ATM 301 Sampling of Aggregates

Following are guidelines for the use of WAQTC FOP for AASHTO T 90 by the State of Alaska DOT&PF.

1. Sample sizes in Table 2 may be used when sampling for WAQTC FOP for AASHTO T 27/T 11 (See Procedure General Note 1).

Table 2
Sample Sizes

Nominal Maximum Size*, Standard mm	Alternate in	Minimum Mass, g	lb
2.36	No. 8	10,000	25
4.75	No. 4	10,000	25
9.5	3/8	10,000	25
12.5	1/2	15,000	35
19.0	3/4	25,000	55
25.0	1	45,000	100
37.5	1-1/2	65,000	145
50	2	85,000	190
75	3	125,000	275

*Nominal Maximum Size: One sieve larger than the first sieve to retain more than 10 percent of the material using an agency specified set of sieves based on cumulative percent retained. Where large gaps in specification sieves exist, intermediate sieve(s) may be inserted to determine nominal maximum size.

2. Samples with a nominal maximum size greater than 3-inch will be sampled using the 3-inch line in Table 2.

3. Field samples containing +3 in. material may be reduced in the field. If allowed, the +3 in. material may be removed. Record the mass of +3 in. material, Note the presence of cobble material.

4. Under section “Report,” change “Location” to “ Location, source and sampling method”

This page intentionally left blank.

SAMPLING AGGREGATE PRODUCTS
FOP FOR AASHTO R 90

Scope

This procedure covers sampling of coarse, fine, or a combination of coarse and fine aggregates (CA and FA) in accordance with AASHTO R 90-18. Sampling from conveyor belts, transport units, roadways, and stockpiles is covered.

Apparatus

- Shovels or scoops, or both
- Brooms, brushes, and scraping tools
- Sampling tubes of acceptable dimensions
- Mechanical sampling systems: normally a permanently attached device that allows a sample container to pass perpendicularly through the entire stream of material or diverts the entire stream of material into the container by manual, hydraulic, or pneumatic operation
- Belt template
- Sampling containers

Procedure – General

Sampling is as important as testing. The technician shall use every precaution to obtain samples that are representative of the material. Determine the time or location for sampling in a random manner.

1. Wherever samples are taken, obtain multiple increments of approximately equal size.

2. Mix the increments thoroughly to form a field sample that meets or exceeds the minimum mass recommended in Table 1.

TABLE 1
Recommended Sample Sizes

Nominal Maximum Size* mm (in.)		Minimum Mass g (lb)	
90	(3 1/2)	175,000	(385)
75	(3)	150,000	(330)
63	(2 1/2)	125,000	(275)
50	(2)	100,000	(220)
37.5	(1 1/2)	75,000	(165)
25.0	(1)	50,000	(110)
19.0	(3/4)	25,000	(55)
12.5	(1/2)	15,000	(35)
9.5	(3/8)	10,000	(25)
4.75	(No. 4)	10,000	(25)
2.36	(No. 8)	10,000	(25)

* One sieve larger than the first sieve to retain more than 10 percent of the material using an agency specified set of sieves based on cumulative percent retained. Where large gaps in specification sieves exist, intermediate sieve(s) may be inserted to determine nominal maximum size. Maximum size is one size larger than nominal maximum size.

Note 1: Sample size is based upon the test(s) required. As a general rule, the field sample size should be such that, when split twice will provide a testing sample of proper size. For example, the sample size may be four times that shown in Table 1 of the FOP for AASHTO T 27/T 11, if that mass is more appropriate.

Procedure – Specific Situations

Conveyor Belts

Avoid sampling at the beginning or end of the aggregate run due to the potential for segregation. Be careful when sampling in the rain. Make sure to capture fines that may stick to the belt or that the rain tends to wash away.

Method A (From the Belt)

1. Stop the belt.
2. Set the sampling template in place on the belt, avoiding intrusion by adjacent material.
3. Remove the material from inside the template, including all fines.
4. Obtain at least three approximately equal increments.
5. Combine the increments to form a single sample.

Method B (From the Belt Discharge)

1. Pass a sampling device through the full stream of the material as it runs off the end of the conveyor belt. The sampling device may be manually, semi-automatic or automatically powered.
2. The sampling device shall pass through the stream at least twice, once in each direction, without overfilling while maintaining a constant speed during the sampling process.
3. When emptying the sampling device into the container, include all fines.
4. Combine the increments to form a single sample.

Transport Units

1. Visually divide the unit into four quadrants.
2. Identify one sampling location in each quadrant.
3. Dig down and remove approximately 0.3 m (1 ft.) of material to avoid surface segregation. Obtain each increment from below this level.
4. Combine the increments to form a single sample.

Roadways

Method A (Berm or Windrow)

- Obtain sample before spreading.
- Take the increments from at least three random locations along the fully formed windrow or berm. Do not take the increments from the beginning or the end of the windrow or berm.
- Obtain full cross-section samples of approximately equal size at each location. Take care to exclude the underlying material.
- Combine the increments to form a single sample.

Note 2: Obtaining samples from berms or windrows may yield extra-large samples and may not be the preferred sampling location.

Method B (In-Place)

- Obtain sample after spreading and before compaction.
- Take the increments from at least three random locations.
- Obtain full-depth increments of approximately equal size from each location. Take care to exclude the underlying material.
- Combine the increments to form a single sample.

Stockpiles

Method A – Loader Sampling

1. Direct the loader operator to enter the stockpile with the bucket at least150 mm (6 in.) above ground level without contaminating the stockpile.
2. Discard the first bucketful.
3. Have the loader re-enter the stockpile and obtain a full loader bucket of the material, tilt the bucket back and up.
4. Form a small sampling pile at the base of the stockpile by gently rolling the material out of the bucket with the bucket just high enough to permit free-flow of the material. (Repeat as necessary.)
5. Create a flat surface by having the loader back drag the small pile.
6. Visually divide the flat surface into four quadrants.
7. Collect an increment from each quadrant by fully inserting the shovel into the flat pile as vertically as possible, take care to exclude the underlying material, roll back the shovel and lift the material slowly out of the pile to avoid material rolling off the shovel.

Method B – Stockpile Face Sampling

1. Create horizontal surfaces with vertical faces in the top, middle, and bottom third of the stockpile with a shovel or loader.
2. Prevent continued sloughing by shoving a flat board against the vertical face. Sloughed material will be discarded to create the horizontal surface.
3. Obtain sample from the horizontal surface as close to the intersection as possible of the horizontal and vertical faces.
4. Obtain at least one increment of equal size from each of the top, middle, and bottom thirds of the pile.
5. Combine the increments to form a single sample.

Method C – Alternate Tube Method (Fine Aggregate)

1. Remove the outer layer that may have become segregated.
2. Using a sampling tube, obtain one increment of equal size from a minimum of five random locations on the pile.
3. Combine the increments to form a single sample.

Identification and Shipping

- Identify samples according to agency standards.
- Include sample report (below).
- Ship samples in containers that will prevent loss, contamination, or damage of material.

Report

- On forms approved by the agency
- Date
- Time
- Sample ID
- Sampling method
- Location
- Quantity represented
- Material type
- Supplier

This page intentionally left blank.

ATM 303 Reducing Samples of Aggregates to Testing Size

Following are guidelines for the use of WAQTC FOP for AASHTO R 76 by the State of Alaska DOT&PF.

1. When determining the correct number of chutes, the chutes will be a minimum of 1.5 times larger than the largest particle, utilizing the maximum even number of chutes possible.
2. AASHTO T 248 Method C may also be used for Fine Aggregate.
3. The check for effective reduction applies to each split.

This page intentionally left blank.

REDUCING SAMPLES OF AGGREGATE TO TESTING SIZE
FOP FOR AASHTO R 76

Scope

This procedure covers the reduction of samples to the appropriate size for testing in accordance with AASHTO R 76-16. Techniques are used that minimize variations in characteristics between test samples and field samples. Method A (Mechanical Splitter) and Method B (Quartering) are covered.

This FOP applies to fine aggregate (FA), coarse aggregate (CA), and mixes of the two (FA / CA) and may also be used on soils.

Apparatus

Method A – Mechanical Splitter

Splitter chutes:

- Even number of equal width chutes
- Discharge alternately to each side
- Minimum of 8 chutes total for CA and FA / CA, 12 chutes total for FA
- Width:
    - Minimum 50 percent larger than largest particle
    - Maximum chute width of 19 mm (3/4 in.) for fine aggregate passing the 9.5 mm (3/8 in.) sieve

Feed control:

- Hopper or straightedge pan with a width equal to or slightly less than the overall width of the assembly of chutes
- Capable of feeding the splitter at a controlled rate

Splitter receptacles / pans:

- Capable of holding two halves of the sample following splitting

The splitter and accessory equipment shall be so designed that the sample will flow smoothly without restriction or loss of material.

Method B – Quartering

- Straightedge scoop, shovel, or trowel
- Broom or brush
- Canvas or plastic sheet, appropriate for the amount and size of the material being reduced

Method Selection

Samples of CA may be reduced by either Method A or Method B.

Samples of FA which are drier than the saturated surface dry (SSD) condition, as described in AASHTO T 84, shall be reduced by a mechanical splitter according to Method A. As a quick approximation, if the fine aggregate will retain its shape when molded with the hand, it is wetter than SSD.

Samples of FA / CA which are drier than SSD may be reduced by Method A or Method B.

Samples of FA and FA / CA that are at SSD or wetter than SSD shall be reduced by
Method B, or the entire sample may be dried – using temperatures that do not exceed those specified for any of the tests contemplated – and then reduced to test sample size using Method A.

Table 1

	Drier than SSD	**Wetter than SSD**
Fine Aggregate (FA)	Method A (Mechanical)	Method B (Quartering)
Mixture of FA/CA	Either Method	Method B (Quartering)
Coarse Aggregate (CA)	Either Method	Either Method

Procedure

Method A – Mechanical Splitter

1. Place two clean empty receptacles under the splitter.
2. Empty the sample into the hopper or pan without loss of material.
3. Uniformly distribute the material in the hopper or pan from edge to edge so that approximately equal amounts flow through each chute.
4. Discharge the material at a uniform rate, allowing it to flow freely through the chutes.
5. Remove any material retained on the surface of the splitter and place into the appropriate receptacle.
6. Using one of the two receptacles containing material, repeat Steps 1 through 6 until the material in one of the two receptacles is the appropriate sample size for the required test.
7. Retain and properly identify the remaining unused sample for further testing if required.

-

Mechanical Splitter Check

- Determine the mass of each reduced portion. If the percent difference of the two masses is greater than 5 percent, corrective action must be taken.
-

Calculation

$$\frac{Smaller\ Mass}{Larger\ Mass} = Ratio \quad (1 - ratio) \times 100 = \%\ Difference$$

Splitter check: 5127 g total sample mass

Splitter pan #1: 2583 g

Splitter pan #2: 2544 g

$$\frac{\mathbf{2544\ g}}{\mathbf{2583\ g}} = \mathbf{0.985} \qquad (\mathbf{1 - 0.985}) \times \mathbf{100} = \mathbf{1.5\%}$$

Alternative to Mechanical Splitter Check

- In lieu of determining the mass of each reduced portion, use the method illustrated in Figure 1 or 2 during reduction.

Figure 1

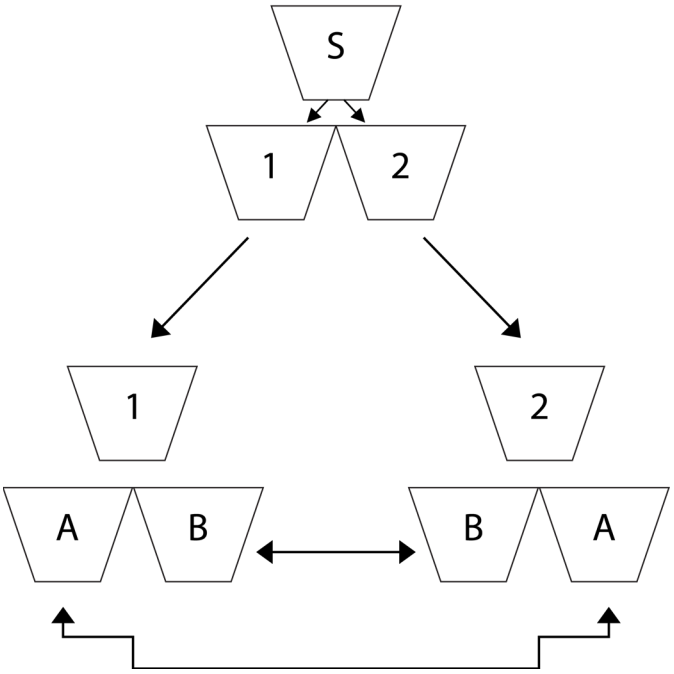

- Sample (S) is an amount greater than or equal to twice the mass needed for testing. Sample (S) is reduced in a mechanical splitter to yield parts (1) and (2).
- Part (1) is further reduced yielding (A) and (B) while part (2) is reduced to yield (B) and (A).
- Final testing sample is produced by combining alternate pans, i.e. A/A or B/B only.

Figure 2

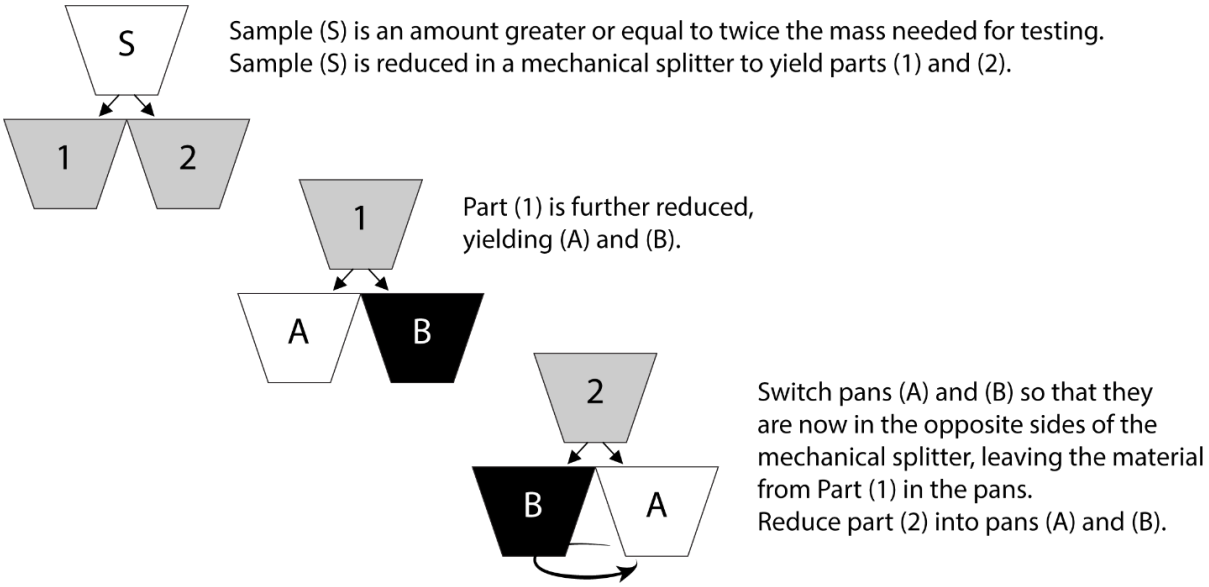

Method B – Quartering

Use either of the following two procedures or a combination of both.

Procedure 1: Quartering on a clean, hard, level surface:

1. Place the sample on a hard, clean, level surface where there will be neither loss of material nor the accidental addition of foreign material.

2. Mix the material thoroughly by turning the entire sample over a minimum of four times. With the last turning, shovel the entire sample into a conical pile by depositing each shovelful on top of the preceding one.

3. Flatten the conical pile to a uniform thickness and diameter by pressing down with a shovel. The diameter should be four to eight times the thickness.

4. Divide the flattened pile into four approximately equal quarters with a shovel or trowel.

5. Remove two diagonally opposite quarters, including all fine material, and brush the cleared spaces clean.

6. Successively mix and quarter the remaining material until the sample is reduced to the desired size.

7. The final test sample consists of <u>two diagonally opposite</u> quarters.

Procedure 2: Quartering on a canvas or plastic sheet:

1. Place the sample on the sheet.

2. Mix the material thoroughly a minimum of four times by pulling each corner of the sheet horizontally over the sample toward the opposite corner. After the last turn, form a conical pile.

3. Flatten the conical pile to a uniform thickness and diameter by pressing down with a shovel. The diameter should be four to eight times the thickness.

4. Divide the flattened pile into four approximately equal quarters with a shovel or trowel, or, insert a stick or pipe beneath the sheet and under the center of the pile, then lift both ends of the stick, dividing the sample into two roughly equal parts. Remove the stick leaving a fold of the sheet between the divided portions. Insert the stick under the center of the pile at right angles to the first division and again lift both ends of the stick, dividing the sample into four roughly equal quarters.

5. Remove two diagonally opposite quarters, being careful to clean the fines from the sheet.

6. Successively mix and quarter the remaining material until the sample size is reduced to the desired size.

7. The final test sample consists of two diagonally opposite quarters.

This page intentionally left blank.

ATM 304 Sieve Analysis of Fine and Coarse Aggregates and Materials Finer than 75-µm (No. 200) Sieve in Mineral Aggregate by Washing

Following are guidelines for the use of WAQTC FOP for AASHTO T 27/T 11 by the State of Alaska DOT&PF.

1. Use Table 3 for all aggregate sizes:

Table 3
Sample sizes for Aggregate Gradation Test

Nominal Maximum Size*		Minimum Dry Mass	
Standard	Alternate		
mm	in	g	lb
4.75	No. 4	500	1
6.3	1/4	1000	2
9.5	3/8	1000	2
12.5	1/2	2000	4
19.0	3/4	5000	11
25.0	1	10,000	22
37.5	1-1/2	15,000	33
50	2	20,000	44
75	3	30,000	66

*Nominal Maximum size: One sieve larger than the first sieve to retain more than 10 percent of the material using an agency specified set of sieves based on cumulative percent retained. Where large gaps between specification sieves exist, intermediate sieve(s) may be inserted to determine nominal maximum size.

2. DOT&PF does not allow the coarse aggregate to be run in a moist condition for sieve analysis.
3. Use Method C unless otherwise specified. Methods A or B may be used for concrete aggregate and materials with ¾" nominal maximum size or less.
4. All methods may use the alternative calculation of:

$$PP = \frac{(M - CMR)}{M} \times 100$$

Where:
CMR = Cumulative Mass Retained
M= Total Dry Sample mass before washing
PP= Percent Passing

5. For calculating Fineness Modulus, subtract reported percent passing from 100 to determine percent retained.

6. When testing Crushed Asphalt Base Course (CABC) or Recycled Asphalt Pavement (RAP), obtain samples in accordance with FOP for AASHTO T 2. Determine and record the total mass of the sample to the nearest 0.1 percent. Perform procedural Method C, steps 3-5 and step 12, except in step 4 the sample may be hand-shaken for the necessary time determined to provide complete separation; taking care not to overload sieves.

7. For material with a nominal maximum size greater than 3-inch, use minimum test size from the 3-inch line of Table 3. When required, collect and re-bag minus 3-inch material and provide to independent assurance. Record the plus 3-inch material and transmit those numbers with the independent assurance sample.

8. For embankment material containing large oversize particles, which are not able to be tested according to conventional sieve analysis test methods (ATM 304), it is acceptable, subject to the approval of the RQE or RME, to provide pictorial evidence of the size and nature of the material being placed. The pictures shall either be embedded into the respective regional sieve analysis form(s) or attached to them. Utilize an object for scale reference that demonstrates size of embankment material containing large particles. The sieve analysis form must include: project name and number(s), field test number, pay item name and number, sample location (station, offset, depth), sample date, material source/Contractor, and quantity represented. Also include an acceptance statement with the inspector's name, date, and signature. The sieve analysis is to be signed and dated by the Project Engineer.

9. ANNEX B – use only the values from TABLE B1 to determine sieve overloading.

SIEVE ANALYSIS OF FINE AND COARSE AGGREGATES
FOP FOR AASHTO T 27

MATERIALS FINER THAN 75 µM (NO. 200) SIEVE IN MINERAL AGGREGATE BY WASHING
FOP FOR AASHTO T 11

Scope

A sieve analysis, or 'gradation,' measures distribution of aggregate particle sizes within a given sample.

Accurate determination of the amount of material smaller than 75 µm (No. 200) cannot be made using just AASHTO T 27. If quantifying this material is required, use AASHTO T 11 in conjunction with AASHTO T 27.

This FOP covers sieve analysis in accordance with AASHTO T 27-20 and materials finer than 75 µm (No. 200) in accordance with AASHTO T 11-20 performed in conjunction with AASHTO T 27. The procedure includes three methods: A, B, and C.

Apparatus

- Balance or scale: Capacity sufficient for the masses shown in Table 1, accurate to 0.1 percent of the sample mass or readable to 0.1 g, and meeting the requirements of AASHTO M 231
- Sieves: Meeting the requirements of ASTM E11
- Mechanical sieve shaker: Meeting the requirements of AASHTO T 27
- Suitable drying equipment (refer to FOP for AASHTO T 255)
- Containers and utensils: A pan or vessel of sufficient size to contain the sample covered with water and permit vigorous agitation without loss of material or water
- Optional

Mechanical washing device

Mallet: With a rubber or rawhide head having a mass of 0.57 ±0.23 kg (1.25 ±0.5 lb)

Sample Sieving

- In all procedures, the sample is shaken in nested sieves. Sieves are selected to furnish information required by specification. Intermediate sieves are added for additional information or to avoid overloading sieves, or both.
- The sieves are nested in order of increasing size from the bottom to the top, and the sample, or a portion of the sample, is placed on the top sieve.
- The loaded sieves are shaken in a mechanical shaker for approximately 10 minutes, refer to Annex A, *Time Evaluation*.
- Care must be taken so that sieves are not overloaded, refer to Annex B, *Overload Determination*. The sample may be sieved in increments and the mass retained for each sieve added together from each sample increment to avoid overloading sieves.

Sample Preparation

Obtain samples according to the FOP for AASHTO R 90 and reduce to sample size, shown in Table 1, according to the FOP for AASHTO R 76.

TABLE 1
Sample Sizes for Aggregate Gradation Test

Nominal Maximum Size* mm (in.)		Minimum Dry Mass g (lb)	
125	(5)	300,000	(660)
100	(4)	150,000	(330)
90	(3 1/2)	100,000	(220)
75	(3)	60,000	(130)
63	(2 1/2)	35,000	(77)
50	(2)	20,000	(44)
37.5	(1 1/2)	15,000	(33)
25.0	(1)	10,000	(22)
19.0	(3/4)	5000	(11)
12.5	(1/2)	2000	(4)
9.5	(3/8)	1000	(2)
6.3	(1/4)	1000	(2)
4.75	(No. 4)	500	(1)

*Nominal maximum size: One sieve larger than the first sieve to retain more than 10 percent of the material using an agency specified set of sieves based on cumulative percent retained. Where large gaps between specification sieves exist, intermediate sieve(s) may be inserted to determine nominal maximum size.

Sample sizes in Table 1 are standard for aggregate sieve analysis, due to equipment restraints samples may need to be divided into several "subsamples." For example, a gradation that requires 100 kg (220 lbs.) of material would not fit into a large tray shaker all at once.

Some agencies permit reduced sample sizes if it is proven that doing so is not detrimental to the test results. Some agencies require larger sample sizes. Check agency guidelines for required or permitted sample sizes.

Selection of Procedure

Agencies may specify which method to perform. If a method is not specified, perform Method A.

Overview

Method A

- Determine original dry mass of the sample
- Wash over a 75µm (No. 200) sieve
- Determine dry mass of washed sample
- Sieve washed sample
- Calculate and report percent retained and passing each sieve

Method B

- Determine original dry mass of the sample
- Wash over a 75 µm (No. 200) sieve

- Determine dry mass of washed sample
- Sieve sample through coarse sieves, 4.75 mm (No. 4) sieves and larger
- Determine mass of fine material, minus 4.75 mm (No. 4)
- Reduce fine material
- Determine mass of reduced portion
- Sieve reduced portion
- Calculate and report percent retained and passing each sieve

Method C

- Determine original dry mass of the sample
- Sieve sample through coarse sieves, 4.75 mm (No. 4) sieves and larger
- Determine mass of fine material, minus 4.75 mm (No. 4)
- Reduce fine material
- Determine mass of reduced portion
- Wash reduced portion over a 75µm (No. 200) sieve
- Determine dry mass of washed reduced portion
- Sieve washed reduced portion
- Calculate and report percent retained and passing each sieve

Procedure Method A

1. Dry the sample to constant mass according to the FOP for AASHTO T 255. Cool to room temperature. Determine and record the original dry mass of the sample to the nearest 0.1 percent or 0.1 g. Designate this mass as *M*.
2. When the specification does not require the amount of material finer than 75 µm (No. 200) be determined by washing, skip to Step 11.
3. Nest a sieve, such as a 2.0 mm (No. 10), above the 75 µm (No. 200) sieve.
4. Place the sample in a container and cover with water.

   Note 1: A detergent, dispersing agent, or other wetting solution may be added to the water to assure a thorough separation of the material finer than the 75 µm (No. 200) sieve from the coarser particles. There should be enough wetting agent to produce a small amount of suds when the sample is agitated. Excessive suds may overflow the sieves and carry material away with them.

5. Agitate vigorously to ensure complete separation of the material finer than 75 µm (No. 200) from coarser particles and bring the fine material into suspension above the coarser material. Avoid degradation of the sample when using a mechanical washing device.

   Note 2: Washing longer than 10 minutes in a mechanical washer has been shown to cause significant amounts of degradation depending upon aggregate type.

6. Immediately pour the wash water containing the suspended material over the nested sieves; be careful not to pour out the coarser particles or over fill the 75 µm (No. 200) sieve.

7. Add water to cover material remaining in the container, agitate, and repeat Step 5. Continue until the wash water is reasonably clear.

8. Remove the upper sieve and return material retained to the washed sample.

9. Rinse the material retained on the 75 µm (No. 200) sieve until water passing through the sieve is reasonably clear and detergent or dispersing agent is removed, if used.

10. Return all material retained on the 75 µm (No. 200) sieve to the container by rinsing into the washed sample.

    Note 3: Excess water may be carefully removed with a bulb syringe; the removed water must be discharged back over the 75 µm (No. 200) sieve to prevent loss of fines.

11. Dry the washed sample to constant mass according to the FOP for AASHTO T 255. Cool to room temperature. Determine and record the dry mass of the sample.

12. Select sieves required by the specification and those necessary to avoid overloading as described in Annex B. With a pan on bottom, nest the sieves increasing in size starting with the 75 µm (No. 200).

13. Place the sample, or a portion of the sample, on the top sieve. Sieves may already be in the mechanical shaker, if not place sieves in mechanical shaker and shake for the minimum time determined to provide complete separation for the sieve shaker being used (approximately 10 minutes, the time determined by Annex A).

    Note 4: Excessive shaking (more than 10 minutes) may result in degradation of the sample.

14. Determine and record the individual or cumulative mass retained for each sieve and in the pan. Ensure that all material trapped in full openings of the sieve are removed and included in the mass retained.

    Note 5: For sieves 4.75 mm (No. 4) and larger, check material trapped in less than a full opening by sieving over a full opening. Use coarse wire brushes to clean the 600 µm (No. 30) and larger sieves, and soft bristle brushes for smaller sieves.

    Note 6: In the case of coarse / fine aggregate mixtures, distribute the minus 4.75 mm (No. 4) among two or more sets of sieves to prevent overloading of individual sieves.

15. Perform the *Check Sum* calculation – Verify the *total mass after sieving* agrees with the *dry mass before sieving* to within 0.3 percent. The *dry mass before sieving* is the dry mass after wash or the original dry mass (*M*) if performing the sieve analysis without washing. Do not use test results for acceptance if the *Check Sum* result is greater than 0.3 percent.

16. Calculate the total percentages passing, and the individual or cumulative percentages retained to the nearest 0.1 percent by dividing the individual sieve masses or cumulative sieve masses by the original dry mass (*M*) of the sample.

17. Report total percent passing to 1 percent except report the 75 µm (No. 200) sieve to 0.1 percent.

Method A Calculations

Check Sum

$$Check\ Sum = \frac{dry\ mass\ before\ seiving - total\ mass\ after\ sieving}{dry\ mass\ before\ sieving} \times 100$$

Percent Retained

$$IPR = \frac{IMR}{M} \times 100 \qquad or \qquad CPR = \frac{CMR}{M} \times 100$$

Where:

IPR	=	Individual Percent Retained
CPR	=	Cumulative Percent Retained
M	=	Original dry mass of the sample
IMR	=	Individual Mass Retained
CMR	=	Cumulative Mass Retained

Percent Passing (PP)

$$PP = PPP - IPR \qquad or \qquad PP = 100 - CPR$$

Where:

PP	=	Percent Passing
PPP	=	Previous Percent Passing

Method A Example Individual Mass Retained

Original dry mass of the sample (*M*): 5168.7 g

Dry mass of the sample after washing: 4911.3 g

Total mass after sieving equals

Sum of Individual Masses Retained (IMR),
including minus 75 µm (No. 200) in the pan: 4905.9 g

Amount of 75µm (No. 200) minus washed out (5168.7 g – 4911.3 g): 257.4 g

Check Sum

$$Check\ Sum = \frac{4911.3\ g - 4905.9\ g}{4911.3\ g} \times 100 = 0.1\%$$

The result is less than 0.3 percent therefore the results can be used for acceptance purposes.

Individual Percent Retained (IPR) for 9.5 mm (3/8 in.) sieve:

$$IPR = \frac{619.2\ g}{5168.7\ g} \times 100 = 12.0\%$$

Percent Passing (PP) 9.5 mm (3/8 in.) sieve:

$$PP = 86.0\% - 12.0\% = 74.0\%$$

Reported Percent Passing = 74%

Method A Individual Gradation on All Sieves

Sieve Size mm (in.)	Individual Mass Retained g (IMR)	Determine IPR Divide IMR by *M* and multiply by 100	Individual Percent Retained (IPR)	Determine PP by subtracting IPR from Previous PP	Percent Passing (PP)	Reported Percent Passing*
19.0 (3/4)	0		0		100.0	100
12.5 (1/2)	724.7	$\frac{724.7}{5168.7} \times 100 =$	14.0	$100.0 - 14.0 =$	86.0	86
9.5 (3/8)	619.2	$\frac{619.2}{5168.7} \times 100 =$	12.0	$86.0 - 12.0 =$	74.0	74
4.75 (No. 4)	1189.8	$\frac{1189.8}{5168.7} \times 100 =$	23.0	$74.0 - 23.0 =$	51.0	51
2.36 (No. 8)	877.6	$\frac{877.6}{5168.7} \times 100 =$	17.0	$51.0 - 17.0 =$	34.0	34
1.18 (No. 16)	574.8	$\frac{574.8}{5168.7} \times 100 =$	11.1	$34.0 - 11.1 =$	22.9	23
0.600 (No. 30)	329.8	$\frac{329.8}{5168.7} \times 100 =$	6.4	$22.9 - 6.4 =$	16.5	17
0.300 (No. 50)	228.5	$\frac{228.5}{5168.7} \times 100 =$	4.4	$16.5 - 4.4 =$	12.1	12
0.150 (No. 100)	205.7	$\frac{205.7}{5168.7} \times 100 =$	4.0	$12.1 - 4.0 =$	8.1	8
0.075 (No. 200)	135.4	$\frac{135.7}{5168.7} \times 100 =$	2.6	$8.1 - 2.6 =$	5.5	5.5
minus 0.075	20.4					

Sieve Size mm (in.)	Individual Mass Retained g (IMR)	Determine IPR Divide IMR by *M* and multiply by 100	Individual Percent Retained (IPR)	Determine PP by subtracting IPR from Previous PP	Percent Passing (PP)	Reported Percent Passing*
(No. 200) in the pan						
Total mass after sieving = sum of sieves + mass in the pan = 4905.9 g						
Original dry mass of the sample *(M)*: 5168.7g						

* Report total percent passing to 1 percent except report the 75 µm (No. 200) sieve to 0.1 percent.

Method A Example Cumulative Mass Retained

Original dry mass of the sample (*M*): 5168.7 g

Dry mass of the sample after washing: 4911.3 g

Total mass after sieving equals Final Cumulative Mass Retained (FCMR) (includes minus 75 µm (No. 200) from the pan): 4905.9 g

Amount of 75µm (No. 200) minus washed out (5168.7 g – 4911.3 g): 257.4 g

Check Sum

$$Check\ Sum = \frac{4911.3\ g - 4905.9\ g}{4911.3\ g} \times 100 = 0.1\%$$

The result is less than 0.3 percent therefore the results can be used for acceptance purposes.

Cumulative Percent Retained (CPR) for 9.5 mm (3/8 in.) sieve:

$$CPR = \frac{1343.9\ g}{5168.7\ g} \times 100 = 26.0\%$$

Percent Passing (PP) 9.5 mm (3/8 in.) sieve:

$$PP = 100.0\% - 26.0\% = 74.0\%$$

Reported Percent Passing = 74%

Method A Cumulative Gradation on All Sieves

Sieve Size mm (in.)	Cumulative Mass Retained g (CMR)	Determine CPR Divide CMR by M and multiply by 100	Cumulative Percent Retained (CPR)	Determine PP by subtracting CPR from 100.0	Percent Passing (PP)	Reported Percent Passing*
19.0 (3/4)	0		0.0		100.0	100
12.5 (1/2)	724.7	$\frac{724.7}{5168.7} \times 100 =$	14.0	$100.0 - 14.0 =$	86.0	86
9.5 (3/8)	1343.9	$\frac{1343.9}{5168.7} \times 100 =$	26.0	$100.0 - 26.0 =$	74.0	74
4.75 (No. 4)	2533.7	$\frac{2533.7}{5168.7} \times 100 =$	49.0	$100.0 - 49.0 =$	51.0	51
2.36 (No. 8)	3411.3	$\frac{3411.3}{5168.7} \times 100 =$	66.0	$100.0 - 66.0 =$	34.0	34
1.18 (No. 16)	3986.1	$\frac{3986.1}{5168.7} \times 100 =$	77.1	$100.0 - 77.1 =$	22.9	23
0.600 (No. 30)	4315.9	$\frac{4315.9}{5168.7} \times 100 =$	83.5	$100.0 - 83.5 =$	16.5	17
0.300 (No. 50)	4544.4	$\frac{4544.4}{5168.7} \times 100 =$	87.9	$100.0 - 87.9 =$	12.1	12
0.150 (No. 100)	4750.1	$\frac{4750.1}{5168.7} \times 100 =$	91.9	$100.0 - 91.9 =$	8.1	8
0.075 (No. 200)	4885.5	$\frac{4885.5}{5168.7} \times 100 =$	94.5	$100.0 - 94.5 =$	5.5	5.5
FCMR	4905.9					
Total mass after sieving: 4905.9 g						
Original dry mass of the sample *(M)*: 5168.7 g						

* Report total percent passing to 1 percent except report the 75 µm (No. 200) sieve to 0.1 percent.

Procedure Method B

1. Dry the sample to constant mass according to the FOP for AASHTO T 255. Cool to room temperature. Determine and record the original dry mass of the sample to the nearest 0.1 percent or 0.1 g. Designate this mass as *M*.

2. When the specification does not require the amount of material finer than 75 µm (No. 200) be determined by washing, skip to Step 11.

3. Nest a protective sieve, such as a 2.0 mm (No. 10), above the 75 µm (No. 200) sieve.

4. Place the sample in a container and cover with water.

   Note 1: A detergent, dispersing agent, or other wetting solution may be added to the water to assure a thorough separation of the material finer than the 75 µm (No. 200) sieve from the coarser particles. There should be enough wetting agent to produce a small amount of suds when the sample is agitated. Excessive suds may overflow the sieves and carry material away with them.

5. Agitate vigorously to ensure complete separation of the material finer than 75 µm (No. 200) from coarser particles and bring the fine material into suspension above the coarser material. Avoid degradation of the sample when using a mechanical washing device.

   Note 2: Washing longer than 10 minutes in a mechanical washer has been shown to cause significant amounts of degradation depending upon aggregate type.

6. Immediately pour the wash water containing the suspended material over the nested sieves; be careful not to pour out the coarser particles or over fill the 75 µm (No. 200) sieve.

7. Add water to cover material remaining in the container, agitate, and repeat Step 5. Continue until the wash water is reasonably clear.

8. Remove the upper sieve and return material retained to the washed sample.

9. Rinse the material retained on the 75 µm (No. 200) sieve until water passing through the sieve is reasonably clear and detergent or dispersing agent is removed, if used.

10. Return all material retained on the 75 µm (No. 200) sieve to the container by rinsing into the washed sample.

    Note 3: Excess water may be carefully removed with a bulb syringe; the removed water must be discharged back over the 75 µm (No. 200) sieve to prevent loss of fines.

11. Dry the washed sample to constant mass according to the FOP for AASHTO T 255. Cool to room temperature. Determine and record the dry mass after wash.

12. Select sieves required by the specification and those necessary to avoid overloading as described in Annex B. With a pan on bottom, nest the sieves increasing in size starting with the 4.75 mm (No. 4).

13. Place the sample, or a portion of the sample, on the top sieve. Sieves may already be in the mechanical shaker, if not place the sieves in the mechanical shaker and shake for the minimum time determined to provide complete separation for the sieve shaker being used (approximately 10 minutes, the time determined by Annex A).

    Note 4: Excessive shaking (more than 10 minutes) may result in degradation of the sample.

14. Determine and record the individual or cumulative mass retained for each sieve. Ensure that all particles trapped in full openings of the sieve are removed and included in the mass retained.

    Note 5: For sieves 4.75 mm (No. 4) and larger, check material trapped in less than a full opening by sieving over a full opening. Use coarse wire brushes to clean the 600 µm (No. 30) and larger sieves, and soft hair bristle for smaller sieves.

15. Determine and record the mass of the minus 4.75 mm (No. 4) material in the pan. Designate this mass as M_1.

16. Perform the *Coarse Check Sum* calculation – Verify the *total mass after coarse sieving* agrees with the *dry mass before sieving* to within 0.3 percent. The *dry mass before sieving* is the dry mass after wash or the original dry mass (M) if performing the sieve analysis without washing. Do not use test results for acceptance if the *Check Sum* result is greater than 0.3 percent.

17. Reduce the minus 4.75 mm (No. 4) according to the FOP for AASHTO R 76 to produce a sample with a minimum mass of 500 g. Determine and record the mass of the minus 4.75 mm (No. 4) split, designate this mass as M_2.

18. Select sieves required by the specification and those necessary to avoid overloading as described in Annex B. With a pan on bottom, nest the sieves increasing in size starting with the 75 µm (No. 200) up to, but not including, the 4.75 mm (No. 4) sieve.

19. Place the sample portion on the top sieve and place the sieves in the mechanical shaker. Shake for the minimum time determined to provide complete separation for the sieve shaker being used (approximately 10 minutes, the time determined by Annex A).

20. Determine and record the individual or cumulative mass retained for each sieve and in the pan. Ensure that all particles trapped in full openings of the sieve are removed and included in the mass retained.

    Note 6: For sieves 4.75 mm (No. 4) and larger, check material trapped in less than a full opening by sieving over a full opening. Use coarse wire brushes to clean the 600 µm (No. 30) and larger sieves, and soft hair bristle for smaller sieves.

21. Perform the *Fine Check Sum* calculation – Verify the *total mass after sieving* agrees with the *dry mass before sieving* (M_2) to within 0.3 percent. Do not use test results for acceptance if the *Check Sum* result is greater than 0.3 percent.

22. Calculate to the nearest 0.1 percent, the Individual Mass Retained (IMR) or Cumulative Mass Retained (CMR) of the size increment of the reduced sample and the original sample.

23. Calculate the total percent passing.

24. Report total percent passing to 1 percent except report the 75 µm (No. 200) sieve to 0.1 percent.

Method B Calculations

Check Sum

$$Coarse\ Check\ Sum = \frac{dry\ mass\ before\ sieveing - total\ mass\ after\ coarse\ sieving}{dry\ mass\ before\ sieving} \times 100$$

$$Fine\ Check\ Sum = \frac{M_2 - total\ mass\ after\ fine\ sieving}{M_2} \times 100$$

Percent Retained for 4.75 mm (No. 4) and larger

$$IPR = \frac{IMR}{M} \times 100 \qquad or \qquad CPR = \frac{CMR}{M} \times 100$$

Where:

IPR	=	Individual Percent Retained
CPR	=	Cumulative Percent Retained
M	=	Original dry mass of the sample
IMR	=	Individual Mass Retained
CMR	=	Cumulative Mass Retained

Percent Passing (PP) for 4.75 mm (No. 4) and larger

$$PP = PPP - IPR \qquad or \qquad PP = 100 - CPR$$

Where:

PP	=	Percent Passing
PPP	=	Previous Percent Passing

Minus 4.75mm (No. 4) adjustment factor (R)

The mass of material retained for each sieve is multiplied by the adjustment factor, the total mass of the minus 4.75 mm (No. 4) from the pan, M_1, divided by the mass of the reduced split of minus 4.75 mm (No. 4), M_2. For consistency, this adjustment factor is carried to three decimal places.

$$R = \frac{M_1}{M_2}$$

Where:

R	= minus 4.75 mm (No. 4) adjustment factor
M_1	= total mass of minus 4.75 mm (No. 4) before reducing
M_2	= mass of the reduced split of minus 4.75 mm (No. 4)

Adjusted Individual Mass Retained (AIMR):

$$AIMR = R \times B$$

Where:

AIMR	= Adjusted Individual Mass Retained
R	= minus 4.75 mm (No. 4) adjustment factor
B	= individual mass of the size increment in the reduced portion sieved

Adjusted Cumulative Mass Retained (ACMR)

$$ACMR = (R \times B) + D$$

Where:

ACMR = Adjusted Cumulative Mass Retained

R = minus 4.75 mm (No. 4) adjustment factor

B = cumulative mass of the size increment in the reduced portion sieved

D = cumulative mass of plus 4.75mm (No. 4) portion of sample

Method B Example Individual Mass Retained

Dry mass of total sample, before washing: 3214.0 g

Dry mass of sample after washing: 3085.1 g

Total mass after sieving

Sum of Individual Masses Retained (IMR) plus the minus 4.75 mm (No. 4) from the pan: 3085.0 g

Amount of 75 µm (No. 200) minus washed out (3214.0 g – 3085.1 g): 128.9 g

Coarse Check Sum

$$Coarse\ Check\ Sum = \frac{3085.1\ g - 3085.0\ g}{3085.1\ g} \times 100 = 0.0\%$$

The result is less than 0.3 percent therefore the results can be used for acceptance purposes.

Individual Percent Retained (IPR) for 9.5 mm (3/8 in.) sieve

$$IPR = \frac{481.4\ g}{3214.0\ g} \times 100 = 15.0\%$$

Percent Passing (PP) for 9.5 mm (3/8 in.) sieve:

$$PP = 95.0\% - 15.0\% = 80.0\%$$

Reported Percent Passing = 80%

Method B Individual
Gradation on Coarse Sieves

Sieve Size mm (in.)	Individual Mass Retained g (IMR)	Determine IPR Divide IMR by M and multiply by 100	Individual Percent Retained (IPR)	Determine PP by subtracting IPR from Previous PP	Percent Passing (PP)
16.0 (5/8)	0		0		100
12.5 (1/2)	161.1	$\frac{161.1}{3214.0} \times 100 =$	5.0	$100.0 - 5.0 =$	95.0
9.50 (3/8)	481.4	$\frac{481.4}{3214.0} \times 100 =$	15.0	$95.0 - 15.0 =$	80.0
4.75 (No. 4)	475.8	$\frac{475.8}{3214.0} \times 100 =$	14.8	$80.0 - 14.8 =$	65.2
Minus 4.75 (No. 4) in the pan	1966.7 (**M_1**)				
Total mass after sieving: sum of sieves + mass in the pan = 3085.0 g					
Original dry mass of the sample *(M)*: 3214.0 g					

Fine Sample

The minus 4.75 mm (No. 4) from the pan, M_1 (1966.7 g), was reduced according to the FOP for AASHTO R 76, to at least 500 g. In this case, the reduced mass was determined to be **512.8 g**. This is M_2.

The reduced mass was sieved.

Total mass after sieving equals

Sum of Individual Masses Retained (IMR) including
minus 75 µm (No. 200) in the pan 511.8 g

Fine Check Sum

$$Fine\ Check\ Sum = \frac{512.8\ g - 511.8\ g}{512.8\ g} \times 100 = 0.2\%$$

The result is less than 0.3 percent therefore the results can be used for acceptance purposes.

Adjustment Factor (*R*) for Adjusted Individual Mass Retained (AIMR) on minus 4.75 (No. 4) sieves

The mass of material retained for each sieve is multiplied by the adjustment factor (*R*) carried to three decimal places.

$$R = \frac{M_1}{M_2} = \frac{1{,}966.7\ g}{512.8\ g} = 3.835$$

Where:

R = minus 4.75 mm (No. 4) adjustment factor
M_1 = total mass of minus 4.75 mm (No. 4) from the pan
M_2 = mass of the reduced split of minus 4.75 mm (No. 4)

Each "individual mass retained" on the fine sieves must be multiplied by *R* to obtain the *Adjusted Individual Mass Retained*.

Adjusted Individual Mass Retained (AIMR) for 2.00 mm (No. 10) sieve

$$AIMR = 3.835 \times 207.1\ g = 794.2\ g$$

Individual Percent Retained (IPR) for 2.00 mm (No. 10) sieve:

$$IPR = \frac{794.2\ g}{3214.0\ g} \times 100 = 24.7\%$$

Percent Passing (PP) 2 mm (No. 10) sieve:

$$PP = 65.2\% - 24.7\% = 40.5\%$$

Reported Percent Passing = 41%

Method B Individual Gradation on Fine Sieves

Sieve Size mm (in.)	Individual Mass Retained g (IMR)	Determine TIMR Multiply IMR by R $\left(\frac{M_1}{M_2}\right)$	Total Individual Mass Retained (TIMR)
2.00 (No. 10)	207.1	$207.1 \times 3.835 =$	794.2
0.425 (No. 40)	187.9	$187.9 \times 3.835 =$	720.6
0.210 (No. 80)	59.9	$59.9 \times 3.835 =$	229.7
0.075 (No. 200)	49.1	$49.1 \times 3.835 =$	188.3
minus 0.075 (No. 200) in the pan	7.8		
Total mass after sieving: sum of fine sieves + the mass in the pan = 511.8 g			

Method B Individual
Final Gradation on All Sieves

Sieve Size mm (in.)	Total Individual Mass Retained g (TIMR)	Determine IPR Divide TIMR by M and multiply by 100	Individual Percent Retained (IPR)	Determine PP by subtracting IPR from Previous PP	Percent Passing (PP)	Reported Percent Passing*
16.0 (5/8)	0		0		100	100
12.5 (1/2)	161.1	$\frac{161.1}{3214.0} \times 100 =$	5.0	$100.0 - 5.0 =$	95.0	95
9.50 (3/8)	481.4	$\frac{481.4}{3214.0} \times 100 =$	15.0	$95.0 - 15.0 =$	80.0	80
4.75 (No. 4)	475.8	$\frac{475.8}{3214.0} \times 100 =$	14.8	$80.0 - 14.8 =$	65.2	65
2.00 (No. 10)	794.2	$\frac{794.2}{3214.0} \times 100 =$	24.7	$65.2 - 24.7 =$	40.5	41
0.425 (No. 40)	720.6	$\frac{720.6}{3214.0} \times 100 =$	22.4	$40.5 - 22.4 =$	18.1	18
0.210 (No. 80)	229.7	$\frac{229.7}{3214.0} \times 100 =$	7.1	$18.1 - 7.1 =$	11.0	11
0.075 (No. 200)	188.3	$\frac{188.3}{3214.0} \times 100 =$	5.9	$11.0 - 5.9 =$	5.1	5.1
minus 0.075 (No. 200) in the pan	29.9					
Original dry mass of the sample *(M)*: 3214.0 g						

* Report total percent passing to 1 percent except report the 75 µm (No. 200) sieve to 0.1 percent.

Method B Example Cumulative Mass Retained

Original dry mass of the sample *(M)*: 3214.0 g

Dry mass of sample after washing: 3085.1 g

Total mass after sieving equals

Cumulative Mass Retained (CMR) on the 4.75 (No. 4)
plus the minus 4.75 mm (No. 4) in the pan: 3085.0 g

Amount of 75 µm (No. 200) minus washed out (3214.0 g – 3085.1 g): 128.9 g

Coarse Check Sum

$$Coarse\ Check\ Sum = \frac{3085.1\ g - 3085.0\ g}{3085.1\ g} \times 100 = 0.0\%$$

The result is less than 0.3 percent therefore the results can be used for acceptance purposes.

Cumulative Percent Retained (CPR) for 9.5 mm (3/8 in.) sieve

$$CPR = \frac{642.5\ g}{3214.0\ g} \times 100 = 20.0\%$$

Percent Passing (PP) for 9.5 mm (3/8 in.) sieve

$$PP = 100.0\% - 20.0\% = 80.0\%$$

Reported Percent Passing = 80%

Method B Cumulative Gradation on Coarse Sieves

Sieve Size mm (in.)	Cumulative Mass Retained g (CMR)	Determine CPR Divide CMR by M and multiply by 100	Cumulative Percent Retained (CPR)	Determine PP by subtracting CPR from 100.0	Percent Passing (PP)
16.0 (5/8)	0		0		100
12.5 (1/2)	161.1	$\frac{161.1}{3214.0} \times 100 =$	5.0	$100.0 - 5.0 =$	95.0
9.50 (3/8)	642.5	$\frac{642.5}{3214.0} \times 100 =$	20.0	$100.0 - 20.0 =$	80.0
4.75 (No. 4)	1118.3 (*D*)	$\frac{1118.3}{3214.0} \times 100 =$	34.8	$100.0 - 34.8 =$	65.2
Minus 4.75 (No. 4) in the pan	1966.7 (M_1)				
CMR: 1118.3 + 1966.7 = 3085.0					
Original dry mass of the sample *(M)*: 3214.0 g					

Fine Sample

The mass of minus 4.75 mm (No. 4) material in the pan, M_1 (1966.7 g), was reduced according to the FOP for AASHTO R 76, to at least 500 g. In this case, the reduced mass was determined to be **512.8 g**. This is M_2.

The reduced mass was sieved.

Total mass after fine sieving equals

Final Cumulative Mass Retained (FCMR) (includes minus
75 µm (No. 200) from the pan): 511.8 g

Fine Check Sum

$$Fine\ Check\ Sum = \frac{512.8\ g - 511.8\ g}{512.8\ g} \times 100 = 0.2\%$$

The result is less than 0.3 percent therefore the results can be used for acceptance purposes.

The cumulative mass of material retained for each sieve is multiplied by the adjustment factor (*R*) carried to three decimal places and added to the cumulative mass retained on the 4.75 mm (No. 4) sieve, *D,* to obtain the *Adjusted Cumulative Mass Retained (ACMR).*

Adjustment factor (*R*) for Cumulative Mass Retained (CMR) in minus 4.75 (No. 4) sieves

$$R = \frac{M_1}{M_2} = \frac{1{,}966.7\ g}{512.8\ g} = 3.835$$

Where:

R	= minus 4.75 mm (No. 4) adjustment factor
M_1	= total mass of minus 4.75 mm (No. 4) from the pan
M_2	= mass of the reduced split of minus 4.75 mm (No. 4)

Adjusted Cumulative Mass Retained (ACMR) for the 2.00 mm (No. 10) sieve

$$ACMR = 3.835 \times 207.1\ g = 794.2\ g$$

Total Cumulative Mass Retained (TCMR) for the 2.00 mm (No. 10) sieve

$$TCMR = 794.2\ g + 1118.3\ g = 1912.5\ g$$

Cumulative Percent Retained (CPR) for 2.00 mm (No. 10) sieve:

$$CPR = \frac{1912.5\ g}{3214.0\ g} \times 100 = 59.5\%$$

Percent Passing (PP) 2.00 mm (No. 10) sieve:

$$PP = 100.0\% - 59.5\% = 40.5\%$$

Reported Percent Passing = 41%

Method B Cumulative
Gradation on Fine Sieves

Sieve Size mm (in.)	Cumulative Mass Retained, g (CMR)	Determine AIMR Multiply IMR by R $\left(\frac{M_1}{M_2}\right)$ and adding D	Total Cumulative Mass Retained (TCMR)
2.00 (No. 10)	207.1	$207.1 \times 3.835 + 1118.3 =$	1912.5
0.425 (No. 40)	395.0	$395.0 \times 3.835 + 1118.3 =$	2633.1
0.210 (No. 80)	454.9	$454.9 \times 3.835 + 1118.3 =$	2862.8
0.075 (No. 200)	504.0	$504.0 \times 3.835 + 1118.3 =$	3051.1
FCMR	511.8		
Total: sum of masses on fine sieves + minus 75 µm (No. 200) in the pan = 511.8			

Method B Cumulative
Final Gradation on All Sieves

Sieve Size mm (in.)	Cumulative Mass Retained g (CMR)	Determine CPR Divide CMR by M and multiply by 100	Cumulative Percent Retained (CPR)	Determine PP by subtracting CPR from 100.0	Percent Passing (PP)	Reported Percent Passing*
16.0 (5/8)	0		0		100.0	100
12.5 (1/2)	161.1	$\frac{161.1}{3214.0} \times 100 =$	5.0	$100.0 - 5.0 =$	95.0	95
9.5 (3/8)	642.5	$\frac{642.5}{3214.0} \times 100 =$	20.0	$100.0 - 20.0 =$	80.0	80
4.75 (No. 4)	1118.3 (*D*)	$\frac{1118.3}{3214.0} \times 100 =$	34.8	$100.0 - 34.8 =$	65.2	65
2.00 (No. 10)	1912.5	$\frac{1912.5}{3214.0} \times 100 =$	59.5	$100.0 - 59.5 =$	40.5	41
0.425 (No. 40)	2633.1	$\frac{2633.1}{3214.0} \times 100 =$	81.9	$100.0 - 81.9 =$	18.1	18
0.210 (No. 80)	2862.8	$\frac{2862.8}{3214.0} \times 100 =$	89.1	$100.0 - 89.1 =$	10.9	11
0.075 (No. 200)	3051.1	$\frac{3051.1}{3214.0} \times 100 =$	94.9	$100.0 - 94.9 =$	5.1	5.1
FCMR	3081.1					
Original dry mass of the sample *(M)*: 3214.0 g						

* Report total percent passing to 1 percent except report the 75 µm (No. 200) sieve to 0.1 percent.

Procedure Method C

1. Dry the sample to constant mass according to the FOP for AASHTO T 255. Cool to room temperature. Determine and record the original dry mass of the sample to the nearest 0.1 percent or 0.1 g. Designate this mass as M.

2. Break up any aggregations or lumps of clay, silt, or adhering fines to pass the 4.75 mm (No. 4) sieve.

3. Select sieves required by the specification and those necessary to avoid overloading as described in Annex B. With a pan on bottom, nest the sieves increasing in size starting with the 4.75 mm (No. 4) sieve.

4. Place the sample, or a portion of the sample, on the top sieve. Sieves may already be in the mechanical shaker, if not place the sieves in the mechanical shaker and shake for the minimum time determined to provide complete separation for the sieve shaker being used (approximately 10 minutes, the time determined by Annex A).

   Note 1: Excessive shaking (more than 10 minutes) may result in degradation of the sample.

5. Determine and record the cumulative mass retained for each sieve. Ensure that all material trapped in full openings of the sieve are removed and included in the mass retained.

   Note 2: For sieves 4.75 mm (No. 4) and larger, check material trapped in less than a full opening sieving over a full opening. Use coarse wire brushes to clean the 600 µm (No. 30) and larger sieves, and soft bristle brush for smaller sieves.

6. Determine and record the mass of the minus 4.75 mm (No. 4) material in the pan. Designate this mass as M_1.

7. Perform the *Coarse Check Sum* calculation –Verify the *total mass after coarse sieving* agrees with the *original dry mass (M*) within 0.3 percent.

8. Reduce the minus 4.75 mm (No. 4) according to the FOP for AASHTO R 76, to produce a sample with a minimum mass of 500 g.

9. Determine and record the mass of the minus 4.75 mm (No. 4) split, designate this mass as M_3.

10. Nest a protective sieve, such as a 2.0 mm (No. 10), above the 75 µm (No. 200) sieve.

11. Place the sample in a container and cover with water.

    Note 3: A detergent, dispersing agent, or other wetting solution may be added to the water to assure a thorough separation of the material finer than the 75 µm (No. 200) sieve from the coarser particles. There should be enough wetting agent to produce a small amount of suds when the sample is agitated. Excessive suds may overflow the sieves and carry material away with them.

12. Agitate vigorously to ensure complete separation of the material finer than 75 µm (No. 200) from coarser particles and bring the fine material into suspension above the coarser material. Avoid degradation of the sample when using a mechanical washing device.

    Note 4: Washing longer than 10 minutes in a mechanical washer has been shown to cause significant amounts of degradation depending upon aggregate type.

13. Immediately pour the wash water containing the suspended material over the nested sieves; be careful not to pour out the coarser particles or over fill the 75 µm (No. 200) sieve.

14. Add water to cover material remaining in the container, agitate, and repeat Step 12. Repeat until the wash water is reasonably clear.

15. Remove the upper sieve and return material retained to the washed sample.

16. Rinse the material retained on the 75 µm (No. 200) sieve until water passing through the sieve is reasonably clear and detergent or dispersing agent is removed, if used.

17. Return all material retained on the 75 µm (No. 200) sieve to the container by flushing into the washed sample.

    Note 5: Excess water may be carefully removed with a bulb syringe; the removed water must be discharged back over the 75 µm (No. 200) sieve to prevent loss of fines.

18. Dry the washed sample portion to constant mass according to the FOP for AASHTO T 255. Cool to room temperature. Determine and record the dry mass, designate this mass as *dry mass before sieving*.

19. Select sieves required by the specification and those necessary to avoid overloading as described in Annex B. With a pan on bottom, nest the sieves increasing in size starting with the 75 µm (No. 200) sieve up to, but not including, the 4.75 mm (No. 4) sieve.

20. Place the sample portion on the top sieve. Place the sieves in the mechanical shaker and shake for the minimum time determined to provide complete separation for the sieve shaker being used (approximately 10 minutes, the time determined by Annex A).

    Note 6: Excessive shaking (more than 10 minutes) may result in degradation of the sample.

21. Determine and record the cumulative mass retained for each sieve. Ensure that all material trapped in full openings of the sieve are removed and included in the mass retained.

    Note 7: For sieves 4.75 mm (No. 4) and larger, check material trapped in less than a full opening by sieving over a full opening. Use coarse wire brushes to clean the 600 µm (No. 30) and larger sieves, and soft bristle brushes for smaller sieves.

22. Perform the *Fine Check Sum* calculation – Verify the *total mass after fine sieving* agrees with the *dry mass before sieving* within 0.3 percent. Do not use test results for acceptance if the *Check Sum* is greater than 0.3 percent.

23. Calculate the Cumulative Percent Retained (CPR) and Percent Passing (PP) for the 4.75 mm (No. 4) and larger.

24. Calculate the Cumulative Percent Retained ($CPR_{-\#4}$) and the Percent Passing ($PP_{-\#4}$) for minus 4.75 mm (No. 4) split and Percent Passing (PP) for the minus 4.75 mm (No. 4).

25. Report total percent passing to 1 percent except report the 75 µm (No. 200) sieve to 0.1 percent.

Method C Calculations

Check Sum

$$Coarse\ check\ sum = \frac{M - total\ mass\ after\ coarse\ sieving}{M} \times 100$$

$$Fine\ check\ sum = \frac{dry\ mass\ before\ sieving - total\ mass\ after\ fine\ sieving}{dry\ mass\ before\ sieving} \times 100$$

Where:

M = Original dry mass of the sample

Cumulative Percent Retained (CPR) for 4.75 mm (No. 4) sieve and larger

$$CPR = \frac{CMR}{M} \times 100$$

Where:

CPR = Cumulative Percent Retained of the size increment for the total sample
CMR = Cumulative Mass Retained of the size increment for the total sample
M = Total dry sample mass before washing

Percent Passing (PP) 4.75 mm (No. 4) sieve and larger

$$PP = 100 - CPR$$

Where:

PP = Percent Passing of the size increment for the total sample
CPR = Cumulative Percent Retained of the size increment for the total sample

Or, calculate PP for sieves larger than 4.75 mm (No. 4) sieve without calculating CPR

$$\frac{M - CMR}{M} \times 100$$

Cumulative Percent Retained ($CPR_{-\#4}$) for minus 4.75 mm (No. 4) split

$$CPR_{-\#4} = \frac{CMR_{-\#4}}{M_3} \times 100$$

Where:

$CPR_{-\#4}$ = Cumulative Percent Retained for the sieve sizes of M_3
$CMR_{-\#4}$ = Cumulative Mass Retained for the sieve sizes of M_3
M_3 = Total mass of the minus 4.75 mm (No. 4) split before washing

Percent Passing ($PP_{-\#4}$) for minus 4.75 mm (No. 4) split

$$PP_{-\#4} = 100 - CPR_{-\#4}$$

Where:

$PP_{-\#4}$ = Percent Passing for the sieve sizes of M_3
$CPR_{-\#4}$ = Cumulative Percent Retained for the sieve sizes of M_3

Percent Passing (PP) for sieves smaller than 4.75 mm (No. 4) sieve

$$PP = \frac{(PP_{-\#4} \times \#4\ PP)}{100}$$

Where:
PP = Total Percent Passing
$PP_{-\#4}$ = Percent Passing for the sieve sizes of M_3
#4 PP = Total Percent Passing the 4.75 mm (No. 4) sieve

Or, calculate PP for sieves smaller than 4.75 mm (No. 4) sieve without calculating $CPR_{-\#4}$ and $PP_{-\#4}$

$$PP = \frac{\#4\ PP}{M_3} \times (M_3 - CMR_{-\#4})$$

Where:
PP = Total Percent Passing
#4 PP = Total Percent Passing the 4.75 mm (No. 4) sieve
M_3 = Total mass of the minus 4.75 mm (No. 4) split before washing
$CMR_{-\#4}$ = Cumulative Mass Retained for the sieve sizes of M_3

Method C Example

Original dry mass of the sample (*M*): 3304.5 g

Total mass after sieving equals

Cumulative Mass Retained (CMR) on the 4.75 (No. 4) plus the minus 4.75 mm (No. 4) from the pan: 3085.0 g

Coarse Check Sum

$$Coarse\ Check\ Sum = \frac{3304.5\ g - 3304.5\ g}{3304.5\ g} \times 100 = 0.0\%$$

The result is less than 0.3 percent therefore the results can be used for acceptance purposes.

Cumulative Percent Retained (CPR) for the 9.5 mm (3/8 in.) sieve:

$$CPR = \frac{604.1\ g}{3304.5\ g} \times 100 = 18.3\%$$

Percent Passing (PP) for the 9.5 mm (3/8 in.) sieve:

$$PP = 100.0\% - 18.3\% = 81.7\%$$

Reported Percent Passing = 82%

Example for Alternate Percent Passing (PP) formula for the 9.5 mm (3/8 in.) sieve:

$$PP = \frac{3304.5 - 604.1}{3304.5} \times 100 = 81.7\%$$

Reported Percent Passing = 82%

Method C Cumulative Gradation on Coarse Sieves

Sieve Size mm (in.)	Cumulative Mass Retained, g (CMR)	Determine CPR Divide CMR by M and multiply by 100	Cumulative Percent Retained (CPR)	Determine PP by subtracting CPR from 100.0	Percent Passing (PP)	Reported Percent Passing*
16.0 (5/8)	0		0.0		100.0	100
12.5 (1/2)	125.9	$\frac{125.9}{3304.5} \times 100 =$	3.8	$100.0 - 3.8 =$	96.2	96
9.50 (3/8)	604.1	$\frac{604.1}{3304.5} \times 100 =$	18.3	$100.0 - 18.3 =$	81.7	82
4.75 (No. 4)	1295.6	$\frac{1295.6}{3304.5} \times 100 =$	39.2	$100.0 - 39.2 =$	60.8 (#4 PP)	61
Mass in pan	2008.9					
CMR: 1295.6 + 2008.9 = 3304.5						
Original dry mass of the sample *(M)*: 3304.5						

Fine Sample

The pan (2008.9 g) was reduced according to the FOP for AASHTO R 76, to at least 500 g. In this case, the reduced mass was determined to be **527.6 g**. This is M_3.

Dry mass of minus 4.75mm (No. 4) reduced portion before wash (M_3): 527.6 g

Dry mass of minus 4.75mm (No. 4) reduced portion after wash: 495.3 g

Total mass after fine sieving equals

Final Cumulative Mass Retained (FCMR)
(includes minus 75 µm (No. 200) from the pan): 495.1 g

Fine Check Sum

$$Fine\ Check\ Sum = \frac{495.3\ g - 495.1\ g}{495.3\ g} \times 100 = 0.04\%$$

The result is less than 0.3 percent therefore the results can be used for acceptance purposes.

Cumulative Percent Retained ($CPR_{-\#4}$) for minus 4.75 mm (No. 4) for the 2.0 mm (No. 10) sieve:

$$CPR_{-\#4} = \frac{194.3\ g}{527.6\ g} \times 100 = 36.8\%$$

Percent Passing ($PP_{-\#4}$) for minus 4.75 mm (No. 4) for the 2.0 mm (No. 10) sieve:

$$PP_{-\#4} = 100.0\% - 36.8\% = 63.2\%$$

Method C Cumulative Gradation on Fine Sieves

Sieve Size mm (in.)	Cumulative Mass Retained g ($CMR_{-\#4}$)	Determine $CPR_{-\#4}$ Divide CMR by M_3 and multiply by 100	Cumulative Percent Retained$_{-\#4}$ ($CPR_{-\#4}$)	Determine $PP_{-\#4}$ by subtracting $CPR_{-\#4}$ from 100.0	Percent Passing$_{-\#4}$ ($PP_{-\#4}$)
2.0 (No. 10)	194.3	$\frac{194.3}{527.6} \times 100 =$	36.8	$100.0 - 36.8 =$	63.2
0.425 (No. 40)	365.6	$\frac{365.6}{527.6} \times 100 =$	69.3	$100.0 - 69.3 =$	30.7
0.210 (No. 80)	430.8	$\frac{430.8}{527.6} \times 100 =$	81.7	$100.0 - 81.7 =$	18.3
0.075 (No. 200)	484.4	$\frac{484.4}{527.6} \times 100 =$	91.8	$100.0 - 91.8 =$	8.2
FCMR	495.1				
Dry mass of minus 4.75mm (No. 4) reduced portion before wash *(M_3)*: 527.6 g					
Dry mass after washing: 495.3 g					

Percent Passing (PP) for the 2.0 mm (No. 10) sieve for the entire sample:

#4 PP (Total Percent Passing the 4.75 mm (No. 4) sieve) = 60.8%

$$PP = \frac{63.2\% \times 60.8\%}{100} = 38.4\%$$

Reported Percent Passing = 38%

Method C Cumulative
Final Gradation on All Sieves

Sieve Size mm (in.)	Cumulative Mass Retained g (CMR)	Cumulative Percent Retained (CPR)	Percent Passing (PP -#4)	Determine PP multiply $PP_{-\#4}$ by #4 PP and divide by 100	Percent Passing (PP)	Reported Percent Passing*
16.0 (5/8)	0	0.0			100.0	100
12.5 (1/2)	125.9	3.8			96.2	96
9.5 (3/8)	604.1	18.3			81.7	82
4.75 (No. 4)	1295.6	39.2			**60.8 (#4 PP)**	61
2.0 (No. 10)	194.3	36.8	63.2	$\frac{63.2 \times 60.8}{100} =$	38.4	38
0.425 (No. 40)	365.6	69.3	30.7	$\frac{30.7 \times 60.8}{100} =$	18.7	19
0.210 (No. 80)	430.8	81.7	18.3	$\frac{18.3 \times 60.8}{100} =$	11.1	11
0.075 (No. 200)	484.4	91.8	8.2	$\frac{8.2 \times 60.8}{100} =$	5.0	5.0
FCMR	495.1					

* Report total percent passing to 1 percent except report the 75 µm (No. 200) sieve to 0.1 percent.

Example for Alternate Percent Passing (PP) for the 4.75 mm (No. 4) sieve for the entire sample:
#4 PP (Total Percent Passing the 4.75 mm (No. 4) sieve) = 60.8%

$$PP = \frac{60.8\%}{527.6} \times (527.6 - 194.3) = 38.4\%$$

Reported Percent Passing = 38%

Alternate Method C Cumulative
Gradation on Coarse Sieves

Sieve Size mm (in.)	Cumulative Mass Retained, g (CMR)	Determine PP subtract CMR from M, divide result by M multiply by 100	Percent Passing (PP)	Reported Percent Passing*
16.0 (5/8)	0.0		100.0	100
12.5 (1/2)	125.9	$\frac{3304.5 - 125.9}{3304.5} \times 100 =$	96.2	96

Sieve Size mm (in.)	Cumulative Mass Retained, g (CMR)	Determine PP subtract CMR from M, divide result by M multiply by 100	Percent Passing (PP)	Reported Percent Passing*
9.5 (3/8)	604.1	$\frac{3304.5 - 604.1}{3304.5} \times 100 =$	81.7	82
4.75 (No. 4)	1295.6	$\frac{3304.5 - 1295.6}{3304.5} \times 100 =$	**60.8 (#4 PP)**	61
Mass in Pan	2008.9			
Cumulative sieved mass: 1295.6 + 2008.9 = 3304.5				
Original dry mass of the sample *(M)*: 3304.5				

Alternate Method C Cumulative Gradation on Fine Sieves

Sieve Size mm (in.)	Cumulative Mass Retained g ($CMR_{-\#4}$)	Determine $PP_{-\#4}$ subtract $CMR_{-\#4}$ from M_3, divide result by M_3 multiply by 100	Percent $Passing_{-\#4}$ ($PP_{-\#4}$)
2.0 (No. 10)	194.3	$\frac{527.6 - 194.3}{527.6} \times 100 =$	63.2
0.425 (No. 40)	365.6	$\frac{527.6 - 365.6}{527.6} \times 100 =$	30.7
0.210 (No. 80)	430.8	$\frac{527.6 - 430.8}{527.6} \times 100 =$	18.3
0.075 (No. 200)	484.4	$\frac{527.6 - 484.4}{527.6} \times 100 =$	8.2
FCMR	495.1		
Dry mass of minus 4.75mm (No. 4) reduced portion before wash (**M_3**): 527.6 g			
Dry mass after washing: 495.3 g			

Alternate Method C Cumulative Final Gradation on All Sieves

Sieve Size mm (in.)	Percent $Passing_{-\#4}$ ($PP_{-\#4}$)	Determine PP multiply $PP_{-\#4}$ by #4 PP and divide by 100	Determined Percent Passing (PP)	Reported Percent Passing*
16.0 (5/8)			100.0	100

Sieve Size mm (in.)	Percent Passing$_{-\#4}$ ($PP_{-\#4}$)	Determine PP multiply $PP_{-\#4}$ by #4 PP and divide by 100	Determined Percent Passing (PP)	Reported Percent Passing*
12.5 (1/2)			96.2	96
9.5 (3/8)			81.7	82
4.75 (No. 4)			**60.8 (#4 PP)**	61
2.0 (No. 10)	63.2	$\frac{63.2 \times 60.8}{100} =$	38.4	38
0.425 (No. 40)	30.7	$\frac{30.7 \times 60.8}{100} =$	18.7	19
0.210 (No. 80)	18.3	$\frac{18.3 \times 60.8}{100} =$	11.1	11
0.075 (No. 200)	8.2	$\frac{8.2 \times 60.8}{100} =$	5.0	5.0

* Report total percent passing to 1 percent except report the 75 µm (No. 200) sieve to 0.1 percent.

Fineness Modulus

Fineness Modulus (FM) is used in determining the degree of uniformity of the aggregate gradation in PCC mix designs. It is an empirical number relating to the fineness of the aggregate. The higher the FM the coarser the aggregate. Values of 2.40 to 3.00 are common for fine aggregate in PCC.

The sum of the cumulative percentages retained on specified sieves in the following table divided by 100 gives the FM.

Sample Calculation

	Example A				Example B		
	Percent				Percent		
		Retained				Retained	
Sieve Size mm (in)	Passing		On Spec'd Sieves*		Passing		On Spec'd Sieves*
75*(3)	100	0	0		100	0	0
37.5*(11/2)	100	0	0		100	0	0
19*(3/4)	15	85	85		100	0	0
9.5*(3/8)	0	100	100		100	0	0
4.75*(No.4)	0	100	100		100	0	0
2.36*(No.8)	0	100	100		87	13	13
1.18*(No.16)	0	100	100		69	31	31
0.60*(No.30	0	100	100		44	56	56
0.30*(No.50)	0	100	100		18	82	82
0.15*(100)	0	100	100		4	96	96
			∑ = 785				∑ = 278
			FM = 7.85				FM = 2.78

In decreasing size order, each * sieve is one-half the size of the preceding * sieve.

Report

- On forms approved by the agency
- Sample ID
- Percent passing for each sieve
- Individual mass retained for each sieve
- Individual percent retained for each sieve

or

- Cumulative mass retained for each sieve
- Cumulative percent retained for each sieve
- FM to the nearest 0.01

Report percentages to the nearest 1 percent except for the percent passing the 75 µm (No. 200) sieve, which shall be reported to the nearest 0.1 percent.

ANNEX A
Time Evaluation

(Mandatory information)

The sieving time for each mechanical sieve shaker shall be checked at least annually to determine the time required for complete separation of the sample by the following method:

Shake the sample over nested sieves for approximately 10 minutes.

Provide a snug-fitting pan and cover for each sieve and hold in a slightly inclined position in one hand.

Hand shake each sieve by striking the side of the sieve sharply and with an upward motion against the heel of the other hand at the rate of about 150 times per minute, turning the sieve about one sixth of a revolution at intervals of about 25 strokes.

Note A1: A mallet may be used instead of the heel of the hand if comparable force is used.

If more than 0.5 percent by mass of the total sample before sieving passes any sieve after one minute of continuous hand shaking adjust shaker time and re-check.

In determining sieving time for sieve sizes larger than 4.75 mm (No. 4), limit the material on the sieve to a single layer of particles.

ANNEX B
Overload Determination

(Mandatory information)

Additional sieves may be necessary to keep from overloading sieves or to provide other information, such as fineness modulus. The sample may also be sieved in increments to prevent overloading.

- For sieves with openings smaller than 4.75 mm (No. 4), the mass retained on any sieve shall not exceed 7 kg/m^2 (4 g/in^2) of sieving surface.

For sieves with openings 4.75 mm (No. 4) and larger, the mass, in grams shall not exceed the product of 2.5 × (sieve opening in mm) × (effective sieving area). See Table B1.

TABLE B1
Maximum Allowable Mass of Material Retained on a Sieve, g
Nominal Sieve Size, mm (in.)
Exact size is smaller (see AASHTO T 27)

Sieve Size mm (in.)		203 dia (8)	305 dia (12)	305 by 305 (12 × 12)	350 by 350 (14 × 14)	372 by 580 (16 × 24)
		Sieving Area m^2				
		0.0285	0.0670	0.0929	0.1225	0.2158
90	(3 1/2)	*	15,100	20,900	27,600	48,500
75	(3)	*	12,600	17,400	23,000	40,500
63	(2 1/2)	*	10,600	14,600	19,300	34,000
50	(2)	3600	8400	11,600	15,300	27,000
37.5	(1 1/2)	2700	6300	8700	11,500	20.200
25.0	(1)	1800	4200	5800	7700	13,500
19.0	(3/4)	1400	3200	4400	5800	10,200
16.0	(5/8)	1100	2700	3700	4900	8600
12.5	(1/2)	890	2100	2900	3800	6700
9.5	(3/8)	670	1600	2200	2900	5100
6.3	(1/4)	440	1100	1500	1900	3400
4.75	(No. 4)	330	800	1100	1500	2600
-4.75	(-No. 4)	200	470	650	860	1510

ATM 305 Determining the Percentage of Fracture in Coarse Aggregate

Following are guidelines for the use of WAQTC FOP for AASHTO T 335 by the State of Alaska DOT&PF.

1. Fracture is determined by Method 1 unless otherwise specified.
2. Unless otherwise specified the 4.75 mm (No.4) sieve shall be used to obtain the test sample.
3. When determining the fracture on a post ignition sample from ATM 406 Determining the Asphalt Binder Content of Hot Mix Asphalt (HMA) by the Ignition Method, use the entire coarse (+#4 sieve) portion of the post-ignition aggregate, regardless if it less than the minimum required in Table 1.

This page intentionally left blank.

DETERMINING THE PERCENTAGE OF FRACTURE IN COARSE AGGREGATE FOP FOR AASHTO T 335

Scope

This procedure covers the determination of the percentage, by mass, of a coarse aggregate (CA) sample that consists of fractured particles meeting specified requirements in accordance with AASHTO T 335-09.

In this FOP, a sample of aggregate is screened on the sieve separating CA and fine aggregate (FA). This sieve will be identified in the agency's specifications but might be the 4.75 mm (No. 4) sieve. CA particles are visually evaluated to determine conformance to the specified fracture. The percentage of conforming particles, by mass, is calculated for comparison to the specifications.

Apparatus

- Balance or scale: Capacity sufficient for the principle sample mass, accurate to 0.1 percent of the sample mass or readable to 0.1 g and meeting the requirements of AASHTO M 231.
- Sieves: Meeting requirements of the FOP for AASHTO T 27/T 11.
- Splitter: Meeting the requirements of FOP for AASHTO R 76.

Terminology

1. Fractured Face: An angular, rough, or broken surface of an aggregate particle created by crushing or by other means. A face is considered a "fractured face" whenever one-half or more of the projected area, when viewed normal to that face, is fractured with sharp and well-defined edges. This excludes small nicks.
2. Fractured particle: A particle of aggregate having at least the minimum number of fractured faces specified. (This is usually one or two.)

Sampling and Sample Preparation

1. Sample and reduce the aggregate in accordance with the FOPs for AASHTO R 90 and R 76.
2. When the specifications list only a total fracture percentage, the sample shall be prepared in accordance with Method 1. When the specifications require that the fracture be counted and reported on each sieve, the sample shall be prepared in accordance with Method 2.
3. Method 1 - Combined Fracture Determination
   a. Dry the sample sufficiently to obtain a clean separation of FA and CA material in the sieving operation.
   b. Sieve the sample in accordance with the FOP for AASHTO T 27/ T 11 over the 4.75 mm (No. 4) sieve, or the appropriate sieve listed in the agency's specifications for this material.

   Note 1: Where necessary, wash the sample over the sieve designated for the determination of fractured particles to remove any remaining fine material, and dry to a constant mass in accordance with the FOP for AASHTO T 255.

   c. Reduce the sample using Method A – Mechanical Splitter, in accordance with the FOP for AASHTO R 76, to the appropriate test size. This test size should be slightly larger than shown in Table 1, to account for loss of fines through washing if necessary.

TABLE 1
Sample Size
Method 1 (Combined Sieve Fracture)

Nominal Maximum Size* mm (in.)	Minimum Cumulative Sample Mass Retained on 4.75 mm (No. 4) Sieve g (lb)
37.5 (1 1/2)	2500 (6)
25.0 (1)	1500 (3.5
19.0 (3/4)	1000 (2.5)
12.5 (1/2)	700 (1.5)
9.5 (3/8)	400 (0.9)
4.75 (No. 4)	200 (0.4)

* One sieve larger than the first sieve to retain more than 10 percent of the material using an agency specified set of sieves based on cumulative percent retained. Where large gaps in specification sieves exist, intermediate sieve(s) may be inserted to determine nominal maximum size.

4. Method 2 – Individual Sieve Fracture Determination

   a. Dry the sample sufficiently to obtain a clean separation of FA and CA material in the sieving operation. A washed sample from the gradation determination (the FOP for T 27/T 11) may be used.

   b. If not, sieve the sample in accordance with the FOP for AASHTO T 27 over the sieves listed in the specifications for this material.

Note 2: If overload (buffer) sieves are used the material from that sieve must be added to the next specification sieve.

   c. The size of test sample for each sieve shall meet the minimum size shown in Table 2. Utilize the total retained sieve mass or select a representative portion from each sieve mass by splitting or quartering in accordance with the FOP for AASHTO R 76.

Note 3: Where necessary, wash the sample over the sieves designated for the determination of fractured particles to remove any remaining fine material, and dry to a constant mass in accordance with the FOP for AASHTO T 255.

TABLE 2
Sample Size
Method 2 (Individual Sieve Fracture)

Sieve Size mm (in.)	Minimum Sample Mass g (lb)
31.5 (1 1/4)	1500 (3.5)
25.0 (1)	1000 (2.2)
19.0 (3/4)	700 (1.5)
16.0 (5/8)	500 (1.0)
12.5 (1/2)	300 (0.7)

9.5	(3/8)	200	(0.5)
6.3	(1/4)	100	(0.2)
4.75	(No. 4)	100	(0.2)
2.36	(No. 8)	25	(0.1)
2.00	(No. 10)	25	(0.1)

Note 4: If fracture is determined on a sample obtained for gradation, use the mass retained on the individual sieves, even if it is less than the minimum listed in Table 2. If less than 5 percent of the total mass is retained on a single specification sieve, include that material on the next smaller specification sieve. If a smaller specification sieve does not exist, this material shall not be included in the fracture determination.

Procedure

1. After cooling, spread the dried sample on a clean, flat surface.
2. Examine each particle face and determine if the particle meets the fracture criteria.
3. Separate the sample into three categories:
   - Fractured particles meeting the criteria
   - Particles not meeting the criteria
   - Questionable or borderline particles
4. Determine the dry mass of particles in each category to the nearest 0.1 g.
5. Calculate the percent questionable particles.
6. Re-sort the questionable particles when more than 15 percent is present. Continue sorting until there is no more than 15 percent in the questionable category.
7. Calculate the percent fractured particles meeting criteria to nearest 0.1 percent. Report to 1 percent.

Calculation

Calculate the mass percentage of questionable particles to the nearest 1 percent using the following formula:

$$\%Q = \frac{Q}{F + Q + N} \times 100$$

Where:

%Q = Percent of questionable fractured particles
F = Mass of fractured particles
Q = Mass of questionable or borderline particles
N = Mass of unfractured particles

Example:

$$\%Q = \frac{97.6\ g}{632.6\ g + 97.6\ g + 352.6\ g} \times 100 = 9.0\%$$

Given:

Mass of fractured particles = 632.6 g
Mass of questionable particles = 97.6 g

Mass of unfractured particles = 352.6 g

Calculate the mass percentage of fractured faces to the nearest 0.1 percent using the following formula:

$$P = \frac{\frac{Q}{2} + F}{F + Q + N} \times 100$$

Where:

P	=	Percent of fracture
F	=	Mass of fractured particles
Q	=	Mass of questionable particles
N	=	Mass of unfractured particles

Example:

$$P = \frac{\frac{97.6\ g}{2} + 632.6\ g}{632.6\ g + 97.6\ g + 352.6\ g} \times 100 = 62.9\% \qquad \text{Report } 63\%$$

Given:

Mass of fractured particles =	632.6 g,	
Mass of questionable particles	=	97.6 g
Mass of unfractured particles	=	352.6 g

Report

- On forms approved by the agency
- Sample ID
- Fractured particles to the nearest 1 percent.

ATM 306 Determining the Percentage of Flat and Elongated Particles in Coarse Aggregate

1. Scope

This procedure covers the determination of the percentages of flat (thin) and elongated particles in coarse aggregates.

2. Apparatus

The apparatus used shall consist of any suitable equipment, by means of which aggregate particles may be tested for compliance, at the dimensional ratios desired, with the definitions given below. Types of acceptable apparatus are:

- ASTM Proportional Caliper Device meeting the requirements of ASTM D 4791. Illustrated in Fig.1
- Balance or scale: Capacity sufficient for the sample mass, readable to 0.1 g and accurate to 0.1 percent of test load, meeting the requirements of AASHTO M 231, Class G 2.

  Note: This test requires a scale with a capacity of at least 1200 g and readable to 0.1 g, or better.
- Sieves, meeting the requirements of AASHTO M 92 (ASTM E11)

3. Definitions

1. Length — maximum dimension of the particle.
2. Thickness — maximum dimension perpendicular to the length and width.
3. Flat & Elongated Particle — a particle having a ratio of length to thickness greater than that specified.

4. Sampling and Sample Preparation

1. Sample and reduce the aggregate in accordance with the FOPs for AASHTO T 2 (ASTM D75) and T 248.
2. Flat and Elongated Determination
   a. Dry the sample sufficiently to obtain a clean separation of FA and CA material in the sieving operation.
   b. Sieve the sample in accordance with the FOP for AASHTO T 27/ T 11 over the 4.75 mm (No. 4) sieve.
   c. Reduce the sample using Method A – Mechanical Splitter, in accordance with the FOP for AASHTO T 248, to the appropriate test size. This test size should be slightly larger than shown in Table 1, to account for loss of fines through washing if necessary.

Table 1
Sample Size

Size Fraction		Minimum Sample Mass
(mm)	(in)	g
-37.5 to +19.0	-1½ to +¾	1000
-19.0 to +9.5	-¾ to +⅜	500
-9.5 to +4.75	-⅜ to +No. 4	100

Note 1: If this test is performed using a sample obtained for gradation, use the mass retained for the size fraction, regardless of the sample mass required by Table 1. If less than 5 percent of the total mass is retained on a single specification sieve, include that material on the next smaller specification sieve.

5. Procedure

1. Unless specified, the caliper ratio shall be 1:5.
2. Determine and record the total dry mass of the size grouping to be tested to the nearest 0.1g.
3. Flat and Elongated Particle Test — Recombine, if necessary, all of the particles from the above process.
4. Set the larger opening to the particle's length. The particle is flat and elongated if the particle's thickness can pass completely through the smaller opening.
5. Determine and record the mass of the flat and elongated particles to the nearest 0.1 g.

6. Calculation

1. Calculate the cumulative percent retained.

   CPR= 100 - CPP

   Where :
   CPR = Cumulative percent retained on original sample gradation
   CPP = Cumulative percent passing from original sample gradation.

2. Calculate the cumulative percent retained of each size group flat and elongated (F&E) in relation to the total plus 4.75 mm (No. 4).

   F&E Group CPR = (CPR ÷ #4 CPR) ×100

3. Calculate the individual percent retained of each size.

   F&E Group Individual Percent Retained (IPR) = F&E Group CPR - Next Larger Group CPR

4. Calculate the percent flat and elongated for each size group.

   % F&E for Size Group = [(Mass F&E Size Group) / (Size Group Mass)] × 100

5. Calculate the weighted percent for each size to 0.1%.

   Weighted % F&E Size Group = (% F&E for Size Group × F&E Group IPR) ÷ 100

6. Calculate the total percentage of FnE by determining the sum of all the weighted % F&E for Size Groups.

7. Report

- Report the total percentage for F&E on Department forms to the nearest whole percent.

Figure 1
ASTM Proportional Caliper

Caliper set to 1:5 ratio

Length Determination Flat Determination

This page intentionally left blank.

ATM 307 Plastic Fines in Graded Aggregates and Soils by Use of the Sand Equivalent Test

Following are guidelines for the use of WAQTC FOP for AASHTO T176 by the State of Alaska DOT&PF.

1. Sieve: A 4.77 mm (NO.4) sieve conforming to requirements of ASTM E11.

This page intentionally left blank.

PLASTIC FINES IN GRADED AGGREGATES AND SOILS BY THE USE OF THE SAND EQUIVALENT TEST

FOP FOR AASHTO T 176

Scope

This procedure covers the determination of plastic fines in accordance with AASHTO T 176-02. It serves as a rapid test to show the relative proportion of fine dust or clay-like materials in fine aggregates (FA) and soils.

Apparatus

See AASHTO T 176 for a detailed listing of sand equivalent apparatus. Note that the siphon tube and blow tube may be glass or stainless steel as well as copper.

- Graduated plastic cylinder.
- Rubber stopper.
- Irrigator tube.
- Weighted foot assembly: Having a mass of 1000 ±5g. There are two models of the weighted foot assembly. The older model has a guide cap that fits over the upper end of the graduated cylinder and centers the rod in the cylinder. It is read using a slot in the centering screws. The newer model has a sand-reading indicator 254 mm (10 in.) above this point and is preferred for testing clay-like materials.
- Bottle: clean, glass or plastic, of sufficient size to hold working solution
- Siphon assembly: The siphon assembly will be fitted to a 4 L (1 gal.) bottle of working calcium chloride solution placed on a shelf 915 ±25 mm (36 ±1 in.) above the work surface.
- Measuring can: With a capacity of 85 ±5 mL (3 oz.).
- Funnel: With a wide-mouth for transferring sample into the graduated cylinder.
- Quartering cloth: 600 mm (2 ft.) square nonabsorbent cloth, such as plastic or oilcloth.
- Mechanical splitter: See the FOP for AASHTO R 76.
- Strike-off bar: A straightedge or spatula.
- Clock or watch reading in minutes and seconds.
- Manually-operated sand equivalent shaker: Capable of producing an oscillating motion at a rate of 100 complete cycles in 45 ±5 seconds, with a hand assisted half stroke length of 127 ±5 mm (5 ±0.2 in.). It may be held stable by hand during the shaking operation. It is recommended that this shaker be fastened securely to a firm and level mount, by bolts or clamps, if a large number of determinations are to be made.
- Mechanical shaker: See AASHTO T 176 for equipment and procedure.
- Oven: Capable of maintaining a temperature of 110 ±5°C (230 ±9°F).
- Thermometer: Calibrated liquid-in-glass or electronic digital type designed for total immersion and accurate to 0.1°C (0.2°F).

Materials

- Stock calcium chloride solution: Obtain commercially prepared calcium chloride stock solution meeting AASHTO requirements.
- Working calcium chloride solution: Make 3.8 L (1 gal) of working solution. Fill the bottle with 2 L (1/2 gal) of distilled or demineralized water, add one 3 oz. measuring can (85 ±5 mL) of stock calcium chloride solution. Agitate vigorously for 1 to 2 minutes. Add the remainder of the water, approximately 2 L (1/2 gal.) for a total of 3.8 L (1 gal) of working solution. Repeat the agitation process. Tap water may be used if it is proven to be non-detrimental to the test and if it is allowed by the agency. The shelf life of the working solution is approximately 30 days. Label working solution with the date mixed. Discard working solutions more than 30 days old.

Note 1: The graduated cylinder filled to 4.4 in. contains 88 mL and may be used to measure the stock solution.

Control

The temperature of the working solution should be maintained at 22 ±3°C (72 ±5°F) during the performance of the test. If field conditions preclude the maintenance of the temperature range, reference samples should be submitted to the Central/Regional Laboratory, as required by the agency, where proper temperature control is possible. Samples that meet the minimum sand equivalent requirement at a working solution temperature outside of the temperature range need not be subject to reference testing.

Sample Preparation

1. Obtain the sample in accordance with the FOP for AASHTO R 90 and reduce in accordance with the FOP for AASHTO R 76.
2. Sieve the sample over the 4.75 mm (No. 4) sieve. If the material is in clods, break it up and re-screen it over a 4.75 mm (No. 4) sieve. Clean all fines from particles retained on the 4.75 mm (No. 4) sieve and include with the material passing that sieve.
3. Split or quarter 1000 to 1500 g of material from the portion passing the 4.75 mm (No. 4) sieve. Use extreme care to obtain a truly representative portion of the original sample.

   Note 2: Experiments show that, as the amount of material being reduced by splitting or quartering is decreased, the accuracy of providing representative portions is reduced. It is imperative that the sample be split or quartered carefully. When it appears necessary, dampen the material before splitting or quartering to avoid segregation or loss of fines.

   Note 3: All tests, including reference tests, will be performed using Alternative Method No. 2 as described in AASHTO T 176, unless otherwise specified.

4. The sample must have the proper moisture content to achieve reliable results. This condition is determined by tightly squeezing a small portion of the thoroughly mixed sample in the palm of the hand. If the cast that is formed permits careful handling without breaking, the correct moisture content has been obtained.

   Note 4: Clean sands having little 75 µm (No. 200), such as sand for Portland Cement Concrete (PCC), may not form a cast.

5. If the material is too dry, the cast will crumble and it will be necessary to add water and remix and retest until the material forms a cast. When the moisture content is altered to provide the required cast, the altered sample should be placed in a pan, covered with a lid or with a damp cloth that does not touch the material, and allowed to stand for a minimum of 15 minutes. Samples that have been sieved without being air-dried and still retain enough natural moisture are exempted from this requirement.
6. If the material shows any free water, it is too wet to test and must be drained and air dried. Mix frequently to ensure uniformity. This drying process should continue until squeezing provides the required cast.

7. Place the sample on the quartering cloth and mix by alternately lifting each corner of the cloth and pulling it over the sample toward the diagonally opposite corner, being careful to keep the top of the cloth parallel to the bottom, thus causing the material to be rolled. When the material appears homogeneous, finish the mixing with the sample in a pile near the center of the cloth.

8. Fill the measuring can by pushing it through the base of the pile while exerting pressure with the hand against the pile on the side opposite the measuring can. As the can is moved through the pile, hold enough pressure with the hand to cause the material to fill the tin to overflowing. Press firmly with the palm of the hand, compacting the material and placing the maximum amount in the can. Strike off the can level full with the straightedge or spatula.

9. When required, repeat steps 5 and 6 to obtain additional samples.

Procedure

1. Start the siphon by forcing air into the top of the solution bottle through the tube while the pinch clamp is open. Siphon 101.6 ±2.5 mm (4 ±0.1 in.) of working calcium chloride solution into the plastic cylinder.

2. Pour the prepared test sample from the measuring can into the plastic cylinder, using the funnel to avoid spilling.

3. Tap the bottom of the cylinder sharply on the heel of the hand several times to release air bubbles and to promote thorough wetting of the sample.

4. Allow the wetted sample to stand undisturbed for 10 ±1 minutes.

5. At the end of the 10-minute period, stopper the cylinder and loosen the material from the bottom by simultaneously partially inverting and shaking the cylinder.

6. After loosening the material from the bottom of the cylinder, shake the cylinder and contents by any one of the following methods:

   a. Mechanical Method – Place the stoppered cylinder in the mechanical shaker, set the timer, and allow the machine to shake the cylinder and contents for 45 ±1 seconds.

Caution: Agencies may require additional operator qualifications for the next two methods.

   b. Manually-operated Shaker Method – Secure the stoppered cylinder in the three spring clamps on the carriage of the manually-operated sand equivalent shaker and set the stroke counter to zero. Stand directly in front of the shaker and force the pointer to the stroke limit marker painted on the backboard by applying an abrupt horizontal thrust to the upper portion of the right hand spring strap.

      Remove the hand from the strap and allow the spring action of the straps to move the carriage and cylinder in the opposite direction without assistance or hindrance. Apply enough force to the right-hand spring steel strap during the thrust portion of each stroke to move the pointer to the stroke limit marker by pushing against the strap with the ends of the fingers to maintain a smooth oscillating motion. The center of the stroke limit marker is positioned to provide the proper stroke length and its width provides the maximum allowable limits of variation.

      Proper shaking action is accomplished when the tip of the pointer reverses direction within the marker limits. Proper shaking action can best be maintained by using only the forearm and wrist action to propel the shaker. Continue shaking for 100 strokes.

   c. Hand Method – Hold the cylinder in a horizontal position and shake it vigorously in a horizontal linear motion from end to end. Shake the cylinder 90 cycles in approximately 30 seconds using a throw of 229 mm ±25 mm (9 ±1 in.). A cycle is defined as a complete back and forth motion. To properly shake the cylinder at this speed, it will be necessary for the operator to shake with the forearms only, relaxing the body and shoulders.

7. Set the cylinder upright on the work table and remove the stopper.

8. Insert the irrigator tube in the cylinder and rinse material from the cylinder walls as the irrigator is lowered. Force the irrigator through the material to the bottom of the cylinder by applying a gentle stabbing and twisting action while the working solution flows from the irrigator tip. Work the irrigator tube to the bottom of the cylinder as quickly as possible, since it becomes more difficult to do this as the washing proceeds. This flushes the fine material into suspension above the coarser sand particles.

   Continue to apply a stabbing and twisting action while flushing the fines upward until the cylinder is filled to the 381 mm (15 in.) mark. Then raise the irrigator slowly without shutting off the flow so that the liquid level is maintained at about 381 mm (15 in.) while the irrigator is being withdrawn. Regulate the flow just before the irrigator is entirely withdrawn and adjust the final level to 381 mm (15 in.).

   Note 5: Occasionally the holes in the tip of the irrigator tube may become clogged by a particle of sand. If the obstruction cannot be freed by any other method, use a pin or other sharp object to force it out, using extreme care not to enlarge the size of the opening. Also, keep the tip sharp as an aid to penetrating the sample.

9. Allow the cylinder and contents to stand undisturbed for 20 minutes ±15 seconds. Start timing immediately after withdrawing the irrigator tube.

   Note 6: Any vibration or movement of the cylinder during this time will interfere with the normal settling rate of the suspended clay and will cause an erroneous result.

10. Clay and sand readings:

    a. At the end of the 20-minute sedimentation period, read and record the level of the top of the clay suspension. This is referred to as the clay reading.

    Note 7: If no clear line of demarcation has formed at the end of the 20-minute sedimentation period, allow the sample to stand undisturbed until a clay reading can be obtained, then immediately read and record the level of the top of the clay suspension and the total sedimentation time. If the total sedimentation time exceeds 30 minutes, rerun the test using three individual samples of the same material. Read and record the clay column height of the sample requiring the shortest sedimentation period only. Once a sedimentation time has been established, subsequent tests will be run using that time. The time will be recorded along with the test results on all reports.

    b. After the clay reading has been taken, place the weighted foot assembly over the cylinder and gently lower the assembly until it comes to rest on the sand. Do not allow the indicator to hit the mouth of the cylinder as the assembly is being lowered. Subtract 254 mm (10 in.) from the level indicated by the extreme top edge of the indicator and record this value as the sand reading.

    c. If clay or sand readings fall between 2.5 mm (0.1 in.) graduations, record the level of the higher graduation as the reading. For example, a clay reading that appears to be 7.95 would be recorded as 8.0; a sand reading that appears to be 3.22 would be recorded as 3.3.

    d. If two Sand Equivalent (SE) samples are run on the same material and the second varies by more than ±4, based on the first cylinder result, additional tests shall be run.

    e. If three or more Sand Equivalent (SE) samples are run on the same material, average the results. If an individual result varies by more than ±4, based on the average result, additional tests shall be run.

Calculations

Calculate the SE to the nearest 0.1 using the following formula:

$$SE = \frac{Sand\ Reading}{Clay\ Reading} \times 100$$

Example

Given:

Sand Reading = 3.3
Clay Reading = 8.0

$$SE = \frac{3.3}{8.0} \times 100 = 41.25\ or\ 41.3 \qquad \text{Report } 42$$

Note 8: This example reflects the use of equipment made with English units. At this time, equipment made with metric units is not available.

Report the SE as the next higher whole number. In the example above, the 41.3 would be reported as 42. An SE of 41.0 would be reported as 41.

When averaging two or more samples, raise each calculated SE value to the next higher whole number (reported value) before averaging.

Example:

calculated value 1 = 41.3

calculated value 2 = 42.8

These values are reported as 42 and 43, respectively.

Average the two reported values:

$$Average\ SE = \frac{42 + 43}{2} = 42.5 \qquad \text{Report } 43$$

If the average value is not a whole number, raise it to the next higher whole number.

Report

- On forms approved by the agency
- Sample ID
- Results to the next higher whole number
- Sedimentation time if over 20 minutes

This page intentionally left blank.

ATM 308 Specific Gravity and Absorption of Coarse Aggregate

Following are guidelines for the use of WAQTC FOP for AASHTO T 85 by the State of Alaska DOT&PF.

1. Add to Terminology:

   Size Fraction – Material retained on a single sieve, excluding material that would be retained on larger sieves.

2. When Specific Gravity is determined on portions of the sample, determine the total sample specific gravity with the following formula:

$$G = \frac{100}{\frac{P_1}{G_1} + \frac{P_2}{G_2} + \ldots \frac{P_n}{G_n}}$$

   Where:
   G= average specific gravity
   P_1, P_2, P_n, = mass percentages of each portion tested from the original sample;
   G_1, G_2, G_n, = specific gravity values of each portion tested from the original sample;

3. The sample size shown in Table 1 represents the material that will be tested. When the material contains both coarse and fine, or there will be material rejected over either the No. 4 or ¾ in. sieves; the size of the field sample must be increased to compensate for the rejected material.

4. When a specific size fraction of an aggregate is tested, the minimum mass of the test sample shall be the difference between the masses prescribed for the maximum and minimum sizes of the fraction.

5. Between step 4 and 5 of procedure:

   Re-inspect the immersion tank to insure the water level is at the overflow outlet height.

This page intentionally left blank.

SPECIFIC GRAVITY AND ABSORPTION OF COARSE AGGREGATE FOP FOR AASHTO T 85

Scope

This procedure covers the determination of specific gravity and absorption of coarse aggregate in accordance with AASHTO T 85-14. Specific gravity may be expressed as bulk specific gravity (G_{sb}), bulk specific gravity, saturated surface dry (G_{sb} SSD), or apparent specific gravity (G_{sa}). G_{sb} and absorption are based on aggregate after soaking in water. This procedure is not intended to be used with lightweight aggregates.

Terminology

Absorption – the increase in the mass of aggregate due to water being absorbed into the pores of the material, but not including water adhering to the outside surface of the particles, expressed as a percentage of the dry mass. The aggregate is considered "dry" when it has been maintained at a temperature of 110 ±5°C (230 ±9°F) for sufficient time to remove all uncombined water.

Saturated Surface Dry (SSD) – condition of an aggregate particle when the permeable voids are filled with water, but no water is present on exposed surfaces.

Specific Gravity – the ratio of the mass, in air, of a volume of a material to the mass of the same volume of gas-free distilled water at a stated temperature.

Apparent Specific Gravity (G_{sa})– the ratio of the mass, in air, of a volume of the impermeable portion of aggregate to the mass of an equal volume of gas-free distilled water at a stated temperature.

Bulk Specific Gravity (G_{sb})– the ratio of the mass, in air, of a volume of aggregate (including the permeable and impermeable voids in the particles, but not including the voids between particles) to the mass of an equal volume of gas-free distilled water at a stated temperature.

Bulk Specific Gravity (SSD) (G_{sb} SSD) – the ratio of the mass, in air, of a volume of aggregate, including the mass of water within the voids filled to the extent achieved by submerging in water for 15 to 19 hours (but not including the voids between particles), to the mass of an equal volume of gas-free distilled water at a stated temperature.

Apparatus

- Balance or scale: with a capacity of 5 kg, sensitive to 0.1 g. Meeting the requirements of AASHTO M 231.
- Sample container: a wire basket of 3.35 mm (No. 6) or smaller mesh, with a capacity of 4 to 7 L (1 to 2 gal) to contain aggregate with a nominal maximum size of 37.5 mm (1 1/2 in.) or smaller; or a larger basket for larger aggregates, or both.
- Water tank: watertight and large enough to completely immerse aggregate and basket, equipped with an overflow valve to keep water level constant.
- Suspension apparatus: wire used to suspend apparatus shall be of the smallest practical diameter.
- Sieves: 4.75 mm (No. 4) or other sizes as needed, meeting the requirements of FOP for AASHTO T 27/T 11.
- Large absorbent towel

Sample Preparation

1. Obtain the sample in accordance with the FOP for AASHTO R 90 (see Note 1).

2. Mix the sample thoroughly and reduce it to the approximate sample size required by Table 1 in accordance with the FOP for AASHTO R 76.

3. Reject all material passing the appropriate sieve by dry sieving.

4. Thoroughly wash sample to remove dust or other coatings from the surface.

5. Dry the test sample to constant mass according to the FOP for AASHTO T 255/T 265 at a temperature of 110 ±5°C (230 ±9°F) and cool in air at room temperature for 1 to 3 hours.

   Note 1: Where the absorption and specific gravity values are to be used in proportioning concrete mixtures in which the aggregates will be in their naturally moist condition, the requirement for initial drying to constant mass may be eliminated, and, if the surfaces of the particles in the sample have been kept continuously wet until test, the 15-to-19 hour soaking may also be eliminated.

6. Re-screen the sample over the appropriate sieve. Reject all material passing that sieve.

7. The sample shall meet or exceed the minimum mass given in Table 1.

   Note 2: If this procedure is used only to determine the Gsb of oversized material for the FOP for AASHTO T 99 / T 180, the material can be ***rejected*** over the appropriate sieve. For T 99 / T 180 Methods A and B, use the 4.75 mm (No. 4) sieve; T 99 / T 180 Methods C and D use the 19 mm (3/4 in).

Table 1

Nominal Maximum Size* mm (in.)	Minimum Mass of Test Sample, g (lb)
12.5 (1/2) or less	2000 (4.4)
19.0 (3/4)	3000 (6.6)
25.0 (1)	4000 (8.8)
37.5 (1 1/2)	5000 (11)
50 (2)	8000 (18)
63 (2 1/2)	12,000 (26)
75 (3)	18,000 (40)

* One sieve larger than the first sieve to retain more than 10 percent of the material using an agency specified set of sieves based on cumulative percent retained. Where large gaps in specification sieves exist, intermediate sieve(s) may be inserted to determine nominal maximum size.

Procedure

1. Immerse the aggregate in water at room temperature for a period of 15 to 19 hours.

   Note 3: When testing coarse aggregate of large nominal maximum size requiring large test samples, it may be more convenient to perform the test on two or more subsamples, and then combine the values obtained.

2. Place the empty basket into the water bath and attach to the balance. Inspect the immersion tank to ensure the water level is at the overflow outlet height. Tare the balance with the empty basket attached in the water bath.

3. Remove the test sample from the water and roll it in a large absorbent cloth until all visible films of water are removed. Wipe the larger particles individually. If the test sample dries past the SSD condition, immerse in water for 30 min, and then resume the process of surface-drying.

   Note 4: A moving stream of air may be used to assist in the drying operation but take care to avoid evaporation of water from aggregate pores.

4. Determine the SSD mass of the sample, and record this and all subsequent masses to the nearest 0.1 g or 0.1 percent of the sample mass, whichever is greater. Designate this mass as "B."

5. Immediately place the SSD test sample in the sample container and weigh it in water maintained at 23.0 ±1.7°C (73.4 ±3°F). Shake the container to release entrapped air before recording the weight. Re-inspect the immersion tank to ensure the water level is at the overflow outlet height. Designate this submerged weight as "C."

   Note 5: The container should be immersed to a depth sufficient to cover it and the test sample during mass determination. Wire suspending the container should be of the smallest practical size to minimize any possible effects of a variable immersed length.

6. Remove the sample from the basket. Ensure all material has been removed. Place in a container of known mass.

7. Dry the test sample to constant mass according to the FOP for AASHTO T 255 / T 265 at 110 ±5°C (230 ±9°F) and cool in air at room temperature for 1 to 3 hours.

8. Determine and record the dry mass. Designate this mass as "A."

Calculations

Perform calculations and determine values using the appropriate formula below.

Bulk specific gravity (G_{sb})

$$G_{sb} = \frac{A}{B - C}$$

Bulk specific gravity, SSD (G_{sb} SSD)

$$G_{sb}SSD = \frac{B}{B - C}$$

Apparent specific gravity (G_{sa})

$$G_{sa} = \frac{A}{A - C}$$

Absorption

$$\text{Absorption} = \frac{B - A}{A} \times 100$$

Where:

A = oven dry mass, g
B = SSD mass, g
C = weight in water, g

Sample Calculations

Sample	A	B	C	B - C	A - C	B - A
1	2030.9	2044.9	1304.3	740.6	726.6	14.0
2	1820.0	1832.5	1168.1	664.4	651.9	12.5
3	2035.2	2049.4	1303.9	745.5	731.3	14.2

Sample	G_{sb}	G_{sb} SSD	G_{sa}	Absorption
1	2.742	2.761	2.795	0.7
2	2.739	2.758	2.792	0.7
3	2.730	2.749	2.783	0.7

These calculations demonstrate the relationship between G_{sb}, G_{sb} SSD, and G_{sa}. G_{sb} is always lowest since the volume includes voids permeable to water. G_{sb} SSD is always intermediate. G_{sa} is always highest since the volume does not include voids permeable to water. When running this test, check to make sure the values calculated make sense in relation to one another.

Report

- On forms approved by the agency
- Sample ID
- Specific gravity values to the nearest 0.001
- Absorption to the nearest 0.1 percent

ATM 309 Relative Standard Density of Soils by the Control Strip Method

1. Scope

This method describes a procedure for determining the relative standard dry density of a material by the control strip testing method. This is applicable to soils and soil mixtures.

Standard density values established with this method are GAUGE-SPECIFIC and must be determined for each gauge used in acceptance testing of the material. Assurance checks should be of uncorrected wet density readings.

2. Significance and Use

Site conditions and/or logistics may make determining the standard density difficult with conventional test methods used in the laboratory. When these problems occur a method that allows the determination of a relative standard density in the field can facilitate the verification of compaction efforts. This method describes a procedure to determine the relative standard density to be used in these circumstances.

3. Apparatus

- Nuclear Moisture/Density Gauge—Calibrate and standardize in accordance with ATM 213.
- Compaction equipment that meets the requirements of the contract and of sufficient size and compaction energy to compact the material.

4. Site Preparation

1. The Engineer will designate the location of the control strip, as well as minimum compaction equipment to be used. If size of control strip is not specified, use a 12 ft. x 300 ft. control strip.
2. A representative lift of the material being evaluated will be placed and prepared for compaction.

5. Procedure

1. Attention should be paid to the requirements of the material being placed so that moisture requirements are maintained in an acceptable range.
2. A minimum of 3 test locations will be selected with-in the control strip. The locations will be in the middle 1/2 of the control strip and at least 12 in from the edge of the control strip. The Engineer will select test locations.
3. The locations will be marked in such a way as not to be lost during the compaction of the control strip. This can be accomplished by marking the side of the strip with stakes or surveyors tape, or by marking with paint beside the location on the control strip.
4. Care should be taken when choosing and preparing the test location, so that it is flat and the surface voids filled. If necessary, use a small quantity of native fines to fill the voids. The thickness of added fines shall not exceed 1/8 in.
5. Tests shall be taken with nuclear moisture/density gauge in backscatter mode. A test will consist of the average of two 15 second readings (fast mode), or one 1 minute reading. Record all readings, and in the case of the 15 second readings record the average dry density determination at each location.
6. After the first pass with the compaction equipment, an initial density is determined by averaging the densities of the selected test locations.

Note 1: One pass of the roller will be defined as one roll over the location.

7. After each subsequent pass and for each piece of compaction equipment used, a test is taken at each location, recorded and then averaged to produce the density value for that pass.

8. Continue the compaction and testing cycle until there is a pass with less than 16 kg/m^3 (1 lb/ft^3) increase in the average dry density of the test locations; and a second consecutive pass with less than 16 kg/m^3 (1 lb/ft^3) increase in the average density of the test locations.

9. Select ten random locations on the completed control strip, and test by averaging two one minute readings or one four minute reading, at each location in accordance with ATM 213. Average the results from the ten locations and this value will be the relative standard dry density for this material. Tests shall be performed in direct transmission mode when practicable.

   Note 2: It may be necessary to repeat the procedure for additional roller types depending on the material to be tested and the requirements of sequencing for the finished surface.

10. Additional control strips may be required if there are changes in the material, lift thickness or compaction equipment.

6. Calculations

The Relative Standard Dry Density value will be calculated as follows:

$$D_S = \frac{(A_1 + A_2 + A_3 + A_4 + A_5 + A_6 + A_7 + A_8 + A_9 + A_{10})}{10}$$

Where:
D_S = Relative Standard Dry Density for the material.
A_n = Average Dry Density for random test location n.

7. Report

- Report the average dry density for each pass
- Report the relative standard dry density to the nearest 0.1 lb/ft^3

ATM 312 Nordic Abrasion Value of Coarse Aggregate

1. Scope

This method describes the test procedure for the simulation of the abrasive action of traffic on coarse aggregates used in a surface layer to determine the ability of the aggregate to resist wear by abrasion from studded tires.

The test shall be performed on the specific size aggregate fraction of 11.2 to 16.0 mm (7/16" to 5/8")

Note 1: Variations from this size range will not give consistent results.

The test is applicable to crushed and uncrushed natural and artificial aggregates.

This test method involves potentially hazardous materials, operations and equipment. This method does not purport to address all of the safety problems associated with it use.

2. Principle

A specimen of an individual size fraction is rotated in a steel drum that contains a steel ball charge and water. The interior of the drum has three ribs, which add to the abrading. The drum is rolled causing the contents within to tumble. After the specified number of revolutions, the contents are removed from the drum and the aggregate is sieved over a 2.00 mm (No. 10) sieve. The measure of wear, as a percentage loss, is calculated.

3. Apparatus

- Testing machine conforming to the design shown in Figure 1.
- The test drum shall have an inside diameter of 206.5 ± 2 mm and an inside length of 335 ± 1 mm. The drum shall be water-tight and made of a seamless steel tube conforming to grade TS 5 of ISO 2604-2, of outside diameter 219.1 mm and wall thickness of 6.3 mm. The drum shall rotate centrically with the axis in a horizontal position at a rate of 90 ± 3 rpm. A revolution counter shall automatically stop the rotation after 5400 revolutions.

  Three ribs, each with a length of 333 ± 1 mm, shall be equally spaced around the internal circumference of the drum. The three ribs shall be removable and made from spring steel as specified in ISO 683-14 and designed in accordance with Figure 1. The ribs, prior to their use in a test, shall be preground in the drum for 25 h using a hard aggregate, together with the normal proportions of steel balls and water.

  Note 2: Over time, and with repeated use, the ribs will wear and their action will change. Each rib shall be replaced, when its loss in original mass exceeds 15 g.
- Steel balls (7000 ± 10 g), 14.50-15.01 mm diameter, of a hardness between 62 and 65 HRC, as specified in ISO 3290.
- Gauge to control minimum steel ball size, e.g. two parallel bars 14.50 mm apart.
- Magnet (optional) for removal of the steel ball charge from the test specimen after abrasion.

  Note 3: Do not use too strong a magnet as the steel balls may become magnetized.
- Oven capable of maintaining a uniform temperature of 110 ± 5 °C (230 ± 9°F).
- Balance or scale: Capacity sufficient for the principle sample mass, readable to 0.1 percent or 0.1 g, of the total sample mass and meeting the requirements of AASHTO M 231.
- Sieves of the following sizes: 2.00 mm, 11.2 mm, and 16.0 mm (No. 10, 7/16" and 5/8").
- Bucket.

- Washing device

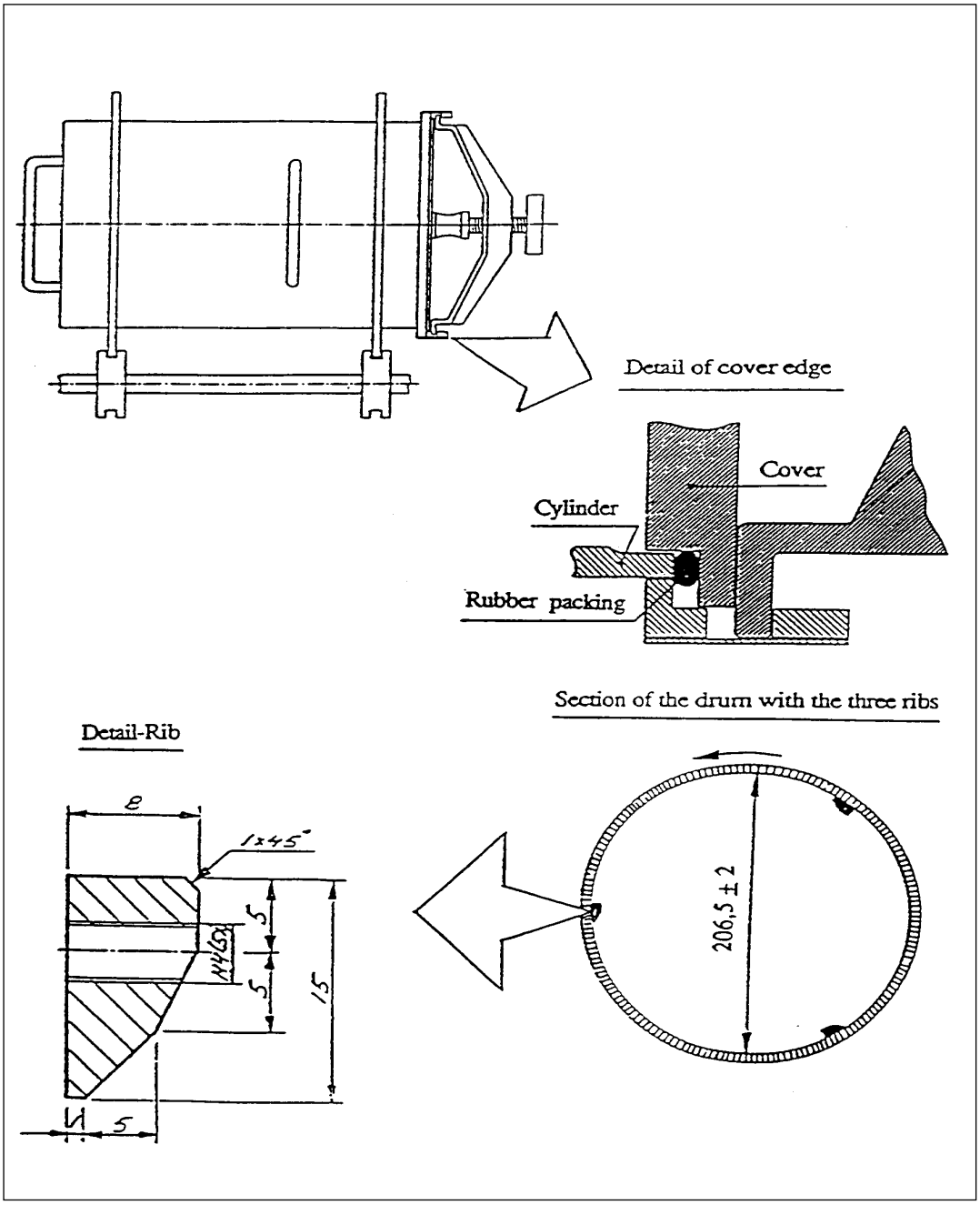

Figure 1
All Dimensions in mm

4. Sampling

Obtain a sample in accordance with WAQTC FOP for AASHTO T 2 (ASTM D75).

5. Preparation of Test Sample

Unprocessed Aggregate

1. Separate the sample on the 19 mm (3/4") sieve by hand or mechanical shaker, sieving the material for 5 minutes. Discard the minus 19 mm (3/4") material.
2. Crush the plus 19 mm (3/4") material, or a representative portion obtained in accordance with WAQTC FOP for AASHTO T 248, to pass the 19 mm (3/4") sieve.
3. Separate the crushed material into a test sample, using 16 mm (5/8") sieve and 11.2 mm (7/16") sieves, in accordance with WAQTC FOP for AASHTO T 27/T 11. Discard all particles retained on the 16 mm (5/8") sieve and all the particles passing the 11.2 mm (7/16") sieve.
4. Proceed to Step 2 below.

Processed (already crushed) Aggregate

1. Separate the material into a test sample, using 16 mm (5/8") and 11.2 mm (7/16") sieves, in accordance with WAQTC FOP for AASHTO T 27/T 11. Discard all particles retained on the 5/8" (16 mm) sieve and all the particles passing the 11.2 mm (7/16") sieve.
2. The test sample must have no more than 8 percent Flat and Elongated particles when tested in accordance with ATM 306 using a caliper ratio of 1:5. Remove Flat and Elongated particles until the test sample meets this requirement.
3. Reduce the test sample to a minimum of 3500 g in accordance with WAQTC FOP for AASHTO T 248.
4. Wash the sample and dry to a constant mass in accordance with WAQTC FOP for AASHTO T 255/T 265.
5. Determine the apparent specific gravity of the test sample, or a portion thereof, in accordance with WAQTC FOP for AASHTO T 85.
6. Determine the individual test specimen mass by:

$$m_i = \frac{P_i}{2.66} \times 1000$$

Where:

m_i = mass of the individual test specimen
p_i = apparent specific gravity of the test sample

7. Batch 3 test specimens at the calculated weight ± 5 g.

6. Procedure

1. Place the steel ball charge (7000 ± 10 g) and the test specimen in the drum and add (2000 ± 10) ml. of water.
2. Rotate the drum at a speed of 90 ± 3 rpm for 5400 ± 10 revolutions.
3. After the specified number of revolutions, discharge the contents (steel ball charge, test specimen, and water) from the drum into a container.
4. Remove the steel ball charge with a magnet, being careful not to degrade and or lose aggregate particles.
5. Wash the remaining contents (test specimen and water) over a 2.00 mm (No. 10) sieve.

Note 4: To avoid overloading the sieve, it may be necessary to divide the test specimen into smaller portions.

6. Dry the test specimen fractions retained on the 2.00 mm (No. 10) sieve, to a constant mass in accordance with WAQTC FOP for AASHTO T 255 and weigh to the nearest 0.1 g.

7. Calculation and Expression of Results

1. Calculate the individual Nordic Abrasion Values (A_n) to the nearest 0.1 percent as follows:

$$A_n = \left(\frac{M_i - M_f}{M_i} \right) \times 100$$

Where

A_n = Nordic Abrasion Values
M_i = Initial dry mass of the test specimen.
M_f = Final dry mass of the test specimen after the test.

2. Compute and record the average of the individual Nordic Abrasion Values to the nearest 0.1 percent.

8. Report

- The individual and average Nordic Abrasion values shall be reported on Department forms to the nearest 0.1 percent.

ATM 313 Degradation Value of Aggregates

1. Scope

This test method describes the procedure for determining the durability of an aggregate. The durability of an aggregate as measured by the Degradation Value indicates the relative resistance of an aggregate to produce detrimental clay-like fines when subjected to a prescribed abrasion process in the presence of distilled or demineralized water.

2. Apparatus

- Jaw crusher with 150 mm (6") capacity.
- Sieves of the following sizes: 12.5 mm (½"), 6.3 mm (¼"), 2.00 mm (No. 10) and 75 µm (No. 200). Sieves shall conform to ASTM E11.
- Balance or scale: Capacity sufficient for the principle sample mass, readable to 0.1 percent or 0.1 g of the total sample mass and meeting the requirements of AASHTO M 231.
- 200 mm (8") sieve shaker with 45 mm (1¾") throw on cam at 285 ± 10 oscillations per minute.
- General Laboratory Interval Timer to control On-Off operation of sieve shaker. Timer will have a minimum 20 minute range accurate to ± 5 seconds.
- Plastic canister 190 mm (7 ½") in diameter and 150 mm (6") high, having a flat bottom; or metal washing vessel conforming to AASHTO T 210 - 5.1.
- Distilled or demineralized water maintained at 22 ±3ºC (72 ± 5°F).
- Sample Washing Apparatus, consisting of a ring stand and ring capable of mounting a 230 mm mouth funnel with a 2.00 mm (No. 10) and 75 µm (No. 200) sieve setting on top of the funnel and a graduated cylinder calibrated at 500 ml with a rubber stopper.
- Graduated cylinder or pipette with 10 ml capacity graduated in 1 ml increments.
- Stock Sand Equivalent Solution prepared in accordance with WAQTC FOP for AASHTO T 176, using distilled water only. This solution should be stored in dark or opaque containers and protected from direct sunlight and heat. Solutions that have turned cloudy or formed precipitates will be discarded.
- Standard Sand Equivalent Cylinder with rubber stopper as described in WAQTC FOP for AASHTO T 176.
- Timer or Stopwatch, preferably with an alarm to indicate end of timed interval.
- Miscellaneous equipment including 500 ml wash bottle with a fine spray nozzle, pans, scoops, etc.

3. Degradation Test Area

The degradation test area must be free of vibration and direct sunlight, and maintained at a temperature of 22 ±3ºC (72 ± 5°F).

4. Sample Preparation

1. Unprocessed Aggregate

    a. Separate the aggregate on the 12.5 mm (½") sieve by hand or by mechanical shaker, sieving the material for 5 minutes. Discard the minus 12.5 mm (½") material unless required for other testing.

b. Crush the plus 12.5 mm (½") aggregate, or a representative portion obtained in accordance with WAQTC FOP for AASHTO T 248, to pass the 12.5 mm (½") sieve.

c. Proceed to Step 2 and process the same as already crushed aggregate.

2. Processed (already crushed) Aggregate

a. Separate the material by hand sieving or by mechanical shaker, sieving the material for 5 minutes, into 2 size groups: minus 12.5 mm (½") to plus 6.3 mm (¼") and minus 6.3 mm (¼") to plus 2.00 mm (No. 10).

b. Reduce each size grouping to a representative sample in accordance with WAQTC FOP for AASHTO T 248, Method A, such that there will be a minimum of 500 grams after washing.

c. Wash each size grouping over a 2.00 mm (No. 10) sieve and dry to a constant mass in accordance with WAQTC FOP for AASHTO T 255/T 265.

d. Weigh out a 500 ±1 g portion of each size grouping.

5. Procedure

1. Combine both sample portions in the plastic canister, add 200 ml of distilled or demineralized water and cover tightly. Do not allow the sample to soak more than 5 minutes before testing.

2. Place the canister in the degradation sieve shaker and run for 20 minutes ±5 seconds. Do not allow the sample to set for more than 5 minutes after agitation is completed.

3. Remove the canister and wash the material through nested 2.00 mm (No. 10) and 75 µm (No. 200) sieves. Continue washing until the wash water is clear and has reached the 500-ml mark on the graduated cylinder.

4. In instances where highly degradable materials are encountered and the sample cannot be washed clean with 500-ml. of water:

a. Continue washing using water sparingly, until the wash water is clear. If a change in receiver cylinders is required, be very careful not to lose any of the wash water.

b. To achieve the required 500 ml. volume, allow the wash water to settle until clear, then siphon or pipette off the excess water, being careful not to remove any of the settled material.

c. Use of a centrifuge to settle the material is allowed but extreme care must be taken to preclude any loss of material in transferring from the cylinders to the centrifuge bottles and then back to a single cylinder. The solution must be brought to a volume of 500 ml before proceeding to Step 5. Removal of extra water by oven-dried evaporation is not allowed.

5. Place the Sand Equivalent Cylinder upright in a vibration free area out of direct sunlight. Measure and pour 7 ml of the Stock Sand Equivalent Solution into the cylinder.

6. Bring all of the solids in the 500 ml of wash water into suspension by capping the graduated cylinder with the palm of the hand or a rubber stopper, then turning the cylinder upside down and right side up allowing the bubble to traverse from one end to the other and back again. This is one cycle. Repeat this cycle 10 times as rapidly as possible (approximately 35 seconds).

7. Immediately pour the solution into the Sand Equivalent Cylinder, fill to the 15 mark, and plug with a rubber stopper.

8. Mix the contents of the Sand Equivalent Cylinder by turning the cylinder upside down and right side up allowing the bubble to traverse from one end to the other and back again. This is one cycle. Repeat this cycle 20 times as rapidly as possible (approximately 60 seconds).

9. Place the cylinder on a vibration free platform out of direct sunlight, remove stopper and immediately start the timer or stopwatch that is pre-set for 20 minutes.

10. After 20 minutes, immediately read and record the height of the sediment to the nearest 0.1 graduation.

6. Calculations

Determine the Degradation Value using the following formula, or by using Table 1 on next page which is derived from the formula.

$$D = \left(\frac{15 - H}{15 + 1.75H} \right) \times 100$$

Where:

D= Degradation value.

H= Height of sediment in cylinder.

Values may range from 0 to 100 with high values representing more suitable material. The formula and chart place doubtful materials at about the midrange (30-70) of the scale, with poor ones below and good ones above that range.

7. Report

- Report degradation values to the nearest whole number.

Table 1
Degradation Value, "D"

H	D	H	D	H	D	H	D	H	D
0.1	98	3.1	58	6.1	35	9.1	19	12.1	8
0.2	96	3.2	57	6.2	34	9.2	19	12.2	8
0.3	95	3.3	56	6.3	33	9.3	18	12.3	7
0.4	93	3.4	55	6.4	33	9.4	18	12.4	7
0.5	91	3.5	54	6.5	32	9.5	17	12.5	7
0.6	90	3.6	54	6.6	32	9.6	17	12.6	6
0.7	88	6.7	53	6.7	31	9.7	17	12.7	6
0.8	87	3.8	52	6.8	30	9.8	16	12.8	6
0.9	85	3.9	51	6.9	30	9.9	16	12.9	6
1.0	84	4.0	50	7	29	10.0	15	13.0	5
1.1	82	4.1	49	7.1	29	10.1	15	13.1	5
1.2	81	4.2	48	7.2	28	10.2	15	13.2	5
1.3	79	4.3	48	7.3	28	10.3	14	13.3	4
1.4	78	4.4	47	7.4	27	10.4	14	13.4	4
1.5	77	4.5	46	7.5	27	10.5	13	13.5	4
1.6	75	4.6	45	7.6	26	10.6	13	13.6	4
1.7	74	4.7	44	7.7	26	10.7	13	13.7	3
1.8	73	4.8	44	7.8	25	10.8	12	13.8	3
1.9	71	4.9	43	7.9	25	10.9	12	13.9	3
2.0	70	5.0	42	8	24	11.0	12	14.0	3
2.1	69	5.1	41	8.1	24	11.1	11	14.1	2
2.2	68	5.2	41	8.2	23	11.2	11	14.2	2
2.3	67	5.3	40	8.3	23	11.3	11	14.3	2
2.4	66	5.4	39	8.4	22	11.4	10	14.4	1
2.5	65	5.5	39	8.5	22	11.5	10	14.5	1
2.6	63	5.6	38	8.6	21	11.6	10	14.6	1
2.7	62	5.7	37	8.7	21	11.7	9	14.7	1
2.8	61	5.8	37	8.8	20	11.8	9	14.8	0
2.9	60	5.9	36	8.9	20	11.9	9	14.9	0
3.0	59	6.0	35	9.0	20	12.0	8	15.0	0

ATM 314 Expansive Breakdown of Stone on Soaking in Ethylene Glycol

1. Scope

This method covers a procedure for subjecting samples of stone to immersion in ethylene glycol and observation of the effects of such immersion in accordance with CRD-C 148-69.

2. Principle of Method

Ethylene glycol is one of the materials that reacts with swelling clays of the montmorillonite group to form an organo-clay complex having a larger basal spacing than that of the clay mineral itself. Hence a sample of stone containing swelling clay of the montmorillonite group will be expected to undergo expansive breakdown upon soaking in ethylene glycol, if the amount, distribution, state of expansion, and ability to take up glycol is such as to cause such breakdown to occur. If such breakdown does occur, it may be expected that similar breakdown may occur if similar rock samples are exposed, for longer times, to wetting and drying or freezing and thawing in a water soaked condition in service.

3. Reagent

Ethylene Glycol – The regent used in this method shall be ethylene glycol meeting the requirements of ASTM D 2693.

4. Apparatus

- Jaw crusher with 150 mm (6 in) capacity.
- Sieves of the following sizes: 75 mm (3 in) and 19.0 mm (¾ in) and conforming to AASHTO M 92 (ASTM E11).
- Balance or scale: Capacity sufficient for the principle sample mass, readable to 0.1 percent or 0.1 g of the total sample mass and meeting the requirements of AASHTO M 231.
- Container shall be of suitable plastic, non-reactive with the reagent and of sufficient size to hold the test sample and sufficient reagent to cover all particles of the sample to a depth of not less that 10 mm (1/2 in) capped with a tight-fitting cover.

5. Sampling and Sample Preparation

1. Obtain representative samples of the stone in accordance with WAQTC FOP for AASHTO T 2 (ASTM D75).
2. Crush the rock to pass a 75 mm (3 in) sieve.
3. Separate the material into the required test size, using 75 mm (3 in) and 19 mm (¾ in) sieves, in accordance with WAQTC FOP for AASHTO T 27/T 11. Discard all particles retained on the 75 mm (3 in) sieve and all particles passing the 19 mm (¾ in) sieve, unless required for other testing.
4. Reduce the sample to a test size of 5 ± 2 kg (11 ± 1 lb) in accordance with WAQTC FOP for AASHTO T 248, Method A.
5. When a sample of the required mass and particle size has been prepared, it shall be washed to remove dust, loosely adherent coatings, and chips. After being washed, dry to a constant mass in accordance with WAQTC FOP for AASHTO T 255/T 265 except that constant mass shall be regarded as having been attained when the loss in weight between successive weighing at intervals of not less than 4 hours does

not exceed 0.1 percent. Determine the number of particles and the mass before immersion to the nearest 0.1 percent of the total sample mass.

6. Procedure

1. The sample shall be placed in the container and immersed in the reagent so that all particles are covered to a depth of at least 12.5 mm (½ in).

2. At intervals not to exceed 3 days, examine the sample and note significant changes. The normal duration of the test shall be 15 days.

   Note 1: Further information of value may be obtained in certain cases by continuing the treatment beyond 15 days: in other cases expansive breakdown may have been too extensive at earlier periods that no information of value will be obtained by continuing the treatment for the full 15 days.

3. When the exposure has been terminated, the sample shall be thoroughly washed and sieved by hand over a 19 mm (¾ in) sieve to remove the reagent from the surfaces of the particles and to remove fragments that will pass a 19 mm (¾ in) sieve. The material remaining on the sieve shall be dried to constant weight as described in Step 4 of the Sampling and Sample Preparation, and the total mass after immersion determined to the nearest 0.1 percent of the total sample mass.

7. Calculations

Calculate the total percent loss by:

$$\%\,Loss = \frac{M_B - M_A}{M_B} \times 100$$

Where:

M_B = Mass before immersion, and
M_A = Mass after immersion.

8. Report

- Report the percent loss to the nearest 1 percent on department forms.

ATM 315 Gradation Count of Riprap

1. Scope

Gradation count determines the distribution of particle masses within a given sample.

2. Apparatus

- Balance or scale: Accurate to 0.1 percent of the masses being determined and meeting the requirements of AASHTO M 231.
- Tape measure or rag tape.

3. Procedure (Method A)

1. Obtain a representative sample of the material, 5 CY minimum.
2. By hand, or with mechanical means, place each piece of Riprap on a scale.
3. Record mass on department approved form.
4. Determine the percentage of each weight range specified.

4. Procedure (Method B)

1. Obtain a representative sample of the material, 5 CY minimum.
2. Measure the longest dimension (length ft.) and two orthogonal dimensions (width, height ft.) of aggregate particles.
3. Record measurements on form.
4. Calculate mass by L (ft.) x W (ft.) x H (ft.) x Specific Gravity (G_{sa}) x 62.27 ($\frac{Lbs}{ft^3}$)
5. Record mass on department approved form.
6. Determine the percentage of each mass range specified.

5. Calculations

$$\%\ of\ mass\ range = \frac{total\ mass\ within\ given\ range}{Total\ mass\ of\ sample} \times 100$$

6. Report

- Results on forms approved by the Department.
- Individual mass of each particle.
- Percent of total mass in each category.
- Report percentages to the nearest 1 percent.

This page intentionally left blank.

ATM 316 Dustfall Column Test

1. Scope

This method describes the procedure for determining the *mean particle residence time* for dust falling in a dust column device. The purpose is to quantify the effectiveness of dust palliative on aggregate surface course.

This standard involves hazardous materials, operations and equipment. This standard does not purport to address all of the safety problems associated with its use. It is the responsibility of the agency to establish appropriate safety and health practices and to train the user of this standard prior to use. It is the responsibility of the user to consult the appropriate agency authority for and to practice and maintain the appropriate safety and health practices.

2. Apparatus

- Testing machine conforming to the design shown in Figure 1
- Sieves # 4 and # 8 conforming to AASHTO M 92 (ASTM E 11)
- Balance or scale: Class G1, sensitive to 0.01 g with a capacity sufficient for the principle sample mass, and meeting the requirements of AASHTO M 231
- Abrader with 80-grit sandpaper, and with ten-pound weight (for laboratory sample testing), and fifteen-pound weight (for field sample testing)
- Compaction mold and collar conforming to ATM 207 (AASHTO T 180), or CBR mold and collar
- Graduated pipet with metered pipet pump
- Cans/tins with covers, having a minimum volume of 100 ml and capable of holding 100 grams
- Containers made of material resistant to corrosion and impervious to moisture, having close-fitting lids to prevent loss of moisture from soil samples before compaction
- Miscellaneous tools, materials, and equipment including spatulas, putty knife, brushes, pan, parchment paper, laboratory grade acetone, torpedo level, low velocity anemometer, microfiber cloth, antistatic unscented dryer sheets, cleaning pig, antistatic spray, water bath, plastic beaker, Plexiglas column, intake tube, drop cone, *DustTrak II Aerosol Monitor 8530* or equivalent
- The day before dustfall testing, prepare about five gallons of water and store them overnight adjacent to the dustfall column device

3. Soil Sample Preparation

3a – Method A (Field-Obtained or Laboratory-Prepared Aggregate Sample)

1. For field-obtained sample test, obtain field sample according to ATM 301. Go to Section 4 to continue test procedure
2. For laboratory-prepared sample test, perform ATM 207 (AASHTO T 180) on the soil/aggregate sample to determine optimum moisture content
3. Dry a separate soil/aggregate sample to constant mass in accordance with ATM 202
4. Sieve over #4 sieve and discard material retained on #4 sieve
5. Thoroughly mix the selected representative sample with sufficient water to dampen it to approximately 70% of optimum moisture content (± 5%) as determined by ATM 207 (Step 2 above)

6. Place the prepared material in the mixing/storage dish, check its consistency (adjust if required), cover to prevent loss of moisture, and allow to saturate for at least 16 hours (overnight). After this standing period and immediately before starting the test, thoroughly remix the soil. Start the test within 36 hours of end of saturation period

7. Compact the soil sample in 6-inch diameter Proctor or CBR mold in accordance with ATM 207

8. Determine the quantity/volume of palliative to be applied using the following expression:
   Volume (ml) = 82.58 x Field Application Rate (sq.yd./gallon) , or
   Volume (ml) = 743 x Field Application Rate (sq.ft./gallon)

9. Apply the quantity of palliative evenly over the surface of the compacted soil

   Note 1: This may require multiple applications allowing the palliative to soak in between applications.

10. Allow to maturate at room temperature in open air for fourteen days. If in a dusty environment cover with breathable cloth or move to dust-free environment. Go to Section 4 to continue test procedure.

3b – Method B (Field-Abraded Sample)

1. Select locations on palliative treated section to obtain field abraded samples

2. Carefully sweep loose aggregate from the sample location using a soft brush

3. Place the abrader guide on the sample location

4. Load the abrader with 15-lbs weight and place the abrader in the circular hole in the abrader guide

5. Turn the abrader 10 full clockwise rotations without exerting downward pressure

6. Tilt the abrader on edge and carefully brush loose material off of the bottom of the abrader back into the abraded area

7. Using a soft brush and a putty knife, collect the abraded material from the abraded area and place the material into a moisture can

8. Replace the abrader into the hole in the abrader guide and repeat steps 5-7 until moisture can is approximately one-half full of sample

9. Repeat steps 1 through 9 (Method B) at other selected locations

10. Proceed to Section 4 (Soil Sample Abrasion), step 7

4. Soil Sample Abrasion

1. After fourteen days of maturation of the laboratory-prepared specimen, place the compaction collar on the mold

2. Cover a pan with parchment paper and place the mold in the pan

3. For laboratory-prepared specimen, load the abrader with a 10-lbs weight and place the abrader on top of the soil in the mold

4. For field-obtained sample, load the abrader with a 15-lbs weight and place the abrader on top of the sample

5. Apply ten full clockwise rotations of the abrader without exerting downward pressure

6. Clean the abraded soil surface and the sand paper using a regular 3-4 in. paint brush, avoiding breakdown and the loss of fines

   Note 2: Use new sand paper for each tested specimen.

7. Gently sieve the abraded material over the #8 sieve over the parchment paper, taking care not to break down the soil and to prevent material to become airborne. Materials retained on the #8 sieve may be discarded
8. Repeat steps 5 and 6 until a minimum of 40 grams of material passing the #8 sieve have been collected. Limit rotations to twenty revolutions
9. Place the material passing the #8 sieve in a moisture can carefully to ensure the soil is not broken down
10. Seal the can with electric tape and label the can for content

5. Drop Cone Preparation

1. Clean the drop cone using a clean cloth dampened with acetone to remove any residual palliative
2. Using unscented dryer sheet or static-free cloth treated with antistatic spray, wipe the interior surfaces of the cone and the trap door
3. Close and latch the trap door

   Note 3: Conduct the test within ten minutes.

6. Dust Column Preparation

1. Rotate the column into the horizontal position and remove the intake tube from the column
2. Clean the bottom of the column (which come into contact with water bath) with a damp sponge
3. Carefully clean the interior of the dust column with the cleaning pig covered with a clean microfiber cloth
4. Apply antistatic spray using the cleaning pig covered with a cloth treated with antistatic spray. Repeat this process one more time

   Note 4: Perform antistatic spraying either in a different room than the test room or under a fume hood to prevent aerosol from impacting the test.

5. Install the intake tube facing downward into the column and tighten its bolts (do not over-tighten)

   Note 5: Ensure that the intake tube is facing downward when the column is vertical.

6. Rotate the column back into the vertical position
7. Check verticality of column using the torpedo level
8. Using the water stored overnight next to the device, fill the water bath at the bottom of the column to a depth of approximately 3.5 inches

   Note 6: Refer to the last bullet of Section 2. Addition of a small amount of soap in the water may break up the surface tension on the water and soften the dust rebound.

9. Lower the bottom of the column into the water approximately 1 inch
10. Place the *DustTrak* device on a pedestal facing the intake tube and attach it to the intake tube using the rubber hose

    Note 7: Ensure rubber hose is almost horizontal. Note that the hose length is not critical.

7. Procedure

1. Carefully open the moisture can (Step 8 in Section 4) and gently mix the sample to achieve a uniform sample
2. Quarter the sample by scoring two orthogonal lines through the sample
3. Place an empty weighing tin on the balance and tare it. Weigh 5 grams of sample (+/- 0.05 g) taking small portions from each quarter until the required 5 grams have been collected
4. Carefully place the sample in the drop cone avoiding contact with the sides of the cone
5. Place the cone on the column and cover with a plastic beaker
6. Ensure that the cone is aligned with the column index marks
7. Zero the *DustTrak* using the procedure outlined in its manual and let it run for one minute

   Note 8: Review the *DustTrak* manual for operating instructions.

8. Set the sample interval to 1 second on the *DustTrak*
9. Set the testing time using these guidelines:
   a. 4 minutes for a treated sample expected to work well
   b. 7 minutes for a sample that is anticipated to have marginal performance
   c. 20 minutes for an untreated sample

   Note 9: It is recommended to program longer time if in doubt and stop the test once background has been reached.

10. Start the *DustTrak* and allow it to run for one minute to obtain a background level. This will be used in the analysis and included in the test report

    Note 10: Do not stop the *DustTrak* before tripping the trap door. If the background level exceeds 0.010 mg/m3 either use a dust filter in the room or move to a space which has a background level below 0.010 mg/m3.

11. Trip the trap door after approximately one minute
12. Allow the test to run until background level value is reached
13. Download the data onto a flash drive to transfer to a computer for analysis

8. Calculations and Data Analysis

1. Import the test data into a spreadsheet
2. Plot *time (sec)* on the horizontal axis and the natural log of *concentration (mg/m^3)* on the vertical axis
3. Print the graph. Figure 2 shows a typical graph
4. Starting at the left of the graph (i.e. at the maximum concentration value, typically 1 to 2 seconds after dropping the sample), draw a best-fit line through the initial linear portion of the graph until there is a break in linearity. This portion of the data represents the rebound phase of the test
5. Starting at the right, draw a best-fit line through the data points that comprise the phase following the initial linear portion of the data set. This portion of the data represents the dustfall phase (if it exists)
6. Find the intersection of the two lines and select the time coordinate closest to the intersection. Note this value
7. Determine the slope of the rebound phase portion of the graph. The linear regression command in the spreadsheet can be used to determine this slope. Note the slope of this best-fit (slopeR)

8. Determine the slope of the dustfall phase portion of the graph. The linear regression command in the spreadsheet can be used to determine this slope. Note the slope of this best-fit (slopeD)
9. Calculate the *mean particle residence time* (T, sec) for the rebound phase as follows: T = 1 / slopeR

Note 11: Alternatively the test data can be imported into the online analysis tool Dust Palliative Calculator found at http://autc.uaf.edu/engineering-tools/ . Follow the instructions provided.

9. Report

Report the following:

1. The type, source, description and classification of the soil tested
2. The type, name, source and concentration of the palliative used, if any
3. The *DustTrak* background level before starting the test
4. The coordinates of the intersection of the two lines (Step 6 in Section 8), to the nearest 0.1
5. The slopes of each line (Steps 7 and 8 in Section 8) to the nearest 0.01
6. The *mean particle residence time* (Step 9 in Section 8), to the nearest 0.1

Note 12: Alternatively print out the test results page of the online analysis tool, if used.

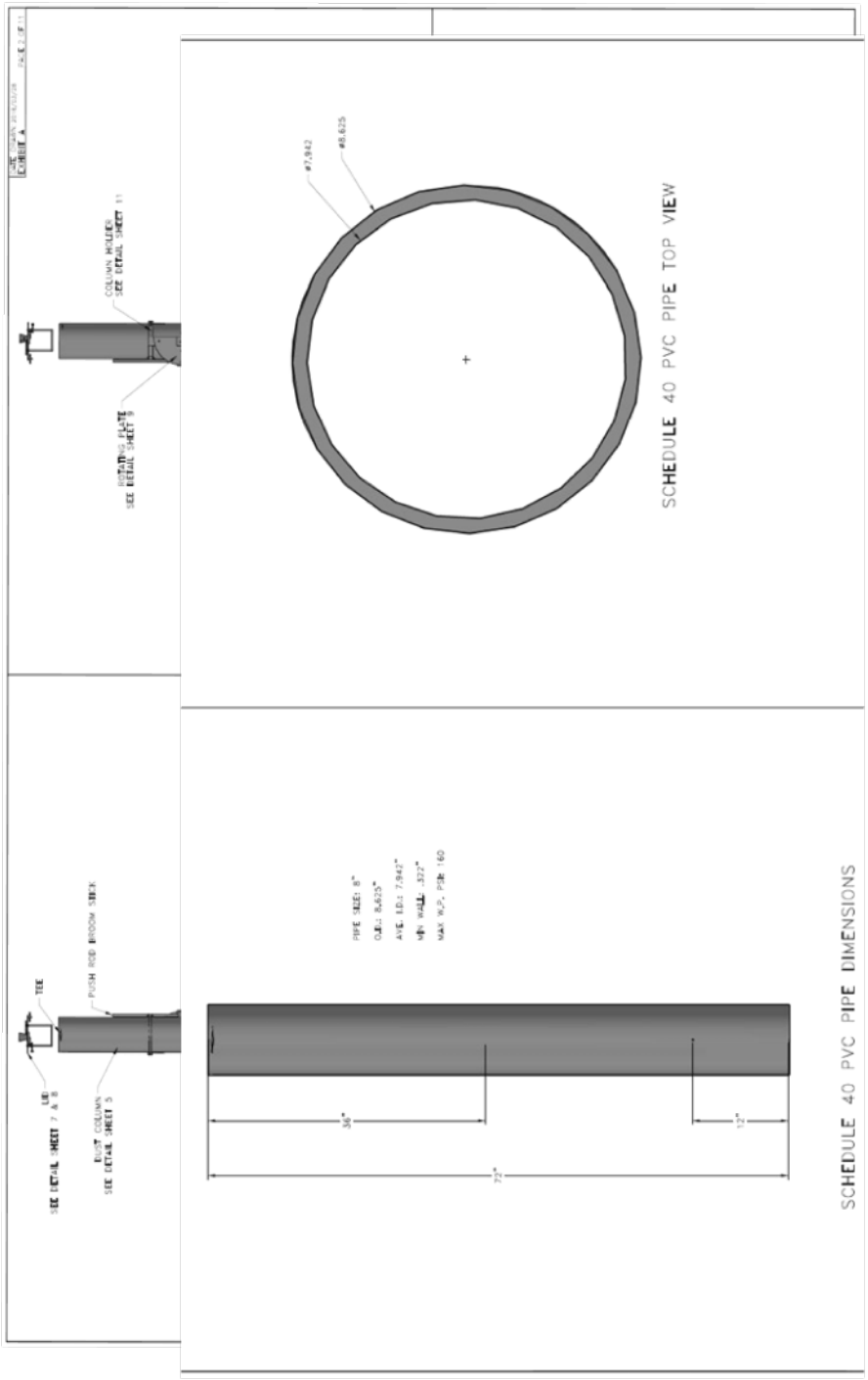

Figure 1
Drawings of the Testing Device.
(All Dimensions in Inches)

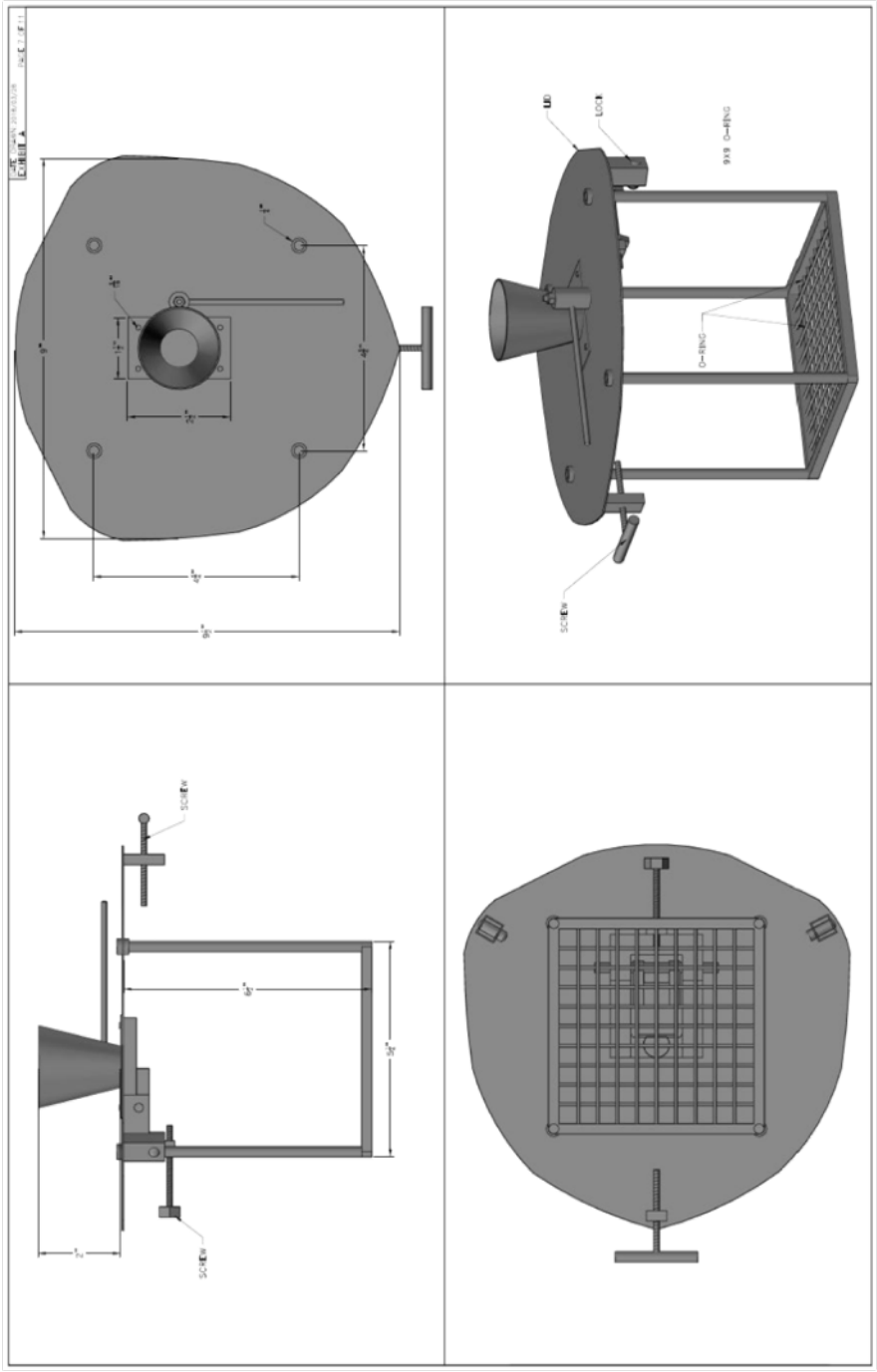

Figure 1
Drawings of the Testing Device
(All Dimensions in Inches)

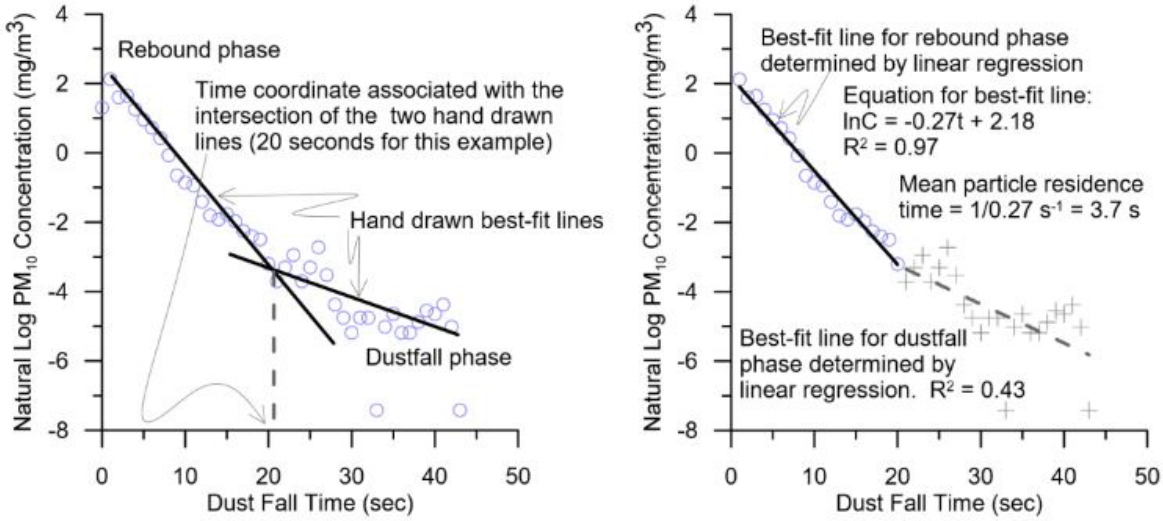

Figure 2
Typical Test Data and Calculation of Mean Particle Residence Time