MMFX2 STEEL
TODAY'S STEEL STANDARD™
ENGINEERING BULLETIN No 2 • JUNE 2012

STRUCTURAL APPLICATIONS USING MMFX$_2$ HIGH-STRENGTH REINFORCING BARS

ASTM A1035 Grade 100 and 120 rebar is an excellent option for reducing construction labor and material cost while enchancing the ease of construction. The following comparison examples utilizing MMFX$_2$ reinforcing steels with a 100 ksi (690 MPa) yield strength demonstrate many potential areas of savings including:

- Reducing rebar congestion
- Improving constructability
- Reducing rebar fabrication
- Reducing project cost
- Easier concrete placement
- Allowing design flexibility

MAT FOUNDATION EXAMPLE

Conventional Design
60 ksi (420 MPa) Yield Strength

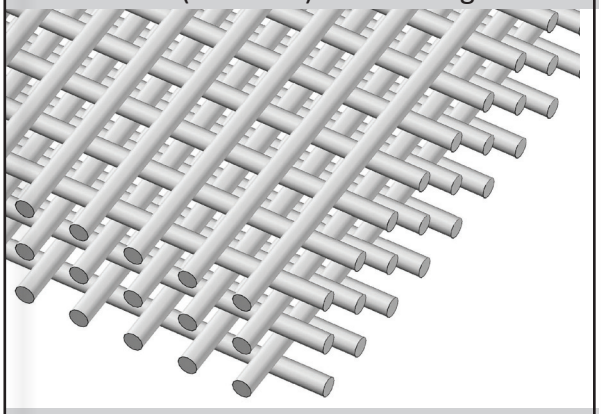

#11 (36 mm) ASTM A615 Grade 60 [420] @ 4" Spacings

MMFX$_2$ Design Improvement
100 ksi (690 MPa) Yield Strength

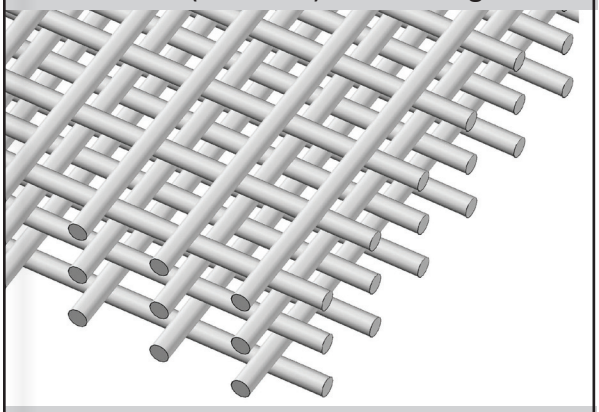

#11 [36 mm] ASTM A1035 Grade 100 [690] @ 6" Spacings

MMFX$_2$ (ASTM A1035) CONCRETE REINFORCING STEELS

Up to 33% Steel Reduction with MMFX$_2$ Reinforcing Bars

Mat Foundation reinforced with MMFX$_2$ bars for a 50-story high-rise in Miami, FL.

STRUCTURAL APPLICATIONS USING MMFX$_2$ HIGH-STRENGTH REINFORCING BARS

SHEAR WALL EXAMPLE

Designing a shear wall jam (vertical) using high strength ASTM A1035 Grade 100 rebar offers significant advantages over conventional A615 Grade 60

- 50% Reduction in Vertical Reinforcing
- Reduced Cross Ties
- Easier Construction

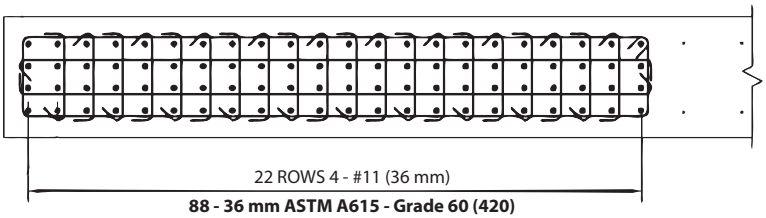

88 - 36 mm ASTM A615 - Grade 60 (420)

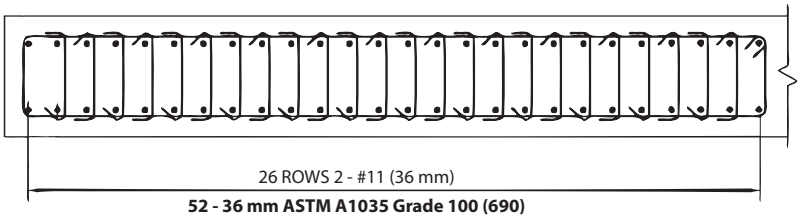

52 - 36 mm ASTM A1035 Grade 100 (690)

DRILLED PILE EXAMPLE

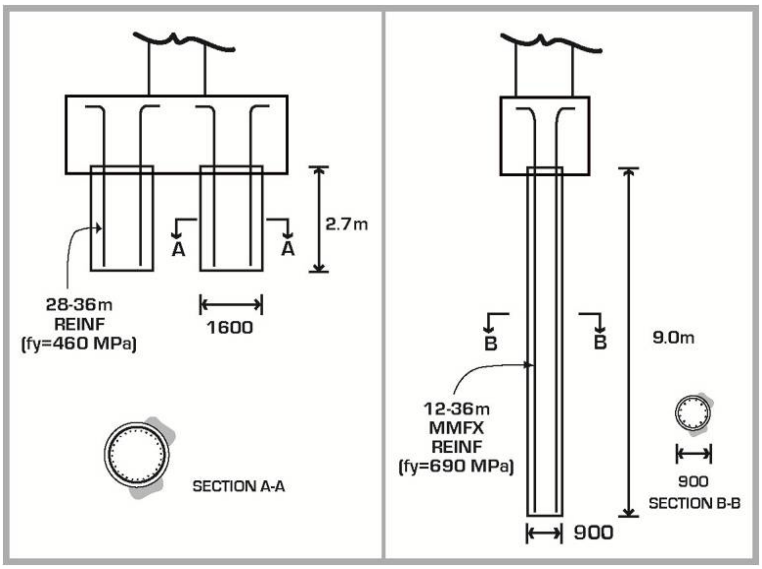

Drilled Piles designed using 100 ksi (690 MPa) MMFX$_2$ rebar lowers drilling time and cost while also reducing construction material requirements

- 40% Less Concrete
- 29% Less Steel

	BASELINE Design	MMFX Design
Pile diameter	1500 mm diameter	900 mm diameter
Reinforcement Grade	Reinf w/fy = 460 MPa	Reinf w/fx = 690 MPa
Reinforcement per Pile	28 - 36M bars	12 - 36M bars
Number of Pile per location	2	1
Length of Pile per location	2.7 m long	9.0 m long
Concrete Volume	9.56 m^3 per location	5.72 m^3 per location
Steel Volume	1.521 x 108 mm^3 per location	1.086 x 108 mm^3 per location