Alaska Department of Transportation and Public Facilities

Alaska Construction Manual

Effective February 16, 2021

Alaska Construction Manual

Effective February 16, 2021

Table of Contents

Foreword and Quick Guide to Alaska Construction Manual

1. Construction Overview 1-1

1.1. Definitions, Terms and Acronyms 1-1

1.2. DOT&PF Organizational Structure 1-5

1.3. Project Engineer/ Delegation of Authority 1-5

1.4. Project Staff – Assignments, Authority, & Training 1-5

1.5. Employee Conduct 1-6

1.6. Federal-Aid Project Oversight Responsibility Agreements 1-6

1.7. Construction Manual Exceptions 1-6

2. Project Funding & Expenditures 2-1

2.1. Project Numbers & Project Account Coding 2-1

2.2. Project Funding & Expenditure Monitoring 2-1

2.3. Federal Funding Agreements 2-2

3. Preliminary Activities 3-1

3.1. Getting Started – Review the Records 3-1

3.2. Prior to Bid Opening 3-2

3.3. Construction Sponsor Force Account Service 3-3

3.4. Bid Opening to Award/Notice to Proceed 3-3

3.5. Contractors Progress Schedule 3-4

3.6. Project Staffing & the Construction Engineering Budget 3-5

3.7. Construction Management Program 3-5

3.8 Preconstruction Conference 3-5

3.9. Partnering 3-7

3.10. Transportation Management Plan (TMP) 3-7

3.11. Stormwater Pollution and Prevention Plan 3-9

3.12. Preconstruction Site Inspection 3-11

4. Field Office Set-Up & Record Keeping 4-1

4.1. Field Office, Supplies, & Equipment 4-1

4.2. Records Systems 4-2

4.3. Records Management 4-3

4.4. Source Documents 4-4
4.5. Materials Certification List (MCL) 4-4
4.6. Qualified Products List (QPL) 4-5
4.7. Degree of Accuracy 4-5
4.8. Disclosure of Records 4-6
4.9. Reference Books/Material 4-6

5. Field Lab Set-Up, Equipment & Record Keeping 5-1

5.1. Field Laboratory 5-1
5.2. Nuclear Testing Equipment and Materials Testing 5-1
5.3. Toxic and Hazardous Substances 5-2
5.4. Materials Tests, Record Keeping & Reference Material 5-2

6. Managing the Staff 6-1

6.1. Project Staff Administration 6-1
6.2. Staff Logistics 6-1
6.3. Authority and Duties of Inspectors 6-1
6.4. Personal Safety 6-2
6.5. Project Safety 6-3

7. Program Administration 7-1

7.1. General 7-1
7.2. External Affirmative Action 7-1
7.3. Labor Compliance 7-3
7.4. Buy American - FAA 7-4
7.5. Buy America - FHWA 7-5
7.6. Alaska Product Preferences 7-5
7.7. FHWA Stewardship Agreement 7-6

8. Contract Administration in the Office 8-1

8.1. Contract Administration – General 8-1
8.2. Subcontract Process 8-1
8.3. Reviewing Materials Submittals & Working Drawings 8-2
8.4. Other Administrative Approvals 8-4
8.5. Construction Progress Schedule 8-4
8.6. Coding, Monitoring Expenses & Reimbursement Requests 8-5

8.7. Recording As-Built Changes 8-5
8.8. Administrative Reviews & Inspections by Others 8-6

9. Contract Administration in the Field 9-1

9.1. Relations with the Contractor 9-1
9.2. Contractor Surveying 9-1
9.3. Contractor's Equipment 9-2
9.4. Legal Loads 9-2
9.5. Site-Specific Hazard Awareness Training 9-2
9.6. Asbestos in Aggregates 9-3
9.7. Airport Construction Safety 9-3
9.8. Highway Traffic Control and Safety 9-5
9.9. SWPPP & HMCP Implementation and Monitoring 9-6
9.10. Oil and Hazardous Materials Reporting Requirements 9-9
9.11. Right-Of-Way Considerations 9-10
9.12. Differing Site Conditions 9-10
9.13. Claims and Disputes 9-10
9.14. Partial Completion 9-11
9.15. Airport Master Record 9-11
9.16 Notices to Airmen (NOTAMs) 9-12
9.17. Environmental Permits and Commitments 9-12
9.18. Nighttime Operations 9-15
9.19 Coordination with Bridge Section 9-15

10. Documenting & Reporting the Contractor's Progress 10-1

10.1. Inspection 10-1
10.2. Directives 10-1
10.3. Diaries, Daily Reports and Photography 10-2
10.4. Measurement of Pay Quantities/Quantity Documentation 10-3
10.5. Construction Progress & Other Reports 10-5

11. Sampling and Testing the Contractor's Work 11-1

11.1. Materials Acceptance 11-1
11.2. Materials Testing Summary & Modifying MSTF Tables 11-1
11.3. Mix Designs 11-2

11.4. Sampling, Testing and Transmitting Materials 11-2
11.5. Dispute Resolution 11-8
11.6. Structural Welding 11-8
11.7. Term Contracts and Job Order Procedures 11-9

12. Contractor Payments 12-1

12.1. General 12-1
12.2. Calculation of Quantities 12-1
12.3. Stockpiled Materials 12-2
12.4. Progress Summary 12-3
12.5. Preparation of Progress Estimate 12-3
12.6. Encumbrance Revisions & Revised PDAs 12-5

13. Contract Changes 13-1

13.1. General 13-1
13.2. Change Order Process 13-1
13.3. Equitable Adjustments 13-4
13.4. Interim Work Authorization 13-4
13.5. Requirements for Professional Seals 13-5
13.6. Supplemental Agreements 13-6

14. Contract Time 14-1

14.1. General 14-1
14.2. Temporary Suspension of Work 14-1
14.3. Seasonal Suspension of Work 14-1
14.4. Extension of Contract Time 14-2
14.5. Liquidated Damages/Incentives & Disincentives 14-2

15. Final Field Construction Activities 15-1

15.1. Final Inspection 15-1
15.2. Additional Work or Corrective Work Remaining 15-2
15.3. Partial Completion 15-2
15.4. Notice of Landing Area Proposal for Airports 15-3
15.5. Navigational Aid Facilities for Airports 15-3
15.6. Project Completion 15-3

16. Project Closeout 16-1

16.1. Project Closeout Overview 16-1
16.2. Contractor's Administrative Requirements 16-1
16.3. Final Estimate Assembly/Final Payment 16-2
16.4. Final Acceptance 16-3
16.5. Engineer's Administrative Responsibilities 16-3
16.6. Final Construction Report 16-4
16.7. Reserved 16-4
16.8. Report on Design Recommendations 16-4
16.9. Report on Claims 16-4
16.10. As-Built Drawings 16-5
16.11. Other Elements of the Final Construction Report 16-5
16.12. Project Materials Certification for Project Closeouts 16-5
16.13. Project Financial Closure 16-6
16.14. Final Federal Reimbursement 16-6
16.15. Record Retention & Disposal 16-7

17. Exhibits - Index, Forms, Letters and Worksheets 17-1

See Exhibits for index of contents.

18. Appendix 1

18.1. Table 1, Project Milestones 1
18.2. Table II, Posting Requirements for DOT&PF Field Offices, All Projects 3
18.3. Table III, Posting Requirements in Contractor Offices 5
18.4. Table IV, Filing System Guide 6
18.5. Table V, Reference Books, Manuals, Polices 7
18.6. Table VI, Field Lab Testing Equipment 9
18.7. Table VII, Materials Sample Identification System 11
18.8 Materials Sampling & Testing Frequency Table for Highways 12
18.9 Materials Sampling & Testing Frequency Table for Airports 12
18.10 Table X, Reserved 12
18.11 Table XI, Reserved 12
18.12 Table XII, Reportable Quantities of Hazardous Substances 13
18.13. Bridges (Reserved) 17

18.14. Earthwork and Drainage 17
18.15. Surveying and Staking 30
18.16. Calculating Equitable Adjustments 56
18.17. Night Work 57
18.18. SCWE Program 58

1. Construction Overview

1.1. Definitions, Terms and Acronyms
1.2. DOT&PF Organizational Structure
1.3. Project Engineer/Delegation Of Authority
1.4. Project Staff – Assignments, Authority & Training
1.5. Employee Conduct
1.6. Federal-aid Project Oversight Responsibility Agreements
1.7. Construction Manual Exceptions

1.1. Definitions, Terms and Acronyms

Terms that are frequently used in the manual are briefly defined below. If there is any conflict between these definitions and definitions contained in the contract, the language of the contract governs.

AAC: Alaska Administrative Code

AC: The FAA's Advisory Circular

ACM: Alaska Construction Manual

AIP: Airport Improvement Program. The program administered by the FAA in accordance with Federal Aviation Regulations and 49 CFR Part 18, Uniform Administrative Requirements for Grants and Cooperative Agreements to State and Local Governments.

AK-CESCL: Alaska Certified Erosion and Sediment Control Lead

AKSAS: Alaska State Accounting System was replaced by IRIS in July 2015.

ALDER: The Alaska Data Enterprise Reporting Data Warehouse is a statewide system designed to integrate and report data from IRIS.

ALP: Airport Layout Plan

American Recovery and Reinvestment Act (ARRA): A federal program that provides stimulus funds to some construction projects.

APDES: The Alaska Pollutant Discharge Elimination System. A DEC storm water discharge permitting system that replaces the EPA clean water act permitting system.

Appeals Officer: The Commissioner of the Department or designee.

APPW: Alaska Products Preference Worksheet

ARFF: Aircraft Rescue Fire Fighting

AS: Alaska Statutes

ATP: Authority to Proceed. FHWA issues the authority for advertising the construction contract for bids.

Bid Tabulation: A certified listing released shortly after the bid opening that shows the three lowest bidders' prices by pay item and total bid, and the Engineer's Estimate.

BMP: Best Management Practices

Calendar Day: Every day shown on the calendar, beginning and ending at midnight.

CFR: Code of Federal Regulations

Change Document: A written order by the Department to the contractor making changes to the contract.

Change Order: A written amendment to the contract covering a modification that is within the scope of the original contract.

Chief Contracts (Procurement) Officer: A person who works statewide for the commissioner on Policy & Procedures, appeals, policy, and guidance.

CIP: Capital Improvement Project

CGP: The Construction General Permit that authorizes stormwater discharges from Construction Activities, issued and enforced by DEC.

CMP: Construction Management Program

CRO: DOT&PF Civil Rights Office

Conformed Contract: The bound contract documents containing the plans and specifications, addenda, the fully-executed contract, payment and performance bonds, EEO forms, and a completed bid schedule.

Construction Engineering (CE): Department management and administration of the contract during construction.

Construction General Permit (CGP or ACGP): The APDES or NPDES storm water permit that

regulates discharges from construction activities. Also see MSGP.

Contracting Officer: The person authorized by the Commissioner of the Department to enter into and administer the contract on behalf of the Department. The project's contracting officer is identified on the Invitation to Bid.

CTAF: Common Traffic Advisory Frequency

CWA: Clean Water Act

D&ES: Statewide Design and Engineering Services Division

DBE: Disadvantaged Business Enterprise

DEC: Alaska Department of Environmental Conservation. Also see APDES.

Deferred-Participating Expense: Expenses on a federally funded project whose eligibility for reimbursement has been questioned by the federal agency, or whose eligibility has not yet been determined.

Department (DOT&PF): The State of Alaska Department of Transportation and Public Facilities

DER: Design Engineer of Record

Directive: A written communication to the contractor from the Project Engineer, enforcing or interpreting a contract requirement or ordering commencement or suspension of an item of work already established in the contract.

DOLWD: Alaska Department of Labor and Workforce Development

EEO: Equal Employment Opportunity

EMT: Emergency Medical Technician

Encumbrance: An amount of money set aside in AKSAS to meet financial obligations to a contractor, consultant, or equipment supplier.

Engineer's Estimate: The estimated unit prices of each contract pay item, developed by the design engineer, which is used to establish the initial funding for the project and is released to the public at the bid opening.

eNOI: The Electronic Notice of Intent to begin construction activity under APDES or NPDES.

eNOT: The Electronic Notice of Termination to end coverage under APDES or NPDES.

EPA: U.S. Environmental Protection Agency. EPA is the federal agency responsible for formulating policies and implementing regulations to maintain water quality throughout the nation.

Employee Safety Concerns Program (ECP): An ECP provides an alternate method for raising safety concerns outside the chain of command. The program is managed by the Statewide Safety Officer and includes a help line. (907) 338-1482.

Erosion and Sediment Control Plan (ESCP): See specifications.

FAA: Federal Aviation Administration. FAA provides a safe, secure, and efficient global aerospace system that contributes to national security and the promotion of U.S. aerospace.

FCC: Federal Communications Commission. FCC is an independent government agency intended to encourage competition in all communications markets and to protect the public interest. The FCC develops and implements policy concerning interstate and international communications by radio, television, wire, satellite, and cable.

FHWA: Federal Highway Administration. FHWA administers a number of highway transportation activities including standards development, research and technology, training, technical assistance, highway access to federally owned lands and Indian lands, and commercial vehicle safety enforcement. FHWA has a significant role, working through partnerships, programs, policies, and resources that facilitate the strategic development and maintenance of state and local transportation systems as effective and efficient elements of the national intermodal transportation system.

Field Engineering Expenses: That portion of CE expenses incurred by the Project Engineer and the project staff.

FOP: Field Operating Procedure

FSS: FAA Flight Service Station

General Scope of the Contract: A phrase used in conjunction with contract changes to define the nature of the original contract and the breadth of the originally intended end product of that construction.

Group Chief/Project Manager (PM): The Project Engineer's immediate supervisor who concurrently supervises several Project Engineers.

HMCP: Hazardous Material Control Plan. The HMCP is integrated into the SWPPP. See specifications.

IDR: Inspector's Daily Report

Interim Work Authorization (IWA): A written order by the Project Engineer initiating changes to the contract, within its general scope, until a subsequent change order is executed.

IRIS: The Integrated Resource Information System is a series of integrated software systems that handle accounting, finance, procurement, payroll and human resources management processes. It includes project financial records.

Liquidated Damages (LDs): An amount contractually stipulated as a reasonable estimation of actual damages to be recovered by the Department if the contractor fails to perform as required.

Manufacturer's Certificate of Compliance: A certificate from the supplied materials manufacturer, which certifies the product meets or exceeds the contract requirements. The certificate must state that the material or assembly fully complies with contract requirements, identify the project name and number, and be signed by the manufacturer. The certificate must accompany each lot of the materials or assemblies delivered to the project.

Materials Certification List (MCL): MCL is a project-specific list developed during the PS&E stage of the design of a highway or airport project that lists all the material certifications required by the contract and the approving authority for the certification. The completed MCL includes materials that have been added by change order with the appropriate approving authority. The 660/661 MCL is a separate MCL for all contracts containing 660 and 661 items in order to comply with the Department of Labor agreement with the Department.

Material Sampling and Testing Frequency (MSTF) Table: A table that lists the minimum frequency of materials sampling and testing.

Materials Testing Summary: A summary of all test reports required and completed for a specific project, based on plans, specifications, the MSTF table, and final pay quantities.

Memorandum of Exceptions: A memorandum by the Project Engineer with concurrence from the Quality Assurance Engineer, explaining any substantial exceptions to the plans and specifications. When a Memorandum of Exceptions is required, it is included with the Project Materials Certification letter.

MS4: Municipal Separate Storm Sewer System. A separate permit required for a municipal storm sewer system to discharge pollutants under an APDES or NPDES permit.

MSDS: Material Safety Data Sheets

MSGP: Multi Sector General Permit, The APDES or NPDES storm water permit that regulates discharges from industrial or commercial sites. Also see CGP.

MSHA: Mine Safety and Health Administration, U.S. Department of Labor.

NHS: National Highway System

NICET: National Institute for Certification in Engineering Technologies

NOC: Notice of Completion, from DOLWD

NOW: Notice of Work, from DOLWD

Non-participating Expense: All expenses on state-funded projects as well as expenses on federally funded projects that are ineligible for reimbursement by the funding agency.

NOTAMs: Notices to Airmen. Information not known sufficiently in advance to publicize by other means concerning the establishment, condition, or change in any component (facility, service, or procedure) of, or hazard in, the National Airspace System (NAS); the timely knowledge of which is essential to personnel concerned with flight operations (FAA Order 7930.2).

NPDES: The National Pollutant Discharge Elimination System is the federal, nationwide, multifaceted permitting program to prevent the pollution of the nation's waters.

NRC: United States Nuclear Regulatory Commission

NTP: Notice To Proceed

OJT: On-the-Job Training.

OSHA: Occupational Safety and Health Administration. OSHA is an agency created to save lives, prevent injuries, and protect the health of America's workers.

Partial Completion: Replaces the term "Partial Acceptance" in future versions of the Standard Specifications for Highway or Airport Construction.

Participating Expense: An expense on a federally funded project that is eligible for reimbursement by the funding agency.

P&P: The Department's Policy and Procedures.

Plans: The Department's contract drawings that show the work. They are supplemented by the contractor's approved Working Drawings.

Project Development Authorization (PDA): An authorization form that establishes the funding for a project or a project phase.

Project Engineer: The authorized representative of the contracting officer, the Project Engineer is in direct charge of the project.

Project Materials Certification: A letter of certification that verifies the materials incorporated into the project conform to the plans and specifications.

Project Materials Report (PMR): PMR may be used to certify off-the-shelf local material purchases and the placement of minor quantities according to the Materials, Sampling & Testing Frequency tables for highway or airport projects (see Section 18.8-18.11).

QC: Quality Control is the contractor's program to ensure that materials and construction meet contract requirements.

QLA: Quality Level Analysis. QLA is used when the specifications require a price adjustment. Price is adjusted for quality of work performed.

QPL: Qualified Products List. A list of materials that meet the Department's standard specifications, except for Buy America and Alaska Agricultural/Wood Products. The Department makes no guarantee that any product on the *Qualified Products List* meets the requirements of the Buy America Act, Buy America Provision, or Alaska Agricultural/Wood Products.

RCCL: Regional Contract Compliance Liaison. The staff person assigned to be liaison between the regional construction branch and the civil rights office.

Regional Construction Engineer: The person in charge of the Regional Construction Section.

Reimbursable Services Agreement (RSA): A contract between the Department and another governmental entity, under which either entity performs contract services for the other, and is reimbursed by them.

RFP: Request for Proposal

RME: Regional Materials Engineer

RQE: Regional Quality Assurance Engineer

Safety Conscious Work Environment (SCWE): An environment where employees feel free to raise safety concerns without fear of retaliation. See Appendix.

SME: Statewide Materials Engineer

Source Document: The original record, created or received at the project site, that contains the necessary measurement and acceptance/rejection information on a contract pay item, and is signed and dated by the author.

SPCC Plan: Spill Prevention Control and Countermeasure Plan. See specifications and 40 CFR 112.

Specifications: The written contract documents that govern the methods and materials the contractor will use to construct the project, and contain the methods of measurement and basis of payment for contract pay items.

SQE: Statewide Quality Assurance Engineer

Supplemental Agreement: A written amendment to the contract covering a modification to the contract that is outside the scope of the original contract.

Support Group: Any unit of the Department, other than the Project Engineer and project staff, that provides support services to the Project Engineer during the construction phase of the project.

SWPPP: Storm Water Pollution Prevention Plan. See specifications.

TAW: Technical Advisor for Welding

Transportation Management Plan (TMP): A plan to manage the work zone impacts of a highway

project. It includes a Traffic Control Plan (TCP), and may also include a Traffic Operations Plan (TOP) and/or a Public Information Plan (PIP).

USCA: The United States Code Appended

Utility: In the usage of this manual, an entity and its facilities that produces/transmits electricity, communication signals, water, steam, sewage, petroleum products, gas, or similar commodity, or is a railroad.

WAQTC: Western Alliance for Quality Transportation Construction

Working Drawings: The contractor's shop drawings, plans, details and diagrams. After the Department approves working drawings, they become part of the contract.

1.2. DOT&PF Organizational Structure

DOT&PF is organized geographically with a Headquarters office in Juneau, and regional offices in Juneau (Southcoast Region), Anchorage (Central Region), and Fairbanks (Northern Region). There are also highway maintenance offices, design offices, marine facilities, airports, and public buildings scattered across the state.

For purposes of construction contract administration, it is important to know who occupies the following positions: the chief contracts officer, the contracting officer, the appeals officer, the Group Chief/PM, and the Project Engineer. The balance of the field crew, the inspectors, and the engineering technicians are referred to as the project staff.

The contracting officer on a given contract is always identified by name on the Invitation for Bids and on the Construction Contract document. The appeals officer is the commissioner of the Department (AS 36.30.625) or their designee (AS 36.30.632).

Shortly after the contract is awarded, the contracting officer will send a letter to the contractor identifying the Project Engineer assigned to administer the contract and the Group Chief/PM who supervises the Project Engineer. The Project Engineer and/or all or a portion of the project staff may be either Department employees or contract employees provided by a consulting engineering firm under a professional services agreement.

1.3. Project Engineer/ Delegation of Authority

The Project Engineer is the Department's key employee in construction contract administration. The Project Engineer, whether a Department employee or a consultant, is the designated representative for the Department who is responsible for the administration of the contract in accordance with the plans and specifications and for the performance of the engineering functions necessary to administer the contract. The contracting officer or designee provides the Project Engineer with a written delegation of authority to administer the contract. That delegation spells out the limits of the Project Engineer's authority and designates the Group Chief/PM who will be the Project Engineer's immediate supervisor. The regional director delegates authority to the Project Engineer to sign the SWPPP and other CGP related documents.

The Project Engineer is the single point of contact between the Department and all other parties associated with the contract. All communications from the contractor should be directed to the Project Engineer, allowing the Project Engineer to deal effectively with the contractor.

1.4. Project Staff – Assignments, Authority, & Training

The Project Engineer and the Group Chief/PM are responsible for developing the staffing plan for a project. When the Group Chief/PM approves the plan, the positions are filled with available staff and in accordance with collective bargaining agreements or as described in a professional service agreement for consulting engineering services. All project staff members should receive written notification of their initial assignment to a project, but notification may be done verbally. The notification should list the Project Engineer as their immediate supervisor, along with the specific staff responsibilities, authorities, and assignments.

The Project Engineer should review new employees' qualifications and the requirements of the assignment; if any job task or safety-related training is needed (AS 18.60.066), it should be arranged before the start of the assignment, if possible. As the Project Engineer or their immediate supervisor familiarizes each new employee with their assignment, they should review the new employee's responsibilities, authority, relationship with their supervisor and other project personnel, and any other information that will make

the new employee better able to perform in the assigned capacities.

1.5. Employee Conduct

Employees should conduct themselves in an ethical, courteous and helpful manner when dealing with the contractor, the public, or other members of the project staff. Rules of conduct apply to all Department employees, including consultant employees.

- The Project Engineer and the contractor must post documents required by law at their field offices.
- See Appendix 18.2 and 18.3 for a list of required documents.

Department policies and Alaska Statutes of interest to employees are available on the web at:

- http://www.dot.state.ak.us/admsvc/pnp/policy_and_procedures.shtml

  (See P&Ps in Sections 2 and 8)
- http://www.legis.state.ak.us/basis/folio.asp

  (See AS 39.25.178 and AS 39.52)

The Department intends to provide a safety conscious work environment (SCWE). Employees should report conditions of work that jeopardize their safety or health, to their supervisor or to the Employee Safety Concerns Program (ECP). Each report filed with the Department will be investigated. No retaliation will occur for raising safety or health concerns. See Section 18.18 for SCWE, and the D&ES website for ECP Manual. Employees may also report conditions to an agency outside of the Department.

1.6. Federal-Aid Project Oversight Responsibility Agreements

FHWA and the Department have entered into a Stewardship and Oversight Agreement. The agreement assigns responsibilities and tasks to the Department or FHWA as outlined. The FHWA Stewardship and Oversight Agreement is posted at:

www.dot.state.ak.us/stwddes/dcspubs/assets/pdf/directives/attach/2015/stewardship_agreement_attach.pdf

The Department will assume these responsibilities under Section 106 of Title 23: for design, plans, specifications, estimates, right-of-way certification statements, contract awards, and inspections/final acceptance of projects. Projects are identified as PoDI, NHS, or Non-NHS Projects.

FHWA's focus will be on emphasizing technical and program assistance. FHWA personnel will conduct reviews on PoDIs (Section 7.7) and may occasionally review other projects. . All project records are open to FHWA, and reports are to be furnished when FHWA requests them.

FAA and the Department used to have an Oversight Agreement, it was rescinded by FAA on April 8, 2014.

The current responsibilities and tasks of the Department or FAA are outlined in Advisory Circulars and Orders, and the grant agreement. For more information use the following links:

- FAA Advisory Circulars: http://www.faa.gov/regulations_policies/advisory_circulars/
- FAA Airports Orders: http://www.faa.gov/airports/resources/publications/orders/
- Airports SOPs: http://www.faa.gov/airports/resources/sops/

There are further discussions on grant requirements for FHWA and FAA in Section 2.3.

1.7. Construction Manual Exceptions

Due to established regional procedures, or variances in project staffing or to the nature of a project; there may be situations where full compliance with the construction manual is either not cost-effective or not practical. In such cases the Project Engineer should document the exceptions in a memo. The memo should be sent through the Group Chief/PM to the Regional Construction Engineer. Regional procedures effecting construction administration should also be documented. The exceptions may not violate federal, state or local law; federal aid requirements; State Policy and Procedures; or D&ES Chief Engineer's Directives.

Project Funding & Expenditures

2.1. Project Numbers & Project Account Coding
2.2. Project Funding & Expenditure Monitoring
2.3. Federal Funding Agreements

2.1. Project Numbers & Project Account Coding

Each federally-funded project has a federal project number or numbers assigned to it; this number relates to the federal funding agreement. An FHWA project number identifies the highway the project is on when a single federal route is identified, and includes a sequential project number for that section of highway. An FAA project number identifies the federal program funding the project, the airport, and includes a sequential grant number for that airport under that federal program. These numbers relate to the project grant, and not to expenditures.

Coding of overhead costs on all Capital Improvement Projects (CIP) changed on July 1, 2001. An Indirect Cost Allocation Plan (ICAP) charge is applied to all capital expenses. ICAP revenue supports the overhead activity within the Department.

Coordinate with regional project control to code project expenditures. See chapters 12.5 and 12.6 for more information about the process of coding project estimates.

2.2. Project Funding & Expenditure Monitoring

Prior to the Department advertising a contract for bid, initial funding is set aside for the construction phase of the project. The amount of funding is based on the Preconstruction Engineer's Estimate of the construction cost, plus a percentage of that estimate for construction engineering (CE) expenses. CE costs typically vary depending on the size, location, and complexity of the project. Also included on federally-funded projects, is enough state-only funding to cover the estimated cost of ineligible construction items plus a small additional amount of state-only funding to cover the cost of ineligible CE items. The total funding available for the construction phase of a project varies by project type, funding source, and the way the project was authorized by the state legislature.

Initial funding is established in IRIS through a document known as a Project Development Authorization (PDA). After the Department awards the contract, this initial funding is adjusted, through a PDA revision, to reflect the awarded contract amount. Subsequent adjustments are the responsibility of the Group Chief/PM and the Project Engineer. Any changes in project costs resulting in an increase or decrease require the preparation of a PDA (request for a) revision.

On federally-funded projects, expenses are divided into two basic categories: participating and non-participating. The federal agency reimburses the Department for a percentage of the cost of all eligible (participating) expenses. The reimbursement percentage is established in the federal funding agreement and varies considerably with the federal agency and the project type. The Department must pay the unreimbursed percentage of eligible expenses (known as state-match funds), as well as the total cost of all ineligible (non-participating) expenses.

Once a construction contract is awarded, the amount of the contract award is encumbered in the accounting system, and referenced to the contractor and contract number. This guarantees that sufficient funds are available to pay the contractor. This is accomplished using an Encumbrance Memo. Each category of funds must be encumbered separately and all funding must be available in the project phase account before the contractor can be allowed to proceed with the work (this applies both to the initial contract and to contract change documents). The Project Engineer and the Group Chief/PM are responsible for encumbering funds as the project progresses, to ensure sufficient funding is available and encumbered to guarantee payment of remaining contract obligations. All contractual obligations (consultant contracts, equipment purchases) and certain vendor stock requests are handled in a similar fashion.

Occasionally the Department may perform work for another governmental agency, or a utility may pay for a portion of the work performed under a Department contract. These outside funding arrangements are set up under Reimbursable Service Agreements (RSAs) or utility agreements. The regional finance unit bills the other agency/utility for the work after the Project Engineer certifies the work has been acceptably performed.

The project control unit designates the Group Chief/PM as the construction phase financial manager for all projects active in the construction phase. This designation makes the Group Chief/PM (or the Project Engineer, as the sub-designee) responsible for maintaining the construction phase financial account in a positive condition at all times. It is critical that both the Project Engineer and the Group Chief/PM closely monitor construction phase expenditures throughout the project to avoid exceeding the available funds. This is particularly important when the project encounters changed conditions or when additional work is contemplated. You can review current project financial information daily in IRIS or through project expenditure reports or special audit trails produced in ALDER. Project expenses will be paid only if sufficient funds are available in IRIS to cover them.

2.3. Federal Funding Agreements

On federally-funded projects, the Department enters into two contracts: one with the federal funding agency and the other with the construction contractor. FHWA and FAA financial programs are set up and monitored differently, but both accomplish the same result– the transfer of federal funds to the Department.

2.3.1 FAA

The signing of the FAA Grant Agreement usually takes place before the construction contract is awarded. The FAA's program consists of individual grants to airport sponsors (the Department is a sponsor). FAA awards grants on a project-by-project basis. The grant program is established/renewed by Congress, usually in three to five year increments, with the program name and emphasis varying.

A single FAA Grant Agreement may involve reimbursement for design engineering, land acquisition, construction improvements and construction engineering (CE); purchase of aircraft rescue and fire fighting (ARFF) vehicles, snow removal equipment, and buildings. The Department could manage each separate item under a separate grant; however, the FAA prefers to consolidate grants. Design engineering is typically included under the same grant with the related construction activity.

The parties to the grant agreement usually sign before the construction contract is awarded. FAA's Airports Division and the Department's Statewide Aviation unit sign the document. In addition to establishing the maximum dollar amount of federal reimbursement, the grant agreement includes a written description of the work items that are eligible for reimbursement. State funds cover improvements not in the grant agreement and the sponsor's matching share.

Amendments to the grant agreement are possible. The Department (sponsor) is limited to fifteen percent in additional funds to cover allowable and reasonable expenses on the project, such as:

- Construction changes
- Claims
- Engineering costs
- Overruns

Justification is required to back up the increased costs. Grant amendments cover changes in grant description and financial concerns. The Project Engineer should be familiar with a signed copy of the grant, the special conditions, and any subsequent amendments.

2.3.2 FHWA

The signing of the FHWA Project Agreement, authorizing the construction phase, always occurs prior to advertising the project for bid. The FHWA's program consists of individually funded agreements, handled on a project-by-project or a phase-by-phase basis. Like the airport grant program, Congress establishes/renews the FHWA funding program in multi-year increments, each bearing a different title and different emphasis. FHWA Project Agreements can fund preliminary engineering (design), land acquisition, construction improvements, construction engineering (CE), and utility relocation all under one agreement or each under a separate agreement.

The Project Agreement that provides the initial funding for the construction phase is usually signed at the same time that the FHWA issues their Authority to Proceed (ATP) for advertising the construction contract for bids. The document is signed by the FHWA's Alaska Division and the Department's Federal Aid unit, both located in Juneau.

Project Information Document (PID) Form: In accordance with 2 CFR 200.210, a Federal-aid project agreement must have an identified period of performance for the scope of work authorized. The period of performance includes both a start and end date, which identifies the period of time when costs can be incurred (work performed) on a project for the authorized scope of work to be eligible for reimbursement with Federal funds. No additional Phase IV costs can be incurred on the project for

federal reimbursement after the Authority to Proceed (ATP) end date.

Construction or Design (depending on regional practices) will submit the PID Form for Phase IV in an electronic program called eWorX. The PID indicates basic project information, scope, and ATP beginning and end dates. See web link: https://portal.eworx.com/

For further information on establishing and modifying ATP End Dates, refer to the FHWA Project Funds Management Guide for State Grants and FAQ's on ATP End Dates at the following respective links:

https://www.fhwa.dot.gov/cfo/projfundsmgta1.cfm

https://www.fhwa.dot.gov/cfo/projfundsmgt_qa.cfm

Following award of the contract, the Department submits a Project Agreement Estimate (the cost of the construction contract plus an additional allowance for the CE) to the FHWA, and the Project Agreement is modified to reflect the contract award amount. The Project Engineer should secure a copy of both the Project Agreement Estimate and the Project Agreement, as well as all subsequent revisions to either, and should become familiar with them. See Section 7.7 for further information.

The FHWA uses a system of Work Type Codes (also known as FA Codes) to track and account for expenditures of their funds. The codes appear on the Project Agreement and subsequent amendments, and must also appear on the Final Estimate. Questions on the proper application of these codes should be directed to the Group Chief/PM, regional project control, or to the FHWA area engineer.

For more information about managing Project Funds, use web link: https://www.fhwa.dot.gov/cfo/projfundsmgt.cfm

This page intentionally left blank.

3. Preliminary Activities

3.1. Getting Started – Review the Records
3.2. Prior to Bid Opening
3.3. Construction Sponsor Force Account Service
3.4. Bid Opening to Award/Notice to Proceed
3.5. Contractors Progress Schedule
3.6. Project Staffing & the Construction Engineering Budget
3.7. Construction Management Program
3.8 Preconstruction Conference
3.9. Partnering
3.10. Transportation Management Plan (TMP)
3.11. Stormwater Pollution and Prevention Plan
3.12. Preconstruction Site Inspection

3.1. Getting Started – Review the Records

The first order of business for a newly assigned Project Engineer is to thoroughly review the contract and become familiar with the project. This holds true no matter what stage the project is in when the assignment is made. From a preliminary review of the contract documents, the Project Engineer should know the scope, location, and type of project and should be able to determine its estimated cost, timing, and general source of funding, as well as the seasonality of the project (winter or summer construction).

The Project Engineer should also obtain and review all of the following documents:

Conformed Contract and Bid Tabulations: Including all paperwork submitted by the contractor prior to receiving the contract, compare the low bidder's/contractor's principal unit prices and overall bid with those of other bidders and with the Engineer's Estimate; check the completion date or contract time.

Design File: Review the design engineer's assumptions and decisions, and gain insight into the whys of the project; obtain any aerial photos used during the design.

Engineer's Estimate: Following a review of the contract, the Project Engineer should compare their own estimated prices with the design engineer's estimated unit prices (the Engineer's Estimate).

Environmental Documents: The Project Engineer should obtain and review copies of the project's Environmental Assessment, Environmental Impact Statement, or Categorical Exclusion and should become familiar with all of the project's environmental commitments.

Federal Funding Agreements: For FHWA-funded highway or marine projects, the Project Engineer shall secure a copy of the Project Agreement, the Project Agreement Estimate, and the Authority to Proceed (ATP) and make certain the project will receive all amendments to the Project Agreement.

On FAA-funded airport projects, the Project Engineer shall have a copy of the Grant Agreement, Application for Federal Assistance, and any Grant Amendments.

Materials Certification List (MCL): The Material Certification List (MCL) is prepared by the Engineer of Record with the assistance of the MCL Coordinator. The MCL lists all materials that require certification and who approves the certification. See Section 4.5 for additional information on the MCL.

Materials Permits: The Project Engineer should secure copies of the permits for each of the projects' designated materials sources, if any, and copies of any royalty agreements and should become familiar with all of the permit stipulations (seasonality requirements, haul route designations/restrictions, fish and wildlife conflicts, overburden disposal, and pit clean-up requirements). Compare the permit stipulations with the contract language to make certain there are no conflicts.

Materials Report: For an in-depth look at the materials investigation, the Project Engineer should: study the materials source test results; check the age (old investigation or fairly recent) of the report and the extent sources were investigated, review sources that were investigated but not included in the design, and compare the materials report's recommendations with the design engineer's final design.

Materials Testing Summary: The Project Engineer, the regional quality assurance section, or the materials unit prepares the project's Material Testing Summary. To create a project-specific Material Testing Summary, combine the contract's specified test methods and estimated quantities with the Materials Sampling & Testing Frequency (MSTF) table for Airports or Highways, published on the Statewide

Materials Website (a web link is in Sections 18.8 thru 18.9). The final Materials Testing Summary is based on final pay quantities (See Section 11.2).

Reimbursable Service Agreements (RSAs): If the project includes work for another agency, review the RSA to determine the scope of the other agency's work and its impact on the work of the prime contractor.

Right-Of-Way Documents: Principal documents include right-of-way plans, airport property plans, right-of-way certifications, airport lease lot drawings, memoranda of agreement regarding encroachments and access to private property. The Project Engineer should review all of these documents relating to the project and compare them to the contract for consistency and completeness.

State Funding Documents: Review the current Project Development Authorization in AKSAS, which contains the exact amounts, sources, and categories of funds that are available for the project.

Transportation Management Plan (TMP): On highway projects review the TMP and identify how it addresses work zone impacts. The TMP always includes a Traffic Control Plan (TCP). The TMP may also include a Traffic Operations Plan (TOP) and/or a Public Information Plan (PIP).

Utility Agreements: If the project involves relocating an existing utility or extending a utility to provide new service, review the utility agreement and determine the scope of involvement, if any, with the agreement; also review the timing and coordination with the prime contractor and the sources of funding for the utility work and/or railroad agreement.

Review and compare these documents to the contract for consistency and completeness.

The Project Engineer should review the plans and specifications and all related documents. The Project Engineer should review the project with the design engineer and airport manager on airport projects. This will allow the Project Engineer to gain needed insight into the design decision-making process, which may provide answers to questions that could arise during the project. The review also opens a channel of communication between the Project Engineer and the design engineer. The Project Engineer should verify the plans with an on-site inspection with the maintenance and operations unit (see Section 3.12).

3.2. Prior to Bid Opening

3.2.1 Constructability Review.

Before the Department advertises the project for bid, the construction unit is given the opportunity to review and comment on the plans and specifications. A Constructability Review (CR) is a design review involving those with construction expertise. When a design review (local, PIH, or PS&E) set is distributed, the Construction Section is responsible for determining the appropriate level of CR and for assigning personnel with adequate construction expertise (depending on available resources). The Group Chief/PM assigned to supervise the project should conduct the review. If the Project Engineer has been selected, that person should also be involved in the review.

The purpose of a CR is to transfer construction knowledge, to ensure the project is biddable and buildable; that the contract documents clearly define when, where, and what work is to be performed; what restrictions exist; and how the contract work will be accepted and paid for.

Additionally, CRs look at:

- Coordination of contract documents
- Construction phasing and scheduling
- Traffic control
- Ease of construction
- Design consistent with field conditions
- Materials availability
- Specifications
- Areas/topics of high risk
- Permits and Environmental Commitments
- Estimate Award to Project Completion Time for bid documents.

Comments from a CR review are handled the same as other plan review comments. CR personnel should participate in plan review meetings as appropriate.

3.2.2 Answering Bid Questions.

If the Group Chief/PM assigns a Project Engineer to the project prior to or in the early stages of the advertising period, the Project Engineer reviews the project records and becomes familiar with the project

against a background of the events described in this and the following section. During the advertising period, either the Group Chief/PM or the Project Engineer may be tasked with responding to bidder's inquiries.

The Project Engineer or Group Chief/PM should keep a permanent record of all contacts made with bidders, suppliers, and subcontractors during the advertising period. The record should include all questions and answers, as well as how the answers were determined. The records should be kept on a telephone call record form, or a similar form, and should be placed in the files. The design unit and the contracting unit will decide whether the answer to one bidder's question is significant enough to the bidding process to make it an addendum to the bid. Prior to the bid opening, the only information on project cost that the Department releases to the public is a range of estimated contract prices. The design engineer's estimate is not made public until bid opening.

3.3. Construction Sponsor Force Account Service

The FAA requires sponsors (the Department) to submit a Construction Force Account Proposal outlining the professional services for administration of the contract. The Force Account Proposal shall include:

- Heading and Introduction
  - Project title
  - Airport Improvement Number
  - Short Description of Project
  - Location
  - Request for approval of force account
- Project Scope
  - Describe nature and extent of force account work
- Justification
  - Describe the benefits to the sponsor and FAA, of using force account instead of competitive bids or negotiated contracts.
- Personnel Qualifications
- Detailed Cost Estimate
- Sponsor's Resources
- Cost Analysis

A detailed Outline for a Force Account Proposal is in Section 17. The FAA requires the Force Account Proposal prior to the contractor starting work. The FAA reviews the Force Account Proposal and must perform a reasonableness-of-cost determination.

3.4. Bid Opening to Award/Notice to Proceed

This subsection is considered informational only. There are no required actions of the Project Engineer.

All bid openings must be done according to P&P 10.02.011.

After the bid opening the Department tabulates the bids. After the bids are certified by the contract officer they are posted on the procurement website.

A confirming letter is sent to the apparent low bidder. The letter requests the following documents to be submitted within five working days:

- Subcontractor List (Form 25D-5) (all projects per AS 36.30.116)
- DBE Utilization Report (Form 25A-325C) (If the project is federally funded and has DBE goals).

If the apparent low bidder is unable to meet the DBE goals (per Form 25A-325C), they must also submit:

- DBE Summary of Good Faith Effort Documentation (Form 25A-332A)
- DBE Contact Reports (Form 25A-321A)
- A Written DBE Commitment (Form 25A-326) for each DBE to be used on the project.

3.4.1 Reviewing Good Faith Effort

On Federally funded projects where the apparent low bidder does not meet stated DBE goals, the Civil Rights Office (CRO) reviews the Good Faith Effort (GFE) documentation. The GFE forms document the bidder's unsuccessful efforts at meeting the DBE goals. The CRO decides either to accept, or not accept the GFE.

If the CRO does not accept the apparent low bidders Good Faith Effort, then the bidder has three days from the date the Department notifies them of this determination to request an administrative reconsideration of the determination. If the bidder doesn't request reconsideration, or their reconsideration is denied, then the Department may award the contract to the next lowest responsive and responsible bidder that meets the DBE goals.

If the contracting officer awards the bid based on Good Faith Effort, then the contracting officer notifies the apparent low bidder that their GFE was accepted in the Letter of Award.

3.4.2 Internal Recommendation to Proceed with Intent to Award

During the five day time period a "Recommendation to Proceed with Intent to Award" memo is circulated with the certified bid results to the Project Manager who is responsible for securing approval from the Section Chief and Project Director, as well as the Project Control official for funding verification. When this form has been approved by all, it is returned to the Chief of Contracts/Contracting Officer, and a Letter of Intent to Award is prepared.

3.4.3 Letter of Intent to Award

The contract section will send a Letter of Intent to Award to the apparent low bidder. For federal-aid funded contracts the following documents (as applicable) are submitted by the bidder within 15 calendar days:

- Corrected Bid Schedule (If Required)
- Bidder Registration (Form 25D-6)
- Contractor's Questionnaire (Form 25D-8)
- Construction Contract (Form 25D-10A)
- Payment Bond (Form 25D-12)
- Performance Bond (Form 25D-13)
- Material Origin Cert. (FHWA, Form 25D-60)
- Buy American Request for Type 3 Waiver (FAA , Form 25D-153)
- EEO-1 Certification (Form 25A-304)
- DOT&PF Training Program (Form 25A-310)
- Training Utilization Report (Form 25A-311)
- A copy of contractor's Alaska Business License
- A copy of contractor's Registration
- Evidence of Insurance

The Letter of Intent to Award triggers the protest period, which is ten (10) calendar days.

3.4.4 Letter of Award, Notice to Proceed and Contract Amount

Once all of the successful low bidder's documents are in order and are approved by the Chief of Contracts, the contracting officer signs the contract and issues a Letter of Award. The successful low bidder then becomes the contractor.

The Notice to Proceed may be issued by the construction section after the Letter of Award is issued, and it has been confirmed that the contractor has electronically submitted the Notice of Work (NOW) to the Alaska Department of Labor.

The amount of the successful low bid becomes the amount of award, and is known as the original contract amount; this amount usually establishes the daily-liquidated damage charge that applies when actual construction time exceeds contract completion time. The daily-liquidated damage charge represents the average daily construction engineering (CE) cost on contracts of this value and is based on analysis of actual CE costs from Department projects.

3.4.5 Additional FAA Requirements

The following documents must be sent to FAA for review, before they will give Concurrence to Award:

- Engineer's Estimate
- Bid Tabulations
- A statement signed by the sponsor that a price analysis was performed and that the sponsor recommends that FAA accept the statement and analysis as evidence of cost reasonableness
- The apparent low bidder's signed Form 25D-159 Certification Regarding Tax Delinquency and Felony Conviction

Submit the following documents to FAA when they are written or assembled:

- Conformed copy of the plans and specifications
- Force account construction proposal
- Construction Management Program (CMP), if applicable (Section 3.7)

3.5. Contractors Progress Schedule

The contract requires that the contractor submit a construction progress schedule to the Project Engineer, before the preconstruction conference. The Project Engineer should review the staffing plan and field engineering budget, and if needed, modify it based on the contractor's schedule.

The contract specifies the type of schedule (CPM, bar chart) that the contractor is to submit. The schedule should break out the construction information into sufficient detail to comply with contract requirements and to make the schedule meaningful for the Project Engineer. The schedule should show beginning and ending dates for the principal items of work, periods of multiple shift work, and periods of anticipated shutdown.

When the Project Engineer finds that the schedule provides all of the required information in a format

that allows them to schedule staffing for the project and to monitor the contractor's operations, they should return a signed copy to the contractor. A copy of the current schedule should be posted in the field office.

3.6. Project Staffing & the Construction Engineering Budget

After reviewing the plans and specifications and other project records, the Project Engineer should have a basic idea of project staff size and should start to develop a preliminary construction engineering (CE) budget. The CE budget consists of two categories of expenses: those that are under the direct control of the Project Engineer (field engineering expenses) and those that aren't (support group expenses).

Numerous groups within the Department, which support the field construction effort, incur expenses that are charged against the project's account; these units are referred to as support groups and include every individual who charges time or expenses to a construction project who is not under the Project Engineer's immediate supervision. Exercise control over the support groups' expenses by requesting, before construction begins, that each support group provide a budget for their group's estimated expenditures. The sample support group budget request memo, shown in the exhibits, lists the majority of the support groups that you should contact. Most of these support groups have a distinct program code or codes (see Section 2.1) to which they charge their expenses; this makes tracking their expenses much easier.

Following the Letter of Award, the project engineer may contact the contractor and find out tentative scheduling and staffing plans. If possible, secure a copy of the progress schedule. This information should allow you to refine the project staffing plan, add more accurate durations to the staff assignments, and refine the field engineering budget. The Project Engineer and the Group Chief/PM should review and coordinate the development of the staffing plan and CE budget.

The Project Engineer should look at the total CE budget amount (support group budgets combined with the field engineering budget) and compare it to the remaining available funds. If the total doesn't exceed available funds, all is well. If the budget does exceed the available funds, ask each support group to reduce their budget, or reduce the field engineering budget, or ask for a CE budget increase. Consult with the Group Chief/PM for budget help if necessary. Any CE expenses exceeding available federal funds must be paid out of state-only funds.

3.7. Construction Management Program

The Department must submit a Construction Management Program (CMP) to the FAA prior to the start of airfield taxiway, apron, and runway construction projects where the federal share of the cost of asphalt and concrete pavement, exceeds $500,000. The CMP shall detail the measures and procedures used to comply with provisions of the construction contract, including but not limited to all acceptance and quality control provisions and tests required by the specifications for subgrade, subbase, base, and surface courses.

The CMP shall include as a minimum:

- Project title and number
- Name of DOT&PF Project Engineer assigned to the project
- Names of testing laboratories and consulting firms with acceptance or quality control testing responsibilities on the project, and a description of the services to be provided, if these responsibilities must be identified
- A statement that construction inspection and material testing is to be performed in accordance with the Standard Specifications for Airport Construction, as modified by the Department and approved by the FAA, for Airport Improvement Program (AIP) construction in Alaska, and documented in accordance with the *Alaska Construction Manual* (Sections 10 and 11)
- Material Testing Summary: The Project Engineer, Quality Assurance section, or the Materials section applies the Materials Sampling & Testing Frequency – Airport Construction Contracts (Section 18.9) to the material quantities in the original contract to make up the summary

The Group Chief/PM and the Project Engineer prepare the plan. The Group Chief/PM submits it to the FAA for review. Receive acknowledgement from FAA prior to the start of construction work.

3.8 Preconstruction Conference

After receiving submittals from the contractor required by the contract, the Group Chief/PM and the Project Engineer should schedule a preconstruction

conference. The meeting should be scheduled around the availability of the Project Engineer, the contractor, maintenance and operations representatives, and the federal agency's engineer. The date and time of the meeting should be arranged verbally with all participants.

The complexity of the project, its location, and the type of work involved determine who should participate in the preconstruction conference. Participants may include the following people or representatives from the following groups:

Usually in attendance:

- Airport manager
- Alaska Department of Labor representative
- Contractor
- Group chief/PM
- Maintenance and Operations representative
- Project Engineer
- Quality Assurance/Materials unit
- Regional compliance officer

Invite as applicable:

- Design engineer, design consultant or naval architect
- Environmental unit
- FHWA or FAA Airports Division
- Major subcontractors (at the prime contractor's invitation)
- Other governmental agencies with direct involvement
- Traffic and Safety unit
- Utilities unit

The contract requires the contractor to provide certain information to the Project Engineer prior to the preconstruction conference. This information usually includes:

- A construction progress schedule
- A submittal list showing anticipated dates of drawing and plan submittals, procurement of materials and equipment, out of state fabrication inspections, and specialty work items inspections
- A list of all the suppliers and the material delivery dates
- A Construction Phasing Plan with Traffic Control Plans for initial phases
- A Stormwater Pollution and Prevention Plan and a Hazardous Material Control Plan
- A Quality Control Plan
- Designation of the Project Superintendent
- Designation of the DBE/EEO officer
- Designation of the Worksite Traffic Supervisor
- Designation of the Safety Officer

The preconstruction conference is intended to serve several additional purposes:

- Provide everyone associated with the contract activity an opportunity to meet and get acquainted
- Set up lines of communication that establish the Project Engineer as the single point of contact for the Department, and the prime contractor as the single point of contact for the prime and all of their subcontractors and suppliers.
- Review state/federal minimum wage rates and payroll reporting requirements; review the timing and procedures of subcontract approval
- Review requirements of the federal EEO programs and state DBE goals that affect the project
- Remind contractor to submit a Notice of Work with DOLWD
- Briefly review important general sections of the contract document
- Discuss the plans and specifications, particularly unusual conditions or requirements, permit stipulations, and load limits
- Discuss materials submittal requirements, including a review of the contract's list or the Project Engineer's list of pay items requiring submittals, the number of copies of each submittal, and the timing of those submittals and of their approval
- Review and discuss the contractor's progress schedule and proposed methods of operation
- Review and discuss the contractor's Traffic Control Plan. The contractor must immediately notify the Project Engineer of any traffic-related accident that occurs within the project limits as soon as the contractor or a subcontractor becomes aware of the accident.
- Review and discuss the contractor's Safety Plan Compliance Document. Discuss how it complies with the airport Construction Safety and Phasing Plan. Discuss the 45 day wait period after filing a Strategic Event Coordination form. Contractors and subcontractors must comply with Notices to Airmen (NOTAMs) issued for any construction activity. The contractor must notify the Department to cancel the NOTAMs when the activity ceases.

- Coordinate contract activities with other affected parties, including maintenance and operations, airport management, airport tenants, air traffic facilities, and security
- Review and discuss the project's environmental documents including borrow permits, wetlands fill permits, and noise abatement requirements.
- Review and discuss the contractor's Stormwater Pollution Prevention Plan and Hazardous Material Control Plan.
- Discuss contractor/subcontractor responsibility for utility locates and Call 811 (if available for project area) before digging.

See FAA Advisory Circular (AC) 150/5300-9A, Predesign, Prebid, and Preconstruction Conferences for Airport Grant Projects.

Prepare an agenda for the preconstruction conference, and provide a copy to each attendee. Also provide a sign-up sheet for each person attending. Record the conference, and furnish copies of the recording to any attendee who requests one. Keep a copy of the recording in the field office. The preconstruction conference can be held as more than one meeting and can be conducted in whatever format the Project Engineer and Group Chief/PM feel best suits their particular project, as long as all topics of importance are covered.

3.9. Partnering

Partnering is an approach to managing a construction project that stresses communication and mutual goals and reduces confrontation and conflict. It is not defined in any contract document nor is it an enforceable part of the contract. The intent of partnering is to establish a cooperative relationship between the Department and the contractor at all levels. The goal is to enhance project cost effectiveness and maintain quality and efficiency by bringing both parties together to solve construction challenges and problems. Projects that incorporate partnering should include an evaluation of the process in the Explanation of Overruns, Underruns, and Change Documents.

Partnering usually starts when the Department approaches the contractor or the contractor approaches the Department, and a request is made to implement partnering on the project. If both agree, they have taken the first step. Partnering is not mandatory but it does require the agreement of all participants.

A professional facilitator may be hired to lead the session, or the session may be held without one. If a facilitator is hired, the Department and the contractor usually share the cost. A change order should be initiated to incorporate the Department's share of the cost into the contract; the FHWA will participate in the cost of partnering, but the FAA will not.

Hold a partnering session before construction begins. Session participants include contractor personnel at various levels, Department construction staff from the project staff up to the group chief/PM, and representatives from the subcontractors. The level of participation can extend to include the contractor's foremen and Department design personnel.

At the initial partnering session, all participants are equally involved and jointly work to develop a partnering pledge. The pledge lists mutual goals and commitments. All participants sign the pledge and agree to abide by it. Through this introduction to performing as a team, the participants start the process of working together toward a mutual goal. It may be necessary to hold a follow-up meeting, but the initial meeting is usually adequate.

There are no firm rules for partnering; the key elements are commitment, equity, trust, development of mutual goals, open communication, implementation, continuous evaluation, and timely responsiveness. The object is to create a spirit of teamwork by working together to avoid or attack mutual problems; the goal is to construct a quality project on time, within budget, and without conflict.

3.10. Transportation Management Plan (TMP)

Policy and Procedure 05.05.015 *"Highway Work Zone Safety and Mobility"* conforms with 23 CFR Part 630, Subparts J and K, Work Zone Safety and Mobility Policy. This P&P describes how to implement a TMP to manage work zone impacts of a highway project.

The TMP includes a TCP, and may also include a TOP and/or a PIP. All three components are required on *significant projects* as determined by Preconstruction and documented in the Design Study Report (See P&P 05.05.015). Neither the TMP nor its three component plans are standalone documents. TMP provisions are included in project plans, specifications, and Department agreements with other parties.

When changes to the TMP are considered, the Project Engineer should consult with stakeholders as appropriate.

Traffic Accident Reporting: Report traffic accidents that occur within the construction limits according to ACM 9.8.

Department Oversight: The Project Engineer is responsible for overseeing TMP components and other safety and mobility aspects of the project. They may delegate to traffic control representatives. Personnel should be trained as Worksite Traffic Supervisors.

Contractor Oversight: The Project Engineer should review the contract to verify if it requires the contractor to assign a certified Worksite Traffic Supervisor for implementing TMP components, and implementing other safety and mobility aspects of the project.

Traffic Control Plan (TCP): Most contracts that contain highway improvements also contain a Traffic Control Plan (TCP) prepared by the Traffic and Safety unit, or by Preconstruction. A Department-prepared TCP may be modified by the contractor to suit its plan of operation.

The contractor must prepare its own detailed TCP if the Department does not provide a TCP.

The TCP should address in general terms how traffic will be maintained through the construction work zone and should include specific plans for controlling traffic through each area and type of construction operation. It should include permanent measures (those in place for the duration of the project or a great part of it) and temporary measures.

TCPs identify traffic control devices to be used and how they should be located and operated to facilitate safe and timely road user transit through a work zone or incident area.

TCPs shall be consistent with the provisions of the *Alaska Traffic Manual* and the work zone hardware recommendations in Chapter 9 of the *Roadside Design Guide (AASHTO).* The TCP shall either be a reference to specific traffic control elements in the *Alaska Traffic Manual,* approved standard traffic control plans, or plans and specifications (see highway spec 643) designed specifically for the project. TCPs also include phased staging and traffic routing plans, where needed.

Before the contractor can use oversize or overweight vehicles within the limits of a highway project, the contractor must submit a TCP that addresses vehicle use and required traffic control measures. (see highway spec 105-1.12 and 643, and Section 9.4)

When the contractor prepares a new TCP or modifies a Department TCP, the contractor must submit the proposed initial TCP to the Project Engineer. The Project Engineer and either the region's Traffic and Safety unit, or the Traffic Control Coordinator of the Construction Unit, will review the submittal. When the TCP is found to be acceptable, the Project Engineer will notify the contractor in writing. Changes after the initial approval will be approved according to Section 9.8.

Public Information Plan (PIP): A communications plan to inform affected road users, the general public, area residences and businesses, and appropriate public entities of project scope, expected work zone impacts, closure details, and recommended action (if any) for drivers to avoid impacts and changing conditions during construction.

The PIP may be designed and managed by the Department, or it may be part of the Contract work. If the PIP is managed by the Department, then the contractor must communicate areas and dates of road work to the Project Engineer in a timely manner so that public notices can be posted.

If the contractor proposes changes to the PIP they are required to submit the proposed changes to the Project Engineer. The Project Engineer will review the submittal. When changes are found to be acceptable, the Project Engineer will notify the contractor in writing. The contractor must notify the public in a timely manner.

Transportation Operations Plan (TOP): A Department plan to minimize project impacts through activities not covered under PIPs or TCPs. In general, these activities consist of coordination with external agencies, events, projects, and other traffic systems. TOP activity may include:

- Plans for on-project enforcement and other activities by external agencies.
- Coordination with other projects to minimize cumulative impact.
- Coordination with agencies that manage signal operations.

- Plans to maintain access for emergency vehicles, school buses, transit, etc.
- Plans to minimize impacts to major traffic-generating events.

Agreements made under the TOP that are not incorporated in project plans or specifications must be retained in project files.

When there is an agreement to provide additional enforcement of traffic laws within the project limits, the Project Engineer or regional traffic control coordinator should coordinate with local law enforcement agencies. Direction to law enforcement may only be given within the terms of the agreement. Provide information such as hours of work, goals/objectives during work, recommendations for areas or locations for increased enforcement presence, and locations that are unsuitable (due to construction activity or safety) for enforcement vehicles. Monitor the hours that local law enforcement agencies work.

When the contractor proposes changes that affect the TOP, they are required to submit the proposed changes to the Project Engineer. The Project Engineer will review the submittal. When changes are found to be acceptable, the Project Engineer will notify the contractor in writing.

3.11. Stormwater Pollution and Prevention Plan

The contractor must prepare a Stormwater Pollution and Prevention Plan (SWPPP) for construction projects that disturb earth or begin with winter construction. The contractor must obtain coverage under the CGP from DEC for projects that disturb one acre or more (and other selected projects). The contractor must prepare a Hazardous Materials Control Plan (HMCP) for all construction projects. The contractor must prepare a Spill Prevention Control and Countermeasure (SPCC) Plan when required by the contract or by DEC. The contractor must prepare and submit the required plans to the Project Engineer according to Highway Specifications Section 641 or Airport Specifications P-641. Timelines for contractor submittals and Department reviews are identified in the specifications.

See Section 9.9 for SWPPP & HMCP Implementation and Monitoring requirements. See Section 9.17 for other agencies permits, environmental commitments, and contractor obtained permits.

3.11.1 SWPPP

Most contracts will include an Erosion and Sediment Control Plan (ESCP) developed by the Department, which addresses identified erosion prevention and sediment control issues. The ESCP addresses issues within the Project Zone, which is where the Department accepts responsibility as a co-operator.

The contractor must use a qualified SWPPP preparer to develop a SWPPP for construction activities within the Project Zone. The contractor is also solely responsible for developing SWPPP2s or Multi-Sector General Permit (MSGP) for areas outside the Project Zone that require stormwater permit coverage. The Department does not review or inspect SWPPP2s or MSGP permits.

SWPPP2s may be required for contractor-supplied waste, material, or staging sites, when the sites are eligible for CGP coverage. In this case, the contractor's declared NOI acreage would be greater than the Department's acreage.

The contractor may also be required to obtain stormwater permit coverage under a MSGP. The contractor is responsible for obtaining all other clearances and permits (see Section 9.17.4).

The SWPPP is based on information from the ESCP, and the contractor's scheduling, workers, equipment, and the CGP requirements. Environmental commitments that are identified in the permits or in the contract should be incorporated into the SWPPP. The HMCP is included in the appendix of the SWPPP.

The SWPPP must follow the format of the DOT&PF SWPPP template, meet the requirements of the DOT&PF SWPPP checklist, and meet contract requirements. It must also address how water quality will be protected in areas within the Project Zone that are permitted by an Army Corps of Engineer Clean Water Act Section 404 permit.

After the contractor submits the SWPPP (and HMCP) to the Project Engineer, the Department has 14 days to review the submittal. Review the SWPPP as soon as possible. The SWPPP is reviewed by the Project Engineer and the regional environmental section (other support resource groups may be required depending on plan complexity and regional policy). Include the design engineer of record if available.

The Project Engineer, the project Stormwater Inspectors, and the Regional Construction Stormwater Specialist must be qualified with a current

certification as an Alaska Certified Erosion and Sediment Control Lead (AK-CESCL), or other acceptable training that meets the DEC CGP requirements for qualified personnel; before they review the SWPPP or perform other SWPPP related duties. For newly employed, transferred or assigned Project Engineers who are not certified as AK-CESCL, they will be considered qualified after completing an interim training course from the DOT&PF training web site, but they must also complete AK-CESCL training within six months.

The Project Engineer will notify the contractor in writing when the SWPPP is found to be acceptable. The contractor and Department must sign and certify the approved SWPPP according to the CGP, Appendix A Part 1.12. This must be completed prior to submitting an NOI and after delegation of authority.

Department Delegation of Signature Authority

The regional director must sign eNOIs and eNOTs, but should delegate signature authority for other documents to the position of Project Engineer and Regional Construction Stormwater Specialist (or other Qualified Delegate) for that project. Use the SWPPP Delegation of Signature Authority for CGP Documents – DOT&PF (Form 25D-107).

The Project Engineer must sign and certify the SWPPP Certification for DOT&PF (Form 25D-109), SWPPP Construction Site Inspection Reports (Form 25D-100) and other CGP related documents on behalf of the Department. These signature authorities cannot be delegated lower than the Project Engineer.

Contractor Delegation of Signature Authority

The contractor's responsible corporate officer must sign the eNOIs and eNOTs, but shall delegate signature authority for other documents to the superintendent assigned to the project. Use the SWPPP Delegation of Signature Authority for CGP Documents - Contractors (Form 25D-108).

The superintendent signs and certifies the SWPPP Certification for Contractor (Form 25D-111), SWPPP Construction Site Inspection Reports (Form 25D-100) and other CGP related documents on behalf of the contractor. These signature authorities cannot be delegated to an authority lower than the superintendent.

DEC authority and filing eNOIs

DEC has authority to permit construction activities, conduct site inspections, and pursue legal action for a project that is out of compliance with the CGP. Regional staff will use the Alaska Pollutant Discharge Elimination System (APDES) NOI electronic filing for obtaining and terminating CGP authorization. EPA retains authority to review DEC and construction projects, and has authority to enforce.

After the Department approves the SWPPP:

- The contractor must submit an electronic Notice of Intent (eNOI) to DEC through the APDES web site, and provide a copy of the signed eNOI and DEC acknowledgement letter to the Project Engineer. The contractor is responsible for paying required fees to DEC.
- The Project Engineer reviews the contractor's eNOI for errors (cross check against other permits). If errors are found, notify the contractor that they must file a NOI modification.
- The regional director will submit the Department's eNOI or paper NOI to DEC. The Project Engineer will send a signed and certified copy of the Department's eNOI and the DEC acknowledgement letter to the contractor.
- After DEC acknowledges receipt of the eNOIs and receives payment, they will post the eNOIs with a "Date Issued" assigned. A project must receive written authorization from the DEC that it is "eligible to discharge stormwater", and may commence earth disturbing activities upon receiving the authorization letter.
- The contractor is prohibited from beginning construction activities until the SWPPP Preparer has visited the site and signed a SWPPP Pre-Construction Site Visit (Form 25D-106).

For more information and to check the status of eNOIs on the Water Permit Search page, use this website:

http://dec.alaska.gov/water/wnpspc/stormwater/index.htm

DEC Review of SWPPP

The contractor must submit the approved SWPPP to DEC for their review when the project disturbs five acres of land or more; or when the project disturbs one acre or more within the Municipality of Anchorage, or

the urbanized area boundaries of Fairbanks or North Pole.

The contractor must submit copies of the signed and certified SWPPP, including all project eNOIs, using delivery receipt confirmation to the DEC stormwater coordinator. The contractor must provide the Project Engineer with a copy of the delivery receipt confirmation within seven days of receiving it.

If DEC responds to the contractor with a review letter, the contractor must transmit a copy to the Project Engineer. The Project Engineer provides a copy to the Department's environmental section. The Project Engineer ensures that the contractor amends the SWPPP as required by the review letter.

The Project Engineer should ensure a copy of the initial SWPPP is retained in the Department's eDocs system within one week of its approval.

For more information, refer to the Department's *Stormwater Pollution Prevention Plan Guide, Construction SWPPP Forms, and Instructions for using Construction SWPPP Forms.* See the statewide D&CS environmental website and D&CS construction website for links to these documents:

http://www.dot.state.ak.us/stwddes/desenviron/resources/stormwater.shtml

http://www.dot.state.ak.us/stwddes/dcsconst/pop_constforms.shtml

DEC and EPA have website links to other publications about BMPs and SWPPP preparation.

3.11.2. HMCP

The HMCP must present the contractor's plans for containment, cleanup, and disposal of all hazardous materials used or hazardous waste generated on the project, including petroleum products and hazardous substances. See the specifications and SWPPP Hazardous Material Control Plan Template on the D&CS Construction Forms page, for information on preparing a project specific HMCP.

HMCP Template Link:

http://www.dot.state.ak.us/stwddes/dcsconst/assets/docs/constforms/hmcp_template.doc

After the contractor submits the HMCP to the Project Engineer, the Department has 14 days to review the submittal. Review the HMCP as soon as possible. The HMCP will be reviewed by the Project Engineer, and the regional environmental section. When the HMCP is found to be acceptable, the Project Engineer will notify the contractor in writing.

3.11.3. SPCC Plan

See highway specifications 641-2.03 (airports P-641-2.3) for SPCC plan requirements (for greater than 1,320 gallons of above ground petroleum storage such as oil, gasoline, diesel fuel, liquid asphalt products, and oil based paints).

The contractor may be required to submit the SPCC Plan to the Project Engineer, but no approval is necessary. The Department reserves the right to review and ask for corrections to the SPCC Plan, and require a resubmittal of the document. For additional information refer to the following web site:

http://www.epa.gov/emergencies/content/spcc/index.htm

3.12. Preconstruction Site Inspection

After the award of the contract, and prior or concurrent with contractor mobilization at the site, the Project Engineer should make an on-site inspection with a Maintenance and Operations (M&O) representative. During the visit, review the project scope and timing with M&O and have them explain what they expect to gain from the project and how the facility should be maintained during construction. Once the contractor begins work on the project, the terms of the contract dictate when maintenance becomes the contractor's responsibility.

The Project Engineer should document all site conditions prior to the start of construction using a video or still camera. Pay close attention to the maintained condition of the facility and of all Department-furnished materials sources. Following the inspection, the Project Engineer should prepare a memorandum, from the Group Chief/PM to the regional M&O head. The memo should give the projected date that the contractor will start construction and assume maintenance responsibilities on all or part of the facility. If maintenance responsibility is assumed by the contractor incrementally, the Project Engineer should advise the M&O representative of the contractor's schedule. The memo should also include the names and phone numbers for the Project Engineer, the Group Chief/PM, the contractor's worksite traffic safety supervisor, and the project's M&O representative.

This page intentionally left blank.

4. Field Office Set-Up & Record Keeping

4.1. Field Office, Supplies, & Equipment
4.2. Records Systems
4.3. Records Management
4.4. Source Documents
4.5. Materials Certification List (MCL)
4.6. Qualified Products List (QPL)
4.7. Degree of Accuracy
4.8. Disclosure of Records
4.9. Reference Books/Material

4.1. Field Office, Supplies, & Equipment

Not all projects are administered out of a field office. For those that are, selecting, locating, and equipping that office is the first chore facing the Project Engineer and the project staff when they move to the project site. In some cases, one or more of these decisions may already have been made for the Project Engineer by the contract: the office and some of the furnishings may be provided by the contractor or by an engineering consultant. Field offices come in all sizes and shapes and may be owned or rented by the contractor, by an engineering consultant, or by the Department (depending on the terms of the contract).

The field office should be located at a site acceptable to the Project Engineer, convenient to the project as a whole, and accessible to persons covered under the Americans with Disabilities Act. A sign located near the entrance should identify the office. If access to the office is not direct, additional signs should be installed to assist the public in locating it. At rural project sites where the office is readily identifiable or the location of it is commonly known, signing is not necessary.

If the contractor or an engineering consultant provides the field office, the contract or professional services agreement establishes its size and the basic furnishings and utilities that are provided. Any remaining furnishings and office equipment are the responsibility of the Department. If the Department provides the field office, the Project Engineer is responsible for securing all of the furnishings and office equipment. In each region, the Project Engineer and Group Chief/PM should review that region's standard list of equipment and supplies needed to equip the field office, and should modify it to suit the needs of their particular project.

The Department will usually be able to supply basic office furnishings and equipment such as desks, chairs, file cabinets, a computer, and copy and fax machines; the Project Engineer must sign for each piece of equipment received from the Department, and it will be added to the Project Engineer's inventory. The contractor must purchase all expendable supplies and any additional equipment or furniture needed. While the Project Engineer's purchase authorization limit varies from region to region, general purchasing and stock request procedures are detailed in the Departmental Procedures (DPDR 10.01.021). To properly prepare and submit Stock Requests (Form 02-303), the Project Engineer must also be familiar with the project's financial account coding system (Section 2.1).

The field office should have a first aid kit equipped commensurate with the size of the project staff and the type of hazards the staff will be exposed to. Depending on the type of project and the funding source, the Project Engineer is responsible for displaying a number of posters at the field office. The specific posting requirements are shown in Table II in the Appendix. Workplace and safety posters should be attached to a wall or bulletin board that is accessible to staff. Posting for the Department is only required at one location on a project site, even when there are multiple offices or buildings.

If the field office and project vehicles are equipped with radios, the Project Engineer and staff shall know basic phraseology and techniques; see chapter four, section two of the *Aeronautical Information Manual*, a link is provided on the DOT&PF Construction web site. This applies when communicating with FAA Flight Service Station, Tower personnel, or aircraft. Also, see FAA Advisory Circular (AC) 150/5370-2 Operational Safety on Airports during Construction.

Several Department Policy & Procedure's have application to the field office and are available on the web for reference: P&P 02.01.050 Use of State Telephones, Fax Machines, Computers & Other Office Technologies; also the P&Ps 10.03.010 Procurement, Maintenance, and Control of Surveying Instruments, P&P 10.03.010 Property Control and P&P 10.03.030 Salvaging and Destroying Structures.

The following link will bring you to P&Ps:

http://www.dot.state.ak.us/admsvc/pnp/policy_and_procedures.shtml

4.2. Records Systems

To fulfill their contract administration responsibilities, the Project Engineer and project staff are responsible for establishing and maintaining a system of accurate and complete records covering all project activities. These records must substantiate the acceptability and the quantity of the contractor's work and certify the disbursement of funds. In addition to covering quality, quantity, and payment, project documentation must cover all of the important administrative matters including contract modifications (time, money, and contract language), differing site conditions and their resolutions, and contractor compliance with all of the administrative aspects of the contract (labor and payroll, DBE, EEO, origin-of-manufacture requirements). The importance of developing and maintaining proper records is basic to successful construction contract administration.

The records system is the general framework within which project staff store the documents generated by contract administration. You must tailor it to meet the needs of each project. On any given project, some elements of that system may be used hardly at all, while others will be developed extensively; the extent and direction of development is largely a matter of the Project Engineer's judgment. For the system to be effective, project records must be sufficiently clear and complete and must be filed in such a manner that they are readily accessible, either manually or electronically.

The records system for each project should include the basic elements shown below; acceptable formats are covered in greater detail in Section 4.3 and contents are covered in Sections 10.3 – 10.5:

Master Index Book or File: A listing of all project records.

Engineer's Diary: An electronic diary, or a bound or loose-leaf book, or inspector's daily reports.

Progress Documentation: Inspector's daily reports, specialized daily reports, field books, and supporting data.

Progress Summary: An Estimate book or estimate files.

Progress Payments: Estimates, quantity calculations.

Reports: Weekly or semi-monthly project construction reports; intermittent program reports on OJT, safety, and labor programs; inspection reports received from the contractor and from other agencies – SWPPP reports, US Coast Guard, American Bureau of Shipping; geotechnical reports; accident reports.

Photographic Records: Photo albums and/or video tape files.

Project Files: This should contain project correspondence; contract documents and changes; materials submittals, certifications, and test results; federal reimbursement agreements and payment information; construction progress schedules and revisions; contractor prepared plans; design and project development data; materials and environmental permits; administrative files; in addition to the above listed items.

Full-size drawings: For as-built markup.

You must tailor the format and scope of the record keeping system to the needs of a project and the size of the project staff. As soon as you have determined the documentation requirements for a project, you should set up the files, books, and indexing. On a smaller project, the Project Engineer usually sets the system up and together with the project staff they jointly maintain the system. On a larger project one project staff member is usually assigned the field office management duties.

All project records, both loose-leaf and bound book, should be listed in a master index, either in a bound book, an index file, or a computer file; the records include all contract documents, engineering drawings, materials reports and test results, bound books, project files, and photographic records. This index book or file serves as the master index for all project records both during construction and after the project is completed.

The purpose of a filing system is to organize loose project records in an orderly manner, so that you can retrieve any record without delay. The project filing system, which organizes all of the above material, should be set up along logical lines; a guide format that subdivides the files into six sections is shown in Table IV in the Appendix. All of the basic sections outlined in Table IV should be present in the filing system, regardless of the format you follow. The specific files required for any project will depend on the nature of the project and there should be enough files to create an efficient, easy to use system. Once established, you must keep the filing system current throughout the project.

In addition to all of the half-size plans that the project inherits from the bidding process, the Project Engineer should obtain several sets of full-size plans also. One of these sets should be set aside in the field office for recording all of the as-built changes made to the project during construction; if regional policy allows, you can record as-built changes on half-size plans, if you can record them accurately.

Accomplishing these organizational steps prior to the start of construction will make it much easier to document the work as it is being performed. It will also allow you to spend more time at the primary job of assuring that the project is constructed in accordance with the contract.

4.3. Records Management

Records developed during the course of the project consist of both loose leaf records (which may be hand written, typed, or computer-stored, and which may include the Engineer's diary, inspector's daily reports, specialized daily reports, photographic records, materials test results, correspondence, progress summary, progress payments, change documents, construction progress reports) and bound book records (hand written records which may include the Engineer's diary, inspector's daily reports, specialized daily reports, field books, progress summary). All project records, particularly loose-leaf records, must contain the project name and project number for identification purposes.

Project records are used to support payments to the contractor to determine the acceptability of materials, verify conformance of the work to the contract, develop a record of the completed project, and, on federally-funded projects or under reimbursable agreements, substantiate the eligibility for reimbursement of construction phase expenses. On contracts with multiple projects or funding sources, the project records must account for the separation of charges to each project or source.

Computers may be used to record and store the records of project progress. The master index, as well as the Engineer's diary, inspector's daily reports, and the Construction Progress Report all may be prepared on a computer and the records stored in computer files. Computers may also be used to calculate quantities and prepare progress estimates, prepare change documents, calculate and prepare materials test results and reports, and prepare general project correspondence. Computer-generated forms may be used in place of any form listed in this manual as long as the computer form contains the same information, in the same or in a different format, and maintains the essential integrity and legal requirements, if any, of the original form.

Computer records used as source documents must be either:

- Printed, signed and dated by the person creating the record, or
- Electronically signed and dated, with the data stored in a non-rewritable electronic archiving system kept in a secure area.

All documentation recorded on a computer bank must be downloaded onto data storage devices for backup and storage no less frequently than once each week; depending on the volume of data being generated on the project, more frequent backup may be advisable.

Loose-leaf records may contain field notes, calculations, transcriptions of audiotape records (such as the Engineer's diary or the minutes of meetings), and other information necessary to document the progress and acceptance of the work. Project name and number must identify each loose-leaf record. Signature and dating requirements vary for loose leaf records, depending on the type of record: calculation sheets and records serving as pay quantity source documents must be signed and dated by both the author and the checker, if applicable, on the front page with initials and dates used on subsequent pages. If it is necessary to change an entry on any written project record, the original entry should lined out and initialed, and the corrected entry made immediately following the incorrect entry.

Bound book records may contain survey measurements, field notes, staking data, calculations and other information necessary to document the progress and acceptance of the work. Certain Department forms may also be available in bound book form, as well as loose-leaf form, including inspector's daily reports and scales diary forms. The number, type and content of field and computation books will vary with the type of project. Each book should have its own index on the first pages, and each project staff member making entries in a book should print and sign their name and initials near the front of the book. The pages in bound books should be numbered as they are used, for ease in cross-referencing the contents. Calculations made in bound

books must be initialed and dated by both the person who calculates and the person who checks. If it is necessary to change an entry on any written project record, the original entry should be lined out and initialed, and the corrected entry made immediately following the incorrect entry.

Photographic records are another form of loose leaf record and include both still photos and video tape, taken from the ground or from the air. The photographer should record the date, time and location of each photo/film segment taken, and should record that information on the back of each still photograph before the photo is placed in the project album. Video segment filming information should be referenced to the tape and tape segment and kept in the project files. Negatives from still photographs should be cross-referenced to the photos in the album for ease in obtaining duplicate prints.

The Project Engineer must maintain a **progress summary**, in the form of an estimate book or estimate files, to tabulate the quantity of work completed on each pay item for each estimate. This record shows how each pay item's quantity was derived (calculated or estimated) and must provide an audit trail back to the source document measurements that were used to establish the quantities. It can be set up as shown in Section 12.4.

4.4. Source Documents

The source document is the basis for determining that work on a pay item has been acceptably performed and is eligible for payment. To be complete and valid, the source document must:

- Identify the project by name and number;
- Identify the pay item, the quantity of the pay item or material inspected, and the location of the installation or placement;
- Be made on the site at the time an item is manufactured, fabricated, or inspected, by the person taking the action;
- Contain a validation statement, indicating that the item substantially conforms to the plans and specifications and was incorporated into the project;
- Be dated and signed by the person creating or receiving it.

A person's initials, printed or typewritten name, electronic (digital) signature, or handwritten signature, are all considered acceptable ways of signing. The contract, ACM or Department forms, may be more specific about signature requirements.

Source documents that are used in determining contract quantities may include materials certifications, field notes, calculations, receipts, invoices, weigh tickets, daily load count or time equipment records, survey measurements, and reports.

You should never destroy an original source document; if you must replace one (to clarify the information or to correct an error), you should line out the original information and label it as original, and label the replacement as a copy. Cross-reference and retain both documents in the project records; add an explanatory note to the original record along with the date and the signature of the person making the change.

4.5. Materials Certification List (MCL)

The contractor must submit certifications, or quality testing must be completed, for all the materials incorporated into the project.

A Materials Certification List (MCL) is a listing of all the material certifications required by the contract, and identifies which positions in the Department can review/approve their use.

Non project specific MCL master documents are available from the D&ES Statewide Materials website.

A project specific MCL should be developed by the Engineer of Record during the final PS&E stage of the design of the project, or it may be developed by construction staff.

The contractor submits material certifications for approval to the Project Engineer, who will approve the material certification or transmit it for approval to the position designated in the MCL. The position that reviews/approves each submittal is identified in the unshaded box corresponding to the appropriate item.

If the contractor submits a material listed on the Qualified Products List (QPL), the Project Engineer must indicate in the appropriate cell on the MCL the manufacturer and model of the material.

If the material submittal by the contractor does not match the material required in the contract, the Project

Engineer must contact the Engineer of Record or the Project Manager to get approval for the material.

If the Project Engineer adds materials by change order, then the new materials must be added to the MCL with the appropriate approval level.

After acceptance of the material, the Project Engineer will fill out the MCL with the date of approval, manufacturer, model number, and the file location of the material certificates.

A sample of the Master Materials Certification List can be found in Section 17.

4.6. Qualified Products List (QPL)

The Qualified Products List (QPL) identifies products that meet the Department's standard specifications. The QPL is populated and maintained by the Statewide Materials section. Access the QPL at this web address:

http://www.dot.state.ak.us/stwddes/desmaterials/qpl_intro.shtml

The QPL provides information on the product; contact information for the manufacturer/supplier, and independent verification of the product's conformance with standard specifications.

The Project Manager or Project Engineer must print a copy of the QPL (revised monthly, kept on file at Statewide Material website) that corresponds to the day of Bid Opening. Products may be added to the QPL after this date and the product can be used on the project if it meets contract requirements.

When products are listed on the QPL, the Project Engineer can approve submittals of catalog cuts or invoices instead of requiring a manufacturer's certificate of compliance.

Products on the QPL do not consider or address compliance with Buy America, Buy American, or Alaska Agricultural/Wood Products. The Project Engineer must verify compliance or non-compliance with the appropriate contract requirements. Verification will include examining the contractor or supplier signed:

- Certificate of Buy America Act Compliance, Form 25D-62 and associated material documents (for FHWA funded steel and iron products)
- Material Submittal for Buy American Compliance, Form 25D-154 and associated material documents (for FAA funded steel and manufactured goods)
- Alaska Products Preference Worksheet, using APPW Form (for agriculture/wood products on 100 percent state funded projects)

Special provisions may modify product requirements so that products listed in the QPL do not meet the modified contract requirements. The contract provisions and federal regulation take precedence over the QPL.

Use of the QPL does not guarantee the approval of, or appropriateness of a product for a given project or application. The contractor must request and receive approval from the Project Engineer before incorporating a product into the project.

Products that perform unacceptably in the field, or are found to be non-compliant with standard specifications, may be removed at any time from the QPL. The Project Engineer must notify the Statewide Materials Quality Assurance Engineer of any product on the QPL that is found to be non-compliant with the standard specifications or that performs unacceptably in the field.

A product that was listed on the QPL on the day of Bid Opening and later removed; may still be used on the Project if it meets contract requirements. Discuss with Statewide Materials the reasons for product removal. If the product hasn't been ordered yet, discuss purchase of equal products with the contractor.

4.7. Degree of Accuracy

The degree of accuracy used in making field measurements, in performing quantity calculations, and in measuring and calculating materials test results should be consistent with the contract requirements, construction methods, and good engineering judgment. You should determine the appropriate degree of accuracy to use in each situation before construction is started.

Measurements and calculations should be rounded off according to the following rules:

- Determine the last digit needed for the required degree of accuracy.

- If the digit following the last needed digit is 4 or lower, drop it.
- If the digit following the last needed digit is 5 or greater, drop it and add 1 to the last needed digit.

Measurements for pay quantities should be made only to the number of decimal places that can be determined with reasonable accuracy, using conventional and commonly used measurement methods; such measurements should be consistent with the value or price of the pay item being measured. Pay quantities and materials test results should be calculated to a degree of accuracy consistent with the measurements. This would normally mean calculating to one less decimal place than the least accurate measurement taken; however, when more than one calculation is necessary to obtain the final answer, all intermediate results should be carried out to one decimal place more than is necessary is the final answer. The following table may be used as a guide in taking measurements and in calculating quantities:

BID PRICE/ UNIT	SIGNIFICANT DECIMAL/ MEASURED UNIT	SIGNIFICANT DECIMAL/ CALCULATED UNIT
< $10	0.1	1
$10 - $99.99	0.01	0.1
$100 - $999.99	0.001	0.01
> $1000	0.0001	0.001

4.8. Disclosure of Records

All project records are available for review by the contractor and the public (under AS 09.25.110 – AS 09.25.220), except for personnel files, labor compliance interviews (Section 7.3), and correspondence between the Department and their attorneys that is marked CONFIDENTIAL – ATTORNEY CLIENT PRIVILEGE. Attorney client privilege correspondence should be kept in a separate file to make its inadvertent release less likely. The Project Engineer should keep a record of all requests to review the project records and should coordinate all reviews in advance with the Group Chief/PM.

After completing the project, transfer records for long term storage according to Section 16.15.

4.9. Reference Books/Material

The Project Engineer should equip the field office with a small library of reference material that may be useful to the project staff during construction. Table V in the Appendix contains a list of both required and recommended reference material for the field office, along with a list of reference material that should be available in the regional office. Some books and safety guides are required by AS or CFR, to be kept on hand in certain offices; other reference material is applicable only to certain types of projects.

5. Field Lab Set-Up, Equipment & Record Keeping

5.1. Field Laboratory
5.2. Nuclear Testing Equipment and Materials Testing
5.3. Toxic and Hazardous Substances
5.4. Materials Tests, Record Keeping, & Reference Material

5.1. Field Laboratory

The field laboratory is set up at approximately the same time as the project office. As is the case with the field office, the contractor, the Department or a consulting engineer fir may provide the lab. In the first two situations, all laboratory test equipment and most or all of the furnishings are the responsibility of the Department; in the latter case, the terms of the professional services agreement detail what the consultant provides. The Department should have on hand all of the materials test equipment that it is responsible for providing. Any expendable supplies or additional equipment will have to be purchased by stock request. Information on this process is shown in Section 4.1.

The field laboratory may be located adjacent to the field office, or at any site that is close to the contractor's materials production operations. Once the field lab is set up, the regional quality assurance/materials unit should inspect it. The field laboratory should have an industrial first aid kit, tailored to the particular chemicals and hazards that the project materials staff could be exposed to. If hazardous materials are present in the field lab in quantities equal to those specified in AS 29.35.500(c), appropriate placards must be prominently displayed on the lab building (13 AAC 54.020). Materials Safety Data Sheets (MSDS)/Safety Data Sheets (SDS), OSHA Form 20, (AS 18.60.067) should be available for distribution for each applicable substance.

5.2. Nuclear Testing Equipment and Materials Testing

The extent to which a field laboratory is equipped depends entirely on the scope and size of the contract. A small rural project, with only a few pay items that require testing, does not require a laboratory equipped to the degree that a major urban project's laboratory is equipped. As an aid to the Project Engineer in equipping the field lab, Table VI in the Appendix contains three lists of testing equipment for various types of projects (an earthwork project, an asphalt paving project, and a project with concrete work). These lists are guides only, and the Project Engineer and Group Chief/PM may modify them to suit the needs of the particular project. If the Department is unable to provide the needed supplies and equipment on the lists, the Project Engineer should obtain them through the stock request procedures outlined in Section 4.1.

Most projects containing earthwork or asphalt involve the use of nuclear testing equipment. The SRSO has overall responsibility for the safety and security of the nuclear testing equipment, in accordance with the U.S. Nuclear Regulatory Commission (NRC) license. Nuclear testing equipment is issued only to project staff members who have received required training and have been approved by the RRSO. Each project staff member who will work with nuclear moisture/density gauges or nuclear asphalt content equipment must receive training /certification (AS 18.60.066 and 10 CFR 19.12) in the safe use, care, and storage of this equipment, and be authorized by the Regional Radiation Safety Officer (RRSO), before they will be permitted to use it.

Nuclear testing equipment must be handled in a manner that will prevent project staff and members of the public from radiation exposure in excess of regulatory requirements (10 CFR 20.1301). Dosimeters must be worn at all times by staff members who are transporting, operating, or working with any nuclear testing equipment. The Radiation Protection Program governs the availability and control of dosimeters. The RRSO is responsible for implementing the Alaska Radiation Protection Program in their region.

Personnel who are not wearing a dosimeter should stay 5 feet or farther away from the nuclear testing equipment.

Nuclear testing equipment must be kept locked when not in use, and kept in a qualified locked storage area, that has a detailed radiation survey (10 CFR 20.1302) posted, and approved by the SRSO. Nuclear testing equipment must be stored in a weatherproof, heated, and ventilated storage shed. The building must be located and approved by the RRSO and should be at least 15 feet away from occupied areas. The shed shall be installed before a nuclear gage is allowed on the

project. The storage unit must be secure, have a lockable entrance door (3' x 6'8") and all keys shall be surrendered to an authorized nuclear gauge user to control access.

The nuclear testing equipment storage area must have postings that are visible to the employees as they go about their licensed activities. Postings must include:

1. The license, license conditions, or documents incorporated into a license by reference, and amendments thereto
2. Any notice of violation involving radiological working conditions, proposed imposition of civil penalty, or order issued, and any response from the licensee
3. NRC Form 3
4. A notice describing 10 CFR 19, CFR 20 and the Radiation Protection Program Manual and where they may be examined (10 CFR 19.11).
5. SCWE/ECP Poster

When nuclear testing equipment is being transported, including within the project site, documentation required by the NRC must accompany the equipment. Further information on NRC regulations can be obtained from the RRSO.

See the Alaska Radiation Protection Program Manual, published by Statewide Materials and located on their website, for additional guidance on the Radiation Protection Program. The Statewide Radiation Safety Officer (SRSO) is responsible for maintenance and control of the Radiation Protection Program and updating and maintaining the manual.

5.3. Toxic and Hazardous Substances

Some materials test procedures require the use of toxic and hazardous substances. Hazardous substances include the propane used to fuel field stoves and ovens. If you use any such substance on the project, you must properly label, store, transport, and handle it. You may need to mark buildings that contain minimum quantities of hazardous materials with placards (AS 29.35.500(c) and 13AAC.54.020). Each project staff member who will work with a toxic or hazardous substance must receive training (AS 18.60.066) in the safe use, care, transport, and storage of the particular substance before they work with that substance. Employees responsible for the transport of hazardous substances should familiarize themselves with the Shipping and Transporting Requirements of the US Department of Transportation.

The Project Engineer must maintain a supply of Material Safety Data Sheets (MSDS)/Safety Data Sheets (SDS), OSHA Form 20, for each classified substance used on the project and must provide them to project staff members on request (AS 18.60.067), or must maintain a list of those classified substances and the location where the MSDS/SDS sheets may be obtained. The Project Engineer must also post the Alaska Department of Labor's "It's Your Right to Know" poster on toxic/hazardous substances (AS 18.60.068 and 8 AAC 61.950) in both the field office and the field laboratory. If there is a spill of a classified substance, the Project Engineer must notify the Group Chief/PM or the environmental unit immediately so that the spill may be properly reported. Further information on classified substances that are still used on construction projects is available from the regional safety officer.

5.4. Materials Tests, Record Keeping, & Reference Material

Materials to be incorporated into the project must meet the quality standards that are established in the contract. Some materials are accepted based on manufacturer's certifications and the results of tests performed off-site. The contract also establishes tests that are to be performed on other materials on-site to demonstrate that they also meet quality standards. The Materials Testing Summary outlines, by pay item, the tests that are to be performed and the approximate numbers of each type of test (Section 11.2). This summary serves as a guide in establishing the project's materials staff testing workload and record keeping requirements. A materials sample identification system has been established to aid the record keeping effort; the system is shown in Table VII in the Appendix.

The project materials staff should set up a filing system for the results of all materials tests taken on-site; staff should set up files for each pay item requiring testing. Section 4.2 and Section 18, Table IV in the Appendix, contain more information on setting up the filing system and its structure. Complete a final Materials Testing Summary by the end of the project. This summary contains a list of all the materials tests taken as required for each pay item and designates passing and failing tests. Prepare the summary in outline form before construction starts so that as you complete each type of test on a particular item, you can enter the results on the summary and keep the summary current.

Certain materials test procedures require you to ship all or a portion of a sample to the regional laboratory for testing. Since the regional laboratory receives materials samples as well as materials test results from many different projects, it's important for the project staff to properly identify samples and test results from their project. Identify samples by: project name, number and materials source; the reason the sample was taken; the purpose for which the material will be used; the type of test to be run; and the number of the sample. Records should be kept of all samples sent off the project for testing.

The field laboratory should be equipped with all applicable test methods and reference materials that are needed for the project materials staff to fully perform their duties. Table V in the Appendix contains a list of both required and recommended reference books and related materials information.

This page left intentionally blank.

6. Managing the Staff

6.1. Project Staff Administration
6.2. Staff Logistics
6.3. Authority and Duties of Inspectors
6.4. Personal Safety
6.5. Project Safety

6.1. Project Staff Administration

The Project Engineer is directly responsible for the training, assignment, supervision, and evaluation of all employees placed on the project staff. The Project Engineer's personnel administration duties include assigning duty and shift assignments, managing overtime and leave, monitoring ethics and conflicts of interest, accident reporting, preparing personnel evaluations, and approving time sheets. The Project Engineer should have applicable policies and procedures relating to these matters available in the field office and/or be familiar with them. Each project staff member should report daily hours worked and vehicle mileage on time sheets and vehicle mileage logs provided by the Project Engineer; staff should secure overtime approvals on the Request for Overtime Authorization form (Form 25A-042).

Good communications between the Project Engineer and the project staff are essential. Employees must know what their duties and responsibilities are, and they must be given authority commensurate with those responsibilities. The Project Engineer or the immediate supervisor should familiarize all new or reassigned employees with their responsibilities, their authority, and their relationship with other project personnel, the schedule of operations, and the status of the contract, and should consider rotation of job assignments where project conditions permit.

6.2. Staff Logistics

The Department provides transportation for its employees on the project site using either Department-furnished or contractor-provided vehicles. When the project site is located over fifty miles from the employees' normal work location, the Department provides transportation for its employees to the project site, and provides either meals or lodging for the employee, or pays the employee a daily allowance in lieu of meals and lodging (per diem) while they are stationed at the site. Check union bargaining agreements for detailed requirements.

All drivers of state vehicles must be 18 and have a valid Alaska Driver's License. Drivers must have a valid Alaska Commercial Driver's License if the License is required for operating their work vehicle (see Division of Motor Vehicles Website and *P&P 07.01.010* for requirements). Drivers are responsible for safety and operation checks on their vehicles (checking oil, gas, batteries, and lights) as well as arranging for all periodic maintenance and repairs.

Drivers should immediately report any accident involving a state vehicle to their supervisor. Report forms with instructions for reporting accidents should be in the glove compartment of the vehicle. Report accidents involving personal injury and/or damage to either vehicles or property on the Supervisor's Accident Investigation Report (Form 02-932). If the accident occurs within the project limits, or within the construction work zone (between construction warning signs), or involving traffic in a queue backed up from work with the project limits, file a Work Zone Accident Report (Form 25D-123). All of the comments in this section apply to both Department-furnished vehicles and contractor-furnished vehicles. The *ADOT&PF Safety Manual*, chapter 2.9, section 6, provides specific details on accident reporting.

ACM Sections 6.4 and 6.5 cover safe working conditions on the project.

The Department insures its vehicles only for public liability and property damage; the Department's employees have insurance under the Alaska Worker's Compensation Law. The contractor furnishes additional insurance coverage on the vehicles they provide. The driver should check vehicles for Proof of Insurance, Alaska DMV registration, and accident report forms. Further details on vehicle operation and responsibilities are contained in Section 5.3 regarding transport of hazardous substances on the project; *P&P 11.04.010 Use, Storage, and Marking of State Owned Vehicles and Equipment* and the *P&P 10.03.010 Property Control*.

6.3. Authority and Duties of Inspectors

Each project staff member should receive a written, general notification of their assignment to a project (Section 1.3). The Project Engineer will assign each staff member their specific project responsibilities and their authority. An inspector's duties may include:

- inspecting any one or all of a contractor's construction operations;
- sampling and/or testing materials produced by or provided by the contractor;
- measuring or verifying the measurements of pay item quantities;
- keeping daily records of the work in progress;
- performing project office duties that could include: reviewing materials submittals, calculating pay item quantities, establishing audit trails from source documents to the calculated quantities;
- assigning duties to and supervising other inspectors.

The inspector is usually authorized to clarify the contract for the contractor when questions arise, to reject materials or work performed by the contractor, and to act as supervisor for other inspectors on larger projects. Inspectors should familiarize themselves with the overall contract placing specific emphasis on the areas of the contract they are responsible for. They should be alert to the status of the work and should maintain good communications with the contractor, keeping the Project Engineer current on the contractor's progress. Inspectors who supervise others have responsibilities similar to those outlined for the Project Engineer in Section 6.1. Some of those responsibilities could include: duty and shift assignments, overtime management, preparing personnel evaluations, and time sheet approval. Inspection duties and reporting requirements are covered in more detail in Sections 10.1 and 10.3.

6.4. Personal Safety

Personal safety and safe working conditions are a top priority on construction project sites, where the exposure to potential accident and injury is much higher than in most work environments. The Project Engineer must set the example for the project staff by encouraging staff to bring safety concerns to him/her and maintaining safe working conditions. The Project Engineer should hold safety meetings at least once each month and all project staff members should attend. The topics of discussion should fit the type of project and the particular construction activities under way at the time. A brief summary of each meeting should be kept on the Supervisor's Safety Meeting Report form (Form 25M-063), and all those attending the meeting should sign the back of the form. Send each summary to the Regional Safety Officer. Vehicular accidents and reporting requirements are covered in Section 6.2.

All necessary safety equipment, required for the particular field conditions, should be made available to any staff member who needs it (AS 18.60.075). This includes items such as hard-hats, safety vests, safety glasses, hearing protectors, and life jackets. The *ADOT&PF Safety Manual* does reference personal protective equipment and the required assessments. Section 5.3 covers safety precautions that must be taken around toxic and hazardous substances that may be present on the project site. Each field office, field laboratory, and all vehicles will be equipped with a first aid kit that is sufficient for the type of project and number of employees.

The Project Engineer, and each staff member in a supervisory position, must have a valid first aid card and a valid certificate in cardiopulmonary resuscitation (CPR). At a minimum, projects with fewer than fifteen employees require only one first aid and CPR certificate; projects with more than fifteen employees require at least two first aid and CPR certificates.

Each employee should familiarize themselves with the contents of the *ADOT&PF Safety Manual* and regional memoranda that applies to their working conditions. The *ADOT&PF Safety Manual* is available on the Department's internal website at: https://web.dot.state.ak.us/stwdmno/safety-manual.shtml.

The D&ES Research & T2 website offers training for both job tasks and safety issues. Currently there are web courses in Hazardous Communication (mandatory all employees), and Wetlands and Stormwater. There will soon be training on Naturally Occurring Asbestos (see Section 9.6). Training opportunities are posted at: http://dot.alaska.ecatts.com/lmsTrainingCalendar

The terms of the Alaska Worker's Compensation Law apply to all Department employees who sustain injuries on the job. Accidents involving employees that result in hospitalization or fatality must be reported immediately to the Group Chief/PM, Regional Safety Officer, and the Alaska Department of Labor. OSHA must be notified within 8 hours (AS 18.60.058). The Project Engineer must also formally report any accident on the Supervisor's Accident

Investigation Report (Form 02-932), and the Report of Occupational Illness or Injury (Form 02-921). When an employee returns to work following an injury involving loss of time, the Project Engineer should notify the Group Chief/PM.

The Department is committed to providing a safety-conscious work environment (SCWE) where concerned individuals feel free to raise safety concerns without fear of retaliation. See Section 18.18 for more information about SCWE. The Department has created an Employee Safety Concerns Program (ECP) that is managed by the Statewide Safety Officer. The program is intended to handle safety concerns from employees, who do not choose to raise concerns with their immediate supervisors. The ECP manual is published on the Design and Engineering Services website, and contains contact information for each region. The ECP manual is posted at: https://web.dot.state.ak.us/stwdmno/safety/resources.shtml#pub.

6.5. Project Safety

The Project Engineer and project staff should be alert to any unsafe working conditions that might develop on the project. The contractor is responsible for compliance with applicable safety standards. If in the judgment of the Project Engineer, a serious hazard exists that presents imminent danger to the contractor's employees, to the state's project staff, or to the public, the Project Engineer may exercise their authority to direct the contractor to stop working on the affected part of the work until corrective measures are taken to eliminate the hazard.

The contractor is responsible for compliance with applicable safety standards for their own operations and employees, and for the operations and employees of their subcontractors.

This page intentionally left blank.

7. Program Administration

7.1. General
7.2. External Affirmative Action
7.3. Labor Compliance
7.4. Buy American - FAA
7.5. Buy America - FHWA
7.6. Alaska Product Preferences
7.7. FHWA Stewardship Agreement

7.1. General

There are a number of administrative programs mandated by both the federal and the state government that may apply to contracts that fall under the Project Engineer's contract administration responsibility. Most of these programs do not have universal application. The administrative programs fall into two groups:

1. Programs that are under the authority of the Civil Rights Office (CRO) and are known as external affirmative action programs (these include EEO, OJT and DBE programs); and

2. All other administrative programs (federal and state labor requirements, Buy American (FAA) the Buy America Act (FHWA), and the Alaska Product Preference program).

A brief review of these programs appears in the following sections.

7.2. External Affirmative Action

There are three affirmative action programs mandated by the federal government that apply to most federally funded contracts that fall under the Project Engineer's contract administration responsibility:

- Equal Employment Opportunity (EEO)
- Disadvantaged Business Enterprise (DBE) Program
- On-the Job Training (OJT) Program

The parallel state affirmative action program is State Administrative Order 76. It requires compliance with federal EEO requirements on all state-funded projects. State Administrative Order 76 requires increased contracting opportunities for minority and women-owned firms. There is no DBE goal on state-funded construction contracts; DBE certification is recognized for participation under an incentive program developed to encourage prime contractors to voluntarily use DBE firms on these projects.

Every federally funded contract includes the EEO and DBE requirements. Only selected FHWA-funded projects include OJT requirements, depending upon specific criteria identified in federal guidelines such as: the type of work, size of workforce in each craft, and length of the project. A contractor's performance with respect to compliance with each of these programs is part of each Contract Compliance Review mandated by the federal government and performed by the Statewide Contract Compliance Review Officer in the Civil Rights Office. For this reason, it is imperative that contractors understand their contractual obligations regarding these programs. It is also imperative for enforcement purposes that Project Engineers administer these programs consistently and uniformly in the field.

Policy and Procedure 01.02.010 delegates final authority on all external affirmative action matters (EEO, OJT, and DBE programs) to the Civil Rights Office. This authority covers implementation, interpretation and clarification of policies, related contract specifications, and reporting requirements of these programs. This authority has been delegated to ensure uniform and consistent interpretation, application, and enforcement of these federally-mandated programs within the Department statewide.

The Contracting Officer has final authority with regard to construction contract decisions and resolution of problems.

If issues or questions arise regarding external affirmative action programs, contact the construction staff person that has been assigned duties as Regional Contract Compliance Liaison (RCCL). If they can't resolve the problem then the issue will be sent to the Civil Rights Office. This includes issues or questions involving the following contract provisions:

1. Statewide Special Provisions, Section 120, Disadvantaged Business Enterprise (DBE) Program, and all related forms;

2. Statewide Special Provisions, Section 645, Training Program, and all related forms;

3. Federal EEO Bid Conditions (Form 25A-301);

4. Form 25D-55, Sections I, II and III.

Construction personnel must obtain concurrence from the Civil Rights Office prior to issuance and/or

approval of change documents involving DBE and OJT.

Construction personnel are encouraged to coordinate with the RCCL or the Civil Rights Office as soon as possible when issues arise. The primary goal is to coordinate early in the process to avoid contract compliance violations later on. Proper contract administration of these programs can help the contractor avoid serious Contract Compliance Review problems, up to and including debarment.

The Department's External Affirmative Action Plan and annual EEO Assurances explain the Department's obligations, procedures, and performance with respect to these programs. Internal operating methods of the Civil Rights Office provide guidance on how the Department will meet its obligations to the federal government. All other documents are obsolete. Because of the dynamics and evolution of these programs, it is impractical for the Department to develop and distribute official policies and procedures just to have them become outdated soon after publication. For these reasons, please use the Civil Rights Office as the resource for current, effective information and/or assistance with these programs.

7.2.1 Equal Employment Opportunity (EEO)

The authority for the EEO program requirements on FHWA-funded Department projects is 23 USC 140. The Department implements the EEO Program as a condition of receiving FHWA funds. EEO goals and timetables in construction come from the US Department of Labor through Executive Order 11246. The requirements apply to contractors, subcontractors, and materials suppliers on federally-funded projects whose contracts/subcontracts exceed $10,000. Specific project EEO goals, good faith efforts, and reporting requirements are included in every construction contract.

7.2.2 Disadvantaged Business Enterprise (DBE) Program

The DBE Program is intended to provide the contracting opportunities on federally funded projects for DBE-owned firms in accordance with federal regulatory criteria. The Civil Rights office establishes a DBE utilization goal for each project, as a percentage of the total contract award amount. The Civil Rights office establishes the DBE project goal in accordance with federal guidelines based upon the subcontractable items for which there are certified DBEs to perform that type of work. Statewide Special Provision, Section 120 explains in detail determination of DBE compliance.

7.2.3 On-the-Job Training (OJT) Program

This program, mandated by 23 USC 140a and implemented only on selected FHWA-funded projects, becomes part of the contractor's required affirmative action program. The Department selects the specific construction projects that will utilize the OJT program and establishes the project training goal in terms of individuals to be trained and the number of hours of training to be provided. The Department establishes annual OJT goals in accordance with federal guidelines; FHWA approves OJT goals before including them in contract documents.

Statewide Special Provision, Section 645, explains the OJT Program requirements and contractor obligations for that project. Contract documents, Form 25A-310 (OJT- DOT&PF Training Program Request) and Form 25A-311 (OJT Training Utilization Report), once approved by the Civil Rights Office, establish the type of training to be provided and bind the contractor, prior to contract award, to specific training curriculum and reporting requirements. Failure by the contractor to comply with OJT requirements during the course of the contract may result in the withholding of progress payments and deduction of damages from the contractor's final payment, as specified in section 645. Also, failure to comply will result in a finding of noncompliance in a Contract Compliance Review.

7.2.4 Commercially Useful Function Monitoring and Verification

Commercially Useful Function Monitoring

Complete a DBE Commercially Useful Function Monitoring Report (Form 25A-298) for each DBE firm that works on each federally funded project. Reports are required regardless of whether the project or program is race-conscious or race-neutral, or the presence of DBE utilization goals.

Complete a CUF Monitoring Report within seven days of when each DBE first shows up on the job site. If the project extends for multiple seasons, complete a CUF Monitoring Report for each construction season the DBE is on-site.

A CUF Monitoring Report is completed by interviewing the DBE's On-Site Representative or other DBE staff who has technical knowledge and the ability to answer questions regarding the DBE's work being performed on the project. The CRO can provide

additional information if you are unsure of who is the on-site DBE representative. Only project personnel can complete the CUF Monitoring Report; it may not be filled out by the contractor or DBE.

The CUF Monitoring Report must be signed and dated by the project staff who performed the interview, and the DBE's On-Site Representative as defined in 120-1.04 of the *Standard Specifications for Highway Construction* or the *Statewide Special Provisions for Airport Construction*. Coordinate directly with the Statewide Civil Rights Office for any questions or assistance in completing the Monitoring Report.

Photograph and document DBE activities. Also note whenever there are significant changes to the DBE's day-to-day operations that may not be consistent with commercially useful work (see: "red flag issues"). Send each completed CUF Monitoring Report to the RCCL, for their acceptance.

CUF Monitoring Reports are not required on projects that have no federal funding.

Commercially Useful Function Verification

Complete a DBE Commercially Useful Function Verification Report (Form 25A-299) for each DBE firm that works on each federally funded project. Only the Project Engineer or designee can complete the CUF Verification Report; it may not be filled out by the contractor or DBE.

Coordinate directly with the Statewide Civil Rights Office for any questions or assistance in making the verification. Complete the CUF Verification Report after the DBE is substantially finished with their portion of the project work but before project final payment. Complete the report by reviewing project records. Send each completed CUF Verification Report to the RCCL, for their acceptance.

CUF Verification Reports are not required on projects that have no federal funding.

The RCCL or Project Engineer will verify that the DBE owner, or DBE On-Site Representative was at the worksite and responsible for the work. Immediately notify the RCCL if the interview reveals a potentially adverse finding. Discuss findings and significant changes with the RCCL. The Project Engineer or RCCL will notify the contractor of potentially adverse findings, and discuss ways to resolve issues. A copy of the reports may be provided to the contractor upon request.

The RCCL will coordinate potentially adverse findings with the CRO as appropriate. Again, the primary goal is to avoid contract compliance violations. Use the CRO as a resource for any questions about these requirements.

Send a copy of all CUF Monitoring and CUF Verification reports to the CRO consistent with regional policy. Copies may be in the form of an electronic PDF file.

7.3. Labor Compliance

7.3.1 Wages and Payroll Reporting

All federally funded contracts fall under the Copeland Act and the Davis-Bacon and Related Acts (29 CFR Parts 1, 3 and 5) regarding wages and the conditions of their payment. These regulations require the payment to all project mechanics and laborers of not less than the prevailing minimum wages for the local area that are contained in the latest wage rate decision published by the US Department of Labor. This decision is included in the contract. The regulations also cover such other matters as frequency of wage payments, fringe benefits, overtime wages, and legitimate deductions. Further details are contained in the contract, in the Required Contract Provisions for Federal-aid Contracts section (Form 25D-055).

Both state-funded and federally funded contracts fall under the requirements of AS 36, which requires the payment of not less than the prevailing minimum wage rates contained in the latest wage rate decision published by the Alaska Department of Labor and Workforce Development (DOWLD). This decision is also included in the contract. On federally funded contracts, if there is a difference between the federal and the state minimum wage rates, the higher rate will govern. Both the federal and the state wage rate decisions also include minimum fringe benefit rates. The federal wage rates are established at the time of contract advertisement and remain in effect for the life of the contract. State wages are established ten days prior to bid opening and remain in effect for the life of the contract, or 24 months, whichever is less. The count of the 24-month period starts at award of the contract. Upon expiration of the initial 24-month period, the latest state wage rates issued by the DOWLD shall become effective for a subsequent 24-month period or until the original contract is completed, whichever occurs first. This process shall be repeated until the original contract is completed.

The contractor and each subcontractor are required to prepare a weekly payroll and statement of compliance (14 CFR 151.53, 23 CFR 635.118, and 29 CFR 3.4) and submit them to the Project Engineer and to DOLWD within seven days of the payroll ending date. The payrolls must be project specific, identify each employee by name and work classification, and must include the hour's worked and hourly rate(s), price extensions, and deductions. Bona fide truck owner-operators hauling materials for the project must appear on the certified payrolls (as owner-operators) of the prime Contractor or an approved subcontractor.

Check that the submitted certified payrolls have a statement of compliance that is signed by the contractor or subcontractor (or their agent) who submitted the payroll.

Store certified payrolls as per the record retention schedule in Section 16.15.

7.3.2 Labor Compliance Interviews

Labor compliance interviews must be conducted on federally funded (not required for state funded) projects by project staff or by the regional contract compliance liaison. Interviews are conducted to determine if contractor employees are receiving the wages and benefits they are entitled to (correct wages and classifications, fringe benefits, hours worked = hours paid).

Conduct interviews at a time that is reasonable and convenient for the worker, with questions and answers documented on a Labor Compliance Interview (Form 25D-040).

Each season, the project staff will conduct one interview per Prime Contractor and one interview per subcontractor for 50 percent of the subcontractors. The subcontractors must be on the project more than one day per season. The seasons are summer and winter.

No interviews are required during periods of seasonal shutdown. Conduct additional interviews if there are indications of possible noncompliance. Information given during the interview is confidential.

Following the interview, the information received should be compared to payroll data to determine compliance. Each compliance evaluation should cover the employee's name, actual wage rates, and deductions from wages.

7.4. Buy American - FAA

The Buy American Preferences under 49 USC § 50101 require that all steel and manufactured goods used in AIP (Airport Improvement Program) funded projects be produced in the United States. The FAA is given the authority to waive these Buy American Preferences if certain market or product conditions exist.

A Buy American waiver may be requested from FAA based on the exceptions listed below. The Department must receive FAA approval for the requested waiver prior to issuing the Letter of Award. The four types of waivers to the Buy American requirement are:

1. **Type I.** The FAA can issue this type of waiver if the FAA determines that applying the Buy American requirements would be inconsistent with the public interest. (Department use only.)

2. **Type II.** The FAA can issue this type of waiver for equipment or construction material if the FAA determines that the goods are not produced in a sufficient and reasonably available amount or are not of a satisfactory quality. Type II Waivers can only be issued on the equipment/construction material level and cannot be issued for a system and/or facility that is comprised of various pieces of equipment/construction material. (Department use only.)

3. **Type III.** The FAA can issue this type of waiver if the FAA determines that 60 percent or more of the components and subcomponents in the equipment/facility are of U.S. origin and their final assembly is in the United States. A Type III Waiver cannot be issued at the system level and must be issued for each piece of equipment; however, in the case of facilities (i.e. buildings) a Type III Waiver may be issued for the entire facility if all the construction materials when combined meet the 60 percent U.S. origin requirement. (The term "final assembly" for purposes of this provision should be substantial rather than a light bulb put in a vehicle.) The application of this type of waiver is determined after bid opening. (Bidder may apply before award.)

   No exception is allowed for structural steel. The manufacturer must certify in writing that any major structural steel used in their equipment is of 100 percent U.S. origin. Small amounts of steel that are used in components and subcomponents,

that are not structural steel, may be of foreign origin. This would typically consist of nuts, bolts and clips. For these types of steel, the manufacturer must indicate the use of the steel (nuts, bolts, clips, etc.) and must count this steel as non-U.S. origin when completing the Content Percentage Calculation Form (Form 25D-155, Buy American Percentage).

4. **Type IV.** This type of waiver is not allowed under Alaska's standard contract language. However, the FAA can issue this type of waiver if the FAA determines that applying Buy American requirements increases the cost of the overall project by more than 25 percent. In order to issue this type of waiver, the FAA must determine that there is at least one bid from a Buy American compliant supplier to make the 25 percent cost increase determination.

FAA-funded projects require each bidder to submit a Certificate of Buy American Compliance (Form 25D-151 or 25D-152) with their bid. If the apparent low bidder indicates they will apply for a Type III waiver, then they must submit the waiver request, with documentation, before award to the Contracting Officer (section 3.4). The waiver request will be reviewed by local FAA office, and it may be approved or denied. If it is denied, the bidder is required to construct using all Buy American compliant products.

FAA-funded projects also have a list of items that have been determined nonavailable and according to 48 CFR § 25.1 are excluded from the Buy American preference requirements, and other products subject to a Nationwide Buy American Waiver, and other products subject to nationwide Buy American waivers. See web links:

https://www.faa.gov/airports/aip/buy_american/

A manufacturer or supplier of products must provide documentation to show they comply with Buy American provisions by completing a Material Submittal Form 25D-154 and associated material documentation for each product. The Contractor may sign Form 25D-154 if they have knowledge of the origins of the material and are the supplier or fabricator of the product.

7.5. Buy America - FHWA

Applicable only to FHWA-funded contracts, the terms of Public Law 98-229 require that under most conditions only certain domestic materials be incorporated into the project (23 CFR 635.410). On FHWA-funded projects, this covers steel, steel-manufactured products, and iron and steel coatings. The contractor must provide a Buy America Material Origin Certificate (Form 25D-60) demonstrating compliance with the provisions of the Buy America Act prior to award of the contract. When the Contractor becomes aware of a change from or error in a previously submitted Material Origin Certificate (Form 25D-60), the Contractor is required to submit an updated Material Origin Certificate, Form 25D-60. The contractor may amend the certificate following award and only up to the limit specified in the contract.

The contract lists exceptions or waivers to the Buy America requirement, including minor amounts, raw materials such as pig iron, and temporary structures.

Minor amounts of foreign (or unknown origin) steel and iron materials is allowed, if the cost of such materials used does not exceed one-tenth of one percent (0.1 percent) of the total contract cost or $2,500, whichever is greater. The cost is that shown to be the value of the steel and iron products as they are delivered to the project including freight. Contract specified steel or iron materials (or equal), which are subject to the Buy America Act but are not manufactured in the United States, are counted towards the project's total value of foreign steel.

The Contractor shall secure and provide a Certificate of Buy America Act Compliance (Form 25D-62) with the material documentation for each steel or iron product that is subject to the Buy America Act and incorporated in the project. The Contractor may sign Form 25D-62 if they have knowledge of the origins of the material and are the supplier or fabricator of the product.

If one contract is federal-aid funded, then Buy America applies to it and all other contracts regardless of funding sources, when those contracts are within the same scope of a finding, determination, or decision under NEPA. This also affects subcontracts with the contractor, third party agreements (like utilities or local government) and related work.

7.6. Alaska Product Preferences

Under the provisions of the Alaska Product Preferences chapter in the Alaska Statutes (AS 36.15.050), the use of Alaska agricultural and fisheries products, including Alaskan timber and

products manufactured in the state from timber and lumber, is required on state-funded contracts when the Alaskan items are priced no more than seven percent above similar outside products. Additionally, under AS 36.30.324, the Department encourages the use of Alaskan products and recycled Alaskan products in all Department procurements. Bidding preferences and monetary penalties for the use of or for the failure to use such products are established for all products except timber, lumber, and manufactured lumber products. The Alaska Product Preferences are not acceptable for FAA-funded or FHWA-funded projects.

The Alaska Department of Commerce and Economic Development maintains the Alaska Product Preferences List which lists all Alaskan products that have established eligibility for the program. Contracts containing Alaska Product Preferences reference the availability of the Department's "Alaska Product Preference Program Preparation Pamphlet" in a Special Notice to Bidders. The Project Engineer should review this pamphlet and all staff members involved with Alaskan Preference items. It contains complete information on the program including: instructions to bidders for completing the Alaska Product Preferences Worksheet (Form APPW); required product specification and installation schedule submittals; inspection procedures and procedures for correcting absent, nonconforming or not substantiable Alaskan products; documentation required to substantiate the declared value of Alaskan products (3AAC 92.050); and instructions for calculating applicable preferences and penalties.

7.7. FHWA Stewardship Agreement

Review the project stewardship and oversight agreement for responsibilities and oversight authority.

The Alaska Division of FHWA has signed a Stewardship and Oversight Agreement with DOT&PF. This agreement describes roles and responsibilities during financing, design and construction of projects that are funded by FHWA.

A copy of the current agreement is attached to the Chief Engineer's Directive dated November 20, 2015. See link: http://dot.alaska.gov/stwddes/dcspubs/assets/pdf/directives/attach/2015/stewardship_agreement_attach.pdf

Attachment A of the Agreement lists project level activities for which the "STATE" has responsibility and approval authority. Attachment B lists program level activities, roles and responsibilities. Attachment C lists DOT&PF manuals and operating agreements that are approved by FHWA.

FHWA has retained project financial approval authority. It is important that we preserve a working relationship with our funding partner by providing the information they need. The following documents are required based on language in the ACM or based on CFR and standard operating procedures with FHWA. Document submittals to FHWA are made by the regional construction engineer or their delegate.

Submit the following documents to FHWA as informational copies:

- Change Orders
- Progress Estimates
- Project Materials Certification and Memorandum of Exceptions (if necessary)
- Form FHWA 1446C – Final Inspection
- Final Construction Payment and Project History
- Letter of Project Completion
- Other documents as required by the PoDI Stewardship and Oversight Agreement.

Submit the following documents to FHWA for approval before described work begins:

- Supplemental Agreements

Project status reports must be available for FHWA review.

Projects of Division Interest

Each year the Alaska Division of FHWA conducts a risk based assessment of projects. They typically designate 10-20 projects to be Projects of Division Interest (PoDIs). FHWA may discuss potential PoDIs with the regions and headquarters in January or February before deciding on a final list.

PoDIs are chosen because they have elevated risk, contain elements of higher risk, or present a meaningful opportunity for FHWA involvement to enhance meeting program or project objectives. The FHWA risk based assessment may include:

1. Complexity
2. Cost
3. Schedule

4. Urgency
5. Environmental Considerations/Stakeholders, and
6. Other considerations.

Each PoDI has its own Stewardship and Oversight Agreement with authorities and responsibilities that may be different from the general agreement. Administer PoDI projects according to their project specific PoDI Stewardship and Oversight Agreement.

This page intentionally left blank.

8. Contract Administration in the Office

8.1. Contract Administration – General
8.2. Subcontract Process
8.3. Reviewing Materials Submittals & Working Drawings
8.4. Other Administrative Approvals
8.5. Construction Progress Schedule
8.6. Coding, Monitoring Expenses & Reimbursement Requests
8.7. Recording As-built Changes
8.8. Administrative Reviews & Inspections by Others

8.1. Contract Administration – General

Construction contract administration involves more than simply inspecting and testing the construction operations, and measuring and accepting them. This Section covers many of the other administrative responsibilities of the Project Engineer and project staff. A few of them, along with Section references where more information may be found, are the following:

Communication requirements: coordination with maintenance and operations personnel (Section 3.12) and with federal agency representatives; keeping all the communication channels open with the prime contractor and all of the subcontractors (Sections 3.9 and 9.1); reporting the progress of the project (Section 10.5).

Review and approval requirements: subcontracts (Section 8.2); materials submittals (Section 8.3); mix designs (Section 11.3); transportation management plans (Sections 3.10 and 9.8); storm water pollution prevention plans and hazardous materials control plans (Sections 3.11 and 9.9).

Monitoring requirements: utility relocation or extension agreements; attainment of DBE goals (Section 7.2); construction progress schedule updates (Section 8.5); compliance with federal and/or state labor (Section 7.3) and occupational safety requirements (Section 6.4 and 6.5); compliance with the TMP (Sections 3.10 and 9.8), with the airport construction safety plan (Sections 3.7 and 9.7) and with the SWPPP and HMCP (Sections 3.11 and 9.9); contractor, subcontractor and owner-operator insurance certificates.

Financial requirements: evaluating, recommending and authorizing contract changes (Section 12); preparing progress payments (Section 12); authorizing federal reimbursement requests (Section 8.6); and constantly monitoring the status of project expenses and project funding (Sections 3.1 and 8.6).

Record keeping requirements: documenting and reporting the contractor's operations (Sections 10.3 and 10.5); maintaining the project records (Sections 4.2 and 4.3); keeping quantity records updated (Sections 10.4 and 12.4); updating as-built drawings (Section 8.7).

8.2. Subcontract Process

Within five days of the identification of the apparent low bidder (AS 36.30.115), the apparent low bidder must submit its Subcontractor List (Section 3.4) to the Department, indicating which pay items they intend to subcontract and to which firms. Once the contract is awarded, the contractor is obligated to subcontract the pay items as indicated on the form.

The contract (specifications Section 103-1.02 or GCP 30-02) and AS 36.30.115 state the only grounds under which the contractor may deviate from the Subcontractor List without the possibility of penalty or termination of contract. *Contracting Officers Bulletins 98-001and 99-003*, clarify the penalties for violating the requirements of the contract and Alaska Statute. The contractor may enter into additional subcontracts as a result of change documents without violating the terms of the contract or Alaska Statutes.

Directions regarding subcontract review are given to the contractor at the preconstruction conference (Section 3.8).

Before a subcontractor (including lower tier subcontractors) can begin work on the contract, the Department must have either received, or reviewed and approved, the subcontractor's information using one of the two following methods:

8.2.1 Self Certification Process

The contractor must submit a Contractor Self Certification for Subcontractors and Lower Tier Subcontractors (Form 25D-042) and other documents required by contract for each subcontractor. The contractor may submit documents to the Regional

Contract Compliance Liaison (RCCL) either directly or through the Project Engineer.

The RCCL reviews Contractor Self Certified subcontracts by comparing each self certification against the Subcontractor's List and DBE Utilization Report.

The RCCL will select at least one in ten contractors self certifications per project for full compliance review. The RCCL will review the subcontractor agreement, licenses, Form 25D-55, and any other documentation relating to the certification (as outlined in 8.2.2 full subcontractor agreements below). The RCCL may select more than the required one in ten for full review, for any reason.

The RCCL does not need to provide written approval to the contractor of Form 25D-042 and subcontracts submitted to the Department.

The RCCL must keep a detailed record identifying which certifications were selected and reviewed for full compliance.

Demonstrating that at least one in ten receives a full compliance review is a condition of FAA and FHWA approval of the Contractor Self Certification process.

8.2.2 Full Subcontractor Agreements Process

In addition to the Self Certification Process described in 8.2.1; the Department may, at its discretion, require the contractor to submit any or all subcontract agreements to the RCCL either directly or through the Project Engineer for review and approval. If the subcontract agreements are acceptable the RCCL will give written approval for each subcontract.

The RCCL reviews the supporting subcontractor agreement and other documentation including:

- Licenses,
- Form 25D-55 for federal-aid contracts
- Mandatory standard language,
- Subcontractor prompt payment requirements (AS 36.90.210),
- Certification that the subcontractor is adequately insured,
- Cumulative percentage of the contract that is being subcontracted.

8.2.3 Unauthorized Subcontractors

Under the terms of the contract, the Project Engineer cannot allow a subcontractor to perform any work on the project prior to the Department receiving the completed and signed Contractor Self Certification (Form 25D-042) and other documents required by the contract. If the contract or RCCL requires full subcontract agreement submittals, no subcontractor can perform any work on the project prior to the approval letter from the RCCL.

If the Contractor does not submit Form 25D-042 or a full subcontract agreement for a subcontractor, and the subcontractor works on the project, upon discovery the Engineer should:

- contact the RCCL
- direct the Contractor to remove the subcontractor from the worksite
- withhold progress payments for the subcontractor's work until proper paperwork is submitted or approved

8.3. Reviewing Materials Submittals & Working Drawings

Certain off-site manufactured, fabricated, structural and/or specialized contract pay items obligate the contractor to provide the Project Engineer with information, verifying that the material or assembly meets the contract requirements, before the items can be ordered. This information, in the form of materials submittals, may vary from manufacturer's tear sheets and catalog cuts on standard manufactured items, to laboratory test results, to certifications establishing a material's point of origin or manufacture, to manufacturer's certifications and, in some cases, to working (shop) drawings on custom manufactured items.

The contract requires the Project Engineer to review and approve all submittals prior to the contractor ordering material. The Project Engineer may also require fabrications or assemblies to be inspected and approved prior to their shipment to the project site.

The contractor can begin making submittals of materials, products, and drawings after they receive a Letter of Award.

The contract requires that the contractor provide the Project Engineer with a list of their materials suppliers (Section 3.8); and a list showing anticipated dates for

procurement of materials and equipment, furnishing of working drawings, and other reviewable items.

8.3.1 Special Clauses

Reserved.

8.3.2 Submittal Process

The contract requires that the contractor prepare a Submittal Register (Form 25D-030) to track working drawings, and other submittal items. Material submittals are tracked with the MCL. The submittal process, with review procedure and time deadlines, is described in the contract under Highway Specification 106-1.08 or Airport Specification GCP 60-08. Some other specifications have alternate submittal review processes and deadlines.

The Project Engineer reviews submittals for content and completeness, and to determine whether the project staff or other reviewer has the expertise to determine the submittal's acceptability. If the submittal changes a sealed design in a technical manner (see ACM 13.6), the submittal review should include the designer of record (or designated professional in their section).

If a submittal is incomplete, it should be marked resubmit and returned to the contractor with the reasons listed. The reasons (insufficient information) may or may not include a comprehensive list of missing information.

The Project Engineer distributes complete submittals to the reviewers. The reviewer should mark the submittal with a review stamp or written direction, and sign the mark. Indicate the submittal status as: approved, conditionally approved with the conditions listed, resubmit (due to incomplete information), or rejected (disapproved) with the reasons for rejection listed. When the Project Engineer returns a conditionally approved or rejected submittal to the contractor, the Project Engineer must explain in detail the requirements to make the submittal acceptable.

8.3.3 Bridge Submittal Reviews

The Project Engineer should send shop drawings and other structural submittals that need to be reviewed to the Designer of Record. The Project Engineer should choose which section will review other bridge related items based on Department or consultant staff expertise. The bridge design section also reviews the submittals for temporary bridges used by the public, including an Independent Design Check letter and a Temporary Bridge Package (design calculations, working drawings, and specifications). See Appendix for Temporary Bridge Submittal Checklist.

8.3.4 Materials Certification List (MCL)

On highway and airport projects, a MCL is included in each contract (ACM 4.5). The MCL lists all material certifications required by contract, and lists Department positions that have approval authority.

The Project Engineer will maintain the MCL in the field office and use the MCL to track the status of all material submittals on airport and highway projects that require material certification. If the MCL is not complete, list other materials that are required by contract to have material certifications on the MCL.

The MCL may require that the Design Engineer of Record, Regional Materials/QA Engineer, Statewide Bridge Engineer, Regional Traffic Engineer, or the Statewide Materials/QA Engineer approve the submittal. Write the date that approval is received in the box on the MCL. After receipt of the approved submittal note the file location of the material certificate.

The Project Engineer may accept a product without a manufacturer's certification (or other Department approvals), if it appears on the Qualified Products List (ACM 4.6) or the FAA AC 150/5345-53, provided it meets contract requirements. An invoice, catalog cut, or proof of purchase is still required, and is stored in project files.

8.3.5 Airport L Series Items

The Airport standard specifications require that materials or equipment in the L series of bid items must be chosen from the current FAA Advisory Circular (AC) 150/5345-53, Airport Lighting Equipment Certification Program. The Project Engineer can only approve material or equipment that is certified by FAA. Any L series bid items not included in the FAA certified list, such as beacon towers and electrical duct, will be evaluated by the Department using submittal documents.

8.3.6 Off Site Testing

If a particular material requires off-site testing and/or inspection, the Project Engineer usually contacts the Project Manager to make the arrangements for use of the Term Contracts managed by Statewide Materials, see Section 11.7 Term Contracts and Job Order Procedures.

8.3.7 Inspection

When each off-site manufactured item is received at the project site, it should be inspected and compared to the approved materials submittal. The item should be undamaged by shipping and storage. Note the inspection in the Inspector's Daily Report or diary.

8.3.8 Project Materials Reports

If the item is an off the shelf purchase or small quantities of miscellaneous materials on the MSTF table, use the Project Materials Report (Form 25D-080) to document the item.

8.3.9 Material Records

The Project Engineer keeps records on all material certifications, material invoices, freight bills, and mill certificates that are submitted. These records must provide enough information to identify the date, company and location of invoice (bill, certificate); project name and number where material will be incorporated, manufacturer, product number, and quantity.

For FHWA and FTA federally funded projects: as per the Cargo Preference Act (see Forms 25D-55H or 25D-55T), keep records of shipments transported by ocean vessel. Submittals consist of 'on-board' commercial ocean bill-of-lading. For more information see the Special Notice in the contract.

8.3.10 Building Plans

If the contract requires the contractor to submit detailed building plans, the Project Engineer and the State Fire Marshal's Office must review and approve those plans (13 AAC 50.027). Building and site development plans may also need to be submitted to local government agencies for their review and approval. When plans have been approved, the State Fire Marshal's permit and local government building permits must be kept in the field office.

8.4. Other Administrative Approvals

On projects involving truck haul operations, a bona fide *truck owner-operator* is not considered a subcontractor and is not an employee of the contractor provided that he or she complies with the contract conditions establishing owner-operator status. The truck owner-operator does not have to be on the subcontractor's list.

However, the contractor is responsible for reviewing the credentials of each owner-operator and approving that status. Prior to the review and approval of their credentials, owner-operators are treated as employees of the contractor and must appear as employees on the certified payroll.

Truck owner-operators must submit to the contractor their Alaska Driver's License, their truck registration, their Alaska Business License, and proof of ownership or their ownership interest in the truck. The contractor must review and approve this information before the contractor can list the owner-operator as such on their certified payroll. The contractor must maintain this documentation in the files for the period of time specified in the contract. In addition to these requirements, the truck owner-operator must qualify as an independent contractor under Alaska Department of Labor criteria; further details on this and on other owner-operator matters are contained in the contract.

If the Project Engineer receives notice of the *loss of a contractor's insurance coverage or bonding coverage*, through cancellation or insolvency, the contractor must immediately be notified that he or she must completely restore the lost coverage. The contract specifies the time frames, if any, that apply and the procedures the contractor must follow in replacing the coverage.

If a contractor wishes to designate a third party to receive the payments on the contract or wishes to transfer the remaining work to another contractor, this is known as an *assignment*. The approvals of the contracting officer and of the contractor's bonding agent are both required. The contractor must present a written request to the Project Engineer, in accordance with the contract. The request will be subject to the review of the contracting officer. If an assignment of payments is approved, it is for the contractor's convenience only, and does not relieve the contractor of any contract obligations. When applicable, withholding and/or liquidated damages are withheld, it is the same as if the assignment had not occurred.

8.5. Construction Progress Schedule

A copy of the contractor's current construction progress schedule should be posted in the field office. The contractor's progress on the individual pay items and the overall estimated value of work completed to date, should be calculated and posted on the schedule each week. This gives the Project Engineer and project staff members an idea of the contractor's actual versus intended progress.

If the contractor falls behind or consistently works ahead of the schedule, or if significant changes are made to the contract via contract change documents or quantity changes, to the extent that the dates and sequence of the information lose their significance as a scheduling or monitoring tool, the Project Engineer should request that the contractor submit a revised progress schedule. Revised schedules should be reviewed in the same manner as the original schedule (Section 3.5).

8.6. Coding, Monitoring Expenses & Reimbursement Requests

Staff members involved in coding invoices for payment, including contractor payment, must be careful to properly establish the eligibility for reimbursement of each item authorized for payment, and properly code each item. If questions arise concerning eligibility of the individual items, the Project Engineer should consult with the Group Chief/PM and Project Control.

The Project Engineer or regional traffic control coordinator should randomly spot check law enforcement billings to ensure the dates and times invoiced are in substantial agreement with the actual work. Ensure billing is consistent with the overall law enforcement agreement. Compare the billable hours with independent records in the project staff diary or daily report. If dates and hours are not in substantial agreement, resolve the billing discrepancies with law enforcement. Document the items spot checked, discrepancies found, and their resolution.

- On federally funded projects, construction costs are divided into two categories: participating expenses and non-participating expenses (Section 2.2). This breakout of expenses is shown on the progress payments on the Recapitulation Sheet (Form 25D-199) by properly coding the construction costs to either participating or non-participating phase codes.

The Group Chief/PM or designee should review total expenses in each funding category (participating and non-participating), and accumulation of expenses for each support group. The Group Chief/PM should periodically compare the buildup of expenses with the support groups' budgets categories. If expenses in any budget segment look out of place, review the individual charges via an ALDER on-line audit trail or request a printed audit trail from the project control unit. Any excessive or potentially erroneous expenses should be brought to the attention of the project control unit, and the support group that incurred the expense. If there is an error the responsible party must initiate the correction.

Support groups may submit a revised budget for the Group Chief/PM's or designee's approval. If the need for additional funding in the construction phase arises, the Group Chief/PM should coordinate with the project control unit. Each project's financial situation is unique, but in all cases the more advance notice that the project control unit has, the more likely it is that additional funding will be available.

On federally funded projects, the Department requests reimbursement for eligible expenses from the federal funding agency (14 CFR 151.61 ff and 23 CFR 140.105).

On FHWA-funded projects, the Department's Federal Aid unit prepares the project Progress Vouchers using the expenditure information in IRIS. One billing covering a number of projects is submitted directly to the FHWA. The Project Engineer and project staff involve themselves in this process through their review of their projects' expenditure information in IRIS.

On FAA-funded projects the reimbursement requests are prepared, on a grant-by-grant basis, according to regional procedures using the same IRIS expenditure information. Reimbursable Services Agreements (RSAs) or utility agreement billings are prepared by the regional finance unit, using the financial information in IRIS.

8.7. Recording As-Built Changes

The Project Engineer should clearly identify to all project staff members the set of drawings that is set aside for recording as-built changes (see Section 4.2). Throughout the project, as changes occur to the design shown in the plans and as new pay items are added to the contract and original items are deleted, project staff must revise and update the designated set of marked up as-built drawings in the field office on a timely basis. The Project Engineer should impress on each staff member the importance of entering the changes to the plans immediately on the drawings.

The Project Engineer or project staff member associated with the change should enter all corrections, revisions, or additions to the work on the

as-built drawings. New drawings or sketches should be added to the set as appropriate. Certain information on the drawings does not need to be updated, particularly information of no significance to the finished project like temporary construction features, staged construction schedules, or temporary traffic control measures.

Update the following information on the as-built drawings: changes in horizontal or vertical alignment; changes in typical sections or new typical sections; new or revised utility locations; changes to electrical wiring diagrams and installations; changes to automated traffic recorders; as-built location and dimensions of all structures; changes in survey control or right of way/property monuments; changes in drainage features; as-built data on materials sources including areas developed and waste areas (if included in the drawings); as-built location and dimensions of piles, foundation elevations and subsurface structural details; revisions/substitutions of materials or equipment; estimated quantities should be revised to final quantities; all change document work. In short, any change made during construction to a permanent feature of the project, should be correctly shown on the final as-built drawings.

8.8. Administrative Reviews & Inspections by Others

The Project Engineer and project staff, in addition to inspecting the contractor's operations, are themselves subject to inspections and reviews by numerous groups.

Periodically the Group Chief/PM will visit the project site, as may other regional employees including the contracting officer, the design engineer, traffic and safety, environmental, and maintenance and operations employees.

8.8.1 Regional Quality Reviews

On all projects, the regional quality assurance/review unit may make periodic field reviews to check project documentation, record keeping and progress payment quantity calculation procedures, as well as to inspect field laboratory equipment, record keeping, and testing procedures.

8.8.2 Annual Regional Traffic Reviews

Each region must conduct an annual work zone traffic control and safety review (except for the year the joint review is held in that region) according to P&P 05.05.015. The Regional Construction Engineer must write a review summary memorandum to the Chief of Design and Construction Standards within three weeks of the review.

8.8.3 Annual Joint Traffic Control Review

D&ES will perform a joint traffic control review in one region each year as defined in P&P 05.05.015. The reviews are rotated each year, so each region has a review every three years. The reviews may evaluate all aspects of the traffic management plan (including TCP, PIP and TOP) implementation, traffic routing plans, impacts on traffic delay, safety, inter project coordination, quality of daily reviews by the contractor and Department personnel, project records, and other aspects of the project.

D&ES will write a review summary memorandum and distribute it to the regions and to the FHWA within three weeks of the review. Significant issues identified in the review will be reported to FHWA and Department construction personnel at regional spring construction meetings.

8.8.4 Statewide D&ES Reviews

D&ES staff may review projects and project records to evaluate the implementation of TMPs, work zone traffic and safety, and SWPPPs, and for conformance with the *Alaska Construction Manual* and the Department's policy and procedures. D&ES staff will not direct the Project Engineer, project staff, or the contractor.

Regional construction management will be notified before a review occurs. Regional staff will, typically, participate in the review to assist and inform the reviewer. The results of the review will be distributed to the regional construction management.

8.8.5 Other State Reviews and Audits

The Department's Internal Review unit auditors and Legislative Budget and Audit auditors, may review the project's records as they relate to financial matters such as contractor and consulting engineering contract payments and reimbursement requests to federal and other agencies. DOLWD may conduct OSHA safety inspections. DEC may conduct SWPPP inspections.

8.8.6 Federal Reviews

On federally funded projects, federal agencies can inspect the contractor's operations and the field operations of the Department (14 CFR 151.49a). The

funding agency, The Office of Management and Budget, and the Inspector General may inspect the project's records.

The United States Coast Guard and the American Bureau of Shipping (and COE, USFW, NMFS, and DEC) may conduct periodic inspections of marine vessel projects to insure compliance with their agencies' regulations.

This page intentionally left blank.

9. Contract Administration in the Field

9.1. Relations with the Contractor
9.2. Contractor Surveying
9.3. Contractor's Equipment
9.4. Legal Loads
9.5. Site-Specific Hazard Awareness Training
9.6. Asbestos in Aggregates
9.7. Airport Construction Safety
9.8. Highway Traffic Control and Safety
9.9. SWPPP & HMCP Implementation and Monitoring
9.10. Oil and Hazardous Materials Reporting Requirements
9.11. Right-Of-Way Considerations
9.12. Differing Site Conditions
9.13. Claims and Disputes
9.14. Partial Completion
9.15. Airport Master Record
9.16 Notices to Airmen (NOTAMs)
9.17. Environmental Permits and Commitments
9.18. Nighttime Operations
9.19 Coordination with Bridge Section

9.1. Relations with the Contractor

The key to a successful project is good communication. Having the Project Engineer as the single point of contact on a project gives them the authority needed to support good communication. In dealing with contractors and their organizations, the Project Engineer should cooperate as shown by the partnering concept (Section 3.9), and should convey to the project staff that they are working with the contractor to secure the best possible finished product; the attitude of the project staff should also reflect this cooperation. The prompt preparation and processing of contract change documents and progress payments exemplifies this spirit.

When the contractor requests information or a clarification, the project staff should respond promptly to the request. If the Project Engineer is unable to respond to a contractor's request for clarification on information, the Project Engineer should immediately seek the assistance of the Group Chief/PM or one of the support groups, and keep the contractor advised of the status of the request. In general, the Project Engineer and the project staff should do everything necessary to enable the contractor to work to their benefit and without delay, but they should not furnish any services that the contractor is responsible for providing.

If the communication link between the contractor and project staff is threatened, the staff member should ask the Project Engineer for advice, or, as a last resort, intervention. If the Project Engineer runs into a similar situation, they should turn to the Group Chief/PM for assistance.

If the Project Engineer receives claims for damage to property or for injuries allegedly resulting from the contractor's operations, the Project Engineer should refer the claims to the contractor. If claims are received for money owed by the contractor for material, supplies, or wages on the project, the Project Engineer should provide the claimant with the name of the contractor's bonding agent and a copy of the payment bond, and should advise the claimant to read AS 36.25.020(c) for further information; wage claimants should also be referred to the Alaska Department of Labor, Wage and Hour Division.

9.2. Contractor Surveying

Under terms of the contract, all construction surveying is the contractor's responsibility. The Department is responsible for establishing the horizontal and vertical control that the contractor will use for construction staking; this control is usually established during the design phase of the project. On projects that have spent a number of years undergoing design, the control survey may be a bit ancient by the time the contractor's surveyors arrive at the site. Because this is usually the first construction activity under way on the project, the Project Engineer should monitor this initial survey effort closely and be alert for any errors that may show up in the horizontal and vertical control. If the contractor discovers any problems with the survey control, the Project Engineer, after consulting with the Group Chief/PM and the design engineer, should take immediate action to correct the control data or to adjust the lines and grades of the finished structure.

The contract provides that contractor surveying which the contractor uses for the computation of pay item quantities is subject to random spot checks by the Project Engineer. The Project Engineer should spot check at least 5 percent of these surveys and should also spot check note reductions and other survey work

for accuracy. If the Project Engineer discovers errors, they should perform additional spot checks and bring the matter to the contractor's attention. The Project Engineer or project staff will take all survey notes for final quantities and completely check them.

9.3. Contractor's Equipment

When the contractor first mobilizes equipment to the project site, and as each additional piece of equipment arrives at the site, the Project Engineer and project staff should inventory the equipment. The contract, with a few exceptions, requires only that the contractor provide an equipment spread that is capable of completing the contract within the contract time; the choice of equipment is left up to the contractor. Contractor vehicles and equipment that require licensing must be licensed in Alaska at all times during their use.

Certain pay item specifications, primarily those dealing with asphalt paving, spell out in some detail the equipment (and its condition) that the contractor is to use; the Project Engineer is responsible for documenting the equipment and its condition. If the Project Engineer notices any deficiencies in the specified equipment, the Project Engineer should immediately bring the deficiency to the contractor's attention. The contractor should not allow specified equipment that does not meet contract requirements to work on the project until the contractor brings the equipment into compliance with the contract.

When the Project Engineer and project staff inventory equipment, they should gather basic information on each piece. Information should include the classification, make, model, year of manufacture, horsepower, attachments and optional features, capacity, engine fuel, serial number, and contractor's number. These data will help the Project Engineer establish a rental rate for each piece of equipment, if necessary. The project staff should use still photographs and videotape to document the initial condition of the contractor's equipment.

9.4. Legal Loads

The Project Engineer may permit oversize and overweight vehicle movements within the project limits provided the contractor submits a written request and an acceptable Traffic Control Plan. The Traffic Control Plan must describe:

- how and where overweight or oversize vehicles will be used
- Each vehicles axle spacing, gross axle weights, and tire widths
- Type of material or equipment being hauled

Weight restrictions still apply to all vehicles and equipment within the project limits, when hauling over:

- base course, surface courses, or structures that will remain, or become part of the finished roadway
- a structure that will be removed later, but is a route the public currently uses
- a structure that will be removed later, but is spanning over a route or other areas the public currently uses

Detailed analysis of structures and weight restrictions can be performed by the Division of Measurement Standards and Commercial Vehicle Enforcement (MSCVE) or the Bridge Section.

Temporary crossings designed by the contractor may support construction and public traffic if the crossing is designed to support those loads.

Beyond the project limits, size and weight limitations apply even though the highway may be a designated haul route. The MSCVE issues oversize and overweight permits for travel outside the project limits.

The Project Engineer and the project staff should be familiar with the size and weight limitations for the vehicles and equipment on their project, and with the effects of overweight operations on the project. Work sheets are available for calculating the maximum legal load for any given vehicle.

Where contractor-furnished weigh people operate the scales, the Project Engineer should monitor the weight tickets to make certain that the weigh people comply with the load limits. If enforcement of legal load limits becomes a problem, the Project Engineer should contact the Group Chief/PM. For further information on vehicle loads and permitting of nonlegal loads, consult 17 AAC 25 and the Department's *Alaska Oversize and Overweight Permit Movements* manual.

9.5. Site-Specific Hazard Awareness Training

In compliance with 30 CFR 46.11, the contractor's operator or commercial operator of the sand and

gravel surface mine (materials source) shall provide Site-Specific Hazard Awareness Training for all the Project Engineer's staff (non-miners) before beginning any operations in the surface mine. The training must be provided for each surface mine that is used to supply processed aggregates. A competent contractor's operator must provide the training in accordance with the operator's written training plan approved by the Mine Safety and Health Administration (MSHA). The training shall cover:

- Site-specific health and safety risks
- Recognition and avoidance of hazards
- Restricted areas
- Warning and evacuation signals
- Evacuation and emergency procedures
- Other special safety procedures
- A site tour

The Project Engineer's staff must sign the Visitor's Log Book after completing the training to indicate that training was provided.

According to the Compliance Guidelines for MSHA Part 46.1, Scope: Government Officials visiting a mine site generally are not required to receive Part 46 training. However, MSHA expects those government agencies whose personnel visit mine sites will ensure that their employees are provided with appropriate personal protective equipment, and receive adequate instruction and training. Where training is not provided, an experienced miner should accompany such government officials.

9.6. Asbestos in Aggregates

The DOT&PF Naturally Occurring Asbestos (NOA) program was established in 2012 by the Alaska state legislature. The law provides immunity under state law for the landowners, extractors, suppliers, transporters, and contractors for certain actions or claims arising in connection with the use of gravel or aggregate material containing NOA; if the applicant has a site specific plan approved by the Chief Engineer and they follow that plan during construction.

On projects with known NOA every person working in the project area must take the T2 Asbestos Awareness Training. All workers in the project area must follow the approved project site specific plan.

A list of best practices for NOA materials is posted at:

http://www.dot.state.ak.us/stwddes/desmaterials/noa.shtml

If NOA materials are found during construction immediately notify the Chief Engineer and stop work in the affected area. A site specific plan must be approved by the Chief Engineer before work can resume in the NOA area.

9.7. Airport Construction Safety

Airport safety requirements are described in FAA Advisory Circular (AC) 150/5370-2F, Operational Safety on Airports During Construction.

A Construction Safety and Phasing Plan (CSPP) is developed by the Department or the airport operator. The CSPP is normally submitted to FAA for approval during the design phase. The CSPP and any changes to the CSPP must be approved by FAA before implementation. The contract should comply with the requirements of the CSPP.

The contractor must submit a Safety Plan Compliance Document (SPCD) to demonstrate how they will comply with the CSPP. The SPCD may provide additional details (such as key personnel, construction phasing or equipment) that were not known at the time the CSPP was developed. The Project Engineer should review the SPCD, and approve the SPCD when it is in compliance with the CSPP.

Each contract for an airport improvement that affects an aircraft operational area (runway, taxiway, aircraft parking apron, and other facilities that adjoin these areas) has a special provision that specifically addresses that airport's traffic and safety requirements. The contract should also include drawings that depict runway and taxiway safety areas, vehicle movement setback lines, designated haul routes, obstacle free zones, temporary lighting requirements, and construction phasing information.

The two principal safety concerns when a contractor works on or adjacent to existing airport operational areas that are open to traffic are:

1. Marking the open portions of those operational areas, so moving aircraft know clearly where to taxi, takeoff, and land

2. Keeping construction equipment and construction project workers separated from moving aircraft

The contract requirements for airport traffic control and safety vary considerably from site to site, but generally include:

- Minimum length and width requirements for the runways
- Marking the closed portions of the runways or taxiways
- Strategic Event Coordination (SEC)
- Filing Notices to Airmen (NOTAMs) that describe the current status of the runway with the appropriate FAA Flight Service Station
- Providing plainly visible markings delineating the open portion of the runways (thresholds and edges), taxiways, and parking aprons from construction areas
- Aircraft frequency radio contact requirements
- Airport security requirements
- Scheduling or work sequencing requirements
- Coordination requirements

9.7.1 Notification Before Work

The Project Engineer shall write a letter to the appropriate FAA Flight Service Station (FSS), and send a copy to the FAA project manager, before the contractor begins work on an airport project. The letter should give the FAA/FSS basic information on the construction project including:

- The scope of work
- The duration of the contract
- The name of the contractor
- The Project Engineer's telephone number

Copies of the letter should be sent to the Regional Airport Safety and Compliance Officer, the DOT&PF airport manager, airport maintenance contractor (if appropriate), other adjacent FSSs, and the contractor.

Prior to starting work, the Project Engineer and the contractor's superintendent should meet with the airport manager and/or Regional Airport Safety and Compliance Officer and a local FAA tower or FSS representative, and air carrier representatives to establish communications, discuss the proposed work, review the CSPP and SPCD, and ensure that everyone fully understands the scheduling of construction activities in conjunction with aircraft operations.

9.7.2 Strategic Event Coordination (SEC)

Prepare and submit a Strategic Event Coordination form (FAA Form 6000-26, Airport Strategic Event Submission) when required. The SEC form must be submitted to FAA via email (send email to 9-AJV-SEC-WSA@faa.gov) at least 45 days prior to the strategic event. These are events that last for greater than 24 hours, or for 4 hours for consecutive days, and they include:

- NAVAID Shutdowns
- Full or partial runway closures
- Significant taxiway closures

9.7.3 Notices to Airmen (NOTAMs)

See Section 9.16 and FAA Advisory Circular 150/5200-28D for more information.

Prepare NOTAMs according to the Advisory Circular and the contract. The airport manager or authorized representative will review and sign the NOTAMs form, and will submit NOTAMs to the FAA.

Each time there is a change in an aircraft operational area (length, width, location, surface condition, lighting, personnel and equipment in the vicinity), a new NOTAM should be prepared and older NOTAMs may have to be cancelled. Only FAA may issue NOTAMs for navigation facilities and approach lights.

When work on the project is completed or is suspended for the season, the last construction NOTAM in effect should be cancelled or a new one issued to convey current runway, taxiway, and parking apron conditions to the FAA.

9.7.4 Radio Communications

At airports equipped with an Air Traffic Control Tower (ATCT), all movement of personnel, vehicles and equipment on open/active runways or taxiways are under direct radio control of the ATCT during hours of ATCT operation. When the ATCT is closed, see the following paragraphs.

At airports equipped with only an FSS, all movements on open/active runways or taxiways shall be coordinated with the FSS by radio on the airport's Common Traffic Advisory Frequency (CTAF).

At non-towered/non-FSS on-field airports, coordinate operations on the open/active runway or taxiway with the appropriate FSS on the airport's Remote Communications Outlet (RCO).

Using the CTAF, vehicle operators will be required to notify all aircraft using the airport of their location on the runway. This will require radios capable of

scanning multiple frequencies. Give all aircraft the right-of-way, and undertake all construction operations and movements on the airport using common sense and caution. All vehicles operating under these conditions should be equipped with radios containing the proper frequencies and operating amber beacons. If a radio isn't available in the vehicle, then the vehicle should be escorted by a properly marked vehicle capable of communicating on the proper frequencies or by a trained flagger using handheld radios.

9.8. Highway Traffic Control and Safety

Implementation of the Traffic Management Plan (TMP) allows for the safe passage of traffic through a highway construction work zone. Section 3.10 covers TMPs and their review and acceptance in detail.

Refer to the contract for traffic control devices payment details.

Prior to the contractor beginning work on the project, the Project Engineer should send a letter to the law enforcement entities having jurisdiction in the area (police, fire and EMT), advising them of the pending construction project and of the project limits, the work schedule, the names and phone numbers of the contractor and worksite traffic safety supervisor, and the Project Engineer's contact information. The Project Engineer should request the cooperation of law enforcement in controlling traffic during construction and should request that they notify the project field office of any accidents that occur within the construction work zone. The Project Engineer should also request that the law enforcement entity provide the project office with copies of all those accident reports.

When there is an agreement for additional traffic enforcement within the project limits, the Project Engineer or regional traffic control coordinator should specify the days and times for law enforcement to be present (see Section 3.10). It is important that project staff also document the dates that law enforcement work in the project limits, using an Inspector's Daily Report or the Traffic Law Enforcement Presence Log, Form 25D-108.

A TCP must be approved before construction starts. See ACM 3.10 for more information. All traffic control devices required by the approved TCPs, in and around the active construction area, must be in place before construction starts, and must be maintained during construction. Project staff should monitor the TCPs. The Project Engineer is responsible for the contractor's compliance with all requirements of the TCPs, including the daily measurement of pay item quantities.

Each day, project staff must document in an Inspector's Daily Report (Section 10.3) or diary, that traffic control devices were checked and whether or not they were in compliance with the approved TCPs.

Under the contract, the responsibility for checking, placing and maintaining the traffic control devices rests with the contractor and must be in accordance with Section 643 of the *Highway Specification.*

Report device counts each day using the Traffic Control Signs and Devices Daily Report, Form 25D-103. It is signed and dated by both the Contractor's Representative and the Project Engineer's Representative.

The contractor must report each day using the Traffic Control Daily Review, Form 25D-104. It is signed and dated by the Contractor's Representative. The contractor's daily documentation on Form 25D-104 should include the TCP numbers in effect, the details of any variations from the approved TCPs, and indicate if any devices need to be repaired or replaced. Dimensional sketches, still, and video photography may be used to clarify the daily entries to document traffic control.

During construction, TCPs may require modification to meet changed construction schedules or conditions. A major revision to the TCP changes the basic application of the approved plan; The Project Engineer and either the region's Traffic and Safety unit, or the Traffic Control Coordinator of the Construction Unit, will review major revisions. A minor revision is one that does not change the basic concept of the plan and can be reviewed by the Project Engineer. When the TCP is found to be acceptable, the Project Engineer will notify the contractor in writing.

Report any vehicular accidents within the project limits, or within the construction work zone (between construction warning signs), or involving traffic in a queue backed up from work with the project limits, on the Work Zone Accident Report, Form 25D-123 (Also see Section 6.2). Report accidents to the regional traffic and safety engineer, within 10 calendar days of occurrence. Submit a copy of the police report and other pertinent information upon receipt.

The *Alaska Traffic Manual* contains additional information on construction work zone traffic safety.

9.9. SWPPP & HMCP Implementation and Monitoring

See Section 3.11 for plan review requirements. See Section 9.17 for other agencies permits, environmental commitments, and contractor obtained permits. Environmental commitments that are identified in the permits or in the contract should be incorporated into the SWPPP.

Ensure that the contractor keeps the approved and updated SWPPP, HMCP and SPCC at the on-site project office, or a nearby office. They are the documents of record, and must be made available to any local, state or federal inspector who requests them.

Project Staff should keep a working copy of the contractor's SWPPP.

9.9.1 Signature Authority and Personnel Qualifications

When a SWPPP is required, the contractor must delegate responsibility and signature authority to a superintendent. The superintendent may delegate work to a SWPPP manager. The superintendent, and SWPPP manager, must have current certification as an Alaska Certified Erosion and Sediment Control Lead (AK-CESCL), or other qualifications that meet the CGP, Appendix C requirements for qualified person. The Project Engineer should verify that the SWPPP documents the contractor's personnel qualifications (certifications).

The Regional Director will delegate responsibility and signature authority to the Project Engineer. The Project Engineer, the project Stormwater Inspectors, and the Regional Construction Stormwater Specialist must have a current certification as an Alaska Certified Erosion and Sediment Control Lead (AK-CESCL), or other acceptable training that meets the CGP requirements for qualified personnel. The Project Engineer and project Stormwater Inspectors must send their certifications to the Superintendent for inclusion in the SWPPP.

When there is personnel turnover or a person assumes the duties of someone on leave: the new person must be AK-CESCL certified. Enter the new person's data on the SWPPP Project Staff Tracking log, Form 25D-127. Enter a copy of their AK-CESCL certification into Appendix E of the SWPPP. The new person's data must be documented before they can inspect or sign SWPPP documents.

9.9.2 Duties of Project Engineer and Inspector

The Project Engineer and the project Stormwater Inspectors must be familiar with the contractor's SWPPP (Section 3.11.), HMCP, the contents of the Department's *Stormwater Pollution Prevention Plan Guide*, and the CGP.

The Department and the contractor are co-permittees for the project SWPPP and HMCP. A violation of permit requirements may result in a monetary penalty for the Department and the contractor.

In addition to the inspections required under the CGP, the Project Engineer and project staff must keep daily watch on the contractor's operations and BMPs. Project staff must immediately report to the Project Engineer observations of inadequate BMPs, a need for new BMPs, or pollutant discharges. The Project Engineer will report them to the superintendent or SWPPP manager and ensure that corrective action is taken within applicable deadlines.

The Project Engineer must become familiar with the project site, and be alert to instances where the SWPPP is not adequate or where the contractor is not following the SWPPP. If there are instances of inadequate BMPs or noncompliance with the SWPPP or CGP, direct the contractor to take corrective action. Ensure that the contractor updates the SWPPP regularly and completes required record keeping. Ensure that SWPPP amendments are signed by the Superintendent or SWPPP Manager and approved by the Project Engineer.

9.9.3 Reporting non-compliance to DEC

If the contractor reports to the Project Engineer, or if the project staff observe: an incident that is (1) non-compliant with the CGP and (2) which may endanger health or the environment; then the Project Engineer must immediately report the incident to the Regional Construction Stormwater Specialist (or equivalent environmental position).

The Regional Construction Stormwater Specialist will determine whether the incident is reportable under the Standard Permit Conditions of the CGP and if so, will make a verbal and written report to DEC on behalf of the Department. The verbal report must be made within 24 hours of the first discovery of the incident.

The written report must be filed within five days of the first discovery of the incident.

Verbal Reports should be made to DEC at:

- Outside of Anchorage: 877-569-4114
- Anchorage Area: 907-269-4114

The contractor is also responsible for reporting the same incident to DEC and other agencies as required by law. If possible the Department and contractor should coordinate reports to ensure a consistent explanation. If the contractor doesn't co-sign the Department's report, they must file their own written report with DEC. The contractor may file their own report even if the Department decides the incident is not reportable.

9.9.4 Public Notice, Forms and Permits

Ensure the contractor has posted public notices and SWPPP postings, as required in the contract and CGP.

The following plans, forms or permits are included in the contractor's SWPPP documents:

- SWPPP formatted per DOT&PF SWPPP template – contractor's document that requires approval from the Department
- 25D-105, SWPPP Subcontractor Certification - Subcontractor signs prior to commencing soil disturbing work
- 25D-106, SWPPP Pre-Construction Site Visit – contractor's document that SWPPP Preparer signs
- 25D-107, SWPPP Delegation of Signature Authority for CGP Documents - DOT&PF – Department's Regional Director signs
- 25D-108, SWPPP Delegation of Signature Authority for CGP Documents - Contractor – contractor's Corporate Officer signs
- 25D-109, SWPPP Certification for DOT&PF – The Project Engineer signs a certification when the SWPPP is approved
- 25D-111, SWPPP Certification for Contractor – The superintendent signs the certification when the SWPPP is approved by the Department
- 25D-125, SWPPP Training Log – contractor tracks personnel training
- Copies of eNOIs in effect and acknowledgement letters from DEC.
- HMCP - contractor's document that requires approval from the Department. It becomes part of the SWPPP.
- Reference the SPCC Plan (if required) – No approval required

The following forms are used by the contractor during construction and kept up to date in the SWPPP:

- 25D-100, SWPPP Construction Inspection Report – Must be completed by the superintendent or SWPPP manager/representative. Requires dual signature and certification by superintendent and Project Engineer after each joint inspection
- 25D-110, SWPPP Grading and Stabilization Activities Log – Superintendent or SWPPP manager/representative date and initial, used to record dates of land disturbance and stabilization measures
- 25D-112, SWPPP Corrective Action Log – Superintendent or SWPPP manager/representative date and initial, used to document timely maintenance or corrective actions
- 25D-114, SWPPP Amendment Log – Superintendent or SWPPP manager signs and dates amendment, project engineer initials to document approval, used to document changes to the SWPPP
- 25D-115, SWPPP Daily Record of Rainfall – Initials required, any worker can fill it out
- 25D-127, SWPPP Project Staff Tracking – contractor and DOT&PF tracks qualified personnel and positions
- 25D-129, SWPPP Visual Monitoring Data – Only used on selected projects and as required by special provision
- 25D-140, SWPPP Turbidity Monitoring Form – Only used on selected projects and as required by special provision
- 25D-143 SWPPP Noncompliance Notification – The contractor should coordinate with the Regional Construction Stormwater Specialist to fill out the report. The contractor signs their report and submits it to DEC.

The following forms are filled out by the Department and kept up to date in the SWPPP:

- 25D-113, SWPPP Delayed Action Item Report – The Project Engineer prepares the report and sends a copy to the Superintendent for inclusion in the SWPPP, used to document BMP actions that are not practicable to complete by the Complete by Date written on construction stormwater inspection report and to assign a new Complete by Date.
- 25D-127, SWPPP Project Staff Tracking – contractor and DOT&PF tracks qualified personnel and positions
- 25D-143 SWPPP CGP Noncompliance Notification – The Project Engineer notifies the Regional Construction Stormwater Specialist (RSWS) of reportable events. The Regional Construction Stormwater Specialist in coordination with the contractor fills out the report. The RSWS signs the report for DOT&PF and submits it to DEC.

9.9.5 Reduced Inspection Frequencies and Seasonal Suspension

When the entire site is stabilized according to the CGP, the Project Engineer may approve the reduction of the inspection frequency to once every 30 days. If the inspection frequency is reduced and the worksite is not actively staffed, the site does not have to be inspected after storm events. If the site is actively staffed, the site must be inspected within two working (business) days of the end of a storm event that resulted in a discharge from the site.

Indicate in the SWPPP why the site is eligible for reduced inspection frequency, and provide the beginning and ending dates. After the SWPPP amendment is approved by the Project Engineer, inspections can be conducted on the new schedule.

During reduced inspection frequencies, the contractor must inspect (preferably jointly with the Department), monitor, and report on BMPs, and take corrective action as required by contract and the CGP.

During seasonal suspension of work (CGP Appendix C calls this winter shutdown) the Project Engineer may approve the reduction of the inspection frequency to once every 30 days, or may waive inspections entirely after 14 days of freezing conditions until 21 days prior to the anticipated spring thaw.

If seasonal suspension is planned for a project, the anticipated dates of fall freeze-up and spring thaw for the site must be documented in the SWPPP. After the SWPPP amendment is approved by the Project Engineer, inspections can be conducted on the new schedule.

Acceptable control measures for stabilization must be provided for conveyance channels, disturbed soils, slopes and stockpiles; prior to, during, and at the conclusion of seasonal suspension. Frozen ground by itself is not considered adequate stabilization. In addition, erosion and sediment controls must be installed in anticipation of spring thaw.

When inspections occur during seasonal suspension or on a reduced inspection frequency, it is preferable that inspections are conducted jointly by the contractor and Department. However, if it is not practicable to conduct a joint inspection, the entity that conducts the inspection must explain why it was not practicable, and provide a copy of the inspection report to the other entity within three days of the inspection and document the submittal.

9.9.6 Final Stabilization and Notice of Termination

The contractor is responsible for all aspects of the SWPPP, including inspection requirements, until final stabilization is achieved. The Project Engineer, in consultation with the Regional Construction Stormwater Specialist and/or environmental personnel, is responsible for determining the date when final stabilization has been achieved. The contractor has 30 days after the date of final stabilization, to submit the Notice of Termination (NOT) to the DEC either by certified mail or through the APDES electronic filing system.

The regional director will sign the Department's eNOT, and they or the environmental section will submit the eNOT to DEC. Although the CGP allows 30 days to do this, it is best to file the Department's NOT as soon as final stabilization is determined. The Project Engineer should send copies of both eNOT submissions to the environmental section and ensure that copies of both are included in the SWPPP of record.

When the contractor's eNOI includes areas where the Department is not an operator (has a SWPPP and SWPPP2s), then the contractor may not be able to file an eNOT until all areas are stabilized. For further information see Highway Specification 641-3.01.6 (Airports P-641-3.1.f).

9.9.7 Project Reporting Requirements

The Department will store records including copies of the initially approved SWPPP, the final SWPPP, inspection reports, and other listed forms kept during construction.

The regions will use eDocs to transmit to Headquarters D&ES. Send the following documents on a regular basis during the construction season, and once every 30 days during a reduced inspection frequency:

- 25D-100, Inspection Report
- 25D-115, Daily Record of Rainfall
- 25D-110 Grading and Stabilization Log*
- 25D-112, Corrective Action Log*
- 25D-113, Delayed Action Item Report*
- 25D-114, SWPPP Amendments and Amendment Log*
- 25D-127, SWPPP Project Staff Tracking*
- Changes to Site Maps*

* *Asterisked forms and data are transmitted if they were changed or information added during the reporting time period.*

When the contractor fails to meet an environmental requirement of the contract that is identified as SWPPP Liquidated Damages (LDs), then the Project Staff should document those LDs on Form 25D-126, SWPPP Liquidated Damages Calculation Table. The LDs will be reviewed by the region. After review the regional accounting office will bill the contractor. The Project Engineer may withhold project funds until the contractor pays the LD amount to the regional accounting office. Funds used for payment must be separate from project funding.

9.10. Oil and Hazardous Materials Reporting Requirements

In the event of a release, discharge or spill, of oil or hazardous substance, the Project Engineer and contractor should be notified immediately. The contractor should begin spill containment and cleanup as soon as practicable.

The contractor is responsible for reporting spills. The following state and federal reporting requirements should be included in the contractor's HMCP:

State DEC: Any release of a hazardous substance must be reported to DEC as soon as the person knows about the discharge.

The following are DEC requirements for reporting oil discharges:

- **To water:** Any release of oil into water must be reported as soon as the person knows about the discharge.
- **To land:** Any release of oil *in excess of 55 gallons* must be reported as soon as the person knows about the discharge. Any release of oil *in excess of 10 gallons but less than 55 gallons* must be reported within 48 hours after the person has knowledge of the discharge. A person in charge of a facility or operation must maintain and provide to the DEC on a monthly basis a written record of any discharge of oil from *1 to 10 gallons*.
- **To impermeable secondary containment areas:** Any release of oil *in excess of 55 gallons* must be reported within 48 hours after the person has knowledge of the discharge.

Notify the Alaska Department of Environmental Conservation (DEC) at one of the following telephone numbers, depending upon project location:

- Central (Anchorage) 907-269-3063
- Northern (Fairbanks) 907-451-2121
- Southeast (Juneau) 907-465-5340
- Outside normal business hours, call: 1-800-478-9300

DEC Reporting requirements and forms can be found on the web at:

http://www.dec.state.ak.us/spar/spillreport.htm

Via telephone, DEC will assist you in completing an Oil and Hazardous Substances Spill Form (Section 17). Submit it to DEC after telephone notification.

Federal: In the event of an oil spill that reaches any surface waters, or a spill on land of certain hazardous substances (listed in Table XII in Appendix 18.12) exceeding the Reportable Quantity (RQ) level, *the contractor must notify the National Response Center in Washington, D.C., immediately at (800) 424-8802.*

THE NRC web form can be reached at:

http://www.nrc.uscg.mil/nrchp.html

The contractor should document information about the spill, and the contractors spill response, containment and cleanup efforts. Other agencies may also inspect the cleanup efforts and make additional requests for cleanup actions.

9.11. Right-Of-Way Considerations

During construction, the Project Engineer may encounter situations that involve unavoidable construction work outside the Department's property or right-of-way limits or situations that involve an adjacent private property owner or lessee's encroachment onto the Department's property or right-of-way. The Project Engineer must obtain a construction permit from the private property owner, or an agreement from the lessee, before permitting the contractor to work outside the Department's property/right-of-way. If the Project Engineer encounters difficulties obtaining the necessary permission, they should seek assistance from the regional right-of-way unit or the airport-leasing unit.

If the Project Engineer discovers encroachments in the right-of-way and no right-of-way document exists in the field records that permit the encroachment, contact the right-of-way unit for assistance in permitting them or in having them removed. The Project Engineer should give the right-of-way unit the opportunity to review all permits or agreements they initiate.

9.12. Differing Site Conditions

When the contractor encounters conditions in the progress of the work that they feel differs from those represented in the contract, the contractor must notify the Project Engineer in writing. Following the contractor's notification, the Project Engineer must notify the Group Chief/PM and should investigate and document the condition and the contractor's efforts in dealing with it. The Project Engineer and the project staff should thoroughly monitor the situation, including doing additional testing and documentation as required, until they resolve the matter.

If a change is found that the Department is responsible for, the Project Engineer should discuss the condition, along with possible actions to mitigate its effects, with the Group Chief/PM. The Project Engineer should attempt to resolve the situation with the contractor, regardless of where the responsibility may lie. If the Project Engineer and the contractor are unable to resolve the situation, the contractor has recourse under the claims and disputes clause in the contract.

This clause establishes a formal framework for handling disputes, and the Project Engineer and the project staff should be very careful to follow it. Once in the dispute status, the Project Engineer should continue to carefully review the documentation being gathered by the project staff. The Project Engineer should keep both the Group Chief/PM and the federal funding agency current on the status of the changed condition and its resolution. The Project Engineer should continue to fully monitor and document the condition, and the contractor's expense in dealing with it, until the matter is resolved.

The Project Engineer should also review project funding if it appears that the project will incur an additional financial liability from the dispute. Once the dispute is resolved, the tentative agreement must be formalized through a contract change document (Section 13.1.).

9.13. Claims and Disputes

The contract establishes a formal framework for the Department and the contractor to follow in the event of a dispute or a claim for an adjustment in the contract; the procedures outlined in AS 36.30.620 form the basis for this framework. If a conflict cannot be avoided, the contract language provides a mechanism for the contractor to seek relief over any contractual matter including interpretation of the contract, a question of fact, extension of contract time, or any act or occurrence that may form the basis for additional compensation.

The burden is on the contractor to first notify the Project Engineer of the situation. If the matter cannot be resolved within seven days of that notification, the contractor has 14 days to submit a written Notice of Intent to Claim to the Project Engineer. Try to resolve the issue based on the contract documents. The contractor must submit a written claim to the contracting officer within 90 days after the date the contractor became aware of the basis of the claim or should have known of the basis of the claim, whichever is earlier.

The claims package must include:

- Act, event, or condition giving rise to the claim
- Contract provisions that apply to the claim and provide the requested relief
- The items or items of contract work affected and how they are affected
- Specific relief requested
- Statement of accuracy and good faith

The contracting officer has 90 days from receipt of the claim package to issue a decision.

The contractor has 14 days after receipt of the decision to appeal to the commissioner. The commissioner may adopt the contracting officer's decision within 15 days after receipt of an appeal as the final decision without a hearing.

If the contractor is not satisfied after exhausting the administrative process, the contractor may pursue the matter through the judicial system.

Throughout this process, it is important for the Project Engineer and the project staff to thoroughly document all of the contractor's operations, keeping both written and visual records. It is most important for the Project Engineer to thoroughly review all of the staff's project reports each day to ensure that the project staff remains vigilant but impartial in the dispute. In addition, keep both the Group Chief/PM and the federal funding agency current on the status of the dispute and its resolution. As with any dispute, once the parties resolve it, they must formalize the agreement through a contract change document and they must advise the federal funding agency of the terms of that resolution.

9.14. Partial Completion

The Department may accept, at its discretion, a substantially complete geographically separate portion of the project. When the contractor notifies the Project Engineer that work has been substantially completed at a geographically separate location, the Project Engineer should, after coordinating with the Group Chief/PM, schedule an inspection and follow the procedures outlined in Sections 15.1 and 15.3.

9.15. Airport Master Record

The Project Engineer collaborates with design and the airport manager in updating the Airport Master Record. Most updates are done on-line electronically. For links to electronic forms go to: https://nfdc.faa.gov/xwiki/bin/view/NFDC/PublicADC

FAA requires an Airport Data Change Form and electronic as-constructed (as-built) records of the airport layout.

Other forms or information (records) may be required for changes to:

1. Runway Length

   If this submission details runway length changes for runways with an Instrument Approach Procedure (RNAV, GPS, ILS, SID, STAR, etc.), then the data must be submitted via a survey. Federally-funded surveys must be submitted through the FAA Airports GIS program.

2. Traffic Pattern Altitude, Right Traffic, Declared Distances

   If this submission requires changes to any of the following items:

   - Traffic Pattern Altitude
   - Right Traffic
   - Declared Distances

   then you must submit an FAA Form 7480-1 to the appropriate Airports District Office (ADO).

3. ARFF Index

   If this submission requires changes to the Aircraft Rescue and Firefighting (ARFF) Index, please send the information to the appropriate regional ADO for approval and publication.

Submit information (records) two months before substantial completion of any airport project regardless of funding source. The Project Engineer should review the forms with the airport manager for changes in any of the data elements. The Project Engineer should field-review data elements such as:

- Airport manager information
- Services available to the airport
- Non-commercial landing fee
- Condition of the surface
- Current users of the airport
- As-constructed (as-built) information

Submit to the design section the information that reflect the changes (runway dimensions, surfacing, lighting changes, or navaid installation), and certificates, warranties and equipment maintenance information. Design should submit copies of the updated information to the maintenance and operations unit, and the airport manager.

The section (design, construction, or airport manager) responsible for submitting the Airport Data Change Form and other required information to the FAA varies by region.

9.16 Notices to Airmen (NOTAMs)

Refer to AC 150/5200-28D, *Notices to Airmen (NOTAMs) for Airport Operators,* and Section 17 for a sample FAA NOTAM. Also see Section 9.7.

A NOTAM is a notice containing information (not known sufficiently in advance to publicize by other means) concerning the establishment, condition, or change in any component (facility, service, or procedure) of, or hazard in, the National Airspace System (NAS); the timely knowledge of which is essential to personnel concerned with flight operations.

The function of the NOTAM system is to disseminate information until the associated aeronautical charts and related publications have been amended. It is not intended to be used to impose restrictions on airport access for the purpose of controlling or managing noise or to advertise data already published or charted.

FAA Flight Service Stations (FSS) and Automated Flight Service Station (AFSS) receive and manage most NOTAM information for processing and dissemination on the NOTAM system. The National Flight Data Center (NFDC) in Washington, DC, has national program management responsibilities for the system and has exclusive operational control of certain NOTAM elements.

The Project Engineer should maintain a file of existing NOTAMs in the project office. The Project Engineer should coordinate with the contractor and airport manager to provide information for NOTAMs. The Project Engineer may draft:

- requests for a new NOTAM,
- to extend an existing NOTAM time duration, or
- cancel the original NOTAM and reissue the data as a new NOTAM with a new time

Draft NOTAMs should be submitted to the airport manager or their authorized representative. Due to Advisory Circular requirements and the need to format information in specialized language, only the airport manager or an authorized representative listed with FSS can provide NOTAM information to the FSS.

Usually the FSS issues the NOTAM. Alternatively (if certified by FAA) the airport manager or authorized representative may use the digital NOTAM system to publish NOTAMs. The digital system is posted at: http://notamdemo.aim.nas.faa.gov/dnotam/

Normally notification should be made not more than 3 days before the expected condition is to occur.

The airport manager or authorized representative must coordinate the issuance, maintenance, and cancellation of NOTAMs about airport conditions resulting from construction activities with tenants and the local air traffic facility (control tower, approach control, or air traffic control center).

Only the FAA may issue or cancel NOTAMs on shutdown or irregular operation of FAA-owned facilities. Only the FAA may issue or cancel NOTAMs regarding navigation facilities and approach lights.

Any person having reason to believe that a NOTAM is missing, incomplete, or inaccurate should notify the airport manager.

9.17. Environmental Permits and Commitments

The Department and contractor must comply with all environmental permits and commitments required to construct a project. These are included in the contract documents.

See the *Alaska Environmental Procedures Manual* for additional information on environmental permits and approvals.

9.17.1 Alaska Pollutant Discharge Elimination System General Permit

In November 2009, the Alaska Department of Environmental Conservation took over primacy from EPA for the National Pollutant Discharge Elimination System (NDPES) and assumed full authority to administer the wastewater and discharge permitting and compliance program, and began the Alaska Pollutant Discharge Elimination System (APDES) General Permit for Construction Activities in Alaska. The Alaska Construction General Permit (CGP) authorizes stormwater discharges from both large and small construction-related activities that result in a total land disturbance of equal to or greater than one acre and where those discharges enter waters of the U.S. (directly or through a stormwater conveyance system) or a municipal separate stormwater sewer system (MS4). This permit requires preparation and implementation of a Stormwater Pollution Prevention Plan (SWPPP) during the construction phase of a project. All work must be conducted in accordance with the CGP, the SWPPP, and the contract. Both the

contractor and the Department are fully liable for the SWPPP.

9.17.2 Permitting Agencies

- The U.S. Army Corps of Engineers issues permits for work in Navigable Waters of the U.S. (Section 10). Discharge of materials into any waters or wetlands of the U.S. is prohibited by the Clean Water Act (Section 404) without a permit. The act also prohibits transporting dredged material for disposal in ocean waters without a permit (Section 103).
- The U.S. Coast Guard permits bridges over navigable waters (Section 9) and private aids to navigation.
- The U.S. Department of the Interior, Bureau of Land Management (BLM) issues permits for material sites on BLM managed land in Alaska for the sale of sand, gravel, and rock. The permit requires that material sites be developed in an environmentally sound manner.
- The Alaska Department of Fish and Game issues permits for work in special areas like fish habitat, state game refuges, critical habitat, or sanctuaries.
- The Alaska Department of Environmental Conservation issues permits for stormwater discharge, wastewater disposal, Section 401 Certificate of Reasonable Assurance (certifying that an activity is in compliance with the Clean Water Act), design plan approval for water and sewer facilities, and construction dewatering. They also handle soil and water contamination, fuel spill cleanup, fuel storage, and related issues.
- The Alaska Department of Natural Resources issues permits for tidelands, right of way, land use, temporary water use, water rights, and material sites on state land. The State Historic Preservation Office must review all material sites Material sites must also be developed in an environmentally sound manner.
- The Department permits designated material sites for projects that have designated sources.

9.17.3 Environmental Commitments

A Location Hydraulic Study may be required for cities and boroughs that have flood-plain management. These include Anchorage, Fairbanks, Kenai, Juneau, and the Matanuska-Susitna area.

National Marine Fisheries Service oversees the Marine Mammal Protection Act, Essential Fish Habitat, and the Endangered Species Act. The U.S. Fish and Wildlife Service also has jurisdiction over the Endangered Species Act, the Bald and Golden Eagle Protection Act, and the Migratory Bird Treaty Act. The Department may have commitments based on any of these laws. Commitments can be found in the project-specific environmental document, permits, environmental commitments memorandum, and project specifications.

9.17.4 Contractor Permits

The contractor permits contractor-furnished material sites. The contractor submits documentation from the following agencies for clearances or permits:

- The State Historic Preservation Officer's historic and archeological clearance.
- U.S. Fish and Wildlife Service clearances for eagle nests and threatened or endangered species.
- U.S. Army Corps of Engineers determination of no wetlands or a permit issued for working in wetlands.
- Alaska Department of Fish and Game fish habitat permit for work below ordinary high water.
- An approved Alaska Department of Natural Resources Mining and Reclamation Plan or an exemption.
- A material sales and/or land use agreement with the property owner.
- A MSGP permit or SWPPP2 permit with Alaska Department of Environmental Conservation. The contractor must file an NOI and NOT with DEC for projects where the total disturbed area (project, material sources, material disposal areas, and other areas with earth-disturbing activities that are directly related to the project) is more than one acre.

The contractor must submit a Hazardous Material Control Plan to the Project Engineer for approval, as well as a copy of the contractor's Spill Prevention Control and Countermeasure (SPCC) plan when fuel storage exceeds 1,320 gallons, and there is a reasonable expectation that a spill of these products could reach navigable waters of the United States.

The contractor may be required to obtain an APDES Excavation Dewatering General Permit from Alaska Department of Environmental Conservation. The contactors SWPPP must have a BMP plan for dewatering that provides assurance that all wastewater will be properly managed, treated, and discharged in accordance to the CGP.

Water use by the contractor may require Alaska Department of Natural Resources' Temporary Water Use Permit and an Alaska Department of Fish and Game Fish Habitat Permit.

Construction camps require Alaska Department of Environmental Conservation water and wastewater permits and the property owner's land use permit.

9.17.5 Achieving Permit Compliance

In order for your project to achieve compliance under these permits and commitments, you and your staff must pay close attention to:

- *The project's environmental document, permits, environmental commitments memorandum, and the project specifications.* Read them every time a new activity starts. Understand what each permit or commitment requires the contractor to do. Request assistance and clarification from the regional environmental manager on any portions that are ambiguous, or don't fit the field conditions.
- *Special conditions.* The Department must comply with the special conditions in permits. Special conditions are usually found in the U.S. Army Corps of Engineers' 404 permits, and may also be found in other agencies permits.
- *Expiration dates.* Permits are issued for a certain length of time and they expire. Verify the permit expiration dates. If they will expire before the projected project completion date, then the permit may need to be updated. Contact the regional environmental manager, who will refer you to the environmental analyst assigned the project and request a permit modification well in advance of the expiration date. Once a permit expires, usually a new one is required.
- *Making changes in permitted areas.* Do not make any changes to the footprint of a project, pipes, fill, or riprap in areas covered by the permit without contacting both the Designer of Record and the regional environmental manager. If there is a change, the permit may need modification.
- *Stormwater runoff.* Read the contract language regarding the Stormwater Pollution Prevention Plan (SWPPP). Incorporate and maintain all best management practices identified in the SWPPP into the project. Perform joint inspections and ensure the contractor corrects any deficiencies in the SWPPP. Make sure the contractor complies with the SWPPP, and the DEC Construction General Permit. See Sections 3.11 and 9.9 for additional requirements for the SWPPP.
- *Waste areas for overburden and excess subgrade.* All waste areas must be in uplands or in permitted wetlands. This includes waste areas on private property, and written permission from the landowner to use the area as a waste area. The law requires the contractor to have a U.S. Army Corps of Engineers permit before placing waste material in wetlands, stream channels, and other Waters of the U.S. DNR must approve state land outside the highway right-of-way for use as a waste area. Waste areas included in the SWPPP must be jointly inspected with the contractor for compliance.
- *Material sites.* Material sites have permitted quantities. If they are to be exceeded in quantity or duration, revise the permits before they expire. Material sites included in the SWPPP must be jointly inspected with the contractor for compliance.
- *Violations.* If you discover that the contractor is in noncompliance or is violating any condition of any permit, or is not complying with the SWPPP requirements, notify your project manager, the regional environmental manager, and the Regional Construction Stormwater Specialist. You may direct the contractor to stop work on that portion of the project. You may withhold progress payments to cover any fine that is a result of the violation. Penalties by the U.S. Army Corps of Engineers may be as high as $50,000/day in fines and from 1 to 3 years of imprisonment. Some permits hold the person(s) certifying compliance responsible and they, along with the Department and the contractor, may be cited for violations. See Highway specification 641-3.04 Failure to Perform Work, for more information.
- *Permit modifications.* Any variation from the issued permit or commitment requires project manager approval and concurrence from the regional environmental manager.

9.18. Nighttime Operations

Frequently the Special Provisions for a project restrict work on the existing traveled way to a specified period at night. Based on traffic counts, the regional traffic unit determines times for closing lanes and for nighttime work.

The effectiveness of handling traffic through night construction depends upon the Traffic Control Plans, Lighting Plan, and the details of the contractor's operations. The contractor is required to submit and obtain approval of his lighting plan before proceeding with nighttime work. Also, here are some details to consider:

- In addition to the requirements for signs and warning devices shown in the Traffic Control Plans, changeable message signs in advance of the work may be used effectively. You may also consult the regional traffic unit on the use of changeable message signs.
- Use road flares to get motorists' attention only under emergency conditions. Take care to prevent fires in susceptible high fire-risk areas.
- During daylight hours, mark signs and lane closure locations in advance. The Project Engineer should review lane closures' layouts for visibility and effectiveness. When possible, mark cone locations in advance so that cones may be placed quickly and accurately and the resulting line of cones will be straight and correctly spaced.
- Ensure that all flaggers' positions, clothing, and equipment meet the requirements of the specifications.
- When rain gear is necessary, it shall conform to the requirements of the specification for tops and bottoms.
- To maintain the cones, signs, and other safety devices, the Work Zone Supervisor must patrol the project's traffic control systems.
- Personnel, representing the Department and the contractor, who are capable of and empowered to make decisions quickly if the need arises, must be on the job at all times.

9.19 Coordination with Bridge Section

Projects with permanent or temporary bridge work require coordination between project staff and the designer of record or a designee. Most permanent bridge design work is done by the Department's Bridge Section. Some permanent bridges and most temporary bridges are designed by a consultant. In both cases there will be a material and fabrication submittal and review process (Section 8.3.3). There may also be structural welding (Section 11.6), and off-site inspection and testing services (Section 11.7).

Project staff should notify the Bridge Section:

- two weeks prior to the anticipated opening of a permanent or temporary bridge to traffic
- the day a permanent or temporary bridge is opened or partially opened to traffic
- The day an existing or temporary bridge is taken out of service

The notifications will allow the Bridge Section to plan for "initial inspection" (term is defined by 23 CFR 630.305 as initial inspection after the bridge is completed) and entering data into the bridge inventory system within 90 days of bridge opening. Provide this notification to the Bridge Section regardless of whether a consultant or the Bridge Section is designer of record.

The designer of record will note critical dimensions (including height and width clearances) in the bid documents. The permanent bridge structure should be measured for as-built dimensions. Note height and width of clearances under/over railroad tracks, overpasses, traffic surfaces, and navigable waters. Where restrictions are tight, Project Engineer may require a professional surveyor to verify clearance. Notify the Statewide Bridge Section if critical clearances change from design.

The bridge load rating is determined by the designer of record (Bridge Section or a consultant). For a bridge designed by a consultant, verify that the load rating was submitted to and approved by Bridge Section, prior to opening the bridge to public traffic.

This page intentionally left blank.

10. Documenting & Reporting the Contractor's Progress

10.1. Inspection
10.2. Directives
10.3. Diaries, Daily Reports and Photography
10.4. Measurement of Pay Quantities/Quantity Documentation
10.5. Construction Progress & Other Reports

10.1. Inspection

Under authority delegated by the Project Engineer, inspectors are responsible for inspecting, testing, and documenting work performed by the contractor; on smaller projects, the Project Engineer and the inspector may be one and the same person. Proper inspections requires good judgment, diplomacy, common sense, and a thorough knowledge of the contract.

The inspector's primary duty is to observe the work to insure that the contractor's performance is in accordance with the contract, or that the contractor's performance yields an end product that is in accordance with the contract. The difference between these two types of inspection is subtle but very important. Some specifications in the contract call for an end product that meets certain requirements; the inspector tests pay items specified this way for conformance when the contractor completes them, and the contractor has the latitude to determine (within the limits of the contract) how they achieve that end result. Other specifications spell out the steps a contractor must follow in constructing an end product; the inspector inspects pay items specified this way for conformance to the construction methods and not for the end result. The inspector must know the difference.

Inspectors also document the work, keeping such records as are necessary to record manpower, equipment, and materials utilized, to establish contractor production rates and measure and verify quantities for acceptance and for payment. Section 10.3 covers the inspector's reporting requirements in detail. In addition, the inspector is responsible for timely testing or arranging for the testing of completed work segments. As the contractor completes pay items or segments of the project, the inspector should make a thorough inspection of the work in sufficient time to inform the contractor of any deficiencies. This will allow the contractor to make the necessary corrections or cleanup before they move their equipment to another area or operation.

The inspector should consider any work that deviates from the contract unauthorized work and the inspector should bring it to the contractor's attention. Deviations include work outside the lines and grades of the project, unauthorized extra work, unacceptable materials, and unacceptable workmanship. If the contractor disregards the notification of the inspector or the Project Engineer and continues to work, the inspector should inspect and measure the work, but must not submit unacceptable work or unauthorized extra work for payment. The inspector should notify the contractor and Project Engineer of unacceptable or unauthorized work. The Department's decision to inspect and measure unacceptable work or unauthorized extra work does not constitute acceptance of the work or commitment to pay the contractor for that work.

In the case of a dispute with the contractor over the quality of the work or acceptability of materials which the inspector is unable to resolve, the inspector should advise the Project Engineer. The Project Engineer has the authority to suspend the contractor's operations until they resolve the matter. The inspector must keep a detailed record of any such dispute in their inspector's daily report and they must keep the Project Engineer advised of the situation from the start. If the Project Engineer is unable to resolve the situation, advise the Group Chief/PM.

If the inspector encounters physical conditions that deviate from those described in the contract or in the permits, they should notify the Project Engineer immediately. If a permit modification or additional permitting appears necessary, the Project Engineer should notify the environmental unit, the right-of-way unit, or the airport leasing unit.

10.2. Directives

Directives are written communications from the Project Engineer to the contractor concerning topics that are within the scope and language of the contract. Directives are a simplified form of letter to the contractor, utilizing preprinted forms (Forms 25D-069 and 25D-065); the Project Engineer can also issue directives in the form of a letter to the contractor. The Project Engineer can use directives to: clarify

contract terms, suspend and resume work, document directions or instructions given to the contractor, reject non-specification materials or work, and initiate work on contingent sum pay items.

Identify directives alphabetically or numerically in the order issued for ease in record keeping. Although the directive form has a space for the contractor to sign acknowledging receipt, the form does not require the contractor's signature; a directive is in effect when physically delivered to the contractor.

10.3. Diaries, Daily Reports and Photography

Documentation records the events of the construction day, the observations, communications, measurements, and calculations of each employee, and is the responsibility of every member of the project staff. Documentation that records the acceptance of pay item quantities must meet the source document requirements of Section 4.4.

Documentation should follow the five C's: **be clear, concise, correct, complete and concurrent**. Do not include subjective or personal comments about workers or their personalities.

You can document through the preparation of diaries or daily reports (either written, audio taped and transcribed, or entered directly into a computer and stored on data storage devices), field and survey notes, photographs, and audio or video tapes; Section 4.3 covers backup of computer data.

Each project staff member has an area of inspection responsibility and they should confine their daily report to their area of responsibility. The Project Engineer is the only project record keeper who should provide an overview of all project operations. Employees should complete the diary/daily reports in real time; that is, during or at the end of the shift that the report covers.

The Project Engineer can use either the Engineer's Diary format or the inspector's daily report format to document project activity, depending on regional preference. When only one person is assigned to a project, only one daily report or diary is required from that person. The **Engineer's Diary,** while containing certain basic daily information (weather, temperature, general nature and location of the contractors principal work efforts that are underway), should be a reflection of the Engineer's day fully covering the events that involved the Project Engineer that day.

The following topics are the core of the Engineer's Diary:

- the substance of important conversations with the contractor
- decisions that were made
- directions that were given
- observations of the contractor's operations and overall progress
- changes in both Department and contractor project staffs or in staff assignments
- project inspections
- visitors to the project
- other significant events such as accidents, changes in traffic control, personnel matters, and completion/acceptance of work segments
- The Engineer's Diary should also include the information listed under the inspector's daily report for any of the contractor's specific activities that are not being covered by one of the inspectors.

The Engineer's Diary should start when the Group Chief/PM initially assigns the Project Engineer to the project. The Project Engineer should keep the Diary until the Project Engineer completes the last work on the project. When the project is not active and the Project Engineer is not at the project site, they do not have to make entries daily, but they should record all significant events. Explain any breaks in the daily entry routine in the following diary entry. Follow-up on all events mentioned in the diary to conclusion.

The contract may require, under the contractor surveying pay item, that the contractor keep a survey party chief's diary and record field notes. If so, the language of that section of the contract establishes the specific requirements for that record keeping. There are no other diaries, as such, required of the Project Engineer or the project staff.

Other project staff who report daily on project events to the Project Engineer, will use the **Inspector's Daily Report (IDR)** form (Form 25D-186) or diary. These reports start when the contractor begins work or when the Project Engineer first assigns the staff member to cover an operation; reports should cease when the contractor completes the particular operation being inspected. Each IDR should limit the scope of its coverage of project operations, to the scope of the authority and responsibilities of its author. On small projects, at the discretion of the Project Engineer the frequency of IDRs may be reduced; explain any

breaks in the daily entry routine in the following diary entry. Follow up on all events mentioned in the IDR to conclusion.

An IDR or diary prepared by an inspector should document the "**who, what, when, where, and why"** of daily activities. Include the following information:

- a detailed report of the contractor's and subcontractor's specific activities
- an equipment and labor listing; idle and down equipment
- observations on the contractor's and subcontractor's operations
- conversations with the contractor, subcontractors, Project Engineer, and other project staff members (that pertain to work)
- pay item work performed
- and may also include the measurement and acceptance of pay item work

Document the presence of local law enforcement personnel that worked on the project in a diary or daily report such as Form 25D-128.

Certain specialized operations such as time and materials work (Section 13.2), materials placement measured by the load, and pile driving operations, have **Specialized Daily Reporting Forms** that the Department has developed for documenting that work; the Project Engineer may elect to use any of these specialized forms/formats in lieu of, or in addition to, the Inspector's Daily Report. If you use these forms in lieu of the IDR, all of the daily information called for on the IDR must appear on the specialized form. The Department's specialized forms are

- Daily Concrete Placement Report (Form 25D-207)
- Daily Report – Labor, Equipment, and Materials for Time & Materials Work (Form 25D-195)
- Daily Force Account Summary Sheet (Form 25D-196)
- Traffic Flagging Report Book/Item 643(15) (Form 25D-037)
- Pile Driving Record (Form 25D-099)
- Pile Log – Boring Log (Form 25D-046)
- Truck Load Measure Record (Form 25D-192)

In addition to these forms, each region may have developed their own specialized worksheets to document certain construction activities, such as scales operation.

Documentation can also be accomplished through field notes, measurements, and survey records in **bound field books**. Certain daily report forms are available in bound book form (the IDR and some of the specialized daily reports). You may use field books to record field notes and survey notes for quantity measurement and to document the measurement and acceptance of most pay item work.

If you use field books for this latter purpose, you may use each book to document more than one pay item. Books may be set up to cover groups of pay items such as: all clearing and grubbing items, all earthwork items, processed base course materials, paving items, structures (major and minor), concrete and steel items, or electrical items. In some instances, you may do the calculation of pay quantities in the field books with the quantity measurements.

You may use **photographic records** to document the work. Each principal project staff member should have access to a camera, still and/or video, and should utilize it to supplement their daily reporting. You should use still photographs and videotape to record events or conditions such as,

- before and after site conditions
- routine progress during construction, unusual events
- heavy equipment set-up and utilization (crushers, hot plants)
- culvert installations
- the condition of materials sources (before, during and after)
- construction signing and safety marking
- accident or damage scenes
- emergency conditions
- differing site conditions and their resolutions
- the condition of the contractor's equipment

You should keep photographic records in accordance with Section 4.3.

10.4. Measurement of Pay Quantities/Quantity Documentation

The contract establishes the method of measurement for each contract pay item. Before measuring any quantities for payment, the Project Engineer and project staff should review the pay item specifications to be certain they understand what to measure and how to measure it. Refer to Section 4.7 for rounding procedures and significant decimals used in quantity

measurements. If you estimate interim quantities for progress payments, you must document the basis used in the progress summary.

Pay quantity measurements are source documents, and you must record them in accordance with Section 4.4. You may document pay item quantities in the Engineer's diary, inspector's daily reports, on any of the specialized daily report forms, in survey books, or in field books. Record documentation of the various measurements as follows:

- **Measurement by Volume, Area or Length:** Each set of measurements or survey notes taken for pay quantities should contain a validation statement recording that the contractor performed work and the inspector accepted it as shown in the notes; the inspector should sign and date this statement; use drawings or sketches in the notes, where necessary, to clarify the survey measurements; calculate quantities with the notes or reference the notes in the calculations.

- **Measurement by Lump Sum:** Partial payments are estimated on a proration basis or schedule of values (By station, type of work, percentage complete, subcontractor work, time, materials invoice, etc). If the contract does not specify a method for prorating partial completion, the Project Engineer and the contractor should work out a mutually agreeable proration basis; keep the documentation of that basis in the pay item file and reference it in the progress quantity calculations, which should contain a validation statement.

- **Measurement by Hours:** Each daily record sheet should contain all of the detailed information required by the form, all required signatures, and a validation statement.

- **Measurement by Item**: Each set of field book entries or inspector's daily report entries should identify the item by name and number and contain a validation statement.

- **Measurement by Volume Vehicle Measure:** Each inspector's daily report entry or daily load count record sheet should contain the contractor's signature and a validation statement; the Project Engineer and the contractor should measure each hauling unit before the start of the work, and place the records of those measurements in the pay item file.

- **Measurement by Load Count:** Use this method for estimating interim quantities only; each inspector's daily report entry of daily load count record sheet should contain the contractor's signature and a validation statement; estimate each hauling unit's capacity.

- **Measurement of Weight:** The scale diary form for each day contains an inclusive listing of weigh tickets issued, including exceptions; documentation of the taring of trucks and the status of scale certification; and a certification statement signed by the scale operator; the inspector should sign and date weigh tickets received on grade and note the location of placement of the material; obtain daily weights by summing the valid weigh tickets or obtain it electronically via computer directly from the scale house; both the inspector and the contractor should sign the daily summations.

- **Measurement by Time and Materials:** Each day's time and materials summary sheet, which includes a complete record of both labor and equipment identification and hours, contains a validation statement, and both the contractor and the Project Engineer or inspector sign it; Section 13.2 describes how to establish hourly rates for equipment; verify labor hours by reviewing the contractor's payrolls, and establish materials costs by purchase and shipping invoices provided by the contractor.

- **Measurement by Plan Quantity:** A method of measurement that relies on the estimated quantity shown in the plans, rather than a physical measurement in the field, to establish the pay quantity (used on items such as bridge railing).

The Project Engineer is responsible for measurement of attainment of the DBE Utilization Goal. Money received by the DBE for creditable Commercially Useful Function (CUF) work is determined by the Project Engineer in accordance with the statewide Special Provision Section 120. Report determination of CUF on DBE CUF Monitoring Report (Form 25A-298). On a monthly basis, using DBE Monthly Summary of DBE Participation (Form 25A-336), the Contractor shall report to the Civil Rights Office the payments made for the qualifying work, goods and services provided by DBEs.

10.5. Construction Progress & Other Reports

The Project Engineer is responsible for preparing certain reports during construction to keep the Group Chief/PM, the federal agencies, the support group staffs, maintenance and operations, and the general public advised of the progress of the work. When required by the Construction Engineer, the Project Engineer will submit a Project Construction Report (Form 25D-057) for each project, and a road condition report for each highway project. The Project Engineer is also responsible for submitting a Supervisor's Safety Meeting Report (Form 25M-063), following each safety meeting (Section 6.4 and 6.5).

The Project Engineer may also receive certain reports periodically from the contractor, the federal agencies, or other agencies with an interest in the project. The contractor is required to submit weekly SWPPP construction inspection reports to the Project Engineer during the life of the project or more frequently following continuous heavy rainfall. On marine projects, the Project Engineer may receive periodic inspection reports from the US Coast Guard and from the American Bureau of Shipping.

The **Project Construction Report** is to be submitted when required by the Construction Engineer. The Project Engineer may use Form 25D-057 or any other form or format that a region has adopted. The Project Engineer should submit the report from the time the field office is first opened until the project is completed. Submit the report at least monthly during periods of active construction and periodically during periods of work suspension; each periodic report should cover all project activity underway since the previous report. Accompanying each report should be copies of significant correspondence, directives, materials test results, inspection reports received from other agencies, and similar material.

The principal contents of the report should include the following:

- **Status of the Project:** Construction progress on the principal items of work; the status of contract changes; anticipated overruns/underruns on principal pay items; significant progress statistics—percent completion, scheduled and anticipated completion dates, latest revised construction contract amount.
- **Summary of Construction Activity:** Narrative summary of the contractor's and subcontractor's progress in each area of work; important matters discussed and/or resolved with the contractor; the completion and/or acceptance of any work segments; listing of the contractor's equipment and work force; the effects of weather on the work.
- **Project Staff Activity:** A summary of project staff activity, including each member's work assignment and their vehicle; a cumulative summary of estimated field engineering expenses to date, plus estimated support group expenses to date.
- **General Comments:** General observations on project progress; significant materials test results not already mentioned; visitors to the project; project funding status; any other significant project matters not mentioned above.

Maintenance and operations may require a periodic **road condition report** as a courtesy to them and to the general public. The report includes location of the project and condition of the road through the area; location and duration of any traffic control delays; length and conditions of detours; and a contact name and phone number for persons desiring more information. The Project Engineer submits the report to the Group Chief/PM and to maintenance and operations on a schedule dictated by regional policy.

This page intentionally left blank

11. Sampling and Testing the Contractor's Work

11.1. Materials Acceptance
11.2. Materials Testing Summary & Modifying MSTF Tables
11.3. Mix Designs
11.4. Sampling, Testing and Transmitting Materials
11.5. Dispute Resolution
11.6. Structural Welding
11.7. Term Contracts and Job Order Procedures

11.1. Materials Acceptance

The Project Engineer is responsible for the acceptability of all material incorporated into the project. The contract, the project's Materials Testing Summary, and the Materials Certification List show the tests or certifications required to determine a material's acceptability. Materials, with few exceptions, must meet the contracts' quality requirements before they can be accepted and paid for; one notable exception is pay items that specify statistical quality level analysis to determine the estimated percentage of a material that falls outside the established specification limits as input into a pay factor equation used to advance payment to the contractor. Statistical quality level evaluation methods are used as an incentive to produce uniform quality materials for incorporation into the project. There are three general categories of materials that are incorporated into projects: (1) materials manufactured or fabricated off-site, which are accepted based on manufacturer's inspections, certifications, and independent laboratory test results; (2) materials produced off-site or on-site that the project materials staff test for acceptability at the point of incorporation into the project; (3) materials incorporated directly into the project without any processing, which the project materials staff test for acceptance at the point of incorporation.

The first category includes items typically found on the Qualified Products List (QPL). Acceptance of these items is based on the review and approval of materials submittals (Section 8.3). The second category is typified by processed aggregates and aggregate-based products, while the third category includes unprocessed materials such as soils, sands, or aggregates. On-site testing is the basis of acceptance of the last two categories of pay items.

11.2. Materials Testing Summary & Modifying MSTF Tables

During the course of the project, the Project Engineer uses the project's Materials Testing Summary to determine the frequency of tests to perform on each pay item. As the Project Engineer completes each type of test on a pay item, he/she should summarize the results of all those tests on the final Materials Testing Summary (Section 5.4). The Project Engineer is responsible for keeping the summary current as the project progresses toward completion. At project completion, the regional quality assurance/materials unit and the Project Engineer will review the completed summary prior to co-signing the Project Materials Certification.

The Materials Testing Summary is prepared by project staff and quality assurance staff. If it is prepared by project staff it should be reviewed by quality assurance staff. It provides the Project Engineer with a complete list of material tests and testing frequencies for all testable materials included under each pay item in the contract. The Materials Testing Summary is developed from the frequencies in the airport or highway Material Sampling & Testing Frequency (MSTF) tables, and the material quantities in the contract. The project staff will update the Materials Testing Summary if items are added by change documents or quantities change.

The Materials Testing Summary is provided to the contractor.

The Project Engineer uses the Materials Testing Summary as a baseline for scheduling project staff and material tests for acceptance. Complete a final Materials Testing Summary by the end of the project. See Section 5.4 for more information.

11.2.1. MSTF Tables

The non-project specific MSTF tables are on the D&ES Statewide Materials website at:

http://www.dot.state.ak.us/stwddes/desmaterials/mat_resource.shtml.

On FAA projects, modifying the Materials Sampling & Testing Frequency Table requires FAA approval if it reduces the frequency or type of testing.

For FHWA projects on NHS routes, modification of the Materials Sampling & Testing Frequency Table requires FHWA approval if it reduces the frequency or type of testing.

For FHWA projects on non-NHS routes and other non-FHWA highway projects, the Project Engineer may request a project specific modification to the testing frequency based on local conditions. The regional materials engineer/quality assurance engineer must approve any modification.

11.3. Mix Designs

11.3.1. Asphalt Paving

On projects containing asphalt paving, the contract specifies the design parameters of the mixture. The Department must approve the mix design before the contractor uses mix on the project. All mix designs, including transfers from previously approved mix designs on other projects, require the approval of the regional quality assurance or regional materials engineer (RQE or RME).

11.3.2. Department Furnished Mix Design

The contractor must submit samples of aggregate, asphalt, and anti-stripping agent, along with information on aggregate stockpile gradations, proposed blend ratios of stockpiles, and proposed gradation of final mix, to the Project Engineer. The samples must be submitted at least 30 days before production of hot mix asphalt.

The Project Engineer will transfer the contractor's samples and proposed aggregate gradations to the RQE or RME. The Department's materials lab will develop the job mix design in conjunction with RQE or RME and send test results and approved oil content in a lab report to the Project Engineer.

The Project Engineer will transmit the lab report to the contractor.

11.3.3. Contractor Furnished Mix Design

When the contractor is responsible for the job mix design, they must use an AASHTO accredited laboratory to prepare the contractor's mix design and an Alaska-licensed professional engineer must seal it (12 AAC 36.190). At least 30 days prior to the start of paving, the contractor must submit the sealed proposed mix design, along with laboratory test results from the design, to the Project Engineer at the time specified in the contract. The Project Engineer will transfer copies of the mix design to the RQE or RME.

The RQE or RME will review the mix design, and may require the contractor to submit materials for verification.

When the mix design is approved, the Project Engineer will notify the contractor.

11.3.4. Concrete

On projects containing structural concrete or concrete pavement, the contract specifies the requirements for the mix design. The Contractor will submit a written mix design, signed and sealed by a Professional Engineer registered in the State of Alaska, for each specified class of concrete and for each Specified Compressive Strength, to the Engineer at least 45 days prior to scheduled production. The mix design is to be submitted on Form 25D-203. All mix designs except prestressed concrete, including transfers from previously approved mix designs on other projects, require the approval of the RQE or RME. The RQE or RME may require the contractor to submit materials for verification. Mix designs for prestressed concrete members require the approval of the state materials engineer.

When the mix design is approved, the Project Engineer will notify the contractor.

11.4. Sampling, Testing and Transmitting Materials

The five broad categories of tests performed on project materials are:

- Contractor Quality Control
- Source Quality Testing
- Acceptance
- Independent Assurance
- Information

11.4.1. Contractor Quality Control (QC) – Contractor Testing and Process Control

The Contractor is responsible for the quality of construction and materials used in the work. Quality control is also process control, and includes all activities that ensure the construction and materials meet contract requirements. All QC work is performed by the contractor.

Contractor QC testing involves inspection, sampling and testing of materials, data analysis, and specific action to maintain the specified overall quality of the construction and materials. It requires the expertise to make timely corrective adjustments in order to achieve and maintain acceptable levels of quality or service. The contractor or supplier must maintain control of the manufacturing processes. In addition, QC work performed by the manufacturers or service provider includes inspection and adequate testing to ensure that manufactured items meet the contract requirements.

When the contract requires the Department to review a QC plan, the contractor must submit their QC plan to the Project Engineer, prior to the preconstruction conference. The Project Engineer or Regional Quality Assurance staff will review the submittal. When the QC plan is found to meet contract requirements, the Project Engineer will notify the contractor in writing.

QC elements may include, but are not limited to:

- Schedule for permits, working drawing submittals, materials submittals, and mix design submittals
- QC personnel and qualifications
- Methods for producing and controlling the materials
- Regularly sampling and testing the materials
- Evaluating test results including action and suspension limit charts
- Adjusting the control process when needed, to produce materials within specifications
- Monitoring trends making refinements when needed
- A corrective action plan describing the action that will be taken when a process is out of control
- Inspection (plant, materials, and construction techniques)

11.4.2. Source Quality Testing

Usually the Department performs tests on aggregate material sources prior to the contractor developing the material source or prior to transporting aggregate to a project. Aggregate material is tested to determine soundness, wear, deleterious substances, and physical and chemical properties. The project staff is responsible for taking representative samples and shipping them to the regional lab for testing.

The contractor may also sample source material in the presence of project staff.

The project staff should be aware that sources may have variability.

11.4.3. Acceptance Testing

The Department is responsible for performing acceptance sampling and testing. The contractor QC test results are not allowed for use in acceptance testing determination.

Acceptance tests determine the acceptability of a particular lot of material incorporated into the project. The contract spells out the particular tests required. The Alaska Test Methods Manual describes most of the required test procedures for earthwork, bases and aggregates, asphalt, and concrete.

Technician Qualifications and Certifications

Material Acceptance (Section 11.1) and Independent Assurance (IA) sampling and testing (Section 11.4.7) shall be performed using WAQTC certified technicians who have been qualified in those modules they have been assigned to perform. Technicians, whom having been trained and formally qualified to be proficient in those methods/protocols not covered under the Department's WAQTC field technician-training program, are qualified to perform sampling and testing specific to their training and qualification.

Note: When a material is required to be sampled by others (i.e. hot asphalt at the plant), a Department representative shall be present as a witness and to immediately take the sample into custody for testing.

A list of WAQTC Certified Technician's and their qualification status can be found at the following link: www.dot.state.ak.us/stwddes/desmaterials/mat_resource.shtml.

Active Materials Testing Technician

A WAQTC certified and qualified technician achieves Active Materials Testing Technician (ATT) Status when, within a specific reporting period, they are actively performing project material acceptance sampling and testing.

Laboratories and Equipment

Per 23 CFR 637.209 Consultant Laboratories used in the material acceptance decisions, Independent Assurance program, or for dispute resolution testing shall be accredited by AASHTO's Accreditation Program (AAP), or a comparable laboratory program approved by FHWA. Accredited laboratories are exempt from the Department's Independent Assurance (IA) program.

Qualified Field Laboratory

A Qualified Field Laboratory is minimally defined as meeting three primary requirements:

1. A building, or mobile, structure that meets all applicable building codes, and is clean, weatherproof, and well secured (lockable and free of vibrations), adequate in size, having a local exhaust system, and the ability to maintain ambient air temperature between 59°-77°F.
2. Staffed with certified, and or qualified, material sampling and testing technicians, and
3. Equipped with properly maintained, calibrated, and checked test equipment.

Laboratory test equipment shall conform to AASHTO R 18, Annex A-EQUIPMENT CALIBRATION, STANDARDIZATION, CHECK, AND MAINTENANCE TABLES , the ATMM, and when applicable the manufactures recommendations. Qualified field laboratories and technicians are subject to the Department's Independent Assurance (IA) program.

11.4.4. Acceptance Test

The two categories of acceptance tests for pay items are:

- Pass/fail sampling and testing,
- Quality level analysis (QLA) sampling and testing, used when specifications include price adjustments

Pass/Fail

The Project Engineer or the materials inspector select the time and place of pass/fail sampling and testing.

In obtaining a representative sample, it is important to eliminate sampling bias by; (a) following a standardized sampling procedure associated with the testing protocol being used, and (b) when numerous samples are required for testing and evaluation, by following a reliable randomized sampling system specific to the material being tested.

Follow ATMM sampling procedures.

A passing test result allows full payment for that lot of material, assuming that the contract requirements for the pay item are met.

Failing test results require the following actions:

- Notify the Contractor as soon as possible.
- Determine conformity per the governing contract specification; Section 105-1.03 or GCP 50-03:

If the material is deemed unacceptable: the material should be removed and replaced, or corrective action taken to bring the material into conformance (and workmanship) to meet contract requirements.

If the material is deemed reasonably acceptable but at a reduced price: then sign a change order establishing the new price, and document with further explanation according to ACM 16.12 for Project Closeout.

If corrective action is performed in response to a failed test, retest the material and cross reference the new test to the original failed test.

Quality Level Analysis

The Project Engineer uses the project's Materials Testing Summary to determine the frequency of tests to perform on each pay item. A stratified random sampling program determines sampling points for QLA testing. The test results are statistically analyzed to determine the overall quality level of the material and construction. The amount paid to the contractor is adjusted for the pay item to account for the quality level using a specified table or formula. The contractor may request a retest, if allowed by the contract.

11.4.5. Signing and Releasing Test Results

Project staff shall make every reasonable effort to sample and test material in a timely manner. The testing technician shall provide the Project Engineer with test results as soon as practicable after the test is complete.

The Project Engineer shall provide the contractor with acceptance test results as soon as practicable after the acceptance tests are complete and the results are available.

For acceptance testing the person performing the test and the person checking the results must both sign the test report.

Upon request from the contractor the Project Engineer (including consultants) will provide hot mix asphalt draft test results. This is with the understanding that the test results are not checked and they may contain errors. All such tests results should be marked "DRAFT".

11.4.6. Off-Site Laboratories

Samples sent to an off-site laboratory must have a transmittal sheet identifying the sample. Retain a copy of the transmittal sheet for the field lab records. Include the following information in the transmittal sheet to help the receiving lab positively identify the sample (see SP 12 in Alaska Test Methods Manual or Table VII in the ACM Appendix):

- Department, project name, and number
- Type of sample and sample number
- Tests required
- Source the material came from
- Location where the sample was taken indicated by station, offset, and layer or depth; or by GPS coordinates
- Specification pay item and quantity represented by the sample
- Description of the sample
- Date of the sample and the name of the sampler with WAQTC qualification number
- Do not write information on sample lids.

11.4.7. Independent Assurance Program

The Department's Independent Assurance (IA) Review Program serves to assure an unbiased and objective evaluation of the equipment, sampling and testing procedures, and reliability of the test results used in the acceptance program.

The IA Program is defined as activities that form an unbiased and independent evaluation of all the sampling and testing procedures and equipment used in the project materials acceptance program.

The IA Program is a distinctly separate audit process maintained by personnel other than project personnel. IA Test results are not to be used for acceptance decisions, and the contractor may not request a retest of the IA test results.

There are two methods to IA: the Project Approach and the System Approach. The RQE will select either the Project or System approach to be used on each project.

IA Inspectors (Quality Assurance Rovers or agency designated representatives) perform IA evaluations.

All test procedures used in the IA Program can be found in *The Alaska Test Methods Manual* (ATMM), AASHTO Standard Specifications for Transportation Materials and Methods of Sampling and Testing, and Provisional Standards, or ASTM Standards & Publications.

The IA tests and frequencies listed in the MSTF Table are minimums, additional evaluations and testing may be performed at the discretion of the Project Engineer, RQE or IA Inspectors.

When acceptance testing is performed in the Department's Regional Laboratories that are accredited in the specified test method, IA testing is not required

Project Approach

The Project Approach evaluates project test equipment as well as the project testing personnel sampling and testing procedures being used in the acceptance decision. The Project Approach requires IA personnel evaluations frequencies on a per pay item, per project basis, as detailed in the MSTF tables.

The Project Engineer must provide advanced IA evaluation testing notice to the RQE for scheduling project IA inspectors. The RQE is responsible for planning, coordinating, and initiate RQE IA personnel's time and travel so as to meet the MSTF IA frequency demands as required by the Project's Materials Testing Summary.

Lab Tests

To perform acceptance/IA laboratory testing (e.g. split sample for aggregates, soils, HMA) the technician shall:

1. Sample the material
2. Split the acceptance/assurance sample in the presence of the IA Inspector, when possible.
3. Test the acceptance portion (or split) in the field lab
4. Submit the assurance portion through the IA inspector to the Regional Materials Lab
5. Report acceptance test results through the IA inspector to the Regional Materials Lab

Using Table 11-1, the Regional Materials Lab reports the comparison of IA and field acceptance test results, to the Project Engineer and the IA inspector. The IA Inspector will investigate, report, and correct findings that have resulted in the out-of-tolerance variances between the acceptance and IA test results.

Field Tests

To perform acceptance/IA field testing (e.g. concrete, densities) the technician shall:

1. Sample in presence of the IA Inspector
2. Test concurrently with or while being observed by, the IA Inspector
3. Report acceptance test results to the IA Inspector
4. Obtain the report from the IA Inspector that compares the acceptance and IA test results

The IA Inspector will investigate out-of-tolerance variances in the test results and report findings to the RQE and Project Engineer.

Use Table 11-1 when comparing acceptance and independent assurance test results. The RME, RQE, or designee must validate that a comparative analysis has been made.

System Approach

The System Approach evaluates Active Testing Technicians (ATT) and acceptance testing equipment on an annual basis.

ATTs will be evaluated, at a minimum, once per calendar year for each test method the technician performs. IA evaluations will be performed by an IA Inspector using a standard checklist of sampling and testing performance criteria. Additional evaluations may be performed at the discretion of the project engineer, RQE or IA Inspector.

The goal is to perform at least 90% of the IA evaluations during the reporting period.

ATTs are required to report to the RQE, within 7 days of testing, when they become an Active Testing Technician in a Test Method.

ATTs will be evaluated using one or more of the following methods:

- Observation of test method performance
- Concurrent tests
- Split sample comparisons according to Table 11-1
- Proficiency sample comparisons according to guidelines established by the regional lab

Equipment will be evaluated once per project per calendar year using one or more of the following methods:

- Verification of calibration
- Verification of critical dimensions
- Concurrent tests
- Split sample comparisons according to Table 11-1

Table 11-1
Guidelines for Comparing Independent Assurance and Acceptance Test Results

Type of Test	Maximum Difference
Sieve Analysis Sieves with Openings -	
Greater than 3”	7%
2” to 3”	6%
3/8” to 1-1/2”	5%
No. 50 to No. 4	4%
No. 100	3%
No. 200	2.0%
Liquid Limits	3%
Plasticity Index	4%
Fracture	10%
Flat and Elongated	2%
Sand Equivalent	8
Moistures Content of Soils and Aggregates	1.0%
Densities of Soils, Gravels, Sands, and Combinations -	
Standard Density	4 pcf
In-Place Field Density	4 pcf
Asphalt Content -	
Ignition oven	0.4%
Nuclear Content Gauge	0.4%
Maximum Specific Gravity	0.020
Percent Compaction of Asphalt Pavements	1.5%
Portland Cement Concrete -	
Slump: less than 3”	3/4”
Slump: 3” to 5”	1”
Slump: Greater than 5”	1-1/2”
Unit Weight	2 pcf
Air Content	1.0%
Compressive and Flexural Strength	15%
Grout Cubes – Comp. Strength	20%

- Proficiency sample comparisons according to guidelines established by the regional lab

At the conclusion of the IA evaluation, the ATT and supervisor will be provided with an evaluation of the results.

Unsatisfactory performance or deficient equipment will result in a failing evaluation. Deficient equipment shall be repaired or replaced, and the repaired or replaced equipment must be calibrated or verified prior to use.

After a failing evaluation, the IA Inspector will schedule a re-evaluation of the technician to occur as soon as possible, but no later than 30 days after the initial evaluation. Upon request, the re-evaluation may be performed by a different IA Inspector. The re-evaluation should be performed in the same manner as the initial evaluation.

An ATT, who refuses to participate in an evaluation, will be considered to have failed the evaluation and may be barred from acceptance testing.

An ATT who fails three evaluations of the same test method in a single reporting period will be referred to the RQE to determine if the failures warrant action; up to being barred from acceptance testing.

IA-Systems Approach Reports

By January 31, each Region using the IA-Systems Approach will report regional findings to D&ES for the previous calendar year. An annual report will be prepared by D&ES and transmitted to FHWA and FAA Division Offices for those evaluations performed in the System Approach.

The report will include:

1. The number of:
    a. Statewide certified technicians
    b. active technicians in the System Approach
    c. technicians evaluated by IA in the System Approach
    d. percentage of evaluated technicians/active technicians
    e. IA reported deviations
2. Summarize corrective actions, by test method, describing how deviations from allowable tolerances and ATMM procedures were addressed
3. Potential systematic solutions to recurring deficiencies

11.4.8. Informational Testing

The Project Engineer has the discretion to take tests for information**.** These tests may be used for, but are not limited to:

- Evaluate materials placed in a stockpile prior to making stockpile payment
- Evaluate early concrete strength
- Provide helpful information in reviewing changes in materials sources

11.5. Dispute Resolution

At the first level of dispute between test results, accredited laboratories with certified technicians will have precedence over non-accredited laboratories. AASHTO-accredited laboratories will have precedence over other laboratories.

11.6. Structural Welding

Structural welding is a critical item of work that requires close coordination between the Project Engineer, Group Chief/PM, the contractor, the design engineer of record (DER), the technical welding advisor (TWA),the state quality assurance consultant (when used) and the state materials engineer (SME). Close coordination is required prior to and during construction. The administrative requirements for structural welding are complex and may often involve all of the aforementioned project team members. This Section describes areas of responsibility and procedures specific to structural welding (e.g. AWS D1.5, D1.1, etc), unless otherwise stated in the contract.

11.6.1. General

The contractor is responsible for quality control (QC) welding submittals, inspections, and testing. The Department has the prerogative to conduct quality assurance (QA) and acceptance inspection and testing.

The chief bridge engineer may designate a staff member to be a technical welding advisor (TWA). The primary responsibilities of the TWA are:

1. Assist the DER in developing the scope of QC inspection required for the plans and specifications;
2. Review or develop the scope of services for contracting the quality assurance welding inspection and nondestructive examination (NDE) when required; and

3. Review the contractor's welding plan and inspection reports when QA consultants are not utilized.

The Statewide Materials Section maintains a consultant term contract for QA welding inspection and NDE conducted on materials fabricated outside of Alaska.

If the project involves structural welding, the Project Engineer shall contact the TWA during the initial review of the project plans and specifications. The TWA will review specifications, plans, NDE requirements, and in conjunction with the DER and Project Engineer, determine if a QA consultant is required to inspect the welding and/or fabrication. If a QA consultant is required, the Project Engineer must follow the Term Contracts and Job Order Procedures in Section 11.7.

11.6.2. Shop Welds

The fabricator (that is, the contractor) is responsible for the QC welding submittals, welding inspection, and testing.

All shop welding is subject to QA inspection at the Department's discretion. When QA is required, the Project Engineer will forward the fabricator's welding submittal and plan to the QA consultant. The QA consultant will review the required Welding Procedure Specifications (WPSs), the Procedure Qualification Records (PQRs), Welder Performance Qualification Records (WPQRs), fabricator's QC inspector qualifications, fabricator's NDE technician qualifications, and the fabrication quality control (QC) program.

Once the contractor's welding submittal and plan satisfies contract requirements, the QA consultant forwards the documents to the Project Engineer with a recommendation for approval. The QA consultant will monitor fabrication and/or welding and conduct/supervise NDE testing as required by the contract project scope of services. The QA consultant will forward post-fabrication inspection/NDE reports to the Project Engineer. During the welding fabrication process the QA consultant will keep the Project Engineer advised as to whether or not the welding fabrication is maintaining conformance to the project's contract requirements.

When the QA consultant is not used, the Project Engineer will submit the fabricator's welding plan to the TWA. The TWA will review the contractor's welding plan and advise the Project Engineer on whether or not the welding plan satisfies contract requirements. The TWA's points of contact would be the Project Engineer and the DER for all welding matters concerning the structure.

11.6.3. Field Welds

The contractor is responsible for QC welding submittals, welding inspections, and testing.

All field welding is subject to QA inspection at the Department's discretion. When QA is required, the Project Engineer forwards the contractor's welding submittal and plan to the QA consultant. The QA consultant will review the required WPSs, the PQRs, WPQRs, qualifications of the contractor's QC inspector, and the contractor's NDE technician qualifications. The QA consultant will also review materials certifications and statements of origin. Once the contractor's welding submittal and plan is found to be in conformance with the contract requirements, the QA consultant forwards the documents to the Project Engineer with a recommendation to approve.

The QA consultant will inspect the field welding and conduct/supervise NDE testing as required by the contract. If the QA consultant recommends a field weld NDE inspection and testing, it is the Project Engineer's responsibility to coordinate and schedule the inspection with the contractor. If the QA consultant determines that field welding is not in conformance with the contract, the QA consultant will, as soon as possible, notify the Project Engineer and the TWA. The QA consultant will forward post-welding/NDE reports to the Project Engineer.

If the quality assurance consultant is not used, the Project Engineer submits the contractor's welding plan to the TWA. The TWA will review the contractor's welding plan and advise the Project Engineer on whether or not the welding plan satisfies contract requirements. The TWA's points of contact would be the Project Engineer and the DER for all welding matters concerning the structure.

11.7. Term Contracts and Job Order Procedures

Statewide Materials manages six QA term contracts. The State Materials Engineer is the contracting officer and will assign a contract manager to each term contract. The Project Engineer oversees the work of the term contractor or consultant.

At this writing, term contracts are available for:

- Pre-stressed and precast concrete inspection, sampling & testing (2 contracts).
- Field welding and coating inspection (2 contracts).
- Soils, aggregate, asphalt and concrete inspection, sampling, and testing (2 contracts).
- Out-of-state fabrication, inspection, sampling, and testing.

For each of the Term Contracts a Regional Notice to Proceed (NTP) is prepared for each regional Construction Section, for the purpose of issuing Job Orders for work not exceeding $60,000. A project specific NTP will be issued for all project related work that will exceed $60,000.

11.7.1. Procedures

At a minimum of 30 calendar days prior to fabrication, contact the Statewide Materials contract manager to request services. The Statewide Materials contract manager will coordinate with the Group Chief/PM or Project Engineer to:

- develop a Request For Proposal (RFP)
- contact the term contractor with the RFP for cost estimate,
- prepare pre-proposal estimate (required for work over $60,000)
- negotiate the scope & budget with term contractor
- get approval to issue the job order or NTP

The Statewide Materials contract manager will prepare the NTP (or job order) documents, prepare a Record of Negotiations (if required), acquire approval/acceptance signatures, encumber the funds, issue the approved NTP or job order, and maintain an accurate log of job order activity.

The Statewide Materials contracting officer approves each NTP for work over $60,000.

Work that is less than $60,000 will be issued as a Job Order under a Regional NTP. Only the Regional Construction Engineer or the Statewide Materials contracting officer may approve a job order.

When time is of the essence, the, Group Chief/PM or Project Engineer or the Statewide Materials contract manager may conduct the request for proposal and negotiation process orally. Following these negotiations, the Statewide Materials contracting officer may orally authorize a NTP, and will follow it with a written confirmation, generally within two working days of the verbal Notice To Proceed.

Authorization for overtime may be included in the job order/NTP; or in a written directive by the Group Chief/PM or Project Engineer. Amendments to the term contract are by the contract manager and approved by the contracting officer. Authority to issue verbal notice to proceed is given only to the contracting officer.

Total job orders may not exceed the total of the regional NTP for that term contract. A new job order is required if there is a change in:

- Performance period
- Scope of services and/or
- Compensation amount

11.7.2. Payments

On FAA projects, the payment method shall be cost plus a fixed fee or fixed price. Payment on the basis of time and materials is allowed with prior approval from FAA project manager. At the time of this writing FAA must also give approval to hire consultants to perform contract inspection work for each specific project. Usually Department project managers seek FAA approval via email.

On FHWA projects, allowable payment methods are: time and materials, cost plus fixed fee, fixed price, or fixed price plus expenses.

The term contractor shall not perform any services or incur billable expense without receipt of an approved NTP or job order or a verbal NTP. The term contractor may only work overtime on a project when given written authorization in advance.

All invoices on Inspection Term Agreements will be processed through the Statewide Materials Contract Managers desk and approved by their Contracting Officer.

Inspection services performed by non-approved QA inspectors will not be acceptable, and the Department will not reimburse associated costs. The Department reserves the right to withdraw approval of any inspector by written notice to the term contractor.

This page intentionally left blank.

12. Contractor Payments

12.1. General
12.2. Calculation of Quantities
12.3. Stockpiled Materials
12.4. Progress Summary
12.5. Preparation of Progress Estimate
12.6. Encumbrance Revisions & Revised PDAs

12.1. General

A primary duty of the Project Engineer and the project staff is to see that the contractor receives timely progress payments for work acceptably completed. The Project Engineer must accept both the material and its installation before authorizing payment.

Base payment on quantities calculated from source document measurements and linked by a clear audit trail between the source document and the calculations.

All pay item quantities used in progress payments should appear in the progress summary referencing the pay item's quantity calculation file and the item's source documents measurements.

The contract establishes the method of measurement and the basis of payment for each contract pay item. Use these methods for calculating pay quantities, except on progress payments where interim quantities on pay items not yet completed may be estimated.

12.2. Calculation of Quantities

The Project Engineer is responsible for keeping adequate project records that establish the accepted quantity of work the contractor has completed under each pay item.

The Project Engineer and the project staff should be thoroughly familiar with the methods of measurement for each pay item, and should measure them accordingly.

If a pay item involves more than one source of funding, establish separate records for the quantities allocated to each source of funds. For partial completion of a pay item, you may estimate the interim quantity as long as the estimate has a justifiable basis (load counts, three-point cross-sections, or similar measurement).

Measure and compute all final pay item quantities as soon as possible after completion of all work on the pay item.

Compute and check quantities of pay items before entering the quantities in the progress summary and using them for a progress payment. You may calculate earthwork quantities using the Earthwork and Mass Quantity Computation sheets (Form 25D-40A). Refer to Section 4.7 for rounding procedures and significant decimals to be used in quantity calculations.

Someone other than the original calculator must check all computations of pay quantities; correct errors and recheck the quantity.

The signatures of the calculator and the checker, along with the date, must appear on the first page of any computations, with initials and dates on successive pages. If it is necessary to change or correct any calculations, you must follow the source document procedures shown in Section 4.4.

Programmable calculators or computers may be used to calculate pay item quantities if the procedures or the program is listed in the file containing the computation sheets. Back up all computer-entered or -generated data as described in Section 4.3. Use sketches, diagrams and drawings whenever necessary to explain or enhance the quantity calculations.

In all cases, clearly show and reference the steps involved in going from the source document measurements, through the computation process, to the resultant quantity to establish a clear audit trail.

Take measurements of each pay item in the field or make them in the office in accordance with the methods established in the contract (Section 10.4) or as noted above. The quantities calculated from those measurements should follow these guidelines; enter quantities in the progress summary.

- **Payment by Volume** (Cubic Yard, MBM): calculate from source document measurements using computer or calculator programs, or longhand using the average end area method or using simple dimensional calculations.
- **Payment by Area** (Acre, Square Yard, Square Foot): calculate from source document measurements using computer or calculator

programs (complex acreage calculations for example), or using simple dimensional calculations.

- **Payment by Length** (Linear Foot, Mile): take measured lengths directly from the source documents to the progress summary.
- **Payment by Lump Sum**: calculate partial completion percentages in accordance with a proration method, as discussed in Section 10.4, and the calculations should contain a validation statement.
- **Payment by Hours**: recorded hours may be extracted directly from the source document into the progress summary.
- **Payment by Item** (Each, Only): you may extract recorded quantities directly from the source document into the progress summary.
- **Payment by Volume Vehicle Measure** (Cubic Yard Vehicle Measure): extract daily quantities resulting from the daily load counts and vehicular dimensional measurements directly from the load count record sheets into the progress summary.
- **Payment by Weight** (Ton, Lb.): extract daily recorded weights directly from the source documents into the progress summary.
- **Payment by Time and Materials**: extract the cumulative recorded cost directly from the daily time & materials summary sheets (Section 10.3) onto the progress estimate.
- **Payment by Plan Quantity**: inspector's acceptance statements establish the basis for paying for the item; take the quantity from the plans.
- **Estimated Payment by Load Count** (volume measurement): not normally specified in the contract as a method of measurement, you may use this method to determine interim quantities on pay items measured by volume; extract daily quantities resulting from the daily load counts and vehicular dimensional measurements directly from the load count record sheets into the progress summary.

12.3. Stockpiled Materials

Stockpiled materials are materials destined for incorporation into the project that have either been manufactured or removed from their initial position and placed into storage until ready for use. Stockpiled materials fall into the three general categories described in Section 11.1:

1. materials manufactured off-site by others, purchased by the contractor, transported , and placed in storage;
2. materials manufactured on- or off-site by the contractor or a subcontractor, transported or not, and placed in storage; or
3. on-site or off-site materials removed from their original position and placed in storage.

In the former category, purchase and freight invoices form the basis for stockpile payments. In the latter two categories, compare the cost allowed for production/removal and stockpiling of the material to the cost of incorporating the material into the project, and then allocate the item's unit price accordingly.

The contract spells out in detail all of the conditions that must be met before payment can be authorized for stockpiled materials. Generally they include the following conditions:

1. Materials must meet contract requirements and be stored on the project site, or other location accessible to and acceptable to the Project Engineer;
2. Approved materials submittals, test reports, and certifications must be on file and verification made that the certifications and test results apply to the delivered materials;
3. If materials is stored at an approved off-site location, the contractor must insure the materials (if required by the contract), segregate them from the contractor's other operations, and identify the materials as pertaining to the project; and
4. For materials produced by the contractor or a subcontractor, the Project Engineer must have records and measurements to document both the quality and quantity of materials.

When the Department makes a stockpile payment, the material becomes the property of the Department.

The contractor cannot dispose of the material outside of the project, and they must record any transfers, waste, etc. of the material and debit it out of the stockpile pay quantity. Similarly, when removing material from the stockpile for incorporation into the project, make an appropriate reduction in stockpile quantity and credit a similar increase into the pay item.

Give a stockpile allowance for the invoice price of the materials plus freight charges to the approved stockpile location. If the bid unit price does not reflect the true cost of the work, prorate the allowance for the stockpiled material to leave enough money for installation. The quantities of stockpiled materials paid for should never exceed the total estimated quantity required to complete the item.

Any materials included in a stockpile payment which the contractor does not incorporate into the project will be debited out of the stockpile total when the need for the material no longer exists.

Handle excess stockpiled materials produced from Department-furnished sources in accordance with contract language. Other excess stockpiled materials revert to the contractor unless the Department purchases them.

12.4. Progress Summary

The progress summary is the start of the audit trail from the calculated quantity back to the source document. Its purpose is to gather all the calculated quantities for a pay item together in one location and lay out an audit trail, from the resultant quantity back through the calculations to the original source document measurement and acceptance.

The progress summary, in the form of an estimate book or estimate files, is a cumulative compilation by contract pay item of quantities (interim through final) of work completed to date. The summary also contains information on where and how the quantity was calculated and on the source of the quantity measurements.

The format of the estimate book or estimate files may vary from project to project. One acceptable format is to use standard forms designed for setting up an estimate file with separate pages used for each pay item.

- Index sheet (Form 25D-162)
- Earthwork pay items measured by the station w/ Continuation sheet (Forms 25D-163 and 25D-065)
- Excavation pay items w/ Continuation sheet (Forms 25D-164 and 25D-065)
- Weighed pay items w/ Continuation sheet (Forms 25D-166 and 25D-065)
- Stockpiled materials (Use Regional form or spreadsheet if needed)
- Item summary (Form 25D-170)
- Summary book (Form 25D-171A)

Items running the length of the project (clearing, grubbing, earthwork) can be broken into sections for ease of measurement. On items paid by weight, enter the daily total weights on the form.

The forms should indicate the pay item's name and number, the method used to calculate the quantities, the location of the calculations, and the source of the measurement data (the source document).

Fill out the estimate columns as you complete the calculations. If the contractor does not complete work on an item in a pay period, note that on the form. Once the contractor completes work on an item, no further entries are necessary.

If you estimate the quantities, spell out the basis for the estimate. Retain calculation sheets for both estimated and calculated quantities in the pay item files. Examples of all these forms are in Section 17 Exhibits.

Interim quantities calculated for the progress summary need not be exact. But estimated quantities must be reasonably commensurate with the work actually accomplished and a sufficient audit trail left in place back to the source documents.

12.5. Preparation of Progress Estimate

The contract details payment frequency, but we normally make progress payments at least once each month during periods of active work. The contract may allow twice monthly payments if the contractor requests it. In either case, prepare payment estimates promptly at the end of each pay period and develop them in accordance with the contract.

The contractor is entitled payment for the value of work that is satisfactorily performed to date. Base

progress payments on estimated quantities. Whether based on unit measure, breakdown of lump sum items, load count, engineering judgment, or another method, document the basis the Project Engineer uses for establishing estimated quantities in the progress summary.

The Project Engineer must insure that the materials and work represented in the estimate conform to contract requirements and that the project records include all required documentation including materials submittals, invoices, and test results.

12.5.1 Writing a Progress Estimate

Take pay item quantities from the progress summary and show them on the progress estimate. Show interim quantities to the nearest whole unit; show final quantities to the appropriate significant decimal as outlined in Section 4.7. Break the items out according to funding source and eligibility (participating or non-participating). This quantity breakout is necessary to insure that we pay the contractor the proper funds and to keep an accurate track of funding status throughout the project.

Carry the funding breakout forward to the recapitulation sheet; and show it by program number, phase code, activity code, and object code. Code all contractor payments to the same activity code, except for:

- Contractor-furnished CE items such as field office, field lab, vehicles, meals, and lodging.
- ARRF vehicles and airport snow removal equipment purchased by the Department on FAA-funded projects.

Each separate source of funding also requires an individual breakout on the recap sheet.

Report the cost of work accomplished under any change documents on the estimate under the respective bid items or show each change document separately at the end of the original pay items. If a change document establishes a new item of work, enter the change document on the estimate at the end of the original pay items.

Maintain project records in such a manner that supporting data for payments made under each pay item and each category of funds is readily discernible.

On the recapitulation sheet, the "Original Contract Amount" is the original contract award amount.

The "Amended Contract Amount" is the award amount adjusted by any approved change documents and quantity overruns/underruns; use this amount to verify encumbrance revisions.

Use another calculation, the "Probable Final Contract Amount," on FAA-funded projects in place of the Amended Contract Amount. The Probable Final Amount is the amended amount adjusted by anticipated quantity overruns/underruns and by anticipated additional work or claim settlements not formally added to the contract. Use this amount to forecast the need for grant increases.

12.5.2 Withholding and Liquidated Damages

If withholding and liquidated damages are applicable, calculate them in accordance with the contract and show them on the recap form also.

The Department may withhold part or all of a payment to a contractor, only for reasons covered in the contract. Reasons for withholding include liquidated damages, unsatisfactory performance by the contractor, the contractor's failure to pay subcontractors, or the subcontractor's failure to pay lower tier subcontractors.

Liquidated damages may be assessed for non-completion of work within time deadlines; failure to meet requirements of 641 Erosion, Sediment and Pollution Control; failure to meet requirements of 643 Traffic Maintenance; and other LDs as listed in the contract.

The Project Engineer will notify the contractor in writing within eight working days of a request for a progress payment of the amount being withheld, the reasons why the amount is being withheld, and what actions may be taken by the contractor to receive full payment.

The Project Engineer should show the amount withheld on the Progress Estimate, and continue to withhold that amount until notified that the contractor has satisfied the cause for the withholding.

12.5.3 Review with Contractor

Review progress payment quantities with the contractor prior to finalizing the forms as a matter of courtesy and to eliminate the possibility of processing delays due to disagreements. Once the Project Engineer receives the signed estimate back from the contractor, they should sign and date the estimate in the *Date Received from the Contractor* signature

block. The Project Engineer should immediately forward the estimate to the Group Chief/PM.

12.5.4 Prompt Payment

As an incentive to promoting prompt payment, AS36.90.200 provides for paying interest to the contractor if prompt payment is not made.

For projects using state money, the contractor should be paid within 30 days of the dates both the contractor and the Project Engineer signed and dated the progress estimate (based on the last date signed).

For projects using federal (or grant) money, the contractor should be paid within 21 calendar days of the dates both the Project Engineer and the contractor signed and dated the progress estimate (based on the last date signed), or within 21 calendar days of the date the state actually receives the federal (or grant) money, whichever is later.

If payment deadlines are not met, the Department will pay the contractor interest on the late payment at the statutory rate upon written request from the contractor. Interest payments are made from state monies, they are non-reimbursable from federal funds.

Timely preparation and prompt processing of progress payments are one of the Project Engineer's most important responsibilities.

The prime contractor must pay each subcontractor within eight working days after receiving payment from which the subcontractor is to be paid (AS 36.90.210). Per AS 45.45.010 (a), the contractor must pay the subcontractor interest on the unpaid balance from the time the payment was due until it is paid.

12.6. Encumbrance Revisions & Revised PDAs

As the project progresses, the Project Engineer (or Group Chief/PM) should keep a close watch on the remaining balance of funds encumbered to the contractor versus the estimated amount that will be paid to the contractor. The Group Chief/PM or Project Engineer should complete an Encumbrance Memo and request PDA modification from Project Control when the estimated amount is more than the encumbered balance.

The need for an increased encumbrance could result from a contract change document, or a quantity overrun.

The Project Engineer should prepare the Encumbrance Memo listing the reasons for the increase and including supporting documentation (copies or listing of change documents, quantity calculations), and submitting it to the Group Chief/PM.

Any time there is a financial change or the possibility of a financial change in the contract amount, the Project Engineer should check the construction phase funding to see if there are sufficient funds to finance the change. The Project Engineer should communicate the need or possible need for additional funding to the Group Chief/PM as early as the need is recognized, as additional funding is not always available. The Project Engineer should communicate the possible decrease in funding needed to the Group Chief/PM, as this may free funding for other projects. The Project Engineer and Group Chief/PM should notify the project control unit of the situation at this point.

If an increase or decrease in funding is necessary and funds are available, the Group Chief/PM or Project Engineer should contact Project Control and request a modification to the PDA (Project Development Authorization) Provide justification for the increase or decrease citing change documents, changes in quantities, or other reasons.

This page intentionally left blank.

13. Contract Changes

13.1. General
13.2. Change Order Process
13.3. Equitable Adjustments
13.4. Interim Work Authorization
13.5. Requirements for Professional Seals
13.6. Supplemental Agreements

13.1. General

Contract change documents refer to changes to the contract that are executed after the contract has been awarded. They may include the modification of bid items, quantities, material requirements, specifications, contract time, or details of construction; and the resolution of disputes, equitable adjustments, or any other deviations from the original contract. Once executed the change document becomes a part of the contract.

Changes within the scope of the project are made using a change order. Change orders are described in more detail in Sections 13.2 and 13.3. For federal aid projects also reference 23 CFR 635.120–121.

An Interim Work Authorization (IWA) may be used to initiate changes to the contract on an interim basis until a subsequent change order is executed. IWAs are described in Section 13.4.

All technical changes need to be reviewed, approved and sealed by a professional engineer as described in Section 13.5.

Contract changes outside the scope of the project are made according to the procurement code (AS 36.30). If the work is awarded to the current prime contractor, then you may use a supplemental agreement to the existing contract. Supplemental Agreements are described in Section 13.6.

For changes to the contract, the Project Engineer can initiate work with an IWA or a change order. In such cases the Project Engineer must keep the Group Chief/PM and the Department employee with Delegation of Authority informed of estimated costs. Normally the Project Engineer and contractor will fully execute the change document before work begins. No payment for proposed changes will be made to the contractor until after the change document is signed by both parties and approved.

For major changes (as defined by the stewardship and/or oversight agreement) and supplemental agreements to federal-aid projects, the Department and the federal agency must authorize the changes prior to the start of new work.

Contracts administered for other agencies may require their approval before start of new work. Refer to the individual project agreements or memoranda of understandings.

When emergency conditions occur that threaten the safety, health, welfare, or sanitary conditions of the public, DOT&PF infrastructure, or the environment; the Project Engineer may verbally initiate changes to the contract with change documents to follow as soon as practicable. The Department employee with Delegation of Authority must approve the verbal authorization prior to beginning work, unless communications are unavailable or delayed. In this case, the Project Engineer may assume this responsibility and will notify the Department as soon as practicable.

Do not separate an issue into multiple IWAs or change orders to avoid the major change order threshold.

The regional staff person assigned to coordinate DBE matters should coordinate with the Statewide Civil Rights Office when there are changes relating to EEO, OJT, and DBE (Section 7.2).

13.2. Change Order Process

Either the Department or the contractor may initiate a request for changes to the contract. See Figure 13-1 for a flow chart of the Change Order Process.

The Project Engineer, in consultation with the group chief/PM, should determine the following things about the proposed change:

- Is it a change?
- Which party pays for the change?
- Is the change outside the scope of the project?
- Is funding agency concurrence needed?
- Are modifications required for any environmental documents or permits?
- Is there sufficient funding available, or will other project reductions be necessary?
- Is this a technical change requiring a professional seal? If so, who will seal the change order?

Discuss the need for a change with the involved parties. The proper disciplines should be involved in

the change order discussions. Consult with the funding agency when required by agreement. The Department employee with Delegation of Authority to approve the change order must decide whether a change order is needed.

If the Department decides a change order is needed, there are two ways that a contractor's proposal may occur:

1. If the contractor initiates the proposed change, require them to submit a proposal with work description, and detailed cost and time data. The Project Engineer should verify that the description is accurate, and the cost and time proposal includes certification that the data is accurate (required by AS 36.30.400[a]); or

2. If the Department initiates the proposed change, the Project Engineer will issue a Request for Proposal (RFP) to the contractor by Form 25D-067, or by letter or email.

   The contractor should submit a proposal based on the RFP, with detailed cost and time data, and a certification that the data is accurate (required by AS 36.30.400[a]).

A contractor signature on the RFP Form 25D-067, when used as a cover page for the proposal data, is sufficient to certify that the data is accurate.

The Project Engineer must prepare an adequate and independent cost and time estimate of the proposed work. They may use Form 25D-049 or regional equivalent.

Compare the engineer's cost and time estimate with the contractor's proposal. Prepare the change order if the estimate and proposal are similar. Negotiate cost and time with the contractor if the estimate and proposal are different; when agreement is reached prepare the change order.

If an agreement cannot be reached with the contractor the Department has four options:

1. Don't perform the work.

2. Bid the work and issue a new contract for the work.

3. Perform the work with Department personnel.

4. Issue a unilateral IWA or change order to the contractor based on:

   a. Time and Materials; or

   b. Items of change work.

The next step in the change order process is for the Project Engineer to prepare the change order and backup documentation. Changes in contract time must be justified and documented. The justification should include analysis of controlling items of work, to determine how the change affects the time to complete the project. See Sections 13.2.3 and 14.4 for more information.

A technical change order must be sealed. See Section 13.5 Requirements for Professional Seals.

The group chief/PM reviews the change order, and it is approved by the Department employee with the appropriate Delegation of Authority for the dollar amount of the change order. The exact process may vary by region. If additional funding is required, request a Project Development Authorization (PDA) revision. Obtain approval from the funding agency when required by agreement.

13.2.1 Federal Agency Approvals

On federally funded projects, consult with the funding agency when:

- There are questions about financial eligibility of the change order.
- Contract time affects the cost.
- Before authorizing a supplemental agreement
- The FHWA Stewardship and Oversight Agreement requires their approval.
- FAA projects may require a grant amendment to fund the change order when the contract amount exceeds the budgeted amount plus contingency.

13.2.2 Time and Materials Basis

The time and materials basis (federal language calls it force account procedure), is a contractually specified method of compensating the contractor directly for hourly equipment and labor costs, and the cost of purchased materials.

Federal time and materials procedures (23 CFR 635.120 [d]) should only be used when strictly necessary, such as:

1. When agreement cannot be reached with the contractor on the price of a new work item,

2. When the extent of work is unknown, or

3. When the work is of such character that a price cannot be determined to a reasonable degree of accuracy.

The Project Engineer must document the reason for using time and materials in the change order backup.

Certain types of extra work where the scope cannot be adequately defined, such as emergency work or differing site conditions are often documented using this approach.

Pay for time and materials work according to the contract. The work may be initiated with an IWA (see Section 13.4) and later finalized in a Change Order with appropriate units of measurement.

Use Form 25D-195, to record labor, equipment and materials, on a daily basis for the duration of the work. Monitor the cumulative costs closely because of their open-ended nature.

13.2.3 Preparing the Change Order

The change order should describe what is being changed. The backup information should describe why it is being changed and the justification for approving the changes in cost or time.

Prepare the contract change using Change Order and Continuation Forms 25D-068 and 25D-065. Describe what is being changed, and the amount and cost of such change. List changes in categories such as:

- Modify Specification
- Modify Plan Set or Detail
- Increase or Decrease Quantity
- Deleted Item Number
- New Item Number
- Contract Time Change

For more information on increase or decrease of quantity, see Section 13.3 Equitable Adjustments.

Summarize backup information for the change order using the Change Order Support Information/Backup and Continuation Forms 25D-064 and 25D-065.

Backup information should include:

- the reason for the change,
- the contractor's proposal,
- the engineer's estimate,
- an explanation or justification for the costs and time adjustments,
- justifications for using time and materials method, and
- other agency concurrence if required.

Label backups and attachments so that they are associated with the project and change order.

If the change is technical, it must be sealed according to Section 13.5. If the change is not technical, then note on the change order in the area for the seal that it is not required.

On state-funded work, changes to the materials listed on the Alaska products preference worksheet Form APPW, may result in a penalty to the contractor. When applicable, note material revisions on Form APPW and attach the form as a backup document to the change order.

Note on change order whether the subcontractors previously submitted on the Contractor Self Certification for Subcontractors Form 25D-042, are approved for new work.

Changes to contract time are shown in the "Change Order Summary" box on Form 25D-068 as either an increase or decrease in calendar days, or as a new completion date depending on the type of contract. Changes in contract time must be justified and documented in the change order backup form. The justification should include analysis of controlling items of work, to determine how the change affects the time to complete the project. See Section 14.4 for more information.

If a change order adds contract time, the construction department or project control, should extend the ATP end date by an equal amount of time. Submit a revised Project Information Document (PID). See ACM 2.3.2 for more information.

Once the scope and estimated cost of a contract change is known, the Project Engineer should verify with the Group Chief/PM that there are sufficient construction phase funds to pay for the work. If not, refer to Section 12.6 for the steps needed to secure additional funding. Once the change document is signed, encumber additional funds as needed.

The amount of the change order determines which Department employee has Delegation of Authority and can authorize the work by signing the "Approved By" line. Signature authority is established by regional policy.

The contractor has two choices when signing Change Order Form 25D-068. Typically the contractor signs and dates it as accepted. This constitutes a bilateral agreement to terms, conditions, and prices stated. When the contractor does not agree with the change, they should sign that they acknowledge the change order. This indicates receipt of the change order, but not the mutual agreement on the basis of payment and/or time allowance (unilateral). Document if the contractor won't sign the change order.

Further disputes may be settled at the Project Engineer level, or the contractor can follow Highway Specification 105-1.17 Claims (Airport GCP 50-17) to initiate the claims process.

After change orders are signed, copies must be provided to the funding agencies, as required by agreements between the Department and funding agency.

13.3. Equitable Adjustments

The Standard Specifications define an equitable adjustment as an increase or decrease in Contract price or time calculated according to the terms of this Contract.

An equitable adjustment is necessary:

1. If the contractor finds differing site conditions (Highway 104-1.03 or Aviation GCP 40-03, Differing Site Conditions) and an increase or decrease in the cost of, or the time required for, performance of the contract. The Project Engineer will prepare a change order for an equitable adjustment to the contract. The contractor must cooperate with the Project Engineer to reach a prompt and fair settlement.
2. If the contractor agrees to cooperate when:
    a. A contract requires a mandatory source or designates the material source (Highway 106-1.02 or Aviation GCP 60-02, Material Sources), and
    b. The quality and quantity of material produced from it is not as represented, making a change of source necessary.
3. If the final quantity of a major contract item varies more than 25 percent above or below a bid quantity (Highway 109-1.04 or Aviation GCP 90-04, Compensation for Altered Quantities). Either party to the contract may request an equitable adjustment in the contract unit price of that item. If the final quantity of work is greater than 125 percent of the bid quantity, the equitable adjustment will be made only for those units that are in excess of 125 percent of the bid quantity. If the final quantity of work is less than 75 percent of the bid quantity, the equitable adjustment will be made for those units of work done and accepted, with the total payment limited to 75 percent of the amount bid for the item.
4. If a major contract item is eliminated (Highway 109-1.09 or Aviation GCP 90-09, Eliminated Items)
5. If the contractor finds conflicts with existing utilities or utilities that are not shown or described in the contract (Highway 105-1.06 or GCP 50-06, Utilities)
6. If a contractor requests additional time due to the Project Engineer's suspension of work (Highway 108-1.06 or Aviation GCP 80-06, Contract Time, Extension of Contract Time and Suspension of Work)

See Section 18.16 of this manual, for more on Calculating Equitable Adjustments.

13.4. Interim Work Authorization

Interim Work Authorization (IWA) can be used to initiate any type of change to the contract that can be made by change order except changes to contract time. An IWA initiates a change on an interim basis until a subsequent change order is executed.

For FHWA-funded projects, the IWA should only be used to initiate changes to the contract when a delay would:

1. Jeopardize life, property or result in environmental damage;
2. Unduly delay the time of completion of a project; or
3. Unduly increase the cost of a project.

The IWA or its backup documentation must identify the situation that warrants the IWA implementation.

The IWA does not relieve the Project Engineer of the responsibility to document the associated change order. However the IWA provides written

authorization for the contractor to begin and get paid for change work.

If an IWA or series of related IWAs may become a major change order, discuss the IWA with the federal funding agency before issuing it.

The Project Engineer may issue the IWA only after obtaining verbal or written approval from the person having the Delegation of Authority for the estimated amount. Write that person's full name on the IWA.

Both the Project Engineer and the contractor's representative must sign and date the IWA.

Note on the IWA whether subcontractors previously submitted using Contractor Self Certification for Subcontractors Form 25D-042, are approved for new work.

The "Basis of Payment" field must have the appropriate box checked: Work shall be paid:

- On a time and materials basis,
- At an agreed unit, or
- Lump sum price.

Prepare the IWA using Forms 25D-070 and 25D-065.

IWAs may be started in one unit of payment and converted to a different unit of payment (such as lump sum) in the change order. The subsequent change order shall address changes in contract time, if required.

IWAs should be converted to change orders as soon as practicable, but no later than March 31 in the year after the IWA was issued. If more time to convert is necessary, document the reason in the project files.

13.5. Requirements for Professional Seals

Policy and Procedure 70-1003 requires that plans, drawings, plats, and all reports or similar documents that the public relies on for the design or construction of a project be sealed by the designer of record or by the person under whose direct supervision they were prepared. It can be found at the D&ES Construction Standards website.

Technical change orders made during construction that fall within the practice of architecture, engineering, or land surveying must be sealed by the designer of record or shall bear the seal, date and signature of those making the design change or under whose direct supervision the change was made. See AS 08.48.341 (9, 10, and 11) for the definitions of the practice of architecture, engineering, or land surveying.

Seal Required

Some examples of technical change orders that require a professional seal are:

- structural changes to a bridge, building, piling, footing, retaining wall, pier or dock,
- changes related to type or quality of material requirements,
- revisions in geometric design (alignment, and/or grade),
- revisions of pavement structural section,
- changes to safety appurtenances,
- technical specification changes, and
- typical section modifications.

Seal Not Required

Some examples of nontechnical change orders are:

- administrative matters, such as quantities and payment amounts,
- extension of contract time,
- changes to methods of measurement and basis of payment,
- specification changes not related to structural elements (seed specifications, paving deadlines, surface tolerances, color selections, staking requirements, temporary facilities, etc.),
- changes to utilities requested by the utility owner, or repairs to utilities, that do not affect the road structure,
- changes to drainage features that do not affect the road structure or clear zone requirements, and
- temporary erosion, sediment and pollution control BMPs.

The seal must comply with 12 AAC 36.180. The regulation allows for a similar electronic or digital representation of the seal.

If other registered professionals prepare portions of plans, documents, or other professional work, a registrant may seal only the portion of the work for which it has direct professional knowledge and direct supervisory control (12 AAC 36.185.7[b], Use of Seals).

The Project Engineer, in consultation with the Group Chief/PM, *should decide early* in the change order

process if the change is technical and if it is necessary for the change to be sealed.

The change order form has an area for a seal to be applied or inserted. If not required, note it as "not required" or "N/A." The seal may be affixed to an attachment instead of the change order form. Note on the change order form that the attachment is sealed.

13.6. Supplemental Agreements

Supplemental agreements cover changes to the contract that the Department considers outside the scope of the contract, and that are awarded to the current prime contractor. See Figure 13-2 for General Guidelines for the Supplemental Agreement Process. Handle all supplemental agreements in accordance with the procurement code (AS 36.30.300). All supplemental agreements are bilateral agreements.

The Department describes the additional work required. The chief procurement officer makes the determination of whether the proposed additional work falls within or outside the scope of the contract.

13.6.1 Small Procurement

If the amount of the supplemental agreement is less than the small procurement threshold (State $200,000; Federal $150,000) the Department may acquire the additional services through the Small Procurement process (AS 36.30.320, 2 CFR 200.88 and 48 CFR 2.101).

13.6.2 Limited Competition Procurement

A Limited Competition Procurement (AS 36.30.305) may be made for amounts less than $100,000, when there are only two contractors and when competitive sealed bid processes are impractical or contrary to the public interest. See DPDR 10.01.040, Alternate Procurements, for the procedure for limited competition procurements.

13.6.3 Single Source Procurement

Supplemental agreement work may use Single Source Procurement (AS 36.30.308).

The Project Engineer prepares an Engineer's Estimate and a written determination using the Waiver Request for Alternate Procurement Methods (Form 25D-026). Cite the specific reasons why a competitive process is not practicable. Provide the specific and significant interests of the State that justify awarding a contract as a single source. Specify the duration of the work in the determination. The determination should demonstrate the cost effectiveness of performing the work by single source procurement, and address any public necessity that cannot be delayed.

Send the Waiver Request to the regional director if it is under the small procurement threshold (State $200,000, Federal $150,000); and to the commissioner if it is equal or greater than those amounts. If the waiver is denied or the contractor refuses the work, then the work shall be competitively bid.

If the commissioner or regional director approves the waiver, then the contracting officer negotiates the terms as to price and delivery of the proposed work with the prime contractor. The Project Engineer prepares the supplemental agreement (Forms 25D-066 and 25D-065) and Support Information/Backup Sheet (Form 25D-064). The latest state and federal wage rate decisions are included as a part of the supplemental agreement.

Supplemental Agreements that depend on federal funding will require the funding agencies approval before adding the work. Depending on federal funding source, send:

- A cover letter and a copy of the Waiver Request for Alternate Procurement Methods and the Supplemental Agreement to the FHWA for approval.
- A cover letter and the Supplemental Agreement to the FAA for approval.

13.6.4 Emergency Procedures

Procurements may be made under emergency conditions (AS 36.30.310) as defined in regulations adopted by the commissioner when there exists:

- a threat to public health, welfare, or safety;
- when a situation exists that makes a procurement through competitive sealed bidding or competitive sealed proposals impracticable or contrary to the public interest; or
- a need to protect public or private property.

The Project Engineer need not prepare an Engineer's Estimate. The Project Engineer prepares the documents required in Figure 13-2.

13.6.5 Competitive Sealed Bid

Procurements may be made using Competitive Sealed Bidding (AS 36.30.100). If the bid is awarded to the existing prime contractor, the work may be added to

the current contract by Supplemental Agreement. If the bid is awarded to a different contractor, then the work is added with a separate contract.

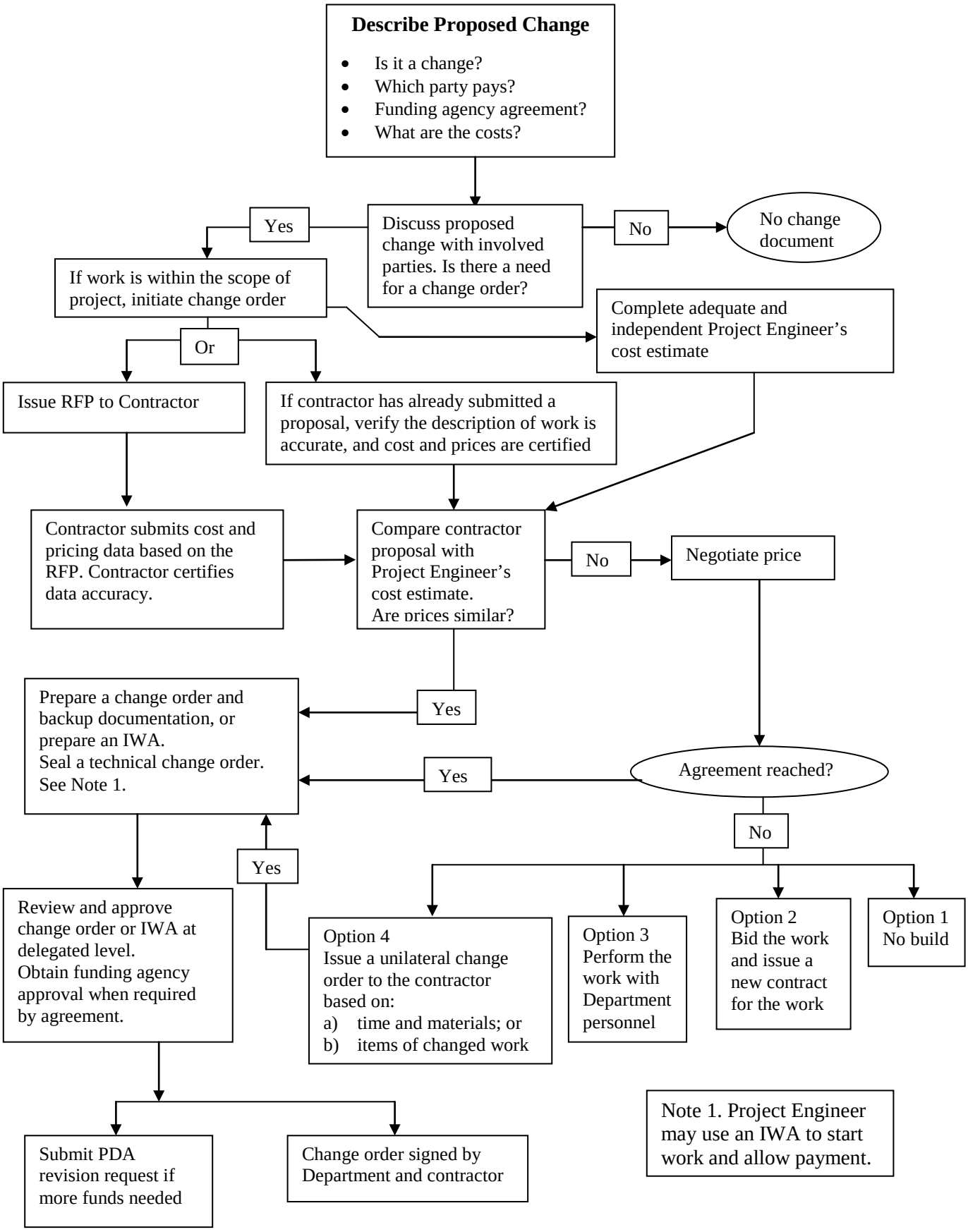

Figure 13-1
Change Order Process

General Guidelines for the Supplemental Agreement Process[1]	
Cost of Change	**Steps Required[2]**
$0 ≤ $10,000	1. Engineer's Estimate 2. Obtain bid(s) (1 contractor minimum) 3. Approval by Department employee with Delegation of Authority 4. Supplemental Agreement and Backup Forms
Greater than $10,000 and less than Small Procurement Threshold State $200,000 FAA $150,000 FHWA $150,000 FTA $150,000 for grants issued after 12/26/2015; or older grants that are amended with new money after 12/26/2015	Option A (Small Procurement): 1. Engineer's Estimate 2. Request bids (three contractors minimum) 3. Supplemental Agreement and Backup Forms Option B (Limited Competition)(must be less than $100,000): 1. Engineer's Estimate 2. Request bids (two contractors minimum) 3. Waiver Request for Alternate Procurement Methods (Form 25D-026) 4. Obtain approval for limited competition from the regional director 5. Supplemental Agreement and Backup Forms Option C (Single Source) 1. Engineer's Estimate 2. Waiver Request for Alternate Procurement Methods (Form 25D-026) approved for single source by the regional director 3. Obtain bid (one contractor only) and negotiate scope and price 4. Supplemental Agreement and Backup Forms Option D (Emergency Procedures) 1. Waiver Request for Alternate Procurement Methods (Form 25D-025) 2. Obtain approval from the chief procurement officer Option E (Competitive Sealed Bidding) 1. Follow regular bid procedures
Equal or greater than Small Procurement Threshold	Option C (Single Source) see above, except the Waiver Request for Procurement is approved by the commissioner Option D (Emergency Procedure) Same as above Option E (Competitive Sealed Bidding) follow regular bid procedures

Figure 13-2
General Guidelines for the Supplemental Agreement Process

[1] All requirements of the Procurement Code (AS 36.30), the Procurement Administrative Regulations (2 AAC 12), and the Policy and Procedure 10.01.040 Alternate Procurements must be followed.

[2] Additional Requirements: All quotes must come from a contractor currently under contract with the state. If the contract is federal-aid, all quotes must come from a contractor currently under contract on a federal-aid project. If the project is FHWA-funded, a copy of the Waiver Request for Procurement shall be included with the supplemental agreement when sent to the FHWA for approval. Help with the supplemental agreement process is available from the contracts section.

This page intentionally left blank.

14. Contract Time

14.1. General
14.2. Temporary Suspension of Work
14.3. Seasonal Suspension of Work
14.4. Extension of Contract Time
14.5. Liquidated Damages/Incentives & Disincentives

14.1. General

Each construction contract contains a specific period of time within which the contractor must complete the project. The completion date or the time allowed for completion is determined during the design stage, based on the estimated time required for construction or the date the completed facility is needed.

The methods most frequently used to state completion time are either a fixed completion date or a set number of calendar days.

In some instances the contract may contain several completion dates, each for a different portion of the work and each containing its own liquidated damages; dates other than the contract completion date are known as intermediate (or interim) completion dates.

The effect of a delay in completing the contract within the specified time limit varies greatly from one project to another and is difficult to determine. When a contractor does not complete a contract in the allotted contract time, including authorized extensions, the contractor is assessed liquidated damages. These damages, shown in the contract, are meant to compensate the Department for its additional engineering costs owing to the delayed completion (see Section 3.3).

On a calendar day contract, the count of contract time starts on the day stated in the contract. Time is not counted during the winter period that is spelled out in the contract. The count of contract time ceases on the date stipulated in the Letter of Project Completion.

14.2. Temporary Suspension of Work

The Project Engineer may temporarily suspend the work at any time for reasons spelled out in the contract, and contract time will continue to be charged during those periods.

If the Project Engineer suspends work on a pay item that is a controlling factor in project progress, the suspension may entitle the contractor to an extension of contract time. The Project Engineer will issue all temporary suspension orders and order to resume work in writing. They may use the Directive form (Section 10.2) or issue the order in the form of a letter to the contractor. Orders to resume work will state the remaining contract time.

When the temporary suspension of work changes the completion date, or adds calendar days to the contract time, a change document must be issued. Only whole days of contract time are charged, beginning and ending at midnight.

14.3. Seasonal Suspension of Work

On calendar day contracts, the count of contract time stops only during the calendar dates shown in the contract.

The timing of the seasonal shutdown as well as the resumption of work, is dependent on the weather, the nature of the project, the contractor's plans, and the concurrence of the Project Engineer.

Depending on the language in the contract, either the contractor or the Department may be responsible for maintenance during the seasonal suspension.

It is incumbent on the Project Engineer, the contractor, and the maintenance and operations representative to work together in advance of the shutdown to document the condition of a partially-completed facility and to assure that it is in safe maintainable condition before the contractor suspends work.

Prior to the work suspension, the Project Engineer should record the condition of the facility using a video camera (if available) or a still camera. The Project Engineer should repeat the recording following the seasonal suspension.

The Project Engineer will issue the seasonal suspension order and the resume work order in writing. Use the Directive (Form 25D-069) and Continuation Sheet (Form 25D-065), or issue orders in the form of letters to the contractor.

The order to resume work should state the remaining contract time, and should provide notice to the contractor that the Department will be terminating seasonal maintenance (if this applies).

If the Department maintained the facility during the suspension, either maintenance and operations or the contractor, under a change document, should repair any significant change/damage to the partially-completed facility resulting from seasonal maintenance.

14.4. Extension of Contract Time

The contract establishes the completion time or date based on the estimated quantities of work. If greater quantities of work or different items of work are necessary for satisfactory completion of the project, contract time may be increased based on the amount and difficulty of the additional work and/or the estimated time to complete it.

When overruns in quantities occur or new items of work are added that increase the time required for completion, or when the Project Engineer suspends work on pay items of work that are controlling factors in job progress, the Project Engineer should grant an equitable extension of contract time using a change document.

Any additional time granted to the contractor should be for reasons outlined in the contract and should be requested by the contractor in accordance with the contract. One reason for granting additional time is when the project is complete except for reaching final stabilization of grass, or plant establishment; and the weather precludes grass or plant growth.

14.5. Liquidated Damages/Incentives & Disincentives

The contractor's failure to complete the project by the completion date or within the allotted contract time, establishes the basis for the assessment of liquidated damages. Liquidated damages are intended to compensate the Department for its additional construction engineering (CE) costs resulting from the contractor's failure to complete the project on time.

When the Department must assess liquidated damages, it calculates them in accordance with the contract, using the daily charge established by the Original Contract Amount. The amount of liquidated damages changes (drops to 20%) after substantial completion, and stops at project completion.

Before assessing liquidated damages, the Project Engineer should discuss the situation with the contractor and provide both the contractor and their bonding agent with written notice.

Liquidated damages are shown as deductions on all subsequent progress payments, including the final estimate, and appear on the recapitulation sheet. Those contracts that contain intermediate completion dates may require the assessment of liquidated damages at specified rates for failure to complete by that intermediate date. These liquidated damages are shown in the same manner on the recapitulation sheet.

Incentives & Disincentives

Occasionally a contract contains a clause that provides for a daily incentive payment to the contractor for early completion of the project, or a portion of the project.

An incentive clause is normally coupled with a disincentive clause, which specifies a daily disincentive for the contractor's failure to complete by a specified date.

Incentive/disincentive clauses are used infrequently and only in situations where timely completion is of the utmost importance to the Department.

15. Final Field Construction Activities

15.1. Final Inspection
15.2. Additional Work or Corrective Work Remaining
15.3. Partial Completion
15.4. Notice of Landing Area Proposal for Airports
15.5. Navigational Aid Facilities for Airports
15.6. Project Completion

15.1. Final Inspection

A final inspection is used to show representatives of the owner agency and the funding agencies that a project was completed according to the plans and specifications. The inspection also gives maintenance and operations personnel a detailed review of the facility and allows them to plan for resuming or assuming their maintenance activities.

Preliminary Punch List: When all of the significant items of work on the project are nearing substantial completion, the project staff should thoroughly review the entire project. Review the contractor's SWPPP and identify remaining actions that should be taken before a Notice of Termination can be filed with DEC. Prepare a preliminary punch list consisting of a comprehensive list of items the contractor must complete. The Project Engineer should discuss the list with the contractor, and give a copy to them to help them plan and focus their resources to complete the project.

After the contractor notifies the Project Engineer of the date that the contractor expects to reach substantial completion, the Project Engineer should review the project to verify that it is likely to be ready for a final inspection. On projects with fall completion dates, it's better to schedule the inspection early to avoid bad weather, than it is to wait for completion and risk having the project site covered with snow.

Once the Project Engineer is satisfied that the project will be ready; schedule the final inspection by coordinating with the Group Chief/PM, the federal funding agency, and the contractor. The size of the final inspection group depends on the nature and magnitude of the project, but generally you should invite the following people:

- Contracting Officer or their designee;
- Group Chief/Project Manager
- Project Engineer;
- Contractor Representative;
- M&O Representative;
- Design Engineer, Design Consultant, or Naval Architect

As appropriate, also include the following groups:

- FAA, FHWA or FTA Representative;
- Other governmental agencies whose acceptance of the project is required;
- Other departmental units with significant involvement in the project, or whose acceptance of the project or of a portion of the project is required;
- Utility companies with direct involvement in the project.

At final inspection, the Project Engineer should present the project to the group. The Project Engineer should acquaint the group with history of the project, including the conditions of the facility prior to the start of construction and the upgrading accomplished under the contract. The Project Engineer should review the construction with the group before discussing the field inspection and any design changes made during construction.

The final inspection should include a physical inspection of the entire project, and should be accomplished on foot to the extent possible; where the length of the project dictates the use of vehicles, the group should make frequent stops to inspect the facility in as much detail as the group desires. The inspection may include an evaluation of whether final stabilization, as defined under the DEC's Construction General Permit, has been achieved.

Following the field inspection, the group should review and revise the preliminary punch list to include any additional items of work that members of the inspection group feel are not in acceptable condition.

The Project Engineer, the contractor, and the maintenance representative should discuss the timing of the transfer of the maintenance responsibility back to the Department.

When the group completes the final inspection, the project will fall into one of three categories of completion, each of which generates a different written record of the inspection:

- If all construction work on the project is complete with both the contractor and Department's staffs ready to depart the site, the Project Engineer prepares the Letter of Project Completion and proceeds as shown in Section 15.6;
- If a geographically separate portion of the project is ready for Partial Completion, the Project Engineer prepares a Letter of Partial Completion and follows the guidance of Section 15.3; or
- If the contractor must complete remaining work following the final inspection, including minor punch list items, or if the Project Engineer intentionally scheduled the inspection early to avoid weather conditions, the Project Engineer prepares a Report of Final Inspection letter as described in Section 15.2, and work continues on the project.

15.2. Additional Work or Corrective Work Remaining

When the final inspection is held intentionally early and the project is not substantially complete, or if the final inspection reveals the need for additional work including minor punch list items, the Project Engineer will prepare a Report of Final Inspection letter to the contractor. The letter, prepared for the Group Chief/PM's signature, serves to document the final inspection, and contains the following essential information:

- Date of the final inspection;
- List of attendees;
- List of additional work required prior to Partial Completion;
- Statement that either another inspection will be scheduled following completion of the additional work or that Partial Completion will be issued when the Project Engineer advises that all the additional work or punch list items have been satisfactorily completed;
- Reminder that contract time will continue to be charged until Project Completion. For calendar day completion contracts, the number of calendar days remaining should be stated.

When the contractor does notify the Project Engineer that they have completed all of the listed additional work, the Project Engineer will either conduct an inspection of the project, or schedule a second final inspection, at the discretion of the Group Chief/PM. Following a satisfactory inspection, the project is ready for the Partial Completion steps in Section 15.3.

15.3. Partial Completion

When the final inspection or a subsequent inspection on an agreed upon geographically separate portion of the project, discloses that all work is substantially complete, the Project Engineer may prepare a Letter of Partial Completion for the Group Chief/PM's signature accepting the physical project or portion of the project from the contractor. It should contain the following information:

- Date of the final inspection (or subsequent) inspection;
- List of attendees (if applicable);
- Describe portion of project that is partially complete
- Statement that the contractor has constructed the applicable portion of the physical project in accordance with the contract, and the Department takes Partial Completion as of the date of the inspection by the Department;
- Date upon which the Department will resume/assume maintenance responsibilities;
- Reminder that contract time will continue to be charged until Project Completion; on calendar day completion contracts, the number of calendar days remaining should be stated.
- Statement that this acceptance does not relieve the contractor from their remaining contract obligations.

A copy of the Letter of Partial Completion is sent to the regional maintenance and operations head; this transmittal formally transfers the maintenance responsibility for the completed portions of the project to the maintenance and operations unit as of the date in the letter. In addition to formally transferring the maintenance responsibilities, the letter also transfers the responsibility for all related electrical utility bills for that portion of the project, to maintenance and operations.

15.4. Notice of Landing Area Proposal for Airports

FAA Form 7480-1 is required when you do any of the following to an airport:

1. Construct or otherwise establish a new airport or activate an airport
2. Construct, realign, alter, or activate any runway, or other aircraft landing or takeoff area of an airport
3. Construct, realign, alter, or activate a taxiway associated with a landing or takeoff area on a public-use airport
4. Deactivate, discontinue using, or abandon an airport or any landing or takeoff area of an airport for a period of one year or more
5. Deactivate, abandon, or discontinue using a taxiway associated with a landing or takeoff area on a public-use airport
6. Change the status of an airport from private use (use by the owner or use by the owner and other persons authorized by the owner) to an airport open to the public or from public use to another status
7. Change status from IFR to VFR or VFR to IFR
8. Establish or change any traffic pattern or traffic pattern altitude or direction

The FAA requires Form 7480-1 at least 90 days before any construction, alteration, activation, deactivation, or change to the status or use of a civil or joint-use (civil/military) airport. Submit Form 7480-1 according to regional policy.

15.5. Navigational Aid Facilities for Airports

Refer to the FAA/DOT&PF Reimbursable Agreement for the scope of services and responsible parties associated with relocated FAA facilities.

When navigational aid facilities for airports are relocated or constructed, usually the FAA requires a joint final inspection between DOT&PF and the FAA. Before navigational aid facilities become operational, the FAA requires flight checks, which may affect the contractor's schedule.

15.6. Project Completion

When the contractor has completed physical construction on the project, including all punch list items and final clean up, the project is ready for Project Completion. The Project Engineer prepares the Letter of Project Completion for the Group Chief/PM's signature, which contains the following elements:

- Statement that the contractor has completed all physical work on the project.
- Statement that contract time was stopped as of the final completion date. For calendar day contracts, the letter should also state the number of days used to complete the contract.
- Statement that this acceptance does not relieve the contractor from their remaining contract obligations.

For Facilities, the Project Engineer prepares the M&O Facility Form. The Group Chief/PM signs the form and sends it to M&O.

A copy of the Letter of Project Completion is sent to the regional maintenance and operations head; this transmittal formally transfers the maintenance responsibility for the project to the maintenance and operations unit as of the date of the letter. In addition to formally transferring the maintenance responsibilities, the letter also transfers the responsibility for all related electrical utility bills for that portion of the project, to maintenance and operations.

For FHWA-funded projects, the Project Engineer also prepares a Final Inspection of Federal-Aid Project form (Form FHWA-1446C-AKDO) for the Contracting Officer's Signature. After the Contracting Office signs the FHWA 1446-C-AKDO, a copy is sent to the Regional Construction Engineer, SDESD Director, Director of Administrative Services and the FHWA Engineer.

A copy of the Letter of Project Completion and (where applicable) the Final Inspection of Federal-Aid Project form should be promptly sent to the federal agency on federally-funded projects. These documents usually mark the end of field construction activities but before leaving the field, the Project Engineer should thoroughly document the finished condition of the project using both a still camera and a video camera. The remaining closure paper work is

usually accomplished with a reduced engineering staff in the regional office.

For FHWA- funded projects, within 30 days of Project Completion the Group Chief/PM creates a revised cost estimate consisting of the projected final estimate and Construction Engineering costs required to reach final acceptance. The Group Chief/PM should submit the revised cost estimate to project control.

16. Project Closeout

16.1. Project Closeout Overview
16.2. Contractor's Administrative Requirements
16.3. Final Estimate Assembly/Final Payment
16.4. Final Acceptance
16.5. Engineer's Administrative Responsibilities
16.6. Final Construction Report
16.7. Reserved
16.8. Report on Design Recommendations
16.9. Report on Claims
16.10. As-Built Drawings
16.11. Other Elements of the Final Construction Report
16.12. Project Materials Certification for Project Closeouts
16.13. Project Financial Closure
16.14. Final Federal Reimbursement
16.15. Record Retention & Disposal

16.1. Project Closeout Overview

This section covers all of the administrative requirements that both the contractor and the Project Engineer must comply with before the construction contract can be closed out, the project's records can be properly disposed of, and the final billing sent to the federal funding agency.

With a few exceptions, most of the records needed to accomplish all of this have already been prepared during the course of the contract. The most important things that remain for the Project Engineer to do are secure additional certifications and documents from the contractor, prepare the final estimate, complete the project history (for FAA projects only) and assemble the final construction report.

The Exhibits include a Project Closeout Checklist that outlines all the significant closeout steps leading to the Final Completion Report. The Final Construction Report summarizes the project through the following:

- materials testing summary;
- project materials certification;
- memorandum of exceptions to the project materials certification;
- explanation of overruns, underruns, and change documents;
- final estimate;
- report on any design recommendations;
- report on any claims; and
- as-built drawings.

The Department retains the report indefinitely.

Following acceptance and distribution of the Final Construction Report, the remaining project field records are combined with the regional office records and they are either micro-filmed and the originals destroyed, scanned and uploaded for electronic document storage and the originals destroyed, or they are placed in storage for the required period of time. Then the project's construction phase financial account is closed out and preparations are made to final bill the federal funding agency. All of these steps are explained in more detail in the following sections.

16.2. Contractor's Administrative Requirements

Before processing the contractor's final payment, the Project Engineer must insure that the contractor has complied with all of the administrative requirements of the contract.

Additional administrative requirements the contractor must meet vary from contract to contract. The contractor's failure to comply with these requirements may result in the deduction of monetary damages from the contractor's final payment. Most of the following examples of requirements have limited applicability, but give a general idea of what the Project Engineer should expect from the contractor:

- Maintenance and operating manuals and warranties for equipment purchased under the contract;
- As-built drawings for specialty items such as electrical work or structures;
- Records to document the use of Alaskan Products on state-funded projects containing Alaska Product Preference requirements (AS 36.30.322-4 and 3 AAC 92.050);
- An Electrical Administrator's Certificate of Personal Supervision for all electrical installations (AS 08.40.195 and 12 AAC 32.900);
- Copy of Notice of Completion approved by DOLWD Wage and Hour Division (may be submitted with Final Estimate)
- Copy of contractor's Notice of Termination from DEC

- Unbonded contractors must provide written certification that all persons supplying materials or labor have been paid (AS 36.25.010 and 3 AAC 92.050).

When the following is applicable to the project, the contractor must submit the required information to the DOT&PF Civil Rights Office (CRO):

- Evidence to verify payments to DBE subcontractors, manufacturers, brokers and regular dealers on the DBE Monthly Summary (Form 25A-336) ;
- Federal Aid Highway Construction Contractor's Annual EEO Report (Form PR-1391) required from all contractors and subcontractors on FHWA funded projects.

The Department must request clearance for the contractor's DBE and OJT (if applicable) from the CRO. The CRO may request additional submittals from the Department, such as final DBE quantities. Clearance can be given by email.

The Department must verify, in written form, that the contractor has tax clearance from the Department of Labor and Workforce Development (DOLWD) Employment Security Division. The Department must receive written tax clearance from the Alaska Department of Revenue that confirms the contractor is current on their tax payments to the state. Tax payments to the state must be current through the end of the last calendar quarter that the contractor had employees working on the project. Confirmation is usually sought from the tax offices closest to the contractor's home area.

16.3. Final Estimate Assembly/Final Payment

The final estimate assembly is essentially the contractor's final pay estimate plus a certificate of release. The Project Engineer should compute the final quantities as soon as possible after issuance of the Letter of Project Completion, preferably within thirty days. The forms used for the final estimate and the format of presentation may differ from the progress pay estimates used throughout the project, depending on regional preferences.

Calculate quantities and show them to the appropriate significant decimal (Section 4.7). Coordinate the calculation of all final costs associated with the Training Program pay items with the regional contract compliance officer.

The Project Engineer may use the:

- Summary of Quantities form (Form 25D-025) to prepare the final estimate;
- The quality assurance/review unit reviews the final estimate and signs both the Final Estimate Review Report (Form 25D-031) and the Certification of Final Estimate (Form 25D-116);
- Both the Project Engineer and the Contractor, use the certification form (Form 25D-116) to certify the Final Estimate; and
- Obtain the certificate of release from the contractor on the Contractor's Release form (Form 25D-117), or on the Assignee's Release form (Form 25D-118) if the contractor has assigned their payments to a third party.

The final estimate contains several sections. The first is a numerical listing of contract pay items and final quantities, which includes the FA Code for each pay item on FHWA-funded projects (Section 2.3).

List original contract pay items first, followed by a listing of change documents with the pay items that were added listed under each change document (or list change orders in the order of the item numbers added).

If the contract contains both participating and non-participating pay items, divide the list into two sections. If there is more than one source of funds within either of those categories, the list is subdivided further.

On FHWA-funded projects, the second section contains a summary showing the cumulative costs in each of the FA Code categories, including any CE costs paid to the contractor (23 CFR 140.203b).

The final section of the estimate is a summary listing of all contractor payments, including the final, broken out by funding source and eligibility (participating or non-participating).

Once the Department receives clearance from Alaska Department of Revenue and Civil Rights/DBE Office, the Project Engineer should sign the Certification of Final Estimate and send it through the Group Chief/PM to the regional quality assurance/review unit for review and approval.

The regional quality assurance/review unit will review the Final Estimate in accordance with P&P 05.01.050 Concurrent Review of Construction Projects. When they have completed the review, that unit will complete and sign the Final Estimate Review Report, sign the certification, and return the estimate assembly to the Project Engineer.

The Project Engineer or Concurrent Review Section, should send the Final Estimate and Certificate of Release to the contractor. When the contractor returns the forms acceptably completed and has submitted the approved Notice of Completion from DOLWD, send the forms through the Group Chief/PM to the finance unit, for final payment. If the Project Engineer or Concurrent Review Section, is aware of any outstanding claims or unresolved disputes, carefully review the contractor's release or written certification before determining whether to proceed with processing the final payment.

16.4. Final Acceptance

The final acceptance by the Department of all work and obligations under the contract, and the formal closure of the contract, is made through the Letter of Final Acceptance to the contractor.

Final acceptance is made following receipt by the Project Engineer of the signed final estimate and an acceptable certificate of release from the contractor. Since the final estimate is not sent to the contractor until the contractor has satisfied all of the physical and administrative requirements of the contract, the Letter of Final Acceptance constitutes the last contractual act.

The Project Engineer prepares the letter for the Contracting Officer's signature including a statement relieving the contractor of further obligations under the contract, except for those involving warranties or guarantees.

Distribute copies of the letter to other units in the Department, other entities directly involved with the contract, and to the federal agency on all projects involving federal funds.

16.5. Engineer's Administrative Responsibilities

After closing out the contract, completing the Final Construction Report should be the top priority. However, before the Project Engineer can submit the Final Construction Report, they have certain administrative responsibilities they must complete.

These responsibilities vary from project to project but may include any of the following:

- **Airport Layout Plan (ALP):** provide Design with any changes in the ALP for them to complete and submit to FAA.
- **Airport Master Record:** The Project Engineer collaborates with Design and the Airport manager in updating FAA Form 5010. FAA requires Form 5010 and a sketch two months before substantial completion of any airport project regardless of funding source. The form contains each individual airport's operational characteristics.

  The Project Engineer estimates the date of substantial completion and reviews the form with the Airport Manager for changes in any of the data elements. Advise Design of each change. The Project Engineer shall review data elements in Form 5010 in the field for Design such as:

  - Airport Manager information
  - As constructed information
  - Condition of the surface evaluation
  - Inventory of current users of the airport
  - Services available to the airport
  - Non-commercial landing fee verification

  Design receives the data changes and updates the form and sketch to reflect the changes (runway dimensions, surfacing, lighting changes, or navaid installation). They forward the updated information on Form 5010 to the maintenance and operations unit and the Airport Manager. The section (Design, Construction, or Airport Manager) responsible for submitting FAA Form 5010 to the FAA varies by region. See FAA Order 5010.4 Airport Safety Data Program for additional information.
- **Airport Sign Plan:** provide design with any changes to the airport sign plan for them to complete and submit to FAA. (49 CFR Part 139 airports only).
- **Alaska Railroad Release:** requires a release from the railroad on all projects interfacing with the railroad.
- **Exhibit A, Airport Property Map:** on projects that have acquisition of land, provide design with any changes to Exhibit A, Airport Property Map, for them to complete and submit to FAA.

- **FAA Sponsor Certification Construction Project Final Acceptance:** a certification signed by the Group Chief/PM on all FAA-funded projects that certifies that the Department has complied with the twelve requirements of the federal aid airport grant program (49 CFR 18.50).
- **Proof of Construction for Right of Way:** a Department form (Form 25D-173) required on projects involving the acquisition of public land or rights-of-way across public lands. The form certifies that the project conformed to the right-of-way limits. If the form does not apply to a project, it is not required.
- **Proof of Use for Materials Sources:** Form 25D-174 to be submitted on projects involving Department-furnished materials sources, whether the sources were used or not. Complete a form for each source and include a plan view of the source showing the condition of the source at the end of the project along with a tabulation of quantities of materials removed. If there were no Department-furnished sources in the contract, the form is not required.
- **Transmittal Letters and Memoranda:** written records required to document: that as-builts, and pile and boring logs have been transmitted to the bridge design unit; that as-builts have been transmitted to maintenance and operations/international airport management, and the FAA; and that a complete set of materials, maintenance, and operating manuals and warranties have been sent to maintenance and operations or to the owner agency.

16.6. Final Construction Report

The key to contract closeout is the Final Construction Report. It is primarily a compilation of the most important documents generated during the project (or a listing of those documents). There are a number of elements that are required in each final report, and several more that are necessary only if applicable to the particular project:

Required

- Final Construction report summary sheet (Section 16.11);
- Final Estimate Assembly (Section 16.3);
- Materials Summary and Materials Certification (Section 16.11);
- As-built drawings (Section 16.10);

As-Applicable

- Explanation of Overruns, Underruns, and Change Documents (Section 16.11);
- Report on Design Recommendations, if any (Section 16.8);
- Report on Claims, if any (Section 16.9)
- Memorandum of Exceptions (Section 16.12)
- Final Federal Billing verification (Section 16.14).

The noted sections of the manual contain detailed descriptions of each of these elements.

When you have assembled the Final Construction Report and completed all of the administrative requirements outlined in section 16.5, submit the report to the regional quality assurance/review unit for their final review, through the Group Chief/PM. When the review has been acceptably completed, copies of the report are distributed based on regional distribution procedures. The report is then placed in the permanent construction file.

Send one copy of the entire Final Construction Report, except for As-built drawings, to Statewide D&ES, D&CS Administrative Assistant.

On federally-funded projects, the last document is added to this permanent project record at a later date: on FAA funded projects, this is the FAA's grant closure letter, and on FHWA-funded projects, it is the Final Voucher submittal letter.

16.7. Reserved

16.8. Report on Design Recommendations

The Project Engineer should report on any Design recommendations that have been encountered during the construction of the project.

16.9. Report on Claims

A report should include information on all claims and their resolution; if any claims remain unresolved at the time the Final Construction Report is prepared, their status should be reported in detail.

16.10. As-Built Drawings

The Project Engineer and project staff must carefully and accurately prepare the final set of marked-up as-built drawings. If, during the course of construction, you recorded all field changes on the marked-up drawings in a timely fashion, there should be very little additional information that needs to be added to them in the contract closeout phase. Once the final pay item quantities have been calculated, reviewed, and approved for payment, they should replace the estimated quantities on the marked-up drawings.

The Project Engineer should initial and date each sheet and sign and date the cover of the marked-up set to indicate that each sheet was completed and checked. Either the marked-up set (copied to mylar) or redrafted original drawings (updated to reflect as-built status) may be used as final as-built plans, depending on regional policy. Additional sheets and copies of approved shop drawings, schematics, or other working drawings should be added to the original plan sheets as needed to accurately portray the completed project.

If the Final Construction Report is completed prior to completion of as-built plans, it should include a record of the as-built's status (e.g. transmittal memorandum). Final as-built plan sets are distributed as follows: to the FAA on FAA-funded projects (14CFR 152.213c); to the regional maintenance and operations head, the international airport manager, or the owner agency on projects built by the Department for others; to the Highway Data Group on highway projects; and to the Final Construction Report (to replace the transmittal memorandum, if applicable).

16.11. Other Elements of the Final Construction Report

The principal elements of the Final Construction Report are described in other sections; the remaining elements of the report are covered briefly here.

Final Construction Report Summary Sheet

This is the final description similar to that contained in the Invitation for Bids. The summary sheet also gives very basic information about the project including identifying the Project Engineer and the contractor, significant contract dates, and significant contract financial information.

MCL, Final Materials Testing Summary and Project Materials Certification

This is the quantity of all materials tests taken during the project and whether they passed or failed are shown in the Materials Testing Summary (Section 5.4).

The MCL and Material Testing Summary are submitted to the regional quality assurance/materials unit, along with the Project Materials Certification and an attached Memorandum of Exceptions (if necessary).

The regional quality assurance/materials unit reviews the MCL, Materials Testing Summary, signs the Project Materials Certification, and forwards it with the Memorandum of Exceptions (if necessary), to the Project Manager.

Explanation of Overruns, Underruns and Change Documents

A listing of only those original major pay items whose final quantity varied more than 25 percent from the estimated quantity and a brief explanation for each quantity change.

List and briefly explain each change document. On multiple project contracts, separate comparison listings for each project are not necessary.

If there are no overruns, underruns, or change documents on the project, this item is not required.

16.12. Project Materials Certification for Project Closeouts

All federal and state funded airport and highway projects require a Project Materials Certification, which is prepared by the Project Engineer for review and signature by the Regional Quality Assurance Engineer. Use the Project Materials Certification to indicate whether there are:

- no exceptions to the material requirements,
- minor exceptions to the material requirements, or
- exceptions to the material requirements as listed in an attached Memorandum of Exceptions.

The Project Materials Certification is provided to FHWA on all NHS projects. Non-NHS projects shall have a Project Materials Certification, but it is not included in the project closeout package to FHWA.

All FAA projects require a Project Materials Certification to be included in each closeout report to FAA.

All State funded airport and highway projects require a Project Materials Certification to be included in each closeout report.

See Section 17 for a Project Materials Certification Letter example that is signed by the Project Engineer and the Quality Assurance Engineer.

16.12.1 Memorandum of Exceptions

When a Memorandum of Exceptions is required, it is prepared by the Project Engineer from the Project Exception List, and submitted for concurrence to the Regional Quality Assurance Engineer. The Memorandum of Exception is required in the following cases:

- More than 10 percent of the required acceptance tests for any construction product fail to meet contract requirements or are missing from project records.
- Any required acceptance test that has structural implications, fails to meet contract requirements or is missing from project records.

The above guidelines are not intended to reduce testing requirements as set forth in the project Materials Testing Summary.

The Memorandum of Exceptions provides a basis for acceptance of the nonconforming material. An engineering analysis of the nonconforming material's test values should be made to determine the magnitude and extent of the material; and to determine acceptability based on performance and the anticipated service life. If the engineering analysis indicates the construction project can be expected to provide a reasonable but reduced service life, limited Federal participation may be allowed.

16.12.2 Minor Exceptions, Price Adjustment, and Change Orders

If there are exceptions to the material requirements, but those exceptions do not warrant a Memorandum of Exceptions, then those exceptions are considered minor and are listed on the Materials Testing Summary.

Asphalt (or other material) that is subject to price adjustment through the contract language (e.g. Highways QLA or Airports PWL process) is not considered a materials exception.

When a change order alters the terms of a contract so that non-conforming material satisfies the changed contract conditions, that material is not considered a materials exception.

16.13. Project Financial Closure

After the project control unit receives the Letter of Final Acceptance (Section 16.4), they will send a Project Completion Form (PCF) to the Group Chief/PM, the designated construction phase financial manager (Section 2.2).

The construction phase financial account in IRIS cannot be closed to charges until all contracts have been closed, all encumbrances have been liquidated, all final audits of consultant contracts and utility agreements have been completed by Internal Review, and all further charging of expenses to the account have ceased. The PCF form, when signed by the Group Chief/PM, certifies that all construction phase activity is complete, both physically and financially, and allows the construction account to be closed to further charges.

The Group Chief/PM is responsible for contacting all of the support groups that have charged to the construction phase financial account to determine the current status of their involvement with the project and to advise them that the construction account is being closed to further charges. The Group Chief/PM needs to make certain that all consultant/utility contracts, involving payments out of the construction account, have been completed and are financially closed.

The remaining balance in all encumbrances in the construction phase, including the encumbrance to the construction contractor, must be liquidated. If the Internal Review audits have not been completed, the Group Chief/PM should provide the Internal Review unit with a list of all construction phase contracts and with the information they need to audit each one.

If the construction phase is still active when the Group Chief/PM receives the PCF form, they should return the form to the project control unit giving them an estimated closure date. When they reach that date, they repeat the procedure. When all of the construction phase work is ultimately complete, the Group Chief/PM authorizes the financial closure of the construction financial account.

16.14. Final Federal Reimbursement

Statewide Grants & Projects in the Administrative Services Division prepares and processes the billings

for FHWA and FAA final reimbursement (Final Billing) in the same manner as the interim billings. The Project Engineer is not directly involved in the billing process.

Statewide Grants & Projects prepares the Final Billing after reviewing the financial data in IRIS, the final estimate assembly, and the Letter of Final Acceptance, and closing all of the project's financial phase accounts.

After Final Billing is complete, the Final Voucher is compiled. Statewide Planning Division prepares the Final Voucher for submission to the FHWA and closure of the project.

The FHWA will not process the Department's Final Voucher until receipt of:

- A copy of the Final Inspection Form FHWA-1446C-AKDO
- The Final Construction Report, including the:
  - Final Estimate Assembly
  - Project Materials Certification (in the format shown in 23 CFR 637.207)
  - Explanation of change documents and claims

After closing an FAA's project financial phase accounts, the Final Billing (the Final Grant Reimbursement Request) is prepared.

The FAA will process the final payment request after receipt of the closeout report. Project Control prepares the closeout report which includes:

- Final construction Report
- Final Outlay Report and Request for Reimbursement for Construction Projects (Form SF-271)
- Final Federal Financial Report (Form SF-425)
- Sponsor Certification for AIP Grant Close-out
- Final Payment Summary Worksheet
- Inventory of Non-Expendable Personal Property (if an Equipment Acquisition project)

After the FAA's final grant payment, they issue their Grant Closure letter to Statewide Aviation and the regional office.

16.15. Record Retention & Disposal

Place the field records and regional office records on the project in storage. When the Project Engineer completes all work on the project, transmit to the Group Chief/PM for storage:

- All of the field records including files,
- conformed contracts & plans,
- engineer's diary,
- inspector's daily reports,
- survey books,
- materials test results,
- scale tickets,
- photographic records,
- Certified Payrolls,
- SWPPP with amendments, and
- SWPPP inspection reports.

According to regional policy or practices, store or transmit to the owner agency, regional maintenance and operations, or the international airport:

- A complete set of materials submittals,
- maintenance and operating manuals,
- warranties,
- a set of the completed as-built drawings (FAA allows CAD as-built drawings on CD),
- field survey books on airport projects to the aviation design unit, and
- field survey books on highway projects, dealing with original survey monuments, to the right-of-way unit.

➢ Personnel records should be removed and destroyed.

Store and maintain the original records (may also be microfilm or electronic records) for the following minimum periods of time:

- State-funded projects – three years from the date of final acceptance

- State Student Loan Corporation funded projects – three years from the date of final acceptance or until July 1, 2021; whichever is later
- FAA-funded projects – three years from the date of final grant payment (14 CFR 151.55c)
- FHWA-funded projects – three years after submittal of the Final Voucher (49 CFR 18.42b)
- SWPPP records for minimum three years after NOT with DEC

In the event of a lawsuit, the records should be kept three years after all court settlements.

Figure 16-1
Project Closeout Schematic

This page left intentionally blank.

17. Exhibits – Index, Forms, Letters and Worksheets

There are exhibits - Check with the regional office and Construction Standards Website for current forms.

17.1. Alaska Products Preference Worksheet (APPW Form)

17.2. Alaska Products Preference Worksheet Instructions

17.3. Alaska Veteran's Preference Affidavit Form 25D-17

17.4. Asphalt Adjustment (xls) Form 25D-075

17.5. Assignee's Release (Form 25D-118)

17.6. Bidder Registration Form 25D-6

17.7. Bridge Formula Chart for Gross Vehicle Weights (April 2010)

17.8. Bridge (Temporary) Submittal Checklist (Form 25D-080)

17.9. Building Facilities Form

17.10. Certification of Final Estimate (Form 25D-116)

17.11. Change Order (Form 25D-068)

17.12. Continuation Sheet (Form 25D-065)

17.13. Contractor Self Certification for Subs. and Lower Tier Subs

17.14. Contractor Intent to Claim (Form 25D-18

17.15. Contractor's Release (Form 25D-117)

17.16. Daily Concrete Placement Report (Form 25D-207)

17.17. Daily Force Account Summary Sheet (Form 25D-196)

17.18. Daily Report for Time & Materials Work (Form 25D-195)

17.19. Delegation of Authority Letter

17.20. Delegation of Authority to Assistant

17.21. Directive (Form 25D-069)

17.22. DBE CUF Monitoring Report (Form 25A-298)

17.23. DBE Contact Report (Form 25A-321A)

17.24. DBE Monthly Summary of DBE Participation (Form 25A-336)

17.25. Earthwork & Mass Quantity Computation Sheets (Form 25D-40A)

17.26. Encumbrance Memo

17.27. EEO Monthly Employment Utilization Report (25A-303)

17.28. FHWA Contractors Annual EEO Report (Form PR-1391

17.29. Estimate of Cost (Form 25D-049)

17.30. "Estimate.xls" Instructions

17.31. Explanation of Overruns, Underruns, and Change Documents
17.32. FAA Construction Project Closeout Checklist
17.33. FAA Project Closeout Requirements
17.34. FAA Sponsor Certification for Construction Project Final Acceptance
17.35. FAA Sponsor Certification for Equipment/Construction Contracts
17.36. FHWA Form 1446C-AKDO, Final Inspection
17.37. FHWA Project Closeout Checklist
17.38. Final Construction Report Summary Sheet
17.39. Final Estimate Review Report, (Form 25D-031)
17.40. Final Estimate, Summary of Quantities (Form 25D-025)
17.41. Inspector's Daily Report (Form 25D-186)
17.42. Interim Work Authorization (Form 25D-070)
17.43. Labor Compliance Interview (Form 25D-040)
17.44. Letter for ESD Tax Clearance
17.45. Letter of CENG Budget Requests
17.46. Letter of Department of Revenue Tax Clearance
17.47. Letter of Final Acceptance
17.48. Letter of Final Inspection
17.49. Letter of Partial Completion
17.50. Letter of Project Completion
17.51. Letter of Wage and Hour Compliance Tax Clearance
17.52. Master Materials Certification List (MCL) sample
17.53. Materials Testing Summary
17.54. Oil and Hazardous Substances Spill Notifications (2 DEC Forms)
17.55. OJT-Apprentice/Trainee Employee Report (25A-312)
17.56. OJT- Monthly Training Report (Form 25A-313)
17.57. OJT Training Utilization (Form 25A-311)
17.58. Outline for Force Account Proposal
17.59. Pile Driving Equipment Data (Form 25D-098)
17.60. Pile Driving Record (Form 25D-099)
17.61. Pile Log-Boring Log (Form 25D-046)
17.62. Preconstruction Conference Synopsis

17.63. Progress Estimate
17.64. Project Completion Form (PCF)
17.65. Project Construction Report (Form 25D-057)
17.66. Project Development Authorization
17.67. Project Funding Request
17.68. Project Material Certification Letter Example
17.69. Project Materials Report (Form 25D-058)
17.70. Proof of Construction for ROW (Form 25D-173)
17.71. Proof of Use for Material Sources (25D-174)
17.72. Public Interest Finding (PIF)
17.73. Report of Occupational Injury or Illness (Form 02-921) with instructions
17.74. Request for Overtime Authorization (Form 25A-042)
17.75. Request for Proposal (Form 25D-067)
17.76. Road Construction/Project Condition Report
17.77. Scale Diary (Form 25D-054)
17.78. Stock Request (Form 02-303)
17.79. Subcontractor List (Form 25D-5)
17.80. Submittal Register (Form 25D-030)
17.81. Supervisor's Accident Investigation Report (Form 02-932)
17.82. Supervisor's Safety Meeting Report (Form 25M-063
17.83. Supplemental Agreement (Form 25D-066)
17.84. Support Information/Backup Sheet (Form 25D-064)
17.85. SWPPP Amendment Log (Form 25D-114)
17.86. SWPPP Certification for Contractor (Form 25D-111)
17.87. SWPPP Certification for DOT&PF (Form 25D-109)
17.88. SWPPP Construction Site Inspection Report (Form 25D-100)
17.89. SWPPP Corrective Action Log (Form 25D-112)
17.90. SWPPP Daily Record of Rainfall (Form 25D-115)
17.91. SWPPP Delayed Action Item Report (Form 25D-113)
17.92. SWPPP Delegation of Signature Authority for CGP Documents - Contractor (Form 25D-108)
17.93. SWPPP Delegation of Signature Authority for CGP Documents – DOT&PF (Form 25D-107)
17.94. SWPPP Grading & Stabilization Activities Log (Form 25D-110)

17.95. SWPPP Pre-Construction Site Visit (Form 25D-106)
17.96. SWPPP Project Staff Tracking Form (Form 25D-127)
17.97. SWPPP Subcontractor Certification (Form 25D-105)
17.98. SWPPP Training Log (Form 25D-125)
17.99. SWPPP Turbidity Monitoring Form 25D-140
17.100. SWPP Turbidity Monitoring Annual Report (Form 25D-141)
17.101. SWPPP Visual Monitering (Form 25D-41)
17.102. SWPPP CGP Noncompliance Notification (Form 25D-143)
17.103. Traffic Control Daily Review (Form 25D-104)
17.104. Traffic Control Signs and Devices Daily Report (Form 25D-103)
17.105. Traffic Enforcement Presence Log
17.106. Traffic Item 643 (15) Flagging (Form 25D-037)
17.107. Waiver Request for Alternate Procurement Methods (Form 25D-026)
17.108. Worksite Traffic Supervisor (Form 25D-124)
17.109. Work Zone Accident Report (Form 25D-123)

17.1. Alaska Products Preference Worksheet (APPW Form)

ALASKA PRODUCTS PREFERENCE WORKSHEET

(See Reverse Side for Instructions)

Project Name and Number: ______________________________

Bid Phase: ______________ Contractor: ______________________

PRODUCT	MANUFACTURER	CLASS & PREFERENCE PERCENTAGE	TOTAL DECLARED VALUE	REDUCTION AMOUNT
			TOTAL	

(APPW) Form Alaska Product Preference Worksheet, Page ____ of ____ Revised 4/97

17.2. Alaska Products Preference Worksheet Instructions

INSTRUCTIONS FOR ALASKA PRODUCTS PREFERENCE WORKSHEET

Special Notice: All procurements, except those funded from Federal sources, shall contain Contract provisions for the preference of Alaska products. To be considered for the Alaska Product Preference, each product listed by the Bidder on this worksheet must have current certification from the Alaska Products Preference Program at the time of Bid Opening. A product with expired certification at the bid opening date will not be considered eligible. Products that are not specified for use on the project will not be considered eligible. The Alaska Product Preference Program List of certified products is available online at: http://www.commerce.state.ak.us/dded/dev/procdocref/procdocref.htm or may be obtained by contacting the local DCED office or writing: Dept. of Commerce & Economic Development, Alaska Products Preference List, P.O. Box 110800, Juneau, Alaska 99811-0800.

BIDDERS INSTRUCTIONS:

A. General. The contracting Agency may request documentation to support entries made on this form. False presentations may be subject to AS 36.30.687. All Bidder's entries must conform to the requirements covering bid preparations in general. Discrepancies in price extensions shall be resolved by multiplying the declared total value times the preference percentage and adjusting any resulting computation(s) accordingly.

B. Form Completion – BASIC BIDS.

(1) Enter project number and name, the words "Basic Bid" and the CONTRACTOR'S name in the heading of each page as provided.

(2) The Bidder shall compare those candidate products appearing on the preference listing (see Special Notice comments above) against the requirements of the technical specifications appearing in the contract documents. If the Bidder determines that a candidate product can suitably meet the contract requirements, then that product may be included in the worksheet as follows:

(3) For each suitable product submitted under the "Basic Bid" enter:

- The product name, generic description and its corresponding technical specification section number under the heading "PRODUCT",
- The company name of the Alaska producer under the heading "Manufacturer", and
- The product class (I, II, or III) and preference percentage (3, 5, or 7% respectively) under the "CLASS/% heading.

(4) For each product appearing on the list and to be utilized by the CONTRACTOR enter:

- Under the heading "TOTAL DECLARED VALUE" the manufacturer's quoted price of the product, (caution: this value is to be the manufacturer's quoted price at the place of origin and shall not include costs for freight, handling or miscellaneous charges of incorporating the product into the Work,) and
- The resulting preference – i.e. the preference percentage times the total declared value amount – under the heading "REDUCTION AMOUNT".

(5) Continue for all "suitable" basic bid products. If the listing exceeds one page enter the words "Page # ___ SUB" in front of the word "TOTAL" and on the first line of the following pages enter "SUBTOTAL OF REDUCTION AMOUNT FROM PREVIOUS PAGE".

(6) On the final page of the listing enter "BASIC BID PREFERENCE GRAND" immediately before the word "TOTAL".

(7) Total the entries in the "REDUCTION AMOUNT" column for each page by commencing at the first entry for that page. If a continuation page exists, ensure that the subtotal from the previous page is computed into the running total. Number pages as appropriate.

(8) Compute a Grand Total for the Basic Bid Preference. Enter the amount on the final page of the worksheet. (Note: When solicitations require written bids this amount should also be entered on line "C" of the Basic Bid Schedule.) Submit worksheet(s) with the Bid Schedule.

C. Form Completion – ALTERNATE BIDS.

(1) Enter project number and name, the words "ALTERNATE BID # __", and CONTRACTOR'S name in the heading of each page as provided.

(2) On the first entry line enter "ADDITIONAL ALASKA PRODUCTS FOR ALTERNATE BID # __", and repeat procedures 2 through 5 under part B these Bidder's instructions except that references to "Basic Bid" shall be replaced with the words "Alternate Bid # __".

(3) Following the listing of all additional Alaska products enter the words "ADDITIONAL PRODUCTS PREFERENCE FOR ALTERNATE BID # __ - SUBTOTAL" and enter a subtotal amount for all additional products as listed. Subtotal amount to be determined by adding all additional product entries in the "REDUCTION AMOUNT" column.

(4) Skip three lines and enter "LESS THE FOLLOWING NON-APPLICABLE ALASKA PRODUCTS:

(5) Beginning on the next line, enter the product name and manufacturer of each Alaska Product appearing on the "Basic Bid" listing which would be deleted or reduced from the Project should the "Alternate Bid" be selected. Details of entry need only be sufficient to clearly reference the subject product. (i.e. "Pre-hung doors by Alaska Door Co., Anchorage.") Products being reduced shall specify the amount of the reduction. Should no products require deletion enter "None". When a product is listed as a "NON-APPLICABLE ALASKA PRODUCT" for this alternate bid and if under the basic bid the Bidder received a preference on his basic bid as a result of that product, then the applicable entries under the headings "TOTAL DECLARED VALUE" and "REDUCTION AMOUNT" (for each product and from the basic bid listing) shall also be entered into the corresponding headings of this form. Where only a portion of the products has been deleted, the entry (which will differ from those on the basic bid listing) may be "pro-rated" or as otherwise substantiated.

(6) Following the listing of all non-applicable Alaska products enter the words "NON-APPLICABLE PRODUCTS PREFERENCE FROM BASIC BID ____ SUBTOTAL" and enter a subtotal amount for all non-applicable products listed. Subtotal amount to be determined by adding all non-applicable entries in the "REDUCTION AMOUNT" column.

(7) At the bottom of the final page enter the words "ALTERNATE BID # ____ PREFERENCE GRAND" immediately before the word "TOTAL".

(8) Compute a Grand Total for the Alternate Bid Preference (for Alternate # ____) by subtracting the non-applicable product preference subtotal from the additional product preference subtotal. Enter on the final page. (Note: When solicitations require written bids this amount should also be entered on line "C" of the Alternate Bid Schedule.) Submit separate worksheet(s) with each Alternate Bid.

17.3. Alaska Veteran's Preference Affidavit Form 25D-17

STATE OF ALASKA
DEPARTMENT OF TRANSPORTATION AND PUBLIC FACILITIES

ALASKA VETERAN'S PREFERENCE AFFIDAVIT

In response to the Invitation to Bid for:

Project Name and Number_____.

I certify under penalty of perjury that _____
(Name) qualifies for the Alaska Veteran's Preference under the following conditions:

(a) If a bidder qualifies under AS 36.30.170(b) as an Alaska bidder and is a qualifying entity, a five percent bid preference shall be applied to the bid price (preference may not exceed $5,000). In this subsection, "qualifying entity" means a:

(1) Sole proprietorship owned by an Alaska Veteran;
(2) Partnership under AS 32.06 or AS 32.11 if a majority of the members are Alaska Veteran's;
(3) Limited liability company organized under AS 10.50 if a majority of the individuals are Alaska Veterans.
(4) Corporation that is wholly owned by individuals and a majority of the individuals are Alaska veterans.

(b) To qualify for a preference under this section, a bidder must add value by the bidder itself actually performing, controlling, managing and supervising a significant part of the services provided, or the bidder must have sold supplies of the general nature solicited to other state agencies, governments, or the general public.

(c) In this section, "Alaska Veteran" means an individual who is a:

(1) Resident of this state; and
(2) Veteran; means an individual who:

(A) Served in the:

(i) Armed Forces of the United States, including a reserve unit of the United States armed forces; or
(ii) Alaska Territorial Guard, the Alaska Army National Guard, the Alaska Air National Guard, or the Alaska Naval Militia; and

(B) Was separated from the service under a condition that was not dishonorable.

_____
Authorized Signature

_____ _____
Printed Name Date

Form 25D-17 (June 2012) Page 1 of 1

17.4. Asphalt Adjustment (xls) Form 25D-075

Rev. 7/22/9															
	Upper Spec. Limit		0	0	0	0	0	0	0	0	0	0	0	0	98
	Target Value														
	Lower Spec. Limit		0	0	0	0	0	0	0	0	0	0	0	0	92
	Sample No.	Date Sampled	LOT:	>>>Enter Job & Lot Name Here<<<								Press F9 for calculations			
#			1"	3/4"	1/2"	3/8"	#4	#8	#16	#30	#50	#100	#200	%AC	%Comp
1															
2															
3															
4															
5															
6															
7															
8															
9															
10															
11															
12															
13															
14															
15															
16															
17															
	Mean														
	Standard Deviation														
	Largest Deviation				######	######	######	######	######	######	######	######	######	######	######
	Test Criterion		0	0	0	0	0	0	0	0	0	0	0	0	0
	Critical Test Crit		#N/A	#N/A	#N/A	#N/A	#N/A	#N/A	#N/A	#N/A	#N/A	#N/A	#N/A	#N/A	#N/A

OUTLIERS

Sample No.	1"	3/4"	1/2"	3/8"	#4	#8	#16	#30	#50	#100	#200	%AC	%Comp
	#N/A	#N/A	#N/A	#N/A	#N/A	#N/A	#N/A	#N/A	#N/A	#N/A	#N/A	#N/A	#N/A
	#N/A	#N/A	#N/A	#N/A	#N/A	#N/A	#N/A	#N/A	#N/A	#N/A	#N/A	#N/A	#N/A
	#N/A	#N/A	#N/A	#N/A	#N/A	#N/A	#N/A	#N/A	#N/A	#N/A	#N/A	#N/A	#N/A
	#N/A	#N/A	#N/A	#N/A	#N/A	#N/A	#N/A	#N/A	#N/A	#N/A	#N/A	#N/A	#N/A
	#N/A	#N/A	#N/A	#N/A	#N/A	#N/A	#N/A	#N/A	#N/A	#N/A	#N/A	#N/A	#N/A
	#N/A	#N/A	#N/A	#N/A	#N/A	#N/A	#N/A	#N/A	#N/A	#N/A	#N/A	#N/A	#N/A
	#N/A	#N/A	#N/A	#N/A	#N/A	#N/A	#N/A	#N/A	#N/A	#N/A	#N/A	#N/A	#N/A
	#N/A	#N/A	#N/A	#N/A	#N/A	#N/A	#N/A	#N/A	#N/A	#N/A	#N/A	#N/A	#N/A
	#N/A	#N/A	#N/A	#N/A	#N/A	#N/A	#N/A	#N/A	#N/A	#N/A	#N/A	#N/A	#N/A
	#N/A	#N/A	#N/A	#N/A	#N/A	#N/A	#N/A	#N/A	#N/A	#N/A	#N/A	#N/A	#N/A
	#N/A	#N/A	#N/A	#N/A	#N/A	#N/A	#N/A	#N/A	#N/A	#N/A	#N/A	#N/A	#N/A
	#N/A	#N/A	#N/A	#N/A	#N/A	#N/A	#N/A	#N/A	#N/A	#N/A	#N/A	#N/A	#N/A
	#N/A	#N/A	#N/A	#N/A	#N/A	#N/A	#N/A	#N/A	#N/A	#N/A	#N/A	#N/A	#N/A
	#N/A	#N/A	#N/A	#N/A	#N/A	#N/A	#N/A	#N/A	#N/A	#N/A	#N/A	#N/A	#N/A
	#N/A	#N/A	#N/A	#N/A	#N/A	#N/A	#N/A	#N/A	#N/A	#N/A	#N/A	#N/A	#N/A
	#N/A	#N/A	#N/A	#N/A	#N/A	#N/A	#N/A	#N/A	#N/A	#N/A	#N/A	#N/A	#N/A
	#N/A	#N/A	#N/A	#N/A	#N/A	#N/A	#N/A	#N/A	#N/A	#N/A	#N/A	#N/A	#N/A
	#N/A	#N/A	#N/A	#N/A	#N/A	#N/A	#N/A	#N/A	#N/A	#N/A	#N/A	#N/A	#N/A

INLIERS

1"	3/4"	1/2"	3/8"	#4	#8	#16	#30	#50	#100	#200	%AC	%Comp
#N/A	#N/A	#N/A	#N/A	#N/A	#N/A	#N/A	#N/A	#N/A	#N/A	#N/A	#N/A	#N/A
#N/A	#N/A	#N/A	#N/A	#N/A	#N/A	#N/A	#N/A	#N/A	#N/A	#N/A	#N/A	#N/A
#N/A	#N/A	#N/A	#N/A	#N/A	#N/A	#N/A	#N/A	#N/A	#N/A	#N/A	#N/A	#N/A
#N/A	#N/A	#N/A	#N/A	#N/A	#N/A	#N/A	#N/A	#N/A	#N/A	#N/A	#N/A	#N/A
#N/A	#N/A	#N/A	#N/A	#N/A	#N/A	#N/A	#N/A	#N/A	#N/A	#N/A	#N/A	#N/A
#N/A	#N/A	#N/A	#N/A	#N/A	#N/A	#N/A	#N/A	#N/A	#N/A	#N/A	#N/A	#N/A
#N/A	#N/A	#N/A	#N/A	#N/A	#N/A	#N/A	#N/A	#N/A	#N/A	#N/A	#N/A	#N/A
#N/A	#N/A	#N/A	#N/A	#N/A	#N/A	#N/A	#N/A	#N/A	#N/A	#N/A	#N/A	#N/A
#N/A	#N/A	#N/A	#N/A	#N/A	#N/A	#N/A	#N/A	#N/A	#N/A	#N/A	#N/A	#N/A
#N/A	#N/A	#N/A	#N/A	#N/A	#N/A	#N/A	#N/A	#N/A	#N/A	#N/A	#N/A	#N/A
#N/A	#N/A	#N/A	#N/A	#N/A	#N/A	#N/A	#N/A	#N/A	#N/A	#N/A	#N/A	#N/A
#N/A	#N/A	#N/A	#N/A	#N/A	#N/A	#N/A	#N/A	#N/A	#N/A	#N/A	#N/A	#N/A
#N/A	#N/A	#N/A	#N/A	#N/A	#N/A	#N/A	#N/A	#N/A	#N/A	#N/A	#N/A	#N/A
#N/A	#N/A	#N/A	#N/A	#N/A	#N/A	#N/A	#N/A	#N/A	#N/A	#N/A	#N/A	#N/A
#N/A	#N/A	#N/A	#N/A	#N/A	#N/A	#N/A	#N/A	#N/A	#N/A	#N/A	#N/A	#N/A
#N/A	#N/A	#N/A	#N/A	#N/A	#N/A	#N/A	#N/A	#N/A	#N/A	#N/A	#N/A	#N/A
#N/A	#N/A	#N/A	#N/A	#N/A	#N/A	#N/A	#N/A	#N/A	#N/A	#N/A	#N/A	#N/A
#N/A	#N/A	#N/A	#N/A	#N/A	#N/A	#N/A	#N/A	#N/A	#N/A	#N/A	#N/A	#N/A
#N/A	#N/A	#N/A	#N/A	#N/A	#N/A	#N/A	#N/A	#N/A	#N/A	#N/A	#N/A	#N/A
#N/A	#N/A	#N/A	#N/A	#N/A	#N/A	#N/A	#N/A	#N/A	#N/A	#N/A	#N/A	#N/A
#N/A	#N/A	#N/A	#N/A	#N/A	#N/A	#N/A	#N/A	#N/A	#N/A	#N/A	#N/A	#N/A
#N/A	#N/A	#N/A	#N/A	#N/A	#N/A	#N/A	#N/A	#N/A	#N/A	#N/A	#N/A	#N/A
#N/A	#N/A	#N/A	#N/A	#N/A	#N/A	#N/A	#N/A	#N/A	#N/A	#N/A	#N/A	#N/A
#N/A	#N/A	#N/A	#N/A	#N/A	#N/A	#N/A	#N/A	#N/A	#N/A	#N/A	#N/A	#N/A
#N/A	#N/A	#N/A	#N/A	#N/A	#N/A	#N/A	#N/A	#N/A	#N/A	#N/A	#N/A	#N/A
#N/A	#N/A	#N/A	#N/A	#N/A	#N/A	#N/A	#N/A	#N/A	#N/A	#N/A	#N/A	#N/A

Number of Samples		#N/A	#N/A	#N/A	#N/A	#N/A	#N/A	#N/A	#N/A	#N/A	#N/A	#N/A	#N/A
Mean Average													
Standard Deviation													
Upper Quality Index				######	######	######	######	######	######	######	######	######	######
Lower Quality Index				######	######	######	######	######	######	######	######	######	######
Percent in Upper Limit			######	######	######	######	######	######	######	######	######	######	######
Percent in Lower Limit			######	######	######	######	######	######	######	######	######	######	######
Quality Level				######	######	######	######	######	######	######	######	######	######
Pay Factor				#N/A	#N/A	#N/A	#N/A	#N/A	#N/A	#N/A	#N/A	#N/A	#N/A
Weight Factor		0	4	4	4	4	5	5	5	5	20	40	
Price Adjustment		#####	######	#N/A	#N/A	#N/A	#N/A	#N/A	#N/A	#N/A	#N/A	#N/A	

Composite Pay Factor	#VALUE!
Density Pay Factor	#N/A
Minimum Pay Factor	**#VALUE!**

17.5. Assignee's Release (Form 25D-118)

25D-118
(5/83)

STATE OF ALASKA
DEPARTMENT OF TRANSPORTATION
AND PUBLIC FACILITIES

ASSIGNEE'S RELEASE

RE: Project No(s). _____

Project Name _____

Pursuant to the terms of the written contract dated _____, 19____,

for the construction of _____
Project Number(s)

and in consideration of the total final sum of _____

_____

Dollars ($ _____) which has been or is to be paid under said contract by the STATE OF ALASKA

(hereinafter called the STATE) to the Contractor or his assignees, the _____
Assignee's Name and Address

_____

(1) a corporation organized and existing under the laws of the State of _____,

(2) a partnership consisting of _____,

(3) an individual trading as _____,

(hereinafter called the Assignee), upon receipt of that part of the said sum due under his assignment does remise, release and discharge the STATE, its officers, agents and employees, of and from all liabilities, obligations, claims and demands whatsoever under or arising from the said contract, whether known or unknown and whether or not ascertainable at the time of the execution of this instrument, except claims asserted in accordance with the provisions of the above-named Contract.

The Assignee agrees, in connection with claims which are not released as set forth above, that final payment under the said contract does not modify the requirements and limitations imposed by the Contract, including without limitation those provisions relating to notification to the Contracting Officer and relating to the prosecution of claims.

IN WITNESS WHEREOF, this release has been executed this _____ day of _____, 19____.

(Assignee) _____

WITNESS _____

BY _____

TITLE _____

(NOTE: In the case of a corporation, witnesses are not required, but certificate below must be complete.)

CERTIFICATE

I, _____, certify that I am the _____

(official title) of the corporation named as Assignee in the foregoing release; that _____

who signed said release on behalf of the Assignee was then _____ (official title)

of said corporation; that said release was duly signed for and in behalf of said corporation by authority of its governing body and is within the scope of its corporate powers.

_____ (Signature)
Name:

IN WITNESS WHEREOF, I have hereunto set my hand and affixed my official seal the day and year written above.

My Commission Expires: _____
Notary Public

17.6. Bidder Registration Form 25D-6

STATE OF ALASKA
DEPARTMENT OF TRANSPORTATION AND PUBLIC FACILITIES
Civil Rights Office – DBE Program

BIDDER REGISTRATION

All firms are required to submit a Bidder's Registration form before an Alaska Department of Transportation and Public Facilities (DOT&PF) project can be awarded. The Bidder Registration form must be submitted to the Civil Rights Officer (CRO) on an annual basis by January 1 and is valid thru December 31. Complete this form for each contractor and subcontractor. Firms will be listed on the bidder registration online directory http://www.dot.state.ak.us/cvlrts/bidreg.shtml.

Name of Firm: _____

Street Address: _____

Mailing Address: _____

Contact Name: _____

Telephone Number: _____

Fax number: _____

E-mail Address: _____

Date Firm was Established: _____

The firm listed above is a (check all that apply):

- Prime Contractor? ☐
- Subcontractor? ☐ Identify specialty: _____
- Service Provider? ☐ Identify service: _____
- Material Supplier? ☐ Identify material: _____
- Manufacturer? ☐ Identify product: _____
- Certified DBE? * ☐ *DBE- Disadvantaged Business Enterprise
- Self-Certified SBE? * ☐ *SBE- Small Business Enterprise *(Complete page 2 of this form.)*

Firm's gross annual receipts:

- ☐ < $500,000
- ☐ $500,000- $999,999
- ☐ $1,000,000- $4,999,999
- ☐ $5,000,000- $9,999,999
- ☐ $10,000,000- $16,999,999
- ☐ > $17,000,000

Type of contracts/proposals bid by the firm (check all that apply):

☐ Highways ☐ Airports ☐ Transit ☐ AMHS

_____ _____ _____

Signature of Company Representative **Title** **Date**

Send this completed form to:
ADOT&PF Civil Rights Office
PO Box 196900
Anchorage, Alaska 99519-6900

OR

You may fax your completed form to:
(907) 269-0847

If you have any questions, please call **(907) 269-0851**.

Form 25D-6 (1/16)

SMALL BUSINESS ENTERPRISE PROGRAM (SBE) SELF-REGISTRATION

Fostering Small Business Participation (SBE) (49 CFR 26.39):
To meet the requirements of 49 CFR 26.39, DOT&PF has implemented a Small Business Enterprise Program. This component is only applicable to federally funded projects.

[Complete the Section below only if you are a Self-Certified SBE Firm] All businesses wishing to be eligible as a SBE are required to submit a SBE Self-Registration form. The SBE Self-Registration form must be submitted on an annual basis by January 1 and is valid thru December 31.

In order to verify your firm's compliance with business size standards under 49 CFR 26.67(2)(i) and 26.65(b), ***at the time of award*** you will be required to submit the following documents:

- SBE Affidavit of Certification Eligibility
- Personal Financial Statement
- Past three years of your corporations and/or individual tax returns
- If not a certified DBE, please provide documentation that you are self-certified as a small business (please contact Procurement Technical Assistance Center (PTAC) at 907-274-7232 if you require assistance on becoming a self-certified small business)

At time of award send required documentation to:

DOT&PF Civil Rights Office
Attn: Certification
PO Box 196900
Anchorage, Alaska 99519-690
Phone: (907) 269-0851
Fax: (907) 269-0847

A. SBE Directory Information

1. Can you verify at time of award that your firm (including affiliates) does not exceed the small business size standards as described by the Small Business Administration (SBA) for the last three years of gross annual receipts per 49 CFR 26.65(a)? To find more information about the SBA size standards, visit the SBA website https://www.sba.gov/content/small-business-size-standards. ◯ Yes ◯ No*

**If you marked "No" you do not qualify for the SBE Program*

2. Can you verify at time of award that your firm (including affiliates) does not exceed the personal net worth standards of $1.32 million per 49 CFR 26.67(2)(i)? ◯ Yes ◯ No*

**If you marked "No" you do not qualify for the SBE Program*

3. Can you verify at time of award that each individual owner of your firm does not exceed the personal net worth standards of $1.32 million per 49 CFR 26.67(2)(i)? ◯ Yes ◯ No*

**If you marked "No" you do not qualify for the SBE Program*

4. Contact Info.

Name of Firm	Contact Name
Telephone Number	Fax Number
Email Address	Company Website

Form 25D-6 (1/16)

17.7. Bridge Formula Chart for Gross Vehicle Weights (April 2010)

BRIDGE FORMULA WEIGHTS

U.S. Department
of Transportation

Federal Highway Administration

January 1994

NOTE- For additional copies contact:
Federal Highway Administration
400 7th Street, SW
Washington, D.C. 20590
(202) 366-2212

$$W = 500\left[\frac{LN}{N-1} + 12N + 36\right]$$

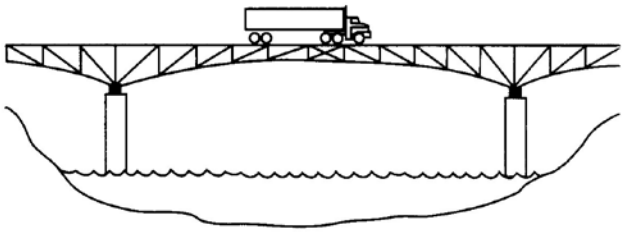

Publication No. FHWA-MC-94-007
HIA-20/1(15M)E
HIA-10/R1-96(7.5M)
HIA-20/10-98(10M)

Three questions are addressed by this pamphlet with regard to the Bridge Formula: What is it? Why is it necessary? How is it used?

WHAT IS IT?

$$W = 500\left[\frac{LN}{N-1} + 12N + 36\right]$$

W = the maximum weight in pounds that can be carried on a group of two or more axles to the nearest 500 pounds.

L = the distance in feet between the outer axles of any two or more consecutive axles.

N = the number of axles being considered.

This formula limits the weight on groups of axles in order to reduce the risk of damage to highway bridges. Allowable weight depends on the number of axles a vehicle has and the distance between those axles. However, the single- or tandem-axle weight limits supersede the Bridge Formula limits for all axles not more than 96 inches apart.

WHY IS THE FORMULA NECESSARY?

Bridges on Interstate System highways are used by a wide variety of traffic. They are designed to support expected loadings. However, as trucks grew heavier in the 1950's and 1960's, something had to be done to protect bridges. The solution was to tie allowable weights to the number and spacing of axles.

Axle spacing is as important as axle weight in bridge design. A bridge is analogous to thin ice on a pond. Walking on the ice concentrates a person's weight on the small area covered by the individual's feet, and the ice may break. Lying down, however, spreads the same weight over a much larger area, and the ice is less likely to break. Consider trucks crossing a bridge:

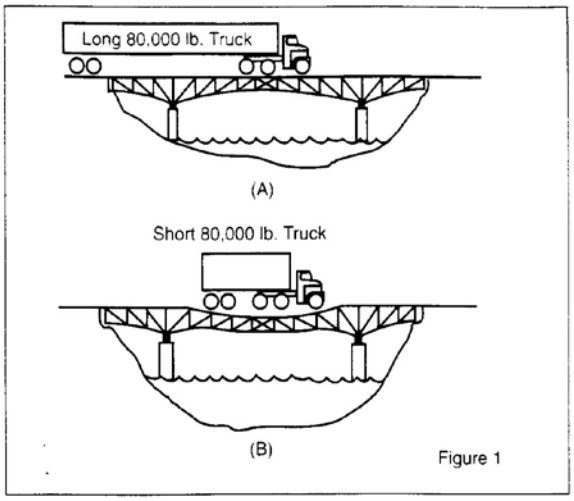

Figure 1

In Figure 1(A), the stress on bridge members as the longer truck rolls across is much less than that caused by the short vehicle in Figure 1 (B), even though both trucks have the same total weight and individual axle weights. The weight of the longer vehicle is spread out, while the shorter vehicle has all of the weight concentrated on a small area.

The Federal-Aid Highway Amendments of 1974 increased the weights allowed on the Interstate System to 20,000 pounds on a single axle, 34,000 pounds on a tandem axle, and 80,000 pounds gross weight (23 U.S.C. 127). But Congress balanced this concession to productivity by enacting the Bridge Formula. The result is that motor vehicles may be loaded to the maximum weight only if each group of axles on the vehicle and their spacing also satisfy the requirements of the Formula. This prevents the vehicle from overstressing bridges in the same way that a person lying down on thin ice woulci minimize the risk of breaking through.

Until 1982, Federal law set only upper limits (or ceilings) on Interstate System weight limits. A few States retained significantly lower weight limits which eventually became barriers to long-distance truck traffic. In 1982, Federal law was amended to make Interstate System weight limits, including the bridge formula limits, both the maximum and the minimum weights (i.e., floors and ceilings) that States must allow on the Interstate System.

HOW IS THE FORMULA USED?

Some definitions are needed to use the Bridge Formula correctly.

Gross Weight—the weight of a vehicle or vehicle combination and any load thereon. The Federal gross weight limit on the Interstate System is 80,000 pounds.

Single-Axle Weight—The total weight on one or more axles whose centers are not more than 40 inches apart. The Federal single-axle weight limit on the Interstate System is 20,000 pounds.

Tandem-Axle Weight—The total weight on two or more consecutive axles more than 40 inches but not more than 96 inches apart. The Federal tandem-axle weight limit on the Interstate System is 34,000 pounds.

Interstate System weight limits in some States may be higher than these figures due to "grandfather" rights. When the Interstate System axle and gross weight limits were adopted in 1956, States were allowed to keep or "grandfather" those which were higher. In 1975, States were also allowed to keep "grandfathered" bridge formula limits which were higher than those established for the Interstate System.

Bridge Formula calculations yield a series of weights (pages 6-7). However, the single-axle weight limit replaces the Bridge Formula weight limit on axles not more than 40 inches apart, and the tandem-axle weight limit replaces the Bridge Formula weight limit for axles over 40 but not more than 96 inches apart. At 97 inches apart, two axles can carry 38,000 pounds and three axles 42,000 pounds, as shown in Figure 2.

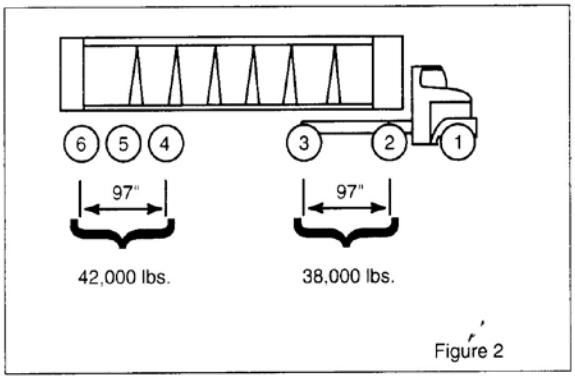

Figure 2

Federal law provides that any two or more consecutive axles may not exceed the weight computed by the Formula even though single axles, tandem axles, and gross weight are within legal limits. In other words, the axle group that includes the entire truck—sometimes called the "outer bridge" group—must comply with the Bridge Formula. But interior combinations of axles, such as the "tractor bridge" (axles 1, 2, and 3) and "trailer bridge" (axles 2, 3, 4, and 5), must also be in compliance with weights computed by the Formula (Figure 3).

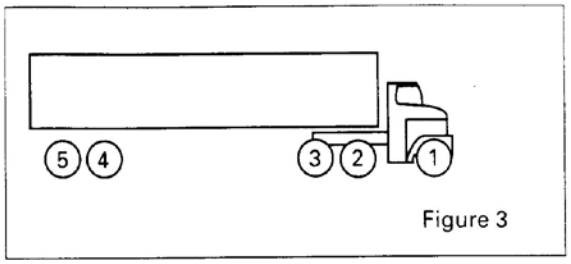

Figure 3

The most common vehicle checked for compliance with weight limit requirements is shown in Figure 3. While the Bridge Formula applies to each combination of two or more axles, experience shows that axle combinations 1 through 3, 1 through 5, and 2 through 5 are critical and must be checked. If these combinations are found to be satisfactory, all of the others on this type of vehicle will normally be satisfactory.

The vehicle with weights and axle dimensions as shown in Figure 4 will be used to illustrate a Bridge Formula check.
(Continued on page 8.)

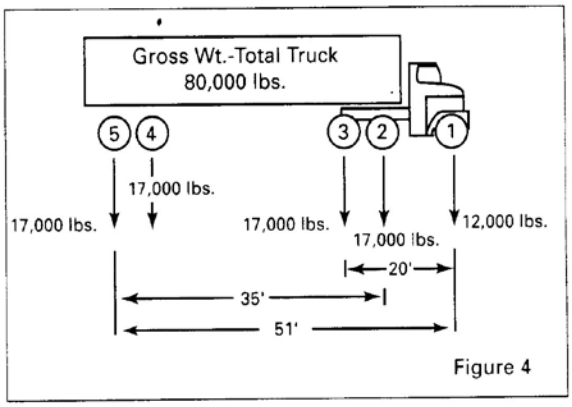

Figure 4

PERMISSIBLE GROSS LOADS FOR VEHICLES IN REGULAR OPERATION [1]

Based on weight formula $W = 500\left[\frac{LN}{N-1} + 12N + 36\right]$

Distance in feet (L) between the extremes of any group of 2 or more consecutive axles	Maximum load in pounds carried on any group of 2 or more consecutive axles							
N =	2 AXLES	3 AXLES	4 AXLES	5 AXLES	6 AXLES	7 AXLES	8 AXLES	9 AXLES
4	34,000	----------	----------	----------	----------	----------	----------	----------
5	34,000	----------	----------	----------	----------	----------	----------	----------
6	34,000	----------	----------	----------	----------	----------	----------	----------
7	34,000	----------	----------	----------	----------	----------	----------	----------
8 & less	34,000	34,000	----------	----------	----------	----------	----------	----------
more than 8	38,000	42,000	----------	----------	----------	----------	----------	----------
9	39,000	42,500	----------	----------	----------	----------	----------	----------
10	40,000	43,500	----------	----------	----------	----------	----------	----------
11	----------	44,000	----------	----------	----------	----------	----------	----------
12	----------	45,000	50,000	----------	----------	----------	----------	----------
13	----------	45,500	50,500	----------	----------	----------	----------	----------
14	----------	46,500	51,500	----------	----------	----------	----------	----------
15	----------	47,000	52,000	----------	----------	----------	----------	----------
16	----------	48,000	52,500	58,000	----------	----------	----------	----------
17	----------	48,500	53,500	58,500	----------	----------	----------	----------
18	----------	49,500	54,000	59,000	----------	----------	----------	----------
19	----------	50,000	54,500	60,000	----------	----------	----------	----------
20	----------	51,000	55,500	60,500	66,000	----------	----------	----------
21	----------	51,500	56,000	61,000	66,500	----------	----------	----------
22	----------	52,500	56,500	61,500	67,000	----------	----------	----------
23	----------	53,000	57,500	62,500	68,000	----------	----------	----------
24	----------	54,000	58,000	63,000	68,500	74,000	----------	----------
25	----------	54,500	58,500	63,500	69,000	74,500	----------	----------
26	----------	55,500	59,500	64,000	69,500	75,000	----------	----------
27	----------	56,000	60,000	65,000	70,000	75,500	----------	----------
28	----------	57,000	60,500	65,500	71,000	76,500	82,000	----------
29	----------	57,500	61,500	66,000	71,500	77,000	82,500	----------
30	----------	58,500	62,000	66,500	72,000	77,500	83,000	----------
31	----------	59,000	62,500	67,500	72,500	78,000	83,500	----------
32	----------	60,000	63,500	68,000	73,000	78,500	84,500	90,000
33	----------	----------	64,000	68,500	74,000	79,000	85,000	90,500
34	----------	----------	64,500	69,000	74,500	80,000	85,500	91,000
35	----------	----------	65,500	70,000	75,000	80,500	86,000	91,500
36	----------	Exception	66,000	70,500	75,500	81,000	86,500	92,000
37	----------	(see page 10)	66,500	71,000	76,000	81,500	87,000	93,000
38	----------	----------	67,500	71,500	77,000	82,000	87,500	93,500
39	----------	----------	68,000	72,500	77,500	82,500	88,500	94,000
40	----------	----------	68,500	73,000	78,000	83,500	89,000	94,500
41	----------	----------	69,500	73,500	78,500	84,000	89,500	95,000
42	----------	----------	70,000	74,000	79,000	84,500	90,000	95,500
43	----------	----------	70,500	75,000	80,000	85,000	90,500	96,000
44	----------	----------	71,500	75,500	80,500	85,500	91,000	96,500
45	----------	----------	72,000	76,000	81,000	86,000	91,500	97,500
46	----------	----------	72,500	76,500	81,500	87,000	92,500	98,000
47	----------	----------	73,500	77,500	82,000	87,500	93,000	98,500
48	----------	----------	74,000	78,000	83,000	88,000	93,500	99,000
49	----------	----------	74,500	78,500	83,500	88,500	94,000	99,500
50	----------	----------	75,500	79,000	84,000	89,000	94,500	100,000
51	----------	----------	76,000	80,000	84,500	89,500	95,000	100,500
52	----------	----------	76,500	80,500	85,000	90,500	95,500	101,000
53	----------	----------	77,500	81,000	86,000	91,000	96,500	102,000
54	----------	----------	78,000	81,500	86,500	91,500	97,000	102,500
55	----------	----------	78,500	82,500	87,000	92,000	97,500	103,000
56	----------	----------	79,500	83,000	87,500	92,500	98,000	103,500
57	----------	Interstate Gross	80,000	83,500	88,000	93,000	98,500	104,000
58	----------	Weight Limit	----------	84,000	89,000	94,000	99,000	104,500
59	----------	(see page 4)	----------	85,000	89,500	94,500	99,500	105,000
60	----------	----------	----------	85,500	90,000	95,000	100,500	105,500

Tandem Axle Weight (see pages 4 & 5)

Example (see page 8)

[1]The permissible loads are computed to the nearest 500 pounds as required by statute.

[2]The following loaded vehicles must not operate over H15-44 bridges: 3-S2 (5-axle) with wheelbase less than 38 feet; 2-S1-2 (5-axle) wih wheelbase less than 45 feet; 3-3 (6-axle) with wheelbase less than 45 feet; and 7- 8- and 9-axle vehicles regardless of wheelbase.

6 7

Before checking a vehicle for compliance with the Bridge Formula, its single-axle, tandem-axle, and gross weight should be checked. Here the single axle (number 1) does not exceed 20,000 pounds, tandems 2-3 and 4-5 do not exceed 34,000 pounds each, and the gross weight does not exceed 80,000 pounds. These preliminary requirements are thus satisfied. The first Bridge Formula combination is checked as follows:

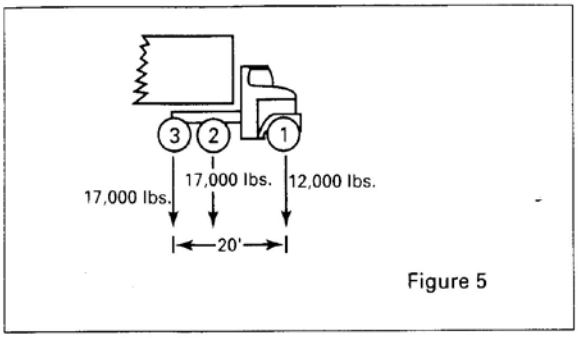

Figure 5

Check of 1 thru 3 (Figure 5)
Actual weight = 12,000 + 17,000 + 17,000 = 46,000 pounds.
N = 3 axles.
L= 20 feet.

$$W = 500\left[\frac{LN}{N-1} + 12N + 36\right]$$

$$W = 500\left[\frac{(20 \times 3)}{(3 - 1)} + (12 \times 3) + 36\right] = 51{,}000\#$$

W maximum = 51,000#, which is more than the actual weight of 46,000#, so the Bridge Formula requirement is satisfied.

Example—From the Bridge Table (pages 6 & 7)
This same number (51,000#) could have been obtained from the Bridge Table by reading down the left side to L = 20 and across to the right where N = 3.

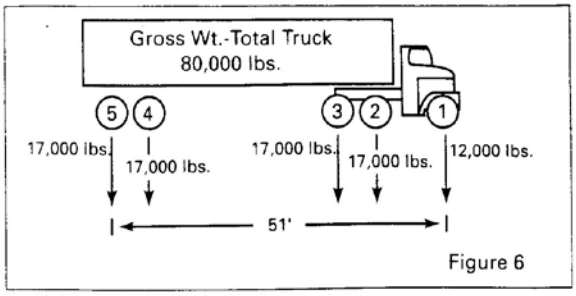

Figure 6

Now check axles 1 thru 5 (Figure 6)
Actual weight = 12,000 + 17,000 + 17,000 + 17,000 + 17,000 = 80,000#.
W maximum, from the Bridge Table for "L" of 51 feet and "N" of 5 = 80,000#.

Therefore, this axle spacing is satisfactory.

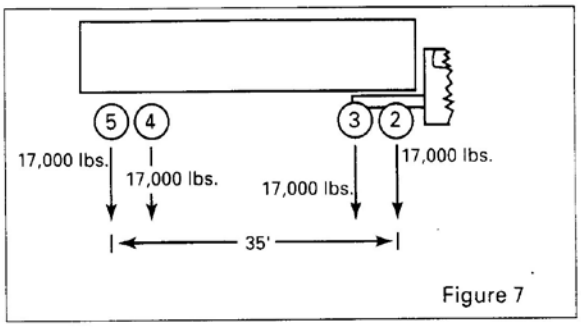

Figure 7

Now check axles 2 thru 5 (Figure 7)
Actual weight = 17,000 + 17,000 + 17,000 + 17,000= 68,000#.
W maximum, Bridge Table for "L" of 35 feet and "N" of 4 = 65,500#.

This is a violation because the actual weight exceeds the weight allowed by the Bridge Formula. To correct the situation, some load must be removed from the vehicle or the axle spacing (35 feet) must be increased.

EXCEPTION TO FORMULA AND BRIDGE TABLE

Federal law (23 U.S.C.127) includes one exception to the Bridge Formula and the Bridge Table—two consecutive sets of tandem axles may carry 34,000 pounds each if the overall distance between the first and last axles of these tandems is 36 feet or more. For example, a five-axle tractor-semitrailer combination may carry 34,000 pounds both on the tractor tandem (axles 2 and 3) and the trailer tandem (axles 4 and 5), provided axles 2 and 5 are spaced at least 36 feet apart. Without this exception, the Bridge Formula would allow an actual weight of only 66,000 to 67,500 pounds on tandems spaced 36 to 38 feet apart.

BRIDGE FORMULA APPLICATION TO SINGLE UNIT TRUCKS

The procedure described above can be used to check any axle combinations, but several closely spaced axles usually produce the most critical situation.

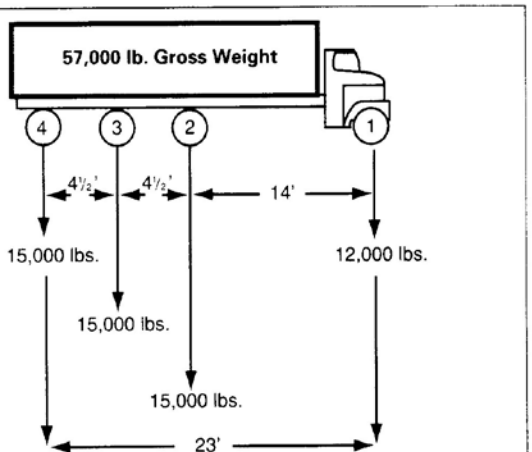

Figure 8

The truck in Figure 8 satisfies the single axle weight limit (12,000# is less than 20,000#), the tandem axle limit (30,000# is less than 34,000#) and gross weight limit (57,000# is less than 80,000#). With these restrictions satisfied, a check will be made for Bridge Formula requirements, axles 1 through 4.

Actual weight = 12,000 + 15,000 +15,000 + 15,000 = 57,000#.
W maximum for "N" of 4 and "L" of 23 feet = 57,500 from the Bridge Table.
Since axles 1 thru 4 are satisfactory, check axles 2 thru 4:
W (actual) = 15,000 + 15,000 + 15,000 = 45,000#.
W maximum for "N" of 3 and "L" of 9 feet= 42,500# (From the Bridge Table).

This is a violation. The load would have to be reduced, axles added, or spacing increased, to comply with the Bridge Formula .

CAUTION

This pamphlet paraphrases the actual provision in 23 U.S.C. 127 and 23 CFR 658 for the sake of clarity. In case of a dispute, the statue and regulations will govern.

Previous editions of this pamphlet released under the title "Bridge Gross Weight Formula", dated April 1984, remain valid. Neither the Formula nor any resulting maximum gross weight values (table entries) have been changed.

17.8. Bridge (Temporary) Submittal Checklist (Form 25D-080)

State of Alaska
Alaska Department of Transportation & Public Facilities

Temporary Bridge Submittal Checklist (Form 25D-080)

Each temporary crossing location is slightly different, and each site requires a unique design. The Contractor is required to submit a design that provides for the safe passage of public traffic, DOT/PF project staff and the Contractor's operations. An Alaska registered professional engineer employed by (or under contract to) the contractor must design, seal and sign the temporary crossing working drawings. The Engineer with support from the DOT/PF Bridge Section will check the working drawings for structural adequacy, contract compliance and overall completeness.

Before the Bridge Section can perform the check, a complete submittal package must be received from the Contractor. While each temporary crossing site is unique, a complete submittal must include all of the items listed below. Additional information and details may be required for unusual situations.

1. Bridge Layout
    a. Plan view
        1. Layout / profile grade line
        2. Traveled way width
        3. Top, toe and slopes of cuts and fills
        4. Horizontal clearance under structure (if over traffic)
        5. Direction of stream flow (if over water)
        6. North arrow
        7. Alignment data
        8. Skew angle
        9. Bank protection
        10. Centerlines of piers
    b. Elevation View
        1. Abutment and pier numbers
        2. Datum line and elevation
        3. Approximate original ground line at bridge centerline
        4. Total bridge length
        5. Span lengths
        6. Bank protection
        7. Vertical clearance or freeboard
    c. Typical Section Including Typical Piers
        1. Roadway width on the bridge
        2. Bridge width
        3. Typical pier
        4. Girders, deck and railings/barriers
        5. Deck surfacing
        6. Location of profile grade
        7. Identify girder and deck type

Form 25D-080 (6/09) 1

Temporary Bridge Submittal Checklist (Form 25D-080)

8. Pedestrian accommodations
9. Utilities

2. Details
    a. Lateral bracing
    b. Blocking
    c. Deck
    d. Railings and barriers
    e. Approach railings and transitions
    f. Erection and removal details
3. Foundation Information
    a. Allowable and applied soil bearing pressure values for spread footings
    b. Pile types, loads, capacities, factors of safety and minimum tip elevation
4. Traffic Openings (if over public or private roads)
5. Pedestrian Accommodations (if specified)
6. Lighting Plan (if specified)
7. Number and name each plan sheet
8. Design Notes
    a. Design specifications
    b. Live load
    c. Dead load
    d. Seismic values
        1. Acceleration coefficient
        2. Site coefficient
    e. Material properties (f'c, Fy, ASTM Designations)
9. Supporting Design Computations
10. Professional Engineer Signature

The Contractor must schedule their operations to allow a minimum of forty five (45) working days for review and checking of the submittal prior to constructing or ordering materials for temporary crossings.

Form 25D-080 (6/09) 2

DEPARTMENT OF TRANSPORTATION & PUBLIC FACILITIES
BUILDING FACILITIES FORM

☐ ADD ☐ CHANGE ☐ DELETE*

LOCATION/TOWN	PROPERTY DESCRIPTION	SQ FT	BOUGHT/BUILT YEAR / MONTH	ORIGINAL VALUE

DOT&PF PROPERTY INFORMATION			RISK MANAGEMENT PROPERTY INFORMATION		
Depatment Property Number Assigned			Risk Management Property Number Assigned		
AKSAS Project # and Name			Department	25	
Contractor			Division #	3	
Construction Dates:	Begin	End	Subdivision #		
Administration & Inspection Costs			Town #		
Site Costs		Included in LS	Class		
Building Costs			Sprinkler	☐ Yes	☐ No
Construction Contract Costs			Fire Protection	☐ Yes	☐ No
Type of Construction			Replacement Value		
Foundation Type			% Occupancy		
Dimensions and Number of Stories					
Is building heated?	☐ Yes	☐ No			
Room Shape	Rectangular		Insure	☐ Yes	Value
Condition				☐ No	
For Generators: make/model/serial number					

AKSAS CODING				
AR	COLLOCODE	PROGRAM CODE	LEDGER CODE	ZIP CODE

*If building is to be deleted, provide a brief explanation of building status:

Facility Manager: _____ Date _____

S:\Operbudg\Excel\Building Facilities Form

17.10. Certification of Final Estimate (Form 25D-116)

STATE OF ALASKA
DEPARTMENT OF TRANSPORTATION
AND PUBLIC FACILITIES

CERTIFICATION OF FINAL ESTIMATE

Project No(s).: _____ Total Amount of Project: _____

Project Name: _____

DEPARTMENT CERTIFICATION

The undersigned certifies that (s)he was in charge of the construction engineering for the State of Alaska for this project and that the foregoing final estimate was prepared under her/his direction and supervision, that to the best of her/his knowledge and belief the work set forth in said estimate has been performed in accordance with the plans and specifications and that the quantities and amounts set forth are correct.

_____, Project Engineer Date _____

The undersigned certifies that (s)he has reviewed the foregoing final estimate and that payment for the quantities shown therein conforms with the contract and is true and correct to the best of her/his knowledge and belief.

_____, Review Engineer Date _____

The undersigned certifies that the construction engineering for this project was under the supervision of authorized representatives of her/his office, that the foregoing final estimate has been prepared and reviewed by such authorized representatives, that (s)he has reviewed the work and the estimate, that the work has been performed in substantial conformance with the specifications and that the quantities and amounts shown in the estimate are true and correct to the best of her/his knowledge and belief.

_____, Construction Engineer Date _____

CONTRACTOR CERTIFICATION

The undersigned certifies that (s)he was the contractor on the above named project; that the work and materials for which payment is being included in this final estimate have been performed or furnished; that payment is just and due, and has not been made in full; and that her/his signature hereon authorizes final payment therefor.

The undersigned further certifies that all commitments or obligations made to property owners and others covering materials, royalties, access rights, waste areas, and other such rights of any nature, have been fully paid and satisfied; that all Federal, State and Local taxes incurred by the contractor, subcontractor, or other person or persons, in the performance of this contract have been fully paid and discharged; and that the contractor has not extended any loan, gratuity, or gift of money in any form whatsoever to any employee of the Department, nor has (s)he rented or purchased any equipment or materials from any such employee.

Contractor:

_____

By: _____, Authorized Agent Date _____

25D-116
(R 1/98)

17.11. Change Order (Form 25D-068)

STATE OF ALASKA
DEPARTMENT OF TRANSPORTATION
AND PUBLIC FACILITIES
Select REGION

Change Order

Project No.: _____ Change Order No. _____

Project Name: _____

Contractor:		**Change Order Summary:**	
Address:		Calendar Days (+ / -):	
		New Completion Date:	
		Amount of Change Order:	

Recommended By: _____ Date: _____

Title: _____

Approved By: _____ Date: _____

Title: _____

This change order constitutes agreement to terms, conditions and prices stated below.

Accepted By: _____ Date: _____
Contractor's Representative

Acknowledgement indicates only receipt of Change Order and not mutual agreement for basis of payment or time allowance. If a the matter cannot be resolved within 7 days from signature date, an Intent to Claim form must be submitted to the engineer within 14 days.

Acknowledged By: _____ Date: _____
Contractor's Representative

Permission for previously submitted subcontractor(s) to perform all or portions of the work described herein is as checked: ☐ Yes ☐ No ☐ N/A

Seal of Alaskan Professional Engineer *(if required)*

The following change(s) in the above Contract are hereby made in accordance with the terms of the Contract and under the terms and conditions stated below. Price adjustments resulting from inaccurate cost and pricing data are subject to the provisions of AS 36.30.400(c). This document shall become an amendment to the Contract and all provisions of the Contract will be applicable.

DESCRIPTION OF CHANGE (Use Continuation Sheet 25D-065 as Required)

Form 25D-068 (Revised 04/12) C.O. No. Page 1 of 1

17.12. Continuation Sheet (Form 25D-065)

STATE OF ALASKA
DEPARTMENT OF TRANSPORTATION AND PUBLIC FACILITIES

Project No.:

Continuation Sheet

Form 25D-065 (Revised 4/12) Page __ of __

17.13. Contractor Self Certification for Subs. and Lower Tier Subs

Alaska Department of Transportation & Public Facilities

Contractor Self Certification for Subcontractors and Lower Tier Subcontractors (Form 25D-042)

Project Name:	
Project Number:	**Federal-Aid Number:**
Submission Number:	
Subcontractor or Lower Tier Subcontractor:	

Contractor Certification

Agreement as included herein refers to the legally binding written contract between the Contractor and Subcontractor or between the Subcontractor and Lower Tier Subcontractor and identified in items 1 or 2 below.

1. ☐ A written agreement ("Agreement") has been executed between Contractor and the above listed subcontractor.
2. ☐ A written agreement ("Agreement") has been executed between (Subcontractor) and the above listed Lower Tier Subcontractor

- The Subcontractor is qualified to perform the work.
- The Subcontractor has adequate insurance as required by the Contract, or the Contractor has adequate insurance for the Subcontractor(s) as required by the contract.
- The subcontractor is on the DOT&PFs current Bidder's Registration List.
- The "Prompt Payment" clauses (AS 36.90.210) are included in the Agreement language.
- All requirements and pertinent provisions of the Contract, including but not limited to; DBE provisions, and minimum wage rates, are included in the agreement.
- Form 25D-55(A, H, or T as applicable) Required Contract Provisions for Federal Aid Construction Contracts, is inserted (shall not be incorporated by reference) in the Agreement
- All Agreements with Subcontractors and with Lower Tier Subcontractors will be in continued compliance with all provisions of the Contract
- The Contractor remains responsible for all quality control and proper performance of all requirements of the Contract.
- The Contractor will continue to perform at least thirty percent (30%) of the Contract work with his own organization.
- This Contractor Self Certification does not relieve the Contractor and his surety, or either the Contractor or surety from any liability or responsibility under the Contract.
- The Contractor certifies firms or individuals debarred or suspended by the Department, FAA, FHWA, or FTA are not employed or subcontracted under this construction project.

Total Agreement Amount:

Total Agreement Amount is _____% of the Total Contract Award Amount.

Total cumulative subcontracts (including this Agreement) are _____% of the Total Contract Award Amount.

Form 25D-042 (03/2017)

Subcontractor or Lower Tier Subcontractor

Federal I.D. No. (if no Federal I.D. No., use owner SSN):
Business License Number:
Contractor's License Number:
Electrical/Mechanical Administrator's License Number (if applicable):
Surveyor's License Number (if applicable):
Phone Number:
Address:
City: State:
Estimated Starting Date:

Department's Request for Information – If the Department at any time makes written request for the Agreement, licenses, proof of insurance, or any other information relating to the certifications contained herein, the Contractor will deliver an executed copy of the Agreement and /or other requested information to the Department within five calendar days. If the Contractor fails to provide the requested information within five calendar days, or if the Contractor fails to include required language and conditions in the Agreement, the Department may suspend all work relating to the Agreement. The Contractor shall not be due any additional compensation or contract time if the Department suspends work due to the Contractor's failure to provide requested information or failure to include required language and conditions in the Agreement.

False Statement or Omission – If a false statement or omission is made in connection with this Contractor Self Certification the Contractor will be excluded from participating in the self-certification process for the remainder of this Contract and for the following construction season. Contractors excluded from the self-certification process will be required to submit all necessary information for the Department's approval of proposed Subcontractors or Lower Tier Subcontractors.

Any false statement or omission made in connection with this Contractor Self Certification may be cause for suspension, a determination of non-responsibility on future bids, and may be cause for revocation of award, default, or debarment. The person or entity making the false statement or omission is subject to any and all civil and criminal penalties available pursuant to applicable state and federal law.

I certify the above information and statements are true, correct, and complete.

Contractor:

By: _____ Date:

Title:

Form 25D-042 (03/2017)

17.14. Contractor Intent to Claim (Form 25D-18)

STATE OF ALASKA
DEPARTMENT OF TRANSPORTATION AND PUBLIC FACILITIES

CONTRACTOR INTENT TO CLAIM

1. Project Number	2. Project Name
3. Contractor	4. Address

5. State the act, failure to act, event, item, occurrence, plan error, specification ambiguity, condition, cause of delay, or suspension of work that caused the alleged change this intent to claim is based on:

6. State the beginning date (and ending date, if applicable) of the alleged change described in Item 5:

7. Check which of the following items are applicable. When stating the basis provide specific reference to relevant contract provisions and documents. Attach additional pages as necessary.

☐ A. In the instance of significant changes in the character of the work, state the basis of changed work:

☐ B. In the instance of extra work, state the basis that the work is extra:

☐ C. In the instance of differing site conditions, state the basis that the site conditions are different:

☐ D. In the instance of acceleration or delay of schedule performance or delivery, state the basis for the claim of acceleration or delay:

☐ E. In the instance of increased or decreased quantities, state the basis for adjusting the unit price or fixed expenses not recovered:

☐ F. In the instance of eliminated pay items or termination of contract, state the basis for the claim for additional payment:

☐ G. Other circumstances not described above:

Form 25D-18 (2-15) **Page 1 of 2**

8. Check the particular elements of contract performance for which the contractor is seeking additional compensation. Attached additional pages as necessary.

☐ A. What pay items(s) have been or may be affected by the alleged change?

☐ B. What labor or materials or both, have been or may be added, deleted, or wasted by the alleged change? What equipment has been idled, added or required for additional time?

☐ C. Describe the disruption in the manner and sequence or performance of the work that has occurred or may be caused by the alleged change:

☐ D. What is your estimate of adjustments in contract prices, contract time, delivery schedule or other provisions, affected by the alleged change? List current cost, daily costs, and estimated final amounts as applicable:

9. Amount of the intent to claim (choose one):

☐ A. The final amount of this intent to claim is $ _____ dollars and _____ additional time.

☐ B. The alleged change described in Item 5 is ongoing and data is still being collected. Estimated costs and additional time are as detailed in 8(d).

10. Certification Statement:
Per AS 36.30.400, I hereby certify that to the best of my knowledge and belief, the data submitted is accurate, complete, and current and is the actual costs to the contractor or additional time for performing the additional work or supplying the additional materials.

_____ X _____
Printed name of Contractor's Representative — Signature of Contractor's Representative

_____ _____
Title — Date

Form 25D-18 (2-15) **Page 2 of 2**

17.15. Contractor's Release (Form 25D-117)

STATE OF ALASKA

Department of:
Transportation and Public Facilities

Contractor's Release

Issue Date: _____
Project No.: _____
_____
Contract No.: _____

Project Name: _____
_____
_____
Located at; _____
_____
_____

Contract Compensation Summary	
Final Amount:	_____
Less Liquidated Damages:	_____
Total Final Sum:	_____
Less previous payments **OR** Estimate(s), 1 through _____ Totaling:	_____
Final Payment Due:	_____

Pursuant to the terms of the written contract dated _____, _____, for the construction of _____, Project Number(s) _____, and in consideration of the total final sum of _____ Dollars (_____) which has been or is to be paid under the said contract to (Contractor's Name) _____ located at _____ (hereinafter called the Contractor) or its assignees, if any, the Contractor, upon payment of the said sum by the STATE OF ALASKA, does remise, release and discharge the STATE OF ALASKA, its officers, agents and employees, of and from all liabilities, obligations, claims, and demands whatsoever under or arising from said contract, whether known or unknown and whether or not ascertainable at the time of the execution of this instrument except specified claims in stated amounts or in estimated amounts where the amounts are not susceptible of exact statement by the Contractor, as follows:

_____
_____
_____

The Contractor agrees, in connection with the claims which are not released as set forth above, that (s)he will comply with all of the provisions of the said contract, including without limitation those provisions relating to notification of the Contracting Officer and relating to the prosecution of claims.

IN WITNESS WHEREOF, this release has been executed this _____ day of _____, _____.

_____ Witness

_____ Contractor:

_____ Witness

By: _____

Title: _____

(NOTE: In the case of a corporation, witnesses are not required, but certificate on reverse side must be completed by a corporate officer other than the one who signs above.)

25D-117 Contractor's Release, Page ___ of ___ Revised 4/97

17.16. Daily Concrete Placement Report (Form 25D-207)

DEPARTMENT OF TRANSPORTATION
AND PUBLIC FACILITIES

ITEM NO _____

DAILY CONCRETE PLACEMENT REPORT

PROJECT NO._____ PROJECT NAME_____ DATE PLACED_____
TYPE STRUCTURE OR BRIDGE NO_____ POUR NO._____
PART STRUCTURE_____ DISTRICT_____
COMPLETED PAY VOLUME_____ WEATHER_____
AIR TEMPERATURE_____ WATER TEMPERATURE_____
POUR TIME: START:_____ FINISH:_____ COMPLETED FINISHING_____
DESIGN LAB. NO._____ CLASS_____ CONCRETE AT_____ SACKS PER CUBIC YARD
AGGREGATE QUALITY LAB NO.(S)_____ MAXIMUM SIZE AGGREGATE_____ TYPE/BRAND CEMENT_____
MIX RATIO _____ _____ AGGREGATE SOURCE _____

FIELD DATA AND CONTROL FOR A 1 YARD BATCH

	1	2	3	4	5	6	
DESIGN CEMENT WEIGHT							
DESIGN GRAVEL WEIGHT							
GRAVEL WEIGHT ADJUSTED							
DESIGN SAND WEIGHT							
SAND WEIGHT ADJUSTED							
WATER WEIGHT ADJUSTED							
TOTAL BATCH WEIGHT							
AMOUNT AEA							
BRAND AEA							
% SAND							SPECS
% AIR ENTRAINED							
SLUMP							
UNIT WEIGHT (FT^3)							NA
YIELD							NA
CEMENT FACTOR							
WATER/CEMENT GAL/SK							
TEST CYLINDER NOISE							NA
TEMPERATURE CONCRETE							

CONCRETE WASTED _____ CU.YD. EXPLAIN _____
CONCRETE REJECTED _____ CU.YD. EXPLAIN _____
CEMENT REJECTED _____ SACKS EXPLAIN _____
REMARKS: _____

SIGNATURE_____
PROJECT ENGINEER

25D-207

17.17. Daily Force Account Summary Sheet (Form 25D-196)

ALASKA DEPARTMENT OF TRANSPORTATION AND PUBLIC FACILITIES
CONSTRUCTION SECTION
DAILY FORCE ACCOUNT SUMMARY SHEET

Sheet _1_ of _1_

Date of Work: _____ Project No.: _____ Description: _____

Project Name: _____

Contractor _____
Subcontractor _____
Directive/Change Document No. _____

LABOR COSTS

Name	Class	% of W.C. (1)	Hours Total (2)	Hours O.T. (3)	Rate Reg. (4)	Fr. Ben. (5)	Travel /Subs.	Labor Amounts 2x4	Labor Amounts 2x5	Labor Amounts 3x4x.5	W.C. Amt. 2x4x1
								0.00	0.00	0.00	0.00
								0.00	0.00	0.00	0.00
								0.00	0.00	0.00	0.00
								0.00	0.00	0.00	0.00
								0.00	0.00	0.00	0.00
								0.00	0.00	0.00	0.00
								0.00	0.00	0.00	0.00
								0.00	0.00	0.00	0.00
								0.00	0.00	0.00	0.00
								0.00	0.00	0.00	0.00
								0.00	0.00	0.00	0.00
								0.00	0.00	0.00	0.00
W.C. = Workmen's Compensation						**Sub-Total**	0.00	0.00	0.00	0.00	0.00
							(6)	(7)	(8)	(9)	(10)

COMPUTATIONS

6+7+8+9+10	=	0.00
		(11)
[11-9] x 35%	=	0.00
		(12)
Total Labor (Including Travel or Subsistence) 11+12	=	0.00

MATERIAL COSTS

Kind	Qty.	Price	Amount
			0.00
			0.00
			0.00
			0.00
			0.00
			0.00
			0.00
			0.00
			0.00
			0.00
			0.00
			0.00
		Sub-Total	0.00
		Plus 15%	0.00
		Total Material Cost	0.00

EQUIPMENT RENTAL COSTS

Type	Model	Hrs.	Rate	Amt.
				0.00
				0.00
				0.00
				0.00
				0.00
				0.00
				0.00
				0.00
				0.00
				0.00
				0.00
Total Equipment Rental Costs				0.00

SUMMARY OF COSTS

Costs	Amount
Costs Brought Forward	0.00
Labor (Incl. Trav. or Subs.)	0.00
Equipment	0.00
Materials	0.00
Amount per Specifications (for work by subcontractors)	0.00
Total cost of Today's Work	0.00
Total Cost to be Forwarded	0.00

Prepared By _____ Date _____

Checked By _____ Date _____

Distribution: Original ..... Project Engineer
Copy ..... Contractor

25D196
(6/06)

17.18. Daily Report for Time & Materials Work (Form 25D-195)

STATE OF ALASKA

Department of:
Transportation and Public Facilities

Daily Report – Labor, Equipment, and Materials for Time and Materials Work

Change Order No.: _____
Project No.: _____
_____
Contract No.: _____

Project Name: _____ Date of Work: _____
Location and Description of Work: _____
_____

LABOR

Employee Name	Job Classification	Actual Work Performed	Hours Regular	Hours Overtime

EQUIPMENT

Description: Make, Model, Year Capacity/Size, Required Attachments	Hours Reg.	Hours O.T.	Hours Stdby

MATERIALS

Description	Quantity

NARRATIVE OF OPERATIONS:

Notes: 1. Invoices must accompany original report. 2. Indicate work done by subcontractors.

The undersigned hereby agree that the above is a true and correct statement of labor, equipment, and materials used this date in executing the work described.

_____ _____ _____ _____
Date Date

25D-195 Daily Report T & M Work; Page ___ of ___ Revised 4/97

17.19. Delegation of Authority Letter

MEMORANDUM

State of Alaska
Department of Transportation & Public Facilities

TO: N.T. Merrill
Project Engineer
Northern Region

DATE: May 21, 1991

FILE NO:

TELEPHONE NO: 451-2268

FAX NUMBER:

TEXT TELEPHONE:

FROM: David L. McCaleb, P.E.
Chief Construction Engineer
Northern Region

SUBJECT: RS-0644(15)/65342
Farmers Loop
Reconstruction – Summit
Drive to Steese Expressway

DELEGATION OF
AUTHORITY

This is notification of your assignment as Project Engineer on the subject project. You are delegated the authority and given full responsibility for the administration of the contract, together with all construction engineering, in accordance with the Plans, Specifications and the Special Provisions. Please note that this authority is delegated through James R. Weed, Construction Group Chief.

/pjs

cc: Construction Group Chief
Project Control
Personnel File

17.20. Delegation of Authority to Assistant

MEMORANDUM

State of Alaska
Department of Transportation & Public Facilities

TO: Dawn Marie Evans
Engineer I
Northern Region

DATE: May 24, 1991

FILE NO:

TELEPHONE NO: 451-5325

FAX NUMBER:

TEXT TELEPHONE:

FROM: N.T. Merrill
Project Engineer
Northern Region

SUBJECT: RS-0644(15)/65342
Farmers Loop
Reconstruction – Summit
Drive to Steese Expressway

DELEGATION OF
AUTHORITY

This notification of your assignment as Assistant Project Engineer on the subject project. In my absence you are delegated the authority and given full responsibility for the administration of the contract, together with all construction engineering, in accordance with the Plans, Specifications and the Special Provisions.

\pjs

cc: Construction Group Chief
Project Control
Personnel File

17.21. Directive (Form 25D-069)

STATE OF ALASKA
DEPARTMENT OF TRANSPORTATION
AND PUBLIC FACILITIES
Select REGION

Directive

Project No.:

Directive No.: _____

Project Name: _____

Contractor:

Address: _____

_____

_____

Scope of this Directive

- ☐ **Commencement of Work**
- ☐ **Suspension of Work**
- ☐ **Contract Non-Conformance**
- ☐ **Contract Clarification**

Directive issued By: _____ Date: _____
Project Engineer:

Receipt Acknowledged By: _____ Date: _____
Contractor's Representative:

This Directive complements, and is used in accordance with the terms and provisions of the above referenced Contract, and shall not serve to authorize a change in Contractual responsibility. If the CONTRACTOR believes that any condition in this document may affect Contract Time, Price, or Requirement the CONTRACTOR shall immediately notify the DEPARTMENT of such condition. Contract Performance is required as follows:

DESCRIPTION (Use Continuation Sheet 25D-065 as Required)

Form 25D-069 (Revised 04/12) Directive No. Page 1 of 1

17.22. DBE CUF Monitoring Report (Form 25A-298)

STATE OF ALASKA
DEPARTMENT OF TRANSPORTATION AND PUBLIC FACILITIES
CIVIL RIGHTS OFFICE

COMMERCIALLY USEFUL FUNCTION (CUF) MONITORING REPORT

Per 49 CFR 26.55, "A DBE performs a commercially useful function when it is responsible for execution of the work of the contract and is carrying out its responsibilities by actually performing, managing, and supervising the work involved… A DBE does not perform a CUF if its role is limited to that of an extra participant in a transaction, contract, or project through which funds are passed in order to obtain the appearance of DBE participation..." This form is for the purposes of reviewing DBEs for compliance with the CUF requirements for credit.

This form is to be used by DOT field staff to perform CUF reviews on DBE primes, subcontractors and DBE joint ventures. Perform a minimum of one review for each DBE on a federally-assisted project per construction season. The review should be conducted when the DBE first begins work. Monitor compliance through the course of the project.

1. PROJECT NAME

2. AKSAS NUMBER | **3. FEDERAL PROJECT NO.**

4. PRIME CONTRACTOR NAME

5. DBE CONTRACTOR NAME

6. DBE START DATE | **7. NAME/TITLE OF DBE ON-SITE REPRESENTATIVE**

8. ON-SITE REPRESENTATIVE REPORTS TO:

9. DBE IS PERFORMING AS

☐ **prime** ☐ **subcontractor** ☐ **joint-venture**

ON-SITE REPRESENTATIVE'S BRIEF DESCRIPTION OF THE DBE'S SCOPE OF WORK (Obtain copy of Subcontract and/or Purchase Order if needed):

WHO PREPARES THE DBE'S CERTIFIED PAYROLL (NAME & LOCATION)

PART I *(based on interviewer's observation)*	**YES**	**NO**
The DBE is responsible for the following:		
1 Responsible for execution of all work?		
2 Is the DBE subcontracting any work?		
3 Actually peforms, manages, and supervises work?		
4 Performs the work using own employees and own equipment		
5 Is DBE using leased or rented equipment (if yes, obtain a copy of the lease or rental agreement)		
6 Responsible for purchase & installation of materials and supplies		
PART II - DBE Trucking Firm	**YES**	**NO**
Does the DBE own and operate at least **one** fully licensed, insured, and operational truck; using drivers employed by the DBE on the contract?		
If leasing trucks, Does the DBE lease trucks from another DBE?		
Does the DBE lease trucks from a non-DBE firm?		
Does the truck(s) leased display name and certification number of the DBE firm?		

SUBMIT COMPLETED FORM IMMEDIATELY TO THE REGIONAL CONTRACT COMPLIANCE LIAISON

AKDOT&PF PROJECT STAFF/REVIEWER (signature) **DATE**

AKDOT&PF PROJECT STAFF/REVIEWER (print)

Form 25A-298 (3/2012) Page 1 of 1

17.23. DBE Contact Report (Form 25A-321A)

STATE OF ALASKA
DEPARTMENT OF TRANSPORTATION AND PUBLIC FACILITIES

CONTACT REPORT

Federal-Aid Contracts

_____
Project Name and Number

Specific Work or Materials (by pay Item): _____

DBE Firm Contacted:

_____ _____ ( ) _____
Name **Address** **Phone Number**

A. INITIAL CONTACT: (See important contact information on instruction sheet)

1. Date _____ Method: [ ] Phone [ ] Mail [ ]FAX [ ] Other
2. Person Contacted _____ _____
Name Title

3. DBE's Response: Date: _____ Method: [ ] Phone [ ] Mail [ ]FAX [ ] Other
[ ] Submitted an acceptable sub-bid. (If sub-bid accepted, *skip to Section D*)
[ ] Not interested: Indicate Reason(s) _____
[ ] Needs more information: Date Prime provided requested information _____
[ ] Will provide quote by: Date _____
[ ] Received unacceptable sub-bid (*complete Section C*)

B. FOLLOW-UP CONTACT

1. Date _____ Method: [ ] Phone [ ] Mail [ ]FAX [ ] Other
2. Person Contacted _____ _____
Name Title

3. DBE's Response: Date: _____ Method: [ ] Phone [ ] Mail [ ]FAX [ ] Other
[ ] Submitted an acceptable sub-bid. (If sub-bid accepted, *skip to Section D*)
[ ] Received unacceptable sub-bid (*complete Section C*)
[ ] Other result: _____

C. EXPLANATION OF FAILURE TO ACHIEVE AN ACCEPTABLE SUB-BID:

1. Were the following required efforts made?
a. [ ] Yes [ ] No Identified specific items of work, products, materials, etc. when asking for quote(s).
b. [ ] Yes [ ] No Offered assistance in acquiring necessary bonding & insurance.
c. [ ] Yes [ ] No Provided all appropriate information concerning the specific work items or materials.

2. Was the DBE's quote non-competitive (i.e., more than 10% higher than the accepted quote)? [ ] Yes [ ] No

3. Was the DBE unable to perform in some capacity? [ ] Yes [ ] No If "Yes", explain: _____

_____

D. CERTIFICATION: I certify that the information provided above is accurate and that efforts to solicit sub-bids were made in good faith.

_____ _____ _____
Signature of Company Representative **Title** **Date**

_____ _____ _____
Name of DOT&PF Reviewer **Title** **Date**

Form 25A-321A (1/02) Page 1 of 2

INSTRUCTIONS

Project Name and Number: Enter project name and number as they appear on bid documents.

Work or Materials: Identify the specific work item or material that you requested this firm to furnish.

Firm Contacted: Enter name of firm as it appears in the current DOT&PF DBE directory.

Address: Enter address of firm contacted. **Phone Number:** Enter phone number of firm contacted.

A. INITIAL CONTACT (Must be made at least seven calendar days prior to bid opening.)

1. **Date and Method of Initial Contact:** Indicate the method and date that actual contact was made or the date correspondence was postmarked. Leaving a "please call me" message does not constitute a contact. Attach a copy of dated letter or fax.

2. **Name and Title of Person Contacted.** Enter name and title of company representative with whom you corresponded or discussed submitting a sub-bid.

3. **DBE's Response:** Indicate one or more of the responses listed. If a firm bid was received and accepted, skip to section D.

B. FOLLOW-UP CONTACT

If no response or an inconclusive response was received from the initial contact, a follow-up contact is required to determine for a certainty that the firm does not intend to submit a sub-bid or to conclude discussions with a sub-bid submittal.

1. **Date and Method of Follow-up Contact:** Indicate the method and date that actual contact was made or the date correspondence was postmarked. Leaving a "please call me" message does not constitute a contact. Attach a copy of dated letter or fax.

2. **Name and Title of Person Contacted.** Enter name and title of company representative with whom you corresponded or discussed submitting a sub-bid.

3. **DBE's Response:** Indicate one or more of the responses listed. If a firm bid was received and accepted, skip to section D.

C. EXPLANATION OF FAILURE TO ACHIEVE AN ACCEPTABLE SUB-BID

1. A NO response to items 1a., b., or c. will result in rejection of this contact. Be specific on results of discussions.

2. A YES answer to item 2. is grounds for rejecting a DBE sub-bid.

3. A YES answer to item 3. is grounds for rejecting a DBE sub-bid, only if the inability to perform is in an area of work specifically identified as a sub-item under the applicable bid item.

D. CERTIFICATION

This certification of accuracy and good faith by the Contractor will be verified by contact with the listed firm. Falsification of information on the DBE Contact Report is grounds for debarment action under AS 36.30.640(4).

MONTLY SUMMARY OF DISADVANTAGED BUSINESS ENTERPRISE PARTICIPATION

Federal-Aid Contracts

State of Alaska DOT & PF Civil Rights Office ● 2200 E 42nd Ave. ● Anchorage, AK 99519-6900

FOR PAYMENTS MADE IN:	
MONTH	YEAR

Please read instructions before completing this form.

Submit this form to the CRO by the 15th of he month following the reporting month. (i.e.: *Work performed in January will be paid in February; the summary report for January must be submitted to the CRO by March 15).*

1. PROJECT NAME	Project Number	
4. PRIME CONTRACTOR NAME		

The undersigned affirms that the information that they are providing to the Alaska Department of Transportation and Public Facilities, Civil Rights Office is accurate and complete to the best of their knowledge. Further, the undersigned authorizes the Alaska Department of Transportation and Public Facilities, Civil Rights Office to verify the accuracy of the information provided. Please note that the Alaska Department of Transportation and Public Facilities, Civil Rights Office, is required to report to the Department of Transportation any false, fraudulent, or dishonest conduct in connection with the program, so that DOT can take steps (e.g. referral to the Department of Justice for criminal prosecution, referral to the DOT Inspector General, action under suspension and debarment or Program Fraud and Civil Penalties rules) provided in §26.109. The Alaska Department of Transportation and Public Facilities, Civil Rights Office, will consider similar action under our own legal authorities, including responsibility determinations in future contracts.

10. NAME OF PERSON PREPARING REPORT	11. TITLE	12. SIGNATURE	13. DATE

SUBCONTRACTORS

	14. FIRM (DBE) NAME	15. BID ITEMS PAID (LIST SEPARATELY)	16. AGREED PRICE	17. AMOUNT PAID THIS PERIOD	18. AMOUNT PAID TO DATE	19. % OF WORK COMPLETED TO DATE	20. FINAL PAYMENT YES	20. FINAL PAYMENT NO
1							☐	☐
2							☐	☐
3							☐	☐
4							☐	☐
5							☐	☐

If more spaces are required, use as many copies of the second page of this form as necessary. The contractor must sign each sheet to certify its content and completion.

Are additional pages attached? ☐ YES ☐ NO

10. NAME OF PERSON PREPARING REPORT	11. TITLE	12. SIGNATURE	13. DATE (mm/dd/yyyy)

Form 25A-336 (3/2012)

Page __ of __

MANUFACTURERS (100 % DBE Credit)

	21. FIRM (DBE MANUFACTURER) NAME	22. PRODUCT MANUFACTURED	23. AMOUNT PAID THIS PERIOD	24. AMOUNT PAID TO DATE	20. FINAL PAYMENT YES	20. FINAL PAYMENT NO
1					☐	☐
2					☐	☐
3					☐	☐
4					☐	☐
5					☐	☐
6					☐	☐
7					☐	☐

BROKERS (5% DBE Credit for brokerage fee)

	25. FIRM (DBE BROKER) NAME	26. PRODUCT/ SERVICE	27. DBE BROKERAGE FEE	28. AMOUNT PAID THIS PERIOD	29. AMOUNT PAID TO DATE	20. FINAL PAYMENT YES	20. FINAL PAYMENT NO
1				$ -		☐	☐
2				$ -		☐	☐
3				$ -		☐	☐
4				$ -		☐	☐
5				$ -		☐	☐
6				$ -		☐	☐

REGULAR DEALERS (60% DBE Credit)

	30. FIRM (DBE REGULAR DEALER) NAME	31. MATERIALS SUPPLIED	32. AMOUNT PAID THIS PERIOD	33. AMOUNT PAID THIS PERIOD (60%)	34. AMOUNT PAID TO DATE	20. FINAL PAYMENT YES	20. FINAL PAYMENT NO
1				$ -		☐	☐
2				$ -		☐	☐
3				$ -		☐	☐
4				$ -		☐	☐
5				$ -		☐	☐
6				$ -		☐	☐

If more spaces are required, use as many copies of the second page of this form as necessary. The contractor must sign each sheet to certify its content and completion.

Are additional pages attached? ☐ YES ☐ NO

17.25. Earthwork & Mass Quantity Computation Sheets (Form 25D-40A)

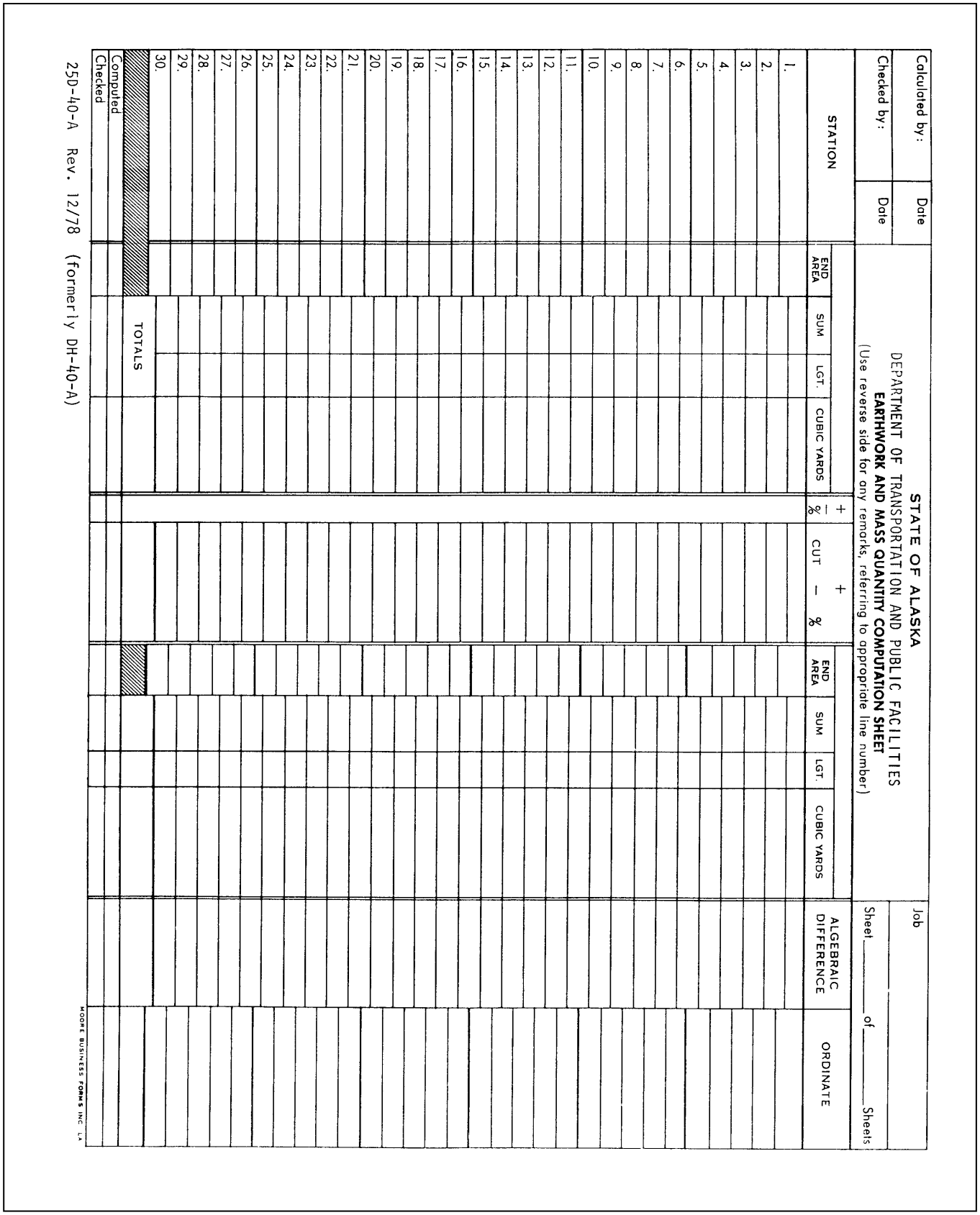

STATE OF ALASKA
DEPARTMENT OF TRANSPORTATION AND PUBLIC FACILITIES
EARTHWORK AND MASS QUANTITY COMPUTATION SHEET
(Use reverse side for any remarks, referring to appropriate line number)

Calculated by: Date
Checked by: Date
Job
Sheet ____ of ____ Sheets

STATION	END AREA	SUM	LGT.	CUBIC YARDS	+ / − %	+ CUT − %	END AREA	SUM	LGT.	CUBIC YARDS	ALGEBRAIC DIFFERENCE	ORDINATE
1.												
2.												
3.												
4.												
5.												
6.												
7.												
8.												
9.												
10.												
11.												
12.												
13.												
14.												
15.												
16.												
17.												
18.												
19.												
20.												
21.												
22.												
23.												
24.												
25.												
26.												
27.												
28.												
29.												
30.												
		TOTALS										

Computed
Checked

25D-40-A Rev. 12/78 (formerly DH-40-A)

MOORE BUSINESS FORMS INC. LA

17.26. Encumbrance Memo

STATE OF ALASKA

DEPARTMENT OF TRANSPORTATION AND PUBLIC FACILITIES

ENCUMBRANCE MEMO

TO: FINANCE **DATE:**

FROM:

RE: PROJECT NAME:
PROJECT/AGREEMENT NO.:
CONTRACTOR/CONSULTANT:
CHANGE ORDER/AMEND. NO.: DATED:

Encumber the attached:
****

☐ Contract ☐ Agreement ☐ Letter of Authority
☐ Change Order ☐ Amendment ☐ Final Payment
☐ Extra Work Order ☐ Quantity Adjustment

Comments:

ENCUMBRANCE TRANSACTIONS REQUIRED				
Amount	Collocode	Program	Ledger Code	Account
	TOTAL (Must agree with amount of document attached.)			

Appoved by: _____ Date: _____

3/98

EEO Monthly Employment Utilization Report

STATE OF ALASKA DEPARTMENT OF TRANSPORTATION & PUBLIC FACILITIES
CIVIL RIGHTS OFFICE

DOT&PF

Name and Location of Contractor	State/Federal #	Reporting Period:
	Project Name	

Construction Trade	Classification	Total Work Hours of Employment												% Minority	% Female	Total Number of Employees		Total Number of Minority Employees	
		All M	All F	CM	CF	BM	BF	HM	HF	AM	AF	IM	IF			M	F	M	F
	Journey Worker																		
	Apprentice																		
	Trainee																		
Machinist	**Sub-Total**																		
	Journey Worker																		
	Apprentice																		
	Trainee																		
Welder	**Sub-Total**																		
	Journey Worker																		
	Apprentice																		
	Trainee																		
Painter	**Sub-Total**																		
	Journey Worker																		
	Apprentice																		
	Trainee																		
Mechanic	**Sub-Total**																		
	Journey Worker																		
	Apprentice																		
	Trainee																		
	Sub-Total																		
	Journey Worker																		
	Apprentice																		
	Trainee																		
	Sub-Total																		
Total hours worked																			
Total %																#DIV/0!	######	######	######

Company Official's Signature and Title	Date

Legend:

		A	Asian or Pacific Islander	H	Hispanic
M	Male	B	Black	I	American Indian / Alaskan Native
F	Female	C	Caucasian		

Form 25A-303 (10-2010)

Page 1

17.28. FHWA Contractors Annual EEO Report (Form PR-1391)

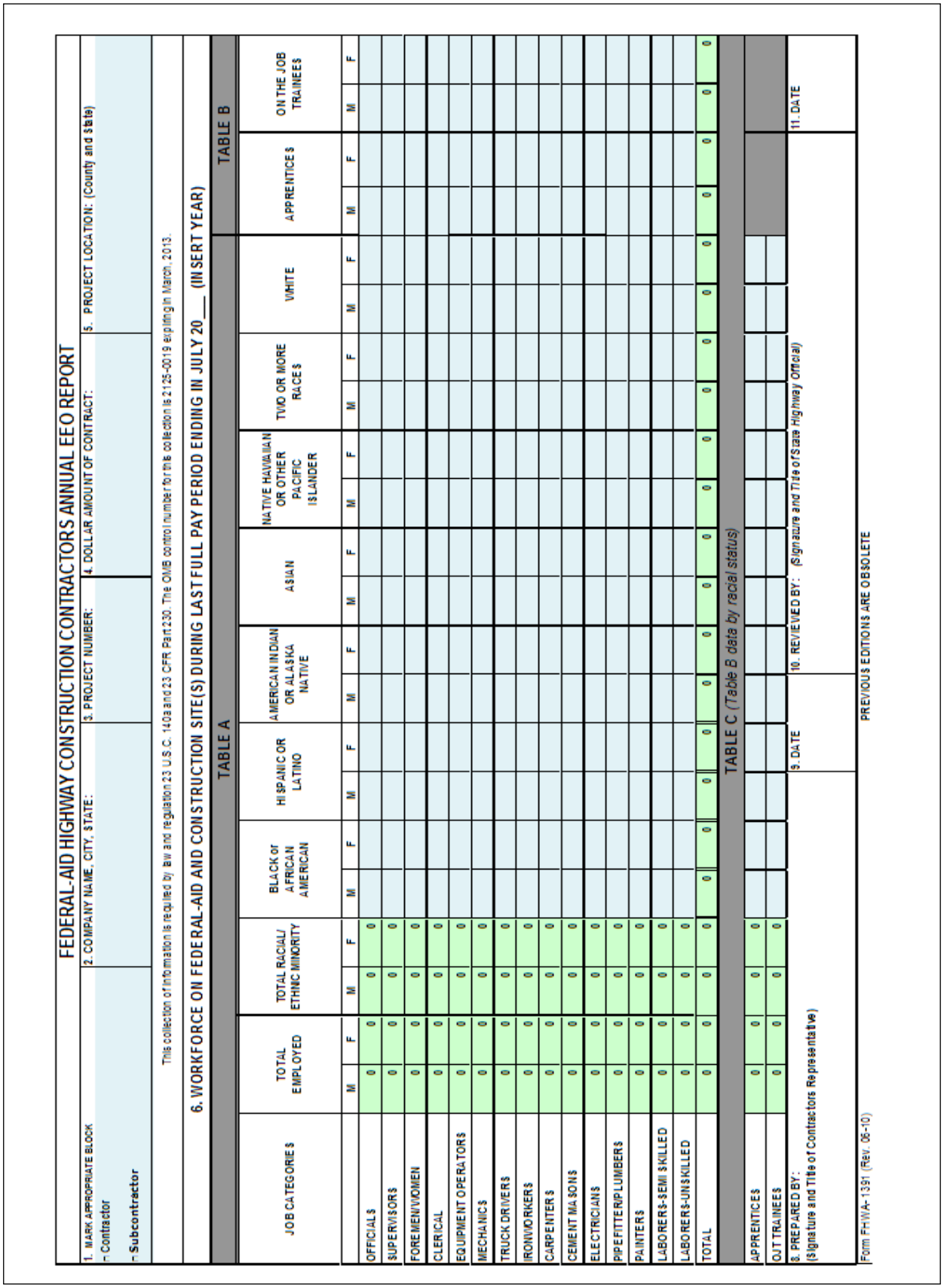

FEDERAL-AID HIGHWAY CONSTRUCTION CONTRACTORS ANNUAL EEO REPORT

1. MARK APPROPRIATE BLOCK
– Contractor
– Subcontractor

2. COMPANY NAME, CITY, STATE:

3. PROJECT NUMBER:

4. DOLLAR AMOUNT OF CONTRACT:

5. PROJECT LOCATION: (County and State)

This collection of information is required by law and regulation 23 U.S.C. 140a and 23 CFR Part 230. The OMB control number for this collection is 2125–0019 expiring in March, 2013.

6. WORKFORCE ON FEDERAL-AID AND CONSTRUCTION SITE(S) DURING LAST FULL PAY PERIOD ENDING IN JULY 20___ (INSERT YEAR)

	TABLE A																		TABLE B			
JOB CATEGORIES	TOTAL EMPLOYED		TOTAL RACIAL/ ETHNIC MINORITY		BLACK or AFRICAN AMERICAN		HISPANIC OR LATINO		AMERICAN INDIAN OR ALASKA NATIVE		ASIAN		NATIVE HAWAIIAN OR OTHER PACIFIC ISLANDER		TWO OR MORE RACES		WHITE		APPRENTICES		ON THE JOB TRAINEES	
	M	F	M	F	M	F	M	F	M	F	M	F	M	F	M	F	M	F	M	F	M	F
OFFICIALS	0	0	0	0																		
SUPERVISORS	0	0	0	0																		
FOREMEN/WOMEN	0	0	0	0																		
CLERICAL	0	0	0	0																		
EQUIPMENT OPERATORS	0	0	0	0																		
MECHANICS	0	0	0	0																		
TRUCK DRIVERS	0	0	0	0																		
IRONWORKERS	0	0	0	0																		
CARPENTERS	0	0	0	0																		
CEMENT MASONS	0	0	0	0																		
ELECTRICIANS	0	0	0	0																		
PIPEFITTER/PLUMBERS	0	0	0	0																		
PAINTERS	0	0	0	0																		
LABORERS-SEMI SKILLED	0	0	0	0																		
LABORERS-UNSKILLED	0	0	0	0																		
TOTAL	0	0	0	0	0	0	0	0	0	0	0	0	0	0	0	0	0	0	0	0	0	0
TABLE C (Table B data by racial status)																						
APPRENTICES	0	0	0	0																		
OJT TRAINEES	0	0	0	0																		

8. PREPARED BY:
(Signature and Title of Contractors Representative)

9. DATE

10. REVIEWED BY: (Signature and Title of State Highway Official)

11. DATE

Form FHWA-1391 (Rev. 06-10) PREVIOUS EDITIONS ARE OBSOLETE

17.29. Estimate of Cost (Form 25D-049)

STATE OF ALASKA
DEPARTMENT OF TRANSPORTATION
AND PUBLIC FACILITIES
Select REGION

Estimate of Cost

Project Number: ____________________ Estimate Number: ____________

Project Name: ____

Item No.	Item	Unit	Unit Price	Quantity	Amount

Prepared by: ________________________________ Date: ____________

Checked by: ________________________________ Date: ____________

Form 25D-049 (04/12) Est. No. _ Page 1

17.30. "Estimate.xls" Instructions

INSTRUCTIONS FOR USING "ESTIMATE.XLS"

1. Estimate.xls is an Excel spreadsheet for reporting the bi-monthly estimate. It consists of four sheets in an Excel workbook: "Original" which is the list of original bid items of your project; "New Items" which is the list of new items you add by Change Order, etc.; "Stockpile" which is the list of any stockpiled items you have and "Recap" which is the Recapitulation sheet.

    a) There is room for about 70 bid items, including engineering items in "Original". If your project has fewer than 70 original bid items, delete the unnecessary rows. If more than 70, you will have to insert rows and copy down the cells that contain zeros (there are formulas in some of these cells).

        i) Note that the Engineering items are already in place at the end of the Original sheet. This allows automatic calculation of Engineering costs for the recap sheet. These items will be out of numeric order if you have electrical items or striping or any bid item with a number greater than 644. However, I checked with QA and there is no problem with this.

    b) "New Items" and "Stockpile" sheets are essentially identical in form to "Original". Delete unnecessary rows as appropriate.

    c) "Recap" sheet calculates automatically.

    d) Small projects usually can fit on 4 pages. Larger projects require more pages, depending on number of bid items, number of new items, etc.

2. If you have a large project, e.g., one that takes 6 or more pages, you will probably need a printer with 3 or more megs of memory. Small projects that fit on 4 pages will print out on printers with only 1 meg of memory..

3. Primarily for ease of setting up the spreadsheet, there are no page totals for Original bid items, New Items, and Stockpiled items. Amounts are totaled at the end of each of these sections.

4. When you retrieve Estimate, you will see grey shaded areas and blue shaded areas in the Original, New Items and Stockpile sheets. There are also grey shaded areas in the Recap sheet.

    a) Customize Estimate for your project by filling in the grey shaded areas. Obviously, at the start of the project, you won't have any

New Items or Stockpiled items, so the grey shaded area on those sheets can't be filled out.

b) At this time, you will need to format the "quantity" cells for each bid item using the appropriate decimal precision required by the Construction Manual. All "amount" cells are formated for 2 decimal places.

5. Once you have customized your Estimate, save it in another directory.

6. When you wish to generate a bi-monthly estimate, retrieve the customized Estimate.

a) Begin with the Original sheet. You will notice two buttons at the top left corner on Original. Select the Enter button. This activates a macro which copies the values from the Total columns to the Previous columns and clears out the current column (This Estimate).

b) **You must use the "Enter" button before entering data in all three sheets; Original, New Items, and Stockpile. *Also*, use the "Enter" button only once for each sheet for each time you generate an estimate.**

c) Next, enter the estimate number and "from and to" dates in the blue shaded cells. Go down to row 9 and begin entering only the quantities for the current estimate period in the blue shaded cells. ***Hint***: you might want to freeze panes from the Windows menu selection. If you place the cursor in cell E9, the bid items, units and unit prices will always be visible.

d) Go through the same procedure, as appropriate, for the New Items and Stockpiled items sheets..

7. Once you have entered all the current quantities, you are ready to print the report. All calculations are automatic and you shouldn't have to do anything else. For your peace of mind, you can click on the recap sheet to view the totals.

8. Select the "Print" button located in the upper left corner of the Original sheet. This activates a macro that prints out all pages of the estimate using pagination in the form of "Page 1 of x", etc. The print macro will print out all four sheets regardless if there is anything in them or not. If you want to print out individual sections, you will have to do so manually, highlighting the printrange for each sheet. By doing this, you will probably destroy the pagination continuity. If this becomes a problem, go to the

Page Setup selection and under the Header/Footer menu, select the type of pagination (or none) you desire.

9. In many respects, Excel treats each sheet as a separate file. That is, just because you do something to one sheet, doesn't mean it will translate to the other sheets.

10. After you print the Estimate, save the updated file. You can either save it as Estimate.xls, using the same file and continually update it throughout the life of the project, or you can save it, for example, as Est1.xls; Est2.xls, etc. and have a series of files, one for each estimate.

Juneau-Glacier Hwy Overlay & Egan Drive Accel/Decel Lane Resurfacing
Project No. NH-0005(314), AKSAS No. 67819, 67827

EXPLANATION OF OVERRUNS, UNDERRUNS AND CHANGE DOCUMENTS

Project No. 67819

Item 202(2) Pavement Removal Square Yard

Plan: 7600 $30,400.00 **Final:** 133.5 $534.00 **Underrun:** 98.2% -$29,866.00

Scope of the project changed half way through completion so that the emphasis was placed on repairing failed areas on Egan Drive. When this change occurred, the contractor had just begun his work on the accel/decel lanes, so there wasn't much pavement removed (pavement was to be removed only on outside edge of shoulders).

Item 301(1) Aggregate Base Course Ton

Plan: 100 $2500.00 **Final:** 0.00 $0.00 **Underrun:** 100% -$2,500

This item was to be used for replacement of D-1 under the pavement removal areas. The contractor did not need to replace the existing D-1

Item 401(1A) Asphalt Concrete Pavement, Type II Class A Ton

Plan: 4500 $220,500.00 **Final:** 3324.26 $162,888.74 **Underrun:** 26.1% -$57,611.26

When the scope of the project changed, the contractor requested and received new unit prices for this item. Therefore we underran this original bid item.

Item 401(1B) Asphalt Concrete Pavement, Type III, Class A Ton

Plan: 625 $30,625.00 **Final:** 0.0 $0.00 **Underrun:** 100% -$30,625.00

This item was for pre-leveling the overlay of Glacier Hwy. The pre-level was eliminated by grinding the asphalt.

Item 401(9) Pavement Patching Square Yard

Plan: 300 $7,500.00 **Final:** 138.46 $3,461.50 **Underrun:** 53.6% -$4,038.50

Needed less patching than design had estimated.

Explanation of Overruns, Underruns and Change Documents

Item 402(1) CSS-1 Asphalt for Tack Coat Ton

Plan: 17.00 $8,500.00 **Final:** 10.35 $5,175.00 **Underrun:** 39.1% -$3,325.00

There was less paving done under this contract after the scope of the project changed, hence less tack was needed.

Item 408(1) Pavement Cold Planing Square Yard

Plan: 19000 $76,000.00 **Final:** 10068.45 $40,273.80 **Underrun:** 47% -$35,726.20

The change in the scope of the project meant fewer accel/decel lanes were cold planed and repaved.

Item 408(2) Pavement Grinding Square Yard

Plan: 250 $2,500.00 **Final:** 0.00 $0.00 **Underrun:** 100% -$2,500.00

This item was for grinding existing driveways and approaches for matching with the overlays. The contractor did not have to utilize this item because the overlays matched in well without additional grinding.

Item 639(2) Commercial Driveway Each

Plan: 15 $7,500.00 **Final:** 2 $1,000.00 **Underrun:** 86.7% -$6,500.00

Only two driveways needed reconstructing.

Item 643(4) Construction Signs Per Day

Plan: 1,000 $4,000 **Final:** 613 $2,452.00 **Underrun:** 38.7% -$1,548.00

Design staff could only estimate a quantity for this item. The contractor ended up using fewer signs than estimated.

Item 643(5) Type II Barricades Each/Day

Plan: 250 $500.00 **Final:** 0 $0.00 **Underrun:** 100% -$500.00

Contractor did not use Type II barricades.

Item 643(6) Type III Barricades Each/Day

Plan: 500 $1,000.00 **Final:** 12 $36.00 **Underrun:** 97.6% -$964.00

Contractor used fewer Type III barricades than Design estimated.

Explanation of Overruns, Underruns and Change Documents

Item 643(7) Cones Each/Day

Plan: 4000 $2,000.00 **Final:** 2648 $1,324.00 **Underrun:** 33.8% -$676.00

Contractor used fewer cones than Design estimated.

Item 643(9) Drum Each/Day

Plan: 500 $1,000.00 **Final:** 126 $252.00 **Underrun:** 74.8% -$748.00

Contractor used fewer drums than Design estimated.

Item 643(10) Sequential Arrow Board Day

Plan: 60 $6,000.00 **Final:** 13 $1,300.00 **Underrun:** 78.3% -$4,700.00

Contractor did not need an arrow board as often as Design had estimated.

Item 643(15) Flagging Hour

Plan: 500 $20,000.00 **Final:** 247 $9,880.00 **Underrun:** 50.6% -$10,120.00

Contractor need less flagging than Design estimated.

Item 670(8) Recessed Pavement Markers Each

Plan: 200 $7,000.00 **Final:** 96 $3,360.00 **Underrun:** 52% -$3,640.00

The majority of the Recessed Markers were installed under the Egan Drive Paving project.

Project #67827

Item 203(6) Borrow, Type A Ton

Plan: 450 $4,500.00 **Final:** 294 $2,940.00 **Underrun:** 34.7% -$1,560.00

Less Borrow was needed than was estimated by Design.

Item 309(1) Recycled Pavement Square Yard

Plan: 708 $3,540.00 **Final:** 1901.5 $9,507.50 **Overrun:** 168.6% +$5,967.50

Design quantity in error.

Explanation of Overruns, Underruns and Change Documents

Item 643(4) Construction Sign Each/Day

Plan: 150 $600.00 **Final:** 42 $168.00 **Underrun:** 72% -$432.00

Contractor used fewer signs than Design estimated.

Item 643(5) Type II Barricades Each/Day

Plan: 150 $300.00 **Final:** 0 $0.00 **Underrun:** 100% -$300.00

Contractor did not use Type II barricades.

Item 643(6) Type III Barricades Each/Day

Plan: 200 $600.00 **Final:** 14 $42.00 **Underrun:** 93% -$558.00

Contractor used fewer Type III barricades than Design estimated.

Item 643(7) Traffic Cone Each/Day

Plan: 1000 $500.00 **Final:** 49 $24.50 **Underrun:** 95.1% -$475.50

Contractor used fewer cones than Design estimated.

Item 543(15) Flagging Hour

Plan: 75 $3,000.00 **Final:** 0 $0.00 **Underrun:** 100% -$3,000.00

Contractor did not need flagging for this project.

Explanation of Overruns, Underruns and Change Documents

Juneau-Glacier Hwy Overlay & Egan Drive Accel/Decel Lane Resurfacing

Project No. NH-0005(314), AKSAS No. 67819, 67827

EXPLANATION OF CHANGE DOCUMENTS

Document	Date	Description/Purpose
Directives		
A	8/11/99	This directive was issued to initiate the installation of new driveway culverts.
B	5/10/00	This directive was issued to initiate the repair of failed asphalt areas on Egan Dr.
C	5/16/00	This directive was issued to direct the contractor to furnish "Double Traffic Fines" signs.

Change Orders	Date	Description/Purpose	Time Days	Change Amount
1	11/15/99	This change order established new items 603(21) 18" Corrugated Polyethylene Pipe, and 408(1A) Pavement Cold Planing. It also deleted Asphalt Concrete Pavement Type III.	0	+$7,717.63
2	3/28/01	This change order established new items 401(c) Asphalt Concrete Pavement Type II, 401(2A) Pavement Removal, 401(9A) Pavement Patching, and 643(2A) Traffic Maintenance.	286	+$63,294.65
		Total of all changes:	**286**	**$71,012.28**

17.32. FAA Construction Project Closeout Checklist

PROJECT FINAL CLOSEOUT CHECKLIST

Aviation Projects

PROJECT NO.:

PROJECT NAME:

FINAL ESTIMATE ASSEMBLY

- ☐ Certification of Final Estimate (Form 25D-116).
- ☐ Contractor's Release (Form 25D-117).
- ☐ Final Estimate (Form 25D-25)
- ☐ Project Materials Certificate from Materials Section.* DATE: _____
- ☐ Contractor required "As-Built" plans (i.e., electrical, etc.)
- ☐ Department of Labor Tax Clearance. DATE: _____
- ☐ Department or Revenue Tax Clearance. DATE: _____
- ☐ Department of Labor Notice of Completion (NOC) DATE: _____

FINAL CONSTRUCTION REPORT

- ☐ **Final Estimate Assembly (see above).**
- ☐ Final Construction Report Summary.*
- ☐ Final Acceptance Letter.*
- ☐ FAA Sponsor Certification.*
- ☐ Airport Master Record (FAA Form 5010).*
- ☐ As-Built Plans.
- ☐ Project History.*
- ☐ Reports (as required): Report on Design Recommendations (required)
  Report on Claims (if a claim was submitted)
- ☐ Explanation of Overruns, Underruns and Change Documents. List only contract major bid items whose final quantity varied more than 25% from the estimated quantity and an explanation of all change document items.
- ☐ Proof of Construction for Right-of-Way (Form 25D-173) -- Completed only if the right-of-way involves public land.
- ☐ Proof of Use for Material Sources (Form 25D-174) with Material Site Record -- Completed only if sites are State furnished or controlled.

***Needed for Final Grant Closeout only.**

REV 4/14/17

17.33. FAA Project Closeout Requirements

1. Summary of Project Closeout Requirements

The following is a summary of the general requirements for construction or equipment AIP project closeout packages, a checklist can be found in Section 17.34:

a) Final payment request SF-271, except for letter of credit grants.
b) Final payment summary worksheet for all projects. Summarize administration, planning, engineering, force account, construction, force account construction, land, and equipment costs, as applicable (see Appendix 5-C of the FAA Alaskan Region Airports Division's Airport Sponsors Guide)
c) Summary of DBE utilization including names of DBE firms used, contract amounts, and percent attained.
d) List of all Grant Special Conditions and actions taken to comply with each special condition.
e) Amendment letter justifying a request for grant increase if allowable costs exceed the grant amount. (planning grants may not be amended).
f) Final project report for planning, construction, land, or equipment (see items 2., 3., 4., and 5. below).
g) Required Sponsor Certifications, unless previously submitted (see Appendix 2-A of the Alaska Airport Sponsor Guide).
h) Although not submitted as part of the Project Closeout Report an annual audit is required under the Single Audit Act. Accounts and records must be kept in accordance with an accounting system that will facilitate an effective audit in accordance with the Single Audit Act. See Grant Assurances 13 and 25 for record keeping and audit requirements.

2. Final Construction Report

The following documentation, in addition to the applicable items in Section 1 above, must be submitted to closeout an AIP grant including construction.

a) Project History, including:
   1) Work items constructed.
   2) Work bid, but not constructed with reasons for deletion.
   3) Table showing as a minimum the following dates: contract award, notice to proceed, scheduled and actual completion for each contract, final inspection and final acceptance. Approved time extensions should also be listed and explained if applicable.
   4) A brief narrative on construction activities, problem areas, unusual conditions, unique features, and actions taken to address any environmental mitigation measures.
   5) List of prime contractor and all subcontractors.
   6) Explanation of any labor problems if applicable.
   7) Explanation of any liquidated damages assessed.
   8) Copy of bid tabulation including engineering estimate, unless previously submitted.

b) Administrative. See AC 150/5100-10B for definition of administrative items.

c) Engineering Design and Construction Management

   1) Contract date, amount, and FAA approval date for consultant engineering design and construction management contracts and any amendments.
   2) Approved amount and FAA approval date for the use of force account design and construction management force account services.

d) Construction
   1) Summary of all change orders and supplemental agreements. Include costs, change order dates, and FAA approval dates (if applicable).

2) Summary of final quantities. Include design quantities and justification if final quantities significantly vary from design.
3) Final inspection report. Include a list of any punch list items and schedule of corrective actions giving method, responsible party, and date of correction.
4) Copy of contractor's statement that no further payment is due and that all subcontractors and material suppliers have been paid in full.
5) One copy of the as-constructed plans on cd-rom.
6) Materials Certification and if required, a Memorandum of Exceptions
7) FAA approval date for the use of construction force account construction (if applicable for equipment and operators).
8) Summary of the force account construction work performed, if applicable. Include the type of work, and hours and costs for labor and equipment.

e) One signed copy of the revised Exhibit "A" Property Map, if applicable.

f) FAA approval date for revised ALP resulting from the as constructed project.

g) Date that the Airport Master Record (FAA from 5010) and sketch were updated.

h) FAA approval date for the updated Sign Plan (for Part 139 certificated airports) resulting from the as-constructed project, if applicable.

3. Final Equipment Closeout Report

The following documentation, in addition to the applicable items in paragraph I. above, must be submitted to closeout an AIP grant including equipment:

a) Summary of amounts and FAA approval date for all contracts and change orders.

b) Table showing as a minimum the following dates: contract award, notice to proceed, scheduled and actual delivery, final inspection and final acceptance.

c) Summary of the acceptance test results.

d) Inventory of Non-Expendable Personal Property (see Appendix 5-F of the FAA Alaskan Region Airports Division's Airport Sponsors Guide).

17.34. FAA Sponsor Certification for Construction Project Final Acceptance

Construction Project Final Acceptance
Airport Improvement Program Sponsor Certification

Sponsor:

Airport:

Project Number:

Description of Work:

Application
49 USC § 47105(d), authorizes the Secretary to require certification from the sponsor that it will comply with the statutory and administrative requirements in carrying out a project under the Airport Improvement Program. General standards for final acceptance and close out of federally funded construction projects are in 2 CFR § 200.343 - Closeout. The sponsor shall determine that project costs are accurate and proper in accordance with specific requirements of the grant agreement and contract documents.

Certification Statements
Except for the certification statement below marked as not applicable (N/A), this list includes major requirements for this aspect of project implementation. This list is not comprehensive nor does it relieve the sponsor from fully complying with all applicable statutory and administrative standards.

1. The personnel engaged in project administration, engineering supervision, construction inspection and testing were or will be determined to be qualified as well as competent to perform the work.
   ☐ Yes ☐ No ☐ N/A

2. Daily construction records were or will be kept by the resident engineer/construction inspector as follows:
   a. Work in progress
   b. Quality and quantity of materials delivered
   c. Test locations and results
   d. Instructions provided the contractor
   e. Weather conditions
   f. Equipment use
   g. Labor requirements
   h. Safety problems
   i. Changes required
   ☐ Yes ☐ No ☐ N/A

Construction Project Final Acceptance – April 2015

3. Weekly payroll records and statements of compliance were or will be submitted by the prime contractor and reviewed by the sponsor for conformance with federal labor and civil rights requirements as required by FAA and U.S. Department of Labor.

   ☐ Yes ☐ No ☐ N/A

4. Complaints regarding the mandated federal provisions set forth in the contract documents have been or will be submitted to the Federal Aviation Administration (FAA).

   ☐ Yes ☐ No ☐ N/A

5. All tests specified in the plans and specifications were or will be performed and the test results documented as well as made available to the FAA.

   ☐ Yes ☐ No ☐ N/A

6. For any test results outside of allowable tolerances, appropriate corrective actions were or will be taken.

   ☐ Yes ☐ No ☐ N/A

7. Payments to the contractor were or will be made in compliance with contract provisions as follows:

   a. Payments are verified by the sponsor's internal audit of contract records kept by the resident engineer, and
   b. If appropriate, pay reduction factors required by the specifications are applied in computing final payments and a summary of pay reductions made available to the FAA.

   ☐ Yes ☐ No ☐ N/A

8. The project was or will be accomplished without significant deviations, changes, or modifications from the approved plans and specifications, except where approval is obtained from the FAA.

   ☐ Yes ☐ No ☐ N/A

9. A final project inspection was or will be conducted with representatives of the sponsor and the contractor, and project files contain documentation of the final inspection.

   ☐ Yes ☐ No ☐ N/A

10. Work in the grant agreement was or will be physically completed and corrective actions required as a result of the final inspection are completed to the satisfaction of the sponsor.

    ☐ Yes ☐ No ☐ N/A

11. If applicable, the as-built plans, an equipment inventory, and a revised airport layout plan have been or will be submitted to the FAA.

    ☐ Yes ☐ No ☐ N/A

12. Applicable close out financial reports have been or will be submitted to the FAA.

    ☐ Yes ☐ No ☐ N/A

Construction Project Final Acceptance – April 2015

13. The construction of all buildings have complied or will comply with the seismic construction requirements of 49 CFR § 41.120.

☐ Yes ☐ No ☐ N/A

Additional documentation for any above item marked "no":

Sponsor's Certification

I certify, for the project identified herein, responses to the forgoing items are accurate as marked and additional documentation for any item marked "no" is correct and complete.

I declare under penalty of perjury that the foregoing is true and correct. I understand that knowingly and willfully providing false information to the federal government is a violation of 18 USC § 1001 (False Statements) and could subject me to fines, imprisonment, or both.

Executed on this _____day of _____, _____.

Name of Sponsor:

Name of Sponsor's Designated Official Representative:

Title of Sponsor's Designated Official Representative:

Signature of Sponsor's Designated Official Representative: _____

Construction Project Final Acceptance – April 2015

17.35. FAA Sponsor Certification for Equipment/Construction Contracts

Equipment and Construction Contracts
Airport Improvement Sponsor Certification

Sponsor:

Airport:

Project Number:

Description of Work:

Application

49 USC § 47105(d) authorizes the Secretary to require certification from the sponsor that it will comply with the statutory and administrative requirements in carrying out a project under the Airport Improvement Program (AIP). General procurement standards for equipment and construction contracts within Federal grant programs are described in 2 CFR §§ 200.317-200.326. Labor and Civil Rights Standards applicable to the AIP are established by the Department of Labor (www.dol.gov) AIP Grant Assurance C.1—General Federal Requirements identifies all applicable Federal Laws, regulations, executive orders, policies, guidelines and requirements for assistance under the AIP. Sponsors may use state and local procedures provided procurements conform to these federal standards.

This certification applies to all equipment projects. Equipment projects may or may not employ laborers and mechanics that qualify the project as a "covered contract" under requirements established by the Department of Labor requirements. Sponsor shall provide appropriate responses to the certification statements that reflect the character of the project.

Certification Statements

Except for the certification statement below marked as not applicable (N/A), this list includes major requirements for this aspect of project implementation. This list is not comprehensive nor does it relieve the sponsor from fully complying with all applicable statutory and administrative standards.

1. A written code or standard of conduct conforming to 2 CFR § 200.319 is or will be in effect governing the performance of the sponsor's officers, employees, or agents in soliciting, awarding and administering procurement contracts.

   ☐ Yes ☐ No ☐ N/A

2. For all contacts, qualified and competent personnel are or will be engaged to perform contract administration, engineering supervision, construction inspection, and testing in accordance with grant assurance C.17.

   ☐ Yes ☐ No ☐ N/A

3. Sponsors that have or are required to have a Disadvantage Business Enterprise (DBE) program on file with the FAA have included or will include clauses required from Title VI of the Civil Rights Act and 49 CFR 23 and 49 CFR 26 for Disadvantaged Business Enterprises in all contracts and subcontracts

   ☐ Yes ☐ No ☐ N/A

Equipment and Construction Contracts – April 2015

9. All construction and equipment installation contracts exceeding $3,000 contain or will contain a contract provision that discourages distracted driving

   ☐ Yes ☐ No ☐ N/A

10. All contracts exceeding $10,000 contain or will contain the following provisions as applicable:

    a. Construction and equipment installation projects - Applicable clauses from 41 CFR Part 60 for compliance with Executive Orders 11246 and 11375 on Equal Employment Opportunity.

    b. Construction and equipment installation - Contract Clause prohibiting segregated facilities in accordance with 41 CFR part 60-1.8

    c. All Contracts - Requirement to maximize use of products containing recovered materials in accordance with 2 CFR § 200.322 and 40 CFR part 247.

    d. All Contracts - Provisions that address termination for cause and termination for convenience

    ☐ Yes ☐ No ☐ N/A

11. All contracts exceeding $25,000, an appropriate check of the System for Award Management has been or will be made to assure that contracts or subcontracts are not awarded to those individuals or firms suspended, debarred, or excluded from participating in this federally assisted project

    ☐ Yes ☐ No ☐ N/A

12. Contracts exceeding the simplified acquisition threshold (currently $150,000) include or will include provisions, as applicable, that address the following:

    a. Construction and equipment installation contracts - a bid guarantee of 5%, a performance bond of 100%, and a payment bond of 100%

    b. Construction and equipment installation contracts - requirements of the Contract Work Hours and Safety Standards Act 40 USC 3701-3708), Sections 103 and 107

    c. All contracts, Restrictions on Lobbying and Influencing (2 CFR part 200, Appendix II(J)

    d. All contracts - Conditions specifying administrative, contractual and legal remedies for instances where contractor of vendor violate or breach the terms and conditions of the contract

    e. All Contracts - Applicable standards and requirements issued under Section 306 of the Clean Air Act (42 USC 7401-7671q), Section 508 of the Clean Water Act (33 USC 1251-1387, and Executive Order 11738

    ☐ Yes ☐ No ☐ N/A

9. All construction and equipment installation contracts exceeding $3,000 contain or will contain a contract provision that discourages distracted driving

☐ Yes ☐ No ☐ N/A

10. All contracts exceeding $10,000 contain or will contain the following provisions as applicable:

    a. Construction and equipment installation projects - Applicable clauses from 41 CFR Part 60 for compliance with Executive Orders 11246 and 11375 on Equal Employment Opportunity.

    b. Construction and equipment installation - Contract Clause prohibiting segregated facilities in accordance with 41 CFR part 60-1.8

    c. All Contracts - Requirement to maximize use of products containing recovered materials in accordance with 2 CFR § 200.322 and 40 CFR part 247.

    d. All Contracts - Provisions that address termination for cause and termination for convenience

☐ Yes ☐ No ☐ N/A

11. All contracts exceeding $25,000, an appropriate check of the System for Award Management has been or will be made to assure that contracts or subcontracts are not awarded to those individuals or firms suspended, debarred, or excluded from participating in this federally assisted project

☐ Yes ☐ No ☐ N/A

12. Contracts exceeding the simplified acquisition threshold (currently $150,000) include or will include provisions, as applicable, that address the following:

    a. Construction and equipment installation contracts - a bid guarantee of 5%, a performance bond of 100%, and a payment bond of 100%

    b. Construction and equipment installation contracts - requirements of the Contract Work Hours and Safety Standards Act 40 USC 3701-3708), Sections 103 and 107

    c. All contracts, Restrictions on Lobbying and Influencing (2 CFR part 200, Appendix II(J)

    d. All contracts - Conditions specifying administrative, contractual and legal remedies for instances where contractor of vendor violate or breach the terms and conditions of the contract

    e. All Contracts - Applicable standards and requirements issued under Section 306 of the Clean Air Act (42 USC 7401-7671q), Section 508 of the Clean Water Act (33 USC 1251-1387, and Executive Order 11738

☐ Yes ☐ No ☐ N/A

13. Concurrence was or will be obtained from the Federal Aviation Administration (FAA) prior to contract award under any of the following circumstances:

    a. Only one qualified person/firm submits a responsive bid

    b. The contract is to be awarded to other than the lowest responsible bidder

    c. Life cycle costing is a factor in selecting the lowest responsive bidder

    d. Proposed contract prices are more than 10% over the sponsor's cost estimate

    ☐ Yes ☐ No ☐ N/A

Additional documentation for any above item marked "no":

Sponsor's Certification

I certify, for the project identified herein, responses to the forgoing items are accurate as marked and additional documentation for any item marked "no" is correct and complete.

I declare under penalty of perjury that the foregoing is true and correct. I understand that knowingly and willfully providing false information to the federal government is a violation of 18 USC § 1001 (False Statements) and could subject me to fines, imprisonment, or both.

Executed on this _____ day of _____ , _____.

Name of Sponsor:

Name of Sponsor's Designated Official Representative:

Title of Sponsor's Designated Official Representative:

Signature of Sponsor's Designated Official Representative: _____

17.36. FHWA Form 1446C-AKDO, Final Inspection

U.S. DEPARTMENT OF TRANSPORTATION
FEDERAL HIGHWAY ADMINISTRATION

FINAL INSPECTION OF FEDERAL-AID PROJECT
CONSTRUCTED UNDER 23 U.S.C. 117

1. PROJECT NAME AND NUMBER	**2. BOROUGH/CITY**	**3. STATE** Alaska
4. DESCRIPTION OF IMPROVEMENT AS PROGRAMMED		
5. CONTRACTOR'S NAME		**6. CONTRACT AMOUNT**

7. NOTICE OF COMPLETION: The above listed project has been completed. A final inspection by ADOT&PF has found this project to be in reasonable conformance with the PS&E.

SIGNATURE (SHA OFFICIAL)_____

TITLE_____

8. ADOT&PF INSPECTION MADE BY	**9. DATE OF INSPECTION**
10. IN COMPANY WITH	

cc: ADOT&PF Regional Construction Engineer
ADOT&PF Headquarters Director, Statewide Design & Engineering Services Division
ADOT&PF Headquarters Director, Administrative Services Division
FHWA Engineer

Form FHWA-1446C-AKDO (5/99ge)

17.37. FHWA Project Closeout Checklist

PROJECT FINAL CLOSEOUT CHECKLIST

Highways Projects

PROJECT NO.: _____

PROJECT NAME: _____

FINAL ESTIMATE ASSEMBLY

- ☐ Certification of Final Estimate (Form 25D-116).
- ☐ Contractor's Release (Form 25D-117).
- ☐ Summary of Quantities (Form 25D-25).
- ☐ Project Materials Certificate from Materials Section. DATE: _____
- ☐ "As-Built" Plans DATE: _____
- ☐ Department of Labor Tax Clearance. DATE: _____
- ☐ Department or Revenue Tax Clearance. DATE: _____
- ☐ Department of Labor Notice of Completion (NOC) DATE: _____
- ☐ Alaska Railroad Release, if applicable

FINAL CONSTRUCTION REPORT

- ☐ **Final Estimate Assembly (see above).**
- ☐ Final Construction Report Summary.
- ☐ Reports (as required): Report on Design Recommendations (required)
  Report on Claims (if a claim was submitted)
  Report on ARRA Documentation
- ☐ Explanation of Overruns, Underruns and Change Documents. List only contract major bid items (>5% of award amount) whose final quantity varied more than 25% from the estimated quantity and an explanation of all change document items.
- ☐ Proof of Construction for Right-of-Way (Form 25D-173) -- Completed only if the right-of-way involves public land.
- ☐ Proof of Use for Material Sources (Form 25D-174) with Material Site Record -- Completed only if sites are State furnished or controlled.

Rev 7/7/14

17.38. Final Construction Report Summary Sheet

STATE OF ALASKA

DEPARTMENT OF TRANSPORTATION
AND
PUBLIC FACILITIES

Final Construction Report Summary Sheet

PROJECT NO.:
PROJECT NAME:
PROJECT DESCRIPTION:
PROJECT ENGINEER(s):
CONTRACTOR:
NOTICE TO PROCEED DATE:
START OF WORK DATE:
CONTRACT COMPLETION DATE:
TIME EXTENSION BY CHANGE DOCUMENTS:
PROJECT ACCEPTANCE DATE:
OVERRUN TIME:
ENGINEER'S ESTIMATE:
ORIGINAL CONTRACT:
- **$ ADDED BY CHANGE DOCUMENTS:**
- **TOTAL AUTHORIZED AMOUNT:**
- **TOTAL CONTRACT AMOUNT:**
- **LESS LIQUIDATED DAMAGES:**
- **FINAL CONTRACT AMOUNT:**

17.39. Final Estimate Review Report, (Form 25D-031)

STATE OF ALASKA
DEPARTMENT OF TRANSPORTATION
AND PUBLIC FACILITIES
FINAL ESTIMATE REVIEW REPORT

Central **REGION**

Project Numbers _____ Contractor _____

Project Name: _____

Description of Work _____

_____

_____

Required Project Completion Date _____ / _____ Calendar Days

Actual Project Completion Date _____ / _____ Calendar Days

Project Manager _____ Project Engineer _____

Final Acceptance Date _____

Days Overrun _____ Liquidated Damages Assessed _____

Final Amount _____ Bid Amount _____

Materials Certification Date _____ Federal Document Date _____

Dept. of Labor Title 36 Clearance Date _____ Right of Way Clearance Date _____

Dept. of Labor Tax Clearance Date _____ Dept. of Revenue Clearance Date _____

* *

CLASSIFICATION OF COSTS --FINAL PROJECT AMOUNTS

Participating

Non-Participating

Liquidated Damages

Reimbursable

Total

Remarks _____

_____

I certify that my review of this project, in accordance with State policy, indicates that all work has been completed within the terms of the contract and authorized change documents; and it also indicates that State and Federal Aid funds have been properly classified unless other wise noted above.

_____ _____

Signature of Reviewer Date Submitted

25D-031 (Rev. 11/16)

17.40. Final Estimate, Summary of Quantities (Form 25D-025)

25D-025
3/98

STATE OF ALASKA
DEPARTMENT OF TRANSPORTATION
AND PUBLIC FACILITIES

FINAL ESTIMATE

SUMMARY OF QUANTITIES

Sheet _____of Sheet _____

Project No.: _____

_____

Project Name & Location: _____

_____

ITEM NO.	FA CODE	ACT. CODE	ITEM	UNIT	UNIT PRICE	QUANTITY	AMOUNT

Prepared by:_____ Date: _____Checked by: _____ Date: _____

17.41. Inspector's Daily Report (Form 25D-186)

STATE OF ALASKA
DEPARTMENT OF TRANSPORTATION & PUBLIC FACILITIES

INSPECTOR'S DAILY REPORT

Project No. _____ Project Name _____

Weather _____ Shift: _____ Contractor's Rep/Title _____

CONTRACTOR'S EQUIPMENT							CONTRACTOR'S WORK FORCE	
No.	Description or Type	Size or Capacity	Hours Worked	Hours Stdby	Hours Down	Remarks	No.	Classification/Duties

LIMITS OF WORK AND MATERIAL PALACMENT							
Item No.	Description	Source (Limits) From	Source (Limits) To	Placement (Limits) From	Placement (Limits) To	Approximate Quantity	Work Completed & Accepted

NARRATIVE (Include report of day's operations, contractor's production rates and efficiency, unusual conditions or problems encountered, orders given and received, discussions with contractor, etc.)

Date _____ Inspector's Signature _____ Page _____ of _____

Form 25D-186 (4/98)

17.42. Interim Work Authorization (Form 25D-070)

STATE OF ALASKA
DEPARTMENT OF TRANSPORTATION
AND PUBLIC FACILITIES
Select REGION

Interim Work Authorization

Project No.: _____ IWA No. _____

Project Name: _____

Contractor: _____

Address: _____

Estimated amount of IWA: $ _____

Recommended By: _____ Date: _____
Project Engineer

Approved By: _____ Date: _____
Department *(can be verbal)*

Acknowledged By: _____ Date: _____
Contractor's Representative

Permission for previously submitted subcontractor(s) to perform all or portions of the work described herein is as checked: ☐ Yes ☐ No ☐ N/A.

The following change(s) in the above Contract are hereby made in accordance with the terms of the Contract and under the terms and conditions stated below. Price adjustments resulting from inaccurate cost and pricing data are subject to the provisions of AS 36.30.400(c). This document shall become an interim amendment to the Contract and all provisions of the Contract will be applicable. Items not mentioned shall not be affected by this document. This document shall be superseded by a subsequent Change Order, which will address any adjustments to contract time.

Basis of Payment (Check One)

☐ Payment for the following work will be paid per Section 109-1.05 of the Standard Specifications.
☐ Payment for the following work will be paid per the unit prices and method of measurement stated.
☐ Payment for the following work will be paid as a lump sum item.

DESCRIPTION OF CHANGE (Use Continuation Sheet 25D-065 as Required)

Form 25D-070 (Revised 4/12) I.W.A No. Page 1 of 1

17.43. Labor Compliance Interview (Form 25D-040)

LABOR COMPLIANCE INTERVIEW

PROJECT NO. (Federal/AKSAS) _____

PROJECT NAME: _____

NAME OF EMPLOYEE INTERVIEWED: _____

PRESENT ADDRESS: _____

PERMANENT ADDRESS: _____

EMPLOYED BY: _____

If a subcontractor, check files for an approved subcontract. If there is no subcontract, notify Project Engineer.

WORK PERFORMED BY EMPLOYEE: _____

Be specific as to type and size of equipment used or duties perfomed so work can be correctly classified.

HOW MUCH DO YOU MAKE AN HOUR? _____

PAID FOR ALL HOURS WORKED? Yes _____ No _____

ARE STRAIGHT TIME AND OVERTIME HOURS CORRECT? Yes _____ No _____
(Paid time & 1/2 over 8 hours per day or 40 hours per week?)

ARE YOU PAID WEEKLY & PAYROLL DEDUCTIONS PROPER? Yes _____ No _____

COMMENTS: _____

INTERVIEWED BY: _____ Date: _____

Information from contract and wage bulletins:

State Minimum Wage		Federal Minimum	
Basic Hourly Rate:		Basic Hourly Rate:	
Fringe Benefit Rate:		Fringe Benefit Rate:	
Total State Rate:		Total Federal Rate:	

Information from payrolls:

Payroll # or date: _____

Job Class (stated on payroll): _____ (ex., laborer II, operator IV, truck driver I, etc.)

Is Job Classification from Interview Correct? _____

Basic Hourly Rate: _____

Overtime Rate: _____

Fringe Benefit Rate: _____

Total Rate Paid: _____

Checked by: _____ Date: _____

Note: If Contract is over 24 months old, new State wage rates apply.

(Form 25D-040 Rev. 10/19/05)

Page 1 of 1

17.44. Letter for ESD Tax Clearance

MEMORANDUM

State of Alaska
Department of Transportation & Public Facilities

TO:	Marty Messick, Sr. Field Auditor Juneau Field Tax Office Division of Employment Security Department of Labor	**DATE:**	September 2, 1992
		FILE NO:	
		TELEPHONE NO:	(907) 465-2707
		FAX NUMBER:	
		TEXT TELEPHONE:	
FROM:	John R. Edwards Construction Chief Marine Engineering AMHS	**SUBJECT:**	Project No. 75221/MT-671 Auke Bay F.T. East Bridge Recoat, Phase I Clearance

Please advise whether or not clearance is granted for the below listed contractor.

Dunkin and Bush, Inc.
P.O. Box 807
Redmond, Washington 98073

Time Worked: July 15, 1992 to August 15, 1992

Chapter 85, SLA 1982 requires that the State now pay interest on contractor's final pay requests if payment is not made within 30 days.

If within 14 calendar days, we do not receive written notice from your office of an outstanding deficiency or failure to file required reports, we will process this contractor's final pay estimate for payment.

( ) Clearance granted for final payment.

( ) Clearance not granted for final payment.

Remarks:_____

_____
Signature

_____
Title

_____
Date

17.45. Letter of CENG Budget Requests

MEMORANDUM

State of Alaska

Department of Transportation and Public Facilities

TO: Distribution

DATE:

FILE NO:

TELEPHONE NO:
FAX NUMBER:

FROM: (Name)
Project Engineer

SUBJECT: (Project No.)
(Project Name)

In order for Construction to arrive at a workable budget for the referenced project, we request the following information from your section. Please fill in the blank and return to the above address.

Total amount required by this Section to monitor the above project:

$_____.

Give a short summarization below of how your total budget was arrived at:

_____
_____
_____

Signed: _____ Date: _____

It is suggested that as the project progresses, you closely monitor your charges. If for any reason you feel you cannot meet your budget, a request for additional funds will be necessary. Any such request needs to address the status of your work, the reason your initial estimate is not sufficient, and an estimate of the additional funds required to complete your involvement with the project.

(Initials)/

DISTRIBUTION:

Construction Group Chief (General Admin.)
Contracts
Design
EEO Officer
Highway Data Group
Anchorage
Internal Review Auditor, HQ
Project Control
Quality Assurance Engineer
Regional Environmental Coordinator
State Materials Engineer
Statewide Civil Rights Office,

17.46. Letter of Department of Revenue Tax Clearance

MEMORANDUM

State of Alaska
Department of Transportation & Public Facilities

TO: Joan Roomsburg
Tax Examiner
Compliance Unit
Department of Revenue

DATE: September 2, 1992

FILE NO:

TELEPHONE NO: (907) 465-2707

FAX NUMBER:

TEXT TELEPHONE:

FROM: John R. Edwards
Construction Chief
Marine Engineering
AMHS

SUBJECT: Project No. 75221/MT-671
Auke Bay F.T. East Bridge
Recoat, Phase I Clearance

Please advise whether or not clearance is granted for the below listed contractor.

Dunkin and Bush, Inc
P.O. Box 807
Redmond, Washington 98073

Time Worked: July 15, 1992 to August 15, 1992

Chapter 85, SLA 1982 requires that the State now pay interest on contractor's final pay requests if payment is not made within 30 days.

If within 14 calendar days, we do not receive written notice from your office of an outstanding deficiency or failure to file required reports, we will process this contractor's final pay estimate for payment.

(X) Clearance granted for final payment.

( ) Clearance not granted for final payment.

Remarks: _____

Joan Roomsburg
Signature

Tax Examiner
Title

9/9/92
Date

17.47. Letter of Final Acceptance

December 6, 1992

RE: Turner Regional Airport
Runway Reconstruction
AIP No. 8-40-1746-01/48702

Final Acceptance GCP 50-16

Mr. Bruce Temple
Hadden Contractors
7465 Modock Road
Eagle River, Alaska 99577

Dear Mr. Temple:

All work on the above named project has been inspected and found to be in substantial conformance with the contract. With this final acceptance you are released from further obligations under the contract, with the exception of any warranties or guaranties that you provided under individual pay items.

Warm regards,

Contracting Officer

cc: Contracts
Department of Labor
D&ES Division
FAA/FHWA
Federal Aid/Statewide Aviation
Group Chief/PM
Project Control
Quality Assurance/Review
Regional Finance
Statewide Civil Rights Office

17.48. Letter of Final Inspection

STATE OF ALASKA

FRANK H. MURKOWSKI, GOVERNOR

DEPARTMENT OF TRANSPORTATION
AND PUBLIC FACILITIES

2301 PEGER ROAD
FAIRBANKS, ALASKA 99709-5399

PHONE: (907) 451-5466
FAX: (907) 451-5411

Northern Region Construction

March 15, 2003
Re: Southcentral Leveling, Phase III
Tok Cutoff MP 55-100
Project No. IM-OOOS(252)/67385

Project Completion 105-1.15

Mr. Quinn Vaterlaus
Wilder Construction Company
11301 Lang Street
Fairbanks, Alaska 99515-3006

Dear Mr. Vaterlaus:

A final inspection was held on March 4, 2003 with the following people in attendance:

Quinn Vaterlaus, Wilder Construction Representative
Billy Collins, Project Engineer, Alaska DOT/PF
Anne Jones, Design and Environmental Services, Alaska DOT/PF
Sam Lewis, Assistant Project Engineer, Alaska DOT/PF

All work was found to have been completed in substantial conformance with the contract and is accepted by the Department as of 2:00 p.m., March 4, 2003. Contract time stopped as of that date.

This acceptance does not relieve you of your remaining obligations under the contract.

Sincerely,

Billy Collins, P.E.
Project Engineer

/vjz

25A-T34LH

17.49. Letter of Partial Completion

THE STATE of ALASKA
GOVERNOR BILL WALKER

Department of Transportation and Public Facilities

December 6, 2016

RE: Becker Highway
111 South Rehabilitation
Project Number

Partial Completion 105-1.14
Maintenance 105-1.13

Mr. Stephen Waterman
Velcro Contractors
1574 Haslemere Loop
Eagle River, Alaska 99577

Dear Mr. Waterman:

An inspection on a segment of the project identified as Miles 117 to 120, was held on August 21, 2016. All items of the contract, with the exception of those listed below, were found to have been constructed according to contract requirements within the identified segment. The Department will take Partial Completion and resume maintenance on the completed segment, except for the following items of work:

1. Repair of damaged culverts; and
2. Correction of workmanship deficiencies on culvert thaw pipes.
3. Permanent grass and plant establishment.

This partial completion and resumption of maintenance was effective as of 5:00 p.m. Friday, August 21, 2016.

As per Section 105-1.15 of the Specifications, the contact completion date remains June 27, 2017 and the contract time will continue to be charged until Project Completion.

This Partial Completion neither voids or alters any Contract terms.

Sincerely,

Group Chief/PM

CC: Maintenance and Operations

"Keep Alaska Moving through service and infrastructure."

17.50. Letter of Project Completion

December 6, 1992

RE: Becker Highway
111 South Rehabilitation
F-670(1)/48701

Project Completion 105-1.15

Mr. Stephen Waterman
Velcro Contractors
1574 Haslemere Loop
Eagle River, Alaska 99577

Dear Mr. Waterman:

A final inspection was held on August 21, 1992 with the following people in attendance:

All work was found to have been completed in substantial conformance with the contract and is accepted by the Department as of 1:00 p.m. August 21, 1992. Contract time was stopped as of that date.

This acceptance does not relieve you of your remaining obligations under the contract.

Warm regards,

Group Chief/PM

cc: FAA/FHWA
Maintenance & Operations
Planning
Statewide Civil Rights Office

17.51. Letter of Wage and Hour Compliance Tax Clearance

MEMORANDUM

State of Alaska

Department of Transportation & Public Facilities

TO: Patricia Woodward
Wage and Hour Technician
Department of Labor
MS 0700

DATE: September 2, 1992

FILE NO:

TELEPHONE NO: (907) 465-2707

FAX NUMBER:

TEXT TELEPHONE:

FROM: John R. Edwards
Construction Chief
Marine Engineering
AMHS

SUBJECT: Project No. 75221/MT-671
Auke Bay F.T. East Bridge
Recoat, Phase I
Clearance

Please advise whether or not clearance is granted for the below listed contractor.

Dunkin and Bush, Inc.
P.O. Box 807
Redmond, Washington 98073

no certified payrolls received as of today

Time Worked: July 15, 1992 to August 15, 1992

Chapter 85, SLA 1982 requires that the State now pay interest on contractor's final pay requests if payment is not made within 30 days.

If within 14 calendar days, we do not receive written notice from your office of an outstanding deficiency or failure to file required reports, we will process this contractor's final pay estimate for payment.

( ) Clearance granted for final payment.

(X) Clearance not granted for final payment.

Remarks:

RECEIVED
SEP 08 1992
Wage and Hour
Juneau

Patricia Woodward
Signature

Wage & Hour Technician
Title

9-21-92
Date

1/4/2005

MASTER MATERIALS CERTIFICATION LIST

	Specification	Construction			Design			Statewide		Certificate
	2004	Qualified Products List	Project Engineer	QA/ Materials Engineer	Design Engineer	Bridge Engineer	Traffic Design Engineer	State Materials Engineer	Manufacturer/ Remarks	Location e.g. Binder #
Project Name										
Project Number										
Project Engineer Signature										
202 REMOVAL OF STRUCTURES AND OBSTRUCTIONS										
Timber	202-2.01									
Pressure Treating	202-2.01									
Steel Pipe	202-2.01									
Galvanization	202-2.01									
Steel Fasteners	202-2.01									
Galvanization	202-2.01									
Reflectors										
Yellow Acrylic	202-2.01									
Reflective Sheeting	202-2.01									
Mailboxes	Std. Drwg. M-20 & M-23									
306 ASPHALT TREATED BASE COURSE										
Mix Design	306-3.01									

17.53. Materials Testing Summary

STATE OF ALASKA
DOT/PF SOUTHEAST REGION
MATERIALS TESTING SUMMARY SHEET

PROJECT NAME: Sitka Lake & Lincoln Traffic Improvements PROJECT NO.: 67960

ITEM & QUANTITY	FREQUENCY	DOCUMENTATION REQUIRED
COMMON EXCAVATION CY for USEABLE quantity :	AS REQUIRED BASED ON CHANGES IN MATERIAL As Req'd. 1 / 5000 CY	STANDARD DENSITY CX - SD - _____ ACCEPTANCE Gradation, PI** _____
Note: Unclassified Ex. will be labeled for the zone in which it is placed. For example: Unclassified Ex. used in the "A" zone will be labeled as: EXA-SD- or EXA-G- or EXA-D-. Unclassified Ex. which is wasted will receive the designation of EXW-G- and be written up on a gradation sheet describing the nature of the waste material in the remarks section.	As Req'd. 1 / 5000 CY	Density _____ Waste Gradation* _____
**If Unclassified Ex. is used in the "A" or "B" zone(s), PI tests will be performed at 1 / 5000 CY from any source.	As Req'd. 1 / 5000 CY *A minimum of 1 gradation per 5000 CY of waste material is required.	
	As Req'd. 1 / 50,000 CY	ASSURANCE Standard Density _____ Density _____ _____

17.54. Oil and Hazardous Substances Spill Notifications (2 DEC Forms)

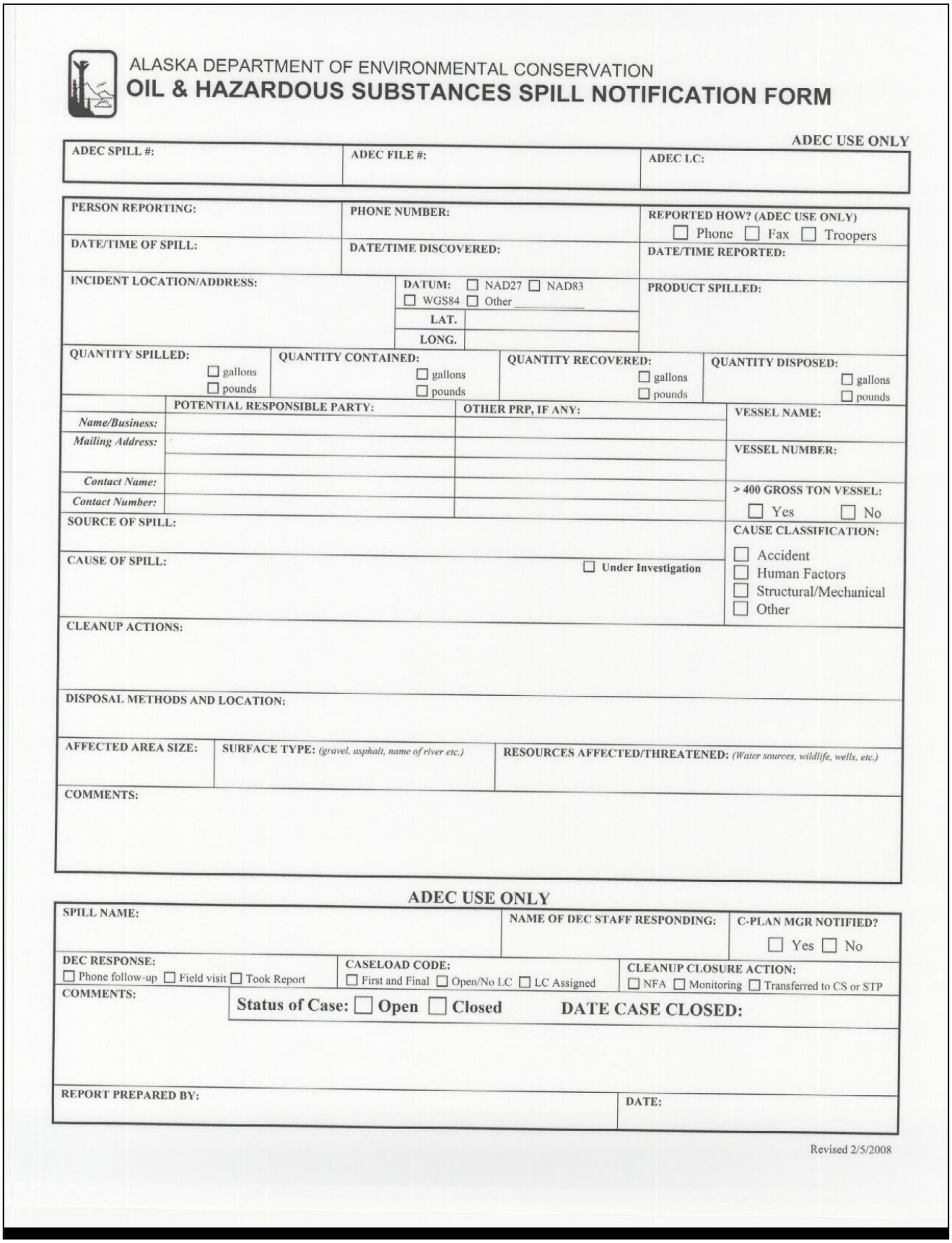

ALASKA DEPARTMENT OF ENVIRONMENTAL CONSERVATION

OIL & HAZARDOUS SUBSTANCES SPILL NOTIFICATION FORM

ADEC USE ONLY

ADEC SPILL #:	ADEC FILE #:	ADEC LC:

PERSON REPORTING:	PHONE NUMBER:	REPORTED HOW? (ADEC USE ONLY) ☐ Phone ☐ Fax ☐ Troopers
DATE/TIME OF SPILL:	DATE/TIME DISCOVERED:	DATE/TIME REPORTED:
INCIDENT LOCATION/ADDRESS:	DATUM: ☐ NAD27 ☐ NAD83 ☐ WGS84 ☐ Other _____ LAT. LONG.	PRODUCT SPILLED:
QUANTITY SPILLED: ☐ gallons ☐ pounds	QUANTITY CONTAINED: ☐ gallons ☐ pounds	QUANTITY RECOVERED: ☐ gallons ☐ pounds
QUANTITY DISPOSED: ☐ gallons ☐ pounds		

	POTENTIAL RESPONSIBLE PARTY:	OTHER PRP, IF ANY:	VESSEL NAME:
Name/Business:			
Mailing Address:			VESSEL NUMBER:
Contact Name:			> 400 GROSS TON VESSEL: ☐ Yes ☐ No
Contact Number:			

SOURCE OF SPILL:

CAUSE OF SPILL: ☐ Under Investigation

CAUSE CLASSIFICATION:
☐ Accident
☐ Human Factors
☐ Structural/Mechanical
☐ Other

CLEANUP ACTIONS:

DISPOSAL METHODS AND LOCATION:

AFFECTED AREA SIZE:	SURFACE TYPE: *(gravel, asphalt, name of river etc.)*	RESOURCES AFFECTED/THREATENED: *(Water sources, wildlife, wells, etc.)*

COMMENTS:

ADEC USE ONLY

SPILL NAME:	NAME OF DEC STAFF RESPONDING:	C-PLAN MGR NOTIFIED? ☐ Yes ☐ No
DEC RESPONSE: ☐ Phone follow-up ☐ Field visit ☐ Took Report	CASELOAD CODE: ☐ First and Final ☐ Open/No LC ☐ LC Assigned	CLEANUP CLOSURE ACTION: ☐ NFA ☐ Monitoring ☐ Transferred to CS or STP

COMMENTS:

Status of Case: ☐ Open ☐ Closed DATE CASE CLOSED:

REPORT PREPARED BY:	DATE:

Revised 2/5/2008

State of Alaska
DEPARTMENT OF ENVIRONMENTAL CONSERVATION

OIL & HAZARDOUS MATERIALS INCIDENT FINAL REPORT

The following written report is required by State regulations 18 AAC 75.300(e), following departmental notification of a discharge of oil and hazardous materials. The report is due within 15 days after the cleanup is completed, or if no cleanup occurs, within 15 days after the discharge. Forward the report to the nearest DEC office of the department. The report must contain, as applicable:

1. Date and time of the discharge:

2. Location of the discharge:

3. Name of the site, facility or operation:

4. Name, mailing address, and telephone number of:

A. Person or persons causing or responsible for the discharge:

B. Owner and operator of the site, facility or operation:

5. Type and amount of each oil or hazardous substance discharged:

6. Cause of the discharge:

7. Description of any environmental damage caused by the discharge or containment, to the extent the damage can be identified:

G:\SPAR\Spar-Prevention and Emergency Response\camille\Final Report Form.doc
Revised: September 19, 2000

Oil & Hazardous Materials Incident Final Report -- continued

8. Description of cleanup actions taken:
9. Estimated amount of: (A) oil or hazardous substance cleaned up: (B) oily or hazardous waste generated:
10. Date, location, and method of ultimate disposal of the oil, hazardous substance and any contaminated materials, including cleanup materials:
11. Description of actions being taken to prevent recurrence of the discharge:
12. Other information the department requires to fully assess the cause and impact of the discharge (receipts for disposal if available):

Signature	**Printed name**
Date	**Title**

MAIL OR FAX TO the Closest A.D.E.C. Office below

Anchorage
Phone: 269-3063
Fax: 269-7648
555 Cordova Street
Anchorage, AK 99501

Fairbanks
Phone: 451-2121
Fax: 451-2362
610 University Ave.
Fairbanks, AK 99709-3643

Juneau
Phone: 465-5340
Fax: 465-2237
410 Willoughby Ave., Suite 309
Juneau, AK 99801-1795

DEC USE ONLY	
ADEC Project Manager:	ADEC Spill #:

G:\SPAR\Spar-Prevention and Emergency Response\camille\Final Report Form.doc
Revised: September 19, 2000

Page 2 of 2

17.55. OJT-Apprentice/Trainee Employee Report (25A-312)

STATE OF ALASKA
DEPARTMENT OF TRANSPORTATION AND PUBLIC FACILITIES

APPRENTICE EMPLOYMENT REPORT

The contractor/approved subcontractor must submit this report to the Engineer for approval each construction season on or before the date that each apprentice is hired or rehired. Section 645 Training is intended for minorities and women. If a contractor wishes to train a non-minority male for credit under Section 645, the contractor must submit documentation of good faith efforts (specified in 645-2.01) to the Engineer. There will be no payment for training hours prior to the approval of this completed report and verification of applicable good faith efforts.

Project Number (Federal/State)	Project Name	
Contractor	Apprentice[1] Name	
Apprentice Social Security No.	Date of Birth	Apprentice Start Date (this project)
Apprentice Mailing Address	Email Address	
Job Class	Wage Scale[2] _____	
	Percentage of Journey Scale _____ %	

Employee Status: New Hire ☐ Re-hire ☐ Upgrade ☐ Transfer ☐

Gender	Male ☐	Ethnicity: Alaska Native ☐	Hispanic ☐
	Female ☐	Asian/Pacific Islander ☐	Caucasian ☐
			American Indian ☐
			African American ☐

Signature of Authorized Company Representative _____ Date _____

Point of Contact _____ Phone _____

Address _____ Email Address _____

For the Engineer:

Did the apprentice (s) start training within two (2) weeks of the start date indicated on Form 25A311.

Yes ☐ No ☐

Signature of Engineer _____ Date Approved for Credit _____

1 An apprentice is a person enrolled in a USDOL/OA training program (union or non-union)
2 A copy of a union dispatch list must accompany this form for each union apprentice hire.

Distribution after approval by Engineer to: Project Files
Regional Contract Compliance Liaison
Civil Rights Office, P.O. Box 196900, Anchorage, Alaska 99519-6900
Contractor

25A-312
(REV. 1/12)

17.56. OJT- Monthly Training Report (Form 25A-313)

STATE OF ALASKA
DEPARTMENT OF TRANSPORTATION AND PUBLIC FACILITIES

MONTHLY TRAINING REPORT

The contractor must fill in the project (Section 645) training hours each month using the table below. The Contractor should retain the original, updating it monthly while the apprentice(s) remain on the project. The Contractor is required to submit copies of each months' updated report by the 15th of the following month.

Project Number (Federal/State)	Project Name	
Contractor Name	Point of Contact	Phone
Apprentice Name	Social Security Number	Job Class

Gender Male ☐ Female ☐

Ethnicity: Alaska Native ☐ American Indian ☐ Hispanic ☐
Asian/Pacific Islander ☐ Caucasian ☐ African American ☐

Anticipated Start Date For Apprentice (From Form 25A-311): _____

Date Employee Started On This Project: _____

Date Apprentice Employment Report Approved by the Engineer (From Form 25A-312): _____

1st YEAR - _____

JAN	FEB	MAR	APR	MAY	JUNE	JULY	AUG	SEP	OCT	NOV	DEC

2nd YEAR - _____

JAN	FEB	MAR	APR	MAY	JUNE	JULY	AUG	SEP	OCT	NOV	DEC

3rd YEAR - _____

JAN	FEB	MAR	APR	MAY	JUNE	JULY	AUG	SEP	OCT	NOV	DEC

When the apprentice separates from this project an explanation must be given:
☐ End of work ☐ Seasonal shutdown ☐ Terminated for cause ☐ Quit

What was the last date worked by the apprentice on this project? _____

I certify that this form has been examined by me and to the best of my knowledge and belief, is true, correct and complete.

_____ _____
Signature of Contractor Date

Send to: Project Files
Civil Rights Office, OJT Coordinator, P.O. Box 196900, Anchorage, Alaska 99519-6900

25A-313
(REV. 1/12)

17.57. OJT Training Utilization (Form 25A-311)

STATE OF ALASKA
DEPARTMENT OF TRANSPORTATION AND PUBLIC FACILITIES

TRAINING UTILIZATION REPORT

Federal-Aid Highway Contracts

_____

Project Name and Number

Training Program Special Provision, Section 645 specifies the number of minorities and/or women to be trained and the number of hours of training to be provided under this Contract; the Contractor may train non-minority males in compliance with Section 645, but only if documentation of good faith efforts has been submitted to, and approved by, the Engineer, prior to the employment of such non-minority male(s). Good faith efforts, at a minimum, must be as extensive as the recruitment efforts listed in the EEO Bid Conditions (Form 25A-301).

The number of individuals to be trained under this Contract is _____.

The number of hours of training to be provided is _____.

This Training Special Provision implements 23CFR 230, Subpart A, Appendix B. Contractors can use either training programs approved by the U.S. Department of Labor, Office of Apprenticeship (USDOL/OA), or training programs approved by DOT&PF. The Contractor must complete this form indicating the type of training to be provided, the number of individuals to be trained in each trade or job classification, the number of hours of training to be provided,[3] and the anticipated training start date.

1. **To be completed by Contractors using USDOL/OA Training Programs**: Indicate below the number of apprentices, total number of hours, type of training, and anticipated start dates for each craft selected:

APPROVED CRAFTS, CERTIFICATION NUMBERS AND JURISDICTIONAL AREAS

STATEWIDE JURISDICTION				SOUTH OF THE 63° PARALLEL			
Craft/Cert Number	No. of Appr.	No. of Hrs.	Start Date	Craft/Cert Number	No. of Appr.	No. of Hrs.	Start Date
Asbestos Worker #90032				Carpenter #74032			
Bricklayer #85040				Painter #72820			
Cement Mason & Plasterer #78533				Pipefitter #72586			
Electrician #81299				Plumber #83534 [1]			
Ironworker #76779				Sheetmetal Worker #74072			
Op. Engineer #X90349				Other #			
Roofer #X90317				NORTH OF THE 63° PARALLEL			
Piledriver [2] (3/30/75)				Carpenter #47990			
Camp Culinary [2] (4/25/74)				Painter #77750			
Laborer #XAK92T017				Fitter/Plumber #75055			
Other # _____				Sheetmetal #76781			
Other # _____				Other # _____			
				Other # _____			

1. Juneau Jurisdictional area is #83534 and Anchorage area is #72586.
2. U.S. DOL does not assign Certification numbers to these training programs. Only approval dates.
3. The total number of hours of training shall equal the hours of training shown in the Bid Schedule, Pay Item 645(1).

Form 25A-311 (1/16) Page 1 of 2

2. **To be completed by Contractors using DOT&PF training programs:** Indicate below the type of training, number of trainees, number of hours of training (500 hours per trainee), and anticipated start dates.

Job Classification	No. Trainees	Total No. Hrs.	Anticipated Start Date(s)

3. **To be completed by all Contractors** as part of the Contractor's EEO affirmative action program, the Contractor certifies that all training will be provided by the Contractor as stated in items 1 **OR** 2 above, in accordance with Training Program Special Provision, Section 645.

Company Name _____ Company Address _____

Point of Contact _____ E-mail / Phone Number _____

Signature of Authorized Company Representative _____ Date _____

To be completed by the DOT&PF OJT Coordinator prior to contract award:

Training Program(s) approve for this Project and Date Approved:

Training Program	Trainee (s) / Apprentice (s)	Hours	Date Approved

Signature of DOT&PF OJT Coordinator _____ Date _____

Form 25A-311 (1/16) Page 2 of 2

17.58. Outline for Force Account Proposal

The Force Account Proposal shall include:

- Project Title,
- Airport Improvement Number,
- Location
- Estimated work days for inspection services
- Identify Consultant Use
- Scope of Services
- Cost Estimate

Scope of Services

The scope of services includes: project management, on-site inspection, materials testing, support sections, concurrent review and project closeout. Use the following lists as a menu of services. Eliminate those items that are not applicable for a given project.

Project management

1. Receive and respond to pre-bid questions.
2. Conduct Pre-Bid Conference, if applicable.
3. Evaluate bid results.
4. Establish project budget, including contract administration costs.
5. Review and approve DBE Utilization Report.
6. Make recommendation of award.
7. Assign project staff.
8. Conduct Pre-Construction Conference.
9. Prepare a Construction Management Plan, if necessary.
10. Supervise project staff, and oversee their work.
11. Provide clerical support.
12. Make periodic site visits to inspect the work.
13. Coordinate with other affected parties, including funding agency and local agencies.
14. Administer consultant contracts, if applicable.
15. Approve contractor payments.
16. Approve procurements.
17. Review and approve Change Orders and Supplemental Agreements.

18. Prepare Waiver Requests for Alternate Procurement Methods, when necessary.
19. Monitor project budget and submit Funding Requests as necessary to adjust funding.
20. Review and approve subcontracts.
21. Monitor external affirmative action compliance (EEO, DBE, and OJT programs).
22. Review, research, and respond to contractor claims.
23. Issue final acceptance to the contractor.
24. Sign FAA Sponsor Certifications, as required.
25. Update the Airport Master Record (FAA 5010), if necessary.

On-site inspections

1. Familiarization with contract documents and project site.
2. Establish a project office.
3. Set up all project files, books, and records.
4. Document all construction activities through use of project journals, inspectors daily reports, and photographs.
5. Review contractor submittals (schedule, shop drawings, TCP, SWPPP, HMCP) and forward to support sections for comment and/or approval.
6. Inspect all work for compliance with contract requirements.
7. Interpret intent of Plans and Specifications when questions arise.
8. Make adjustments to the design to better fit field conditions.
9. Document acceptance of all completed work.
10. Conduct periodic (sometimes-weekly) coordination meetings on complex projects.
11. Measure and document all pay quantities.
12. Prepare and submit Bi-Weekly Construction Reports.
13. Prepare progress estimates of contractor payments.
14. Coordinate design clarifications and changes with support sections.
15. Forward materials submittals and shop drawings to the appropriate support section.
16. Conduct monthly safety meetings.
17. Monitor effectiveness of contractor's traffic control.
18. Forward work zone accident reports to the Regional Traffic Engineer.
19. Monitor effectiveness of contractor's storm water control measures.
20. Monitor contractor's adherence to environmental permits.
21. Monitor contractor's adherence to legal loads.

22. Monitor project budget and anticipate cost overruns.
23. Issue Directives and Interim Work Authorizations.
24. Prepare Change Orders and Supplemental Agreements.
25. Author Engineer's Decision in response to contractor claims.
26. Resolve issues with facility users and adjacent property owners and businesses.
27. Coordinate and document a Final Inspection.
28. Prepare project As-Builts.
29. Update Exhibit "A" Property Map, ALP and Sign Plan to reflect as constructed conditions and forward to FAA.
30. Prepare the Final Assembly, including the Final Estimate.

Materials testing

1. Establish an itemized, project specific Materials Testing Frequency Guide.
2. Gather, inspect, and maintain all required testing equipment.
3. Set up on-site materials testing lab trailer, if needed.
4. Set up materials testing files.
5. Coordinate off-site inspections of fabricated items.
6. Coordinate reviews and approvals of submittals of all manufactured items, including Manufacturer's Certificates of Compliance for all materials incorporated into manufactured items.
7. Perform and document all quality tests in accordance with the Frequency Guide and contract specified test methods.
8. Perform and document all acceptance tests in accordance with project specifications.
9. Perform and document any retests required as a result of failing acceptance tests.
10. Perform and document all independent assurance tests in accordance with project specifications.
11. Monitor compliance with "Buy America" and "Buy American" requirements.
12. Evaluate and document asphalt test results under the Asphalt Price Adjustment specification, if applicable.
13. Assemble a Project Materials Testing Summary at the completion of the project.
14. Issue a signed Project Materials Certification.

Support sections

1. Design and drafting support during construction.

2.Evaluation and approval of mix designs for concrete and hot mix asphalt.

3.Periodic environmental reviews, as needed.

4.Environmental permit modifications, as needed.

5.Geotechnical support during construction, as needed.

6.Right-of-way support during construction, as needed.

7.Utilities support during construction, as needed.

8.Traffic support during construction, as needed.

9.Plans room support during construction, as needed.

10. Maintenance support during construction, as needed.

11. Airport Manager or Airport Safety Officer support, as needed.

Concurrent review and project closeout

1.Periodic concurrent records reviews, as needed (except on small projects).

2.Review contractor payments.

3.Review Change Orders and Supplemental Agreements.

4.Comprehensive records review at project completion.

5.Request labor and tax clearances.

6.Assemble final closeout package, including final estimate and contractor's release.

7.Prepare FAA Sponsor Certifications, as required.

8.Assemble FAA Grant closeout package and submit to Project Control.

9.Archive project records.

Cost Estimate for Scope of Services

Item	**Reg Rate**	**OT Rate**	**Reg Hrs**	**OT Hrs**	**Total Cost/Item**
Project Management					
Position 1					
Position 2					
Position 3					
Position 4					
On site inspections					
Position 1					
Position 2					

Item	Reg Rate	OT Rate	Reg Hrs	OT Hrs	Total Cost/Item
Position 3					
Position 4					
Materials testing					
Position 1					
Position 2					
Position 3					
Position 4					
Support sections					
Position 1					
Position 2					
Position 3					
Position 4					
Concurrent review & project closeout					
Position 1					
Position 2					
Position 3					
Position 4					
Direct Costs					
Travel					
Per diem					
Supplies					
Subtotal					
ICAP rate					
Project Total Cost					

17.59. Pile Driving Equipment Data (Form 25D-098)

State of Alaska
Department of Transportation and Public Facilities

Pile Driving Equipment Data

Project: _____ Structure name: _____

Project No.: _____ Structure no.: _____

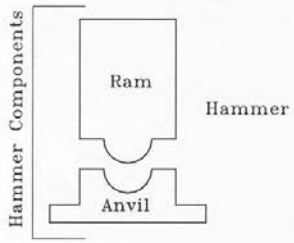

Hammer

Manufacturer: _____ Model: _____

Type: _____ Serial No.: _____

Ram weight: _____
Maximum
Rated energy: _____ at _____ length of stroke

Modifications: _____
_____
_____
_____

Capblock
(Hammer
Cushion)

Material: _____
Thickness: _____ Area: _____
Modulus of Elasticity: _____ (P.S.I.)
Coefficient of restitution: _____

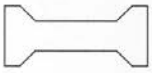

Pilecap — Helmet, Bonnet, Anvil Block, Drivehead

Weight: _____

Pile

Pile type: _____
Length (in leads): _____
Wall thickness: _____
Description of splice: _____
_____
Tip treatment description: _____
_____

Submitted by: _____ _____

Date: _____

Form 25D-098 (4/02)

Page ___ of ___

17.60. Pile Driving Record (Form 25D-099)

STATE OF ALASKA
DEPARTMENT OF TRANSPORTATION AND PUBLIC FACILITIES

PILE DRIVING RECORD

Sheet ____ of ____

FORMULA USED TO DETERMINE BEARING

P = ______________

INSTR: A SKETCH SHOWING THE LOCATION OF THE PILES BY NUMBER SHALL BE DRAWN ON THE BACK OF THIS FORM OR ON AN ATTACHED SHEET

STRUCTURE NAME	CONTRACTOR	PROJECT NAME	BRIDGE NUMBER

PROJECT NO	DISTRICT	TYPE OF BRIDGE

TYPE OF HAMMER	MANUFACTURER	WT OF RAM OR GRAVITY HAMMER	STROKE LENGTH MAX	NO. BLOWS PER MIN	MFG'S MAX. ENERGY RATING

DATE	ABUTMENT OR PIER NO	PILE NO	TYPE OF PILE (specify tip & butt, diameter of timber & concrete pile in inches)	LENGTH PLACED IN LEADS INCLUDING EXTENSIONS (FT)	CUTOFF LENGTH (FT)	NET LENGTH CUTOFF TO TIP (FT)	PENETRATION IN GROUND (FT)	PILE CUTOFF ELEV	OBSERVED GROUND ELEV	PILE TIP ELEV	DROP OF HAMMER (INCHES)	AVG PENETRATION LAST 5 BLOWS	COMPUTED BEARING (TONS)	REMARKS SPECIFY BATTER IF ANY. HOW DID PILE DRIVE; SPECIFY SPLICES, CORE STOPPERS, EXTENSION LENGTHS USED

PREPARED BY NAME	DATE	CHECKED BY NAME	DATE	TOTAL LENGTH FURNISHED

25D-099

17.61. Pile Log-Boring Log (Form 25D-046)

Page _____ of _____

STATE OF ALASKA
DEPARTMENT OF TRANSPORTATION & PUBLIC FACILITIES

PILE LOG-BORING LOG					
PILE LOG		ELEV.	BORING LOG #		
Blows Ft.	Bearing Capacity		Material Description	Blows/Ft. 2" Sampler	Bridge _____
					Project _____
					Pile Type _____
					Location _____
					Date Driven _____
					Hammer Type _____
					Manufacturer _____
					Model _____
					Manufacturere's Rated Energy _____
					Remarks
					Prepared by: _____
					Date _____

25D-046 (4-98)

17.62. Preconstruction Conference Synopsis

PRECONSTRUCTION CONFERENCE SYNOPSIS

DATE HELD: _____

Prior to starting, outline procedures for conducting conference:

(1) Informal.

(2) Everyone to sign attendance sheet.

(3) Restrict comments to subjects germane to project.

(4) Each individual to **state name** prior to making any statement.

Distribution of Copies: ☐ Project Engineer ☐ Contractor ☐ Civil Rights ☐ Original to File

Date Copied:_____

This is a preconstruction conference pertaining to: _____

Federal Project Number:_____ State Project Number:_____

Bids were opened (date): _____

The contract was awarded to (contractor & address):_____

The Intent to Award was issued on (date):_____

in the amount of: $_____ with a completion of: _____

The Notice to Proceed was issued on (date):_____ **NOTE: Must have evidence of Notice of Work (NOW) from Department of Labor prior to issuing the NTP.**

I. INTRODUCTION OF PERSONNEL:

A. Each person to introduce themselves and whom they represent.

II. ADMINISTRATION:

a. Statement as to:

1. Project Engineer is:_____

2. DOT&PF Engineer-in-Charge is: _____ ☐ N/A

3. Project Manager is:_____

4. All matters concerning the project are to be handled through the Project Engineer and the Project Manager as far as practical. If it cannot be resolved at those levels, contact _____ Construction Group Chief at 269-0_____.

b. One copy of all correspondence given to Project Engineer to be also sent to the Project Manager at Regional Construction Office at _____.

c. **Project name and number will appear on all correspondence to and from the contractor.**

d. Mailing address for project (if applicable)?_____

e. Ask contractor for their:

1. Mailing Address:_____

2. Copies of correspondence to "home office"? ☐ YES ☐ NO

3. Name of individual directly in charge of project: _____
Letter stating above received? ☐YES ☐ NO

4. Who has authority to sign:
a. Change Order: _____

b. Directives: _____
Letter stating above received? ☐ YES ☐ NO

5. Who will be the EEO & DBE officer? _____
Letter stating above received? ☐ YES ☐ NO

e. Introduction of Contracts and EEO Officer for State who will discuss:

1. Training (if in contract)
2. EEO Requirements
3. Subcontract Requirements and Present Contractor with Necessary Forms and Posters.
4. Certified Weekly Payrolls (Copy to Department of Labor)
5. Railroad Insurance (When applicable)
6. Questions regarding Directives and Change Orders - Procedures for issuing.
7. Blue Book Rental Rate Book - Latest Copy and Revisions.

f. Statements of General Nature By: (Comments attached if critical.)

1. Utilities Engineer
2. Right of Way Agent
3. Traffic Engineer
4. Materials Engineer
5. Project Engineer
6. Other Representatives (Environmental, The Alaska Railroad)

g. Has contractor submitted Progress Schedule? ☐ YES ☐ NO
Discussion. (Section 108-1.03 or CGP-80-03 a.)

h. Has contractor submitted Construction Phasing Plan? ☐ YES ☐ NO ☐ N/A for Aviation
Discussion. (Section 643-1.05)

I. Has contractor submitted Temporary Erosion & Pollution Control/SWPPP & Hazardous Materials Control Plan? ☐ YES ☐ NO Discussion. (Section 108-1.03 or GCP-80-03 d.)

j. Has contractor submitted a list showing anticipated material procurement dates? ☐YES ☐ NO
(Section 108-1.03 or GCP-80-03 b.)

k. Has contractor submitted a list showing proposed subcontractors and materials suppliers? ☐ YES ☐ NO (Section 108-0.03 or GCP-80-03 c.)

l. Has contractor submitted a QC Plan (Section 106-1.03 or GCP-100-02)? ☐ YES ☐ NO

m. Has contractor submitted a Wastewater Treatment Plan? ☐ YES ☐ NO ☐ N/A for Aviation (Section 510-3.04)

n. Has contractor submitted a Submittal Register? (GCP-60-08) ☐ YES ☐ NO ☐ N/A for Highways

o. Bid Items Discussed. (Comments attached if critical.)

p. General Discussion and Additional Comments.

q. Conference Closed.

PRECONSTRUCTION CONFERENCE ATTENDANCE SHEET

DATE HELD:_____

PROJECT NAME:_____

PROJECT NO.:_____

	PRINTED NAME	TITLE/POSITION	COMPANY
1			
2			
3			
4			
5			
6			
7			
8			
9			
10			
11			
12			
13			
14			
15			
16			
17			
18			
19			
20			

Northern	STATE OF ALASKA DEPARTMENT OF TRANSPORTATION	Contractor: Paving Products, Inc.
Cowles Street at Airport Way Southbound Lane Addition	AND PUBLIC FACILITIES *PROGRESS ESTIMATE*	Address: P.O. Box 80430 Fairbanks Alaska, 99708
HRO-0641(1) /66144	Estimate #:	For Period: to

			Plan		Previous		This Estimate		Totals to Date	
Description	Unit	Unit Price	Quanitity	Amount	Quantity	Amount	Quantity	Amount	Quantity	Amount
DBE Adjustment	C.S.	$5,000.00	C.S.	$5,000.00	0	$0.00		$0.00	0	$0.00
Removal of Structures and	L.S.	$8,400.00	All Req'd	$8,400.00	0.0%	$0.00		$0.00	0	$0.00
Obstructions	0	$0.00	0	$0.00	0	$0.00		$0.00	0	$0.00
Unclassified Excavation	L.S.	$14,700.00	All Req'd	$14,700.00	0.0%	$0.00		$0.00	0	$0.00
Borrow, Select Material Type A	L.S.	$18,500.00	All Req'd	$18,500.00	0.0%	$0.00		$0.00	0	$0.00
Crushed Aggregate Base	L.S.	$19,200.00	All Req'd	$19,200.00	0.0%	$0.00		$0.00	0	$0.00
Course Grading D-1	0	$0.00	0	$0.00	0	$0.00		$0.00	0	$0.00
Asphalt Concrete, Type II	L.S.	$35,000.00	All Req'd	$35,000.00	0.0%	$0.00		$0.00	0	$0.00
Class B	0	$0.00	0	$0.00	0	$0.00		$0.00	0	$0.00
CSS-1 Emulsfied Asphalt for	L.S	$1,250.00	All Req'd	$1,250.00	0.0%	$0.00		$0.00	0	$0.00
Prime Coat	0	$0.00	0	$0.00	0	$0.00		$0.00	0	$0.00
12 Inch Corrugated Steel Pipe	L.S.	$2,200.00	All Req'd	$2,200.00	0.0%	$0.00		$0.00	0	$0.00
Drop Inlet Type A	Each	$1,500.00	1	$1,500.00	0	$0.00		$0.00	0	$0.00
Relocate Inlet	Each	$750.00	1	$750.00	0	$0.00		$0.00	0	$0.00
Concrete Sidewalk	L.S.	$33,000.00	All Req'd	$33,000.00	0.0%	$0.00		$0.00	0	$0.00
Sidewalk Ramp	Each	$350.00	6	$2,100.00	0.00	$0.00		$0.00	0	$0.00
Curb & Gutter	L.S.	$46,300.00	All Req'd	$46,300.00	0.0%	$0.00		$0.00	0	$0.00
Standard Signs	S.F.	$44.00	125.75	$5,533.00	0	$0.00		$0.00	0	$0.00
Seeding	L.S.	$3,000.00	All Req'd	$3,000.00	0.0%	$0.00		$0.00	0	$0.00
Topsoil	L.S.	$7,700.00	All Req'd	$7,700.00	0.0%	$0.00		$0.00	0	$0.00
Fire Hydrant Installation	Each	$7,300.00	1	$7,300.00	0	$0.00		$0.00	0	$0.00
Adjustment of Valve Box	Each	$75.00	6	$450.00	0	$0.00		$0.00	0	$0.00
Lawn Sprinkler Sys. Relocate	L.S.	$6,000.00	All Req'd	$6,000.00	0.0%	$0.00		$0.00	0	$0.00
Water System Relocate	L.S.	$18,300.00	All Req'd	$18,300.00	0.0%	$0.00		$0.00	0	$0.00
Mobilization & Demobilization	L.S.	$8,000.00	All Req'd	$8,000.00	0.0%	$0.00		$0.00	0	$0.00
Temporary Erosion and	L.S.	$5,000.00	All Req'd	$5,000.00	0.0%	$0.00		$0.00	0	$0.00
Pollution Control	0	$0.00	0	$0.00	0	$0.00		$0.00	0	$0.00

Northern	STATE OF ALASKA DEPARTMENT OF TRANSPORTATION	Contractor: **Paving Products, Inc.**
Cowles Street at Airport Way Southbound Lane Addition	**AND PUBLIC FACILITIES** ***PROGRESS ESTIMATE***	Address: **P.O. Box 80430** **Fairbanks Alaska, 99708**
HRO-0641(1) /66144	Estimate #:	For Period: to

			Plan		Previous		This Estimate		Totals to Date	
Description	**Unit**	**Unit Price**	**Quanitity**	**Amount**	**Quantity**	**Amount**	**Quantity**	**Amount**	**Quantity**	**Amount**
Construction Surveying	L.S.	$8,125.00	All Req'd	$8,125.00	0.0%	$0.00		$0.00	0	$0.00
Traffic Maintenance	L.S.	$14,300.00	All Req'd	$14,300.00	0.0%	$0.00		$0.00	0	$0.00
Permanent Construction Signs	L.S.	$1,540.00	All Req'd	$1,540.00	0.0%	$0.00		$0.00	0	$0.00
Construction Signs	Day	$2.75	2,000	$5,500.00	0	$0.00		$0.00	0	$0.00
Type II Barricades	Day	$1.65	1,000	$1,650.00	0	$0.00		$0.00	0	$0.00
Type III Barricades	Day	$4.40	100	$440.00	0	$0.00		$0.00	0	$0.00
Traffic Cone	Day	$0.85	1,500	$1,275.00	0	$0.00		$0.00	0	$0.00
Drum	Day	$2.20	2,000	$4,400.00	0	$0.00		$0.00	0	$0.00
Book Drop Relocation	L.S.	$750.00	1	$750.00	0.0%	$0.00		$0.00	0	$0.00
	Each	$715.00	2	$1,430.00	0	$0.00		$0.00	0	$0.00
	L.S.	$77,200.00	All Req'd	$77,200.00	0.0%	$0.00		$0.00	0	$0.00
	Each	$484.00	12	$5,808.00	0	$0.00		$0.00	0	$0.00
	L.S.	$18,600.00	All Req'd	$18,600.00	0.0%	$0.00		$0.00	0	$0.00
		Totals		**$390,201.00**		**$0.00**		**$0.00**		**$0.00**

PROJECT COMPLETION FORM (PCF)

AKSAS Project Number _____ Federal # _____ Ledger _____ Date _____

Project Name _____

Movement of each phase of the following project to completed status will be initiated once the phase manager signs certifying that all physical activity relating to their respective phase is complete. Ledger codes will then be inactivated in each completed phase and no further charges will process.

Before closing a phase to further charges, the phase manager must insure that the following steps have been completed:

1. All necessary audits have been completed on all contracts for services over $1,000 with engineering and right-of-way consultants, utility companies, etc.; list each contract below with final dollar amount followed by audit status.
2. Update the latest cost estimate for your phase and attach to this form.
3. Liquidate all outstanding encumbrances.

If your phase is not yet complete, please indicate the work that remains and an estimated completion date.

Please, complete this form and forward to the next phase manager or return to Project Control, Attn: PCIS, within three days of receipt.

	Routing	Phase Complete	Remarks/Contract Audit Status/Resubmittal Date/Signature
☐	PH 2 DESIGN ENGR	Yes/No	_____ Signature/Date
☐	PH 3 ROW	Yes/No	_____ Signature/Date
☐	PH 4 CONSTRUCTION	Yes/No	_____ Signature/Date
☐	PH 7 UTILITIES	Yes/No	_____ Signature/Date
☐	PH 8 PLAN. & RESEARCH	Yes/No	_____ Signature/Date

17.65. Project Construction Report (Form 25D-057)

STATE OF ALASKA

Department of:
Transportation and Public Facilities

Project Construction Report

Report Number: _____
Period Ending: _____
Project No.: _____
_____
Contract No.: _____

Project Name: _____	**Contractor:** _____
_____	**Address:** _____
Located at: _____	_____
FMS No.: _____	_____
Contract Time:	Progress: On Schedule: _____
Original Completion Date	Weeks Ahead/Behind: _____
Additional Time Authorized * . .	Percent of Work Completed: _____
Revised Completion Date	Original Contract Amount: . . .
Probable Completion Date . . .	Probable Final Contract Amount:

CONSTRUCTION STATUS OF PRINCIPLE / CONTROLLING ITEMS

Item	% this Period	% to Date	% Probable +/-	Remarks

Narrative of CONTRACTOR's operations, problem areas, and Contractor's plans for next week.

WORK FORCE SUMMARY

CONTRACTOR/ SUBCONTRACTOR	"x" Dates Worked S M T W T F S	Status Change **	Shift / Hours	Remarks

* Include all authorized time extensions and time not chargeable due to winter shutdowns.
** Note whether started, suspended, resumed, or completed operations

25D-057 Project Construction Report, Page ___ of ___ Revised 4/97

PROJECT CONSTRUCTION REPORT (continued)
Project Name: _____

Project No.: _____ Contract No.: _____
Report Number: _____ Period Ending: _____

ENGINEERING FORCE

Name	Class	Assignment	Regular			Overtime			Per Diem (man days)		
			Hours	Rate*	Amount	Hours	Rate*	Amount	Days	Rate	Amount
Subtotals											

Total Wages plus Benefits (Regular + O.T.) _____ Total Hours This Period ** _____ Average Rate/Hour ** _____

Construction Engineering Expenditures

Project Wages + Benefits + Per Diem . . . . . _____
Project Vehicles/Engr. Transportation. . . . . _____
Project Misc./Meals and Lodging . . . . . _____
Project Subtotal (This Report) . . . . . _____
General Administration and Overhead . . .
as ___ of Project Subtotal . . . . . _____

Total C. E.(As sum of above, or . . .
as cost based on ave. hourly rate) . . . . . _____
Previous Total C. E. . . . . _____
Total to Date . . . . . _____
C. E. Budget . . . . . _____
Percent of C. E. Budget Expended . . . . . _____

Vehicle License	Rate	Miles this Period	Miles to Date	Amount this Period
	Total	Vehicle	Rental	

This report will be submitted whenever charges are made against a project.

* Use buffered rate (or "loaded rate") from Finance section.

** Optional method of estimating C.E. expenditures is to multiply total man-hours by the average hourly rate for this project, obtained from computer runs.

Narrative of DEPARTMENT's Operations:

Copies to: Construction Engineer
Review Engineer
Materials Engineer
FAA (Federal Aid Airport Projects Only)

_____ Project Engineer

_____ Date

25D-057

Project Construction Report, Page ___ of ___

Revised 4/97

ALASKA DEPARTMENT OF TRANSPORTATION AND PUBLIC FACILITIES
PROJECT DEVELOPMENT AUTHORIZATION

AKSAS #:	70134	PROJECT NAME:	JNU THANE ROAD RECONSTRUCTION			CONTACT:	P. MCCALLON
LEDGER CODE:	306532	DIVISION:	D&C	HOUSE:	67012	PDA #:	20
FEDERAL #:	STP-F-M-0963(1)	MODE:	HWY 79632	STRUCTURE BATCH:	N/A	PFD/RS #:	2430097
FMS #:	N/A	REGION:	SOUTHEAST	FINANCIAL BATCH:		PDA AR #:	83024

PROJECT SCOPE: PE AND RECONSTRUCTION OF THANE ROAD FROM THE FERRY TERMINAL TO MT. ROBERTS ROAD. WORK TO INCLUDE 8.5 METER WIDE ROADWAY, 1.8 & 2.4 METER WIDE SIDEWALKS, CURBING, AND DRAINAGE.

BY: MW

ACTION REQUEST: INCREASE PHASE 4 FUNDING FOR CONTRACT ITEM FUNDING ADJUSTMENTS, FOR REVISIONS TO FIVE EXISTING CHANGE ORDERS, FOR A PENDING CHANGE ORDER, AND FOR INCREASED C.E. COSTS ASSOCIATED WITH CONTRACT ADMINISTRATION AND DESIGN SUPPORT FOR DESIGN OF THE HISTORICAL MITIGATION CONTRACT WORK. GF MATCH IS FROM FY98 ALLOCATION.

A MODIFIED AGREEMENT FOR PHASE 4 IS REQUESTED

FAA GRANT INFORMATION
FAA GRANT DATE: _____
FAA GRANT: _____
FAA MAX ALLOWED: _____
CURR. PROG.: _____

AUTHORITY TO PROCEED SUMMARY (FHWA)

PRELIMINARY ENGINEERING

Reconnaissance Study:	1/19/90
PE up to Location:	1/5/93
PE thru Final PS&E:	5/15/96
Final PS&E thru Award (S):	2/11/97

RIGHT OF WAY/UTILITIES

Titles & Plans:	3/27/90
Appraisals & Acquisitions:	8/12/96
Utility Relocation Work (S):	9/11/96

CONSTRUCTION

ATP with Construction: 2/11/97

DISTRIBUTION

- PREDESIGN
- ENGINEERING MANAGER
- ENVIRONMENTAL
- RIGHT OF WAY
- UTILITIES
- CONSTRUCTION GROUP CHIEF
- PLANNING
- MAINTENANCE & OPERATIONS
- SE. ADMIN. SERVICES

PHASE 2 SUMMARY

Start Date	1/19/90
Cutoff Date	3/24/97
Federal Ratio	88.68%
Collocation Code	24430355
Ledger Code	306532-21,22

	PARTICIPATING	NON-PAR
PRIOR TOTAL:	$1,420,680.00	$12,570.00
CHANGE:	$0.00	$0.00
TOTAL:	**$1,420,680.00**	**$12,570.00**

PHASE 3 SUMMARY

Start Date	3/27/90
Cutoff Date	12/31/00
Federal Ratio	88.68%
Collocation Code	24430587
Ledger Code	306532-31,32

	PARTICIPATING	NON-PAR
	$2,579,210.00	$10,000.00
	$0.00	$0.00
	$2,579,210.00	**$10,000.00**

PHASE 4 SUMMARY

Start Date	2/11/97
Cutoff Date	12/31/98
Federal Ratio	90.97%
Collocation Code	24431812
Ledger Code	306532-41,42

	PARTICIPATING	NON-PAR
	$3,251,180.00	$5,820.00
	$184,692.00	$0.00
	$3,435,872.00	**$5,820.00**

	FEDERAL	GF/IARF
PHASE 1 TOTAL	$1,047,551.58	$0.00
TOTAL AUTH.	**$8,511,703.58**	

PHASE 2 TOTAL:	**$1,433,250.00**	**PHASE 3 TOTAL:**	**$2,589,210.00**
PHASE 4 TOTAL:	**$3,441,692.00**		

NOT REQUIRED

PROJECT CONTROL _____ DATE

DIRECTOR, DESIGN & ENGINEERING SERVICES _____ DATE

HEADQUARTERS PLANNING _____ DATE

SOUTHEAST REGIONAL DIRECTOR _____ DATE

DATE PROCESSED _____ DATE

17.67. Project Funding Request

PROJECT FUNDING REQUEST

To: Martha Wysor, CIP Analyst, Project Control Date: _____

From: _____

Project Name: _____

AKSAS Project Number: _____ Federal Project Number: _____

APPROVALS OF REQUEST

Latest Estimates for all project phases were reviewed and updated prior to submission of this funding request and all phases in need of a funding adjustment that can be addressed at this time are included in this request. Support groups please indicate concurrence with this request:

_____ _____ _____ _____
PreConstruction Right of Way Utilities Construction

Post-Environmental Document Approval Funding Requests: I certify that the attached request is consistent with the approved environmental document: _____
William F. Ballard, Regional Environmental Coordinator

REQUEST TYPE AND DOLLAR AMOUNT (Dollar amount of CHANGE, including non-participating funds):

Phase 2 Requests: $_____ Design PDA $_____ ROW P.E. PDA $_____ Utilities P.E. PDA

Phase 3 Requests: $_____ ROW PDA $_____ Utility Relocation PDA

Phase 4 Requests: $_____ Construction PDA

FHWA AUTHORITIES TO PROCEED (ATPs) REQUESTED:

_____ Increase within an existing ATP
_____ PE-Reconnaissance Study
_____ PE through Environmental Document Approval
_____ PE through Final PS&E
_____ ROW Appraisals & Acquisitions
_____ Utility Relocation
_____ Construction

CONSULTANT INFORMATION (required for FHWA and FAA projects):

Consultant Names	Services to be provided	Estimated Contract $ Amount

PHASE CUTOFF DATES (required for FHWA and FAA projects):

Phase 2: _____ **Phase 3:** _____ **Phase 4:** _____

ADDITIONAL INFORMATION OR SPECIAL REQUESTS (non-participating funds, etc.):

Rev. 3/98

17.68. Project Material Certification Letter Example

THE STATE of ALASKA
GOVERNOR SEAN PARNELL

Department of Transportation and Public Facilities

NORTHERN REGION CONSTRUCTION
2301 PEGER ROAD
FAIRBANKS, ALASKA 99709-5316
Main: 907-451-5466
TDD: 907-451-2363
FAX: 907-451-5487

PROJECT MATERIAL CERTIFICATION

Project No:

Project Name:

This is to certify that the manufacturer's certifications, and results of the tests on acceptance samples, indicate that the materials incorporated in the construction work, and the construction operations controlled by sampling and testing, were in conformity with the approved plans and specifications.

It is further certified that the results of tests on acceptance samples compare favorably with the results of the independent assurance sampling and testing.

Please mark the appropriate box below:

☐ There are no exceptions to the material requirements.

☐ Minor exceptions to the material requirements are listed in the Materials Testing Summary or Materials Sampling Checklist.

☐ Exceptions to the material requirements are listed in the attached Memorandum of Exceptions.

Date: _____ _____

Project Engineer

Date: _____ _____

Andrew Schultz, P.E.
Quality Assurance Engineer

"Keep Alaska Moving through service and infrastructure."

17.69. Project Materials Report (Form 25D-058)

STATE OF ALASKA
DEPARTMENT OF TRANSPORTATION AND PUBLIC FACILITIES

PROJECT MATERIALS REPORT

Project No.: _____ **Date:** _____
Project Name: _____
Bid Item No.: _____

THE FOLLOWING ITEM HAS BEEN DELIVERED TO THE PROJECT:

Description: _____

Supplier: _____

Quantity: _____

Check One:

☐ Item described above is a standard shelf or local purchase item and it meets contract requirements

☐ Item described above is listed on the Materials, Sampling and Testing Frequency Table under Small Quantities of Miscellaneous Materials

☐ Other – include explanation for acceptance under remarks

Remarks: _____

ALL MATERIALS HAVE BEEN INSPECTED AND INVENTORIED AT THE PROJECT AND FOUND TO BE ACCEPTABLE FOR INCORPORATION INTO THE WORK

_____
Project Engineer

_____
Date

25D-058 Rev. 01/10

17.70. Proof of Construction for ROW (Form 25D-173)

STATE OF ALASKA
DEPARTMENT OF TRANSPORTATION
AND PUBLIC FACILITIES

PROOF OF CONSTRUCTION FOR RIGHT OF WAY

_____ states that he is the Project Engineer for the State of Alaska, Department of Transportation and Public Facilities; that Project No(s)_____ _____ has/have been constructed under his supervision; that construction commenced on the _____, and was completed on the _____; that the constructed project(s), as foresaid, conform(s) to the R/W limits as shown on the Project Right-of-Way Plans or the plat(s) which received the approval of the (agency) _____ on the following date: BLM/ADL # _____, on _____.

_____
Signature of Project Engineer

_____
Date

(THIS SECTION TO BE COMPLETED FOR BLM GRANTS ONLY, AS NEEDED, AFTER RECEIVED IN RIGHT-OF-WAY.)

I, _____, certify that I am the _____ of the Alaska Department of Transportation and Public Facilities; that Project No(s) _____ _____ was/were actually constructed as set forth in the accompanying statement of _____, the _____ Engineer, and project(s) was/were constructed in compliance with the conditions of the grant.

_____
Construction Engineer
State of Alaska
Department of Transportation
and Public Facilities

Attest: _____

25D-173 (1-03)

17.71. Proof of Use for Material Sources (25D-174)

STATE OF ALASKA
DEPARTMENT OF TRANSPORTATION
AND PUBLIC FACILITIES

PROOF OF USE FOR MATERIAL SOURCES, MAINTENANCE & STOCKPILE SITES, ROADSIDE & LANDSCAPE DEVELOPMENT AREAS

_____ states that he is the Project Engineer for the State of Alaska, Department of Transportation and Public Facilities; that _____ has been utilized under his supervision; as _____ on Project No(s) _____; that the _____ as aforesaid, conforms to the plat which received the approval of the (agency) _____ _____ on the following date:
BLM/ADL # _____, on _____.

_____
Signature of Project Engineer

_____
Date

(THIS SECTION TO BE COMPLETED FOR BLM GRANTS ONLY, AS NEEDED, AFTER RECEIVED IN RIGHT-OF-WAY.)

I, _____, certify that I am the _____ of the Alaska Department of Transportation and Public Facilities; that _____ was actually utilized as set forth in the accompanying statement of _____, the _____ Engineer, and Project was constructed in compliance with the conditions of the grant.

_____
Regional Director
State of Alaska
Department of Transportation
and Public Facilities

Attest: _____

25D-174 (1-03)

17.72. Public Interest Finding (PIF)

PUBLIC INTEREST FINDING
Deadhorse Airport Parallel T/W
D10732/AIP 3-02-0339-01
30169842
Supplemental Agreement #1

Supplemental Agreement #1 provides for the construction of a general aviation apron, lighted T/W and access road; plus security fencing on the main parking apron. The fencing has been mandated by the FAA and was not included in the contract earlier because of some layout complications that couldn't be resolved during the initial design phase.

As the oilfield development continues to grow on the North Slope so does the demand on the Deadhorse Airport as it is the only public, paved and lighted, all weather facility serving the area. The airport development has almost always been behind in keeping up with that demand. The last major capitol improvement was the lighting and paving work in 1978. During the interim time the air carrier traffic has increased from one carrier to four and possibly five major carriers that make up to 11 scheduled flights per day. Also on this parking apron we have three helicopter operations that have had over 25 helicopters operating at one time; two fixed base operators with numerous daily flights and weekly oil company charter flights from the lower 48.

Add to this now the ever increasing transient and based small private aircraft traffic and you have a major congestion problem. The Airport Manager has to park planes in the designated taxilane on the south side of the parking apron, which is against FAA safety regulations. All of the above is compounded when the weather is poor since all traffic to the other area airports is diverted to the Deadhorse Airport with its Instrument Landing System.

The FAA axiom that air carrier operations and general aviation activity don't mix is definitely borne out at Deadhorse. Small aircraft owners are very reluctant to park on the main parking apron because (1) there are not any tiedowns and more importantly (2) the ever increasing damage potential because of the increasing jet traffic. Some owners have refused to park on the apron and on their own, without permission, parked on private property. This has created problems with and for the airport leaseholders. Also in light of increased terrorist activity the FAA is becoming particularly sensitive to maintaining separation of air carrier and general aviation activity for security reasons. Clearly there is a need for a general aviation facility at Deadhorse Airport.

The Department has an opportunity to satisfy this demand under the present contract at a very substantial savings to the State.

The design staff has outlined the construction costs, (mob-demob, field office and lab etc.), contract engineering and review and advertising costs, that we would incur if we advertise and administer this work under a new contract. These costs would be in addition to the costs to do the actual work under this proposal. (See Dan Urbach's memo June 26, 1985.) The estimate is $230,000, and this is felt to be on the conservative side. This represents a 33% increase over our present proposal cost. Even if we started the review and advertising process today, the contract could not be advertised and awarded in time for construction this season. (See Dan Urbach's memo of June 17, 1985.) This approach is moot anyway if we add the above additional costs to the Engineer's estimate – there wouldn't be sufficient funds available to do the work.

In summary the present parking apron is no longer adequate to accommodate the heavy air carrier traffic and the general aviation mix. We have an opportunity to get a much needed facility for a very reasonable cost that will be available for public use this year, which otherwise would not be available under normal contract procedures. It is clearly in the State's best interest to take advantage of this opportunity to improve the safety, security and convenience of the flying public.

17.73. Report of Occupational Injury or Illness (Form 02-921) with instructions

Alaska Department of Labor
Alaska Workers' Compensation Board
P.O. Box 25512
Juneau, AK 99802-5512

STATE OF ALASKA
REPORT OF OCCUPATIONAL INJURY OR ILLNESS

AWCB Case Number

EMPLOYEE: Answer ALL questions 1-20. Follow instructions on Pages 3 and 5.

1. Last Name / First Name / Initial	2. Telephone Number	3. Date of Birth / /	4. Sex ☐ M ☐ F	5. Social Security Number

6a. Mailing Address	7a. Residence Address (Do not use P.O. Box; this must be your residence address)
6b. City / State / ZIP Code	7b. City / State / ZIP Code

8. City, Town, Village where injury occurred	9. Date & Hour of Injury or Exposure to Disease Date / / Hour ☐ a.m. ☐ p.m.	10. On Employer's Premises? ☐ Yes ☐ No
11. Full Name and Address of Attending Physician City / State / ZIP Code	12. Hospitalized? ☐ Yes ☐ No	13. Name and Address of Hospital City / State / ZIP Code

14. Type of Injury or Illness and Part of Body Injured ☐ Left ☐ Right	15. Describe How the Injury or Illness Happened (Be specific)

16. Employee's Signature (If not available, explain)	17. Date Signed / /

EMPLOYER: Answer questions 18-49. Carefully follow instructions on Page 2.

18. Department / Code	Division/Location / Code	19. Region (if applicable)

20. Mailing Address (street and number)	21. Name of Insurer: State of Alaska Self Insurance Program
City / State / ZIP Code / Telephone	22. Full Name and Address of Adjusting Company

23. Date Employer First Knew Injury was Work-Related / /	24. Time Employee Left Work Date / / Hour ☐ a.m. ☐ p.m.	Mailing Address (street and number)
25. Will Injury Result in Lost Time Beyond Date of Accident? ☐ Yes ☐ No	26. Date Returned to Work / /	27. Death ☐ Yes ☐ No Date / /
		City / State / ZIP Code / Telephone

28. Place Where Injury or Illness Took Place (if different from location listed in #20).	29. Employee's Occupation	30. Date Hired by Employer

31. Earnings Calculated By: ☐ Hr. ☐ Day ☐ Output ☐ Wk. ☐ Mo. ☐ Year	32. Rate of Pay $ per	33. Days Employee Works per Week ☐ 3 or Less ☐ 4 ☐ 5 ☐ 6 ☐ 7	34. Scheduled Days Off	35. Workday Began ☐ a.m. ☐ p.m.
36. Was Employee Paid for Day of Injury? ☐ Yes ☐ No	37. Federal EIN / AK U.I Acct. No. 92-6001185 / 588997			

38. Give Details of How Accident Happened.

39. Was Accident Caused by Failure of a Machine or Product? ☐ Yes ☐ No	40. Were Mechanical Guards or Other Safeguards Provided? ☐ Yes ☐ No	41. Name Machine, Substance, or Object Which Directly Injured Employee	42. If Mechanical, Specifically What Part?

43. Name and Addresses of Witnesses	44. If the Accident Was Caused by Anyone Besides Employee, Give Name and Address

45. Dependents (name and address in case of death)

46. If you Doubt Validity of Claim, State Reason (complete Supervisor's Report if necessary, and describe in detail)

47. Signature of Authorized Employer Representative	48. Title	49. Date Signed / /

WARNING TO EMPLOYEES AND EMPLOYERS: Penalties for fraud or misleading statements. A person who knowingly makes a false or misleading statement that adversely affects another person, is guilty of deception as defined in AS 11.46.180, and may be punished as provided in AS 11.46.120-150.

Instructions: Complete the Original and make 4 copies. **Distribution: Original – Workers' Compensation Board**
Copy – Risk Management **Copy – Adjuster** **Copy – Employer** **Copy – Employee**

Form 02-921 (Rev. 9/02) 09/19/02-921.doc

Page 1

TO THE EMPLOYER

This form must be completed and mailed immediately and in no case later than **ten (10) days** after you have knowledge that your employee has been injured or claims to have been injured while working for you. Be certain to mail the Original Blue Copy to the Alaska Workers' Compensation Board within the 10-day requirement.

"Injury" means accidental injury or death arising out of and in the course of employment and an occupational disease, illness, or infection which arises naturally out of the employment or which naturally or unavoidably results from an accidental injury.

"Injury" does not include **mental injury** caused by stress unless it is established that (A) the work stress was extraordinary and unusual in comparison to pressures and tensions experienced by individuals in a comparable work environment, and (B) the work stress was the predominant cause of the mental injury. A mental injury is not considered to arise out of and in the course of employment if it results from a disciplinary action, work evaluation, job transfer, layoff, demotion, termination, or similar action taken in good faith by the employer.

Failure to file this report within the required time may subject you and/or your insurer to a penalty equal to 25 percent of the amount of compensation due plus interest to the injured worker.

If you believe the employee will be unable to work for more than three days because of injury, be certain to complete items 31, 32, 33, and 34, or contact the adjuster and provide information about employee's earnings.

Original ..... Alaska Workers' Compensation Board
P.O. Box 25512
Juneau, AK 99802-5512

Copy ..... Alaska Division of Risk Management
P.O. Box 110218
Juneau, AK 99811-0218

Copy ..... The Adjusting Service listed in the State of Alaska Claims Manual

Copy ..... For department's administrative personnel file.

Copy ..... Employee

OSHA REQUIREMENTS

Report industrial deaths and accidents to the Division of Labor Standards and Safety. Alaska Statute 18.60.058 requires employers to report to the Division of Labor Standards and Safety an employment accident which is fatal to one or more employees or which results in the overnight hospitalization of one or more employees. The report, which must be made immediately, but no later than 24 hours after receipt by the employer, of information that the accident has occurred, must relate the circumstances of the accident, the number of fatalities, and the extent of the injuries.

ALL INFORMATION IN THE WORKERS' COMPENSATION BOARD FILES, EXCEPT MEDICAL AND REHABILITATION RECORDS, IS AVAILABLE FOR PUBLIC REVIEW AND COPYING.

Alaska Department of Labor
Alaska Workers' Compensation Board
P.O. Box 25512
Juneau, AK 99802-5512

STATE OF ALASKA
REPORT OF OCCUPATIONAL INJURY OR ILLNESS

AWCB Case Number

EMPLOYEE: Answer ALL questions 1-20. Follow instructions on Pages 3 and 5.

1. Last Name	First Name	Initial	2. Telephone Number	3. Date of Birth / /	4. Sex ☐ M ☐ F	5. Social Security Number

6a. Mailing Address	7a. Residence Address (Do not use P.O. Box; this must be your residence address)
6b. City State ZIP Code	7b. City State ZIP Code
8. City, Town, Village where injury occurred	9. Date & Hour of Injury or Exposure to Disease Date / / Hour ☐ a.m. ☐ p.m.
	10. On Employer's Premises? ☐ Yes ☐ No
11. Full Name and Address of Attending Physician	12. Hospitalized? ☐ Yes ☐ No
	13. Name and Address of Hospital
City State ZIP Code	City State ZIP Code
14. Type of Injury or Illness and Part of Body Injured ☐ Left ☐ Right	15. Describe How the Injury or Illness Happened (Be specific)
16. Employee's Signature (If not available, explain)	17. Date Signed / /

EMPLOYER: Answer questions 18-49. Carefully follow instructions on Page 2.

18. Department	Code	Division/Location	Code	19. Region (if applicable)

20. Mailing Address (street and number)				21. Name of Insurer: State of Alaska Self Insurance Program
City	State	ZIP Code	Telephone	22. Full Name and Address of Adjusting Company

23. Date Employer First Knew Injury was Work-Related / /	24. Time Employee Left Work Date / / Hour ☐ a.m. ☐ p.m.		Mailing Address (street and number)	
25. Will Injury Result in Lost Time Beyond Date of Accident? ☐ Yes ☐ No	26. Date Returned to Work / /	27. Death ☐ Yes ☐ No Date / /	City State ZIP Code	Telephone

EMPLOYEE: READ AND FOLLOW THE INSTRUCTIONS BELOW

DECLARE YOUR MARITAL STATUS AND THE NUMBER OF YOUR ACTUAL DEPENDENTS ON THE INJURY DATE. "ACTUAL DEPENDENTS" MEANS THE EXEMPTIONS YOU WOULD BE ABLE TO CLAIM IF YOU WERE FILING YOUR INCOME TAX RETURN.

1. MARITAL STATUS: ☐ SINGLE ☐ MARRIED, SPOUSE'S FULL NAME _____

2. DEPENDENTS:
   a. ☐ YOURSELF ☐ 65 OR OVER ☐ BLIND
   b. ☐ SPOUSE ☐ 65 OR OVER ☐ BLIND
   c. ☐ List first names and birthdates of your dependent children who live with you:
   _____

Enter number of boxes checked in (a) and (b) ☐

d. Other Dependents (1) Name	(2) Relationship	(3) Do you provide more than 1/2 of dependent's support?

Enter number of children listed ☐

Enter number of other dependents ☐

Always check the box labeled "Yourself." Check other boxes if they apply

e. Total Number of Dependents Claimed..... Add numbers entered in boxes above ☐

Employee's Signature	Date

EMPLOYEE: IF YOU LOSE MORE THAN 3 DAYS FROM WORK AS A RESULT OF THIS INJURY, READ the instructions on Page 4
Complete Pages 3 and 4 – send them to the Adjuster

TO THE EMPLOYEE

IF YOU BELIEVE THAT YOU WILL NOT BE ABLE TO WORK FOR MORE THAN THREE (3) DAYS BECAUSE OF YOUR INJURY, IMMEDIATELY FILL OUT THE FORM BELOW AND SEND IT TO THE ADJUSTING SERVICE COMPANY OR YOUR DEPARTMENT'S HUMAN RESOURCES MANAGER FOR FORWARDING TO THE STATE'S ADJUSTING SERVICE.

Check the BOXES which are true for you. Attach wage stubs or records about your earnings as indicated, including deferred income, employer-provided room and board, and employer contributions to a qualified pension or profit-sharing plan.

1. ☐ When injured, I was a seasonal/temporary worker. ATTACH EARNING RECORDS FOR ALL WORK FOR THE CALENDAR YEAR IMMEDIATELY BEFORE THE INJURY.

   IF YOU CHECKED BOX NUMBER ONE ABOVE, SKIP TO NUMBER FIVE (5) BELOW.

2. ☐ I was employed less than 13 calendar weeks immediately before the injury. YOU DO NOT NEED TO ATTACH EARNING RECORDS.

3. ☐ I was employed 13 calendar weeks or more immediately before the injury.

   a. ☐ When injured, my wages were calculated by the:
   ☐ Week ☐ Month ☐ Year

   ATTACH EARNING RECORDS IF YOU WORKED FOR MORE THAN ONE EMPLOYER.

   b. ☐ When injured, my wages were calculated by the day, hour, or output. IF YOU WERE EMPLOYED 13 WEEKS OR MORE, ATTACH EARNING RECORDS FOR YOUR MOST FAVORABLE 13 CONSECUTIVE CALENDAR WEEKS WITHIN THE 52 WEEKS IMMEDIATELY BEFORE YOUR INJURY.

4. ☐ When injured, my wages or the basis for my pay had not been set. ATTACH INFORMATION ABOUT THE USUAL WAGE FOR SIMILAR SERVICES.

5. ☐ When injured, I was employed by two or more employers.

6. ☐ When injured, I was a minor, apprentice, or trainee in a formal training program.

7. ☐ I was injured working as a volunteer ambulance attendant, volunteer police officer, or volunteer fire fighter.

8. ☐ I was injured before September 4, 1995.

ALL INFORMATION IN THE WORKERS' COMPENSATION BOARD FILES, EXCEPT MEDICAL AND REHABILITATION RECORDS, IS AVAILABLE FOR PUBLIC REVIEW AND COPYING.

17.74. Request for Overtime Authorization (Form 25A-042)

STATE OF ALASKA
DEPARTMENT OF TRANSPORTATION
AND
PUBLIC FACILITIES

REQUEST FOR OVERTIME AUTHORIZATION

LOCATION: _____ **DIVISION:** _____ **SECTION:** _____ **DATE:** _____

TO: _____ **FROM:** _____
Division or District Head — Supervisor

PROJECT NUMBER: _____
(Construction or Location only)

Authority is requested for overtime authorization for a total maximum of _____ hours, beginning _____ and ending _____ not to exceed 31 days for the following employees:

NAME	CLASSIFICATION	ASSIGNMENT OR ACTIVITY

Reason for request: _____

Supervisor will be prepared to justify all overtime worked upon audit. Actual overtime worked by any of the above employees will be only that which is absolutely necessary to accomplish the task.

Signed _____
Supervisor

NAME	TITLE	DATE	APPROVED	DISAPPROVED

(Approval Authority - Division Head)

25A-042 1/98

17.75. Request for Proposal (Form 25D-067)

STATE OF ALASKA
DEPARTMENT OF TRANSPORTATION
AND PUBLIC FACILITIES
Select REGION

Request For Proposal

NOTE: This form does not authorize commencement of work.

Project No.: _____ RFP No.: _____

Project Name: _____

Contractor: Company Name

Address: Address

City/State

Recommended By: _____ Date: _____

Title: _____

Description of Work (attach additional sheet(s) if necessary):

Change in Contract Price and Time (Contractor's breakdown required, attach additional sheet(s) if necessary):

Per AS 36.30.400, I hereby certify that to the best of my Knowledge and Belief, the data submitted is accurate, complete and current and is the actual costs to the contractor or additional time for performing the additional work or supplying the additional materials.

Authorization to Proceed required by _____ to avoid additional costs.

Signature: _____
Contractor's Representative

Date: _____

Form 25D-067 (Rev 5/14) Page 1 of 1

17.76. Road Construction/Project Condition Report

DEPARTMENT OF TRANSPORTATION & PUBLIC FACILITIES
NORTHERN REGION

ROAD CONSTRUCTION/PROJECT CONDITION REPORT

\\

Road Name: _____

Beginning: _____MP Ending: _____MP

(Check if Applicable)
CONDITIONS:

Gravel:

Loose packed	_____	Dusty	_____
Rocks	_____	Muddy	_____
No Shoulders	_____	Soft Shoulders	_____
Expect Pilot Car	_____	Delays of Minutes	_____
Priming with Tar	_____	Laying Asphalt	_____

Other: _____

Construction Equipment:

Heavy Equipment Activity is:

_____ Low _____ Moderate _____ High

_____
Comments

_____
Project Engineer Date Phone

//

Send this Report to:

Dalton/Denali Area Clerk
MS 2550-12 or phone (907) 451-2206
FAX# (907) 451-2212

17.77. Scale Diary (Form 25D-054)

State of Alaska
Alaska Department of Transportation & Public Facilities

Scale Diary (Form 25D-054)

Date: _____ Item Number: _____ Source: _____

Scale Location: _____

Time scale balanced: _____

Scales opened: _____ Scales closed: _____

First ticket number: _____ Last ticket number: _____

Haul started: _____ Haul stopped: _____

Void ticket numbers: _____ _____ _____

_____ _____ _____ _____

_____ _____ _____ _____

Truck Number	Ticket Number	Time	Tare Weight

Remarks: _____

_____

_____

_____

_____

_____

_____

Scaleman: _____

Form 25D-054 (3/06)

17.78. Stock Request (Form 02-303)

STATE OF ALASKA
STOCK REQUEST

NAME OF REQUESTING OFFICE	PHONE

SHIP TO:	REQUESTING OFFICE ORDER NO.
ADDRESS	DATE OF REQUEST
CITY	DATE REQUIRED

FINANCIAL CODING						Total Est. Cost	Shipping Instructions
SY	CC	PGM	LC	ACCT	FY		

Item No	Qty.	Unit	DESCRIPTION OR NOMENCLATURE (Include Stock or part No. and Suggested Vendor)	Unit Cost	Ext. Cost

SIGNATURE OF REQUESTOR	DATE	APPROVED BY	DATE

02-303(Rev. 1-98)

17.79. Subcontractor List (Form 25D-5)

STATE OF ALASKA
DEPARTMENT OF TRANSPORTATION AND PUBLIC FACILITIES

SUBCONTRACTOR LIST

Project Name and Number

The apparent low bidder shall complete this form and submit it so as to be received by the Contracting Officer prior to the close of business on the fifth working day after receipt of written notice from the Department.

Failure to submit this form with all required information by the due date will result in the bidder being declared nonresponsive and may result in the forfeiture of the Bid Security.

Scope of work must be clearly defined. If an item of work is to be performed by more than one firm, indicate the portion or percent of work to be done by each.

Check as applicable:

[ ] All Work on the above-referenced project will be accomplished without subcontracts greater than ½ of 1% of the contract amount.

or

[ ] Subcontractor List is as follows:

LIST FIRST TIER SUBCONTRACTORS ONLY

FIRM NAME, ADDRESS, PHONE NO.	AK BUSINESS LICENSE NO., CONTRACTOR'S REGISTRATION NO.	SCOPE OF WORK TO BE PERFORMED

CONTINUE SUBCONTRACTOR INFORMATION ON REVERSE

For projects with federal-aid funding, I hereby certify Alaska Business Licenses and Contractor registrations will be valid for all subcontractors prior to award of the subcontract. For projects without federal-aid funding (State funding only), I hereby certify the listed Alaska Business Licenses and Contractor's Registration were valid at the time bids were opened for this project.

Signature of Authorized Company Representative | **Title**

Company Name | **Company Address (Street or PO Box, City, State, Zip)**

Date | ( ) **Phone Number**

Form 25D-5 (10/12)

Page 1 of 2

FIRM NAME, ADDRESS, PHONE NO.	AK BUSINESS LICENSE NO., CONTRACTOR'S REGISTRATION NO.	SCOPE OF WORK TO BE PERFORMED

Form 25D-5 (10/12)

17.80. Submittal Register (Form 25D-030)

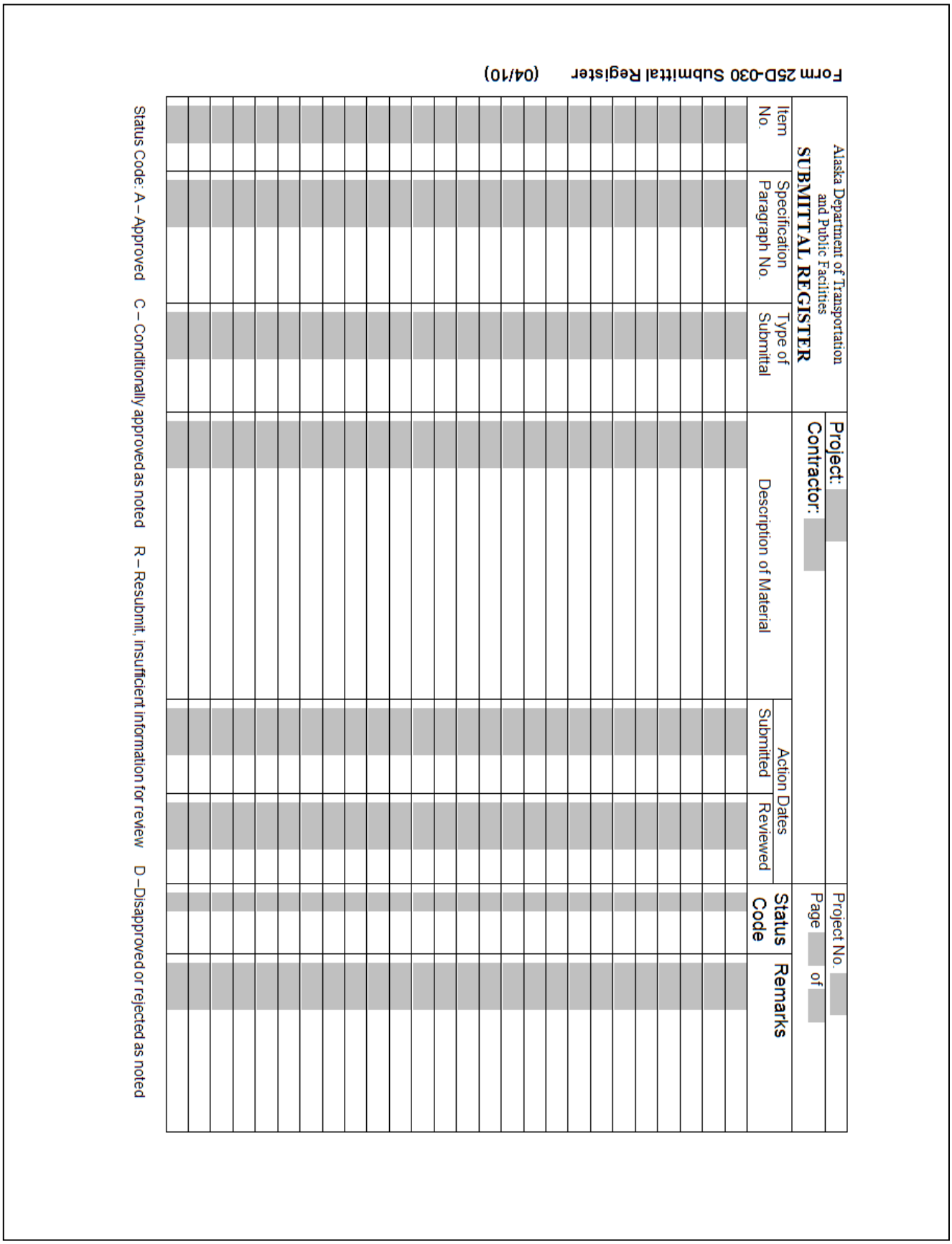

17.81. Supervisor's Accident Investigation Report (Form 02-932)

STATE OF ALASKA

SUPERVISOR'S ACCIDENT INVESTIGATION REPORT

Name of Injured / Equipment / Property: _____

_____

Job or Activity at Time of Accident _____ Date of Accident: _____

Exact Location: _____ Time: _____

1. WHAT HAPPENED? _____ Tell what the employee was doing, how the accident occurred, and what thing directly injured the employee.

_____

_____

_____

2. WHY DID IT HAPPEN? _____ Get all the facts by studying the job and situation involved. Use the following factors to help you identify the condition responsible:

OPERATING FACTORS TO BE CONSIDERED:

Proper Equipment	**Proper Material**	**People**
Selection	Selection	Selection
Arrangement	Placement	Placement
Use	Handling	Training
Maintenance	Use	Supervision

3. WHAT SHOULD BE DONE? _____ What action(s) will prevent similar accidents in the future?

_____

_____

4. WHAT HAVE YOU DONE THUS FAR? _____ Take or recommend action, depending on your authority.

_____

_____

5. HOW WILL THIS IMPROVE OPERATIONS? _____ How will it help us meet our objective: ACCIDENT PREVENTION?

_____

_____

6. WHAT IS YOUR ROUGH ESTIMATED COST OF THIS ACCIDENT?

Cost of lost wages and medical expenses? ..... _____

Damage to State property or equipment? ..... _____

Damage to third parties, property and people? ..... _____

TOTAL _____

Investigated By: _____ Date: _____

Unit / Division / Department: _____

COMPLETE INSTRUCTIONS ARE ON THE BACK

02-932 (10/93)

SUPERVISOR'S INVESTIGATION REPORT

INSTRUCTIONS

A. Investigate each accident immediately after it occurs.

B. Distribution: (To be completed within 72 hours.)

BLUE	—	Your Division Director
PINK	—	Your Copy
GREEN	—	Division of Administration Services
YELLOW	—	Division of Risk Management*

(Division of Risk Management)
Department of Administration
P.O. Box 110218
Juneau, AK 99811-0218

** on worker compensation injuries attach to yellow copy of form No. 02-921*

1. WHAT HAPPENED?

GET ALL THE FACTS by studying the job and conditions where the accident occurred.

TELL WHAT THE EMPLOYEE WAS DOING when injured. (BE SPECIFIC. If employee was using tools or equipment or handling material, name them and tell what employee was doing with them.)

TELL HOW THE ACCIDENT OCCURRED. (Describe fully the events which resulted in injury. Tell what happened and how it happened. Name any objects or substances involved and tell how they were involved. Give full details on all factors which led or contributed to the accident.)

TELL WHAT THING DIRECTLY INJURED THE EMPLOYEE. (Name object struck against or struck by. If strain or hernia, name the object lifted, pulled, etc. If injury resulted solely from bodily motion, state the stretching, twisting, etc. which caused the injury.)

2. WHY DID IT HAPPEN?

Describe in detail the CONDITION RESPONSIBLE for the accident. It will always involve one or more of 12 OPERATION FACTORS listed. Be specific in identifying the equipment, material, and people involved and how they contributed to the accident.

3. WHAT SHOULD BE DONE?

Determine what CORRECTIVE ACTION is needed to prevent a similar accident in the future. The OPERATION FACTORS used in No. 2 should help you determine what should be done.

4. WHAT HAVE YOU DONE THUS FAR?

State what CORRECTIVE ACTION you have taken or recommended to your supervisor, depending on your authority.

5. HOW WILL THIS IMPROVE OPERATIONS?

State how the CORRECTIVE ACTION you have taken or recommended will help to prevent future accidents.

6. WHAT IS YOUR ROUGH ESTIMATED COST OF THIS ACCIDENT?

In most cases, actual accident costs are not available for some period of time. Please use your BEST JUDGEMENT IN MAKING A DETERMINATION of lost wages, medical expenses, damage to State property and/or equipment.

02-932 BACK (10/93)

17.82. Supervisor's Safety Meeting Report (Form 25M-063

STATE OF ALASKA

DEPARTMENT OF TRANSPORTATION AND PUBLIC FACILITIES

SUPERVISOR'S SAFETY MEETING REPORT

TOTAL EMPLOYEES _____ REGION _____

EMPLOYEES PRESENT _____ DIVISION _____

DATE _____ SECTION _____

LOCATION _____

SUBJECT DISCUSSED:

SAFETY SUGGESTIONS AND RECOMMENDATIONS:

SUGGESTIONS FOR FUTURE SAFETY MEETINGS:

All personnel in attendance shall sign back of original.

_____

Safety Meeting Supervisor

_____

Title

25M-063(4/98)

17.83. Supplemental Agreement (Form 25D-066)

STATE OF ALASKA
DEPARTMENT OF TRANSPORTATION
AND PUBLIC FACILITIES
CENTRAL REGION

SUPPLEMENTAL AGREEMENT NO.: _____

Sheet _____ of _____

Project No.: _____ Contractor: _____

Project Name: _____ Address: _____

_____ _____

The above designated Contract is hereby modified in the manner described below. This agreement is supplemental to the above Contract, which is, by reference made a part hereof. Price adjustments resulting from inaccurate cost and pricing data are subject to the provisions of AS 36.30.400c. All terms, conditions, and provisions of the Contract, except as specifically modified herein, remain unchanged and in full force and effect.

Acceptance of this Supplemental Agreement constitutes agreement to the terms, conditions, and prices stated.

_____
Contractor

_____
Contractor Representative Title

Date: _____

Recommended: | Title:

Issued: _____

Date: _____

WITNESS

Use Form 25D-065 for continuation, if required

25D-066 (1/03)

17.84. Support Information/Backup Sheet (Form 25D-064)

State of Alaska
Department of Transportation and Public Facilities
Support Information/Backup Sheet (Form 25D-064)

Sheet 1 of

Backup for: _____	Region Review
Project Number: _____	
Project Name: _____	FHWA/ FAA (If required)
Contract Amount: _____	FHWA/FAA Verbal Approval Date (If required) _____

Comparison of Cost Due to Change

Item No.	FA Code	Negotiated Yes or No	Item	Unit	Price	Quantity (+ or -)	Amount (+ or -)

Prepared By: _____ Project Engineer	Net Change This Order	
	Total Previous Changes	
Prior Change Documents:	Accumulative Change	
	% of Accumulative Change	

Description and Reason for Change

Use Form 25D-065 for continuation, if required

25D-064 (3/05ge)

17.85. SWPPP Amendment Log (Form 25D-114)

STATE OF ALASKA
DEPARTMENT OF TRANSPORTATION AND PUBLIC FACILITIES

SWPPP AMENDMENT LOG PAGE ____

AKSAS Number: **Project Name:**

All amendments must be approved by the Engineer per 641.3.03, therefore the Project Engineer's approval of each amendment must be documented.
Detailed instructions for completing this form can be found on the Alaska Construction Forms website:
http://dot.alaska.gov/stwddes/dcsconst/pop_constforms.shtml

Amendment Number	Description of the Amendment and Related Corrective Action Number (if applicable)	Page or Sheet Number	Date of Amendment	Amendment Authorized by (Sign Full Name)	PE Initials

Form 25D-114 (12/2015)

17.86. SWPPP Certification for Contractor (Form 25D-111)

STATE OF ALASKA
DEPARTMENT OF TRANSPORTATION AND PUBLIC FACILITIES

SWPPP CERTIFICATION FOR CONTRACTOR

Project Name:

Operator:

I certify under penalty of law that this document and all attachments were prepared under my direction or supervision in accordance with a system designed to assure that qualified personnel properly gathered and evaluated the information submitted. Based on my inquiry of the person or persons who manage the system, or those persons directly responsible for gathering the information, the information submitted is, to the best of my knowledge and belief, true, accurate, and complete. I am aware that there are significant penalties for submitting false information, including the possibility of fine and imprisonment for knowing violations.

Name: _____

Duly Authorized Representative in accordance with Appendix A, Part 1.12 APDES General Permit for Discharges From Large and Small Construction Activities

Title: _____

Date: _____

Signature: _____

Form 25D-111 (12/2015) Page 1 of 1

17.87. SWPPP Certification for DOT&PF (Form 25D-109)

STATE OF ALASKA
DEPARTMENT OF TRANSPORTATION AND PUBLIC FACILITIES

SWPPP CERTIFICATION FOR DOT&PF

Project Name:

Operator: Alaska Department of Transportation and Public Facilities,

[FILL IN YOUR REGION OR DIVISION]

I certify under penalty of law that this document and all attachments were prepared under my direction or supervision in accordance with a system designed to assure that qualified personnel properly gathered and evaluated the information submitted. Based on my inquiry of the person or persons who manage the system, or those persons directly responsible for gathering the information, the information submitted is, to the best of my knowledge and belief, true, accurate, and complete. I am aware that there are significant penalties for submitting false information, including the possibility of fine and imprisonment for knowing violations.

Name: _____

Duly Authorized Representative in accordance with Appendix A, Part 1.12 APDES General Permit for Discharges From Large and Small Construction Activities

Title: Project Engineer

Date: _____

Signature: _____

Form 25D-109 (12/2015) Page 1 of 1

17.88. SWPPP Construction Site Inspection Report (Form 25D-100)

STATE OF ALASKA
DEPARTMENT OF TRANSPORTATION AND PUBLIC FACILITIES

SWPPP CONSTRUCTION SITE INSPECTION REPORT

Detailed instructions for completing this form can be found on the Alaska Construction Forms website:
http://www.dot.state.ak.us/stwddes/dcsconst/pop_constforms.shtml

1.0 General Information

1.1 Project Name			
1.2 Project Number		**1.3 Location**	
1.4 NOI Tracking No.	**Contractor's:**	**DOT&PF's:**	
1.5a Date of Inspection		**1.5b Start/End Times:**	
1.6 Inspectors' Names	**Contractor:**	**DOT&PF:**	
1.7 Inspectors' Titles	**Contractor:**	**DOT&PF:**	
1.8 Inspectors' Contact Information	**Contractor:**	**DOT&PF:**	
1.9a AK-CESCL Cert. No.	**Contractor:**	**DOT&PF:**	
1.9b AK-CESCL Exp. Date	**Contractor:**	**DOT&PF:**	

1.10 Describe construction activities

1.11 Type of Inspection: ☐ Regular ☐ Post-storm Event ☐ Reduced Inspection Frequency Period

2.0 Weather Information

2.1 Describe the weather since the last inspection, or start of construction activities if first Inspection.

Check all appropriate boxes.
☐ Clear ☐ Cloudy ☐ Rain ☐ Sleet ☐ Fog ☐ Snow ☐ High Winds ☐ Other:

2.2 Storm events. Complete storm event information if there were any storm events since the last inspection.

Storm event: a rainfall event that produces more than 0.5 inch of precipitation in 24 hours and that is separated from the previous storm event by at least 3 days of less than 0.1 inch of rain per day, CGP C16.

Estimated Start Date:					
Estimated Duration (#days):					
Approximate Amount of Precipitation (in):					

2.3 Weather at time of this inspection? ☐ Clear ☐ Cloudy ☐ Rain ☐ Sleet ☐ Fog ☐ Snow ☐ High Winds ☐ Other:
Temperature:

Form 25D-100 (6/2016) Page 1 of 7 Project Number:
Inspection Date:

3.0 Overall Site Issues
For complete instructions, please see instructions on Constructions Forms web page, by separate form • ***Overall Site Issue*** *-- These are general site issues that must be assessed during inspections.* • ***Implemented?*** *– If a BMP should be installed at the time of the inspection and you marked "No" in the "BMP Installed" column, then you must check "Yes" in the "BMP Action Required?" column. If there is good reason to mark "no" in the "BMP Installed" column (such as the BMP is no longer needed and was removed) then you can mark "no" in the "BMP Action Required?" column and explain in the "Comments" column.* • ***Corrective Action Required?*** *- When maintenance or some other corrective action is required, check "Yes" in this column.* • ***Corrective Action Required, Complete by Date*** *- When a corrective action is required, before certifying the report, fill in the date when the corrective action can reasonably be expected to be completed. When a corrective action is NOT required, leave the "Complete by Date" blank.* • ***If Corrective Action is required, describe Action and Location*** *– Anytime you check "Yes" in the "Corrective Action Required?" column, you must fill in the "Describe Corrective Action and Location" column as well.* • ***Corrective Action Log*** *- When a Corrective Action is required as noted in this report, you must also enter all the information for this action in the Corrective Action Log and document on the Log the actual date of completed correction.*

	Overall Site Issue	Response	Corrective Action Required?	If Corrective Action is required, describe Action and Location	Comments
3.1	Have stabilization measures been initiated on slopes and disturbed areas not actively being worked?	☐Yes ☐No	☐Yes ☐No Complete by Date:		
3.2	Are natural resource areas (e.g., streams, wetlands, mature trees, etc.) required by the SWPPP to be delineated in the field, identified with barriers or markings?	☐Yes ☐No	☐Yes ☐No Complete by Date:		
3.3	Are perimeter controls and sediment barriers adequately installed (keyed into substrate) and maintained?	☐Yes ☐No	☐Yes ☐No Complete by Date:		
3.4	Are storm drain inlets properly protected?	☐Yes ☐No	☐Yes ☐No Complete by Date:		
3.5	Are the construction exits preventing sediment from being tracked into the street?	☐Yes ☐No	☐Yes ☐No Complete by Date:		
3.6	Is trash/litter from work areas collected and disposed of properly?	☐Yes ☐No	☐Yes ☐No Complete by Date:		

	Overall Site Issue	Response	Corrective Action Required?	If Corrective Action is required, describe Action and Location	Comments
3.7	Are washout facilities (e.g., paint, concrete) available, clearly marked, and maintained?	☐Yes ☐No	☐Yes ☐No Complete by Date:		
3.8	Are vehicle and equipment fueling, cleaning, and maintenance areas free of spills, leaks, or any other potential pollutants?	☐Yes ☐No	☐Yes ☐No Complete by Date:		
3.9	Are materials that are potential stormwater contaminants stored inside or under cover?	☐Yes ☐No	☐Yes ☐No Complete by Date:		
3.10	Are non-stormwater discharges (e.g., wash water, dewatering) properly controlled?	☐Yes ☐No	☐Yes ☐No Complete by Date:		
3.11	Has Spill Response kit been used since the last inspection?	☐Yes ☐No	☐Yes ☐No Complete by Date:		
3.12	Are the NOI postings legible, updated and do they contain the correct information?	☐Yes ☐No	☐Yes ☐No Complete by Date:		
3.13	Are erodible stockpiles properly covered and have a perimeter control?	☐Yes ☐No	☐Yes ☐No Complete by Date:		
3.14	Are any additional BMPs needed?	☐Yes ☐No	☐Yes ☐No Complete by Date:		
3.15	(Other)	☐ Yes ☐ No	☐ Yes ☐ No Complete by Date:		

4.0 Discharge Points					
	Overall Site Issue	**Response**	**Corrective Action Required?**	**If Response is No, describe Location. If Corrective Action is required, describe Action and Location**	**Comments**
4.1	At the time of inspection, are the discharge points and receiving waters free of pollutant discharges (sediment deposits, sediment plume or oil sheen)? (See Section 4.3 for list of discharge points)	☐ Yes ☐ No	☐ Yes ☐ No Complete by Date:		
4.2	Since the last inspection, are the discharge points and receiving waters free of evidence that pollutants had left the project site (for example, sediment deposits, oily residue)? (See Section 4.3 for list of discharge points)	☐ Yes ☐ No	☐ Yes ☐ No Complete by Date:		

4.3 Location of Discharge Points	
List the project discharge point locations	**Inspected? Circle**
	Yes No
	Yes No
	Yes No
	Yes No
	Yes No
	Yes No
	Yes No
	Yes No
	Yes No
	Yes No
	Yes No
	Yes No
	Yes No

List the project discharge point locations	Inspected? Circle

5.0 Site-specific BMPs

- ***BMP Identifier*** *-- This column is a mandatory entry used to help correspond BMPs with the site map. Number the structural and non-structural BMPs identified in your SWPPP on your site map and list them below (add as many BMPs as necessary on the continuation sheets).*
- ***BMP and Location*** *- Describe and give the location of the structural and non-structural BMPs identified in your SWPPP in the BMP column below (Include areas that are required to be inspected by the CGP, such as material storage areas that are exposed to precipitation.)*
- ***BMP Installed? –*** *If a BMP should be installed at the time of the inspection and you marked "No" in the "BMP Installed" column, then you must check "Yes" in the "BMP Action Required?" column. If there is good reason to mark "no" in the "BMP Installed" column (such as the BMP is no longer needed and was removed) then you can mark "no" in the "BMP Action Required?" column and explain in the "Comments" column.*
- ***BMP Action Required?*** *- If a BMP needs repair, modification, replacement, maintenance or a new BMP is needed or a SWPPP amendment is needed, then a BMP Action is required.*
- ***BMP Action Required, Complete by Date*** *- Before certifying the report, fill in the date when the BMP Action can reasonably be expected to be completed. When a BMP Action is NOT required, leave the "Complete by Date" blank.*
- ***If BMP Action is required, describe Action and Location –*** *Anytime you check "Yes" for "BMP Action Required," then you must also fill in the "Describe BMP Action and Location" column.*
- ***Corrective Action Log*** *- When a BMP Action is required as noted in this report, you must also enter all the information for this action in the Corrective Action Log, and document on the Log the actual date of completing correction.*

BMP Identifier	BMP & Location	BMP Installed?	BMP Action Required?	If BMP Action is required, describe Action and Location	Comments
		__Yes __No	__Yes __No Complete by Date:		
		__Yes __No	__Yes __No Complete by Date:		
		__Yes __No	__Yes __No Complete by Date:		
		__Yes __No	__Yes __No Complete by Date:		
		__Yes __No	__Yes __No Complete by Date:		

BMP Identifier	BMP & Location	BMP Installed?	BMP Action Required?	If BMP Action is required, describe Action and Location	Comments
		__Yes __No	__Yes __No Complete by Date:		
		__Yes __No	__Yes __No Complete by Date:		
		__Yes __No	__Yes __No Complete by Date:		
		__Yes __No	__Yes __No Complete by Date:		
		__ Yes __ No	__Yes __No Complete by Date:		
		__ Yes __ No	__ Yes __No Complete by Date:		
		__ Yes __ No	__ Yes __No Complete by Date:		
		__ Yes __ No	__Yes __No Complete by Date:		
		__ Yes __ No	__ Yes __ No Complete by Date:		
		__Yes __No	__ Yes __ No Complete by Date:		
		__ Yes __ No	__ Yes __No Complete by Date:		
		__ Yes __No	__Yes __No Complete by Date:		

6.0 Inspection Certification		
6.1 Areas of Inspection		
Did you inspect all areas of the project that are required to be inspected by the CGP including areas disturbed by construction activity, areas used for storage of materials that are exposed to precipitation, areas where control measures are installed, areas where sediment or other pollutants have accumulated or been deposited and may have the potential for or are entering a stormwater conveyance system, locations where vehicles enter or exit the site, areas where storm water typically flows, points of discharge from the site, and portions of the site where temporary or permanent stabilization has been initiated?	☐ Yes ☐ No	If you did not inspect any required areas, list those locations here and explain why they weren't inspected.

6.2 Project Compliance

- *If there are incidences of non-compliance identified in this inspection report then you must summarize below the incidence(s) of non-compliance.*
- *If there is an Action Item described in the non-compliance box below that does not already have a "Complete by Date" assigned elsewhere in this report, then add a Complete by Date within the box.*

Non-Compliance
Incidence(s) of Non-compliance:
Action Item(s) and Complete by Date(s):

- *Check the box below if there are no incidences of non-compliance with the CGP:*

☐ **I certify that on the date of this inspection, this project was found to be in compliance with the terms of the applicable Construction General Permit.**

CERTIFICATION STATEMENT

"I certify under penalty of law that this document and all attachments were prepared under my direction or supervision in accordance with a system designed to assure that qualified personnel properly gathered and evaluated the information submitted. Based on my inquiry of the person or persons who manage the system, or those persons directly responsible for gathering the information, the information submitted is, to the best of my knowledge and belief, true, accurate, and complete. I am aware that there are significant penalties for submitting false information, including the possibility of fine and imprisonment for knowing violations."

Contractor's Duly Authorized Representative

Print name: _____

Title: Superintendent

Signature _____

Date _____

DOT&PF's Duly Authorized Representative

Print Name: _____

Title: Project Engineer

Signature _____

Date _____

17.89. SWPPP Corrective Action Log (Form 25D-112)

STATE OF ALASKA
DEPARTMENT OF TRANSPORTATION AND PUBLIC FACILITIES

SWPPP CORRECTIVE ACTION LOG PAGE ____

Project Number: **Project Name:**

Use this form to track completion of all corrective actions. Note that corrective actions can be identified during and outside of inspections. Detailed instructions for completing this form can be found on the Alaska Construction Forms website: http://dot.alaska.gov/stwddes/dcsconst/pop_constforms.shtml

Corrective Action Number	Date Identified (check box if outside inspection)	Description of corrective action, including the following as applicable: • Related SWPPP Amendment # • Note if a >2-yr., 24-hr. storm event occurred (see instructions) • All corrective actions require a complete by date and description	Complete-by Date	Date Complete	Name of Person Documenting Completion
	☐				
	☐				
	☐				
	☐				
	☐				
	☐				
	☐				
	☐				
	☐				
	☐				

Form 25D-112 (12/2015)

17.90. SWPPP Daily Record of Rainfall (Form 25D-115)

STATE OF ALASKA
DEPARTMENT OF TRANSPORTATION AND PUBLIC FACILITIES

SWPPP DAILY RECORD OF RAINFALL PAGE ____

Project Number: Project Name:

Date	Precipitation, inches	Storm Event Info	Comments	Initials

Form 25D-115 (12/2015)

17.91. SWPPP Delayed Action Item Report (Form 25D-113)

STATE OF ALASKA
DEPARTMENT OF TRANSPORTATION AND PUBLIC FACILITIES

SWPPP DELAYED ACTION ITEM REPORT (DAIR)

Use when impracticability prevented Contractor from meeting initial "Complete by Date" for a BMP Action or Corrective Action. This form must be completed by a DOT&PF Project Engineer and attached to the inspection report. Detailed instructions for completing this form can be found on the Alaska Construction Forms website: http://www.dot.state.ak.us/stwddes/dcsconst/pop_constforms.shtml

PART 1

Project name _____

Project Number: _____

DOT&PF NOI Tracking # _____

Date completing this form _____

DOT&PF Project Engineer completing this form _____

BMP Action or Corrective Action description and location
_____

Date of inspection report that identified a BMP Action or Corrective Action was needed _____

"Complete by Date" on that inspection report _____

Provide a detailed explanation as to why the BMP Action or Corrective Action was not completed as scheduled (attach additional page, if necessary)
_____

New "Complete by Date" _____

PART 2

Date the BMP Action or Corrective Action was actually completed _____

If the BMP Action or Corrective Action is not completed by the new date written above, then complete another Delayed Action Item Report.

DOT&PF Project Engineer recording the action completion _____ Date _____

Form 25D-113 (12/2015)

17.92. SWPPP Delegation of Signature Authority for CGP Documents - Contractor (Form 25D-108)

STATE OF ALASKA
DEPARTMENT OF TRANSPORTATION AND PUBLIC FACILITIES

SWPPP DELEGATION OF SIGNATURE AUTHORITY FOR CGP DOCUMENTS -- CONTRACTOR

Project Name:

I, *(Contractor's responsible corporate officer)* hereby designate the project superintendant assigned to *(Project Name)* to be *(Contractor's company name)'s* duly authorized representative for the purpose of overseeing compliance with the APDES Construction General Permit, at the *(Project Name)* construction site. By signing this authorization, I confirm that I meet the requirements to make such a designation as set forth in Appendix A, Subsection 1.12.2 of ADEC's Construction General Permit (CGP), and that the designee above meets the definition of a "duly authorized representative" as set forth in Appendix A, Subsection 1.12.3.

I certify under penalty of law that this document and all attachments were prepared under my direction or supervision in accordance with a system designed to assure that qualified personnel properly gathered and evaluated the information submitted. Based on my inquiry of the person or persons who manage the system, or those persons directly responsible for gathering the information, the information submitted is, to the best of my knowledge and belief, true, accurate, and complete. I am aware that there are significant penalties for submitting false information, including the possibility of fine and imprisonment for knowing violations.

Name: _____

Title: _____

Company: _____

Signature _____

Date_____

Form 25D-108 (12/2015) **Page 1 of 1**

17.93. SWPPP Delegation of Signature Authority for CGP Documents – DOT&PF (Form 25D-107)

STATE OF ALASKA
DEPARTMENT OF TRANSPORTATION AND PUBLIC FACILITIES

SWPPP DELEGATION OF SIGNATURE AUTHORITY FOR CGP DOCUMENTS – DOT&PF

Project Name:

I, *(REGIONAL DIRECTOR'S NAME)* hereby designate the Project Engineer assigned to *(Project Name)* to be the DOT&PF duly authorized representative for the purpose of overseeing compliance with the APDES Construction General Permit, at the *(Project Name)* construction site. By signing this authorization, I confirm that I meet the requirements to make such a designation as set forth in Appendix A, Subsection 1.12.2 of ADEC's Construction General Permit (CGP), and that the designee above meets the definition of a "duly authorized representative" as set forth in Appendix A, Subsection 1.12.3.

I certify under penalty of law that this document and all attachments were prepared under my direction or supervision in accordance with a system designed to assure that qualified personnel properly gathered and evaluated the information submitted. Based on my inquiry of the person or persons who manage the system, or those persons directly responsible for gathering the information, the information submitted is, to the best of my knowledge and belief, true, accurate, and complete. I am aware that there are significant penalties for submitting false information, including the possibility of fine and imprisonment for knowing violations.

Name: _____

Title: Regional Director

Signature: _____

Date: _____

Form 25D-107 (12/2015) Page 1 of 1

17.94. SWPPP Grading & Stabilization Activities Log (Form 25D-110)

STATE OF ALASKA
DEPARTMENT OF TRANSPORTATION AND PUBLIC FACILITIES

SWPPP GRADING & STABILIZATION ACTIVITIES LOG PAGE ____

Project Number: **Project Name:**

Project Area (if applicable:

Detailed instructions for completing this form can be found on the Alaska Construction Forms website: http://dot.alaska.gov/stwddes/dcsconst/pop_constforms.shtml

Date Grading Activity Initiated/ Initials	Description of Grading Activity and Location	Date Grading Activity Ceased (Temporary or Permanent) and Initials	Date Stabilization Measures Initiated (Temporary or Permanent) and Initials	Date Stabilization Measure Complete	Description of Stabilization Measure
		T ☐ P ☐	T ☐ P ☐		
		T ☐ P ☐	T ☐ P ☐		
		T ☐ P ☐	T ☐ P ☐		
		T ☐ P ☐	T ☐ P ☐		
		T ☐ P ☐	T ☐ P ☐		
		T ☐ P ☐	T ☐ P ☐		
		T ☐ P ☐	T ☐ P ☐		
		T ☐ P ☐	T ☐ P ☐		
		T ☐ P ☐	T ☐ P ☐		
		T ☐ P ☐	T ☐ P ☐		

Form 25D-110 (12/2015)

17.95. SWPPP Pre-Construction Site Visit (Form 25D-106)

STATE OF ALASKA
DEPARTMENT OF TRANSPORTATION AND PUBLIC FACILITIES

SWPPP PRE-CONSTRUCTION SITE VISIT

Project Name:	
Project Number:	
Date of Site Visit:	

1. PERSONS CONDUCTING THE VISIT

Name:		Name:	
Title:		Title:	
Company:		Company:	
Name:		Name:	
Title:		Title:	
Company:		Company:	
Name:		Name:	
Title:		Title:	
Company:		Company:	

2. **SWPPP PREPARER STATEMENTS AND SIGNATURE**

	Yes	No
1. Did you identify or verify opportunities to phase construction activities at the project?	☐	☐
2. Did you identify or verify appropriate BMPs and their sequencing for the project?	☐	☐
3. Did you identify or verify which sediment controls must be installed at the project prior to commencing construction activities (as defined by the CGP)?	☐	☐

If you answered NO to any of the questions above, explain:

Printed Name: _____

Title: _____

Company: _____

Signature: _____

Date: _____

Form 25D-106 (12/2015)

STATE OF ALASKA
DEPARTMENT OF TRANSPORTATION AND PUBLIC FACILITIES

PROJECT STAFF TRACKING FORM

PAGE _____

Project Number: **Project Name:**

Use to track staff changes and certification information for the following four positions: Contractor's Superintendent, Contractor's SWPPP Manager, DOT&PF Project Engineer, and DOT&PF Stormwater Inspector. If a person is listed more than once on the same sheet and their certification information has not changed, in the subsequent entries you may leave the certification columns blank. If helpful, each position can be documented on a separate sheet for ease of tracking. Detailed instructions for completing this form can be found on the Alaska Construction Forms website: http://www.dot.state.ak.us/stwddes/dcsconst/pop_constforms.shtml

Position	Name	Start Date	End Date	Certification Type	Certification Number	Expiration Date	Initials	Signature

Form 25D-127 (6/2016)

17.97. SWPPP Subcontractor Certification (Form 25D-105)

STATE OF ALASKA
DEPARTMENT OF TRANSPORTATION AND PUBLIC FACILITIES

SWPPP SUBCONTRACTOR CERTIFICATION

Project Name:	
Project Number:	
Project Location:	
Operator(s):	

As a subcontractor, you are required to comply with the Construction General Permit (CGP) and the conditions of the Stormwater Pollution Prevention Plan (SWPPP), for any work that you perform on-site. Any person or group who violates any condition of the SWPPP may be subject to substantial penalties or loss of contract. You are encouraged to advise each of your employees working on this project of the requirements of the SWPPP. A copy of the SWPPP is available for your review at the site or other location easily accessible during normal business hours CGP 5.10.3.1.

Each subcontractor engaged in activities at the construction site that could impact stormwater must be identified and sign the following certification statement:

I certify under the penalty of law that I have read and understand the terms and conditions of the SWPPP for the above designated project and agree to follow the BMPs and practices described in the SWPPP.

This certification is hereby signed in reference to the above named project:

Company: _____

Address: _____ Telephone Number: _____

_____

Type of Construction Service Provided:

Printed Name: _____

Title: _____

Signature: _____

Date: _____

Form 25D-105 (12/2015) Page 1 of 1

17.98. SWPPP Training Log (Form 25D-125)

STATE OF ALASKA
DEPARTMENT OF TRANSPORTATION AND PUBLIC FACILITIES

SWPPP TRAINING LOG

Project name: _____
Project Number: _____
Project Location: _____

Instructor's Name(s): _____
Instructor's Titles(s): _____

Course Location: _____
Course Date: _____
Course Length (hours): _____

Storm Water Training Topic: (check as appropriate)

- ☐ Erosion Control BMPs
- ☐ Sediment Control BMPs
- ☐ Non-Storm Water BMPs
- ☐ Emergency Procedures
- ☐ Good Housekeeping BMPs
- ☐ Treatment Chemicals

Specific Training Objective: _____

Attendee Roster: (attach additional pages as necessary)

No.	Name of Attendee	Company	Attendee Initials
1			
2			
3			
4			
5			
6			
7			
8			
9			
10			

Form 25D-125 (12/2015)

17.99. SWPPP Turbidity Monitoring Form 25D-140

STATE OF ALASKA

DEPARTMENT OF TRANSPORTATION AND PUBLIC FACILITIES

SWPPP TURBIDITY MONITORING FIELD DATA

For Discharges to Impaired Waterbodies

Use this form only when required to conduct monitoring under the 2016 CGP Part 3.2.

Project Number: **Project Name:**

Discharge Point/Location

Representative Discharge Point: ☐ NO ☐ YES

Sample Information	**Analysis Information**
Name of Person Conducting Sampling:	Name of Person Conducting Analysis:
Title of Person Conducting Sampling:	Title of Person Conducting Analysis:
Sampling Method ☐ Grab Samples: ☐ Manual ☐ Automated Sampler ☐ No Samples – In-Water Probe/Sonde	Analytical Method Turbidity Meter Manufacture/Model Number Method Detection Limit Last Calibration Date

Date/Time of Sampling	**Sample Identification**	**No Sample Due To**	**Date/Time of Analysis**	**Turbidity Analysis Results (in NTU)**
		☐ No discharge ☐ Unsafe conditions		
		☐ No discharge ☐ Unsafe conditions		
		☐ No discharge ☐ Unsafe conditions		
		☐ No discharge ☐ Unsafe conditions		
		☐ No discharge ☐ Unsafe conditions		
Notes:			**Notes:**	

Review and Recordkeeping: Results entered into Turbidity Monitoring Annual Report Data Log on (date) by (initial)

Form 25D-140 (12/2015)

17.100. SWPP Turbidity Monitoring Annual Report (Form 25D-141)

STATE OF ALASKA
DEPARTMENT OF TRANSPORTATION AND PUBLIC FACILITIES

SWPPP TURBIDITY MONITORING ANNUAL REPORT DATA LOG

For Discharges to Impaired Waterbodies

Use this form only when required to conduct monitoring under the 2016 CGP Part 3.2.

Project Number: **Project Name:**

Part 1 – TURBIDITY DATA

Date of Sampling			
Discharge Point/ Location Check Box if Representative Discharge Point and List Substantially Identical Discharge Points/Locations in Part 2		**Sample Identification**	**Turbidity Analysis Results (in NTU)**
	☐		☐ No discharge at time of sample
	☐		☐ No discharge at time of sample
	☐		☐ No discharge at time of sample
	☐		☐ No discharge at time of sample
	☐		☐ No discharge at time of sample
	☐		☐ No discharge at time of sample
Daily Average of All Samples			

Form 25D-141 (12/2015)

STATE OF ALASKA
DEPARTMENT OF TRANSPORTATION AND PUBLIC FACILITIES

SWPPP TURBIDITY MONITORING ANNUAL REPORT DATA LOG

For Discharges to Impaired Waterbodies

Use this form only when required to conduct monitoring under the 2016 CGP Part 3.2.

Project Number: **Project Name:**

Part 2 – REPRESENTATIVE DISCHARGE POINT INFORMATION

Representative Discharge Point/ Location	Substantially Identical Discharge Points/Locations

Form 25D-141 (12/2015)

17.101. SWPPP Visual Monitering (Form 25D-41)

STATE OF ALASKA
DEPARTMENT OF TRANSPORTATION AND PUBLIC FACILITIES

SWPPP VISUAL MONITORING DATA

For Discharges to High Quality Waters or Impaired Waterbodies

Use this form only when required under the 2011 CGP Part 2.1.5 or Part 3.2.

AKSAS Number: **Project Name:**

Name of Person Conducting Monitoring:	**Title of Person Conducting Monitoring:**
Date	**Discharge Point/Location**

Observations

Discharges	**Pollutant indicators present:** ☐ NO ☐ YES (If YES, check all that apply and describe)	**Conditions Require Corrective Action:** ☐ NO ☐ YES
☐ No discharge at this time ☐ Clear discharge ☐ Colored Discharge Color of Discharge Water:	☐ Odor: ☐ Floating/settled/suspended solids: ☐Foam: ☐ Other: ☐Oil Sheen:	If YES, describe the conditions that require corrective action and what corrective action will be taken.

Date	**Discharge Point/Location**

Observations

Discharges	**Pollutant indicators present:** ☐ NO ☐ YES (If YES, check all that apply and describe)	**Conditions Require Corrective Action:** ☐ NO ☐ YES
☐ No discharge at this time ☐ Clear discharge ☐ Colored Discharge Color of Discharge Water:	☐ Odor: ☐ Floating/settled/suspended solids: ☐Foam: ☐ Other: ☐Oil Sheen:	If YES, describe the conditions that require corrective action and what corrective action will be taken.

Form 25D-129 (3/12)

17.102. SWPPP CGP Noncompliance Notification (Form 25D-143)

Alaska Department of Transportation and Public Facilities
Construction General Permit
Noncompliance Notification

DEC Toll Free: 1(877) 569-4114 Fax: (907) 269-4604

GENERAL INFORMATION		
DOT&PF Region:	Project Name:	Project Location:
DOT&PF CGP Tracking Number:	Contractor:	Contractor CGP Tracking Number:
Person Reporting:	Phone Numbers of Person Reporting:	Reported How? (e.g. by phone):
Date/Time Event was Noticed:	Date/Time Reported to DEC:	Name of DEC Staff Contacted:

VERBAL NOTIFICATION MUST BE MADE TO DEC WITHIN 24 HOURS OF DISCOVERY OF NONCOMPLIANCE

INCIDENT DETAILS (attach additional sheets, lab reports, and photos as necessary)

Period of Noncompliance	
Start Date/Time (exact):	End Date/Time (exact):

If noncompliance has not been corrected, provide a statement regarding the anticipated time the noncompliance is expected to continue:

Description of the noncompliance and its cause (be specific):

Actions taken to reduce, eliminate, and prevent reoccurrence of noncompliance:

Pollutant:

Corrective Actions:

I certify under penalty of law that this document and all attachments were prepared under my direction or supervision in accordance with a system designed to assure that qualified personnel properly gather and evaluate the information submitted. Based on my inquiry of the person or persons who manage the system, or those persons directly responsible for gathering the information, the information submitted is, to the best of my knowledge and belief, true, accurate, and complete. I am aware that there are significant penalties for submitting false information, including the possibility of fine and imprisonment for knowing violations.

Name: Title: Signature: Date:

FORM MUST BE SENT TO DEC WITHIN FIVE DAYS OF BECOMING AWARE OF THE EVENT.

Form 25D-143 September 2015

17.103. Traffic Control Daily Review (Form 25D-104)

State of Alaska
Department of Transportation and Public Facilities

Traffic Control Daily Review (Form 25D-104)

Project Name:

Project Number: | **Date:**

Summary of TCPs in effect today

TCP Number	Beginning & Ending Station	Start Time & Date	End Time & Date

Traffic Control Changes

TCP No.	Time	Description of Change

Traffic Control Devices Inspection

Item	Condition of TCD	Day Time:			Night Time:		
		Pass	Corrective Action	NA	Pass	Corrective Action	NA
All Devices	Conforms to approved TCPs	☐	☐	☐	☐	☐	☐
Arrow and Changeable Message Boards	Properly aligned, maintained, approved messages	☐	☐	☐	☐	☐	☐
Barriers/Attenuators	Properly installed and maintained	☐	☐	☐	☐	☐	☐
Channelizing Devices	Clean, aligned, properly spaced	☐	☐	☐	☐	☐	☐
Devices	Retro-reflectivity, legibility	☐	☐	☐	☐	☐	☐
Pavement Markings	Correct placement	☐	☐	☐	☐	☐	☐
Signs	Properly installed and legible, in use. If not in use, covered or removed	☐	☐	☐	☐	☐	☐

***Note: If corrective action taken, explain on a Continuation Sheet Form 25D-065 (or on the back of this form) the reason for the corrective action**

I am aware that to knowingly make or allow false entries or alterations on public record, or knowingly destroy, mutilate, suppress, conceal, remove or otherwise impair the verity, legibility, or availability of a public record constitutes tampering with public records punishable under AS 11.56.815-820 and/or 23 CFR 635. Other disciplinary action may include Worksite Traffic Supervisor decertification.

Inspected and certified correct by: _____ Date:
Contractor's Worksite Traffic Supervisor

Form 25D-104 (12/05ge)

17.104. Traffic Control Signs and Devices Daily Report (Form 25D-103)

State of Alaska
Department of Transportation and Public Facilities

Traffic Control Signs and Devices Daily Report (Form 25D-103)

Project Name:
Project Number: **Date:**

Location (Beginning and ending station, left or right if applicable.)													
TCP Number													
Item	**Pay Unit**												**Total**
Construction. Signs	Day												
Type I Barricade	Day												
Type II Barricade	Day												
Traffic Cone	Day												
Tubular Marker	Day												
Plastic Safety Fence	LF												
Drum	Day												
Seq. Arrow Panel	Day												
Special Const. Signs	SF												
Port. Conc. Barrier	Each												
Temp. Crash Cush.	Each												
Int. Pave. Marking	Station												
Flagging	Hour												
Pilot Car	Hour												
Street Sweeping	Hour												
Watering	M-Gal.												
Lane Closure	Hour												
Detour	Day												
Road Closure	Day												
One Lane Road	Hour												
PCM Board Sign	Day												
Sidewalk Surfacing	SY												
Temp. Guardrail	LF												
Power Brooming	Hour												
												Total	

Oral or Written Directives:

Contractor's Representative	**Date**	**Project Engineer's Representative**	**Date**

Form 25D-103 (1/04 ge)

17.105. Traffic Enforcement Presence Log

STATE OF ALASKA
DEPARTMENT OF TRANSPORTATION AND PUBLIC FACILITIES

Traffic Law Enforcement Presence PAGE ____

Project Name:

Date	Number of Law Enforcement	Approximate Hours on Project Site	Initials Of Observer
		From: To: or Total Hours:	
		From: To: or Total Hours:	
		From: To: or Total Hours:	
		From: To: or Total Hours:	
		From: To: or Total Hours:	
		From: To: or Total Hours:	
		From: To: or Total Hours:	
		From: To: or Total Hours:	
		From: To: or Total Hours:	
		From: To: or Total Hours:	
		From: To: or Total Hours:	
		From: To: or Total Hours:	
		From: To: or Total Hours:	
		From: To: or Total Hours:	
		From: To: or Total Hours:	
		From: To: or Total Hours:	
		From: To: or Total Hours:	
		From: To: or Total Hours:	
		From: To: or Total Hours:	
		From: To: or Total Hours:	
		From: To: or Total Hours:	
		From: To: or Total Hours:	
		From: To: or Total Hours:	
		From: To: or Total Hours:	
		From: To: or Total Hours:	
		From: To: or Total Hours:	

Form 25D-128 (April 2012)

17.106. Traffic Item 643 (15) Flagging (Form 25D-037)

Page _____ of _____

STATE OF ALASKA
DEPARTMENT OF TRANSPORTATION AND PUBLIC FACILITIES

ITEM 643(15) FLAGGING

Project Name: _____

Project Number: _____ Date: _____

Flagging Required: _____

_____

_____

Name	Start	Time *	End	Hours	Comments

*Indicate break

Today's Total _____

Previous Total _____

Total to Date _____

_____ _____
Contractor's Representative Inspector

_____ _____
Calculated by/Date Checked by/Date

Form 25D-037(4/98)

17.107. Waiver Request for Alternate Procurement Methods (Form 25D-026)

State of Alaska
Department of Transportation & Public Facilities

WAIVER REQUEST
FOR ALTERNATE PROCUREMENT METHODS

Send waiver requests over $100,000 to: DOT&PF Chief Contracts Officer; 3132 Channel Drive (Mail Stop 2500); Juneau, Alaska 99801-7898
Fax to: 1 (907) 586-8365; For Information: 1 (907) 465-6990

Requesting Department/Division:		Date:	Bid Waiver Number (FOR HQ USE ONLY)
Project Number(s) AKSAS/Federal:	Estimated Price:	Signature of Requesting Procurement Officer:	
Project Name:		Person to Contact (Project Manager & Telephone Number):	

Part 1 - Type of Procurement Method:

☐ Competitive Sealed Bid ☐ Competitive Sealed Proposal ☐ * Limited Competition
☐ * Emergency ☐ * Single Source ☐ Small Procurement

* Regardless of the contract amount, any purchase using Emergency, Single Source or Limited Competition procurement must be assigned a Bid Waiver Number and PART 6 of this form must be completed for each resulting contract.

Part 2 - Specific description of procurement requirements to be waived: For example time of advertisement, public notice, selection process, record keeping, etc.

Part 3 - Project Description: Provide the following information: 1) The contract requirements with attached schematics, planning documents, or narratives as appropriate. 2) A cost estimate that is linked to the contract requirements. Identify funding source: (General Fund, Bond, Federal, etc.) and if Federally funded attach copy of Federal approval. 3) A time line depicting the project schedule from inception to completion. 4) List all agency officials with oversight or supervisory responsibility for the project. Attach separate page(s) if necessary.

Part 4 - Justification: Provide the following information: 1) Need for construction or services. 2) Reason(s) for agency's inability to conform with standard procurement methods. 3) Statutory or Regulatory authorization (if other than budgetary process) for construction or services. 4) Impact on project if waiver is not approved -- explain in detail. 5) Any other documentation/ justification the agency feels would be helpful in evaluating the request. Attach separate page(s) if necessary.

Form 25D-026 (rev 8/00) Page 1 of 2

PART 5 - Department of Transportation and Public Facilities' comments and recommendations:

Recommended: ☐ Approval ☐ Disapproval ☐ Other ☐ Return for other/further action as noted above.

Reviewed by:	Signature:	Date:

☐ **Approved** by: _____ Date:
Commissioner of Department of Transportation and Public Facilities

☐ **Approved with conditions**

☐ **Disapproved** _____
Title if executed by other than the Commissioner of Department of Transportation and Public Facilities

Part 6 - Record of procurement: submit a completed copy of this entire form to the Chief Contracts Officer within 15 days of executing the contract. When multiple contracts are awarded under an emergency procurement, information pertaining to all contracts must be reported. Under such circumstances, attach additional information in the format below - for each contract.

Complete all of the following:

(1) Name of Supplier or Contractor: (2) Their Zip Code:

(3) Contract Amount: $ (4) Contract Identification Number: (5) Commodity Code:

(6) Type (i.e. Professional Service, Construction, Supplies, etc.):

(7) Listing of services, products, construction (etc.) obtained:

(8) If other vendors, suppliers or contractors submitted bids or proposals, list the number of these that were:

Alaskan Bidders # "Out-of-State" Bidders #

This PART 6 prepared by: Date:

Form 25D-026 (rev 8/00)

17.108. Worksite Traffic Supervisor (Form 25D-124)

STATE OF ALASKA
DEPARTMENT OF TRANSPORTATION AND PUBLIC FACILITIES

DESIGNATION OF WORKSITE TRAFFIC SUPERVISOR

Project Name:

I, *(Contractor's responsible corporate officer or Project Superintendent)* hereby designate *(Worksite Traffic Supervisor's name)* to be the Worksite Traffic Supervisor, WTS, assigned to *(Project Name)* at *(Project Location(s))*. The WTS 24-hour contact phone number is *(24-Hr. Phone #)*. By signing this certification, I confirm that the designee is qualified and capable of conducting temporary traffic control on the above named project safely and in conformance with approved Traffic Control Plans and the Alaska Traffic Manual. The designee has the authority to perform the duties and responsibilities as described in Standard Specifications for Highway Construction (SSHC) Section 643-1.04.

The Worksite Traffic Supervisor is certified (attach copy of certification) as:

- ☐ Traffic Control Supervisor, American Traffic Safety Services Association (ATSSA)
- ☐ Work Zone Safety Specialist, International Municipal Signal Association (IMSA)
- ☐ Work Zone Temporary Traffic Control Technician, International Municipal Signal Association (IMSA)

The following lists employment history (see minimum experience required by SSHC Section 643-1.04) that provides the experience to perform the duties and tasks required for this project.

(Job Title)	*(Project Name)*	*(Duties)*
(Job Title)	*(Project Name)*	*(Duties)*
(Job Title)	*(Project Name)*	*(Duties)*
(Job Title)	*(Project Name)*	*(Duties)*

I certify that the information above was reviewed by me and, to the best of my knowledge and belief, is true and accurate.

Name: _____

Title: _____

Company: _____

Signature _____

Date _____

Form 25D-124 (5/14)

Page 1 of 1

17.109. Work Zone Accident Report (Form 25D-123)

Work Zone Accident Report (Form 25D-123)

Report WZ accidents to the Regional Traffic and Safety Engineer within 10 calendar days of accident.
Use the Tab key or mouse to navigate, and fill in the requested information.
In boxes with Yes or No choices, double click in a square and in next menu hit checked to fill it in.

1. **Project name:**
2. **Project number:**
3. **Roadway name:**

4. **Investigated by (DOT&PF employee):**
5. **Reported by:**
6. **Date & time of arrival at accident site:**
7. **Milepost:**
8. **Date of accident:**
9. **Time of accident:**
10. **Number of vehicles involved:**
11. **Roadway conditions:**
12. **Drivers' names:**
13. **Were contractor's vehicles or equipment involved?** ☐ Yes ☐ No
14. **Were state vehicles or equipment involved?** ☐ Yes ☐ No
15. **Did the accident happen within project limits?** ☐ Yes ☐ No
16. **Did the accident happen within the active work zone?** ☐ Yes ☐ No
17. **Was the accident related to construction activity?** ☐ Yes ☐ No
18. **Were the police on-site? (If Yes, attach their report)** ☐ Yes ☐ No
19. **Police Case No.:**
20. **Weather conditions:**

21. **Severity of injuries:**

22. **Accident Narrative:**

Form 25D-123 (Rev. 02/09jg)

Page 1 of 2

LEGEND							
Types of Collisions		**Symbols**					
	Head-on		Moving Vehicle		Channelizing Device
	Left turn		Backing Vehicle		Type II Barricade
	Rear End		Non-involved Vehicle		Type II Barricade
	Sideswipe – Opposite Direction		Pedestrian		Arrow Panel
	Sideswipe – Same Direction		Parked Vehicle		Sign Support
	Out of Control		Overturned Vehicle		Flagger
	Right Angle		Fixed Object		Work Area
	Fixed Object				

23. **Accident Diagram. You may paste an electronic sketch here or attach a hard copy sketch. Use symbols as shown in the Legend above, and include all traffic control devices, vehicles, and equipment involved or near the accident. Indicate North.**

This page intentionally left blank.

18. Appendix

18.1. Table 1, Project Milestones
18.2. Table II, Posting Requirements for DOT&PF Field Offices, All Projects
18.3. Table III, Posting Requirements in Contractor Offices
18.4. Table IV, Filing System Guide
18.5. Table V, Reference Books, Manuals, Polices
18.6. Table VI, Field Lab Testing Equipment
18.7. Table VII, Materials Sample Identification System
18.8 Materials Sampling & Testing Frequency Table for Highways
18.9 Materials Sampling & Testing Frequency Table for Airports
18.10 Table X, Reserved
18.11 Table XI, Reserved
18.12 Table XII, Reportable Quantities of Hazardous Substances
18.13. Bridges (Reserved)
18.14. Earthwork and Drainage
18.15. Surveying and Staking
18.16. Calculating Equitable Adjustments
18.17. Night Work
18.18. SCWE Program

This page intentionally left blank.

18.1. Table 1, Project Milestones

The following milestones and their dates will be documented by another section such as Contracts or Preconstruction.

- Constructability Review. This is often included with the PS&E, it is described in the Highway Preconstruction Manual 450.18.
- PS&E Review. This is construction's last chance to review the project design before it goes out to bid. See ACM 3.2 and Highway Preconstruction Manual 450.19.
- Bid Opening. Bids are opened by contract section. Starts various actions and submittals required of the contractor before Award. See ACM 3.4 and Highway Specification 103-1.01.
- Intent to Award. Indicates the Department's intention to award to a bidder, and the letter is used to convey documents to that bidder for signature. See ACM 3.4 and Highway Specification 103-1.03.
- Escrow Document Delivery. When required by special provision.
- Subcontract List. Submitted by contractor within 5 days of receiving notice of Intent to Award. See ACM 3.4 and Highway Specification 103-1.02.
- Award of Contract. This indicates the contract has been signed, required documents received, and the bid is awarded to the Contractor. See ACM 3.4 and Highway Specification 103-1.03.

The following milestones and dates should be documented by letter or email between the project engineer (or Group Chief/PM) and the contractor. Letters may combine milestones (such as a completion date and a transfer of maintenance responsibilities). This is not an all-inclusive list. Examples of letters are in Chapter 17 Exhibits.

- Notice to Proceed. This authorizes construction and indicates the date that contract time starts. See ACM 3.4 and Highway Specification 108-1.02.
- Preconstruction Conference. This is the first group meeting of the Project Engineer, contractor, and other interested parties. See ACM 3.8 and Highway Specification 108-1.03.
- Notice of Work and Notice of Completion. Requirements of the Department of Labor for the contractor. See ACM 3.8 and 16.2, and Highway Specification 107-1.04.
- Date that the Engineer determines the conditions for ending CGP coverage have been met.
- Notice of Intent and Notice of Termination. A requirement of the Department of Environmental Conservation for the contractor and the Department. See ACM 3.11 and 9.9.6, and Highway Specification 641-1.01.
- Seasonal suspension of work. See ACM 14.3 and 9.9.5, and Highway Specification 643-3.07.
- Contractor maintenance ends. This indicates when the Department will take over some or all maintenance activities. See ACM 15.3 and 15.6, and Highway Specification 105-1.13.
- Final Inspection. The owner, contractor, other interested DOT&PF groups, and funding agencies inspect the project before closeout. See ACM 15.1 and Highway Specification 105-1.15.
- Substantial Completion. This indicates that the project is usable by the public. It also affects the amount of liquidated damages and may affect the contractor's maintenance responsibilities. See ACM 15, and Highway Specification101-1.03 (definition) and 105-1.13 thru 1.15.
- Partial Completion. The Department accepts a geographically separate portion of the project as being substantially complete. See ACM 15.3 and Highway Specification 105-1.14.
- Project Completion. The Department accepts the entire project as physically complete and stops contract time. See ACM 15.6 and Highway Specification 105-1.15.

- Date Contract Time stops. Normally this is at Project Completion. See ACM 14 and 15.6, and Highway Specification 105-1.15.

- Final Acceptance. This closes the Contract Agreement (except for bonding and warranties) after all work is complete, records are submitted, and final payment made to contractor. See ACM 16.4 and Highway Specification 105-1.16.

18.2. Table II, Posting Requirements for DOT&PF Field Offices, All Projects

Required posters include all those listed on the Division of Personnel website at http://doa.alaska.gov/dop/resources/mandatoryPosters/ plus other posters required by law or funding agency (+).

Office of Federal Contract Compliance Programs: http://www.dol.gov/ofccp/regs/compliance/posters/ofccpost.htm

+ **Alaska Whistleblowers Act,** (AS 39.90.100)

+ **Contact Information** for Safety Conscious Work Environment and for Employee Safety Concerns Program (see ECP Manual for information) Attach to bottom of Sexual harassment is Prohibited poster.

+ **Drug Free Workplace Act of 1988,** Required for Federal funding (41USC701).

+ **Emergency Phone Numbers** (Doctors, hospitals and ambulance or 911) must be posted. ADOL's Poster DOSH 51 may be used. Required by OSHS 01.0501(h).

Employer's Certificate of Self-Insurance, Alaska Department of Labor. Required by AS 23.30.060.

Equal Employment Opportunity is the Law, Federal EEO Commission (Poster EEOC-P/E-1), and

+**"EEO is the Law" Poster Supplement.** Required by 29 CFR 1601. 30.

It's Your Right to Know –Safety and Health Protection on the Job, Alaska Department of Labor, Standards and Safety. Required by AS 18.60.010 to .105.

Notice to Employees – Federal Minimum Wage, U.S. Dept. of Labor Wage & Hour Division (Notice WH 1088). Required by 29 CFR 516.4

Notice to Employees - Unemployment Insurance, Alaska Department of Labor, Employment Security Division,

Form 07-1012. Required by 8 AAC 85.060.

+ **Policy on Discriminatory Treatment of Individuals with Disabilities,** Alaska Department of Administration, Office of EEO. Poster required by Administration Order 129, Section X-A.

Sexual Harassment is Prohibited, Alaska Commission for Human Rights and Federal EEO Commission.

+ **Smoking Prohibited by Law,** Alaska Dept. of Environmental Conservation, Sign 18-1140. Required by AS 18.35.330.

Summary of Alaska Wage and Hour Act, Alaska Department of Labor. Required by AS 23.10.105.

Summary of Alaska Child Labor Law, Alaska Department of Labor.

You have a Right to a Safe and Healthful Workplace (It's the Law- Job Safety and Health), Alaska Department of Labor, Labor Standards Division (Poster DOSH 2003). Required by OSHS 01.0102(c).

Your Rights Under the Family and Medical Leave Act, U.S. Dept. of Labor Wage & Hour Division (Notice WH 1420 or duplicated text). Required by 29 CFR 825.300.

USERRA - The Uniformed Services Employment and Reemployment Rights Act, U.S. Dept. of Labor Wage & Hour Division.

Table II, Posting Requirements for DOT&PF Field Offices, All Projects

Common Additional Requirements

ARRA – Know your Rights Under the Recovery Act! Poster required on projects funded under American Recovery and Reinvestment Act of 2009. For more information go to website: www.recovery.gov

Building Permit, from State Fire Marshal.

Construction Permits from local governments.

Material Safety Data Sheets/Safety Data Sheets (OSHA Form 20) for toxic or hazardous substances or agents to which

employees may be exposed. Required OSHS 15.01.01(h).

Materials Source and Wetlands Permits, from U.S. Corps of Engineers.

Nuclear/Radioactive Material Warning Signs and Radiation Incident Reporting Information Sheet, required where radioactive materials are present.

Note: This list is not comprehensive; many other posting requirements apply in specific circumstances (e.g. asbestos removal, transportation of hazardous materials).

18.3. Table III, Posting Requirements in Contractor Offices

The contractor is responsible for required posters, including all those listed on the Department of Labor and Workforce Development website at http://www.labor.alaska.gov/lss/posters.htm plus other posters required by law or funding agency including FHWA website http://www.fhwa.dot.gov/programadmin/contracts/poster.cfm.

Table III, Posting Requirements in Contractor Offices **Required by DOT&PF Construction Contracts**		
	Federal Aid Projects	**State Funded Projects**
Contractor's Civil Rights Representative, DOT&PF Form 25A-302, completed by contractor.	x	X
Contractor's Company Equal Employment Opportunity Policy, prepared by contractor.	x	X
Federal Davis-Bacon Wage Determinations, "Davis-Bacon rates determined by U.S. Department of Labor, attached to either the: **Notice to all employees…on Federal…Projects,** U.S. Dept. of Labor Wage & Hour Division Poster WH 1321; or **Wage Rate Information – Federal Aid Highway Project,** FHWA Poster FHWA-1495.	x	
Labor's & Mechanics' Minimum Rates of Pay (Pamphlet 600), determined by Alaska Department of Labor and Workforce Development.	x	X
Notice of Intents, From ADEC's APDES system, contractors and departments, **Name and phone number of SWPPP Manager**, and **Location of SWPPP** available for public viewing. Must be posted outside the office and near the beginning and end of the project, in accessible locations.	X	X
Falsification Notice, FHWA-1022	**FHWA only**	

Note:

1. This is a standard list of postings required by our contracts. Individual contracts may contain language requiring additional posting requirements.
2. **Beginning in 2016 there is a new "EEO is the Law" Poster Supplement required on Federal-Aid projects.**

18.4. Table IV, Filing System Guide

Table IV, Filing System Guide, (section 4.2)

A. Contract Files

1. Conformed Contract (including half-size plans)
2. Engineers Estimate and Bid Tabulations
3. Directives
4. Change Documents
5. Utility Installation/Relocation Agreements (including payment authorizations/requests)
6. Professional Service Agreements (including amendments and payment authorizations)

B. Correspondence and Report Files

1. Contractor correspondence (including Letter of Award, Notice to Proceed, Progress Schedules, TCP, SWPPP, HMCP)
2. Claims (separate files for each situation, if more than one, and a separate file for Attorney-Client Privilege correspondence)
3. All other correspondence (intra-departmental, inter-agency)
4. Project Construction Reports (weekly/semi-monthly reports)
5. Computer-generated Progress Reports (Engineer's diary, inspector's daily reports)
6. All other reports (safety meeting reports, SWPPP inspection reports, federal agency inspection reports, quality assurance/review reports, accident reports, and Departmental inspection reports.

C. Pay Estimate and Quantity Files

1. Progress Payment Estimates
2. Pay Item Files (set up files for each contract pay item, as needed, to contain or reference the calculations for progress estimate pay quantities).

D. Material Files

1. Material Test Results and Reports (set up files for each contract pay item and type of test, as needed)
2. Pending and Approved Materials Submittals (including Project Materials Reports)

E. Administrative Files

1. Master Index
2. State Funding Information (PDA's, encumbrance memos)
3. Federal Funding Agreements (including amendments and payment requests)
4. Permits (material sources, environmental, building)
5. Overtime Authorization Requests
6. Personnel Files (files for each employee including delegations of authority and assignment memos, time sheets, travel vouchers)
7. Stock Requests
8. Bills, Invoices, Vouchers (for office, utilities, supplies, equipment)
9. Project Engineer's Equipment Inventory
10. Photographic Records (photo albums, video index)

F. Design/Project Development Data Files

1. Materials Report
2. Design Files (including original bid quantity calculations)
3. Right-of-Way Information
4. Project Survey Data

Only one file in each category may be necessary to accommodate each of the six general categories of files, depending on a project's volume and type of paperwork; other projects may require many files under some of the sub-categories (such as pay item and personnel files).

18.5. Table V, Reference Books, Manuals, Polices

Table V, Reference Books, Manuals, Policies, (section 4.7)						
Required	**Federally Funded**			**State Funded**		
	HWY	**AIR**	**MAR**	**HWY**	**AIR**	**MAR**
AASHTO-Standard Specifications for Transportation Materials	R	R	R	R	R	R
ADEA, ASEA, Local 71-Collective Bargaining Agreements	X	X	X	X	X	X
ADOL-Construction Code for Occupational Safety & Health Standards	X	X	X	X	X	X
ADOL-Wages and Hours of Laborers…. (Pamphlet No. 400)	X	X	X	X	X	X
DOT&PF-Alaska Construction Manual	X	X	X	X	X	X
DOT&PF-Alaska Oversize & Overweight Permit Movements	X	A	A	X	A	A
DOT&PF-Alaska Product Preference Program Preparation Pamphlet				A	A	A
DOT&PF-Alaska Test Methods Manual	X	X	A	X	X	A
DOT&PF-Qualified Products List	X	X	X	X	X	X
DOT&PF-Policy and Procedures Manual	R	R	R	R	R	R
DOT&PF-Standard Drawings (for Highways)	X		A	X		A
DOT&PF-Standard Specifications for Highway Construction	X		X	X		X
DOT&PF-Storm Water Pollution Prevention Plan Guide	X	X	A	X	X	A
Alaska Statutes, Alaska Administrative Code	R	R	R	R	R	R
ASTM-American Society for Testing Materials Test Methods	R	R	R	R	R	R
FAA-Advisory Circular 150/5345-1A, Approved Airport Lighting Equipment		X			X	
FAA-Advisory Circular 150/5370-2C, Safety on Airports During Construction		X			X	
FHWA/DOT&PF-Alaska Traffic Manual	X	A	A	X	A	A
U.S. DOT-Shipping and transporting requirements (for hazardous materials)	R	R	A	R	R	A
Recommended						
ADCED-Alaska Products Preference List				A	A	A
ADOA-Risk Management Division Claims Reporting Procedures Manual	R	R	R	R	R	R
DOA-State Personnel Rules	R	R	R	R	R	R
DOT&PF-Airport Standard Specifications		X			X	
DOT&PF-Asphalt Pavement Inspector's Manual	A	A	A	A	A	A
Appendix A, 23 CFR 230 (EEO Program)		X				
Asphalt Institute Manual Series	A	A	A	A	A	A
Code of Federal Regulations	R	R	R	R	R	R
FAA-Advisory Circulars		R			R	
FAA-AIP Handbook		X				
FHWA-Federal Aid Program Guide	X		X			
Hot Mix Asphalt Paving Handbook (AASHTO, FAA, FHWA, US Army Corps)	A	A	A	A	A	A
US EPA-NPDES General Permit for Storm Water Discharges	A	A	A	A	A	A
USDOL-Field Operations Handbook, Chapter 15	X	X	X			
X=entire book R=Applicable sections only A=only if applicable						

Table V (continued), Regional Office Reference
AASHTO-Standard Specifications for Transportation Materials and Methods of Sampling and Testing
ADOA-State Personnel Rules
ADOA-State Procurement Reference Manual
DOT&PF Alaska Construction Manual
DOT&PF Policy Manual (DPOL); Policy and Procedures Manual; Procedures Manual (DPDR)
DOT&PF Pre-Construction Manual
DOT&PF Procurement Policy and Procedure Manual
DOT&PF-Alaska Oversize and Overweight Permit Movements manual
Alaska Administrative Code
Alaska Statutes
ASTM-American Society of Testing Materials Standards
FAA-Advisory Circulars
FAA-AIP Handbook
FCC-Radio Communications Procedures
NRC Regulations (applicable sections)
Rental Rate Blue Book for Construction Equipment, Volumes 1-3
USDOT-Shipping and Transporting Requirements

18.6. Table VI, Field Lab Testing Equipment

Table VI - Field Lab Testing Equipment (See Section 5.2)	
Basic Aggregate and Soils Lab	
1" and 3" bristle brushes – (2 each)	Gloves
10' and 100' tape measures (one each)	Handling pans (2-3 each)
100 and 1,000 ml graduated cylinders (2-3 each)	Large and small flathead screwdrivers (one each)
18"x18"x3" pans (6-8 each)	Large and small sample splitters with pans (one each)
2"-3" paintbrush for splitter pans	Large and small scoops (2-3 each)
3-5 pound sledge hammer	Large digital scale
5 gallon buckets (10-20 each)	Large Gilson shaker with timer
6' folding ruler	Large magic markers (3 each)
6" proctor mold, 10 lb. hammer, 12" beveled straightedge	Large spoons (3 each)
9"x12" pans (6-8 each)	Liquid limit machine with grooving tool, spatula and tins
Alaska Construction Manual	Nested sieves (#4 and ¾" and 3") full height
Alaska Test Methods manual	No. 10 pre-screen (2 each)
All purpose cleaner/degreaser 32 oz.	No. 200 wash sieves (2 each)
Armored thermometers, 0° to 400° F (3 each)	Nuclear densometer (moisture/density gauge with reference stand, rod, scraper, plate, and charger
Bench brush, broom, dustpan	Round point and square point shovels (2-3 each)
Calculator (2 each)	Sample bags and liners (10-15 each)
Canvas for quartering	Set of large sieves (4" through No. 4)
Clipboards	Set of nested sieves (8 inch or 12 inch diameter) including 4", 3", 2", 1 ½", 1", ¾", ½", 3/8", No. 4, No. 8, No. 10, No. 16, No. 20, No. 30, No. 40, No. 50, No. 80, No. 100, No. 200, pan, lid
Digital Scale	Sieve brushes (soft and wire bristle) (one each)
Dust masks (one package, double band)	Sieve shaker, 12"
Ear Plugs (box of 100)	Specific gravity bucket with suspension apparatus
Electrical surge protector	State of Alaska aggregate worksheets
Extension cords	State of Alaska density worksheets
Fire extinguisher	Stop watch
First aid kit	Transmittal forms
Forced air oven	Water Bath with overflow and heated circ. system
Garbage bags	Waterproof field books (10/box)
	Zip poly bags, quart size (many)
Table VI - Additional for Asphalt Lab	
1 gallon plastic jug or glass sampling containers (6)	Gloves (heat resistant)
1 liter flasks with stopper (2 each)	Hot plate for tools
1 quart sampling cans with lids and labels (12)	Insulated box for transporting hot mix
1"x6" spatula (2 each)	Large road sign (asphalt sample splitter)
Absolute pressure gauge or Manometer	Liquid soap or dispersing agent (1 quart)
Absorbent pads for spills and cleanup (1 bundle)	Nuclear asphalt content gauge with accessory kit
Aluminum foil	Scale fitted with a suitable suspension apparatus and holder to permit weighing the cores
Asphalt ignition oven with accessory kit with carbon monoxide detector, or nuclear asphalt content gauge with pans	Sealing tape (not duct tape)

Asphalt sample boxes, pails or plate	Silver spray paint
Asphalt saw (wet to separate core lifts)	Small spatulas or putty knives (2)
Asphalt thermometer to 550° F	Splitting paper
Asphalt trowel for splitting samples (2 each)	Spray lubricant & rust preventative
Citrus based solvent (1 gallon)	State of Alaska asphalt worksheets
Cooking spray, high heat, non-sticking	Thermometer 66° to 80° F, graduated in 0.2° F, for cores
Dial thermometers, 50° to 500° F (6 each)	Thermometer accurate to 0.9° F (digital) or calibrated liquid in glass
Electrical surge protector	Vacuum pump or water aspirator, capable of removing air from container to 30 mm HG
Flat bottom scoop	Vacuum pycnometer (2000 g)
Additional for Concrete Lab	
8" torpedo level	Reference Thermometer (Readable to 0.5° F)
Airmeter, complete	Rubber mallet (1.25 +/-0.5 lbs.) for up to ½ ft^3 measure
Aluminum/Acrylic plate screed	Scale
Board for slump test, non-absorbent surface	Slump cone
Canvas or burlap wheelbarrow cover	Small shims or wedges
Concrete cylinder molds with lids or plastic wrap (12 each)	Squirt bottle
Concrete thermometer, 25° to 125° F (+/-1° F) (2 each)	State of Alaska concrete worksheets
Grout Cube Mold with accessories	Tamping rod, 5/8"x24" with rounded ends
Hand brush for cleanup	Wheel barrow (4 ft^3 capacity)
Insulated box or cooler for cylinders	
Latex gloves	
Maximum-minimum thermometer, 30° to 200° F (may need wider range for cold temperatures)	

18.7. Table VII, Materials Sample Identification System

Table VII, Materials Sample Identification System, also see ACM 5.4

Each materials sample taken on a construction contract project will be assigned a four part number that identifies the type of sample, the type of material, the test that will be performed on the sample, and the sequential number of the test in that series on that type of material and sample. When a test sample fails to meet the specifications, the test number is circled in the Materials Testing Summary. A retest of a failing test is identified by adding the letter "A" after the test number for the first retest; a second retest adds the letter "B", and so on. Samples sent to the regional lab for testing will also be identified by this system, in addition to the project name and number, the location the sample was taken, and the name of the sampler. This sample identification system will be used on test results from the field lab and from the regional lab, and on the Materials Testing Summary form. (This table is duplicate of ATMM SP-12. Codes verified on 4/2016)

Types of Samples

Acceptance	No prefix	Information	I
Independent Assurance	IA	Quality	Q

Types of Materials

Aggregate Base Course	BC	Gas Line Conduit	GC
Aggregate Surface Course	SC	Hot Mix Asphalt	HMA
Asphalt Cement	AC	Grout	GR
Asphalt Pathway	AP	Manhole Type (I, II, III)	MH(_)
Asphalt Sidewalk	AS	Medium Cure Liquid Asphalt	MC
Asphalt Surface Treatment	AST	Mineral Filler	MF
Asphalt Treated Base Course	ATB	Performance Grade Liquid Asphalt	PG
Bed Course Material	BCM	Porous Backfill	PB
Bedding and Backfill	BB	Reclaimed Asphalt Pavement	RAP
Borrow Material Type (A, B, C)	BM(_)	Rip Rap	RR
Common Excavation	CX	Rock Excavation	RX
Concrete Coarse Aggregate	CA	Sewer Conduit	SC
Concrete Fine Aggregate	FA	Sidewalk	SW
Cover Coat Grading B	CCB	Stone Mastic Asphalt	SMA
Crushed Asphalt Base Course	CABC	Structural Backfill Material	B
Culvert	C	Structural Plate Pipe	SPP
Ditch Lining	DL	Subbase	SB
Electrical Conduit	EC	Telephone Conduit	TC
Electrical - Miscellaneous	EL	Television Conduit	TV
Emulsified Asphalt Materials	EAM	Top Soil	TS
Emulsified Treated Base	ETB	Type A Inlet	AI
Field Inlet	FI	Unclassified Excavation	EX
Filter Blanket	FB	Useable Excavation, Type (A, B, C)	EX(_)
Filter Material	FM	Waste	EXW
Fire Hydrant	FH	Water Conduit	WC
Foundation Fill	FF	Waterline	WL
Gabion Backfill	GB	Warm Mix Asphalt	WMA

Types of Tests

Correction Factor – Ignition Oven	CF	Mix Design	MD
Field Density	D	Moisture	M
Fracture Count	F	Oil Content	O
Gradation	G	Plastic Index	PI
Joint Density	JD	Plastic Limit	PL
Liquid Limit	LL	Standard Density	SD

18.8 Materials Sampling & Testing Frequency Table for Highways

The non-project specific MSTF tables for highways are on the D&ES Statewide Materials website at:
http://www.dot.state.ak.us/stwddes/desmaterials/mat_resource.shtml

18.9 Materials Sampling & Testing Frequency Table for Airports

A project specific MSTF table for airports may be in the contract.
The non-project specific MSTF tables for airports are on the D&ES Statewide Materials website at:
http://www.dot.state.ak.us/stwddes/desmaterials/mat_resource.shtml

18.10 Table X, Reserved

18.11 Table XI, Reserved

18.12 Table XII, Reportable Quantities of Hazardous Substances

Table XII, Federal Reportable Quantities of Hazardous Substances Designated Pursuant to Section 311 of the Clean Water Act - The State of Alaska requires all hazardous substance spills to be reported, regardless of quantity.

Material	Category	RQ in pounds (kg)
Acetaldehyde	C	1,000 (454)
Acetic acid	D	5,000 (2,270)
Acetic anhydride	D	5,000 (2,270)
Acetone cyanohydrin	A	10 (4.54)
Acetyl bromide	D	5,000 (2,270)
Acetyl chloride	D	5,000 (2,270)
Acrolein	X	1 (0.454)
Acrylonitrile	B	100 (45.4)
Adipic acid	D	5,000 (2,270)
Aldrin	X	1 (0.454)
Allyl alcohol	B	100 (45.4)
Allyl chloride	C	1,000 (454)
Aluminum sulfate	D	5,000 (2,270)
Ammonia	B	100 (45.4)
Ammonium acetate	D	5,000 (2,270)
Ammonium benzoate	D	5,000 (2,270)
Ammonium bicarbonate	D	5,000 (2,270)
Ammonium bichromate	A	10 (4.54)
Ammonium bifluoride	B	100 (45.4)
Ammonium bisulfite	D	5,000 (2,270)
Ammonium carbamate	D	5,000 (2,270)
Ammonium carbonate	D	5,000 (2,270)
Ammonium chloride	D	5,000 (2,270)
Ammonium chromate	A	10 (4.54)
Ammonium citrate dibasic	D	5,000 (2,270)
Ammonium fluoborate	D	5,000 (2,270)
Ammonium fluoride	B	100 (45.4)
Ammonium hydroxide	C	1,000 (454)
Ammonium oxalate	D	5,000 (2,270)
Ammonium silicofluoride	C	1,000 (454)
Ammonium sulfamate	D	5,000 (2,270)
Ammonium sulfide	B	100 (45.4)
Ammonium sulfite	D	5,000 (2,270)
Ammonium tartrate	D	5,000 (2,270)
Ammonium thiocyanate	D	5,000 (2,270)
Amyl acetate	D	5,000 (2,270)
Aniline	D	5,000 (2,270)
Antimony pentachloride	C	1,000 (454)
Antimony potassium tartrate	B	100 (45.4)
Antimony tribromide	C	1,000 (454)
Antimony trichloride	C	1,000 (454)
Antimony trifluoride	C	1,000 (454)
Antimony trioxide	C	1,000 (454)
Arsenic disulfide	X	1 (0.454)
Arsenic pentoxide	X	1 (0.454)
Arsenic trichloride	X	1 (0.454)
Arsenic trioxide	X	1 (0.454)
Arsenic trisulfide	X	1 (0.454)
Barium cyanide	A	10 (4.54)
Benzene	A	
Benzoic acid	D	5,000 (2,270)
Benzonitrile	D	5,000 (2,270)
Benzoyl chloride	C	1,000 (454)
Benzyl chloride	B	100 (45.4)
Beryllium chloride	X	1 (0.454)
Beryllium fluoride	X	1 (0.454)
Beryllium nitrate	X	1 (0.454)
Butyl acetate	D	5,000 (2,270)
Butylamine	C	1,000 (454)
n-Butyl phthalate	A	10 (4.54)
Butyric acid	D	5,000 (2,270)
Cadmium acetate	A	10 (4.54)
Cadmium bromide	A	10 (4.54)
Cadmium chloride	A	10 (4.54)
Calcium arsenate	X	1 (0.454)
Calcium arsenite	X	1 (0.454)
Calcium carbide	A	10 (4.54)
Calcium chromate	A	10 (4.54)
Calcium cyanide	A	10 (4.54)
Calcium dodecylbenzenesulfonate	C	1,000 (454)
Calcium hypochlorite	A	10 (4.54)
Captan	A	10 (4.54)
Carbaryl	B	100 (45.4)
Carbofuran	A	10 (4.54)
Carbon disulfide	B	100 (45.4)
Carbon tetrachloride	A	10 (4.54)
Chlordane	X	1 (0.454)
Chlorine	A	10 (4.54)
Chlorobenzene	B	100 (45.4)
Chloroform	A	10 (4.54)
Chlorosulfonic acid	C	1,000 (454)
Chlorpyrifos	X	1 (0.454)
Chromic acetate	C	1,000 (454)
Chromic acid	A	10 (4.54)
Chromic sulfate	C	1,000 (454)
Chromous chloride	C	1,000 (454)
Cobaltous bromide	C	1,000 (454)
Cobaltous formate	C	1,000 (454)
Cobaltous sulfamate	C	1,000 (454)
Coumaphos	A	10 (4.54)
Cresol	B	100 (45.4)
Crotonaldehyde	B	100 (45.4)
Cupric acetate	B	100 (45.4)
Cupric acetoarsenite	X	1 (0.454)
Cupric chloride	A	10 (4.54)
Cupric nitrate	B	100 (45.4)
Cupric oxalate	B	100 (45.4)

Material	Category	RQ in pounds (kg)
Cupric sulfate	A	10 (4.54)
Cupric tartrate	B	100 (45.4)
Cyanogen chloride	A	10 (4.54)
Cyclohexane	C	1,000 (454)
2,4-D Acid	B	100 (45.4)
2,4-D Esters	B	100 (45.4)
DDT	X	1 (0.454)
Diazinon	X	1 (0.454)
Dicamba	C	1,000 (454)
Dichlobenil	B	100 (45.4)
Dichlone	X	1 (0.454)
Dichlorobenzene	B	100 (45.4)
Dichloropropane	C	1,000 (454)
Dichloropropene	B	100 (45.4)
Dichloropropene-Dichloropropane (mixture)	B	100 (45.4)
2,2-Dichloropropionic acid	D	5,000 (2,270)
Dichlorvos	A	10 (4.54)
Dicofol	A	10 (4.54)
Dieldrin	X	1 (0.454)
Diethylamine	B	100 (45.4)
Dimethylamine	C	1,000 (454)
Dinitrobenzene (mixed)	B	100 (45.4)
Dinitrophenol	A	10 (45.4)
Dinitrotoluene	A	10 (4.54)
Diquat	C	1,000 (454)
Disulfoton	X	1 (0.454)
Diuron	B	100 (45.4)
Dodecylbenzenesulfonic acid	C	1,000 (454)
Endosulfan	X	1 (0.454)
Endrin	X	1 (0.454)
Epichlorohydrin	B	100 (45.4)
Ethion	A	10 (4.54)
Ethylbenzene	C	1,000 (454)
thylenediamine	D	5,000 (2,270)
Ethylenediamine-tetraacetic acid (EDTA)	D	5,000 (2,270)
Ethylene dibromide	X	1 (0.454)
Ethylene dichloride	B	100 (45.4)
Ferric ammonium citrate	C	1,000 (454)
Ferric ammonium oxalate	C	1,000 (454)
Ferric chloride	C	1,000 (454)
Ferric fluoride	B	100 (45.4)
Ferric nitrate	C	1,000 (454)
Ferric sulfate	C	1,000 (454)
Ferrous ammonium sulfate	C	1,000 (454)
Ferrous chloride	B	100 (45.4)
Ferrous sulfate	C	1,000 (454)
Formaldehyde	B	100 (45.4)
Formic acid	D	5,000 (2,270)
Fumaric acid	D	5,000 (2,270)
Furfural	D	5,000 (2,270)
Guthion	X	1 (0.454)
Heptachlor	X	1 (0.454)
Hexachlorocyclopentadiene	A	10 (4.54)
Hydrochloric acid	D	5,000 (2,270)
Hydrofluoric acid	B	100 (45.4)
Hydrogen cyanide	A	10 (4.54)
Hydrogen sulfide	B	100 (45.4)
Isoprene	B	100 (45.4)
Isopropanolamine dodecylbenzenesulfonate	C	1,000 (454)
Kepone	X	1 (0.454)
Lead acetate	A	10 (4.54)
Lead arsenate	X	1 (0.454)
Lead chloride	A	10 (4.54)
Lead fluoborate	A	10 (4.54)
Lead fluoride	A	10 (4.54)
Lead iodide	A	10 (4.54)
Lead nitrate	A	10 (4.54)
Lead stearate	A	10 (4.54)
Lead sulfate	A	10 (4.54)
Lead sulfide	A	10 (4.54)
Lead thiocyanate	A	10 (4.54)
Lindane	X	1 (0.454)
Lithium chromate	A	10 (4.54)
Malathion	B	100 (45.4)
Maleic acid	D	5,000 (2,270)
Maleic anhydride	D	5,000 (2,270)
Mercaptodimethur	A	10 (4.54)
Mercuric cyanide	X	1 (0.454)
Mercuric nitrate	A	10 (4.54)
Mercuric sulfate	A	10 (4.54)
Mercuric thiocyanate	A	10 (4.54)
Mercurous nitrate	A	10 (4.54)
Methoxychlor	X	1 (0.454)
Methyl mercaptan	B	100 (45.4)
Methyl methacrylate	C	1,000 (454)
Methyl parathion	B	100 (45.4)
Mevinphos	A	10 (4.54)
Mexacarbate	C	1,000 (454)
Monoethylamine	B	100 (45.4)
Monomethylamine	B	100 (45.4)
Naled	A	10 (4.54)
Naphthalene	B	100 (45.4)
Naphthenic acid	B	100 (45.4)
Nickel ammonium sulfate	B	100 (45.4)
Nickel chloride	B	100 (45.4)
Nickel hydroxide	A	10 (4.54)
Nickel nitrate	B	100 (45.4)
Nickel sulfate	B	100 (45.4)
Nitric acid	C	1,000 (454)

Material	**Category**	**RQ in pounds (kg)**	*Material*	**Category**	**RQ in pounds (kg)**
Nitrobenzene	C	1,000 (454)	Styrene	C	1,000 (454)
Nitrophenol (mixed)	B	100 (45.4)	Sulfuric acid	C	1,000 (454)
Nitrotoluene	C	1,000 (454)	Sulfur monochloride	C	1,000 (454)
			2,4,5-T acid	C	1,000 (454)
Paraformaldehyde	C	1,000 (454)	2,4,5-T amines	D	5,000 (2,270)
Parathion	A	10 (4.54)	2,4,5-T esters	C	1,000 (454)
Pentachlorophenol	A	10 (4.54)	2,4,5-T salts	C	1,000 (454)
Phenol	C	1,000 (454)			
Phosgene	A	10 (4.54)	TDE	X	1 (0.454)
Phosphoric acid	D	5,000 (2,270)	2,4,5-TP acid	B	100 (45.4)
Phosphorus	X	1 (0.454)	2,4,5-TP acid esters	B	100 (45.4)
Phosphorus oxychloride	C	1,000 (454)	Tetraethyl lead	A	10 (4.54)
Phosphorus pentasulfide	B	100 (45.4)	Tetraethyl pyrophosphate	A	10 (4.54)
Phosphorus trichloride	C	1,000 (454)	Thallium sulfate	B	100 (45.4)
Polychlorinated biphenyls	X	1 (0.454)	Toluene	C	1,000 (454)
Potassium arsenate	X	1 (0.454)	Toxaphene	X	1 (0.454)
Potassium arsenite	X	1 (0.454)	Trichlorfon	B	100 (45.4)
Potassium bichromate	A	10 (4.54)	Trichloroethylene	B	100 (45.4)
Potassium chromate	A	10 (4.54)	Trichlorophenol	A	10 (4.54)
Potassium cyanide	A	10 (4.54)	Triethanolamine dodecylbenzenesulfonate	C	1,000 (454)
Potassium hydroxide	C	1,000 (454)	Triethylamine	D	5,000 (2,270)
Potassium permanganate	B	100 (45.4)	Trimethylamine	B	100 (45.4)
Propargite	A	10 (4.54)			
Propionic Acid	D	5,000 (2,270)	Uranyl acetate	B	100 (45.4)
Propionic anhydride	D	5,000 (2,270)	Uranyl nitrate	B	100 (45.4)
Propylene oxide	B	100 (45.4)			
Pyrethrins	X	1 (0.454)	Vanadium pentoxide	C	1,000 (454)
			Vanadyl sulfate	C	1,000 (454)
Quinoline	D	5,000 (2,270)	Vinyl acetate	D	5,000 (2,270)
			Vinylidene chloride	B	100 (45.4)
Resorcinol	D	5,000 (2,270)			
			Xylene (mixed)	B	100 (45.4)
Selenium oxide	A	10 (4.54)	Xylenol	C	1,000 (454)
Silver nitrate	X	1 (0.454)			
Sodium	A	10 (4.54)	Zinc acetate	C	1,000 (454)
Sodium arsenate	X	1 (0.454)	Zinc ammonium chloride	C	1,000 (454)
Sodium arsenite	X	1 (0.454)	Zinc borate	C	1,000 (454)
Sodium bichromate	A	10 (4.54)	Zinc bromide	C	1,000 (454)
Sodium bifluoride	B	100 (45.4)	Zinc carbonate	C	1,000 (454)
Sodium bisulfite	D	5,000 (2,270)	Zinc chloride	C	1,000 (454)
Sodium chromate	A	10 (4.54)	Zinc cyanide	A	10 (4.54)
Sodium cyanide	A	10 (4.54)	Zinc fluoride	C	1,000 (454)
Sodium dodecylbenzenesulfonate	C	1,000 (454)	Zinc formate	C	1,000 (454)
Sodium fluoride	C	1,000 (454)	Zinc hydrosulfite	C	1,000 (454)
Sodium hydrosulfide	D	5,000 (2,270)	Zinc nitrate	C	1,000 (454)
Sodium hydroxide	C	1,000 (454)	Zinc phenolsulfonate	D	5,000 (2,270)
Sodium hypochlorite	B	100 (45.4)	Zinc phosphide	B	100 (45.4)
Sodium methylate	C	1,000 (454)	Zinc silicofluoride	D	5,000 (2,270)
Sodium nitrite	B	100 (45.4)	Zinc sulfate	C	1,000 (454)
Sodium phosphate, dibasic	D	5,000 (2,270)	Zirconium nitrate	D	5,000 (2,270)
Sodium phosphate, tribasic	D	5,000 (2,270)	Zirconium potassium fluoride	C	1,000 (454)
Sodium selenite	B	100 (45.4)	Zirconium sulfate	D	5,000 (2,270)
Strontium chromate	A	10 (4.54)	Zirconium tetrachloride	D	5,000 (2,270)
Strychnine	A	10 (4.54)			

(This page intentionally left blank)

18.13. Bridges (Reserved)

18.14. Earthwork and Drainage

The items of work discussed in this section on earthwork and drainage include those construction operations necessary to complete the facility to the top of the subgrade.

The subgrade is considered to be the top surface of the embankment and is the graded surface upon which the subbase, base course, paving, and shoulders will be constructed. In the case of a project involving stage construction, the subgrade may be the top surface required by the contract. Such items as clearing and grubbing, earthwork, culverts and the installation of minor drainage and erosion control structures are usually considered in this category.

18.14.1 Structural Design

The construction of any facility consists of a number of correlated operations, which must be integrated to produce a finished product. Each step has a definite effect on the quality of that product. In any type of construction, the preparation of the foundation is the first and one of the most important stages of the work. In the case of highways or airports, grading and drainage make up the foundation, and regardless of the care taken in succeeding phases of the work, a durable facility cannot be attained if it has an unsatisfactory foundation or is inadequately drained.

The basic concept of structural design is selecting, from preliminary tests, the most suitable available materials and placing them most advantageously. Their grouping in horizontal layers under the surfacing is such that the most benefit will be derived from the inherent qualities of each material. In establishing the depth of each layer, the objective is to provide the minimum thickness that will reduce the unit stress in the next lower layer commensurate with the load-carrying capacity of the material within that layer. Introducing inferior material at a lesser depth than that for which it was designed will upset the equilibrium of such a design. For this reason, field personnel must be constantly alert during construction to guard against the use of material of a lesser quality than that allowed by the plans and specifications.

18.14.2 Preliminary Checking of Plans and Outlining of Work

Prior to the start of work, the project engineer is to review the plans and specifications onsite and to note all conditions, as follows:

1. Note topography, drainage, and the general characteristics of material to be handled.
2. Check borrow and material pits for size, nature, and locations.
3. Check all rights-of-way. Note utility agreements and special agreements regarding both right-of-way and material sites. Do not allow encroachments on private property without permission of the property owner.
4. Note all obstructions within the right-of-way that may interfere with construction. Notify the proper parties of obstructions they must move.
5. Check all drainage and structures.
6. Investigate completely and report to the project manager/group chief any significant conditions that may require a change document.
7. Analyze the Traffic Control Plans (TCPs) for handling traffic during construction. Note any special conditions in the special provisions.
8. Consult airport managers and keep them fully informed of *all* operations. Complete coordination between the airport manager, contractor, and project personnel is essential.
9. Contact The FAA project manager and airport manager concerning runway closures or partial closures and other construction features that may or will result in issuance of a NOTAM (Notice to Airmen). Full cooperation with the FAA is required on all airport projects.

18.14.3 Authority and Duties of Inspectors

Grading and drainage inspectors work under the supervision of the project engineer and are directly responsible to him or her in all matters pertaining to the work. To realize the importance of the duties, the grade inspector needs only to recognize that the greatest portion of embankment failures is due to deficiencies in the subgrade. Inspectors are authorized to inspect all work performed and materials furnished. Such inspection may extend to all or any part of the work. The inspector is not authorized to issue

instructions contrary to the plans and specifications, or to act as foreman for the contractor. The inspector shall notify the project engineer at once of any changes affecting the quality of work or disagreement with the contractor.

The inspector must become familiar with the plans, specifications, special provisions, staking procedures, the Geotechnical Report, the cross-sections, the balance points, and proposed drainage features.

When the inspector is given transportation for maximum coverage of a construction project, it does not mean that inspecting duties can be performed from the vehicle. As an example, it is impossible to check blue tops for base course from a vehicle. The so-called "ride test" will never replace or duplicate work with hand level, cloth tape, and a 10- or 16-foot straightedge.

A grading and drainage inspector's duties are divided into the following classifications:

1. Inspection of clearing and grubbing; excavation of cuts and/or drainage operations; and the construction of embankments
2. Sampling and testing, or notifying the field laboratory technician responsible for the sampling and testing when required
3. Measuring or verifying pay quantities
4. Keeping daily records of work in progress and making required reports; including, if required, a complete, factual, legible diary

18.14.4 SWPPP Requirements

The contractor must have an approved Storm Water Pollution Prevention Plan (SWPPP) and a Notice of Intent (NOI), if one acre or more of ground is disturbed. The contractor may not begin earth disturbing activities until after: the Alaska Department of Environmental Conservation (DEC) has listed the contractor's and the Department's project NOIs as active status on their web site, and the SWPPP Preparer has visited the site and signed a SWPPP Pre-Construction Site Visit (Form 25D-106). For more information on the SWPPP, see Sections 3.11 and 9.9.

18.14.5 Clearing and Grubbing

Complete clearing and grubbing in advance of grading operations in accordance with the specifications. This work consists of clearing the ground within the required limits and materials sites of trees, brush, rubbish, berm piles left from previous construction, and other objectionable material; then grubbing the stumps and larger roots.

No grading is permitted in any area until the clearing and grubbing has been completed to the satisfaction of the engineer. Scattered piles of debris within the usable excavation or embankment area may be easily incorporated in a fast-moving grading job unless the inspector is alert to prevent it.

During the course of construction, ditches, waterways and culverts frequently become clogged or partially filled with debris. The inspector must see that such obstructions are cleared in a satisfactory manner.

Burning

When burning combustible material, the contractor is required to observe all federal, state, and local regulations. Advise the contractor that he or she is responsible for compliance with laws relating to the creating of fire hazards and setting forest fires, including obtaining required burning permits. Pay particular attention to obligations for fire prevention and control. Before burning debris, remove it from areas adjacent to the trees and shrubs selected to remain.

Other Methods of Disposal

Where the specifications allow, areas outside the actual construction limits may be cleared by hydro axing or chipping. Where this is allowed, the debris remains are left on the ground; however, the specifications usually provide for a maximum size allowable and even distribution of debris or chips.

The specifications may require that debris from the clearing and grubbing operations are removed from the project, burned, or otherwise disposed of with the approval of the project engineer. Some contractors tend to dispose of this material by placing it on the abutting property. Permit this only when the contractor will dispose of this material outside of the right-of-way and where the contractor has written permission from the landowner (not the tenant) to use the land and has obtained permits (Army Corps of Engineers). All disposals will be in accordance with the specification requirements for the project.

18.14.6 Earthwork

The operations of excavating borrow and the placing, compacting, and finishing of the excavated material in the embankment or fills are among the most common

operations in our construction work. These operations are practically inseparable, since one operation is rarely carried out without the other, and so we generally consider, inspect, and control them as a single grading operation. The bulk of the grade inspector's duties and responsibilities are the inspection and control of the excavation and embankment work of the grading operation.

Survey Materials Report

Furnish the materials report to the project engineer at the beginning of a project. It is prepared from tests of samples taken from borings or test pits at the time the material survey is made.

Since the design of the facility was based on information from the materials report, make a thorough check of the actual soils encountered while constructing the subgrade. Notify the project engineer if you encounter soils that vary from those shown in the materials report. The project engineer may find it necessary to consult the project manager/group chief or the regional materials engineer. When notifying the regional construction office, the project engineer must make recommendations as to what action should be taken and have all the factual data.

18.14.7 Excavation

Excavation consists of excavating cuts, borrow pits, drainage channels, ditches, etc., for the construction of embankments or waste, in accordance with the requirements of the plans. It includes the removal and disposal of all materials encountered in the excavation, except those items for which direct payment is made separately.

In the event the specifications provide that the contractor will be paid twice for the volume of any materials excavated, stockpiled, and later used in the work, extreme care must be employed in measuring the material.

Unsuitable Material

As a guide, silty soils encountered in excavation with a natural moisture content over 5 percentage points above the optimum moisture as determined by ATM 207, Method D, may be designated as unsuitable material and disposed, at the discretion of the project engineer, unless the contract states otherwise. Use ATM 207, Method D, or ATM 212 to determine maximum densities. In-place field densities will be determined in accordance with ATM 213 and ATM 214.

In the event that the specifications indicate that density requirements will not apply to the portions of embankments constructed that cannot be tested in accordance with ATM 207, Method D, and the specifications require no special rolling requirements, place materials in lifts not exceeding eight inches, or the diameter of the maximum size particle, and route construction equipment uniformly over the entire surface of each layer until embankment does not rut under the loaded hauling equipment.

During the excavation operations, it is necessary at all times to observe the nature of the material encountered. Adverse soils, such as certain silts that exhibit large changes in volume with varying water content, are usually unstable under varying moisture conditions and frost action, and you should use them with discretion. It is essential that you give full consideration to making the best possible use of the soil material encountered in the excavation. However, you should avoid the use of soils that may cause instability in the embankment, or that may have some other detrimental effect, unless adequately treated to make them satisfactory. Soils, which are unsuitable in the upper portions of the subgrade, may often be used in the bottom or center of the embankment mass where their detrimental effects will be minimized. Recommendations on use of those materials should come from the designer or regional materials engineer and be documented.

Remove unsuitable material and replace it with acceptable material as provided in the specifications. Field tests documenting that the materials are unsuitable for use in embankments will be required for all wasted excavation.

It is the intent of the specifications that all usable excavation be placed in the embankment. Contract plans usually include quantities of unsuitable material to be wasted from excavation sections. Materials, which are usually designated as waste on the plans, are peat and muck, soils with a high percentage of vegetable matter, or silts and clays with high natural moisture content. The quantities shown on the plans as waste reflect only the best estimate, which the design sections are able to make on the basis of available materials reports and their knowledge of moisture conditions, which may be anticipated during the construction period. Estimates are based on a limited number of borings judged to be representative of the area. During construction, there may be considerable variation in the required depths of stripping or in the

extent of pockets of unsuitable materials, such as muck or peat. Further, variations in moisture content throughout a season or even in a matter of hours may have a substantial effect on certain materials and may make the difference as to whether they can be used or must be wasted. Under such circumstances, it is scarcely reasonable to expect the designer to include firm estimates of such quantities in the plans.

In many instances, the decision on whether or not this material must be removed is obvious regardless of whether the quantities conform to the plan estimate. However, in many other instances the decision is not so obvious due to the basic borderline nature of the material or as a result of the variations in moisture content. The decision on whether the material will be used or wasted must be made at the site with full knowledge of all the facts on its suitability for use in the embankment, the length of haul, and the cost of replacement with suitable borrow material.

When variations from plan quantities are rather minor and the distinction between usable material and waste is readily apparent, it is anticipated that the decision to waste or use will be made at the project level. When it is evident that a large quantity of excavated material intended for use as embankment must be wasted, a change document might be necessary to adjust the unit price, and the project engineer should immediately notify the project manager/group chief. Project engineers and inspectors do not have authority to order large quantities of waste not contemplated on the plans. When you must make extensive changes or when you encounter unusual soil conditions, consult the regional office at the earliest possible time so that you can consider methods to eliminate the waste.

In all cases where overruns in waste occur, document the overruns in the inspector's daily report and sample and test to establish the classification and moisture content of the material being wasted: a minimum of one gradation, P.I., and moisture content per undesignated waste cut. See the Material Sampling & Testing Frequency tables in sections 18.8 and 18.9.

The specifications require the use of useable excavation before placing borrow. There are occasional instances where it is advantageous to waste good material. Such an occurrence might result when the distance from the excavation to the embankment is so great that the additional haul would cause such material to be more expensive than wasting and substituting borrow from a nearer source.

Undercutting and Over-excavating

The following applies to projects where payment is other than to neat line as shown on the plans.

The specifications do not allow payment for materials excavated beyond the limits of the required slopes, except in certain cases. The inspector must continually inspect the construction of all slopes and ditches. If at any time the contractor excavates outside the slope stakes or below subgrade, except as required on the plans or as directed by the project engineer, or if the contractor over-excavates the slopes, or by methods of operation cause overbreak, the project engineer will immediately notify them that the specifications and contract do not permit payment for such excavation.

Where contractors excavate below subgrade, except as required on the plans or directed by the project engineer, they will replace the excavated material with a material of equal or better quality at their own expense. Before the work is accepted, the facility shall be substantially true to line, grade, and section shown on the plans.

Blasting

Overshooting of rock may shatter the adjacent hillside far behind the backslope, causing subsequent slides and over-breakage. Powder work is highly specialized, more an art than a science, and few, if any Department personnel have the knowledge and expertise required to actually criticize a contractor's drilling and shooting operations. Project personnel must be extremely careful to avoid any action that can be construed as assuming responsibility for the management of the contractor's operations. The contractor is required to have a licensed Powderman with a certificate of fitness for explosive handlers.

Project personnel can obtain copies of the "Blaster's Handbook" and familiarize themselves with the rules, regulations, properties, uses, and action of explosives. Before drilling, the contractor must furnish the project engineer with a blasting plan. The plan shows the pattern and depth of drill holes, type and amount of explosives used, loading pattern and sequence of firing. See Exhibit A for Sample Blasting Notes.

If the contractor's operation is not producing the desired results and the contractor appears to be making no effort to change, the project engineer will notify the contractor in writing, specifying what the problem is, that there appears to be no attempt at correction forthcoming, and that overbreak and slides

due to overshooting, which is usually the problem, will be at the contractor's expense.

Safety is primarily the contractor's responsibility but project personnel on projects requiring powder work should secure and become familiar with all applicable federal and state laws and regulations governing the storage, transportation, and use of explosives. The Powderman is responsible for all activities of employees within the blasting area and within 100 feet of the blasting area. The Powderman controls access by employees to this area. Employees may not enter the area until the Powderman gives the clearance to do so.

Particular care must be taken to ensure that there is no drilling behind the backslopes. However, drilling below grade is common practice to ensure that no points of rock are left sticking up between drill holes. The specifications recognize this and may provide for payment for excavation and backfill below plan grade.

Overbreak and Slides

The specifications may provide for payment of overbreak due to blasting operations. If excessive overbreak is occurring, the project engineer should proceed as outlined in Section 18.14.7, Unsuitable Material.

Excess Material

Excess required unclassified excavation should be used to the state's best advantage uniformly within the right-of-way limits, unless other methods are provided in the contract.

18.14.8 Borrow

In addition to the usable unclassified excavation, borrow is material required for embankments or other portions of the work, which is normally obtained from outside the project limits.

Although the specifications provide that the contractor may furnish material from sources of his or her choice, borrow sources require approval by the project engineer and must meet gradation and liquid limits requirements. Approval should be in writing.

Do not place borrow in an embankment until all usable excavation has been utilized as provided for in the plans.

Approval of Borrow Pits

When material sources are designated on the plans, no additional approval is required. A designated source does not guarantee acceptance of all the material in the pit. The contractor may use the source as long as the material continues to satisfy the requirements indicated in the contract. The project engineer may reject portions of the deposit as unacceptable or may reject any material produced from a designated source that does not meet the specification requirements.

When the contractor wants to use sources other than those included on the plans, he or she may use the material only after samples prove the material is acceptable, and the project engineer gives written approval. The contractor and the project engineer should clearly understand that approval of a contractor-furnished source in no way relieves the contractor of his responsibility for furnishing material meeting the specifications.

Quality

Materials produced at the site by the contractor must meet various standards of quality. You should request that the contractor furnish the location of the sources of these materials well in advance of production so that it will not cause a delay because of the time involved in testing. See the Materials Sampling & Testing Frequency tables in sections 18.8 and 18.9 for materials with quality requirements.

Pit Stripping

In the event that borrow pit clearing and/or stripping is required, it is important that the project engineers familiarize themselves with all of the pertinent requirements of the plans, specifications, special provisions, pit agreements, and environmental concerns, as well as the information available in the materials investigation report.

If the contract includes pit clearing and/or stripping as pay items, it is important that only those portions of the pits be staked that are needed to satisfy the quantity requirements of the project, keeping in mind adequate provisions for sloping, working floor space, and access to and from the pit area. A pit development plan may be required under the contract.

Because of the usual difference in unit prices between the cost of pit stripping and the cost of the borrow material, exercise care in determining stripping limits.

Haul Roads

Locate haul roads so that a minimum of haul, if haul is a contract pay item, will be required. In the normal instance where material will be hauled in two directions from the junction with the facility, a haul road with right angles to centerline is satisfactory. However, such factors as terrain, soil conditions, drainage, and the necessity for preserving natural vegetative cover must be taken into consideration. Check right-of-way plans and pit agreements to ensure that you have obtained the right to use the proposed location. In no instance should you allow the contractor to haul across private property without the written permission of the owner.

18.14.9 Embankment

The end results of the grading operation are a completed embankment having a high stability and density. The specifications include general requirements with respect to preparation work for the embankment construction. These requirements include suitability of materials, the use or disposal of unsuitable materials, requirements for benching existing side hill slopes, use of frozen material, and construction of embankments on existing surfacing. The grade inspector should be thoroughly familiar with these requirements and should be certain that the grade foreman is also familiar with them.

The grade inspector will inspect the contractor's operations and procedures, as necessary, to obtain stability and the density specified. The inspection and control necessary will vary considerably depending on the requirements specified, the type of soil and ease of compaction, the moisture control necessary, weather conditions, the skill of the contractor's forces, numbers and types of equipment, and other factors. Density tests are an aid to and a verification of the proper compaction of the finished embankment.

Experience shows that despite good grading operations and proper compactive effort in the construction of embankments, there are a number of items that, if not carefully observed and specifically inspected, may result in settlement. These special attention areas are as follows:

1. Settlement or sideslip may result on existing fill slopes or side hills if the original ground is not properly benched. Give careful inspection to the matter of benching side hill slopes and existing embankment slopes to be widened, as indicated in the plans and specifications.
2. Settlement may result at cut-to-fill transitions due to fill taper and insufficient compaction in the natural ground at the beginning of the fill. Give particular attention to the compaction of the new embankment at these points during the course of construction.
3. Settlement in areas adjacent to or over structures frequently occurs. Probably the most important inspection feature in this connection is the proper placement and compaction of material in the areas inaccessible to rollers, and the compactive effort of the earth-moving equipment. In most cases, you can eliminate this by close inspection of compaction by small mechanical tampers.
4. Compact backfills at bridge abutments, wings, and retaining walls carefully. Step the slope of the existing ground to prevent wedging against the wall. Use material that will compact readily, if available. Do not use silty soil. During backfill operations, check possible displacement of wing or abutment walls as the backfill progresses.
5. The grade inspector should be alert to possible damage to any drainage structure, which the contractor's heavy equipment may cross or work over, and particularly to possible damage to pipe culverts with minimum fill heights over the structure.

The grade inspector must insist on the construction of slopes conforming to the typical cross section. Encourage the contractor to maintain adequate surface crown during construction to facilitate proper drainage. Note actual limits of haul from each source in the daily diary, and report (if required), as well as any cross haul.

On some projects, you may encounter major shortages or overages in the quantity of excavated material available to construct the embankments. The proper solution of such problems will vary depending on the cause of the excess or shortage of material. Revising the grade lines, rebalancing, or obtaining additional material outside construction limits or balance points shown on the plans may involve additional haul with problems and measurements incidental thereto. Accordingly, if you encounter more than minor shortage or excess of excavation material, contact the project engineer for instruction. Any significant changes in the plans to correct for shortage or excess of excavation may require a change document.

Uniform Density

Compaction directly affects supporting power of soils. The lower the compaction, the lower the supporting power at any given moisture content. Improperly compacted embankments will consolidate non-uniformly under traffic, resulting in an uneven surface. Soils vary widely in the amount of compactive effort necessary to reach a common degree of compaction.

Take care to obtain uniform density throughout each fill rather than to have some areas compacted in excess of the density requirements while others are below requirements. Encourage full width embankment construction where possible. This will ensure more uniform density; it is essential that the moisture content be uniform. In most cases, the required density can be obtained with the least effort if the moisture content is close to the optimum obtained by the standard moisture density test.

Layer Method

The specifications state that embankment must be placed in horizontal layers not to exceed eight inches, except when the excavated material consists predominately of rock fragments or boulders of such size that the material cannot be placed in layers of the thickness prescribed without crushing, pulverizing, or further breaking down the pieces resulting from the excavation or when the initial lift of embankment is to be placed over swampy or saturated ground. When the layer method is employed, the prescribed thickness (loose measurement) of the material should be placed in horizontal layers and compacted as specified prior to placement of each succeeding layer. Material of such size that it cannot be placed in layers of the thickness prescribed may be placed in the embankment in layers not exceeding in thickness the approximate average size of the larger rocks. The thicker lifts shall not be constructed above an elevation two feet below the finished subgrade. However, the contractor is permitted to end dump an initial lift of material of sufficient depth to support hauling equipment when embankments are to be placed over swampy or saturated ground.

Density Control Method

The contract will show any areas and the distance below subgrade to which moisture and density control will apply. Where it is necessary to add water for compaction, this may be done either in the cut, borrow pit, or on the fill.

In general, the moisture content required for compaction should approximate the optimum obtained by laboratory tests. However, the construction optimum moisture content for any given soil is not necessarily the same as the laboratory optimum but will vary from it within a small range, depending on the type and weight of the compacting equipment and the method of operation.

Materials having a high percentage of fines are susceptible to over-watering. Avoid such over-watering. When the soil voids are completely filled with moisture, no more compaction is possible by rolling. The pore pressure instead of the soil is supporting the roller and quaking or rubbery action under the roller is evident. Unless corrected by draining or drying, this quaking will be reflected through the base material courses and it will not be possible to properly compact the base material. No lift may be covered by another until the required compaction is obtained.

Using Oversize Rock

Do not permit gouging or digging of holes in the original ground surface or in any layers of the embankment for the purpose of disposing of large boulders. Dispose of them to the satisfaction of the project engineer.

Compaction Equipment

The choice of compaction equipment is normally left to the contractor unless otherwise stipulated in the specifications.

In general, heavy steel rollers will be best for cohesive soils, while the pneumatic rollers and vibratory compactors will work better on sand and gravel-type materials of low plasticity. Grid rollers have been found to be advantageous in broken rock.

Proper routing of the contractor's hauling equipment over the fill area is another essential operation in obtaining uniformity in the compacted area. One of the main difficulties the inspector will encounter in constructing embankments will be that the rate of placing material in the fill area may far exceed the compaction capacity of the contractor's equipment. In this case, the project engineer will require a decrease in the amount of hauling equipment or an increase in the amount of compaction equipment to ensure that each layer is satisfactorily compacted before any material for the succeeding layer is placed.

Density Testing

Determine maximum densities using ATM 207, Method D, or ATM 212. Determine in-place field densities in accordance with ATM 213 and ATM 214. Test adjacent to structures and at random locations throughout the embankment area in each layer sufficiently often to ensure that adequate compaction at all points is being achieved. In coarse material where it is not practical to make density tests, compaction will be obtained as stipulated in the specifications. In such material the grade inspector will have to verify that the compaction meets the requirements of the specifications.

18.14.10 Fine Grading

Finish the surface in conformity with the grades shown in the plans and within the tolerances shown in the specifications. The shoulder lines and slopes should be true and ditches should be finished to a grade that will drain.

The project engineer should keep the contractor advised about cleanup that must be performed as work progresses. In advance of finish grading operations, the project engineer should go over the work in detail and furnish the contractor with a written list of items of work requiring corrective action. The contractor is entitled to this information in advance in order to plan and efficiently carry out the remaining work.

Encourage the contractor to progressively finish sections of the project. This procedure expedites completion of the whole project and facilitates the taking of final measurements and computations.

18.14.11 Haul

Haul is not an item of work that requires inspection to maintain a standard of quality. This does not mean that the inspector or the project engineer can neglect this item. The balance point as indicated on the plans represent the most economical haul for the state computed from theoretical swell or shrinkage factors. Keep accurate records of the field balance points, distribution of borrow, and authorized or unauthorized cross haul during construction so that the actual distribution of the excavation and borrow material is known.

The inspector must carefully check the balancing of excavation quantities as the work proceeds to check the shrinkage or swell factors used in preparing the balance points on the plans. Should the balance point on the plans be a considerable distance from the actual construction balance point, a change in the shrinkage or swell factor is likely. A substantial change in the shrinkage or swell factors indicates that a change in plans may be necessary to avoid wasting excavated material or an overrun of borrow. Any substantial change in shrinkage or swell factors must be referred to the project engineer, who may consult with the project manager/group chief about the proper action.

18.14.12 Drainage

Water, either directly or as a contributory factor, is often the cause of embankment failures. It is therefore essential that all work involving drainage be carried out carefully and accurately and in such a way that the design features are not impaired in construction, yet the flow lines and other features satisfactorily fit field conditions.

Cut Section

In cut sections, construct ditches to such grade that there will be no impounding of water. This may require ditch grades, which are independent of the embankment grade or a special ditch.

Furrow Ditches

A properly placed furrow ditch need not always parallel the centerline or grade line of the embankment. The ideal would be a ditch following the contour of the land with 0.5 to 1 percent grade, but right-of-way considerations normally prevent this. It is therefore considered good engineering practice to study each case to prevent erosion. Where considerable surface drainage over the top of high cuts appears likely, the construction of ditches above the cut to lead the flow to natural drainage courses shall be far enough away from the edge of the back slope to prevent seepage, which could cause sliding; and ditch grades should not be so steep as to cause erosion.

Inlet and Outlet Channels

Construct inlet and outlet channels to culverts as shown on the plans, of ample size and shape to take the maximum flow. If practical, make them prior to or at the time the culvert trench is being excavated. They must present a neat and workmanlike appearance upon completion and be open and ready for operation upon completion of the adjacent structure. Check adjacent side ditches to be sure they drain toward the culverts or toward the natural drainage outlets.

Channel Changes

Construct channel changes to the line, grade, and dimension shown on the plans. Complete channel changes to direct the flow into structures by the time the structure is completed. Construct channel changes to direct drainage flow away from the embankment section before completion of the embankment to protect the new construction work.

Underdrain

This work consists of constructing underdrains using the type and size of pipe and granular material in accordance with the specifications and in conformity with the lines and grades shown on the plans or otherwise established by the project engineer. The inspector should know and understand the specifications and special detail drawings for the type of underdrain to be constructed.

Underdrains are placed to lower a high water table or to intercept and dispose of water seeping into the embankment from sources outside of the embankment. The location of underdrains is usually determined by soils investigations previous to completion of the plans, but may be changed or added to during grading operations. The project engineer should make any significant changes in design location or the selection of additional locations and document it in writing with the appropriate contractual document.

Place perforated pipe with their perforations down except when their only purpose is to transport water. When their purpose is to carry water only, use a pipe without perforations and place granular material around the pipe. If you install blind drains, omit the pipe, and lower the water table using free draining material.

Rigid inspection is required during construction of all types of underdrains. This ensures that any slides from the sides of the trench are removed to ensure the filtering action of the granular backfill and that the holes in the underdrain pipe are not clogged with foreign material, which would prevent the drain from functioning properly.

If equipment must cross underdrains after installation, the inspector must insist on adequate covering to protect the pipe from crushing and the granular material from contamination.

The inspector should record the accepted quantity and location of all underdrains and should verify that all required tests and certificates of compliance are in the project record.

18.14.13 Minor Drainage Structures

Minor drainage structures are those of less than 20-foot span, including culverts, sewers, manholes, catch basins, and inlets. Prior to the contractor starting work on a structure, review the plans and designated stationing of structures at their respective sites to ensure that they are properly located. Bring any changes, additions, or deletions to the contractor's attention as early as possible.

Inspect all material prior to incorporating it into the work. The inspector must also ensure that all materials have been approved for use in the work and that all the required certifications have been received.

Before the contractor begins the construction of the structure foundation, the inspector should inspect the soil conditions. The foundation material should be firm and relatively dry for proper support of the structure. Walls of structures should be constructed plumb, unless otherwise indicated on the plans, and the dimensions of the structures must conform to that required by the plans.

Pay careful attention to the backfilling operations to be sure that no damage occurs to the structure, and also to be sure that backfill material is properly compacted. Place and compact material in level layers around the structure.

Carefully adjust any required grate or cover for masonry or structural concrete structures to the line and elevation required and supported as shown in the plans and specifications.

Structural Excavation

If structural excavation is a pay item, the specifications will set the limits of structural excavation, which shall be measured for payment. Documentation of the quantities submitted for payment shall consist of cross sections taken prior to beginning of the excavation, upon completion of the excavation, and at the top of any bedding material that may be required immediately prior to laying the pipe. Review contract specifications for any special methods of measurement.

Foundation for Structures

It is essential that the foundation under a structure provide support as firm and as nearly uniform as

possible under the entire bearing surface. Whenever conditions permit, the bottom of the excavation should be on undisturbed ground for its full length and width. If you can avoid it, do not place culverts partly on filled ground and partly on undisturbed natural ground because of the probability of unequal settlement, which might distort or break the structure. This applies transversely as well as longitudinally and, when you use a side hill location, bench the culvert into the hillside far enough to be entirely on solid ground. If part of the culvert must be on filled ground, place the filled material in thin, thoroughly compacted layers, so it will provide a foundation as comparable to the natural ground as possible.

Avoid the installation of drainage structures or systems in embankments, or constructed on unstable foundation material. This reduces the possibility of providing a foundation subject to settlement, which could cause breakage of the structure, or low spots that do not drain. When you must make such an installation, construct and thoroughly compact the embankment to the elevation indicated on the plans. Then, make the excavation in the compacted fill.

Remove unstable foundation material other than massive deposits of permafrost or muskeg and replace it with satisfactory bedding material to the extent practicable. Place a layer of sand, gravel, or other suitable material on the unstable material until a stable foundation is formed. If placing a pipe culvert in rock excavation, remove the rock at least six inches below the bottom of the pipe and then place a well-compacted cushion of gravel, sand, or other suitable material as a bed for the pipe. When using bell and spigot-type pipe, excavate holes to fit the bells so that the pipe will have uniform bearing throughout its length, rather than resting on the bells.

Consider cambering of a culvert grade line before starting installation of the pipe. Subsidence varies widely depending on the fill height, the depth to a solid stratum, and the compressible character of the foundation site. Do not use camber as a substitute for foundation stabilization. Correct a poor foundation before installing culverts. Base the amount of camber on the foundation soil profile stabilization.

In areas of extensive permafrost, innumerable variables and their unique combinations must be considered in approaching the problem of adequate foundation conditions. In most instances, the plans and specifications will provide construction requirements to be followed. In the event that an isolated installation in permafrost has been overlooked and no plan or specification procedure is indicated, do the foundation work so it will least disturb the thermal balance of the foundation. To upset the thermal balance will set up a condition of unequal subsidence that would create a maintenance problem for some time. If doubt exists about proper and adequate procedure, consult with the project manager/group chief or regional materials section for recommendations.

In the event of an isolated installation in a muskeg area, it is good to follow the procedure established for foundation treatment of the immediate embankment area. This will more nearly ensure uniform subsidence and continued functional ability of the structure. If the muskeg in the immediate embankment area is being removed to suitable foundation materials, then follow the same procedure at the structure site. On the other hand, if the muskeg material in the immediate embankment area is to be loaded either by the normal fill or a rolling or static surcharge, then treat the foundation material at the structure site in the same manner. In either case, it is best to maintain the maximum feasible camber.

Pipe Culvert

Where practicable, construct pipe culverts before beginning the fill in the adjacent section. A properly placed culvert should have a flowline gradient the same as that of the stream channel in which it is placed and on approximately the same alignment. However, the elevation of the flowline of the culvert should be low enough that water is not impounded above the embankment. In the event that a culvert is to be added during construction, give special attention to inlet and outlet ends with respect to their abilities to withstand the variable forces exerted during times of above-average flow. This is especially true with respect to structures 48” and greater in diameter, which require headwalls, riprap, or end sections to protect the structure.

Since culvert conduit is manufactured off the project site, testing on the project is not normally required. However, do not install and pay for culverts until you have received an approved certification verifying the quality of the pipe. Test the quality and compaction of the backfill and bedding material in accordance with instructions as outlined in the Materials Sampling & Testing Frequency tables in sections 18.8 and 18.9.

Camber in the grade under high fills, or on a foundation that may settle, should be considered in base preparation. Camber is simply a rise at the center of a culvert above a straight line connecting its ends. The objective is to shape and/or elevate the grade to ensure a proper flowline after settlement takes place. This forethought will prevent a sag in the middle of the culvert that might pocket water or reduce capacity because of sedimentation. Generally, you can obtain enough camber by placing the base for the upstream half of the pipe on an almost flat grade and the downstream half on a steeper-than-normal grade. The greater load at center of the embankment, and the corresponding settlement, will result in the desired positive slope after full consolidation. Soils engineering techniques are available to predict the amount of camber required for unusual conditions. It is usually possible to obtain camber equal to a minimum of one-half of 1 percent of the length of the culvert without special fittings.

When installing pipe culverts, the inspector must:

1. Check the location for proper size, length, camber, skew, and flow line elevation.
2. Check the foundation, and if the underlying material is unsuitable, remove, replace, and compact with suitable bedding material.
3. Check for the pipe being laid to the correct line and grade.
4. Check to see that the pipe is placed with the outside seams pointing upgrade and coupling bands and end sections are properly installed. Coupling band bolts should be at the side.
5. The backfill should be brought up equally on both sides of the pipe. See that each successive layer is thoroughly compacted and the required density achieved for each layer.
6. Check the plans for any required strutting or shoring details for large pipes. When shop strutting of the pipe is called for, no additional vertical diameter elongation is required in the field. However, the struts must conform to the plan details.
7. Remember to stake the pipe according to the horizontal distance from the centerline while measuring the length of pipe along the slope distance. Note that on steep hillside slopes there is considerable difference in the two lengths.
8. Note any special requirements relating to the passage of fish. Culverts in streams may require permits from the Alaska Department of Fish and Game, the Alaska Department of Environmental Conservation, and/or the Army Corps of Engineers. Although permits are usually acquired in the design phase, if you have any questions about the need for a permit or about permit stipulations, check with the Environmental Section to determine the need for permits.

When installing the structural plate pipes, the inspector should ensure that the erection plan furnished by the fabricator is followed. For ease in erection, do not tighten bolts until all plates are in place. Check the plate pattern for conformance with the manufacturer's erection diagrams.

The inspector must also check the installation of culvert thaw pipes or wire to ensure that they are installed according to the plans and specifications. After installing the thaw pipe, thoroughly flush it with water.

Backfilling

Settlements in fill adjacent to or over structures is one of the more frequent causes of uneven surfaces. Backfill material should be the best available so that uniform bearing may be provided. Granular material is preferable. In any event, the material should be free from muck, large stones, lumps, and rubbish. To obtain uniform pressure against the pipe or structure, place the backfill material in layers about six inches thick and thoroughly compacted. Add water if necessary to bring the material to the optimum moisture content for maximum consolidation. To avoid displacing or unduly stressing the structure, backfill on both sides simultaneously.

In the case of pipe culverts, there should be a berm of compacted material on each side of the pipe as shown in the plans. The compacted backfill should extend at least eight inches and preferably a distance of two diameters above the top of the pipe. Give special care to tamping material under the haunches of pipes. Excessive compaction under the haunches will raise the pipe above intended grade.

Density tests shall be as required. Material with low density must receive additional compactive effort; if it cannot be compacted, remove it and replace it with material that can be compacted. Deposit the backfill for trenches and other small areas and compact it in thin layers. Use hand tampers or mechanical tampers.

Do not allow the use of backfilling by tractors and bulldozers, special backfilling attachments for tractors and power shovels, or other equipment, or compacting by rollers next to the pipe wall because of the probability of damage to the pipe. Adequately protect pipe culverts and other structures from damage before operating any heavy equipment near or over them.

You can sometimes use water to facilitate the settlement of granular backfills but never use it where conditions are such that liquid or semiliquid pressure may develop within the berm area or where prohibited by the specifications.

18.14.14 Curb and Gutter and Sidewalk

This work consists of constructing bituminous concrete or Portland cement concrete curbs, curb and gutter, or sidewalks in accordance with the specifications and in conformity with the lines and grades shown on the plans.

The inspector must understand the specifications for the type of curb and gutter or sidewalk to be constructed. The location should be staked and checked well in advance of the work.

Usually, both sidewalks and curb and gutter are constructed on a bed of specified material that has been compacted to specification requirements.

Concrete and bituminous material must meet the requirements of the specifications. All material specified to be tested must meet testing requirements before being incorporated into the work.

Bituminous sidewalks are normally constructed in one layer and compacted with a sidewalk roller where feasible or hand tamped in places inaccessible to the roller. When constructing sidewalks adjacent to curbing, take care that you do not damage or discolor the curb. Wherever possible, the new sidewalk grade should meet existing driveway or walkway grades.

Bituminous curbs are normally constructed with a special curb machine. Portland cement concrete sidewalk or curb and gutter forms should be strongly constructed and braced so that you maintain proper alignment and grade. Before placing Portland cement concrete, moisten the bedding material thoroughly so it will not absorb an excessive amount of moisture from the fresh concrete. Joint spacing, joint material, and reinforcing steel, if required, will be shown on the plans.

Proportioning of the Portland cement concrete mix and the method of finishing and edging are outlined in the specifications. It is the duty of the inspector to see that these requirements are carried out. Usually the contractor has a choice of several methods of curing the concrete. After the method of curing is selected and approved, the requirements for the specific method must be carried out. This may require bridges for pedestrians or vehicles during the construction and curing periods to protect the sidewalk or curb and gutter.

When the material is being placed, the inspector must:

1. Check the plans, specifications, and special provisions to make sure that all construction requirements are clearly understood
2. Check the staking for alignment and grade
3. Check forms for strength and adequacy. Be sure they are braced; fresh concrete exerts unbelievable pressures
4. Check the forms for location, alignment, and grade. After checking with the instrument, tape, etc., be sure to “eyeball” the forms by sighting both ways along them at frequent intervals. This will pick up minor irregularities that cannot be found any other way.
5. Check bedding
6. Check mixing and placing of material
7. Check type and location of joints
8. Check finishing
9. Make sure all required sampling and testing is performed
10. Check curing of Portland cement concrete
11. Record all required measurements and data in the field book

18.14.15 Beam Type Guardrail

This work consists of the construction of beam type guardrail. The inspector should keep in mind that the guardrail is constantly in the eyes of the public and the finished rail must present a suitable appearance. The inspector should have full knowledge of the specifications and detail drawings, including shop drawings, curved rail elements to fit specified radii. If the inspector is not around during the guardrail

installation, he or she will not know how many posts were cut short due to hitting rocks.

Review the proposed location of the guardrail as staked to ascertain that it is properly placed to prevent the possibility of a vehicle running behind it into a hazard zone. Changes should be made only when authorized by the project engineer.

Using the centerline or pavement edge to align the guardrail posts. Before driving or drilling posts, make sure there are no underground utilities or culverts that may be damaged at post locations. Generally, the holes for the posts are auger dug, although metal posts are punched with a mandrel. After the placing the posts in the holes, backfill and compact them as specified. Posts should be set plumb and spaced at the specified intervals with the tops of the posts set to the design elevation. Check rail elements for proper height and the overlapping of joints with the direction of vehicular traffic.

Materials are manufactured off the site and are normally inspected before arrival on the project. However, the inspector must verify that the required test certification indicating compliance with the specifications are available prior to installation. He or she should further ascertain that the materials have not been damaged subsequent to testing. The accepted lengths and locations of the guardrail sections should be recorded in the project files.

18.14.16 Fences

Fencing items consist of the furnishing and erection of woven wire, barbed wire, chain link fabric fences, and gates in conformity with the specifications and detail drawings.

Inspectors must familiarize themselves with all specifications and drawings. Staking is the contractor's responsibility. The inspector should review all proposed locations and if changes either in location or type of fence are desirable, should obtain the approval of the project engineer for such changes and furnish the contractor with a revised list.

The inspector should inspect the installation or erection of all items of fencing to ensure that the posts are erected true to line; that the wire, fabric, and hardware is attached to the posts in the proper manner and at the proper elevation with the wire installed on the specified side; and make sure the posts are firmly installed.

The inspector must record the accepted quantity for the types of fences and gates installed. Measurement for payment shall be as stated in the specifications. The inspector must verify that required materials test indicating compliance with specifications is available prior to installation.

18.14.17 Riprap

When required, place riprap as soon as feasible after the construction of embankments, dikes, or channels. Where possible, finish the embankment, dike, or channel slopes to a smooth line before placing riprap. When stream conditions require that the riprap be placed in conjunction with the construction of embankments of dikes, the inspector should take particular care to ensure the placement of the proper thickness of riprap.

To avoid any delay in the contractor's work due to the time involved in testing the quality of rock for riprap, the project engineer should require the contractor to provide the location of his riprap source well in advance of the date he intends to start placing riprap. The gradation of the riprap, when required, and the method of determining that gradation shall be as called for in the specifications or special provisions.

18.14.18 Contractor Furnished Surveying

Check the contract for any special provisions modifying the Construction Surveying and Monuments Section 642 of the Standard Specifications for Highway Construction and the Airport Contract for any Special Provisions modifying contractor-furnished surveying.

The surveyor must be a registered Professional Land Surveyor, currently registered in the State of Alaska, and shall follow the Alaska Construction Surveying Requirements (U.S. Customary Units or Metric) in the specifications.

The project engineer or the representative will randomly spot-check the contractor's surveys, staking, and computations. The contractor will provide the project engineer notice prior to performing any work, and will furnish the appropriate data as required, to allow for such random spot-checking. The Department assumes no responsibility for the accuracy of the work.

18.15. Surveying and Staking

18.15.1 General

Use this section as a reference of acceptable procedures for consultant or contractor forces performing construction surveys. Perform construction surveying to industry standards. An Alaska-registered Professional Land Surveyor shall install the monuments.

This section is not a substitute for a textbook or handbook on surveying. Party chiefs, instrument-men, and other personnel shall be competent surveyors and have the necessary tables, handbooks, and other references.

This section will provide the standard methods of staking used on construction projects. The contractor performs the construction surveys and provides the Project Engineer with the surveying data.

Employ surveying techniques that will provide a minimum of confusion, a maximum of economy, and documentation to substantiate quantities of material. The documentation provides a reproducible audit trail. Establish centerlines, right-of-way monuments, and benchmarks to the required limits of accuracy in the Alaska Construction Surveying Requirements (US Customary Units or Metric). Construction survey personnel assigned to the work shall be familiar with efficient methods of staking.

Construction surveys provide for the setting of construction stakes, establishing lines, slopes and continuous profile-grade for grading work, and centerline and benchmarks for structure work, culvert work, protective and accessory structures, and appurtenances as necessary. These stakes and marks constitute the field control with which the contractor performs the work.

The Project Engineer will provide the contractor sufficient horizontal and vertical control data to enable the contractor to establish the planned lines, grades, shapes, and structures. The preconstruction survey may have established this control. The control data should be checked and if necessary, provide additional baseline points or benchmarks.

On projects, which require considerable staking, the surveyor should begin staking as far in advance of the beginning of construction operations as weather and soil conditions will permit. Maintain staking in advance of the contractor's operations and requirements. Check the message and possible displacement of stakes that stand over the winter before use. Recheck all benchmarks, temporary benchmarks, and other primary control before use after a winter layover.

The contractor shall assign sufficient qualified personnel to perform the required surveying and staking.

18.15.2 Field Notes

Record all field notes in standard bound field notebooks furnished by the Department. They are permanent source documents. Persons with varied professional backgrounds may refer to these notebooks. Notes will be neat, legible, precise, and sufficiently detailed to convey their intent to anyone not familiar with the project.

Erasures of errors in field notes are not acceptable. A line drawn through those portions of notes in error (leaving the original note legible) with corrections noted directly above and initialed where quantity measurements are involved is the rule. Include a note of explanation with initials.

Identify all field notebooks on the outside of the front cover indicating content, project number, station limits and year. Index each book and its contents with page numbers. Place page numbers in the upper right hand corner of each page. Show the date, weather condition, and party personnel at the beginning of each day's notes. As a rule, place field notes for each phase of the work in a separate series of field books. Sometimes, it is feasible to combine minor items into one or more "Miscellaneous" books.

18.15.3 Construction Centerline

The first survey work on a project is usually the establishment of the construction centerline. This line conforms to the construction centerline shown on the plans, which may or may not be the existing survey line. Correct any errors found in line and show on the plans with reference to the plan centerline.

The chief of party or his designated representative prepares the alignment book. Conduct a thorough field review before actual staking. The construction centerline is marked by witness stakes driven on the line behind the point of beginning, with the station and plus station facing the zero station of the survey. If the line traverses a traveled way, centerline points are referenced at right angles with the station and plus station and the distance right or left marked on the

side of the stake facing centerline. After reproducing the centerline, reference the control points at the beginning and end of curves, points of intersection, points on tangents at approximately 1,000-foot intervals, and points on long curves where visibility is restricted. It is good practice to reference often enough so that each point will see at least one other reference point ahead and back.

Reference control points per the Alaska Construction Surveying Requirements (US Customary Units or Metric). The surveyor shall select the method. The choice of method may be based on the terrain, the area of the right-of-way to be disturbed by construction operations, and the land use adjacent to the right-of-way. Place reference points at locations where there is the least possibility of being disturbed during the construction period. Consider the utility of the reference points after cutting and filling to final grades. Keep records and sketches of the reference points in the alignment notebooks.

Avoid swing or chain ties at major control points (PC's, PT's, and PI's). Use three point right angle ties where possible, preferably two points to the right and one to the left or vice versa. Random transit crossties are acceptable. Three reference points per line are the rule with the angle of interception a minimum of 45 degrees. Refer to Figure 18.15.1 for Sample Construction Transit Notes.

The third order survey shall have a 1/5000 horizontal closure. Angle closure shall be 30"x $\sqrt{N}$ seconds where N equals the number of angles in the traverse. It is essential that the transit be "double centered" at the beginning of use, adjusted if required, and checked often enough to be sure it is in adjustment.

Promptly report errors of closure, in either angle or distance, to the Project Engineer for proper disposition.

18.15.4 Bench Levels

A complete, tight and dependable set of bench levels is one of the most important items of the construction survey. A large portion of the pay quantities relies on elevations as the basis of measurement. A loose line of bench levels is often the basis of disagreement and claims.

The equipment used for this work shall be in good repair and adjustment. Check levels by the two-peg method and adjust if necessary. Check each rod used for extended length and condition.

Before any staking involving elevations, verify the benchmarks shown on the plans for location and elevation. At this time, reestablish any benchmark that is disturbed by construction. Do the centerline profile at this time, if required.

In the case of an error in vertical control, run sufficient centerline profile to pinpoint the extent of erroneous elevations. Check the plans and design data for the effect the error has on the design quantities. Bring serious discrepancies to the attention of the Project Engineer and the Project Manager/Group Chief. Run a centerline profile to check design profile and quantities for "O" lines and any other areas where ground elevations may be suspect.

Consult the Project Engineer with respect to placement of benchmarks in areas of permafrost, muskeg, peat, or other unstable soils peculiar to the locality involved. Do not set benchmarks on utility poles. Utility poles are unstable and the spike is a safety hazard for maintenance personnel. Refer to Figure 18.15.2, Sample Level Notes.

Follow the procedures for checking and establishing benchmarks:

1. During the reading process, plumb the rod, wave the rod, and record readings to the nearest 0.01-foot.
2. Balance the backsight and foresight distances and elevations within any level loop.
3. Do not use side shots on benchmarks. Use the turn through method.
4. Establish benchmarks at intervals and locations consistent with good engineering practice and not more than 1,000 feet.
5. The allowable vertical error for disclosure in feet is 0.05 x $\sqrt{M}$ where M is equal to the length of the level circuit in miles.

   Correct errors in benchmark elevations in a manner that will not affect the elevations of succeeding benchmarks. If a minor error will change the elevation of succeeding benchmarks, set up an elevation equation at the point where the error is noted. You may need to make a minor adjustment in grade in this event. Report a major error to the Project Engineer for resolution, if it

will affect the elevation of succeeding benchmarks.

18.15.5 Clearing and Grubbing Stakes

This portion of the work is generally among the earliest operations by the contractor.

The specifications provide for measurement by one of the following methods:

1. Area basis—The clearing and grubbing is paid by the number of acres and fractions thereof acceptably cleared and grubbed within the staked limits. If areas not shown on the plans or not staked for clearing and grubbing, do not measure for payment. The limits of the areas to be cleared and grubbed shall be staked, so as to exclude those areas covered by existing roadway, lakes, ponds, existing stream beds and other areas not covered by trees or brush. Check the specifications for any special conditions pertaining to this method of payment.
2. Lump sum—In the event that measurements and payment for the work is by lump sum, stake and keep notes the same as for the area basis. No calculation of area is required; therefore no measurement of the area is needed.
3. Individual Unit Basis (Selective Tree Removal)—The Project Engineer will designate trees that are outside the normal clearing and grubbing limits. Refer to Figure 18.15.3, Sample Clearing and Grubbing Notes.

Stake the clearing limits per the plans. Avoid sharp breaks in the width of the clearing line and adjust stakes to overcome this. On road projects, give special attention to clearing lines on the insides of curves and at intersections to provide adequate sight distance when contract quantities and right-of-way limits permit this. The contractor may flag approximate culvert locations with the clearing and grubbing for any special cleanup for his culvert crews. Measure distances to the nearest foot and place standard lath to designate the intended limits. The use of surveyor's tape, cloth or other assorted miscellaneous items tied to brush or trees is not proper staking practice. Intervals for placing lath is dependent on terrain and denseness of the foliage, but generally, lath spacing of 100 feet is adequate. In areas of heavy timber, clearing stakes should be so set as to avoid leaving trees on the clearing line. Record in the field notes revisions of originally staked distances, which are required as the work progresses. Refer to Figure 18.15.3, Sample Clearing and Grubbing Notes.

18.15.6 Cross Sections

Perform cross sections and slope staking after clearing and grubbing.

The staking and measurement of earthwork is the source of more disputes than any other phase of the work. Performing cross sections and setting of slope stakes must be done with competent, experienced personnel properly equipped and instructed. Careful planning of the work is essential. Cross sections shall be taken wide enough to include all potentially disturbed areas.

Before cross sectioning and slope staking, the party chief prepares the slope stake books. Do the grade computations with a computer and make the resulting information available in hard copy. Make computations for all stations to be slope staked, in accordance with the plans and the Alaska Construction Surveying Requirements (US Customary Units or Metric).

Show in the slope stake book the adjusted elevation of the centerline, the distances from the centerline to each shoulder, and the adjusted elevations of each shoulder. Performing grade computations with care saves time during slope staking.

Perform cross sectioning and slope staking simultaneously after clearing and grubbing. Sections will be taken as often as necessary, but at least every station on tangent and every fifty feet on curves, and every station on tangent and every fifty feet on curves, and at all breaks in topography. Take additional cross sections at odd stations where structure exceptions begin or end. Extend the cross sections beyond the construction limits a minimum of twenty-five feet. Extend the sections further in areas of overbreak or slides.

Do cross sectioning with an engineer's level or transit in mountainous terrain. The engineer's level is the preferred method. When necessary, permit hand level turns, up or down from the instrument. Take sections on a perpendicular to the centerline on tangents, and on radial lines on curves. Use a transit or right angle prism to perform perpendiculars. Record H.I.s to the nearest 0.01 foot. Record cross section readings to the nearest 0.1-foot. Hold the tape horizontally with a minimum of sag and record readings to the nearest 0.1-foot from base or centerline.

Take final cross sections after the construction is complete. Plot all final cross sections. The Project Engineer shall make spot checks in areas where final cross sections are not required to assure that the work is in conformance with the slope stakes. Check areas of embankment in the same manner. Perform the work with one man working from the slope stakes with an engineer's rule, hand level, and cloth tape. Record notes in the inspector's diary. Document all pay quantities in this manner.

18.15.7 Material Sites

If the specifications call for measuring borrow by the ton or megagram, cross sectioning of the material sites is not required.

Measure borrow in the same manner as roadway excavation. Extend the regular cross sections to include a borrow pit adjacent to the construction. Compute the excavation and borrow quantities separately.

If the borrow pit is located away from the construction site, follow a systematic procedure of laying out the pit for cross sectioning. Determine and stake the area that the borrow is coming from. Establish base lines outside the anticipated work area to assure there is a reference for starting each series of cross sections. Extend the cross sections out to the base lines.

Locate and reference the base lines for use during final cross sections. If feasible, use the centerline datum for borrows pits. If this is not practical, set two benchmarks in reference to an assumed datum. Sketch the layout of the borrow pit on the first page of the borrow pit notes.

It may be necessary to stake the limit and the depth of excavation due to stipulations in the borrow permit. In most cases, remove the borrow to an elevation best suited for drainage and appearance.

Without exception, each subsequent cross-section will close the proceeding section at the outer limit of the excavation. When practical, tie material sites to the centerline of the project.

After borrow operations and trimming, do final cross sections at the exact location of the original cross sections and extend them to the base lines. Record any additional information about zero points of cut at this time. Refer to Figure 18.15.5, Sample Field Notes for Borrow pit layout. See Figure 18.15.6 for Sample Borrow Pit Cross Section Notes.

18.15.8 Slope Stakes

Slope stakes may be set in conjunction with the clearing and grubbing stakes. Set slope stakes at the same intervals as cross sections. See Section 18.15.6 for intervals of cross sections and the Alaska Construction Surveying Requirements (US Customary Units or Metric) for additional information. Set the stakes at points where the cut or fill slopes intersect the surface of the natural ground. Make visual inspections of the stake, with reference to previous stakes, taking into consideration any change in slope and grade to avoid abrupt, unsightly breaks in slopes.

There are several satisfactory methods of showing information on slope stakes. The intent is to provide the workers with the minimum information of:

1. Where to begin a cut or fill.
2. Which slope to follow.
3. The depth or height of the cut or fill.

Show additional information, but not to the point of confusion.

Do not use hand levels for setting slope stakes, except two turns up or down from the instrument to the catch point. Clearly note hand level TPs in the field book.

There are several different methods to set slope stakes, dependent on the terrain. Use one of the three primary methods to set slope stakes.

1. Use a level instrument, level rod, and cloth tape. This preferred method is best suited to relatively flat or rolling terrain where it is possible to run the profile, cross section, and set the slope stakes with only a few additional instrument setups.
2. Use a level, transit, level rod, cloth tape or chain. Employ this method in rough or mountainous areas.
3. Use an Electronic Distance Measuring instrument and a level rod. Employ this in all terrain.

Follow the established and accepted surveying techniques when leveling, chaining, and rod reading as outlined in Section 18.15.6. Cross Sections. Grade on slope stakes shall be within 0.1 foot. See Figures 18.15.7-18.15.11 for slope stake procedures and sample notes.

18.15.9 Slope Stake Reference

Set a reference for each slope stake section on one side or both. The reference shall be set a minimum of ten feet and a maximum of twenty feet beyond the slope stake. The main purpose of the reference is to convey the slope stake information in the event the slope stake is disturbed or destroyed. Provide the amount of information on the reference stake to allow for its replacement. A hub should be driven flush with the ground at the reference stake and reference all elevations to this hub. It is good practice to run an independent level circuit over the reference hubs to check for errors. Perform this check in areas of heavy grading. Figure 18.15.7 shows methods that convey the minimum required information.

18.15.10 Grade Stakes

The contractor is required to bring the roadway slopes up or down per the slope stakes. As grade is approached, additional stakes must be set so that the surface is brought to the proper elevation and the slopes are true. Use grade stakes for rough grading of the prism to the top of embankment. Use red tops and blue tops for fine grading of the prism.

Usually when the depth of the subbase is variable, provide grade stakes indicating the shoulder line and elevation of the rough grading (bottom of selected material). Provide grade stakes indicating separation of two types of selected material.

These stakes consist of standard length lath. Set the stakes to rough line and grade. The grade inspector must check these stakes at random for accuracy.

18.15.11 Blue and Red Tops

After completing the embankment, set red tops at the top of each subbase layer. Set blue tops at the top of base course. Set blue and red tops at centerline and shoulders. Frequency of red and blue tops is the same as cross sections. Place blue and red tops at the required locations. Drive the stake so that the top of the stake is at the elevation of the finished grade. A good grade foreman and grader operator should be capable of finishing the grade to ±0.1 foot before calling for blue tops. Call the grader operator back to finish grading if the grade varies more than ±0.2 foot.

Provide staking in areas of critical drainage to assure adequate slope. Do not allow ponding of water along embankments, in special ditches, drainage ditches, and channel changes.

Set red tops accurately to line, solidly driven. Record H.I.s and grade rods to the nearest 0.01-foot. Set the grade elevation to plus or minus 0.05 foot.

Set blue tops accurately to line, solidly driven. Record H.I.s and grade rods to the nearest 0.01-foot. Set the grade elevation to plus or minus 0.02 foot. See Figure 18.15.12, Sample Blue Top Notes.

18.15.12 Culverts

Stake culverts early to determine the amount of culvert pipe. A good time to do culvert staking is during slope staking.

Drive hubs on the extended centerline of the culvert at a convenient distance from the ends to be out of the way of the excavation, but close enough for easy reference. Show the information necessary to construct the culvert on the guard stake. Show in the culvert book the minimum information to stake a culvert:

1. Station.
2. Size, length, and type of pipe (Such as 24” x 60’ CMP).
3. The amount of cut or fill from the top of the hub to the flow line at the end of the pipe.
4. The horizontal distance from the hub to the end of the pipe.
5. The gradient of the pipe.
6. The amount of camber (if required).

It may be desirable to set additional stakes offset along the centerline of the pipe showing the amount of cut or fill to the flow line at the location of each stake. When the culverts are in rough terrain or of considerable length, offset stakes are desirable. Stake headwalls for culverts on each side of the culvert on line with the face of the headwall.

A single cross section along the flow line of the structure is adequate. Occasionally, running transverse sections provide better excavation information. Indicate staking data, cross sections, and other pertinent data in the culvert book. Normally, culvert pipe is paid for by the linear foot. Measure the culvert pipe installation according to the specifications. The Project Engineer must approve culvert relocations and changes in length of culvert. See Figure 18.15.13 for Sample Culvert Installation.

18.15.13 Miscellaneous Drainage Facilities

The plans show the location, type, size, length, and flow line elevations for miscellaneous drainage facilities. Before staking, field check the plan information to assure adequate drainage characteristics. The Project Engineer must approve minor changes in locations and grades to meet existing field conditions.

Ditches and channels

Generally, this work is unclassified excavation. Slope stake and cross section per Sections 18.15.6 – 18.15.9. In the absence of no typical section on the plans, provide sufficient width and depth to accommodate existing field conditions.

Underdrains and sewer

Use a similar procedure to establish the flow line for underdrains and sewers as for culverts. Provide adequate outlets and establish flow lines that connect to existing drains.

Set line and grade stakes for underdrains and sewers at intervals not greater than twenty five feet and offset stakes a distance that will insure their permanency during construction operations.

Manholes, catch basins and inlets

Construct manholes, catch basins, and inlets adjacent to any curb and gutter. Take extreme care in staking so they will fit properly into the design of the facility. Adjust castings after the curb and gutter are set.

The straddle hub method fixes the position of manholes, catch basins, and inlets. Set a grade hub stake offset a distance to protect it from disturbance. Indicate clearly the portion of the structure on the guard stakes at the straddle hubs. The guard stake at the grade hub shall have the distance to the top of the structure, the distance to the flow line, and to what point on the structure these distances refer.

It may be desirable to have separate field books for each phase of the work on projects where there are a number of manholes, catch basins, and inlets. Use separate pages in the field books for each structure. Show the location, type, and size of each structure with a staking diagram showing all distances and elevations in the field notes. See Figure 18.15.14 for Sample Methods of Staking Manholes, Catch Basins, and Inlets.

Dikes

Stake dikes to the alignment, grade, and slopes shown on the plans or as necessitated by field conditions. Slope stake to the shoulder of the dike with distances referenced to centerline of the dike. Use the same method of staking as for embankments.

Set up a separate field book for all dikes. Show a sketch tying to the centerline of the main facility and position in relation to the main facility.

Riprap and slope protection

Stake all riprap and slop protection after constructing the fill, channel change, or dike. The slope must be in substantial conformance before placement of the riprap or slop protection. Slope stake all bank protection when feasible. The surveyor may use special methods in staking unusual bank conditions. Set up a separate book for riprap and slope protection.

18.15.14 Miscellaneous Construction Staking

The surveyor shall provide sufficient stakes for the adequate control of all structures and incidental construction. The surveyor shall take into consideration the contractor's proposed methods of constructing the project to prevent the destruction of the controls by the contractor's operations.

Guardrail and guide posts

The plans show the guardrail and guide post locations with special instructions on standard detail sheets. It is difficult for a designer to accurately locate these facilities. Field check these locations before staking and making adjustments in lengths and location.

Signs

Stake signs at the location shown on the plans. A lath or hub indicating the location and identification of the sign is usually sufficient.

Right-of-way monuments

A professional land surveyor registered in the State of Alaska must supervise the staking and setting of right-of-way monuments. Set the monuments using a third order survey. Stake right-of-way monuments at the locations indicated on the plans. Do not set monuments in loose fill slopes, slides, streams or other locations where it is apparent that their position is incorrect.

Stake right-of-way monuments using the straddle hub method. Set right-of-way monuments using a transit and chain or Electronic Distance Measuring device. Position the monument to the nearest 0.1 foot. Set up a separate book for right-of-way monuments. Sketch each monument showing ties to centerline and position in relation to the facility.

Curb and gutter sidewalks

Set the stakes for curb and gutter forms with an instrument for alignment and grade as shown on the plans. They will be set at full and half stations on tangents, twenty-five to fifty foot intervals on horizontal curves, and not greater than twenty-five foot intervals on vertical curves. Curb returns and sidewalk radii require special attention when staking.

Use the offset line of tacked hubs for accurate alignment and grade correct to the nearest 0.01 foot. Visually check the final position of the forms by sighting along the form from either direction. Thoroughly check the forms for line and grade before concrete placement. In the field book, show a staking diagram in relation to centerline; dates and locations of concrete pours; and measurement of pay quantities. See Figure 18.15.15 for a method of staking curb returns.

18.15.15 Major Structures

The first step in any structure layout is to check all dimensions and elevations shown on the plans.

Stake and reference only those centerlines and layout lines used as dimensional references on the plans. These lines include:

1. Centerline or layout line of bridge.
2. Centerline of bent, pier, or abutment.
3. Layout lines for wingwalls or retaining walls.

Do not stake specific structure element locations such as piles, edge of footing, end of wall, or other details that are located from staked lines and plan dimensions. The inspector shall check these locations after the contractor establishes them.

Sketch a layout showing the location of all control points. Stake control lines for use by carpenters, excavation foreman, and others.

Do layout work carefully and accurately to convey information clearly and without confusion. Check all work from computation through staking to eliminate errors. Compute and stake elevations and alignment to the nearest 0.01 foot. Specific field methods shall be suited to the needs of the individual survey. Use third order survey accuracy for all bridge work. See Figure 18.15.16 for an example of field notes for such a structure layout. The Project Engineer shall check the overall length of the bridge and all computed distances.

Control lines shall be referenced so points in or near work areas are reset with minimum effort. It is normal to lose a certain number of control points during construction. Reference each pier centerline with at least three points on each side of the bridge. Set a working point on each side of the bridge fifty feet from the bridge centerline. Set one reference on each side of the bridge at least 150 feet or whatever distance is necessary to clear all construction activity. Set up a coordinate system to check the original layout and to facilitate resetting points removed or displaced by construction activity. By knowing the coordinates of all control points, it is easy to compute distance and bearing from any point to any other.

The Project Engineer shall check all detail layout work done by the contractor. Before any forms are set, check batter boards for line and grade.

Set a minimum of two good benchmarks for each bridge site. Locate one near the substructure work, as it is practical, and the other a distance from the bridge where it is safe from construction operations. The primary use of the second benchmark is to reestablish elevation control in the event that the working benchmark near the bridge is lost or disturbed. Establish a benchmark on an abutment or pier cap as soon as construction allows for setting and checking all superstructure grades.

18.15.16 Monuments Established by Others

A very important activity of construction surveying is the location, marking, and protection of monuments inside or outside the construction limits.

The Project Engineer shall obtain from the region copies of the right-of-way plats for the project before beginning survey work on the project. Make an active search for all monuments. A Professional Land Surveyor registered in Alaska must replace any public survey monuments.

Public land monuments

Protect existing land monuments within the paved portion of the project with monument cases. Place monuments located under graveled surfaces, unpaved shoulders, fill slopes, back slopes, or ditches six inches below the surface.

Preserve all U.S.G.S., U.S.C., G.S., B.L.M., and other agency benchmarks, triangulation points, land monuments, and other permanent markers found on the project. Use third order survey accuracy in the replacement of all public land monuments.

Private survey monuments

Use a Professional Land Surveyor registered in Alaska to set all survey monuments. Conduct a search for all property marks shown on the survey plats or subdivision plats. If corners shown on the plats can not be located, contact the property owner, if possible. The Memorandum of Agreement describes the disposition of survey monuments within the right-of-way. The Department is very concerned when a property owner claims that his property marker was destroyed during construction and was not replaced. Show a dated and signed entry in the monument field book stating what action was taken for each marker on the project. Place emphasis on describing attempts to locate markers that could not be found.

It is policy of the Department to reference and reset in its original location any private survey monument or marker, which may be disturbed by construction.

When the original monument or marker cannot be reset, establish one or more permanent reference markers, plainly marked as a witness corner as near as practicable to the original mark. Submit the original field notes to the regional Right-of-Way section.

18.15.17 Party Chief's Diary

The survey party chief on the project shall keep a factual diary of all work performed by the survey crew on the project on a daily basis. The diary shall contain:

1. Date.
2. Weather.
3. Crew.
4. Type and location of work being performed.
5. Work accomplished.
6. Orders from the Project Engineer.
7. Signature.

This record is extremely important in case of claims by the contractor, or claims from abutting property owners that their monuments have been destroyed and were never reset.

18.15.18 Contractor Furnish Surveying

Check the contract for any special provisions modifying the Construction Surveying and Monuments Section 642 of the Standard Specifications for Highway Construction and the Airport Contract for any Special Provisions modifying Contractor-furnished surveying.

The surveyor shall be a registered Professional Land Surveyor, currently registered in the State of Alaska and shall follow the Alaska Construction Surveying Requirements (US Customary Units or Metric) in the specifications.

The Project Engineer or his representative shall randomly spot-check the Contractor's surveys, staking, and computations. The contractor will provide the Project Engineer notice prior to performing any work, and will furnish the appropriate data as required, to allow for such random spot-checking. The Department assumes no responsibility for the accuracy of the work.

Figure 18.15.1
Sample Construction Transit Notes

38 Benchmark & Profile levels
F-055-A(6) Chulitna River to Little Coal Cr.

June 1, 1992
Weather: Fair, 55°-75°
5-10 M.P.H. Wind

Party: Sather, Helms

39

Sta.	B.S. +	H.I.	F.S. -	Elev.	
					Camp. E.C.S. - P.C.
					CK. J.B. - O.E.
T.B.M. #10				520.23	Nail in base of 12" spruce, 86' Lt. 107+55
	12.22	5.482			
108+00			6.4	55.4	
109+00			7.6	54.4	
110+00			9.7	52.2	
T.P.			10.2	53.50	Keel Mark on rock, 10' Lt. ℄ 110+15
	5.62	5.542			
111+00			7.6	27.3	
112+00			8.4	26.2	
T.P.			9.26	52.546	Hub Lt. Sh. Existing Rd. 112+20
	7.25	5.553			
113+00			5.6	29.7	
T.B.M. #11			5.35	52.356	Nail in Base of 30" stump, 60' Rt. Sta. 113+25 - Elev. 529.57
(Σ B.S.'s 23.92)		(Σ F.S.'s 23.66)			
	4.12			52.962	
114+00		5.542	5.4	28.8	

Note: 1. Σ BS's & FS's need not be shown but personnel should recognize need for approximate balancing.

2. Full page headings need be made only at the beginning of each days work. Succeeding pages need only be numbered and initialed by the party chief.

3. Party chief to complete index at the end of each days work.

Figure 18.15.2
Sample Level Notes

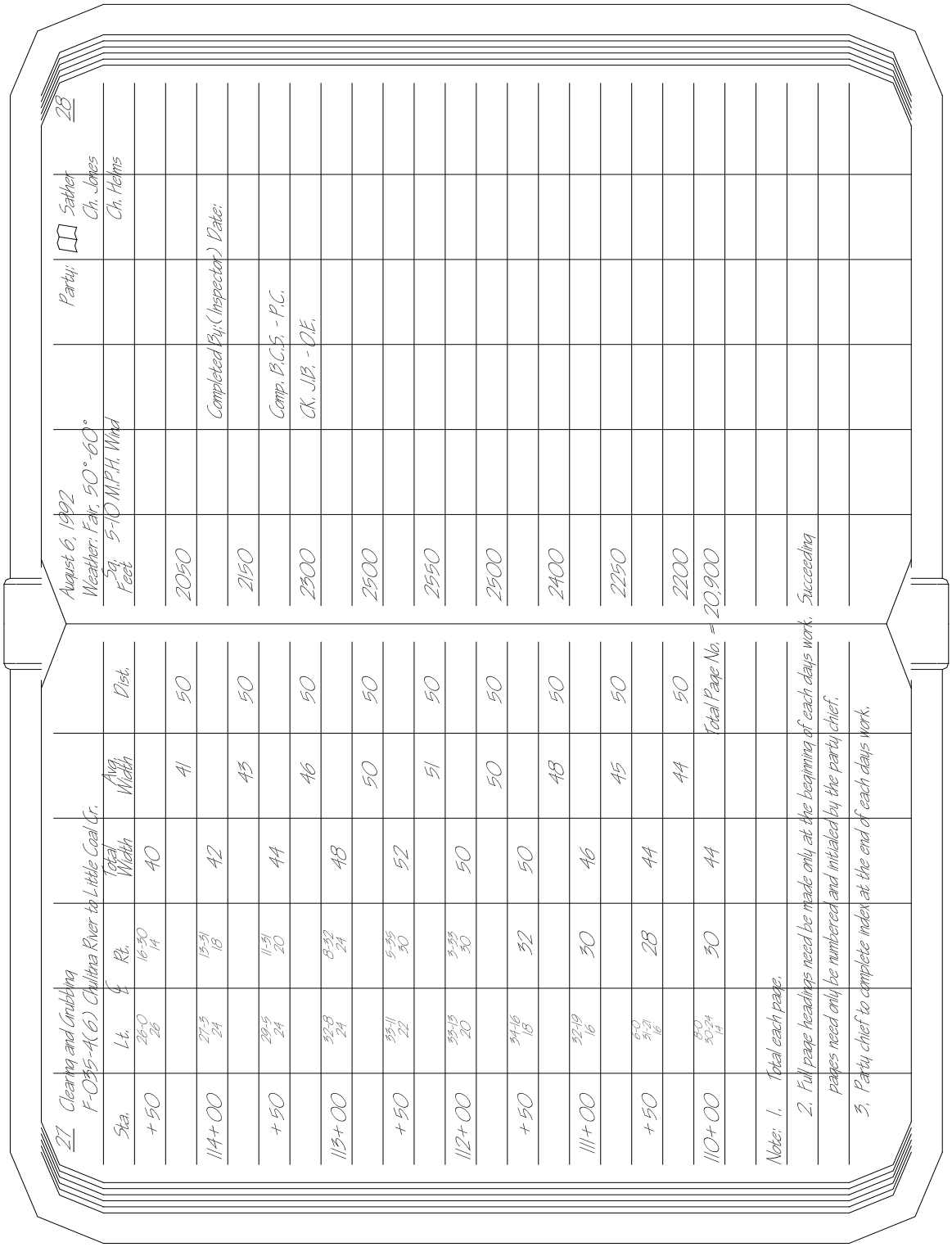

27 Clearing and Grubbing
F-035-4(6) Chulitna River to Little Coal Cr.

Sta.	Lt.	℄ Rt.	Total Width	Avg. Width	Dist.
+50	26-0 26	16-30 14	40		
				41	50
114+00	27-3 24	13-31 18	42		
				43	50
+50	29-5 24	11-31 20	44		
				46	50
113+00	32-8 24	8-32 24	48		
				50	50
+50	33-11 22	5-35 30	52		
				51	50
112+00	33-13 20	3-33 30	50		
				50	50
+50	34-16 18	32	50		
				48	50
111+00	32-19 16	30	46		
				45	50
+50	6-0 31-21 16	28	44		
				44	50
110+00	8-0 30-24 14	30	44		

Total Page No. = 20,900

August 6, 1992
Weather: Fair, 50°-60°
Sq. Feet 5-10 M.P.H. Wind

Party: Sather
Ch. Jones
Ch. Helms

Completed By: (Inspector) Date:

Comp. B.C.S. - P.C.
CK. J.B. - O.E.

28

Note: 1. Total each page.
2. Full page headings need be made only at the beginning of each days work. Succeeding pages need only be numbered and initialed by the party chief.
3. Party chief to complete index at the end of each days work.

Figure 18.15.3
Sample Clearing and Grubbing Notes

Figure 18.15.4
Individual Removal of Trees and Snags

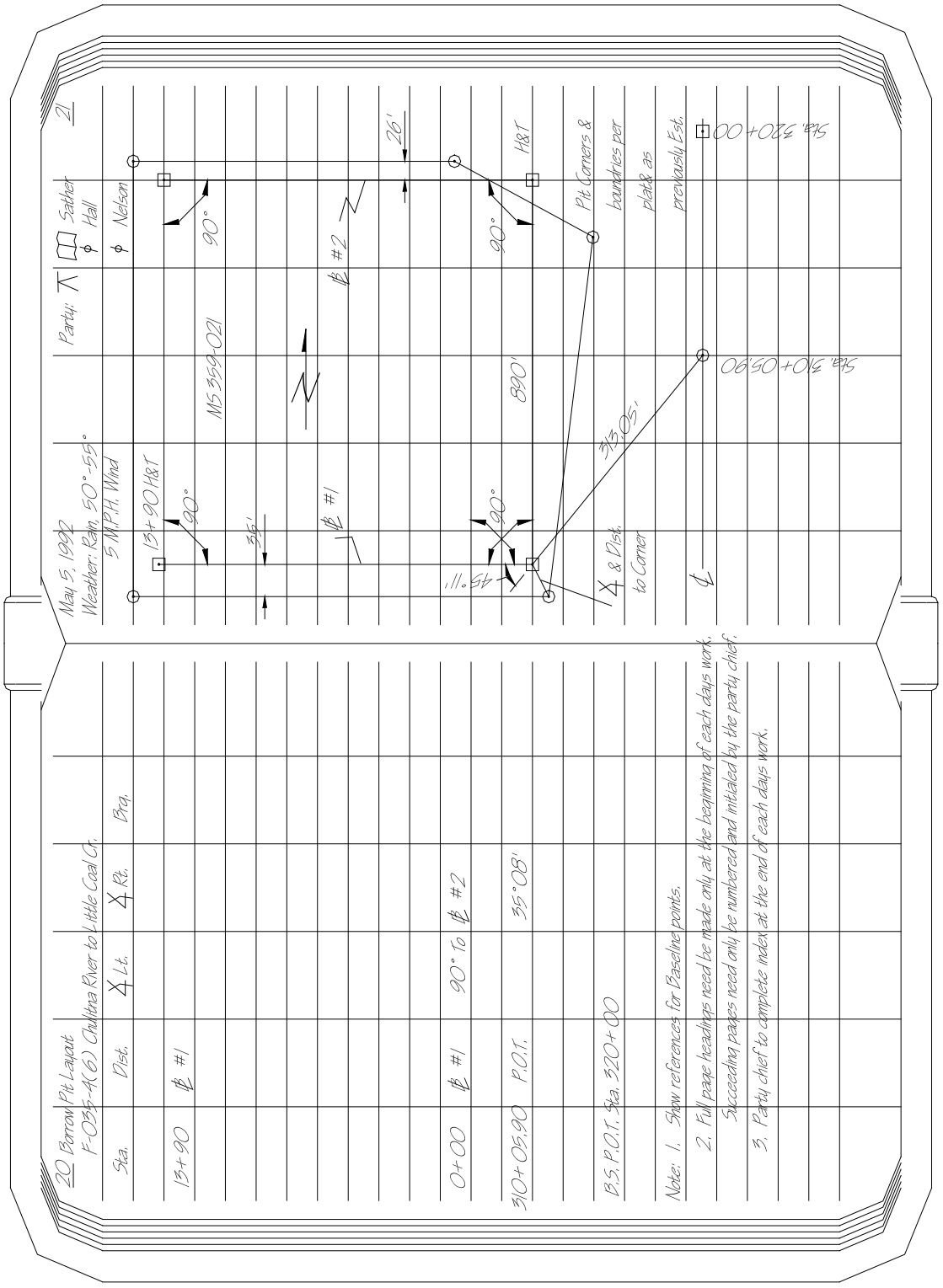

Figure 18.15.5
Sample Field Notes

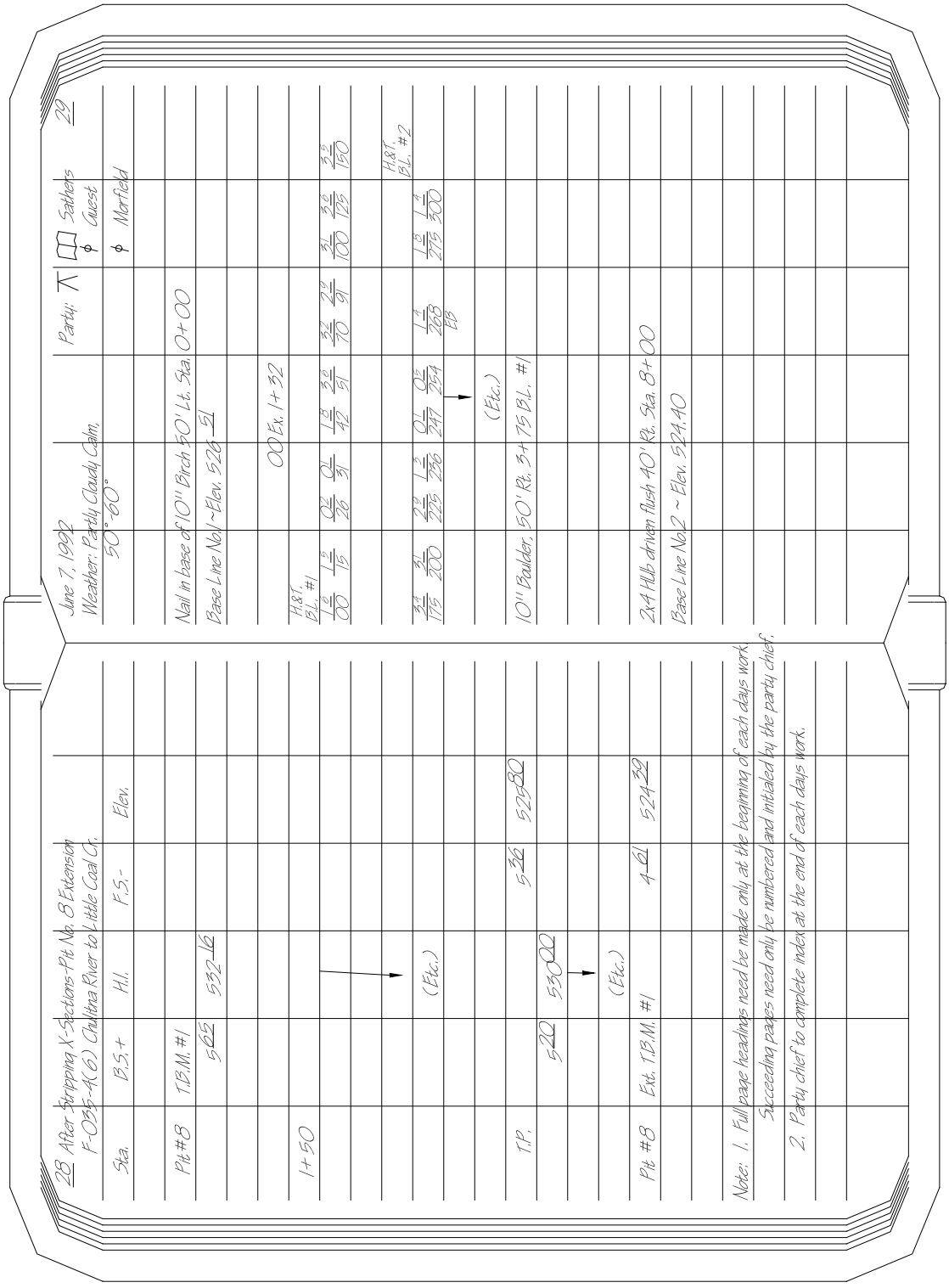

Figure 18.15.6
Sample Borrow Pit Cross Section Notes

Figure 18.15.7
Sample Slope Stakes (Page 1 of 2)

Figure 18.15.8
Sample Slope Stakes (Page 2 of 2)

Figure 18.15.9
Sample Slope Stake Book

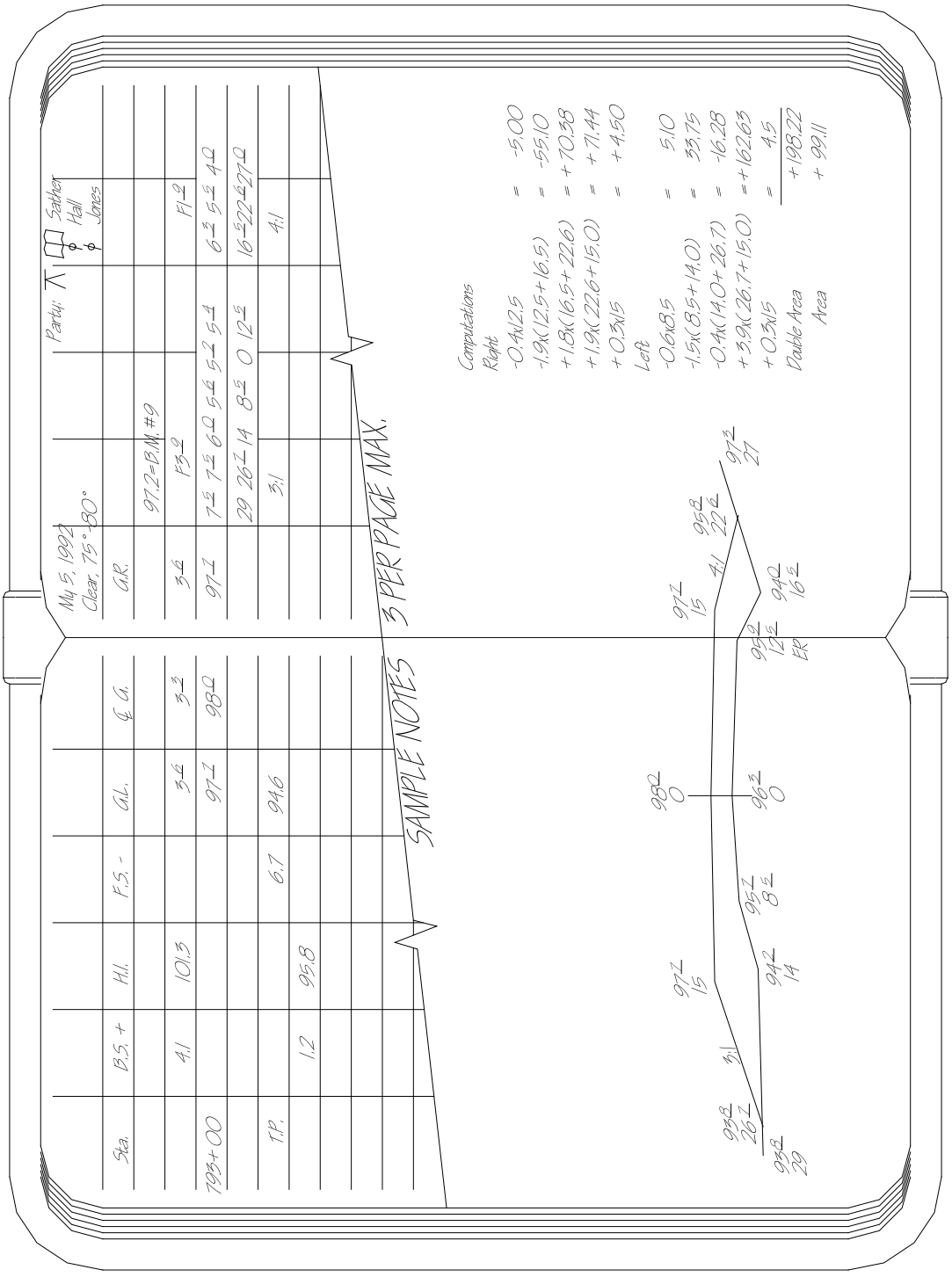

Figure 18.15.10
Sample Notes

Setting Cut Stakes Explanation of markings: **Front** C 6^{6}, 40^{9}, 1 ½ : 1, ditch 8^{0} indicates a cut of 6.6' beginning at the SS and progressing on a 1 ½ : 1 slope to the back of the 8' ditch. **Side** S=1.0' R indicates 1.0 foot of superelevation from centerline to shoulder line on a curve to the right. **Back** Centerline C 3^{6}, 22+00 indicates a cut of 3.6' from the SS to centerline grade and the station of the SS being 22+00. **RP No. 2** **Front** C 1^{8} 15^{0}, 22+00 indicates that the natural ground at the slope stake is 1.8 feet lower in elevation than the natural ground at the RP, the RP is offset 15'beyond the SS and that the station of the RP is 22+00. **Side** Repeat the same information that is on the SS. **Back** Repeat the same information that is on the SS. This is turned away from centerline to attract attention. In the event the SS is missing the cut will not be started at the RP.	**Setting Fill Stakes** Explanation of markings: **SS No. 1** **Front** F 4^{0}, 23^{0}, 2:1 indicates a fill of 4' beginning at the SS and progressing on a 2:1 slope to shoulder line and elevation. **Side** S=1.0' R indicates a 1.0 feet of superelevation from centerline to shoulder line on a curve to the right. **Back** Centerline F 3^{0}, 22+00 indicates a fill of 3' from the SS to centerline grade and the station of the SS being 22+00. **RP No. 1** **Front** F 1^{0}, 20^{0}, 22+00 indicates that the natural ground at the slope stake is 1.0 foot higher in elevation than the natural ground at the RP, the RP is offset 20' beyond the SS and that the station of the RP is 22+00. **Side** Repeat the same information that is on the SS. **Back** Repeat the same information that is on the SS. This is turned away from centerline to attract attention. In the event the SS is missing the fill will not be started at the RP.

Figure 18.15.11
Slope Stake Explanations

38 Blue Top Notes F-055-4(6) Chulitna River to Little Coal Cr. Aug. 10, 1992 Weather: Fair, 51°-55° No Wind Party: Sather Helms Underhill 39

Sta.	Lt. Shld. Grade & Distance	Lt. Grade Rod	℄ Grade	℄ Grade Rod	Rt. Shld. Grade & Distance	Rt. Grade Rod	Remarks
							BM# & Elev. = 59-160.62
							Rod = 8.75
687+00	165.65/15.0	3.72	165.95/0.0	3.42	165.65/15.0	3.72	H.I. = 169.35
688+00	166.32/15.0	3.03	166.62/0.0	2.73	166.32/15.0	3.03	
689+00	167.01/15.0	2.34	167.31/0.0	2.04	167.01/15.0	2.34	
+50	167.32/15.0	2.03	167.62/0.0	1.73	167.32/15.0	2.03	
690+00	167.61/15.0	1.74	167.91/0.0	1.44	167.61/15.0	1.74	
							Rod = 1.65
							T.P. #1 = 167.72
							5.19
							H.I. = 172.91
							8.94
							BM#38 = 163.97
							Error = -0.01

Note: 1. Full page headings need be made only at the beginning of each days work. Succeeding pages need only be numbered and initialed by the party chief.

2. Party chief to complete index at the end of each days work.

2. The use of computer print out for grades is acceptable.

Figure 18.15.12
Sample Blue Top Notes

Figure 18.15.13
Sample Culvert Installation

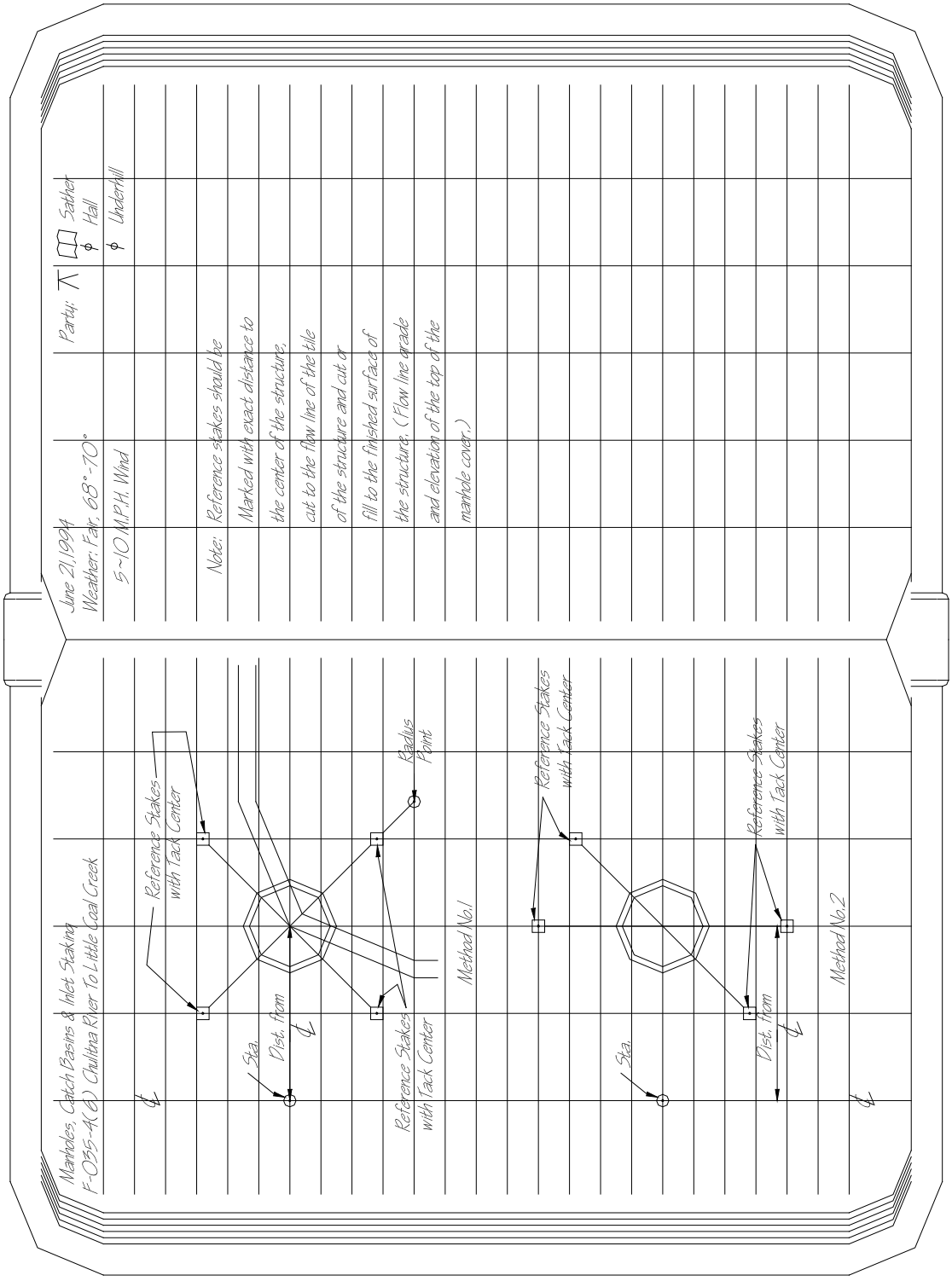

Figure 18.15.14
Sample Methods of Staking Manholes, Catch Basins, and Inlets

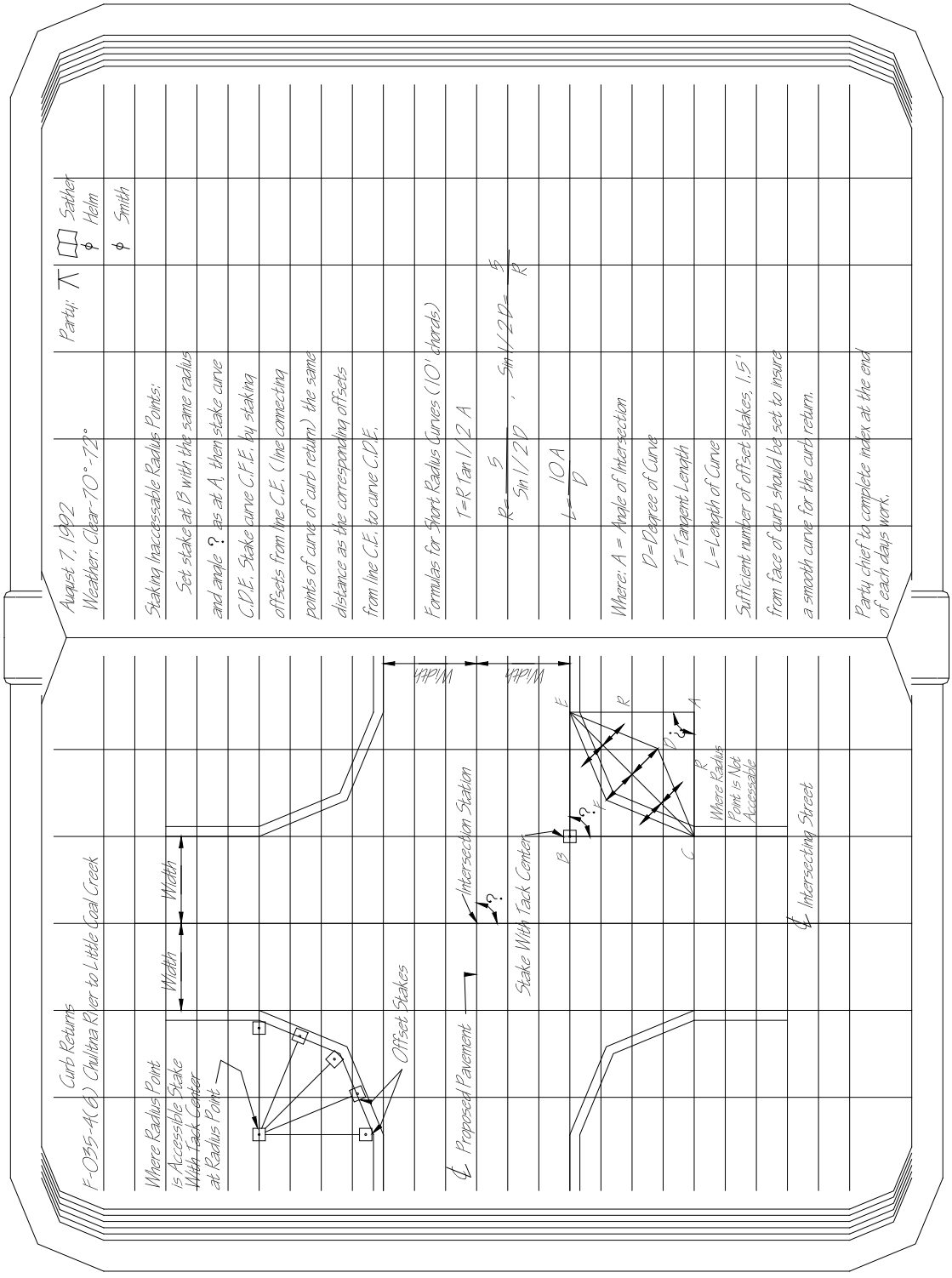

Figure 18.15.15
Sample Methods of Staking Curb Returns

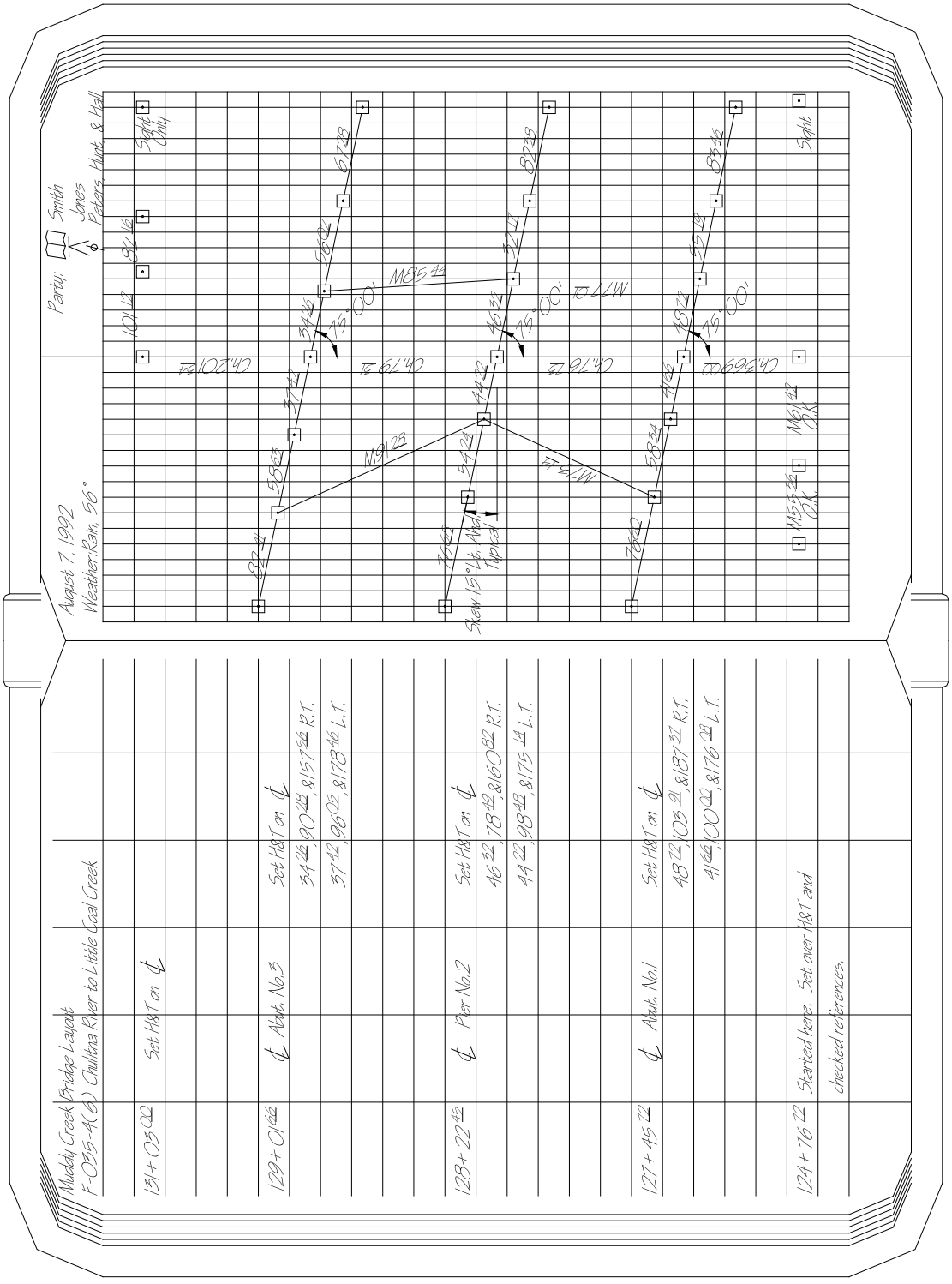

Figure 18.15.16
Sample Structure Staking Notes

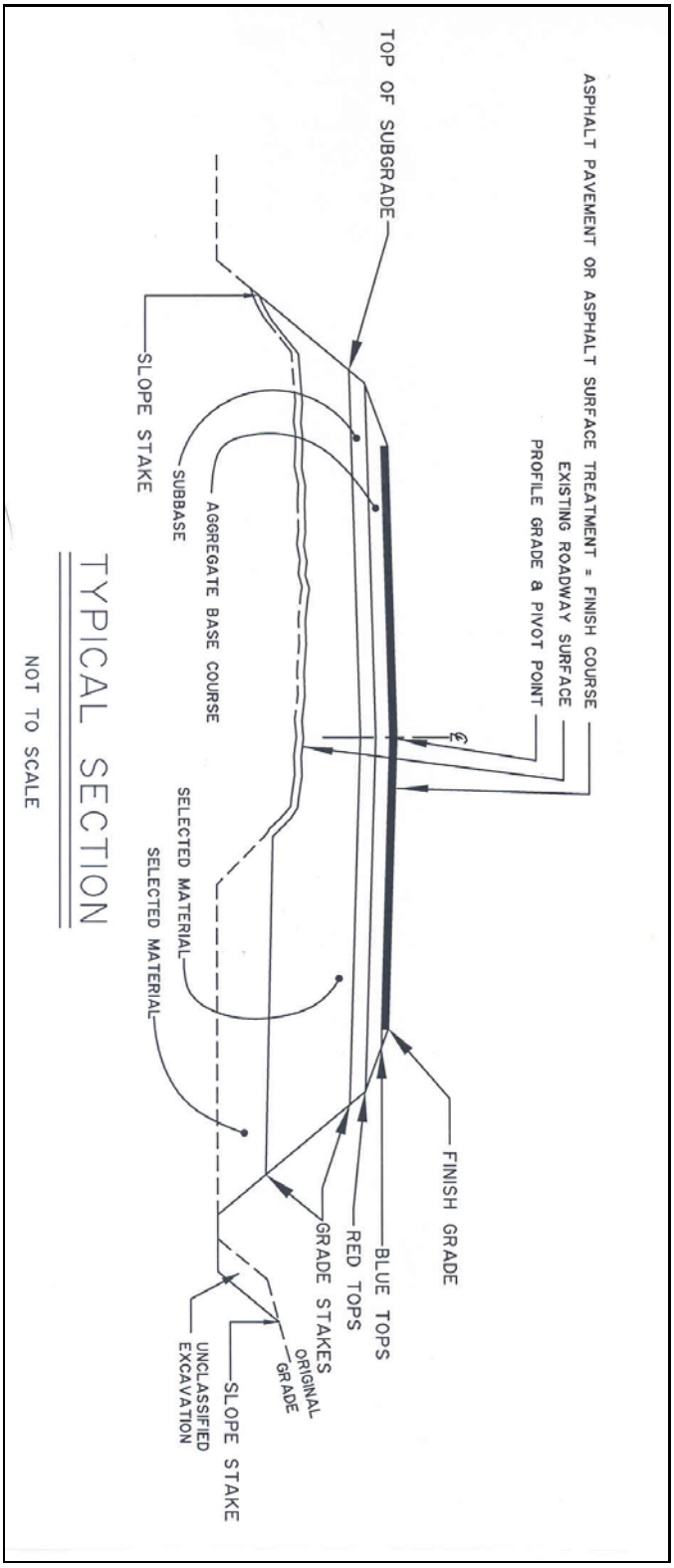

Figure 18.15.17
Typical Section

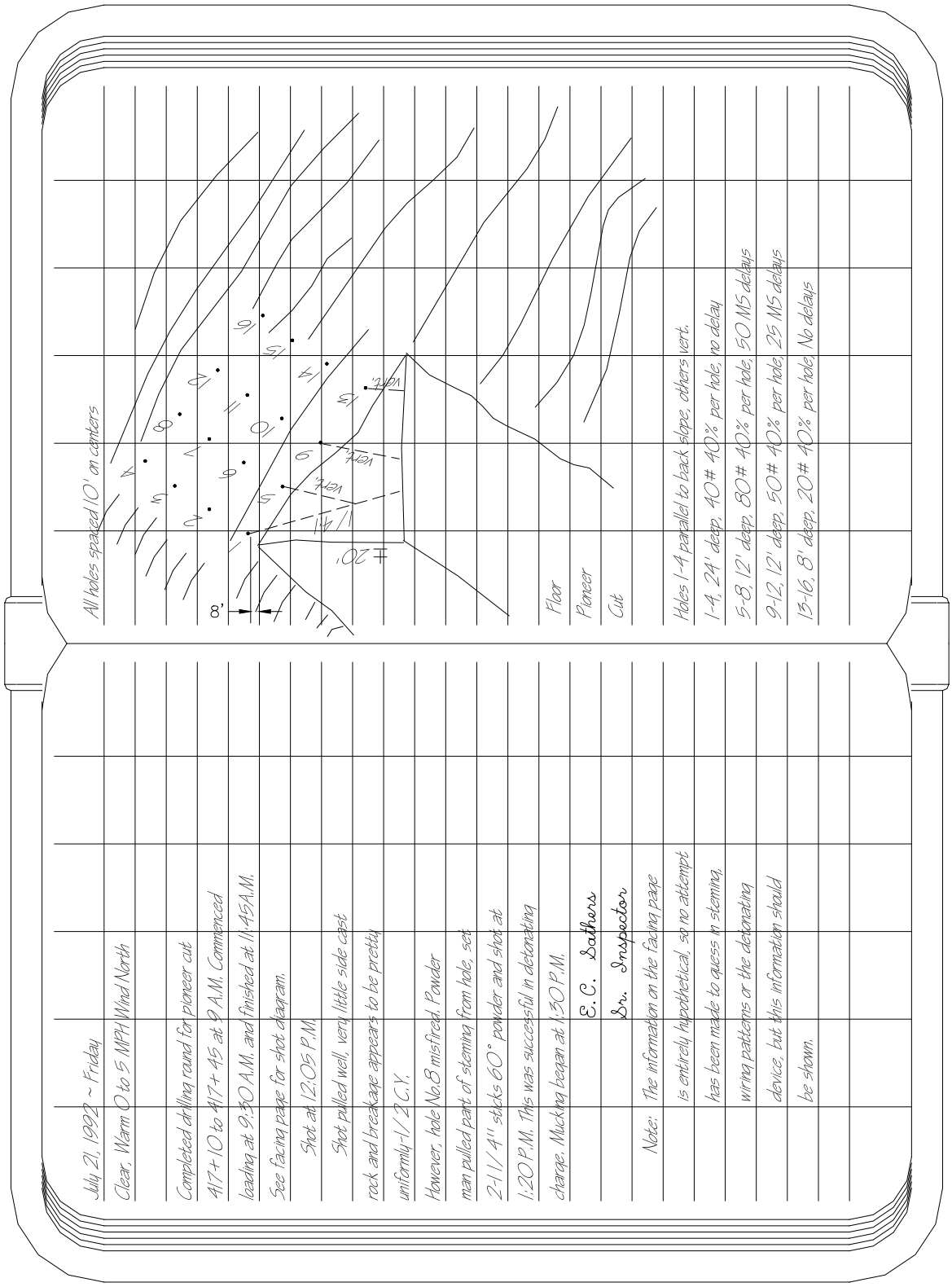

Exhibit A
Sample Blasting Notes

18.16. Calculating Equitable Adjustments

An equitable adjustment is a change in the contract price and/or time that preserves the relative cost and pricing principles of the original contract. The contractor and the Project Engineer will attempt to negotiate an equitable adjustment that is fair and acceptable to both parties. The adjustment will be based on costs and credits that are "allowable costs" for overhead and profit.

A cost is allowable if it:

- Meets the definition of "cost" in the contract
- Is reasonable
- Is allocable to the contract
- Is compensable under the terms of the contract and Alaska law
- Is incurred as a result of the act or event giving rise to the request for, or issuance of, the equitable adjustment

Guidance on determining reasonableness can be found in 48 CFR 31.201-3.

"A cost is reasonable if, in its nature and amount, it does not exceed that which would be incurred by a prudent person in the conduct of competitive business. Reasonableness of specific costs must be examined with particular care in connection with firms or their separate divisions that may not be subject to effective competitive restraints. No presumption of reasonableness shall be attached to the incurrence of costs by a contractor. If an initial review of the facts results in a challenge of a specific cost by the contracting officer or the contracting officer's representative, the burden of proof shall be upon the contractor to establish that such cost is reasonable.

What is reasonable depends upon a variety of considerations and circumstances, including:

a. Whether it is the type of cost generally recognized as ordinary and necessary for the conduct of the contractor's business or the contract performance;

b. Generally accepted sound business practices, arm's length bargaining, and federal and state laws and regulations;

c. The contractor's responsibilities to the government, other customers, the owners of the business, employees, and the public at large; and

d. Any significant deviations from the contractor's established practices."

Guidance on whether a cost is allocable to the contract is provided in 48 CFR 31.201-4.

"A cost is allocable if it is assignable or chargeable to one or more cost objectives on the basis of relative benefits received or other equitable relationship. Subject to the foregoing, a cost is allocable to a federal contract if it:

a. Is incurred specifically for the contract;

b. Benefits both the contract and other work, and can be distributed to them in reasonable proportion to the benefits received; or

c. Is necessary to the overall operation of the business, although a direct relationship to any particular cost objective cannot be shown."

Guidance on whether the Department is entitled to a credit and how it will be determined is provided in 48 CFR 31.201-5.

"The applicable portion of any income, rebate, allowance, or other credit relating to any allowable cost and received by or accruing to the contractor will be submitted to the Department either as a cost reduction or by cash refund.

The percentage rate payable to the contractor will be a rate established by mutual agreement between the Department and the contractor, taking into consideration the contractor's customary overhead and profit rates as documented by the contractor's accounting and financial records.

The term "price" means allowable costs (as defined above) plus profit, plus overhead

18.17. Night Work

The Special Provisions and Standard Modifications of a contract may require or allow a contractor to perform the construction during the night. Night work is defined as work occurring between sunset to sunrise, except for work occurring on the days that no lighting is required for a specific latitude, see the table in 643-1.02. The Worksite Supervisor is responsible for implementing the Night Work Lighting Plan. Work zone illumination shall be subsidiary to other items.

18.17.1 Night Work Lighting Plan

The contractor is required to submit a Night Work Lighting Plan to the Project Engineer with the Traffic Control Plan 30 days prior to the start of night work for all projects where night work is planned. The Project Engineer has seven days to review the plan. The contractor will make necessary modifications in response to any comments by the Project Engineer. The contractor is not allowed to begin night work before the plan approval.

The Night Work Lighting Plan shall include:

- Layout plan showing light location and configuration, including both typical spacing and lateral placement.
- Description of light towers.
- Description of electrical power source.
- Specific technical details on all lighting fixtures to be provided.
- Details on any hoods, louvers, shields, or other means to be used to control glare.

18.17.2 Lighting of the Night Work

The contractor shall illuminate night work areas as required in the specifications.

The contractor shall maintain the required lighting equipment. See Table 643-2 for a listing of specific tasks and required lighting equipment.

The Project Engineer shall monitor the lighting system for unacceptable glare and notify the contractor to correct the situation when it occurs.

The contractor needs to beware of overhead height restrictions (such as trees, aerial utilities, or bridges) when moving the lighting system.

Existing street and highway lighting do not eliminate the need for the contractor to provide lighting.

18.17.3 High Visibility Clothing

All flaggers and workers who work next to traffic or equipment (includes workers who represent the Department), and who are under the contractor's control (including all subcontractors), must wear clothing that meets specifications.

Department personnel shall maintain all vests, jackets, coveralls, raingear, hard hats, and other apparel in a neat, clean, and presentable condition.

18.18. SCWE Program

18.18.1 Purpose

The purpose of this section is to describe the intent, function and operational procedures for the Alaska Department of Transportation and Public Facilities (DOT&PF) Safety Conscious Work Environment (SCWE) Program.

18.18.2 What is SCWE?

A safety conscious work environment is one which employees feel free to raise safety concerns without fear of retaliation.

18.18.3 Scope and Applicability

The intent of the SCWE program is to foster an atmosphere to encourage employees' willingness to identify safety concerns. The SCWE program applies to all DOT&PF employees. The program provides guidance to employees who have concerns about safety practices, harassment, hostile workplace, or similar problems while on the job. The program provides an overview of the protections afforded under the various regulations.

18.18.4 Policy

We are committed to provide an environment where employees are encouraged to raise safety concerns without fear of retaliation. It is appropriate for employees to spend work time into reporting concerns. Management at all levels invites the communication of safety concerns and is committed to the timely investigation and disposition of all safety-related issues. Retaliation for raising concerns will not be tolerated and when found appropriate management action will be taken.

18.18.5 Reference

This SCWE Program is established in accordance with employee protection as required under state and federal laws and regulations to include:

1. Section 211 Energy Reorganization Act, 42 U.S.C. § 5851—Section of the Energy Reorganization Act of 1974 dealing with Whistleblower Protection;
2. 10 CFR 30.7—NRC Employee Protection for engaging in protected activities regulations;
3. Title 29 CFR—OSHA regulations
4. May 1996 NRC Policy Statement—Requires the establishment of a Safety Conscious Work Environment;
5. Alaska Statute Title 18—Health, Safety, and Housing; Chapter 60 – Safety
6. Alaska Statute Title 39—Public Officers and Employees; Chapter 90. Miscellaneous Provisions; Article 2/ Protection for Whistleblowers.

18.18.6 Definitions

NRC: Nuclear Regulatory Commission

SRSO: Statewide Radiation Safety Officer

Protected Activity: Is when a Concerned Individual (CI) identifies and communicates a safety concern regulated by the NRC or other government agency (i.e. OSHA). The protection applies if the CI communicates the concern to co-workers, supervisors, the NRC, another government agency, Congress, or the Media. Types of concerns can be reporting of, refusing to engage in, requesting an investigation of, or testifying on, unsafe work practices.

Adverse Action: Action initiated by the employer that detrimentally affects the employee's terms, conditions or privileges of employment. They can include any action that involves involuntary changes in the CI's employment. Examples are but not limited to termination, demotion, denial of a promotion, lower performance appraisal, or transfer to a less desirable job.

Retaliation: Occurs when an adverse action is taken against a CI that is legally engaged in protected activities. The employer/decision maker must have knowledge of the protected activity and a cause and effect connection is made between the protected activity and adverse action.

Employee Safety Concerns Program (ECP): An alternative process for a CI to report safety concerns and seeks an impartial review of the concern. The Program is appropriate if an employee is uncomfortable with direct management interface or desires confidentiality.

18.18.7 Training

Content

The training will address the following points:

1. NRC Employee Protection regulations and other applicable federal and state laws pertaining to whistleblower protection.
2. DOT&PF policies and procedures for maintaining a safety conscious work environment. Roles and responsibility of the statewide and regional radiation safety officers in assuring compliance with NRC radiation safety requirements.

Frequency

- Nuclear Gauge Users: Those involved in the use of radioactive materials will receive SCWE training as a part of the initial eight hour nuclear gauge users training and HAZMAT refresher training every two to three years.
- Supervisors: Training will be provided for supervisors of nuclear gauge users and those providing nuclear gauge program oversight on a rotating basis. Specifically:
  a. SCWE training will be provided at the annual regional construction season project engineer meetings.
  b. The intended training session will occur in the Northern Region in the spring of 2009, followed by Southeast Region and Central Region in years 2010 and 2011.
  c. Starting in year 2012, training will be provided in each region every third year on a rotating basis.

Trainer Qualifications

Individuals performing the training shall have received:

- 40 hour safety-related course (HAZMAT, RSO, OSHA)
- DOT&PF SCWE training course

18.18.8 Communication

Posters with pertinent SCWE information shall be placed on all project office bulletin boards. Information shall include:

1. Definition of SCWE; 18.18
2. DOT&PF policy statement;
3. Contact information for the Employee Safety Concerns Program, State and Federal Agencies.

The SRSO will publish an annual newsletter at the beginning of the construction season for the Nuclear Gauge Users. Information shall include:

1. Definition of SCWE;
2. Lessons learned and/or case studies;
3. Updates on any changes to the Radiation Protection Program and/or SCWE Program;
4. Contact information for the Employee Safety Concerns Program, State and Federal Agencies;
5. Recognition of employees for raising concerns (with their permission);
6. Other pertinent items of interest.

Management Notification of Concerns

The goal of DOT&PF's SCWE Program is to create and maintain an environment where employees feel free to raise concerns without fear of retaliation. Each employee is responsible to see that management is notified promptly of a safety concern. This does not restrict the avenue used to inform management. Employees are free to use alternate channels of communication if desired. Means of communicating a concern include the following:

a. Direct Supervisor. Addressing a safety issue informally through the direct supervisor or any member of the management chain is often the most efficient avenue.

b. Employee Safety Concerns Program (ECP). If an employee is uncomfortable with management or desires confidentiality, the employee may contact the Statewide Safety Officer or the Statewide Radiation Safety Officer through the Employee Safety Concerns Program. The ECP provides an employee an alternate route to raise and resolve a concern. See Alaska Employee Safety Concerns Program Manual.

c. Human Resources.

d. Regulatory Authority.

Program Responsibilities

Directors and Chiefs are responsible for:

1. Implementing DOT&PF's SCWE Program in their work areas through demonstrated behaviors by:
   a. Availability

b. Receptiveness
c. Sensitivity
d. Communications
e. Timeliness
f. Responsiveness
g. Safety-first focus

2. Ensuring that employees are offered training in the policies and practices of SCWE.
3. Ensuring that managers and superintendents are aware of their responsibilities for raising concerns and where to go to do so; receiving and addressing concerns in a positive, objective, and professional manner; and acting quickly on allegations of harassment, intimidation, retaliation or discrimination with appropriate help.

Managers, Superintendents, Foremen and Leads are responsible for:

a. Encouraging employees to bring safety concerns forward by being available and having an open-door policy in the office and in the field;
b. Being sensitive to an employee's potential reluctance to raise concerns and, therefore the need to protect their identity or the identity of others involved;
c. Receiving concerns by listening and restating the concern, making sure they understand what the concern is;
d. Ensuring that employees are trained in SCWE;
e. Familiarizing themselves with the SCWE Program;
f. Receiving and addressing concerns in a positive, objective, and professional manner; and acting quickly on allegations of harassment, intimidation, retaliation or discrimination with appropriate help.

Statewide Safety Officer is responsible for:

1. Coordinating supervisor training;
2. Performing reviews of the SCWE Program and updating, if required;
3. Providing support and assistance to all employees with safety issues that may arise.

Regional Radiation Safety Officer is responsible for:

1. Coordinating nuclear gauge user training;
2. Providing support and assistance for safety issues involving nuclear gauges.

Workers are responsible for:

- Following all safety instructions and carrying out work duties in a safety-conscious manner;
- Timely reporting all safety related incidences or concerns.

18.18.9 Self Assessment

Department Management shall make or cause to be made, an assessment of the effectiveness of the policies and procedures detailed in this Program. The self-assessment shall consist of one or more of the following methods:

- Lessons Learned Evaluation: to determine if lessons learned from internal and external sources are shared in a timely manner;
- Benchmarking: to determine best practices in industry;
- Performance Indicators: to track how we are doing;
- Survey and Interviews: to determine program effectiveness;
- Direct Behavior Observations: as part of normal supervisory responsibilities.

18.18.10 Program Review

The Statewide Safety Officer in conjunction with the commissioner, or designee, will review the SCWE Program and relevant publications on an annual basis. Where deficiencies are found or enhancements identified, corrective action will be developed as appropriate.