STATE	PROJECT	YEAR	SHEET NO.	TOTAL SHEETS
ALASKA	G-30309	1974	1	3

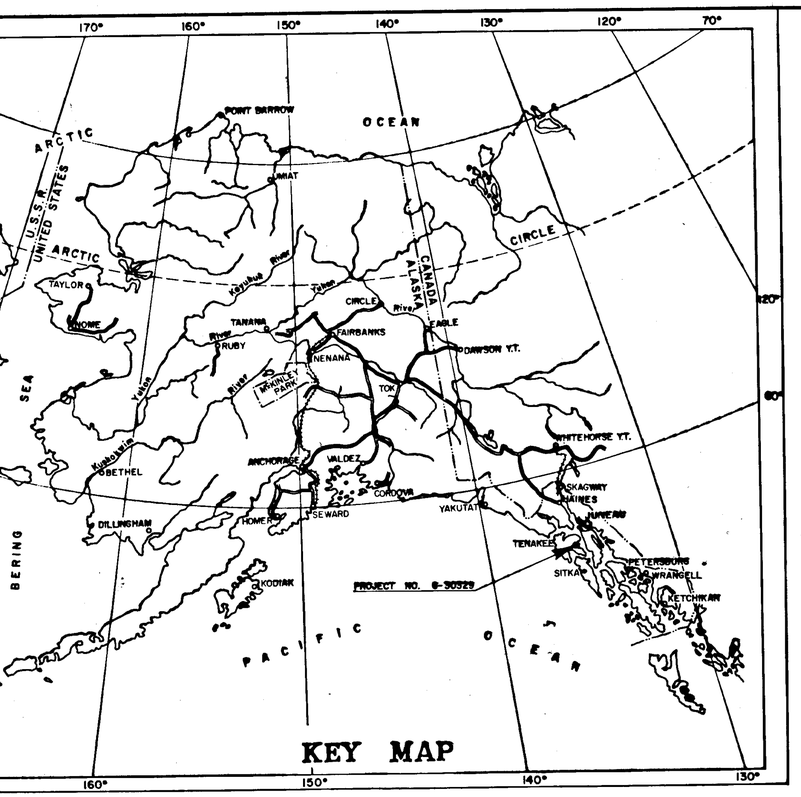

STATE OF ALASKA
DEPARTMENT OF HIGHWAYS

PLAN AND PROFILE
PROPOSED HIGHWAY PROJECT

G-30309

TENAKEE SPRINGS
DOCK STREET REPLACEMENT

INDEX OF SHEETS

SHEET NO.	DESCRIPTION
1	TITLE SHEET
2	TYPICAL SECTION, PLAN & PROFILE
3	CONSTRUCTION PLANS, GENERAL NOTES, ESTIMATE OF QUANTITIES

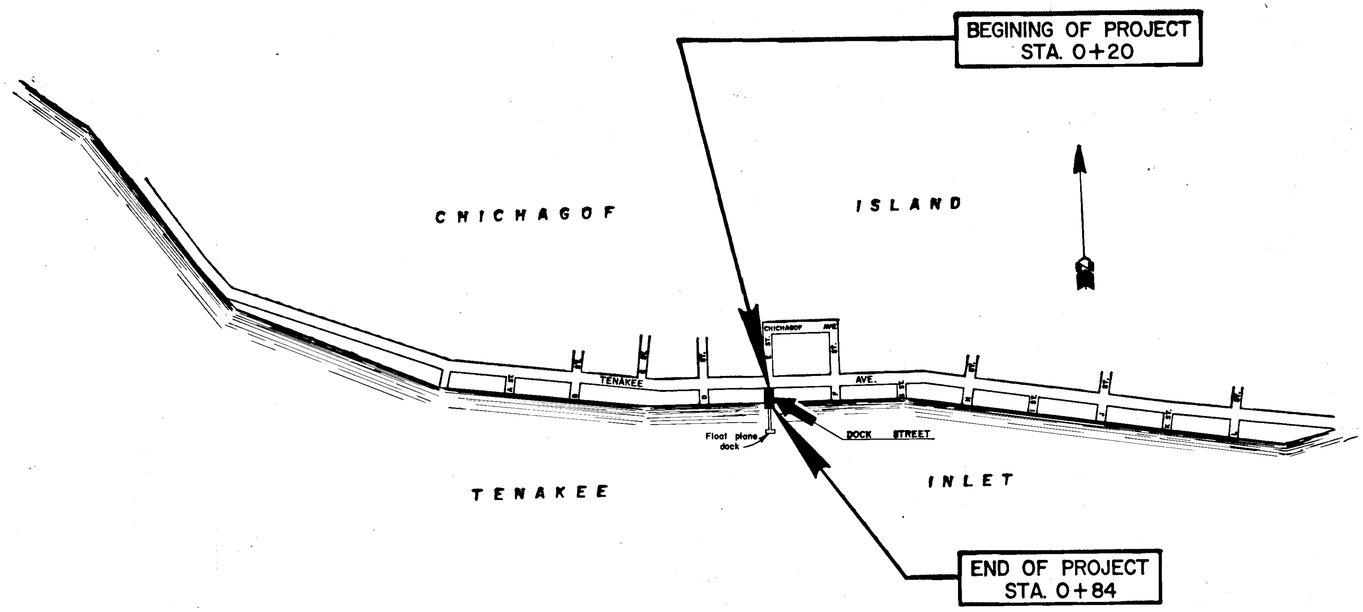

APPROVED
Warren E. Mell Date 4/22/74
SOUTHEAST DISTRICT ENGINEER

STATE OF ALASKA
DEPARTMENT OF HIGHWAYS
APPROVED
R. Cashell Date 4/30/74
COMMISSIONER OF HIGHWAYS

KEUFFEL & ESSER CO.

STATE	PROJECT	YEAR	SHEET NUMBER	TOTAL SHEETS
ALASKA	G-30309	1974	2	3

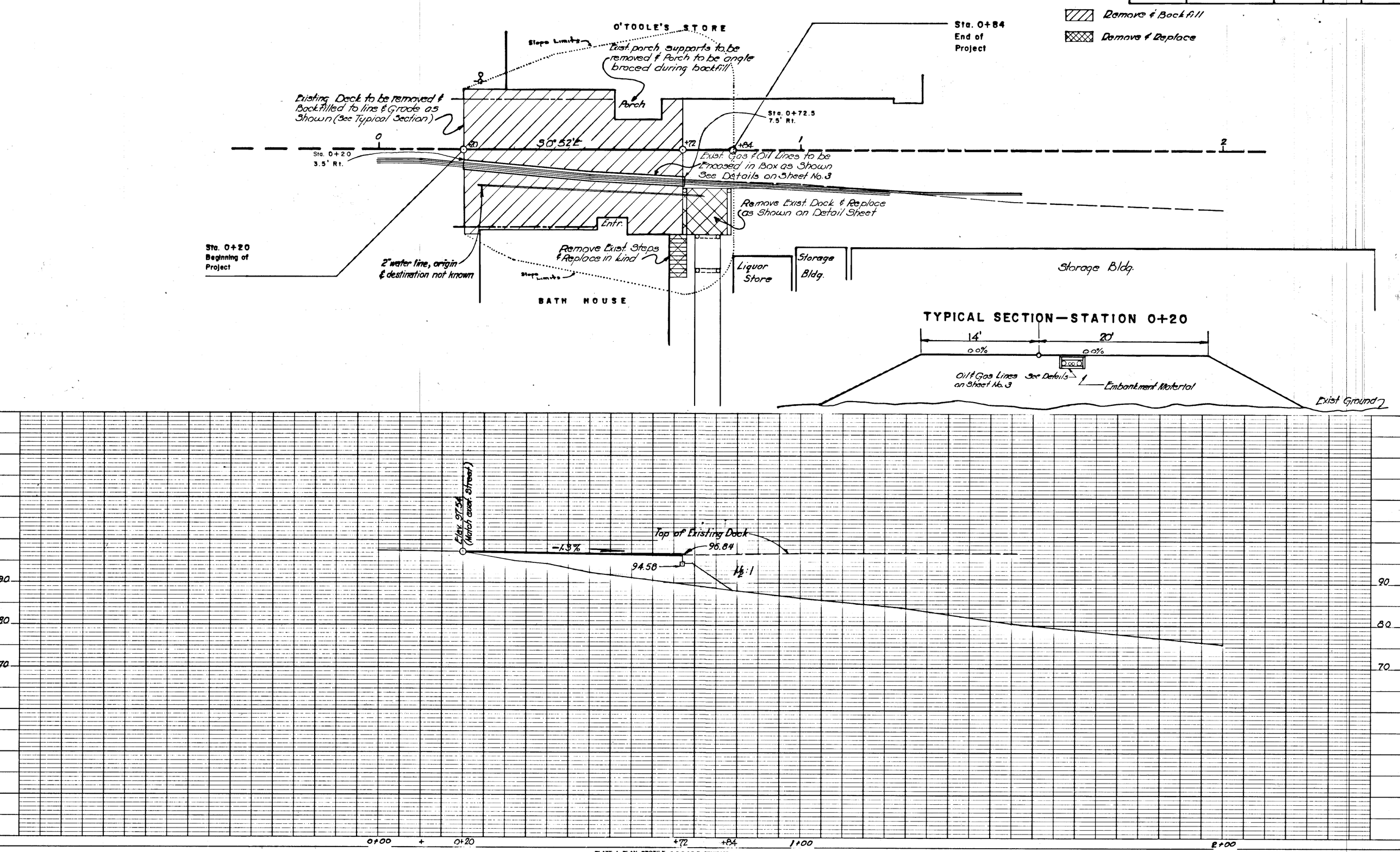

PLATE 1 - PLAN - PROFILE O. P. R. & R. E. STANDARD
135M-2 AGEPROOF FILM—MADE AND PRINTED IN U. S. A.
EUGENE DIETZGEN CO.

STATE	PROJECT DESIGNATION	YEAR	SHEET NO.	TOTAL SHEETS
ALASKA	G-30309	1974	3	3

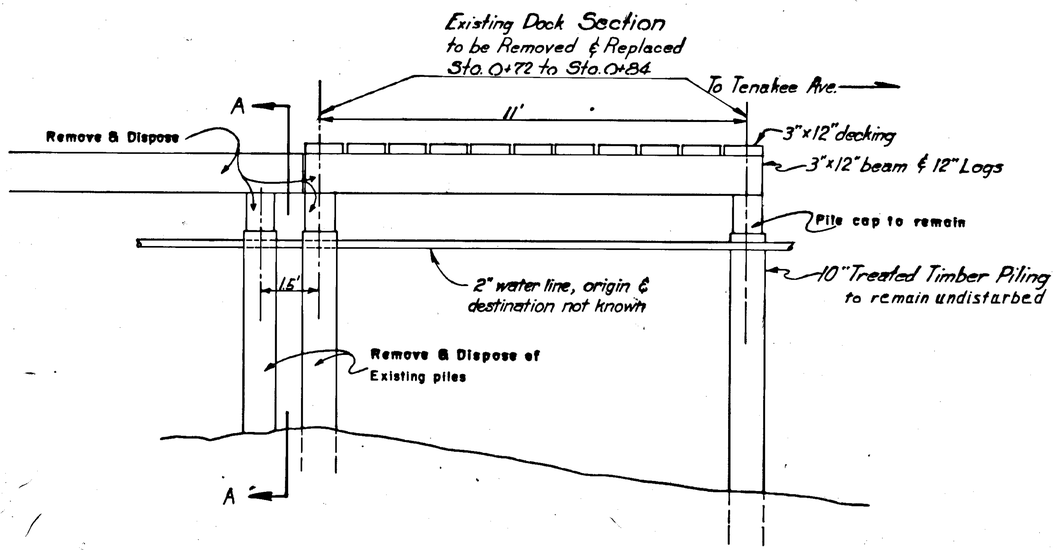

EXISTING DOCK

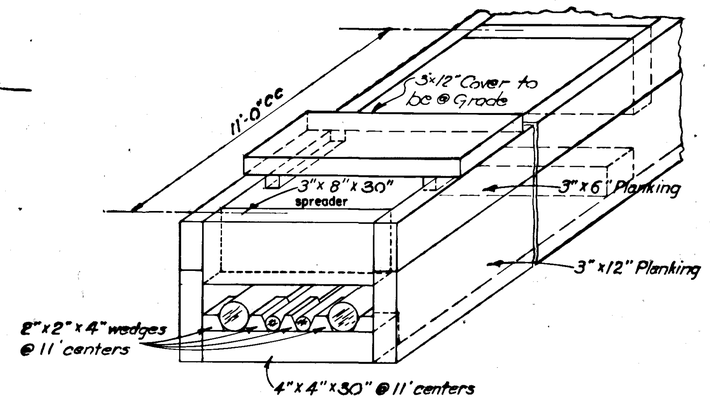

DETAIL—PIPE ENCASEMENT

Sta. 0+20 to Sta. 0+72.5

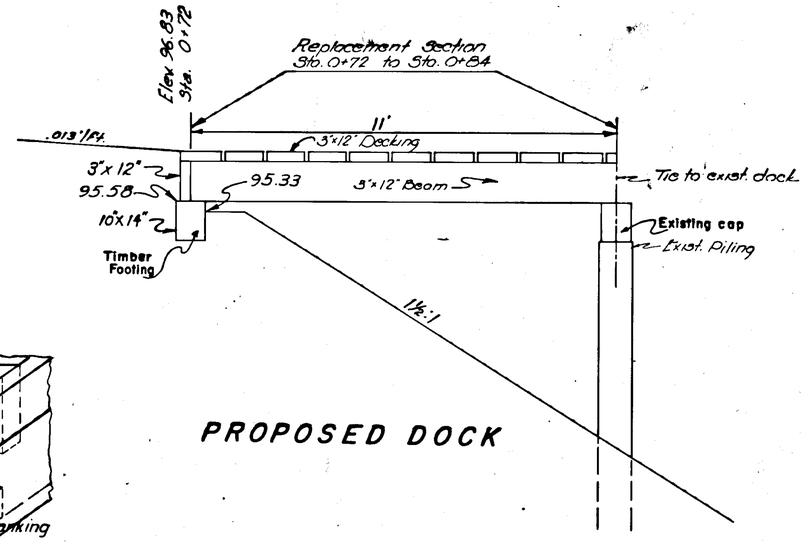

PROPOSED DOCK

NOTE

All timber shall be S-4-S construction grade f = 1200 p.s.i. minimum, Douglas Fir or Hemlock.

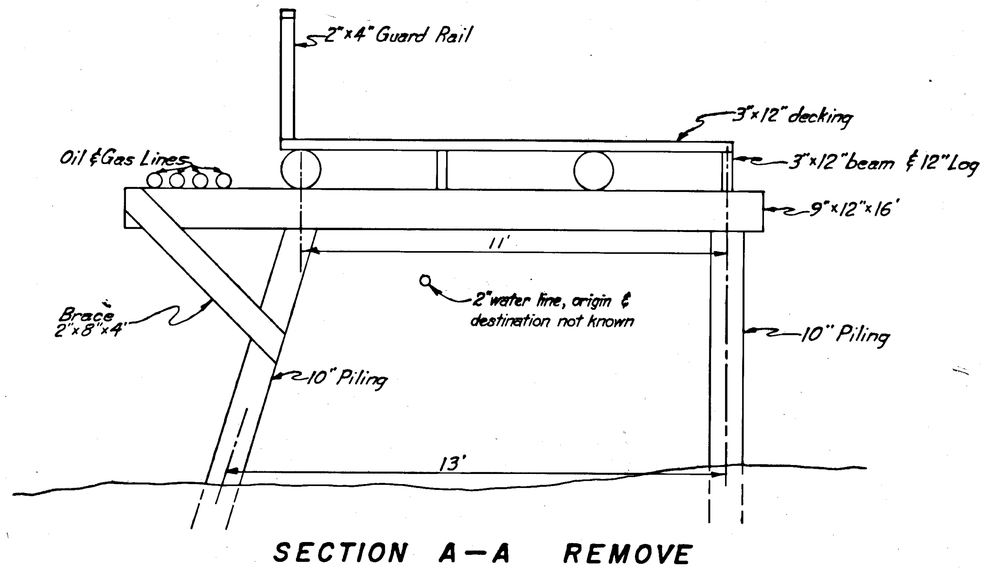

SECTION A—A REMOVE

SUMMARY OF QUANTITIES

ITEM	UNIT	QUANTITY
Mobilization	L.S.	All Req'd
Removal of all structures and obstructions	L.S.	All Req'd
Borrow	C.Y.	415
Oil Line Treatment	L.S.	All Req'd
Untreated Timber	L.S.	All Req'd