PORT ALEXANDER

PORT & HARBOR IMPROVEMENTS

PORT
PROJECT No. 874027

HARBOR
PROJECT No. 377136

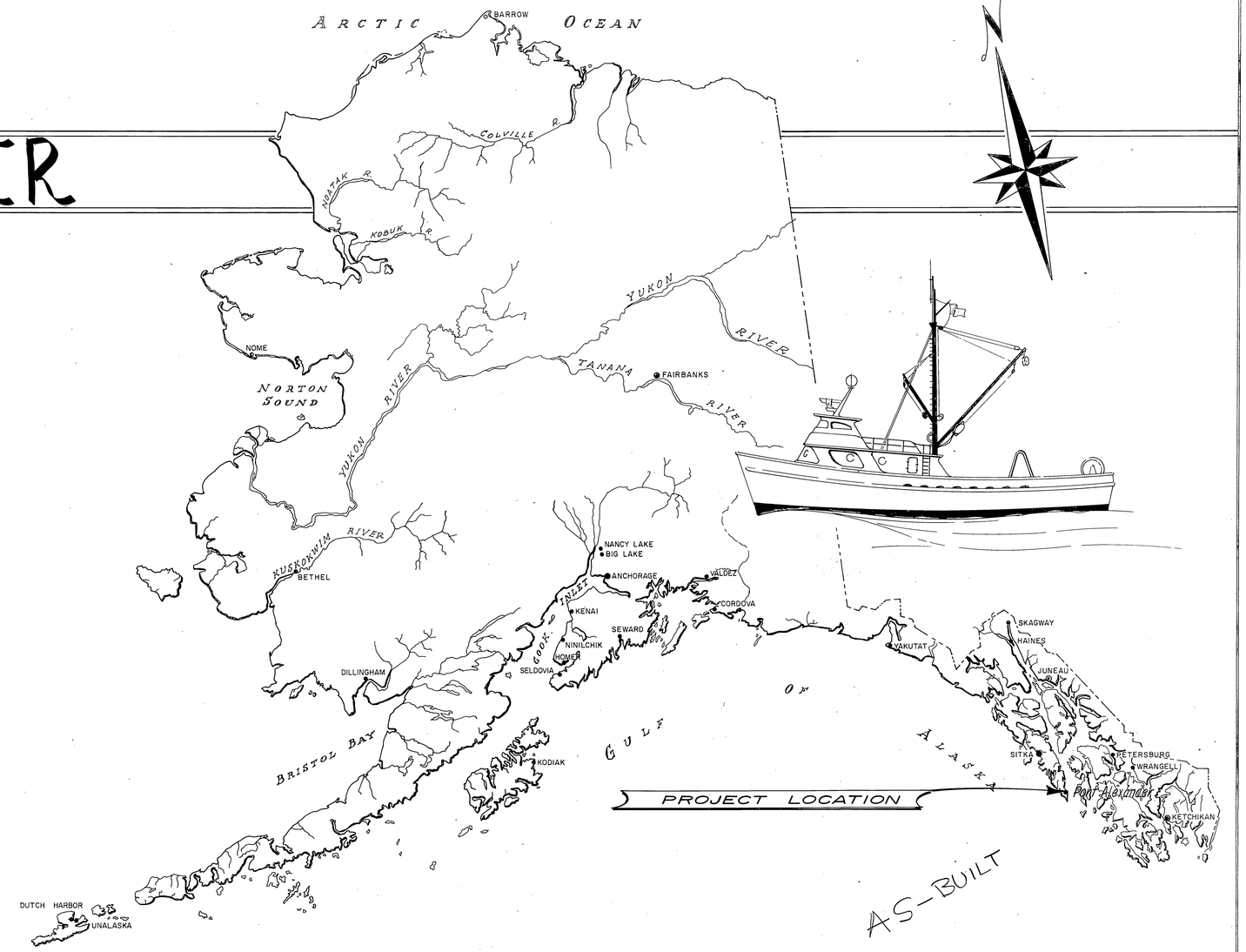

AS-BUILT

WORK SUMMARY

Project consists of constructing the following new items:

1. 10'×150' Timber Float
2. 24'×68' Timber Barge
3. Barge Storage Grid
4. 4~5 Pile Timber Dolphins

Other project work items include new alignment of the existing float system, modification of gangway and seaplane float connections, installation of new steel pile collars on existing 10' float, & installation of new gangway transition covers.

STATE OF ALASKA — DEPARTMENT OF PUBLIC WORKS
DIVISION OF WATER & HARBORS

INDEX TO SHEETS

1	Title & Location
2	Float Improvement Layout
3	Storage Grid & Dolphin Details
4	24'×68' Barge Construction Details
5	Typical 10' Float
6	Miscellaneous Construction Details

APPROVED
DIRECTOR
DATE 1/24/77

SHEET 1 OF 6

K&E 19 1153 10-76 MC 5426+

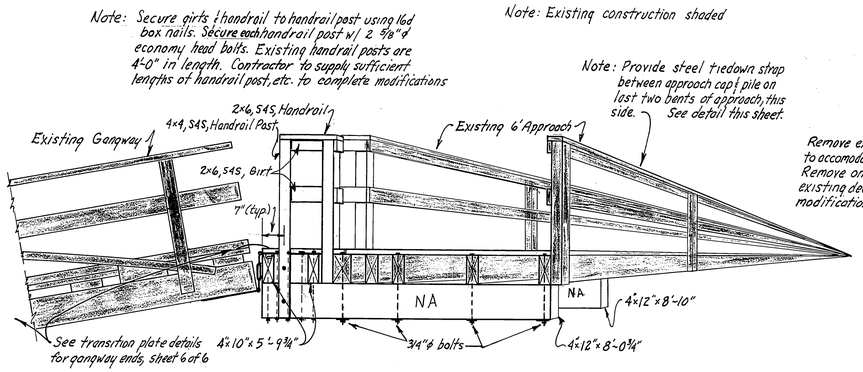

VIEW B~B
(Perspective)
½" = 1'-0"

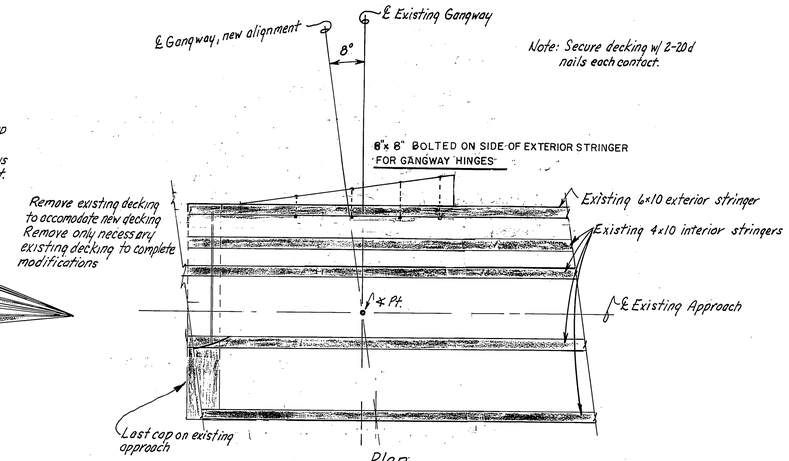

Plan
GANGWAY CONNECTION
½" = 1'-0"

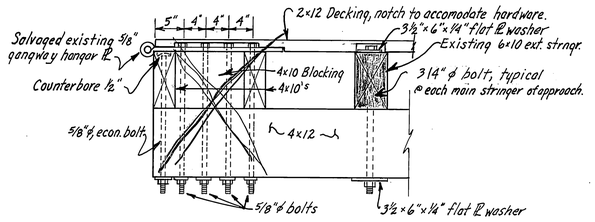

VIEW ~ A-A
(Typical Hangar Connection)
1" = 1'-0"

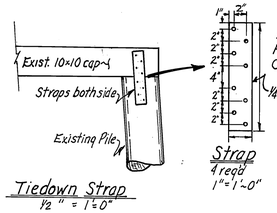

Tiedown Strap
½" = 1'-0"

Strap
4 req'd
1" = 1'-0"

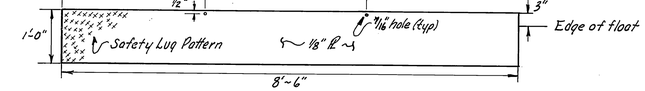

COVER PL
¾" = 1'-0"

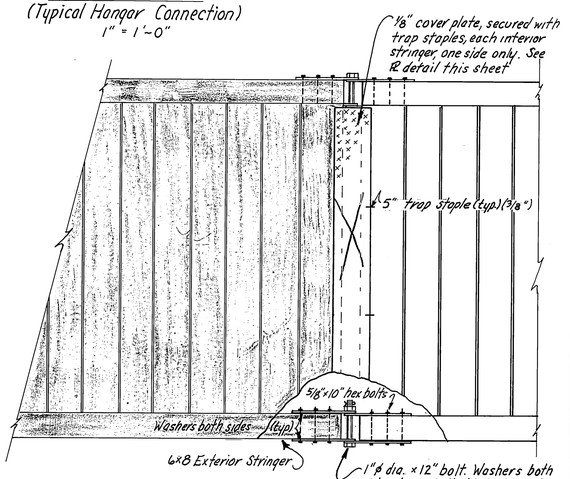

Plan

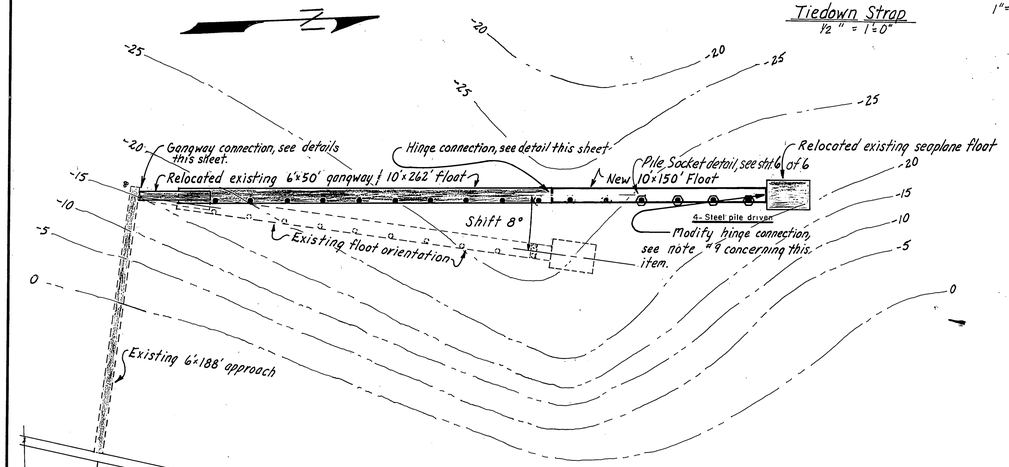

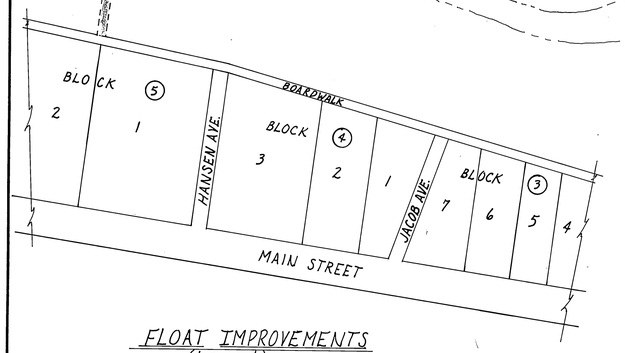

FLOAT IMPROVEMENTS
(Layout)
1" = 50'-0"

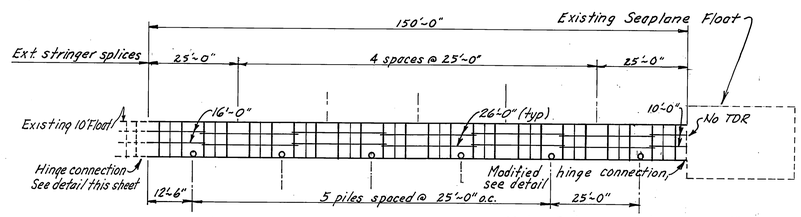

Note: Return Seaplane Float to this location after construction of new 10' float.

10' x 150'-0" FLOAT

FLOAT STRINGER DIAGRAM
1" = 20'

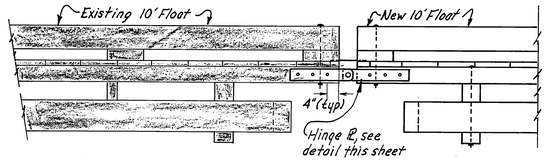

Elevation
FLOAT HINGE CONNECTION
½" = 1'-0"

Notes:

1. Relocate existing 10'×262' float using original pile spacing. All piles to be new treated timber pile
2. Existing piles, to become property of the contractor. ~~Last 7 piles to be drilled & socketed~~ These pile are indicated by ○. See pile socket detail sheet 5 of 5
3. All existing pile collars are to be replaced with new steel pile collars.
4. All float pile to be driven or socketed butt down to 15' penetration or refusal, whichever is less. Cut-off elev. = +22.0'
5. All hardware to be hot dip galvanized. A malleable iron washer shall be placed between all nut & wood surfaces, except as noted.
6. All exterior stringers to be spliced at the locations indicated. Splice locations are typical both sides of float. Distances are c. to c. of dapp joints or to butt end of float.
7. Interior stringers are dimensioned full length, 26', except as noted.
8. Tie-down rails to be spliced at the same locations as exterior stringers.
9. Existing hinge hardware to be reused in connecting seaplane float to new 10'×150' float. Originally connection was made using the bullrail of the existing 10' float, as the support member. When connecting seaplane float to new float, use the 6×8 exterior stringers as support members. There is to be no change in the location of hinge hardware on seaplane float.
10. All lumber used in gangway connection modification shall be S4S, except decking. Decking shall be S1S w/ rough side up. All lumber to be 0.5lb penta treated.

1' OF DAMAGED 6"x 8" STRINGER WAS REMOVED BEFORE ATTACHING NEW FLOAT

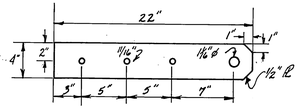

HINGE PLATE
1½" = 1'-0"

DO NOT SCALE THIS DRAWING – USE DIMENSIONS

STATE OF ALASKA
DEPARTMENT OF PUBLIC WORKS
DIVISION OF WATER AND HARBORS

FLOAT IMPROVEMENT LAYOUT, GANGWAY CONNECTION & MISCELANEOUS FLOAT DETAILS

SCALE As noted	SURVEYED	APPROVED
DESIGNED	DRAWN JAL	Don Statter DIRECTOR
CHECKED	DATE	
PROJECT NUMBER 377136		SHEET 2 OF 6

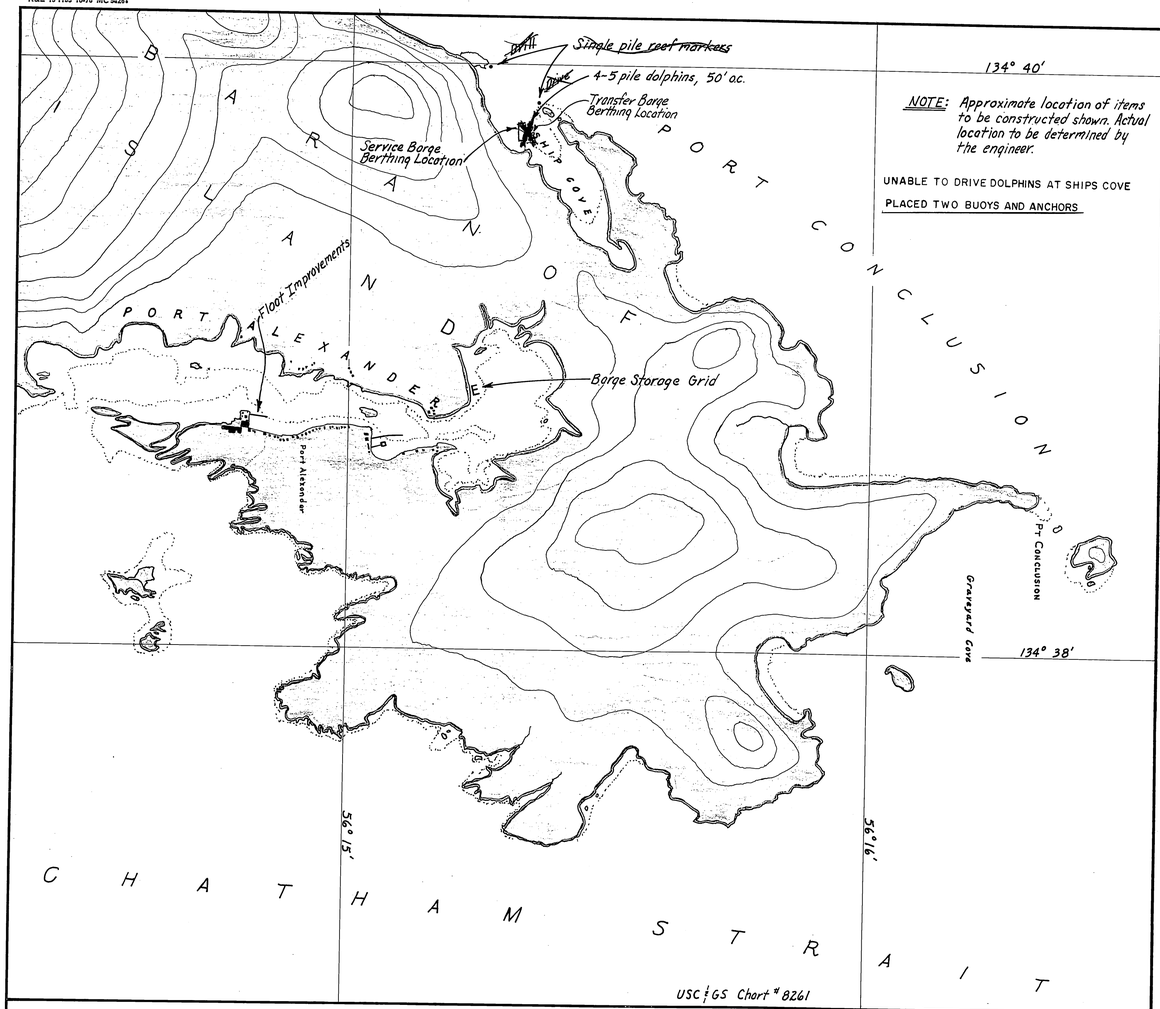

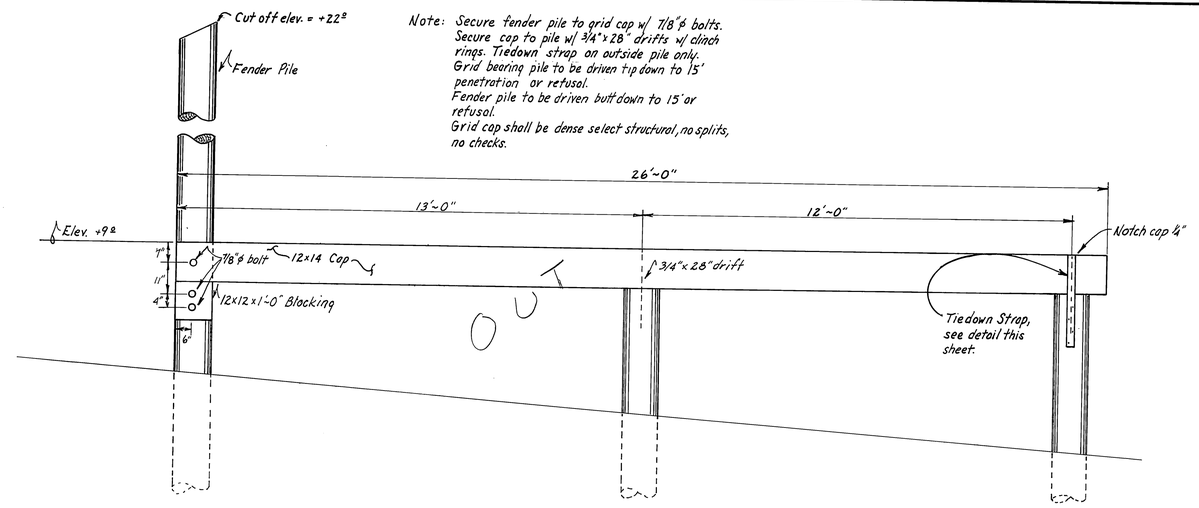

VIEW A-A
1/2" = 1'-0"

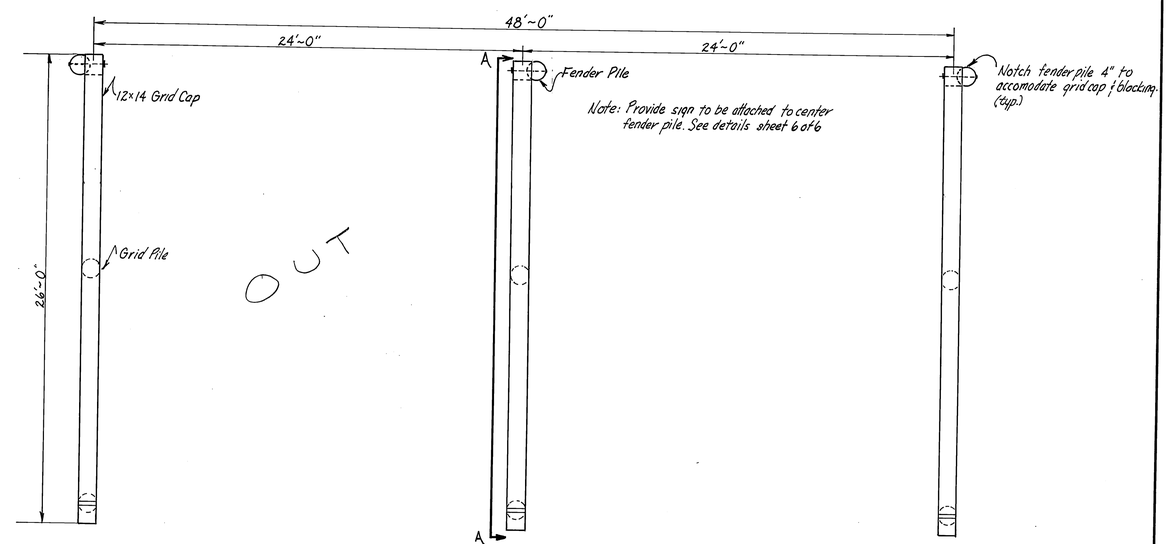

GRID LAYOUT
1/4" = 1'-0"

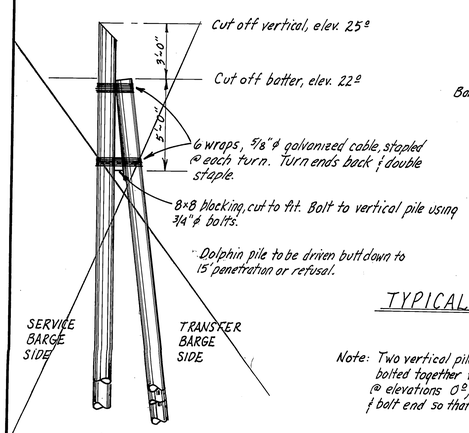

View B-B

PORT ALEXANDER
VICINITY MAP
Scale 1" = 10,000"

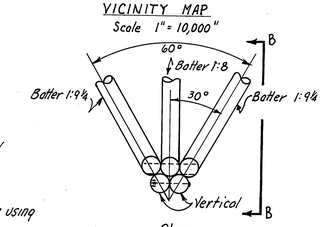

Plan

TYPICAL 5 PILE DOLPHIN
1/4" = 1'-0"

Note: Two vertical pile after installation to be bolted together w/ 7/8"ϕ economy head bolts @ elevations 0', 8' & 16'. Countersink nut & bolt end so that the end does not protrude.

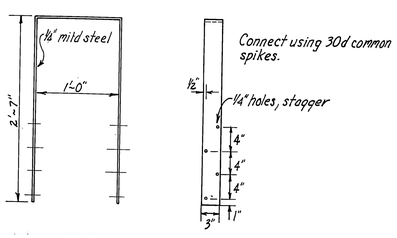

TIEDOWN STRAP
1" = 1'-0"
3 req'd

Note:
All piling to be Class A, pressure creo treated 20lb ret. Min. butt dia. 14", Min. length 75'
All timber to be rough, pressure creo treated to 12 lb ret.
All holes & notches made in timber members to be treated w/ hot creosote oil.
All hardware to be hot dipped galvanized.
A malleable iron washer to be used between all nut & wood surfaces. All bolts to be economy head.

DO NOT SCALE THIS DRAWING — USE DIMENSIONS

STATE OF ALASKA
DEPARTMENT OF PUBLIC WORKS
DIVISION OF WATER AND HARBORS

BARGE STORAGE GRID, BERTHING AREA, & TYPICAL 5 PILE DOLPHIN

SCALE As noted	SURVEYED	APPROVED
DESIGNED	DRAWN JAL	Don Statter, DIRECTOR
CHECKED	DATE	
PROJECT NUMBER 874027		SHEET 3 OF 6

K&E 19 1153 10-76 MC 5426+

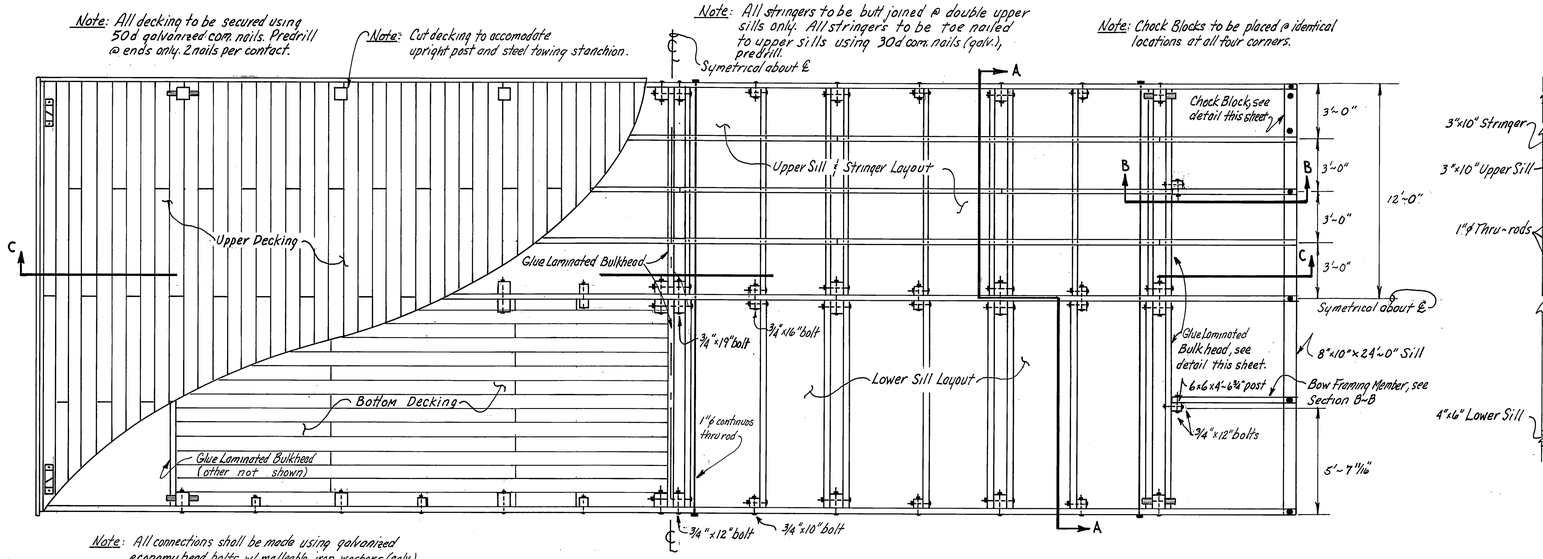

Note: All connections shall be made using galvanized economy head bolts w/ malleable iron washers (galv.), except head ends of bolts @ towing stanchions, use cut washers.

Plan
Scale 1/4"=1'-0"

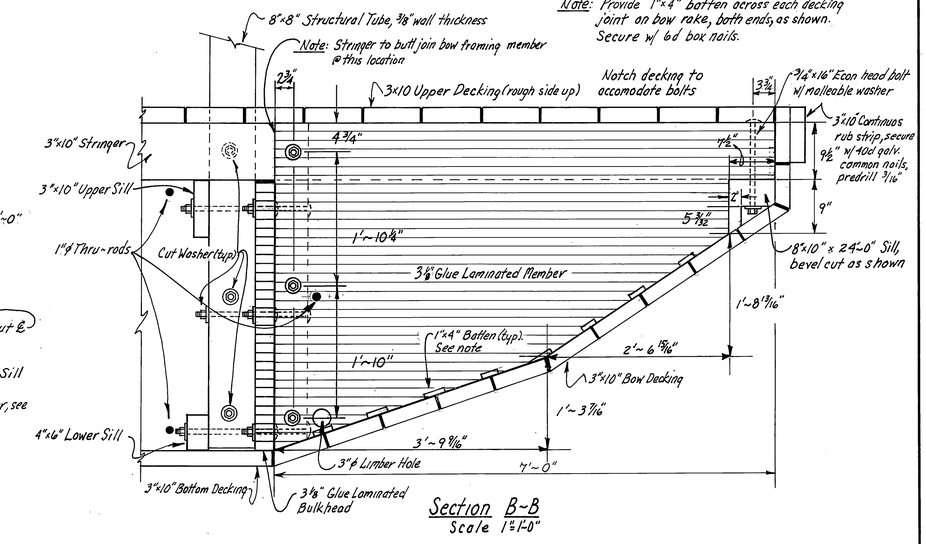

Section B-B
Scale 1"=1'-0"

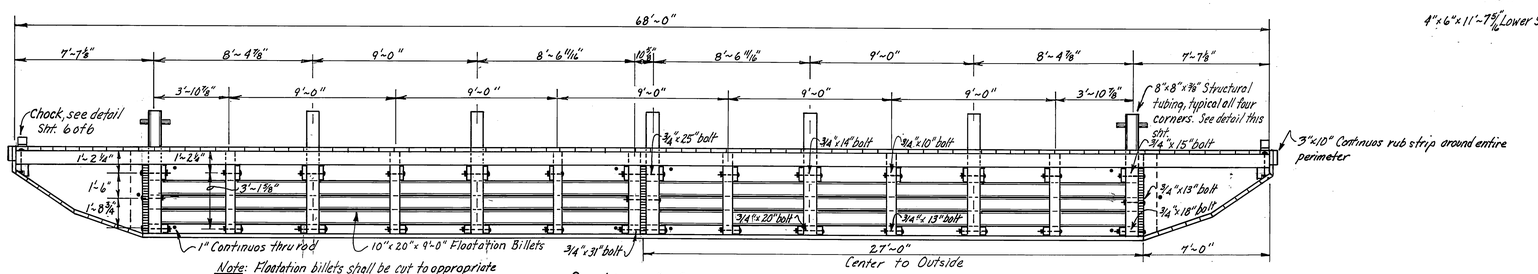

Note: Floatation billets shall be cut to appropriate length @ bulkhead ends only.

Section C-C
Scale 1/4"=1'-0"

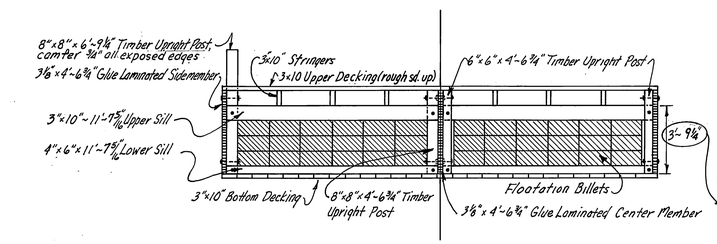

Section A-A
Scale 1/4"=1'-0"

IMPORTANT NOTE:
Upper & Bow Decking to be secured w/ NO space between planks.
Bottom Decking to be secured w/ SPACE 1/4" between planks.
All decking to be staggered as shown on plan view.

Note: THIS DIMENSION MUST BE MAINTAINED. In case of irregular foam thickness, notch foam to insure proper fit.

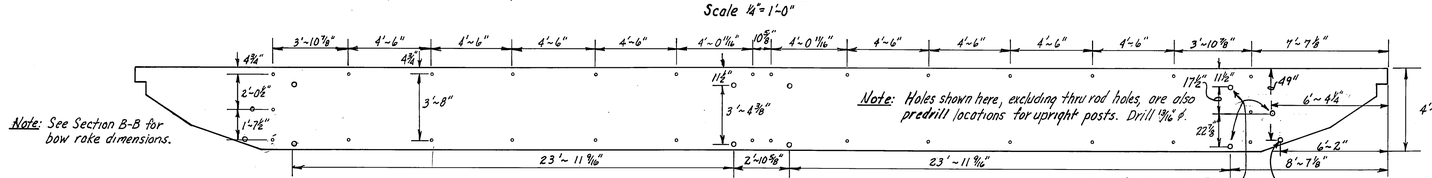

Note: See Section B-B for bow rake dimensions.

Note: Holes shown here, excluding thru rod holes, are also predrill locations for upright posts. Drill 13/16" ϕ.

Predrill Hole Locations ~ Glue Laminated Members
Scale 1/4"=1'-0"

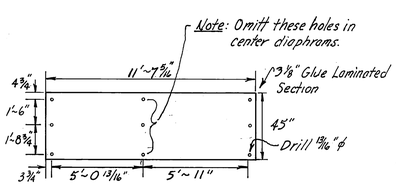

Typical Bulkhead
Scale 1/4"=1'-0"

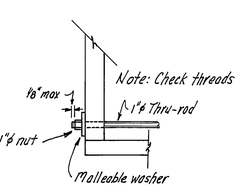

Typical Thru-Rod Conn.
Scale 1"=1'-0"

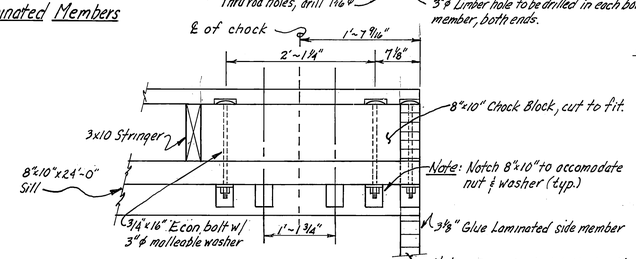

Note: See chock detail, sheet 6 of 6. 4 req'd.

Chock Block Detail
Scale 1"=1'-0"

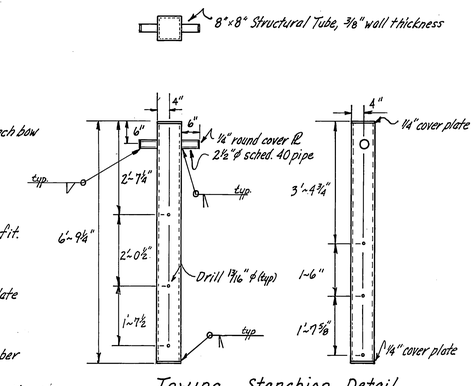

Towing Stanchion Detail
Scale 1/2"=1'-0"

MATERIAL	DRESS	TREATMENT
8x8 Upright Posts	S4S	0.6 lb. Penta
6x6 Upright Posts	"	"
4x6 Lower Sills	"	"
3x10 Upper Sills	"	"
3x10 Stringers	"	"
3x10 Upper Decking	S1S2E	"
3x10 Bottom Decking	S4S	"
3x10 Bow Decking	"	"
3x10 Continuous Rub Strip	"	"
3 1/8 Glue Laminated Sections	None	"
8x10x24'-0" Sills	S4S	"
8x10 Chock Blocks	"	"

General Notes:

All metal hardware such as nails, bolts, washers, thru-rods & nuts, and including 8x8 Structural Tube Towing Stanchions shall be hot-dipped galvanized in accordance w/ ASTM specifications.

All timber materials shall be treated in accordance with latest applicable AWPA specifications for each respective item.

DO NOT SCALE THIS DRAWING — USE DIMENSIONS

STATE OF ALASKA
DEPARTMENT OF PUBLIC WORKS
DIVISION OF WATER AND HARBORS

Barge Construction Layout
(24' x 68' BARGE)

SCALE As Noted	SURVEYED	APPROVED
DESIGNED	DRAWN JAL	Don Statter, DIRECTOR
CHECKED	DATE 12/23/76	
PROJECT NUMBER 874027		SHEET 4 OF 6

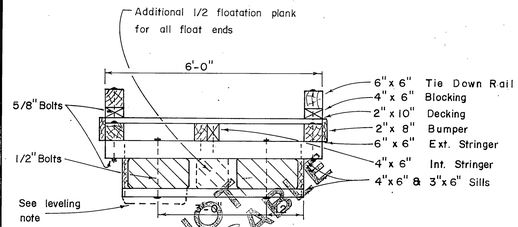

6' FLOAT SECTION

1/2" = 1'-0"

NOTE

6' Float construction shall conform to 10' float constr. except as noted.

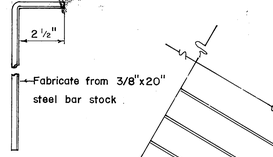

FLOTATION PIN DETAIL

Scale: 3" = 1'-0"

Leveling note

5" x 20" x 4' to 5' leveling floatation shall be installed as directed by the Engr. (required on approx. 20% of the stall floats including 6' stall floats). Place floatation between lower sill members with the outer edge bearing on siding members (cut side up). Pin floatation together with 3/8" x 20" "ell" pin (see detail, this sheet), 3 places, approx. equally spaced.

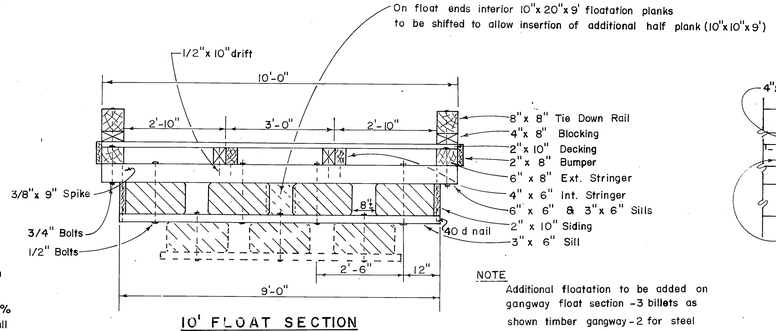

10' FLOAT SECTION

1/2" = 1'-0"

NOTE

Additional floatation to be added on gangway float section - 3 billets as shown timber gangway - 2 for steel gangway.

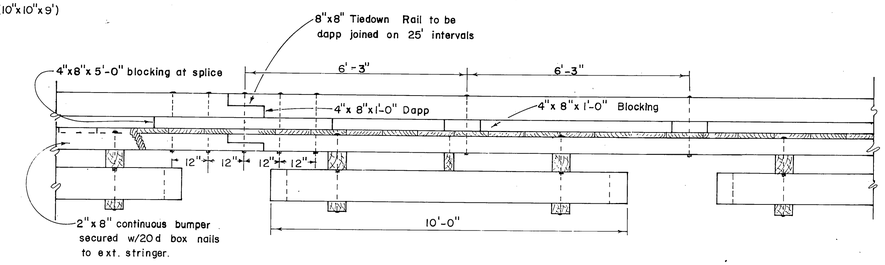

ELEVATION

1/2" = 1'-0"

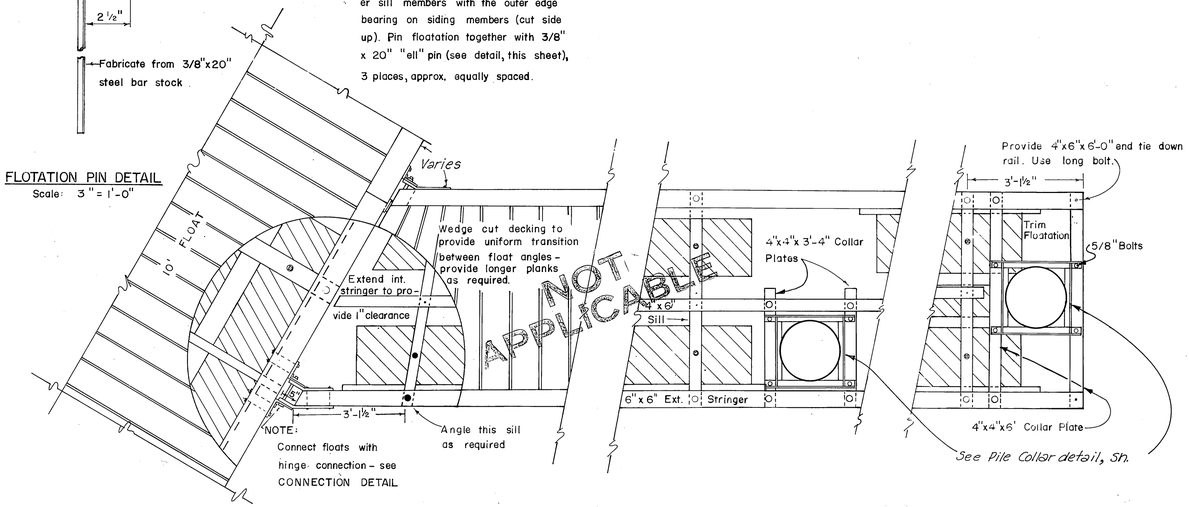

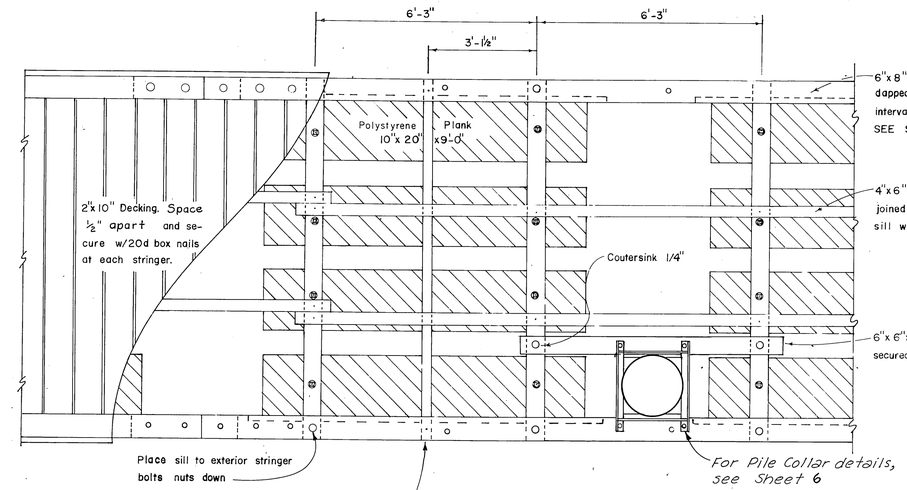

PLAN VIEW 10' FLOAT

1/2" = 1'-0"

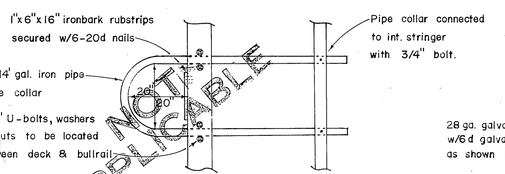

PIPE PILE COLLAR DETAIL

1/2" = 1'-0"

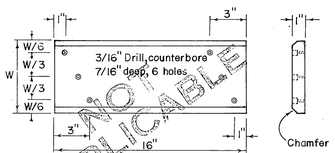

W = 2'-6" float & 4' stall float
6" all others

IRONBARK RUB STRIP

1" = 6"

CONNECTION & COLLAR DETAIL

6' STALL FLOAT

1/2" = 1'-0"

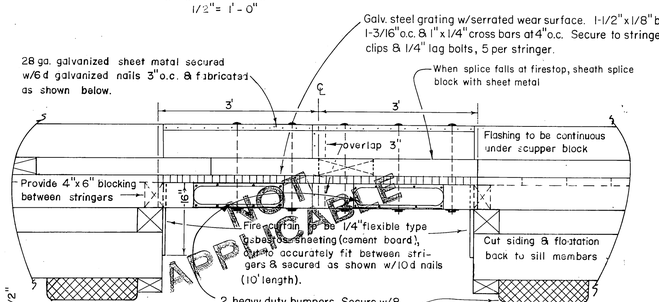

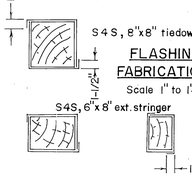

FLASHING FABRICATION

Scale 1" to 1'-0"

FIRE STOP DETAILS

Scale 3/4" to 1'-0"

NOTES:

Secure grating to stringers with saddle clips & 1/4" lag bolts - 5 at each stringer per 6' width

* Exact width to conform to width of floatation material

MATERIALS		
ITEM	DRESSING	TREATMENT
3" x 6" - 4" x 6" & 6" x 6" upper sill	S-1-E 1/8" off	10 lbs. ret. (LP-55)
2" x 10" Siding	2" x 10 1/2"	" " "
3" x 6" Lower Sill	Rough	" " "
4" x 4" & 3" x 6" Collar Plates	Rough	" " "
4" x 6" Collar Members	S-2-E	" " "
4" x 6" Interior Stringers	" "	8 lbs ret. (LP-5)
6" x 6" & 6" x 8" Ext. Stringers	S-4-S	" " "
2" x 8" Bumpers	" " "	0.5 lb. Penta
6" x 6" Collar Stringers	" " "	8 lb. ret. (LP-5)
2" x 10" Decking	Milled	0.5 lb. Penta.
4" x 6" & 4" x 8" Blocking	S-4-S	" "
6" x 6" & 8" x 8" Rail	" " "	" "

All material to be Dense No. 1 grade Douglas Fir

All piling will be Class A creosoted to 20 lbs. retention (MP-2)

PRE-DRILLED BOLT HOLES

COLLAR MEMBERS - all holes
SILLS - holes for floatation plank bolts
STRINGERS - 1. holes for stringer to sill bolts

TIE DOWN RAIL - all holes
PILE COLLAR STRINGER - 10' FLOAT - all holes

FIELD DRILLED BOLT HOLES

SILLS - 1. holes for stringer to sill bolts
2. pile collar stringer to sill

PILE COLLAR INT. STRINGER - 6' FLOAT - all holes
RAIL BLOCKING - all holes
COLLAR PLATES - all holes
EXT. STRINGER - 1. holes for tiedown rail bolts
2. " " pile collar plate bolt

NOTES

All hardware to be hot-dipped galvanized. A malleable iron washer shall be placed between all nut and wood surfaces. All bolts to be of the economy headed type. Bolt holes to be drilled 1/16" oversize except sill bolt holes for floatation planks 1/8" oversize. Drift holes to be drilled 1/16" undersize. All field drill holes shall be treated with hot creosote oil. All pressure treated creosote material shall be cut to size prior to treatment. Tie down rails shall extend across all float ends except under gangway. All bolt heads facing decking shall be countersunk 1/4" previous to treatment. Field drill all drift bolt holes. A barrier of 6 mil black polyethylene shall be placed between the contact surfaces of all creosote timber and floatation material (except float siding members).

No.	Revision	Date	By
1	Changed treatment for Bumpers, Decking, Blocking & Tie-down rails to 0.5 lb. Penta. Spaced deck planks 1/2"	7-29-71	JET

DO NOT SCALE THIS DRAWING — USE DIMENSIONS

STATE OF ALASKA
DEPARTMENT OF PUBLIC WORKS
DIVISION OF WATER AND HARBORS

TYPICAL FLOATS

SCALE As shown	SURVEYED —	APPROVED	
DESIGNED DW/DS	DRAWN MH/JET	Don Statter, DIRECTOR	
CHECKED DS	DATE 4-68		
PROJECT NUMBER 377136		SHEET 5 OF 6	

K&E 19 1153 10-76 MC 5426x

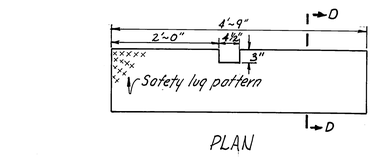

PLAN

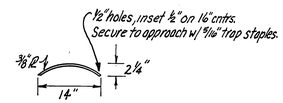

SECTION-C-C

UPPER GANGWAY TRANSITION ℞
Scale ¾" = 1'-0"

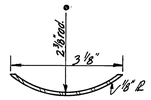

Grind ends to accomodate desired welds.

Shoe ℞

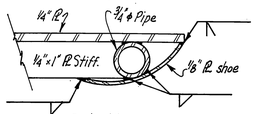

Side View

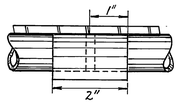

Front View

SHOE DETAILS
Half Size
5 req'd

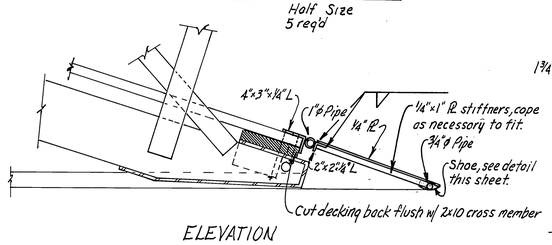

ELEVATION

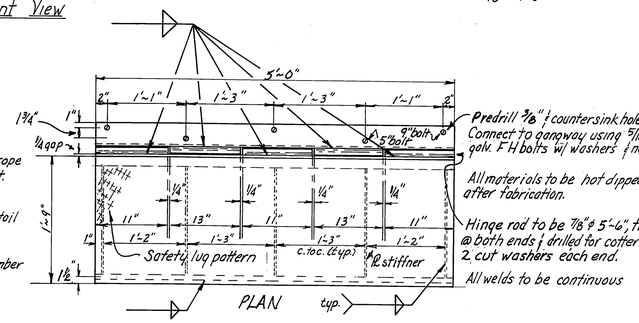

Predrill ⅜" ϕ countersink holes as shown. Connect to gangway using 5/16"-18NC galv. F.H bolts w/ washers & nuts.

All materials to be hot dipped galvanized after fabrication.

Hinge rod to be 7/8" ϕ 5'-6", threaded @ both ends & drilled for cotter key. Supply 2 cut washers each end.

All welds to be continuous

PLAN

LOWER GANGWAY TRANSITION ℞
1" = 1'-0"

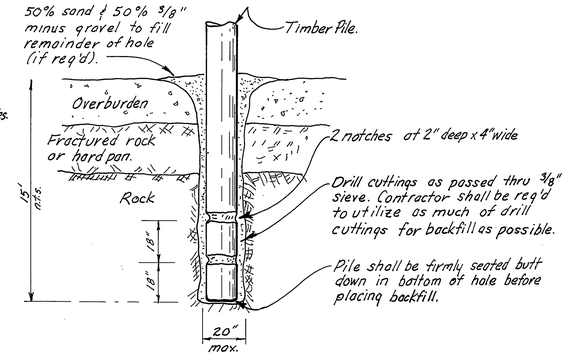

TYPICAL DRILL HOLE & PILE INSTALLATION
3/8" = 1'-0"

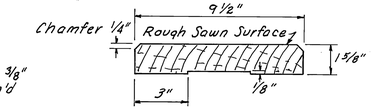

MILLED DECKING DETAIL
3" = 1'-0"

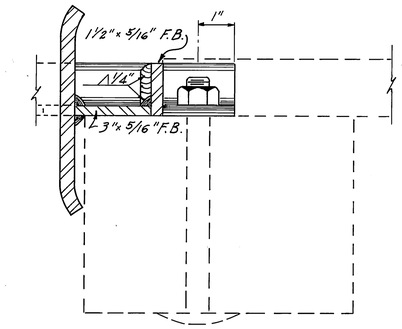

SECTION B-B
Half Size

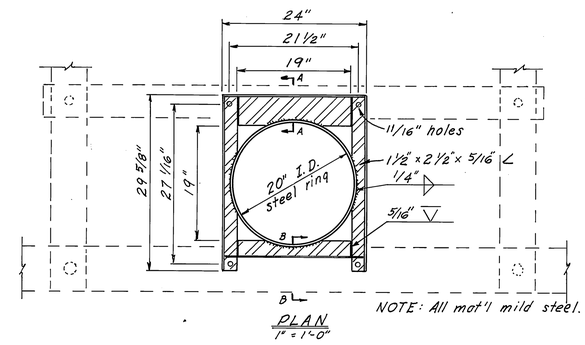

PLAN
1" = 1'-0"

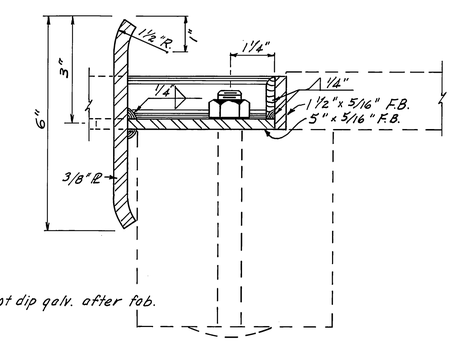

SECTION A-A
Half Size

NOTE: All mat'l mild steel. Hot dip galv. after fab.

STEEL PILE COLLAR DETAILS

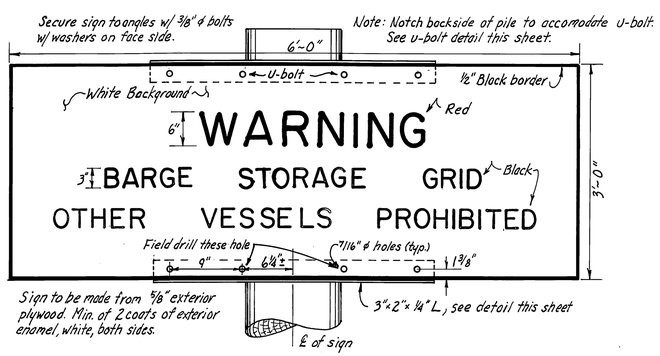

SIGN DETAILS
NTS

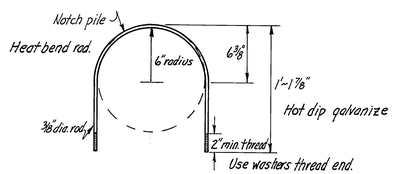

TYPICAL U-BOLT
2 req'd
1½" = 1'-0"

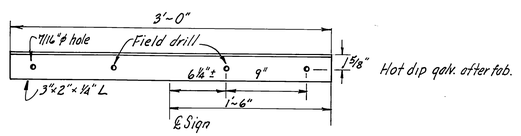

L SUPPORT
2 req'd
1½" = 1'-0"

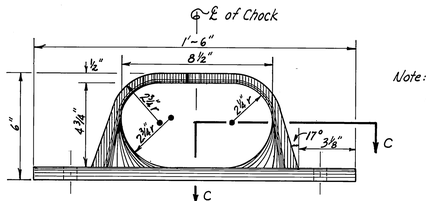

ELEVATION

Note: Round all interior edges in opening & exterior edges of base.

CHOCK DETAILS
3" = 1'-0"

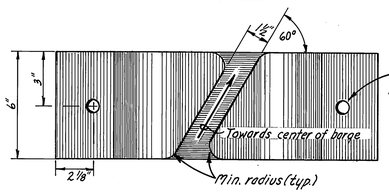

PLAN

Holes to be drilled 13/16" ϕ, connect w/ 3/4" ϕ bolts.

Note: Chocks to be cast from malleable iron. Hot dip galvanize after casting.

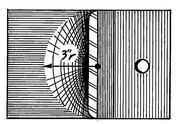

SECTION C-C

DO NOT SCALE THIS DRAWING — USE DIMENSIONS

STATE OF ALASKA
DEPARTMENT OF PUBLIC WORKS
DIVISION OF WATER AND HARBORS

MISCELLANEOUS DETAILS

SCALE As noted	SURVEYED	APPROVED
DESIGNED	DRAWN JAL	Don Statter, DIRECTOR
CHECKED	DATE 1/18/77	
PROJECT NUMBER 874027 & 377136		SHEET 6 OF 6