Change Order Items.

MT EDGECUMBE HIGH SCHOOL
BUILDING 1330
ACADEMIC EXPANSION

Project Number 67751C

Sitka, Alaska

DECEMBER 13, 2004

1 Windows = Sheet 3,
2 LAB EQUIPMENT: Sheet 57
3 Data Relocation: 73
4 Science TABLES: Provided to MEHS.
5 Insect DAMAGE: Sheet 8, 13
6 Sprinkler Additions: for construction only.
7 Additional Circuits 72
8 Wall CARPET Base: 14
9 Lounge Remodel: 70
10 Existing Fuel line Removal: 37, 56
11 Dry Wall Patching: 56
12 Concrete Placement: Sheets 8, 34.

CONTRACTOR: McGRAW'S CUSTOM CONSTRUCTION
PROJECT ENGINEER: DON NEWELL
BEGIN DATE: 3-7-05
END DATE: 8-30-06

SHEET INDEX

ARCHITECT
JENSEN YORBA LOTT, INC
522 WEST 10TH STREET
JUNEAU, ALASKA 99801
(907) 586-1070
FAX (907) 586-3959

A001 TITLE SHEET
A002 ALTERNATE LEGEND
A003 SCHEDULES

A101 DEMOLITION PLAN

A201 OVERALL PLAN
A202 MAIN FLOOR PLAN – SCIENCE WING
A203 MECHANICAL MEZZANINE PLAN
A204 ENLARGED FLOOR PLANS
A205 ROOF PLAN – SCIENCE WING

A301 EXTERIOR ELEVATIONS
A302 EXTERIOR ELEVATIONS
A303 BUILDING SECTIONS
A304 BUILDING SECTIONS
A305 BUILDING SECTIONS
A306 EXTERIOR WALL SECTIONS
A307 INTERIOR WALL SECTIONS

A501 INTERIOR ELEVATIONS
A502 INTERIOR ELEVATIONS
A503 INTERIOR ELEVATIONS
A504 INTERIOR ELEVATIONS

A601 REFLECTED CEILING PLAN – MAIN FLOOR SCIENCE WING
A602 REFLECTED CEILING PLAN – MECHANICAL MEZZANINE
A603 REFLECTED CEILING PLAN – CLASSROOM 128 & 129

A701 EXTERIOR CONCRETE RAMP AND STEEL RAILING
A702 EXTERIOR STAIRS AND RAILING
A703 INTERIOR STAIRS

A801 EXTERIOR DETAILS
A802 EXTERIOR DETAILS
A803 EXTERIOR DETAILS
A804 EXTERIOR DETAILS

A900 INTERIOR SIGNAGE
A901 INTERIOR DETAILS

L101 LANDSCAPE PLAN
L102 LANDSCAPE PLAN
L103 LANDSCAPE DETAILS

STRUCTURAL ENGINEER
PERATROVICH, NOTTINGHAM & DRAGE, INC
3220 HOSPITAL DRIVE, SUITE 200
JUNEAU, ALASKA 99801
(907) 586-2093
FAX (907) 586-2099

C100 SITE PLAN
C200 PARTIAL SITE PLAN
C201 DETAILS
C202 DETAILS

S100 STRUCTURAL GENERAL NOTES
S101 SHEAR WALL DIAGRAMS

S200 FOUNDATION PLAN – SCIENCE WING BASE BID
S201 FOUNDATION DETAILS
S202 FOUNDATION DETAILS
S203 FOUNDATION DETAILS

S300 2ND FLR FRAMING PLAN ✪ MECH RM
S301 STRUCTURAL DETAILS
S302 STRUCTURAL DETAILS

S400 ROOF FRAMING PLAN
S401 ROOF FRAMING DETAILS
S402 ROOF FRAMING DETAILS
S403 DETAILS

MECHANICAL ENGINEER
MURRAY & ASSOCIATES, P.C.
P.O. BOX 21081
JUNEAU, AK 99802
(907) 780-6151
FAX (907) 780-6182

M001 SCHEDULES SYMBOLS
M101 DEMOLITION FLOOR PLAN – BUILDING A SCIENCE ROOM

M201 FOUNDATION PLAN BUILDING C
M202 FLOOR PLAN – PIPING BUILDING C PART FLOOR PLAN – ALTERNATE
M203 ATTIC FLOOR PLAN – PIPING BUILDING C AND B
M204 FLOOR PLAN – BUILDING A CLASSROOMS

M302 FLOOR PLAN VENTILATION BUILDING C
M303 ATTIC FLOOR PLAN – DUCTWORK BUILDING C

M401 ENLARGED FAN ROOM PLAN BUILDING C
M402 ENLARGED FAN ROOM SECTION BUILDING C

M501 PIPING DIAGRAMS
M502 PIPING DIAGRAMS

M601 CONTROL

M701 MECHANICAL DETAILS
M702 MECHANICAL DETAILS

ELECTRICAL ENGINEER
HAIGHT & ASSOCIATES, INC.
526 MAIN STREET
JUNEAU, ALASKA 99801
(907) 586-9788
FAX (907) 586-5774

E100 DEMOLITION PHOTOS

E200 ELECTRICAL MASTER PLAN, LEGEND
E201 PARTIAL LIGHTING DEMOLITION PLAN, PARTIAL POWER/SIGNAL DEMOLITION PLAN
E202 FIRST FLOOR POWER
E203 MECHANICAL ROOM 201 POWER/SIGNAL, EXISTING MECHANICAL ROOM
E204 MECHANICAL ROOM ALTERNATE PLANS
E205 PANEL SCHEDULES
E206 FIRE ALARM DIAGRAMS, WIRING DIAGRAMS
E207 SINGLE LINE DIAGRAMS

E301 FIRST FLOOR PLAN – LIGHTING, SECOND FLOOR PLAN LIGHTING
E302 LUMINAIRE SCHEDULE

ABBREVIATIONS

&	AND
∠	ANGLE
@	AT
℄	CENTERLINE
ø	DIAMETER
#	NUMBER
ACOUS	ACOUSTICAL
AC	ASPHALT CONCRETE
ACM	ASBESTOS CONTAINING MATERIAL
ACP	ACOUSTICAL PANEL
ADJ	ADJUSTABLE
AFF	ABOVE FINISH FLOOR
AIB	AIR INFILTRATION BARRIER
AL	ALUMINUM
AP	ACOUSTICAL PANEL
APPROX	APPROXIMATE
ARCH	ARCHITECTURAL
ASB	ASBESTOS
AST	ABOVE GROUND STORAGE TANK
BD	BOARD
BITUM	BITUMINOUS
BLDG	BUILDING
BLK	BLOCK
BLKG	BLOCKING
BM	BEAM
BOT	BOTTOM
CAB	CABINET
CB	CATCH BASIN
CEM	CEMENT
CER	CERAMIC
CG	CORNER GUARD
CHAN	CHANNEL
CI	CAST IRON
CLG	CEILING
CLKG	CAULKING
CLO	CLOSET
CLR	CLEAR
CNTR	COUNTER
COL	COLUMN
CONC	CONCRETE
CONN	CONNECTION
CONT	CONTINUOUS
CORR	CORRIDOR
CPT	CARPET
CT	CERAMIC TILE
CTR	CENTER
CTSK	COUNTERSUNK
DBL	DOUBLE
DEPT	DEPARTMENT
DF	DRINKING FOUNTAIN
DET	DETAIL
DIA	DIAMETER
DIM	DIMENSION
DISP	DISPENSER
DN	DOWN
DR	DOOR
DS	DOWNSPOUT
DWG	DRAWING
DWR	DRAWER
E	EAST
EA	EACH
EF	EXHAUST FAN
EIFS	EXTERIOR INSULATION & FINISH SYSTEM
EJ	EXPANSION JOINT
EL	ELEVATION
ELEC	ELECTRICAL
ELEV	ELEVATOR
EMER	EMERGENCY
EM	ENTRY MAT
ENCL	ENCLOSURE
EP	ELECTRICAL PANELBOARD
EPDM	ETHYLENE PROPYLEVE DIENE MONOMER
EQ	EQUAL
EQP	EQUIPMENT
EX	EXISTING
EXPO	EXPOSED
EXP	EXPANSION
EXT	EXTERIOR
FA	FIRE ALARM
FB	FLAT BAR
FD	FLOOR DRAIN
FDN	FOUNDATION
FEC	FIRE EXTINGUISHER CAB
FF	FINISH FLOOR
FHC	FIRE HOSE CABINET
FIN	FINISH
FLASH	FLASHING
FLR	FLOOR
FLUOR	FLUORESCENT
FOC	FACE OF CONCRETE
FOF	FACE OF FINISH
FOS	FACE OF STUDS
FRP	FIBERGLASS REINFORCED POLYESTER
FPRF	FIREPROOF
F/R	FIRE RETARDANT
FSR	FLEXIBLE SHEET ROOFING
FT	FOOT OR FEET
FTG	FOOTING
FURR	FURRING
FUT	FUTURE
GA	GAUGE
GALV	GALVANIZED
GB	GRAB BAR
GL	GLASS
GR	GRADE
GT	TEMPERED GLASS, 1/4"
GW	WIRE GLASS, 1/4"
GWB	GYPSUM WALL BOARD
GYP	GYPSUM
H	HIGH
HB	HOSE BIBB
HC	HOLLOW CORE
HDWD	HARDWOOD
HDWR	HARDWARE
HM	HOLLOW METAL
HORIZ	HORIZONTAL
HR	HOUR
HT	HEIGHT
HW	HOT WATER
	SHEET VINYL INTEGRAL COVE
IC	INSULATED TEMPERED GLASS
ID	INSIDE DIAMETER
IGT	
IHM	INSULATED HOLLOW METAL
INSUL	INSULATION
INT	INTERIOR
JAN	JANITOR
JT	JOINT
LAB	LABORATORY
LAM	LAMINATE
LAV	LAVATORY
LB	POUND
LKR	LOCKER
M	MIRROR
MAX	MAXIMUM
MC	MEDICINE CABINET
MDO	MEDIUM DENSITY OVERLAID
MECH	MECHANICAL
MEMB	MEMBRANE
MFR	MANUFACTURER
MH	MANHOLE
MIN	MINIMUM
MISC	MISCELLANEOUS
MO	MASONARY OPENING
MTD	MOUNTED
MTL	METAL
MUL	MULLION
N	NORTH
NIC	NOT IN CONTRACT
NO OR #	NUMBER
NOM	NOMINAL
NTS	NOT TO SCALE
O/	OVER
OA	OVERALL
OC	ON CENTER
OD	OUTSIDE DIAMETER
OFD	OVERFLOW DRAIN
OFF	OFFICE
OPNG	OPENING
OPP	OPPOSITE
OSB	ORIENTED STRAND BOARD
PL	PLATE
PLAM	PLASTIC LAMINATE
PLAS	PLASTER
PC	PRE-CAST
PF	PRE-FINISHED
PR	PAIR
PT	PAINT
PTD	PAPER TOWEL DISPENSER
PTN	PARTITION
PVC	POLYVINYL CHLORIDE
PWD	PLYWOOD
QT	QUARRY TILE
R	RISER
RAD	RADIUS
RAU	RUBBERIZED ASPHALT UNDERLAYMENT
RD	ROOF DRAIN
REF	REFERENCE
REFR	REFRIGERATOR
REINF	REINFORCED
REQ	REQUIRED
RESIL	RESILIENT
RH	ROBE HOOK
RM	ROOM
RO	ROUGH OPENING
RUB	RUBBER
RWD	REDWOOD
RWL	RAIN WATER LEADER
S	SOUTH
SC	SOLID CORE
SCD	SEAT COVER DISPENSER
SCHED	SCHEDULE
SD	SOAP DISPENSER
SECT	SECTION
SF	SQUARE FOOT
SH	SHELF
SHR	SHOWER
SHTH	SHEATHING
SIM	SIMILAR
SIP	STRUCTURAL INSULATED PANEL
SND	SANITARY NAPKIN DISPENSER
SNR	SANITARY NAPKIN RECEPTACLE
SPEC	SPECIFICATIONS
SQ	SQUARE
STA	STATION
STC	SOUND TRANSMISSION CLASS
STD	STANDARD
STL	STEEL
STOR	STORAGE
STRUCT	STRUCTURAL
SS	STAINLESS STEEL
SUSP	SUSPENDED
SY	SQUARE YARD
SV	SHEET VINYL
TB	TOWEL BAR
TC	TOP OF CURB
TEL	TELEPHONE
TEMP	TEMPORARY
T&G	TONGUE & GROOVE
THK	THICK
TOC	TOP OF CONCRETE
TOD	TOP OF DECK
TP	TOP OF PAVEMENT
TPD	TOILET PAPER DISPENSER
TRD	TREAD
TRTD	PRESSURE TREATED
TV	TELEVISION
TOW	TOP OF WALL
TYP	TYPICAL
UL	UNDERWRITER LABORATORY
UNF	UNFINISHED
UON	UNLESS OTHERWISE NOTED
UR	URINAL
UST	UNDERGROUND STORAGE TANK
VB	VAPOR BARRIER
VCT	VINYL COMPOSITION TILE
VERT	VERTICAL
VEST	VESTIBULE
VP	VENT PIPE
VTR	VENT THROUGH ROOF
W	WIDE
W/	WITH
WC	WATER CARPET
WD	WOOD
W/O	WITHOUT
WP	WALL PROTECTION
WR	WASTE RECEPTACLE
WSCT	WAINSCOT
WT	WEIGHT
WWF	WELDED WIRE FABRIC

SYMBOLS

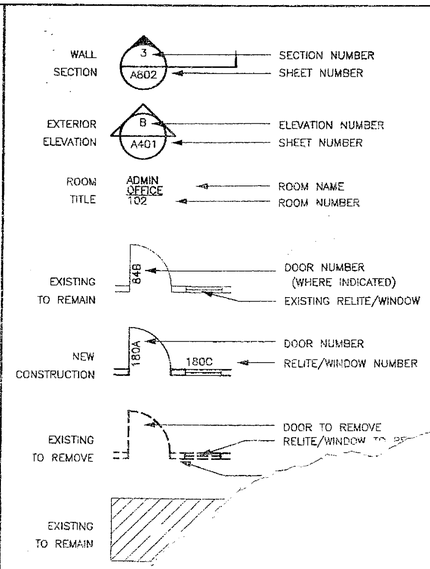

Project As-Built Drawings have been reviewed by the Project Engineer and represent to the best of my knowledge, the project as constructed.
Proj. Engr. _____ Date 7/07

STATE OF ALASKA
DEPARTMENT OF TRANSPORTATION
AND
PUBLIC FACILITIES
SOUTHEAST REGION

APPROVED _____ Date 12/14/04
Patrick J. Kamp, P.E.
Regional Preconstruction Engineer

APPROVED _____ Date 12/15/04
Gary L. Paxton
Regional S.E. Director

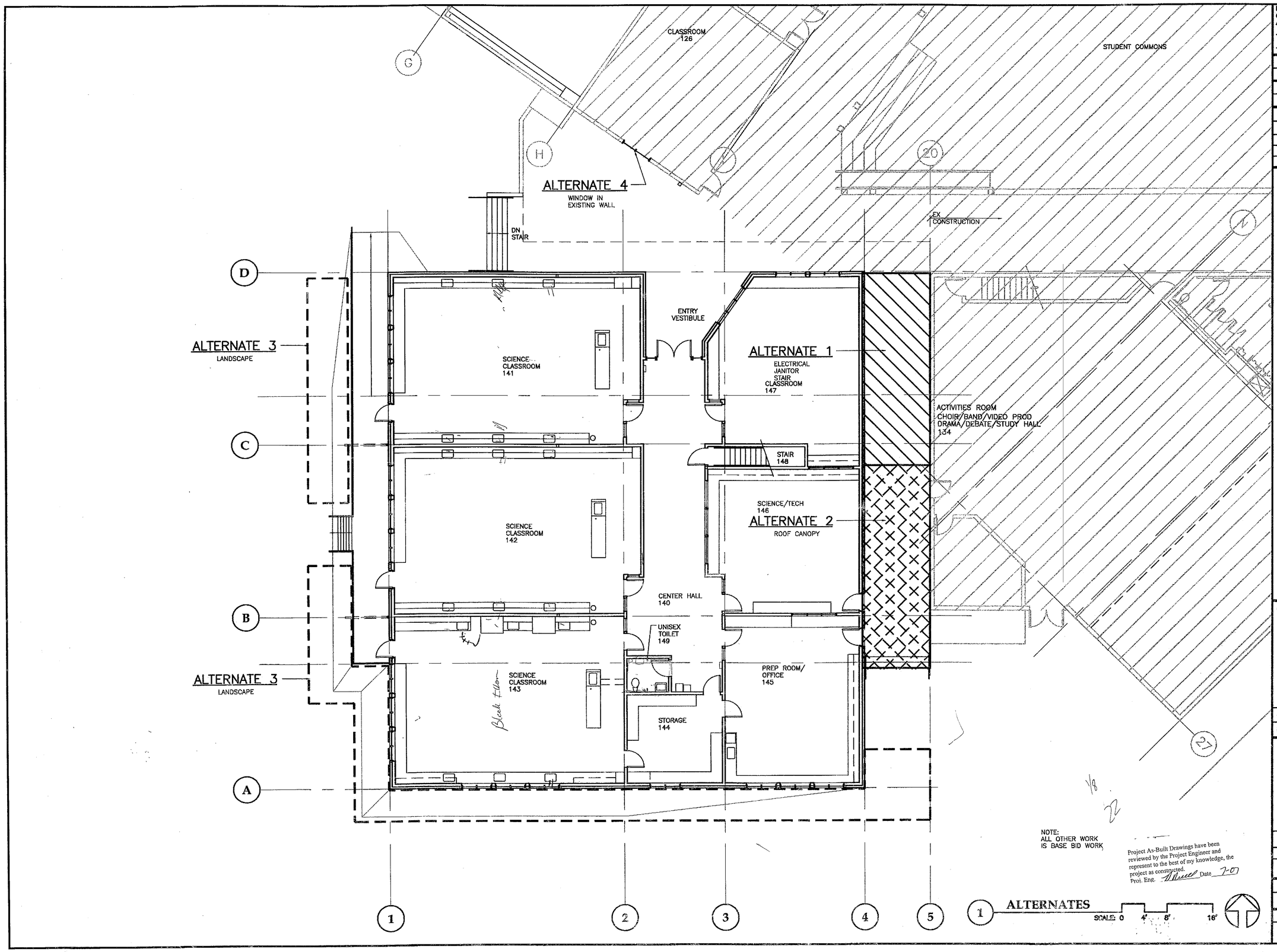

PATH: G:_Projects\0411\Cad\CD\1330\Arch\A002.dwg

Tue, 14/Dec/04 02:27PM

TAB: Layout1

ADDENDUM NUMBER

ATTACHMENT NUMBER

RECORD OF REVISIONS

No.	DATE	DESCRIPTION

CHECKED BY:

STATE OF ALASKA 49TH JOANN E. LOTT NO. A 806 PROFESSIONAL ENGINEER

DESIGNED BY: JENSEN YORBA LOTT

DRAWN BY: .

STATE OF ALASKA
DEPARTMENT OF TRANSPORTATION & PUBLIC FACILITIES
STATEWIDE DESIGN & ENGINEERING SERVICES DIVISION

MT EDGECUMBE HIGH SCHOOL
BUILDING 1330
ACADEMIC EXPANSION

SHEET A002

PROJECT DESIGNATION NUMBER

67751C

STATE	YEAR
ALASKA	2004
SHEET NUMBER	TOTAL SHEETS
2	

DOOR & RELITE TYPE

DOOR TYPES: PROVIDE SAFETY GLASS IN ALL DOORS AND ALL WINDOWS ADJACENT TO DOORS
PROVIDE HORIZONTAL LOUVER BLINDS FOR ALL RELITES INSTALL INSIDE CLASS/OFFICE TYPICAL

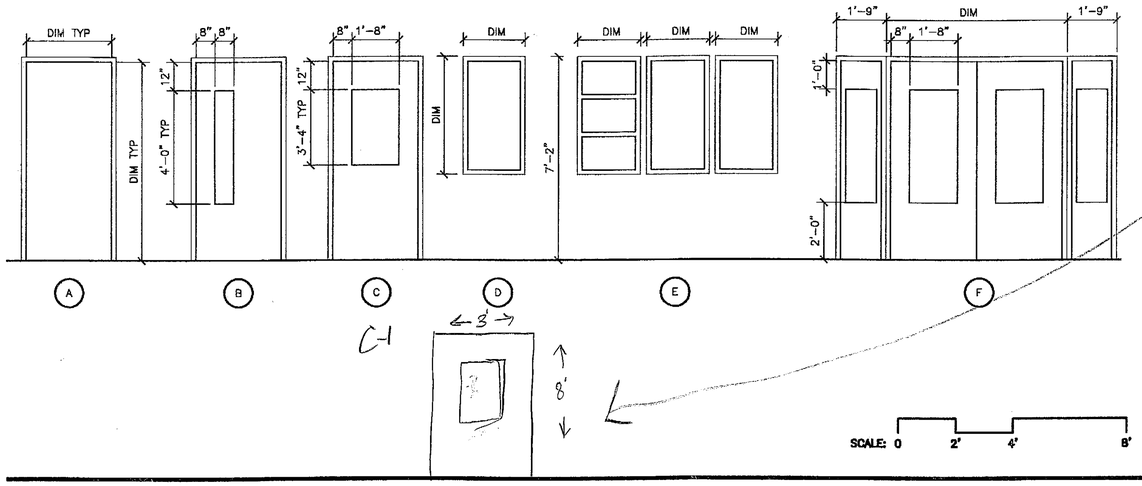

EXTERIOR WINDOW TYPE

PROVIDE HORIZONTAL LOUVER BLINDS FOR ALL EXTERIOR WINDOWS

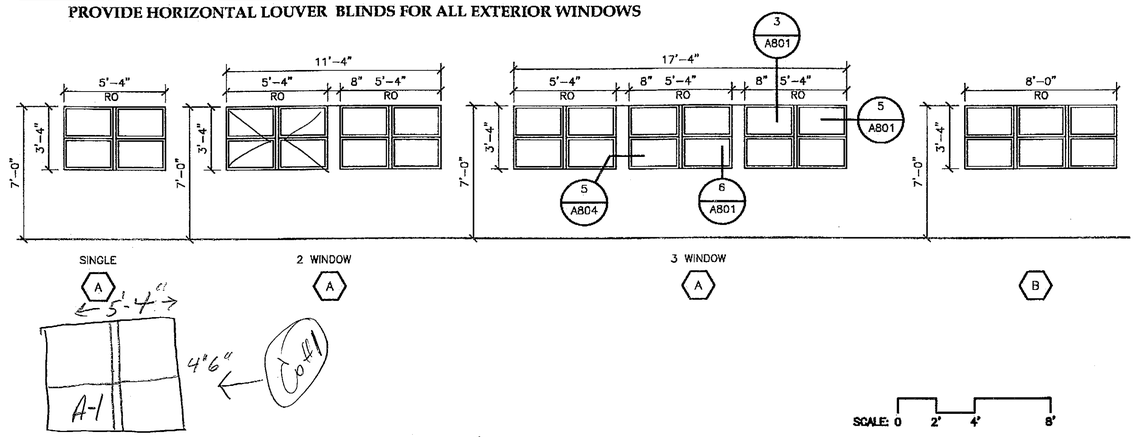

PARTITION SCHEDULE
SEE A201 FOR LOCATION OF RATED CONSTRUCTION

NOTE:
1. ALL WALLS ARE TYPE A UON
2. PROVIDE ACOUSTICAL SEALANT AT PERIMETER & ALL PENETRATIONS TYP

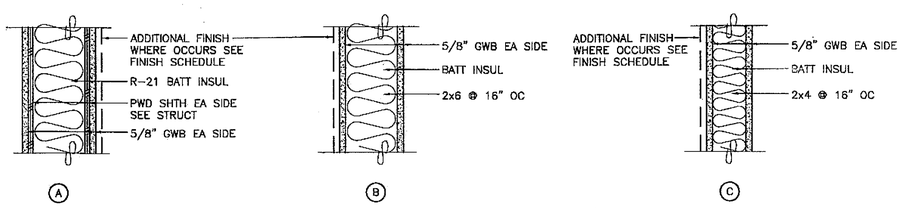

SECTION - DOOR AND RELITE SCHEDULE

OPENING No.	Type	Size WXH	DOOR Mat.	DOOR Fin.	FRAME Mat.	FRAME Fin.	GLASS	SIGNAGE Type	SIGNAGE Text	RATING	DETAILS XXX/A000 UON Head	Jamb	Sill	HW	REMARKS
128A															Existing To Remain
128B															Existing To Remain
129A-A	C	3'-0"x7'-0"	HM	PT	HM	PT	GT	A	000WORKROOM					03	
129A-B	D	1'-10"x4'-0"			HM	PT	GT								
129A-C	D	1'-10"x4'-0"			HM	PT	GT								
129B-A	C	3'-0"x7'-0"	HM	PT	HM	PT	GT	A	0000FFICE					11	
129C-A	C	3'-0"x7'-0"	HM	PT	HM	PT	GT	A	0000FFICE					11	
140A	F	PR3'-0"x7'-0"	HM	PT	HM	PT	IGT				1/A801	4/A801	2/A801	01	
141A	B	3'-0"x7'-0"	HM	PT	HM	PT	GT	A	000CLASSROOM 3-0 x					02	
141B	C-1	3'-0"x7'-0"	HM	PT	HM	PT	IGT				1/A801	4/A801	2/A801	09	
141C	D	1'-10"x4'-0"			HM	PT	GT								
141D	D	1'-10"x4'-0"			HM	PT	GT								
142A	B	3'-0"x7'-0"	HM	PT	HM	PT	GT	A	000CLASSROOM					02	
142B	C-1	3'-0"x7'-0"	HM	PT	HM	PT	IGT				1/A801	4/A801	2/A801	09	
142C	D	1'-10"x4'-0"			HM	PT	GT								
142D	D	1'-10"x4'-0"			HM	PT	GT								
143A	B	3'-0"x7'-0"	HM	PT	HM	PT	GT	A	000CLASSROOM					02	
143B	C-1	3'-0"x7'-0"	HM	PT	HM	PT	IGT				1/A801	4/A801	2/A801	09	
143C	D	1'-10"x4'-0"			HM	PT	GT								
144A	B	3'-0"x7'-0"	HM	PT	HM	PT	GT	A	000 WORK ROOM					04	
144B	B	3'-0"x7'-0"	HM	PT	HM	PT	GT	A	000 WORK ROOM					03	
145A	B	3'-0"x7'-0"	HM	PT	HM	PT	GT	A	000 OFFICE					05	
145B	B	3'-0"x7'-0"	HM	PT	HM	PT	IGT				1/A801	4/A801	2/A801	10	
145C	C-1	3'-0"x7'-0"	HM	PT	HM	PT	GT		4					04	
145D	D	1'-10"x4'-0"			HM	PT	GT								
145E	E	(3)1'-10"x4'-0"			HM	PT	GT								
146A	B	3'-0"x7'-0"	HM	PT	HM	PT	GT	A	000CLASSROOM					02	
146B	D	1'-10"x4'-0"			HM	PT	GT								
146C	D	4'-0"x4'-0"			HM	PT	GT				1/A801	4/A801	2/A801		
146D	D	4'-0"x4'-0"			HM	PT	GT								
146E	D	4'-0"x4'-0"			HM	PT	GT								
146F	E	(3)1'-10"x4'-0"			HM	PT	GT								
146G		3'-0"x7'-0"													
147A	B	3'-0"x7'-0"	HM	PT	HM	PT	GT	A	000CLASSROOM					02	
147B	D	1'-10"x4'-0"			HM	PT	GT								
147C	D	1'-10"x4'-0"			HM	PT	GT								
147D															
148A	A	3'-0"x7'-0"	HM	PT	HM	PT		D	MECHANICAL					07	
149A	A	3'-0"x7'-0"	HM	PT	HM	PT		D	RESTROOM					06	
150A	A	3'-0"x7'-0"	HM	PT	HM	PT		A	000 JANITOR		1/A801	4/A801	2/A801	12	ALTERNATE 1
150B	A	PR3'-0"x7'-0"	HM	PT	HM	PT					1/A801	4/A801	2/A801	08	ALTERNATE 1
150C	A	PR3'-0"x7'-0"	HM	PT	HM	PT		A	000 STORAGE		1/A801	4/A801	2/A801	08	ALTERNATE 1
201A	A	PR3'-0"x7'-0"	HM	PT	HM	PT		A	000 MECHANICAL					08	ALTERNATE 1

SECTION 09000 - FINISH SCHEDULE

ROOM No.	Name	FLOOR	BASE	Ht.	See Interior Elevations WAINSCOT	Ht.	WALLS North	East	South	West	CEILING	NOTES
128	Classroom	CPT	Rubber	4"	WC	7' 2"	PT	PT	PT	PT	ACP	
129A	Workroom	CPT	Rubber	4"			PT	PT	PT	PT	ACP	
129B	Office	CPT	Rubber	4"			PT	PT	PT	PT	ACP	
129C	Office	CPT	Rubber	4"			PT	PT	PT	PT	ACP	
140	Center Hall	EM/SV	Rubber	4"	WC	7' 2"	PT	PT	PT	PT	ACP	
141	Science Classroom	SV	Rubber	4"	WP	7' 2"	PT	PT	PT	PT	ACP	
142	Science Classroom	SV	Rubber	4"	WP	7' 2"	PT	PT	PT	PT	ACP	
143	Science Classroom	SV	Rubber	4"	WP	7' 2"	PT	PT	PT	PT	ACP	
144	Storage	SV	Rubber	4"	WP	7' 2"	PT	PT	PT	PT	ACP	
145	Prep Room/ Office	CPT/SV	Rubber	4"	WP	7' 2"	PT	PT	PT	PT	ACP	
146	Classroom	CPT	Rubber	4"	WC	7' 2"	PT	PT	PT	PT	ACP	
147	Classroom	CPT	Rubber	4"	WC	7' 2"	PT	PT	PT	PT	ACP	
148	Stair	SV	Rubber	4"	WP	7' 2"	PT	PT	PT	PT	PT	Note 1
149	Unisex toilet	SV	IC	6"	WP	4'	PT	PT	PT	PT	PT	
150	Janitor/Storage	CONC	Rubber	4"	WP	7' 2"	PT	PT	PT	PT	PT	Alternate 1
151	Stair	SV	Rubber	4"	WP	7' 2"	PT	PT	PT	PT	PT	Alternate 1, Note 1
201	Mechanical	CONC	Rubber	4"			PT	PT	PT	PT	PT	
202	Electrical	CONC	Rubber	4"			PT	PT	PT	PT	PT	Alternate 1

Note:
1. RUBBER STAIR TREAD & RISER ON STAIRS

CODE DATA

OCCUPANCY E OCCUPANT LOAD OF ADDITION 272
CONSTRUCTION TYP VB SPRINKLERED
503-VB a_t=9,500SF 1STORY/40'
a_a= 45,125 I_f=75 I_s=300
ACTUAL = 30,597 EXISTING 23,125 + ADDITION 7,472

TABLE 601 - FIRE RESISTANCE REQUIREMENTS
STRUCTURAL FRAME 0 HR
EXTERIOR BEARING WALLS 0 HR
EXTERIOR NON BEARING WALLS 0 HR (TABLE 602 <30')
INTERIOR WALLS 0 HR (TABLE 302.1.1 LABORATORIES SMOKE BARRIER REQUIRED)
FLOOR CONSTRUCTION 0 HR
ROOF CONSTRUCTION 0 HR

Coll Add A-1 windows to RMS 141/142 143, 145. See sheet
~~Coll 1 Lab equipment ... page~~

Project As-Built Drawings have been reviewed by the Project Engineer and represent to the best of my knowledge, the project as constructed.
Proj. Eng. _____ Date 7-07

PATH: G:_Projects\0411\Cad\CD\1330\Arch\A003.dwg
Tue, 14/Dec/04 02:27PM
TAB: Layout1

ADDENDUM NUMBER

ATTACHMENT NUMBER

RECORD OF REVISIONS

No.	DATE	DESCRIPTION

CHECKED BY:

STATE OF ALASKA 49TH JOANN E. LOTT NO. A 7806 REGISTERED PROFESSIONAL ENGINEER

DESIGNED BY: JENSEN YORBA LOTT
DRAWN BY: .

STATE OF ALASKA
DEPARTMENT OF TRANSPORTATION & PUBLIC FACILITIES
STATEWIDE DESIGN & ENGINEERING SERVICES DIVISION

MT EDGECUMBE HIGH SCHOOL
BUILDING 1330
ACADEMIC EXPANSION

SHEET A003

PROJECT DESIGNATION NUMBER
67751C

STATE	YEAR
ALASKA	2004
SHEET NUMBER	TOTAL SHEETS
3	79

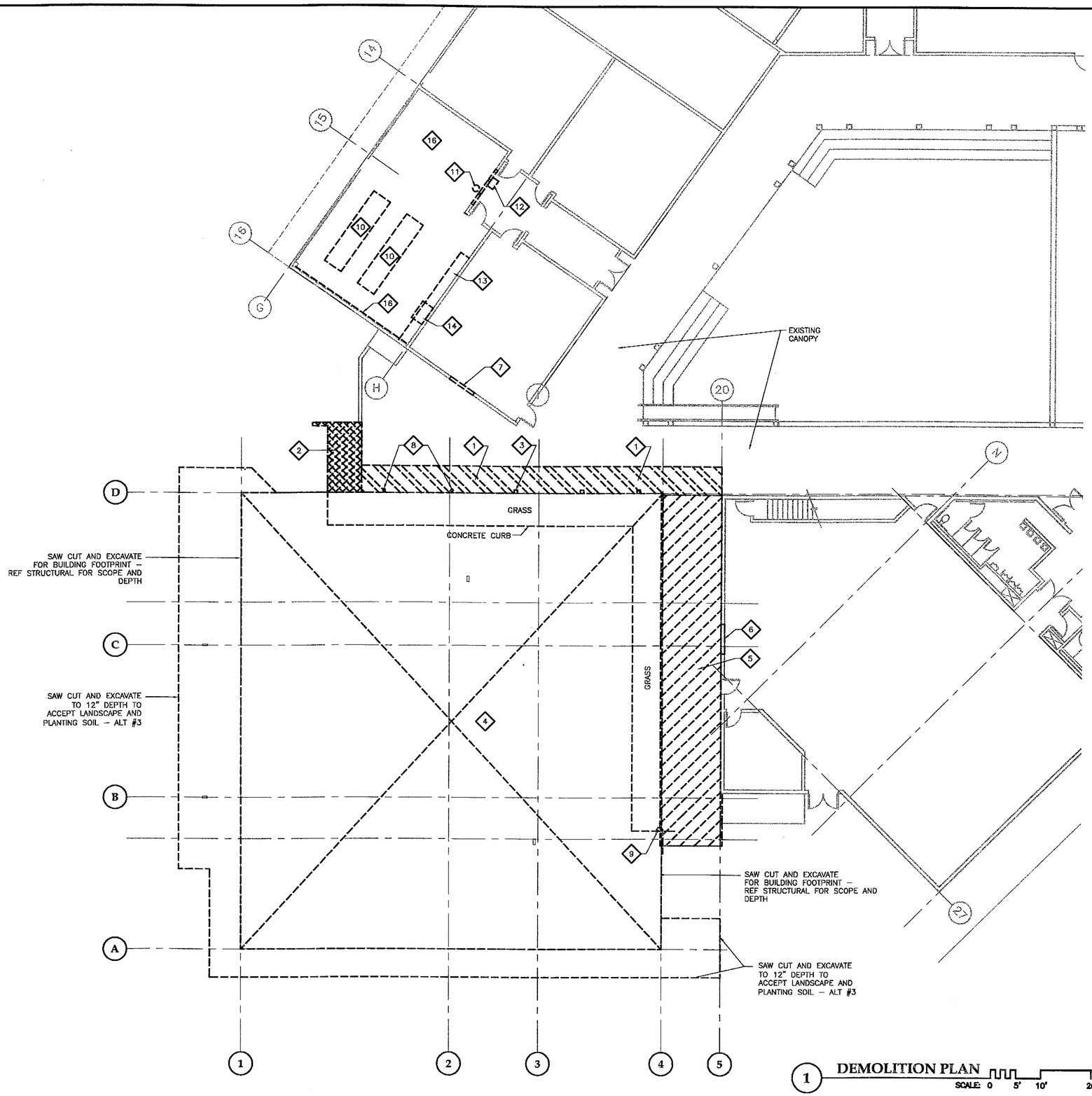

DEMOLITION KEY NOTES:

EXTERIOR DEMOLITION

1. SAW CUT & REMOVE CONCRETE WALKWAY AS REQ FOR NEW WORK
2. SAW CUT & REMOVE CONCRETE STAIR & STEEL HANDRAILS AS REQ FOR NEW WORK
3. REMOVE STEEL COLUMN SEE STRUCTURAL
4. SAW CUT & REMOVE EX 6" CONC SLAB ON GRADE, CONCRETE CURB & GRASS AS REQ FOR NEW WORK
5. SAW CUT & REMOVE CONCRETE SIDE WALK & STAIR
6. ALTERNATE 1
   REMOVE EXISTING BRICK & WOOD STUD BEARING WALL FOR NEW DOOR 6'-0"X7'-0"
   VERIFY DOOR DIMENSIONS
7. ALTERNATE 4
   REMOVE EXISTING BRICK & WOOD STUD BEARING WALL FOR NEW WINDOW
   REMOVE WHITE BD & TACK BD AS REQ FOR NEW WORK. SALVAGE FOR REUSE.
   REMOVE INTERIOR WALL FINISHES AS REQ FOR NEW WORK
8. REMOVE EXISTING BOLLARD TYP OF (3)
9. REMOVE EXISTING LIGHT

INTERIOR DEMOLITION

10. REMOVE COUNTER TOP, BASE CABINETS RETURN TO OWNER
    REMOVE ASSOCIATED PLUMBING & POWER SERVICE
11. REMOVE EMERGENCY EYEWASH & SHOWER RETURN TO OWNER
12. REMOVE DRINKING FOUNTAIN RETURN TO OWNER
13. REMOVE FULL HEIGHT HALL CABINETS RETURN TO OWNER
14. REMOVE LABORATORY HOOD & ASSOCIATED POWER WATER WASTE & DRAIN SERVICE RETURN TO OWNER
15. NOT USED
16. REMOVE EXISTING VISUAL DISPLAY BOARD

Project As-Built Drawings have been reviewed by the Project Engineer and represent to the best of my knowledge, the project as constructed.
Proj. Eng. _____ Date 7-07

PATH: G:_Projects\0411\Cad\CD\1330\Arch\A101.dwg
Tue, 14/Dec/04 02:27PM
TAB: Layout1

ADDENDUM NUMBER

ATTACHMENT NUMBER

RECORD OF REVISIONS

No.	DATE	DESCRIPTION

CHECKED BY:

STATE OF ALASKA 49TH JOANN E. LOTT NO. A-7806 REGISTERED PROFESSIONAL ARCHITECT

DESIGNED BY: JENSEN YORBA LOTT
DRAWN BY: .

STATE OF ALASKA
DEPARTMENT OF TRANSPORTATION & PUBLIC FACILITIES
STATEWIDE DESIGN & ENGINEERING SERVICES DIVISION

MT EDGECUMBE HIGH SCHOOL
BUILDING 1330
ACADEMIC EXPANSION

SHEET A101

PROJECT DESIGNATION NUMBER
67751C

STATE	YEAR
ALASKA	2004
SHEET NUMBER	TOTAL SHEETS
4	79

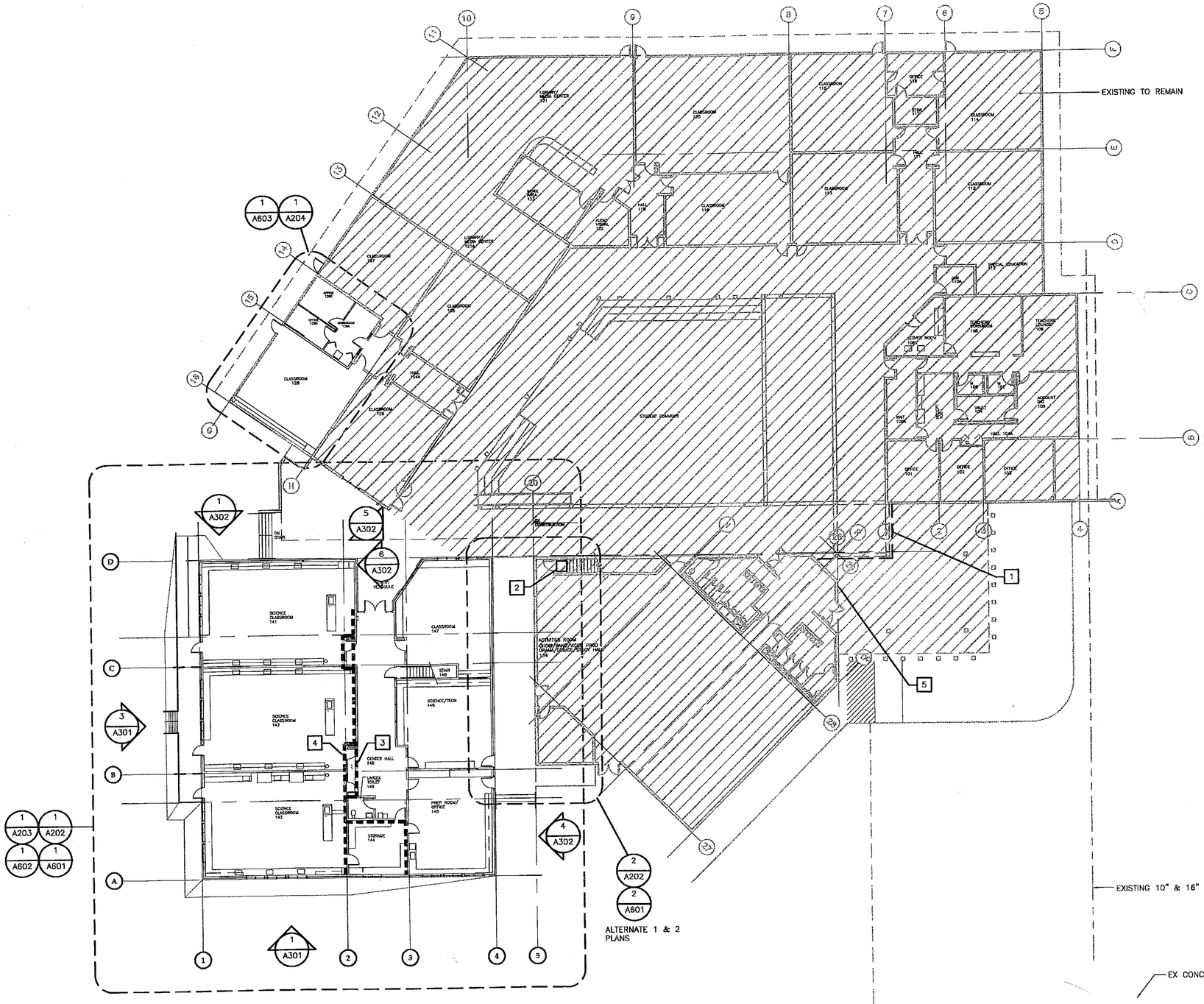

1 OVERALL PLAN BASE BID

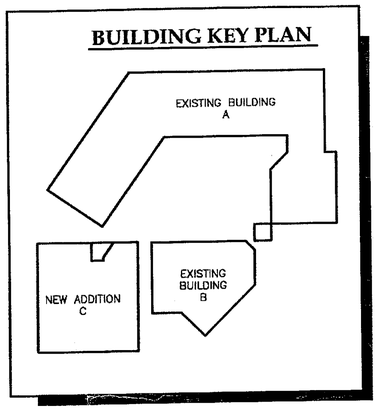

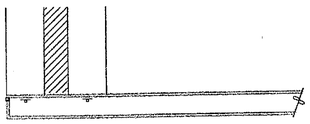

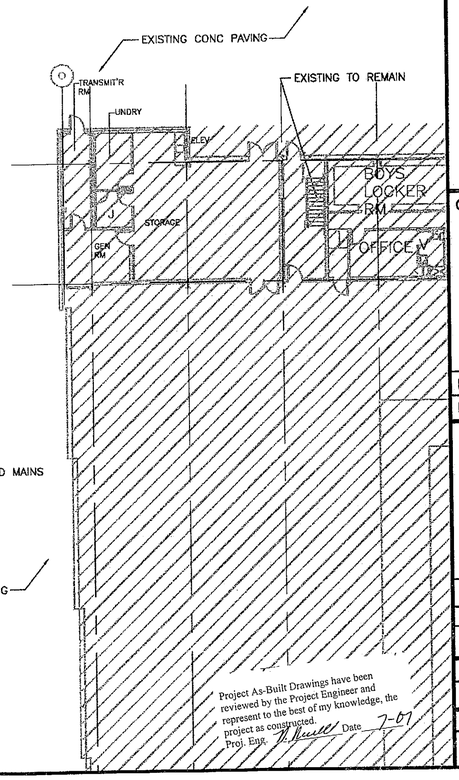

PATH: G:_Projects\0411\Cad\CD\1330\Arch\A201.dwg

Tue, 14/Dec/04 02:27PM

TAB: Layout1

ADDENDUM NUMBER

ATTACHMENT NUMBER

RECORD OF REVISIONS

No.	DATE	DESCRIPTION

KEY NOTES:

1. (5) 1"–2" SURFACE MOUNTED CONDUIT FROM BUILDING "B" MECHANICAL ROOM TO BUILDING "A" INTERSTITIAL SPACE ROUTED AT UNDERSIDE OF EXISTING SLOPED CANOPY AS SHOWN PAINT TO MATCH EXISTING SOFFIT SEAL ALL PENETRATIONS
2. PROVIDE NEW 3'–0"x3'–0" CEILING ACCESS DOOR IN EXISTING WOOD FRAME & GWB CEILING REVISE FRAMING FOR NEW DOOR
3. SMOKE PARTITION ABOVE SOFFIT TYP
4. SMOKE PARTITION TYP
5. REMOVE EXISTING FIRE ALARM ANNUNCIATOR INSTALL NEW (SEE ELEC) SEAL PERIMETER W/ INTEGRAL PANEL TRIM & SEALANT

CHECKED BY:

STATE OF ALASKA 15TH JOHN E. LOTT NO. A 7806 REGISTERED ARCHITECT

DESIGNED BY: JENSEN YORBA LOTT

DRAWN BY: .

STATE OF ALASKA
DEPARTMENT OF TRANSPORTATION & PUBLIC FACILITIES
STATEWIDE DESIGN & ENGINEERING SERVICES DIVISION

MT EDGECUMBE HIGH SCHOOL BUILDING 1330 ACADEMIC EXPANSION

SHEET A201

PROJECT DESIGNATION NUMBER

67751C

STATE	YEAR
ALASKA	2004
SHEET NUMBER	TOTAL SHEETS
5	79

Project As-Built Drawings have been reviewed by the Project Engineer and represent to the best of my knowledge, the project as constructed.
Proj. Eng. Date 7-07

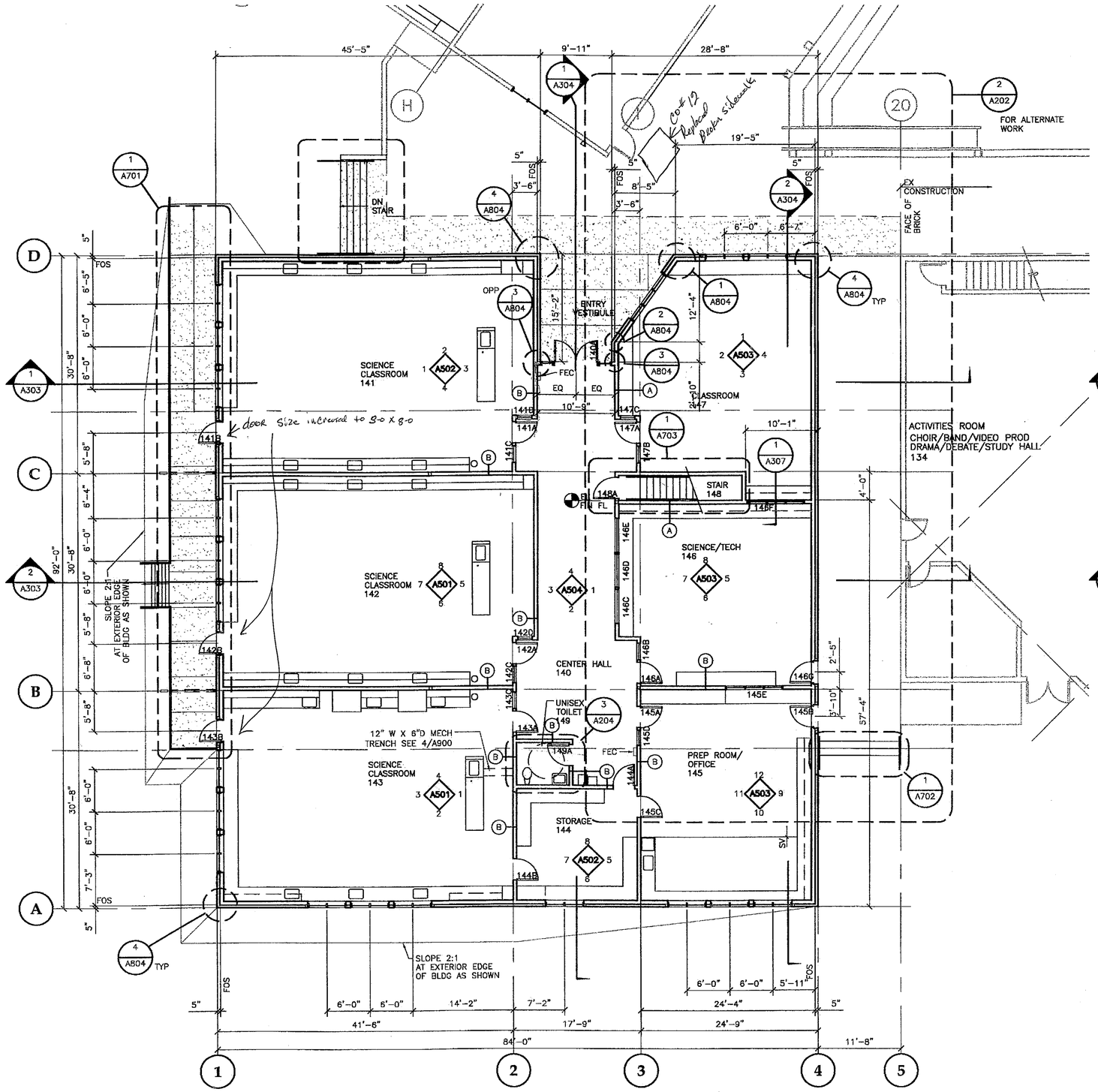

1 MAIN FLOOR PLAN-BASE BID
FINISH FLOOR ELEVATION 18.30' = DATUM 0'-0"
SCALE: 0 4' 8' 16'

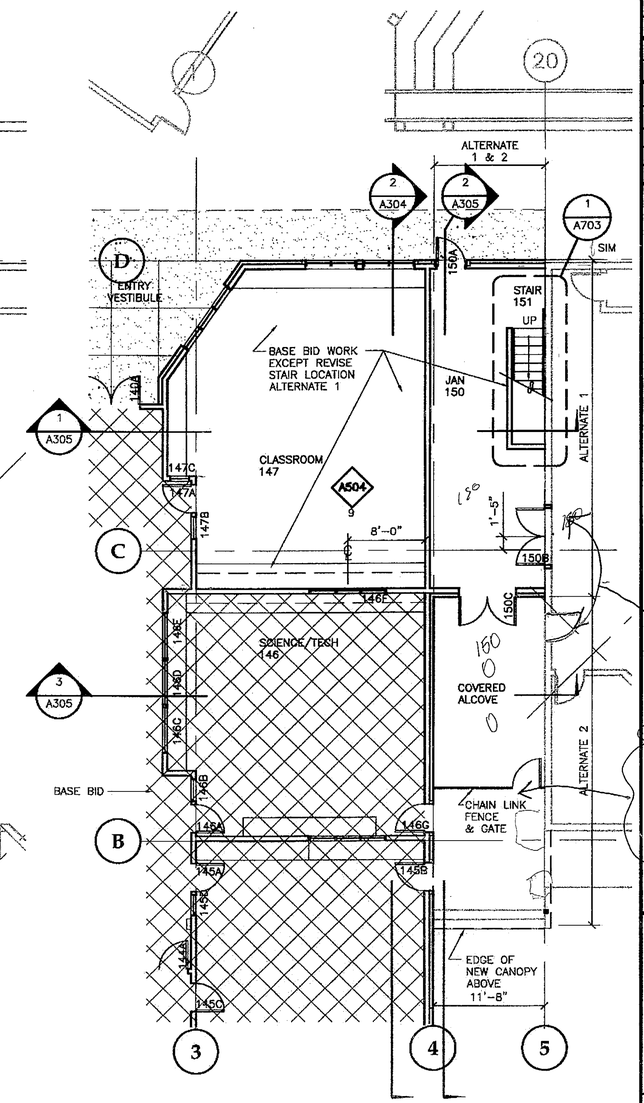

2 PARTIAL PLAN
ALTERNATE 1 & 2
MAIN FLOOR PLAN
SCALE: 0 4' 8' 16'

Project As-Built Drawings have been reviewed by the Project Engineer and represent to the best of my knowledge, the project as constructed.
Proj. Eng. _____ Date 7-07

PATH: G:_Projects\0411\Cad\CD\1330\Arch\A202.dwg
Tue, 14/Dec/04 02:27PM
TAB: Layout1

ADDENDUM NUMBER

ATTACHMENT NUMBER

RECORD OF REVISIONS

No.	DATE	DESCRIPTION

CHECKED BY:

DESIGNED BY: JENSEN YORBA LOTT
DRAWN BY: .

STATE OF ALASKA
DEPARTMENT OF TRANSPORTATION & PUBLIC FACILITIES
STATEWIDE DESIGN & ENGINEERING SERVICES DIVISION

MT EDGECUMBE HIGH SCHOOL
BUILDING 1330
ACADEMIC EXPANSION

SHEET A202
PROJECT DESIGNATION NUMBER
67751C

STATE	YEAR
ALASKA	2004
SHEET NUMBER	TOTAL SHEETS
6	79

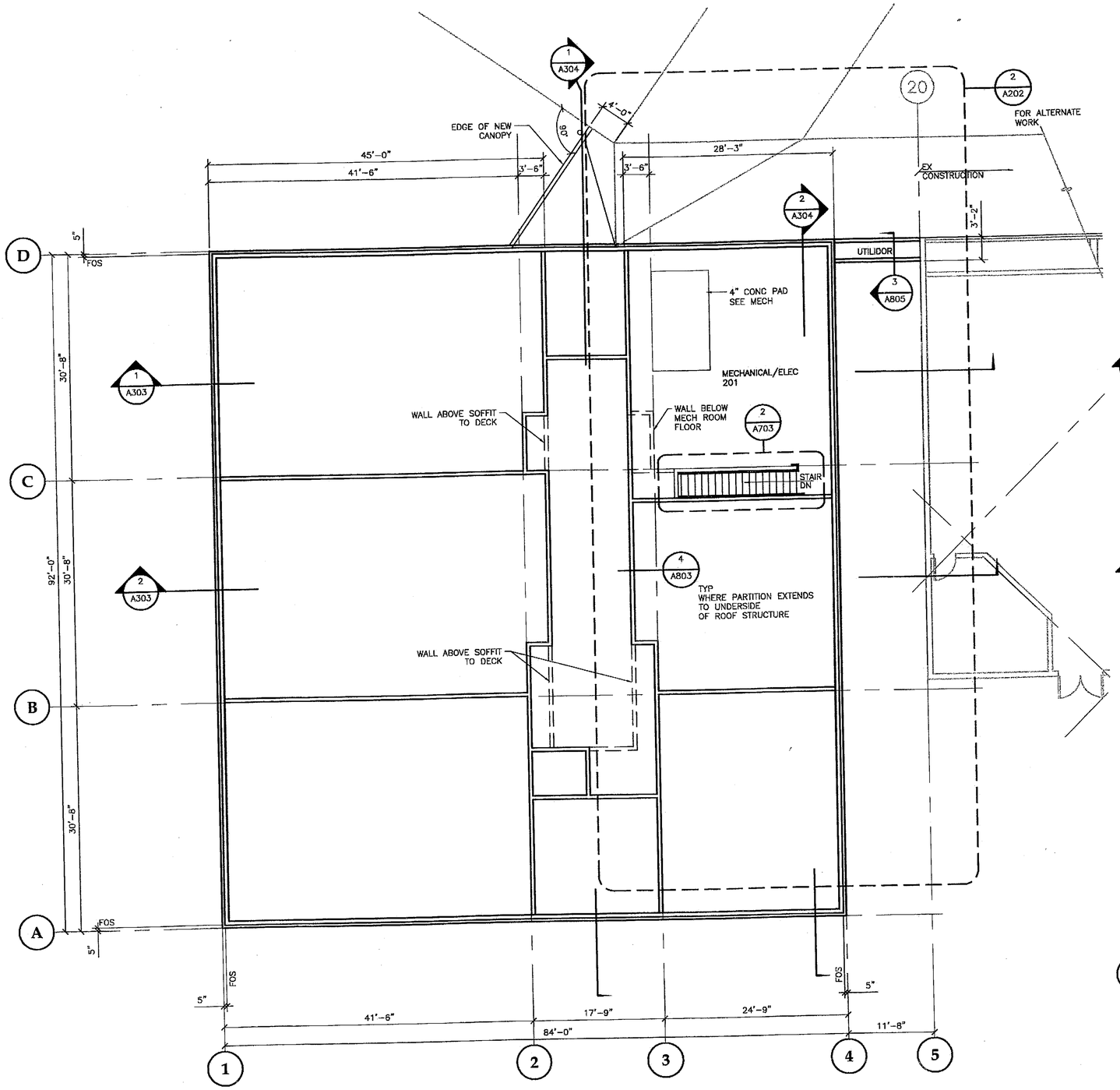

1 MECH ROOM FLOOR PLAN-BASE BID

SCALE: 0 4' 8' 16'

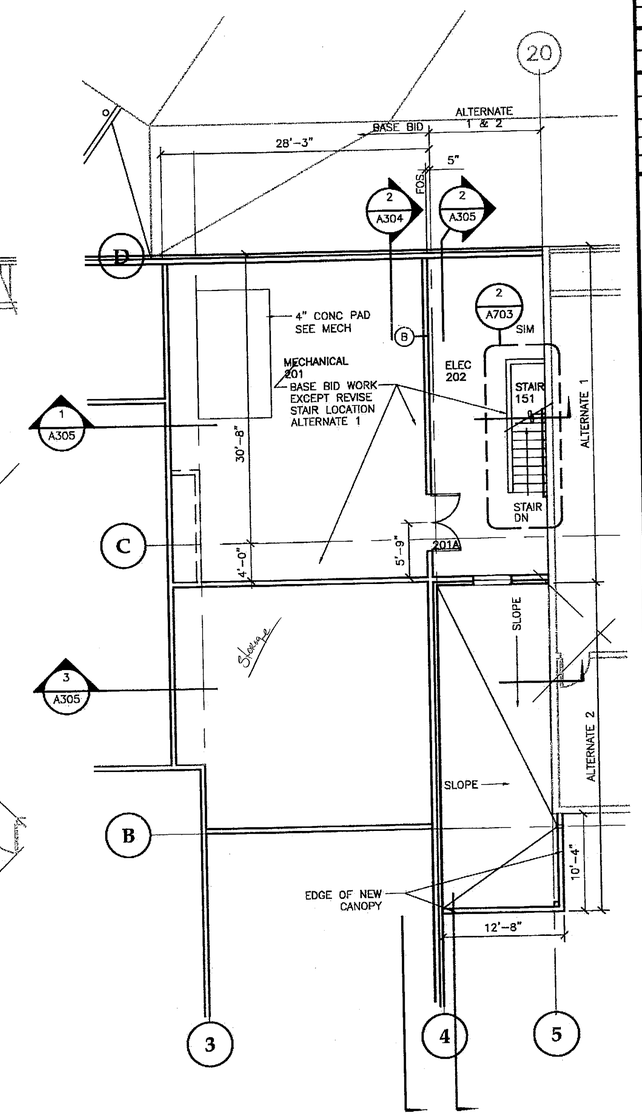

2 ALTERNATE 1 & 2 MECH/ROOM FLOOR PLAN

SCALE: 0 4' 8' 16'

PATH: G:_Projects\0411\Cad\C0\1330\Arch\A203.dwg

Tue, 14/Dec/04 02:28PM

TAB: Layout1

ADDENDUM NUMBER

ATTACHMENT NUMBER

RECORD OF REVISIONS

No.	DATE	DESCRIPTION

CHECKED BY:

STATE OF ALASKA 49TH JOANN E. LOTT NO. A 606 REGISTERED ARCHITECT

DESIGNED BY: JENSEN YORBA LOTT

DRAWN BY: .

STATE OF ALASKA
DEPARTMENT OF TRANSPORTATION & PUBLIC FACILITIES
STATEWIDE DESIGN & ENGINEERING SERVICES DIVISION

MT EDGECUMBE HIGH SCHOOL
BUILDING 1330
ACADEMIC EXPANSION

SHEET A203

PROJECT DESIGNATION NUMBER

67751C

STATE	YEAR
ALASKA	2004
SHEET NUMBER	TOTAL SHEETS
7	79

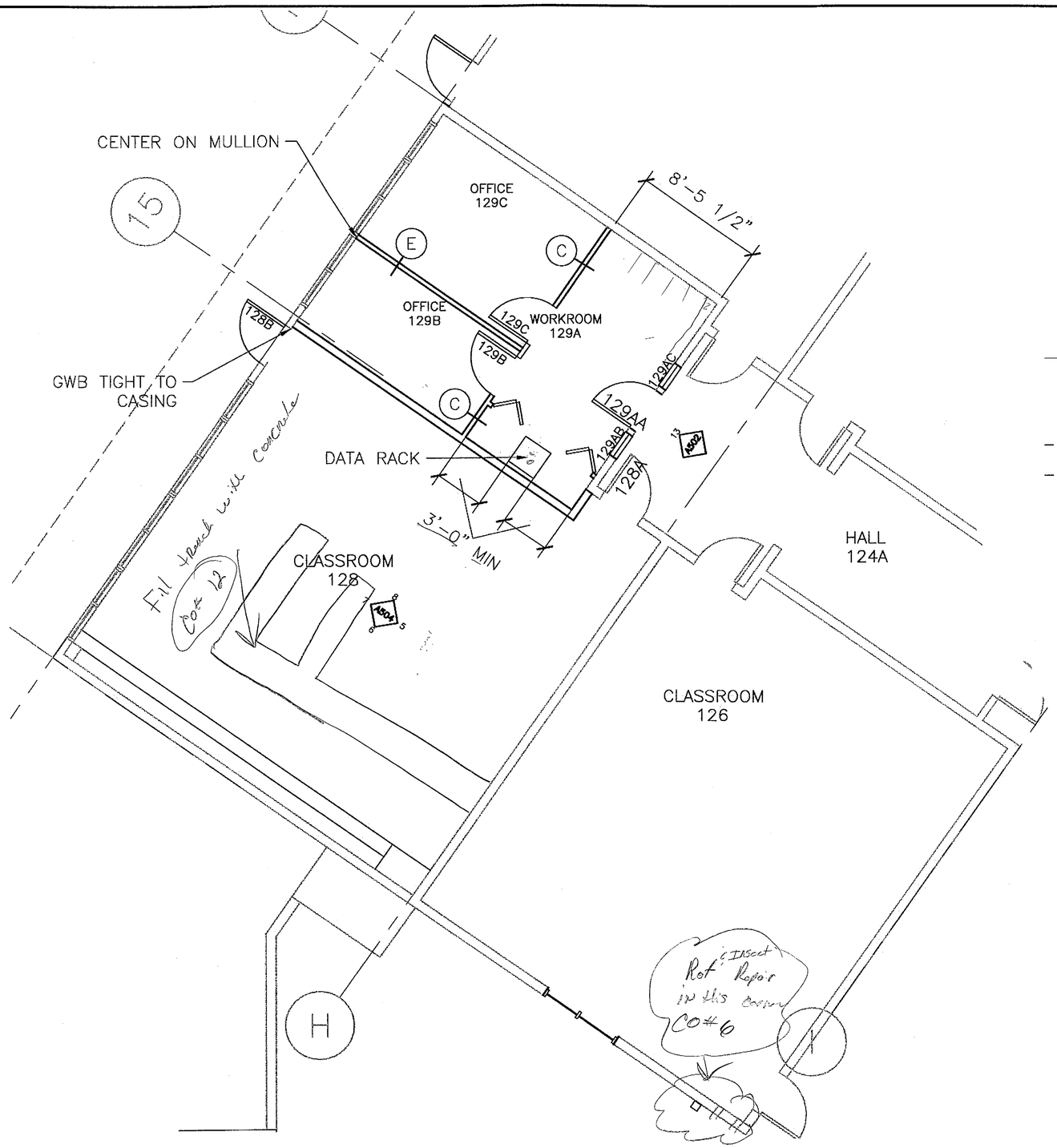

1 OFFICE 129 AND CLASSROOM 8

SCALE: 0 2' 4' 8'

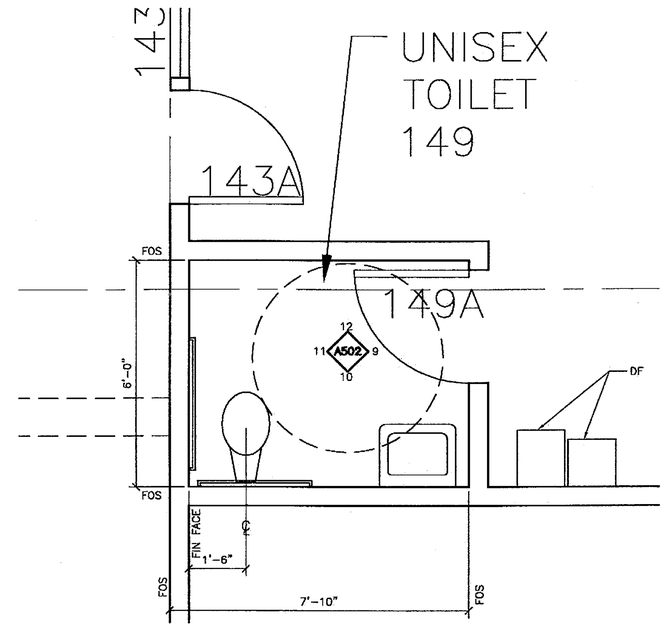

3 ROOM 149 - UNISEX TOILET

Project As-Built Drawings have been reviewed by the Project Engineer and represent to the best of my knowledge, the project as constructed.
Proj. Eng. _____ Date _____

PATH: G:_Projects\0411\Cad\CD\1330\Arch\A204.dwg

Tue, 14/Dec/04 02:28PM

TAB: Layout1

ADDENDUM NUMBER

ATTACHMENT NUMBER

RECORD OF REVISIONS

No.	DATE	DESCRIPTION

CHECKED BY:

STATE OF ALASKA 9TH JOANN E. LOTT NO. A-7808 REGISTERED ARCHITECT NOT VALID UNLESS PRINTED ORIG. SEAL RED

DESIGNED BY: JENSEN YORBA LOTT

DRAWN BY: .

STATE OF ALASKA
DEPARTMENT OF TRANSPORTATION & PUBLIC FACILITIES
STATEWIDE DESIGN & ENGINEERING SERVICES DIVISION

MT EDGECUMBE HIGH SCHOOL BUILDING 1330 ACADEMIC EXPANSION

SHEET A204

PROJECT DESIGNATION NUMBER

67751C

STATE	YEAR
ALASKA	2004
SHEET NUMBER	TOTAL SHEETS
8	79

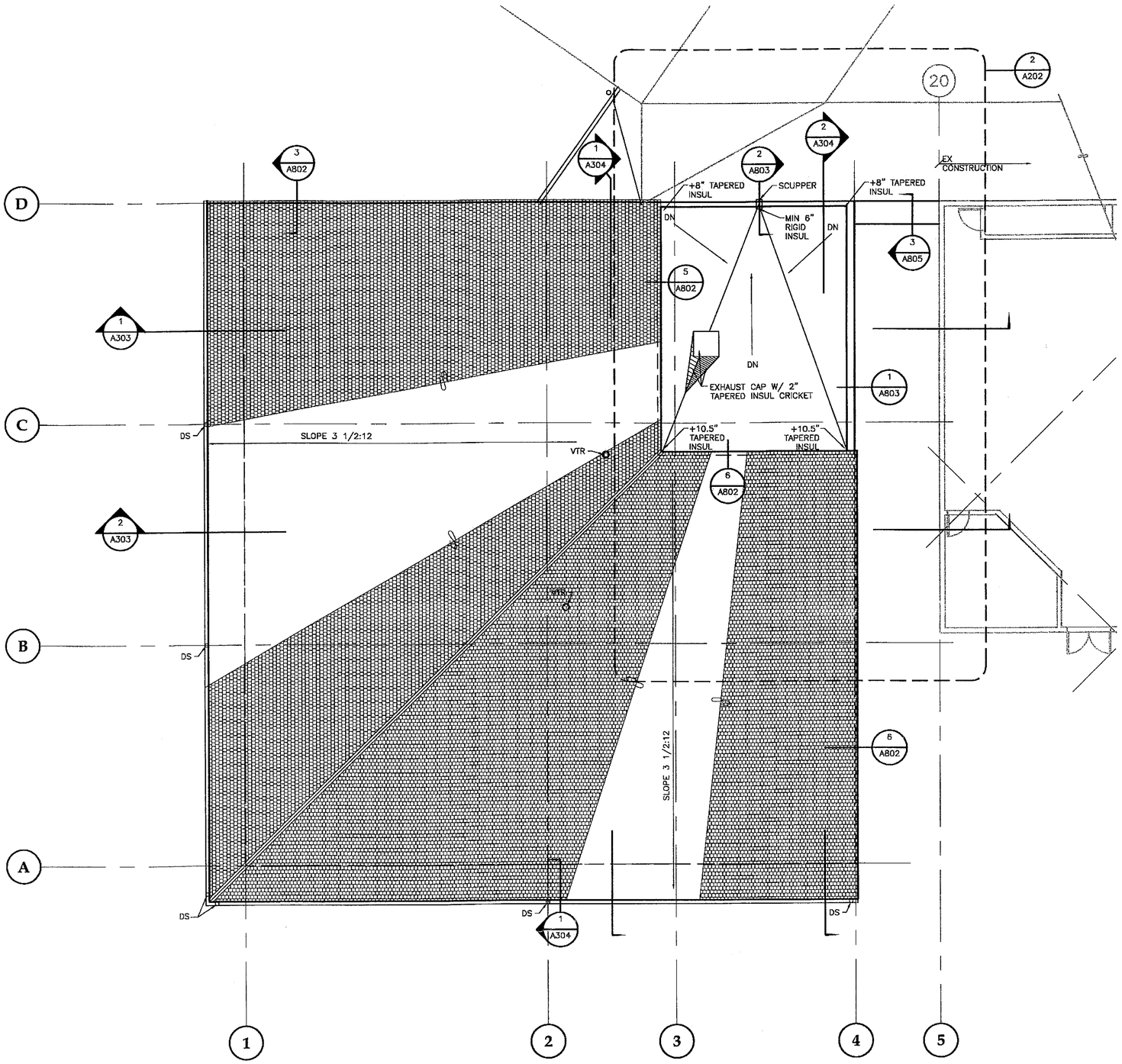

1 ROOF PLAN-BASE BID

SCALE: 0 4' 8' 16'

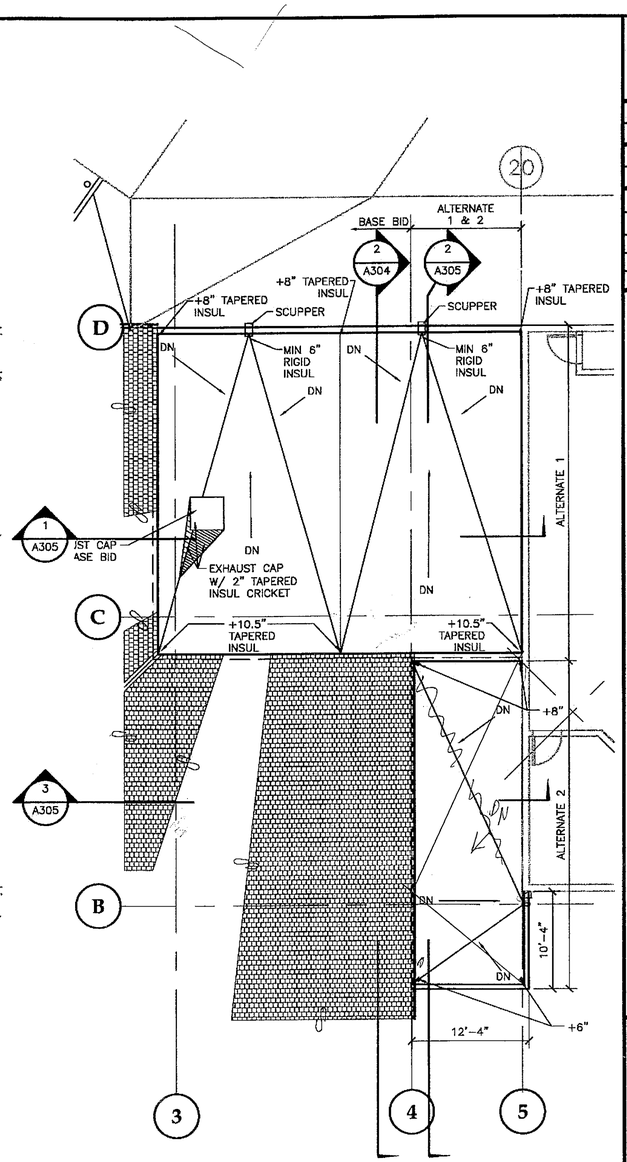

2 ALTERNATE 1 & 2 ROOF PLAN

SCALE: 0 4' 8' 16'

Project As-Built Drawings have been reviewed by the Project Engineer and represent to the best of my knowledge, the project as constructed.
Proj. Engr. [illegible] Date 7-07

PATH: G:_Projects\0411\Cad\CD\1330\Arch\A205.dwg

Tue, 14/Dec/04 02:28PM

TAB: Layout1

ADDENDUM NUMBER

ATTACHMENT NUMBER

RECORD OF REVISIONS

No.	DATE	DESCRIPTION

CHECKED BY:

STATE OF ALASKA 49TH JOHN E. LOTT NO. AK 7806 REGISTERED PROFESSIONAL ENGINEER

DESIGNED BY: JENSEN YORBA LOTT

DRAWN BY: .

STATE OF ALASKA
DEPARTMENT OF TRANSPORTATION & PUBLIC FACILITIES
STATEWIDE DESIGN & ENGINEERING SERVICES DIVISION

MT EDGECUMBE HIGH SCHOOL
BUILDING 1330
ACADEMIC EXPANSION

SHEET A205

PROJECT DESIGNATION NUMBER

67751C

STATE	YEAR
ALASKA	2004
SHEET NUMBER	TOTAL SHEETS
9	79

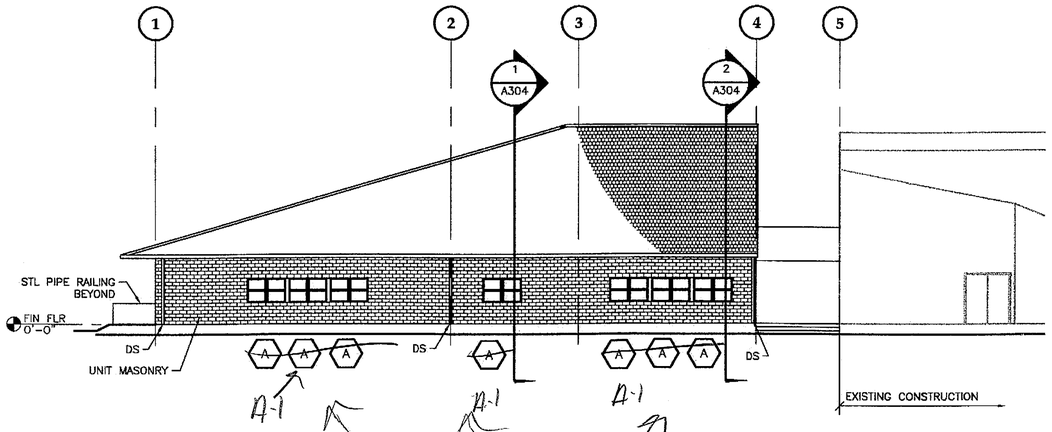

1 EXTERIOR ELEVATION - BASE BID

SCALE: 0 5' 10' 20'

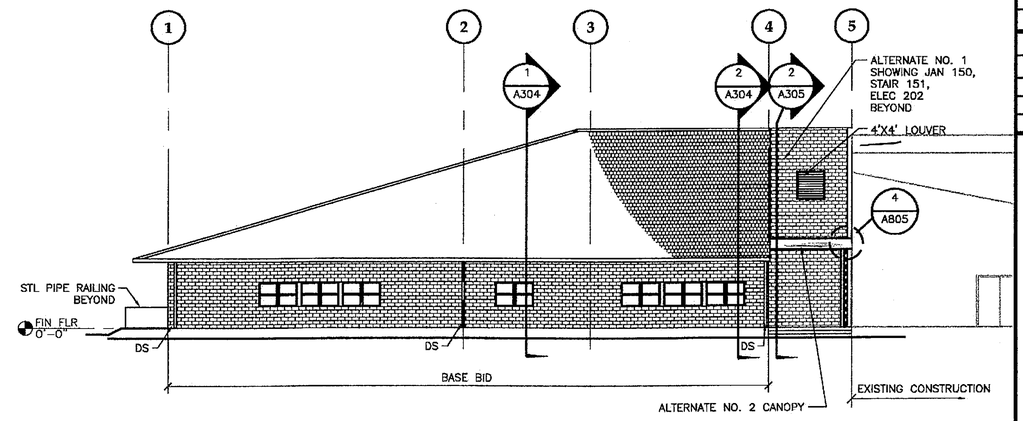

2 EXTERIOR ELEVATION - ALTERNATE NO. 1

SCALE: 0 5' 10' 20'

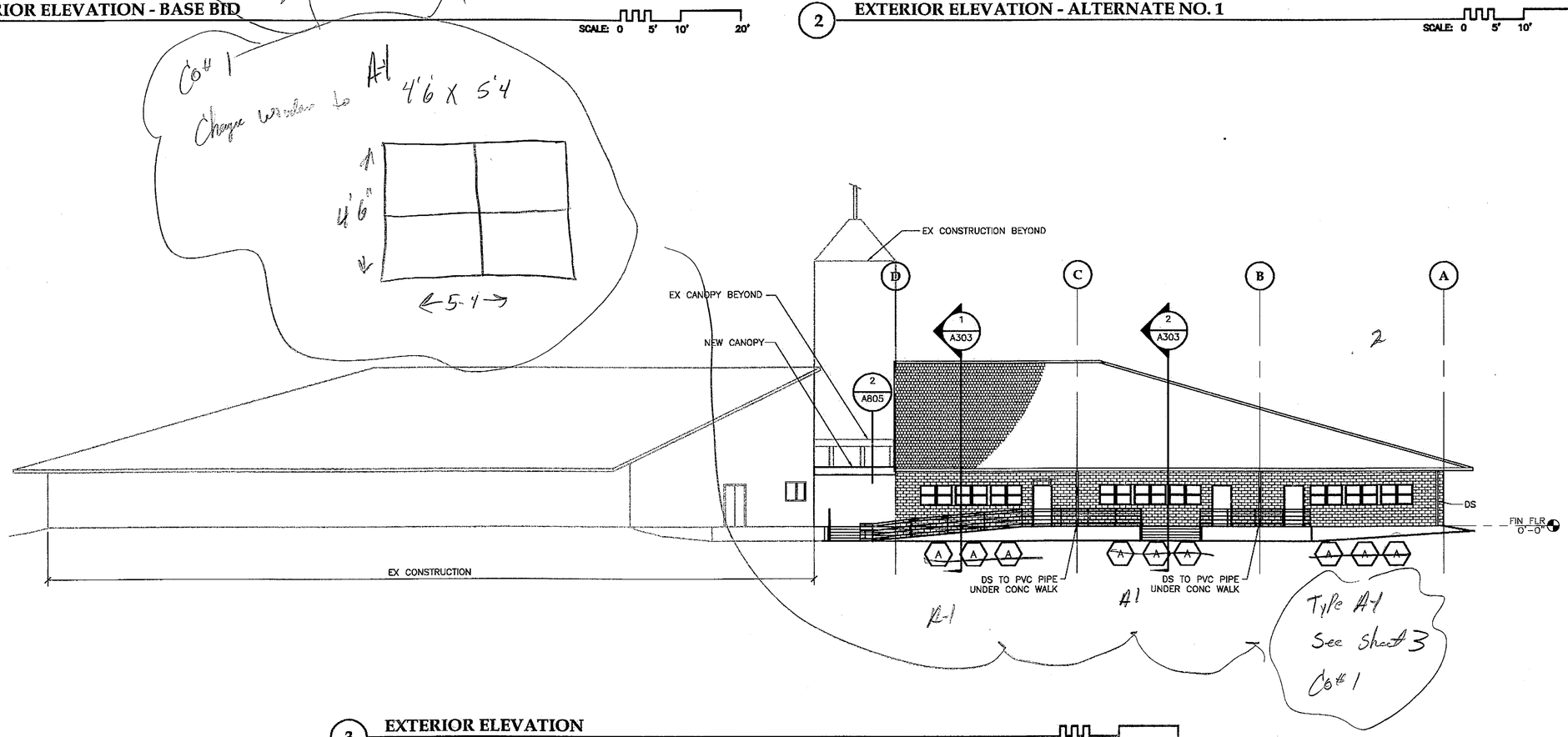

3 EXTERIOR ELEVATION

SCALE: 0 5' 10' 20'

Project As-Built Drawings have been reviewed by the Project Engineer and represent to the best of my knowledge, the project as constructed.
Proj. Eng. _____ Date 7-07

PATH: G:_Projects\0411\Cad\CD\1330\Arch\A301.dwg

Tue, 14/Dec/04 02:28PM

TAB: Layout1

ADDENDUM NUMBER

ATTACHMENT NUMBER

RECORD OF REVISIONS

No.	DATE	DESCRIPTION

CHECKED BY:

STATE OF ALASKA 49TH JOHN E. LOTT NO. A-7806 REGISTERED ARCHITECT

DESIGNED BY: JENSEN YORBA LOTT

DRAWN BY: .

STATE OF ALASKA
DEPARTMENT OF TRANSPORTATION & PUBLIC FACILITIES
STATEWIDE DESIGN & ENGINEERING SERVICES DIVISION

MT EDGECUMBE HIGH SCHOOL BUILDING 1330 ACADEMIC EXPANSION

SHEET A301

PROJECT DESIGNATION NUMBER

67751C

STATE	YEAR
ALASKA	2004
SHEET NUMBER	TOTAL SHEETS
10	79

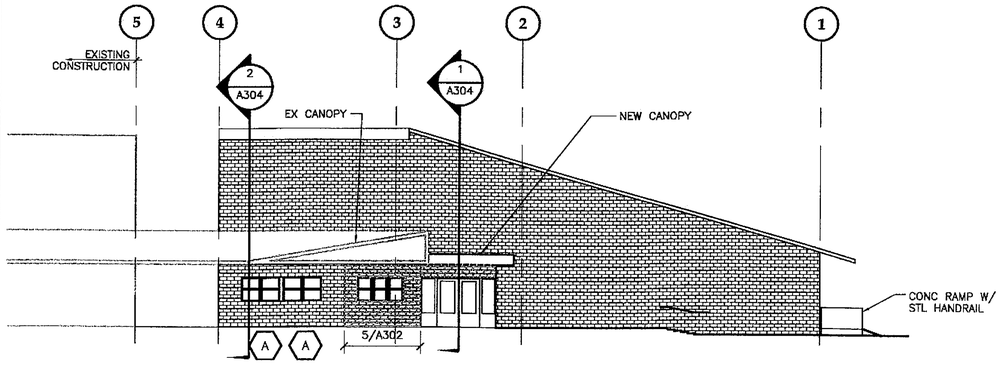

1 EXTERIOR ELEVATION - BASE BID

SCALE: 0 5' 10' 20'

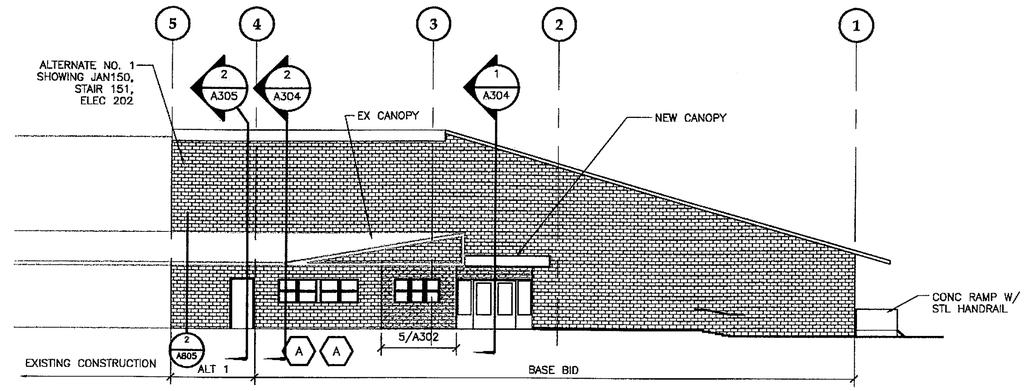

2 EXTERIOR ELEVATION - BASE BID & ALTERNATE NO. 1

SCALE: 0 5' 10' 20'

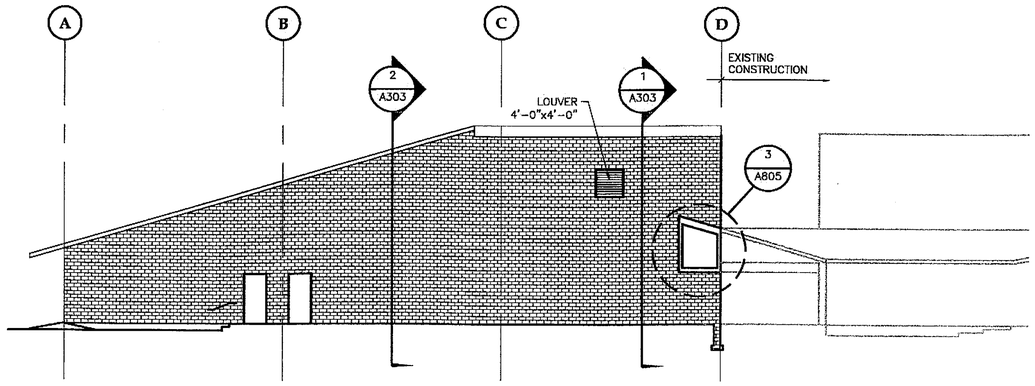

3 EXTERIOR ELEVATION - BASE BID

SCALE: 0 5' 10' 20'

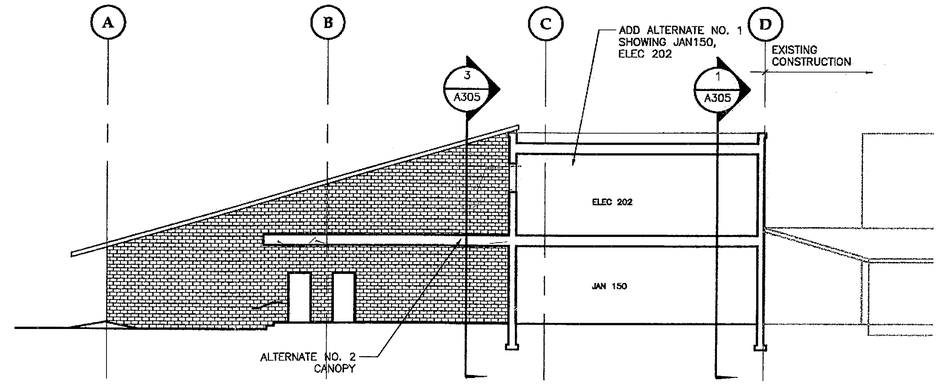

4 EXTERIOR ELEVATION - ALTERNATE NO. 1 AND NO. 2

SCALE: 0 5' 10' 20'

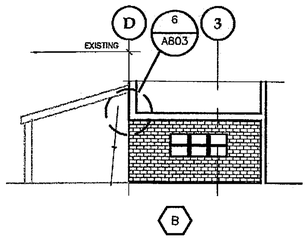

5 ENTRY ELEVATION

SCALE: 0 5' 10' 20'

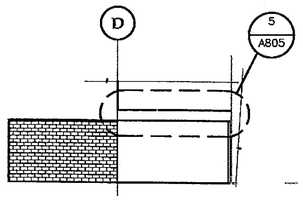

6 ENTRY ELEVATION

SCALE: 0 5' 10' 20'

Project As-Built Drawings have been reviewed by the Project Engineer and represent to the best of my knowledge, the project as constructed.
Proj. Eng. _____ Date 7-07

PATH: G:_Projects\0411\Cad\CD\1330\Arch\A302.dwg

Tue, 14/Dec/04 02:28PM

TAB: Layout1

ADDENDUM NUMBER

ATTACHMENT NUMBER

RECORD OF REVISIONS

No.	DATE	DESCRIPTION

CHECKED BY:

STATE OF ALASKA 48TH JOANN E. LOTT NO. A 7806 REGISTERED ARCHITECT

DESIGNED BY: JENSEN YORBA LOTT

DRAWN BY: .

STATE OF ALASKA
DEPARTMENT OF TRANSPORTATION & PUBLIC FACILITIES
STATEWIDE DESIGN & ENGINEERING SERVICES DIVISION

MT EDGECUMBE HIGH SCHOOL BUILDING 1330 ACADEMIC EXPANSION

SHEET A302

PROJECT DESIGNATION NUMBER

67751C

STATE	YEAR
ALASKA	2004
SHEET NUMBER	TOTAL SHEETS
11	79

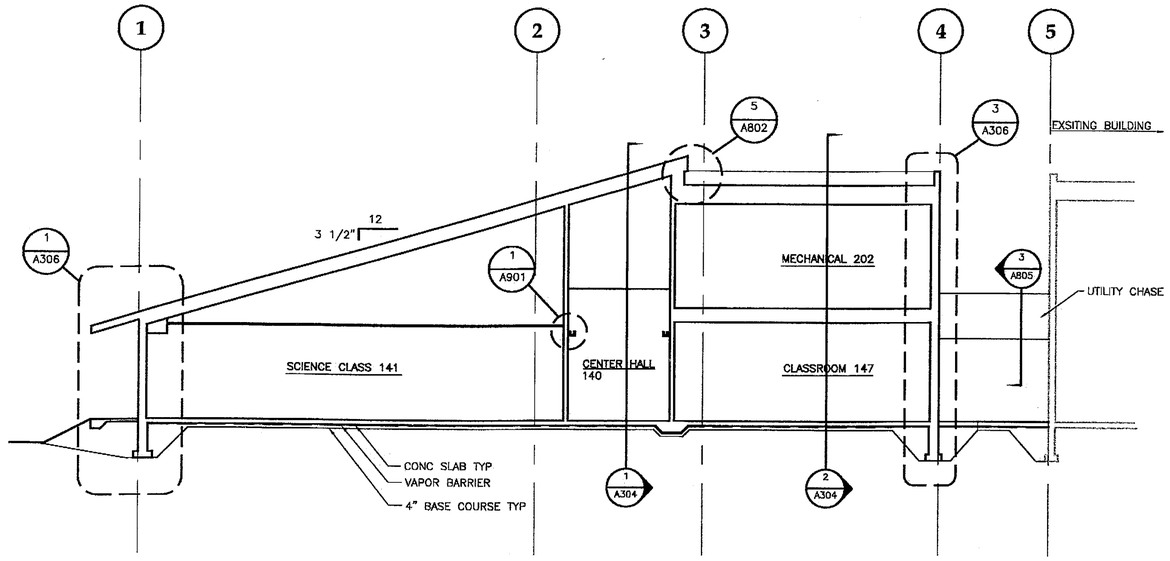

1 **BUILDING SECTION BASE BID**

SCALE: 0 4' 8' 16'

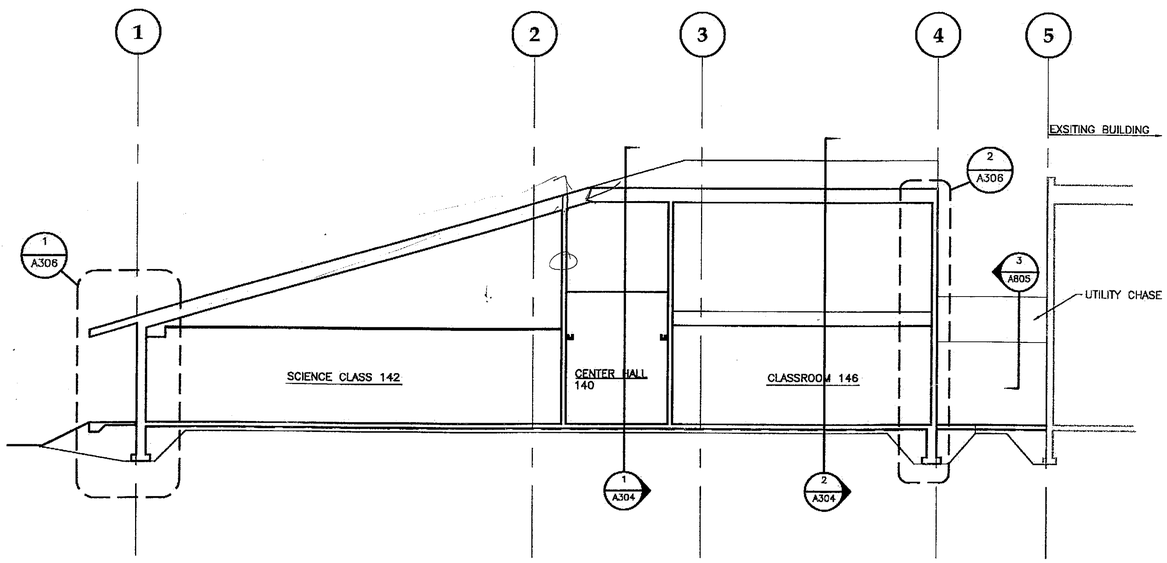

2 **BUILDING SECTION BASE BID**

SCALE: 0 4' 8' 16'

Project As-Built Drawings have been reviewed by the Project Engineer and represent to the best of my knowledge, the project as constructed.
Proj. Eng. _____ Date 7-07

PATH:
G:_Projects\0411\Cad\CD\1330\Arch\A303.dwg

Tue, 14/Dec/04 02:29PM

TAB: Layout1

ADDENDUM NUMBER

ATTACHMENT NUMBER

RECORD OF REVISIONS

No.	DATE	DESCRIPTION

CHECKED BY:

STATE OF ALASKA 48TH JOANN E. LOTT NO. A 7806 REGISTERED PROFESSIONAL ARCHITECT

DESIGNED BY: JENSEN YORBA LOTT

DRAWN BY: .

STATE OF ALASKA
DEPARTMENT OF TRANSPORTATION & PUBLIC FACILITIES
STATEWIDE DESIGN & ENGINEERING SERVICES DIVISION

MT EDGECUMBE HIGH SCHOOL
BUILDING 1330
ACADEMIC EXPANSION

SHEET A303

PROJECT DESIGNATION NUMBER

67751C

STATE	YEAR
ALASKA	2004
SHEET NUMBER	TOTAL SHEETS
12	79

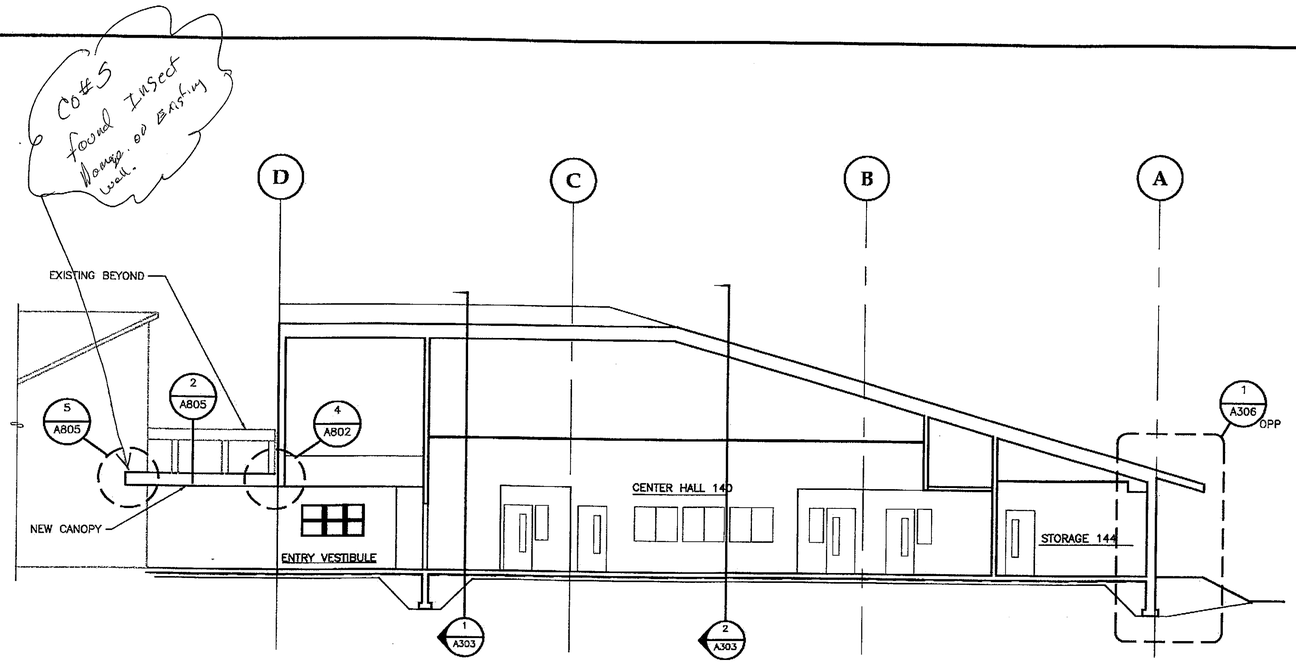

1 BUILDING SECTION BASE BID

SCALE: 0 4' 8' 16'

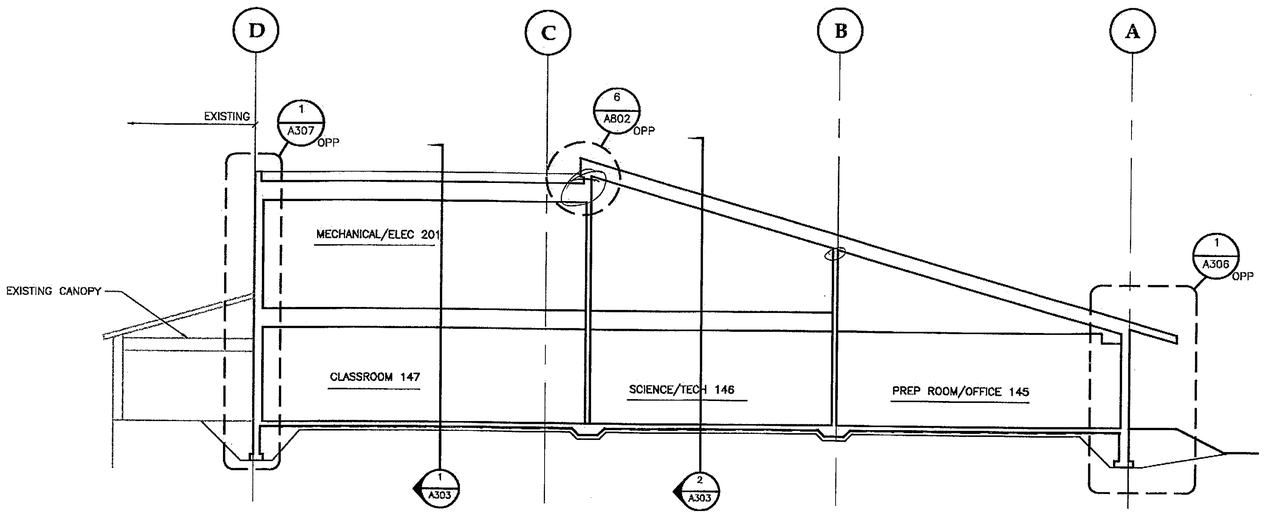

2 BUILDING SECTION BASE BID

SCALE: 0 4' 8' 16'

Project As-Built Drawings have been reviewed by the Project Engineer and represent to the best of my knowledge, the project as constructed.
Proj. Eng. _____ Date 7-07

PATH: G:_Projects\0411\Cad\CD\1330\Arch\A304.dwg

Tue, 14/Dec/04 02:29PM

TAB: Layout1

ADDENDUM NUMBER

ATTACHMENT NUMBER

RECORD OF REVISIONS

No.	DATE	DESCRIPTION

CHECKED BY:

STATE OF ALASKA 19TH JOANN E. LOTT NO. 7806 REGISTERED PROFESS ENGR

DESIGNED BY: JENSEN YORBA LOTT

DRAWN BY: .

STATE OF ALASKA
DEPARTMENT OF TRANSPORTATION & PUBLIC FACILITIES
STATEWIDE DESIGN & ENGINEERING SERVICES DIVISION

MT EDGECUMBE HIGH SCHOOL
BUILDING 1330
ACADEMIC EXPANSION

SHEET A304

PROJECT DESIGNATION NUMBER

67751C

STATE	YEAR
ALASKA	2004
SHEET NUMBER	TOTAL SHEETS
13	79

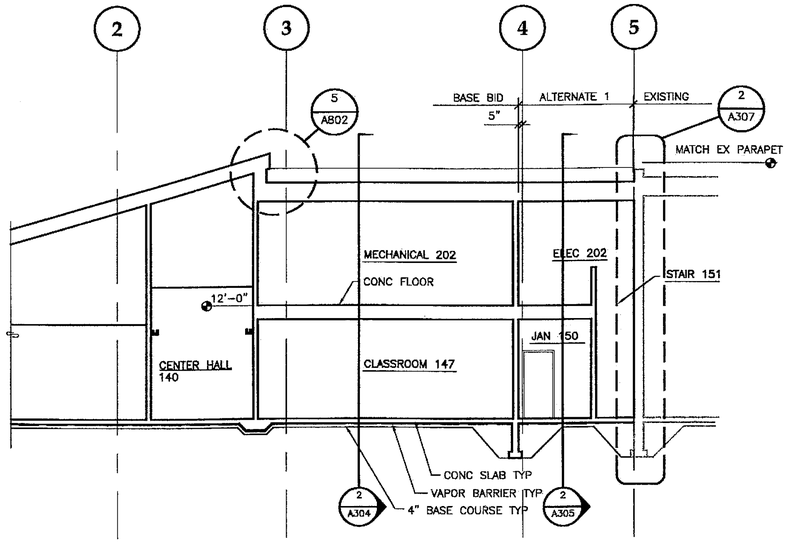

1 BUILDING SECTION ALTERNATE 1

SCALE: 0 4' 8' 16'

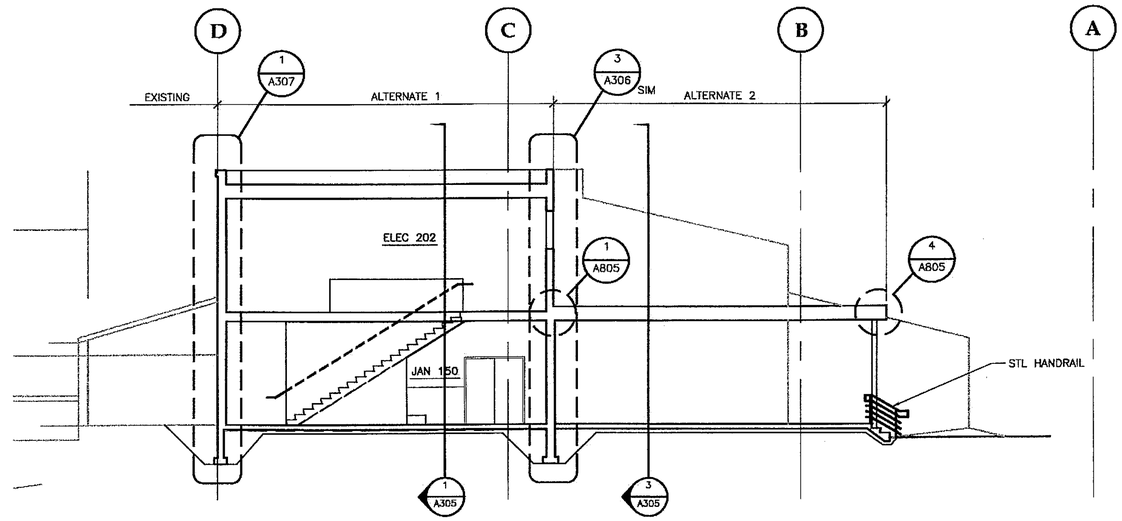

2 BUILDING SECTION ALTERNATE 1 & 2

SCALE: 0 4' 8' 16'

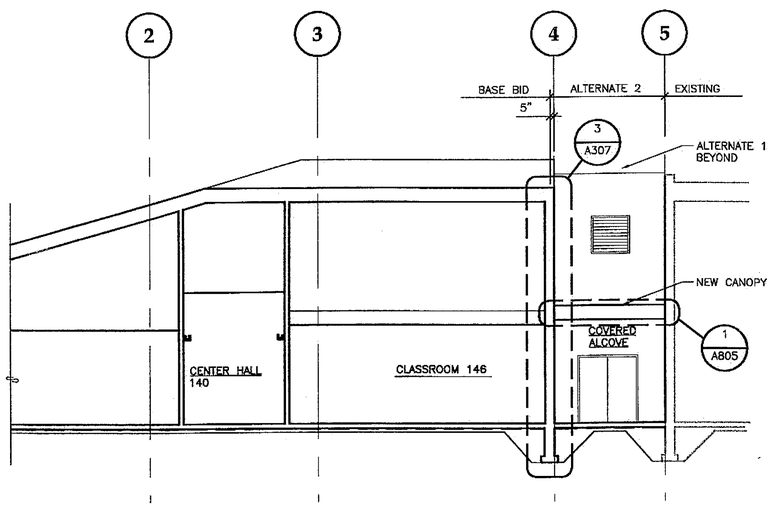

3 BUILDING SECTION ALTERNATE 2

SCALE: 0 4' 8' 16'

Project As-Built Drawings have been reviewed by the Project Engineer and represent to the best of my knowledge, the project as constructed.
Proj. Eng. _____ Date 7/07

PATH:
G:_Projects\0411\Cad\CD\1330\Arch\A305.dwg

Tue, 14/Dec/04 02:29PM

TAB: Layout1

ADDENDUM NUMBER

ATTACHMENT NUMBER

RECORD OF REVISIONS

No.	DATE	DESCRIPTION

CHECKED BY:

STATE OF ALASKA
49TH
JOANN E. LOTT
NO. A 9806
REGISTERED PROFESSIONAL ENGINEER

DESIGNED BY: JENSEN YORBA LOTT

DRAWN BY: .

STATE OF ALASKA
DEPARTMENT OF TRANSPORTATION & PUBLIC FACILITIES
STATEWIDE DESIGN & ENGINEERING SERVICES DIVISION

MT EDGECUMBE HIGH SCHOOL
BUILDING 1330
ACADEMIC EXPANSION

SHEET A305

PROJECT DESIGNATION NUMBER

67751C

STATE	YEAR
ALASKA	2004
SHEET NUMBER	TOTAL SHEETS
14	79

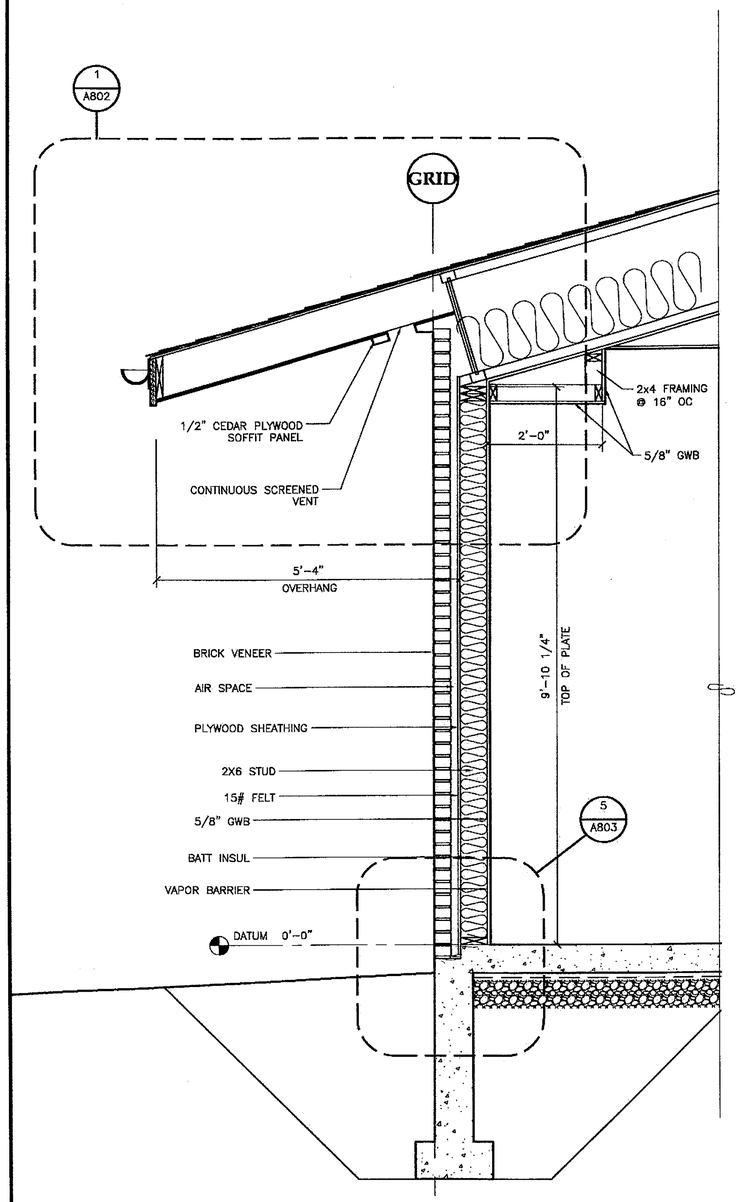

1 WALL SECTION

SCALE: 0 6" 1' 2' 4'

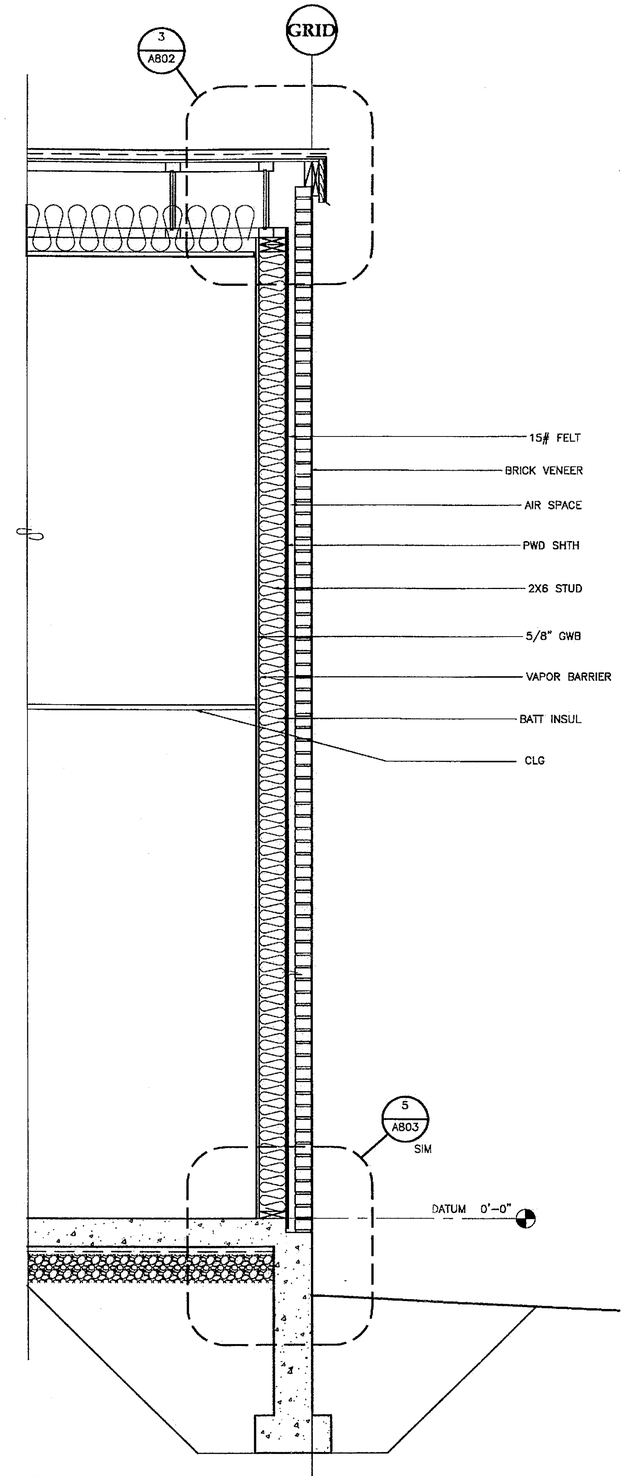

2 WALL SECTION @ RAKE

SCALE: 0 6" 1' 2' 4'

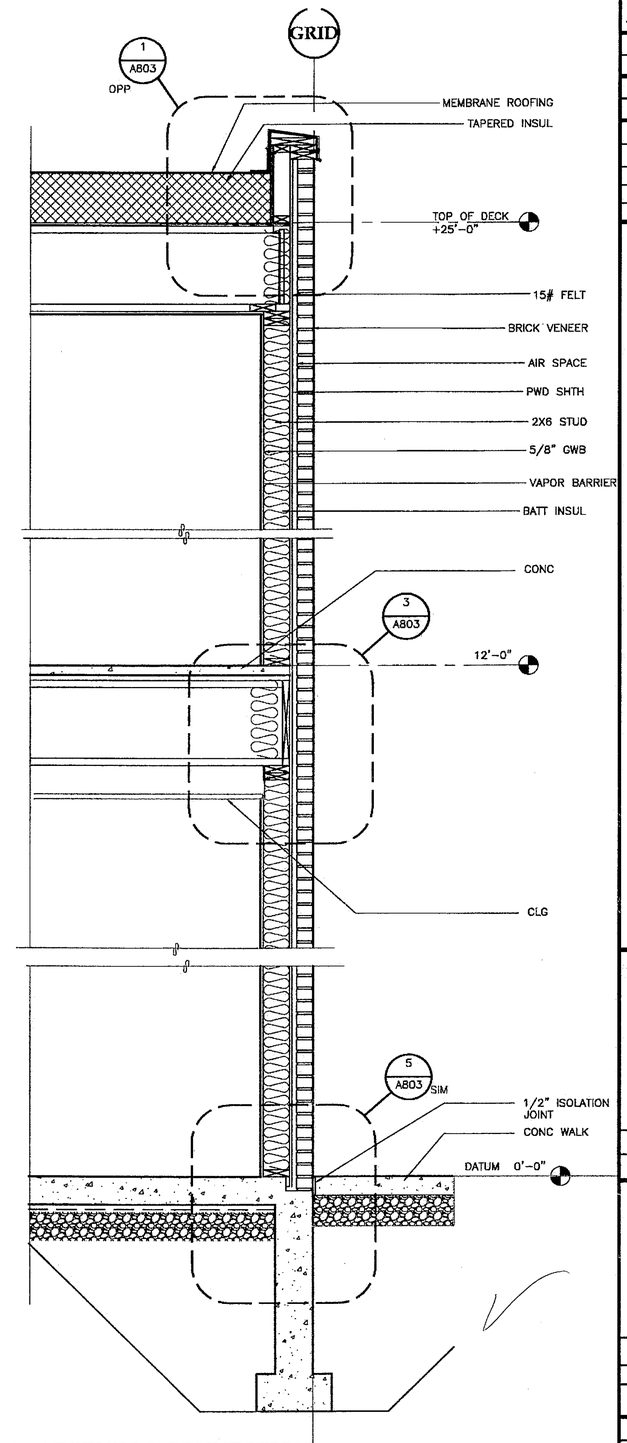

3 WALL SECTION @ CONNECTION

SCALE: 0 6" 1' 2' 4'

PATH: G:_Projects\0411\Cad\CD\1330\Arch\A306.dwg

Tue, 14/Dec/04 02:29PM

TAB: Layout1

ADDENDUM NUMBER

ATTACHMENT NUMBER

RECORD OF REVISIONS

No.	DATE	DESCRIPTION

CHECKED BY:

STATE OF ALASKA 19TH JOANN Y. LOTT NO. 7806 REGISTERED PROFESSIONAL ENGINEER

DESIGNED BY: JENSEN YORBA LOTT

DRAWN BY: -

STATE OF ALASKA
DEPARTMENT OF TRANSPORTATION & PUBLIC FACILITIES
STATEWIDE DESIGN & ENGINEERING SERVICES DIVISION

MT EDGECUMBE HIGH SCHOOL BUILDING 1330 ACADEMIC EXPANSION

SHEET A306

PROJECT DESIGNATION NUMBER

67751C

STATE	YEAR
ALASKA	2004
SHEET NUMBER	TOTAL SHEETS
15	79

Project As-Built Drawings have been reviewed by the Project Engineer and represent to the best of my knowledge, the project as constructed.
Proj. Eng. _____ Date 7-07

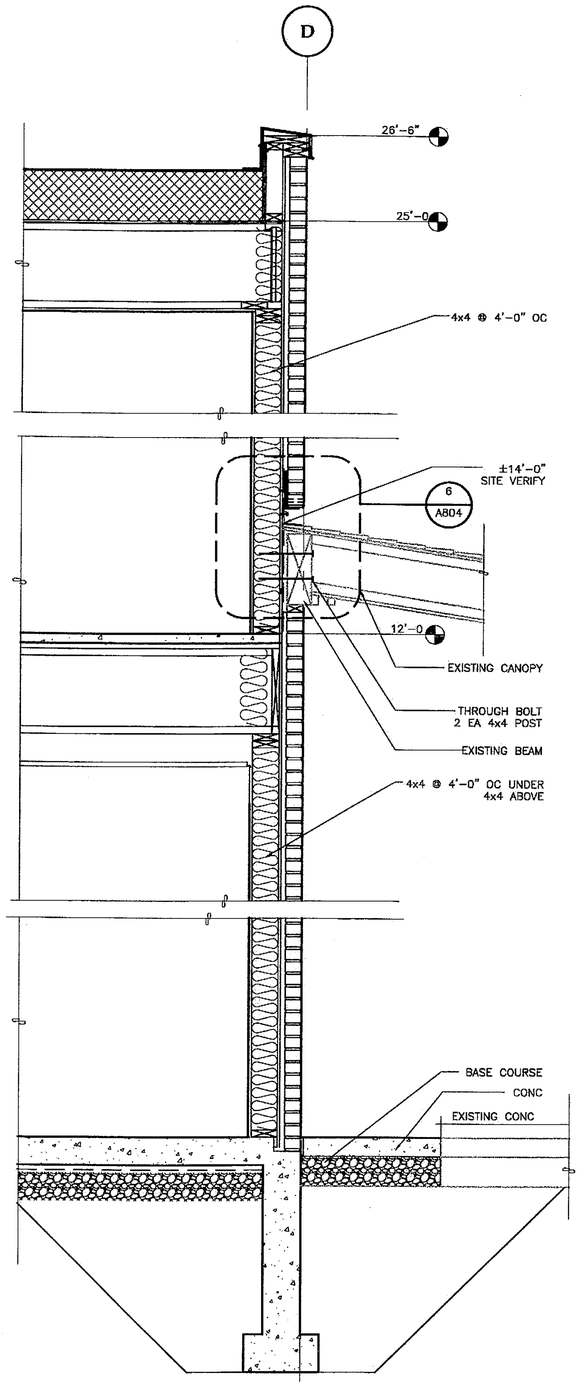

SEE 3/A306 FOR SIMILAR CALL OUTS

1 WALL SECTION

SCALE: 0 6" 1' 2' 4'

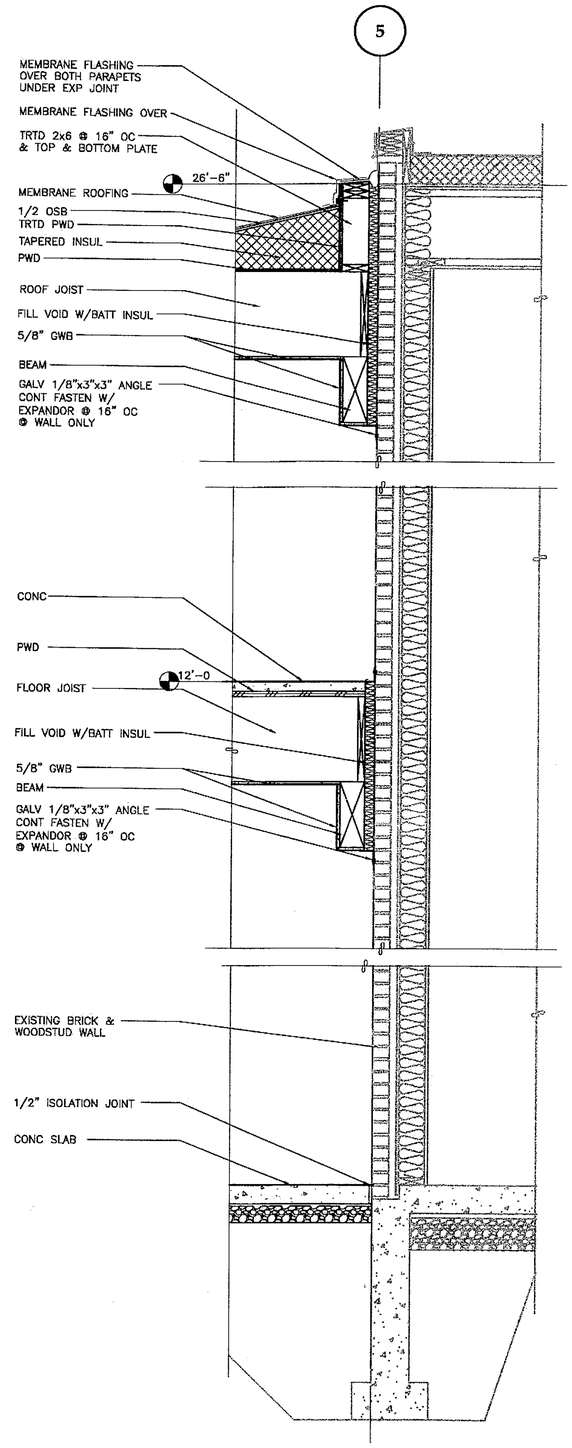

2 WALL SECTION @ JOINT TO EX BUILDING

SCALE: 0 6" 1' 2' 4'

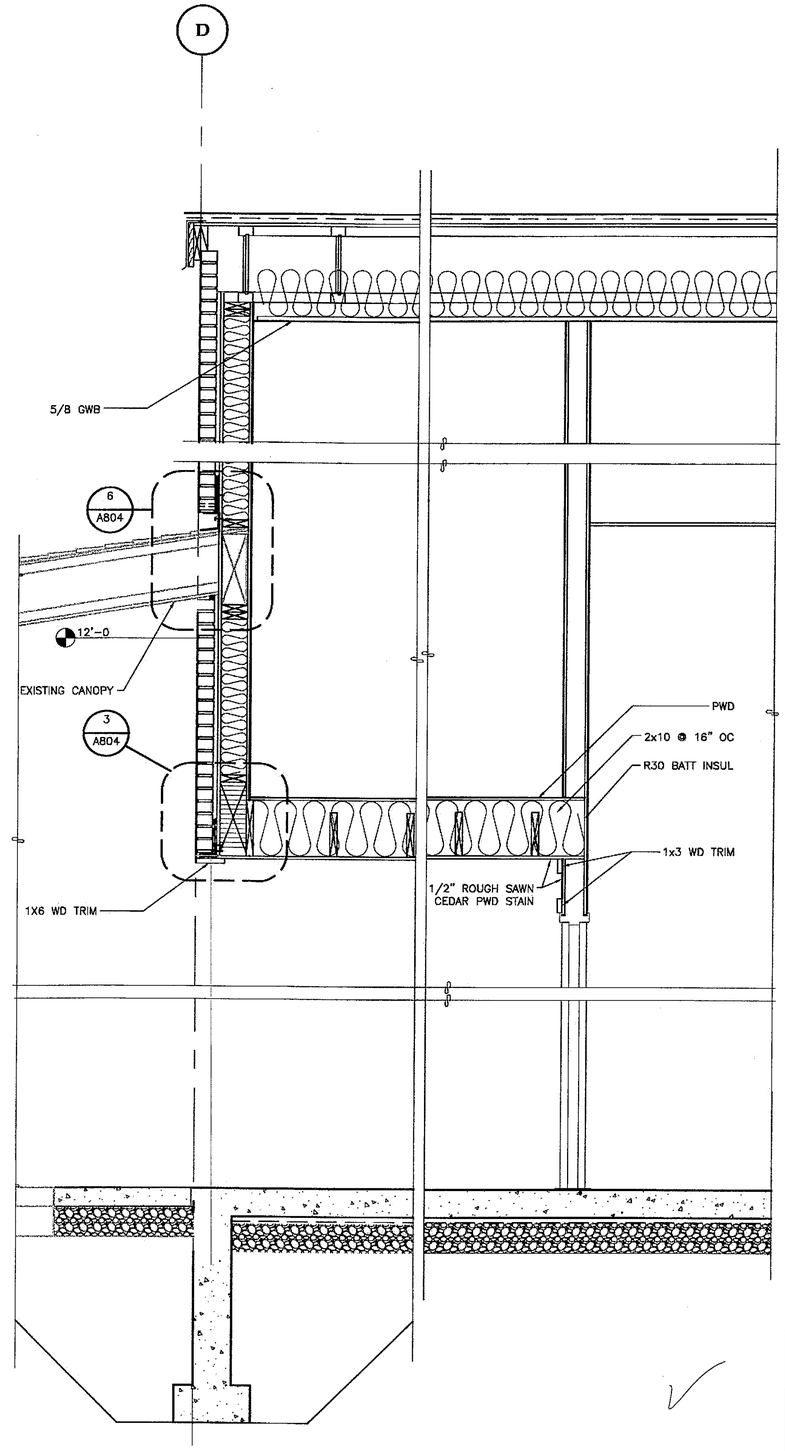

3 WALL SECTION @ EXISTING CANOPY

SCALE: 0 6" 1' 2' 4'

PATH:
G:_Projects\0411\Cad\CD\1330\Arch\A307.dwg

Tue, 14/Dec/04 02:28PM

TAB: Layout1

ADDENDUM NUMBER

ATTACHMENT NUMBER

RECORD OF REVISIONS

No.	DATE	DESCRIPTION

CHECKED BY:

STATE OF ALASKA
JOHN E. LOTT
NO. A 7806
"PROFESSIONAL ENGINEER"

DESIGNED BY: JENSEN YORBA LOTT

DRAWN BY: .

STATE OF ALASKA
DEPARTMENT OF TRANSPORTATION
& PUBLIC FACILITIES
STATEWIDE DESIGN & ENGINEERING
SERVICES DIVISION

MT EDGECUMBE
HIGH SCHOOL
BUILDING 1330
ACADEMIC
EXPANSION

SHEET A307

PROJECT DESIGNATION NUMBER

67751C

STATE	YEAR
ALASKA	2004
SHEET NUMBER	TOTAL SHEETS
16	79

Project As-Built Drawings have been reviewed by the Project Engineer and represent to the best of my knowledge, the project as constructed.
Proj. Eng. _____ Date 7-07

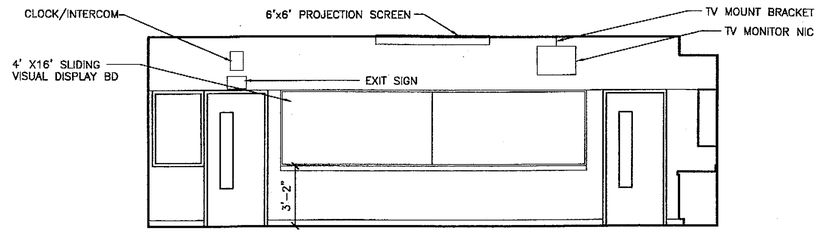

1 ROOM 143 SCIENCE

SCALE: 0 2' 4' 8'

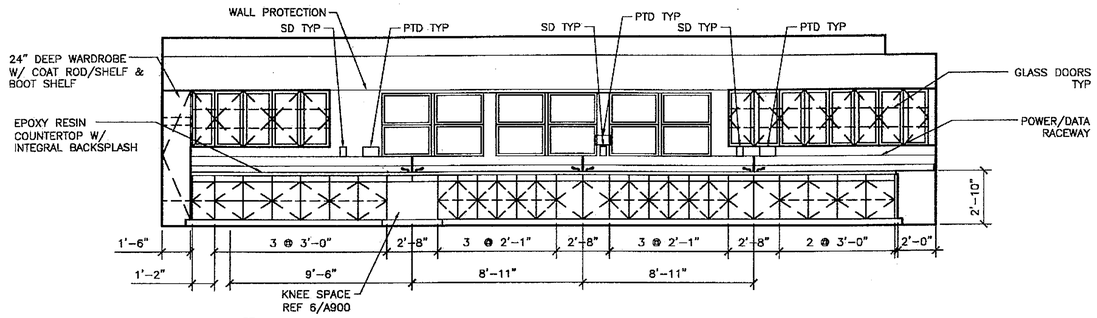

2 ROOM 143 SCIENCE

SCALE: 0 2' 4' 8'

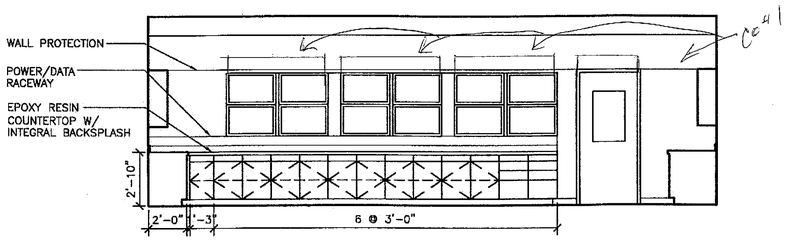

3 ROOM 143 SCIENCE

SCALE: 0 2' 4' 8'

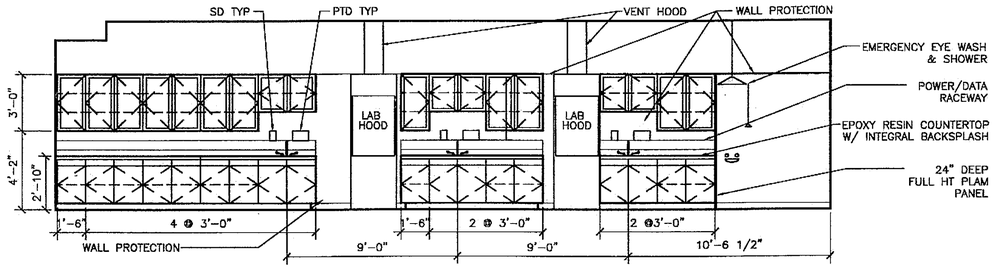

4 ROOM 143 SCIENCE

SCALE: 0 2' 4' 8'

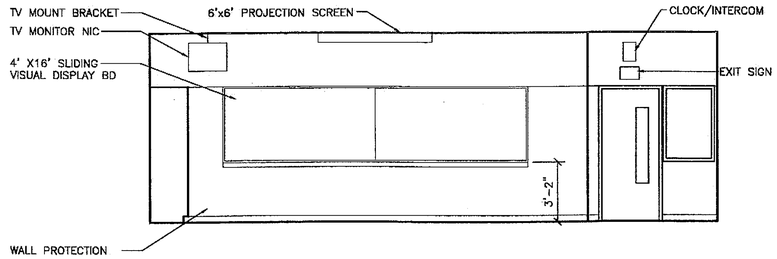

5 ROOM 142 SCIENCE

SCALE: 0 2' 4' 8'

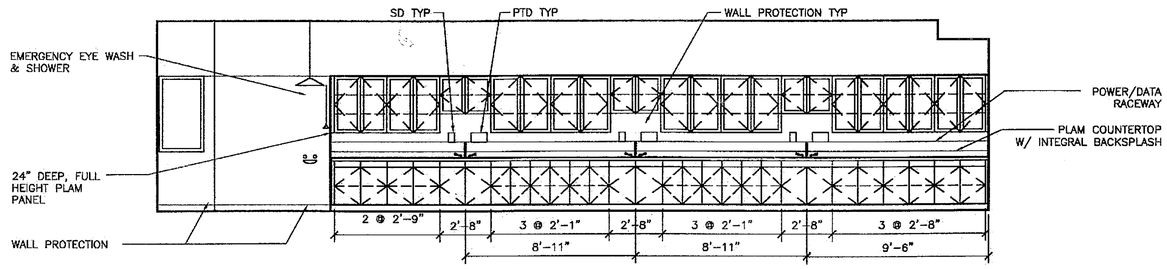

6 ROOM 142 SCIENCE

SCALE: 0 2' 4' 8'

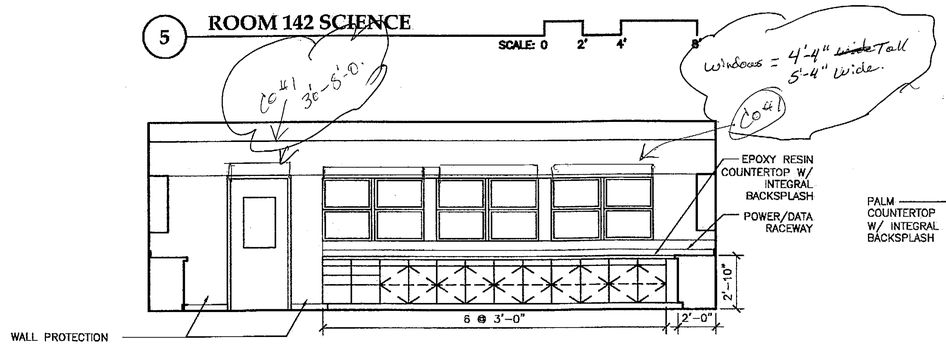

7 ROOM 142 SCIENCE

SCALE: 0 2' 4' 8'

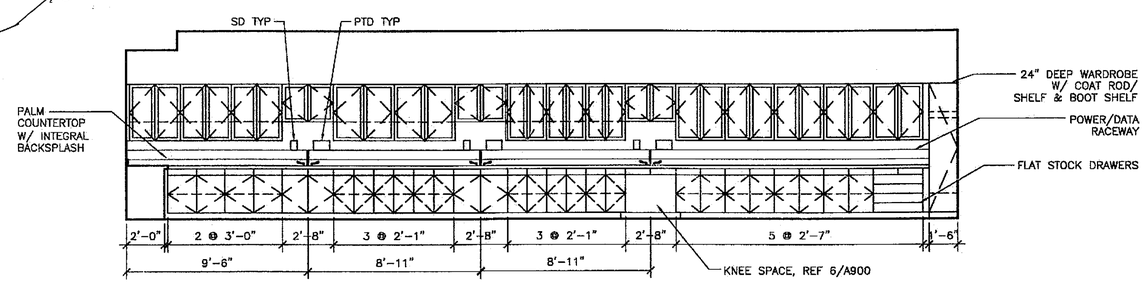

8 ROOM 142 SCIENCE

SCALE: 0 2' 4' 8'

Project As-Built Drawings have been reviewed by the Project Engineer and represent to the best of my knowledge, the project as constructed.
Proj. Eng. _____ Date 7-07

PATH: G:_Projects\0411\Cad\CD\1330\Arch\A501.dwg

Tue, 14/Dec/04 02:32PM

TAB: Layout1

ADDENDUM NUMBER

ATTACHMENT NUMBER

RECORD OF REVISIONS

No.	DATE	DESCRIPTION

CHECKED BY:

STATE OF ALASKA 49TH JOANN E. LOTT NO. A 7808 REGISTERED PROFESSIONAL ENGINEER

DESIGNED BY: JENSEN YORBA LOTT

DRAWN BY: .

STATE OF ALASKA
DEPARTMENT OF TRANSPORTATION & PUBLIC FACILITIES
STATEWIDE DESIGN & ENGINEERING SERVICES DIVISION

MT EDGECUMBE HIGH SCHOOL
BUILDING 1330
ACADEMIC EXPANSION

SHEET A501

PROJECT DESIGNATION NUMBER

67751C

STATE	YEAR
ALASKA	2004
SHEET NUMBER	TOTAL SHEETS
17	79

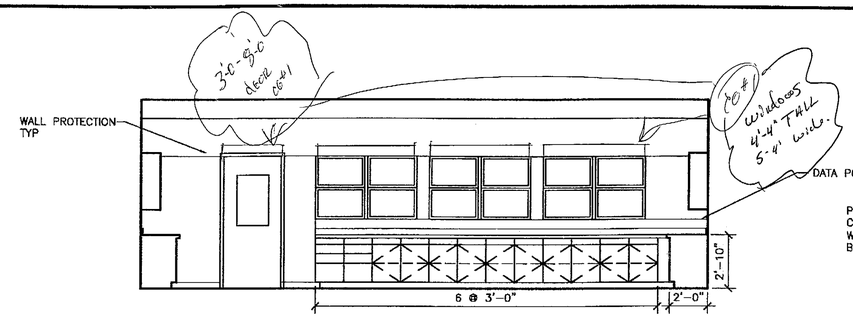

1 ROOM 141 SCIENCE
SCALE: 0 2' 4' 8'

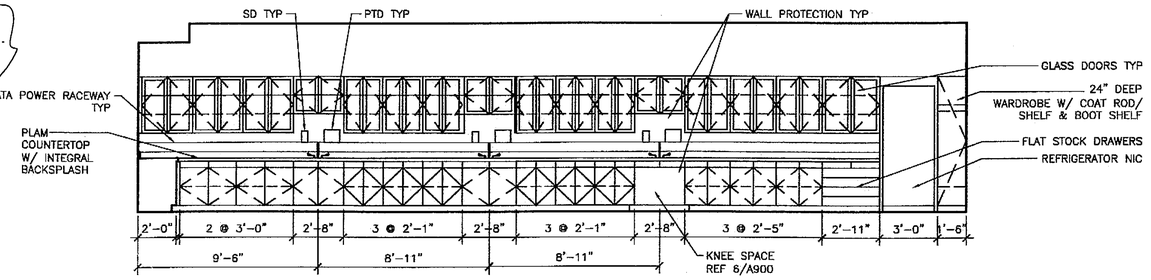

2 ROOM 141 SCIENCE
SCALE: 0 2' 4' 8'

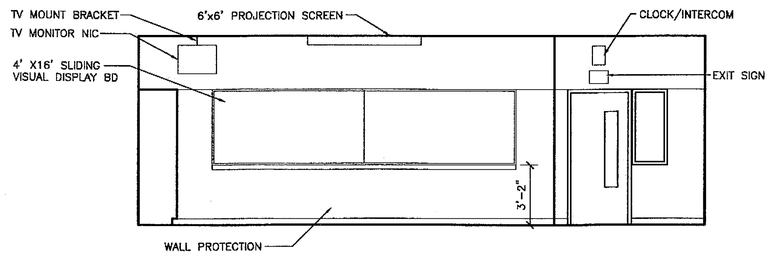

3 ROOM 141 SCIENCE
SCALE: 0 2' 4' 8'

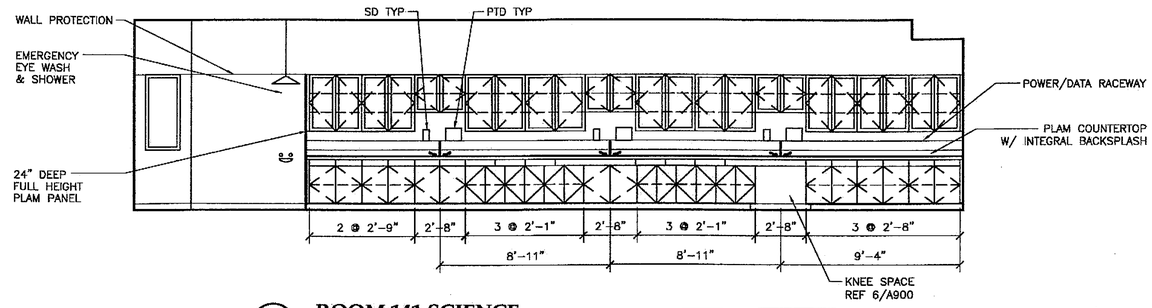

4 ROOM 141 SCIENCE
SCALE: 0 2' 4' 8'

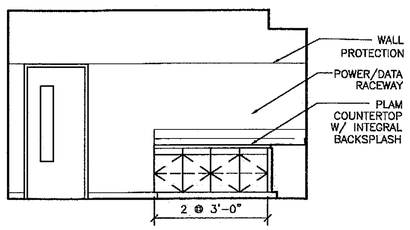

5 ROOM 144 STORAGE
SCALE: 0 2' 4' 8'

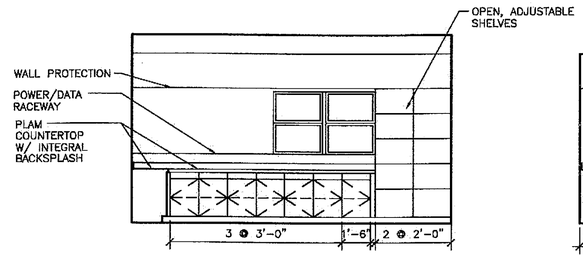

6 ROOM 144 STORAGE
SCALE: 0 2' 4' 8'

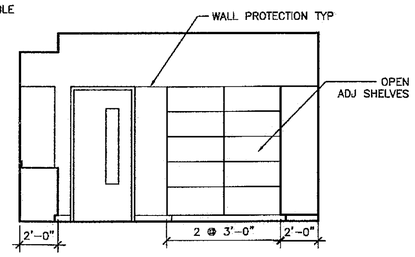

7 ROOM 144 STORAGE
SCALE: 0 2' 4' 8'

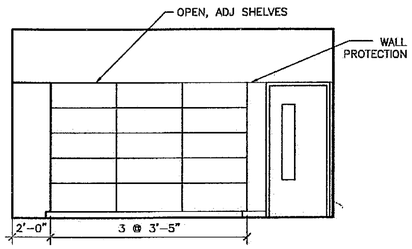

8 ROOM 144 STORAGE
SCALE: 0 2' 4' 8'

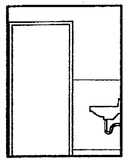

9 ROOM 149
SCALE: 0 2' 4' 8'

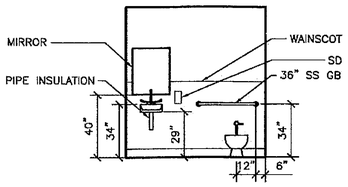

10 ROOM 149
SCALE: 0 2' 4' 8'

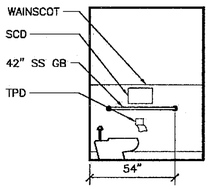

11 ROOM 149
SCALE: 0 2' 4' 8'

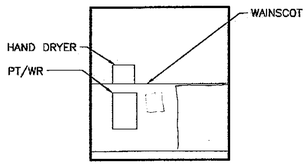

12 ROOM 149
SCALE: 0 2' 4' 8'

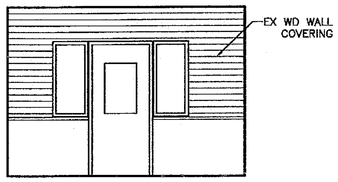

12 HALL 124
SCALE: 0 2' 4' 8'

Project As-Built Drawings have been reviewed by the Project Engineer and represent to the best of my knowledge, the project as constructed.
Proj. Eng. _____ Date 7-07

PATH: G:_Projects\0411\Cad\CD\1330\Arch\A502.dwg
Tue, 14/Dec/04 02:32PM
TAB: Layout1

ADDENDUM NUMBER

ATTACHMENT NUMBER

RECORD OF REVISIONS

No.	DATE	DESCRIPTION

CHECKED BY:

STATE OF ALASKA 49TH JOANNE E. LOTT NO. A 7808 REGISTERED PROFESSIONAL ENGINEER

DESIGNED BY: JENSEN YORBA LOTT
DRAWN BY: .

STATE OF ALASKA
DEPARTMENT OF TRANSPORTATION & PUBLIC FACILITIES
STATEWIDE DESIGN & ENGINEERING SERVICES DIVISION

MT EDGECUMBE HIGH SCHOOL BUILDING 1330 ACADEMIC EXPANSION

SHEET A502
PROJECT DESIGNATION NUMBER
67751C

STATE	YEAR
ALASKA	2004
SHEET NUMBER	TOTAL SHEETS
18	79

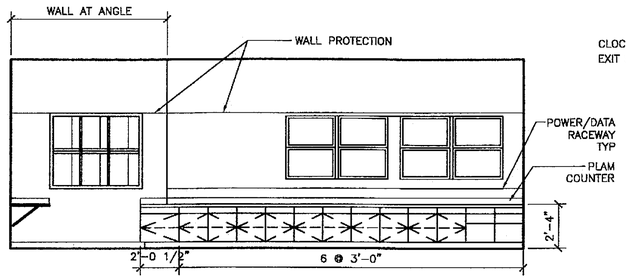

1 147 CLASSROOM
SCALE: 0 2' 4' 8'

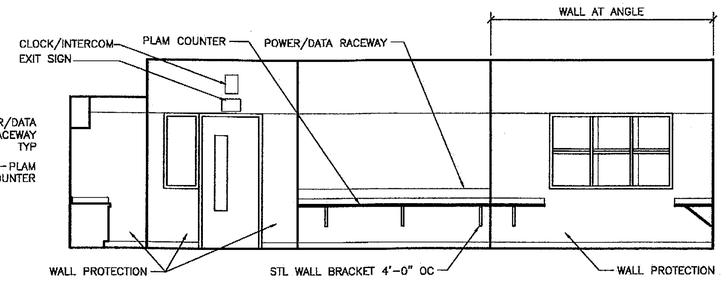

2 147 CLASSROOM
SCALE: 0 2' 4' 8'

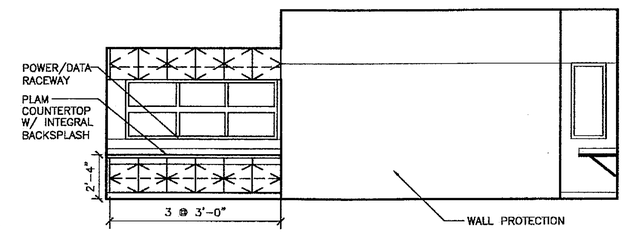

3 147 CLASSROOM
SEE 9/A504 FOR VIEW W/ALTERNATE 1
SCALE: 0 2' 4' 8'

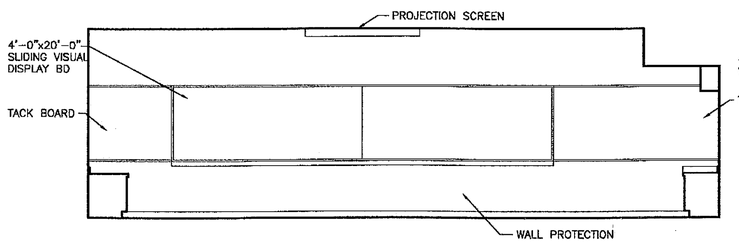

4 147 CLASSROOM
SCALE: 0 2' 4' 8'

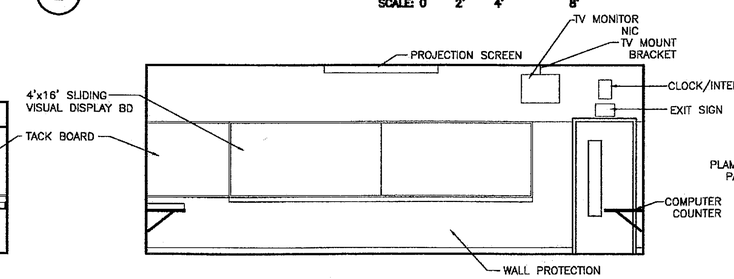

5 ROOM 146 SCIENCE/TECH
SCALE: 0 2' 4' 8'

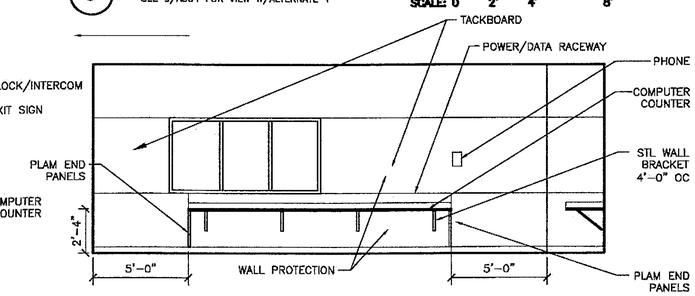

6 ROOM 146 SCIENCE/TECH
SCALE: 0 2' 4' 8'

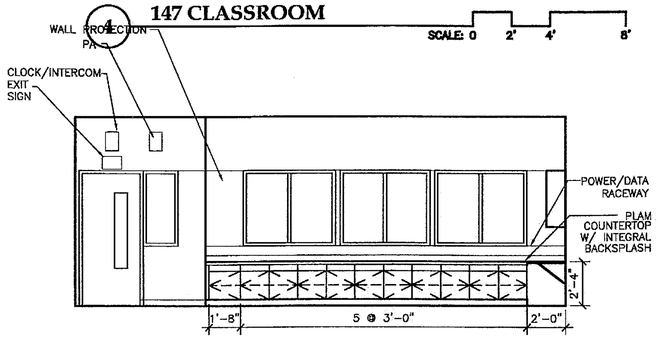

7 ROOM 146 SCIENCE/TECH
SCALE: 0 2' 4' 8'

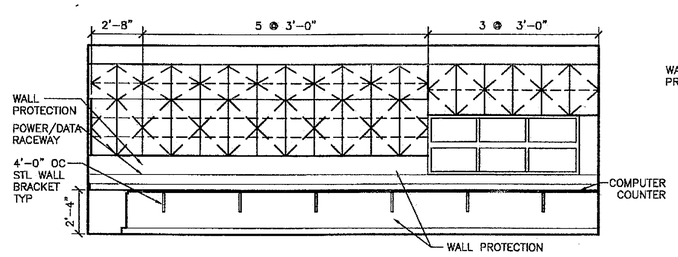

8 ROOM 146 SCIENCE/TECH
SCALE: 0 2' 4' 8'

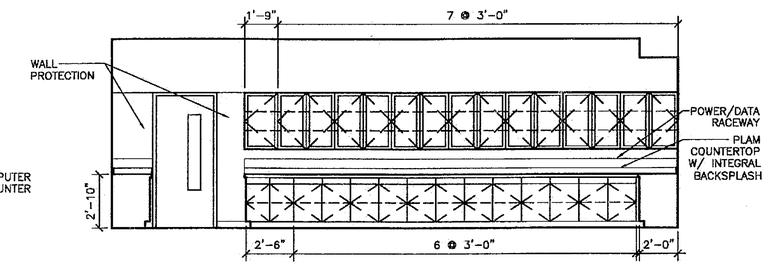

9 ROOM 145 PREP ROOM/OFFICE
SCALE: 0 2' 4' 8'

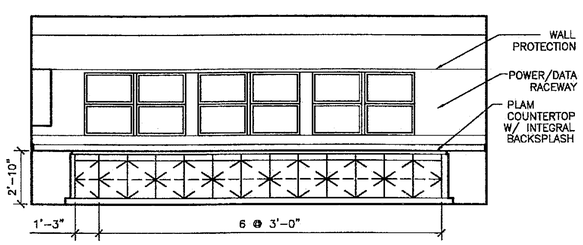

10 ROOM 145 PREP ROOM/OFFICE
SCALE: 0 2' 4' 8'

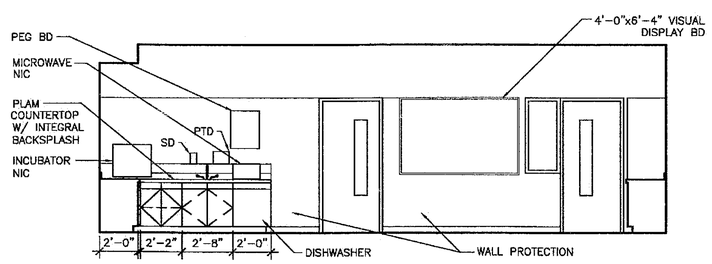

11 ROOM 145 PREP ROOM/OFFICE
SCALE: 0 2' 4' 8'

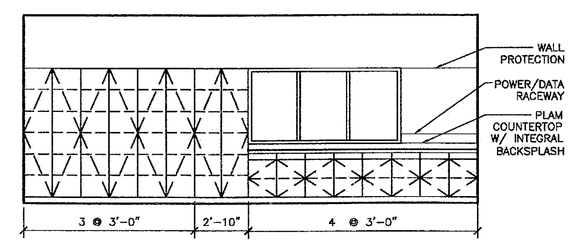

12 ROOM 145 PREP ROOM/OFFICE
SCALE: 0 2' 4' 8'

PATH: G:_Projects\0411\Cad\CD\1330\Arch\A503.dwg
Tue, 14/Dec/04 02:32PM
TAB: Layout1

ADDENDUM NUMBER

ATTACHMENT NUMBER

RECORD OF REVISIONS

No.	DATE	DESCRIPTION

CHECKED BY:

STATE OF ALASKA 49TH JOANN R. LOTT NO. AR 7805 REGISTERED ARCHITECT

DESIGNED BY: JENSEN YORBA LOTT
DRAWN BY: .

STATE OF ALASKA
DEPARTMENT OF TRANSPORTATION & PUBLIC FACILITIES
STATEWIDE DESIGN & ENGINEERING SERVICES DIVISION

MT EDGECUMBE HIGH SCHOOL
BUILDING 1330
ACADEMIC EXPANSION

SHEET A503

PROJECT DESIGNATION NUMBER
67751C

STATE	YEAR
ALASKA	2004
SHEET NUMBER	TOTAL SHEETS
19	79

Project As-Built Drawings have been reviewed by the Project Engineer and represent to the best of my knowledge, the project as constructed.
Proj. Eng. _____ Date 7-07

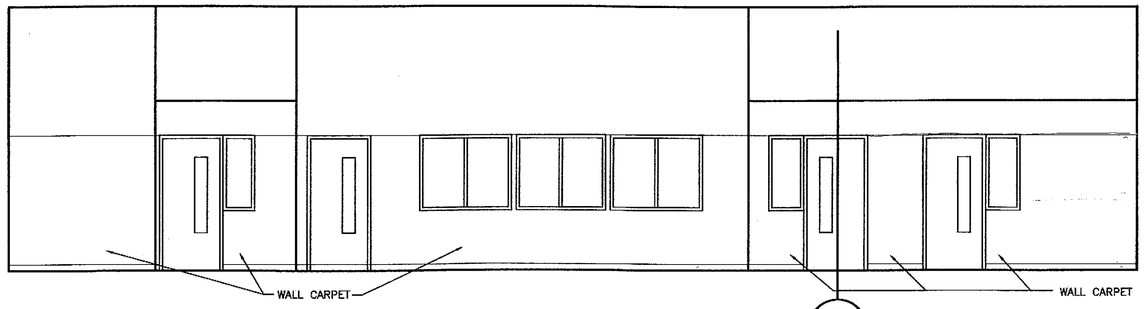

1 140 CENTER HALL
SCALE: 0 2' 4' 8'

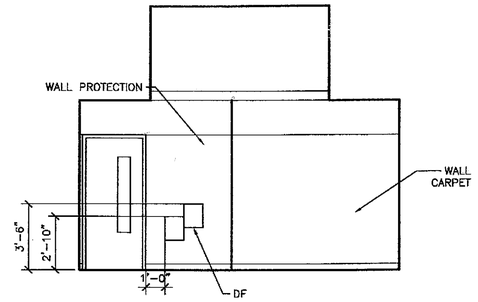

2 140 CENTER HALL
SCALE: 0 2' 4' 8'

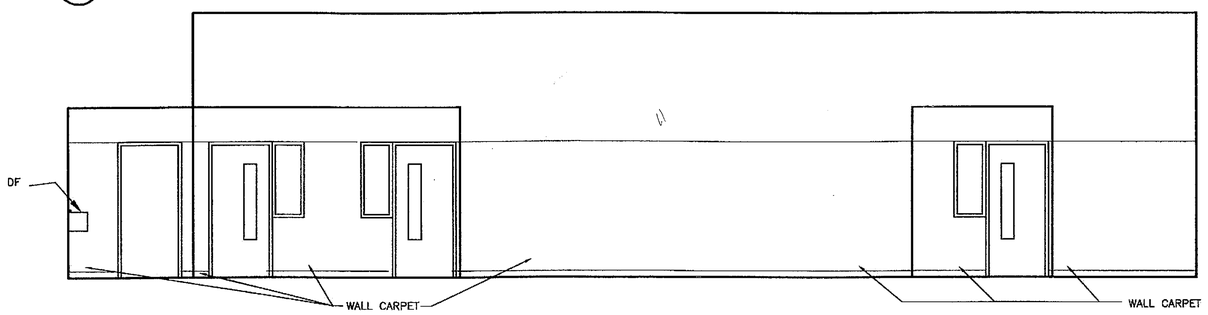

3 140 CENTER HALL
SCALE: 0 2' 4' 8'

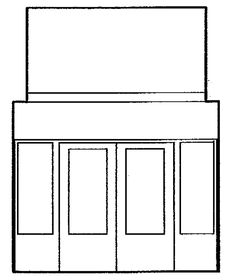

4 140 CENTER HALL
SCALE: 0 2' 4' 8'

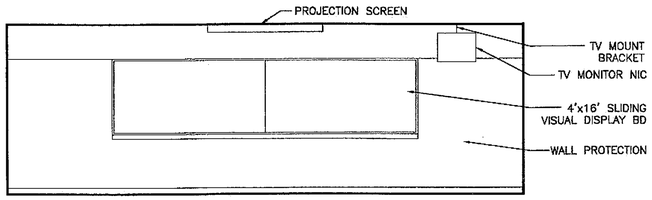

5 128 CLASSROOM
SCALE: 0 2' 4' 8'

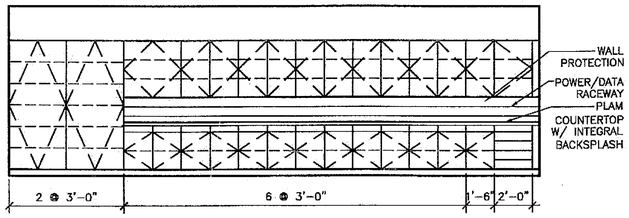

6 128 CLASSROOM
SCALE: 0 2' 4' 8'

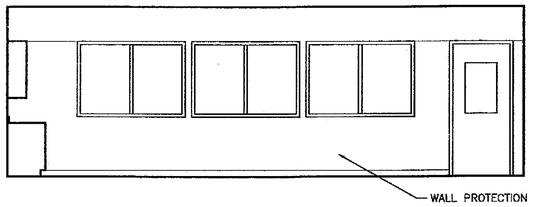

7 128 CLASSROOM
SCALE: 0 2' 4' 8'

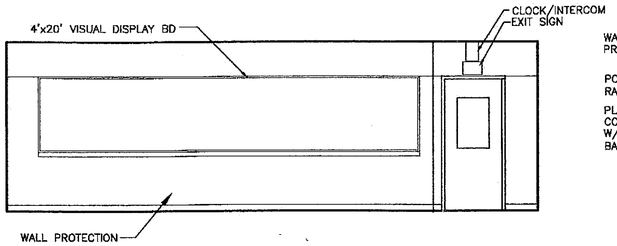

8 128 CLASSROOM
SCALE: 0 2' 4' 8'

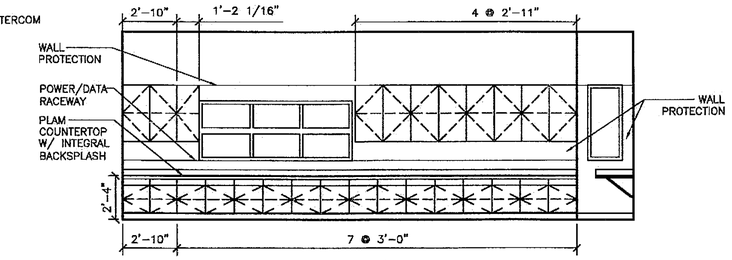

9 CLASSROOM 147 ALTERNATE 1
SCALE: 0 2' 4' 10 8'

PATH: G:_Projects\0411\Cad\CD\1330\Arch\A504.dwg

Tue, 14/Dec/04 02:32PM

TAB: Layout1

ADDENDUM NUMBER

ATTACHMENT NUMBER

RECORD OF REVISIONS

No.	DATE	DESCRIPTION

CHECKED BY:

STATE OF ALASKA 49TH JOANN E. LOTT NO. 7808 REGISTERED PROFESSIONAL ENGINEER

DESIGNED BY: JENSEN YORBA LOTT

DRAWN BY: .

STATE OF ALASKA
DEPARTMENT OF TRANSPORTATION & PUBLIC FACILITIES
STATEWIDE DESIGN & ENGINEERING SERVICES DIVISION

MT EDGECUMBE HIGH SCHOOL
BUILDING 1330
ACADEMIC EXPANSION

SHEET A504

PROJECT DESIGNATION NUMBER
67751C

STATE	YEAR
ALASKA	2004
SHEET NUMBER	TOTAL SHEETS
20	79

Project As-Built Drawings have been reviewed by the Project Engineer and represent to the best of my knowledge, the project as constructed.
Proj. Eng. D.Hill Date 7-07

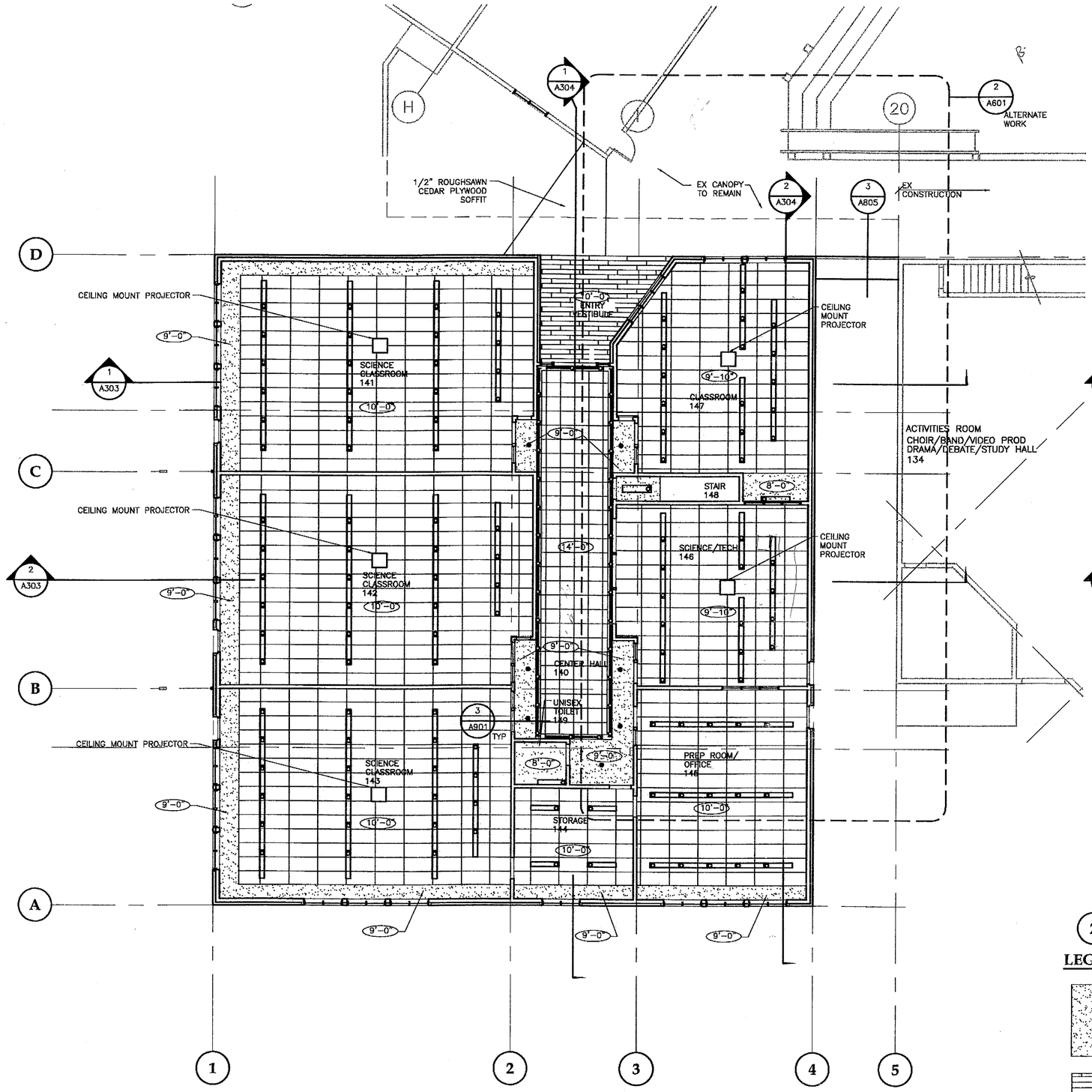

1 REFLECTED CEILING PLAN - SCIENCE WING

SCALE: 0 4' 8' 16'

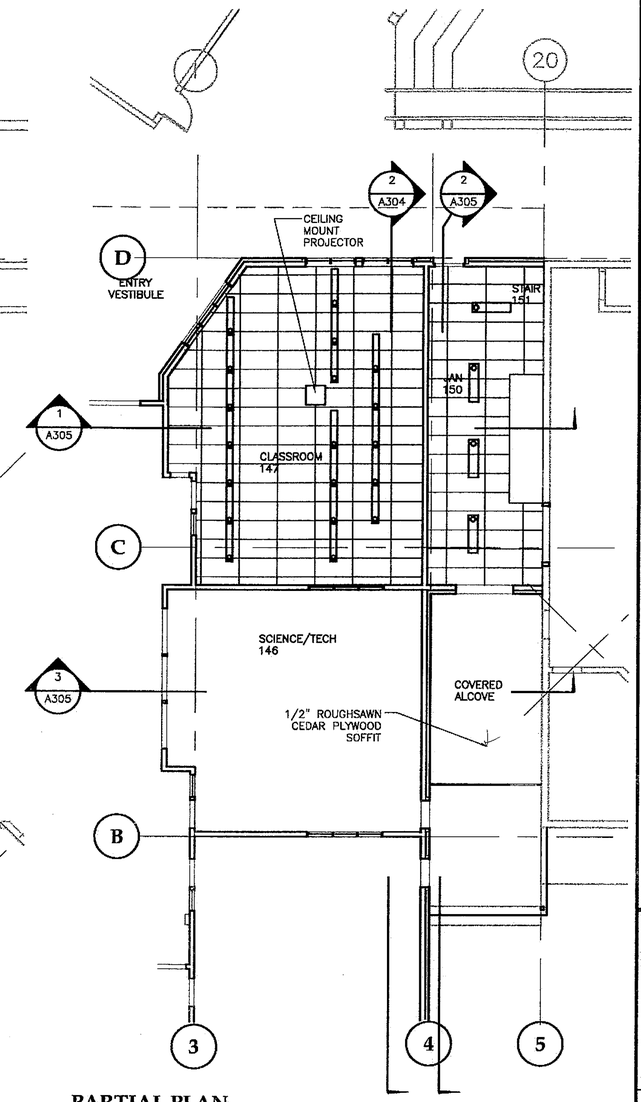

2 PARTIAL PLAN ALTERNATE 1 & 2 REFLECTED CEILING PLAN

SCALE: 0 4' 8' 16'

LEGEND

	GWB
	SOFFIT BOARD 6" REVEAL
	SUSPENDED ACOUSTICAL CEILING 2 X 4 GRID
	SUSPENDED ACOUSTICAL CEILING 2 X 4 GRID
9'-0"	HEIGHT ABOVE FIN. FLOOR

PATH: G:_Projects\0411\Cad\CD\1330\Arch\A601.dwg

Tue, 14/Dec/04 02:32PM

TAB: Layout1

ADDENDUM NUMBER

ATTACHMENT NUMBER

RECORD OF REVISIONS

No.	DATE	DESCRIPTION

CHECKED BY:

STATE OF ALASKA 49TH JOANN E. LOTT NO. 7809 REGISTERED PROFESSIONAL ENGINEER

DESIGNED BY: JENSEN YORBA LOTT

DRAWN BY:

STATE OF ALASKA
DEPARTMENT OF TRANSPORTATION & PUBLIC FACILITIES
STATEWIDE DESIGN & ENGINEERING SERVICES DIVISION

MT EDGECUMBE HIGH SCHOOL BUILDING 1330 ACADEMIC EXPANSION

SHEET A601

PROJECT DESIGNATION NUMBER

67751C

STATE	YEAR
ALASKA	2004
SHEET NUMBER	TOTAL SHEETS
21	79

Project As-Built Drawings have been reviewed by the Project Engineer and represent to the best of my knowledge, the project as constructed.
Proj. Eng. _____ Date 7-07

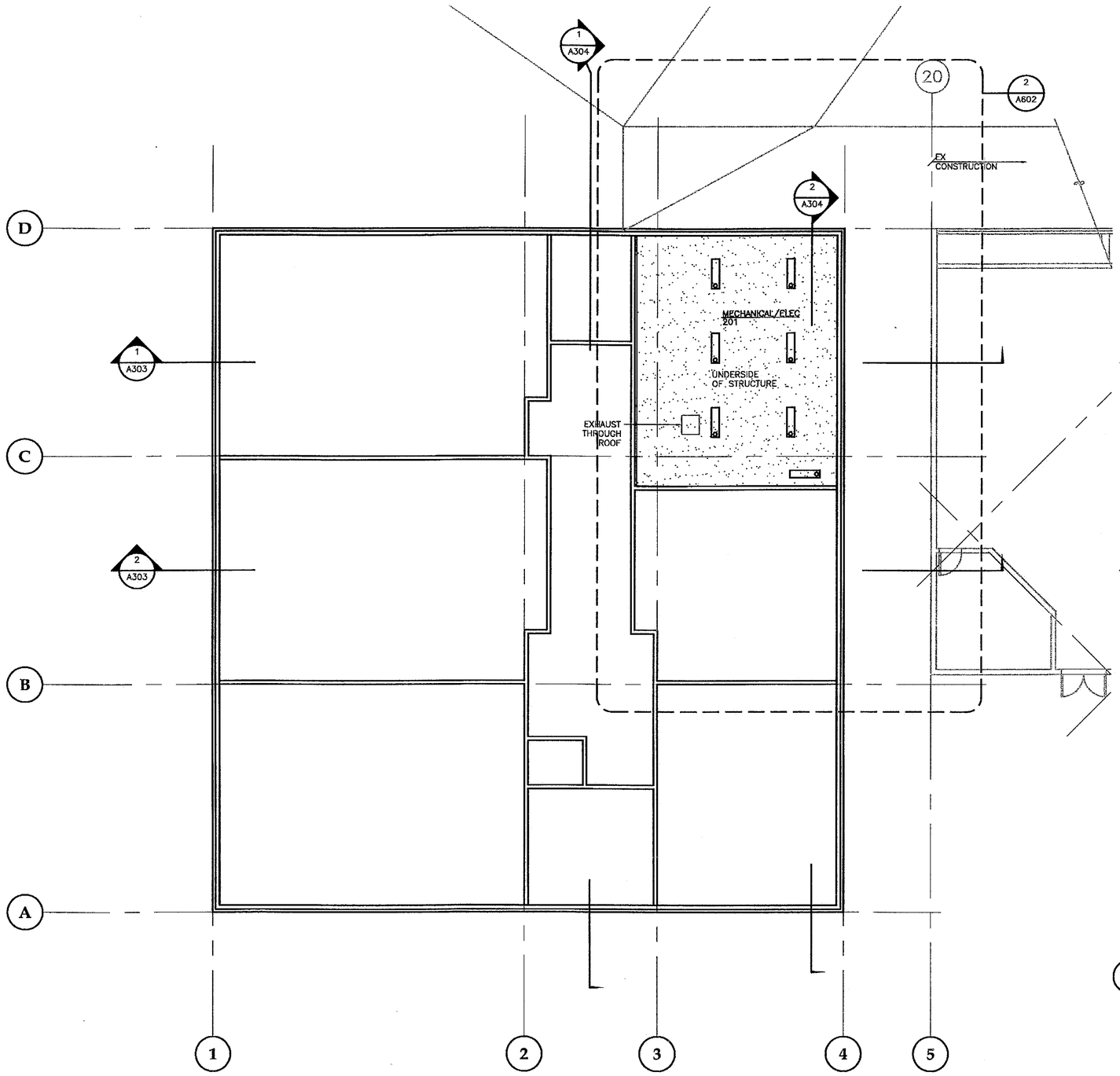

1 REFLECTED CEILING PLAN - MECH ROOM

NOTE: PROVIDE GWB @ UNDERSIDE OF ROOF STRUCTURE, TYP.

SCALE: 0 4' 8' 16'

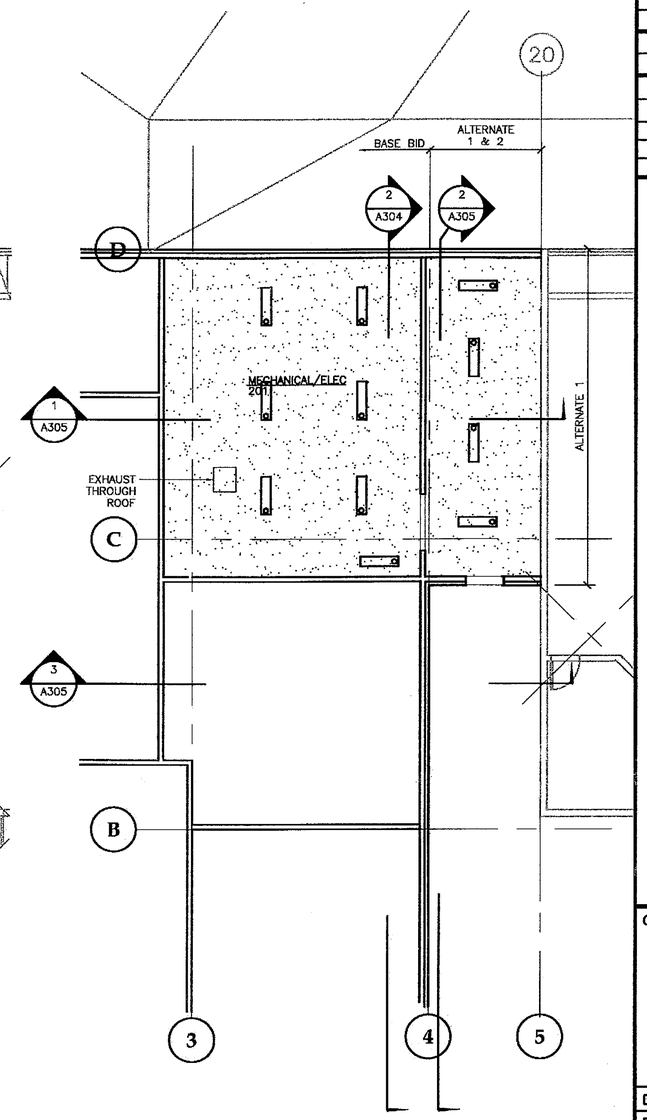

2 ALTERNATE 1 & 2
REFLECTED CEILING PLAN
MECH ROOM

SCALE: 0 4' 8' 16'

NOTE: PROVIDE GWB @ UNDERSIDE OF ROOF STRUCTURE, TYP.

LEGEND

GWB

PATH:
G:_Projects\0411\Cad\CD\1330\Arch\A602.dwg

Tue, 14/Dec/04 02:32PM

TAB: Layout1

ADDENDUM NUMBER

ATTACHMENT NUMBER

RECORD OF REVISIONS

No.	DATE	DESCRIPTION

CHECKED BY:

STATE OF ALASKA
49TH
JOANN D. LOTT
NO. 7808
REGISTERED PROFESSIONAL ENGINEER

DESIGNED BY: JENSEN YORBA LOTT

DRAWN BY: .

STATE OF ALASKA
DEPARTMENT OF TRANSPORTATION
& PUBLIC FACILITIES
STATEWIDE DESIGN & ENGINEERING
SERVICES DIVISION

MT EDGECUMBE
HIGH SCHOOL
BUILDING 1330
ACADEMIC
EXPANSION

SHEET A602

PROJECT DESIGNATION NUMBER

67751C

STATE	YEAR
ALASKA	2004
ET NUMBER	TOTAL SHEETS
22	79

roject As-Built Drawings have been
eviewed by the Project Engineer and
epresent to the best of my knowledge, the
roject as constructed.
roj. Eng. Date 7-07

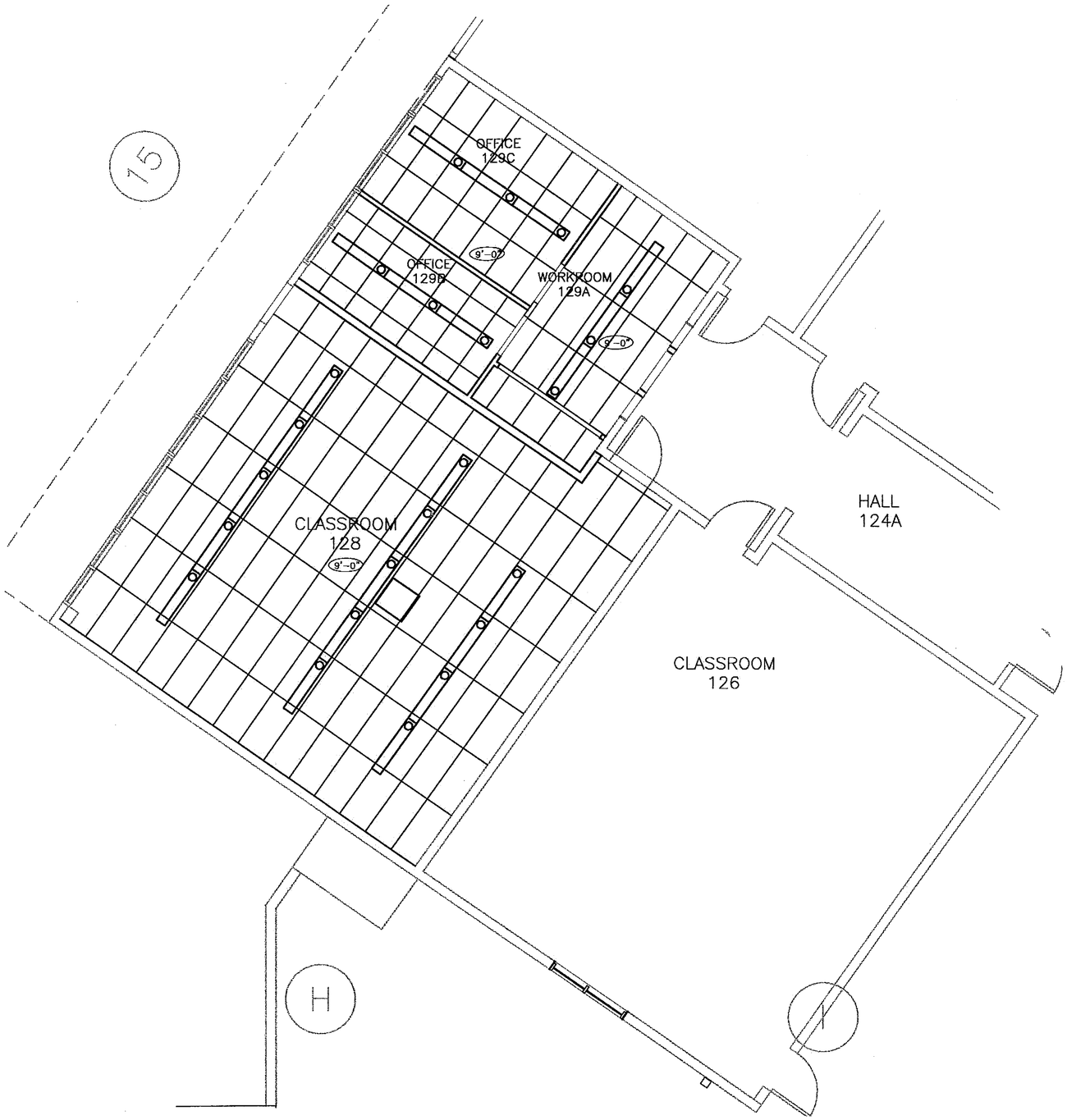

SUSPENDED ACOUSTICAL CEILING
2 X 4 GRID

9'-0" HEIGHT ABOVE FIN. FLOOR

1 REFLECTED CEILING PLAN OFFICE 129 AND CLASSROOM 8

SCALE: 0 2' 4' 8'

PATH:
G:_Projects\0411\Cad\CD\1330\Arch\A603.dwg

Tue, 14/Dec/04 02:33PM

TAB: Layout1

ADDENDUM NUMBER

ATTACHMENT NUMBER

RECORD OF REVISIONS

No.	DATE	DESCRIPTION

CHECKED BY:

STATE OF ALASKA
JOHN E. LOTT
NO. A-7808
REGISTERED PROFESS. ENGL. DESIGNER

DESIGNED BY: JENSEN YORBA LOTT

DRAWN BY: .

STATE OF ALASKA
DEPARTMENT OF TRANSPORTATION & PUBLIC FACILITIES
STATEWIDE DESIGN & ENGINEERING SERVICES DIVISION

MT EDGECUMBE HIGH SCHOOL BUILDING 1330 ACADEMIC EXPANSION

SHEET A603

PROJECT DESIGNATION NUMBER

67751C

STATE	YEAR
ALASKA	2004
SHEET NUMBER	TOTAL SHEETS
23	79

roject As-Built Drawings have been eviewed by the Project Engineer and epresent to the best of my knowledge, the roject as constructed.
roj. Eng. Date 7-07

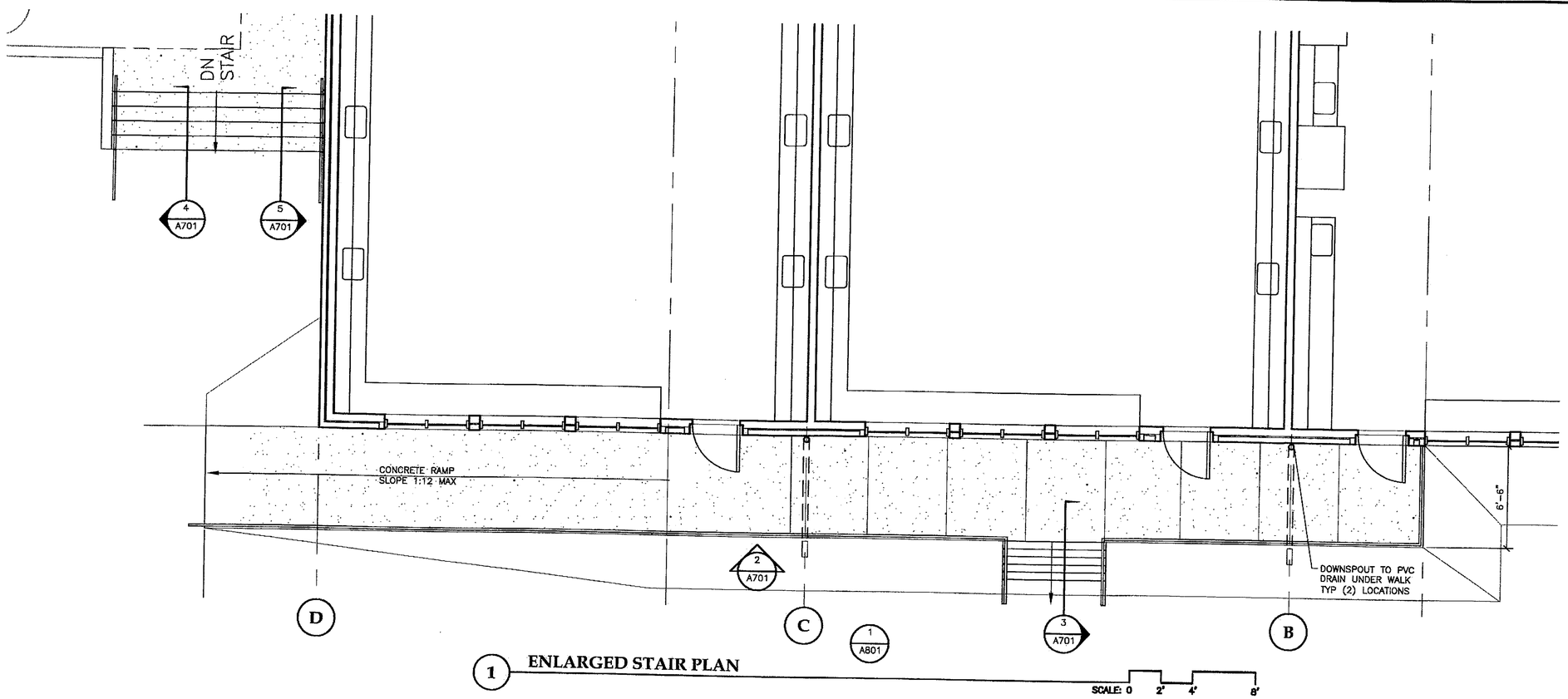

1 ENLARGED STAIR PLAN

SCALE: 0 2' 4' 8'

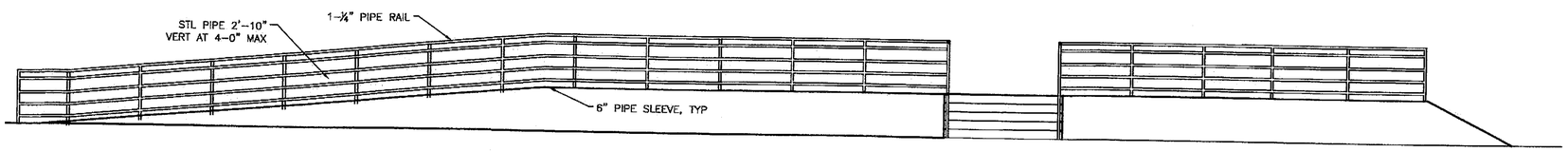

2 STAIRS/RAIL ELEVATION

SCALE: 0 2' 4' 8'

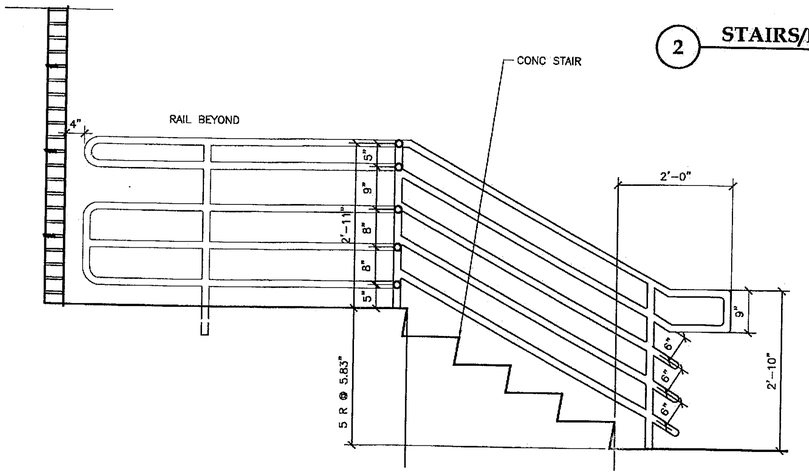

3 STAIRS/RAIL ELEVATION

SCALE: 0 6" 1' 2' 4'

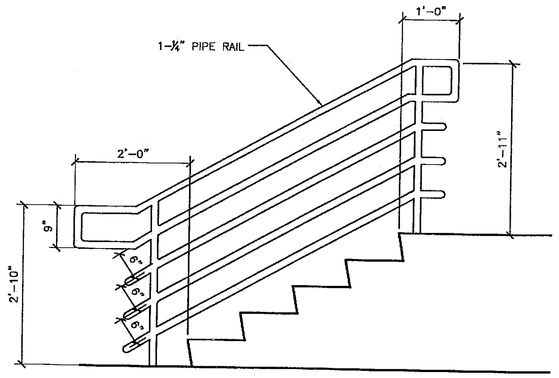

4 STAIRS/RAIL ELEVATION

SCALE: 0 6" 1' 2' 4'

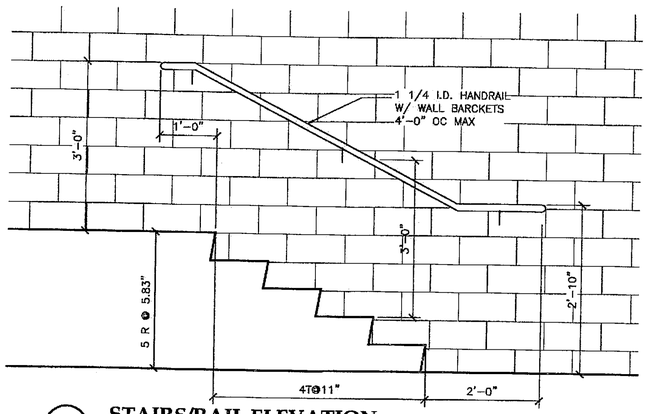

5 STAIRS/RAIL ELEVATION

SCALE: 0 6" 1' 2' 4'

PATH:
G:_Projects\0411\Cad\CD\1330\Arch\A701.dwg

Tue, 14/Dec/04 02:33PM

TAB: Layout1

ADDENDUM NUMBER

ATTACHMENT NUMBER

RECORD OF REVISIONS

No.	DATE	DESCRIPTION

CHECKED BY:

STATE OF ALASKA 19TH JOANN E. LOTT NO. 7808 NOT VALID UNLESS PROFESS ENGL. INDIV. TITLE

DESIGNED BY: JENSEN YORBA LOTT

DRAWN BY: .

STATE OF ALASKA
DEPARTMENT OF TRANSPORTATION & PUBLIC FACILITIES
STATEWIDE DESIGN & ENGINEERING SERVICES DIVISION

MT EDGECUMBE HIGH SCHOOL
BUILDING 1330
ACADEMIC EXPANSION

SHEET A701

PROJECT DESIGNATION NUMBER

67751C

STATE	YEAR
ALASKA	2004
SHEET NUMBER	TOTAL SHEETS
24	79

Project As-Built Drawings have been reviewed by the Project Engineer and represent to the best of my knowledge, the project as constructed.
Proj. Eng. _____ Date 2-07

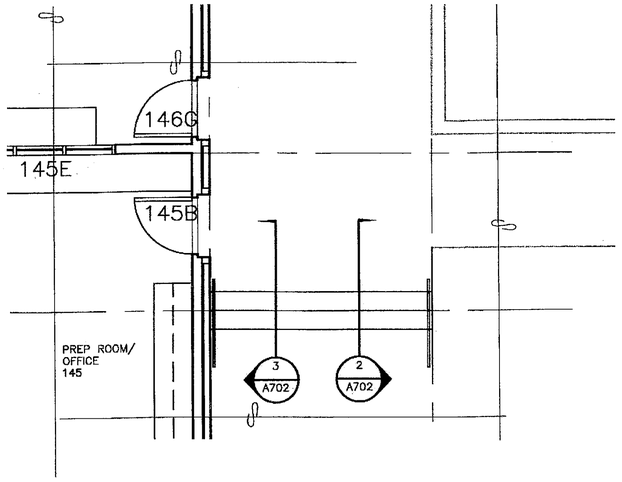

1 **ENLARGED STAIR PLAN**

SCALE: 0 2' 4' 8'

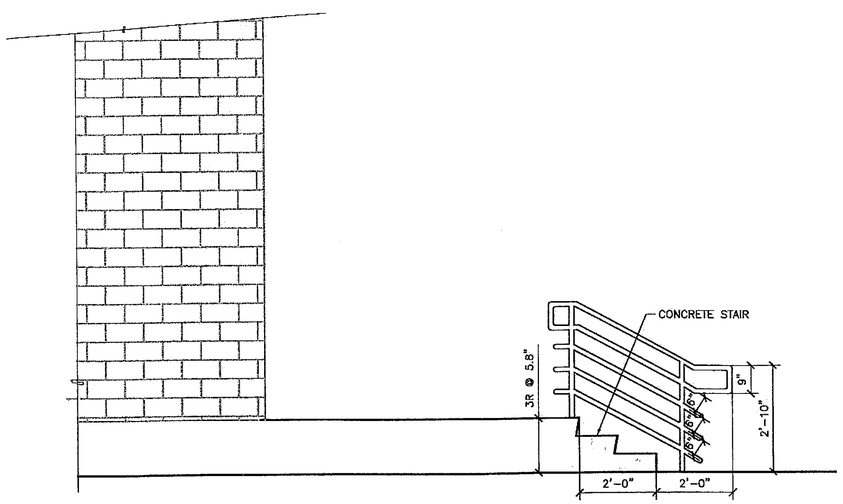

2 **STAIRS/RAIL ELEVATION**

SCALE: 0 6" 1' 2'

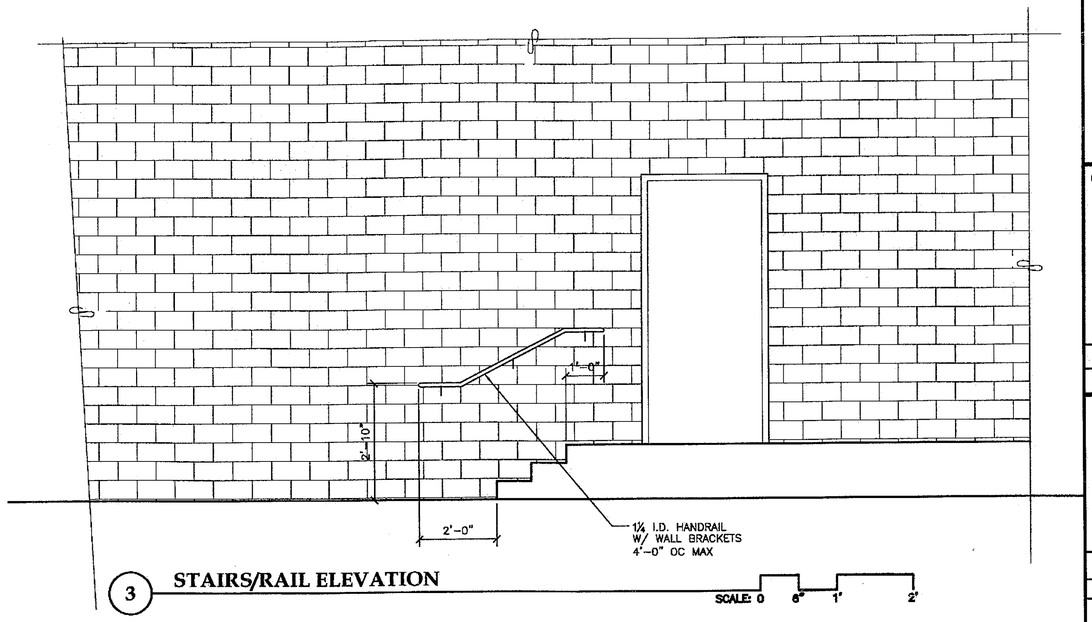

3 **STAIRS/RAIL ELEVATION**

SCALE: 0 6" 1' 2'

PATH:
G:_Projects\0411\Cad\CD\1330\Arch\A702.dwg

Tue, 14/Dec/04 02:33PM

TAB: Layout1

ADDENDUM NUMBER

ATTACHMENT NUMBER

RECORD OF REVISIONS

No.	DATE	DESCRIPTION

CHECKED BY:

STATE OF ALASKA
49TH
JOANN L. LOTT
NO. 7806
REGISTERED PROFESSIONAL ENGINEER

DESIGNED BY: JENSEN YORBA LOTT

DRAWN BY: .

STATE OF ALASKA
DEPARTMENT OF TRANSPORTATION
& PUBLIC FACILITIES
STATEWIDE DESIGN & ENGINEERING
SERVICES DIVISION

MT EDGECUMBE
HIGH SCHOOL
BUILDING 1330
ACADEMIC
EXPANSION

SHEET A702

PROJECT DESIGNATION NUMBER

67751C

STATE	YEAR
ALASKA	2004
SHEET NUMBER	TOTAL SHEETS
25	79

Project As-Built Drawings have been reviewed by the Project Engineer and represent to the best of my knowledge, the project as constructed.
Proj. Eng. _____ Date 7-07

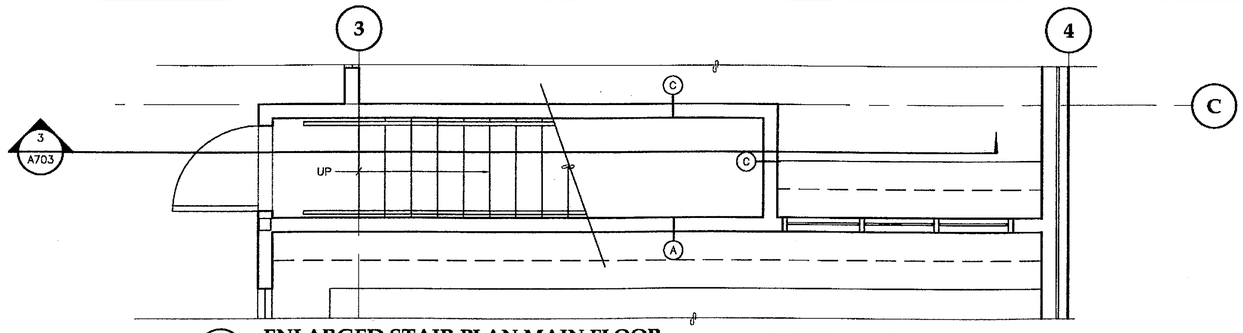

1 ENLARGED STAIR PLAN MAIN FLOOR

⊕ SIM DELETE DOOR AT BOTTOM OF STAIR
SEE 2/A202 FOR ENCLOSING WALL CONFIGURATION

SCALE: 0 2' 4' 8'

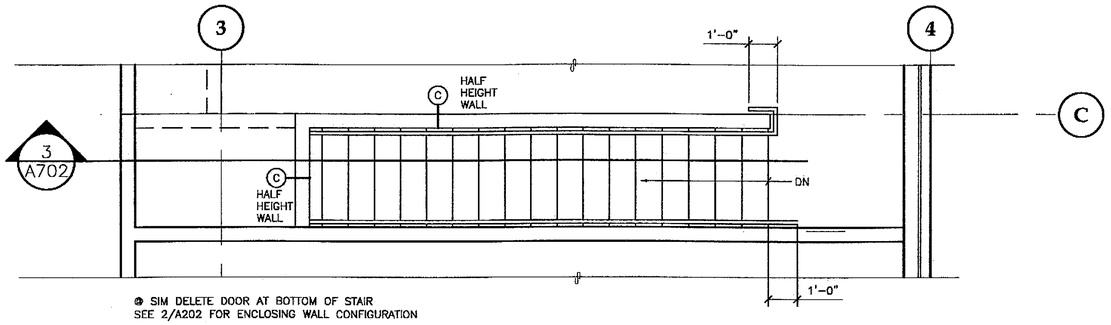

⊕ SIM DELETE DOOR AT BOTTOM OF STAIR
SEE 2/A202 FOR ENCLOSING WALL CONFIGURATION

2 ENLARGED STAIR PLAN MECH ROOM

SCALE: 0 2' 4' 8'

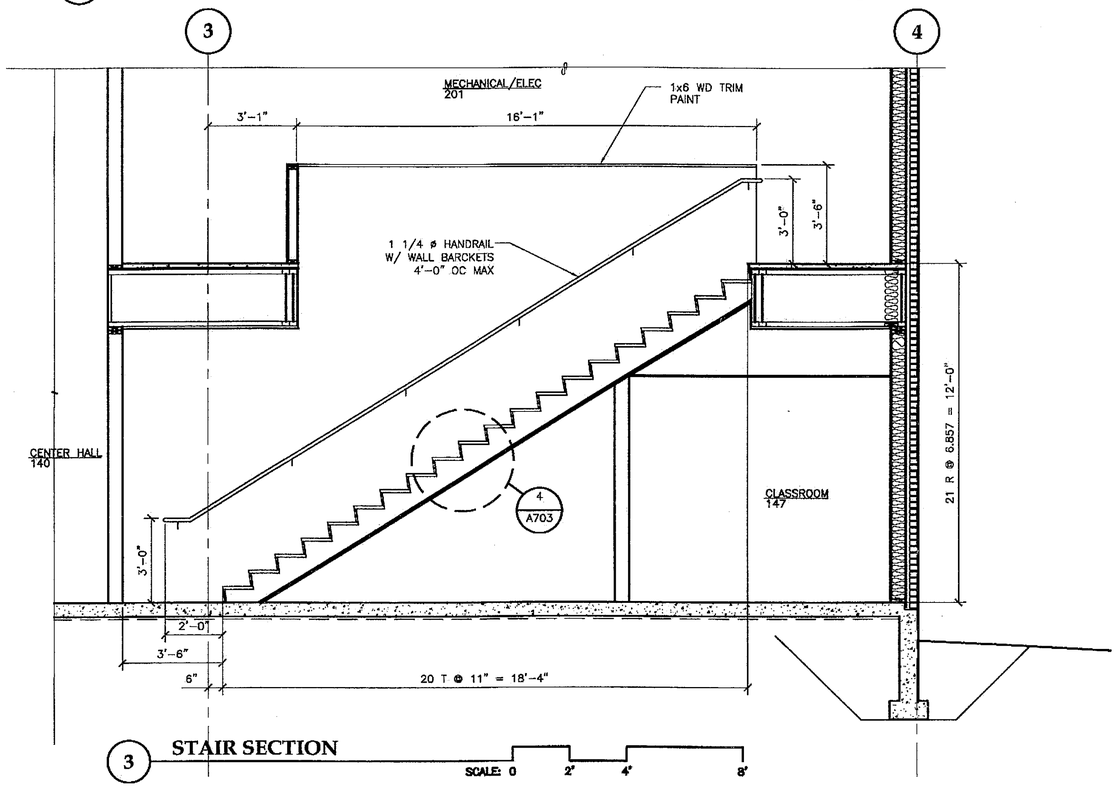

3 STAIR SECTION

SCALE: 0 2' 4' 8'

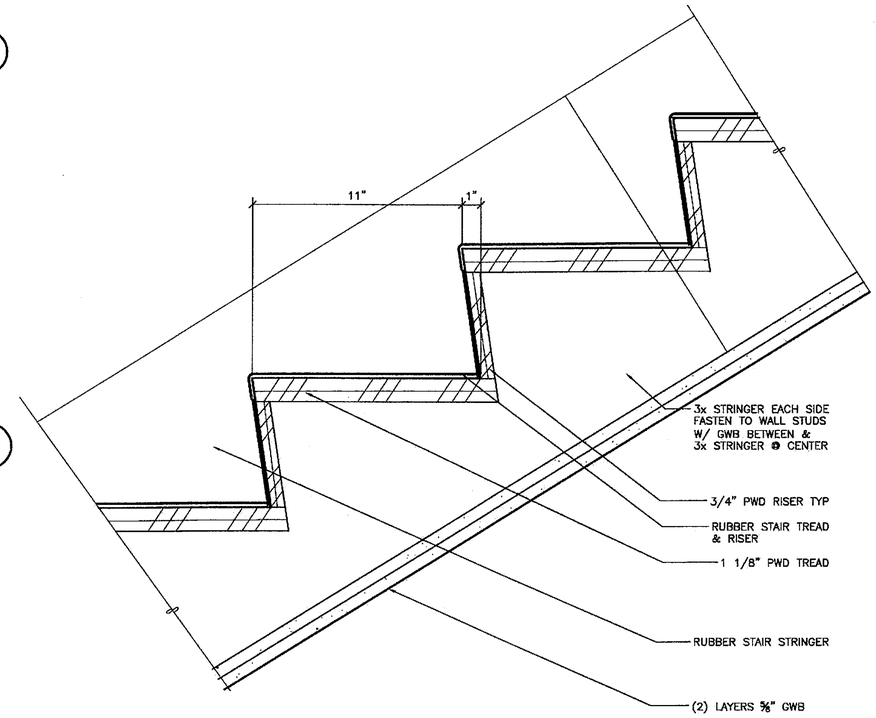

4 STAIR DETAIL

SCALE: 0 3" 6" 12"

Project As-Built Drawings have been reviewed by the Project Engineer and represent to the best of my knowledge, the project as constructed.
Proj. Eng. _____ Date 7-07

PATH:
G:_Projects\0411\Cad\CD\1330\Arch\A703.dwg

Tue, 14/Dec/04 02:33PM

TAB: Layout1

ADDENDUM NUMBER

ATTACHMENT NUMBER

RECORD OF REVISIONS

No.	DATE	DESCRIPTION

CHECKED BY:

STATE OF ALASKA 49TH JOANN E. LOTT NO. AK 7808 REGISTERED PROFESSIONAL ENGINEER

DESIGNED BY: JENSEN YORBA LOTT

DRAWN BY: .

STATE OF ALASKA
DEPARTMENT OF TRANSPORTATION & PUBLIC FACILITIES
STATEWIDE DESIGN & ENGINEERING SERVICES DIVISION

MT EDGECUMBE HIGH SCHOOL
BUILDING 1330
ACADEMIC EXPANSION

SHEET A703

PROJECT DESIGNATION NUMBER
67751C

STATE	YEAR
ALASKA	2004
SHEET NUMBER	TOTAL SHEETS
26	79

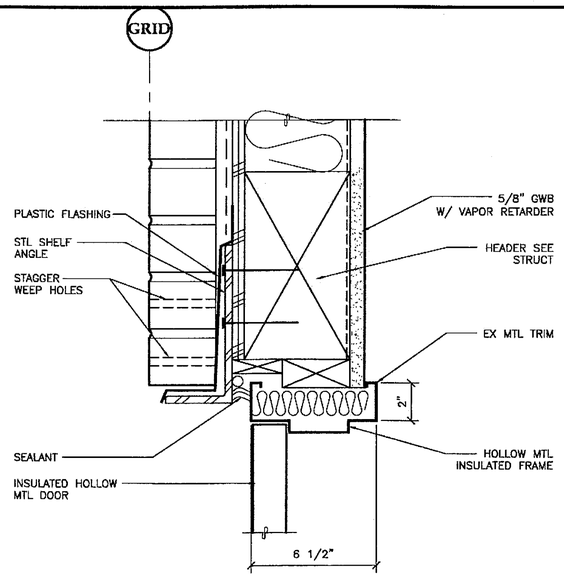

1 DOOR HEAD DETAIL

SCALE: 0 3" 6" 12"

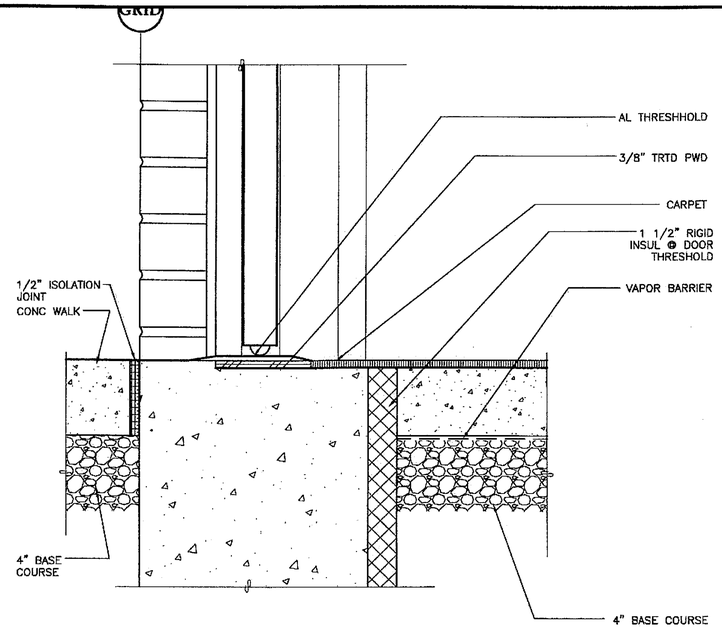

2 FOOTING DETAIL

SCALE: 0 3" 6" 12"

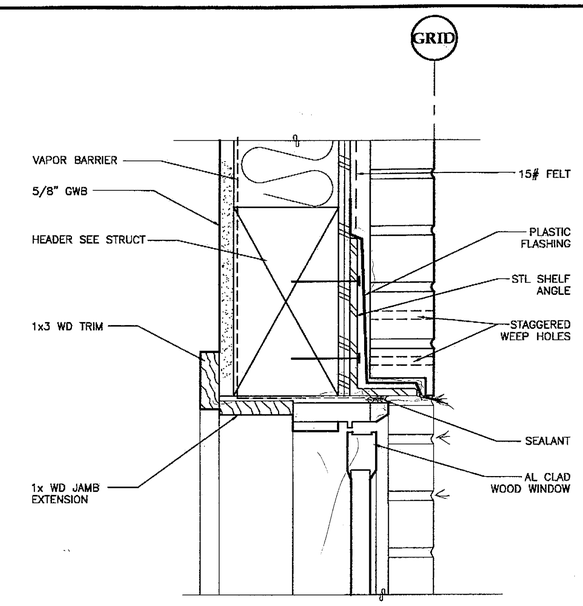

3 WINDOW HEAD DETAIL

SCALE: 0 3" 6" 12"

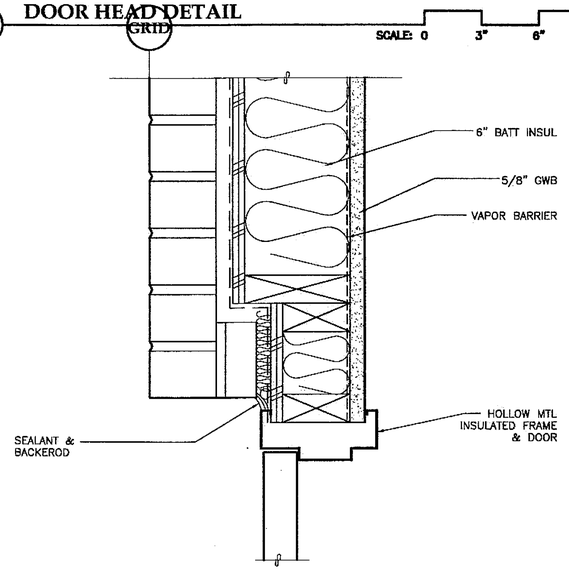

4 DOOR JAMB DETAIL

SCALE: 0 3" 6" 12"

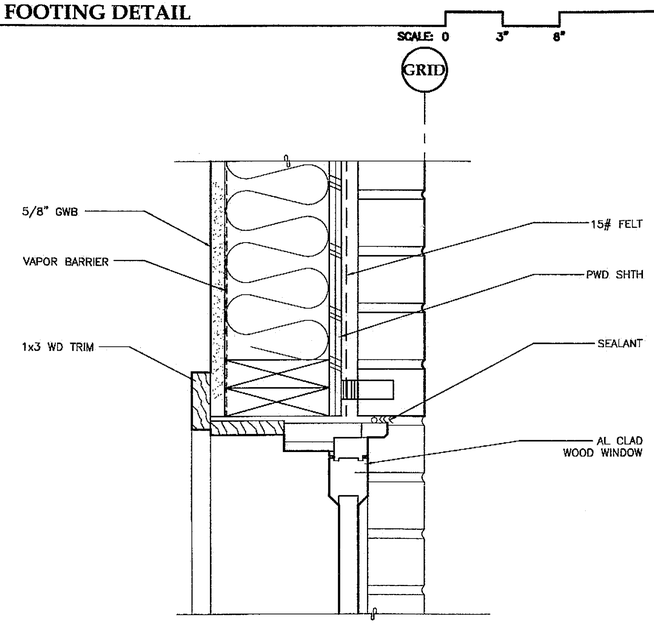

SEE 3/A801 FOR SIMILAR CALLOUTS

5 WINDOW JAMB DETAIL

SCALE: 0 3" 6" 12"

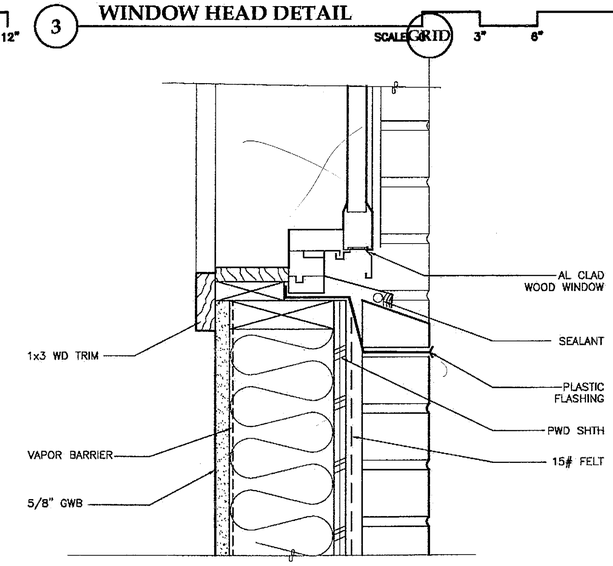

SEE 3/A801 FOR SIMILAR CALLOUTS

6 WINDOW SILL DETAIL

SCALE: 0 3" 6" 12"

Project As-Built Drawings have been reviewed by the Project Engineer and represent to the best of my knowledge, the project as constructed.
Proj. Eng. _____ Date 2-07

PATH: G:_Projects\0411\Cad\CD\1330\Arch\A801.dwg
Tue, 14/Dec/04 02:33PM
TAB: Layout1

ADDENDUM NUMBER

ATTACHMENT NUMBER

RECORD OF REVISIONS

No.	DATE	DESCRIPTION

CHECKED BY:

STATE OF ALASKA 49TH JOANNE E. LOTT NO. A 7808 REGISTERED PROFESSIONAL ARCHITECT

DESIGNED BY: JENSEN YORBA LOTT
DRAWN BY: .

STATE OF ALASKA
DEPARTMENT OF TRANSPORTATION & PUBLIC FACILITIES
STATEWIDE DESIGN & ENGINEERING SERVICES DIVISION

MT EDGECUMBE HIGH SCHOOL BUILDING 1330 ACADEMIC EXPANSION

SHEET A801

PROJECT DESIGNATION NUMBER
67751C

STATE	YEAR
ALASKA	2004
SHEET NUMBER	TOTAL SHEETS
27	79

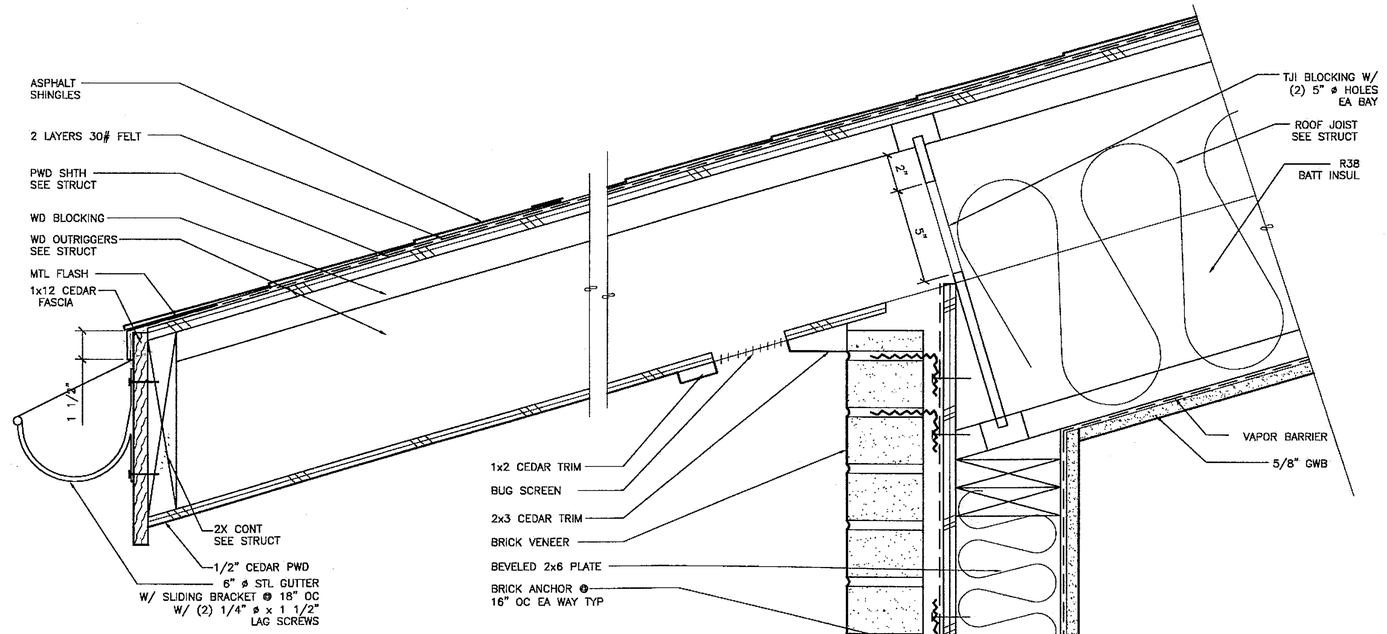

1 EAVE DETAIL

SCALE: 0 3" 6" 12"

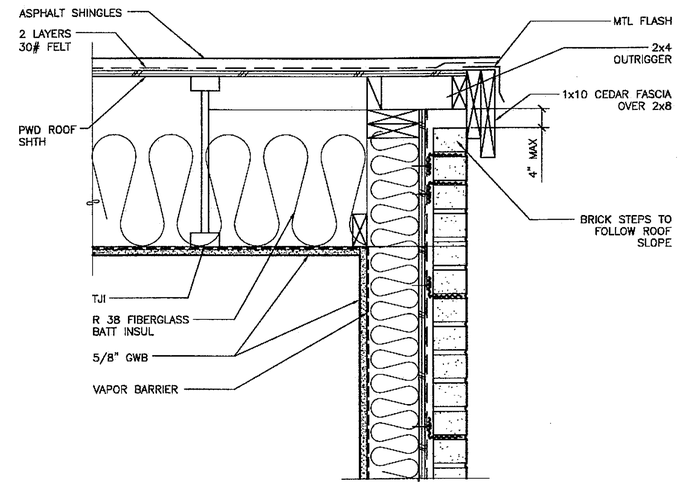

3 END WALL ROOF

SCALE: 0 6" 1' 2'

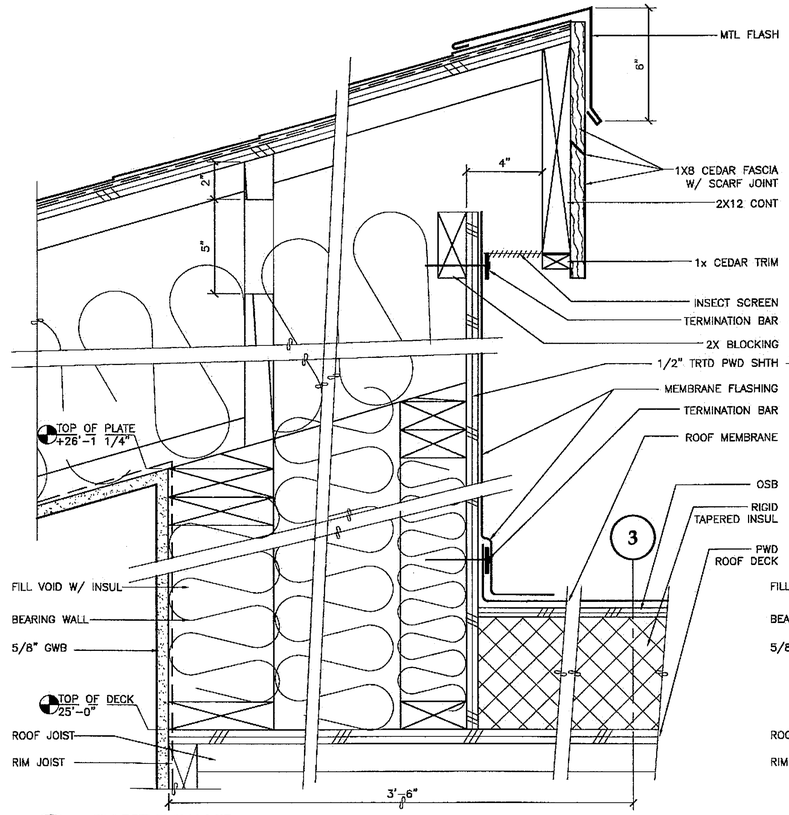

5 EAVE DETAIL

SCALE: 0 3" 6" 12"

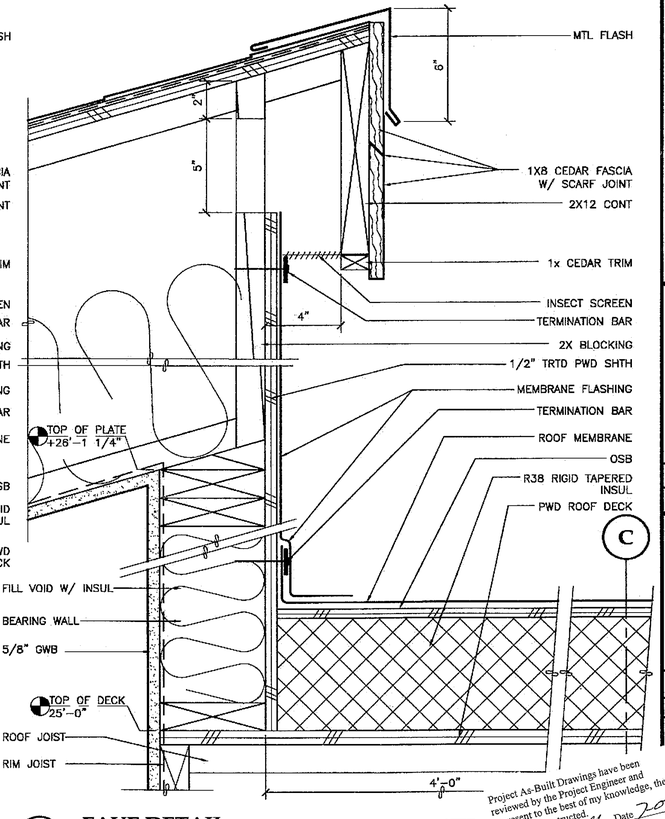

6 EAVE DETAIL

SCALE: 0 6" 1' 2'

Project As-Built Drawings have been reviewed by the Project Engineer and represent to the best of my knowledge, the project as constructed.
Proj. Eng. Date 2/07

PATH: G:_Projects\0411\Cad\CD\1330\Arch\A802.dwg

Tue, 14/Dec/04 02:33PM

TAB: Layout1

ADDENDUM NUMBER

ATTACHMENT NUMBER

RECORD OF REVISIONS

No.	DATE	DESCRIPTION

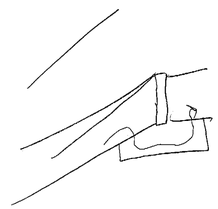

CHECKED BY:

STATE OF ALASKA 19TH JOANN F. LOTT NO. 7806 NOT FOR CONSTRUCTION UNTIL FINAL PROJECT REVIEW

DESIGNED BY: JENSEN YORBA LOTT

DRAWN BY: .

STATE OF ALASKA
DEPARTMENT OF TRANSPORTATION & PUBLIC FACILITIES
STATEWIDE DESIGN & ENGINEERING SERVICES DIVISION

MT EDGECUMBE HIGH SCHOOL
BUILDING 1330
ACADEMIC EXPANSION

SHEET A802

PROJECT DESIGNATION NUMBER

67751C

STATE	YEAR
ALASKA	2004
SHEET NUMBER	TOTAL SHEETS
28	79

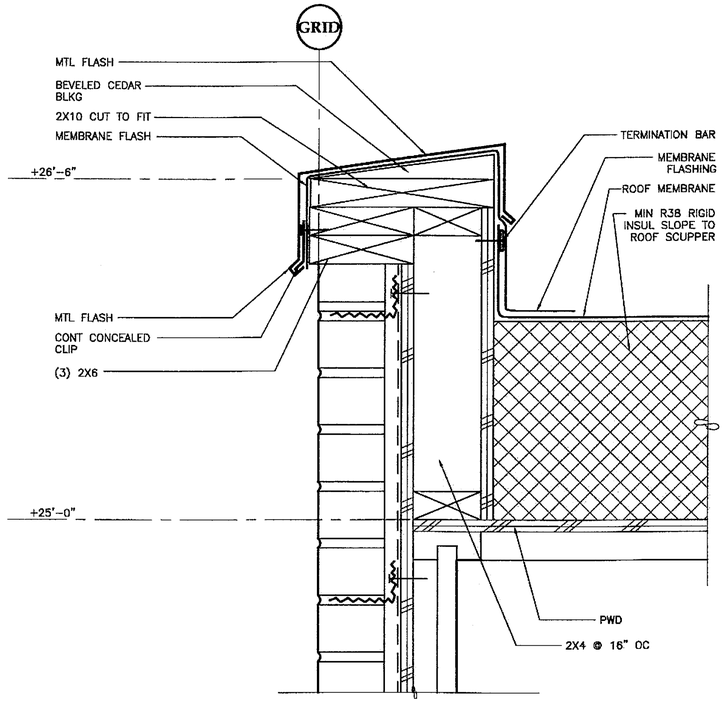

1 ROOF PARAPET DETAIL

SCALE: 0 3" 6" 12"

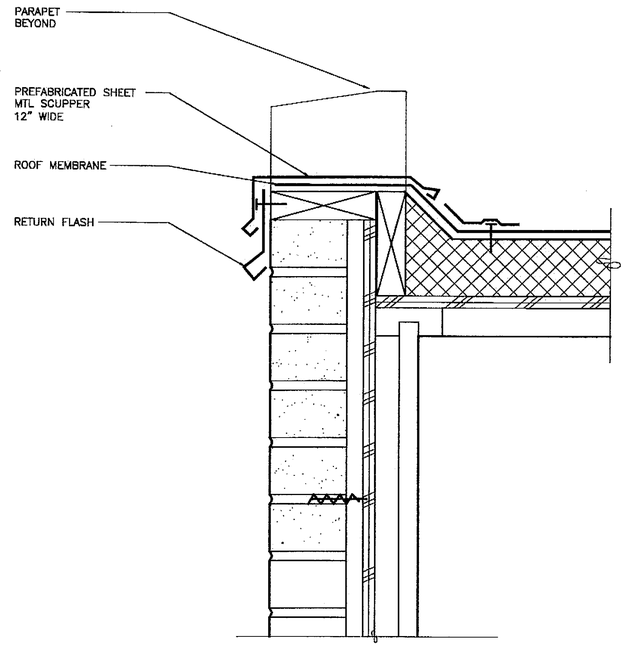

2 ROOF SCUPPER W/ PARAPET DETAIL

SCALE: 0 3" 6" 12"

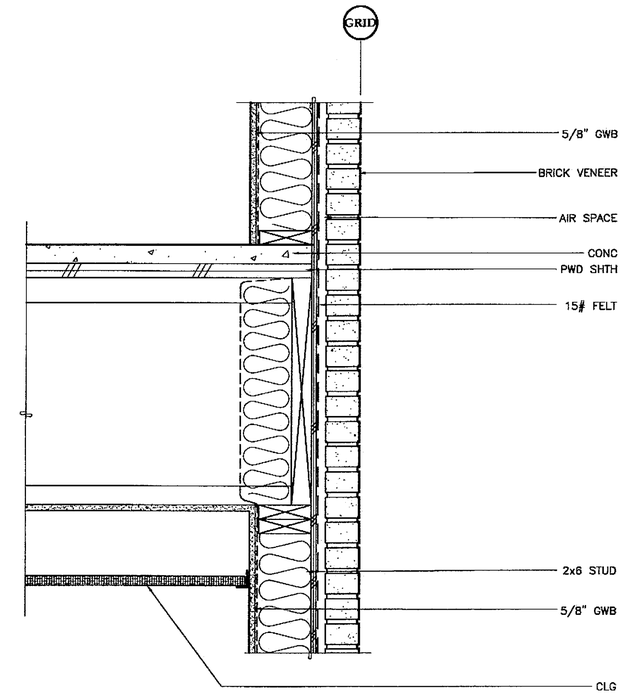

3 WALL SECTION DETAIL

SCALE: 0 6" 1' 2'

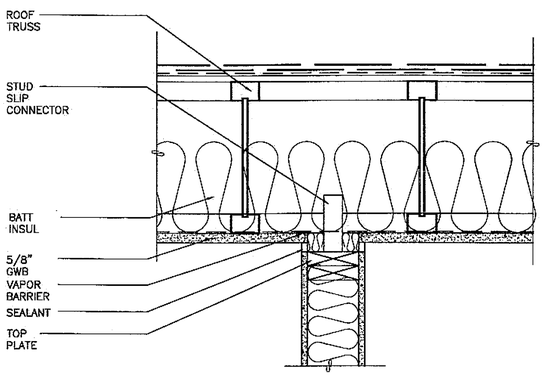

4 SLIP JOINT DETAIL

SCALE: 0 6" 1' 2'

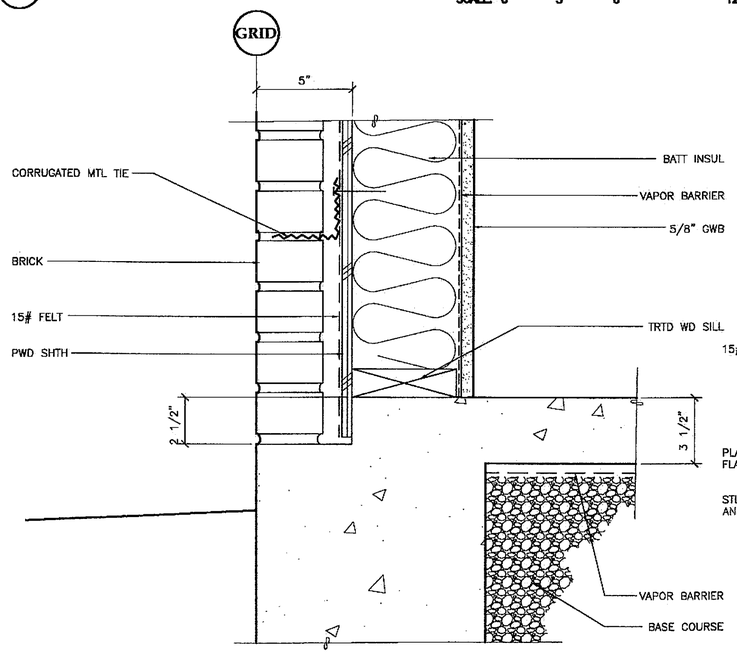

5 WALL SILL DETAIL

SCALE: 0 3" 6" 12"

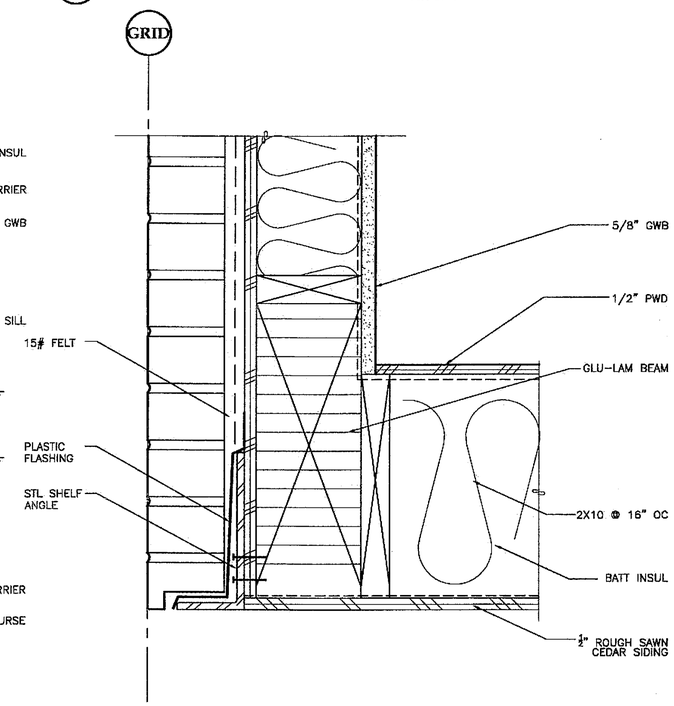

6 WALL SECTION DETAIL

SCALE: 0 3" 6" 12"

Project As-Built Drawings have been reviewed by the Project Engineer and represent to the best of my knowledge, the project as constructed.
Proj. Eng. Date 2-07

PATH: G:_Projects\0411\Cad\CD\1330\Arch\A803.dwg

Tue, 14/Dec/04 02:33PM

TAB: Layout1

ADDENDUM NUMBER

ATTACHMENT NUMBER

RECORD OF REVISIONS

No.	DATE	DESCRIPTION

CHECKED BY:

STATE OF ALASKA 48TH JOANN E. LOTT No. A 7806 REGISTERED PROFESS. ENG. ARCH. TEC.

DESIGNED BY: JENSEN YORBA LOTT

DRAWN BY: .

STATE OF ALASKA
DEPARTMENT OF TRANSPORTATION & PUBLIC FACILITIES
STATEWIDE DESIGN & ENGINEERING SERVICES DIVISION

MT EDGECUMBE HIGH SCHOOL BUILDING 1330 ACADEMIC EXPANSION

SHEET A803

PROJECT DESIGNATION NUMBER

67751C

STATE	YEAR
ALASKA	2004
SHEET NUMBER	TOTAL SHEETS
29	79

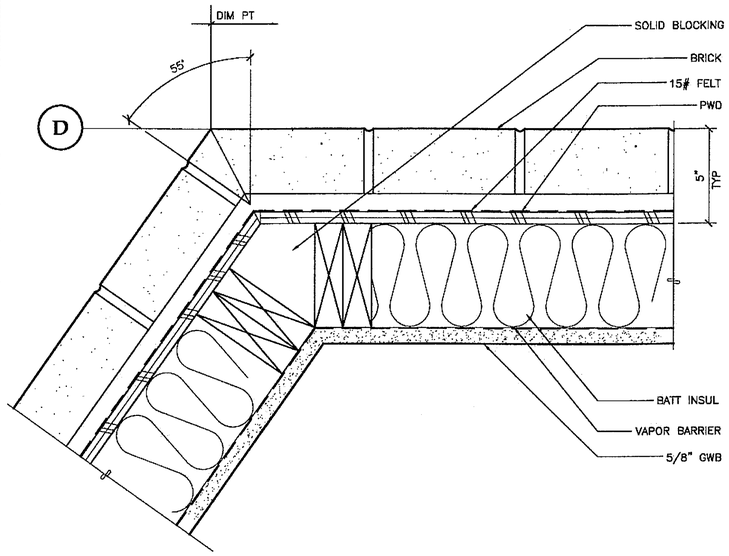

1 BRICK DETAIL
SCALE: 0 3" 6" 12"

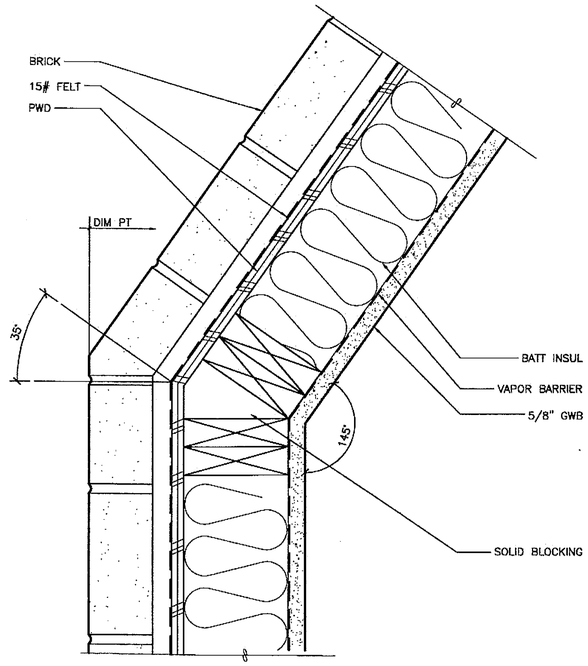

2 BRICK DETAIL
SCALE: 0 3" 6" 12"

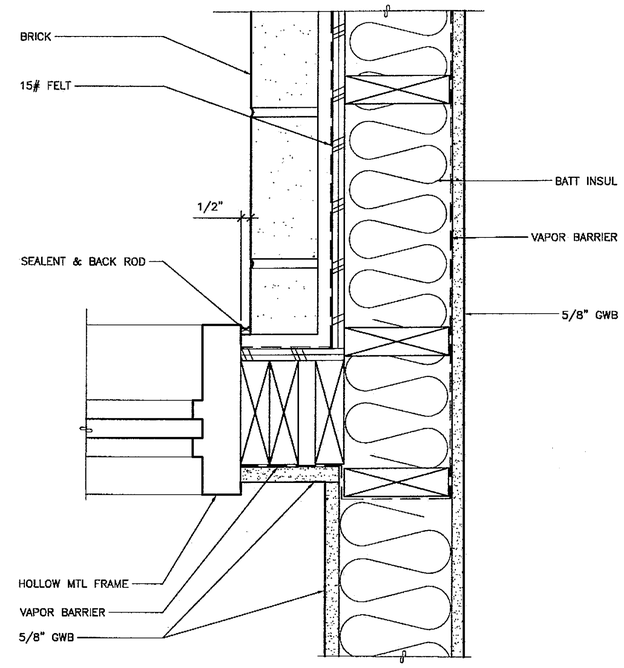

3 BRICK DETAIL
SCALE: 0 3" 6" 12"

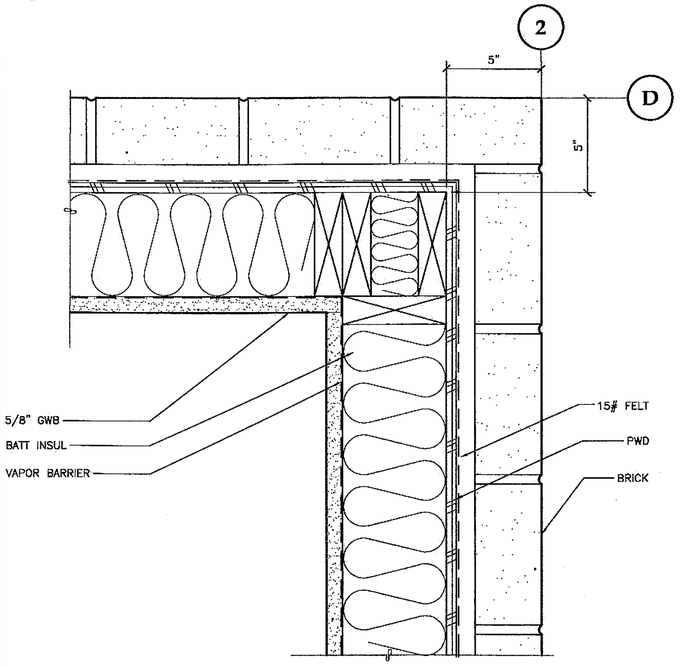

4 BRICK DETAIL
SCALE: 0 3" 6" 12"

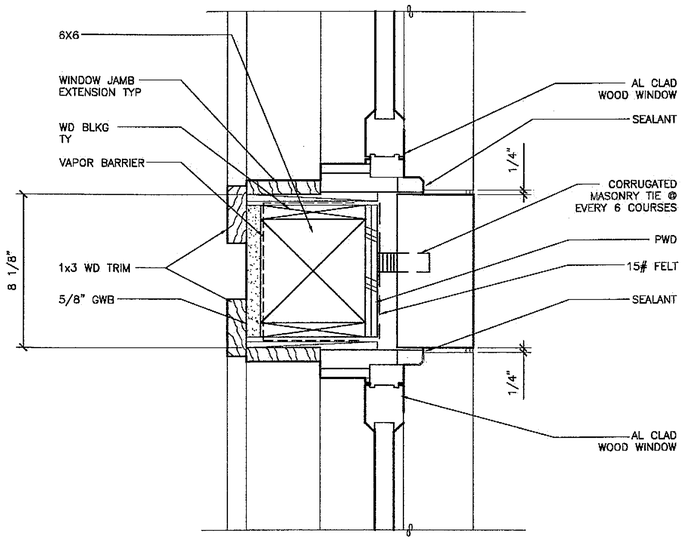

5 TYPICAL MULLION DETAIL
SCALE: 0 3" 6" 12"

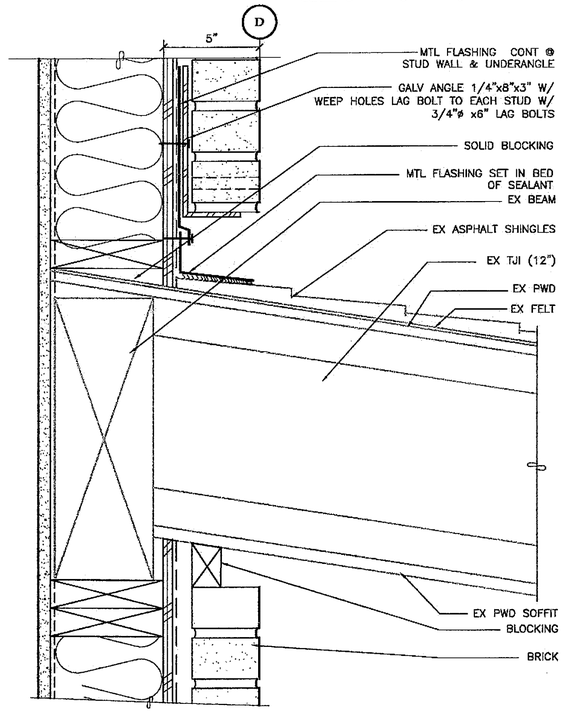

6 DETAIL @ EXISTING CANOPY
SCALE: 0 3" 6"

PATH: G:_Projects\0411\Cad\CD\1330\Arch\A804.dwg
Tue, 14/Dec/04 02:33PM
TAB: Layout1

ADDENDUM NUMBER

ATTACHMENT NUMBER

RECORD OF REVISIONS

No.	DATE	DESCRIPTION

CHECKED BY:

STATE OF ALASKA 49TH JOANN E. LOTT NO. 7805 NOT VALID UNLESS PRESS ONLY INK TYPE

DESIGNED BY: JENSEN YORBA LOTT
DRAWN BY: .

STATE OF ALASKA
DEPARTMENT OF TRANSPORTATION & PUBLIC FACILITIES
STATEWIDE DESIGN & ENGINEERING SERVICES DIVISION

MT EDGECUMBE HIGH SCHOOL
BUILDING 1330
ACADEMIC EXPANSION

SHEET A804
PROJECT DESIGNATION NUMBER
67751C

STATE	YEAR
ALASKA	2004
NUMBER	TOTAL SHEETS
	79

Project As-Built Drawings have been reviewed by the Project Engineer and represent to the best of my knowledge, the project as constructed.
Proj. Eng. Date 7-07

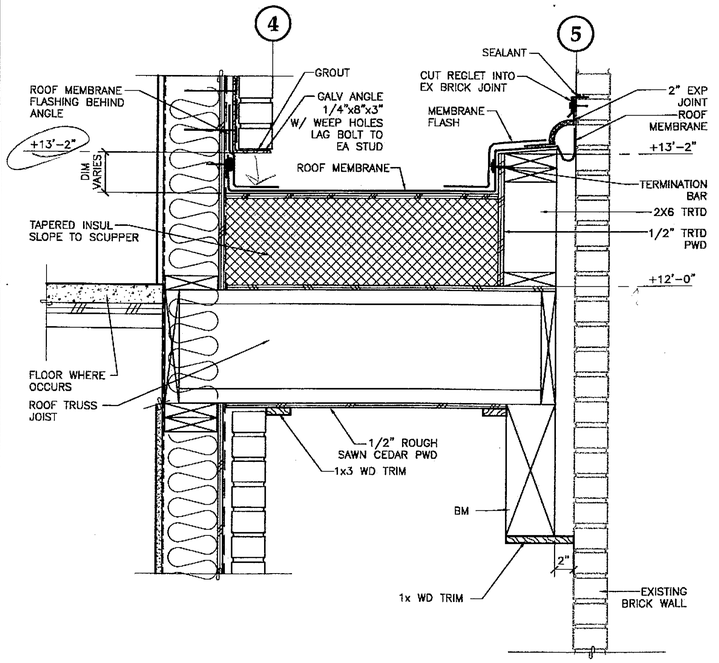

1 ROOF DETAIL ALT 2

SCALE: 0 3" 6" 12"

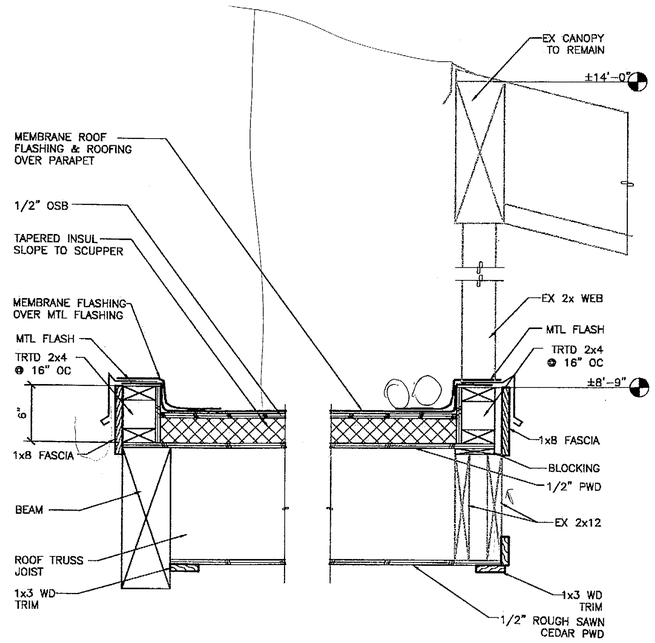

2 DETAIL @ ENTRY CANOPY

SCALE: 0 3" 6" 12"

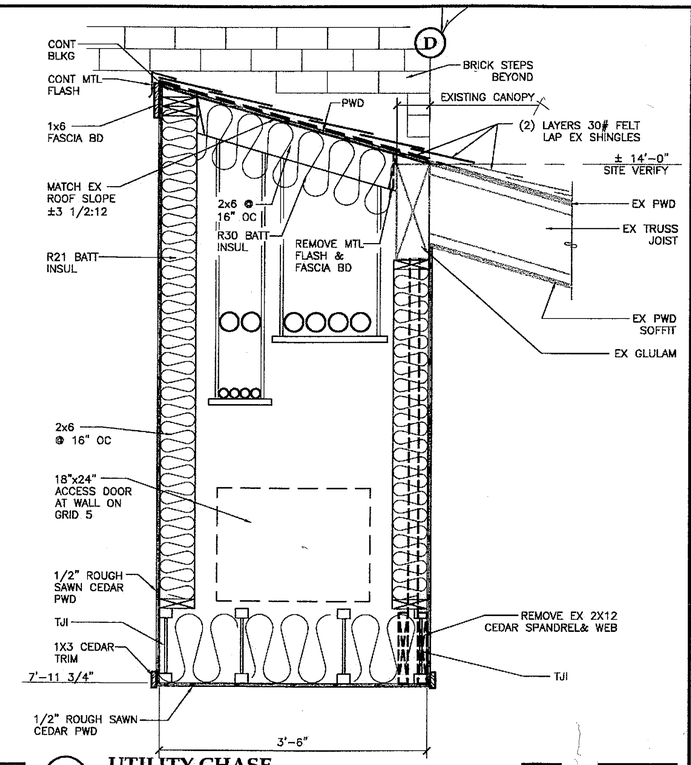

3 UTILITY CHASE

SCALE: 0 6" 1' 2'

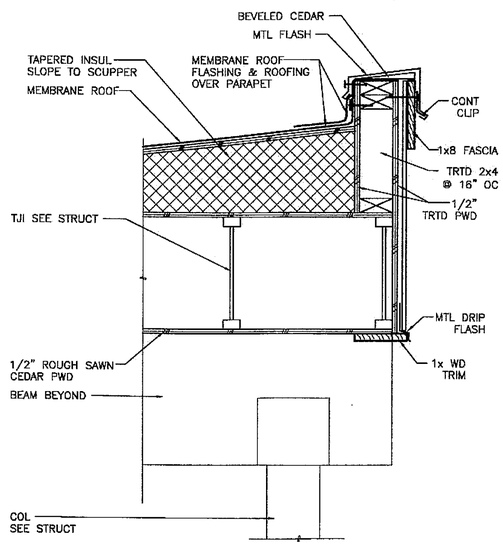

4 EAVE DETAIL ALTERNATE 2

SCALE: 0 3" 6" 12"

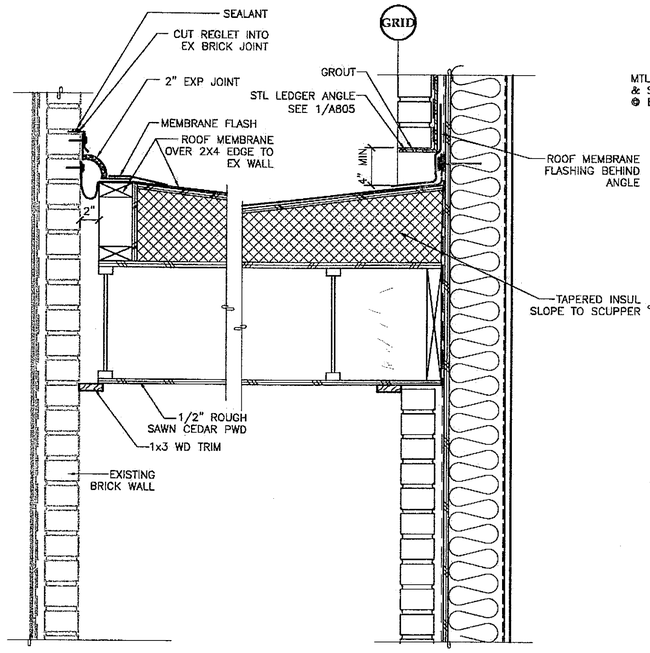

5 DETAIL @ ENTRY CANOPY

SCALE: 0 3" 6" 12"

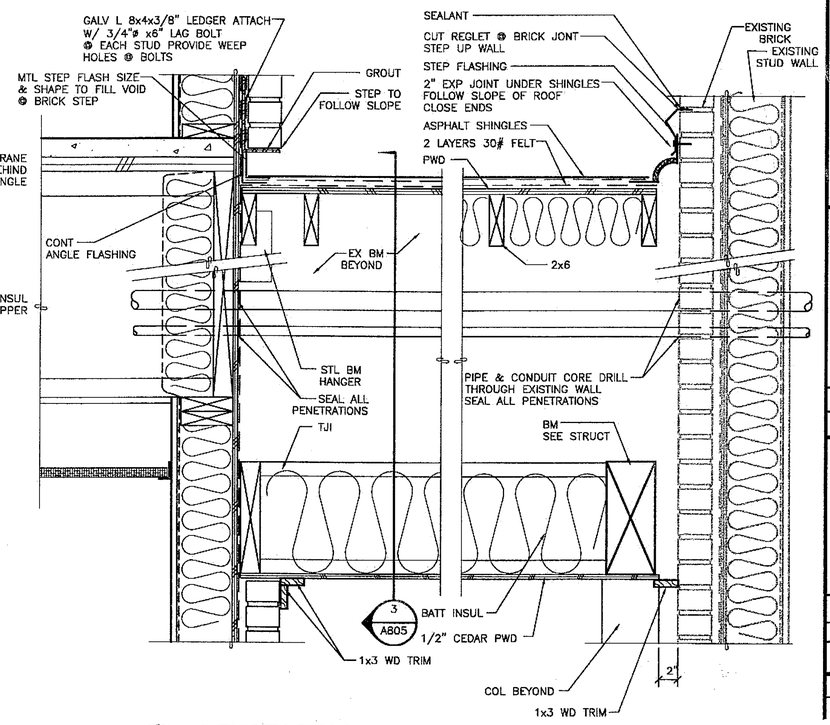

6 UTILITY CHASE @ EX BLDG

SCALE: 0 6" 1' 2'

PATH: G:_Projects\0411\Cad\CD\1330\Arch\A805.dwg

Tue, 14/Dec/04 02:33PM

TAB: Layout1

ADDENDUM NUMBER

ATTACHMENT NUMBER

RECORD OF REVISIONS

No.	DATE	DESCRIPTION

CHECKED BY:

STATE OF ALASKA 19TH JOANN E. LOTT NO. A-7808 REGISTERED PROFESSIONAL ARCHITECT

DESIGNED BY: JENSEN YORBA LOTT

DRAWN BY: .

STATE OF ALASKA
DEPARTMENT OF TRANSPORTATION & PUBLIC FACILITIES
STATEWIDE DESIGN & ENGINEERING SERVICES DIVISION

MT EDGECUMBE HIGH SCHOOL
BUILDING 1330
ACADEMIC EXPANSION

SHEET A805

PROJECT DESIGNATION NUMBER

67751C

STATE	YEAR
ALASKA	2004
SHEET NUMBER	TOTAL SHEETS
31	79

Project As-Built Drawings have been reviewed by the Project Engineer and represent to the best of my knowledge, the project as constructed.
Proj. Eng. _____ Date 7-07

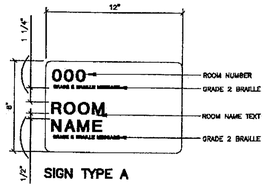

SIGN TYPE A

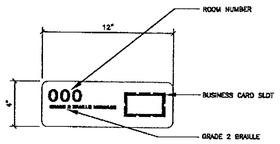

SIGN TYPE B

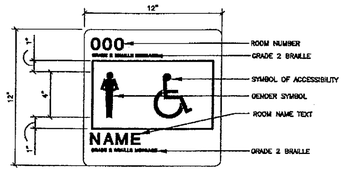

SIGN TYPE C

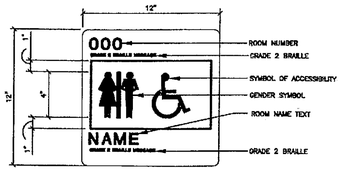

SIGN TYPE D

NOTES:
3/4" SPACING TO SIGN EDGE ALL AROUND
3/8" SPACING BETWEEN ROWS UON
GRADE 2 BRAILLE 1/4" HIGH
TEXT 1" HIGH UON
3/4" RADIUS ALL CORNERS
TYP MOUNTING -SEE 1/A500
TEXT AND SYMBOLS RAISED 3/32"

1 INTERIOR SIGNAGE

SCALE: 0 3" 6" 12"

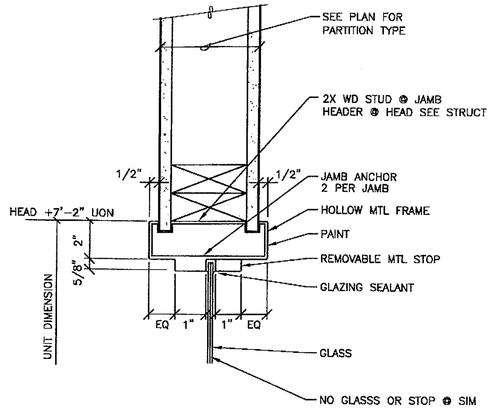

2 RELITE HEAD (JAMB SIM)

SCALE: 0 3" 6" 12"

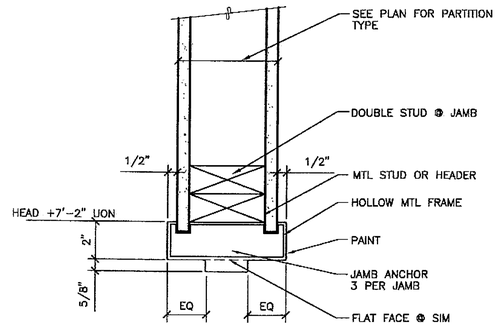

3 DOOR JAMB (HEAD SIM)

SCALE: 0 3" 6" 12"

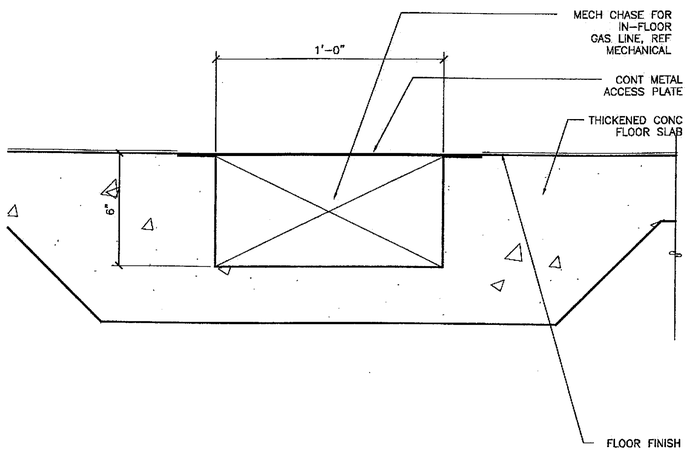

4 GAS TRENCH DETAIL

SCALE: 0 3" 6" 12"

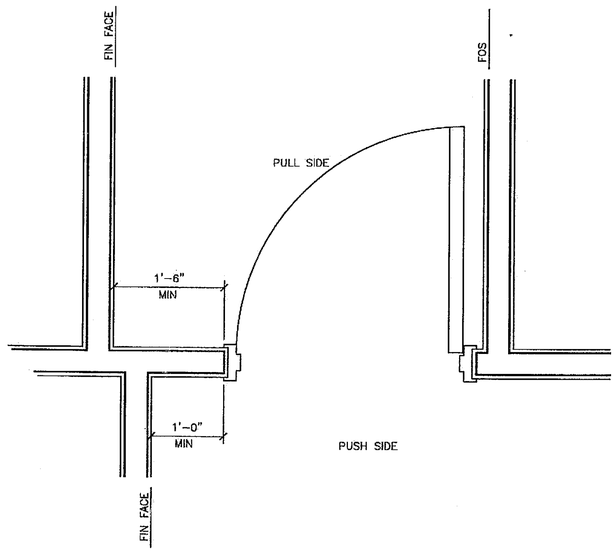

NOTIFY OWNER & ARCHITECT IF DOOR INSTALLATION
DOES NOT MEET OR EXCEED DIM SHOWN

5 TYPICAL DOOR CLEARANCE

SCALE: 0 3" 6" 12"

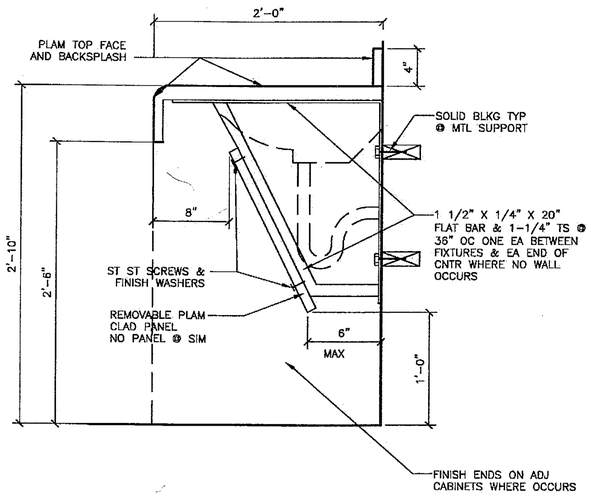

Project As-Built Drawings have been reviewed by the Project Engineer and represent to the best of my knowledge, the project as constructed.
Proj. Eng. _____ Date _____

6 SECTION @ SINK COUNTER W/ KNEE SPACE

SCALE: 0 3" 6" 12"

PATH:
G:_Projects\0411\Cad\CD\1330\Arch\A900.dwg

Tue, 14/Dec/04 02:34PM

TAB: Layout1

ADDENDUM NUMBER

ATTACHMENT NUMBER

RECORD OF REVISIONS

No.	DATE	DESCRIPTION

CHECKED BY:

STATE OF ALASKA 29TH JO ANN E. LOTT REG. NO. AK 7808 REGISTERED PROFESSIONAL ARCHITECT

DESIGNED BY: JENSEN YORBA LOTT

DRAWN BY: .

STATE OF ALASKA
DEPARTMENT OF TRANSPORTATION & PUBLIC FACILITIES
STATEWIDE DESIGN & ENGINEERING SERVICES DIVISION

MT EDGECUMBE HIGH SCHOOL
BUILDING 1330
ACADEMIC EXPANSION

SHEET A900

PROJECT DESIGNATION NUMBER

67751C

STATE	YEAR
ALASKA	2004
SHEET NUMBER	TOTAL SHEETS
32	79

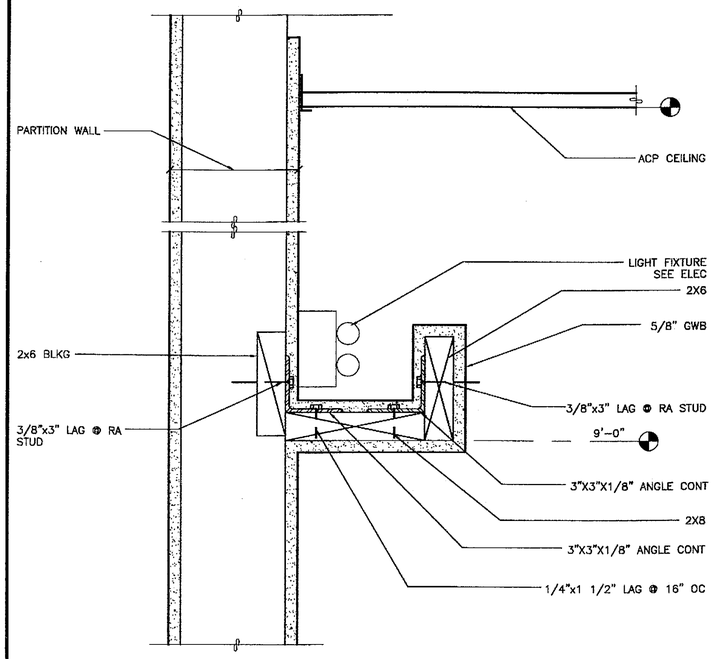

1 LIGHT VALANCE

SCALE: 0 3" 6" 12"

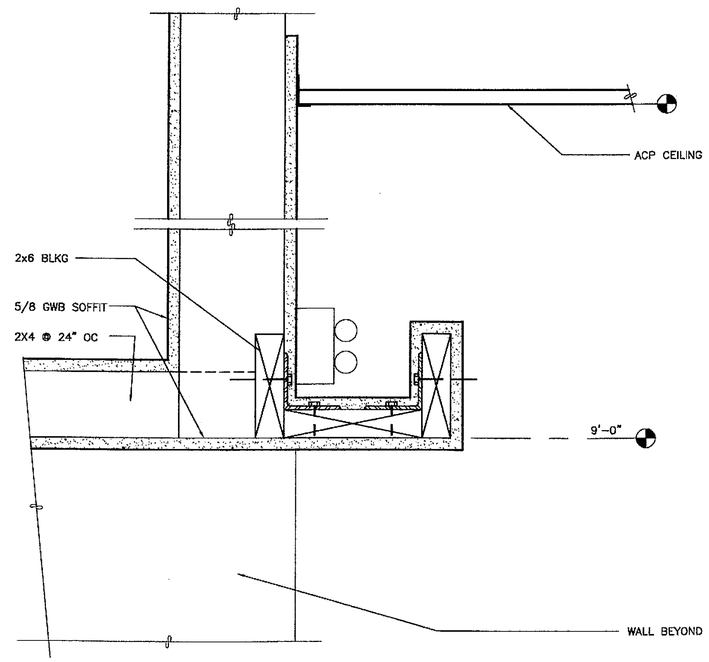

SEE 1/A901 FOR SIMILAR CALLOUTS

2 LIGHT VALANCE @ ALCOVE

SCALE: 0 3" 6" 12"

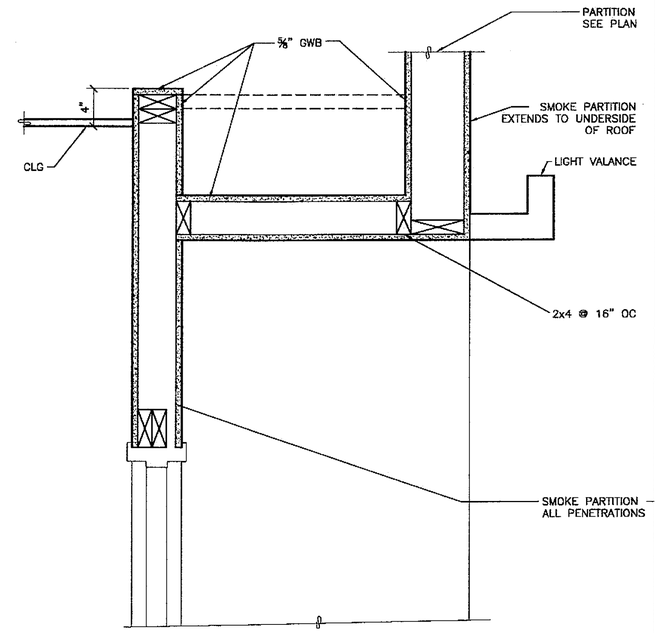

3 SMOKE PARTITION SOFFIT

SCALE: 0 6" 1' 2'

Project As-Built Drawings have been reviewed by the Project Engineer and represent to the best of my knowledge, the project as constructed.
Proj. Eng. _____ Date _____

PATH: G:_Projects\0411\Cad\CD\1330\Arch\A901.dwg

Tue, 14/Dec/04 02:34PM

TAB: Layout1

ADDENDUM NUMBER

ATTACHMENT NUMBER

RECORD OF REVISIONS

No.	DATE	DESCRIPTION

CHECKED BY:

STATE OF ALASKA 49TH JENN E. LOTT NO. A 7808 REGISTERED PROFESSIONAL ARCHITECT

DESIGNED BY: JENSEN YORBA LOTT

DRAWN BY: .

STATE OF ALASKA
DEPARTMENT OF TRANSPORTATION
& PUBLIC FACILITIES
STATEWIDE DESIGN & ENGINEERING
SERVICES DIVISION

MT EDGECUMBE
HIGH SCHOOL
BUILDING 1330
ACADEMIC
EXPANSION

SHEET A901

PROJECT DESIGNATION NUMBER

67751C

STATE	YEAR
ALASKA	2004
SHEET NUMBER	TOTAL SHEETS
33	79

LANDSCAPE NOTES:
ALL ROCKS TO BE SMOOTH GLACIAL ROCKS WITH A MIN DIMENSION OF 18" IN EACH DIRECTION.
IDEAL DIMENSION IS HEIGHT 18–24", WIDTH 24–36", LENGTH 24–36"

INSTALL AVERAGE 18" DEPTH OF PLANTING SOIL IN EXCAVATION. PLACE 12" DEPTH ALONG PLANTER PERIMETER AND 24" ALONG BUILDING FACE. GRADE TO CREATE SLOPE OF 15%. SEE DETAIL 5/L102.

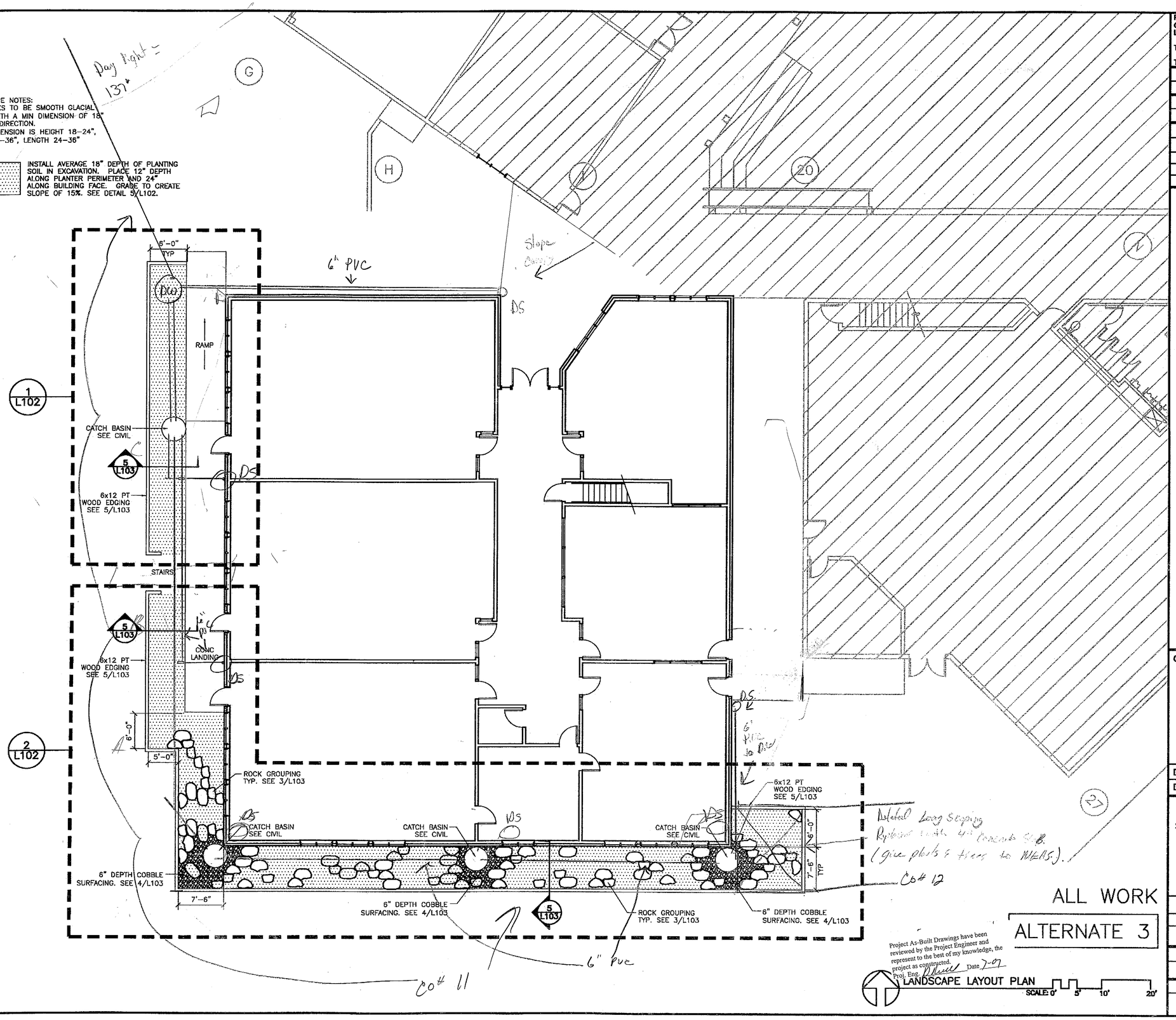

ALL WORK

ALTERNATE 3

Project As-Built Drawings have been reviewed by the Project Engineer and represent to the best of my knowledge, the project as constructed.
Proj. Eng. _____ Date 7-07

LANDSCAPE LAYOUT PLAN
SCALE: 0' 5' 10' 20'

PATH: G:__Projects\0411\Cad\CD\1330\Arch\L101.dwg
Tue, 14/Dec/04 02:34PM
TAB: Layout1

ADDENDUM NUMBER

ATTACHMENT NUMBER

RECORD OF REVISIONS

No.	DATE	DESCRIPTION

CHECKED BY:

STATE OF ALASKA 49TH CHRISTOPHER R. MERTL LA 10440 REGISTERED PROFESSIONAL LANDSCAPE ARCHITECT

DESIGNED BY: JENSEN YORBA LOTT
DRAWN BY: CRM

STATE OF ALASKA
DEPARTMENT OF TRANSPORTATION & PUBLIC FACILITIES
STATEWIDE DESIGN & ENGINEERING SERVICES DIVISION

MT EDGECUMBE HIGH SCHOOL
BUILDING 1330
ACADEMIC EXPANSION

SHEET L101

PROJECT DESIGNATION NUMBER
67751C

STATE	YEAR
ALASKA	2004
SHEET NUMBER	TOTAL SHEETS
34	79

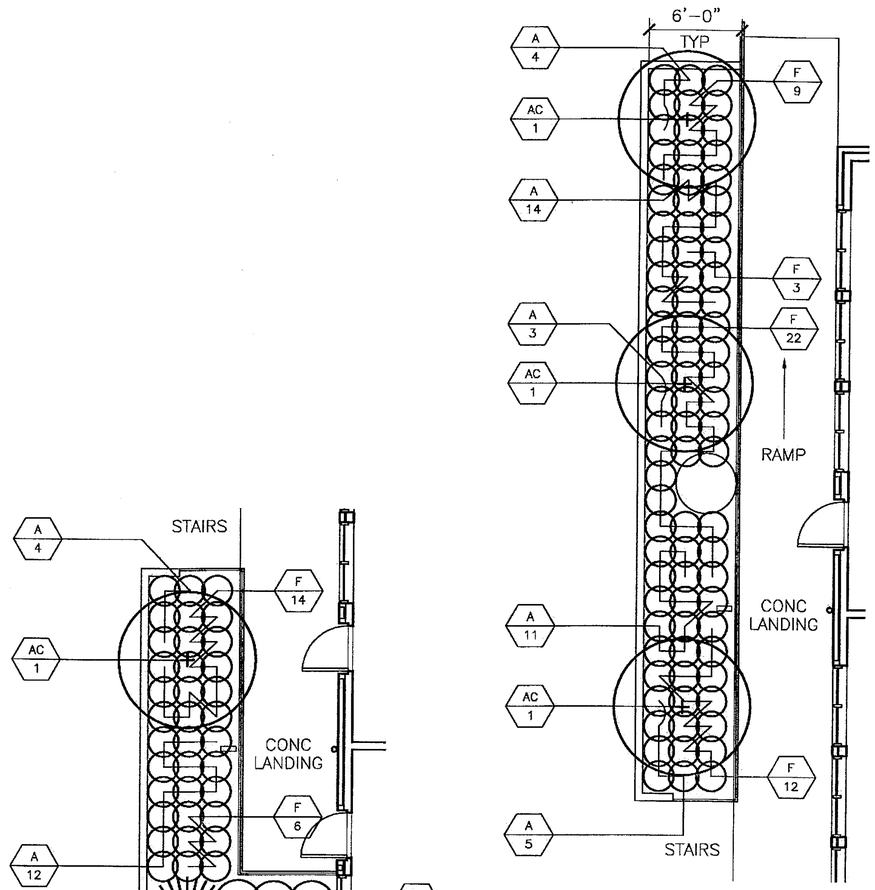

1 NORTHWEST SIDE PLANTING

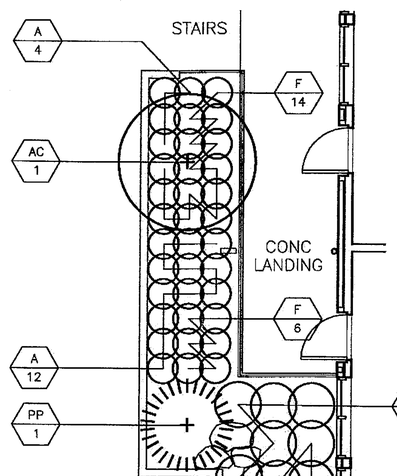

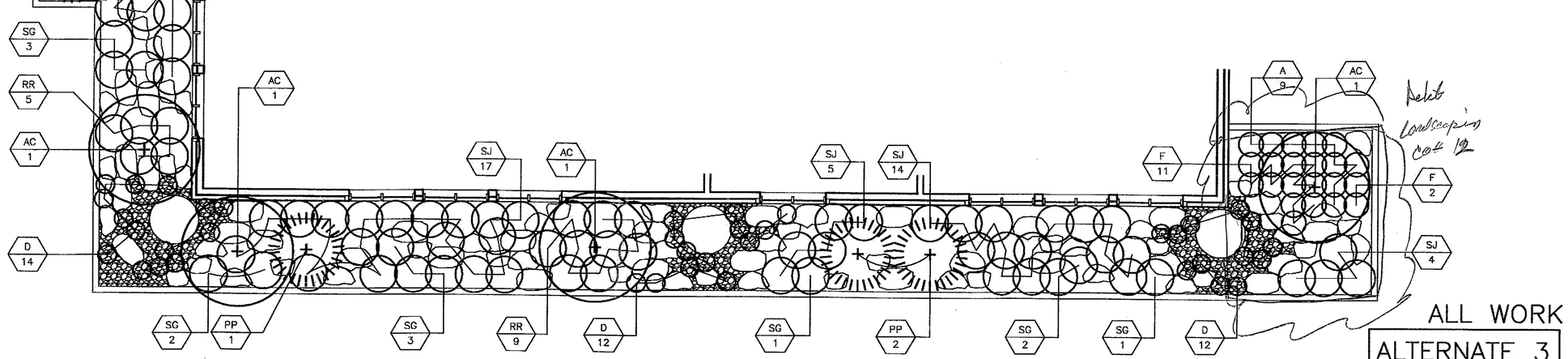

Delete landscaping cost 12

2 SOUTH SIDE PLANTING

PLANT MATERIAL SCHEDULE

SYM	QTY	BOTANICAL	COMMON	SIZE	ROOT	COMMENTS
TREES						
AC	8	Acer circinatum	Vine maple	8' high	B&B	Multi-stemmed specimen. Detail 1/L103
PP	4	Pinus parviflora	Japanese white pine	6' high	B&B	Specimen. Detail 6/L103
SHRUBS						
RR	14	Rhododendron 'Ramapo'	Ramapo rhododendron	2 gal	CG	2.5' OC Detail 2/L103
SG	12	Spiraea japonica 'Golden Elf'	Golden elf spirea	1 gal	CG	2.0' OC Detail 2/L103
SJ	50	Spiraea japonica 'Magic Carpet'	Magic carpet spirea	2 gal	CG	2.0' OC Detail 2/L103
PERENNIALS/GRASSES						
A	62	Astilbe arendsii 'Fanal'	Fanal astilbe	1 gal	CG	1.5' OC Detail 2/L103
D	38	Deschampsia caespitosa	Tufted hair grass	1 gal	CG	1.5' OC Detail 2/L103
F	79	Athyrium filix-femina	Lady fern	1 gal	CG	1.5' OC Detail 2/L103

ALL WORK

ALTERNATE 3

LANDSCAPE PLANTING PLANS

SCALE: 0' 5' 10'

Project As-Built Drawings have been reviewed by the Project Engineer and represent to the best of my knowledge, the project as constructed.
Proj. Eng. _____ Date 7-07

PATH: G:_Projects\0411\Cad\CD\1330\Arch\L102.dwg

Tue, 14/Dec/04 02:34PM

TAB: Layout1

ADDENDUM NUMBER

ATTACHMENT NUMBER

RECORD OF REVISIONS

No.	DATE	DESCRIPTION

CHECKED BY:

STATE OF ALASKA 49TH CHRISTOPHER R. MOTH LA 10440 REGISTERED PROFESSIONAL LANDSCAPE ARCHITECT

DESIGNED BY: JENSEN YORBA LOTT

DRAWN BY: CRM

STATE OF ALASKA
DEPARTMENT OF TRANSPORTATION & PUBLIC FACILITIES
STATEWIDE DESIGN & ENGINEERING SERVICES DIVISION

MT EDGECUMBE HIGH SCHOOL BUILDING 1330 ACADEMIC EXPANSION

SHEET L102

PROJECT DESIGNATION NUMBER

67751C

STATE	YEAR
ALASKA	2004
SHEET NUMBER	TOTAL SHEETS
35	79

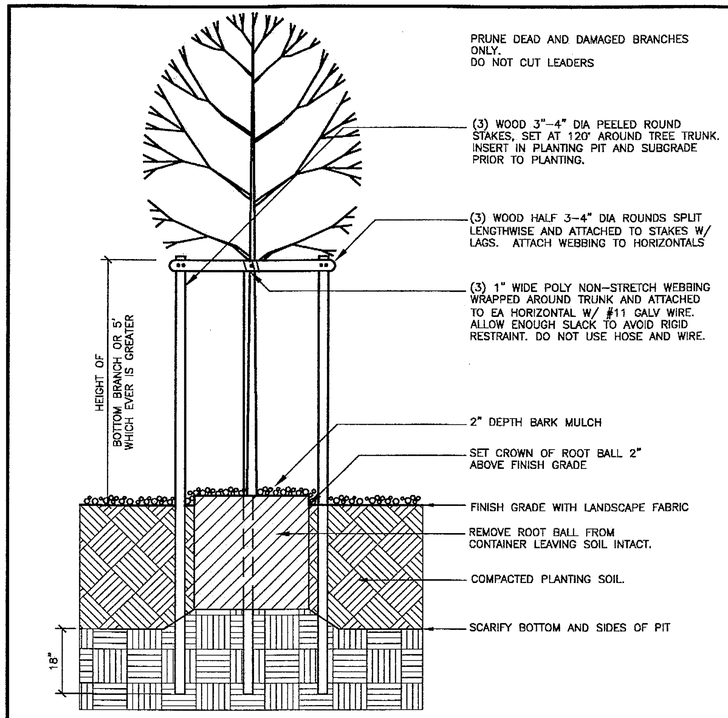

1 **TREE W/ THREE STAKES**

SCALE: 0 6" 1' 2' 4'

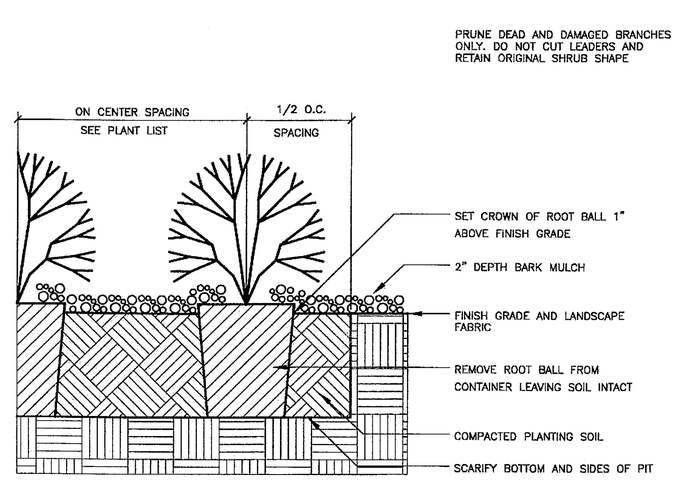

2 **SHRUB/PERENNIAL PLANTING**

SCALE: 0 6" 1' 2'

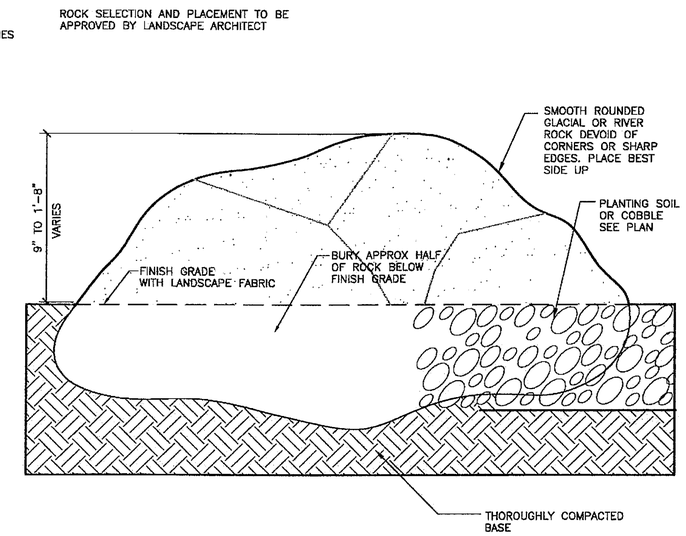

3 **ROCK DETAIL**

SCALE: 0 6" 1' 2'

ALL WORK

ALTERNATE 3

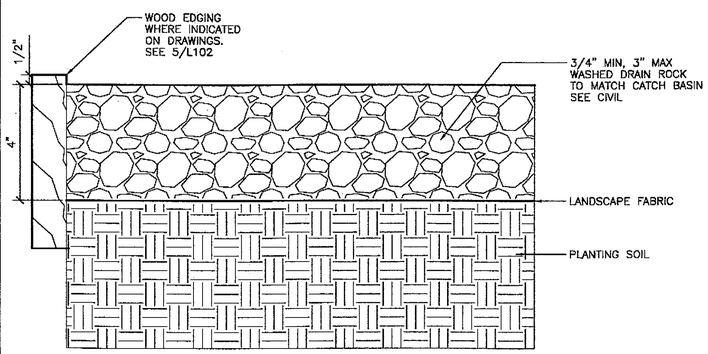

4 **COBBLE SURFACING**

SCALE: 0 3" 6" 12"

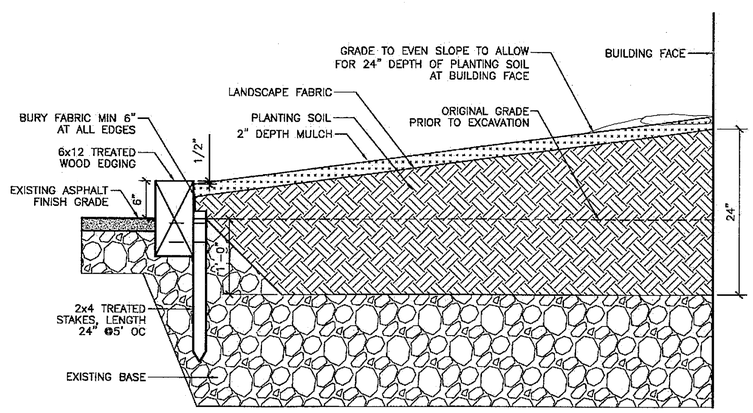

5 **EDGING SOIL DETAIL**

SCALE: 0 6" 1' 2'

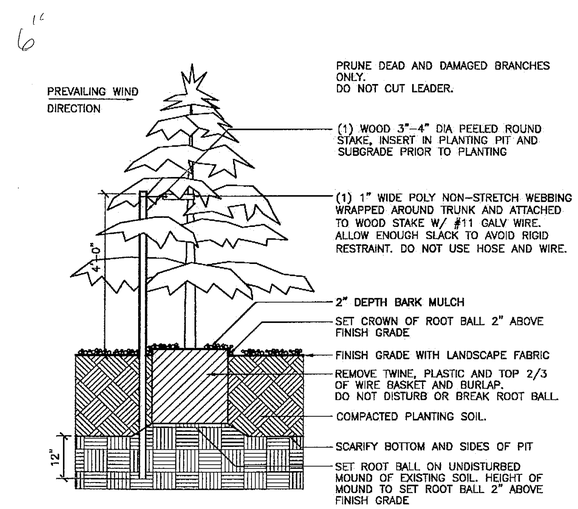

6 **CONIFER TREE DETAIL**

SCALE: 0 6" 1' 2'

PATH: G:_Projects\0411\Cad\CD\1330\Arch\L103.dwg

Tue, 14/Dec/04 02:34PM

TAB: Layout1

ADDENDUM NUMBER

ATTACHMENT NUMBER

RECORD OF REVISIONS

No.	DATE	DESCRIPTION

CHECKED BY:

STATE OF ALASKA 49TH CHRISTOPHER R. MERTL LA 10440 REGISTERED PROFESSIONAL LANDSCAPE ARCHITECT

DESIGNED BY: JENSEN YORBA LOTT

DRAWN BY: CRM

STATE OF ALASKA
DEPARTMENT OF TRANSPORTATION & PUBLIC FACILITIES
STATEWIDE DESIGN & ENGINEERING SERVICES DIVISION

MT EDGECUMBE HIGH SCHOOL BUILDING 1330 ACADEMIC EXPANSION

SHEET L103

PROJECT DESIGNATION NUMBER

67751C

STATE	YEAR
ALASKA	2004
SHEET NUMBER	TOTAL SHEETS
26	79

Project As-Built Drawings have been reviewed by the Project Engineer and represent to the best of my knowledge, the project as constructed.
Proj. Eng. [signature] Date 7-07

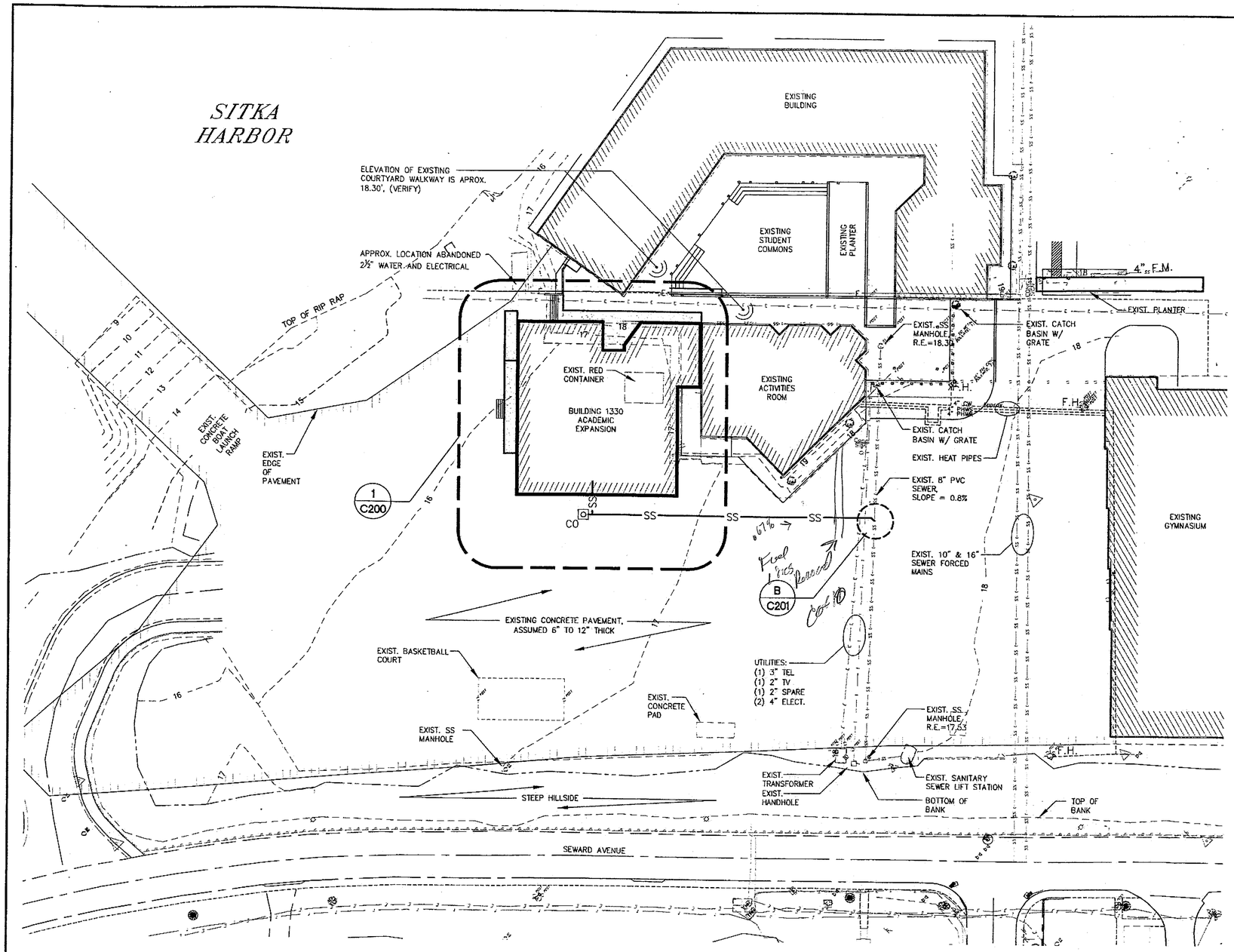

LEGEND

EXISTING	PROPOSED	
—E—		ELECRICAL
—SS—	—SS—	SANITARY SEWER
—F.M.—		SEWER FORCE MAIN
—SS—		SEWER MAIN GRAVITY
—T—		TELEPHONE/TV
—W—		WATER MAIN
—PHWS—		HOT WATER SUPPLY
—PHWR—		HOT WATER RETURN
C.B.	CO	CATCH BASIN w/ GRATE
		CLEANOUT
F.H.		FIRE HYDRANT
SS MH		SS MANHOLE
		LIGHT POLE
—16—		EDGE OF PAVEMENT
		GROUND ELEVEVATION, APPROX.
		SURVEY MONUMENT
		TREES
		STRUCTURES

1 SITE PLAN

SCALE: 0 15' 30' 60'

PLAN NORTH

NOTES:

1. UNDERGROUND UTILITIES SHOWN IN APPROXIMATE LOCATION, EXCEPT FOR 16" AND 10" SEWER FORCE MAINS. OTHER EXISTING UTILITIES ARE REFERENCED FROM AS-BUILT PLANS AND SHOULD BE VERIFIED BEFORE DIGGING OR ORDERING OR FABICATING ANY MATERIAL.
2. OTHER ABANDONED UTILITIES MAY BE ENCOUNTERED DURING EXCAVATION.
3. ENGINEER REFERENCED ON THIS DRAWING IS THE CONTRACTING OFFICER OR HIS DESIGNATED REPRESENTATIVE.
4. THESE PLANS ARE BASED UPON MAPPING BY ALASKA DOT/PF, SURVEYED 7/21/2004 BY T. REED, PLS & L. GEHRING, PE.
5. CONSULT WITH UTILITY OWNER BEFORE DISTURBING EXISTING UTILITY.
6. CONTRACTOR REPONSIBLE FOR REPAIR OF ANY DAMAGED UTILITY CAUSED BY CONSTRUCTION.
7. RESTORE PAVEMENT DISTRURBED DURING UTILITY WORK TO ORIGINAL CONDITION.

Tue, 14/Dec/04 12:00PM

ADDENDUM NUMBER

ATTACHMENT NUMBER

RECORD OF REVISIONS

No.	DATE	DESCRIPTION

CHECKED BY:

STATE OF ALASKA
Christopher Gehring
CE-7869
REGISTERED PROFESSIONAL ENGINEER

DESIGNED BY: CMG

DRAWN BY: PJD

STATE OF ALASKA
DEPARTMENT OF TRANSPORTATION & PUBLIC FACILITIES
STATEWIDE DESIGN & ENGINEERING SERVICES DIVISION

MT EDGECUMBE HIGH SCHOOL BUILDING 1330 ACADEMIC EXPANSION

SHEET C100

PROJECT DESIGNATION NUMBER

67751

STATE	YEAR
ALASKA	2004
SHEET NUMBER	TOTAL SHEETS
37	79

Project As-Built Drawings have been reviewed by the Project Engineer and represent to the best of my knowledge, the project as constructed.
Proj. Eng. _____ Date _____

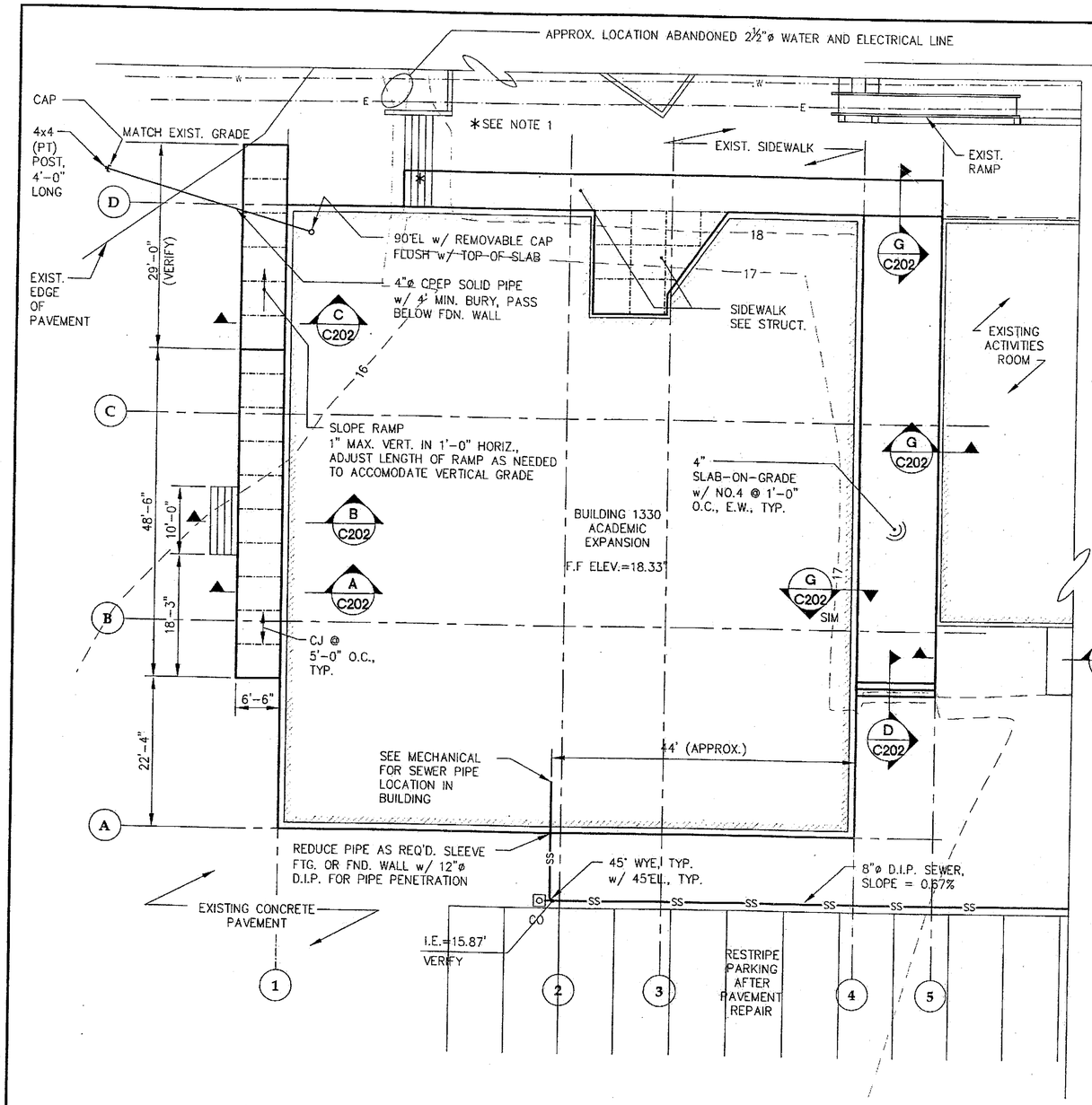

1 PARTIAL SITE PLAN
BASE BID

SCALE: 0 5' 10' 20'

PLAN NORTH

CAUTION:
EXACT LOCATION OF ABANDONED ELECTRICAL UNKNOWN. VERIFY.

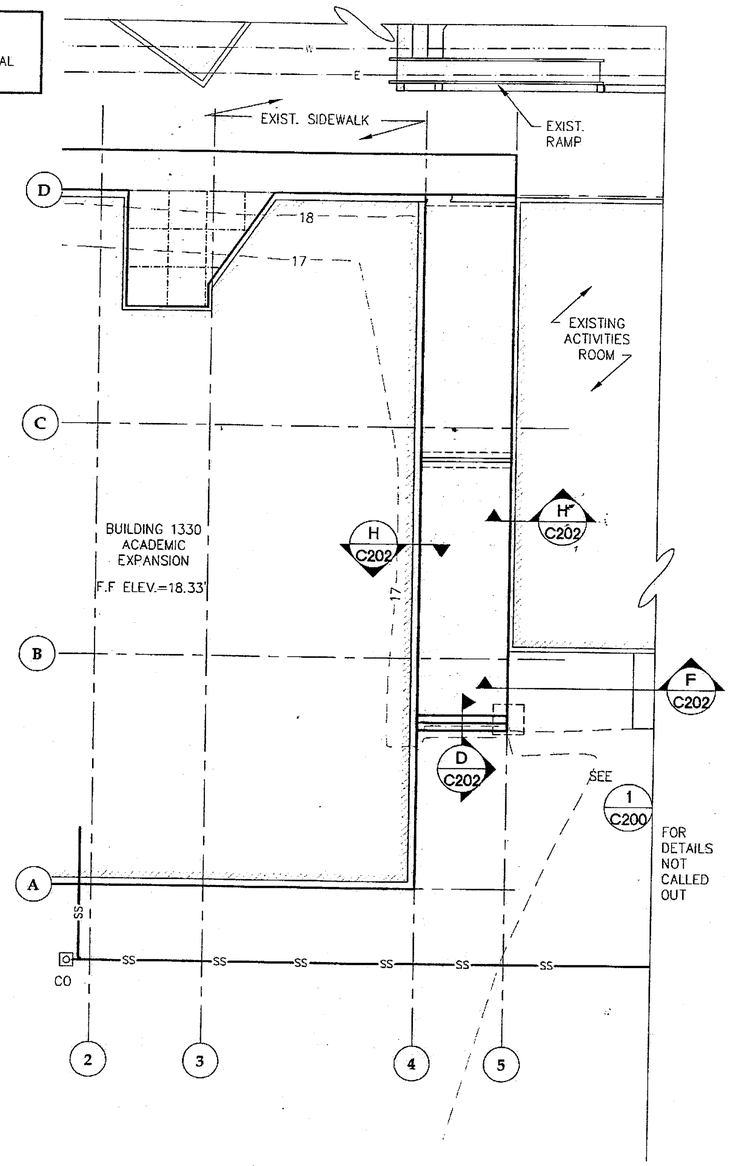

2 PARTIAL SITE PLAN
ADDITIVE ALTERNATE

SCALE: 0 5' 10' 20'

PLAN NORTH

NOTES:

1. SAW CUT EXISTING STAIRS TO CONSTRUCT NEW FOUNDATION. AFTER FOUNDATION WALL CONSTRUCTION, BACKFILL AND COMPACT TO RECONSTRUCT STAIRS. DOWEL INTO EXISTING WITH NO.4 BARS, (2) EACH EXISTING STAIR TREAD AND AT 12" O.C. AT NEW WALL. EMBED 6" IN HILTI HIT HY150, TYP.
2. SEWER ELEVATIONS ARE BASED ON SITE PLAN ARCTIC SLOPE ENGINEERS, OCTOBER 1987. ELEVATIONS DO NOT APPEAR TO MATCH SITE PLAN DATUM. VERIFY INVERT ELEVATION OF EXISTING MANHOLES PRIOR TO EXCAVATION. NOTIFY ARCHITECT OF EXISTING ELEVATIONS.

LEGEND

—SS—	NEW SEWER GRAVITY
17	EXIST. GROUND ELEVEVATION, APPROX.
—E—	ELECTRICAL (BURIED)
—W—	WATER PIPE
—·—·—	CONCRETE CONTROL JOINT
☐	NEW CONSTRUCTION

Tue, 14/Dec/04 12:00PM

ADDENDUM NUMBER
ATTACHMENT NUMBER

RECORD OF REVISIONS

No.	DATE	DESCRIPTION

CHECKED BY:

STATE OF ALASKA
Christopher Mann
CE-7559
REGISTERED PROFESSIONAL ENGINEER

DESIGNED BY: CMG
DRAWN BY: PJD

STATE OF ALASKA
DEPARTMENT OF TRANSPORTATION & PUBLIC FACILITIES
STATEWIDE DESIGN & ENGINEERING SERVICES DIVISION

MT EDGECUMBE HIGH SCHOOL BUILDING 1330 ACADEMIC EXPANSION

SHEET C200

PROJECT DESIGNATION NUMBER
67751

STATE	YEAR
ALASKA	2004
SHEET NUMBER	TOTAL SHEETS
38	79

Project As-Built Drawings have been reviewed by the Project Engineer and represent to the best of my knowledge, the project as constructed.
Proj. Eng. _____ Date _____

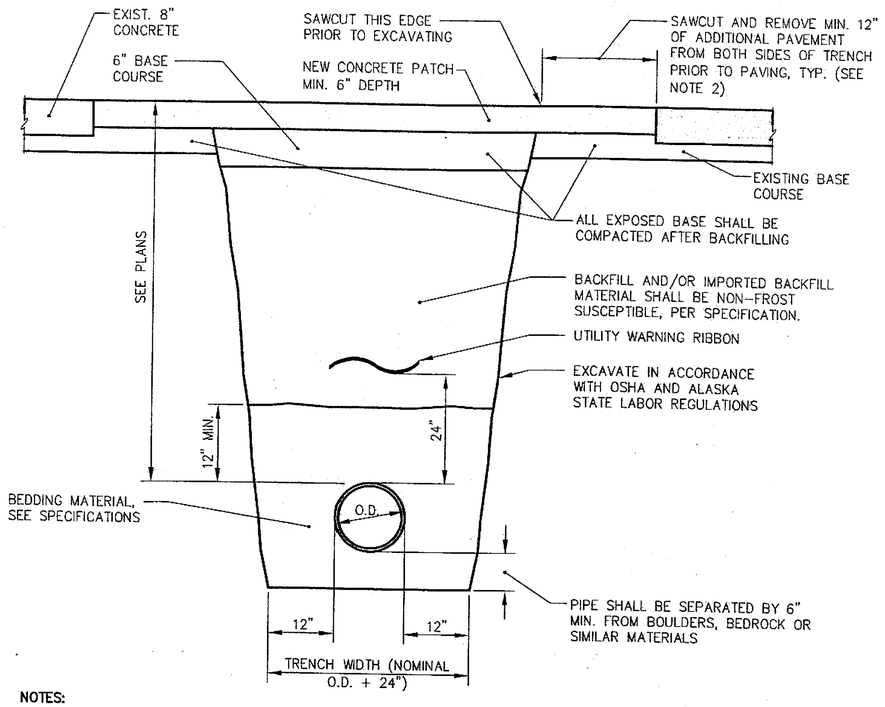

NOTES:

1. BEDDING & BACKFILL SHALL BE COMPACTED TO 95% OF MAXIMUM PROCTOR DENSITY THROUGHOUT THE DEPTH OF EACH LIFT.
2. PAVEMENT SHALL BE SAWCUT PRIOR TO EXCAVATING. AFTER BACKFILLING TRENCH, PAVEMENT SHALL BE SAWCUT A SECOND TIME TO EXPOSE A MINIMUM OF 12" OF UNDISTURBED BASE MATERIAL. ENTIRE WIDTH OF EXPOSED BASE SHALL BE COMPACTED TO 95% OF MAXIMUM PROCTOR DENSITY.
3. IF TRENCH IS NOT IMMEDIATELY BACKFILLED AND COMPACTED, REMOVAL OF MORE THAN 12" MIN. OF EXTRA CONCRETE AND FURTHER COMPACTION OF THE ROADBASE SHALL BE REQUIRED BY THE ENGINEER.
4. RESURFACE WITH 6" MIN. BASE COURSE AND 6" MIN. CONCRETE.

A TYPICAL PIPE TRENCH

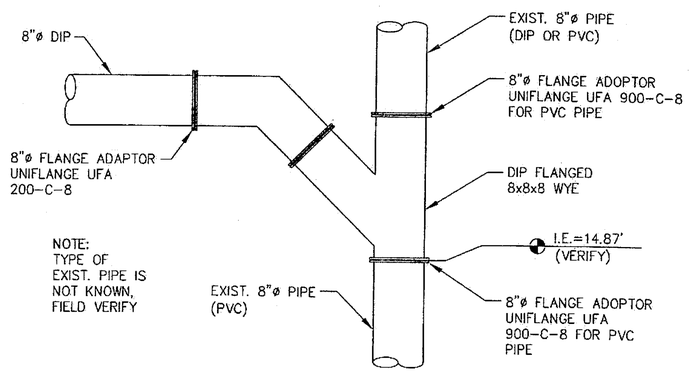

B CONNECTION TO EXISTING MAIN

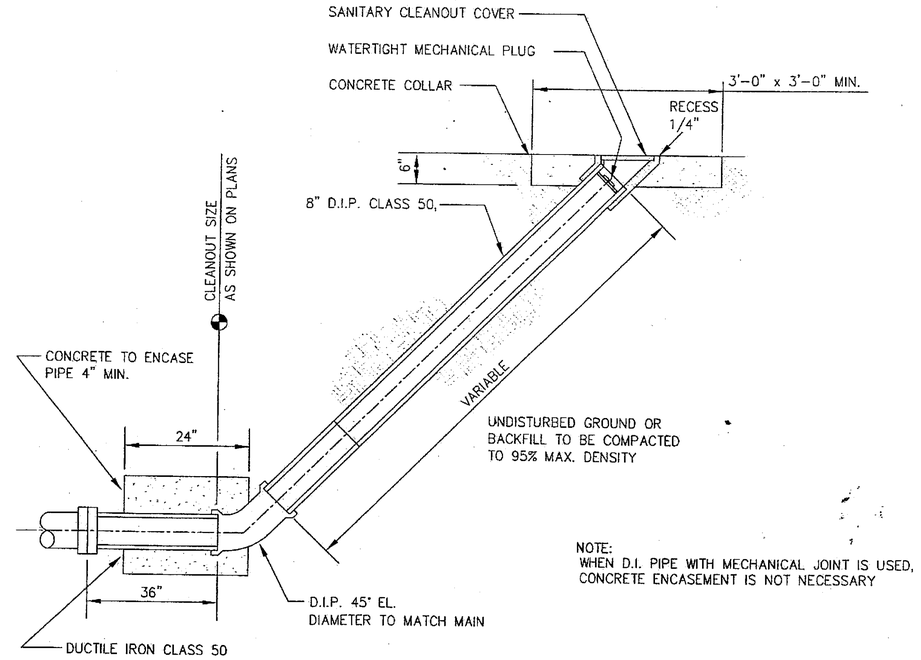

NOTE:
WHEN D.I. PIPE WITH MECHANICAL JOINT IS USED, CONCRETE ENCASEMENT IS NOT NECESSARY

C SANITARY CLEANOUT

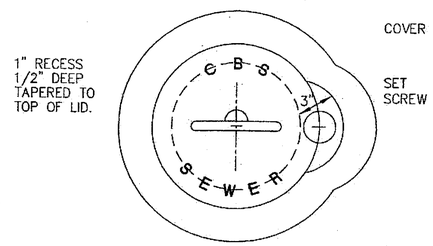

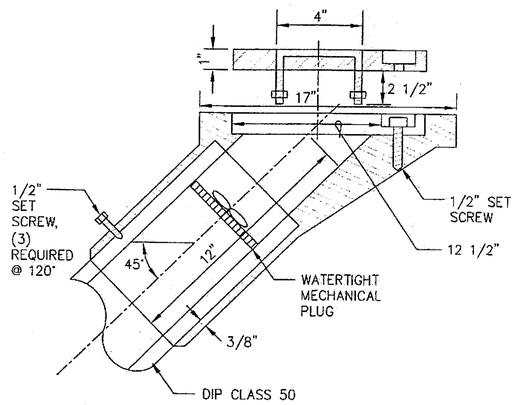

NOTES:

1. COVER SHALL BE CAST.
2. CASTING THICKNESS SUBJECT TO FOUNDRY REQUIREMENTS.
3. CASTING MUST BE SIZED TO 8" CLASS 50 D.I.P.
4. COVER SHALL BE 1/4" BELOW TOP OF PAVEMENT & 6" BELOW GRAVEL.

D SANITARY CLEANOUT COVER

Project As-Built Drawings have been reviewed by the Project Engineer and represent to the best of my knowledge, the project as constructed.
Proj. Eng. _____ Date 7-07

Tue, 14/Dec/04 12:00PM

ADDENDUM NUMBER

ATTACHMENT NUMBER

RECORD OF REVISIONS

No.	DATE	DESCRIPTION

CHECKED BY:

STATE OF ALASKA REGISTERED PROFESSIONAL ENGINEER Christopher M. Bell CE-7559

DESIGNED BY: CMG
DRAWN BY: PJD

STATE OF ALASKA
DEPARTMENT OF TRANSPORTATION & PUBLIC FACILITIES
STATEWIDE DESIGN & ENGINEERING SERVICES DIVISION

MT EDGECUMBE HIGH SCHOOL BUILDING 1330 ACADEMIC EXPANSION

SHEET C201

PROJECT DESIGNATION NUMBER
67751

STATE	YEAR
ALASKA	2004
SHEET NUMBER	TOTAL SHEETS
39	79

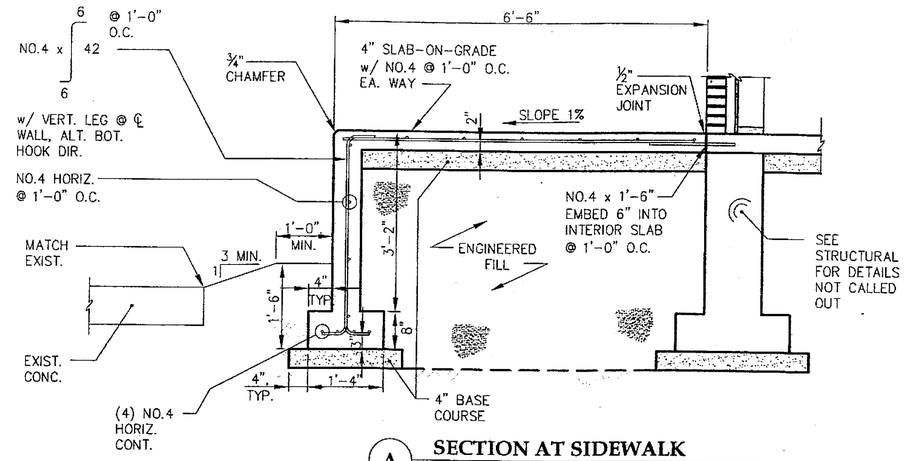

A SECTION AT SIDEWALK

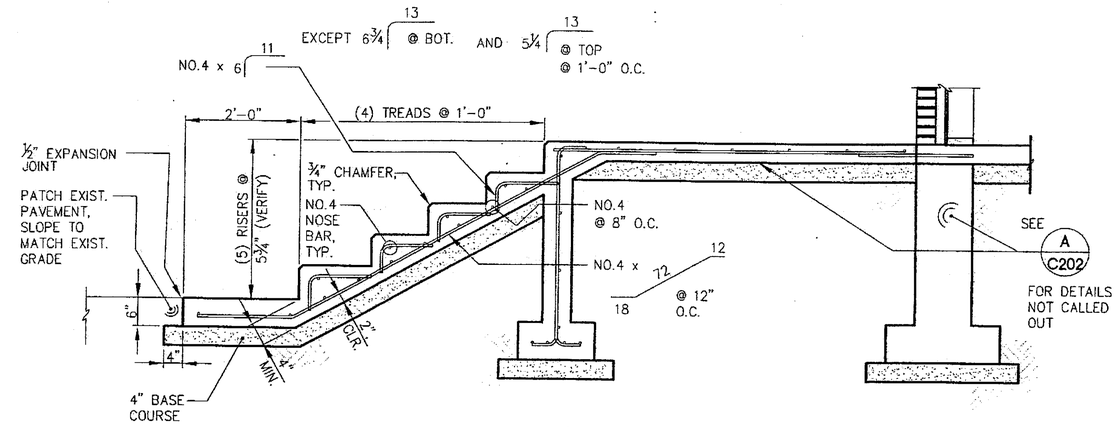

B TYPICAL SECTION AT STAIRS

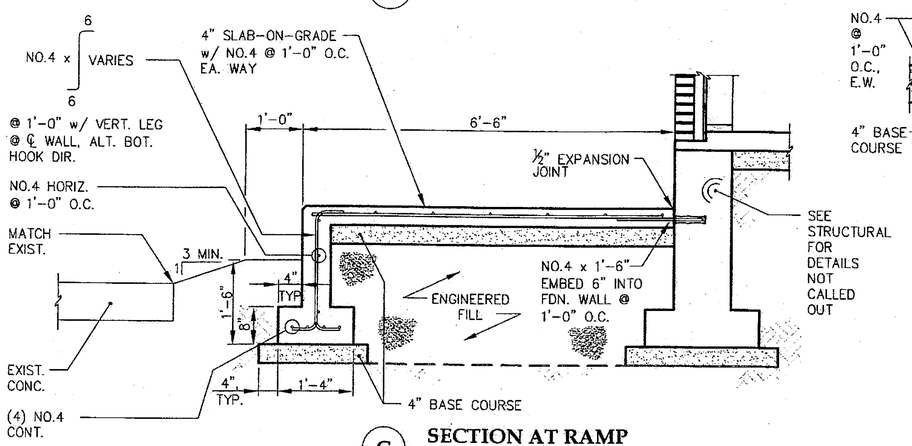

C SECTION AT RAMP

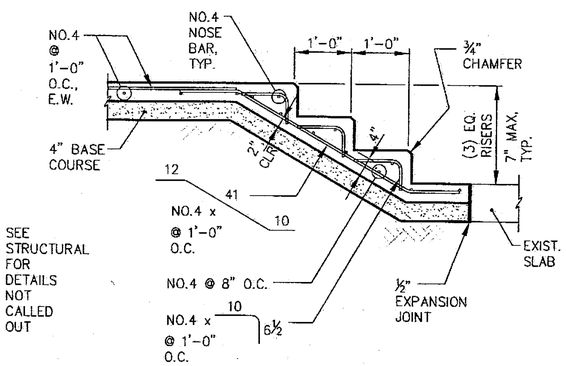

D SECTION AT STAIRS

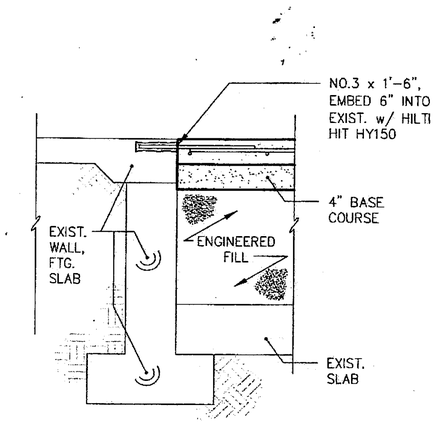

G SECTION AT EXISTING WALL

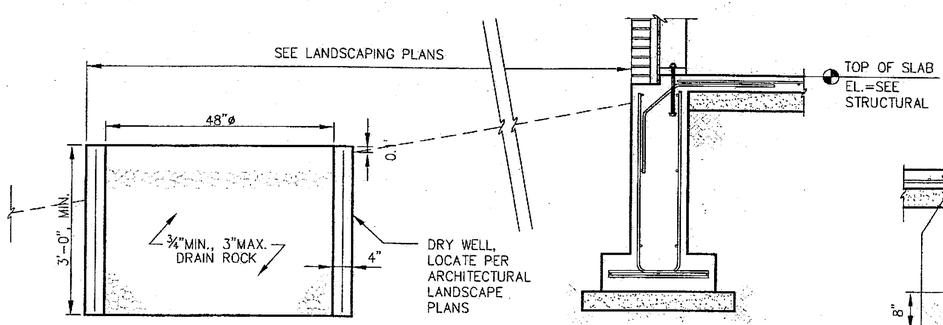

E DRY WELL DETAIL

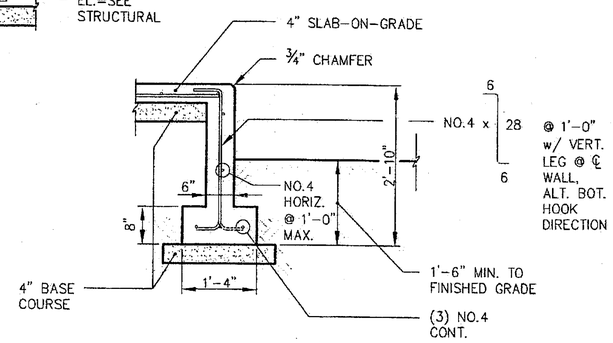

F SECTION

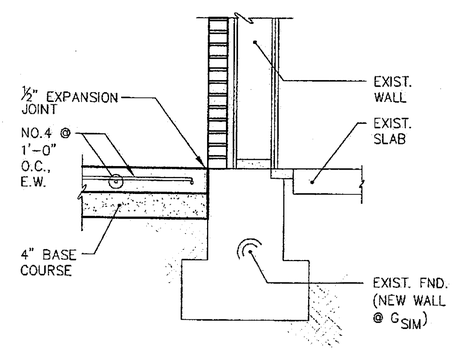

H SECTION AT EXISTING WALK/ BUILDING

Tue, 14/Dec/04 12:00PM

ADDENDUM NUMBER

ATTACHMENT NUMBER

RECORD OF REVISIONS

No.	DATE	DESCRIPTION

CHECKED BY:

STATE OF ALASKA — Christopher D. Smith — CE-7525 — REGISTERED PROFESSIONAL ENGINEER

DESIGNED BY: CMG

DRAWN BY: PJD

STATE OF ALASKA
DEPARTMENT OF TRANSPORTATION & PUBLIC FACILITIES
STATEWIDE DESIGN & ENGINEERING SERVICES DIVISION

MT EDGECUMBE HIGH SCHOOL BUILDING 1330 ACADEMIC EXPANSION

SHEET C202

PROJECT DESIGNATION NUMBER

67751

STATE	YEAR
ALASKA	2004
SHEET NUMBER	TOTAL SHEETS
40	79

Project As-Built Drawings have been reviewed by the Project Engineer and represent to the best of my knowledge, the project as constructed.
Proj. Eng. Date 7-07

STRUCTURAL GENERAL NOTES

CODE:

CONSTRUCTION SHALL BE IN CONFORMANCE WITH THE INTERNATIONAL BUILDING CODE (IBC), 2000 EDITION, AS AMENDED BY STATE OF ALASKA

LOAD CRITERIA:

FUTURE STORAGE	125 psf
SECOND FLOOR LIVE LOAD:	100 psf OR EQUIPMENT WEIGHT
ROOF SNOW LOAD:	40 psf MINIMUM BALANCED SNOW LOAD + DRIFT
GROUND SNOW LOAD:	50 psf, C_e=1.0, C_t=1.0, I_S=1.1
WIND:	V=120 mph (3-SECOND GUST), EXPOSURE D, I_w=1.15
SEISMIC:	S_s=0.97g, S_1=0.50g, S_{ds}=0.71g, S_{d1}=0.50g, I_e=1.25, R=6 SITE CLASS D, USE GROUP III, DESIGN CATEGORY D

FOUNDATION:

FOUNDATIONS SHALL BEAR ON COMPACTED BASE COURSE OVER COMPACTED NATIVE MATERIAL OR STRUCTURAL FILL. FOOTINGS HAVE BEEN DESIGNED TO AN ALLOWABLE SOIL PRESSURE OF 2500 psf IN ACCORDANCE WITH ORIGINAL BUILDING PLANS BY KCM DATED 1987.

CONCRETE:

CONCRETE SHALL BE A DENSE WORKABLE MIX WITHOUT EXCESS SURFACE WATER. CONCRETE AND CONCRETE COMPONENTS SHALL BE IN CONFORMANCE WITH THE IBC. USE OF CALCIUM CHLORIDE IS PROHIBITED. SUBMIT MIX DESIGN FOR REVIEW AND APPROVAL PRIOR TO MIXING. CONCRETE FORMWORK, MIXING, PLACING, CONSOLIDATION, AND CURING SHALL BE IN CONFORMANCE WITH THE IBC. MAXIMUM SLUMP AND CEMENT CONTENT SHALL BE AS FOLLOWS FOR VARIOUS CONCRETE STRENGTHS (fc') BASED ON THE STANDARD 28 DAY CYLINDER TESTS:

LOCATION	f'c	MIN. SACKS OF CEMENT PER C.Y. OF CONCRETE	MAX. W/C RATIO	MAX. SLUMP
EXTERIOR SLABS	4000	6.0	0.45	4"
ALL OTHER CONCRETE	3500	5.5	0.50	4"

CONCRETE REINFORCING SHALL CONFORM TO ASTM A615 GRADE 60. FABRICATE AND PLACE STEEL REINFORCEMENT IN ACCORDANCE WITH CRSI'S "MANUAL OF STANDARD PRACTICE". REINFORCING SHALL BE SUPPORTED ON WELL-CURED BLOCKS OR APPROVED METAL ACCESSORIES. WELDING OF REINFORCING IS PROHIBITED. PROVIDE MINIMUM CONCRETE COVER AS SHOWN ON THE PLANS.

STRUCTURAL STEEL:

STEEL SHALL CONFORM TO THE FOLLOWING:

HSS SECTIONS	= ASTM A500 GRADE B
PLATES	= ASTM A572, GRADE 50
BOLTS	= ASTM A307, HEADED BOLTS

ALL STRUCTURAL STEEL SHALL BE FABRICATED AND ERECTED IN ACCORDANCE WITH THE AISC CODE OF STANDARD PRACTICE, LATEST EDITION. SUBMIT FABRICATION SHOP DRAWINGS FOR REVIEW AND APPROVAL PRIOR TO COMMENCING FABRICATION. CLEAN AND PREPARE ALL FABRICATED STEEL IN ACCORDANCE WITH SSPC SP6, COMMERCIAL BLAST, AND SHOP PRIME WITH RED OXIDE PRIMER.

ALL WELDING SHALL BE PERFORMED IN ACCORDANCE WITH AWS D1.1, STRUCTURAL WELDING CODE, BY WELDERS QUALIFIED IN ACCORDANCE WITH AWS D1.1, IN THE POSITION AND PROCESS USED ON THIS PROJECT. SUBMIT WELDER QUALIFICATIONS AND WELDING PROCEDURES IN ACCORDANCE WITH AWS D1.1.

ALL BASE PLATE GROUT SHALL BE NON-SHRINK, NON-METALLIC GROUT WITH MINIMUM COMPRESSIVE STRENGTH OF 7,000psi AT 28 DAYS. PREPARE SURFACES FOR GROUTING, MIX AND APPLY GROUT IN ACCORDANCE WITH MANUFACTURER'S INSTRUCTIONS.

PLYWOOD:

ALL PLYWOOD SHALL BE STANDARD SHEATHING AS GRADED BY THE AMERICAN PLYWOOD ASSOCIATION CONFORM TO APA PS1 OR PS2 AND BEAR THAT QUALITY MARK. ALL PLYWOOD SHALL BE MADE WITH EXTERIOR TYPE GLUE. FLAT BLOCKING SHALL BE USED AT ALL PLYWOOD EDGES AS NOTED ON THE TYPICAL DETAILS OR SHOWN IN THE PLANS. ALL PLYWOOD IN CONTACT WITH OR WITHIN 6 INCHES OF SOIL OR DESIGNATED AS (P/T) SHALL BE PRESSURE TREATED IN ACCORDANCE WITH AWPA C-9, WITH ACZA TO A NET RETENTION OF 0.40 PCF.

LUMBER:

ALL WORKMANSHIP AND CONSTRUCTION SHALL CONFORM TO IBC, CHAPTER 23. ALL SAWN LUMBER SHALL BE VISUALLY GRADED IN ACCORDANCE WITH THE W.W.P.A. GRADING RULES. ALL DIMENSIONED LUMBER SMALLER THAN 6x SHOWN ON THE PLANS, SHALL BE SEASONED S4S NO. 2 GRADE HEM FIR OR BETTER. BEAMS, STRINGERS AND POSTS 6x6 AND LARGER SHALL BE SEASONED S4S NO.1 HEM FIR OR BETTER. ORIENTED STRAND LUMBER SHALL BE PARALLAM OR TIMBERSTRAND AS NOTED ON THE PLANS. PARALLAM MEMBERS SHALL BE MANUFACTURED BY TRUSS JOIST CORPORATION W/E=2.0x10^6 psi, Fb=2900 psi, $Fc_{\parallel}$ =2900 psi, $Fc_{\perp}$ =750 psi, AND Fv =265 psi. TIMBERSTRAND MEMBERS SHALL BE AS MANUFACTURED BY THE TRUSS JOIST CORPORATION AND HAVE FOLLOWING PROPERTIES: E=1.5x10^6 psi, Fb = 2250 psi, $Fc_{\perp}$ = 750 psi, $Fc_{\parallel}$ = 1950 psi, Fv=285 psi. ANY SUBSTITUTION SHALL EITHER HAVE THE SAME PROPERTIES OR BE SIZED TO PROVIDE THE SAME PERFORMANCE. SUBMITTAL FOR SUBSTITUTION SHALL BE ACCOMPANIED WITH ICBO EVALUATION REPORT.

TREATED LUMBER:

ALL TIMBER IN CONTACT WITH CONCRETE OR AS INDICATED AS (P/T) ON THE PLANS SHALL BE PRESSURE TREATED WITH ACZA TO A NET RETENTION OF 0.40 PCF IN ACCORDANCE WITH AWPA C2. FIELD TREAT CUTS, HOLES OR DAMAGE TO TREATMENT WITH CUPRINOL IN ACCORDANCE WITH AWPA M4.

WOOD CONNECTIONS AND FRAMING:

ALL FRAMING NAILING SHALL CONFORM TO TABLE 2304.9.1 OF THE IBC UNLESS OTHERWISE SHOWN. STANDARD WASHERS SHALL BE UNDER ALL BOLT HEADS AND NUTS CONTACTING WOOD. PROVIDE STEEL STRAPS AT PIPES IN STUD WALLS AS REQUIRED BY IBC. BOLTS SHALL BE STANDARD ASTM A307, GALVANIZED. ALL NAILS SHALL BE GALVANIZED COMMON WIRE NAILS. ALL METAL HANGERS AND CONNECTORS SHOWN ON DRAWINGS ARE MANUFACTURED BY THE SIMPSON COMPANY. METAL HANGERS OR CONNECTORS BY OTHER MANUFACTURER'S MAY BE CONSIDERED WHERE LOAD CAPACITY AND DIMENSIONS ARE EQUAL OR BETTER. ALL SUBSTITUTIONS SHALL BE SUBMITTED TO THE ENGINEER FOR REVIEW AND APPROVAL. SUBMITTALS MUST INCLUDE AN ICBO EVALUATION REPORT. INSTALL CONNECTORS WITH FULL NAILING AND BOLTING UNLESS OTHERWISE NOTED.

MANUFACTURED WOOD ROOF AND FLOOR TRUSSES AND JOISTS:

ALL WOOD TRUSSES AND MANUFACTURED JOISTS SHALL BE FACTORY MANUFACTURED WITH MACHINE STRESS RATED MATERIALS DESIGNED TO SUPPORT THE LOADING SHOWN ON THE DRAWINGS. BASIS FOR DESIGN OF I JOISTS SHOWN ON THE DRAWINGS ARE IN ACCORDANCE WITH PUBLISHED LOAD CHARTS AND MEMBER DESIGNATION OF THE "TRUSS JOIST CORP". TRUSSES BY OTHER MANUFACTURER'S MAY BE SUBSTITUTED UPON APPROVAL BY THE ENGINEER. WHERE DIMENSIONS AND DETAILS CHANGE DUE TO SUCH A SUBSTITUTION, CONTRACTOR SHALL BE RESPONSIBLE FOR ANY REQUIRED MODIFICATION TO THE CONTRACT DRAWINGS. SUBMIT DETAILED SHOP DRAWINGS AND DESIGN CALCULATIONS OF ALL TRUSSES AND MANUFACTURED JOISTS TO THE ENGINEER FOR REVIEW AND APPROVAL PRIOR TO FABRICATION.

SHOP DRAWINGS:

THE CONTRACTOR SHALL REVIEW, STAMP WITH HIS APPROVAL, DATE AND SIGN ALL SHOP DRAWINGS REQUIRED BY THE CONTRACT DOCUMENTS PRIOR TO SUBMITTAL TO THE ENGINEER. AT THE TIME OF SUBMISSION, THE CONTRACTOR SHALL INFORM THE ENGINEER IN WRITING OF ANY DEVIATION IN THE SHOP DRAWINGS FROM THE REQUIREMENTS OF THE CONTRACT DRAWINGS.

MISCELLANEOUS:

REFER TO ARCHITECTURAL PLANS FOR WALL OPENINGS, ARCHITECTURAL TREATMENT AND DIMENSIONS NOT SHOWN, CONSULT MECHANICAL PLANS FOR SIZE AND LOCATION OF ALL OPENINGS FOR DUCTS, PIPING, ETC. NOT SHOWN. COORDINATE WITH ARCHITECTURAL FOR DETAILED INFORMATION. PROVIDE AND INSTALL BLOCKING BETWEEN STUDS AT MECHANICAL EQUIPMENT AND SEISMIC RESTRAINT PER MECHANICAL. PROVIDE BLOCKING FOR ARCHITECTURAL ELEMENTS.

ABBREVIATIONS

AITC	AMERICAN INSTITUTE FOR TIMBER CONSTRUCTION
AISC	AMERICAN INSTITUTE OF STEEL CONSTRUCTION
ARCH	ARCHITECT
ASTM	AMERICAN SOCIETY FOR TESTING AND MATERIALS
AWPA	AMERICAN WOOD PRESERVER'S ASSOCIATION
BLDG	BUILDING
BLKG	BLOCKING
BM	BEAM
BN	BOUNDARY NAILING
BTWN	BETWEEN
℄	CENTERLINE
CJ	CONTROL JOINT
CLR	CLEAR
CONC	CONCRETE
CP	COMPLETE PENETRATION
CRSI	CONCRETE REINFORCING STEEL INSTITUTE
CY	CUBIC YARD
DBL	DOUBLE
DFT	DRY FILM THICKNESS
EA	EACH
EMBED	EMBEDMENT
EN	EDGE NAILING
ELEV.	ELEVATION
EQ	EQUIVALENT
EW	EACH WAY
GALV	GALVANIZED
GLB	GLU LAM BEAM
MAX.	MAXIMUM
MI.	MALLEABLE IRON
MIN.	MINIMUM
NO.	NUMBER
O.C.	ON CENTER
OSB	ORIENTED STRAND BOARD
ℙ	PLATE
P/T	PRESSURE TREATED
PHD	SIMPSON HOLD DOWN
PSI	POUNDS PER SQUARE INCH
PVC	POLYVINYL CHLORIDE
REINF	REINFORCING
REQ'D	REQUIRED
SEL	SELECT
SHED	SCHEDULE
SIM	SIMILAR
SIP	STRUCTURAL INSULATED PANEL
STD	STANDARD
STR	STRUCTURAL
T&G	TONGUE AND GROOVE
T.O.S.	TOP OF SLAB
TYP.	TYPICAL
W/C	WATER/CEMENT
W.P.	WORK POINT
U.N.O.	UNLESS NOTED OTHERWISE

Tue, 14/Dec/04 12:00PM

ADDENDUM NUMBER

ATTACHMENT NUMBER

RECORD OF REVISIONS

No.	DATE	DESCRIPTION

CHECKED BY:

STATE OF ALASKA
Christopher Blake Nye
CE-7536
REGISTERED PROFESSIONAL ENGINEER

DESIGNED BY: BCN

DRAWN BY: PJD

STATE OF ALASKA
DEPARTMENT OF TRANSPORTATION & PUBLIC FACILITIES
STATEWIDE DESIGN & ENGINEERING SERVICES DIVISION

MT EDGECUMBE HIGH SCHOOL BUILDING 1330 ACADEMIC EXPANSION

SHEET S100

PROJECT DESIGNATION NUMBER

67751C

STATE	YEAR
ALASKA	2004
SHEET NUMBER	TOTAL SHEETS
41	79

Project As-Built Drawings have been reviewed by the Project Engineer and represent to the best of my knowledge, the project as constructed.
Proj. Eng. _____ Date _____

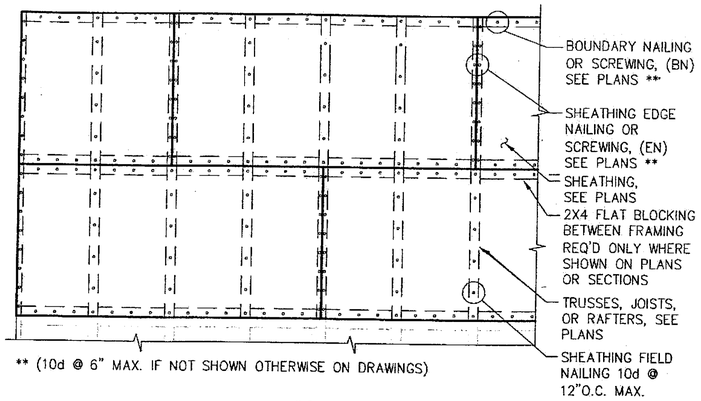

PLAN

NOTES:
1. STAGGER SHEATHING JOINTS A MINIMUM OF TWO JOIST SPACES
2. NAILS AT ABUTTING SHEATHING EDGES MUST PENETRATE THE SAME PIECE OF FRAMING OR BLOCKING.

A TYPICAL PLYWOOD DIAPHRAGM FOR FLOOR OR ROOF DETAIL

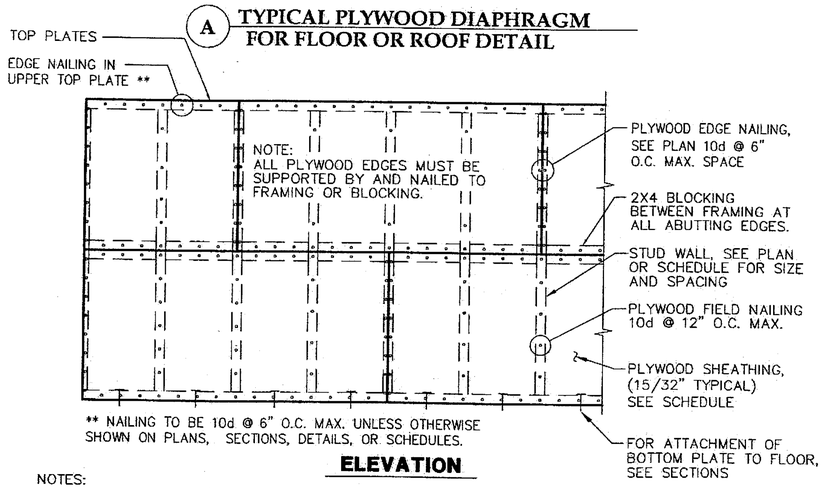

ELEVATION

NOTES:
1. PLYWOOD IS SHOWN HORIZONTAL, IT MAY ALSO BE POSITIONED VERTICAL.
2. STAGGER PLYWOOD JOINTS A MINIMUM OF TWO STUD SPACES.
3. NAILS AT ABUTTING PLYWOOD EDGES MUST PENETRATE THE SAME PIECE OF FRAMING OR BLOCKING.
4. SEE TYPICAL WALL ELEVATIONS AND PLANS FOR HOLD DOWNS, STRAPS AND ADDITIONAL BLOCKING.

B TYPICAL SHEAR WALL DETAIL

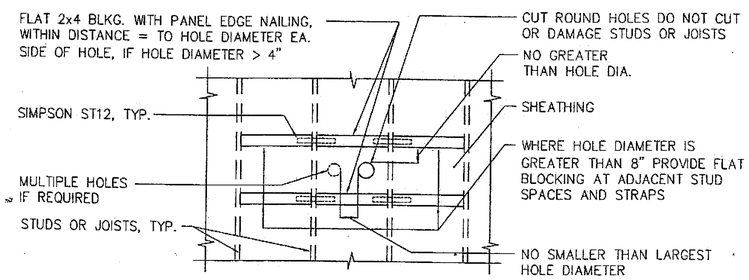

C TYPICAL SHEAR WALL AND DIAPHRAGM PENETRATION DETAIL

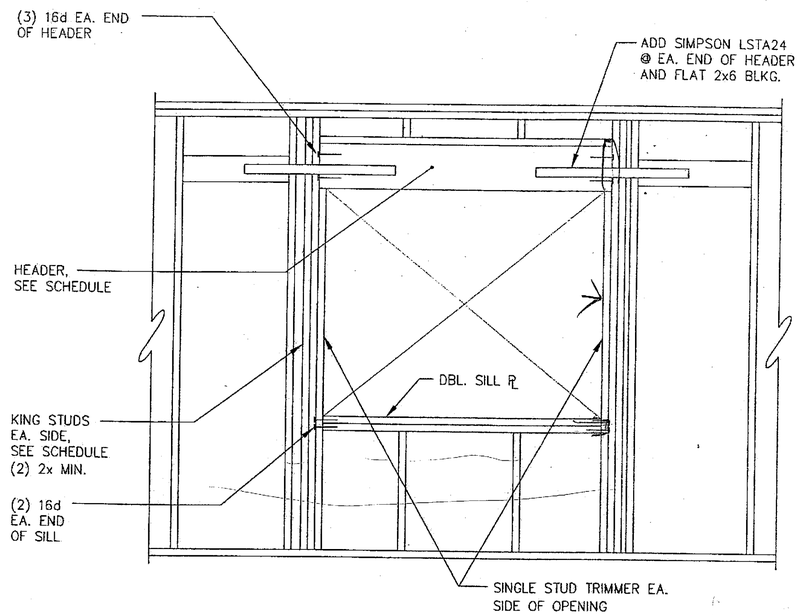

D TYPICAL HEADER DETAIL

HEADER SCHEDULE			
MARK	OPENING	HEADER SIZE	KING STUDS
X	TYPICAL HEADER WHERE INDICATED	(3) 2x12	DBL. STUD
Y	TYPICAL HEADER WHERE INDICATED	5¼"x16" P-LAM	DBL. STUD

BASE PLATE SCHEDULE						
	t	b	l	ANCHOR BOLTS		
TYPE	(IN)	(IN)	(IN)	NO.	DIA (IN)	EMBED (IN)
1	1/2	11	11	4	3/4	9
2	3/8	10	10	4	3/4	9
3	3/8	5 1/2	10	4	3/4	9

NOTES:
1. 1 INDICATES BASE PLATE TYPE AND ANCHOR BOLTS. SEE SCHEDULE THIS SHEET.

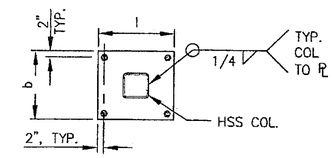

B TYPICAL BASE PLATE DETAIL

NTS

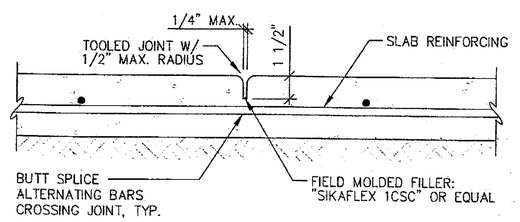

E TYPICAL CRACK CONTROL JOINT (CJ)

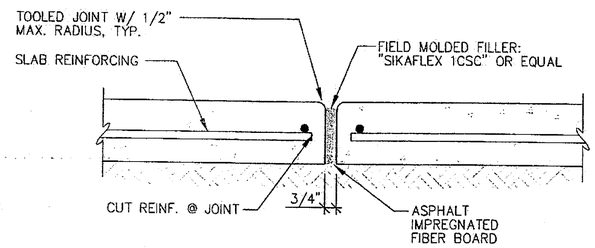

F TYPICAL ISOLATION OR EXPANSION JOINT SECTION

Project As-Built Drawings have been reviewed by the Project Engineer and represent to the best of my knowledge, the project as constructed.
Proj. Eng. _____ Date 7-07

Tue, 14/Dec/04 12:00PM

ADDENDUM NUMBER

ATTACHMENT NUMBER

RECORD OF REVISIONS

No.	DATE	DESCRIPTION

CHECKED BY:

STATE OF ALASKA REGISTERED PROFESSIONAL ENGINEER

DESIGNED BY: BCN

DRAWN BY: PJD

STATE OF ALASKA
DEPARTMENT OF TRANSPORTATION & PUBLIC FACILITIES
STATEWIDE DESIGN & ENGINEERING SERVICES DIVISION

MT EDGECUMBE HIGH SCHOOL BUILDING 1330 ACADEMIC EXPANSION

SHEET S101

PROJECT DESIGNATION NUMBER

67751C

STATE	YEAR
ALASKA	2004
SHEET NUMBER	TOTAL SHEETS
42	79

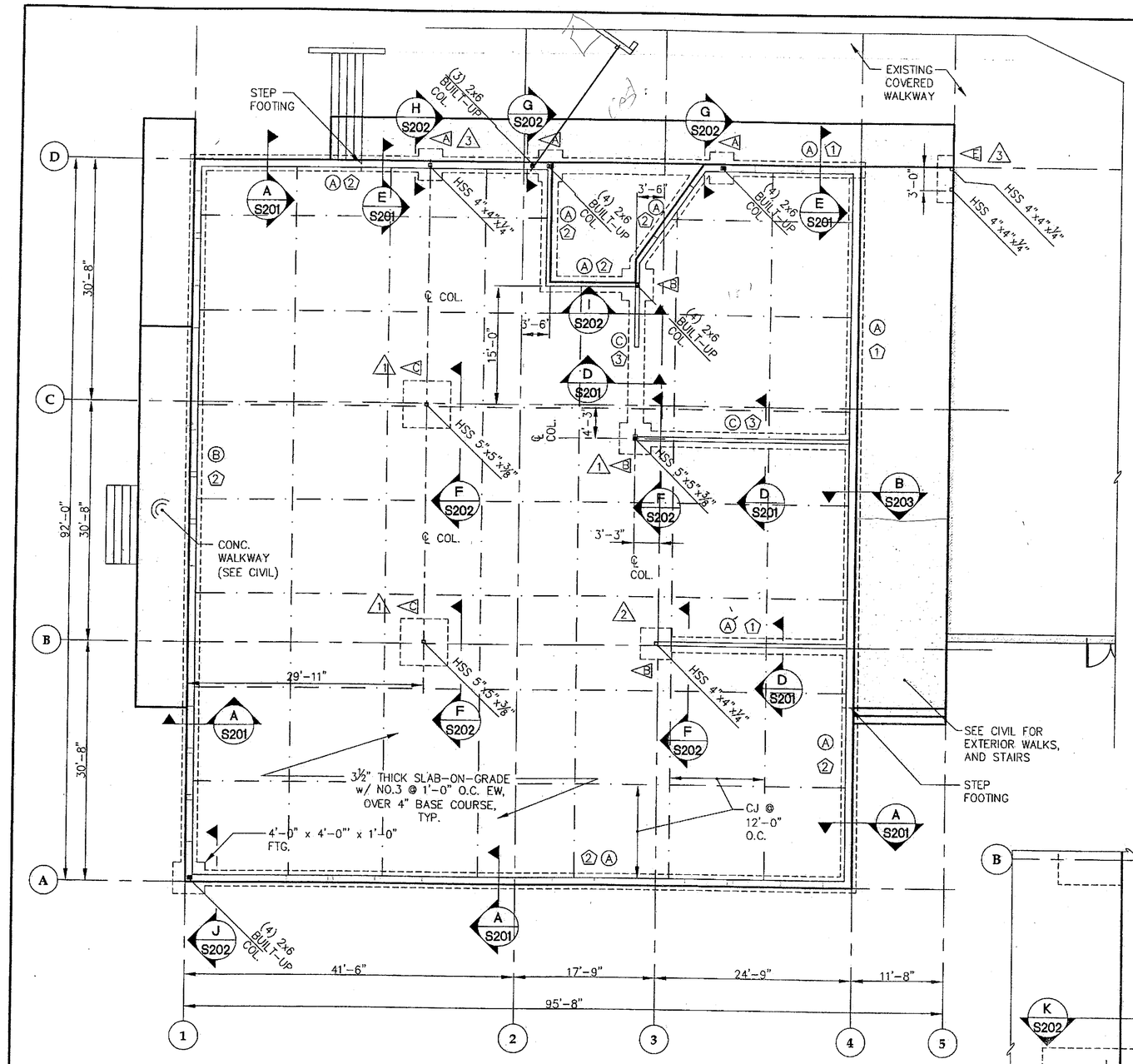

1 **FOUNDATION & FIRST FLOOR FRAMING PLAN**
BASE BID

SCALE: 0 4' 8' 16'

PLAN

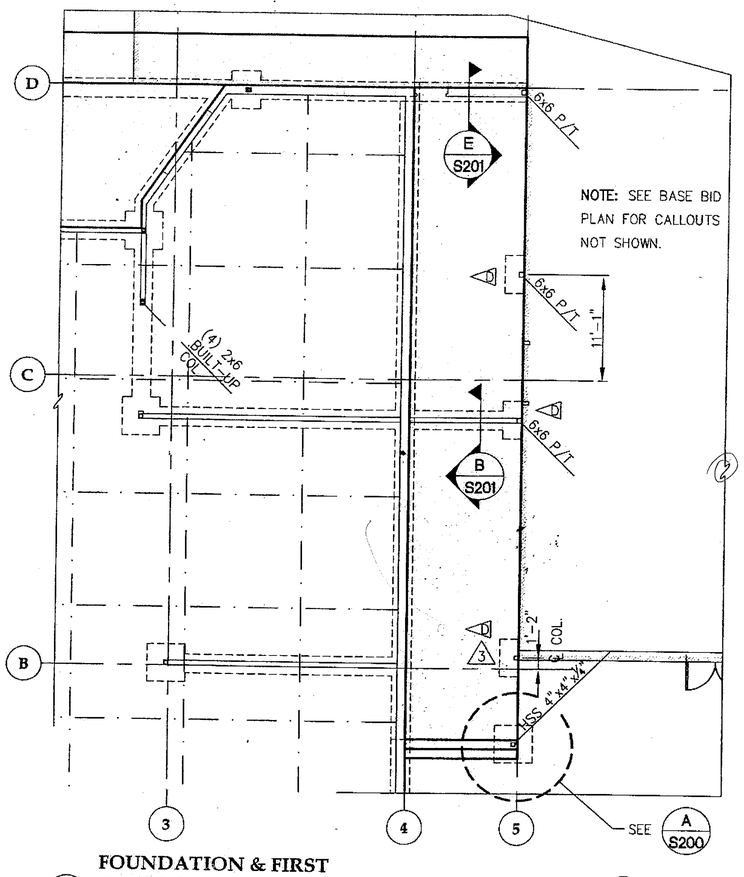

2 **FOUNDATION & FIRST FLOOR FRAMING PLAN**
ALTERNATE

SCALE: 0 4' 8' 16'

PLAN

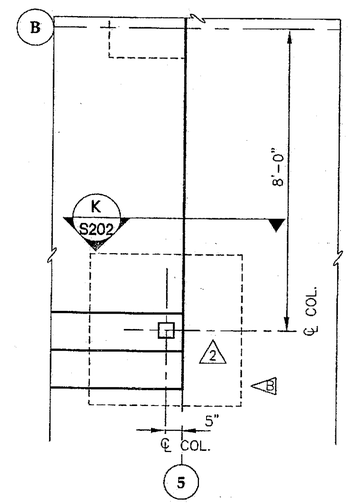

A **FOOTING DETAIL**

NOTES:

1. (1) INDICATES STUDWALL TYPE, SEE SCHEDULE.
2. (A) INDICATES SHEAR WALL TYPE, SEE SCHEDULE.
3. ◁A INDICATES FOOTING TYPE, SEE SCHEDULE.
4. DIMENSIONS TO FACE OF STUD, UNLESS NOTED OTHERWISE.

SHEAR WALL SCHEDULE

MARK	SHEATHING	PANEL EDGE NAILING	ANCHOR BOLTS
(A)	15/32 CDX ONE SIDE	10d@ 6"	3/4"ø @ 4'-0"
(B)	15/32 CDX ONE SIDE	10d@ 4"	3/4"ø @ 2'-0"
(C)	15/32 CDX BOTH SIDES	10d@ 4"	3/4"ø @ 1'-0"
(D)	15/32 CDX BOTH SIDES	10d@ 6"	3/4"ø @ 1'-0"

STUDWALL SCHEDULE

NO.	MATERIAL	STUD SIZE	STUD SPACING
(1)	HEM-FIR	2"x6"	1'-0"
(2)	HEM-FIR	2"x6"	2'-0"
(3)	HEM-FIR	(2) 2"x6"	2'-0"

FOOTING SCHEDULE

MARK	LENGTH	DEPTH
◁A	3'-0" x 4'-0"	8"
◁B	4'-0" x 4'-0"	1'-0"
◁C	6'-0" x 6'-0"	1'-6"
◁D	5'-0" x 3'-6"	1'-0"
◁E	6'-0" x 2'-0"	1'-0"

Tue, 14/Dec/04 12:00PM

ADDENDUM NUMBER

ATTACHMENT NUMBER

RECORD OF REVISIONS

No.	DATE	DESCRIPTION

39,000
20,000
Extremely
$ 20,000

CHECKED BY:

STATE OF ALASKA
Christopher Bonetti
CE-7559
REGISTERED PROFESSIONAL ENGINEER

DESIGNED BY: BCN

DRAWN BY: PJD

STATE OF ALASKA
DEPARTMENT OF TRANSPORTATION & PUBLIC FACILITIES
STATEWIDE DESIGN & ENGINEERING SERVICES DIVISION

MT EDGECUMBE HIGH SCHOOL BUILDING 1330 ACADEMIC EXPANSION

SHEET S200

PROJECT DESIGNATION NUMBER

67751C

STATE	YEAR
ALASKA	2004

SHEET NUMBER	TOTAL SHEETS
43	79

Project As-Built Drawings have been reviewed by the Project Engineer and represent to the best of my knowledge, the project as constructed.
Proj. Eng. _____ Date _____

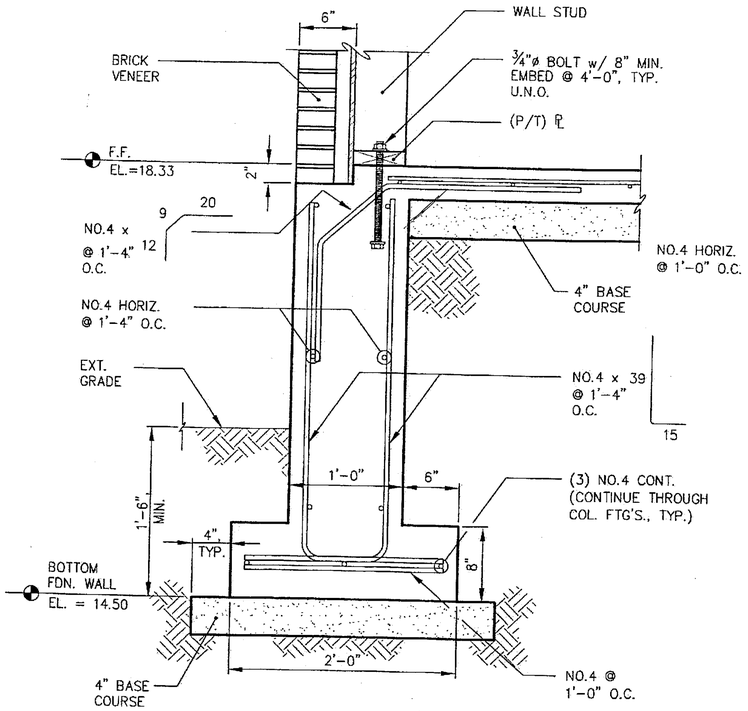

A TYPICAL EXTERIOR FOUNDATION WALL

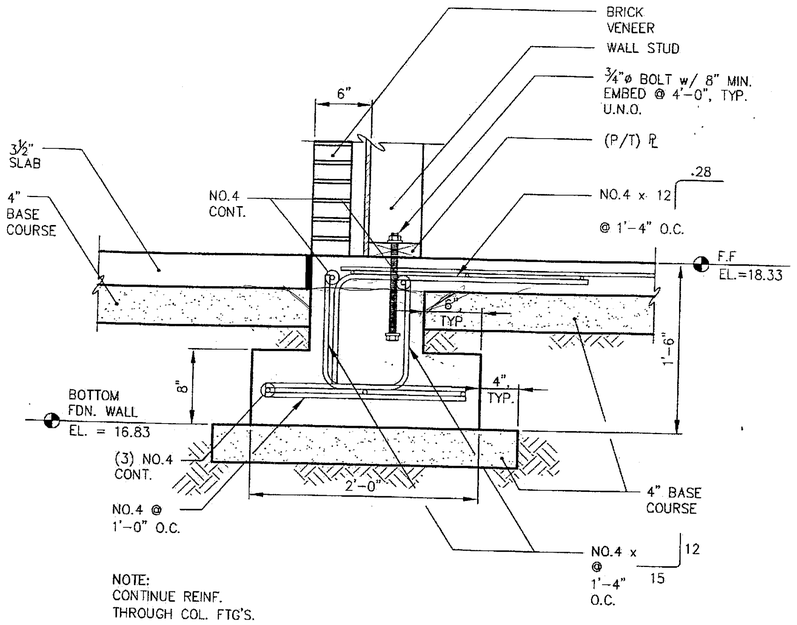

B EXTERIOR FOUNDATION WALL AT ALTERNATE NO.1

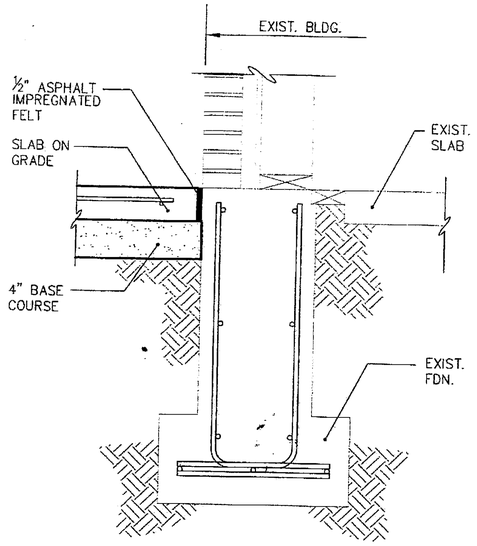

C SLAB AT EXISTING BUILDING

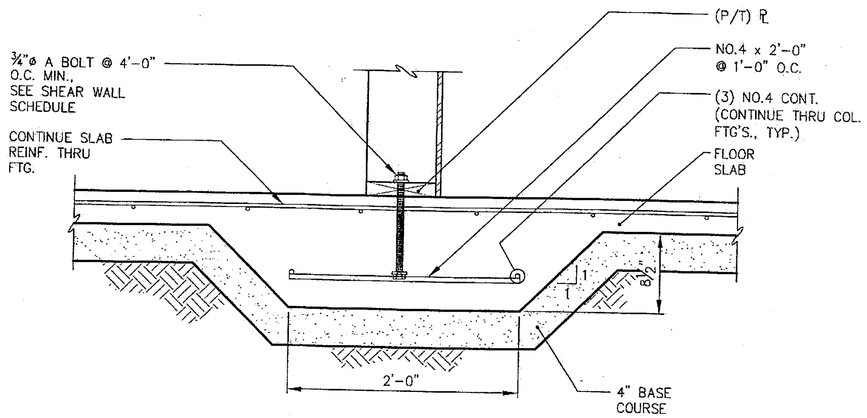

D TYPICAL INTERIOR FOOTING

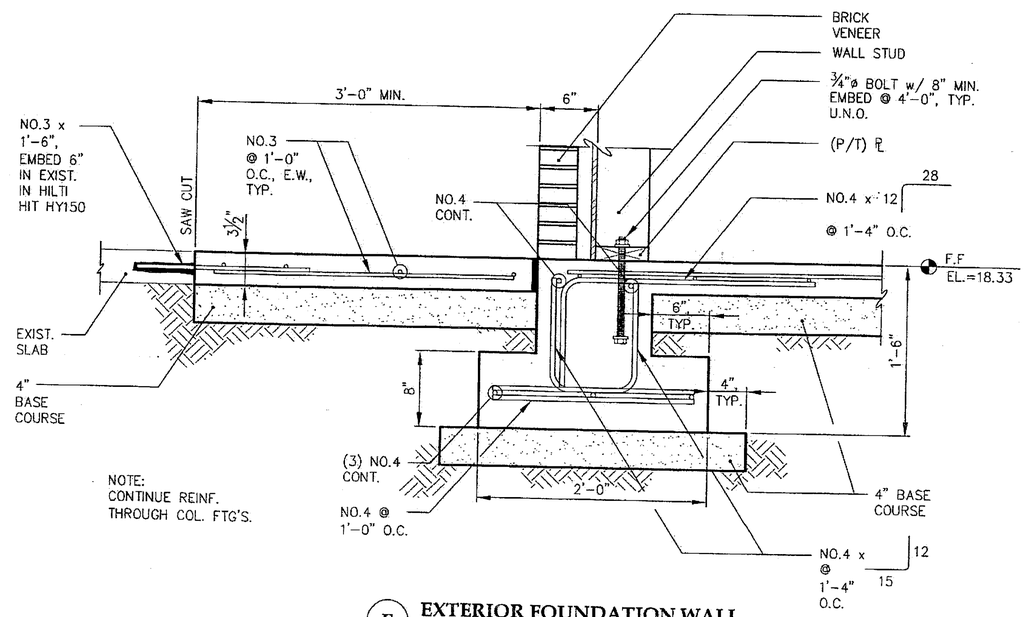

E EXTERIOR FOUNDATION WALL AT EXISTING SIDEWALK

Project As-Built Drawings have been reviewed by the Project Engineer and represent to the best of my knowledge, the project as constructed.
Proj. Eng. _____ Date 7-07

Tue, 14/Dec/04 12:00PM

ADDENDUM NUMBER

ATTACHMENT NUMBER

RECORD OF REVISIONS

No.	DATE	DESCRIPTION

CHECKED BY:

STATE OF ALASKA
BRIAN C. NEUBERT
CIVIL
No. 7559
REGISTERED PROFESSIONAL ENGINEER

DESIGNED BY: BCN

DRAWN BY: PJD

STATE OF ALASKA
DEPARTMENT OF TRANSPORTATION & PUBLIC FACILITIES
STATEWIDE DESIGN & ENGINEERING SERVICES DIVISION

MT EDGECUMBE HIGH SCHOOL
BUILDING 1330
ACADEMIC EXPANSION

SHEET S201

PROJECT DESIGNATION NUMBER
67751C

STATE	YEAR
ALASKA	2004
SHEET NUMBER	TOTAL SHEETS
44	79

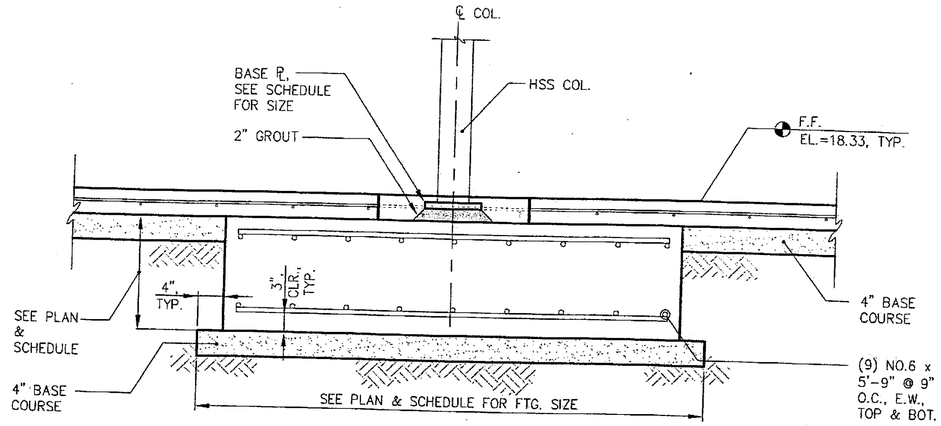

F INTERIOR HSS COLUMN FOOTING

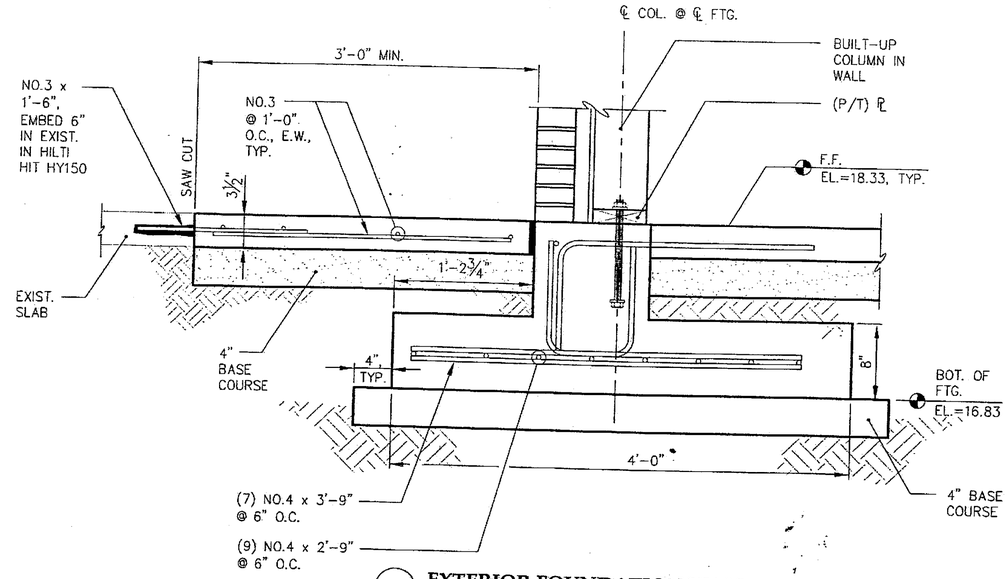

G EXTERIOR FOUNDATION WALL AT BUILT-UP COLUMN

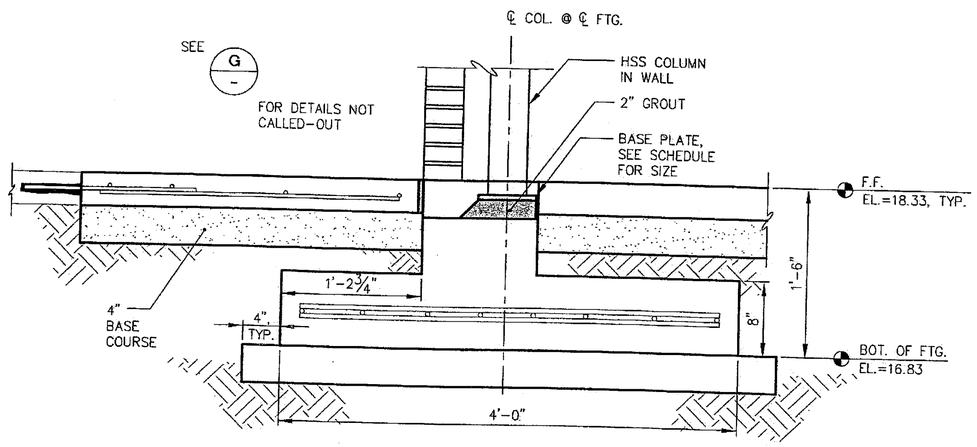

H EXTERIOR FOUNDATION WALL AT HSS COLUMN

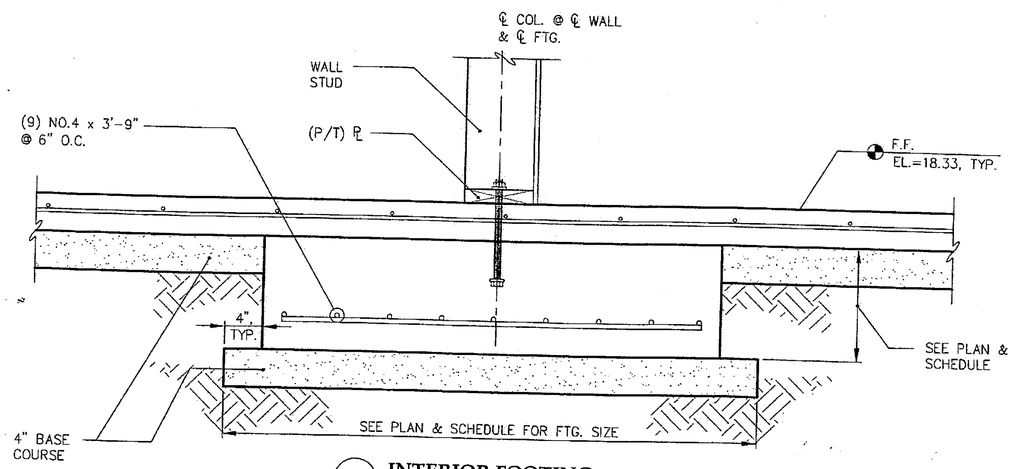

I INTERIOR FOOTING AT BUILT-UP COLUMN

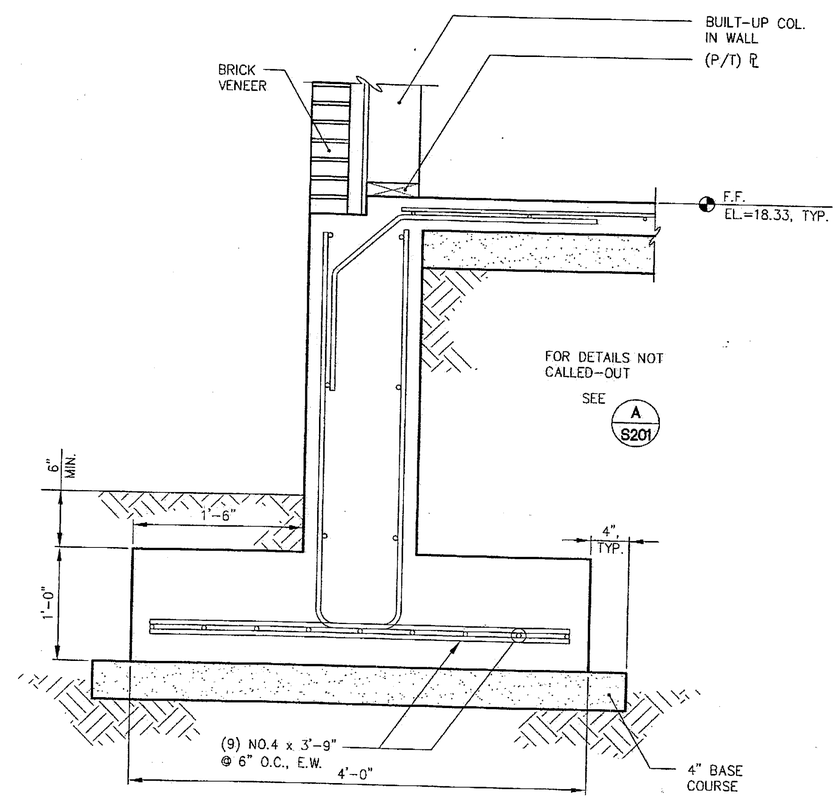

J EXTERIOR FOOTING AT BUILT-UP COLUMN

Project As-Built Drawings have been reviewed by the Project Engineer and represent to the best of my knowledge, the project as constructed.
Proj. Eng. _____ Date 7/07

Tue, 14/Dec/04 12:00PM

ADDENDUM NUMBER
ATTACHMENT NUMBER

RECORD OF REVISIONS

No.	DATE	DESCRIPTION

CHECKED BY:

STATE OF ALASKA REGISTERED PROFESSIONAL ENGINEER

DESIGNED BY: BCN
DRAWN BY: PJD

STATE OF ALASKA
DEPARTMENT OF TRANSPORTATION & PUBLIC FACILITIES
STATEWIDE DESIGN & ENGINEERING SERVICES DIVISION

MT EDGECUMBE HIGH SCHOOL BUILDING 1330 ACADEMIC EXPANSION

SHEET S202

PROJECT DESIGNATION NUMBER
67751C

STATE	YEAR
ALASKA	2004
SHEET NUMBER	TOTAL SHEETS
45	79

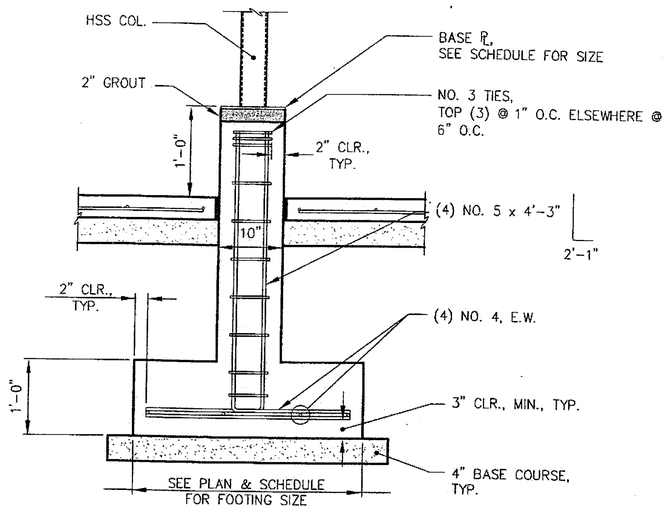

A PILASTER DETAIL

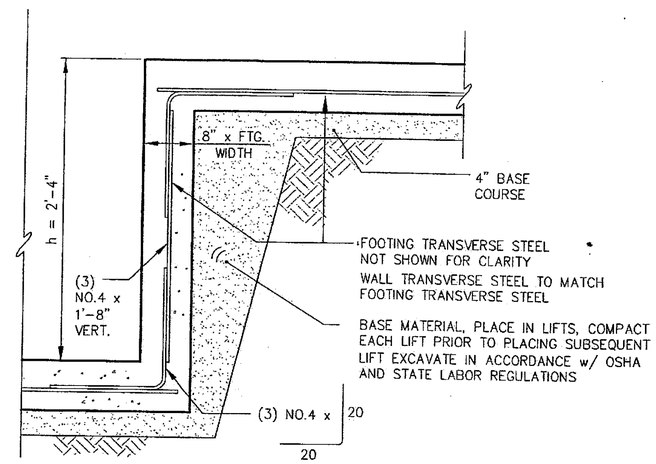

B STEP FOOTING SECTION

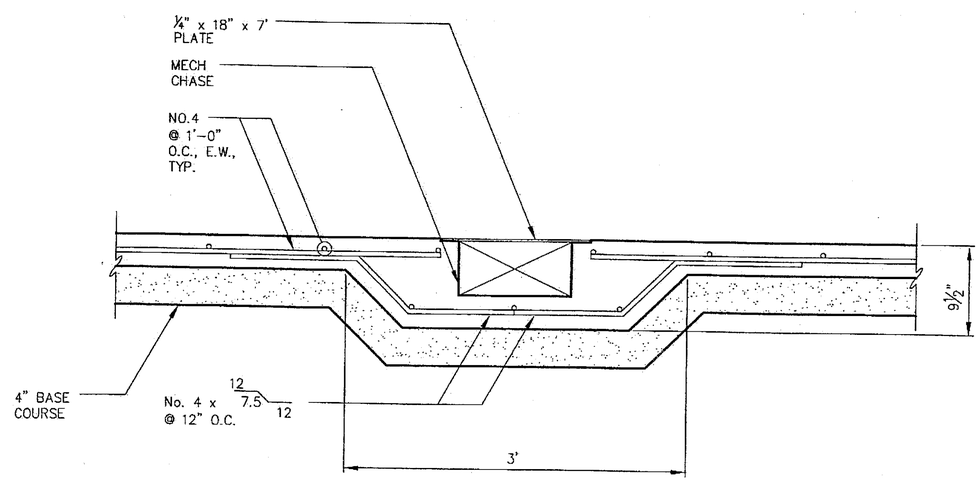

C SLAB AT MECHANICAL CHASE

Tue, 14/Dec/04 12:00PM

ADDENDUM NUMBER

ATTACHMENT NUMBER

RECORD OF REVISIONS

No.	DATE	DESCRIPTION

CHECKED BY:

STATE OF ALASKA
Christopher Gilbert
CE-7559
REGISTERED PROFESSIONAL ENGINEER

DESIGNED BY: BCN

DRAWN BY: PJD

STATE OF ALASKA
DEPARTMENT OF TRANSPORTATION & PUBLIC FACILITIES
STATEWIDE DESIGN & ENGINEERING SERVICES DIVISION

MT EDGECUMBE HIGH SCHOOL BUILDING 1330 ACADEMIC EXPANSION

SHEET S203

PROJECT DESIGNATION NUMBER

67751C

STATE	YEAR
ALASKA	2004
SHEET NUMBER	TOTAL SHEETS
46	79

Project As-Built Drawings have been reviewed by the Project Engineer and represent to the best of my knowledge, the project as constructed.
Proj. Eng. _____ Date _____

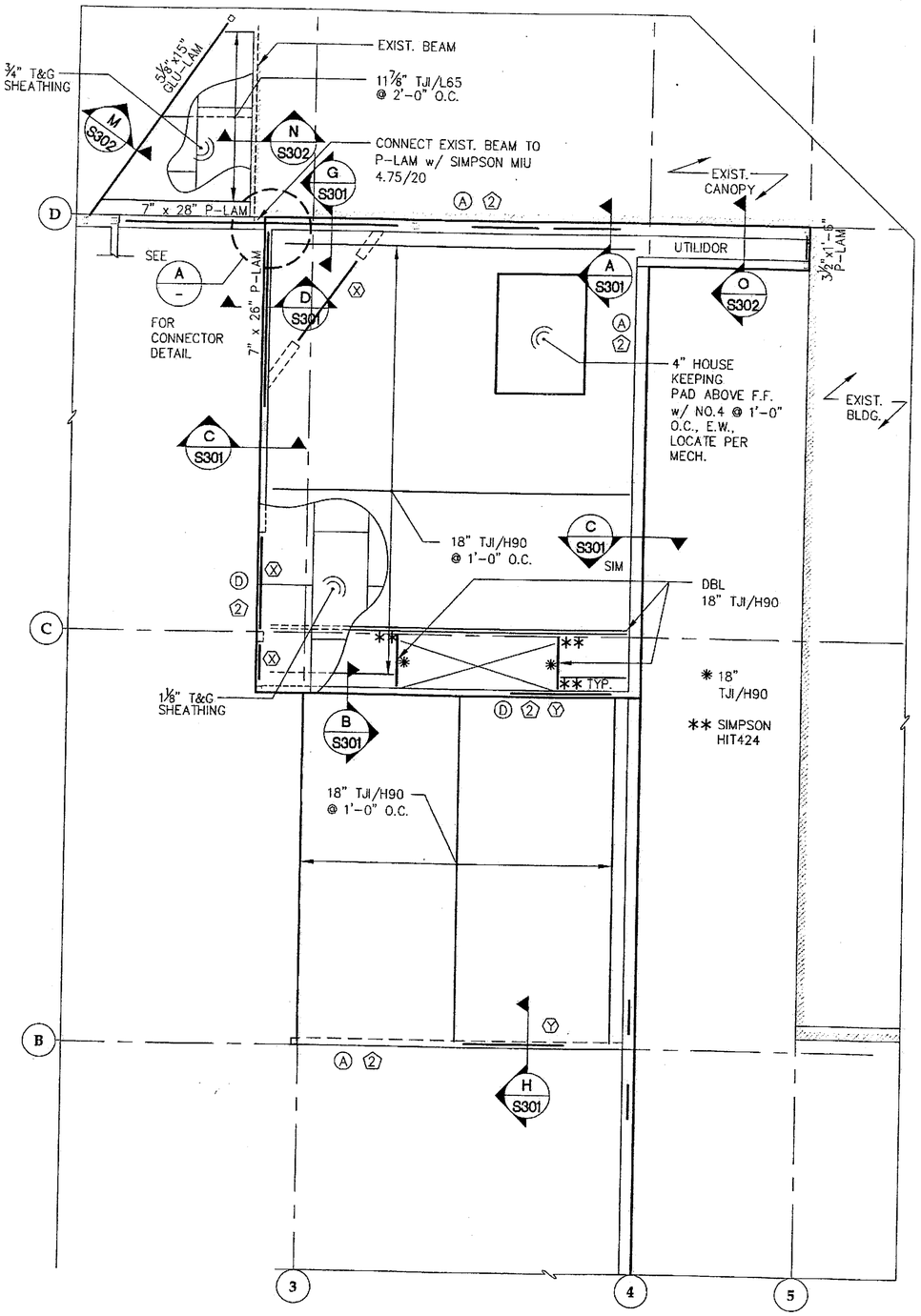

1 **SECOND FLOOR FRAMING PLAN**
BASE BID

SCALE: 0 2' 4' 8'

PLAN

NOTES:

1. (1) INDICATES STUDWALL TYPE, SEE SCHEDULE.
2. (A) INDICATES SHEAR WALL TYPE, SEE SCHEDULE.

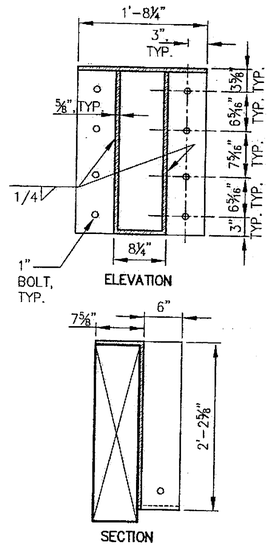

A **CONNECTION DETAIL**

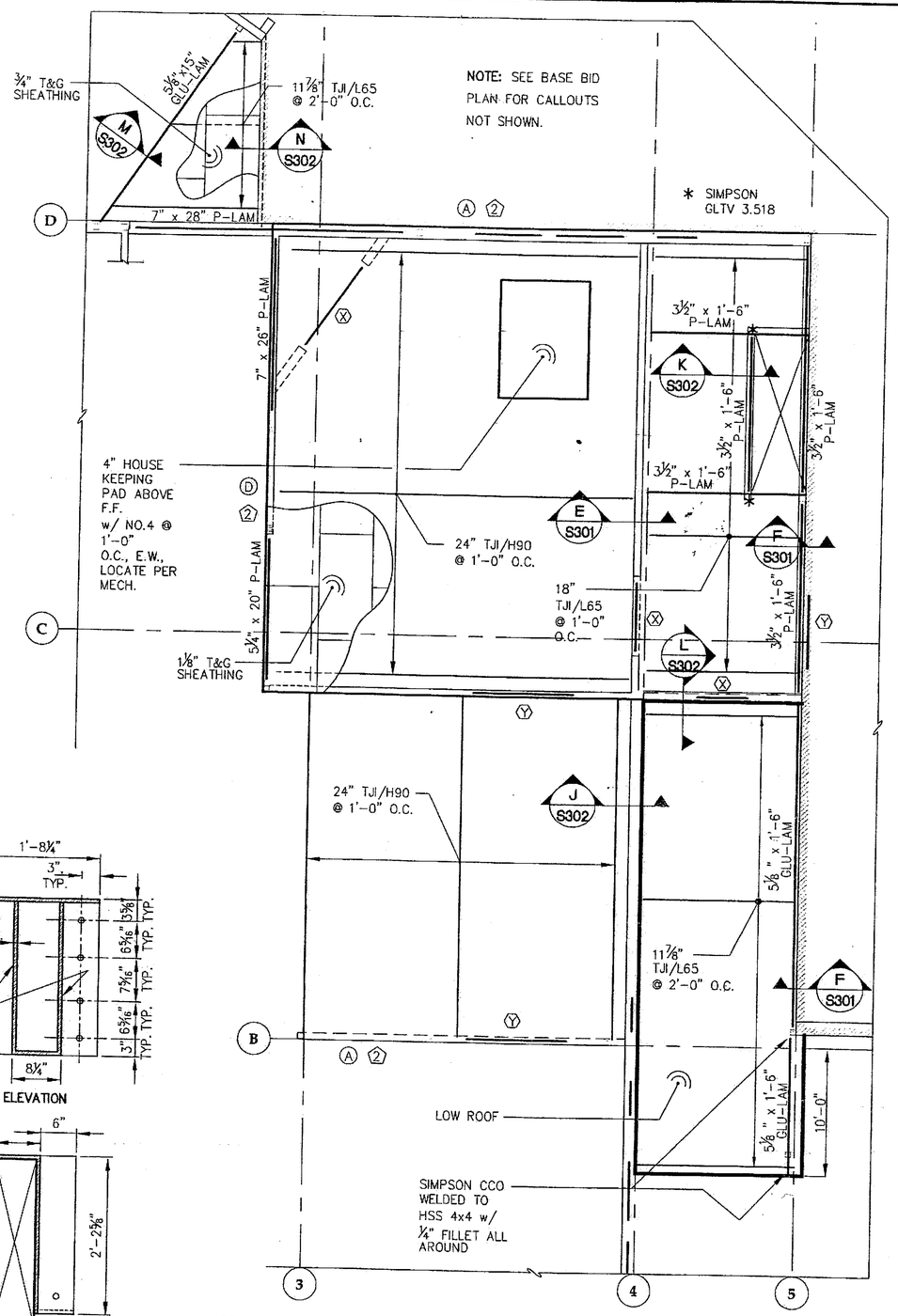

2 **SECOND FLOOR FRAMING PLAN**
ALTERNATE

SCALE: 0 2' 4' 8'

PLAN

Project As-Built Drawings have been reviewed by the Project Engineer and represent to the best of my knowledge, the project as constructed.
Proj. Eng. _____ Date 7-07

Tue, 14/Dec/04 12:00PM

ADDENDUM NUMBER
ATTACHMENT NUMBER

RECORD OF REVISIONS

No.	DATE	DESCRIPTION

CHECKED BY:

DESIGNED BY: BCN
DRAWN BY: PJD

STATE OF ALASKA
DEPARTMENT OF TRANSPORTATION & PUBLIC FACILITIES
STATEWIDE DESIGN & ENGINEERING SERVICES DIVISION

MT EDGECUMBE HIGH SCHOOL
BUILDING 1330
ACADEMIC EXPANSION

SHEET S300
PROJECT DESIGNATION NUMBER
67751C

STATE	YEAR
ALASKA	2004
SHEET NUMBER	TOTAL SHEETS
47	79

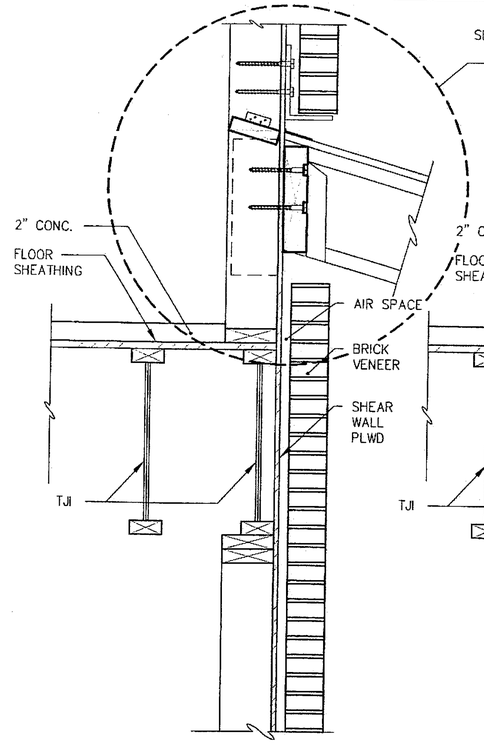

A TYPICAL SECTION

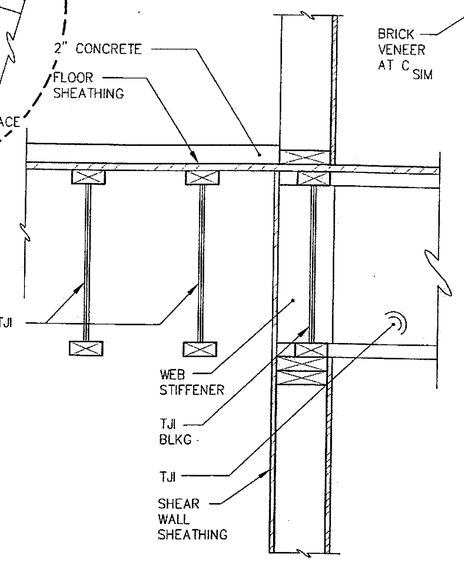

B SECTION

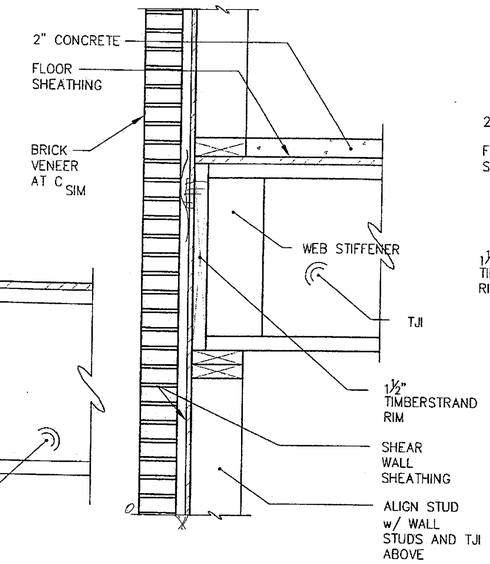

C SECTION

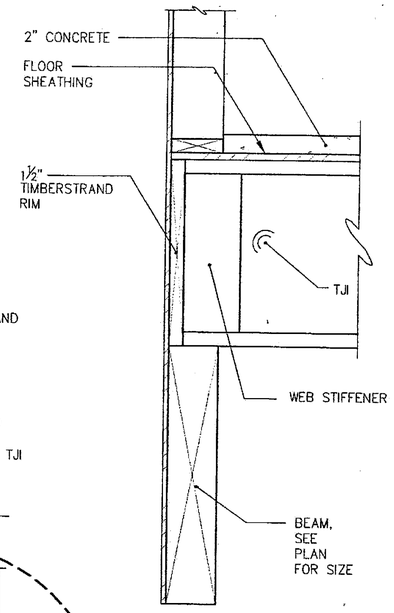

D SECTION AT BEAM

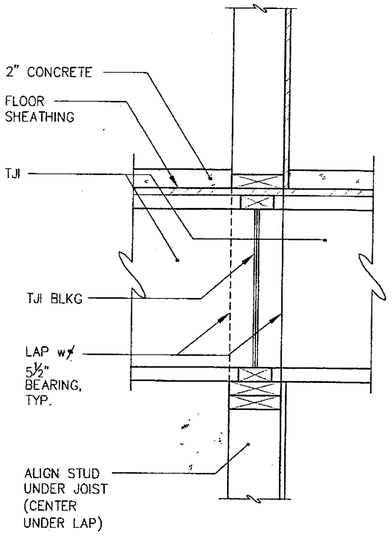

E SECTION AT INTERIOR WALL

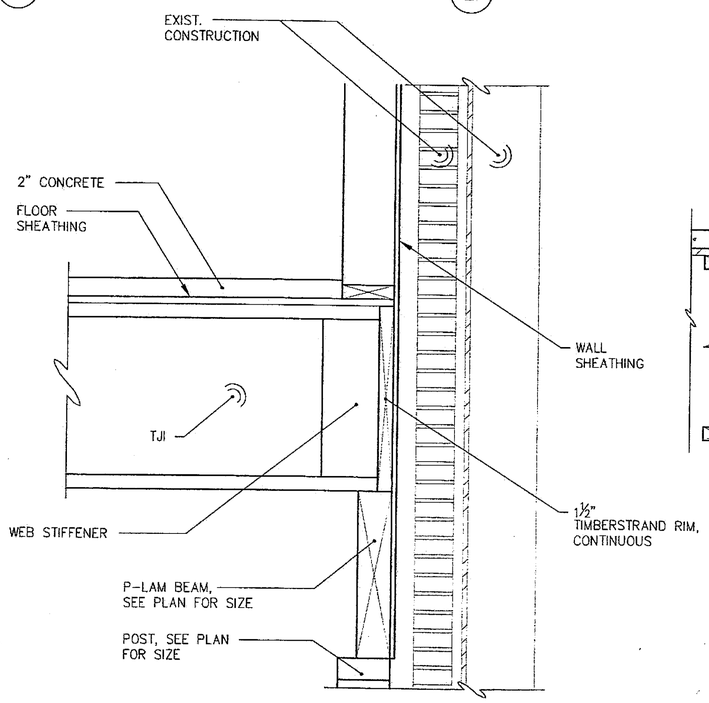

F SECTION AT EXISTING WALL

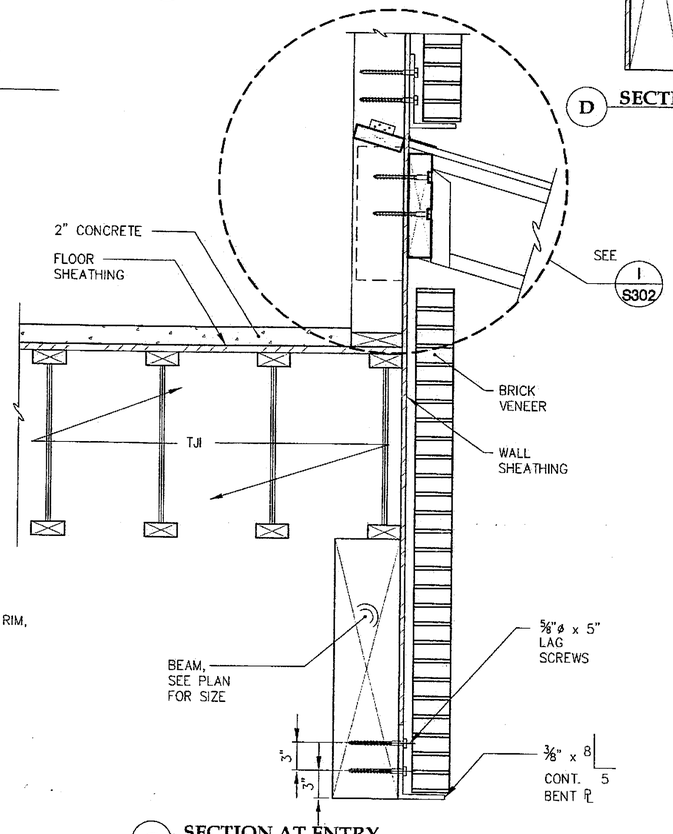

G SECTION AT ENTRY

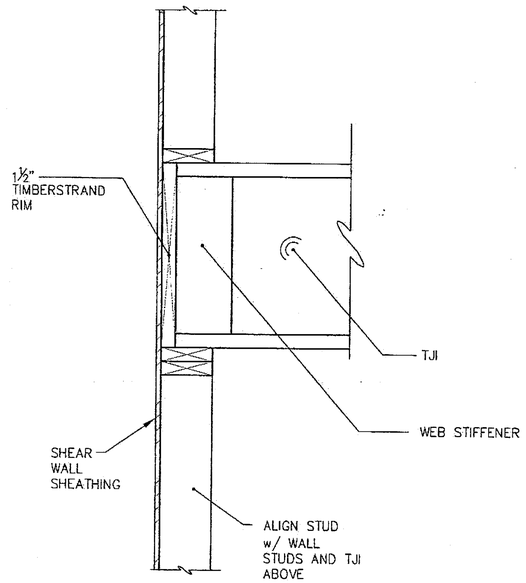

H SECTION

Project As-Built Drawings have been reviewed by the Project Engineer and represent to the best of my knowledge, the project as constructed.
Proj. Eng. Date 7-07

Tue, 14/Dec/04 12:00PM

ADDENDUM NUMBER

ATTACHMENT NUMBER

RECORD OF REVISIONS

No.	DATE	DESCRIPTION

CHECKED BY:

STATE OF ALASKA
REGISTERED PROFESSIONAL ENGINEER

DESIGNED BY: BCN
DRAWN BY: PJD

STATE OF ALASKA
DEPARTMENT OF TRANSPORTATION & PUBLIC FACILITIES
STATEWIDE DESIGN & ENGINEERING SERVICES DIVISION

MT EDGECUMBE HIGH SCHOOL BUILDING 1330 ACADEMIC EXPANSION

SHEET S301

PROJECT DESIGNATION NUMBER
67751C

STATE	YEAR
ALASKA	2004
SHEET NUMBER	TOTAL SHEETS
48	79

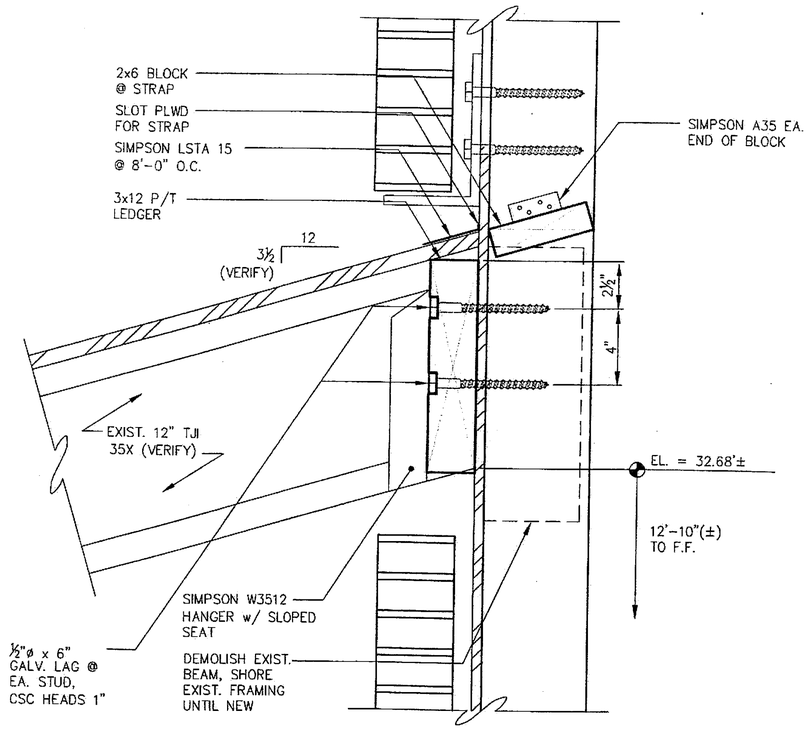

I EXISTING CANOPY TO STUDS

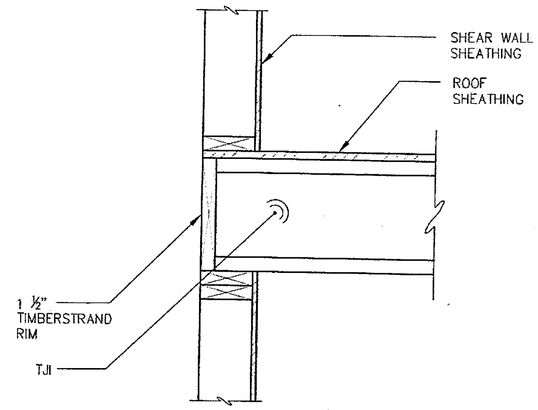

J SECTION

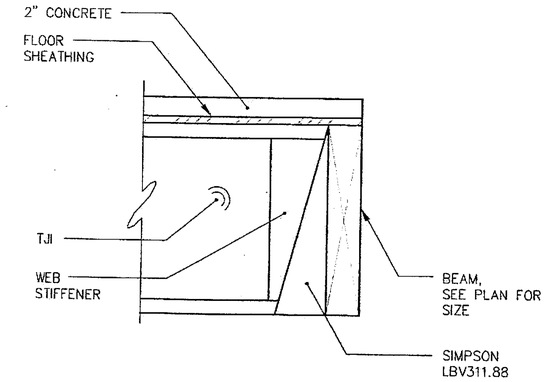

K SECTION

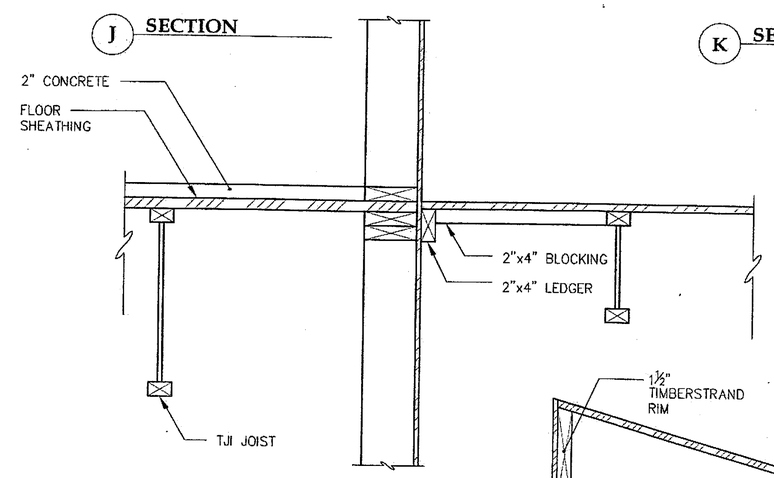

L SECTION

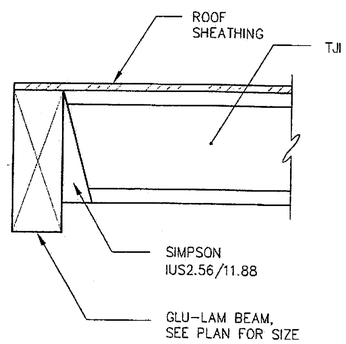

M SECTION AT CANOPY

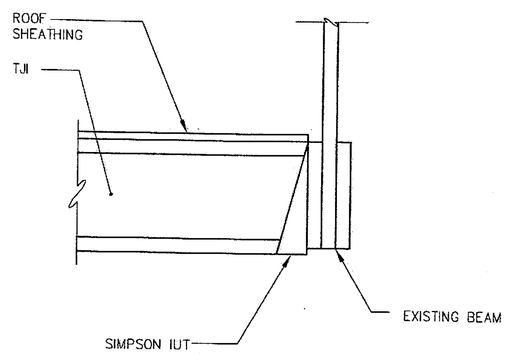

N SECTION AT CANOPY

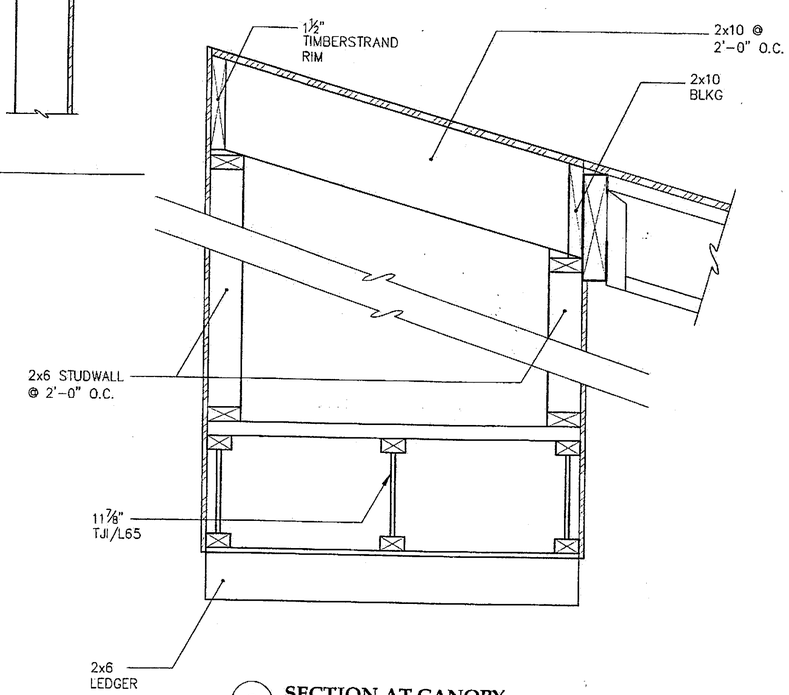

0 SECTION AT CANOPY

Tue, 14/Dec/04 12:00PM

ADDENDUM NUMBER

ATTACHMENT NUMBER

RECORD OF REVISIONS

No.	DATE	DESCRIPTION

CHECKED BY:

STATE OF ALASKA
Christopher Bennett
CE-7356
REGISTERED PROFESSIONAL ENGINEER

DESIGNED BY: BCN

DRAWN BY: PJD

STATE OF ALASKA
DEPARTMENT OF TRANSPORTATION
& PUBLIC FACILITIES
STATEWIDE DESIGN & ENGINEERING
SERVICES DIVISION

MT EDGECUMBE
HIGH SCHOOL
BUILDING 1330
ACADEMIC
EXPANSION

SHEET S302

PROJECT DESIGNATION NUMBER

67751C

STATE	YEAR
ALASKA	2004
SHEET NUMBER	TOTAL SHEETS
49	79

Project As-Built Drawings have been reviewed by the Project Engineer and represent to the best of my knowledge, the project as constructed.
Proj. Eng. _____ Date 7-07

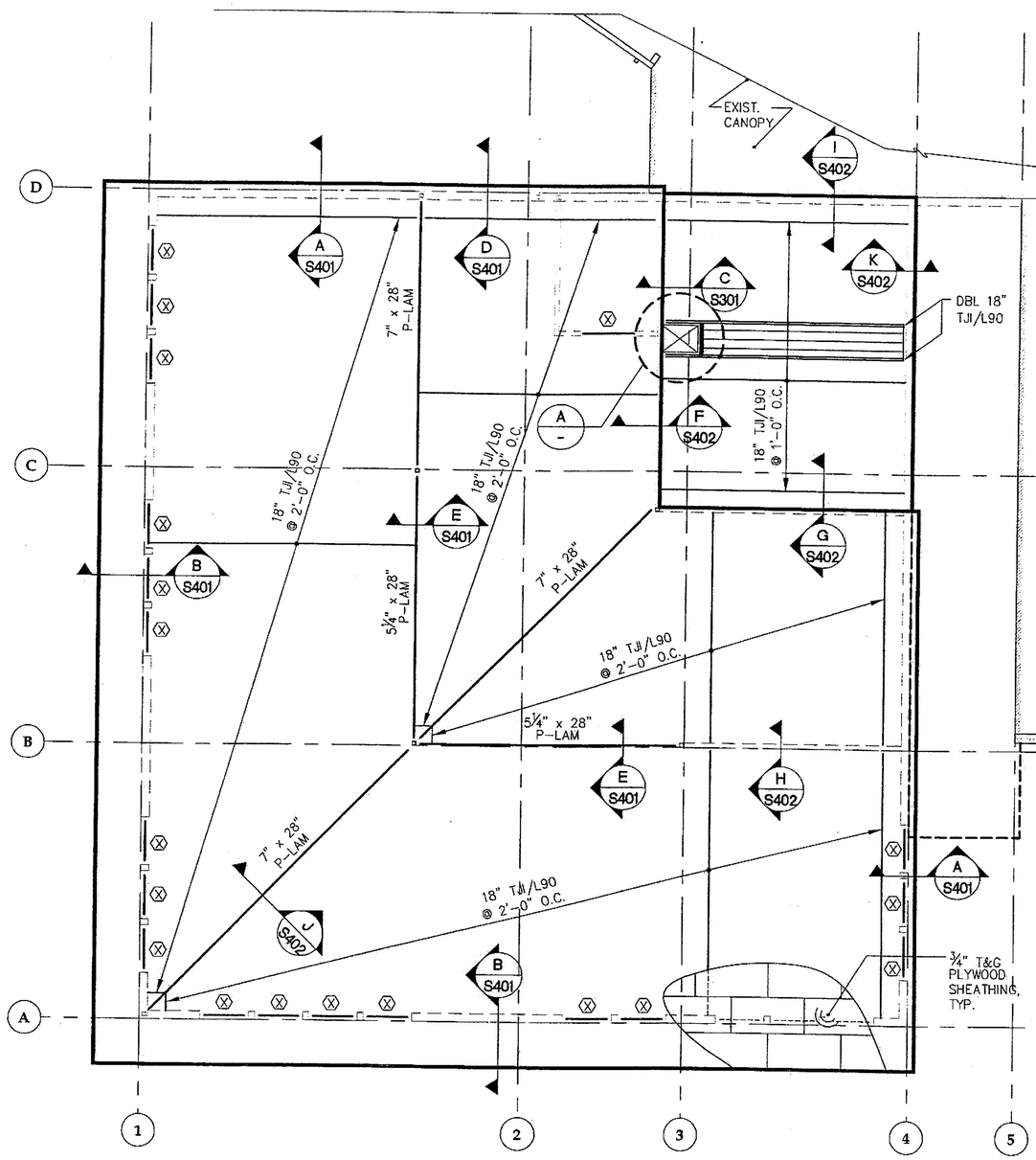

1 **ROOF FRAMING PLAN BASE BID**

SCALE: 0 4' 8' 16'

PLAN

NOTES:

1. (1) INDICATES STUDWALL TYPE, SEE SCHEDULE.
2. (A) INDICATES SHEAR WALL TYPE, SEE SCHEDULE.

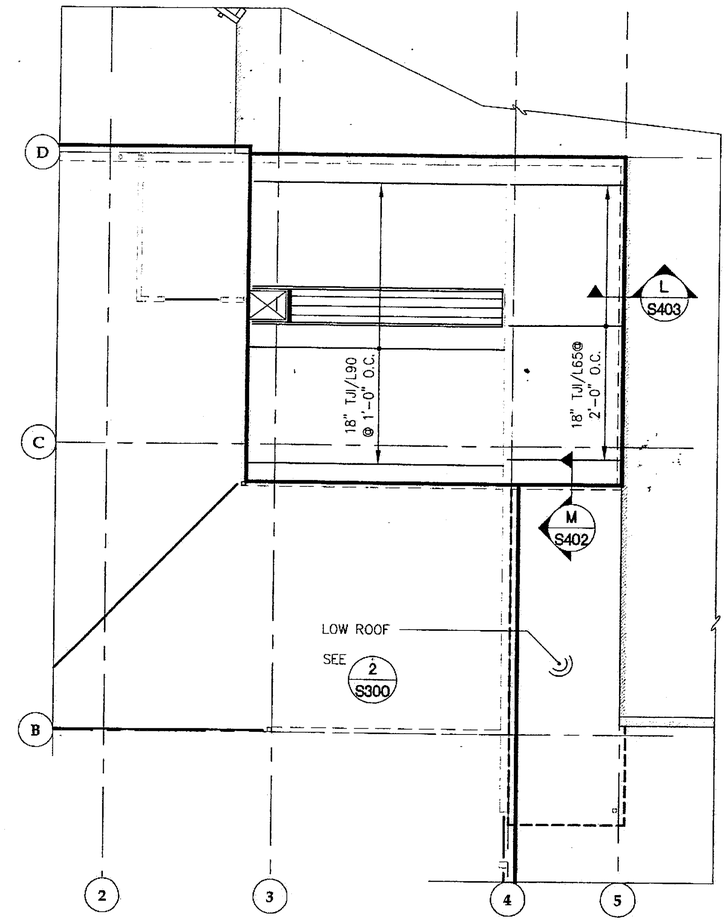

2 **ROOF FRAMING PLAN ALTERNATE**

SCALE: 0 4' 8' 16'

PLAN

NOTE: SEE BASE BID PLAN FOR CALLOUTS NOT SHOWN.

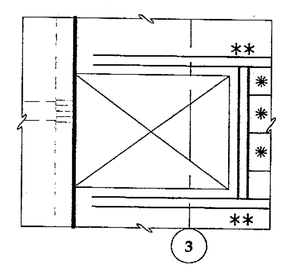

A **CONNECTION DETAIL**

* SIMPSON MIT418

** SIMPSON WPI418-2

Project As-Built Drawings have been reviewed by the Project Engineer and represent to the best of my knowledge, the project as constructed.
Proj. Eng. _____ Date 7-01

Tue, 14/Dec/04 12:00PM

ADDENDUM NUMBER
ATTACHMENT NUMBER

RECORD OF REVISIONS

No.	DATE	DESCRIPTION

CHECKED BY:

DESIGNED BY: BCN

DRAWN BY: PJD

STATE OF ALASKA
DEPARTMENT OF TRANSPORTATION & PUBLIC FACILITIES
STATEWIDE DESIGN & ENGINEERING SERVICES DIVISION

MT EDGECUMBE HIGH SCHOOL BUILDING 1330 ACADEMIC EXPANSION

SHEET S400

PROJECT DESIGNATION NUMBER

67751C

STATE	YEAR
ALASKA	2004
SHEET NUMBER	TOTAL SHEETS
50	79

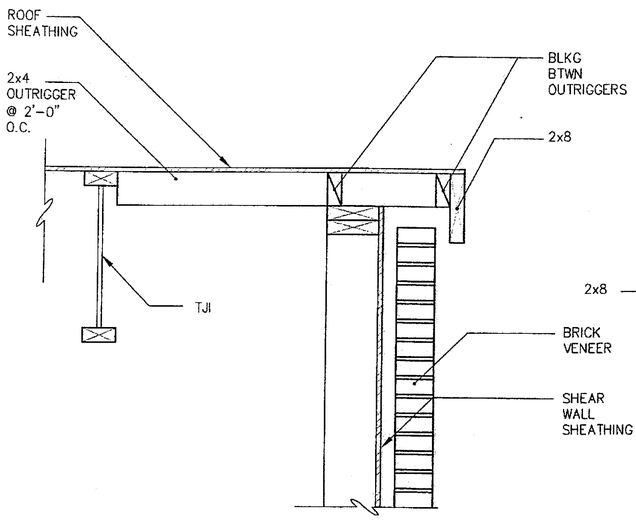

A ROOF SECTION AT EXTERIOR WALL

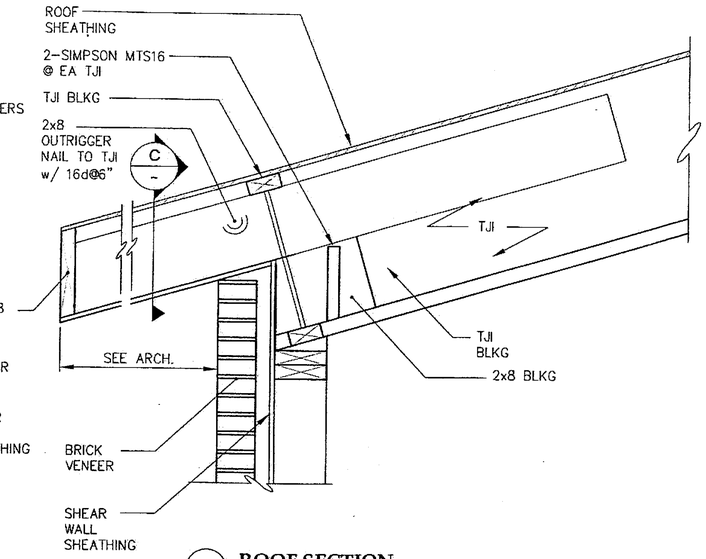

B ROOF SECTION AT EXTERIOR WALL

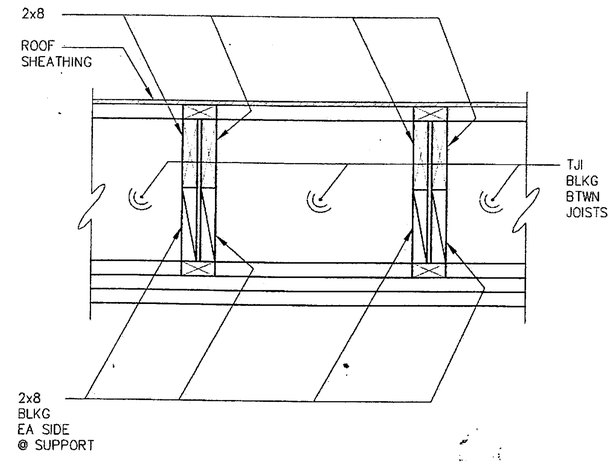

C ROOF SECTION AT EXTERIOR WALL

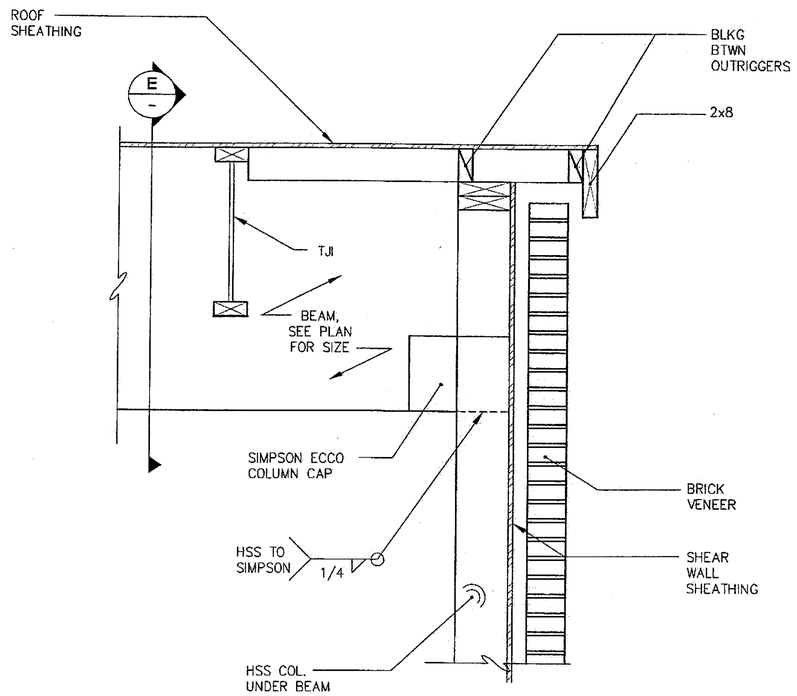

D ROOF SECTION AT BEAM

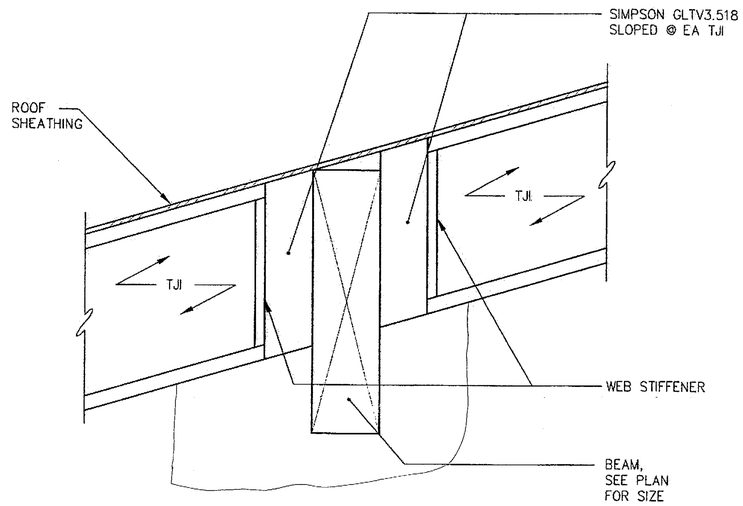

E ROOF SECTION AT BEAM

Tue, 14/Dec/04 12:00PM

ADDENDUM NUMBER

ATTACHMENT NUMBER

RECORD OF REVISIONS

No.	DATE	DESCRIPTION

CHECKED BY:

STATE OF ALASKA
Gonotti
CE-7559
REGISTERED PROFESSIONAL ENGINEER

DESIGNED BY: BCN

DRAWN BY: PJD

STATE OF ALASKA
DEPARTMENT OF TRANSPORTATION & PUBLIC FACILITIES
STATEWIDE DESIGN & ENGINEERING SERVICES DIVISION

MT EDGECUMBE HIGH SCHOOL BUILDING 1330 ACADEMIC EXPANSION

SHEET S401

PROJECT DESIGNATION NUMBER

67751C

STATE	YEAR
ALASKA	2004
SHEET NUMBER	TOTAL SHEETS
51	79

Project As-Built Drawings have been reviewed by the Project Engineer and represent to the best of my knowledge, the project as constructed.
Proj. Eng. Date

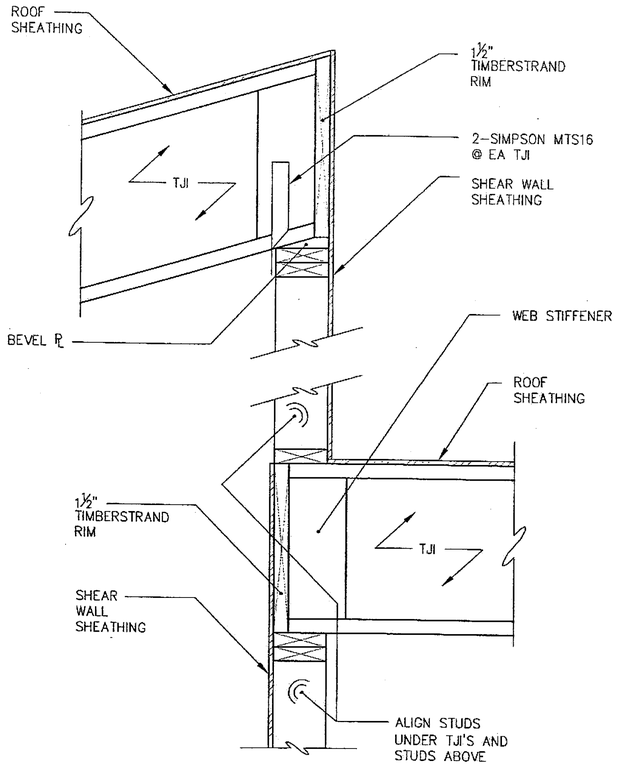

F ROOF SECTION AT INTERIOR WALL

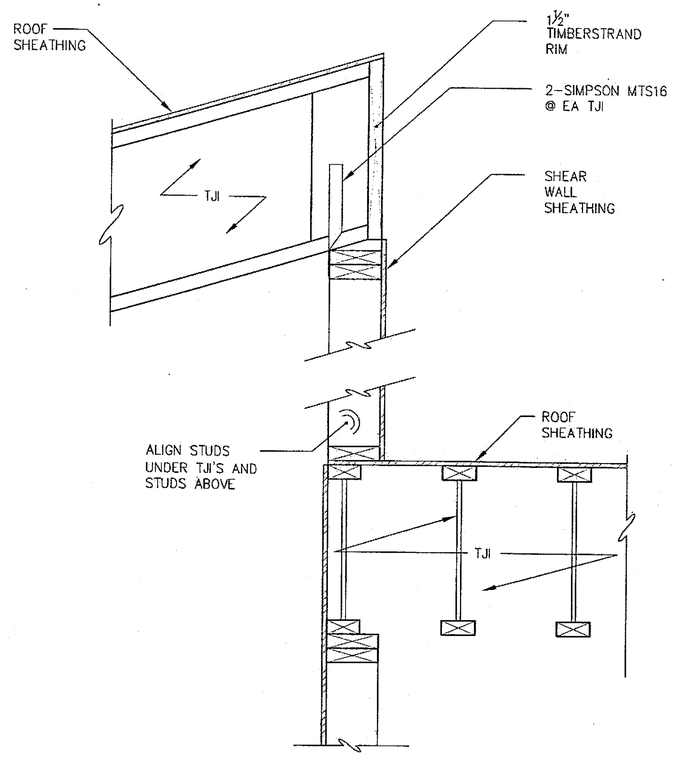

G ROOF SECTION AT INTERIOR WALL

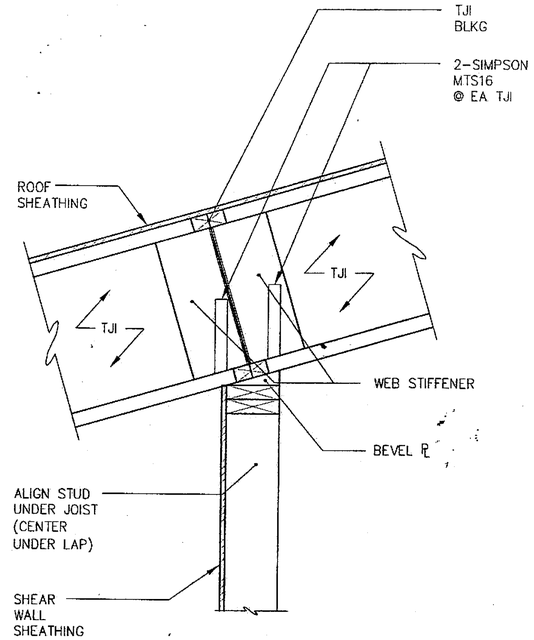

H ROOF SECTION AT BEARING WALL

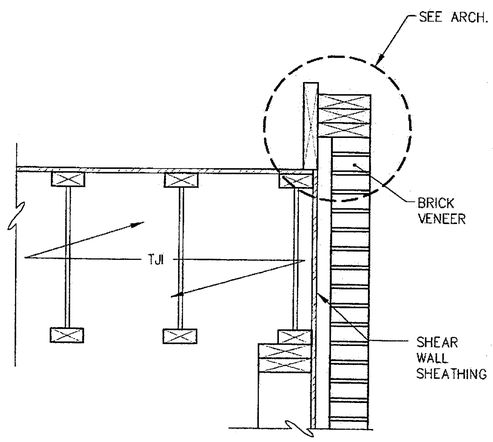

I ROOF SECTION

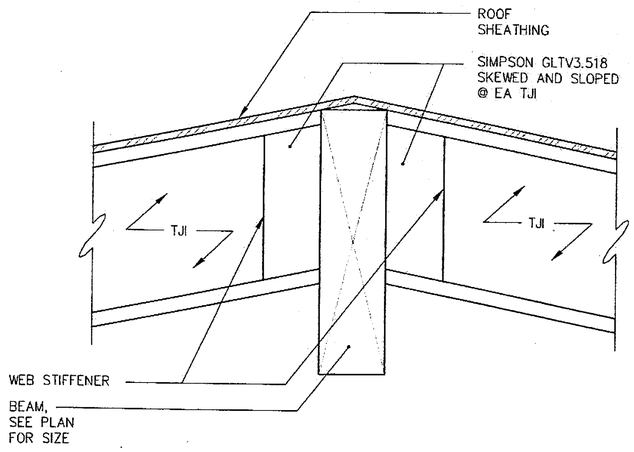

J ROOF SECTION AT BEAM

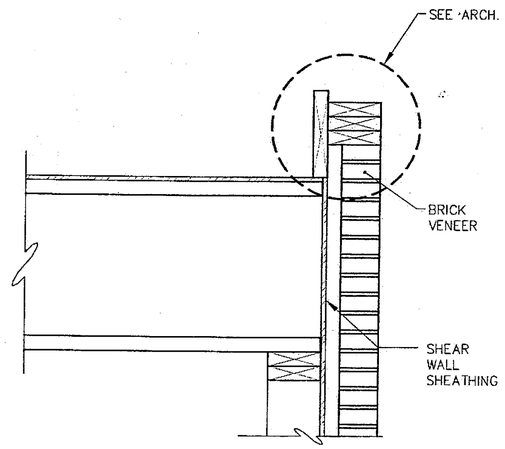

K ROOF SECTION AT EXTERIOR WALL

Project As-Built Drawings have been reviewed by the Project Engineer and present to the best of my knowledge, the project as constructed.
Proj. Eng. _____ Date 2/07

Tue, 14/Dec/04 12:00PM

ADDENDUM NUMBER
ATTACHMENT NUMBER

RECORD OF REVISIONS

No.	DATE	DESCRIPTION

CHECKED BY:

DESIGNED BY: BCN

DRAWN BY: PJD

STATE OF ALASKA
DEPARTMENT OF TRANSPORTATION & PUBLIC FACILITIES
STATEWIDE DESIGN & ENGINEERING SERVICES DIVISION

MT EDGECUMBE HIGH SCHOOL BUILDING 1330 ACADEMIC EXPANSION

SHEET S402

PROJECT DESIGNATION NUMBER

67751C

STATE	YEAR
ALASKA	2004
SHEET NUMBER	TOTAL SHEETS
52	79

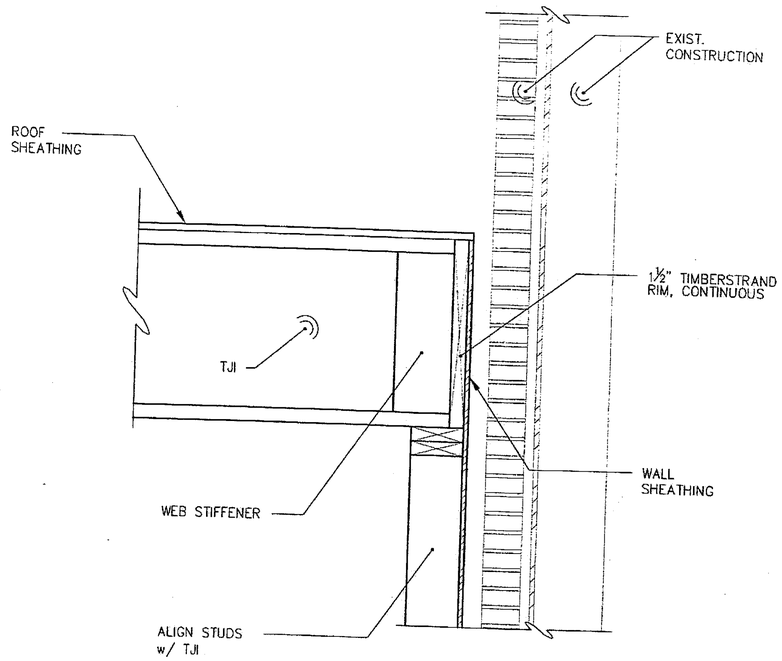

L ROOF SECTION

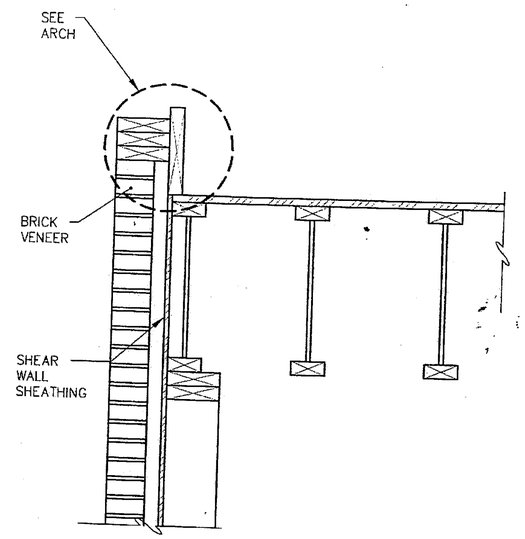

M ROOF SECTION

Tue, 14/Dec/04 12:00PM

ADDENDUM NUMBER

ATTACHMENT NUMBER

RECORD OF REVISIONS

No.	DATE	DESCRIPTION

CHECKED BY:

DESIGNED BY: BCN

DRAWN BY: PJD

STATE OF ALASKA
DEPARTMENT OF TRANSPORTATION
& PUBLIC FACILITIES
STATEWIDE DESIGN & ENGINEERING
SERVICES DIVISION

MT EDGECUMBE
HIGH SCHOOL
BUILDING 1330
ACADEMIC
EXPANSION

SHEET S403

PROJECT DESIGNATION NUMBER

67751C

STATE	YEAR
ALASKA	2004
SHEET NUMBER	TOTAL SHEETS
53	79

roject As-Built Drawings have been
eviewed by the Project Engineer and
epresent to the best of my knowledge, the
roject as constructed.
roj. Eng. Date 7-07

SYMBOLS

CW	COLD WATER
HW	HOT WATER
HWR	HOT WATER RECIRCULATING
THW	TEMPERED HOT WATER
V	VENT
W	WASTE
HS	HEATING SUPPLY
HR	HEATING RETURN
DSPR	DRY SPRINKLER
SPR	SPRINKLER
A	COMPRESSED AIR
G	GAS
100	AIR VOLUME
12x12	DIFFUSER/GRILLE SIZE
8"ø	DUCT CONNECTION SIZE
SG-1	GRILLE TYPE
RG/EG	CEILING RETURN AIR GRILLE/EXHAUST AIR GRILLE
SG	CEILING SUPPLY DIFFUSER
	RETURN/EXHAUST DUCT UP, DOWN
	SUPPLY DUCT UP, DOWN
PU-1	PUMP
	GATE VALVE
	CHECK VALVE
	UNION
AV	AUTOMATIC VALVE
1	FLOW SETTER W/NO.
	RISING STEM GATE VALVE WITH VALVE SWITCH
DV	DRAIN VALVE
	PITCHED DOWN
	REDUCER
	CAPPED OR PLUGGED
CO	CLEANOUT
FCO	FLOOR CLEANOUT
	TEST PORT/PLUG

T	THERMOSTAT – IMMERSION, ROOM
	THERMOMETER
	PRESSURE GAGE
P	PRESSURE SWITCH
E	EXISTING
R	TO BE RELOCATED
	POINT OF CONNECTION OR REMOVAL
A	ACCESS DOOR
ø	DIAMETER
AAV	AUTOMATIC AIR VENT
AHU	AIR HANDLING UNIT
BC-1	BOOSTER COIL
BTU	BRITISH THERMAL UNIT
CFM	CUBIC FEET PER MINUTE
DF-1	DRINKING FOUNTAIN
DW	DISHWASHER
EA	EXHAUST AIR
EAC	EXHAUST AIR CAP
EAT	ENTERING AIR TEMPERATURE
EF	EXHAUST FAN
ESP	EXTERNAL STATIC PRESSURE
EW-1	EMERGENCY EYEWASH/SHOWER
EWT	ENTERING WATER TEMPERATURE
FD-1	FLOOR DRAIN
FP-1	FINNED PIPE
FPM	FEET PER MINUTE
FS-1	FLOOR SINK
FT	FEET
GPM	GALLONS PER MINUTE
HC	HEATING COIL
HP	HORSE POWER

HWM	HOT WATER MAKER
HWRP	HOT WATER RECIRCULATING PUMP
IPS	IRON PIPE SIZE
HWRP	HOT WATER RECIRCULATING PUMP
L-1	LAVATORY
LAT	LEAVING AIR TEMPERATURE
LWT	LEAVING WATER TEMPERATURE
MAV	MANUAL AIR VENT
OSA	OUTSIDE AIR
PRV	PRESSURE REDUCING VALVE
RA	RETURN AIR
RF	RETURN FAN
S-1	SINK
SA	SUPPLY AIR TEMPERATURE
SS-1	SERVICE SINK
T&P	TEMPERATURE AND PRESSURE RELIEF VALVE
TEF	TOILET EXHAUST FAN
TMB	TERMINAL MIXING BOX
TV	TEMPERING VALVE
UH-1	UNIT HEATER
VAV	VARIABLE AIR VOLUME
VTR	VENT THROUGH ROOF
WC-1	WATER CLOSET
WH-1	WALL HYDRANT

SHEET NOTES:

1. SEE SPECIFICATIONS FOR ADDITIONAL DATA ON ALL EQUIPMENT. DATA REQUIRED SHOWING CONFORMANCE OF DESIGN INTENT FOR EACH PIECE OF EQUIPMENT AND APPURTENANCES LISTED IN THE SCHEDULES.

CODE NOTES:

1. ALL MECHANICAL WORK IS TO BE DESIGNED AND CONSTRUCTED IN ACCORDANCE WITH 2003 INTERNATIONAL BUILDING CODES, 2003 UNIFORM PLUMBING CODE, AND NFPA.

EQUIPMENT SCHEDULE

EQUIPMENT	FUNCTION	LOCATION	SIZE/CAPACITY	DESIGN MANUFACTURE AND MODEL	FEATURES AND ACCESSORIES
EXPANSION TANK (ET) DOMESTIC	AIR EXPANSION	MECH./ELEC. 201	10 GALLON TOTAL 2 GALLON ACCEPTANCE	AMTROL ST SERIES	ASME. PIPE MOUNTED.

FLOWSETTER AND AUTOMATIC VALVE SCHEDULE

NUMBER	UNIT SERVED	LOCATION	DESIGN GPM	SETTER SIZE (INCHES)	VALVE TYPE	VALVE OPERATION	NORMAL POSITION
1	TMB-1	ROOM 141	3.5	1"	2-WAY	MODULATING	OPEN
2	TMB-2	ROOM 142	3.0	1"	2-WAY	MODULATING	OPEN
3	TMB-3	ROOM 143	3.5	1"	2-WAY	MODULATING	OPEN
4	TMB-4	ROOM 144	1.6	3/4	2-WAY	MODULATING	OPEN
5	TMB-5	ROOM 145	2.4	3/4	2-WAY	MODULATING	OPEN
6	TMB-6	ROOM 146	1.3	1/2	2-WAY	MODULATING	OPEN
7	TMB-7	ROOM 147	1.2	1/2	2-WAY	MODULATING	OPEN
8	HWM	ROOM 201	9.0	1-1/4	2-WAY	POSITIVE	CLOSED
9	AHU-3 HC	ROOM 201	10.0	1-1/4	3-WAY	MODULATING	OPEN
10	CV	CENTER HALL 140	1.0	1/2	2-WAY	POSITIVE	OPEN
11	UH-1	FAN ROOM	0.5	1/2	2-WAY	POSITIVE	OPEN
12*	UH-1	JAN 150	0.8	1/2	2-WAY	POSITIVE	OPEN

* IN ALTERNATE WORK.

TMB BOX AND REHEAT COIL SCHEDULE

NUMBER	CFM	COIL CAPACITY * (MBH)	INLET DIAMETER	OUTLET DIAMETER	OUTLET NUMBER	UNIT MODEL **
TMB-1	1,190	35.0	10	8	5	DESV 10
TMB-2	1,190	30.0	10	8	5	DESV 10
TMB-3	1,460	35.0	12	10	5	DESV 12
TMB-4	760	16.0	8	8	4	DESV 8
TMB-5	670	24.4	8	8	5	DESV 8
TMB-6	650	12.6	8	10	2	DESV 8
TMB-7	810	12.2	8	8	4	DESV 8

* 190°F EWT, 160°F LWT, 55°F EAT
** DESIGN BASED ON TITUS MODEL DESV

PLUMBING FIXTURE SCHEDULE

FIXTURE	HOT WATER	COLD WATER	WASTE	VENT
WATER CLOSET, WC-1	–	1-1/4	3 OR 4	3
LAVATORY, L-1	1/2	1/2	1-1/2	1-1/2
SINK, S-1	1/2	1/2	2	1-1/2
SINK, S-2	–	1/2	1-1/2	1-1/2
SINK, S-3	1/2	1/2	2	1-1/2
SERVICE SINK, SS-1	1/2	1/2	3	2
FLOOR SINK, FS-1	–	–	3	2
FLOOR DRAIN, FD-1	–	–	2	1-1/2
EMERGENCY EYEWASH, EW-1	–	–	–	–
DRINKING FOUNTAIN, DF-1	–	1/2	2	1-1/2
WALL HYDRANT, WH-1	–	3/4	–	–

PUMP SCHEDULE

EQUIPMENT	FUNCTION	GPM	HEAD, FT	DESIGN MANUFACTURER AND MODEL	MINIMUM HORSEPOWER ELECTRICAL CHARACTERISTICS	FEATURES
HWRP	DOMESTIC HOT WATER RECIRC.	2	7	TACO – 006	1/40HP, 120V, SINGLE-PHASE	BRONZE, UNITIZED.
PU-5, PU-6	HEATING	40	18	TACO – 1635	1/2HP, 208-230/460V, THREE-PHASE	PIPE MOUNTED. CENTRIFUGAL PUMP. TRIMMED CUSTOM IMPELLER 4.6"ø.

FAN SCHEDULE

EQUIPMENT	AREA SERVED	CFM	ESP, INCHES OF WATER	DESIGN MANUFACTURER AND MODEL	MIN. HP	VOLTS / PHASE	FEATURES AND ACCESSORIES
AHU-3	BUILDING SUPPLY	6,440	1.0	SCOTT SPRINGFIELD BAF-DW 27	5.0	208V/3ø	CUSTOM AIR FOIL OR BACKWARD INCLINED CABINET FAN.
RF-3	BUILDING RETURN	5,760	0.75	SCOTT SPRINGFIELD BAF-DW 22	3.0	208V/3ø	CUSTOM AIR FOIL OR BACKWARD INCLINED CABINET FAN.
EF-13, EF-14	FUME HOOD EXHAUST	735	1.25	GREENHECK, 12-BISW-21	1/4	120V/1ø	BACKWARD INCLINED UTILITY FAN.
EF-12	GENERAL EXHAUST	800	1.0	GREENHECK SWB-12-4	1/4	120V/1ø	FORWARD CURVED UTILITY FAN.

HEATING COIL SCHEDULE

COIL	UNIT SERVED	CAPACITY (MBH)	WATER TEMPERATURES ENTERING	WATER TEMPERATURES LEAVING	AIR TEMPERATURES ENTERING	AIR TEMPERATURES LEAVING	FEATURES AND ACCESSORIES
HC	AHU	150	180°F	160°F	45°F	65°F	MAXIMUM 8 FPI, NONFERROUS MATERIAL. MAXIMUM AIR FRICTION DROP 0.25 INCHES OF WATER. MAXIMUM WATER FRICTION DROP, 3.0 FEET OF WATER. MAXIMUM COIL FACE VELOCITY, 500 FPM.

HEATING UNIT SCHEDULE

EQUIPMENT	DESIGN MANUFACTURER	MODEL	FEATURES AND ACCESSORIES
CONVECTOR, CV	VULCAN	SF-A24	8,200 BTU/HR WATER RATING AT AVERAGE 180°F WATER TEMPERATURE, AND 65°F ENTERING AIR. FLOOR MOUNTED SURFACE MOUNTED, CONVECTOR. ACCESS DOOR FOR ACCESS TO AUTOMATIC VALVE. 48"Lx24"Hx6" DEEP. COLOR SELECTED BY ARCHITECT.
UNIT HEATER, UH-1	VULCAN	HV-24	HORIZONTAL UNIT HEATER. 20,000 BTU/HR AT AVERAGE 180°F WATER TEMPERATURE, 20°F DROP. 120V/1ø.

PLUMBING EQUIPMENT SCHEDULE

EQUIPMENT	DESIGN MANUFACTURER	OPTIONS/TRIM
WATER CLOSET, WC-1	AMERICAN STANDARD, KOHLER CRANE	FLOOR MOUNTED FLUSH VALVE, TOP SPUD, ELONGATED BOWL WITH OPEN FRONT SEAT AND CHECK HINGES. 1-1/2-INCH, BATTERY POWERED, SENSOR OPERATED FLUSH VALVE. 1-1/4-INCH IPS WHEEL HANDLE ISOLATING VALVE AND FLEXIBLE RISER.
LAVATORY, L-1	AMERICAN STANDARD, KOHLER	VITREOUS CHINA, WALL MOUNTED, 20"x18". 4" FAUCET CENTERS. BATTERY POWERED, SENSOR OPERATED SUPPLY, WITH MIXING VALVE. COMBINATION SUPPLY WITH GRID DRAIN. ADA COMPLIANT.
SINK 1, S-1	JUST, ELKAY	SINGLE-COMPARTMENT SINK SUPPLIED WITH SCIENCE CASEWORK. TRIM: GOOSENECK FAUCET WITH VACUUM BREAKER, SERRATED NOZZLE, HOT AND COLD WATER INDEXED WRIST BLADE HANDLES. COORDINATE WITH SCIENCE CASEWORK.
SINK 2, S-2	JUST, ELKAY	SINGLE-COMPARTMENT, SELF-RIMMING, LEDGEBACK FULLY UNDERCOATED, PRE-PUNCHED 18-GAGE STAINLESS STEEL. 21"x19"x6-1/2" DEEP. TRIM: GOOSENECK FAUCET WITH VACUUM BREAKER, SERRATED NOZZLE, HOT AND COLD WATER INDEXED WRIST BLADE HANDLES. COORDINATE WITH CASEWORK.
SINK 3, S-3	JUST, ELKAY	SINGLE-COMPARTMENT CUP SINK PROVIDED WITH FUME HOOD. TRIM ALSO PROVIDED WITH HOOD. PROVIDE COLD WATER, WASTE, AND VENT CONNECTION.
SERVICE SINK, SS-1	AMERICAN STANDARD, KOHLER	28"x28" VITREOUS CHINA, WITH MIXING FAUCET. INTEGRAL VACUUM BREAKER, RIM GUARD AND TRIM. 3" OUTLET.
FLOOR SINK, FS-1	ZURN JOSAM	4"x8" PORCELAIN ENAMEL INTERIOR WITH SECONDARY STRAINER. 3" OUTLET. 4" SUMP DEPTH.
FLOOR DRAIN, FD-1	ZURN JOSAM	7" DIAMETER TOP WITH INTEGRAL FUNNEL DRAIN SOLID NICKEL BRONZE. 2" OUTLET.
EMERGENCY EYEWASH, EW-1	HAWS ELKAY	COMBINATION EMERGENCY EYEWASH AND SHOWER, ADA COMPLIANT.
DRINKING FOUNTAIN, DF-1	ELKAY	STAINLESS STEEL DOUBLE UNIT, ADA COMPLIANT.
WALL HYDRANT, WH-1	JOSAM, ZURN	3/4" NON-FREEZE TYPE IN RECESSED BOX. WITH INTERNAL VACUUM BREAKER.

Tue, 14/Dec/04 12:10PM

ADDENDUM NUMBER

ATTACHMENT NUMBER

RECORD OF REVISIONS

No.	DATE	DESCRIPTION

CHECKED BY: DM

STATE OF ALASKA
DOUGLAS H. MURRAY
ME 7870
REGISTERED PROFESSIONAL ENGINEER
EXPIRATION DATE: 12-31-05

DESIGNED BY: DM/LH

DRAWN BY: WN

STATE OF ALASKA
DEPARTMENT OF TRANSPORTATION & PUBLIC FACILITIES
STATEWIDE DESIGN & ENGINEERING SERVICES DIVISION

MT EDGECUMBE HIGH SCHOOL
BUILDING 1330
ACADEMIC EXPANSION

SHEET M001

PROJECT DESIGNATION NUMBER

67751C

STATE	YEAR
ALASKA	2004

SHEET NUMBER	TOTAL SHEETS
54	79

Project As-Built Drawings have been reviewed by the Project Engineer and represent to the best of my knowledge, the project as constructed.
Proj. Eng. [illegible] Date 2-07

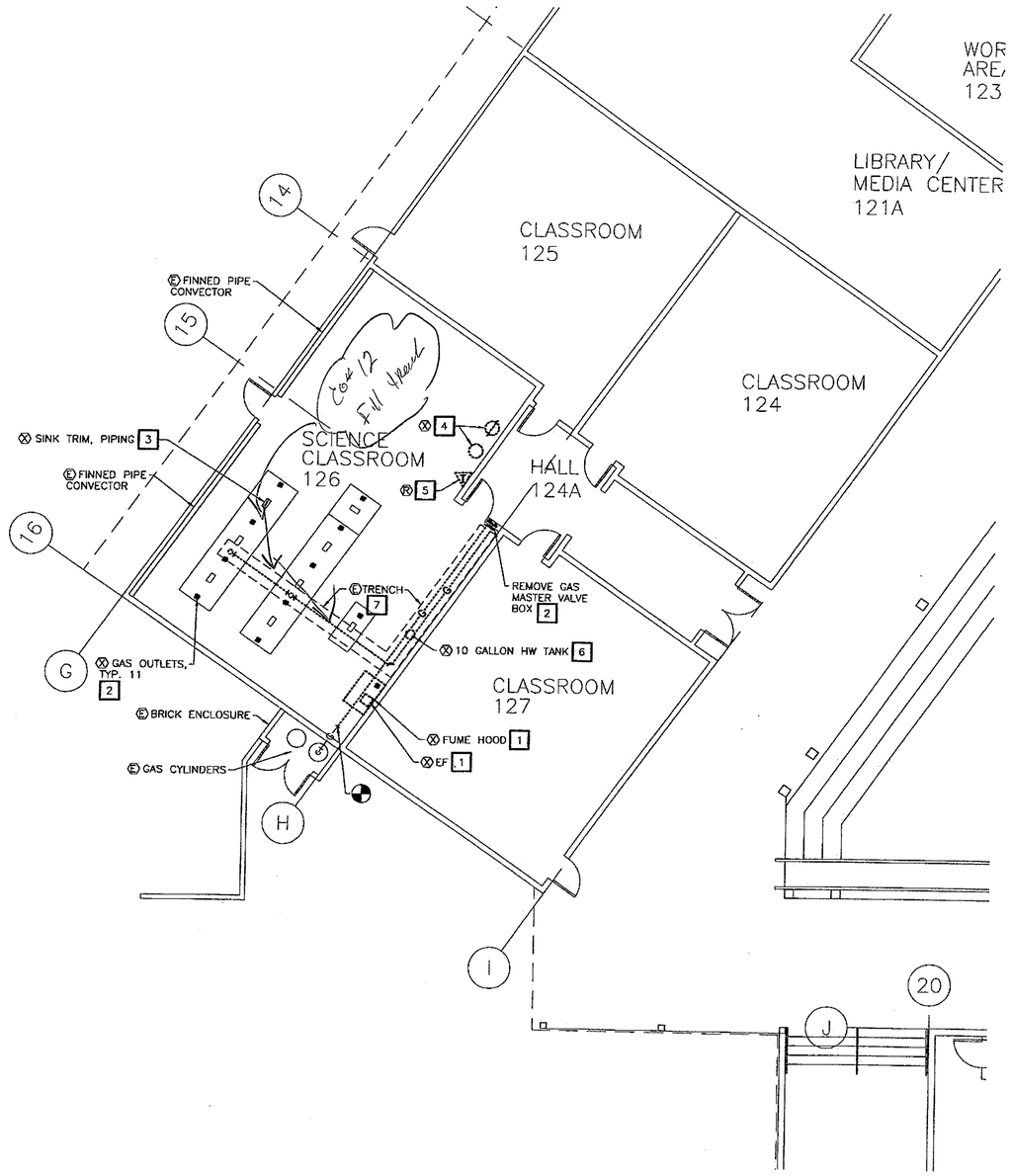

DEMOLITION NOTES:

1. REMOVE FUME HOOD, EXHAUST FAN AND SUPPORTS ABOVE, AND DUCT THROUGH ROOF. PATCH ROOF. REMOVE ALL PLUMBING AND GAS CONNECTIONS.
2. REMOVE ALL GAS PIPING, VALVES, AND OUTLETS.
3. REMOVE DOMESTIC CW, HW, W, AND V FROM LAB SINKS. CAP DOMESTIC WATER MAINS AT EAST WALL OF CLASSROOM. CAP WASTE PIPING AT FLOOR AND VENT PIPING. TYPICAL OF 8 SINKS TOTAL.
4. REMOVE EMERGENCY SHOWER AND EMERGENCY EYEWASH FIXTURES. CAP PIPING IN ADJACENT WALL. FILL FLOOR DRAIN WITH CONCRETE AND FINISH SMOOTH.
5. RELOCATE PNEUMATIC THERMOSTAT.
6. REMOVE HW TANK, PIPING, TRIM AND ELECTRICAL.
7. REMOVE ALL GAS, CW, HW, W, AND V PIPING FROM TRENCH. CAP AT MAINS.

1 **DEMOLITION FLOOR PLAN**

SCALE: 0 4' 8' 16'

Tue, 14/Dec/04 08:35AM

ADDENDUM NUMBER

ATTACHMENT NUMBER

RECORD OF REVISIONS

No.	DATE	DESCRIPTION

CHECKED BY: DM

STATE OF ALASKA 10th DOUGLAS H. MURRAY ME 7870 REGISTERED PROFESSIONAL ENGINEER

EXPIRATION DATE: 12-31-05

DESIGNED BY: DM/LH

DRAWN BY: WN

STATE OF ALASKA
DEPARTMENT OF TRANSPORTATION & PUBLIC FACILITIES
STATEWIDE DESIGN & ENGINEERING SERVICES DIVISION

MT EDGECUMBE HIGH SCHOOL BUILDING 1330 ACADEMIC EXPANSION

SHEET M101

PROJECT DESIGNATION NUMBER

67751C

STATE	YEAR
ALASKA	2004
SHEET NUMBER	TOTAL SHEETS
55	79

Project As-Built Drawings have been reviewed by the Project Engineer and represent to the best of my knowledge, the project as constructed.
Proj. Eng. Date

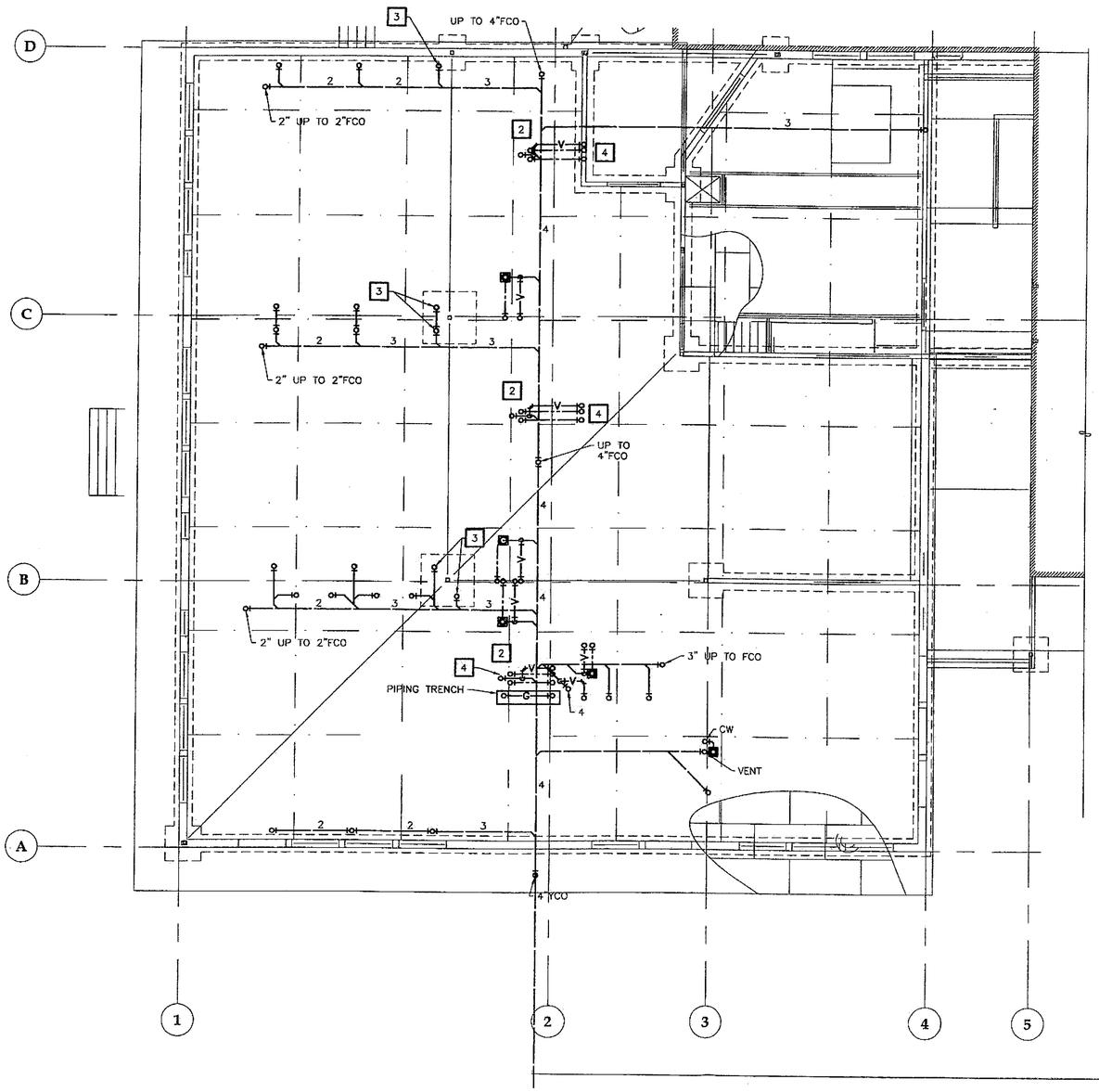

1 **FOUNDATION PLAN - BUILDING C**

SCALE: 0 4' 8' 16'

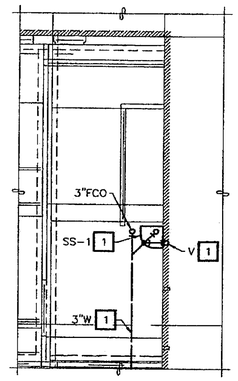

2 **PART FOUNDATION PLAN-ALTERNATE**

SCALE: 0 4' 8' 16'

CONSTRUCTION NOTES:

1. SERVICE SINK, SS-1, WASTE, AND VENT PIPING TO BE INSTALLED IN ALTERNATE WORK. SEE ARCHITECTURAL DRAWINGS FOR EXTENT OF ALTERNATE WORK. VENT PIPING ROUTED UP TO FAN ROOM.
2. ISLAND WASTE AND VENTING PIPING AT THESE LOCATIONS. SEE PLUMBING PIPING DIAGRAM ON SHEET M502 FOR CONFIGURATION.
3. SLEEVE PIPING BEFORE POURING FOOTING. COORDINATE WITH STRUCTURAL.
4. ROUTE POLYETHYLENE WATER, WASTE, AND VENT PIPING IN CONCRETE FLOOR TO ISLAND SINK.
5. ROUTE GAS PIPING IN TRENCH.

Fuel Lines
Cott 10
Removed Fuel Lines.

City Main

Service Line

Project As-Built Drawings have been reviewed by the Project Engineer and represent to the best of my knowledge, the project as constructed.
Proj. Eng. _____ Date _____

Tue, 14/Dec/04 08:47AM

ADDENDUM NUMBER

ATTACHMENT NUMBER

RECORD OF REVISIONS

No.	DATE	DESCRIPTION

CHECKED BY: DM

STATE OF ALASKA 49th DOUGLAS H. MURRAY ME 7870 REGISTERED PROFESSIONAL ENGINEER

EXPIRATION DATE: 12-31-05

DESIGNED BY: DM/LH

DRAWN BY: WN

STATE OF ALASKA
DEPARTMENT OF TRANSPORTATION & PUBLIC FACILITIES
STATEWIDE DESIGN & ENGINEERING SERVICES DIVISION

MT EDGECUMBE HIGH SCHOOL
BUILDING 1330
ACADEMIC EXPANSION

SHEET M201

PROJECT DESIGNATION NUMBER

67751C

STATE	YEAR
ALASKA	2004
SHEET NUMBER	TOTAL SHEETS
56	79

Cost 2 LAB Equipment: $ No sinks were provided in Contract. plumbing was Required But not the actual sinks. This CO also contained gas Faucets for RM 143. LD.

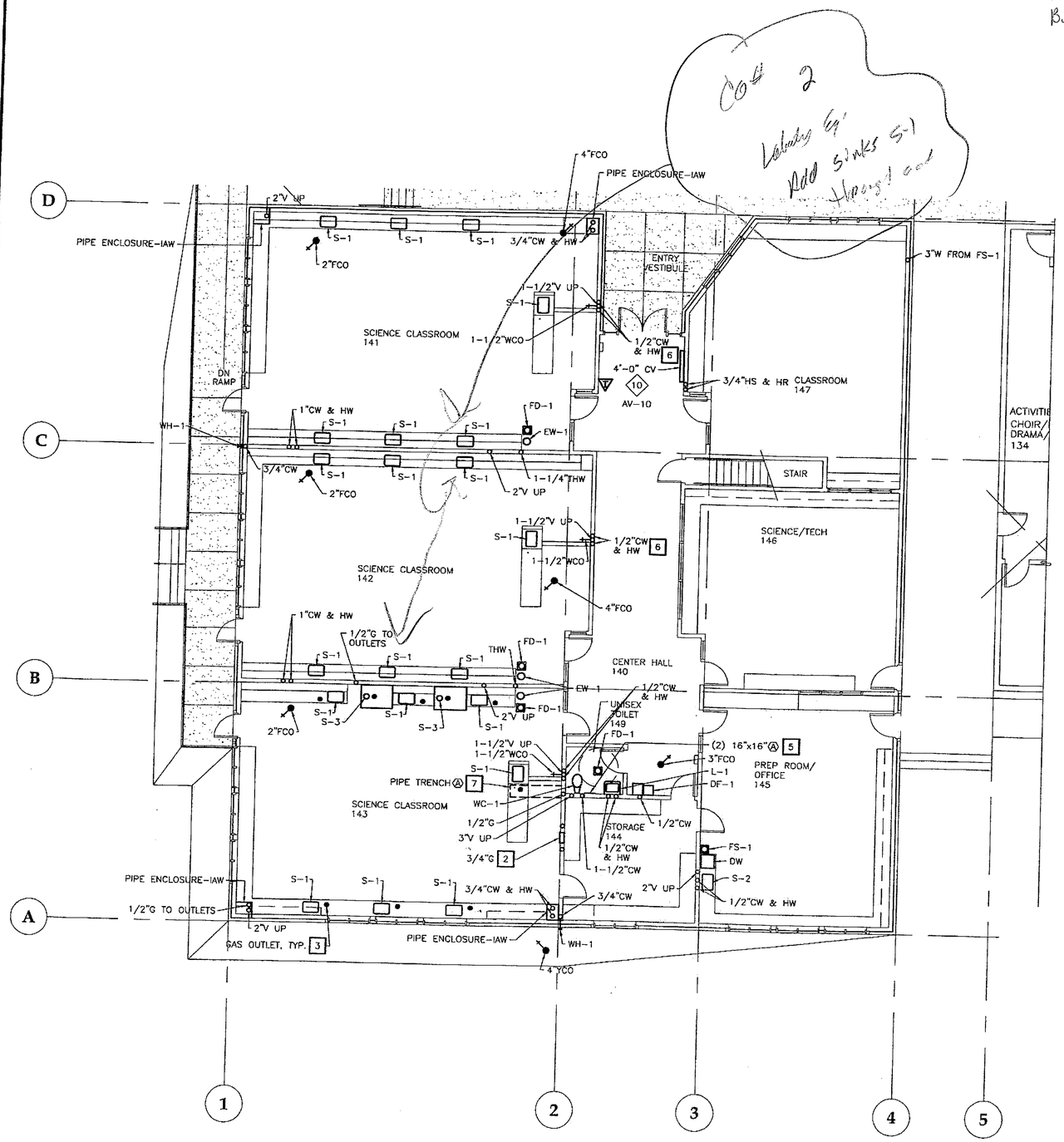

1 FLOOR PLAN - PIPING

SCALE: 0 4' 8' 16'

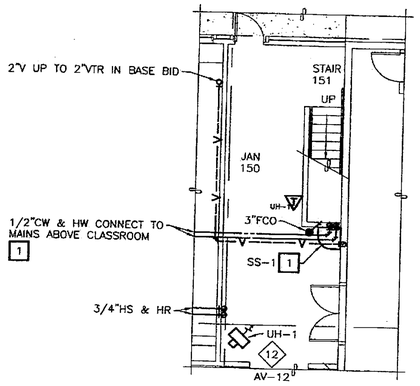

2 PART FLOOR PLAN-ALTERNATE

SCALE: 0 4' 8' 16'

CONSTRUCTION NOTES:

1. IN ALTERNATE WORK.
2. 1/2" G DOWN TO MASTER SHUT OFF VALVE.
3. 1/2" G DOWN TO GAS OUTLETS, 9 TOTAL.
4. ROUTE CW, HW, V PIPING IN SPACE BEHIND COUNTER.
5. LOCATE WATER HAMMER ARRESTOR WHA-1 AND WHA-2 BEHIND ACCESS DOOR-HIGH. LOCATE TRAP PRIMER FOR FD & FS BEHIND ACCESS DOOR-LOW.
6. ROUTE POLYETHYLENE WATER, WASTE, AND VENT PIPING IN CONCRETE FLOOR TO ISLAND SINK.
7. ROUTE GAS PIPING IN TRENCH.

SHEET NOTES:

1. VENT PIPING FROM INDIVIDUAL SINKS IS TO BE ROUTED BEHIND CABINETRY SEPARATELY AND MANIFOLDED TOGETHER MINIMUM 12 INCHES ABOVE RIM OF FIXTURES SERVED.

Tue, 14/Dec/04 10:13AM

ADDENDUM NUMBER

ATTACHMENT NUMBER

RECORD OF REVISIONS

No.	DATE	DESCRIPTION

CHECKED BY: DM

STATE OF ALASKA 49th DOUGLAS H. MURRAY ME 7870 REGISTERED PROFESSIONAL ENGINEER

EXPIRATION DATE: 12-31-05

DESIGNED BY: DM/LH

DRAWN BY: WN

STATE OF ALASKA
DEPARTMENT OF TRANSPORTATION & PUBLIC FACILITIES
STATEWIDE DESIGN & ENGINEERING SERVICES DIVISION

MT EDGECUMBE HIGH SCHOOL BUILDING 1330 ACADEMIC EXPANSION

SHEET M202

PROJECT DESIGNATION NUMBER

67751C

STATE	YEAR
ALASKA	2004
SHEET NUMBER	TOTAL SHEETS
57	79

Project As-Built Drawings have been reviewed by the Project Engineer and represent to the best of my knowledge, the project as constructed.
Proj. Eng. DHM Date 2-14

M-67761-D

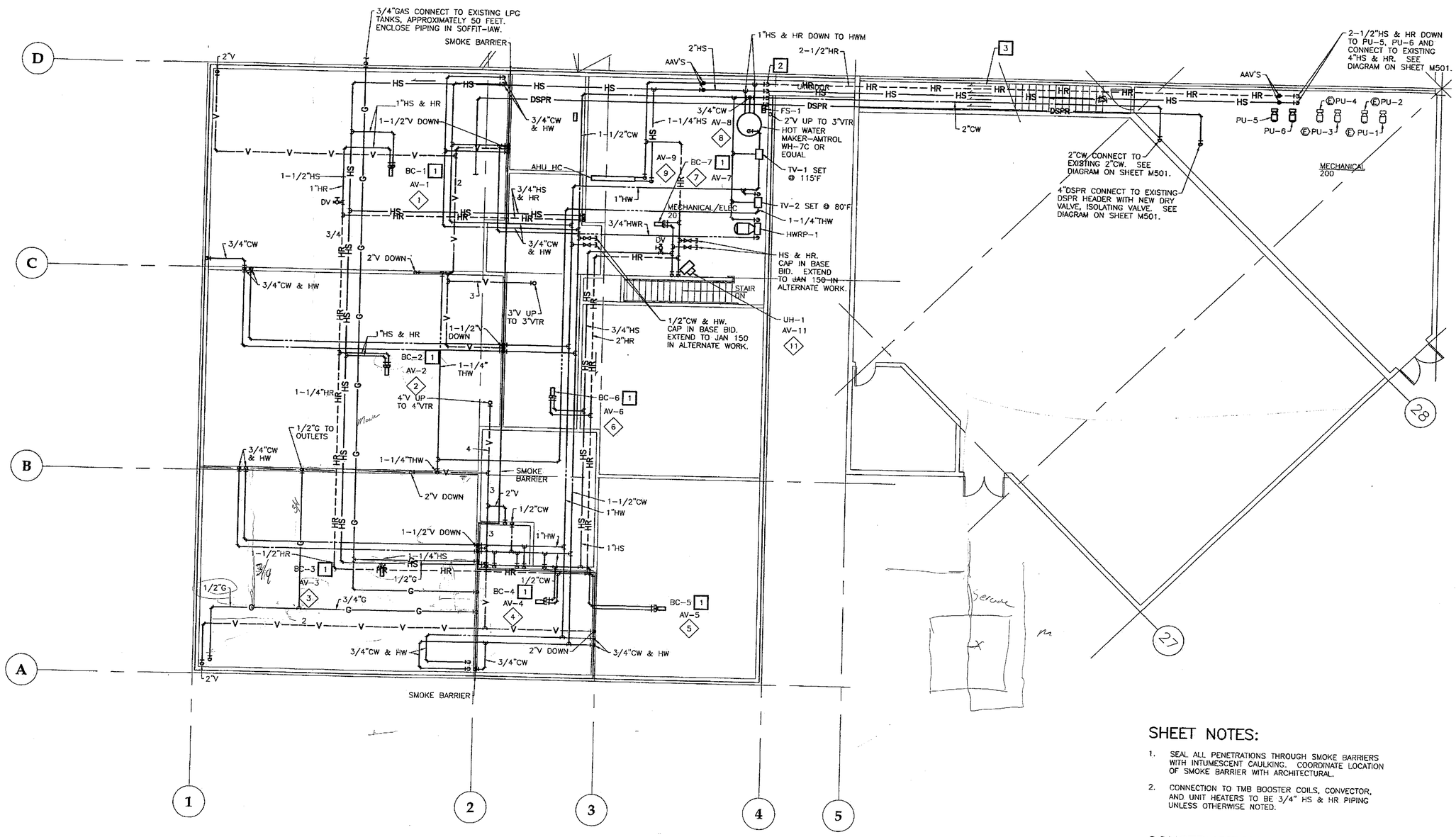

1 ATTIC FLOOR PLAN - PIPING

SCALE: 0 4' 8' 16'

SHEET NOTES:

1. SEAL ALL PENETRATIONS THROUGH SMOKE BARRIERS WITH INTUMESCENT CAULKING. COORDINATE LOCATION OF SMOKE BARRIER WITH ARCHITECTURAL.
2. CONNECTION TO TMB BOOSTER COILS, CONVECTOR, AND UNIT HEATERS TO BE 3/4" HS & HR PIPING UNLESS OTHERWISE NOTED.

CONSTRUCTION NOTES:

1. SEE DETAIL ON SHEET M701.
2. ELBOW PIPING DOWN TO ROUTE PIPING THROUGH CANOPY AREA. COORDINATE WITH HEIGHT OF CANOPY. INSTALL AUXILIARY DRAIN AT LOW POINT OF DRY SPRINKLER PIPE. COORDINATE DRAIN LOCATION.
3. ROUTE PIPING AS HIGH AS POSSIBLE. PITCH PIPING DOWN FOLLOWING PITCH OF STAIRWELL. COORDINATE WITH ARCHITECT ROUTING AND CONDUIT LOC

Project As-Built Drawings have been reviewed by the Project Engineer and represent to the best of my knowledge, the project as constructed.
Proj. Eng. _____ Date 12/7

Tue, 14/Dec/04 02:53PM

ADDENDUM NUMBER

ATTACHMENT NUMBER

RECORD OF REVISIONS

No.	DATE	DESCRIPTION

48-30-3840
A04
55
CORSON

CHECKED BY: DM

STATE OF ALASKA 19th DOUGLAS H. MURRAY ME 7870 REGISTERED PROFESSIONAL ENGINEER
EXPIRATION DATE: 12-31-05

DESIGNED BY: DM/LH
DRAWN BY: WN

STATE OF ALASKA
DEPARTMENT OF TRANSPORTATION & PUBLIC FACILITIES
STATEWIDE DESIGN & ENGINEERING SERVICES DIVISION

MT EDGECUMBE HIGH SCHOOL BUILDING 1330 ACADEMIC EXPANSION

SHEET M203

PROJECT DESIGNATION NUMBER
67751C

STATE	YEAR
ALASKA	2004
SHEET NUMBER	TOTAL SHEETS
58	79

Tue, 14/Dec/04 09:43AM

CONSTRUCTION NOTES:

1. INSTALL 3/4" GAS PIPING ABOVE CEILINGS OR ENCLOSED IN SOFFIT UNDER EXISTING CANOPY. CONNECT TO 1/2" AT WALL WHERE SHOWN.
2. RELOCATE THERMOSTAT TO WHERE SHOWN, MOUNT AT 4'-0" AFF. PROVIDE NEW PNEUMATIC TUBING AS REQUIRED. TEST HEATING CONTROL AND REPORT ANY DEFICIENCIES TO OWNER.

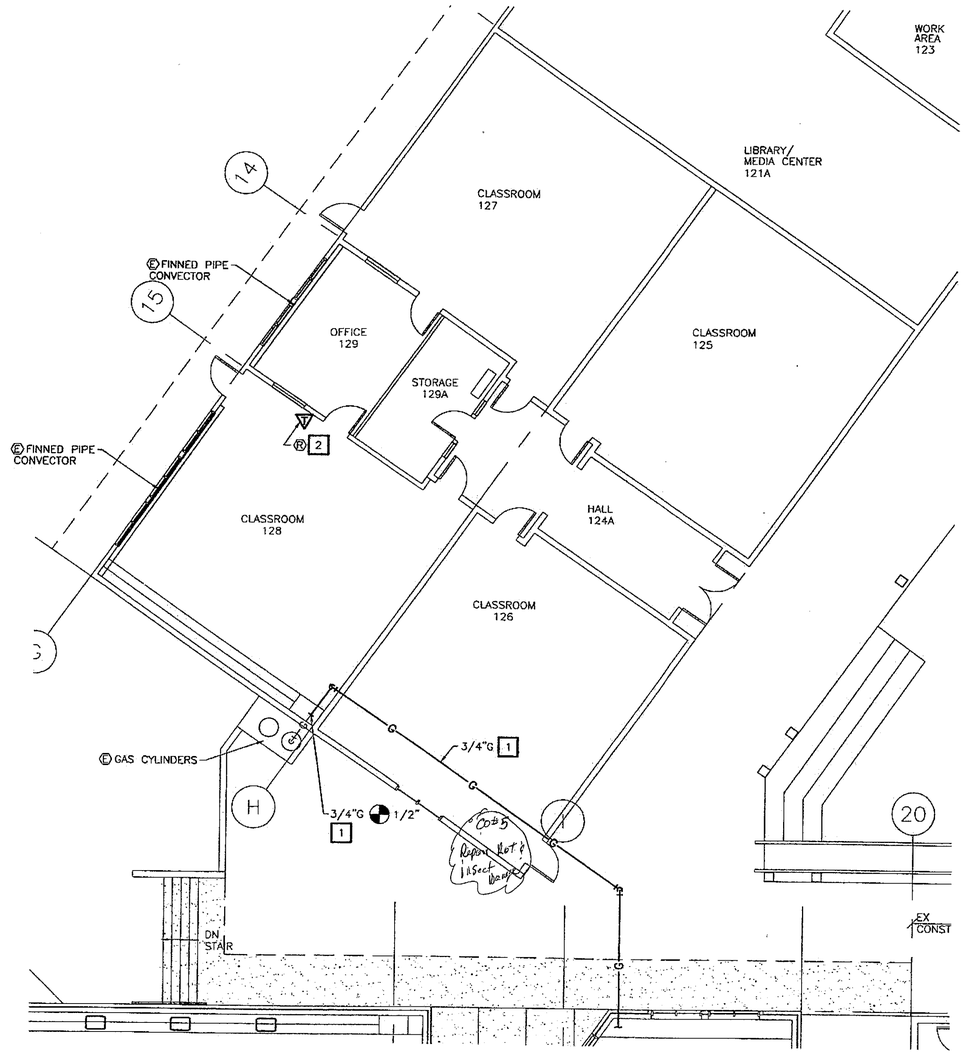

1 FLOOR PLAN - BUILDING A CLASSROOMS

SCALE: 0 4' 8' 16'

Project As-Built Drawings have been reviewed by the Project Engineer and represent to the best of my knowledge, the project as constructed.
Proj. Eng. _____ Date 7/07

ADDENDUM NUMBER

ATTACHMENT NUMBER

RECORD OF REVISIONS

No.	DATE	DESCRIPTION

CHECKED BY: DM

STATE OF ALASKA 49th DOUGLAS H. MURRAY ME 7870 REGISTERED PROFESSIONAL ENGINEER

EXPIRATION DATE: 12-31-05

DESIGNED BY: DM/LH

DRAWN BY: WN

STATE OF ALASKA
DEPARTMENT OF TRANSPORTATION & PUBLIC FACILITIES
STATEWIDE DESIGN & ENGINEERING SERVICES DIVISION

MT EDGECUMBE HIGH SCHOOL
BUILDING 1330
ACADEMIC EXPANSION

SHEET M204

PROJECT DESIGNATION NUMBER

67751C

STATE	YEAR
ALASKA	2004
SHEET NUMBER	TOTAL SHEETS
59	79

CONSTRUCTION NOTES:

1 IN ALTERNATE WORK.

SHEET NOTES:

1. ALL SUPPLY DIFFUSERS TO BE 12"x12" WITH 12"ø COLLAR IN 24"x24" LAY-IN PANEL. ALL RETURN/EXHAUST GRILLES TO BE 18"x18" SIZE.

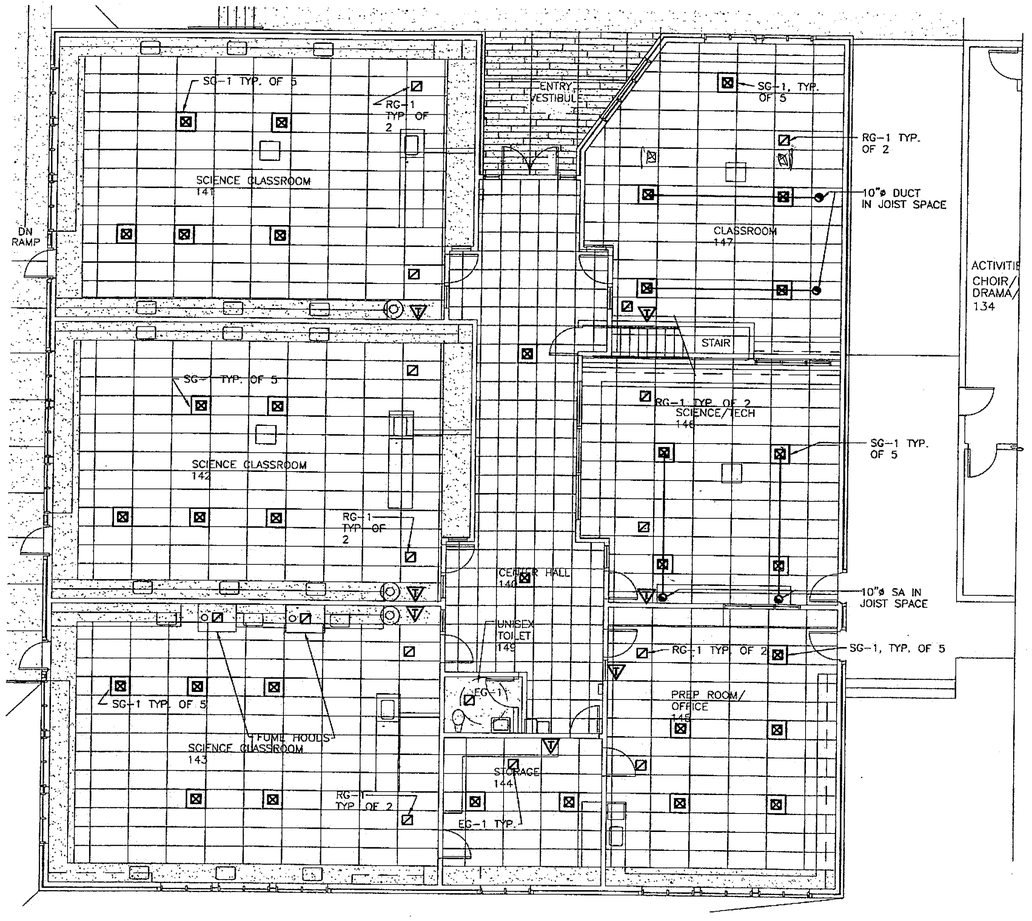

1 **FLOOR PLAN - VENTILATION**

SCALE: 0 4' 8' 16'

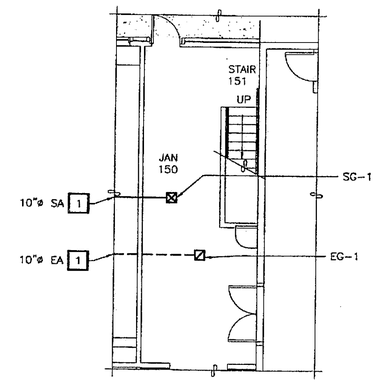

2 **PART FLOOR PLAN-ALTERNATE**

SCALE: 0 4' 8' 16'

DIFFUSER AND GRILLE SCHEDULE

NOTE: SEE FLOOR PLANS FOR DIFFUSER BLOW PATTERNS

SUPPLY CEILING DIFFUSER OR WALL GRILLE						RETURN OR EXHAUST GRILLE					
ROOM	MARK	NUMBER	SUPPLY CFM	FACE SIZE	NECK SIZE	MARK	NUMBER	RETURN CFM	EXHAUST CFM	FACE SIZE	NECK SIZE
140	SG-1	2	240	12 X 12	8"ø	–	–	–	–	–	–
141	SG-1	5	238	12 X 12	10"ø	RG-1	2	570	–	24 X 22	24 X 22
142	SG-1	5	238	12 X 12	10"ø	RG-1	2	570	–	24 X 22	24 X 22
143	SG-1	5	292	12 X 12	12"ø	RG-1	2	695	–	24 X 24	24 X 24
144	SG-1	2	125	9 X 9	8"ø	EG-1	1	–	280	20 X 20	20 X 20
145	SG-1	5	135	9 X 9	8"ø	RG-1	2	320	–	20 X 20	20 X 20
146	SG-1	4	162	12 X 12	8"ø	RG-1	2	310	–	20 X 20	20 X 20
147	SG-1	5	162	12 X 12	8"ø	RG-1	2	385	–	20 X 20	20 X 20
149	–	–	–	–	–	EG-1	1	–	90	10 X 10	10 X 10
*150	SG-1	1	350	12 X 12	12"ø	EG-1	1	–	390	20 X 20	20 X 20

NOTE: *ALTERNATE WORK

Project As-Built Drawings have been reviewed by the Project Engineer and represent to the best of my knowledge, the project as constructed.
Proj. Eng. _____ Date 7-07

Tue, 14/Dec/04 02:54PM
TAB: 11x17

ADDENDUM NUMBER

ATTACHMENT NUMBER

RECORD OF REVISIONS

No.	DATE	DESCRIPTION

CHECKED BY: DM

STATE OF ALASKA 1961 DOUGLAS H. MURRAY ME 7870 REGISTERED PROFESSIONAL ENGINEER

EXPIRATION DATE: 12-31-05

DESIGNED BY: DM/LH

DRAWN BY: WN

STATE OF ALASKA
DEPARTMENT OF TRANSPORTATION & PUBLIC FACILITIES
STATEWIDE DESIGN & ENGINEERING SERVICES DIVISION

MT EDGECUMBE HIGH SCHOOL BUILDING 1330 ACADEMIC EXPANSION

SHEET M302

PROJECT DESIGNATION NUMBER

67751C

STATE	YEAR
ALASKA	2004

SHEET NUMBER	TOTAL SHEETS
60	80

Tue. 14/Dec/04 12:19PM

SHEET NOTES:

1. INLET DIAMETER TO TMB'S IS 8" UNLESS SHOWN OTHERWISE. OUTLET DIAMETER OF TMB'S TO DIFFUSERS IS 8" UNLESS SHOWN OTHERWISE.
2. INDIVIDUAL RETURN DUCTS TO GRILLES ARE 10"ø UNLESS SHOWN OTHERWISE.
3. SEAL ALL PENETRATIONS THROUGH SMOKE BARRIERS WITH INTUMESCENT CAULKING.

CONSTRUCTION NOTES:

1 IN ALTERNATE WORK. DUCTWORK TO JANITOR. CAP 10" DIAMETER DUCT IN BASE BID.

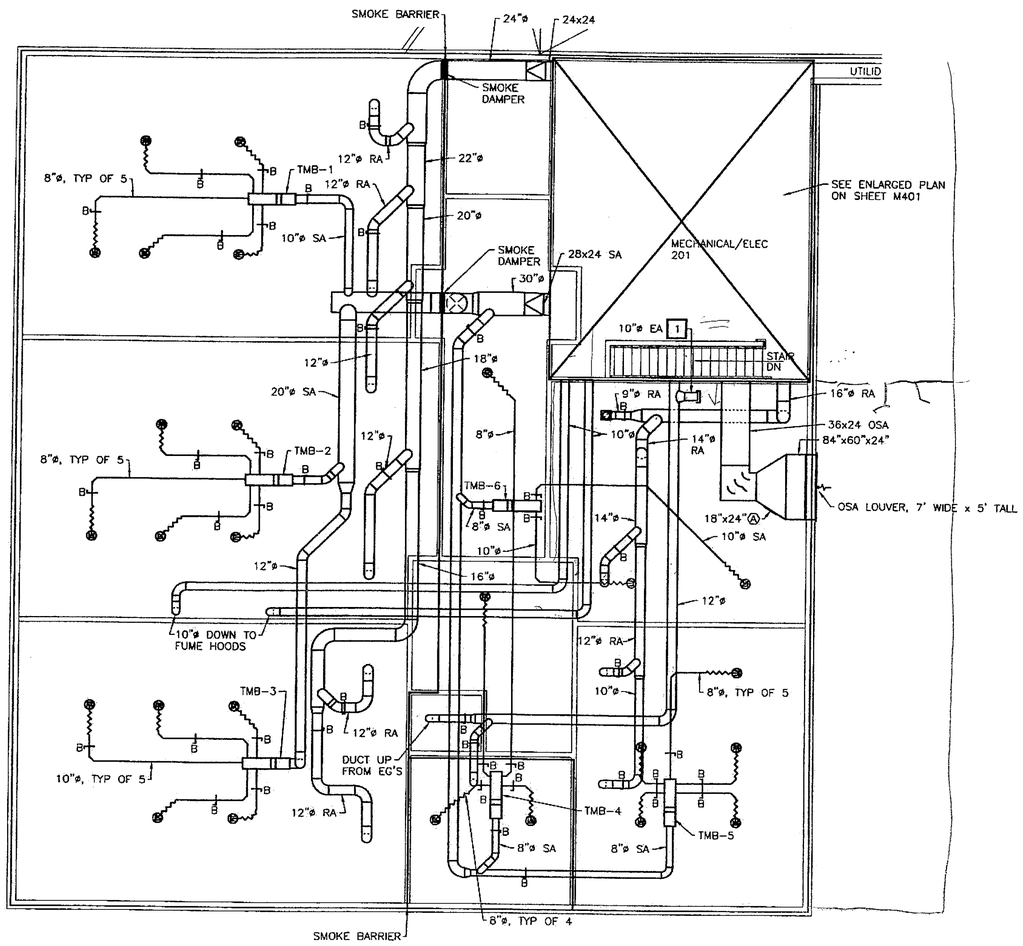

1 **MEZZANINE FLOOR PLAN - DUCTWORK**

SCALE: 0 4' 8' 16'

Project As-Built Drawings have been reviewed by the Project Engineer and represent to the best of my knowledge, the project as constructed.
Proj. Eng. Date 7-07

ADDENDUM NUMBER
ATTACHMENT NUMBER

RECORD OF REVISIONS

No.	DATE	DESCRIPTION

CHECKED BY: DM

STATE OF ALASKA 49th DOUGLAS H. MURRAY ME 7870 REGISTERED PROFESSIONAL ENGINEER

EXPIRATION DATE: 12-31-05

DESIGNED BY: DM/LH

DRAWN BY: WN

STATE OF ALASKA
DEPARTMENT OF TRANSPORTATION & PUBLIC FACILITIES
STATEWIDE DESIGN & ENGINEERING SERVICES DIVISION

MT EDGECUMBE HIGH SCHOOL BUILDING 1330 ACADEMIC EXPANSION

SHEET M303

PROJECT DESIGNATION NUMBER

67751C

STATE	YEAR
ALASKA	2004
SHEET NUMBER	TOTAL SHEETS
61	79

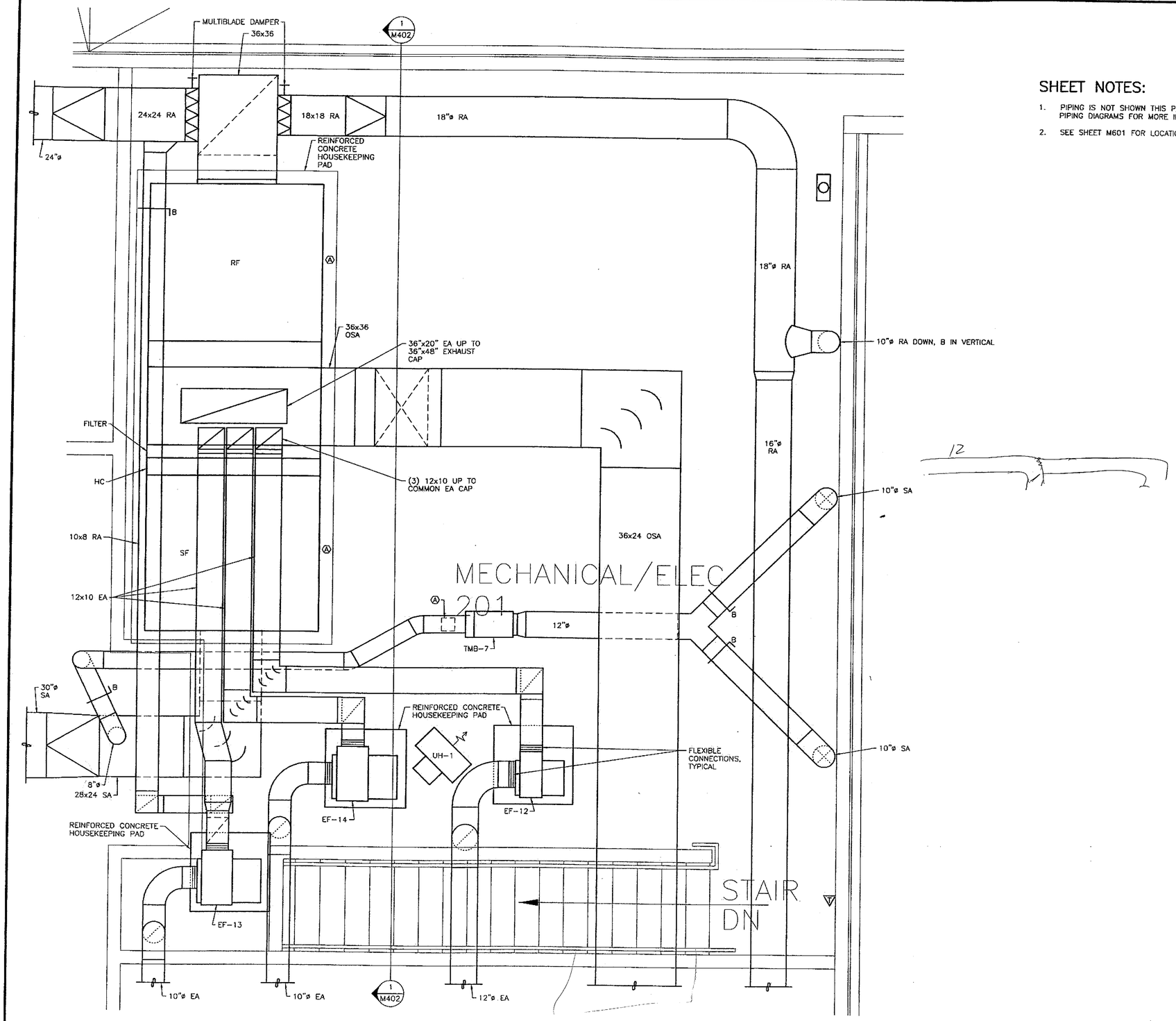

SHEET NOTES:

1. PIPING IS NOT SHOWN THIS PLAN. SEE SHEET M203 AND PIPING DIAGRAMS FOR MORE INFORMATION ON PIPING.
2. SEE SHEET M601 FOR LOCATION OF CONTROL DEVICES.

1 ENLARGED FAN ROOM PLAN BUILDING C

SCALE: 0 1' 2' 4'

Tue, 14/Dec/04 03:59PM

ADDENDUM NUMBER
ATTACHMENT NUMBER

RECORD OF REVISIONS

No.	DATE	DESCRIPTION

CHECKED BY: DM

STATE OF ALASKA 49th DOUGLAS H. MURRAY ME 7870 REGISTERED PROFESSIONAL ENGINEER

EXPIRATION DATE: 12-31-05

DESIGNED BY: DM/LH

DRAWN BY: WN

STATE OF ALASKA
DEPARTMENT OF TRANSPORTATION & PUBLIC FACILITIES
STATEWIDE DESIGN & ENGINEERING SERVICES DIVISION

MT EDGECUMBE HIGH SCHOOL BUILDING 1330 ACADEMIC EXPANSION

SHEET M401

PROJECT DESIGNATION NUMBER

67751C

STATE	YEAR
ALASKA	2004
SHEET NUMBER	TOTAL SHEETS
62	79

Project As-Built Drawings have been reviewed by the Project Engineer and represent to the best of my knowledge, the project as constructed.
Proj. Eng. _____ Date 7-07

SHEET NOTES:

1. INSULATE OUTSIDE AIR AND EXHAUST AIR DUCTS AS SPECIFIED.

CONSTRUCTION NOTES:

1 INSTALL BACKDRAFT DAMPERS IN THREE EA DUCTS FOR EF-12, EF-13, AND EF-14.

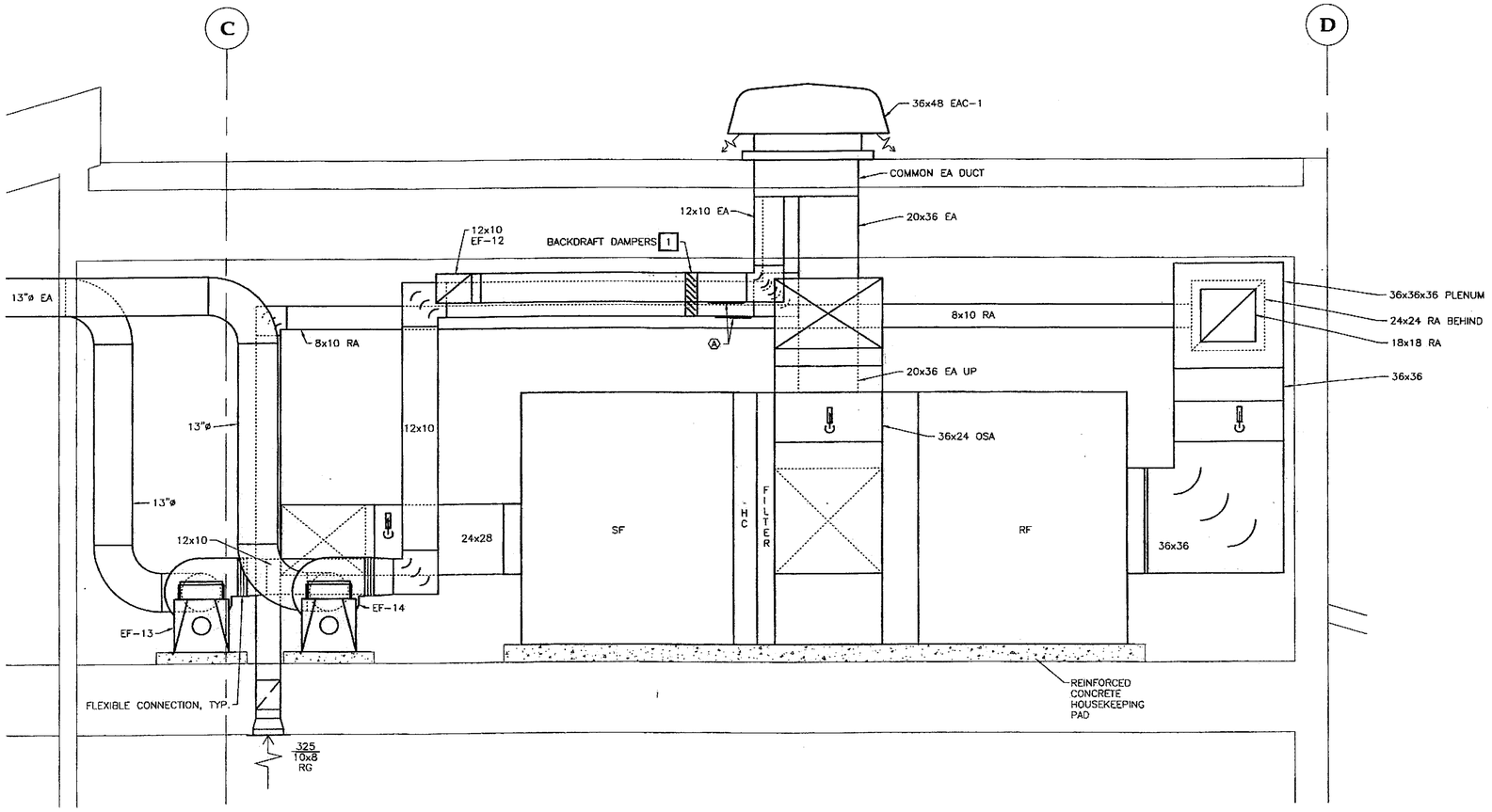

1 ENLARGED FAN ROOM SECTION BUILDING C

SCALE: 0 1' 2' 4'

Project As-Built Drawings have been reviewed by the Project Engineer and represent to the best of my knowledge, the project as constructed.
Proj. Eng. _____ Date _____

Tue, 14/Dec/04 10:20AM

ADDENDUM NUMBER
ATTACHMENT NUMBER

RECORD OF REVISIONS

No.	DATE	DESCRIPTION

CHECKED BY: DM

STATE OF ALASKA
49th
THOMAS H. MURRAY
ME 7870
REGISTERED PROFESSIONAL ENGINEER
EXPIRATION DATE: 12-31-05

DESIGNED BY: DM/LH

DRAWN BY: WN

STATE OF ALASKA
DEPARTMENT OF TRANSPORTATION & PUBLIC FACILITIES
STATEWIDE DESIGN & ENGINEERING SERVICES DIVISION

MT EDGECUMBE HIGH SCHOOL BUILDING 1330 ACADEMIC EXPANSION

SHEET M402

PROJECT DESIGNATION NUMBER

67751C

STATE	YEAR
ALASKA	2004
SHEET NUMBER	TOTAL SHEETS
63	79

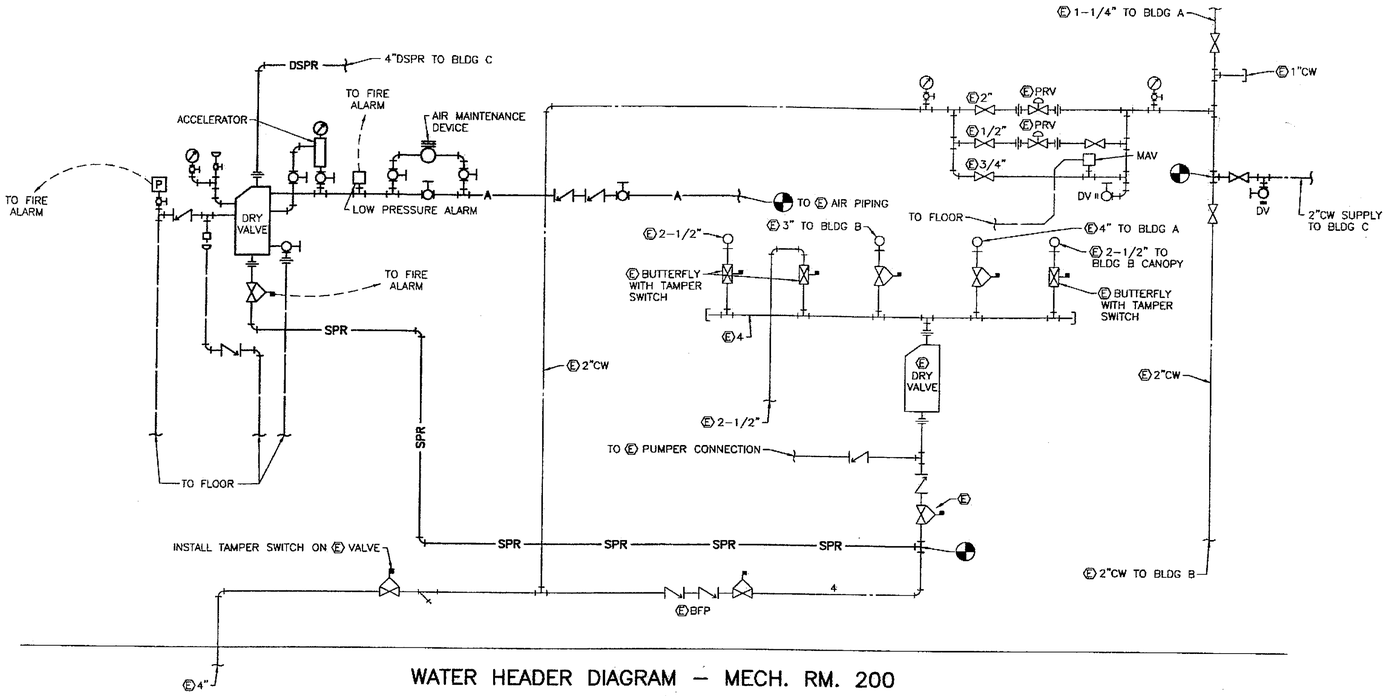

WATER HEADER DIAGRAM – MECH. RM. 200

NO SCALE

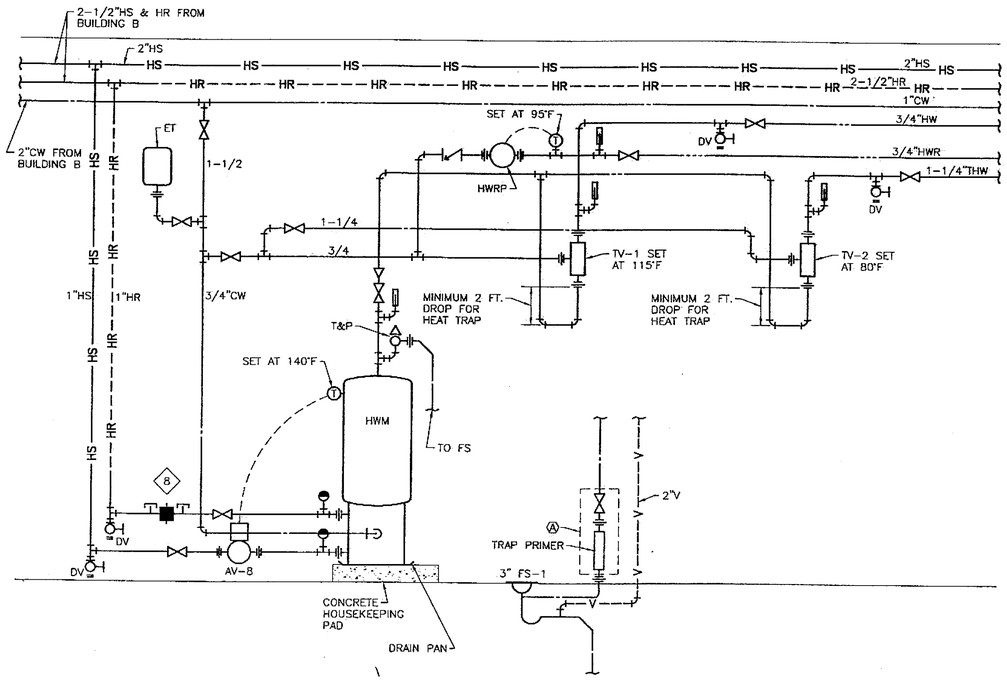

HOT WATER MAKER PIPING DIAGRAM

NO SCALE

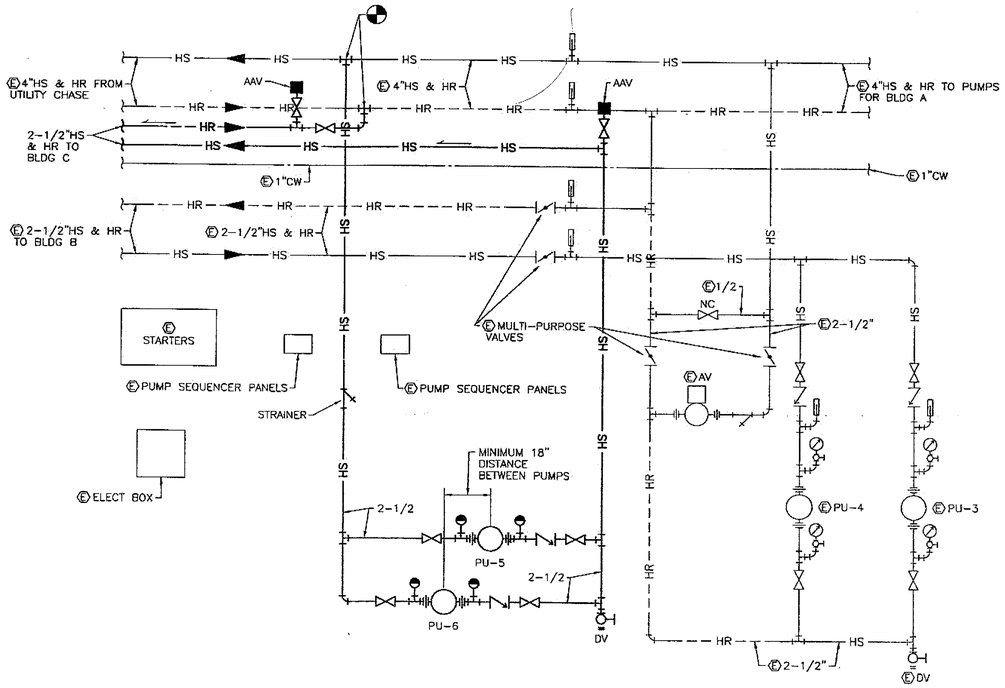

HEATING PIPING DIAGRAM – MECH. RM. 200

NO SCALE

Project As-Built Drawings have been reviewed by the Project Engineer and represent to the best of my knowledge, the project as constructed.
Proj. Eng. _____ Date 2-07

Tue, 14/Dec/04 09:34AM

ADDENDUM NUMBER
ATTACHMENT NUMBER

RECORD OF REVISIONS

No.	DATE	DESCRIPTION

CHECKED BY: DM

STATE OF ALASKA 49th DOUGLAS H. MURRAY ME 7870 REGISTERED PROFESSIONAL ENGINEER

EXPIRATION DATE: 12-31-05

DESIGNED BY: DM/LH

DRAWN BY: WN

STATE OF ALASKA
DEPARTMENT OF TRANSPORTATION & PUBLIC FACILITIES
STATEWIDE DESIGN & ENGINEERING SERVICES DIVISION

MT EDGECUMBE HIGH SCHOOL
BUILDING 1330
ACADEMIC EXPANSION

SHEET M501

PROJECT DESIGNATION NUMBER

67751C

STATE	YEAR
ALASKA	2004
SHEET NUMBER	TOTAL SHEETS
64	79

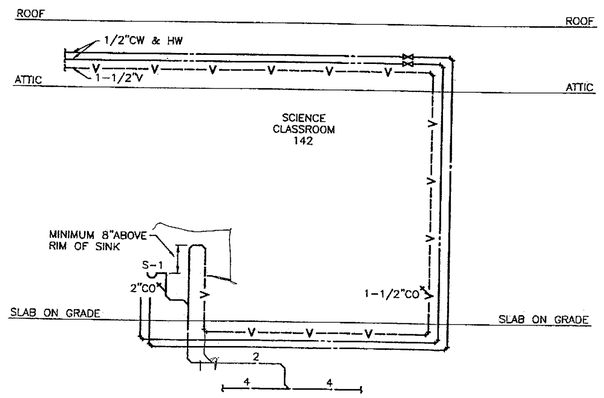

PLUMBING DIAGRAM
TYPICAL ISLAND WASTE AND VENT

NO SCALE

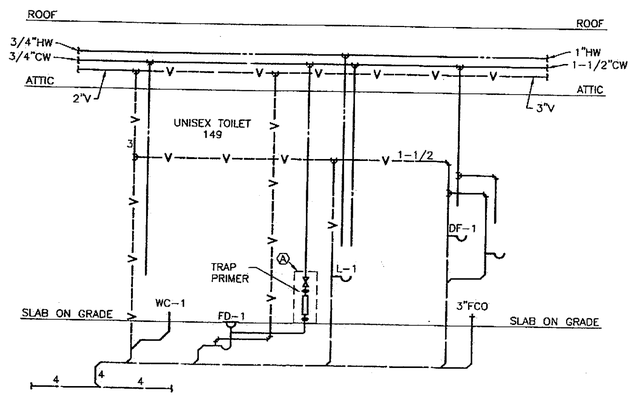

PLUMBING DIAGRAM
UNISEX TOILET 149

NO SCALE

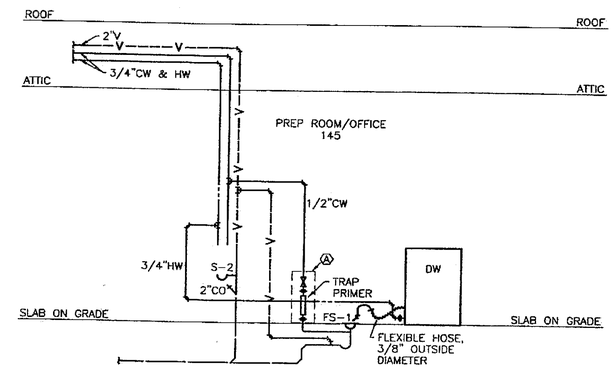

PLUMBING DIAGRAM
PREP ROOM/OFFICE 145

NO SCALE

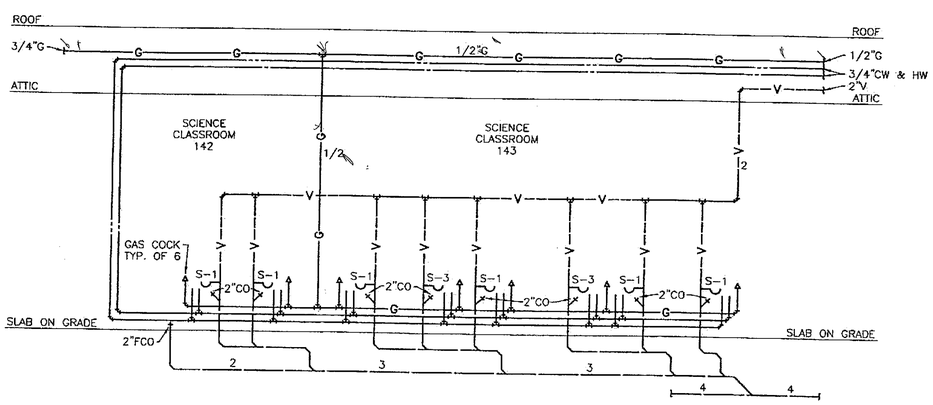

PLUMBING DIAGRAM
SCI 142 & 143 FUME HOOD WALL

NO SCALE

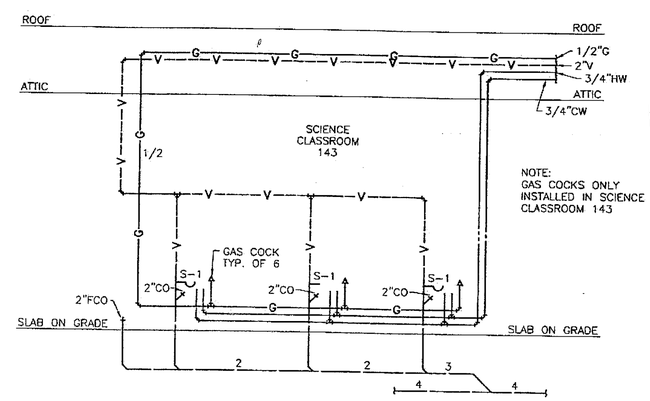

NOTE:
GAS COCKS ONLY
INSTALLED IN SCIENCE
CLASSROOM 143

PLUMBING DIAGRAM
TYP. OF SCI 141 & 143

NO SCALE

Project As-Built Drawings have been reviewed by the Project Engineer and represent to the best of my knowledge, the project as constructed.
Proj. Eng. _____ Date 7-07

Tue, 14/Dec/04 02:55PM

ADDENDUM NUMBER

ATTACHMENT NUMBER

RECORD OF REVISIONS

No.	DATE	DESCRIPTION

CHECKED BY: DM

STATE OF ALASKA
DOUGLAS H. MURRAY
ME 7870
REGISTERED PROFESSIONAL ENGINEER
EXPIRATION DATE: 12-31-05

DESIGNED BY: DM/LH

DRAWN BY: WN

STATE OF ALASKA
DEPARTMENT OF TRANSPORTATION
& PUBLIC FACILITIES
STATEWIDE DESIGN & ENGINEERING
SERVICES DIVISION

MT EDGECUMBE
HIGH SCHOOL
BUILDING 1330
ACADEMIC
EXPANSION

SHEET M502

PROJECT DESIGNATION NUMBER

67751C

STATE	YEAR
ALASKA	2004
SHEET NUMBER	TOTAL SHEETS
65	79

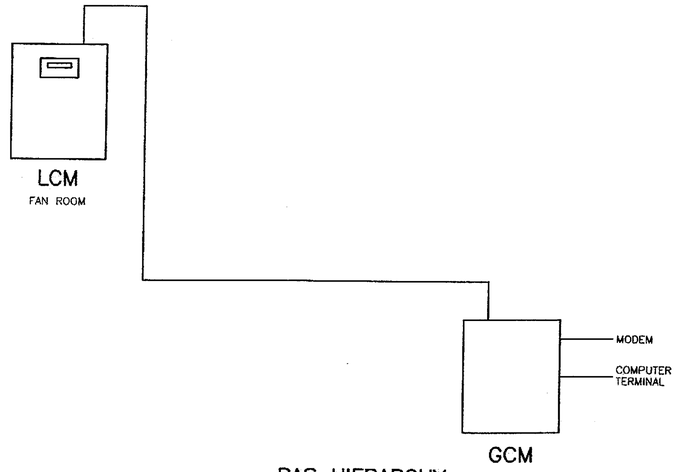

BAS HIERARCHY

NO SCALE

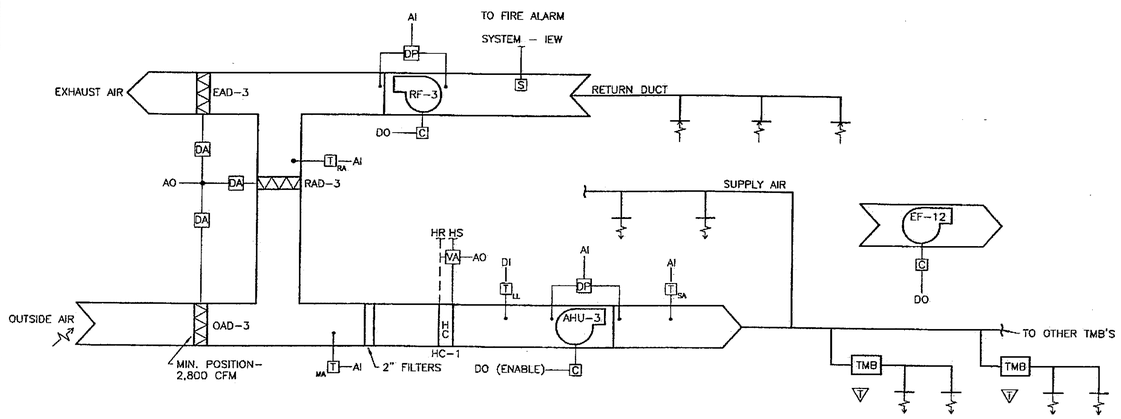

CONTROL SCHEMATIC – AHU-3

NO SCALE

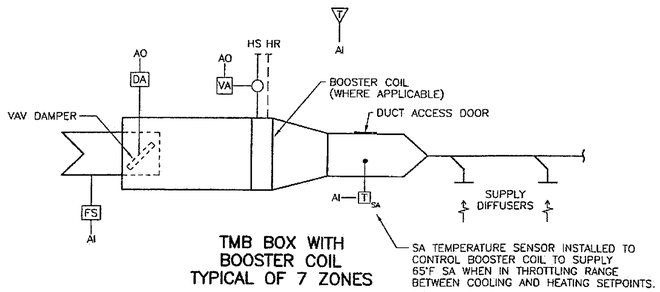

TMB BOX WITH BOOSTER COIL TYPICAL OF 7 ZONES

ROOM TEMPERATURE CONTROL DIAGRAM

NO SCALE

CONTROLS LEGEND

C	CONTROLLER	AHU	AIR HANDLING UNIT	LCM	LOCAL CONTROL MODULE
S	SMOKE SENSOR	AI	ANALOG INPUT	LL	LOW LIMIT CONTROL
T	IMMERSION THERMOSTAT OR THERMOSTATIC SENSOR	AO	ANALOG OUTPUT	MA	MIXED AIR
VA	VALVE ACTUATOR	COM	COMMON	NO	NORMALLY OPEN
DA	DAMPER ACTUATOR	DDC	DIRECT DIGITAL CONTROL	NC	NORMALLY CLOSED
CS	CURRENT SENSOR	DI	DIGITAL INPUT	OSA	OUTSIDE AIR
	ROOM THERMOSTAT	DO	DIGITAL OUTPUT	RA	RETURN AIR
	AIR DIRECTION	EF	EXHAUST FAN	RF	RETURN FAN
	THERMOMETER	GCM	GLOBAL CONTROL MODULE	RHP	RADIANT HEAT PANEL
M	MOTOR	HC	HEATING COIL	SA	SUPPLY AIR
DP	DIFFERENTIAL PRESSURE SWITCH	IEW	IN ELECTRICAL WORK		

GENERAL NOTES:

1. THE DIAGRAMS AND POINTS SHOWN HERE ARE SCHEMATIC ONLY. REFER TO SEQUENCE OF OPERATIONS OF THE SPECIFICATIONS FOR COMPLETE CONFIGURATION OF THE SYSTEMS. COORDINATE WITH ALL OTHER DISCIPLINES TO ACHIEVE RESULTS AS SHOWN AND INTENDED HEREUNDER IN THE DOCUMENTS.
2. SEE FLOOR PLANS AND PIPING DIAGRAMS FOR RESPECTIVE ROOM THERMOSTAT, IMMERSION THERMOSTAT, AND PRESSURE SWITCH LOCATIONS. SEE PLANS FOR OTHER CONTROL EQUIPMENT LOCATIONS. COORDINATE WITH DIVISION 15 AND 16 FOR EQUIPMENT INTERFACE REQUIREMENTS, INCLUDING PIPING TEES AND WELLS, SENSOR LOCATIONS, AND INTERCONNECTIONS.
3. ALL SYSTEMS ABBREVIATIONS, FUNCTIONS, AND EQUIPMENT NAMES SHALL BE LISTED IN ALL SUBMITTAL DATA, O&M DATA, AND AS-BUILTS, AS SHOWN HEREUNDER.
4. ALL THERMOSTATS LOCATED IN ALL ROOMS SHALL HAVE THERMOMETER ONLY ON COVER, AND SHALL BE DDC. ALL THERMOSTATS IN OCCUPIED AREAS SHALL HAVE TEMPERATURE ADJUSTMENT ON COVER INSIDE LOCKABLE ENCLOSURE.

SEQUENCE OF OPERATIONS

1. AIR HANDLING UNIT AHU-3:

   A. SWITCHES: MAGNETIC STARTERS WITH HAND-OFF-AUTO SWITCH AND AUXILIARY CONTACT, LOCATED ON THE MOUNTING BOARD IN THE FAN ROOM. IN THE AUTO POSITION, AHU OPERATES AT THE COMMAND OF THE BAS SYSTEM. IN THE HAND POSITION, THE FAN OPERATES. IN BOTH POSITIONS AHU OPERATES AT THE COMMAND OF THE SAFETY FUNCTIONS; LOW LIMIT CONTROL AND FIRE ALARM. DIFFERENTIAL AIR PRESSURE SWITCH SHALL SIGNAL BAS STATUS OF FAN.

   B. AHU-3 MIXED AIR DAMPER CONTROL: AVERAGING BULB MIXED AIR THERMOSTAT COVERING THE CROSS SECTIONAL AREA OF FAN MODULATES THE OUTSIDE AND RETURN AIR DAMPERS TO MAINTAIN THE MIXED AIR TEMPERATURE (MAT) SETPOINT. THE MAT SETPOINT IS TO BE RESET AS FOLLOWS: OUTSIDE AIR TEMPERATURE OF 40F AND LESS THE MIXED AIR TEMPERATURE IS TO BE 65F AND MODULATE TO 55F AT AN OUTSIDE AIR TEMPERATURE OF 55F AND ABOVE. OUTSIDE AIR DAMPER MINIMUM POSITION IS TO BE POSITIONED DURING BALANCING TO DELIVER 2,800 CFM AT ALL OCCUPIED TIMES. NORMAL POSITION OF OUTSIDE DAMPER AND EXHAUST AIR DAMPER IS CLOSED AND NORMAL POSITION OF RETURN AIR DAMPER IS OPEN.

   C. AHU-3 SUPPLY AIR TEMPERATURE: AVERAGING BULB DUCT THERMOSTAT IN THE SUPPLY AIR DISCHARGE TO MODULATE THE THREE WAY AUTOMATIC VALVE AV-12 ON THE HEATING COIL TO MAINTAIN SUPPLY AIR TEMPERATURE SETPOINT RESET BY OUTSIDE AIR THERMOSTAT. ADJUSTABLE RESET SCHEDULE SET AS FOLLOWS: OUTSIDE AIR TEMPERATURE OF 40F AND LESS THE SUPPLY AIR TEMPERATURE IS TO BE 70F AND MODULATE TO 55F AT AN OUTSIDE AIR TEMPERATURE OF 55F AND ABOVE. OUTSIDE AIR DAMPER MINIMUM POSITION IS TO BE 20% OPEN AT ALL OCCUPIED TIMES. EXHAUST AIR DAMPER IS TO LAG OUTSIDE AIR DAMPER BY 20% TO ALLOW FOR A SLIGHT PRESSURIZATION OF SPACE.

   D. RETURN FANS (RF-3): MAGNETIC STARTER WITH HAND-OFF-AUTO SWITCH ON THE COVER. LOCATED ON THE MOUNTING BOARD IN THE MECHANICAL ROOM. IN THE HAND POSITION, RETURN FAN RF OPERATES WHENEVER RESPECTIVE AHU OPERATES. IN THE HAND POSITION THE RETURN FAN OPERATES. IN BOTH POSITIONS RETURN FAN OPERATES AT THE COMMAND OF THE SAFETY FUNCTIONS, FIRE ALARM, AND SMOKE SENSOR.

   E. AHU-3 LOW LIMIT CONTROL: AVERAGING BULB THERMOSTAT, LOCATED AT THE DISCHARGE OF THE HEATING COIL TO STOP THE FAN BELOW 35F AFTER AN ADJUSTABLE TIME DELAY OF 45 SECONDS. BAS SHALL RECORD ALARM. DURING A LOW LIMIT CONDITION RESPECTIVE AUTOMATIC VALVE IS TO OPEN TO FULL.

   F. SMOKE SENSORS: UPON ACTIVATION OF SENSOR, THE SMOKE SENSOR SHALL STOP THE AHU, RF, AND EF. SMOKE SENSOR AND FAN SHUT DOWN CONTROL PROVIDED UNDER ELECTRICAL DIVISION. COORDINATE PROVISION AND CONNECTION TO BAS FOR ALARM.

2. EXHAUST FAN EF-12: MAGNETIC STARTER WITH HAND-OFF-AUTO SWITCH, LOCATED ON THE WALL IN THE JANITOR'S ROOM TO CONTROL FAN. IN THE AUTO POSITION, FAN OPERATES WHEN AHU-3 OPERATES. IN THE HAND POSITION, FAN OPERATES. COORDINATE WORK WITH ELECTRICAL WORK.
3. UNIT HEATER CONTROL: LOCAL CONTROL. ROOM THERMOSTAT OPENS RESPECTIVE AUTOMATIC VALVE AND OPERATES FAN BELOW SETPOINT. LOCAL LINE VOLTAGE CONTROL IN ELECTRICAL WORK.
4. CONVECTOR HEATING CONTROL: ROOM THERMOSTAT OPENS RESPECTIVE AUTOMATIC VALVE WHEN BELOW SETPOINT.
5. ROOM TEMPERATURE CONTROLS:

   A. TMB BOX WITH HEATING COIL CONTROLS: ROOM TEMPERATURE SHALL BE MAINTAINED ACCORDING TO AN OCCUPIED/UNOCCUPIED SCHEDULE FOR EACH ZONE. ROOM THERMOSTAT WITH ADJUSTABLE OCCUPIED HEATING SETPOINT, AND OCCUPIED SCHEDULE OVERRIDE PUSHBUTTON. SET THE COOLING SETPOINTS AT 5F ABOVE THE HEATING SETPOINTS. THE OVERRIDE BUTTON SHALL PROVIDE VISUAL INDICATION THAT THE THERMOSTAT IS IN OVERRIDE STATUS. ACTIVATION OF THE OVERRIDE BUTTON SHALL CHANGE SYSTEM TO OCCUPIED MODE FOR AN ADJUSTABLE 3 HOURS. AFTER THE ADJUSTABLE 3 HOURS, THE SCHEDULE SHALL RETURN TO NORMAL. UNOCCUPIED HEATING AND COOLING SETPOINTS AND OCCUPIED SETPOINT LIMIT ADJUSTABLE FROM THE BAS. GRAPHICS: ALL ROOMS, ZONES, ROOM NAMES AND NUMBERS, ROOM TEMPERATURE SETPOINTS, AND ACTUAL ROOM TEMPERATURES SHALL BE DISPLAYED IN PLAN VIEW. ROOMS IN COOLING MODE SHALL BE SHOWN AS RED, ROOMS IN HEATING MODE SHALL BE SHOWN AS BLUE, AND ROOMS IN THROTTLING RANGE SHALL BE SHOWN AS WHITE. EACH ZONE'S TMB VAV DAMPER POSITIONS, AUTOMATIC VALVE POSITIONS, AND SUPPLY AIR TEMPERATURE SETPOINTS AND ACTUAL TEMPERATURES SHOULD BE ACCESSIBLE ON THE GRAPHICS PROGRAM BY "CLICKING" ON THE ZONE.

   B. OCCUPIED MODE: HEATING: THE TMB DAMPER AND HEATING AUTOMATIC VALVE SHALL MODULATE TO MAINTAIN ROOM TEMPERATURE WITHIN 1 DEGREE OF HEATING SETPOINT UTILIZING A PID CONTROL SEQUENCE. THE TMB DAMPER SHALL POSITION TO MAINTAIN THE MINIMUM AIR VOLUME AT 3 DEGREES BELOW SETPOINT. COOLING: MODULATE VAV DAMPER BETWEEN MINIMUM POSITION AND MAXIMUM POSITION, WITH FEEDBACK FROM A FLOW SENSOR IN THE BOX INLET TO MAINTAIN ROOM TEMPERATURE. HEATING VALVE SHALL REMAIN SHUT WHEN IN COOLING MODE.

   C. IN THE UNOCCUPIED MODE, THE TMB DAMPER SHALL POSITION TO THE MINIMUM POSITION AND THE AUTOMATIC VALVE SHALL BE FULLY OPEN (ADJUSTABLE) WHEN TEMPERATURE IS 2F BELOW SETPOINT. THE AUTOMATIC VALVE SHALL CLOSE WHEN ROOM TEMPERATURE IS 2F ABOVE THE SETPOINT.

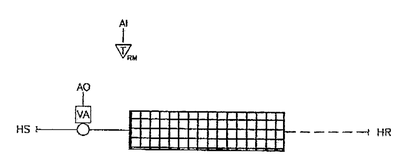

CV CONTROL DIAGRAM

NO SCALE

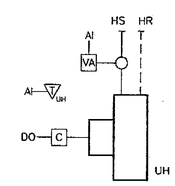

UH CONTROL DIAGRAM

NO SCALE

Tue, 14/Dec/04 02:58PM

ADDENDUM NUMBER

ATTACHMENT NUMBER

RECORD OF REVISIONS

No.	DATE	DESCRIPTION

CHECKED BY: DM

STATE OF ALASKA 49 DOUGLAS H. MURRAY ME 7870 REGISTERED PROFESSIONAL ENGINEER

EXPIRATION DATE: 12-31-05

DESIGNED BY: DM/LH

DRAWN BY: WN

STATE OF ALASKA
DEPARTMENT OF TRANSPORTATION & PUBLIC FACILITIES
STATEWIDE DESIGN & ENGINEERING SERVICES DIVISION

MT EDGECUMBE HIGH SCHOOL BUILDING 1330 ACADEMIC EXPANSION

SHEET M601

PROJECT DESIGNATION NUMBER

67751C

STATE	YEAR
ALASKA	2004
SHEET NUMBER	TOTAL SHEETS
66	79

Project As-Built Drawings have been reviewed by the Project Engineer and represent to the best of my knowledge, the project as constructed.
Proj. Eng. Date 7-07

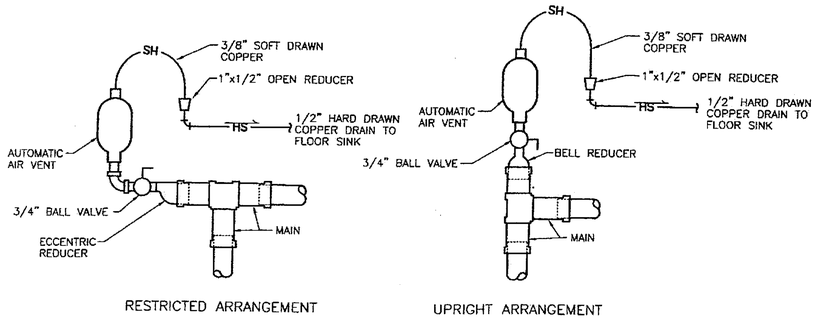

AUTOMATIC AIR VENT DETAIL

NO SCALE

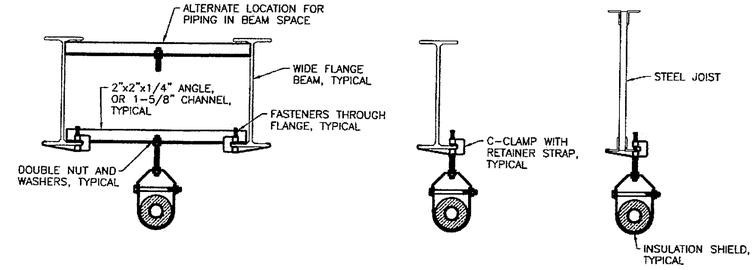

PIPE SUPPORT DETAILS–JOISTS

NO SCALE

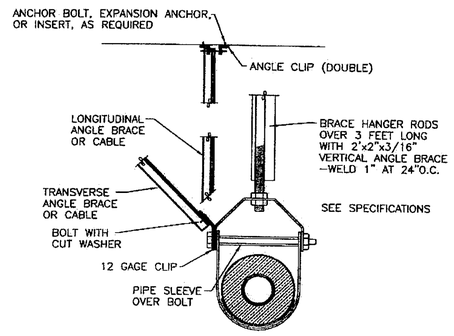

SEISMIC PIPE BRACING DETAIL

NO SCALE

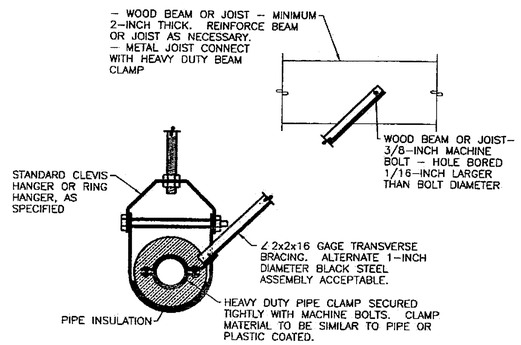

PIPE ANCHOR DETAIL

NO SCALE

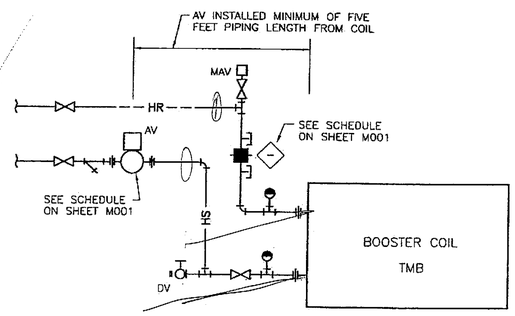

TMB BOOSTER COIL DETAIL

NO SCALE

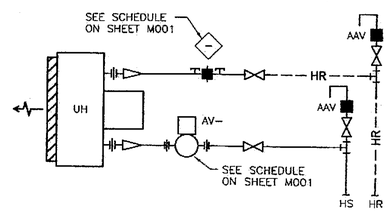

UNIT HEATER DETAIL

NO SCALE

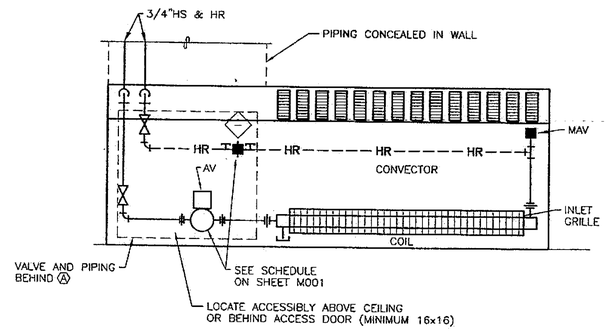

CONVECTOR DETAIL

NO SCALE

Tue, 14/Dec/04 09:00AM

ADDENDUM NUMBER

ATTACHMENT NUMBER

RECORD OF REVISIONS

No.	DATE	DESCRIPTION

CHECKED BY: DM

STATE OF ALASKA 49th DOUGLAS H. MURRAY ME 7870 REGISTERED PROFESSIONAL ENGINEER

EXPIRATION DATE: 12-31-05

DESIGNED BY: DM/LH

DRAWN BY: WN

STATE OF ALASKA
DEPARTMENT OF TRANSPORTATION & PUBLIC FACILITIES
STATEWIDE DESIGN & ENGINEERING SERVICES DIVISION

MT EDGECUMBE HIGH SCHOOL BUILDING 1330 ACADEMIC EXPANSION

SHEET M701

PROJECT DESIGNATION NUMBER

67751C

STATE	YEAR
ALASKA	2004
SHEET NUMBER	TOTAL SHEETS
67	79

Project As-Built Drawings have been reviewed by the Project Engineer and represent to the best of my knowledge, the project as constructed.
Proj. Eng. Date 7-09

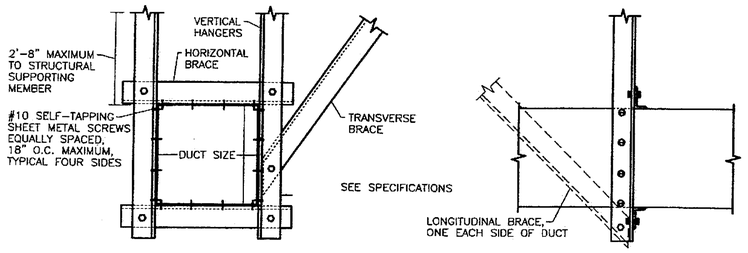

DUCT SEISMIC BRACING DETAIL

NO SCALE

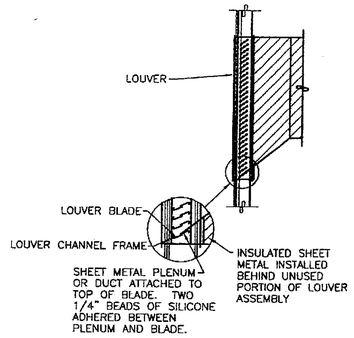

LOUVER CONNECTION DETAIL

NO SCALE

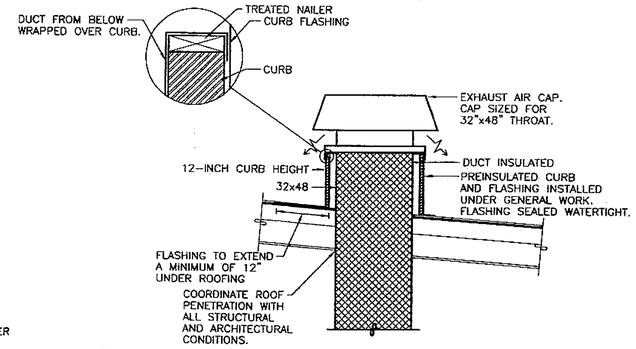

EXHAUST CAP DETAIL

NO SCALE

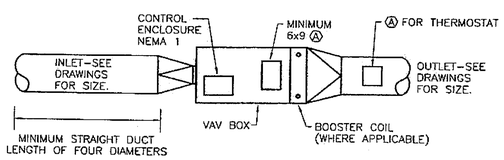

NOTE: LOCATE CONTROL ENCLOSURE AND ACCESS DOOR ACCESSIBLE ON SAME SIDE WHERE SHOWN ON DRAWINGS. TRANSITIONS WITH MAXIMUM 15° OFFSET.

TMB BOX DETAIL

NO SCALE

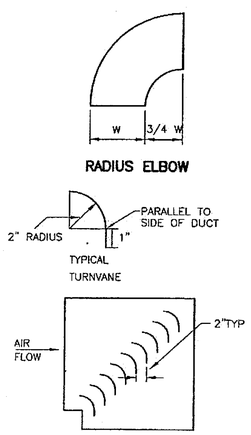

RECTANGULAR DUCTS

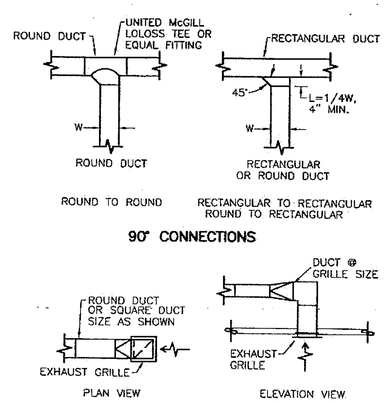

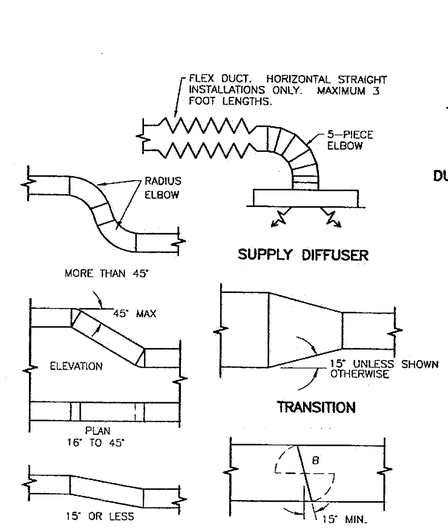

RECTANGULAR AND ROUND DUCTS

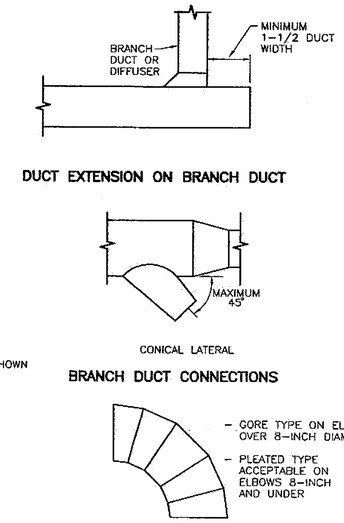

ROUND DUCTS

NOTE: ALL DUCTWORK SHALL BE CONSTRUCTED IN ACCORDANCE WITH THESE DETAILS AND THE SPECIFICATIONS.

DUCT CONSTRUCTION DETAILS

NO SCALE

Tue, 14/Dec/04 08:50AM

ADDENDUM NUMBER

ATTACHMENT NUMBER

RECORD OF REVISIONS

No.	DATE	DESCRIPTION

CHECKED BY: DM

STATE OF ALASKA 49th DOUGLAS H. MURRAY ME 7870 REGISTERED PROFESSIONAL ENGINEER

EXPIRATION DATE: 12-31-05

DESIGNED BY: DM/LH

DRAWN BY: WN

STATE OF ALASKA
DEPARTMENT OF TRANSPORTATION & PUBLIC FACILITIES
STATEWIDE DESIGN & ENGINEERING SERVICES DIVISION

MT EDGECUMBE HIGH SCHOOL BUILDING 1330 ACADEMIC EXPANSION

SHEET M702

PROJECT DESIGNATION NUMBER

67751C

STATE	YEAR
ALASKA	2004
SHEET NUMBER	TOTAL SHEETS
68	79

Project As-Built Drawings have been reviewed by the Project Engineer and represent to the best of my knowledge, the project as constructed.
Proj. Eng. _____ Date 7-07

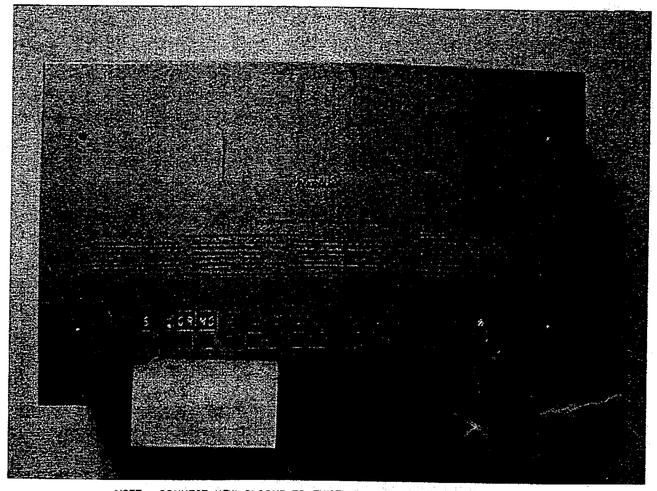

NOTE: CONNECT NEW CLOCKS TO EXISTING MASTER CLOCK UNIT.

MASTER CLOCK
BUILDING A

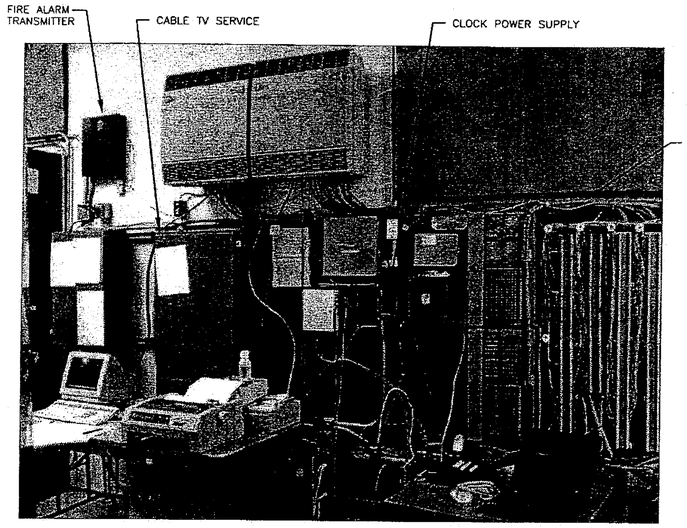

NOTE: REPLACE EXISTING FIRE ALARM TRANSMITTER. UTILIZE EXISTING CONDUIT TO FACP, RE-TERMINATE EXISTING TELEPHONE LINES.

ROUTE NEW TELEVISION CABLING TO EXISTING SERVICE ENTRANCE. COORDINATE WITH LOCAL SERVICE PROVIDER TO INTERTIE NEW OUTLETS TO EXISTING SYSTEM. EXISTING SYSTEM CONFIGURATION IS NOT DOCUMENTED.

TERMINATE NEW TELEPHONE OUTLETS AT EXISTING TELEPHONE TERMINAL BOARD. COORDINATE WITH LOCAL SERVICE PROVIDER.

TERMINATE NEW CLOCK CORRECTION CIRCUIT AT EXISTING CLOCK POWER SUPPLY. MAINTAIN CIRCUIT CONTINUITY TO EXISTING CLOCKS.

MECHANICAL 200 – EAST WALL
BUILDING B

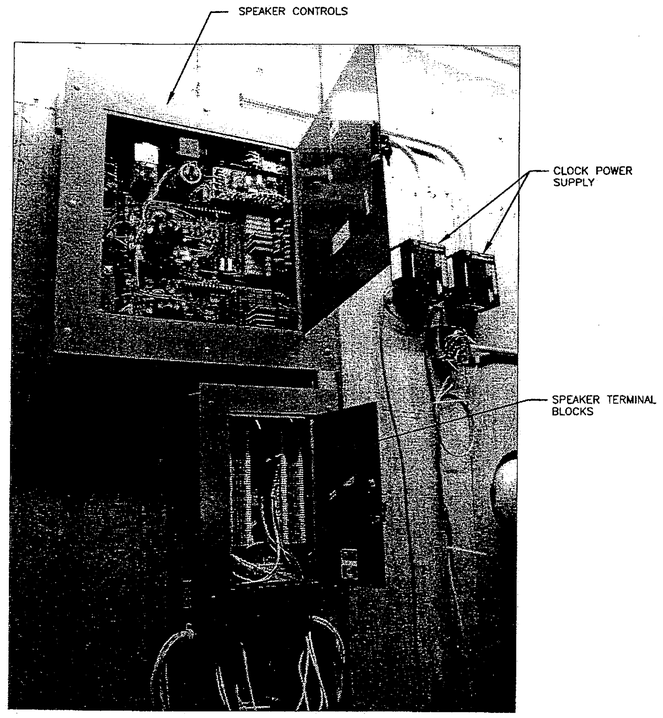

NOTE: TERMINATE NEW INTERCOM SPEAKERS AT EXISTING SPEAKER TERMINAL BLOCK. INTEGRATE NEW INTERCOM SPEAKERS WITH EXISTING CONTROLS.

INTERCOM/CLOCK EQUIPMENT
BUILDING A

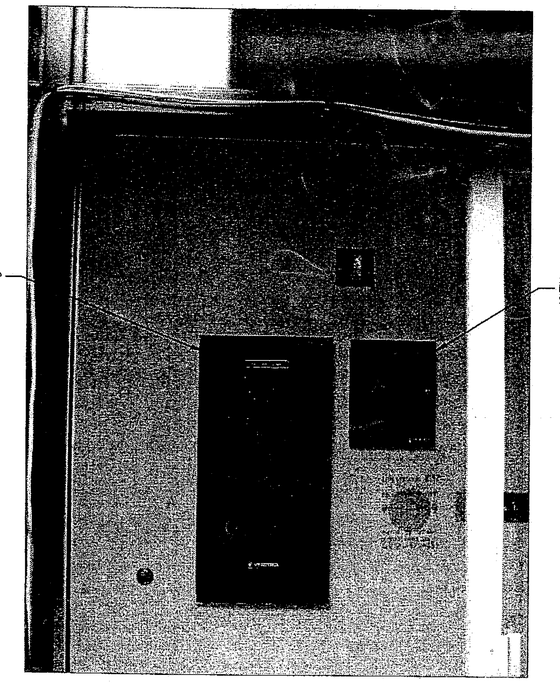

NOTE: REPLACE EXISTING FIRE ALARM CONTROL PANEL AND POWER SUPPLY.

FIRE ALARM EQUIPMENT
BUILDING A

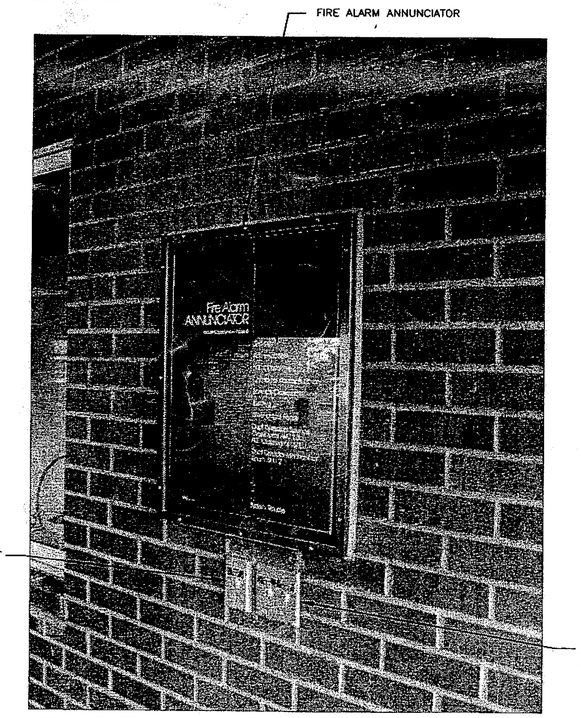

NOTE: REPLACE EXISTING FIRE ALARM ANNUNCIATOR AND MAIN CIRCUIT BREAKER SHUNT TRIP SWITCH. DEMOLISH LAMP TEST AND SYSTEM RESET SWITCHES.

FIRE ALARM ANNUNCIATOR
BUILDING A

OK

DATE: DECEMBER 13, 2004

ADDENDUM NUMBER

ATTACHMENT NUMBER

RECORD OF REVISIONS

No.	DATE	DESCRIPTION

STATE OF ALASKA 29th B.C. HAUGHT EE 4600 REGISTERED PROFESSIONAL ENGINEER

13 DEC 2004

DESIGNED BY: BJB

DRAWN BY: PEL, RJB

STATE OF ALASKA
DEPARTMENT OF TRANSPORTATION & PUBLIC FACILITIES
STATEWIDE DESIGN & ENGINEERING SERVICES DIVISION

MT EDGECUMBE HIGH SCHOOL
BUILDING 1330
ACADEMIC EXPANSION

SHEET E100

PROJECT DESIGNATION NUMBER
67751C

STATE	YEAR
ALASKA	2004
SHEET NUMBER	TOTAL SHEETS
69	79

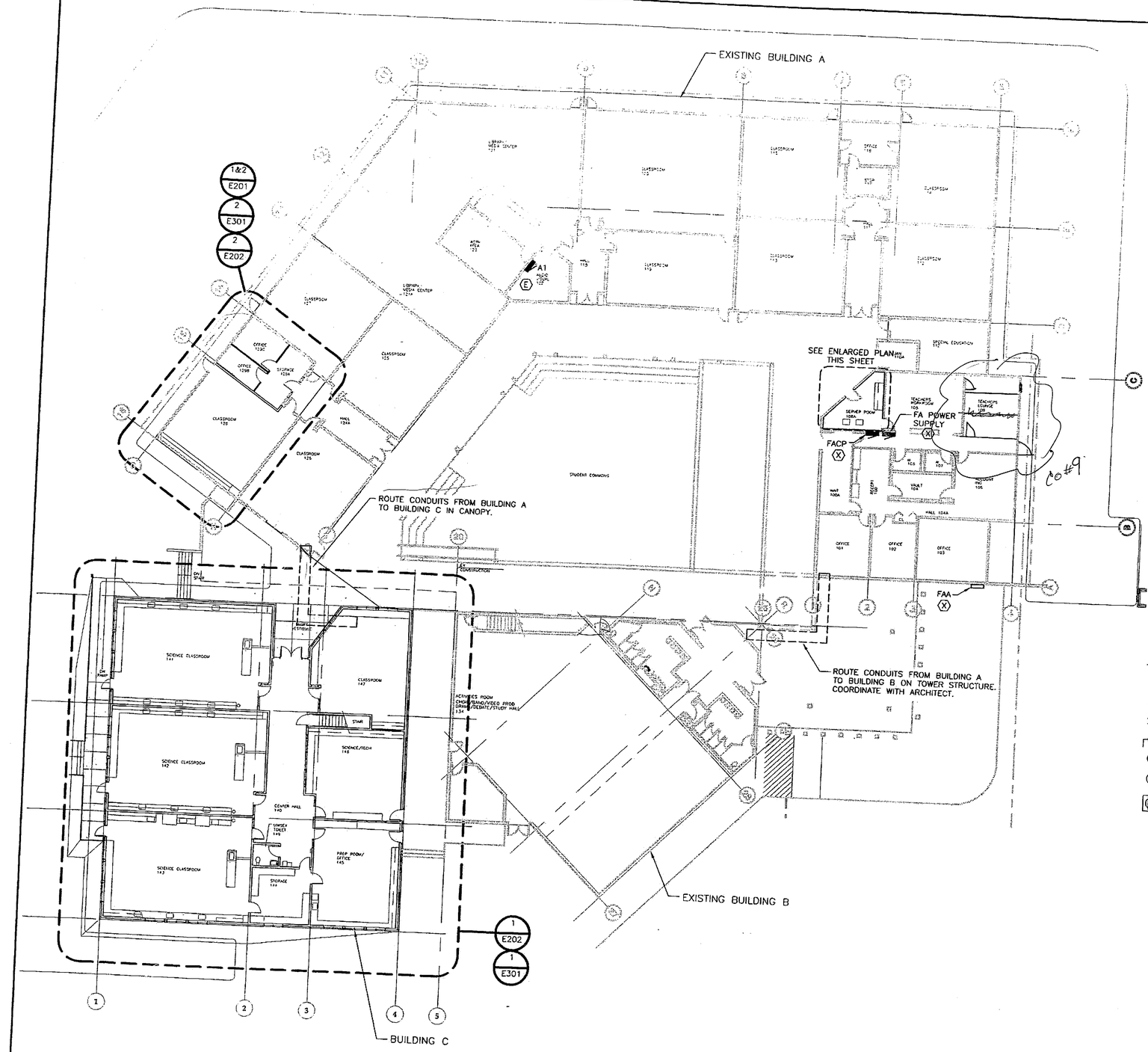

1 FLOOR PLAN

SCALE: 0 8' 16' 32'

LEGEND

ABBREVIATIONS:

AFF	ABOVE FINISHED FLOOR
AFG	ABOVE FINISHED GRADE
FAA	FIRE ALARM ANNUNCIATOR
FACP	FIRE ALARM CONTROL PANEL
GFI	GROUND FAULT INTERRUPTED
PE	PHOTOELECTRIC
TTB	TELEPHONE TERMINAL BOARD
UON	UNLESS OTHERWISE NOTED
WP	WEATHERPROOF
XFMR	TRANSFORMER
(E)	EXISTING
(N)	NEW
	REPLACE
(R)	RELOCATE
(X)	REMOVE

SWITCHING:

S	SINGLE POLE SWITCH, 48" AFF
S_a	SUBSCRIPT DENOTES LUMINAIRE SWITCHED, 48" AFF
S_3	THREE WAY SWITCH, 48" AFF
S_M	MANUAL STARTER
$\bar{S}$	SWITCH, THERMAL TRIP, w/ O.L. HTR TO SUIT MOTOR PROTECTED
NS	NON SWITCHED
PE	PHOTOELECTRIC CELL

LIGHTING:

	FLUORESCENT LUMINAIRE, EQUIP w/ SINGLE EMERGENCY BALLAST WHERE SHOWN. BODINE B50 F-48 OR APPROVED EQUAL.
	FLUORESCENT LUMINAIRE
	RECESSED DOWNLIGHT LUMINAIRE
	WALL MOUNTED EXIT LUMINAIRE
	EXTERIOR SOFFIT MOUNTED LUMINAIRE
	EXTERIOR WALL MOUNTED LUMINAIRE

POWER:

	DUPLEX RECEPTACLE, 18" AFF UON.
	DOUBLE DUPLEX RECEPTACLE, 18" AFF
	RECEPTACLE RACEWAY
	SPECIAL RECEPTACLE, 18" AFF UON.
	220V SINGLE PHASE RECEPTACLE, 18" AFF
	FLOOR RECEPTACLE
J	JUNCTION BOX
	PANELBOARD
	SIGNAL CABINET
	MOTOR CONNECTION
	MOTOR STARTER
	COMBINATION STARTER/DISCONNECT
	DISCONNECT

SIGNAL:

S	SMOKE DETECTOR
H	HEAT DETECTOR
S	DUCT DETECTOR
F	MANUAL PULL STATION, 48" AFF
	FIRE ALARM HORN/STROBE, 80" AFF TO BASE
	FIRE ALARM STROBE ONLY, 80" AFF TO BASE
EOL	END-OF-LINE DEVICE
B	FIRE ALARM BELL, 90" AFF
	SPRINKLER TAMPER SWITCH
	SPRINKLER PRESSURE SWITCH
	SPRINKLER FLOW SWITCH
P	PROGRAM BELL, 90" AFF
	TELEPHONE, 18" AFF UON.
	DATA, 18" AFF UON.
	DATA/TELEPHONE, 18" AFF UON.
	TELEVISION, 18" AFF UON.
	INTERCOM CALL STATION, 48" AFF
	CLOCK RECEPTACLE, 90" AFF
	WALL SPEAKER, 90" AFF
	CEILING SPEAKER
	MAGNETIC DOOR HOLDER

GENERAL:

- HOME RUN
- CONDUIT: 1/2" UON.
- UNGROUNDED CONDUCTORS
- NEUTRAL: #10 WITH DOT #12 OTHERWISE
- GROUND CONDUCTOR

CONDUCTORS NOT SHOWN WHERE ONLY #12 NEUTRAL AND UNGROUNDED CONDUCTOR ARE REQUIRED

- CONDUIT IN FLOOR
- FLEXIBLE CONDUIT

NOTE: ALL DEVICE HEIGHTS TO CENTER, UON.

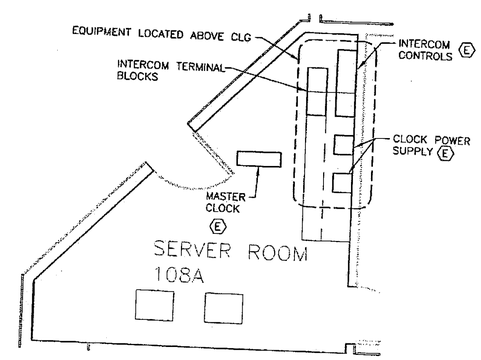

2 RM 108A ENLARGED PLAN

SCALE: 0 4' 8' 16'

DATE: DECEMBER 13, 2004

ADDENDUM NUMBER
ATTACHMENT NUMBER

RECORD OF REVISIONS

No.	DATE	DESCRIPTION

STATE OF ALASKA 29th B.C. HAIGHT EE 4800 REGISTERED PROFESSIONAL ENGINEER

13 DEC 2004

DESIGNED BY: BJB

DRAWN BY: PEL, RJB

STATE OF ALASKA
DEPARTMENT OF TRANSPORTATION & PUBLIC FACILITIES
STATEWIDE DESIGN & ENGINEERING SERVICES DIVISION

MT EDGECUMBE HIGH SCHOOL
BUILDING 1330
ACADEMIC EXPANSION

SHEET E200

PROJECT DESIGNATION NUMBER
67751C

STATE	YEAR
ALASKA	2004
SHEET NUMBER	TOTAL SHEETS
70	79

NOTES:

1. UTILIZE EXISTING HOMERUNS NOTED FOR NEW POWER AND LIGHTING CIRCUITS IN CLASSROOM 126. DEMOLISH CONDUIT AND WIRING NOT NOTED FOR REUSE. SEE SHEET E200 FOR PANELBOARD LOCATIONS. SEE SHEETS E202 AND E301 FOR NEW POWER AND LIGHTING PLANS.

2. EXISTING TO REMAIN.

3. ALL EQUIPMENT THIS SHEET IS EXISTING.

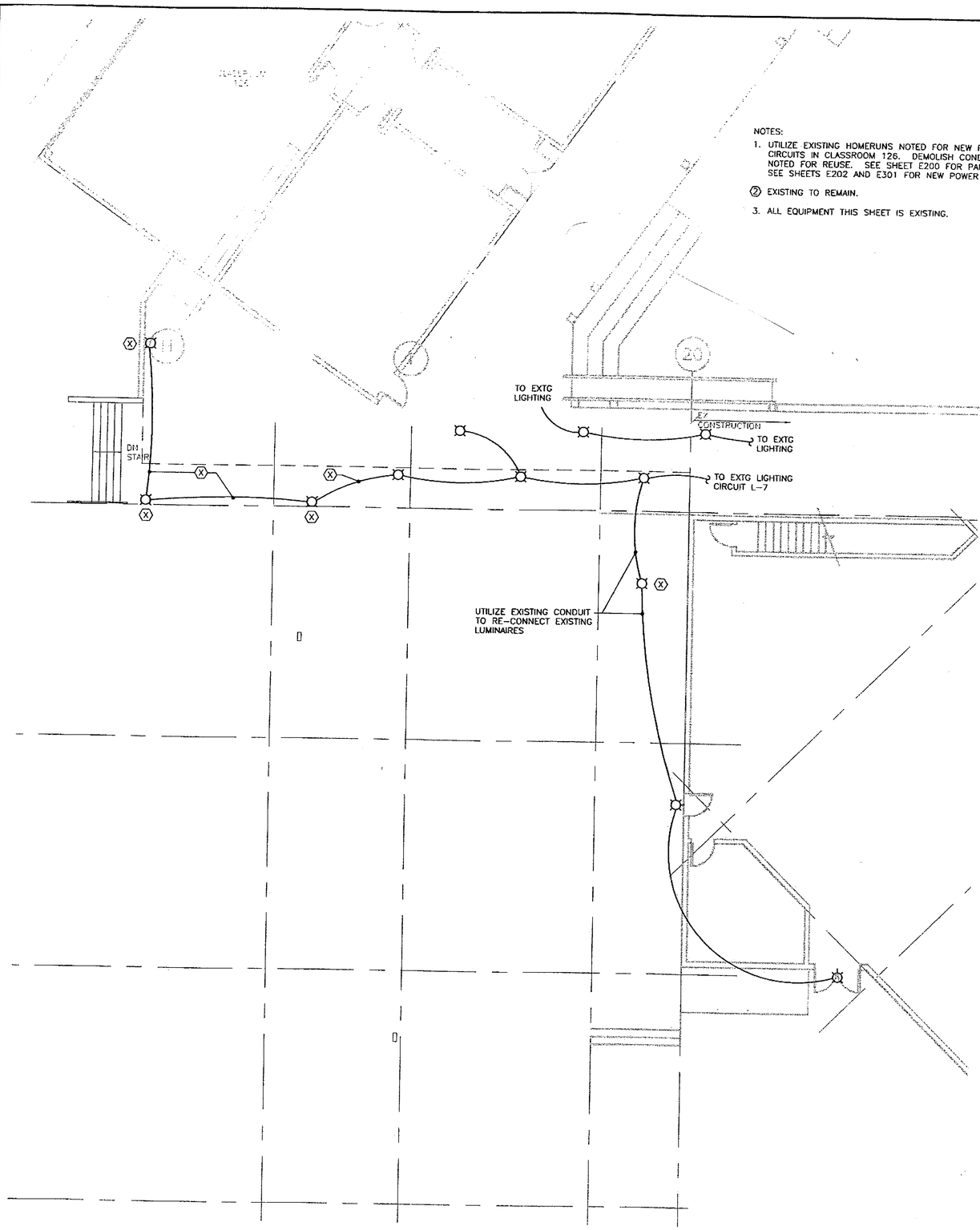

3 EXTERIOR LIGHTING DEMOLITION PLAN
BUILDINGS A & B

SCALE: 0 4' 8' 16'

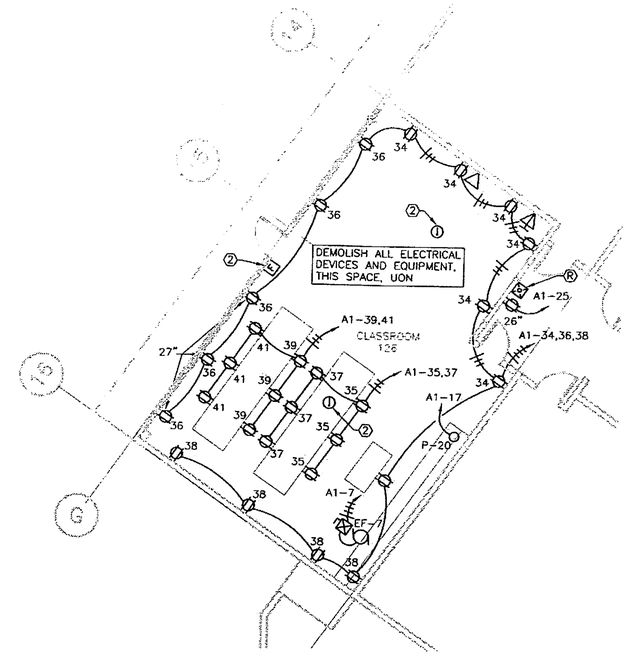

1 PARTIAL POWER/SIGNAL DEMOLITION PLAN
BUILDING A

SCALE: 0 4' 8' 16'

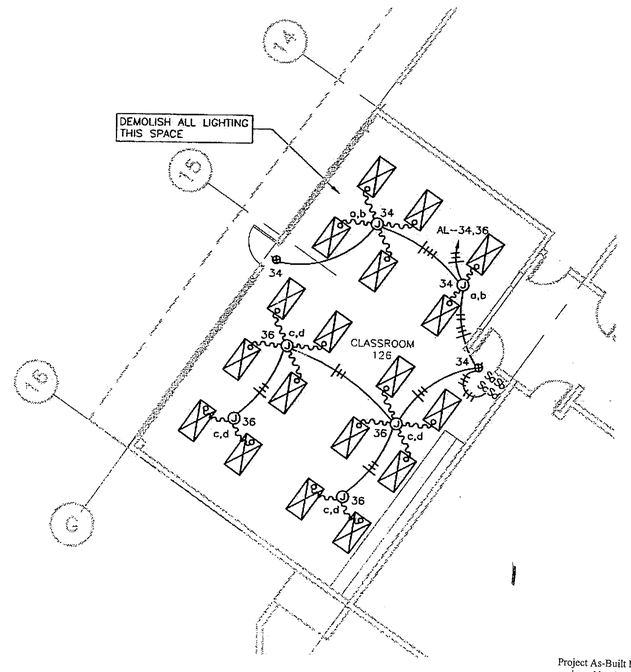

2 PARTIAL LIGHTING DEMOLITION PLAN
BUILDING A

SCALE: 0 4' 8' 16'

Project As-Built Drawings have been reviewed by the Project Engineer and represent to the best of my knowledge, the project as constructed.
Proj. Eng. Date 7-09

DATE: DECEMBER 13, 2004

ADDENDUM NUMBER

ATTACHMENT NUMBER

RECORD OF REVISIONS

No.	DATE	DESCRIPTION

STATE OF ALASKA 49th B.C. HAIGHT EE 4800 13 DEC 2004

DESIGNED BY: BJB

DRAWN BY: PEL, RJB

STATE OF ALASKA
DEPARTMENT OF TRANSPORTATION & PUBLIC FACILITIES
STATEWIDE DESIGN & ENGINEERING SERVICES DIVISION

MT EDGECUMBE HIGH SCHOOL
BUILDING 1330
ACADEMIC EXPANSION

SHEET E201

PROJECT DESIGNATION NUMBER
67751C

STATE	YEAR
ALASKA	2004
SHEET NUMBER	TOTAL SHEETS
71	79

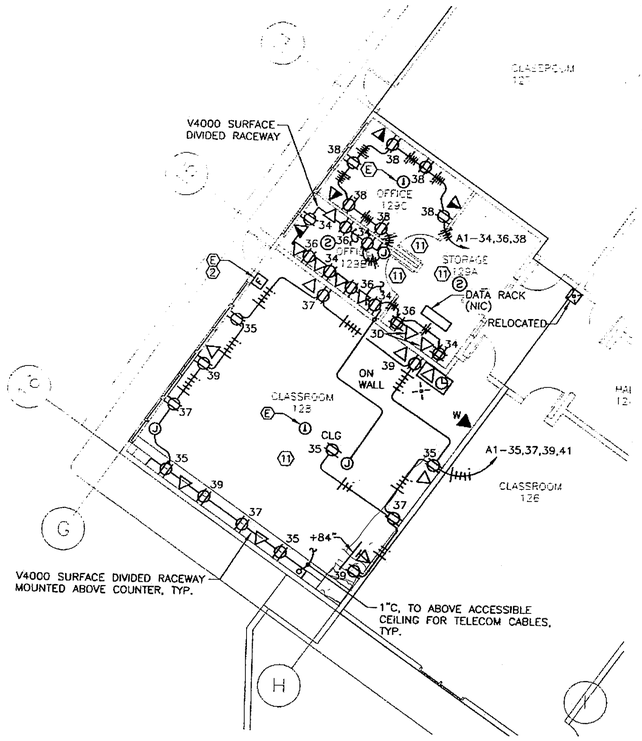

2 FIRST FLOOR PARTIAL PLAN - POWER
BUILDING A

SCALE: 0 4' 8' 16'

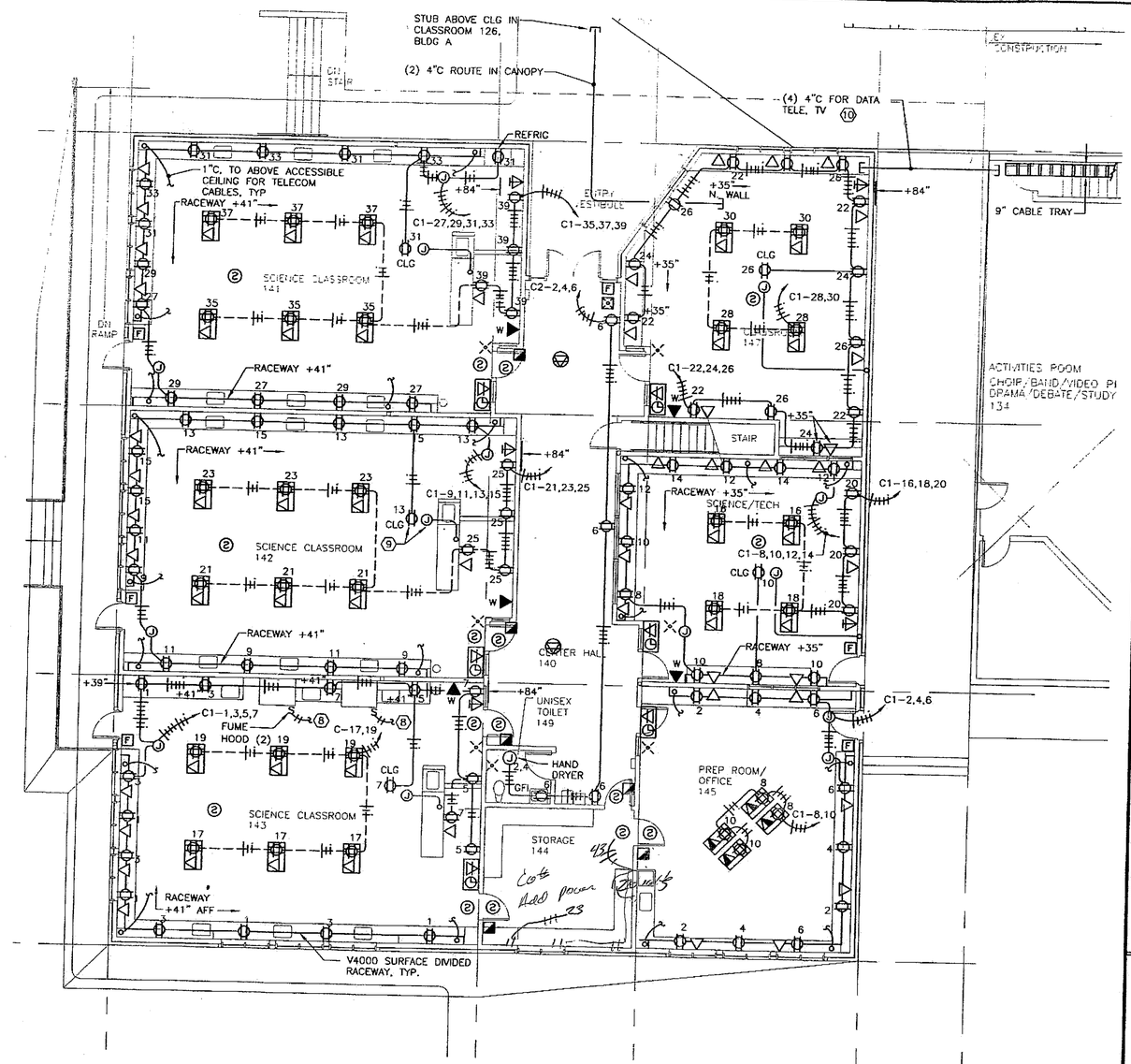

1 FIRST FLOOR PARTIAL PLAN - POWER
BUILDING C

SCALE: 0 4' 8' 16'

NOTES:

1. COORDINATE EXACT LOCATION OF FLOOR BOXES WITH OWNER.
2. RELOCATE PULLSTATION TO HEIGHT NOTED ON LEGEND. MAINTAIN WIRING TO EXISTING ZONE.
3. ALL POWER OUTLETS MOUNTED ABOVE COUNTER IN 141, 142, AND 143 SHALL BE GFI.
4. ROUTE DATA CABLES TO TELECOM RACK IN MECH 200. ROUTE TELE CABLES IN ADDITION TO EXISTING TELEPHONE TERMINAL BOARD IN MECH 200. ROUTE TELEVISION CABLES IN ADDITION TO EXISTING TV TERMINAL BOARD IN MECH 200. SEE E203 FOR EQUIPMENT LOCATIONS.
5. ROUTE FIRE ALARM INITIATING LOOP TO EXISTING FACP NEAR SERVER ROOM 108A. ROUTE FIRE ALARM INDICATING LOOP TO EXISTING POWER SUPPLY NEAR SERVER ROOM 108A. SEE E200 FOR PANEL LOCATIONS.
6. PROVIDE 2 DATA JACKS PER DATA OUTLET, UON. PROVIDE 1 TELEPHONE AND 1 DATA OUTLET PER COMBINATION DATA/TELE OUTLET, UON.
7. DEVICE HEIGHTS ARE REFERENCED TO CENTER OF BOX, OR RACEWAY. VERIFY HEIGHTS WITH CASEWORK SHOP DRAWINGS.

(8) ROUTE SWITCH WIRING TO EF IN MECH 201.

(9) MOUNT RECEPTACLE FLUSH IN CEILING FOR PROJECTOR. MOUNT JUNCTION BOX ABOVE CEILING WITH 1"C TO TEACHERS STATION FOR CONTROL CABLE ROUTING. VERIFY EXACT ROUGH-IN REQUIREMENTS WITH ARCHITECT. TYPICAL IN CLASSROOMS AND SCIENCE/TECH.

(10) WALL MOUNT 11 FEET AFF, MINIMUM.

(11) ROUTE DATA CABLING TO EXISTING PATCH PANEL IN CLASSROOM 120, EAST WALL, BUILDING A. ROUTE TELEPHONE CABLING TO EXISTING TELEPHONE TERMINAL BOARD, IN MECHANICAL 200, BUILDING B.

12. PROVIDE RG59 COAX CABLE FROM EACH TELEVISION OUTLET TO THE EXISTING TV TERMINAL BOARD IN MECH 200. COORDINATE WITH LOCAL SERVICE PROVIDER FOR INTERCONNECTION TO EXISTING SYSTEM. EXISTING SYSTEM CONFIGURATION IS NOT DOCUMENTED.

Project As-Built Drawings have been reviewed by the Project Engineer and represent to the best of my knowledge, the project as constructed.
Proj. Eng. _____ Date 7-07

DATE: DECEMBER 13, 2004

ADDENDUM NUMBER
ATTACHMENT NUMBER

RECORD OF REVISIONS

No.	DATE	DESCRIPTION

STATE OF ALASKA 49th B.C. HAIGHT EE 4800 REGISTERED PROFESSIONAL ENGINEER
13 DEC 2004

DESIGNED BY: BJB
DRAWN BY: PEL, RJB

STATE OF ALASKA
DEPARTMENT OF TRANSPORTATION & PUBLIC FACILITIES
STATEWIDE DESIGN & ENGINEERING SERVICES DIVISION

MT EDGECUMBE HIGH SCHOOL
BUILDING 1330
ACADEMIC EXPANSION

SHEET E202

PROJECT DESIGNATION NUMBER
67751C

STATE	YEAR
ALASKA	2004
SHEET NUMBER	TOTAL SHEETS
72	79

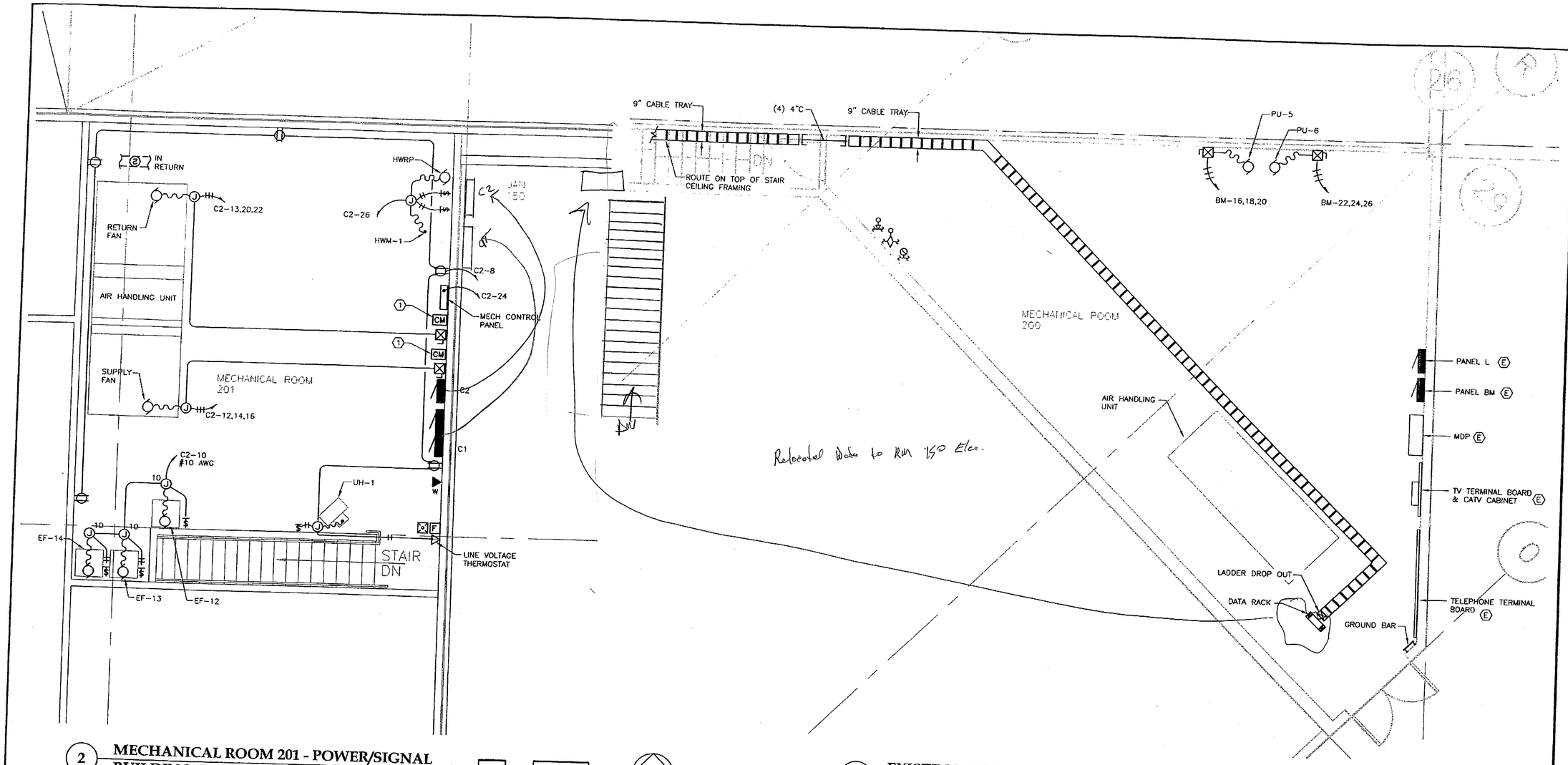

2 MECHANICAL ROOM 201 - POWER/SIGNAL
BUILDING C

SCALE: 0 1' 4' 8'

1 EXISTING MECHANICAL ROOM 200
BUILDING B

SCALE: 0 2' 4' 8'

EQUIPMENT SCHEDULE

DESIGNATION			LOAD					CIRCUITING			CONTROL		
ITEM	DESCRIPTION	LOCATION	HP	KW	AMPS	VOLTS	PHASE	CONDUCTORS	DISCONNECT SWITCH	DISCONNECT FUSE	STARTER SIZE	CONTROL	REMARKS
AHU	AIR HANDLING UNIT												
	SUPPLY FAN	MECHANICAL 201	5			208	3 PH	3/4"C, 3 NO. 10, 1 NO. 10 GND	30/3	.	1	H-O-A	.
	RETURN FAN	MECHANICAL 201	1			208	3 PH	1/2"C, 3 NO. 12, 1 NO. 12 GND	30/3	8	0	H-O-A	.
EF-12	EXHAUST FAN	MECHANICAL 201	1/4			120	1 PH	1/2"C, 2 NO. 12, 1 NO. 12 GND	$	.	0	H-O-A	.
EF-13	FUME HOODS	MECHANICAL 201	1/4			120	1 PH	1/2"C, 2 NO. 12, 1 NO. 12 GND	$	.	.	ON-OFF	.
EF-14	FUME HOODS	MECHANICAL 201	1/4			120	1 PH	1/2"C, 2 NO. 12, 1 NO. 12 GND	$	.	.	ON-OFF	.
UH-1	UNIT HEATER	MECHANICAL 201	1/20			120	1 PH	1/2"C, 2 NO. 12, 1 NO. 12 GND	$	.	.	ON-OFF	DISC BY DIV. 15
PU-5/6	MAIN HEATING PUMPS	MECHANICAL/FAN ROOM	3/4			208	3 PH	1/2"C, 3 NO. 12, 1 NO. 12 GND	30/3	6.25	0	H-O-A	.
HWRP	CIRC PUMP	MECHANICAL/FAN ROOM BLDG B	1/8			120	1 PH	1/2"C, 2 NO. 12, 1 NO. 12 GND	$	.	.	ON-OFF	.
HWM-1	HOT WATER MAKER	MECHANICAL/FAN ROOM BLDG B	1/40			120	1 PH	1/2"C, 2 NO. 12, 1 NO. 12 GND	$	.	.	.	.
–	CONTROLS	MECHANICAL 201				120	1 PH	1/2"C, 2 NO. 12, 1 NO. 12 GND		.	.	.	.

NOTES:

1. INTERFACE CONTROL MODULE WITH SUPPLY AND RETURN FAN CONTROLS. SEE WIRING DIAGRAM, E206.
2. PROVIDE DATA LINE TO MECHANICAL CONTROL PANEL IN MECHANICAL ROOM 201.
3. PROVIDE 19" x 7' DATA RACK, CHATSWORTH 46353503 WITH DOUBLE SIDED WIDE VERTICAL CABLING SECTION AND 70" VERTICAL POWER STRIP. PROVIDE (2) 96 PORT PATCH PANELS WITH HORIZONTAL CABLE MANAGEMENT. OWNER SHALL PROVIDE NETWORK SWITCH. INTERCONNECT NETWORK SWITCH TO FIBER DISTRIBUTION UNIT MOUNTED ON EAST WALL. PROVIDE 2-STRAND FIBER OPTIC CABLE FOR INTERCONNECTION.
4. PROVIDE NO. 6 AWG FROM GROUND BAR TO MDP GROUND BUS. BOND TO CABLE TRAY, CONDUIT, AND RACK WITH NO. 6 INSULATED GROUND CONDUCTOR.
5. SUSPEND CABLE TRAY AT APPROXIMATELY 8' AFF, BELOW PIPING AND DUCTWORK.
6. VERIFY QUANTITY AND CONFIGURATION OF SPRINKLER MONITORING DEVICES WITH DIVISION 15 DRAWINGS.
7. VERIFY MOTOR HORSEPOWER RATINGS WITH DIVISION 15 DRAWINGS.

Project As-Built Drawings have been reviewed by the Project Engineer and represent to the best of my knowledge, the project as constructed.
Proj. Eng. _____ Date _____

DATE: DECEMBER 13, 2004

ADDENDUM NUMBER
ATTACHMENT NUMBER

RECORD OF REVISIONS

No.	DATE	DESCRIPTION

STATE OF ALASKA 49th B.C. HAGHT EE 4800 PROFESSIONAL ENGINEER
13 DEC 2004

DESIGNED BY: BJB
DRAWN BY: PEL, RJB

STATE OF ALASKA
DEPARTMENT OF TRANSPORTATION & PUBLIC FACILITIES
STATEWIDE DESIGN & ENGINEERING SERVICES DIVISION

MT EDGECUMBE HIGH SCHOOL
BUILDING 1330
ACADEMIC EXPANSION

SHEET E203

PROJECT DESIGNATION NUMBER
67751C

STATE	YEAR
ALASKA	2004
SHEET NUMBER	TOTAL SHEETS
73	79

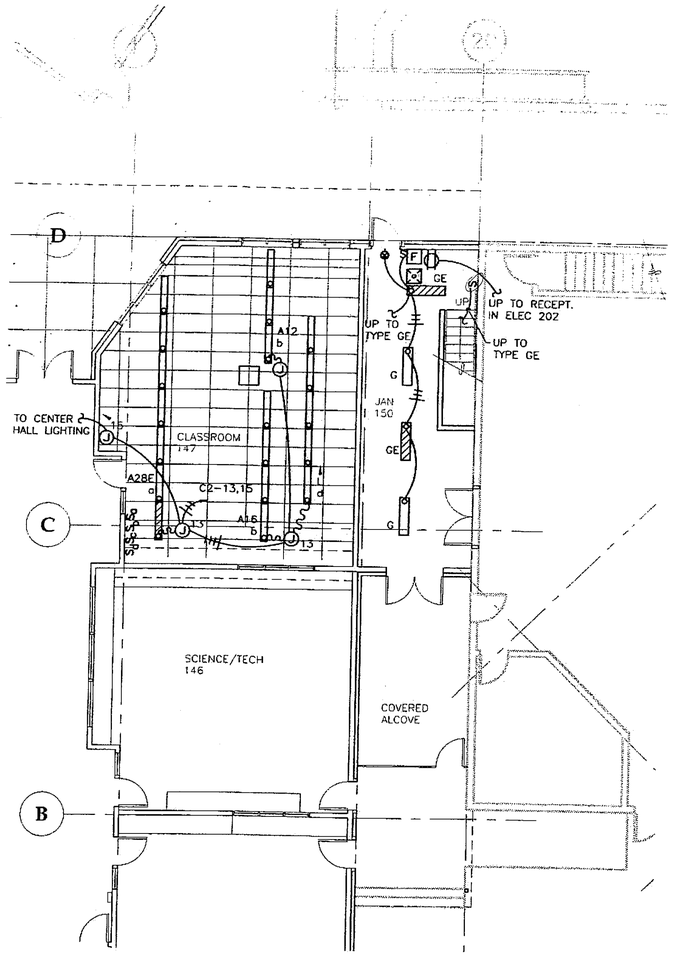

1 **FIRST FLOOR PARTIAL PLAN - ALTERNATE POWER/SIGNAL**
BUILDING C

SCALE: 0 4' 8' 16'

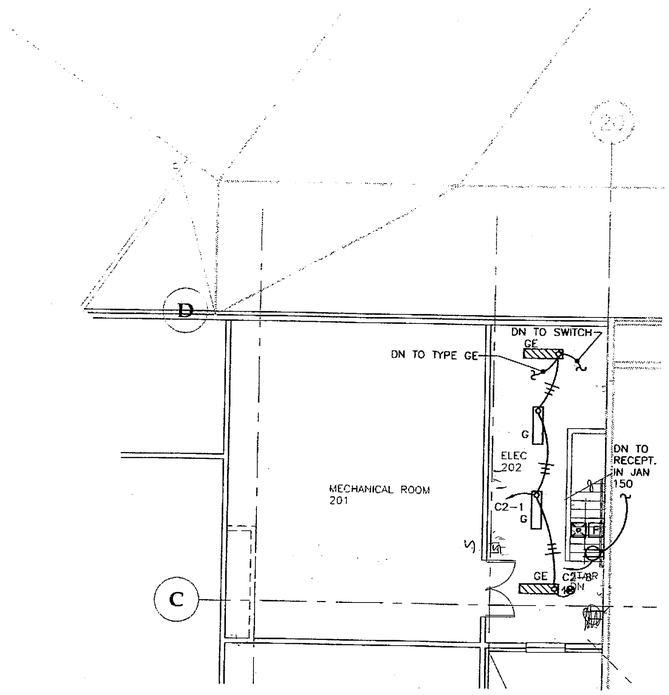

2 **MECHANICAL ROOM 201 - ALTERNATE POWER/SIGNAL**
BUILDING C

SCALE: 0 1' 4' 8'

DATE: DECEMBER 13, 2004

ADDENDUM NUMBER

ATTACHMENT NUMBER

RECORD OF REVISIONS

No.	DATE	DESCRIPTION

STATE OF ALASKA
49th
B.C. HAUGHT
EE 4840
PROFESSIONAL ENGINEER

13 DEC 2004

DESIGNED BY: BJB

DRAWN BY: PEL, RJB

STATE OF ALASKA
DEPARTMENT OF TRANSPORTATION
& PUBLIC FACILITIES
STATEWIDE DESIGN & ENGINEERING
SERVICES DIVISION

MT EDGECUMBE
HIGH SCHOOL
BUILDING 1330
ACADEMIC
EXPANSION

SHEET E204

PROJECT DESIGNATION NUMBER

67751C

STATE	YEAR
ALASKA	2004
SHEET NUMBER	TOTAL SHEETS
74	79

Project As-Built Drawings have been reviewed by the Project Engineer and represent to the best of my knowledge, the project as constructed.
Proj. Eng. _____ Date 7-07

PANEL C1 (SECTION 1)

SIZE	VOLTS/PHASE	MAIN	LOCATION	MOUNT
225 AMPS	120/208V, 3Ø, 4W	LUGS ONLY	MECHANICAL 201	SURFACE

CKT NO	DESCRIPTION	BREAKER AMP/POLE	KVA CKT	KVA AØ	KVA BØ	KVA CØ	KVA CKT	BREAKER AMP/POLE	DESCRIPTION	CKT NO
1	CLASSROOM 143	20/1	0.9	1.4			0.5	20/1	PREP ROOM 145	2
3	CLASSROOM 143	20/1	0.9		1.4		0.5	20/1	PREP ROOM 145	4
5	CLASSROOM 143	20/1	0.5			1.0	0.5	20/1	PREP ROOM 145	6
7	CLASSROOM 143	20/1	0.5	1.0			0.5	20/1	SCIENCE/TECH 146	8
9	CLASSROOM 142	20/1	0.5		1.0		0.5	20/1	SCIENCE/TECH 146	10
11	CLASSROOM 142	20/1	0.5			1.0	0.5	20/1	SCIENCE/TECH 146	12
13	CLASSROOM 142	20/1	0.7	1.2			0.5	20/1	SCIENCE/TECH 146	14
15	CLASSROOM 142	20/1	0.5		1.2		0.7	20/1	SCIENCE/TECH 146	16
17	CLASSROOM 143	20/1	1.1			1.8	0.7	20/1	SCIENCE/TECH 146	18
19	CLASSROOM 143	20/1	1.1	1.6			0.5	20/1	SCIENCE/TECH 146	20
21	CLASSROOM 142	20/1	1.1		2.0		0.9	20/1	CLASSROOM 147	22
23	CLASSROOM 142	20/1	1.1			1.8	0.7	20/1	CLASSROOM 147	24
25	CLASSROOM 142	20/1	0.7	1.2			0.5	20/1	CLASSROOM 147	26
27	CLASSROOM 141	20/1	0.5		1.2		0.7	20/1	CLASSROOM 147	28
29	CLASSROOM 141	20/1	0.5			1.2	0.7	20/1	CLASSROOM 147	30
31	CLASSROOM 141	20/1	0.7	.7			0.0	20/1	SPARE	32
33	CLASSROOM 141	20/1	0.5		.5		0.0	20/1	SPARE	34
35	CLASSROOM 141	20/1	1.1			1.1	0.0	20/1	SPARE	36
37	CLASSROOM 141	20/1	1.1	1.1			0.0	20/1	SPARE	38
39	CLASSROOM 141	20/1	0.7		.7		0.0	20/1	SPARE	40
41	SPARE	20/1	0.0			0.0	0.0	20/1	SPARE	42
BALANCED CONNECTED LOAD = 24 KVA / 67 AMPS				8.2	8.0	7.9	BALANCED DEMAND LOAD = 0.0 KVA / 00 AMPS			
MAXIMUM CONNECTED LOAD = 24 KVA / 68 AMPS							MAXIMUM DEMAND LOAD = 0.0 KVA / 00 AMPS			

PANEL C1 (SECTION 2)

SIZE	VOLTS/PHASE	MAIN	LOCATION	MOUNT
225 AMPS	120/208V, 3 PH	LUGS ONLY	MECHANICAL 201	SURFACE

CKT NO	DESCRIPTION	BREAKER AMP/POLE	KVA CKT	KVA AØ	KVA BØ	KVA CØ	KVA CKT	BREAKER AMP/POLE	DESCRIPTION	CKT NO
43	SPACE	--	0.0	0.0			0.0	70/3	TVSS UNIT	44
45	SPACE	--	0.0		0.0		0.0	---	----	46
47	SPACE	--	0.0			0.0	0.0	---	----	48
49	SPACE	--	0.0	0.0			0.0	20/1	SPARE	50
51	SPACE	--	0.0		0.0		0.0	20/1	SPARE	52
53	SPACE	--	0.0			0.0	0.0	20/1	SPARE	54
55	SPACE	--	0.0	0.0			0.0	20/1	SPARE	56
57	SPACE	--	0.0		0.0		0.0	20/1	SPARE	58
59	SPACE	--	0.0			0.0	0.0	20/1	SPARE	60
61	SPACE	--	0.0	0.0			0.0	20/1	SPARE	62
63	SPACE	--	0.0		0.0		0.0	--	SPACE	64
65	SPACE	--	0.0			0.0	0.0	--	SPACE	66
67	SPACE	--	0.0	0.0			0.0	--	SPACE	68
69	SPACE	--	0.0		0.0		0.0	--	SPACE	70
71	SPACE	--	0.0			0.0	0.0	--	SPACE	72
73	SPACE	--	0.0	0.0			0.0	--	SPACE	74
75	SPACE	--	0.0		0.0		0.0	--	SPACE	76
77	SPACE	--	0.0			0.0	0.0	--	SPACE	78
79	SPACE	--	0.0	0.0			0.0	--	SPACE	80
81	SPACE	--	0.0		0.0		0.0	--	SPACE	82
83	SPACE	--	0.0			0.0	0.0	--	SPACE	84
BALANCED CONNECTED LOAD = 0.0 KVA / 00 AMPS				0.0	0.0	0.0	BALANCED DEMAND LOAD = 0.0 KVA / 00 AMPS			
MAXIMUM CONNECTED LOAD = 0.0 KVA / 00 AMPS							MAXIMUM DEMAND LOAD = 0.0 KVA / 00 AMPS			

PANEL C2

SIZE	VOLTS/PHASE	MAIN	LOCATION	MOUNT
100 AMPS	120/208V, 3 PH	LUGS ONLY	MECHANICAL 201	SURFACE

CKT NO	DESCRIPTION	BREAKER AMP/POLE	KVA CKT	KVA AØ	KVA BØ	KVA CØ	KVA CKT	BREAKER AMP/POLE	DESCRIPTION	CKT NO
1	MECHANICAL 201, JANITOR (ALTERNATE) LTG	20/1	1.0	2.5			1.5	20/2	HAND DRYER	2
3	SCIENCE CLASSROOM 141	20/1	1.4		2.9		1.5	--	----	4
5	SCIENCE CLASSROOM 142	20/1	1.4			2.1	0.7	20/1	CENTER HALL 140	6
7	SCIENCE CLASSROOM 143	20/1	1.4	2.8			1.4	20/1	MECHANICAL 201, JANITOR (ALTERNATE)	8
9	STORAGE 144, PREP/OFFICE 145	20/1	1.3		3.4		2.1	20/1	EF-12,13,14	10
11	SCIENCE/TECH CLASSROOM 146	20/1	1.1			3.2	2.1	25/3	SUPPLY FAN	12
13	CLASSROOM 147	20/1	0.9	3.0			2.1	---	----	14
15	CENTER HALL 140	20/1	1.3		3.4		2.1	---	----	16
17	EXTERIOR	20/1	0.0			0.6	0.6	15/3	RETURN FAN	18
19	SMOKE DAMPERS	20/1	0.0	0.6			0.6	---	----	20
21	SPACE Rm 145 Storage	--	0.0		0.6		0.6	---	----	22
23	SPACE Rm 144 Storage	--	0.0			0.6	0.6	20/1	MECH CONTROL PANEL	24
25	SPACE Rm 143 Storage	--	0.0	0.6			0.6	20/1	HWRP, HWM	26
27	SPACE	--	0.0		0.0		0.0	20/1	SPARE	28
29	SPACE	--	0.0			0.0	0.0	20/1	SPARE	30
31	SPACE	--	0.0	0.0			0.0	20/1	SPARE	32
33	SPACE	--	0.0		0.0		0.0	20/1	SPARE	34
35	SPACE	--	0.0			0.0	0.0	20/1	SPARE	36
37	SPACE	--	0.0	0.0			0.0	20/1	SPARE	38
39	SPACE	--	0.0		0.0		0.0	20/1	SPARE	40
41	SPACE	--	0.0			0.0	0.0	20/1	SPARE	
BALANCED CONNECTED LOAD = 26.3 KVA / 73 AMPS				9.5	10.3	6.5	BALANCED DEMAND LOAD = 0.0 KVA			
MAXIMUM CONNECTED LOAD = 26.3 KVA / 86 AMPS							MAXIMUM DEMAND LOAD =			

Project As-Built Drawings have been reviewed by the Project Engineer and represent to the best of my knowledge, the project as constructed.
Proj. Eng. [signature] Date 7-07

DATE: DECEMBER 13, 2004

ADDENDUM NUMBER

ATTACHMENT NUMBER

RECORD OF REVISIONS

No.	DATE	DESCRIPTION

STATE OF ALASKA 49th B.C. HAIGH EE 4800 REGISTERED PROFESSIONAL ENGINEER

13 DEC. 2004

DESIGNED BY: BJB

DRAWN BY: PEL, RJB

STATE OF ALASKA
DEPARTMENT OF TRANSPORTATION & PUBLIC FACILITIES
STATEWIDE DESIGN & ENGINEERING SERVICES DIVISION

MT EDGECUMBE HIGH SCHOOL
BUILDING 1330
ACADEMIC EXPANSION

SHEET E205

PROJECT DESIGNATION NUMBER

67751C

STATE	YEAR
ALASKA	2004
SHEET NUMBER	TOTAL SHEETS
75	79

NOTES:

1. VERIFY FIRE ALARM DEVICE QUANTITIES.
2. PROVIDE FIRE ALARM CONTROL MODULE AND 120V BRANCH CIRCUIT TO EACH SMOKE DAMPER. REFER TO MECHANICAL DRAWINGS FOR LOCATIONS. MAXIMUM OF (6) DAMPERS PER 20 AMP CIRCUIT.
3. RELEASE ALL MAGNETIC DOOR HOLDERS UPON SMOKE ALARM.

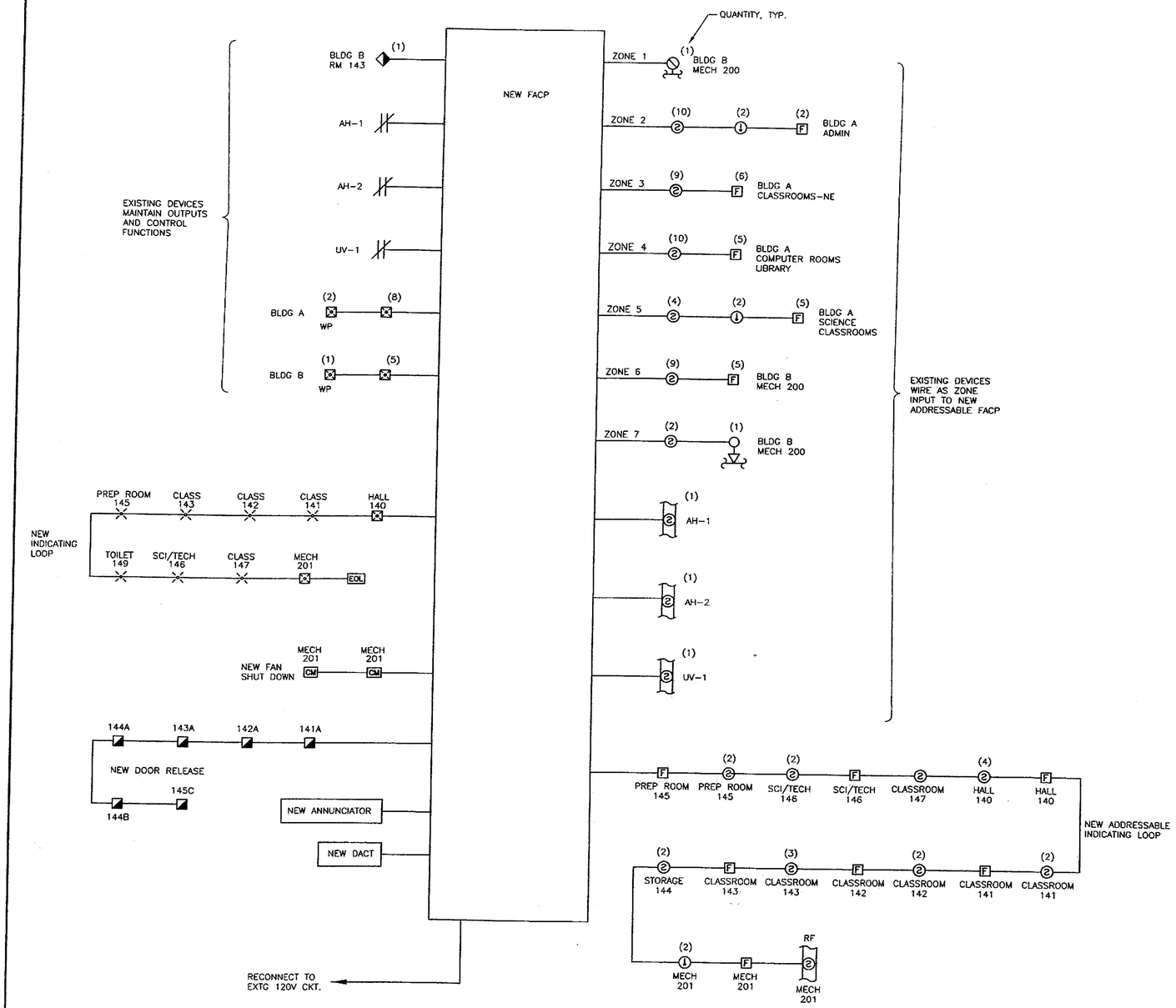

FIRE ALARM RISER DIAGRAM

NO SCALE

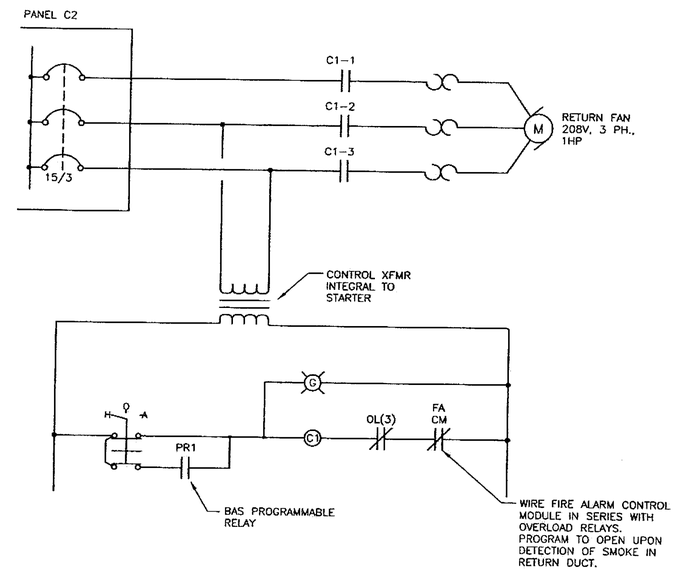

SUPPLY AND RETURN FAN WIRING DIAGRAM

NO SCALE

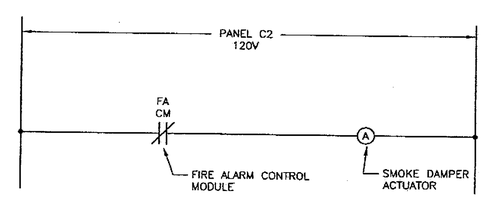

SMOKE DAMPER WIRING DIAGRAM

NO SCALE

DATE: DECEMBER 13, 2004

ADDENDUM NUMBER

ATTACHMENT NUMBER

RECORD OF REVISIONS

No.	DATE	DESCRIPTION

STATE OF ALASKA 49th B.C. HAIGHT EE 4800 PROFESSIONAL ENGINEER
13 DEC 2004

DESIGNED BY: BJB

DRAWN BY: PEL, RJB

STATE OF ALASKA
DEPARTMENT OF TRANSPORTATION & PUBLIC FACILITIES
STATEWIDE DESIGN & ENGINEERING SERVICES DIVISION

MT EDGECUMBE HIGH SCHOOL
BUILDING 1330
ACADEMIC EXPANSION

SHEET E206

PROJECT DESIGNATION NUMBER

67751C

STATE	YEAR
ALASKA	2004
SHEET NUMBER	TOTAL SHEETS
76	79

Project As-Built Drawings have been reviewed by the Project Engineer and represent to the best of my knowledge, the project as constructed.
Proj. Eng. _____ Date 7-07

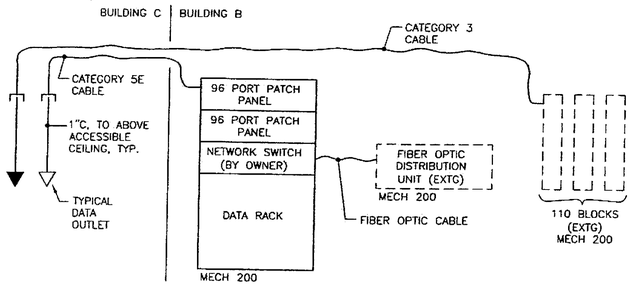

TELECOM SINGLE LINE DIAGRAM

NO SCALE

NOTES:

1. TVSS UNIT: TRANSTECTOR APEX II X5120WR, OR APPROVED EQUAL.
2. VERIFY SIZE OF TVSS CIRCUIT BREAKER WITH SUPPLIER.
3. EXISTING EQUIPMENT SHOWN DASHED.
4. REPLACE SHUNT TRIP EPO SWITCH MOUNTED IN EXISTING FIRE ALARM ANNUNCIATOR PANEL.

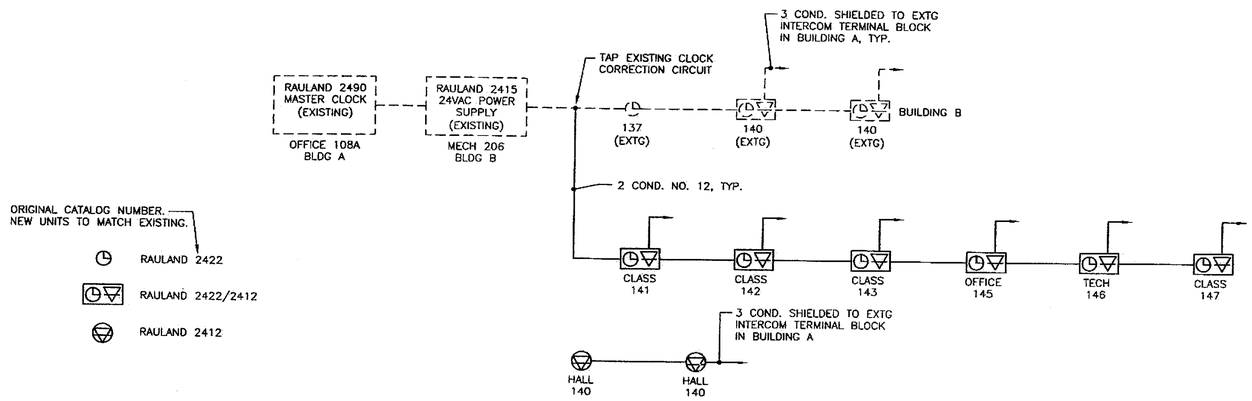

CLOCK AND INTERCOM SPEAKER SINGLE LINE DIAGRAM

NO SCALE

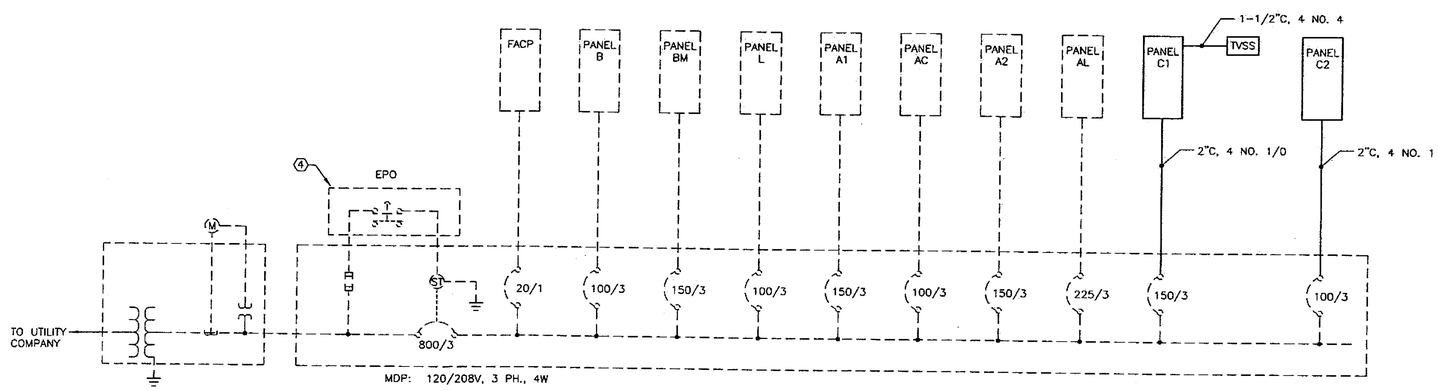

SINGLE LINE DIAGRAM

NO SCALE

DATE: DECEMBER 13, 2004

ADDENDUM NUMBER
ATTACHMENT NUMBER

RECORD OF REVISIONS

No.	DATE	DESCRIPTION

STATE OF ALASKA 49th B.C. HAIGHT EE 4800 PROFESSIONAL ENGINEER

13 DEC 2004

DESIGNED BY: BJB

DRAWN BY: PEL, RJB

STATE OF ALASKA
DEPARTMENT OF TRANSPORTATION & PUBLIC FACILITIES
STATEWIDE DESIGN & ENGINEERING SERVICES DIVISION

MT EDGECUMBE HIGH SCHOOL
BUILDING 1330
ACADEMIC EXPANSION

SHEET E207

PROJECT DESIGNATION NUMBER

67751C

STATE	YEAR
ALASKA	2004
SHEET NUMBER	TOTAL SHEETS
77	79

Project As-Built Drawings have been reviewed by the Project Engineer and represent to the best of my knowledge, the project as constructed.
Proj. Eng. _____ Date 7-07

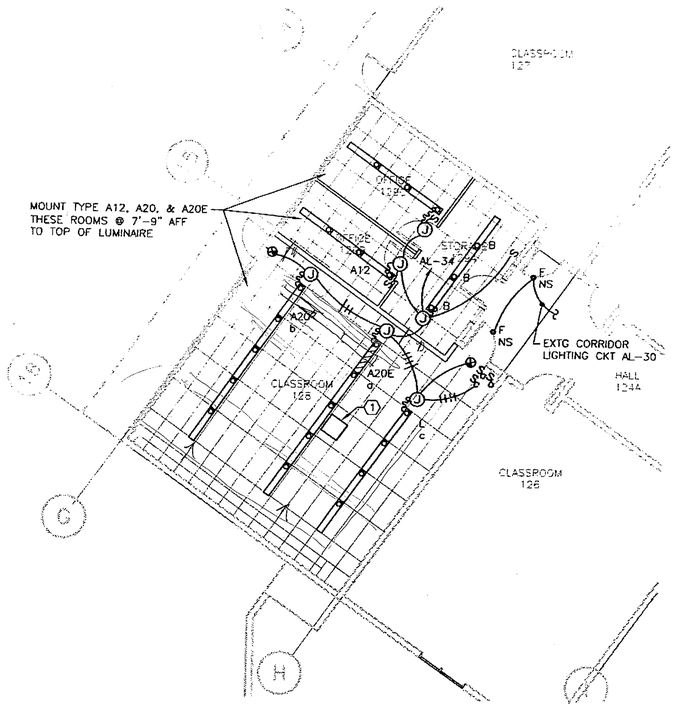

2 **FIRST FLOOR PARTIAL PLAN - LIGHTING**
BUILDING A

SCALE: 0 4' 8' 16'

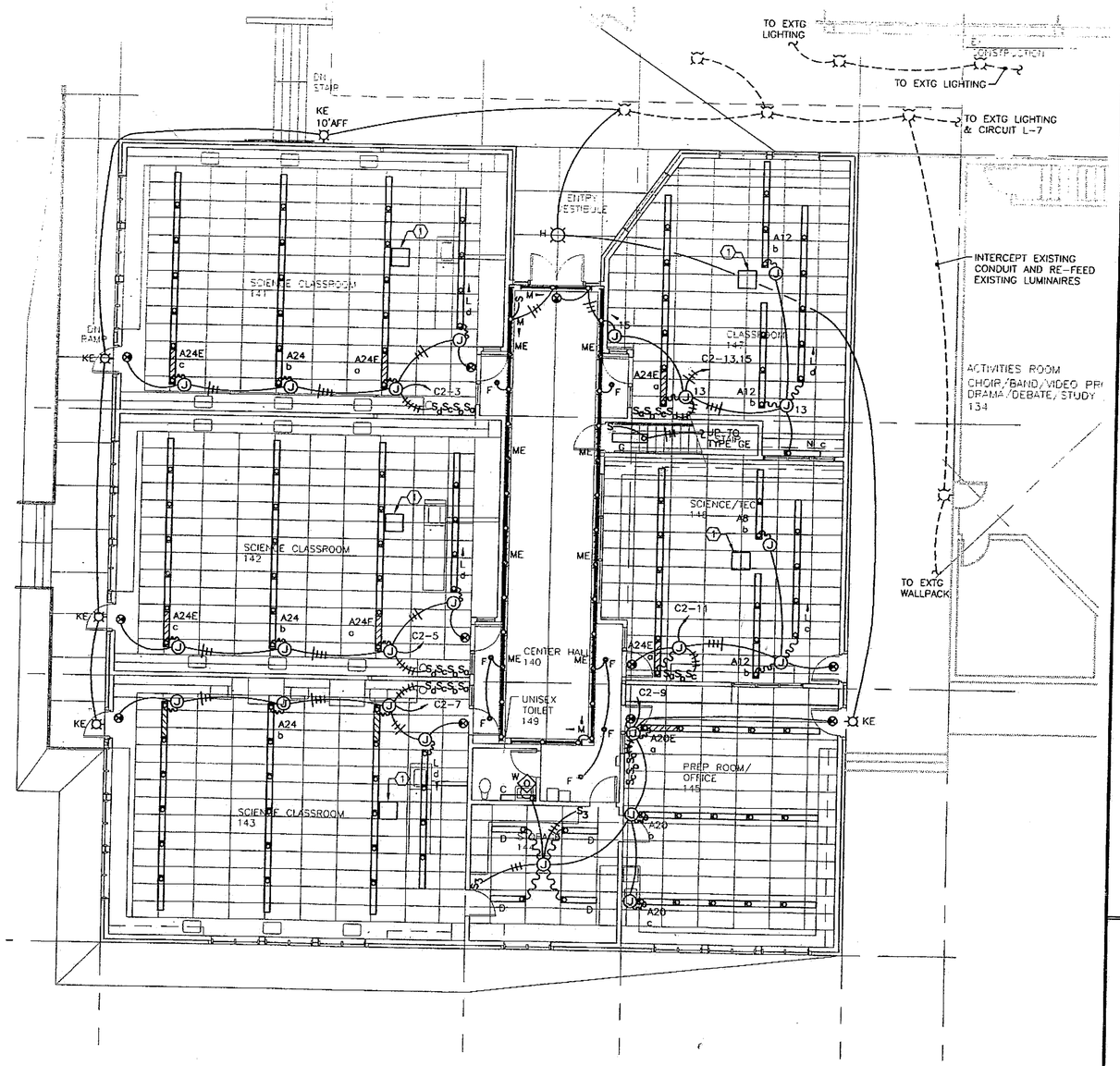

1 **FIRST FLOOR PARTIAL PLAN - LIGHTING**
BUILDING C

SCALE: 0 4' 8' 16'

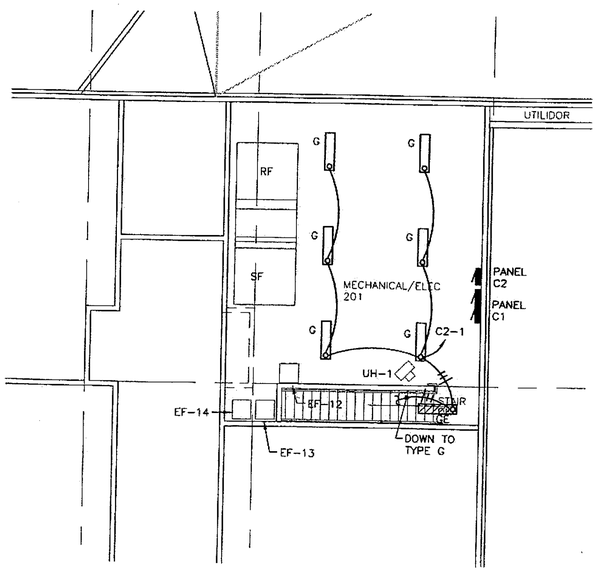

3 **SECOND FLOOR PARTIAL PLAN - LIGHTING**
BUILDING C

SCALE: 0 4' 8' 16'

NOTES:

1. PROJECTOR: COORDINATE LUMINAIRE LOCATIONS WITH PROJECTOR MOUNTING BRACKET TO AVOID CONFLICTS WITH PROJECTION.

Project As-Built Drawings have been reviewed by the Project Engineer and represent to the best of my knowledge, the project as constructed.
Proj. Eng. _____ Date 7-07

DATE: DECEMBER 13, 2004

ADDENDUM NUMBER

ATTACHMENT NUMBER

RECORD OF REVISIONS

No.	DATE	DESCRIPTION

STATE OF ALASKA 49th B.C. HAIGH EE 4800 REGISTERED PROFESSIONAL ENGINEER

15 DEC 2004

DESIGNED BY: BJB

DRAWN BY: PEL, RJB

STATE OF ALASKA
DEPARTMENT OF TRANSPORTATION & PUBLIC FACILITIES
STATEWIDE DESIGN & ENGINEERING SERVICES DIVISION

MT EDGECUMBE HIGH SCHOOL
BUILDING 1330
ACADEMIC EXPANSION

SHEET E301

PROJECT DESIGNATION NUMBER

67751C

STATE	YEAR
ALASKA	2004
SHEET NUMBER	TOTAL SHEETS
78	79

LUMINAIRE SCHEDULE

TYPE	DESCRIPTION	MANUFACTURER	LAMPS	REMARKS
A8	8 FT PENDANT MOUNT INDIRECT LINEAR FLUORESCENT w/ SPECULAR REFLECTOR, SQUARE PERF/ACRYLIC OVERLAY SHIELDING, DUST COVER, 2 LAMP	PEERLESS LIGHTING 10CRM2 232 SPR 8FT R8 120 GEB10IS SCT LP835 F1/21 ACG CMG DU	(2) 32W T8 3500K, CRI 85	MOUNT @ 8'-0" AFF TO BOTTOM OF LUMINAIRE, UON.
A12	12 FT PENDANT MOUNT INDIRECT LINEAR FLUORESCENT w/ SPECULAR REFLECTOR, SQUARE PERF/ACRYLIC OVERLAY SHIELDING, DUST COVER, 2 LAMP	PEERLESS LIGHTING 10CRM2 232 SPR 12FT R8 120 GEB10IS SCT LP835 F1/21 ACG CMG DU	(2) 32W T8 3500K, CRI 85	MOUNT @ 8'-0" AFF TO BOTTOM OF LUMINAIRE, UON.
A16	16 FT PENDANT MOUNT INDIRECT LINEAR FLUORESCENT w/ SPECULAR REFLECTOR, SQUARE PERF/ACRYLIC OVERLAY SHIELDING, DUST COVER, 2 LAMP	PEERLESS LIGHTING 10CRM2 232 SPR 16FT R8 120 GEB10IS SCT LP835 F1/21 ACG CMG DU	(2) 32W T8 3500K, CRI 85	MOUNT @ 8'-0" AFF TO BOTTOM OF LUMINAIRE, UON.
A20	20 FT PENDANT MOUNT INDIRECT LINEAR FLUORESCENT w/ SPECULAR REFLECTOR, SQUARE PERF/ACRYLIC OVERLAY SHIELDING, DUST COVER, 2 LAMP	PEERLESS LIGHTING 10CRM2 232 SPR 20FT R8 120 GEB10IS SCT LP835 F1/21 ACG CMG DU	(2) 32W T8 3500K, CRI 85	MOUNT @ 8'-0" AFF TO BOTTOM OF LUMINAIRE, UON.
A20E	SAME AS TYPE A20, w/ 1 SECTION EMERGENCY BATTERY PACK, AND THROUGH WIRE w/ SEPARATE FEED	PEERLESS LIGHTING 10CRM2 232 SPR 20FT R8 120 GEB10IS 1SE EL SCT LP835 F1/21 ACG CMG DU ELH	(2) 32W T8 3500K, CRI 85	MOUNT @ 8'-0" AFF TO BOTTOM OF LUMINAIRE, UON.
A24	24 FT PENDANT MOUNT INDIRECT LINEAR FLUORESCENT w/ SPECULAR REFLECTOR, SQUARE PERF/ACRYLIC OVERLAY SHIELDING, DUST COVER, 2 LAMP	PEERLESS LIGHTING 10CRM2 232 SPR 24FT R8 120 GEB10IS SCT LP835 F1/21 ACG CMG DU	(2) 32W T8 3500K, CRI 85	MOUNT @ 8'-0" AFF TO BOTTOM OF LUMINAIRE, UON.
A24E	SAME AS TYPE A24, w/ 1 SECTION EMERGENCY BATTERY PACK, AND THROUGH WIRE w/ SEPARATE FEED	PEERLESS LIGHTING 10CRM2 232 SPR 24FT R8 120 GEB10IS 1SE EL SCT LP835 F1/21 ACG CMG DU ELH	(2) 32W T8 3500K, CRI 85	MOUNT @ 8'-0" AFF TO BOTTOM OF LUMINAIRE, UON.
A28E	28 FT PENDANT MOUNT INDIRECT LINEAR FLUORESCENT w/ SPECULAR REFLECTOR, SQUARE PERF/ACRYLIC OVERLAY SHIELDING, DUST COVER, 1 SECTION EMERGENCY BATTERY PACK, AND THROUGH WIRE w/ SEPARATE FEED, 2 LAMP	PEERLESS LIGHTING 10CRM2 232 SPR 28FT R8 120 GEB10IS 1SE EL SCT LP835 F1/21 ACG CMG DU ELH	(2) 32W T8 3500K, CRI 85	MOUNT @ 8'-0" AFF TO BOTTOM OF LUMINAIRE, UON.
B	4' SURFACE MOUNT SPEC GRADE FLUORESCENT WRAPAROUND w/ ACRYLIC DIFFUSER, 2 LAMP	DAY-BRITE SWN232-120-1/2-EB	(2) 32W T8 3500K, CRI 85	
C	4' WALL MOUNTED DIRECT/INDIRECT FLUORESCENT WRAPAROUND w/ ACRYLIC DIFFUSER, 2 LAMP	DAY-BRITE CB232W-120-1/2EB	(2) 32W T8 3500K, CRI 85	MOUNT ABOVE MIRROR
D	4' SURFACE FLUORESCENT ENCLOSED GASKETED INDUSTRIAL w/ FIBERGLASS HOUSING, HIGH-IMPACT ACRYLIC DIFFUSER, 2 LAMP OPTION	DAY-BRITE V2AT232-120-1/2EB METALUX VT2-232DR-120V-EB8	(2) 32W T8 3500K, CRI 85 (2) 32W T8 3500K, CRI 85	
F	6" DIA RECESSED LENSED DOWNLIGHT w/ HORIZONTAL LAMP, CLEAR SPECULAR LOW IRIDESCENT REFLECTOR, BLACK BAFFLE, FRESNEL LENS, 2 LAMP	OMEGA LIGHTING OM62H26QPL-BBSPLFL-120	(2) 26W QUAD 3500K, CRI 85	
G	4' SURFACE FLUORESCENT INDUSTRIAL w/20% UPLIGHT, END CAPS, 2 LAMP OPTION	DAY-BRIGHT 2F232-PP-120-1/2EB METALUX EIVM-232-120-EB8 / CEP	(2) 32W T8 3500K, CRI 85 (2) 32W T8 3500K, CRI 85	
GE	SAME AS TYPE G, w/ EMERGENCY BATTERY PACK OPTION	DAY-BRIGHT 2F232-PP-120-1/2EB DEB-5 METALUX EIVM-232-120-EB8-EL-B50 CEP	(2) 32W T8 3500K, CRI 85 (2) 32W T8 3500K, CRI 85	
H	10" SQUARE RECESSED LENSED HID DOWNLIGHT, WITH STEPPED TRIM AND FRESNEL LENS. MATCH EXISTING	PRESCOLITE LFHSQL-H10-50HPS-50HPSFE-9SRFR	(1) 50W HPS 1900K, CRI 22	
KE	EXTERIOR COMPACT FLUORESCENT WALLPACK, WITH EMERGENCY BATTERY PACK, MATCH APPEARANCE OF EXISTING WALLPACKS.	NITEBRITES WLS26CF120-LP	(1) 26W QUAD 3500K, CRI 85	MOUNT @ 8'-0" AFF TO BOTTOM OF LUMINAIRE, UON.
L	4' SEMI-RECESSED LINEAR FLUORESCENT WALLWASH, WITH SPECULAR ALUMINUM REFLECTOR, 1 LAMP	ELLIPTIPAR F210-T155-L-02-1-00-0	(1) 54W T5HO 3500K, CRI 80	
M	4' COVE MOUNTED FLUORESCENT STRIP w/ ASYMMETRIC REFLECTOR, 1 LAMP OPTION	DAY-BRITE N132-120-1/1-EB-NAR-4 METALUX STN-132-120-EB8	(1) 32W T8 3500K, CRI 85 (1) 32W T8 3500K, CRI 85	SEE ARCHITECTURAL PLANS FOR MOUNTING DETAIL. PROVIDE LUMINAIRE LENGTHS REQUIRED FOR CONTINUOUS ROW AS SHOWN ON PLANS.
ME	SAME AS TYPE M, w/ EMERGENCY BATTERY PACK OPTION	DAY-BRITE N132-120-1/2-EB-NAR-4 DEB-5 METALUX STN-132-120-EB8-EL-B50	(1) 32W T8 3500K, CRI 85 (1) 32W T8 3500K, CRI 85	SEE ARCHITECTURAL PLANS FOR MOUNTING DETAIL. PROVIDE LUMINAIRE LENGTHS REQUIRED FOR CONTINUOUS ROW AS SHOWN ON PLANS.
N	4' SURFACE MOUNTED FLUORESCENT UNDERCABINET w/ ACRYLIC DIFFUSER, 1 LAMP	DAY-BRITE 8UC132-W-120-1/1-EB	(1) 32W T8 3500K, CRI 85	
⊗	EMERGENCY EXIT LIGHT w/ SELF DIAGNOSTICS	McPHILBEN ER55LD-1-12/27-G	LED	CEILING MOUNT IN CENTER HALL AND CLASSROOMS 141,142,143,145. WALL MOUNT @ 8'-0" AFF IN CLASS 128.
◇O	WALL MOUNTED OCCUPANCY SENSOR WITH HARD LENS	THE WATT STOPPER WA-100	---	MOUNT @ 48" AFF TO CENTER.

Project As-Built Drawings have been reviewed by the Project Engineer and represent to the best of my knowledge, the project as constructed.
Proj. Eng. [illegible] Date 7-07

DATE: DECEMBER 13, 2004

ADDENDUM NUMBER

ATTACHMENT NUMBER

RECORD OF REVISIONS

No.	DATE	DESCRIPTION

STATE OF ALASKA 49th B.C. HAIGHT EE 4900 REGISTERED PROFESSIONAL ENGINEER
13 DEC 2004

DESIGNED BY: BJB

DRAWN BY: PEL, RJB

STATE OF ALASKA
DEPARTMENT OF TRANSPORTATION & PUBLIC FACILITIES
STATEWIDE DESIGN & ENGINEERING SERVICES DIVISION

MT EDGECUMBE HIGH SCHOOL
BUILDING 1330
ACADEMIC EXPANSION

SHEET E302

PROJECT DESIGNATION NUMBER

67751C

STATE	YEAR
ALASKA	2004
SHEET NUMBER	TOTAL SHEETS
79	79