SITKA

CRESCENT HARBOR FACILITIES

PROJECT NO. 3-71183

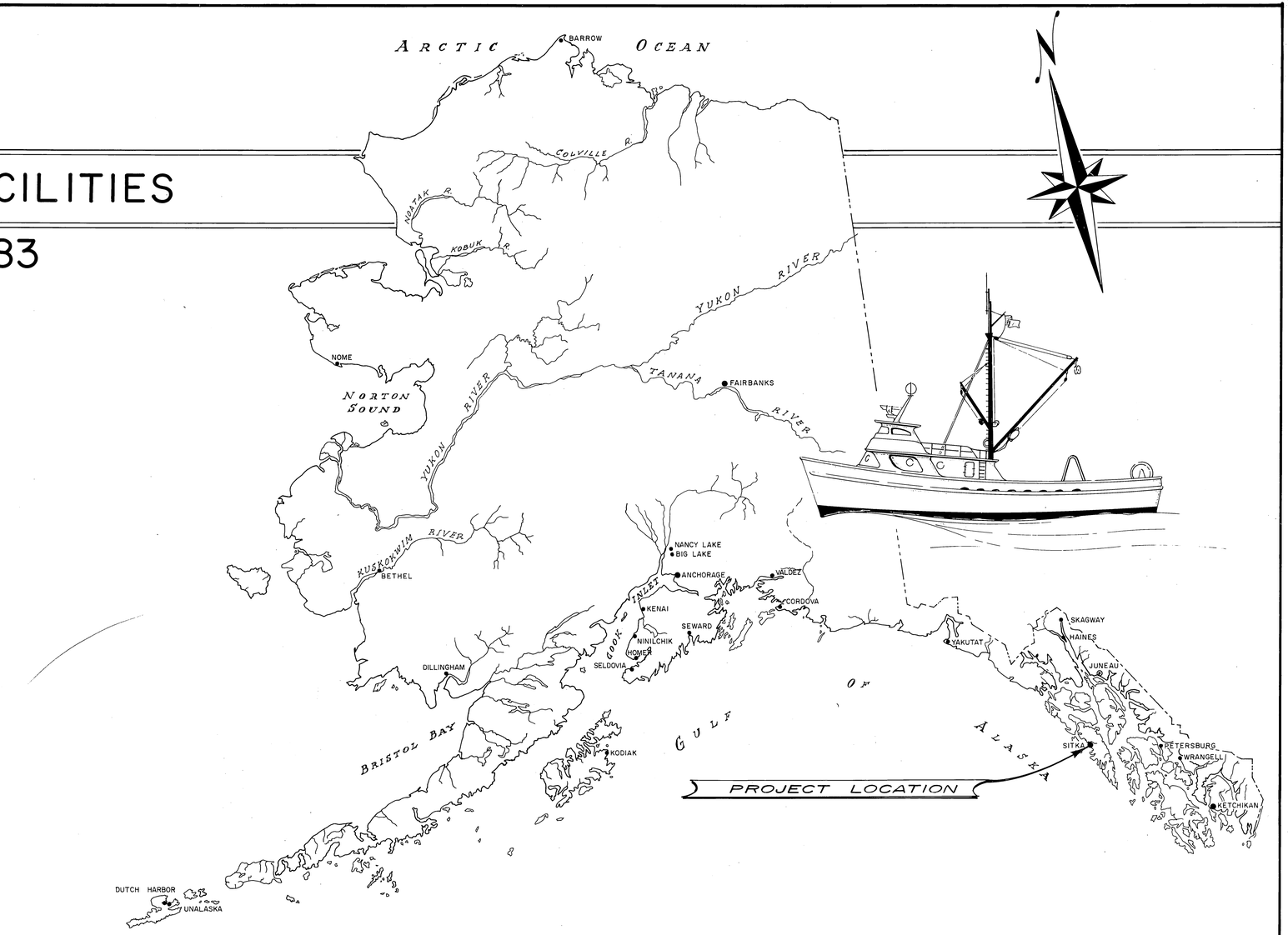

WORK SUMMARY

This project consists of constructing and installing 2179 S.F. of timber and polystyrene stall floats; furnishing and installing 2568 S.F. of concrete floats; furnishing and driving approx. 950 L.F. of float piling; furnishing and installing approx. 252 L.F. of domestic water system.

This drawing has not been corrected "As-Built"

STATE OF ALASKA — DEPARTMENT OF PUBLIC WORKS

DIVISION OF WATER & HARBORS

INDEX TO SHEETS

1	TITLE & LOCATION	7	CONCRETE FLOATS-MISC. DETAILS
2	PROJECT LAYOUT	8	TYPICAL WATER SYSTEM DETAILS
3	TIMBER STALL FLOATS		
4	TYP. HINGE CONNECTIONS		
5	CONCRETE FLOAT ASSEMBLIES		
6	CONC. FLOATS-STD. DETAILS		

APPROVED

COMMISSIONER

DATE June 19, 1970

SHEET 1 OF 8

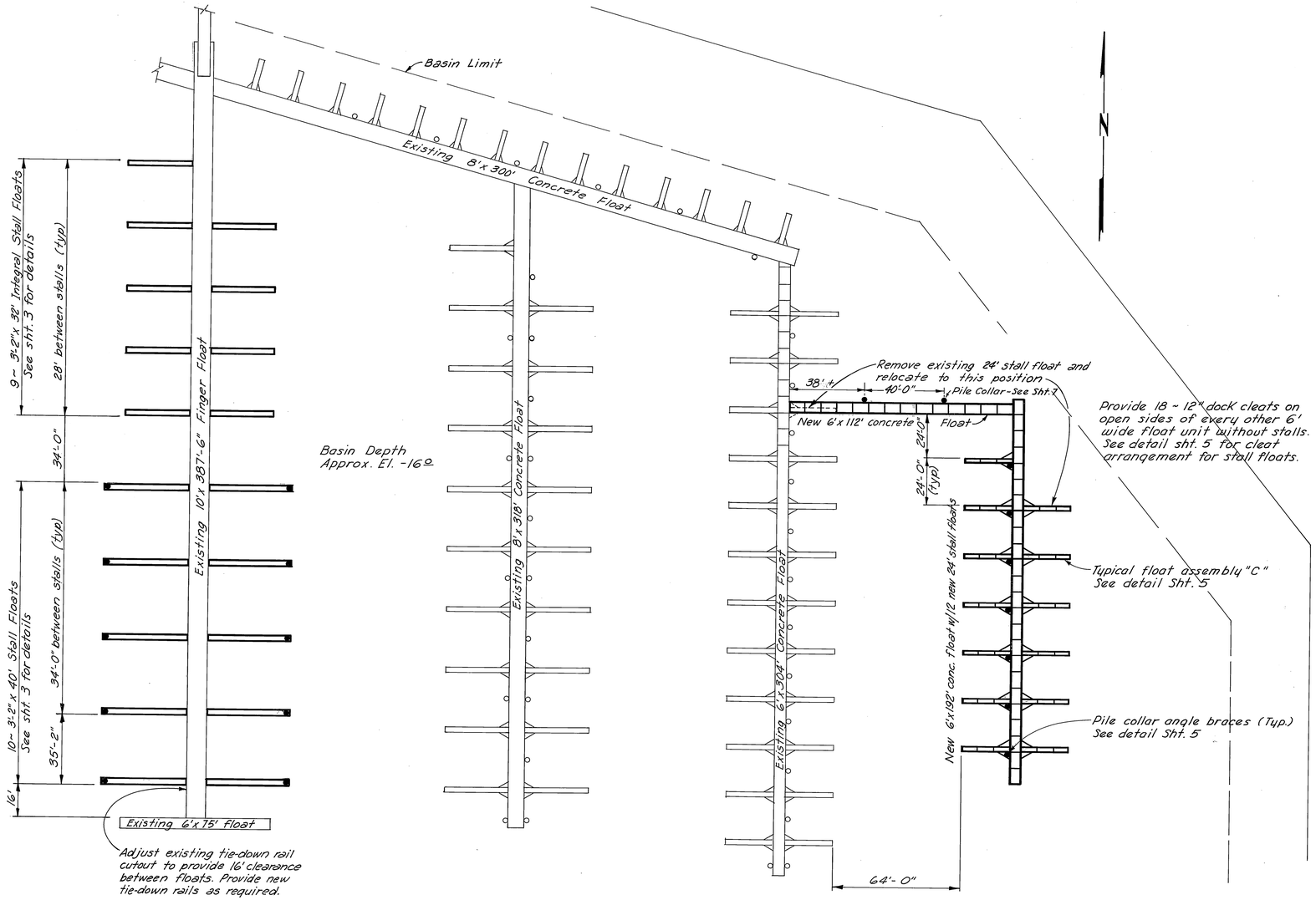

PLAN
1" = 30'

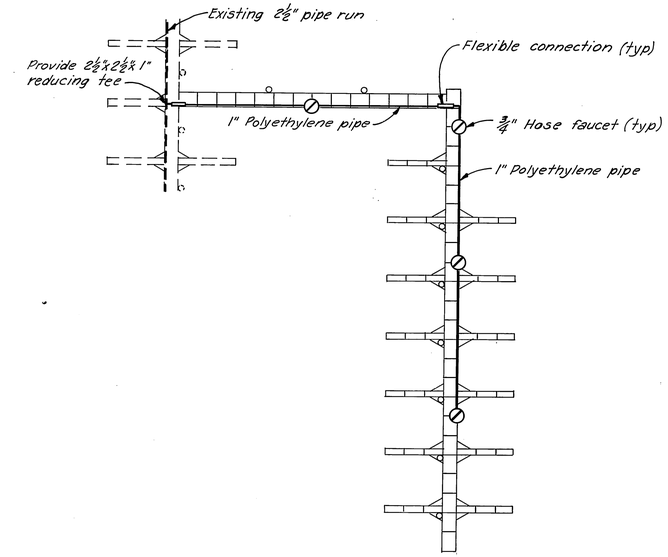

WATER SYSTEM LAYOUT
1" = 30'

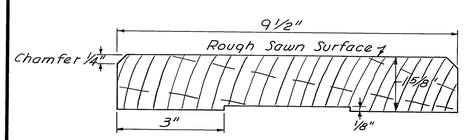

SECTION
½ Size

2x10 TIMBER DECK DETAIL

NOTES:
1. 40' stall floats shall be located at existing tie-down rail cut-outs, except that the end stall float shall be moved 2' to provide 16' clearance between it and existing 6'x75' float.
2. Do not make tie-down rail cutouts for 32' stall floats.
3. Test piling indicate that between 5' & 15' of solid driving is available. Piling shall be driven to 15' penetration or refusal.
4. Pile cutoff elev. = +22±.
5. 2x8 bumpers covering all bolts shall be installed on 6' wide concrete floats.

DO NOT SCALE THIS DRAWING – USE DIMENSIONS

STATE OF ALASKA
DEPARTMENT OF PUBLIC WORKS
DIVISION OF WATER AND HARBORS

PROJECT LAYOUT
WATER SYSTEM LAYOUT

SCALE As noted	SURVEYED —	APPROVED
DESIGNED DSM	DRAWN JET	Don Statter
CHECKED	DATE	DIRECTOR
PROJECT NUMBER 3-71183		SHEET 2 OF 8

SITKA CRESENT HARBOR

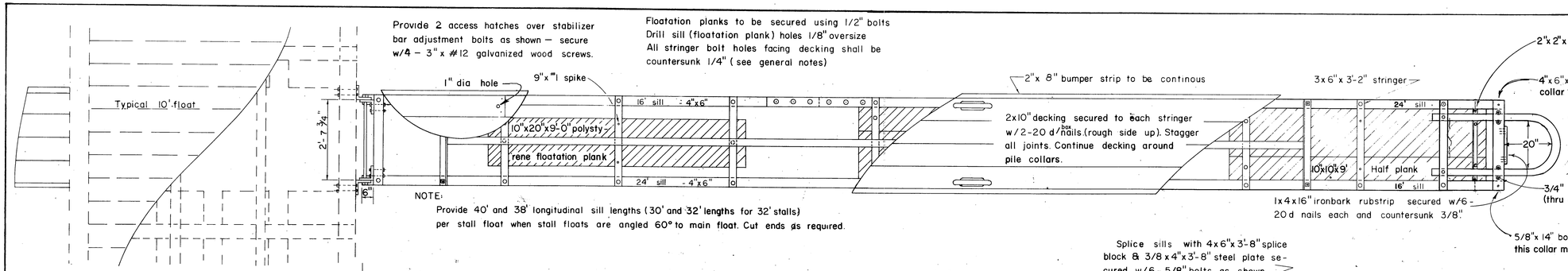

NOTE:
Provide 40' and 38' longitudinal sill lengths (30' and 32' lengths for 32' stalls) per stall float when stall floats are angled 60° to main float. Cut ends as required.

FLOAT END ANGLE
3" = 1'-0"

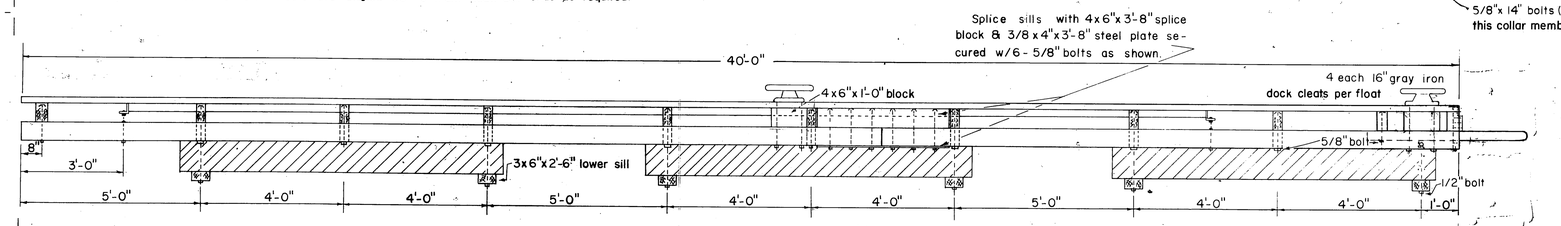

3'-2" x 40'-0" STALL FLOAT

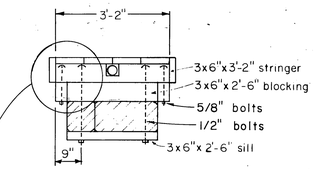

TYPICAL 3'-2" FLOAT SECTION

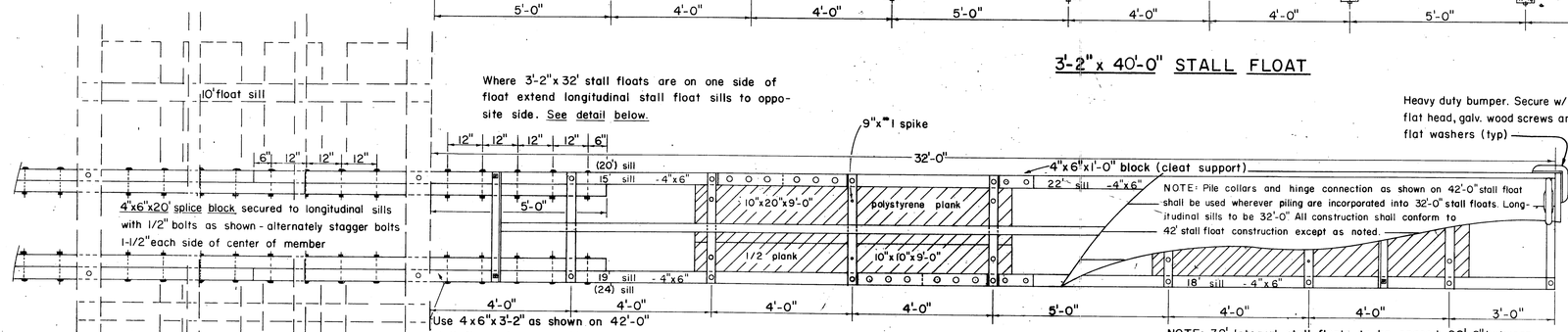

3'-2" x 32'-0" STALL FLOAT
(Showing installation with no mooring piling)

NOTE: 32' Integral stall floats to be spaced 28'-0" between floats. Decking shall span between stall & 10' float - stagger splices.
Longitudinal sills may be provided in continous lengths (no splices).

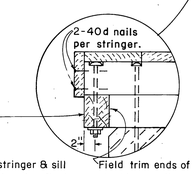

MATERIALS		
ITEM	DRESSING	TREATMENT
PILING - CLASS "A"		12" Ret
3x6" LOWER SILLS	S-2-E	" "
3x6" STRINGERS		8" "
3x6" COLLARS		" "
3x6" BLOCKING	"	" "
4x6" SPLICE BLOCKS	"	" "
4x6" LONGITUDINAL	"	" "
2x8" BUMPERS	S-1-S-2-E	" "
2x10" DECKING	"	" "
STALL FLOAT SILLS	S-2-E	" "

NOTE: ALL 12" CREO TREATMENT TO BE FULL CELL
" 8" " " " " EMPTY "
ALL TIMBER MATERIAL TO BE CONSTRUCTION GRADE DOUGLAS FIR

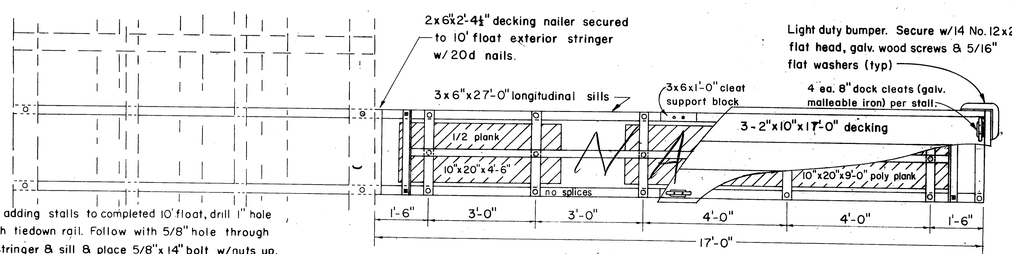

2'-4 1/2" x 17'-0" STALL FLOAT

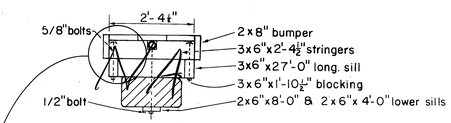

TYPICAL 2'-4 1/2" FLOAT SECTION

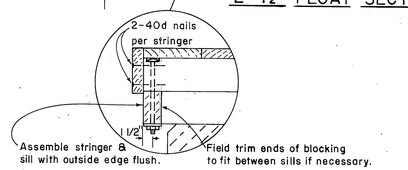

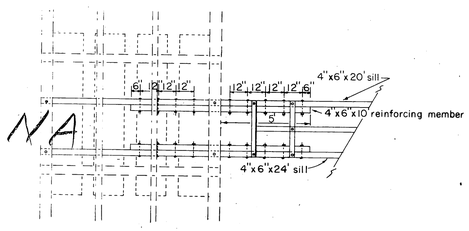

3'-2" x 32' STALL FLOAT DETAIL
ONE SIDE INSTALLATION
1/4" = 1'-0"

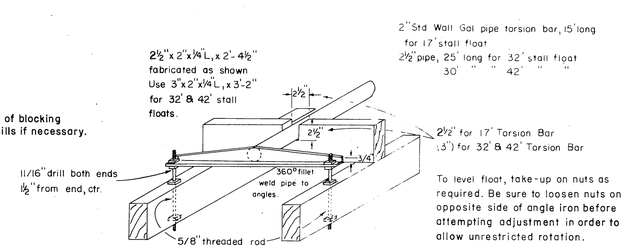

STALL FLOAT STABILIZER DETAILS
Scale 1" = 1'-0"

GENERAL NOTES

All hardware to be hot dip galvinized. A malleable washer shall be placed between all nut and wood surfaces. All bolts to be of economy headed type. Bolt holes to be drilled true size except sill bolt holes for floatation planks 1/8" oversized. Spike holes to be drilled 1/16" undersized. All drill holes shall be treated with not creosote oil. All pressure treated creosote material shall be cut to size prior to treatment. All bolts to be 5/8" except 1/2" floatation plank bolts. Omit tie down rails where stall floats join 10' floats, add blocking and bolt tie down rail to exterior stringer. All bolt holes to be predrilled except holes in splice block (integral stall float installation). Field drill all 9" spike holes. 5/8" bolt holes countersunk 1/4" deep x 2-1/8" diameter. 1/2" bolt holes countersunk 1/4" deep x 1-3/4" diameter.

DO NOT SCALE THIS DRAWING — USE DIMENSIONS

STATE OF ALASKA
DEPARTMENT OF PUBLIC WORKS
DIVISION OF WATER AND HARBORS

TIMBER STALL FLOATS

SCALE As noted	SURVEYED —	APPROVED
DESIGNED DS	DRAWN MH	Don Statter
CHECKED DS	DATE 8-66	DIRECTOR
PROJECT NUMBER 3-71183		SHEET 3 OF 8

NOTE:
All cotter keys to be 3/16" x 1 3/4"
drill holes located 1/2" from end of bolt.

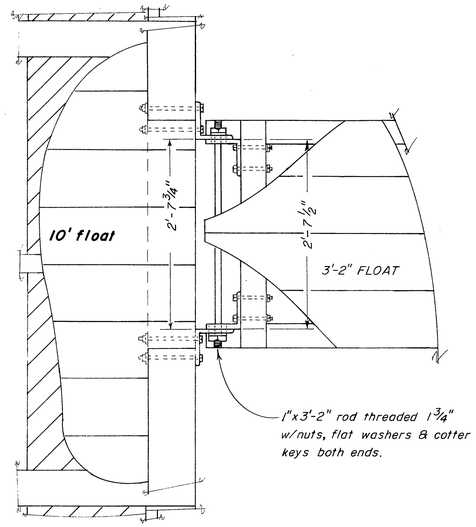

Plan - cutaway view

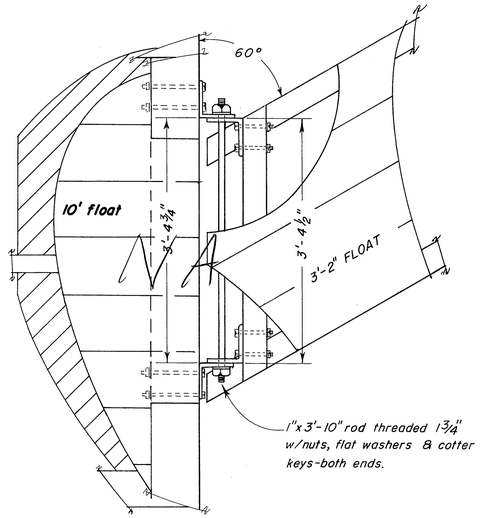

Plan - cutaway view

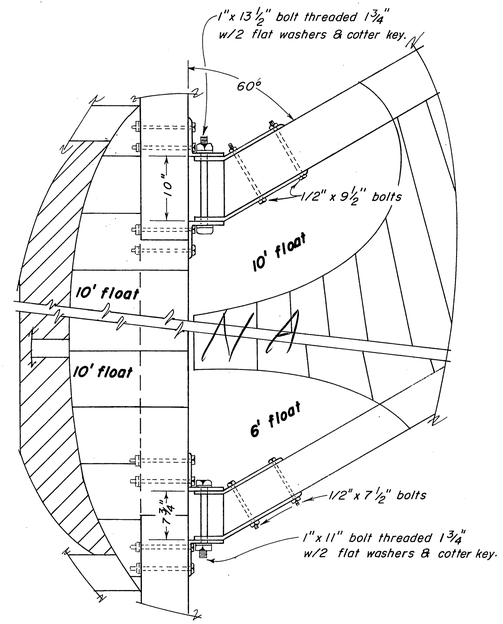

Plan-cutaway views

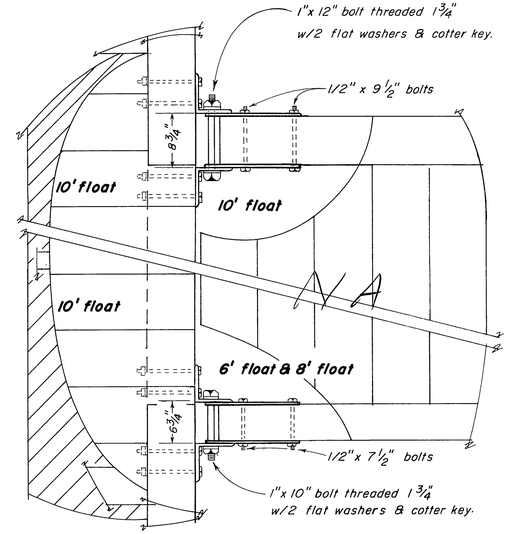

Plan-cutaway views

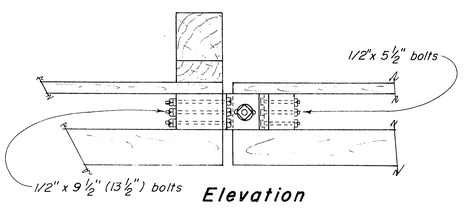

Elevation

3'-2" FLOAT
Right angle connection

Scale 1" = 1'-0"

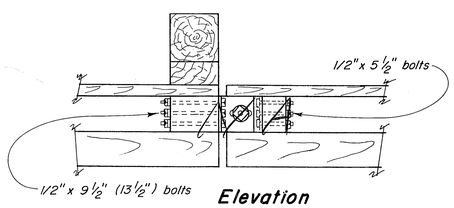

Elevation

3'-2" FLOAT
60° angle connection

Scale 1" = 1'-0"

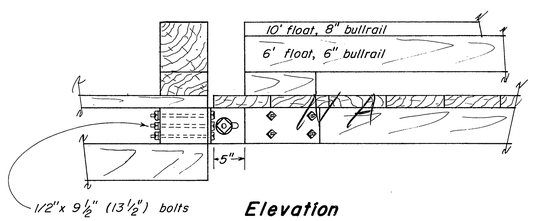

Elevation

6' & 10' FLOATS
60° angle connection

Scale 1" = 1'-0"

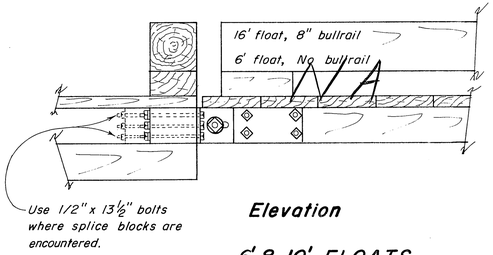

Elevation

6' & 10' FLOATS
Right angle connection

Scale 1" = 1'-0"

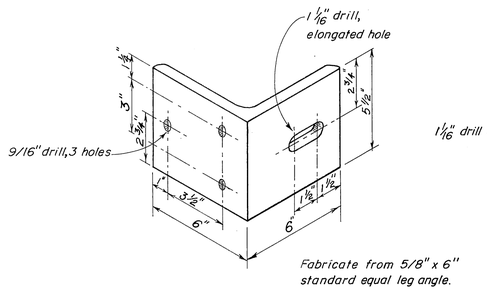

ANGLE CLIP DETAILS

Scale 3" = 1'-0"

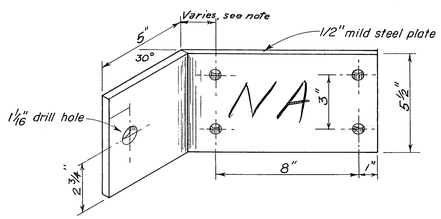

BENT PLATE DETAILS

Scale 3" = 1'-0"

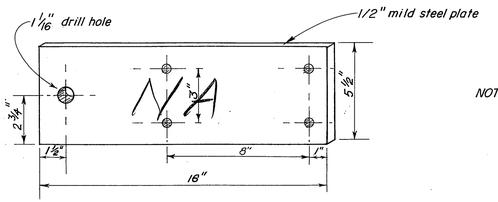

STANDARD PLATE DETAILS

Scale 3" = 1'-0"

NOTE: Variable dimension to be –
2" all short side plates for 16" plate
5 1/2" outside plates 6' angled float, for 19 1/2" plate.
6 5/8" outside plates 10' angled float, for 20 5/8" plate.

STATE OF ALASKA
DEPARTMENT OF PUBLIC WORKS
DIVISION OF WATER AND HARBORS

TYPICAL HINGE CONNECTION DETAILS

SCALE As Shown
DATE August 15, 1968
PROJ. NO. 3-71183
APPROVED DON STATTER
DIRECTOR
SURVEYED BY
DRAWN BY C.E.D. CHECKED BY

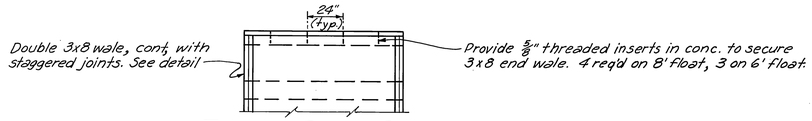

TYPICAL FLOAT END DETAIL

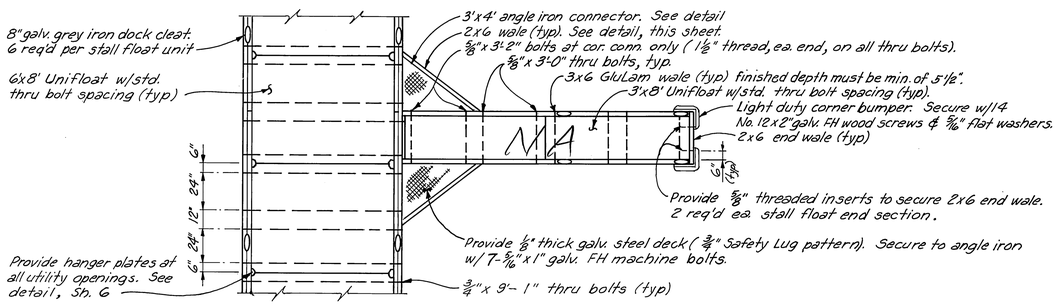

TYPICAL FLOAT ASSEMBLY "A"

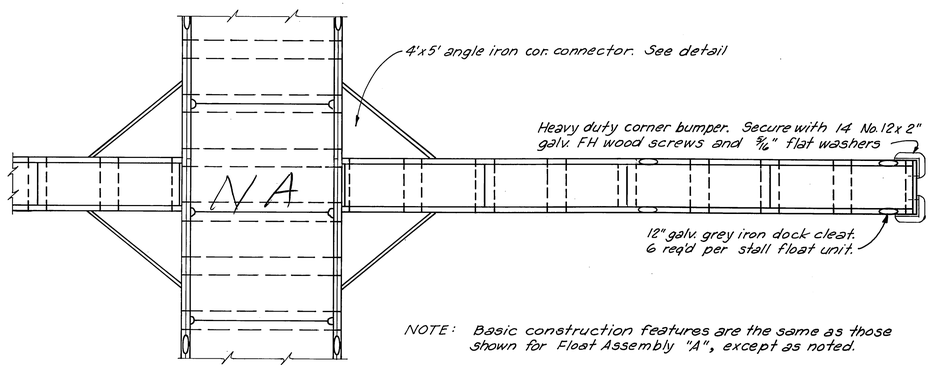

NOTE: Basic construction features are the same as those shown for Float Assembly "A", except as noted.

TYPICAL FLOAT ASSEMBLY "B"

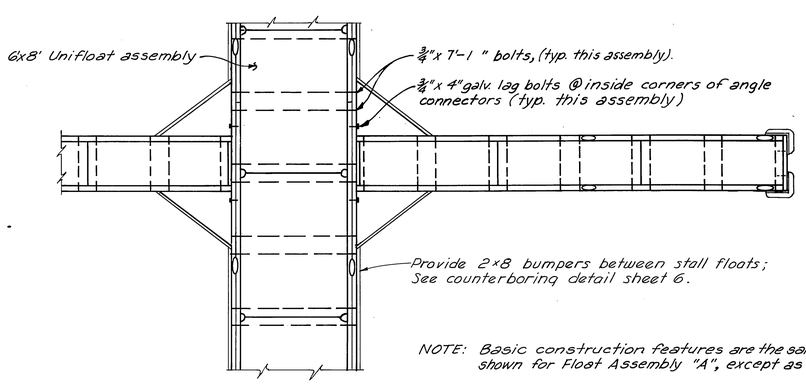

NOTE: Basic construction features are the same as those shown for Float Assembly "A", except as noted.

TYPICAL FLOAT ASSEMBLY "C"

FLOAT ASSEMBLY DETAILS

1/4" = 1'-0"

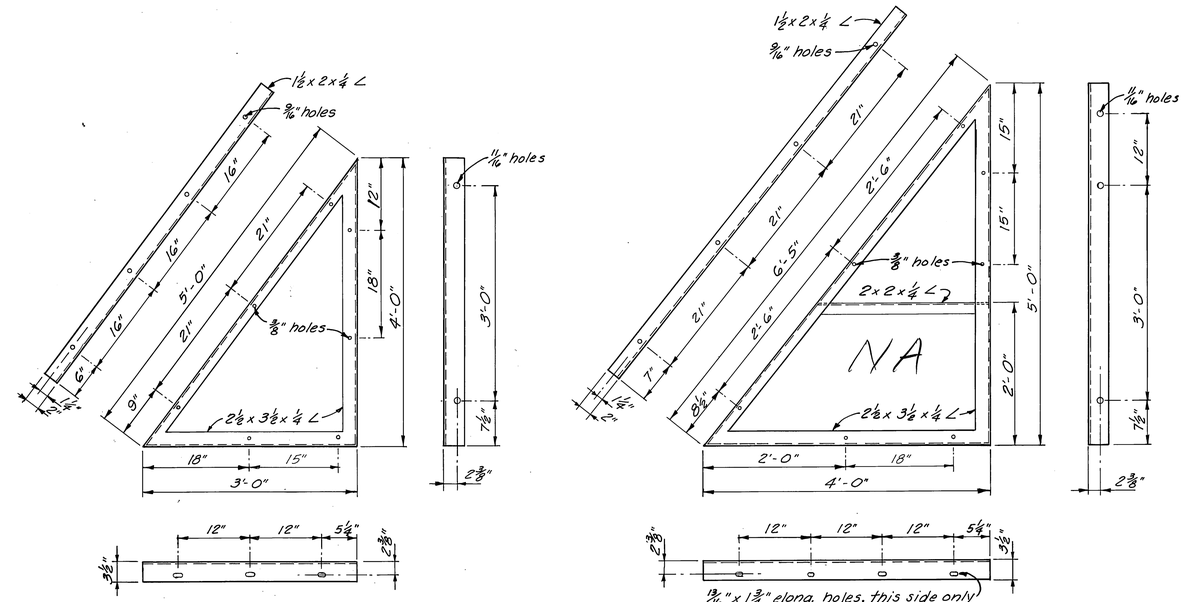

NOTE: Angle braces to be fabricated for left & right sides. Left side shown.

STALL FLOAT ANGLE BRACES

1" = 1'-0"

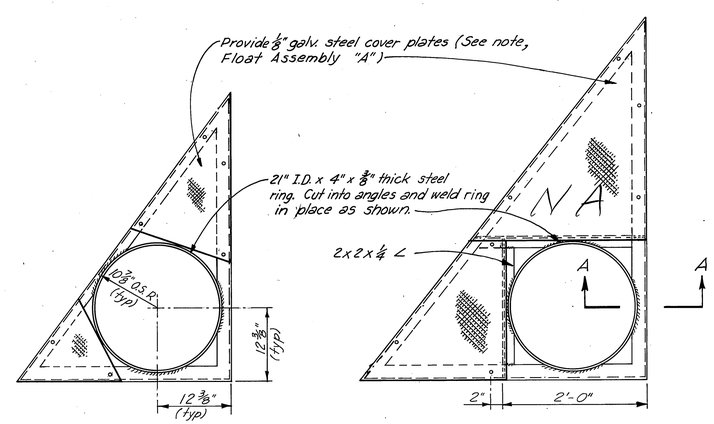

Note: All materials, dimensions, fasteners, etc. shall conform to those shown in Stall Float Angle Brace Detail, except as noted.

PILE COLLAR ANGLE BRACES

1" = 1'-0"

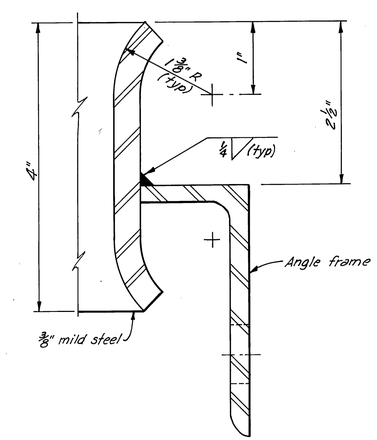

SECTION A-A

Full Size

DO NOT SCALE THIS DRAWING – USE DIMENSIONS

STATE OF ALASKA
DEPARTMENT OF PUBLIC WORKS
DIVISION OF WATER AND HARBORS

CONCRETE FLOATS
TYPICAL ASSEMBLIES & MISC. DETAILS

SCALE As shown	SURVEYED —	APPROVED
DESIGNED D.S. Mills P.E.	DRAWN JET	Don Statter
CHECKED	DATE 3-10-70	DIRECTOR
PROJECT NUMBER 3-71183	SHEET 5 OF 8	

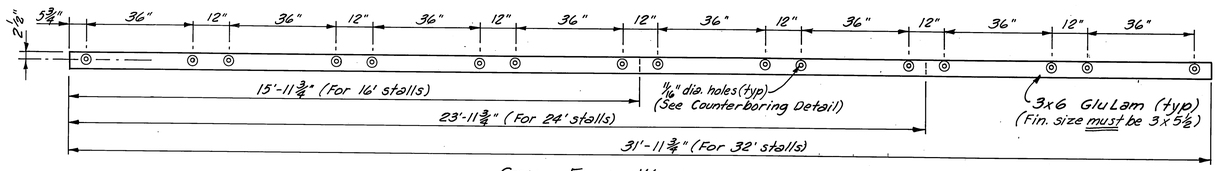

STALL FLOAT WALE

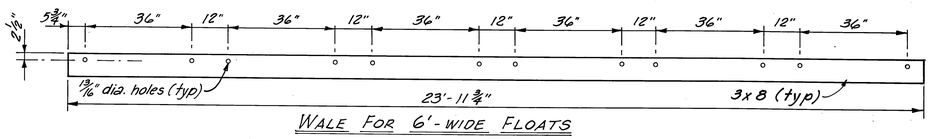

WALE FOR 6'-WIDE FLOATS

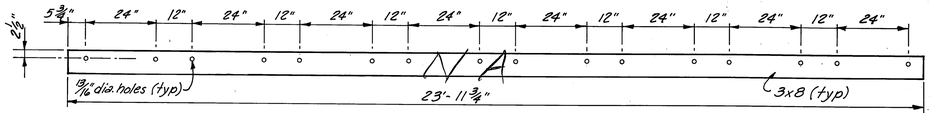

WALE FOR 8'-WIDE FLOATS

Notes:
1. All wales to be constr. grade Douglas fir, pressure treated w/0.5lb. Penta-chlorophenol after fabrication.
2. Wales for Main & Finger floats to be 3x8, S4S, doubled as shown. All butt joints to be made at center of float section.
3. Counterboring req'd for wales on stall floats, and 2x8 bumpers on gangway float and finger float.
4. Provide odd size lengths at float ends & angles as req'd.
5. Gangway Float framing timber for additional flotation to be Douglas Fir, pressure treated to 12lb. creosote retention, full cell process.

NOTE: ALL HOLES MUST BE IN STRAIGHT LINE.

TYPICAL WALES
⅛" = 1'-0"

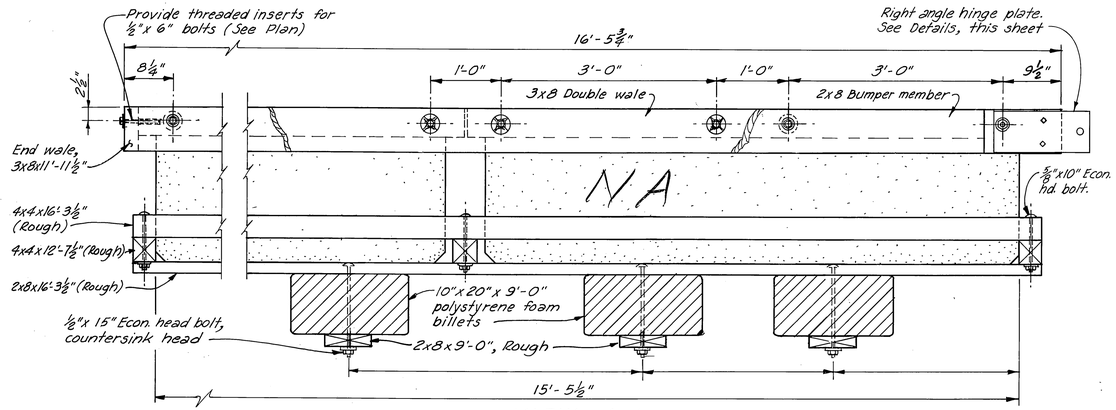

VIEW A-A
1" = 1'-0"

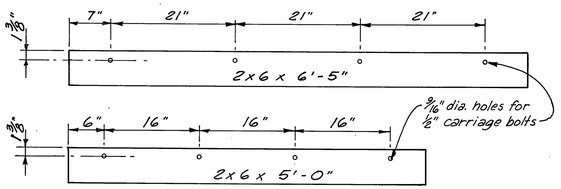

ANGLE CONNECTOR WALES
1" = 1'-0"

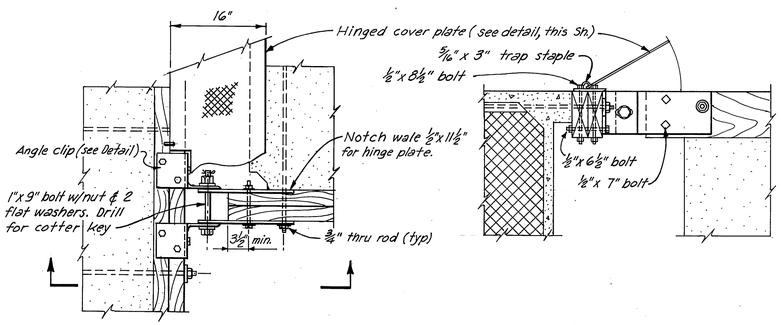

TYPICAL RIGHT ANGLE CONNECTION
1" = 1'-0"

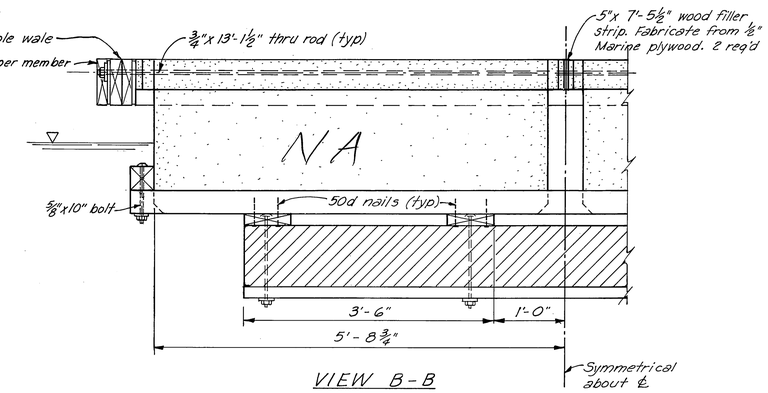

VIEW B-B
1" = 1'-0"

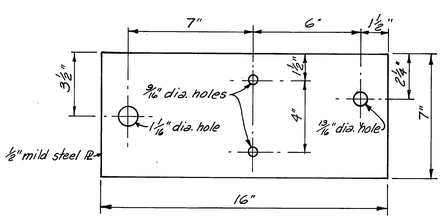

STANDARD PLATE ~ RIGHT ANGLE CONNECTION
3" = 1'-0"

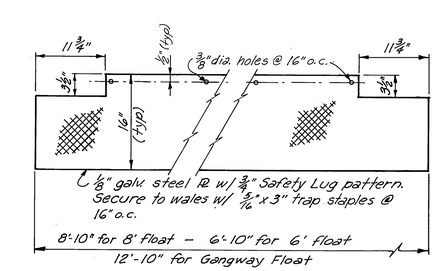

COVER PLATE
1" = 1'-0"

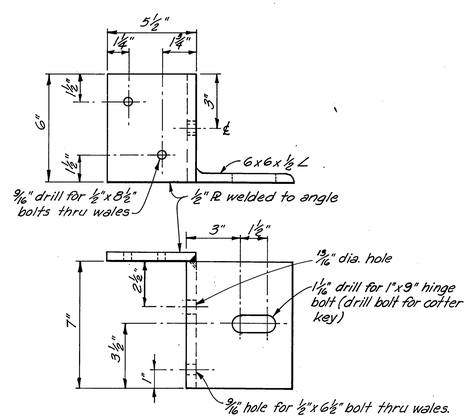

ANGLE CLIP
3" = 1'-0"

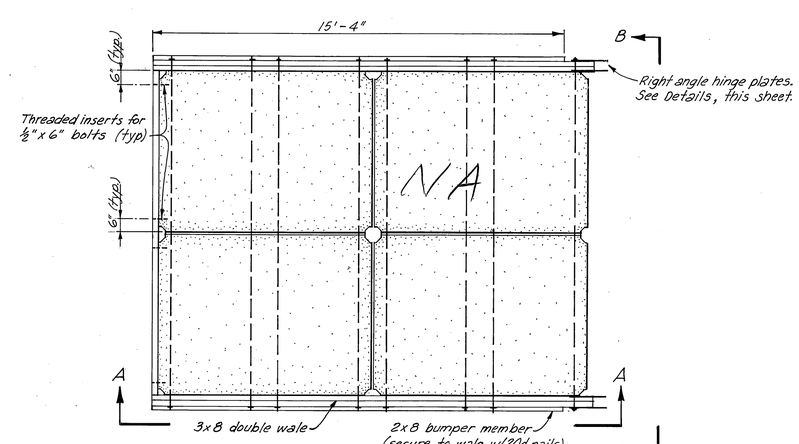

GANGWAY FLOAT ~ PLAN
⅜" = 1'-0"

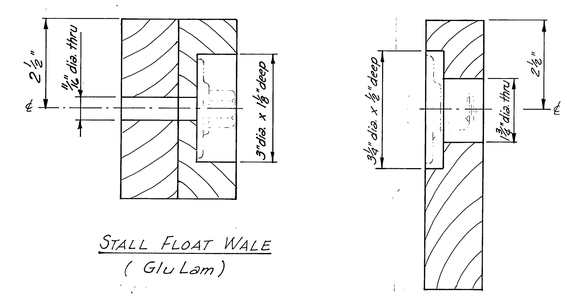

STALL FLOAT WALE
(GluLam)

2 x 8 BUMPER MEMBER

TYPICAL COUNTERBORING DETAIL
Half Size

DO NOT SCALE THIS DRAWING – USE DIMENSIONS

STATE OF ALASKA
DEPARTMENT OF PUBLIC WORKS
DIVISION OF WATER AND HARBORS

CONCRETE FLOATS
GANGWAY FLOAT &
STANDARD DETAILS

SCALE As noted	SURVEYED –	APPROVED
DESIGNED	DRAWN JET	Don Statter
CHECKED D.S. Wilde P.E.	DATE 4-70	DIRECTOR
PROJECT NUMBER 3-71183		SHEET 6 OF 8

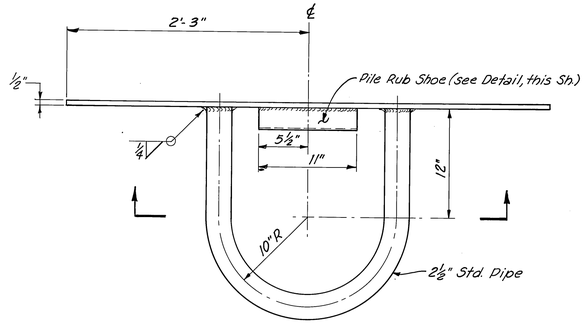

PILE - COLLAR
1 1/2" = 1'-0"

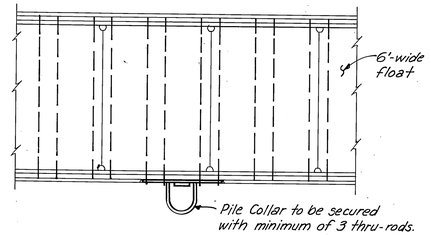

PILE COLLAR CONNECTING DETAIL
1/4" = 1'-0"

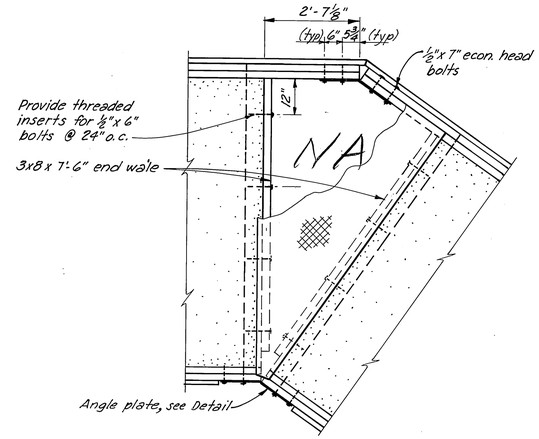

FLOAT ANGLE DETAIL
1/2" = 1'-0"

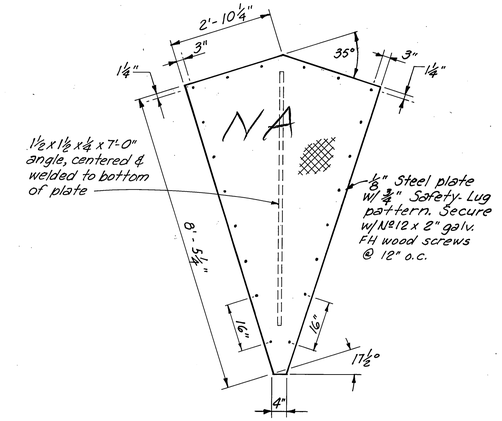

FLOAT ANGLE COVER PLATE
1/2" = 1'-0"

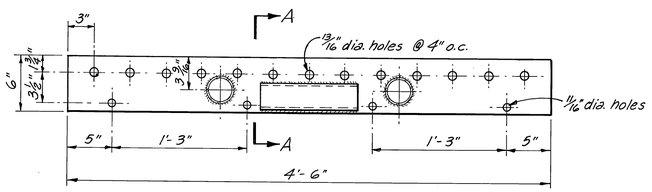

PILE - COLLAR
1 1/2" = 1'-0"

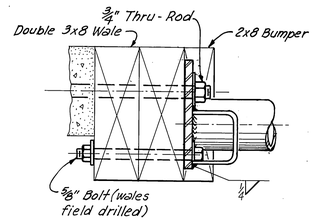

SECTION A-A
3" = 1'-0"

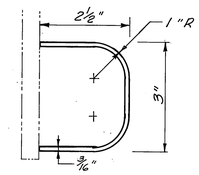

PILE RUB SHOE DETAIL
Half Scale

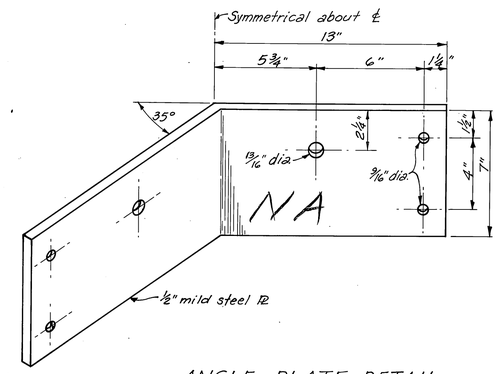

ANGLE PLATE DETAIL
3" = 1'-0"

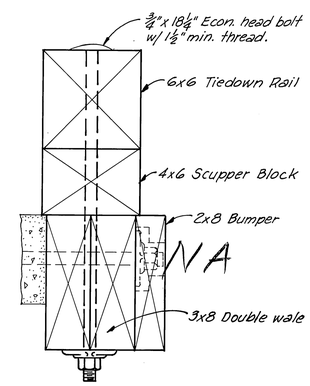

TIE-DOWN RAIL
3" = 1'-0"

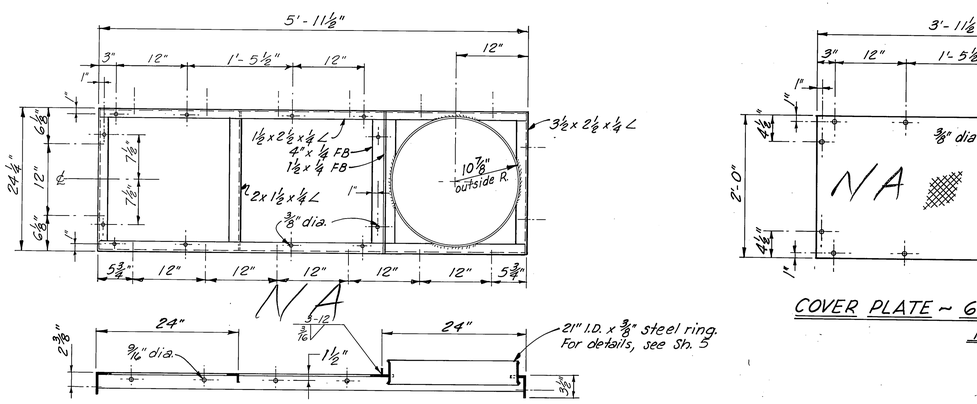

All mat'l mild steel. Hot dip galvanize after fabrication.

6'x 2' CONNECTOR & PILE COLLAR
1" = 1'-0"

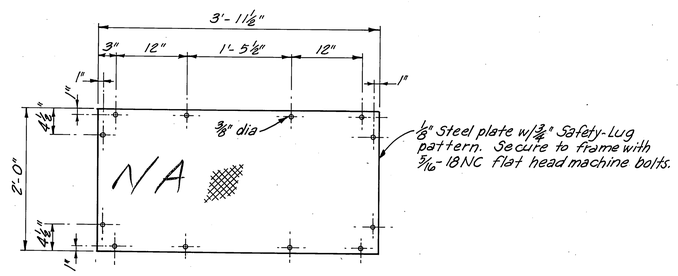

COVER PLATE ~ 6'x 2' PILE COLLAR CONNECTOR
1" = 1'-0"

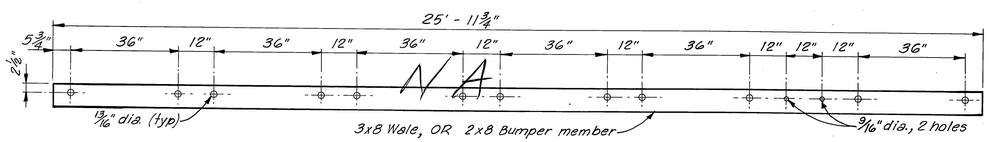

Note: Hole sizes are for 3x8 wale, only. For 2x8 Bumper, see Counterboring Detail, Sheet 6.

DRILLING LAYOUT FOR WALE & BUMPER MEMBER ~ 6'-WIDE STALL FLOATS
1/2" = 1'-0"

DO NOT SCALE THIS DRAWING — USE DIMENSIONS

STATE OF ALASKA
DEPARTMENT OF PUBLIC WORKS
DIVISION OF WATER AND HARBORS

CONCRETE FLOATS
MISCELLANEOUS DETAILS

SCALE As Noted	SURVEYED —	APPROVED
DESIGNED —	DRAWN JET	Don Statter
CHECKED Dave Miller, P.E.	DATE 4-9-70	DIRECTOR
PROJECT NUMBER 3-71183		SHEET 7 OF 8

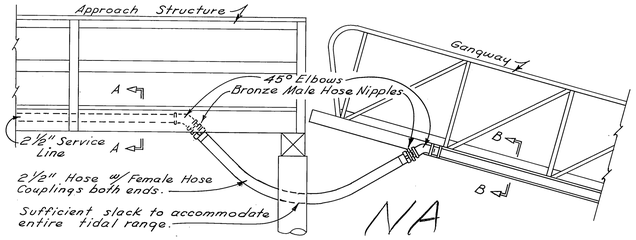

SIDE ELEVATION
Scale 3/8" = 1'-0"

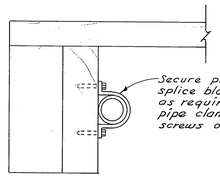

SECTION A-A
No Scale

SECTION B-B
No Scale

FLEXIBLE CONNECTION DETAILS
Approach to Gangway

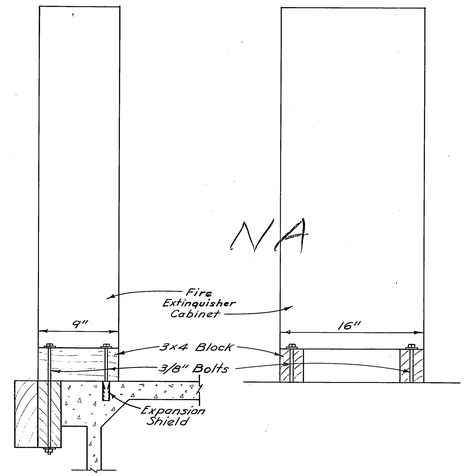

FIRE EXTINGUISHER CABINET CONNECTION
Scale 1½" = 1'-0"

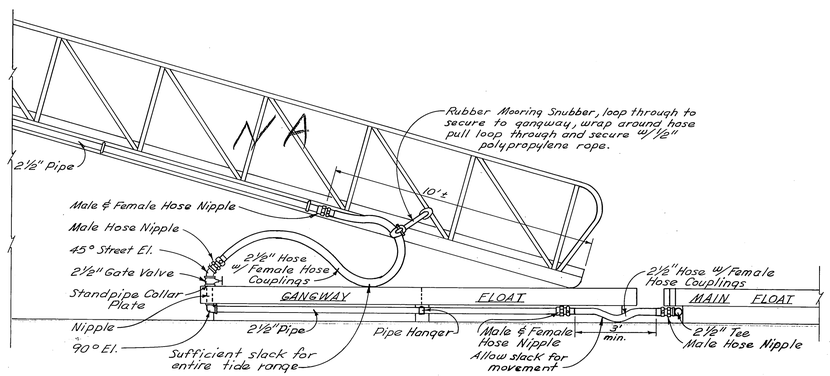

FLEXIBLE CONNECTION DETAILS
Gangway Float
Scale 3/8" = 1'-0"

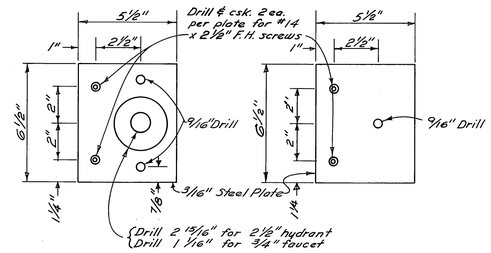

STANDPIPE COLLAR PLATE
Scale 3" = 1'-0"

PIPE HANGER PLATE
Scale 3" = 1'-0"

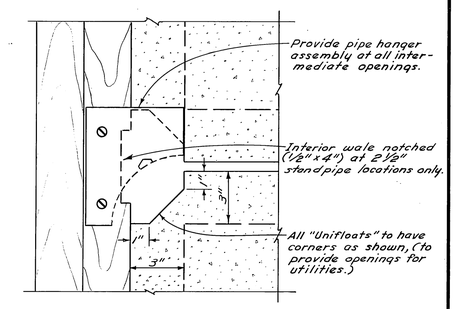

TYPICAL FLOAT CORNER DETAIL
Scale 3" = 1'-0"

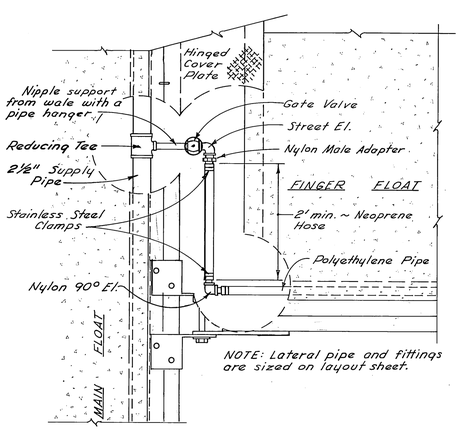

FLEXIBLE CONNECTION DETAIL
Main Float to Finger Float
Scale 1" = 1'-0"

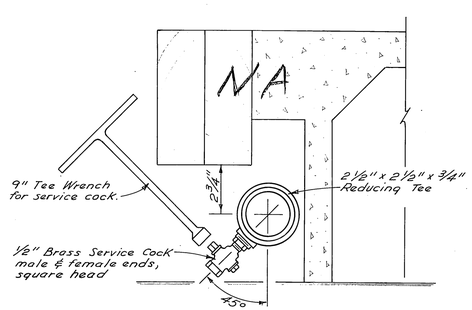

DRAIN DETAIL
Scale 3" = 1'-0"

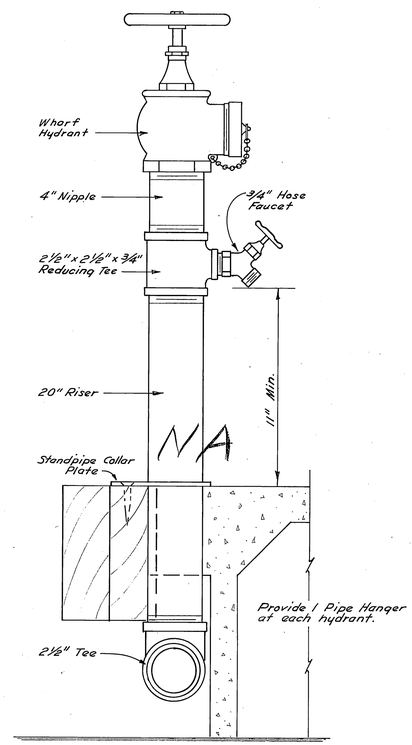

HYDRANT DETAIL
Scale 3" = 1'-0"

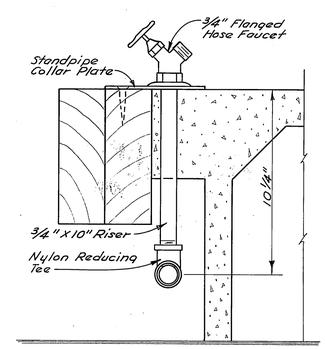

FAUCET DETAIL
Scale 3" = 1'-0"

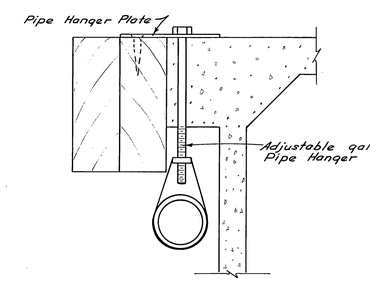

PIPE HANGER ASSEMBLY
Scale 3" = 1'-0"

DO NOT SCALE THIS DRAWING – USE DIMENSIONS

STATE OF ALASKA
DEPARTMENT OF PUBLIC WORKS
DIVISION OF WATER AND HARBORS

CONCRETE FLOAT WATER SYSTEM DETAILS

SCALE As Noted	SURVEYED	APPROVED
DESIGNED D. S. M.	DRAWN E. L. S.	DON STATTER
CHECKED D. S. M.	DATE 4-8-70	DIRECTOR
PROJECT NUMBER 3-71183		SHEET 8 OF 8