State of Alaska

Department of Transportation and Public Facilities

Southeast Region

SKAGWAY, ALASKA

DYEA ROAD BRIDGE # 309 REPLACEMENT (TAIYA RIVER BRIDGE)

PROJECT No. 69275

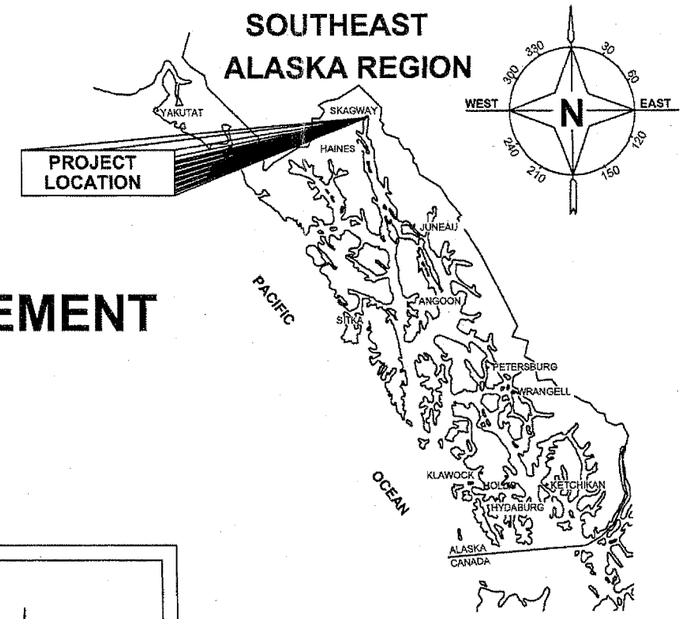

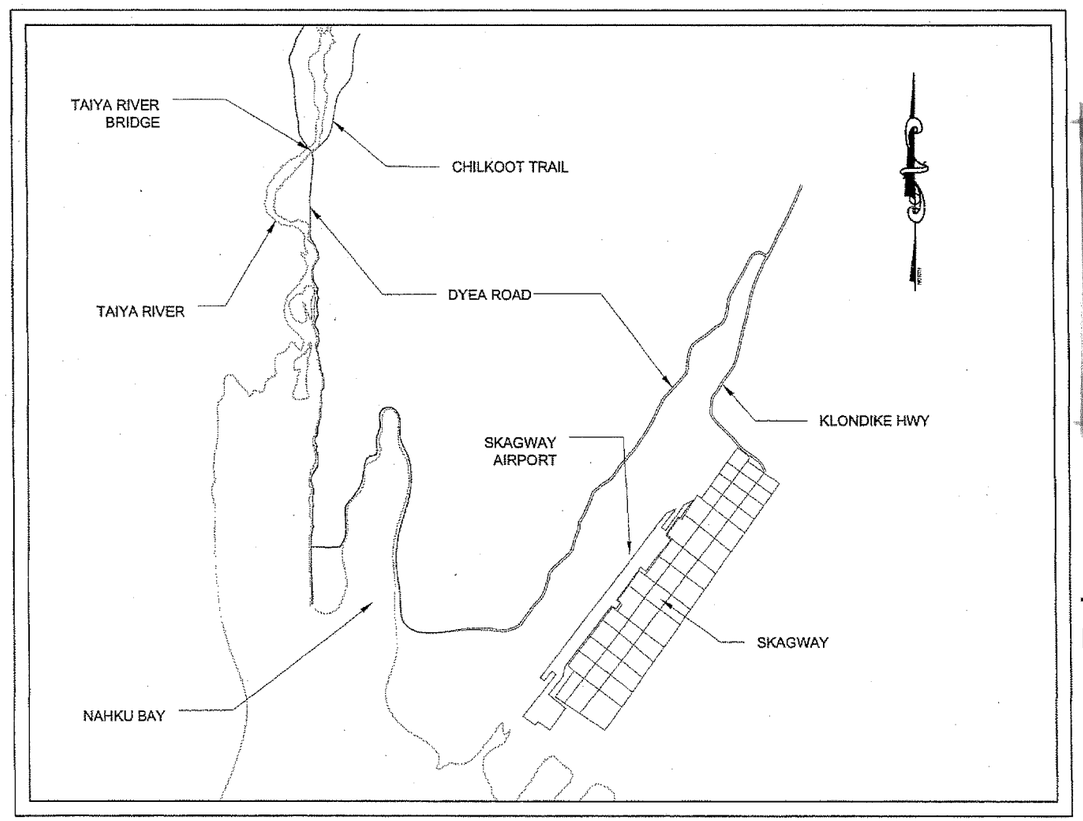

VICINITY MAP

AS-BUILT DRAWINGS

Contractor: Steve B. Mielke
Project Engineer: North Pacific Erectors, Inc.
Project Start Date: September 27, 2011
Project End Date: April 12, 2012

A.D.T.: 180

THE FOLLOWING STANDARD DRAWINGS APPLY TO THIS PROJECT

A-1
S-05.01
S-20.10

INDEX

SHEET NO.	DESCRIPTION
A1	TITLE SHEET
A2	LAYOUT PLAN
C1	ESTIMATE OF QUANTITIES
N1	GENERAL LAYOUT
N2	ESTIMATE OF QUANTITIES
N3	FRAMING PLAN AND TYPICAL SECTION
N4	FLOOR BEAM AND STRINGER DETAILS
N5	LATERAL BRACING
N6	DECK
N7	DECK DETAILS
N8	TIMBER BRIDGE RAILING
N9	PEDESTRIAN GANGWAY
S1	TRAFFIC MAINTENANCE

PATH: Q:\SGY\69275\EN\PS&E REVIEW\PS&E_7_MILE_PLANSET_20110414.DWG TAB:A1
Tuesday, May 10, 2011 11:21:08 AM
PLOT: PSPACE OR MSPACE: 1=1(F)

STATE OF ALASKA
DEPARTMENT OF TRANSPORTATION & PUBLIC FACILITIES
SOUTHEAST REGION

STATE OF ALASKA 49TH CHARLES M. TRIPP CE-9613 REGISTERED PROFESSIONAL ENGINEER 5/10/11

APPROVED: Chuck Correa 5/17/11
REGIONAL PRE-CONSTRUCTION ENGINEER DATE
CHUCK CORREA, P.E.

APPROVED: Gary L. Davis 5-17-11
DIRECTOR, SOUTHEAST REGION DATE
GARY L. DAVIS

CERTIFIED TRUE & CORRECT AS-BUILT OF ACTUAL FIELD CONDITION:
Maureen A Hansen 10/29/13
CONSTRUCTION PROJECT MANAGER DATE

STATE	PROJECT DESIGNATION	YEAR	SHEET NO.	TOTAL SHEETS
ALASKA	69275	2011	A1	13

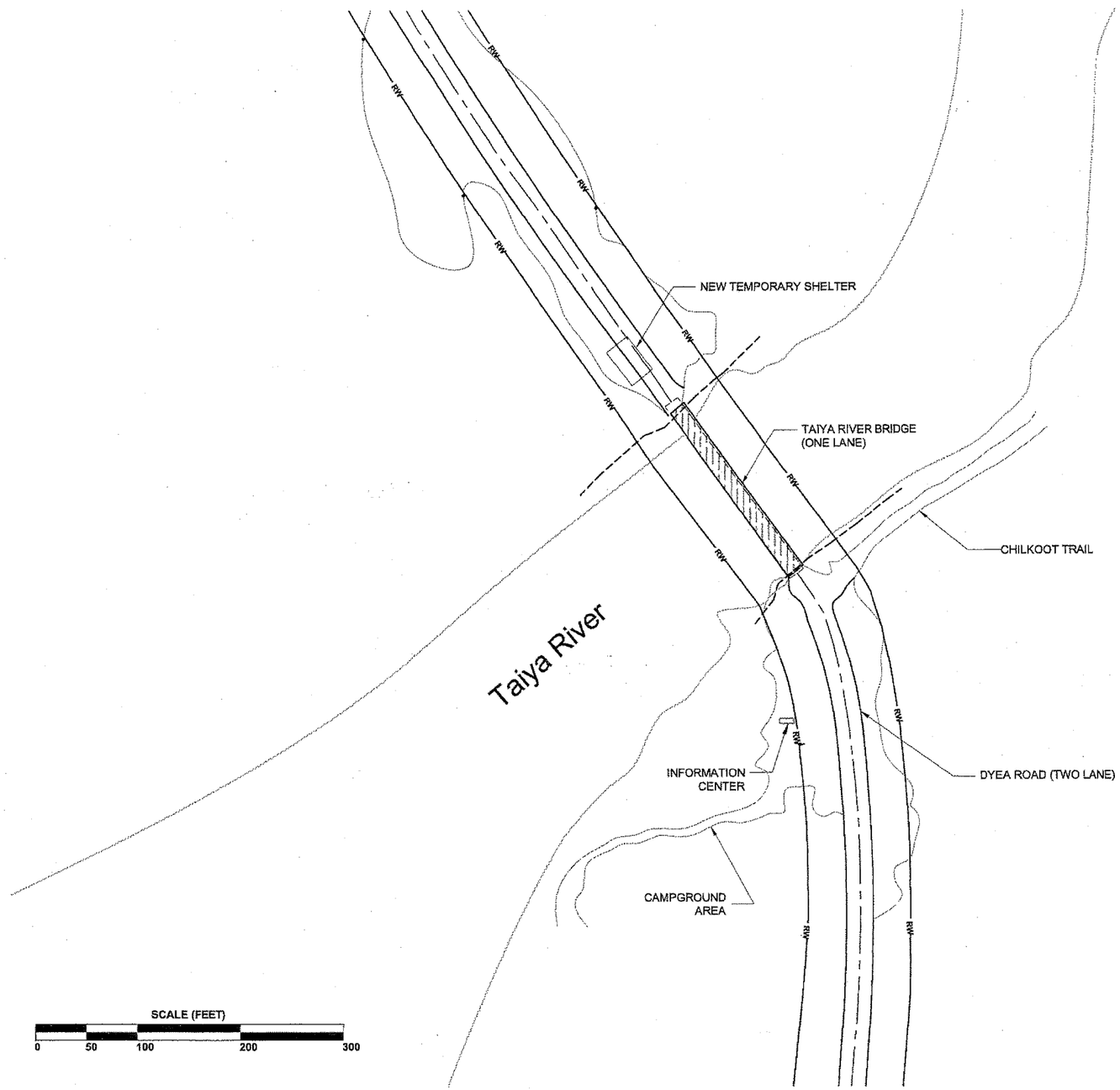

LEGEND

——— RW ———	RIGHT OF WAY BOUNDARIES
— — — — —	CENTERLINE LOCATION
———	APPROXIMATE ROAD LOCATION
·····	CLEAR GROUND
- - - - - -	ORDINARY HIGH WATER

Project As-Built Drawings have been reviewed by the Project Engineer and represent to the best of my knowledge, the project as constructed,

PE _____ Date 3/26/13

ADDENDUM NUMBER
ATTACHMENT NUMBER

RECORD OF REVISIONS

No.	DATE	DESCRIPTION

LAYOUT PLAN

CHECKED BY: C. TRIPP

5/10/11

STATE OF ALASKA 49th Charles M. Tripp CE-9613 REGISTERED PROFESSIONAL ENGINEER

DESIGNED BY: K. NOVIKOVA / T. FAGNANT

DRAWN BY: K. NOVIKOVA / T. FAGNANT

STATE OF ALASKA
DEPARTMENT OF TRANSPORTATION
& PUBLIC FACILITIES
SOUTHEAST REGION

SGY
DYEA ROAD BRIDGE # 309
REPLACEMENT
(TAIYA RIVER BRIDGE)

LAYOUT PLAN

PROJECT DESIGNATION NUMBER	
69275	
STATE	YEAR
ALASKA	2011
SHEET NUMBER	TOTAL SHEETS
A2	13

ESTIMATE OF QUANTITIES

ITEM NO.	PAY ITEM	PAY UNIT	PLAN QUANTITY
202(13)	REMOVAL OF BRIDGE COMPONENTS	LUMP SUM	ALL REQ'D
202(14)	CONTAINMENT	LUMP SUM	ALL REQ'D
504(1)	STRUCTURAL STEEL	LUMP SUM	ALL REQ'D
504(3)	MISCELLANEOUS REPAIRS	CONTINGENT SUM	ALL REQ'D
506(1)	TREATED TIMBER	LUMP SUM	ALL REQ'D
506(2)	UNTREATED TIMBER	LUMP SUM	ALL REQ'D
507(5)	TIMBER BRIDGE RAILING	LINEAR FOOT	410.5
640(1)	MOBILIZATION AND DEMOBILIZATION	LUMP SUM	ALL REQ'D
640(4)	WORKER MEALS AND LODGING, OR PER DIEM	LUMP SUM	ALL REQ'D
641(1)	EROSION AND POLLUTION CONTROL ADMINISTRATION	LUMP SUM	ALL REQ'D
641(2)	TEMPORARY EROSION AND POLLUTION CONTROL	CONTINGENT SUM	ALL REQ'D
641(5)	EROSION, SEDIMENT AND POLLUTION CONTROL PRICE ADJUSTMENT	CONTINGENT SUM	ALL REQ'D
643(2)	TRAFFIC MAINTENANCE	LUMP SUM	ALL REQ'D
643(3)	PERMANENT CONSTRUCTION SIGNS	LUMP SUM	ALL REQ'D
643(23)	TRAFFIC PRICE ADJUSTMENT	CONTINGENT SUM	ALL REQ'D
643(30)	PEDESTRIAN CROSSING	LUMP SUM	ALL REQ'D
644(1)	FIELD OFFICE	LUMP SUM	ALL REQ'D
644(6)	VEHICLES	LUMP SUM	ALL REQ'D
645(1)	TEMPORARY SHELTER	LUMP SUM	ALL REQ'D
645(2)	SNOW REMOVAL	LUMP SUM	ALL REQ'D
645(3)	SHUTTLE SERVICE	LUMP SUM	ALL REQ'D

NOTE:

ALL QUANTITIES SHOWN AS BASIS OF ESTIMATE FOR LUMP SUM ITEMS ARE APPROXIMATE. SEE SECTION 109 OF THE STANDARD SPECIFICATION.

640(2)	Additional Mobilization Costs, C.O. #1	Lump Sum	All Req'd
501(10)	Temporary Concrete Pavement, C.O. #2	Lump Sum	All Req'd
615(7)	Low Clearance Sign, C.O. #3	Lump Sum	All Req'd

BASIS OF ESTIMATE

ITEM NO.	PAY ITEM	ESTIMATING UNIT	TOTAL
504(1)	STRUCTURAL STEEL	LB	51,223
506(1)	TREATED TIMBER	MBM	20.7
506(2)	UNTREATED TIMBER	MBM	5.9
645(2)	SNOW REMOVAL	SY	15,000

Project As-Built Drawings have been reviewed by the Project Engineer and represent to the best of my knowledge, the project as constructed.

PE _____ Date 3/26/13

ADDENDUM NUMBER

ATTACHMENT NUMBER

RECORD OF REVISIONS

No.	DATE	DESCRIPTION

ESTIMATE OF QUANTITIES

CHECKED BY: C. TRIPP

5-17-11

STATE OF ALASKA 49th Charles M. Tripp CE-9613 REGISTERED PROFESSIONAL ENGINEER

DESIGNED BY: K. NOVIKOVA / T. FAGNANT

DRAWN BY: K. NOVIKOVA / T. FAGNANT

STATE OF ALASKA
DEPARTMENT OF TRANSPORTATION & PUBLIC FACILITIES
SOUTHEAST REGION

SGY
DYEA ROAD BRIDGE # 309 REPLACEMENT
(TAIYA RIVER BRIDGE)

ESTIMATE OF QUANTITIES

PROJECT DESIGNATION NUMBER

69275

STATE	YEAR
ALASKA	2011
SHEET NUMBER	TOTAL SHEETS
C1	13

STATE	PROJECT DESIGNATION	YEAR	SHEET NO.	TOTAL SHEETS
ALASKA	69275	2011	N1	13

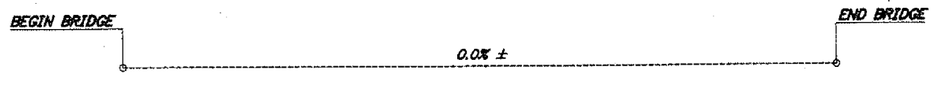

BRIDGE PROFILE GRADE
No Scale

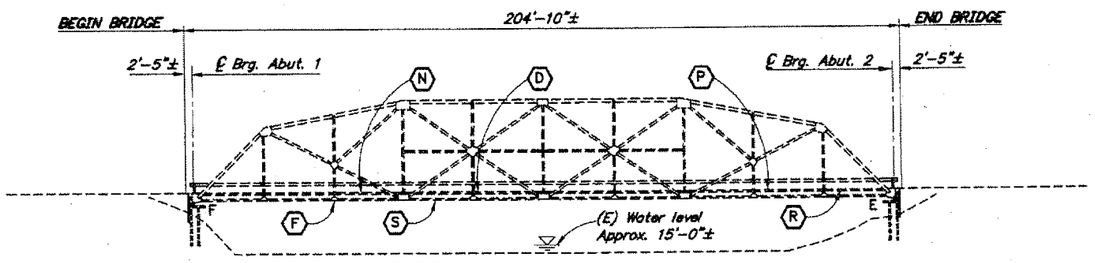

ELEVATION

10 0 20 40
Feet

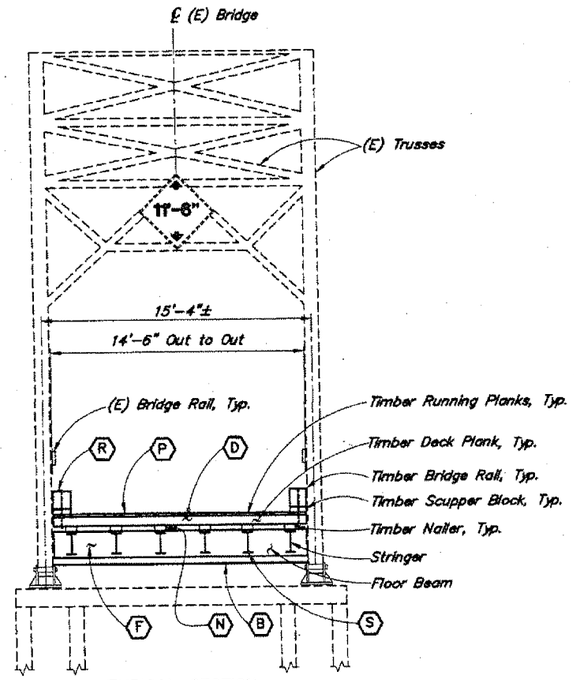

TYPICAL SECTION

12 0 4 8
In. Feet

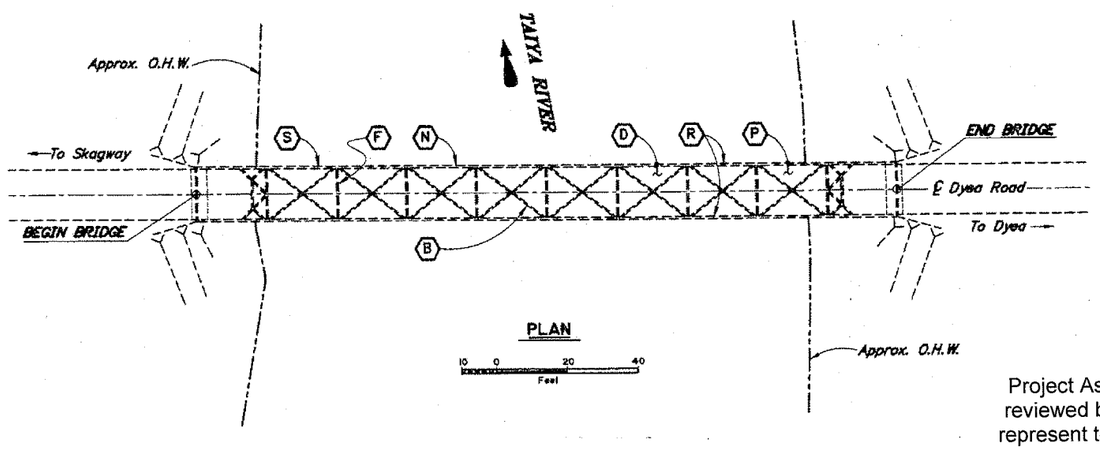

PLAN

10 0 20 40
Feet

REPLACEMENT WORK LEGEND
(B) – Lateral Bracing
(D) – Timber Deck
(F) – Floor Beam
(N) – Timber Nailers
(P) – Timber Running Planks
(R) – Bull Rail
(S) – Stringers

BRIDGE DRAWING INDEX

TITLE	DWG. NO.
GENERAL LAYOUT	1
ESTIMATE OF QUANTITIES	2
FRAMING PLAN AND TYPICAL SECTION	3
FLOOR BEAM AND STRINGER DETAILS	4
LATERAL BRACING	5
DECK	6
DECK DETAILS	7
TIMBER BRIDGE RAILING	8
PEDESTRIAN GANGWAY	9

Project As-Built Drawings have been reviewed by the Project Engineer and represent to the best of my knowledge, the project as constructed.
PE [signature] Date 3/26/13

LEGEND
------ = Existing
——— = Work in this Contract

DESIGNED BY: Todd Borls	CHECKED: Jared Levings	LAYOUT BY: Todd Borls	CHECKED BY: Jared Levings
DRAWN BY: C. Anderson (Cathy Anderson)	CHECKED: Todd Borls	SPECIFICATIONS BY: Todd Borls	P S & E COMPARED: Todd Borls
QUANTITIES BY: Todd Borls	CHECKED: Jared Levings	APPROVAL RECOMMENDED BY: Richard Pratt	

STATE OF ALASKA
DEPARTMENT OF TRANSPORTATION AND PUBLIC FACILITIES
BRIDGE SECTION

STATE OF ALASKA 49TH Todd A. Borls No. CE 10809 3-26-13 REGISTERED PROFESSIONAL ENGINEER

TAIYA RIVER BRIDGE
DYEA ROAD
GENERAL LAYOUT

BRIDGE NO. 309
DWG. NO. 1

STATE	PROJECT DESIGNATION	YEAR	SHEET NO.	TOTAL SHEETS
ALASKA	69275	2011	N2	13

BRIDGE BASIS OF ESTIMATE

ITEM NO.	ITEM	PAY UNIT	ESTIMATING UNIT	SUBST.	SUPERST.	TOTAL
202(13)	Removal of Bridge Components	LS	LS		All Req'd	All Req'd
202(14)	Containment	LS	LS		All Req'd	All Req'd
504(1)	Structural Steel	LS	LB		51,223	51,223
504(3)	Miscellaneous Repairs	CS	CS		All Req'd	All Req'd
506(1)	Treated Timber	LS	MBM		20.7	20.7
506(2)	Untreated Timber	LS	MBM		5.9	5.9
507(5)	Timber Bridge Railing	LF	LF		410	410
643(30)	Pedestrian Crossing	LS	LS		All Req'd	All Req'd

Item numbers are for reference only. Quantities shown are not necessarily the pay quantities nor the total quantity of the particular item.

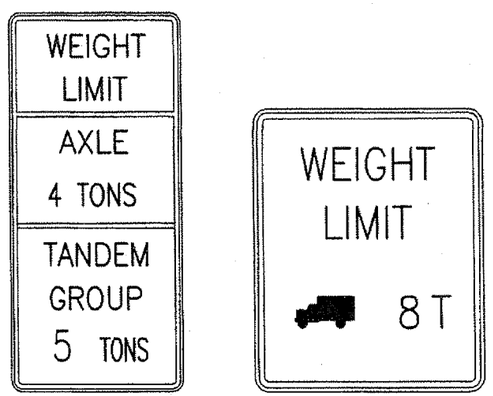

CURRENT BRIDGE POSTING
No Scale

GENERAL NOTES

DESIGN: ..... *AASHTO Standard Specifications for Highway Bridges with latest interim specifications.*

LIVE LOAD: *H-15*

DEAD LOAD: ..... *Includes 17 psf for all wearing surfaces.*

STRUCTURAL STEEL: ..... *ASTM A709, Grade 36T3. Fy = 36,000 psi*
Galvanize structural steel.

STRUCTURAL TIMBER: .... *Treated Douglas Fir-Larch, No. 1 (WCLIB & WWPA) for deck planks and nail laminated approach planks.*

Treated Douglas Fir-Larch, No. 2 (WCLIB & WWPA) for nailers.

Untreated Douglas Fir-Larch, Alaska Hemlock, or Alaska Spruce, No. 2 for timber running planks.

"As-Built" drawings, fabrication shop drawings or other documentation for the existing bridges note significant changes from the original contract plans but do not necessarily show normal construction tolerances and variances. These documents are for informational use only and the Department neither warrants nor represents that these documents accurately depict the configuration of the existing bridges. Where dimensions of the proposed work in this Contract are dependent on the dimensions of the existing bridge, adjust dimensions of the work to fit existing conditions.

SYMBOLS & ABBREVIATIONS

±	= Approximate dimension, verify controlling field dimensions.
℄	= Centerline
(E)	= Existing
&	= and
@	= at
ø	= diameter
Approx.	= Approximate
Abut.	= Abutment
Brg.	= Bearing(s)
H.S.	= High Strength
max.	= maximum
min.	= minimum
o.c.	= on center
O.H.W.	= Ordinary High Water
Symm.	= Symmetric
Typ.	= Typical

Project As-Built Drawings have been reviewed by the Project Engineer and represent to the best of my knowledge, the project as constructed.
PE _____ Date 3/26/13

DESIGNED BY: Todd Borle	CHECKED: Jared Levings	STATE OF ALASKA DEPARTMENT OF TRANSPORTATION AND PUBLIC FACILITIES BRIDGE SECTION	TAIYA RIVER BRIDGE DYEA ROAD ESTIMATE OF QUANTITIES
DRAWN BY: C. Anderson	CHECKED: Todd Borle		BRIDGE NO. 309
QUANTITIES BY: Todd Borle	CHECKED: Jared Levings		DWG. NO. 2

STATE OF ALASKA 49TH Todd A. Borle No. CE 10809 REGISTERED PROFESSIONAL ENGINEER

STATE	PROJECT DESIGNATION	YEAR	SHEET NO.	TOTAL SHEETS
ALASKA	69275	2011	N3	13

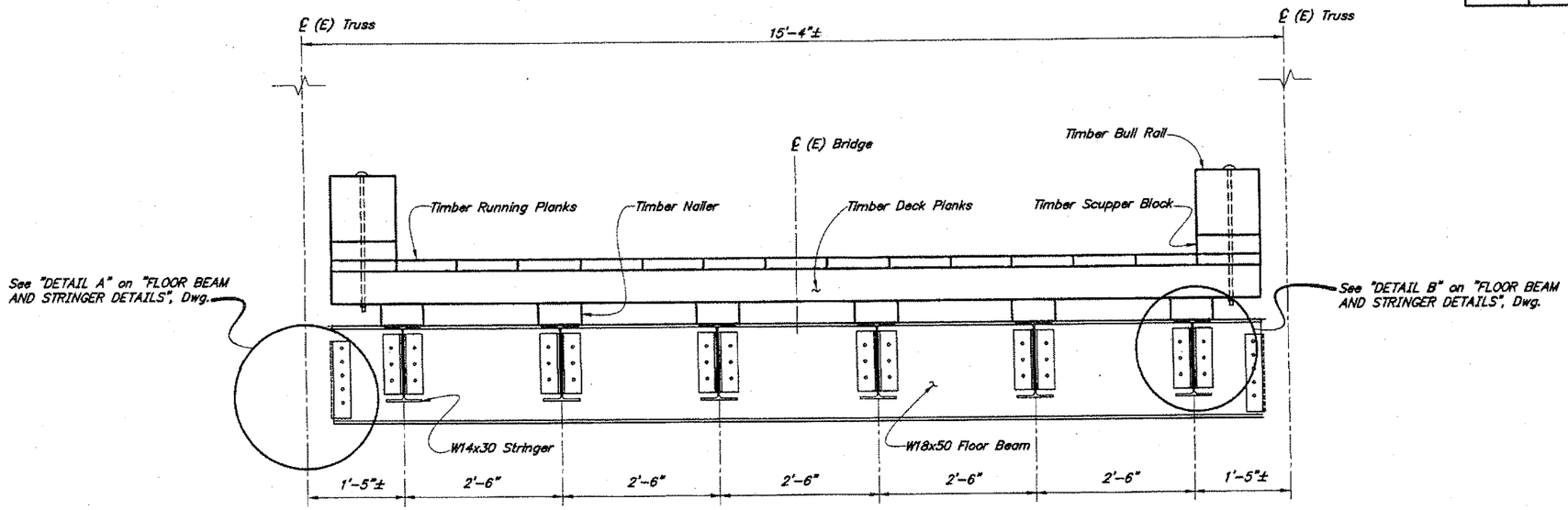

TYPICAL SECTION

12 6 0 1 2
In. Feet

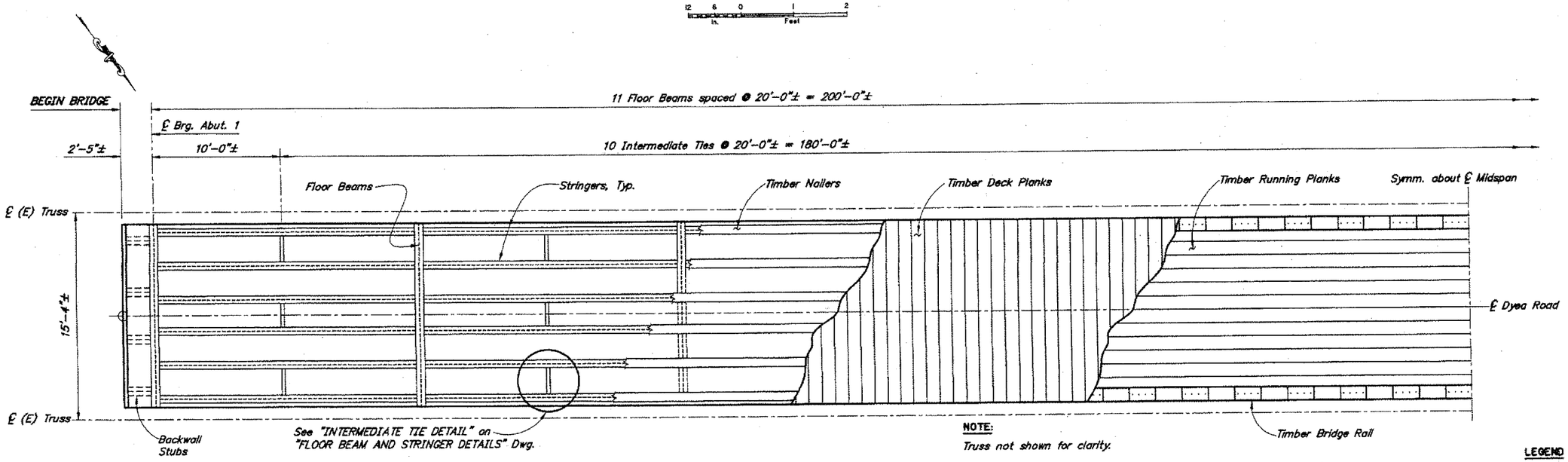

NOTE:
Truss not shown for clarity.

HALF FRAMING PLAN

12 0 4 8
In. Feet

LEGEND

- - - - - = Existing
——— = Work in this Contract

DESIGNED BY: Todd Boris	CHECKED: Jared Levings
DRAWN BY: C. Anderson (Cathy Anderson)	CHECKED: Todd Boris
QUANTITIES BY: Todd Boris	CHECKED: Jared Levings

Project As-Built Drawings have been reviewed by the Project Engineer and represent to the best of my knowledge, the project as constructed.
PE Steve Millhorn Date 3/26/13

STATE OF ALASKA
DEPARTMENT OF TRANSPORTATION AND PUBLIC FACILITIES
BRIDGE SECTION

STATE OF ALASKA 49TH Todd A. Boris No. CE 10809 REGISTERED PROFESSIONAL ENGINEER

TAIYA RIVER BRIDGE
DYEA ROAD
FRAMING PLAN AND TYPICAL SECTION

BRIDGE NO. 309
DWG. NO. 3

STATE	PROJECT DESIGNATION	YEAR	SHEET NO.	TOTAL SHEETS
ALASKA	69275	2011	N4	13

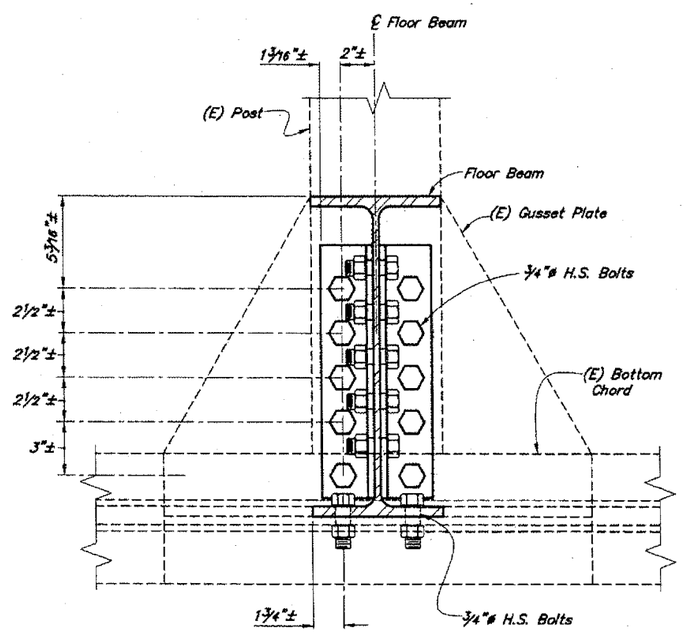

END VIEW

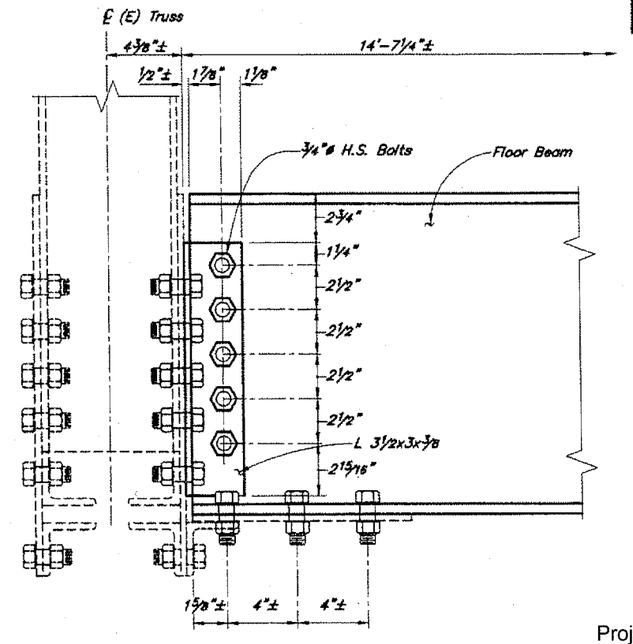

SIDE VIEW

DETAIL A

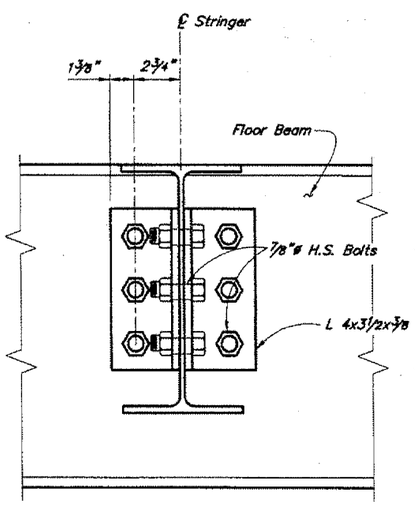

END VIEW

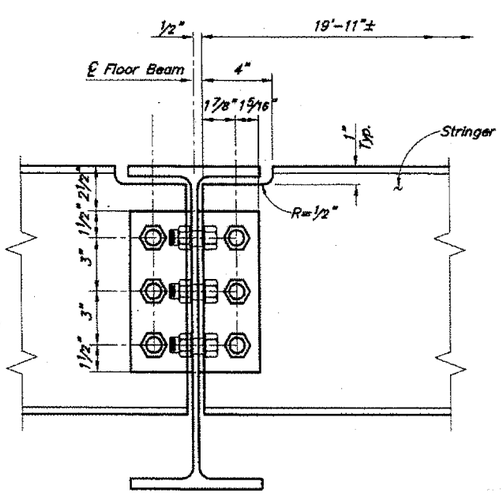

SIDE VIEW

DETAIL B

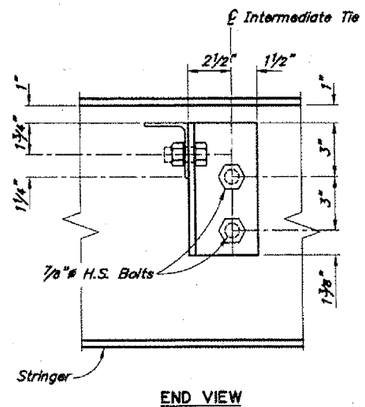

END VIEW

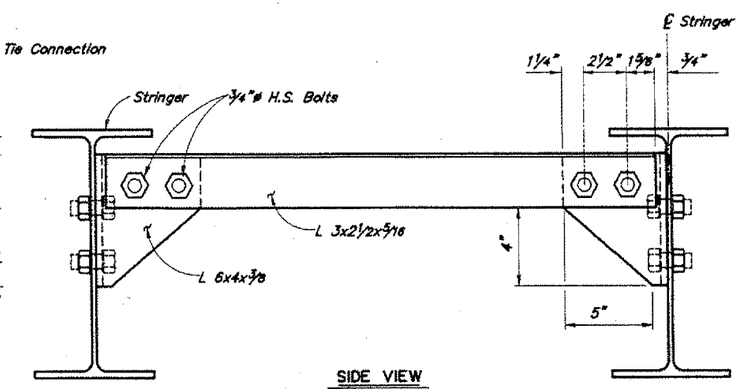

SIDE VIEW

INTERMEDIATE TIE DETAIL

Project As-Built Drawings have been reviewed by the Project Engineer and represent to the best of my knowledge, the project as constructed.

PE _____ Date 3/26/13

LEGEND

----- = Existing

——— = Work in this Contract

DESIGNED BY: Todd Borle	CHECKED: Jared Lindrige
DRAWN BY: C. Anderson (Cathy Anderson)	CHECKED: Todd Borle
QUANTITIES BY: Todd Borle	CHECKED: Jared Lindrige

STATE OF ALASKA
DEPARTMENT OF TRANSPORTATION AND PUBLIC FACILITIES
BRIDGE SECTION

STATE OF ALASKA 49TH — Todd A. Borle No. CE 10809 — REGISTERED PROFESSIONAL ENGINEER

TAIYA RIVER BRIDGE

DYEA ROAD

FLOOR BEAM AND STRINGER DETAILS

BRIDGE NO. 309

DWG. NO. 4

STATE	PROJECT DESIGNATION	YEAR	SHEET NO.	TOTAL SHEETS
ALASKA	69275	2011	N5	13

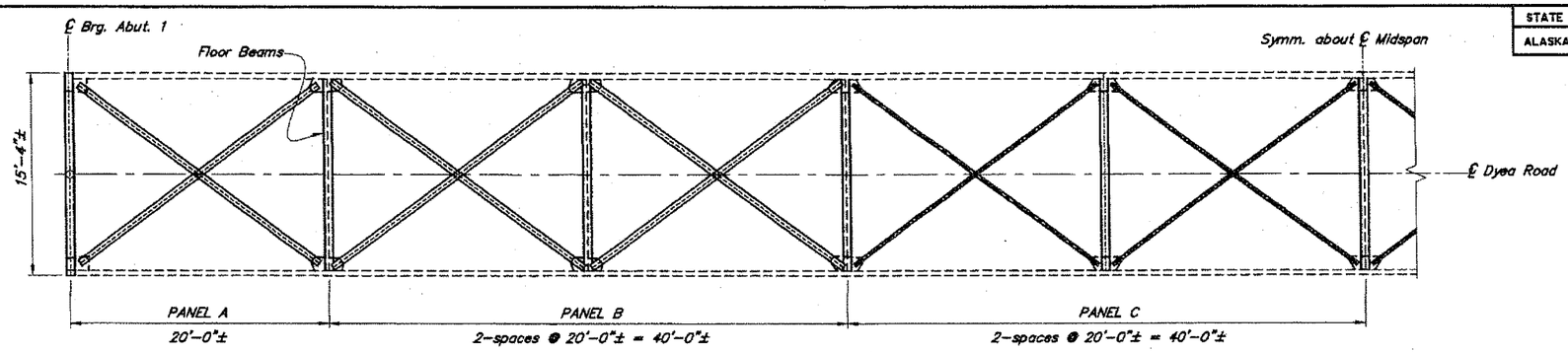

HALF LATERAL BRACING PLAN

12 0 5 10 In. Feet

CHANGED HOLE LAYOUT TO FIT CONNECTION POINT. LAST 3 BAYS NORTH

DRILLED NEW HOLES CONNECTION POINT & CLIPS DID NOT ALINE... LAST 2 BAY NORTH

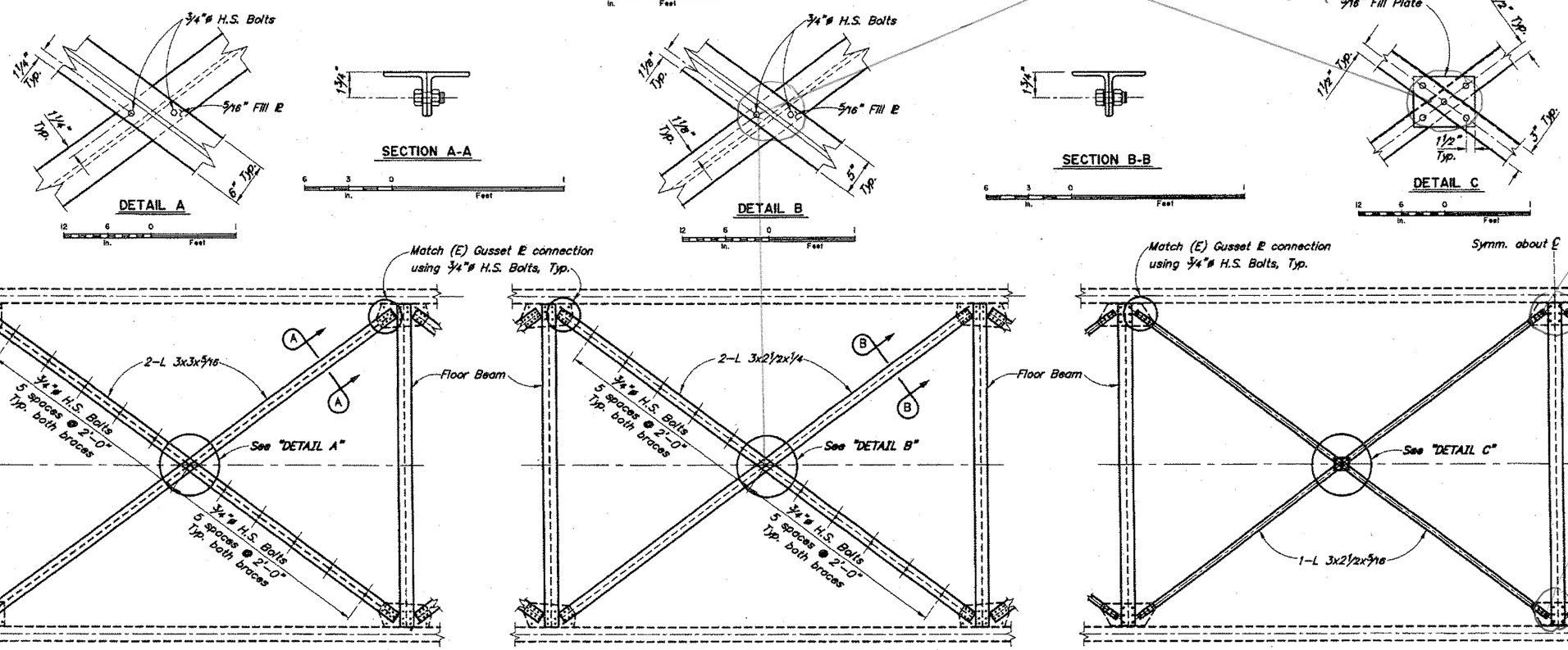

PANEL A DETAILS

PANEL B DETAILS

PANEL C DETAILS

LATERAL BRACING CONNECTION DETAILS

12 0 1 2 3 4 In. Feet

NOTES:
- - - - - = Existing
——— = Work in this Contract

Stringers and Truss not shown for clarity.

DESIGNED BY: Todd Borle	CHECKED: Jared Levings		
DRAWN BY: C. Anderson	CHECKED: Todd Borle		
QUANTITIES BY: Todd Borle	CHECKED: Jared Levings		

Project As-Built Drawings have been reviewed by the Project Engineer and represent to the best of my knowledge, the project as constructed.

PE _____ Date 3/26/13

STATE OF ALASKA
DEPARTMENT OF TRANSPORTATION AND PUBLIC FACILITIES
BRIDGE SECTION

STATE OF ALASKA 49TH Todd A. Borle No. CE 10606 REGISTERED PROFESSIONAL ENGINEER

TAIYA RIVER BRIDGE

DYEA ROAD

LATERAL BRACING

BRIDGE NO. 309

DWG. NO. 5

STATE	PROJECT DESIGNATION	YEAR	SHEET NO.	TOTAL SHEETS
ALASKA	69275	2011	N6	13

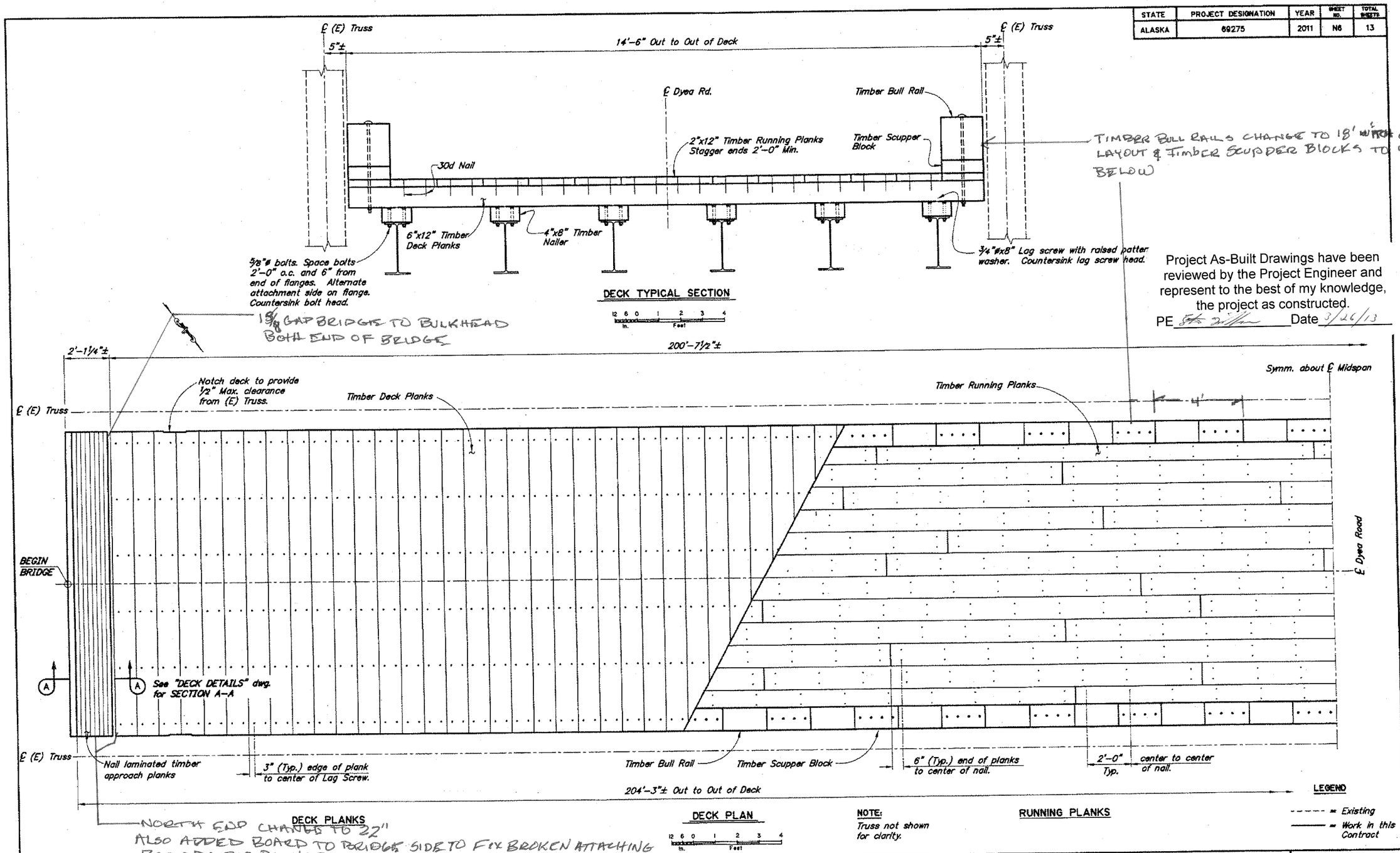

Project As-Built Drawings have been reviewed by the Project Engineer and represent to the best of my knowledge, the project as constructed.

PE _____ Date 3/26/13

DESIGNED BY: Todd Boris	CHECKED: Jared Levings
DRAWN BY: C. Anderson (Cathy Anderson)	CHECKED: Todd Boris
QUANTITIES BY: Todd Boris	CHECKED: Jared Levings

STATE OF ALASKA
DEPARTMENT OF TRANSPORTATION AND PUBLIC FACILITIES
BRIDGE SECTION

STATE OF ALASKA 49TH Todd A. Boris No. CE 10809 REGISTERED PROFESSIONAL ENGINEER

TAIYA RIVER BRIDGE

DYEA ROAD

DECK

BRIDGE NO. 309

DWG. NO. 6

STATE	PROJECT DESIGNATION	YEAR	SHEET NO.	TOTAL SHEETS
ALASKA	69275	2011	N7	13

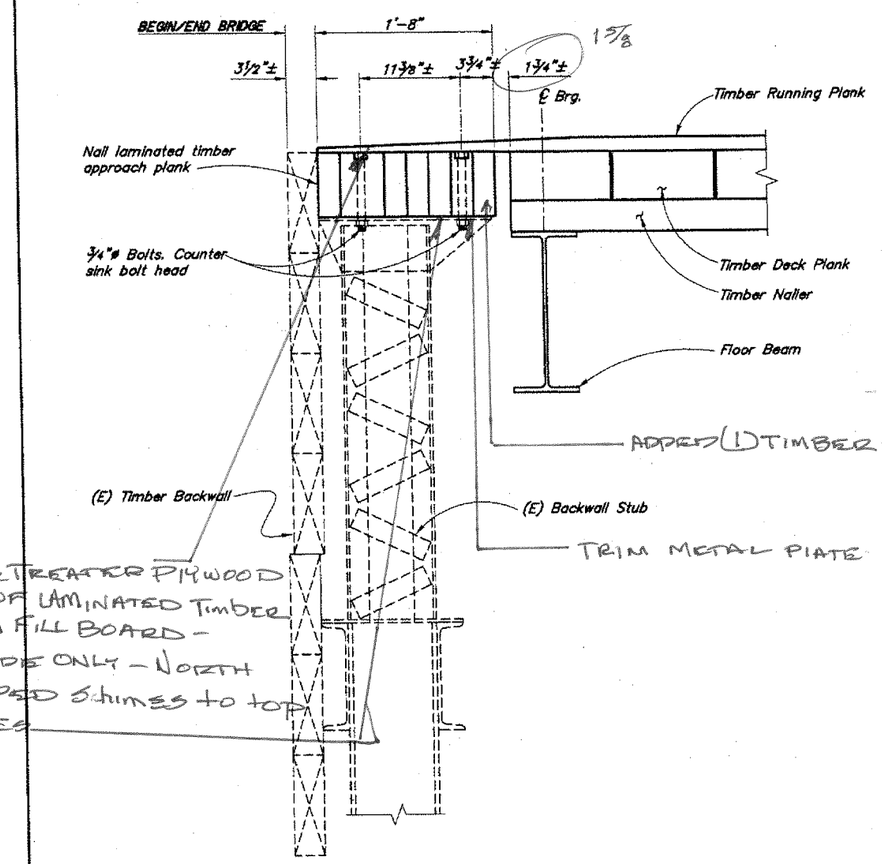

SECTION A-A

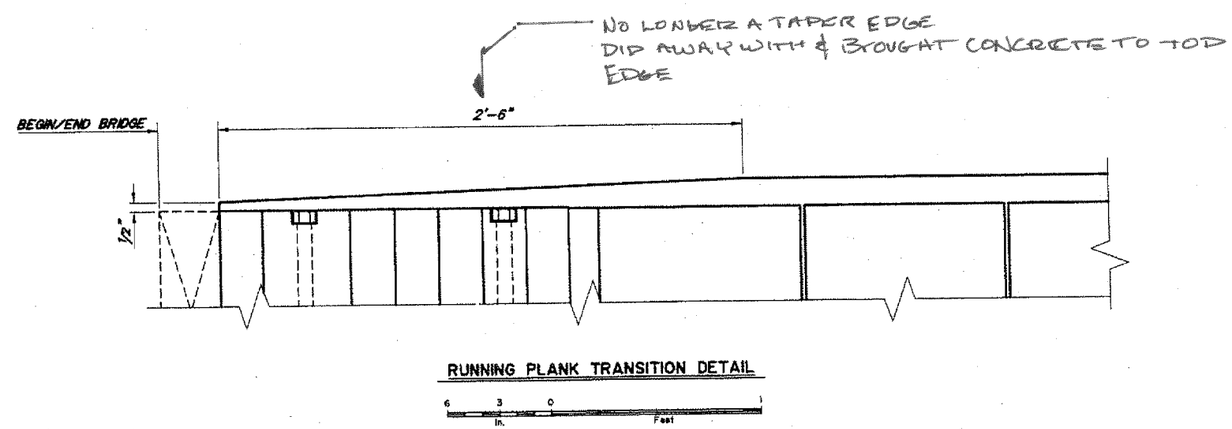

RUNNING PLANK TRANSITION DETAIL

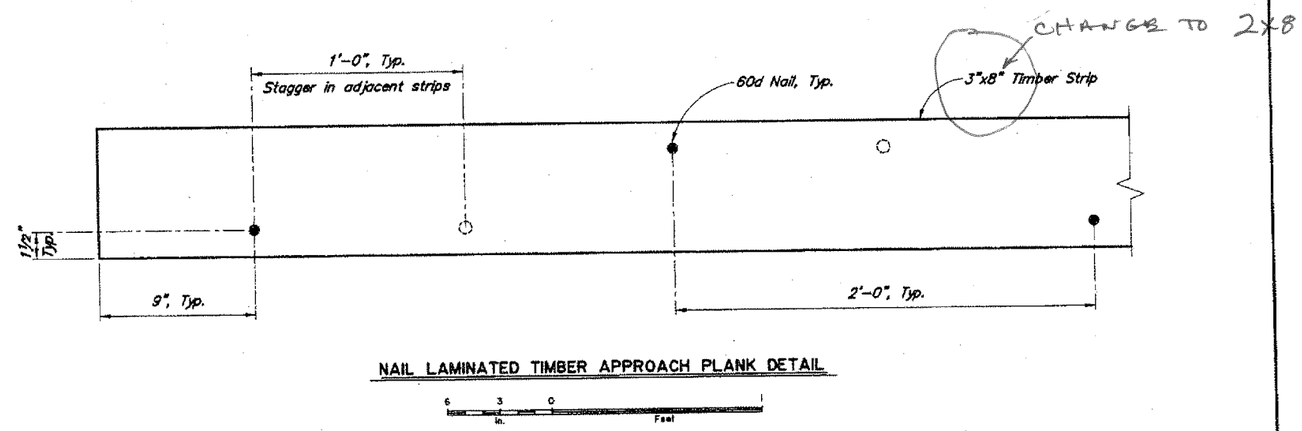

NAIL LAMINATED TIMBER APPROACH PLANK DETAIL

Project As-Built Drawings have been reviewed by the Project Engineer and represent to the best of my knowledge, the project as constructed.

PE _____ Date 3/26/13

LEGEND

- - - - - = Existing

——— = Work in this Contract

DESIGNED BY: Todd Boris	CHECKED: Jared Levings
DRAWN BY: C. Anderson Cathy Anderson	CHECKED: Todd Boris
QUANTITIES BY: Todd Boris	CHECKED: Jared Levings

STATE OF ALASKA
DEPARTMENT OF TRANSPORTATION AND PUBLIC FACILITIES
BRIDGE SECTION

STATE OF ALASKA 49TH Todd A. Boris No. CE 10909 4-26-11 REGISTERED PROFESSIONAL ENGINEER

TAIYA RIVER BRIDGE

DYEA ROAD

DECK DETAILS

BRIDGE NO. 309

DWG. NO. 7

STATE	PROJECT DESIGNATION	YEAR	SHEET NO.	TOTAL SHEETS
ALASKA	69275	2011	N8	13

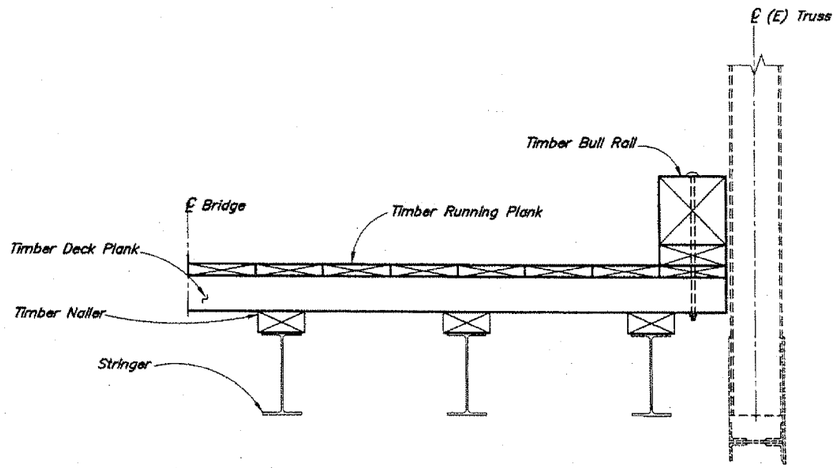

HALF TYPICAL SECTION AT BRIDGE RAIL

12 6 0 1 2
In. Feet

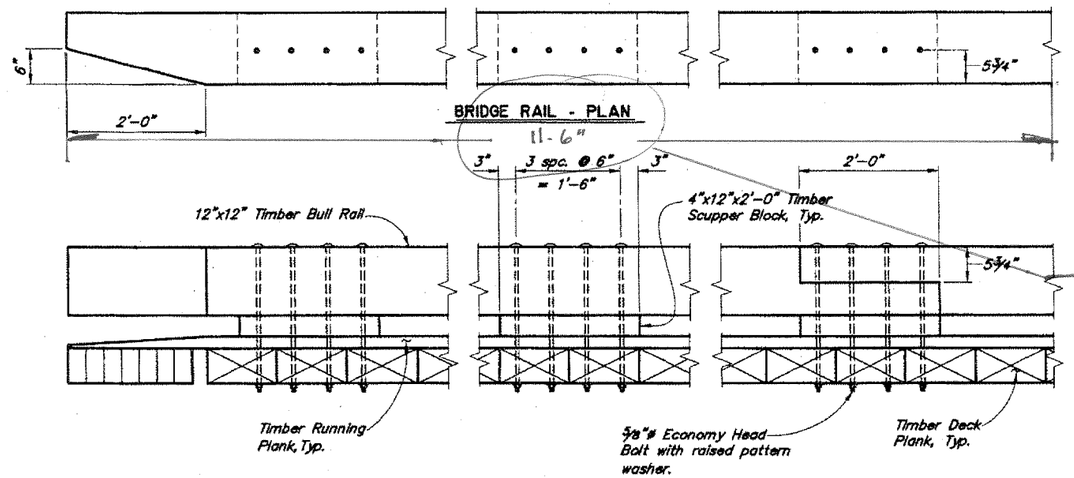

BRIDGE RAIL - PLAN

11-6"

TYPICAL END

TYPICAL SCUPPER BLOCK

TYPICAL SPLICE

BRIDGE RAIL - ELEVATION

12 6 0 1 2
In. Feet

NOTE: LAST BULL RAIL CUT 11'-6" TO FINISH LAYOUT

RITTER to ARRIVE 12-27-11 to FINISH ~~15~~ 10 BOLTS 2 END RAILS 4 SCUPPER BLOCKS CLEAN UP.

204'-3½"

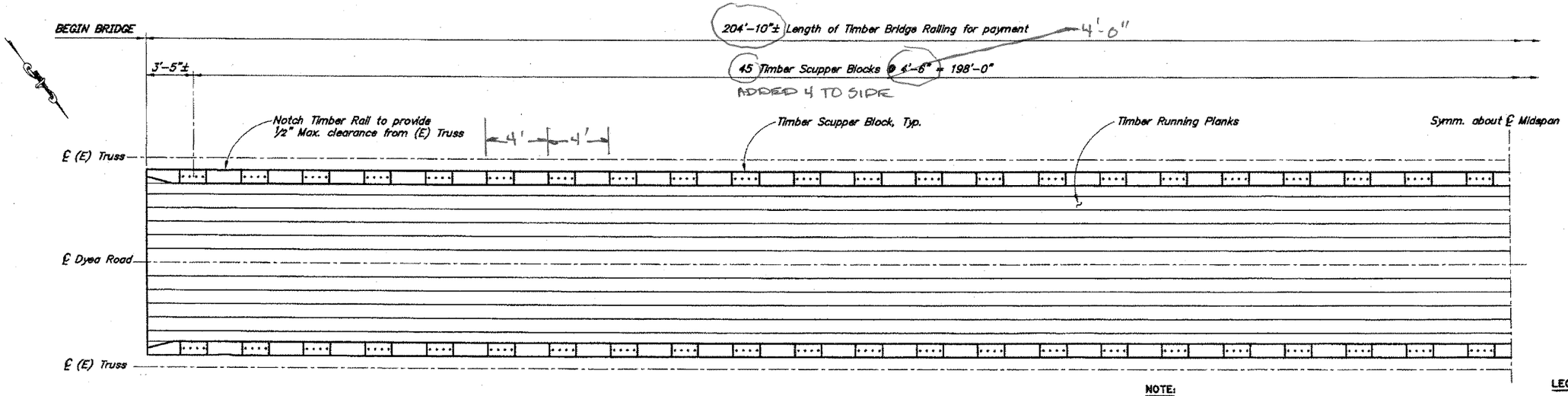

HALF DECK PLAN

12 0 4 8
In. Feet

NOTE:
Truss not shown for clarity.

LEGEND
- - - - - = Existing
——— = Work in this Contract

DESIGNED BY: Todd Borls	CHECKED: Jared Levings
DRAWN BY: C. Anderson Cathy Anderson	CHECKED: Todd Borls
QUANTITIES BY: Todd Borls	CHECKED: Jared Levings

Project As-Built Drawings have been reviewed by the Project Engineer and represent to the best of my knowledge, the project as constructed.
PE _____ Date 3/26/13

STATE OF ALASKA
DEPARTMENT OF TRANSPORTATION AND PUBLIC FACILITIES
BRIDGE SECTION

STATE OF ALASKA 49TH Todd A. Borls No. CE 10809 REGISTERED PROFESSIONAL ENGINEER

TAIYA RIVER BRIDGE
DYEA ROAD
TIMBER BRIDGE RAILING

BRIDGE NO. 309
DWG. NO. 8

STATE	PROJECT DESIGNATION	YEAR	SHEET NO.	TOTAL SHEETS
ALASKA	69275	2011	N9	13

NOTES:

Limit the total weight of dead load and live load applied to the existing structure from each end of the gangway to the following:

Maximum Dead Load = 9,600 lb.
Maximum Live Load = 6,800 lb.

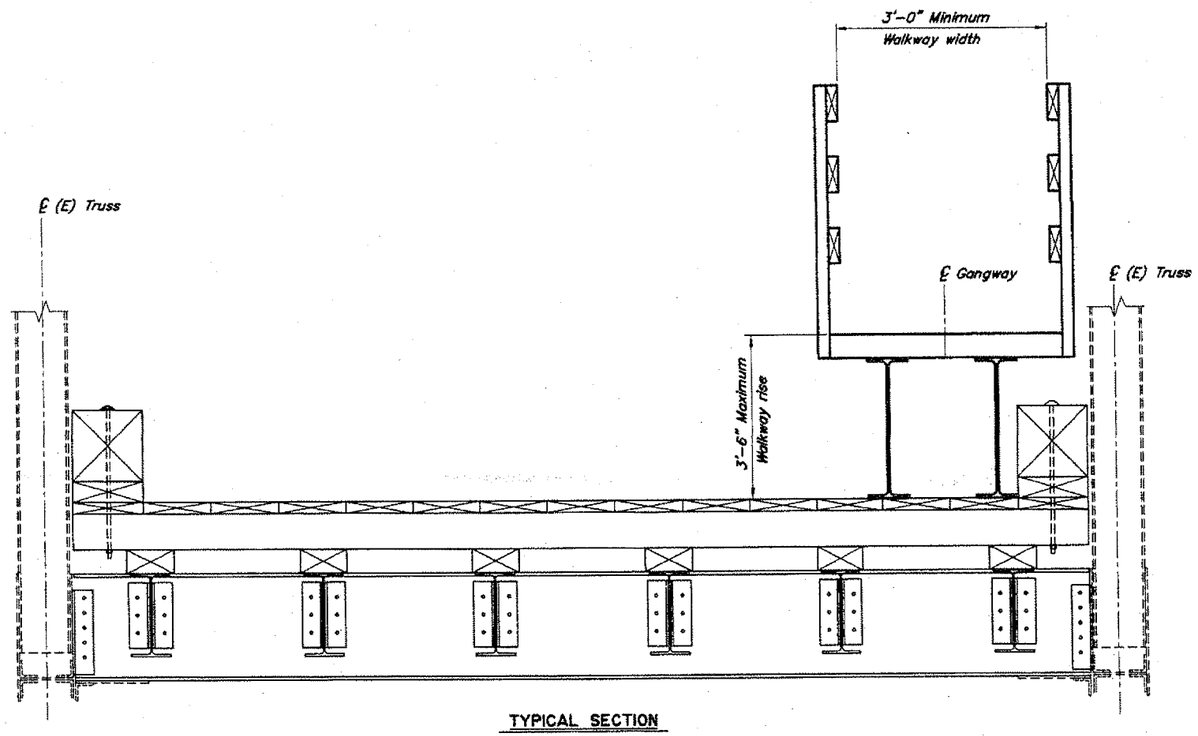

TYPICAL SECTION

12 6 0 1 2
In. Feet

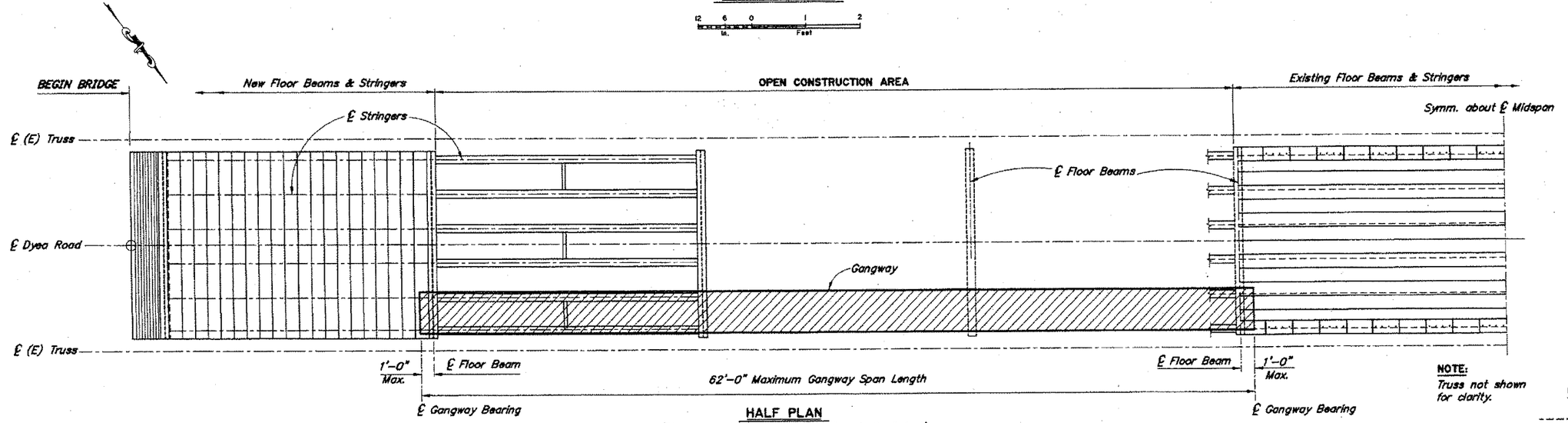

HALF PLAN

(Showing replacement work on Panels 2, 3 & 4)

12 0 4 8
In. Feet

NOTE:
Truss not shown for clarity.

LEGEND

------ = *Existing*
——— = *Work in this Contract*

DESIGNED BY: Todd Borts	CHECKED: Jared Levings
DRAWN BY: C. Anderson (Cathy Anderson)	CHECKED: Todd Borts
QUANTITIES BY: Todd Borts	CHECKED: Jared Levings

Project As-Built Drawings have been reviewed by the Project Engineer and represent to the best of my knowledge, the project as constructed.
PE _____ Date 3/26/13

STATE OF ALASKA
DEPARTMENT OF TRANSPORTATION AND PUBLIC FACILITIES
BRIDGE SECTION

STATE OF ALASKA 49TH Todd A. Borts No. CE 10606 4-26-11 REGISTERED PROFESSIONAL ENGINEER

TAIYA RIVER BRIDGE
DYEA ROAD
PEDESTRIAN GANGWAY

BRIDGE NO. 309
DWG. NO. 9

NOTES: chilkoot

1. KEEP TRAIL ENTRANCE AND ACCESS TO CAMPGROUND ROAD OPEN AT ALL TIMES. DO NOT BLOCK, OBSTRUCT OR DAMAGE ANY PART OF THE TRAIL, CAMPGROUND ROAD OR ANY OTHER PROPERTY OF PARK SERVICES.
2. A MINIMUM OF ONE ROAD LANE SHALL BE MAINTAINED TO THE SOUTH END OF THE BRIDGE, RESUMING AT THE NORTH END. TEMPORARY DRIVING LANE WILL HAVE A MINIMUM WIDTH OF 10'.
3. NO CONTRACTOR VEHICLES WILL BE PARKED OR CONSTRUCTION ACTIVITY SHALL BE PERFORMED OUTSIDE RIGHT OF WAY BOUNDARIES (50' FROM CENTERLINE OF ROAD). IT'S CONTRACTOR'S RESPONSIBILITY TO DELINEATE THE BOUNDARIES WITH A TEMPORARY FENCE OR APPROPRIATE NUMBER OF CONES, AS SPECIFIED ON PLANS.
4. USE APPROPRIATE NUMBER OF CONES OR TEMPORARY CONSTRUCTION FENCE TO DELINEATE ZONES 1 AND 2 AS SHOWN ON PLANS.
5. INSTALL APPROPRIATE NUMBER OF BARRICADES TO RESTRICT VEHICULAR ACCESS TO THE BRIDGE.
6. DESIGNATE MORE PARKING FOR RESIDENTS BELOW ZONE 2B IF EXTRA SPACE IS REQUIRED.
7. USE AT LEAST 6 CONES IN THE TAPER ZONE.
8. INSTALL SIGNS AS INDICATED ON PLANS. SIGNS 1 AND 2 ARE FOR GUIDANCE ONLY AND DON'T HAVE TO CONFORM TO STANDARD SPECIFICATIONS.
9. ALL LOCATIONS AND DIMENSIONS ARE APPROXIMATE AND ARE BASED ON AERIAL VIEW PHOTOS.

ZONES

CATEGORY	ZONE 1	ZONE 2a	ZONE 2b	ZONE 3
DESIGNATION	AMBULANCE, VISITORS', RESIDENTS' VEHICLES, ~~SHUTTLE PARKING~~	CONTRACTOR'S EQUIPMENT STAGING AREA, STORAGE	CONTRACTOR'S EMPLOYEE PARKING, EXTRA PARKING FOR RESIDENTS' AND VISITORS' VEHICLES	TEMPORARY SHELTER, RESIDENTS' PARKING Shuttle Parking
APPROXIMATE OCCUPANCY (VEHICLES)	14-16	N/A	12-14	10-12

PERMANENT CONSTRUCTION SIGNS

SIGN NO.	DESCRIPTION	ASDS SIGN NUMBER
1	PARKING FOR AMBULANCE, SHUTTLE, RESIDENTS AND VISITORS	N/A
2	PARKING FOR CONTRACTOR'S EMPLOYEES, RESIDENTS AND VISITORS	N/A
3	ONE LANE ROAD AHEAD	CW-20-4
4	BRIDGE CLOSED AHEAD	W14-104
5	BRIDGE CLOSED	R11-2
6	BRIDGE CLOSED 7 MILES AHEAD. LIMITED PEDESTRIAN ACCESS. CALL [CONTRACTOR], [TIMES AVAILABLE]	N/A

LEGEND

- RW — RIGHT OF WAY BOUNDARIES
- CENTERLINE LOCATION
- APPROXIMATE ROAD LOCATION
- CLEAR GROUND
- ORDINARY HIGH WATER

Project As-Built Drawings have been reviewed by the Project Engineer and represent to the best of my knowledge, the project as constructed.
PE [signature] Date 3/26/13

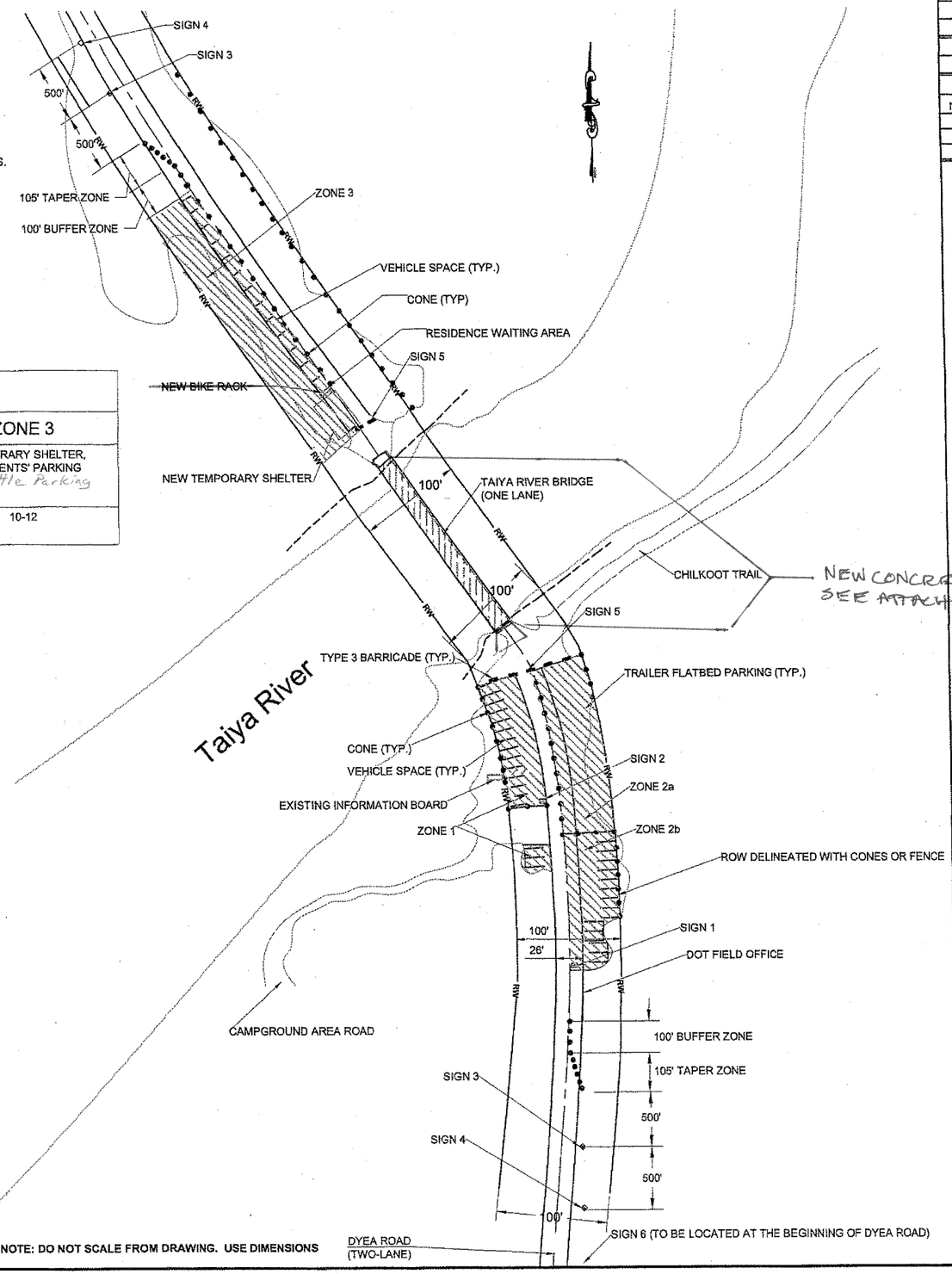

NOTE: DO NOT SCALE FROM DRAWING. USE DIMENSIONS

ADDENDUM NUMBER
ATTACHMENT NUMBER

RECORD OF REVISIONS

No.	DATE	DESCRIPTION

TRAFFIC MAINTENANCE

CHECKED BY: C. TRIPP 5/10/11

STATE OF ALASKA 49th Charles M. Tripp CE-9613 REGISTERED PROFESSIONAL ENGINEER

DESIGNED BY: K. NOVIKOVA / T. FAGNANT

DRAWN BY: K. NOVIKOVA / T. FAGNANT

STATE OF ALASKA
DEPARTMENT OF TRANSPORTATION & PUBLIC FACILITIES
SOUTHEAST REGION

SGY
DYEA ROAD BRIDGE # 309 REPLACEMENT
(TAIYA RIVER BRIDGE)

TRAFFIC MAINTENANCE

PROJECT DESIGNATION NUMBER	
69275	
STATE	YEAR
ALASKA	2011
SHEET NUMBER	TOTAL SHEETS
S1	13

501(10)

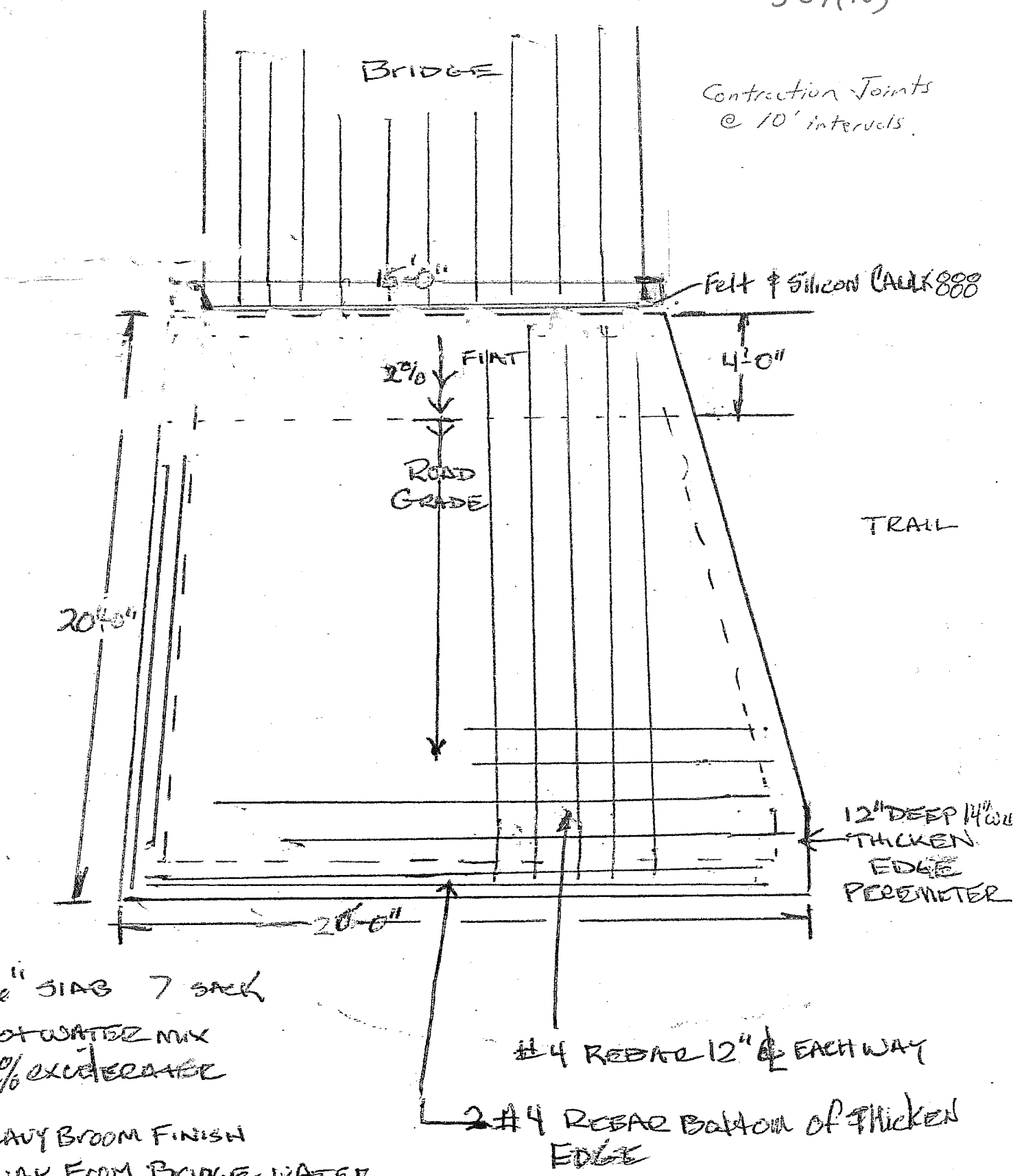

Project As-Built Drawings have been reviewed by the Project Engineer and represent to the best of my knowledge, the project as constructed.

PE _____ Date 3/26/13

501(10)
Temporary Concrete
Pavement

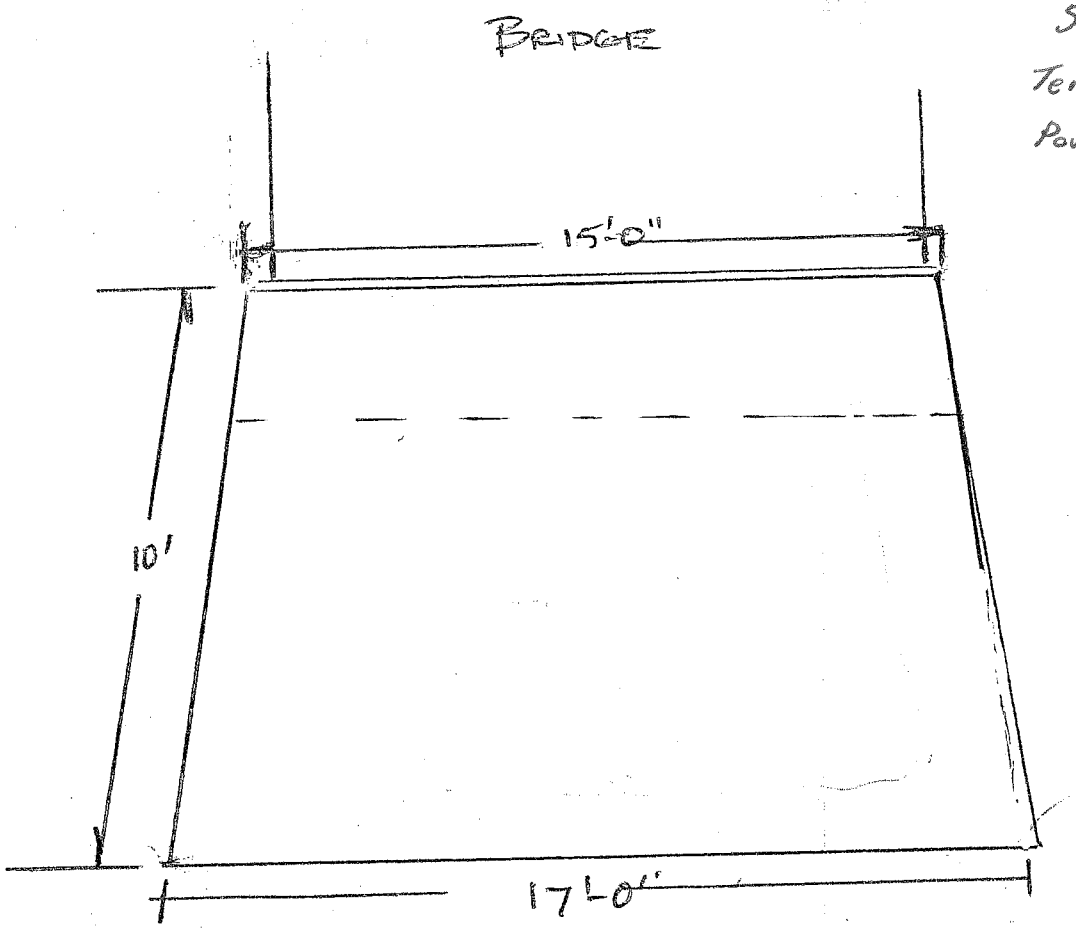

SAME DETAILS AS SOUTH SIDE

Project As-Built Drawings have been reviewed by the Project Engineer and represent to the best of my knowledge, the project as constructed.
PE [signature] Date 3/26/13

NORTH SIDE