SKAGWAY FERRY TERMINAL ELECTRICAL IMPROVEMENTS
PROJECT NO. 68161/ NH-097-1(5)

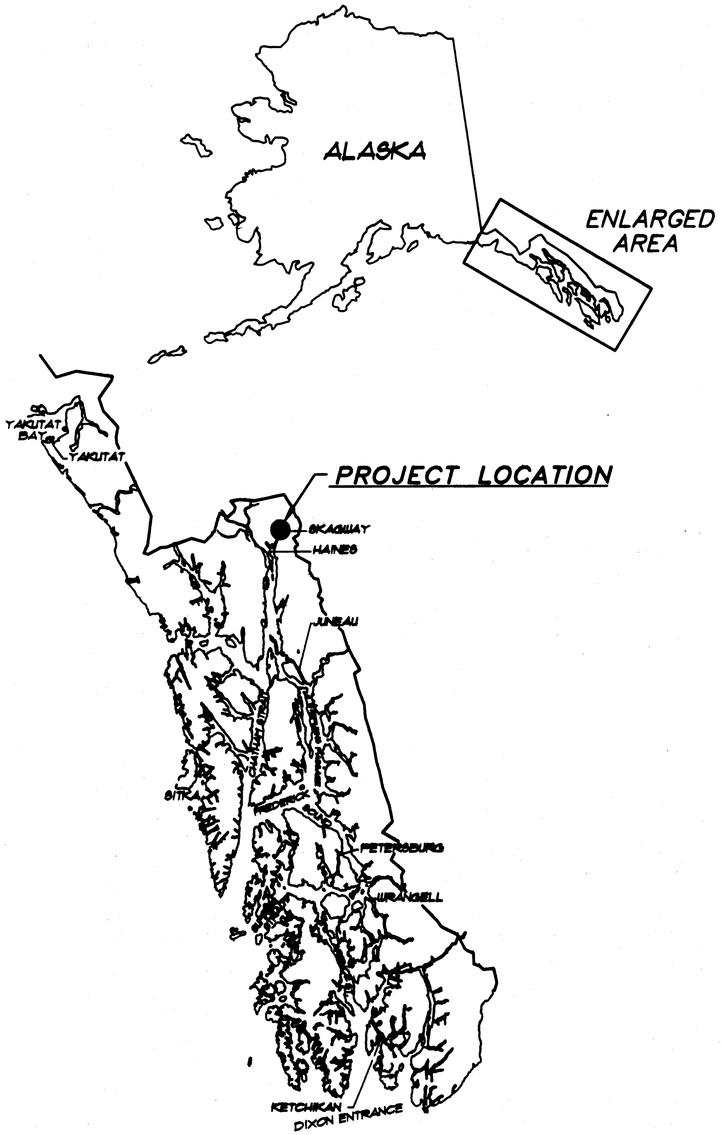

LOCATION MAP
NOT TO SCALE

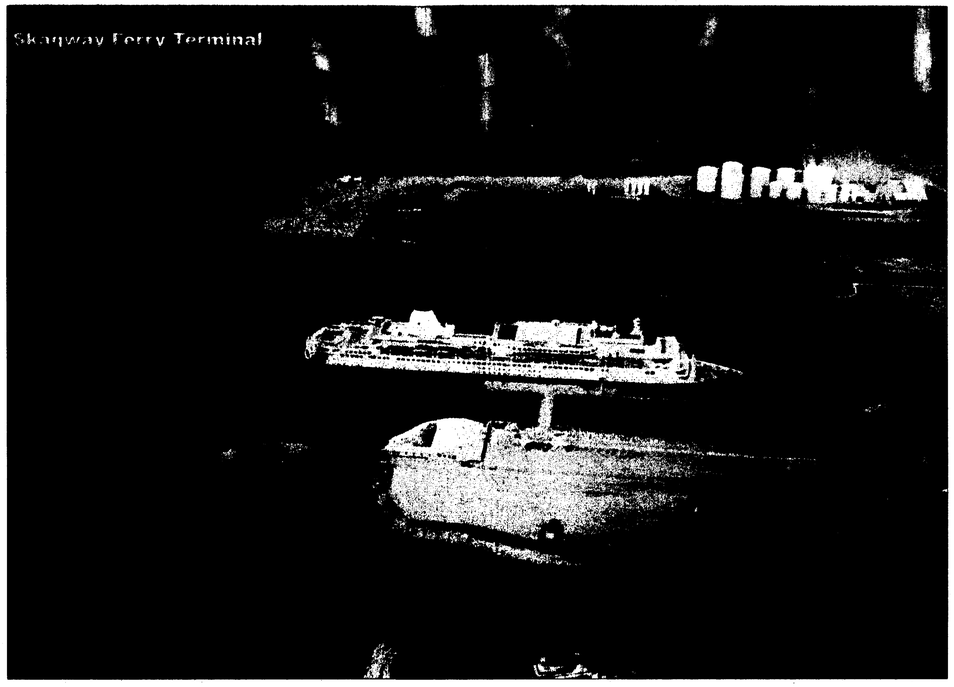

AS-BUILT DRAWINGS

CONTRACTOR: GOERTZ CONSTRUCTION

PROJECT ENGINEER: CLIFF DOUGLAS

BEGIN DATE: OCTOBER 11, 2001

END DATE: DECEMBER 18, 2001

STANDARD DRAWINGS: A-1, F-01.01 AND L-23.01

SHEET INDEX	
SHEET 1	TITLE SHEET
SHEET 2	SITE PLANS
SHEET 3	ELECTRIAL PLANS
SHEET 4	ELECTRIAL PLANS
SHEET 5	ELECTRIAL PLANS
SHEET 6	ELECTRIAL PLANS
SHEET 7	ELECTRIAL PLANS
SHEET 8	ARCHITECTURAL PLANS

ESTIMATE QUANTIES		
ITEM	UNIT	QTY.
EXCAVATION	CU. YDS.	241
FILL TYPE A	CU. YDS.	115
FILL & BEDDING D-1	CU. YDS.	70
CONCRETE ALL TYPES	CU. YDS.	14
ASPHALT CONCRETE	TONS	28

STATE OF ALASKA
DEPARTMENT OF TRANSPORTATION AND PUBLIC FACILITIES
SOUTHEAST REGION DESIGN & CONSTRUCTION

APPROVED Date 6/26/01
Regional Preconstruction Engineer

APPROVED Date 6-26-01
Director, S.E. Region Design & Construction

NOTE: DO NOT SCALE FROM THESE PLANS-USE DIMENSIONS

RECORD OF REVISIONS		
DATE: G:\LOWELL\SKAGWAY\CVRSHT-E1.DWG		
PLOT:		
BY:	DATE:	DESCRIPTION OF CHANGE:

STATE OF ALASKA
DEPARTMENT OF TRANSPORTATION AND PUBLIC FACILITIES
SOUTHEAST REGION DESIGN & CONSTRUCTION

SKAGWAY — *SKAGWAY FERRY TERMINAL ELECTRIAL IMPROVEMENTS 68161/ NH-097-1(5)* — *ALASKA*

ELECTRICAL PLANS

DESIGNED BY: LPL	PROJECT NO. 68161
DRAWN BY: GDM	DATE: 6/11/2001
CHECKED BY: LPL	SHEET 1 OF 8

STATE OF ALASKA 49TH LEONARD P. LOWELL 553 E REGISTERED PROFESSIONAL ENGINEER

G:\Lowell\Skagway\CvrSht-E1.dwg 06/10/01 09:22:54 PM ADT GDM Graphics (907) 789-5798

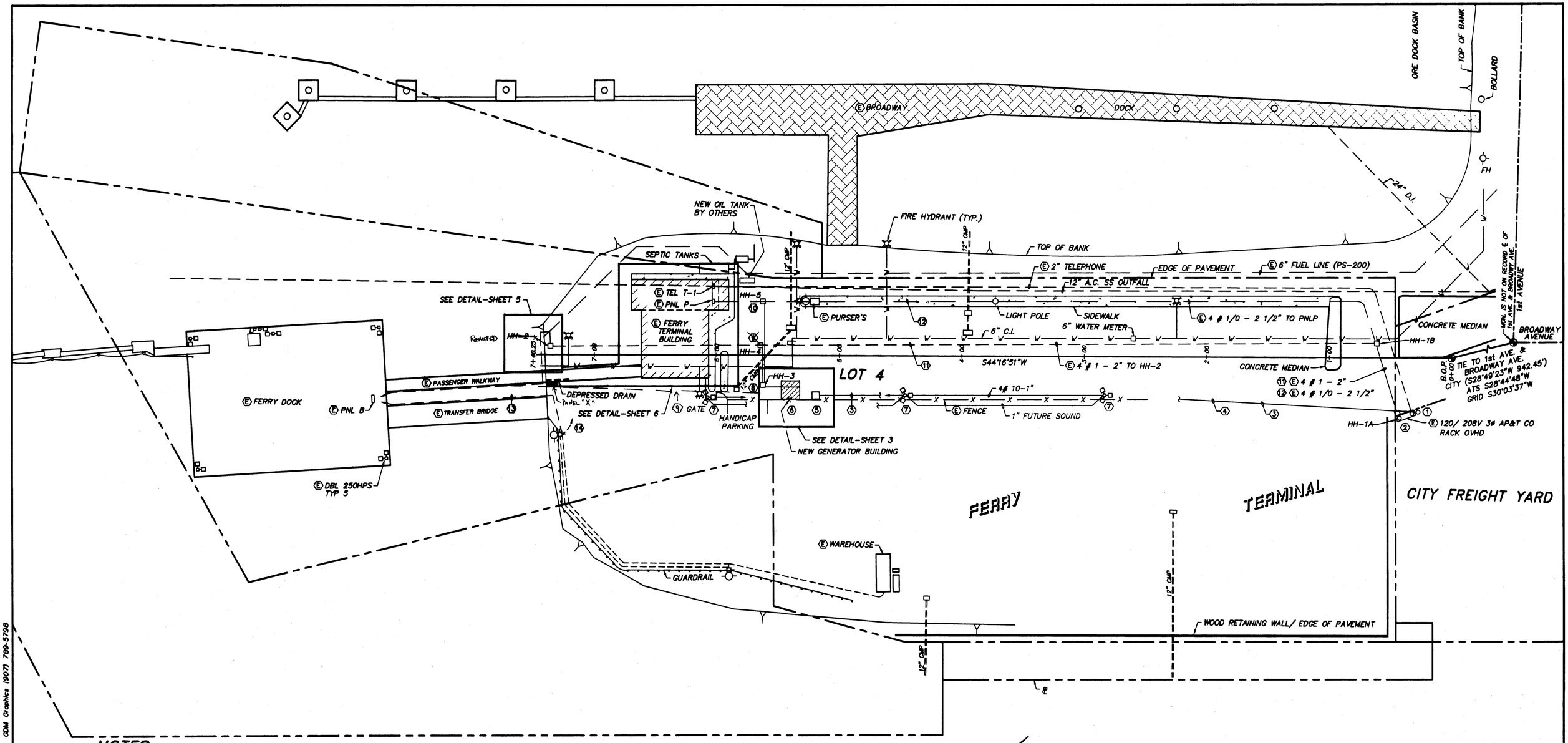

NOTES

1. NEW PRIMARY POLE BY UTILITY. RISER 4" RIGID CONDUIT WITH 36" RADIUS BEND UP AS REQUIRED. SPARE 4" CAPPED AT 24" UP.
2. EXISTING 2-POLE RACK RETIRED BY UTILITY
3. 2-4" PVC SCHEDULE 40 DOWN 36" BY ELECTRICAL SAW CUT ASPHALT PAVEMENT 36" WIDE AND REPAVE TO MATCH EXISTING.
4. INSTALLATION OF 15 KV PRIMARY CABLES BY UTILITY.
5. NEW 75 KVA TRANSFORMER (2.4 KVA/7.2/12.47 TO 120/208 v., 3-PHASE, 4-WIRE) BY UTILITY. CONCRETE PAD BY ELECTRICAL. COORDINATE. SEE DETAIL-SHEET 3.
6. 14'-0" x 18'-0" GENERATOR BUILDING. SEE DETAIL-SHEETS 3 & 8.
7. FIXTURE TYPE "D" 3-400W HPS. SEE DETAIL-SHEET 6. EXTEND 1" SOUND TO BUILDING WITH PULL STRING.
8. 4'-0" x 4'-0" x 4'-0" HAND HOLE #3. SEE DETAIL-SHEET 7.
9. 4'-0" x 4'-0" x 4'-0" HAND HOLE #4. SEE DETAIL-SHEET 7. ~~INTERCEPT EXISTING 2" RGC.~~ REMOVE EXISTING 4#1 ~~AND REPLACE WITH~~ 4#1 XHHW-2 FROM MDP TO ~~HH-2.~~ BRIDGE ABUTMENT.
10. 4'-0" x 4'-0" x 4'-0" HAND HOLE #5. SEE DETAIL-SHEET 7. INTERCEPT EXISTING 2-1/2" RGC AND REMOVE 4#1/0 AND REPLACE WITH 4#1/0 XHHW-2 FROM MDP TO EXISTING PANEL "P".
11. REMOVE EXISTING 4#1 FROM EXISTING POLE TO HH-4.
12. REMOVE EXISTING 4#1/0 FROM EXISTING POLE TO HH-5.
13. REMOVE 3#8-1 "RGC FOR WAREHOUSE FROM BRIDGE AND PANEL "B" AND REROUTE ALONG ABUTMENT TO PANEL "X".
14. REROUTE EXISTING 2#8 - 1" RGC ~~FROM HH-2~~ TO PANEL "X".
15. FIELD VERIFY ALL STATIONS, OFFSETS AND STRUCTURE LOCATIONS WITH THE ENGINEER.

40' 0 80'
Scale in feet

NOTE: DO NOT SCALE FROM THESE PLANS-USE DIMENSIONS

PATH: G:\LOWELL\SKAGWAY\SITEPLN-E2.DWG		
PLOT:		
BY:	DATE:	DESCRIPTION OF CHANGE:
RECORD OF REVISIONS		

STATE OF ALASKA
DEPARTMENT OF TRANSPORTATION AND PUBLIC FACILITIES
SOUTHEAST REGION DESIGN & CONSTRUCTION

SKAGWAY — SKAGWAY FERRY TERMINAL ELECTRIAL IMPROVEMENTS 68161/ NH-097-1(5) — ALASKA

SITE PLAN

DESIGNED BY: LPL	PROJECT NO. 68161
DRAWN BY: GDM	DATE: 6/11/2001
CHECKED BY: LPL	SHEET 2 OF 8

STATE OF ALASKA 49TH LEONARD P. LOWELL 553 E REGISTERED PROFESSIONAL ENGINEER

G:\Lowell\Skagway\SitePln-E2.dwg 06/11/01 09:26:23 AM ADT GDM Graphics (907) 789-5798

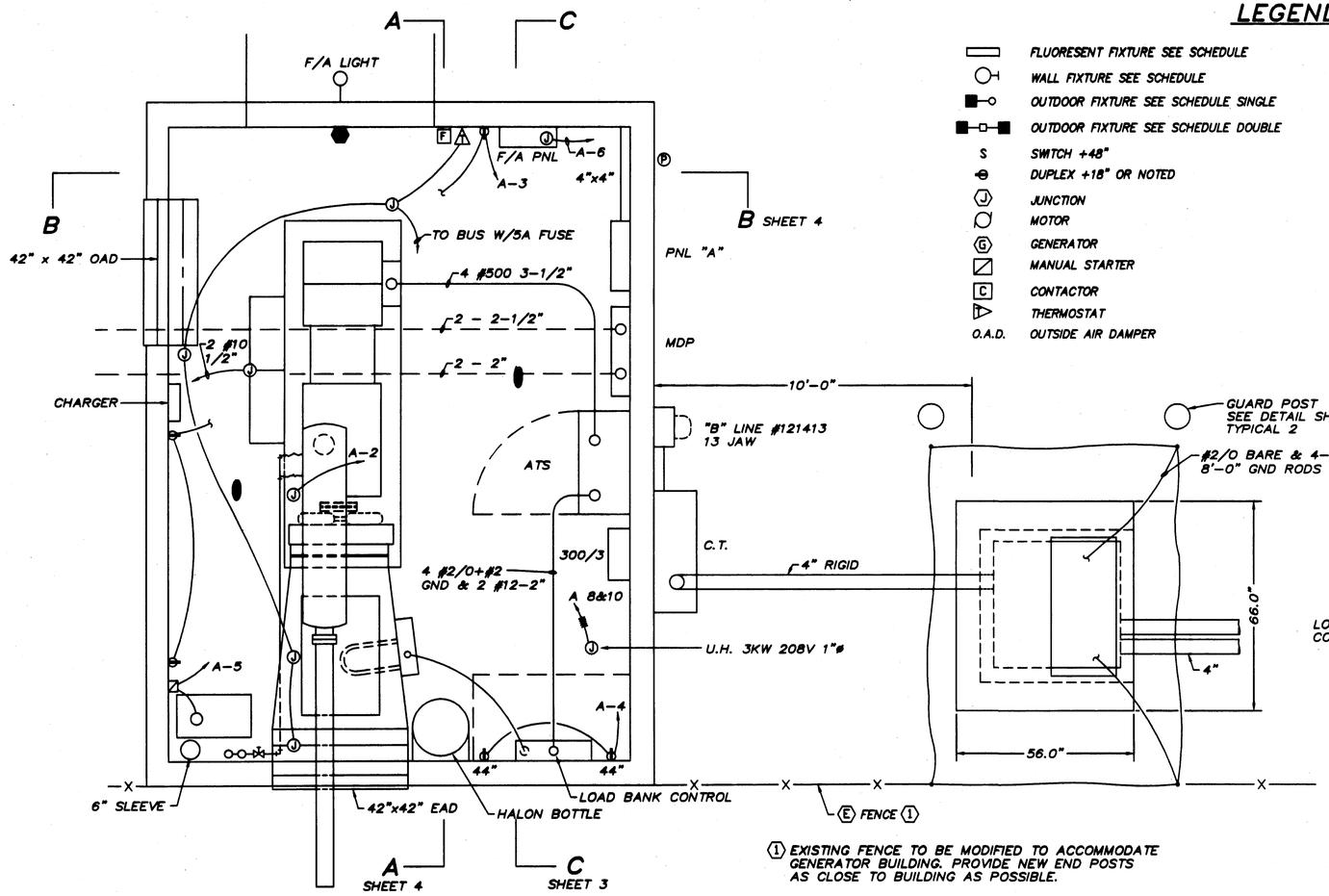

(1) EXISTING FENCE TO BE MODIFIED TO ACCOMMODATE GENERATOR BUILDING. PROVIDE NEW END POSTS AS CLOSE TO BUILDING AS POSSIBLE.

DETAIL PLAN
SCALE: 1/2"=1'-0"

LEGEND

	FLUORESENT FIXTURE SEE SCHEDULE	E.A.D.	EXHAUST AIR DAMPER
	WALL FIXTURE SEE SCHEDULE	R.A.D.	RETURN AIR DAMPER
	OUTDOOR FIXTURE SEE SCHEDULE SINGLE	H.O.A.	HAND OFF AUTO
	OUTDOOR FIXTURE SEE SCHEDULE DOUBLE	A.T.S.	AUTO TRANSFER SWITCH
S	SWITCH +48"	R.G.C.	RIGID GALV. CONDUIT
	DUPLEX +18" OR NOTED		WIRING & CONDUIT 3/C
J	JUNCTION	E	EXISTING X REMOVE
	MOTOR	F	FIRE ALARM STATION
G	GENERATOR		FIRE ALARM DETECTOR 190° NO R/R
	MANUAL STARTER		FIRE ALARM BELL/STROBE
C	CONTACTOR	P	PHOTO ELECTRIC
	THERMOSTAT		
O.A.D.	OUTSIDE AIR DAMPER		

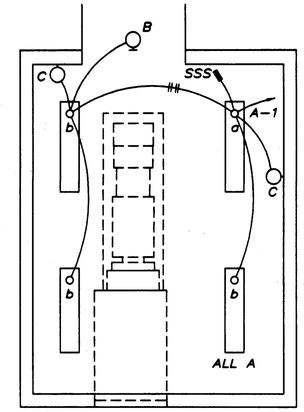

GENERATOR BUILDING LIGHTING
SCALE: 1/4"=1'-0"

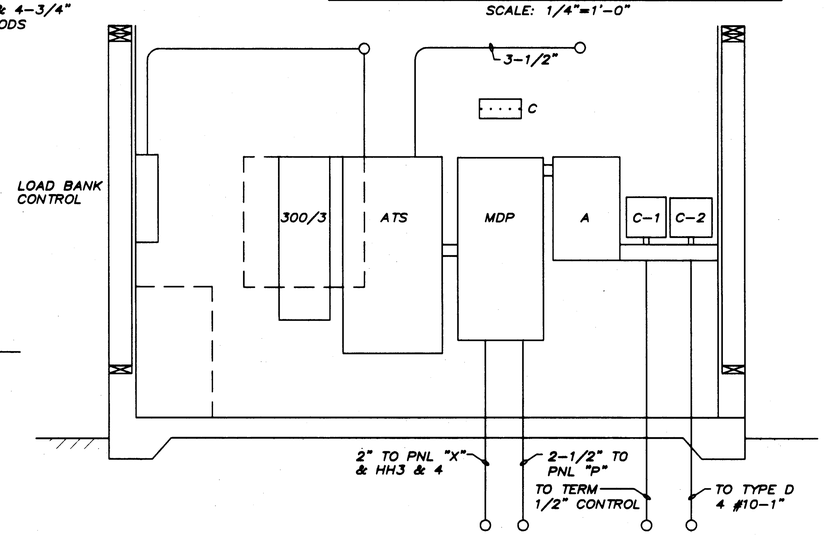

C-C
SCALE: 1/2"=1'-0"

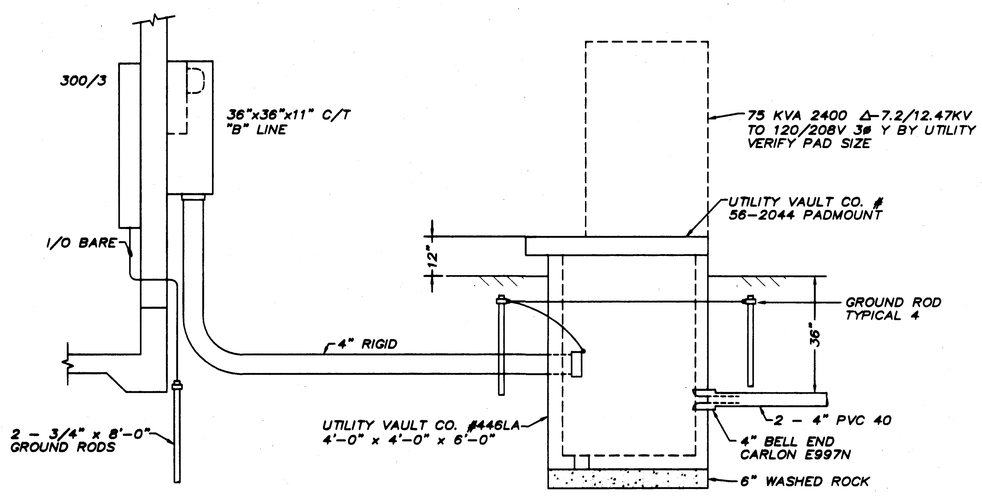

TRANSFORMER ELEVATION
SCALE: 1/2"=1'-0"

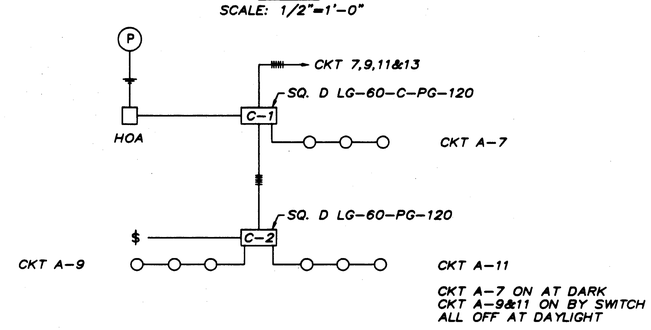

EXTERIOR LIGHT CONTROL
N.T.S.

NOTE: DO NOT SCALE FROM THESE PLANS-USE DIMENSIONS

DATE: G:\LOWELL\SKAGWAY\ELEC-E3.DWG	STATE OF ALASKA DEPARTMENT OF TRANSPORTATION AND PUBLIC FACILITIES SOUTHEAST REGION DESIGN & CONSTRUCTION	SKAGWAY — SKAGWAY FERRY TERMINAL ELECTRIAL IMPROVEMENTS 68161/ NH-097-1(5) — ALASKA ELECTRICAL PLANS
PLOT:		
BY: / DATE: / DESCRIPTION OF CHANGE:		
RECORD OF REVISIONS		

DESIGNED BY: LPL	PROJECT NO. 68161
DRAWN BY: GDM	DATE: 6/11/2001
CHECKED BY: LPL	SHEET 3 OF 8

STATE OF ALASKA 49TH LEONARD P. LOWELL 553 E REGISTERED PROFESSIONAL ENGINEER

G:\Lowell\Skagway\Elec-E3.dwg 06/10/01 09:04:13 PM ADT GDM Graphics (907) 789-5798

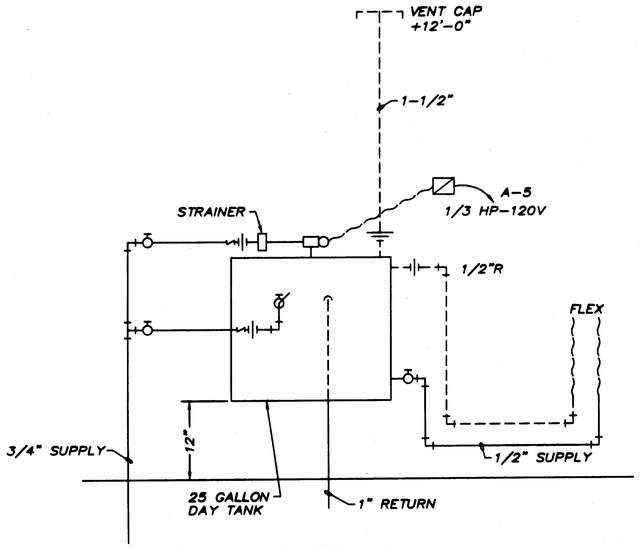

DAY TANK DETAIL
N.T.S.

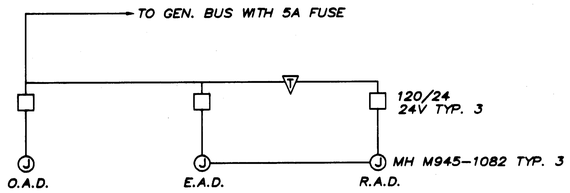

WHEN GEN. SET STARTS O.A.D. & E.A.D. WILL OPEN. IF ROOM TEMPERATURE FALLS BELOW 55°F ▽ WILL MODULATE TO OPEN R.A.D. AND PARTIAL CLOSE E.A.D. TO MAINTAIN TEMPERATURE. IF F/A PANEL IS ACTIVATED GEN. SET WILL STOP & O.A.D. & E.A.D. LOUVERS WILL CLOSE (SPRING RETURN 30 SECONDS) PRIOR TO HALON DISCHARGE.

LOUVER CONTROL DIAGRAM
N.T.S.

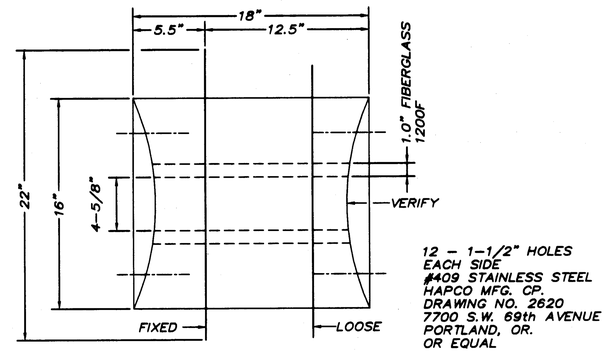

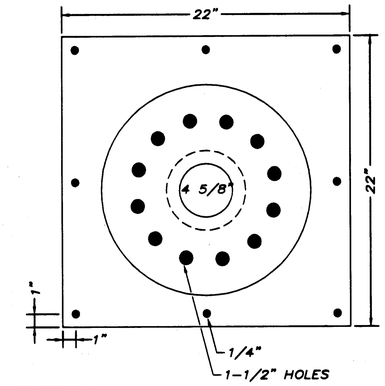

EXHAUST THIMBLE DETAIL
N.T.S.

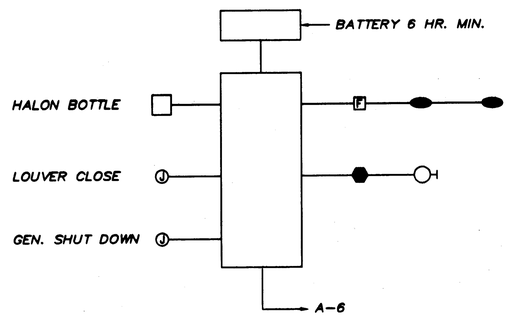

FIRE ALARM DETAIL
N.T.S.

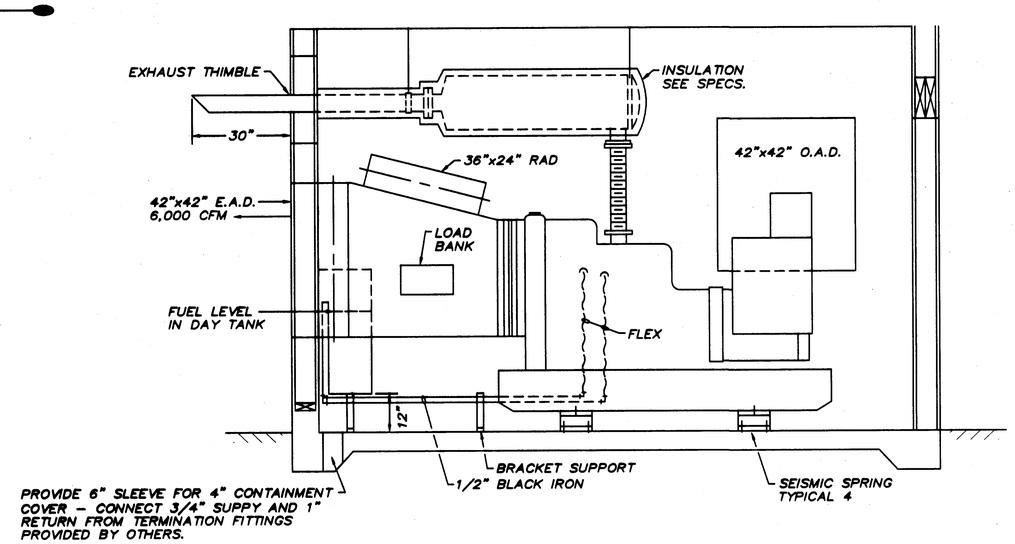

SECTION A-A
SCALE: 1/2"=1'-0"

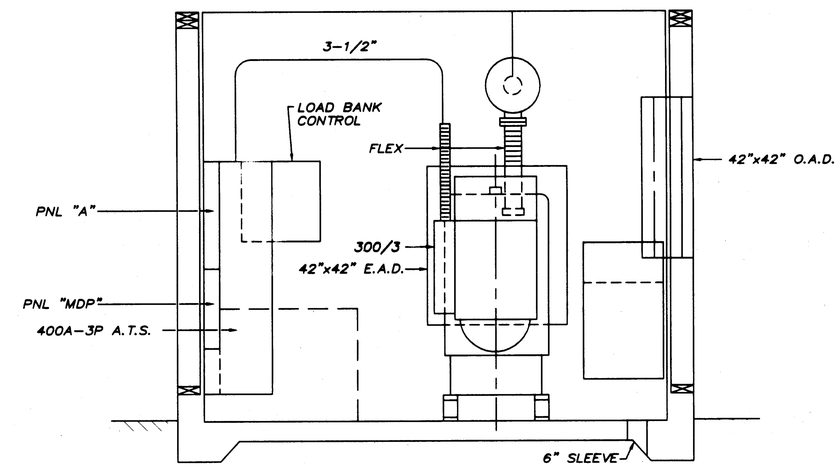

SECTION B-B
SCALE: 1/2"=1'-0"

LEGEND

▭	FLUORESENT FIXTURE SEE SCHEDULE	E.A.D.	EXHAUST AIR DAMPER
○-I	WALL FIXTURE SEE SCHEDULE	R.A.D.	RETURN AIR DAMPER
■-○	OUTDOOR FIXTURE SEE SCHEDULE SINGLE	H.O.A.	HAND OFF AUTO
■-□-■	OUTDOOR FIXTURE SEE SCHEDULE DOUBLE	A.T.S.	AUTO TRANSFER SWITCH
S	SWITCH +48"	R.G.C.	RIDIG GALV. CONDUIT
⊖	DUPLEX +18" OR NOTED	⌒	WIRING & CONDUIT 3/C
(J)	JUNCTION	(E)	EXISTING (X) REMOVE
○	MOTOR	[F]	FIRE ALARM STATION
(G)	GENERATOR	⬬	FIRE ALARM DETECTOR 190° NO R/R
◪	MANUAL STARTER	⬢	FIRE ALARM BELL/STROBE
[C]	CONTACTOR	(P)	PHOTO ELECTRIC
▷	THERMOSTAT		
O.A.D.	OUTSIDE AIR DAMPER		

NOTE: DO NOT SCALE FROM THESE PLANS-USE DIMENSIONS

PATH: G:\LOWELL\SKAGWAY\ELEC-E4.DWG	STATE OF ALASKA DEPARTMENT OF TRANSPORTATION AND PUBLIC FACILITIES SOUTHEAST REGION DESIGN & CONSTRUCTION	SKAGWAY — SKAGWAY FERRY TERMINAL ELECTRIAL IMPROVEMENTS 68161/ NH-097-1(5) — ALASKA ELECTRICAL PLANS	DESIGNED BY: LPL DRAWN BY: GDM CHECKED BY: LPL
PLOT: .			PROJECT NO. 68161 DATE: 6/11/2001 SHEET 4 OF 8
BY: / DATE: / DESCRIPTION OF CHANGE:			
RECORD OF REVISIONS			

STATE OF ALASKA 49TH LEONARD P. LOWELL 553 E REGISTERED PROFESSIONAL ENGINEER

G:\Lowell\Skagway\Elec-E4.dwg 06/11/01 09:39:14 AM ADT GDM Graphics (907) 789-5798

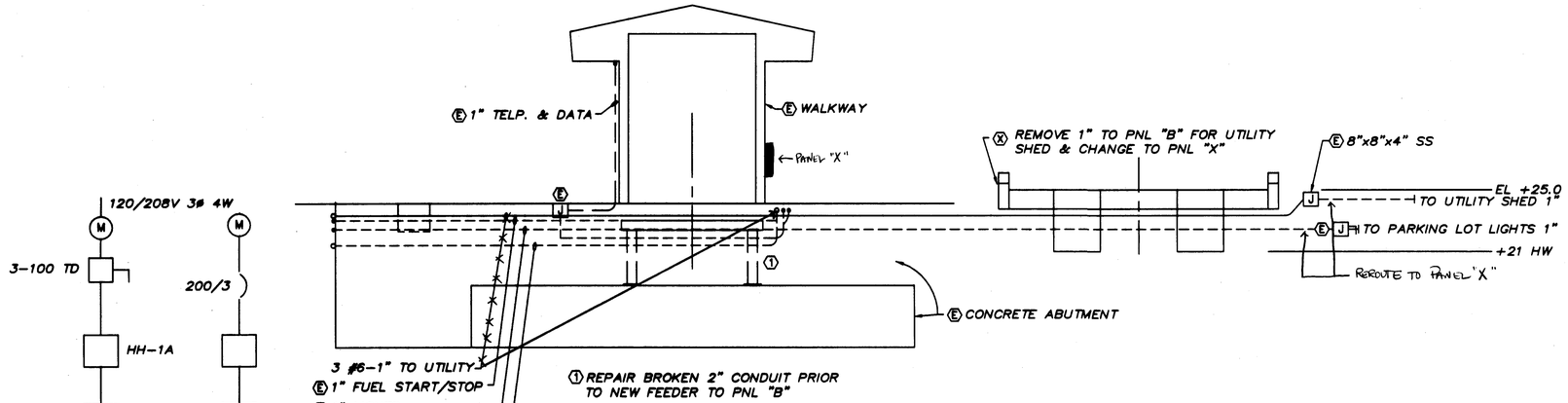

ELEVATION @ ABUTMENTS DETAIL

N.T.S.

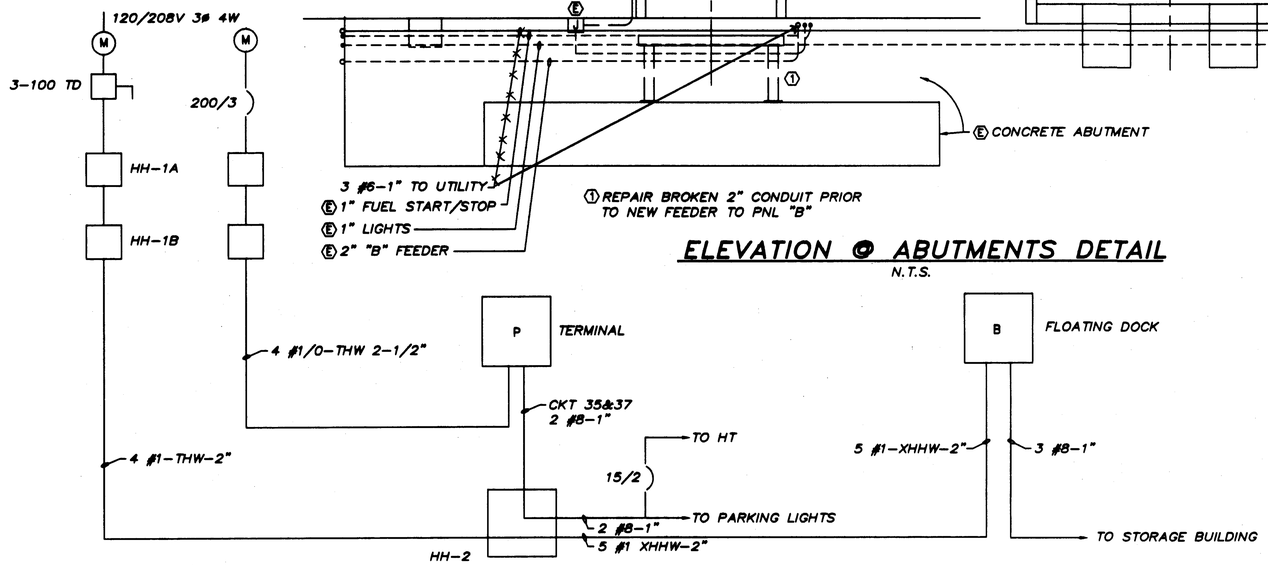

EXISTING ONE LINE DIAGRAM

N.T.S.

TYPE		PANEL A		SECTION 1 OF 1		,000 A/C
BUS	VOLTS 120/208	PHASE 3	☐ MAIN CS	☐ ISO GND	☒ SURF MTD	☐ TOP FEED
	AMPS	WIRES 4# 4	☒ MAIN LUGS	☐ FEED THRU	☐ FLUSH MTD	☐ BTM FEED

CKT NO	DESCRIPTION	LOAD VA A	LOAD VA B	LOAD VA C	CB AMP	CB POLE	A B C	CB A	CB POLE	LOAD VA A	LOAD VA B	LOAD VA C	DESCRIPTION	CKT NO
1	LIGHTS	500			20	1		20	1	1500			ENG. HEATER	2
3	RECP		600		20	1		20	1		400		RECP.	4
5	DAY TANK			900	20	1		20	1			500	F/A	6
7	EXTERIOR LIGHTS	1350			20	1		20		1500			W/HEATER	8
9	EXTERIOR LIGHTS		1350		20	1			2		1500			10
11	EXTERIOR LIGHTS			1350	20	1		20	1				SPARE	12
13	EXTERIOR CONTROL	200			20	1		20	1				SPARE	14
15	SPARE				20	1		20	1				SPARE	16
17	SPARE				20	1		20	1				SPARE	18
19	SPARE				20	1		20	1				SPARE	20
21	SPARE				20	1		20	1				SPARE	22
23	SPARE				20	1		20	1				SPARE	24
25														26
27														28
29														30
31														32
33														34
35														36
37														38
39														40
41														42
CONNECTION LOAD: 11.6 KVA 32.4 AMPS		2050	1950	2250						3000	1900	500	DEMAND LOAD: 32.4 KVA 32.4 AMPS	

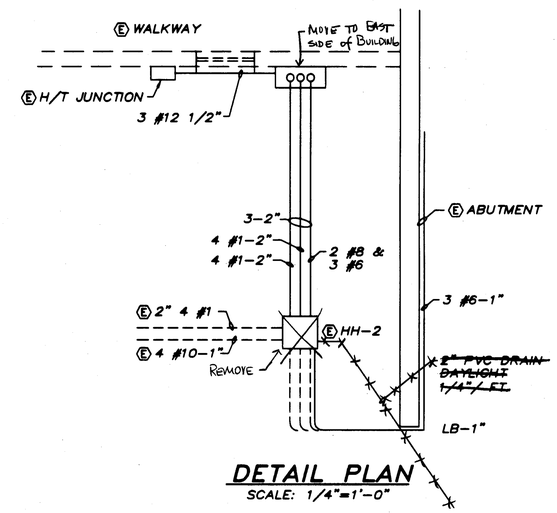

DETAIL PLAN

SCALE: 1/4"=1'-0"

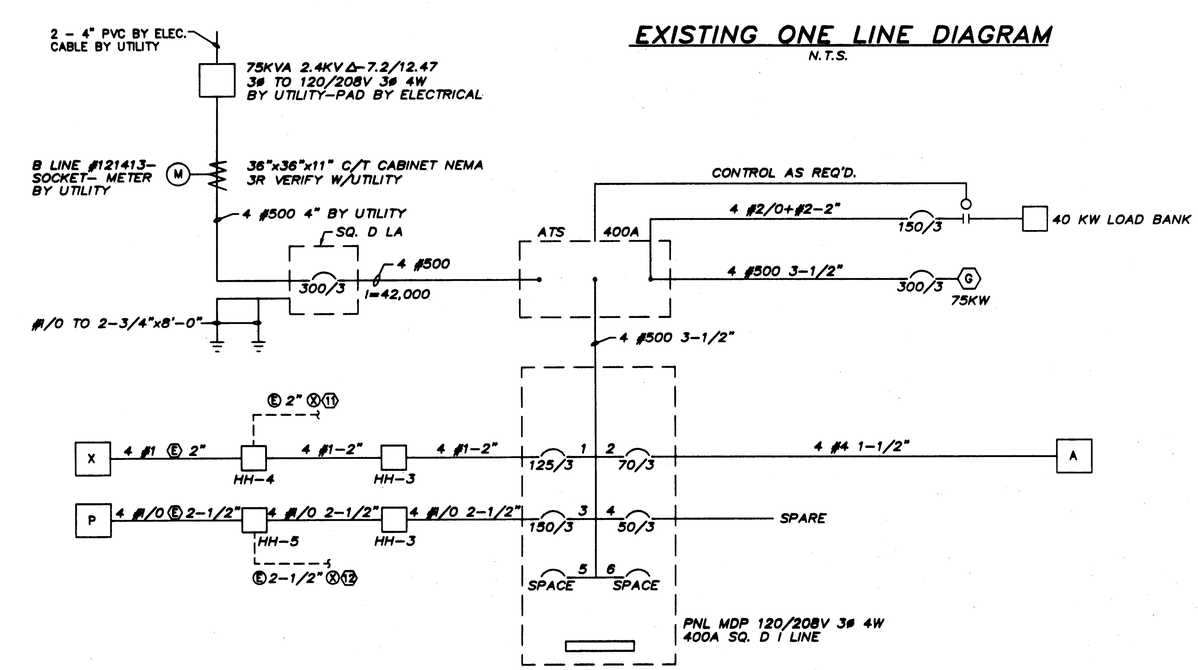

PROPOSED ONE LINE DIAGRAM

N.T.S.

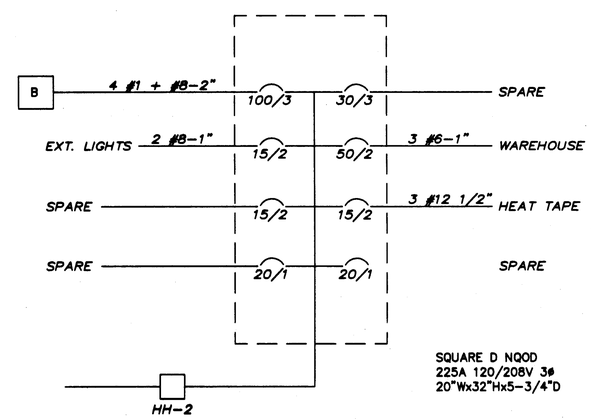

PANEL "X" DIAGRAM

N.T.S.

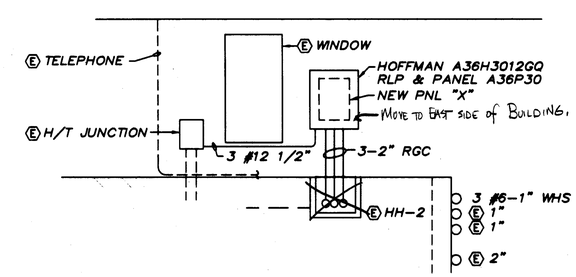

DETAIL ELEVATION

SCALE: 1/4"=1'-0"

NOTE: DO NOT SCALE FROM THESE PLANS-USE DIMENSIONS

PATH: G:\LOWELL\SKAGWAY\ELEC-E5.DWG	STATE OF ALASKA DEPARTMENT OF TRANSPORTATION AND PUBLIC FACILITIES SOUTHEAST REGION DESIGN & CONSTRUCTION	SKAGWAY — SKAGWAY FERRY TERMINAL ELECTRIAL IMPROVEMENTS 68161/ NH-097-1(5) — ALASKA
PLOT: .		ELECTRICAL PLANS
BY: / DATE: / DESCRIPTION OF CHANGE:		
RECORD OF REVISIONS		

DESIGNED BY: LPL	PROJECT NO. 68161
DRAWN BY: GDM	DATE: 6/11/2001
CHECKED BY: LPL	SHEET 5 OF 8

STATE OF ALASKA 49TH LEONARD P. LOWELL 553 E REGISTERED PROFESSIONAL ENGINEER

G:\Lowell\Skagway\Elec-E5.dwg 06/11/01 09:51:35 AM ADT GDM Graphics (907) 789-5798

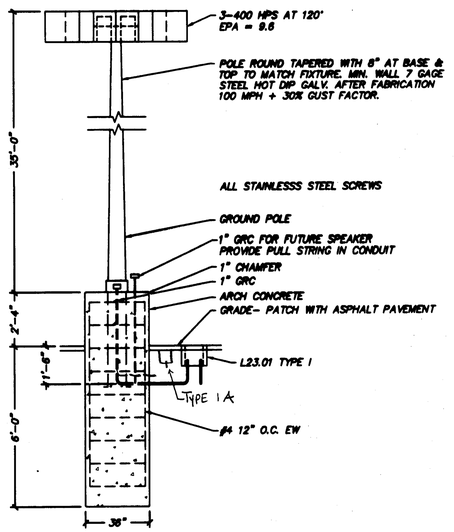

FIXTURE TYPE "D"

N.T.S.

FIXTURE "D" SCHEDULE				
STATION	OFFSET LEFT	OFFSET RIGHT	ITEM	REMARKS
2+83	34'		POLE #1	
4+46	34'		POLE #2	
6+06	34'		POLE #3	

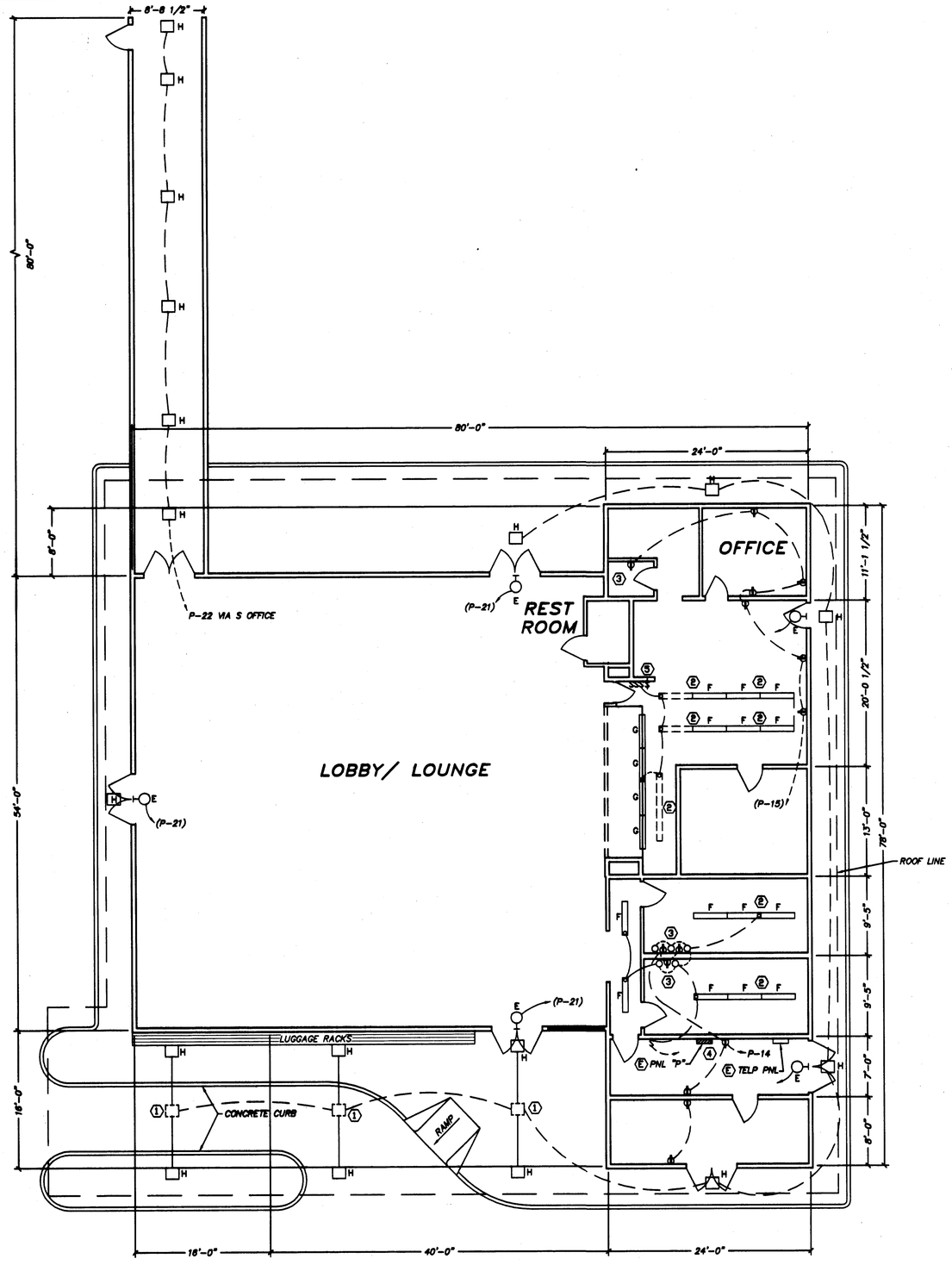

SCALE: 1/8"=1'-0"

FIXTURE SCHEDULE				
TYPE	MFG		W	REMARKS
A	LITHONIA	AF 10-240	2-40 RS	CEILING-SHEET 3
	BENJAMIN	FL 1024 4U	2-40 RS	CEILING-SHEET 3
B	McPHILBEN	22B3162JB	70W HPS	ABOVE DOOR-SHEET 3
C	LITHONIA	ELM	EMERGENCY	WALL +96"-SHEET 3
D	LSI GBM-5-400	CT-MT-BRZ	3-400 HPS	SEE DETAIL-SHEET 6
E	McPHILBEN	55L-1-120-WR-RDL	LED	ABOVE DOOR *
F	HOLOPHANE	HWSM4DBH62EP-11	2-40 RS	CEILING
G	HOLOPHANE	HWSM4DBH62EP-21	3-40 RS	CEILING
H	FAIL SAFE	HDR-70S-120-81	70W HPS	LE3-SSN RECESSED #

(*) THE EXISTING EXIT LIGHTS (HOLOPHANE M23) ARE 23-7/8"Lx7" HIGH FIXTURE "E" IS 12"Lx8-1/4"H. TOUCH UP WALL TO MATCH ADJACENT.

(#) THE EXISTING RECESSED FIXTURE (DEVINE D415-AT26) CAN IS 10-1/4"x10-1/4"x4-3/8"D & 12"x12" TRIM. THE NEW FIXTURE IS 14-1/4" SQUARE BY 7-1/4"D ADJUST OPENING.

(1) CANOPY FIXTURE (DEVINE D415-AT26 150W INC.) REMOVE TRIM SOCKET ETC. & USE AS J.B. PROVIDE NEW COVER PLATE TYP. 3

(2) REMOVE ONE HOLOPHANE 6200E261 (2-40 RS - 8'-0") & REPLACE AS NOTED.

(3) IN ALL RESTROOMS (3) REPLACE EXIST RECPTACLES (4) WITH GFI OUTLETS OR INSTALL GFI CIRCUIT BREAKERS IN PNL "P" FOR CIRCUITS P-14 & 15 VERIFY.

(4) REMOVE FUSE CONTROL PANEL & CONDUIT FOR EMERGENCY POWER

(5) PROVIDE NEW SWITCH $ FOR CONTROL ON NEW EXTERIOR POLE LIGHTS

LEGEND

	FLUORESENT FIXTURE SEE SCHEDULE	E.A.D.	EXHAUST AIR DAMPER
	WALL FIXTURE SEE SCHEDULE	R.A.D.	RETURN AIR DAMPER
	OUTDOOR FIXTURE SEE SCHEDULE SINGLE	H.O.A.	HAND OFF AUTO
	OUTDOOR FIXTURE SEE SCHEDULE DOUBLE	A.T.S.	AUTO TRANSFER SWITCH
S	SWITCH +48"	R.G.C.	RIDIG GALV. CONDUIT
	DUPLEX +18" OR NOTED		WIRING & CONDUIT 3/C
J	JUNCTION		EXISTING WIRE & CONDUIT
	MOTOR	E	EXISTING X REMOVE
G	GENERATOR	F	FIRE ALARM STATION
	MANUAL STARTER		FIRE ALARM DETECTOR 190' NO R/R
C	CONTACTOR		FIRE ALARM BELL/STROBE
	THERMOSTAT	P	PHOTO ELECTRIC
O.A.D.	OUTSIDE AIR DAMPER		

NOTE: DO NOT SCALE FROM THESE PLANS-USE DIMENSIONS

PATH: G:\LOWELL\SKAGWAY\ELEC-E6.DWG	STATE OF ALASKA DEPARTMENT OF TRANSPORTATION AND PUBLIC FACILITIES SOUTHEAST REGION DESIGN & CONSTRUCTION	SKAGWAY — SKAGWAY FERRY TERMINAL ELECTRIAL IMPROVEMENTS 68161/ NH-097-1(5) — ALASKA ELECTRICAL PLANS
PLOT: .		
BY: / DATE: / DESCRIPTION OF CHANGE:		
RECORD OF REVISIONS		

DESIGNED BY: LPL	PROJECT NO. 68161
DRAWN BY: GDM	DATE: 6/11/2001
CHECKED BY: LPL	SHEET 6 OF 8

STATE OF ALASKA 49TH STATE LEONARD P. LOWELL 553 E REGISTERED PROFESSIONAL ENGINEER

G:\Lowell\Skagway\Elec-E6.dwg 06/11/01 10:00:56 AM ADT GDM Graphics (907) 789-5798

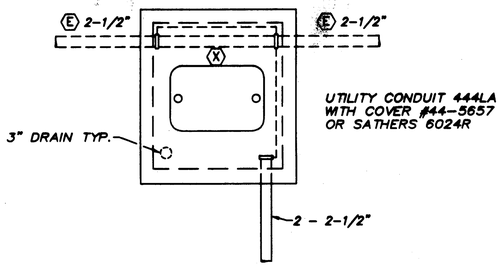

HH-5 PLAN

SCALE: 1/2"=1"-0"

HAND HOLE SCHEDULE					
NO	STATION	LEFT	RIGHT	SLOPE	REMARKS
HH-1A	0+45	46.0'			EXISTING
HH-1B	0+60		13.0'		EXISTING
HH-2	7+36		7.0'		EXISTING
HH-3	5+62	24.0'		1.8%	
HH-4	5+64.5		8.0'	0.30%	
HH-5	5+62		44.0'	0.30%	

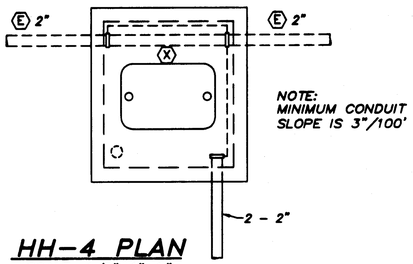

HH-4 PLAN

SCALE: 1/2"=1"-0"

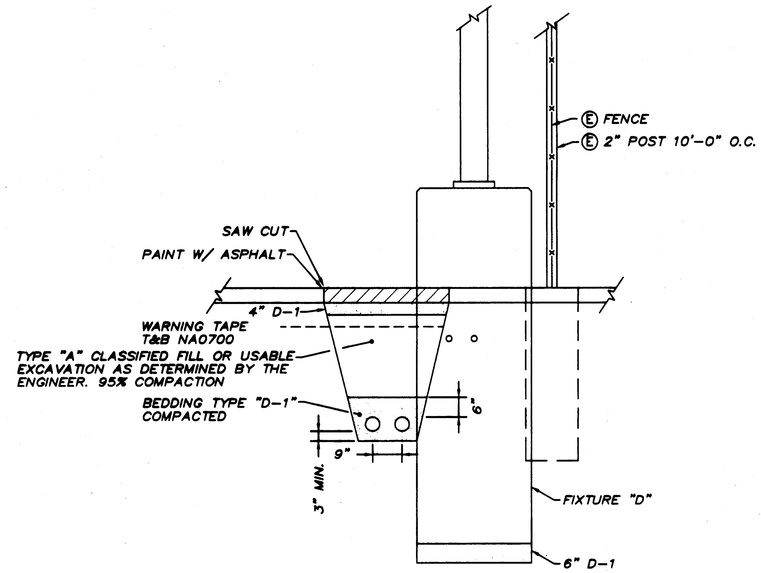

TYPICAL SECTION

N.T.S.

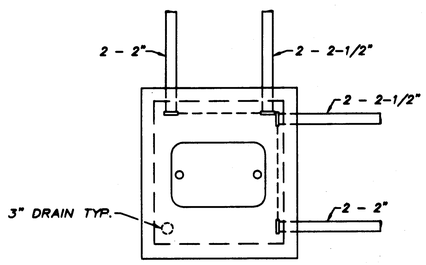

HH-3 PLAN

SCALE: 1/2"=1"-0"

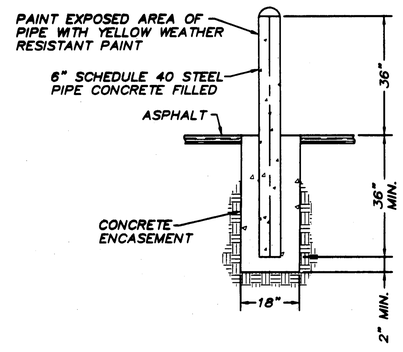

GUARD POST DETAIL

SCALE: 1/2"=1"-0"

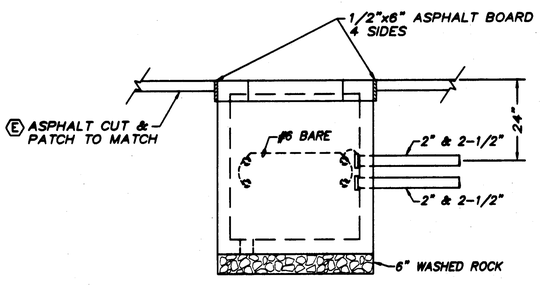

ELEVATION

SCALE: 1/2"=1"-0"

LEGEND

	FLUORESENT FIXTURE SEE SCHEDULE	E.A.D.	EXHAUST AIR DAMPER
	WALL FIXTURE SEE SCHEDULE	R.A.D.	RETURN AIR DAMPER
	OUTDOOR FIXTURE SEE SCHEDULE SINGLE	H.O.A.	HAND OFF AUTO
	OUTDOOR FIXTURE SEE SCHEDULE DOUBLE	A.T.S.	AUTO TRANSFER SWITCH
S	SWITCH +48"	R.G.C.	RIDIG GALV. CONDUIT
	DUPLEX +18" OR NOTED		WIRING & CONDUIT 3/C
J	JUNCTION	E	EXISTING X REMOVE
	MOTOR	F	FIRE ALARM STATION
G	GENERATOR		FIRE ALARM DETECTOR 190° NO R/R
	MANUAL STARTER		FIRE ALARM BELL/STROBE
C	CONTACTOR	P	PHOTO ELECTRIC
	THERMOSTAT		
O.A.D.	OUTSIDE AIR DAMPER		

NOTE: DO NOT SCALE FROM THESE PLANS-USE DIMENSIONS

PATH: G:\LOWELL\SKAGWAY\ELEC-E7.DWG PLOT:	STATE OF ALASKA DEPARTMENT OF TRANSPORTATION AND PUBLIC FACILITIES SOUTHEAST REGION DESIGN & CONSTRUCTION	SKAGWAY — SKAGWAY FERRY TERMINAL ELECTRIAL IMPROVEMENTS 68161/ NH-097-1(5) — ALASKA ELECTRICAL PLANS	DESIGNED BY: LPL DRAWN BY: GDM CHECKED BY: LPL
PROJECT NO. 68161 DATE: 6/11/2001 SHEET 7 OF 8			

BY:	DATE:	DESCRIPTION OF CHANGE:

RECORD OF REVISIONS

STATE OF ALASKA 49TH P.E. LEONARD P. LOWELL 553 E REGISTERED PROFESSIONAL ENGINEER

G:\Lowell\Skagway\Elec-E7.dwg 06/11/01 10:11:45 AM ADT GDM Graphics (907) 789-5798

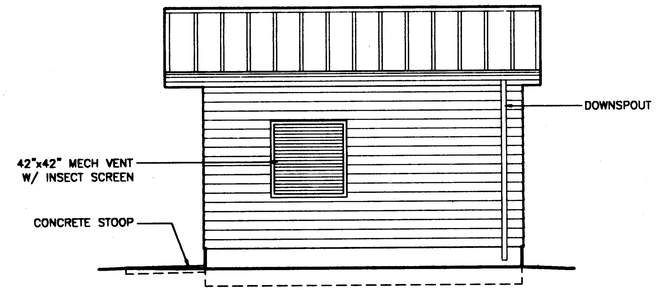

WEST ELEVATION

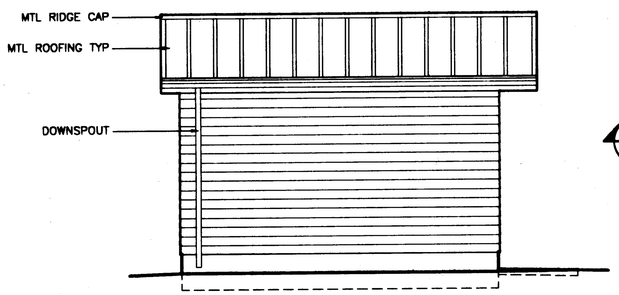

EAST ELEVATION

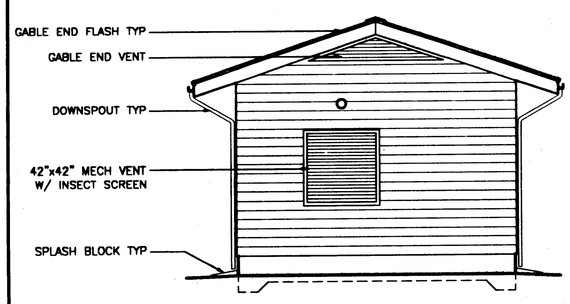

SOUTH ELEVATION

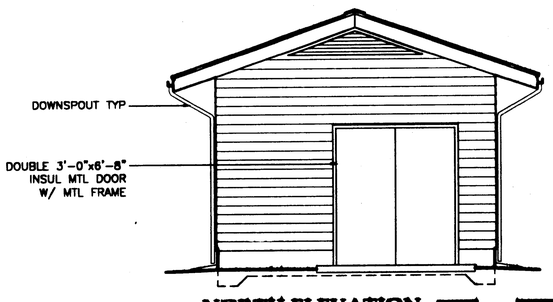

NORTH ELEVATION

SCALE: 0 2' 4' 8'

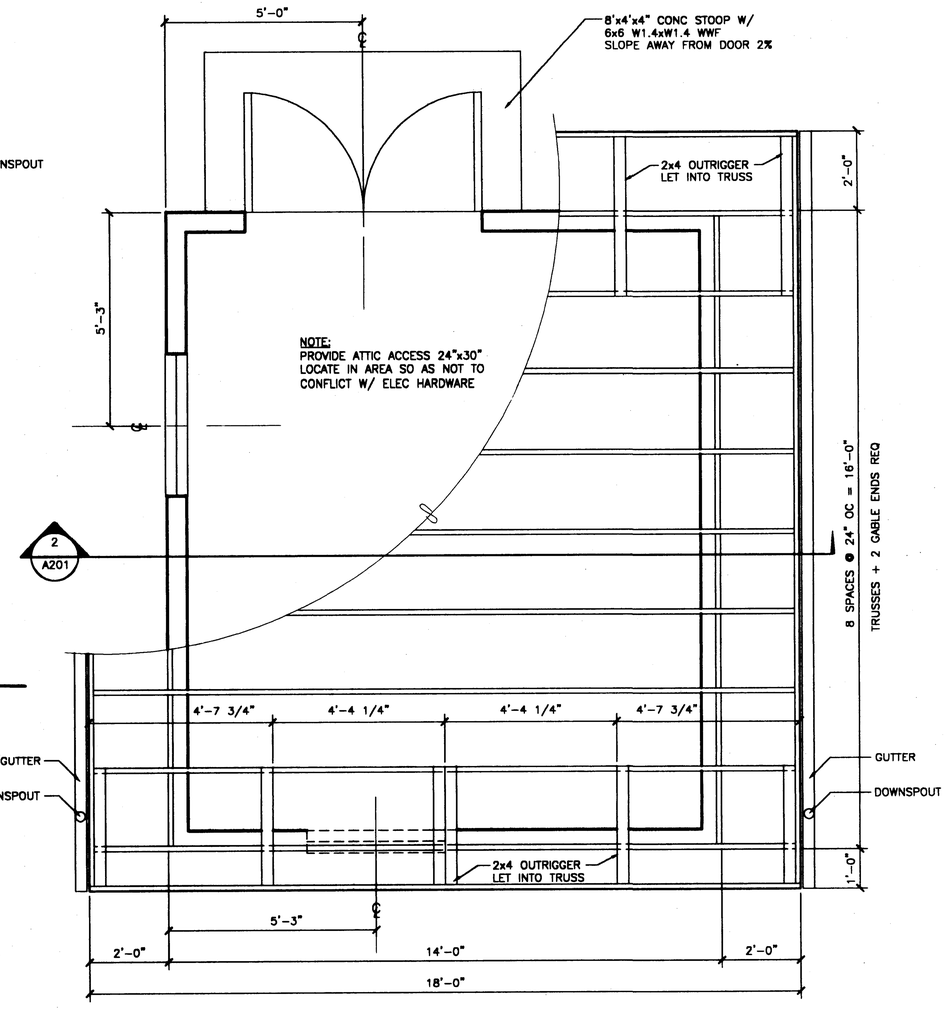

1 FLOOR PLAN & ROOF FRAMING DETAILS

SCALE: 0 1' 2' 4'

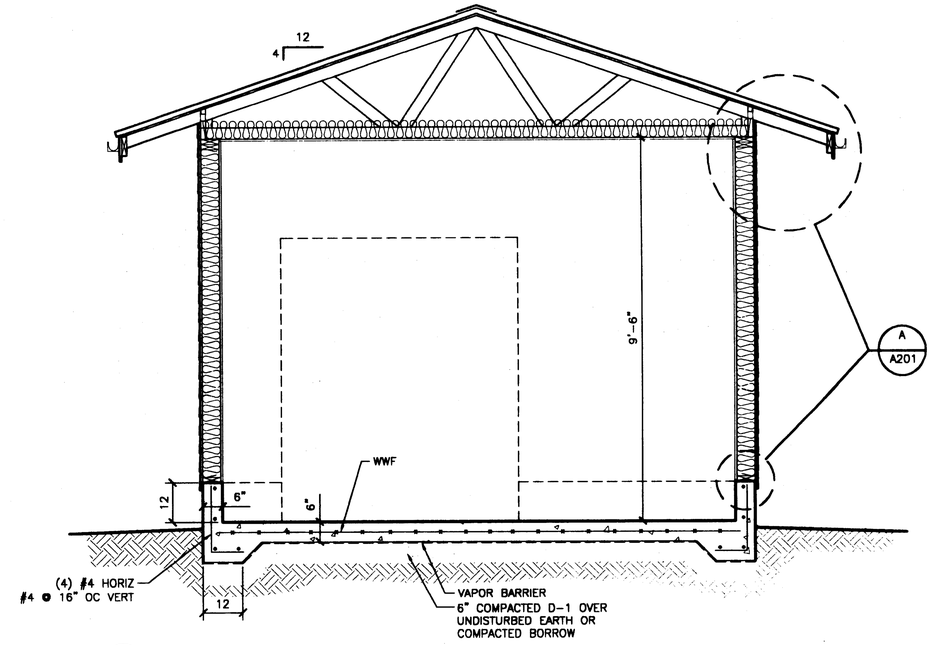

2 BUILDING SECTION

SCALE: 0 1' 2' 4'

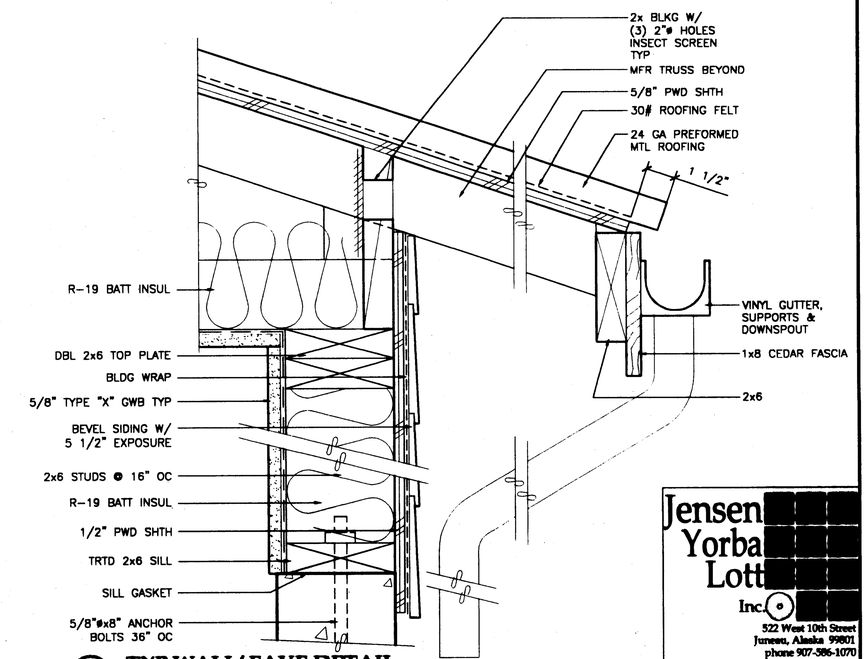

A TYP WALL/ EAVE DETAIL

0107/ A

SCALE: 0 3" 6" 1'

DESIGN CRITERIA:

UNIFORM BUILDING CODE: 1997 EDITION
ROOF SNOW LOAD: 60 PSF, PER UBC CHAPTER 16, DIVISION 1
FLOOR LIVE LOAD: – 100 PSF
WIND: 100 MPH, EXPOSURE C
SEISMIC: ZONE 2B WITH Z = 0.2, I= 1.0, SOIL PROFILE= Sd, Ca = 0.28, AND Rw = 5.5

GENERAL NOTES:

1. COLOR SCHEDULE SELECTED FOR EXTERIOR SHALL BE COORDINATED TO MATCH EXISTING TERMINAL BUILDING CONTRACTOR TO VERIFY EXISTING SCHEDULE
2. EXTERIOR OPENINGS SHALL BE TRIMMED WITH 1x3 CEDAR MITERED CORNERS
3. LOUVERED VENTS SHALL BE SELECTED TO BE COMPATIBLE WITH MECHANICAL OPERATED VENTS SPECIFIED BY ELECTRICAL
4. PROVIDE 3/4" PAINTED AC PWD ON INTERIOR FACE OF EQUIPMENT WALL TO MOUNT PANELS
5. CONCRETE FOUNDATION SLAB SHALL BE ADJUSTED BY THE ENGINEER IN DEPTH, THICKNESS, & HEIGHT TO ACCOMMODATE A NON-LEVEL SITE
6. FOUNDATION EXCAVATION SHALL BE LIMITED TO THAT NEEDED FOR THE CONCRETE FOUNDATION & BACKFILL MATERIAL IN-SITU MATERIAL SHALL BE COMPACTED TO THE SATISFACTION OF THE ENGINEER PRIOR TO PLACEMENT OF D-1 MATERIAL & THE VAPOR BARRIER & THE FORMATION OF THE CONCRETE FOUNDATION
7. IF UNSUITABLE MATERIALS ARE FOUND UNDER THE GENERATOR BUILDING FOOTPRINT, THE MATERIAL SHALL BE REMOVED & REPLACED WITH D-1 MATERIAL AS DIRECTED BY THE ENGINEER

Jensen Yorba Lott Inc.
522 West 10th Street
Juneau, Alaska 99801
phone 907-586-1070
fax 907-586-3999
jenseniyorbalott.com

NOTE:
DO NOT SCALE FROM THESE PLANS - USE DIMENSIONS

ENGINEER'S SEAL

STATE OF ALASKA 49TH WILLIAM O. JENSEN REGISTERED PROFESSIONAL ARCHITECT

DATE: 0107		
BY:	DATE:	DESCRIPTION OF CHANGE:

RECORD OF REVISIONS

STATE OF ALASKA
DEPARTMENT OF TRANSPORTATION AND PUBLIC FACILITIES
SOUTHEAST REGION DESIGN & CONSTRUCTION

SKAGWAY — SKAGWAY FERRY TERMINAL ELECTRICAL IMPROVEMENTS 68161/ NH-097-1(6) — ALASKA

FLOOR PLANS/ BLDG SECTION/ ELEVATIONS/ DETAIL

DESIGNED BY: WJ	PROJECT NO. 68161
DRAWN BY: DF	DATE: 4/10/2001
CHECKED BY: WJ	SHEET 8 OF 8