PETERSBURG HARBOR FACILITIES

PROJECT NO. K-~~78190~~ 31901 (PHASE III)

AS Built

Dave Ward 2-6-87

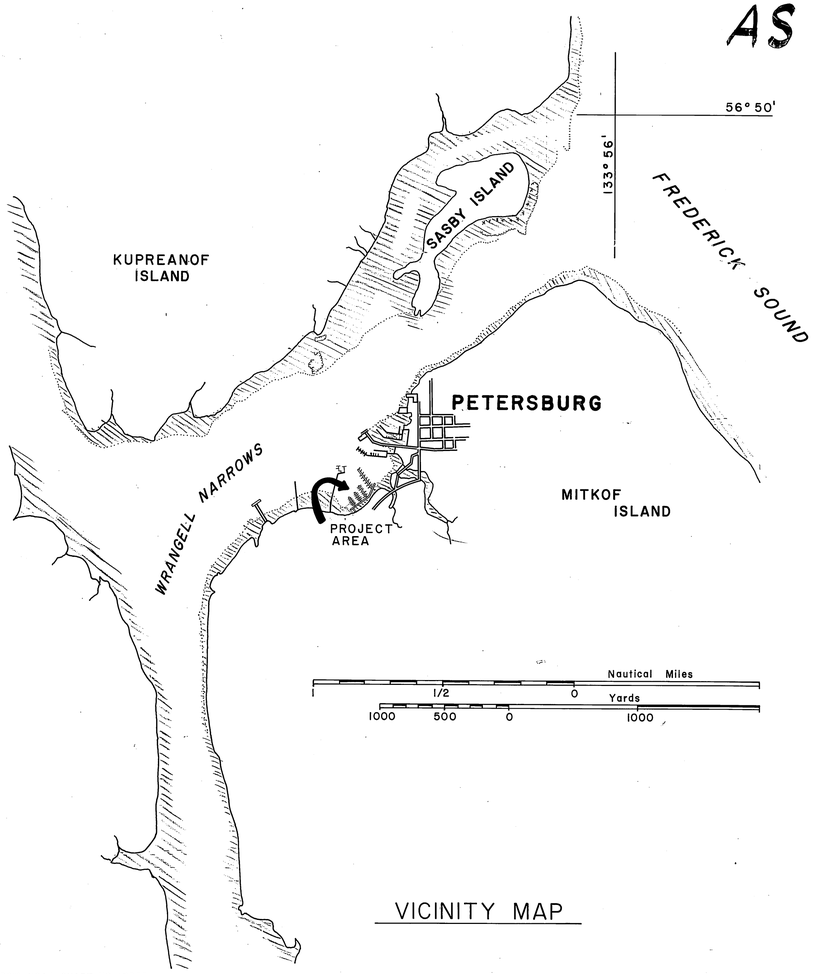

VICINITY MAP

FROM NOAA CHART NO. 17375

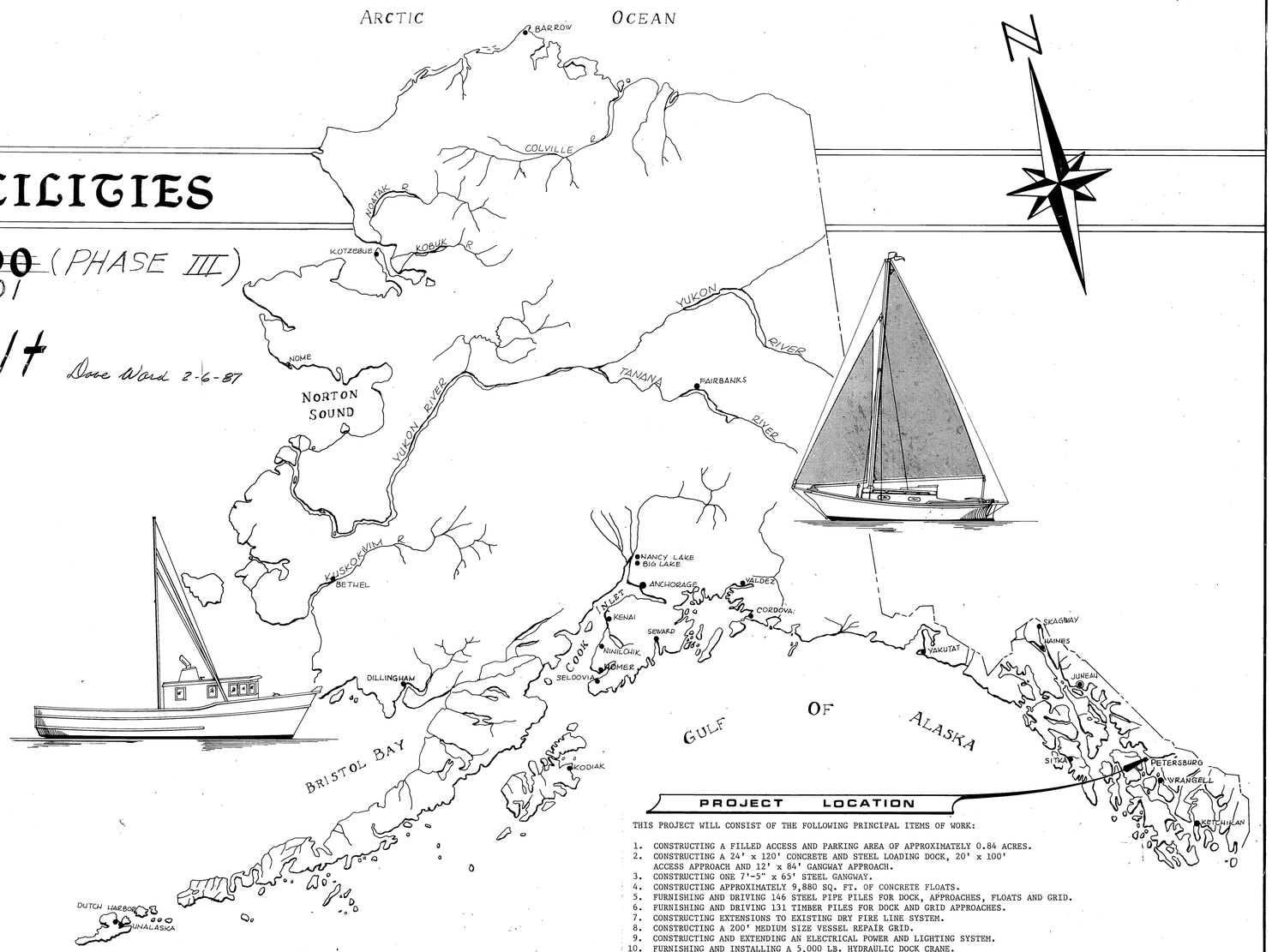

PROJECT LOCATION

THIS PROJECT WILL CONSIST OF THE FOLLOWING PRINCIPAL ITEMS OF WORK:

1. CONSTRUCTING A FILLED ACCESS AND PARKING AREA OF APPROXIMATELY 0.84 ACRES.
2. CONSTRUCTING A 24' x 120' CONCRETE AND STEEL LOADING DOCK, 20' x 100' ACCESS APPROACH AND 12' x 84' GANGWAY APPROACH.
3. CONSTRUCTING ONE 7'-5" x 65' STEEL GANGWAY.
4. CONSTRUCTING APPROXIMATELY 9,880 SQ. FT. OF CONCRETE FLOATS.
5. FURNISHING AND DRIVING 146 STEEL PIPE PILES FOR DOCK, APPROACHES, FLOATS AND GRID.
6. FURNISHING AND DRIVING 131 TIMBER PILES FOR DOCK AND GRID APPROACHES.
7. CONSTRUCTING EXTENSIONS TO EXISTING DRY FIRE LINE SYSTEM.
8. CONSTRUCTING A 200' MEDIUM SIZE VESSEL REPAIR GRID.
9. CONSTRUCTING AND EXTENDING AN ELECTRICAL POWER AND LIGHTING SYSTEM.
10. FURNISHING AND INSTALLING A 5,000 LB. HYDRAULIC DOCK CRANE.
11. REMOVING AND DISPOSING OF THE EXISTING TIMBER VESSEL REPAIR GRID.
12. SUPPLEMENT #1 BID ITEM CONSISTS OF ENLARGING ITEM 2, 24' X 120' LOADING DOCK TO 36' X 120' IN SIZE. Awarded
13. SUPPLEMENT #2 CONSISTS OF DELETING WEST TIMBER GRID APPROACH AND SUBSTITUTING A STEEL VEHICLE APPROACH. Awarded
14. SUPPLEMENT #3 CONSISTS OF MISCELLANEOUS ITEMS OF MAINTENANCE WORK. Awarded

61/63 HANDRAIL ADDITIONS

CONTRACTOR: TAMICO, INC.

Subcontractors: Channel Electric (electrical)
: Rock-N-Road Const. (embankment)
: Glacier Bear Fence Co. (guardrail)
: Kaspac Corp. (stripping)

Begin const: Oct. 29, 1984
Finish " : Sept. 30, 1986

Project Engr: John Edwards - Dave Ward

INDEX TO SHEETS

1.	TITLE SHEET	26/26	FLOAT LAYOUTS
2.	PROJECT LAYOUT	27.	GNGWY. FLOAT GEOMETRICS
3.	DOCK & FILL CONTROL	28.	TYP. 8' & 10' FLOAT UNITS
4.	TYP. FILL AREA X-SECTION	29/31	TYP. STALL FLOAT DETAILS
5.	CAP LAYOUT & MISC.	32.	PILE COLLAR DETAILS
6/8	CAP DETAILS	33.	MISC. FLOAT DETAILS
9.	DIAPHRAGM DETAILS	34.	FLOAT "F" INT. PILE LOCATIONS
10/13	CONC. DECK PANEL DETAILS	35.	FLOAT LAYOUT - BY TYPE
14.	CURB RAIL LAYOUT & DET.S	36/37	UTILITY TRENCH INTERSECT.S
15	WALE DETAILS	38/43	DRY FIRE LINE DETAILS + D.F.R. (2)
16.	MISC. DETAILS	44/47	GRID DETAILS
17	LAYOUTS FOR SUPPLEMENT # 1	48/51	ELECTRICAL DETAILS
18/19	GANGWAY DETAILS	52/55	DET. FOR. SUPPLEMENTS #2 & #3

57/60 LAUNCH RAMP

STATE OF ALASKA

DEPARTMENT OF TRANSPORTATION & PUBLIC FACILITIES

S.E. REGION

DESIGN & CONSTRUCTION

APPROVED

K. D. Dieckmann 7-23-84
DIRECTOR S.E. D. & C. DATE

RECOMMEND FOR APPROVAL Steve D. Bradford 7/23/84
GROUP DESIGN CHIEF DATE

SHEET 1 OF ~~55~~ 63

GENERAL NOTES

1. FLOAT PILES
   A. Cutoff Elevation : +35.0
   B. Design Penetration : 15.0'
   C. Estimated Tip Elevation : -30 to -33 and -32 to -35
   D. Pile Size : 12 3/4" ø x 3/8" wall with APF 0-14001 reinforced tips
   E. Treatment Per Specifications

2. FLOAT DESIGN, Per S.E. Region Harbor Design Standards. Design Vessel Types I thru V.
3. GRID DESIGN
   A. Design Vessel : 200 Tons
   B. Pile Cap Design Load : 30 Tons
   C. Grid Pile Size : 12 3/4" ø x 3/8" wall with APF 0-14001 reinforced tips.
   D. Grid Pile Bearing Capacity : 30 Tons
   E. Grid Pile min. Depth of Penetration : 30'
   F. Fender Pile Cutoff Elevation : + 24.0' + } 12' to 30'
   G. Fender Pile Design Penetration : 30'
   H. Fender Pile Size : 12 3/4" ø x 1/2" wall thickness
   I. Approach Design Live Load : 50 PSF
   J. Approach Pile Cutoff Elevation : 19.86'
   K. Approach Pile Minimum Depth of Penetration : 15.0'
   L. Approach Pile Size : 38" min. butt circumference
4. SUPPLEMENT # 2
   A. Approach Pile Size 12 3/4" ø x 1/2" wall thickness
   B. Approach Design Live Load : 100 PSF
   C. Approach Pile Cutoff Elevation : + 20.77'
   D. Approach Pile min. Depth of Penetration : 15.0'

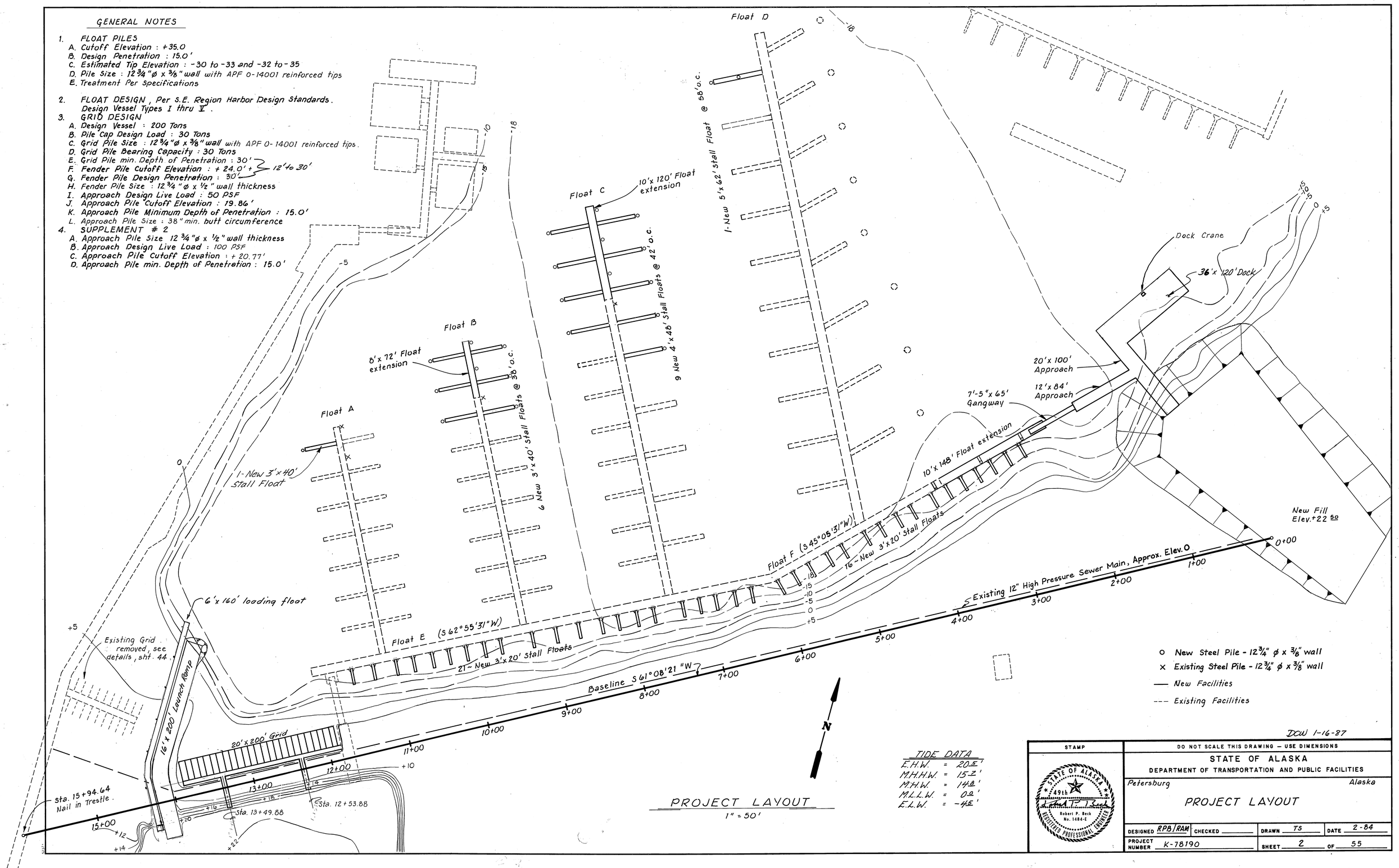

TIDE DATA
E.H.W. = 20.5'
M.H.H.W. = 15.2'
M.H.W. = 14.2'
M.L.L.W. = 0.2'
E.L.W. = -4.2'

PROJECT LAYOUT
1" = 50'

DCW 1-16-87

STAMP

STATE OF ALASKA 49th
Robert P. Beck No. 1484-E
REGISTERED PROFESSIONAL ENGINEER

DO NOT SCALE THIS DRAWING — USE DIMENSIONS

STATE OF ALASKA
DEPARTMENT OF TRANSPORTATION AND PUBLIC FACILITIES

Petersburg Alaska

PROJECT LAYOUT

DESIGNED RPB/RAM	CHECKED	DRAWN TS	DATE 2-84
PROJECT NUMBER K-78190		SHEET 2	OF 55

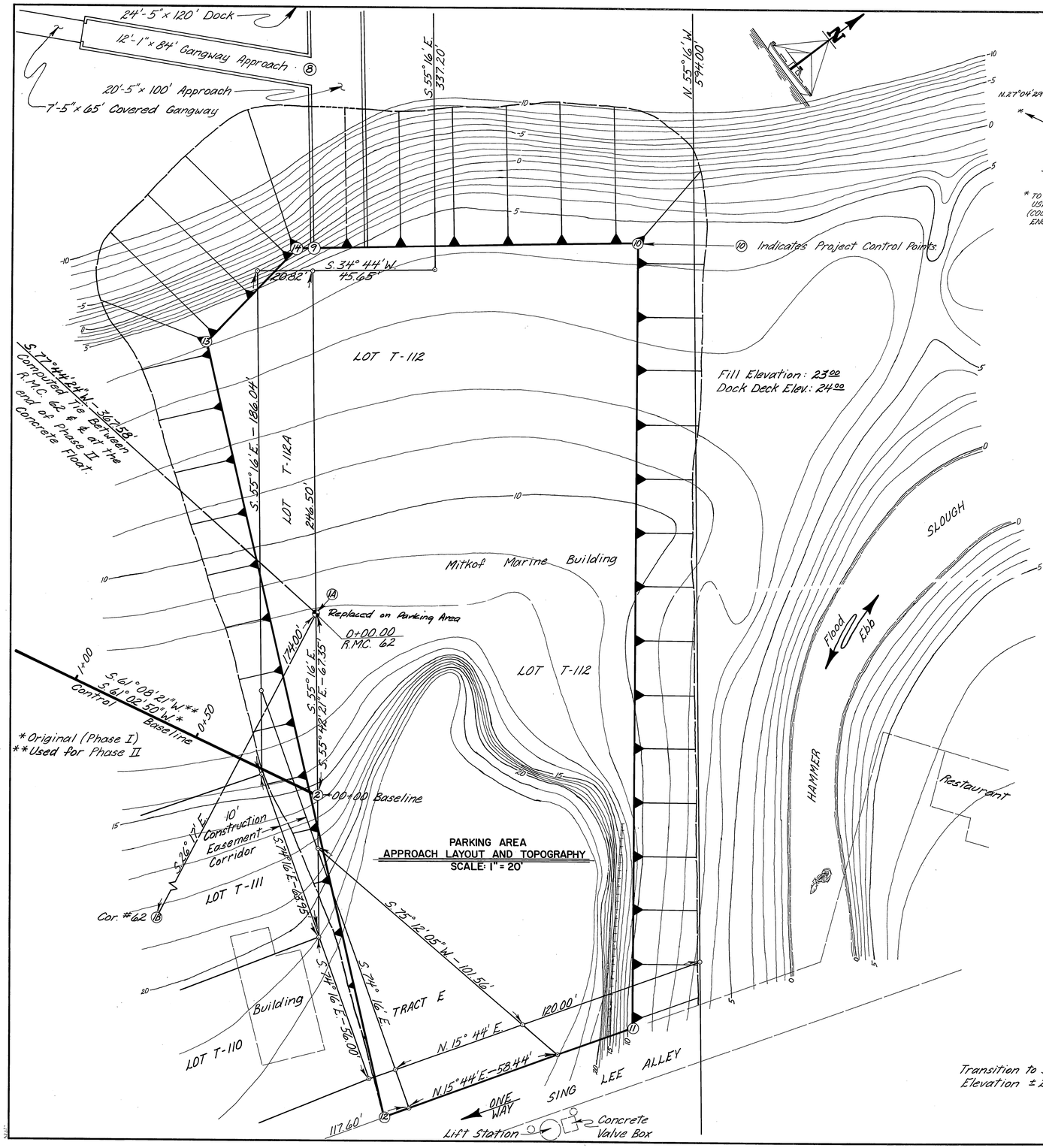

COORDINATES FOR PROJECT CONTROL			
POINT	COORDINATES LATITUDE	COORDINATES LONGITUDE	DESCRIPTION
⑭	10,057.96	9,944.33	R.M.C. #62
⑱	9,881.92	10,021.41	CORNER #62
②	10,000.00	10,000.00	STATION 00+00 CONTROL BASELINE
③	9,931.98	8,969.37	STATION 11+76.80 CONTROL BASELINE
④	9,900.01	8,986.99	℄ APPROACH - BEGINS
⑤	9,558.50	8,917.73	℄ MAIN FLOAT AT ℄ GANGWAY
⑥	9,789.07	9,413.78	℄ MAIN FLOAT AT ∡ POINT
⑦	9,959.89	9,585.15	℄ MAIN FLOAT AT END
⑧	10,153.12	9,779.00	℄ FLOAT APPROACH & LEFT SIDE DOCK (℄ PILE ROW)
⑨	10,115.55	9,833.00	BEGIN DOCK APPROACH (℄ LEFT PILE ROW)
⑩	10,213.89	9,901.18	∡ POINT, TOP OF FILL
⑪	10,041.82	10,135.86	∡ POINT, TOP OF FILL
⑫	9,947.49	10,109.29	∡ POINT, TOP OF FILL
⑬	10,062.76	9,837.74	∡ POINT, TOP OF FILL
⑭	10,110.34	9,829.40	∡ POINT, TOP OF FILL

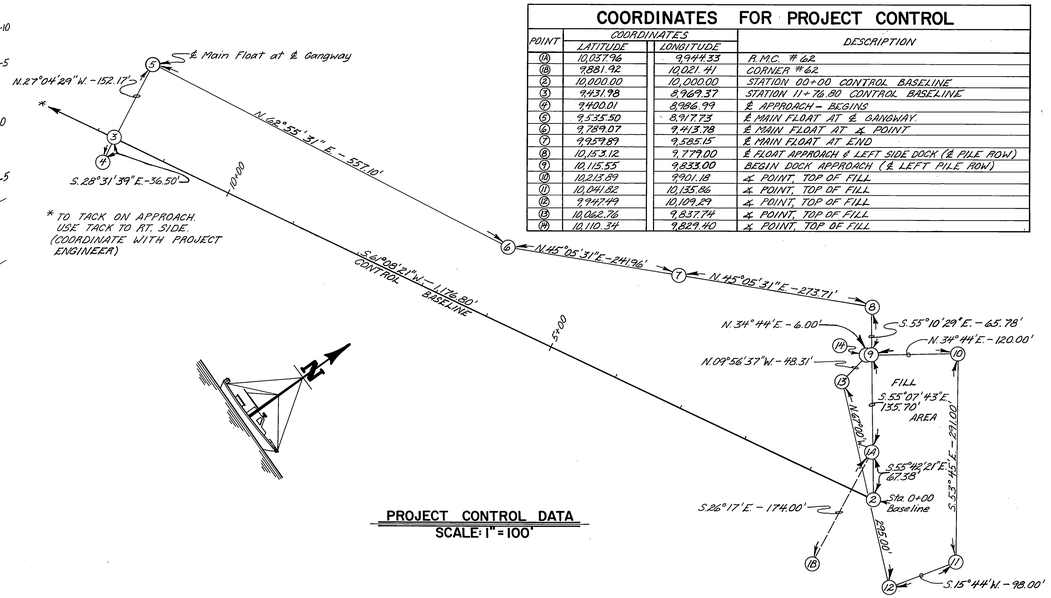

PROJECT CONTROL DATA
SCALE: 1" = 100'

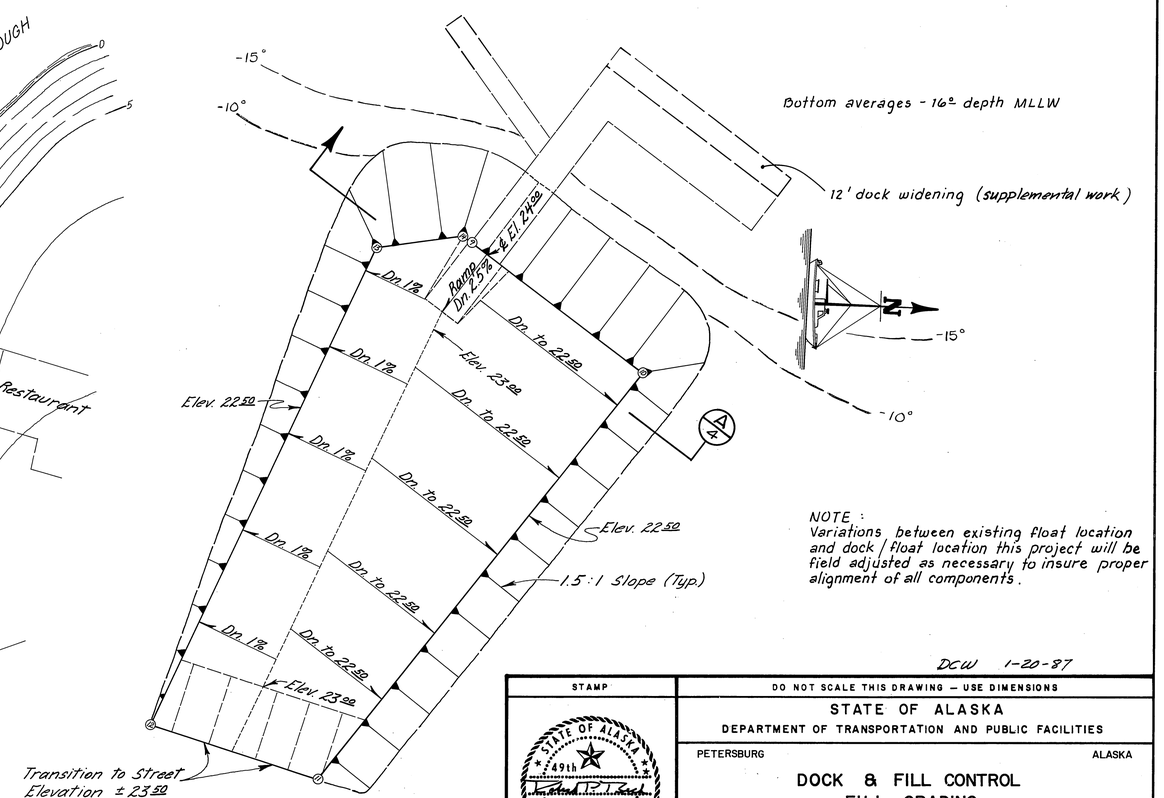

GRADING AND DRAINAGE PLAN
SCALE: 1" = 40'

NOTE:
Variations between existing float location and dock / float location this project will be field adjusted as necessary to insure proper alignment of all components.

DCW 1-20-87

STAMP

STATE OF ALASKA 49th Robert P. Beck No. 1481-E REGISTERED PROFESSIONAL ENGINEER

DO NOT SCALE THIS DRAWING — USE DIMENSIONS

STATE OF ALASKA
DEPARTMENT OF TRANSPORTATION AND PUBLIC FACILITIES

PETERSBURG — ALASKA

DOCK & FILL CONTROL
FILL GRADING

DESIGNED R.B.	CHECKED	DRAWN JEM	DATE
PROJECT NUMBER K-78190		SHEET 3	OF 55

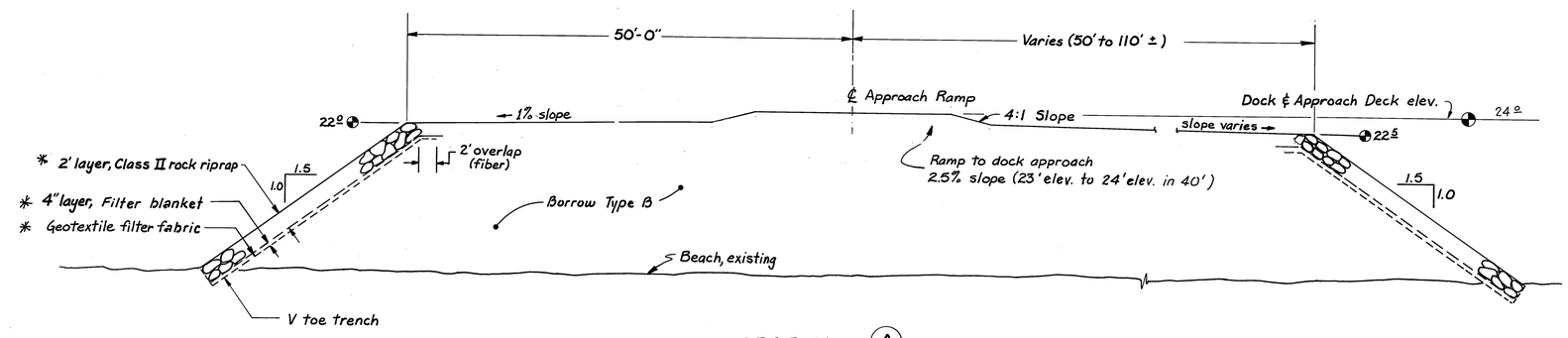

SECTION (A)

Scale : 1/8" = 1'-0"

* See Specs., Section 203 - 2.01 for contractor elective contstruction option.

DCW 1-20-87

STAMP

STATE OF ALASKA 49th Robert P. Beck No. 1484-E REGISTERED PROFESSIONAL ENGINEER

DO NOT SCALE THIS DRAWING — USE DIMENSIONS

STATE OF ALASKA

DEPARTMENT OF TRANSPORTATION AND PUBLIC FACILITIES

Petersburg Alaska

TYPICAL FILL AREA X-SECTION

DESIGNED RPB	CHECKED	DRAWN RTB	DATE 2/84
PROJECT NUMBER K-78190		SHEET 4	OF 55

Note
At begining of approach, excavate as req'd. for caps and piling. Rock slope protection will have to be temporarily moved in order to accomodate driving piling for first 60' of dock approach.

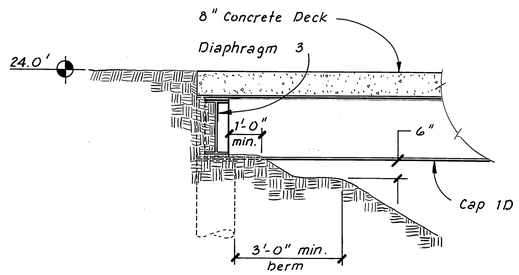

SECTIONAL ELEVATION (C)
1/2" = 1'-0"

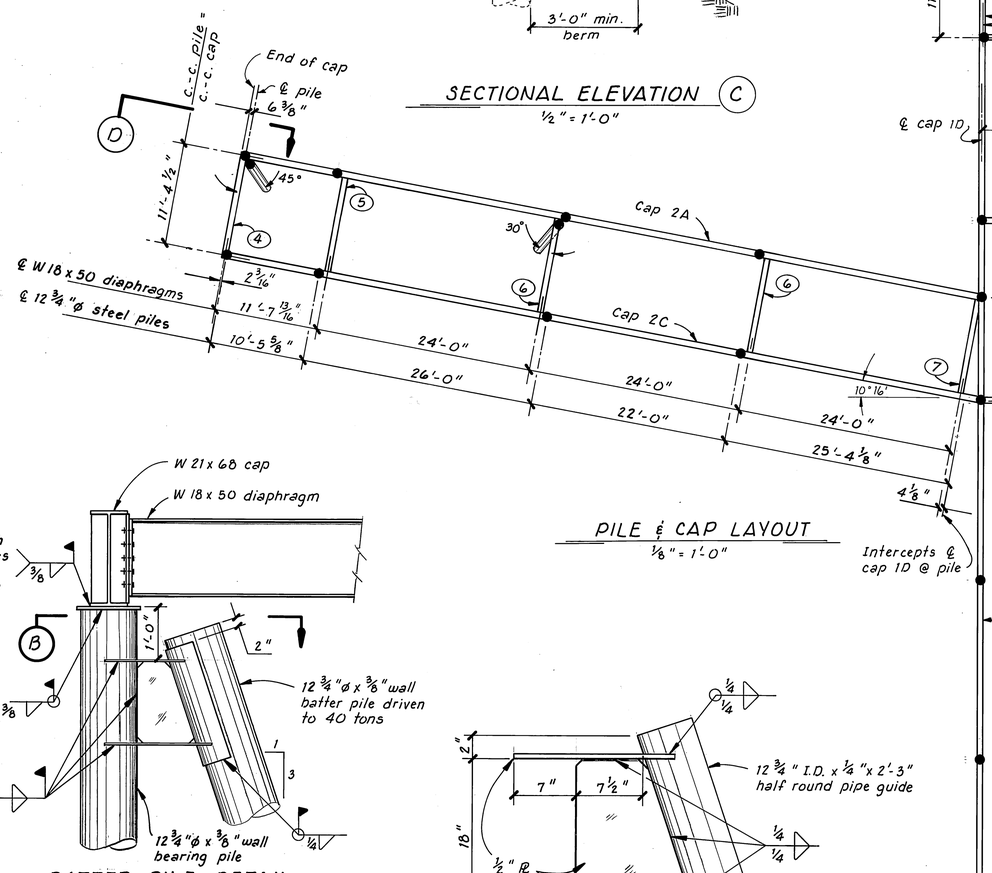

PILE & CAP LAYOUT
1/8" = 1'-0"

BATTER PILE DETAIL
3/4" = 1'-0"

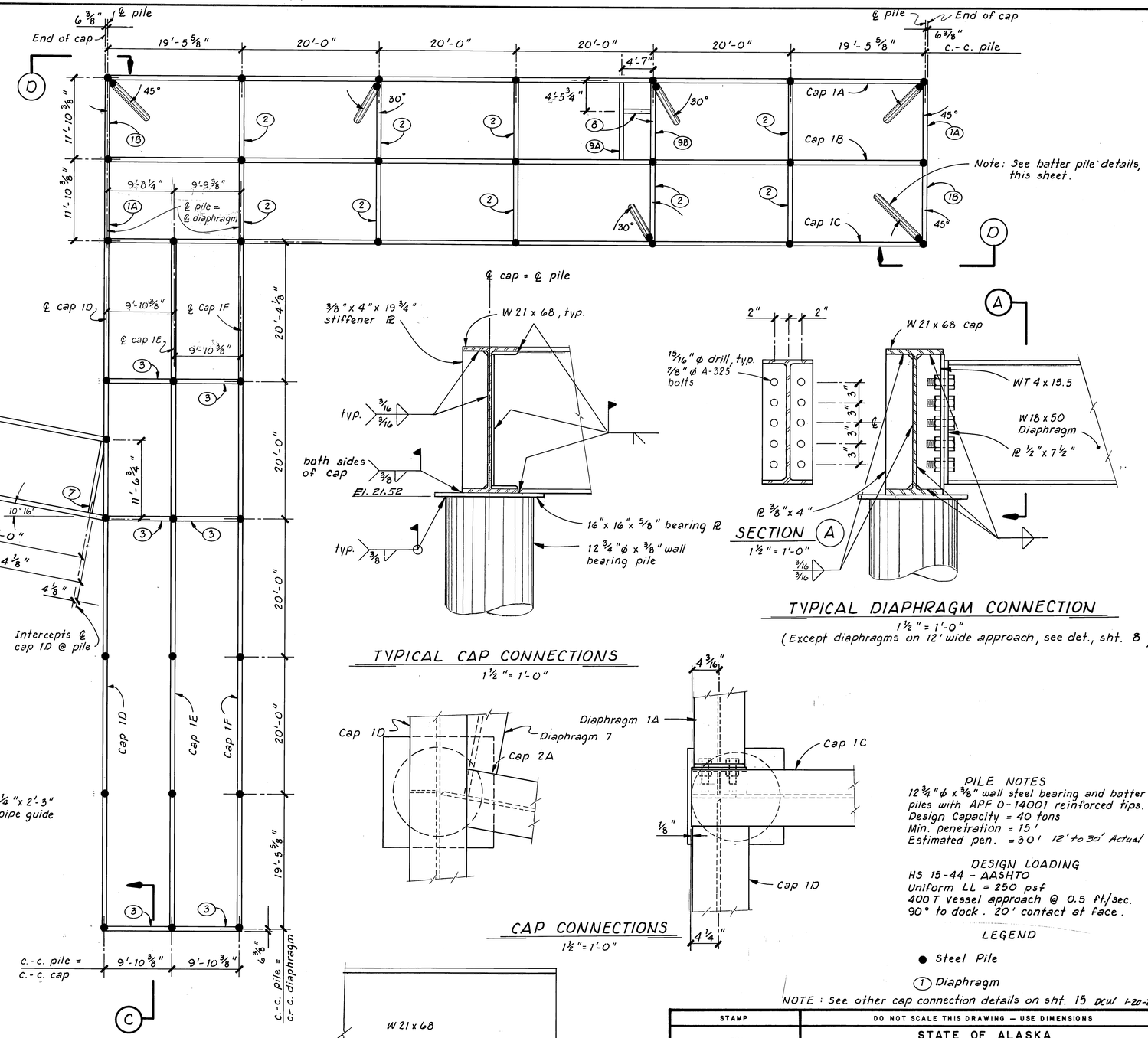

TYPICAL CAP CONNECTIONS
1 1/2" = 1'-0"

SECTION (A)
1 1/2" = 1'-0"

TYPICAL DIAPHRAGM CONNECTION
1 1/2" = 1'-0"
(Except diaphragms on 12' wide approach, see det., sht. 8)

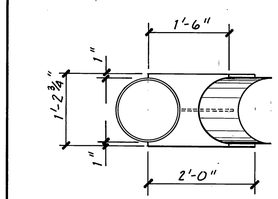

Note: Batter pile not shown.

SECTIONAL PLAN (B)
3/4" = 1'-0"

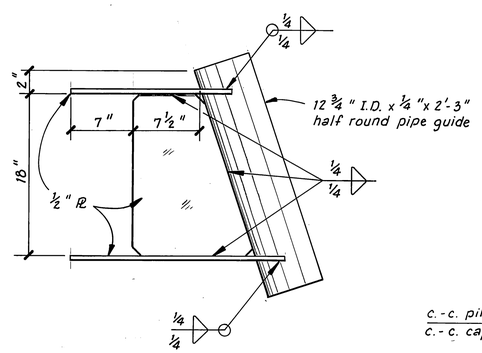

BATTER PILE TEMPLATE
1 1/2" = 1'-0"

CAP CONNECTIONS
1 1/2" = 1'-0"

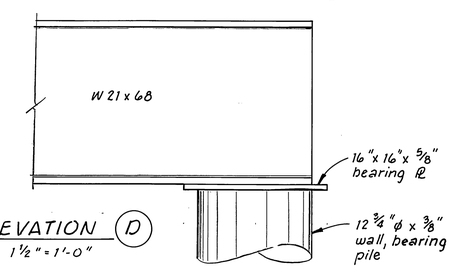

ELEVATION (D)
1 1/2" = 1'-0"

PILE NOTES
12 3/4" ø x 3/8" wall steel bearing and batter piles with APF 0-14001 reinforced tips.
Design Capacity = 40 tons
Min. penetration = 15'
Estimated pen. = 30' 12' to 30' Actual

DESIGN LOADING
HS 15-44 - AASHTO
Uniform LL = 250 psf
400 T vessel approach @ 0.5 ft./sec.
90° to dock. 20' contact at face.

LEGEND
● Steel Pile
(1) Diaphragm

NOTE: See other cap connection details on sht. 15 DCW 1-20-87

STAMP
STATE OF ALASKA 49th Robert P. Beck No. 1484-E REGISTERED PROFESSIONAL ENGINEER

DO NOT SCALE THIS DRAWING — USE DIMENSIONS

STATE OF ALASKA
DEPARTMENT OF TRANSPORTATION AND PUBLIC FACILITIES

Petersburg Alaska

APPROACH & DOCK
PILE & CAP LAYOUT AND MISC. DET.
See Sheet 17 for Actual Layout

DESIGNED RPB	CHECKED	DRAWN TS	DATE 2-84
PROJECT NUMBER K-78190		SHEET 5	OF 55

Ⓐ Diaphragm Attachment Brackets
Ⓑ Rail Post Attachment Brackets
Ⓒ Wale Attachment Brackets
Ⓓ Stiffener Plates
} Notes

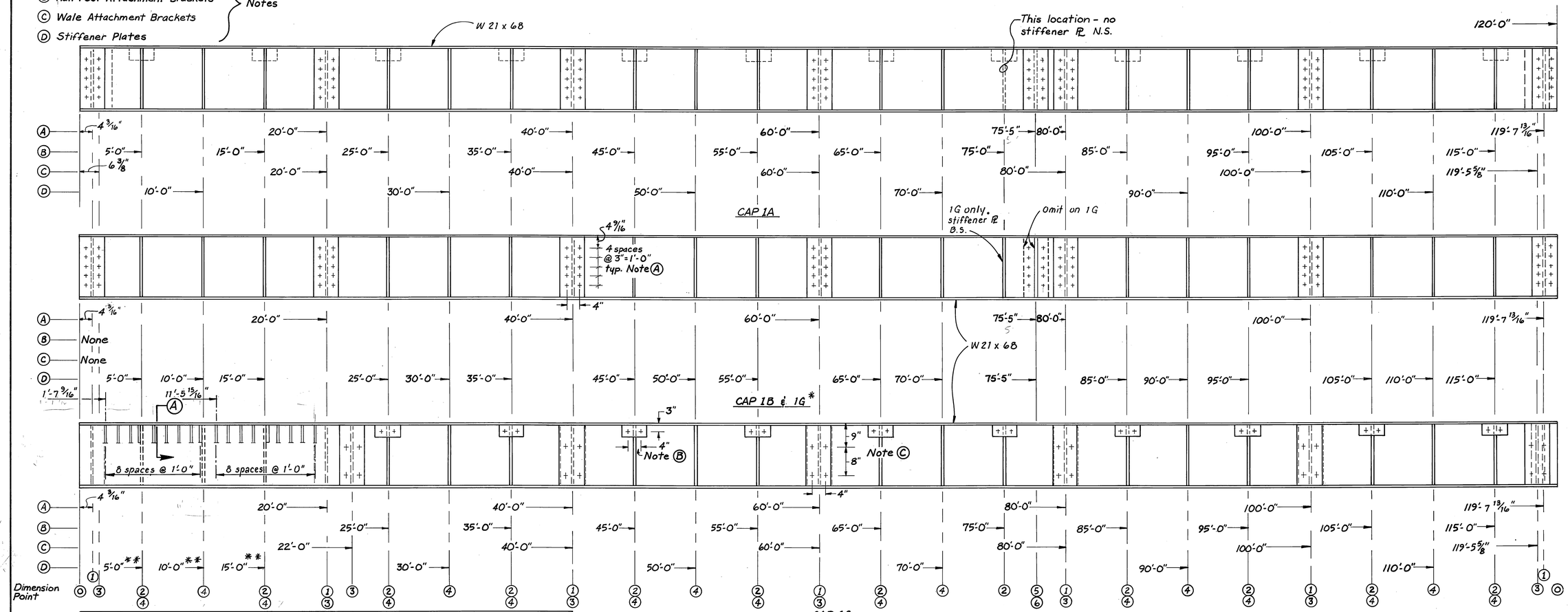

F.S. = Far side
N.S. = Near side
B.S. = Both sides

HARDWARE SCHEDULE							
Note	Cap	Point	Hardware	Note	Cap	Point	Hardware
Ⓐ	1A	①	WT 4 x 15.5 x 19 3/4" long N.S.	Ⓒ	1A	③	WT 4 x 15.5 x 19 3/4" long F.S.
Ⓐ	1A	⑥	WT 4 x 15.5 x 19 3/4" long N.S.	Ⓒ	1C	③	WT 4 x 15.5 x 19 3/4" long N.S.
Ⓐ	1B	①	WT 4 x 15.5 x 19 3/4" long B.S.				
Ⓐ	1B	⑤	WT 4 x 15.5 x 19 3/4" long F.S.	Ⓓ	1A	④	℞ 3/8" x 4" x 19 3/4" long B.S.
Ⓐ			℞ 3/8" x 4" x 19 3/4" long N.S.	Ⓓ	1B	④	℞ 3/8" x 4" x 19 3/4" long B.S.
Ⓐ	1C	①	WT 4 x 15.5 x 19 3/4" long F.S.	Ⓓ	1B	⑥	℞ 3/8" x 4" x 19 3/4" long N.S.
Ⓑ	1A	②	WT 4 x 15.5 x 4" long F.S.	Ⓓ	1C	④	℞ 3/8" x 4" x 19 3/4" long B.S.
			℞ 3/8" x 4" x 15 3/4" long F.S.				
			℞ 3/8" x 4" x 19 3/4" long N.S.				
Ⓑ	1C	②	WT 4 x 15.5 x 4" long N.S.				
			℞ 3/8" x 4" x 15 3/4" long N.S.				
			℞ 3/8" x 4" x 19 3/4" long F.S.				

* Cap 1G is the same as 1B except, as noted, points 5 & 6.
** ℞ 3/8" x 4" x 19 3/4" long, F.S. only.

NOTE: See typ. welds, Sect. B, sht. 15

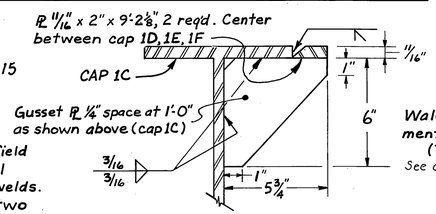

SECTION A
Scale: 3" = 1'-0"

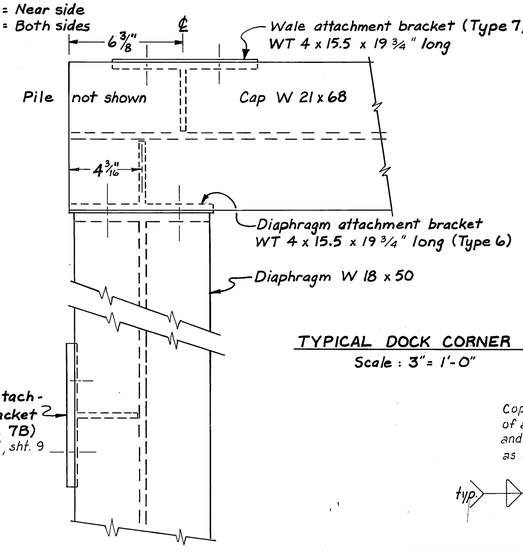

TYPICAL DOCK CORNER
Scale: 3" = 1'-0"

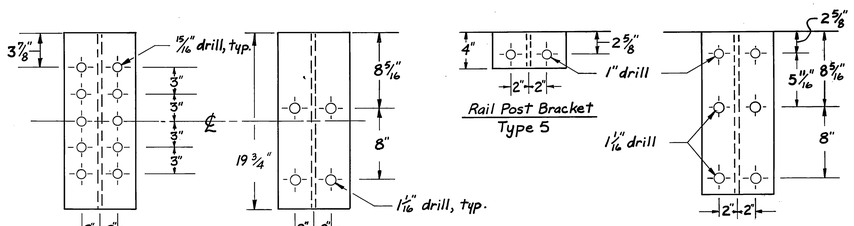

BRACKET DRILLING PATTERNS
Scale: 1 1/2" = 1'-0"

Note: All Brackets are fabricated from WT 4 x 15.5
DCW 1-20-87

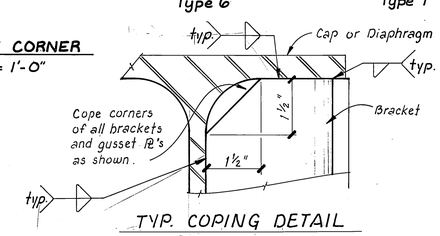

TYP. COPING DETAIL
6" = 1'-0"

STAMP

STATE OF ALASKA 49th Robert P. Beck No. 1484-E REGISTERED PROFESSIONAL ENGINEER

DO NOT SCALE THIS DRAWING — USE DIMENSIONS

STATE OF ALASKA
DEPARTMENT OF TRANSPORTATION AND PUBLIC FACILITIES

Petersburg Alaska

CAP 1A, 1B, 1C, 1G DETAILS

DESIGNED RPB	CHECKED	DRAWN RTB	DATE 3-84
PROJECT NUMBER K-78190		SHEET 6	OF 55

Ⓐ Diaphragm Attachment Brackets

Ⓑ Rail Post Attachment Brackets

Ⓒ Wale Attachment Brackets

Ⓓ Stiffener Plates

Note: See details of brackets, sheet 6.

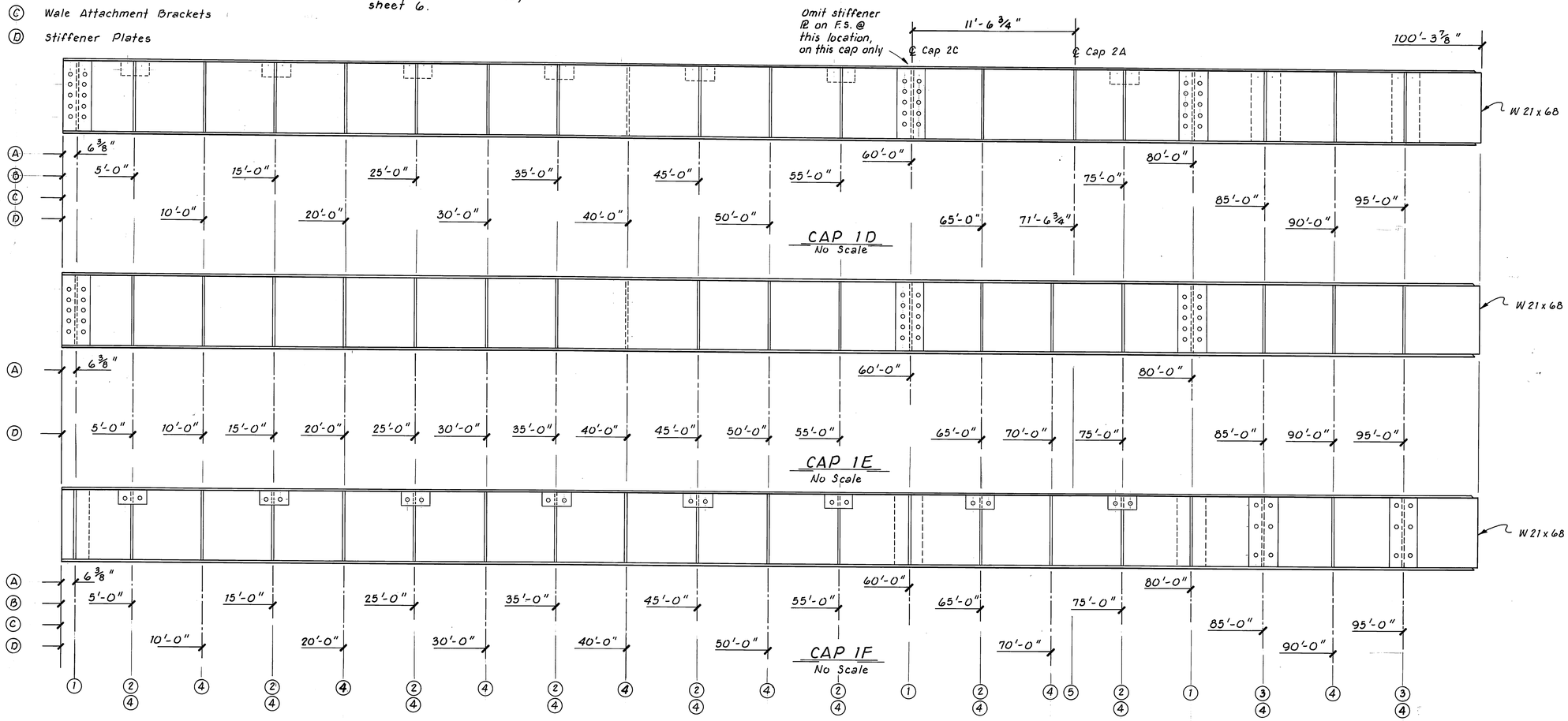

F.S. - Far Side
N.S. - Near Side
B.S. - Both Sides

HARDWARE SCHEDULE			
NOTE	CAP	POINT	HARDWARE
Ⓐ	1D	①	WT 4 x 15.5 x 19 3/4" long N.S.
			PL 3/8" x 4" x 19 3/4" long F.S.
	1E	①	WT 4 x 15.5 x 19 3/4" long B.S.
	1F	①	WT 4 x 15.5 x 19 3/4" long F.S.
			PL 3/8" x 4" x 19 3/4" long N.S.
Ⓑ	1D	②	WT 4 x 15.5 x 4" long F.S.
			PL 3/8" x 4" x 15 3/4" long F.S.
			PL 3/8" x 4" x 19 3/4" long N.S.
	1F	②	WT 4 x 15.5 x 4" long N.S.
			PL 3/8" x 4" x 15 3/4" long N.S.
			PL 3/8" x 4" x 19 3/4" long F.S.
Ⓒ	1D	③	WT 4 x 15.5 x 19 3/4" long F.S. *
			PL 3/8" x 4" x 19 3/4" long N.S.
	1F	③	WT 4 x 15.5 x 19 3/4" long N.S. *
			PL 3/8" x 4" x 19 3/4" long F.S.
Ⓓ	1D	④	PL 3/8" x 4" x 19 3/4" long B.S.
		⑤	PL 3/8" x 4" x 19 3/4" long N.S.
	1E	④	PL 3/8" x 4" x 19 3/4" long B.S.
	1F	④	PL 3/8" x 4" x 19 3/4" long B.S.

* Special drilling pattern to accomodate both rail post and wale. See detail of bracket type 7A, sht. 6.

Note: Caps may be spliced (shop or field) utilizing full penetration butt welds. Caps to be spliced two feet from pile.

DCW 1-20-87

STAMP

STATE OF ALASKA 7491 Robert P. Beck No. 1484-E REGISTERED PROFESSIONAL ENGINEER

DO NOT SCALE THIS DRAWING — USE DIMENSIONS

STATE OF ALASKA
DEPARTMENT OF TRANSPORTATION AND PUBLIC FACILITIES

Petersburg Alaska

CAP 1D, 1E, 1F DETAILS

DESIGNED	RPB	CHECKED		DRAWN	TS	DATE	2-84
PROJECT NUMBER	K-78190			SHEET	7	OF	55

Ⓐ Diaphragm Attachment Bracket

Ⓑ Rail Post Attachment Bracket

Ⓓ Stiffener Plate

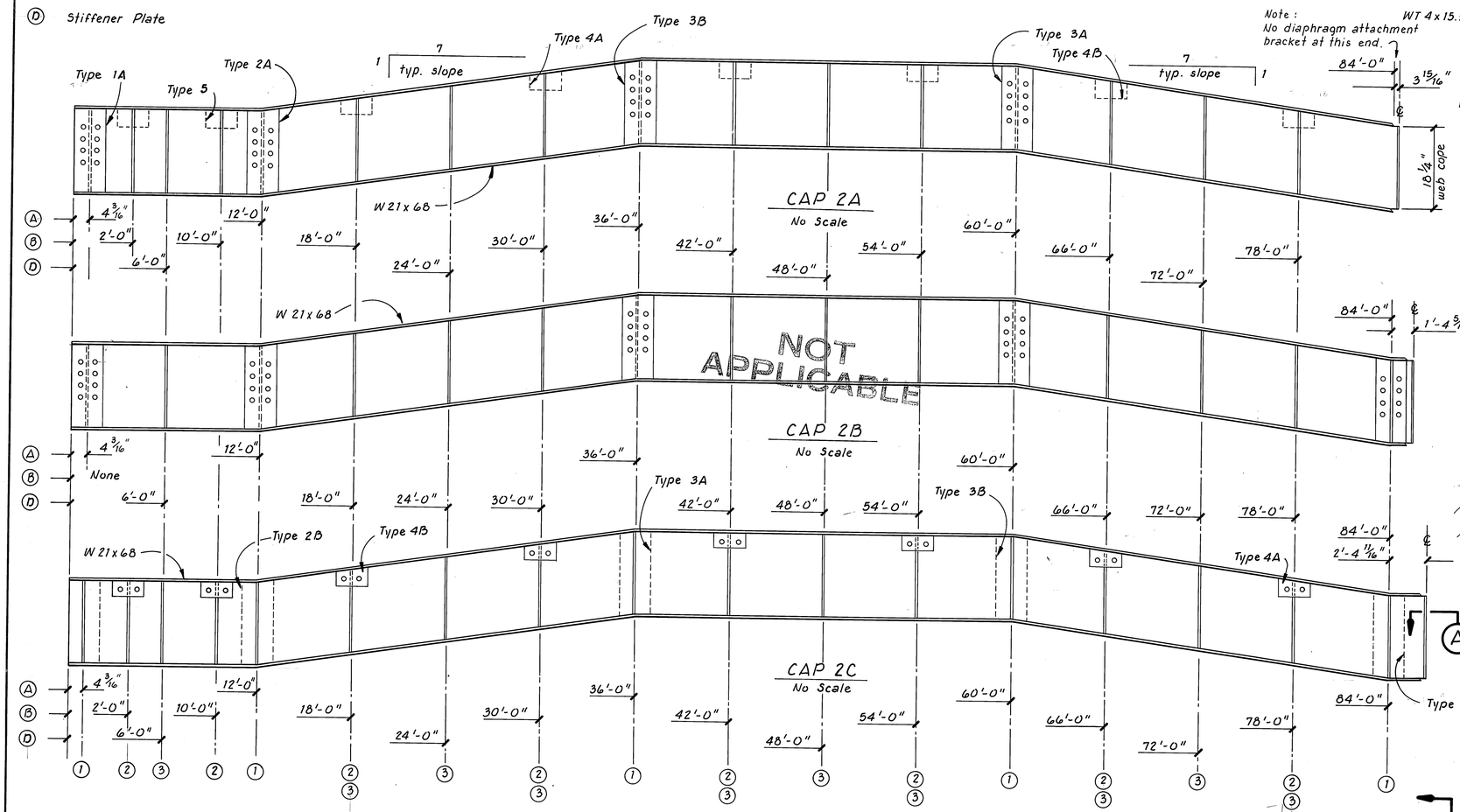

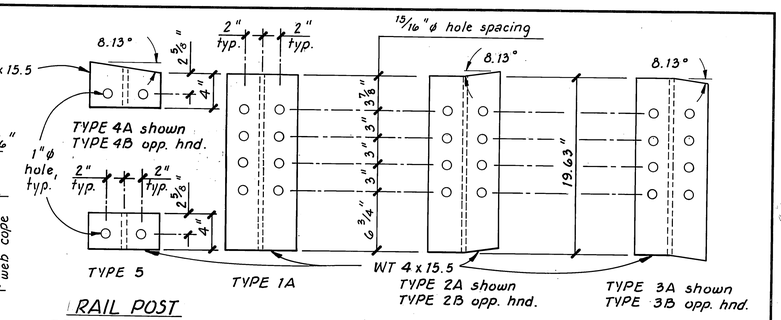

RAIL POST BRACKET DETAILS

DIAPHRAGM ATTACHMENT BRACKET DETAILS

1½" = 1'-0"

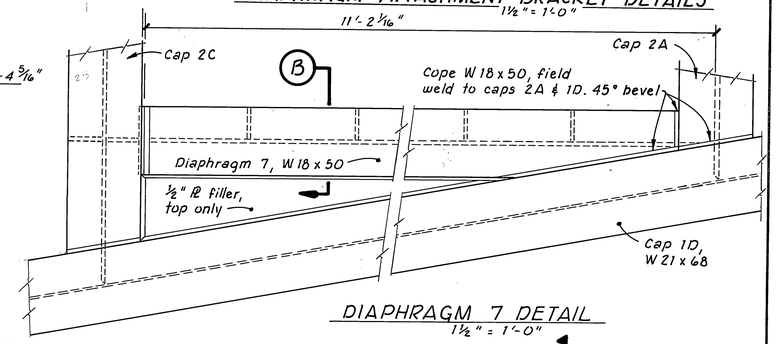

DIAPHRAGM 7 DETAIL

1½" = 1'-0"

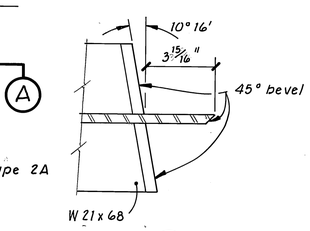

SECTION Ⓐ

3" = 1'-0"

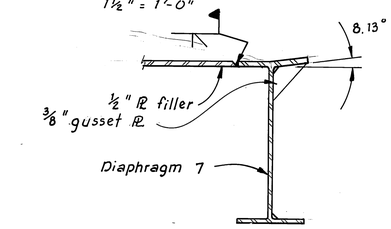

SECTION Ⓑ

1½" = 1'-0"

HARDWARE SCHEDULE			
NOTE	CAP	POINT	HARDWARE
Ⓐ	2A	①	WT 4 x 15.5 x 19¾" long N.S
			℞ ⅜" x 4" x 19¾" long F.S.
	2C	①	WT 4 x 15.5 x 19¾" long F.S.
			℞ ⅜" x 4" x 19¾" long N.S.
Ⓑ	2A	②	WT 4 x 15.5 x 4" long F.S.
			℞ ⅜" x 4" x 15.06" long F.S.
			℞ ⅜" x 4" x 19¾" long N.S.
	2C	②	WT 4 x 15.5 x 4" long N.S.
			℞ ⅜" x 4" x 15.06" long N.S.
			℞ ⅜" x 4" x 19¾" long F.S.
Ⓓ	2A	③	℞ ⅜" x 4" x 19¾" long B.S.
	2C	③	℞ ⅜" x 4" x 19¾" long B.S.

F.S. - Far Side
N.S. - Near Side
B.S. - Both Sides

Note: Caps may be spliced (shop or field) utilizing full penetration butt welds.
Caps to be spliced two feet from pile (field splices).

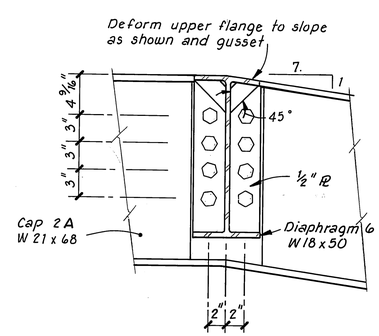

SECTION Ⓒ

1½" = 1'-0"

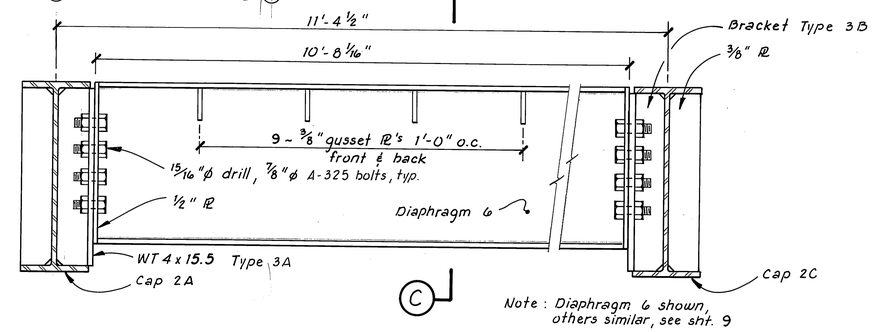

Note: Diaphragm 6 shown, others similar, see sht. 9

BEARING DIAPHRAGM DETAILS

1½" = 1'-0"

DCW 1-20-87

STAMP

STATE OF ALASKA 49th Robert P. Beck No. 1484-E REGISTERED PROFESSIONAL ENGINEER

DO NOT SCALE THIS DRAWING — USE DIMENSIONS

STATE OF ALASKA

DEPARTMENT OF TRANSPORTATION AND PUBLIC FACILITIES

Petersburg Alaska

CAP 2A, 2B, 2C DETAILS

DESIGNED RPB	CHECKED	DRAWN T.S	DATE 2-84
PROJECT NUMBER K-78190		SHEET 8	OF 55

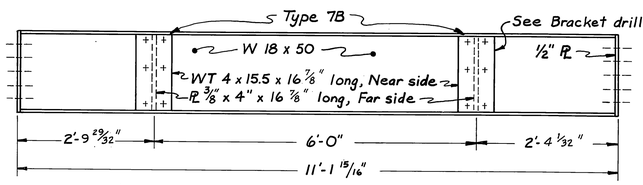

OPP. HND. SHOWN — DIAPHRAGM 1B 2 Req'd (See Det. A)
DIAPHRAGM 1A 2 Req'd.

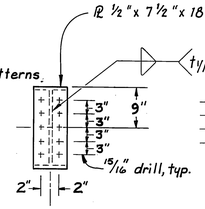

END PLATE DETAIL A

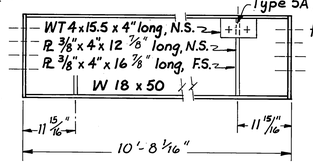

DIAPHRAGM 4 1 Req'd (See Det. B)

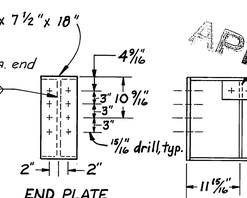

END PLATE DETAIL B

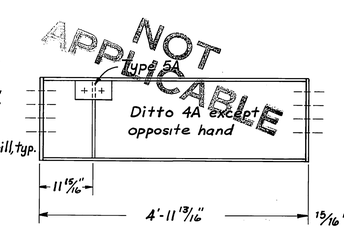

DIAPHRAGM 4B 1 Req'd (See det. B)

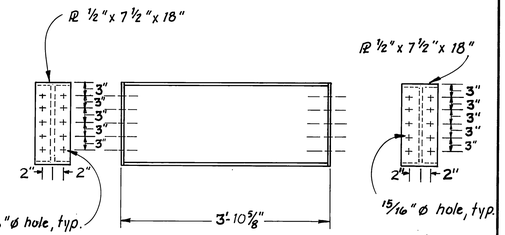

DIAPHRAGM 8 1 Req'd

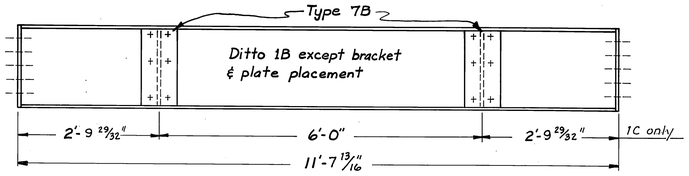

DIAPHRAGM 1C 2 Req'd (See Det. A)
DIAPHRAGM 1D 5 Req'd. } USED ON ALTERNATE ONLY.

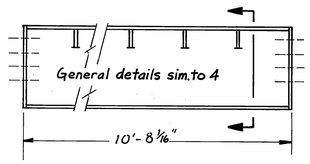

DIAPHRAGM 5 1 Req'd (See Det. B)

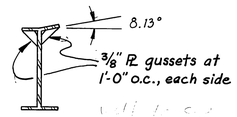

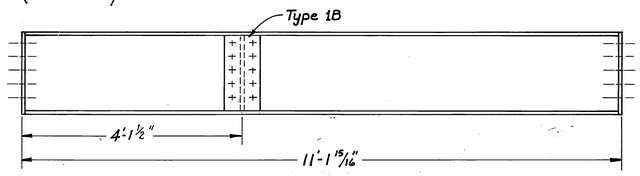

DIAPHRAGM 9A 1 Req'd
DIAPHRAGM 9B 1 Req'd (opposite hand)
(See Det. A)

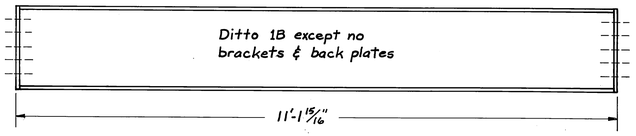

DIAPHRAGM 2 9 Req'd (See Det. A)

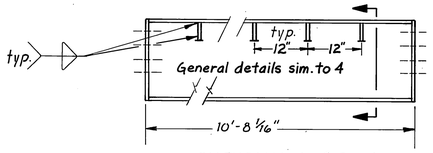

DIAPHRAGM 6 2 Req'd (See Det. B)

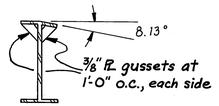

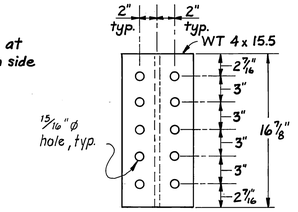

TYPE 1B

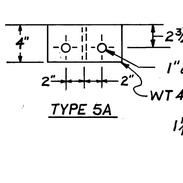

TYPE 5A

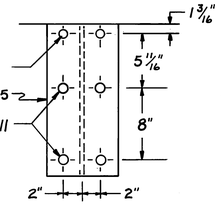

TYPE 7B

BRACKET DRILLING PATTERNS
Scale: 1 1/2" = 1'-0"

NOTE: All diaphragms are W 18 x 50's

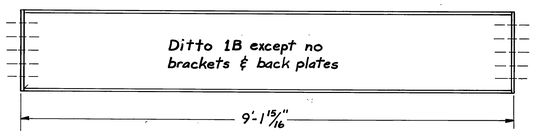

DIAPHRAGM 3 6 Req'd (See Det. A)

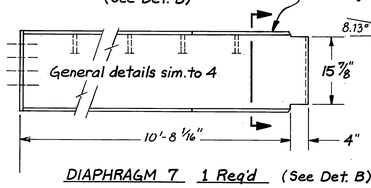

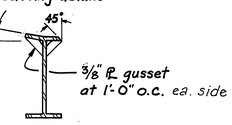

DIAPHRAGM 7 1 Req'd (See Det. B)

DOCK & MAIN APPROACH DIAPHRAGMS
Scale: 3/4" = 1'-0"

GANGWAY APPROACH BEARING DIAPHRAGMS
Scale: 3/4" = 1'-0"

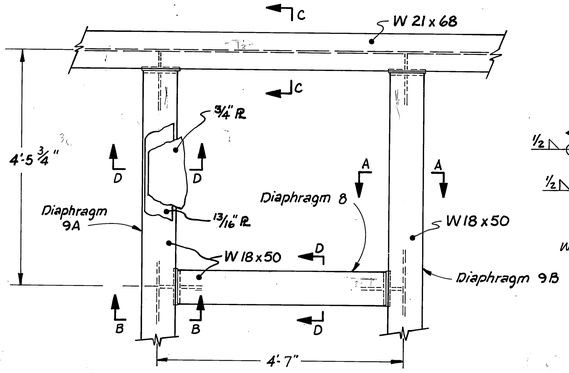

CRANE SUPPORT PLATE DIAPHRAGMS
Scale: 3/4" = 1'-0"

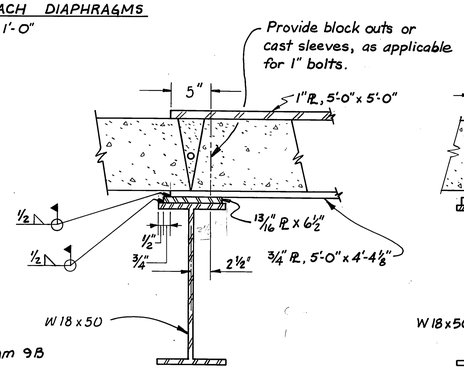

SECTION A
SECTION D (same as Sect. A but no joint in concrete panel.)
Scale: 1 1/2" = 1'-0"

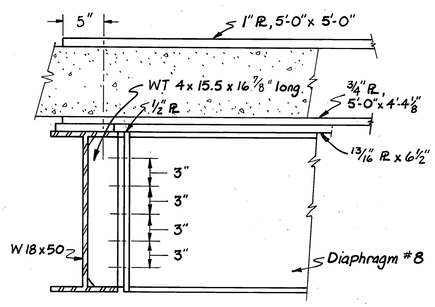

SECTION B
Scale: 1 1/2" = 1'-0"

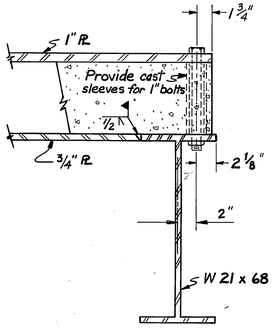

SECTION C
Scale: 1 1/2" = 1'-0"

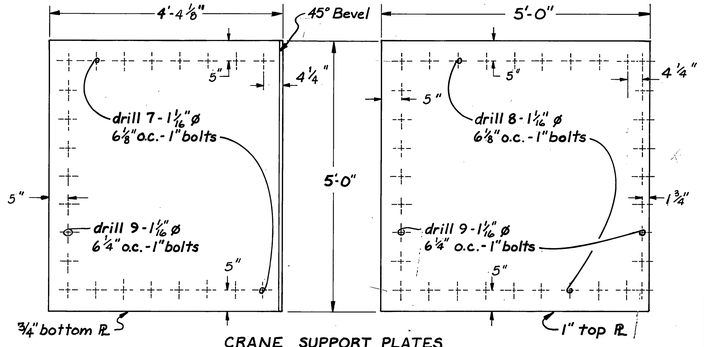

CRANE SUPPORT PLATES
Scale: 3/4" = 1'-0"

DCW 1-20-87

STAMP

STATE OF ALASKA — 49th — Robert P. Geck No. 1484-E — REGISTERED PROFESSIONAL ENGINEER

DO NOT SCALE THIS DRAWING — USE DIMENSIONS

STATE OF ALASKA
DEPARTMENT OF TRANSPORTATION AND PUBLIC FACILITIES

Petersburg — Alaska

DIAPHRAGM DETAILS

DESIGNED RPB	CHECKED	DRAWN RTB	DATE 2/84
PROJECT NUMBER K-78190		SHEET 9	OF 55

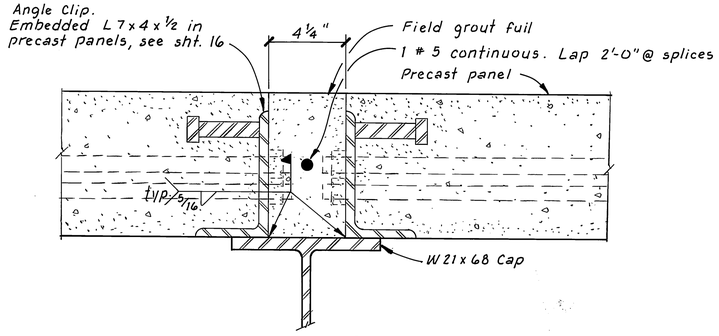

SECTION (C)
3" = 1'-0"

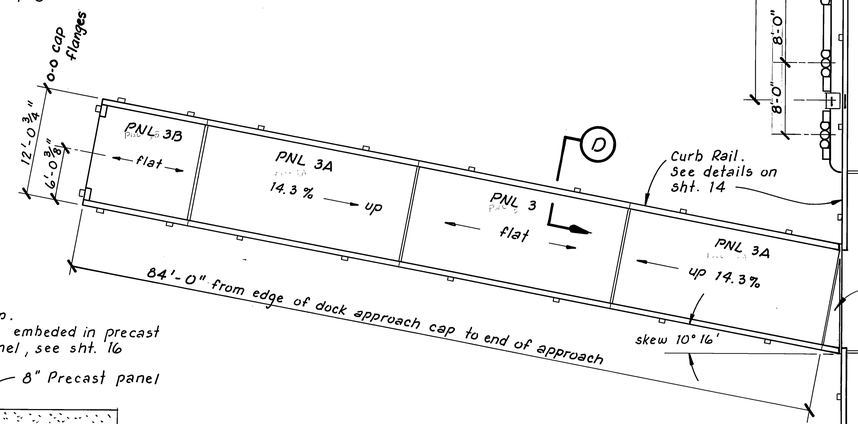

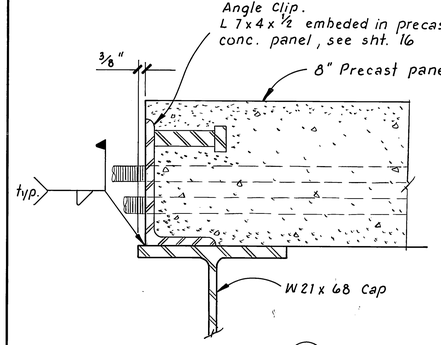

SECTION (D)
3" = 1'-0"

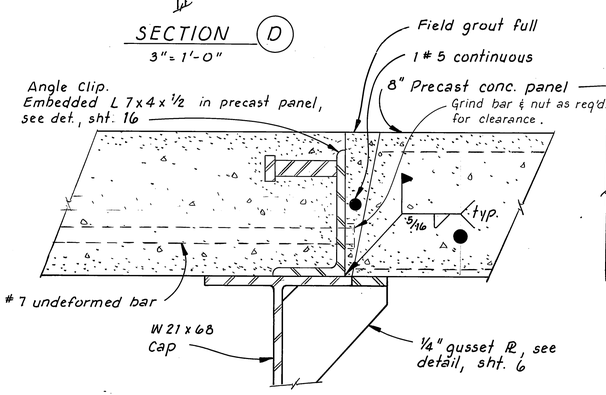

SECTION (E)
3" = 1'-0"

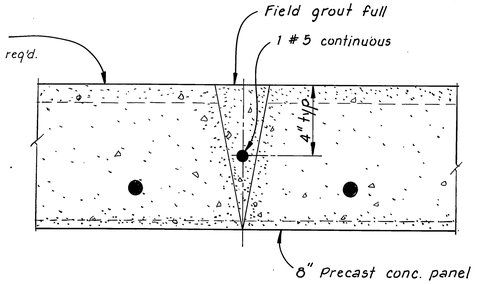

SECTION (F)
3" = 1'-0"

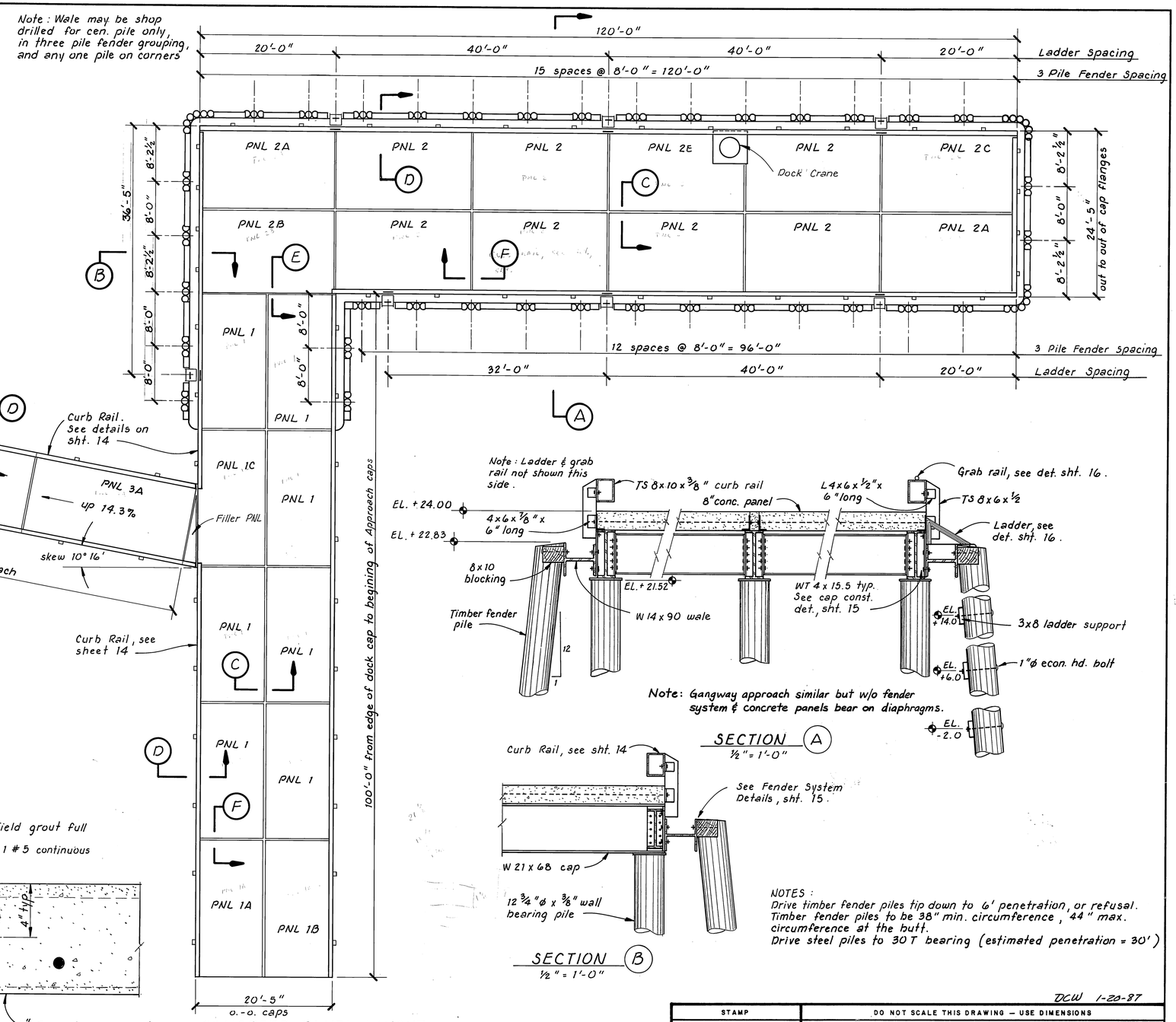

CONCRETE PANEL LAYOUT
⅛" = 1'-0"

Note: Gangway approach similar but w/o fender system & concrete panels bear on diaphragms.

SECTION (A)
½" = 1'-0"

SECTION (B)
½" = 1'-0"

NOTES:
Drive timber fender piles tip down to 6' penetration, or refusal.
Timber fender piles to be 38" min. circumference, 44" max. circumference at the butt.
Drive steel piles to 30T bearing (estimated penetration = 30')

DCW 1-20-87

STAMP	DO NOT SCALE THIS DRAWING — USE DIMENSIONS
STATE OF ALASKA 49th Robert P. Beck No. 14846 REGISTERED PROFESSIONAL ENGINEER	STATE OF ALASKA DEPARTMENT OF TRANSPORTATION AND PUBLIC FACILITIES Petersburg Alaska CONCRETE PANEL LAYOUT See Sheet 17 for Actual Layout

DESIGNED RPB	CHECKED	DRAWN TS	DATE 2-84
PROJECT NUMBER K-78190		SHEET 10 OF 55	

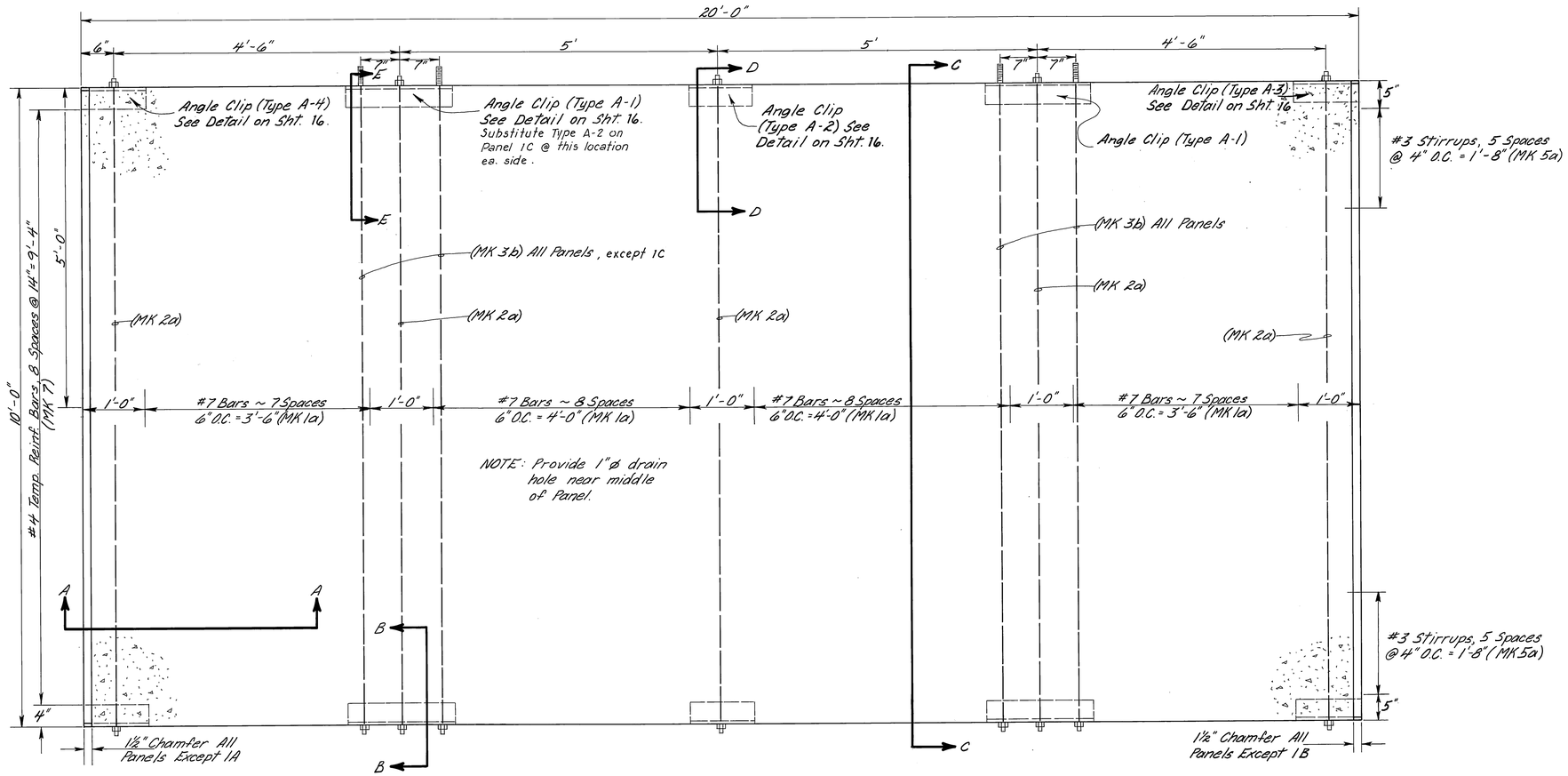

NOTES

1. All bars shall be Grade 60, f_c = 5,000 P.S.I.
2. Five (7) Panel 1, One (1) Panel 1A, One (1) Panel 1B, One (1) Panel 1C, are req'd. for this project.

BAR SCHEDULE

MK #	SIZE	TYPE	FABRICATED LENGTH	NO. REQ'D. PER PANEL
MK 1a	#7	Deformed	9'-8"	34
MK 2a	#7	Undeformed	10'-2½"	5
MK 3b	#7	Undeformed	10'-4¾"	4*
MK 5a	#3	Deformed	19'-8"	12
MK 7	#4	Deformed	19'-8"	9
MK 8a	#5	Deformed	9'-8"	1

*Panel 1C = 2

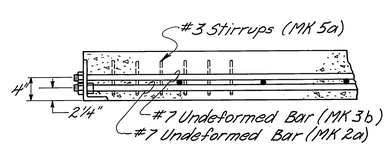

SECTION B-B
1" = 1'-0"

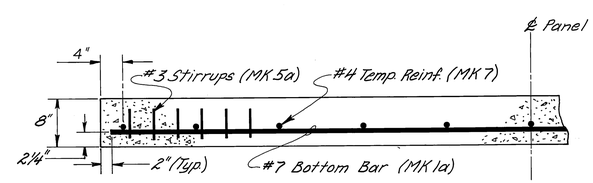

SECTION C-C
1" = 1'-0"

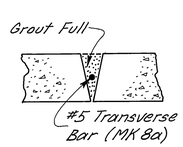

TYPICAL PANEL CONNECTION DETAIL
1" = 1'-0"

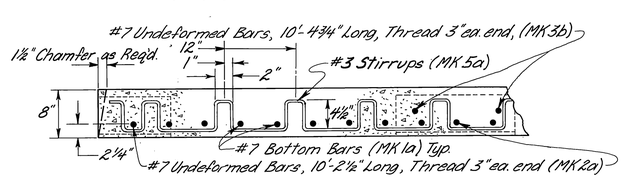

SECTION A-A
1" = 1'-0"

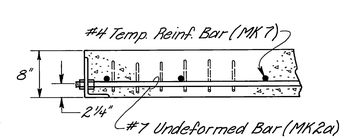

SECTION D-D
1" = 1'-0"

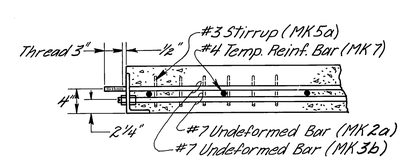

SECTION E-E
1" = 1'-0"

DCW 1-20-87

STAMP

STATE OF ALASKA 49th Robert P. Beck No. 1484-E REGISTERED PROFESSIONAL ENGINEER

DO NOT SCALE THIS DRAWING — USE DIMENSIONS

STATE OF ALASKA
DEPARTMENT OF TRANSPORTATION AND PUBLIC FACILITIES

PETERSBURG ALASKA

10'x20'x8" CONCRETE DECK PANEL
PANELS 1, 1A, 1B, 1C

DESIGNED RPB	CHECKED	DRAWN JEM	DATE 2/84
PROJECT NUMBER K-78190		SHEET 11 OF 55	

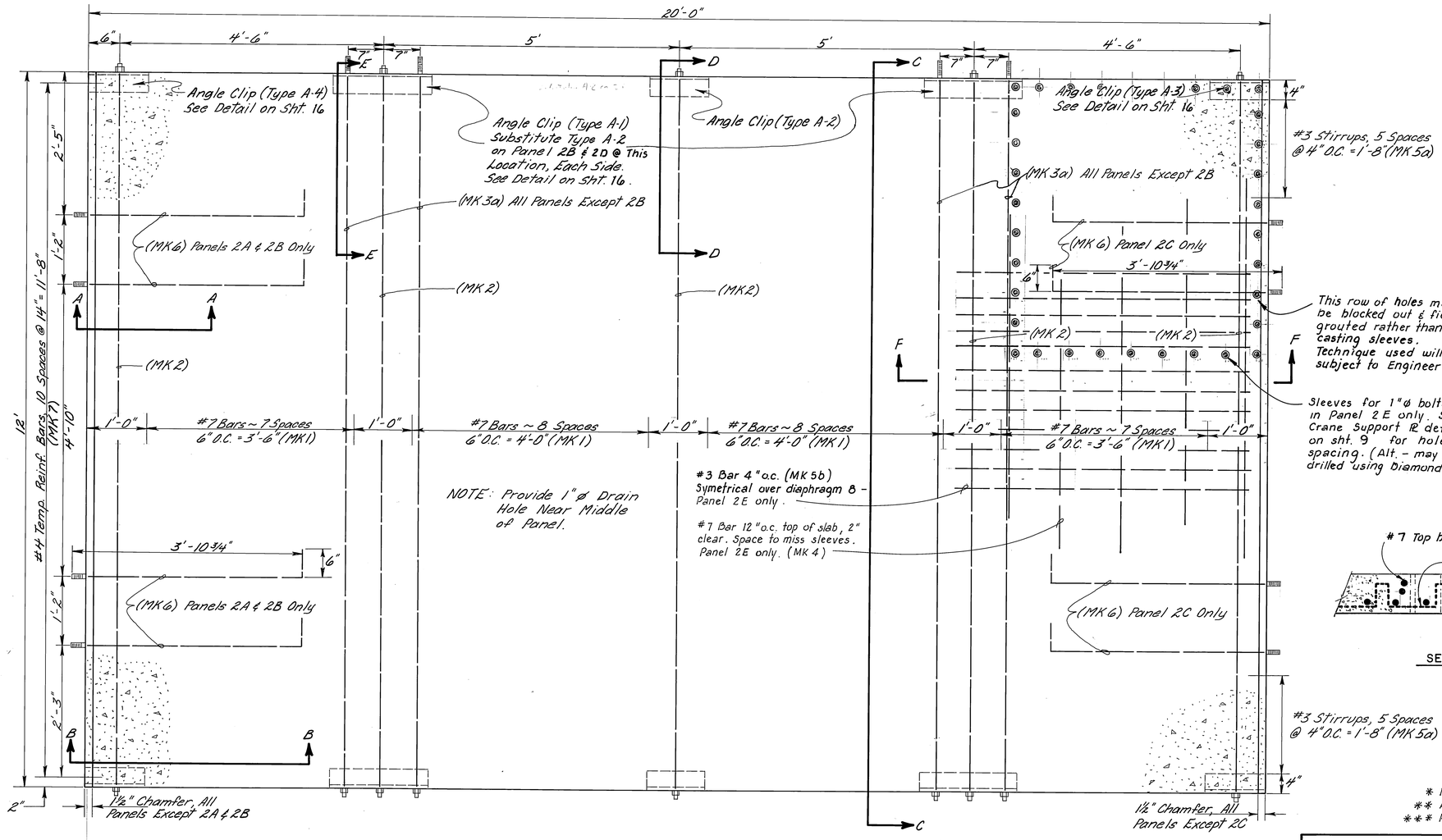

NOTES

1. All bars shall be Grade 60, f_c = 5000 P.S.I.
2. Seven (7) Panel 2, Two (2) Panel 2A, One (1) Panel 2B, One (1) Panel 2C & One (1) Panel 2E Required for this project.
3. Two (2) Panel 2B & Four (4) Panel 2D Required for Alternate.

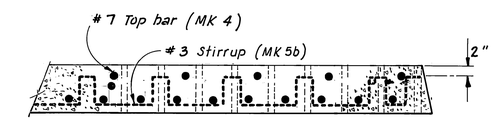

SECTION F-F (Panel 2E only)
1" = 1'-0"

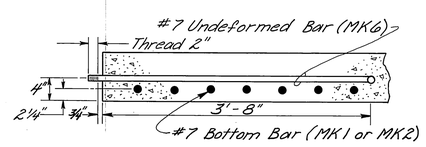

SECTION A-A
1" = 1'-0"

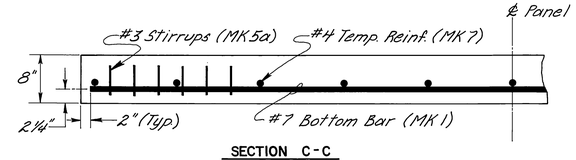

SECTION C-C
1" = 1'-0"

MK #	SIZE	TYPE	FABRICATED LENGTH	NO. REQ'D. PER PANEL
MK 1	#7	Deformed	11'-8"	34
MK 2	#7	Undeformed	12'-2½"	5
MK 3a	#7	Undeformed	12'-4¾"	4 ***
MK 5a	#3	Deformed	19'-8"	12
MK 6	#7	Undeformed	3'-10¾"	4 *
MK 7	#4	Deformed	19'-8"	11
MK 8	#5	Deformed	11'-8"	1
MK 4	#7	Deformed	11'-8"	5 ***
MK 5b	#3	Deformed	5'-0"	12 ***

* Panels 2A, 2B & 2C only
** All Panels Except 2B & 2D
*** Panel 2E only

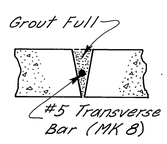

TYPICAL PANEL CONNECTION DETAIL
1" = 1'-0"

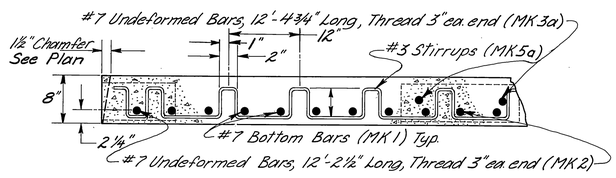

SECTION B-B
1" = 1'-0"

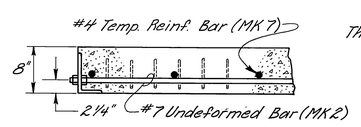

SECTION D-D
1" = 1'-0"

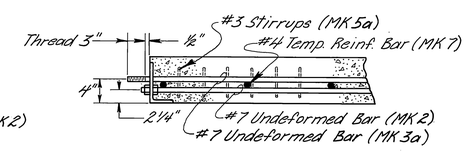

SECTION E-E
1" = 1'-0"

DCW 1-20-87

STAMP

STATE OF ALASKA 49th Robert P. Beck No. 1484-E REGISTERED PROFESSIONAL ENGINEER

DO NOT SCALE THIS DRAWING — USE DIMENSIONS

STATE OF ALASKA
DEPARTMENT OF TRANSPORTATION AND PUBLIC FACILITIES

PETERSBURG ALASKA

12'x20'x8" CONCRETE DECK PANEL PANELS 2, 2A, 2B, 2C, 2D & 2E

DESIGNED	CHECKED RPB	DRAWN JEM	DATE 2/84
PROJECT NUMBER K-78190		SHEET 12 OF 55	

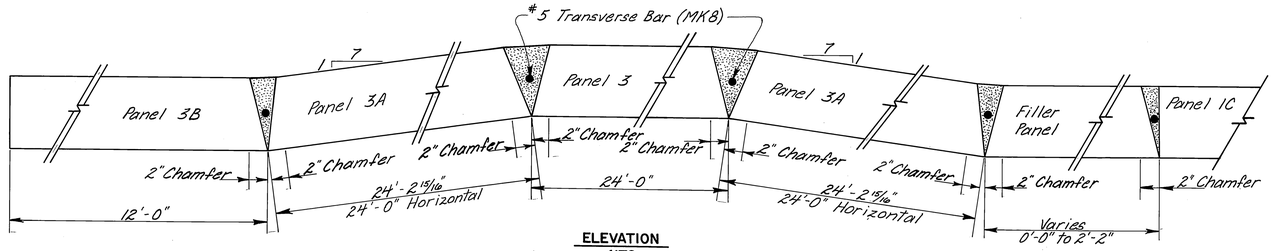

ELEVATION
N.T.S.

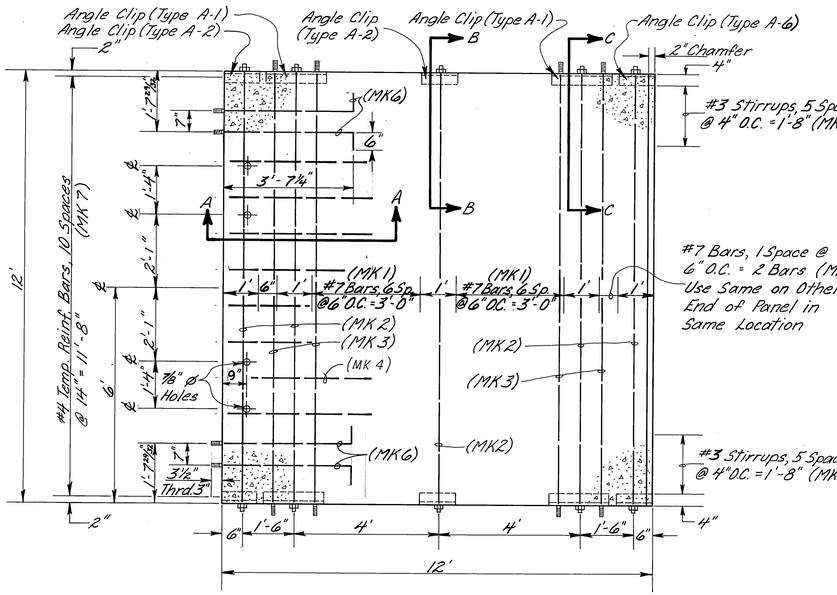

PANEL 3B
1/2" = 1'-0"

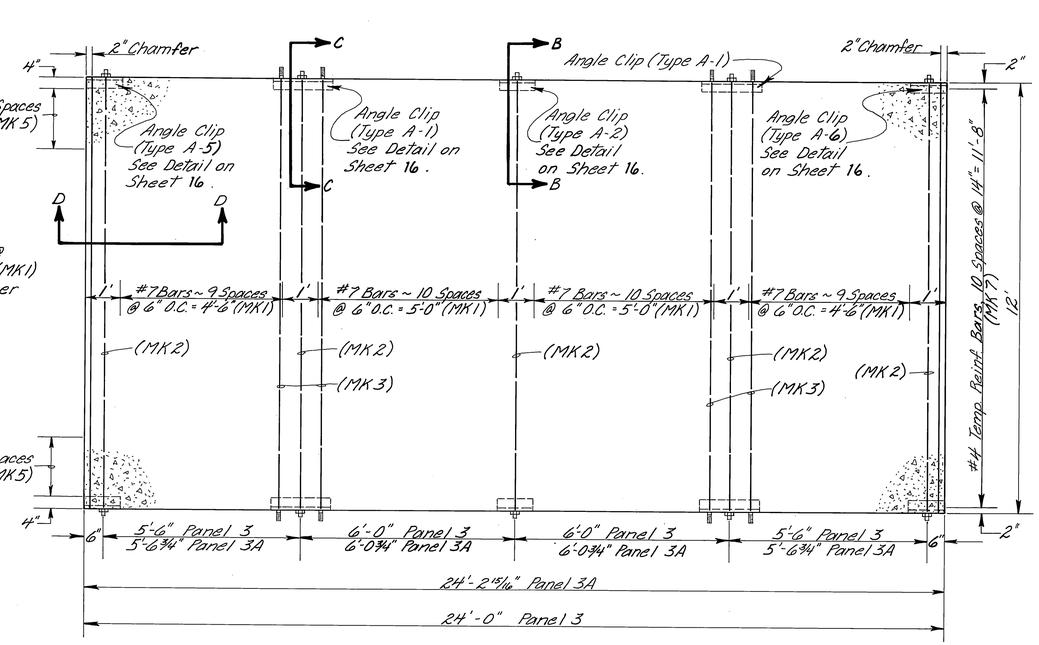

PANELS 3 & 3A
1/2" = 1'-0"

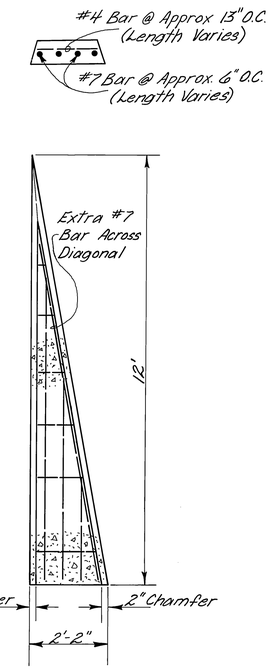

FILLER PANEL
(FIELD POUR ALLOWABLE)
1/2" = 1'-0"

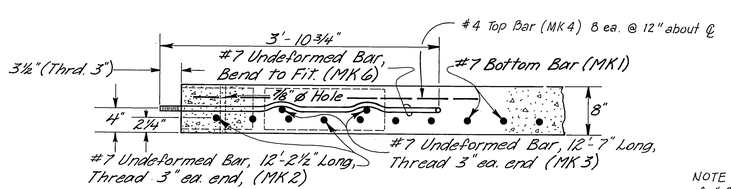

SECTION A-A
1" = 1'-0"

NOTE: See sht. 12 for shape of #3 stirrups (MK5)

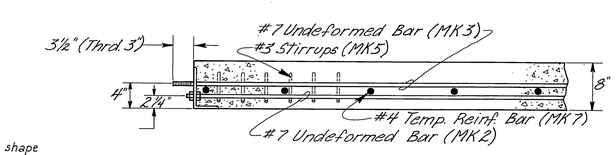

SECTION C-C
1" = 1'-0"

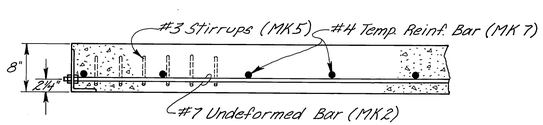

SECTION B-B
1" = 1'-0"

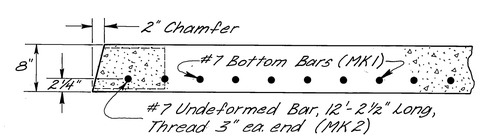

SECTION D-D
1" = 1'-0"

BAR SCHEDULE

MK #	SIZE	TYPE	PANEL 3 FABRICATED LENGTH	PANEL 3 NO. REQ'D PER PANEL	PANEL 3A FABRICATED LENGTH	PANEL 3A NO. REQ'D PER PANEL	PANEL 3B FABRICATED LENGTH	PANEL 3B NO. REQ'D PER PANEL
MK 1	#7	Deformed	11'-8"	42	11'-8"	42	11'-8"	18
MK 2	#7	Undeformed	12'-2 1/2"	5	12'-2 1/2"	5	12'-2 1/2"	5
MK 3	#7	Undeformed	12'-7"	4	12'-7"	4	12'-7"	4
MK 4	#7	Deformed					4'-0"	8
MK 5	#3	Deformed	23'-8"	12	24'-0"	12	11'-8"	12
MK 6	#7	Undeformed	—	—	—	—	3'-10 3/4"	4
MK 7	#4	Deformed	23'-8"	11	24'-0"	11	11'-8"	11
MK 8	#5	Deformed	11'-8"	1	11'-8"	1	11'-8"	1

DCW 1-20-87

STAMP

STATE OF ALASKA 49th Robert P. Beck No. 1484-E REGISTERED PROFESSIONAL ENGINEER

DO NOT SCALE THIS DRAWING — USE DIMENSIONS

STATE OF ALASKA
DEPARTMENT OF TRANSPORTATION AND PUBLIC FACILITIES

PETERSBURG ALASKA

12'x24'x8" CONCRETE DECK PANEL 3
12'x24'-2 15/16"x8" CONCRETE DECK PANEL 3A
12'x12'x8" CONCRETE DECK PANEL 3B

DESIGNED RPB	CHECKED	DRAWN JEM	DATE 2/84
PROJECT NUMBER K-78190		SHEET 13	OF 55

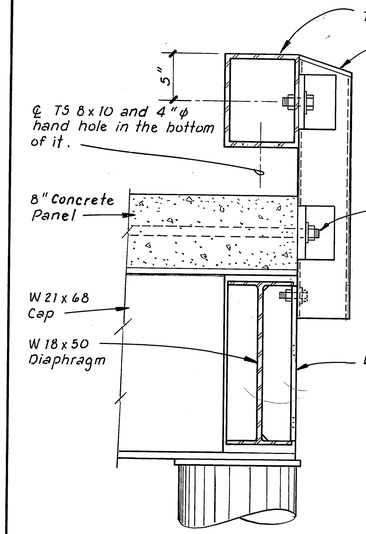

TYPICAL TRANSVERSE POST CONNECTION
1 1/2" = 1'-0"

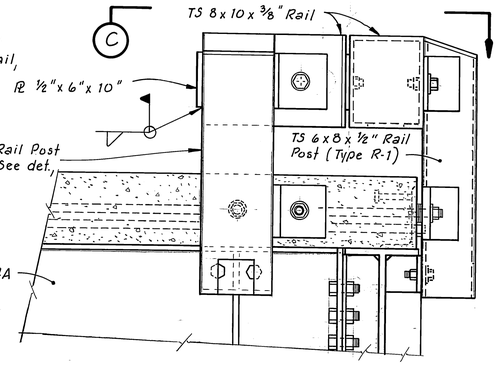

STUB RAIL CONNECTION DETAIL
1 1/2" = 1'-0"

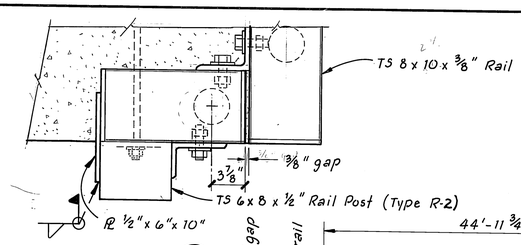

SECTION C
1 1/2" = 1'-0"

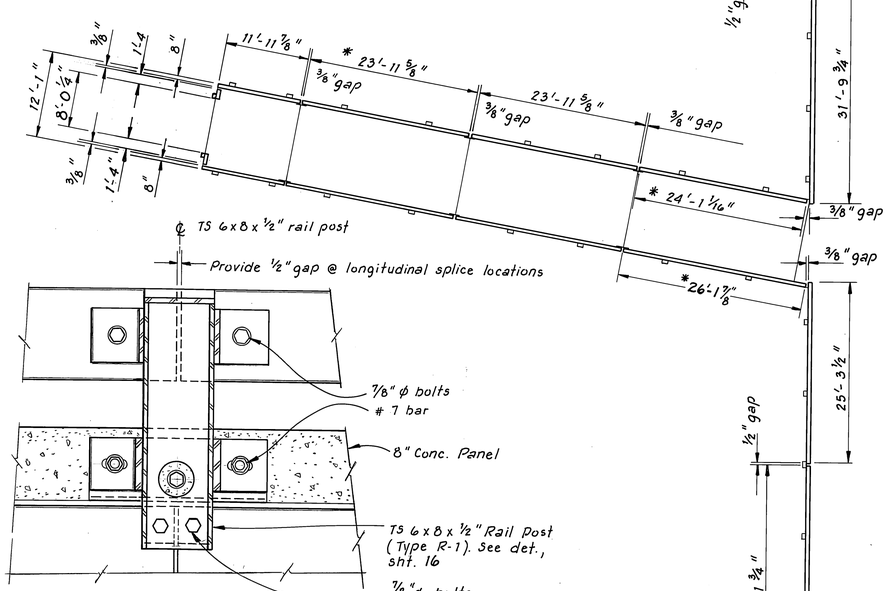

SECTION A
1 1/2" = 1'-0"

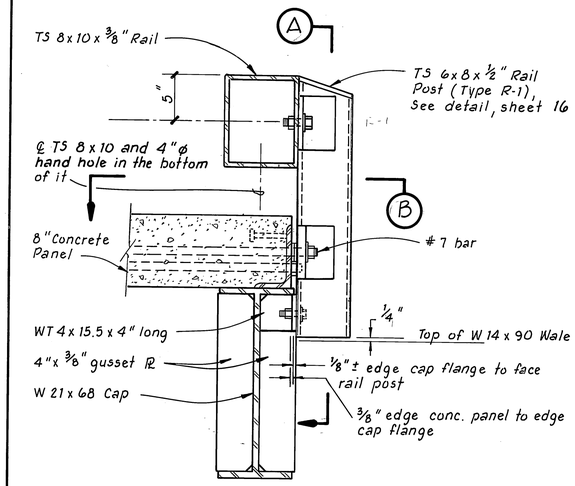

TYPICAL LONGITUDINAL POST CONNECTION
1 1/2" = 1'-0"

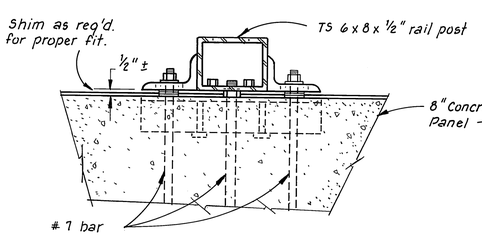

SECTION B
1 1/2" = 1'-0"

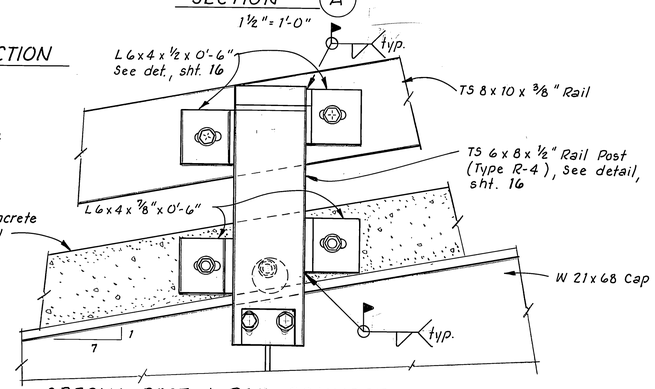

SPECIAL POST & RAIL CONNECTION DETAIL
1 1/2" = 1'-0"

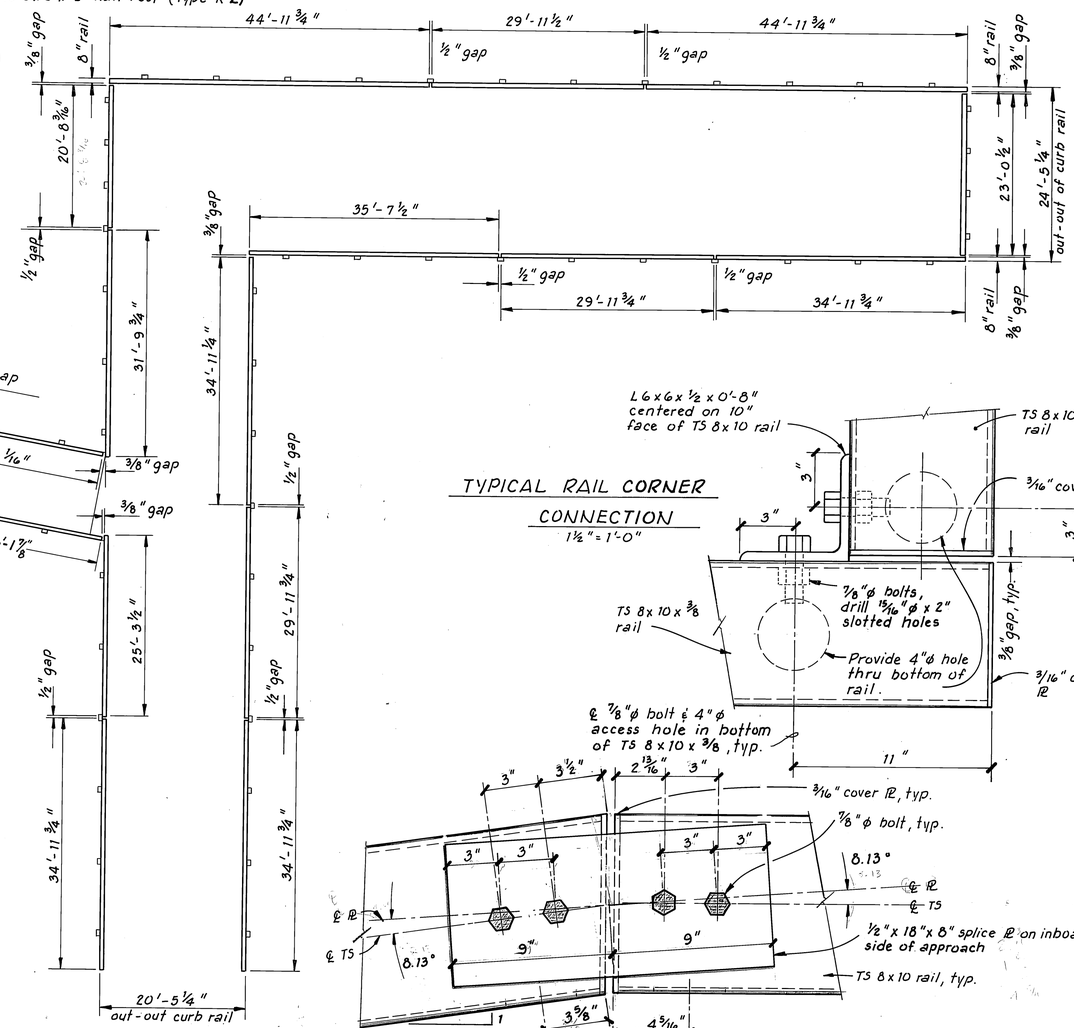

CURB RAIL LAYOUT
1" = 10'
* Horizontal Length

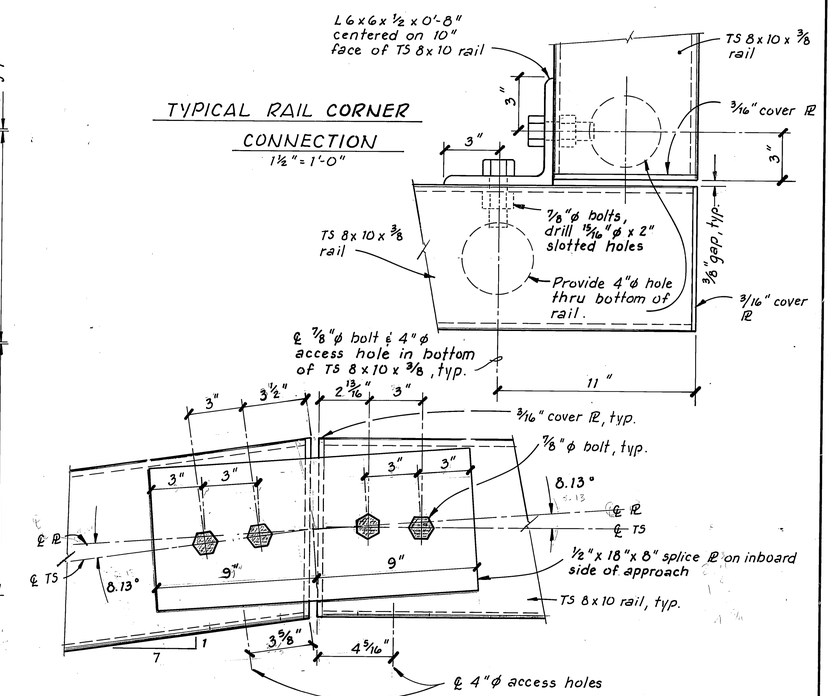

TYPICAL RAIL CORNER CONNECTION
1 1/2" = 1'-0"

GRADE CHANGE RAIL SPLICE PLATE
3" = 1'-0"

DCW 1-20-87

STAMP

STATE OF ALASKA 49th — Robert P. Beck No. 1484-E — REGISTERED PROFESSIONAL ENGINEER

DO NOT SCALE THIS DRAWING — USE DIMENSIONS

STATE OF ALASKA
DEPARTMENT OF TRANSPORTATION AND PUBLIC FACILITIES

Petersburg Alaska

CURB RAIL LAYOUT & DETAILS

DESIGNED RPB	CHECKED	DRAWN TS	DATE 2-84
PROJECT NUMBER K-78190		SHEET 14	OF 55

Note: One hole only may be shop drilled for corner piles.

120'-0"

Timber Fender Pile. See spacing on layout, sht. 10

8 x 10 Blocking, typ.

Ladder. See layout, sht. 10
See details, sht. 16

1"ø economy head bolt, typ. all piles & blocking

Splice PL, see det. this sht.

W 14 x 90 Wale, typ.

Hole, for cen. pile bolt only, may be shop drilled, typ. Remaining to be field drilled.

99'-6 3/4"

Crane Support PL. See detail on sht. 9

Cap 1A. See sht. 6

Diaphragm 1A. See sht. 9

Notch pile & cut blocking for tight fit. Treat raw faces per specs.

Provide 1"ø drain holes in web of W 14 x 90 Wale, 8'-0" o.c.

Conc. Panel 2A, see details on sht. 12.

Conc. Panel 2B, see details on sht. 12.

Conc. Panel 2, see details on sht. 12.

8 x 10 Curb Rail. See layout & details on sht. 14.

Grab Rail. See detail on sht. 16

Conc. Panel 2C. See sht. 12

Conc. Panel 2A. See sht. 12

26'-9 1/4"

45'-7 1/8"

Curb Rail Post. See sht. 14

Splice PL, see det. this sht.

W 14 x 90 Wale, typ.

6"

18'-9 7/8"

Conc. Panel 1D, See sht. 11

Conc. Panel 1, see sht. 11

Conc. Panel 1C, See sht. 11

Conc. Panel 1E, See sht. 11

PLAN
WALE DETAILS
1" = 1'-0"

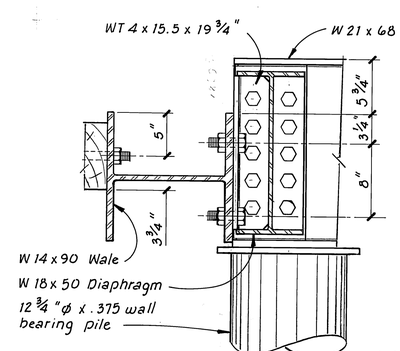

SECTION (A)
1 1/2" = 1'-0"

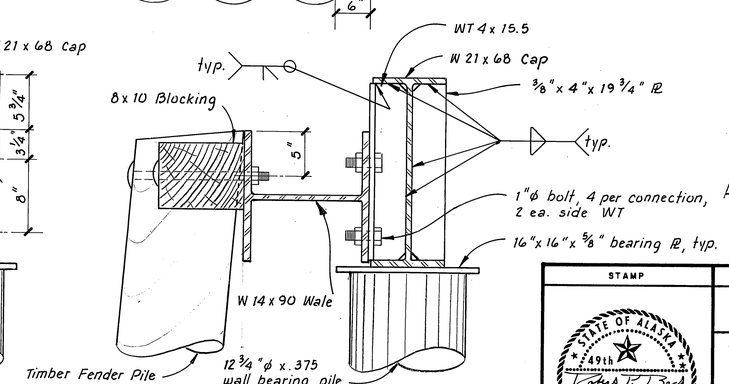

SECTION (B)
1 1/2" = 1'-0"

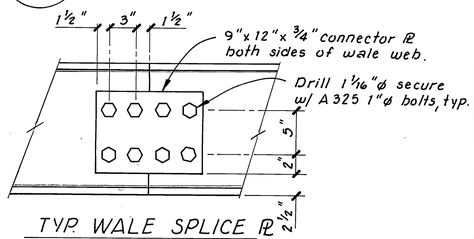

TYP. WALE SPLICE PL
1 1/2" = 1'-0"

DCW 1-20-87

STAMP

STATE OF ALASKA 49th
Robert P. Beck No. 1484-E
REGISTERED PROFESSIONAL ENGINEER

DO NOT SCALE THIS DRAWING — USE DIMENSIONS

STATE OF ALASKA
DEPARTMENT OF TRANSPORTATION AND PUBLIC FACILITIES

Petersburg Alaska

WALE DETAILS

DESIGNED RPB	CHECKED	DRAWN TS	DATE 3-84		
PROJECT NUMBER K-78190		SHEET 15	OF 55		

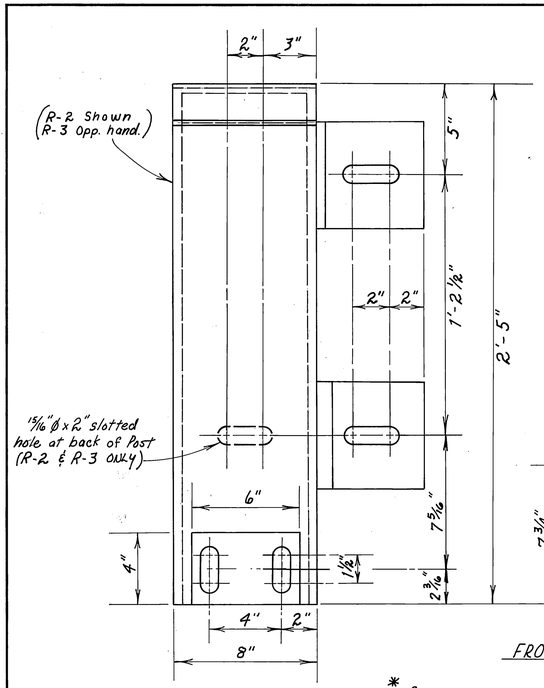

FRONT

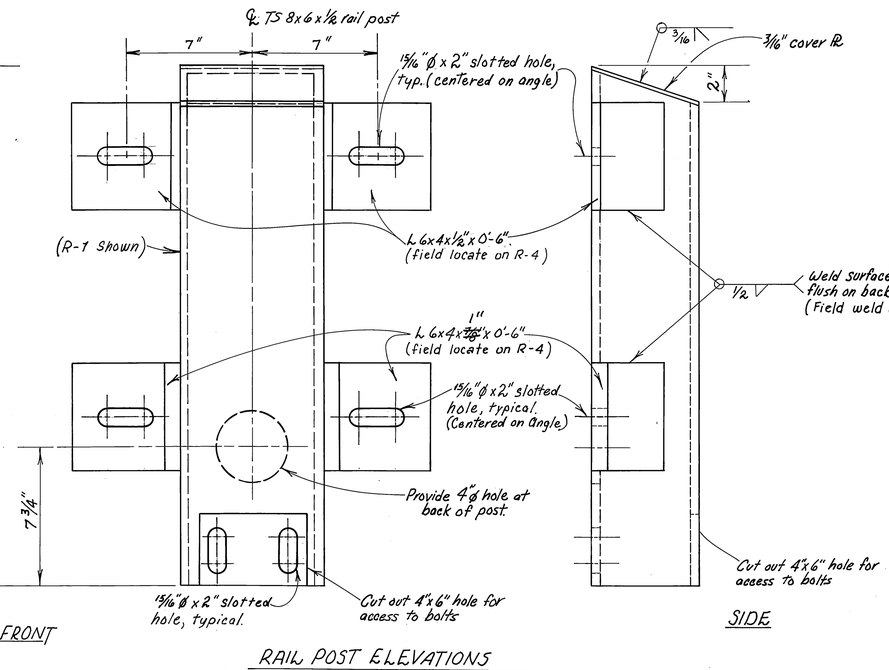

SIDE

RAIL POST ELEVATIONS
3" = 1'-0"

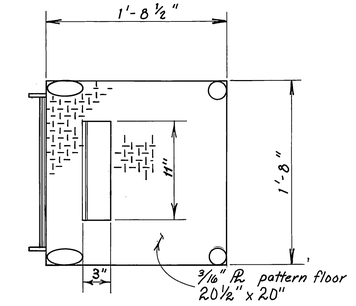

SECTION A
1 1/2" = 1'-0"

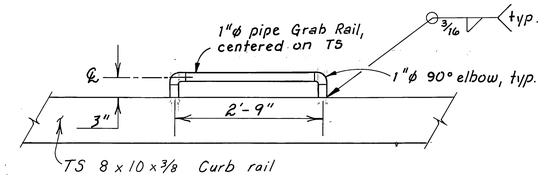

GRAB RAIL DETAIL
3/4" = 1'-0"

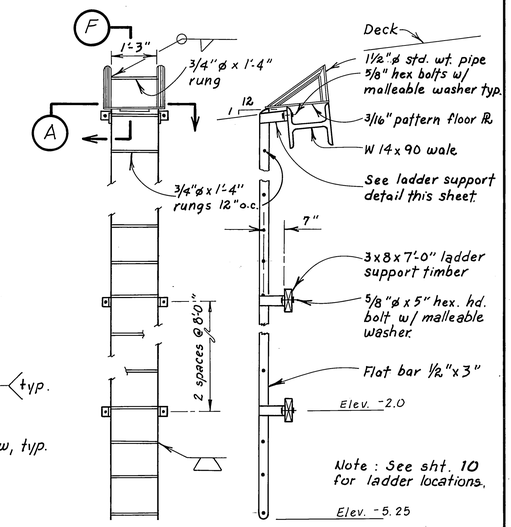

LADDER DETAILS
1/2" = 1'-0"

* Type 5 & 6 only.

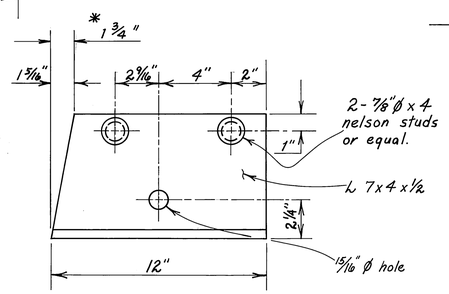

TYPE A-4 & A-5 shown
TYPE A-3 & A-6 opp. hand

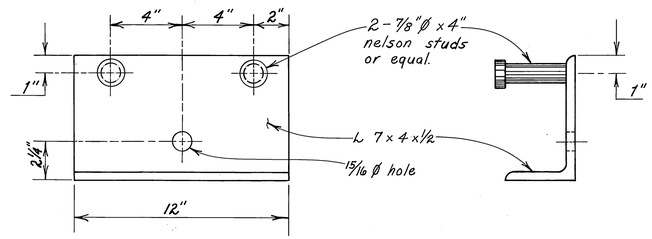

TYPE A-2

1'-0" ANGLE CLIP
3" = 1'-0"

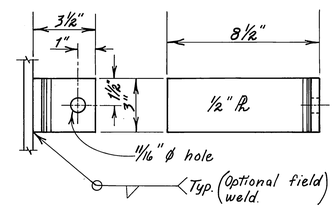

LADDER SUPPORT DETAILS
3" = 1'-0"

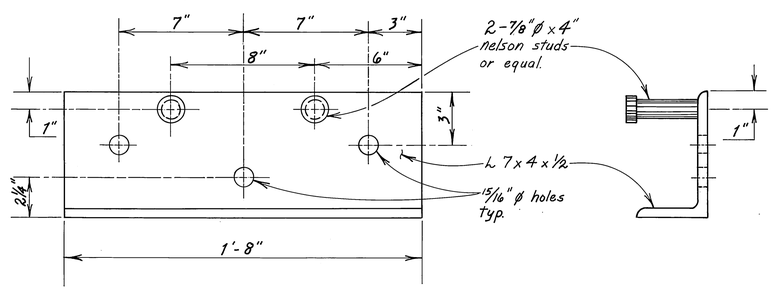

(TYPE A-1)
1'-8" ANGLE CLIP
3" = 1'-0"

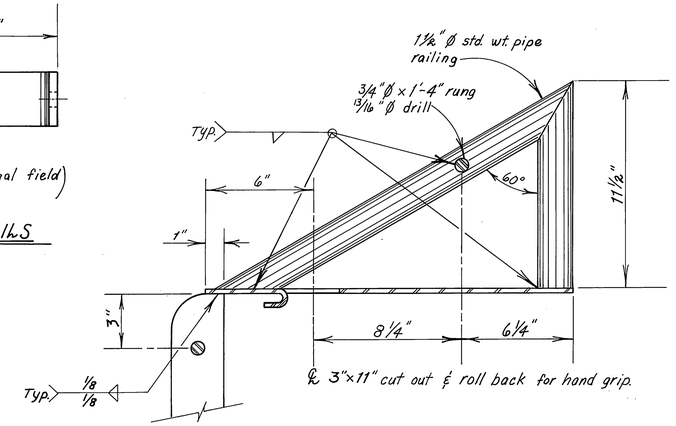

SECTION F
3" = 1'-0"

DCW 1-20-87

STAMP	DO NOT SCALE THIS DRAWING – USE DIMENSIONS		
STATE OF ALASKA 49th Robert P. Beck No. 1484-E REGISTERED PROFESSIONAL ENGINEER	STATE OF ALASKA DEPARTMENT OF TRANSPORTATION AND PUBLIC FACILITIES		
	PETERSBURG		ALASKA
	MISC. DETAILS		
	DESIGNED RBP	CHECKED	DRAWN MC.	DATE 3/5/84
	PROJECT NUMBER K-78190		SHEET 16 OF 55

Note: For approach pile & cap layout, see sht. 5

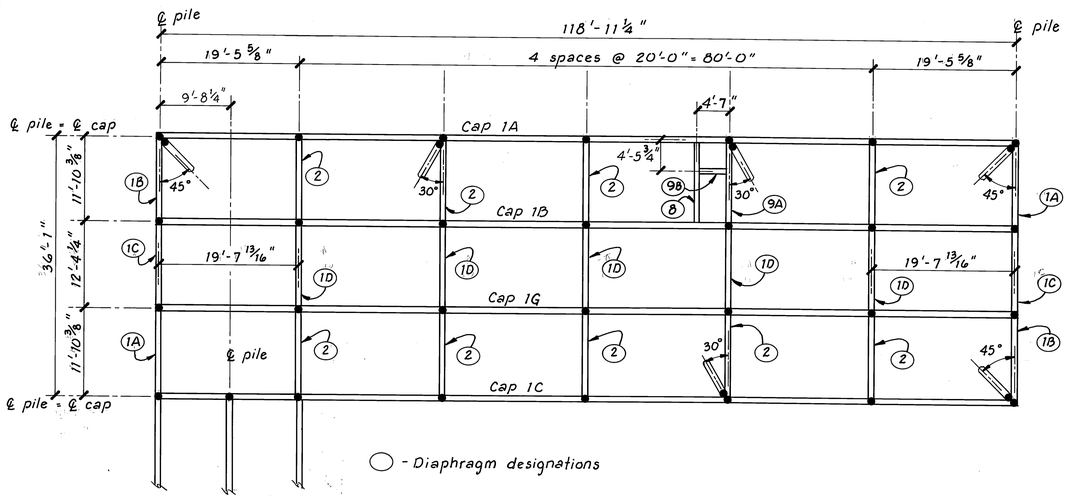

BEARING PILE, CAP AND DIAPHRAGM LAYOUT

1" = 10'

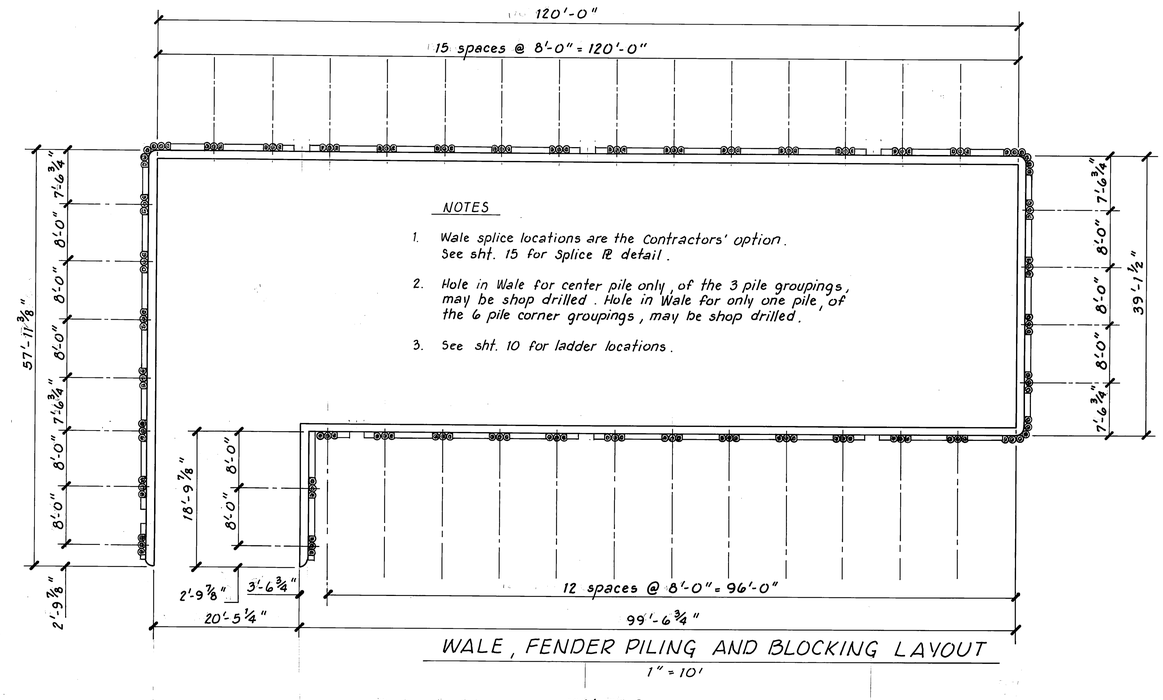

WALE, FENDER PILING AND BLOCKING LAYOUT

1" = 10'

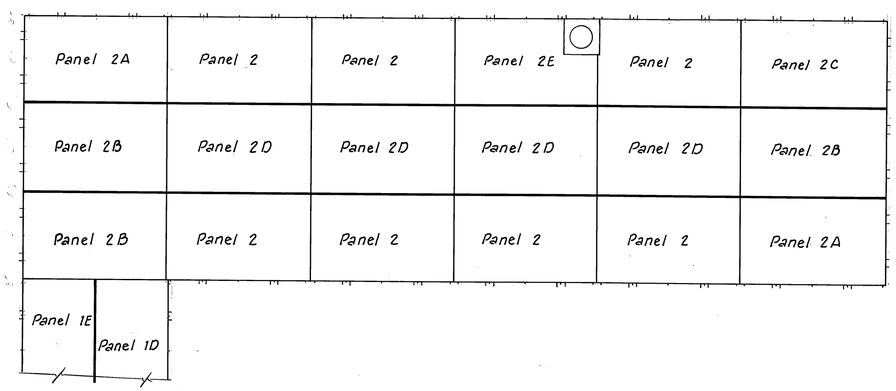

CONCRETE PANEL LAYOUT

1" = 10'

Note: For panel layout of approaches, see sht. 10

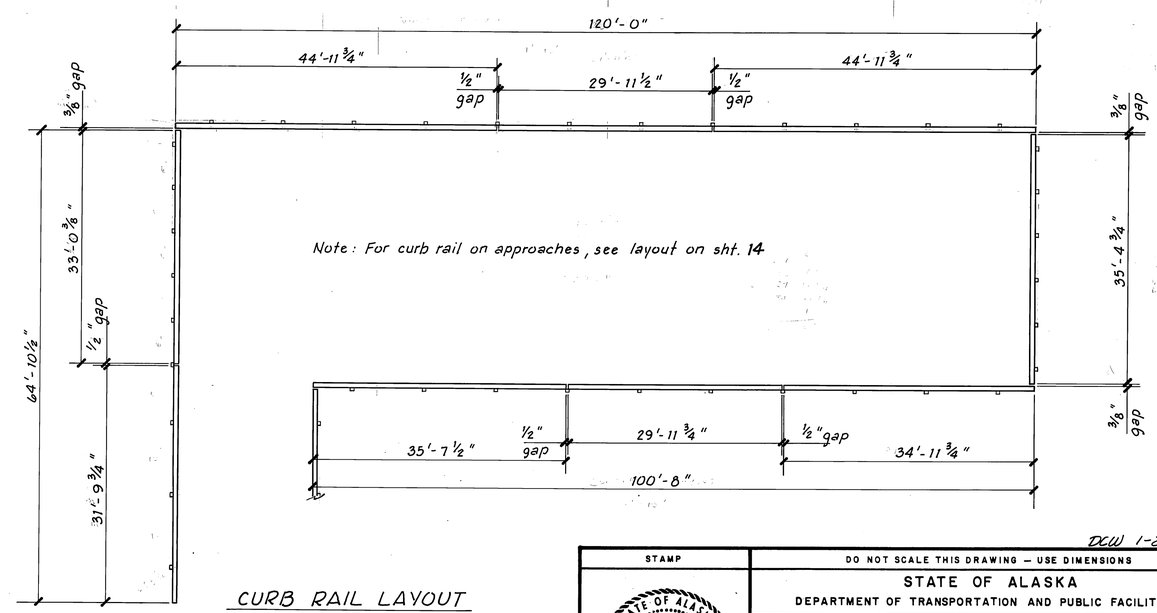

CURB RAIL LAYOUT

1" = 10'

DCW 1-20-87

STAMP

STATE OF ALASKA 49th Robert P. Beck No. 1484-E REGISTERED PROFESSIONAL ENGINEER

DO NOT SCALE THIS DRAWING — USE DIMENSIONS

STATE OF ALASKA
DEPARTMENT OF TRANSPORTATION AND PUBLIC FACILITIES

Petersburg Alaska

LAYOUTS FOR SUPPLEMENT # 1
As Built

DESIGNED RPB	CHECKED	DRAWN TS	DATE 3/84
PROJECT NUMBER K-78190		SHEET 17	OF 55

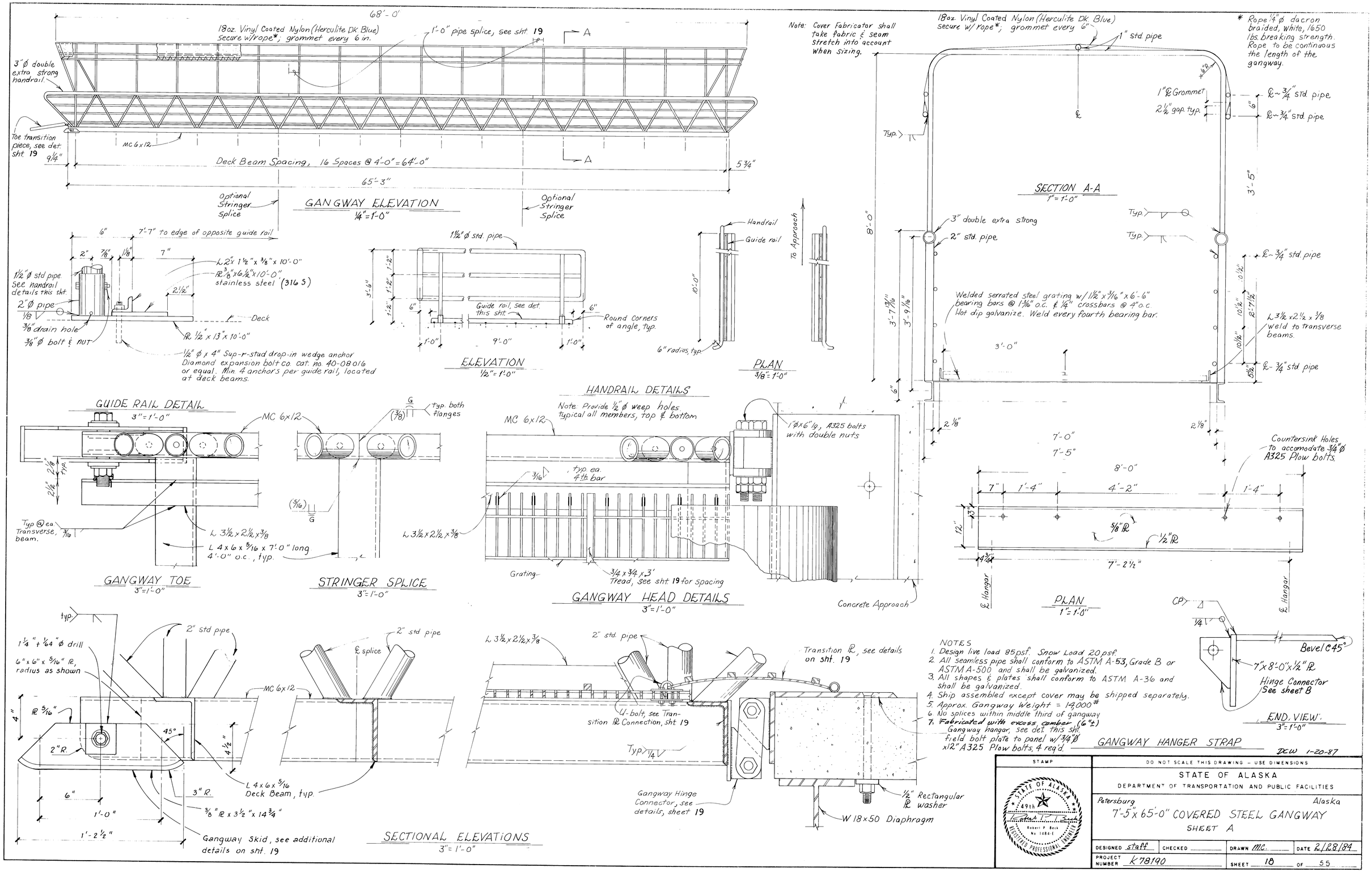
68'-0"
18oz. Vinyl Coated Nylon (Herculite Dk. Blue) Secure w/rope*; grommet every 6 in.
1'-0" pipe splice, see sht 19
A
3" Ø double extra strong handrail.
Toe transition piece, see det. sht. 19
MC 6x12
9¼"
Deck Beam Spacing, 16 Spaces @ 4'-0" = 64'-0"
5¾"
65'-3"
Optional Stringer Splice
GANGWAY ELEVATION
¼" = 1'-0"
Optional Stringer Splice
Note: Cover Fabricator shall take fabric & seam stretch into account when sizing.
18oz. Vinyl Coated Nylon (Herculite Dk. Blue) secure w/ rope*, grommet every 6"
1" std. pipe
* Rope 1/4" Ø dacron braided, white, 1650 lbs. breaking strength. Rope to be continuous the length of the gangway.
1" ℄ Grommet
2½" gap typ.
℄ ~ ¾" std. pipe
℄ ~ ¾" std. pipe
Typ.
8'-0"
3'-5"
SECTION A-A
1" = 1'-0"
3" double extra strong
2" std. pipe
Welded serrated steel grating w/ 1½" x 3/16" x 6'-6" bearing bars @ 1 7/16" o.c. & ¼" crossbars @ 4" o.c. Hot dip galvanize. Weld every fourth bearing bar.
℄ ~ ¾" std. pipe
L 3½ x 2½ x ⅜ weld to transverse beams.
℄ ~ ¾" std. pipe
3'-0"
7'-0"
7'-5"
8'-0"
Countersink Holes to accomodate ¾" Ø A325 Plow bolts.
7"
1'-4"
4'-2"
1'-4"
5/8" R
½" R
7'-2½"
℄ Hangar
℄ Hangar
PLAN
1" = 1'-0"
6"
7'-7" to edge of opposite guide rail
2"
⅞"
⅛"
7"
L 2" x 1½" x ⅜" x 10'-0"
PL ⅜" x 6½" x 10'-0" stainless steel (316 S)
1½" Ø std. pipe. See handrail details this sht.
2½"
2" Ø pipe
⅜" drain hole
⅜" Ø bolt & nut
Deck
PL ½" x 13" x 10'-0"
½" Ø x 4" Sup-r-stud drop-in wedge anchor Diamond expansion bolt co. cat. no. 40-08016 or equal. Min. 4 anchors per guide rail, located at deck beams.
GUIDE RAIL DETAIL
3" = 1'-0"
MC 6x12
2⅛"
2½" typ.
Typ @ ea Transverse beam.
L 3½ x 2½ x ⅜
L 4 x 6 x 5/16 x 7'-0" long 4'-0" o.c., typ.
GANGWAY TOE
3" = 1'-0"
1½" Ø std. pipe
3'-6"
1'-2"
1'-2"
1'-2"
6"
Guide rail, see det. this sht.
6"
Round Corners of angle, Typ.
1'-0"
9'-0"
1'-0"
ELEVATION
½" = 1'-0"
Handrail
Guide rail
10'-0"
6" radius, typ.
To Approach
PLAN
⅜" = 1'-0"
G
(⅜)
typ. both flanges
(5/16)
G
STRINGER SPLICE
3" = 1'-0"
HANDRAIL DETAILS
Note: Provide ½" Ø weep holes typical all members, top & bottom
MC 6x12
1¾ x 6" lg, A325 bolts with double nuts
3/16
typ. ea. 4th bar
L 3½ x 2½ x ⅜
Grating
¾ x ¾ x 3' Tread, see sht 19 for spacing
GANGWAY HEAD DETAILS
3" = 1'-0"
Concrete Approach
typ.
1¼" + 1/64" Ø drill
6" x 6" x 5/16" R, radius as shown
2" std pipe
4"
R 5/16"
45°
2" R.
4½"
6"
1'-0"
3" R.
⅜" R x 3½" x 14¾"
1'-2½"
Gangway Skid, see additional details on sht. 19
MC 6x12
L 4 x 6 x 5/16 Deck Beam, typ.
2" std pipe
℄ splice
SECTIONAL ELEVATIONS
3" = 1'-0"
L 3½ x 2½ x ⅜
2" std. pipe
U-bolt, see Transition PL Connection, sht 19
Typ. ¼
Transition PL, see details on sht. 19
Gangway Hinge Connector, see details, sheet 19
½" Rectangular PL washer
W 18x50 Diaphragm
NOTES
1. Design live load 85psf. Snow Load 20psf.
2. All seamless pipe shall conform to ASTM A-53, Grade B or ASTM A-500 and shall be galvanized.
3. All shapes & plates shall conform to ASTM A-36 and shall be galvanized.
4. Ship assembled except cover may be shipped separately.
5. Approx. Gangway Weight = 14,000#
6. No splices within middle third of gangway
7. Fabricated with excess camber (6"±)
Gangway hangar, see det. this sht. field bolt plate to panel w/ ¾" Ø x 12" A325 Plow bolts, 4 req'd.
CP
¼
Bevel @ 45°
7" x 8'-0" x ½" PL
Hinge Connector See sheet B
END VIEW
3" = 1'-0"
GANGWAY HANGER STRAP
DCW 1-20-87
STAMP
STATE OF ALASKA
49th
Robert P. Beck
No 10861
REGISTERED PROFESSIONAL ENGINEER
DO NOT SCALE THIS DRAWING – USE DIMENSIONS
STATE OF ALASKA
DEPARTMENT OF TRANSPORTATION AND PUBLIC FACILITIES
Petersburg
Alaska
7'-5" x 65'-0" COVERED STEEL GANGWAY
SHEET A
DESIGNED staff
CHECKED
DRAWN MC
DATE 2/28/84
PROJECT NUMBER K78190
SHEET 18 OF 55

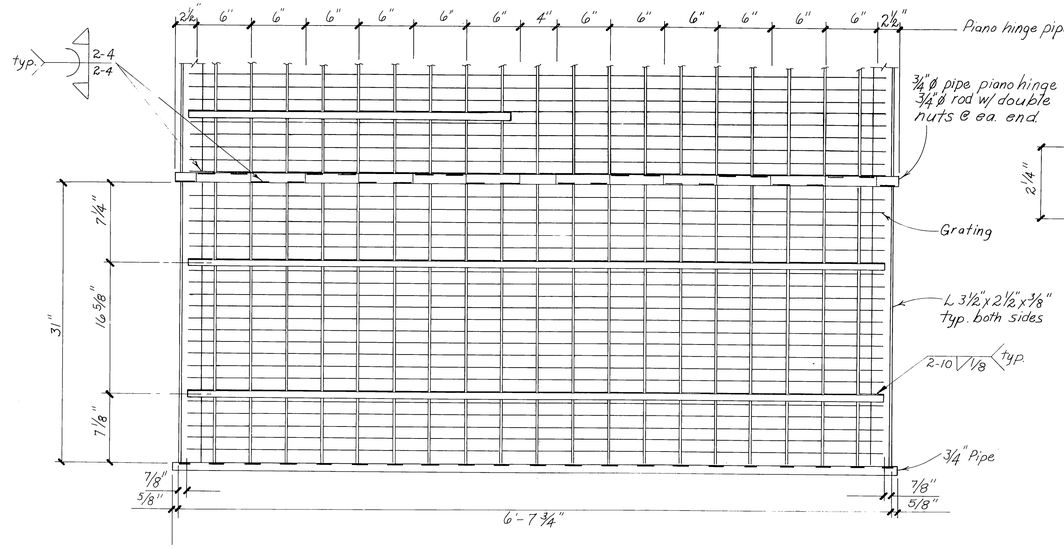

TOE TRANSITION PIECE PLAN
1½"=1'-0"

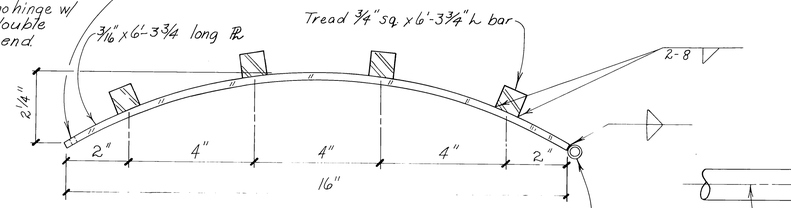

GANGWAY HEAD TRANSITION COVER PL
Not To Scale

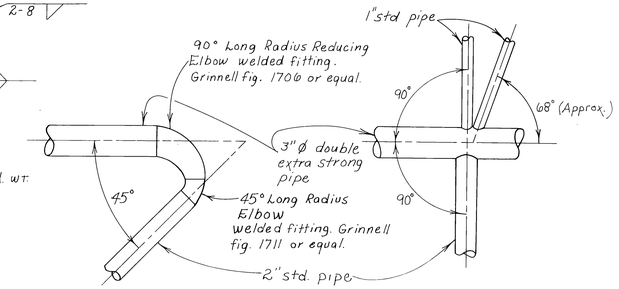

HANDRAIL TERMINAL
COVER FRAME
END DETAILS

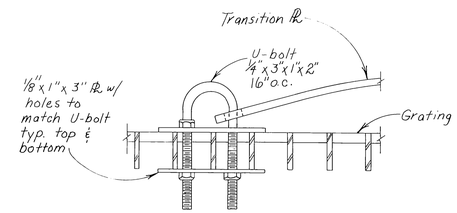

TRANSITION PL CONNECTION
½"=1"

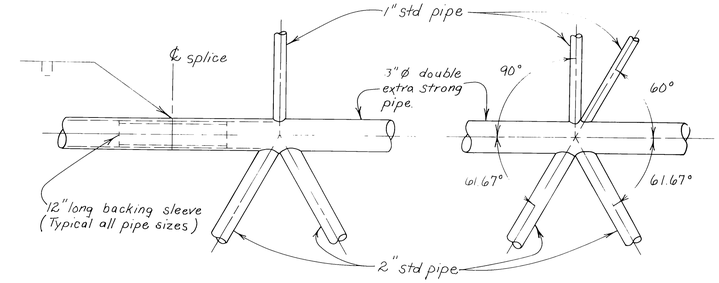

PIPE SPLICE DETAIL
BRACE DETAIL

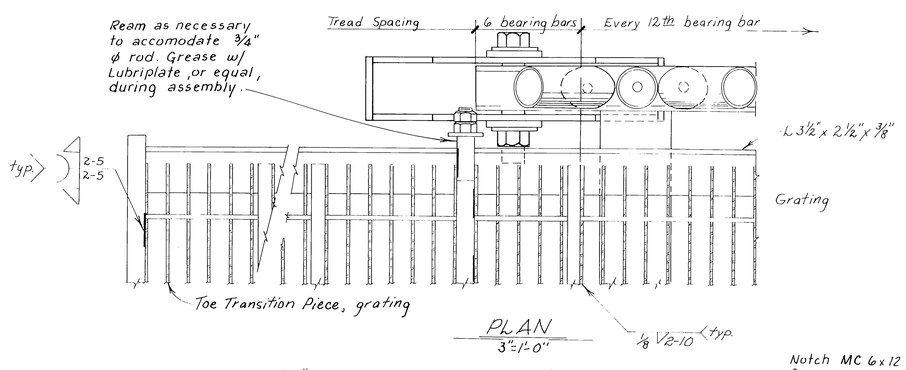

PLAN
3"=1'-0"

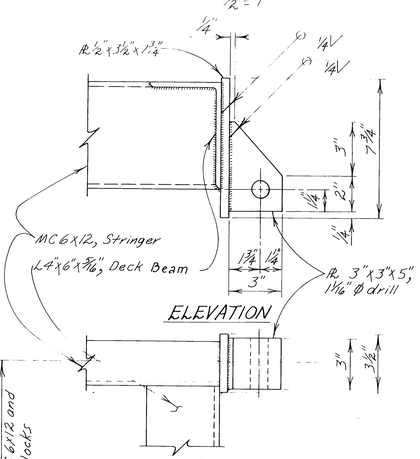

GANGWAY HINGE CONNECTOR
3"=1'-0"

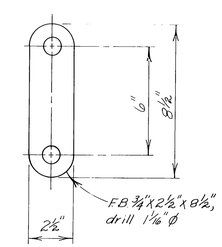

HINGE LINK
(4 req'd)

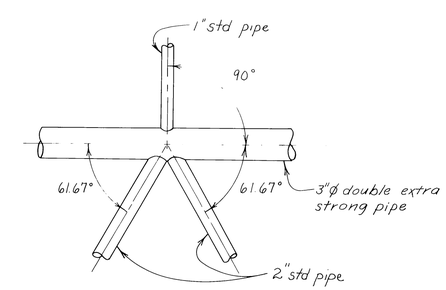

TYPICAL
HANDRAIL DETAILS
1½"=1'-0"

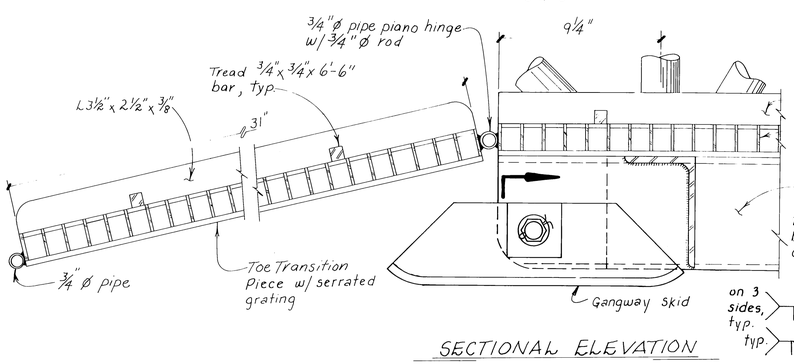

SECTIONAL ELEVATION
3"=1'-0"

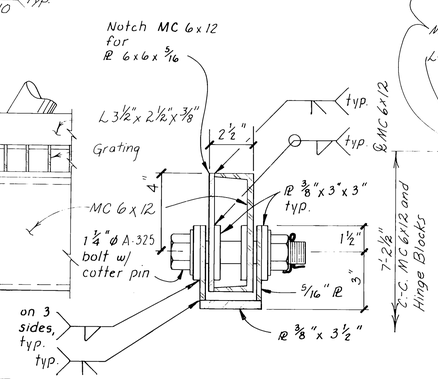

SECTION (A)
3"=1'-0"
For more details of gangway skid, see sht. 18

(A)

DCW 1-20-87

STAMP

STATE OF ALASKA 49th Robert P. Beck No. 14842 REGISTERED PROFESSIONAL ENGINEER

DO NOT SCALE THIS DRAWING – USE DIMENSIONS

STATE OF ALASKA
DEPARTMENT OF TRANSPORTATION AND PUBLIC FACILITIES

PETERSBURG ALASKA

7'-5"x65'-0" COVERED STEEL GANGWAY
SHEET B

DESIGNED HRM/JDB	CHECKED	DRAWN MARK	DATE 2-84
PROJECT NUMBER K-78190		SHEET 19 OF 55	

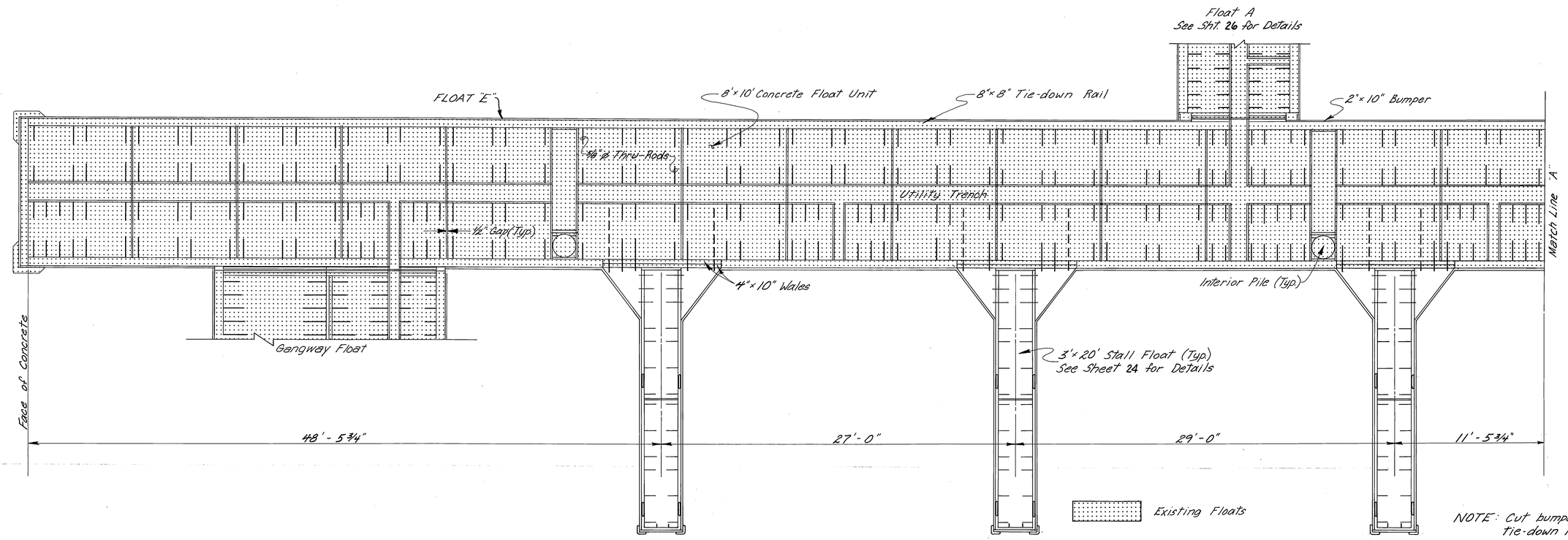

Existing Floats

New Floats

Existing Thru Rods

New Thru Rods in Existing Floats

NOTE: Cut bumper board & tie-down rail, as necessary, to install stall floats. See tie-down rail detail & typical float timber detail on sheet 33.

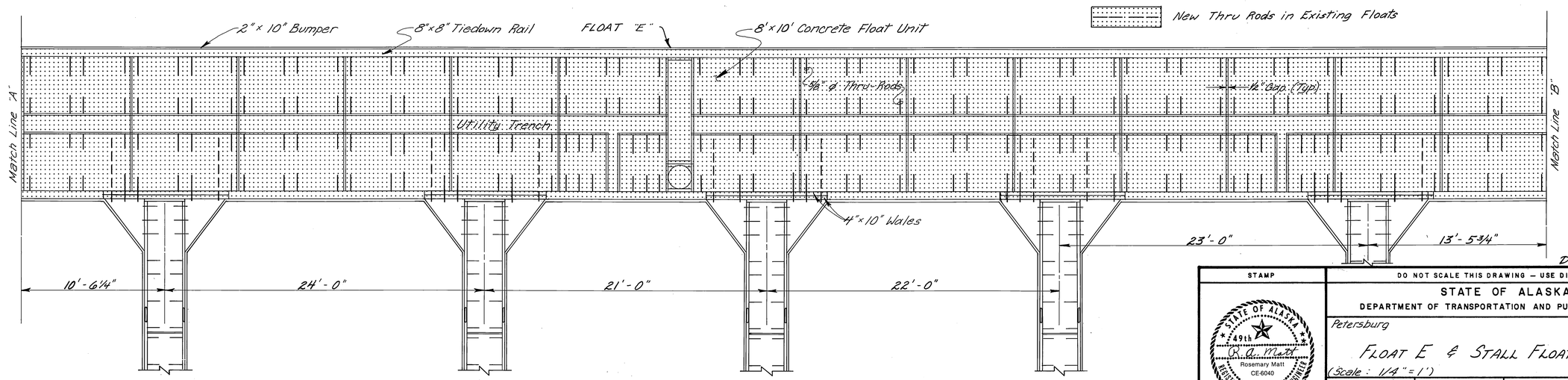

DCW 1-21-87

STAMP

STATE OF ALASKA 49th Rosemary Matt CE-6040 REGISTERED PROFESSIONAL ENGINEER

DO NOT SCALE THIS DRAWING — USE DIMENSIONS

STATE OF ALASKA

DEPARTMENT OF TRANSPORTATION AND PUBLIC FACILITIES

Petersburg Alaska

FLOAT E & STALL FLOAT LAYOUT

(Scale: 1/4" = 1')

DESIGNED	R.A.M.	CHECKED		DRAWN MEB	DATE 1/84
PROJECT NUMBER	K78190			SHEET 20	OF 55

(20 new T.R.)

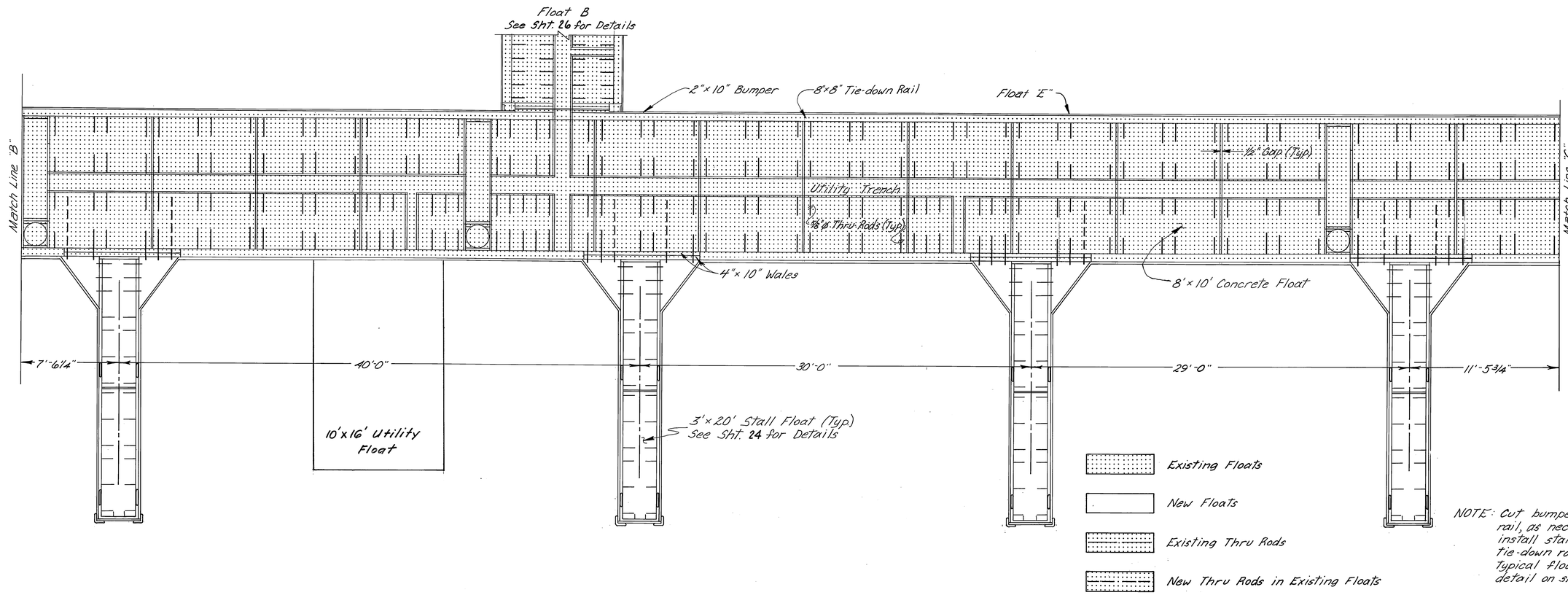

NOTE: Cut bumper & Tiedown rail, as necessary, to install stall floats. See tie-down rail detail & Typical float timber detail on sheet 33.

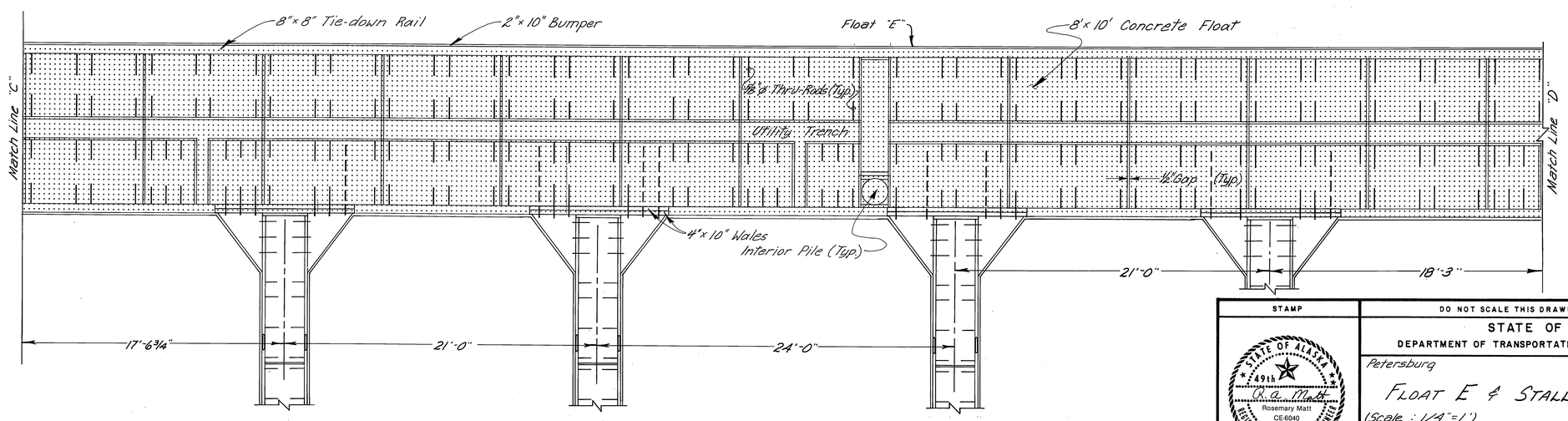

DCW 1-22-87

STAMP	DO NOT SCALE THIS DRAWING — USE DIMENSIONS
STATE OF ALASKA 49th Rosemary Matt CE-6040 REGISTERED PROFESSIONAL ENGINEER	STATE OF ALASKA DEPARTMENT OF TRANSPORTATION AND PUBLIC FACILITIES
	Petersburg Alaska
	FLOAT E & STALL FLOAT LAYOUT
	(Scale: 1/4"=1')
	DESIGNED RAM CHECKED ____ DRAWN MEB DATE 1/84
	PROJECT NUMBER K78190 SHEET 21 OF 55

(26 new T.R.)

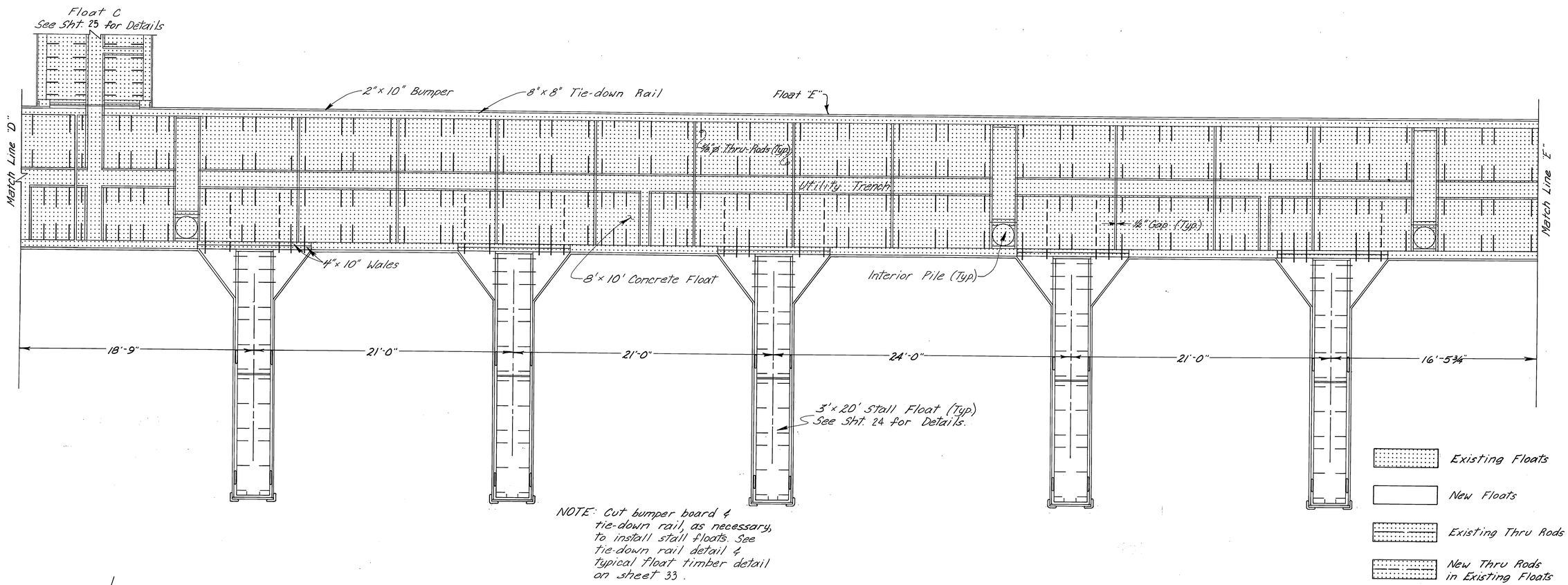

NOTE: Cut bumper board & tie-down rail, as necessary, to install stall floats. See tie-down rail detail & typical float timber detail on sheet 33.

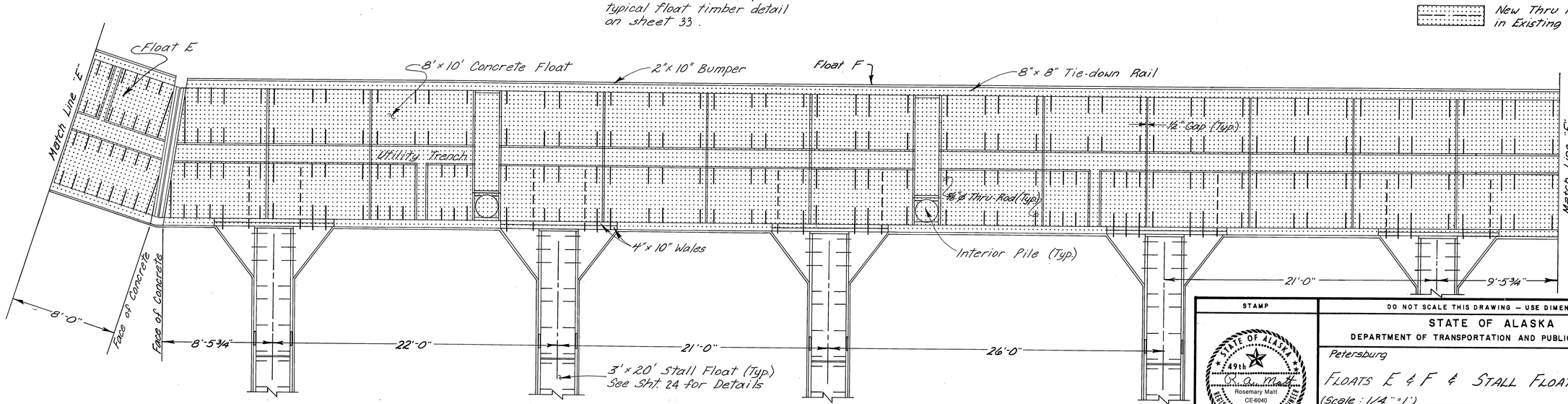

DCW 1-22-87

STAMP	DO NOT SCALE THIS DRAWING — USE DIMENSIONS
STATE OF ALASKA 49th — Rosemary Matt CE-6040 — REGISTERED PROFESSIONAL ENGINEER	STATE OF ALASKA DEPARTMENT OF TRANSPORTATION AND PUBLIC FACILITIES Petersburg Alaska FLOATS E & F & STALL FLOAT LAYOUT (Scale: 1/4" = 1')

DESIGNED RAM	CHECKED	DRAWN MEB	DATE 1/84
PROJECT NUMBER K78190		SHEET 22	OF 55

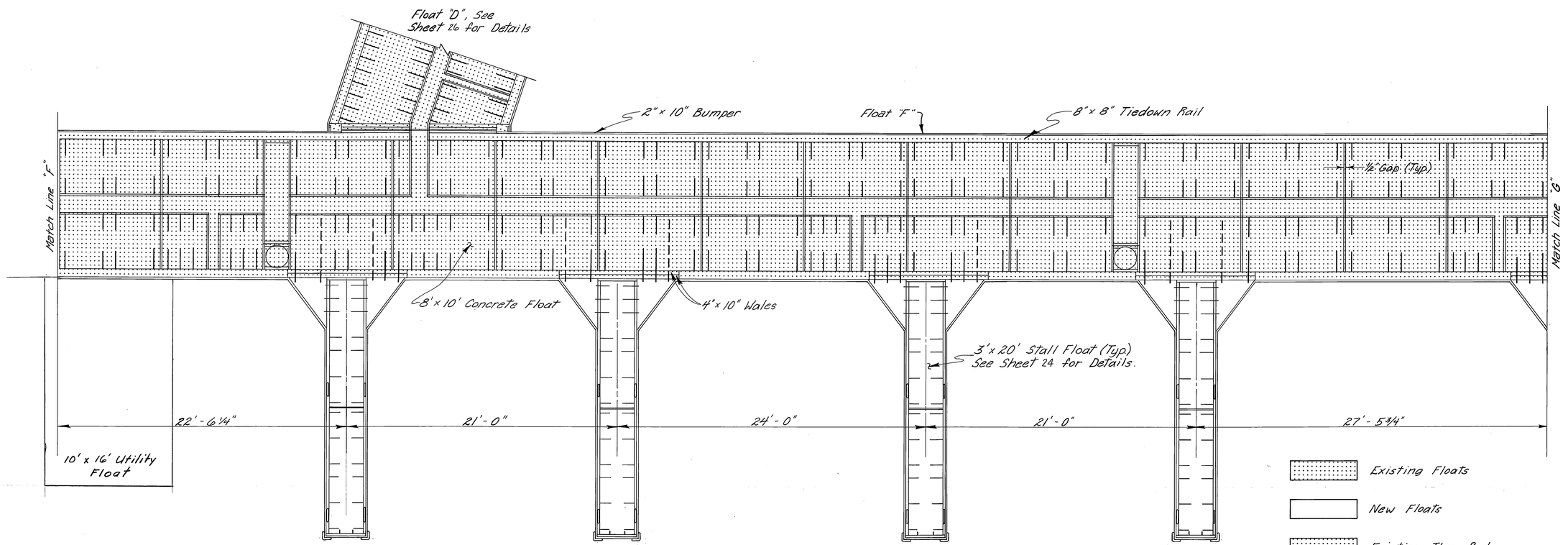

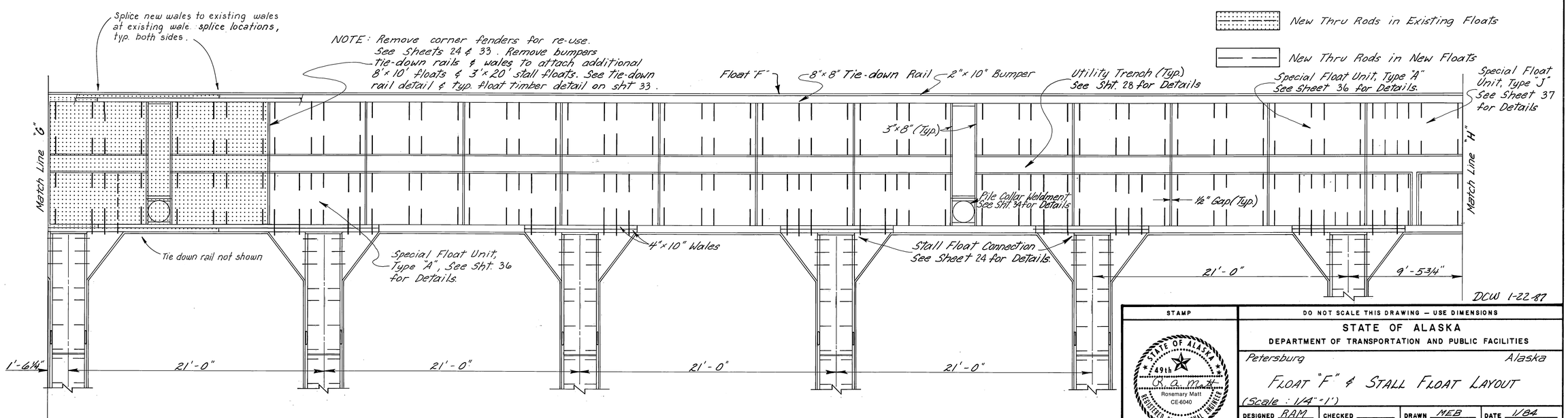

DCW 1-22-87

STAMP

STATE OF ALASKA 49th Rosemary Matt CE-6040 REGISTERED PROFESSIONAL ENGINEER

DO NOT SCALE THIS DRAWING — USE DIMENSIONS

STATE OF ALASKA

DEPARTMENT OF TRANSPORTATION AND PUBLIC FACILITIES

Petersburg Alaska

FLOAT "F" & STALL FLOAT LAYOUT

(Scale : 1/4" = 1')

DESIGNED RAM	CHECKED	DRAWN MEB	DATE 1/84
PROJECT NUMBER X78190		SHEET 23	OF 55

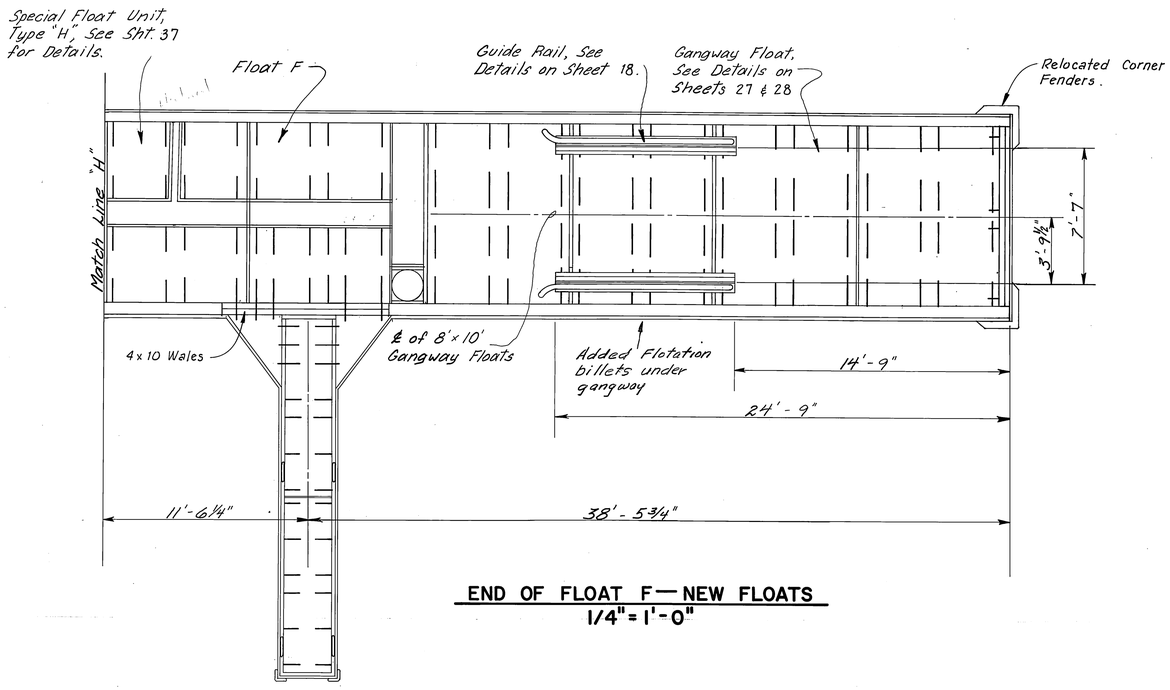

END OF FLOAT F — NEW FLOATS
1/4" = 1'-0"

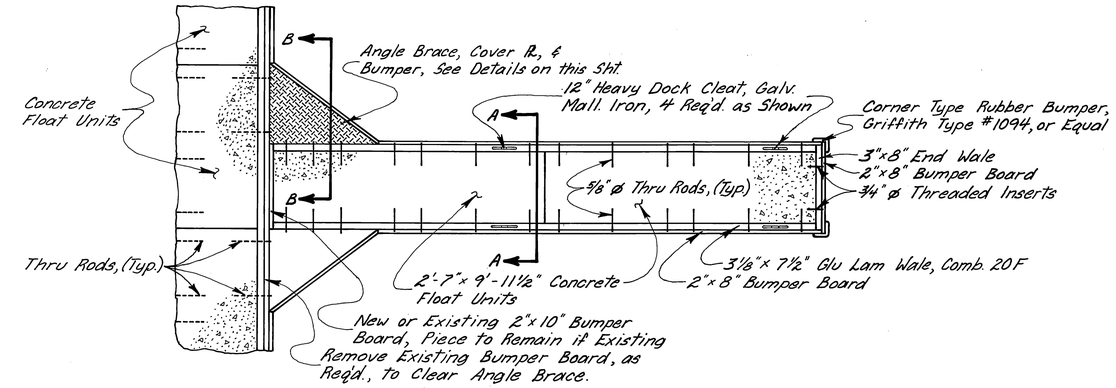

3'x 20' STALL FLOAT (74.1 S.F.)
3/8" = 1'-0"

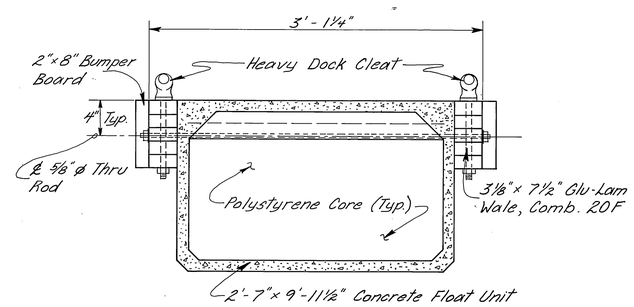

SECTION A - A
1-1/2" = 1'-0"

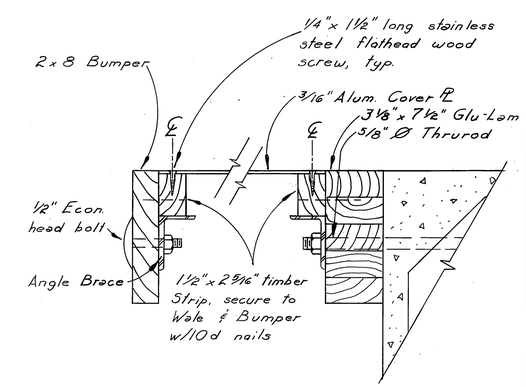

SECTION B - B
3" = 1'-0"

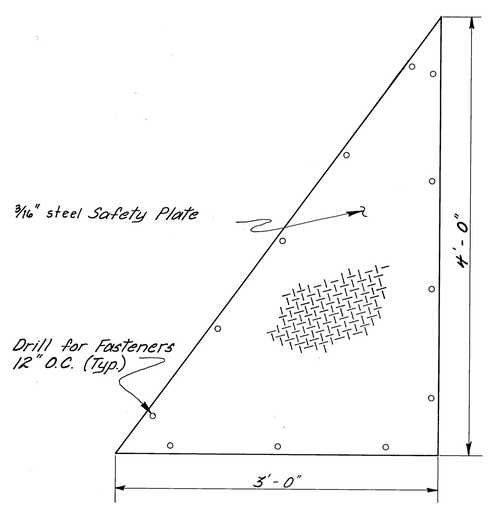

ANGLE BRACE COVER PLATE
1-1/2" = 1'-0"

NOTE: Angle Braces & Cover Plates to be Fabricated for Right & Left Sides.

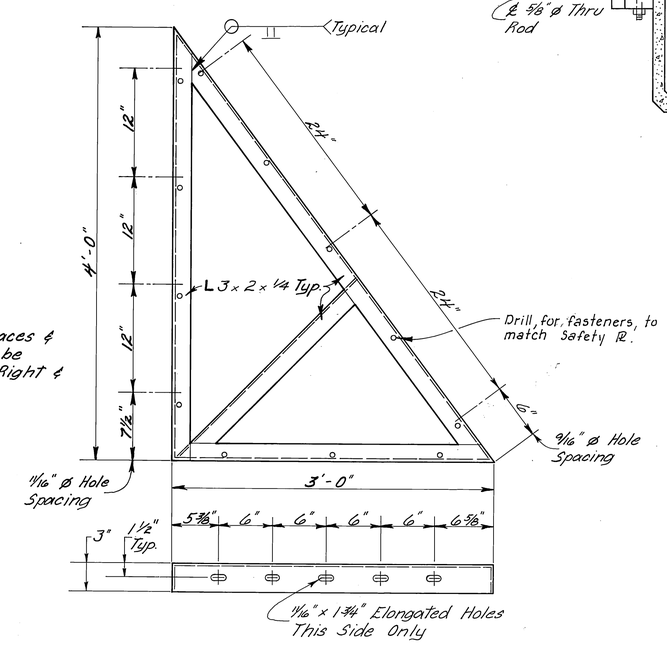

ANGLE BRACE
1-1/2" = 1'-0"

DCW 1-22-87

STAMP	DO NOT SCALE THIS DRAWING — USE DIMENSIONS
STATE OF ALASKA 49th Rosemary Matt CE-6040 REGISTERED PROFESSIONAL ENGINEER	STATE OF ALASKA DEPARTMENT OF TRANSPORTATION AND PUBLIC FACILITIES Petersburg Alaska FLOAT "F" & STALL FLOAT LAYOUT & DETAILS
	DESIGNED RAM CHECKED ____ DRAWN RM/MEB DATE 1/84
	PROJECT NUMBER K78190 SHEET 24 OF 55

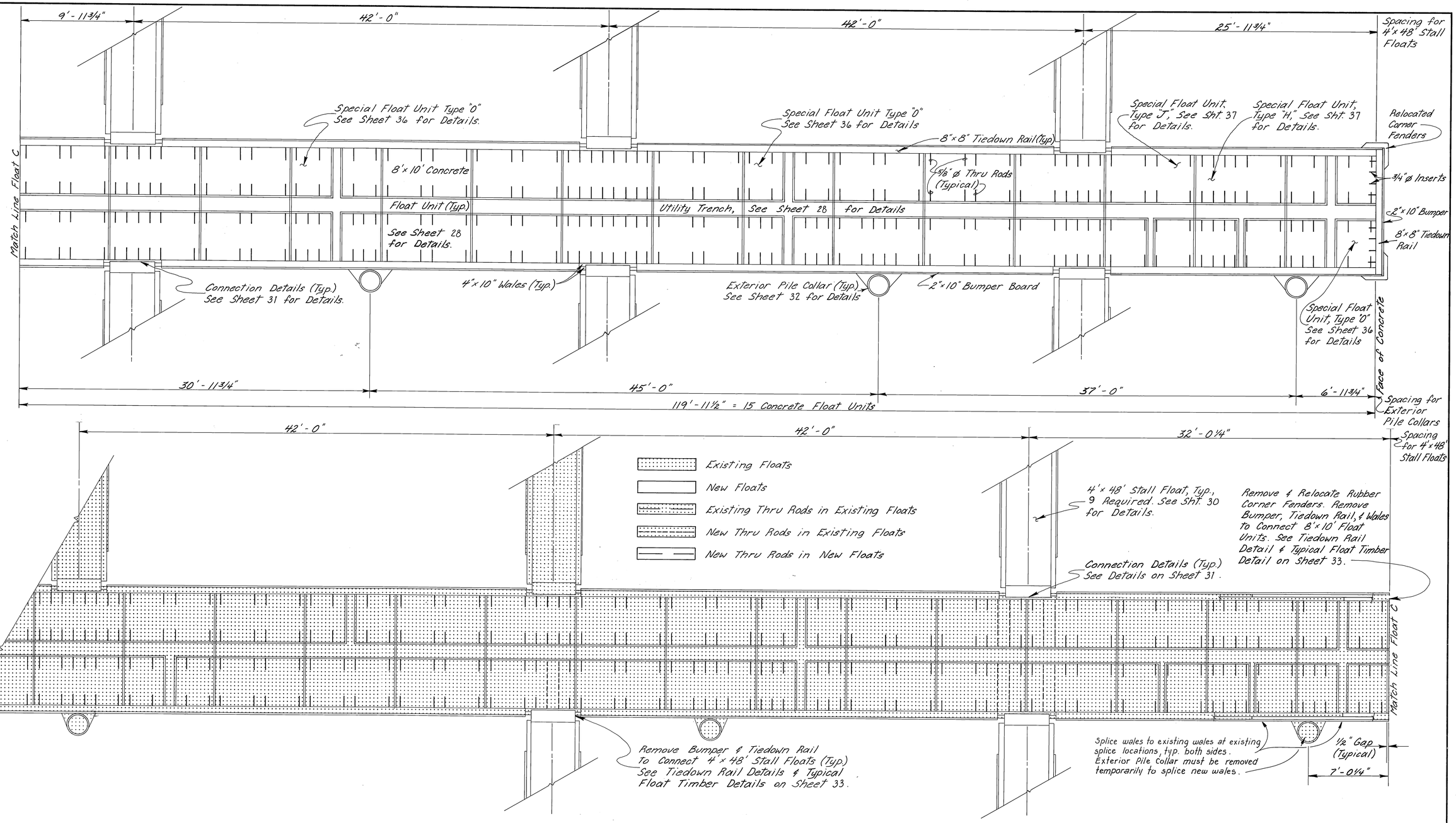

DCW 1-22-87

STAMP	DO NOT SCALE THIS DRAWING — USE DIMENSIONS
STATE OF ALASKA 49th Rosemary Matt CE-6040 REGISTERED PROFESSIONAL ENGINEER	STATE OF ALASKA DEPARTMENT OF TRANSPORTATION AND PUBLIC FACILITIES Petersburg — Alaska FLOAT "C" LAYOUT WITH 4'x48' STALL FLOATS — Scale: ¼"=1'-0"

DESIGNED RAM	CHECKED	DRAWN JM	DATE 3/84
PROJECT NUMBER K-78190		SHEET 25	OF 55

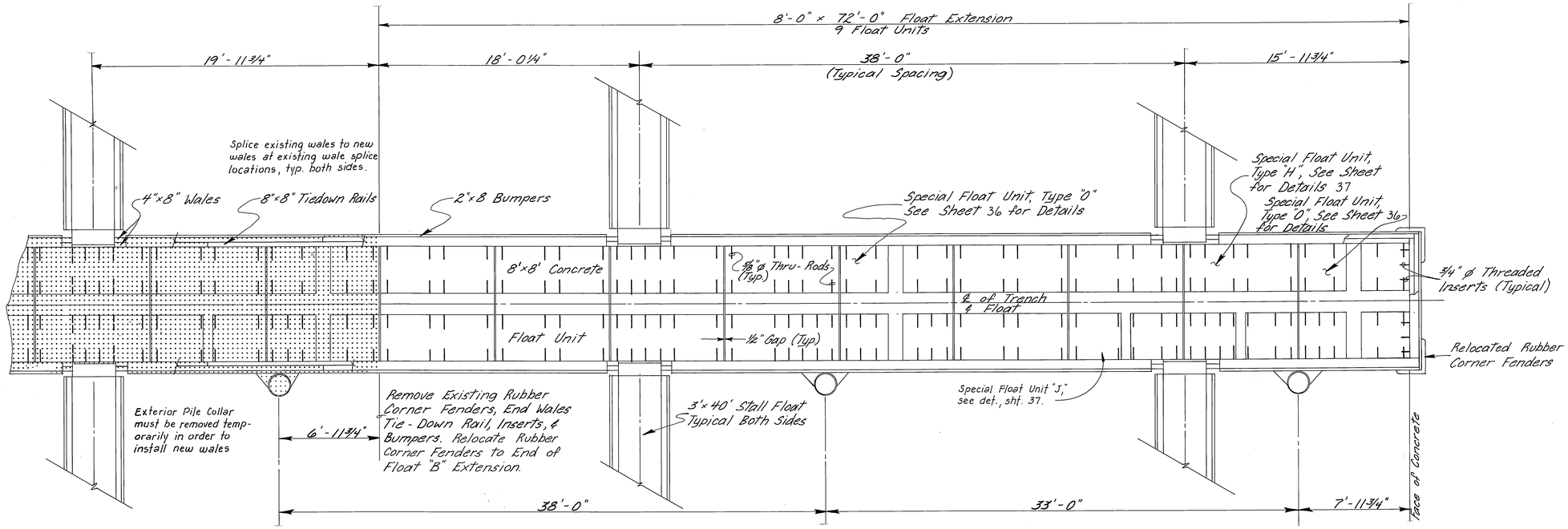

FLOAT B
1/4" = 1' - 0"

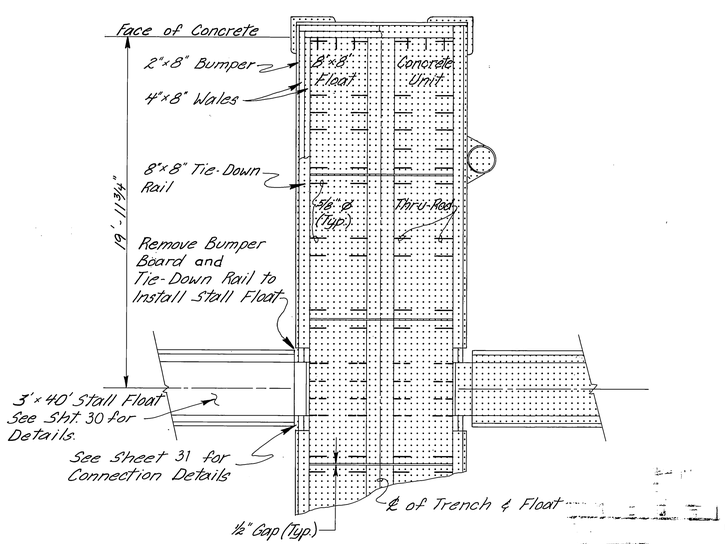

FLOAT A
1/4" = 1' - 0"

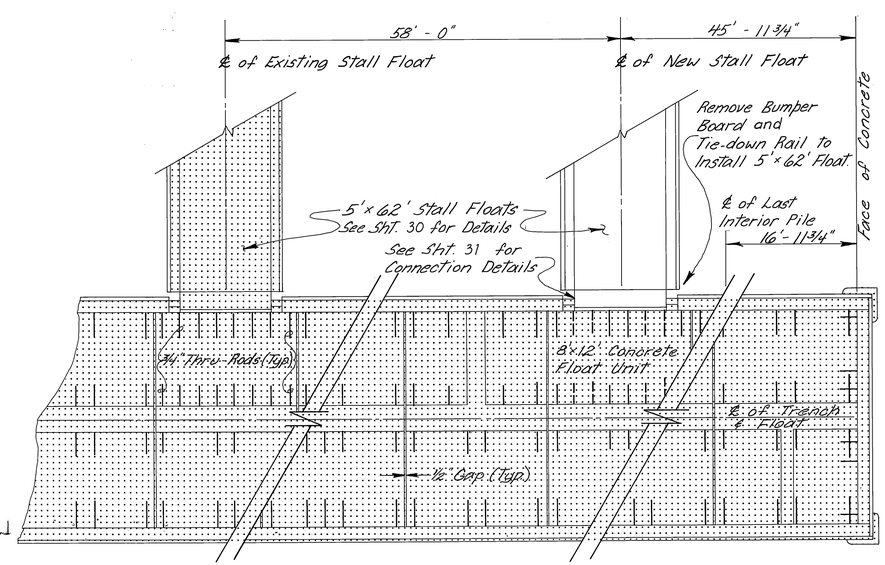

FLOAT D
1/4" = 1' - 0"

Existing Floats
New Floats
Existing Thru-Rods
New Thru Rods in Existing Floats

DCW 1-22-87

STAMP

STATE OF ALASKA 49th Rosemary Matt CE-6040 REGISTERED PROFESSIONAL ENGINEER

DO NOT SCALE THIS DRAWING — USE DIMENSIONS

STATE OF ALASKA
DEPARTMENT OF TRANSPORTATION AND PUBLIC FACILITIES

PETERSBURG ALASKA

FLOATS "A", "B", & "D"

DESIGNED RAM	CHECKED	DRAWN JM	DATE 3/84
PROJECT NUMBER K-78190		SHEET 26	OF 55

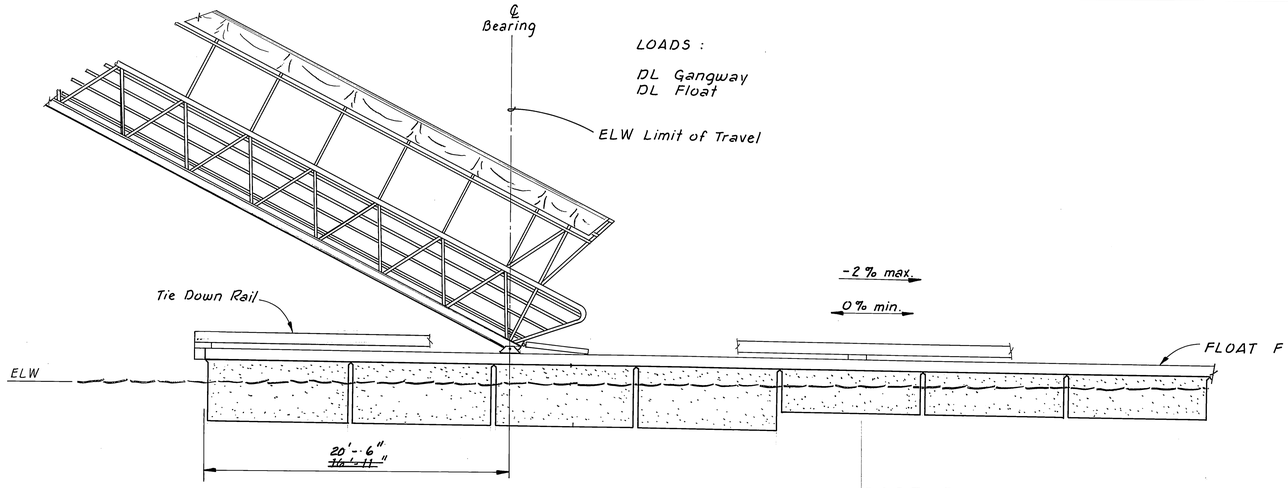

CASE I

¼" = 1'-0"

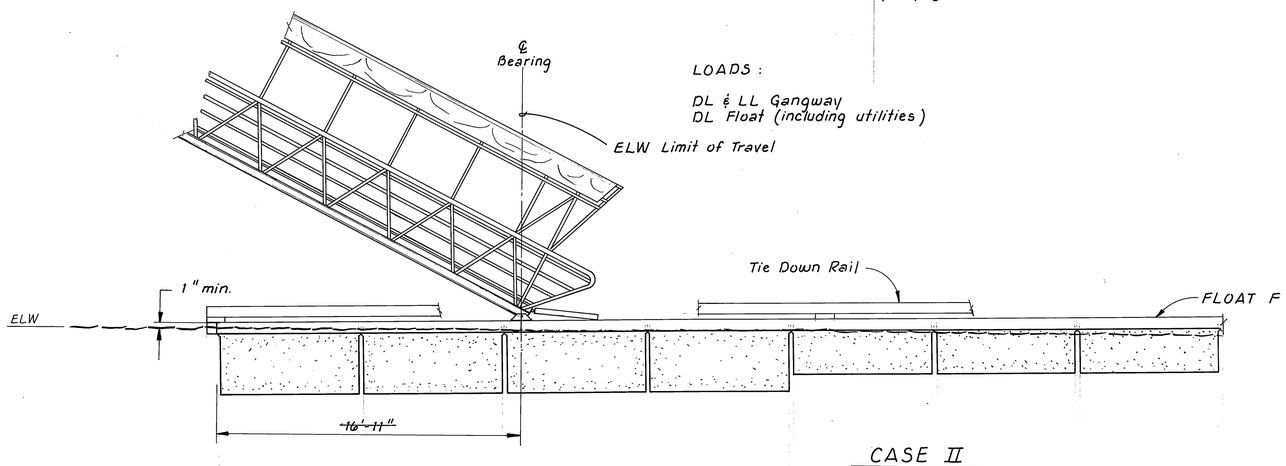

CASE II

¼" = 1'-0"

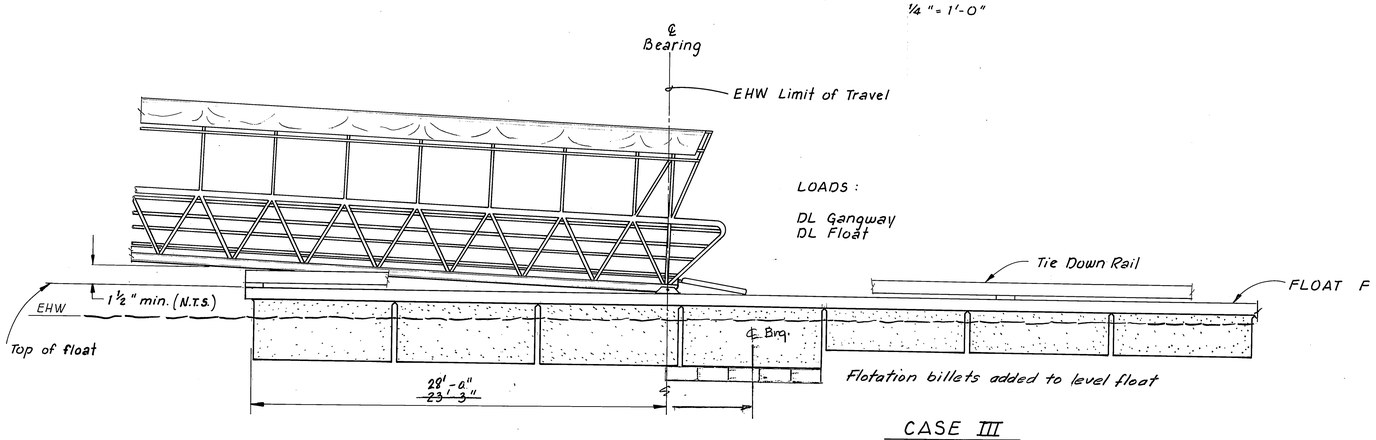

CASE III

¼" = 1'-0"

DESIGN CRITERIA

Total Dead Load of Gangway = 14,?000 lbs. +
Live Load = 60 PSF
Design Freeboard = 13"

DCW 1-22-87

STAMP	DO NOT SCALE THIS DRAWING — USE DIMENSIONS
STATE OF ALASKA 49th REGISTERED PROFESSIONAL ENGINEER Rosemary Matt CE-6040	STATE OF ALASKA DEPARTMENT OF TRANSPORTATION AND PUBLIC FACILITIES Petersburg Alaska RIGIDLY FRAMED GANGWAY FLOAT DESIGN & GEOMETRIC CRITERIA
	DESIGNED ____ CHECKED ____ DRAWN T.S. DATE 3-84
	PROJECT NUMBER K-78190 SHEET 27 OF 55

K&E 19 1153 9-81 MC 2860

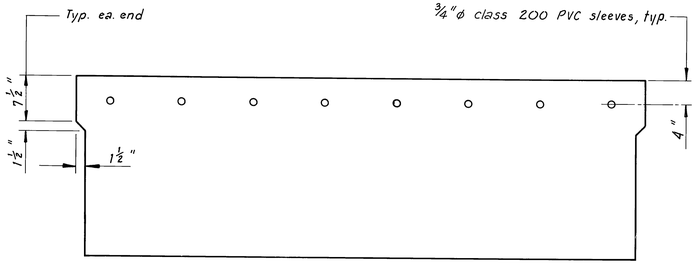

OUTBOARD ELEVATION
1" = 1'-0"

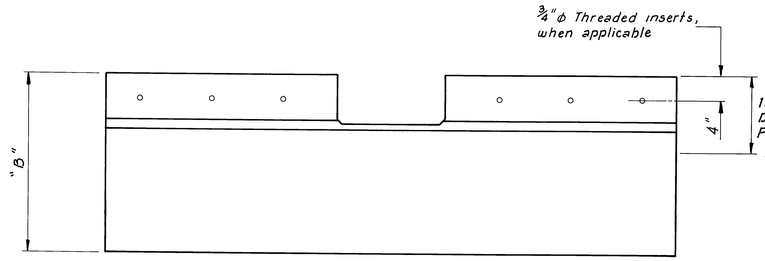

END ELEVATION
1" = 1'-0"

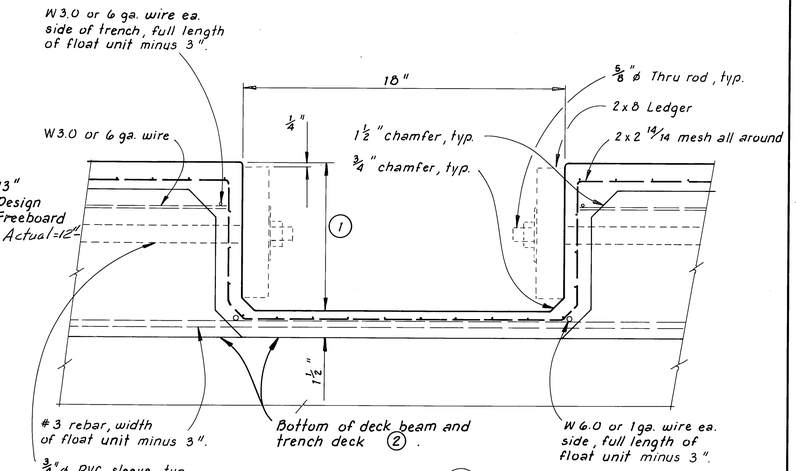

SECTION C
1" = 1'-0"

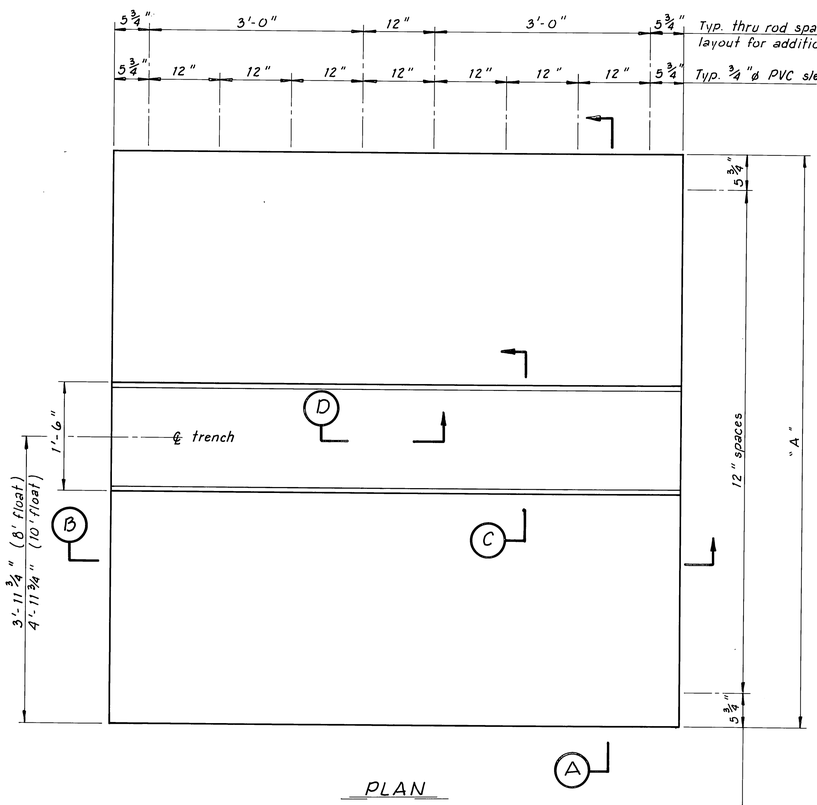

PLAN
1" = 1'-0"

3/4"ϕ Threaded insert spacing, @ end Float "F" and Interior Pile Collars for 8x10 Units.

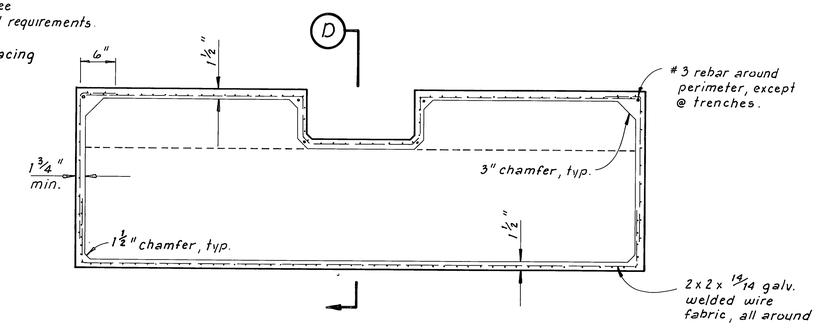

SECTION A
1" = 1'-0"

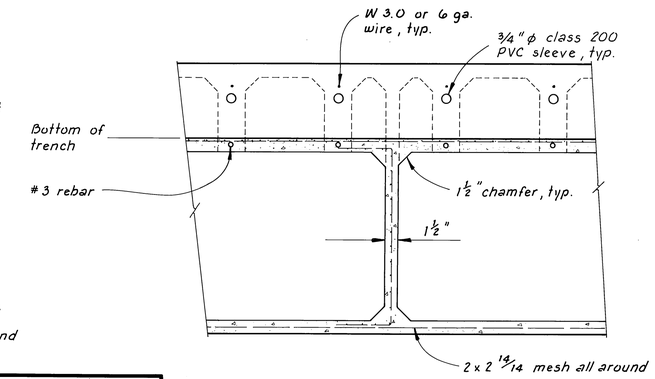

SECTION D
1 1/2" = 1'-0"

DIMENSIONS		
NOMINAL FLOAT	"A"	"B"
8x8	7'-11 1/2"	5
8x10	9'-11 1/2"	5
4 8x10 w/o trench	9'-11 1/2"	5

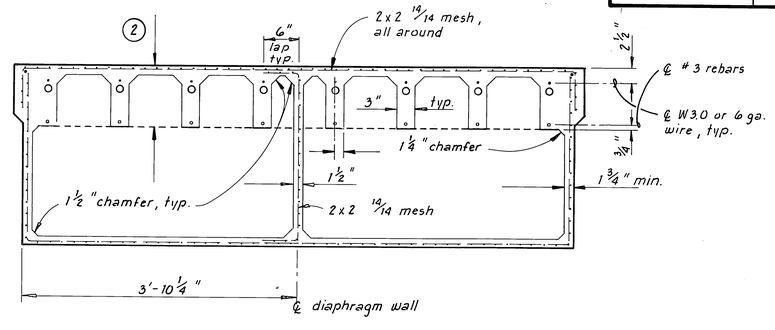

SECTION B
1" = 1'-0"

General Notes:

1. Trench depth varies, see utility trench intersection, sheets 36 & 37
2. Depth of deck beam varies with depth of trench. 9 3/4" typ. on float shown.
3. All floats solidly filled w/ polystyrene as per specs.
4. Four 8x10 Float Units w/o trenches req'd. for Gangway Float. Use same reinforcing and deck beams as shown. Required freeboard with gangway Dead Load loading is 13". See Specifications for freeboard tolerances.
5. To be determined by supplier based on wall thickness and float weight. to achieve design freeboard.

DCW 1-22-87

STAMP

STATE OF ALASKA 49th Rosemary Matt CE-6040 REGISTERED PROFESSIONAL ENGINEER

DO NOT SCALE THIS DRAWING – USE DIMENSIONS

STATE OF ALASKA
DEPARTMENT OF TRANSPORTATION AND PUBLIC FACILITIES
DESIGN AND CONSTRUCTION

Petersburg Alaska

TYPICAL 8' & 10' FLOAT UNITS

SCALE As Noted	SURVEYED	APPROVED
DESIGNED JS	DRAWN TS	
CHECKED	DATE 4-83	
PROJECT NUMBER K-78190	SHEET 28 OF 55	

K&E 19 1153 9-81 MC 2860•

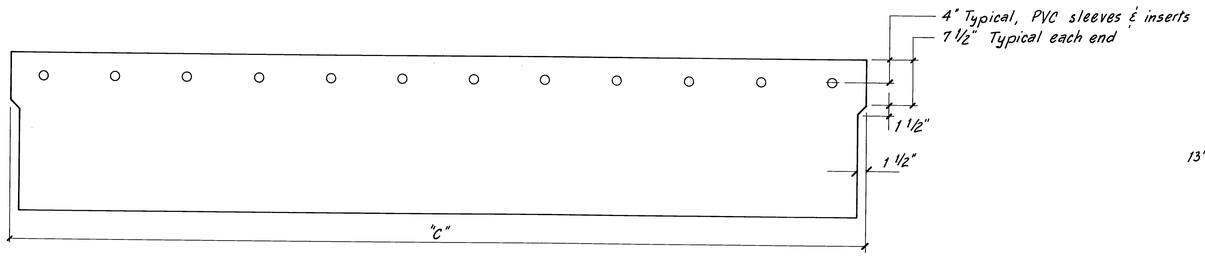

OUTBOARD ELEVATION
1" = 1'-0"

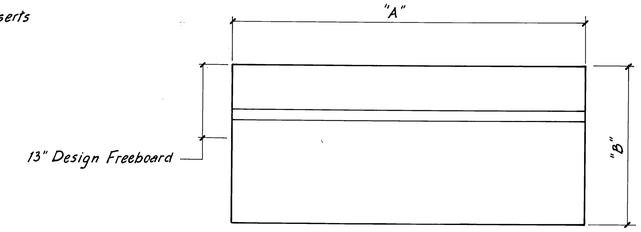

END ELEVATION
1" = 1'-0"

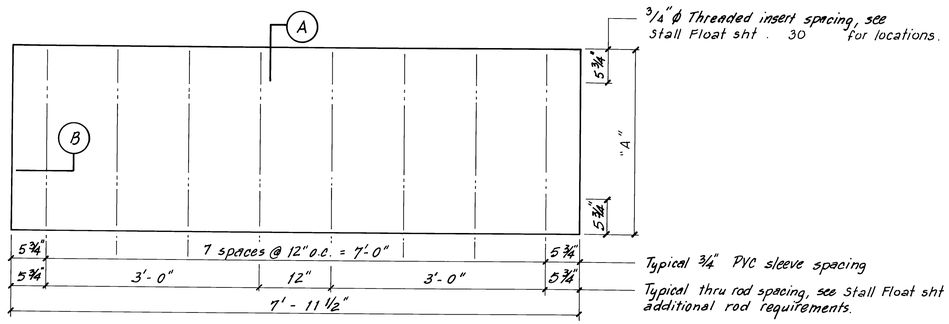

P L A N
1" = 1'-0"

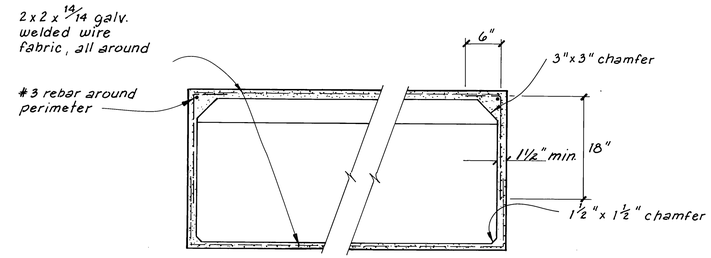

SECTION A
1" = 1'-0"

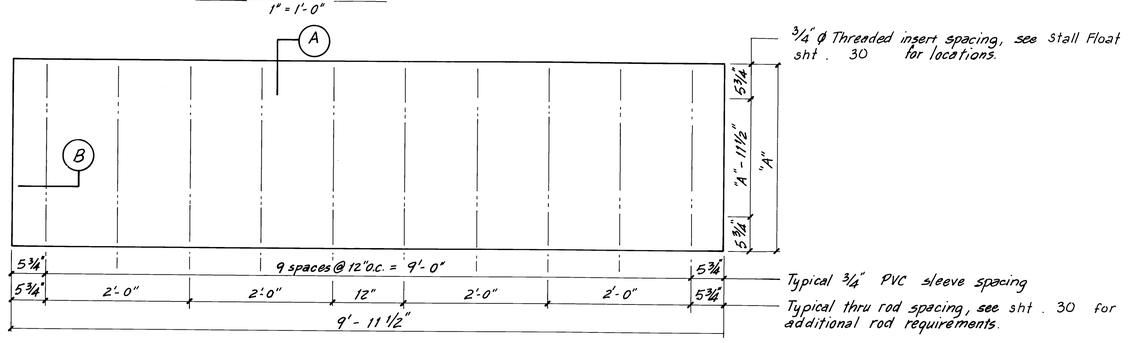

P L A N
1" = 1'-0"

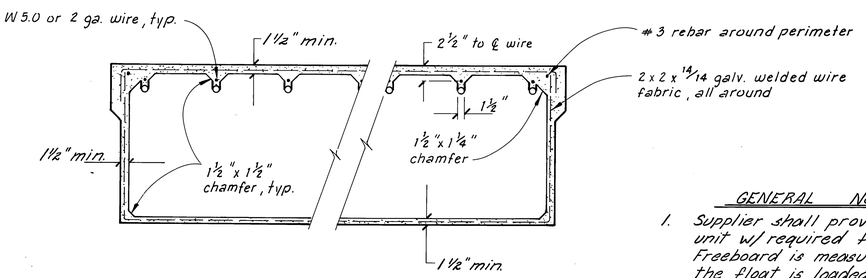

SECTION B
1" = 1'-0"

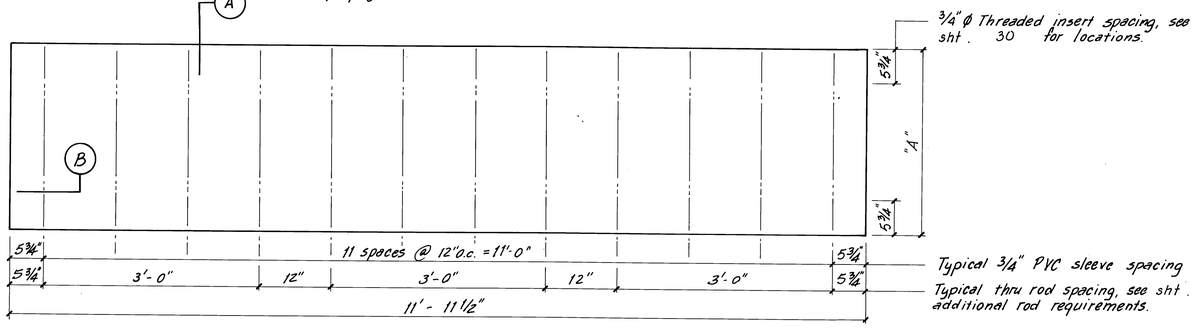

P L A N
1" = 1'-0"

GENERAL NOTES

1. Supplier shall provide float unit w/ required freeboard. Freeboard is measured when the float is loaded with the weight of the float timbers & the thru-rods. Depth of float depends upon freeboard. Minimum Freeboard = 12.5" Maximum Freeboard = 14.0"
2. It was noted that all units are tending toward being heavier, rather than lighter, which with added utilities is resulting in free boards of 12". Freeboard design should be increased.

DIMENSIONS			
Nominal Float	A	B	C
3 x 10	2'-7"	Note 1	9'-11½"
3 x 10	2'-11½"	Note 1	9'-11½"
4 x 12	3'-11½"	Note 1	11'-11½"
5 x 10	4'-11½"	Note 1	9'-11½"

Note: All floats solidly filled w/ polystyrene as per specs.

DCW 1-22-87

STAMP

STATE OF ALASKA 49th Rosemary Matt CE-6040 REGISTERED PROFESSIONAL ENGINEER

DO NOT SCALE THIS DRAWING – USE DIMENSIONS

STATE OF ALASKA
DEPARTMENT OF TRANSPORTATION AND PUBLIC FACILITIES
HARBOR DESIGN AND CONSTRUCTION

Petersburg, Alaska

TYPICAL STALL FLOAT UNITS

SCALE As Noted	SURVEYED	APPROVED
DESIGNED RAM	DRAWN Staff	
CHECKED	DATE	
PROJECT NUMBER K-78190	SHEET 29 OF 55	

K&E 19 1153 9-81 MC 2860

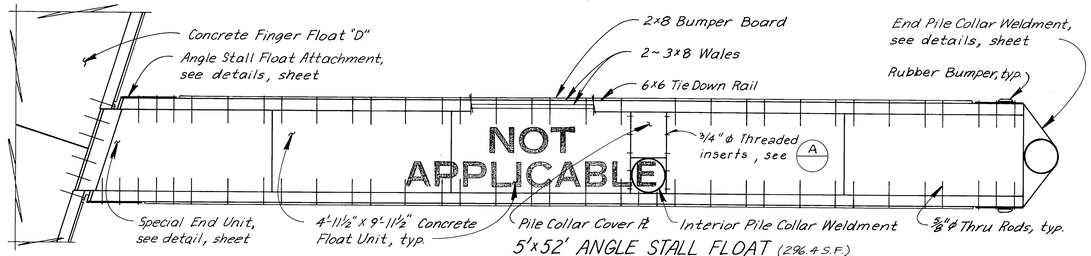

5'x52' ANGLE STALL FLOAT (296.4 S.F.)
1/4" = 1'-0"

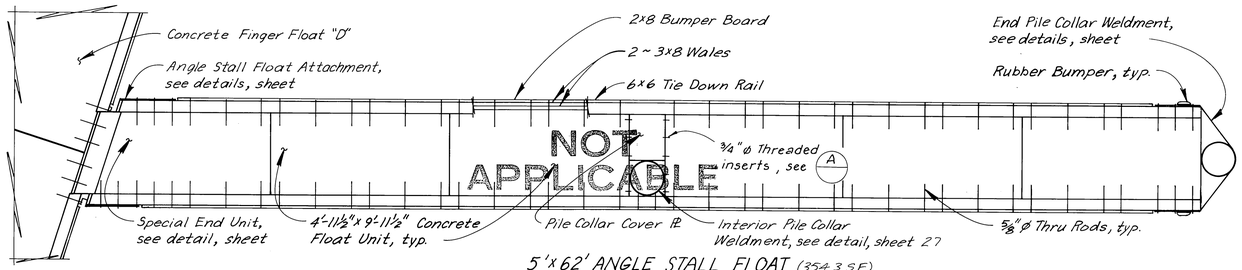

5'x62' ANGLE STALL FLOAT (354.3 S.F.)
1/4" = 1'-0"

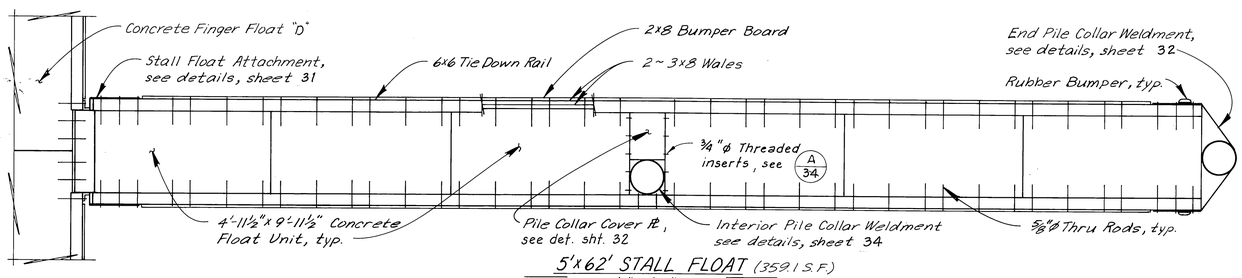

5'x62' STALL FLOAT (359.1 S.F.)
1/4" = 1'-0"

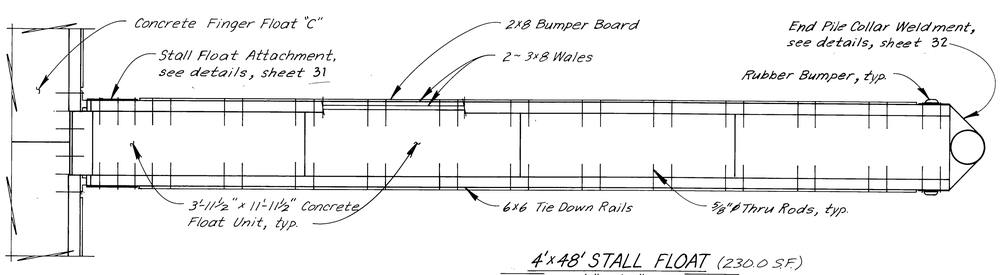

4'x48' STALL FLOAT (230.0 S.F.)
1/4" = 1'-0"

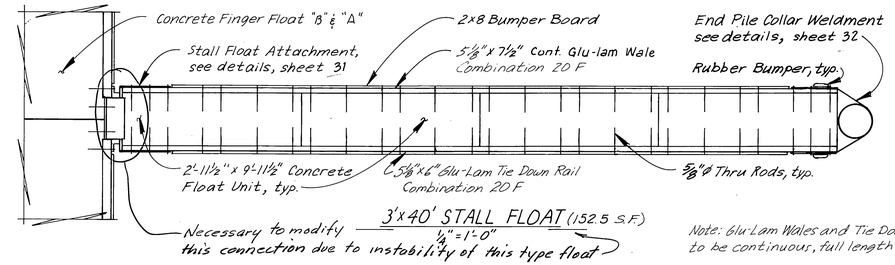

3'x40' STALL FLOAT (152.5 S.F.)
1/4" = 1'-0"

Note: Glu-Lam Wales and Tie Down Rails to be continuous, full length of float.

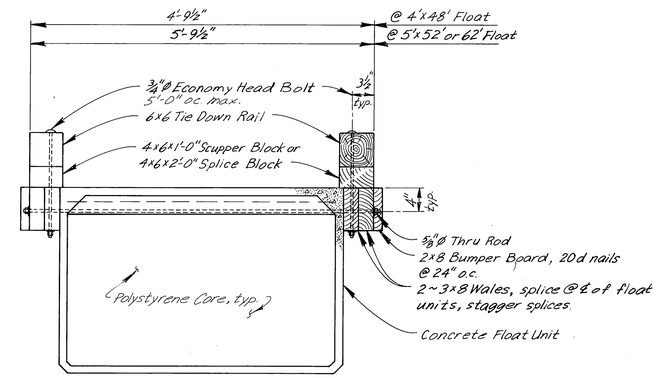

4' & 5' STALL FLOATS
1" = 1'-0"

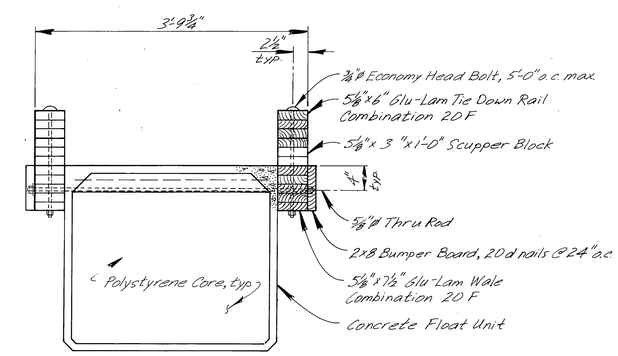

3' STALL FLOAT
1" = 1'-0"

DCW 1-22-87

STAMP	DO NOT SCALE THIS DRAWING USE DIMENSIONS
STATE OF ALASKA 49th R. L. Matt Rosemary Matt CE-6040 REGISTERED PROFESSIONAL ENGINEER	STATE OF ALASKA DEPARTMENT OF TRANSPORTATION AND PUBLIC FACILITIES DESIGN AND CONSTRUCTION
	Petersburg — Alaska
	TYPICAL STALL FLOATS
SCALE As Noted; DESIGNED Staff; CHECKED JS	SURVEYED; DRAWN LVB; DATE 3/10/84 — APPROVED
PROJECT NUMBER K78190	SHEET 30 OF 55

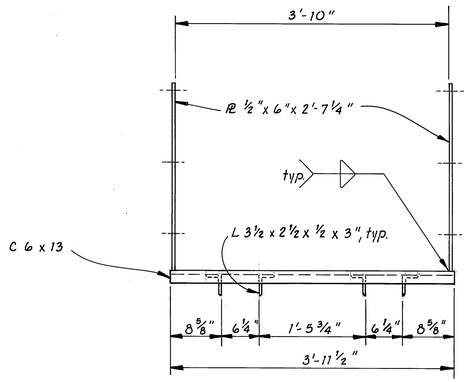

PLAN

3' STALL FLOAT ATTACHMENT

1" = 1'-0"

NOTE: End view of 4' & 5' stall float attachment typical of 3' stall float attachment.

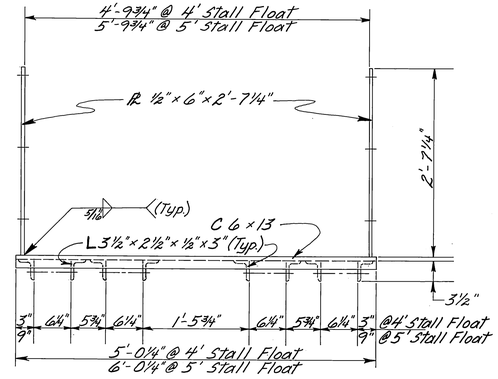

PLAN

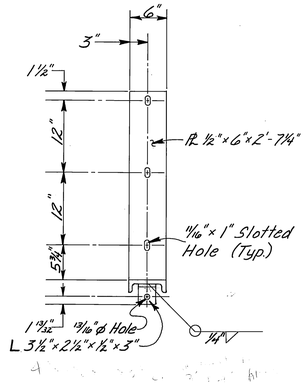

END VIEW

4' & 5' STALL FLOAT ATTACHMENTS

1" = 1'-0"

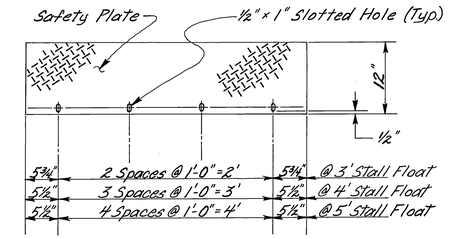

STALL FLOAT TRANSITION PL

1" = 1'-0"

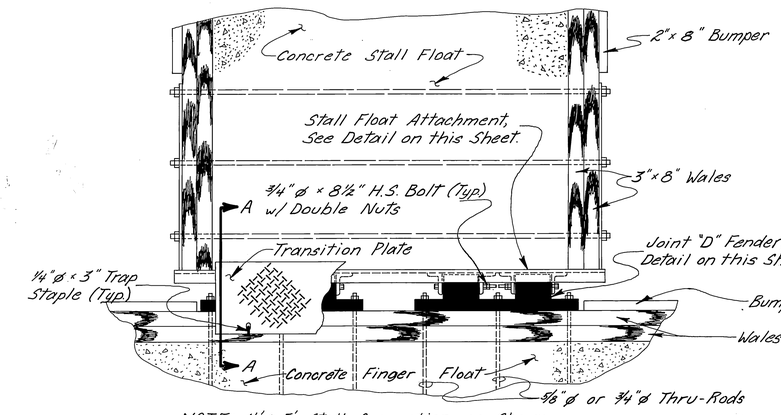

NOTE: 4' & 5' Stall Connection, as Shown.

HINGED STALL FLOAT CONNECTION DETAIL

1" = 1'-0"

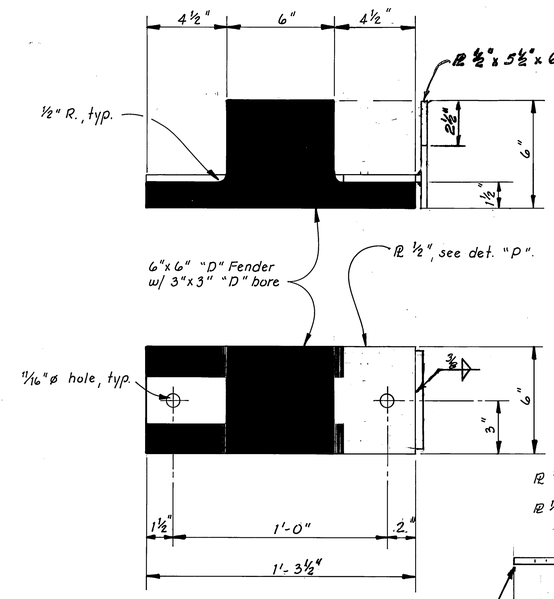

JOINT "D" FENDER FOR 3' FLOATS

3" = 1'-0"

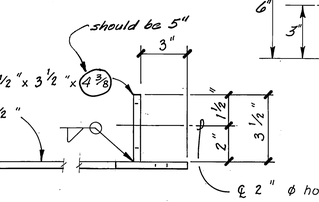

END VIEW

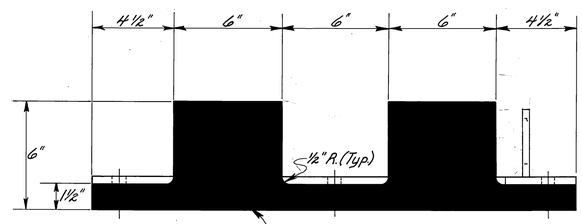

PLAN

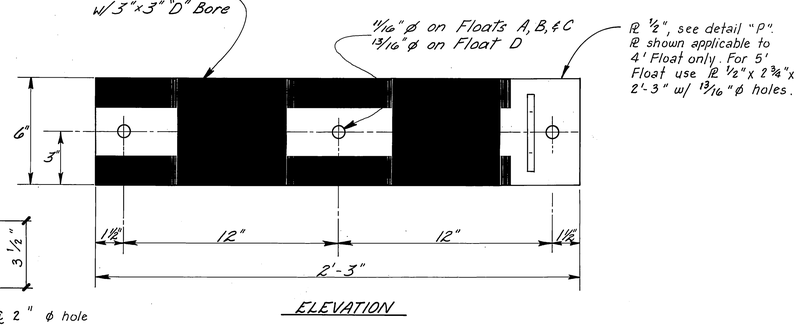

ELEVATION

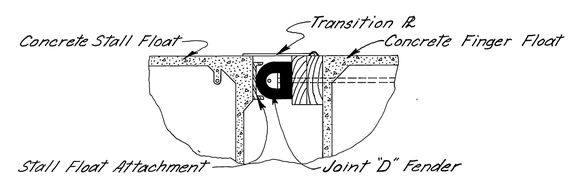

SECTION A - A

1" = 1'-0"

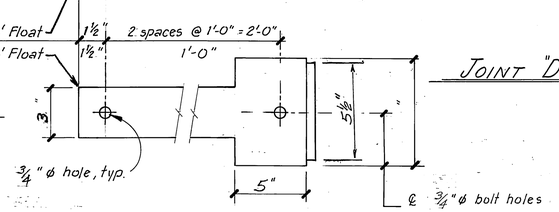

DETAIL "P"

3" = 1'-0"

JOINT "D" FENDER FOR 4' & 5' FLOATS

3" = 1'-0"

DCW 1-22-87

STAMP

STATE OF ALASKA 49th Rosemary Matt CE-6040 REGISTERED PROFESSIONAL ENGINEER

DO NOT SCALE THIS DRAWING — USE DIMENSIONS

STATE OF ALASKA
DEPARTMENT OF TRANSPORTATION AND PUBLIC FACILITIES

PETERSBURG ALASKA

TYPICAL STALL FLOAT CONNECTION

DESIGNED staff	CHECKED RAM	DRAWN JM	DATE 3/83
PROJECT NUMBER K-78190		SHEET 31	OF 55

K&E 19 1153 9-81 MC 2860*

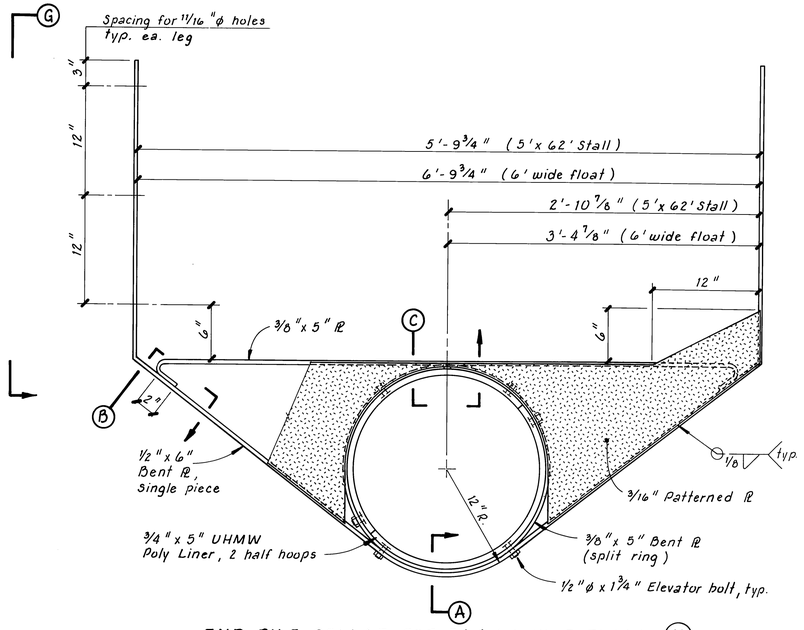

END PILE COLLAR FOR 5' & 6' WIDE FLOATS (H)

1 1/2" = 1'-0"

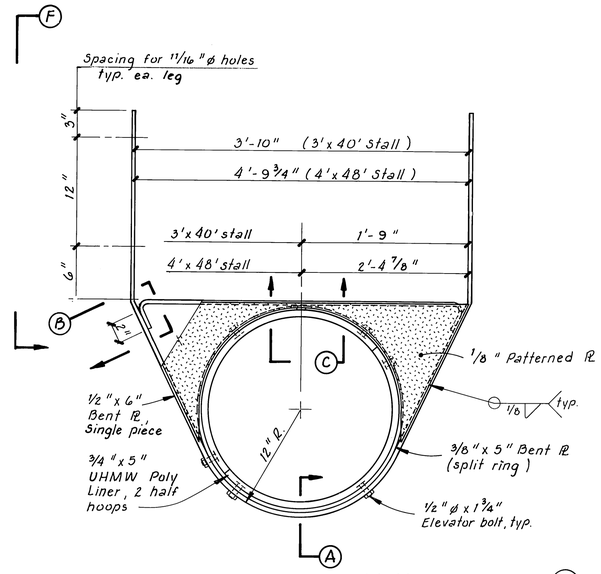

END PILE COLLAR FOR 3' & 4' WIDE FLOATS (I)

1 1/2" = 1'-0"

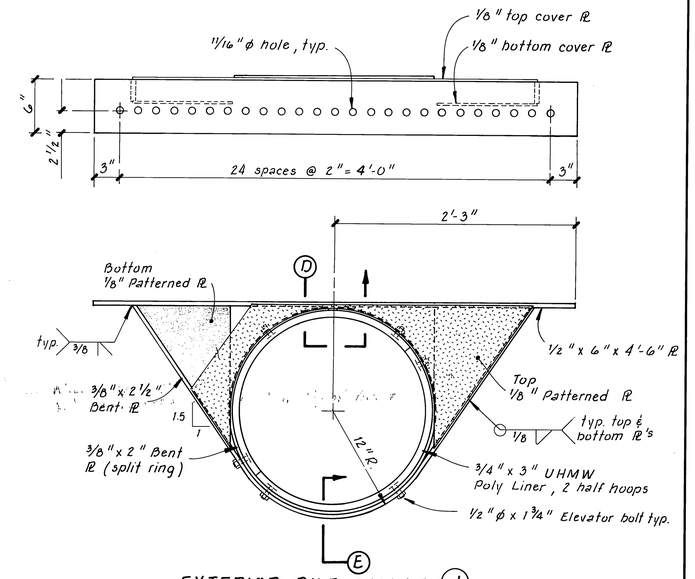

EXTERIOR PILE COLLAR (J)

1 1/2" = 1'-0"

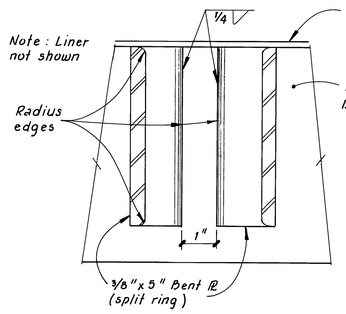

SECTION (C)

6" = 1'-0"

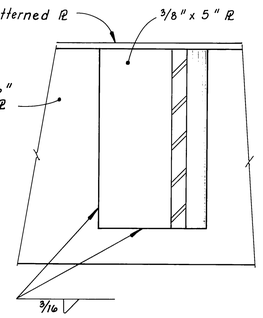

SECTION (B)

6" = 1'-0"

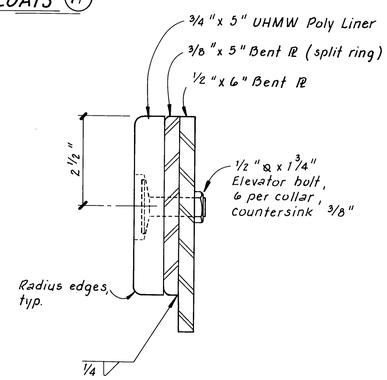

SECTION (A)

6" = 1'-0"

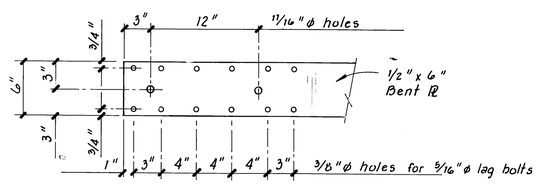

SECTION (F)

1 1/2" = 1'-0"

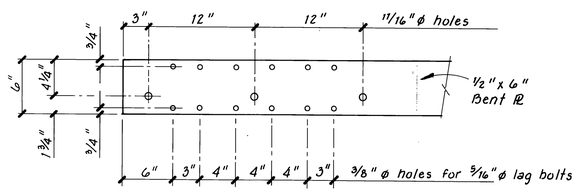

SECTION (G)

1 1/2" = 1'-0"

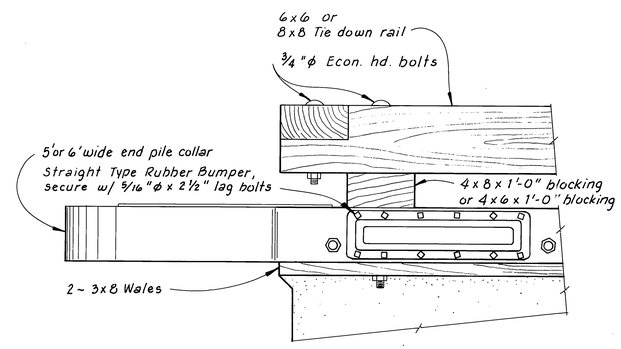

TIE DOWN RAIL & 5' or 6' WIDE END PILE COLLAR

1 1/2" = 1'-0"

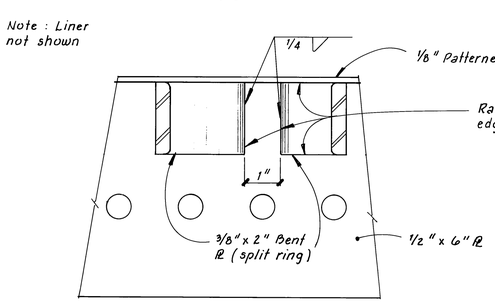

SECTION (D)

6" = 1'-0"

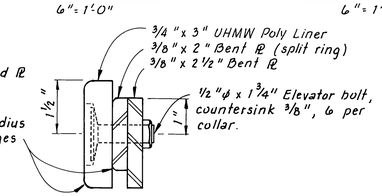

SECTION (E)

6" = 1'-0"

NOTES:

1. UHMW poly liners, as shown, with 3 bolts per half collar are for the case where the UHMW poly liner has been heated and then molded to the shape shown. For liners which are cold bent a minimum of 5 bolts per half collar are required. Type of bending shall be called out on shop drawings.

2. All Plates shall be 6061-T6 Aluminum.

DCW 1-22-87

STAMP	DO NOT SCALE THIS DRAWING – USE DIMENSIONS
STATE OF ALASKA 49th Rosemary Matt CE-6040 REGISTERED PROFESSIONAL ENGINEER	STATE OF ALASKA DEPARTMENT OF TRANSPORTATION AND PUBLIC FACILITIES DESIGN AND CONSTRUCTION
	Petersburg, Alaska
	PILE COLLAR DETAILS
SCALE As Noted; DESIGNED JS; CHECKED	SURVEYED; DRAWN TS; DATE 12-82
	APPROVED Robert P. Beck; James A. Lowell
PROJECT NUMBER K-78190	SHEET 32 OF 55

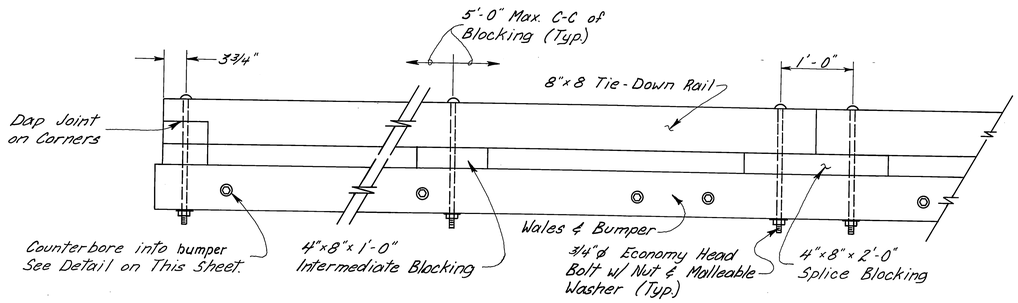

TIE - DOWN RAIL DETAILS
1" = 1'-0"

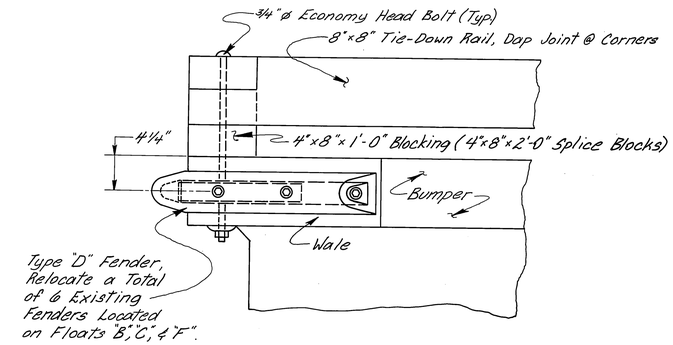

ELEVATION
1½" = 1'-0"

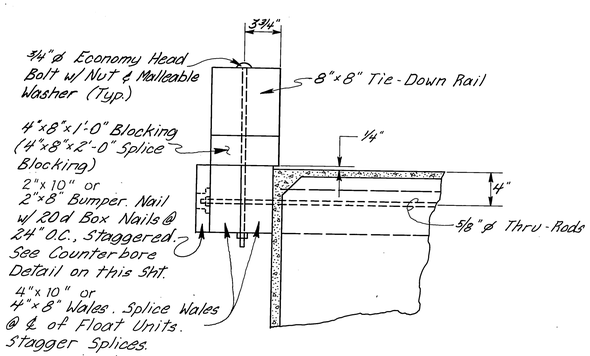

TYPICAL FLOAT TIMBER
1½" = 1'-0"

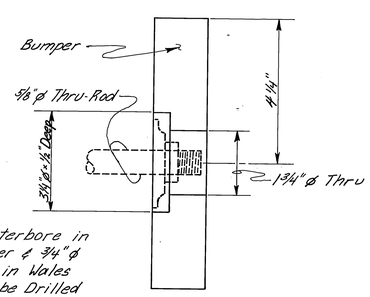

NOTE: Counterbore in Bumper & ¾"ø Holes in Wales Shall be Drilled to Match ¾"ø PVC sleeve spacing.

COUNTERBORE DETAIL
6" = 1'-0"

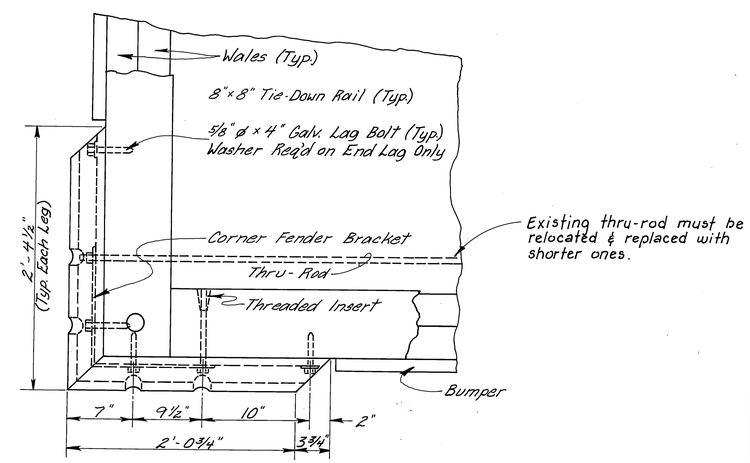

PLAN
1½" = 1'-0"

EXISTING
CORNER FENDER DETAILS

DCW 1-22-87

STAMP	DO NOT SCALE THIS DRAWING — USE DIMENSIONS
STATE OF ALASKA 49th Rosemary Matt CE-6040 REGISTERED PROFESSIONAL ENGINEER	STATE OF ALASKA DEPARTMENT OF TRANSPORTATION AND PUBLIC FACILITIES PETERSBURG ALASKA MISC. FLOAT DETAILS

DESIGNED RAM	CHECKED	DRAWN JPM	DATE 3/83
PROJECT NUMBER K-78190		SHEET 33	OF 55

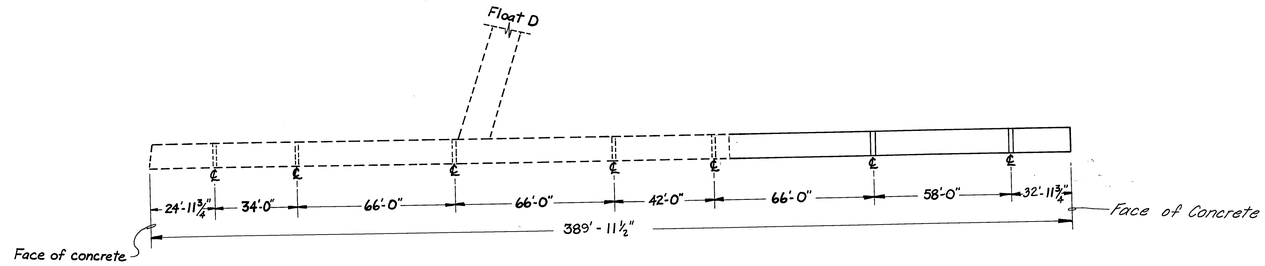

FLOAT "F" INTERIOR PILE LOCATIONS
N.T.S.

—— New
---- Existing

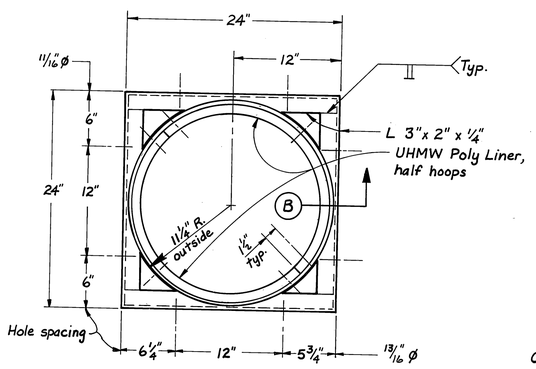

PLAN

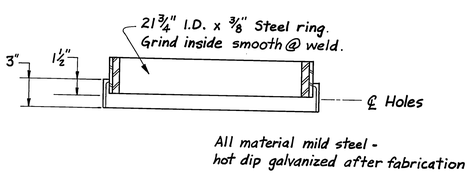

SECTION

INTERIOR PILE COLLAR WELDMENT DETAILS
1½" = 1'-0"

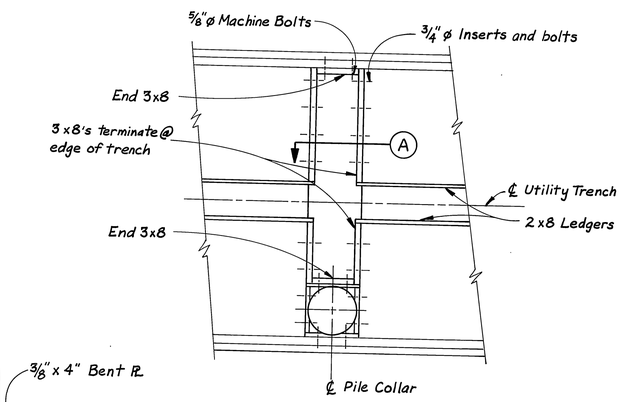

PLAN
⅜" = 1'-0"

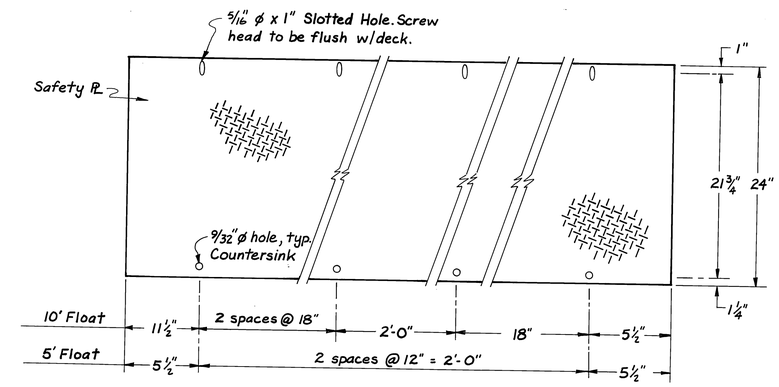

COVER PLATE FOR
INTERIOR PILE COLLAR
No Scale

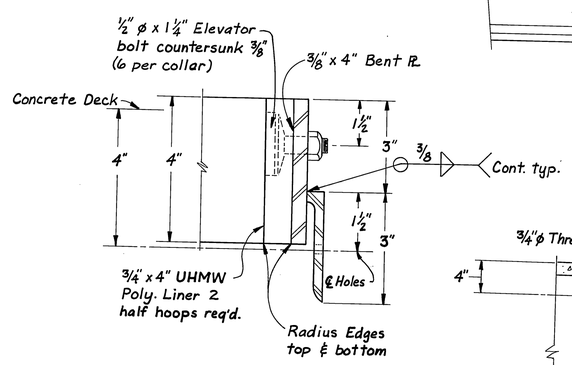

SECTION B
6" = 1'-0"

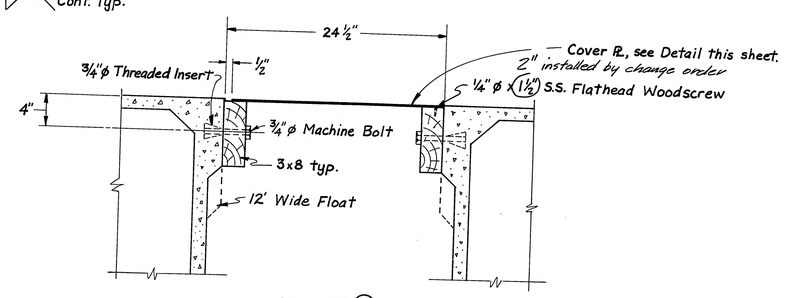

SECTION A
1½" = 1'-0"

NOTES:

1. 13/16" ø holes in 3x8 to be drilled so that top of PL will match deck. End 3x8's to be bolted to wales & pile collar weldment.
2. UHMW Poly Liners, as shown, with 3 bolts per half collar are for the case where the UHMW Poly Liner has been heated and then molded to the shape shown. For liners which are cold bent a minimum of 5 bolts per half collar are required. Type of bending shall be called out on the shop drawings.

DCW 1-22-87

STAMP

STATE OF ALASKA 49th Rosemary Matt CE-6040 REGISTERED PROFESSIONAL ENGINEER

DO NOT SCALE THIS DRAWING — USE DIMENSIONS

STATE OF ALASKA
DEPARTMENT OF TRANSPORTATION AND PUBLIC FACILITIES

Petersburg Alaska

FLOAT "F" INTERIOR PILE LOCATION & DETAILS

DESIGNED Staff	CHECKED	DRAWN RTB	DATE 2/84
PROJECT NUMBER K-78190		SHEET 34	OF 55

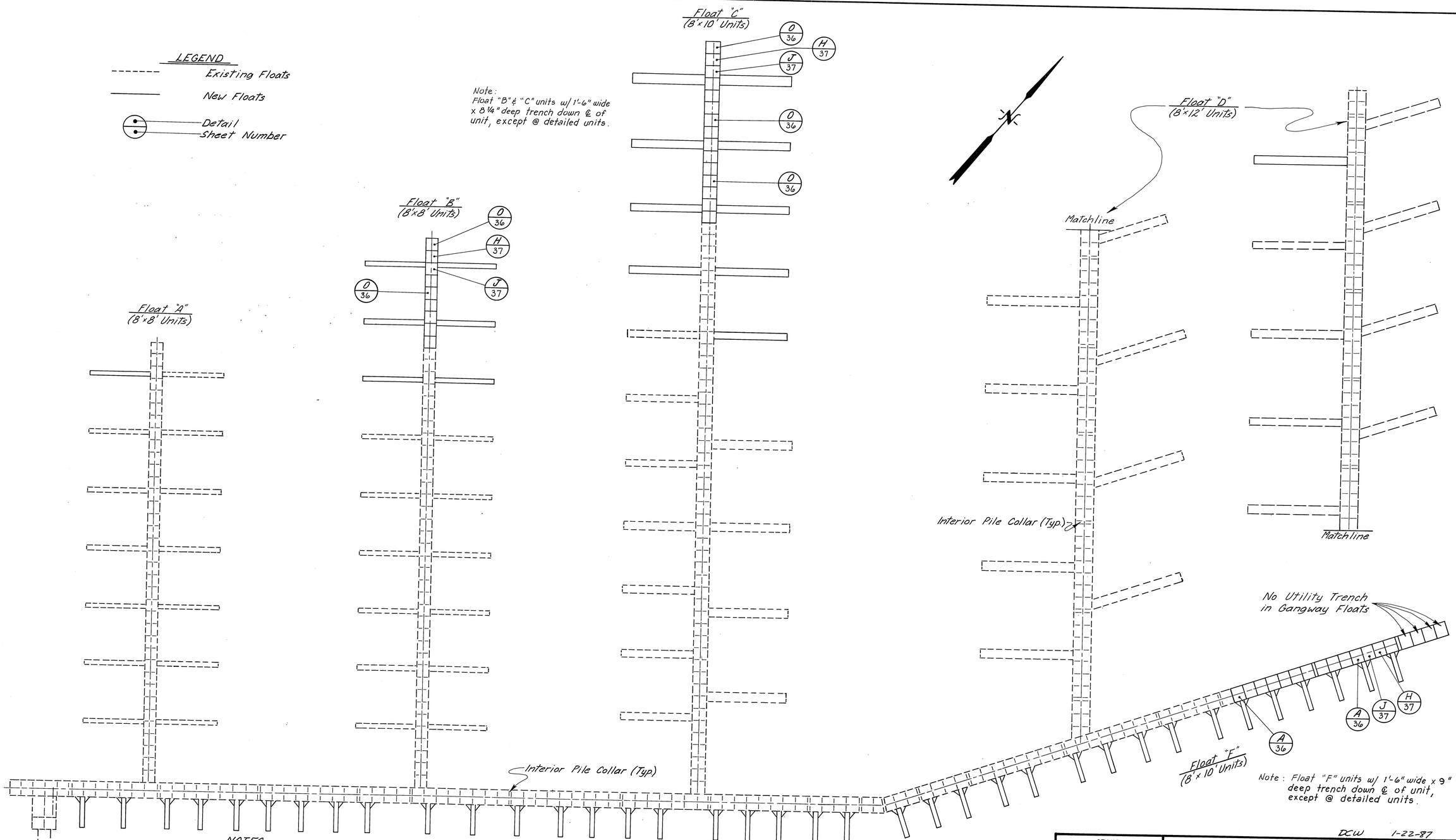

NOTES

1. For Float Dry Fire Line Layout & Details, See Sht. 38-43 & DFR1
2. For Float Electrical System Layout & Details, See Sht. 48-51
3. For Stall Float Dimensions, See General Layout & Sht. 29 & 30.

DETAIL DESCRIPTIONS

A - Exp./Cont. Assembly Only

H - Finger Float Fire Line Valve Cross Trench.

J - Finger Float Fire Line Tee w/ Hydrant on the Northeast Side of Floats "B" & "C" and the North Side of Float "F".

O - Finger Float w/ Meterbase on Each Side & Exp./Cont. Assembly as Required.

DCW 1-22-87

STAMP

STATE OF ALASKA 49th Rosemary Matt CE-6040 REGISTERED PROFESSIONAL ENGINEER

DO NOT SCALE THIS DRAWING — USE DIMENSIONS

STATE OF ALASKA

DEPARTMENT OF TRANSPORTATION AND PUBLIC FACILITIES

PETERSBURG ALASKA

MAIN & FINGER FLOAT UNIT LAYOUT, BY TYPE

DESIGNED RAM	CHECKED	DRAWN JM	DATE 3/84
PROJECT NUMBER K-78190		SHEET 35	OF 55

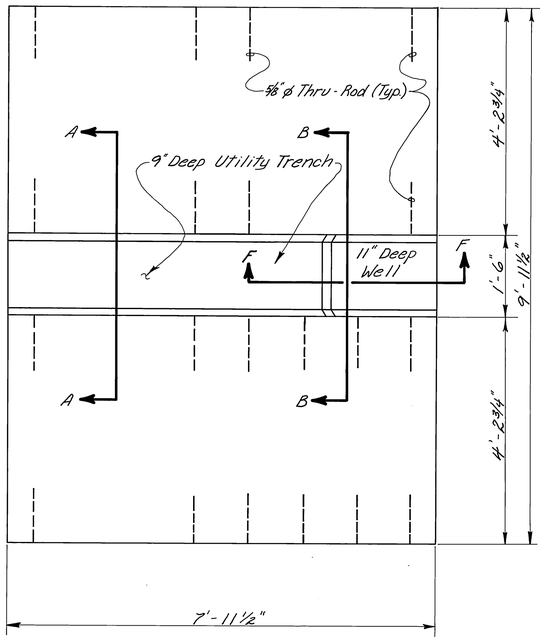

DETAIL "A"
3/4" = 1'-0"
(Trench for Contraction/Expansion Assembly)

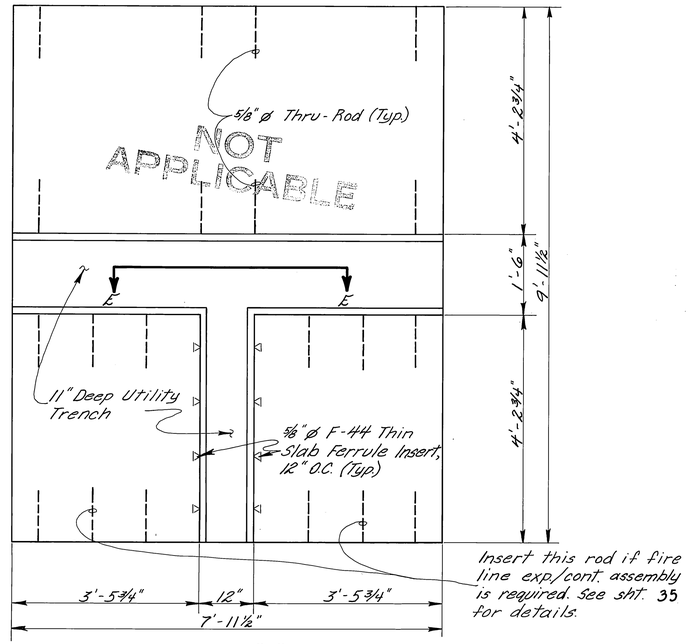

DETAIL "C"
3/4" = 1'-0"
(Electrical Cross Trench for Float "F")

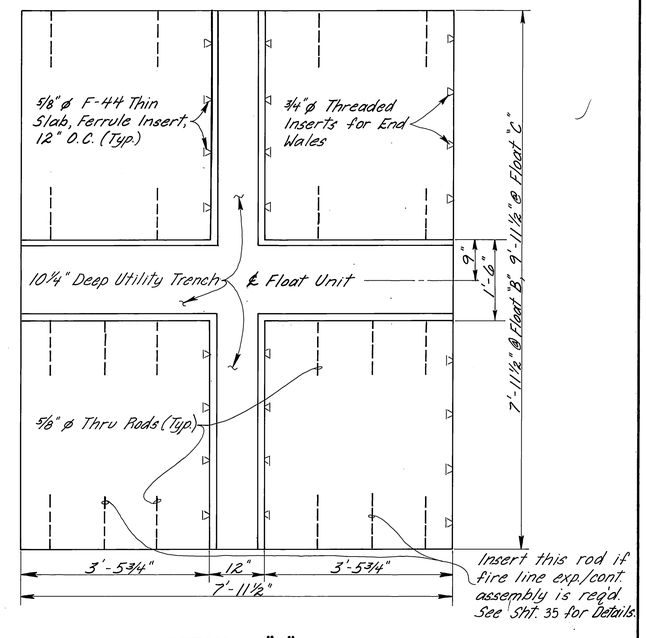

DETAIL "O"
3/4" = 1'-0"
(Finger Float w/ Meterbase ea. side & exp/cont. assembly, as required)

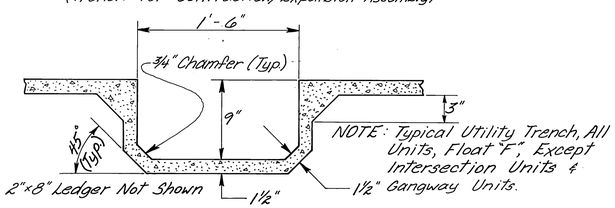

SECTION A-A
1-1/2" = 1'-0"

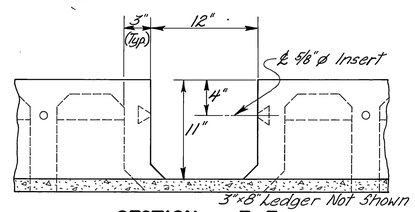

SECTION E-E
1-1/2" = 1'-0"

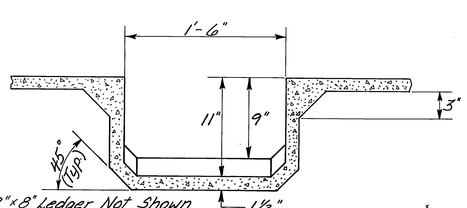

SECTION B-B
1-1/2" = 1'-0"

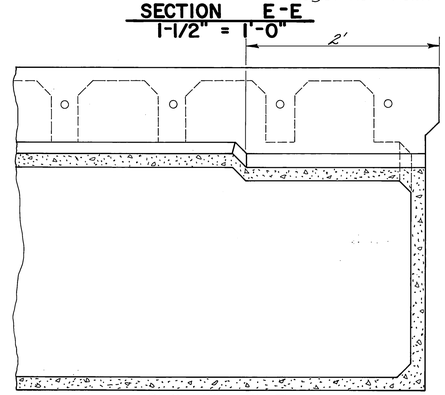

SECTION F-F
1-1/2" = 1'-0"

NOTES

1. See sheet 28 for additional details & reinforcing.
2. Ledgers not shown: 2"×8" ledgers in main trench & fire line cross trenches, 3"×8" ledgers in electrical trench.

DCW 1-22-87

STAMP	DO NOT SCALE THIS DRAWING — USE DIMENSIONS
STATE OF ALASKA 49th R.R. Matt Rosemary Matt CE-6040 REGISTERED PROFESSIONAL ENGINEER	STATE OF ALASKA DEPARTMENT OF TRANSPORTATION AND PUBLIC FACILITIES PETERSBURG, ALASKA UTILITY TRENCH INTERSECTIONS

DESIGNED RAM	CHECKED	DRAWN JM	DATE 3/83
PROJECT NUMBER K-78190		SHEET 36	OF 55

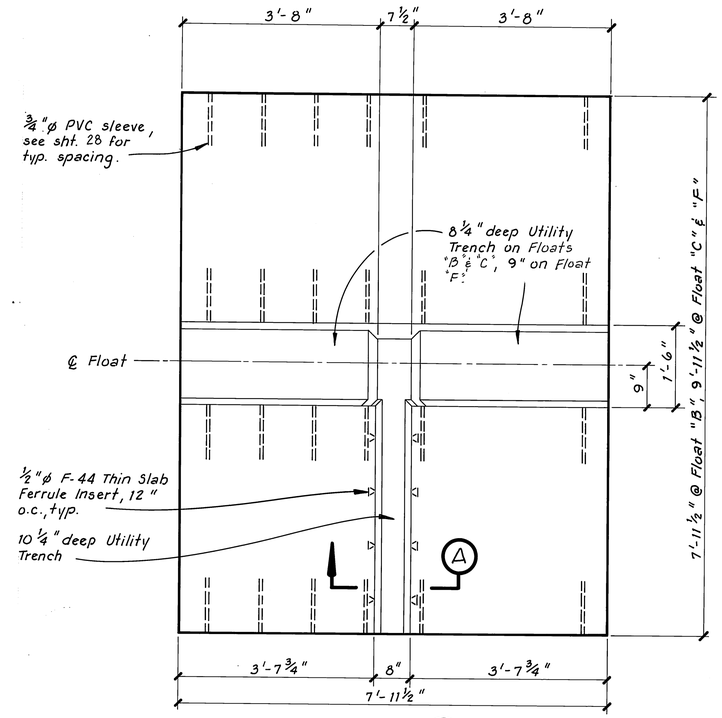

DETAIL (H)
¾" = 1'-0"
(Finger Float Fire Line Valve Cross Trench)

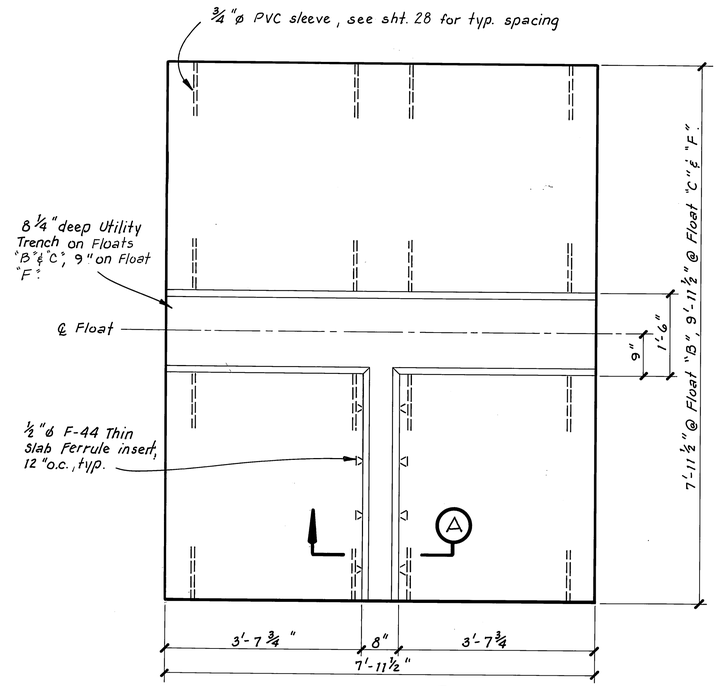

DETAIL (J)
¾" = 1'-0"
(Finger Float Fire Line Tee w/ Hydrant on the Northeast side of Float "B" & "C" or North side of Float "F".)

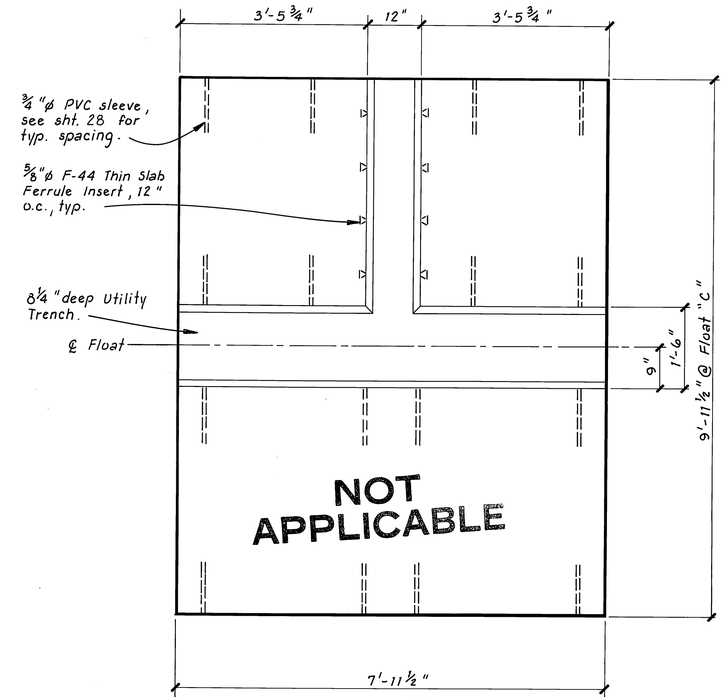

DETAIL (K)
¾" = 1'-0"
(Finger Float Electrical w/ Meterbase on Southwest side.)

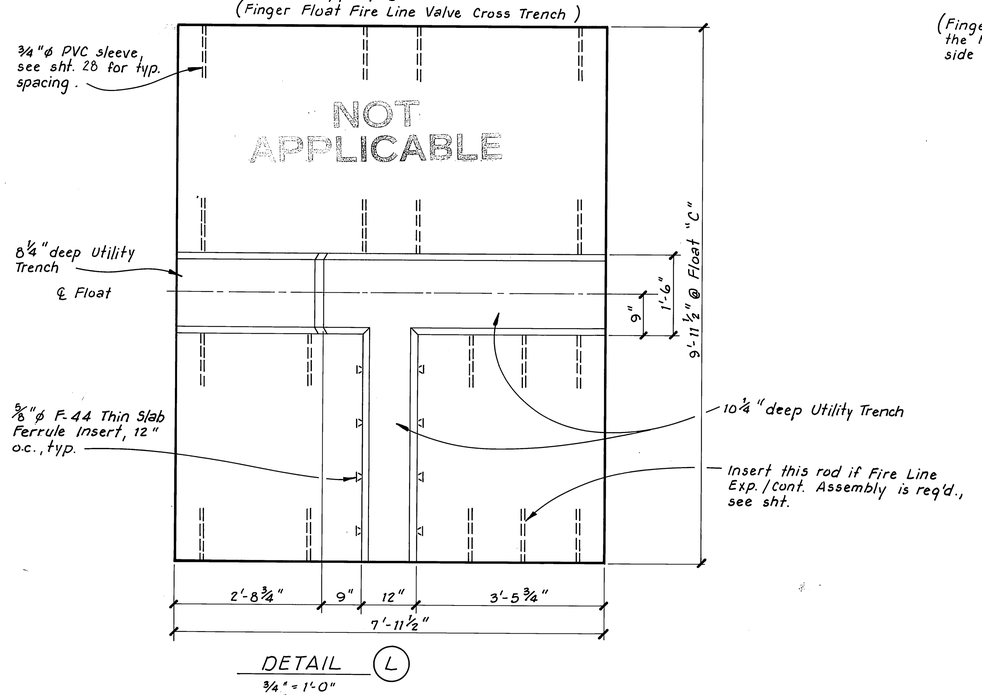

DETAIL (L)
¾" = 1'-0"
(Finger Float w/ Meterbase on Northwest side and Exp./Cont. assembly as req'd.)

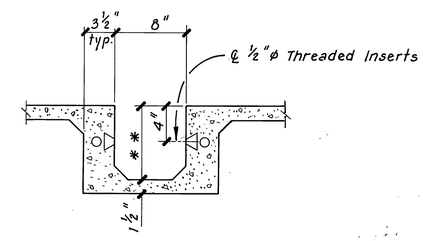

** 8¼" or 10¼", see details this sheet.

SECTION (A)
1½" = 1'-0"

NOTE:
1. See sht. 28 for additional details and reinforcing
2. Ledgers not shown: 2x8 ledgers in main trench and Fireline cross trenches.
   3x8 ledgers in electrical cross trenches.

DCW 1-22-87

STAMP

STATE OF ALASKA 49th Rosemary Matt CE-6040 REGISTERED PROFESSIONAL ENGINEER

DO NOT SCALE THIS DRAWING — USE DIMENSIONS

STATE OF ALASKA
DEPARTMENT OF TRANSPORTATION AND PUBLIC FACILITIES

Petersburg Alaska

UTILITY TRENCH INTERSECTIONS

DESIGNED	CHECKED	DRAWN TS	DATE 3-84
PROJECT NUMBER K-78190		SHEET 37	OF 55

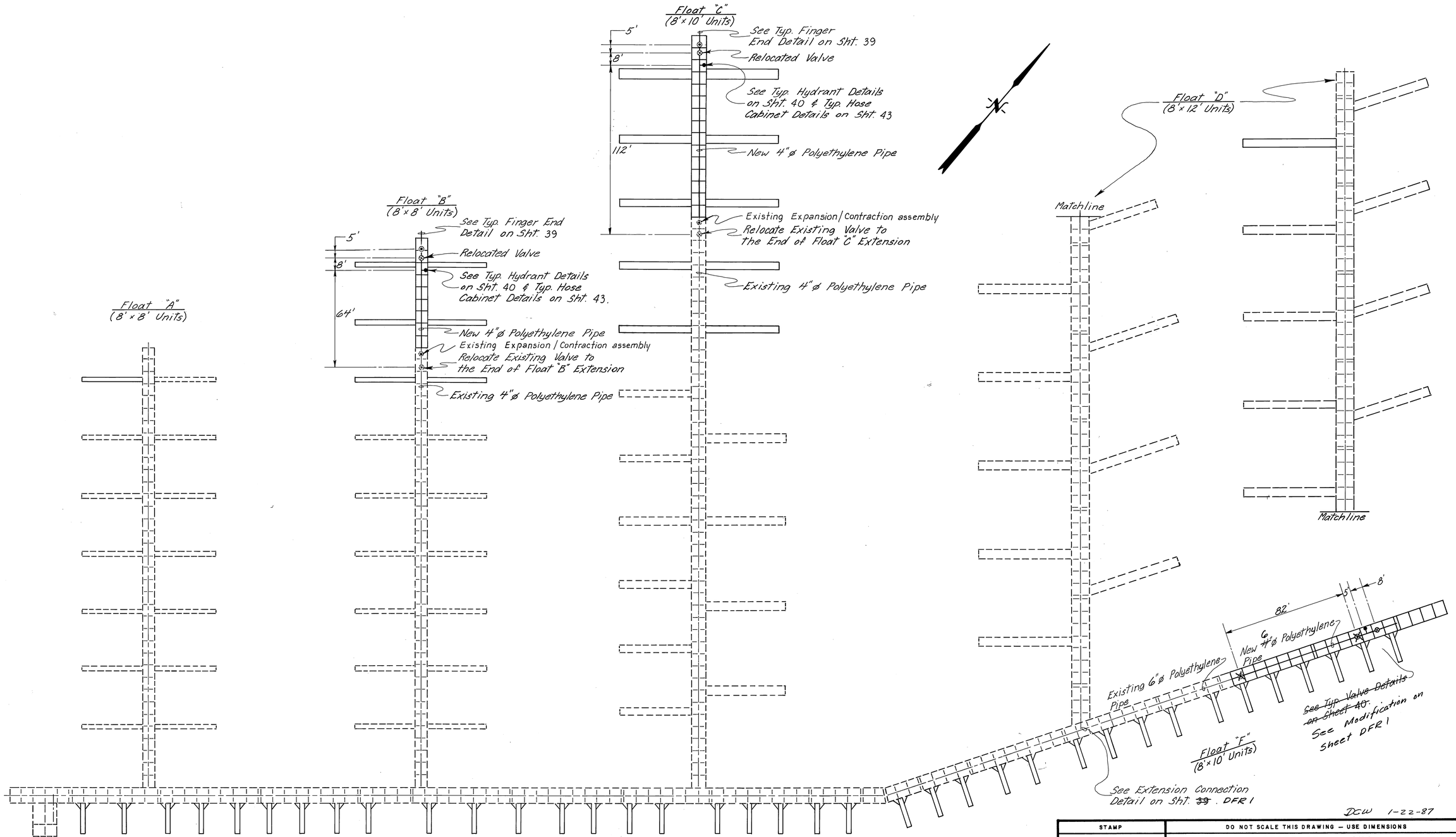

DCW 1-22-87

STAMP	DO NOT SCALE THIS DRAWING — USE DIMENSIONS
STATE OF ALASKA 49th Rosemary Matt CE-6040 REGISTERED PROFESSIONAL ENGINEER	STATE OF ALASKA DEPARTMENT OF TRANSPORTATION AND PUBLIC FACILITIES PETERSBURG ALASKA DRY FIRE LINE EXTENSION LAYOUT

DESIGNED RAM	CHECKED	DRAWN JM	DATE 3/84
PROJECT NUMBER K-78190		SHEET 38	OF 55

NOTE: System & details shown utilize the butt-fusion process. Flanged or coupled joints shall not be used, except molded stub ends are required at the valves, and a flanged connection shall be used to extend the dry fire line onto the Float "F" Extension.

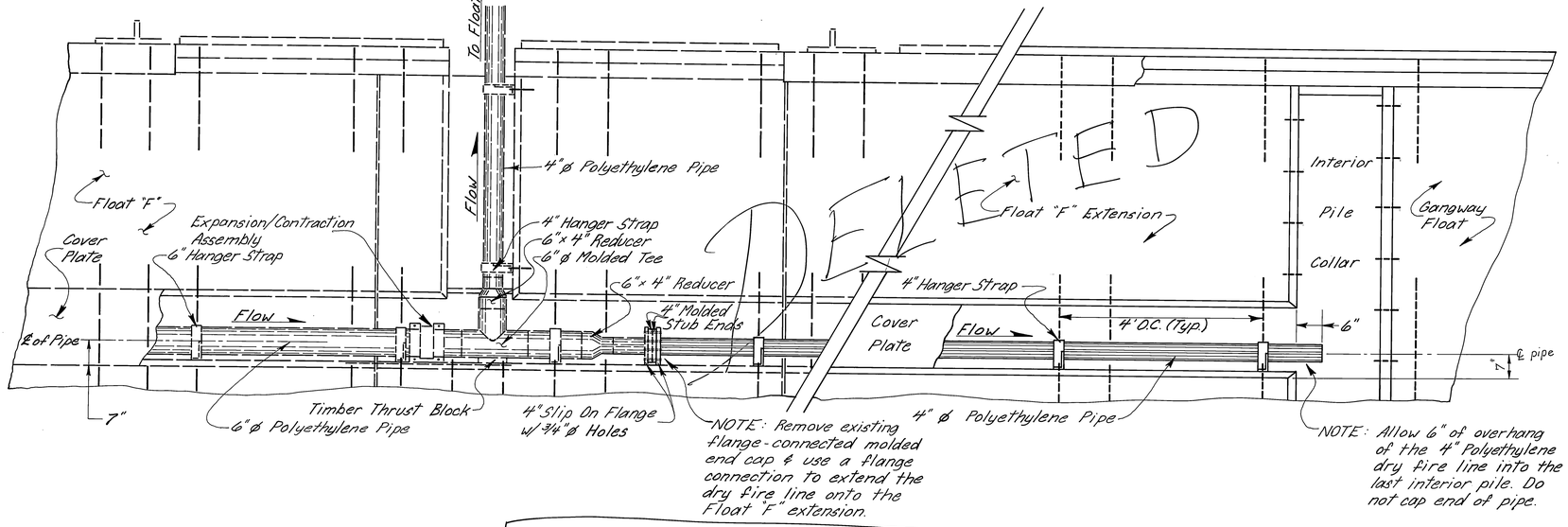

DELETED

NOTE: Blocking will be required every 4'-0" under pipe at hanger locations on Float "F".

FLOAT "F" SERVICE DETAIL
3/4" = 1'-0"
See Sheet DF R1

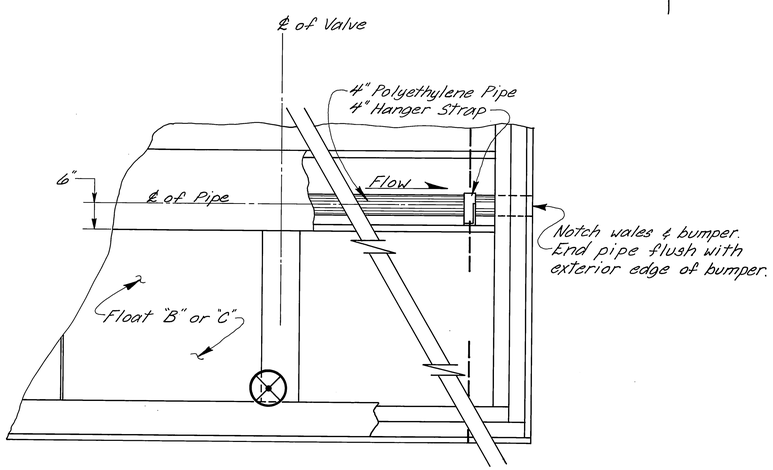

TYPICAL FINGER END DETAIL
3/4" = 1'-0"

DCW 1-22-87

STAMP	DO NOT SCALE THIS DRAWING – USE DIMENSIONS
STATE OF ALASKA 49th Rosemary Matt CE-6040 REGISTERED PROFESSIONAL ENGINEER	STATE OF ALASKA DEPARTMENT OF TRANSPORTATION AND PUBLIC FACILITIES PETERSBURG ALASKA DRY FIRE LINE SERVICE DETAILS
	DESIGNED RAM CHECKED ____ DRAWN JM DATE 3/83 PROJECT NUMBER K-78190 SHEET 39 OF 55

K&E 19 1153 9-81 MC 2860•

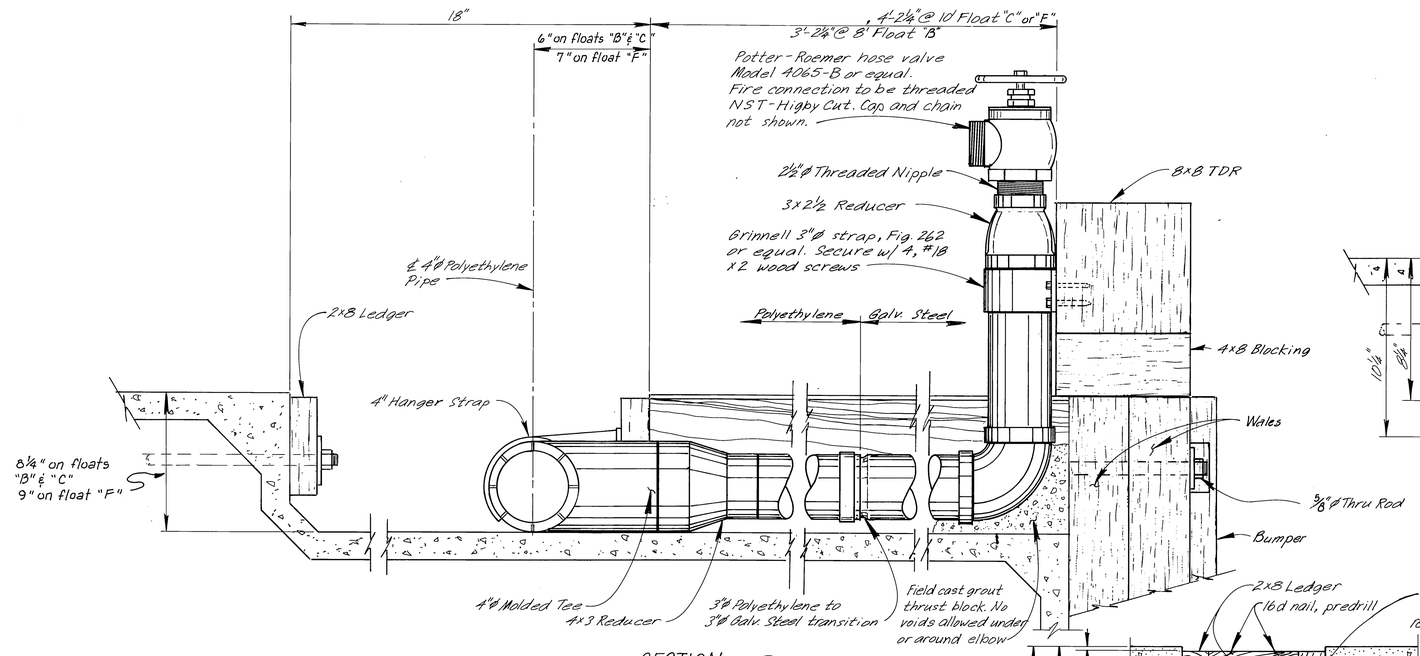

SECTION (A)

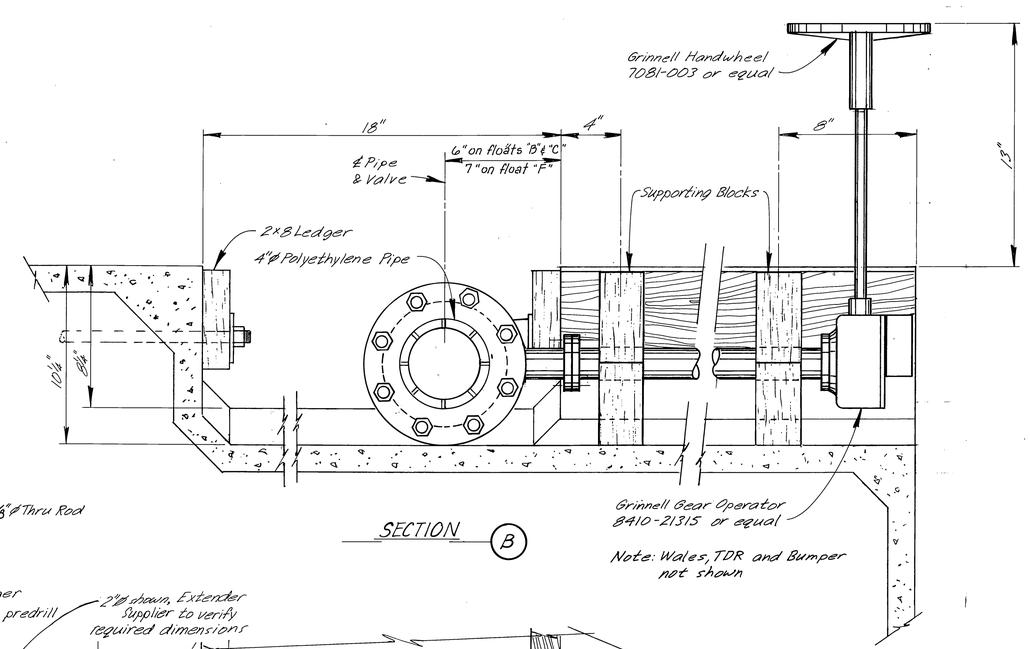

SECTION (B)

Note: When relocating Valves, it will be necessary to install a flanged joint in the area from which the valve is removed.

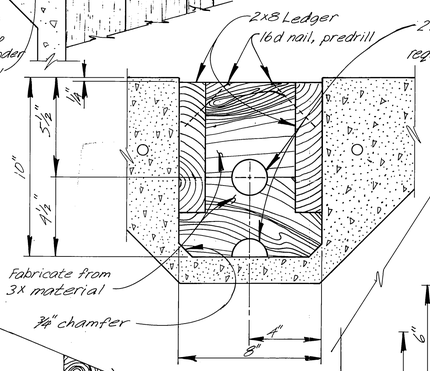

SECTION (C)

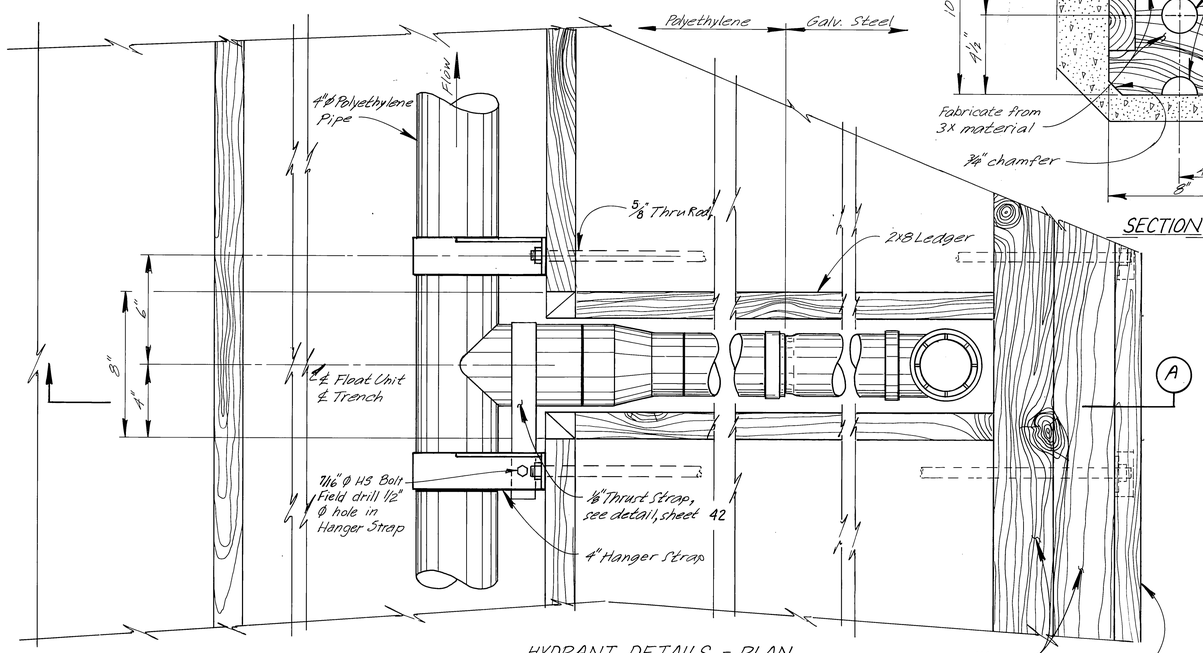

HYDRANT DETAILS - PLAN

Note: On float "F" Thrust Strap is installed on top of the Hanger Strap and the end must be field trimmed to fit.

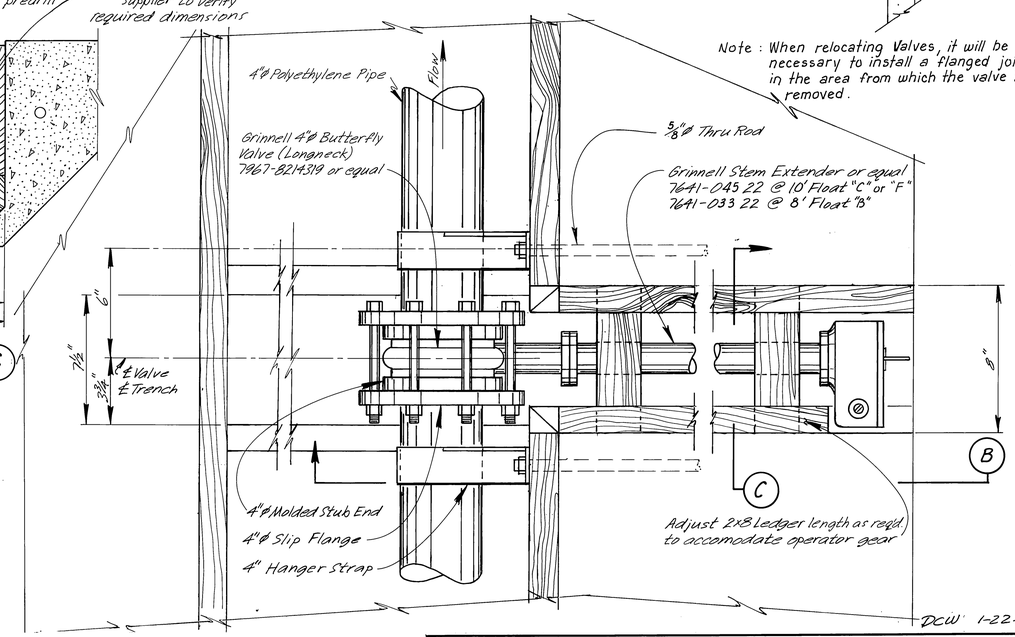

VALVE DETAILS - PLAN

Note: 4"Ø Molded Stub End may require reaming to insure proper clearance for butterfly movement between opened and closed positions. Contractor and/or supplier shall verify.

DCW 1-22-87

STAMP	DO NOT SCALE THIS DRAWING – USE DIMENSIONS
STATE OF ALASKA 49th Rosemary Matt CE-6040 REGISTERED PROFESSIONAL ENGINEER	STATE OF ALASKA DEPARTMENT OF TRANSPORTATION AND PUBLIC FACILITIES DESIGN AND CONSTRUCTION
	Petersburg Alaska
	HYDRANT & VALVE DETAILS
	SCALE 3"=1'-0" SURVEYED APPROVED DESIGNED VAL/RAM DRAWN VAL/WB CHECKED DATE 3/84
	PROJECT NUMBER K78190 SHEET 40 OF 55

K&E 19 1153 9-81 MC 2860

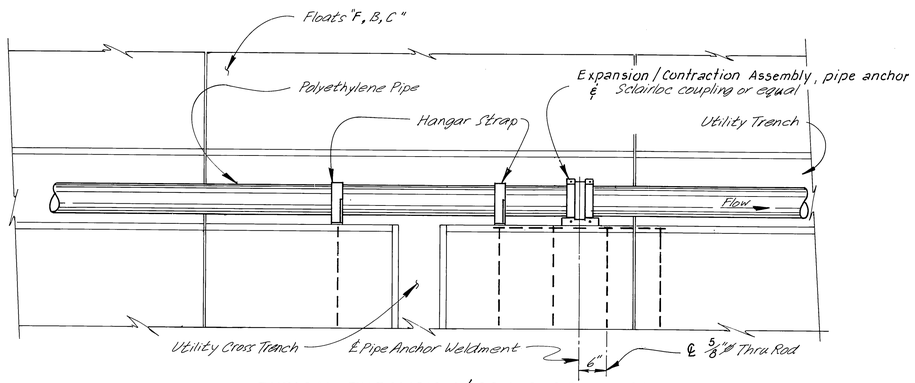

TYPICAL EXPANSION/CONTRACTION ASSEMBLY

3/4"=1'-0"

(See sht. 38 for Assembly Locations)

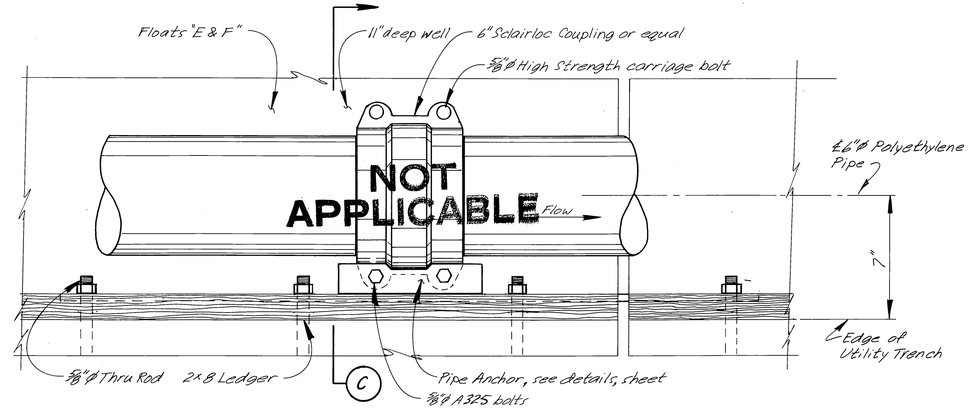

PLAN

6"ø ASSEMBLY DETAILS

3"=1'-0"

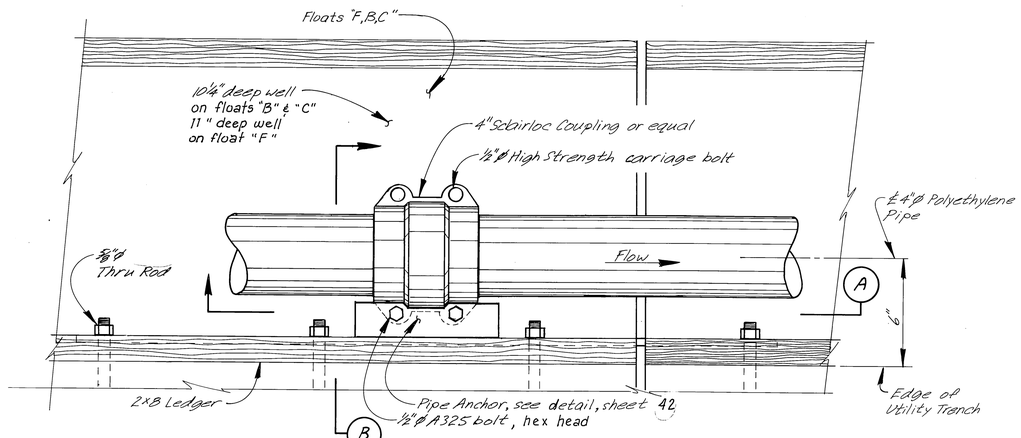

PLAN

4"ø ASSEMBLY DETAILS

3"=1'-0"

Notes:

1. Prior to fit up of coupling into pipe anchor the coupling shall be adequately seated on the pipe by tightening of the coupling bolts. Once the seating has been completed, the mounting bolts can be removed and the connection made as detailed.
2. 1/2"ø hex head mounting bolts shall be tightened to a degree adequate to insure uniform coupling tightness around pipe.

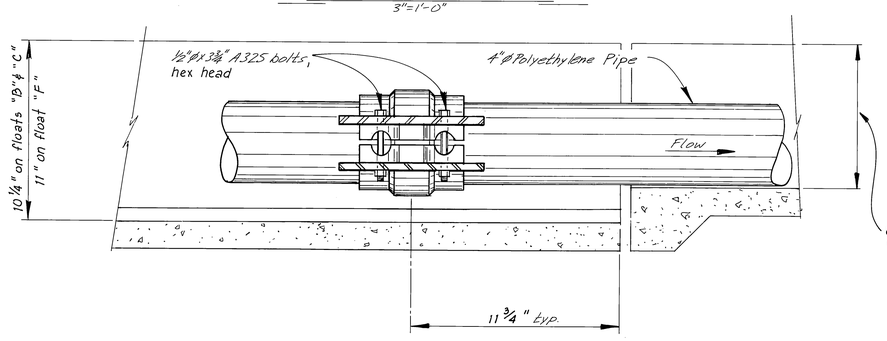

SECTION (A)

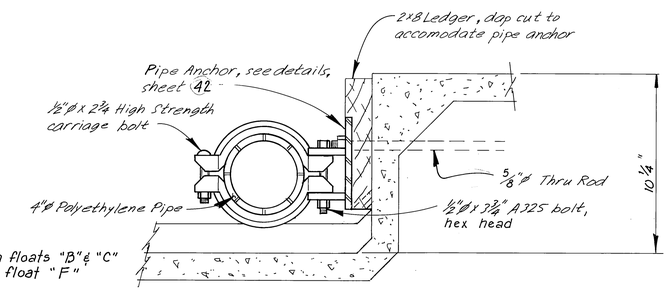

SECTION (B)

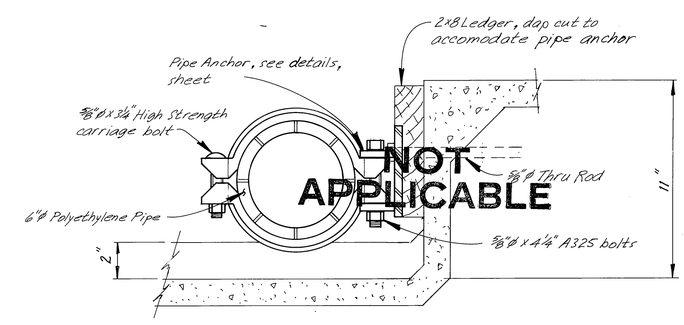

SECTION (C)

DCW 1-22-87

STAMP	DO NOT SCALE THIS DRAWING – USE DIMENSIONS
STATE OF ALASKA 49th Rosemary Matt CE-6040 REGISTERED PROFESSIONAL ENGINEER	STATE OF ALASKA DEPARTMENT OF TRANSPORTATION AND PUBLIC FACILITIES DESIGN AND CONSTRUCTION
	Petersburg — Alaska
	EXPANSION/CONTRACTION ASSEMBLIES
SCALE As Noted DESIGNED JAL/RAM CHECKED JS	SURVEYED DRAWN JAL/LVB DATE 3/84 — APPROVED
PROJECT NUMBER K78190	SHEET 41 OF 55

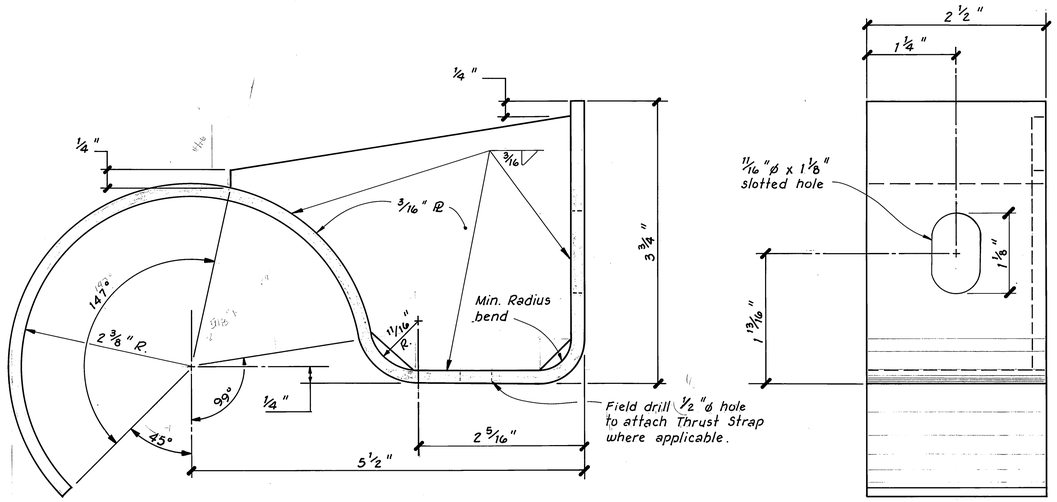

ELEVATION

PLAN

4" ø HANGER STRAP

12" = 1'-0"

(FOR FLOAT F ONLY)

Note: Pipe in contact with steel straps shall be wrapped with 1/8" thick x 3" wide rubber sheathing. Extend beyond contact surface 1" in either direction.

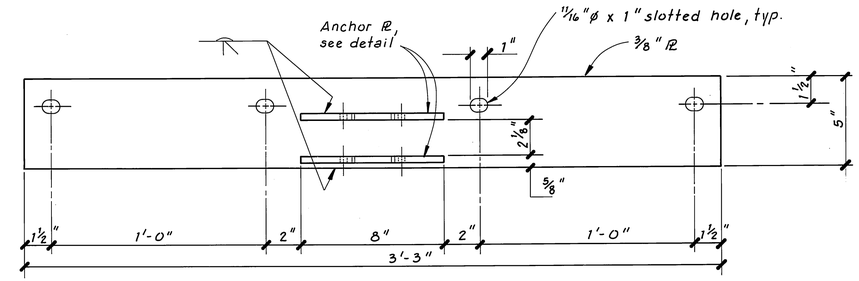

PIPE ANCHOR

3" = 1'-0"

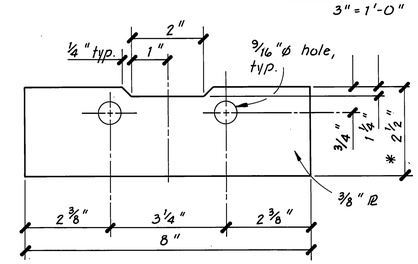

* 2 1/2" for pipe anchors on Float B & C.
3 1/2" for pipe anchors on Float F.

NOTE: Dimensions shown are approximate. Supplier of couplings shall verify dimensions.

ANCHOR ℞

6" = 1'-0"

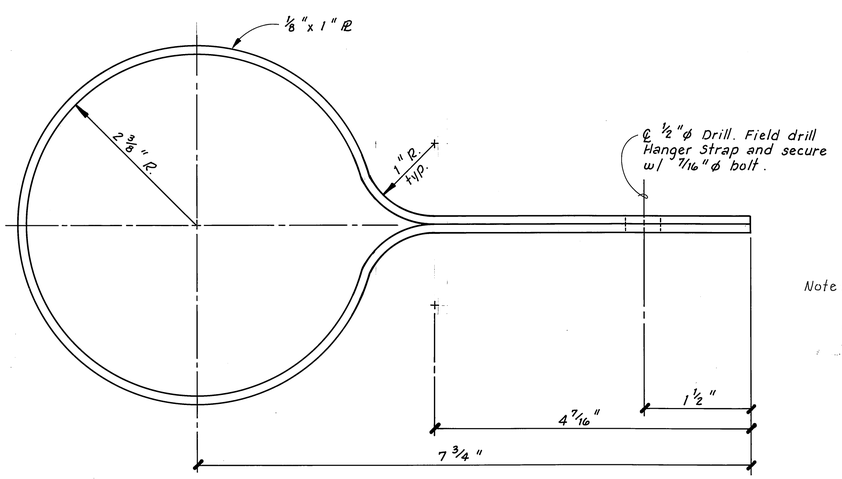

Note: On float "F" the end of the Thrust Strap must be field trimmed.

THRUST STRAP

12" = 1'-0"

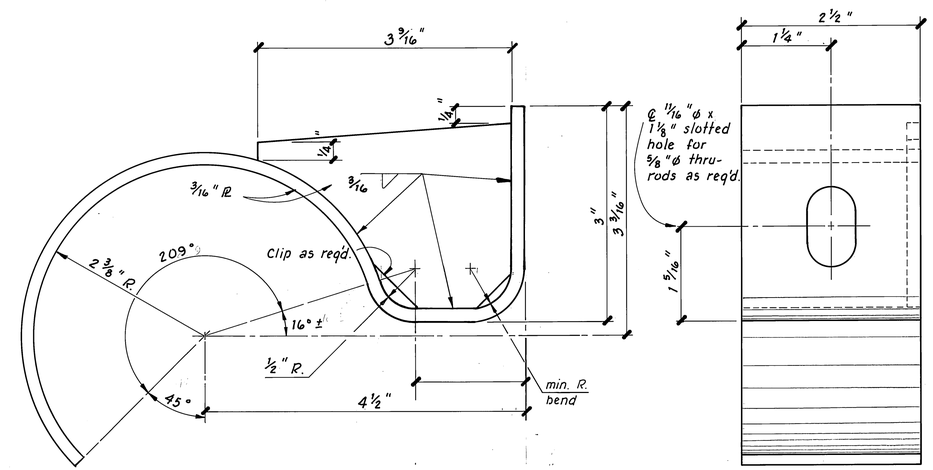

4" HANGER STRAP

12" = 1'-0"

(FOR FLOATS B & C ONLY)

DCW 1-22-87

STAMP

STATE OF ALASKA 49th Rosemary Matt CE-6040 REGISTERED PROFESSIONAL ENGINEER

DO NOT SCALE THIS DRAWING — USE DIMENSIONS

STATE OF ALASKA
DEPARTMENT OF TRANSPORTATION AND PUBLIC FACILITIES

Petersburg Alaska

DRY FIRE LINE MISC. DETAILS

DESIGNED	CHECKED	DRAWN TS	DATE 3-84
PROJECT NUMBER K-78190		SHEET 42	OF 55

K&E 19 1153 9-81 MC 2860

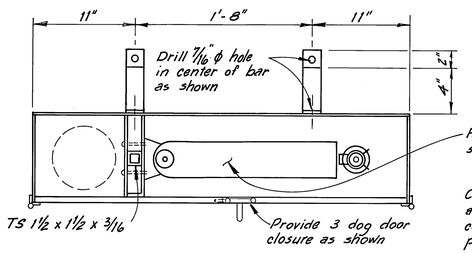

Hose rack w/ wall bracket and 1½" ϕ x 150' single jacket linen hose w/ 1½" fog nozzle.

Cabinet to be constructed of 12 ga. galv. sheet metal adequately reinforced at corners & edges in conformance with established sheet metal fabricating practice. Provide weather stripping on all door to cabinet contact surfaces.

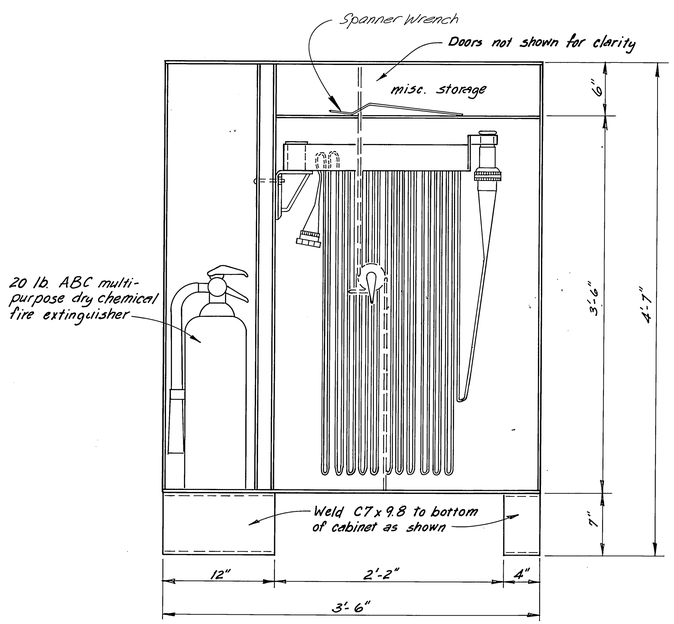

HOSE & EXTINGUISHER CABINET

1½" = 1'-0"

Note: Locate cabinets opposite every fire hydrant on floats.

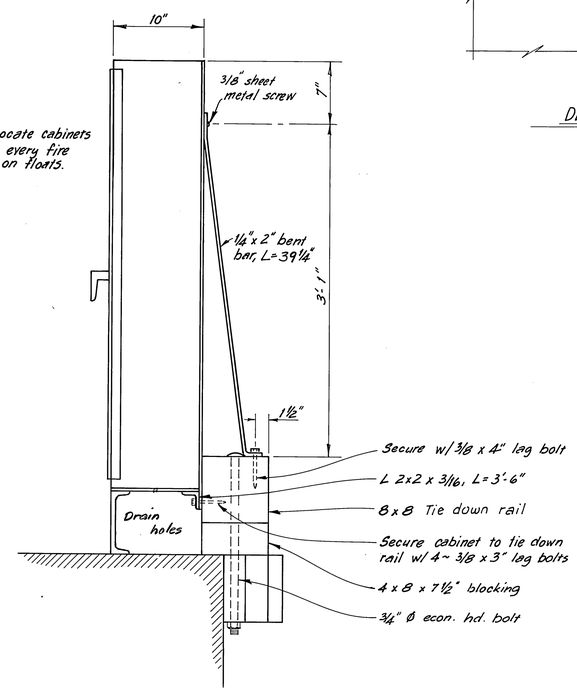

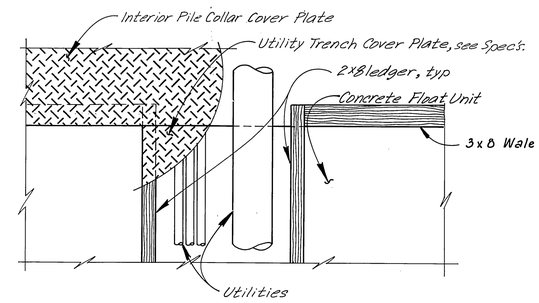

DETAIL @ INTERIOR PILE COLLAR

1½" = 1'-0"

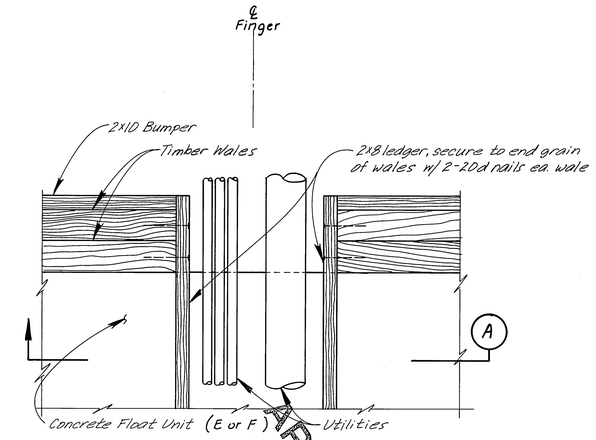

UTILITY DETAILS @ TIMBER WALES

1½" = 1'-0"

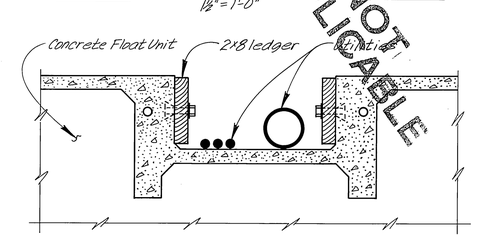

SECTION A

1½" = 1'-0"

NOT APPLICABLE

DCW 1-22-87

STAMP	DO NOT SCALE THIS DRAWING – USE DIMENSIONS
STATE OF ALASKA 49th Rosemary Matt CE-6040 REGISTERED PROFESSIONAL ENGINEER	STATE OF ALASKA DEPARTMENT OF TRANSPORTATION AND PUBLIC FACILITIES DESIGN AND CONSTRUCTION
	Petersburg — Alaska
	UTILITY DETAILS & FIRE EXTINGUISHER CABINET
	SCALE As Noted; DESIGNED JAL/RAM; CHECKED RAM; SURVEYED; DRAWN DB; DATE 4-83; APPROVED
	PROJECT NUMBER K78190; SHEET 43 OF 55

K&E 19 1153 9-81 MC 2860•

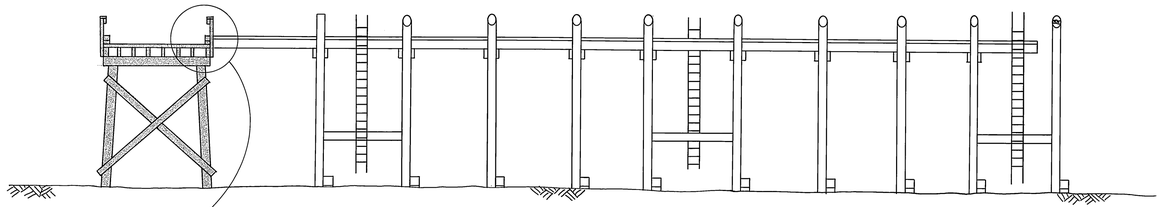

ELEVATION

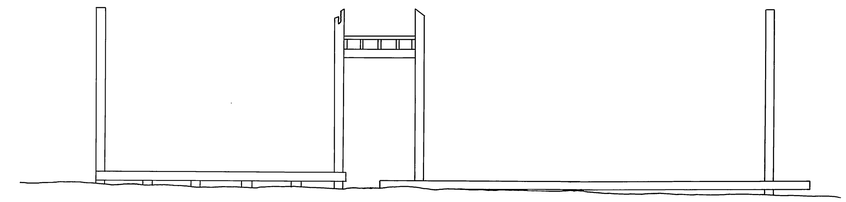

CROSS SECTION

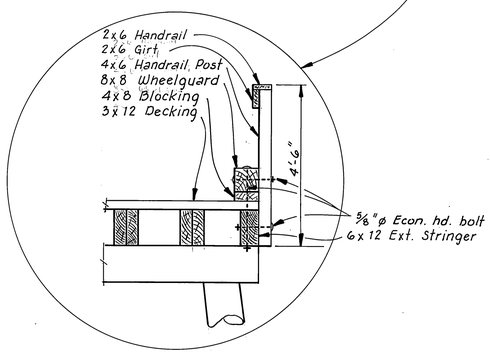

½" = 1'-0"

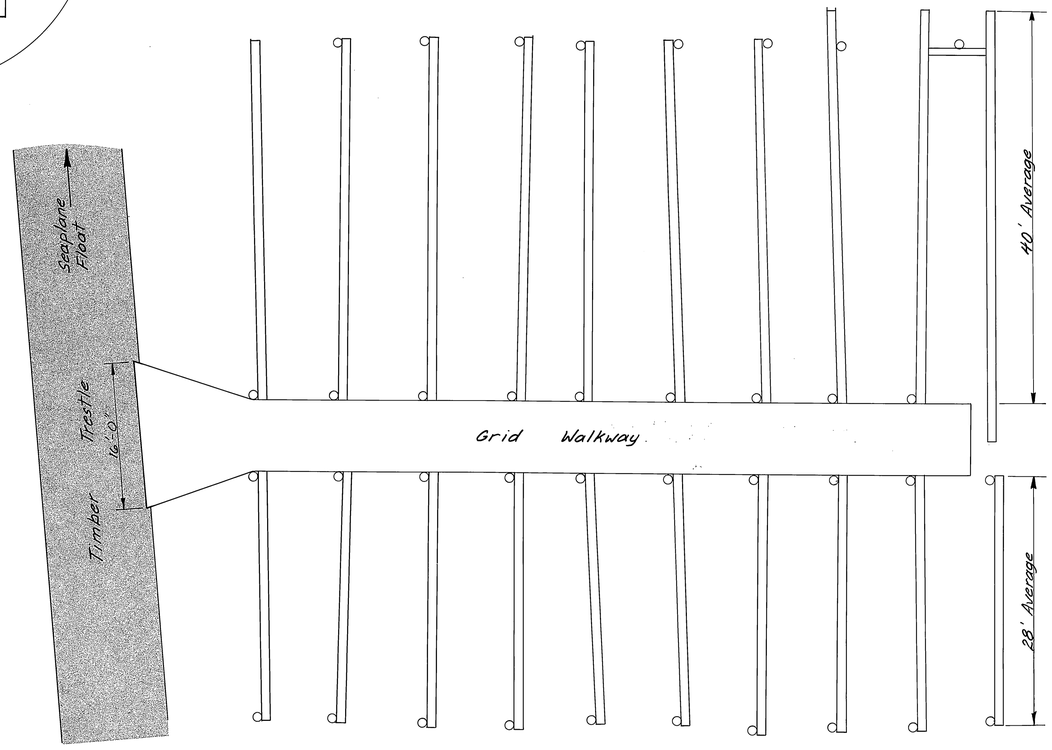

PLAN

WORK SUMMARY

1. Removal & disposal of existing grid which consists of: 10 - 12"x12" Timber Pile Caps, Average Length = 40'

   10 - 12"x 12" Timber Pile Caps, Average Length = 28'

   Approx. 784 s.f. of Timber Walkway

   Pull Approx. 220 Timber Piles - Includes Fender Piles, Piles Under Grid Caps, & Piles that Support Walkway.

2. Disconnect & remove electrical & water service to grid.

3. Reconstruct wheel guard & handrail to close the opening on the main timber trestle.

NOTE: Structures to remain shown shaded.

DCW 1-22-87

STAMP	DO NOT SCALE THIS DRAWING – USE DIMENSIONS
STATE OF ALASKA 49th Rosemary Matt CE-6040 REGISTERED PROFESSIONAL ENGINEER	STATE OF ALASKA DEPARTMENT OF TRANSPORTATION AND PUBLIC FACILITIES DESIGN AND CONSTRUCTION
	PETERSBURG ALASKA
	GRID REMOVAL ED
SCALE ½"=1'-0" DESIGNED RAM CHECKED	SURVEYED DRAWN MEB DATE 2/84 APPROVED
PROJECT NUMBER K-78190	SHEET 44 OF 55

COVER PL CONN. DETAIL
3" = 1'-0"

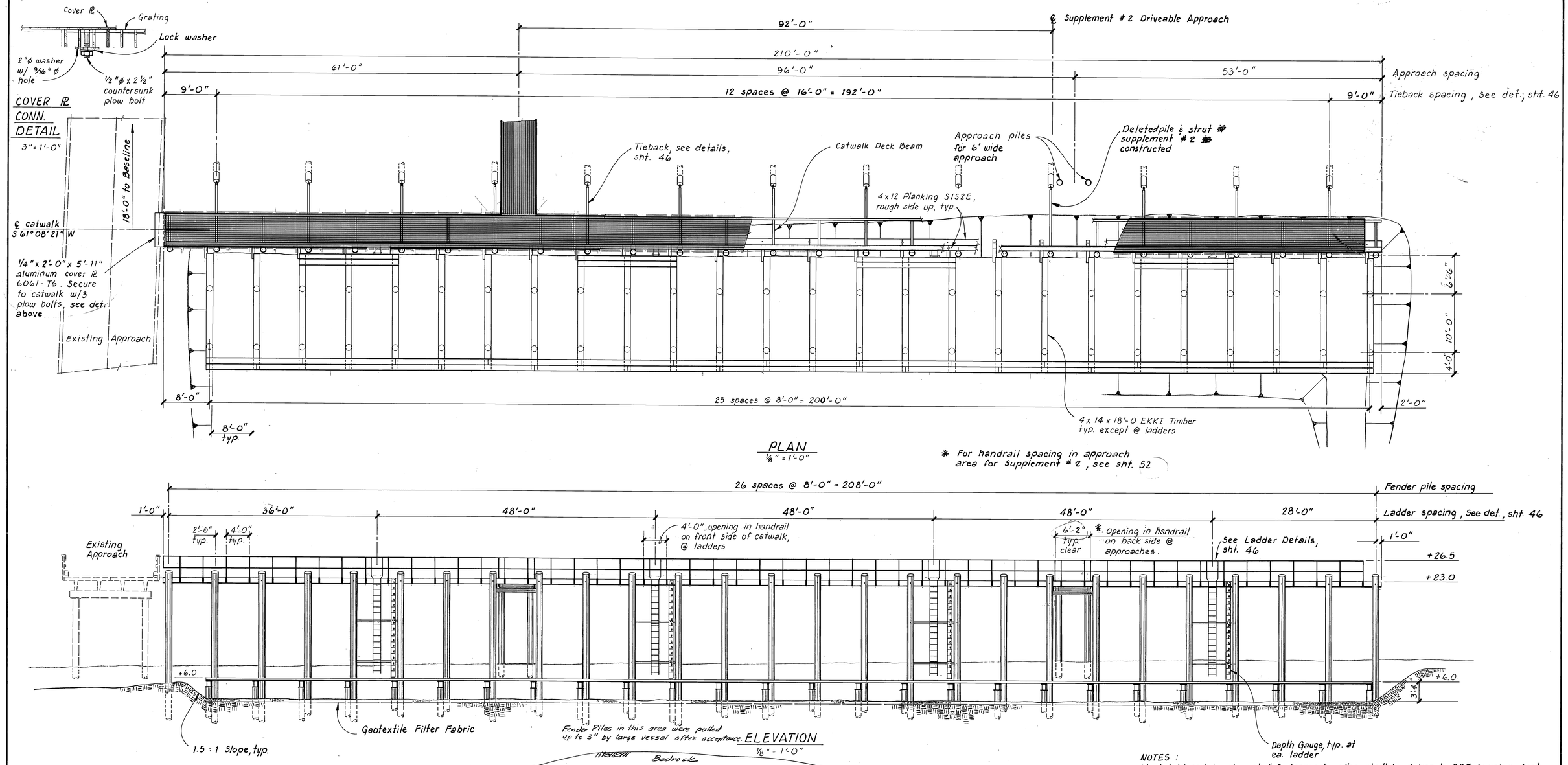

PLAN
1/8" = 1'-0"

* For handrail spacing in approach area for Supplement #2, see sht. 52

ELEVATION
1/8" = 1'-0"

NOTES:
Steel, Grid and Supplement #2 Approach, piles shall be driven to 30T bearing (est. penetration is 30').
Grid batter piles shall be driven at a 45° batter to 30T bearing (est. pen. is 30').
Timber approach piles shall be driven to 8T bearing (est. penetration is 15').
Penetration varied from 12' to 30'.
See Grid Cross Section on sht. 46.

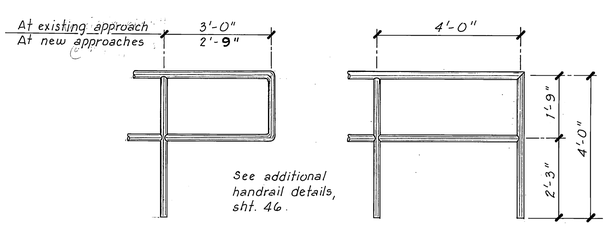

HANDRAIL DETAILS
AT APPROACHES 1/2" = 1'-0" AT LADDERS

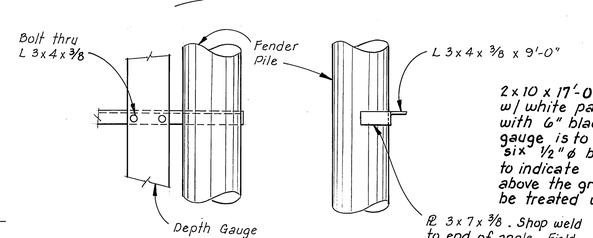

ELEVATION + PROFILE
DEPTH GAUGE & LADDER SUPPORT DETAILS
3/4" = 1'-0"

2x10 x 17'-0" timber planks w/ white painted background with 6" black numbers. Depth gauge is to be fastened with six 1/2"ø bolts & positioned to indicate the water depth above the grid caps. Plank to be treated with W.R. Penta.

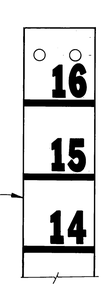

DEPTH GAUGE DETAIL
1" = 1'-0"

STAMP

STATE OF ALASKA 49th Robert P. Beck No. 1484-E REGISTERED PROFESSIONAL ENGINEER

DO NOT SCALE THIS DRAWING — USE DIMENSIONS

STATE OF ALASKA
DEPARTMENT OF TRANSPORTATION AND PUBLIC FACILITIES

Petersburg Alaska

GRID LAYOUT

DESIGNED RPB	CHECKED	DRAWN TS	DATE 6-84
PROJECT NUMBER K-78190		SHEET 45	OF 55

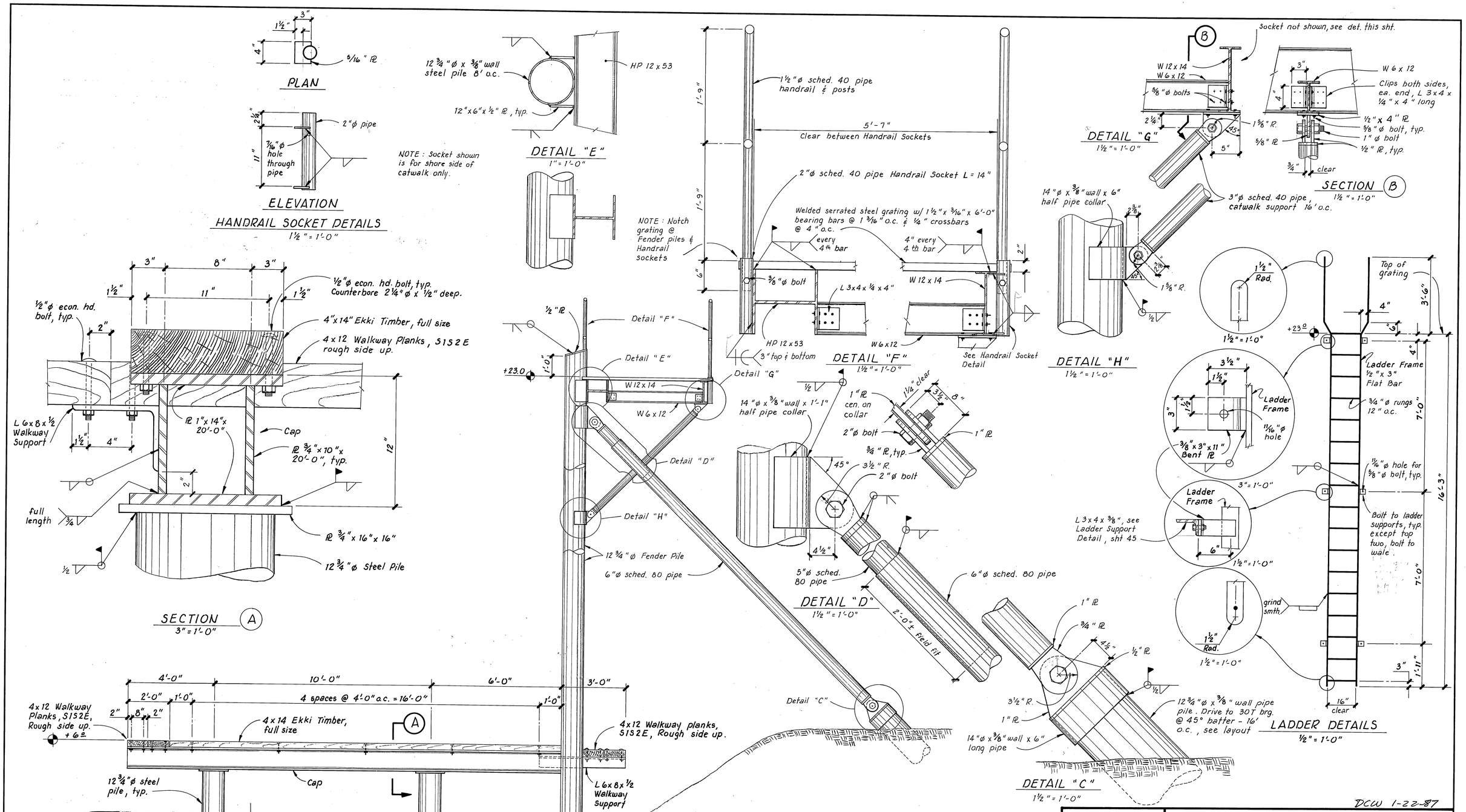

DCW 1-22-87

STAMP	DO NOT SCALE THIS DRAWING — USE DIMENSIONS
STATE OF ALASKA 49th Robert P. Beck No. 1484-E REGISTERED PROFESSIONAL ENGINEER	STATE OF ALASKA DEPARTMENT OF TRANSPORTATION AND PUBLIC FACILITIES Petersburg Alaska GRID DETAILS

DESIGNED RPB	CHECKED	DRAWN T.S.	DATE 6-84
PROJECT NUMBER K-78190		SHEET 46	OF 55

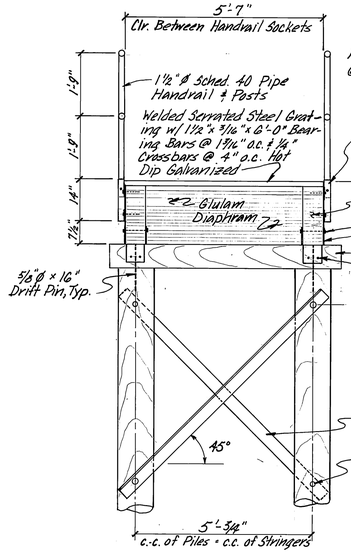

SECTION (A)
½" = 1'-0"

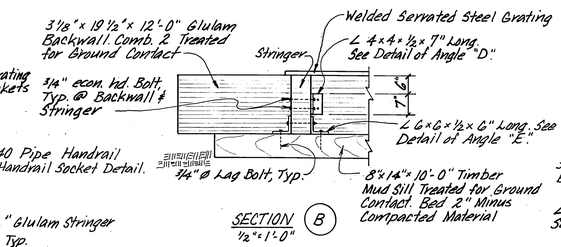

SECTION (B)
½" = 1'-0"

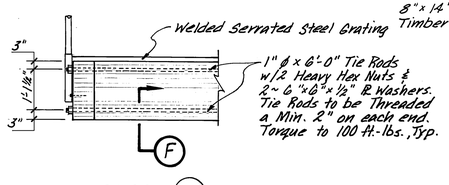

SECTION (C)
½" = 1'-0"

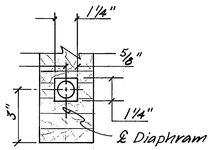

Note: Provide holes for tie rods by routing 1¼"x ⅝" channels in mating laminations prior to gluing.

SECTION (F)
3" = 1'-0"

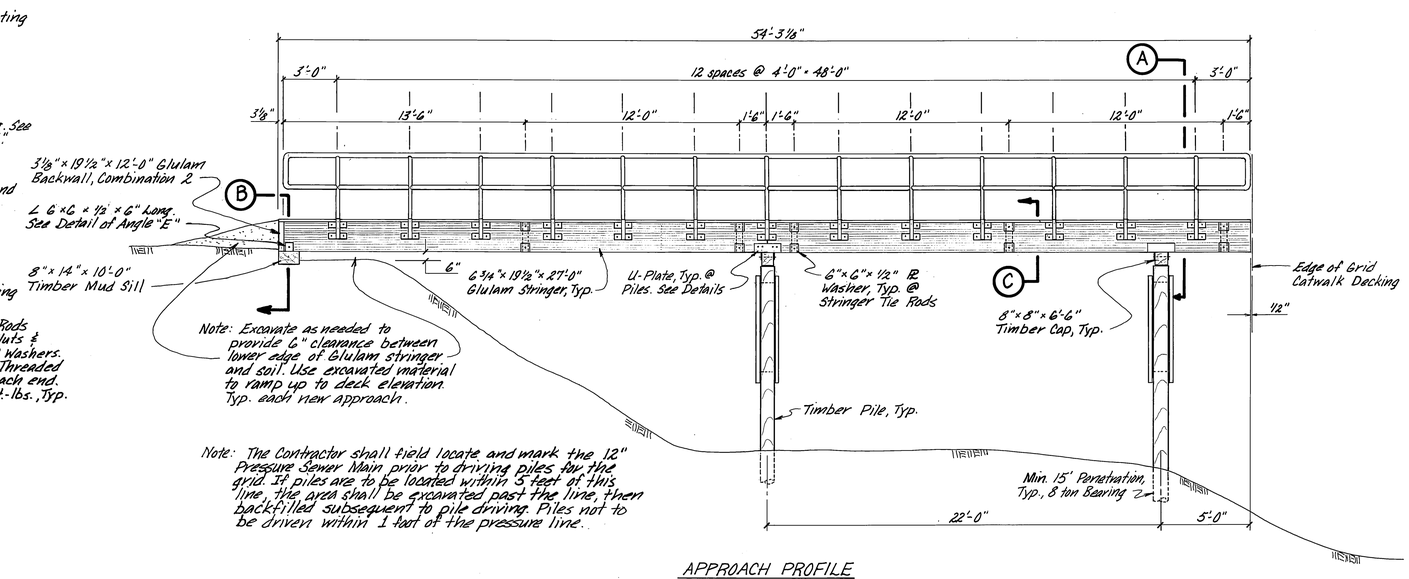

Note: The Contractor shall field locate and mark the 12" Pressure Sewer Main prior to driving piles for the grid. If piles are to be located within 5 feet of this line, the area shall be excavated past the line, then backfilled subsequent to pile driving. Piles not to be driven within 1 foot of the pressure line.

APPROACH PROFILE
¼" = 1'-0"

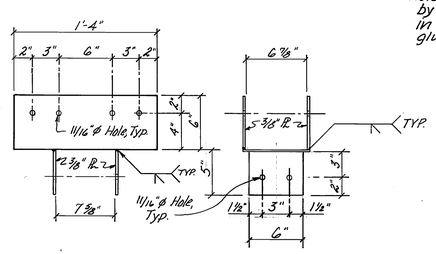

U-PLATE DETAILS
1½" = 1'-0"

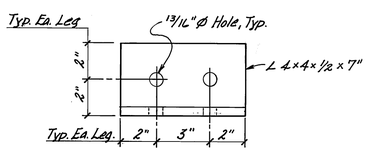

ANGLE "D"
3" = 1'-0"

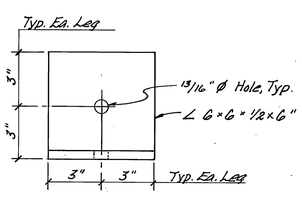

ANGLE "E"
3" = 1'-0"

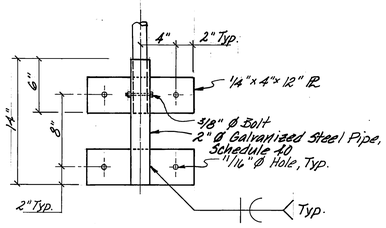

HANDRAIL SOCKET DETAIL
1½" = 1'-0"

DCW 1-22-87

STAMP	DO NOT SCALE THIS DRAWING — USE DIMENSIONS
STATE OF ALASKA 49th Rosemary Matt CE-6040 REGISTERED PROFESSIONAL ENGINEER	STATE OF ALASKA DEPARTMENT OF TRANSPORTATION AND PUBLIC FACILITIES Petersburg — Alaska GRID APPROACH DETAILS
	DESIGNED ____ CHECKED ____ DRAWN ORH DATE ____
	PROJECT NUMBER K-78190 SHEET 47 OF 55

K&E 19 1153 9-81 MC 2860

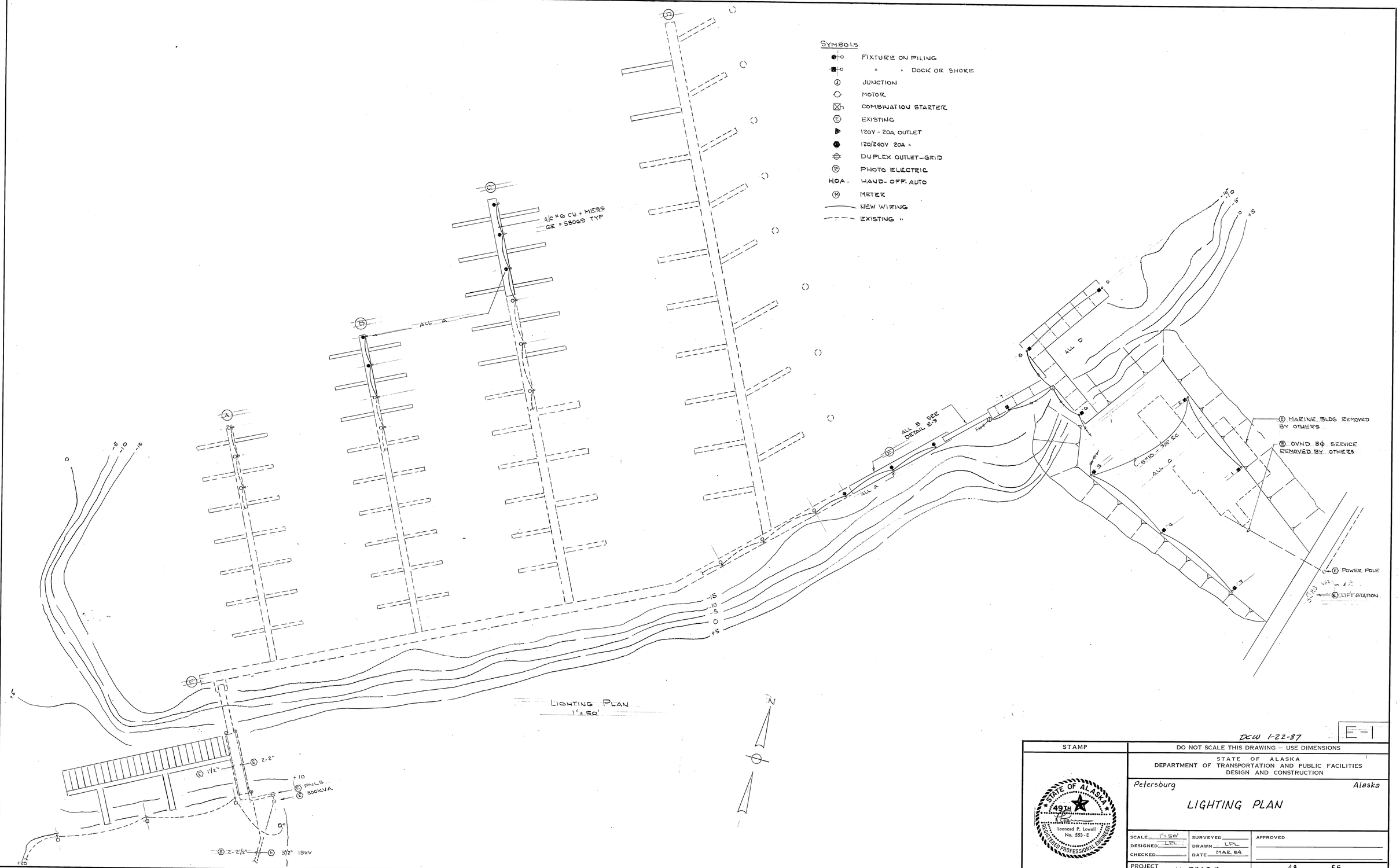

DCW 1-22-87

E-1

STAMP	DO NOT SCALE THIS DRAWING – USE DIMENSIONS
STATE OF ALASKA 49TH REGISTERED Leonard P. Lowell No. 553-E REGISTERED PROFESSIONAL ENGINEER	STATE OF ALASKA DEPARTMENT OF TRANSPORTATION AND PUBLIC FACILITIES DESIGN AND CONSTRUCTION
	Petersburg — Alaska
	LIGHTING PLAN
SCALE 1" = 50' · DESIGNED LPL · CHECKED	SURVEYED · DRAWN LPL · DATE MAR. 84 · APPROVED
PROJECT NUMBER K-78190	SHEET 48 OF 55

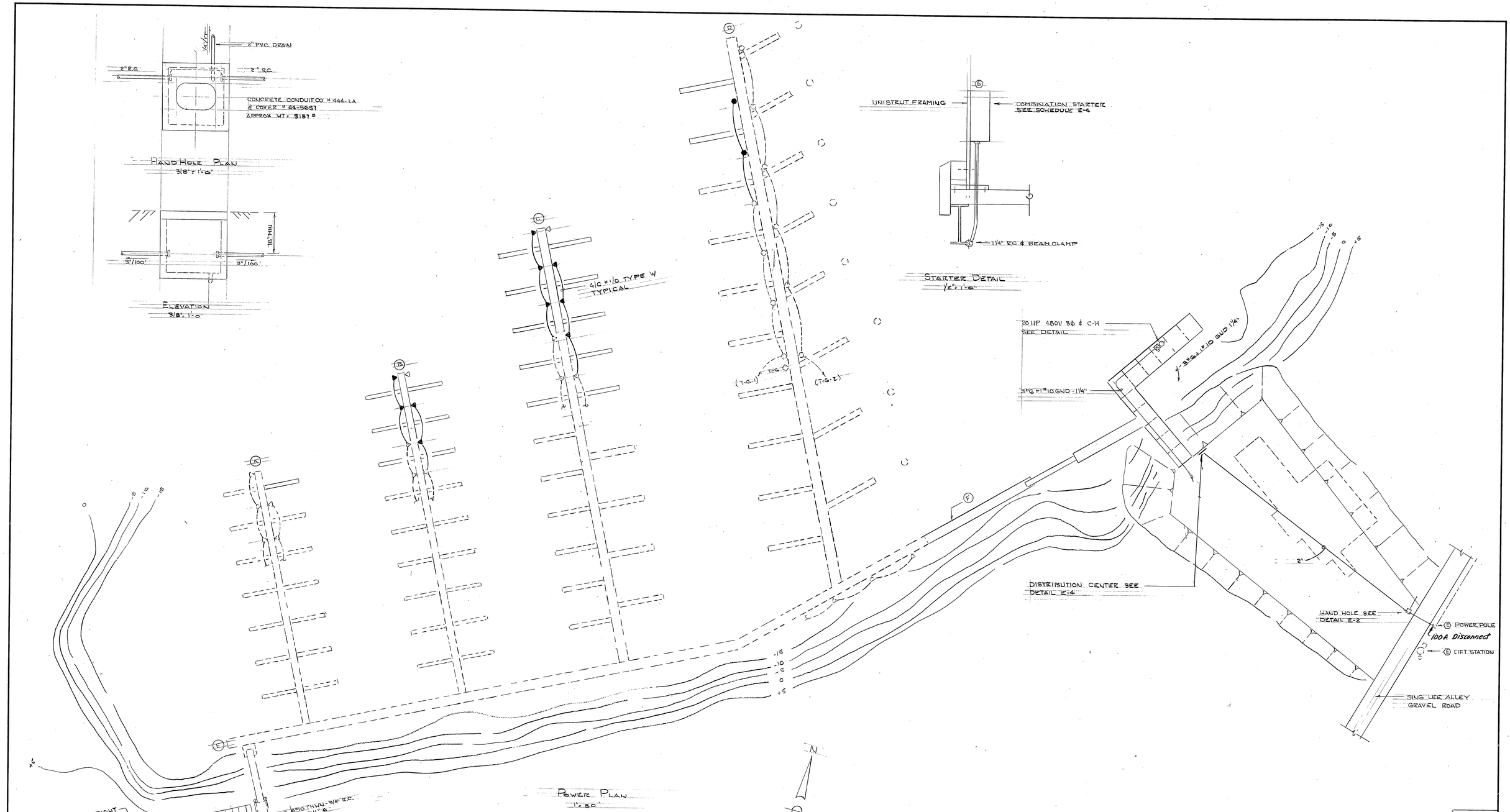

DCW 1-22-87

E-2

STAMP

STATE OF ALASKA
49TH
Leonard P. Lowell
No. 553-E
REGISTERED PROFESSIONAL ENGINEER

DO NOT SCALE THIS DRAWING — USE DIMENSIONS

STATE OF ALASKA

DEPARTMENT OF TRANSPORTATION AND PUBLIC FACILITIES

Petersburg Alaska

POWER PLAN

DESIGNED LPL	CHECKED	DRAWN LPL	DATE MAR 84
PROJECT NUMBER K-78190		SHEET 49	OF 55

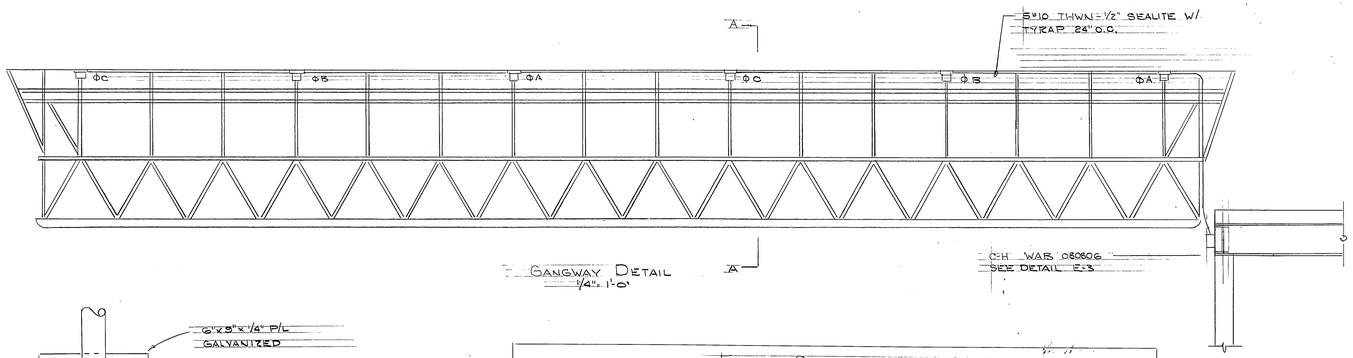

GANGWAY DETAIL
1/4"=1'-0"

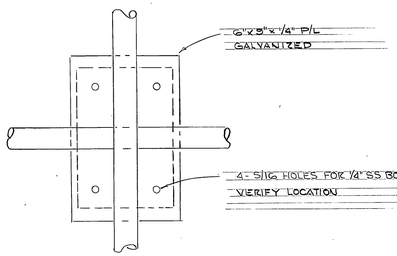

MOUNTING PLATE PLAN
3"=1'-0"

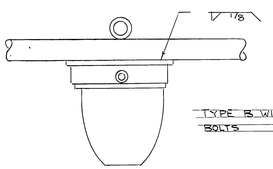

TYPE B WITH SECURITY BOLTS

ELEVATION
3"=1'-0"

FIXTURE SCHEDULE				
TYPE	MFG		W	REMARKS
A	HOLOPHANE	21GC-HPS-120	100 HPS	ON PILING - SEE DETAIL
B	KENALL	3737-DD-9037	100	SEE DETAIL
C	McPHILBEN	17RB-G4-1D-120	250 HPS	" " CONCRETE BASE
D	"	17RB-G4-1D-120	250 HPS	" " BRACKET

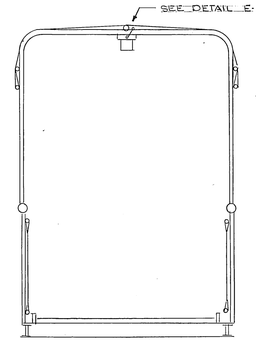

SECTION A-A
1/2"=1'-0"

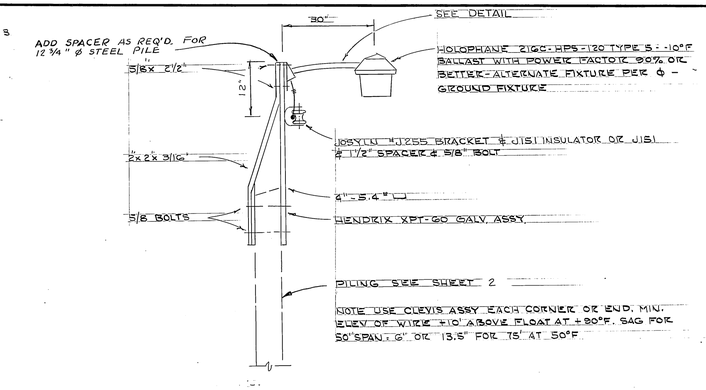

FIXTURE TYPE A
1/2"=1'-0"

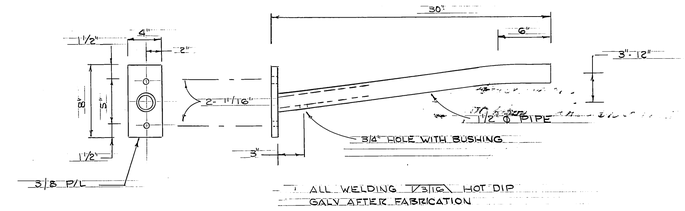

FIXTURE A SUPPORT
1 1/2"=1'-0"

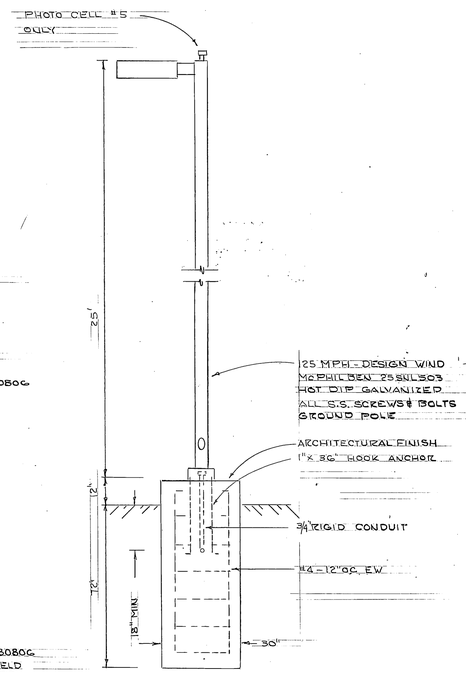

FIXTURE TYPE "C"
3/8"=1'-0"

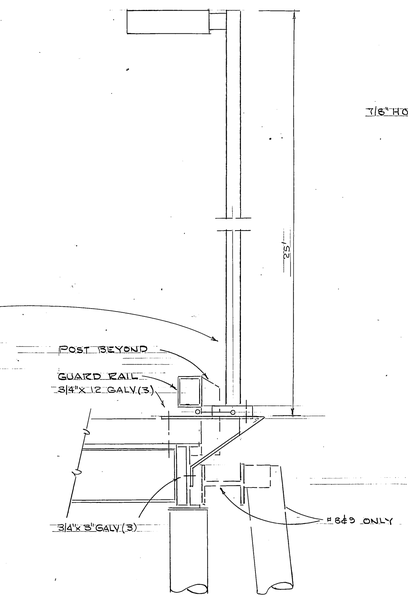

FIXTURE TYPE "D"
1/2"=1'-0"

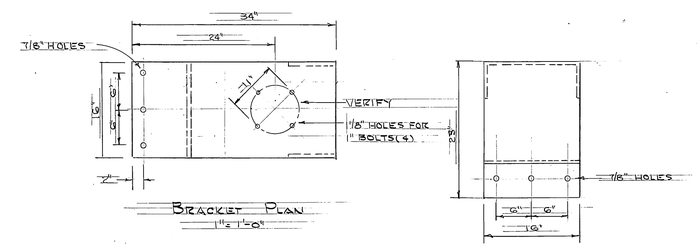

BRACKET PLAN
1"=1'-0"

BRACKET ELEVATION
1"=1'-0"

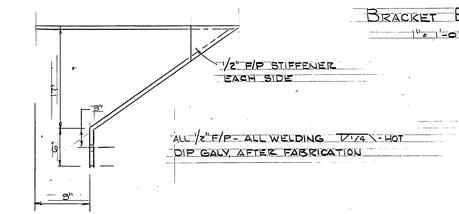

ELEVATION
1"=1'-0"

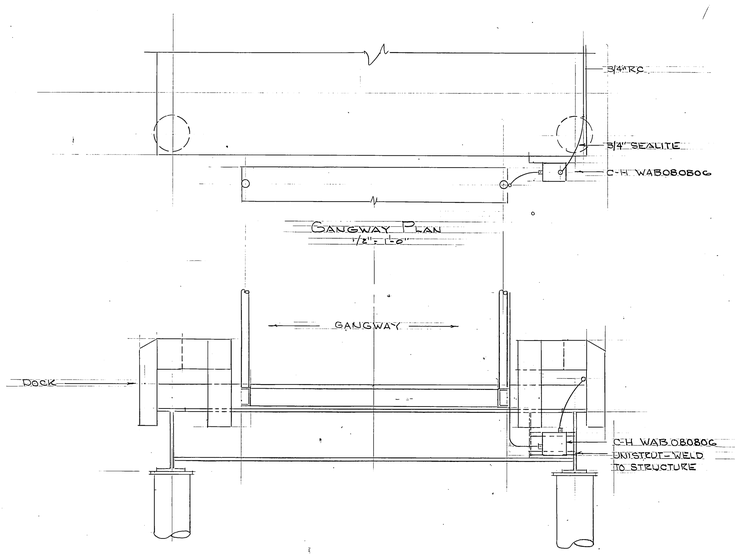

GANGWAY PLAN
1/2"=1'-0"

ELEVATION
1/2"=1'-0"

DCW 1-22-87

E-3

STAMP

STATE OF ALASKA 49TH
Leonard P. Lowell
No. 553-E
REGISTERED PROFESSIONAL ENGINEER

DO NOT SCALE THIS DRAWING — USE DIMENSIONS

STATE OF ALASKA
DEPARTMENT OF TRANSPORTATION AND PUBLIC FACILITIES

Petersburg Alaska

MISC. ELECTRICAL DETAILS

DESIGNED LPL	CHECKED	DRAWN LPL	DATE MAR. 84
PROJECT NUMBER K-78190		SHEET 50	OF 55

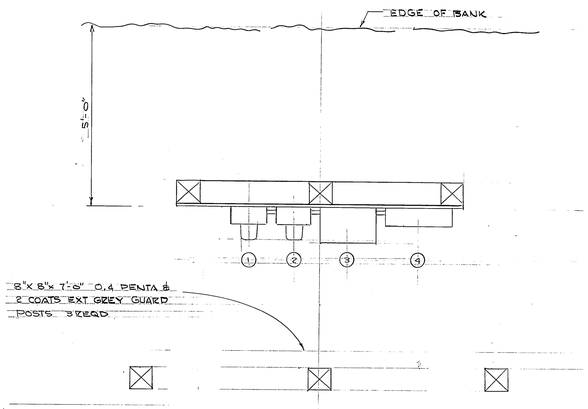

DISTRIBUTION CENTER PLAN
1/2" = 1'-0"

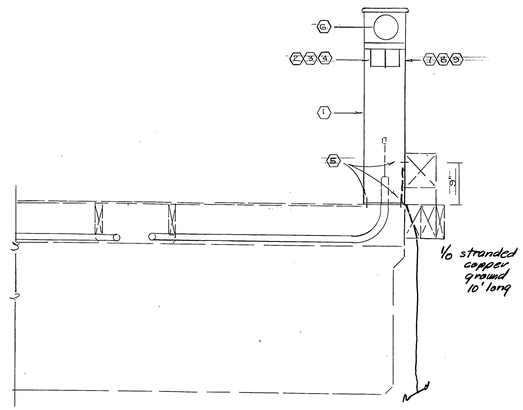

TYPICAL SECTION
3/4" = 1'-0"

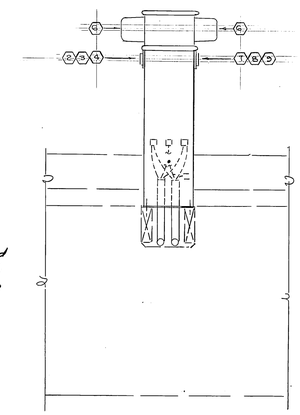

TYPICAL ELEVATION
3/4" = 1'-0"

EQUIPMENT SCHEDULE No 1				
NO	ITEM	QTY ♥	QTY ●	REMARKS
1	POST DANIEL WOODHEAD	1	1	MATCH EXIST
2	CIRCUIT BREAKER HEINEMANN 20/1	2		
3	RECEPTACLE L5-30R CORR RESIST	2		LOCKING COVER
4	PLUG L5-30P " "	2		
5	LAG SCREWS 3/8"x 2" 18-8 SS	5	5	
6	METER GE V62S SNAW CYCO	2	2	
7	CIRCUIT BREAKER HEINEMANN 20/2		2	LOCKING COVER
8	RECEPTACLE L14-30R CORR RESIST		2	
9	PLUG L14-30P " "		2	

NOTES
1. ALL NUTS, BOLTS, SCREWS ETC TO BE STAINLESS STEEL
2. POST TO BE FIBERGLASS - FINISH COLOR MARINE BLUE
3. LUGS INCL GROUND FOR 1/0 TYPE W CABLE
4. ALL INTERNAL WIRING #12AWG STRANDED COPPER MINIMUM
5. PROVIDE UL LABEL

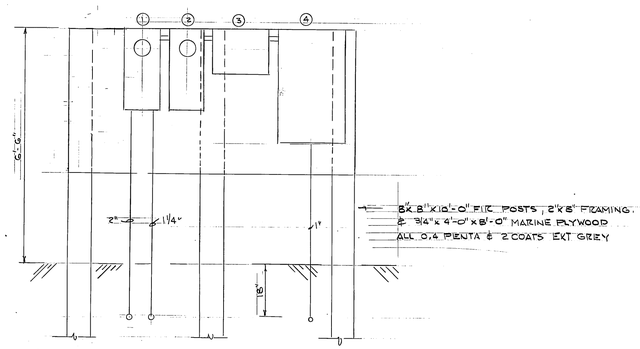

ELEVATION
1/2" = 1'-0"

EQUIPMENT SCHEDULE No. 2			
NO	ITEM	QTY	REMARKS
	METER/CB ANCHOR UTS7771-QC100-2P	1	50/3 480V 3Φ C/B
2	" " " "	1	15/3 480V 3Φ C/B
3	5KVA 480-3Φ-120/208V 3Φ	1	SORGEL ST2F EPOXY ENCAPSULATED
4	PNL B SEE SPECS	1	
5	STARTER SQ D SDW-11-55 "	1	20HP-480V 3Φ-120V CONTROL

#START/STOP/RESET BEHIND PLASTIC COVER - HANDLE FOR PADLOCK - PROVIDE UNISTRUT STAND NEAR HOIST - SEALITE TO MOTOR

ALL METERS FOR ITEMS 1 & 2 480V 3Φ TAW BY UTILITY

ALL ENCLOSURES NEMA 3R OR BETTER

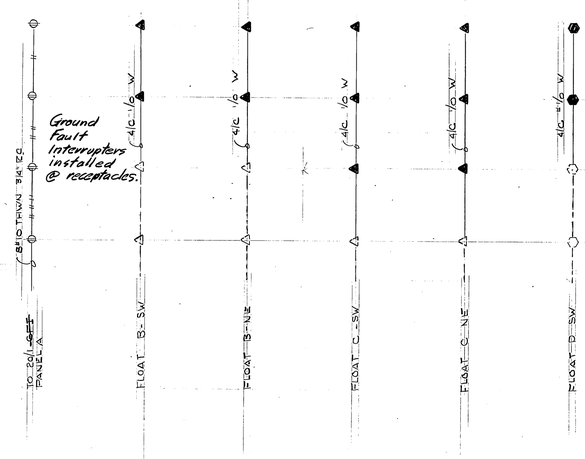

ONE LINE DIAGRAM EXISTING
NO SCALE

NOTE DIAGRAM OF EXTENSION OF EXISTING LIGHTING CIRCUITS NOT SHOWN - SEE E-1 FOR SCOPE - ALL WIRE 4/C #6 CU & MESS. GE #SI-58069 TO MATCH EXIST

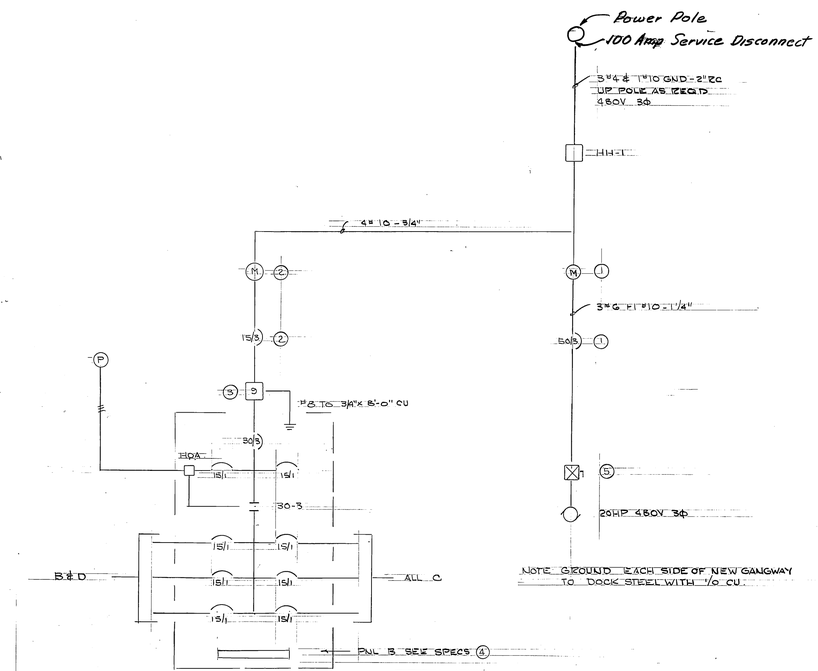

ONE LINE DIAGRAM NEW
NO SCALE

DCW 1-22-87

E-4

STAMP

STATE OF ALASKA 49TH Leonard P. Lowell No. 553-E REGISTERED PROFESSIONAL ENGINEER

DO NOT SCALE THIS DRAWING — USE DIMENSIONS

STATE OF ALASKA
DEPARTMENT OF TRANSPORTATION AND PUBLIC FACILITIES

Petersburg Alaska

MISC. ELECTRICAL DETAILS

DESIGNED LPL	CHECKED	DRAWN LPL	DATE MAR 84
PROJECT NUMBER K-78190		SHEET 51	OF 55

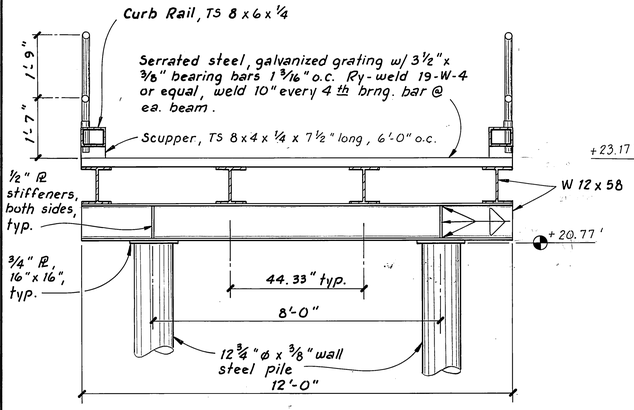

TYPICAL X-SECTION
1/2" = 1'-0"

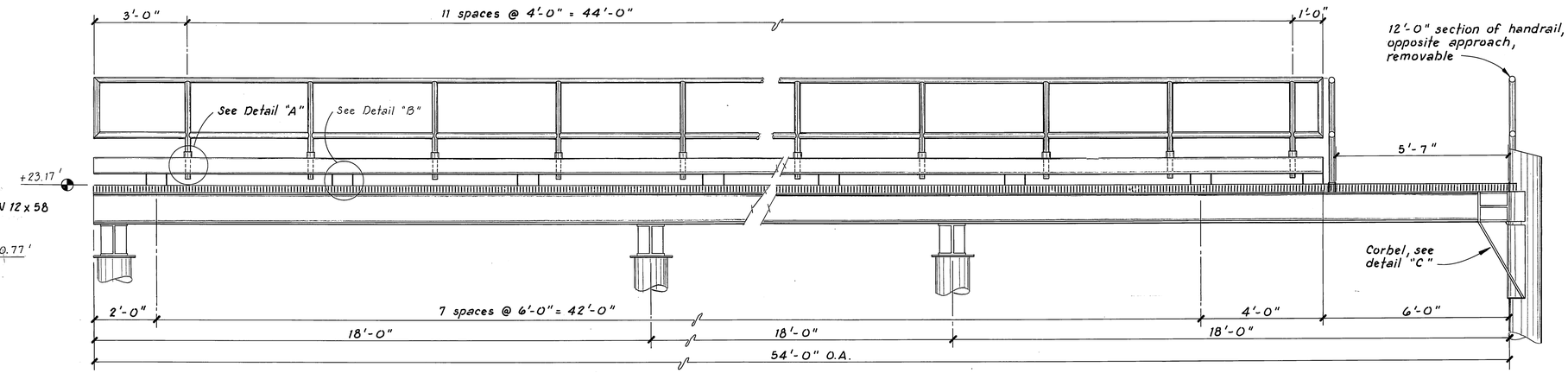

ELEVATION
1/2" = 1'-0"

NOTES : See typical details re: dock & grid for standard handrail, pile/plate/cap construction. W 12 x 58 beams may be spliced using appropriate full penetration welds - no welds middle 1/2 of beam between spans.

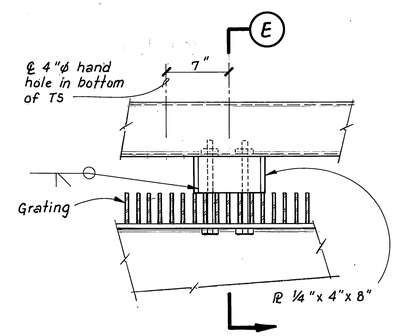

DETAIL "B"
1 1/2" = 1'-0"

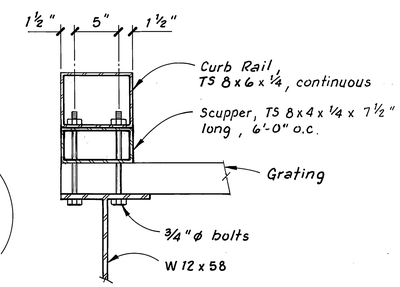

SECTION E
1 1/2" = 1'-0"

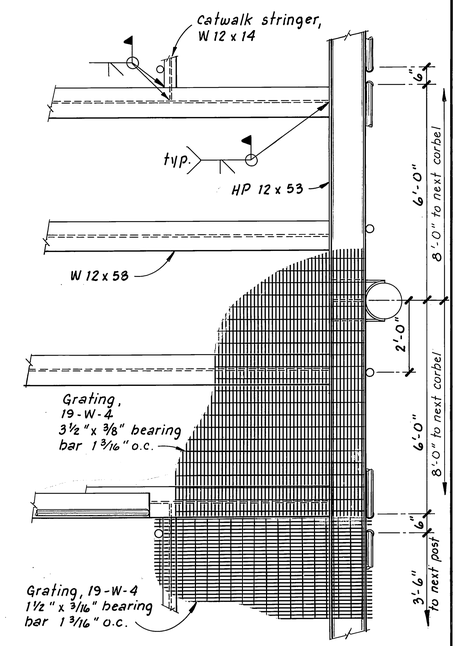

APPROACH / CATWALK INTERSECTION PLAN
1/2" = 1'-0"

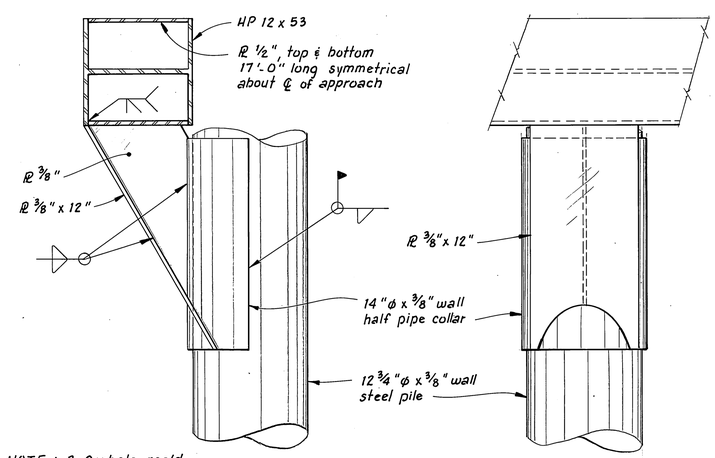

NOTE : 3 Corbels req'd. Symmetrical about ℄ of approach, 8' o.c.

CORBEL
DETAIL "C"
1 1/2" = 1'-0"

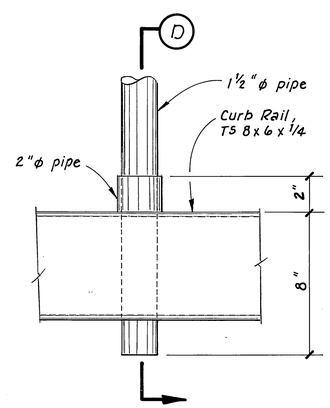

DETAIL "A"
1 1/2" = 1'-0"

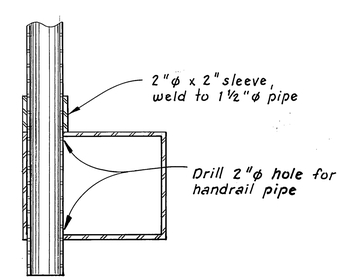

SECTION D
1 1/2" = 1'-0"

DCW 1-22-87

STAMP

STATE OF ALASKA 49th Robert P. Beck No. 1484-E REGISTERED PROFESSIONAL ENGINEER

DO NOT SCALE THIS DRAWING — USE DIMENSIONS

STATE OF ALASKA
DEPARTMENT OF TRANSPORTATION AND PUBLIC FACILITIES

Petersburg Alaska

DRIVEABLE GRID APPROACH
SUPPLEMENT # 2 (Awarded)

DESIGNED RPB	CHECKED	DRAWN TS	DATE 6-84
PROJECT NUMBER K-78190		SHEET 52	OF 55

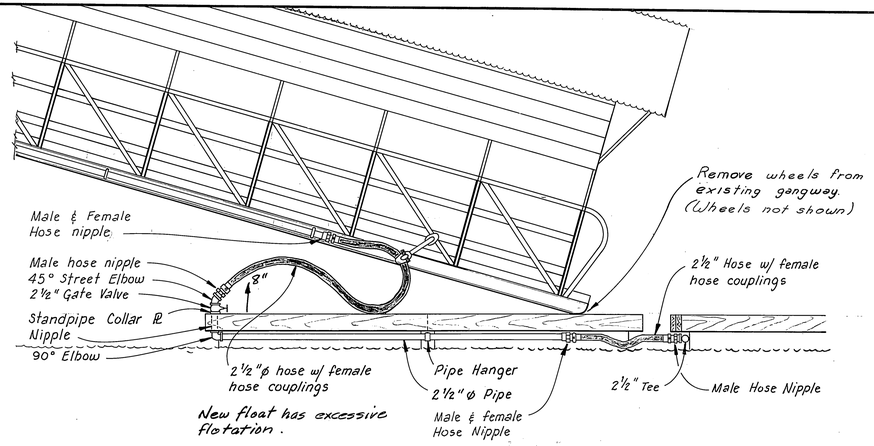

EXISTING WATER SYSTEM ON GANGWAY FLOAT

3/8" = 1'-0"

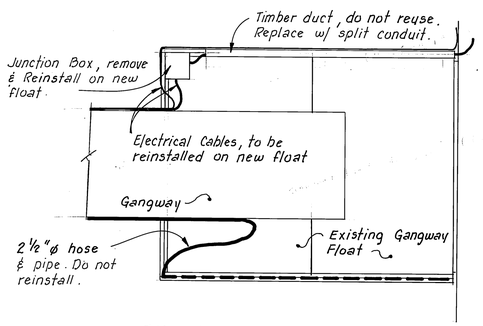

EXISTING UTILITIES ON GANGWAY FLOAT

¼" = 1'-0"

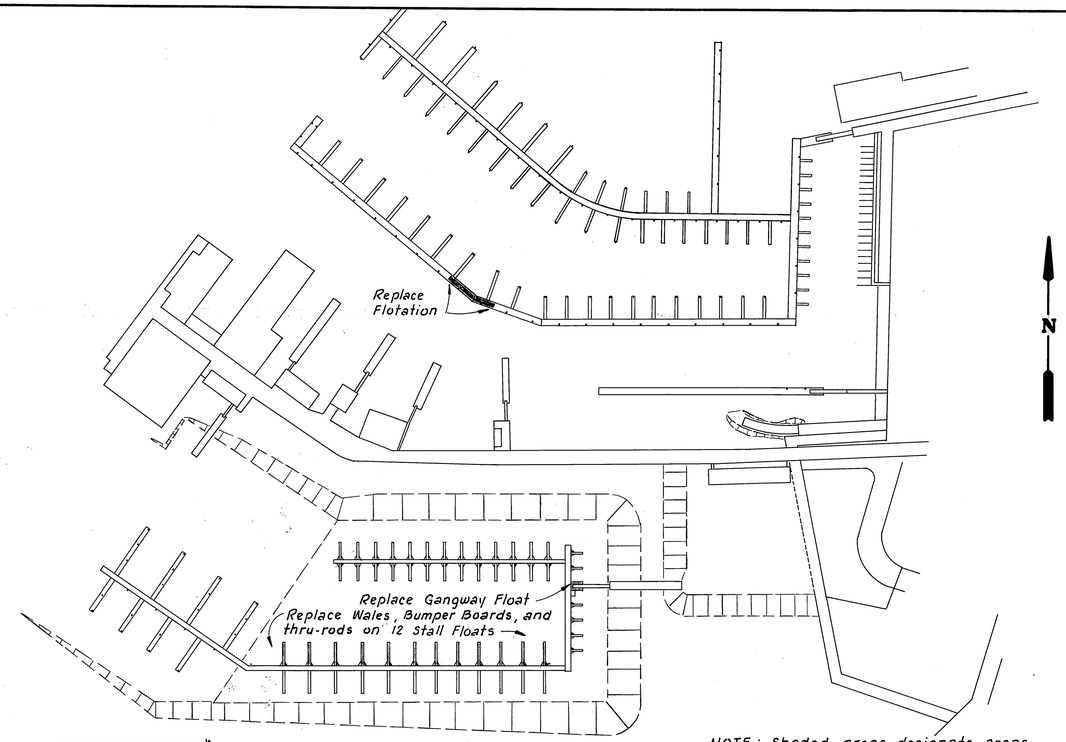

HARBOR LAYOUTS

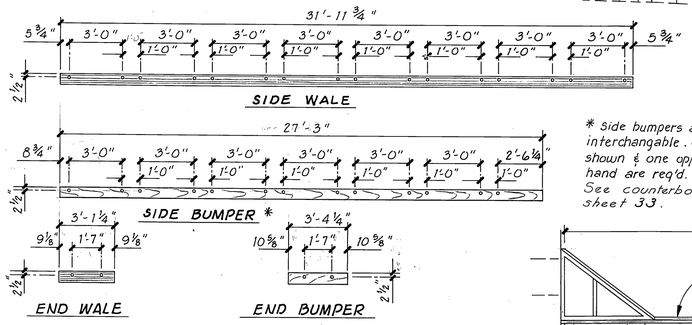

WALE & BUMPER DETAILS FOR 32' STALL FLOAT

* Side bumpers are not interchangable. One as shown & one opposite hand are req'd. per stall. See counterbore detail sheet 33.

200 150 100 50 0 100 200 FT.

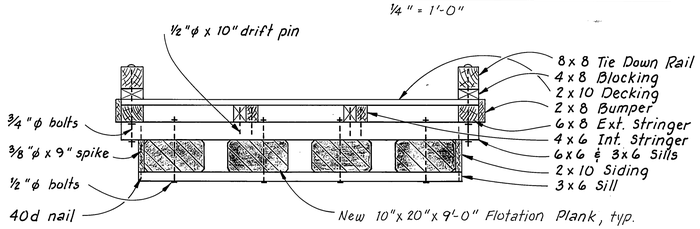

SECTION

½" = 1'-0"

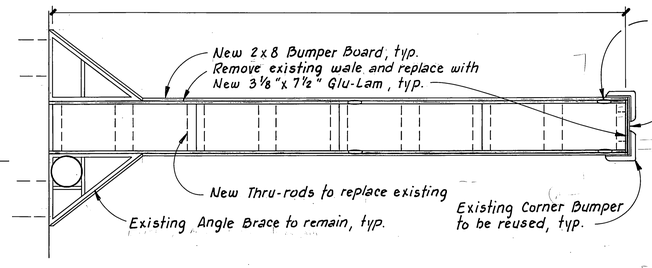

32' STALL FLOAT PLAN

¼" = 1'-0"

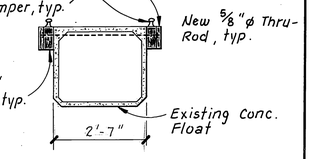

TYP. STALL FLOAT SECTION

½" = 1'-0"

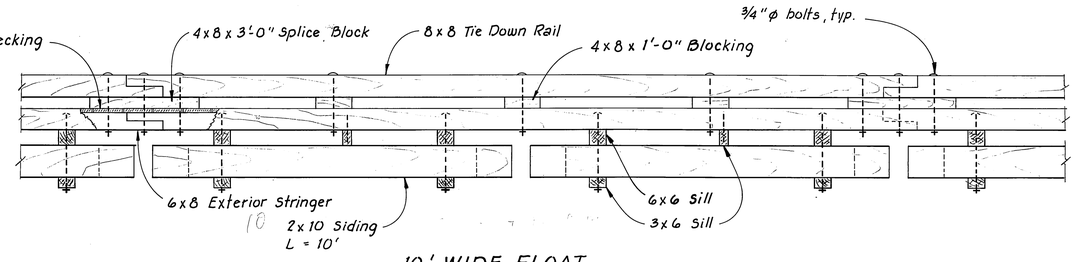

10' WIDE FLOAT ELEVATION

½" = 1'-0"

DCW 1-22-87

STAMP	DO NOT SCALE THIS DRAWING — USE DIMENSIONS
STATE OF ALASKA 49th Rosemary Matt CE-6040 REGISTERED PROFESSIONAL ENGINEER	STATE OF ALASKA DEPARTMENT OF TRANSPORTATION AND PUBLIC FACILITIES Petersburg Alaska LAYOUT AND DETAILS FOR SUPPLEMENT # 3 WORK ITEMS

DESIGNED RAM	CHECKED	DRAWN TS	DATE 6-84
PROJECT NUMBER K-78190		SHEET 53	OF 55

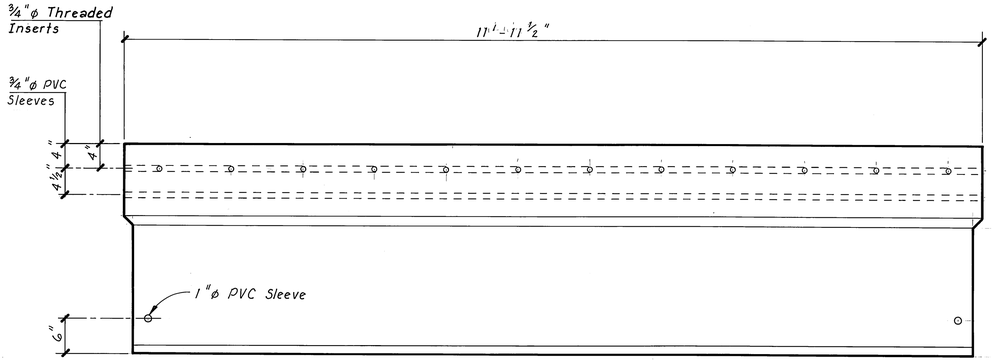

SIDE ELEVATION
1" = 1'-0"

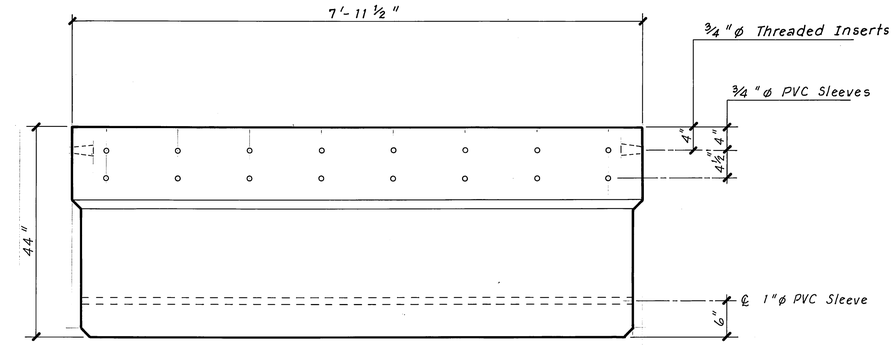

END ELEVATION
1" = 1'-0"

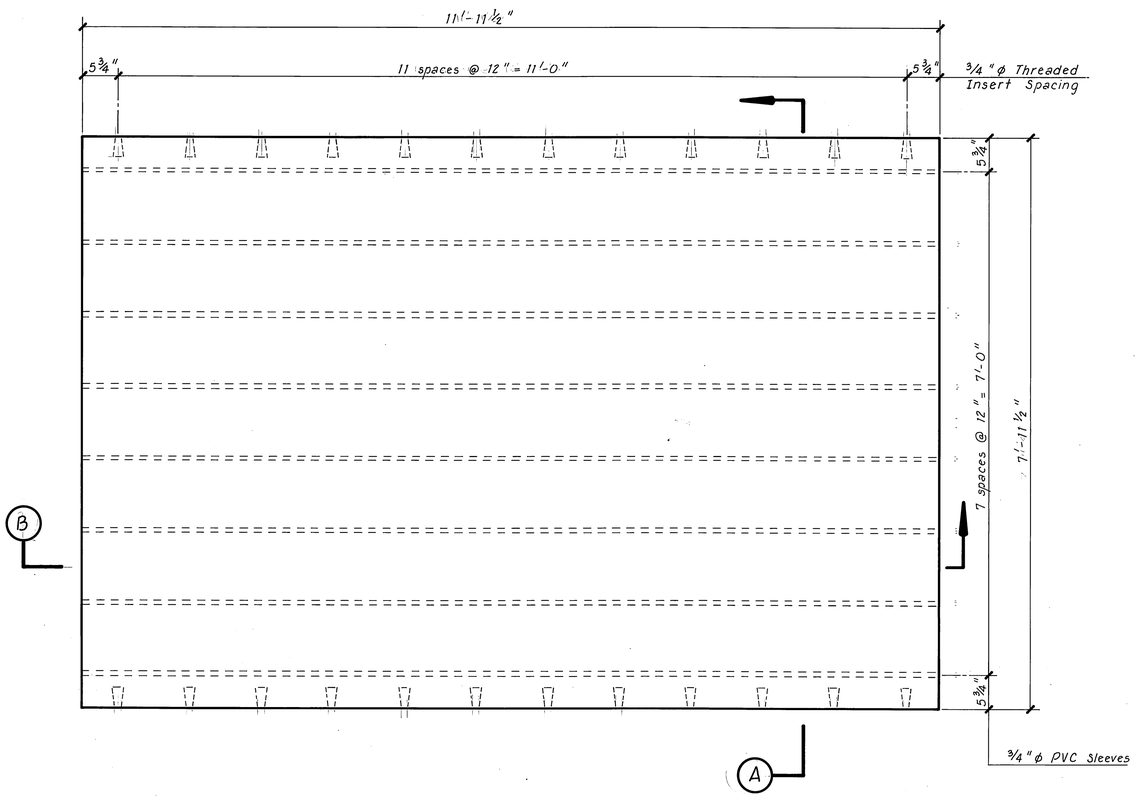

PLAN
1" = 1'-0"

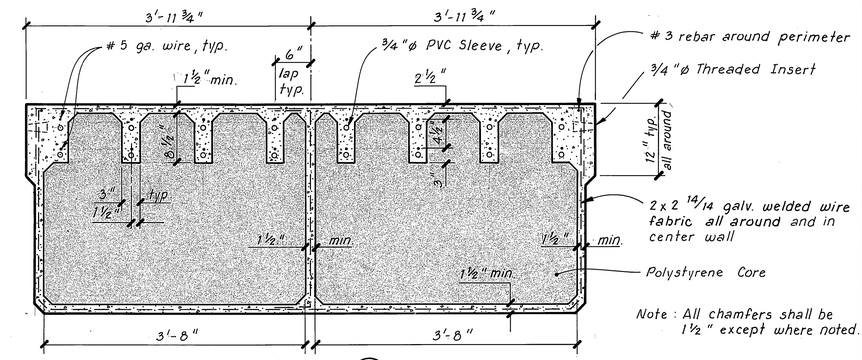

SECTION (A)
1" = 1'-0"

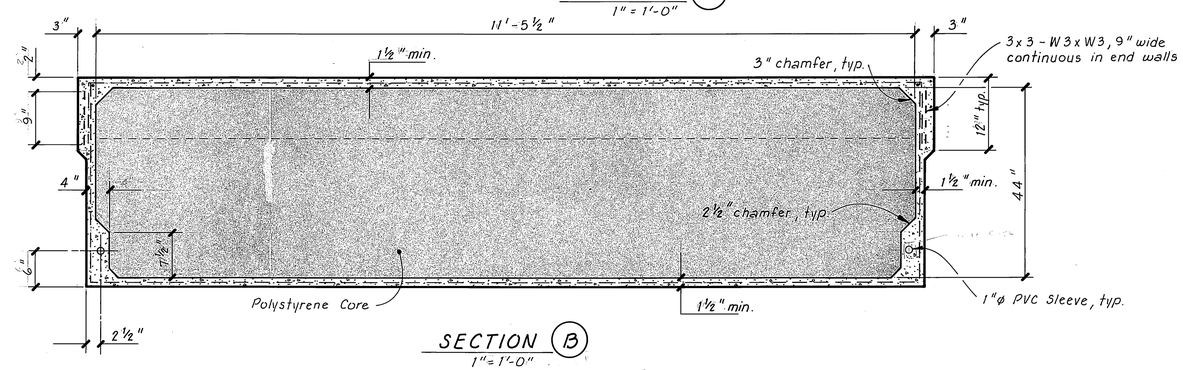

SECTION (B)
1" = 1'-0"

DCW 1-22-87

STAMP	DO NOT SCALE THIS DRAWING — USE DIMENSIONS
STATE OF ALASKA 49th Rosemary Matt CE-6040 REGISTERED PROFESSIONAL ENGINEER	STATE OF ALASKA DEPARTMENT OF TRANSPORTATION AND PUBLIC FACILITIES
	8'x 12' HD GANGWAY FLOAT
	DESIGNED Staff · CHECKED · DRAWN TS · DATE 7/84
	PROJECT NUMBER · SHEET 54 OF 55

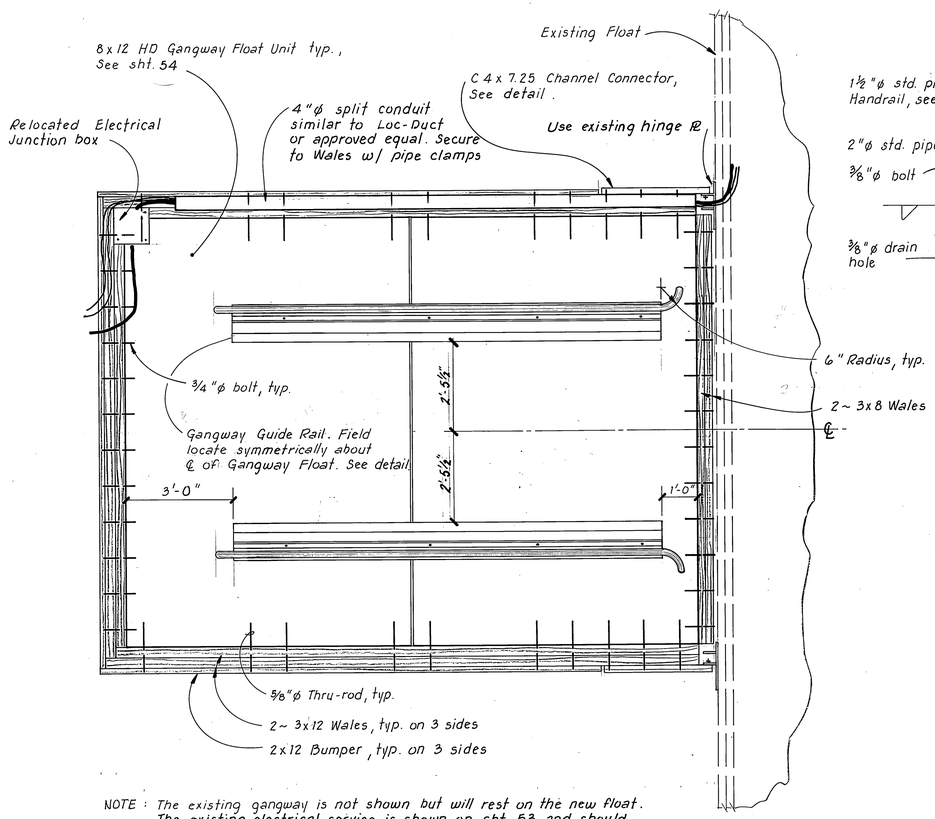

NOTE: The existing gangway is not shown but will rest on the new float. The existing electrical service is shown on sht. 53 and should be reinstalled as shown. The existing water service is shown on sht. 53 and should not be reinstalled.

PLAN VIEW
½" = 1'-0"

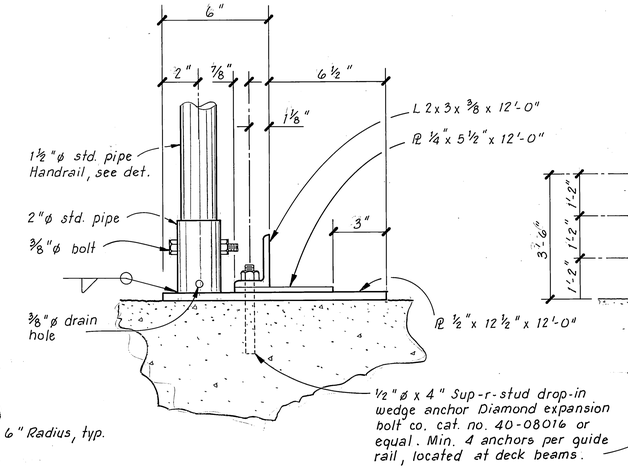

GANGWAY GUIDE RAIL DETAIL
3" = 1'-0"

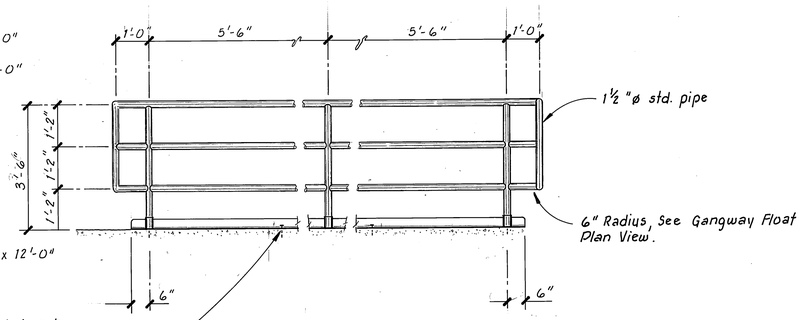

HANDRAIL DETAIL
½" = 1'-0"

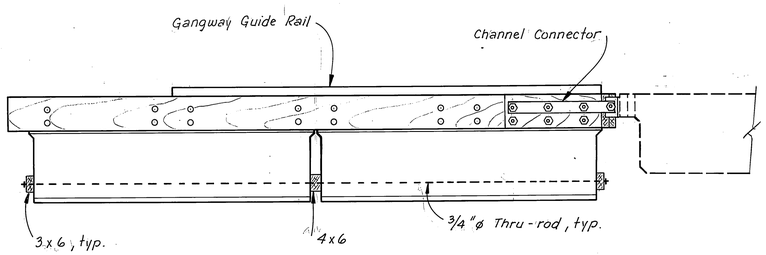

ELEVATION
½" = 1'-0"

GANGWAY FLOAT DETAILS

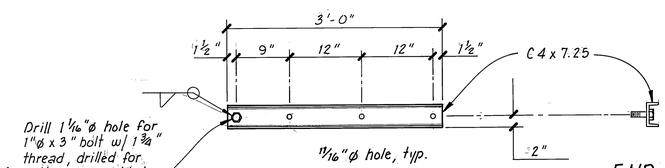

ELEVATION

END VIEW

CHANNEL CONNECTOR DETAILS
1" = 1'-0"

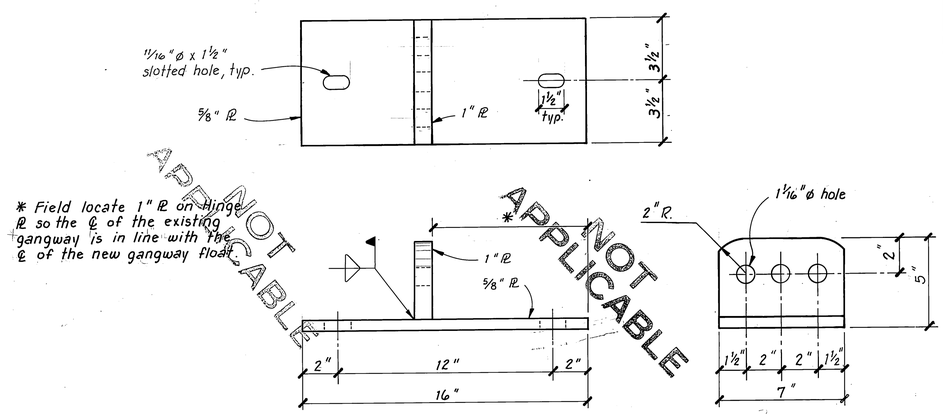

NOT APPLICABLE

NOT APPLICABLE

HINGE ℞ DETAILS
3" = 1'-0"

DCW 1-22-87

STAMP

STATE OF ALASKA 49th Rosemary Matt CE-6040 REGISTERED PROFESSIONAL ENGINEER

DO NOT SCALE THIS DRAWING — USE DIMENSIONS

STATE OF ALASKA
DEPARTMENT OF TRANSPORTATION AND PUBLIC FACILITIES

Petersburg Alaska

GANGWAY FLOAT FOR SUPPLEMENT # 3

DESIGNED RAM	CHECKED	DRAWN TS	DATE 7/84
PROJECT NUMBER K-78190		SHEET 55	OF 55

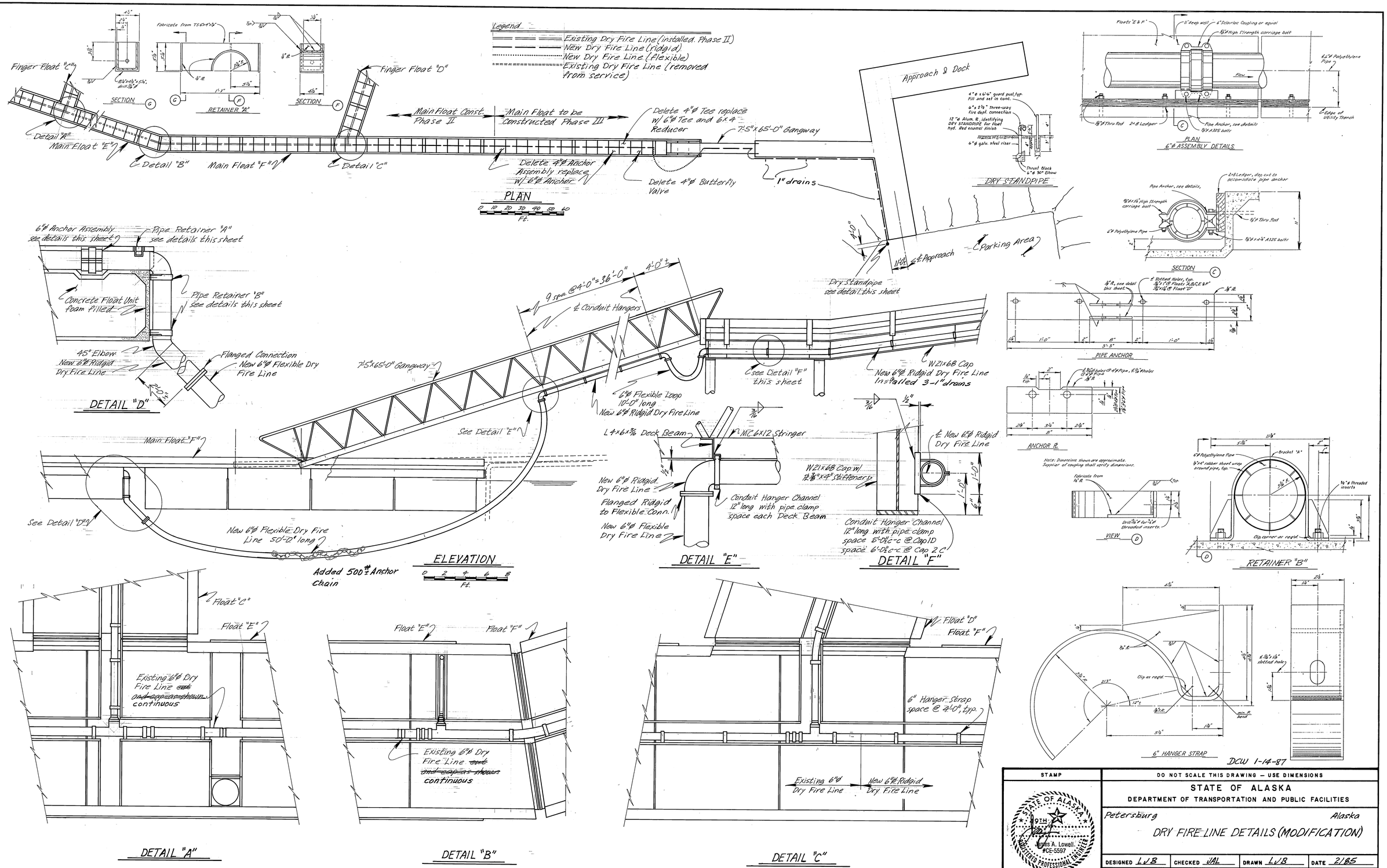

STAMP	DO NOT SCALE THIS DRAWING — USE DIMENSIONS
STATE OF ALASKA 49TH James A. Lowell #CE-5597 REGISTERED PROFESSIONAL ENGINEER 2/11/85	STATE OF ALASKA DEPARTMENT OF TRANSPORTATION AND PUBLIC FACILITIES
	Petersburg — Alaska
	DRY FIRE LINE DETAILS (MODIFICATION)
	DESIGNED LVB · CHECKED JAL · DRAWN LVB · DATE 2/85
	PROJECT NUMBER K78190 · SHEET DFR.1 OF 1 (56)

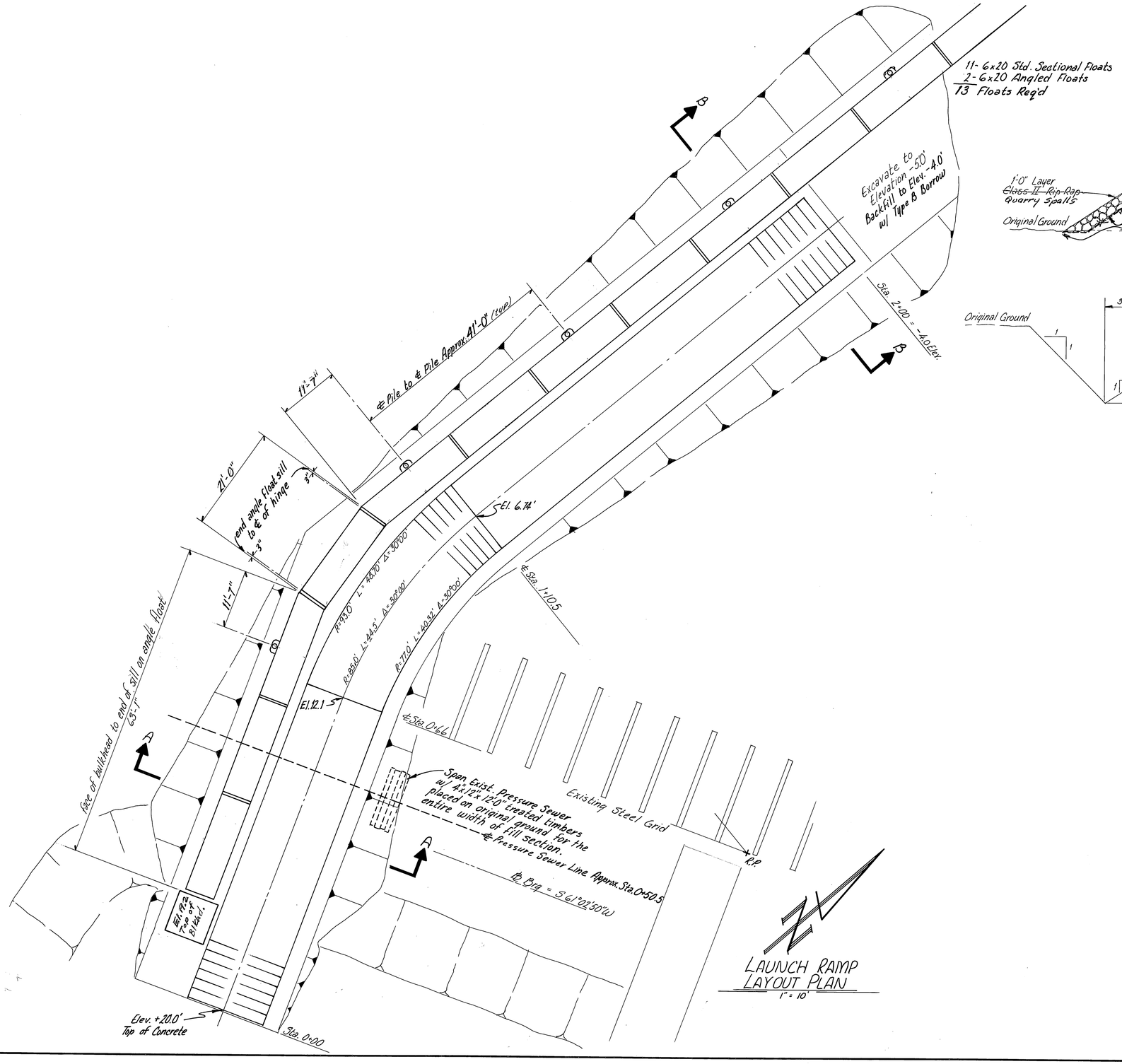

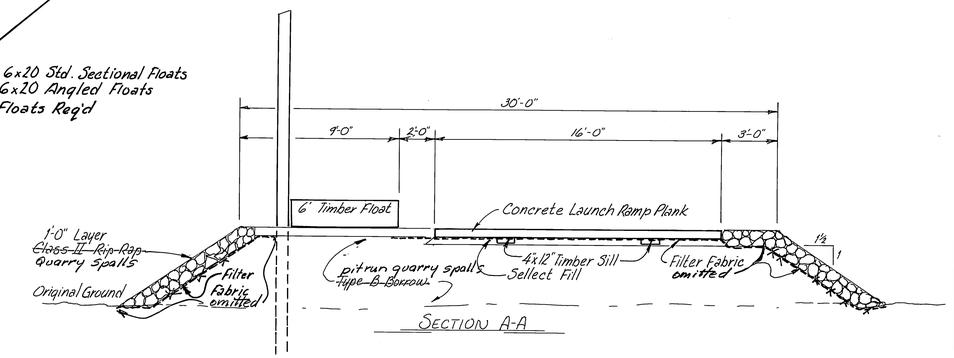

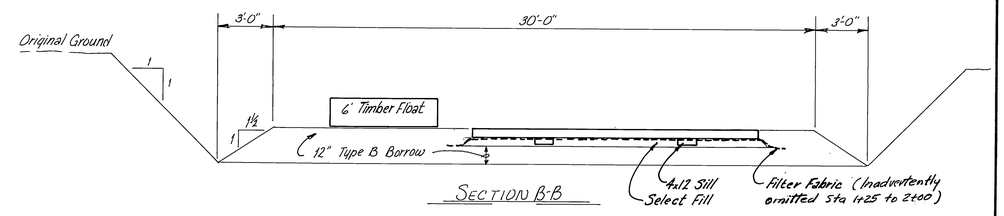

NOTES:

1. Ramp to be constructed at a uniform 12% slope.
2. Project specifications for embankment shall apply to this construction.
3. Excavation & disposal shall be in accordance with the project specs.
4. Alternate rip rap is allowed as per para. 203-1.02. Used alternate.

DCW 1-14-87

STAMP	DO NOT SCALE THIS DRAWING — USE DIMENSIONS
	STATE OF ALASKA DEPARTMENT OF TRANSPORTATION AND PUBLIC FACILITIES
	PETERSBURG — ALASKA
	LAUNCH RAMP LAYOUT PLAN
	DESIGNED DCW · CHECKED DCW · DRAWN WMN · DATE Feb, 1985
	PROJECT NUMBER K31901 · SHEET LR1 OF 4 (57)

84842

K&E 19 1153 3-76 MC 7738-

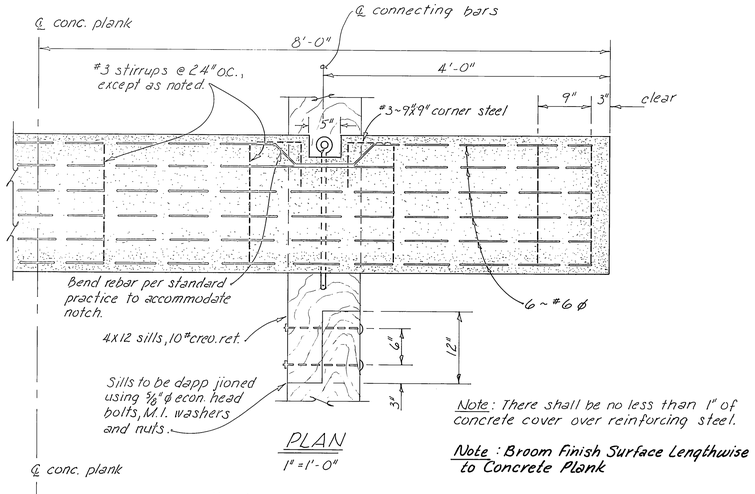

PLAN
1" = 1'-0"

Note: There shall be no less than 1" of concrete cover over reinforcing steel.

Note: Broom Finish Surface Lengthwise to Concrete Plank

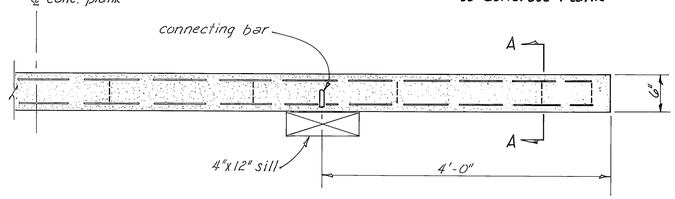

ELEVATION
1" = 1'-0"

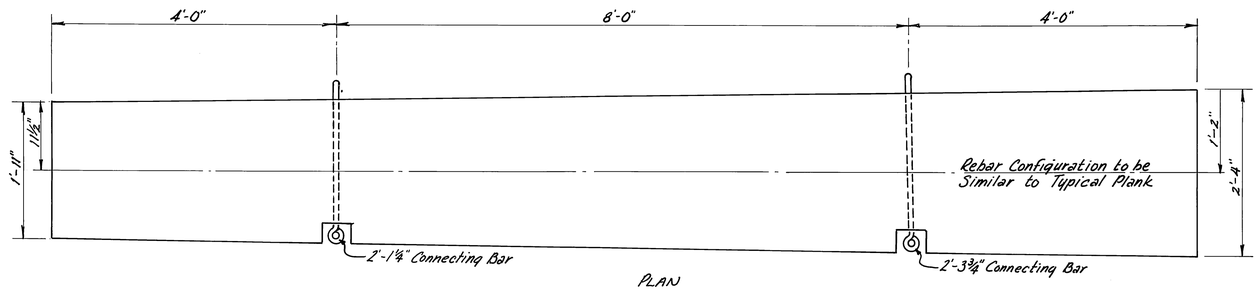

PLAN
CURVE PLANK - 20 req'd
1" = 1'-0"

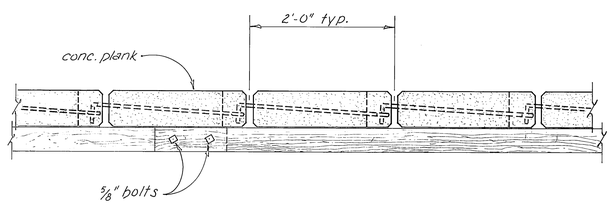

TYPICAL PLANK ASSEMBLY
1" = 1'-0"

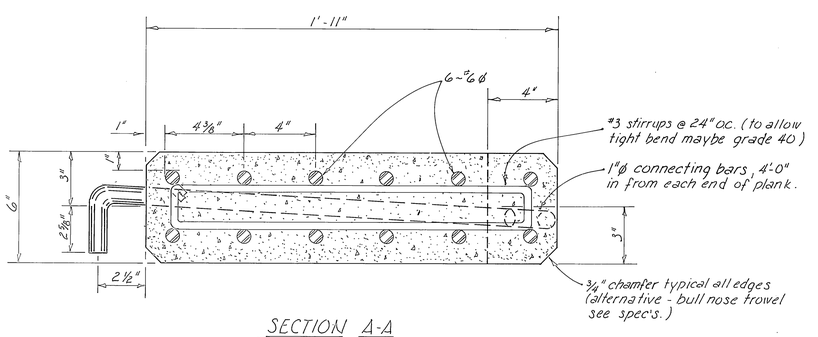

SECTION A-A
3" = 1'-0"

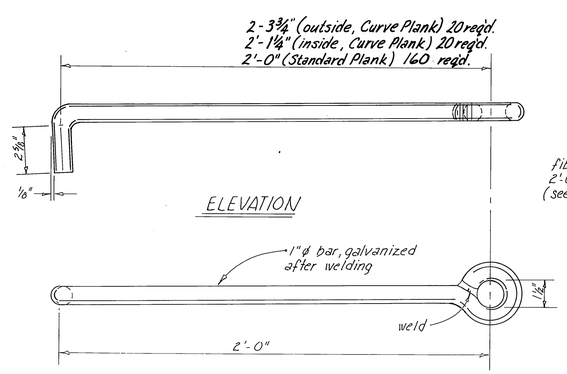

ELEVATION

PLAN
connecting bar
3" = 1'-0"

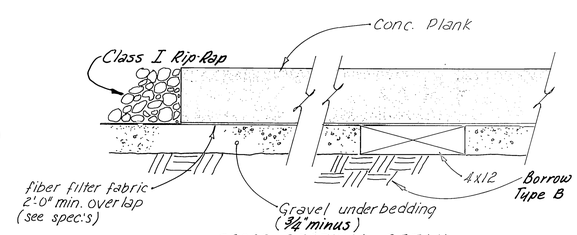

CROSS SECTION DETAIL
1½" = 1'-0"

Note: Concrete fc ≥ 5000 psi
Reinforcing steel fc = 60,000 psi

DCW 1-14-87

STAMP

DO NOT SCALE THIS DRAWING - USE DIMENSIONS

STATE OF ALASKA
DEPARTMENT OF TRANSPORTATION AND PUBLIC FACILITIES
DIVISION OF HARBOR DESIGN AND CONSTRUCTION

PETERSBURG ALASKA

LAUNCH RAMP DETAILS

SCALE As Noted	SURVEYED	APPROVED
DESIGNED	DRAWN GRF	
CHECKED WmN	DATE Dec. 1978	DIRECTOR
PROJECT NUMBER K31901	SHEET HR 2 OF 4 (58)	

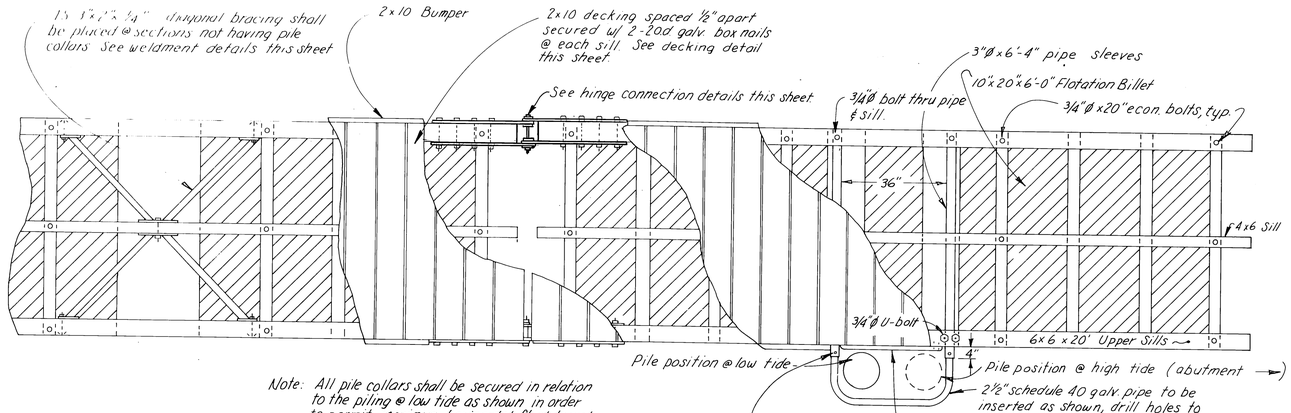

Note: All pile collars shall be secured in relation to the piling @ low tide as shown in order to permit maximum horizontal float travel during flood stage of tide.

Note: ① Penta treat per specs. decking and bumper boards. All other wood material shall be creosote treated per specs.
② 6 Mill polyethylene film between creo members and foam.

PLAN
½" = 1'-0"

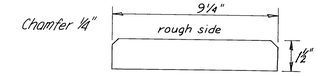

DECKING
3" = 1'-0"

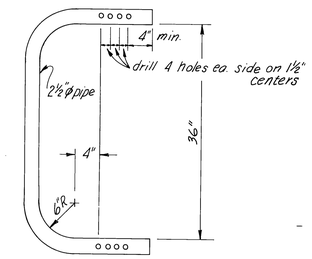

DETAIL
PIPE PILE COLLAR
1" = 1'-0"

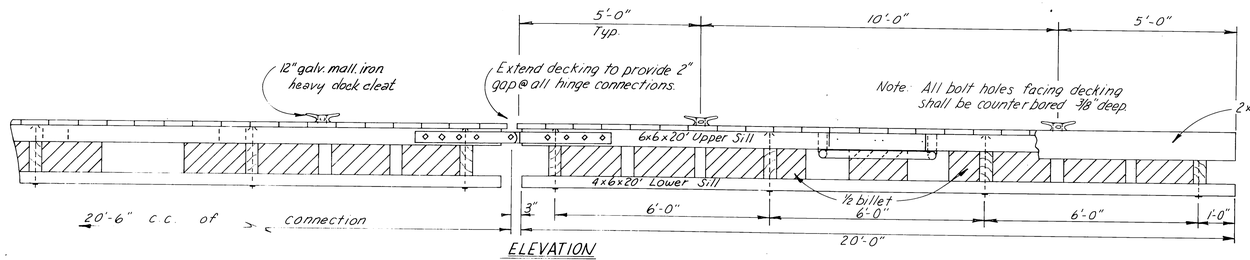

ELEVATION
½" = 1'-0"

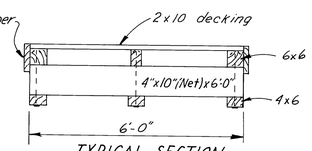

TYPICAL SECTION
½" = 1'-0"

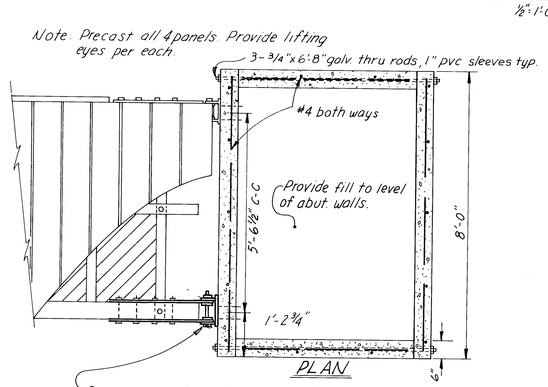

PLAN

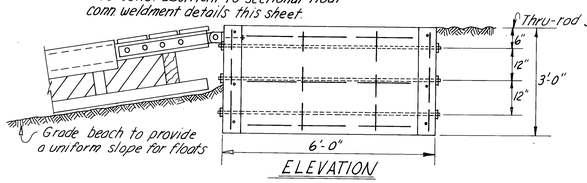

ELEVATION

CONCRETE ABUTMENT DETAILS
½" = 1'-0"

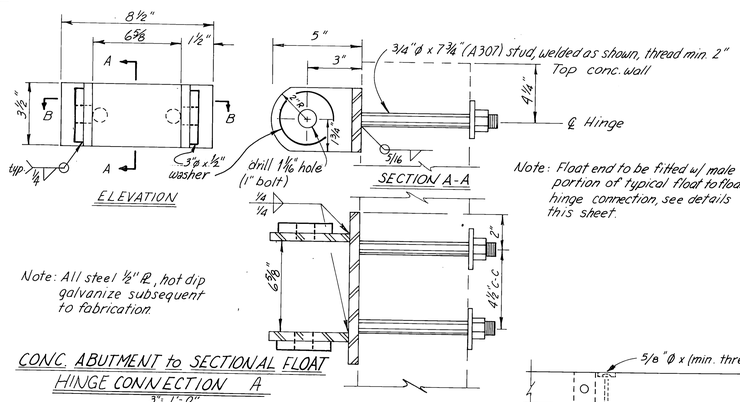

Note: Float end to be fitted w/ male portion of typical float to float hinge connection, see details this sheet.

Note: All steel ½" PL, hot dip galvanize subsequent to fabrication.

CONC. ABUTMENT to SECTIONAL FLOAT
HINGE CONNECTION A
3" = 1'-0"

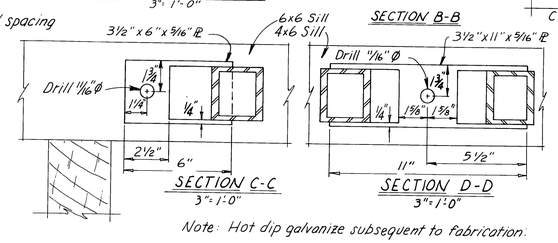

Note: Hot dip galvanize subsequent to fabrication.

DIAGONAL BRACING DETAILS

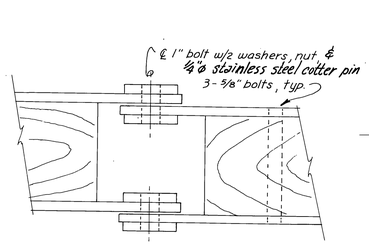

HINGE ASSEMBLY DIAGRAM
¼" = 1"

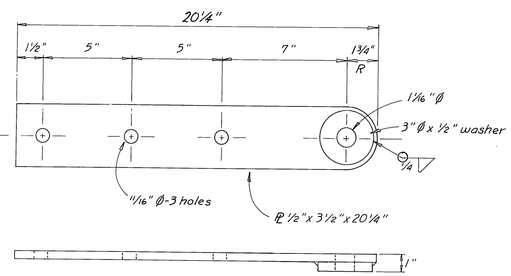

CONNECTION B
HINGE PLATE DETAIL
¼" = 1"

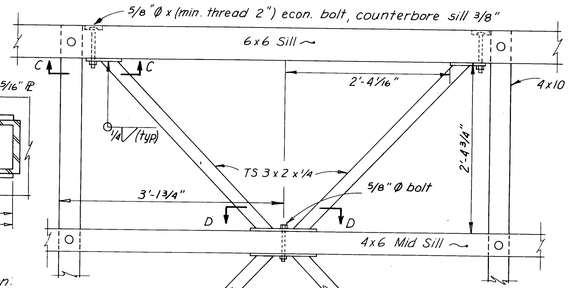

PLAN
1" = 1'-0"

DCW 1-14-87

STAMP	DO NOT SCALE THIS DRAWING — USE DIMENSIONS
	STATE OF ALASKA DEPARTMENT OF TRANSPORTATION AND PUBLIC FACILITIES DIVISION OF HARBOR DESIGN AND CONSTRUCTION
	PETERSBURG — ALASKA
	6' SECTIONAL FLOAT
SCALE As Noted DESIGNED CHECKED WmN	SURVEYED DRAWN TS DATE NOV. 79
	APPROVED CHIEF OF DESIGN
PROJECT NUMBER K31901	SHEET LR3 OF 4 (59)

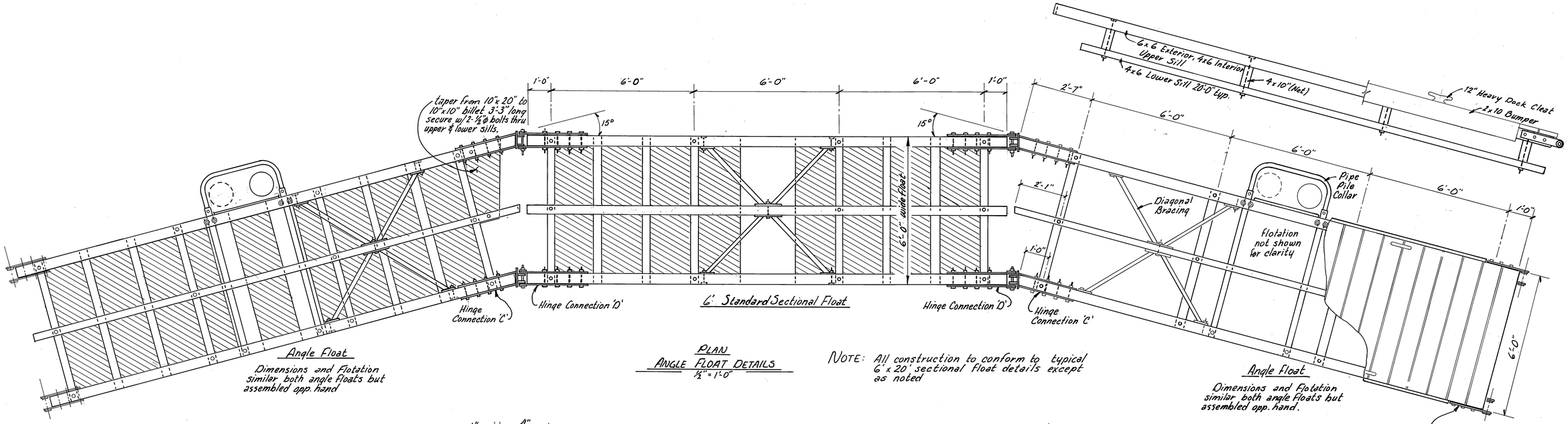

PLAN
ANGLE FLOAT DETAILS
½" = 1'-0"

NOTE: All construction to conform to typical 6' x 20' sectional float details except as noted

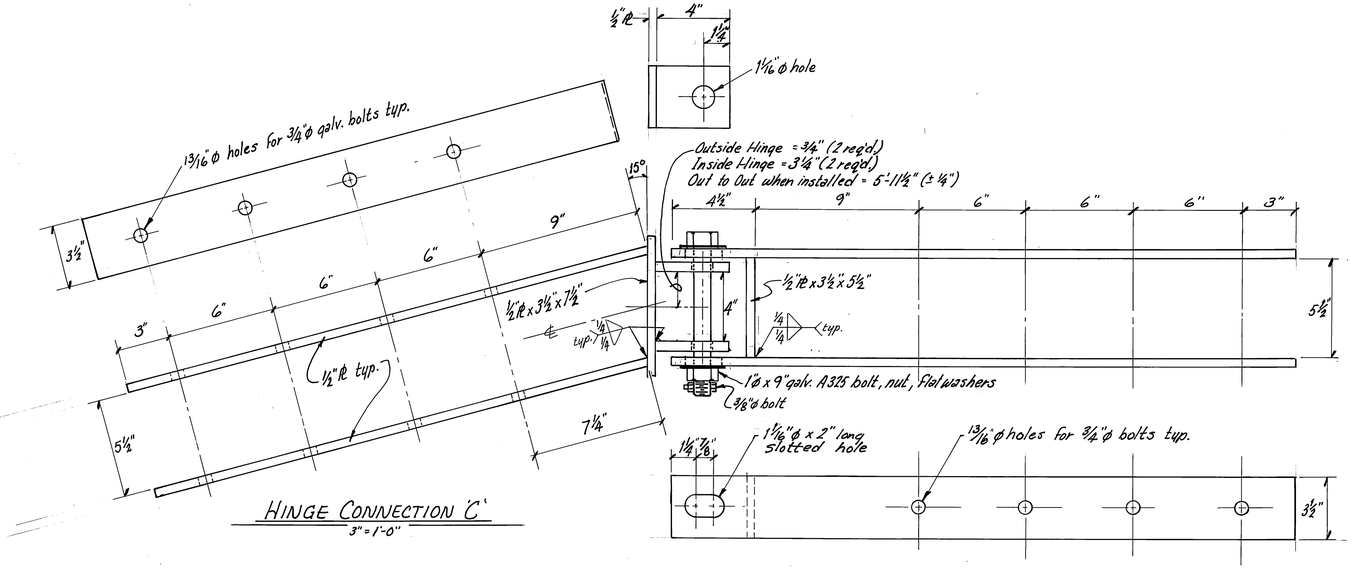

HINGE CONNECTION 'C'
3" = 1'-0"

HINGE CONNECTION 'D'
3" = 1'-0"

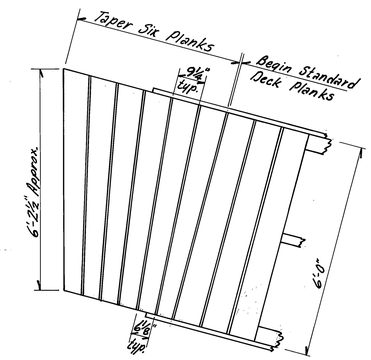

Angle Float Decking
½" = 1'-0"

DCW 1-14-87

STAMP	DO NOT SCALE THIS DRAWING — USE DIMENSIONS
	STATE OF ALASKA DEPARTMENT OF TRANSPORTATION AND PUBLIC FACILITIES
	PETERSBURG — ALASKA
	6' SECTIONAL ANGLE FLOAT DETAILS
	DESIGNED DCW · CHECKED · DRAWN WMN · DATE Feb. 85
	PROJECT NUMBER K31901 · SHEET LR 4 OF 4 (60)

64842

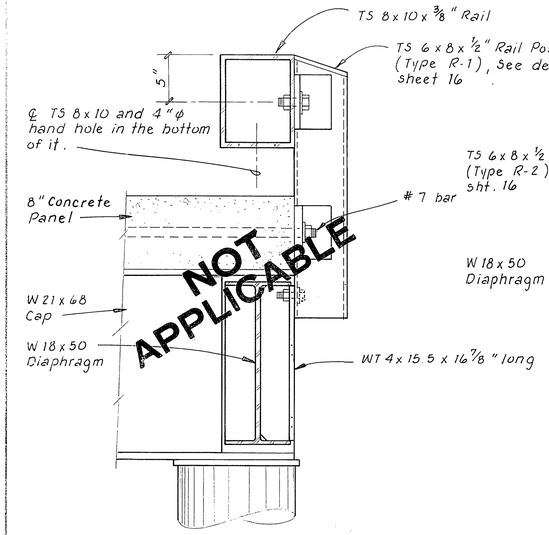

TYPICAL TRANSVERSE POST CONNECTION
1 1/2" = 1'-0"

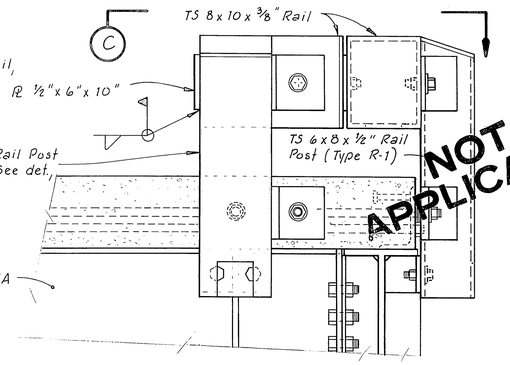

STUB RAIL CONNECTION DETAIL
1 1/2" = 1'-0"

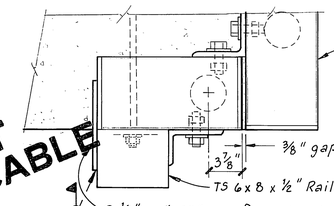

SECTION C
1 1/2" = 1'-0"

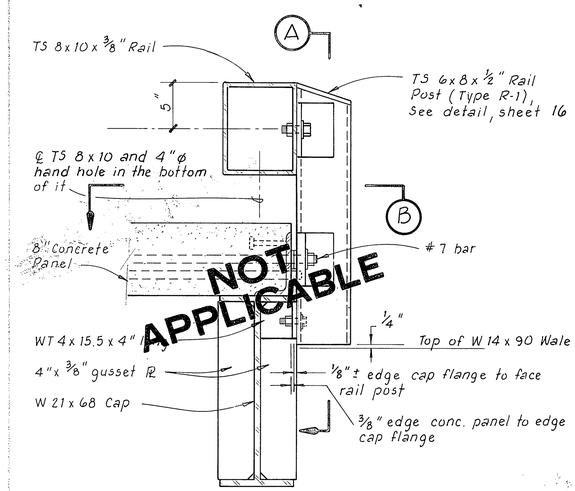

TYPICAL LONGITUDINAL POST CONNECTION
1 1/2" = 1'-0"

SECTION A
1 1/2" = 1'-0"

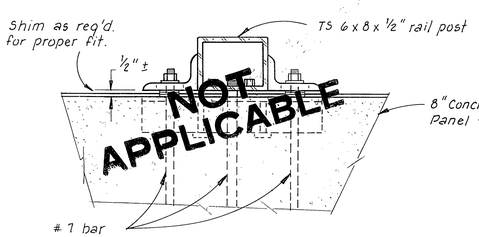

SECTION B
1 1/2" = 1'-0"

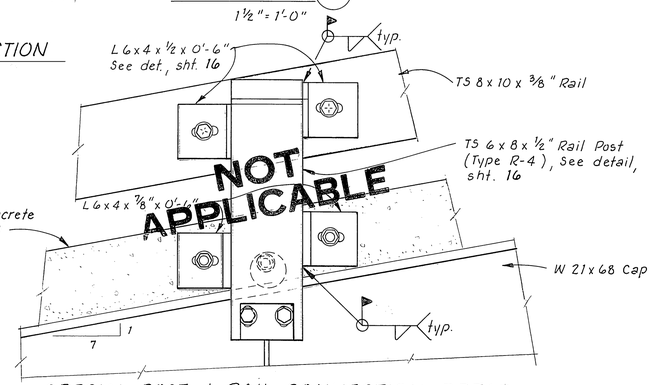

SPECIAL POST & RAIL CONNECTION DETAIL
1 1/2" = 1'-0"

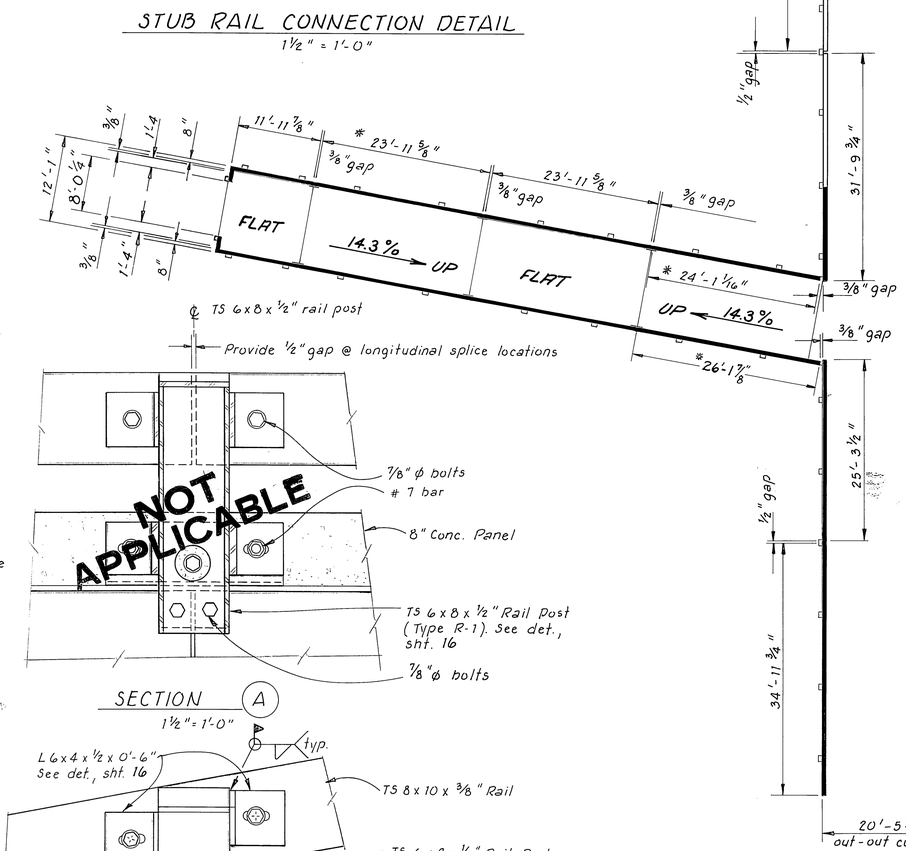

HANDRAIL LAYOUT
1" = 10'

* Horizontal Length

NOTE: Handrail in shaded area only. Totals approx. 323 linear feet.

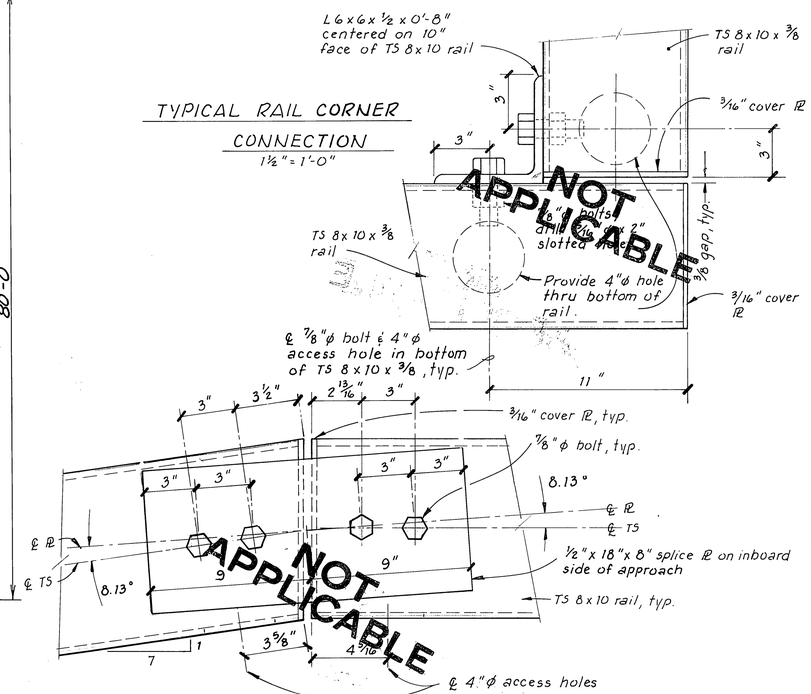

TYPICAL RAIL CORNER CONNECTION
1 1/2" = 1'-0"

GRADE CHANGE RAIL SPLICE PLATE
3" = 1'-0"

As built 2-2-87 DCW

STAMP	DO NOT SCALE THIS DRAWING — USE DIMENSIONS STATE OF ALASKA DEPARTMENT OF TRANSPORTATION AND PUBLIC FACILITIES Petersburg Alaska CURB RAIL LAYOUT & DETAILS
STATE OF ALASKA 49th Robert P. Beck No. 1484-E REGISTERED PROFESSIONAL ENGINEER	DESIGNED RPB CHECKED ____ DRAWN TS DATE 2-84 PROJECT NUMBER K-78190 SHEET 61 OF 63

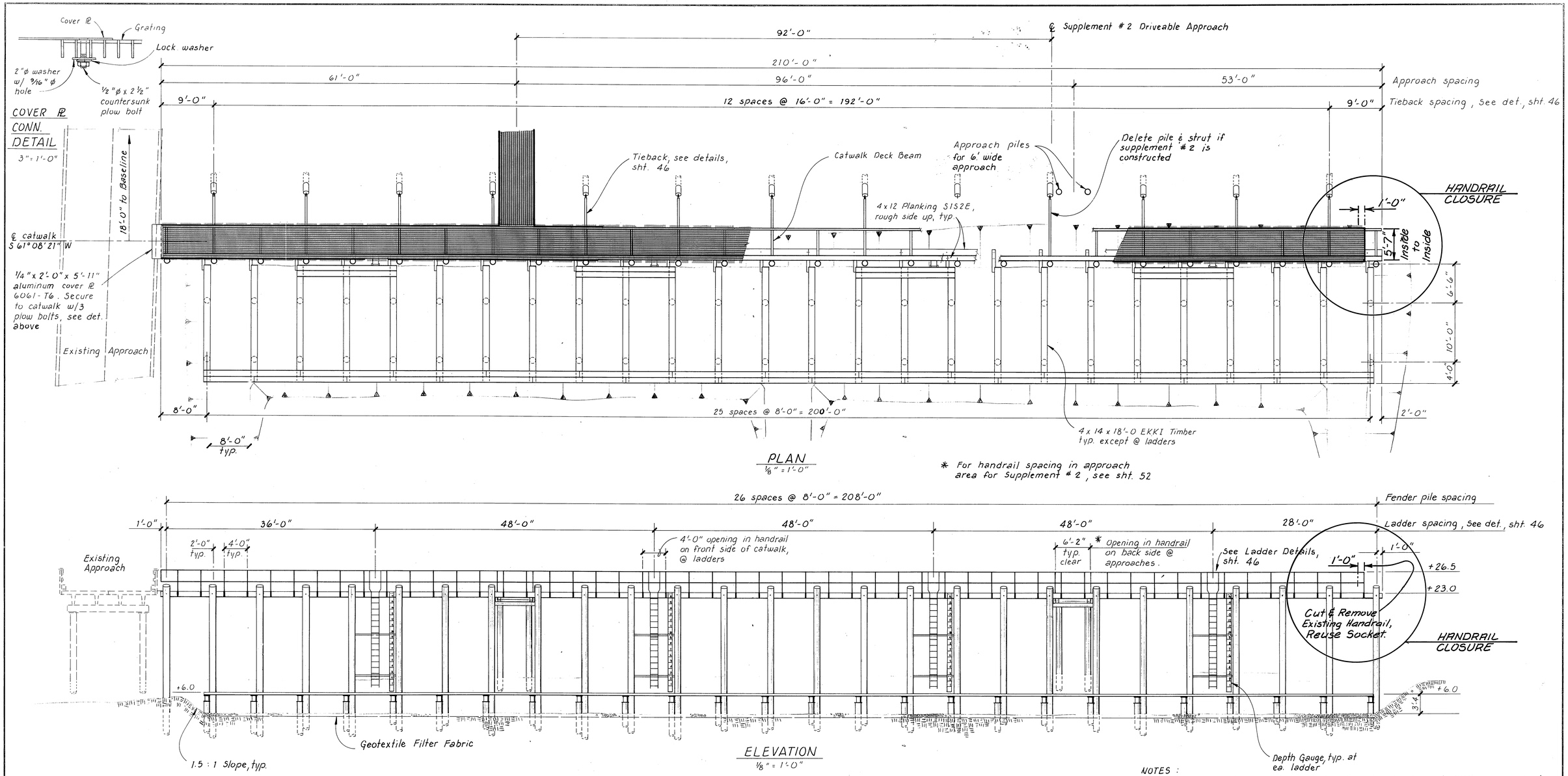

NOTES:
Steel, Grid and Supplement # 2 Approach, piles shall be driven to 30T bearing (est. penetration is 30').
Grid batter piles shall be driven at a 45° batter to 30T bearing (est. pen. is 30').
Timber approach piles shall be driven to 8T bearing (est. penetration is 15').

See Grid Cross Section on sht. 46.

DCW 2-2-87

STAMP	DO NOT SCALE THIS DRAWING — USE DIMENSIONS
STATE OF ALASKA 49th Robert P. Beck No. 1484-E REGISTERED PROFESSIONAL ENGINEER	STATE OF ALASKA DEPARTMENT OF TRANSPORTATION AND PUBLIC FACILITIES Petersburg Alaska GRID LAYOUT
	DESIGNED RPB CHECKED ____ DRAWN TS DATE 6-84 PROJECT NUMBER K-78190 SHEET 63 OF 73

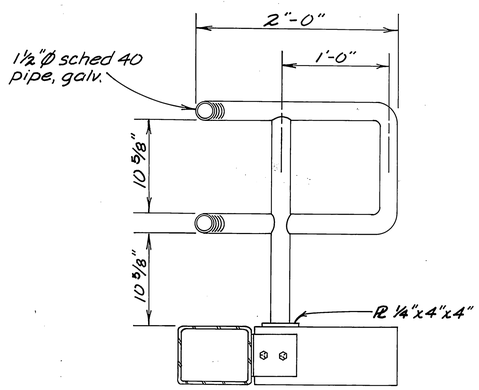

HANDRAIL AT GANGWAY

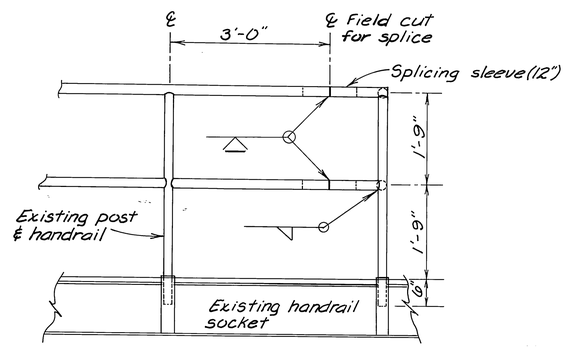

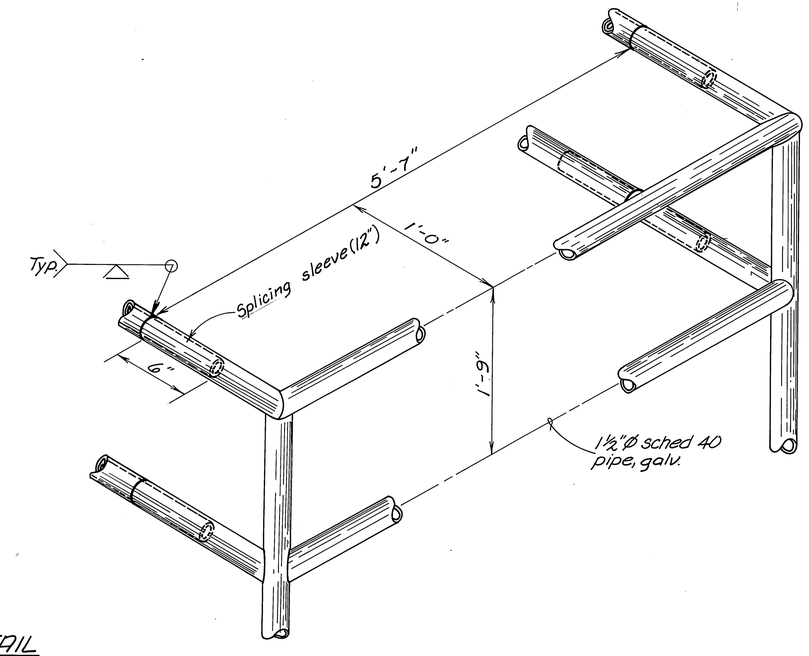

GRID-HANDRAIL DETAIL
3/4" = 1'-0"

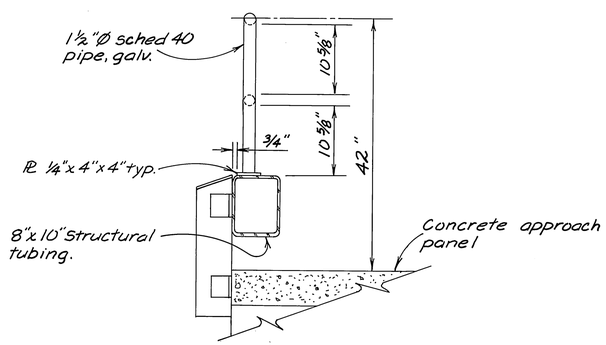

X-SECTION

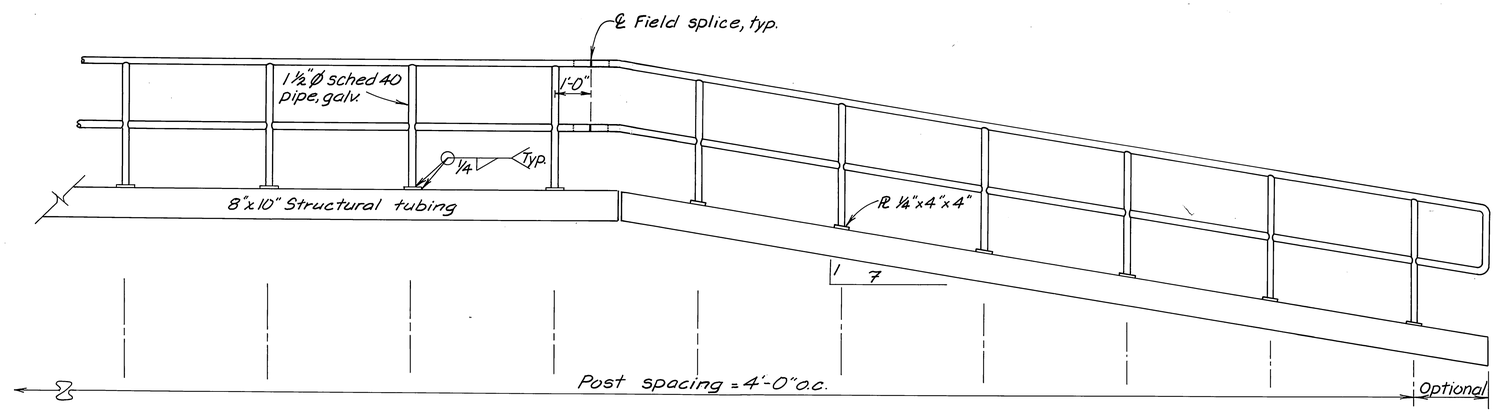

ELEVATION VIEW

APPROACH-HANDRAIL DETAILS
½" = 1'-0"

DCW 2-2-87

STAMP	DO NOT SCALE THIS DRAWING — USE DIMENSIONS			
STATE OF ALASKA 4911 Robert P. Beck No. 1484-E REGISTERED PROFESSIONAL ENGINEER	STATE OF ALASKA DEPARTMENT OF TRANSPORTATION AND PUBLIC FACILITIES			
	PETERSBURG EXTRA WORK ALASKA			
	HANDRAIL DETAILS			
	DESIGNED	CHECKED	DRAWN M.C.	DATE 7/85
	PROJECT NUMBER K-78190		SHEET 63 OF 63	

64842