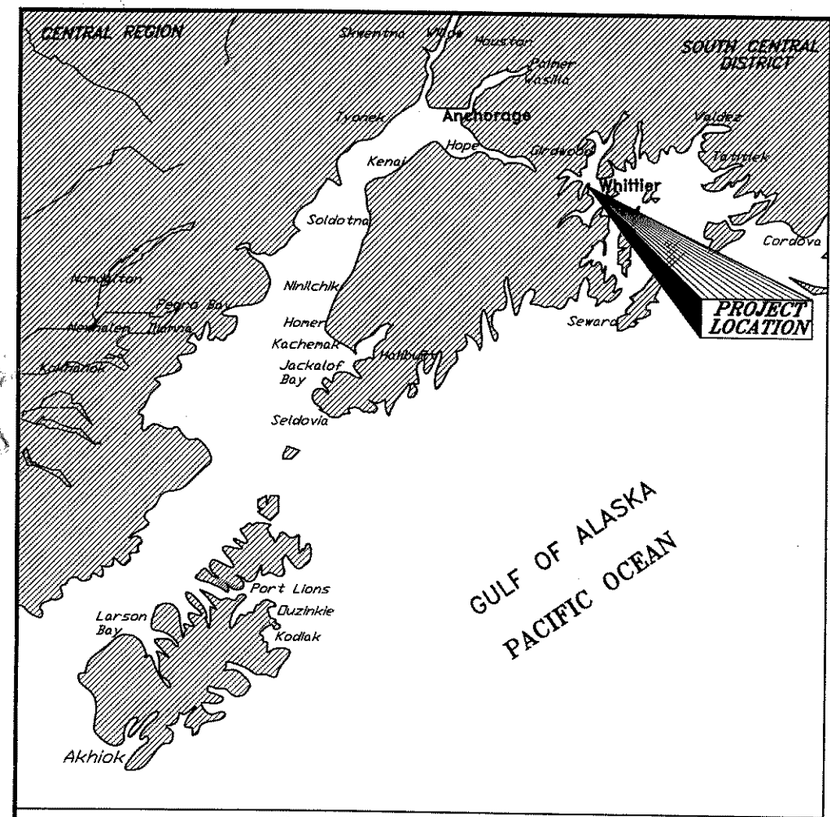

Location Map

STATE OF ALASKA
DEPARTMENT OF TRANSPORTATION
AND PUBLIC FACILITIES
SOUTHEAST REGION

WHITTIER, ALASKA

WHITTIER FERRY TERMINAL MODIFICATIONS

MARINE FACILITIES

PROJECT NO. 68355 / NH-0830(2)

INDEX OF SHEETS

SHEET NO.	DESCRIPTION
1	Title Sheet
2	Estimate of Quantities
3	Existing Site Plan
4	Demolition & Dredging Plan
5	Dredging Section, Profile & Details
6	New Site Plan
7	Marine Layout
8	Pile Layout
9–12	Mooring Structures R1 & R2
13–20	Lead-In Mooring Structures L1 & L2
21–26	Mooring Structures B1–B4
27–28	Floating Mooring Structures F1 & F2
29–33	Catwalks
34–37	Lift Tower Modifications
38–40	Bridge End Modifications
41–48	Apron
49	Hydraulic System Layout
50	Hydraulic Power Unit
51	Cathodic Protection Anodes
52	Bridge Repairs & Painting

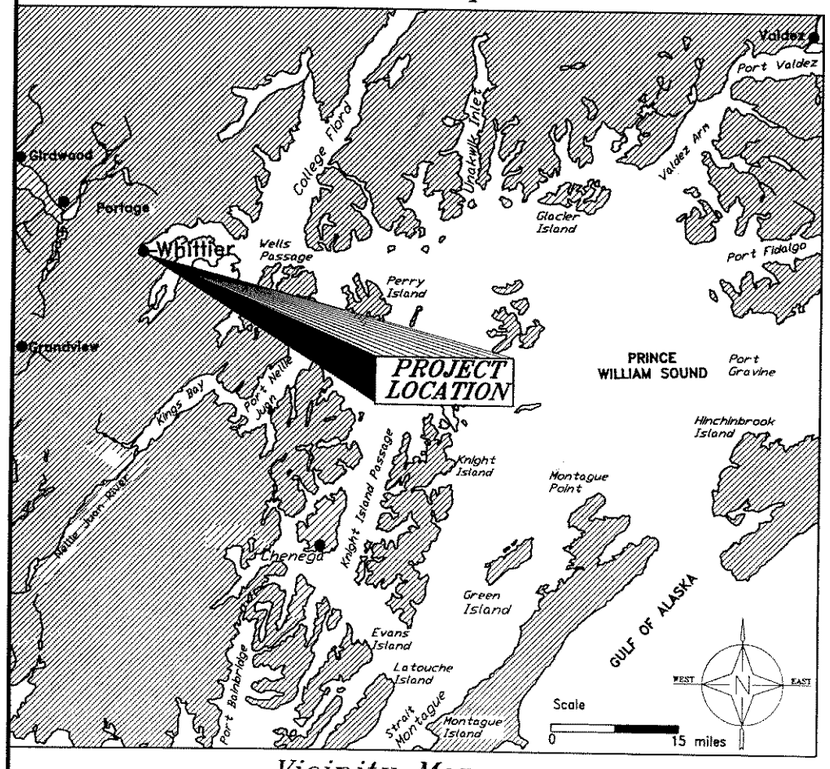

Vicinity Map

Existing Terminal Site

AS-BUILT DRAWINGS

Contractor - American Civil Constructors

Project Engineer - Cliff Douglas

Field Work Date Began - 10/04

Date Complete - 9/05

Fender Modifications Complete - 5/06

STATE OF ALASKA
DEPARTMENT OF TRANSPORTATION
AND
PUBLIC FACILITIES
SOUTHEAST REGION

PROJECT NUMBER: 68355

DATE: June 2004

SHEET 1 OF 52

STATE OF ALASKA 49th Kirk D. Miller CE-8550 REGISTERED PROFESSIONAL ENGINEER

7/8/04

GENERAL NOTES FOR MARINE STRUCTURES AND COMPONENTS

Specifications: Per Contract Documents for Project No. NH-MGE-099-1(1) ~ 68355

Design Standards: AKDOT/PF & SOUTHEAST REGION MARINE ENGINEERING DESIGN STANDARDS & AASHTO

Design Loads: Roof Snow Load = 200 psf
Approach & Bridge – LL Vehicle Lane: AASHTO HS20
LL Pedestrian Walkway: 85 psf, 500 lb concentrated

Materials

Steel Shapes & Plates: Plates and shapes– ASTM A36 unless otherwise noted
Tube Sections– ASTM A500 Grade B
Pipe– ASTM A53, Grade B, Type E or S
Stainless Steel– ASTM Type T316
Charpy Group 2 impact requirements shall apply where noted on Plans.

Piling: **Steel**– ASTM A252 Grade 3 or Approved Equal. See Specifiations.
Size– As noted on Plans and Pile Tables
Tips– Reinforced inside flange cutting shoe tips (APF 14001 or equal) for open end pipe piles.
Driving Requirements– Drive all piles to estimated tip elevations or to practical refusal (see specifications). Reference Pile Table, Sheet 8

Steel Grating– Welded bar type, serrated top, thickness & bar spacings as noted on Plans.

UHMW: Ultra High Molecular Weight Plastic, ASTM D4020

Polyethylene Pipe: High density polyethylene (HDPE) ASTM D3350. Diameter & wall thickness as noted on Plans.

Hardware: ASTM A325

Protective Coatings

Steel Shapes & Plates, Weldments & Piling– Galvanized after fabrication per Specifications.
Existing Steel Transfer Bridge– Paint (over-coat process) all exterior surfaces per System 5 (see Plans & Specifications).
Gangways, Catwalks, Mooring Structures– Galvanized after fabrication as noted on Plans & Specifications. Apply non-skid coatings to galvanized surfaces of mooring structures, apron transition plates and other surfaces where noted on the Plans per System 7.

Welding

All welding shall be performed by qualified welders in accordance with AWS D1.1 and D1.5 as applicable. Unless otherwise noted on the plans, all fillet welds are 1/4-inch minimum size.

Electrical System

Electrical system drawings for marine facilities not included in this plan set. Reference plans for Project No. 67883 for electrical facilities not shown. Also reference specifications.

Reference Drawings

Portions of the work involve removal and/or modification of existing facilities and structures. As-built drawings are not included in this plan set. The Contractor shall inspect all existing facilities prior to removal and modification. As-built drawings are on file with the Department and may be reviewed upon request.

ESTIMATE OF QUANTITIES

ITEM NO.	ITEM	UNIT	ESTIMATE QUANTITY
202(14)	Demolition & Removal (Marine)	LS	All Req'd.
203(19)	Dredge Mooring Basin	CY	17,500
203(20)	Dredge Material Royalty	CS	Contingent Sum
504(01)	Vehicle Apron & Lift System Winch	LS	All Req'd.
504(02)	Lift Tower Platform Roof Structures	EA	2
504(03)	Replace Syncrolift Winch Cables	LS	All Req'd.
504(04)	Transfer Bridge Lift Beam Riser & Misc. Modifications	LS	All Req'd.
504(05)	Mooring Float Dolphin Cap (F1 & F2)	EA	2
504(06)	Rear Mooring Dolphin Cap & Fender System (R1 & R2)	EA	2
504(07)	Lead-In Mooring Dolphin Cap & Fender System (L1 & L2)	EA	2
504(08)	Breasting Dolphin Cap & Fender System (B1-B4)	EA	4
504(09)	New 3.5'x34' Steel Catwalk (C1)	LS	All Req'd.
504(10)	New 3.5'x71.6' Steel Catwalk (C6)	LS	All Req'd.
504(11)	New 3.5'x64.7' Steel Catwalk (C7)	LS	All Req'd.
504(12)	Salvage/Modify 3.5'x8.8' Steel Catwalk (C2 & C3)	EA	2
504(13)	Salvage/Modify 3.5'x33' Steel Catwalk (C4)	LS	All Req'd.
504(14)	Salvage/Modify 3.5'x57' Steel Catwalk (C5)	LS	All Req'd.
504(15)	Salvage/Modify 3.5'x61' Steel Catwalk (C8)	LS	All Req'd.
505(01)	30" dia. x 1/2" Wall Pipe Piles, Furnished	LF	4,104
505(02)	30" dia. x 1/2" Wall Pipe Piles, Driven	EA	32
505(03)	24" dia. x 5/8" Wall Pipe Piles, Furnished	LF	664
505(04)	24" dia. x 5/8" Wall Pipe Piles, Driven	EA	6
505(05)	20" dia. x 1/2" Wall Pipe Piles, Furnished	LF	220
505(06)	20" dia. x 1/2" Wall Pipe Piles, Driven	EA	2
505(07)	100 lb Anode	EA	18
513(01)	Paint Existing Transfer Bridge	LS	All Req'd.
530(01)	HDPE Mooring Float (F1 & F2)	EA	2
641(05)	Silt Containment Boom	LS	All Req'd.
662(02)	Electrical System (Marine)	LS	All Req'd.

Note: Above table reflects major marine facilities work items only. Reference sheets Q1 and Q2 and bid schedule for complete listing of all bid items.

As Built <0
5/12/06

LEGEND

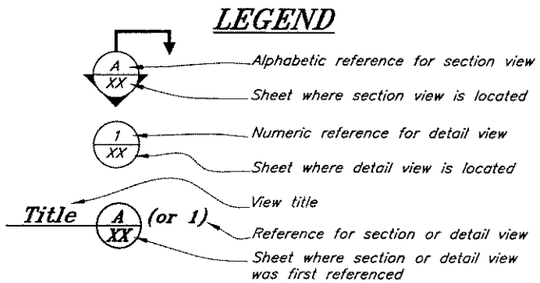

Abbreviations

PL	Plate
CL	Centerline
UON	Unless otherwise noted
SS	Stainless Steel

Tidal Data

EHW	18.7
HTL	15.5
MHHW	12.3
MHW	11.3
MLLW	0
ELW	-4.0

DO NOT SCALE FROM THESE DRAWINGS USE DIMENSIONS

DESIGNED BY: K. Miller
CHECKED BY: J. Scott
DRAWN BY: Staff

STATE OF ALASKA 49th Kirk D. Miller CE-8550 REGISTERED PROFESSIONAL ENGINEER
7/6/04

STATE OF ALASKA
DEPARTMENT OF TRANSPORTATION
& PUBLIC FACILITIES
STATEWIDE DESIGN & ENGINEERING SERVICES DIVISION

WHITTIER FERRY TERMINAL
MODIFICATIONS
PROJECT NO. 68355

Estimate of Quantities

PATH: O:\Wit\68355\Mt\PlanSet\02-Estimate of Quantities.dwg Tue, 06/Jul/04 04:54PM
PLOT: PSPACE 1=1 Tab: Layout1

REVISIONS NO.	DATE	DESCRIPTION	PROJECT DESIGNATION	YEAR	SHEET NO.	TOTAL SHEETS
			68355	2004	2	52

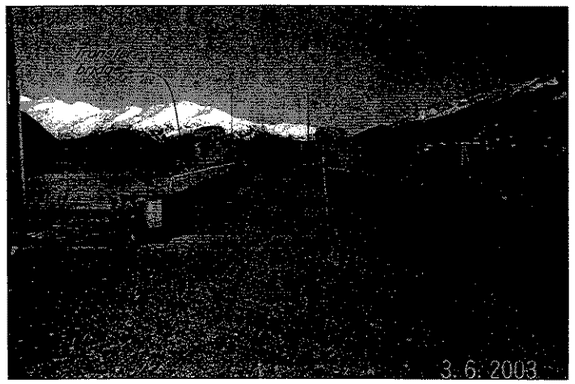

Photo 1

Photo 2

Photo 3

Photo 4

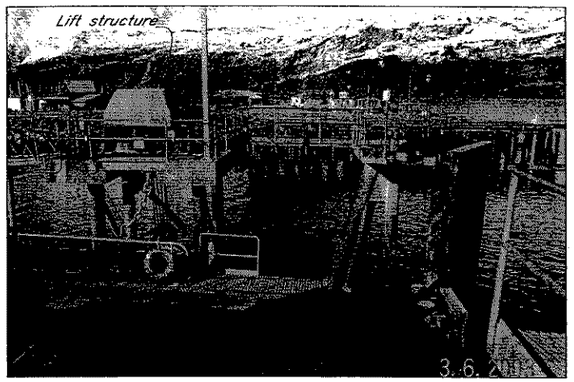

Photo 5

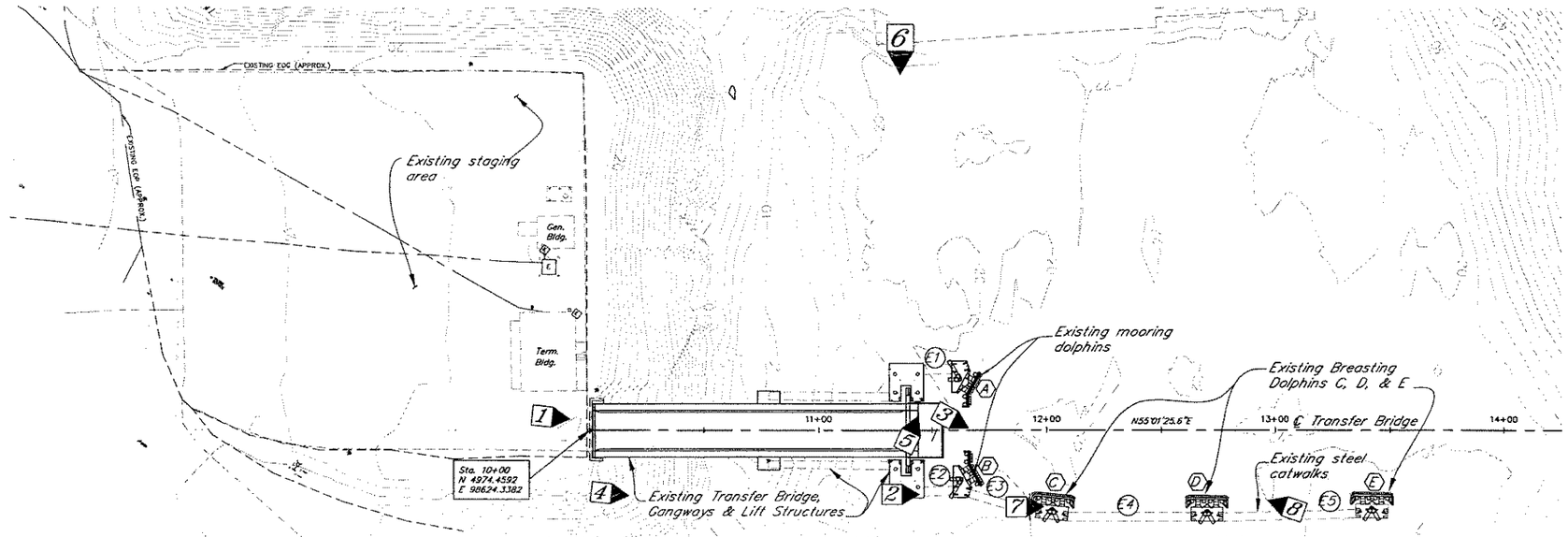

Existing Site Plan

As Built
5/12/06

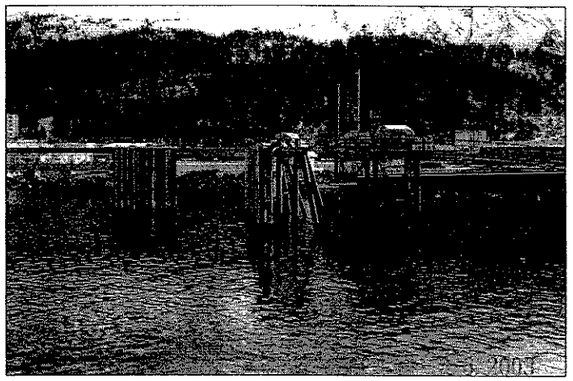

Photo 6

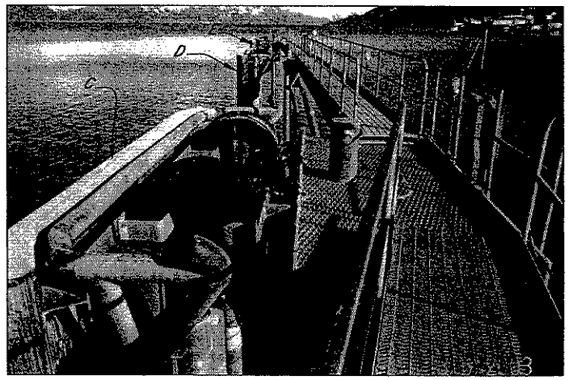

Photo 7

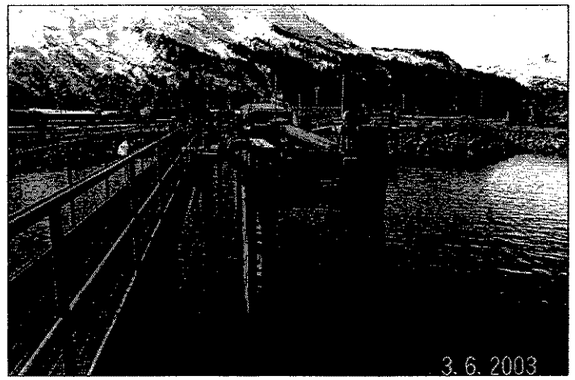

Photo 8

DO NOT SCALE FROM THESE DRAWINGS USE DIMENSIONS

DESIGNED BY: K. Miller

STATE OF ALASKA
49th
Kirk D. Miller
CE-8550
REGISTERED PROFESSIONAL ENGINEER
7/8/04

CHECKED BY: J. Beedle
DRAWN BY: Staff

STATE OF ALASKA
DEPARTMENT OF TRANSPORTATION
& PUBLIC FACILITIES
STATEWIDE DESIGN & ENGINEERING SERVICES DIVISION

WHITTIER FERRY TERMINAL MODIFICATIONS
PROJECT NO. 68355

Existing Site Plan

PATH: Q:\WI\68355\MI\PlanSet\03-Existing Marine Layout.dwg Fri, 18/Jun/08/10:01AM
PLOT: PSPACE 1=1 TAB: DETAIL Tab: Layout1

REVISIONS			PROJECT DESIGNATION	YEAR	SHEET NO.	TOTAL SHEETS
NO.	DATE	DESCRIPTION				
			68355	2004	3	52

City Dock

R/W

Existing staging area

Gen. Bldg.

Term. Bldg.

Sta. 10+00
N 49741.4592
E 98624.3382

Existing Transfer Bridge, Gangways & Lift Structures to remain

Slope limits, typ

5:1 typ

20' typ

2:1 typ

Remove existing end mooring dolphins A & B, typ. 2 each

Toe of dredge limits, elev=30.0', typ

Remove existing breasting dolphins C, D, & E, typ. 3 each

Remove and salvage existing steel catwalks E1–E5, typ. 5 each

80' typ

42' typ

11+00 12+00 13+00 14+00 15+00

N55°01'25.63"E

℄ Transfer Bridge

Temporary construction easement

Floating Sediment Control Silt boom. Approximate location and alignment noted. See Sheet 5 and specs.

Steel Trestle

Exist. Bldg.

A 5

As Built 5/12/06

0 10 20 40 80
Scale in Feet

DO NOT SCALE FROM THESE DRAWINGS USE DIMENSIONS

Dredging Data

Dredging Area = 1.4 acre
Dredging Volume
Estimated Total = 17,500 C.Y.

Notes:

1. See civil plans for Project 67883 for upland demolition and new site improvements not shown.
2. See as-built drawings for features of existing structures to be removed.
3. Unless otherwise authorized by the City of Whittier and the Engineer, access and use of the existing City Dock facility shall be maintained at all times during construction of this project except for between the dates of October 1 and December 15, 2004. The Contractor shall coordinate all nearby activities with the City of Whittier so that safe access to the City Dock is maintained until October 1 and after December 15, 2004.
4. Reference Sheet 5 and the Contract Specifications for additional dredging and dredge material disposal requirements.

DESIGNED BY: D. Blockburn

STATE OF ALASKA 49th Kirk D. Miller CE-8550 REGISTERED PROFESSIONAL ENGINEER

5/8/04

CHECKED BY: J. Beedle
DRAWN BY: K. Miller

STATE OF ALASKA
DEPARTMENT OF TRANSPORTATION
& PUBLIC FACILITIES
STATEWIDE DESIGN & ENGINEERING SERVICES DIVISION

WHITTIER FERRY TERMINAL
MODIFICATIONS
PROJECT NO. 68355

Demolition & Dredging Plan

PATH: Q:\Wit\68355\Mf\PlanSet\04-Demo & Dredge Plan 12-17-03.dwg Wed, 30/Jun/04 03:58PM
PLOT: PSPACE 1=1 Tab: Plan

REVISIONS			PROJECT DESIGNATION	YEAR	SHEET NO.	TOTAL SHEETS
NO.	DATE	DESCRIPTION	68355	2004	4	52

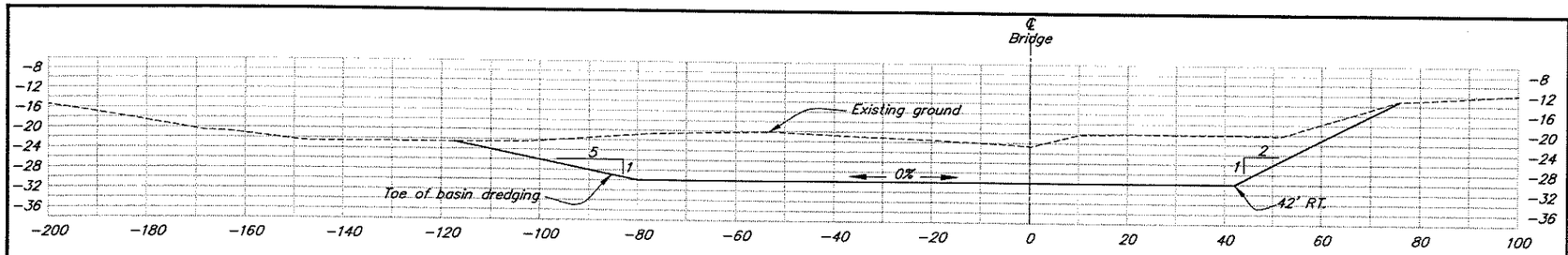

Typical Section (A/4)
(Sta. 12+80)

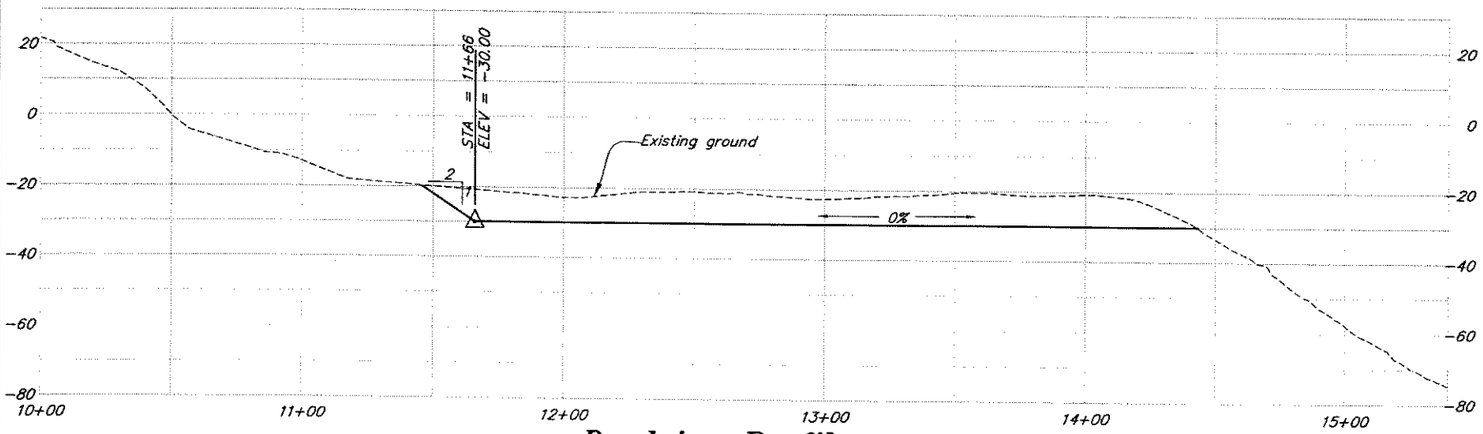

Dredging Profile
(CL of Transfer Bridge)

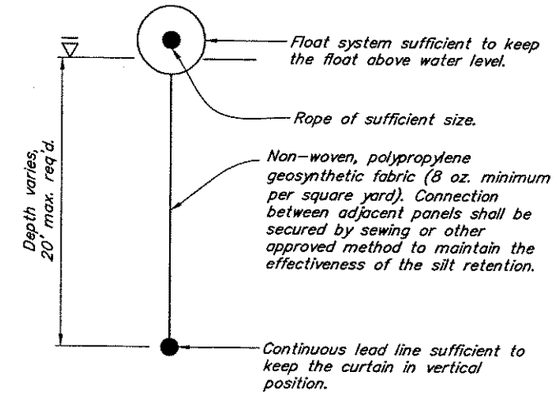

Typical Section
Silt Containment Boom

Silt Containment Boom Notes:

1. Before ground disturbing activities, including excavation or embankment work, the Contractor shall install a silt containment boom to isolate the worksite. The boom shall completely contain the site during all dredging activities.

2. The horizontal alignment of the silt boom shown on Sheet 4 is approximate only. The Contractor may utilize any reasonable alignment such that the site remains enclosed in accordance with the environmental commitments (reference Specifications) and otherwise contained within the project property limits. Also reference Note 3 on Sheet 4. The silt boom may not interfere with access and use of the existing City Dock prior to October 1 or after December 15, 2004 unless otherwise authorized by the City of Whittier and the Engineer. Alternative silt boom alignments and length of silt boom from that shown on the plans may therefore be required depending on the Contractors work schedule.

3. The boom shall be maintained 24 hours per day by the Contractor and upon removal, shall be the property of the Contractor.

4. The Contractor shall submit an anchoring plan for Department review. The anchoring system must be stamped by an Engineer registered in the State of Alaska. The boom shall be sufficently secured to withstand wind, seas, propeller wash, and tidal forces reasonably expected at the site.

5. The boom shall remain in place until all earth disturbing activities are complete and water quality is deemed acceptable by the Engineer.

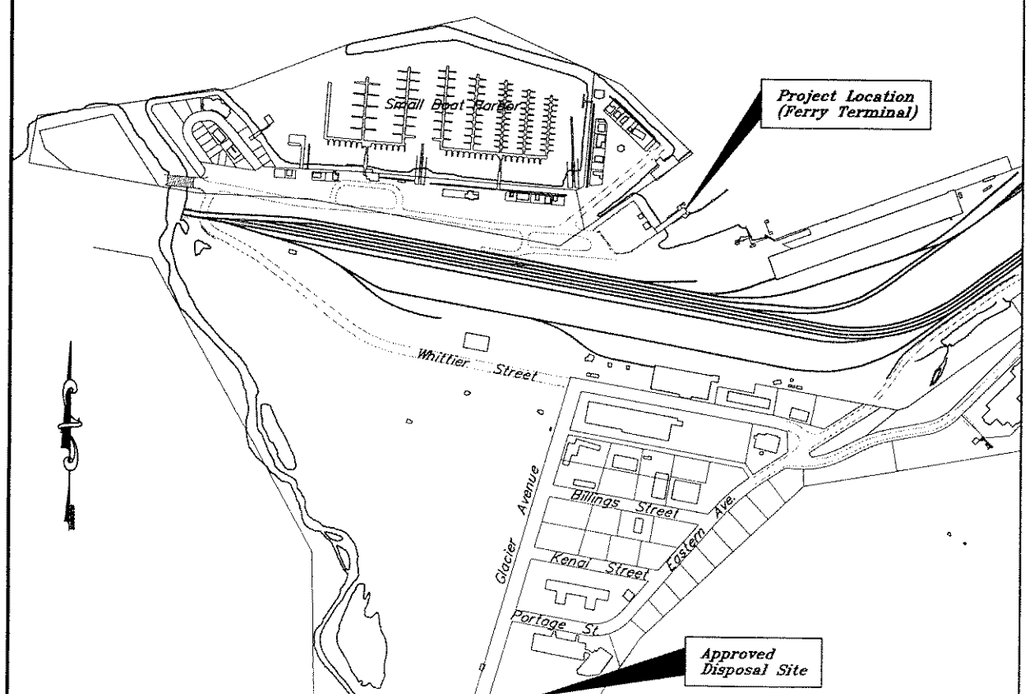

Vicinity Map
Dredge Disposal Location

Dredge Disposal Notes:

1. Surplus dredge material shall be removed from the site. Offshore, or in-water disposal is not permitted. Use of existing transfer bridge for dredge disposal or truck loading shall not be permitted.

2. The Contractor may haul and stockpile surplus dredge materials to the property site generally indicated on the map. The disposal site is sited on property owned by the City of Whittier. Materials stockpiled at this location will become the property of the City of Whittier.

3. Stockpiled materials at the designated disposal site shall be neatly dumped and stacked in the location(s) directed by the City of Whittier. Materials shall be graded and/or shaped as may be required to allow suitable drainage. Also reference Specifications, Section 641, for erosion & sediment control requirments pertaining to the disposal site.

4. The Contractor is not required to utilize the City of Whittier disposal and storage site. Surplus materials from this project may also become the property of the Contractor and shall be removed from the site and properly disposed of at other locations if approved by the Engineer.

As Built co
5/12/06

DO NOT SCALE FROM THESE DRAWINGS USE DIMENSIONS

DESIGNED BY: D. BLACKBURN
CHECKED BY: K. MILLER
DRAWN BY: B. BENNETT

STATE OF ALASKA 49th Kirk D. Miller CE-8550 REGISTERED PROFESSIONAL ENGINEER
5/8/04

STATE OF ALASKA
DEPARTMENT OF TRANSPORTATION
& PUBLIC FACILITIES
STATEWIDE DESIGN & ENGINEERING SERVICES DIVISION

WHITTIER FERRY TERMINAL
MODIFICATIONS
PROJECT NO. 68355

Dredging Section Profile & Details

PATH: Q:\Wit\68355\Mf\PlanSet\05-Dredging Section & Profile 12-17-03.dwg
PLOT: PSPACE 1=1 Thu, 24/Jun/04 10:20AM

REVISIONS			PROJECT DESIGNATION	YEAR	SHEET NO.	TOTAL SHEETS
NO.	DATE	DESCRIPTION	68355	2004	5	52

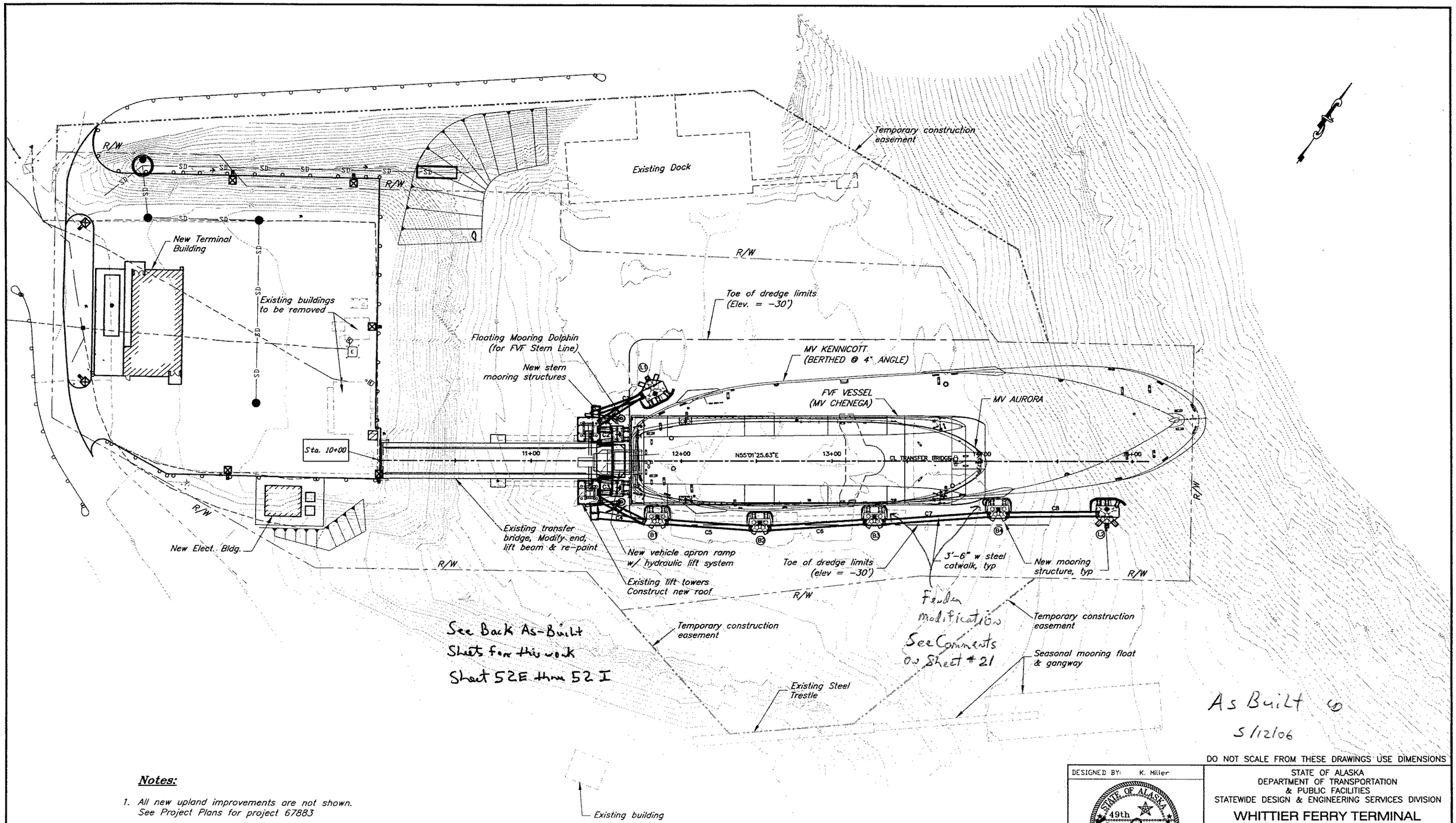

DO NOT SCALE FROM THESE DRAWINGS USE DIMENSIONS

Notes:

1. All new upland improvements are not shown. See Project Plans for project 67883

New Site Plan

GRAPHIC SCALE

0 15 30 60

(1"=60')

DESIGNED BY: K. Miller

STATE OF ALASKA 49th Kirk D. Miller CE-8550 REGISTERED PROFESSIONAL ENGINEER

7/8/04

CHECKED BY: J. Beedle

DRAWN BY: Staff

STATE OF ALASKA
DEPARTMENT OF TRANSPORTATION
& PUBLIC FACILITIES
STATEWIDE DESIGN & ENGINEERING SERVICES DIVISION

WHITTIER FERRY TERMINAL MODIFICATIONS
PROJECT NO. 68355

New Site Plan

PATH: Q:\Wit\68355\Mf\PlanSet\06-New Site Plan 12-17-03.dwg Mon, 28/Jun/04 09:59AM
PLOT: PSPACE 1=1 Tab: Plot

REVISIONS			PROJECT DESIGNATION	YEAR	SHEET NO.	TOTAL SHEETS
NO.	DATE	DESCRIPTION				
			68355	2004	6	52

Notes:
1. Station 10+00 is CL of existing transfer bridge at back edge of concrete abutment.
2. Bearing of CL of transfer bridge may vary from that shown on the plans. Prior to survey layout and construction, the Contractor shall make as-built measurements of the transfer bridge and establish the actual CL. Report any discrepancies from the plan bearing to the Engineer for establishment of the project CL. If a new bearing is established, the location of the mooring structures and associated coordinate values listed on Sheet 8 shall be adjusted accordingly.

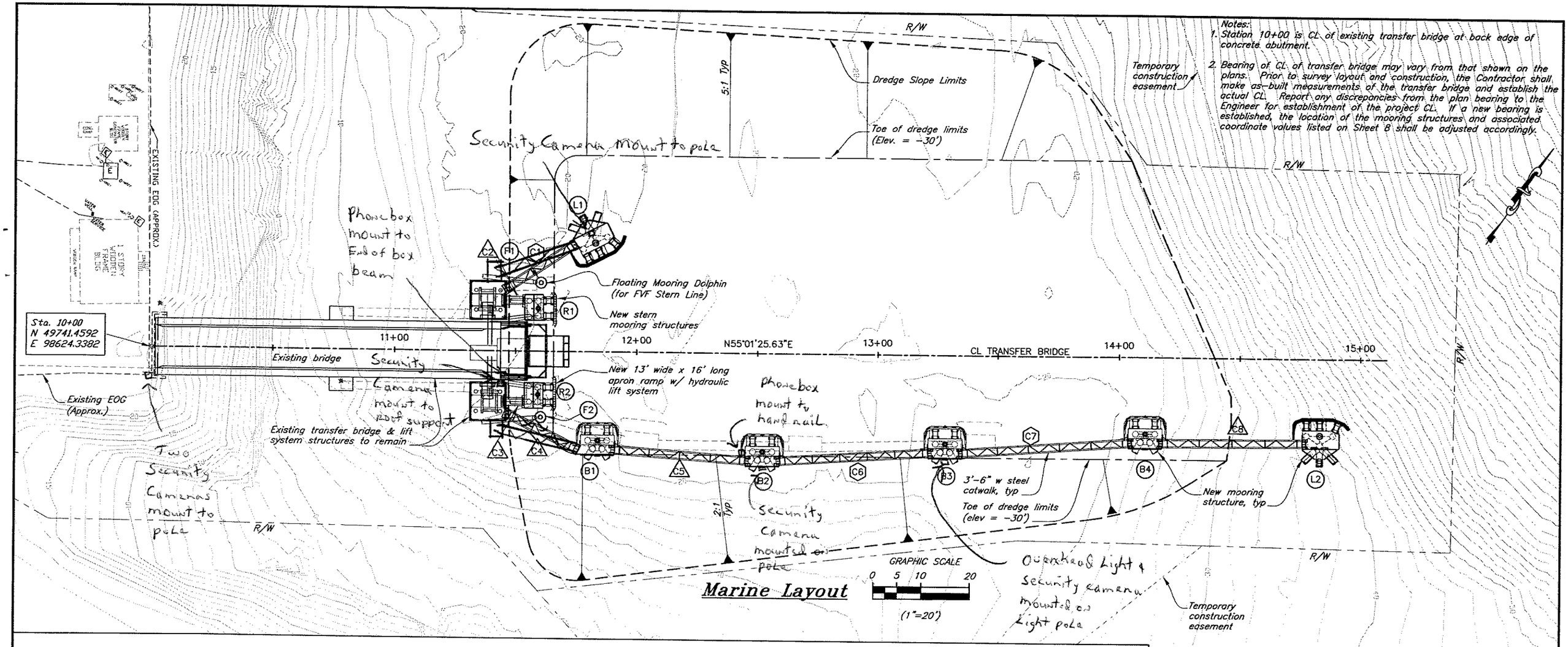

Marine Layout

As Built CD 5/12/06

Legend

- Mooring Structure
- Salvaged Catwalk
- New Catwalk

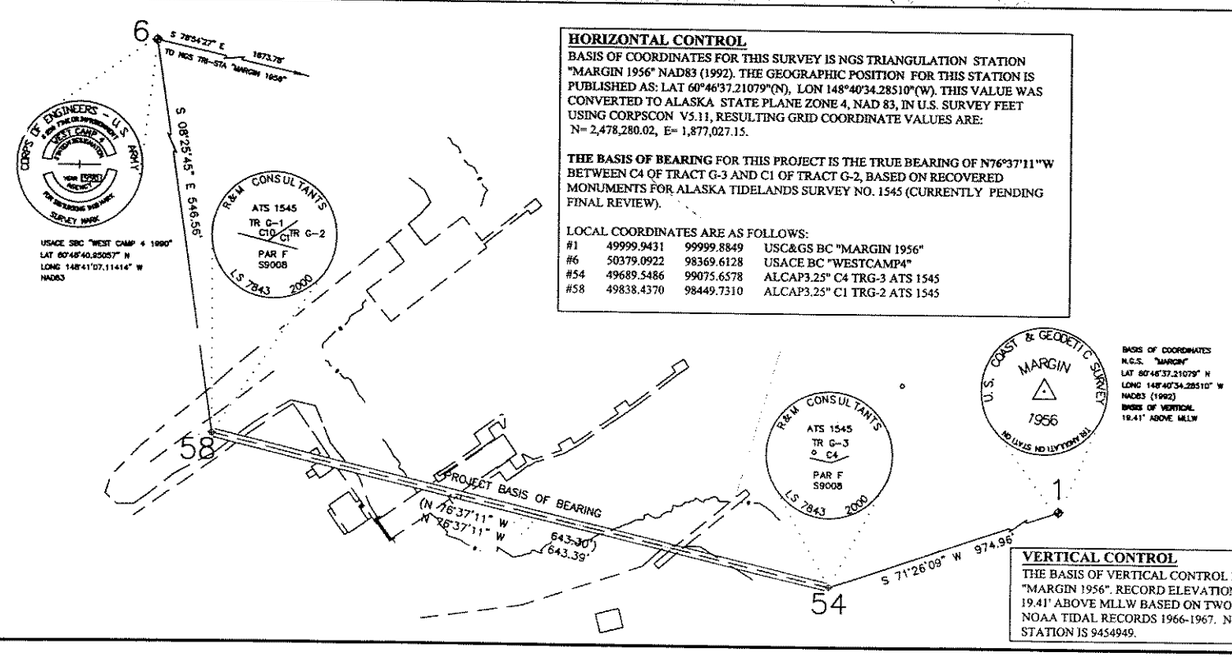

HORIZONTAL CONTROL

BASIS OF COORDINATES FOR THIS SURVEY IS NGS TRIANGULATION STATION "MARGIN 1956" NAD83 (1992). THE GEOGRAPHIC POSITION FOR THIS STATION IS PUBLISHED AS: LAT 60°46'37.21079"(N), LON 148°40'34.28510"(W). THIS VALUE WAS CONVERTED TO ALASKA STATE PLANE ZONE 4, NAD 83, IN U.S. SURVEY FEET USING CORPSCON V5.11, RESULTING GRID COORDINATE VALUES ARE: N= 2,478,280.02, E= 1,877,027.15.

THE BASIS OF BEARING FOR THIS PROJECT IS THE TRUE BEARING OF N76°37'11"W BETWEEN C4 OF TRACT G-3 AND C1 OF TRACT G-2, BASED ON RECOVERED MONUMENTS FOR ALASKA TIDELANDS SURVEY NO. 1545 (CURRENTLY PENDING FINAL REVIEW).

LOCAL COORDINATES ARE AS FOLLOWS:

#1	49999.9431	99999.8849	USC&GS BC "MARGIN 1956"
#6	50379.0922	98369.6128	USACE BC "WESTCAMP4"
#54	49689.5486	99075.6578	ALCAP3.25" C4 TRG-3 ATS 1545
#58	49838.4370	98449.7310	ALCAP3.25" C1 TRG-2 ATS 1545

VERTICAL CONTROL

THE BASIS OF VERTICAL CONTROL IS USC&GS BC "MARGIN 1956". RECORD ELEVATION AT MARGIN IS 19.41' ABOVE MLLW BASED ON TWO YEARS OF NOAA TIDAL RECORDS 1966-1967. NOAA TIDE STATION IS 9454949.

SURVEY CONTROL

GENERAL NOTES:

1. THE INFORMATION SHOWN IS BASED ON A FIELD SURVEY PERFORMED BY TERRA SURVEYS, LLC FROM JAN. 28 - FEB. 1, 2002, FOR THE STATE OF ALASKA, DOT/PF, SOUTHEAST REGION, PROJECT NO. 67883/68355. THIS SURVEY LIES WITHIN SECTIONS 13 AND 24 OF PROTRACTED TOWNSHIP 8 NORTH, RANGE 4 EAST, SEWARD MERIDIAN, ALASKA.

2. ALASKA STATE PLANE COORDINATES, ZONE 4, NAD83, IN U.S.SURVEY FEET ARE BASED ON THE LINE BETWEEN RECOVERED MONUMENTS USC&GS "MARGIN 1956" AND USACE "WEST CAMP 4 1990". ASP Z4 COORDINATE VALUES WERE COMPUTED FOR THIS SURVEY HOLDING "MARGIN 1956" AS THE BASIS OF COORDINATES AND "WEST CAMP 4 1990" AS THE BASIS OF BEARING. USACE PUBLISHED VALUES FOR "WEST CAMP 4 1990", WERE CONVERTED USING CORPSCON V5.11 RESULTING IN COORDINATE VALUES, N= 2,478,626.94, E= 1,875,389.78.

COORDINATE TRANSFORMATION PARAMETERS
BASE POINT FOR TRANSLATION, ROTATION AND SCALING = "MARGIN 1956"

TO CONVERT FROM LOCAL GRID TO NAD 83, ASPC Z4 (US SURVEY FT):

1.) TRANSLATE BY THE FOLLOWING ADDITIVE FACTORS: N= +2,428,280.077'
E= + 1,777,027.265'
2.) ROTATE COUNTER-CLOCKWISE (-) 01°07'47"
3.) SCALE FROM "MARGIN 1956": 0.99996283

TO CONVERT FROM NAD83, ASPC Z4 (US SURVEY FT) TO LOCAL GRID:

1.) SCALE FROM "MARGIN 1956": 1.00003717
2.) ROTATE CLOCK-WISE (+) 01°07'47"
3.) TRANSLATE BY THE FOLLOWING SUBTRACTIVE FACTORS: N= -2,428,280.077'
E= - 1,777,027.265'

3. WHETHER LISTED OR NOT, ALL MONUMENTS OR PROPERTY MARKERS OR ACCESSORIES WHICH WILL BE DISTURBED OR BURIED SHALL BE REFERENCED PRIOR TO BEING DISTURBED AND RE-ESTABLISHED IN THEIR ORIGINAL POSITION AND A RECORD OF MONUMENT FORM IN ACCORDANCE WITH A.S. 34.65.040 SHALL BE SUBMITTED TO THE CONSTRUCTION ENGINEER FOR REVIEW PRIOR TO RECORDING. COORDINATE VALUES LISTED ARE FOR INFORMATIONAL PURPOSES AND SHOULD BE USED TO RESET MONUMENTS ONLY AS A LAST RESORT.

4. IF ANY PAIR OF CONTROL POINTS DISAGREES FROM PUBLISHED VALUE BY MORE THAN 1:10,000 HORIZONTALLY OR VERTICALLY THEN A THIRD NETWORK POINT MUST BE TIED TO ASCERTAIN WHICH POINT IS IN ERROR, OR HAS BEEN DISTURBED.

DO NOT SCALE FROM THESE DRAWINGS USE DIMENSIONS

DESIGNED BY: K. Miller
STATE OF ALASKA 49th Kirk D. Miller CE-8550 REGISTERED PROFESSIONAL ENGINEER
7/8/04
CHECKED BY: J. Beedle
DRAWN BY: Staff

STATE OF ALASKA
DEPARTMENT OF TRANSPORTATION
& PUBLIC FACILITIES
STATEWIDE DESIGN & ENGINEERING SERVICES DIVISION

WHITTIER FERRY TERMINAL
MODIFICATIONS
PROJECT NO. 68355

Marine Layout & Survey Control

PATH: Q:\Wit\68355\Mf\PlanSet\07-Marine Layout&control.dwg Thu, 24/Jun/04 11:12AM
PLOT: PSPACE 1=1 Tab: Plot

REVISIONS			PROJECT DESIGNATION	YEAR	SHEET NO.	TOTAL SHEETS
NO.	DATE	DESCRIPTION	68355	2004	7	52

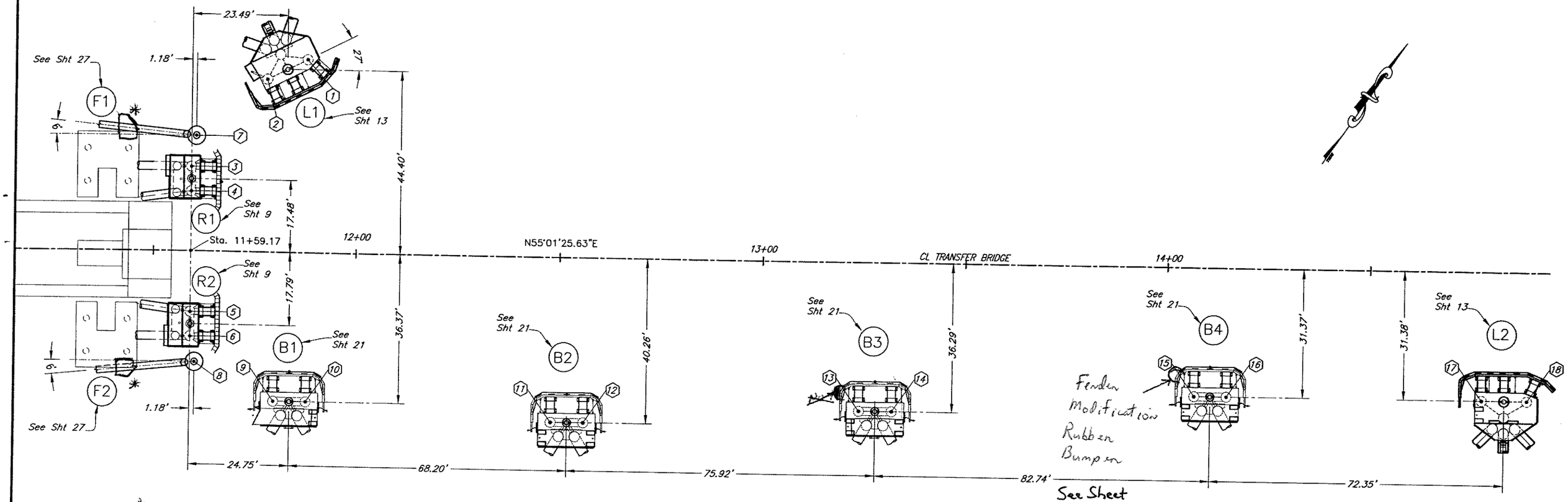

* Gangway Support

Pile Layout

COORDINATE CONTROL TABLE

Note: Contractor shall verify all coordinates prior to construction.

Coordinate ID No.	North	East	Description
1	49,887.3745	98,751.1701	Center Point of 30" Diameter Mooring Dolphin Pile
2	49,877.7061	98,745.9286	Center Point of 30" Diameter Mooring Dolphin Pile
3	49,849.4786	98,743.0192	Center Point of 30" Diameter Mooring Dolphin Pile
4	49,844.5625	98,746.4591	Center Point of 30" Diameter Mooring Dolphin Pile
5	49,820.5849	98,763.2371	Center Point of 30" Diameter Mooring Dolphin Pile
6	49,815.6689	98,766.6770	Center Point of 30" Diameter Mooring Dolphin Pile
7	49,856.3077	98,739.6821	Center Point of 24" Diameter Mooring Dolphin Pile
8	49,811.2455	98,771.2137	Center Point of 24" Diameter Mooring Dolphin Pile
9	49,814.7945	98,792.6142	Center Point of 30" Diameter Mooring Dolphin Pile
10	49,819.3810	98,799.1689	Center Point of 30" Diameter Mooring Dolphin Pile
11	49,850.7030	98,850.7223	Center Point of 30" Diameter Mooring Dolphin Pile
12	49,855.2895	98,857.2770	Center Point of 30" Diameter Mooring Dolphin Pile
13	49,897.4762	98,910.6532	Center Point of 30" Diameter Mooring Dolphin Pile
14	49,902.0627	98,917.2079	Center Point of 30" Diameter Mooring Dolphin Pile
15	49,948.9351	98,975.6348	Center Point of 30" Diameter Mooring Dolphin Pile
16	49,953.5217	98,982.1895	Center Point of 30" Diameter Mooring Dolphin Pile
17	49,989.5414	99,033.6885	Center Point of 30" Diameter Mooring Dolphin Pile
18	49,995.8466	99,042.6994	Center Point of 30" Diameter Mooring Dolphin Pile

PILE DATA

PILE LOCATION, STRUCTURE ORIENTATION	No. PILES	DIA. Inches	CAPACITY (TONS) BEARING	CAPACITY (TONS) UPLIFT	ELEVATIONS ~ O.G.	ELEVATIONS CUT-OFF	ESTIMATED PENE-TRATION	ESTIMATED TIP ELEV.	TOTAL EST. LENGTH
L1 - NORTHWEST LEAD-IN DOLPHIN									
Vertical	3	30x1/2	100	100	-30.0	24.0	66.00	-96.00	120
Outside Batters (1:2)	2	30x1/2	120	100	-28.0	31.0	69.81	-94.23	140
Center Batter (1:3)	1	30x1/2	120	100	-30.0	31.0	65.71	-92.34	130
L2 - SOUTHEAST LEAD-IN DOLPHIN									
Vertical	3	30x1/2	110	110	-38.0	24.0	78.00	-116.00	140
Batter (1:3)	3	30x1/2	130	110	-38.0	31.0	77.27	-111.30	150
F1 - NORTH MOORING FLOAT DOLPHIN									
Vertical	1	24x5/8	26.5	N/A	-28.0	33.0	39.00	-67.00	100
Batter (1:3)	1	20x1/2	N/A	30	-20.0	38.5	48.34	-65.86	110
F2 - SOUTH MOORING FLOAT DOLPHIN									
Vertical	1	24x5/8	26.5	N/A	-28.0	33.0	39.00	-67.00	100
Batter (1:3)	1	20x1/2	N/A	30	-20.0	38.5	48.34	-65.86	110
R1 - NORTH REAR MOORING DOLPHIN									
Vertical	2	30x1/2	33	115	-28.0	23.0	65.00	-93.00	116
Batter (1:3)	2	24x5/8	140	40	-20.0	30.0	64.47	-82.55	116
R2 - SOUTH REAR MOORING DOLPHIN									
Vertical	2	30x1/2	33	115	-28.0	23.0	65.00	-93.00	116
Batter (1:3)	2	24x5/8	140	40	-20.0	30.0	64.47	-82.55	116
B1 - BREASTING DOLPHIN									
Vertical	2	30x1/2	100	100	-30.0	24.0	66.00	-96.00	120
Batter (1:3)	2	30x1/2	120	100	-26.0	31.0	69.92	-92.33	130
B2 - BREASTING DOLPHIN									
Vertical	2	30x1/2	100	100	-30.0	24.0	66.00	-96.00	120
Batter (1:3)	2	30x1/2	120	100	-26.0	31.0	69.92	-92.33	130
B3 - BREASTING DOLPHIN									
Vertical	2	30x1/2	100	100	-30.0	24.0	66.00	-96.00	120
Batter (1:3)	2	30x1/2	120	100	-26.0	31.0	69.92	-92.33	130
B4 - BREASTING DOLPHIN									
Vertical	2	30x1/2	100	100	-30.0	24.0	66.00	-96.00	120
Batter (1:3)	2	30x1/2	120	100	-26.0	31.0	69.92	-92.33	130

Notes:
1: Elevations are in feet (MLLW)
2: Penetrations are in feet (mudline to tip)
3: Existing mudline (OG) elevations listed in table are approx. only.

As Built
5/12/06

DO NOT SCALE FROM THESE DRAWINGS USE DIMENSIONS

DESIGNED BY: K. Miller
STATE OF ALASKA 49th Kirk D. Miller CE-8550 REGISTERED PROFESSIONAL ENGINEER
2/8/04
CHECKED BY: J. Beedle
DRAWN BY: Staff

STATE OF ALASKA
DEPARTMENT OF TRANSPORTATION
& PUBLIC FACILITIES
STATEWIDE DESIGN & ENGINEERING SERVICES DIVISION

WHITTIER FERRY TERMINAL
MODIFICATIONS
PROJECT NO. 68355

Pile Layout

PATH: Q:\Wit\68355\Mf\PlanSet\08-Pile Layout 12-17-03.dwg
PLOT: PSPACE 1=1
Thu, 24/Jun/04 10:20AM
Tab: Plot

REVISIONS NO.	DATE	DESCRIPTION	PROJECT DESIGNATION	YEAR	SHEET NO.	TOTAL SHEETS
			68355	2004	8	52

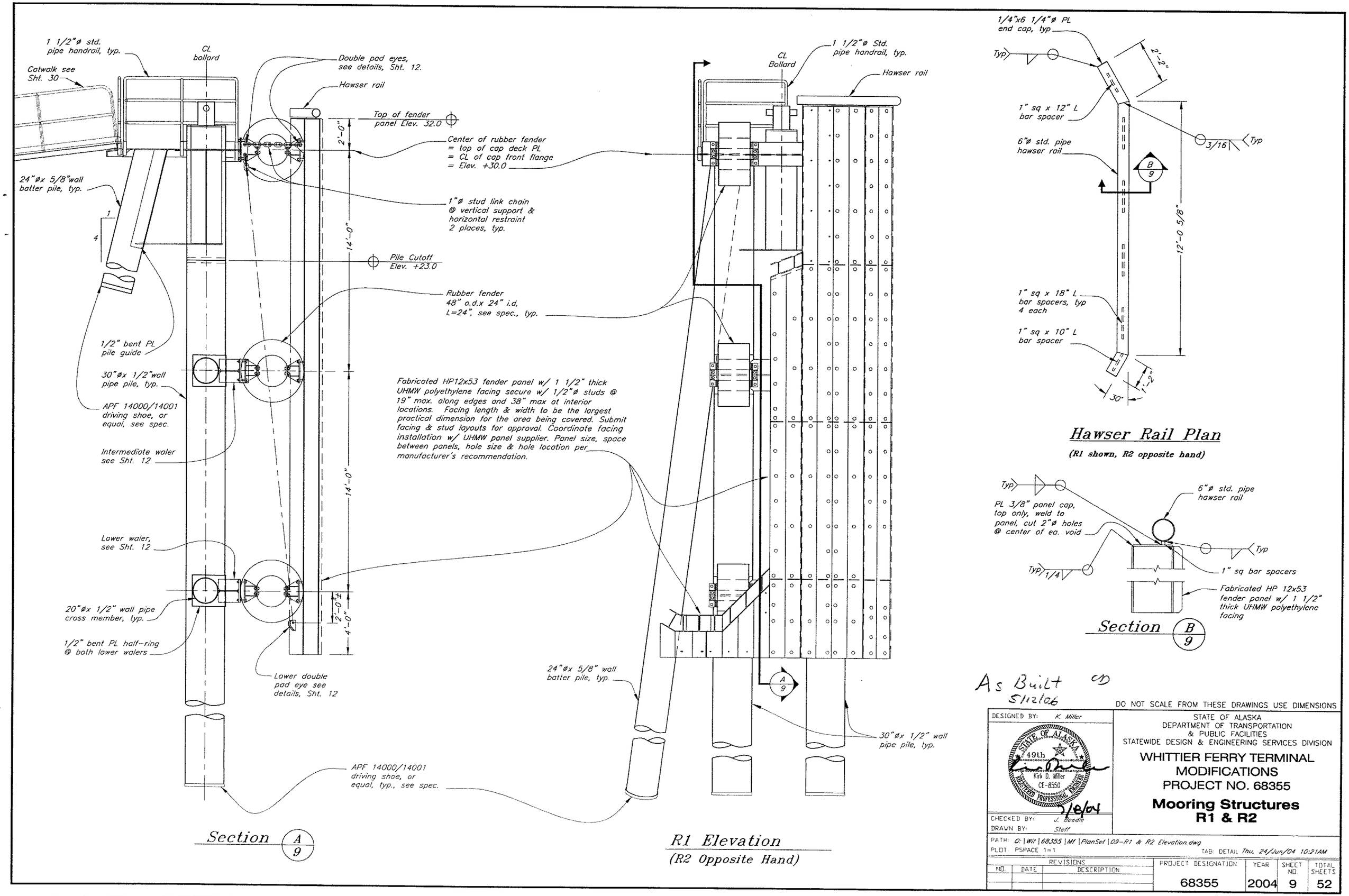

As Built 5/12/06

DO NOT SCALE FROM THESE DRAWINGS USE DIMENSIONS

DESIGNED BY: K. Miller

STATE OF ALASKA 49th Kirk D. Miller CE-8550 REGISTERED PROFESSIONAL ENGINEER

5/8/04

CHECKED BY: J. Beedle

DRAWN BY: Staff

STATE OF ALASKA
DEPARTMENT OF TRANSPORTATION
& PUBLIC FACILITIES
STATEWIDE DESIGN & ENGINEERING SERVICES DIVISION

WHITTIER FERRY TERMINAL
MODIFICATIONS
PROJECT NO. 68355

Mooring Structures
R1 & R2

PATH: O:\Wit\68355\Mf\PlanSet\09-R1 & R2 Elevation.dwg
PLOT: PSPACE 1=1 TAB: DETAIL Thu, 24/Jun/04 10:21AM

REVISIONS			PROJECT DESIGNATION	YEAR	SHEET NO.	TOTAL SHEETS
NO.	DATE	DESCRIPTION	68355	2004	9	52

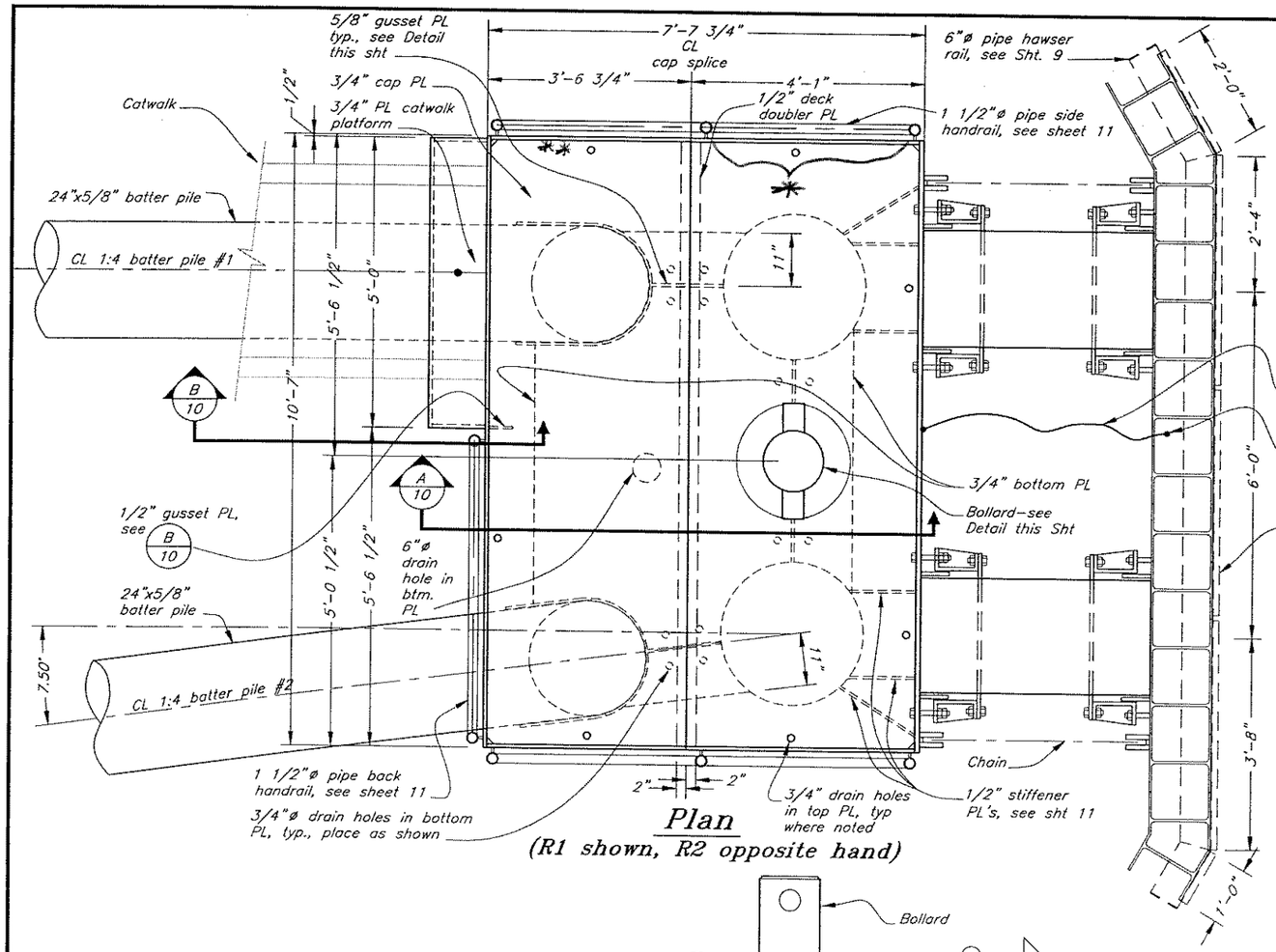

Plan
(R1 shown, R2 opposite hand)

* This section of hand rail removed per ferry boat request on R2

** Relocate Light fixture to middle rail this location

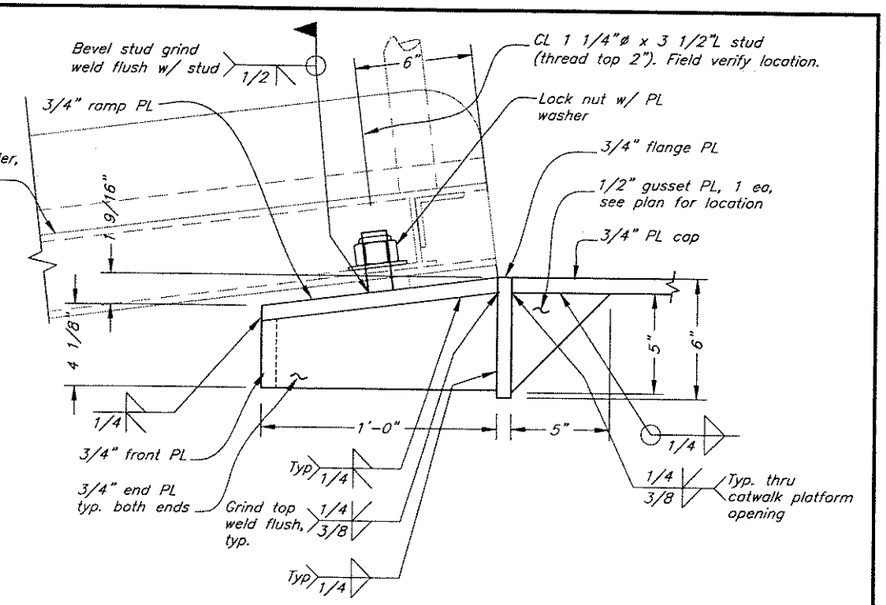

Catwalk Platform Section B/10

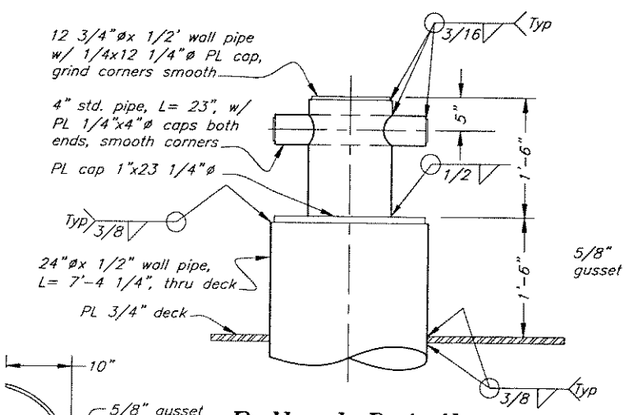

Bollard Detail

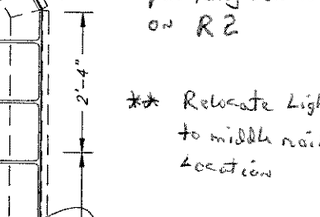

Batter Pile Chute

As Built
5/12/06

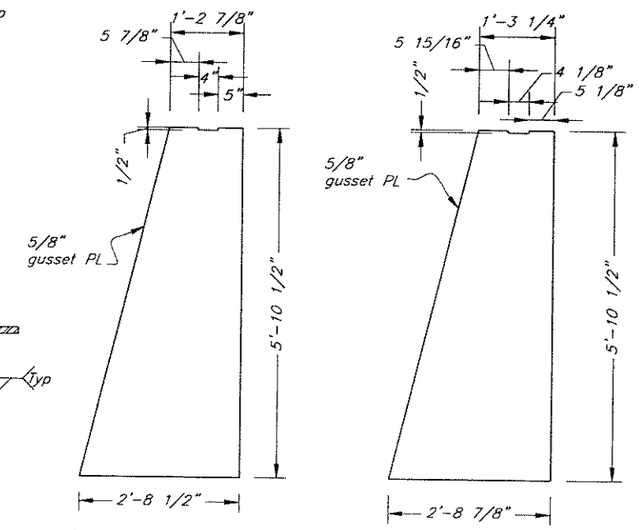

Gusset Plate – Batter Pile #1

Gusset Plate – Batter Pile #2

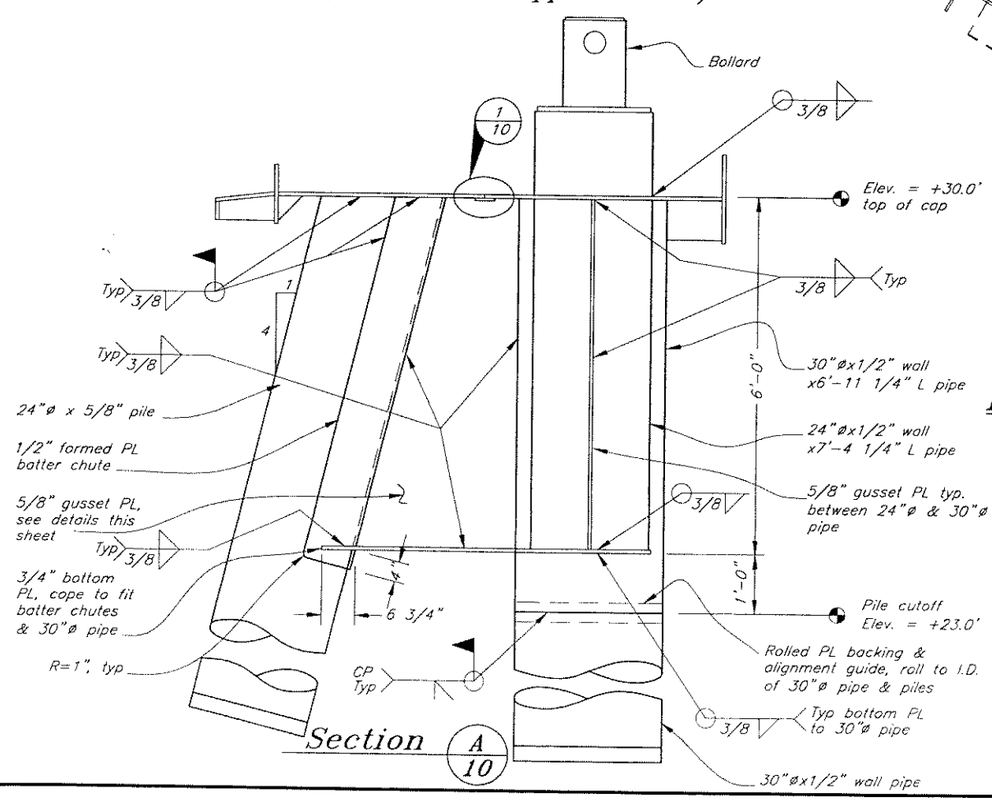

Section A/10

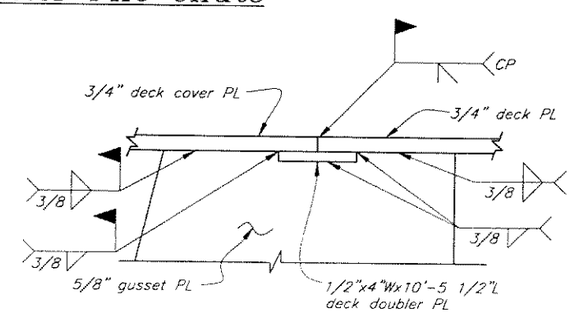

Detail 1/10

DO NOT SCALE FROM THESE DRAWINGS USE DIMENSIONS

DESIGNED BY: K. Miller

STATE OF ALASKA 49th Kirk D. Miller CE-8550 REGISTERED PROFESSIONAL ENGINEER

7/8/04

CHECKED BY: J. Beedle

DRAWN BY Miller/Fuman

STATE OF ALASKA
DEPARTMENT OF TRANSPORTATION
& PUBLIC FACILITIES
STATEWIDE DESIGN & ENGINEERING SERVICES DIVISION

WHITTIER FERRY TERMINAL
MODIFICATIONS
PROJECT NO. 68355

R1 & R2 Cap Details

PATH: G:\Wit\68355\Mf\PlanSet\10-R1 & R2 Plan & Sections.dwg
PLOT: PSPACE 1=1

Fri, 18/Jun/04 11:41AM
Tab: Layout1 (2)

REVISIONS NO.	DATE	DESCRIPTION	PROJECT DESIGNATION	YEAR	SHEET NO.	TOTAL SHEETS
			68355	2004	10	52

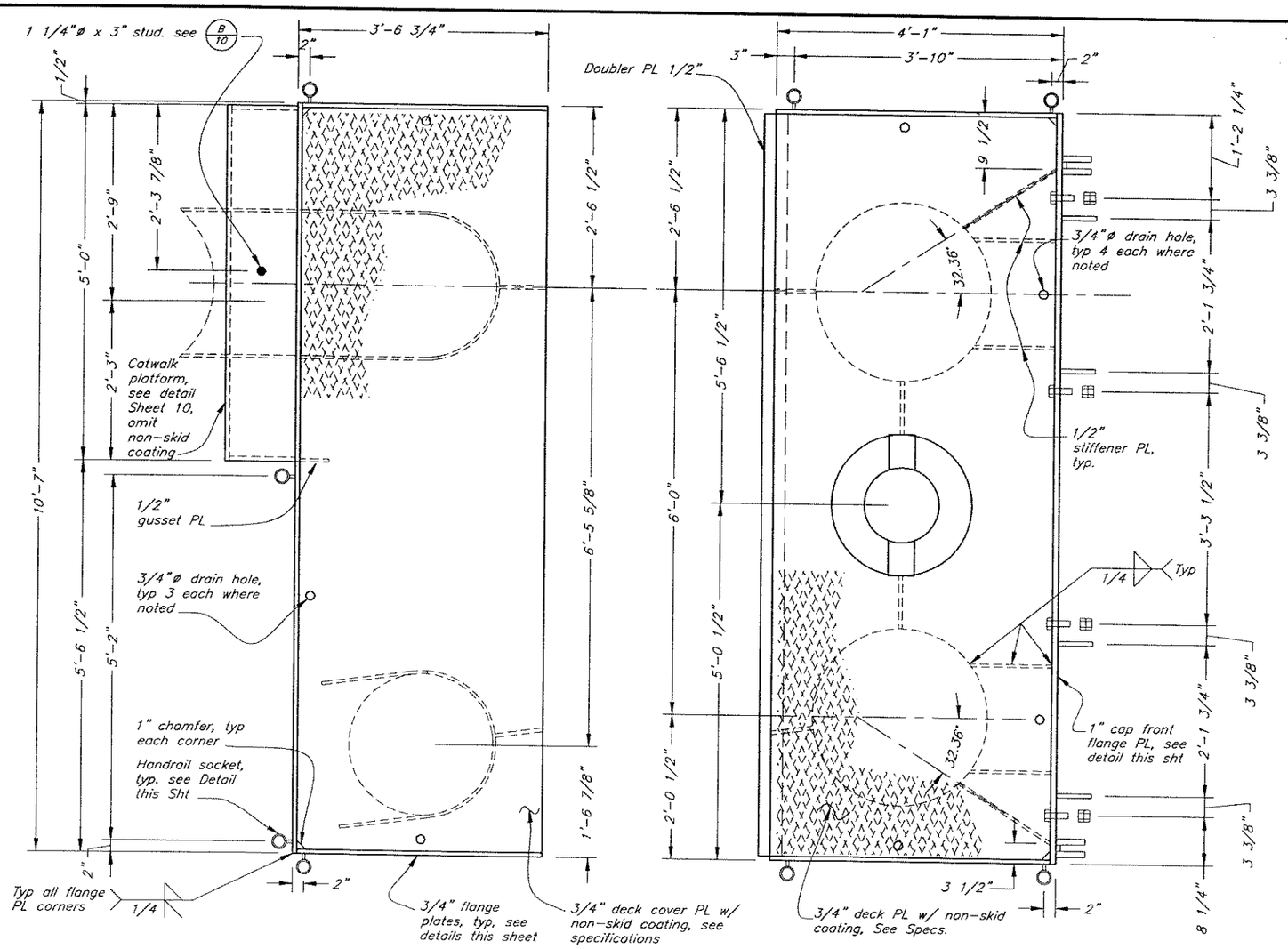

Cap Deck Plates

(R1 Shown, R2 Opposite Hand)

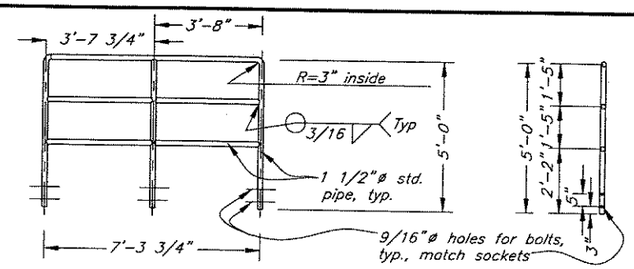

Side Handrails

Handrail End View, Typical

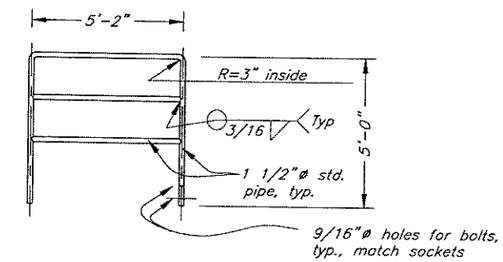

Back Handrail

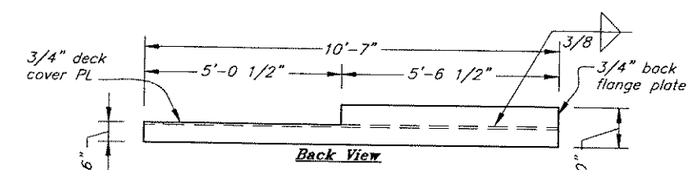

Back Flange PL @ Cap Cover PL

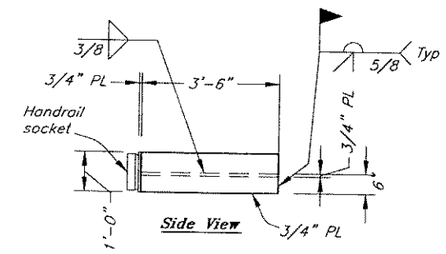

Side Flange PL @ Cap Cover PL

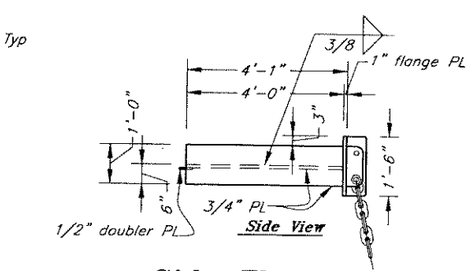

Side Flange PL @ Cap Deck PL

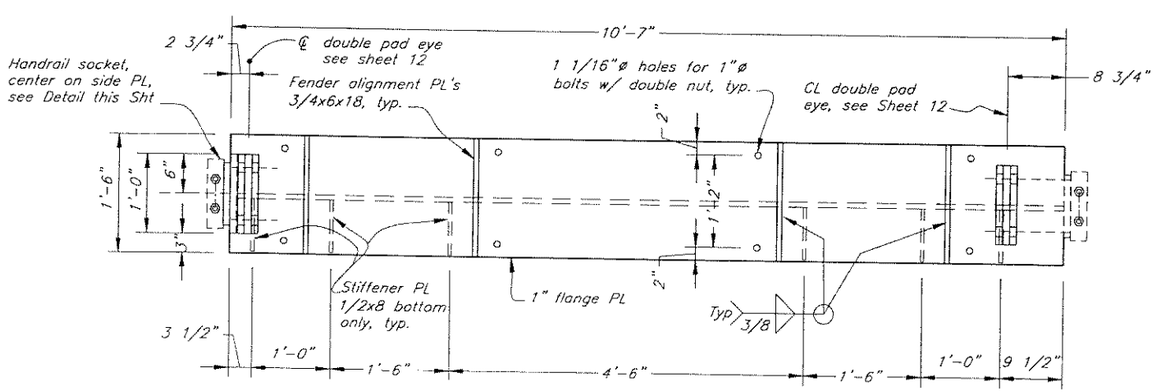

Detail Cap Front Flange Plate

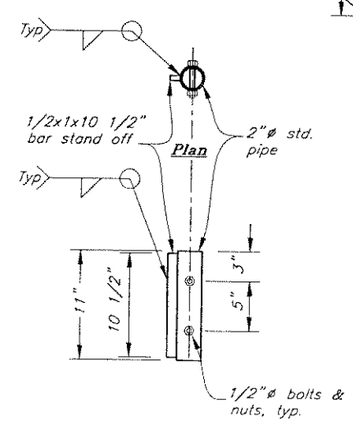

Detail Handrail Socket

As Built 40
5/12/06

DO NOT SCALE FROM THESE DRAWINGS USE DIMENSIONS

DESIGNED BY: K. Miller
CHECKED BY: J. Beedle
DRAWN BY: Staff

STATE OF ALASKA 49th Kirk D. Miller CE-8550 REGISTERED PROFESSIONAL ENGINEER
7/8/04

STATE OF ALASKA
DEPARTMENT OF TRANSPORTATION & PUBLIC FACILITIES
STATEWIDE DESIGN & ENGINEERING SERVICES DIVISION

WHITTIER FERRY TERMINAL MODIFICATIONS
PROJECT NO. 68355

R1 & R2 Deck Details

PATH: Q:\Wit\68355\Mf\PlanSet\11-R1 & R2 Deck Details.dwg Fri, 18/Jun/04 11:41AM
PLOT: PSPACE 1=1 Tab: Layout1 (2)

REVISIONS			PROJECT DESIGNATION	YEAR	SHEET NO.	TOTAL SHEETS
NO.	DATE	DESCRIPTION	68355	2004	11	52

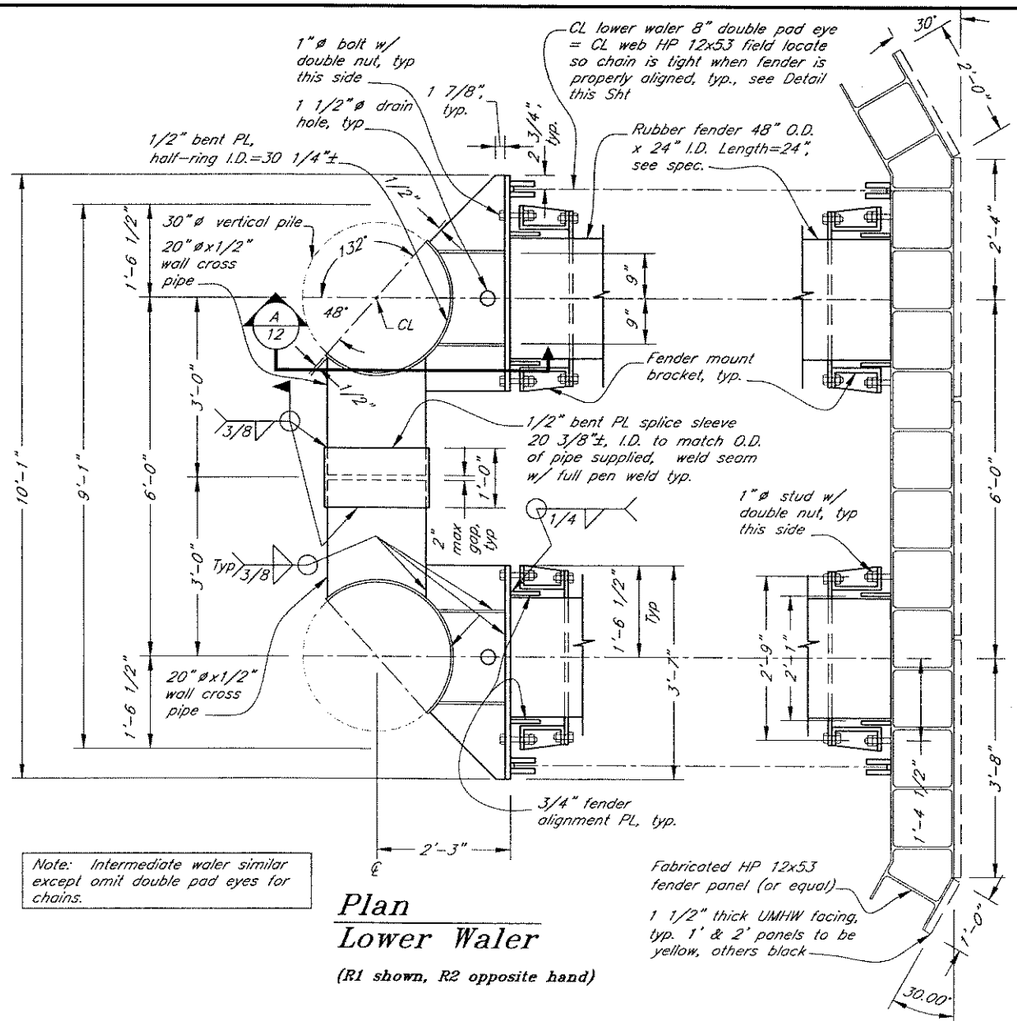

Note: Intermediate waler similar except omit double pad eyes for chains.

Plan
Lower Waler

(R1 shown, R2 opposite hand)

Note: Bracket on walers and cap flange similar except use 1"ø bolt w/ double nut instead of stud

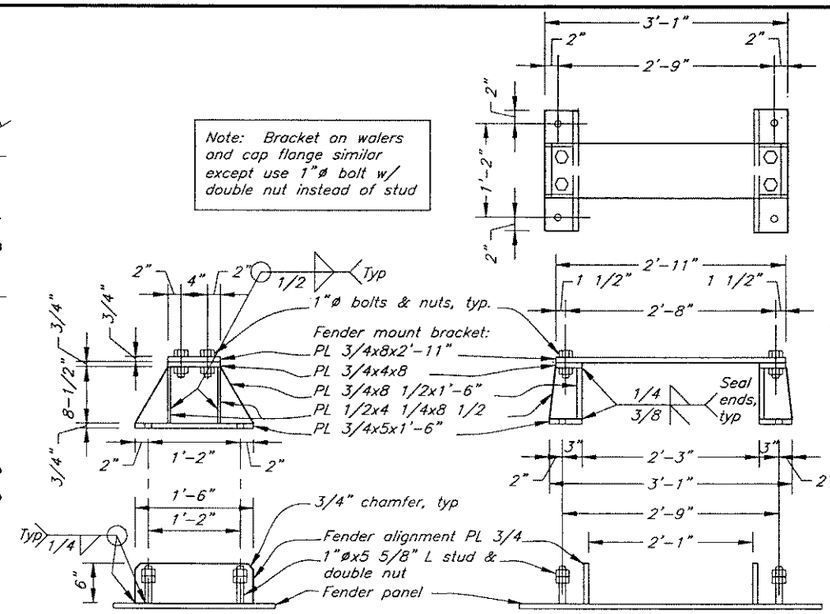

Fender Mount Bracket & Mounting Details

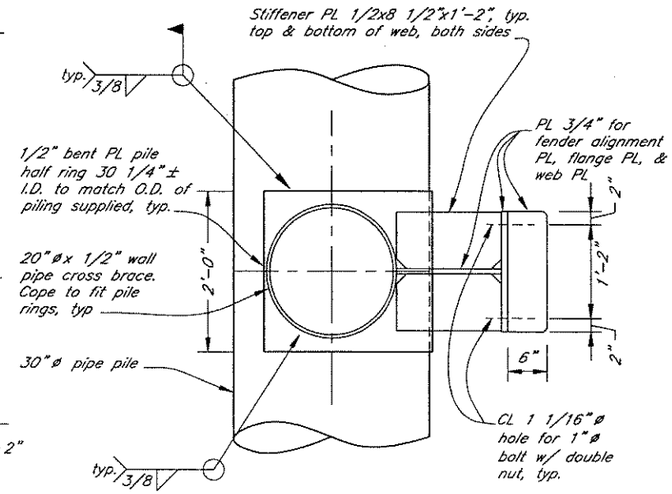

Section A/12

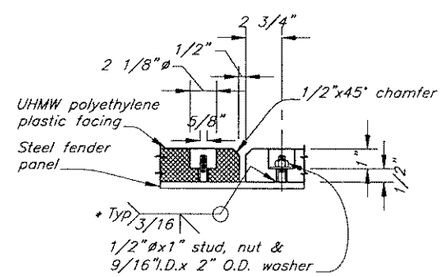

Fender Face Detail

* Grind weld smooth or bevel back of UHMW hole to fit flush, typ

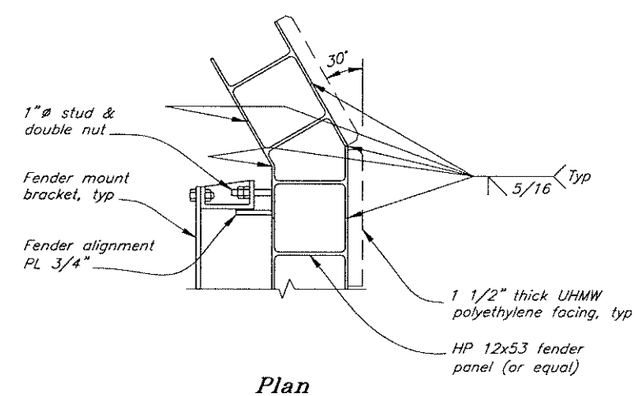

Plan

Typ. Panel Details

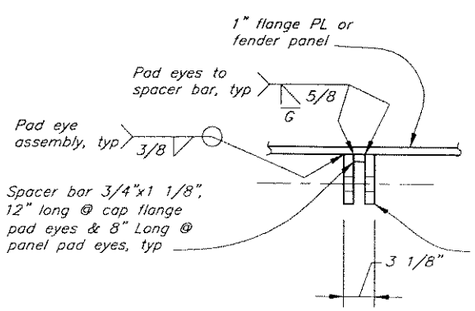

Typical Pad Eye Plan

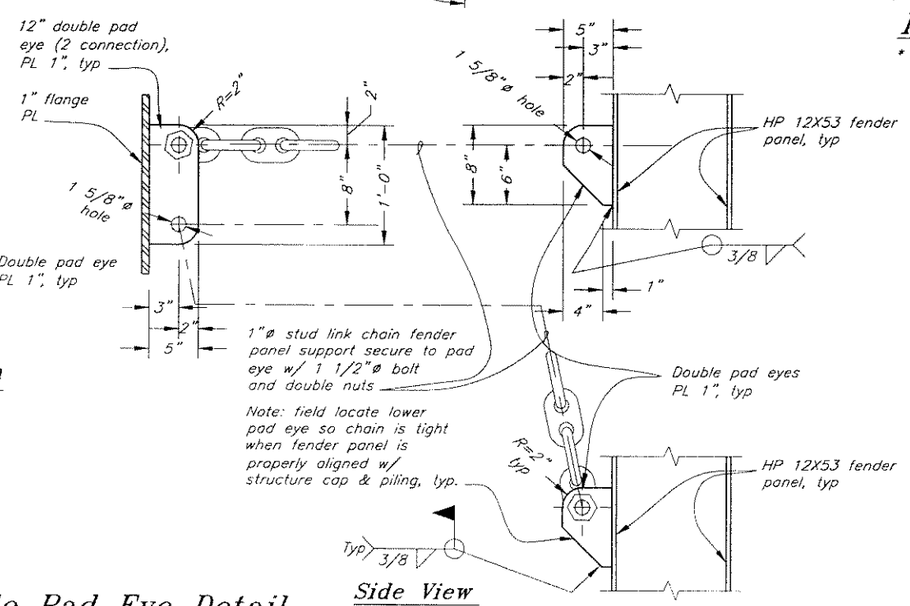

Double Pad Eye Detail

Side View

As Built
5/12/06

DO NOT SCALE FROM THESE DRAWINGS USE DIMENSIONS

DESIGNED BY: K. Miller

STATE OF ALASKA 49th Kirk D. Miller CE-8550 REGISTERED PROFESSIONAL ENGINEER

7/8/04

CHECKED BY: J. Beedle

DRAWN BY: Staff

STATE OF ALASKA
DEPARTMENT OF TRANSPORTATION
& PUBLIC FACILITIES
STATEWIDE DESIGN & ENGINEERING SERVICES DIVISION

WHITTIER FERRY TERMINAL
MODIFICATIONS
PROJECT NO. 68355

R1 & R2
Walers & Fenders

PATH: Q:\Wit\68355\MI\PlanSet\12-R1 & R2 Fender Details.dwg
PLOT: PSPACE 1=1 TAB: DETAIL Mon, 28/Jun/04 09:23AM

REVISIONS			PROJECT DESIGNATION	YEAR	SHEET NO.	TOTAL SHEETS
NO.	DATE	DESCRIPTION	68355	2004	12	52

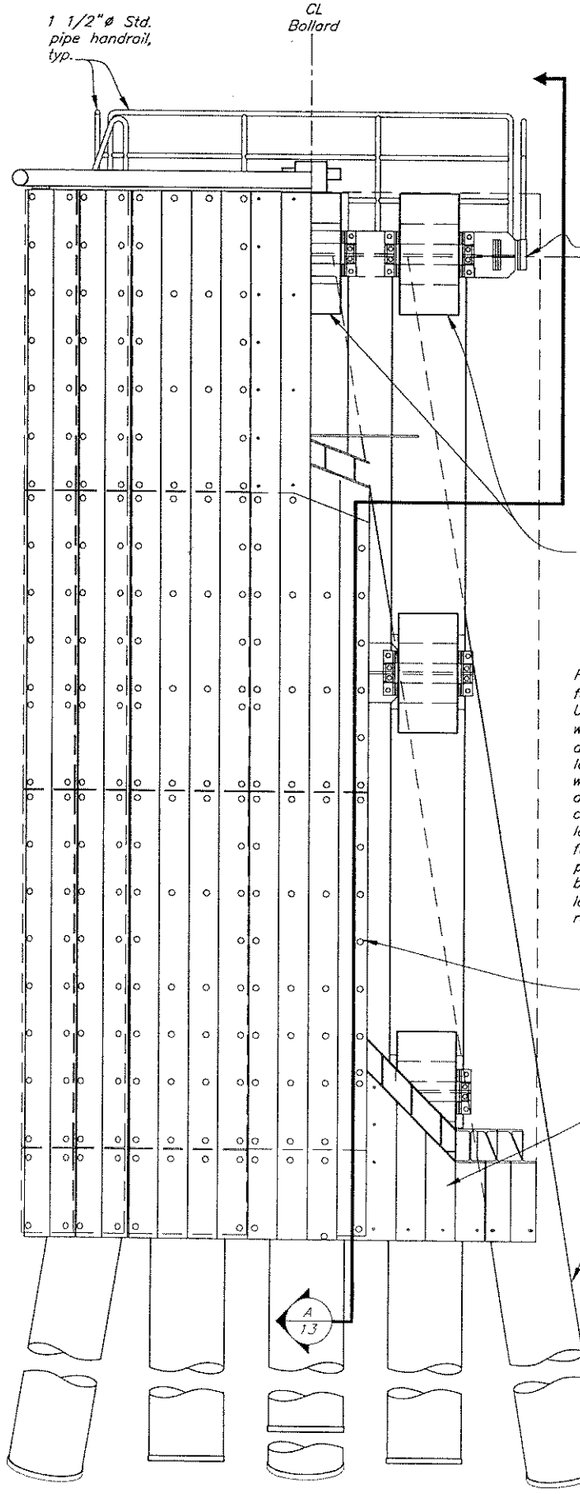

Front Elevation

(L2 shown, L1 similar except for catwalk platform & other details as noted)

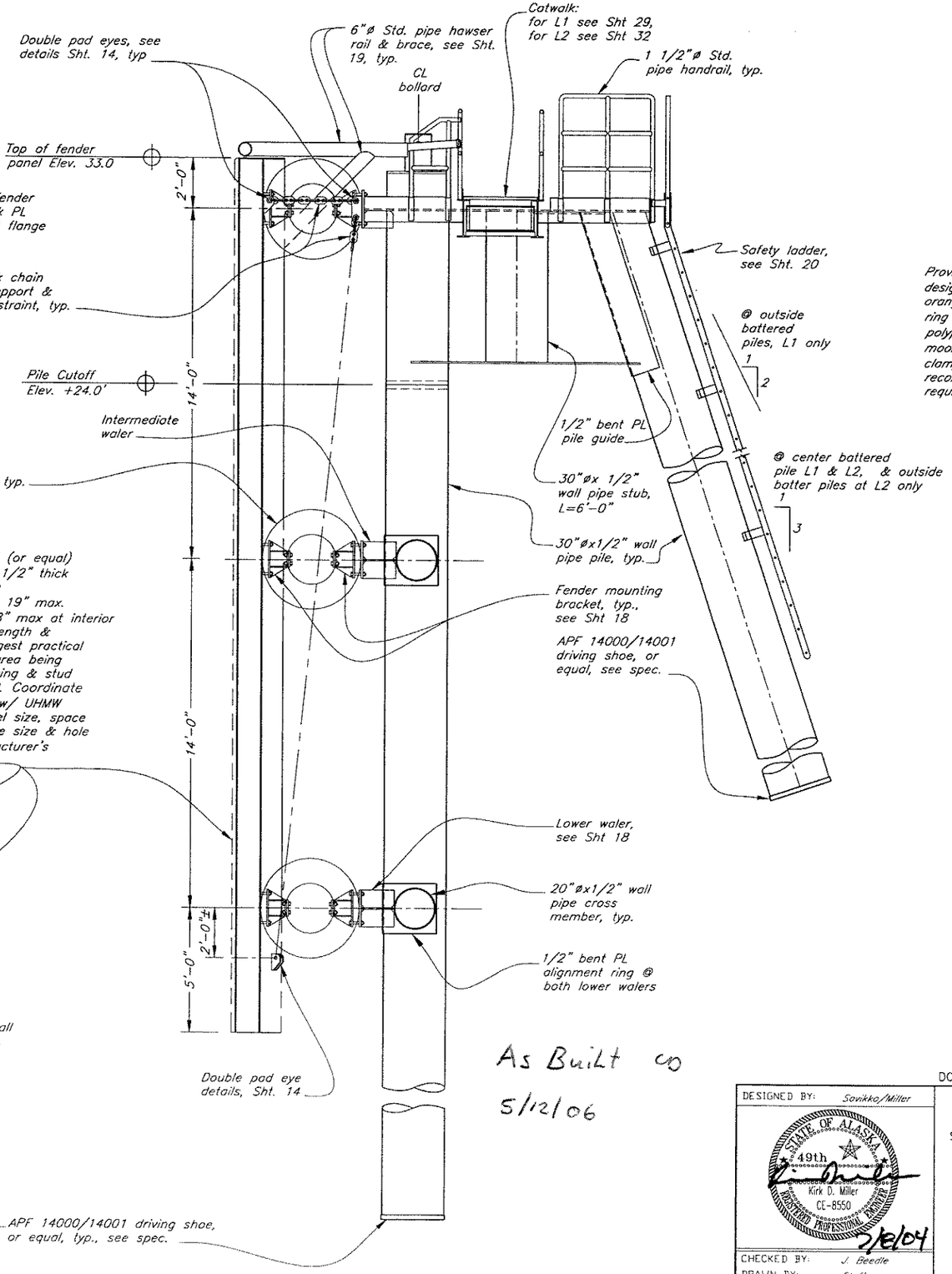

Section A/13

As Built
5/12/06

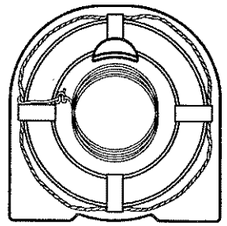

Life Ring

(1 ea. required @ L1, B1, B3 & L2)

Provide Coast Guard aproved life ring, in purpose designed fiberglass cabinet, 30"ø type 4 PFD., orange softex covered closed cell plastic core ring w/ rope grab ring & 100 ft of polypropelene hand line (fuse ends) mount to mooring structure handrail w/ stainless steel clamp & bolts per manufacturer's recommendation. Life ring, box & hand line required @ ends & alternate mooring structures.

DO NOT SCALE FROM THESE DRAWINGS USE DIMENSIONS

DESIGNED BY: Savikko/Miller

STATE OF ALASKA 49th Kirk D. Miller CE-8550 REGISTERED PROFESSIONAL ENGINEER 2/6/04

CHECKED BY: J. Beedle

DRAWN BY: Staff

STATE OF ALASKA
DEPARTMENT OF TRANSPORTATION
& PUBLIC FACILITIES
STATEWIDE DESIGN & ENGINEERING SERVICES DIVISION

WHITTIER FERRY TERMINAL
MODIFICATIONS
PROJECT NO. 68355

Lead-in Mooring Structures L1 & L2

PATH: Q:\Wit\68355\Mt\PlanSet\13-L1 & L2 Elevation.dwg
PLOT: PSPACE 1=1 TAB: DETAIL Tue, 22/Jun/04 01:42PM

REVISIONS			PROJECT DESIGNATION	YEAR	SHEET NO.	TOTAL SHEETS
NO.	DATE	DESCRIPTION	68355	2004	13	52

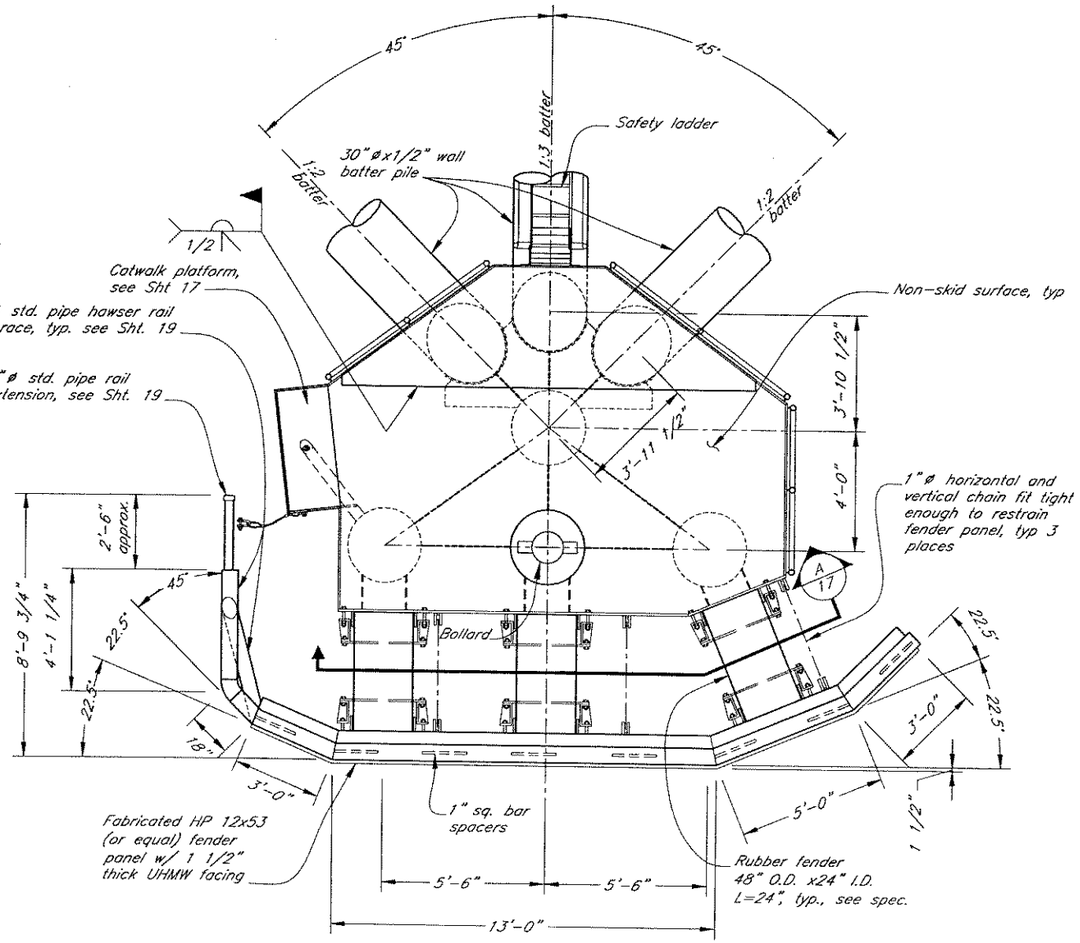

Plan L1

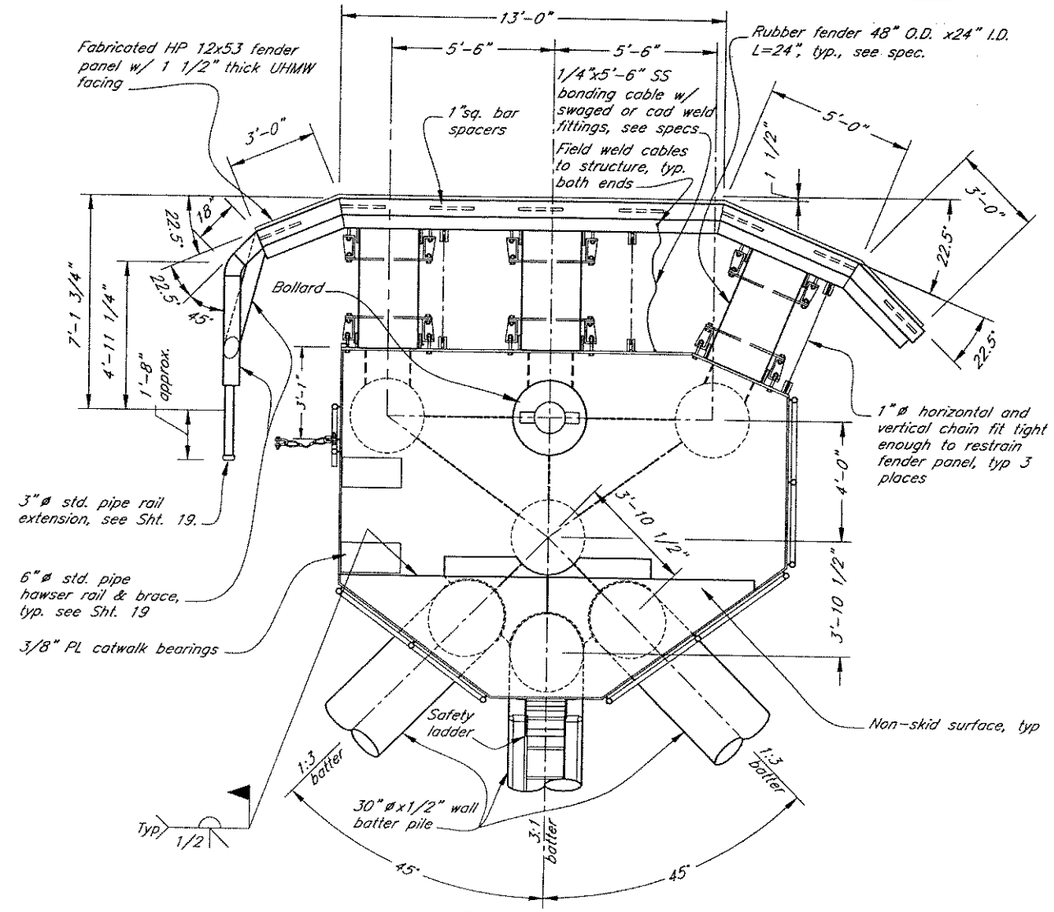

Plan L2

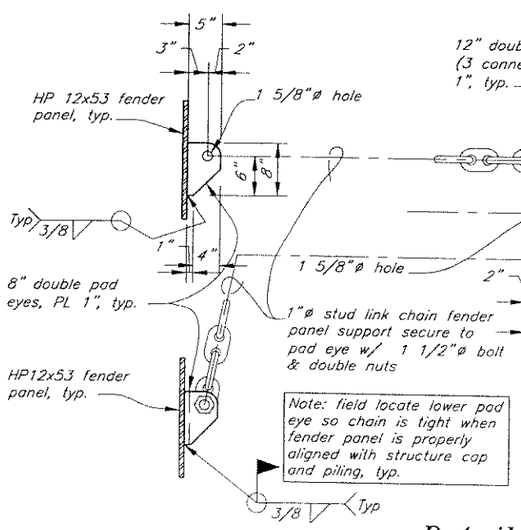

Side View

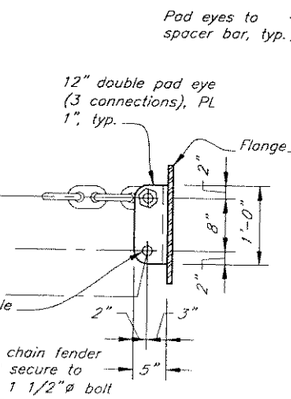

Note: field locate lower pad eye so chain is tight when fender panel is properly aligned with structure cap and piling, typ.

Detail
Double Pad Eye

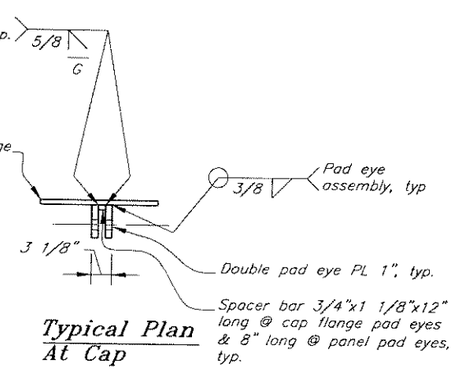

Typical Plan
At Cap

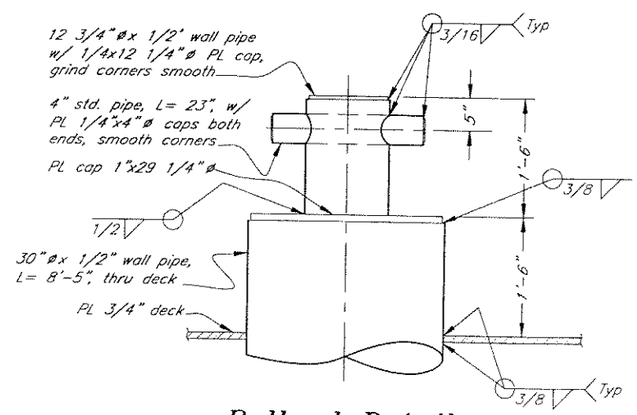

Bollard Detail

As Built
5/12/06

DO NOT SCALE FROM THESE DRAWINGS USE DIMENSIONS

DESIGNED BY: B. Savvika/ K. Miller

STATE OF ALASKA 49th Kirk D. Miller CE-8550 REGISTERED PROFESSIONAL ENGINEER

7/8/04

CHECKED BY: J. Beedle

DRAWN BY: C. Furman, T. Mores

STATE OF ALASKA
DEPARTMENT OF TRANSPORTATION
& PUBLIC FACILITIES
STATEWIDE DESIGN & ENGINEERING SERVICES DIVISION

WHITTIER FERRY TERMINAL
MODIFICATIONS
PROJECT NO. 68355

L1 & L2 Plan

PATH: O:\Wit\68355\Mf\PlanSet\14-L1 & L2 Plan.dwg Fri, 18/Jun/04 01:16PM
PLOT: PSPACE 1=1 TAB: DETAIL Fri, 18/Jun/04 01:16PM

REVISIONS			PROJECT DESIGNATION	YEAR	SHEET NO	TOTAL SHEETS
NO.	DATE	DESCRIPTION	68355	2004	14	52

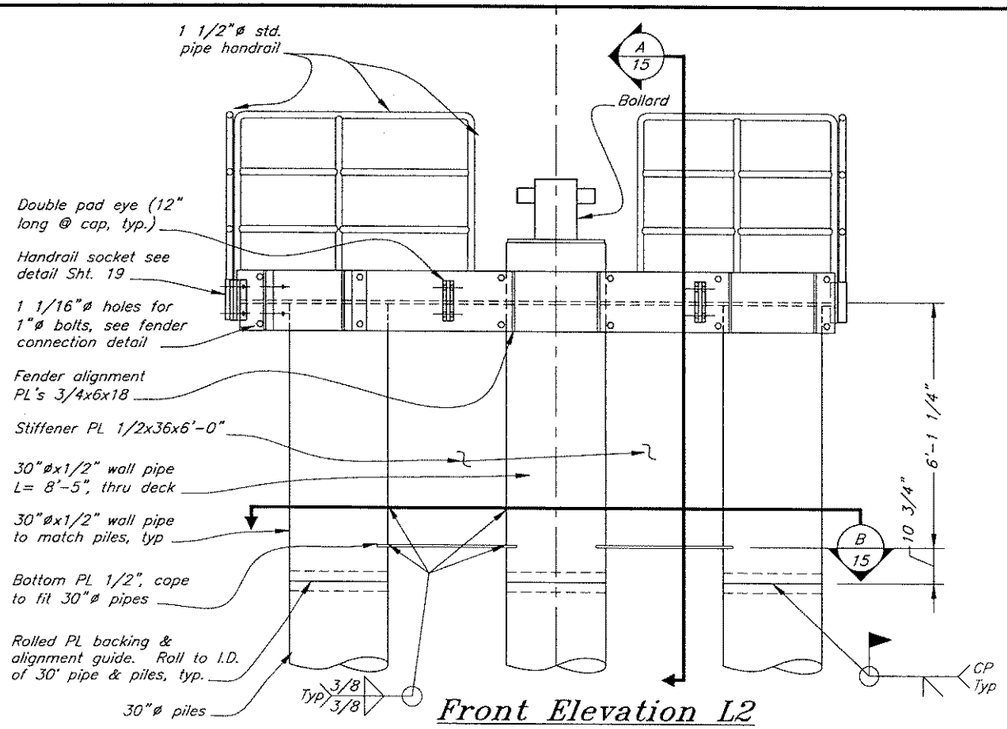

Front Elevation L2

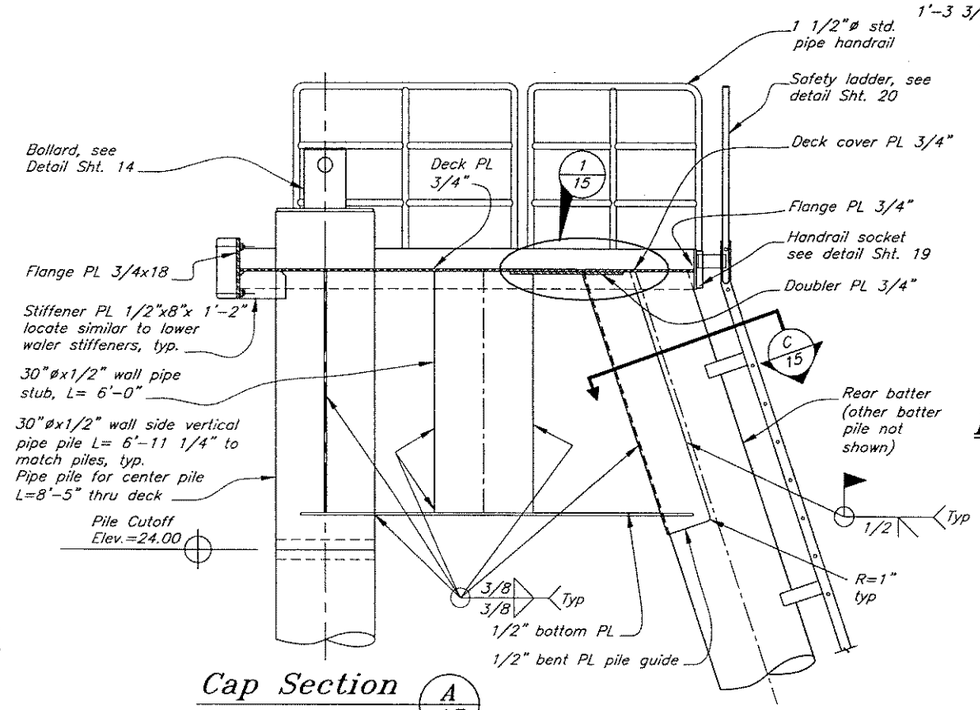

Cap Section A/15

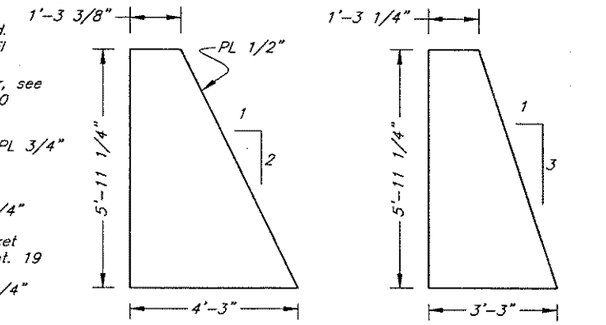

L1– 1:2 outside battered piles

L1 & L2 1:3 battered piles

Battered Pile Guide Stiffeners

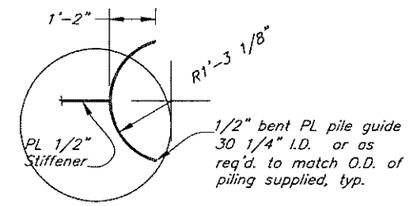

Batter Pile Guide Section C/15

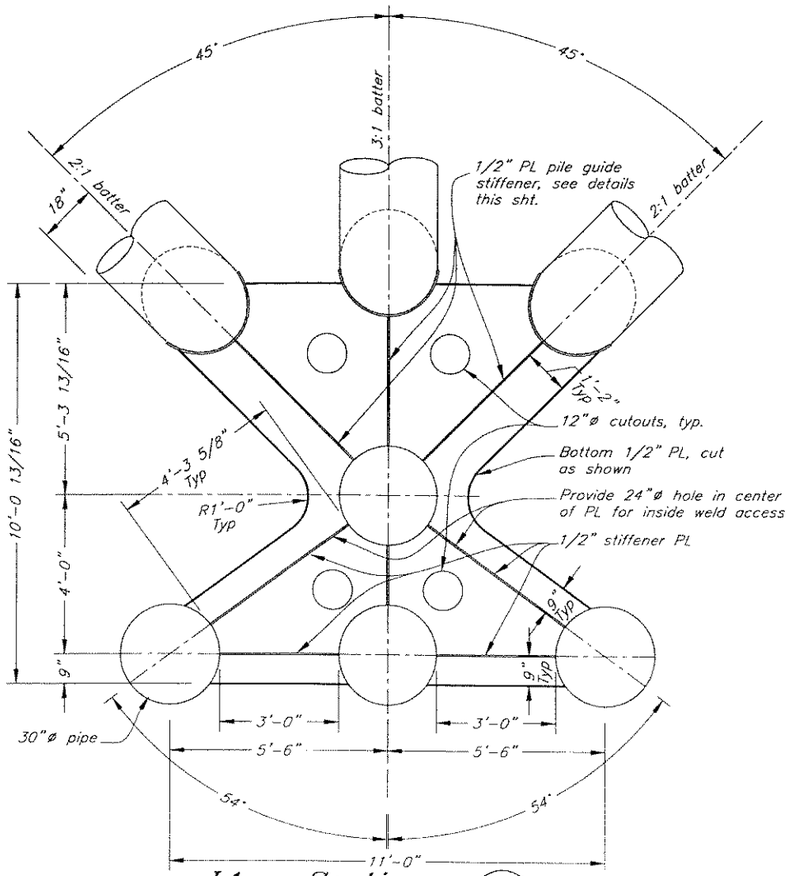

L1 – Section B/15 Bottom Plate

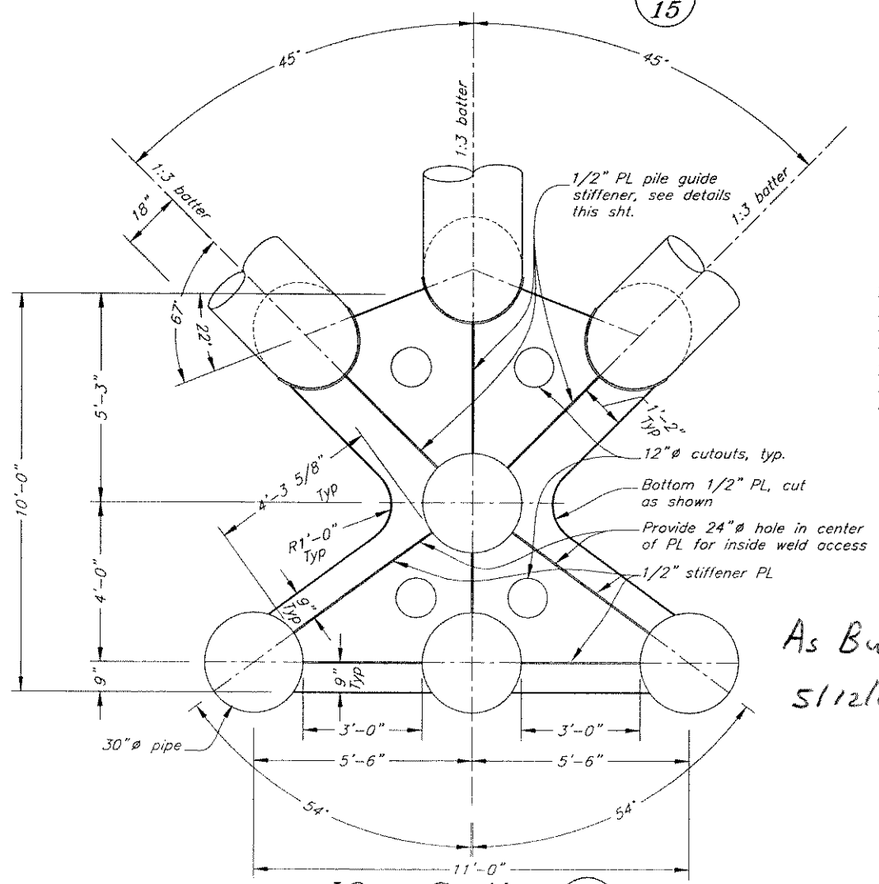

L2 – Section B/15 Bottom Plate

As Built
5/12/06

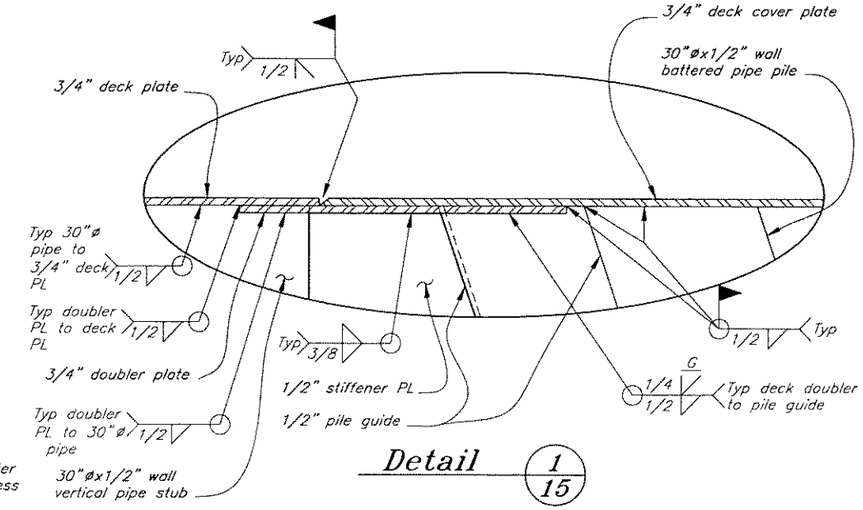

Detail 1/15

DO NOT SCALE FROM THESE DRAWINGS USE DIMENSIONS

DESIGNED BY: B. Savikko/K. Miller

STATE OF ALASKA 49th Kirk D. Miller CE-8550 PROFESSIONAL ENGINEER

2/8/04

CHECKED BY: J. Beedle
DRAWN BY: Staff

STATE OF ALASKA
DEPARTMENT OF TRANSPORTATION
& PUBLIC FACILITIES
STATEWIDE DESIGN & ENGINEERING SERVICES DIVISION

WHITTIER FERRY TERMINAL
MODIFICATIONS
PROJECT NO. 68355

L1 & L2 Cap Details

PATH: C:\Wit\68355\Mt\PlanSet\15-L1 & L2 Cap Details.dwg
PLOT: PSPACE 1=1
Fri, 18/Jun/04 01:17PM
Tab: Layout1

REVISIONS NO.	DATE	DESCRIPTION	PROJECT DESIGNATION	YEAR	SHEET NO.	TOTAL SHEETS
			68355	2004	15	52

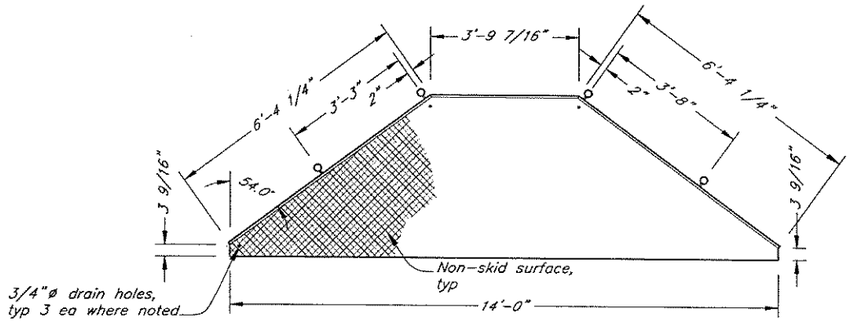

Deck Cover Plate (L1)

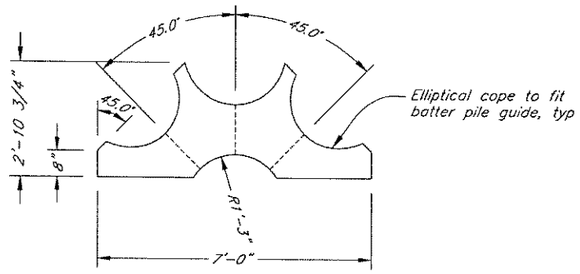

Doubler Plate (L1)

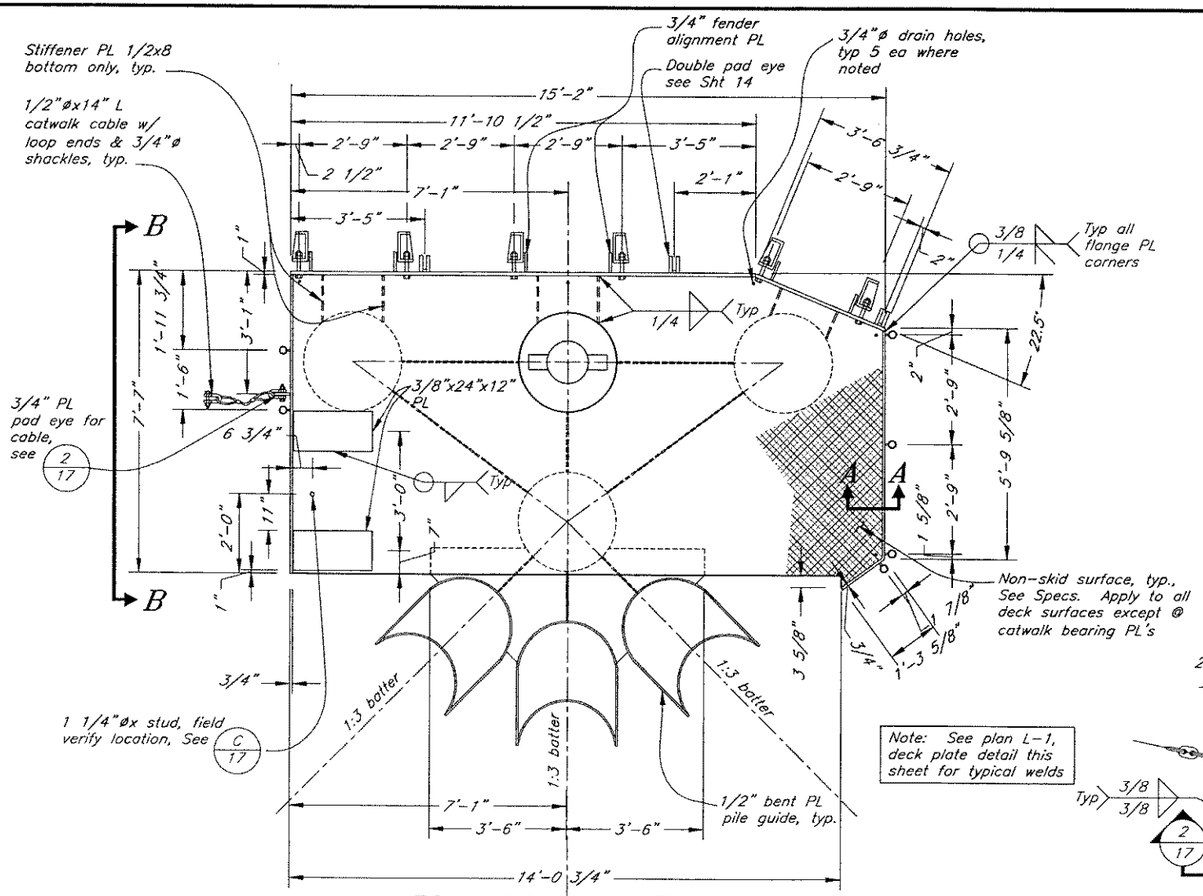

Plan L2 Deck Plate

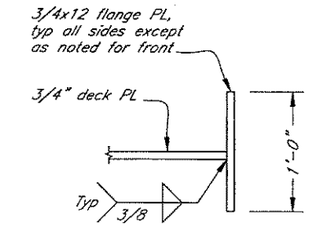

Section A-A

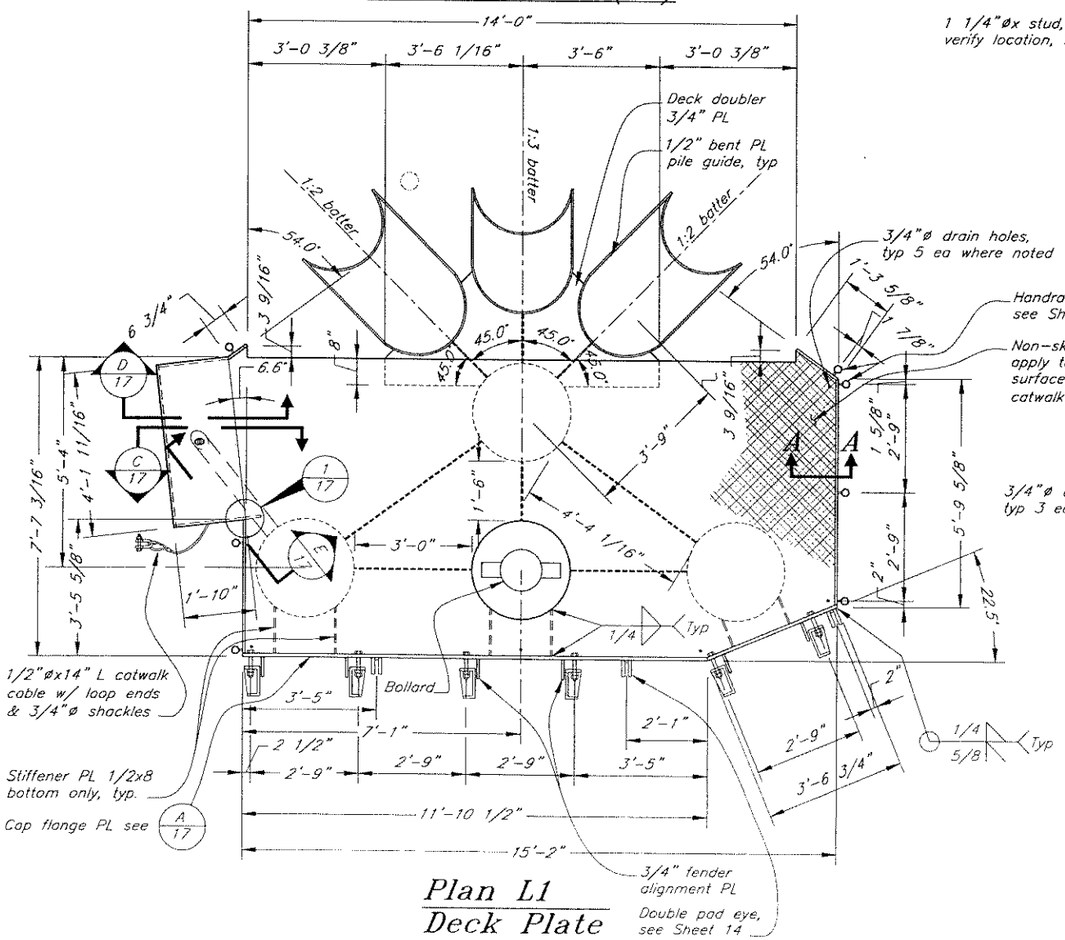

Plan L1
Deck Plate

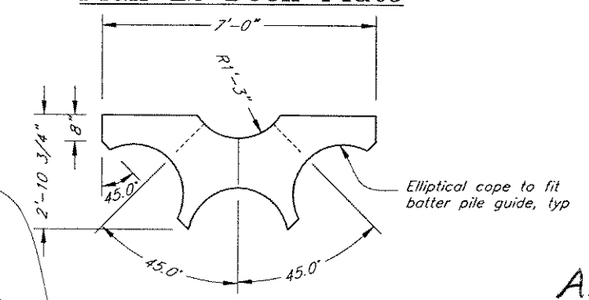

Doubler Plate (L2)

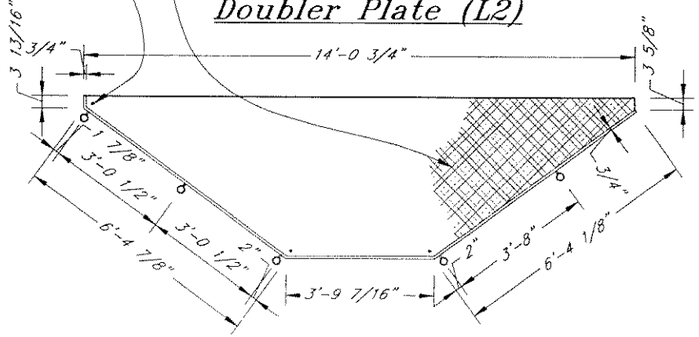

Deck Cover Plate (L2)

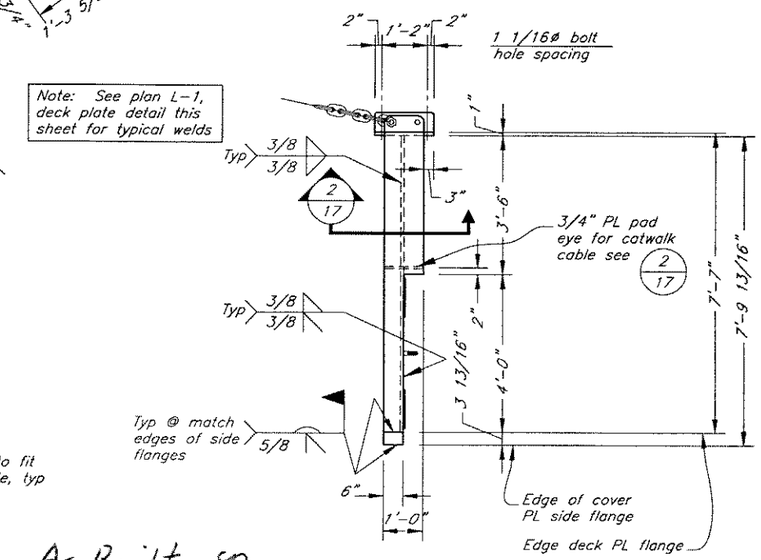

Elevation B-B
Cap Deck

As Built
5/12/06

DO NOT SCALE FROM THESE DRAWINGS USE DIMENSIONS

DESIGNED BY: B. Savikko/K. Miller
CHECKED BY: J. Beedle
DRAWN BY: C. Fuman/T. Mores

STATE OF ALASKA
49th
Kirk D. Miller
CE-8550
REGISTERED PROFESSIONAL ENGINEER
7/8/04

STATE OF ALASKA
DEPARTMENT OF TRANSPORTATION
& PUBLIC FACILITIES
STATEWIDE DESIGN & ENGINEERING SERVICES DIVISION

WHITTIER FERRY TERMINAL
MODIFICATIONS
PROJECT NO. 68355

Lead-In Mooring Structures L1 & L2 Details

PATH: Q:\Wit\68355\MI\PlanSet\16-L1 & L2 Deck Details.dwg
PLOT: PSPACE 1=1 TAB: DETAIL Fri, 18/Jun/04 01:17PM

REVISIONS			PROJECT DESIGNATION	YEAR	SHEET NO	TOTAL SHEETS
NO.	DATE	DESCRIPTION	68355	2004	16	52

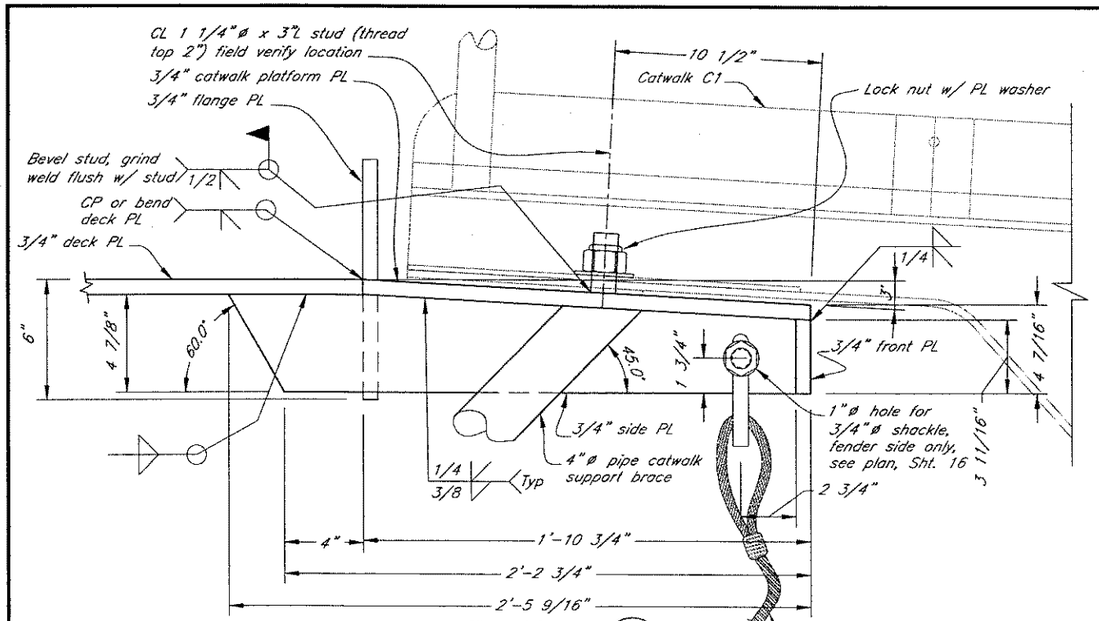

Section C/16

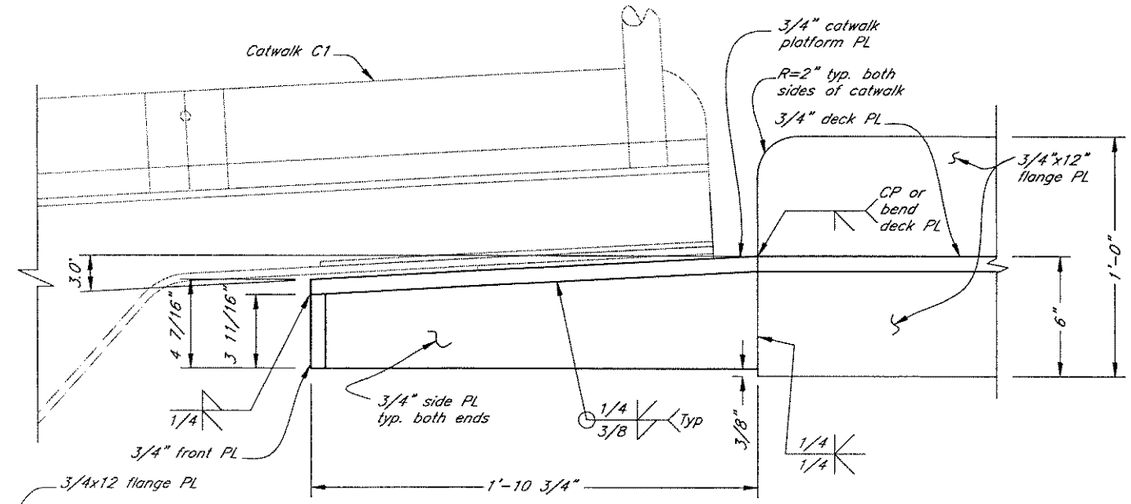

Section D/16

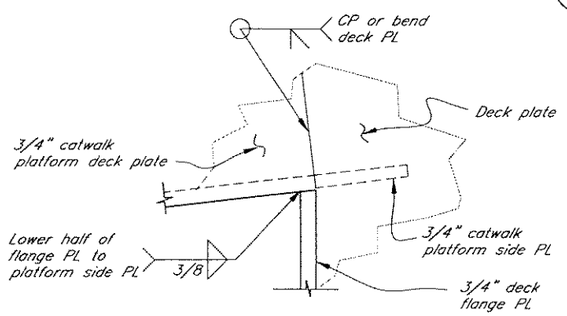

Detail 1/16

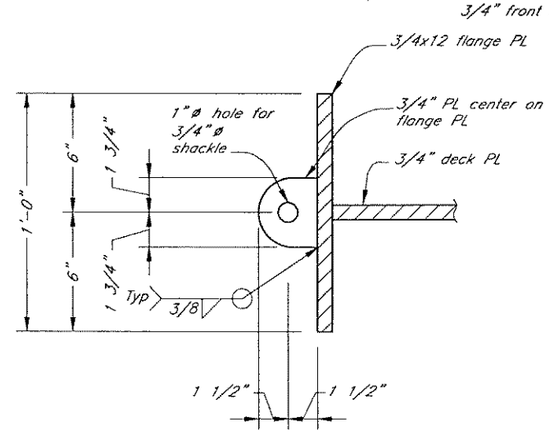

Catwalk Cable Pad Eye 2/16

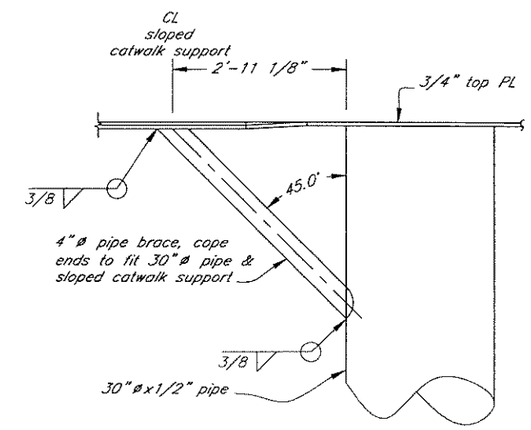

Catwalk Support Brace E/16

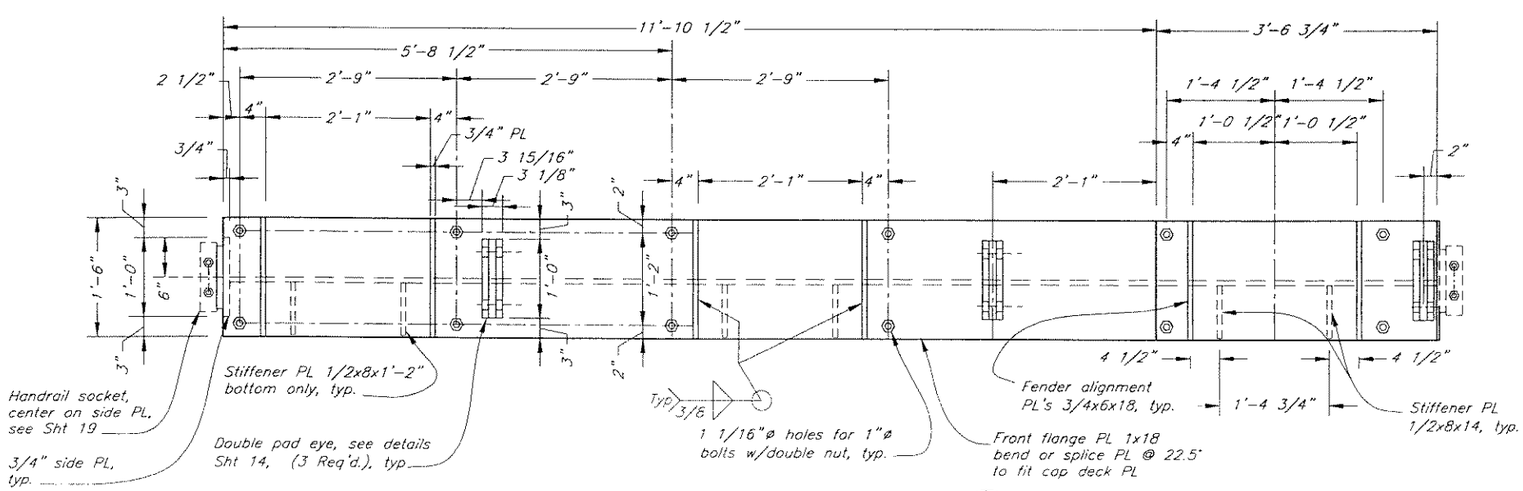

Elevation A/14
Cap Flange Plate

As Built
5/12/06

DO NOT SCALE FROM THESE DRAWINGS USE DIMENSIONS

DESIGNED BY: B. Savikko/K. Miller

STATE OF ALASKA 49th Kirk D. Miller CE-8550 REGISTERED PROFESSIONAL ENGINEER 7/8/04

CHECKED BY: J. Beedle
DRAWN BY: C. Fumari/ T. Mares

STATE OF ALASKA
DEPARTMENT OF TRANSPORTATION
& PUBLIC FACILITIES
STATEWIDE DESIGN & ENGINEERING SERVICES DIVISION

WHITTIER FERRY TERMINAL
MODIFICATIONS
PROJECT NO. 68355

L1 & L2 Flange & L1 Platform Details

PATH: Q:\Wit\68355\Mf\PlanSet\17-L1 Platform Details.dwg
PLOT: PSPACE 1=1 TAB: DETAIL Fri, 18/Jun/04 01:17PM

REVISIONS			PROJECT DESIGNATION	YEAR	SHEET NO.	TOTAL SHEETS
NO.	DATE	DESCRIPTION				
			68355	2004	17	52

Note: Intermediate waler similar except omit pad eyes

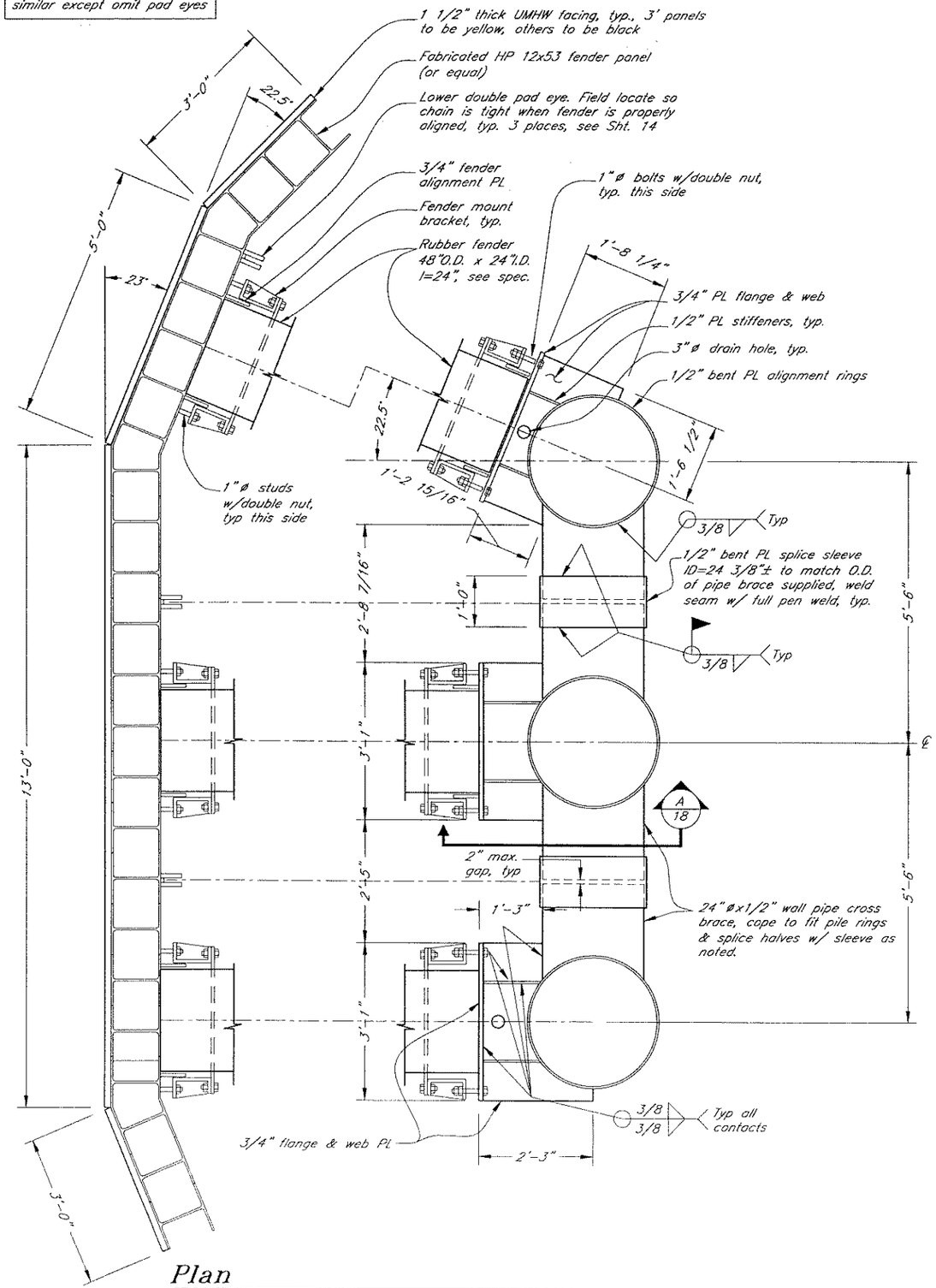

Plan
Intermediate & Lower Walers

(L2 shown, L1 is mirror image)

Note: Bracket on walers and cap flange similar except use 1"ø bolt w/ double nut instead of stud

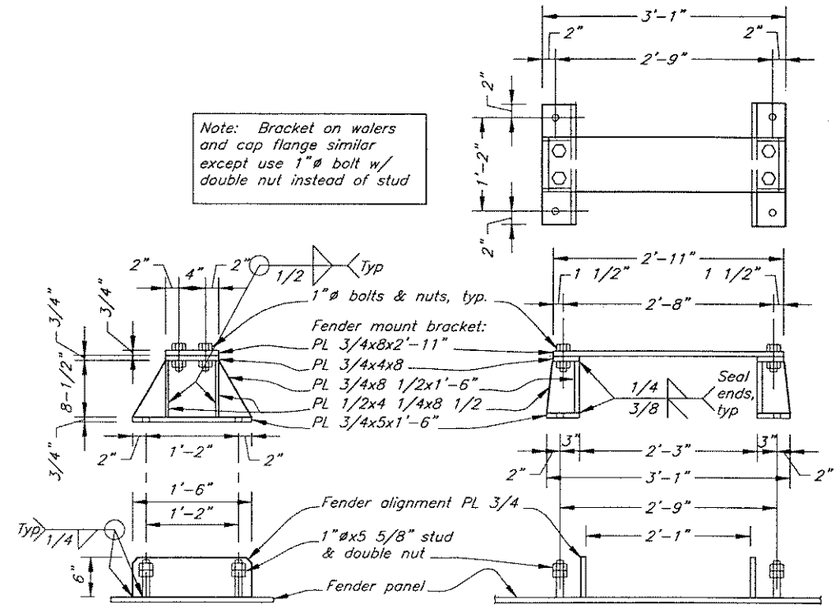

Details
Fender Mount Bracket & Mounting

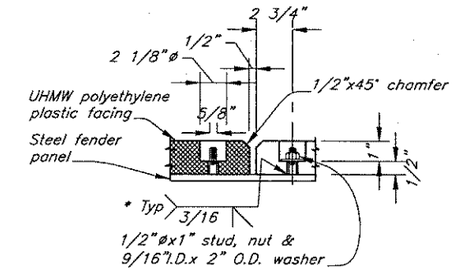

Detail
Fender Face

* Grind weld smooth or bevel back of UHMW hole to fit flush, typ.

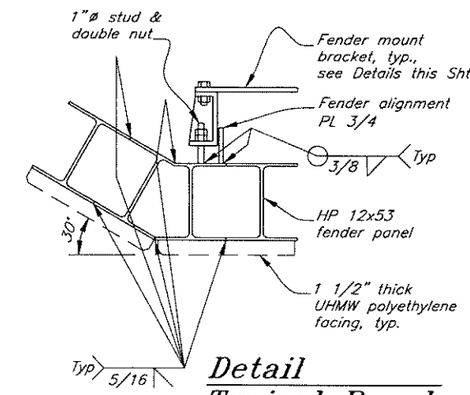

Detail
Typical Panel

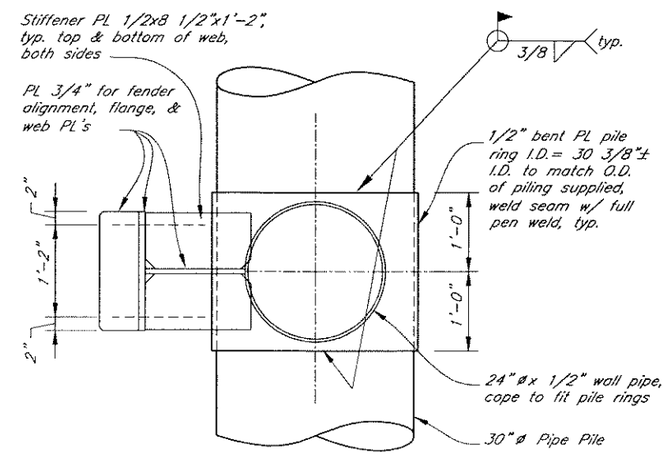

Section A/18

As Built co
5/12/06

DO NOT SCALE FROM THESE DRAWINGS USE DIMENSIONS

DESIGNED BY: B. Savikko/K. Miller
CHECKED BY: J. Beedle
DRAWN BY: T. Mores

STATE OF ALASKA 49th Kirk D. Miller CE-8550 REGISTERED PROFESSIONAL ENGINEER
7/8/04

STATE OF ALASKA
DEPARTMENT OF TRANSPORTATION & PUBLIC FACILITIES
STATEWIDE DESIGN & ENGINEERING SERVICES DIVISION

WHITTIER FERRY TERMINAL MODIFICATIONS
PROJECT NO. 68355

L1 & L2
Waler & Fender Details

PATH: Q:\Wit\68355\Mt\PlanSet\18-L1 & L2 Fender Details.dwg Mon, 21/Jun/04 11:43AM
PLOT: PSPACE 1=1 TAB: DETAIL

REVISIONS NO.	DATE	DESCRIPTION	PROJECT DESIGNATION	YEAR	SHEET NO.	TOTAL SHEETS
			68355	2004	18	52

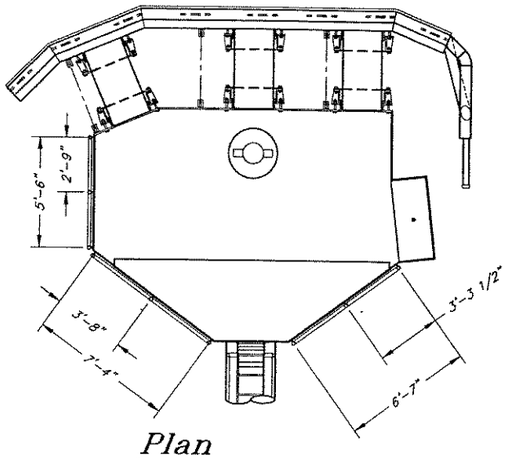

Plan
L1-Railing Layout

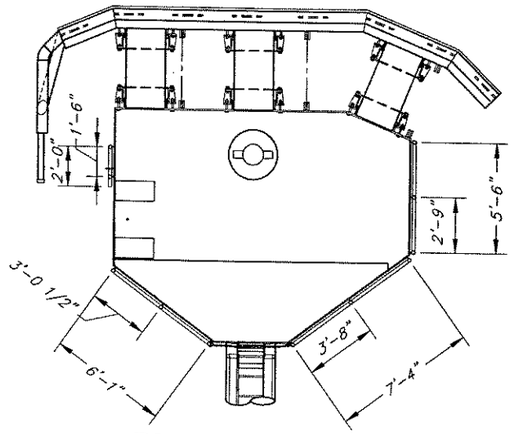

Plan
L2-Railing Layout

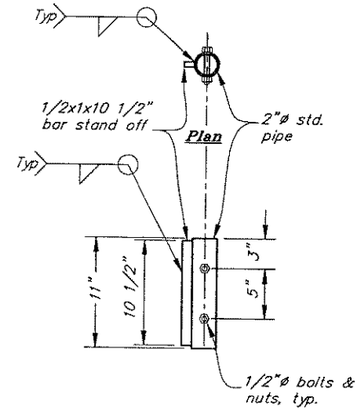

Detail
Handrail Socket

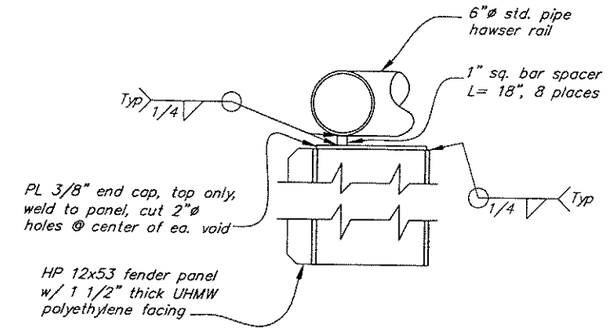

Section A/19
Hawser Pipe

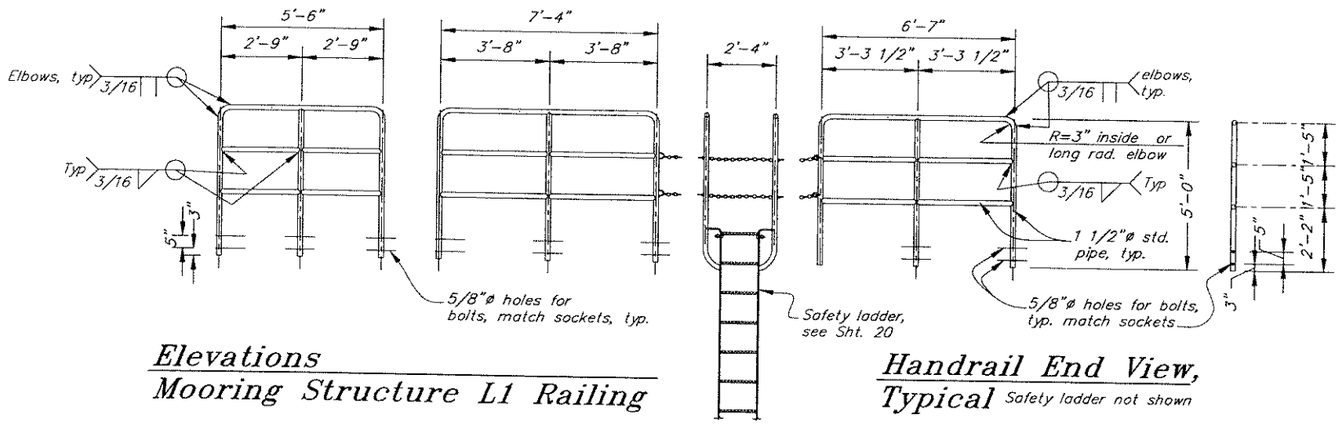

Elevations
Mooring Structure L1 Railing

Handrail End View, Typical
Safety ladder not shown

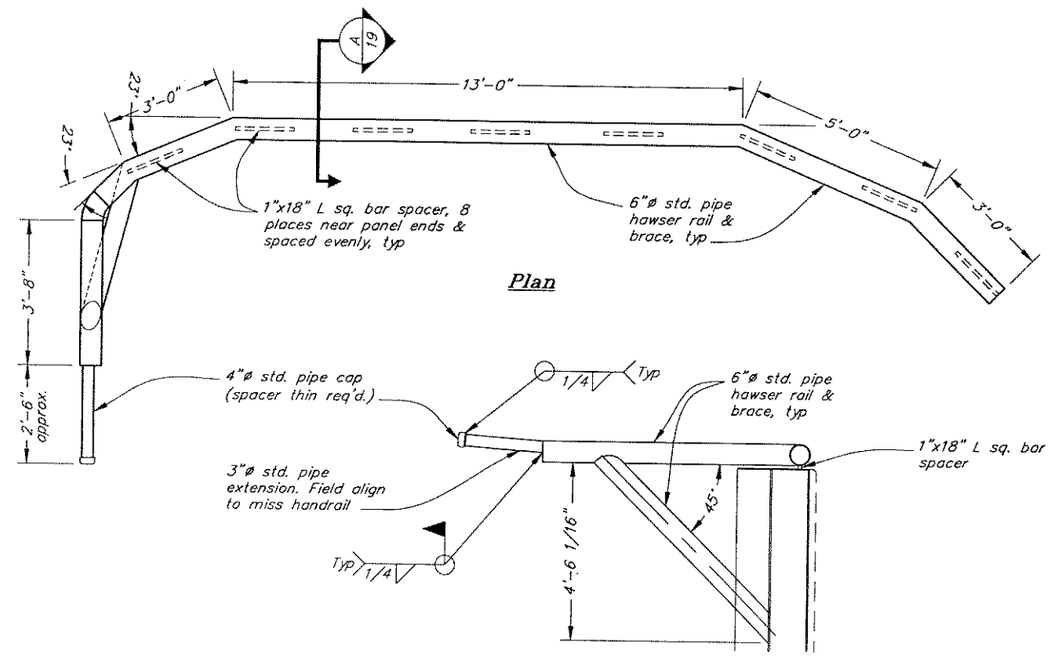

Side View
Hawser Rail Detail

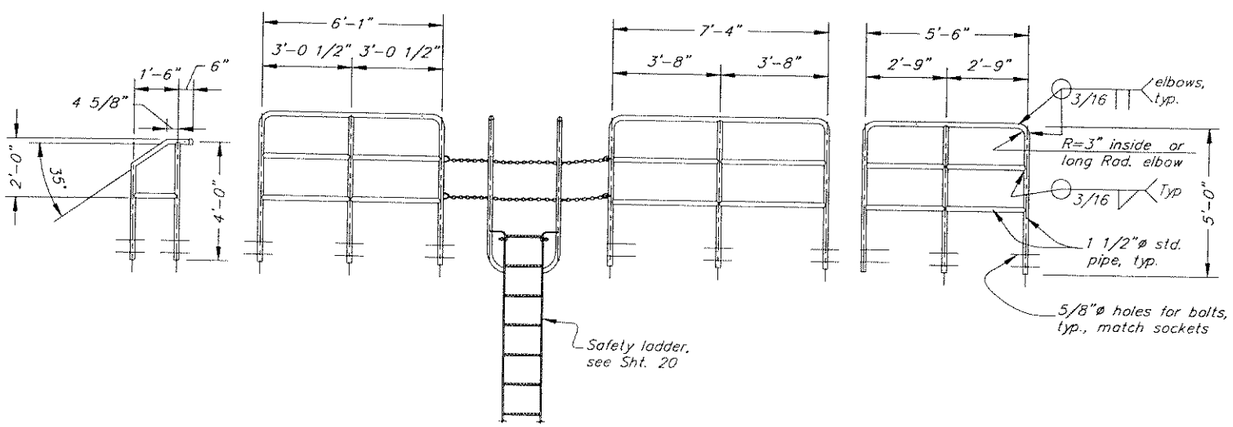

Elevations
Mooring Structure L2 Railing

As Built
5/12/06

DO NOT SCALE FROM THESE DRAWINGS USE DIMENSIONS

DESIGNED BY: K. Miller
CHECKED BY: J. Beedle
DRAWN BY: Staff

STATE OF ALASKA
Kirk D. Miller
CE-8550
49th
PROFESSIONAL ENGINEER
5/6/04

STATE OF ALASKA
DEPARTMENT OF TRANSPORTATION
& PUBLIC FACILITIES
STATEWIDE DESIGN & ENGINEERING SERVICES DIVISION

WHITTIER FERRY TERMINAL MODIFICATIONS
PROJECT NO. 68355

L1 & L2 Railing Details

PATH: O:\Wit\68355\Mt\PlanSet\19-L1 & L2 Rail Details.dwg
PLOT: PSPACE 1=1
TAB: DETAIL Fri, 18/Jun/04 01:19PM

REVISIONS			PROJECT DESIGNATION	YEAR	SHEET NO.	TOTAL SHEETS
NO.	DATE	DESCRIPTION	68355	2004	19	52

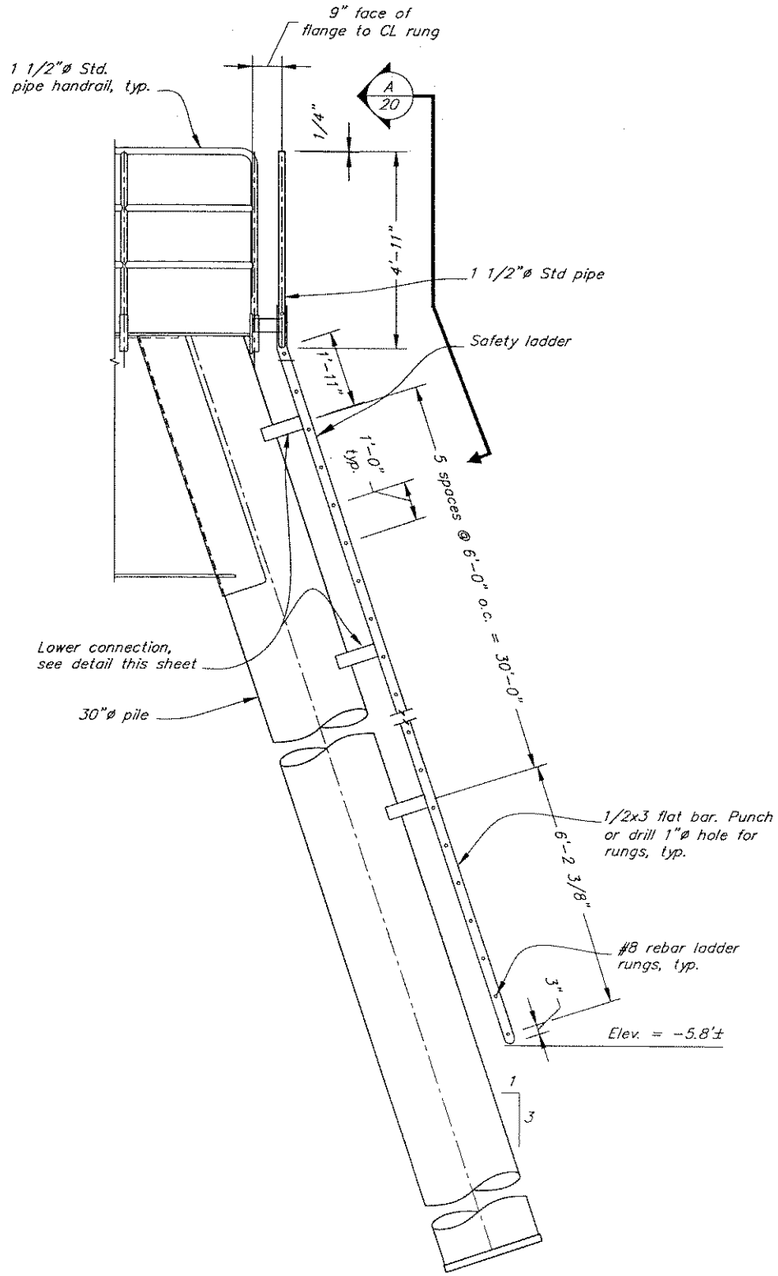

Side Elevation
Safety Ladder

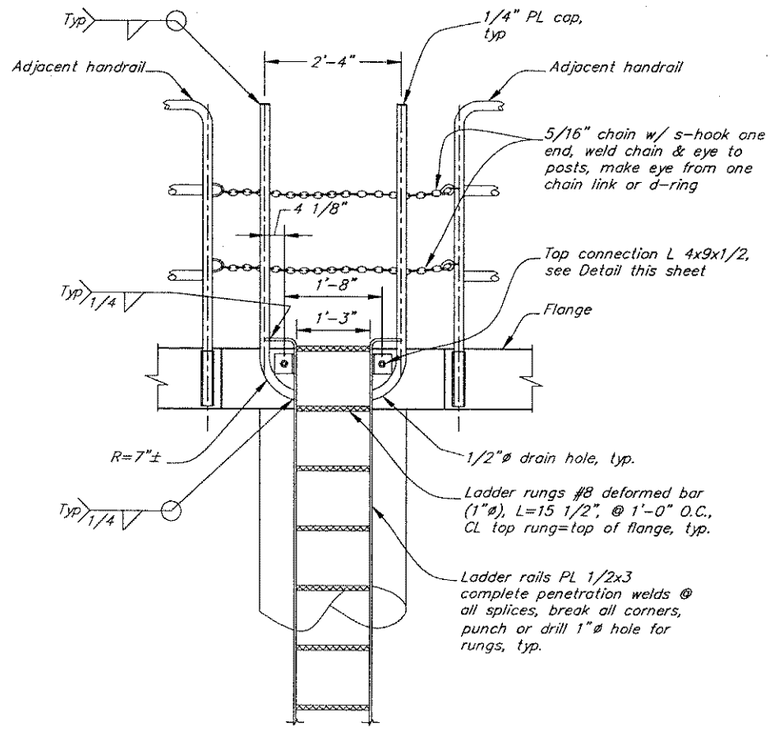

Elevation A/20

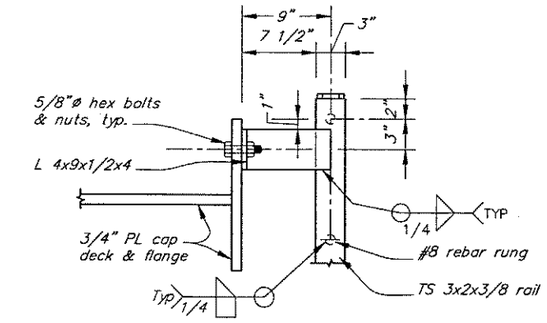

Top Connection

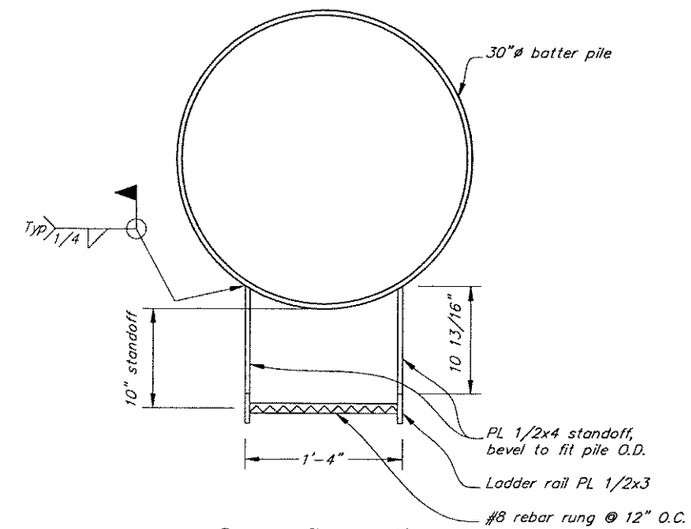

Lower Connection

Details
Safety Ladder

Safety ladder required on mooring structures

As Built 00
5/12/06

DO NOT SCALE FROM THESE DRAWINGS USE DIMENSIONS

DESIGNED BY: K. Miller

STATE OF ALASKA 49th Kirk D. Miller CE-8550 REGISTERED PROFESSIONAL ENGINEER
7/8/04

CHECKED BY: J. Beedle
DRAWN BY: T. Mores

STATE OF ALASKA
DEPARTMENT OF TRANSPORTATION
& PUBLIC FACILITIES
STATEWIDE DESIGN & ENGINEERING SERVICES DIVISION

WHITTIER FERRY TERMINAL MODIFICATIONS
PROJECT NO. 68355

L1 & L2
Ladder Details

PATH: O:\Wr\68355\Mf\PlanSet\20-L1 & L2 ladder Details.dwg
PLOT: PSPACE 1=1 TAB: DETAIL Fri, 18/Jun/04 01:19PM

REVISIONS			PROJECT DESIGNATION	YEAR	SHEET NO.	TOTAL SHEETS
NO.	DATE	DESCRIPTION				
			68355	2004	20	52

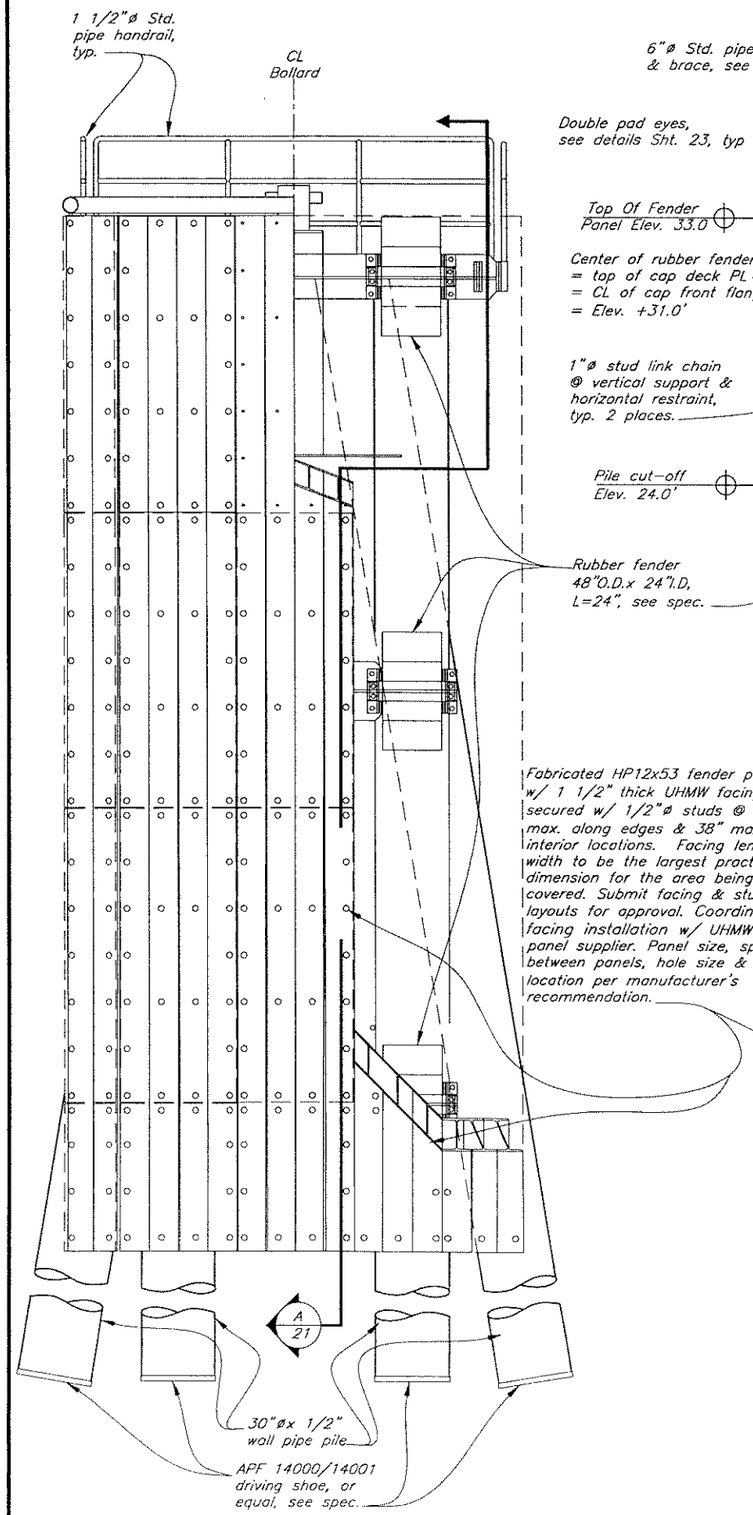

Typical Front Elevation

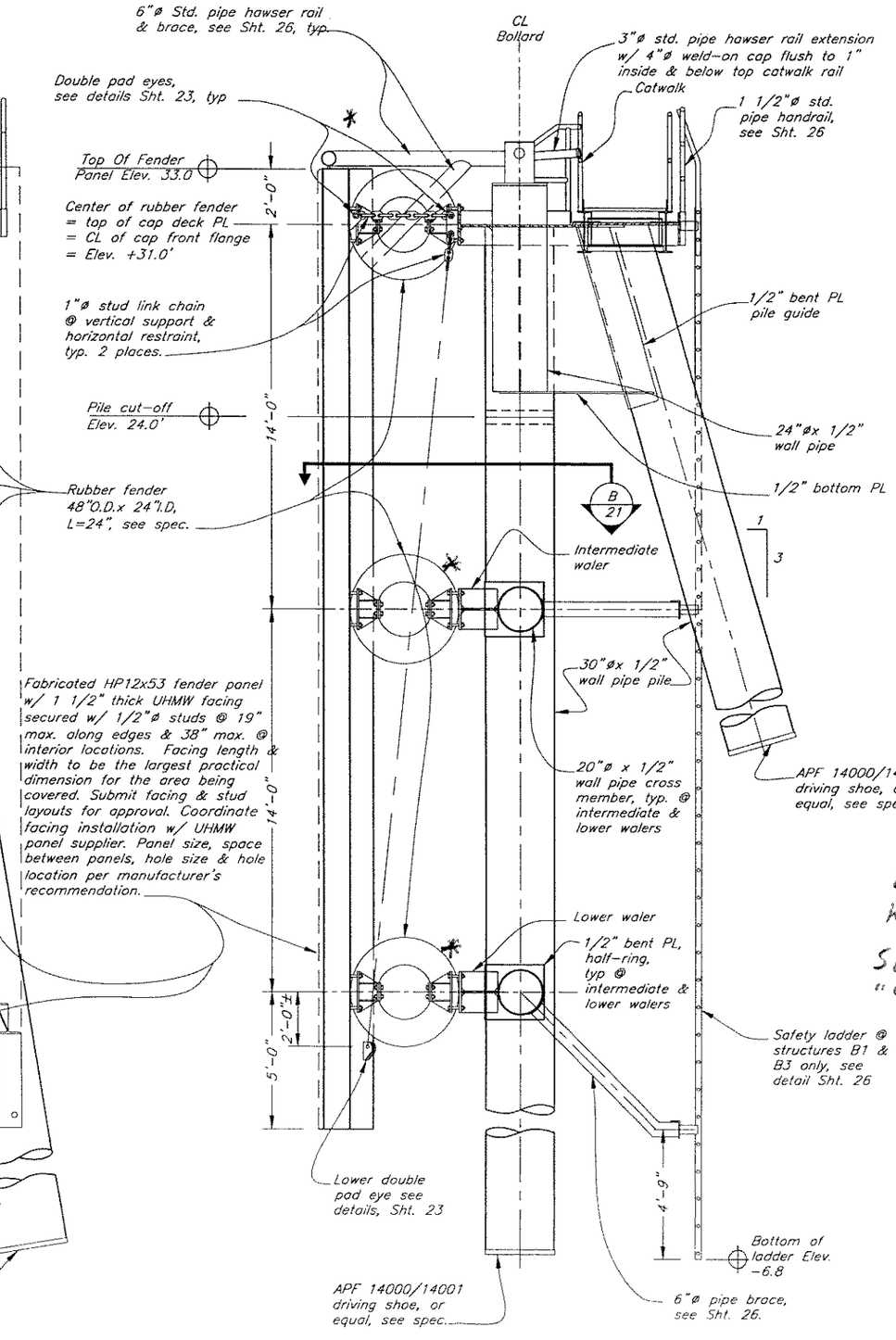

Typical Section A/21

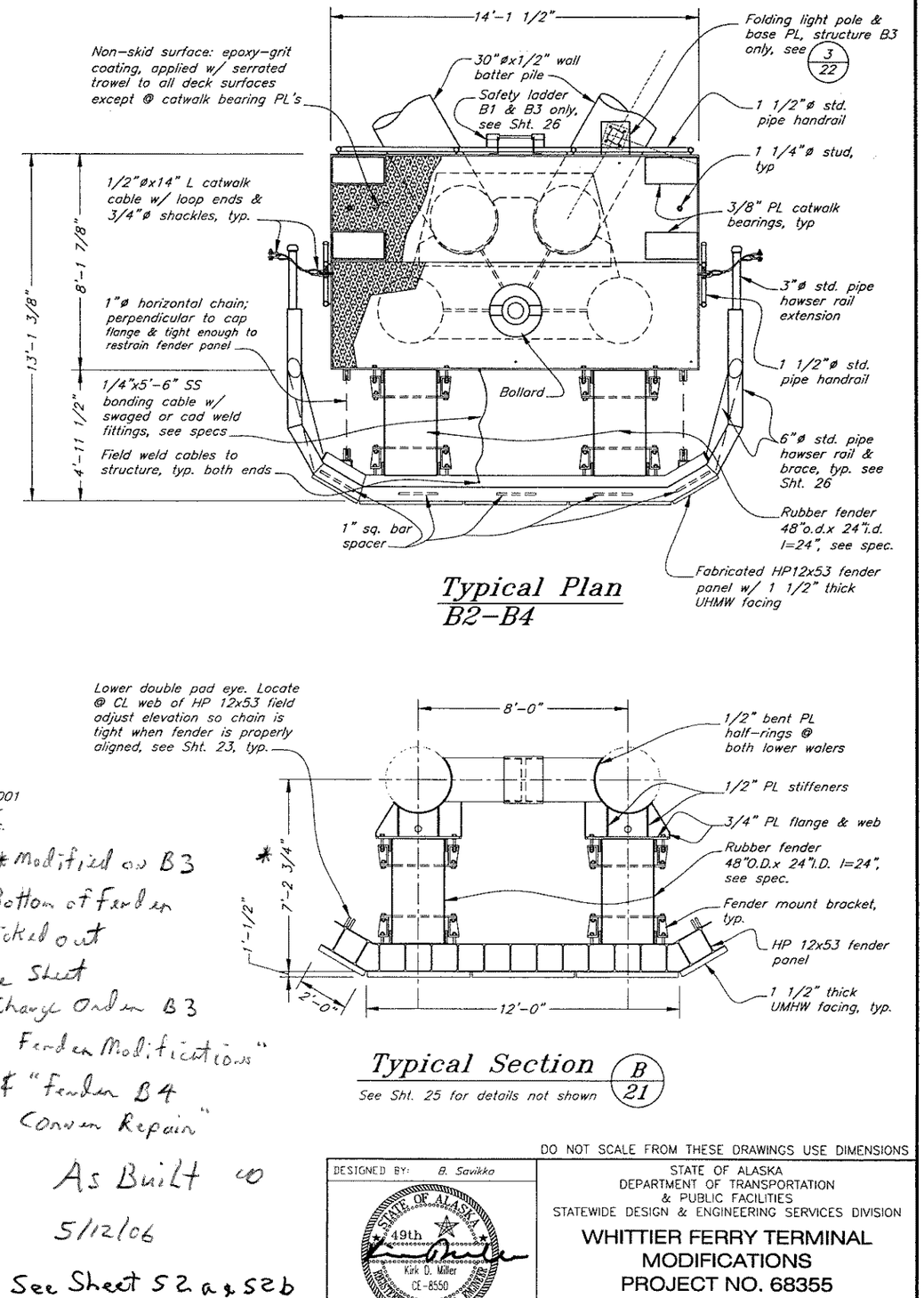

Typical Plan B2-B4

Typical Section B/21

See Sht. 25 for details not shown

* Modified on B3
Bottom of Fender
Kicked out
See Sheet
"Change Order B3
Fender Modifications"
& "Fender B4
Corner Repair"
As Built 10
5/12/06
See Sheet 52a & 52b

DO NOT SCALE FROM THESE DRAWINGS USE DIMENSIONS

DESIGNED BY: B. Savikka
STATE OF ALASKA 49th Kirk D. Miller CE-8550 REGISTERED PROFESSIONAL ENGINEER
7/8/04
CHECKED BY: J. Beedle
DRAWN BY: Staff

STATE OF ALASKA
DEPARTMENT OF TRANSPORTATION
& PUBLIC FACILITIES
STATEWIDE DESIGN & ENGINEERING SERVICES DIVISION

WHITTIER FERRY TERMINAL
MODIFICATIONS
PROJECT NO. 68355

B1 - B4
Plan & Elevation

PATH: O:\Wit\68355\Mt\PlanSet\21-B2, B3, B4 plan & elevation.dwg
PLOT: PSPACE 1=1 TAB. DETAIL Mon, 28/Jun/04 09:23AM

REVISIONS			PROJECT DESIGNATION	YEAR	SHEET NO.	TOTAL SHEETS
NO	DATE	DESCRIPTION	68355	2004	21	52

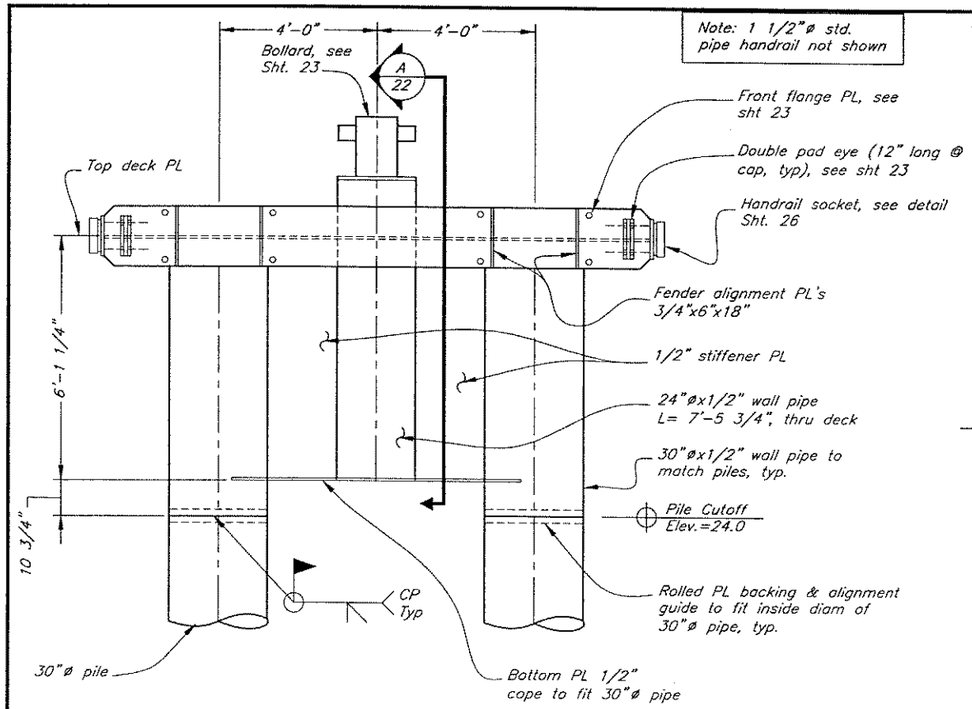

Elevation
Cap Front

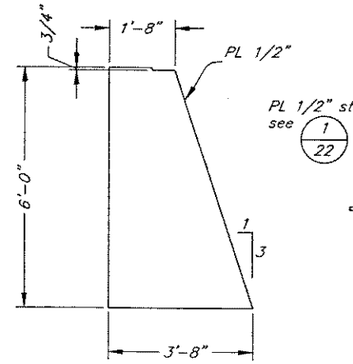

Detail – Pile Guide Stiffener (1/22)

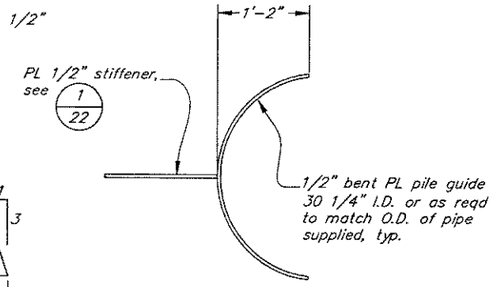

Section B/22

Note: B1 catwalk platform not shown for clarity, see Sht. 24

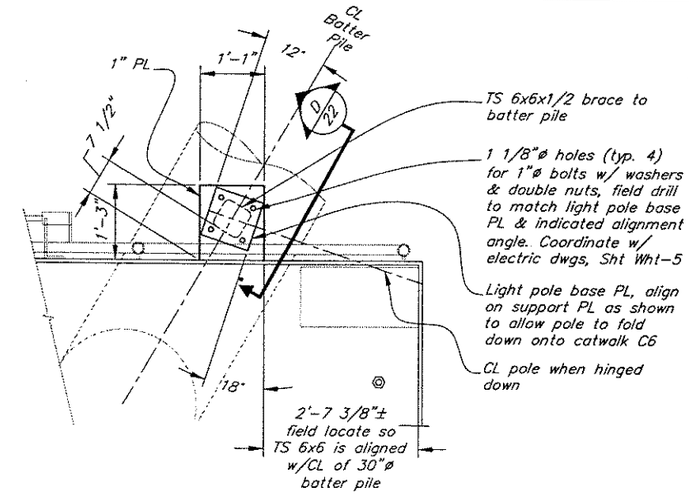

Light Support Plan (B3 only) (3/21)

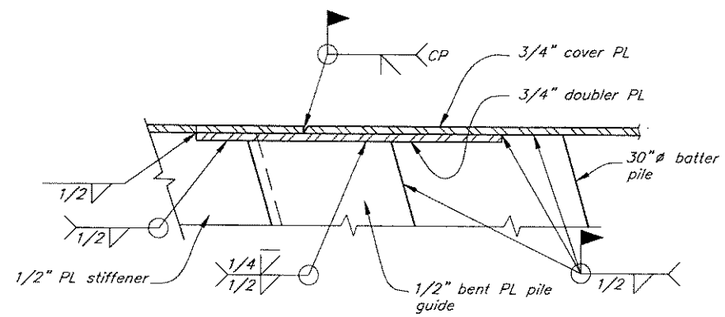

Detail (2/22)

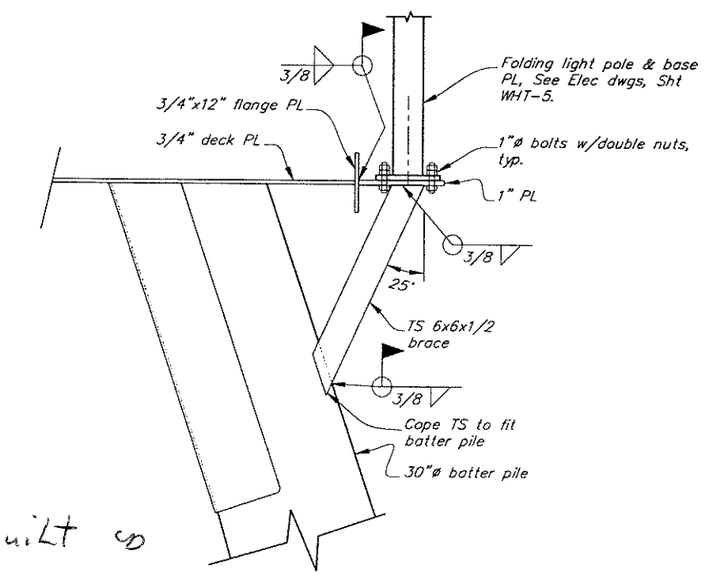

Section Light Pole Support (D/22)

As Built 5/12/06

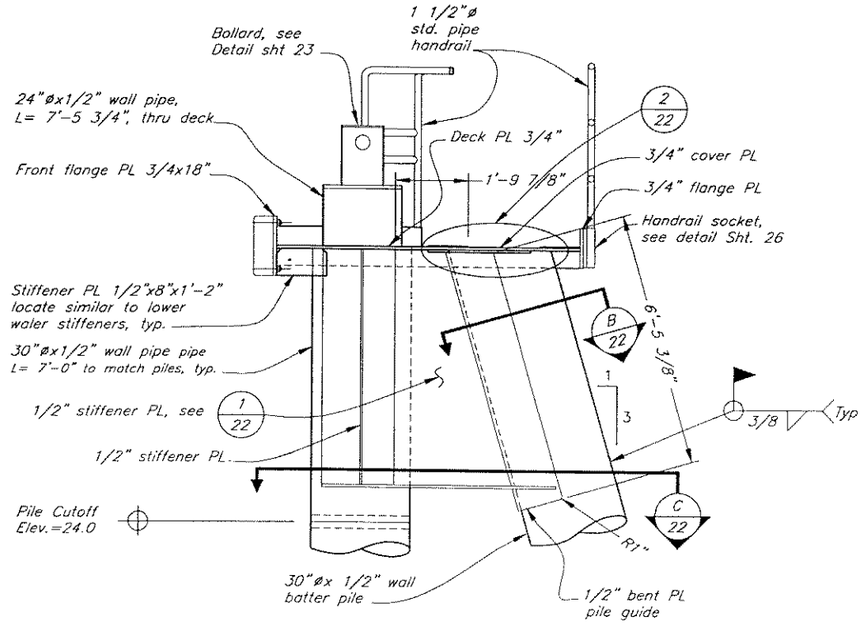

Cap Section (A/22)

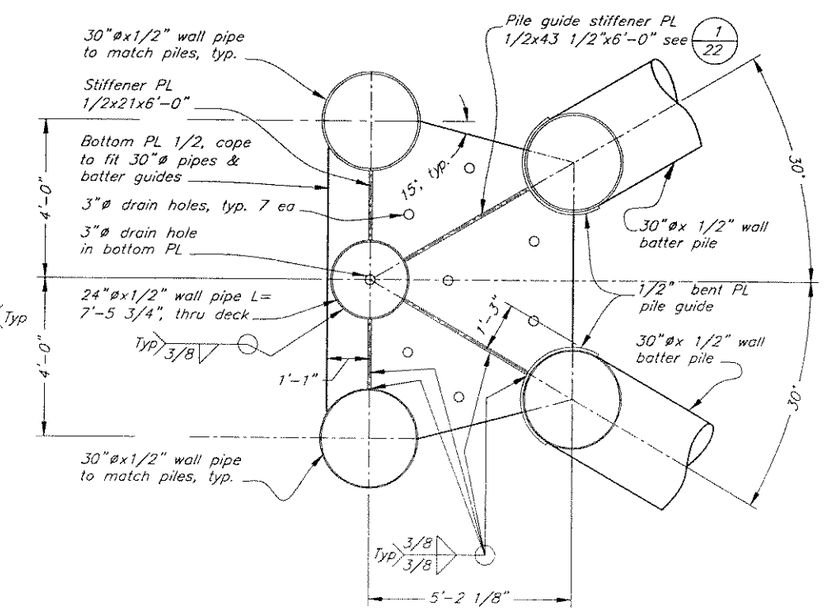

Section (C/22)

DO NOT SCALE FROM THESE DRAWINGS USE DIMENSIONS

DESIGNED BY: B. Savikko/K. Miller

STATE OF ALASKA 49th Kirk D. Miller CE-8550 REGISTERED PROFESSIONAL ENGINEER

7/8/04

CHECKED BY: J. Beedle
DRAWN BY: Staff

STATE OF ALASKA
DEPARTMENT OF TRANSPORTATION
& PUBLIC FACILITIES
STATEWIDE DESIGN & ENGINEERING SERVICES DIVISION

WHITTIER FERRY TERMINAL
MODIFICATIONS
PROJECT NO. 68355

B1-B4 Cap Typical Details

PATH: Q:\Wit\68355\Mt\PlanSet\22-B2 thru B4 cap.dwg
PLOT PSPACE 1=1 TAB: DETAIL Thu, 24/Jun/04 10:48AM

REVISIONS NO.	DATE	DESCRIPTION	PROJECT DESIGNATION	YEAR	SHEET NO.	TOTAL SHEETS
			68355	2004	22	52

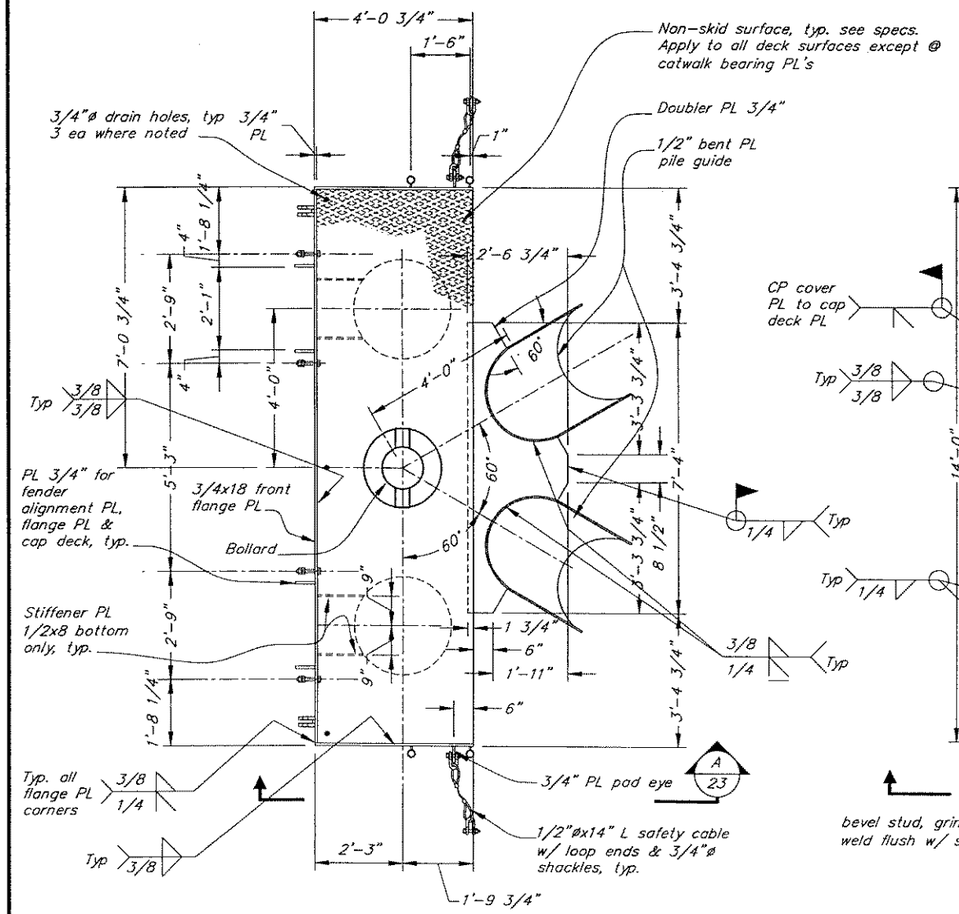

Cap Deck Plan

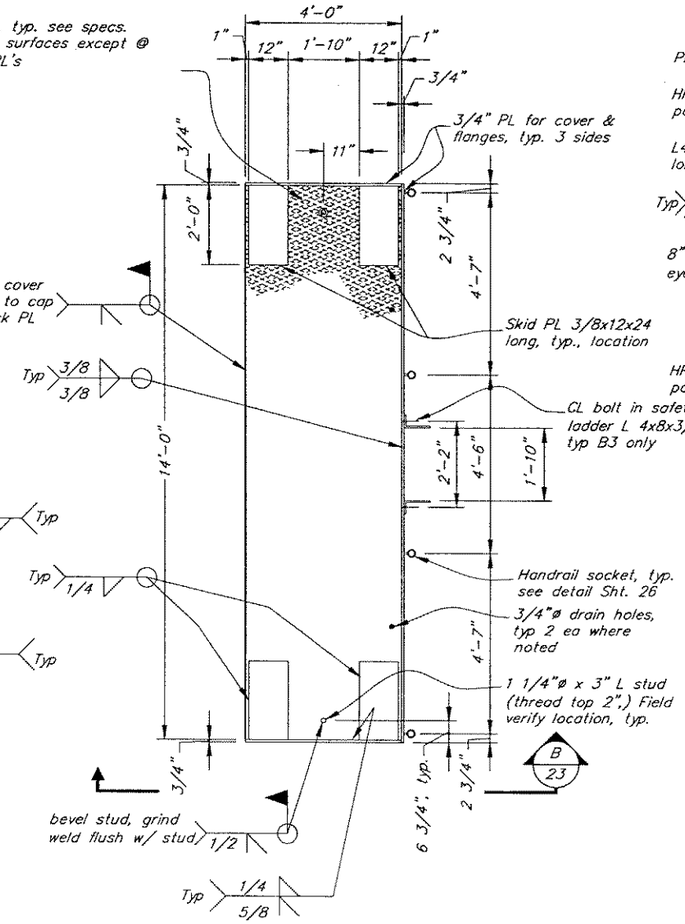

Cover Plan

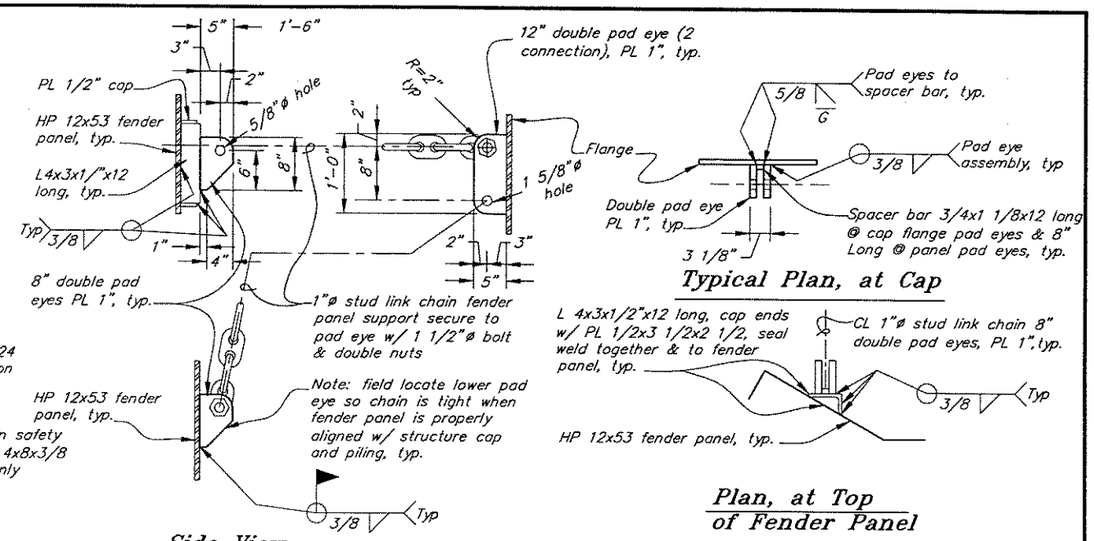

Detail
Double Pad Eye

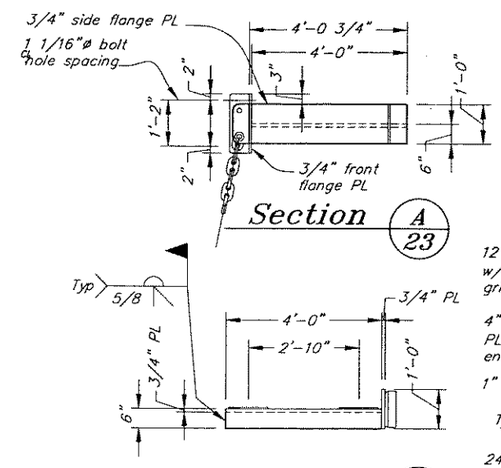

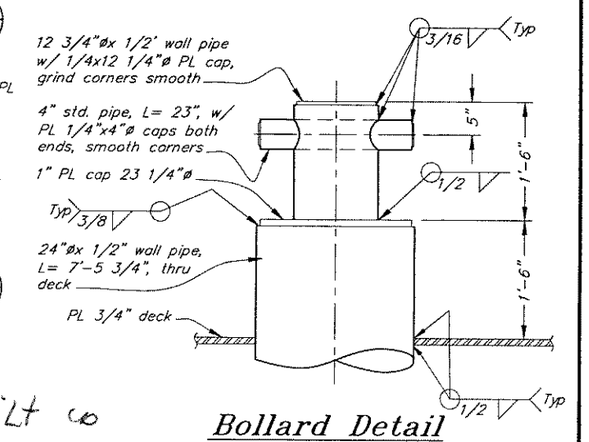

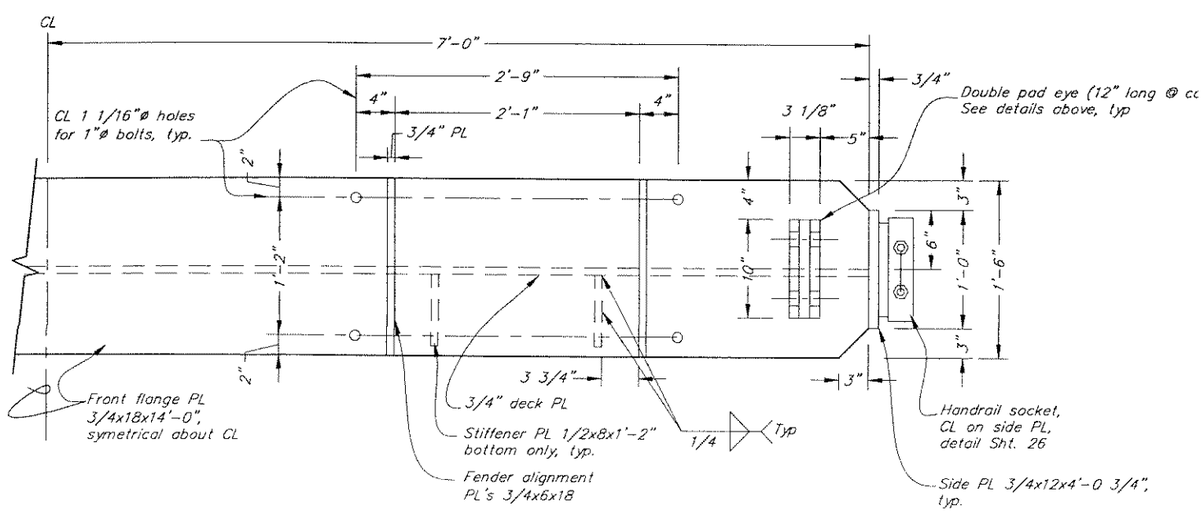

Detail
Cap Front Flange Plate

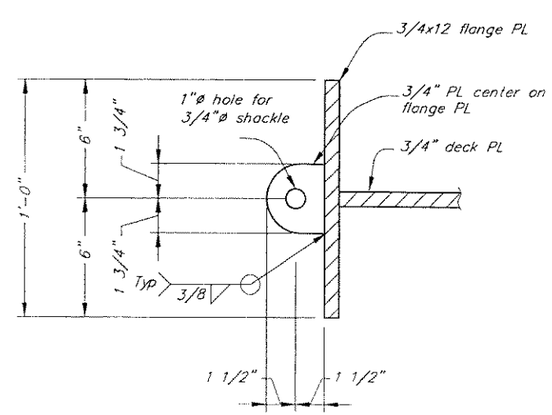

Catwalk Cable
Pad Eye

As Built 10 5/12/06

DO NOT SCALE FROM THESE DRAWINGS USE DIMENSIONS

DESIGNED BY: B. Savikko
STATE OF ALASKA 49th Kirk D. Miller CE-8550 REGISTERED PROFESSIONAL ENGINEER
7/8/04
CHECKED BY: J. Beedle
DRAWN BY: Staff

STATE OF ALASKA
DEPARTMENT OF TRANSPORTATION & PUBLIC FACILITIES
STATEWIDE DESIGN & ENGINEERING SERVICES DIVISION

WHITTIER FERRY TERMINAL MODIFICATIONS
PROJECT NO. 68355
B2-B4
Deck & Misc. Details

PATH: Q:\Wit\68355\Mf\PlanSet\23-B1 thru4 deck plan.dwg
PLOT: PSPACE 1=1 TAB: DETAIL Fri, 18/Jun/04 01:24PM

REVISIONS NO.	DATE	DESCRIPTION	PROJECT DESIGNATION	YEAR	SHEET NO.	TOTAL SHEETS
			68355	2004	23	52

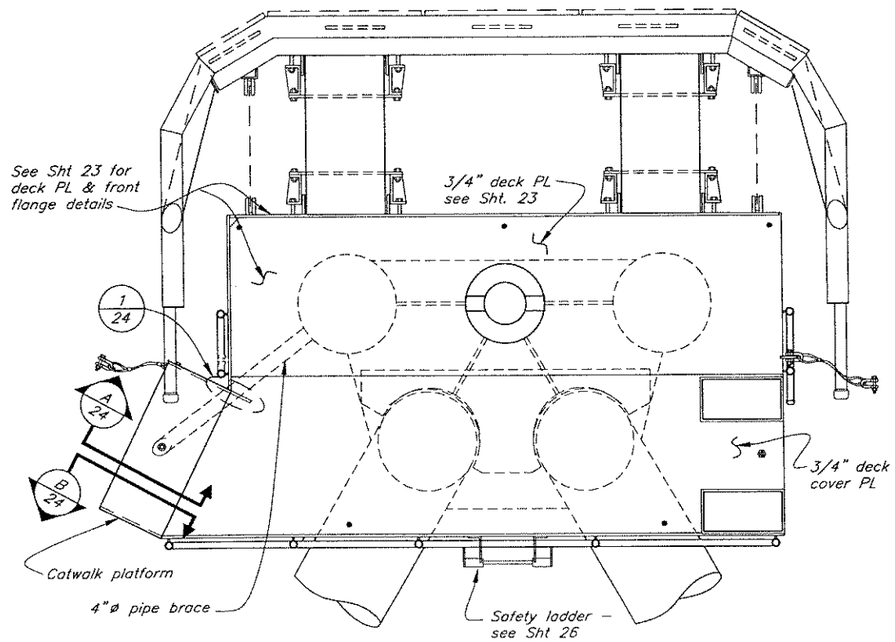

B1 Plan

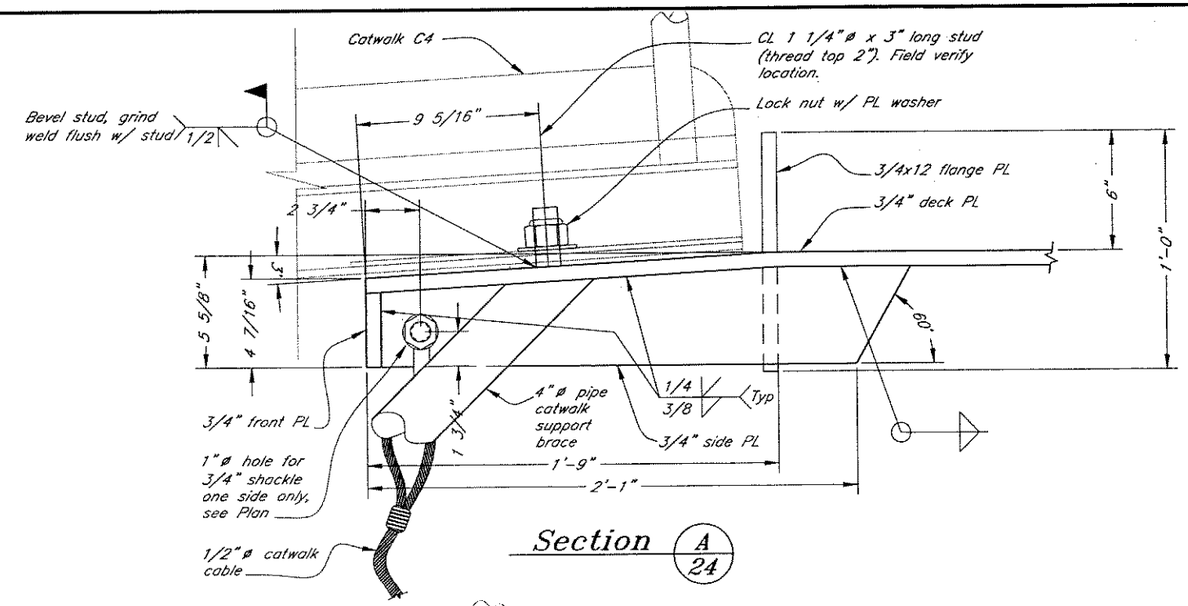

Section A/24

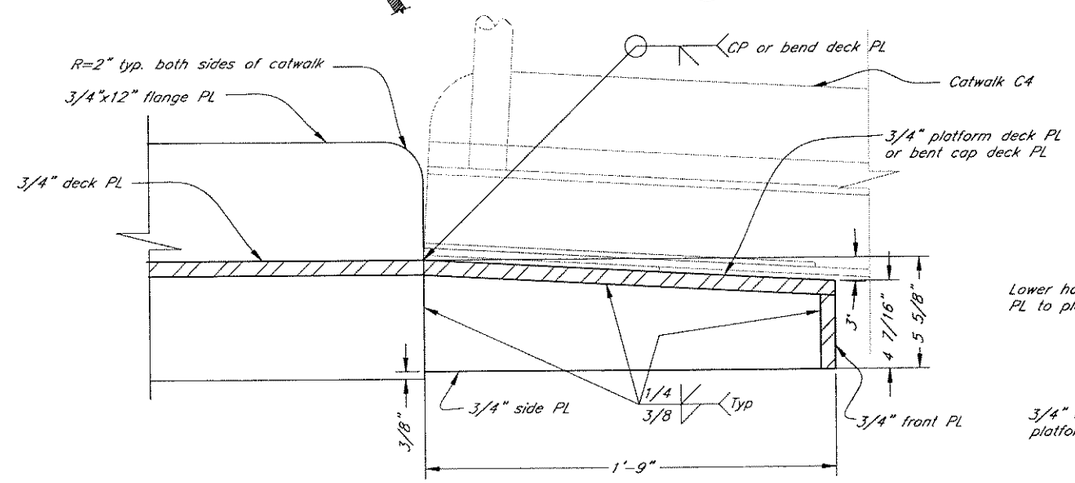

Section B/24

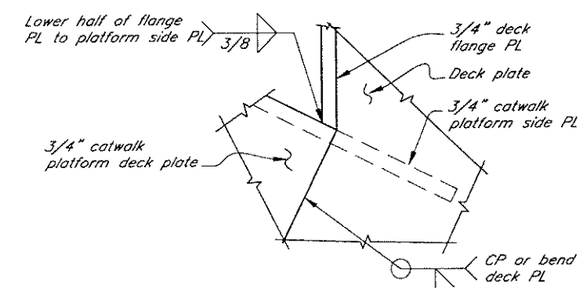

Detail 1/24

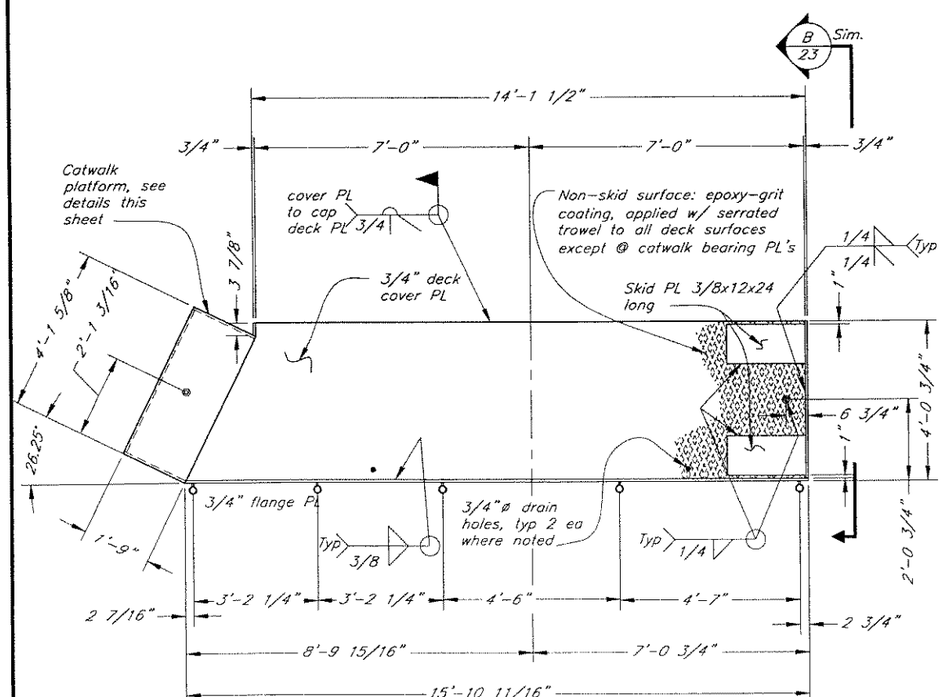

B1 Cover Plate Plan

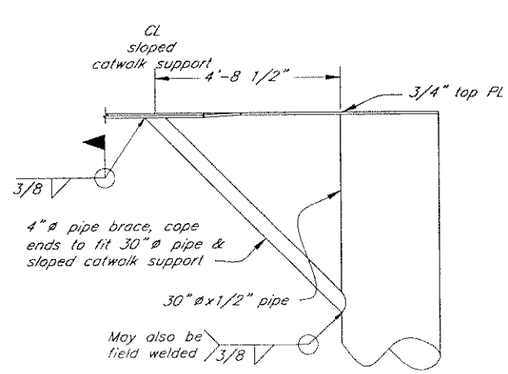

Catwalk Support Brace

As Built co
5/12/06

DO NOT SCALE FROM THESE DRAWINGS USE DIMENSIONS

DESIGNED BY: K. Miller

STATE OF ALASKA 49th Kirk D. Miller CE-8550 REGISTERED PROFESSIONAL ENGINEER
7/8/04

CHECKED BY: J. Beedle
DRAWN BY: C. Fuman

STATE OF ALASKA
DEPARTMENT OF TRANSPORTATION
& PUBLIC FACILITIES
STATEWIDE DESIGN & ENGINEERING SERVICES DIVISION

WHITTIER FERRY TERMINAL
MODIFICATIONS
PROJECT NO. 68355

B1 Deck Details

PATH: Q:\Wil\68355\M\PlanSet\24-B1 Cap.dwg
PLOT: PSPACE 1=1
Thu, 24/Jun/04 10:49AM
Tab: Layout1

REVISIONS			PROJECT DESIGNATION	YEAR	SHEET NO.	TOTAL SHEETS
NO.	DATE	DESCRIPTION	68355	2004	24	52

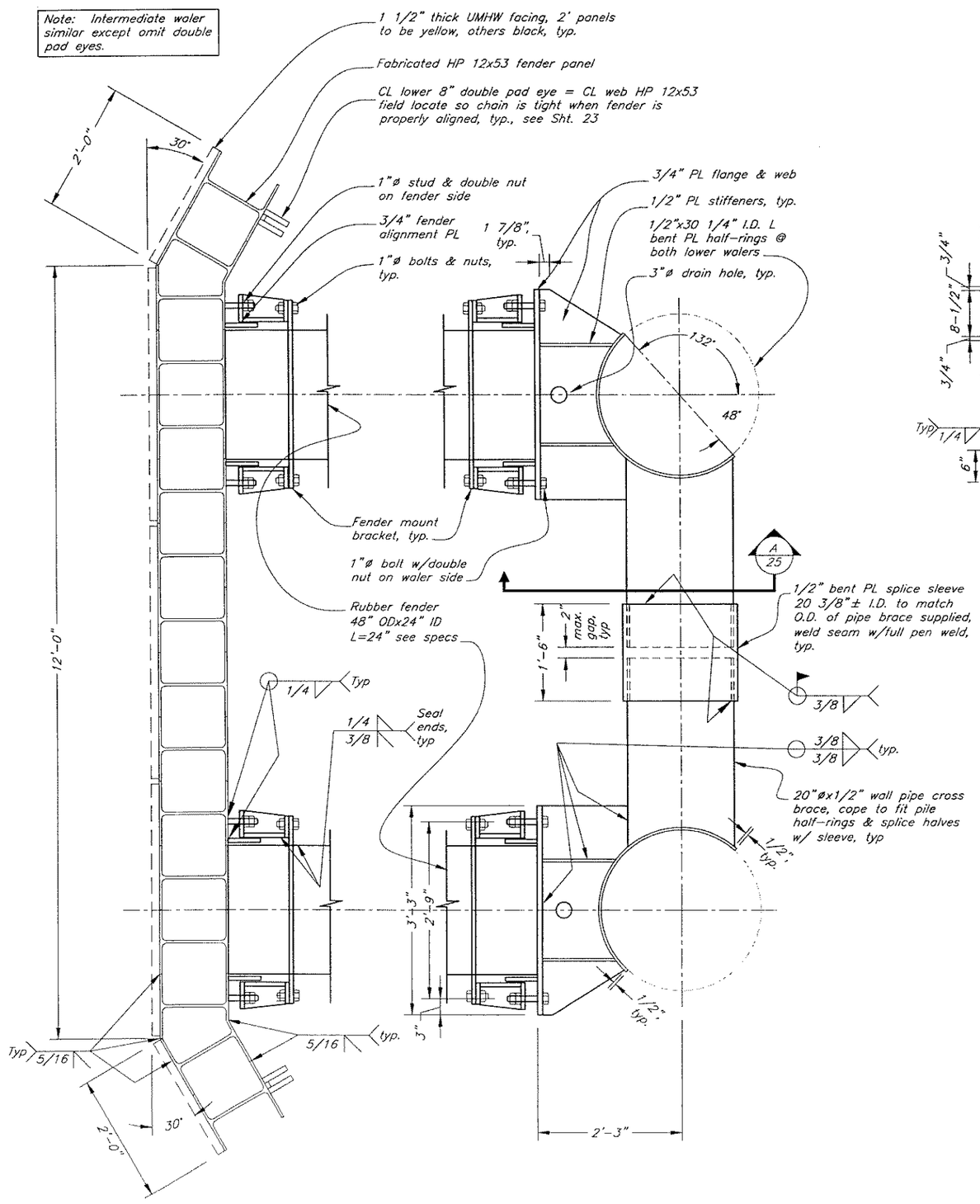

Plan
Intermediate & Lower Walers B1-B4 *

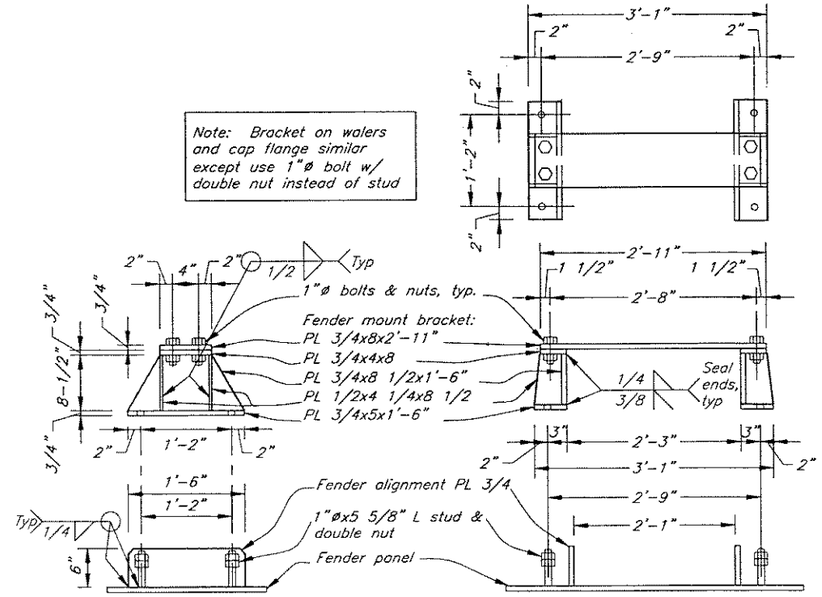

Fender Mount Bracket & Mounting Details

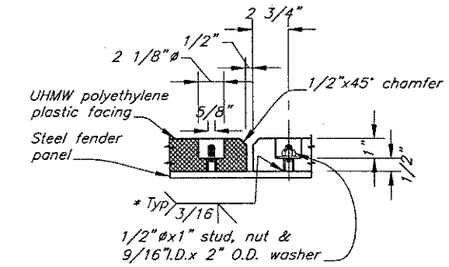

* Grind weld smooth or bevel back of UHMW hole to fit flush, typ.

Detail Fender Face

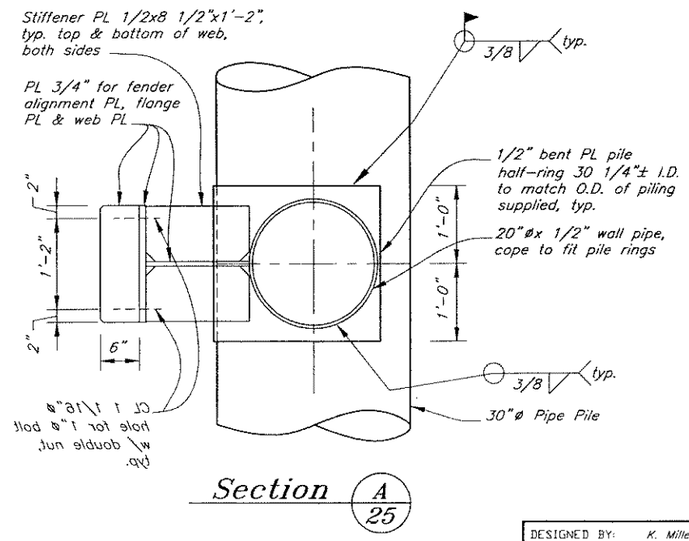

Section A/25

As Built
5/12/06

* See Comments Sheet #21

DO NOT SCALE FROM THESE DRAWINGS USE DIMENSIONS

DESIGNED BY: K. Miller
CHECKED BY: J. Beedle
DRAWN BY: T. Mores

STATE OF ALASKA
DEPARTMENT OF TRANSPORTATION
& PUBLIC FACILITIES
STATEWIDE DESIGN & ENGINEERING SERVICES DIVISION

WHITTIER FERRY TERMINAL MODIFICATIONS
PROJECT NO. 68355
B1-B4
Walers & Fender Mount Bracket

PATH: O:\Wt\68355\Mt\PlanSet\25-B2 thru B4 fenders mount bracket.dwg
PLOT: PSPACE 1=1 TAB: DETAIL Mon, 28/Jun/04 09:25AM

REVISIONS			PROJECT DESIGNATION	YEAR	SHEET NO.	TOTAL SHEETS
NO.	DATE	DESCRIPTION	68355	2004	25	52

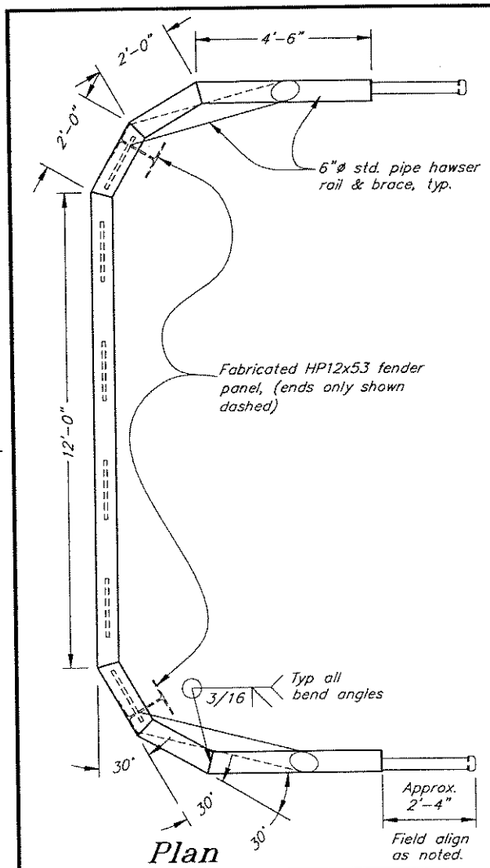

Plan
Structure Hawser

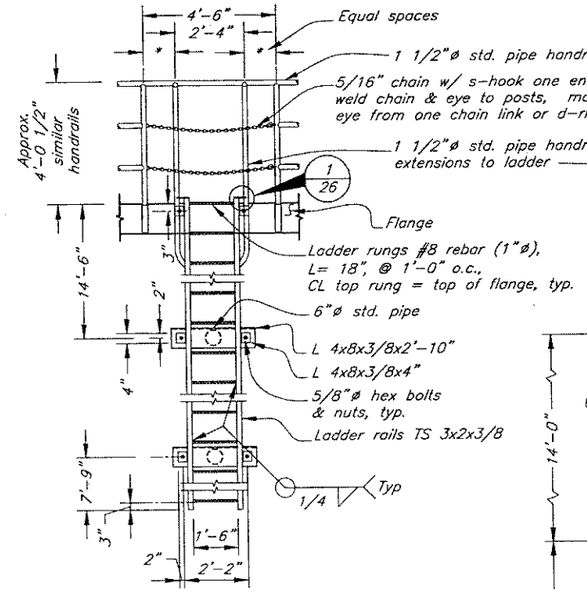

Front View

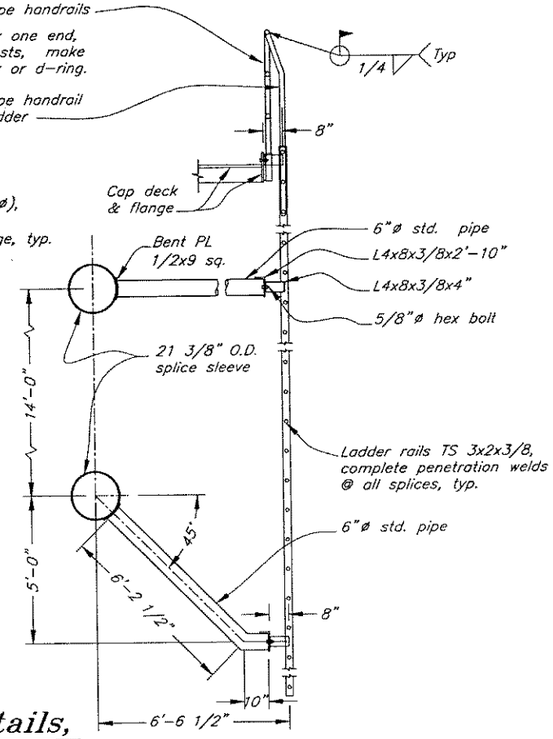

Side View

Safety Ladder Details, Typical

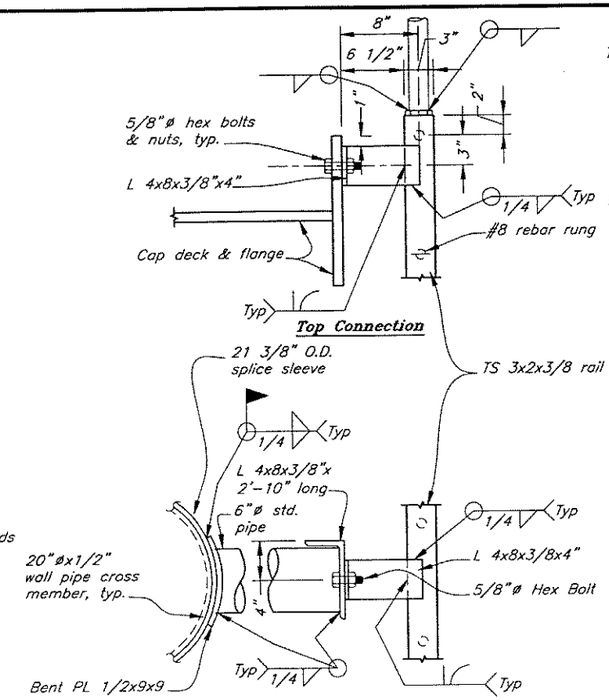

Top Connection

Lower Connection

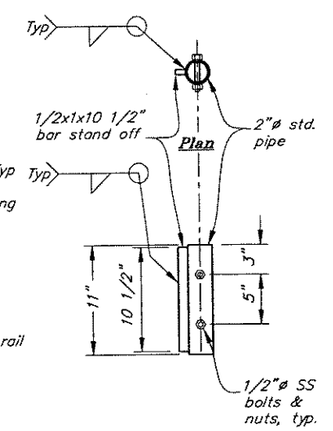

Detail
Handrail Socket

Safety Ladder Details

Safety ladder required on mooring structures

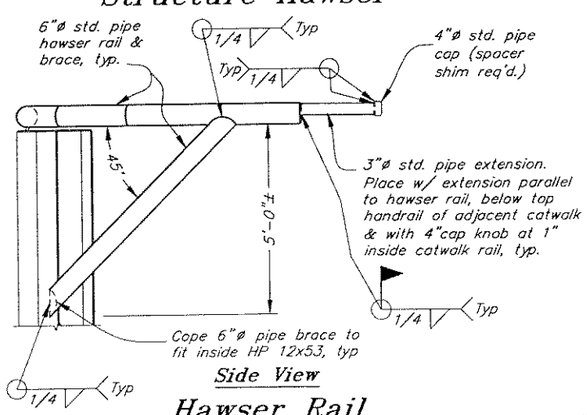

Side View

Hawser Rail

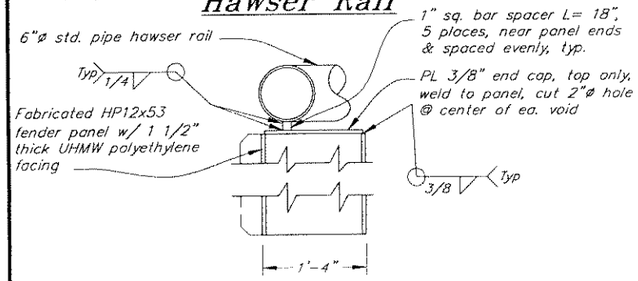

Panel Details
Mooring Structure

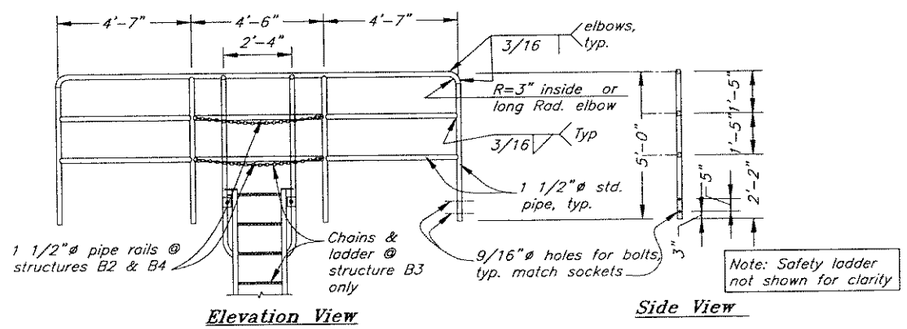

Elevation View **Side View**

B2-B4 Back Handrail

As Built
5/12/06

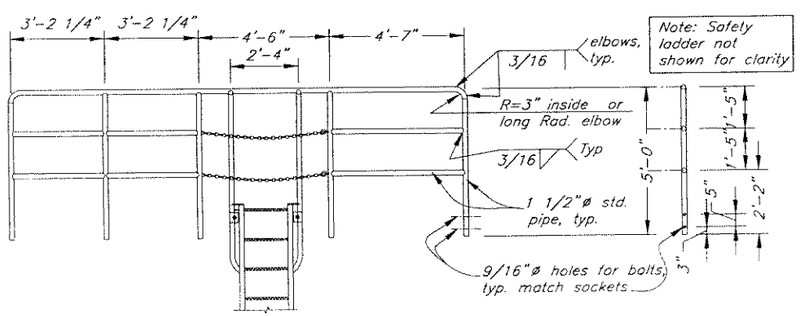

Elevation View **Side View**

B1-Back Handrail

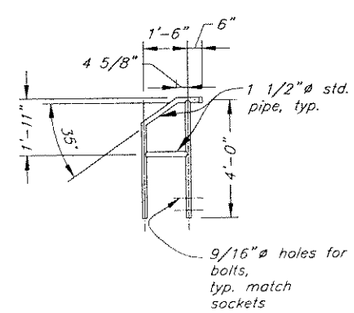

B1-B4 Side Handrail

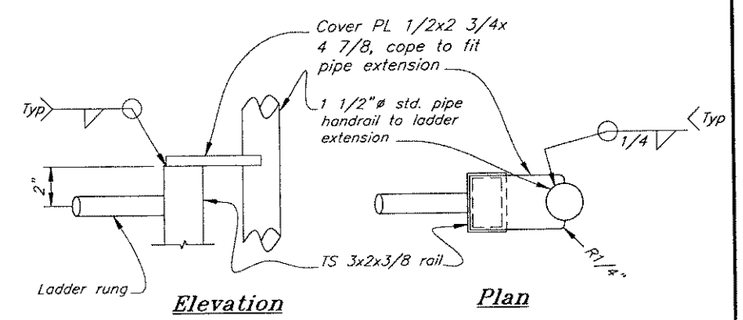

Elevation **Plan**

Detail 1/26

DO NOT SCALE FROM THESE DRAWINGS USE DIMENSIONS

DESIGNED BY: K. Miller

STATE OF ALASKA 49th Kirk D. Miller CE-8550 REGISTERED PROFESSIONAL ENGINEER
7/8/04

CHECKED BY: J. Beedle
DRAWN BY: T. Mores

STATE OF ALASKA
DEPARTMENT OF TRANSPORTATION
& PUBLIC FACILITIES
STATEWIDE DESIGN & ENGINEERING SERVICES DIVISION

WHITTIER FERRY TERMINAL
MODIFICATIONS
PROJECT NO. 68355

B1-B4
Ladder & Rail Details

PATH: Q:\Wir\68355\M1\PlanSet\26-B1 thru B4 Ladders & railing.dwg
PLOT: PSPACE 1=1 TAB: DETAIL Mon, 28/Jun/04 09:26AM

REVISIONS			PROJECT DESIGNATION	YEAR	SHEET NO.	TOTAL SHEETS
NO.	DATE	DESCRIPTION	68355	2004	26	52

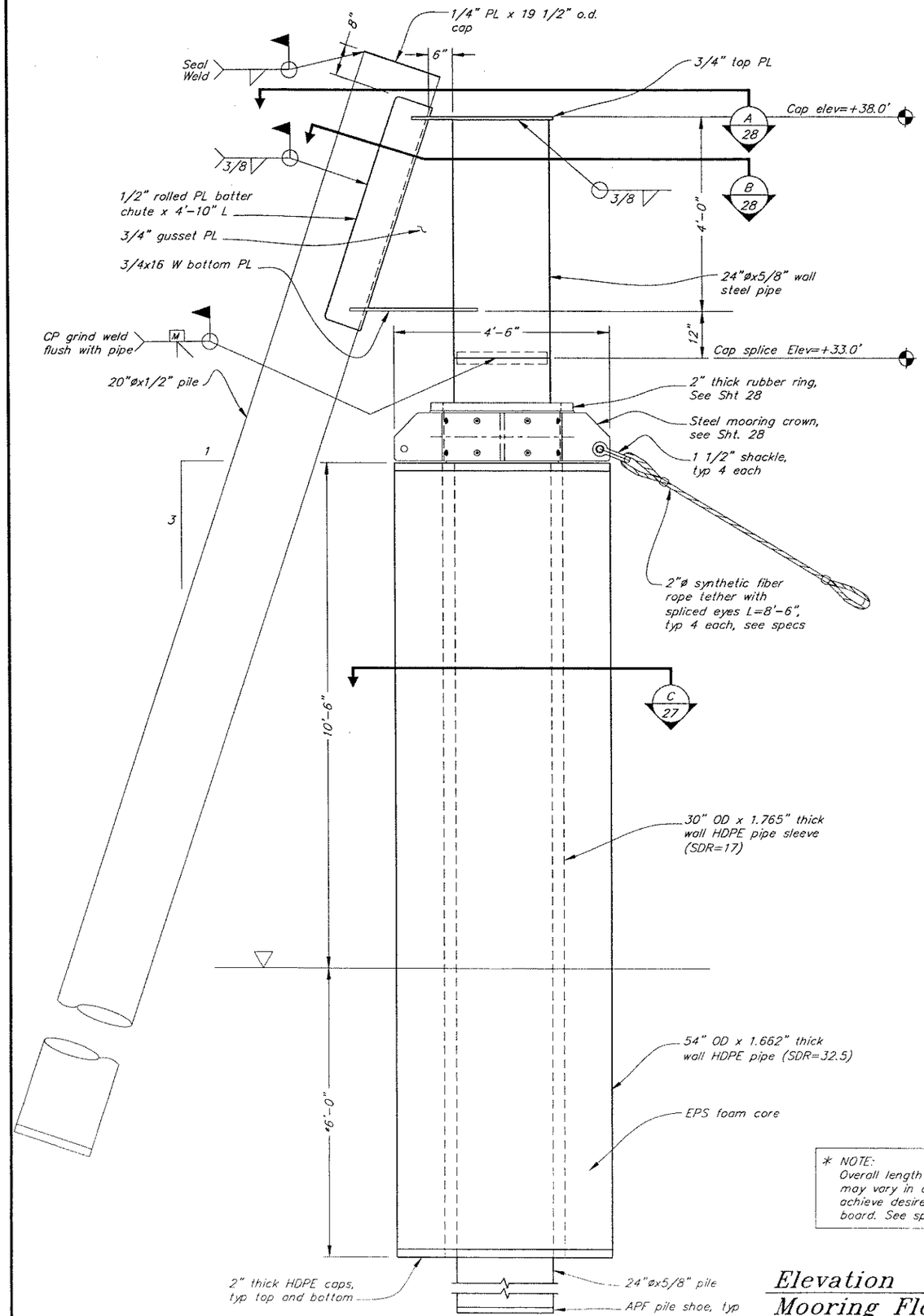

Elevation
Mooring Float Dolphin

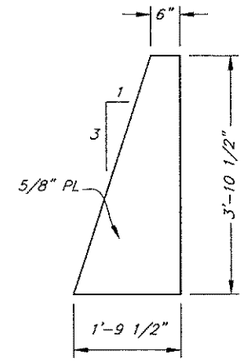

Gusset PL

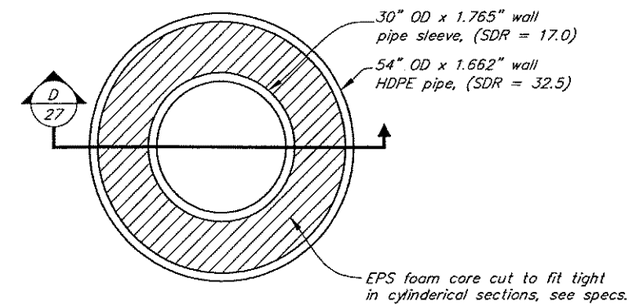

Typical Section C 27
Float

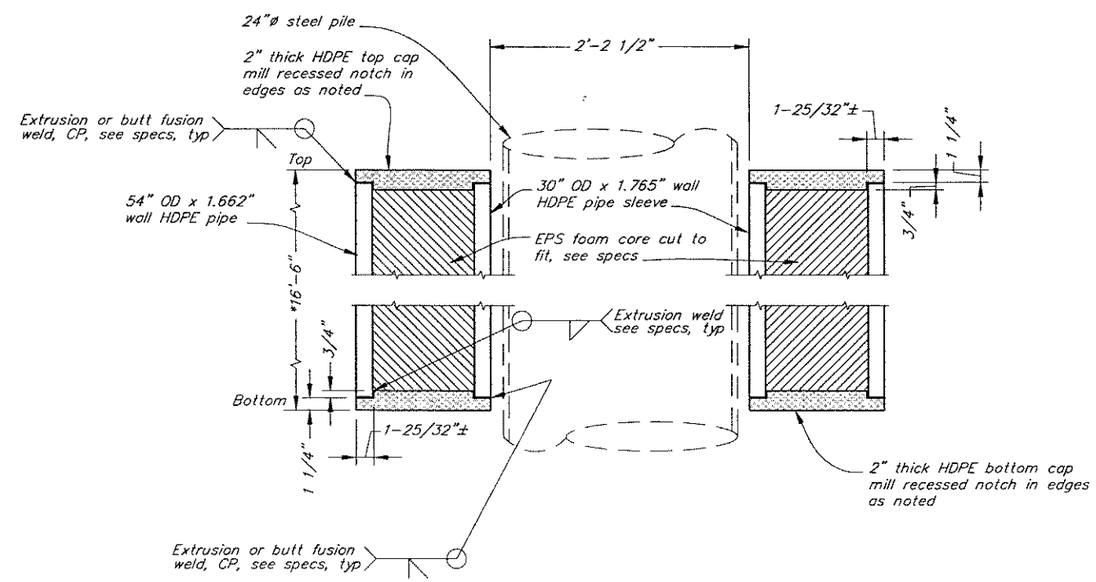

Typical Section D 27
Float

* NOTE:
Overall length of float may vary in order to achieve desired free board. See specs.

As Built
5/12/06

DO NOT SCALE FROM THESE DRAWINGS USE DIMENSIONS

DESIGNED BY: K. Miller
CHECKED BY: J. Beedle
DRAWN BY: Staff

STATE OF ALASKA 49th Kirk D. Miller CE-8550 REGISTERED PROFESSIONAL ENGINEER
7/8/04

STATE OF ALASKA
DEPARTMENT OF TRANSPORTATION
& PUBLIC FACILITIES
STATEWIDE DESIGN & ENGINEERING SERVICES DIVISION

WHITTIER FERRY TERMINAL
MODIFICATIONS
PROJECT NO. 68355
Mooring Float Structures F1 & F2

PATH: Q:\Wit\68355\Mf\PlanSet\27-Floating Mooring Struct.dwg
PLOT: PSPACE 1=1
Fri, 18/Jun/04 01:27PM
Tab: Mooring 1

REVISIONS			PROJECT DESIGNATION	YEAR	SHEET NO.	TOTAL SHEETS
NO.	DATE	DESCRIPTION				
			68355	2003	27	XX

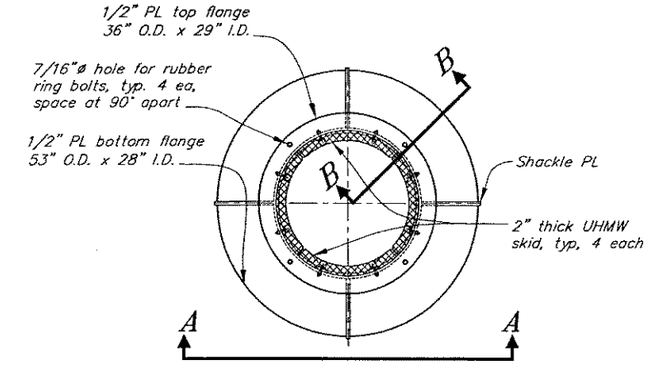

Mooring Crown, Plan

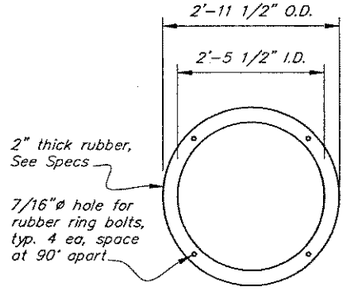

Plan
Rubber Bumper Ring

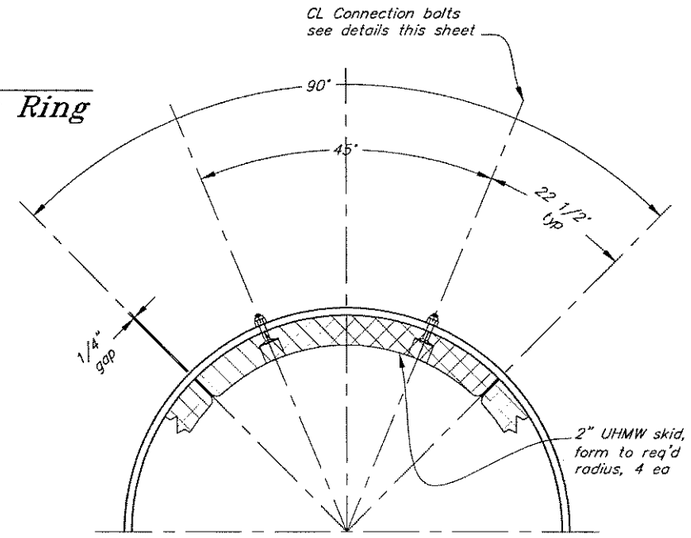

Plan

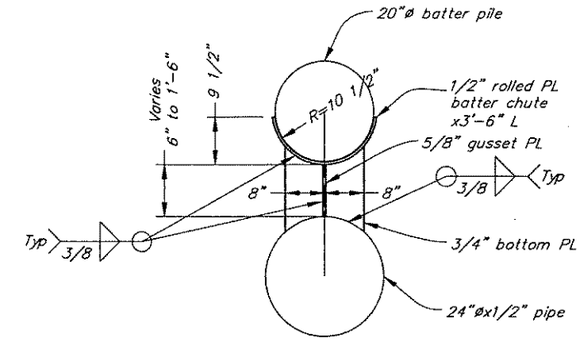

Section B/27
Pile Cap

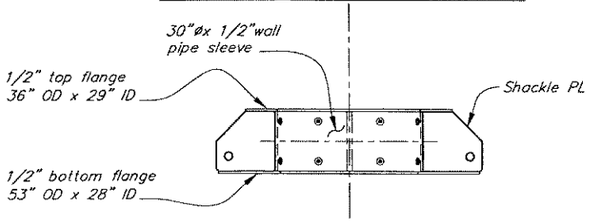

Section A-A
Mooring Crown

Approx. Weight = 450 LB.±

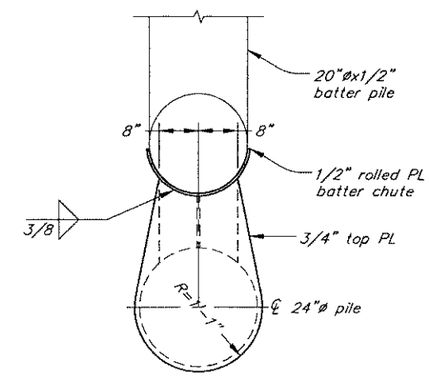

Plan A/27
Top Plate

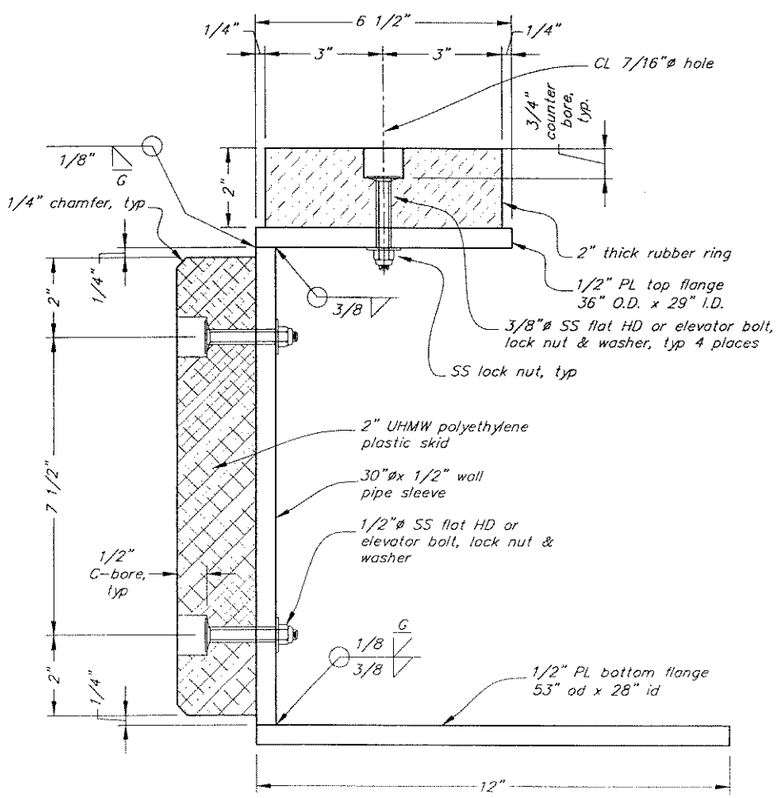

Section B-B
Mooring Crown

Elevation

UHMW Crown Skid

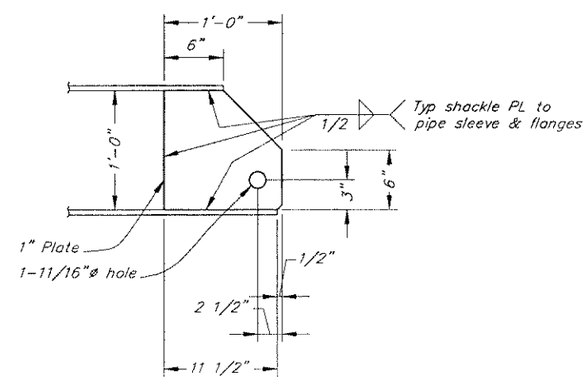

Detail
Crown Shackle Plate

Typ 4 EA

As Built
5/12/06

DO NOT SCALE FROM THESE DRAWINGS USE DIMENSIONS

DESIGNED BY: K. Miller

STATE OF ALASKA 49th Kirk D. Miller CE-8550 REGISTERED PROFESSIONAL ENGINEER

7/8/04

CHECKED BY: J. Beedle
DRAWN BY: Staff

STATE OF ALASKA
DEPARTMENT OF TRANSPORTATION
& PUBLIC FACILITIES
STATEWIDE DESIGN & ENGINEERING SERVICES DIVISION

WHITTIER FERRY TERMINAL
MODIFICATIONS
PROJECT NO. 68355

F1 & F2 Details

PATH: Q:\Wrk\68355\Wf\PlanSet\28-Floating Mooring Struct.Details.dwg Fri, 18/Jun/04 01:31PM
PLOT: PSPACE 1=1 Tab: Mooring 1 (2)

REVISIONS			PROJECT DESIGNATION	YEAR	SHEET NO.	TOTAL SHEETS
NO	DATE	DESCRIPTION				
			68355	2004	28	52

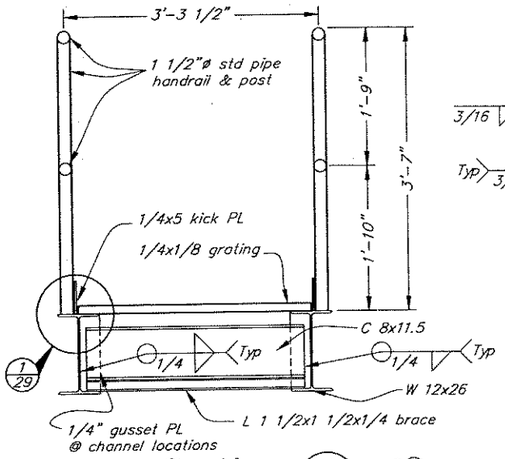

Section A/29

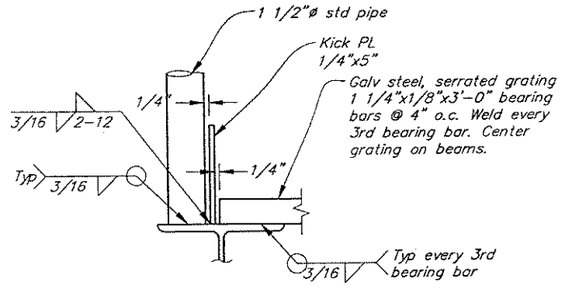

Detail 1/29

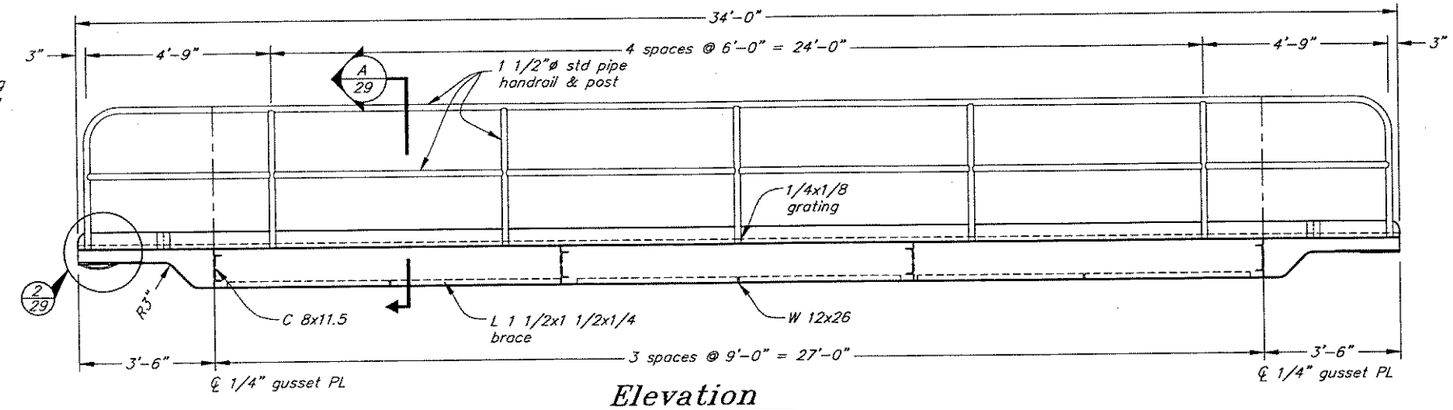

Elevation
Catwalk C1

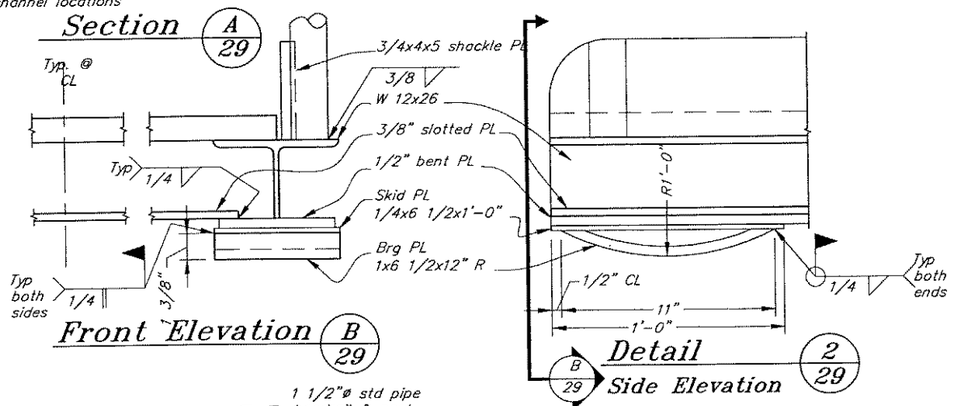

Front Elevation B/29

Detail 2/29
B/29 Side Elevation

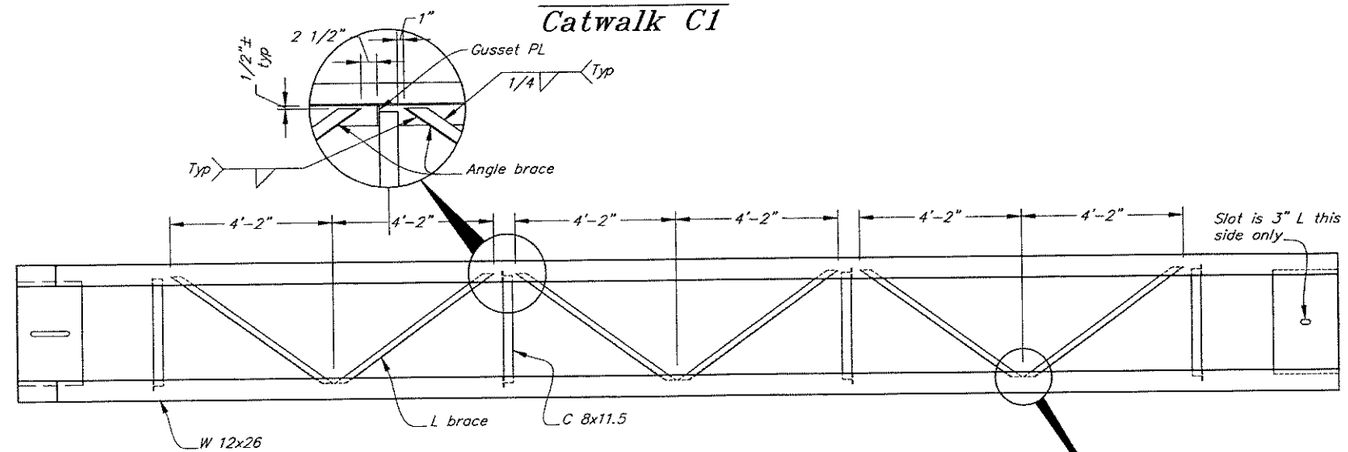

Plan
Underside Bracing

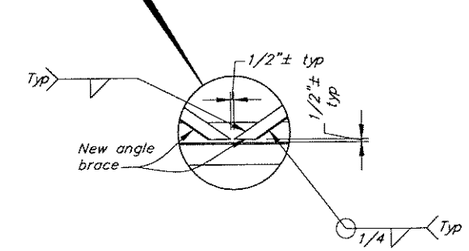

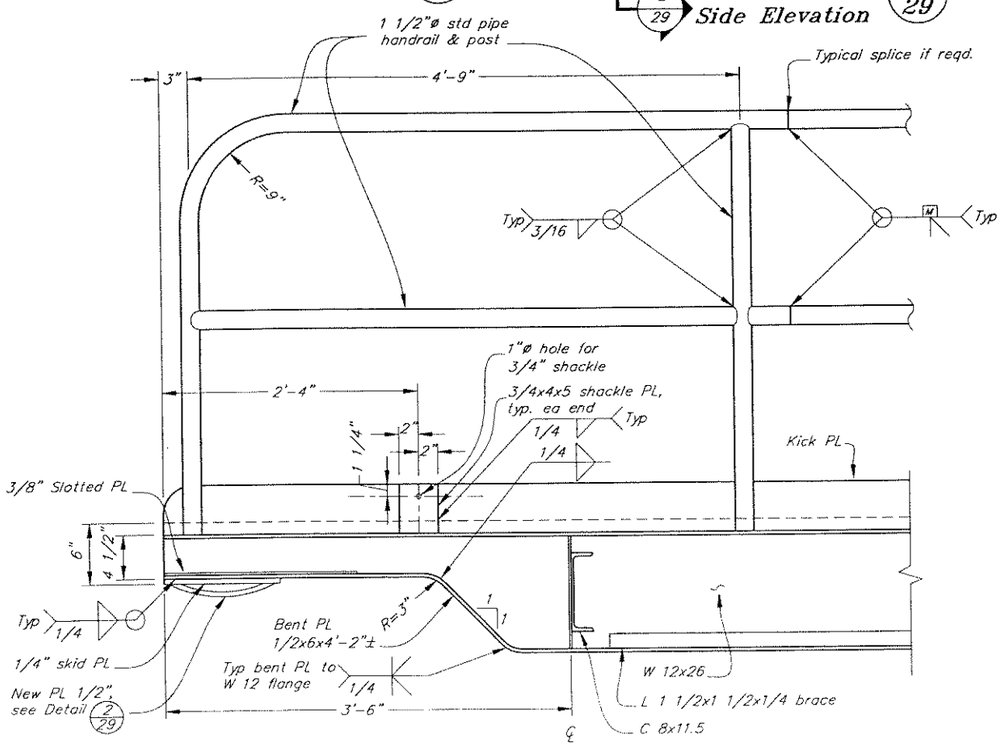

End Section

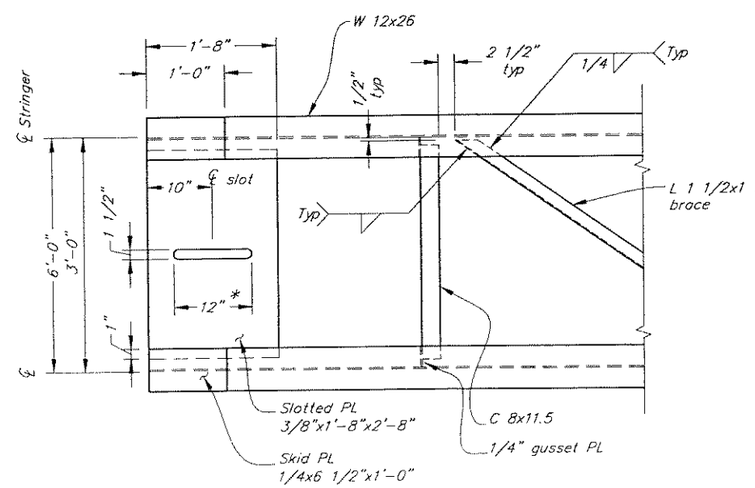

* Provide 3" L slot on seaward side of catwalk.

Plan
Bottom End

As Built 5/12/06

DO NOT SCALE FROM THESE DRAWINGS USE DIMENSIONS

DESIGNED BY: K. Miller
CHECKED BY: J. Beedle
DRAWN BY: Staff

STATE OF ALASKA
49th
Kirk D. Miller
CE-8550
REGISTERED PROFESSIONAL ENGINEER
2/8/04

STATE OF ALASKA
DEPARTMENT OF TRANSPORTATION
& PUBLIC FACILITIES
STATEWIDE DESIGN & ENGINEERING SERVICES DIVISION

WHITTIER FERRY TERMINAL
MODIFICATIONS
PROJECT NO. 68355

New Catwalk C1

PATH: O:\W1\68355\M1\PlanSet\29-Catwalk C1 Details.dwg
PLOT: PSPACE 1=1
Fri, 18/Jun/04 01:32PM
Tab: F1

REVISIONS			PROJECT DESIGNATION	YEAR	SHEET NO.	TOTAL SHEETS
NO.	DATE	DESCRIPTION	68355	2004	29	52

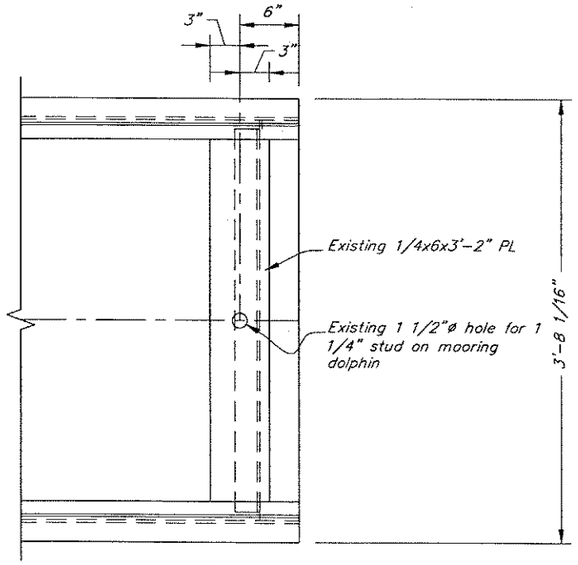

Plan A/30

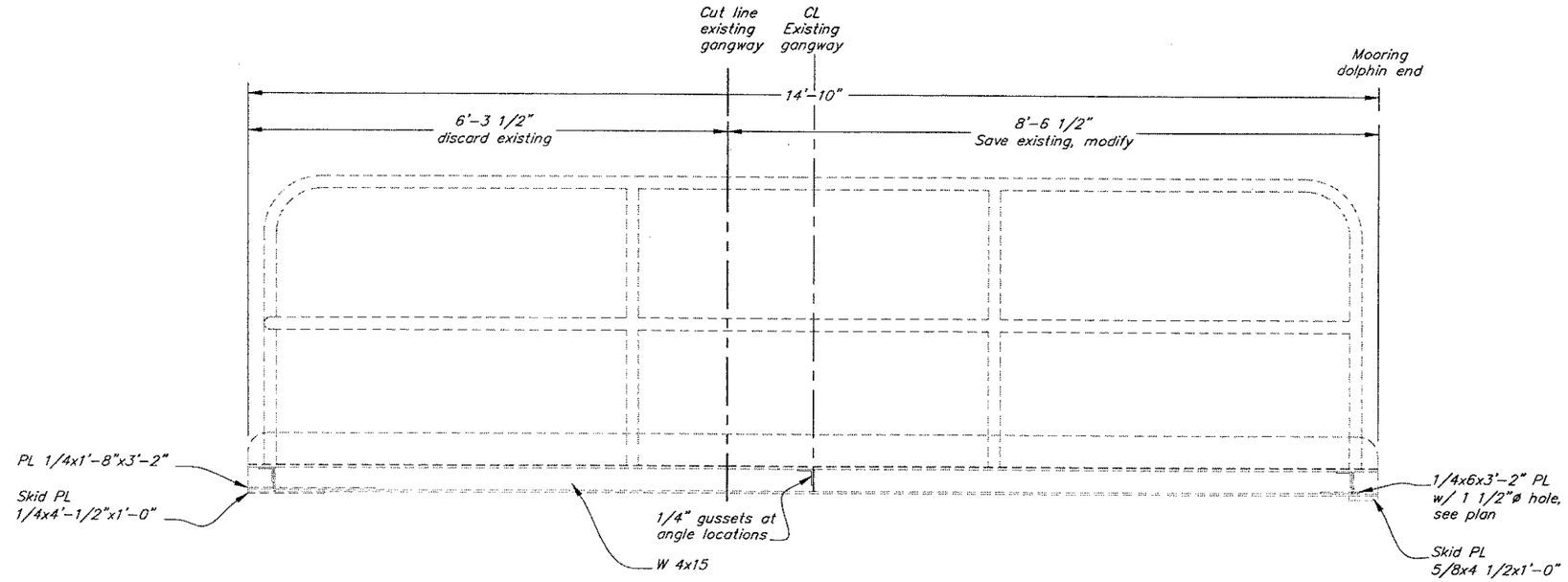

Elevation
Existing Catwalk

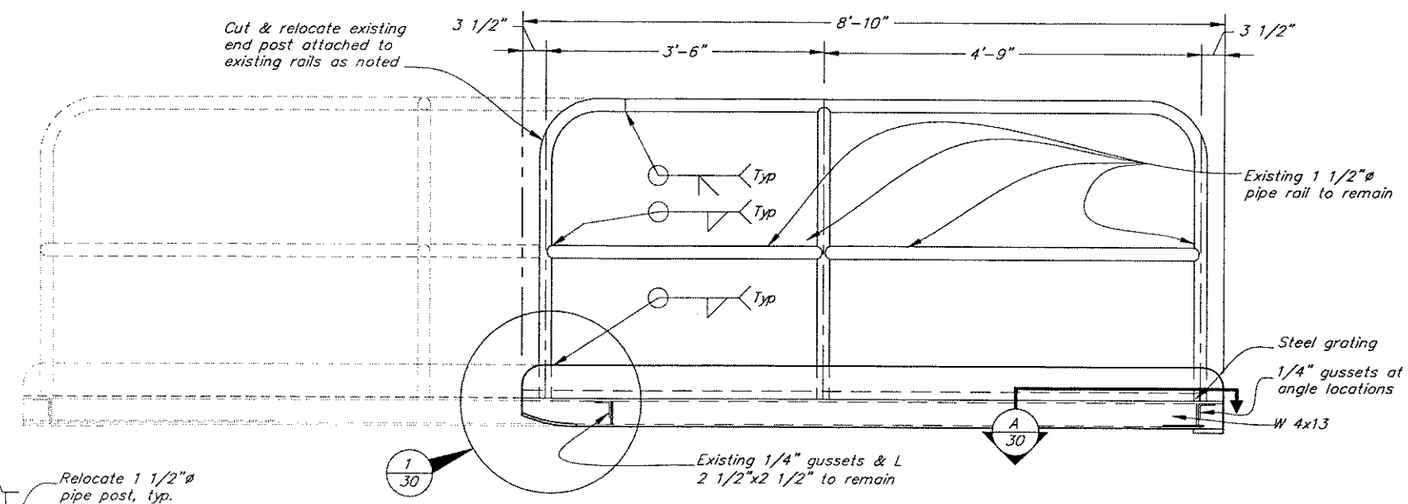

Elevation
Catwalk Modification

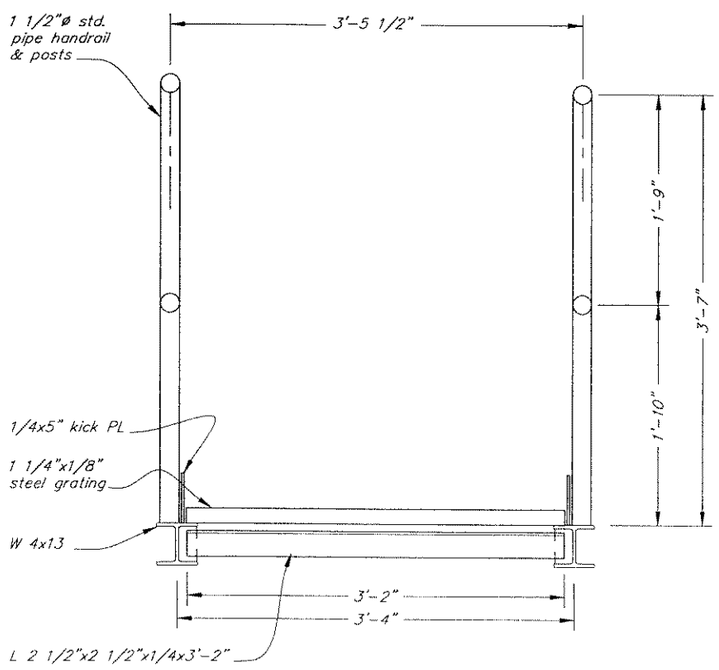

Typical Section

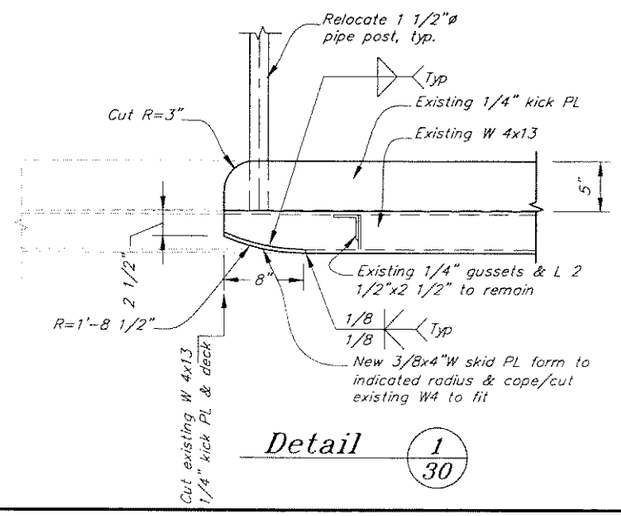

Detail 1/30

As Built
5/12/06

DO NOT SCALE FROM THESE DRAWINGS USE DIMENSIONS

DESIGNED BY: K. Miller
CHECKED BY: J. Beedle
DRAWN BY: T. Mores

STATE OF ALASKA
DEPARTMENT OF TRANSPORTATION
& PUBLIC FACILITIES
STATEWIDE DESIGN & ENGINEERING SERVICES DIVISION

WHITTIER FERRY TERMINAL
MODIFICATIONS
PROJECT NO. 68355

Catwalks C2-C3
(Salvaged E1- & E2)

PATH: Q:\WI\68355\MI\PlanSet\30-Catwalk C2-C3.dwg Fri, 18/Jun/04 01:32PM
PLOT: PSPACE 1=1 TAB: DETAIL TAB: DETAIL

REVISIONS			PROJECT DESIGNATION	YEAR	SHEET NO.	TOTAL SHEETS
NO.	DATE	DESCRIPTION	68355	2004	30	52

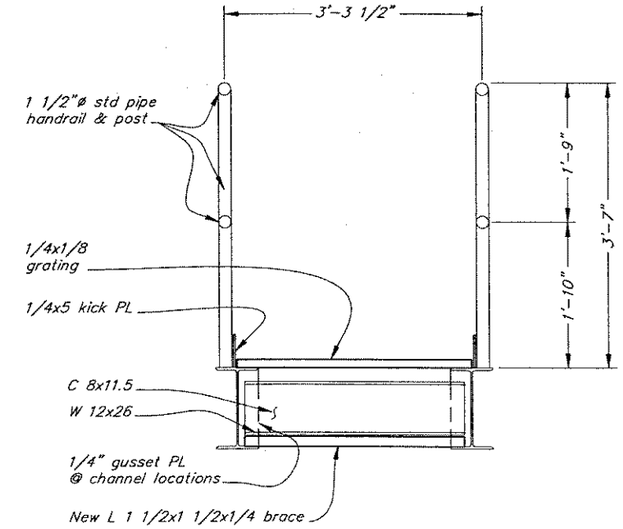

Section A/31

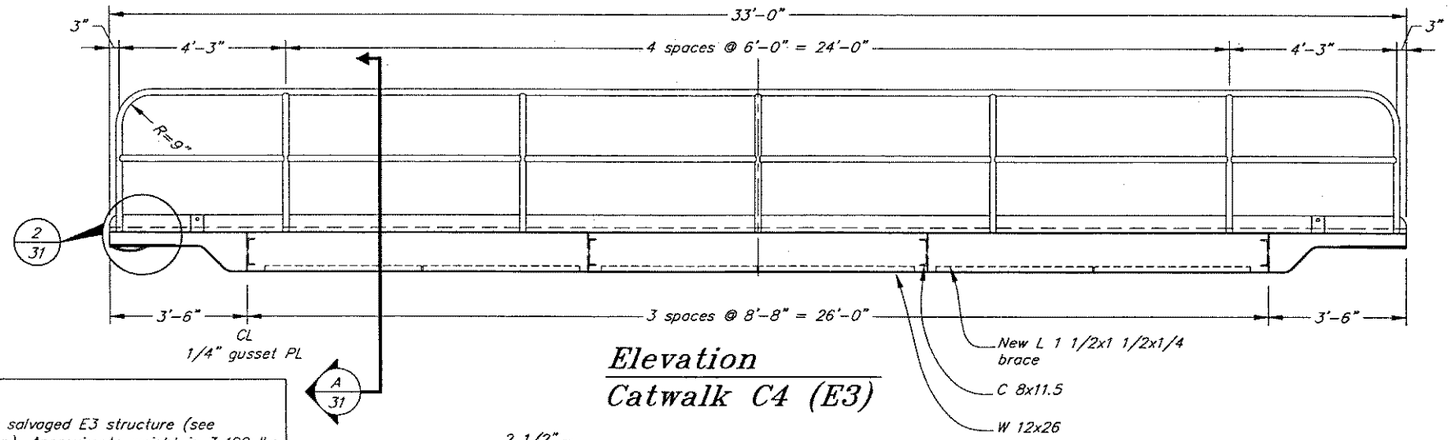

Elevation
Catwalk C4 (E3)

Notes:

1. Catwalk C4 is salvaged E3 structure (see demolition plan). Approximate weight is 3,400 lbs.
2. Modify catwalk with new angle braces rolled bearing plates & shackle plates as noted on this plan sheet. See as-built drawing's for existing features not shown.
3. Repair all field modifications and welds with hot-stick galvanizing per specifications.

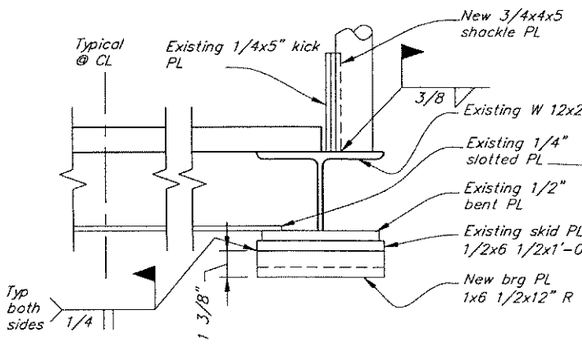

Front Elevation B/31

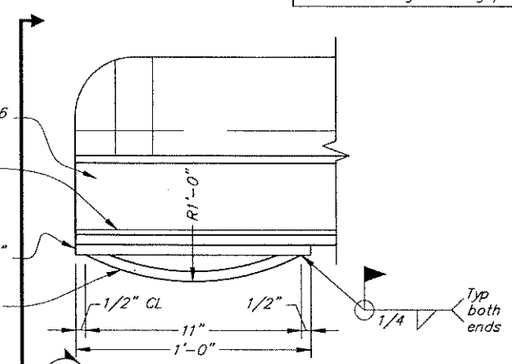

Detail 2/31
Side Elevation

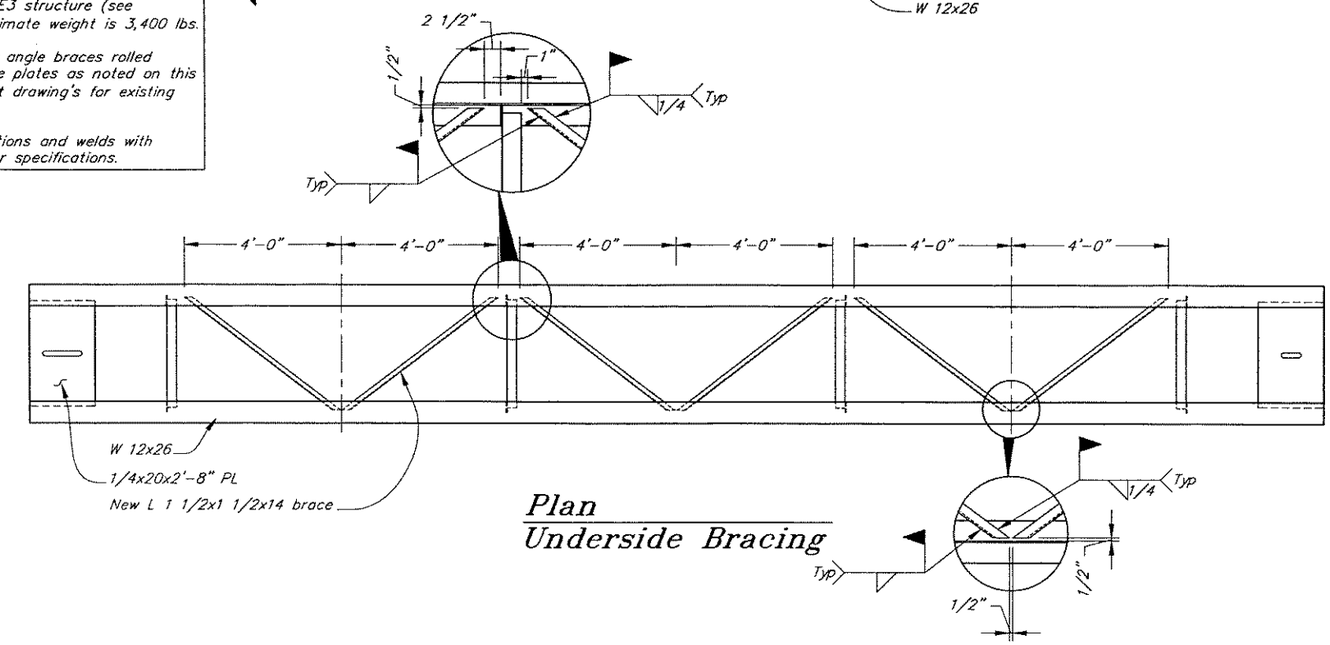

Plan
Underside Bracing

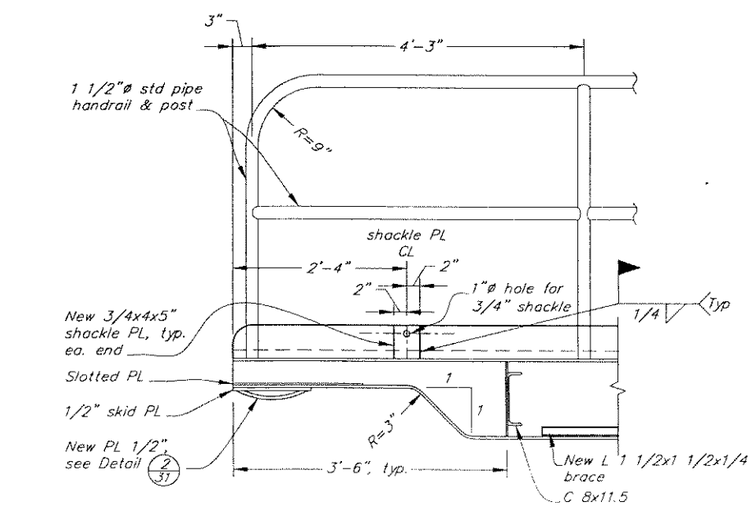

End Section

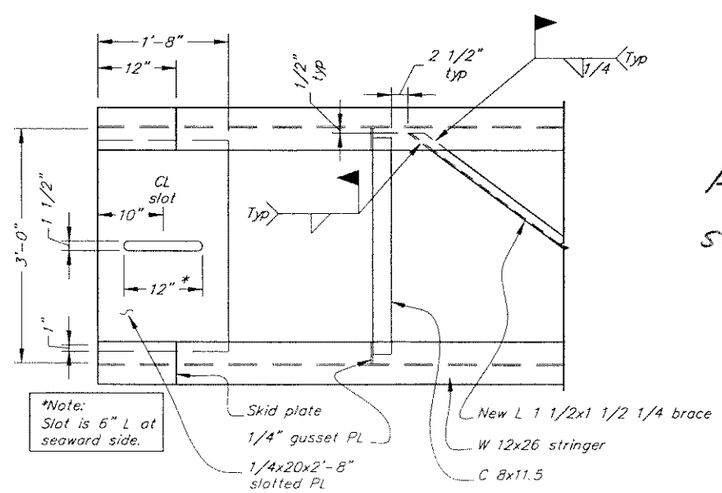

Plan
Bottom End

As Built
5/12/06

DO NOT SCALE FROM THESE DRAWINGS USE DIMENSIONS

DESIGNED BY: K. Miller

STATE OF ALASKA 49th Kirk D. Miller CE-8550 REGISTERED PROFESSIONAL ENGINEER
5/8/04

CHECKED BY: J. Beedle
DRAWN BY: K. Miller, T. Mores

STATE OF ALASKA
DEPARTMENT OF TRANSPORTATION & PUBLIC FACILITIES
STATEWIDE DESIGN & ENGINEERING SERVICES DIVISION

WHITTIER FERRY TERMINAL MODIFICATIONS
PROJECT NO. 68355

Catwalk C4 (Salvaged E3)

PATH: Q:\Wit\68355\Mf\PlanSet\31-Catwalk C4 Details.dwg
PLOT: PSPACE 1=1
Fri, 18/Jun/04 01:33PM
Tab: C4

REVISIONS			PROJECT DESIGNATION	YEAR	SHEET NO.	TOTAL SHEETS
NO.	DATE	DESCRIPTION	68355	2004	31	52

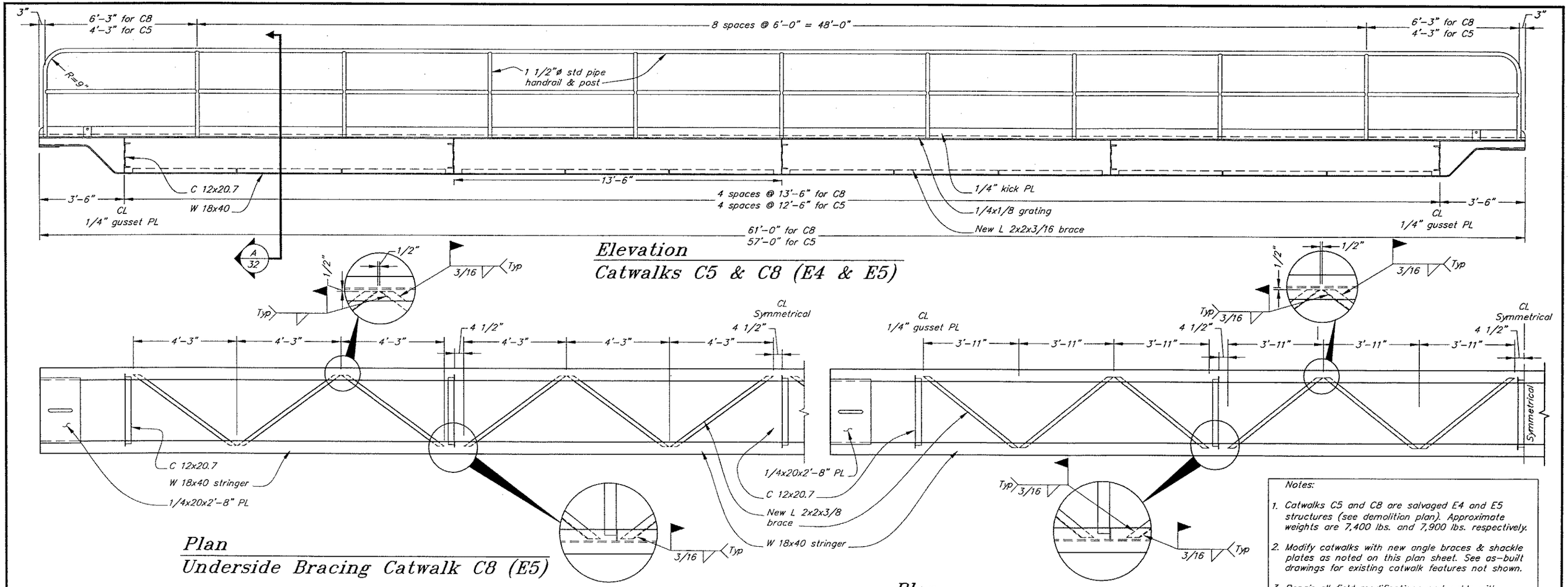

Elevation
Catwalks C5 & C8 (E4 & E5)

Plan
Underside Bracing Catwalk C8 (E5)

Plan
Underside Bracing Catwalk C5 (E4)

Notes:

1. Catwalks C5 and C8 are salvaged E4 and E5 structures (see demolition plan). Approximate weights are 7,400 lbs. and 7,900 lbs. respectively.
2. Modify catwalks with new angle braces & shackle plates as noted on this plan sheet. See as-built drawings for existing catwalk features not shown.
3. Repair all field modifications and welds with hot-stick galvanizing per specifications.

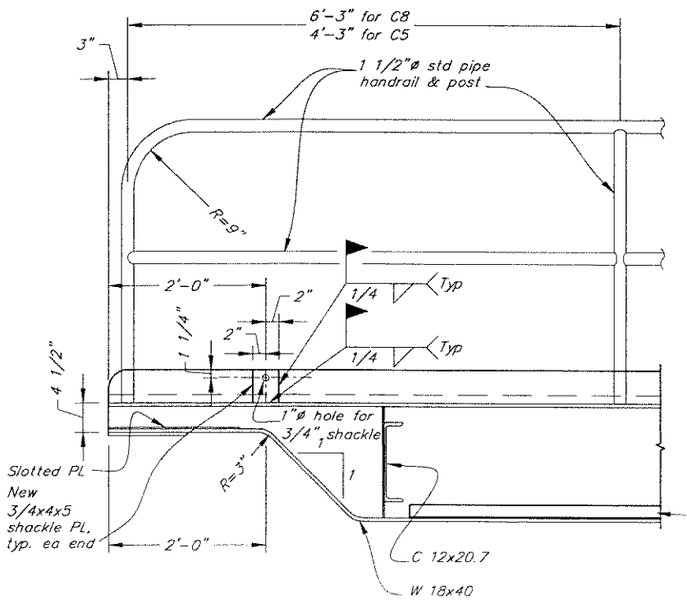

End Section

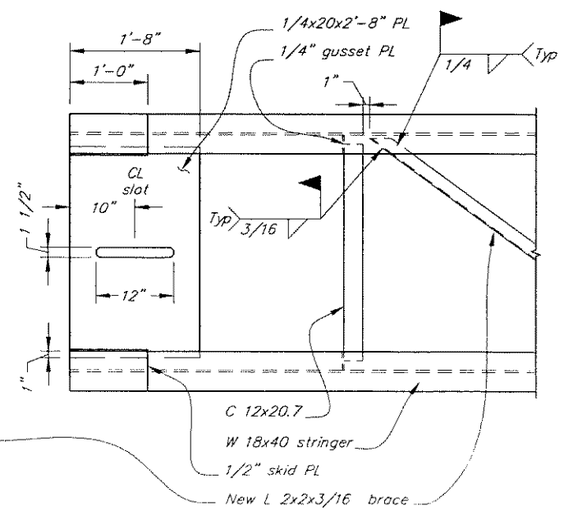

Plan
Bottom End

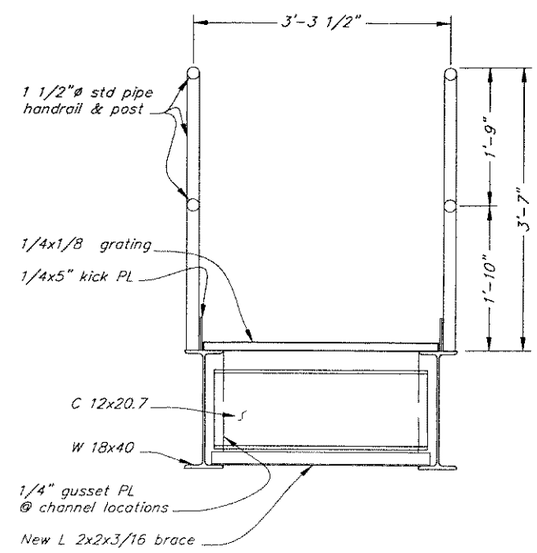

Section A/32

As Built
5/12/06

DO NOT SCALE FROM THESE DRAWINGS USE DIMENSIONS

DESIGNED BY: K. Miller

STATE OF ALASKA 49th Kirk D. Miller CE-8550 REGISTERED PROFESSIONAL ENGINEER

7/8/04

CHECKED BY: J. Beedle
DRAWN BY: K. Miller, T. Mores

STATE OF ALASKA
DEPARTMENT OF TRANSPORTATION
& PUBLIC FACILITIES
STATEWIDE DESIGN & ENGINEERING SERVICES DIVISION

WHITTIER FERRY TERMINAL
MODIFICATIONS
PROJECT NO. 68355

Catwalks C5 & C8
(Salvaged E4 & E5)

PATH: O:\Wt\68355\Mt\PlanSet\32-Catwalk C5 & C8 Details.dwg Fri, 18/Jun/04 01:33PM
PLOT: PSPACE 1=1 Tab: C5 & C8

REVISIONS			PROJECT DESIGNATION	YEAR	SHEET NO.	TOTAL SHEETS
NO.	DATE	DESCRIPTION	68355	2004	32	52

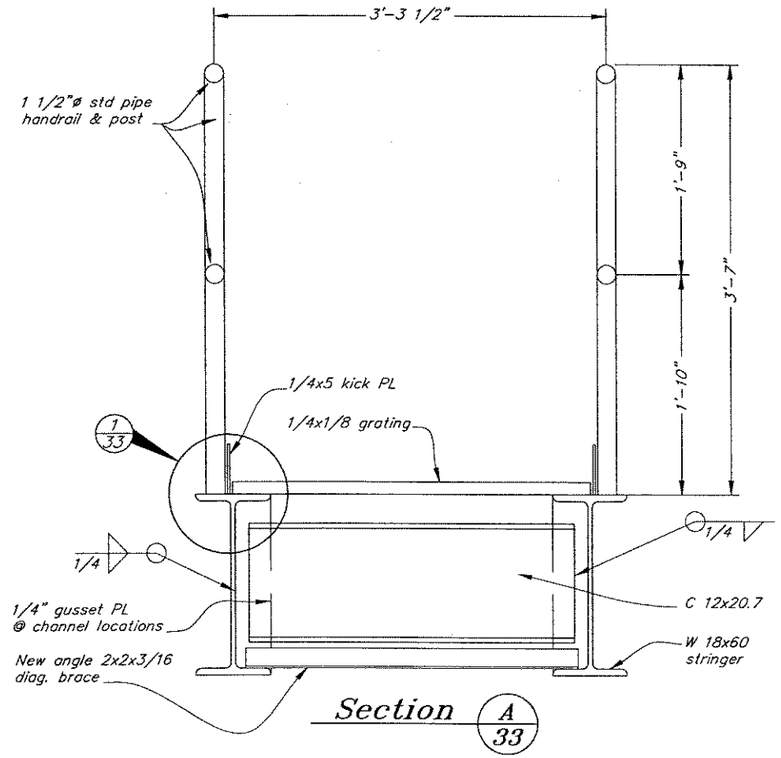

Section A/33

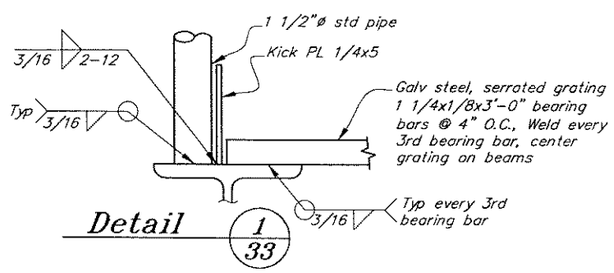

Detail 1/33

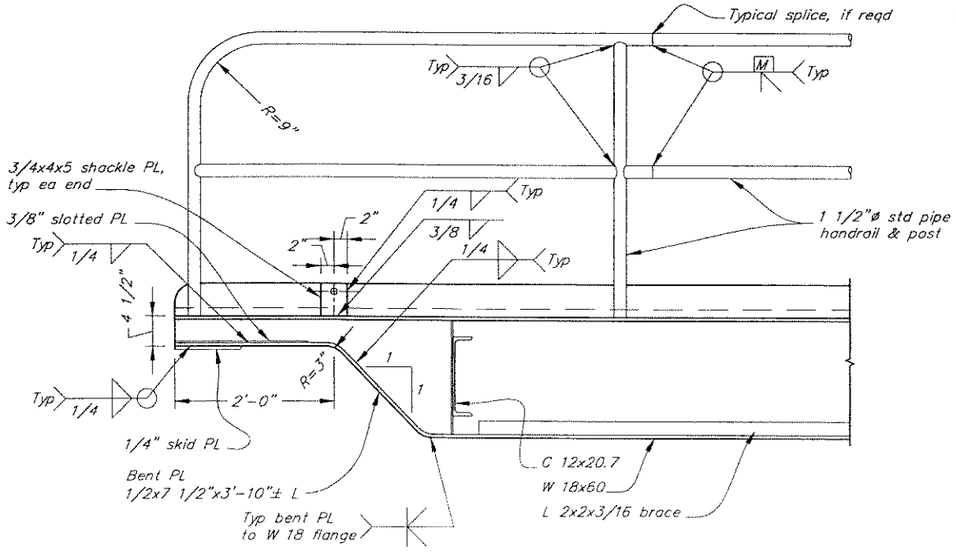

End Section

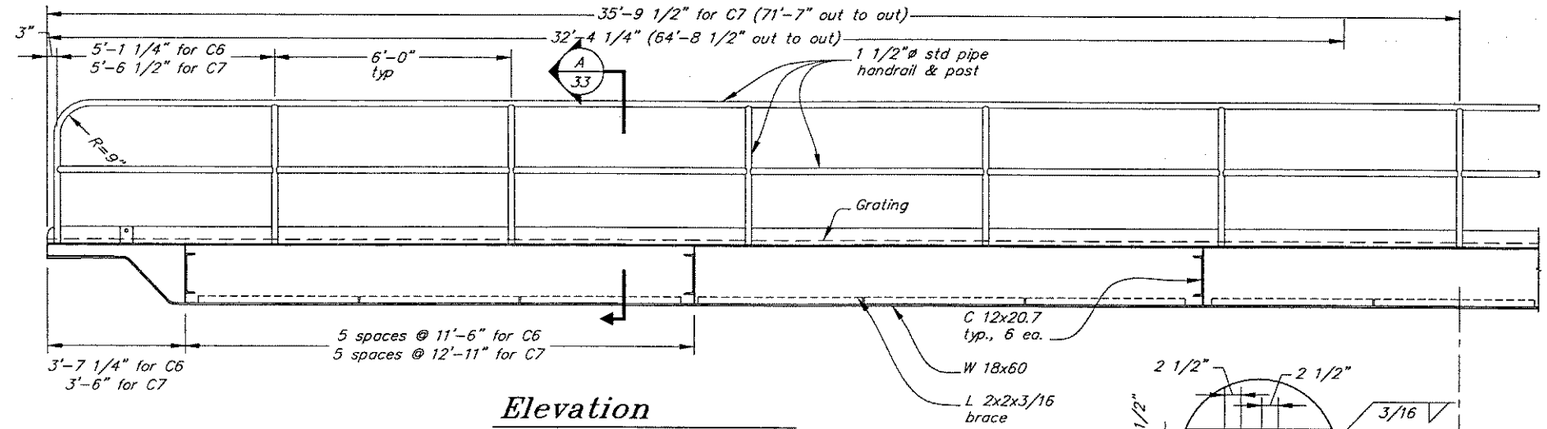

Elevation
Catwalk C6 & C7

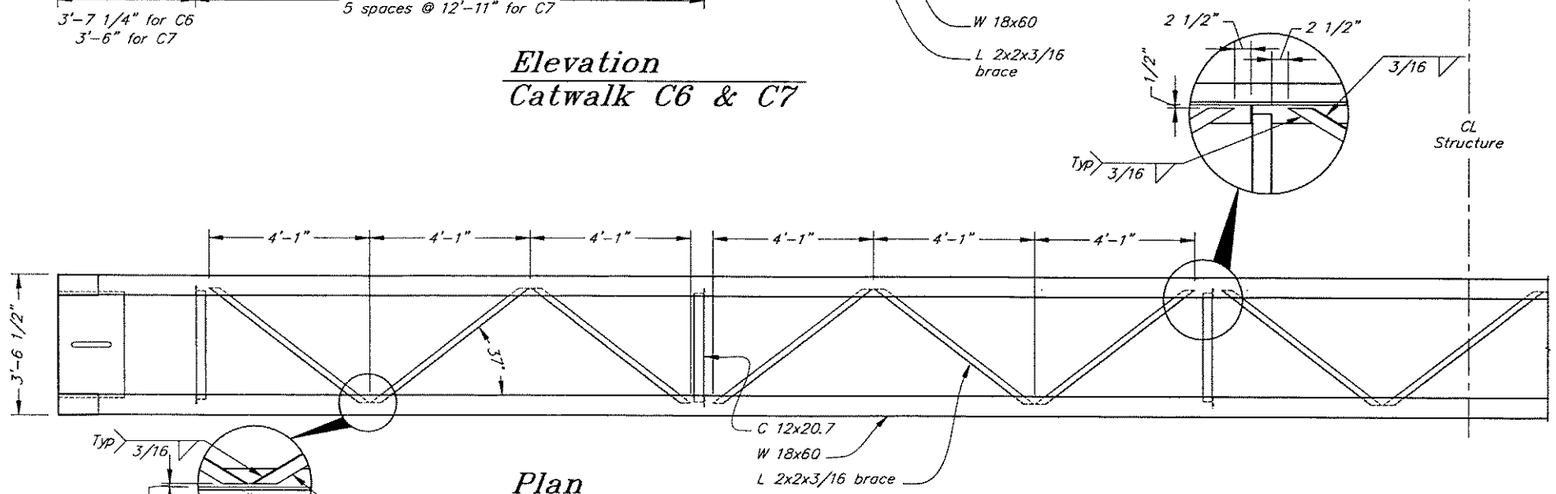

Plan
Underside Bracing Catwalk C7

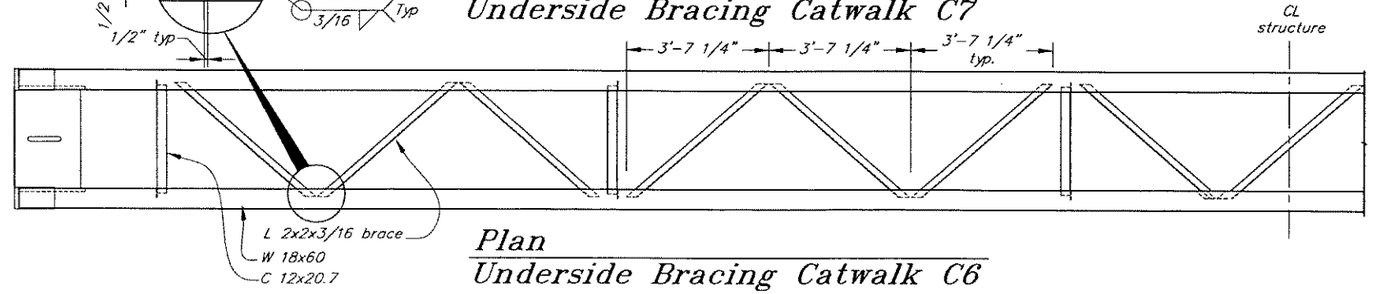

Plan
Underside Bracing Catwalk C6

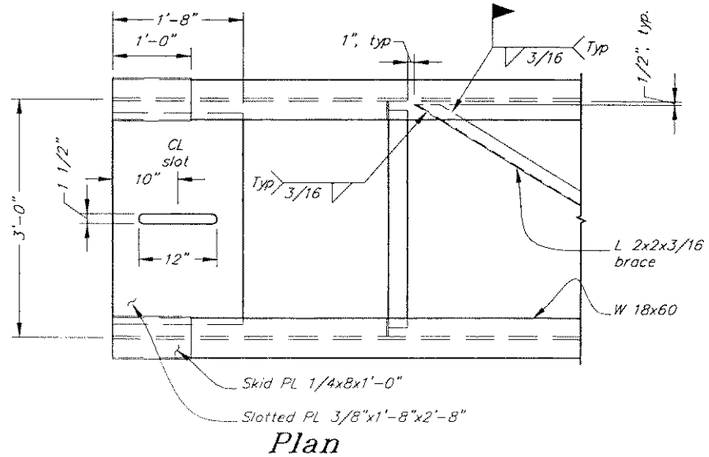

Plan
Bottom End

As Built
5/12/06

Catwalk	Approx Weight	Camber @ Midspan
C6	11,030 lbs	1.50"
C7	12,030 lbs	1.75"

DO NOT SCALE FROM THESE DRAWINGS USE DIMENSIONS

DESIGNED BY: K. Miller
CHECKED BY: J. Beedle
DRAWN BY: K. Miller, T. Mores

STATE OF ALASKA 49th Kirk D. Miller CE-8550 REGISTERED PROFESSIONAL ENGINEER
7/8/04

STATE OF ALASKA
DEPARTMENT OF TRANSPORTATION
& PUBLIC FACILITIES
STATEWIDE DESIGN & ENGINEERING SERVICES DIVISION

WHITTIER FERRY TERMINAL
MODIFICATIONS
PROJECT NO. 68355

New Catwalks
C6 & C7

PATH: G:\Wlt\68355\M1\PlanSet\33-Catwalk C6 &C7 Details.dwg
PLOT: PSPACE 1=1
Fri, 18/Jun/04 01:33PM
Tab: C6 & C7

REVISIONS			PROJECT DESIGNATION	YEAR	SHEET NO.	TOTAL SHEETS
NO.	DATE	DESCRIPTION	68355	2004	33	52

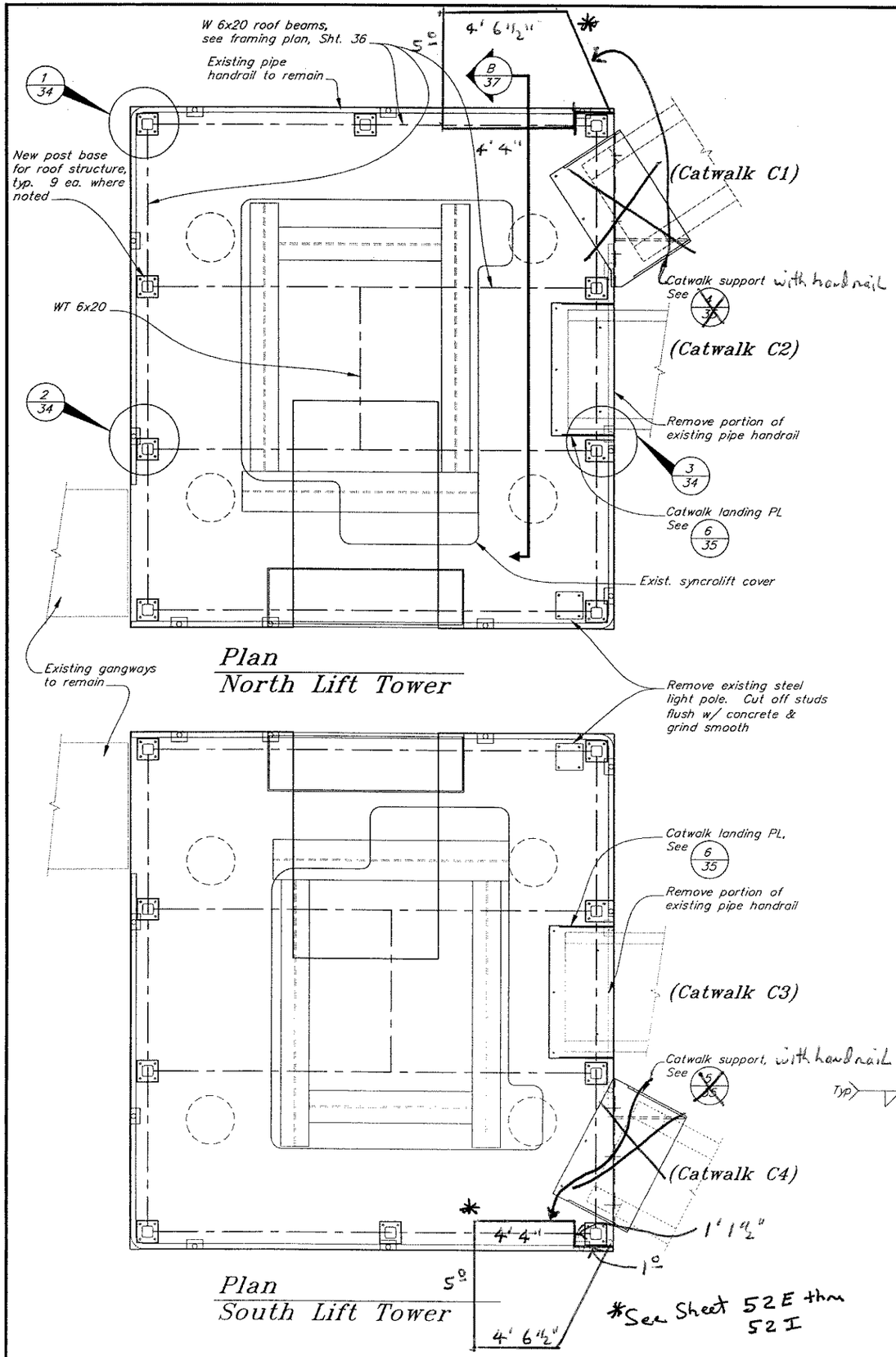

Plan
North Lift Tower

Plan
South Lift Tower

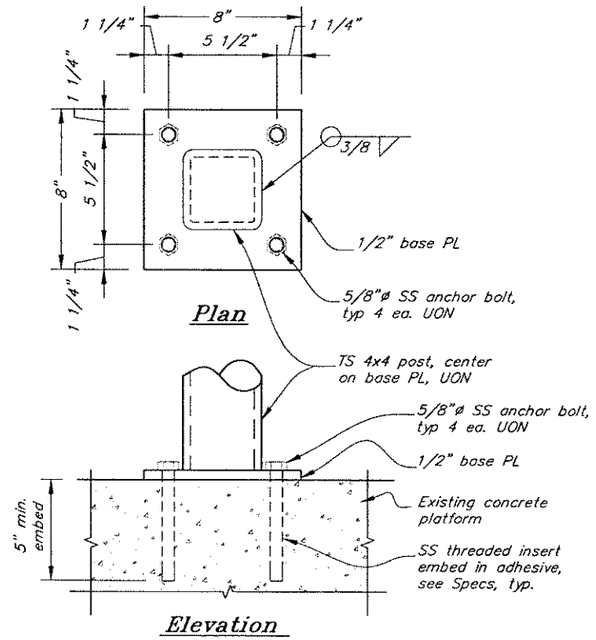

Plan

Elevation

Detail 1/34
Typical Post Base

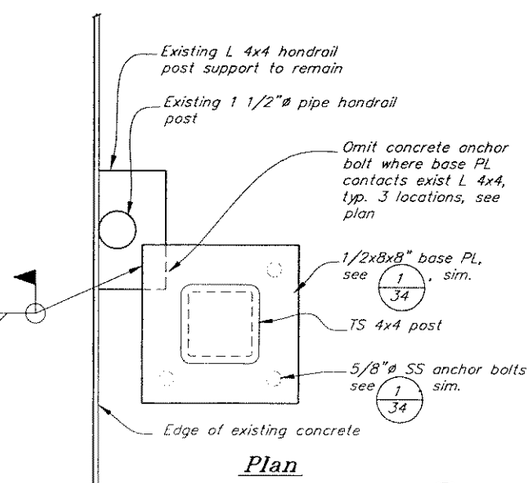

Plan

Detail 2/34
Typical Post Base

As Built 5/12/06

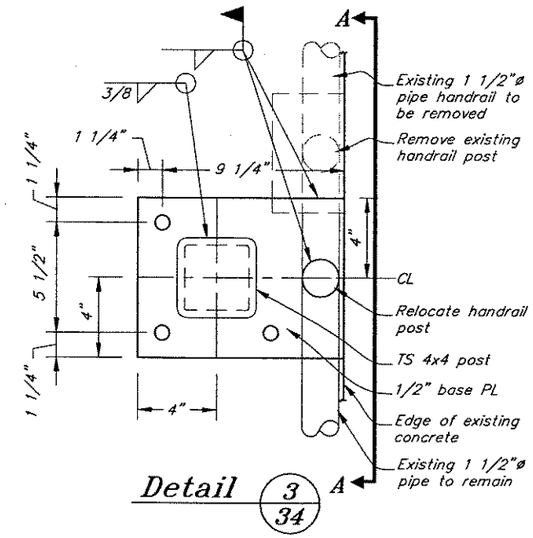

Detail 3/34

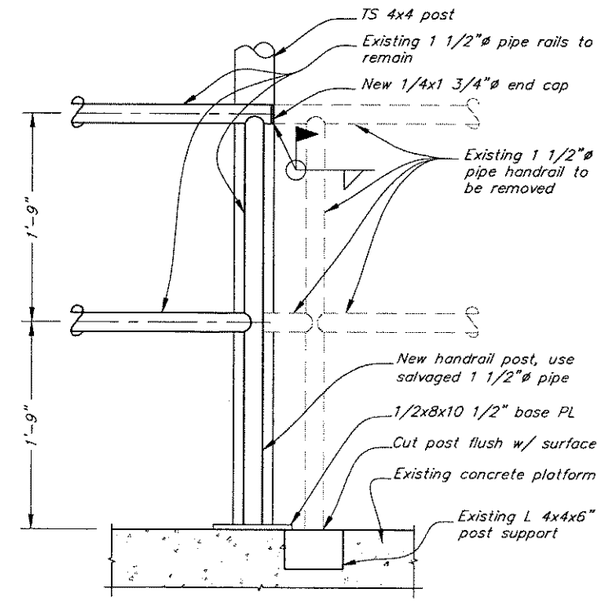

Section A–A

DO NOT SCALE FROM THESE DRAWINGS USE DIMENSIONS

DESIGNED BY: K. Miller
CHECKED BY: J. Beedle
DRAWN BY: T. Mores

STATE OF ALASKA
Kirk D. Miller
CE-8550
REGISTERED PROFESSIONAL ENGINEER
2/8/04

STATE OF ALASKA
DEPARTMENT OF TRANSPORTATION
& PUBLIC FACILITIES
STATEWIDE DESIGN & ENGINEERING SERVICES DIVISION

WHITTIER FERRY TERMINAL
MODIFICATIONS
PROJECT NO. 68355

Lift Tower & Roof Modifcations 1

PATH: O:\Wit\68355\M1\PlanSet\34 Lift Tower & Roof Mods.dwg
PLOT: PSPACE 1=1 TAB: DETAIL Fri, 18-Jun-04 01:34PM

REVISIONS			PROJECT DESIGNATION	YEAR	SHEET NO.	TOTAL SHEETS
NO.	DATE	DESCRIPTION	68355	2004	34	52

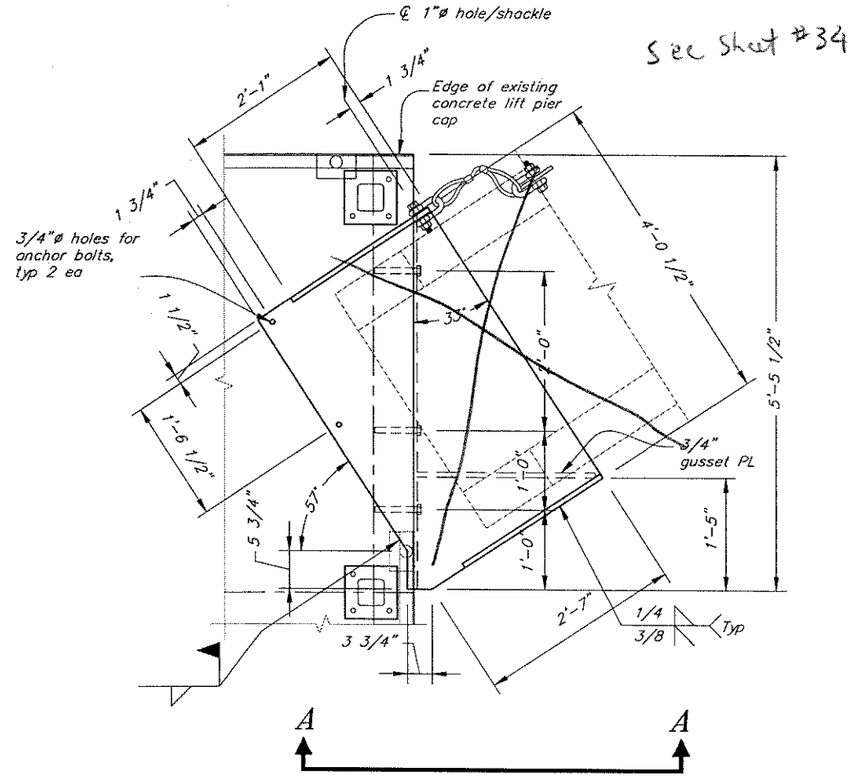

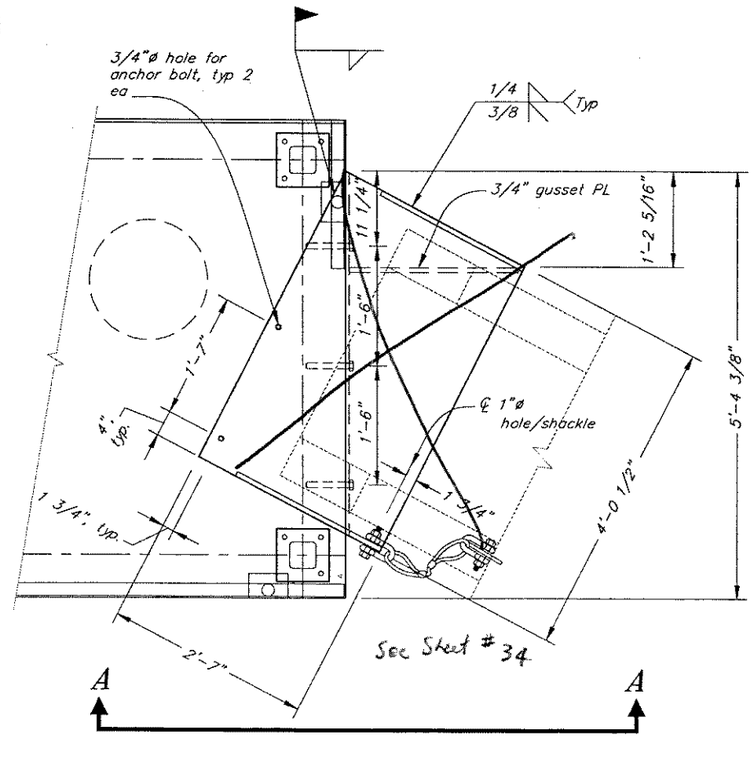

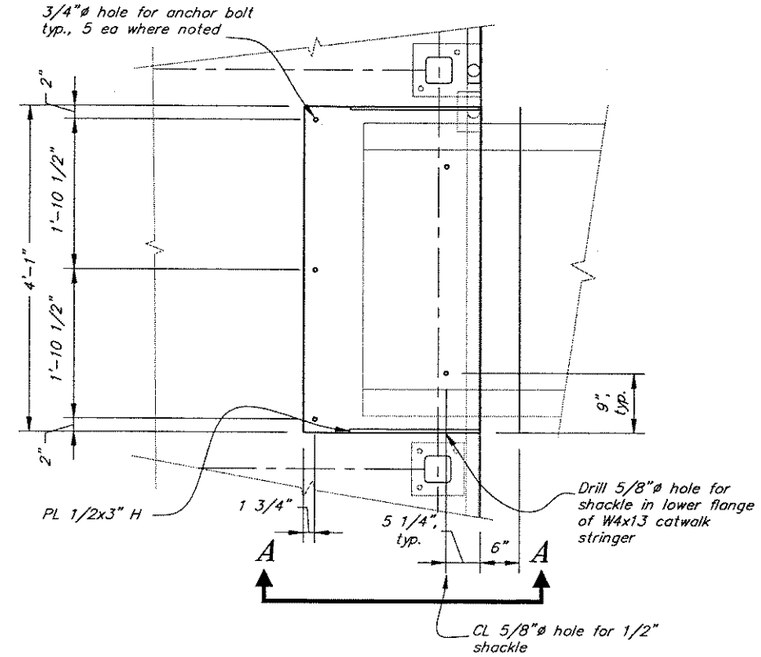

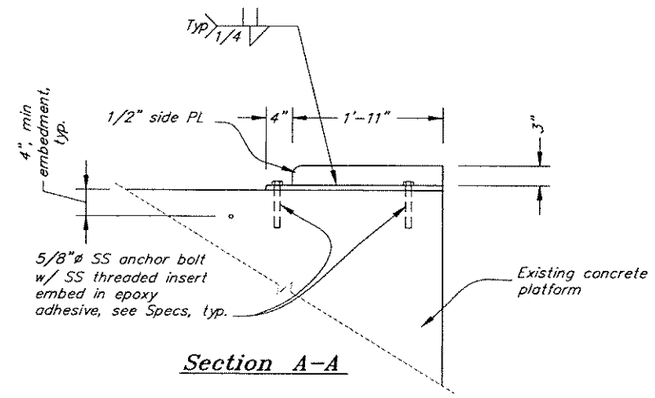

Section A-A

Detail 6/34

Catwalk Landing Plate
2 Reqd.
(North Tower location shown, South Tower similar, see plan)

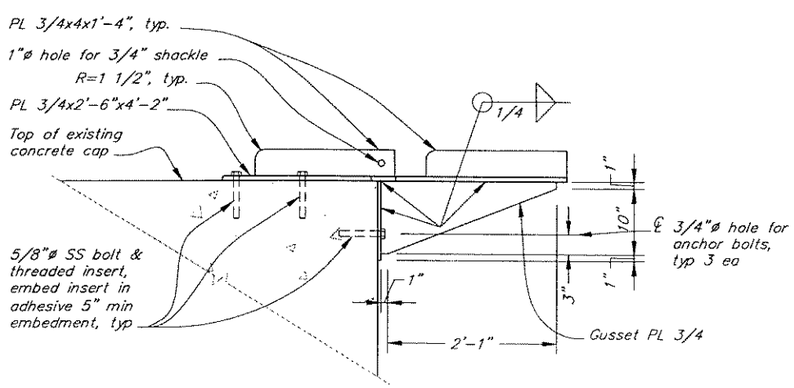

Section A-A

Detail 4/34

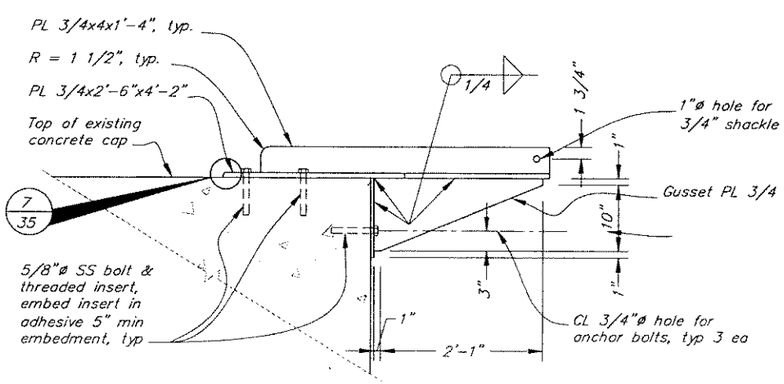

Section A-A

Detail 5/34

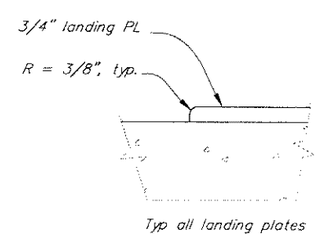

Detail 7/35

As Built
5/12/06

DO NOT SCALE FROM THESE DRAWINGS USE DIMENSIONS

DESIGNED BY: K. Miller
CHECKED BY: J. Beedle
DRAWN BY: T. Mores

STATE OF ALASKA 49th Kirk D. Miller CE-8550 REGISTERED PROFESSIONAL ENGINEER
7/8/04

STATE OF ALASKA
DEPARTMENT OF TRANSPORTATION
& PUBLIC FACILITIES
STATEWIDE DESIGN & ENGINEERING SERVICES DIVISION

WHITTIER FERRY TERMINAL
MODIFICATIONS
PROJECT NO. 68355

Lift Tower & Roof Modifications 2

PATH: O:\Wil\68355\Mf\PlanSet\35 Lift Tower & Roof Mods.dwg
PLOT: PSPACE 1=1 TAB: DETAIL Fri, 18/Jun/04 01:36PM

REVISIONS			PROJECT DESIGNATION	YEAR	SHEET NO	TOTAL SHEETS
NO.	DATE	DESCRIPTION				
			68355	2004	35	52

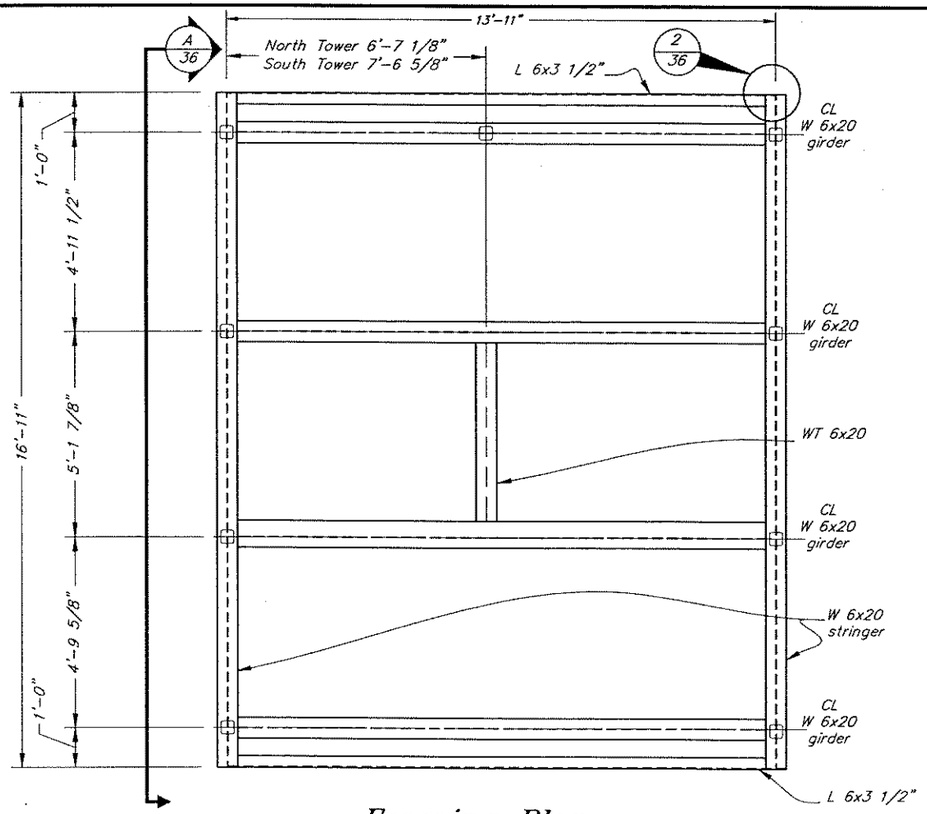

Framing Plan
North Tower

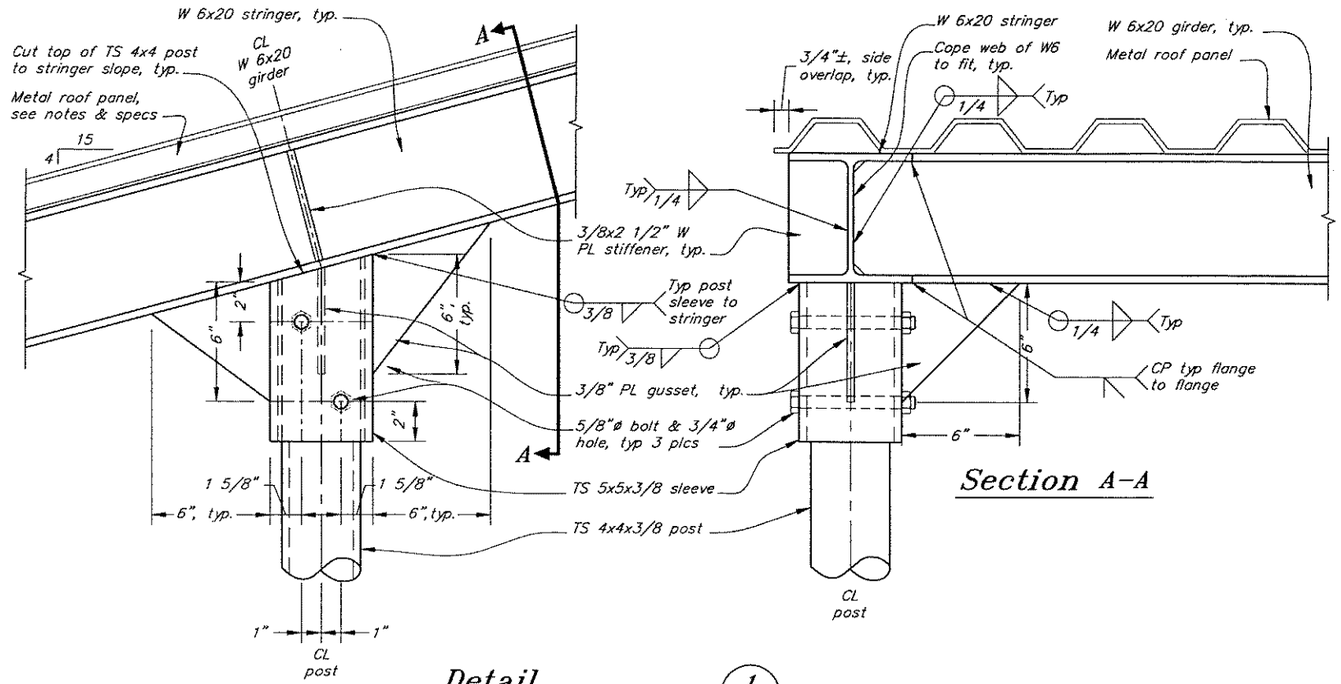

Detail
Post to Stringer 1/36

* Pulley Installed but not used

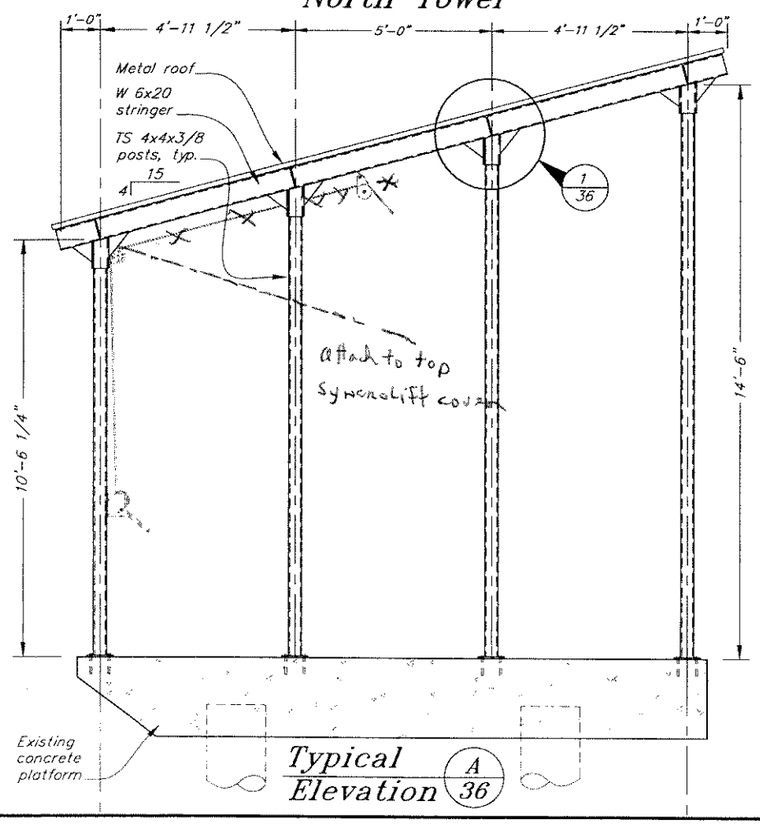

Typical Elevation A/36

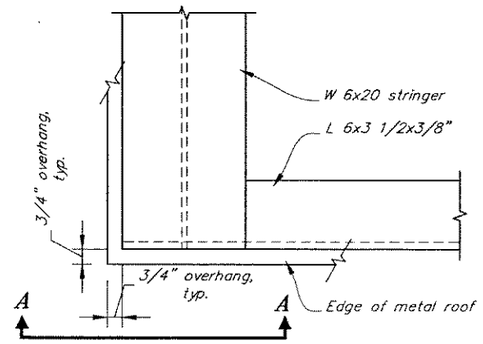

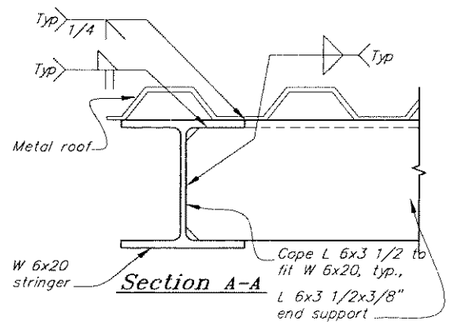

Detail
Roof Corner 2/36

As Built CD 5/12/06

Metal Roofing Notes:

1. Metal roof panels shall be coated galvanized steel, 18 gauge thickness and nominal width of 36-inches. Panels shall have a minimum live load rating of 200 psf for triple spans at span length noted and maximum deflection of L/180. Color shall be blue or as otherwise approved by the Engineer. Roof panels shall be placed continuous over length of structure. Also see specifications.

2. Affix metal roofing to steel framing members with stainless steel, self-tapping watertight screws or as otherwise recommended by the manufacturer and approved by the Engineer. Spacing and type of fasteners shall be determined by the roof panel manufacturer in order to achieve a minimum uplift load of 60 psf. Also see specifications.

DO NOT SCALE FROM THESE DRAWINGS USE DIMENSIONS

DESIGNED BY: K. Miller

STATE OF ALASKA 49th Kirk D. Miller CE-8550 REGISTERED PROFESSIONAL ENGINEER

7/8/04

CHECKED BY: J. Beedle

DRAWN BY: T. Mores

STATE OF ALASKA
DEPARTMENT OF TRANSPORTATION
& PUBLIC FACILITIES
STATEWIDE DESIGN & ENGINEERING SERVICES DIVISION

WHITTIER FERRY TERMINAL
MODIFICATIONS
PROJECT NO. 68355

Lift Tower & Roof Modifications 3

PATH: O:\Wit\68355\M1\PlanSet\36 Lift Tower & Roof Mods.dwg
PLOT: PSPACE 1=1 TAB: DETAIL Fri, 18/Jun/04 01:37PM

REVISIONS			PROJECT DESIGNATION	YEAR	SHEET NO.	TOTAL SHEETS
NO.	DATE	DESCRIPTION	68355	2004	36	52

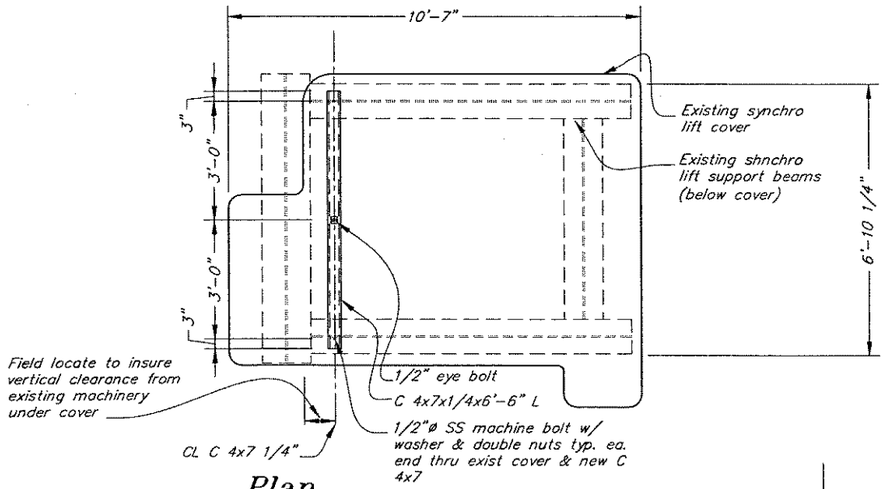

Plan
Synchro Lift Cover

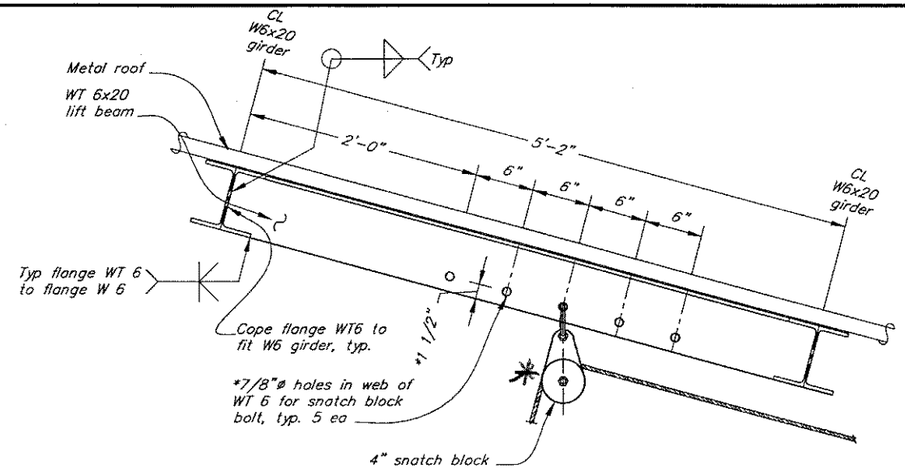

*Note: Coord final diameter & edge distance of holes to fit 4" snatch block

Detail 3/37
Lift Beam

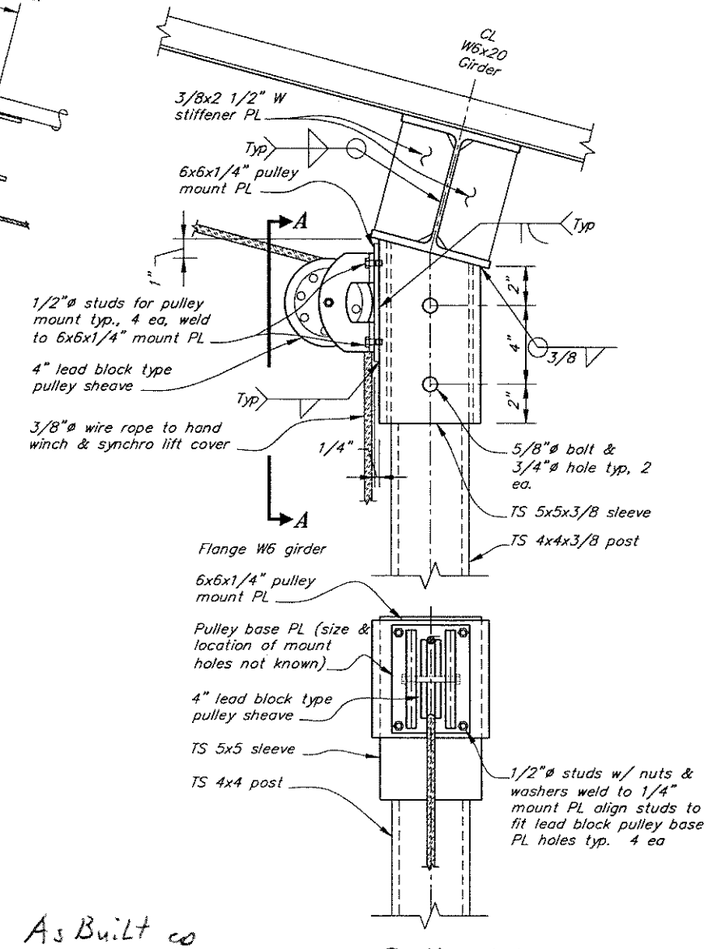

Section A-A

Detail 6/37
Lead Block

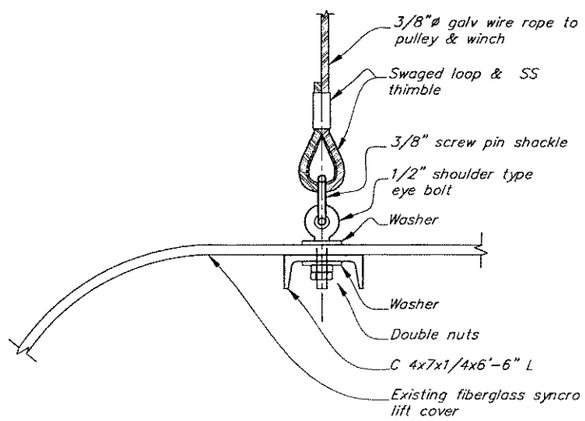

Detail 4/37
Lift Cover

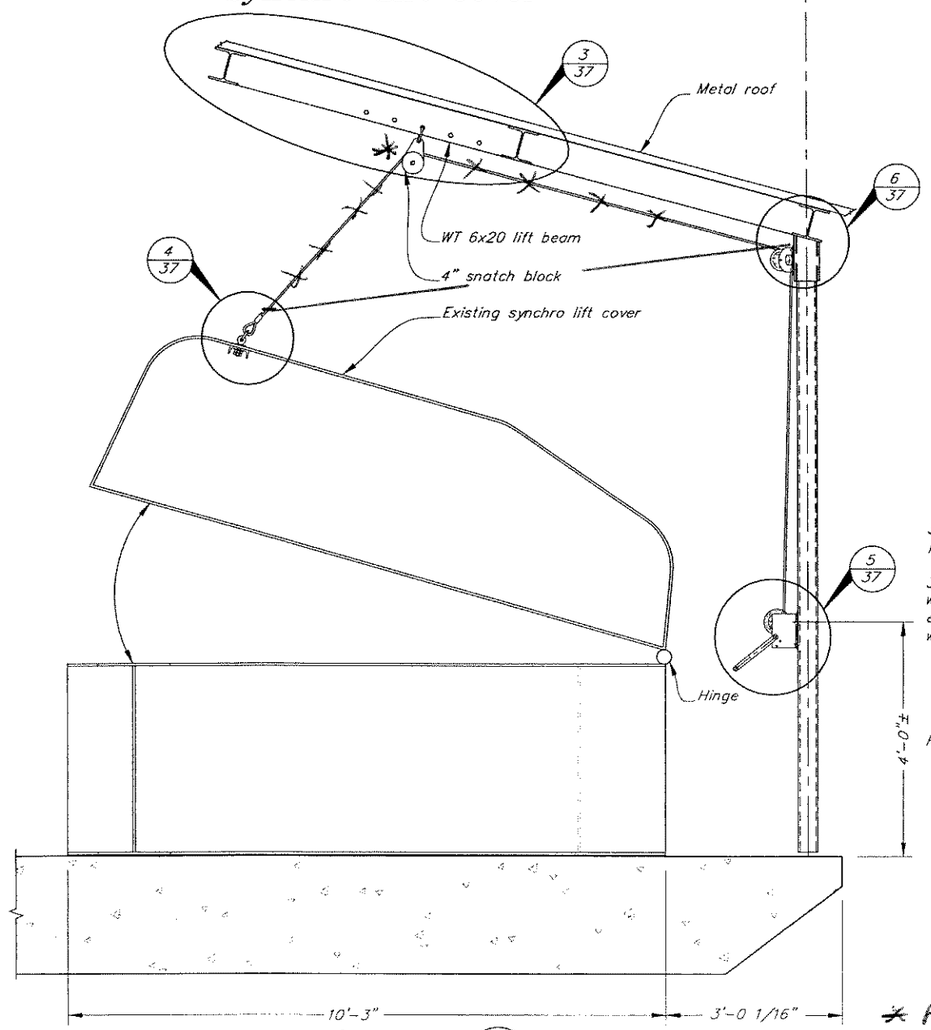

Section B/34

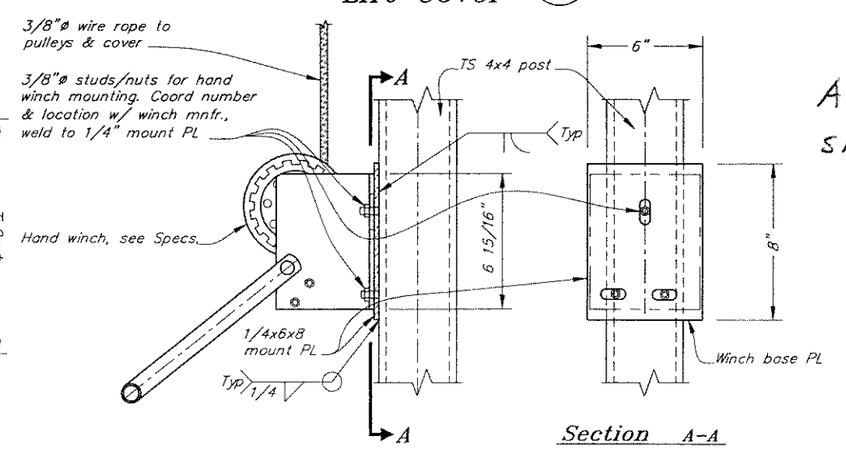

Section A-A

Detail 5/37
Hand Winch

* Pulley Install but not used

As Built co 5/12/06

DO NOT SCALE FROM THESE DRAWINGS USE DIMENSIONS

DESIGNED BY: K. Miller

STATE OF ALASKA 49th Kirk D. Miller CE-8550 REGISTERED PROFESSIONAL ENGINEER 5/18/04

CHECKED BY: J. Beedle
DRAWN BY: T. Mores

STATE OF ALASKA
DEPARTMENT OF TRANSPORTATION
& PUBLIC FACILITIES
STATEWIDE DESIGN & ENGINEERING SERVICES DIVISION

WHITTIER FERRY TERMINAL
MODIFICATIONS
PROJECT NO. 68355

Lift Tower & Roof Modification 4

PATH: Q:\WH\68355\MI\PlanSet\37 Lift Tower & Roof Mods.dwg
PLOT: PSPACE 1=1 TAB: DETAIL Fri, 18/Jun/04 01:37PM

REVISIONS			PROJECT DESIGNATION	YEAR	SHEET NO.	TOTAL SHEETS
NO	DATE	DESCRIPTION	68355	2004	37	52

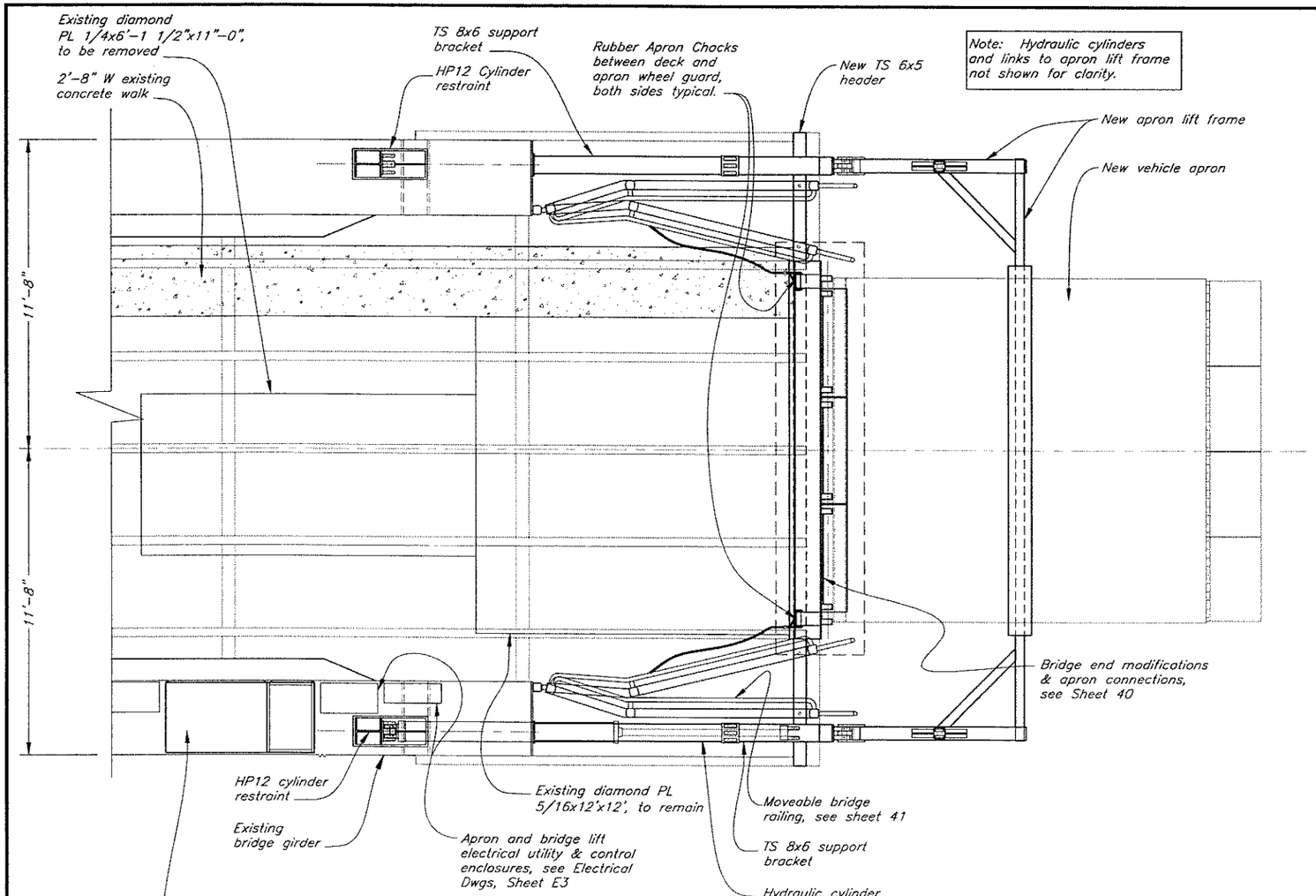

Plan
Bridge End/Apron Lift

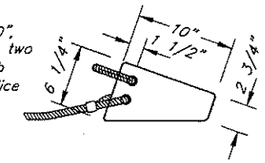

Rubber Apron Chock, 6"x 6 1/4"x 10", fabric reinforced, duro 70, cross drill two 1"ø holes for 5/8"ø nylon rope grab loop and tag line (loop plus 20') splice loops, melt and heat shrink ends. Two Chocks Required.

Rubber Apron Chocks

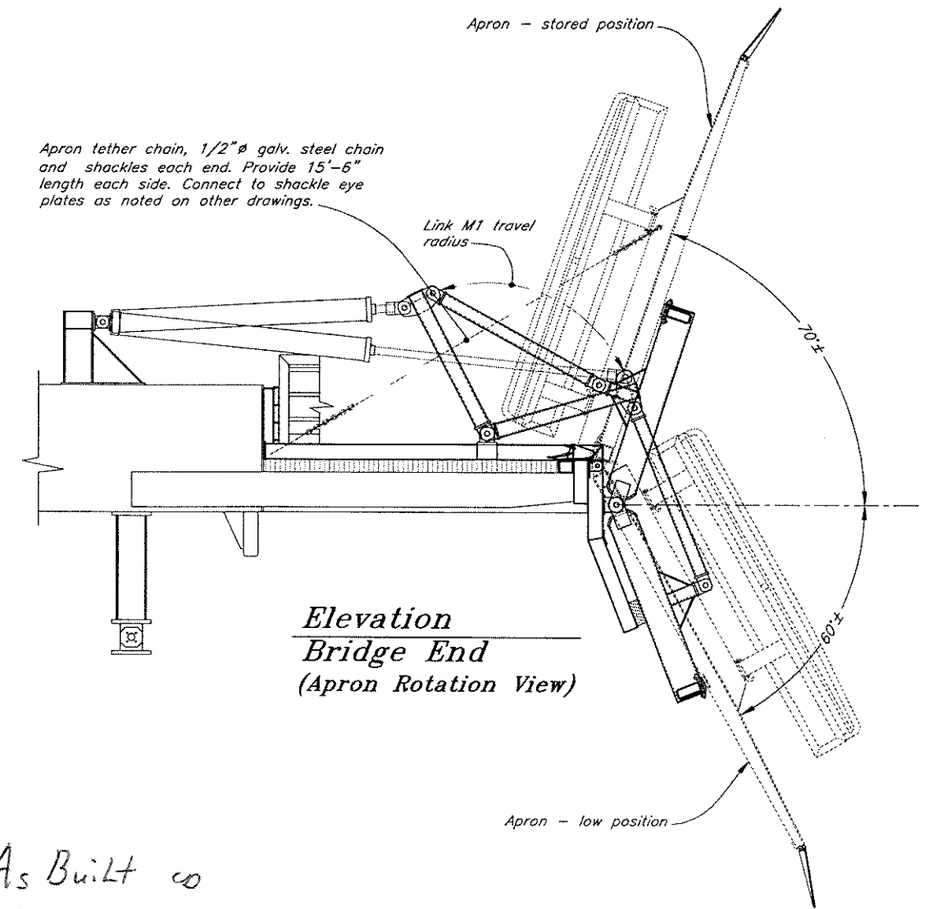

Elevation
Bridge End
(Apron Rotation View)

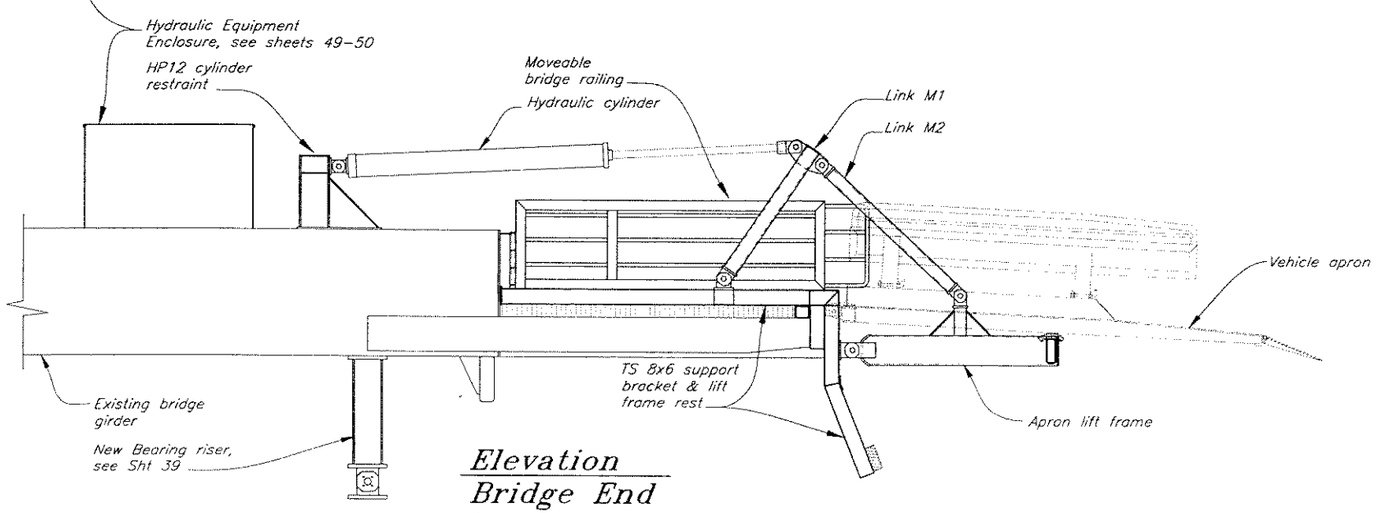

Elevation
Bridge End
(Apron Lift Level)

As Built
5/12/06

DO NOT SCALE FROM THESE DRAWINGS USE DIMENSIONS

DESIGNED BY: K. Miller

STATE OF ALASKA 49th Kirk D. Miller CE-8550 REGISTERED PROFESSIONAL ENGINEER

5/8/04

CHECKED BY: J. Beedle
DRAWN BY: B. Bennett

STATE OF ALASKA
DEPARTMENT OF TRANSPORTATION
& PUBLIC FACILITIES
STATEWIDE DESIGN & ENGINEERING SERVICES DIVISION

WHITTIER FERRY TERMINAL
MODIFICATIONS
PROJECT NO. 68355

Bridge End & Apron Lift
Plan & Sections

PATH: Q:\Wit\68355\Mf\PlanSet\38-Bridge End & Apron Lift.dwg Thu, 24/Jun/04 10:55AM
PLOT: PSPACE 1=1 Tab: G5

REVISIONS			PROJECT DESIGNATION	YEAR	SHEET NO.	TOTAL SHEETS
NO.	DATE	DESCRIPTION	68355	2004	38	52

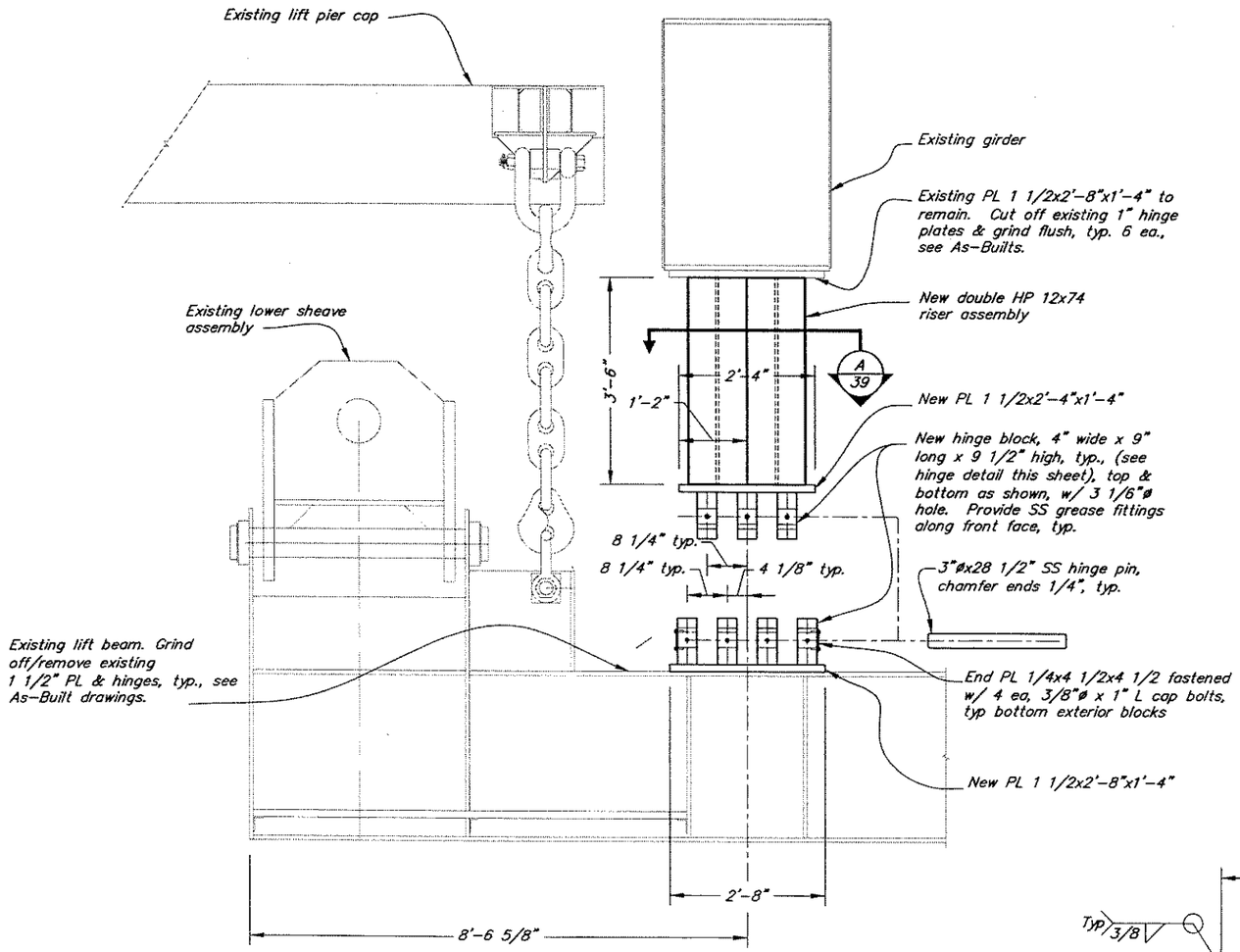

Elevation
Riser and Hinge Front

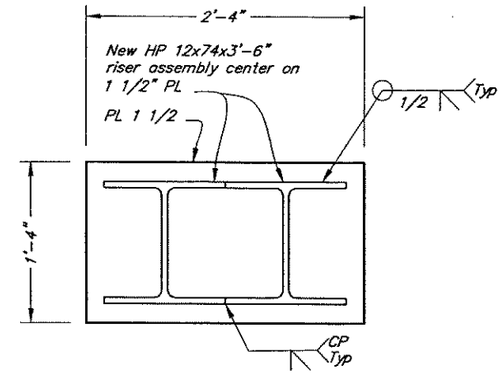

Section A/39

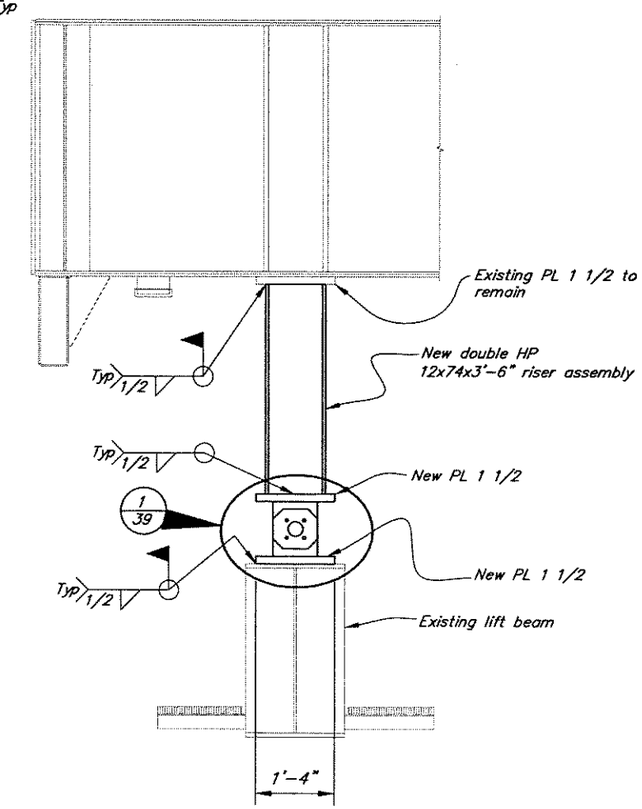

Elevation
Riser and Hinge Side

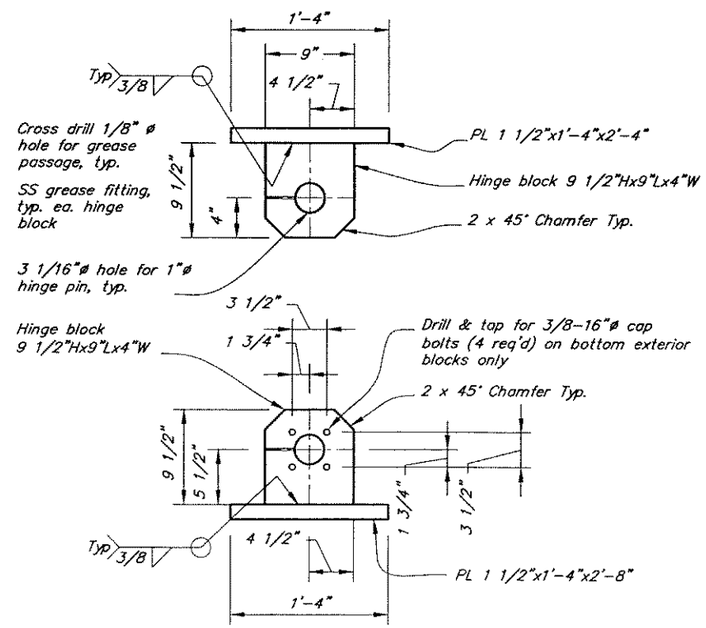

Detail 1/39
Hinge Assembly

As Built CO
5/12/06

DO NOT SCALE FROM THESE DRAWINGS USE DIMENSIONS

DESIGNED BY: K. Miller
CHECKED BY: J. Beedle
DRAWN BY: Staff

STATE OF ALASKA
DEPARTMENT OF TRANSPORTATION
& PUBLIC FACILITIES
STATEWIDE DESIGN & ENGINEERING SERVICES DIVISION

WHITTIER FERRY TERMINAL
MODIFICATIONS
PROJECT NO. 68355
Transfer Bridge Seaward Bearing Modifications

PATH: O:\Wrt\68355\Mf\PlanSet\39-Seaward Brgs Mods.dwg
PLOT: PSPACE 1=1
Fri, 18/Jun/04 01:38PM
Tab: Layout1

REVISIONS			PROJECT DESIGNATION	YEAR	SHEET NO.	TOTAL SHEETS
NO.	DATE	DESCRIPTION	68355	2004	39	52

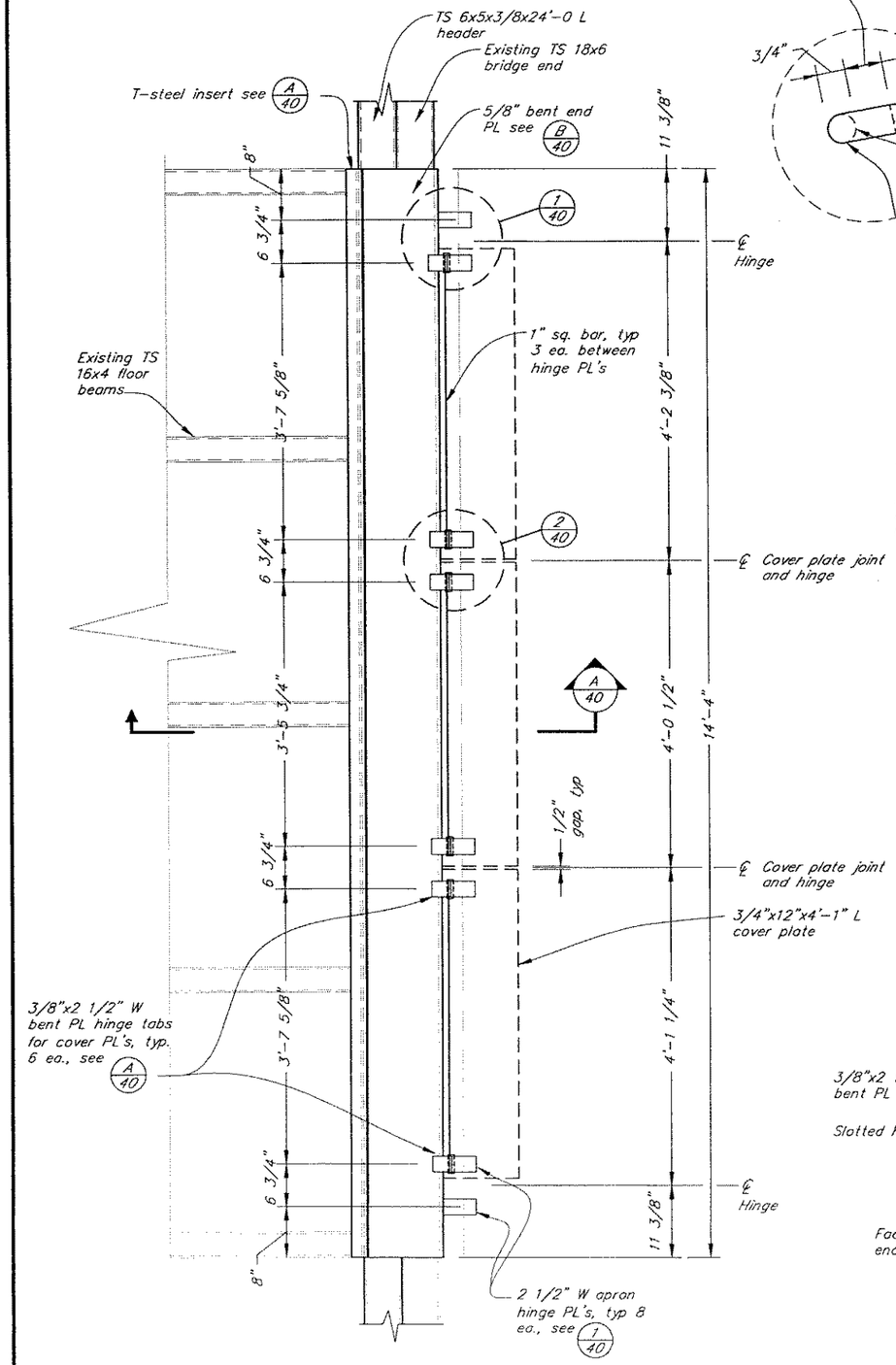

Plan
Bridge End

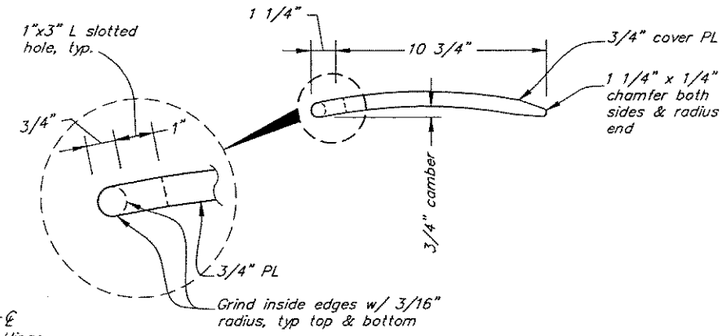

Section B/40
Cover Plate

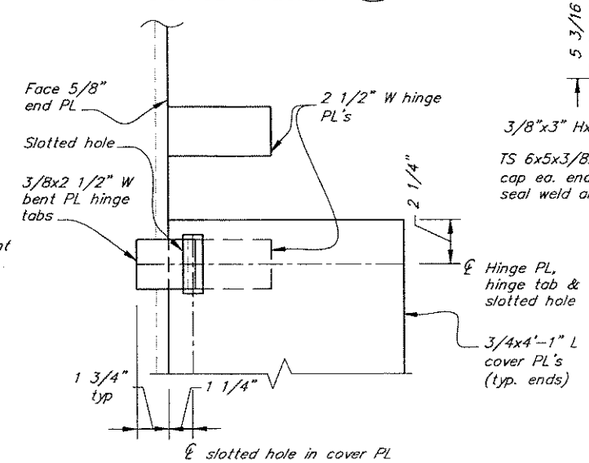

Detail 1/40
Cover Plate

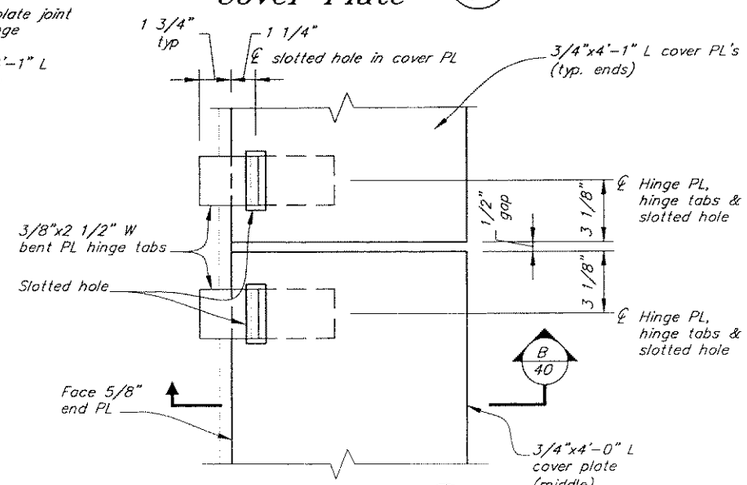

Detail 2/40
Cover Plate

Details
Apron Cover Plate

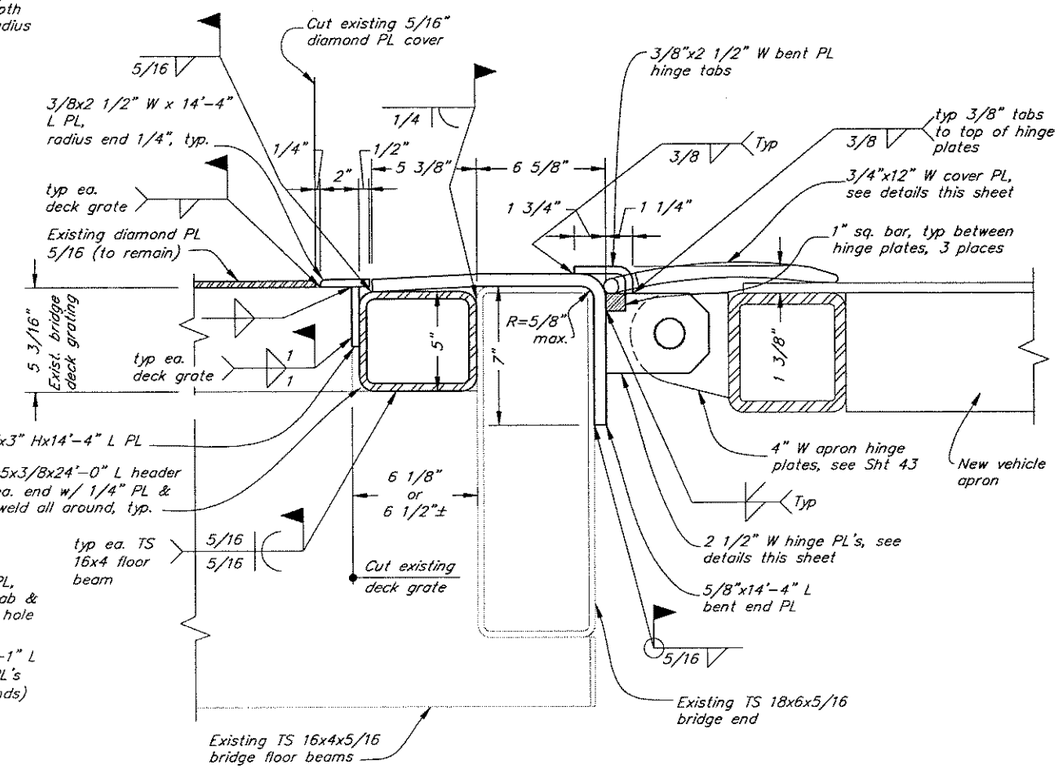

Section A/40
Bridge End

As Built
5/12/06

DO NOT SCALE FROM THESE DRAWINGS USE DIMENSIONS

DESIGNED BY: K. Miller
CHECKED BY: J. Beedle
DRAWN BY: B. Bennett

STATE OF ALASKA
Kirk D. Miller
CE-8550
49th
PROFESSIONAL ENGINEER
7/8/04

STATE OF ALASKA
DEPARTMENT OF TRANSPORTATION
& PUBLIC FACILITIES
STATEWIDE DESIGN & ENGINEERING SERVICES DIVISION

WHITTIER FERRY TERMINAL
MODIFICATIONS
PROJECT NO. 68355

Bridge End Details

PATH: O:\Wit\68355\Mf\PlanSet\40-Bridge End Details.dwg
PLOT: PSPACE 1=1
Fri, 18/Jun/04 01:39PM
TAB: G7

REVISIONS			PROJECT DESIGNATION	YEAR	SHEET NO.	TOTAL SHEETS
NO.	DATE	DESCRIPTION	68355	2004	40	52

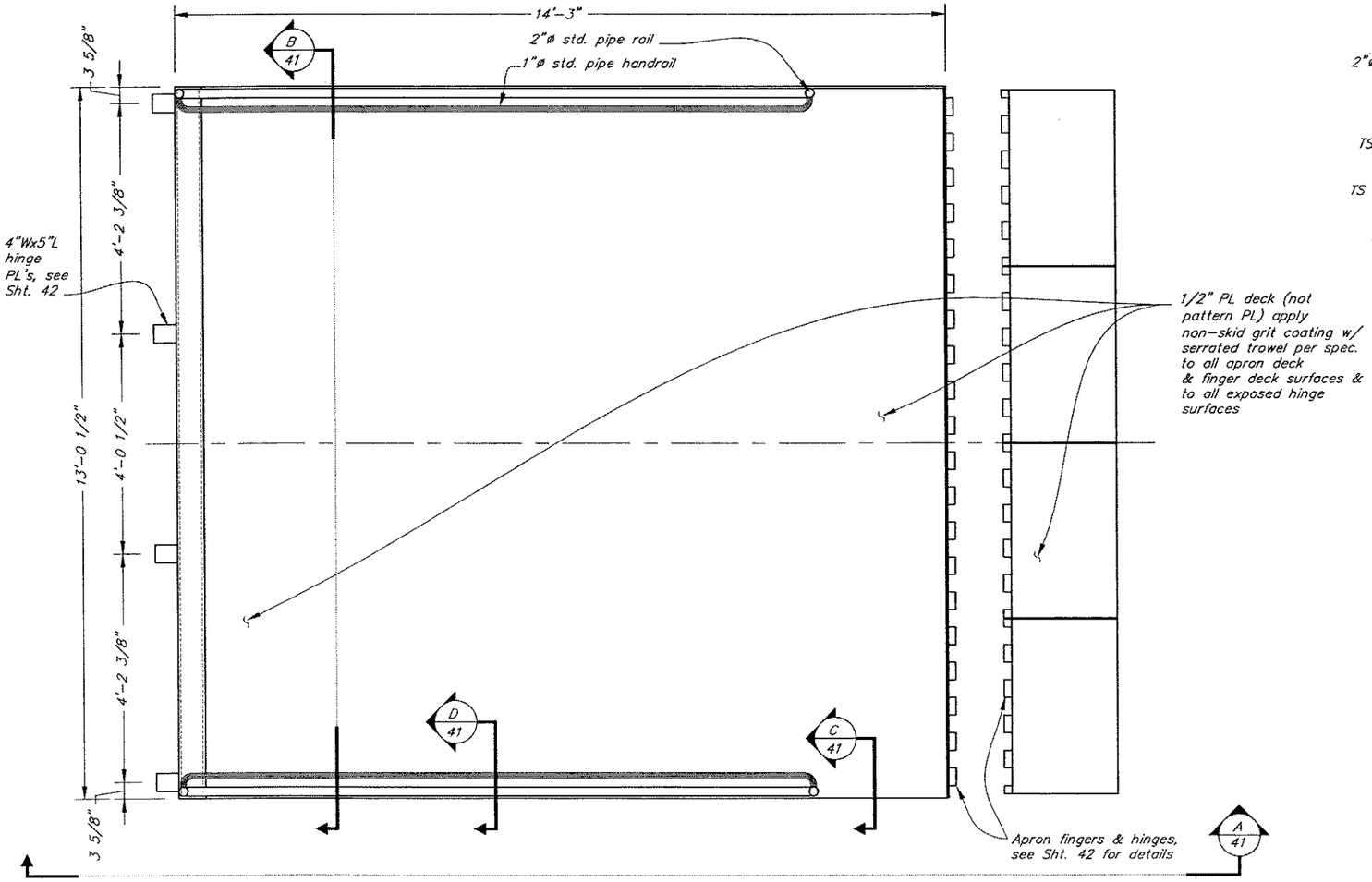

Plan
Apron

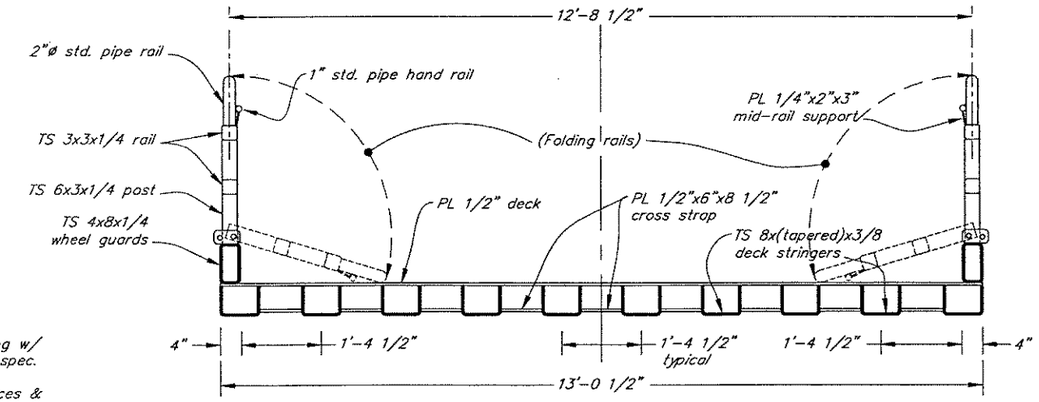

Section B 41

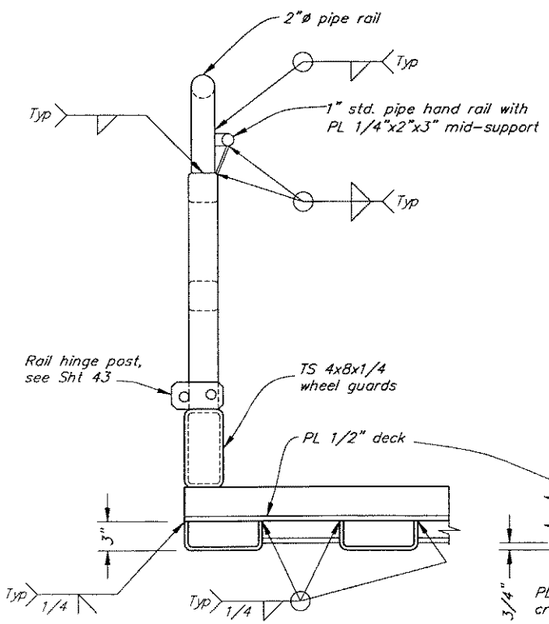

Section C 41

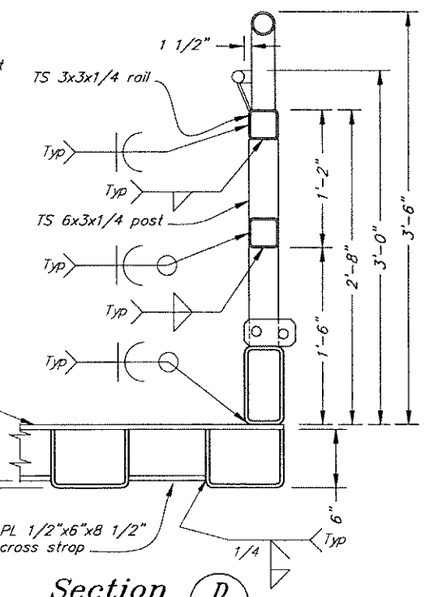

Section D 41

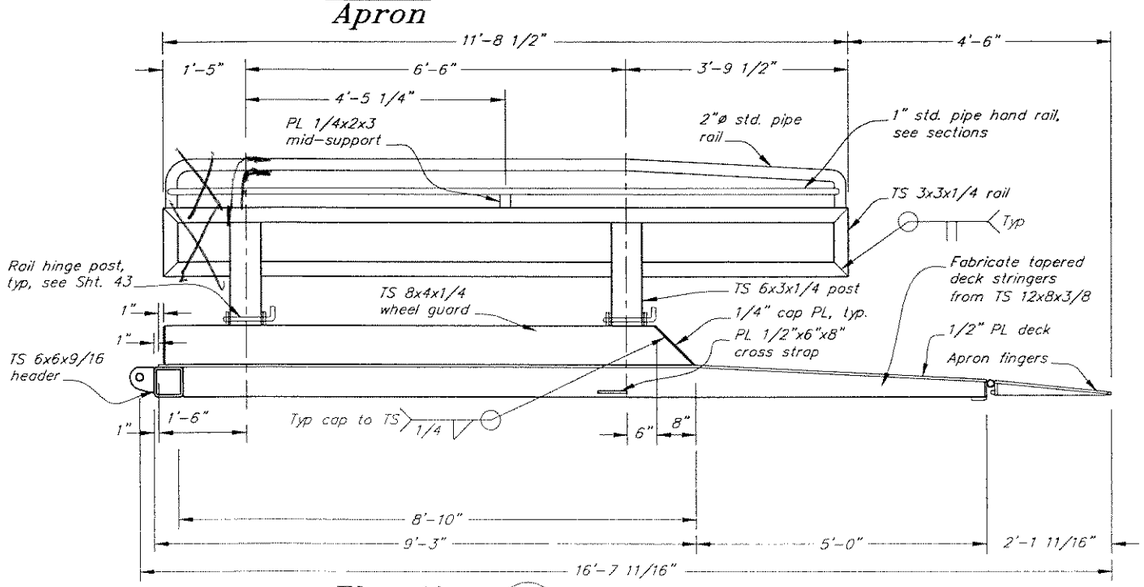

Elevation A 41
Apron

As Built
5/12/06

DO NOT SCALE FROM THESE DRAWINGS USE DIMENSIONS

DESIGNED BY: K. Miller
CHECKED BY: J. Beedle
DRAWN BY: B. Bennett

STATE OF ALASKA
49th
Kirk D. Miller
CE-8550
REGISTERED PROFESSIONAL ENGINEER
7/8/04

STATE OF ALASKA
DEPARTMENT OF TRANSPORTATION
& PUBLIC FACILITIES
STATEWIDE DESIGN & ENGINEERING SERVICES DIVISION

WHITTIER FERRY TERMINAL
MODIFICATIONS
PROJECT NO. 68355

Apron Plan & Sections

PATH: O:\Wit\68355\Mt\PlanSet\41-Apron Plan & Sections.dwg
PLOT: PSPACE 1=1
Fri, 18/Jun/04 01:39PM
Tab: G8

REVISIONS			PROJECT DESIGNATION	YEAR	SHEET NO.	TOTAL SHEETS
NO.	DATE	DESCRIPTION				
			68355	2004	41	52

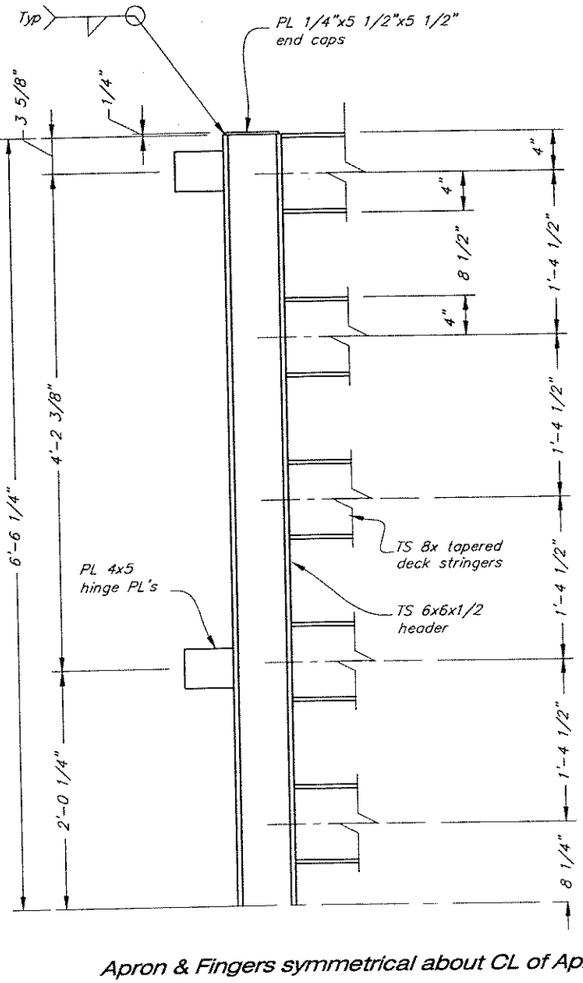

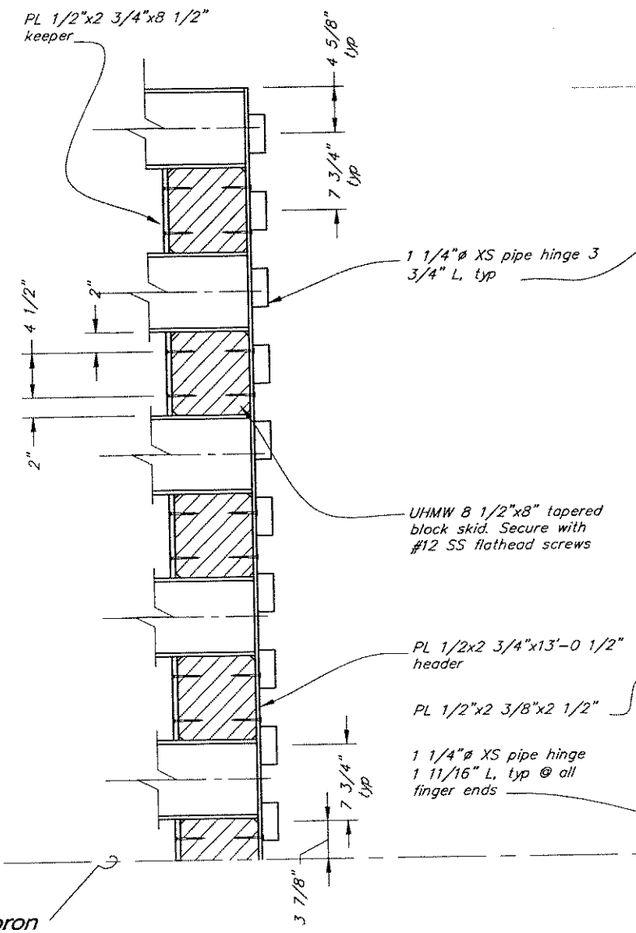

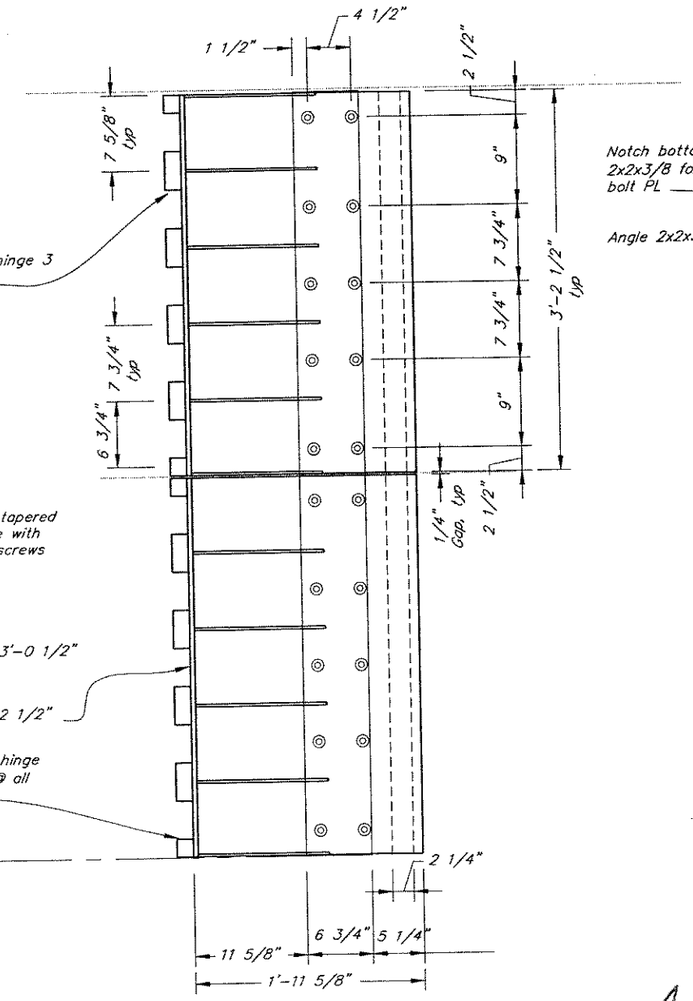

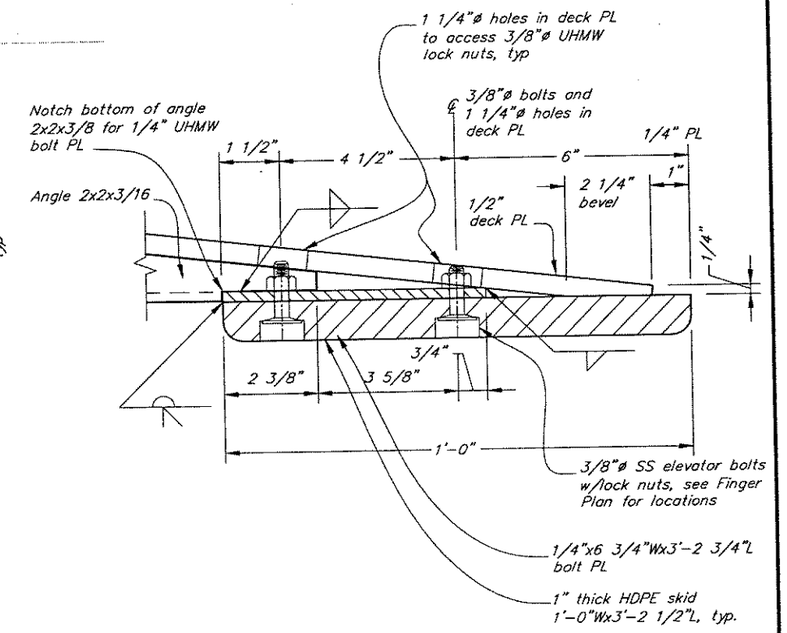

Apron Finger Detail (1/42)

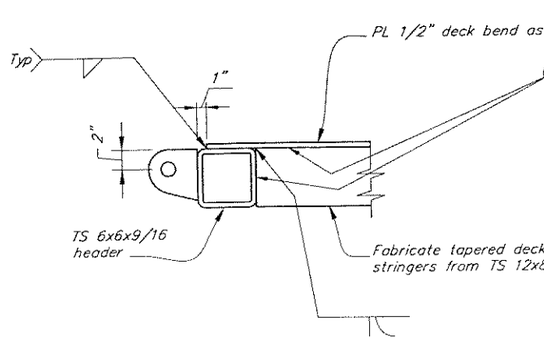

Apron @ Bridge End

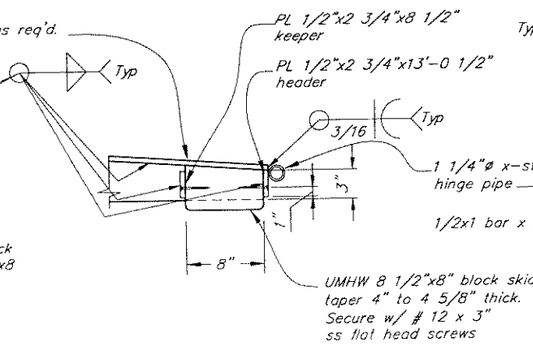

Apron @ Finger End

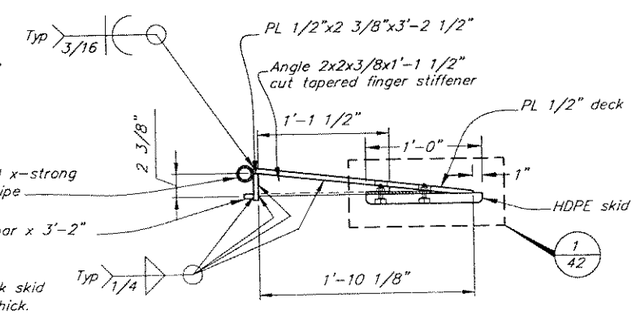

Finger Details

As Built
5/12/06
CO

DO NOT SCALE FROM THESE DRAWINGS USE DIMENSIONS

DESIGNED BY: K. Miller

STATE OF ALASKA 49th Kirk D. Miller CE-8550 REGISTERED PROFESSIONAL ENGINEER

7/8/04

CHECKED BY: J. Beedle
DRAWN BY: B. Bennett

STATE OF ALASKA
DEPARTMENT OF TRANSPORTATION
& PUBLIC FACILITIES
STATEWIDE DESIGN & ENGINEERING SERVICES DIVISION

WHITTIER FERRY TERMINAL
MODIFICATIONS
PROJECT NO. 68355

Apron Details

PATH: O:\Wit\68355\Mf\PlanSet\42-Apron Details.dwg
PLOT: PSPACE 1=1

Fri, 18/Jun/04 01:39PM
G9

REVISIONS			PROJECT DESIGNATION	YEAR	SHEET NO.	TOTAL SHEETS
NO.	DATE	DESCRIPTION	68355	2004	42	52

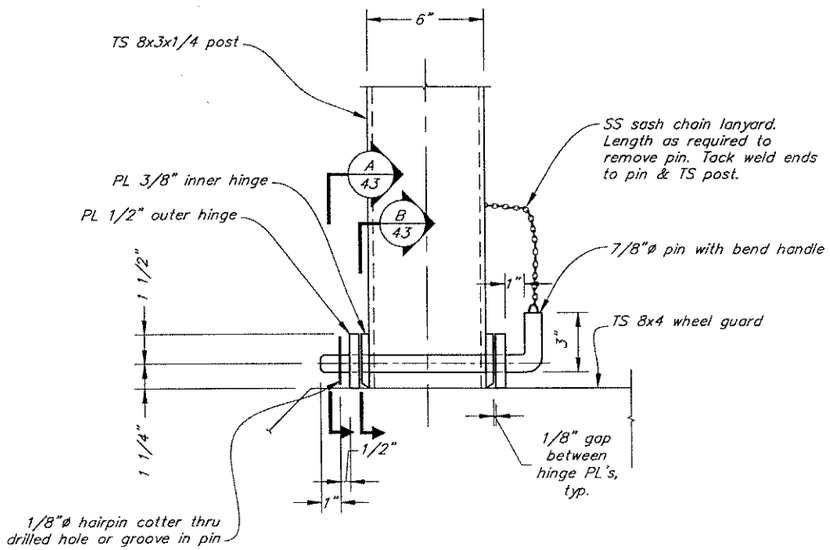

Elevation – Back

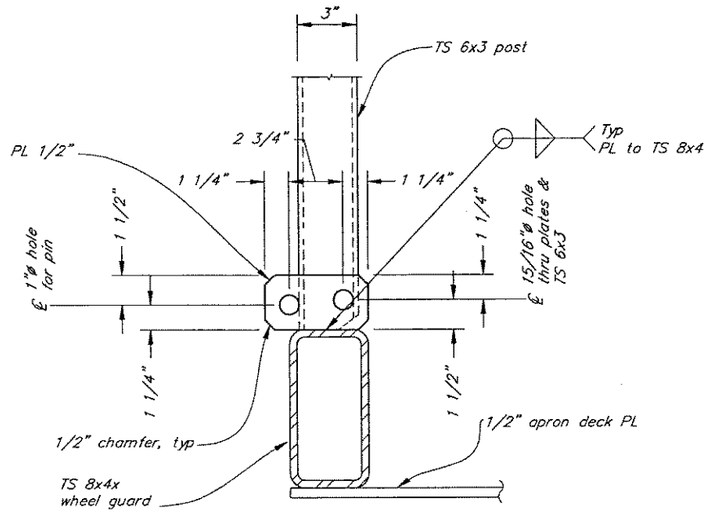

Outer Hinge Plate (A/43)

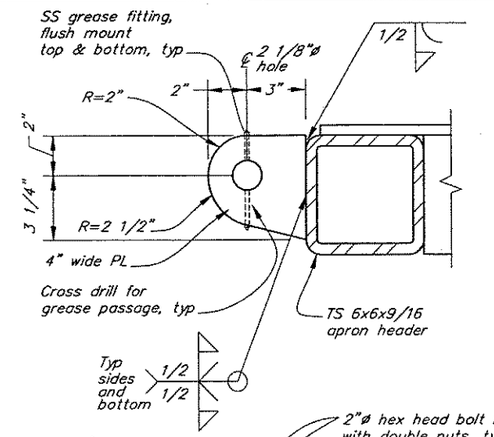

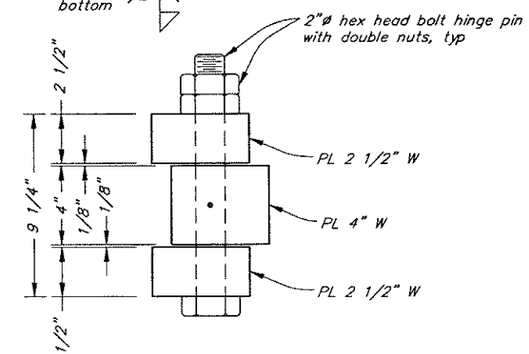

Hinge Plan

Note:
Center hinge blocks (4" W) shall have a 1/8" deep grease groove along inside circumference at midpoint, typ
Grease all hinges during installation.

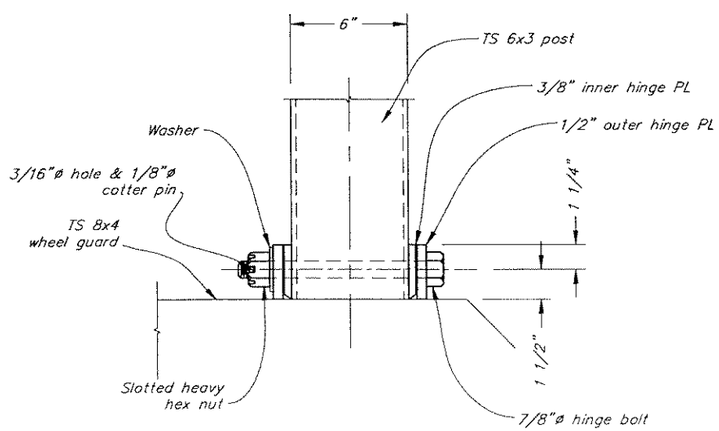

Elevation – Front
(Apron side)

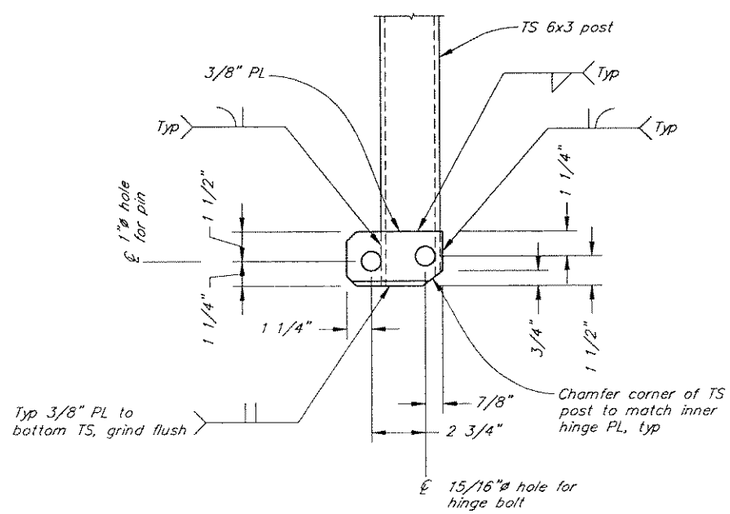

Inner Hinge Plate (B/43)

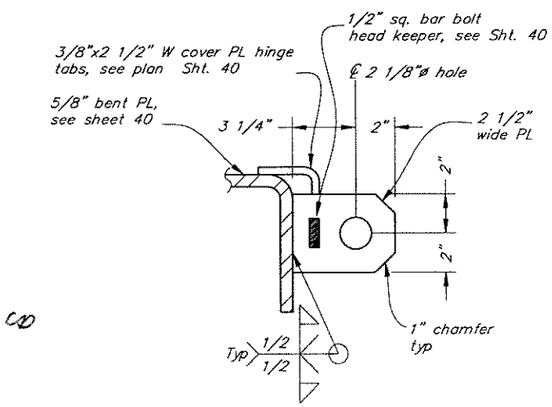

Detail
Apron Hinge

As Built
5/12/06

Apron Rail Hinge Post

DO NOT SCALE FROM THESE DRAWINGS USE DIMENSIONS

DESIGNED BY: K. Miller
STATE OF ALASKA 49th Kirk D. Miller CE-8550 REGISTERED PROFESSIONAL ENGINEER
7/8/04
CHECKED BY: J. Beedle
DRAWN BY: B. Bennett

STATE OF ALASKA
DEPARTMENT OF TRANSPORTATION
& PUBLIC FACILITIES
STATEWIDE DESIGN & ENGINEERING SERVICES DIVISION

WHITTIER FERRY TERMINAL
MODIFICATIONS
PROJECT NO. 68355

Misc. Apron Hinge Details

PATH: O:\Wit\68355\Mf\PlanSet\43-Apron Hinge Details.dwg Fri, 18/Jun/04 01:40PM
PLOT: PSPACE 1=1 Tab: G10

REVISIONS			PROJECT DESIGNATION	YEAR	SHEET NO.	TOTAL SHEETS
NO.	DATE	DESCRIPTION	68355	2004	43	52

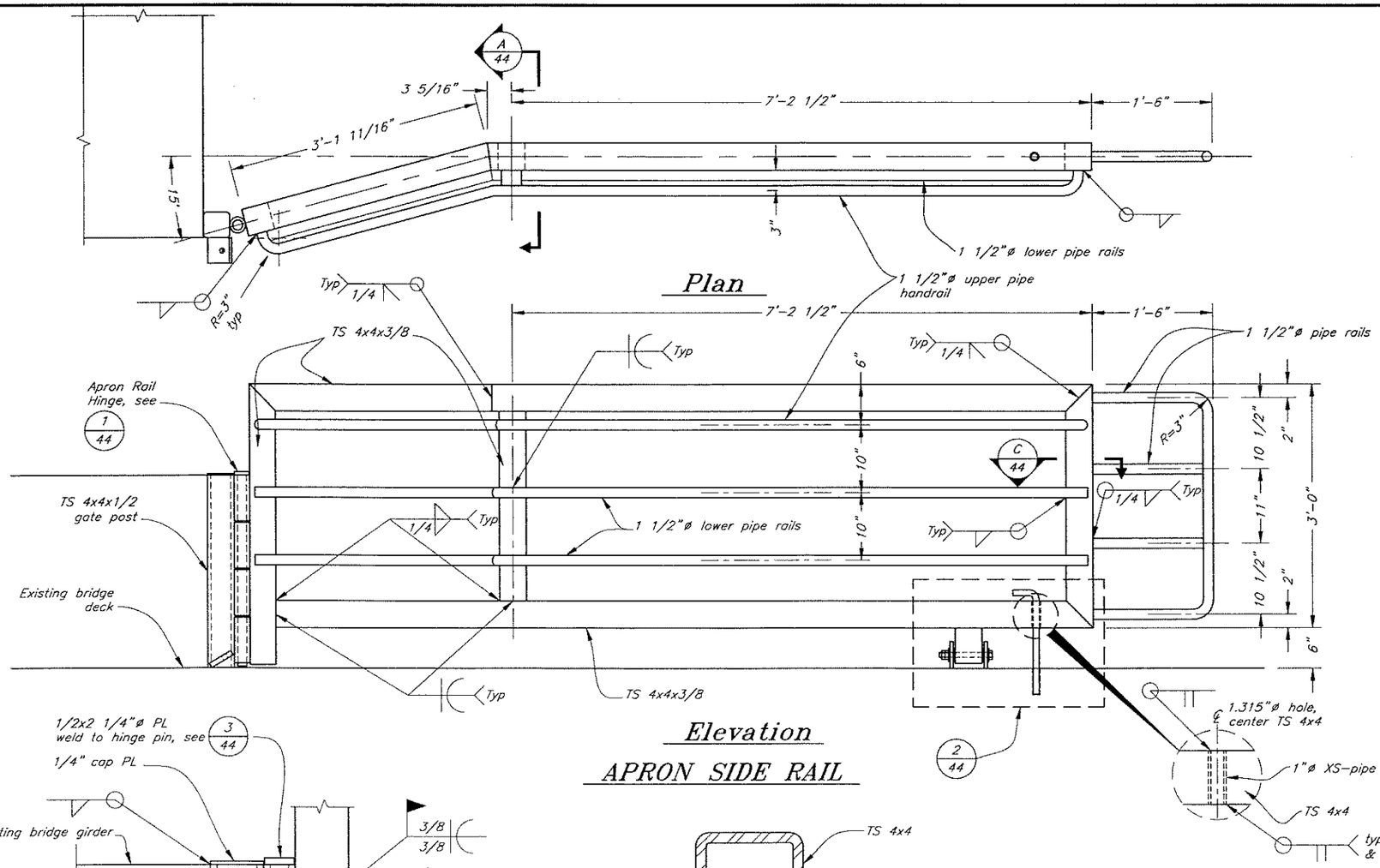

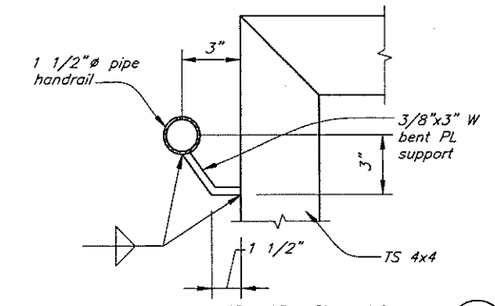

Support Rail Section A/44

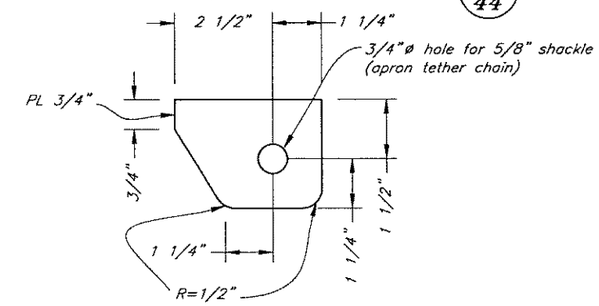

Tether Plate Section B/44

As Built 60
5/12/06

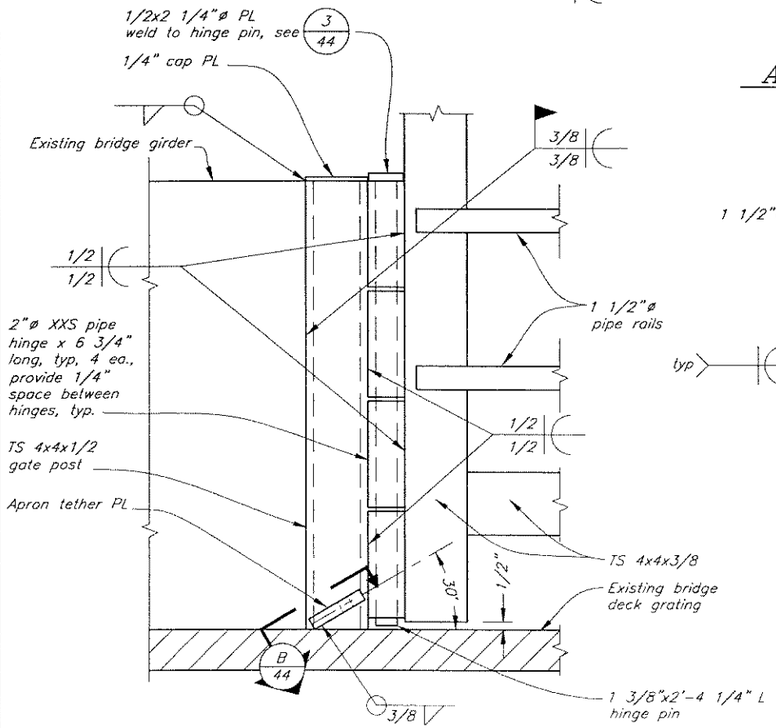

APRON RAIL HINGE DETAIL 1/44

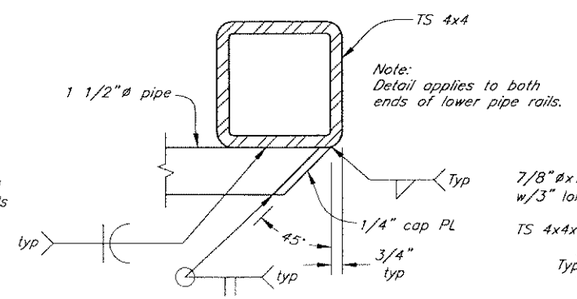

Section C/44

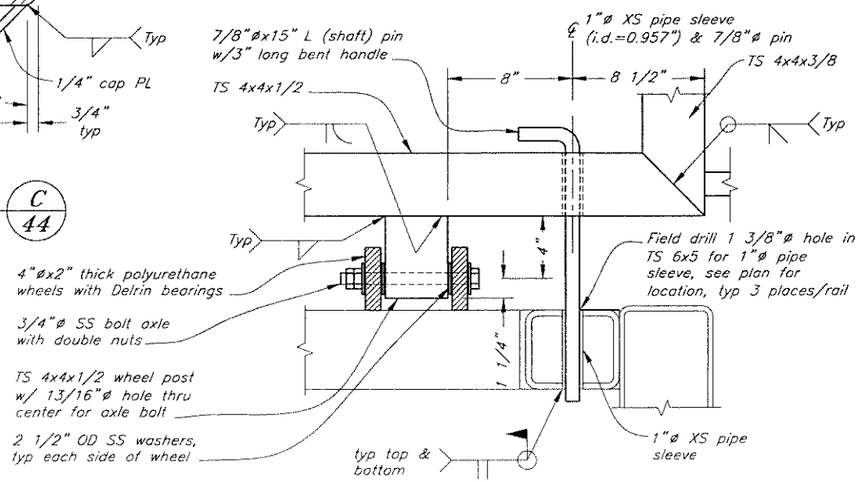

CORNER DETAIL 2/44

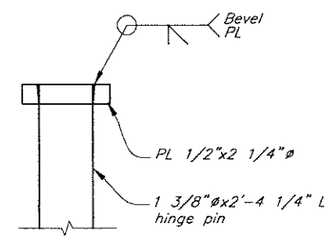

Apron Rail Hinge Detail 3/44

DO NOT SCALE FROM THESE DRAWINGS USE DIMENSIONS

DESIGNED BY: K. Miller
CHECKED BY: J. Beedle
DRAWN BY: B. Bennett

STATE OF ALASKA
DEPARTMENT OF TRANSPORTATION & PUBLIC FACILITIES
STATEWIDE DESIGN & ENGINEERING SERVICES DIVISION

WHITTIER FERRY TERMINAL MODIFICATIONS
PROJECT NO. 68355

Apron Rail Details

PATH: O:\Wit\68355\Mf\PlanSet\44-Apron Rail Details.dwg Thu, 08/Jul/04 03:32PM
PLOT: PSPACE 1=1 Tab: G11

REVISIONS NO.	DATE	DESCRIPTION	PROJECT DESIGNATION	YEAR	SHEET NO.	TOTAL SHEETS
			68355	2004	44	52

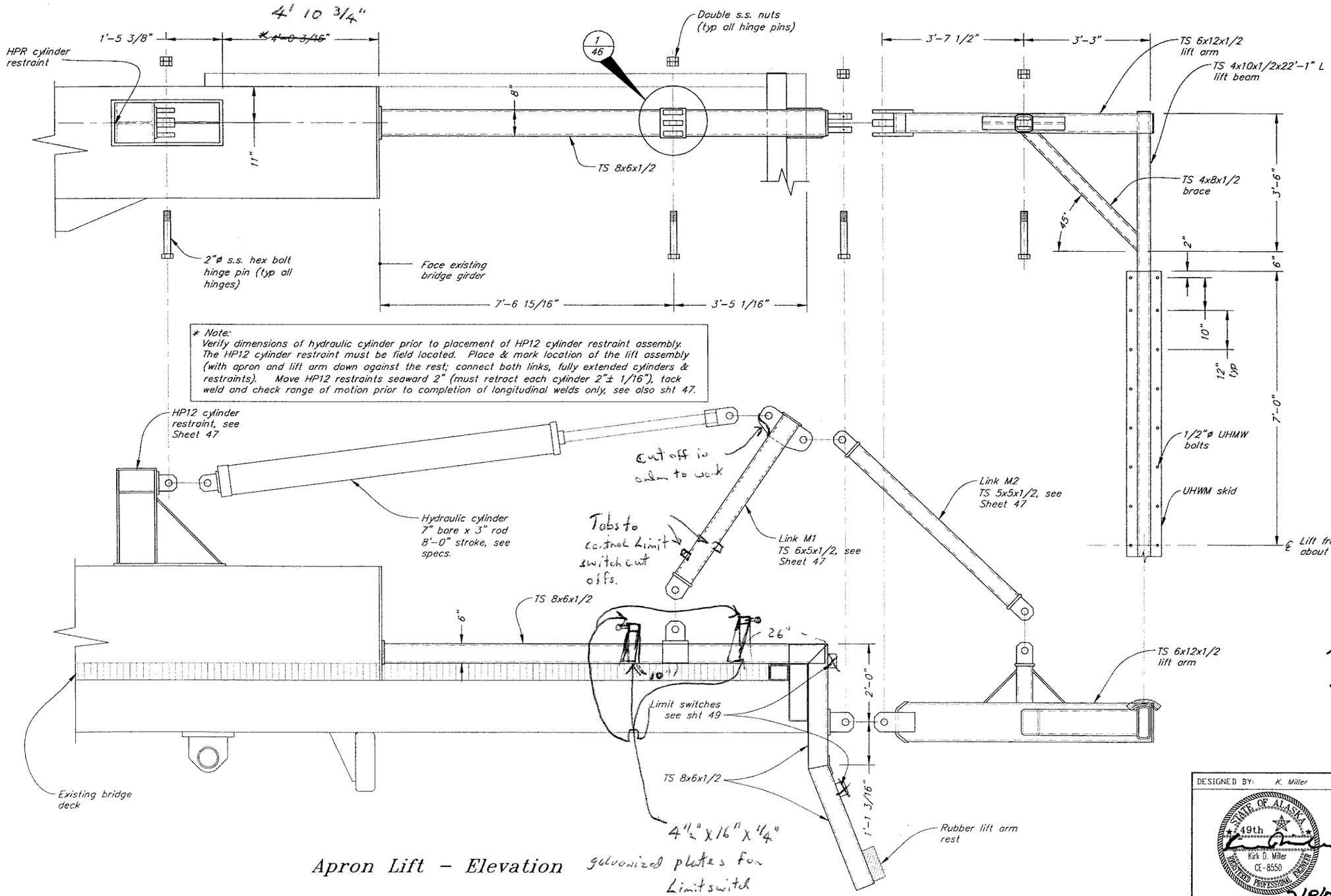

* Note:
Verify dimensions of hydraulic cylinder prior to placement of HP12 cylinder restraint assembly. The HP12 cylinder restraint must be field located. Place & mark location of the lift assembly (with apron and lift arm down against the rest; connect both links, fully extended cylinders & restraints). Move HP12 restraints seaward 2" (must retract each cylinder 2"± 1/16"), tack weld and check range of motion prior to completion of longitudinal welds only, see also sht 47.

Apron Lift – Elevation

As Built 00
5/12/06

DO NOT SCALE FROM THESE DRAWINGS USE DIMENSIONS

DESIGNED BY: K. Miller
STATE OF ALASKA 49th Kirk D. Miller CE-8550 REGISTERED PROFESSIONAL ENGINEER
7/8/04
CHECKED BY: J. Beedle
DRAWN BY: B. Bennett

STATE OF ALASKA
DEPARTMENT OF TRANSPORTATION
& PUBLIC FACILITIES
STATEWIDE DESIGN & ENGINEERING SERVICES DIVISION

WHITTIER FERRY TERMINAL
MODIFICATIONS
PROJECT NO. 68355

Apron Lift Details 1

PATH: O:\Wit\68355\M1\PlanSet\45-Apron Lift Details 1.dwg Fri, 18/Jun/04 01:41PM
PLOT: PSPACE 1=1 Tab: G12

REVISIONS NO.	DATE	DESCRIPTION	PROJECT DESIGNATION	YEAR	SHEET NO.	TOTAL SHEETS
			68355	2004	45	52

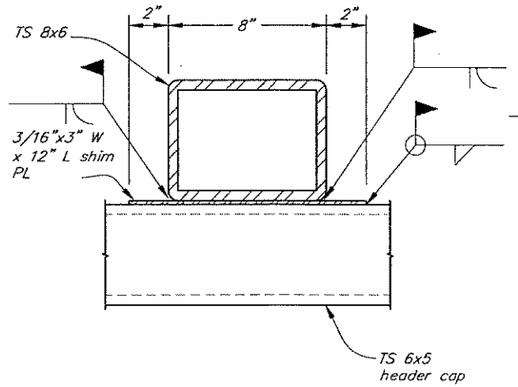

Section A/46

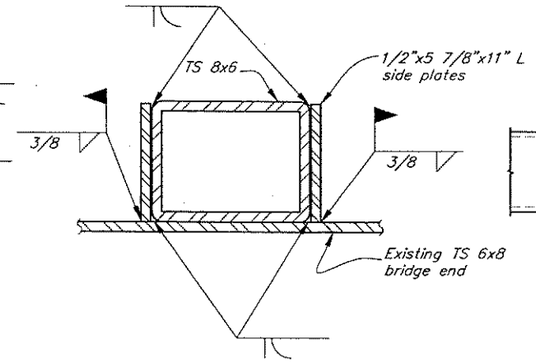

Section B/46

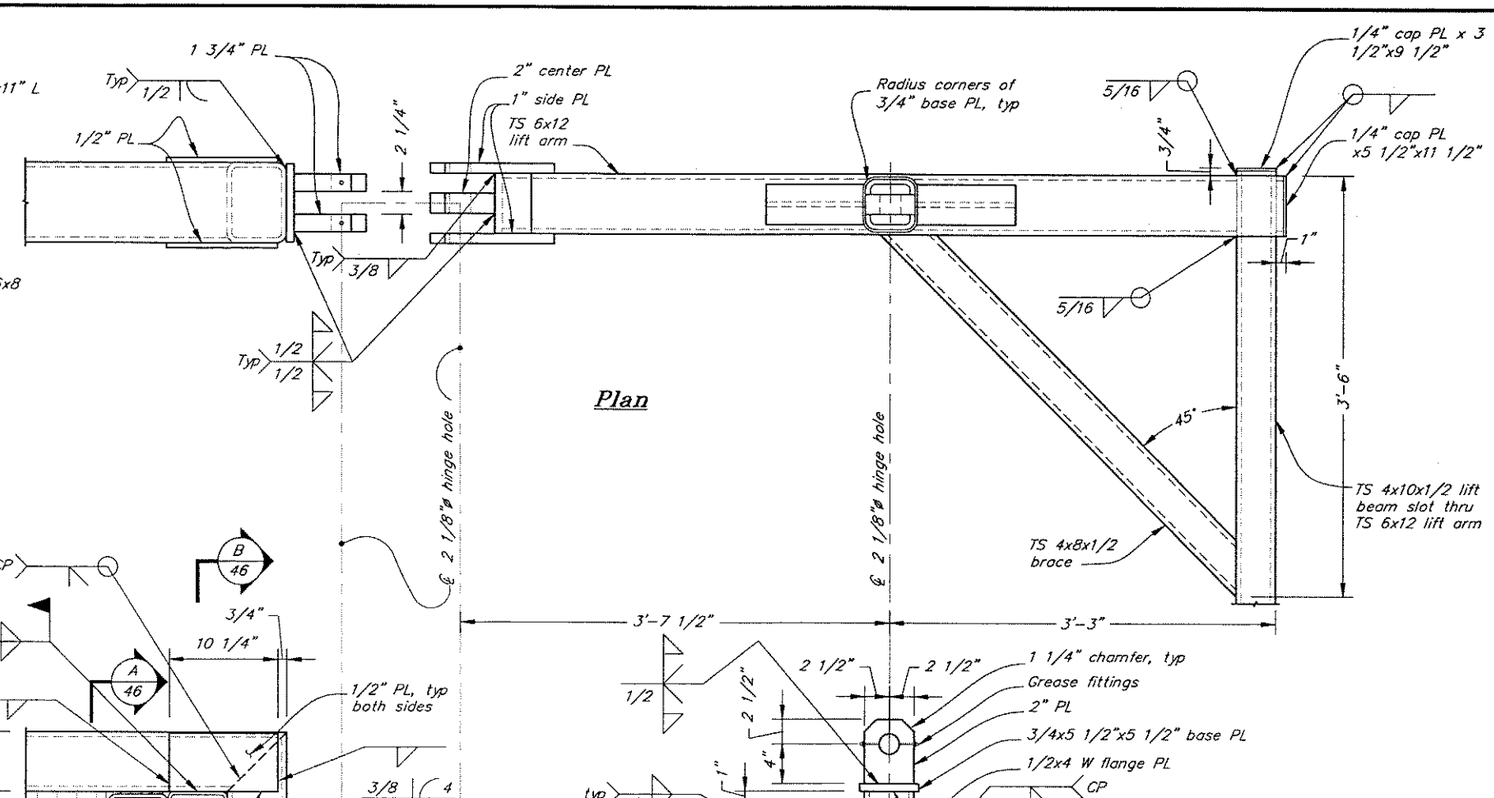

Plan

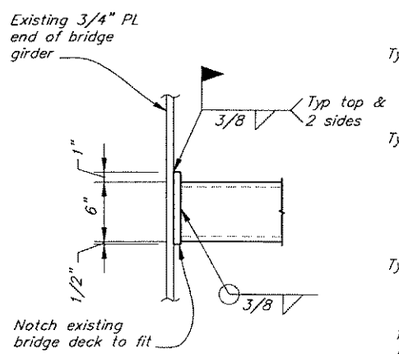

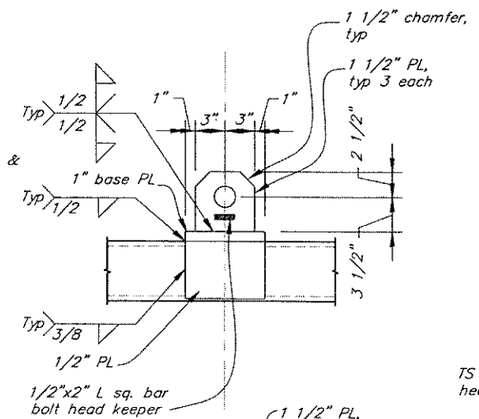

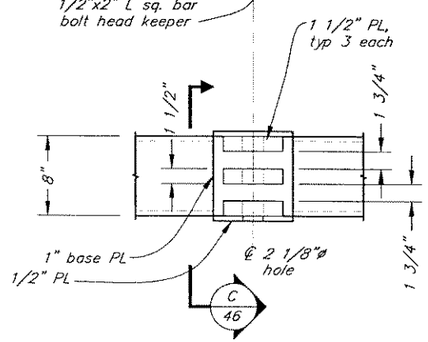

Detail 1/45

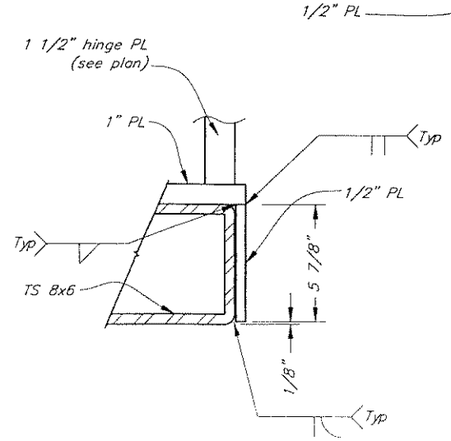

Section C/46

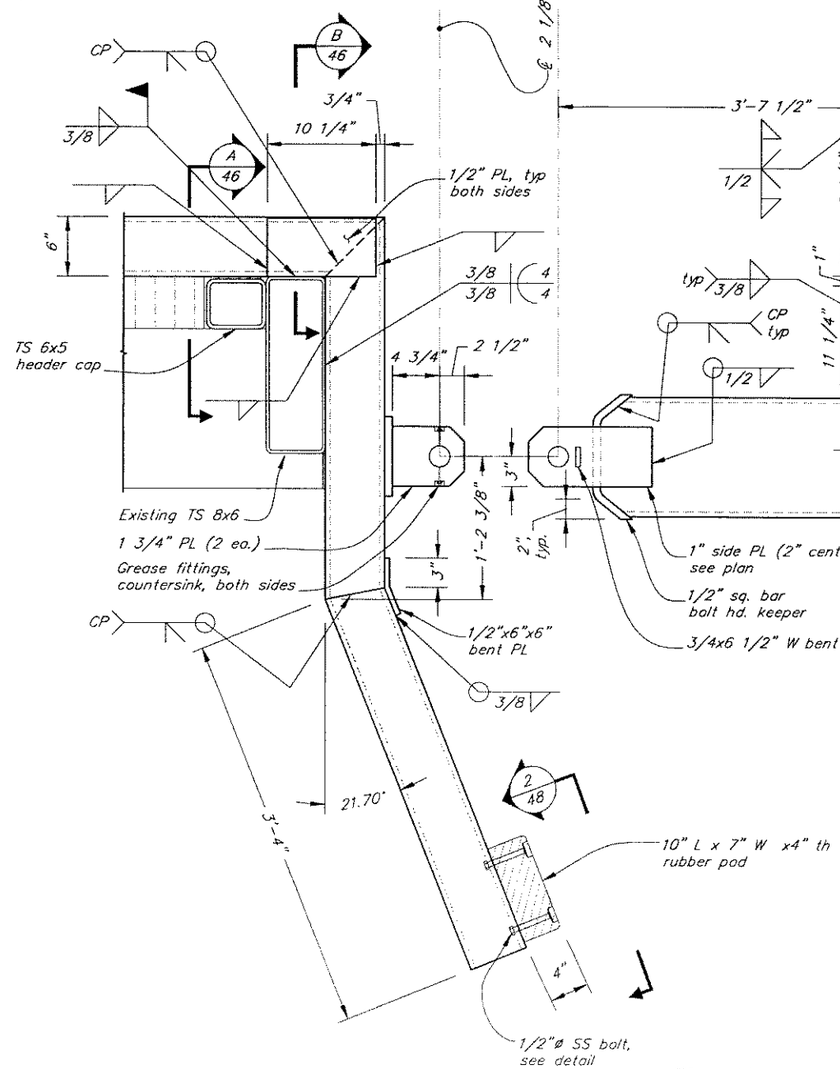

Elevation

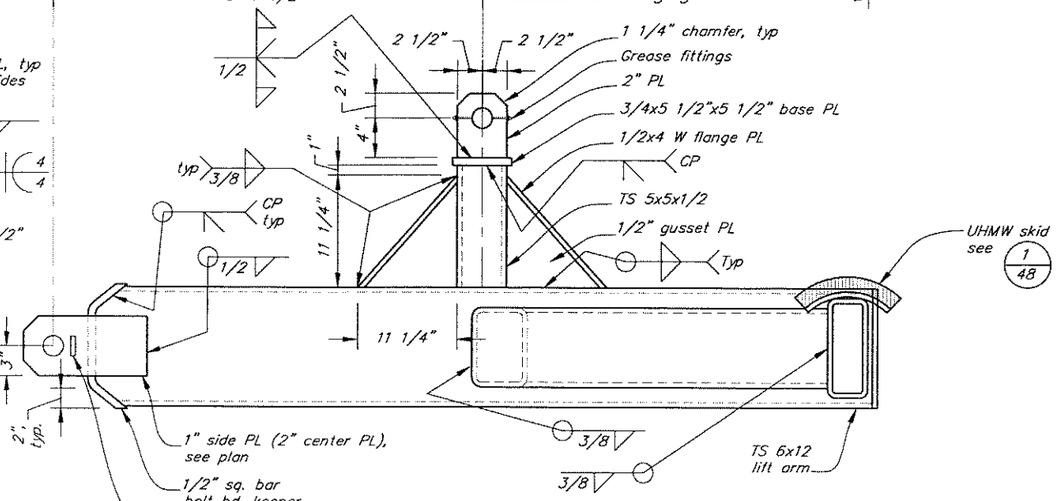

As Built
5/12/06

NOTE: Limit switches not shown for clarity.
For information see shts 45 & 49.

DO NOT SCALE FROM THESE DRAWINGS USE DIMENSIONS

DESIGNED BY: K. Miller
CHECKED BY: J. Beedle
DRAWN BY: B. Bennett

STATE OF ALASKA 49th Kirk D. Miller CE-8550 REGISTERED PROFESSIONAL ENGINEER
7/8/04

STATE OF ALASKA
DEPARTMENT OF TRANSPORTATION
& PUBLIC FACILITIES
STATEWIDE DESIGN & ENGINEERING SERVICES DIVISION

WHITTIER FERRY TERMINAL
MODIFICATIONS
PROJECT NO. 68355

Apron Lift Details 2

PATH: O:\Wit\68355\Mf\PlanSet\46-Apron Lift Details 2.dwg
PLOT: PSPACE 1=1
Fri, 18/Jun/04 01:42PM
Tab: G13

REVISIONS			PROJECT DESIGNATION	YEAR	SHEET NO.	TOTAL SHEETS
NO.	DATE	DESCRIPTION	68355	2004	46	52

LIft Beam & Arm Details

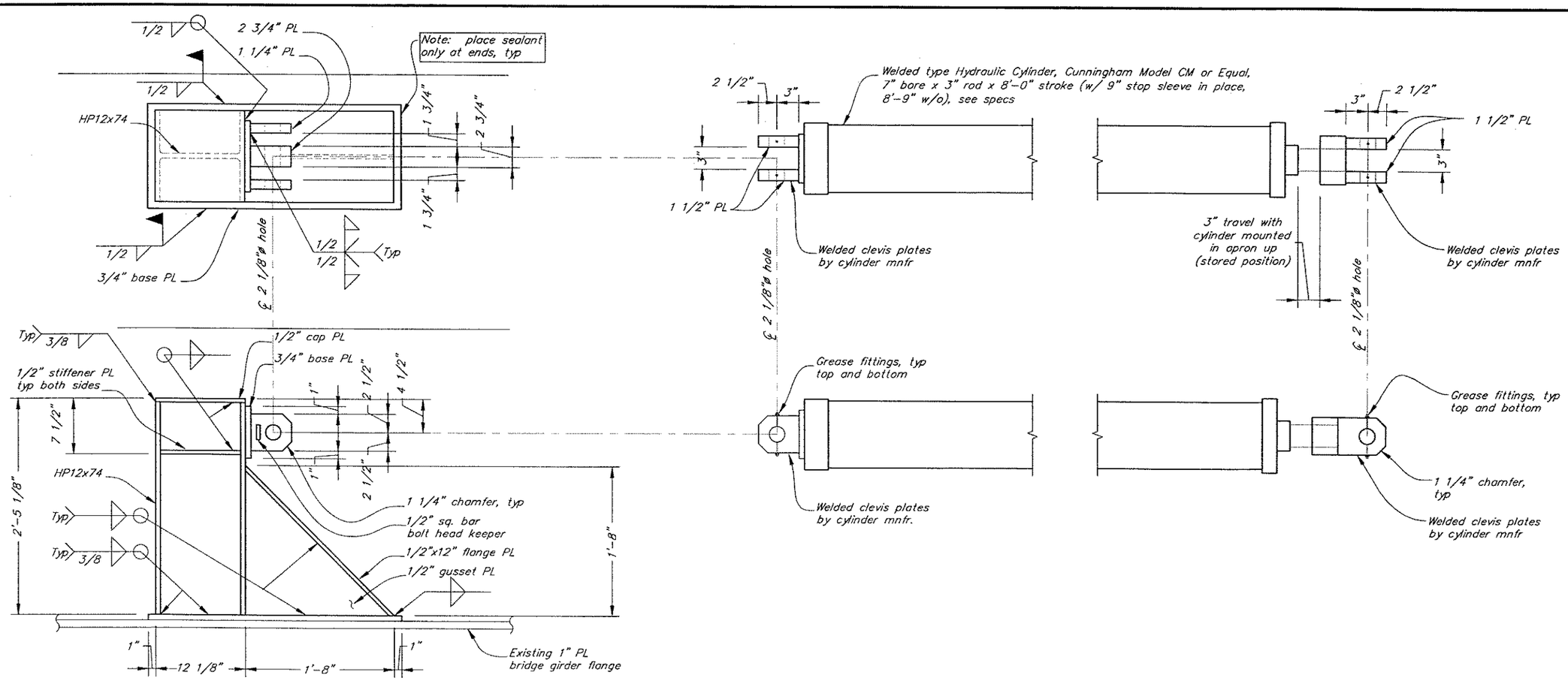

Hydraulic Cylinder & Restraint

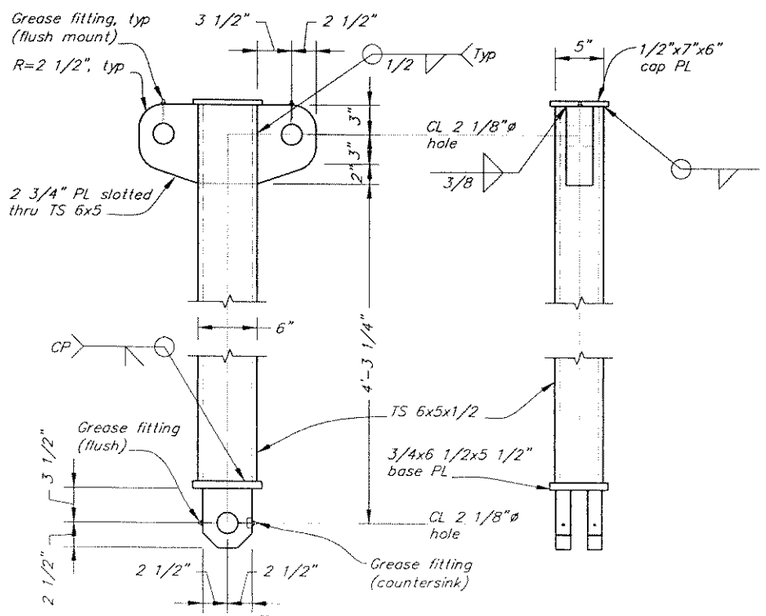

Link M1

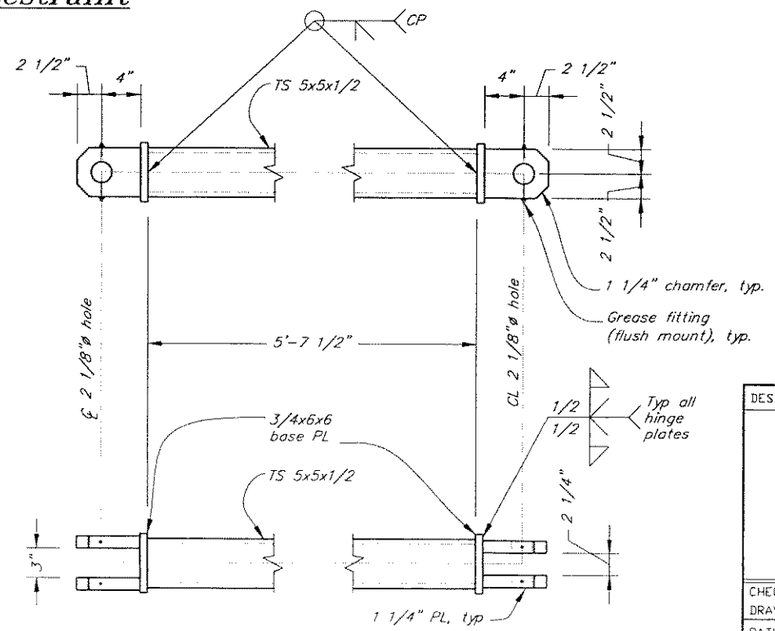

Link M2

As Built
5/12/06

DO NOT SCALE FROM THESE DRAWINGS USE DIMENSIONS

DESIGNED BY: K. Miller

STATE OF ALASKA 49th Kirk D. Miller CE-8550 REGISTERED PROFESSIONAL ENGINEER

7/8/04

CHECKED BY: J. Beedle

DRAWN BY: B. Bennett

STATE OF ALASKA
DEPARTMENT OF TRANSPORTATION
& PUBLIC FACILITIES
STATEWIDE DESIGN & ENGINEERING SERVICES DIVISION

WHITTIER FERRY TERMINAL
MODIFICATIONS
PROJECT NO. 68355

Apron Lift 3

PATH: O:\Wit\68355\M1\PlanSet\47-Apron Lift Details 3.dwg
PLOT: PSPACE 1=1

Fri, 18/Jun/04 01:42PM
Tab: G14

REVISIONS			PROJECT DESIGNATION	YEAR	SHEET NO.	TOTAL SHEETS
NO.	DATE	DESCRIPTION	68355	2004	47	52

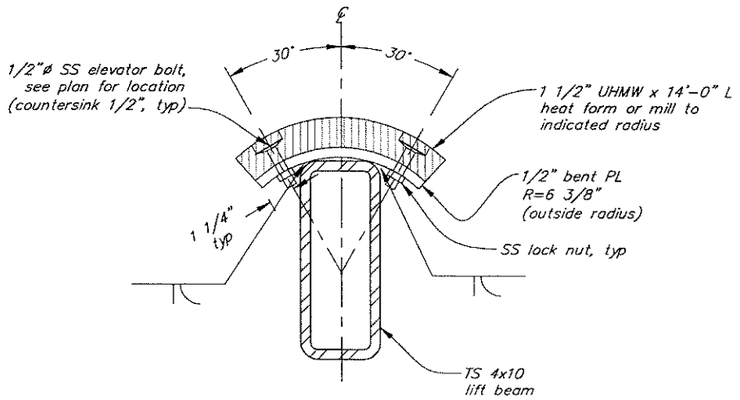

Detail 1 / 46
Lift Beam Skid

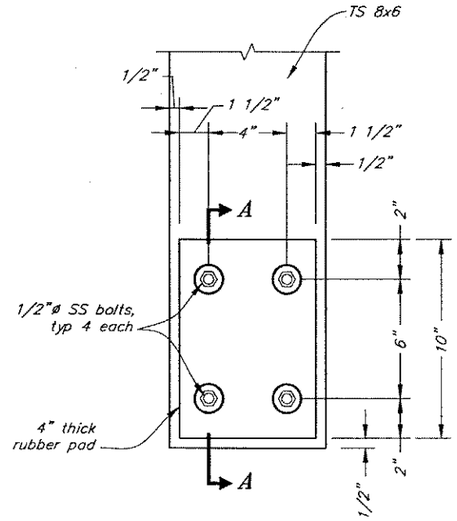

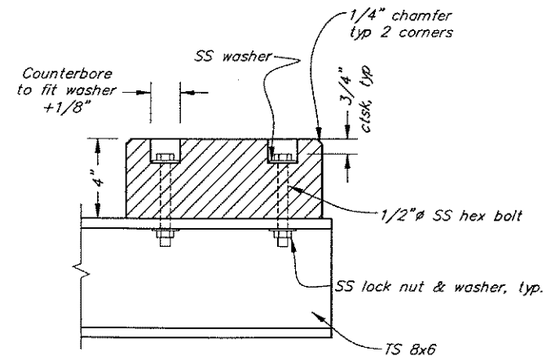

Section A-A

Detail 2 / 46
Rubber Pad

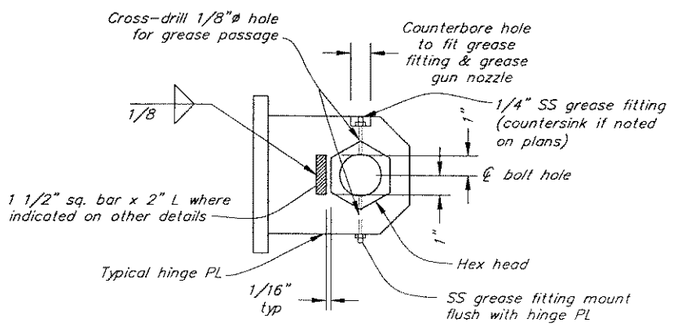

Typical Detail
Bolt Head Keeper & Grease Fitting

As Built
5/12/06

DO NOT SCALE FROM THESE DRAWINGS USE DIMENSIONS

DESIGNED BY: K. Miller

STATE OF ALASKA 49th Kirk D. Miller CE-8550 REGISTERED PROFESSIONAL ENGINEER
5/8/04

CHECKED BY: J. Beedle
DRAWN BY: B. Bennett

STATE OF ALASKA
DEPARTMENT OF TRANSPORTATION
& PUBLIC FACILITIES
STATEWIDE DESIGN & ENGINEERING SERVICES DIVISION

WHITTIER FERRY TERMINAL
MODIFICATIONS
PROJECT NO. 68355

Apron Lift Details 4

PATH: Q:\Wit\68355\Mf\PlanSet\48-Apron Lift Details 4.dwg Fri, 18/Jun/04 01:42PM
PLOT: PSPACE :=1 Tab: G15

REVISIONS			PROJECT DESIGNATION	YEAR	SHEET NO.	TOTAL SHEETS
NO.	DATE	DESCRIPTION				
			68355	2004	48	52

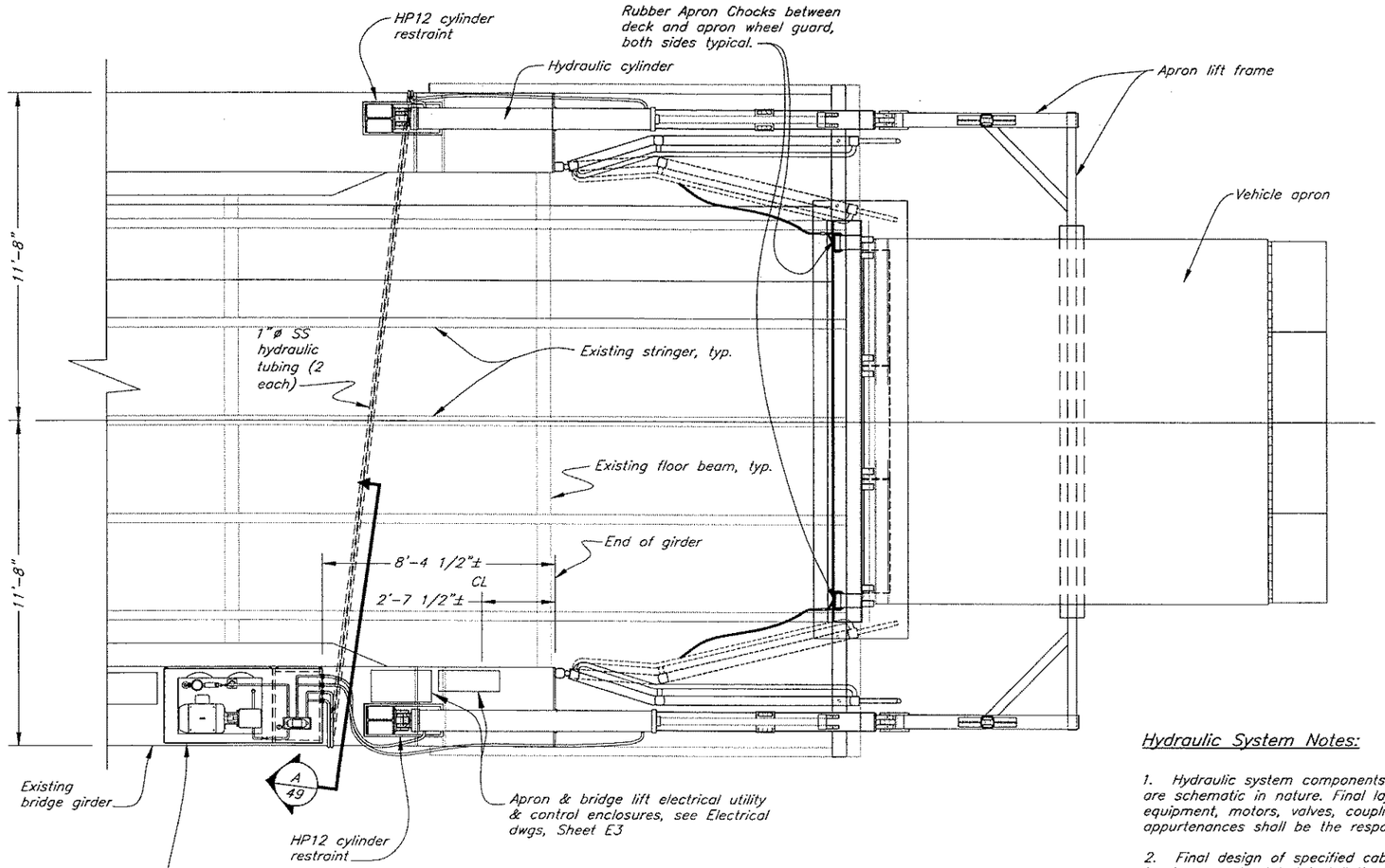

Plan
Hydraulic system

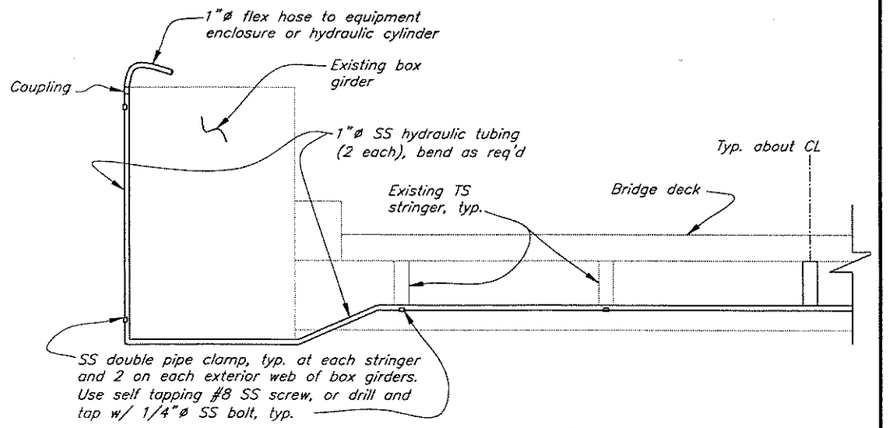

Section A/49

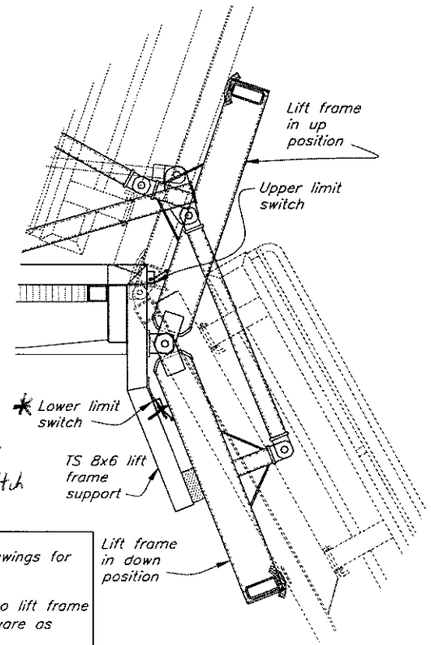

* See Sheet 45 for Limit Switch Location

* Limit Switch Notes:
1. See electrical drawings for limit switch details.
2. Mount switches to lift frame support w/ SS hardware as recommended by the manufacturer or otherwise approved by the Engineer.

Detail 1/49

Hydraulic System Notes:

1. Hydraulic system components and enclosure details shown are schematic in nature. Final layout and placement of equipment, motors, valves, couplings, hoses, pipes and other appurtenances shall be the responsibility of the Contractor.

2. Final design of specified cabinets, enclosures, connection hardware and related installation of hydraulic equipment shall be the responsibility of the Contractor. All cabinets shall be stainless steel, watertight, Type 4X, with integral gutters/drip shields, seals, hinges and latches as generally indicated. Hoffman Enclosures, Inc. or approved equal. All hardware shall be stainless steel unless otherwise approved by the Engineer.

3. Electrical details not shown. Coordinate all electrical system controls, components and related installation with Electrical drawings.

As Built
5/12/06

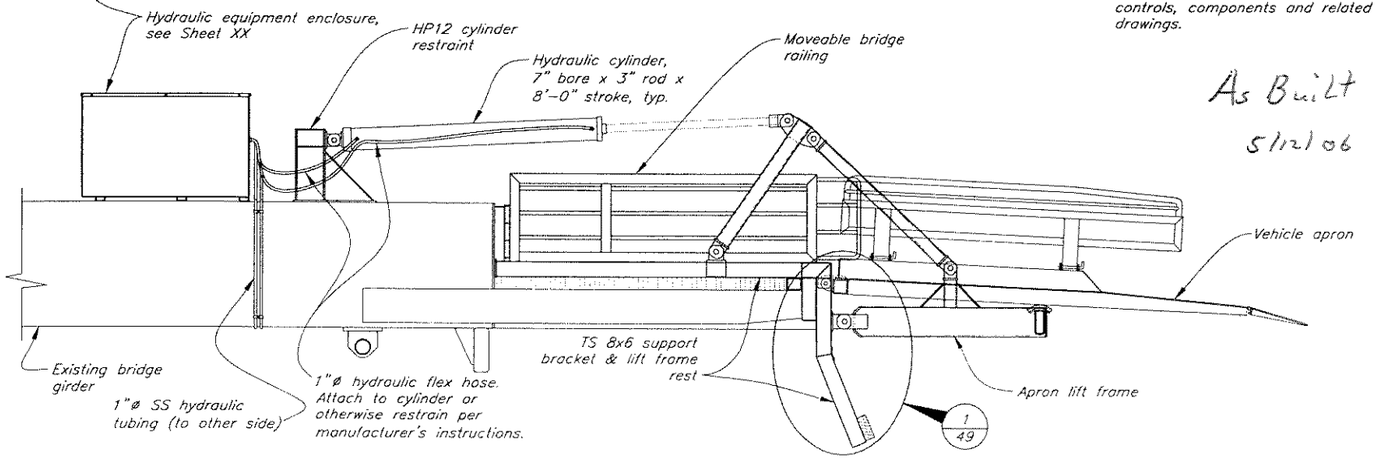

Elevation
Hydraulic System

DO NOT SCALE FROM THESE DRAWINGS USE DIMENSIONS

DESIGNED BY: K. Miller
STATE OF ALASKA 49th Kirk D. Miller CE-8550 REGISTERED PROFESSIONAL ENGINEER
5/8/04
CHECKED BY: J. Beedle
DRAWN BY: C. Furman

STATE OF ALASKA
DEPARTMENT OF TRANSPORTATION
& PUBLIC FACILITIES
STATEWIDE DESIGN & ENGINEERING SERVICES DIVISION

WHITTIER FERRY TERMINAL
MODIFICATIONS
PROJECT NO. 68355

Hydraulic System Layout

PATH: G:\Wit\68355\Mf\PlanSet\49-Hydraulic layout.dwg — Tue, 22/Jun/04 11:57AM
PLOT: PSPACE 1=1 — Tab: H1

REVISIONS NO.	DATE	DESCRIPTION	PROJECT DESIGNATION	YEAR	SHEET NO.	TOTAL SHEETS
			68355	2004	49	52

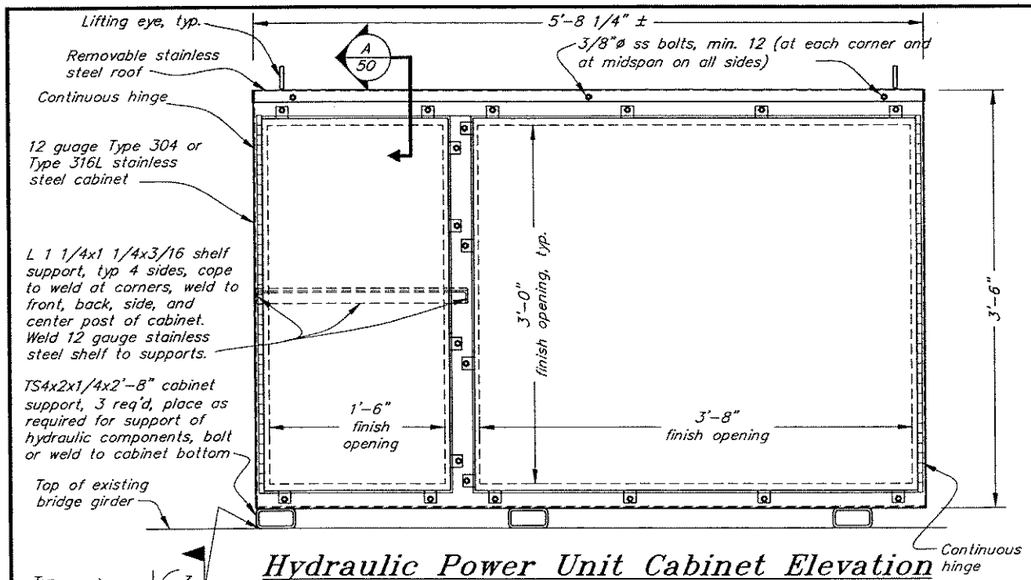

Hydraulic Power Unit Cabinet Elevation

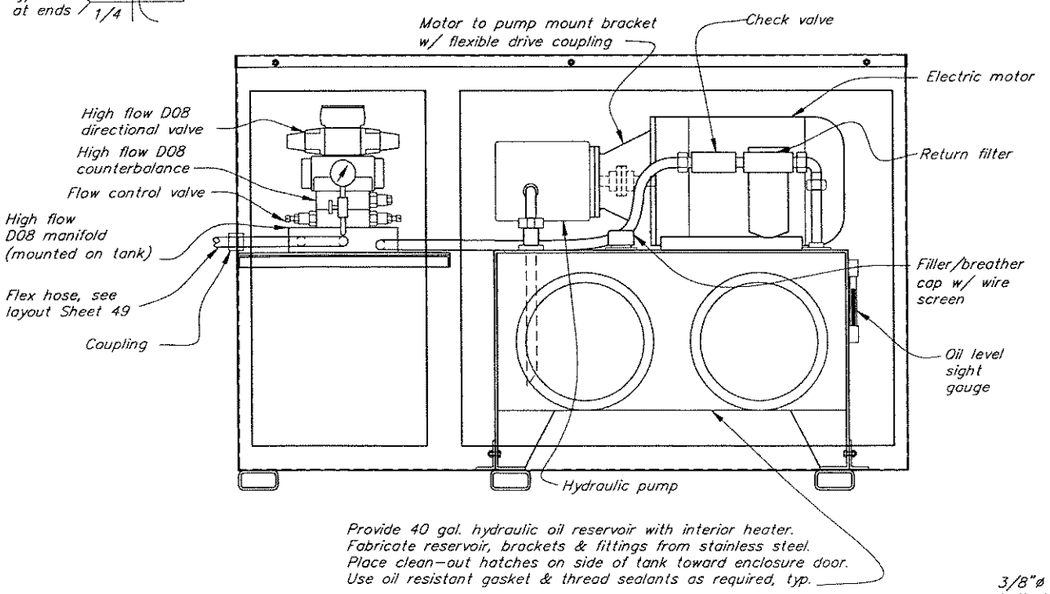

Hydraulic Power Unit Elevation

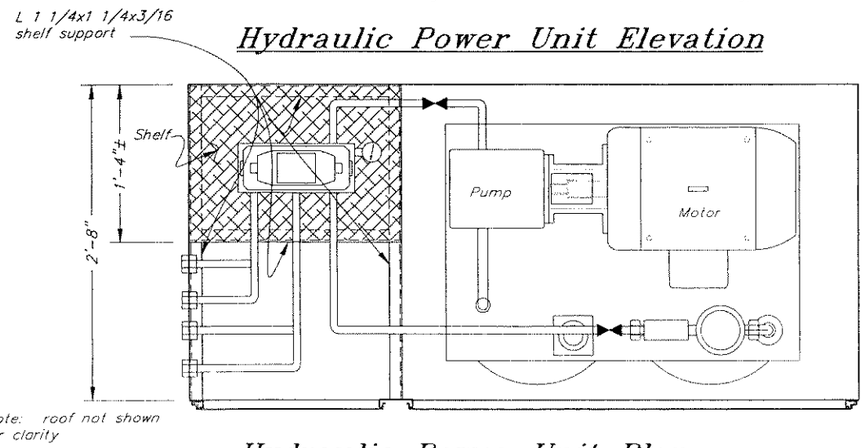

Hydraulic Power Unit Plan

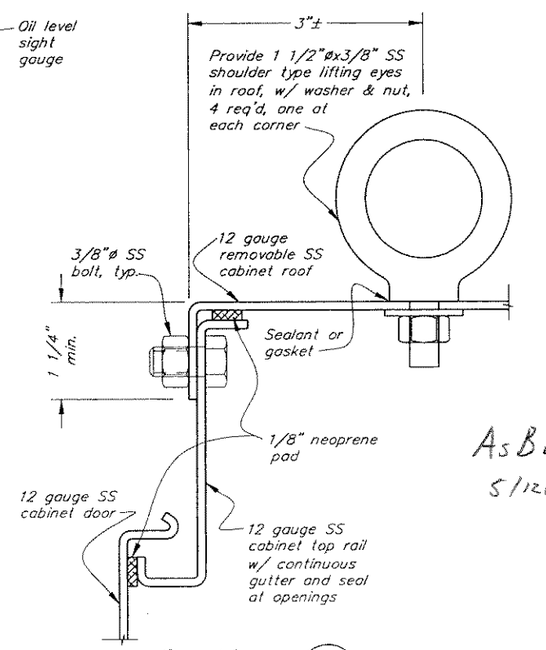

Section A/50

As Built 5/12/06

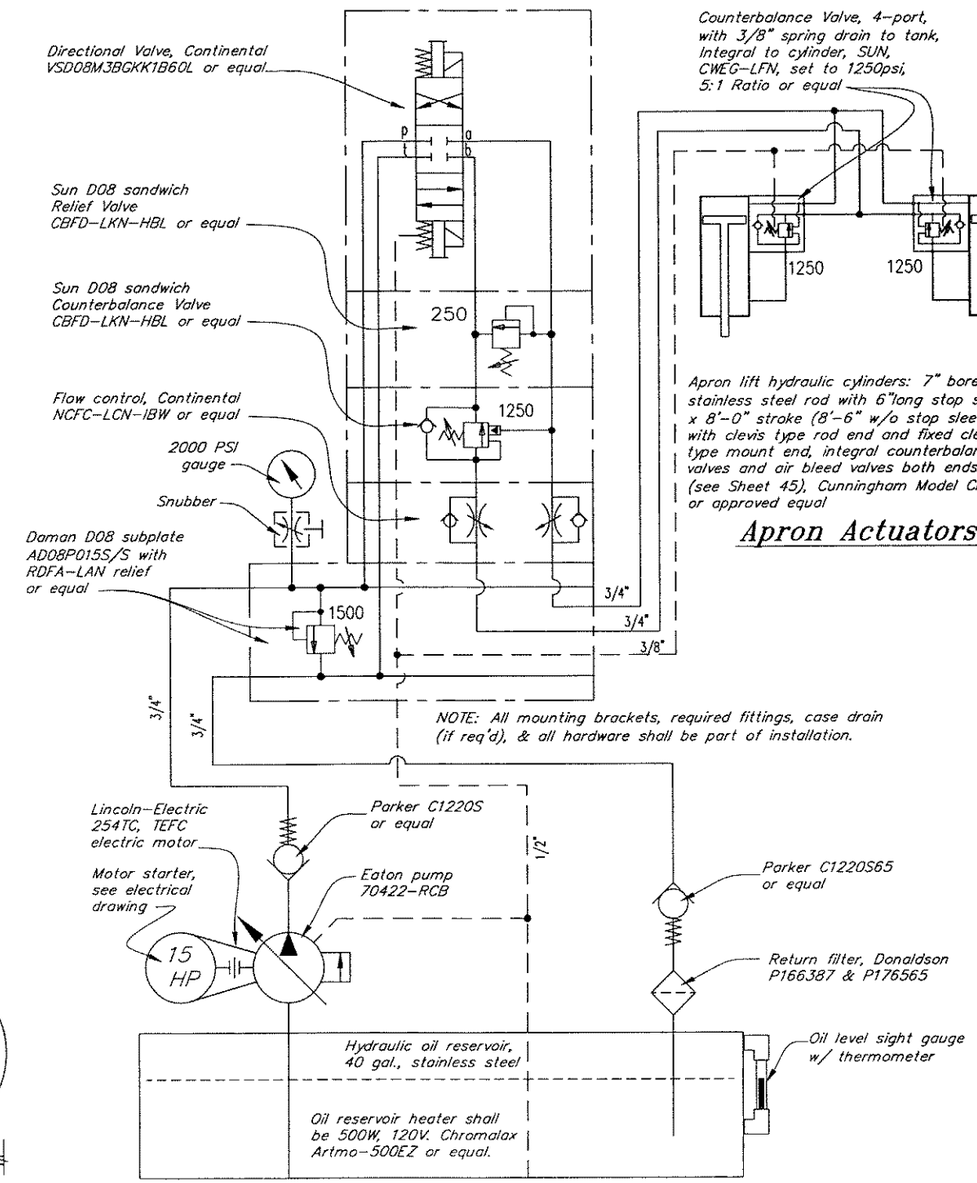

Apron Actuators

Hydraulic Schematic

DO NOT SCALE FROM THESE DRAWINGS USE DIMENSIONS

DESIGNED BY: K. Miller

STATE OF ALASKA 49th Kirk D. Miller CE-8550 REGISTERED PROFESSIONAL ENGINEER

2/10/04

CHECKED BY: J. Beedle

DRAWN BY: C. Fuman

STATE OF ALASKA
DEPARTMENT OF TRANSPORTATION
& PUBLIC FACILITIES
STATEWIDE DESIGN & ENGINEERING SERVICES DIVISION

WHITTIER FERRY TERMINAL MODIFICATIONS
PROJECT NO. 68355

Hydraulic Power Unit

PATH: Q:\Wit\68355\Mf\PlanSet\50-Hydraulic Pwer Unit.dwg — Fri, 18/Jun/04 01:43PM
PLOT: PSPACE 1=1 — Tab: H2

REVISIONS			PROJECT DESIGNATION	YEAR	SHEET NO.	TOTAL SHEETS
NO	DATE	DESCRIPTION				
			68355	2004	50	52

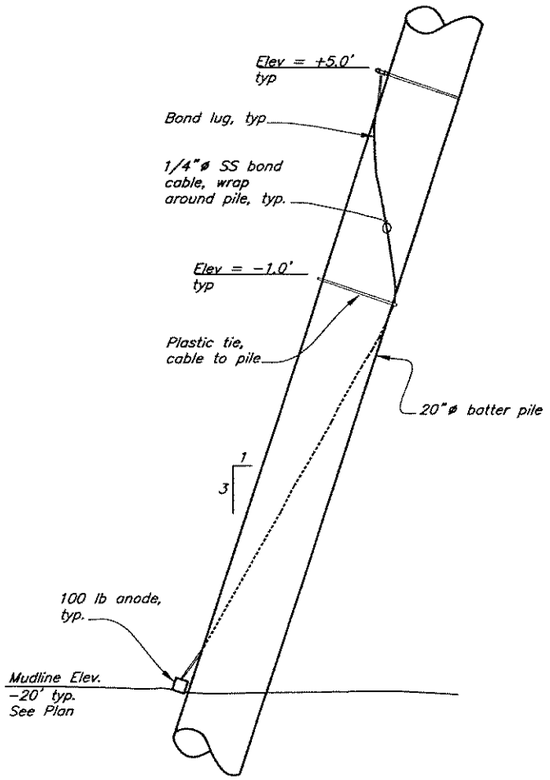

Typical Elevation
Mooring Float Structure

F1 & F2

2 anodes required

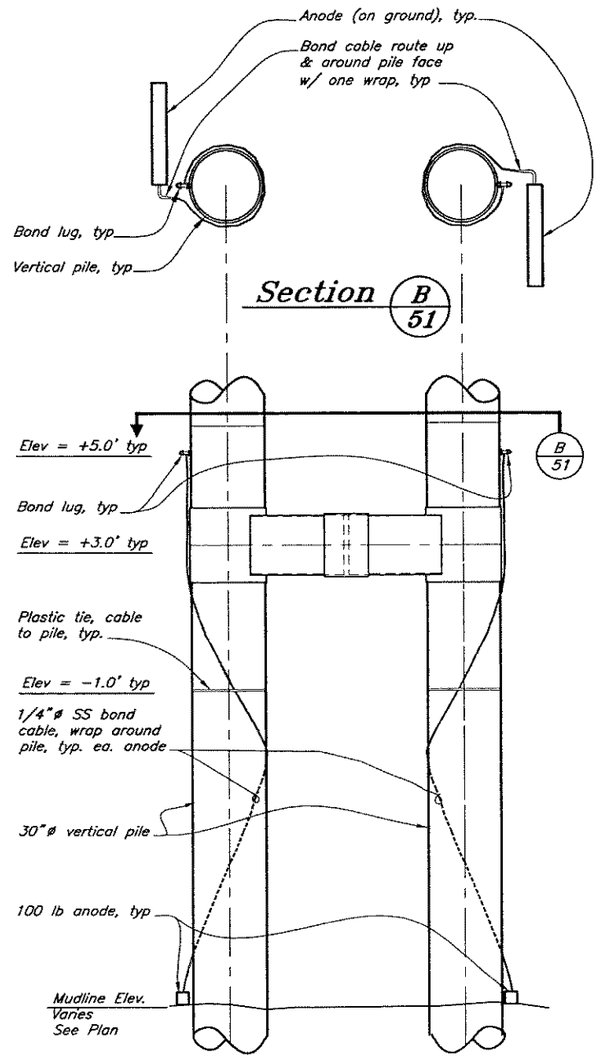

Typical Elevation
4 Pile Structure

R1, R2, L1, L2, B1-B4

16 anodes required

As Built 10
5/12/06

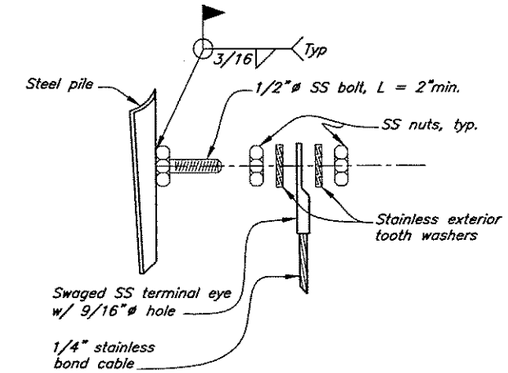

Detail
Bond Lug Connection

(apply min. 1/8" thick coating of waterproof corrosiion protection grease to all connections)

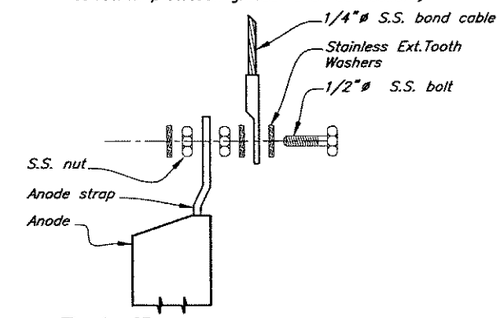

Detail
Anode & Cable Connection

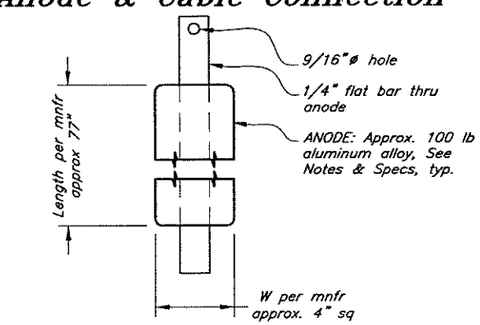

Detail
Anode

General Notes:

1. Anode connection details may vary from those indicated. Submit alternate details to the engineer for approval.

2. Std swaged fittings for bond cables may be replaced with 1/4" SS plate w/ 9/16"ø hole for direct connection to 1/2"ø bond lugs on piles (cad-weld 1/4" SS cable directly to plate in lieu of swaged fitting & 3/8"ø bolts).

3. Anode materials shall be aluminum alloy conforming to the following minimum reqmts:

Current Capacity = 1,100 amp hours/lb
Efficiency = 85%
Min Voltage Potential = 1.1 volts (CU/CU reference electrode in seawater).

Dimensions of anodes shall be determined by the manufacturer.

4. Unless otherwise noted, all bond cables, bond lugs, fastener plates and connection hardware shall be stainless steel, Type 316. Cables shall be sheathed in plastic tubing.

5. Repair all field welds and damaged coatings in accordance with Section 504 of the Contract Specifications.

DO NOT SCALE FROM THESE DRAWINGS USE DIMENSIONS

DESIGNED BY: K. Miller

STATE OF ALASKA 49th Kirk D. Miller CE-8550 REGISTERED PROFESSIONAL ENGINEER

7/8/04

CHECKED BY: J. Beedle
DRAWN BY: T. Mores

STATE OF ALASKA
DEPARTMENT OF TRANSPORTATION
& PUBLIC FACILITIES
STATEWIDE DESIGN & ENGINEERING SERVICES DIVISION

WHITTIER FERRY TERMINAL
MODIFICATIONS
PROJECT NO. 68355

Cathodic Protection
Anodes

PATH: Q:\Wit\68355\Mf\PlanSet\51-Cathodic Protection Anodes.dwg Thu, 24/Jun/04 11:28AM
PLOT: PSPACE 1=1 Tab: Layout1

REVISIONS			PROJECT DESIGNATION	YEAR	SHEET NO.	TOTAL SHEETS
NO.	DATE	DESCRIPTION	68355	2004	51	52

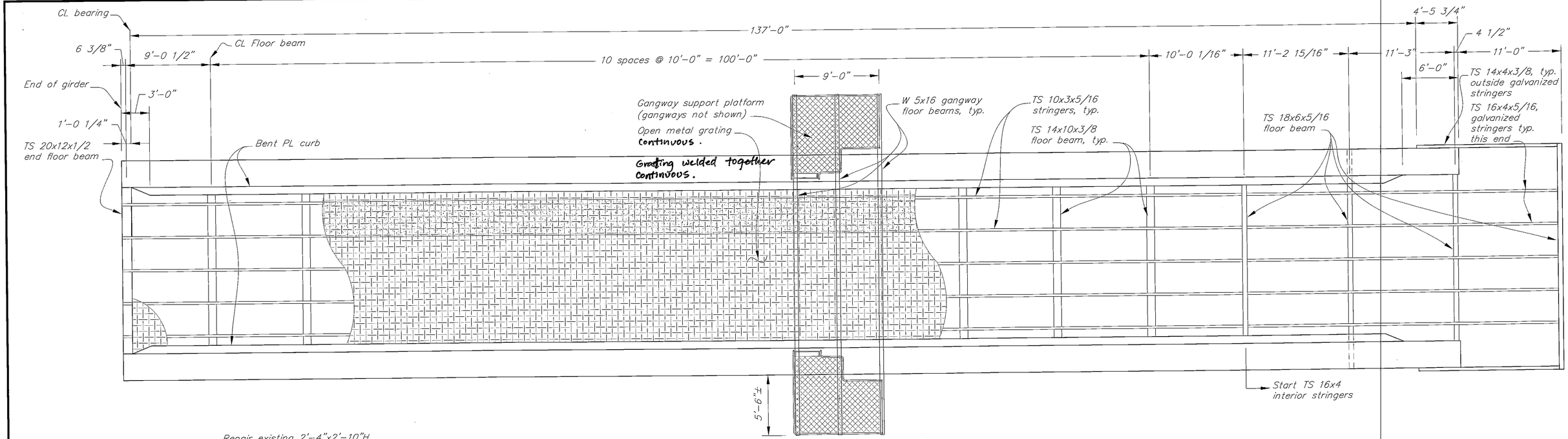

Plan

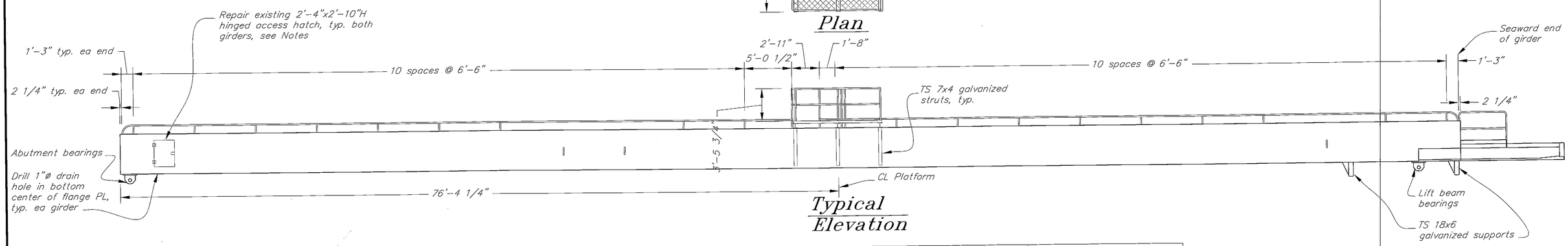

Typical Elevation

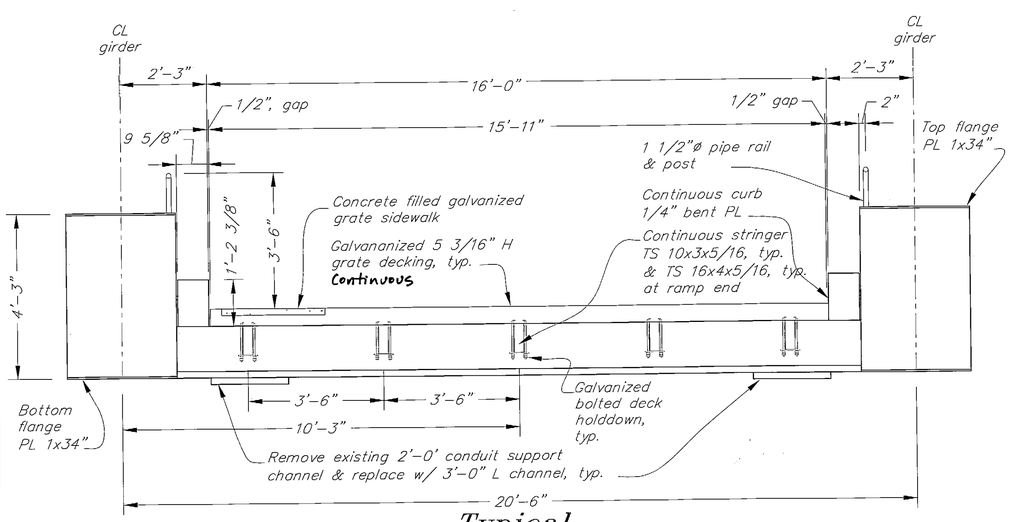

Typical Section (seaward view)

General Bridge Notes

1. All existing features and dimensions are not shown. Reference as-built plans for additional details not shown.
2. Existing bridge weight is approximately 212,000 lbs.

Bridge Painting Notes (Additive Alternate A)

1. Under Additive Alternate A, all exterior bridge surfaces shall be prepared and painted in accordance with Paint System 5 (over-coat process) per contract specifications. Bridge decking shall be removed prior to surface preparation and painting and replaced after painting is complete.
2. Existing bridge may either be removed and shop painted or field painted as approved by the Engineer. Submit removal and lifting details to the Engineer for approval. Reference contract specifications.
3. Paint interior of bridge girders near abutment ends with two prime coats only for a minimum of ten lineal feet. Remainder of girder interiors need not be painted. Remove all water, rust and scale in accordance with specifications.
4. Elements of the existing bridge structure that are presently galvanized shall be inspected. Localized areas of galvanized coating deterioration shall be prepared and coated with flame spray metalizing.

Bridge Repair Notes

1. Bridge modifications for the new vehicle apron and lift beam risers are shown on other plan sheets. Bridge repairs also consist of removing and replacing all electrical channel supports with new galvanized channels, placement of drain holes in the bottom of the girders at the abutment end and repair of the access hatch doors. Access door hatches shall be removed and repaired as required to facilitate ease of opening and closing. At minimum, this will consist of re-tapping threads for the door screws and placement of a water-seal around the perimeter of the door. Water seal material shall be 1/4-inch thick neoprene gasket and glued to the girder surface with an approved adhesive.

DO NOT SCALE FROM THESE DRAWINGS USE DIMENSIONS

DESIGNED BY: K. Miller

STATE OF ALASKA 49th Kirk D. Miller CE-8550 REGISTERED PROFESSIONAL ENGINEER

CHECKED BY: J. Beedle
DRAWN BY: T. Mores

STATE OF ALASKA
DEPARTMENT OF TRANSPORTATION & PUBLIC FACILITIES
STATEWIDE DESIGN & ENGINEERING SERVICES DIVISION

WHITTIER FERRY TERMINAL MODIFICATIONS
PROJECT NO. 68355
Transfer Bridge Repair & Painting Plan

PATH: Q:\Wit\68355\Mf\PlanSet\52-bridge painting.dwg
PLOT: PSPACE 1=1 TAB: DETAIL
Tue, 21/Sep/04 10:51AM

REVISIONS			PROJECT DESIGNATION	YEAR	SHEET NO.	TOTAL SHEETS
NO.	DATE	DESCRIPTION	68355	2004	52	52

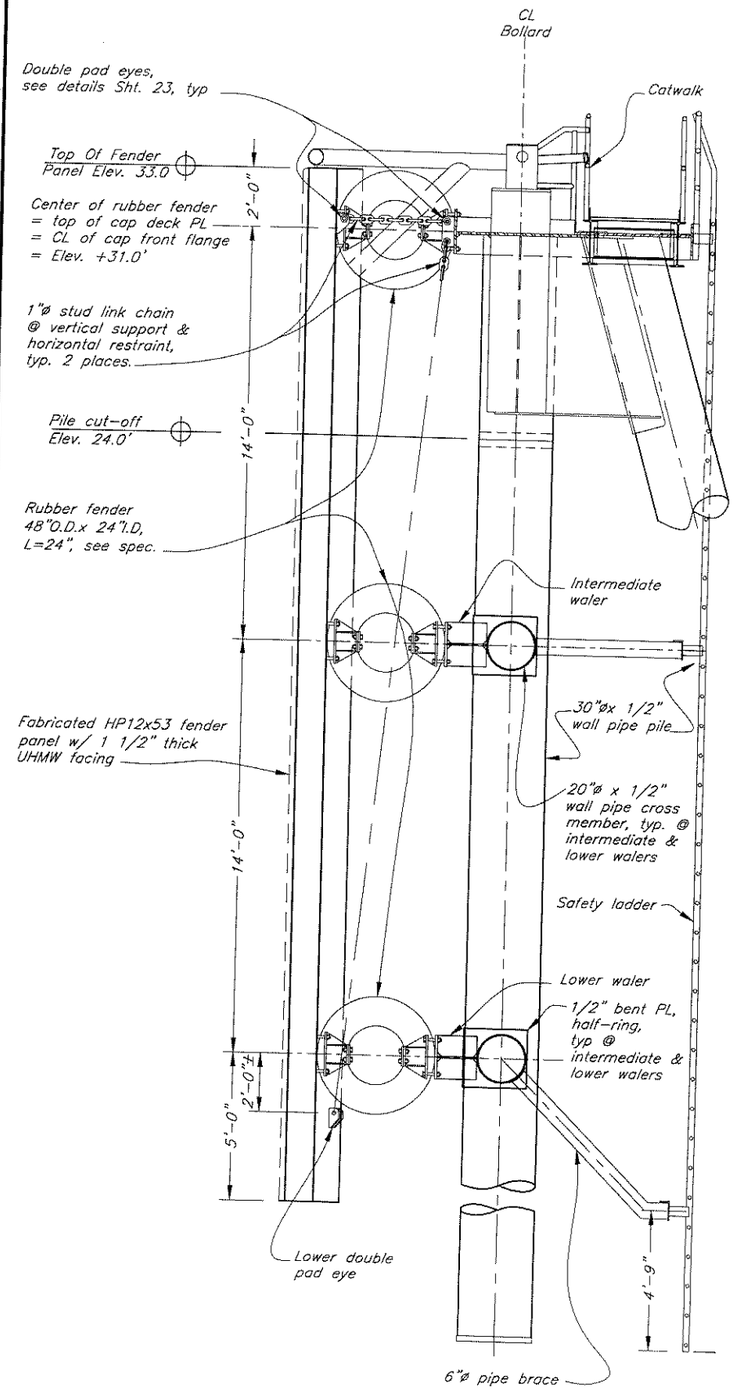

Existing Mooring Structure B-3
Typical Side Elevation

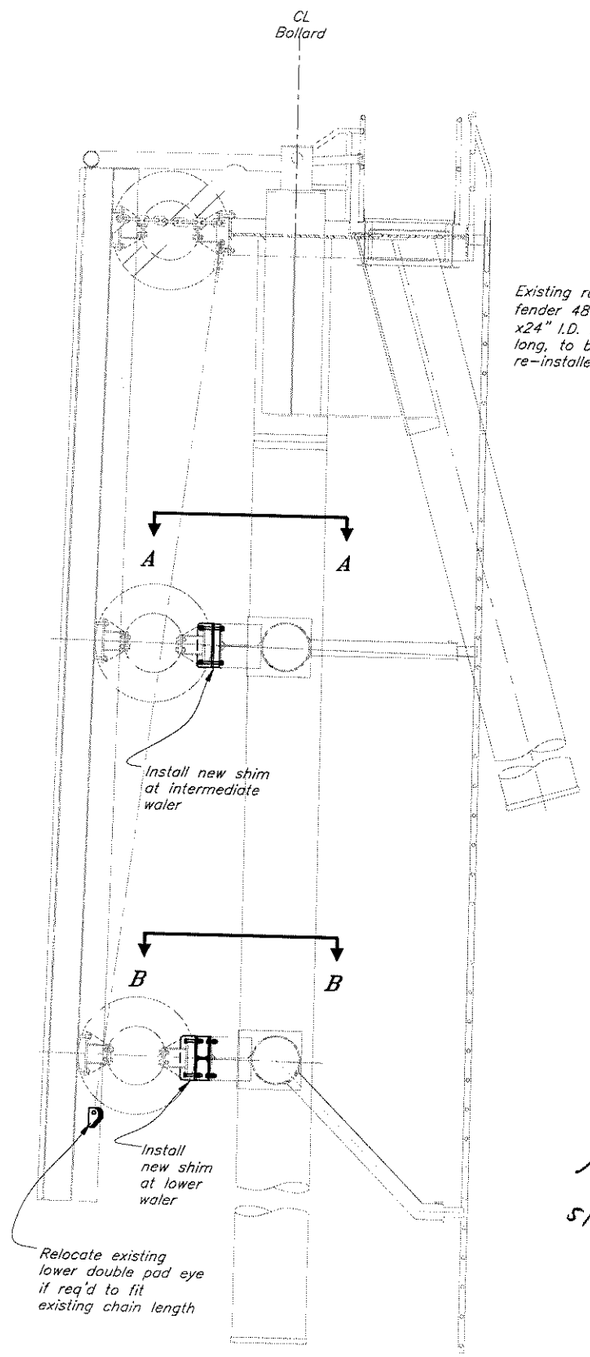

Mooring Structure B-3 Modifications
Typical Side Elevation

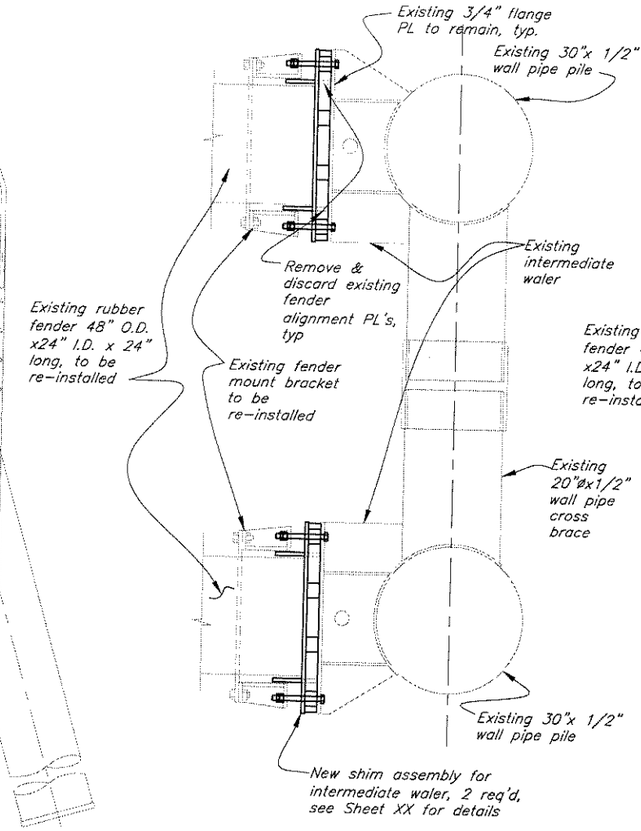

Section A-A
Intermediate Waler Shim

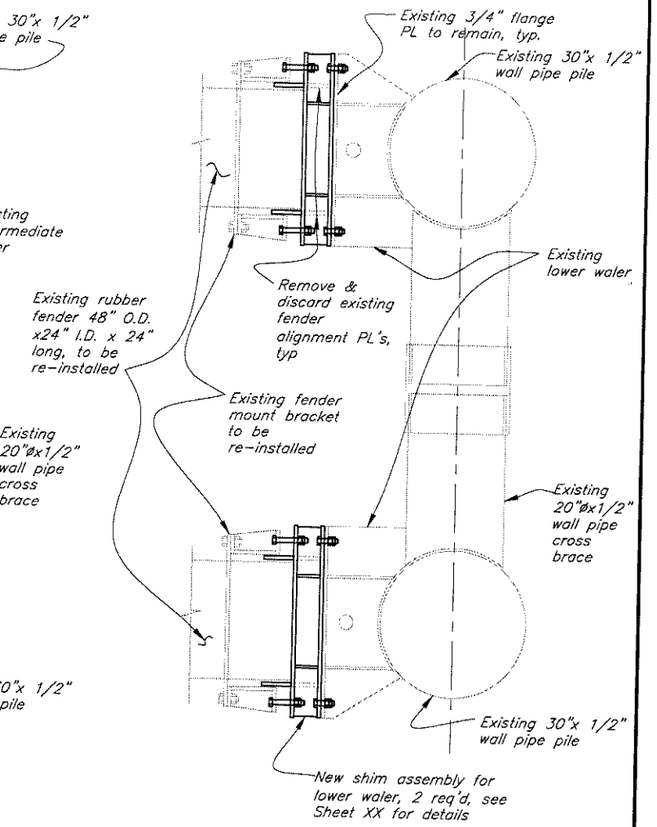

Section B-B
Lower Waler Shim

Note: Reference contract plans, Sheets 21-26, for existing fender structure details not shown.

As Built
5/22/06
KD

DO NOT SCALE FROM THESE DRAWINGS USE DIMENSIONS

DESIGNED BY: K. Miller

STATE OF ALASKA 49th Kirk D. Miller CE-8550 REGISTERED PROFESSIONAL ENGINEER

CHECKED BY: J. Beedle
DRAWN BY: C. Furman

STATE OF ALASKA
DEPARTMENT OF TRANSPORTATION
& PUBLIC FACILITIES
STATEWIDE DESIGN & ENGINEERING SERVICES DIVISION

WHITTIER FERRY TERMINAL
MODIFICATIONS
PROJECT NO. 68355

Change Order
B3 Fender Modification

PATH: O:\Wif\68355\Mf\Construction\Change Orders\Dolphin B3 Fix.dwg
PLOT: PSPACE 1=1
TAB: DETAIL Mon, 22/May/06 10:22AM

REVISIONS			PROJECT DESIGNATION	YEAR	SHEET NO.	TOTAL SHEETS
NO.	DATE	DESCRIPTION	68355	2005	1	2

Sheet 52a

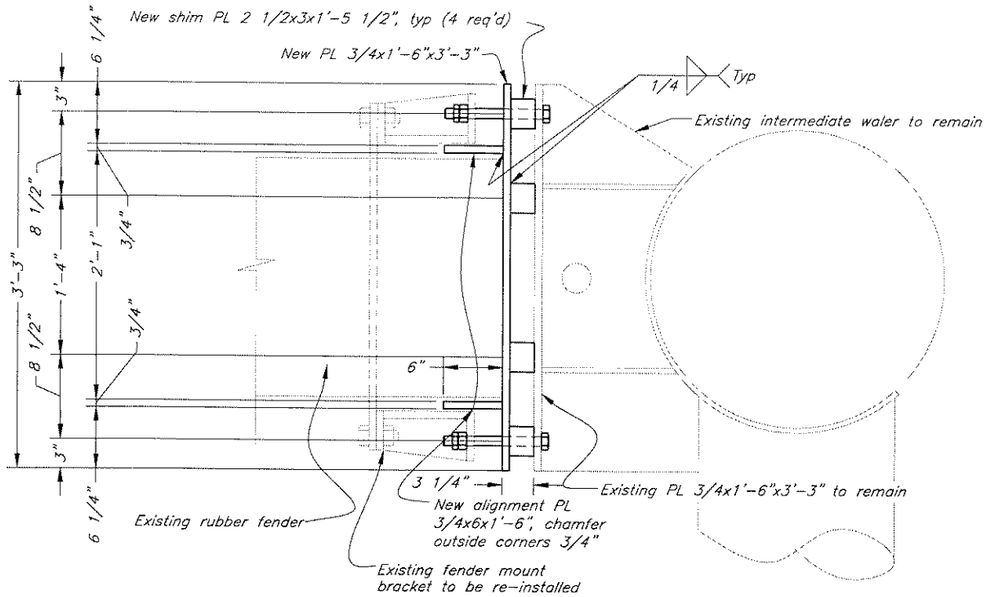

Intermediate Waler Shim Plan View

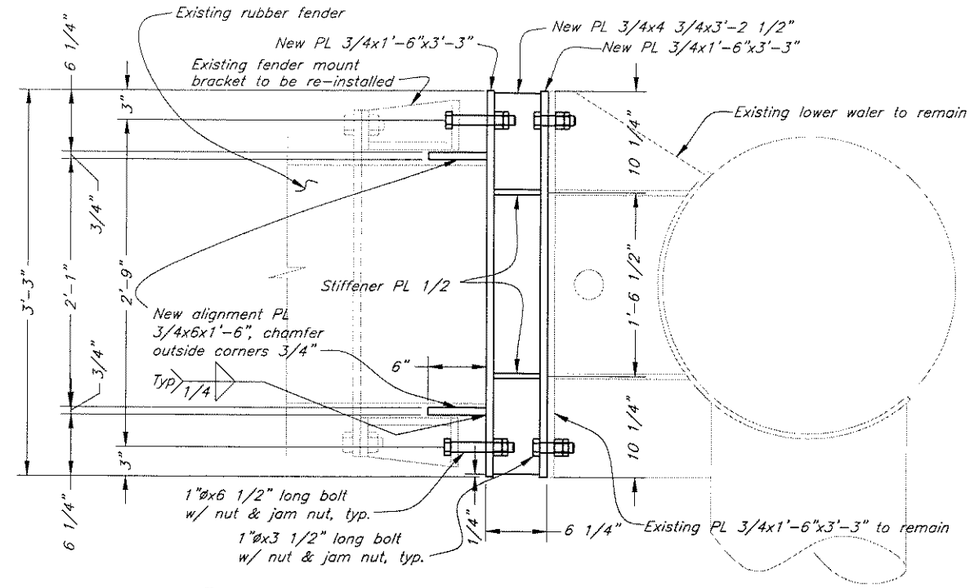

Lower Waler Shim Plan View

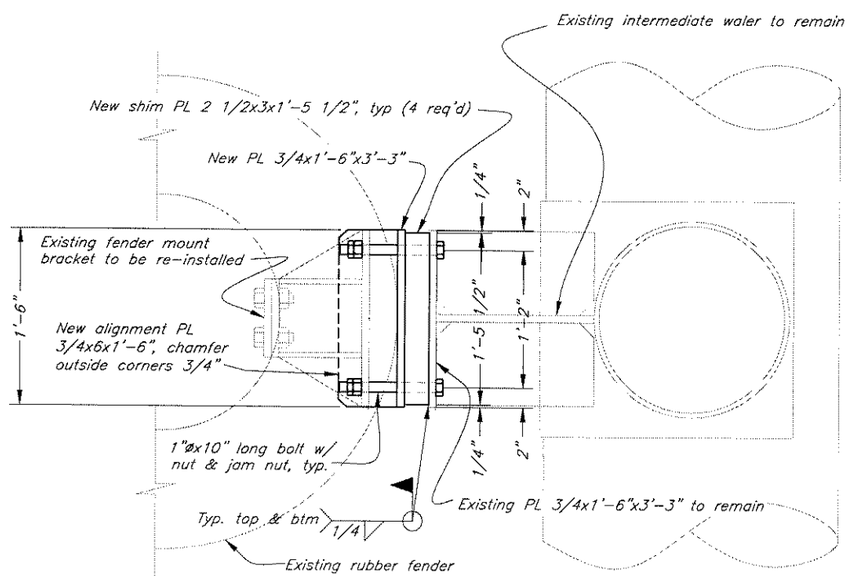

Intermediate Waler Shim Elevation View

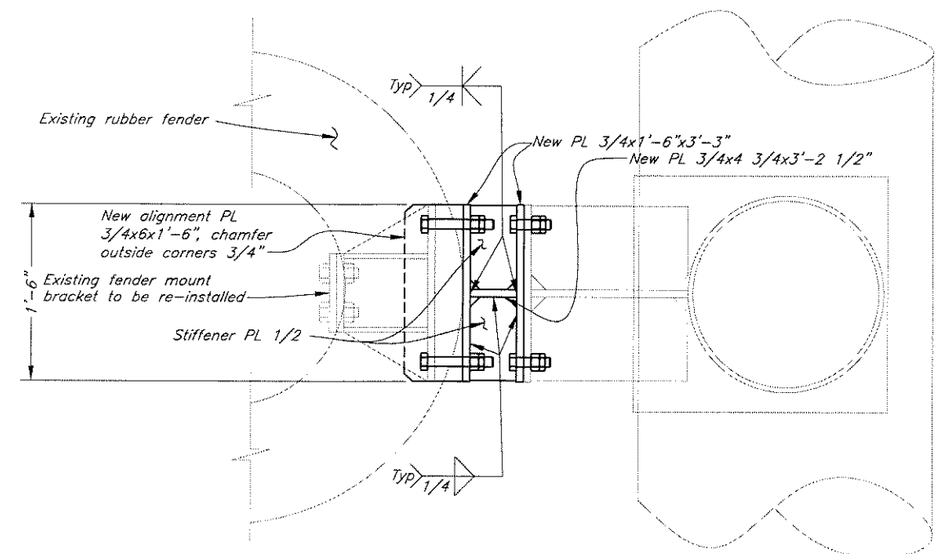

Lower Waler Shim Elevation View

As Built
5/22/06
WD

Sheet S2b

DO NOT SCALE FROM THESE DRAWINGS USE DIMENSIONS

DESIGNED BY: K. Miller

STATE OF ALASKA 49th Kirk D. Miller CE-8550 REGISTERED PROFESSIONAL ENGINEER

CHECKED BY: J. Beedle
DRAWN BY: C. Furman

STATE OF ALASKA
DEPARTMENT OF TRANSPORTATION
& PUBLIC FACILITIES
STATEWIDE DESIGN & ENGINEERING SERVICES DIVISION

WHITTIER FERRY TERMINAL
MODIFICATIONS
PROJECT NO. 68355

Change Order
B3 Fender Modification

PATH: O:\Wif\68355\Mf\Construction\Change Orders\Dolphin B3 Fix.dwg
PLOT: PSPACE 1=1
TAB: DETAIL Mon, 22/May/06 10:22AM

REVISIONS			PROJECT DESIGNATION	YEAR	SHEET NO.	TOTAL SHEETS
NO.	DATE	DESCRIPTION	68355	2005	2	2

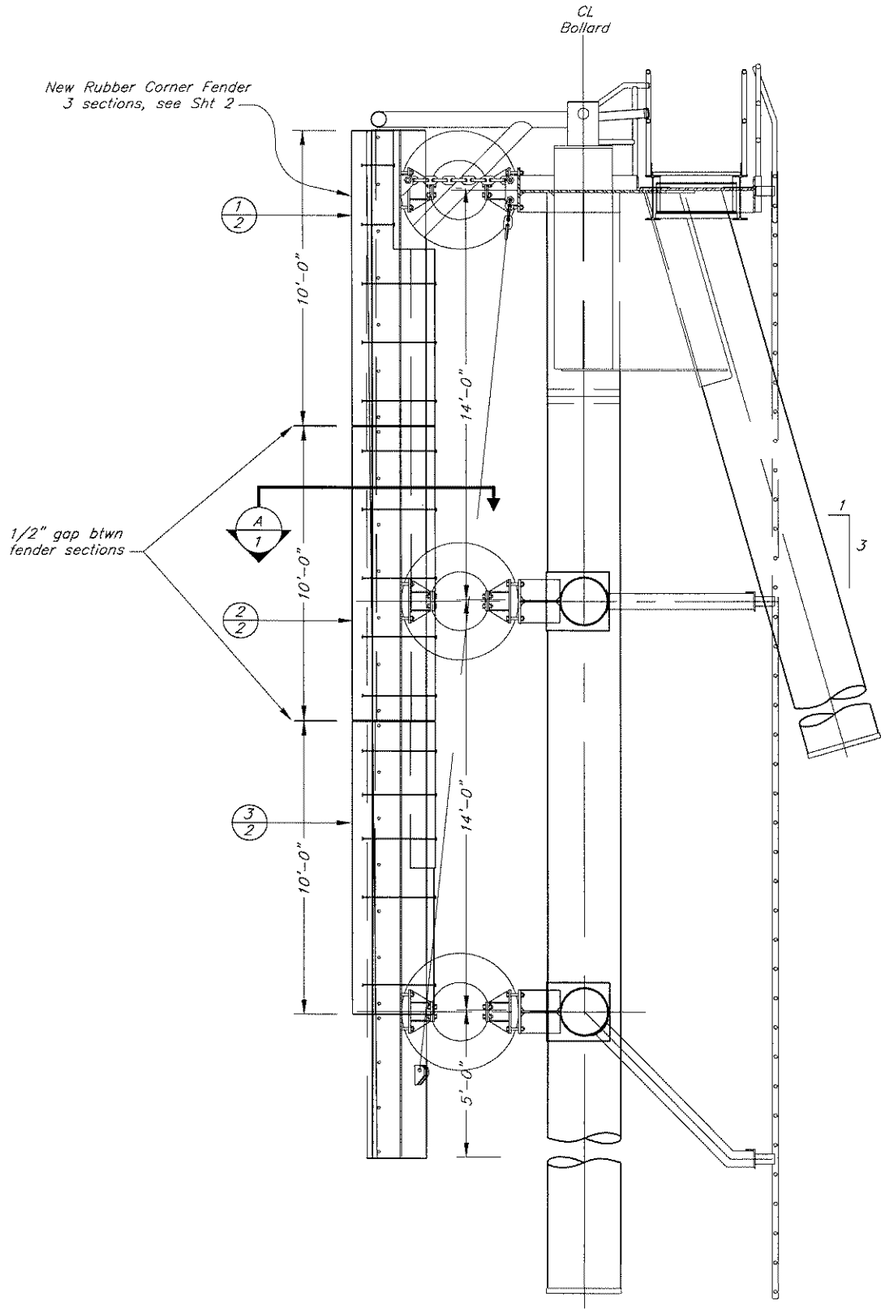

Fender Structure B4
Side Elevation

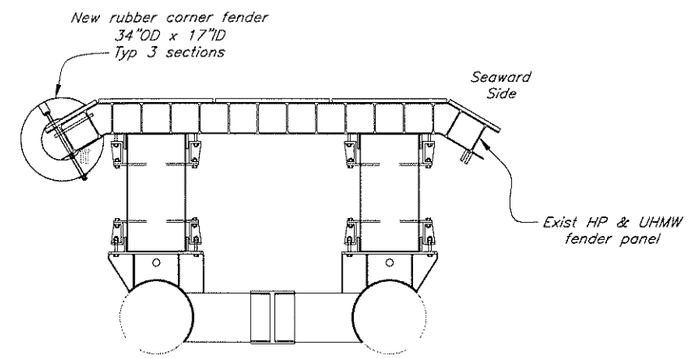

A/1 Fender Structure B4
Typical Section

As Built
5/22/06
CO

Sheet S2c

DO NOT SCALE FROM THESE DRAWINGS USE DIMENSIONS

DESIGNED BY: B. Savikko

STATE OF ALASKA 49th Kirk D. Miller CE-8550 REGISTERED PROFESSIONAL ENGINEER

CHECKED BY: J. Beedle
DRAWN BY: Staff

STATE OF ALASKA
DEPARTMENT OF TRANSPORTATION
& PUBLIC FACILITIES
STATEWIDE DESIGN & ENGINEERING SERVICES DIVISION

WHITTIER FERRY TERMINAL
MODIFICATIONS
PROJECT NO. 68355

Fender B4 Corner Repair

PATH: O:\Wit\68355\Mt\Construction\Dolphin B4 Corner Fender.dwg
PLOT: PSPACE 1=1 TAB: DETAIL Mon, 22/May/06 10:24AM

REVISIONS			PROJECT DESIGNATION	YEAR	SHEET NO.	TOTAL SHEETS
NO.	DATE	DESCRIPTION	68355	2005	1	2

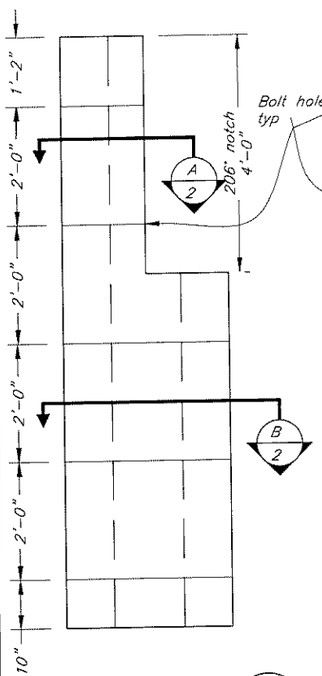

Top Fender 1/2

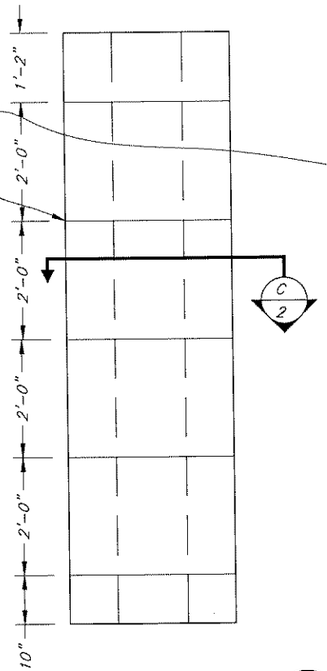

Middle Fender 2/2

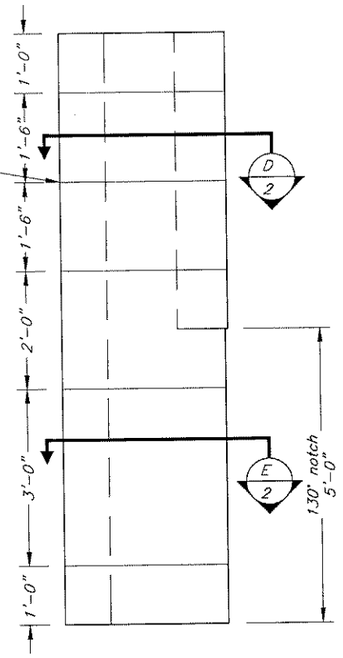

Bottom Fender 3/2

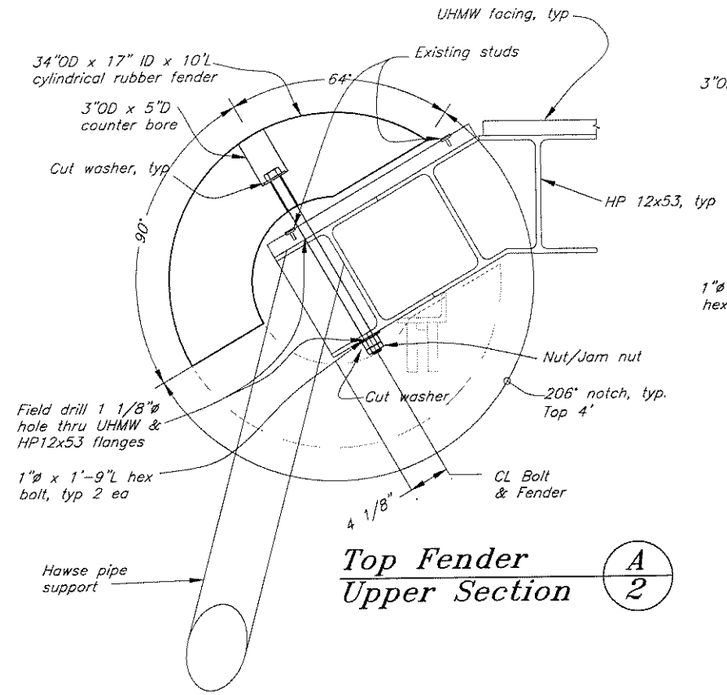

Top Fender A/2
Upper Section

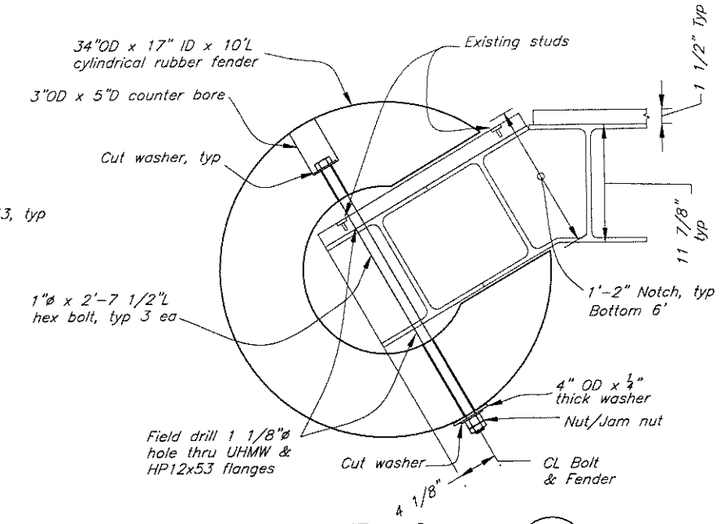

Top Fender B/2
Lower Section

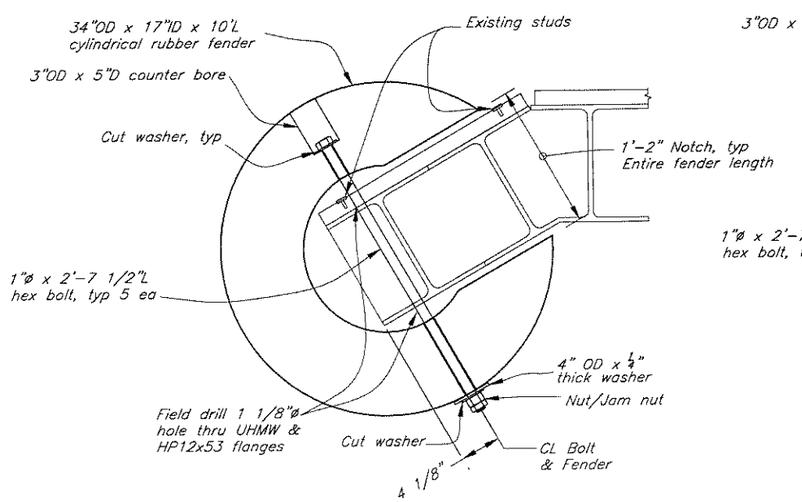

Middle Fender C/2

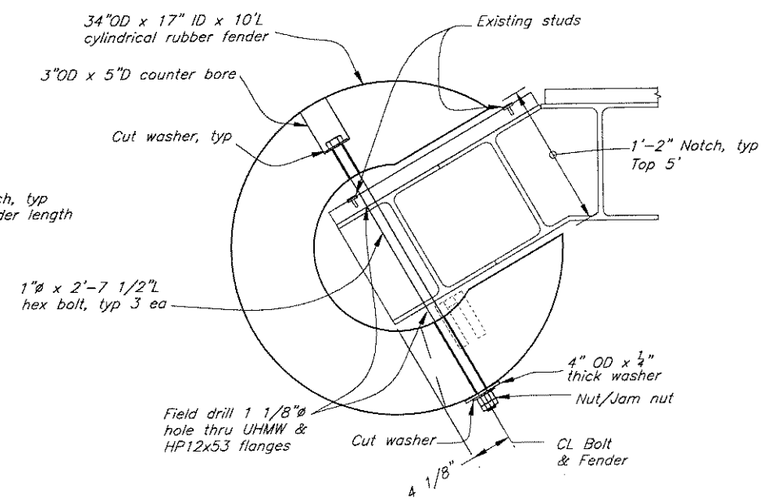

Bottom Fender D/2
Upper Section

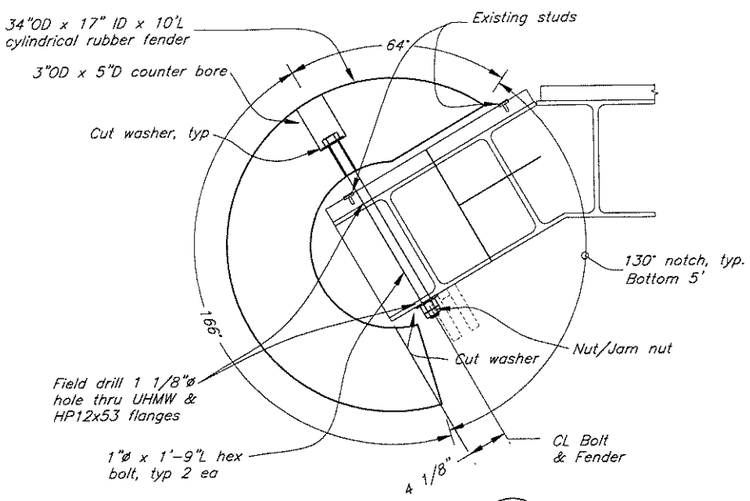

Bottom Fender E/2
Lower Section

As Built
5/22/06

Sheet 52d

DO NOT SCALE FROM THESE DRAWINGS USE DIMENSIONS

DESIGNED BY: B. Savikko

STATE OF ALASKA 49th Kirk D. Miller CE-8550 REGISTERED PROFESSIONAL ENGINEER

CHECKED BY: J. Beedle
DRAWN BY: Staff

STATE OF ALASKA
DEPARTMENT OF TRANSPORTATION
& PUBLIC FACILITIES
STATEWIDE DESIGN & ENGINEERING SERVICES DIVISION

WHITTIER FERRY TERMINAL
MODIFICATIONS
PROJECT NO. 68355

Fender B4 Corner Repair

PATH: Q:\Wif\68355\Mf\Construction\Dolphin B4 Corner Fender.dwg
PLOT: PSPACE 1=1
TAB: DETAIL Mon, 22/May/06 10:24AM

REVISIONS			PROJECT DESIGNATION	YEAR	SHEET NO.	TOTAL SHEETS
NO.	DATE	DESCRIPTION	68355	2005	2	2

Q:\Wit\68355\Mf\Construction\CatwalkC1C4Modification.dwg

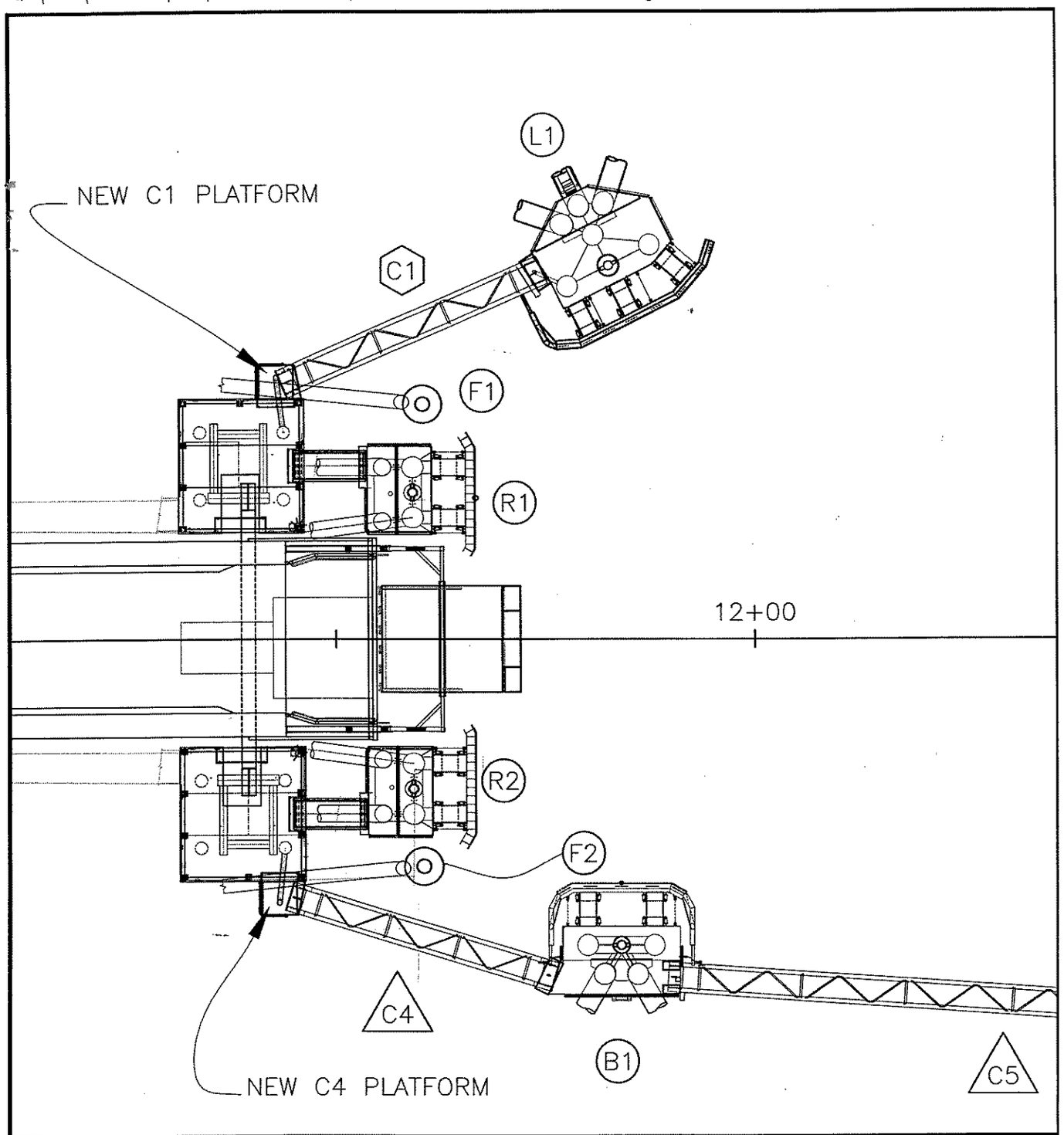

STATE OF ALASKA
49th
Kirk D. Miller
CE-8550
REGISTERED PROFESSIONAL ENGINEER

CATWALK C1 & C4
LAYOUT PLAN

WHITTIER FERRY
TERMINAL MODIFICATIONS
PROJECT NO. 68355

DATE: APRIL, 2005 SHEET 1 OF 5

As Built
5/22/06
CO

Sheet 52E

Q:\Wit\68355\Mf\Construction\CatwalkC1C4Modification.dwg

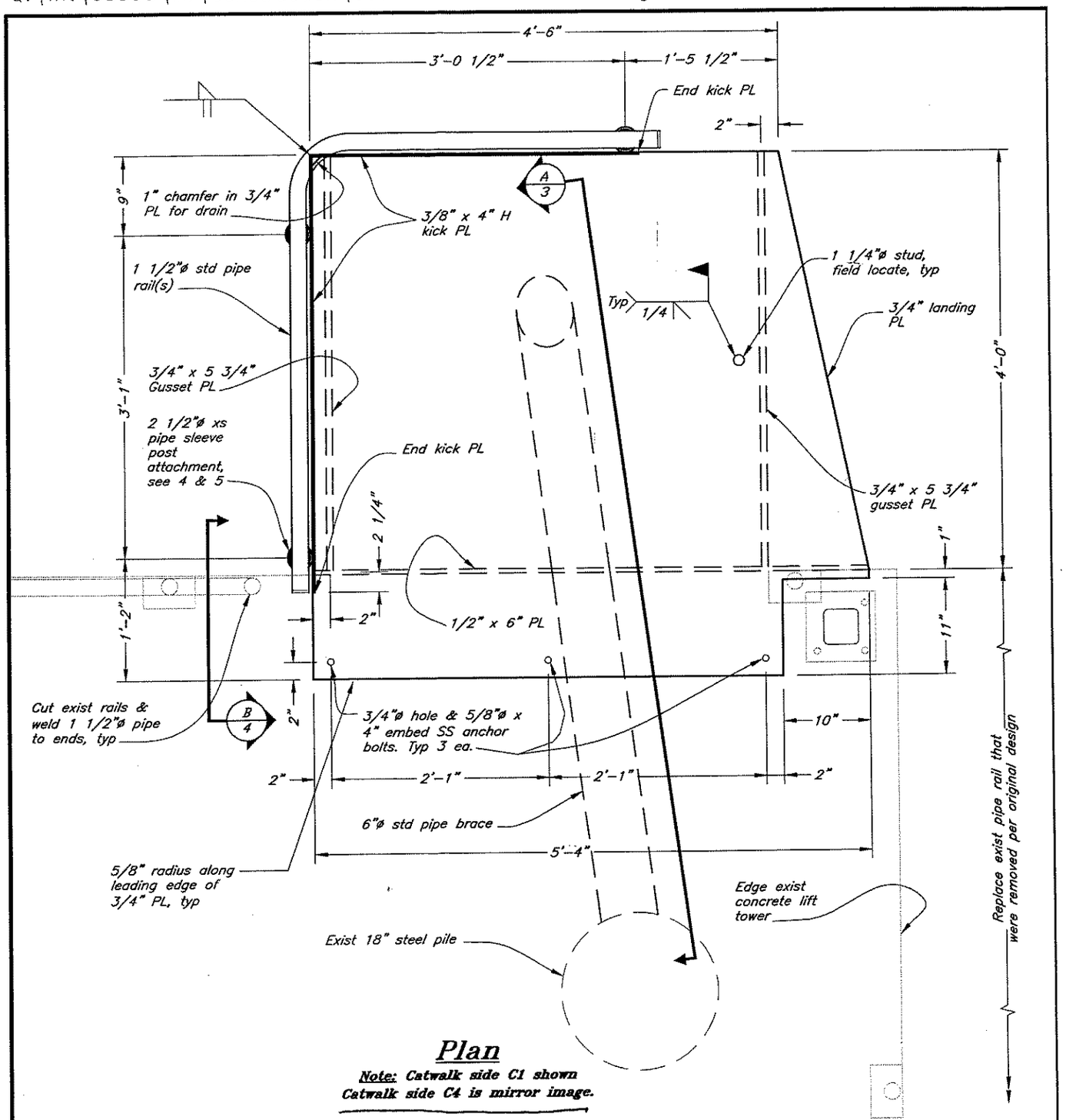

Plan

Note: Catwalk side C1 shown
Catwalk side C4 is mirror image.

STATE OF ALASKA
49th
Kirk D. Miller
CE-8550
REGISTERED PROFESSIONAL ENGINEER

CATWALK LANDING PLAN

Sheet 52 F

WHITTIER FERRY
TERMINAL MODIFICATIONS
PROJECT NO. 68355

DATE: APRIL, 2005 SHEET 2 OF 5

As Built
5/22/06

Q:\Wit\68355\Mf\Construction\CatwalkC1C4Modification.dwg

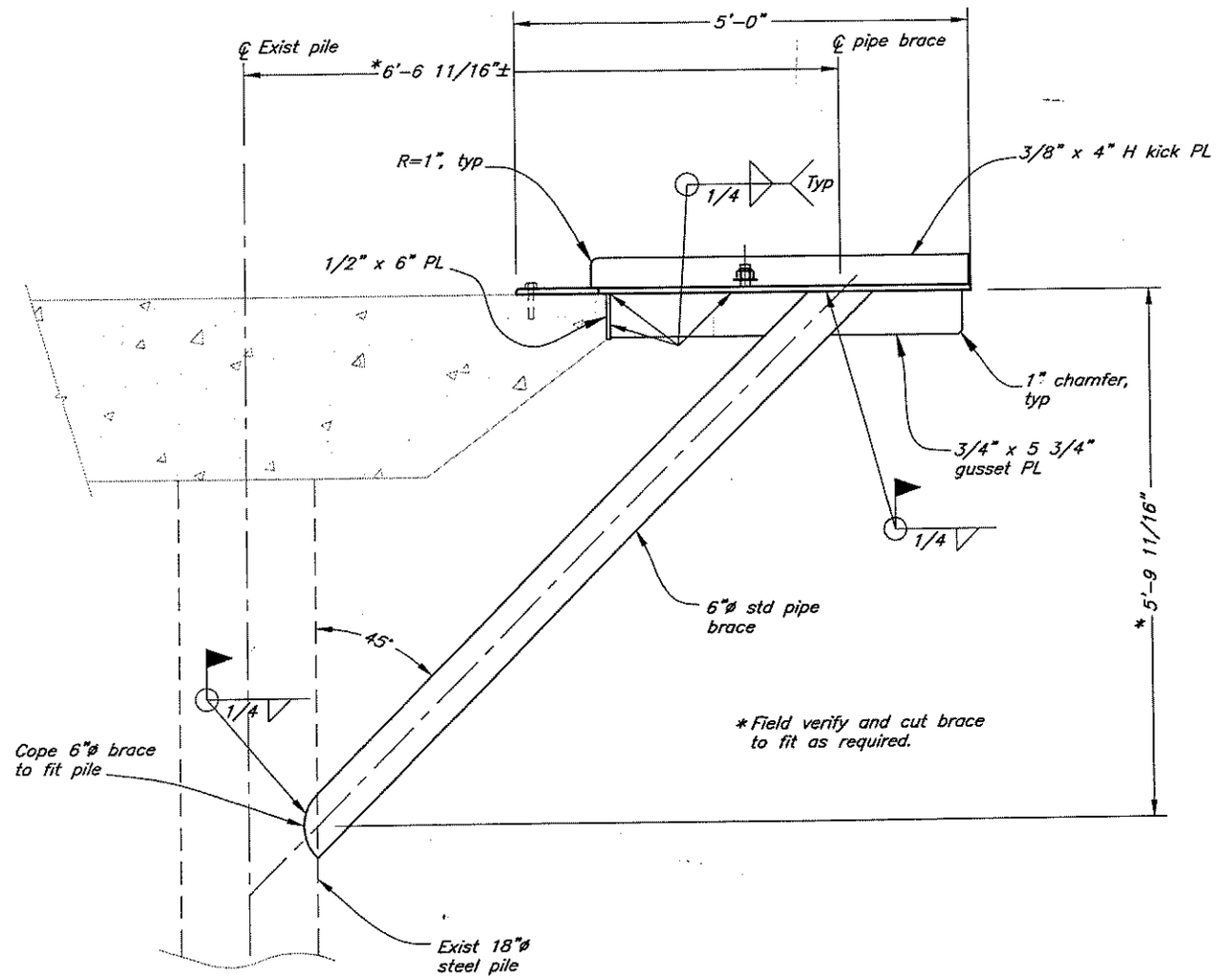

Section A-A

STATE OF ALASKA
49th
Kirk D. Miller
CE-8550
REGISTERED PROFESSIONAL ENGINEER

CATWALK LANDING SECTION

Sheet 52G

WHITTIER FERRY
TERMINAL MODIFICATIONS
PROJECT NO. 68355

DATE: APRIL, 2005 SHEET 3 OF 5

As Built
5/22/06

Q:\Wit\68355\Mf\Construction\CatwalkC1C4Modification.dwg

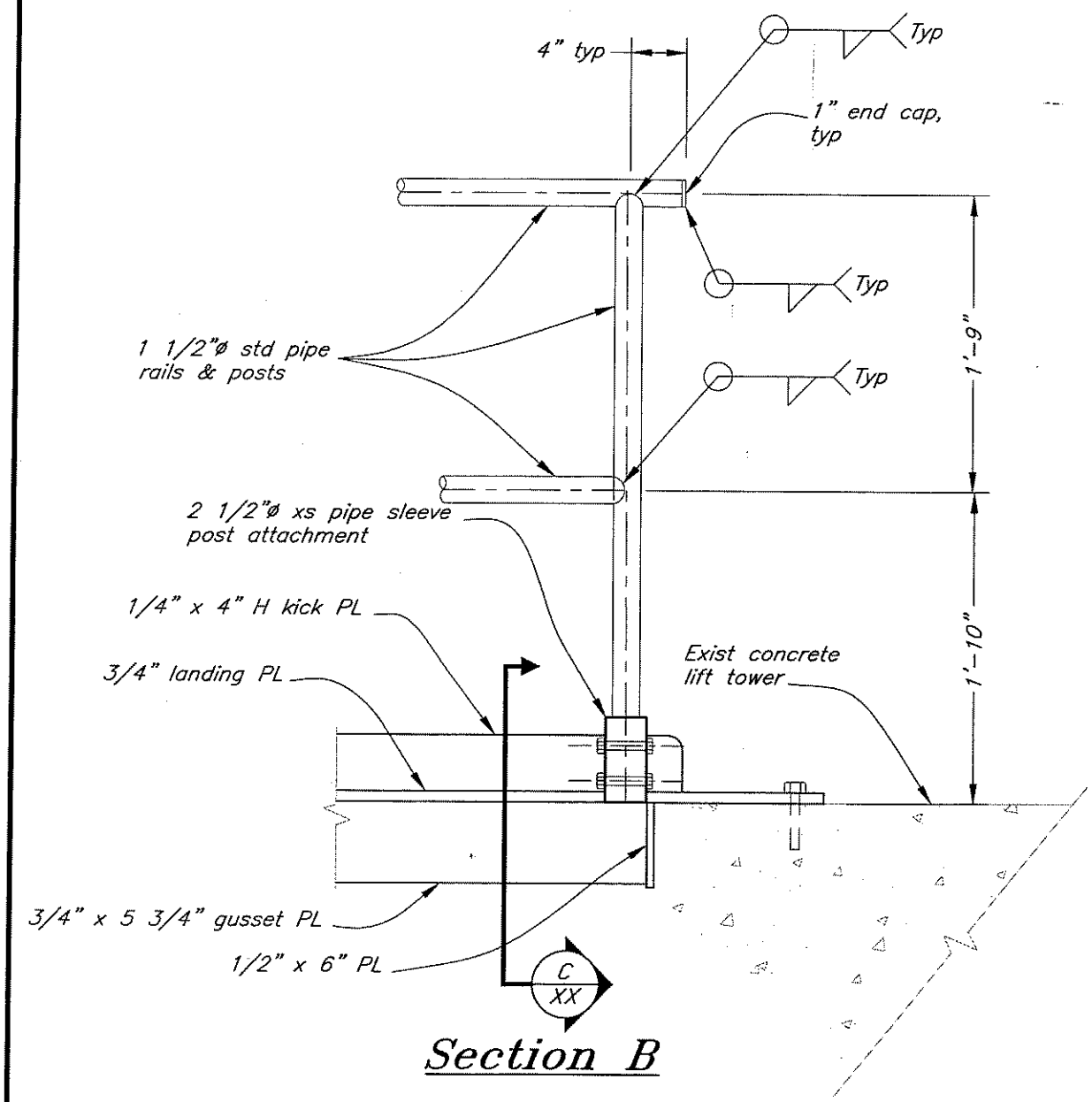

Section B

As Built
5/22/06
CO

STATE OF ALASKA
49th
Kirk D. Miller
CE-8550
REGISTERED PROFESSIONAL ENGINEER

CATWALK LANDING HANDRAIL

Sheet S2H

WHITTIER FERRY
TERMINAL MODIFICATIONS
PROJECT NO. 68355

DATE: APRIL, 2005 SHEET 4 OF 5

Q:\Wit\68355\Mf\Construction\CatwalkC1C4Modification.dwg

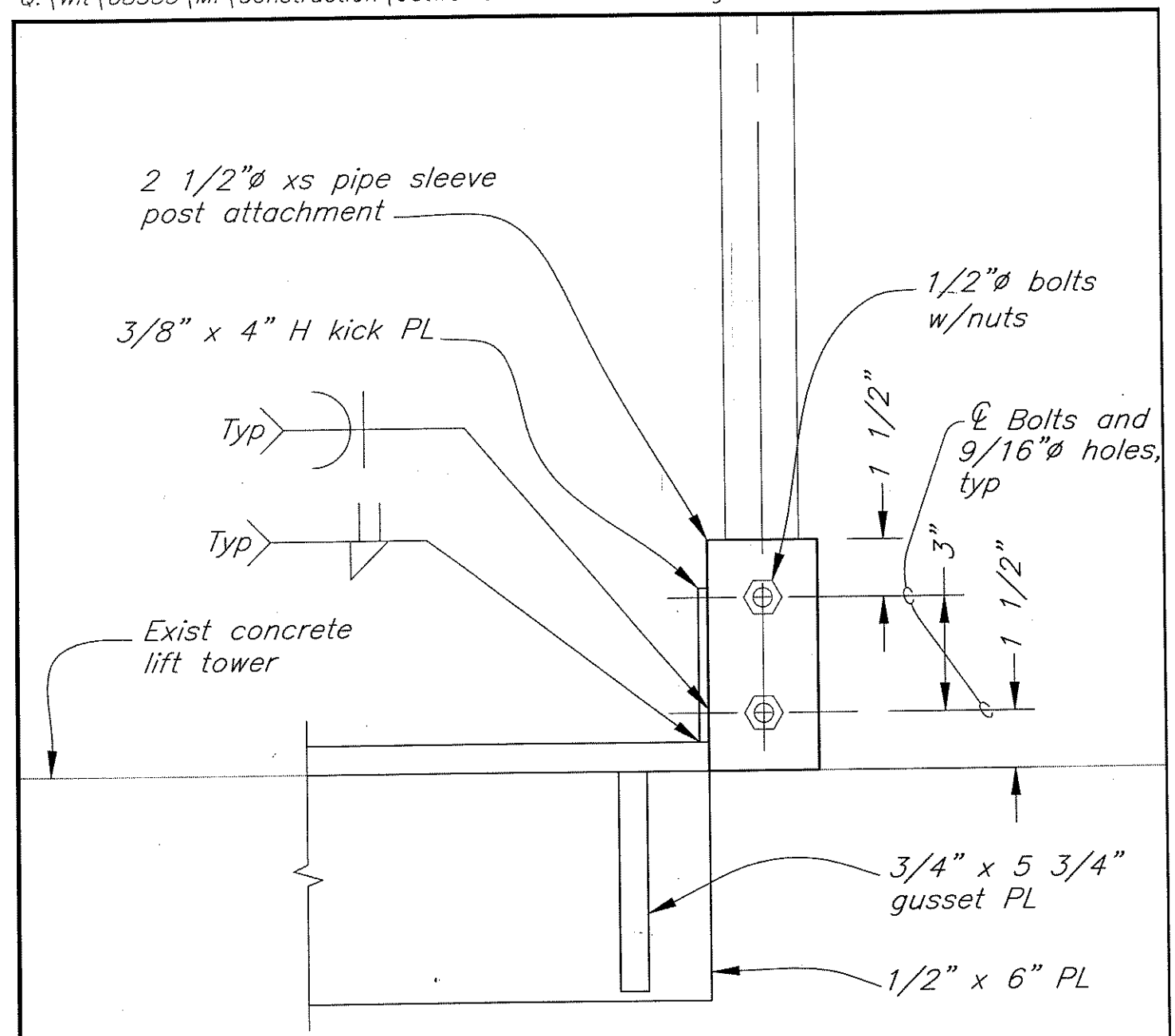

Section C

STATE OF ALASKA
49th
Kirk D. Miller
CE-8550
REGISTERED PROFESSIONAL ENGINEER

CATWALK LANDING HANDRAIL DETAIL

Sheet 52 I

WHITTIER FERRY
TERMINAL MODIFICATIONS
PROJECT NO. 68355

DATE: APRIL, 2005 SHEET 5 OF 5

As Built
5/22/06