STATE OF ALASKA

DEPARTMENT OF TRANSPORTATION & PUBLIC FACILITIES

NO.	DATE	REVISIONS	STATE	PROJECT DESIGNATION	YEAR	SHEET NO.	TOTAL SHEETS
			ALASKA	0902043/SFHWY00072	2021	A1	124
			CDS ROUTE: 291400		MILEPOINT: 10.30 TO 10.58		
			LATITUDE: 55°19'34"N		LONGITUDE: 131°31'32"E		

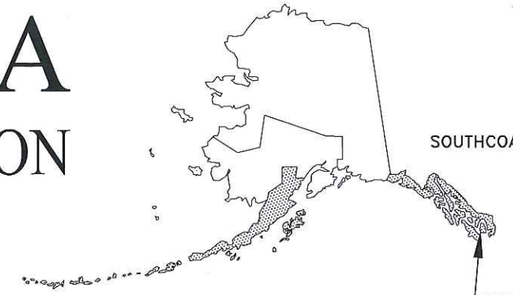

PROPOSED HIGHWAY PROJECT

KTN HERRING COVE BRIDGE IMPROVEMENTS PROJECT NO. 0902043/SFHWY00072

GRADING, DRAINAGE, PAVING, PATHWAYS, SIGNING, STRIPING, ILLUMINATION, BRIDGE AND SIDE SLOPE STABILIZATION

PROJECT SUMMARY	
WIDTH OF PAVEMENT	20' TO 28
LENGTH OF PAVING	1,765'
LENGTH OF PROJECT	1,557'

DESIGN DESIGNATIONS	
PROJECT TYPE	3R
FUNCTIONAL CLASS	MAJOR COLLECTOR
ADT (2018)	761
ADT (2041)	871
DHV (2018)	100
DHV (2041)	110
PERCENT TRUCKS (T)	16%
DIRECTIONAL SPLIT (D)	50 / 50
DESIGN SPEED (V)	45 MPH
DESIGN EAL'S (20 YEARS)	350,000

The undersigned hereby certifies that this duplicated document is an exact and true copy of the original.

November 15, 2021

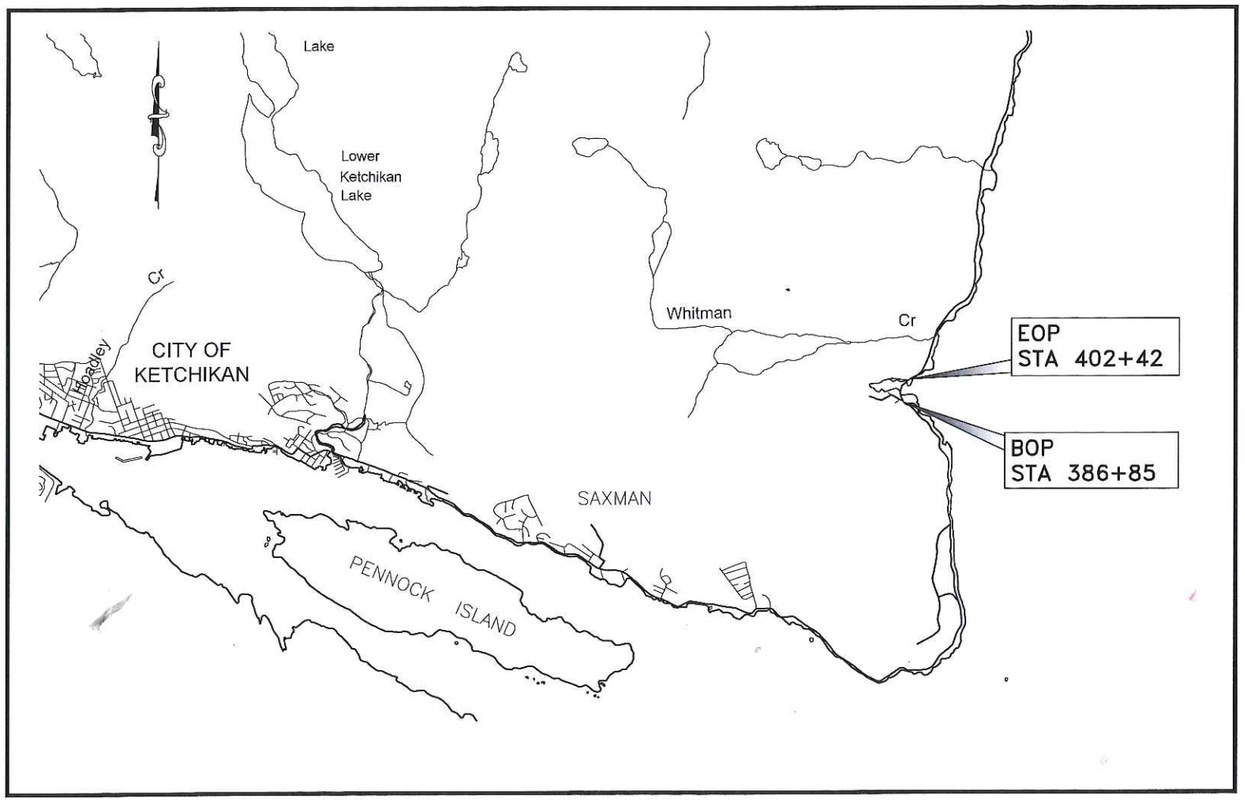

VICINITY MAP

USE THESE PLANS IN CONJUNCTION WITH THE STATE OF ALASKA STANDARD SPECIFICATIONS FOR HIGHWAY CONSTRUCTION, 2020 EDITION AND THE PROJECT SPECIAL PROVISIONS.

STATE OF ALASKA
DEPARTMENT OF TRANSPORTATION & PUBLIC FACILITIES
6860 GLACIER HIGHWAY, JUNEAU, AK 99801
(907) 465-1763

APPROVED: 8/12/2021
REGIONAL PRECONSTRUCTION ENGINEER — DATE
KIRK D. MILLER, P.E.

CONCUR: 12 Aug 2021
REGIONAL DIRECTOR — DATE
D. LANCE MEARIG, P.E.

Carrie Neary
10/23/2024

FILE	Q:\Ktn\SFHWY00072\Planset\00072_A1.dwg	DATE	6/18/2021 16:02	LAYOUT	A1	DESIGNED	STAFF	CHECKED	STAFF	DRAFTED	STAFF

NO.	DATE	REVISION

STATE	PROJECT DESIGNATION	YEAR	SHEET NO.	TOTAL SHEETS
ALASKA	0902043/SFHWY00072	2021	A2	5

NOT TO SCALE

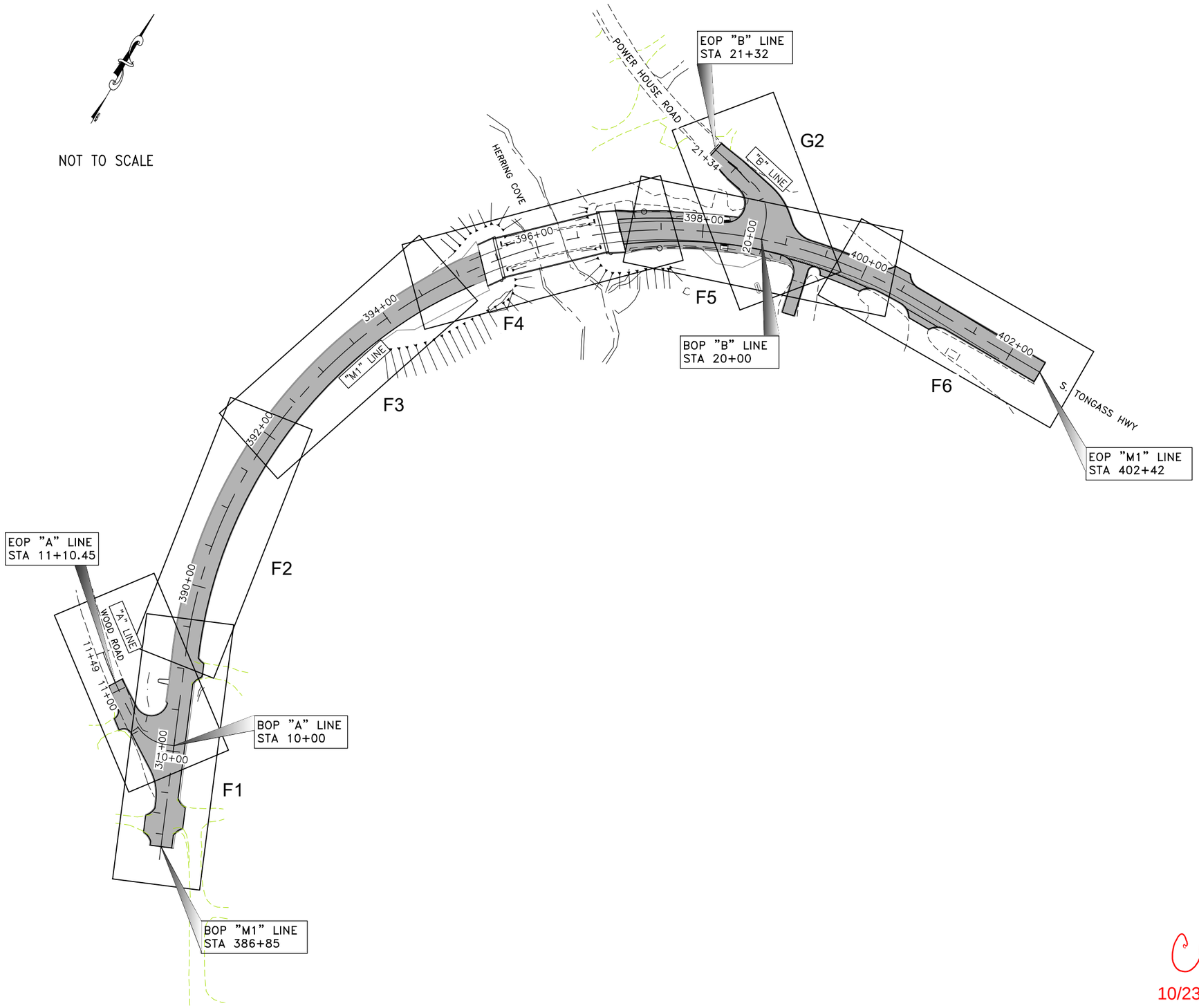

INDEX OF SHEETS

SHEET NO.	DESCRIPTION
A1	TITLE SHEET
A2	LAYOUT & INDEX OF SHEETS
A3	LEGEND & SYMBOLS
A4–A5	SURVEY CONTROL
B1–B2	TYPICAL SECTIONS
C1	ESTIMATE OF QUANTITIES
D1–D3	SUMMARIES
E1–E9	MISCELLANEOUS DETAILS
F1–F6	PLAN & PROFILE
G1	WOOD ROAD INTERSECTION PLAN & PROFILE
G2	POWERHOUSE ROAD INTERSECTION PLAN & PROFILE
G3–G4	BRIDGE APPROACH GRADING PLAN
H1–H4	SIGNING & STRIPING PLANS
H5	SIGNING & STRIPING DETAILS & SUMMARIES
M1–M5	SOLDIER PILE WALL PLAN & PROFILE
N1–N22	BRIDGE PLANS
P1–P2	STORMDRAIN PLAN & PROFILE
Q1–Q5	EROSION SEDIMENT CONTROL PLANS
S1–S6	PHASING PLANS
T1–T4	PERMANENT CONSTRUCTION SIGNS
U1–U45	ELECTRICAL PLANS

THE FOLLOWING STANDARD PLANS APPLY TO THIS PROJECT:

C–04.12	G–00.05	I–20.20	T–06.00
C–05.20	G–05.11S	I–81.00	T–20.04
D–01.02	G–05.11W	L–03.10	T–21.04
D–04.22	G–10.20	L–23.02	
D–20.05	G–14.01	L–25.01	
D–22.01	G–20.12	L–30.11	
	G–29.00	M–13.01	
	G–47.00	M–16.01	
		M–20.15	
		M–23.13	
		S–01.02	
		S–05.02	
		S–20.10	
		S–30.05	
		S–32.02	

CN
10/23/2024

STATE OF ALASKA 49TH
BRAN POLLARD, P.E.
106710
REGISTERED PROFESSIONAL ENGINEER
8/9/2021

STATE OF ALASKA
DEPARTMENT OF TRANSPORTATION
AND PUBLIC FACILITIES

KTN HERRING COVE BRIDGE
IMPROVEMENTS

PROJECT LAYOUT

FILE	DATE	LAYOUT	DESIGNED	CHECKED	DRAFTED
Q:\Ktn\SFHWY00072\Planset\00072_A2.dwg	8/9/2021 11:37	A2	STAFF	STAFF	STAFF

NO.	DATE	REVISION	STATE	PROJECT DESIGNATION	YEAR	SHEET NO.	TOTAL SHEETS
			ALASKA	0902043/SFHWY00072	2021	A3	5

	RECOVERED	SET
BLM MONUMENT		
GLO MONUMENT		
USC&GS MONUMENT		
PRIMARY MONUMENT		
CENTERLINE MONUMENT IN CASING		
PRIMARY R.O.W. MONUMENT		
BEARING OBJECT		
MISCELLANEOUS MONUMENT		
LINE OF SIGHT MONUMENT		
CONCRETE R.O.W. MONUMENT		
BENCHMARK		BM
REBAR AND CAP		
REBAR		
IRON PIPE		
PK NAIL		
SPIKE		
HUB AND TACK		
CONSTRUCTION CENTERLINE	5+00	
MICELLANEOUS CENTERLINE	10+00	
STATION EQUATION	"L"48+97.23 POT BK= "O"48+97.23 PC AHD	
PROJECT RIGHT-OF-WAY LINE	ROW	
EXISTING RIGHT-OF-WAY LINE		
EXISTING PROPERTY LINE		
CONTROLLED ACCESS LINE	C/A	
EXISTING EASEMENT LINE		
PROPOSED EASEMENT LINE		
PROPOSED CUT SLOPE LIMIT		
PROPOSED FILL SLOPE LIMIT		
SECTION LINE		
1/4 SECTION LINE		
1/16 SECTION LINE		
TOWNSHIP & RANGE LINE	T. 2 N. / T. 1 N. / T. 1 E. / T. 2 E.	
MEANDER LINE	M1 M2 M3	

	EXISTING	PROPOSED
SANITARY SEWER (FLOW DIRECTION)	SS	SS
FUEL LINE	O	O
GAS LINE	G	G
WATER LINE	W	W
METER, VALVE, FIRE HYDRANT	W	W
EXISTING STORM DRAIN (FLOW DIRECTION)	SD	
PROPOSED STORM DRAIN	S-10, SD, S-11, P-11, P-10, MH	
FIBER OPTIC LINE	FO	
DIRECT BURIAL TELEPHONE CABLE	T	T
DIRECT BURIAL ELECTRIC CABLE	E	E
ELECTRIC LINE (OVERHEAD)		
POWER POLE LINE		
JOINT USE POWER & TELEPHONE		
TELEPHONE POLE LINE		
POLE ANCHOR		
STUB POLE (POWER OR TELEPHONE)		
TELEPHONE DUCT	T	T
TELEPHONE PEDESTAL		
BURIED CABLE MARKER		
PIPELINE MARKER OR VALVE		
CATCH BASIN OR DROP INLET		
MANHOLE	MH	MH
SANITARY SEWER CLEAN OUT		
RIPRAP		
SPECIAL DITCH CENTERLINE		
HIGH TIDE LINE	HTL	HTL
D-1 SHOULDER		

	EXISTING	PROPOSED
ROADWAY/PAVEMENT EDGE		
FENCE	X	
CURB AND GUTTER		
DETECTABLE WARNINGS		
GUARDRAIL		
CULVERT PIPE		
SIGN		
MAILBOX	MB	MB
RAILROAD TRACKS		
RAILROAD DEVICES	CROSS-BUCK, FLASHING LIGHT	CANTILEVER, SWITCH
TREE LINE		
WATER BOUNDARY		
ORDINARY HIGH WATER LINE		
FLOW CENTERLINE		
FLOW DIRECTION		
WETLANDS		
EXISTING BUILDINGS	H H = HOUSE G = GARAGE M = MERCHANT/STORE B = BARN S = SHED P = PRIVY SS= SERVICE STATION W = WAREHOUSE	
POST OR BOLLARD		
WELL OR MONITORING WELL	W, MW	
SEPTIC PIPE	S	
FUEL TANK FILL PIPE/VENT	P	
SATELLITE DISH	SAT. DISH	
TEST HOLE	TH	
CONIFER TREE		
DECIDUOUS TREE		
GRAVE		
THERMOSIPHON		
PARKING METER		
VEHICLE PLUG-IN		
DELINEATOR/GUIDE MARKER		

	EXISTING	PROPOSED
JUNCTION BOX, TYPE IA		5
JUNCTION BOX, TYPE II		6
JUNCTION BOX, TYPE III		3
SIGNAL FACE, VEHICULAR	42	42
SIGNAL FACE, BACKPLATE	42	42
SIGNAL FACE, LEFT TURN, BACKPLATE	43	43
SIGNAL FACE, PEDESTRIAN	41	41
LOOP DETECTOR	33	73
VIDEO DETECTOR	2	2
RADAR DETECTOR	4	4A
OPTICOM DETECTOR	1	1
PEDESTRIAN PUSH BUTTON	1	1
SIGNAL POST W/O MAST ARM		1
SIGNAL POLE W/MAST ARM		4
SIGNAL CONTROLLER		
LOAD CENTER		
LUMINAIRE		22
RIGID METAL CONDUIT		

ABBREVIATIONS:

CPP	CORRUGATED POLYETHYLENE PIPE
CMP	CORRUGATED METAL PIPE
(E)	EXISTING
GRAIL	GUARDRAIL
HMA	HOT MIX ASPHALT
N.T.S.	NOT TO SCALE
P.O.C.	POINT ON CURVE
PC	POINT OF CURVATURE
PT	POINT OF TANGENCY
SHLDR	SHOULDER

CN
10/23/2024

STATE OF ALASKA 49TH BRAN POLLARD, P.E. 106710 REGISTERED PROFESSIONAL ENGINEER
8/9/2021

STATE OF ALASKA DEPARTMENT OF TRANSPORTATION AND PUBLIC FACILITIES
6860 GLACIER HIGHWAY, JUNEAU, AK 99801
(907) 465-1763

KTN HERRING COVE BRIDGE IMPROVEMENTS

LEGEND / SYMBOLS

FILE Q:\Ktn\SFHWY00072\Planset\00072_A3.dwg | DATE 8/9/2021 11:37 | LAYOUT A3 | DESIGNED STAFF | CHECKED STAFF | DRAFTED STAFF

NO.	DATE	REVISION	STATE	PROJECT DESIGNATION	YEAR	SHEET NO.	TOTAL SHEETS
			ALASKA	0902043/SFHWY00072	2021	A4	108

HERRING COVE ROAD DESIGN ALIGNMENT									
SEGMENT	STATION	NORTHING	EASTING	DISTANCE	BEARING	STATION	RADIUS	LENGTH	DELTA
L1	386+69.32	331626.73	670762.43	251.05	N23° 01' 14"W	389+20.37			
C1	389+20.37	331857.79	670664.25			400+62.44	578.74	1142.07	113°03'56"
L2	400+62.44	332662.86	671197.37	179.66	S89° 57' 18"E	402+42.11			

WOOD ROAD DESIGN ALIGNMENT									
SEGMENT	STATION	NORTHING	EASTING	DISTANCE	BEARING	STATION	RADIUS	LENGTH	DELTA
L4	10+00.00	331773.71	670699.98	23.85	S66° 58' 46"W	10+23.85			
C2	10+23.85	331764.38	670678.03			10+75.74	50.00	51.89	59°27'48"
L5	10+75.74	331770.18	670628.78	61.91	N53° 33' 25"W	11+37.65			
C3	11+37.65	331806.95	670578.98			11+62.93	408.49	25.28	3°32'46"

POWER HOUSE ROAD DESIGN ALIGNMENT									
SEGMENT	STATION	NORTHING	EASTING	DISTANCE	BEARING	STATION	RADIUS	LENGTH	DELTA
L6	20+00.00	332631.62	671009.32	19.01	N16° 52' 30"W	20+19.01			
C4	20+19.01	332649.81	671003.81			20+72.61	50.00	53.60	61°25'04"
L7	20+72.61	332684.26	670966.10	61.56	N78° 17' 33"W	21+34.17			

COORDINATES LISTED ABOVE HOLD OVER DISTANCE AND BEARING

HORIZONTAL CONTROL

Horizontal Control for this project is based on the DOT/PF South Tongass Grid 2000.

The DOT/PF Ketchikan South Tongass Grid -2000 System is a local ground coordinate system based at DOT/PF GPS control station 95-K-4 (#36). It relates to AKSPC zone 1 NAD83 (92) through the following parameters:
Zone = NAD83 AKSPC ZONE 1
Grid Scale = 0.999900264
Convergence = +144'48”
Translation about DOT/PF control point 95-K-4 as follows:
AKSPC Northing = 1277612.23 FT US
AKSPC Easting = 3117379.87 FT US
Local Northing = 328083.33 FT US
Local Easting = 656166.67 FT US

95-K-4 : 2” Brass Cap located in the breakwater of Saxman harbor.

NAD83(1992) Lat 5518'51.88” N Long 13135'43.15”W
KTN_S-Tongass-Grid N 328083.33' E 656166.67'
AKSPC N =1277612.23' E=3117379.87'

95-K-6 : 2” Brass Cap in bedrock on beach located adjacent to 2976 S. Tongass

NAD83(1992) Lat 5518'49.09”N Long 13135'23.73”W
KTN_S-Tongass-Grid N 327799.94' E 657290.48'
AKSPC N 1277363.24' E 3118511.69'

Existing Property					
Point #	Northing	Easting	Description	Station	Offset
1234	331679.72	670799.13	BC3"_1E_395+61.8_1932	387+03.74	54.50R
1235	331902.27	670528.57	BC2.5"_GLO_1942	389+99.16	113.90L
1236	331921.81	670559.02	BC2.5"_GLO_1942	390+08.70	79.47L
1240	332724.47	670951.17	BC-2.5"_GLO_S2403/TR-A/L85-C4/L86-C1/ROW	398+49.92	107.15L
1244	331783.85	670738.16	PLASCAP_3408-S	388+23.42	39.10R
1245	331799.04	670742.52	PLASCAP_3408-S	388+35.69	49.05R
1246	331918.77	670691.80	PLASCAP_8408-S	389+69.82	47.26R
1248	332657.61	670951.14	BC2.5"_GLO_S2218/ROW/C3_L94B_TRA/S2403	398+27.67	45.20L
1249	332722.20	670746.42	BC2.5"_GLO-S2403/TRA/C3_L95A/C3_L94A/C2_L94B	397+06.21	202.33L
1250	332607.62	671115.39	IP1"	399+72.58	48.93R
1251	332439.63	671151.40	SPINHOLE_FND BENT NAIL	399+88.31	220.33R
1252	332233.65	671170.17	FND_BRASS STEM	399+59.58	426.84R

Existing Property Monuments To Be Referenced & Replaced					
Point #	Northing	Easting	Description	Station	Offset
1241	332527.03	670846.94	BC3"_BPR	396+74.98	14.25R
1242	332496.79	670774.28	ALCAP3"_WC/ATS200/TR-A/LS7213	396+00.54	11.95L
1243	332562.38	670801.11	REBAR	396+61.89	42.05L
1255	332526.81	670891.53	SPINHOLE_REBAR W/1.5"ALCAP	397+12.51	40.94R

ALL EXISTING PROPERTY & SHOULDER MONUMENTS IN THESE TABLES SHALL BE REFERENCED PRIOR TO DISTURBANCE FROM CONSTRUCTION AND RE-ESTABLISHED IN THEIR ORIGINAL HORIZONTAL POSITION AND A RECORD OF MONUMENT FORM IN ACCORDANCE WITH A.S.34.65.040 SHALL BE SUBMITTED TO DOT FOR REVIEW PRIOR TO RECORDING.

Existing Shoulder Monuments To Be Referenced & Replaced						
Point #	Northing	Easting	Elev	Description	Station	Offset
238	331639.58	670743.91	27.54	GPS_SH_MON_BC	386+88.39	12.02L
239	332084.42	670606.10	27.64	SH_MON_BC	391+53.20	12.07L
240	332404.75	670699.67	31.12	GPS_SH_MON_BC	394+84.36	12.91L
241	332628.31	670965.10	32.49	GPS_SH_MON_BC	398+28.94	12.76L

* **THE EXISTING SHOULDER MONUMENTS LISTED IN THE ABOVE TABLE ARE TO BE USED AS ADDITIONAL HORIZONTAL AND VERTICAL SURVEY PROJECT CONTROL POINTS.**

* Survey Control Table						
Point #	Northing	Easting	Elevation	Description	Station	Offset
242	332706.22	671653.14	47.44	GPS_SH_MON_BC	N\A	N\A

CN
10/23/2024

STATE OF ALASKA 49th H. Erik Pedersen 07/29/21 No. 14828 REGISTERED PROFESSIONAL LAND SURVEYOR

STATE OF ALASKA
DEPARTMENT OF TRANSPORTATION
AND PUBLIC FACILITIES
6860 Glacier Highway Juneau Ak. 99801
(907) 465-1763

KTN HERRING COVE BRIDGE IMPROVEMENTS

SURVEY CONTROL

DESIGNED J.PAPOI
CHECKED D.LIGNOTOV
DRAFTED J.PAPOI
XREFS
SCALE
LAYOUT A4
DATE 7/29/2021 TIME 16:06
DRAWING LOCATION Q:\Ktn\SFHWY00072\SV\C3D\BASEMAPS\SFHWY00072_SCS_090220.dwg

NO.	DATE	REVISION

STATE	PROJECT DESIGNATION	YEAR	SHEET NO.	TOTAL SHEETS
ALASKA	0902043/SFHWY00072	2021	A5	108

MONUMENT NOTES:

1. IF ANY PAIR OF CONTROL POINTS DISAGREES FROM PUBLISHED VALUE BY MORE THAN 1:10,000 HORIZONTALLY OR VERTICALLY THEN A THIRD NETWORK POINT MUST BE TIED TO ASCERTAIN WHICH POINT IS IN ERROR OR HAS BEEN DISTURBED.

2. WHETHER LISTED OR NOT, ALL PROPERTY MONUMENTS, OR PROPERTY MARKERS, CORNERS OR ACCESSORIES WHICH WILL BE DISTURBED OR BURIED SHALL BE REFERENCED PRIOR TO BEING DISTURBED, AND RE-ESTABLISHED IN THEIR ORIGINAL HORIZONTAL POSITION AND A RECORD OF MONUMENT FORM IN ACCORDANCE WITH (A.S.34.65.040) AND (A.S.19.10.260) SHALL BE SUBMITTED TO THE CONSTRUCTION ENGINEER FOR REVIEW PRIOR TO RECORDING. COORDINATE VALUES LISTED ARE FOR INFORMATIONAL PURPOSES AND SHOULD BE USED TO RESET MONUMENTS ONLY AS A LAST RESORT.

3.WHEN POSSIBLE ALL ORIGINAL PRIMARY MONUMENTS SHALL BE SAVED AND RESET IN THEIR ORIGINAL HORIZONTAL POSITION AND A RECORD OF MONUMENT FORM IN ACCORDANCE WITH (A.S.34.65.040) AND (A.S.19.10.260) SHALL BE SUBMITTED TO THE CONSTRUCTION ENGINEER FOR REVIEW PRIOR TO RECORDING

4. RIGHT OF WAY LOCATION IS SHOWN FOR GRAPHICAL ORIENTATION PURPOSES ONLY. REFER TO ALASKA DOT&PF RIGHT OF WAY MAPS FOR RIGHT OF WAY INFORMATION.

5. HORIZONTAL AND VERTICAL CONTROL MUST BE FIELD VERIFIED BY THE CONTRACTOR. DISCREPANCIES WILL BE REPORTED TO DOT&PF CONSTRUCTION PROJECT ENGINEER.

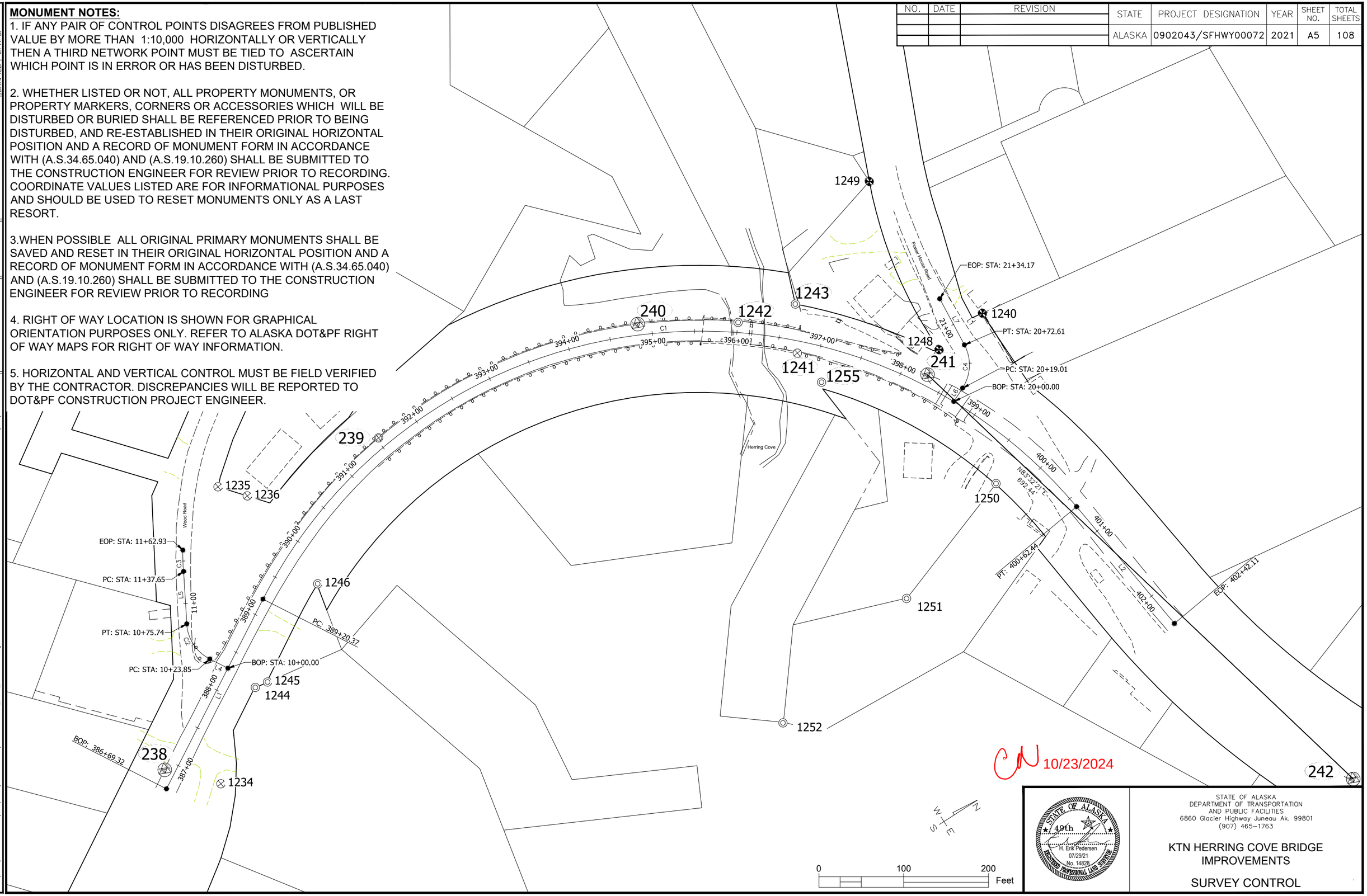

CN 10/23/2024

STATE OF ALASKA
49th
H. Erik Pedersen
07/29/21
No. 14828
REGISTERED PROFESSIONAL LAND SURVEYOR

STATE OF ALASKA
DEPARTMENT OF TRANSPORTATION
AND PUBLIC FACILITIES
6860 Glacier Highway Juneau Ak. 99801
(907) 465-1763

KTN HERRING COVE BRIDGE IMPROVEMENTS

SURVEY CONTROL

DESIGNED J.PAPOI
CHECKED D.LIGNOTOV
DRAFTED J.PAPOI

XREFS

SCALE

LAYOUT A5

DATE 7/29/2021 TIME 16:06

DRAWING LOCATION
Q:\Ktn\SFHWY00072\SV\C3D\BASEMAPS\SFHWY00072_SCS_090220.dwg

NO.	DATE	REVISION	STATE	PROJECT DESIGNATION	YEAR	SHEET NO.	TOTAL SHEETS
			ALASKA	0902043/SFHWY00072	2021	B1	2

LEGEND

1. 4" AGGREGATE BASE COURSE, GRADING D-1
2. 6" AGGREGATE BASE COURSE, GRADING D-1
3. 10" AGGREGATE BASE COURSE, GRADING D-1
4. SEEDING, BFM AND 4" OF TOPSOIL ON DISTURBED SLOPES UNLESS OTHERWISE SPECIFIED
5. W-BEAM GUARDRAIL
6. SELECTED MATERIAL, TYPE B AS REQUIRED
7. BORROW, SHOT ROCK
8. EXISTING GROUND

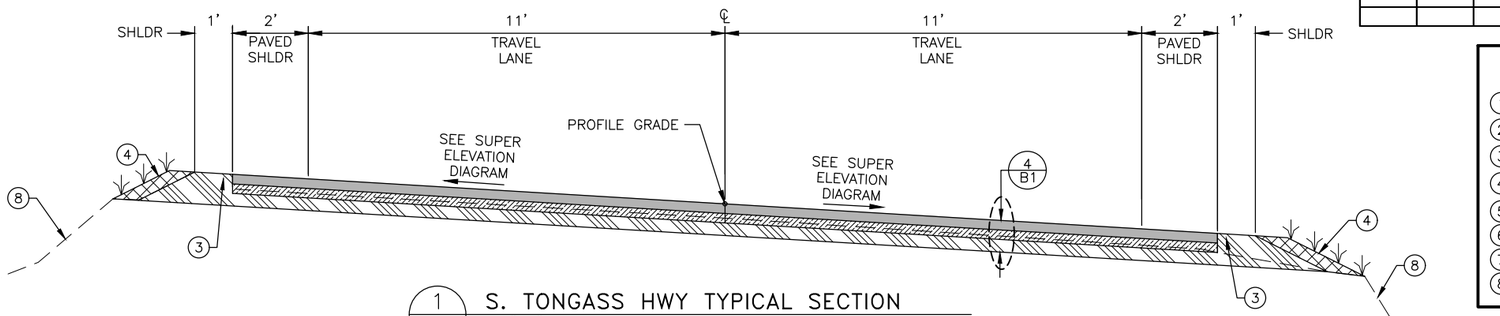

1 B1 S. TONGASS HWY TYPICAL SECTION

- "M1" LINE BOP TO STA. 388+70
- "M1" LINE STA. 399+10 TO EOP

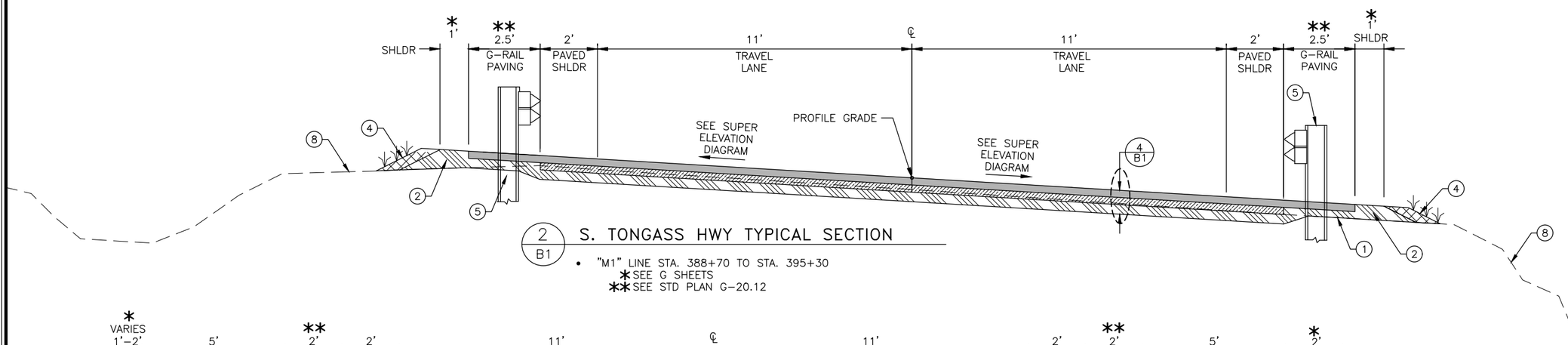

2 B1 S. TONGASS HWY TYPICAL SECTION

- "M1" LINE STA. 388+70 TO STA. 395+30
  - * SEE G SHEETS
  - ** SEE STD PLAN G-20.12

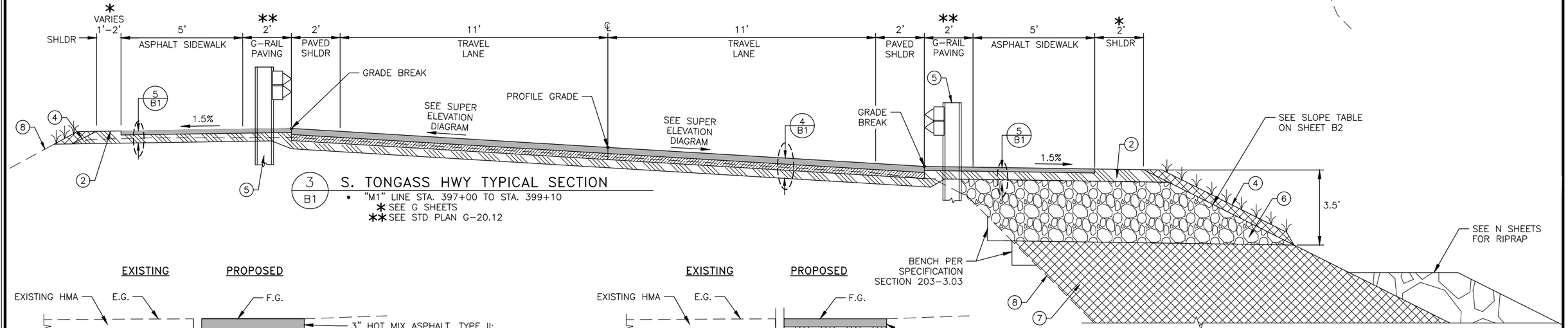

3 B1 S. TONGASS HWY TYPICAL SECTION

- "M1" LINE STA. 397+00 TO STA. 399+10
  - * SEE G SHEETS
  - ** SEE STD PLAN G-20.12

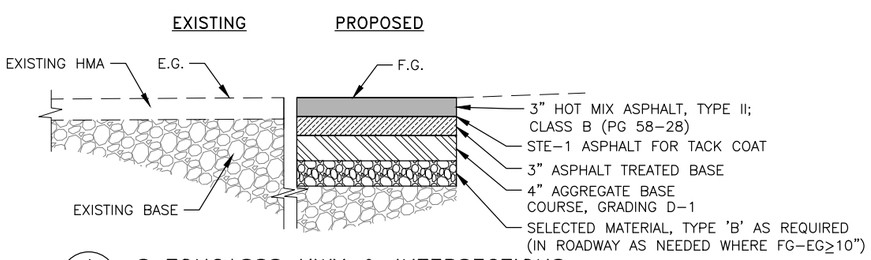

4 B1 S TONGASSS HWY & INTERSECTIONS

SCALE: NOT TO SCALE

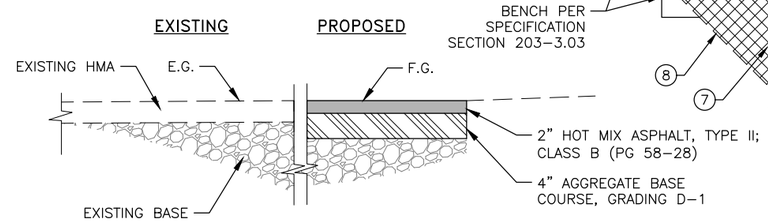

5 B1 PEDESTRIAN PATHS AND APPROACHES

SCALE: NOT TO SCALE

CN
10/23/2024

STATE OF ALASKA 49TH BRAN POLLARD, P.E. 106710 REGISTERED PROFESSIONAL ENGINEER
8/9/2021

STATE OF ALASKA
DEPARTMENT OF TRANSPORTATION AND PUBLIC FACILITIES

KTN HERRING COVE BRIDGE IMPROVEMENTS

TYPICAL SECTIONS

FILE Q:\Ktn\SFHWY00072\Planset\00072_B1.dwg | DATE 8/9/2021 11:39 | LAYOUT B1 | DESIGNED STAFF | CHECKED STAFF | DRAFTED STAFF

NO.	DATE	REVISION

STATE	PROJECT DESIGNATION	YEAR	SHEET NO.	TOTAL SHEETS
ALASKA	0902043/SFHWY00072	2021	B2	2

LEGEND

1. 4" AGGREGATE BASE COURSE, GRADING D-1
2. 6" AGGREGATE BASE COURSE, GRADING D-1
3. 10" AGGREGATE BASE COURSE, GRADING D-1
4. SEEDING, BFM AND 4" OF TOPSOIL ON DISTURBED SLOPES UNLESS OTHERWISE SPECIFIED
5. W-BEAM GUARDRAIL
6. SELECTED MATERIAL, TYPE B AS REQUIRED
7. BORROW, SHOT ROCK
8. EXISTING GROUND

LEFT FORESLOPES

Begin STA	End STA	Cut/Fill	Slope
BOP	387+44	FILL	4:1
387+44	388+68	FILL	1.5:1
388+68	391+42	FILL	1.75:1
391+42	393+21	CUT	50:1
393+21	393+43	FILL	50:1
393+43	393+78	CUT	50:1
393+78	395+34	FILL	1.75:1
396+98	398+38	FILL	1.75:1
399+28	400+28	FILL	4:1
400+28	400+50	CUT	50:1
400+50	EOP	FILL	1.75:1

RIGHT FORESLOPES

Begin STA	End STA	Cut/Fill	Slope
BOP	387+02	FILL	1.75:1
387+02	387+43	CUT	20:1
387+43	388+98	FILL	1.75:1
388+98	389+16	CUT	25:1
389+16	393+56	FILL	1.75:1
393+56	395+27	FILL	2:1
397+05	399+16	FILL	1.75:1
399+16	400+05	FILL	3:1
400+05	400+40	CUT	20:1
400+40	401+76	FILL	3:1
401+76	EOP	CUT	20:1

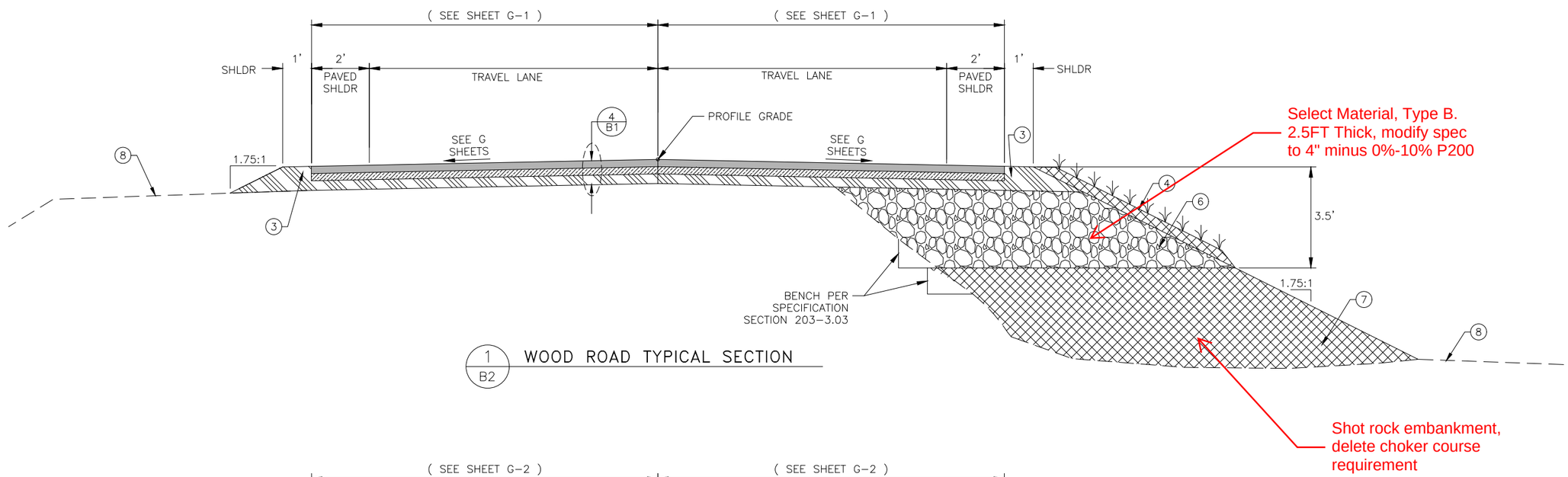

1 / B2 WOOD ROAD TYPICAL SECTION

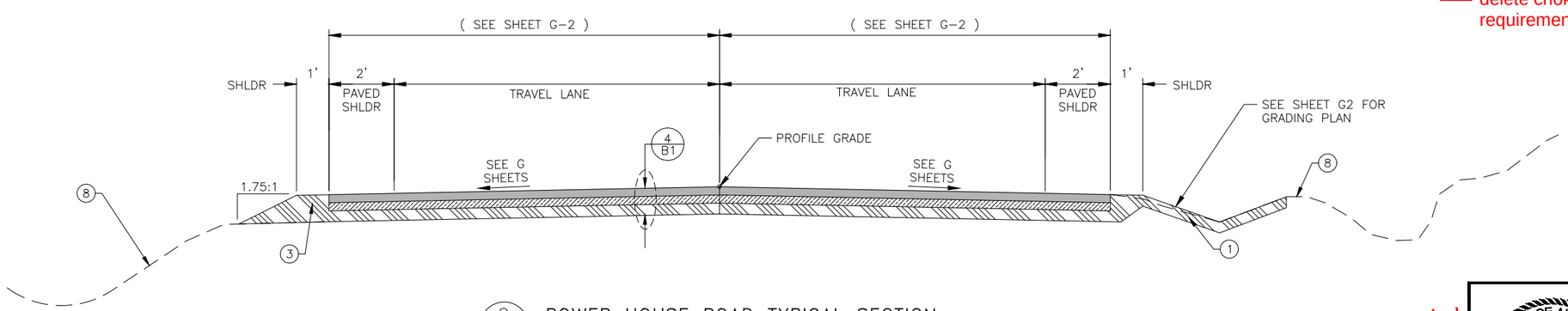

2 / B2 POWER HOUSE ROAD TYPICAL SECTION

CN
10/23/2024

STATE OF ALASKA 49TH BRAN POLLARD, P.E. 106710 REGISTERED PROFESSIONAL ENGINEER
8/9/2021

STATE OF ALASKA
DEPARTMENT OF TRANSPORTATION AND PUBLIC FACILITIES

KTN HERRING COVE BRIDGE IMPROVEMENTS

TYPICAL SECTIONS

FILE Q:\Ktn\SFHWY00072\Planset\00072_B1.dwg | DATE 8/9/2021 11:39 | LAYOUT B2 | DESIGNED STAFF | CHECKED STAFF | DRAFTED STAFF

NO.	DATE	REVISION
1	9/9/21	Deleted 2 Pay Items. Added 1 Pay Item.
2	9/21/21	Deleted 1 Pay Item. Added 2 Pay Items.

STATE	PROJECT DESIGNATION	YEAR	SHEET NO.	TOTAL SHEETS
ALASKA	0902043/SFHWY00072	2021	C1	1

ESTIMATE OF QUANTITIES

ITEM No.	PAY ITEM	PAY UNIT	QTY.	
201.0009.0000	CLEARING AND GRUBBING	LUMP SUM	ALL REQUIRED	
201.2001.0000	INVASIVE PLANT SPECIES CONTROL, REMOVAL, AND DISPOSAL	SQUARE YARD	~~1765~~	1837.5
202.0001.0000	REMOVAL OF STRUCTURES AND OBSTRUCTIONS	LUMP SUM	ALL REQUIRED	
202.0002.0000	REMOVAL OF PAVEMENT	SQUARE YARD	~~4570~~	4152.20
202.0004.0000	REMOVAL OF CULVERT PIPE	LINEAR FOOT	89	
202.0010.0000	SINGLE MAIL BOX INSTALLATION	EACH	1	
~~202.0012.0000~~	~~DOUBLE BOX INSTALLATION~~	~~EACH~~	~~11~~	Deleted
202.0023.0000	REMOVAL OF BRIDGE, NO. 253	LUMP SUM	ALL REQUIRED	
203.0002.0000	ROCK EXCAVATION	CUBIC YARD	~~750~~	168.78
203.0003.0000	UNCLASSIFIED EXCAVATION	CUBIC YARD	~~1158~~	2375.30
203.0006.0000	BORROW, SHOT ROCK	TON	~~4730~~	8119.81
203.0006.000B	BORROW, TYPE B	TON	~~1386~~	2826.00
203.2008.0000	SPECIAL DITCH	LINEAR FOOT	121	
205.0001.0000	EXCAVATION FOR STRUCTURES	CUBIC YARD	~~650~~	1025.20
205.0006.0000	STRUCTURAL FILL	CUBIC YARD	~~680~~	1203.81
2 205.2002.0000	SHEETING, SHORING AND BRACING	LUMP SUM	ALL REQUIRED	
301.0001.00D1	AGGREGATE BASE COURSE, GRADING D-1	TON	~~1634~~	2617.61
306.0001.0000	ATB	TON	~~965~~	926.26
401.0001.002B	HMA, TYPE II; CLASS B	TON	~~1163~~	1215.10
401.0004.5828	ASPHALT BINDER, GRADE PG 58-28	TON	~~70~~	60.87
401.0005.002B	HMA, TEMPORARY, TYPE II; CLASS B	TON	~~120~~	00.00
1 401.0010.0001	PAVEMENT SMOOTHNESS PRICE ADJUSTMENT, METHOD 1	CONTINGENT SUM	~~ALL REQUIRED~~	00.00
401.0015.0000	ASPHALT MATERIAL PRICE ADJUSTMENT	CONTINGENT SUM	~~ALL REQUIRED~~	00.00
402.0001.STE1	STE-1 ASPHALT FOR TACK COAT	TON	~~2.2~~	3.26
501.0001.0000	CLASS A CONCRETE	LUMP SUM	ALL REQUIRED	
501.0007.0000	PRECAST CONCRETE MEMBER, 129'-0" DECKED BULB-TEE	EACH	11	
501.0007.0000	PRECAST CONCRETE MEMBER, LAGGING	EACH	~~64~~	47
503.0001.0000	REINFORCING STEEL	LUMP SUM	ALL REQUIRED	
503.0002.0000	EPOXY-COATED REINFORCING STEEL	LUMP SUM	ALL REQUIRED	
1 505.0005.0001	FURNISH STRUCTURAL STEEL H PILES, HP 12x74	LINEAR FOOT	218.0	
505.0005.0001	FURNISH STRUCTURAL STEEL H PILES, HP 14x117	LINEAR FOOT	~~279.8~~	194.30
505.2008.0000	INSTALL STRUCTURAL STEEL H PILES, HP 12x74	EACH	~~18~~	9
505.2006.0000	INSTALL STRUCTURAL STEEL H PILES, HP 14x117	EACH	~~13~~	10
507.0001.0003	STEEL BRIDGE RAILING, 3-TUBE	LINEAR FOOT	342	
507.0002.0000	PEDESTRIAN RAILING	LINEAR FOOT	342	
507.0006.0000	CABLE SAFETY RAILING	LINEAR FOOT	~~102~~	104
~~508.0001.0000~~	~~WATERPROOFING MEMBRANE, SPRAY-APPLIED~~	~~LUMP SUM~~	~~ALL REQUIRED~~	Deleted
~~603.0009.0048~~	~~CORRUGATED ALUMINUM PIPE 48 INCH~~	~~LINEAR FOOT~~	~~56~~	Deleted
603.0021.0024	CORRUGATED POLYETHYLENE PIPE 24 INCH	LINEAR FOOT	128	
604.0001.0001	STORM SEWER MANHOLE, TYPE I	EACH	1	
604.0004.0000	ADJUST EXISTING MANHOLE	EACH	1	
606.0001.0000	W-BEAM GUARDRAIL	LINEAR FOOT	~~1336~~	1233.50
606.0006.0000	REMOVING AND DISPOSING OF GUARDRAIL	LINEAR FOOT	~~1771~~	1738.90
606.0013.0000	PARALLEL GUARDRAIL TERMINAL	EACH	4	
606.0016.0000	TRANSITION RAIL	EACH	4	
606.2014.0000	GUARDRAIL PAVING	LINEAR FOOT	~~1845~~	1491
606.2015.0000	GUARDRAIL POST DRILLING OR SPUDDING	EACH	~~245~~	253
608.0001.0004	CONCRETE SIDEWALK, 4 INCHES THICK	SQUARE YARD	~~14~~	13.5
608.0003.0000	ASPHALT SIDEWALK	SQUARE YARD	~~220~~	220
608.0006.0000	CURB RAMP	EACH	2	
~~609.2004.0000~~	~~VALLEY GUTTER~~	~~LINEAR FOOT~~	~~181~~	Deleted
~~611.0001.0001~~	~~RIPRAP, CLASS I~~	~~CUBIC YARD~~	~~570~~	Deleted
611.0001.0003	RIPRAP, CLASS III	CUBIC YARD	~~3400~~	3566.38
615.0001.0000	STANDARD SIGN	SQUARE FOOT	80	
618.0004.0000	SEEDING	SQUARE YARD	~~1161~~	692.16
619.2013.0000	BONDED FIBER MATRIX (BFM)	POUND	~~960~~	1050
620.0001.0000	TOPSOIL	SQUARE YARD	~~1161~~	692.16
625.0001.0000	PIPE HAND RAIL	LINEAR FOOT	~~150~~	155
627.0003.0000	INSTALL VALVE BOX	EACH	~~1~~	5
627.0006.0000	FIRE HYDRANT RELOCATION	EACH	1	
627.0010.0000	ADJUSTMENT OF VALVE BOX	EACH	~~9~~	10
2 627.2018.0000	RELOCATE, WATER MAIN	CONTINGENT SUM	ALL REQUIRED	

ESTIMATE OF QUANTITIES

ITEM No.	PAY ITEM	PAY UNIT	QTY.	
627.2028.0000	WATER LINE SURVEY	EACH	4	
639.0001.0000	DRIVEWAY	EACH	~~7~~	8
640.0001.0000	MOBILIZATION AND DEMOBILIZATION	LUMP SUM	ALL REQUIRED	
640.0004.0000	WORKER MEALS AND LODGING, OR PER DIEM	LUMP SUM	ALL REQUIRED	
641.0001.0000	EROSION, SEDIMENT AND POLLUTION CONTROL ADMINISTRATION	LUMP SUM	ALL REQUIRED	
641.0003.0000	TEMPORARY EROSION, SEDIMENT AND POLLUTION CONTROL	LUMP SUM	ALL REQUIRED	
641.0005.0000	TEMPORARY EROSION, SEDIMENT AND POLLUTION CONTROL BY DIRECTIVE	CONTINGENT SUM	ALL REQUIRED	
641.0006.0000	WITHHOLDING	CONTINGENT SUM	ALL REQUIRED	
642.0001.0000	CONSTRUCTION SURVEYING	LUMP SUM	ALL REQUIRED	
642.0003.0000	THREE PERSON SURVEY PARTY	HOUR	~~100~~	4
642.0006.0000	REPLACE EXISTING WITH PRIMARY MONUMENT	EACH	~~6~~	4
642.0007.0000	REPLACE EXISTING WITH SECONDARY MONUMENT	EACH	~~2~~	5
642.0009.0000	REFERENCE EXISITING MONUMENT	EACH	~~8~~	9
642.0010.0000	MONUMENT CASE	EACH	4	
643.0002.0000	TRAFFIC MAINTENANCE	LUMP SUM	ALL REQUIRED	
643.0003.0000	PERMANENT CONSTRUCTION SIGNS	LUMP SUM	ALL REQUIRED	
643.0023.0000	TRAFFIC PRICE ADJUSTMENT	CONTINGENT SUM	ALL REQUIRED	
643.0025.0000	TRAFFIC CONTROL	CONTINGENT SUM	ALL REQUIRED	
643.0031.0000	INTERIM PAVEMENT MARKING	LUMP SUM	ALL REQUIRED	
643.0032.0000	FLAGGING	CONTINGENT SUM	ALL REQUIRED	
~~644.0001.0000~~	~~FIELD OFFICE~~	~~LUMP SUM~~	~~ALL REQUIRED~~	Deleted
~~644.0002.0000~~	~~FIELD LABORATORY~~	~~LUMP SUM~~	~~ALL REQUIRED~~	Deleted
1 ~~644.0003.0000~~	~~CURING SHED~~	~~LUMP SUM~~	~~ALL REQUIRED~~	Deleted
~~644.0015.0000~~	~~NUCLEAR TESTING EQUIPMENT STORAGE SHED~~	~~EACH~~	~~1~~	Deleted
~~644.2004.0000~~	~~ENGINEERING COMMUNICATIONS~~	~~CONTINGENT SUM~~	~~ALL REQUIRED~~	Deleted
~~644.2008.0000~~	~~WEB-BASED SUBMITTALS~~	~~LUMP SUM~~	~~ALL REQUIRED~~	Deleted
645.0001.0000	TRAINING PROGRAM, 2 TRAINEES/APPRENTICES	LABOR HOUR	1000	
660.0003.0000	HIGHWAY LIGHTING SYSTEM COMPLETE, HERRING COVE	LUMP SUM	ALL REQUIRED	
660.0007.0000	TEMPORARY SIGNAL SYSTEM COMPLETE, HERRING COVE BRIDGE	LUMP SUM	ALL REQUIRED	
670.0001.0000	PAINTED TRAFFIC MARKINGS	LUMP SUM	ALL REQUIRED	
670.0008.0000	RECESSED PAVEMENT MARKER	EACH	~~34~~	35
670.2009.0000	MMA PAVEMENT MARKINGS, TRANSVERSE AND GORE SURFACE APPLIED	SQUARE FOOT	140	
680.2000.0000	TELECOMMUNICATIONS UTILITY RELOCATION	LUMP SUM	ALL REQUIRED	
684.2000.0000	TELEVISION UTILITY RELOCATION	LUMP SUM	ALL REQUIRED	
687.2000.0000	POWER UTILITY RELOCATION	LUMP SUM	ALL REQUIRED	

BASIS OF ESTIMATE

ITEM No.	PAY ITEM	ESTIMATING FACTOR
203.0006.000B	BORROW, TYPE B	1.85 TONS/CY
301.0001.00D1	AGGREGATE BASE COURSE, GRADING D-1	1.95 TONS/CY
401.0001.002B	HMA, TYPE II; CLASS B	120 LBS/SY/IN
401.0004.5828	ASPHALT BINDER, GRADE PG-58-28	6.0% OF ITEM 401(1)
402.0001.STE1	STE-1 ASPHALT FOR TACK COAT	0.10 GAL/S.Y. 243 GAL/TON
501.0001.0000	CLASS A CONCRETE	291.5 Cu.Yd
503.0001.0000	REINFORCING STEEL	13,553 LBS
503.0002.0000	EPOXY-COATED REINFORCING STEEL	33,261 lbs
508.0001.0000	WATERPROOFING MEMBRANE, SPRAY-APPLIED	569 Sq.Yd.
618.0004.0000	SEEDING	1.2 LB/ 1000 SF
619.2013.0000	BONDED FIBER MATRIX (BFM)	4000 LB/ ACRE
670.0001.0000	PAINTED TRAFFIC MARKINGS	SOLID, WHITE 4" = 3322 L.F.
		STOP BAR, WHITE 24" = 68 L.F
		SOLID DOUBLE, YELLOW 4" = 1546 L.F
670.2009.0000	MMA PAVEMENT MARKINGS, TRANSVERSE AND GORE SURFACE APPLIED	CROSSWALK, WHITE 24" = 70 L.F.

CN
10/23/2024

STATE OF ALASKA 49TH
BRIAN POLLARD, P.E.
106710
REGISTERED PROFESSIONAL ENGINEER
9/21/2021

STATE OF ALASKA
DEPARTMENT OF TRANSPORTATION
AND PUBLIC FACILITIES

KTN HERRING COVE BRIDGE
IMPROVEMENTS

EST OF QUANTITIES

FILE Q:\Ktn\SFHWY00072\Planset\00072_C1.dwg | DATE 9/21/2021 9:28 | LAYOUT C1 | DESIGNED STAFF | CHECKED STAFF | DRAFTED STAFF

NO.	DATE	REVISION

STATE	PROJECT DESIGNATION	YEAR	SHEET NO.	TOTAL SHEETS
ALASKA	0902043/SFHWY00072	2021	D1	3

201.2003.0000 INVASIVE PLANT SPECIES CONTROL, REMOVAL, AND DISPOSAL

BEGIN STATION	END STATION	AREA (SY)	SPECIES
396+80.00	398+25.00	135.03	orange hawkweed/oxeye daisy
399+50.00	400+76.00	53.88	reed canary grass
397+50.00	397+51.00	0.11	Japanese knotweed
387+70.00	395+60.00	73.15	orange hawkweed/oxeye daisy
390+00.00	393+75.00	41.67	reed canary grass
388+30.00	388+40.00	11.11	Japanese knotweed
387+55.00	389+80.00	300.00	reed canary grass
389+80.00	395+60.00	773.33	orange hawkweed /oxeye daisy
396+80.00	397+70.00	120.00	orange hawkweed/oxeye daisy
397+70.00	398+80.00	146.67	reed canary grass/orange hawkweed/oxeye daisy
399+25.00	402+42.00	110.22	reed canary grass
	TOTAL =	~~1765.17~~	1837.5

202.0001.0000 REMOVAL OF STRUCTURES AND OBSTRUCTIONS

BEGIN STATION	OFFSET	REMARKS
388+27.90	25.62 LT	VALVE BOX NEAR FIRE HYDRANT

202.0002.0000 REMOVAL OF PAVEMENT

BEGIN STA.	END STA.	AREA (S.Y.)	REMARKS
10+20	11+61	448	WOOD RD.
386+85	395+31	2363	S. TONGASS
397+02	402+42	1703	S. TONGASS
399+28	399+56	56	POWERHOUSE RD. ASPHALT PAD
	TOTAL =	~~4570~~	4152.20

202.0004.0000 REMOVAL OF CULVERT PIPE

INLET		OUTLET		LENGTH (LF)	REMARKS
STATION	OFFSET	STATION	OFFSET		
388+00.50	56.96 LT	388+33.38	32.97 LT	41.00	18" DIA, CORRUGATED POLYETHYLENE PIPE
388+01.95	58.59 LT	388+35.22	34.89 LT	41	18" DIA, CORRUGATED POLYETHYLENE PIPE
398+20.10	15.75 RT	398+15.65	21.37 RT	7	
			TOTAL =	89	

202.0010.0000 SINGLE MAIL BOX INSTALLATION

STATION	OFFSET	QUANTITY(EA)	REMARKS
10+77	11' R	1	WOOD RD. INSTALL WOOD CANTILEVER PER M-20.15 & M-23.13

202.0012.0000 DOUBLE MAIL BOX INSTALLATION

STATION	OFFSET	QUANTITY(EA)	REMARKS
~~20+92.00~~	~~19' L~~	~~11~~	~~POWER HOUSE RD. INSTALL GANG BOX PER M-20.15 & M-23.13~~

203.2008.0000 SPECIAL DITCH

BEGIN STA.	END STA.	LENGTH	REMARKS
398+73	399+94	121	POWER HOUSE RD.
	TOTAL =	121	

603.0009.0048 CORRUGATED ALUMINUM PIPE ~~48 INCH~~ 60 Inch

PIPE	INLET			OUTLET			LENGTH (FT)	REMARKS
	STATION	OFFSET	ELEV.	STATION	OFFSET	ELEV.		
P-1	388+00.81	58.00 LT	18.27	388+52.74	37.94 LT	17.60	~~55.7~~ 56	INSTALL PER D-01.02 & D-04.22. SEE DETAIL 1/E1

603.0021.0024 CORRUGATED POLYETHYLENE PIPE 24 INCH

PIPE	INLET			OUTLET			LENGTH (FT)	REMARKS
	STATION	OFFSET	ELEV.	STATION	OFFSET	ELEV.		
P-2	398+19.49	16.56	23.00	396+89.04	55.08	19.50	128.0	INSTALL PER D-01.02 & D-04.22

604.0001.0001 STORM SEWER MANHOLE, TYPE I

STATION	OFFSET	QUANTITY(EA)	REMARKS
398+19.48	16.57 RT	1	INSTALL MANHOLE LID, FRAME & GRATE PER D-22.01. SEE DETAIL ON SHEET E3.
	TOTAL =	1	

604.0004.0000 ADJUST EXISTING MANHOLE

STATION	OFFSET	QUANTITY(EA)	REMARKS
399+61.00	18 RT	1	LOCATION IS APPROXIMATE
	TOTAL =	1	

606.0001.0000 W-BEAM GUARDRAIL

BEGIN STA	END STA	OFFSET	LENGTH (LF)	REMARKS
389+08	395+16	LT	~~622~~627.5	INSTALL PER DETAIL 4/E1 & G-05.11S. ~~TYPE II POSTS~~
389+65	395+11	RT	~~533~~411.5	INSTALL PER DETAIL 4/E1 & G-05.11S. ~~TYPE II POSTS~~
397+16	397+72	LT	~~59~~ 65.5	INSTALL PER DETAIL 4/E1 & G-05.11S. ~~TYPE II POSTS~~
397+21	397+71	RT	~~48~~ 66	INSTALL PER DETAIL 4/E1 & G-05.11S. ~~TYPE II POSTS~~
398+24	399+01	RT	~~74~~ 63	INSTALL PER G-05.11S. ~~TYPE II POSTS~~
		TOTAL =	~~1336~~	1233.5

Type I posts used for all

606.0006.0000 REMOVAL & DISPOSAL OF GUARDRAIL

BEGIN STA	END STA	OFFSET	LENGTH	REMARKS
388+22	395+59	LT	~~793~~	789
389+15	395+57	RT	~~642~~	581.7
396+73	397+91	LT	~~126~~	119.7
396+75	398+87	RT	~~216~~	164
		TOTAL =	~~1771~~	1738.9

CN
10/23/2024

STATE OF ALASKA 49TH BRAN POLLARD, P.E. 106710 REGISTERED PROFESSIONAL ENGINEER
8/9/2021

STATE OF ALASKA
DEPARTMENT OF TRANSPORTATION
AND PUBLIC FACILITIES

KTN HERRING COVE BRIDGE IMPROVEMENTS

SUMMARIES

FILE Q:\Ktn\SFHWY00072\Planset\00072_D1.dwg | DATE 8/9/2021 12:08 | LAYOUT D1 | DESIGNED STAFF | CHECKED STAFF | DRAFTED STAFF

NO.	DATE	REVISION	STATE	PROJECT DESIGNATION	YEAR	SHEET NO.	TOTAL SHEETS
2	9/21/21	Changed Item Name	ALASKA	0902043/SFHWY00072	2021	D2	3

606.0013.0000 PARALLEL GUARDRAIL TERMINAL

STATION	OFFSET	QUANTITY(EA)	REMARKS
388+58.00	14.5' LT	1	INSTALL PER G-20.12. ALTERNATE GUARDRAIL TERMINAL WIDENING
389+14.50	14.5' RT	1	INSTALL PER G-20.12. ALTERNATE GUARDRAIL TERMINAL WIDENING
398+22.00	13' LT	1	INSTALL PER G-20.12. ALTERNATE GUARDRAIL TERMINAL WIDENING
398+21.54	13' RT	1	INSTALL PER G-20.12. ALTERNATE GUARDRAIL TERMINAL WIDENING
	TOTAL =	4	

Deleted

~~609.2004.0000 VALLEY GUTTER~~

BEGIN STA	END STA	OFFSET	LENGTH (LF)	REMARKS
399+00.0	400+22.0	13 RT	122.0	INSTALL PER I-20.20, TYPE: GUTTER
400+59.0	401+18.0	13 RT	59.0	INSTALL PER I-20.20, TYPE: GUTTER
		TOTAL =	181.0	

606.0016.0000 TRANSITION RAIL

BEGIN STA	END STA	OFFSET*	LENGTH	QUANTITY (EA)	REMARKS
395+16.26	395+33.02	14.62 LT	17.20	1	SEE N SHEETS
395+10.92	395+28.56	14.61 RT	17.20	1	SEE N SHEETS
396+99.43	397+16.19	14.62 LT	17.20	1	SEE N SHEETS
397+03.89	397+21.53	14.61 RT	17.20	1	SEE N SHEETS
			TOTAL =	4	*Offset given at Bridge Rail transition

625.0001.0000 PIPE HAND RAIL

BEGIN STA	END STA	OFFSET	LENGTH (FT)	REMARKS
396+98	397+62	LT	~~66.5~~ 66	INSTALL PER DETAILS ON SHEET E5
397+12	398+03	RT	~~91~~ 89	INSTALL PER DETAILS ON SHEET E5
		TOTAL =	~~158~~ 155	

~~627.0003.0000 INSTALL VALVE BOX~~

STATION	OFFSET	QUANTITY(EA)	REMARKS
~~388+81~~	~~25.5' L~~	~~1~~	~~FOR HYDRANT RELOCATION AT WOOD RD INTERSECTION. INSTALL PER DETAIL 1/E6~~

627.0003.0000 INSTALL VALVE BOX

STATION	OFFSET	QUANTITY	REMARKS
20+23.19	15.04 RT	1	POWER HOUSE ROAD, CHANGED FROM ASJUSTMENT TO INSTALL
20+22.52	16.29 RT	1	POWER HOUSE ROAD, CHANGED FROM ASJUSTMENT TO INSTALL
20+23.79	16.51 RT	1	POWER HOUSE ROAD, CHANGED FROM ASJUSTMENT TO INSTALL
20+23.01	17.72 RT	1	POWER HOUSE ROAD, CHANGED FROM ASJUSTMENT TO INSTALL
	TOTAL =	4	

627.0006.0000 FIRE HYDRANT RELOCATION

STATION	OFFSET	QUANTITY (EA)	REMARKS
388+81	27.5' L	1	INSTALL PER DETAIL 1/E6

606.2014.0000 GUARDRAIL PAVING

BEGIN STA	END STA	OFFSET	LENGTH (LF)	REMARKS
388+58	395+33	LT	675	
389+14	395+28	RT	614	
396+99	398+22	LT	123	
397+04	398+22	RT	118	
397+99	399+14	RT	115	
		TOTAL =	~~1645~~	1491

627.0010.0000 ADJUSTMENT OF VALVE BOX

STATION	OFFSET	QUANTITY	REMARKS
387+82.35	23.21 LT	1	TONGAS HWY AT WOOD ROAD
387+87.86	19.91 LT	1	TONGAS HWY AT WOOD ROAD
10+22.47	12.97 LT	1	WOOD ROAD
10+23.52	12.34 LT	1	WOOD ROAD
10+22.92	10.78 LT	1	WOOD ROAD
399+33	22 RT	1	In driveway off Tongass
399+33	38 RT	1	In driveway off Tongass
20+75	5 RT	1	Power House Road
21+05	13 LT	1	Power House Road
	TOTAL =	9	

627.0010.0000 ADJUSTMENT OF VALVE BOX

STATION	OFFSET	QUANTITY(EA)	REMARKS
387+82.35	23.21 LT	1	S. TONGAS HWY. SEE DETAIL 3/E8
387+87.86	19.91 LT	1	S. TONGAS HWY. SEE DETAIL 3/E8
10+22.47	12.97 LT	1	WOOD RD. SEE DETAIL 3/E8
20+23.52	12.34 LT	1	WOOD RD. SEE DETAIL 3/E8
10+22.92	10.78 LT	1	WOOD RD. SEE DETAIL 3/E8
~~20+23.19~~	~~15.04 RT~~	~~1~~	~~POWER HOUSE RD. SEE DETAIL 3/E8~~
~~20+22.52~~	~~16.29 RT~~	~~1~~	~~POWER HOUSE RD. SEE DETAIL 3/E8~~
~~20+23.79~~	~~16.51 RT~~	~~1~~	~~POWER HOUSE RD. SEE DETAIL 3/E8~~
~~20+23.01~~	~~17.72 RT~~	~~1~~	~~POWER HOUSE RD. SEE DETAIL 3/E8~~
	TOTAL =	9	

608.0001.0004 CONCRETE SIDEWALK, 4 INCHES THICK

STATION	OFFSET	AREA (S.Y.)	REMARKS
398+27.41	14.07	6.0	
398+27.71	13.97	7.5	
	TOTAL =	~~14~~	13.5

627.2018.0000 RELOCATE, WATER MAIN

2

BEGIN STA	END STA	OFFSET	QUANTITY (EA)	REMARKS
388+18	388+25	41' L	1	FISH CULVERT AT WOOD RD. INSTALL PER DETAIL 3/E4
395+22	395+75	33' L	2	BRIDGE WING-WALL. INSTALL PER DETAIL 3/E6
		TOTAL =	3	

608.0003.0000 ASPHALT SIDEWALK

BEGIN STATION	END STATION	OFFSET	AREA (S.Y.)	REMARKS
396+98.11	398+39.83	LT	~~84~~ 82	INSTALL PER DETAIL 5/B1
397+03.89	399+14.47	RT	~~142~~ 138	INSTALL PER DETAIL 5/B1
		TOTAL =	~~226~~ 220	

627.2028.0000 WATER LINE SURVEY

BEGIN STA	END STA	OFFSET	QUANTITY (EA)	REMARKS
388+18	388+25	41' L	1	FISH CULVERT NEAR WOOD RD, DETAIL 3/E6
388+81	388+81	27' L	1	FIRE HYDRANT RELOCATION, DETAIL 1/E6
395+22	395+75	33' L	2	BRIDGE WING-WALL, DETAIL 3/E6
		TOTAL =	4	

608.0006.0000 CURB RAMP

STA.	OFFSET	REMARKS
398+27.41	14.07	INSTALL DETECTABLE WARNING TILE, DETAIL 1/E7. SEE STD PLAN I-20.20
398+27.71	13.97	INSTALL DETECTABLE WARNING TILE, DETAIL 1/E7. SEE STD PLAN I-20.20
TOTAL =	2	

CN
10/23/2024

STATE OF ALASKA 49TH
BRAN POLLARD, P.E.
106710
REGISTERED PROFESSIONAL ENGINEER
9/21/202

STATE OF ALASKA
DEPARTMENT OF TRANSPORTATION
AND PUBLIC FACILITIES

KTN HERRING COVE BRIDGE
IMPROVEMENTS

SUMMARIES

FILE Q:\Ktn\SFHWY00072\Planset\00072_D1.dwg | DATE 8/9/2021 12:18 | LAYOUT D2 | DESIGNED STAFF | CHECKED STAFF | DRAFTED STAFF

NO.	DATE	REVISION	STATE	PROJECT DESIGNATION	YEAR	SHEET NO.	TOTAL SHEETS
			ALASKA	0902043/SFHWY00072	2021	D3	3

639.2000.0000 APPROACH

STATION	OFFSET	WIDTH (FT)		RADIUS(FT)		DEPTH (FT)	QUANITY (EA)	REMARKS
		FRONT	BACK	R1	R2			
387+10.00	LT	40	20	20	20	10	1	GRADE TO MATCH EXISITNG GRAVEL
387+22.00	RT	45	25	20	20	10	1	INTERSECTION
389+00.83	RT	33	15	20	20	10	1	GRADE TO MATCH EXISITNG GRAVEL
399+25.55	RT	34	15	20	7	66	1	GRADE TO MATCH EXISITNG DRIVEWAY
399+81.05	RT	67	51	7	20	8	1	GRADE TO MATCH EXISITNG GRAVEL
400+40.00	LT	53	20	20	20	10	1	GRADE TO MATCH EXISITNG GRAVEL
400+88.00	RT	61	28	20	20	10	1	GRADE TO MATCH EXISITNG GRAVEL
10+64.00	LT	34	14	20	20	11	1	DRIVEWAY ON WOOD RD.
						TOTAL =	8	

STREET LIGHT FOUNDATIONS

STATION	OFFSET	POLE	TOP OF FOUNDATION ELEVATION	REMARKS
387+86.94	24.84' RT	LP 1	24.84	INSTALL PER L-30.11
398+20.98	25.16' RT	LP 4	31.70	INSTALL PER L-30.11
398+36.51	50.28' LT	LP 5	34.40	INSTALL PER L-30.11
399+32.59	18.59' LT	LP 6	32.77	INSTALL PER L-30.11

642.0006.0000 REPLACE EXISTING WITH PRIMARY MONUMENT

STATION	OFFSET	POINT #	QUANTITY (EA)	REMARKS
~~396+74.98~~	~~14.25 RT~~	~~1241~~	~~1~~	~~RESET WITH ORIGINAL MONUMENT IF POSSIBLE. 3" ALCAP SET FLUSH IN BRIDGE DECK.~~
~~396+00.54~~	~~11.95 LT~~	~~1242~~	~~1~~	~~RESET WITH ORIGINAL MONUMENT IF POSSIBLE. 3" ALCAP SET FLUSH IN BRIDGE DECK.~~
386+88.39	12.02 LT	238	1	RESET WITH ORIGINAL MONUMENT IF POSSIBLE. ~~3~~" ALCAP SET IN MONUMENT CASE.
391+53.20	12.07 LT	239	1	RESET WITH ORIGINAL MONUMENT IF POSSIBLE. ~~3~~" ALCAP SET IN MONUMENT CASE.
394+84.36	12.91 LT	240	1	RESET WITH ORIGINAL MONUMENT IF POSSIBLE. ~~3~~" ALCAP SET IN MONUMENT CASE.
398+28.94	12.76 LT	241	1	RESET WITH ORIGINAL MONUMENT IF POSSIBLE. ~~3~~" ALCAP SET IN MONUMENT CASE.
		TOTAL =	~~6~~ 4	2.5" alum caps used on all

Replaced as secondary monument

Replaced as secondary monument

642.0007.0000 REPLACE EXISTING WITH SECONDARY MONUMENT

STATION	OFFSET	POINT #	QUANTITY (EA)	REMARKS
396+61.89	42.05	1243	1	RESET WITH 5/8" REBAR AND ~~PLASTIC~~ OR 2" ALUM. CAP.
397+12.51	40.94 RT	1255	1	RESET WITH 5/8" REBAR AND ~~PLASTIC OR 1.5"~~ ALUM. CAP 2"
		TOTAL =	~~2~~ 5	

396+74.98	14.25 RT	1241	1	RESET WITH ORIGINAL MONUMENT IF POSSIB~~LE. 3" ALCAP SET FLUSH IN BRIDGE DE~~CK. 2" Alum rock monument
396+00.54	11.95 LT	1242	1	RESET WITH ORIGINAL MONUMENT IF POSSIB~~LE. 3" ALCAP SET FLUSH IN BRIDGE DE~~CK. 2" Alum rock monument
398+27.67	45.20' LT	1248	1	Rest with 2.5" Aluminum cap on flared aluminum pipe monument

642.0009.0000 REFERENCE EXISITNG MONUMENTS

STATION	OFFSET	POINT #	QUANTITY	REMARKS
386+88.39	12.02 LT	238	1	RESET WITH ORIGINAL MONUMENT IF POSSIBLE. 3" ALCAP SET IN MONUMENT CASE.
391+53.20	12.07 LT	239	1	RESET WITH ORIGINAL MONUMENT IF POSSIBLE. 3" ALCAP SET IN MONUMENT CASE.
394+84.36	12.91 LT	240	1	RESET WITH ORIGINAL MONUMENT IF POSSIBLE. 3" ALCAP SET IN MONUMENT CASE.
396+74.98	14.25 RT	1241	1	RESET WITH ORIGINAL MONUMENT IF POSSIBLE. 3" ALCAP SET FLUSH IN BRIDGE DECK.
396+00.54	11.95 LT	1242	1	RESET WITH ORIGINAL MONUMENT IF POSSIBLE. 3" ALCAP OR BC SET FLUSH IN BRIDGE ABUNTMENT IF POSSIBLE
396+61.89	42.05 LT	1243	1	RESET WITH 5/8" REBAR AND PLASTIC OR 2" ALUM CAP.
397+12.51	40.94 RT	1255	1	RESET WITH 5/8" REBAR AND PLASTIC OR 1.5" ALUM. CAP
398+28.94	12.76 LT	241	1	RESET WITH ORIGINAL MONUMENT IF POSSIBLE. 3" ALCAP SET IN MONUMENT CASE.
		TOTAL =	~~8~~ 9	
398+27.67	45.20' LT	1248	1	Rest with 2.5" Aluminum cap on flared aluminum pipe monument

642.0010.0000 MONUMENT CASE

STATION	OFFSET	POINT #	QUANTITY	REMARKS
386+88.39	12.02 LT	238	1	REPLACE MONUMENT CASE AND LID UNLESS THE ORIGINAL CAN BE REUSED.
391+53.20	12.07 LT	239	1	REPLACE MONUMENT CASE AND LID UNLESS THE ORIGINAL CAN BE REUSED.
394+84.36	12.91 LT	240	1	REPLACE MONUMENT CASE AND LID UNLESS THE ORIGINAL CAN BE REUSED.
398+28.94	12.76 LT	241	1	REPLACE MONUMENT CASE AND LID UNLESS THE ORIGINAL CAN BE REUSED.
		TOTAL =	4	

CN
10/23/2024

STATE OF ALASKA 49TH BRAN POLLARD, P.E. 106710 REGISTERED PROFESSIONAL ENGINEER
8/9/2021

STATE OF ALASKA
DEPARTMENT OF TRANSPORTATION
AND PUBLIC FACILITIES

KTN HERRING COVE BRIDGE
IMPROVEMENTS

SUMMARIES

FILE Q:\Ktn\SFHWY00072\Planset\00072_D1.dwg | DATE 8/9/2021 12:08 | LAYOUT D3 | DESIGNED STAFF | CHECKED STAFF | DRAFTED STAFF

NO.	DATE	REVISION	STATE	PROJECT DESIGNATION	YEAR	SHEET NO.	TOTAL SHEETS
			ALASKA	0902043/SFHWY00072	2021	E1	9

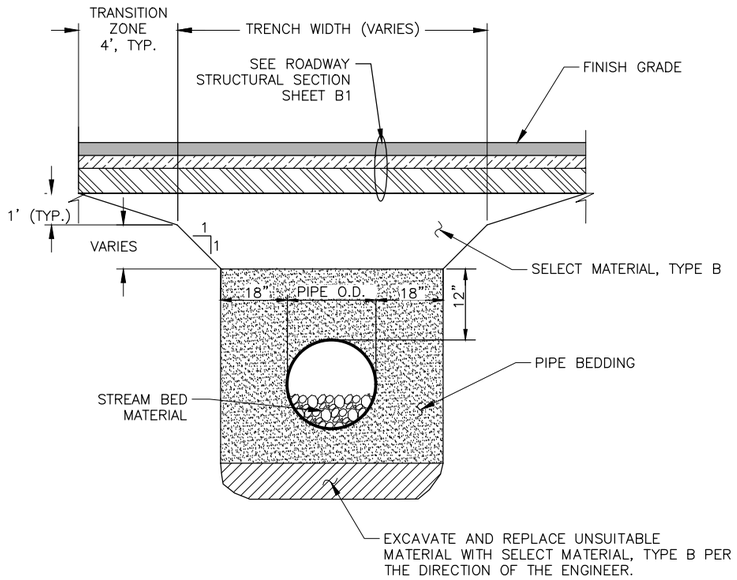

1/E1 CULVERT BEDDING/BACKFILL DETAIL
SCALE: N.T.S.
NOTE: D-1 BEDDING PLUG AT INVERT PER SPECIFICATION 204-2.01

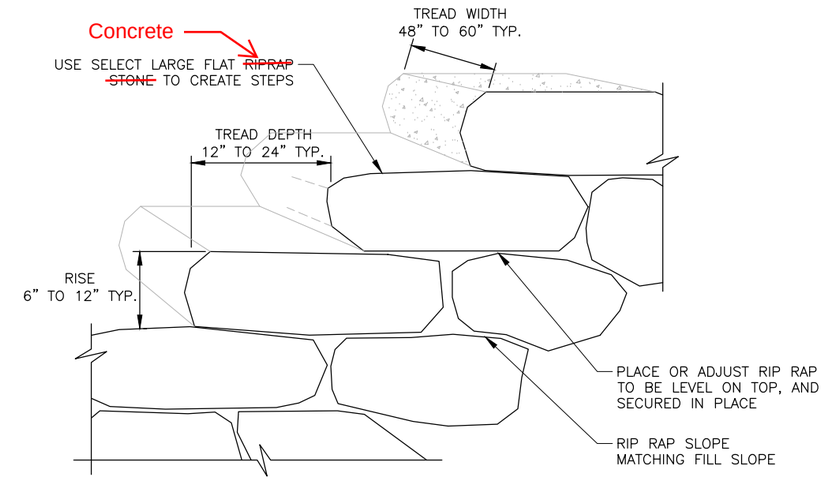

Concrete

3/E1 ~~RIPRAP~~ STEPPING STONES
SCALE: N.T.S.
NOTE: CAREFULLY PLACE STONES TO LOCK IN PLACE AND CREATE FIRM SURFACE.

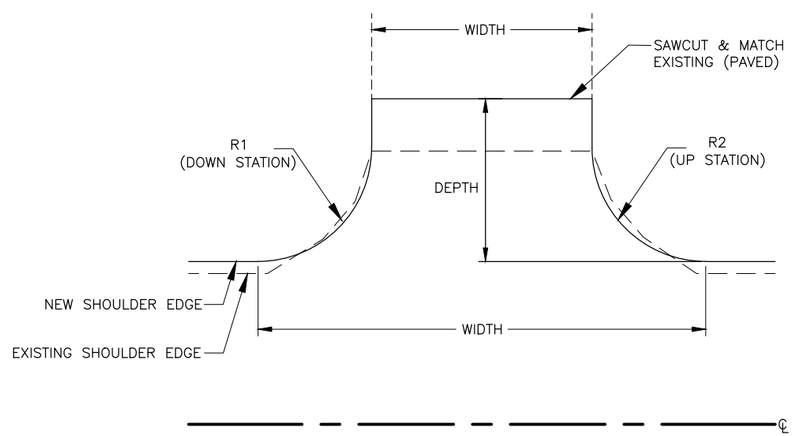

2/E1 PAVED APPROACH – PLAN VIEW
SCALE: N.T.S.

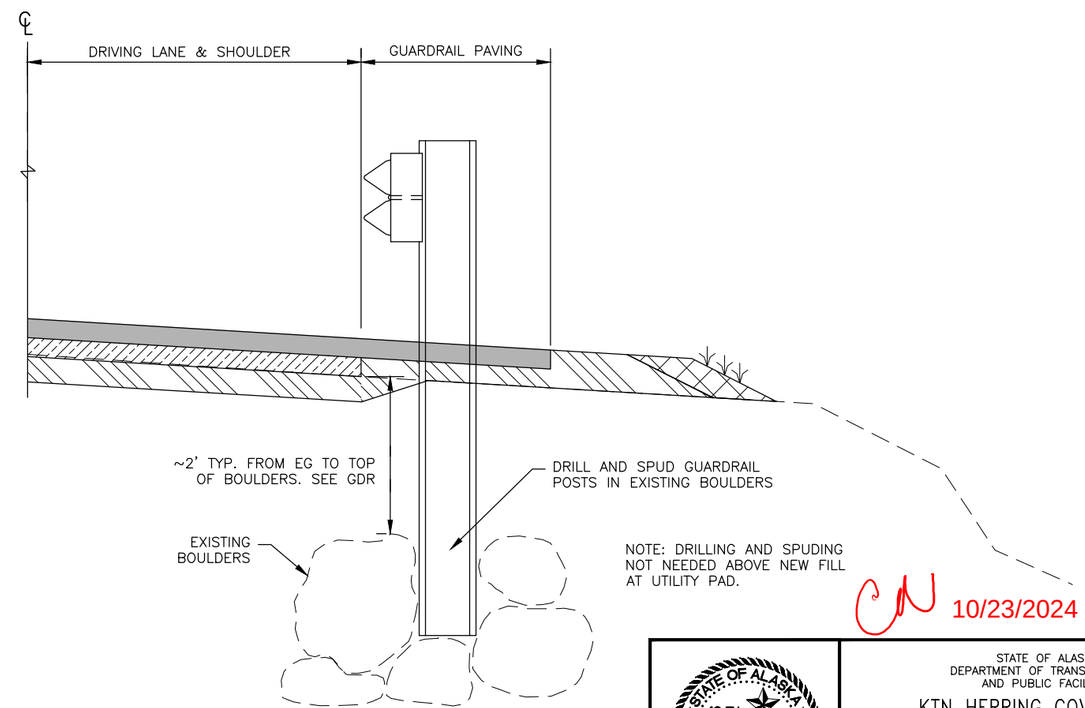

CN 10/23/2024

4/E1 DRILL AND SPUD GUARDRAIL POSTS
SCALE: N.T.S.

STATE OF ALASKA 49TH BRAN POLLARD, P.E. 106710 REGISTERED PROFESSIONAL ENGINEER
8/9/2021

STATE OF ALASKA
DEPARTMENT OF TRANSPORTATION AND PUBLIC FACILITIES

KTN HERRING COVE BRIDGE IMPROVEMENTS

MISCELLANEOUS DETAILS

FILE Q:\Ktn\SFHWY00072\Planset\00072_E1.dwg | DATE 8/9/2021 12:23 | LAYOUT E1 MISCELLANEOUS DE | DESIGNED STAFF | CHECKED STAFF | DRAFTED STAFF

NO.	DATE	REVISION	STATE	PROJECT DESIGNATION	YEAR	SHEET NO.	TOTAL SHEETS
			ALASKA	0902043/SFHWY00072	2021	E2	9

LEGEND

1. 3" HOT MIX ASPHALT, TYPE II, CLASS B
2. STE-1 ASPHALT FOR TACK COAT
3. 3" ASPHALT TREATED BASE COURSE
4. 4" AGGREGATE BASE COURSE, GRADING D-1

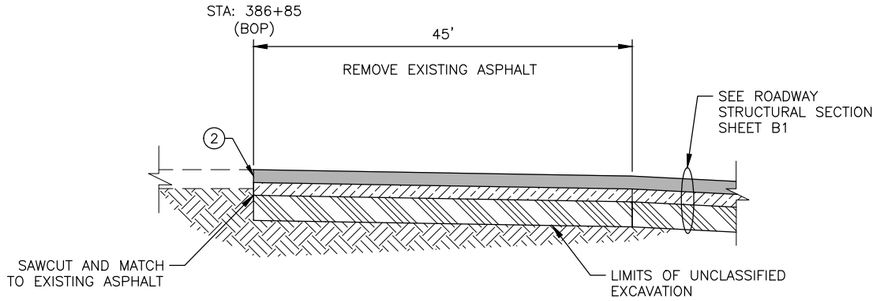

1 / E2 BOP TRANSITION
SCALE: NOT TO SCALE

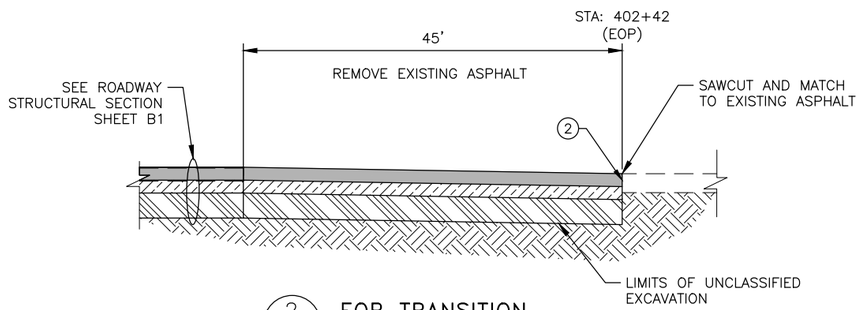

2 / E2 EOP TRANSITION
SCALE: NOT TO SCALE

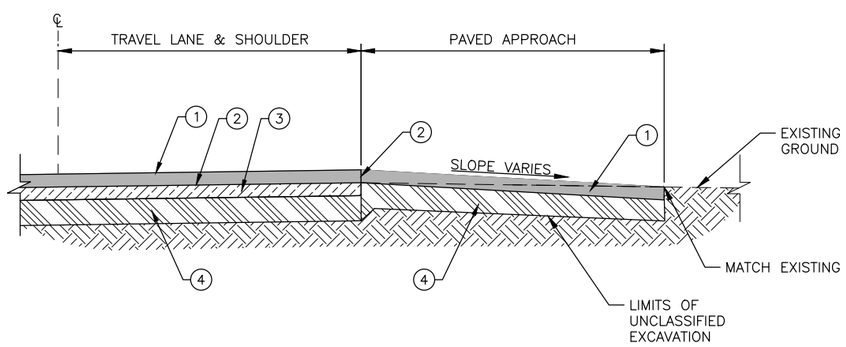

3 / E2 APPROACH PROFILE
SCALE: NOT TO SCALE

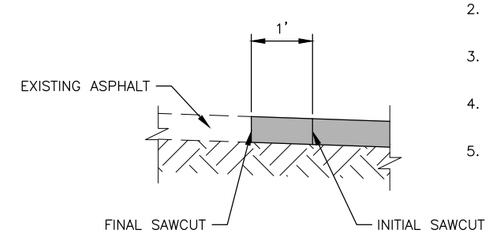

4 / E2 SAWCUT
SCALE: NOT TO SCALE

NOTES:

1. THIS DETAIL APPLIES TO ALL ASPHALT SAWCUTS.
2. INITIALLY SAWCUT EXISTING ASPHALT TO PROTECT FINAL CUT EDGE DURING ASPHALT REMOVAL & BASE COURSE PREPARATION.
3. FINAL SAWCUT WITHIN 24 HOURS PRIOR TO PAVING. PROTECT FINAL SAWCUT EDGE FROM DAMAGE.
4. INITIAL SAWCUT MAY BE ELIMINATED IF PAVING IS TO TAKE PLACE WITHIN 24 HRS AND SAWCUT EDGE IS PROTECTED FROM DAMAGE, PRIOR TO PAVING.
5. FINAL SAWCUT SHALL BE STRAIGHT & THE FULL DEPTH OF EXISTING ASPHALT.

CN
10/23/2024

STATE OF ALASKA 49TH
BRAN POLLARD, P.E.
106710
REGISTERED PROFESSIONAL ENGINEER
8/9/2021

STATE OF ALASKA
DEPARTMENT OF TRANSPORTATION
AND PUBLIC FACILITIES

KTN HERRING COVE BRIDGE IMPROVEMENTS

MISCELLANEOUS DETAILS

FILE Q:\Ktn\SFHWY00072\Planset\00072_E1.dwg | DATE 8/9/2021 12:23 | LAYOUT E2 MISCELLANEOUS DE | DESIGNED STAFF | CHECKED STAFF | DRAFTED STAFF

NO.	DATE	REVISION	STATE	PROJECT DESIGNATION	YEAR	SHEET NO.	TOTAL SHEETS
			ALASKA	0902043/SFHWY00072	2021	E3	9

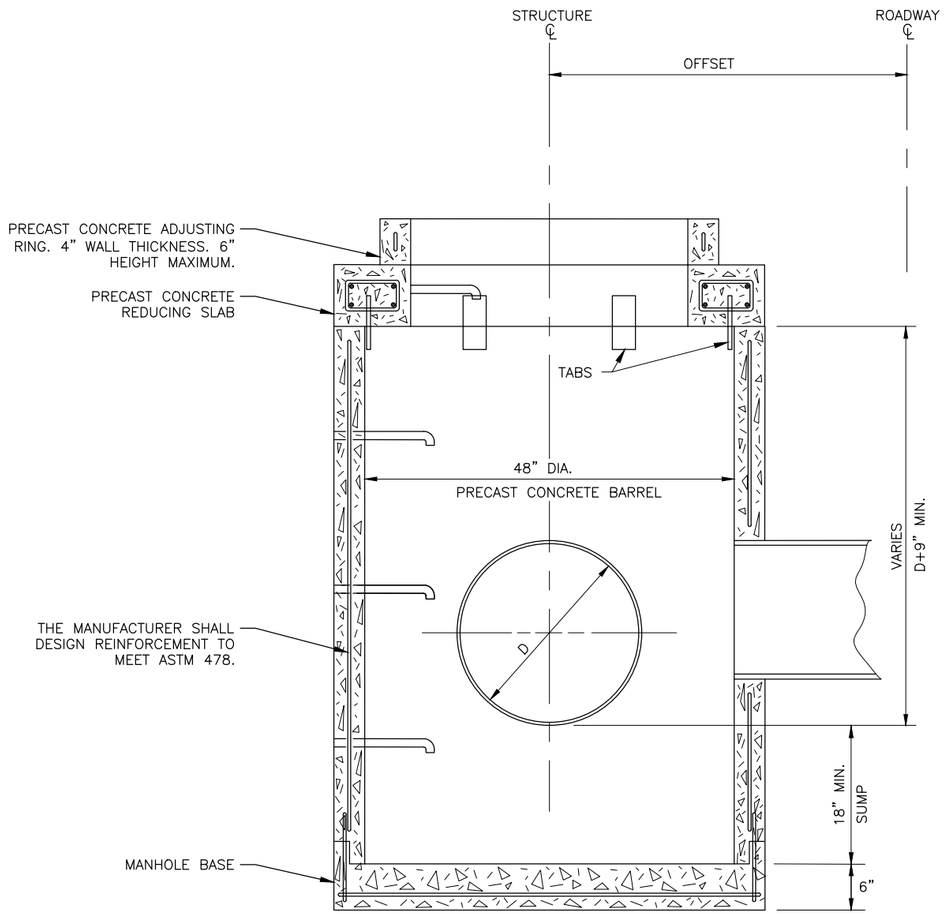

STORM DRAIN MANHOLE, TYPE I

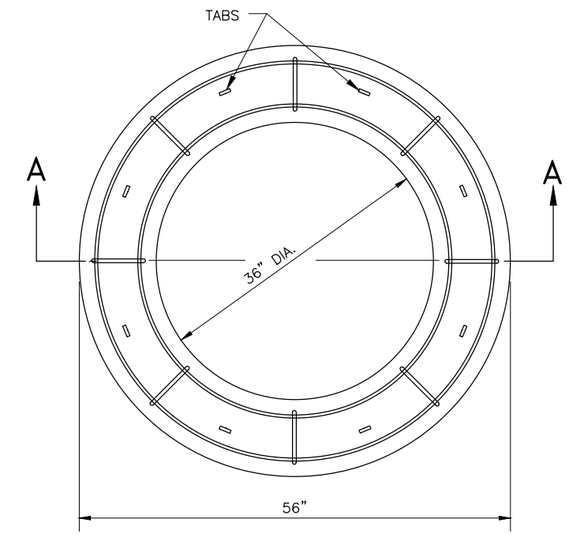

PLAN VIEW

NOTE:
EVENLY SPACE 8 TABS AROUND EACH SLAB.

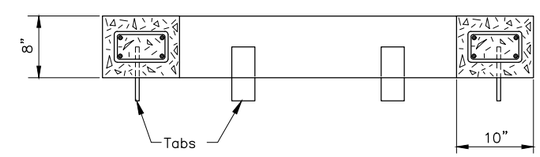

SECTION A–A

PRECAST CONCRETE REDUCING SLAB

56" TO 36" WITH CENTERED HOLE.

GENERAL NOTES:

1. ALL DRAINAGE STRUCTURES AND APPURTENANCES SHALL MEET THE REQUIREMENTS OF ASTM C–478.
2. ALL BLOCKOUTS SHALL BE FORMED.
3. MANHOLES AND INLETS SHALL HAVE 18" MINIMUM SUMPS.
4. STEPS SHALL BE PLACED 12" O.C. ON THE UNOBSTRUCTED SIDE OF THE STRUCTURE, 20" FROM TOP OF CASTING AND 18" MAXIMUM FROM MANHOLE BASE.
5. OFFSETS ARE MEASURED FROM ℄ OF THE ROAD TO ℄ OF THE STRUCTURE.

CN
10/23/2024

STATE OF ALASKA
49TH
BRAN POLLARD, P.E.
106710
REGISTERED PROFESSIONAL ENGINEER
8/9/2021

STATE OF ALASKA
DEPARTMENT OF TRANSPORTATION AND PUBLIC FACILITIES

KTN HERRING COVE BRIDGE IMPROVEMENTS

MISCELLANEOUS DETAILS

FILE	DATE	LAYOUT	E3 MISCELLANEOUS DETAILS	DESIGNED	STAFF	CHECKED	STAFF	DRAFTED	STAFF
Q:\Ktn\SFHWY00072\Planset\00072_E1.dwg	8/9/2021 12:23								

NO.	DATE	REVISION	STATE	PROJECT DESIGNATION	YEAR	SHEET NO.	TOTAL SHEETS
			ALASKA	0902043/SFHWY00072	2021	E4	9

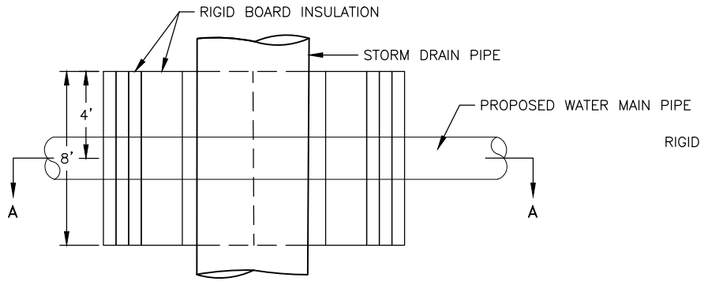

PLAN VIEW

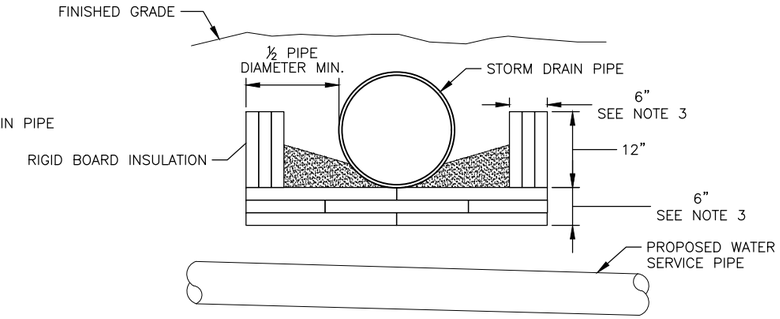

SECTION A–A

1/E4 **RIGID INSULATION**
SCALE: N.T.S.

NOTES 1/E4:

1. PIPE INSULATION SHALL BE 8' IN LENGTH, CENTERED OVER EXISTING WATER PIPE.
2. PIPE INSULATION WITH R–FACTOR EQUAL TO RIGID BOARD MAY BE SUBSTITUTED IF APPROVED BY THE ENGINEER.
3. CROSSING SHALL BE PROTECTED WITH A MINIMUM OF 6" OF INSULATION BOARDS WITH A 12" OVER LAP AS SHOWN.

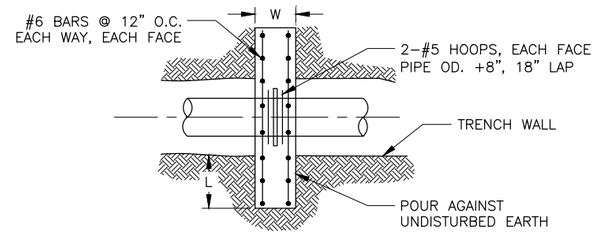

THRUST COLLAR PLAN VIEW SEE TABLE A

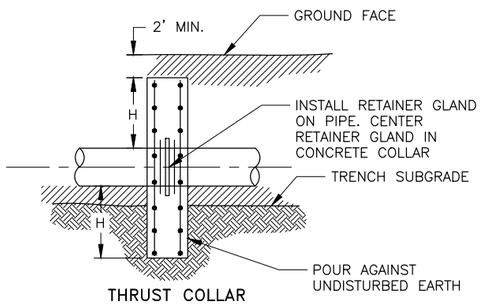

THRUST COLLAR PROFILE VIEW SEE TABLE A

2/E4 **THRUST BLOCKING DETAILS**
SCALE: N.T.S.

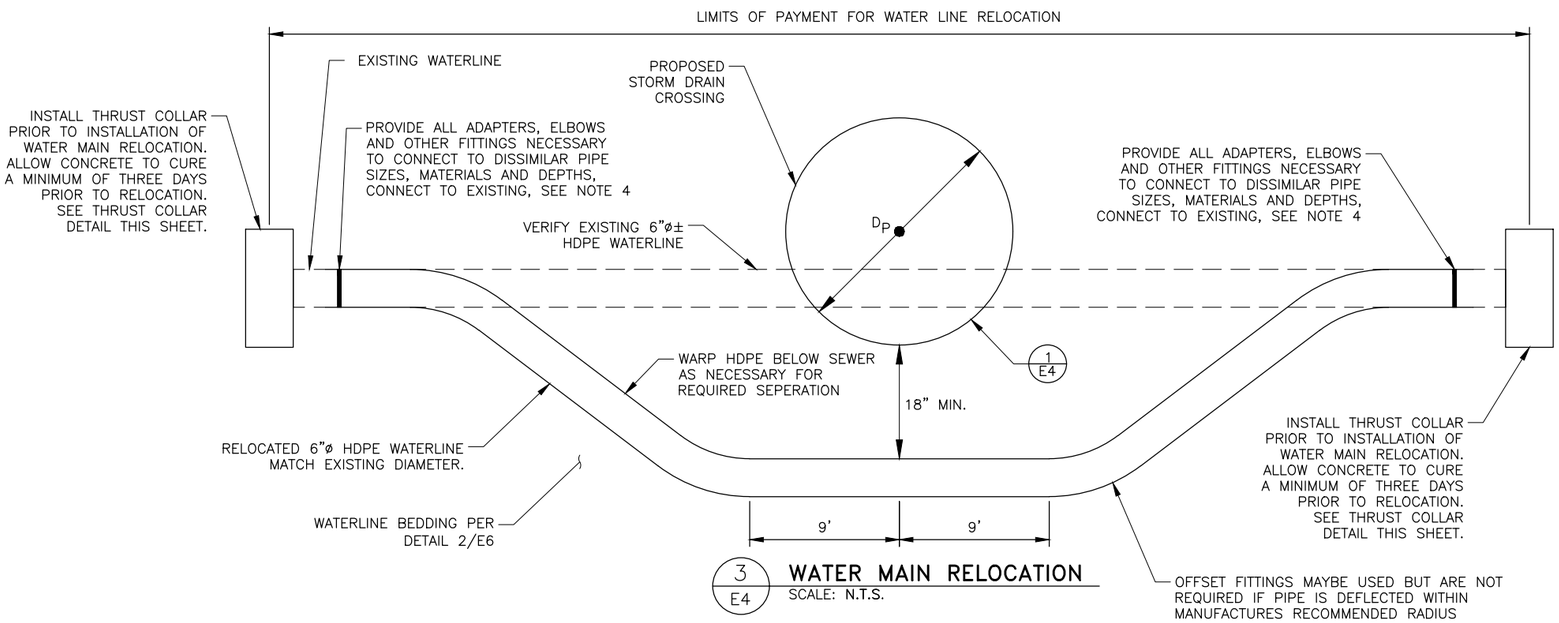

3/E4 **WATER MAIN RELOCATION**
SCALE: N.T.S.

DETAIL 3/E4 NOTES:

1. WATER MAIN RELOCATION MAY NOT BE REQUIRED. THE CONTRACTOR SHALL FIELD VERIFY THE EXISTING WATERLINE TOP OF PIPE ELEVATION, PIPE TYPE, AND DIAMETER AT THE STORM DRAIN CROSSING. SUBMIT RESULTS OF THE WATER LINE SURVEY TO THE ENGINEER.
2. THE ENGINEER WILL DETERMINE IF WATER MAIN RELOCATION IS REQUIRED BASED ON THE CONTRACTOR'S WATER LINE SURVEY. OBTAIN THE ENGINEER'S APPROVAL TO PROCEED WITH WATER MAIN RELOCATION PRIOR TO ORDERING ANY WATER MAIN RELOCATION MATERIALS.
3. PIPE INSULATION (NOT SHOWN) SHALL BE INSTALLED PER THE RIGID INSULATION DETAIL.
4. ELECTROFUSION CUPPLINGS MAYBE USED TO JOIN WATERMAIN RELOCATION TO EXISTING WATERLINE.
5. ALL NEW MATERIALS SHALL BE CLEANED AND DISINFECTED IN ACCORDANCE WITH THE AMERICAN WATER WORKS ASSOCIATION (AWWA) GUIDANCE. CONTRACTOR SHALL DISINFECT PRIOR TO MAKING CONNECTION. AFTER INSTALLATION CONTRACTOR SHALL FLUSH TO THE NEAREST HYDRANT.
6. NEW PIPE WORK INSTALLED WILL BE VISUALLY CHECKED FOR LEAKS AT LINE PRESSURE. VERIFICATION OF RESTRAINT REQUIREMENTS AND VISUAL INSPECTION WILL BE PERFORMED BY THE ENGINEER PRIOR TO PIPE BURIAL.

TABLE A – THRUST COLLAR DIMENSIONS

PIPE SIZE	H	W	L
12" AND UNDER	1'–6"	2'	1'–6"

NOTE: TABLE VALUES ARE BASED ON 200 PSI WATER PRESSURE AND 2000 PSF SOIL BEARING CAPACITY.

CN
10/23/2024

STATE OF ALASKA 49TH BRAN POLLARD, P.E. 106710 REGISTERED PROFESSIONAL ENGINEER
8/9/2021

STATE OF ALASKA
DEPARTMENT OF TRANSPORTATION AND PUBLIC FACILITIES

KTN HERRING COVE BRIDGE IMPROVEMENTS

MISCELLANEOUS DETAILS

FILE Q:\Ktn\SFHWY00072\Planset\00072_E1.dwg | DATE 8/9/2021 12:23 | LAYOUT E4 MISCELLANEOUS DETAILS | DESIGNED STAFF | CHECKED STAFF | DRAFTED STAFF

NO.	DATE	REVISION	STATE	PROJECT DESIGNATION	YEAR	SHEET NO.	TOTAL SHEETS
			ALASKA	0902043/SFHWY00072	2021	E5	9

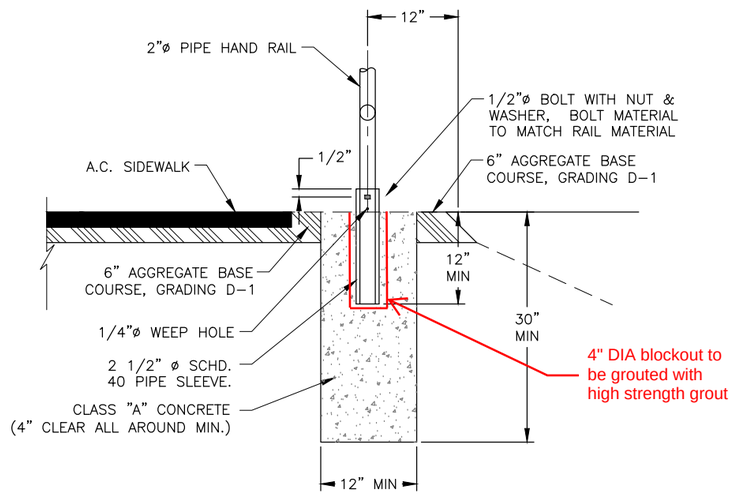

1 / E5 CAST IN PLACE FOUNDATION
SCALE: NOT TO SCALE

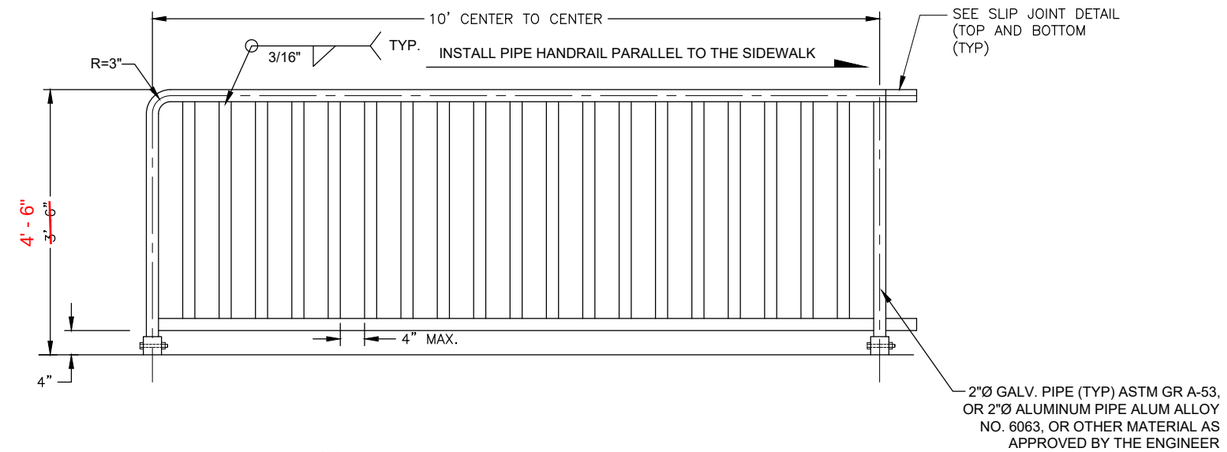

2 / E5 PIPE HANDRAIL ELEVATION (TYP)
SCALE: NOT TO SCALE

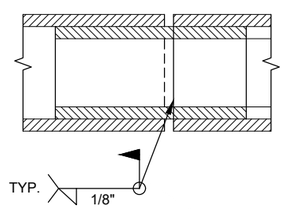

SLIP JOINT DETAIL

NTS

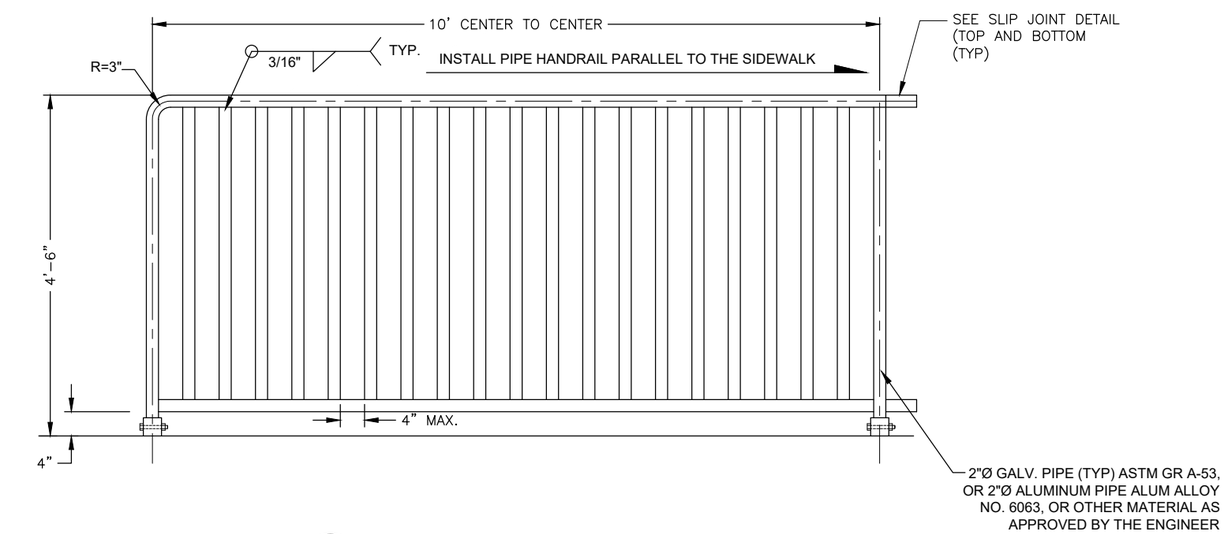

3 / E5 PIPE HANDRAIL ELEVATION (TYP)
SCALE: NOT TO SCALE

HANDRAIL NOTES:

1. HANDRAIL STATIONING IS APPROXIMATE. THE CONTRACTOR SHALL MARK POST HOLE FOUNDATION LOCATIONS BEFORE INSTALLING FOUNDATIONS. ADJUST POST HOLE LOCATIONS AS NECESSARY TO ENSURE THAT NO POST HOLE LOCATIONS CONFLICT WITH UNDERGROUND UTILITIES.
2. CONTRACTOR SHALL PROVIDE SHOP DRAWINGS OF ALL PEDESTRIAN RAILING, PRIOR TO FABRICATION, FOR THE ENGINEER'S REVIEW AND APPROVAL.
3. THE 6" DIMENSION BETWEEN PIPE RAIL SECTIONS IS TYPICAL. THE CONTRACTOR MAY ADJUST THE SPACING BETWEEN RAIL SECTIONS +/- 3" AS REQUIRED TO AVOID UNDERGROUND UTILITIES AND OTHER CONFLICTS.

CN
10/23/2024

STATE OF ALASKA 49TH BRAN POLLARD, P.E. 106710 REGISTERED PROFESSIONAL ENGINEER
8/9/2021

STATE OF ALASKA
DEPARTMENT OF TRANSPORTATION AND PUBLIC FACILITIES

KTN HERRING COVE BRIDGE IMPROVEMENTS

MISCELLANEOUS DETAILS

FILE Q:\Ktn\SFHWY00072\Planset\00072_E1.dwg | DATE 8/9/2021 12:23 | LAYOUT E5 MISCELLANEOUS DE | DESIGNED STAFF | CHECKED STAFF | DRAFTED STAFF

NO.	DATE	REVISION	STATE	PROJECT DESIGNATION	YEAR	SHEET NO.	TOTAL SHEETS
			ALASKA	0902043/SFHWY00072	2021	E6	9

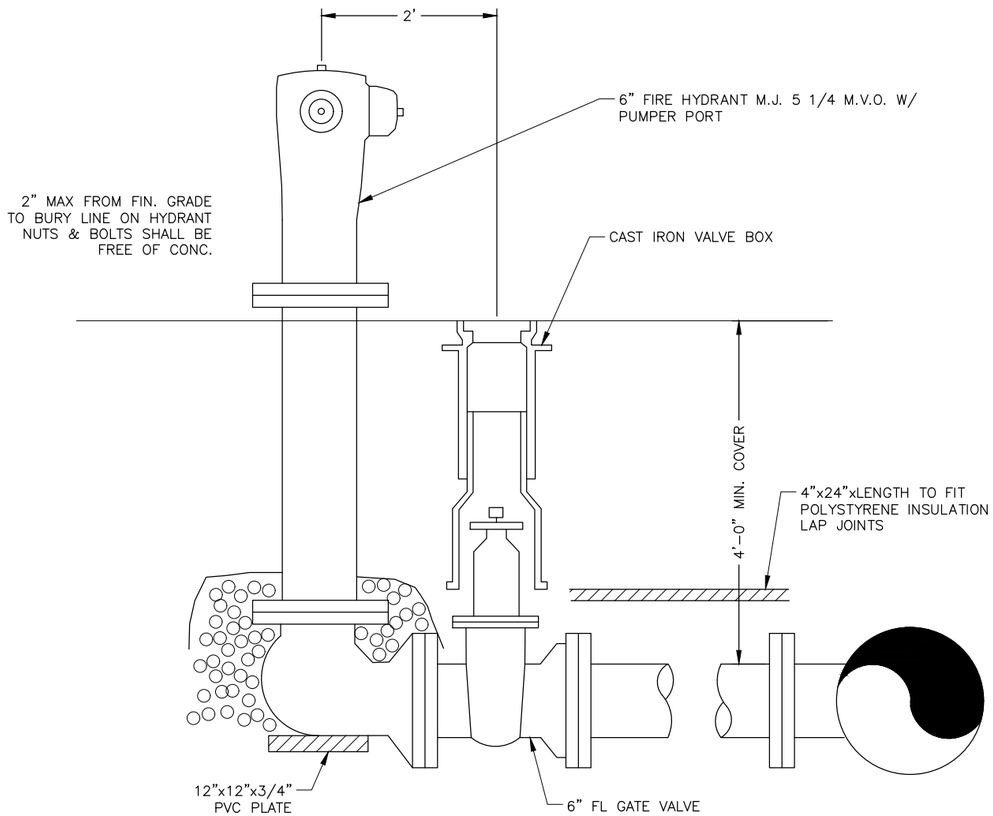

NOTES:

1. ALL BOLT THREADS TO BE GREASED PRIOR TO INSTALLATION.
2. ALL JOINTS RESTRAINED WITH FOLLOWMER GLANDS.
3. HYDRANT SHALL BE PAINTED 7745 SUNSET YELLOW (SUSTOLEUM).
4. NUTS AND BOLTS SHALL BE FREE OF CONCRETE.

1/E6 FIRE HYDRANT SERVICE RELOCATION

SCALE: N.T.S.

DETAIL 1/E6 NOTES:

1. FIRE HYDRANT RELOCATION MAY NOT BE REQUIRED. THE CONTRACTOR SHALL FIELD VERIFY THE EXISTING WATERLINE TOP OF PIPE ELEVATION, PIPE TYPE, AND DIAMETER AT THE STORM DRAIN CROSSING. SUBMIT RESULTS OF THE WATER LINE SURVEY TO THE ENGINEER.
2. THE ENGINEER WILL DETERMINE IF FIRE HYDRANT RELOCATION IS REQUIRED BASED ON THE CONTRACTOR'S WATER LINE SURVEY. OBTAIN THE ENGINEER'S APPROVAL TO PROCEED WITH WATER MAIN RELOCATION PRIOR TO ORDERING ANY WATER FIRE HYDRANT RELOCATION MATERIALS.
3. PIPE INSULATION (NOT SHOWN) SHALL BE INSTALLED PER THE RIGID INSULATION DETAIL (SEE 1/E4).
4. ALL NEW MATERIALS SHALL BE CLEANED AND DISINFECTED IN ACCORDANCE WITH THE AMERICAN WATER WORKS ASSOCIATION (AWWA) PROCEDURES. CONTRACTOR SHALL DISINFECT PRIOR TO MAKING CONNECTION. AFTER INSTALLATION CONTRACTOR SHALL FLUSH TO THE HYDRANT.
5. NEW PIPE WORK INSTALLED WILL BE VISUALLY CHECKED FOR LEAKS AT LINE PRESSURE. VERIFICATION OF RESTRAINT REQUIREMENTS AND VISUAL INSPECTION WILL BE PERFORMED BY THE ENGINEER, PRIOR TO BACKFILL PLACEMENT.

DETAIL 3/E6 NOTES:

1. PIPE INSULATION (NOT SHOWN) SHALL BE INSTALLED PER THE RIGID INSULATION DETAIL (SEE 1/E4).

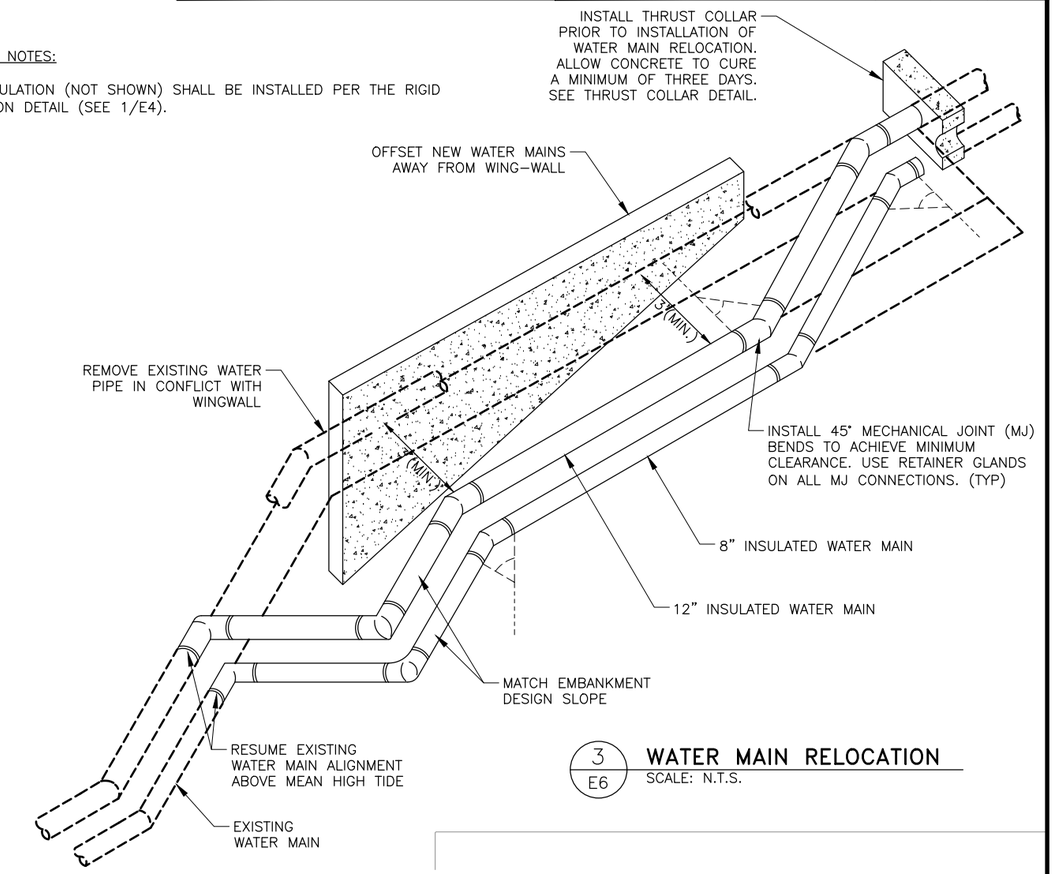

3/E6 WATER MAIN RELOCATION

SCALE: N.T.S.

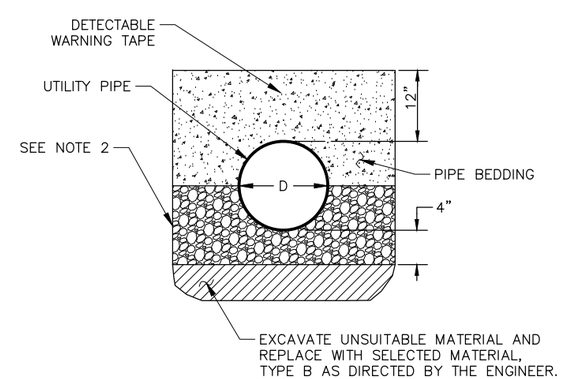

2/E6 WATER LINE BEDDING

SCALE: N.T.S.

NOTES 2/E6:

1. THE MAXIMUM CLEAR WIDTH OF THE TRENCH AT THE TOP OF THE PIPE SHALL NOT EXCEED THE PIPE OD + 2'. MINIMUM TRENCH WIDTH SHALL BE PIPE OD + 1'
2. WHERE DIRECTED BY THE ENGINEER, GRANULAR TRENCH STABILIZATION SHALL BE PLACED PRIOR TO PLACEMENT OF THE BEDDING. SIZE AND DEPTH ARE DEPENDENT ON SOIL CONDITIONS.
3. FOR ROCK OR OTHER INCOMPRESSIBLE MATERIALS, THE TRENCH SHALL BE OVEREXCAVATED A MINIMUM OF 6" AND REFILLED WITH GRANULAR MATERIAL AS DIRECTED BY THE ENGINEER.
4. BEDDING AND BACKFILL MATERIALS IN THE PIPE ZONE SHALL BE COMPACTED AS SPECIFIED PRIOR TO BACKFILLING THE REMAINDER OF THE TRENCH.
5. INSTALL BEDDING & BACKFILL IN ACCORDANCE WITH SECTION 204.
6. PIPE INSULATION (NOT SHOWN) SHALL BE INSTALLED PER THE RIGID INSULATION DETAIL (SEE 1/E4).

CN
10/23/2024

STATE OF ALASKA 49TH BRAN POLLARD, P.E. 106710 REGISTERED PROFESSIONAL ENGINEER
8/9/2021

STATE OF ALASKA
DEPARTMENT OF TRANSPORTATION AND PUBLIC FACILITIES

KTN HERRING COVE BRIDGE IMPROVEMENTS

MISCELLANEOUS DETAILS

FILE Q:\Ktn\SFHWY00072\Planset\00072_E1.dwg | DATE 8/9/2021 12:23 | LAYOUT E6 MISCELLANEOUS DETAILS | DESIGNED STAFF | CHECKED STAFF | DRAFTED STAFF

NO.	DATE	REVISION	STATE	PROJECT DESIGNATION	YEAR	SHEET NO.	TOTAL SHEETS
			ALASKA	0902043/SFHWY00072	2021	E7	9

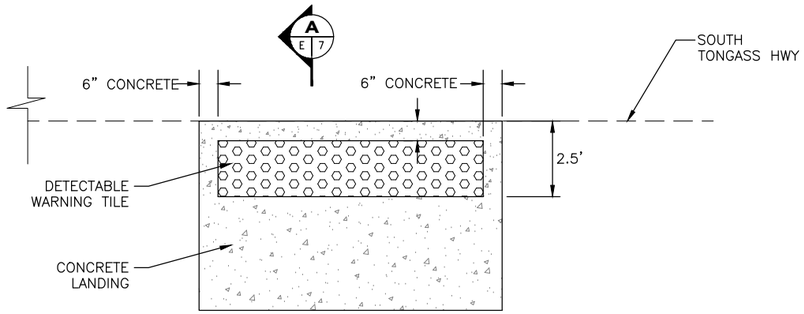

PLAN VIEW
NTS

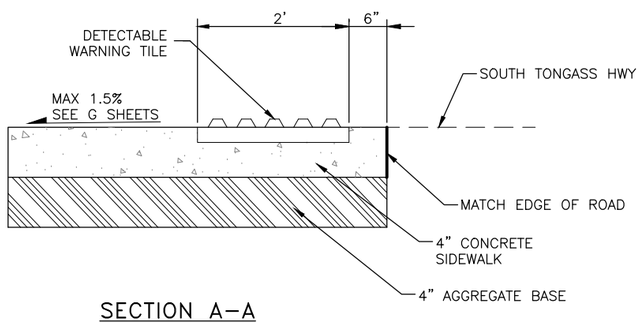

SECTION A–A
NTS

1 / E7 PEDESTRIAN LANDING
SCALE: NOT TO SCALE
SEE G SHEETS

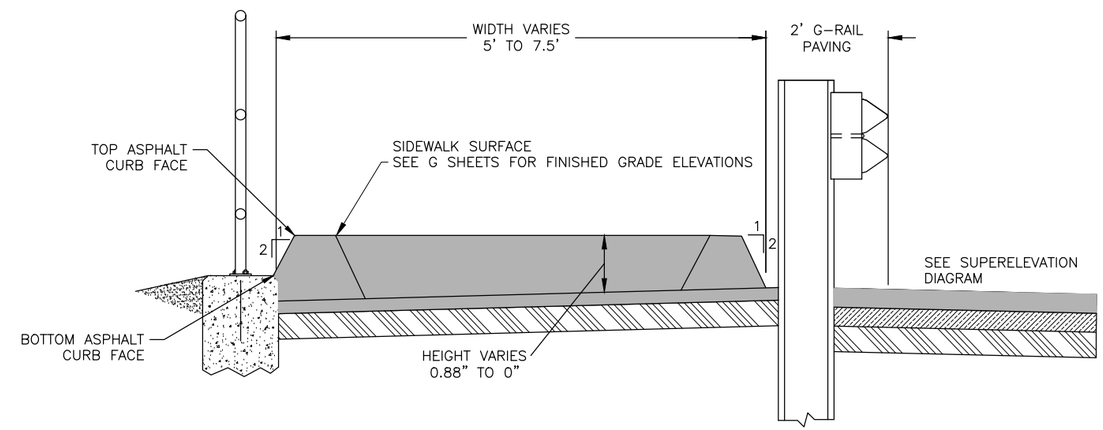

2 / E7 SIDEWALK TRANSITION TO BRIDGE
SCALE: NOT TO SCALE

CN
10/23/2024

STATE OF ALASKA
49TH
BRAN POLLARD, P.E.
106710
REGISTERED PROFESSIONAL ENGINEER
8/9/2021

STATE OF ALASKA
DEPARTMENT OF TRANSPORTATION
AND PUBLIC FACILITIES

KTN HERRING COVE BRIDGE
IMPROVEMENTS

E7 MISCELLANEOUS DETAILS

FILE	DATE	LAYOUT	E7 MISCELLANEOUS DETAILS	DESIGNED	STAFF	CHECKED	STAFF	DRAFTED	STAFF
Q:\Ktn\SFHWY00072\Planset\00072_E1.dwg	8/9/2021 12:23								

NO.	DATE	REVISION	STATE	PROJECT DESIGNATION	YEAR	SHEET NO.	TOTAL SHEETS
			ALASKA	0902043/SFHWY00072	2021	E8	9

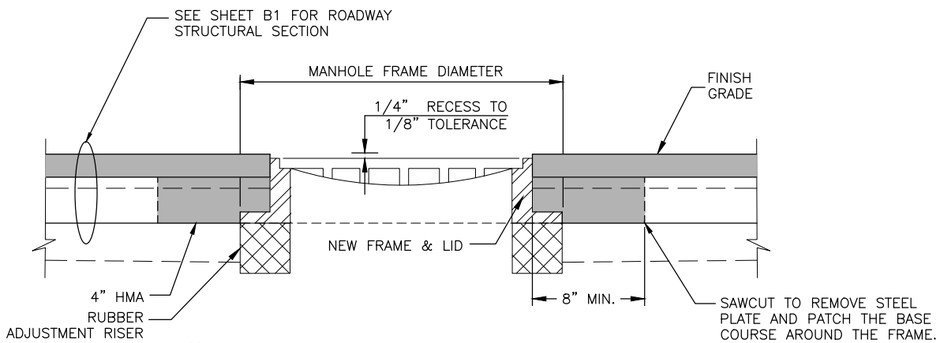

1 / E8 MANHOLE ADJUSTMENT DETAIL
SCALE:NOT TO SCALE

MANHOLE ADJUSTMENT CONSTRUCTION SEQUENCING NOTES:

1. SAW CUT AND REMOVE FULL DEPTH OF EXISTING ASPHALT CONCRETE A MINIMUM OF 8" AROUND EXISTING MANHOLE FRAMES.
2. REMOVE EXISTING MANHOLE FRAMES, LIDS, & ADJUSTING RINGS.
3. INSTALL STEEL PLATE OVER MANHOLE OPENING AS A TEMPORARY MEASURE.
4. AFTER PLACING THE BASE COURSE, SAWCUT THE BASE COURSE AND REMOVE THE STEEL PLATE AND INSTALL NEW RISERS, FRAME AND LID. ADJUST FRAMES TO FINISHED GRADE.
5. PRIOR TO FINAL PAVING, CONSTRUCT 4" OF HOT MIX ASPHALT (HMA) AROUND FRAME. CONSTRUCT HMA PER SECTION 408.
6. CONSTRUCT FINAL HMA IN ACCORDANCE WITH SECTION 408.

MANHOLE & VALVE ADJUSTMENT NOTES:

1. MANHOLE CASTING SHALL BE ADJUSTED TO CONFORM WITH SLOPE AND GRADE OF PROPOSED PAVEMENT.
2. ADJUSTING RINGS SHALL BE PROPERLY SIZED FOR THE EXISTING CONE OR FLAT TOP OPENING.
3. INSTALLATION OF FRAME, COVER, AND ADJUSTMENT RINGS, ONTO THE EXISTING STRUCTURE SHALL BE WATER-TIGHT.
4. APPLY WATERPROOF MASTIC AND MEMBRANE AROUND RINGS. RUBBER GRADE RIND ADJUSTMENT RISERS SHALL BE BONDED TO ADJACENT SURFACES BY LAYING AT LEAST 3 BEADS, A MINIMUM OF $\frac{3}{16}$" THICK OF POLYURETHANE CONSTRUCTION ADHESIVE ON EACH SIDE OF THE RUBBER RISERS OR THE TOP SURFACE OF THE CONCRETE COURSE. TWO OF THE ADHESIVE BEADS SHALL BE WITHIN 1" OF THE EDGES OF THE RUBBER GRADE RING ADJUSTMENT RISER, THE THIRD SHALL BE EQUIDISTANT BETWEEN THE TWO OUTER BEADS. THE BEADS SHALL BE CONTINUOUS AROUND THE RUBBER GRADE RING ADJUSTMENT RISER.

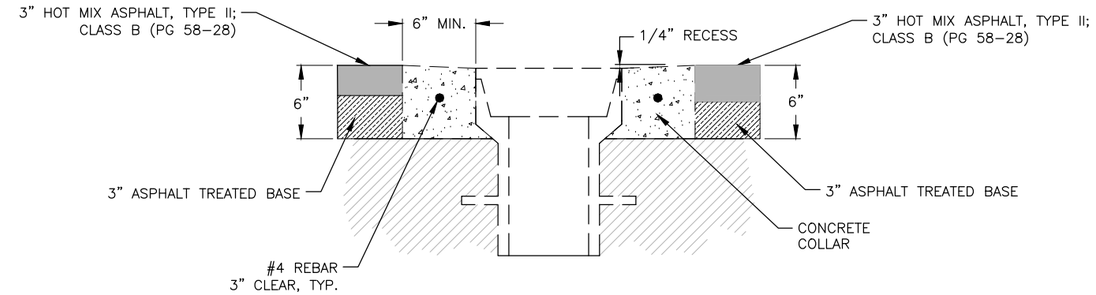

2 / E8 MONUMENT CASE ADJUSTMENT DETAIL
SCALE: NOT TO SCALE

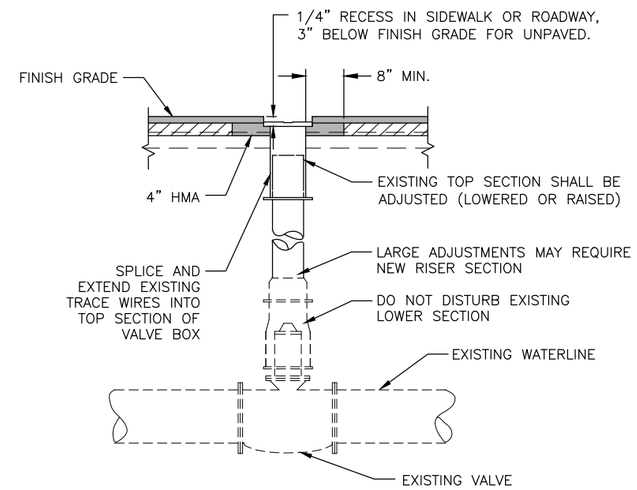

3 / E8 VALVE BOX ADJUSTMENT DETAIL
SCALE:NOT TO SCALE

CN
10/23/2024

STATE OF ALASKA 49TH BRAN POLLARD, P.E. 106710 REGISTERED PROFESSIONAL ENGINEER
8/9/2021

STATE OF ALASKA
DEPARTMENT OF TRANSPORTATION AND PUBLIC FACILITIES

KTN HERRING COVE BRIDGE IMPROVEMENTS

E8 MISCELLANEOUS DETAILS

FILE Q:\Ktn\SFHWY00072\Planset\00072_E1.dwg | DATE 8/9/2021 12:23 | LAYOUT E8 MISCELLANEOUS DE | DESIGNED STAFF | CHECKED STAFF | DRAFTED STAFF

NO.	DATE	REVISION

STATE	PROJECT DESIGNATION	YEAR	SHEET NO.	TOTAL SHEETS
ALASKA	0902043/SFHWY00072	2021	E9	9

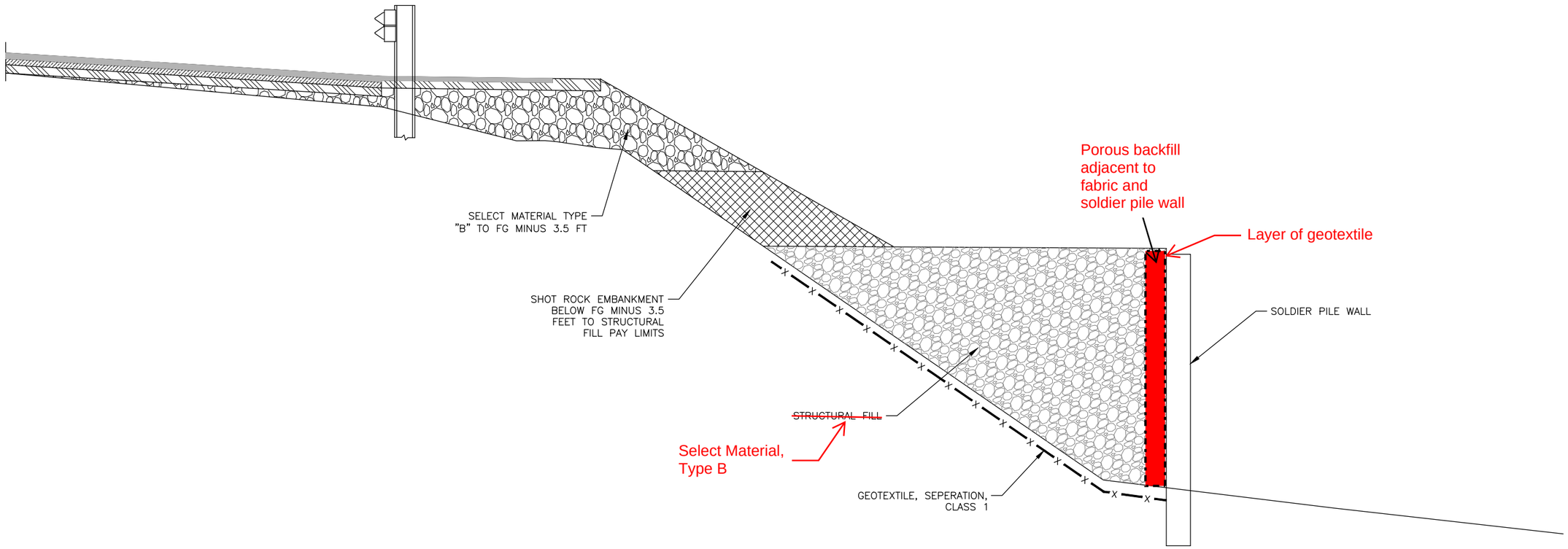

1 / E9 SOLDIER PILE WALL BACKFILL

SCALE: NOT TO SCALE
STA 397+59 RT to 398+69 RT

CN
10/23/2024

STATE OF ALASKA 49TH BRAN POLLARD, P.E. 106710 REGISTERED PROFESSIONAL ENGINEER
8/9/2021

STATE OF ALASKA
DEPARTMENT OF TRANSPORTATION AND PUBLIC FACILITIES

KTN HERRING COVE BRIDGE IMPROVEMENTS

E9 MISCELLANEOUS DETAILS

FILE	DATE	LAYOUT	E9 MISCELLANEOUS DETAILS	DESIGNED	STAFF	CHECKED	STAFF	DRAFTED	STAFF
Q:\Ktn\SFHWY00072\Planset\00072_E1.dwg	8/9/2021 12:23								

NO.	DATE	REVISION

STATE	PROJECT DESIGNATION	YEAR	SHEET NO.	TOTAL SHEETS
ALASKA	0902043/SFHWY00072	2021	F1	6

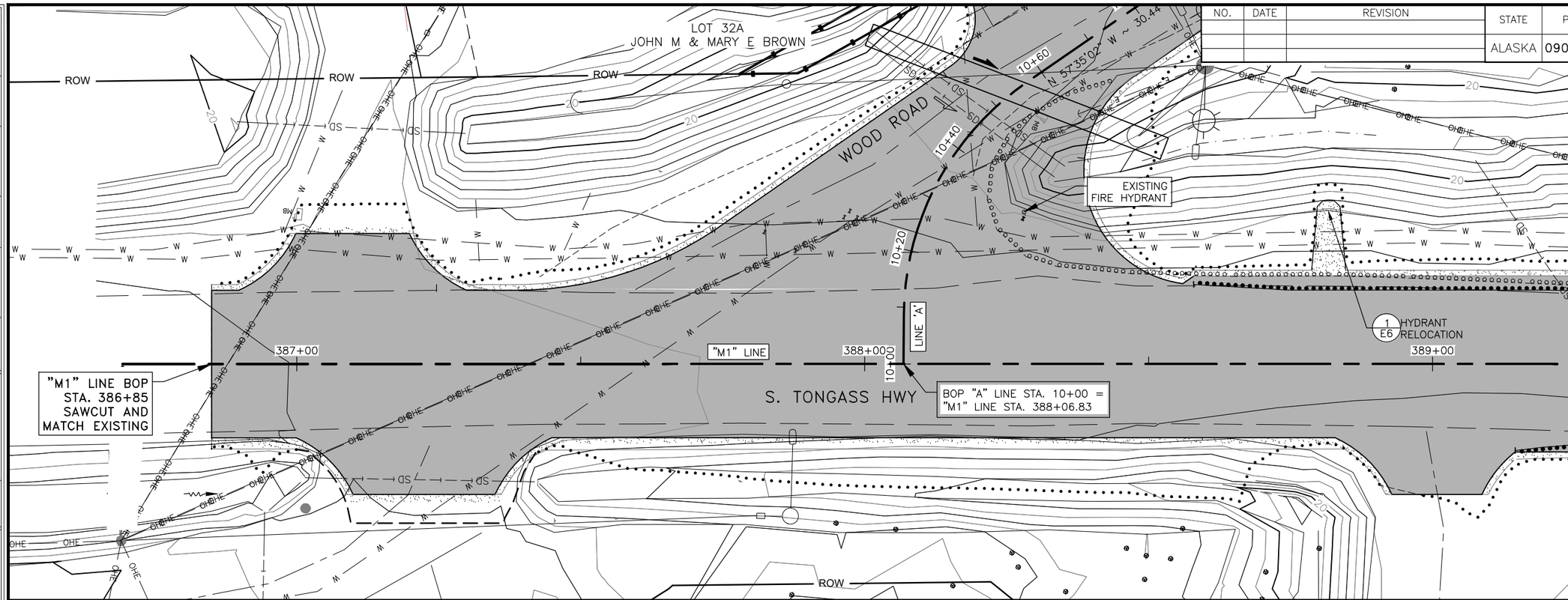

CN
10/23/2024

STATE OF ALASKA 49TH
BRAN POLLARD, P.E.
106710
REGISTERED PROFESSIONAL ENGINEER
8/9/2021

SUPERELEVATION

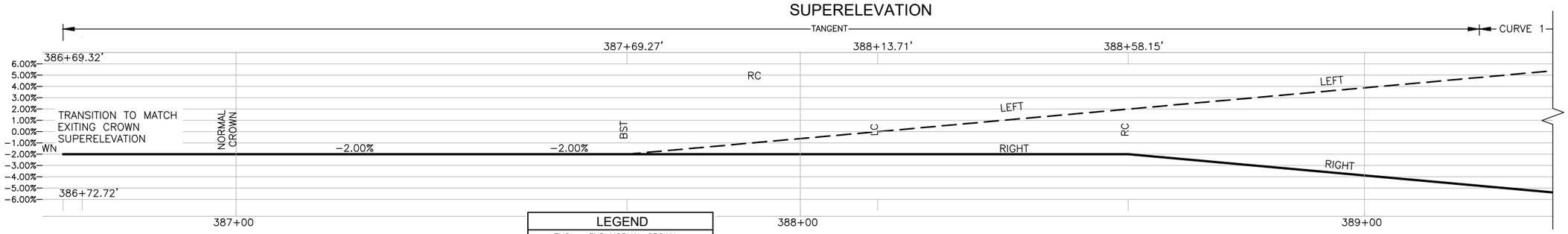

LEGEND	
ENC:	END NORMAL CROWN
LC:	LEVEL CROWN
RC:	REVERSE CROWN
BFS:	BEGIN FULL SUPERELEVATION
EFS	END FULL SUPERELEVATION
— —	LEFT EDGE
═══	RIGHT EDGE

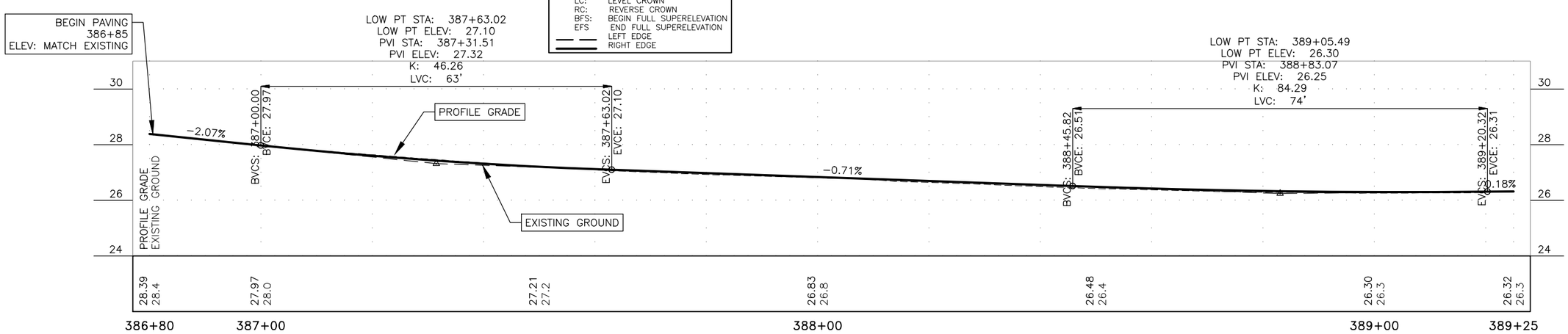

FIRM	STATE OF ALASKA DEPARTMENT OF TRANSPORTATION & PUBLIC FACILITIES	PHONE	(907) 465-1763	CERTIFICATE OF AUTH #:
ADDRESS	6860 GLACIER HWY, JUNEAU, AK 99811	DESIGNED	STAFF	CHECKED STAFF
DATE	6/22/2021 9:57	LAYOUT	F1	DRAFTED STAFF
FILE	Q:\Ktn\SFHWY00072\Planset\00072_F1.dwg			

NO.	DATE	REVISION

STATE	PROJECT DESIGNATION	YEAR	SHEET NO.	TOTAL SHEETS
ALASKA	0902043/SFHWY00072	2021	F2	6

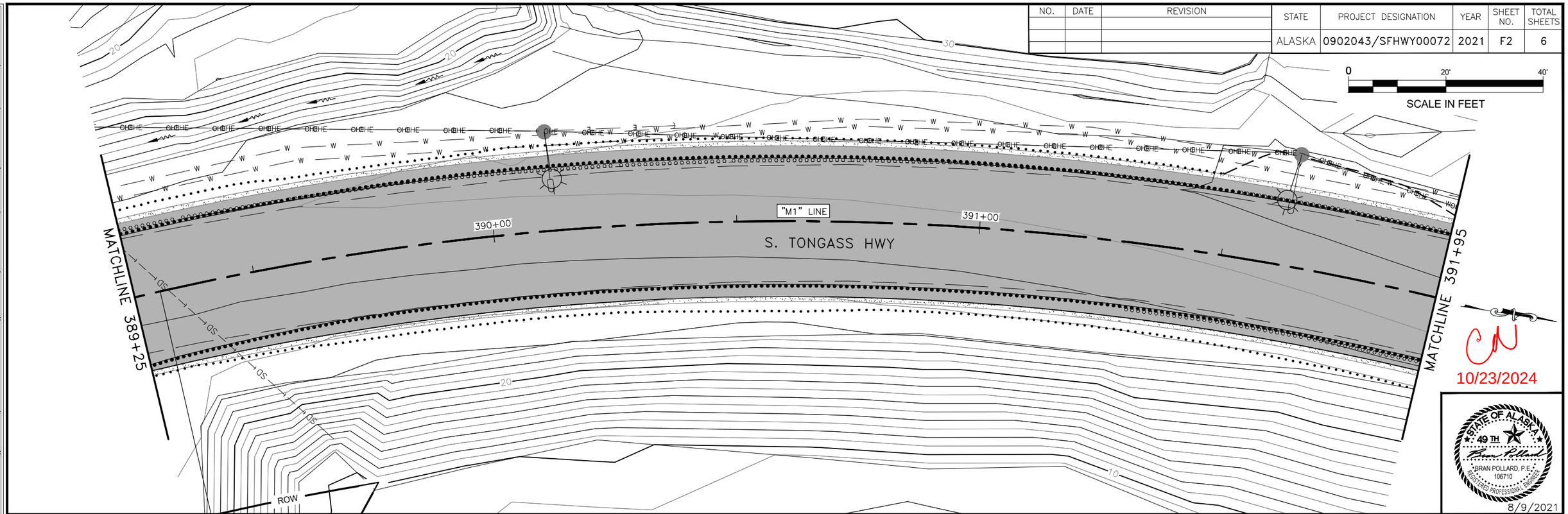

CN
10/23/2024

STATE OF ALASKA
49TH
BRAN POLLARD, P.E.
106710
REGISTERED PROFESSIONAL ENGINEER
8/9/2021

SUPERELEVATION

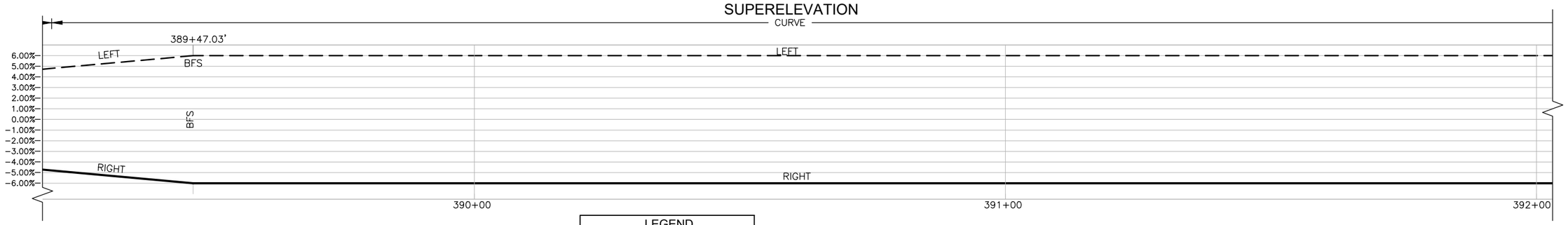

LEGEND

ENC:	END NORMAL CROWN
LC:	LEVEL CROWN
RC:	REVERSE CROWN
BFS:	BEGIN FULL SUPERELEVATION
EFS	END FULL SUPERELEVATION
	LEFT EDGE
	RIGHT EDGE

LOW PT STA: 390+36.93
LOW PT ELEV: 26.52
PVI STA: 391+38.18
PVI ELEV: 26.70
K: 179.52
LVC: 202'

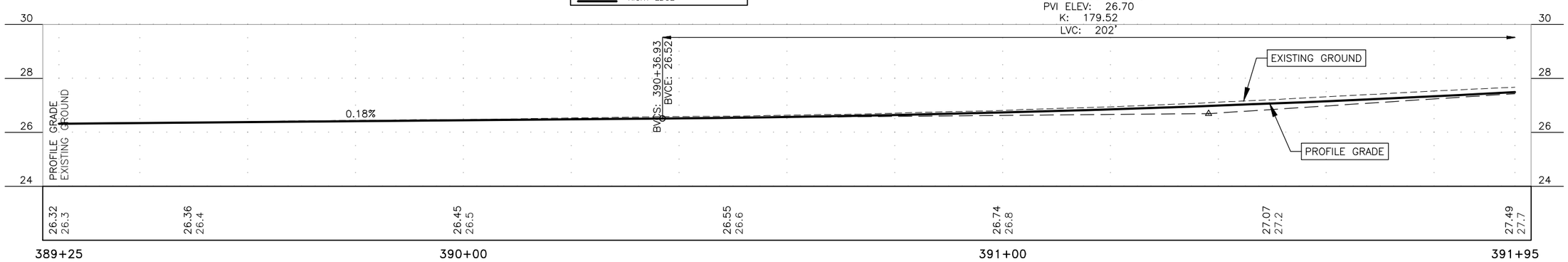

FIRM	STATE OF ALASKA DEPARTMENT OF TRANSPORTATION & PUBLIC FACILITIES	PHONE	(907) 465-1763	CERTIFICATE OF AUTH #:
ADDRESS	6860 GLACIER HWY, JUNEAU, AK 99811	DESIGNED	STAFF	CHECKED STAFF
DATE	6/22/2021 9:57	LAYOUT	F2	DRAFTED STAFF
FILE	Q:\Ktn\SFHWY00072\Planset\00072_F1.dwg			

NO.	DATE	REVISION

STATE	PROJECT DESIGNATION	YEAR	SHEET NO.	TOTAL SHEETS
ALASKA	0902043/SFHWY00072	2021	F3	6

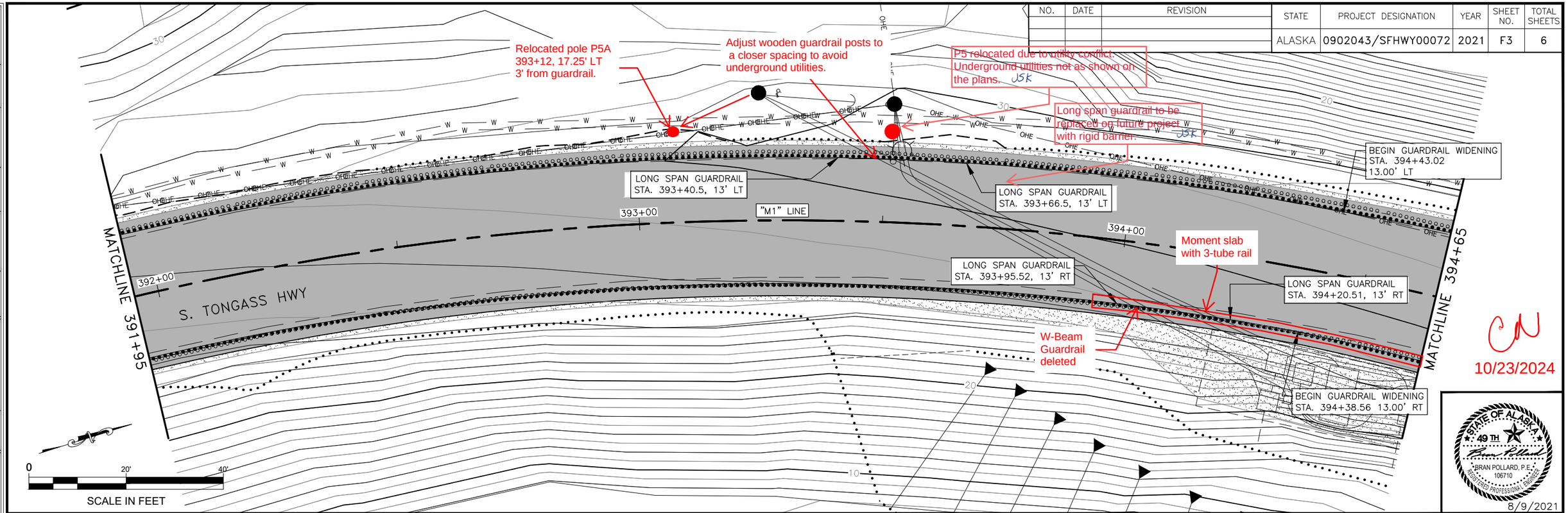

CN
10/23/2024

STATE OF ALASKA 49TH
BRAN POLLARD, P.E.
106710
REGISTERED PROFESSIONAL ENGINEER
8/9/2021

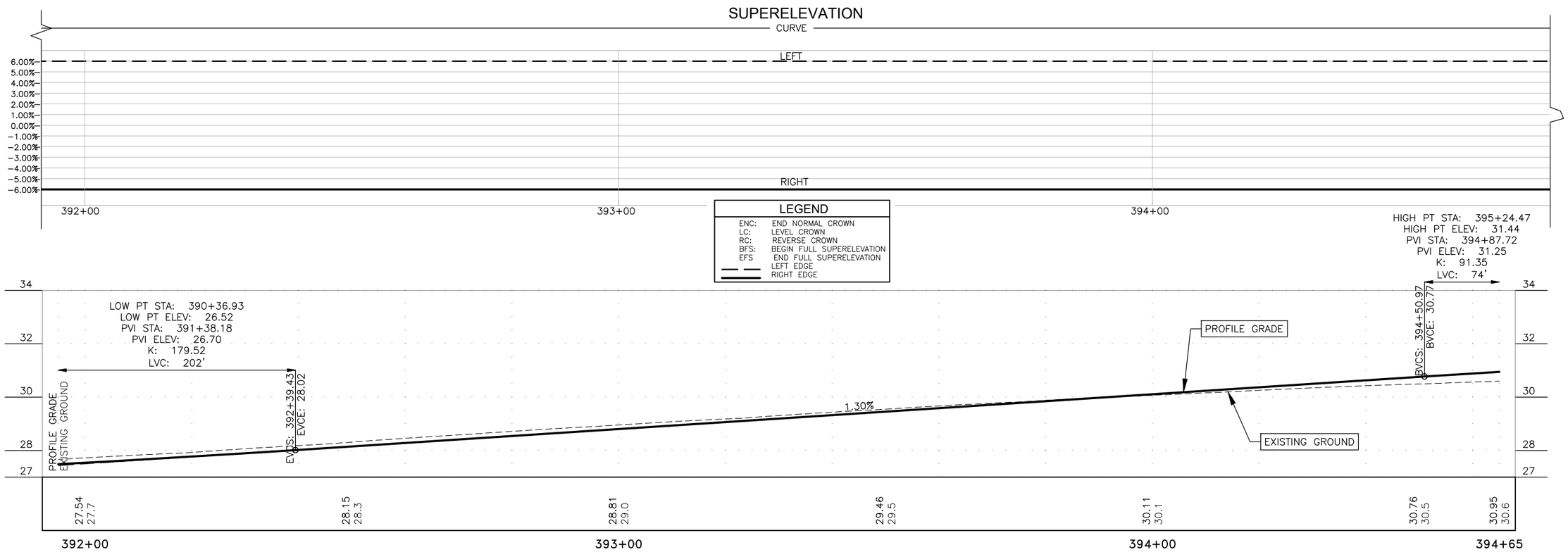

FIRM	STATE OF ALASKA DEPARTMENT OF TRANSPORTATION & PUBLIC FACILITIES	ADDRESS	6860 GLACIER HWY, JUNEAU, AK 99811	PHONE	(907) 465-1763	CERTIFICATE OF AUTH #:
FILE	Q:\Ktn\SFHWY00072\Planset\00072_F1.dwg	DATE	6/22/2021 9:57	LAYOUT	F3	DESIGNED STAFF	CHECKED STAFF	DRAFTED STAFF

NO.	DATE	REVISION

STATE	PROJECT DESIGNATION	YEAR	SHEET NO.	TOTAL SHEETS
ALASKA	0902043/SFHWY00072	2021	F4	6

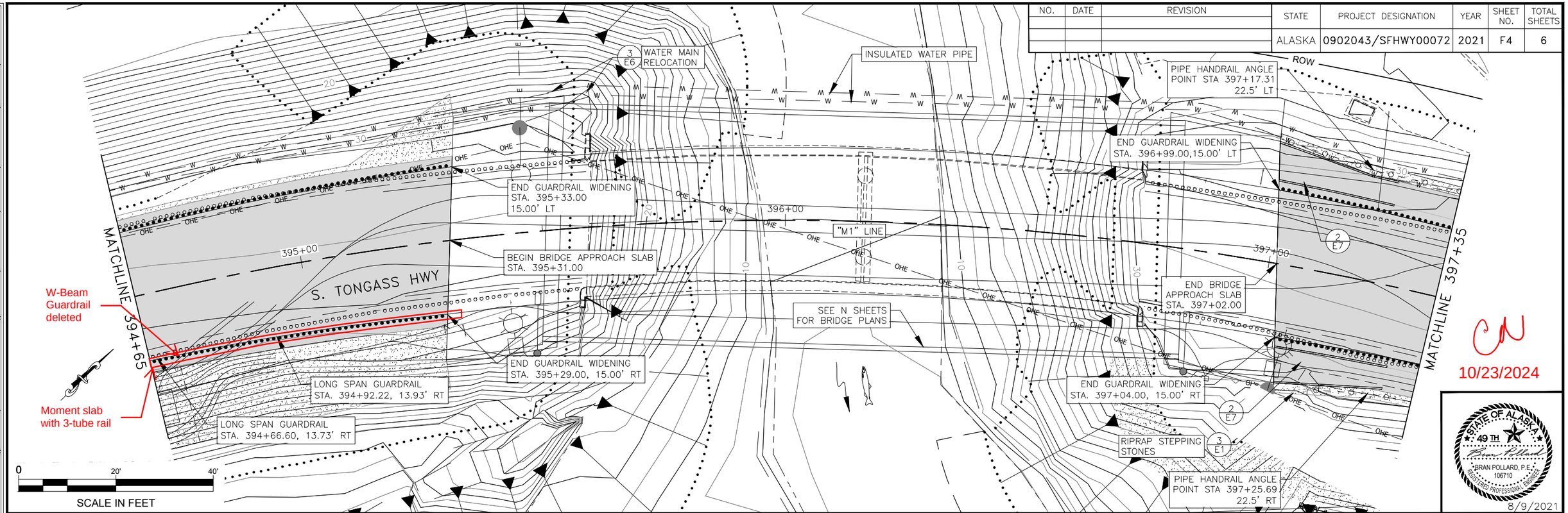

CN
10/23/2024

STATE OF ALASKA 49TH
BRAN POLLARD, P.E.
106710
REGISTERED PROFESSIONAL ENGINEER
8/9/2021

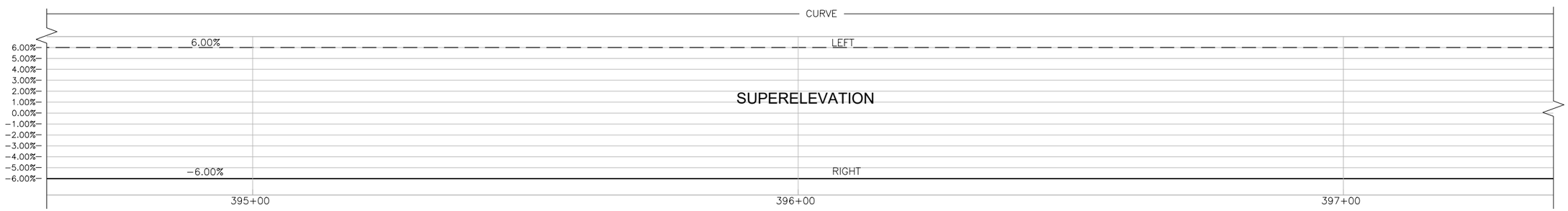

LEGEND

ENC:	END NORMAL CROWN
LC:	LEVEL CROWN
RC:	REVERSE CROWN
BFS:	BEGIN FULL SUPERELEVATION
EFS	END FULL SUPERELEVATION
— —	LEFT EDGE
———	RIGHT EDGE

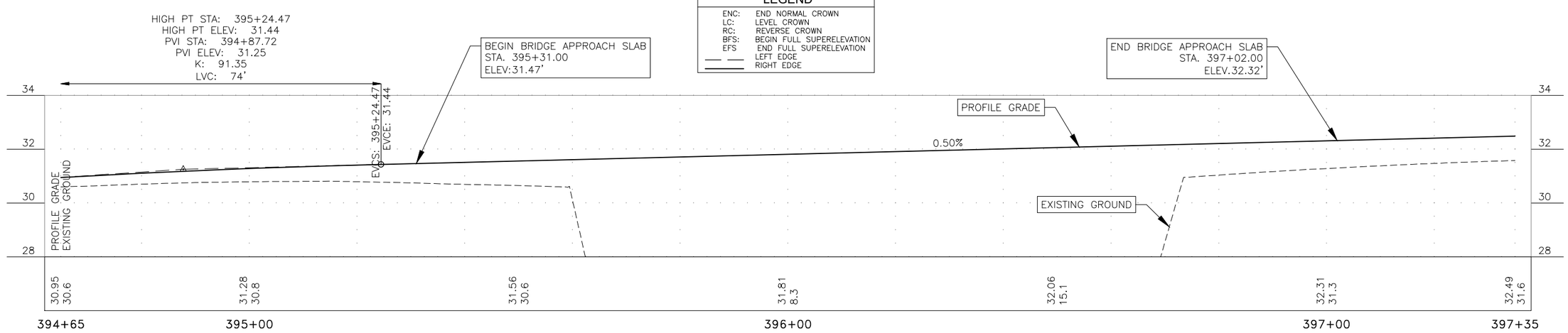

FIRM	STATE OF ALASKA DEPARTMENT OF TRANSPORTATION & PUBLIC FACILITIES	ADDRESS	6860 GLACIER HWY, JUNEAU, AK 99811	PHONE	(907) 465-1763	CERTIFICATE OF AUTH #:
FILE	Q:\Ktn\SFHWY00072\Planset\00072_F1.dwg	DATE	6/22/2021 9:57	LAYOUT	F4	DESIGNED STAFF CHECKED STAFF DRAFTED STAFF

NO.	DATE	REVISION

STATE	PROJECT DESIGNATION	YEAR	SHEET NO.	TOTAL SHEETS
ALASKA	0902043/SFHWY00072	2021	F5	6

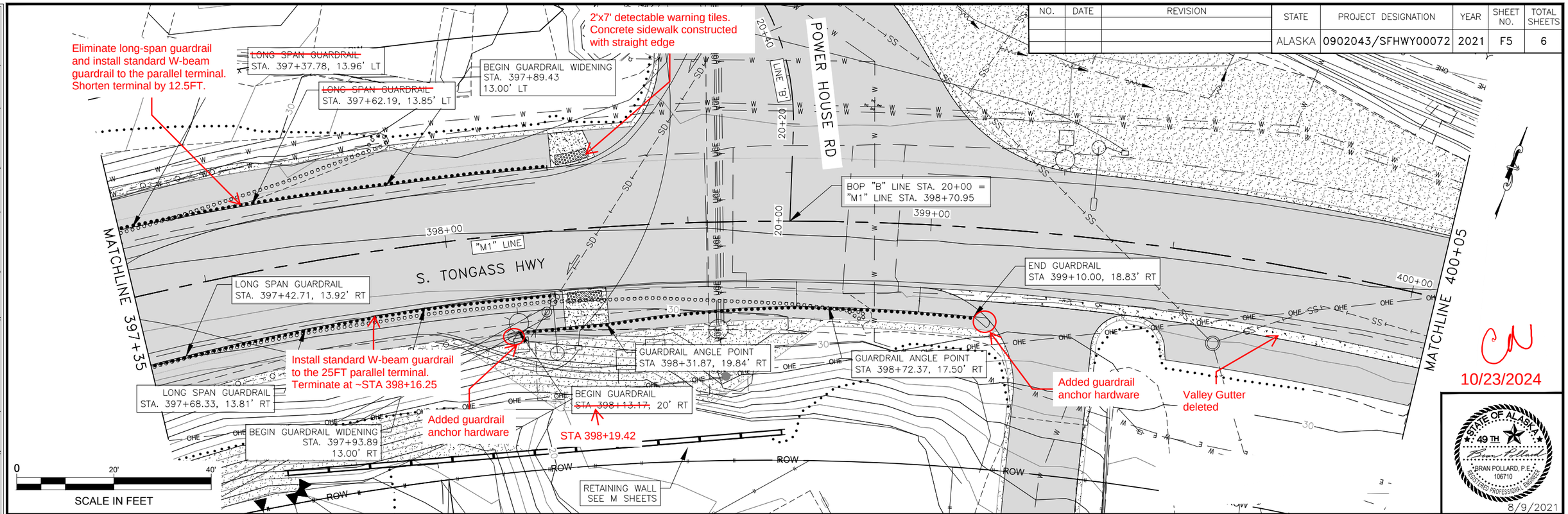

CN
10/23/2024

STATE OF ALASKA 49TH
BRAN POLLARD, P.E. 106710
REGISTERED PROFESSIONAL ENGINEER
8/9/2021

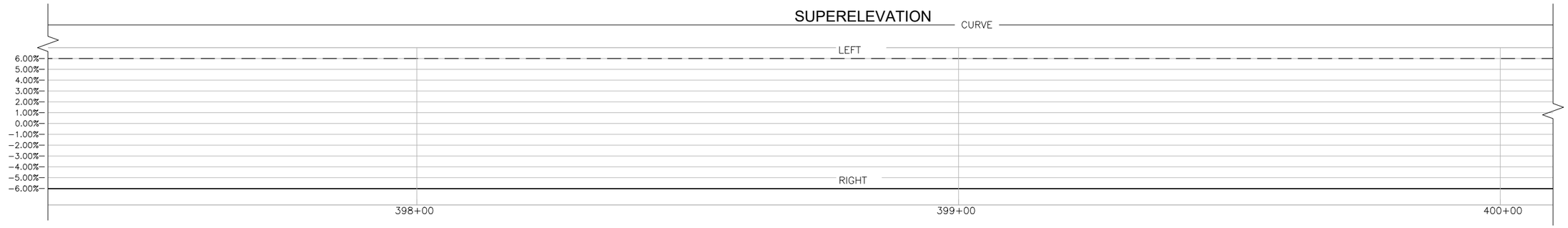

HIGH PT STA: 398+25.02
HIGH PT ELEV: 32.80
PVI STA: 398+32.84
PVI ELEV: 32.98
K: 112.51
LVC: 128'

LEGEND

ENC:	END NORMAL CROWN
LC:	LEVEL CROWN
RC:	REVERSE CROWN
BFS:	BEGIN FULL SUPERELEVATION
EFS	END FULL SUPERELEVATION
— —	LEFT EDGE
═══	RIGHT EDGE

LOW PT STA: 400+29.09
LOW PT ELEV: 31.88
PVI STA: 401+04.32
PVI ELEV: 31.24
K: 75.62
LVC: 247'

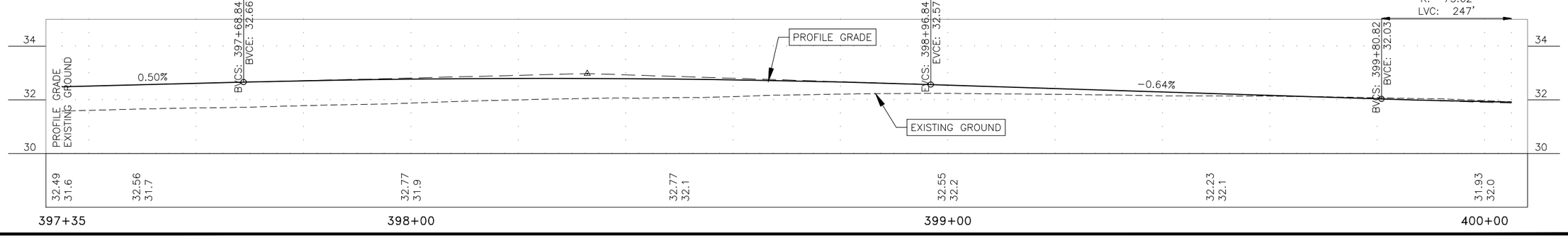

FIRM	STATE OF ALASKA DEPARTMENT OF TRANSPORTATION & PUBLIC FACILITIES	PHONE	(907) 465-1763	CERTIFICATE OF AUTH #:	
ADDRESS	6860 GLACIER HWY, JUNEAU, AK 99811	DESIGNED	STAFF	CHECKED	STAFF
DATE	6/22/2021 9:57	LAYOUT	F5	DRAFTED	STAFF
FILE	Q:\Ktn\SFHWY00072\Planset\00072_F1.dwg				

NO.	DATE	REVISION

STATE	PROJECT DESIGNATION	YEAR	SHEET NO.	TOTAL SHEETS
ALASKA	0902043/SFHWY00072	2021	F6	6

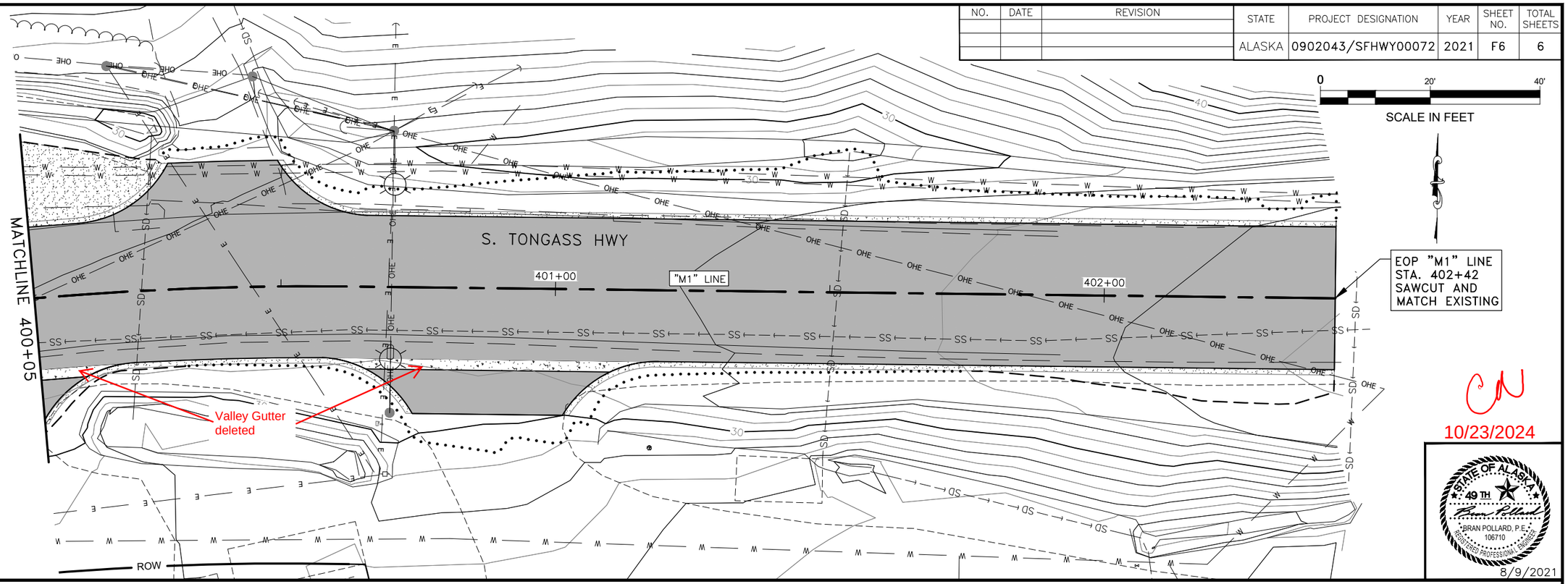

CN
10/23/2024

STATE OF ALASKA
49 TH
BRAN POLLARD, P.E.
106710
REGISTERED PROFESSIONAL ENGINEER
8/9/2021

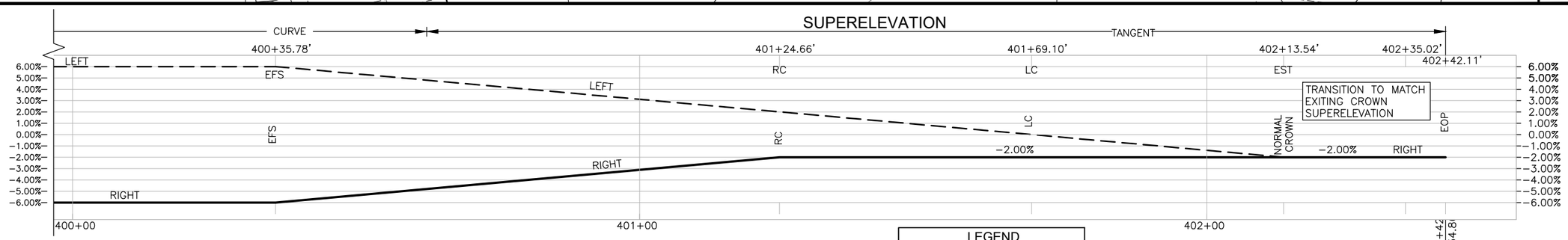

LOW PT STA: 400+29.09
LOW PT ELEV: 31.88
PVI STA: 401+04.32
PVI ELEV: 31.24
K: 75.62
LVC: 247'

LEGEND	
ENC:	END NORMAL CROWN
LC:	LEVEL CROWN
RC:	REVERSE CROWN
BFS:	BEGIN FULL SUPERELEVATION
EFS	END FULL SUPERELEVATION
— —	LEFT EDGE
———	RIGHT EDGE

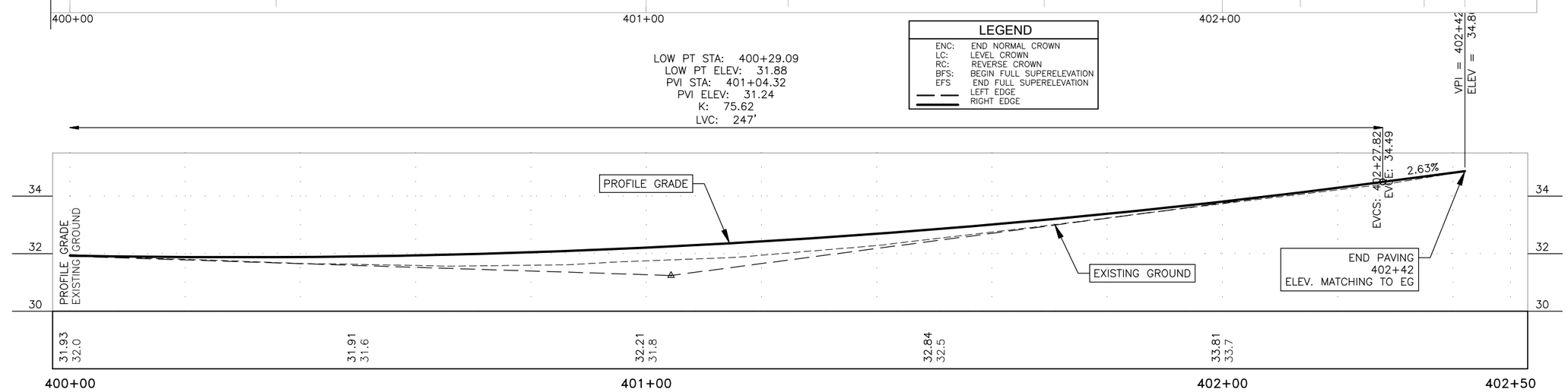

FIRM	STATE OF ALASKA DEPARTMENT OF TRANSPORTATION & PUBLIC FACILITIES	ADDRESS	6860 GLACIER HWY, JUNEAU, AK 99811	PHONE	(907) 465-1763	CERTIFICATE OF AUTH #:
FILE	Q:\Ktn\SFHWY00072\Planset\00072_F1.dwg	DATE	8/9/2021 13:19	LAYOUT	F6	DESIGNED STAFF CHECKED STAFF DRAFTED STAFF

NO.	DATE	REVISION

STATE	PROJECT DESIGNATION	YEAR	SHEET NO.	TOTAL SHEETS
ALASKA	0902043/SFHWY00072	2021	G1	4

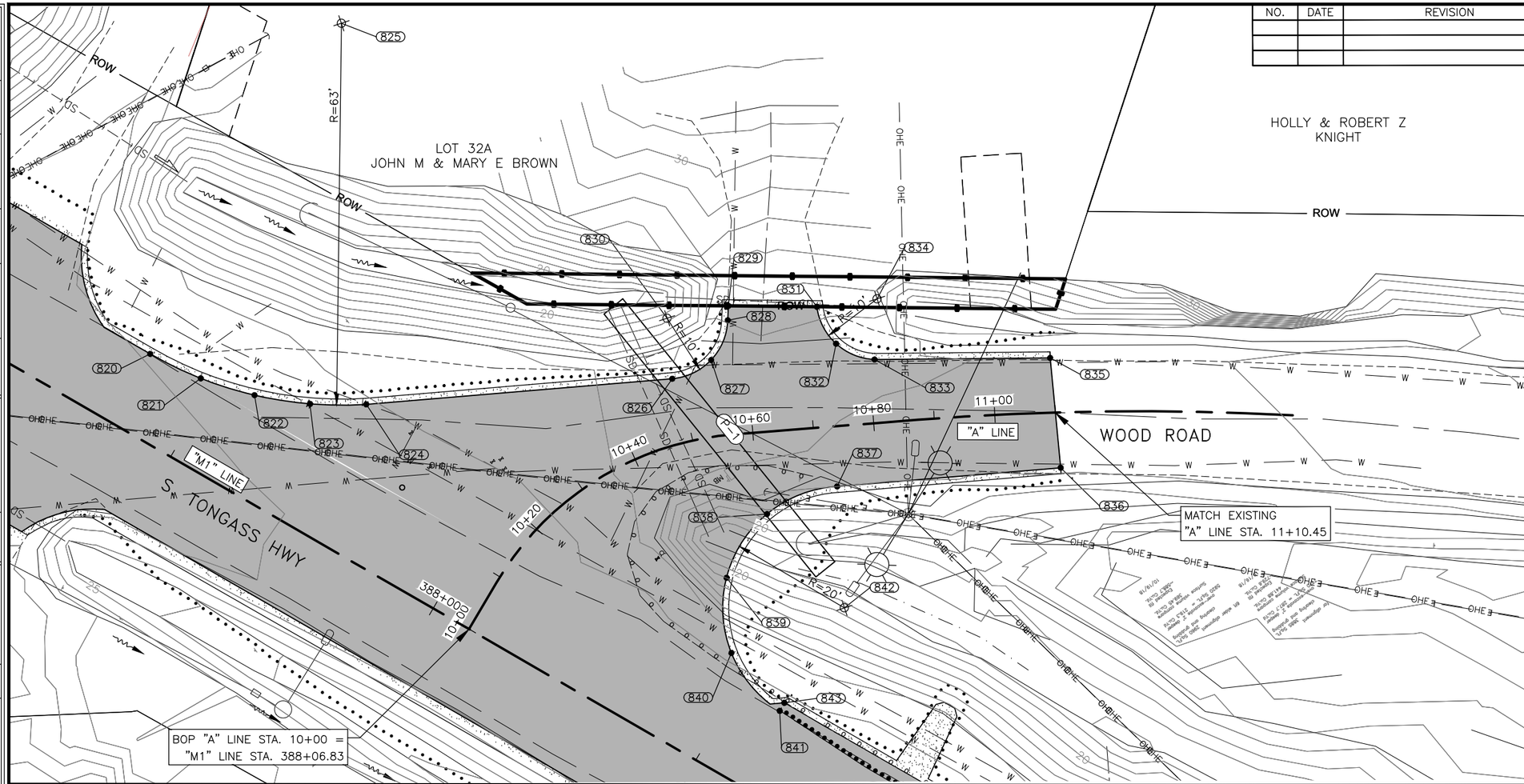

0 20' 40'

SCALE IN FEET

LAYOUT POINT DESCRIPTIONS:

MTE = MATCH TO EXISTING
OFF = OFFSET
EP = EDGE OF PAVEMENT
RP = RADIUS POINT
GP = GRADING POINT
MP = MATCH POINT
BC = BEGIN CURVE
EC = END CURVE
PCC= POINT OF COMPOUND CURVE

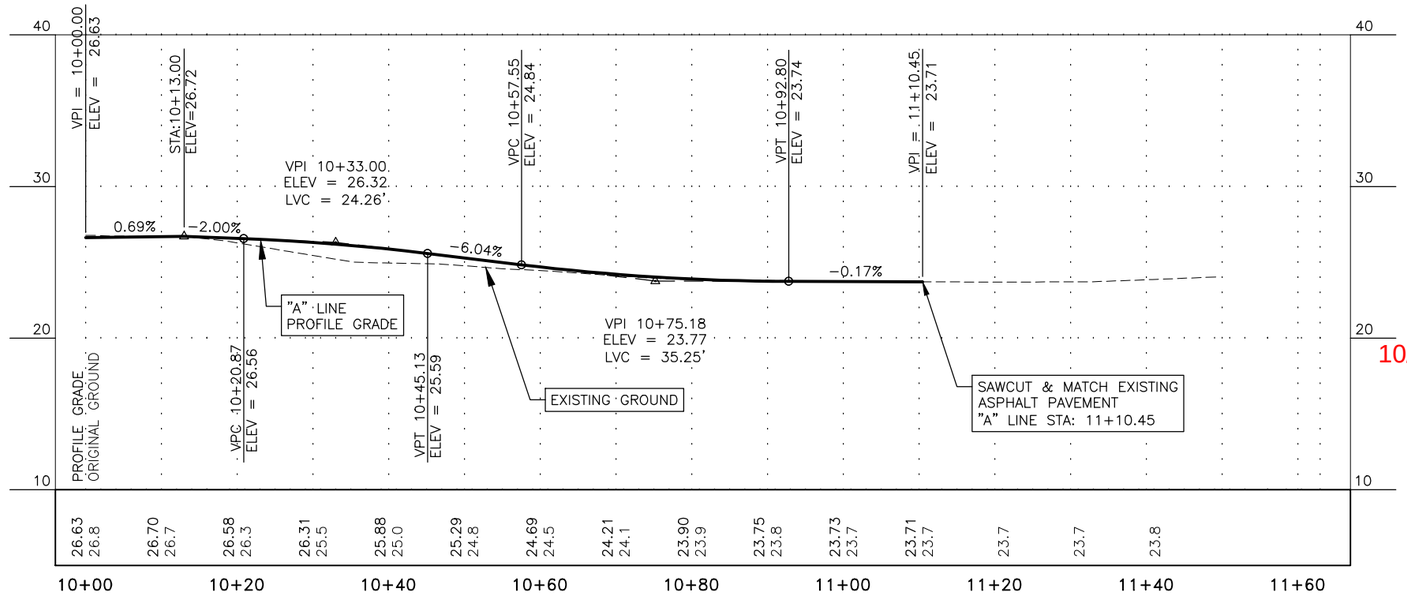

POINTS COORDINATE TABLE

POINT	STATION	OFFSET	ELEVATION	DESCRIPTION	DESCRIPTION
820	387+38.61	13.00L	27.07	EP	BC
821	387+47.84	14.70L	27.36	EP	Δ/4
822	10+12.09	50.28L	27.33	EP	Δ/4
823	10+14.23	41.94L	27.01	EP	Δ/4
824	10+17.46	34.67L	26.71	EP	EC
825	10+34.41	86.22L		RP	
826	10+49.09	10.69L	25.03	EP	BC
827	10+54.66	12.58L	24.77	EP	Δ/2
828	10+57.36	18.84L	24.61	EP	EC
829	10+57.63	21.20L	24.57	EP	MTE
830	10+50.16	20.59L		RP	
831	10+72.18	19.90L	24.32	EP	BC
832	10+74.86	13.58L	24.36	EP	Δ/2
833	10+80.97	10.47L	24.29	EP	EC
834	10+82.19	20.42L		PR	
835	11+09.41	9.02L	23.75	EP	MTE
836	11+10.63	9.13R	23.32	EP	MTE
837	10+73.17	9.92R	24.10	EP	EC
838	10+61.28	3.54R	25.06	EP	Δ/4
839	10+51.14	23.30R	25.96	EP	Δ/4
840	388+46.25	18.25L	26.34	EP	Δ/4
841	388+57.91	13.96L	26.57	EP	BC
842	10+72.78	29.97R		RP	
843	388+57.91	5.50L	26.32	EP	

CN
10/23/2024

STATE OF ALASKA
49TH
BRAN POLLARD, P.E.
106710
REGISTERED PROFESSIONAL ENGINEER
8/9/2021

STATE OF ALASKA
DEPARTMENT OF TRANSPORTATION
AND PUBLIC FACILITIES

KTN HERRING COVE BRIDGE
IMPROVEMENTS

WOOD ROAD INTERSECTION
PLAN & PROFILE

FILE Q:\Ktn\SFHWY00072\Planset\00072_G1.dwg | DATE 6/18/2021 17:13 | LAYOUT G1 | DESIGNED STAFF | CHECKED STAFF | DRAFTED STAFF

NO.	DATE	REVISION

STATE	PROJECT DESIGNATION	YEAR	SHEET NO.	TOTAL SHEETS
ALASKA	0902043/SFHWY00072	2021	G2	4

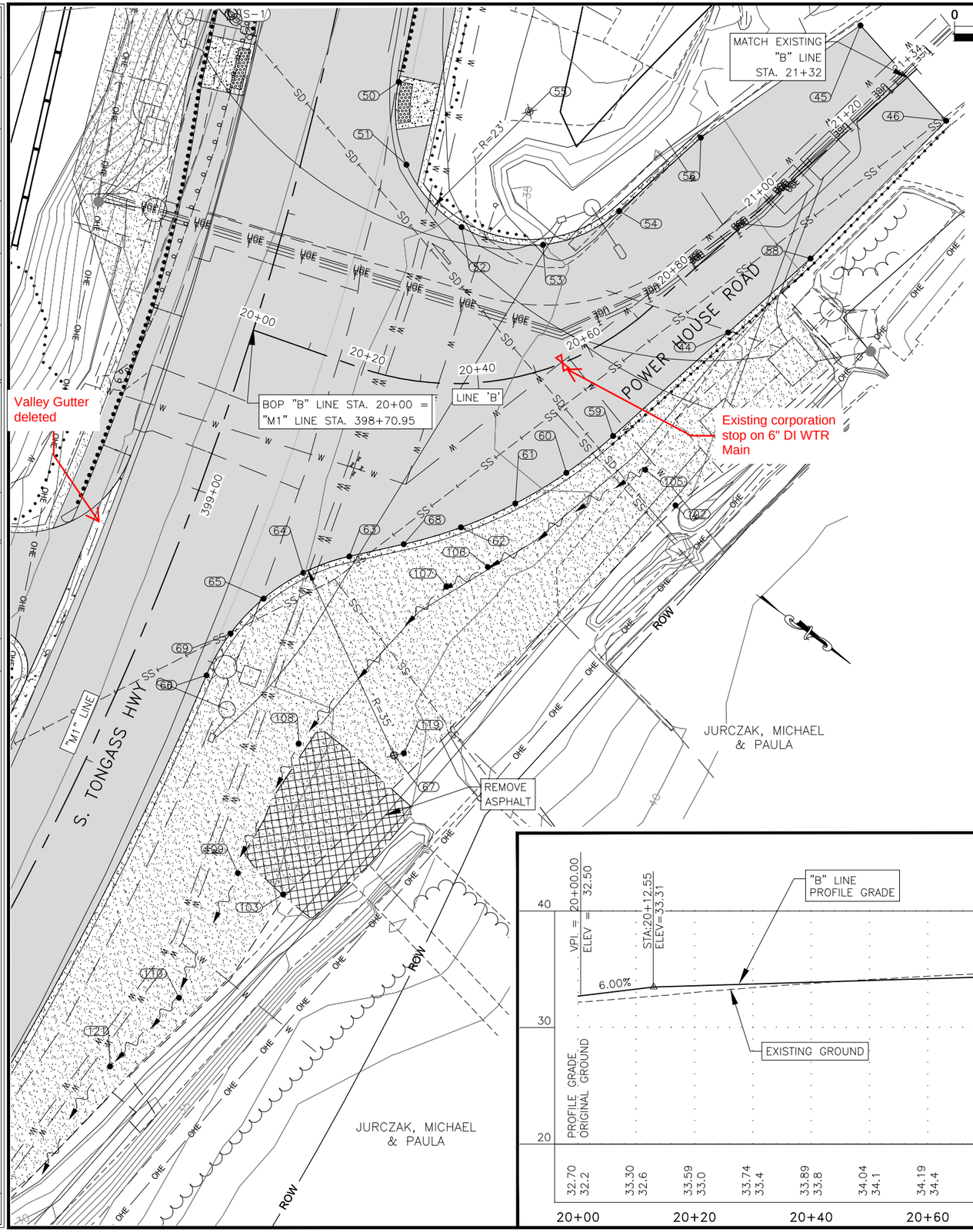

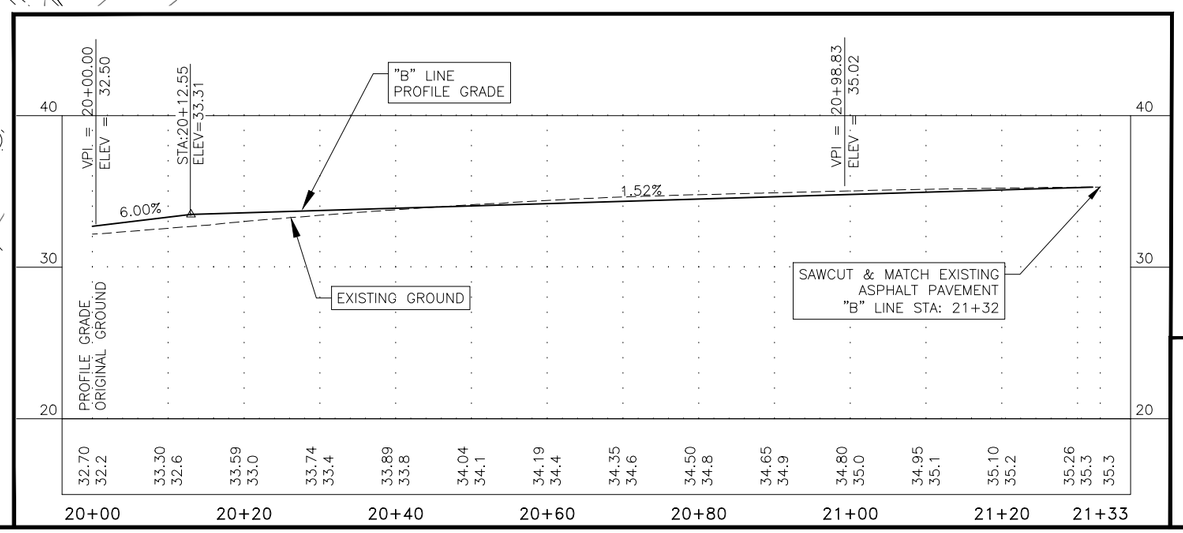

POINTS COORDINATE TABLE

POINT	STATION	OFFSET	ELEVATION	DESCRIPTION	DESCRIPTION
44	20+79.91	12.00R	34.72	EP	EC
50	398+23.85	13.00L	33.59	EP	BC
51	398+37.03	17.59L	33.82	EP	Δ/4
52	20+38.47	26.84L	34.06	EP	Δ/4
53	20+62.15	19.78L	34.29	EP	Δ/4
54	20+79.91	16.00L	34.53	EP	EC
55	20+79.91	39.00L		RP	
56	20+98.76	16.00L	34.83	EP	MTE
58	20+00.00		35.03	EP	MTE
59	20+57.55	14.92R	34.28	EP	EC
60	20+50.23	18.05R	34.11	EP	Δ/4
61	20+43.28	21.33R	33.94	EP	Δ/4
62	20+36.67	24.68R	33.77	EP	Δ/4
63	20+24.81	31.68R	33.45	EP	EC
64	20+20.71	36.46R	33.31	EP	Δ/4
65	20+17.00	42.86R	33.17	EP	Δ/4
66	20+12.15	58.52R	33.14	EP	BC
67	20+31.42	64.27R	33.73	RP	
68	20+30.35	28.04R	33.60	EP	BC
69	20+13.65	50.41R	33.04	EP	Δ/4

POINTS COORDINATE TABLE

POINT	STATION	OFFSET	ELEVATION	DESCRIPTION	DESCRIPTION
45	21+32.00	12.00L	32.23	GP	MTE
46	21+32.00	10.00R	32.23	GP	MTE
102	398+77.14	78.13L	34.86	GP	MTE
103	399+56.17	40.55L	33.10	GP	MTE
105	398+73.40	71.32L	33.84	GP	FL
106	398+95.54	51.12L	33.34	GP	FL
107	399+00.69	45.58L	33.26	GP	FL
108	399+33.01	32.17L	32.88	GP	FL
109	399+56.26	31.95L	32.64	GP	FL
110	399+78.64	32.66L	32.40	GP	FL
119	399+27.76	49.38L	33.93	GP	MTE
121	399+93.89	27.97L	32.23	GP	FL

LAYOUT POINT DESCRIPTIONS:

MTE = MATCH TO EXISTING
OFF = OFFSET
EP = EDGE OF PAVEMENT
RP = RADIUS POINT
GP = GRADING POINT
MP = MATCH POINT
BC = BEGIN CURVE
EC = END CURVE
PCC= POINT OF COMPOUND CURVE

CN
10/23/2024

STATE OF ALASKA 49TH BRAN POLLARD, P.E. 106710 REGISTERED PROFESSIONAL ENGINEER
8/9/2021

STATE OF ALASKA
DEPARTMENT OF TRANSPORTATION
AND PUBLIC FACILITIES

KTN HERRING COVE BRIDGE IMPROVEMENTS

POWERHOUSE ROAD
INTERSECTION PLAN & PROFILE

FILE Q:\Ktn\SFHWY00072\Planset\00072_G1.dwg | DATE 6/18/2021 17:13 | LAYOUT G2 | DESIGNED STAFF | CHECKED STAFF | DRAFTED STAFF

NO.	DATE	REVISION

STATE	PROJECT DESIGNATION	YEAR	SHEET NO.	TOTAL SHEETS
ALASKA	0902043/SFHWY00072	2021	G3	4

LAYOUT POINT DESCRIPTIONS:

MTE = MATCH TO EXISTING
OFF = OFFSET
EP = EDGE OF PAVEMENT
RP = RADIUS POINT
GP = GRADING POINT
MP = MATCH POINT
BC = BEGIN CURVE
EC = END CURVE
PCC= POINT OF COMPOUND CURVE
BFC = BOTTOM FACE OF CURB
TFC = TOP FACE OF CURB

0 20' 40'
SCALE IN FEET

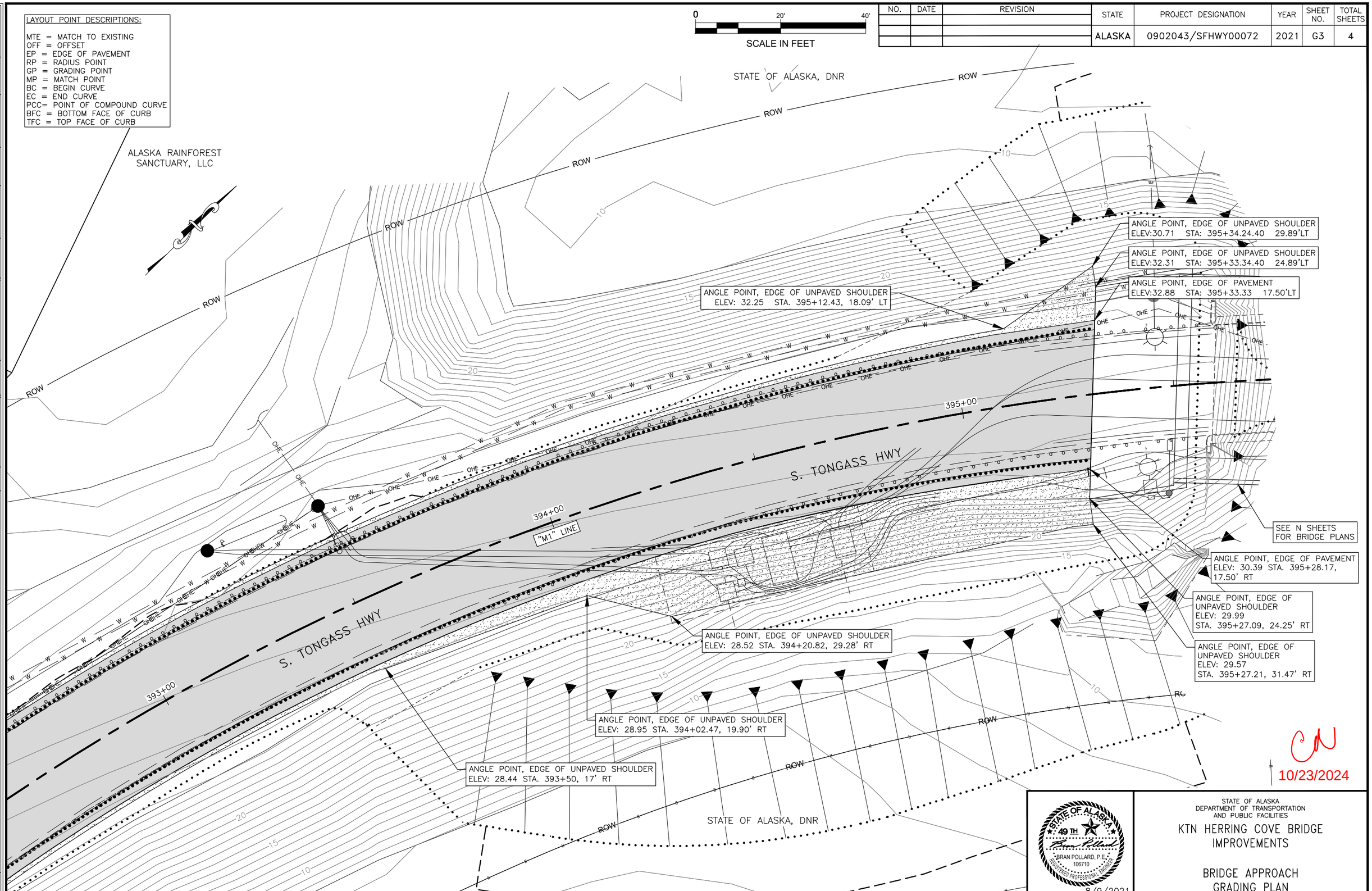

CN
10/23/2024

STATE OF ALASKA
49 TH
BRAN POLLARD, P.E.
106710
REGISTERED PROFESSIONAL ENGINEER
8/9/2021

STATE OF ALASKA
DEPARTMENT OF TRANSPORTATION
AND PUBLIC FACILITIES

KTN HERRING COVE BRIDGE
IMPROVEMENTS

BRIDGE APPROACH
GRADING PLAN

FILE Q:\Ktn\SFHWY00072\Planset\00072_G4.dwg | DATE 6/18/2021 17:07 | LAYOUT G3 BRIDGE APPROACH | DESIGNED STAFF | CHECKED STAFF | DRAFTED STAFF

NO.	DATE	REVISION

STATE	PROJECT DESIGNATION	YEAR	SHEET NO.	TOTAL SHEETS
ALASKA	0902043/SFHWY00072	2021	G4	4

CN
10/23/2024

LAYOUT POINT DESCRIPTIONS:

MTE = MATCH TO EXISTING
OFF = OFFSET
EP = EDGE OF PAVEMENT
RP = RADIUS POINT
GP = GRADING POINT
MP = MATCH POINT
BC = BEGIN CURVE
EC = END CURVE
PCC= POINT OF COMPOUND CURVE
BFC = BOTTOM FACE OF CURB
TFC = TOP FACE OF CURB

0 20' 40'
SCALE IN FEET

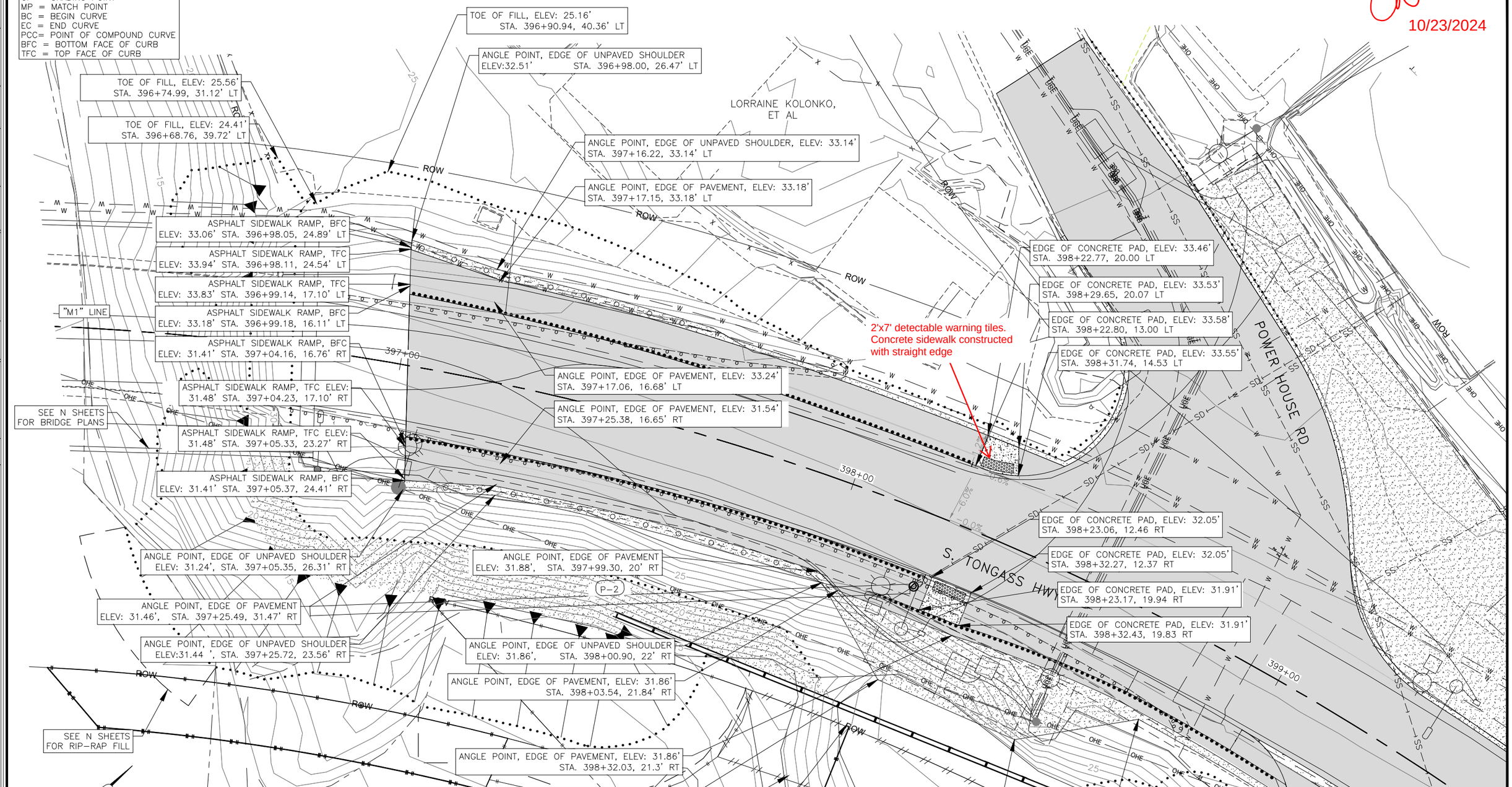

STATE OF ALASKA 49TH BRAN POLLARD, P.E. 106710 REGISTERED PROFESSIONAL ENGINEER
8/9/2021

STATE OF ALASKA
DEPARTMENT OF TRANSPORTATION AND PUBLIC FACILITIES

KTN HERRING COVE BRIDGE IMPROVEMENTS

BRIDGE APPROACH GRADING PLAN

TOE OF FILL: changing with Soldier Pile Wall

FILE Q:\Ktn\SFHWY00072\Planset\00072_G4.dwg | DATE 6/18/2021 17:07 | LAYOUT G4 BRIDGE APPROACH | DESIGNER STAFF | CHECKED STAFF | DRAFTED STAFF

NO.	DATE	REVISION

STATE	PROJECT DESIGNATION	YEAR	SHEET NO.	TOTAL SHEETS
ALASKA	0902043/SFHWY00072	2021	H1	5

STRIPING LEGEND

SYMBOL	DESCRIPTION	PATTERN
A	SOLID, WHITE 4"	
B	SOLID DOUBLE, YELLOW 4"	
C	STOP BAR, WHITE 24"	
D	CROSSWALK, WHITE 24"	

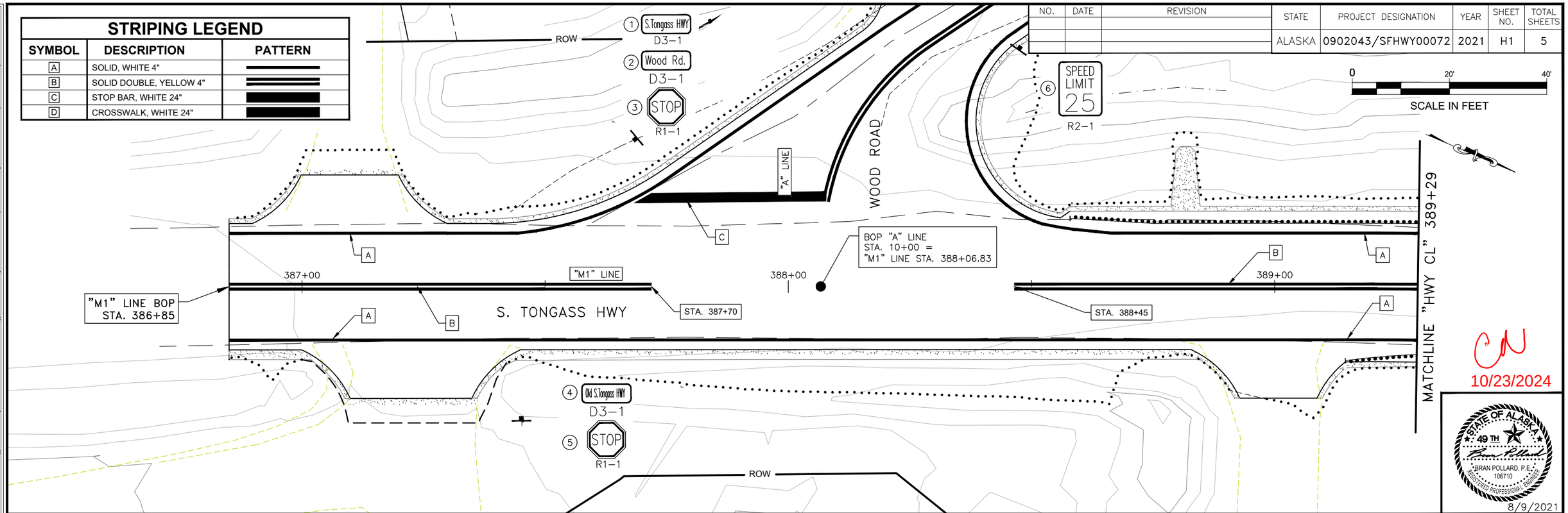

CN
10/23/2024

STATE OF ALASKA 49TH
BRAN POLLARD, P.E.
106710
REGISTERED PROFESSIONAL ENGINEER
8/9/2021

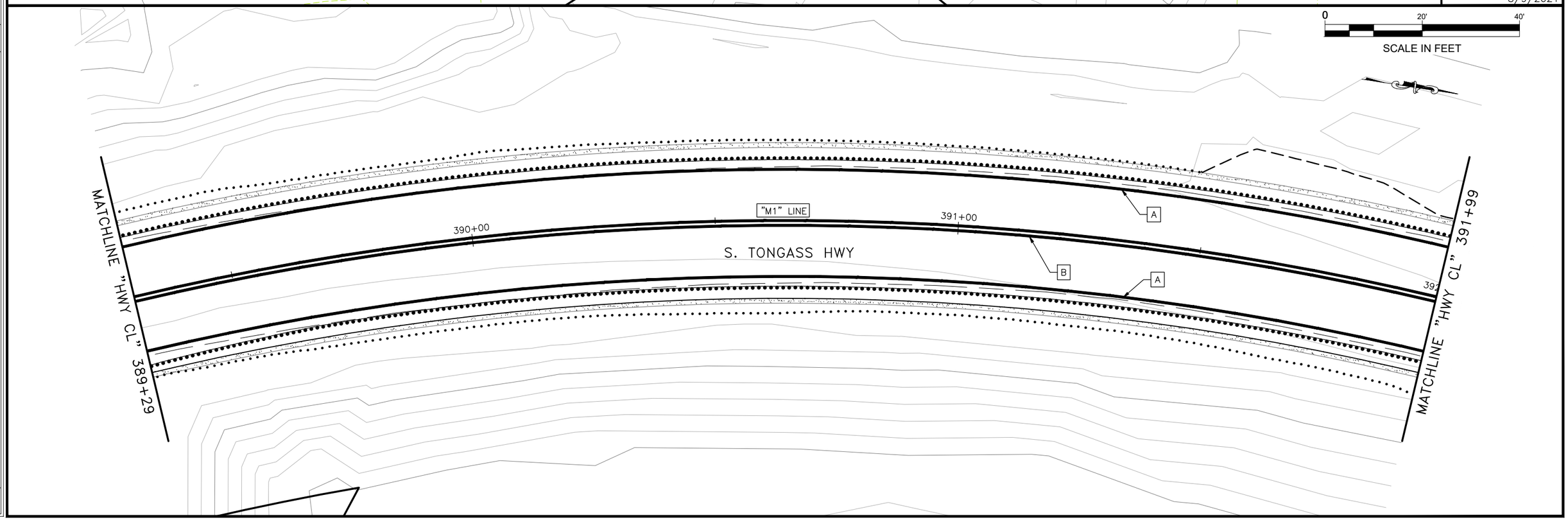

FIRM	STATE OF ALASKA DEPARTMENT OF TRANSPORTATION & PUBLIC FACILITIES					ADDRESS	6860 GLACIER HWY, JUNEAU, AK 99811
FILE	Q:\Ktn\SFHWY00072\Planset\00072_H1.dwg					DATE	6/18/2021 16:27
		PHONE	(907) 465-1763	CERTIFICATE OF AUTH #:		LAYOUT	H1
		DESIGNED	STAFF	CHECKED	STAFF	DRAFTED	STAFF

NO.	DATE	REVISION

STATE	PROJECT DESIGNATION	YEAR	SHEET NO.	TOTAL SHEETS
ALASKA	0902043/SFHWY00072	2021	H2	5

STRIPING LEGEND

SYMBOL	DESCRIPTION	PATTERN
A	SOLID, WHITE 4"	
B	SOLID DOUBLE, YELLOW 4"	
C	STOP BAR, WHITE 24"	
D	CROSSWALK, WHITE 24"	

0 20' 40'
SCALE IN FEET

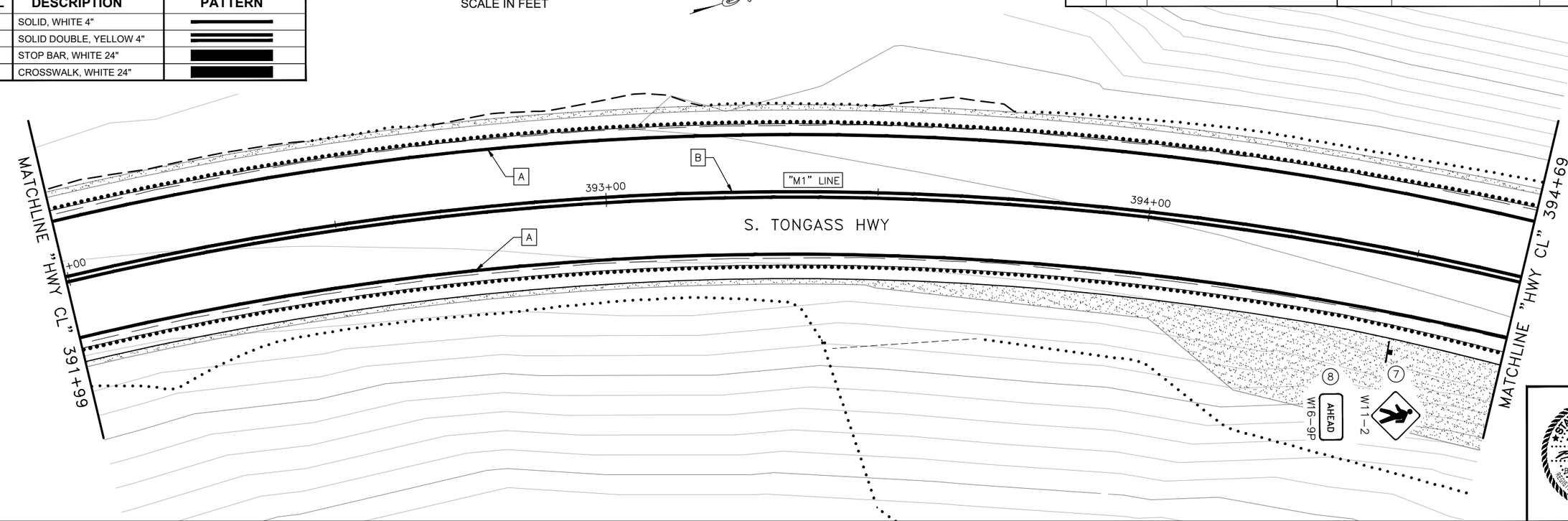

CN
10/23/2024

STATE OF ALASKA
49TH
BRAN POLLARD, P.E.
106710
REGISTERED PROFESSIONAL ENGINEER
8/9/2021

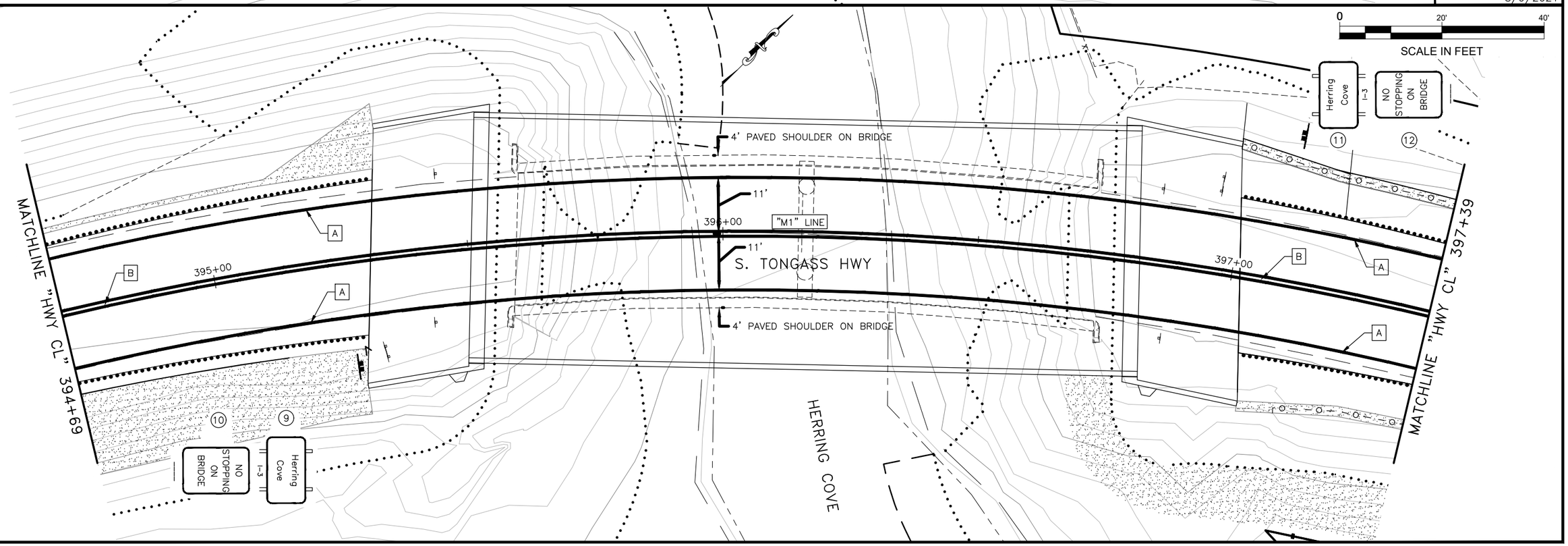

FIRM	STATE OF ALASKA DEPARTMENT OF TRANSPORTATION & PUBLIC FACILITIES										
FILE	Q:\Ktn\SFHWY00072\Planset\00072_H1.dwg										
ADDRESS	6860 GLACIER HWY, JUNEAU, AK 99811										
DATE	6/18/2021	16:27	LAYOUT	H2	DESIGNED	STAFF	CHECKED	STAFF	DRAFTED	STAFF	
					PHONE	(907) 465-1763			CERTIFICATE OF AUTH #		

NO.	DATE	REVISION

STATE	PROJECT DESIGNATION	YEAR	SHEET NO.	TOTAL SHEETS
ALASKA	0902043/SFHWY00072	2021	H3	5

STRIPING LEGEND

SYMBOL	DESCRIPTION	PATTERN
A	SOLID, WHITE 4"	
B	SOLID DOUBLE, YELLOW 4"	
C	STOP BAR, WHITE 24"	
D	CROSSWALK, WHITE 24"	

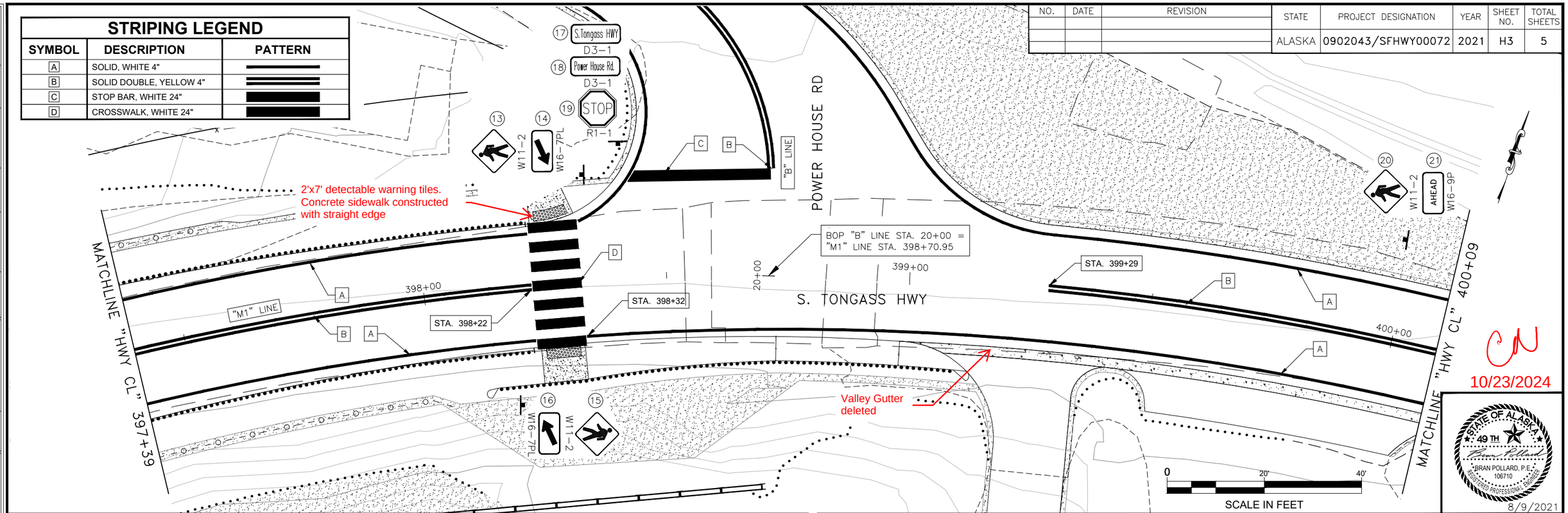

CN
10/23/2024

STATE OF ALASKA 49TH
BRAN POLLARD, P.E.
106710
REGISTERED PROFESSIONAL ENGINEER
8/9/2021

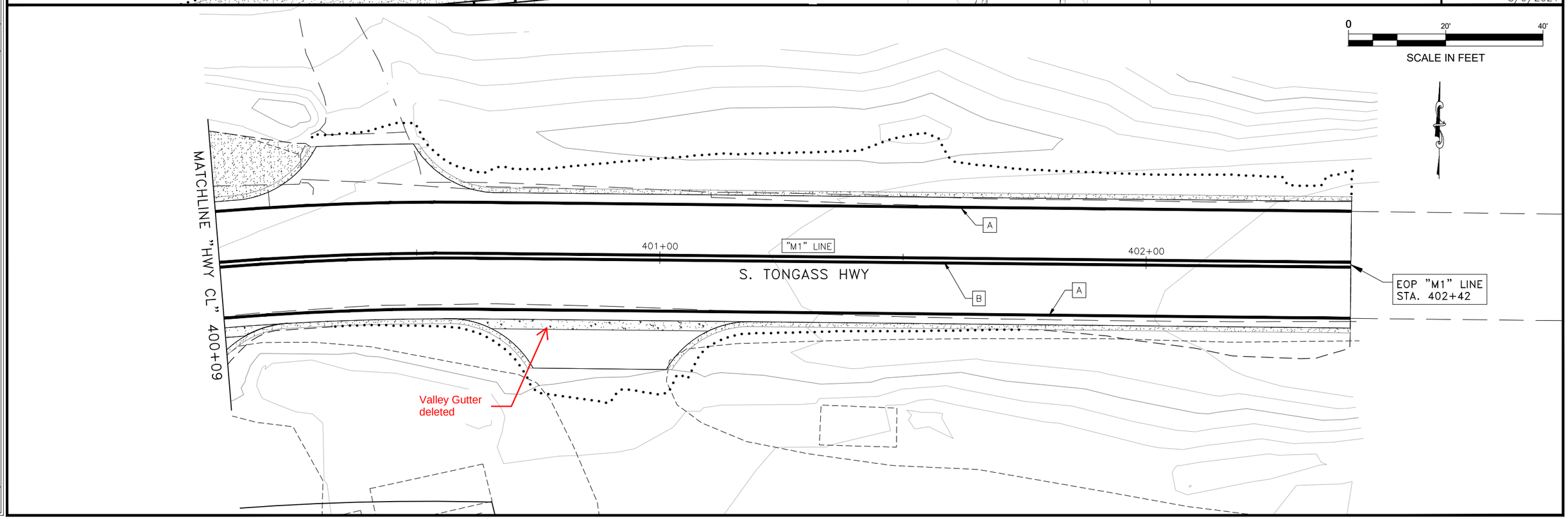

FIRM	STATE OF ALASKA DEPARTMENT OF TRANSPORTATION & PUBLIC FACILITIES					ADDRESS	6860 GLACIER HWY, JUNEAU, AK 99811
FILE	Q:\Ktn\SFHWY00072\Planset\00072_H1.dwg					DATE	6/18/2021 16:27
	PHONE	(907) 465-1763	CERTIFICATE OF AUTH #			DESIGNED	STAFF
	DESIGNED	STAFF	CHECKED	STAFF		LAYOUT	H3
	DRAFTED	STAFF					

NO.	DATE	REVISION

STATE	PROJECT DESIGNATION	YEAR	SHEET NO.	TOTAL SHEETS
ALASKA	0902043/SFHWY00072	2021	H4	5

STRIPING LEGEND

SYMBOL	DESCRIPTION	PATTERN
A	SOLID, WHITE 4"	
B	SOLID DOUBLE, YELLOW 4"	
C	STOP BAR, WHITE 24"	
D	CROSSWALK, WHITE 24"	

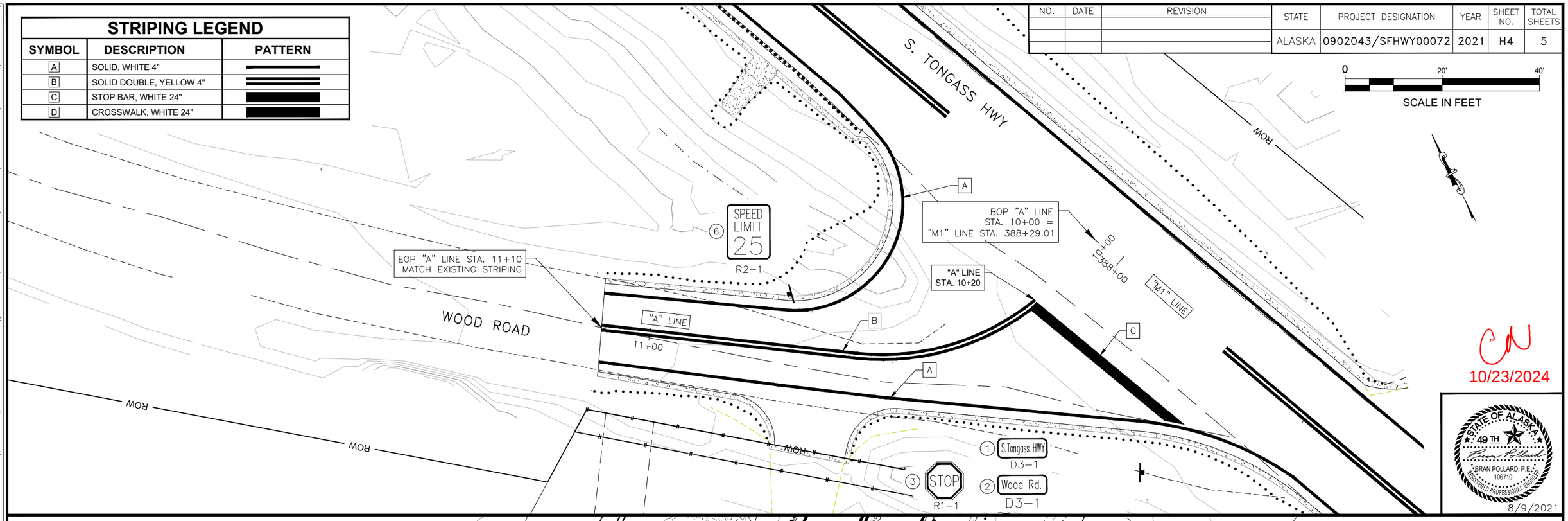

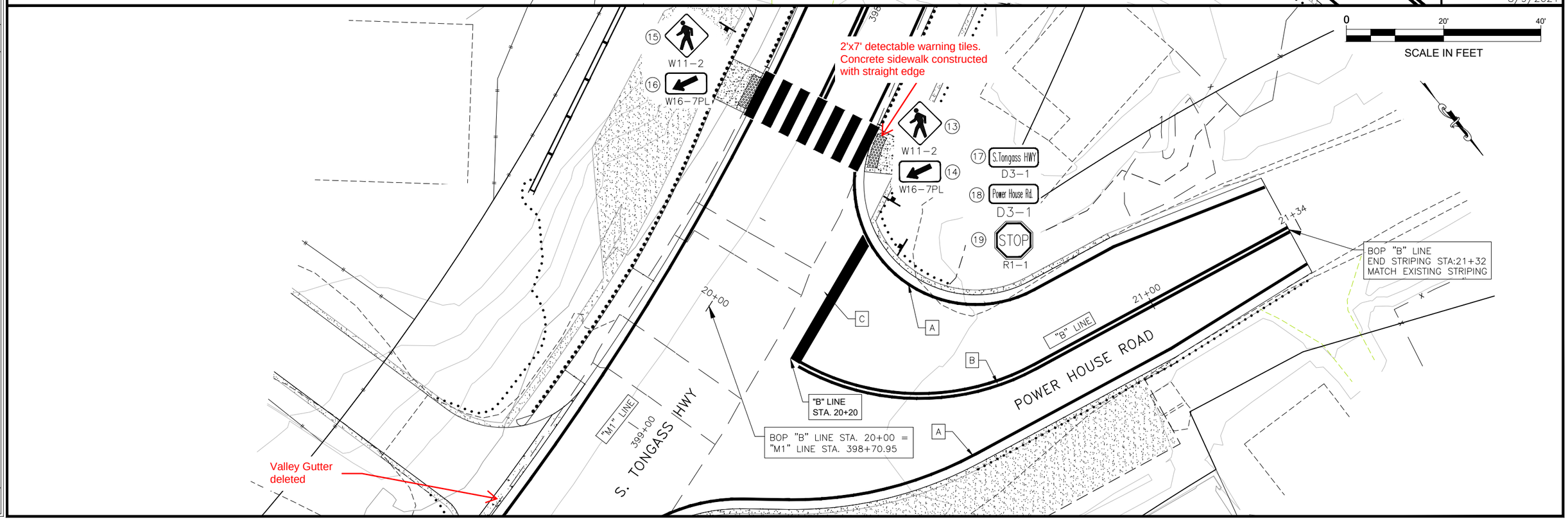

FIRM	STATE OF ALASKA DEPARTMENT OF TRANSPORTATION & PUBLIC FACILITIES	ADDRESS	6860 GLACIER HWY, JUNEAU, AK 99811	PHONE	(907) 465-1763	CERTIFICATE OF AUTH #:
FILE	Q:\Kin\SFHWY00072\Planset\00072_H1.dwg	DATE	6/18/2021 16:27	LAYOUT	H4	DESIGNED STAFF CHECKED STAFF DRAFTED STAFF

NO.	DATE	REVISION	STATE	PROJECT DESIGNATION	YEAR	SHEET NO.	TOTAL SHEETS
			ALASKA	0902043/SFHWY00072	2021	H5	5

615.0001.0000 STANDARD SIGN SUMMARY

SIGN NO.	LEGEND	STATION	OFFSET	ASDS CODE	WIDTH (IN)	HEIGHT (IN)	AREA (SF)	POST	SIGN FACING	REMARKS
1	S Tongass HWY	387+68	24' LT	D3-1	36	8	2.00	2.5 PST	E-W	2-SIDED SIGN. USE 4" UC/3" LC B-FONT
2	Wood Rd	387+68	24' LT	D3-1	42	12	3.50		N-S	2-SIDED SIGN. USE 6" UC/4" LC C-FONT
3	STOP	387+68	24' LT	R1-1	30	30	6.25		W	MOUNT BELOW SIGN ~~3~~ 1 and 2
4	Old S Tongass HWY	387+45	27' RT	D3-1	48	8	2.67	2.5 PST	N-S	2-SIDED SIGN. USE 4" UC/3" LC B-FONT
5	STOP	387+45	27' RT	R1-1	30	30	6.25		S	MOUNT BELOW SIGN ~~5~~ 4
6	SPEED LIMIT 25	388+47	48' LT	R2-1	30	36	7.50	2.5 PST	E	
7	CROSSING	394+48	18' RT	W11-2	30	30	6.25	2.5 PST		
8	AHEAD	394+48	18' RT	W16-9P	24	12	2.00			
9	Herring Cove	395+26	23' RT	I-3	30	18	3.75	2 4x6 W	SW	USE 4" UC / 3" LC EMOD-FONT. TWO LINE
10	NO STOPPING ON BRIDGE	395+26	23' RT		24	30	5.00		SW	~~REUSE,~~ ATTACH TO HERRING COVE SIGN Replace
11	Herring Cove	397+09	29' LT	I-3	30	18	3.75	2 4x6 W	NE	USE 4" UC / 3" LC EMOD-FONT. TWO LINE
12	NO STOPPING ON BRIDGE	397+09	29' LT		24	30	5.00		NE	~~REUSE~~, ATTACH TO HERRING COVE SIGN Replace
13	CROSSING	398+34	22' LT	W11-2	30	30	6.25	2.5 PST	SW	
14	ARROW	398+34	22' LT	W16-7pL	24	12	2.00		SW	
15	CROSSING	398+18	24' RT	W11-2	30	30	6.25	2.5 PST	E	
16	ARROW	398+18	24' RT	W16-7pL	24	12	2.00		E	
17	S Tongass HWY	398+42	28' LT	D3-1	36	8	2.00	2.5 PST	N-S	2-SIDED SIGN. USE 4" UC/3" LC B-FONT
18	Power House Rd	398+42	28' LT	D3-1	48	8	2.67		E-W	2-SIDED SIGN. 4"/3" UC/LC C-FONT
19	STOP	398+42	28' LT	R1-1	30	30	6.25		N	MOUNT BELOW SIGN ~~23~~ 17 and 18
20	CROSSING	399+98	21' LT	W11-2	30	30	6.25	2.5 PST	E	Mount below sign 20
21	AHEAD	399+98	21' LT	W16-9P	24	12	2.00		E	
						TOTAL =	79.58			

NOTE: OFFSET SIGNS PER S-05.02.

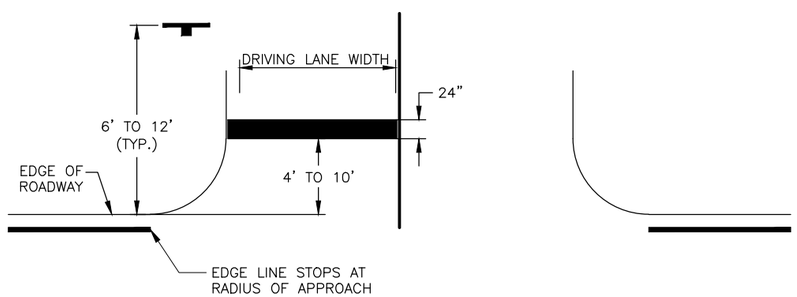

1 / H5 STOP BAR DETAIL
SCALE: NOT TO SCALE

1. STRIPE TO CENTERLINE OF APPROACH.

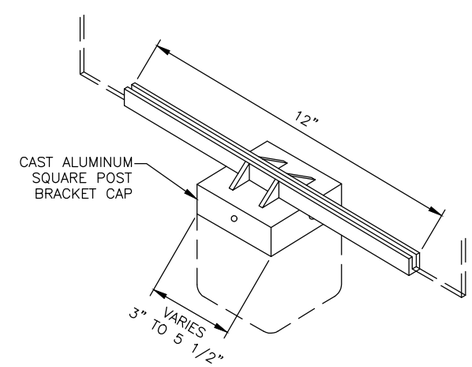

2 / H5 HEAVY DUTY SIGN TO POST BRACKET
SCALE: NOT TO SCALE

1. THIS REPLACES DETAIL SHOWN ON STD. S-20.10.

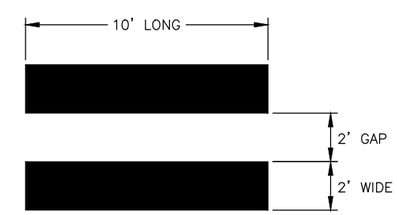

3 / H5 LONGITUDINAL CROSSWALK DETAIL
SCALE: N.T.S.

GAP MAY BE ADJUSTED TO 3' MAX SO MARKING IS OUTSIDE OF THE WHEEL PATH. CENTER CROSSWALK AT CURB RAMP.

CN
10/23/2024

STATE OF ALASKA 49TH
BRAN POLLARD, P.E.
106710
REGISTERED PROFESSIONAL ENGINEER
8/9/2021

STATE OF ALASKA
DEPARTMENT OF TRANSPORTATION
AND PUBLIC FACILITIES

KTN HERRING COVE BRIDGE
IMPROVEMENTS

SIGNING AND STRIPING DETAILS
AND SUMMARY TABLE

FILE Q:\Ktn\SFHWY00072\Planset\00072_H1.dwg | DATE 6/18/2021 16:27 | LAYOUT H5 SIGNING AND STRIP | NOESIGNED | ASDESIGNED | ASDRAFT | CHECKED | STAFF | DRAFTED | STAFF

STATE	PROJECT DESIGNATION	YEAR	SHEET NO.	TOTAL SHEETS
ALASKA	SFHWY00072/0902043	2021	M1	M5

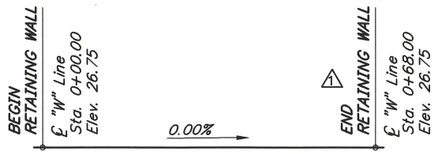

PROFILE GRADE DATA

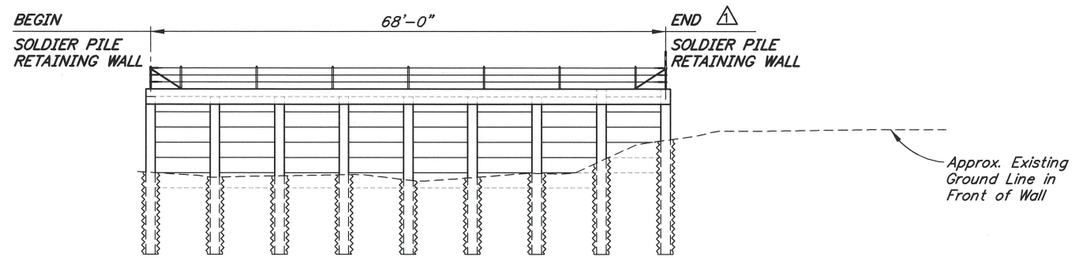

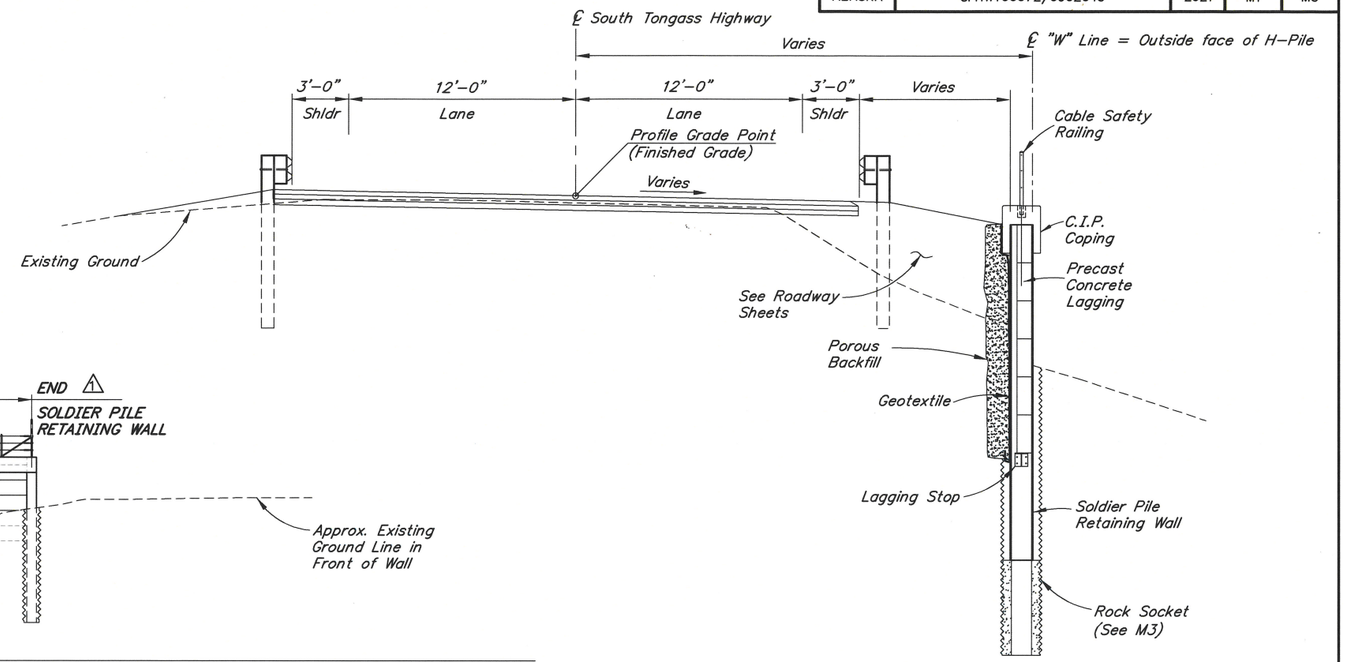

TYPICAL SECTION

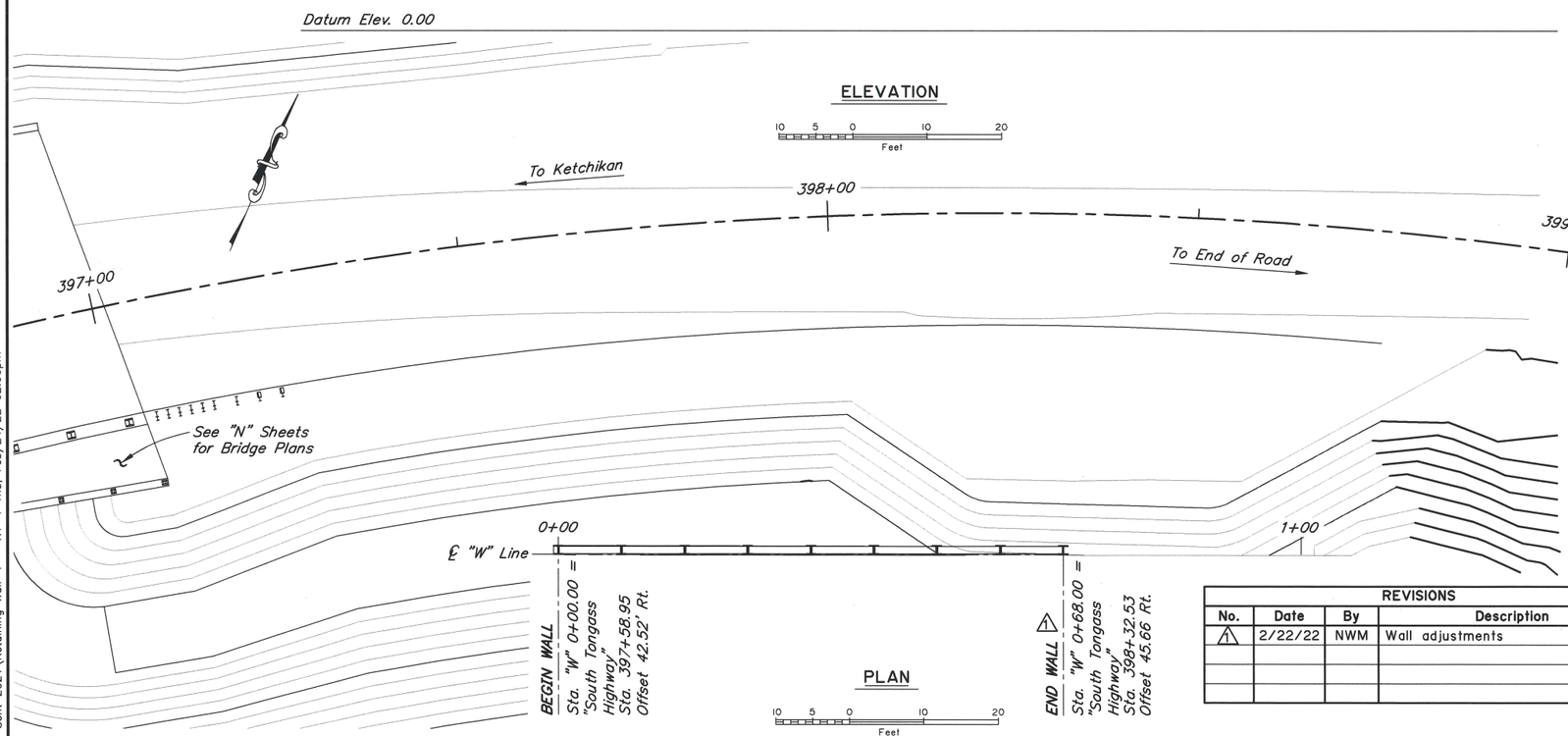

REVISIONS			
No.	Date	By	Description
1	2/22/22	NWM	Wall adjustments

CN
10/23/2024

DRAWING INDEX

TITLE	DWG. NO.
GENERAL LAYOUT	1
SITE PLAN	2
WALL DETAILS 1	3
WALL DETAILS 2	4
CABLE SAFETY RAILING	5

DESIGNED BY: Nick Murray	CHECKED: Ben Still	LAYOUT BY: Nick Murray	CHECKED BY: Ben Still
DRAWN BY: Sam Sollie	CHECKED: Nick Murray	SPECIFICATIONS BY: Nick Murray	P S & E COMPARED: Ben Still
QUANTITIES BY: Nick Murray	CHECKED: Ben Still	APPROVAL RECOMMENDED BY: Rich Pratt	

STATE OF ALASKA
DEPARTMENT OF TRANSPORTATION AND PUBLIC FACILITIES
BRIDGE SECTION
3132 Channel Drive
Juneau, Alaska 99801
907-465-2975

STATE OF ALASKA 49TH Nicholas W. Murray 02-24-2022 No. CE 107613 REGISTERED PROFESSIONAL ENGINEER

HERRING COVE RETAINING WALL

SOUTH TONGASS HIGHWAY

GENERAL LAYOUT

DWG. NO. 1

R:\evault\253\cad\253 As-Sent 2021\Retaining Wall-1 - R1-1 Thu, Feb/24/22 02:00pm

STATE	PROJECT DESIGNATION	YEAR	SHEET NO.	TOTAL SHEETS
ALASKA	SFHWY00072/0902043	2021	M2	M5

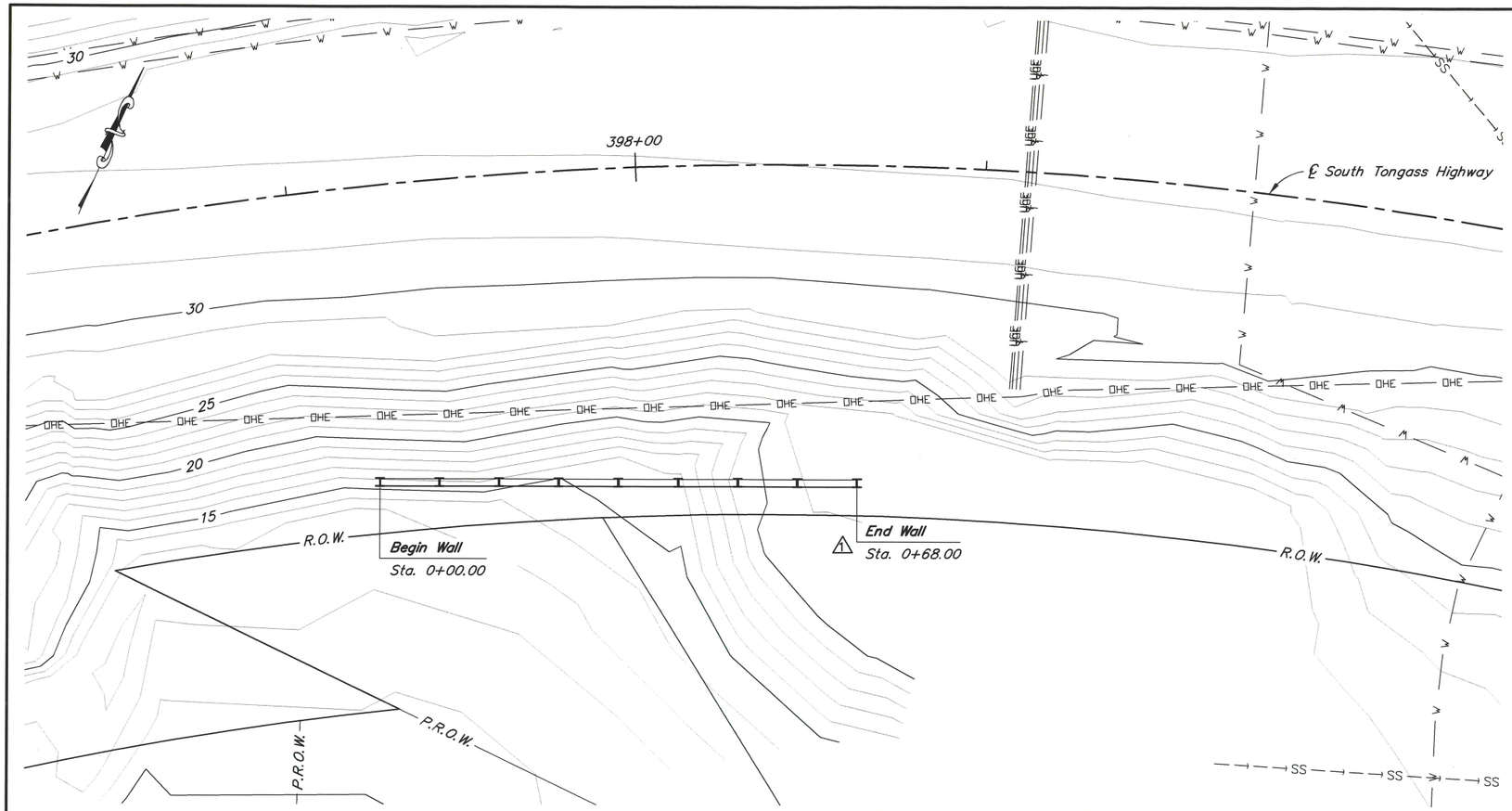

SITE PLAN

10 5 0 10 20
Feet

GENERAL NOTES

DESIGN:..... AASHTO LRFD Bridge Design Specifications, 9th Edition, 2020, with latest interim revisions

LIVE LOAD:..... Two foot live load surcharge.

REINFORCEMENT:..... Epoxy-coated ASTM A706, Grade 60, Fy = 60,000 psi. Space reinforcement evenly unless otherwise noted.

CAST-IN-PLACE CONCRETE:. Class A Concrete unless otherwise noted, f'c = 4,000 psi.

STRUCTURAL STEEL:..... ASTM A709, Grade 36T3, Fy = 36,000 psi
Galvanize structural steel in accordance with AASHTO M111 unless noted otherwise.

PRECAST CONCRETE:..... Class P Concrete unless otherwise noted, f'c = 5,000 psi.

STRUCTURAL STEEL PILING:.. ASTM A709, GR50T3, Fy = 50,000 psi.
Pile Tip reinforcing is required.

HIGH STRENGTH BOLTS:..... ASTM F3125, Grade A325, Fu = 120,000 psi. Galvanize in accordance with AASHTO M232.

ABBREVIATIONS:

℄	= centerline	f'c	= specified concrete compressive strength
ℙ	= plate	Fy	= yield stress
&	= and	Galv.	= galvanize
@	= at	HPT	= horizontal point of tangent
ø	= diameter	Hwy.	= highway
±	= approximate	ksf	= 1000 pounds per square foot
AASHTO	= American Association of State Highway and Transportation Officials	LB	= pound
		LF	= linear foot
ASTM	= American Society for Testing and Materials	LS	= lump sum
		Lt.	= left
Abut.	= abutment	max.	= maximum
Approx.	= approximate	min.	= minimum
b.f.	= back/dirt face	n.f.	= near face
bot.	= bottom	No.	= number
Br.	= bridge	o.c.	= on center
btwn.	= between	O.H.W.	= ordinary high water
Brg.	= Bearings	pcf	= pounds per cubic foot
C.I.P.	= cast in place	psf	= pounds per square foot
Clr.	= clear, clearance	psi	= pounds per square inch
CY	= cubic yard	PVC	= point of vertical curve
dia.	= diameter	PVI	= point of vertical intersection
Dwg.	= drawing	PVT	= point of vertical tangent
E	= expansion	R.O.W.	= right of way
(E)	= existing	Rt.	= right
EA	= each	Rd.	= road
Elev.	= elevation	spc.	= space, spaces
e.f.	= each face	Sta.	= station
e.w.	= each way	SF	= square feet
F	= fixed	SY	= square yard
f.f.	= front/air face	Symm.	= symmetric
		Typ.	= typical
		w/	= with

ESTIMATE OF QUANTITIES

ITEM NO.	ITEM	PAY UNIT	ESTIMATING UNIT	TOTAL QUANTITY	
501.0001.0000	Class A Concrete	LS	CY	12.76	1
501.0007.0000	Precast Concrete Member, Lagging	EA	EA	47	1
503.0002.0000	Epoxy-Coated Reinforcing Steel	LS	LBS	478	1
505.0005.0001	Furnish Structural Steel H-Piles, HP 14x117	LF	LF	~~186.8~~	1 194.3
505.2006.0000	Install Structural Steel H-Piles, HP 14x117	EA	EA	9	1
507.0006.0000	Cable Safety Railing	LF	LF	~~103.5~~	1 104

Item numbers are for reference only. Quantities shown are not necessarily the pay quantities nor the total quantity of the particular item.

REVISIONS			
No.	Date	By	Description
1	2/22/22	NWM	Wall adjustments

CN
10/23/2024

DESIGNED BY: Nick Murray	CHECKED: Ben Still	
DRAWN BY: Sam Sollie	CHECKED: Nick Murray	
QUANTITIES BY: Nick Murray	CHECKED: Ben Still	

STATE OF ALASKA
DEPARTMENT OF TRANSPORTATION AND PUBLIC FACILITIES
BRIDGE SECTION
3132 Channel Drive
Juneau, Alaska 99801
907-465-2975

STATE OF ALASKA 49TH
Nicholas W. Murray
02-24-2022
No. CE 107613
REGISTERED PROFESSIONAL ENGINEER

HERRING COVE RETAINING WALL
SOUTH TONGASS HIGHWAY
SITE PLAN

DWG. NO. 2

R:\evault\253\cad\253 As-Sent 2021\Retaining Wall-1 - R1-2 Thu, Feb/24/22 02:00pm

STATE	PROJECT DESIGNATION	YEAR	SHEET NO.	TOTAL SHEETS
ALASKA	SFHWY00072/0902043	2021	M3	M5

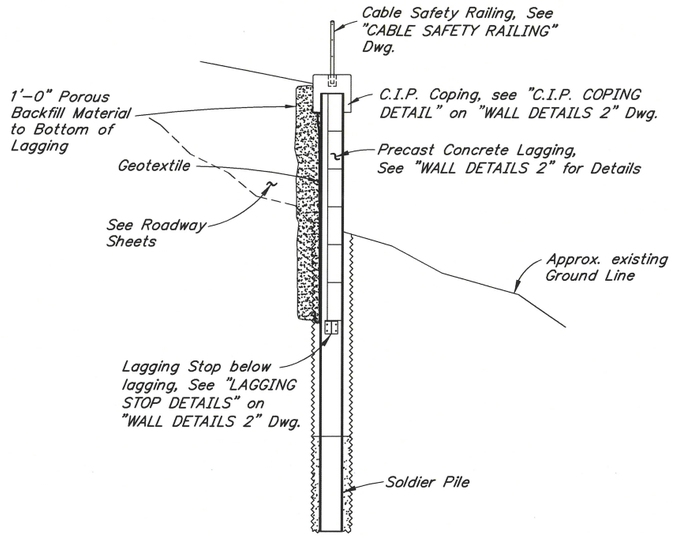

TYPICAL WALL SECTION

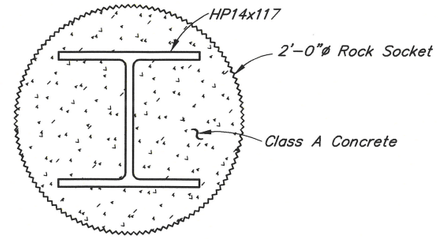

SECTION A-A

12 6 0 1
In. Feet

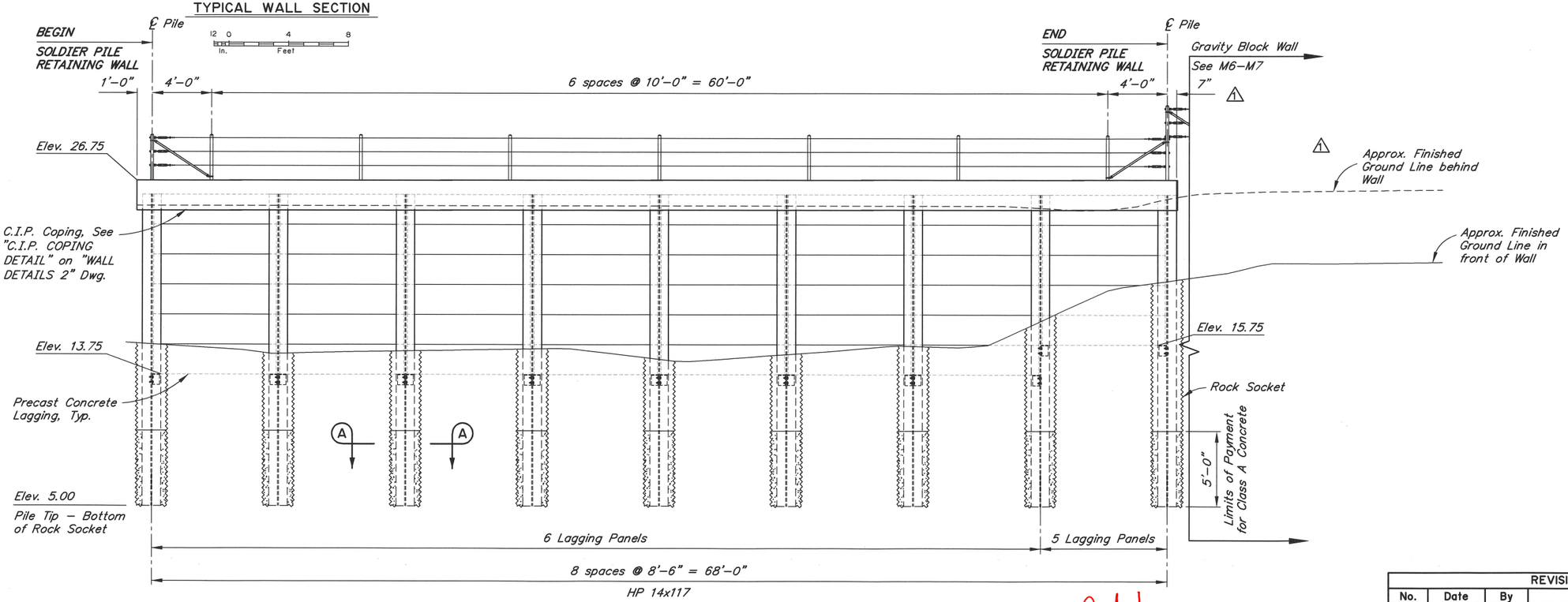

ELEVATION

12 0 4 8
In. Feet

CN
10/23/2024

REVISIONS			
No.	Date	By	Description
1	2/22/22	NWM	Wall adjustments

DESIGNED BY: Nick Murray	CHECKED: Ben Still	
DRAWN BY: Sam Sollie	CHECKED: Nick Murray	
QUANTITIES BY: Nick Murray	CHECKED: Ben Still	

STATE OF ALASKA
DEPARTMENT OF TRANSPORTATION AND PUBLIC FACILITIES
BRIDGE SECTION
3132 Channel Drive
Juneau, Alaska 99801
907-465-2975

STATE OF ALASKA 49TH Nicholas W. Murray 02-24-2022 No. CE 107613 REGISTERED PROFESSIONAL ENGINEER

HERRING COVE RETAINING WALL

SOUTH TONGASS HIGHWAY

WALL DETAILS 1

DWG. NO. 3

R:\evault\253\cad\253 As-Sent 2021\Retaining Wall-1 - R1-3 Thu, Feb/24/22 02:01pm

STATE	PROJECT DESIGNATION	YEAR	SHEET NO.	TOTAL SHEETS
ALASKA	SFHWY00072/0902043	2021	M4	M5

REINFORCING STEEL

MARK	NOTE	SIZE	NO.	LENGTH	TYPE
C401	E,L	4	6	69'-3"	---
C402	E	4	46	5'-0"	BENT
P401	E,P	4	36	0'-9"	---
P402	E,P	4	18	2'-5"	HOOP
L401	E,U	4	8	9'-0"	BENT
L402	E,U	4	9	4'-11"	STIRRUP

BENDING DIAGRAM

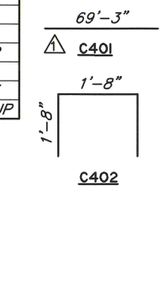

E – Epoxy-Coated
L – Length does not include lap splices
P – Per post
U – Per precast unit

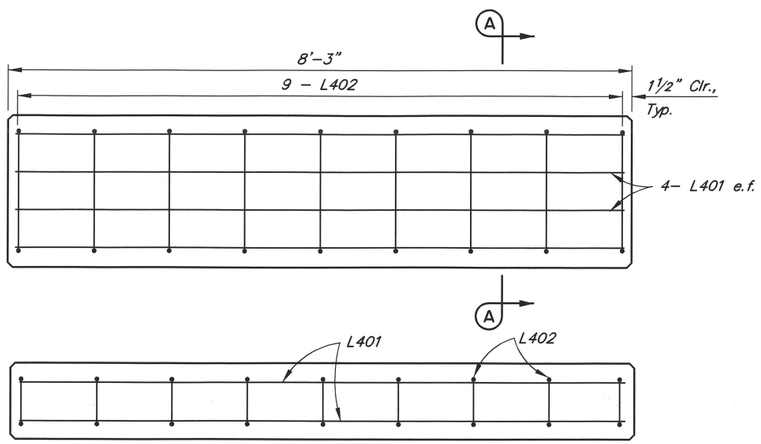

PRECAST CONCRETE LAGGING

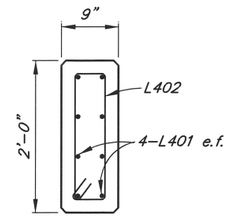

SECTION A-A

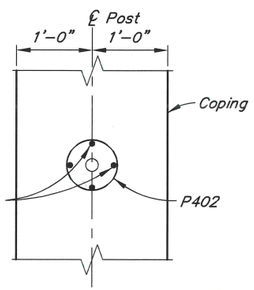

SECTION B-B
No Scale

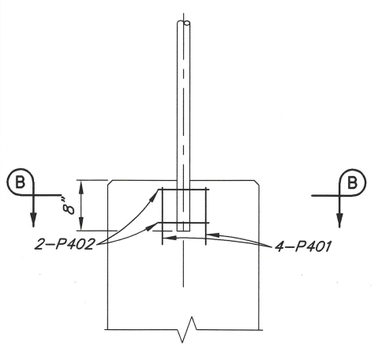

POST REINFORCING
No Scale

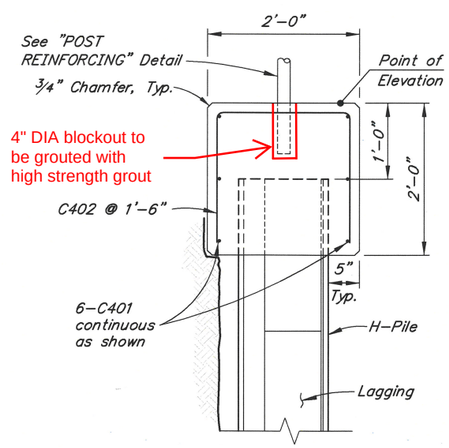

C.I.P. COPING DETAIL
No Scale

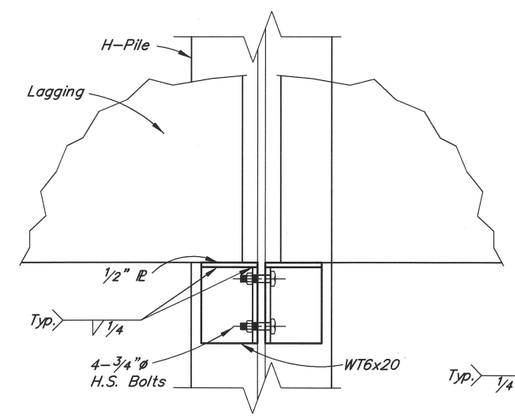

SECTION

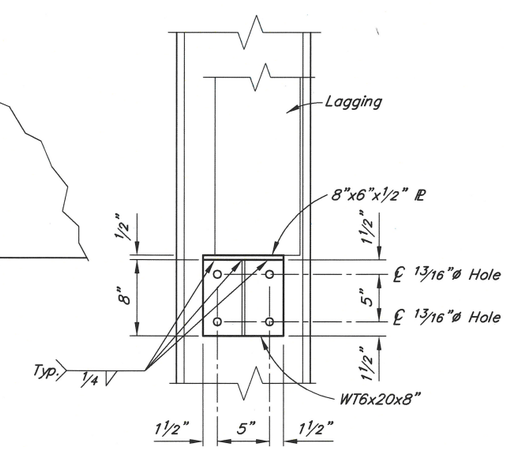

ELEVATION

REVISIONS			
No.	Date	By	Description
1	2/22/22	NWM	Wall adjustments

CN
10/23/2024

LAGGING STOP DETAILS

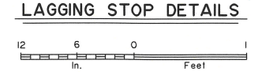

* Place ⅛" deep crack control joints at 50'-0" max.

DESIGNED BY: Nick Murray	CHECKED: Ben Still		
DRAWN BY: Sam Sollie	CHECKED: Nick Murray		
QUANTITIES BY: Nick Murray	CHECKED: Ben Still		

STATE OF ALASKA
DEPARTMENT OF TRANSPORTATION AND PUBLIC FACILITIES
BRIDGE SECTION
3132 Channel Drive
Juneau, Alaska 99801
907-465-2975

STATE OF ALASKA 49TH
Nicholas W. Murray
02-24-2022
No. CE 107613
REGISTERED PROFESSIONAL ENGINEER

HERRING COVE RETAINING WALL

SOUTH TONGASS HIGHWAY

WALL DETAILS 2

DWG. NO. 4

R:\evault\253\cad\253 As-Sent 2021\Retaining Wall-1 – R1-4 Thu, Feb/24/22 02:01pm

STATE	PROJECT DESIGNATION	YEAR	SHEET NO.	TOTAL SHEETS
ALASKA	SFHWY00072/0902043	2021	M5	M5

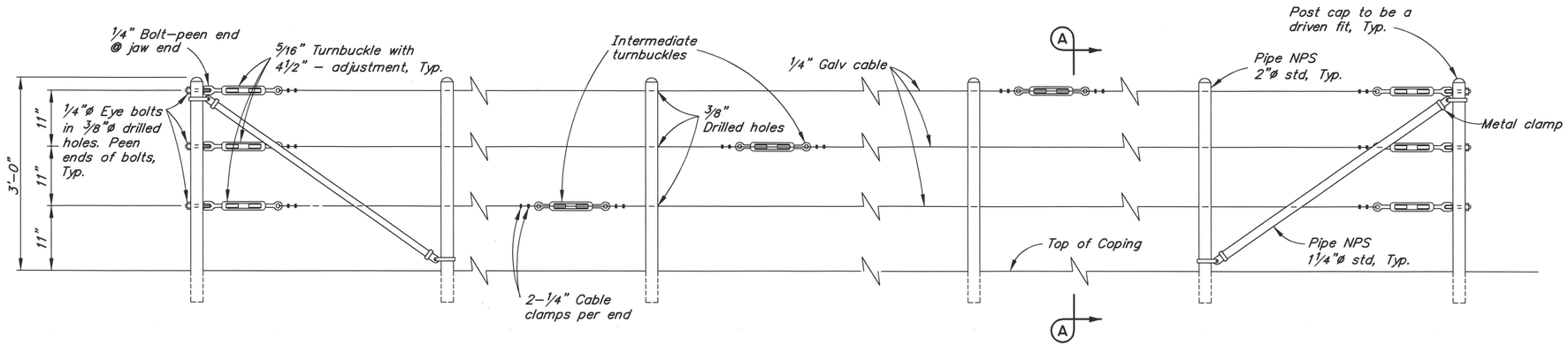

ELEVATION

No Scale

NOTES:

1. Intermediate turnbuckles to be placed in adjacent spans.
2. Do not splice cable between intermediate turnbuckles and end posts.
3. All posts, cable and hardware to be galvanized.
4. Posts to be plumb.
5. Verify all controlling dimensions in the field before ordering or fabricating any material.
6. Line posts shall be braced horizontally and trussed diagonally in both directions, at each end.
7. Post pockets to be centered in top of coping.
8. Provide thimbles at all cable loops.
9. See "WALL DETAILS 2" Dwg. for post spacing and reinforcing.

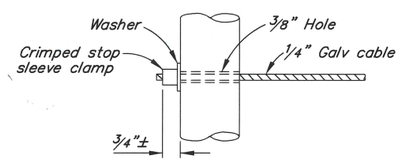

ALTERNATIVE DEAD END ANCHORAGE

No Scale

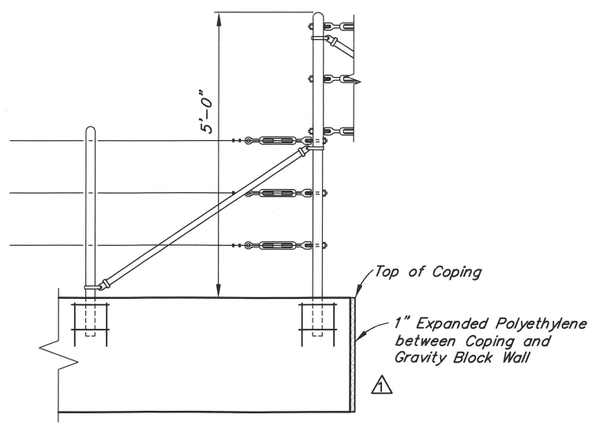

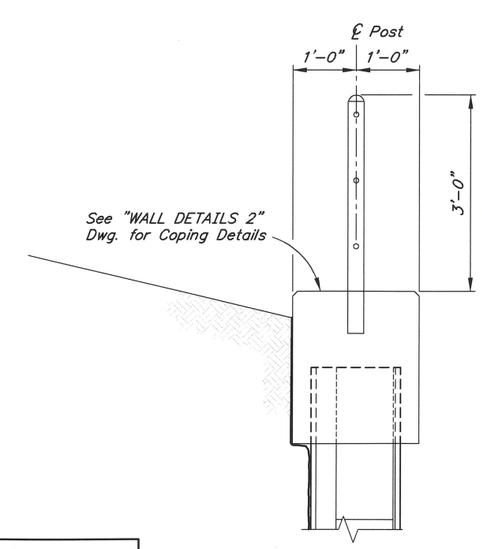

SECTION A-A

No Scale

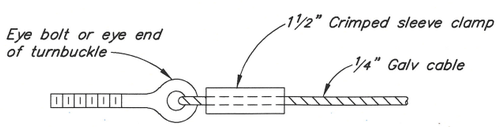

ALTERNATIVE CABLE CONNECTION

No Scale

CN
10/23/2024

ELEVATION AT COPING STEP

12 6 0 1 2 3
In. Feet

REVISIONS			
No.	Date	By	Description
1	2/22/22	NWM	Wall adjustments

DESIGNED BY: Nick Murray	CHECKED: Ben Still
DRAWN BY: Sam Sollie	CHECKED: Nick Murray
QUANTITIES BY: Nick Murray	CHECKED: Ben Still

STATE OF ALASKA
DEPARTMENT OF TRANSPORTATION AND PUBLIC FACILITIES
BRIDGE SECTION
3132 Channel Drive
Juneau, Alaska 99801
907-465-2975

STATE OF ALASKA 49TH Nicholas W. Murray 02-24-2022 No. CE 107613 REGISTERED PROFESSIONAL ENGINEER

HERRING COVE RETAINING WALL

SOUTH TONGASS HIGHWAY

CABLE SAFETY RAILING

DWG. NO. 5

R:\evault\253\cad\253 As-Sent 2021\Retaining Wall-1 – R1-5 Thu, Feb/24/22 02:01pm

NO.	DATE	REVISION

STATE	PROJECT DESIGNATION	YEAR	SHEET NO.	TOTAL SHEETS
ALASKA	SFHWY00072/0902043	2022	M6	M7

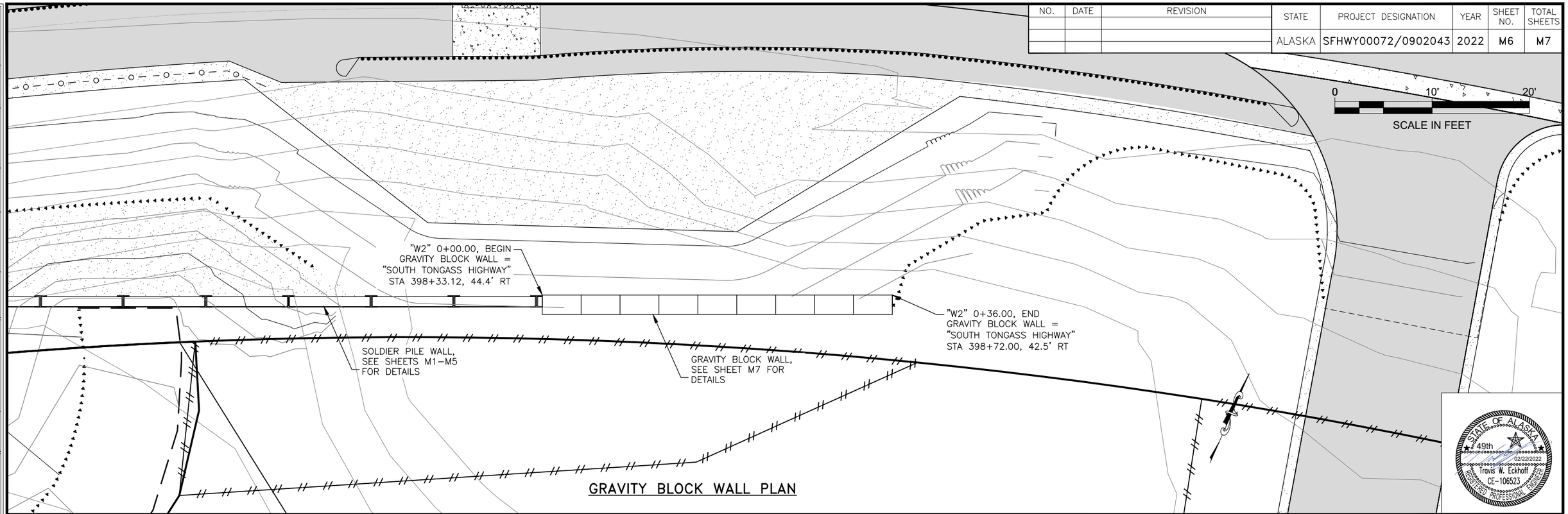

GRAVITY BLOCK WALL PLAN

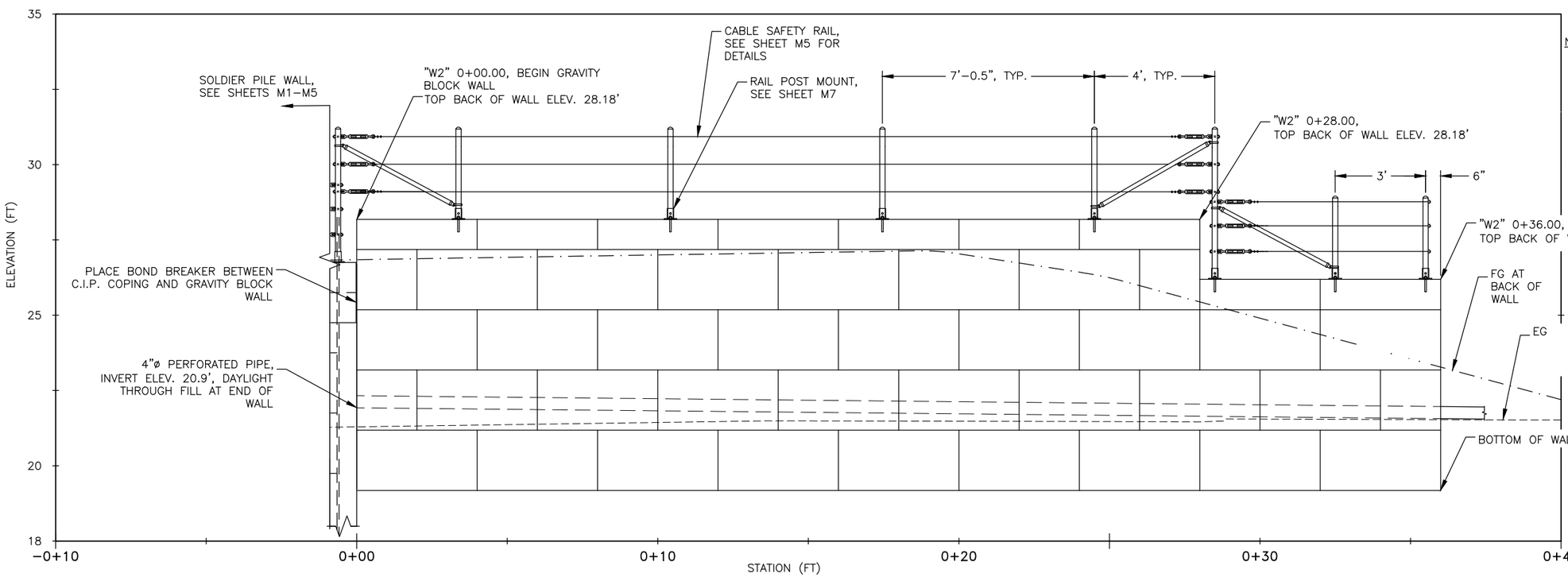

GRAVITY BLOCK WALL PROFILE

10/23/2024

NOTES:

1. USE 2'x2'x2' BLOCKS TO STAGGER JOINTS BETWEEN ROWS OF BLOCKS AS SHOWN.

FIRM	STATE OF ALASKA DEPARTMENT OF TRANSPORTATION & PUBLIC FACILITIES					ADDRESS	6860 GLACIER HWY, JUNEAU, AK 99811
FILE	Q:\Ktn\SFHWY00072\GE\Design\Retaining Wall\Redesign\SFHWY00072_Revised Wall Layout.dwg	DATE	2/22/2022 11:11	LAYOUT	M6	PHONE	(907) 465-1763
		DRAFTED	TWE	CHECKED		DESIGNED	TWE
		CERTIFICATE OF AUTH #:					

NO.	DATE	REVISION	STATE	PROJECT DESIGNATION	YEAR	SHEET NO.	TOTAL SHEETS
			ALASKA	0902043/SFHWY00072	2022	M7	M7

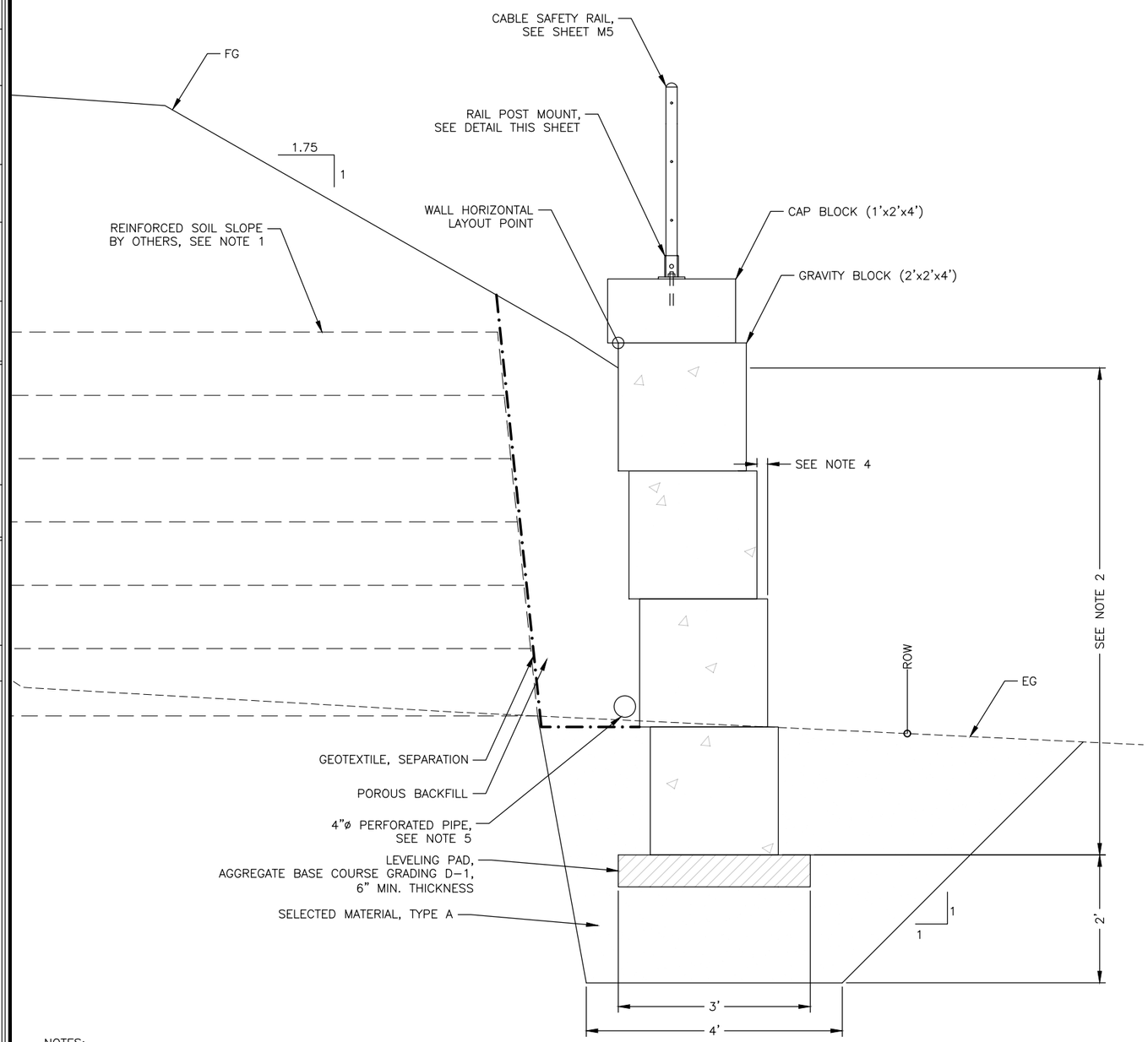

NOTES:

1. MINIMUM TOP OF REINFORCED FILL ELEVATION = 27.3'
2. SEE SHEET M6 FOR WALL LAYOUT AND PROFILE. MAXIMUM RETAINED FILL HEIGHT = 8'.
3. EXCAVATE EXISTING FOUNDATION SOIL TO A DEPTH OF 2' BELOW THE BOTTOM OF WALL ELEVATION AND REPLACE WITH SELECTED MATERIAL, TYPE A COMPACTED TO MEET SUBSECTION 205-3.05.
4. MINIMUM BLOCK OFFSET = 2". CONSTRUCT WALL WITH A 6° BATTER IF BLOCKS CANNOT BE OFFSET 2".
5. DAYLIGHT PERFORATED PIPE THROUGH FILL AT END OF GRAVITY BLOCK WALL. ADJUST PIPE ELEVATION AS NEEDED TO PROVIDE POSITIVE DRAINAGE.

GRAVITY BLOCK WALL

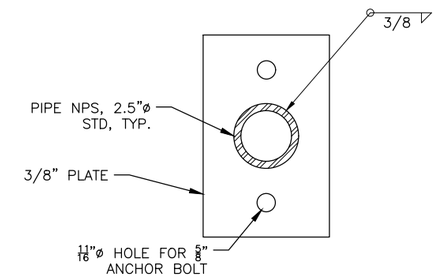

RAIL POST MOUNT SECTON

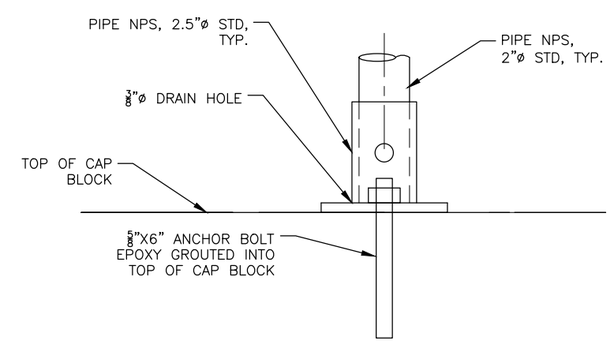

RAIL POST MOUNT DETAIL

CN
10/23/2024

STATE OF ALASKA 49th 02/22/2022 Travis W. Eckhoff CE-106523 REGISTERED PROFESSIONAL ENGINEER

STATE OF ALASKA
DEPARTMENT OF TRANSPORTATION
AND PUBLIC FACILITIES

KTN HERRING COVE BRIDGE IMPROVEMENTS

GRAVITY BLOCK WALL DETAIL

FILE Q:\Ktn\SFHWY00072\GE\Design\Retaining Wall\Redesign\SFHWY00072_Revised Wall Layout.dwg | DATE 2/22/2022 11:11 | LAYOUT M7 | DESIGNED TWE | CHECKED | DRAFTED TWE

STATE	PROJECT DESIGNATION	YEAR	SHEET NO.	TOTAL SHEETS
ALASKA	SFHY00072/0902043	2021	N1	N26

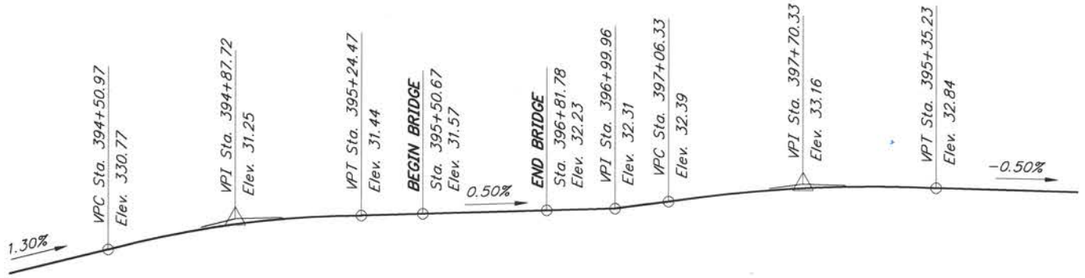

PROFILE GRADE DATA

No Scale

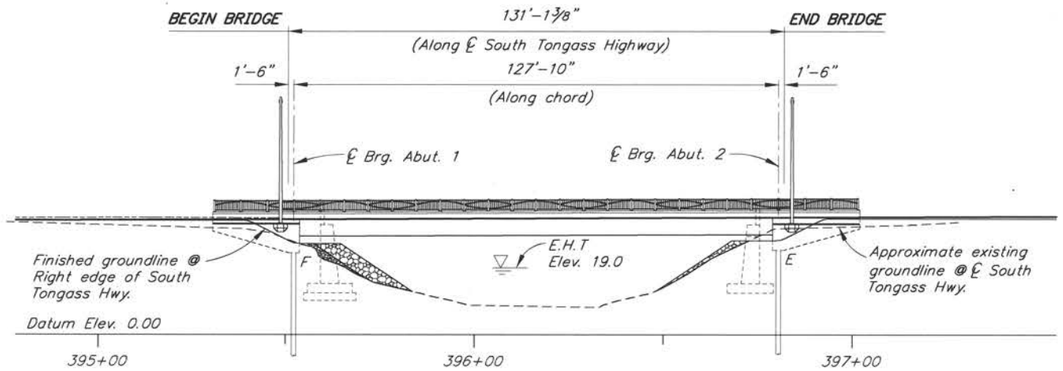

ELEVATION

10 0 20 40
Feet

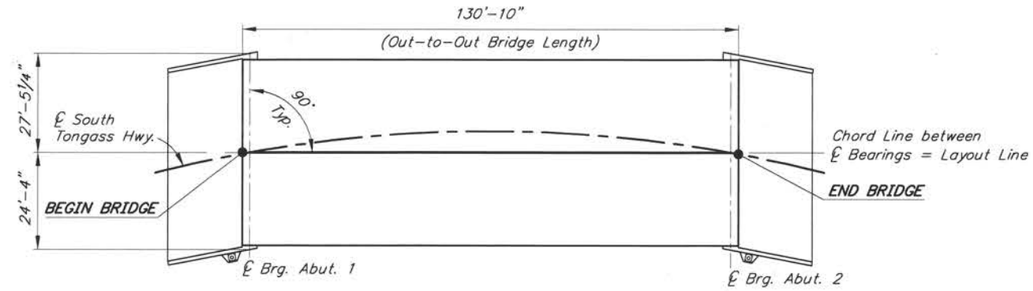

LAYOUT LINE

No Scale

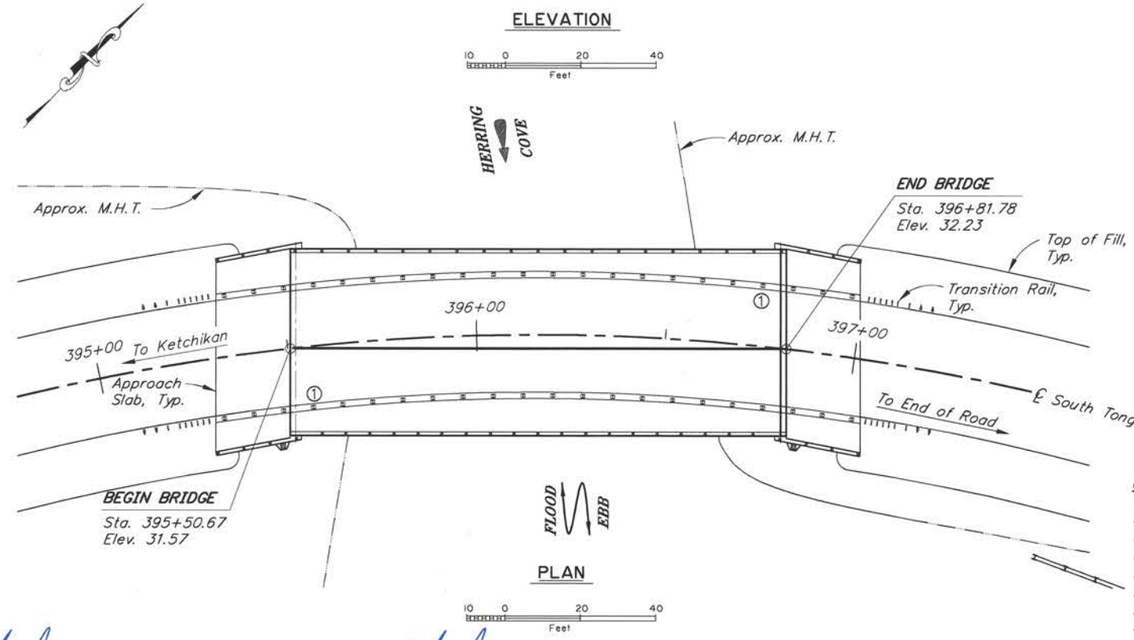

PLAN

10 0 20 40
Feet

CURVE DATA:

PI = 397+95.85
Δ = 113°03'56"
D = 9°54'00"
T = 875.47'
L = 1147.07'
R = 578.74'
S = 6.00%

DRAWING INDEX

TITLE	DWG. NO.
GENERAL LAYOUT	1
STAGED CONSTRUCTION	2
TEMPORARY CONCRETE BRIDGE BARRIER	3
SITE PLAN	4
RIPRAP LAYOUT	5
RIPRAP DETAILS	6
EXISTING BRIDGE DETAILS	7
ABUTMENT 1	8
ABUTMENT 1 DETAILS	9
ABUTMENT 2	10
ABUTMENT 2 DETAILS	11
WINGWALLS	12
LUMINAIRE CORBEL	13
FRAMING PLAN AND TYPICAL SECTION	14
GIRDERS	15
GIRDER DETAILS	16
SIDEWALK PLAN AND PEDESTRIAN RAIL PLAN	17
SIDEWALK DETAILS	18
APPROACH SLABS	19
PEDESTRIAN RAILING	20
STEEL BRIDGE RAILING, 3-TUBE	21
TRANSITION RAIL, 3-TUBE	22
LOG OF TEST BORINGS	23-26

CN 10/23/2024

NOTES

① Approximate location of Bridge Number Plate.

DESIGNED BY: Nick Murray	CHECKED: Douglas Gelineau	LAYOUT BY: Nick Murray	CHECKED BY: Douglas Gelineau
DRAWN BY: Sam Sollie	CHECKED: Nick Murray	SPECIFICATIONS BY: Nick Murray	P S & E COMPARED: Douglas Gelineau
QUANTITIES BY: Nick Murray	CHECKED: Douglas Gelineau	APPROVAL RECOMMENDED BY: Rich Pratt	

STATE OF ALASKA
DEPARTMENT OF TRANSPORTATION AND PUBLIC FACILITIES
BRIDGE SECTION
3132 Channel Drive
Juneau, Alaska 99801
907-465-2975

STATE OF ALASKA 49TH
Nicholas W. Murray
08-04-2021
No. CE 107613
REGISTERED PROFESSIONAL ENGINEER

HERRING COVE BRIDGE

SOUTH TONGASS HIGHWAY

GENERAL LAYOUT

BRIDGE NO. 253

DWG. NO. 1

R:\cad\253\253-GENERAL LAYOUT Wed, Aug/04/21 10:58am

STATE	PROJECT DESIGNATION	YEAR	SHEET NO.	TOTAL SHEETS
ALASKA	SFHWY00072/0902043	2021	N2	N26

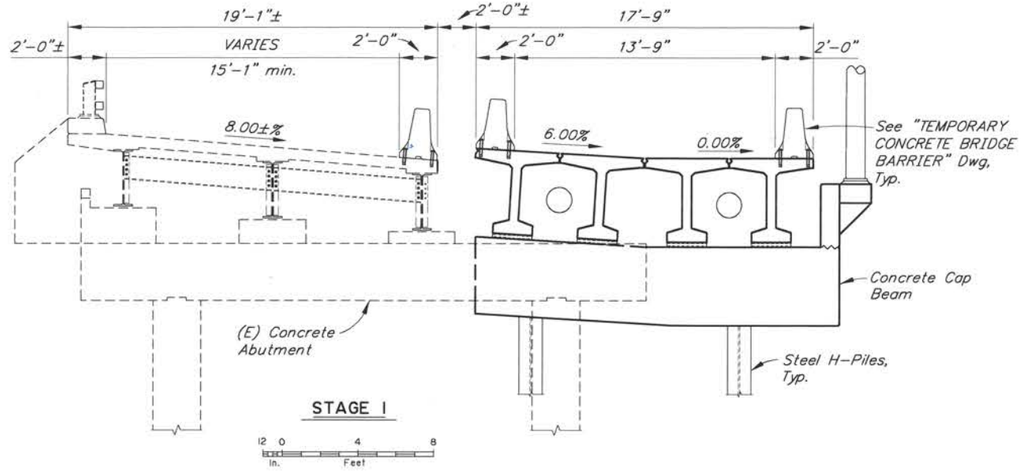

STAGE I

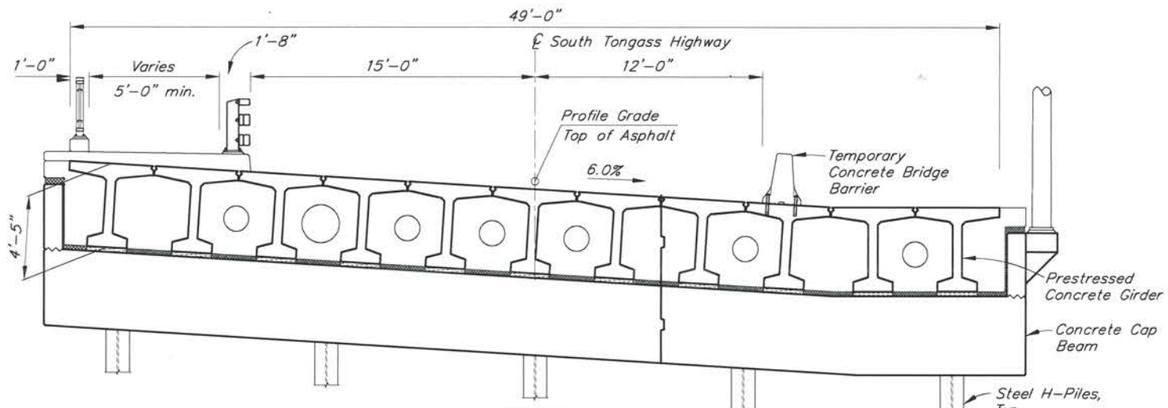

STAGE 2

5" asphalt overlay (2" bottom lift, 3" top lift) Waterproofing membrane, deleted

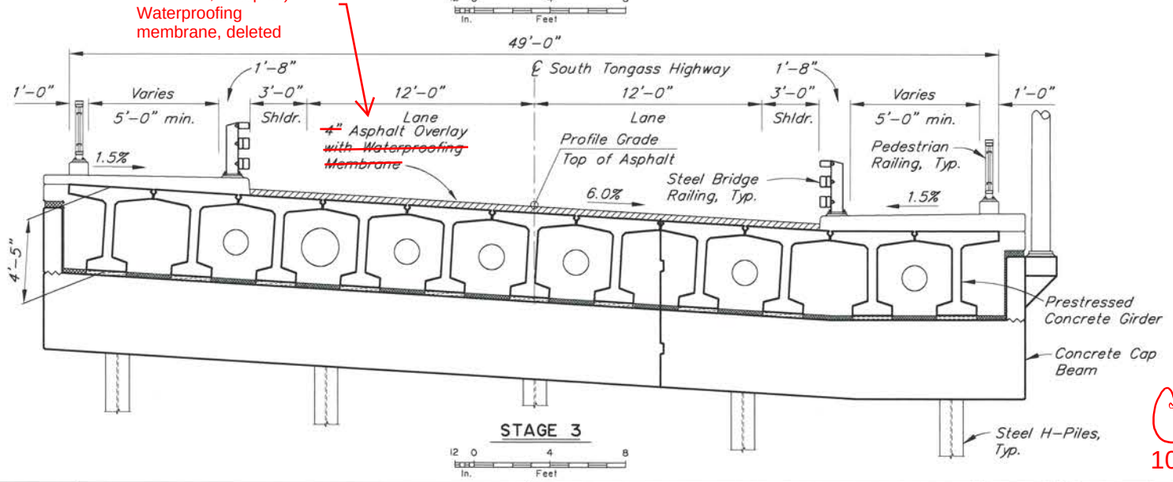

STAGE 3

CN
10/23/2024

STAGED CONSTRUCTION NOTES

1. Place riprap under first stage of bridge prior to setting girders on bearings.
2. Cast all Diaphragms before applying loads to bridge.
3. Splice all reinforcing steel crossing the vertical construction joint with mechanical couplers. Stagger splices.
4. Roughen the surfaces of all vertical construction joints.
5. Provide earth retaining structure along approach roadway between stages. Remove prior to back filling.
6. See civil drawings for utility details.
7. Raise the pavement elevation 1 inch to maintain 5" overlay on bridge (2" bottom lift and 3" top lift) to allow one continuous pull for the S. Tongass Highway and across the bridge per RFI 056.

DESIGNED BY: Nick Murray	CHECKED: Douglas Gelineau		
DRAWN BY: Sam Sollie	CHECKED: Nick Murray		
QUANTITIES BY: Nick Murray	CHECKED: Douglas Gelineau		

STATE OF ALASKA
DEPARTMENT OF TRANSPORTATION AND PUBLIC FACILITIES
BRIDGE SECTION
3132 Channel Drive
Juneau, Alaska 99801
907-465-2975

STATE OF ALASKA 49TH Nicholas W. Murray 08-04-2021 No. CE 107613 REGISTERED PROFESSIONAL ENGINEER

HERRING COVE BRIDGE
SOUTH TONGASS HIGHWAY
STAGED CONSTRUCTION

BRIDGE NO. 253
DWG. NO. 2

R:\cad\253\253-STAGE Wed, Aug/04/21 10:58am

STATE	PROJECT DESIGNATION	YEAR	SHEET NO.	TOTAL SHEETS
ALASKA	SFHWY00072/0902043	2021	N3	N26

REINFORCING STEEL - ONE SEGMENT

MARK	NOTE	SIZE	NO.	LENGTH	TYPE
B401	E	4	13	6'-1"	STIRRUP
B402	E	4	4	12'-2"	---
B501	E	5	4	12'-2"	---
B601	E	6	8	3'-6"	BENT

BENDING DIAGRAM

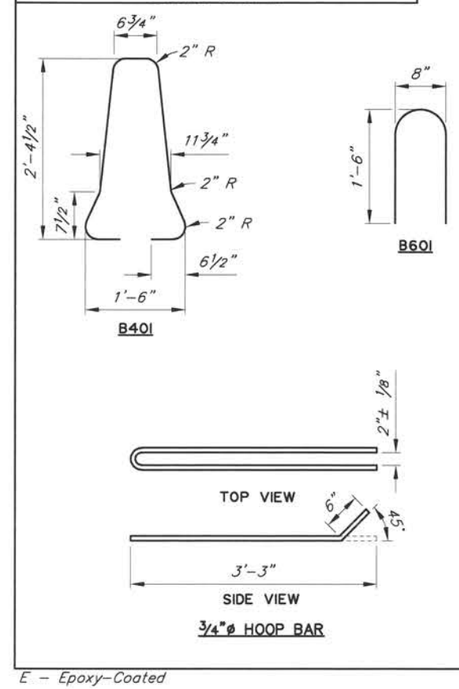

E - Epoxy-Coated

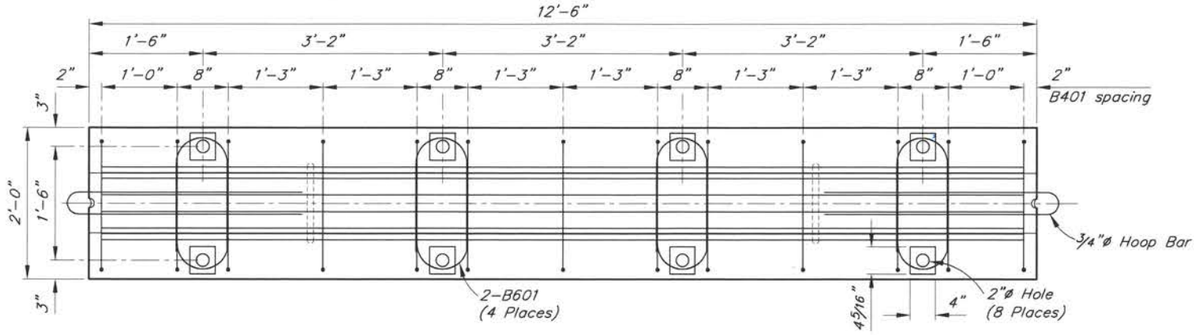

PLAN

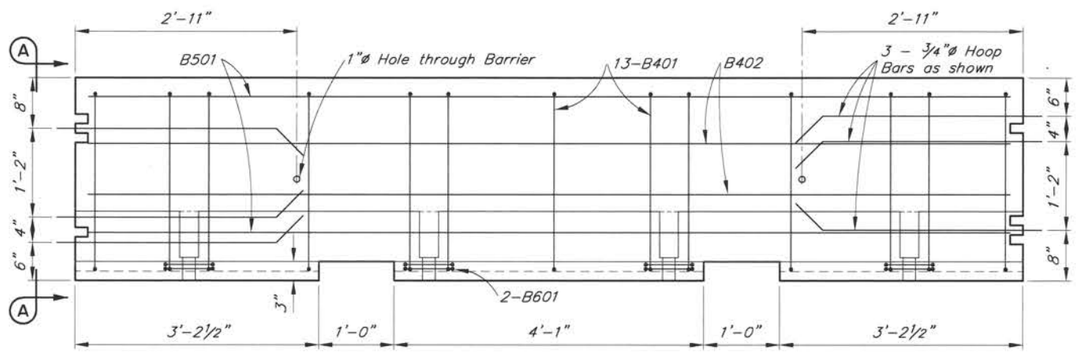

ELEVATION

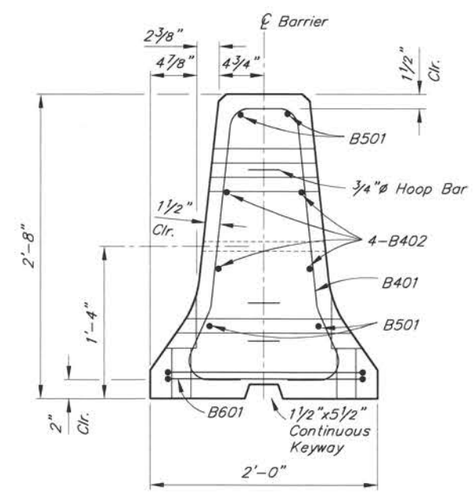

SECTION A-A

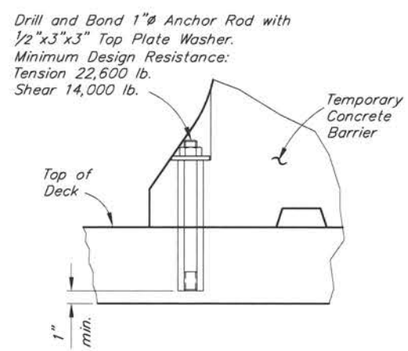

ANCHOR DETAIL

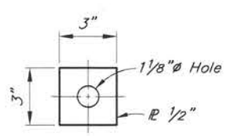

TOP PLATE WASHER DETAIL

CN
10/23/2024

NOTE:

1. Remove anchor rods in final girders to no less than 1" below top of girder. Patch void with high-strength grout.

DESIGNED BY: Nick Murray	CHECKED: Douglas Gelineau		
DRAWN BY: Sam Sollie	CHECKED: Nick Murray		
QUANTITIES BY: Nick Murray	CHECKED: Douglas Gelineau		

STATE OF ALASKA
DEPARTMENT OF TRANSPORTATION AND PUBLIC FACILITIES
BRIDGE SECTION
3132 Channel Drive
Juneau, Alaska 99801
907-465-2975

STATE OF ALASKA 49TH Nicholas W. Murray 08-04-2021 No. CE 107613 REGISTERED PROFESSIONAL ENGINEER

HERRING COVE BRIDGE

SOUTH TONGASS HIGHWAY

TEMPORARY CONCRETE BRIDGE BARRIER

BRIDGE NO. 253
DWG. NO. 3

R:\cad\253\253-BARRIER Wed, Aug/04/21 10:58am

STATE	PROJECT DESIGNATION	YEAR	SHEET NO.	TOTAL SHEETS
ALASKA	SFHWY00072/0902043	2021	N4	N26

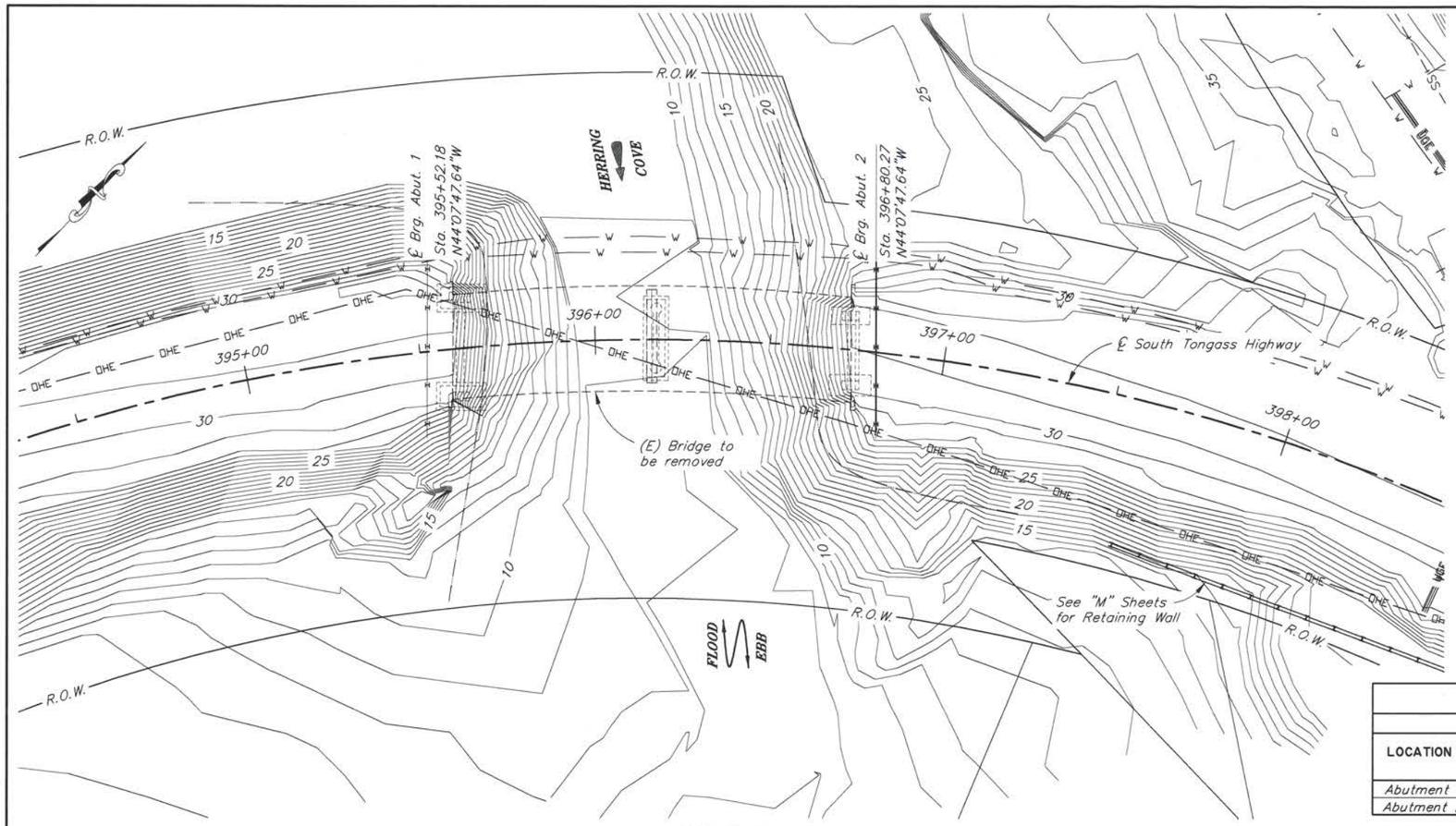

SITE PLAN

10 0 20 40
Feet

GENERAL NOTES

DESIGN:..... AASHTO LRFD Bridge Design Specifications, 9th Edition, with latest interim specifications.

Seismic design per AASHTO Guide Specifications for LRFD Seismic Bridge Design, 2011 with latest interim revisions.

LIVE LOAD:..... HL-93

DEAD LOAD:..... Includes 50 psf for all wearing surfaces.

SEISMIC PARAMETERS:..... PGA = 0.09
Ss = 0.18
S1 = 0.14
Site Class = D
Liquefaction Potential = Moderate
AASHTO 7% probability of exceedance in 75 years.

REINFORCEMENT:..... ASTM A706, Grade 60, Fy = 60,000 psi
ASTM A970 Headed bars, Class HA.
Space reinforcement evenly unless otherwise noted.

PRESTRESSED CONCRETE:..... See "GIRDERS" Dwg.

CONCRETE:..... Class A Concrete unless otherwise noted, f'c = 4000 psi

STRUCTURAL STEEL:..... ASTM A709, Grade 36T3, Fy = 36,000 psi
Galvanize structural steel in accordance with AASHTO M111 unless shown otherwise.

STRUCTURAL STEEL PILING:..... ASTM A709, GR50T3, Fy = 50,000 psi.
Embed piles into rock sockets

ROCK SOCKET PILE DATA TABLE

INSTALLATION CRITERIA					DESIGN DATA		
LOCATION	SHAFT TYPE	TIP ELEVATION (ft.)	MINIMUM ROCK SOCKET LENGTH (ft.)	MINIMUM TOP OF ROCK SOCKET ELEVATION (ft.)	STRENGTH I FACTORED LOAD (K)	NOMINAL RESISTANCE (K)	RESISTANCE FACTOR, φ
Abutment 1	HP 12x74	-1	4.0	3	620	> 1,240	0.50
Abutment 2	HP 12x74	7	4.0	11	620	> 1,240	0.50

ESTIMATE OF QUANTITIES

ITEM NO.	ITEM	PAY UNIT	ESTIMATING UNIT	SUBST.	SUPERST.	TOTAL QUANTITY	
202.0023.0000	Removal of Bridge, No. 253	LS	LS	All Req'd	All Req'd	All Req'd	
203.0006.0000	Borrow, Shot Rock	TON	TON	4,730	---	~~4,730~~	8119.81
205.0006.0000	Structural Fill	CY	CY	499	---	~~499~~	1203.81
501.0001.0000	Class A Concrete	LS	CY	66.5	205.0	271.5	
501.0007.0000	Precast Concrete Member, 129'-0" Decked Bulb-Tee	EA	EA	---	11	11	
503.0001.0000	Reinforcing Steel	LS	LBS	13,553	---	13,553	
503.0002.0000	Epoxy-Coated Reinforcing Steel	LS	LBS	238	32,256	32,494	
505.0005.0001	Furnish Structural Steel H-Piles, HP 12x74	LF	LF	218.0	---	218.0	
505.2006.0000	Install Structural Steel H-Piles, HP 12x74	EA	EA	10	---	10	
507.0001.0003	Steel Bridge Railing, 3-Tube	LF	LF	---	342	342	
507.0002.0000	Pedestrian Railing	LF	LF	---	342	342	
~~508.2000.0000~~	~~Waterproofing Membrane, Spray Applied~~	~~LS~~	~~SF~~	~~---~~	~~5,122~~	~~5,122~~	Deleted
606.0016.0000	Transition Rail	EA	EA	---	4	4	
~~611.0001.0001~~	~~Riprap, Class I~~	~~CY~~	~~CY~~	~~570~~	~~---~~	~~570~~	Deleted
611.0001.0003	Riprap, Class III	CY	CY	3,070	---	~~3,070~~	3566.38

Item numbers are for reference only. Quantities shown are not necessarily the pay quantities nor the total quantity of the particular item.

CN 10/23/2024

ABBREVIATIONS:

℄	= centerline	e.w.	= each way	O.H.W.	= ordinary high water
ℙ	= plate	E.H.T.	= extreme high tide	—— OHE ——	= overhead electrical cable
&	= and	Ext.	= exterior	pcf	= pounds per cubic foot
@	= at	F	= fixed	psf	= pounds per square foot
ø	= diameter	f.f.	= front/air face	psi	= pounds per square inch
±	= approximate	f'c	= specified concrete compressive strength	R.O.W.	= right of way
Abut.	= abutment	Fy	= yield stress	Rt.	= right
Approx.	= approximate	Glav.	= galvanize	Rd.	= road
b.f.	= back/dirt face	Hwy.	= highway	spc.	= space, spaces
bot.	= bottom	Int.	= interior	Sta.	= station
Br.	= bridge	Jt.	= joint	Std.	= standard
btwn.	= between	ksf	= 1000 pounds per square foot	SF	= square feet
Brg.	= bearings	ksi	= 1000 pounds per square inch	- - →| — — →| SS -	= sanitation sewer
C.I.P.	= cast in place	LB	= pound	Symm.	= symmetric
C.G.	= center of gravity	LF	= linear foot	—— T ——	= telephone line
CJP	= complete joint penetration	LS	= lump sum	Typ.	= typical
Clr.	= clear, clearance	Lt.	= left	UT	= ultrasonic testing
CY	= cubic yard	m	= multiple presence factor	VPC	= point of vertical curve
dia.	= diameter	max.	= maximum	VPI	= point of vertical intersection
Dwg.	= drawing	min.	= minimum	VPT	= point of vertical tangent
E	= expansion	N/A	= not applicable	—— UGE ——	= underground electrical
(E)	= existing	n.f.	= near face	- W ⊢ — ⊢ - -	= underground waterline
EA	= each	No.	= number	w/	= with
Elev.	= elevation	o.c.	= on center		
e.f.	= each face				

DESIGNED BY: Nick Murray	CHECKED: Douglas Gelineau	FOUNDATIONS REVIEWED BY: David Hemstreet	STATE OF ALASKA DEPARTMENT OF TRANSPORTATION AND PUBLIC FACILITIES BRIDGE SECTION 3132 Channel Drive Juneau, Alaska 99801 907-465-2975
DRAWN BY: Sam Sollie	CHECKED: Nick Murray		
QUANTITIES BY: Nick Murray	CHECKED: Douglas Gelineau		

STATE OF ALASKA 49TH
Nicholas W. Murray
08-04-2021
No. CE 107613
REGISTERED PROFESSIONAL ENGINEER

HERRING COVE BRIDGE

SOUTH TONGASS HIGHWAY

SITE PLAN

BRIDGE NO. 253

DWG. NO. 4

R:\cad\253\253-SITE PLAN Wed, Aug/04/21 10:59am

STATE	PROJECT DESIGNATION	YEAR	SHEET NO.	TOTAL SHEETS
ALASKA	SFHWY00072/0902043	2021	N5	N26

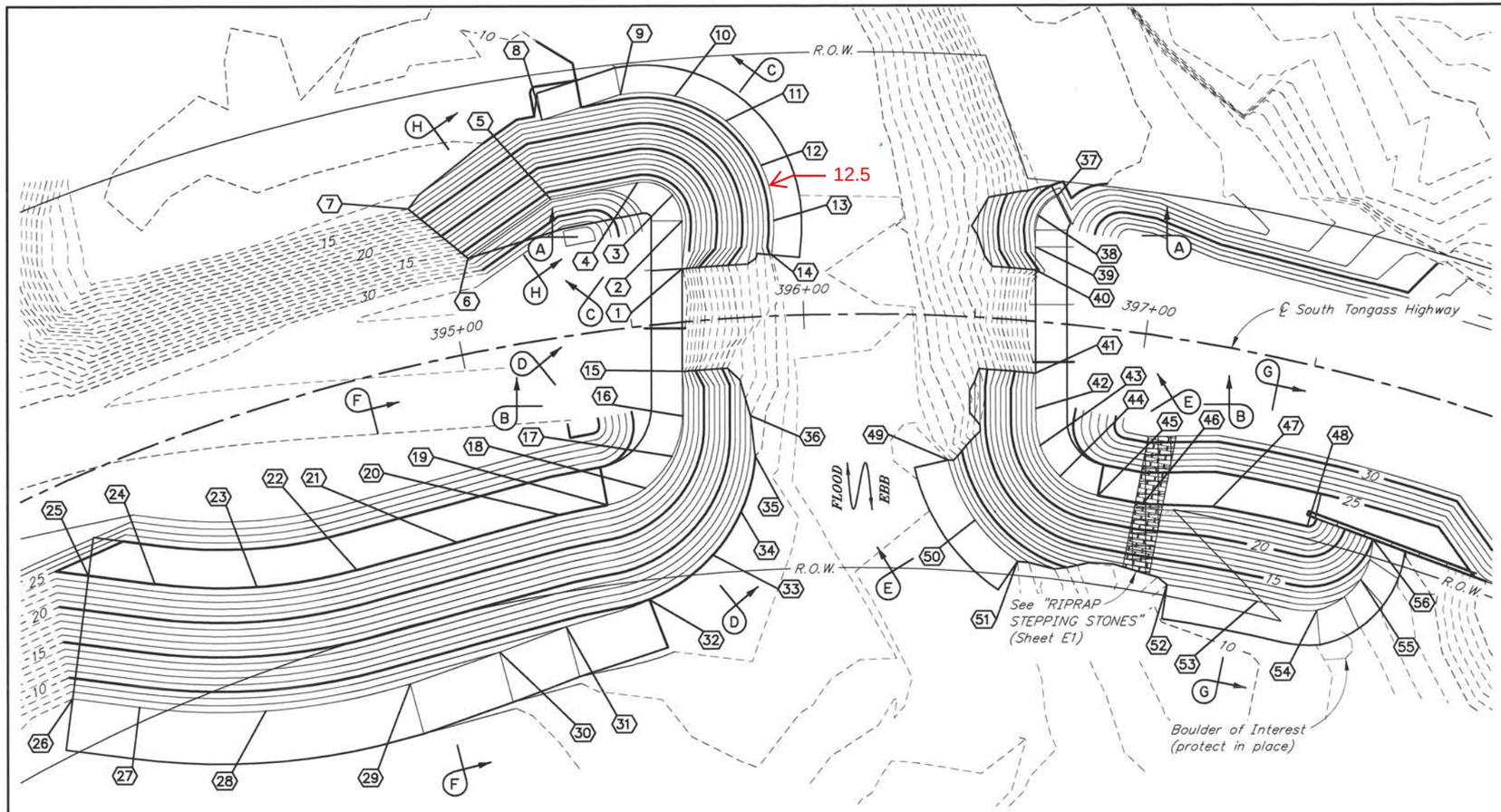

RIPRAP LAYOUT

10 0 20 40 Feet

RIPRAP TABLE

POINT	STATION	OFFSET	ELEVATION	POINT	STATION	OFFSET	ELEVATION
1	395+66.1	15.4' Left	Match O.G.	29	394+59.8	89.2' Right	7.0'
2	395+67.2	29.3' Left	26.5'	30	394+92.1	86.6' Right	8.0'
3	395+65.3	37.1' Left	26.5'	31	395+16.8	83.1' Right	9.0'
4	395+56.0	41.6' Left	26.5'	32	395+46.0	78.9' Right	10.0'
5	395+32.1	40.0' Left	26.5'	33	395+68.5	68.1' Right	10.0'
6	395+06.9	27.2' Left	26.5'	34	395+78.6	56.1' Right	10.0'
7	394+93.6	44.8' Left	12.0'	35	395+84.0	40.3' Right	10.0'
8	395+32.8	63.3' Left	11.0'	36	395+83.2	28.6' Right	11.0'
9	395+54.0	67.8' Left	9.0'	37	396+70.2	36.8' Left	27.3'
10	395+68.2	65.8' Left	9.0'	38	396+65.9	30.7' Left	27.3'
11	395+81.1	57.4' Left	9.0'	39	396+65.8	21.5' Left	27.0'
12	395+89.8	43.9' Left	9.0'	40	396+66.4	14.9' Left	Match O.G.
13	395+92.5	27.6' Left	9.0'	41	396+69.1	14.9' Right	Match O.G.
14	395+91.6	17.8' Left	9.0'	42	396+70.0	25.2' Right	24.8'
15	395+63.5	14.3' Right	Match O.G.	43	396+72.4	35.8' Right	24.9'
16	395+62.2	27.1' Right	24.1'	44	396+79.5	44.0' Right	25.0'
17	395+57.8	38.5' Right	24.5'	45	396+92.1	48.3' Right	25.0'
18	395+48.3	46.8' Right	24.8'	46	397+06.6	48.9' Right	25.0'
19	395+35.7	50.2' Right	25.0'	47	397+28.7	46.1' Right	25.0'
20	395+19.6	50.7' Right	25.0'	48	397+59.2	45.7' Right	25.0'
21	394+86.3	52.8' Right	25.0'	49	396+44.1	41.8' Right	7.0'
22	394+52.9	53.2' Right	25.0'	50	396+53.8	58.8' Right	7.0'
23	394+20.9	49.0' Right	25.0'	51	396+68.5	69.8' Right	7.0'
24	393+91.4	37.7' Right	25.0'	52	397+18.7	70.8' Right	11.0'
25	393+73.4	27.7' Right	25.0'	53	397+49.1	70.3' Right	11.0'
26	393+52.5	58.1' Right	7.0'	54	397+69.0	68.6' Right	11.0'
27	393+71.2	68.7' Right	7.0'	55	397+80.0	56.5' Right	13.0'
28	394+09.7	83.6' Right	7.0'	56	397+80.2	44.4' Right	15.0'
12.5	395+91.7	37.7' Left	9.0'				

HYDRAULIC & HYDROLOGIC SUMMARY, BRIDGE NO. 253

Flood Frequency (Yr.)	50	100	500
Exceedance Probability (%)	2	1	0.2
Discharge (cfs)	524	603	794
Water Surface Elevation (ft)*	19		
Anticipated Add'l Backwater (ft)	0		
Contraction Scour (ft)	0		
Pier Scour (ft)	N/A		
Abutment Scour (ft)	0		
Long-Term Degradation (ft)	3		

Drainage Area: 1.12 square miles
The hydraulic capacity is >>Q500, excluding tidal effects.
* Design water surface elevation is based upon tides and coastal storm levels, not riverine floods. The water surface elevation reported above is taken from the Federal Emergency Management Agency's coastal flood analysis for the Ketchikan Gateway Borough, as reported in its Revised Preliminary Flood Insurance Study, dated August 28, 2020.

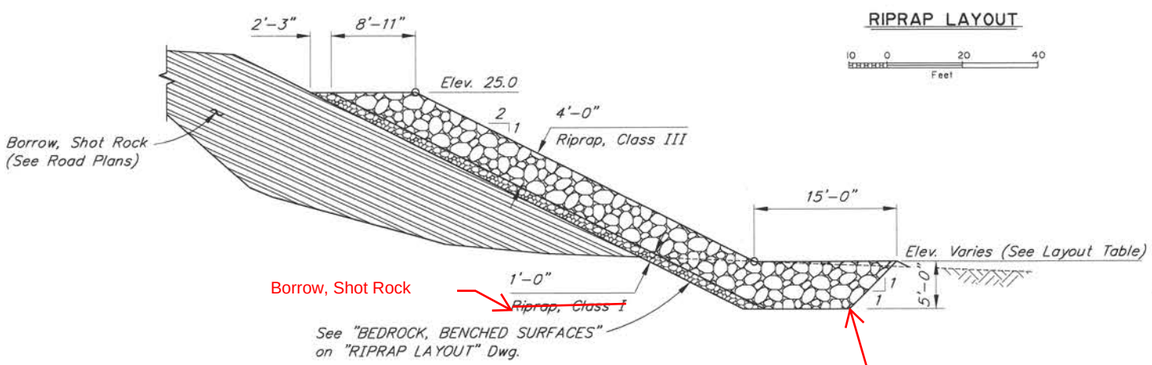

RIPRAP SECTION F-F

12 0 4 8 12 In. Feet

When bedrock prevents excavation per plan, roughen surface at bedrock interface. Maintain 5 foot section of rip-rap, class III. Top of toe elevation will vary.

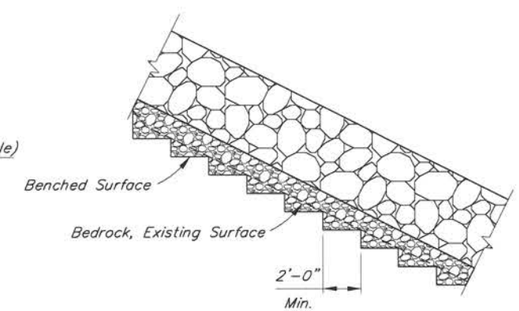

BEDROCK, BENCHED SURFACES

12 0 4 8 12 In. Feet

CN
10/23/2024

NOTE:
For riprap sections not on "RIPRAP LAYOUT" Dwg. see "RIPRAP DETAILS" Dwg.

DESIGNED BY: Michael Knapp	CHECKED:	
DRAWN BY: Sam Sollie	CHECKED: Michael Knapp	
QUANTITIES BY: Michael Knapp	CHECKED:	

STATE OF ALASKA
DEPARTMENT OF TRANSPORTATION AND PUBLIC FACILITIES
BRIDGE SECTION
3132 Channel Drive
Juneau, Alaska 99801
907-465-2975

STATE OF ALASKA 49TH Michael W. Knapp 08-04-2021 No.CE 11079 REGISTERED STRUCTURAL ENGINEER

HERRING COVE BRIDGE
SOUTH TONGASS HIGHWAY
RIPRAP LAYOUT

BRIDGE NO. 253
DWG. NO. 5

R:\cad\253\253-RIPRAP LAYOUT Wed, Aug/04/21 10:59am

STATE	PROJECT DESIGNATION	YEAR	SHEET NO.	TOTAL SHEETS
ALASKA	SFHWY00072/0902043	2021	N6	N26

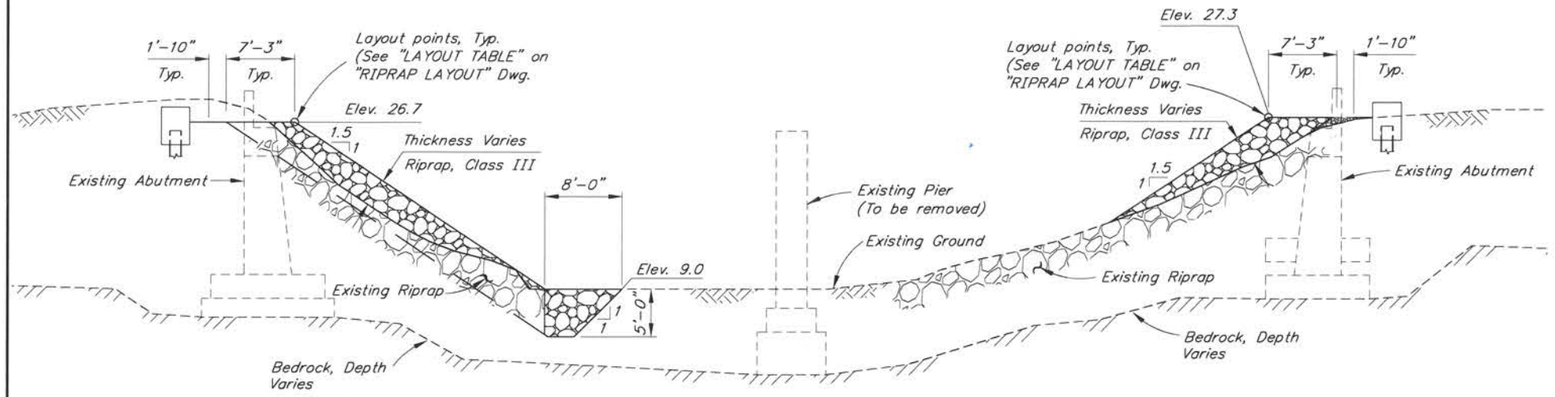

RIPRAP SECTION A-A

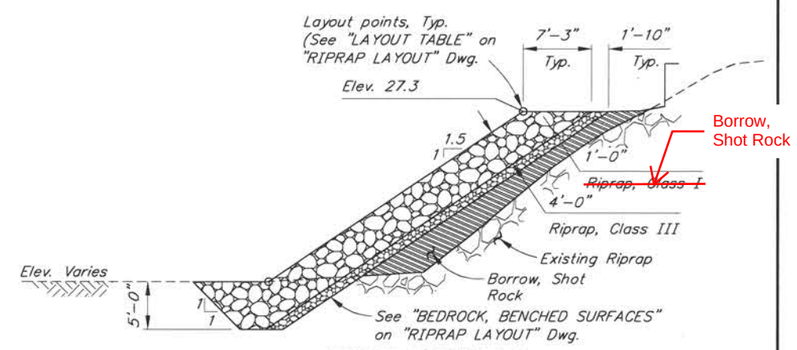

RIPRAP SECTION C-C

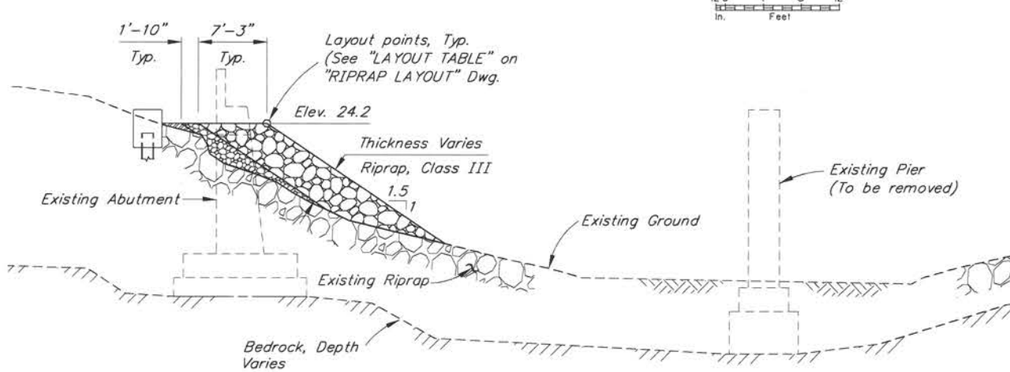

RIPRAP SECTION B-B

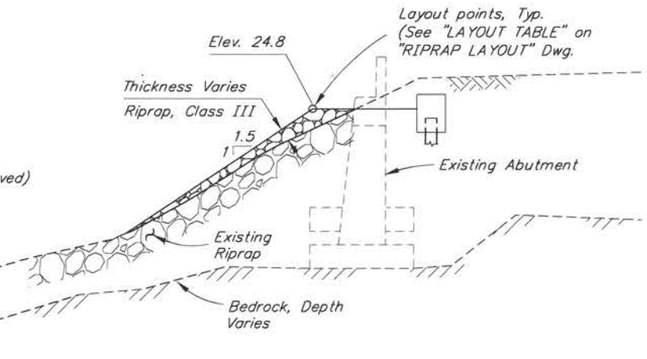

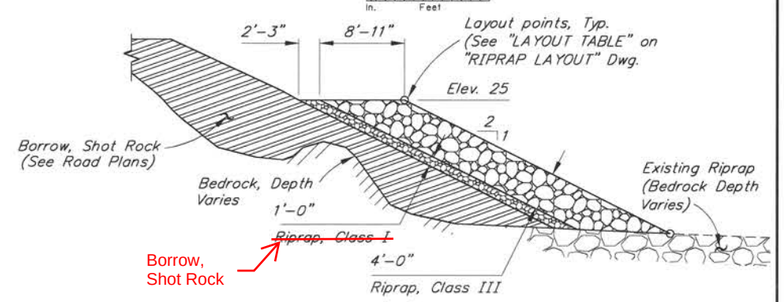

RIPRAP SECTION D-D

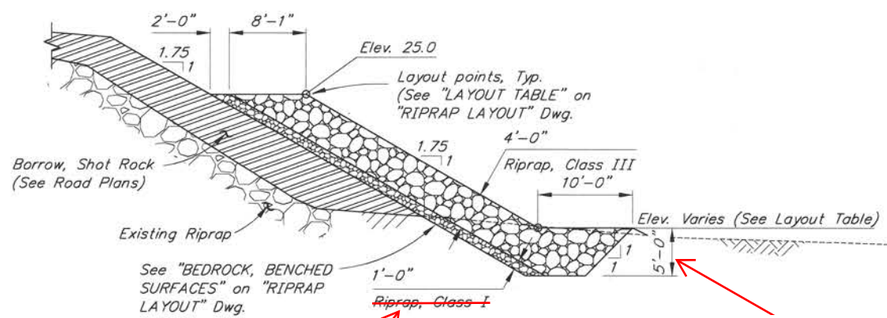

RIPRAP SECTION G-G

When bedrock prevents excavation per plan, roughen surface at bedrock interface. Maintain 5 foot section of rip-rap, class III. Top of toe elevation will vary.

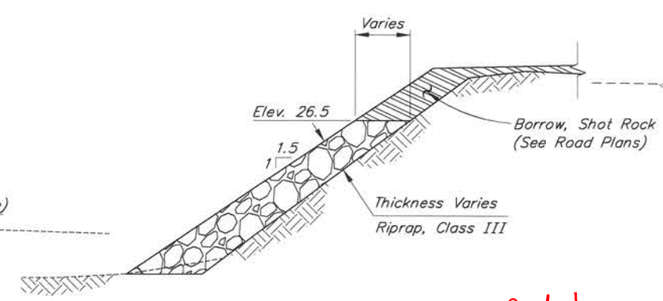

RIPRAP SECTION H-H

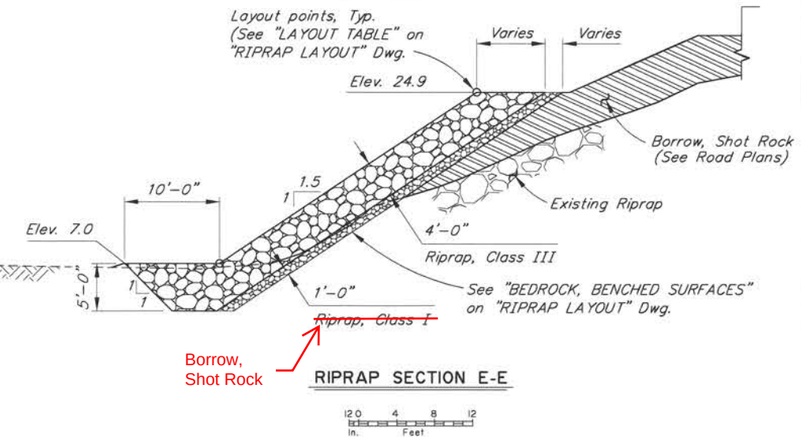

RIPRAP SECTION E-E

CN
10/23/2024

DESIGNED BY: Michael Knapp	CHECKED:	
DRAWN BY: Sam Sollie	CHECKED: Michael Knapp	
QUANTITIES BY: Michael Knapp	CHECKED:	

STATE OF ALASKA
DEPARTMENT OF TRANSPORTATION AND PUBLIC FACILITIES
BRIDGE SECTION
3132 Channel Drive
Juneau, Alaska 99801
907-465-2975

STATE OF ALASKA 49TH Michael W. Knapp 08-04-2021 No. CE 11079 REGISTERED STRUCTURAL ENGINEER

HERRING COVE BRIDGE

SOUTH TONGASS HIGHWAY

RIPRAP DETAILS

BRIDGE NO. 253
DWG. NO. 6

R:\cad\253\253-RIPRAP DETAILS Wed, Aug/04/21 10:59am

STATE	PROJECT DESIGNATION	YEAR	SHEET NO.	TOTAL SHEETS
ALASKA	SFHWY00072/0902043	2021	N7	N26

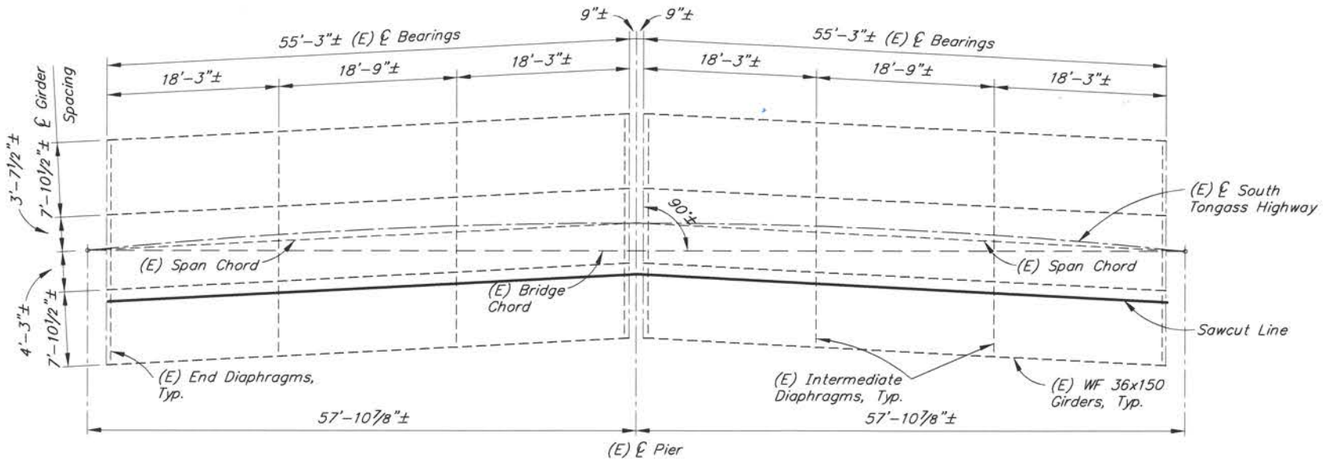

EXISTING FRAMING PLAN

12 0 4 8 12
In. Feet

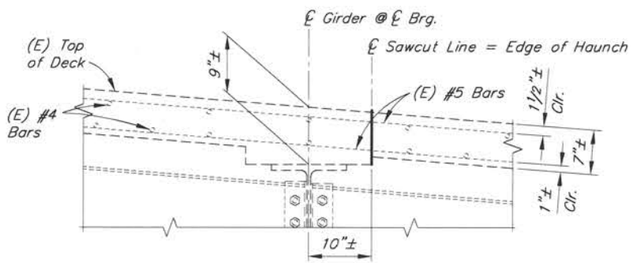

DETAIL A

12 6 0 1 2
In. Feet

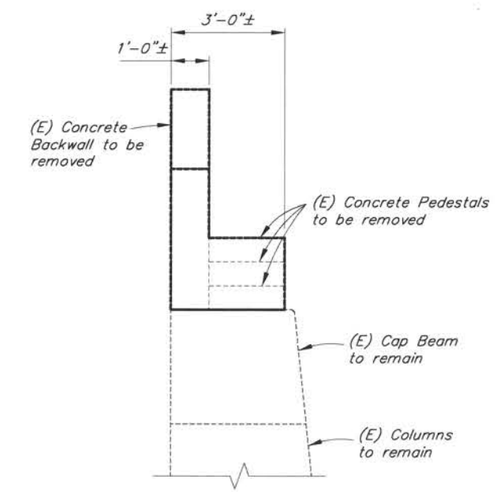

EXISTING CAP BEAM SECTION

12 6 0 1 2 3 4
In. Feet

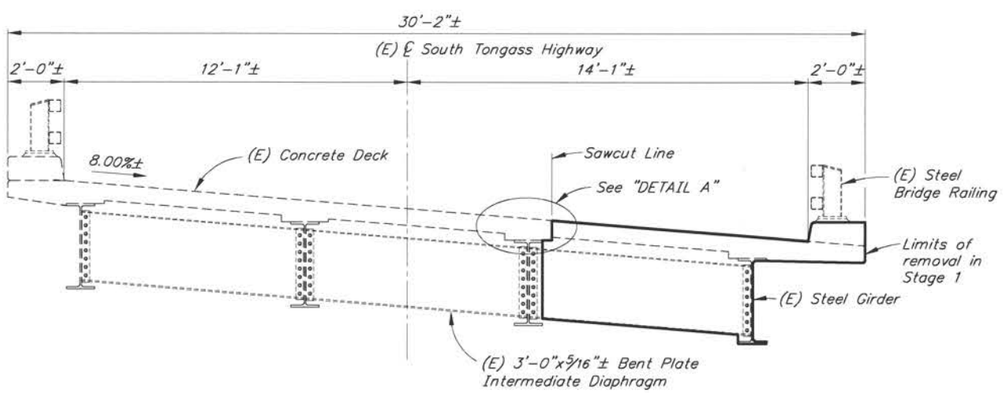

EXISTING TYPICAL SECTION

12 0 1 2 3 4
In. Feet

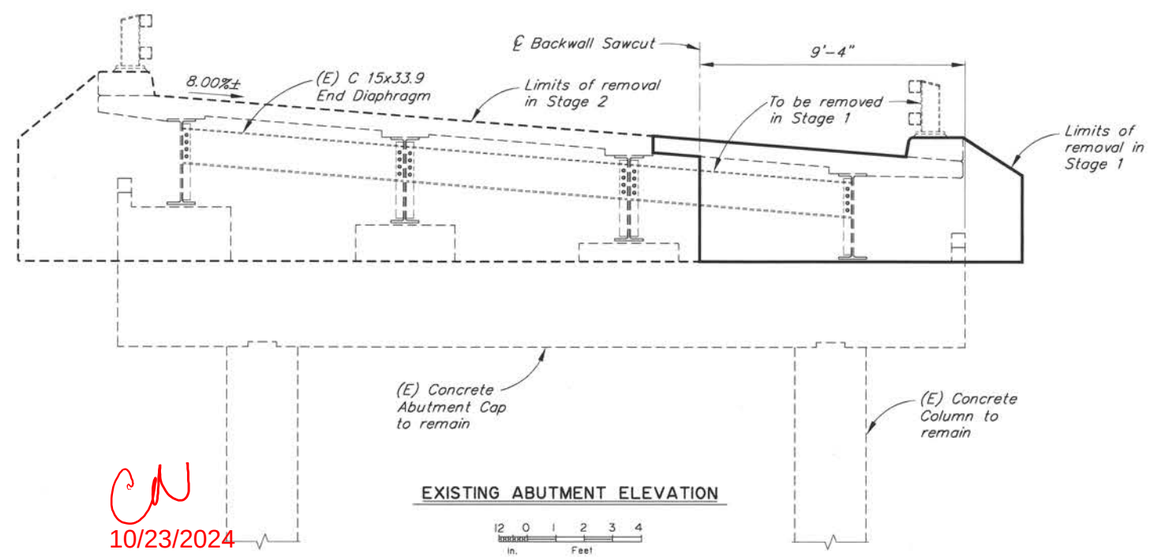

EXISTING ABUTMENT ELEVATION

12 0 1 2 3 4
In. Feet

CN
10/23/2024

DESIGNED BY: Nick Murray	CHECKED: Douglas Gelineau	
DRAWN BY: Sam Sollie	CHECKED: Nick Murray	
QUANTITIES BY: Nick Murray	CHECKED: Douglas Gelineau	

STATE OF ALASKA
DEPARTMENT OF TRANSPORTATION AND PUBLIC FACILITIES
BRIDGE SECTION
3132 Channel Drive
Juneau, Alaska 99801
907-465-2975

STATE OF ALASKA 49TH Nicholas W. Murray 08-04-2021 No. CE 107613 REGISTERED PROFESSIONAL ENGINEER

HERRING COVE BRIDGE

SOUTH TONGASS HIGHWAY

EXISTING BRIDGE DETAILS

BRIDGE NO. 253
DWG. NO. 7

R:\cad\253\253-1 Sidewalks-EXISTING Wed, Aug/04/21 11:00am

STATE	PROJECT DESIGNATION	YEAR	SHEET NO.	TOTAL SHEETS
ALASKA	SFHWY00072/0902043	2021	N8	N26

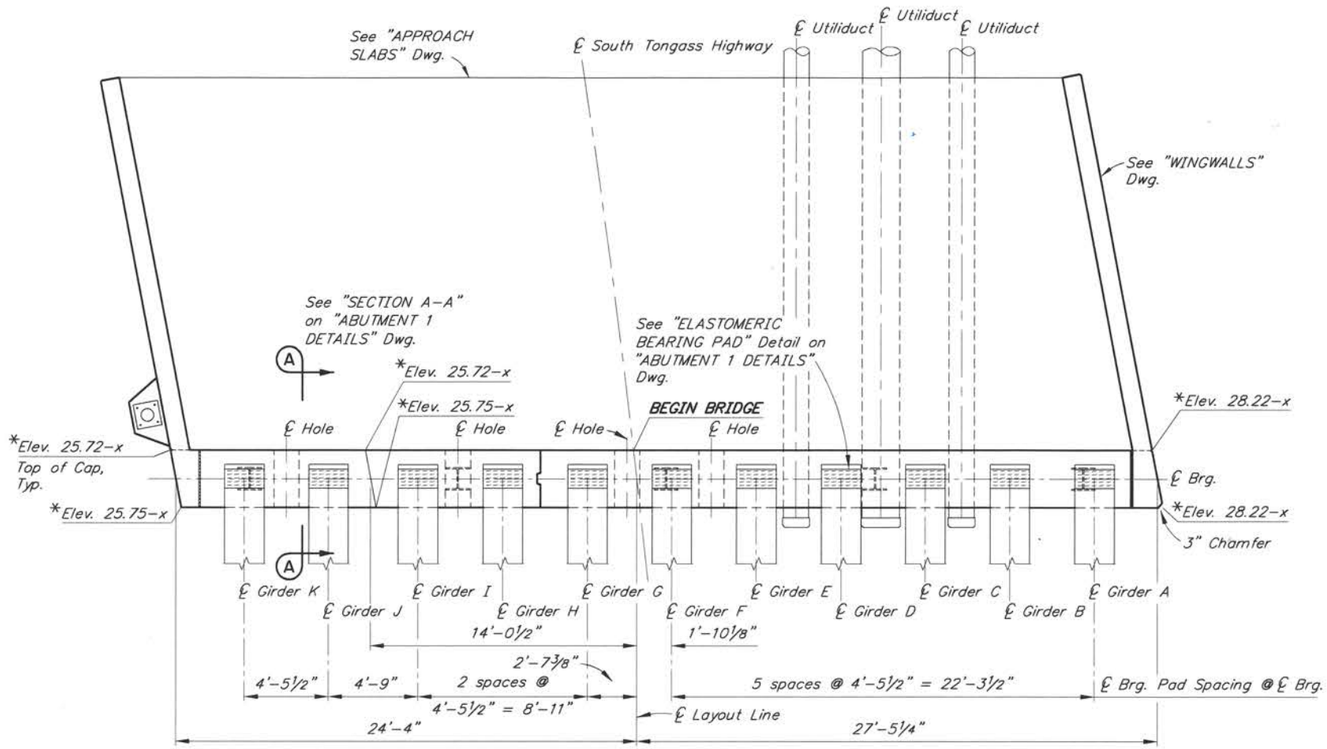

PLAN

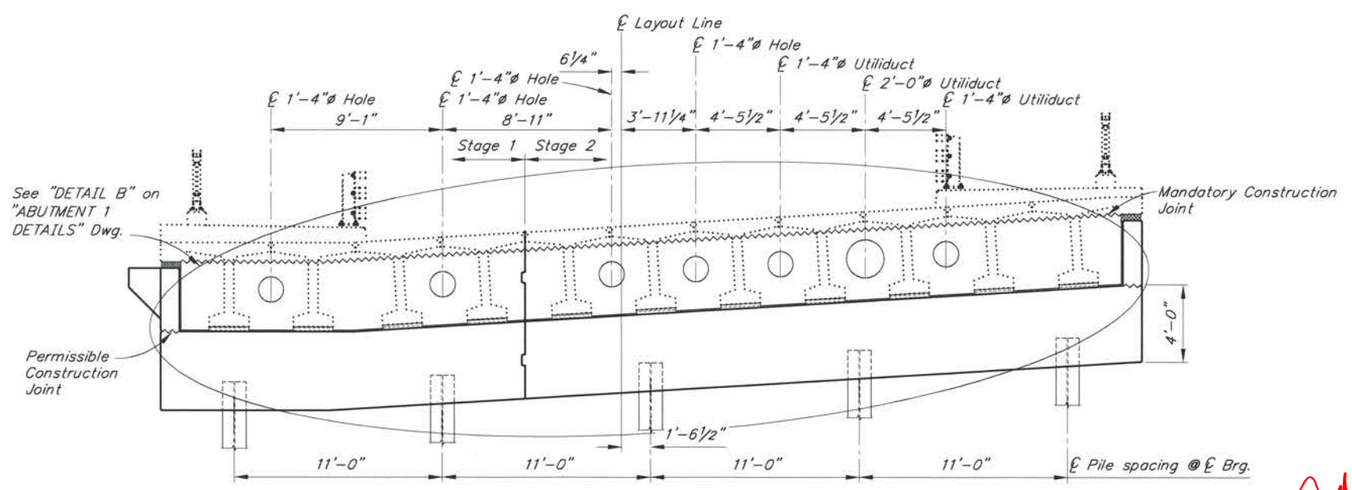

ELEVATION

(Looking Back on Station)

REINFORCING STEEL - ABUTMENT I

MARK	NOTE	SIZE	NO.	LENGTH	TYPE	BENDING DIAGRAM
A501		5	160	12'-3"	STIRRUP	A501
A502	E	5	38	6'-0"	---	
A503	E	5	42	14'-1" min.	STIRRUP	A503
A601	C,M,S	6	10	51'-6"	---	A601, A603, A901
A602	C,E,M,S	6	7	48'-9"	---	A602
A603	C,E,M,S	6	5	51'-6"	---	
A604	E	6	10	2'-0"	---	
A701	E	7	24	4'-9"	BENT	A701
A702	E	7	4	5'-5"	BENT	A702
A901	C,M,S	9	5	51'-6"	---	
A902	C,H,M,S	9	5	51'-4"	HEADED	A902

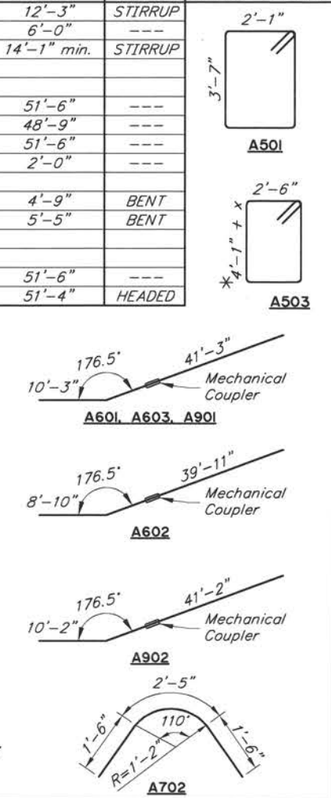

C – Mechanical coupler required. Stagger splices.
E – Epoxy-Coated
H – Headed Reinforcing Steel
M – Match cross slope

NOTE:

* x Represents the amount of girder top flange thickening at the ends of the girder in feet.

10/23/2024

DESIGNED BY: Nick Murray	CHECKED: Douglas Gelineau	STATE OF ALASKA DEPARTMENT OF TRANSPORTATION AND PUBLIC FACILITIES BRIDGE SECTION 3132 Channel Drive Juneau, Alaska 99801 907-465-2975	STATE OF ALASKA 49TH Nicholas W. Murray 08-04-2021 No. CE 107613 REGISTERED PROFESSIONAL ENGINEER
DRAWN BY: Sam Sollie	CHECKED: Nick Murray		
QUANTITIES BY: Nick Murray	CHECKED: Douglas Gelineau		

HERRING COVE BRIDGE

SOUTH TONGASS HIGHWAY

ABUTMENT 1

BRIDGE NO. 253

DWG. NO. 8

R:\cad\253\253-1 Sidewalks-ABUT 1 Wed, Aug/04/21 11:00am

STATE	PROJECT DESIGNATION	YEAR	SHEET NO.	TOTAL SHEETS
ALASKA	SFHWY00072/0902043	2021	N9	N26

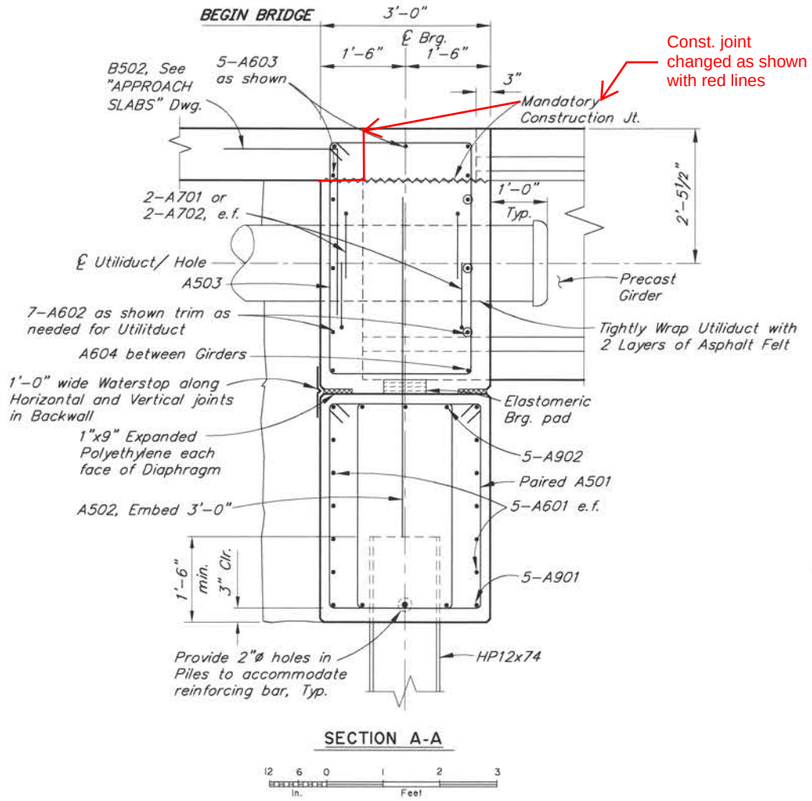

SECTION A-A

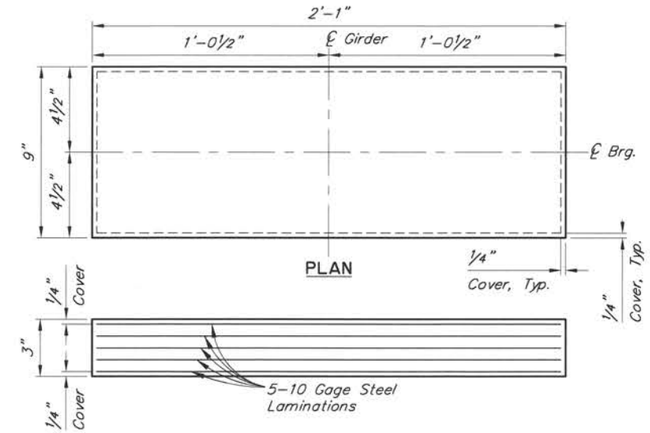

ELEVATION
ELASTOMERIC BEARING PAD

Grade 5
Shear Modulus = 0.115 ksi
Dead Load = 88 k
Live Load = 63 k

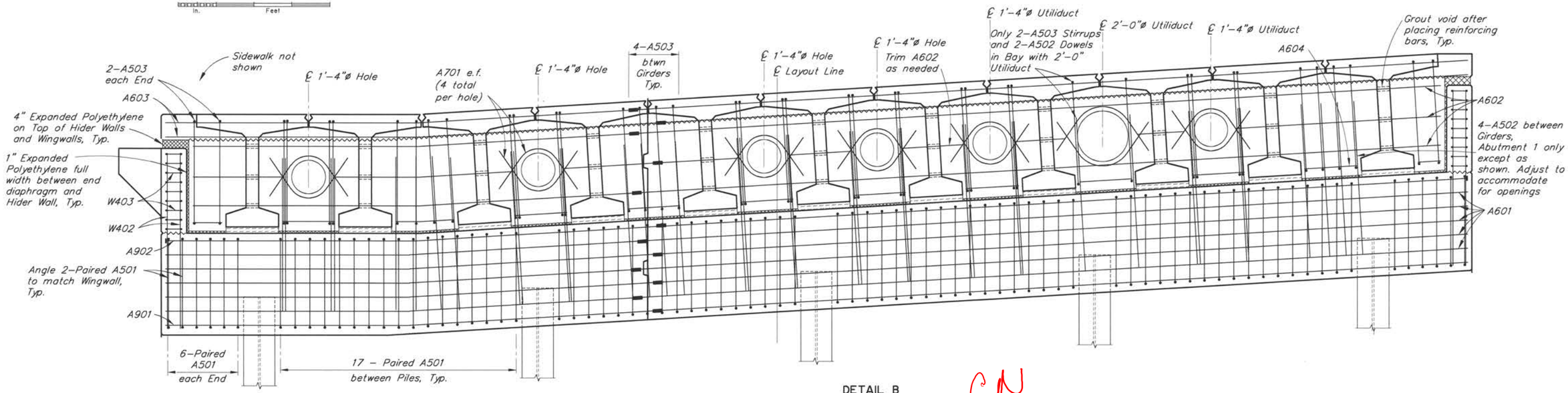

DETAIL B

CN
10/23/2024

DESIGNED BY: Nick Murray	CHECKED: Douglas Gelineau
DRAWN BY: Sam Sallie	CHECKED: Nick Murray
QUANTITIES BY: Nick Murray	CHECKED: Douglas Gelineau

STATE OF ALASKA
DEPARTMENT OF TRANSPORTATION AND PUBLIC FACILITIES
BRIDGE SECTION
3132 Channel Drive
Juneau, Alaska 99801
907-465-2975

STATE OF ALASKA 49TH Nicholas W. Murray 08-04-2021 No. CE 107613 REGISTERED PROFESSIONAL ENGINEER

HERRING COVE BRIDGE
SOUTH TONGASS HIGHWAY
ABUTMENT 1 DETAILS

BRIDGE NO. 253
DWG. NO. 9

R:\cad\253\253-1 Sidewalks-ABUT 1DET Wed, Aug/04/21 11:01am

STATE	PROJECT DESIGNATION	YEAR	SHEET NO.	TOTAL SHEETS
ALASKA	SFHWY00072/0902043	2021	N10	N26

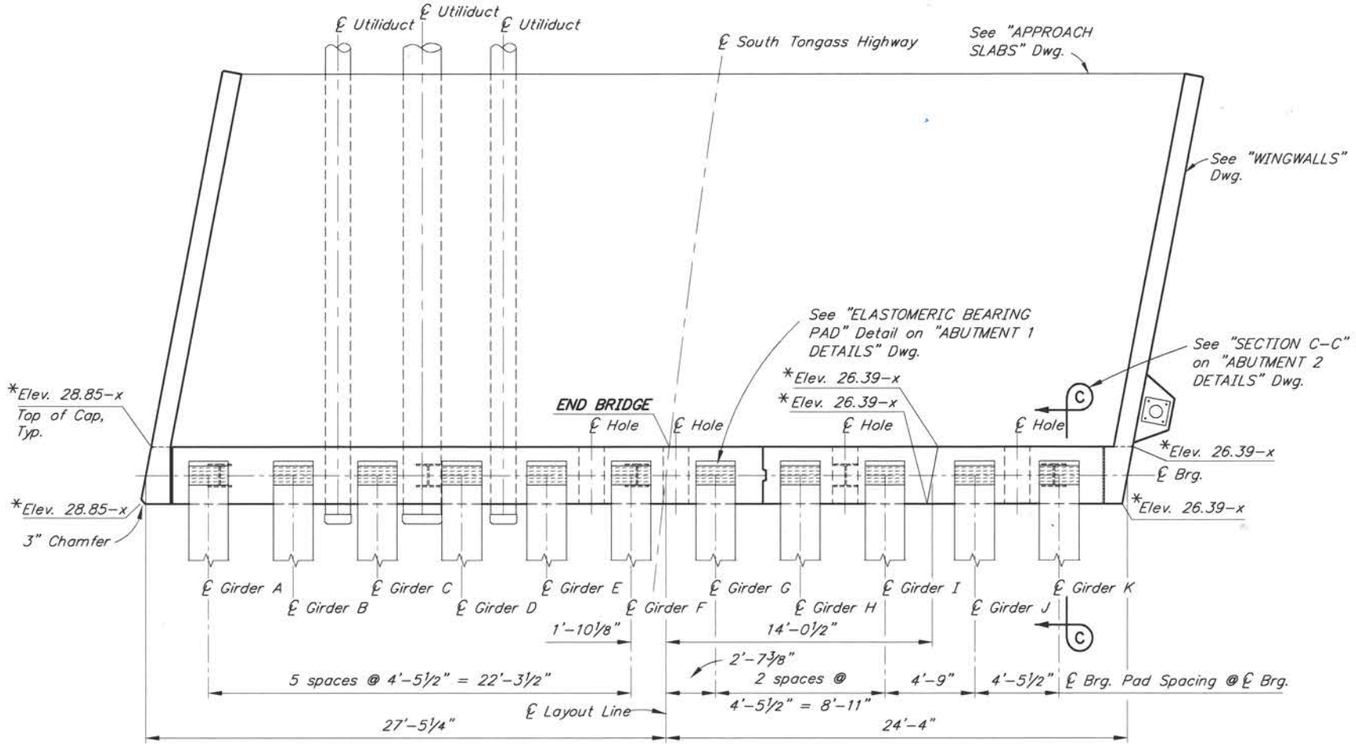

PLAN

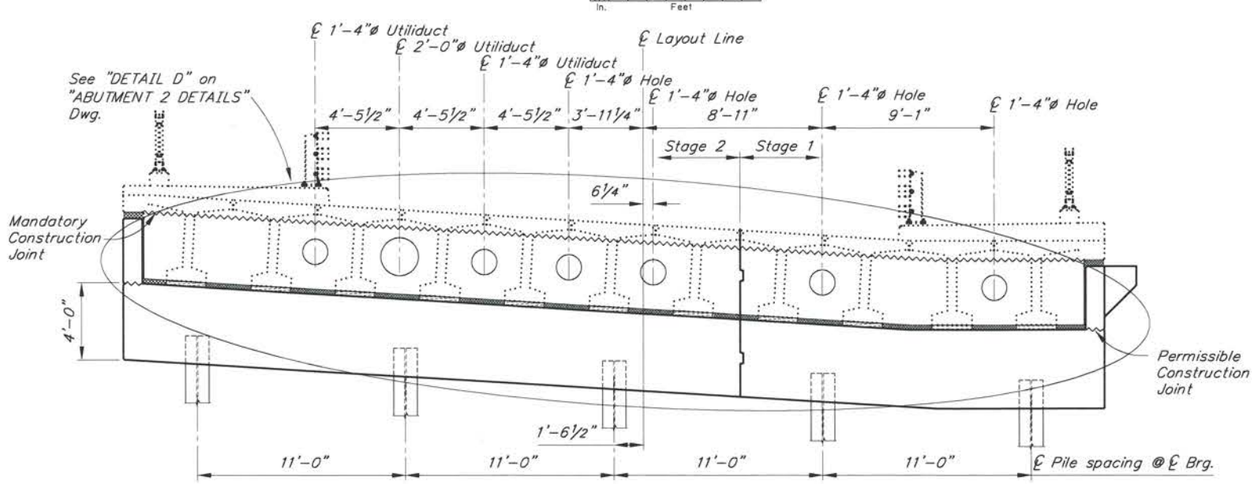

ELEVATION

REINFORCING STEEL - ABUTMENT 2

MARK	NOTE	SIZE	NO.	LENGTH	TYPE	BENDING DIAGRAM
A501		5	160	12'–3"	STIRRUP	
A503	E	5	42	14'–1" min.	STIRRUP	
A601	C,M,S	6	10	51'–6"	---	
A602	C,E,M,S	6	7	48'–9"	---	
A603	C,E,M,S	6	5	51'–6"	---	
A604	E	6	10	2'–0"	---	
A701	E	7	24	4'–9"	BENT	
A702	E	7	4	5'–5"	BENT	
A901	C,M,S	9	5	51'–6"	---	
A902	C,H,M,S	9	5	51'–4"	HEADED	

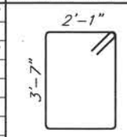

A501

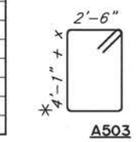

A503

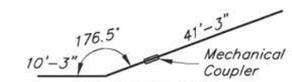

A601, A603, A901

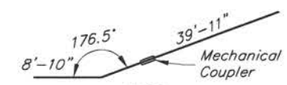

A602

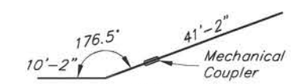

A902

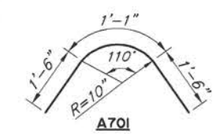

A701

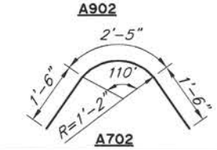

A702

C – Mechanical coupler required. Stagger splices.
E – Epoxy–Coated
H – Headed Reinforcing Steel
M – Match cross slope

NOTE:

* x Represents the amount of girder top flange thickening at the ends of the girder in feet.

CN
10/23/2024

DESIGNED BY: Nick Murray	CHECKED: Douglas Gelineau		
DRAWN BY: Sam Sollie	CHECKED: Nick Murray		
QUANTITIES BY: Nick Murray	CHECKED: Douglas Gelineau		

STATE OF ALASKA
DEPARTMENT OF TRANSPORTATION AND PUBLIC FACILITIES
BRIDGE SECTION
3132 Channel Drive
Juneau, Alaska 99801
907–465–2975

STATE OF ALASKA 49TH
Nicholas W. Murray
08-04-2021
No. CE 107613
REGISTERED PROFESSIONAL ENGINEER

HERRING COVE BRIDGE

SOUTH TONGASS HIGHWAY

ABUTMENT 2

BRIDGE NO. 253
DWG. NO. 10

R:\cad\253\253-1 Sidewalks-ABUT 2 Wed, Aug/04/21 11:01am

STATE	PROJECT DESIGNATION	YEAR	SHEET NO.	TOTAL SHEETS
ALASKA	SFHWY00072/0902043	2021	N11	N26

Const. joint changed as shown with red lines

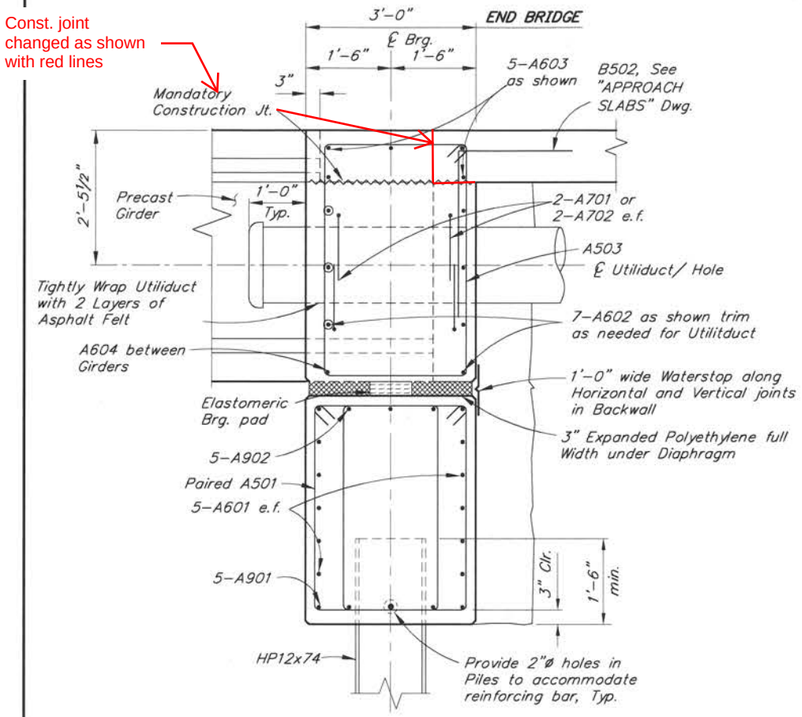

SECTION C-C

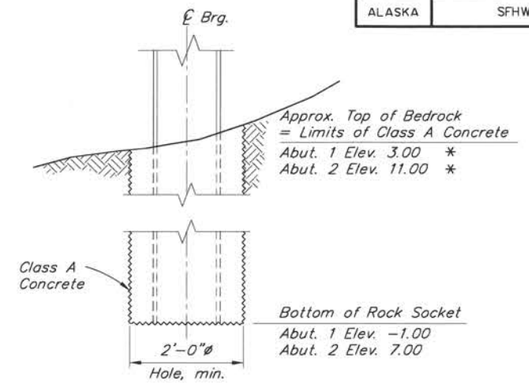

ROCK SOCKET DETAIL

Omitted where conduits will be installed permanently. Conduits are tightly wrapped with 2 layers of asphalt felt and cast in with the diaphragm pour.

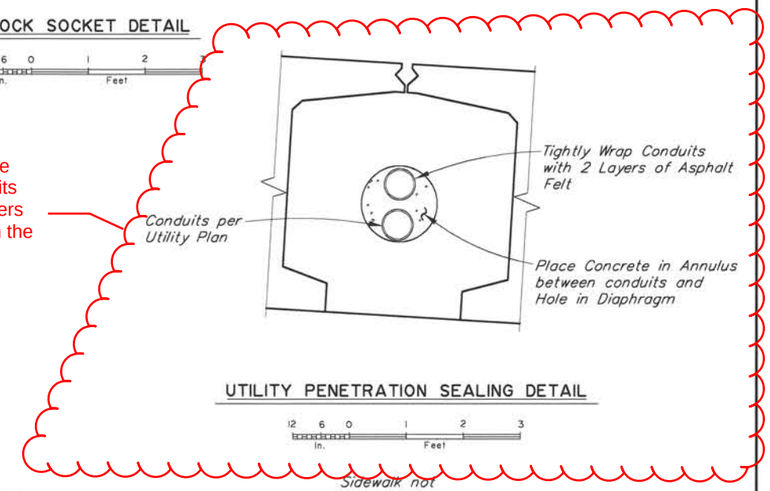

UTILITY PENETRATION SEALING DETAIL

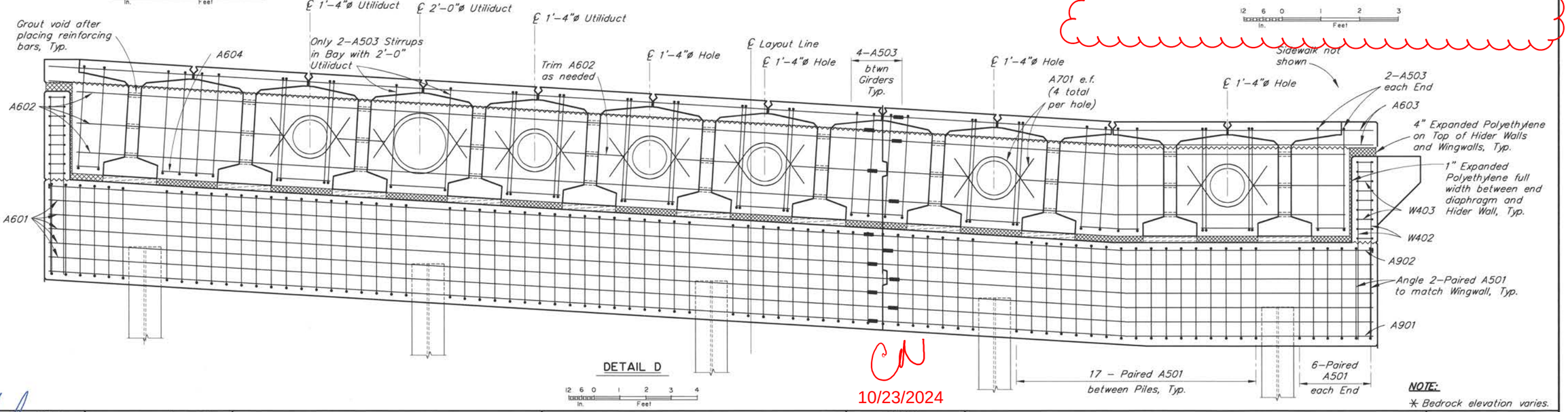

DETAIL D

CN
10/23/2024

NOTE:
* Bedrock elevation varies.

DESIGNED BY: Nick Murray	CHECKED: Douglas Gelineau	
DRAWN BY: Sam Sollie	CHECKED: Nick Murray	
QUANTITIES BY: Nick Murray	CHECKED: Douglas Gelineau	

STATE OF ALASKA
DEPARTMENT OF TRANSPORTATION AND PUBLIC FACILITIES
BRIDGE SECTION
3132 Channel Drive
Juneau, Alaska 99801
907-465-2975

STATE OF ALASKA 49TH Nicholas W Murray 08-04-2021 No. CE 107613 REGISTERED PROFESSIONAL ENGINEER

HERRING COVE BRIDGE
SOUTH TONGASS HIGHWAY
ABUTMENT 2 DETAILS

BRIDGE NO. 253
DWG. NO. 11

R:\cad\253\253-1 Sidewalks-ABUT 2 DET Wed, Aug/04/21 11:01am

STATE	PROJECT DESIGNATION	YEAR	SHEET NO.	TOTAL SHEETS
ALASKA	SFHWY00072/0902043	2021	N12	N26

REINFORCING STEEL - ONE ABUTMENT

MARK	NOTE	SIZE	NO.	LENGTH	TYPE	BENDING DIAGRAM
W401		4	84	VARIES	---	
W402		4	6	7'-0"	---	
W403		4	18	8'-0"	STIRRUP	
W501		5	16	VARIES	---	
W901		9	4	22'-10"	BENT	
W902		9	16	VARIES	---	
W903		9	4	VARIES	BENT	

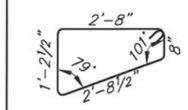

W403

22'-6" min.
22'-8" max.

W903

6'-2" Min.
22'-8" Max.

W501, W902

W901

2'-7" Min.
7'-0" Max.

W401

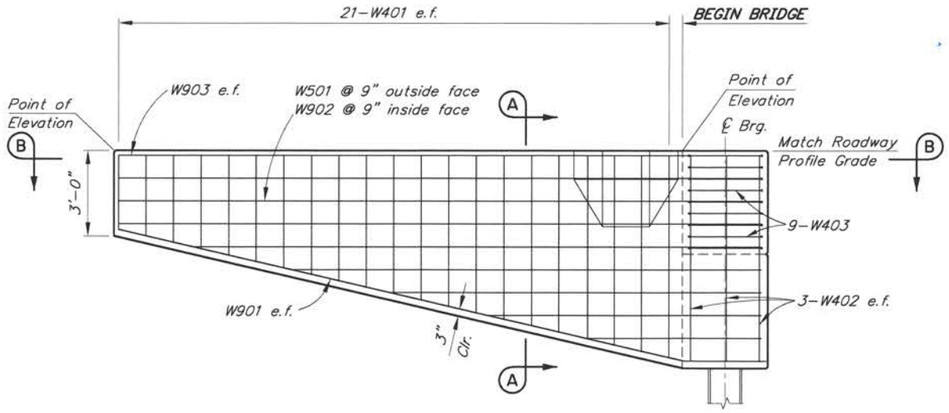

ELEVATION

12 0 1 2 3 4
In. Feet

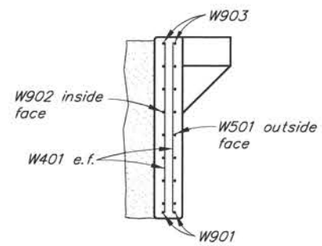

SECTION A-A

12 0 1 2 3 4
In. Feet

TOP OF WINGWALL ELEVATION TABLE (FT)				
LOCATION	A UPSTREAM	B UPSTREAM	C DOWNSTREAM	D DOWNSTREAM
ABUTMENT 1	31.31	31.48	28.94	29.06
ABUTMENT 2	32.13	32.11	29.83	29.71

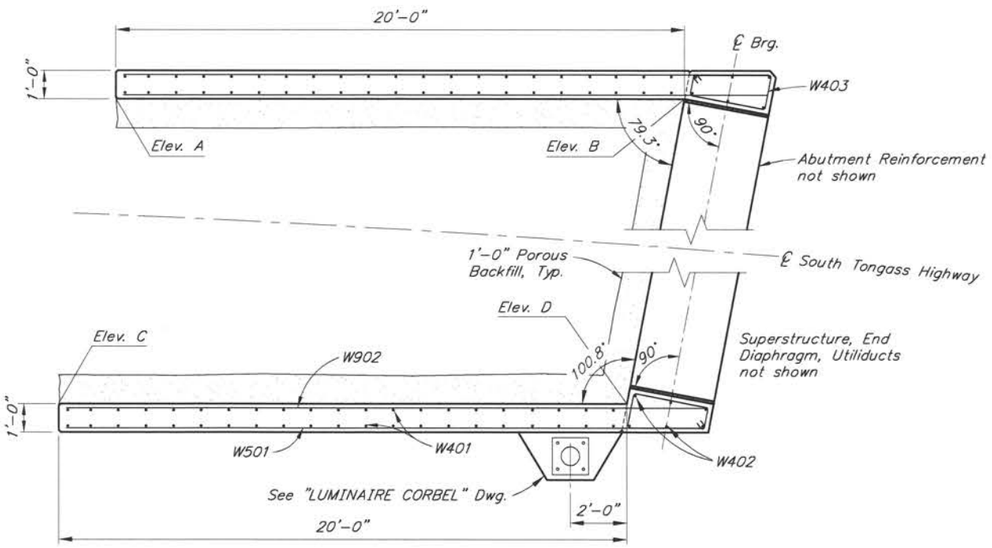

SECTION B-B

(Abut. 1 shown, Abut. 2 similar)

12 0 1 2 3 4
In. Feet

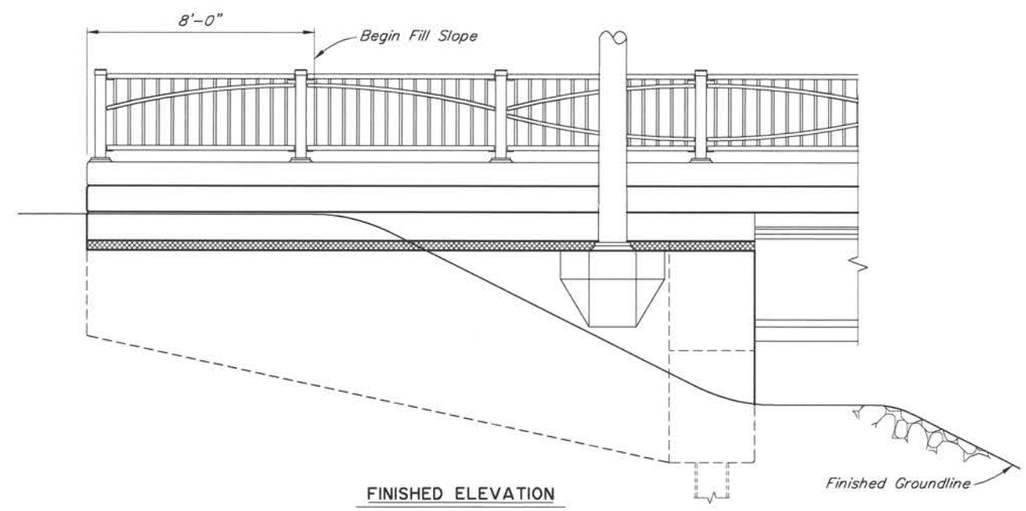

FINISHED ELEVATION

12 0 1 2 3 4
In. Feet

CN
10/23/2024

DESIGNED BY: Nick Murray	CHECKED: Douglas Gelineau	
DRAWN BY: Sam Sollie	CHECKED: Nick Murray	
QUANTITIES BY: Nick Murray	CHECKED: Douglas Gelineau	

STATE OF ALASKA
DEPARTMENT OF TRANSPORTATION AND PUBLIC FACILITIES
BRIDGE SECTION
3132 Channel Drive
Juneau, Alaska 99801
907-465-2975

STATE OF ALASKA 49TH
Nicholas W. Murray
08-04-2021
No. CE 107613
REGISTERED PROFESSIONAL ENGINEER

HERRING COVE BRIDGE

SOUTH TONGASS HIGHWAY

WINGWALLS

BRIDGE NO. 253
DWG. NO. 12

R:\cad\253\253-1 Sidewalks-WINGWALLS Wed, Aug/04/21 11:01am

STATE	PROJECT DESIGNATION	YEAR	SHEET NO.	TOTAL SHEETS
ALASKA	SFHWY00072/0902043	2021	N13	N26

REINFORCING STEEL - ONE CORBEL

MARK	NOTE	SIZE	NO.	LENGTH	TYPE	BENDING DIAGRAM
L501		5	3	8'-4"	BENT	
L502		5	3	7'-3"	BENT	
L503		5	6	VARIES	---	

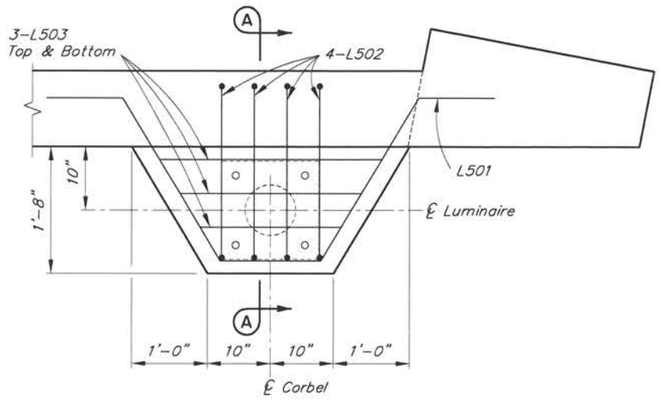

CORBEL PLAN

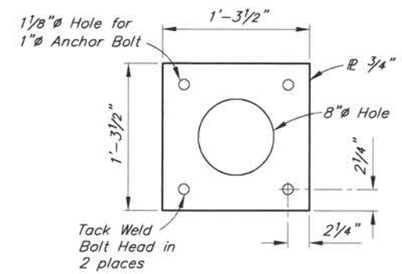

ANCHOR PLATE DETAIL

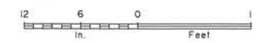

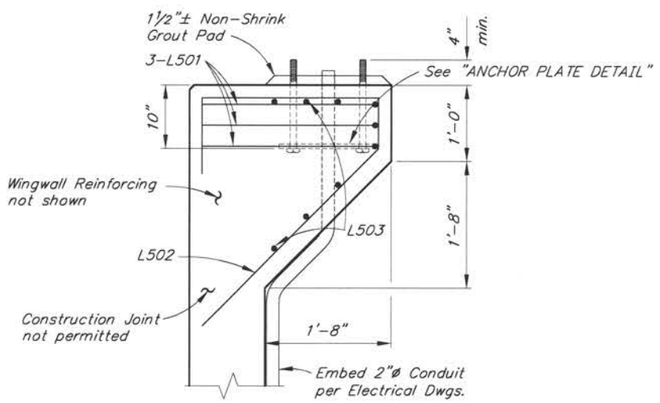

SECTION A-A

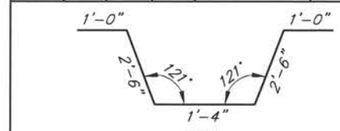

L501

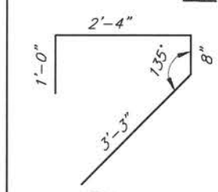

L502

1'-6" min.
3'-1" max.

L503

NOTES:

1. Verify anchor bolt layout compatibility with luminaire prior to placing corbel.

CN
10/23/2024

DESIGNED BY: Nick Murray	CHECKED: Douglas Gelineau	
DRAWN BY: Sam Sollie	CHECKED: Nick Murray	
QUANTITIES BY: Nick Murray	CHECKED: Douglas Gelineau	

STATE OF ALASKA
DEPARTMENT OF TRANSPORTATION AND PUBLIC FACILITIES
BRIDGE SECTION
3132 Channel Drive
Juneau, Alaska 99801
907-465-2975

STATE OF ALASKA 49TH
Nicholas W. Murray
08-04-2021
No. CE 107613
REGISTERED PROFESSIONAL ENGINEER

HERRING COVE BRIDGE

SOUTH TONGASS HIGHWAY

LUMINAIRE CORBEL

BRIDGE NO. 253
DWG. NO. 13

R:\cad\253\253-1 Sidewalks-CORBEL Wed, Aug/04/21 11:01am

STATE	PROJECT DESIGNATION	YEAR	SHEET NO.	TOTAL SHEETS
ALASKA	SFHWY00072/0902043	2021	N14	N26

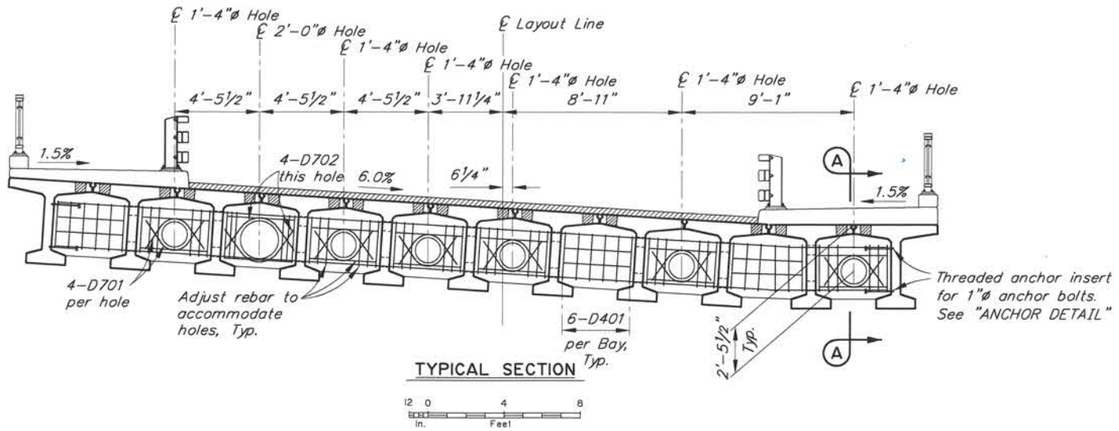

TYPICAL SECTION

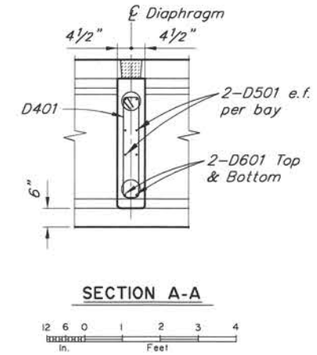

SECTION A-A

REINFORCING STEEL - ONE DIAPHRAGM

MARK	NOTE	SIZE	NO.	LENGTH	TYPE	BENDING DIAGRAM
D401	E	4	60	6'-9"	STIRRUP	
D501	E	5	40	3'-6"	---	
D601	C,E,S	6	4	44'-7"	---	
D701	E	7	24	4'-9"	BENT	
D702	E	7	4	5'-5"	BENT	

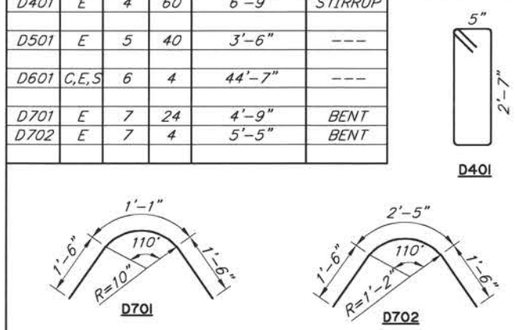

C – Mechanical couplers required. Stagger splices.
E – Epoxy-Coated
S – Splice permitted. Length does not include splices

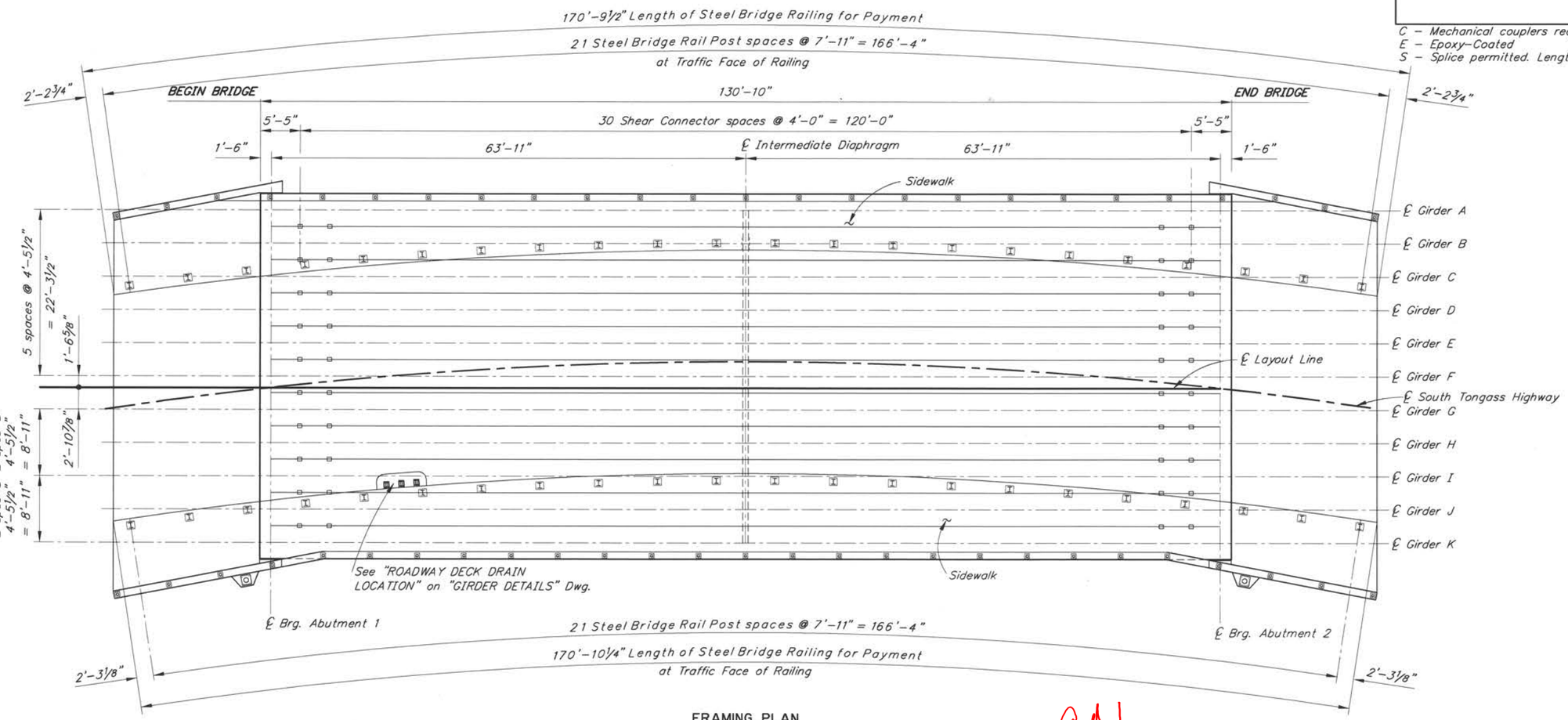

FRAMING PLAN

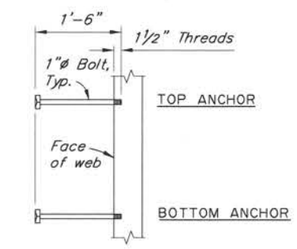

ASTM A307 GALVANIZED

ANCHOR DETAIL

No Scale

CN
10/23/2024

DESIGNED BY: Nick Murray	CHECKED: Douglas Gelineau	
DRAWN BY: Sam Sollie	CHECKED: Nick Murray	
QUANTITIES BY: Nick Murray	CHECKED: Douglas Gelineau	

STATE OF ALASKA
DEPARTMENT OF TRANSPORTATION AND PUBLIC FACILITIES
BRIDGE SECTION
3132 Channel Drive
Juneau, Alaska 99801
907-465-2975

STATE OF ALASKA 49TH Nicholas W. Murray 08-04-2021 No. CE 107613 REGISTERED PROFESSIONAL ENGINEER

HERRING COVE BRIDGE

SOUTH TONGASS HIGHWAY

FRAMING PLAN AND TYPICAL SECTION

BRIDGE NO. 253
DWG. NO. 14

R:\cad\253\253-1 Sidewalks-FRAMING PLAN Wed, Aug/04/21 11:19am

STATE	PROJECT DESIGNATION	YEAR	SHEET NO.	TOTAL SHEETS
ALASKA	SFHWY00072/0902043	2021	N15	N26

REINFORCING STEEL-ONE GIRDER

MARK	NOTE	SIZE	NO.	LENGTH	TYPE
G401	E	4	188	4'-2"	BENT
G401X	E	4	215	4'-2"	BENT
G402	E,S	4	8	125'-2"	---
G402X	E,S	4	8	125'-2"	---
G403	E	4	336	6'-0"	BENT
G404	E	4	60	3'-3"	BENT
G501	E	5	188	4'-1"	---
G501X	E	5	215	4'-9"	BENT
G502	E,S	5	8	130'-6"	BENT
G502X	E,S	5	8	130'-6"	BENT
G601	E	6	16	6'-0"	BENT
S401	E,X	4	85	1'-9"	BENT
S402	E,X	4	85	2'-0"	BENT
S403	C,E,X	4	170	1'-9"	BENT

BENDING DIAGRAM

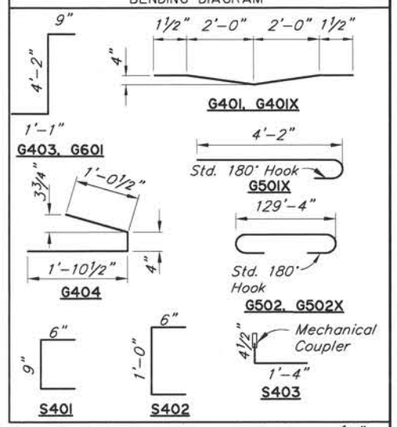

C – Mechanical coupler required. Recess ½" below surface
E – Epoxy-Coated
S – Length does not include splices
X – Exterior Girders only

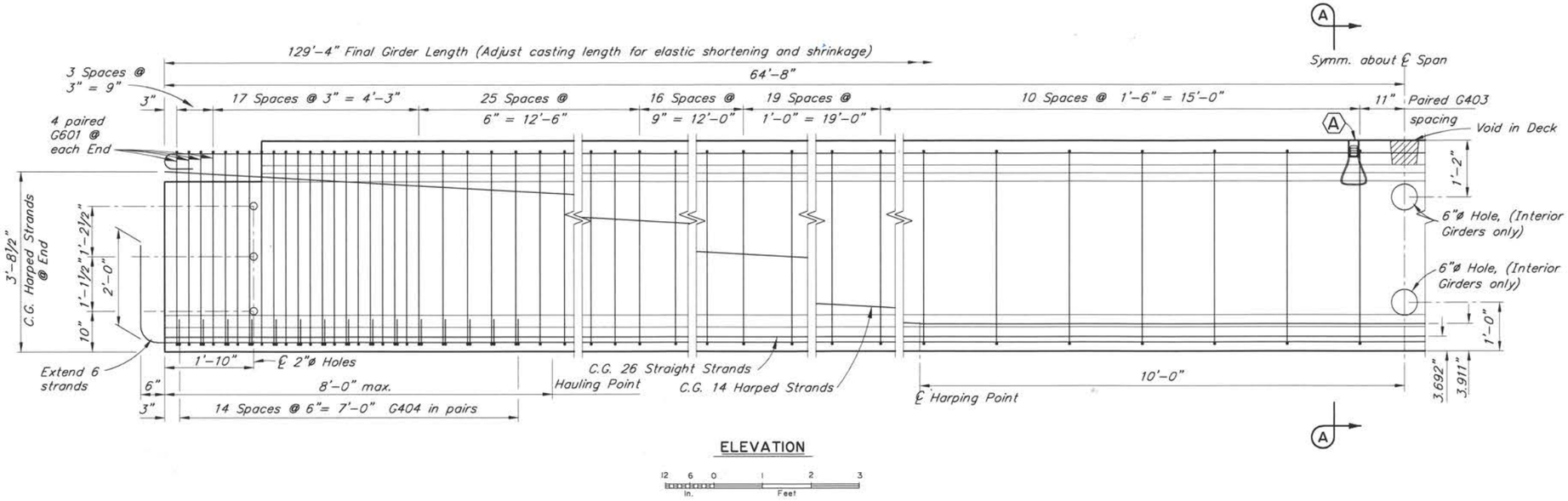

ELEVATION

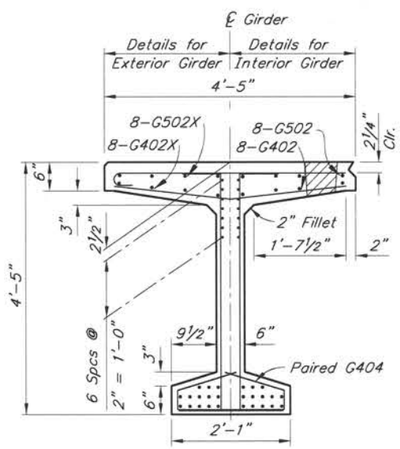

END VIEW

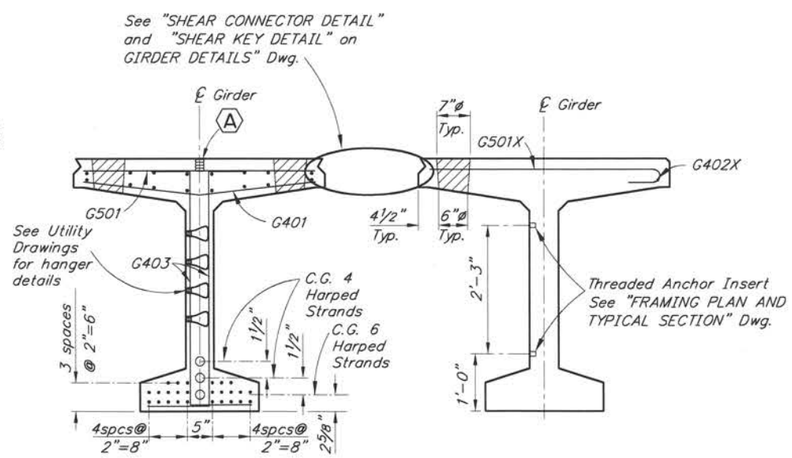

SECTION A-A

EXTERIOR GIRDER NEAR MID SPAN

(Unrelated Reinforcement not shown)

GIRDER NOTES:

Class P Concrete: at Stress Transfer.....f'ci = 6,500 psi
at 28 Days.....f'c = 7,500 psi

0.6"ø low-relaxation prestressing strands with an ultimate strength of 270 ksi and a cross sectional area of 0.217 in².

Steel stresses: Pretensioning – Jacking Stress 189 ksi
After initial losses 169 ksi
After all losses 139 ksi

One inch clear cover on reinforcing steel unless otherwise noted.

See "FRAMING PLAN AND TYPICAL SECTION" Dwg. for Shear Connector spacing.

Thicken deck to compensate for camber. Calculate camber based on uniform weight of 900 lb/ft and applied uniform load of 225 lb/ft.

Galvanize structural steel embedded in girders except for shear connectors.

(A) 1"X1'-0" Coil Anchor Insert for vertical adjustment of girders. Recess 2". Prevent concrete from filling hole.

Omit Shear Key, Shear Key Connector and Deck Void in exterior face of exterior girders.

Cast ends of girders plumb with respect to roadway grade. Install web holes and web anchor inserts parallel to ℄ bearing.

Finish top flange with rough broom finish. Roughen the surface under the left sidewalk.

CN
10/23/2024

DESIGNED BY: Nick Murray	CHECKED: Douglas Gelineau	STATE OF ALASKA DEPARTMENT OF TRANSPORTATION AND PUBLIC FACILITIES BRIDGE SECTION 3132 Channel Drive Juneau, Alaska 99801 907-465-2975	STATE OF ALASKA 49TH Nicholas W. Murray 08-04-2021 No. CE 107613 REGISTERED PROFESSIONAL ENGINEER
DRAWN BY: Sam Sollie	CHECKED: Nick Murray		
QUANTITIES BY: Nick Murray	CHECKED: Douglas Gelineau		

HERRING COVE BRIDGE

SOUTH TONGASS HIGHWAY

GIRDERS

BRIDGE NO. 253
DWG. NO. 15

R:\cad\253\253-1 Sidewalks-GIRDERS Wed, Aug/04/21 11:19am

STATE	PROJECT DESIGNATION	YEAR	SHEET NO.	TOTAL SHEETS
ALASKA	SFHWY00072/0902043	2021	N16	N26

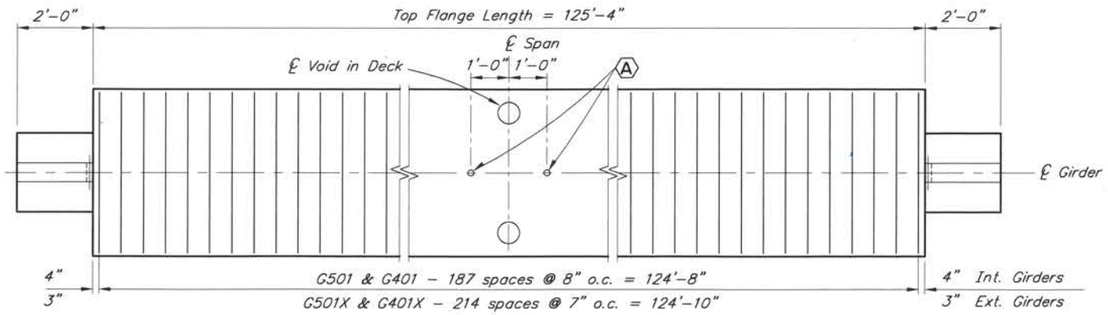

DECK PLAN

No Scale

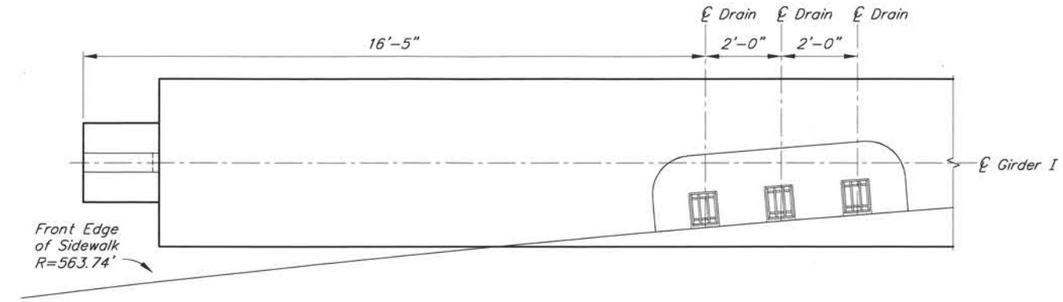

DECK DRAIN LOCATIONS

12 6 0 1 2 3 4
In. Feet

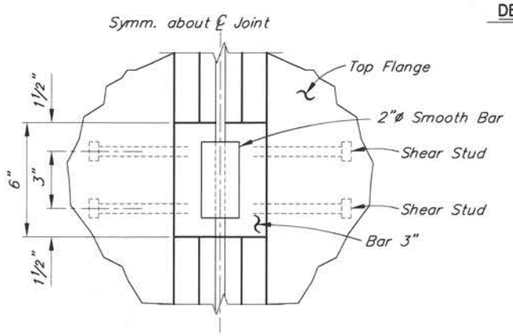

SHEAR CONNECTOR PLAN VIEW

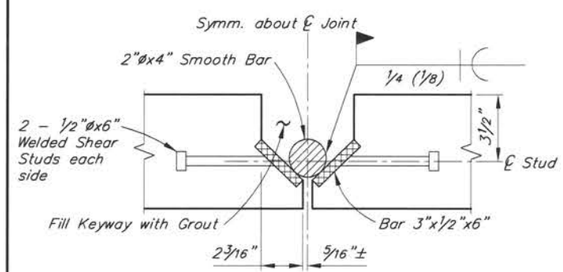

SHEAR CONNECTOR DETAIL

6 3 0 1
In. Feet

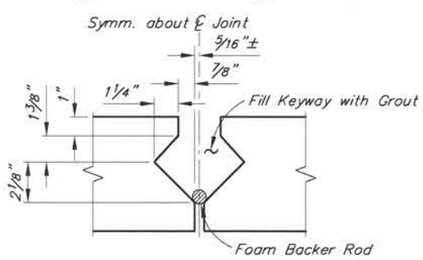

SHEAR KEY DETAIL

6 3 0 1
In. Feet

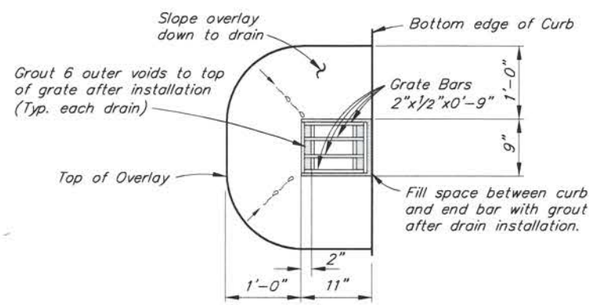

PLAN

12 6 0 1 2
In. Feet

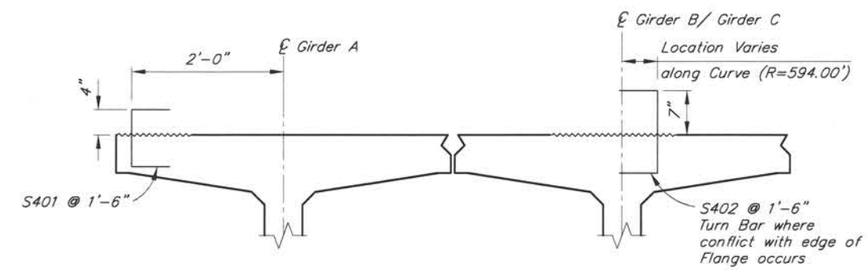

LEFT SIDEWALK REINFORCING

12 6 0 1 2
In. Feet

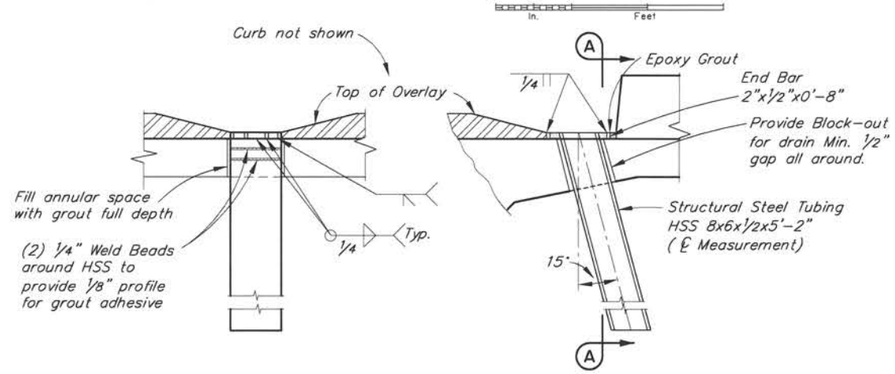

SECTION A-A

12 6 0 1 2
In. Feet

DRAIN ELEVATION

12 6 0 1 2
In. Feet

DECK DRAINS

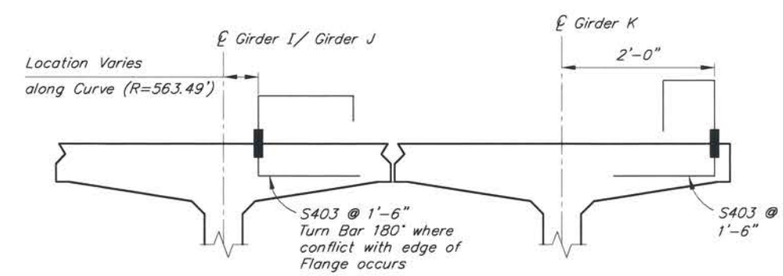

RIGHT SIDEWALK REINFORCING

12 6 0 1 2
In. Feet

CN
10/23/2024

DESIGNED BY: Nick Murray	CHECKED: Douglas Gelineau		
DRAWN BY: Sam Sollie	CHECKED: Nick Murray		
QUANTITIES BY: Nick Murray	CHECKED: Douglas Gelineau		

STATE OF ALASKA
DEPARTMENT OF TRANSPORTATION
AND PUBLIC FACILITIES
BRIDGE SECTION
3132 Channel Drive
Juneau, Alaska 99801
907-465-2975

STATE OF ALASKA 49TH
Nicholas W. Murray
08-04-2021
No. CE 107613
REGISTERED PROFESSIONAL ENGINEER

HERRING COVE BRIDGE

SOUTH TONGASS HIGHWAY

GIRDER DETAILS

BRIDGE NO. 253
DWG. NO. 16

R:\cad\253\253-1 Sidewalks-GIRDER DETAILS Wed, Aug/04/21 11:19am

STATE	PROJECT DESIGNATION	YEAR	SHEET NO.	TOTAL SHEETS
ALASKA	SFHWY00072/0902043	2021	N17	N26

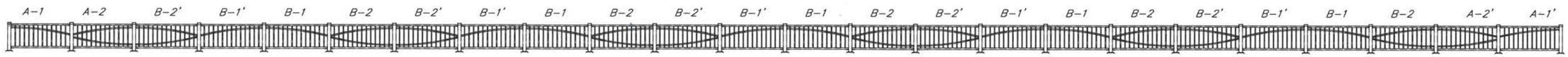

PROJECTED PEDESTRIAN RAILING - LEFT SIDE

No Scale

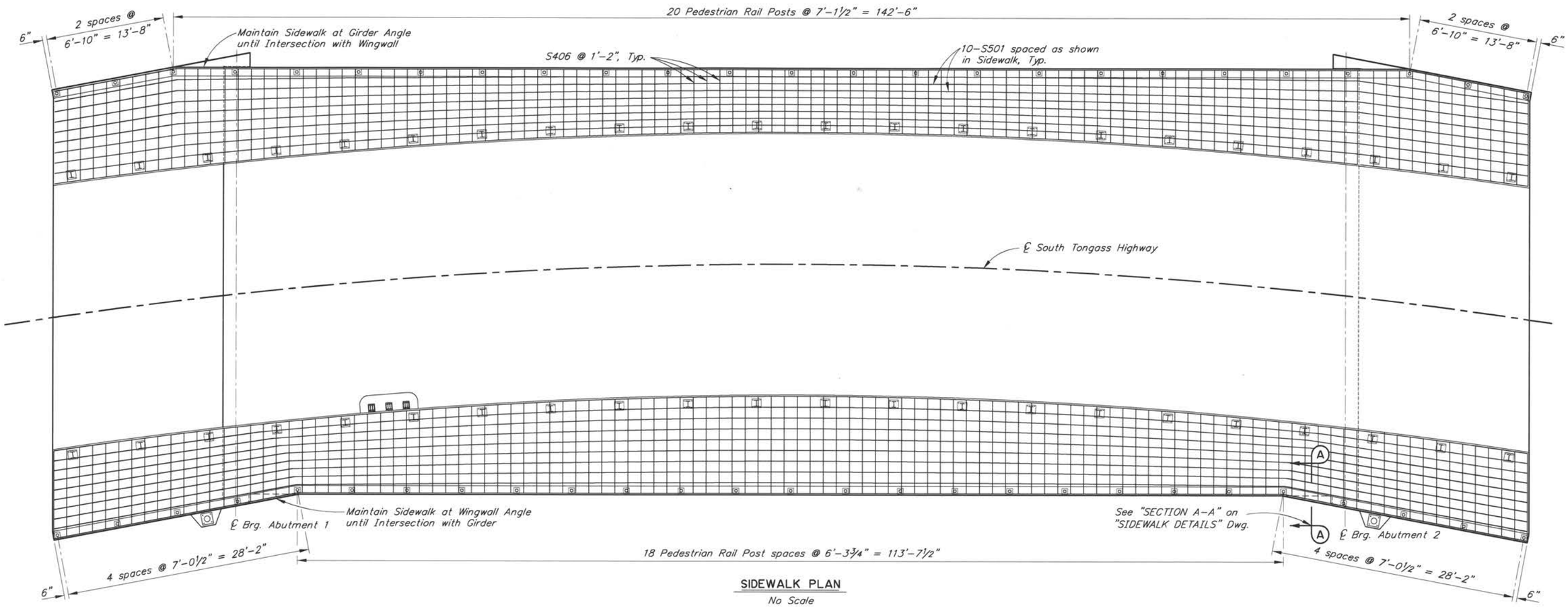

SIDEWALK PLAN

No Scale

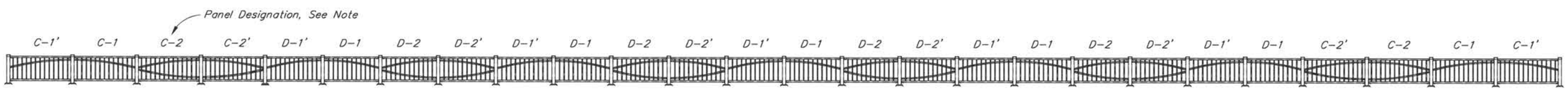

PROJECTED PEDESTRIAN RAILING - RIGHT SIDE

No Scale

CN 10/23/2024

NOTE:

Letter indicates panel length.
Number indicates horizontal tube type.
Apostrophe indicates tube curve direction.

DESIGNED BY: Nick Murray	CHECKED: Douglas Gelineau	
DRAWN BY: Sam Sollie	CHECKED: Nick Murray	
QUANTITIES BY: Nick Murray	CHECKED: Douglas Gelineau	

STATE OF ALASKA
DEPARTMENT OF TRANSPORTATION AND PUBLIC FACILITIES
BRIDGE SECTION
3132 Channel Drive
Juneau, Alaska 99801
907-465-2975

STATE OF ALASKA 49TH Nicholas W. Murray 08-04-2021 No. CE 107613 REGISTERED PROFESSIONAL ENGINEER

HERRING COVE BRIDGE

SOUTH TONGRASS HIGHWAY

SIDEWALK PLAN AND PEDESTRIAN RAIL PLAN

BRIDGE NO. 253
DWG. NO. 17

R:\cad\253\253-1 Sidewalks-SIDEWALK Wed, Aug/04/21 11:19am

STATE	PROJECT DESIGNATION	YEAR	SHEET NO.	TOTAL SHEETS
ALASKA	SFHWY00072/0902043	2021	N18	N26

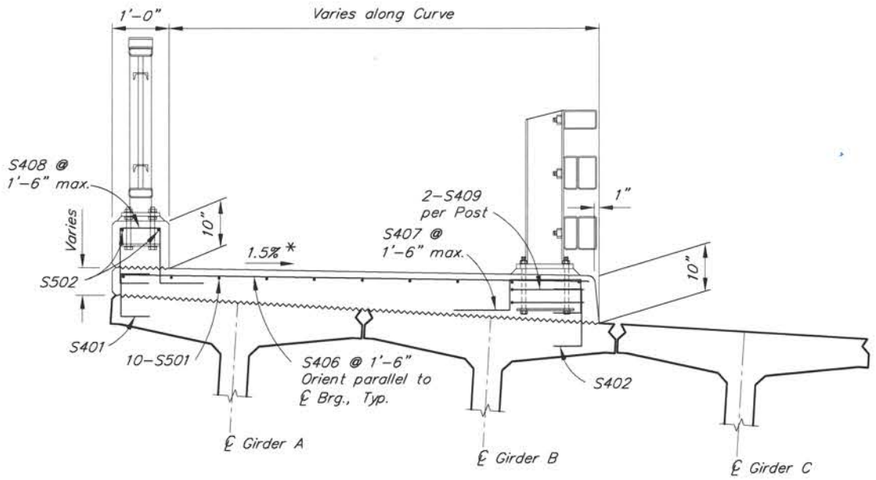

LEFT SIDEWALK SECTION ON BRIDGE

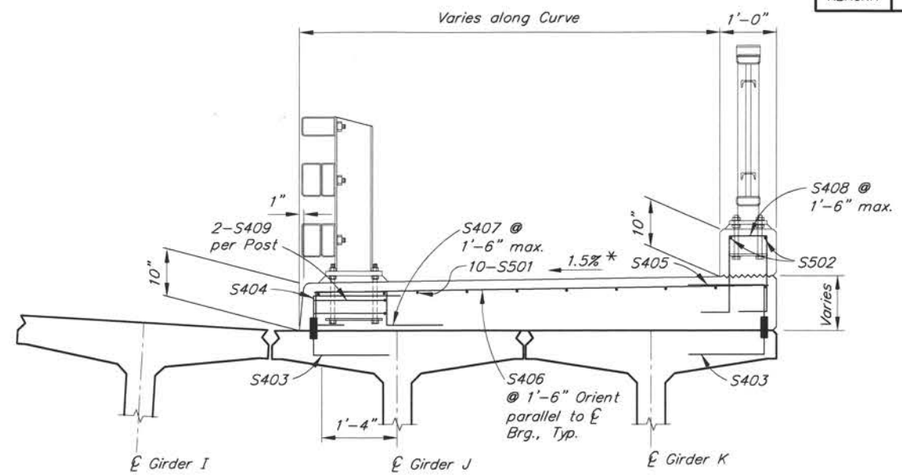

RIGHT SIDEWALK SECTION ON BRIDGE

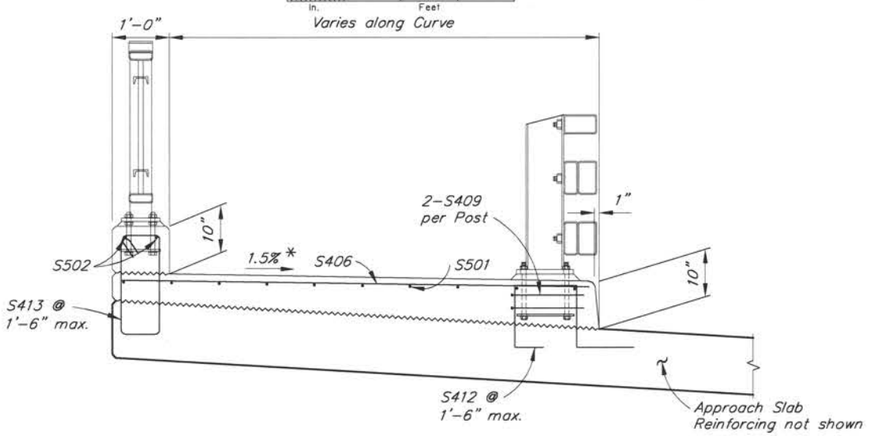

LEFT SIDEWALK SECTION ON APPROACH SLAB

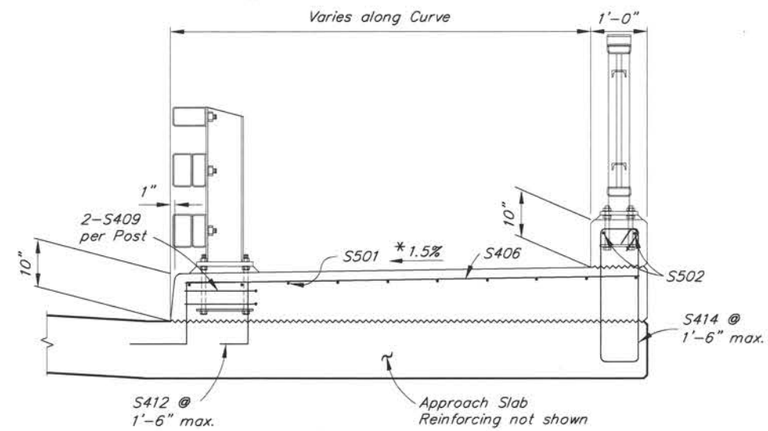

RIGHT SIDEWALK SECTION ON APPROACH SLAB

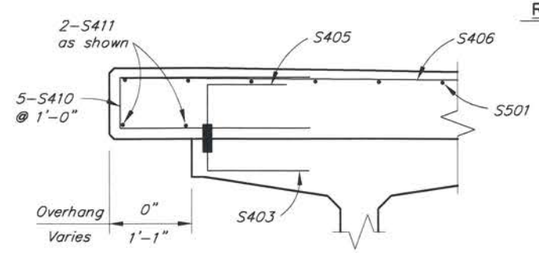

SECTION A-A

REINFORCING STEEL

MARK	NOTE	SIZE	NO.	LENGTH	TYPE
S404	E,T	4	85	1'-10"	BENT
S405	E,T	4	85	2'-1"	BENT
S406	E	4	228	VARIES	BENT
S407	E	4	130	3'-11"	BENT
S408	E	4	130	3'-8"	BENT
S409	E	4	36	3'-10"	---
S410	E,R	4	5	5'-8"	BENT
S411	E,R	4	2	10'-0"	---
S412	E	4	56	4'-9"	BENT
S413	E	4	28	5'-3"	STIRRUP
S414	E	4	28	6'-5"	STIRRUP
S501	E,T	5	20	170'-9"	---
S502	E,T	5	4	170'-9"	---

BENDING DIAGRAM

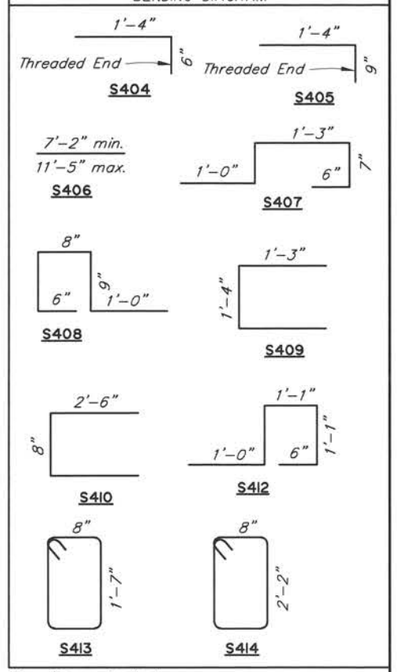

E – Epoxy-Coated
R – Right side only
S – Length does not include splices
T – Threaded

CN
10/23/2024

* Cross slope is perpendicular to ℄ South Tongass Highway

DESIGNED BY: Nick Murray	CHECKED: Douglas Gelineau		
DRAWN BY: Sam Sallie	CHECKED: Nick Murray		
QUANTITIES BY: Nick Murray	CHECKED: Douglas Gelineau		

STATE OF ALASKA
DEPARTMENT OF TRANSPORTATION AND PUBLIC FACILITIES
BRIDGE SECTION
3132 Channel Drive
Juneau, Alaska 99801
907-465-2975

STATE OF ALASKA 49TH Nicholas W. Murray 08-04-2021 No. CE 107613 REGISTERED PROFESSIONAL ENGINEER

HERRING COVE BRIDGE
SOUTH TONGASS HIGHWAY
SIDEWALK DETAILS

BRIDGE NO. 253
DWG. NO. 18

R:\cad\253\253-1 Sidewalks-SIDEWALK (2) Wed, Aug/04/21 11:20am

STATE	PROJECT DESIGNATION	YEAR	SHEET NO.	TOTAL SHEETS
ALASKA	SFHWY00072/0902043	2021	N19	N26

REINFORCING STEEL - ONE APPROACH SLAB

MARK	NOTE	SIZE	NO.	LENGTH	TYPE	BENDING DIAGRAM
B401	E,F	4	62	51'-6"	---	
B501	E	5	104	20'-5"	---	
B502	E	5	52	5'-0"	BENT	
B801	E	8	104	20'-5"	---	

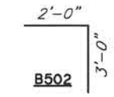

E – Epoxy-Coated
F – Field bend to match cross slope
T – Threaded

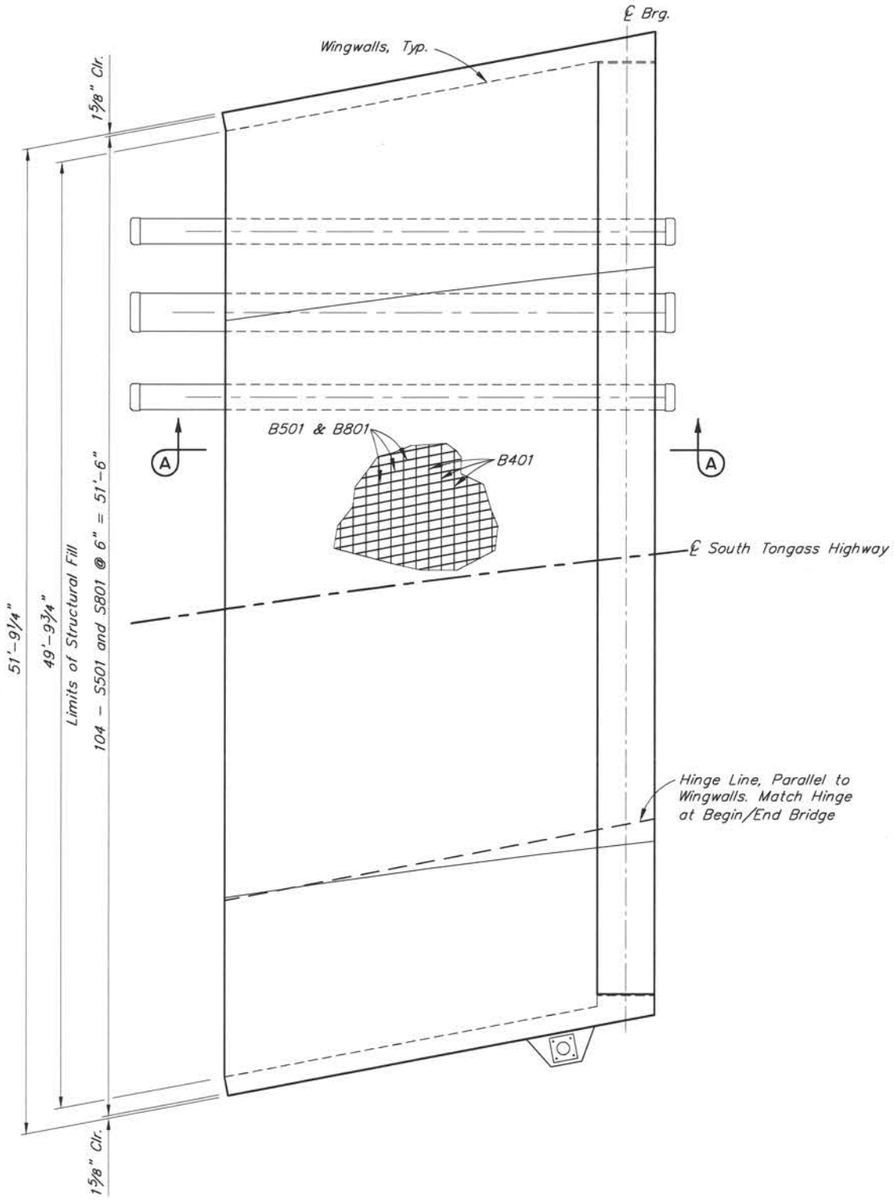

PLAN

(Abutment 1 shown Abutment 2 similar)

12 0 4 8
In. Feet

5" asphalt overlay (2" bottom lift, 3" top lift) Waterproofing Membrane, deleted

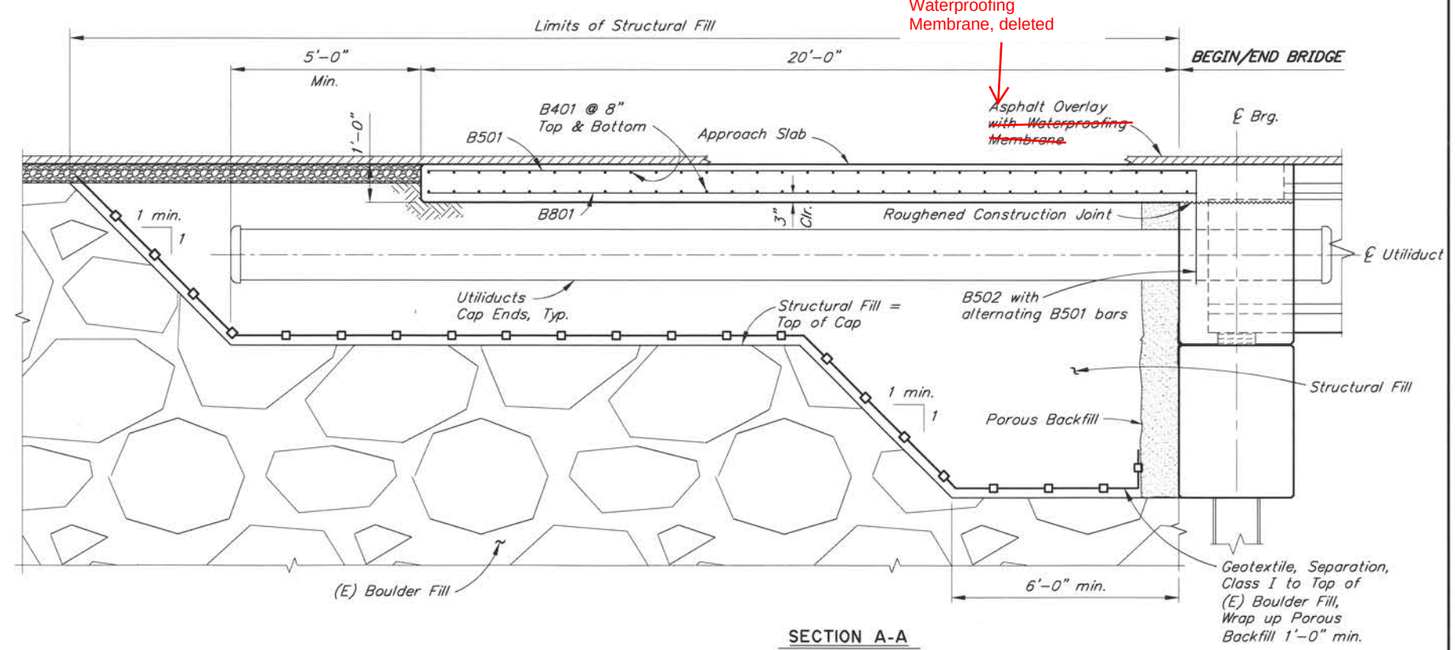

SECTION A-A

12 6 0 1 2 3 4
In. Feet

CN
10/23/2024

DESIGNED BY: Nick Murray	CHECKED: Douglas Gelineau	
DRAWN BY: Sam Sollie	CHECKED: Nick Murray	
QUANTITIES BY: Nick Murray	CHECKED: Douglas Gelineau	

STATE OF ALASKA
DEPARTMENT OF TRANSPORTATION AND PUBLIC FACILITIES
BRIDGE SECTION
3132 Channel Drive
Juneau, Alaska 99801
907-465-2975

STATE OF ALASKA 49TH
Nicholas W. Murray
08-04-2021
No. CE 107613
REGISTERED PROFESSIONAL ENGINEER

HERRING COVE BRIDGE

SOUTH TONGASS HIGHWAY

APPROACH SLABS

BRIDGE NO. 253
DWG. NO. 19

R:\cad\253\253-1 Sidewalks-APPROACH SLABS Wed, Aug/04/21 11:20am

STATE	PROJECT DESIGNATION	YEAR	SHEET NO.	TOTAL SHEETS
ALASKA	SFHWY00072/0902043	2022	N19A	N26

REINFORCING STEEL

MARK	NOTE	SIZE	NO.	LENGTH	TYPE	BENDING DIAGRAM
M501	E	5	223	8'-11"	STIRRUP	
M502	E,S	5	12	110'-3"	---	
C401	E	4	75	5'-1"	BENT	
C402	E,S	4	3	110'-3"	---	
C403	E	4	28	3'-10"	BENT	

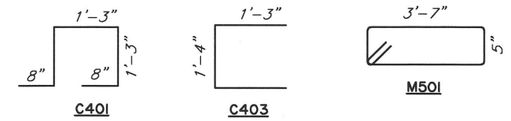

E – Epoxy-Coated
S – Splice permitted. Length does not include splices

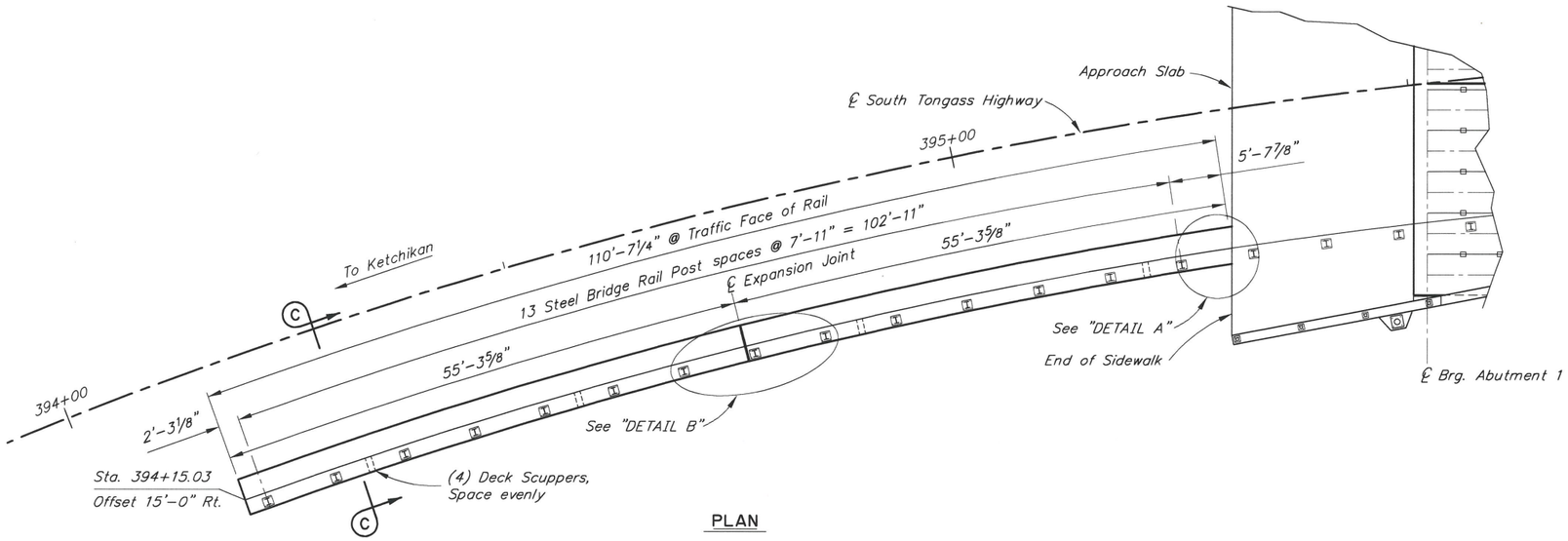

PLAN

12 0 4 8 12
In. Feet

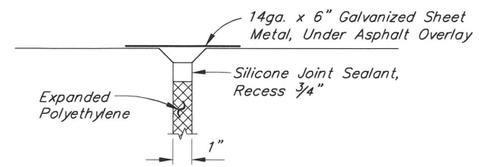

SECTION D-D

6 3 0 1
In. Feet

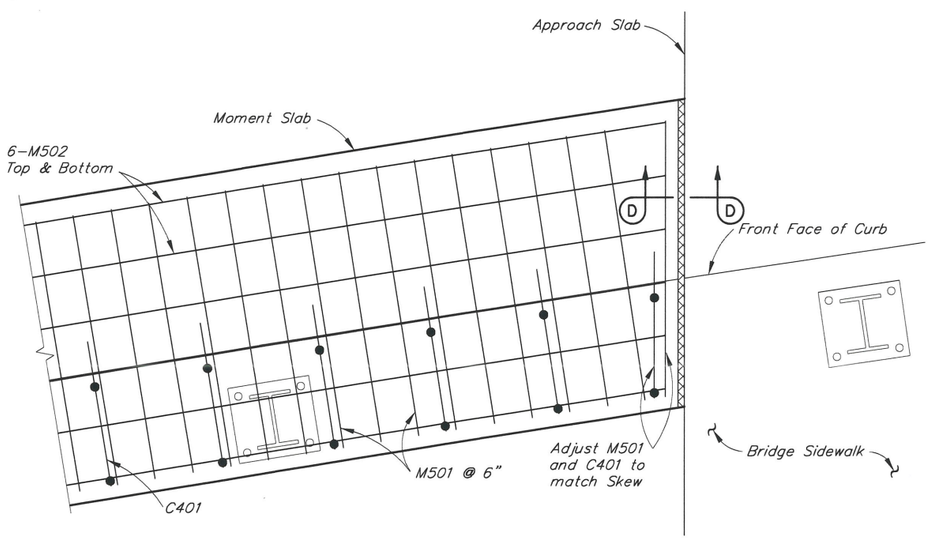

DETAIL A

12 6 0 1 2
In. Feet

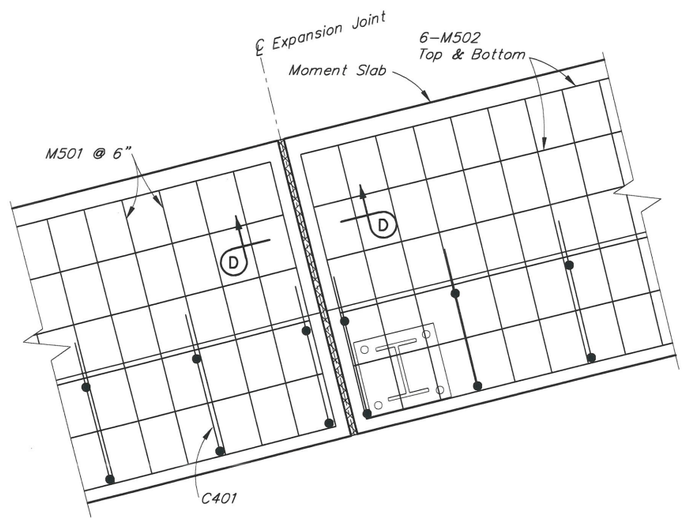

DETAIL B

12 6 0 1 2
In. Feet

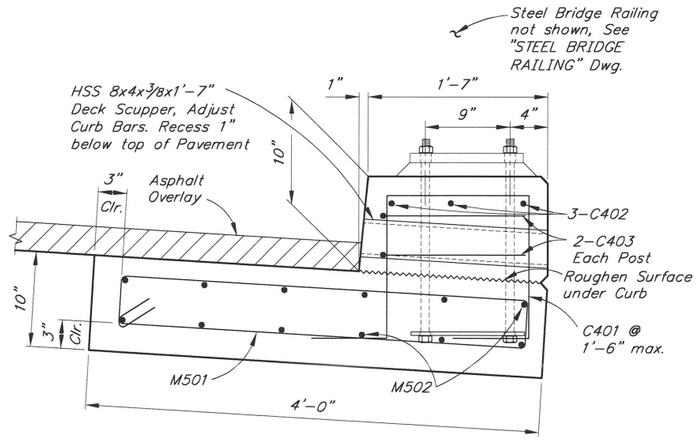

SECTION C-C

12 6 0 1
In. Feet

CN
10/23/2024

DESIGNED BY: Nick Murray	CHECKED: Douglas Gelineau
DRAWN BY: Sam Sollie	CHECKED: Nick Murray
QUANTITIES BY: Nick Murray	CHECKED: Douglas Gelineau

STATE OF ALASKA
DEPARTMENT OF TRANSPORTATION AND PUBLIC FACILITIES
BRIDGE SECTION
3132 Channel Drive
Juneau, Alaska 99801
907-465-2975

STATE OF ALASKA 49TH Nicholas W. Murray 09-16-2022 No. CE 107613 REGISTERED PROFESSIONAL ENGINEER

HERRING COVE BRIDGE
SOUTH TONGASS HIGHWAY
MOMENT SLAB

BRIDGE NO. 253
DWG. NO. 19A

R:\evault\253\cad\253 As-Sent 2021\253-1 MOMENT SLAB-FRAMING PLAN (2) Fri, Sep/16/22 10:53am

STATE	PROJECT DESIGNATION	YEAR	SHEET NO.	TOTAL SHEETS
ALASKA	SFHWY00072/0902043	2021	N20	N26

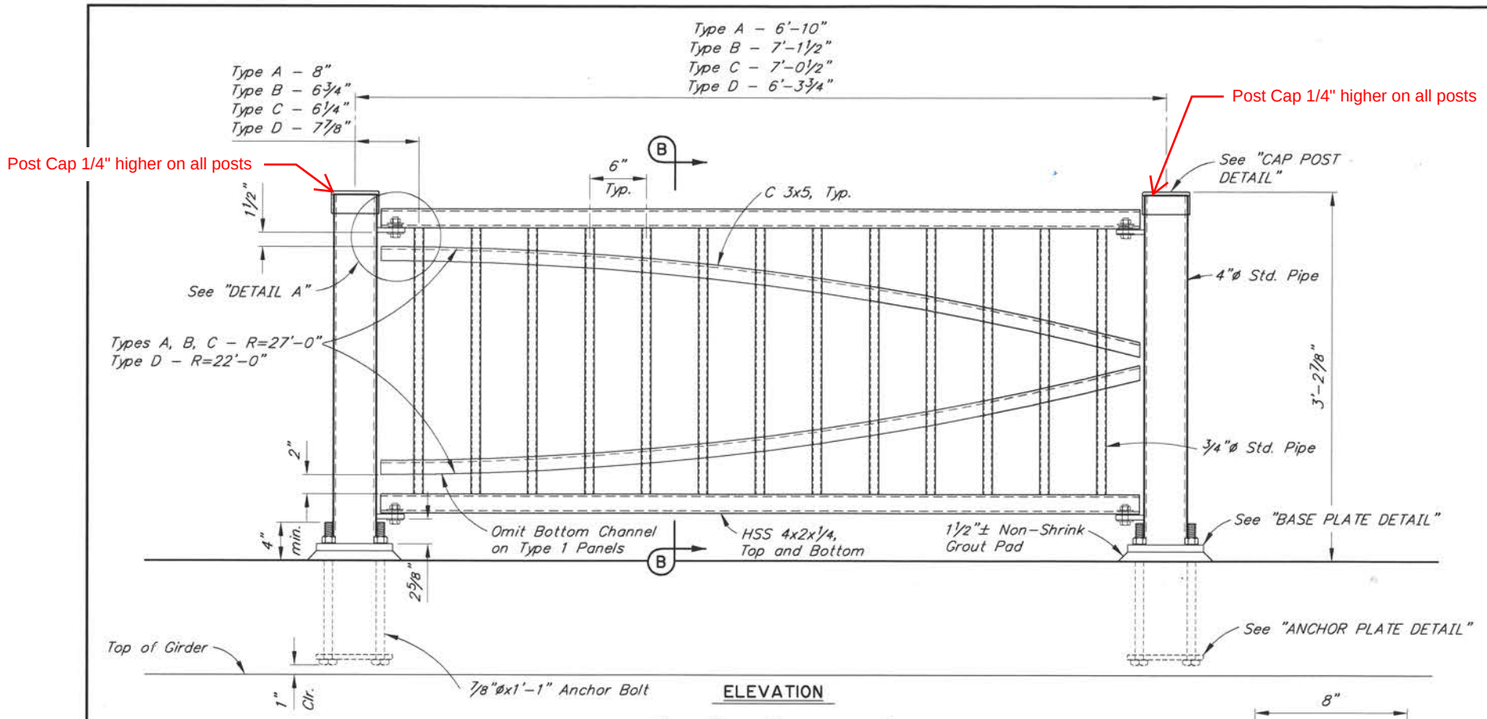

ELEVATION

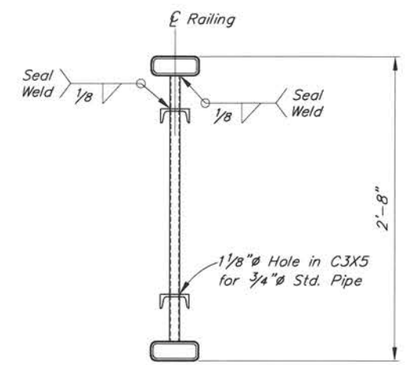

SECTION B-B

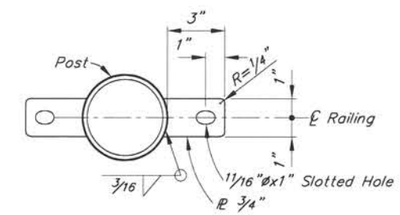

POST ATTACHMENT - FIXED TAB

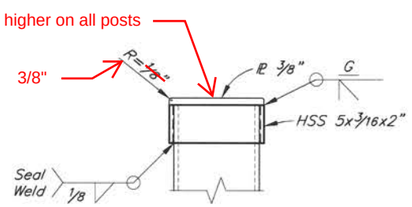

POST CAP DETAIL

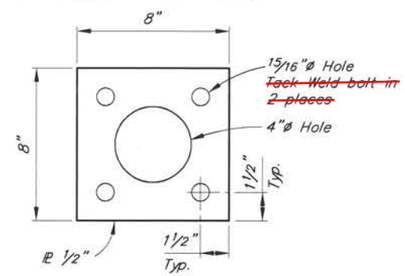

ANCHOR PLATE DETAIL

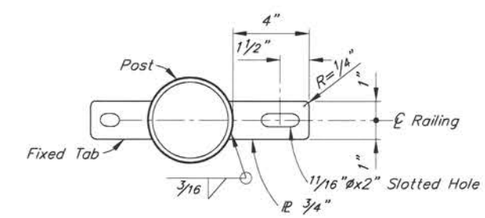

POST ATTACHMENT - EXPANSION TAB

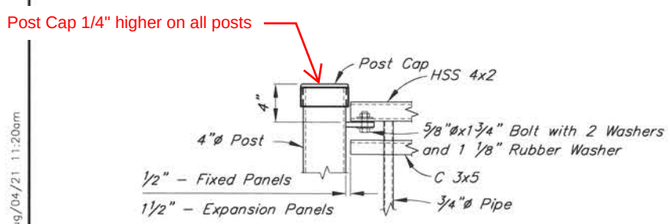

DETAIL A

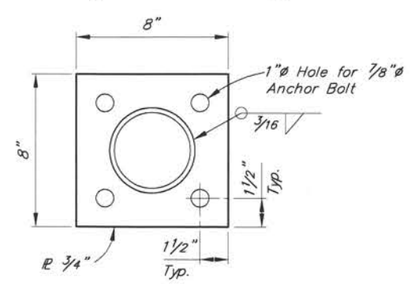

BASE PLATE DETAIL

CN
10/23/2024

NOTE:

1. Provide railing expansion points at 50'-0" maximum intervals and where angle change in railing occurs.
2. See "SIDEWALK PLAN AND PEDESTRIAN RAIL PLAN" for post spacing and panel layout.
3. Use a grout with a minimum 24 hours f'c of 3,000 psi in a single placement.
4. Install posts plumb.
5. Rotate tabs as required at angle change in railing

DESIGNED BY: Nick Murray	CHECKED: Douglas Gelineau
DRAWN BY: Sam Sollie	CHECKED: Nick Murray
QUANTITIES BY: Nick Murray	CHECKED: Douglas Gelineau

STATE OF ALASKA
DEPARTMENT OF TRANSPORTATION AND PUBLIC FACILITIES
BRIDGE SECTION
3132 Channel Drive
Juneau, Alaska 99801
907-465-2975

STATE OF ALASKA 49TH Nicholas W. Murray 08-04-2021 No. CE 107613 REGISTERED PROFESSIONAL ENGINEER

HERRING COVE BRIDGE
SOUTH TONGASS HIGHWAY
PEDESTRIAN RAILING

BRIDGE NO. 253
DWG. NO. 20

R:\cad\253\253-1 Sidewalks-PED RAIL Wed. Aug/04/21 11:20am

STATE	PROJECT DESIGNATION	YEAR	SHEET NO.	TOTAL SHEETS
ALASKA	SFHWY00072/0902043	2021	N21	N26

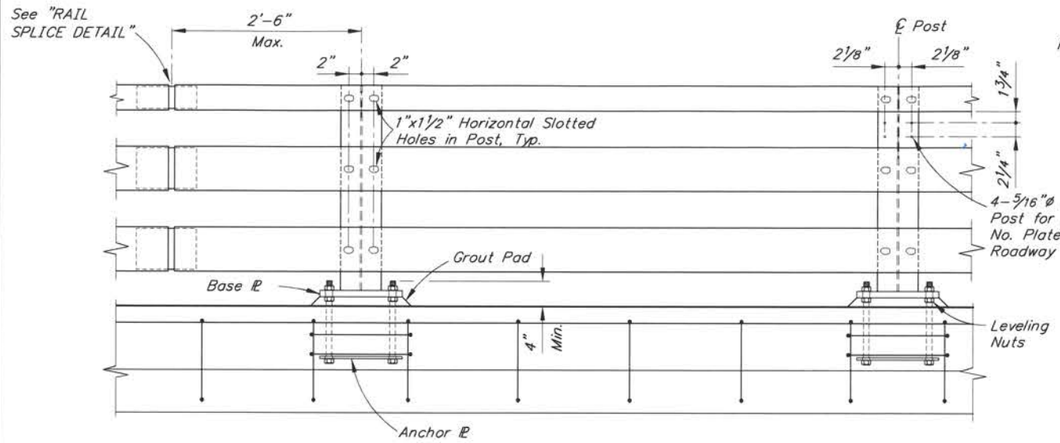

EXPANSION JOINT

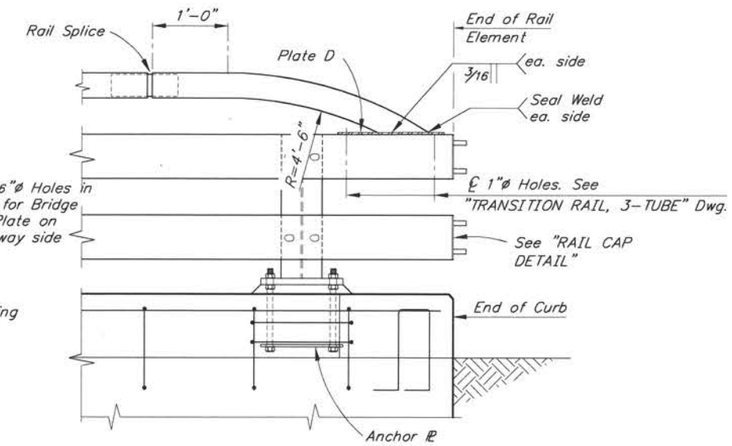

TYPICAL POST ELEVATION

END POST - ELEVATION

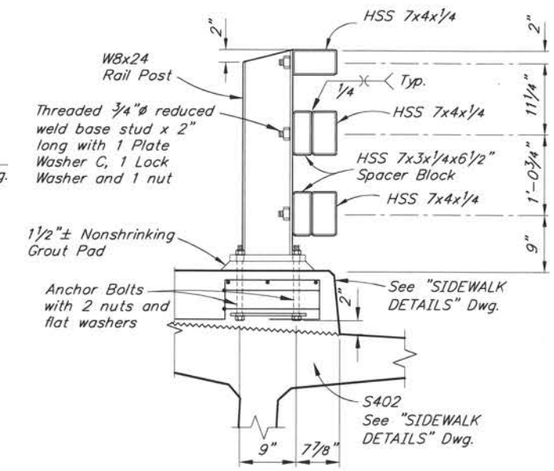

TYPICAL SECTION

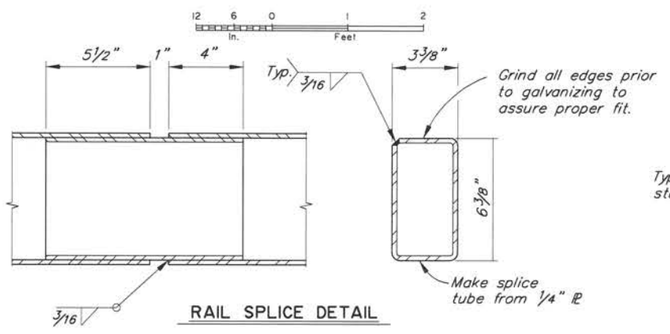

RAIL SPLICE DETAIL

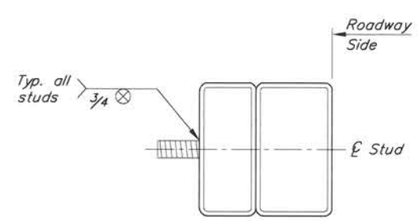

RAILING STUD DETAIL

(Lower rail shown, upper rail similar)

No Scale

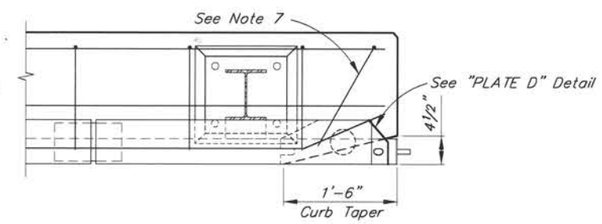

PLAN

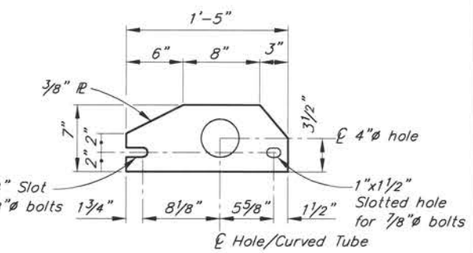

PLATE D

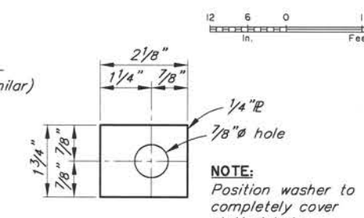

PLATE WASHER

No Scale

NOTE:
Position washer to completely cover slotted hole

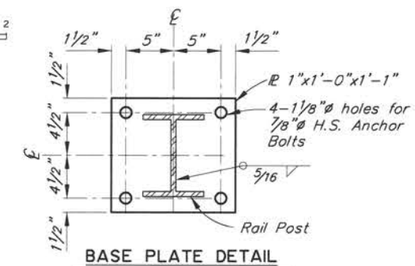

BASE PLATE DETAIL

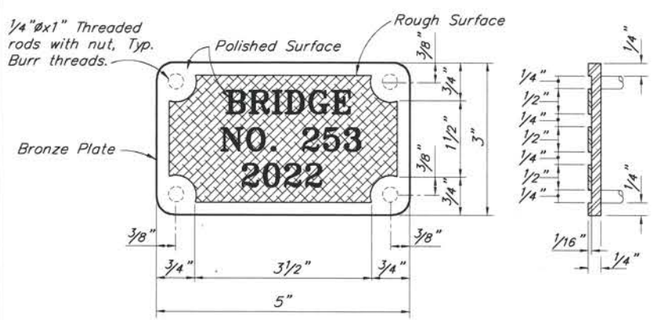

BRONZE BRIDGE NO. PLATE

No Scale

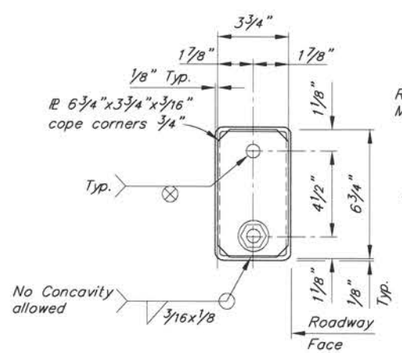

RAIL CAP DETAIL

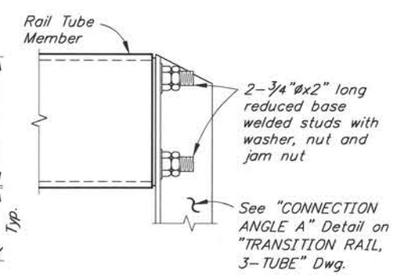

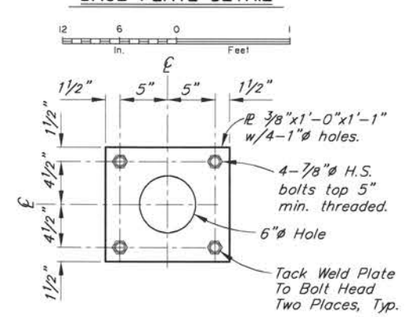

ANCHOR PLATE DETAIL

CN 10/23/2024

NOTES:

1. Locate bridge number plates on right hand side of approaching traffic near each end as shown on "GENERAL LAYOUT" Dwg. (2 total).
2. Furnish bridge number plates. Use "Century" type style lettering. Use studs and nuts that conform to UNS C65100 or C65500. Braze ¼"ø threaded rod to back of plate with nut – 4 required. Use tamper proof nuts.
3. Provide railing expansion joints at 50'-0" maximum intervals. Railing shall be continuous over 2 posts minimum. Railing expansion joints are required in rail panels that span bridge expansion joints.
4. Use grout with a minimum 24-hour f'c of 3000 psi in single placement.
5. See "FRAMING PLAN AND TYPICAL SECTION" Dwg. for rail post spacing.
6. Install bridge rail posts plumb.
7. Adjust reinforcing to accommodate curb taper.

DESIGNED BY: Nick Murray	CHECKED: Douglas Gelineau		
DRAWN BY: Sam Sollie	CHECKED: Nick Murray		
QUANTITIES BY: Nick Murray	CHECKED: Douglas Gelineau		

STATE OF ALASKA
DEPARTMENT OF TRANSPORTATION AND PUBLIC FACILITIES
BRIDGE SECTION
3132 Channel Drive
Juneau, Alaska 99801
907-465-2975

STATE OF ALASKA 49TH Nicholas W. Murray 08-04-2021 No. CE 107613 REGISTERED PROFESSIONAL ENGINEER

HERRING COVE BRIDGE
SOUTH TONGASS HIGHWAY
STEEL BRIDGE RAILING

BRIDGE NO. 253
DWG. NO. 21

R:\cad\253\253-1 Sidewalks-STEEL RAIL Wed, Aug/04/21 11:20am

STATE	PROJECT DESIGNATION	YEAR	SHEET NO.	TOTAL SHEETS
ALASKA	SFHWY00072/0902043	2021	N22	N26

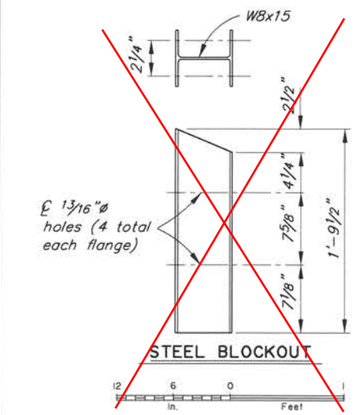

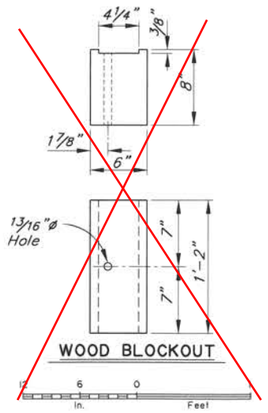

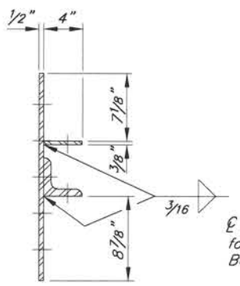

VIEW A-A

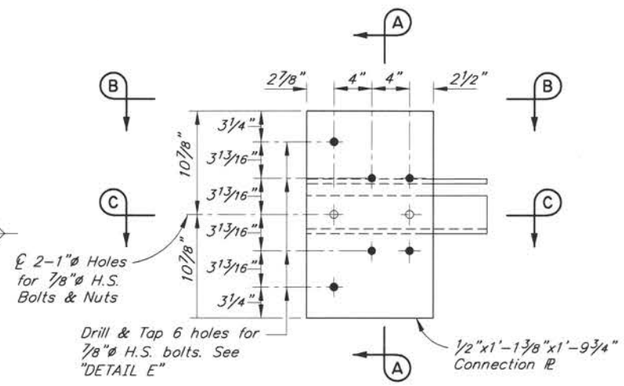

GUARDRAIL CONNECTION PLATE DETAILS

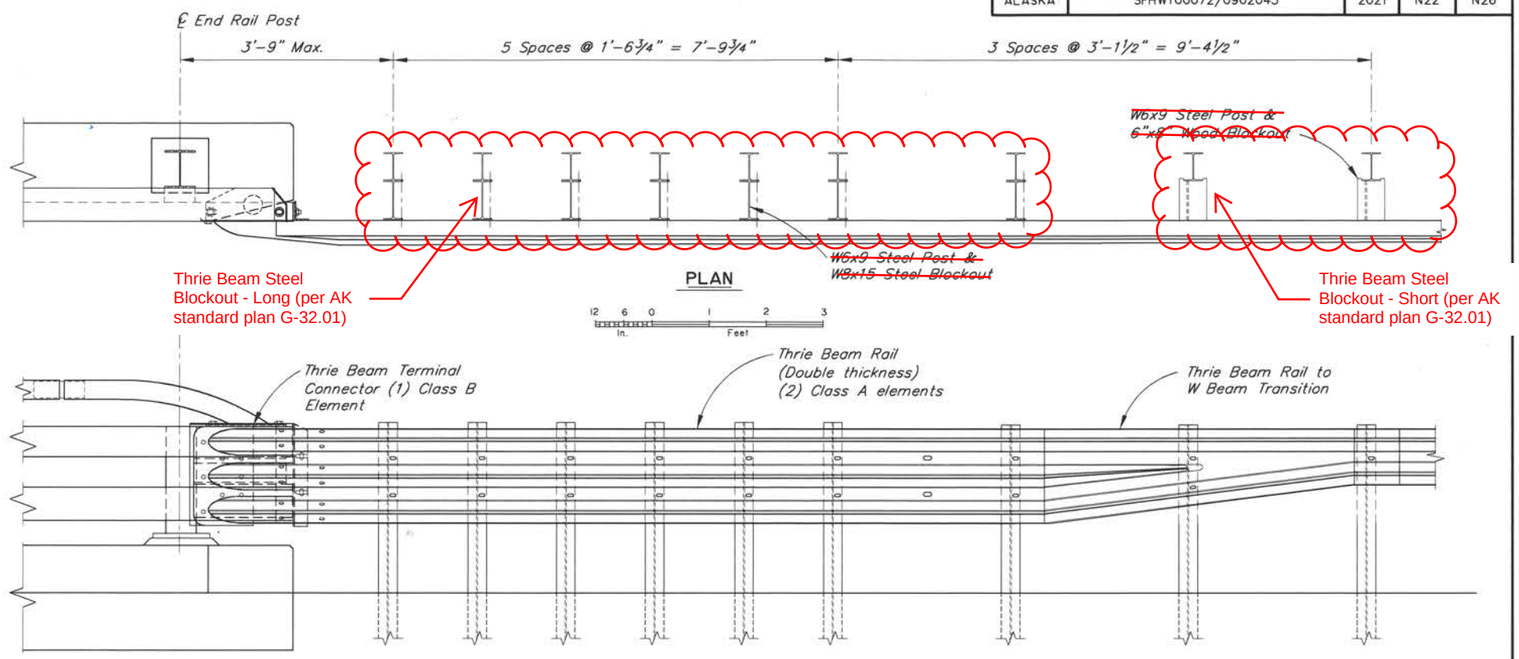

PLAN

ELEVATION

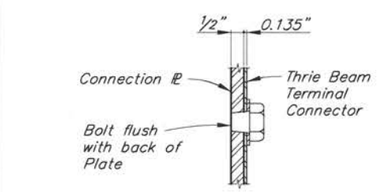

DETAIL E

No Scale

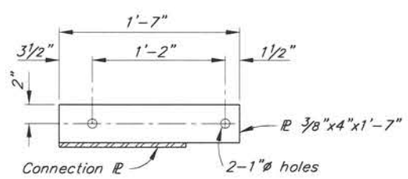

VIEW B-B

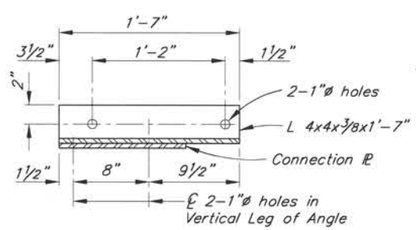

SECTION C-C

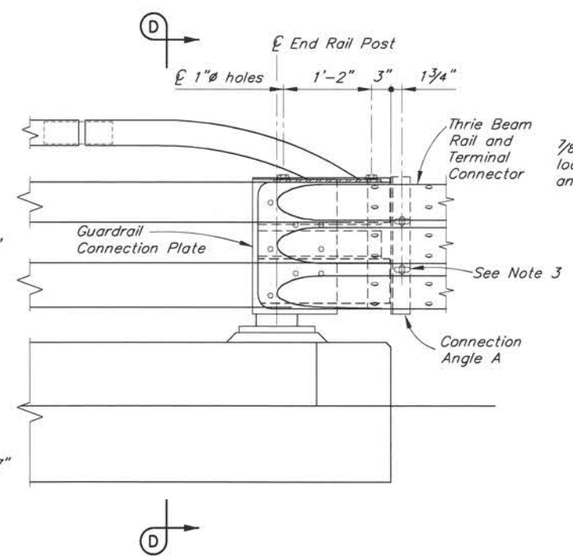

THRIE BEAM CONNECTION

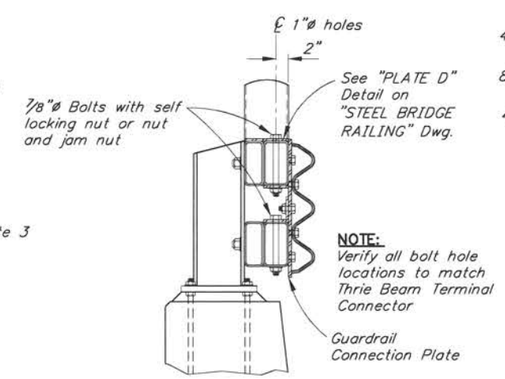

SECTION D-D

NOTE:
Verify all bolt hole locations to match Thrie Beam Terminal Connector

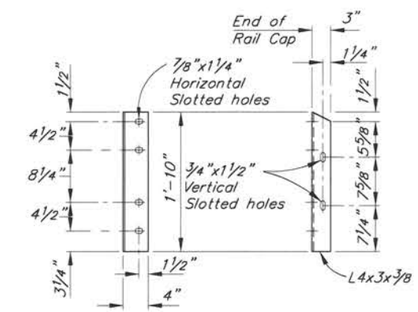

END VIEW ELEVATION

CONNECTION ANGLE A

NOTES:

1. Conform to G-00, G-05 and G-10 for all guardrail details not shown.
2. Lap approach guardrail to prevent snags from oncoming traffic.
3. Provide 4 1/2" horizontal slots in approach guardrail. Adjust guardrail bolts for sliding fit.

CN 10/23/2024

DESIGNED BY: Nick Murray	CHECKED: Douglas Gelineau		
DRAWN BY: Sam Sollie	CHECKED: Nick Murray		
QUANTITIES BY: Nick Murray	CHECKED: Douglas Gelineau		

STATE OF ALASKA
DEPARTMENT OF TRANSPORTATION AND PUBLIC FACILITIES
BRIDGE SECTION
3132 Channel Drive
Juneau, Alaska 99801
907-465-2975

STATE OF ALASKA 49TH Nicholas W. Murray 08-04-2021 No. CE 107613 REGISTERED PROFESSIONAL ENGINEER

HERRING COVE BRIDGE

SOUTH TONGASS HIGHWAY

TRANSITION RAIL, 3-TUBE

BRIDGE NO. 253
DWG. NO. 22

R:\cad\253\253-1 Sidewalks-TRANSTION Wed, Aug/04/21 11:20am

NO.	DATE	REVISION
1	5/17/22	CULVERT DIAMETER CHANGE

STATE	PROJECT DESIGNATION	YEAR	SHEET NO.	TOTAL SHEETS
ALASKA	0902043/SFHWY00072	2021	P1	2

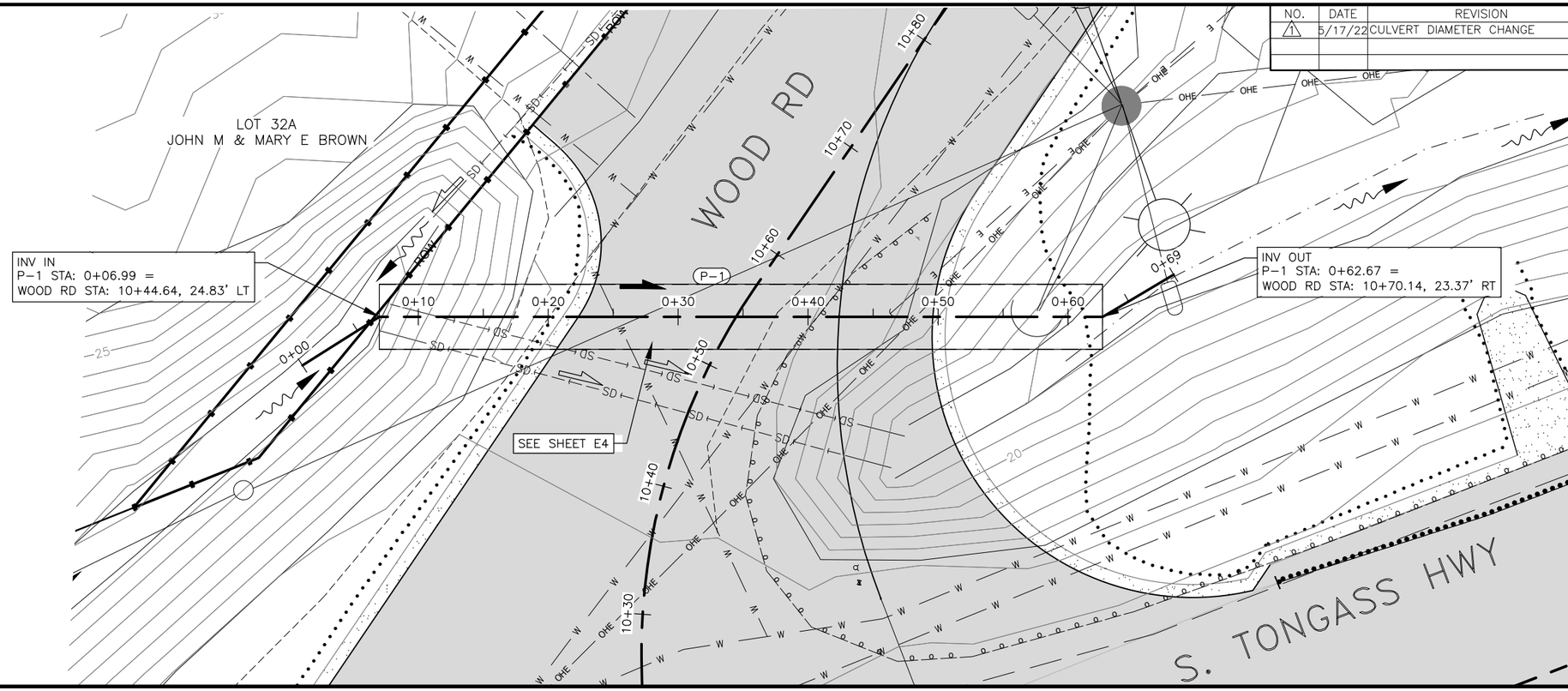

0 10' 20'

SCALE IN FEET

1

STREAMBED MATERIALS GRADATION

% PASSING 75 mm (3")	100%
% PASSING 37.5 mm (1.5")	55% +/- 2.5%
% PASSING 12.5 mm (0.5")	45% +/- 2.5%
% PASSING 1.18 mm (#16")	15% +/- 2.5%
% PASSING 0.75 mm (# 200)	0-10%

CN

10/23/2024

STATE OF ALASKA 49TH
BRAN POLLARD, P.E.
106710
REGISTERED PROFESSIONAL ENGINEER

8/9/2021

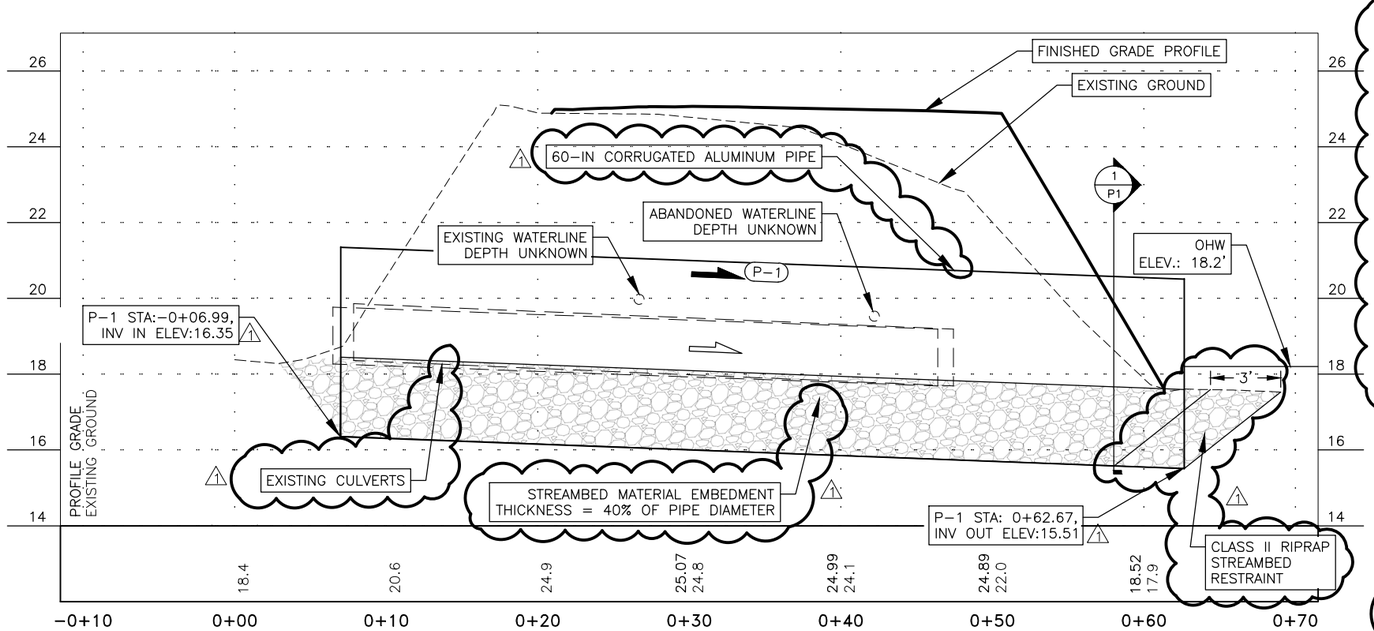

CULVERT DATA

CULVERT ID	P-1
CULVERT MATERIAL	CORRUGATED ALUMINUM
CULVERT STA	10+54
CULVERT DIA, IN	60
DRAINAGE AREA, AC	38.4
LENGTH, FT	56
HWY CL ELEV, FT	25
INLET INVERT ELEV, FT	16.35
OUTLET INVERT ELEV, FT	15.51
Hw ELEV @ Q50, FT	21.53
Hw/D RATIO, Q50	1.03
END TREATMENT	NONE

EXCEEDENCE/RECCURANCE PROBABILITIES:
Q2 – TWO YR = 50%
Q50 – FIFTY YR = 2%
Q100 – ONE HUNDRED YR = 1%
Q500 – FIVE HUNDRED YR = 0.5%

1

LEGEND

- NEW CULVERT FLOW
- EXISTING CULVERT FLOW
- NEW DITCH RECONSTRUCTION
- LIMITS OF CUT
- LIMITS OF FILL

HYDRAULIC SUMMARY

RETURN PERIOD	FLOWRATE, (CFS)
Q2	15.00
Q50	57.00
Q100	68.00
Q500	95.00
CAPACITY	>95.0 cfs
DISCHARGE WHEN Hw/D= 1, CFS	55
DISCHARGE RQD TO OVERTOP ROADWAY, CFS	>95.0
ROADWAY OVERTOPPING RECCURANCE PROBABILITY	>Q0.2%

NOTE:

1. EXCAVATION AREA: 1,490 SQ.FT.
   EXCAVATION VOLUME: 214 CU.YD.
   EXCAVATION BENEATH OHW: 39 CU.YD.
2. AWC STREAM NO. 101-45-10068
3. HYDRAULICS ENGINEER WILL FIELD DETERMINE FINAL INVERT ELEVATIONS OF FISH PASSAGE PIPES AT TIME OF INSTALLATION.
4. PLACE STREAM BED MATERIAL TO A DEPTH OF 40% OF THE PIPE DIAMETER

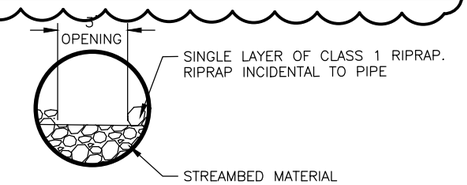

1 / P1 STREAMBED MATERIAL DETAIL
SCALE: NOT TO SCALE

FIRM	STATE OF ALASKA DEPARTMENT OF TRANSPORTATION & PUBLIC FACILITIES
FILE	Q:\Ktn\SFHWY00072\Planset\00072_P1 Revised Sheet.dwg

ADDRESS	6860 GLACIER HWY, JUNEAU, AK 99811	PHONE	(907) 465-1763	CERTIFICATE OF AUTH #:
DATE	5/18/2022 13:59	LAYOUT	P1 REVISED	DESIGNED STAFF	CHECKED STAFF	DRAFTED STAFF

NO.	DATE	REVISION

STATE	PROJECT DESIGNATION	YEAR	SHEET NO.	TOTAL SHEETS
ALASKA	0902043/SFHWY00072	2021	P2	2

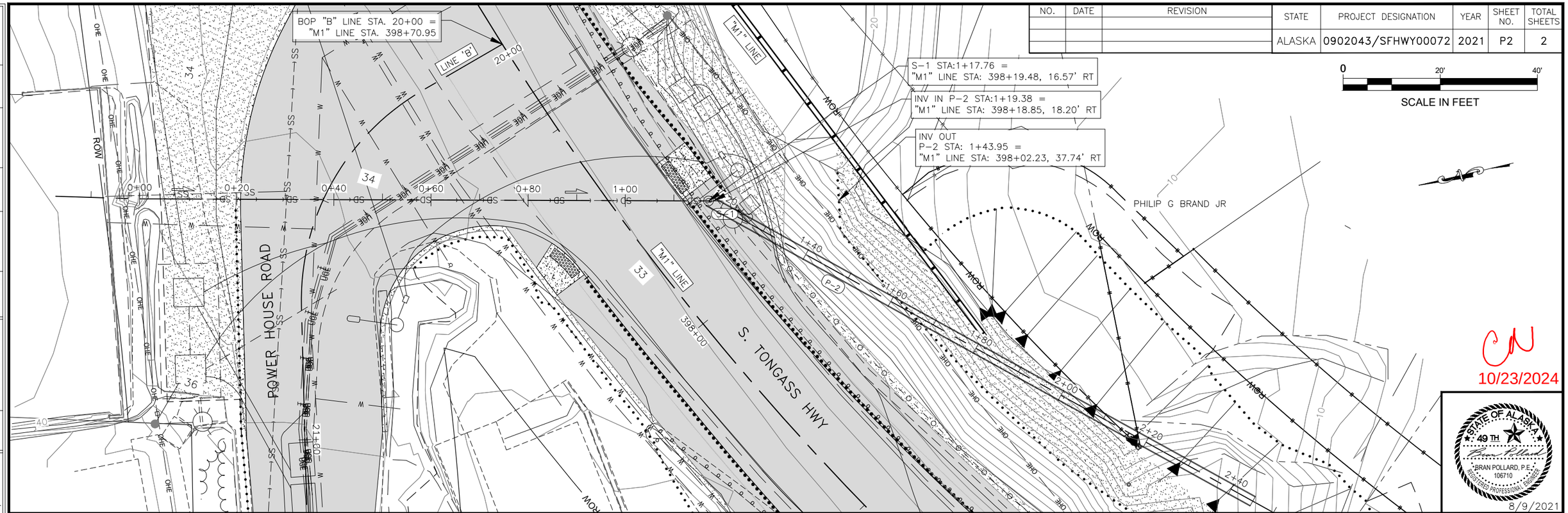

CN
10/23/2024

STATE OF ALASKA
49TH
BRAN POLLARD, P.E.
106710
REGISTERED PROFESSIONAL ENGINEER
8/9/2021

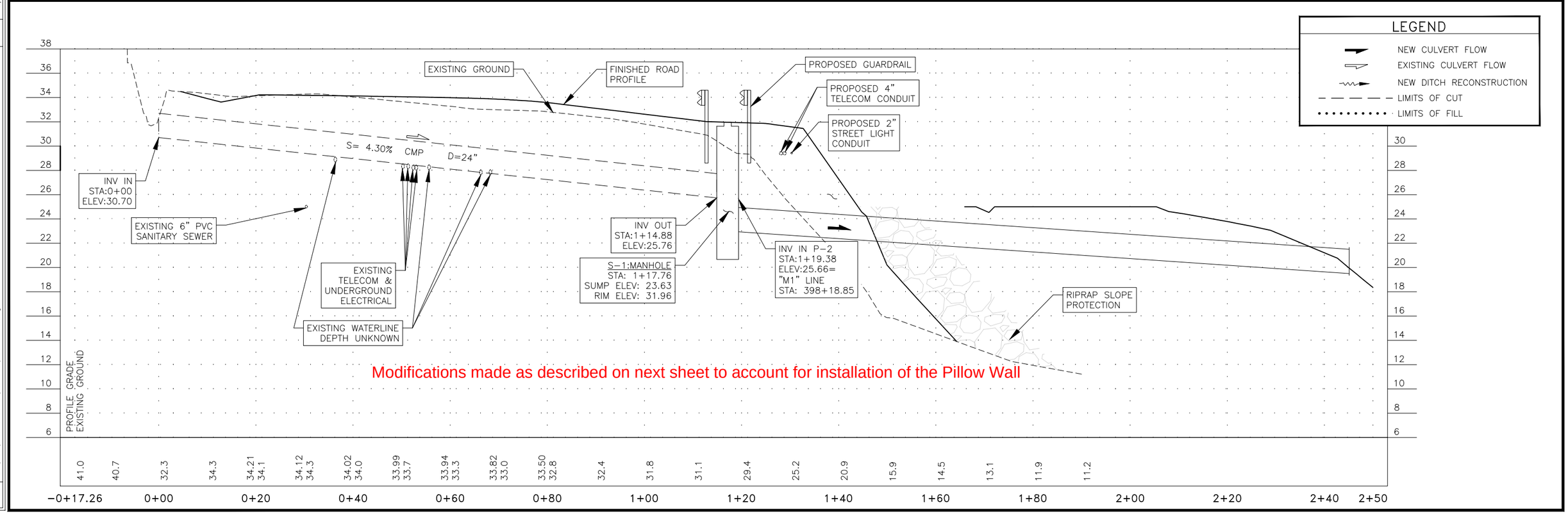

Modifications made as described on next sheet to account for installation of the Pillow Wall

FIRM	STATE OF ALASKA DEPARTMENT OF TRANSPORTATION & PUBLIC FACILITIES	ADDRESS	6860 GLACIER HWY, JUNEAU, AK 99811	PHONE	(907) 465-1763	CERTIFICATE OF AUTH #:
FILE	Q:\Ktn\SFHWY00072\Planset\00072_P1.dwg	DATE	8/9/2021 12:04	LAYOUT	P2 STORMDRAIN PLAN	DESIGNED STAFF / CHECKED STAFF / DRAFTED STAFF

NO.	DATE	REVISION

STATE	PROJECT DESIGNATION	YEAR	SHEET NO.	TOTAL SHEETS
ALASKA	0902043/SFHWY00072	2021	P2	2

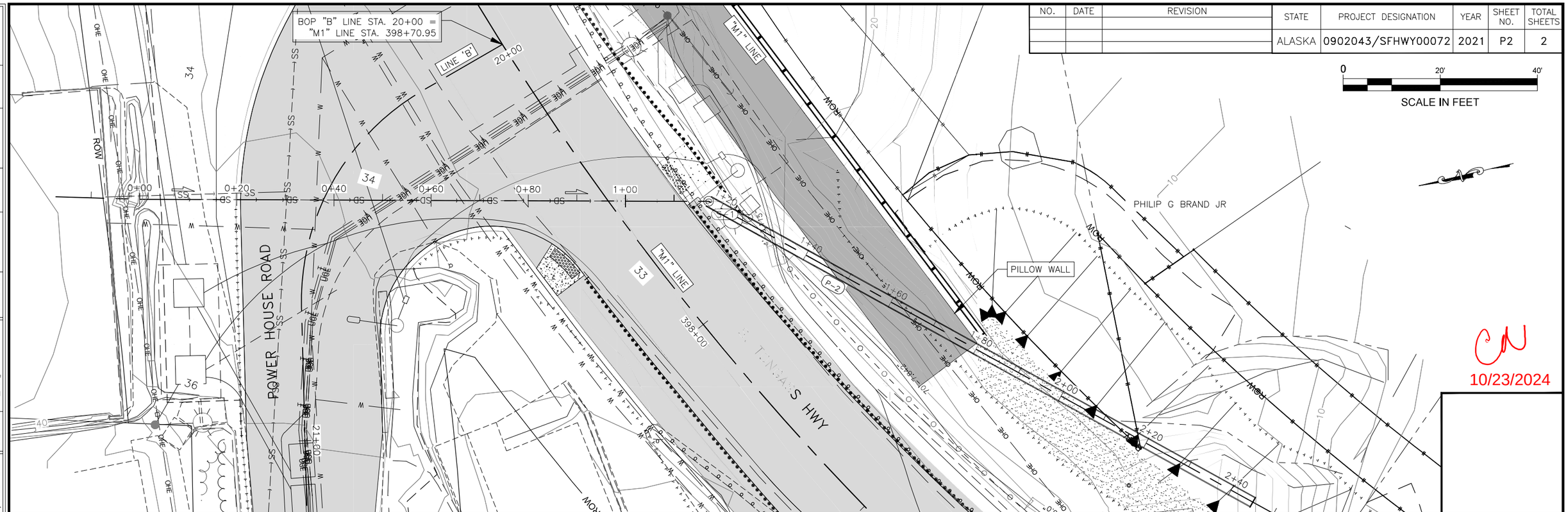

CN
10/23/2024

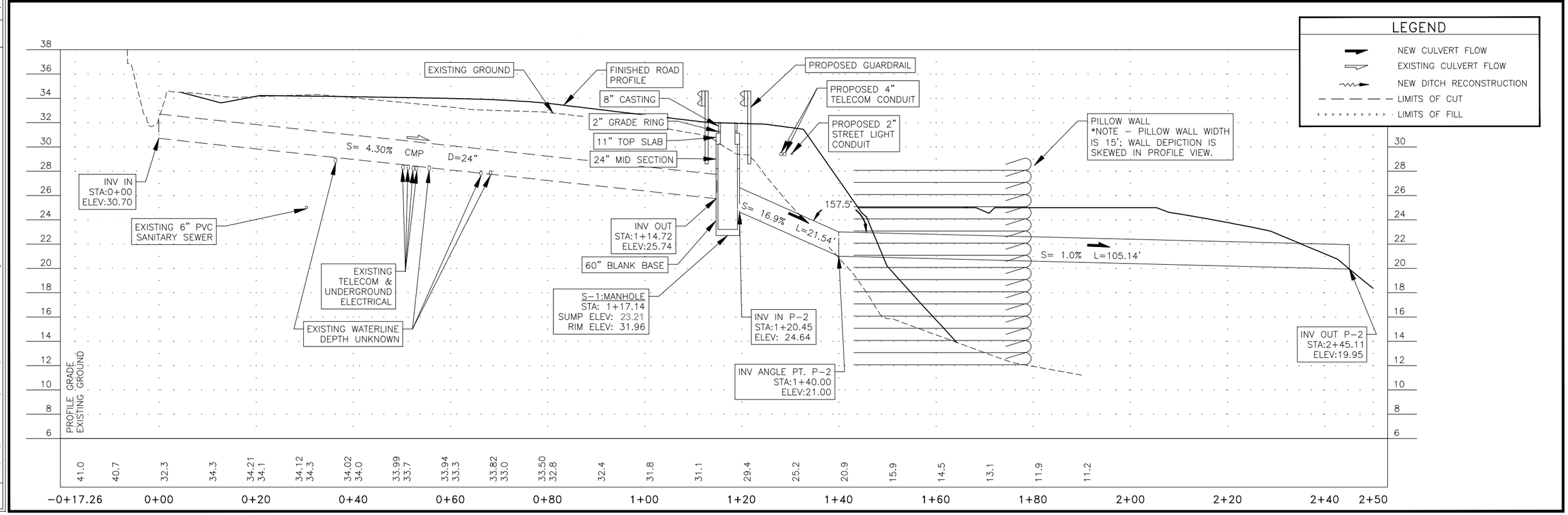

| FIRM | STATE OF ALASKA DEPARTMENT OF TRANSPORTATION & PUBLIC FACILITIES | | |

Pad 6 Flat Bottom Ditch & Pipe "P-3"

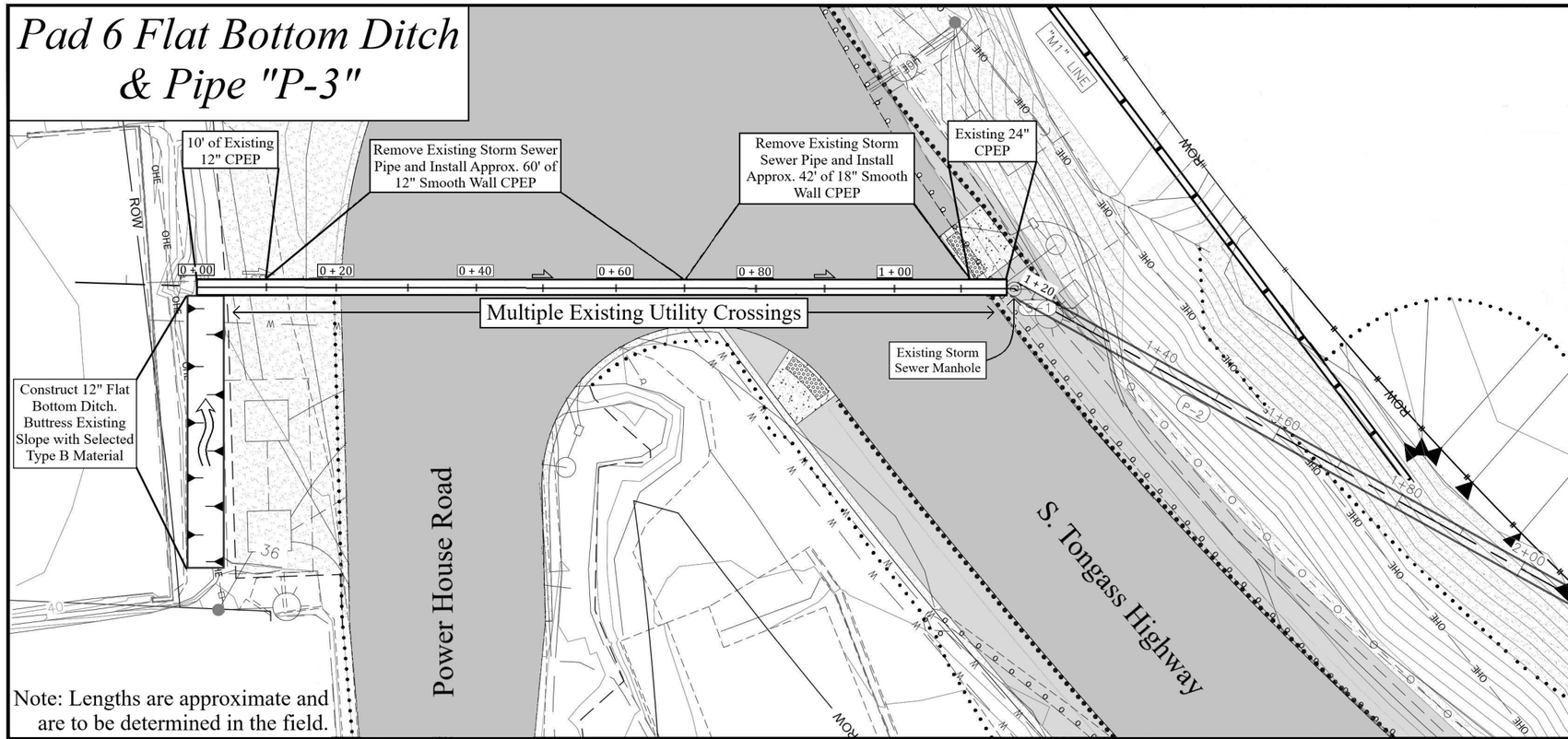

Note: Lengths are approximate and are to be determined in the field.

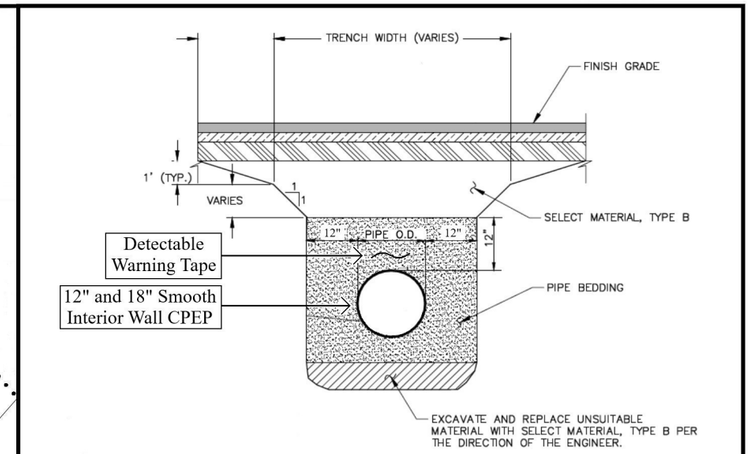

Culvert Bedding/Backfill Detail

Scale: N.T.S.

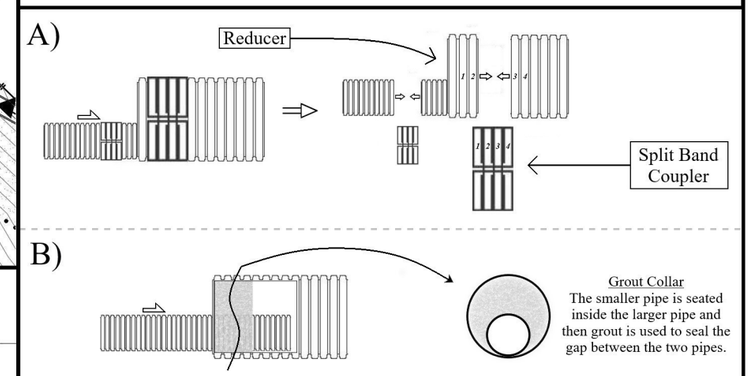

Connection Options at Pipe Size Increase

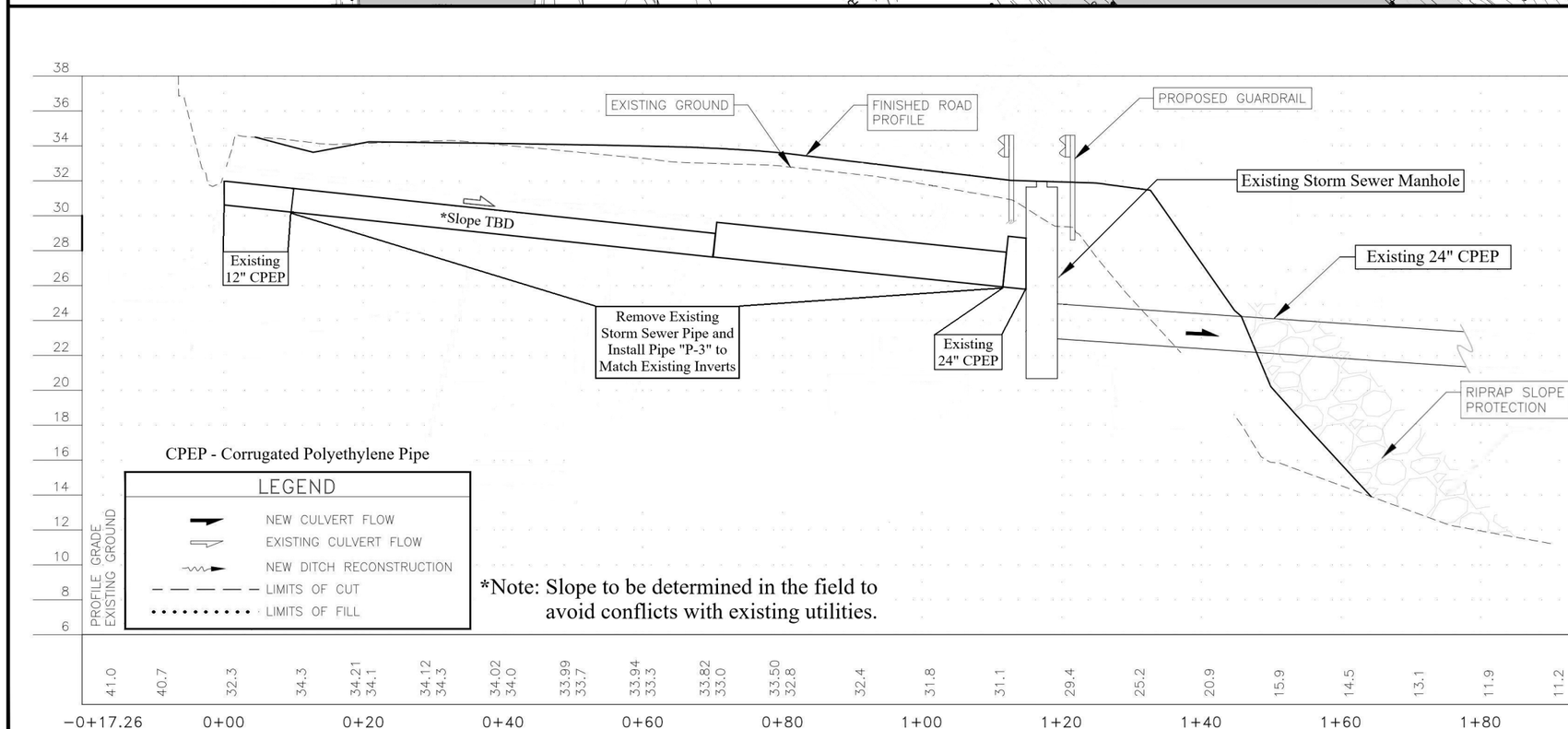

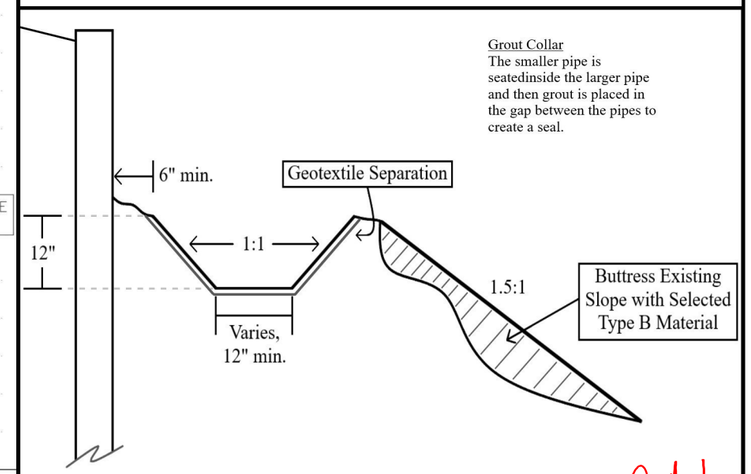

Flat Bottom Ditch Detail

Scale: N.T.S.

CN

10/23/2024

NO.	DATE	REVISION

STATE	PROJECT DESIGNATION	YEAR	SHEET NO.	TOTAL SHEETS
ALASKA	0902043/SFHWY00072	2021	Q1	5

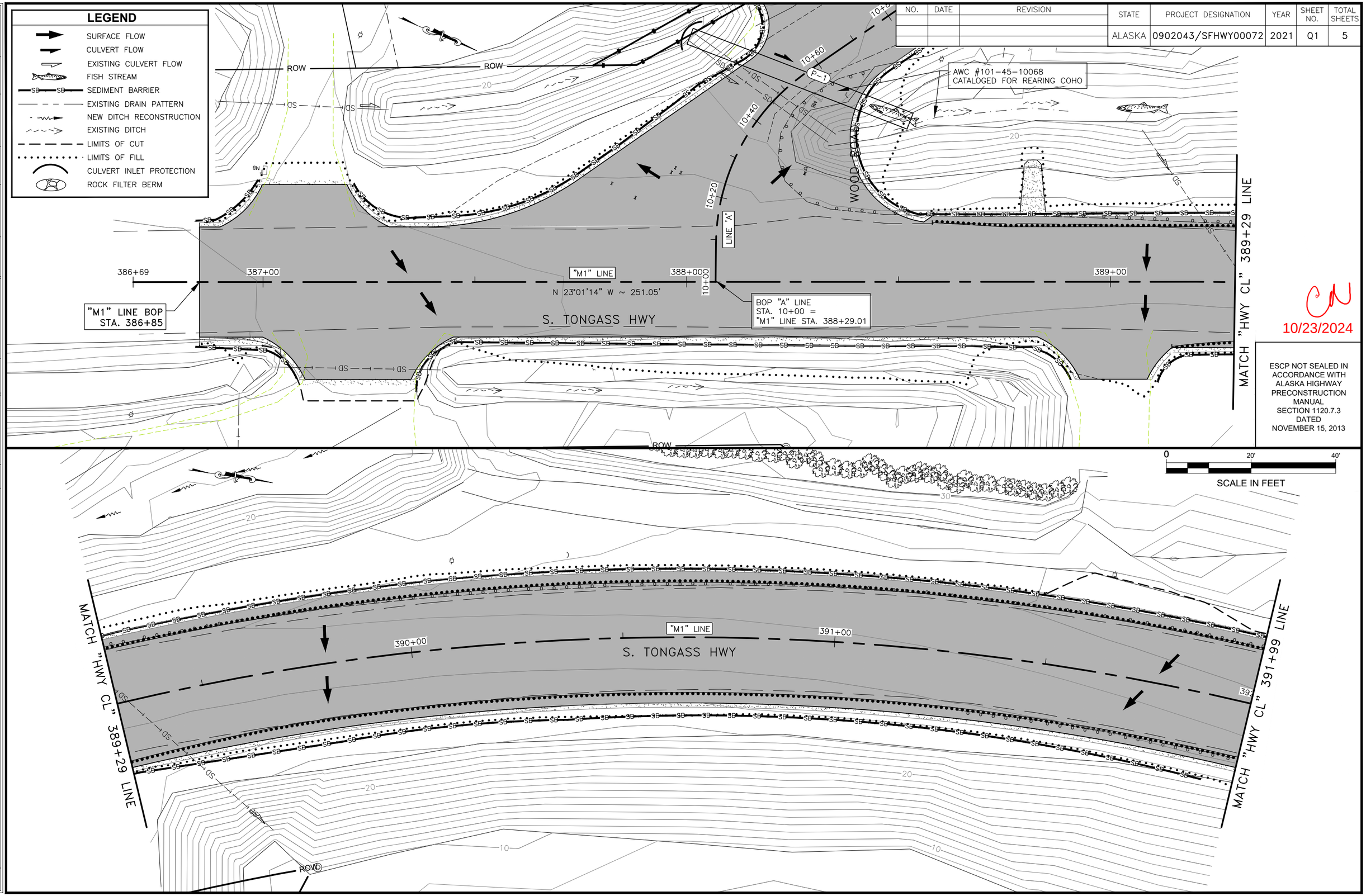

CN
10/23/2024

ESCP NOT SEALED IN ACCORDANCE WITH ALASKA HIGHWAY PRECONSTRUCTION MANUAL SECTION 1120.7.3 DATED NOVEMBER 15, 2013

FIRM	STATE OF ALASKA DEPARTMENT OF TRANSPORTATION & PUBLIC FACILITIES	ADDRESS	6860 GLACIER HWY, JUNEAU, AK 99811	PHONE	(907) 465-1763	CERTIFICATE OF AUTH #:
FILE	Q:\Kin\SFHWY00072\Planset\00072_Q1.dwg	DATE	8/9/2021 11:57	LAYOUT	Q1 EROSION & SEDIMENT	TDESIGNED PSTAFF PCHECKED PSTAFF CHECKED STAFF DRAFTED STAFF

NO.	DATE	REVISION

STATE	PROJECT DESIGNATION	YEAR	SHEET NO.	TOTAL SHEETS
ALASKA	0902043/SFHWY00072	2021	Q2	5

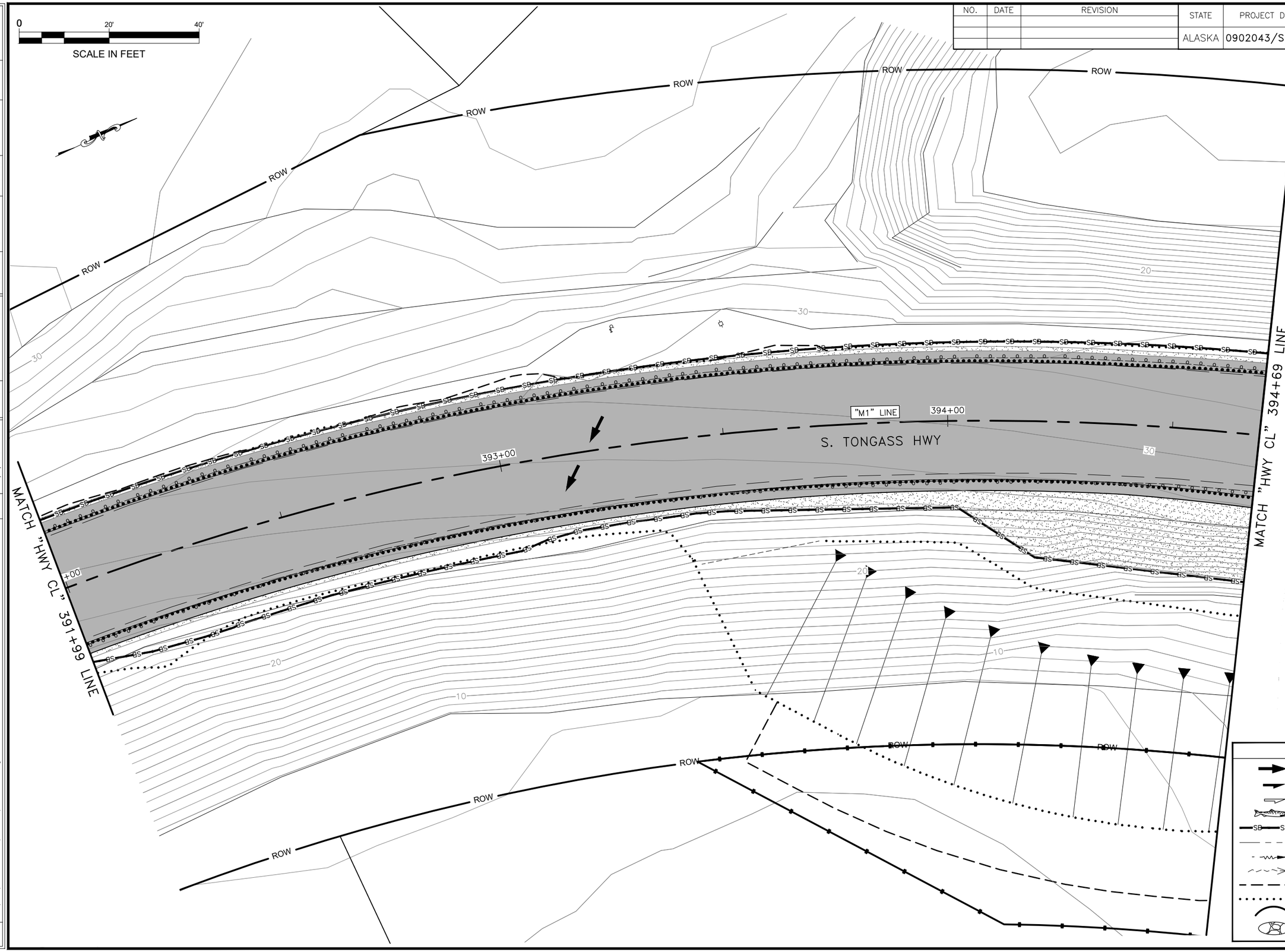

LEGEND

- SURFACE FLOW
- CULVERT FLOW
- EXISTING CULVERT FLOW
- FISH STREAM
- SEDIMENT BARRIER
- EXISTING DRAIN PATTERN
- NEW DITCH RECONSTRUCTION
- EXISTING DITCH
- LIMITS OF CUT
- LIMITS OF FILL
- CULVERT INLET PROTECTION
- ROCK FILTER BERM

CN
10/23/2024

ESCP NOT SEALED IN ACCORDANCE WITH ALASKA HIGHWAY PRECONSTRUCTION MANUAL SECTION 1120.7.3 DATED NOVEMBER 15, 2013

FIRM	STATE OF ALASKA DEPARTMENT OF TRANSPORTATION & PUBLIC FACILITIES						
FILE	Q:\Ktn\SFHWY00072\Planset\00072_Q1.dwg						
		ADDRESS	6860 GLACIER HWY, JUNEAU, AK 99811	PHONE	(907) 465-1763	CERTIFICATE OF AUTH #:	
		DATE	8/9/2021 11:57	LAYOUT	Q2 EROSION & SEDIMENT CONTROL	DESIGNED: STAFF	CHECKED: STAFF
						DRAFTED: STAFF	

NO.	DATE	REVISION

STATE	PROJECT DESIGNATION	YEAR	SHEET NO.	TOTAL SHEETS
ALASKA	0902043/SFHWY00072	2021	Q3	5

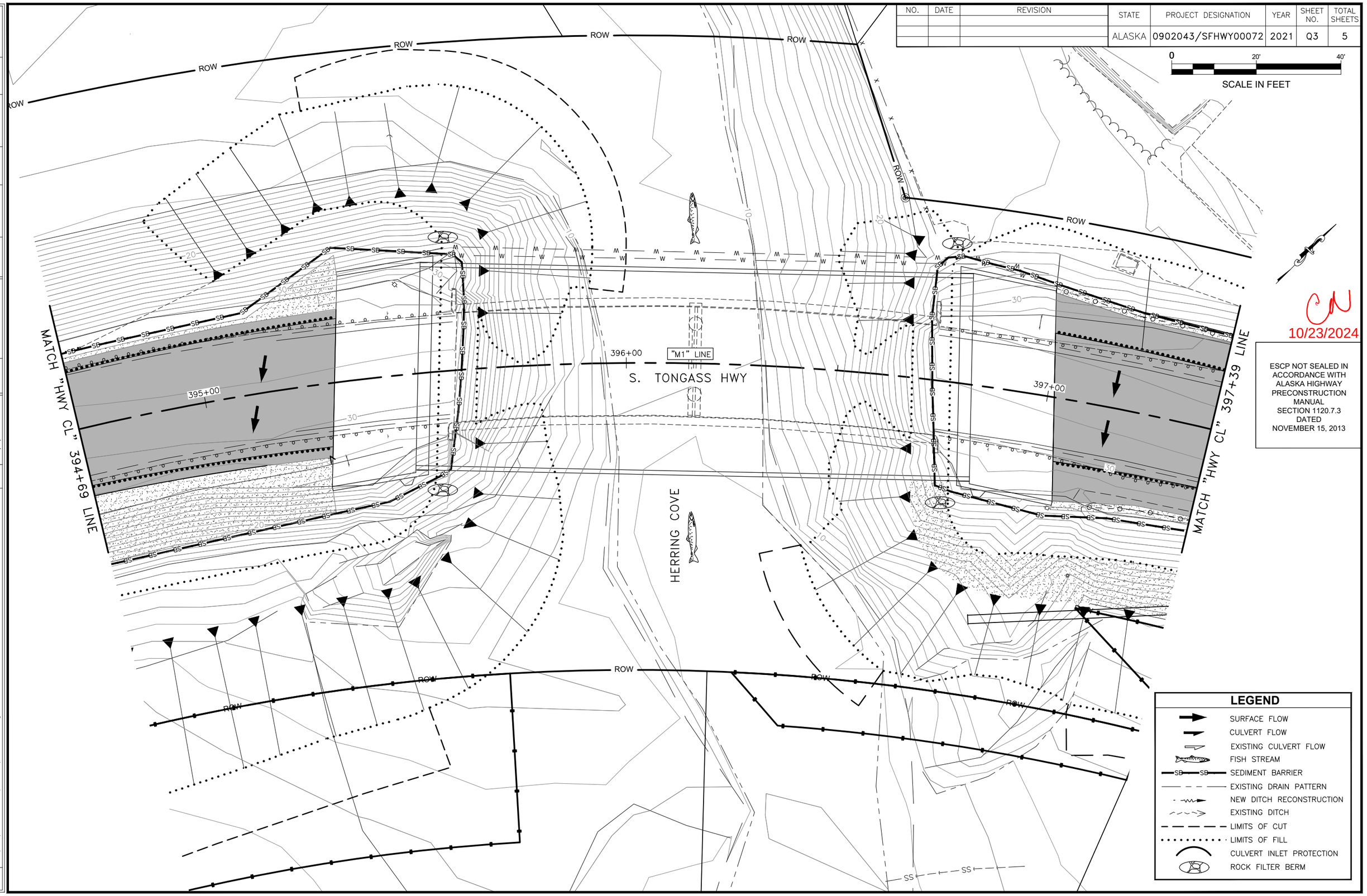

CN
10/23/2024

ESCP NOT SEALED IN ACCORDANCE WITH ALASKA HIGHWAY PRECONSTRUCTION MANUAL SECTION 1120.7.3 DATED NOVEMBER 15, 2013

FIRM	STATE OF ALASKA DEPARTMENT OF TRANSPORTATION & PUBLIC FACILITIES					ADDRESS	6860 GLACIER HWY, JUNEAU, AK 99811
FILE	Q:\Ktn\SFHWY00072\Planset\00072_Q1.dwg					DATE	8/9/2021 11:57
						LAYOUT	Q3 EROSION & SEDIMENT CONTROL
						PHONE	(907) 465-1763
						DESIGNED	STAFF
						CHECKED	STAFF
						CERTIFICATE OF AUTH #:	
						DRAFTED	STAFF

NO.	DATE	REVISION

STATE	PROJECT DESIGNATION	YEAR	SHEET NO.	TOTAL SHEETS
ALASKA	0902043/SFHWY00072	2021	Q4	5

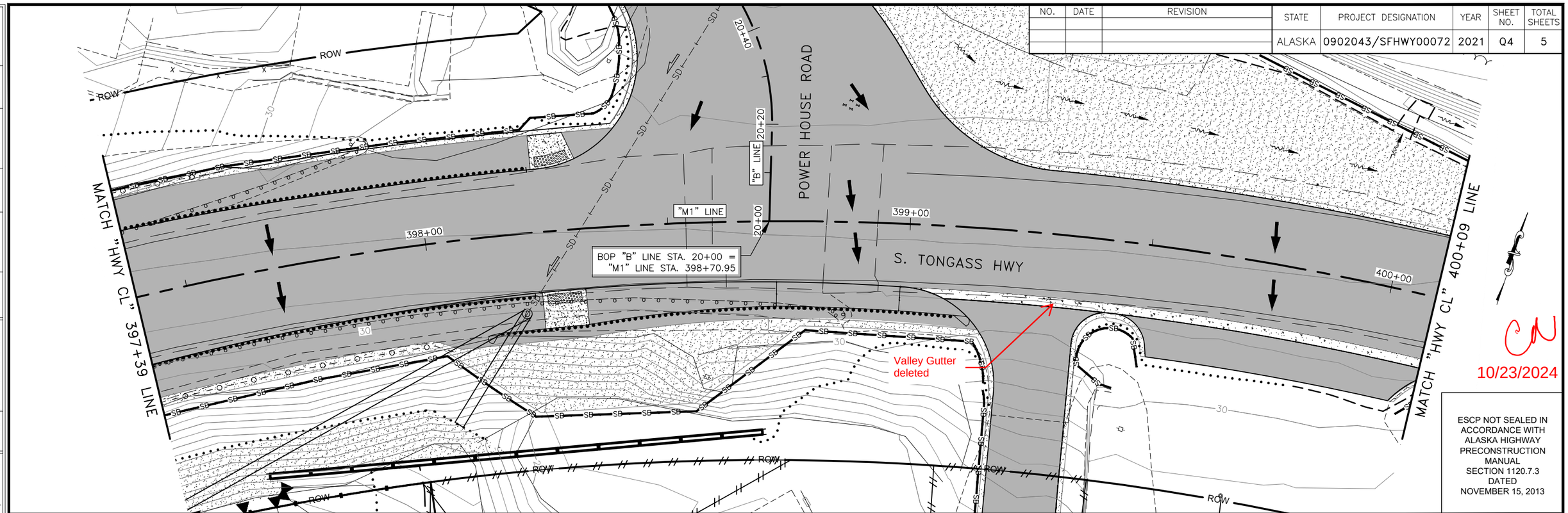

CN
10/23/2024

ESCP NOT SEALED IN ACCORDANCE WITH ALASKA HIGHWAY PRECONSTRUCTION MANUAL SECTION 1120.7.3 DATED NOVEMBER 15, 2013

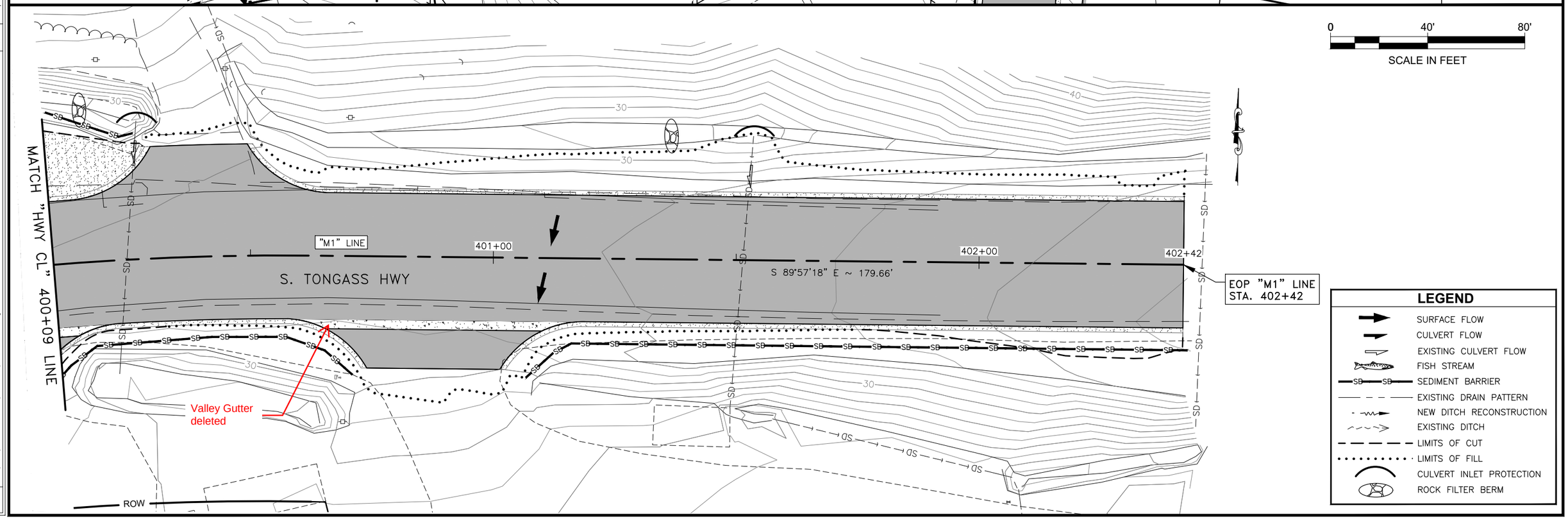

FIRM	STATE OF ALASKA DEPARTMENT OF TRANSPORTATION & PUBLIC FACILITIES	ADDRESS	6860 GLACIER HWY, JUNEAU, AK 99811	PHONE	(907) 465-1763	CERTIFICATE OF AUTH #:			
FILE	Q:\ktn\SFHWY00072\Planset\00072_01.dwg	DATE	8/9/2021 11:57	LAYOUT	Q4 EROSION & SEDIMENT CONTROL	DESIGNED	STAFF	CHECKED	STAFF
						DRAWN	STAFF	DRAFTED	STAFF

NO.	DATE	REVISION

STATE	PROJECT DESIGNATION	YEAR	SHEET NO.	TOTAL SHEETS
ALASKA	0902043/SFHWY00072	2021	Q5	5

0 20' 40'
SCALE IN FEET

CN
10/23/2024

ESCP NOT SEALED IN ACCORDANCE WITH ALASKA HIGHWAY PRECONSTRUCTION MANUAL SECTION 1120.7.3 DATED NOVEMBER 15, 2013

FIRM	STATE OF ALASKA DEPARTMENT OF TRANSPORTATION & PUBLIC FACILITIES			PHONE	(907) 465-1763	CERTIFICATE OF AUTH #:	
FILE	Q:\Ktn\SFHWY00072\Planset\00072_Q1.dwg	LAYOUT	Q5 EROSION & SEDIMENT CONTROL	DESIGNED	STAFF	CHECKED	STAFF
				DRAWN	STAFF	DRAFTED	STAFF
				ADDRESS	6860 GLACIER HWY, JUNEAU, AK 99811		
				DATE	8/9/2021 11:57		

NO.	DATE	REVISION

STATE	PROJECT DESIGNATION	YEAR	SHEET NO.	TOTAL SHEETS
ALASKA	0902043/SFHWY00072	2021	S1	6

0 80' 160'
SCALE IN FEET

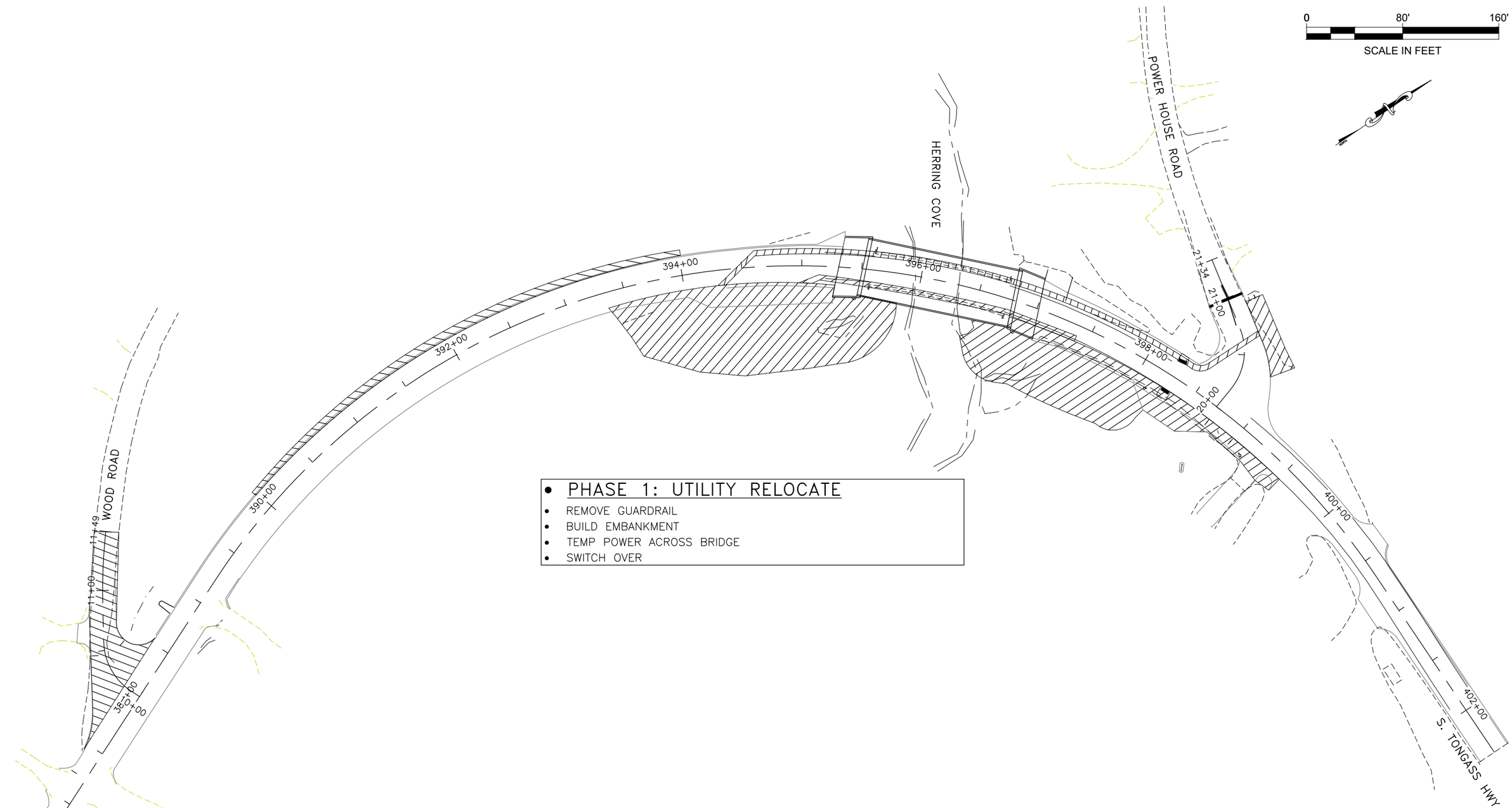

- PHASE 1: UTILITY RELOCATE
- REMOVE GUARDRAIL
- BUILD EMBANKMENT
- TEMP POWER ACROSS BRIDGE
- SWITCH OVER

CN
10/23/2024

STATE OF ALASKA
49TH
BRAN POLLARD, P.E.
106710
REGISTERED PROFESSIONAL ENGINEER
8/9/2021

STATE OF ALASKA
DEPARTMENT OF TRANSPORTATION
AND PUBLIC FACILITIES

KTN HERRING COVE BRIDGE
IMPROVEMENTS

PHASING PLAN 1

FILE	DATE	LAYOUT	DESIGNED	CHECKED	DRAFTED
Q:\Ktn\SFHWY00072\Planset\00072_S1.dwg	8/9/2021 11:51	S1 PHASING PLAN 1	STAFF	STAFF	STAFF

NO.	DATE	REVISION

STATE	PROJECT DESIGNATION	YEAR	SHEET NO.	TOTAL SHEETS
ALASKA	0902043/SFHWY00072	2021	S2	6

0 80' 160'
SCALE IN FEET

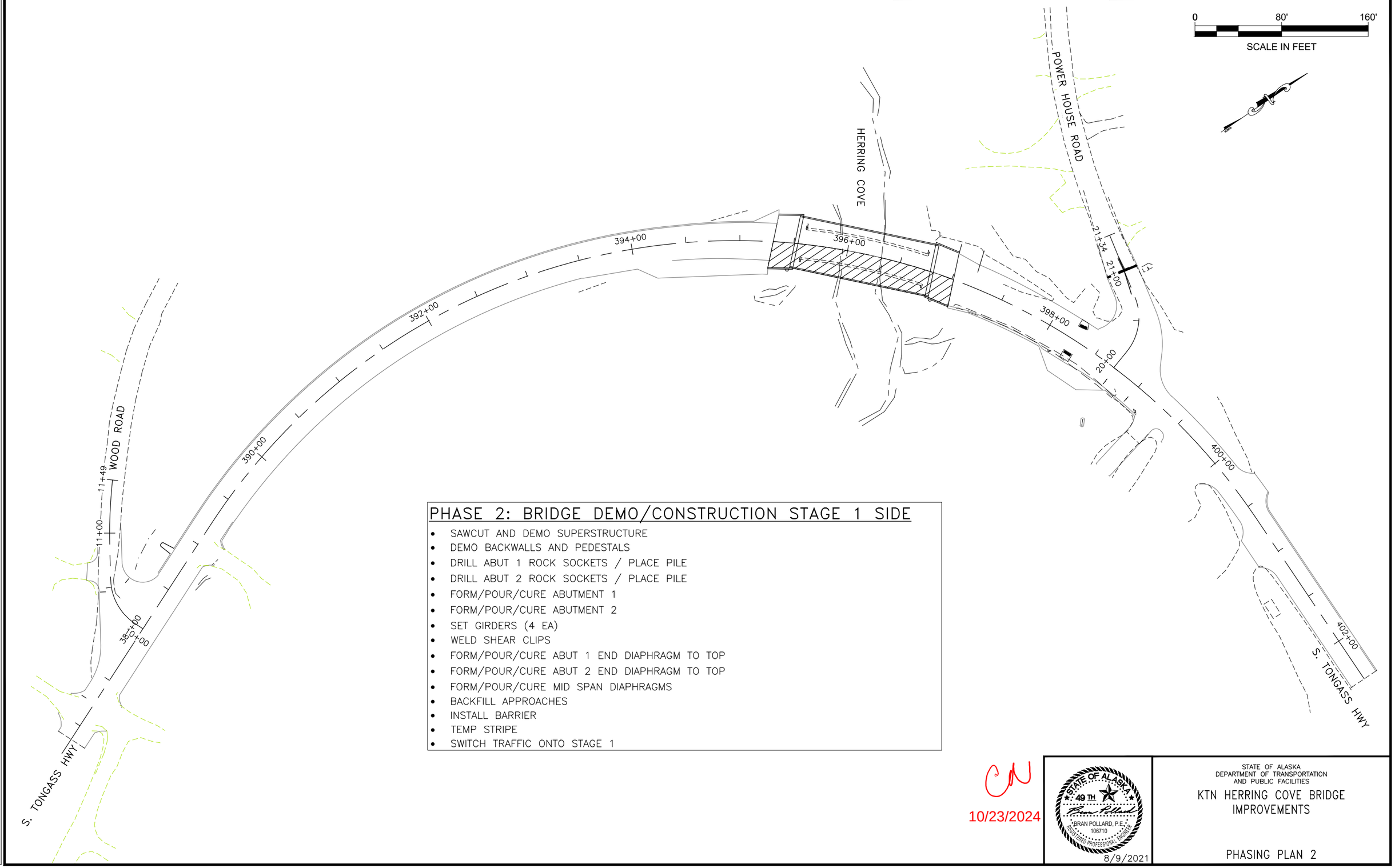

PHASE 2: BRIDGE DEMO/CONSTRUCTION STAGE 1 SIDE

- SAWCUT AND DEMO SUPERSTRUCTURE
- DEMO BACKWALLS AND PEDESTALS
- DRILL ABUT 1 ROCK SOCKETS / PLACE PILE
- DRILL ABUT 2 ROCK SOCKETS / PLACE PILE
- FORM/POUR/CURE ABUTMENT 1
- FORM/POUR/CURE ABUTMENT 2
- SET GIRDERS (4 EA)
- WELD SHEAR CLIPS
- FORM/POUR/CURE ABUT 1 END DIAPHRAGM TO TOP
- FORM/POUR/CURE ABUT 2 END DIAPHRAGM TO TOP
- FORM/POUR/CURE MID SPAN DIAPHRAGMS
- BACKFILL APPROACHES
- INSTALL BARRIER
- TEMP STRIPE
- SWITCH TRAFFIC ONTO STAGE 1

CN
10/23/2024

STATE OF ALASKA
49TH
BRAN POLLARD, P.E.
106710
REGISTERED PROFESSIONAL ENGINEER
8/9/2021

STATE OF ALASKA
DEPARTMENT OF TRANSPORTATION
AND PUBLIC FACILITIES

KTN HERRING COVE BRIDGE
IMPROVEMENTS

PHASING PLAN 2

FILE	DATE	LAYOUT	DESIGNED	CHECKED	DRAFTED
Q:\Ktn\SFHWY00072\Planset\00072_S1.dwg	8/9/2021 11:51	S2 PHASING PLAN 2	STAFF	STAFF	STAFF

NO.	DATE	REVISION

STATE	PROJECT DESIGNATION	YEAR	SHEET NO.	TOTAL SHEETS
ALASKA	0902043/SFHWY00072	2021	S3	6

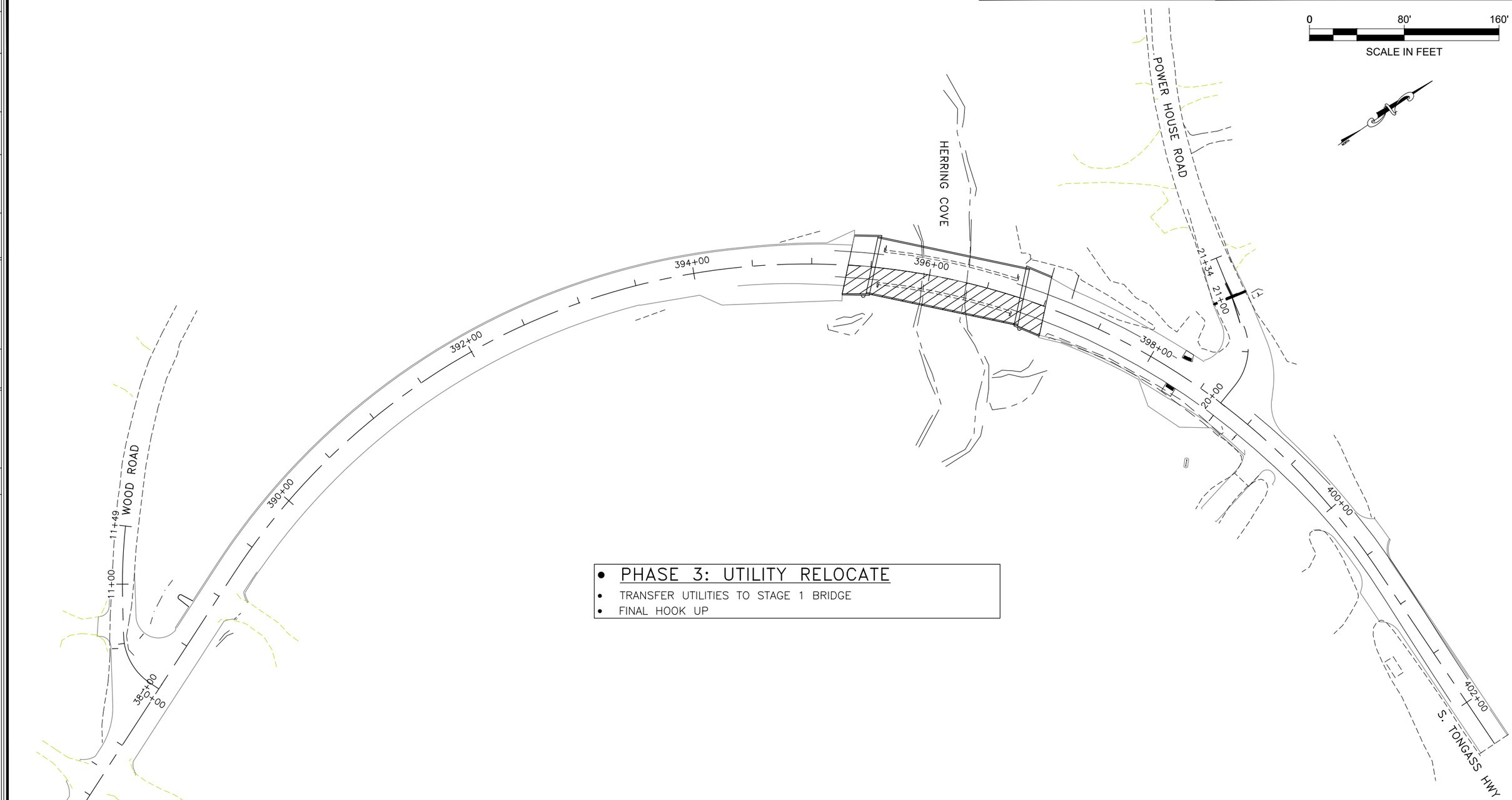

- **PHASE 3: UTILITY RELOCATE**
- TRANSFER UTILITIES TO STAGE 1 BRIDGE
- FINAL HOOK UP

CN
10/23/2024

STATE OF ALASKA
49TH
BRAN POLLARD, P.E.
106710
REGISTERED PROFESSIONAL ENGINEER
8/9/2021

STATE OF ALASKA
DEPARTMENT OF TRANSPORTATION
AND PUBLIC FACILITIES

KTN HERRING COVE BRIDGE
IMPROVEMENTS

PHASING PLAN 3

FILE	DATE	LAYOUT	DESIGNED	CHECKED	DRAFTED
Q:\Ktn\SFHWY00072\Planset\00072_S1.dwg	8/9/2021 11:51	S3 PHASING PLAN 3	STAFF	STAFF	STAFF

NO.	DATE	REVISION

STATE	PROJECT DESIGNATION	YEAR	SHEET NO.	TOTAL SHEETS
ALASKA	0902043/SFHWY00072	2021	S4	6

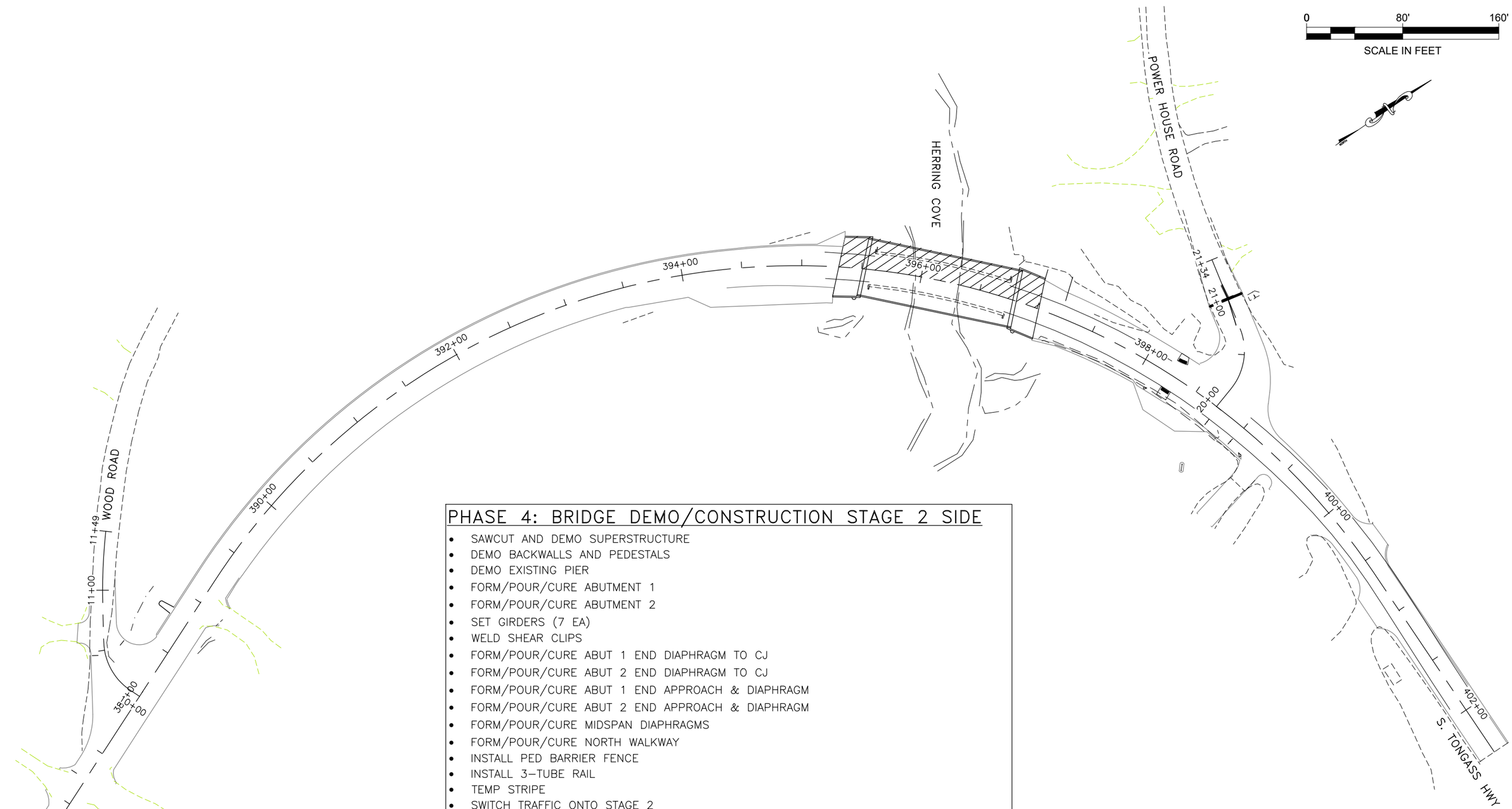

PHASE 4: BRIDGE DEMO/CONSTRUCTION STAGE 2 SIDE

- SAWCUT AND DEMO SUPERSTRUCTURE
- DEMO BACKWALLS AND PEDESTALS
- DEMO EXISTING PIER
- FORM/POUR/CURE ABUTMENT 1
- FORM/POUR/CURE ABUTMENT 2
- SET GIRDERS (7 EA)
- WELD SHEAR CLIPS
- FORM/POUR/CURE ABUT 1 END DIAPHRAGM TO CJ
- FORM/POUR/CURE ABUT 2 END DIAPHRAGM TO CJ
- FORM/POUR/CURE ABUT 1 END APPROACH & DIAPHRAGM
- FORM/POUR/CURE ABUT 2 END APPROACH & DIAPHRAGM
- FORM/POUR/CURE MIDSPAN DIAPHRAGMS
- FORM/POUR/CURE NORTH WALKWAY
- INSTALL PED BARRIER FENCE
- INSTALL 3-TUBE RAIL
- TEMP STRIPE
- SWITCH TRAFFIC ONTO STAGE 2

CN
10/23/2024

STATE OF ALASKA
49TH
BRAN POLLARD, P.E.
106710
REGISTERED PROFESSIONAL ENGINEER
8/9/2021

STATE OF ALASKA
DEPARTMENT OF TRANSPORTATION
AND PUBLIC FACILITIES

KTN HERRING COVE BRIDGE
IMPROVEMENTS

PHASING PLAN 4

FILE Q:\Ktn\SFHWY00072\Planset\00072_S1.dwg | DATE 8/9/2021 11:51 | LAYOUT S4 PHASING PLAN 4 | DESIGNED STAFF | CHECKED STAFF | DRAFTED STAFF

NO.	DATE	REVISION

STATE	PROJECT DESIGNATION	YEAR	SHEET NO.	TOTAL SHEETS
ALASKA	0902043/SFHWY00072	2021	S5	6

0 80' 160'

SCALE IN FEET

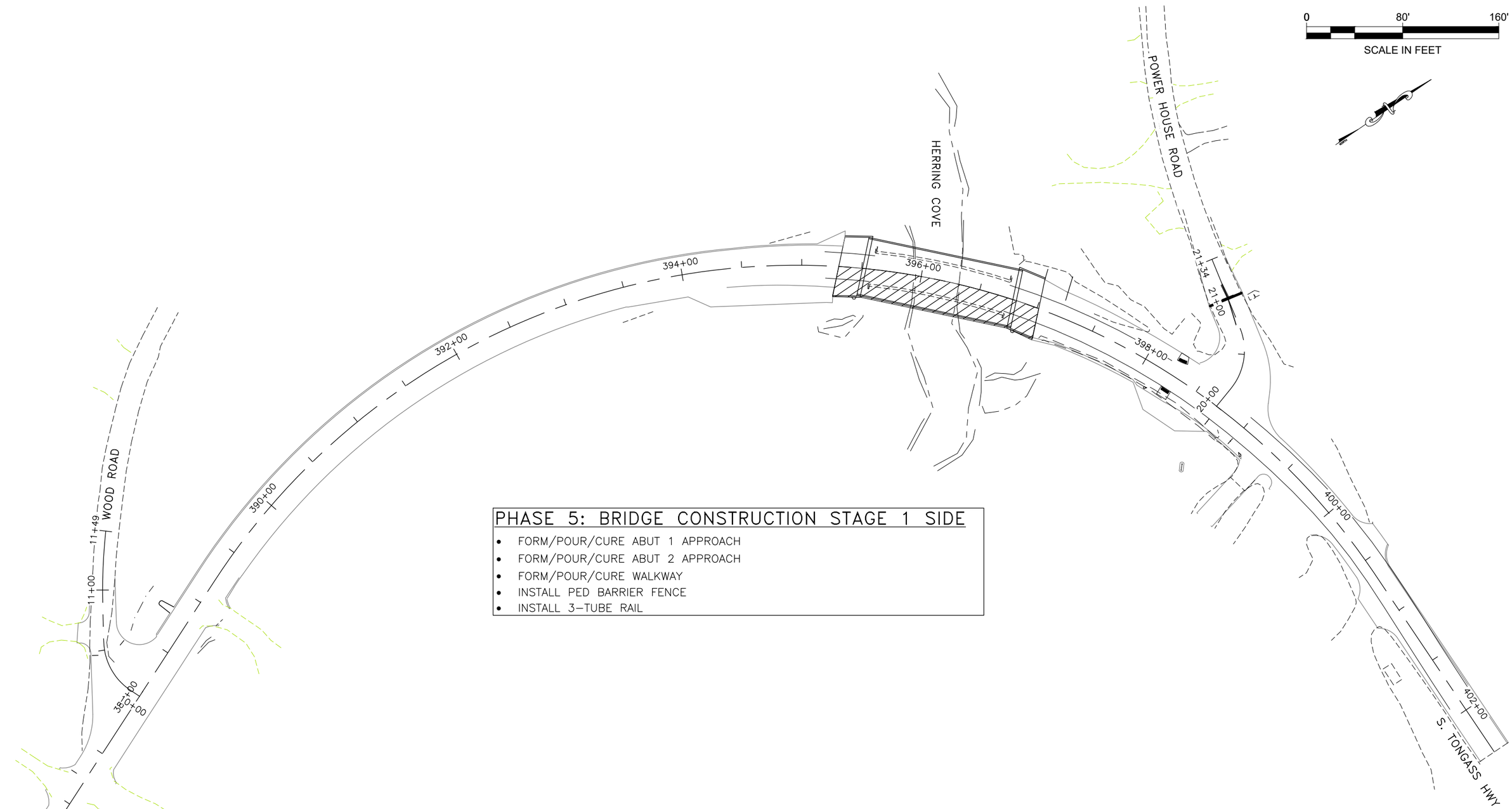

PHASE 5: BRIDGE CONSTRUCTION STAGE 1 SIDE

- FORM/POUR/CURE ABUT 1 APPROACH
- FORM/POUR/CURE ABUT 2 APPROACH
- FORM/POUR/CURE WALKWAY
- INSTALL PED BARRIER FENCE
- INSTALL 3-TUBE RAIL

CN
10/23/2024

STATE OF ALASKA
49TH
BRAN POLLARD, P.E.
106710
REGISTERED PROFESSIONAL ENGINEER
8/9/2021

STATE OF ALASKA
DEPARTMENT OF TRANSPORTATION
AND PUBLIC FACILITIES

KTN HERRING COVE BRIDGE
IMPROVEMENTS

PHASING PLAN 5

FILE	DATE	LAYOUT	DESIGNED	CHECKED	DRAFTED
Q:\Ktn\SFHWY00072\Planset\00072_S1.dwg	8/9/2021 11:51	S5 PHASING PLAN 5	STAFF	STAFF	STAFF

NO.	DATE	REVISION

STATE	PROJECT DESIGNATION	YEAR	SHEET NO.	TOTAL SHEETS
ALASKA	0902043/SFHWY00072	2021	S6	6

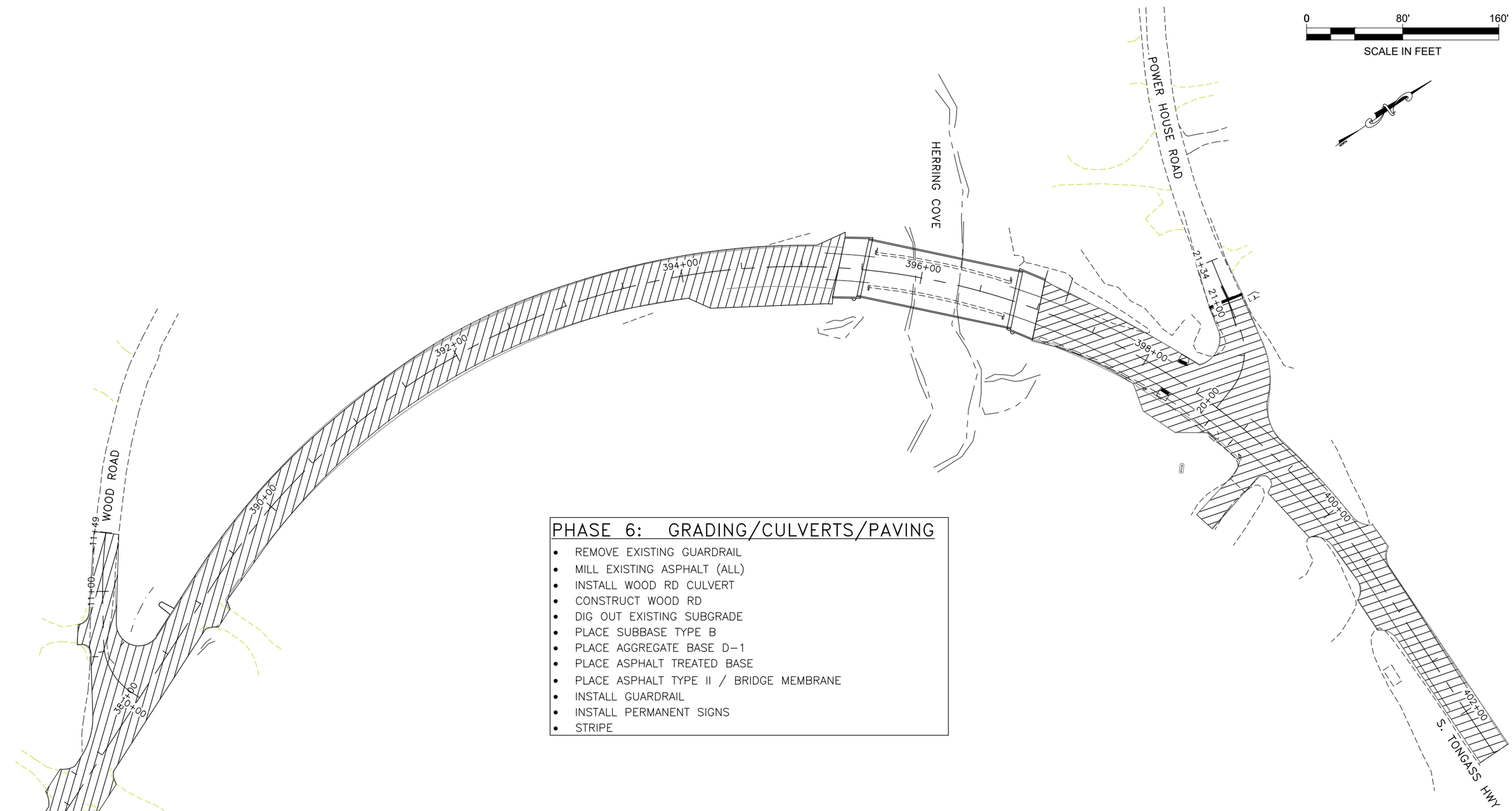

PHASE 6: GRADING/CULVERTS/PAVING

- REMOVE EXISTING GUARDRAIL
- MILL EXISTING ASPHALT (ALL)
- INSTALL WOOD RD CULVERT
- CONSTRUCT WOOD RD
- DIG OUT EXISTING SUBGRADE
- PLACE SUBBASE TYPE B
- PLACE AGGREGATE BASE D-1
- PLACE ASPHALT TREATED BASE
- PLACE ASPHALT TYPE II / BRIDGE MEMBRANE
- INSTALL GUARDRAIL
- INSTALL PERMANENT SIGNS
- STRIPE

CN
10/23/2024

STATE OF ALASKA 49TH
BRAN POLLARD, P.E.
106710
REGISTERED PROFESSIONAL ENGINEER
8/9/2021

STATE OF ALASKA
DEPARTMENT OF TRANSPORTATION
AND PUBLIC FACILITIES

KTN HERRING COVE BRIDGE
IMPROVEMENTS

PHASING PLAN 6

FILE	DATE	LAYOUT	DESIGNED	CHECKED	DRAFTED
Q:\Ktn\SFHWY00072\Planset\00072_S1.dwg	8/9/2021 11:51	S6 PHASING PLAN 6	STAFF	STAFF	STAFF

NO.	DATE	REVISION	STATE	PROJECT DESIGNATION	YEAR	SHEET NO.	TOTAL SHEETS
			ALASKA	0902043/SFHWY00072	2021	T1	4

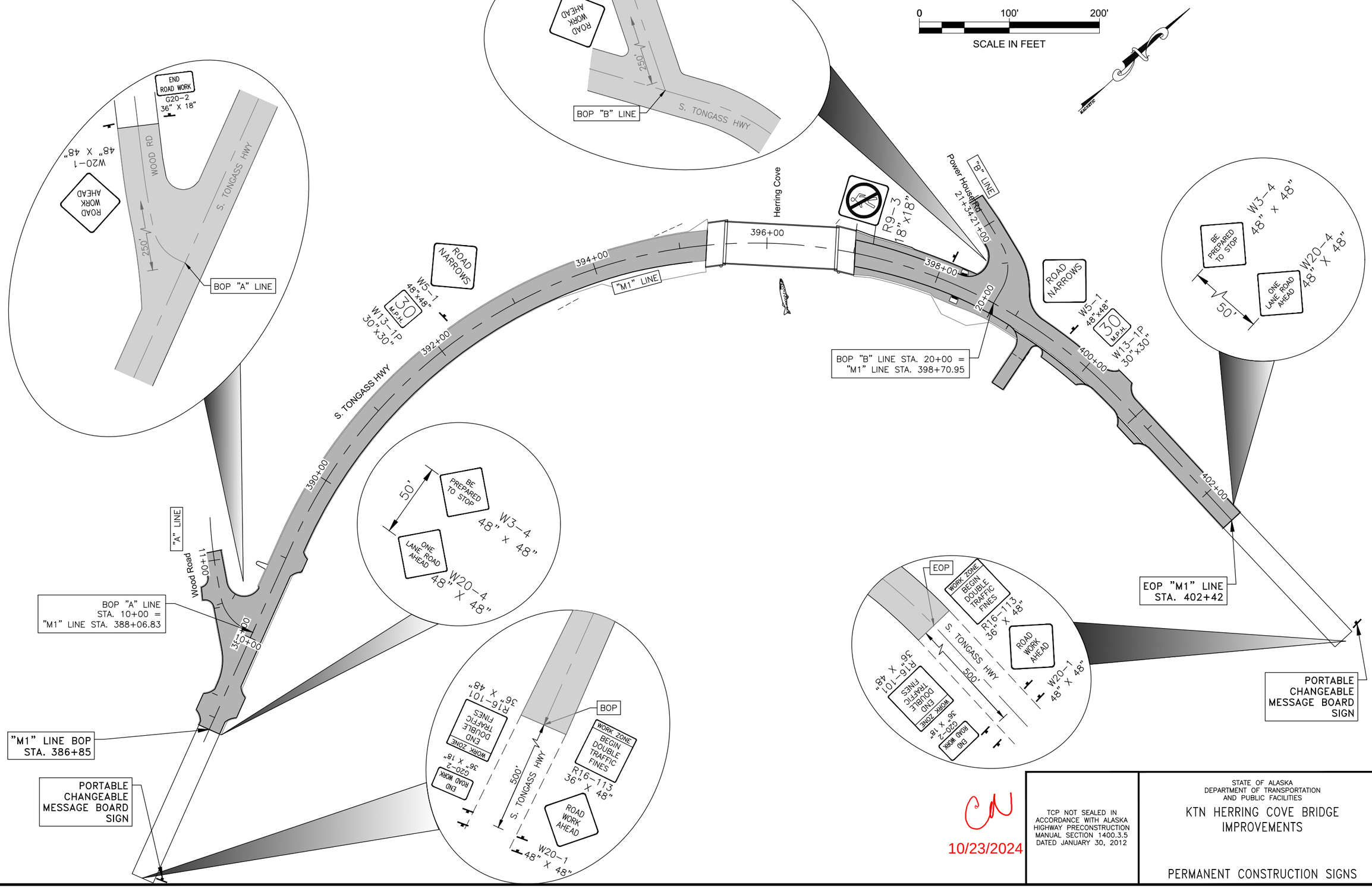

CN
10/23/2024

TCP NOT SEALED IN ACCORDANCE WITH ALASKA HIGHWAY PRECONSTRUCTION MANUAL SECTION 1400.3.5 DATED JANUARY 30, 2012

STATE OF ALASKA
DEPARTMENT OF TRANSPORTATION AND PUBLIC FACILITIES

KTN HERRING COVE BRIDGE IMPROVEMENTS

PERMANENT CONSTRUCTION SIGNS

FILE	DATE	LAYOUT	T1 TRAFFIC CONTROL	DESIGNED	STAFF	CHECKED	STAFF	DRAFTED	STAFF
Q:\Ktn\SFHWY00072\Planset\00072_T1.dwg	8/9/2021 11:43								

NO.	DATE	REVISION

STATE	PROJECT DESIGNATION	YEAR	SHEET NO.	TOTAL SHEETS
ALASKA	0902043/SFHWY00072	2021	T2	4

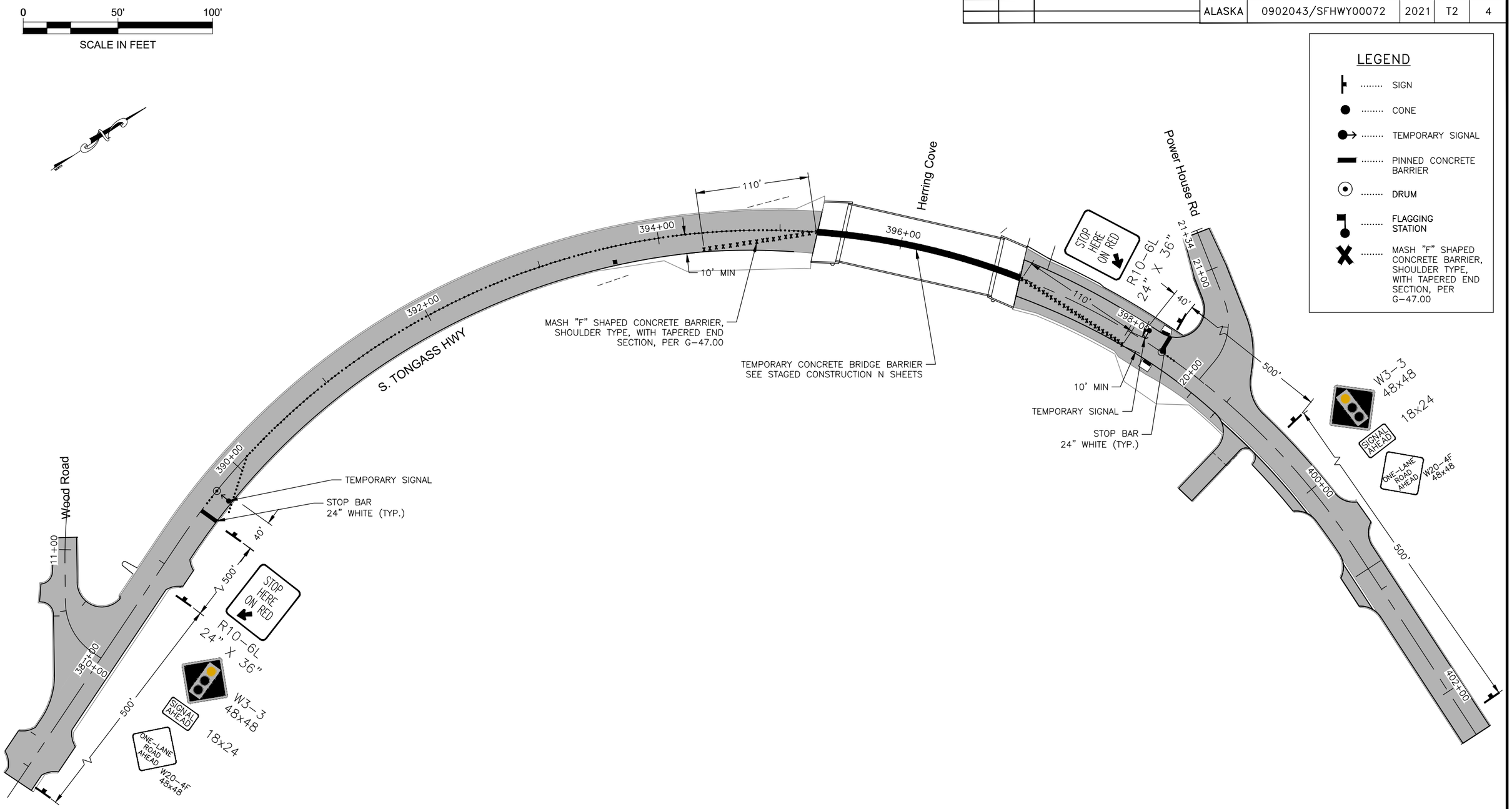

CN
10/23/2024

TCP NOT SEALED IN ACCORDANCE WITH ALASKA HIGHWAY PRECONSTRUCTION MANUAL SECTION 1400.3.5 DATED JANUARY 30, 2012

STATE OF ALASKA
DEPARTMENT OF TRANSPORTATION AND PUBLIC FACILITIES

KTN HERRING COVE BRIDGE IMPROVEMENTS

STAGED CONSTRUCTION TEMPORARY SIGNILIZATION

FILE	DATE	LAYOUT	T2 TRAFFIC CONTROL	DESIGNED	STAFF	CHECKED	STAFF	DRAFTED	STAFF
Q:\Ktn\SFHWY00072\Planset\00072_T2.dwg	8/9/2021 11:45								

NO.	DATE	REVISION

STATE	PROJECT DESIGNATION	YEAR	SHEET NO.	TOTAL SHEETS
ALASKA	0902043/SFHWY00072	2021	T3	4

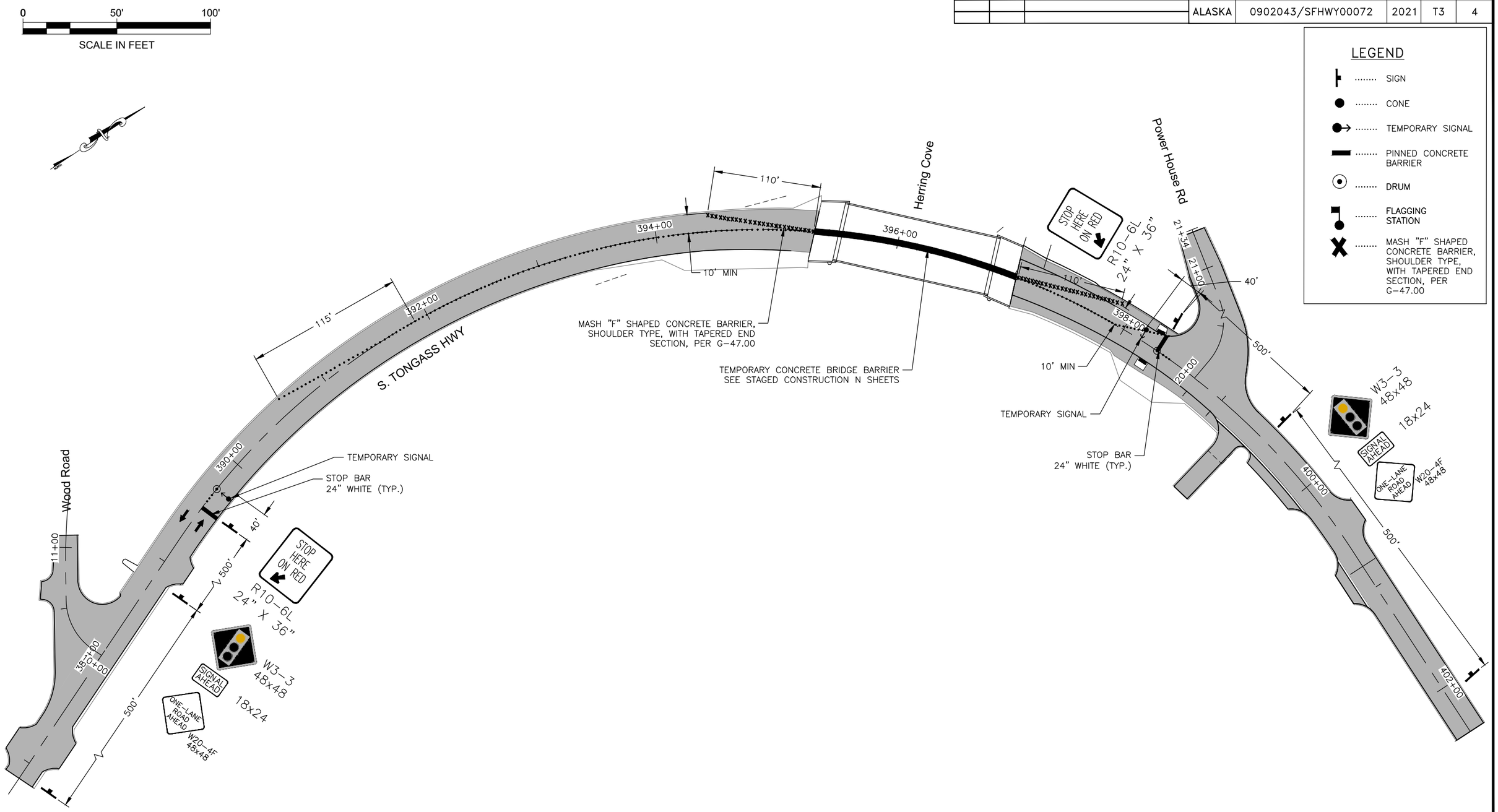

CN
10/23/2024

TCP NOT SEALED IN ACCORDANCE WITH ALASKA HIGHWAY PRECONSTRUCTION MANUAL SECTION 1400.3.5 DATED JANUARY 30, 2012

STATE OF ALASKA
DEPARTMENT OF TRANSPORTATION AND PUBLIC FACILITIES

KTN HERRING COVE BRIDGE IMPROVEMENTS

STAGED CONSTRUCTION TEMPORARY SIGNILIZATION

FILE	DATE	LAYOUT	T3 TRAFFIC CONTROL	DESIGNED	STAFF	CHECKED	STAFF	DRAFTED	STAFF
Q:\Ktn\SFHWY00072\Planset\00072_T3.dwg	8/9/2021 11:46								

NO.	DATE	REVISION	STATE	PROJECT DESIGNATION	YEAR	SHEET NO.	TOTAL SHEETS
			ALASKA	0902043/SFHWY00072	2021	T4	4

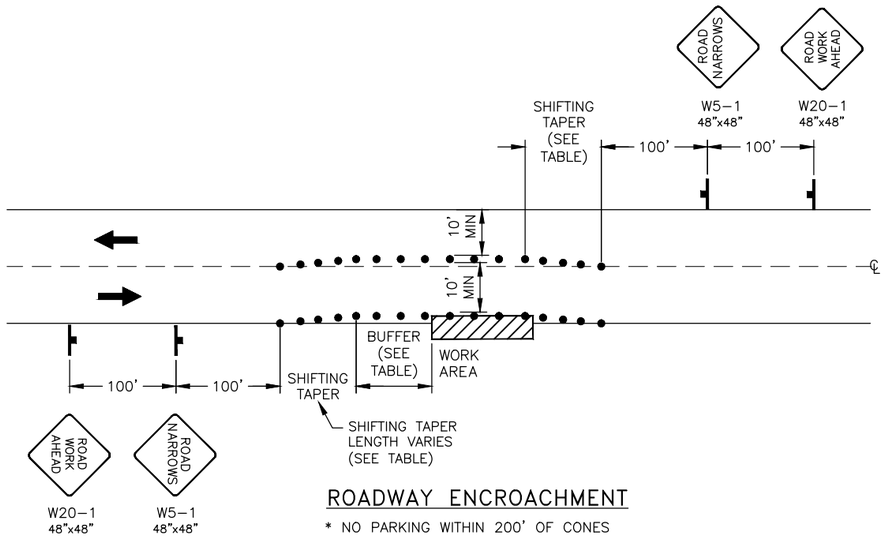

ROADWAY ENCROACHMENT

* NO PARKING WITHIN 200' OF CONES

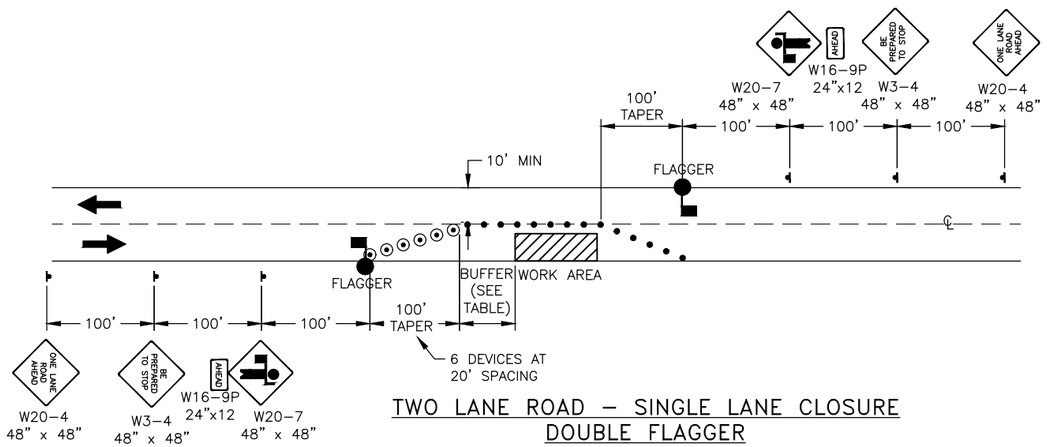

TWO LANE ROAD – SINGLE LANE CLOSURE DOUBLE FLAGGER

* NO PARKING WITHIN 200' OF CONES
TAPERS ARE 6 DEVICES EVENLY SPACED

TCP SETUP TABLE

FORMULA FOR DETERMINING SHIFTING TAPER LENGTH (40 MPH OR LESS)	MAX DEVICE SPACING (FT)			MIN BUFFER SPACE (FT)
	SPEED	ALONG SHIFTING TAPER	ALONG TANGENT	
$L=WS^2/120$ WHERE: L = TAPER LENGTH IN FEET W = WIDTH OF OFFSET IN FEET S = POSTED SPEED LIMIT (MPH)	25 MPH OR BELOW	25'	50'	155'
	30 MPH	30'	60'	200'

TRAFFIC CONTROL NOTES

1. A MINIMUM OF ONE LANE SHALL BE MAINTAINED AT ALL TIMES, THROUGH ALL WORK AREAS.
2. TWO LANES SHALL BE MAINTAINED AT ALL TIMES IN NON–WORK AREAS DURING NON–WORKING HOURS.
3. TEMPORARY DRIVING LANES SHALL HAVE A MINIMUM WIDTH OF 10'.
4. CONSTRUCTION SIGNS SHALL BE IN PLACE ONLY WHEN THE CONDITIONS THEY WARN ABOUT EXIST.
5. THE CONTRACTOR SHALL PROVIDE VEHICULAR ACCESS THRU WORK ZONES AS REQUIRED BY THE ENGINEER.
6. FLOOD LIGHTS SHALL BE PROVIDED FOR FLAGGER STATIONS DURING NIGHT OPERATIONS.
7. CHANNELIZATION DEVICES, IF USED AT NIGHT, SHALL BE LIT IN ACCORDANCE WITH THE ALASKA TRAFFIC MANUAL.
8. IT IS THE INTENT OF THIS TRAFFIC CONTROL PLAN (TCP) TO ILLUSTRATE SOME, NOT ALL, OF THE TRAFFIC CONTROL SETUPS WHICH WILL BE REQUIRED ON THIS PROJECT. PLANS FOR CONFIGURATIONS NOT COVERED BY THE TCP SHALL BE CREATED BY THE CONTRACTOR AND SUBMITTED TO THE ENGINEER FOR APPROVAL. WHERE APPROPRIATE, THEY SHALL INCORPORATE APPLICABLE PORTIONS OF DETAILS ON THESE SHEETS.
9. TEMPORARY PAVEMENT MARKINGS WILL BE REQUIRED AS DESCRIBED IN SECTION 643–3.04 OF THE SPECIFICATIONS.
10. THE CONTRACTOR SHALL RESTORE ACCESS TO BUSINESSES AND HOMES AT THE END OF EVERY WORK DAY. ACCESS TO BUSINESSES AND HOMES SHALL NOT BE SHUT OFF FOR MORE THAN A 24–HOUR PERIOD.
11. THE CONTRACTOR SHALL KEEP THE PUBLIC INFORMED OF HIS CONSTRUCTION ACTIVITIES THROUGH THE USE OF THE LOCAL NEWS MEDIA. NEWS RELEASES SHALL BE APPROVED BY THE PROJECT ENGINEER PRIOR TO THEIR RELEASE. NEWS RELEASES WILL BE REQUIRED BUT NOT LIMITED TO, THE ONSET OF WORK, GRINDING, PAVING, AND CHANGES IN THE LANE CONFIGURATIONS.
12. ALL TRAFFIC DETOURS SHALL BE APPROVED BY THE ENGINEERS. PEDESTRIAN TRAFFIC CONTROL PLANS SHALL CONFORM TO THE LATEST COPY OF THE MUTCD. TYPICAL APPLICATIONS TA–28 AND TA–29 ARE RECOMMENDED.
13. THE CONTRACTOR SHALL GIVE 24 HOURS ADVANCE NOTICE BEFORE WORKING ON DRIVEWAYS.
14. IF VEHICLE STOP TIME EXCEEDS FIVE MINUTES, THE CONTRACTOR SHALL SHORTEN HIS WORK ZONE OR RESCHEDULE HIS WORK TO A LESS BUSY HOUR.

LEGEND

- ..... SIGN
- ..... CONE
- ..... DRUM
- ..... FLAGGING STATION

CN
10/23/2024

TCP NOT SEALED IN ACCORDANCE WITH ALASKA HIGHWAY PRECONSTRUCTION MANUAL SECTION 1400.3.5 DATED JANUARY 30, 2012

STATE OF ALASKA
DEPARTMENT OF TRANSPORTATION AND PUBLIC FACILITIES

KTN HERRING COVE BRIDGE IMPROVEMENTS

TRAFFIC CONTROL

FILE | Q:\Ktn\SFHWY00072\Planset\00072_T1.dwg | DATE | 8/9/2021 11:43 | LAYOUT | T4 TRAFFIC CONTROL | DESIGNED | STAFF | CHECKED | STAFF | DRAFTED | STAFF

NO.	DATE	REVISION	STATE	PROJECT DESIGNATION	YEAR	SHEET NO.	TOTAL SHEETS
1	5/2024	AS-BUILT					
AS-BUILT DRAWING PREPARED FROM CONTRACTOR PROVIDED REDLINE WHICH MAY NOT BE CORRECT			ALASKA	0902043/SFHWY00072	2021	U1	45

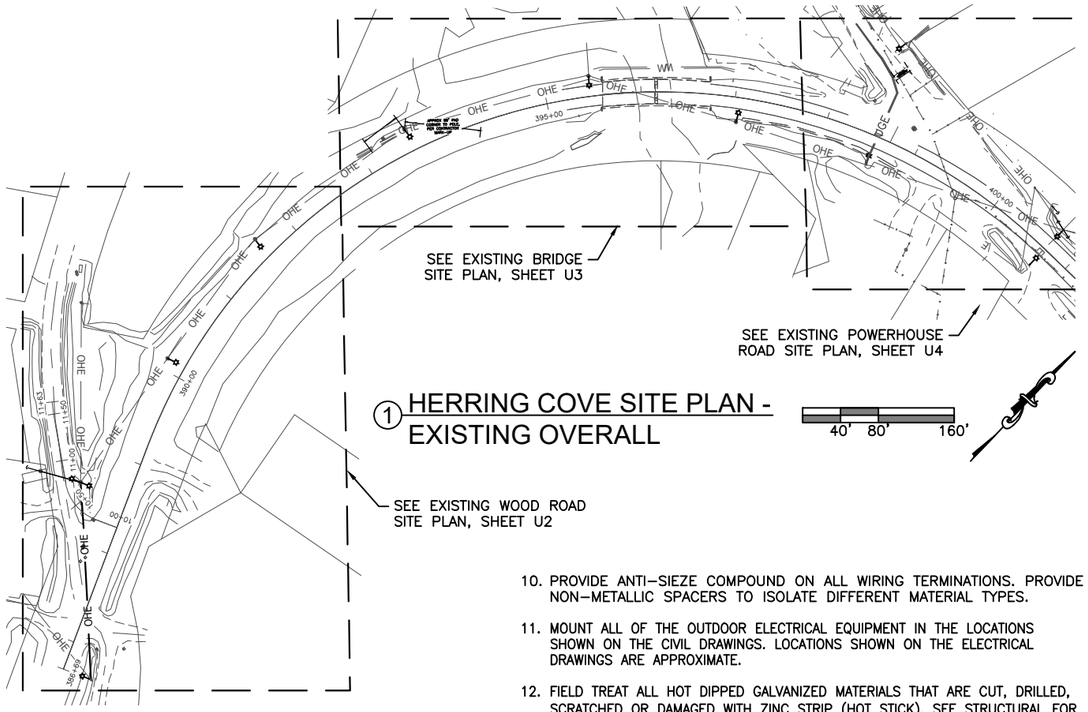

1 HERRING COVE SITE PLAN - EXISTING OVERALL

GENERAL NOTES (APPLICABLE TO THE ENTIRE ELECTRICAL SET OF PLANS AND SPECIFICATIONS, ALL SHEETS U1–U41, AND ALL SPECIFICATION SECTIONS):

1. PERFORM ALL WORK PER NATIONAL ELECTRICAL CODE (NEC), 2020 EDITION. PERFORM ALL WORK PER NATIONAL ELECTRICAL SAFETY CODE (NESC), 2017 EDITION.

2. PERFORM ALL WORK NEEDED, WORK EXPLICITLY SHOWN, WORK IMPLIED, AND WORK REQUIRED THAT IS NOT SPECIFICALLY NOTED, AS REQUIRED TO PROVIDE COMPLETE AND FULLY FUNCTIONAL POWER, TELECOM, TELEVISION, AND STREET LIGHTING SYSTEMS.

3. COORDINATE WITH ALL UTILITIES TO ALLOW THEM TO PERFORM THEIR WORK. UTILITY WORK WILL BE PAID FOR BY OTHERS. DO NOT INSTALL ANYTHING IN CONFLICT WITH UTILITIES. BRING ALL CONFLICTS TO THE ATTENTION OF THE ENGINEER. OBTAIN LOCATES BEFORE WORKING. COORDINATE ALL OUTAGES WITH UTILITIES. ALL SWITCHING AND CLEARANCE ORDERS BY KPU. SEE NOTE 22, THIS SHEET FOR WORK OUTSIDE CONTRACTORS SCOPE.

4. UNLESS OTHERWISE NOTED, ALL UNDERGROUND CONDUITS SHALL BE SCHEDULE 80 HDPE, ALL CONDUIT ACROSS BRIDGE SECTIONS SHALL BE FIBERGLASS, AND ALL ABOVE GROUND CONDUITS SHALL BE GRS. INSTALL CONDUITS IN TRENCHES PER DETAILS ON SHEET U38. SEE SHEET U18 FOR MORE ON REQUIREMENTS OF HDPE CONDUIT AND INSTALLATION.

5. STREET LIGHT WIRING SHALL BE IN CABLE WITH COPPER CONDUCTOR, 600V RATED XHHW INSULATION, AND OVERALL PVC JACKET. PROVIDE ADDITIONAL BARE GROUND. USE BARE GROUND TO GROUND TYPE 1A JUNCTION BOXES, LIGHT POLES, FOUNDATIONS, ETC. BOND GROUND INSIDE CABLE TO LIGHT POLES.

6. LOCATE EQUIPMENT WHERE SHOWN ON THE SUMMARY TABLES, SEE SHEET U34. COORDINATE WITH CIVIL. SEE NOTE 11, THIS SHEET.

7. THE EXISTING STREET LIGHTING, UTILITIES, ETC. CIRCUITING IS BASED ON THE ORIGINAL DRAWINGS AND MAY NOT BE WHERE SHOWN. OBTAIN PRIVATE LOCATES BEFORE CONSTRUCTION AND PROTECT CONDUIT, EQUIPMENT, ETC. TO REMAIN. ADJUST NEW CONDUIT ROUTING AS REQUIRED TO INTERCEPT, EXTEND, AND RE–USE EXISTING CONDUIT, ETC.

8. ALL WORK IS NEW UNLESS OTHERWISE NOTED.

9. ALL PART NUMBERS ARE GIVEN AS A GUIDE TO WHAT MATERIAL IS BEING SPECIFIED. THEY ARE BASED UPON INFORMATION AVAILABLE DURING DESIGN AND MAY NOT BE ACCURATE. VERIFY ALL PART NUMBERS DURING BIDDING AND CHANGE AS REQUIRED TO CONFORM TO DRAWINGS AND SPECIFICATIONS. THE DRAWINGS SHALL NOT BE USED AS A BILL OF MATERIALS.

10. PROVIDE ANTI–SIEZE COMPOUND ON ALL WIRING TERMINATIONS. PROVIDE NON–METALLIC SPACERS TO ISOLATE DIFFERENT MATERIAL TYPES.

11. MOUNT ALL OF THE OUTDOOR ELECTRICAL EQUIPMENT IN THE LOCATIONS SHOWN ON THE CIVIL DRAWINGS. LOCATIONS SHOWN ON THE ELECTRICAL DRAWINGS ARE APPROXIMATE.

12. FIELD TREAT ALL HOT DIPPED GALVANIZED MATERIALS THAT ARE CUT, DRILLED, SCRATCHED OR DAMAGED WITH ZINC STRIP (HOT STICK). SEE STRUCTURAL FOR FIELD TREATMENT.

13. ALL LOW VOLTAGE CONDUCTORS SHALL BE COPPER, ALL CABLE INSULATION SHALL BE 600V RATED, AND SHALL BE TYPE XHHW. ALL CABLES SHALL BE THE TYPE SPECIFIED, NO SUBSTITUTIONS.

14. USE 316 STAINLESS STEEL BOLTS, WASHERS, ETC. TO MOUNT ELECTRICAL EQUIPMENT AND STRUT CHANNEL. ALL FASTENERS AND OTHER EXPOSED HARDWARE SHALL BE 316 STAINLESS STEEL.

15. SEAL ALL PENETRATIONS IN ELECTRICAL EQUIPMENT WITH UL LISTED HARDWARE FOR SUCH USE. USE RUBBER OR SILICONE WASHERS IN ADDITION TO STAINLESS STEEL WASHERS.

16. PROJECT WILL BE COMPLETED IN PHASES IN CLOSE COORDINATION WITH GENERAL CONSTRUCTION AND CIVIL ACTIVITIES. AN OVERALL PROJECT PHASING PLAN IS REQUIRED. SEE SHEET U5 FOR MORE ON PHASING PLAN REQUIREMENTS.

17. PROVIDE OXIDE INHIBITING COMPOUND ON ALL ELECTRICAL CONNECTIONS. BURNDY PENTROX TYPE A OR E AS REQUIRED.

18. DRILL A 1/4" HOLE IN ALL CONDUIT ELBOWS INSTALLED UNDERGROUND AND LOW POINTS OF UNDERGROUND CONDUIT TO ALLOW THEM TO DRAIN. DRILL THE HOLES PRIOR TO INSTALLATION. DEBURR THE HOLES AND FIELD TREAT HOT DIPPED GALVANIZED ELBOWS PRIOR TO INSTALLATION. SEE NOTE 12.

19. COORDINATE WITH OTHER TRADES TO PERFORM THE ELECTRICAL WORK. STUDY THE OTHER PLANSETS TO UNDERSTAND HOW OTHER WORK IMPACTS THE ELECTRICAL WORK AND HOW TO INSTALL THE ELECTRICAL EQUIPMENT AND MATERIALS. INSTALL EQUIPMENT AND MATERIALS AS SHOWN ON THE DRAWINGS AND AS REQUIRED TO PROVIDE A COMPLETE AND OPERATIONAL SYSTEM. STUDY THE DRAWINGS, COORDINATE WITH OTHER TRADES, DETERMINE HOW AND PROVIDE ALL WORK (MATERIALS AND LABOR) TO MOUNT EQUIPMENT, ROUTE CONDUIT, ROUTE CABLES AND WIRING, AND ALL OTHER DETAILS OF THE INSTALLATION IN ORDER TO PROVIDE A COMPLETE AND OPERATIONAL SYSTEM. PROVIDE BACKING PLATES, BLOCKING, MOUNTING HARDWARE, NECESSARY PRODUCT ACCESSORIES AND OPTIONS, SUPPORTS, STRUCTURAL CHANNEL, AS REQUIRED.

20. NOTIFY OTHER TRADES AND COORDINATE WITH THEM THE SEQUENCE OF INSTALLING THE ELECTRICAL WORK. IF PORTIONS OF OTHER WORK HAS TO WAIT UNTIL THE ELECTRICAL WORK IS DONE, VERIFY ADEQUATE TIME IS ALLOTTED IN THE CONSTRUCTION SCHEDULE TO ALLOW THE ELECTRICAL WORK TO BE DONE AND MAKE SURE OTHER TRADES HONOR THE SCHEDULE TO ALLOW THE ELECTRICAL WORK TO BE DONE. IT IS UP TO THE GENERAL CONTRACTOR AND ALL SUB–CONTRACTORS TO WORK TOGETHER AS REQUIRED TO PROVIDE THE WORK SHOWN ON THE CONTRACT DOCUMENTS.

21. CONDUIT SPACING SHALL BE STRICTLY ENFORCED AND SHALL ADHERE TO SPECIFIC TRENCH SECTION NOTED IN EACH INSTANCE. TRENCH ROUTES AND WIDTHS SHOWN ON THE SITE PLANS ARE GRAPHICAL IN NATURE ONLY AND NOT TO SCALE. SEE SHEET U38 FOR TRENCH DETAILS.

22. OVERALL PROJECT SCOPE – POWER: PROVIDE ALL MEDIUM VOLTAGE POWER UTILITY WORK ON THE PROJECT, UNLESS NOTED OTHERWISE. THIS INCLUDES DEMOLITION OF OVERHEAD FACILITIES, RECONFIGURATION OF EXISTING OVERHEAD FACILITIES, AND COORDINATION REQUIRED WITH KPU ELECTRIC. THIS INCLUDES ALL NEW CONDUIT, CONDUCTORS, AND BOXES REQUIRED FOR THE NEW UNDERGROUND DISTRIBUTION SYSTEM, INCLUDING ALL CABLE ELBOW ASSEMBLIES, SPLICES, TERMINATIONS, ETC. THIS INCLUDES ALL POLE INFRASTRUCTURE, EQUIPMENT, MOUNTS, AND ACCESSORIES FOR THE EXISTING TO REMAIN POLES AND THE NEW POLES ON THE PROJECT. WORK INCLUDES ALL PAD MOUNTED SWITCHES, JUNCTION CABINETS, CONCRETE BASEMENTS, TRANSFORMERS, PEDESTALS, AND ASSOCIATED CABLE CONNECTION COMPONENTS, SURGE ARRESTERS, GROUNDING, EQUIPMENT ACCESSORIES, ETC. AS NOTED ON THE PLANS. WORK INCLUDES THE NEW VAULTS IN POWERHOUSE ROAD AND ALL ASSOCIATED CIRCUIT WORK.

ALL CABLING SHALL BE PULLED CONTINUOUS, WITHOUT SPLICES OR TAPS, BETWEEN POLES AND PADS, AND FROM PAD TO PAD. PROVIDE ALL ELECTRICAL WORK REQUIRED, WHETHER SHOWN OR NOT SHOWN, FOR COMPLETE AND FULLY FUNCTIONAL 12.47KV AND 34.5KV UNDERGROUND ELECTRICAL DISTRIBUTION.

CONTRACTOR SHALL PROVIDE TEMPORARY POWER CONNECTIONS DURING CONSTRUCTION. SEE DETAIL 3, SHEET U18.

WORK NOT WITHIN THE CONTRACTOR'S SCOPE INCLUDES: ALL POLE DEMOLITION AND NEW WORK AT POLES P7–P10. ALL UNDERGROUND TO THESE POLES BY CONTRACTOR. SEE PHASING NOTES ON SHEET U5 FOR UTILITY CONTACT INFORMATION.

23. OVERALL PROJECT SCOPE – TELECOM: PROVIDE ALL TELECOMMUNICATION (TELEPHONE) WORK ON THE PROJECT, UNLESS NOTED OTHERWISE. THIS INCLUDES ALL DEMOLITION OF OVERHEAD FACILITIES, RECONFIGURATION OF EXISTING OVERHEAD FACILITIES, AND COORDINATION REQUIRED WITH KPU TELECOMMUNICATIONS. THIS INCLUDES ALL NEW CONDUIT, COPPER CABLES, FIBER CABLES, BOXES, AND VAULTS REQUIRED FOR THE NEW UNDERGROUND DISTRIBUTION SYSTEM. ALL CABLES WILL BE PROVIDED, PULLED AND SPLICED, TERMINATED, AND TESTED BY THE CONTRACTOR. WORK INCLUDES ALL POLE CONDUIT RISER AND CABLE WORK, THE EXISTING TO REMAIN POLES, AND THE NEW POLE ON THE PROJECT. WORK INCLUDES ALL PAD MOUNTED AND UNDERGROUND EQUIPMENT AND VAULTS, INCLUDING ALL TELECOMMUNICATIONS GROUNDING NEEDED.

ALL CABLING SHALL BE PULLED CONTINUOUS, WITHOUT SPLICES OR TAPS, BETWEEN POLES AND PADS, AND FROM PAD TO PAD. PROVIDE ALL TELECOMMUNICATIONS WORK REQUIRED, WHETHER SHOWN OR NOT SHOWN, FOR COMPLETE AND FULLY INSTALLED COPPER AND FIBER OPTICAL UNDERGROUND DISTRIBUTION SYSTEM. CONTRACTOR IS RESPONSIBLE FOR ALL COPPER AND FIBER CABLE SPLICING AND TERMINATION WORK.

WORK NOT WITHIN THE CONTRACTOR'S SCOPE INCLUDES: NONE, PROVIDE ALL TELECOMMUNICATIONS WORK ON THE PROJECT. COORDINATE WITH KPU TELECOMMUNICATIONS TO ALLOW THEM TO REVIEW AND APPROVE THE COPPER AND FIBER CABLE BUILDS. SEE PHASING NOTES ON SHEET U5 FOR UTILITY CONTACT INFORMATION.

24. OVERALL PROJECT SCOPE – TELEVISION: PROVIDE ALL TELEVISION WORK ON THE PROJECT, UNLESS NOTED OTHERWISE. THIS INCLUDES ALL DEMOLITION OF OVERHEAD FACILITIES, RECONFIGURATION OF EXISTING OVERHEAD FACILITIES, AND COORDINATION REQUIRED WITH GCI UTILITY. THIS INCLUDES ALL NEW CONDUIT, COAXIAL CABLES, AND VAULTS REQUIRED FOR THE NEW UNDERGROUND DISTRIBUTION SYSTEM. ALL CABLES WILL BE PROVIDED, PULLED AND LEFT COILED AS NOTED, TERMINATIONS BY GCI. WORK INCLUDES ALL POLE CONDUIT RISER AND CABLE WORK, THE EXISTING TO REMAIN POLES, AND THE NEW POLE ON THE PROJECT. WORK INCLUDES ALL PAD MOUNTED AND UNDERGROUND EQUIPMENT AND VAULTS, INCLUDING ALL TELEVISION GROUNDING NEEDED.

ALL CABLING SHALL BE PULLED CONTINUOUS, WITHOUT SPLICES OR TAPS, BETWEEN POLES AND PADS, AND FROM PAD TO PAD. PROVIDE ALL TELECOMMUNICATIONS WORK REQUIRED, WHETHER SHOWN OR NOT SHOWN, FOR COMPLETE AND FULLY INSTALLED COAXIAL UNDERGROUND DISTRIBUTION SYSTEM.

WORK NOT WITHIN THE CONTRACTOR'S SCOPE INCLUDES: ALL TELEVISION COAXIAL CABLE SPLICING, TERMINATIONS, CONNECTIONS, TESTING, ETC. ALL SUCH WORK AND THE ACTIVATION OF THE COAXIAL TELEVISION SYSTEM IS BY GCI. SEE PHASING NOTES ON SHEET U5 FOR UTILITY CONTACT INFORMATION.

25. OVERALL PROJECT SCOPE – STREET LIGHTING: PROVIDE ALL STREET LIGHTING WORK ON THE PROJECT, UNLESS NOTED OTHERWISE. THIS INCLUDES ALL DEMOLITION OF OVERHEAD FACILITIES, RECONFIGURATION OF EXISTING OVERHEAD FACILITIES, AND COORDINATION REQUIRED WITH KPU UTILITY. THIS INCLUDES ALL NEW CONDUIT, COPPER POWER CONDUCTORS AND CABLES, JUNCTION BOXES, LIGHT POLES, LIGHT FIXTURES, LIGHT POLE BASES, GROUNDING, SURGE AND FUSE PROTECTION, ETC. AS REQUIRED FOR THE NEW UNDERGROUND STREET LIGHTING SYSTEM. WORK INCLUDES A COMPLETE AND FULLY FUNCTIONAL DOT&PF STANDARD TYPE 1A LIGHTING LOAD CENTER, AND WORK INCLUDES ALL STREET LIGHTING GROUNDING REQUIRED AND NOTED. AS WELL, WORK INCLUDES ALL TEMPORARY ROADWAY LIGHTING REQUIRED DURING CONSTRUCTION.

ALL STREET LIGHTING CIRCUITS SHALL BE PULLED CONTINUOUS, WITHOUT SPLICES OR TAPS, BETWEEN POLES, JUNCTION BOXES, AND LIGHTING LOAD CENTER AS REQUIRED. PROVIDE ALL LIGHTING WORK REQUIRED, WHETHER SHOWN OR NOT SHOWN, FOR COMPLETE AND FULLY FUNCTIONAL DOT&PF STREET LIGHTING SYSTEM.

NOTE: SEE SHEET U2 FOR THE SYMBOL LEGEND.

SEE DOT&PF WEBSITE FOR STANDARDS. SEE BELOW:

STANDARD DETAILS THAT APPLY ON PROJECT:
L–03.10 LIGHTING STANDARD
L–23.02 JUNCTION BOXES FOR ELECTROLIER
L–25.01 TYPE 1A LOAD CENTER
L–30.11 CONCRETE STREET LIGHT POLE FOUNDATION

CN
10/23/2024

SHEET INDEX

SHEET NO.	SHEET TITLE
U1	HERRING COVE SITE PLAN – EXISTING OVERALL
U2	HERRING COVE SITE PLAN – EXISTING WOOD ROAD
U3	HERRING COVE SITE PLAN – EXISTING BRIDGE
U4	HERRING COVE SITE PLAN – EXISTING POWERHOUSE ROAD
U5	HERRING COVE SITE PLAN – NEW OVERALL & PHASING PLAN
U6	HERRING COVE SITE PLAN – NEW WOOD ROAD
U7A	HERRING COVE SITE PLAN – BRIDGE WORK – STAGE 0
U7B	HERRING COVE SITE PLAN – BRIDGE WORK – STAGE 1
U7C	HERRING COVE SITE PLAN – BRIDGE WORK – STAGE 2
U8	HERRING COVE SITE PLAN – NEW POWERHOUSE ROAD
U9	UTILITY PAD 4 DETAILS
U10	UTILITY PAD 5 & 6 DETAILS
U11	UTILITY PAD 4 – ROADWAY SECTIONS & PAD ELEVATIONS
U12	UTILITY PAD 5 & 6 – ROADWAY SECTIONS & PAD ELEVATONS
U13	EXISTING BRIDGE TEMP CONDUIT SECTIONS & DETAILS
U14	NEW BRIDGE CONDUIT SECTIONS & DETAILS
U15	DEMOLITION UTILITY SCHEMATIC DIAGRAM
U16	RENOVATION POWER UTILITY SCHEMATIC DIAGRAM
U17	POWER UTILITY RENOVATION SINGLE LINE DIAGRAM
U18	MEDIUM VOLTAGE CABLE DETAILS & CONDUIT SPECS
U19	POLE P2 & P2B ELEVATIONS (KPU#2430–A5–3 & KPU#2430–A5–10)
U20	POLE P5A ELEVATIONS (KPU#2430–B5–12)
U21	POLE P5 ELEVATIONS (KPU#2430–B5–1)
U22	POLE P7 ELEVATIONS (KPU#2430–A4–6)
U23	POLE P8 ELEVATIONS (KPU#2430–A4–7)
U24	POLE P9 ELEVATIONS (KPU#2430–B4–4)
U25	POLE P10 ELEVATIONS (KPU#2430–B4–5)
U26A	UTILITY POLE MATERIAL LISTS
U26B	UTILITY WOOD POLE SPECIFICATION
U27	TRANSFORMER DETAILS
U28	POWER UTILITY SWITCH DETAILS
U29	POWER UTILITY SECTIONALIZING CABINET DETAILS
U30A	POWERHOUSE VAULT ELECTRICAL DETAILS
U30B	POWERHOUSE VAULT STRUCTURAL DETAILS
U31	POWERHOUSE VAULTS – ENLARGED PLAN
U32	DEADBREAK ELBOW DETAILS
U33	LOADBREAK ELBOW DETAILS
U34	SCHEDULES
U35	LIGHTING LOAD CENTER SUMMARY, SCHEMATIC & CALCS.
U36	ELECTROLIER, JUNCTION BOX, & BOLLARD DETAILS
U37	BRIDGE ELECTROLIER & JUNCTION BOX DETAILS
U38	TRENCH DETAILS
U39	RENOVATION TELECOM & TV UTILITY SCHEMATIC DIAGRAM
U40	FIBER CABLE SPLICE DETAILS
U41	TELECOM & TV CKT, PULLING DIAGRAMS, VAULT DETAIL, & COIL TABLE

PLANS DEVELOPED BY:
MORRIS ENGINEERING GROUP, INC
2375 JORDAN AVE #7
JUNEAU, AK 99801
907–789–3350
AECL 1010

STATE OF ALASKA 49TH
Mark G. Morris
May 31, 2024
No. EE 8613
REGISTERED PROFESSIONAL ENGINEER

STATE OF ALASKA DEPARTMENT OF TRANSPORTATION AND PUBLIC FACILITIES
6860 GLACIER HIGHWAY, JUNEAU, AK 99801
(907) 465–1763

UTILITY RELOCATION FOR KETCHIKAN AREA BRIDGES

HERRING COVE SITE PLAN – EXISTING OVERALL

FILE | y:\102 state of ak\44 utility relocation design for ketchikan bridges\Working Drawings\00072_U1.dwg | DATE | 5/30/2024 12:56 | LAYOUT | U1 | DESIGNED | MGM | CHECKED | MGM | DRAFTED | JODI

NO.	DATE	REVISION	STATE	PROJECT DESIGNATION	YEAR	SHEET NO.	TOTAL SHEETS
1	5/2024	AS-BUILT					
AS-BUILT DRAWING PREPARED FROM CONTRACTOR PROVIDED REDLINE WHICH MAY NOT BE CORRECT			ALASKA	0902043/SFHWY00072	2021	U2	45

DEMOLITION NOTES (APPLICABLE TO SHEETS U2–U4):

1. AT EXISTING POLES TO REMAIN, GUYING WILL BE REPLACED BY CONTRACTOR AND REWORKING OF OVERHEAD CONNECTIONS SHALL BE BY CONTRACTOR WITH UTILITY SUPPORT. ALL SUCH WORK SHALL BE COORDINATED WITH KPU POWER UTILITY. KPU TELECOM UTILITY, AND GCI TELEVISION UTILITY.
2. REMOVE STREET LIGHTING AND EQUIPMENT MOUNTED TO POLES THAT ARE TO BE DEMOLISHED. KPU POWER HAS FIRST RIGHTS TO SALVAGEABLE MATERIALS AND EQUIPMENT.
3. NO DEMOLITION WORK SHALL BEGIN WITHOUT A WRITTEN AND APPROVED PHASING PLAN THAT INCLUDES DETAILS ON HOW TO MAINTAIN TEMPORARY UTILITIES TO ALL CUSTOMERS THROUGHOUT THE PROJECT. PHASING PLAN GENERAL REQUIREMENTS PER SHEET U5.
4. SOME SITE OVERHEAD UTILITIES ARE TO REMAIN. PROTECT AND MAINTAIN AS REQUIRED.
5. ALL WORK SHALL BE COORDINATED WITH KPU POWER, KPU TELECOMMUNICATIONS, AND GCI TELEVISION UTILITY COMPANIES. SOME WORK IN THE OVERALL PROJECT IS BY UTILITIES, SEE SCOPE DESCRIPTIONS ON SHEET U1.

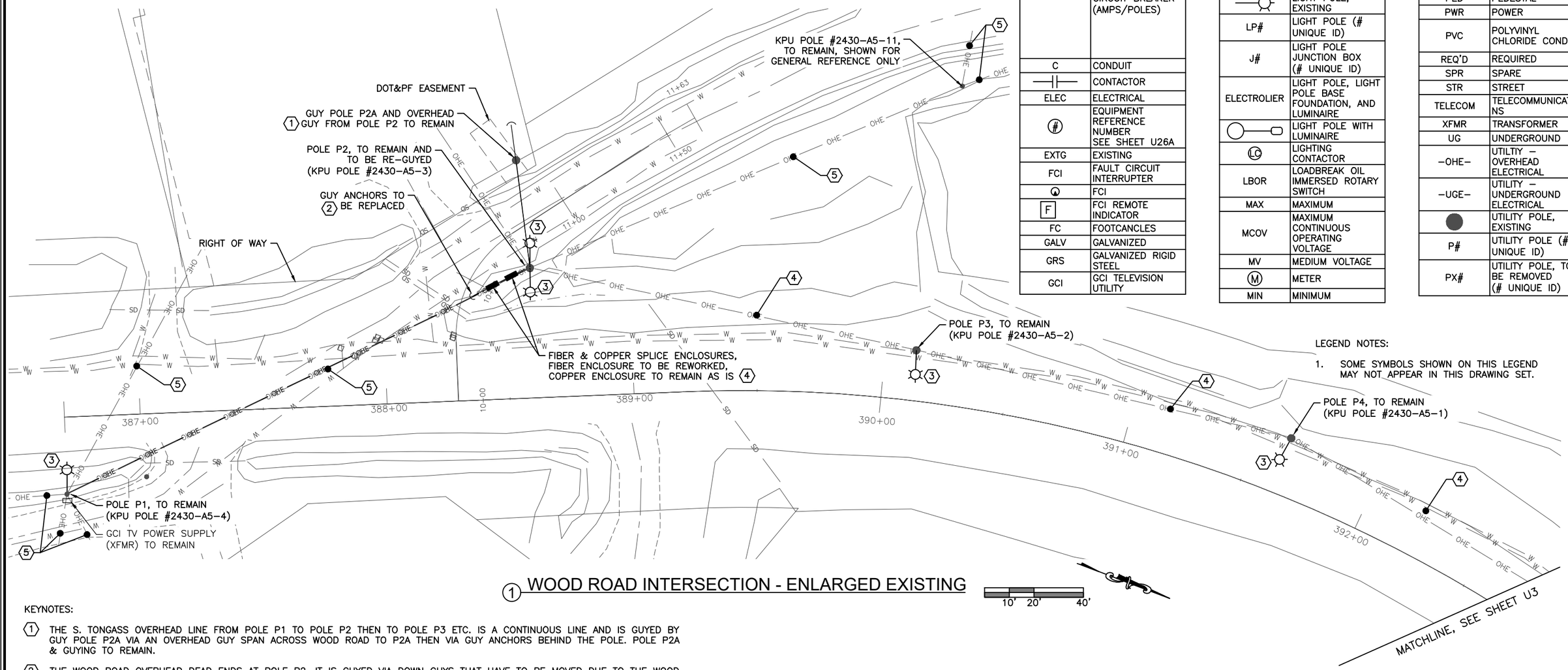

1 WOOD ROAD INTERSECTION - ENLARGED EXISTING

10' 20' 40'

LEGEND	
AFG	ABOVE FINISHED GRADE
BSMNT	BASEMENT
CU	BARE COPPER
CKT	CIRCUIT
C/B	CIRCUIT BREAKER
20/1	CIRCUIT BREAKER (AMPS/POLES)
C	CONDUIT
	CONTACTOR
ELEC	ELECTRICAL
#	EQUIPMENT REFERENCE NUMBER SEE SHEET U26A
EXTG	EXISTING
FCI	FAULT CIRCUIT INTERRUPTER
	FCI
F	FCI REMOTE INDICATOR
FC	FOOTCANCLES
GALV	GALVANIZED
GRS	GALVANIZED RIGID STEEL
GCI	GCI TELEVISION UTILITY

LEGEND	
GND	GROUND
GFI	GROUND FAULT INTERRUPTER
ID	INNER DIAMETER
J–BOX	JUNCTION BOX
KPU	KETCHIKAN PUBLIC UTILITY
#	KEYNOTE
LTG	LIGHTING
	LIGHT POLE, EXISTING
LP#	LIGHT POLE (# UNIQUE ID)
J#	LIGHT POLE JUNCTION BOX (# UNIQUE ID)
ELECTROLIER	LIGHT POLE, LIGHT POLE BASE FOUNDATION, AND LUMINAIRE
	LIGHT POLE WITH LUMINAIRE
LC	LIGHTING CONTACTOR
LBOR	LOADBREAK OIL IMMERSED ROTARY SWITCH
MAX	MAXIMUM
MCOV	MAXIMUM CONTINUOUS OPERATING VOLTAGE
MV	MEDIUM VOLTAGE
M	METER
MIN	MINIMUM

LEGEND	
NEC	NATIONAL ELECTRIC CODE
NESC	NATIONAL ELECTRICAL SAFETY CODE
NEUT	NEUTRAL
NO	NUMBER
OD	OUTSIDE DIAMETER
OH	OVERHEAD
PED	PEDESTAL
PWR	POWER
PVC	POLYVINYL CHLORIDE CONDUIT
REQ'D	REQUIRED
SPR	SPARE
STR	STREET
TELECOM	TELECOMMUNICATIONS
XFMR	TRANSFORMER
UG	UNDERGROUND
–OHE–	UTILTIY – OVERHEAD ELECTRICAL
–UGE–	UTILITY – UNDERGROUND ELECTRICAL
	UTILITY POLE, EXISTING
P#	UTILITY POLE (# UNIQUE ID)
PX#	UTILITY POLE, TO BE REMOVED (# UNIQUE ID)

LEGEND NOTES:

1. SOME SYMBOLS SHOWN ON THIS LEGEND MAY NOT APPEAR IN THIS DRAWING SET.

KEYNOTES:

1. THE S. TONGASS OVERHEAD LINE FROM POLE P1 TO POLE P2 THEN TO POLE P3 ETC. IS A CONTINUOUS LINE AND IS GUYED BY GUY POLE P2A VIA AN OVERHEAD GUY SPAN ACROSS WOOD ROAD TO P2A THEN VIA GUY ANCHORS BEHIND THE POLE. POLE P2A & GUYING TO REMAIN.
2. THE WOOD ROAD OVERHEAD DEAD ENDS AT POLE P2. IT IS GUYED VIA DOWN GUYS THAT HAVE TO BE MOVED DUE TO THE WOOD ROAD REALIGNMENT. TO REPLACE THESE DOWN GUYS (34.5KV & 12.47KV) A NEW GUY POLE P2B AND DOWN GUYS ARE NEEDED ACROSS WOOD ROAD TO THE SOUTH. THIS CREATES AN ANGLE WITH THE WOOD ROAD OVERHEAD REQUIRING A SECOND SET OF DOWN GUYS, SEE SHEET U6 FOR POLE P2 NEW GUYING WORK.
3. LUMINAIRE AND MAST ARM MOUNTED TO UTILITY POLE TO BE REPLACED IN PLACE WITH NEW. SEE SHEETS U35 & U36 FOR DETAILS. OVERHEAD STREET LIGHTING CIRCUITS TO REMAIN AND BE RE–FED FROM NEW LIGHTING LOAD CENTER AT PAD 4.
4. OVERHEAD POWER AND STREET LIGHTING TO REMAIN. TELECOM: FIBER TO BE REPLACED IN PLACE, COPPER TO REMAIN. TELEVISION: COAX TO BE REPLACED IN PLACE. SEE SHEET U15 FOR DEMO SCHEMATIC, SHEET U39 FOR RENOVATION SCHEMATIC, AND U41 FOR CIRCUIT DIAGRAM.
5. OVERHEAD POWER, STREET LIGHTING, TELECOM, AND TV LINES TO REMAIN. PROTECT AND MAINTAIN AS REQUIRED. EXACT QUANTITIES AND CONFIGURATIONS NOT NOTED HERE.

CN
10/23/2024

PLANS DEVELOPED BY:
MORRIS ENGINEERING GROUP, INC
2375 JORDAN AVE #7
JUNEAU, AK 99801
907–789–3350
AECL 1010

STATE OF ALASKA 49TH Mark G. Morris May 31, 2024 No. EE 8613 REGISTERED PROFESSIONAL ENGINEER

STATE OF ALASKA DEPARTMENT OF TRANSPORTATION AND PUBLIC FACILITIES
6860 GLACIER HIGHWAY, JUNEAU, AK 99801
(907) 465–1763

UTILITY RELOCATION FOR KETCHIKAN AREA BRIDGES

HERRING COVE SITE PLAN – EXISTING WOOD ROAD

FILE y:\102 state of ak\44 utility relocation design for ketchikan bridges\Working Drawings\00072_U1.dwg | DATE 5/30/2024 12:56 | LAYOUT U2 | DESIGNED MGM | CHECKED MGM | DRAFTED JODI

NO.	DATE	REVISION	STATE	PROJECT DESIGNATION	YEAR	SHEET NO.	TOTAL SHEETS
1	5/2024	AS-BUILT					
AS-BUILT DRAWING PREPARED FROM CONTRACTOR PROVIDED REDLINE WHICH MAY NOT BE CORRECT			ALASKA	0902043/SFHWY00072	2021	U3	45

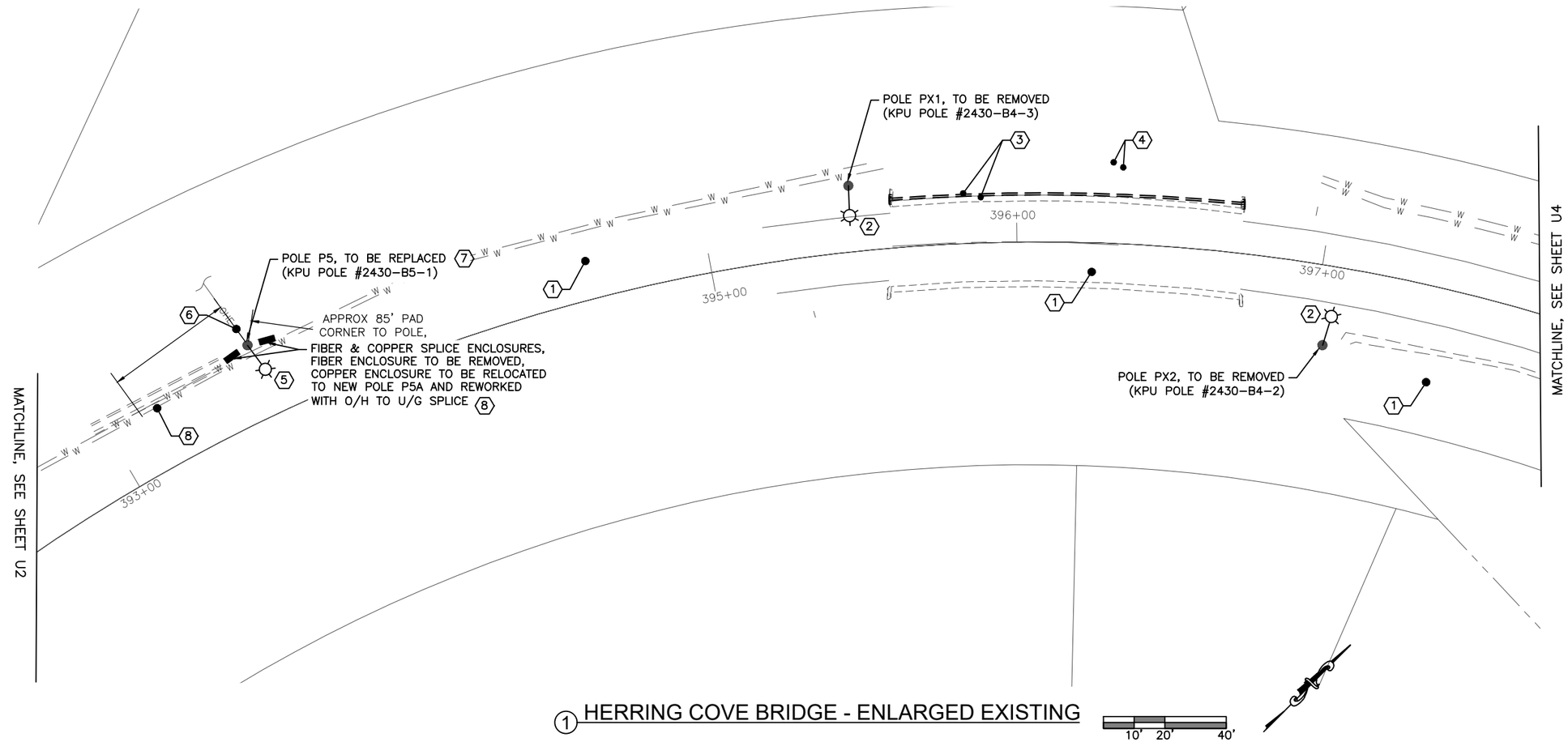

1 HERRING COVE BRIDGE - ENLARGED EXISTING

SHEET NOTES:

1. SEE SHEET U2 FOR NOTES APPLICABLE TO THIS PAGE.

KEYNOTES:

1. OVERHEAD LINES TO BE REMOVED BY CONTRACTOR. COORDINATE WITH UTILITIES.
2. REMOVE LIGHT FIXTURE AND MAST ARM.
3. NEW CONDUITS SHALL BE PROVIDED ALONG EXISTING BRIDGE AS PART OF STAGE 0 WORK. SEE SHEETS U7A–U7C FOR BRIDGE WORK DETAILS.
4. THERE ARE NUMEROUS EXISTING UNDERGROUND UTILITIES AND INFRASTRUCTURE TO REMAIN. NOT ALL ARE SHOWN ON THE PLANS BUT ALL NEED TO BE PROTECTED AND MAINTAINED THROUGHOUT PROJECT. CONTRACTOR SHALL CALL FOR LOCATES, DIG WITH CAUTION, AND COORDINATE ALL WORK WITH LOCAL UTILITIES, OTHER TRADES, ALASKA DOT&PF, AND CITY OF KETCHIKAN, SO AS TO IDENTIFY AND WORK AROUND UTILITIES TO REMAIN.
5. LUMINAIRE AND MAST ARM MOUNTED TO UTILITY POLE TO BE REPLACED IN PLACE WITH NEW. SEE SHEETS U35 & U36 FOR DETAILS. OVERHEAD STREET LIGHTING CIRCUITS TO REMAIN AND BE RE–FED FROM NEW LIGHTING LOAD CENTER AT PAD 4.
6. SECONDARY OVERHEAD SERVICE TO CUSTOMER FROM POLE MOUNTED TRANSFORMER AT POLE P5 (TRANSFORMER NOT SHOWN HERE). OVERHEAD TO BE REFED FROM NEW PAD MOUNT TRANSFORMER AT PAD 4, POLE TRANSFORMER TO BE REMOVED.
7. OVERHEAD UTILITIES WILL TRANSITION TO UNDERGROUND SOUTH OF THE BRIDGE AT EXISTING POLE P5 AND NEW POLE P5A SHOWN IN THE RENOVATION PLANS.
8. OVERHEAD POWER (MV CIRCUITS, SECONDARIES, AND STREET LIGHTING) TO BE RECONFIGURED ONTO NEW POLES, TELECOM: FIBER TO BE REPLACED IN PLACE, SOUTHWARD COPPER TO REMAIN, NORTHWARD TO BE REPLACED. TELEVISION: COAX TO BE REPLACED IN PLACE. SEE SHEET U15 FOR DEMO SCHEMATIC, SHEET U39 FOR RENOVATION SCHEMATIC, AND U41 FOR CIRCUIT DIAGRAM.

CN
10/23/2024

PLANS DEVELOPED BY:
MORRIS ENGINEERING GROUP, INC
2375 JORDAN AVE #7
JUNEAU, AK 99801
907–789–3350
AECL 1010

STATE OF ALASKA 49TH
Mark G. Morris
May 31, 2024
No. EE 8613
REGISTERED PROFESSIONAL ENGINEER

STATE OF ALASKA DEPARTMENT OF TRANSPORTATION AND PUBLIC FACILITIES
6860 GLACIER HIGHWAY, JUNEAU, AK 99801
(907) 465–1763

UTILITY RELOCATION FOR KETCHIKAN AREA BRIDGES

HERRING COVE SITE PLAN – EXISTING BRIDGE

FILE	DATE	LAYOUT	DESIGNED	CHECKED	DRAFTED
y:\102 state of ak\44 utility relocation design for ketchikan bridges\Working Drawings\00072_U1.dwg	5/30/2024 12:56	U3	MGM	MGM	JODI

NO.	DATE	REVISION	STATE	PROJECT DESIGNATION	YEAR	SHEET NO.	TOTAL SHEETS
1	5/2024	AS-BUILT					
AS-BUILT DRAWING PREPARED FROM CONTRACTOR PROVIDED REDLINE WHICH MAY NOT BE CORRECT			ALASKA	0902043/SFHWY00072	2021	U4	45

SHEET NOTE:

1. SEE SHEET U2 FOR NOTES APPLICABLE TO THIS PAGE.

KEYNOTES:

1. OVERHEAD LINES TO BE REMOVED BY CONTRACTOR. COORDINATE WITH UTILITIES.
2. OVERHEAD LINES TO BE RECONFIGURED BY UTILITY. PROTECT AND MAINTAIN AS REQUIRED. COORDINATE WITH UTILITIES.
3. POLE TO REMAIN AND BE REWORKED AS REQUIRED. ALL WORK BY KPU UTILITIES PER DETAILS IN THIS DRAWINGS PACKAGE.
4. POLE TO BE REPLACED AS REQUIRED. ALL WORK BY KPU UTILITIES PER DETAILS IN THIS DRAWINGS PACKAGE.
5. REMOVE LIGHT FIXTURE AND MAST ARM.
6. THERE ARE NUMEROUS EXISTING UNDERGROUND UTILITIES AND INFRASTRUCTURE TO REMAIN. NOT ALL ARE SHOWN ON THE PLANS BUT ALL NEED TO BE PROTECTED AND MAINTAINED THROUGHOUT PROJECT. CONTRACTOR SHALL CALL FOR LOCATES, DIG WITH CAUTION, AND COORDINATE ALL WORK WITH LOCAL UTILITIES, OTHER TRADES, ALASKA DOT&PF, AND CITY OF KETCHIKAN, SO AS TO IDENTIFY AND WORK AROUND UTILITIES TO REMAIN.
7. LUMINAIRE AND MAST ARM MOUNTED TO UTILITY POLE TO BE REPLACED IN PLACE WITH NEW. SEE SHEETS U35 & U36 FOR DETAILS.
8. LIVE UNDERGROUND 12.47KV & 34.5KV POWER CIRCUITS, AND SPARE TELECOM CONDUITS ROUTED UP POWERHOUSE ROAD FROM THE OVERHEAD TRANSITION AT POLE P6. LINES WILL BE REWORKED INTO AND PAST NEW VAULTS IN POWERHOUSE ROAD. SEE SHEET U8 FOR DETAILS.
9. SEE SHEET U15 FOR TELECOM DEMO SCHEMATIC, SHEET U39 FOR RENOVATION SCHEMATIC, AND U41 FOR CIRCUIT DIAGRAM.

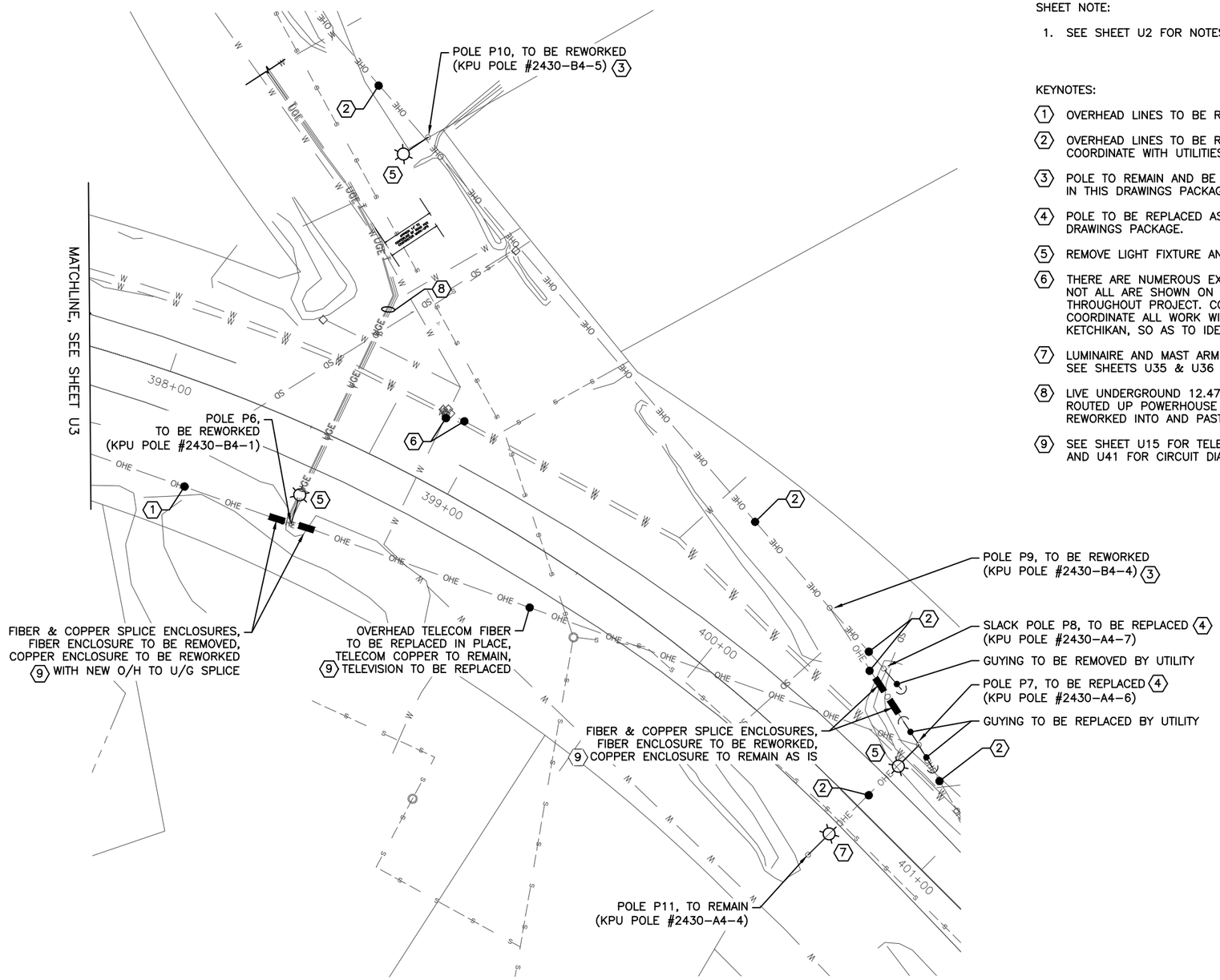

1 POWERHOUSE ROAD INTERSECTION - ENLARGED EXISTING

10' 20' 40'

CN 10/23/2024

PLANS DEVELOPED BY:
MORRIS ENGINEERING GROUP, INC
2375 JORDAN AVE #7
JUNEAU, AK 99801
907-789-3350
AECL 1010

STATE OF ALASKA 49TH Mark G. Morris May 31, 2024 No. EE 8613 REGISTERED PROFESSIONAL ENGINEER

STATE OF ALASKA DEPARTMENT OF TRANSPORTATION AND PUBLIC FACILITIES
6860 GLACIER HIGHWAY, JUNEAU, AK 99801
(907) 465-1763

UTILITY RELOCATION FOR KETCHIKAN AREA BRIDGES

HERRING COVE SITE PLAN – EXISTING POWERHOUSE ROAD

FILE y:\102 state of ak\44 utility relocation design for ketchikan bridges\Working Drawings\00072_U1.dwg | DATE 5/30/2024 12:56 | LAYOUT U4 | DESIGNED MGM | CHECKED MGM | DRAFTED JODI

NO.	DATE	REVISION	STATE	PROJECT DESIGNATION	YEAR	SHEET NO.	TOTAL SHEETS
1	5/2024	AS-BUILT					
AS-BUILT DRAWING PREPARED FROM CONTRACTOR PROVIDED REDLINE WHICH MAY NOT BE CORRECT			ALASKA	0902043/SFHWY00072	2021	U5	45

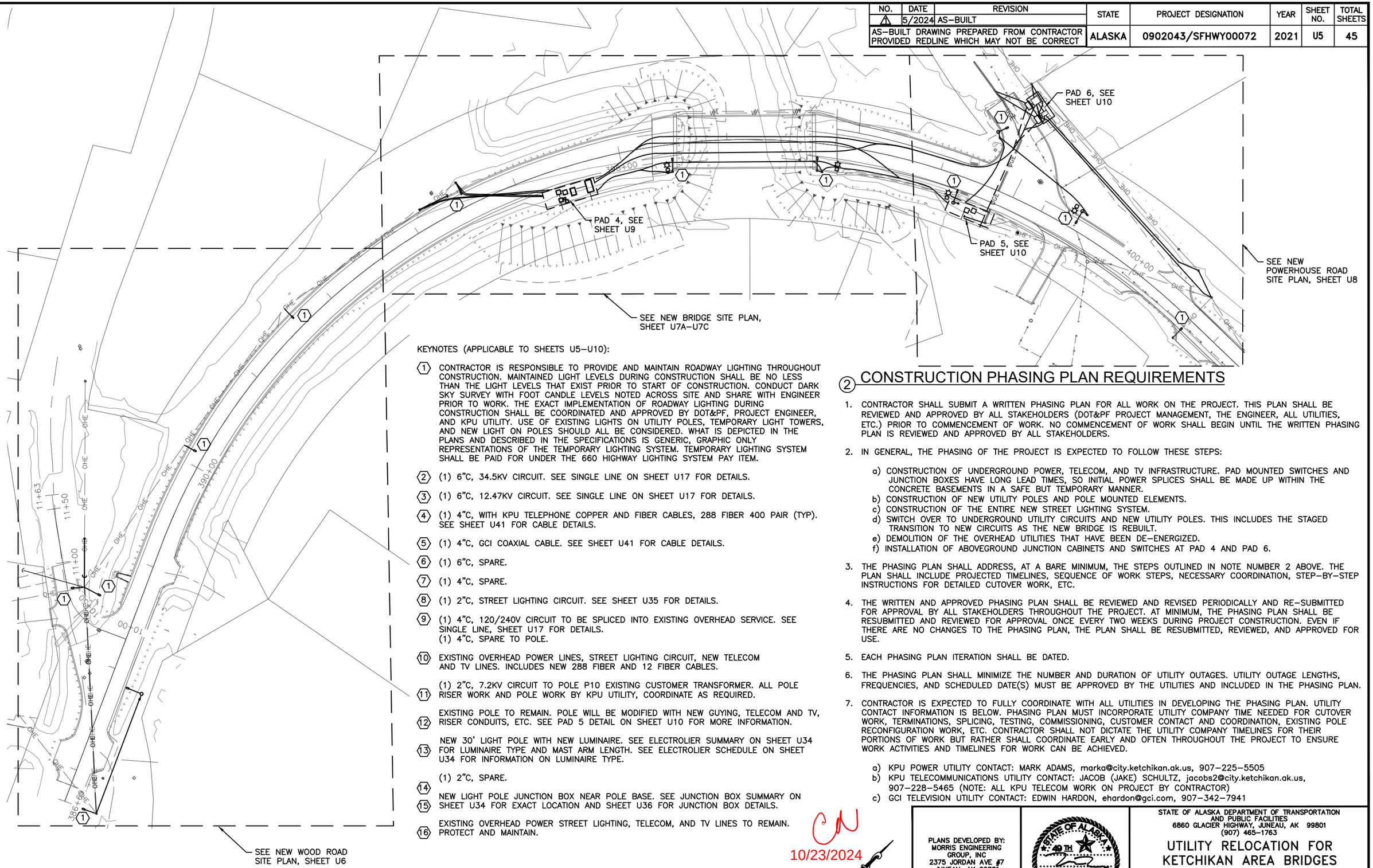

KEYNOTES (APPLICABLE TO SHEETS U5–U10):

1. CONTRACTOR IS RESPONSIBLE TO PROVIDE AND MAINTAIN ROADWAY LIGHTING THROUGHOUT CONSTRUCTION. MAINTAINED LIGHT LEVELS DURING CONSTRUCTION SHALL BE NO LESS THAN THE LIGHT LEVELS THAT EXIST PRIOR TO START OF CONSTRUCTION. CONDUCT DARK SKY SURVEY WITH FOOT CANDLE LEVELS NOTED ACROSS SITE AND SHARE WITH ENGINEER PRIOR TO WORK. THE EXACT IMPLEMENTATION OF ROADWAY LIGHTING DURING CONSTRUCTION SHALL BE COORDINATED AND APPROVED BY DOT&PF, PROJECT ENGINEER, AND KPU UTILITY. USE OF EXISTING LIGHTS ON UTILITY POLES, TEMPORARY LIGHT TOWERS, AND NEW LIGHT ON POLES SHOULD ALL BE CONSIDERED. WHAT IS DEPICTED IN THE PLANS AND DESCRIBED IN THE SPECIFICATIONS IS GENERIC, GRAPHIC ONLY REPRESENTATIONS OF THE TEMPORARY LIGHTING SYSTEM. TEMPORARY LIGHTING SYSTEM SHALL BE PAID FOR UNDER THE 660 HIGHWAY LIGHTING SYSTEM PAY ITEM.
2. (1) 6"C, 34.5KV CIRCUIT. SEE SINGLE LINE ON SHEET U17 FOR DETAILS.
3. (1) 6"C, 12.47KV CIRCUIT. SEE SINGLE LINE ON SHEET U17 FOR DETAILS.
4. (1) 4"C, WITH KPU TELEPHONE COPPER AND FIBER CABLES, 288 FIBER 400 PAIR (TYP). SEE SHEET U41 FOR CABLE DETAILS.
5. (1) 4"C, GCI COAXIAL CABLE. SEE SHEET U41 FOR CABLE DETAILS.
6. (1) 6"C, SPARE.
7. (1) 4"C, SPARE.
8. (1) 2"C, STREET LIGHTING CIRCUIT. SEE SHEET U35 FOR DETAILS.
9. (1) 4"C, 120/240V CIRCUIT TO BE SPLICED INTO EXISTING OVERHEAD SERVICE. SEE SINGLE LINE, SHEET U17 FOR DETAILS.
   (1) 4"C, SPARE TO POLE.
10. EXISTING OVERHEAD POWER LINES, STREET LIGHTING CIRCUIT, NEW TELECOM AND TV LINES. INCLUDES NEW 288 FIBER AND 12 FIBER CABLES.
11. (1) 2"C, 7.2KV CIRCUIT TO POLE P10 EXISTING CUSTOMER TRANSFORMER. ALL POLE RISER WORK AND POLE WORK BY KPU UTILITY, COORDINATE AS REQUIRED.
12. EXISTING POLE TO REMAIN. POLE WILL BE MODIFIED WITH NEW GUYING, TELECOM AND TV, RISER CONDUITS, ETC. SEE PAD 5 DETAIL ON SHEET U10 FOR MORE INFORMATION.
13. NEW 30' LIGHT POLE WITH NEW LUMINAIRE. SEE ELECTROLIER SUMMARY ON SHEET U34 FOR LUMINAIRE TYPE AND MAST ARM LENGTH. SEE ELECTROLIER SCHEDULE ON SHEET U34 FOR INFORMATION ON LUMINAIRE TYPE.
    (1) 2"C, SPARE.
14. NEW LIGHT POLE JUNCTION BOX NEAR POLE BASE. SEE JUNCTION BOX SUMMARY ON
15. SHEET U34 FOR EXACT LOCATION AND SHEET U36 FOR JUNCTION BOX DETAILS.
16. EXISTING OVERHEAD POWER STREET LIGHTING, TELECOM, AND TV LINES TO REMAIN. PROTECT AND MAINTAIN.

1 HERRING COVE SITE PLAN - NEW OVERALL

20' 40' 80'

2 CONSTRUCTION PHASING PLAN REQUIREMENTS

1. CONTRACTOR SHALL SUBMIT A WRITTEN PHASING PLAN FOR ALL WORK ON THE PROJECT. THIS PLAN SHALL BE REVIEWED AND APPROVED BY ALL STAKEHOLDERS (DOT&PF PROJECT MANAGEMENT, THE ENGINEER, ALL UTILITIES, ETC.) PRIOR TO COMMENCEMENT OF WORK. NO COMMENCEMENT OF WORK SHALL BEGIN UNTIL THE WRITTEN PHASING PLAN IS REVIEWED AND APPROVED BY ALL STAKEHOLDERS.
2. IN GENERAL, THE PHASING OF THE PROJECT IS EXPECTED TO FOLLOW THESE STEPS:
   a) CONSTRUCTION OF UNDERGROUND POWER, TELECOM, AND TV INFRASTRUCTURE. PAD MOUNTED SWITCHES AND JUNCTION BOXES HAVE LONG LEAD TIMES, SO INITIAL POWER SPLICES SHALL BE MADE UP WITHIN THE CONCRETE BASEMENTS IN A SAFE BUT TEMPORARY MANNER.
   b) CONSTRUCTION OF NEW UTILITY POLES AND POLE MOUNTED ELEMENTS.
   c) CONSTRUCTION OF THE ENTIRE NEW STREET LIGHTING SYSTEM.
   d) SWITCH OVER TO UNDERGROUND UTILITY CIRCUITS AND NEW UTILITY POLES. THIS INCLUDES THE STAGED TRANSITION TO NEW CIRCUITS AS THE NEW BRIDGE IS REBUILT.
   e) DEMOLITION OF THE OVERHEAD UTILITIES THAT HAVE BEEN DE–ENERGIZED.
   f) INSTALLATION OF ABOVEGROUND JUNCTION CABINETS AND SWITCHES AT PAD 4 AND PAD 6.
3. THE PHASING PLAN SHALL ADDRESS, AT A BARE MINIMUM, THE STEPS OUTLINED IN NOTE NUMBER 2 ABOVE. THE PLAN SHALL INCLUDE PROJECTED TIMELINES, SEQUENCE OF WORK STEPS, NECESSARY COORDINATION, STEP–BY–STEP INSTRUCTIONS FOR DETAILED CUTOVER WORK, ETC.
4. THE WRITTEN AND APPROVED PHASING PLAN SHALL BE REVIEWED AND REVISED PERIODICALLY AND RE–SUBMITTED FOR APPROVAL BY ALL STAKEHOLDERS THROUGHOUT THE PROJECT. AT MINIMUM, THE PHASING PLAN SHALL BE RESUBMITTED AND REVIEWED FOR APPROVAL ONCE EVERY TWO WEEKS DURING PROJECT CONSTRUCTION. EVEN IF THERE ARE NO CHANGES TO THE PHASING PLAN, THE PLAN SHALL BE RESUBMITTED, REVIEWED, AND APPROVED FOR USE.
5. EACH PHASING PLAN ITERATION SHALL BE DATED.
6. THE PHASING PLAN SHALL MINIMIZE THE NUMBER AND DURATION OF UTILITY OUTAGES. UTILITY OUTAGE LENGTHS, FREQUENCIES, AND SCHEDULED DATE(S) MUST BE APPROVED BY THE UTILITIES AND INCLUDED IN THE PHASING PLAN.
7. CONTRACTOR IS EXPECTED TO FULLY COORDINATE WITH ALL UTILITIES IN DEVELOPING THE PHASING PLAN. UTILITY CONTACT INFORMATION IS BELOW. PHASING PLAN MUST INCORPORATE UTILITY COMPANY TIME NEEDED FOR CUTOVER WORK, TERMINATIONS, SPLICING, TESTING, COMMISSIONING, CUSTOMER CONTACT AND COORDINATION, EXISTING POLE RECONFIGURATION WORK, ETC. CONTRACTOR SHALL NOT DICTATE THE UTILITY COMPANY TIMELINES FOR THEIR PORTIONS OF WORK BUT RATHER SHALL COORDINATE EARLY AND OFTEN THROUGHOUT THE PROJECT TO ENSURE WORK ACTIVITIES AND TIMELINES FOR WORK CAN BE ACHIEVED.
   a) KPU POWER UTILITY CONTACT: MARK ADAMS, marka@city.ketchikan.ak.us, 907–225–5505
   b) KPU TELECOMMUNICATIONS UTILITY CONTACT: JACOB (JAKE) SCHULTZ, jacobs2@city.ketchikan.ak.us, 907–228–5465 (NOTE: ALL KPU TELECOM WORK ON PROJECT BY CONTRACTOR)
   c) GCI TELEVISION UTILITY CONTACT: EDWIN HARDON, ehardon@gci.com, 907–342–7941

CN
10/23/2024

PLANS DEVELOPED BY:
MORRIS ENGINEERING GROUP, INC
2375 JORDAN AVE #7
JUNEAU, AK 99801
907–789–3350
AECL 1010

STATE OF ALASKA 49TH
Mark G. Morris
May 31, 2024
No. EE 8613
REGISTERED PROFESSIONAL ENGINEER

STATE OF ALASKA DEPARTMENT OF TRANSPORTATION AND PUBLIC FACILITIES
6860 GLACIER HIGHWAY, JUNEAU, AK 99801
(907) 465–1763

UTILITY RELOCATION FOR KETCHIKAN AREA BRIDGES

HERRING COVE SITE PLAN – NEW OVERALL & PHASING PLAN

FILE	y:\02 state of ak\44 utility relocation design for ketchikan bridges\Working Drawings\00072_U1.dwg	DATE	5/30/2024 12:56	LAYOUT	U5	DESIGNED	MGM	CHECKED	MGM	DRAFTED	JODI

NO.	DATE	REVISION	STATE	PROJECT DESIGNATION	YEAR	SHEET NO.	TOTAL SHEETS
1	5/2024	AS-BUILT					
AS-BUILT DRAWING PREPARED FROM CONTRACTOR PROVIDED REDLINE WHICH MAY NOT BE CORRECT			ALASKA	0902043/SFHWY00072	2021	U6	45

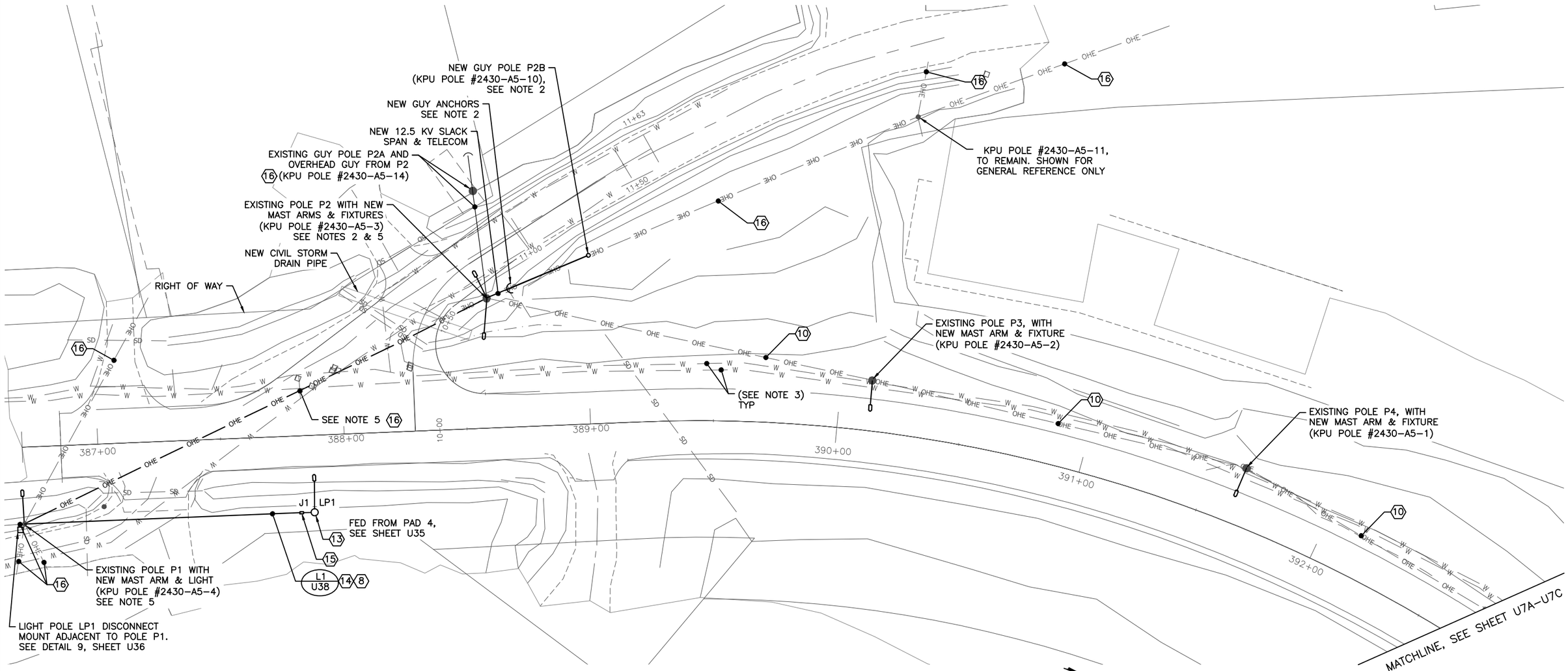

(1) WOOD ROAD INTERSECTION - ENLARGED NEW

10' 20' 40'

SHEET NOTES:

1. SEE SHEET U5 FOR KEYNOTES APPLICABLE TO THIS SHEET.
2. PROVIDE NEW GUYING AT POLE, SEE POLE DETAIL SHEET U19 FOR INFORMATION.
3. THERE ARE NUMEROUS EXISTING UNDERGROUND UTILITIES AND INFRASTRUCTURE TO REMAIN. NOT ALL ARE SHOWN ON THE PLANS BUT ALL NEED TO BE PROTECTED AND MAINTAINED THROUGHOUT PROJECT. CONTRACTOR SHALL CALL FOR LOCATES, DIG WITH CAUTION, AND COORDINATE ALL WORK WITH LOCAL UTILITIES. OTHER TRADES, ALASKA DOT&PF, AND CITY OF KETCHIKAN. SO AS TO IDENTIFY AND WORK AROUND UTILITIES TO REMAIN.
4. COORDINATE EXACT GUY POSITION WITH NEW STORM DRAIN PIPE NOTED ON THIS SHEET. ADJUST ANCHOR DISTANCE FROM WHAT IS SHOWN ON SHEET U19 AS REQUIRED BASED ON FINAL PIPE LOCATION.
5. EXTEND OVERHEAD DUPLEX WIRE AS REQUIRED OVERHEAD BETWEEN POLE P2 TO POLE P1 TO SERVE LP1 DISCONNECT AT BASE OF POLE. EXTEND THE CIRCUIT FROM POLE P1 NEW STREET LIGHT UNDERGROUND TO LIGHT POLE LP1 AS REQUIRED WITH NEW CONDUIT RISERS ON POLE P1 UNDERGROUND TO JUNCTION BOX J1.

CN
10/23/2024

PLANS DEVELOPED BY:
MORRIS ENGINEERING GROUP, INC
2375 JORDAN AVE #7
JUNEAU, AK 99801
907-789-3350
AECL 1010

STATE OF ALASKA 49TH Mark G. Morris May 31, 2024 No. EE 8613 REGISTERED PROFESSIONAL ENGINEER

STATE OF ALASKA DEPARTMENT OF TRANSPORTATION AND PUBLIC FACILITIES
6860 GLACIER HIGHWAY, JUNEAU, AK 99801
(907) 465-1763

UTILITY RELOCATION FOR KETCHIKAN AREA BRIDGES

HERRING COVE SITE PLAN - NEW WOOD ROAD

FILE y:\102 state of ak\44 utility relocation design for ketchikan bridges\Working Drawings\00072_J1.dwg | DATE 5/30/2024 12:56 | LAYOUT U6 | DESIGNED MGM | CHECKED MGM | DRAFTED JODI

NO.	DATE	REVISION	STATE	PROJECT DESIGNATION	YEAR	SHEET NO.	TOTAL SHEETS
1	5/2024	AS-BUILT					
AS-BUILT DRAWING PREPARED FROM CONTRACTOR PROVIDED REDLINE WHICH MAY NOT BE CORRECT			ALASKA	0902043/SFHWY00072	2021	U7A	45

CN
10/23/2024

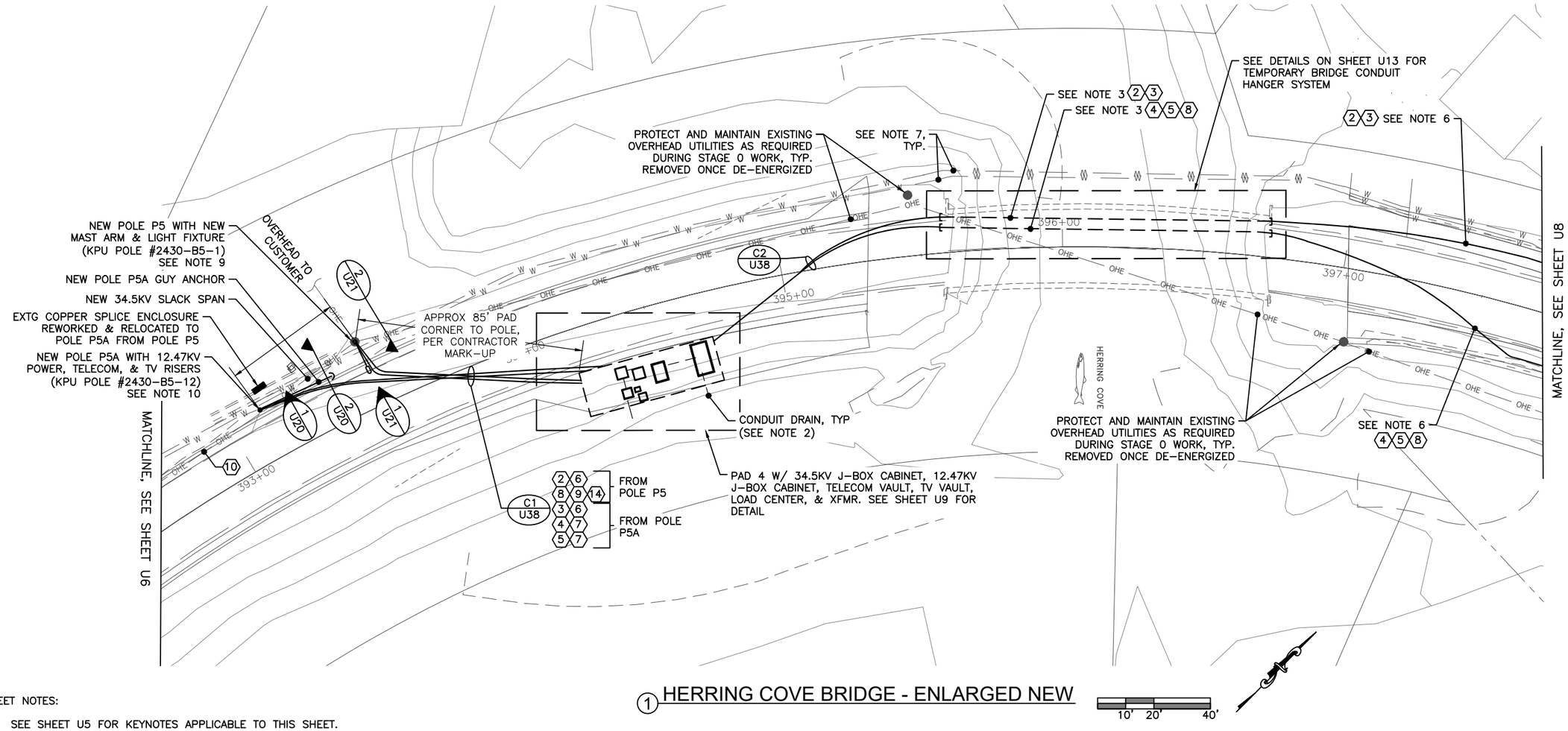

1 HERRING COVE BRIDGE - ENLARGED NEW

SHEET NOTES:

1. SEE SHEET U5 FOR KEYNOTES APPLICABLE TO THIS SHEET.
2. BETWEEN EACH UNDERGROUND ELECTRICAL AND TELECOM/TV BASEMENT AND VAULT, PROVIDE A CONDUIT DRAIN TO REMOVE WATER. TIE ADJACENT STRUCTURES TOGETHER WITH A DRAIN AND RUN ANOTHER DRAIN TO DAYLIGHT AS REQUIRED. SLOPE CONDUITS TO DRAIN. SEE INDIVIDUAL EQUIPMENT DETAILS FOR MORE ON THE DRAINS. COORDINATE DRAIN ROUTING WITH CIVIL CONTRACTOR.
3. FIBERGLASS CONDUITS ADDED TO EXISTING BRIDGE FOR TEMPORARY UNDERGROUND CIRCUITS NEEDED DURING CONSTRUCTION. SEE SHEET U13 FOR TEMPORARY BRIDGE WORK. CONTINUE CONDUITS TO PAD 4, PAD 5, AND PAD 6 EQUIPMENT CONNECTIONS AS REQUIRED. THESE NEW CONDUITS AT EXISTING BRIDGE WILL BE DEMOLISHED AND CORRESPONDING SECTIONS UNDER ROADWAY ABANDONED AS BRIDGE REPLACEMENT IS COMPLETED.
4. THIS SHEET DEPICTS BRIDGE STAGE 0 ELECTRICAL WORK. STAGE 0 WORK INCLUDES ESTABLISHING UNDERGROUND POWER, TELECOM, TV, AND STREET LIGHTING UNDERGROUND ACROSS THE PROJECT SITE, AS WELL AS ACROSS THE EXISTING BRIDGE. THIS WORK IS TO BE COMPLETED BEFORE DEMOLISHING THE EXISTING OVERHEAD ON SITE. STAGE 0 CIRCUITS ACROSS THE EXISTING BRIDGE SHOWN ON THIS SHEET WILL BE ENERGIZED AND USED UNTIL STAGE 1 BRIDGE WORK IS COMPLETE; AFTER WHICH ALL UNDERGROUND SHOWN HERE, FROM PAD 4 TO PADS 5 AND 6, WILL BE DISCONNECTED AND REMOVED WITH CONDUITS DEMOLISHED OR ABANDONED AS APPLICABLE.
5. THERE ARE TWO ADDITIONAL STAGES ASSOCIATED WITH WORK BETWEEN PAD 4 AND PADS 5 AND 6. SEE SHEETS U7B AND U7C FOR MORE INFORMATION.
6. CONDUITS INDICATED HERE ARE PART OF A LARGER COLLECTION OF CONDUITS IN ONE OVERALL TRENCH THAT HEADS NORTH TO PAD 5 OR PAD 6 AS APPLICABLE. ONLY CONDUITS ASSOCIATED WITH BRIDGE STAGE 0 WORK ARE INDICATED ON THIS SHEET. SEE SHEETS U7B AND U7C FOR MORE CONDUIT WORK.
7. THERE ARE NUMEROUS EXISTING UNDERGROUND UTILITIES AND INFRASTRUCTURE TO REMAIN. NOT ALL ARE SHOWN ON THE PLANS BUT ALL NEED TO BE PROTECTED AND MAINTAINED THROUGHOUT PROJECT. CONTRACTOR SHALL CALL FOR LOCATES, DIG WITH CAUTION, AND COORDINATE ALL WORK WITH LOCAL UTILITIES. OTHER TRADES, ALASKA DOT&PF, AND CITY OF KETCHIKAN. SO AS TO IDENTIFY AND WORK AROUND UTILITIES TO REMAIN.
8. TRENCH DETAIL REFERENCES ARE CALLED OUT ON THE SITE PLANS AND ARE DEPICTED ON SHEET U38. THE CONTRACTOR IS RESPONSIBLE TO LAYOUT THE CONDUIT TRENCHES THROUGHOUT THE SITE IN COORDINATION WITH GENERAL CONSTRUCTION, FINAL LOCATIONS OF ALL EQUIPMENT AND VAULTS, AND AS NEEDED TO ADJUST TO SITE CONDITIONS NOT CAPTURED IN THE DESIGN DOCUMENTS. KEEP CONDUITS FROM CROSSING ONE ANOTHER AS MUCH AS POSSIBLE, MAINTAIN SEPARATION AND DEPTH DIMENSIONS INDICATED, AND ADJUST SECTIONS DEPICTED IN THE SET AS REQUIRED. THERE WILL BE CASES WHERE A TRENCH REFERENCE ON A SITE PLAN MAY BE MISSING CONDUITS PLANNED IN THAT AREA (i.e. 2" STREET LIGHTING CONDUITS THAT ARE SERVING AREA LIGHT POLES). IN SUCH CASES THE CONTRACTOR IS EXPECTED TO INCLUDE THOSE CONDUITS IN THE OVERALL TRENCH AND ADJUST THE WORK AS REQUIRED.
9. REPLACE EXISTING POLE P5 IN PLACE WITH NEW. SEE SHEET U21 FOR POLE P5 DETAILS. POLE TO BE SET AND OVERHEAD LINES CUTOVER AS PART OF BRIDGE STAGE 0 WORK. COORDINATE AS PART OF OVERALL PHASING PLAN, SEE DETAIL 2, SHEET U5.
10. PROVIDE NEW POLE P5A ADJACENT TO POLE P5. TO AVOID EXISTING WATERLINES IN THE AREA POLE P5A IS TO BE OFFSET A MINIMUM OF 6 FEET FROM CENTER OF POLE TO NEAREST EDGE OF WATER PIPES PRESENT. FIELD VERIFY AS REQUIRED PRIOR TO WORK. SEE SHEET U20 FOR POLE P5A DETAILS. POLE TO BE SET AND OVERHEAD LINES CUTOVER AS PART OF BRIDGE STAGE 0 WORK. COORDINATE AS PART OF OVERALL PHASING PLAN, SEE DETAIL 2, SHEET U5.

PLANS DEVELOPED BY:
MORRIS ENGINEERING GROUP, INC
2375 JORDAN AVE #7
JUNEAU, AK 99801
907-789-3350
AECL 1010

STATE OF ALASKA 49TH
Mark G. Morris
May 31, 2024
No. EE 8613
REGISTERED PROFESSIONAL ENGINEER

STATE OF ALASKA DEPARTMENT OF TRANSPORTATION AND PUBLIC FACILITIES
6860 GLACIER HIGHWAY, JUNEAU, AK 99801
(907) 465-1763

UTILITY RELOCATION FOR KETCHIKAN AREA BRIDGES

HERRING COVE SITE PLAN – BRIDGE WORK – STAGE 0

FILE y:\102 state of ak\44 utility relocation design for ketchikan bridges\Working Drawings\00072_U1.dwg | DATE 5/30/2024 12:56 | LAYOUT U7A | DESIGNED MGM | CHECKED MGM | DRAFTED JODI

NO.	DATE	REVISION	STATE	PROJECT DESIGNATION	YEAR	SHEET NO.	TOTAL SHEETS
1	5/2024	AS-BUILT	ALASKA	0902043/SFHWY00072	2021	U7B	45
AS-BUILT DRAWING PREPARED FROM CONTRACTOR PROVIDED REDLINE WHICH MAY NOT BE CORRECT							

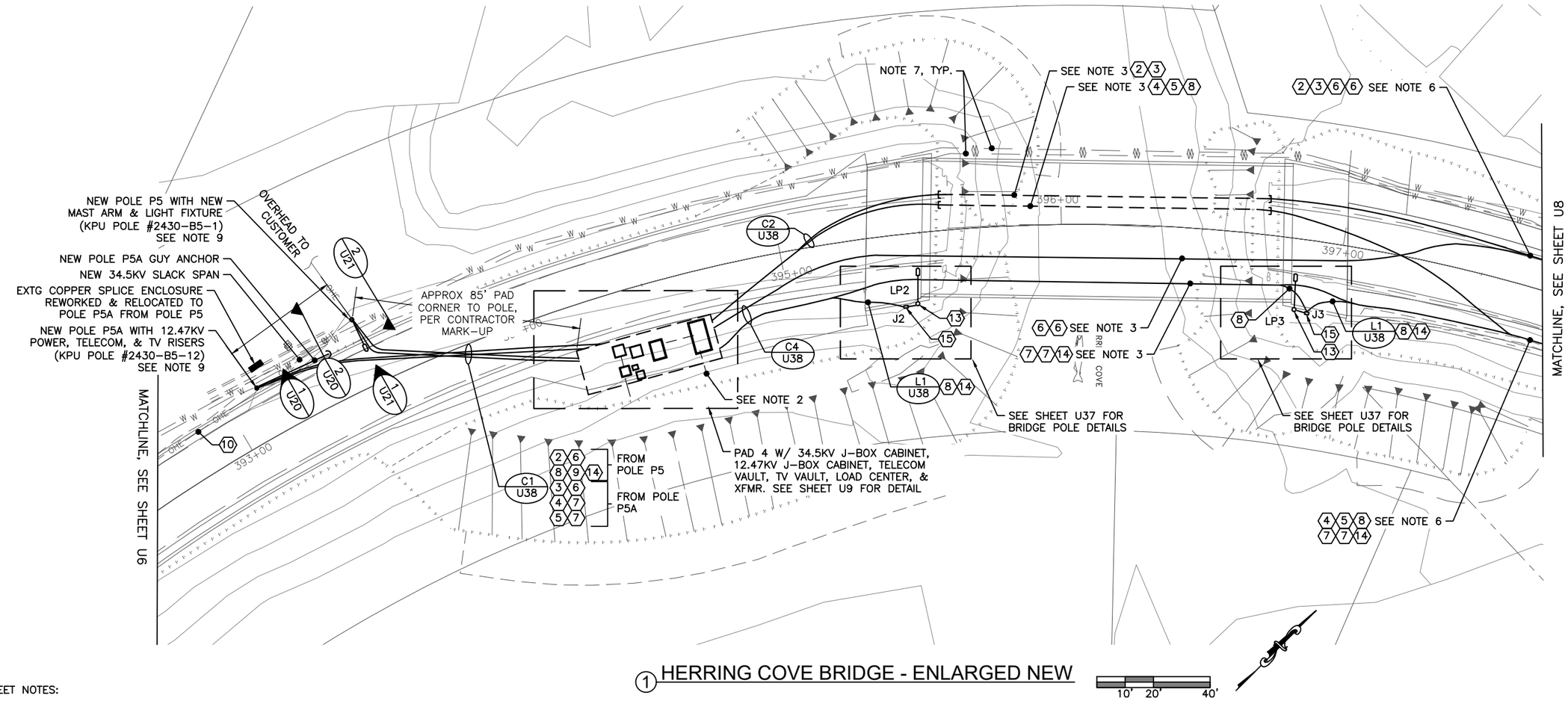

1 HERRING COVE BRIDGE - ENLARGED NEW

SHEET NOTES:

1. SEE SHEET U5 FOR KEYNOTES APPLICABLE TO THIS SHEET.
2. INCLUDE DRAINS BETWEEN UNDERGROUND STRUCTURES PER NOTE 2, SHEET U7A.
3. UPLAND SIDE CONDUITS AT EXISTING BRIDGE INSTALLED AND ENERGIZED AS PART OF BRIDGE STAGE 0 WORK, SEE SHEET U7A. WATER SIDE CONDUITS AT NEW BRIDGE BUILT AS PART OF STAGE 1 INSTALLED AS SPARE AND THEN ENERGIZED DURING A CUTOVER DURING STAGE 1. AFTER CUTOVER, UPLAND SIDE CONDUITS AND CIRCUITS WILL BE DEMOLISHED OR ABANDONED IN PLACE AS APPLICABLE. SEE DETAILS ON SHEET U14 FOR NEW BRIDGE CONDUIT WORK. CONTRACTOR TO VERIFY ONSITE CONDITIONS AS REQUIRED TO DEVELOP HANGER SYSTEM SPECIFICS (EMBEDMENT, HANGER SPACING, ETC.)
4. THIS SHEET DEPICTS BRIDGE STAGE 1 ELECTRICAL WORK. STAGE 1 WORK INCLUDES CONTINUED USE OF STAGE 0 UNDERGROUND ACROSS THE UPLANDS PORTION OF THE EXISTING BRIDGE AND ESTABLISHING UNDERGROUND POWER, TELECOM, TV, AND STREET LIGHTING UNDERGROUND ACROSS THE WATERSIDE PORTION OF THE NEW BRIDGE SEGMENT. THIS WORK IS TO BE COMPLETED AND NEW WATERSIDE CIRCUITS ENERGIZED BEFORE DEMOLISHING THE EXISTING BRIDGE SEGMENT CIRCUITS INSTALLED AS PART OF STAGE 0. ONCE STAGE 1 NEW CIRCUITS SHOWN HERE ARE ENERGIZED, THEY SHALL REMAIN AS THE PERMANENT CIRCUITS UNDERGROUND THROUGH THE END OF CONSTRUCTION. STAGE 0 CONDUITS AND CIRCUITS SHALL BE DEMOLISHED AND ABANDONED ONLY AFTER STAGE 1 CIRCUITS ARE ENERGIZED. STAGE 1 WORK ALSO INCLUDES COMPLETION OF THE BRIDGE STREET LIGHTING WORK DEPICTED HERE, INCLUDING TYING POLES INTO THE STREET LIGHTING CIRCUITS AND INTO THE NEW LIGHTING LOAD CENTER.
5. THERE ARE TWO ADDITIONAL STAGES ASSOCIATED WITH WORK BETWEEN PAD 4, PAD 5, AND PAD 6. SEE SHEETS U7A AND U7C FOR MORE INFORMATION.
6. CONDUITS INDICATED HERE ARE PART OF A LARGER COLLECTION OF CONDUITS IN ONE OVERALL TRENCH THAT HEADS NORTH TO PAD 5 OR PAD 6 AS APPLICABLE. ONLY CONDUITS ASSOCIATED WITH STAGE 0 AND STAGE 1 WORK INDICATED ON THIS SHEET. SEE SHEET U7C FOR MORE CONDUIT WORK.
7. THERE ARE NUMEROUS EXISTING UNDERGROUND UTILITIES AND INFRASTRUCTURE TO REMAIN. NOT ALL ARE SHOWN ON THE PLANS BUT ALL NEED TO BE PROTECTED AND MAINTAINED THROUGHOUT PROJECT. CONTRACTOR SHALL CALL FOR LOCATES, DIG WITH CAUTION, AND COORDINATE ALL WORK WITH LOCAL UTILITIES, OTHER TRADES, ALASKA DOT&PF, AND CITY OF KETCHIKAN, SO AS TO IDENTIFY AND WORK AROUND UTILITIES TO REMAIN.
8. TRENCH DETAIL REFERENCES ARE CALLED OUT ON THE SITE PLANS AND ARE DEPICTED ON SHEET U38. THE CONTRACTOR IS RESPONSIBLE TO LAYOUT THE CONDUIT TRENCHES THROUGHOUT THE SITE IN COORDINATION WITH GENERAL CONSTRUCTION, FINAL LOCATIONS OF ALL EQUIPMENT AND VAULTS, AND AS NEEDED TO ADJUST TO SITE CONDITIONS NOT CAPTURED IN THE DESIGN DOCUMENTS. KEEP CONDUITS FROM CROSSING ONE ANOTHER AS MUCH AS POSSIBLE, MAINTAIN SEPARATION AND DEPTH DIMENSIONS INDICATED, AND ADJUST SECTIONS DEPICTED IN THE SET AS REQUIRED. THERE WILL BE CASES WHERE A TRENCH REFERENCE ON A SITE PLAN MAY BE MISSING CONDUITS PLANNED IN THAT AREA (i.e. 2" STREET LIGHTING CONDUITS THAT ARE SERVING AREA LIGHT POLES). IN SUCH CASES THE CONTRACTOR IS EXPECTED TO INCLUDE THOSE CONDUITS IN THE OVERALL TRENCH AND ADJUST THE WORK AS REQUIRED.
9. SEE SHEET U7A FOR DETAILS ABOUT EACH POLE.

CN
10/23/2024

PLANS DEVELOPED BY:
MORRIS ENGINEERING GROUP, INC
2375 JORDAN AVE #7
JUNEAU, AK 99801
907-789-3350
AECL 1010

STATE OF ALASKA 49TH Mark G. Morris No. EE 8613 May 31, 2024 REGISTERED PROFESSIONAL ENGINEER

STATE OF ALASKA DEPARTMENT OF TRANSPORTATION AND PUBLIC FACILITIES
6860 GLACIER HIGHWAY, JUNEAU, AK 99801
(907) 465-1763

UTILITY RELOCATION FOR KETCHIKAN AREA BRIDGES

HERRING COVE SITE PLAN - BRIDGE WORK - STAGE 1

FILE y:\102 state of ak\44 utility relocation design for ketchikan bridges\Working Drawings\00072_U1.dwg | DATE 5/30/2024 12:56 | LAYOUT U7B | DESIGNED MGM | CHECKED MGM | DRAFTED JODI

NO.	DATE	REVISION	STATE	PROJECT DESIGNATION	YEAR	SHEET NO.	TOTAL SHEETS
1	5/2024	AS-BUILT	ALASKA	0902043/SFHWY00072	2021	U7C	45
AS-BUILT DRAWING PREPARED FROM CONTRACTOR PROVIDED REDLINE WHICH MAY NOT BE CORRECT							

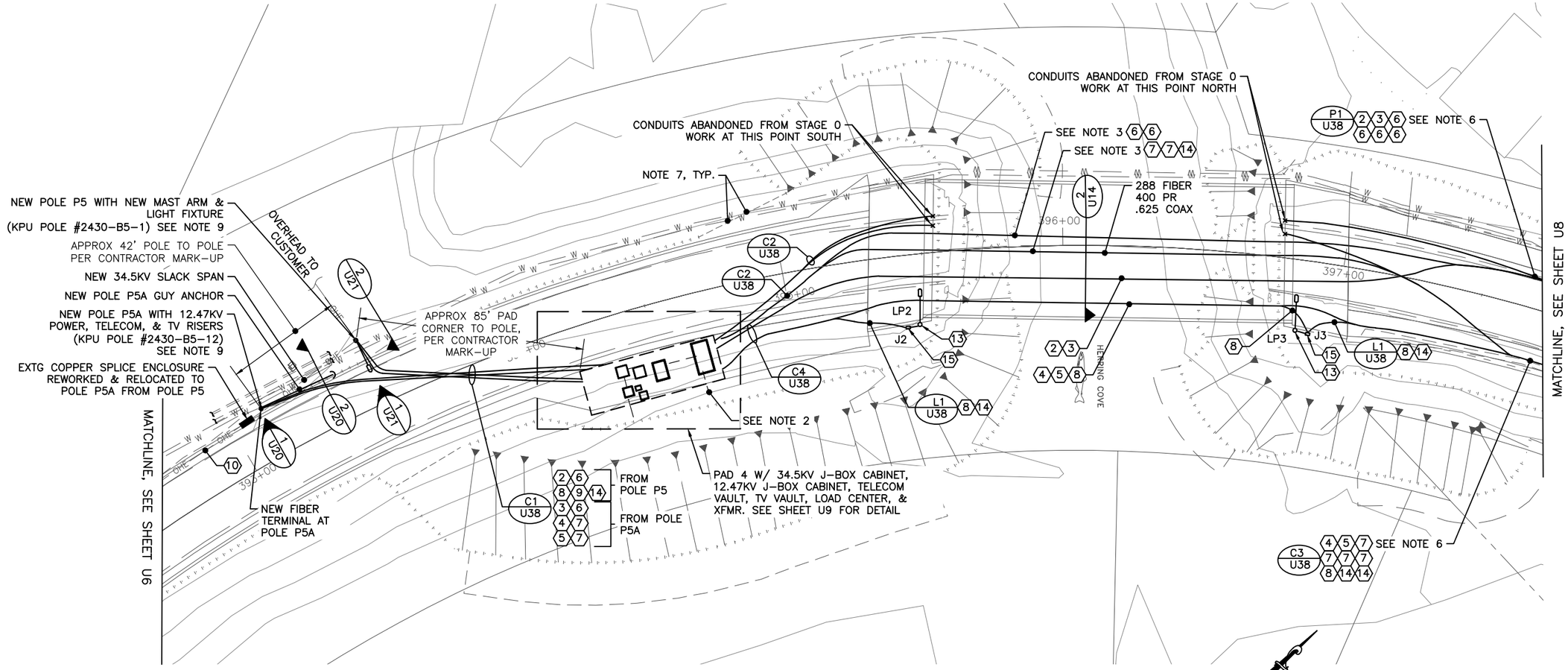

1 HERRING COVE BRIDGE - ENLARGED NEW

10' 20' 40'

SHEET NOTES:

1. SEE SHEET U5 FOR KEYNOTES APPLICABLE TO THIS SHEET.
2. INCLUDE DRAINS BETWEEN UNDERGROUND STRUCTURES PER NOTE 2, SHEET U7A.
3. CONDUITS INSTALLED AS PART OF BRIDGE STAGE 2 (FINAL STAGE) WORK SHOWN ON THIS SHEET WILL BE SET AS SPARE CONDUITS AND REMAIN SO THROUGH END OF CONSTRUCTION. SEE DETAILS ON SHEET U14 FOR NEW BRIDGE WORK. PROVIDE ALL SPARES WITH PULLSTRINGS.
4. THIS SHEET DEPICTS BRIDGE STAGE 2 ELECTRICAL WORK. STAGE 2 WORK IS THE FINAL STAGE OF WORK. THIS STAGE INCLUDES CONTINUED USE OF STAGE 1 UNDERGROUND ACROSS THE WATERSIDE PORTION OF THE NEW BRIDGE AND INCLUDES INSTALLATION OF NEW UNDERGROUND SPARE POWER, TELECOM, TV, AND STREET LIGHTING CONDUITS ACROSS THE UPLANDS SIDE PORTION OF THE NEW BRIDGE SEGMENT. NEW CONDUITS INSTALLED SHALL BE SPARES, SEE NOTE 3.
5. THEE ARE TWO ADDITIONAL STAGES ASSOCIATED WITH WORK BETWEEN PAD 4 AND PADS 5 AND 6. SEE SHEETS U7A AND U7B FOR MORE INFORMATION.
6. CONDUITS INDICATED HERE INCLUDE THE COMPLETE COLLECTION OF CONDUITS INSTALLED VIA STAGE 0, 1, AND 2 WORK IN THIS AREA. CONDUITS PROVIDED AS PART OF STAGE 0 WORK WILL BE ABANDONED WITHIN THEIR RESPECTIVE TRENCHES. LABEL AND PLUG ABANDONED CONDUITS AT BOTH ENDS PRIOR TO SUBSTANTIAL COMPLETION.
7. THERE ARE NUMEROUS EXISTING UNDERGROUND UTILITIES AND INFRASTRUCTURE TO REMAIN. NOT ALL ARE SHOWN ON THE PLANS BUT ALL NEED TO BE PROTECTED AND MAINTAINED THROUGHOUT PROJECT. CONTRACTOR SHALL CALL FOR LOCATES, DIG WITH CAUTION, AND COORDINATE ALL WORK WITH LOCAL UTILITIES, OTHER TRADES, ALASKA DOT&PF, AND CITY OF KETCHIKAN, SO AS TO IDENTIFY AND WORK AROUND UTILITIES TO REMAIN.
8. TRENCH DETAIL REFERENCES ARE CALLED OUT ON THE SITE PLANS AND ARE DEPICTED ON SHEET U38. THE CONTRACTOR IS RESPONSIBLE TO LAYOUT THE CONDUIT TRENCHES THROUGHOUT THE SITE IN COORDINATION WITH GENERAL CONSTRUCTION, FINAL LOCATIONS OF ALL EQUIPMENT AND VAULTS, AND AS NEEDED TO ADJUST TO SITE CONDITIONS NOT CAPTURED IN THE DESIGN DOCUMENTS. KEEP CONDUITS FROM CROSSING ONE ANOTHER AS MUCH AS POSSIBLE, MAINTAIN SEPARATION AND DEPTH DIMENSIONS INDICATED, AND ADJUST SECTIONS DEPICTED IN THE SET AS REQUIRED. THERE WILL BE CASES WHERE A TRENCH REFERENCE ON A SITE PLAN MAY BE MISSING CONDUITS PLANNED IN THAT AREA (i.e. 2" STREET LIGHTING CONDUITS THAT ARE SERVING AREA LIGHT POLES). IN SUCH CASES THE CONTRACTOR IS EXPECTED TO INCLUDE THOSE CONDUITS IN THE OVERALL TRENCH AND ADJUST THE WORK AS REQUIRED.
9. SEE SHEET U7A FOR DETAILS ABOUT EACH POLE.

CN
10/23/2024

PLANS DEVELOPED BY:
MORRIS ENGINEERING GROUP, INC
2375 JORDAN AVE #7
JUNEAU, AK 99801
907-789-3350
AECL 1010

STATE OF ALASKA 49TH Mark G. Morris May 31, 2024 No. EE 8613 REGISTERED PROFESSIONAL ENGINEER

STATE OF ALASKA DEPARTMENT OF TRANSPORTATION AND PUBLIC FACILITIES
6860 GLACIER HIGHWAY, JUNEAU, AK 99801
(907) 465-1763

UTILITY RELOCATION FOR KETCHIKAN AREA BRIDGES

HERRING COVE SITE PLAN - BRIDGE WORK - STAGE 2

FILE y:\102 state of ak\44 utility relocation design for ketchikan bridges\Working Drawings\00072_U1.dwg | DATE 5/30/2024 12:56 | LAYOUT U7C | DESIGNED MGM | CHECKED MGM | DRAFTED JODI

NO.	DATE	REVISION	STATE	PROJECT DESIGNATION	YEAR	SHEET NO.	TOTAL SHEETS
1	5/2024	AS-BUILT					
AS-BUILT DRAWING PREPARED FROM CONTRACTOR PROVIDED REDLINE WHICH MAY NOT BE CORRECT			ALASKA	0902043/SFHWY00072	2021	U8	45

SHEET NOTES:

1. SEE SHEET U5 FOR KEYNOTES APPLICABLE TO THIS SHEET.
2. PROVIDE NEW GUYING AT POLE, SEE SHEET U22 FOR POLE P7 DETAILS AND SHEET U24 FOR POLE P9 DETAILS.
3. THERE ARE NUMEROUS EXISTING UNDERGROUND UTILITIES AND INFRASTRUCTURE TO REMAIN. NOT ALL ARE SHOWN ON THE PLANS BUT ALL NEED TO BE PROTECTED AND MAINTAINED THROUGHOUT PROJECT. CONTRACTOR SHALL CALL FOR LOCATES, DIG WITH CAUTION, AND COORDINATE ALL WORK WITH LOCAL UTILITIES, OTHER TRADES, ALASKA DOT&PF, AND CITY OF KETCHIKAN, SO AS TO IDENTIFY AND WORK AROUND UTILITIES TO REMAIN.
4. BETWEEN EACH UNDERGROUND ELECTRICAL AND TELECOM/TV BASEMENT AND VAULT, PROVIDE A CONDUIT DRAIN TO REMOVE WATER (LINE DASHED ON THIS SHEET). TIE ADJACENT STRUCTURES TOGETHER WITH A DRAIN AND RUN ANOTHER DRAIN TO DAYLIGHT AT PAD 5. SLOPE CONDUITS TO DRAIN, SEE INDIVIDUAL EQUIPMENT DETAILS FOR MORE ON THE DRAINS. COORDINATE DRAIN ROUTING WITH CIVIL CONTRACTOR.
5. TRENCH DETAIL REFERENCES ARE CALLED OUT ON THE SITE PLANS AND ARE DEPICTED ON SHEET U38. THE CONTRACTOR IS RESPONSIBLE TO LAYOUT THE CONDUIT TRENCHES THROUGHOUT THE SITE IN COORDINATION WITH GENERAL CONSTRUCTION, FINAL LOCATIONS OF ALL EQUIPMENT AND VAULTS, AND AS NEEDED TO ADJUST TO SITE CONDITIONS NOT CAPTURED IN THE DESIGN DOCUMENTS. KEEP CONDUITS FROM CROSSING ONE ANOTHER AS MUCH AS POSSIBLE, MAINTAIN SEPARATION AND DEPTH DIMENSIONS INDICATED, AND ADJUST SECTIONS DEPICTED IN THE SET AS REQUIRED. THERE WILL BE CASES WHERE A TRENCH REFERENCE ON A SITE PLAN MAY BE MISSING CONDUITS PLANNED IN THAT AREA (i.e. 2" STREET LIGHTING CONDUITS THAT ARE SERVING AREA LIGHT POLES). IN SUCH CASES THE CONTRACTOR IS EXPECTED TO INCLUDE THOSE CONDUITS IN THE OVERALL TRENCH AND ADJUST THE WORK AS REQUIRED.
6. EXISTING CONDUITS TO POLE P6: (1) 6" POWER, (1) 4" POWER. (2) 4" TELECOM. THE POWER CONDUITS TO RISERS AT POLE P6 TO BE REROUTED TO THE VAULTS. THE REMAINDER OF THE CONDUIT SHALL BE ABANDONED IN PLACE. SPARE TELECOM CONDUITS TO BE PROTECTED AND MAINTAINED. SEE SHEET U38 FOR EXISTING POWERHOUSE ROAD TRENCH DETAIL.
7. ALL WORK AT AND ON POLES P7–P10 BY KPU UTILITY PER PROJECT PLANS AND SPECIFICATIONS. ALL UNDERGROUND TO THE POLES BY CONTRACTOR. SEE SHEETS U22–U25 FOR POLES P7–P10 DETAILS.
8. TV AND TELEPHONE OVERHEAD LINES ROUTED AND CONNECTED TO NEW POLE P6A. SEE SHEET U39A FOR MORE INFORMATION.

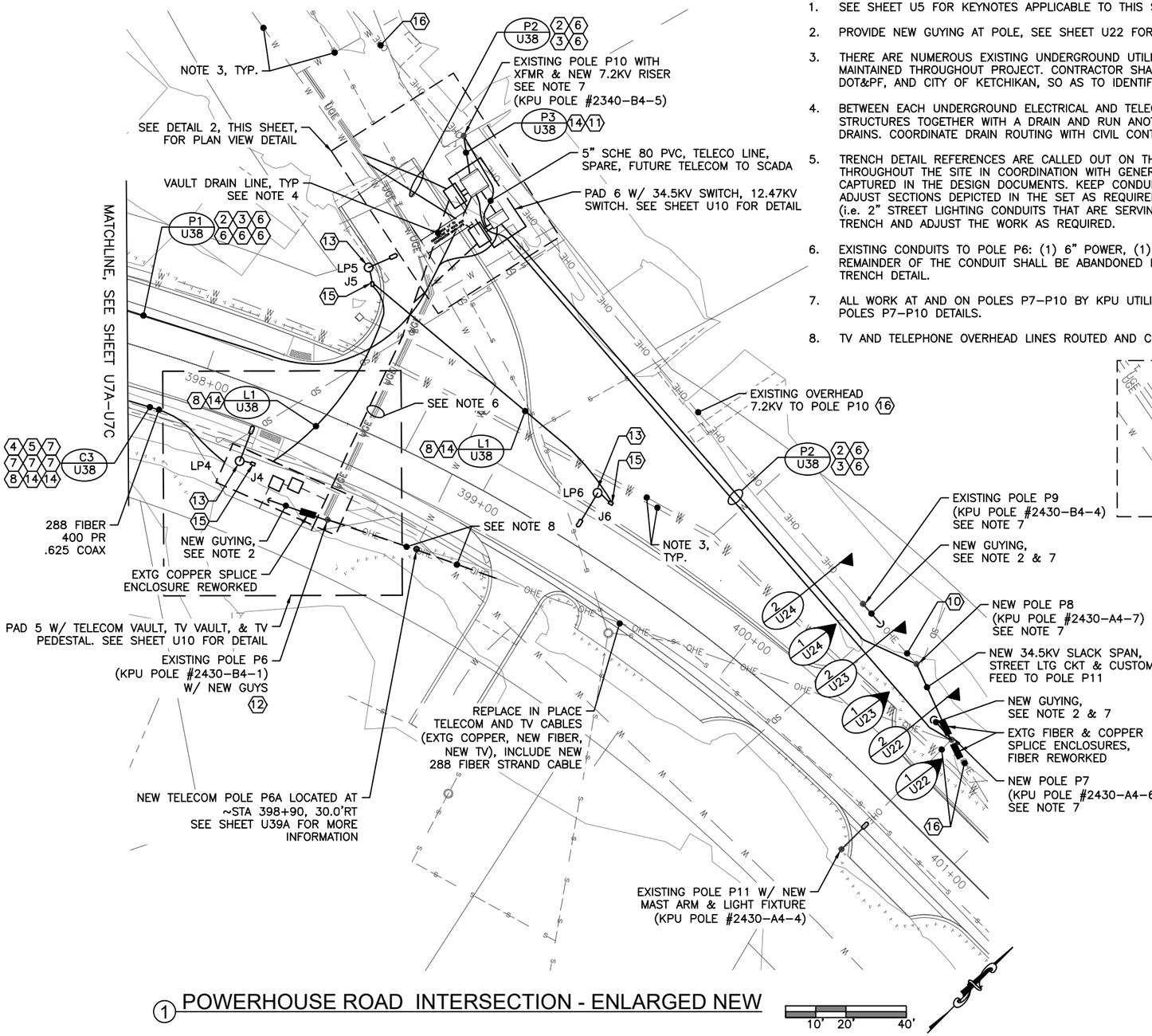

1 POWERHOUSE ROAD INTERSECTION - ENLARGED NEW

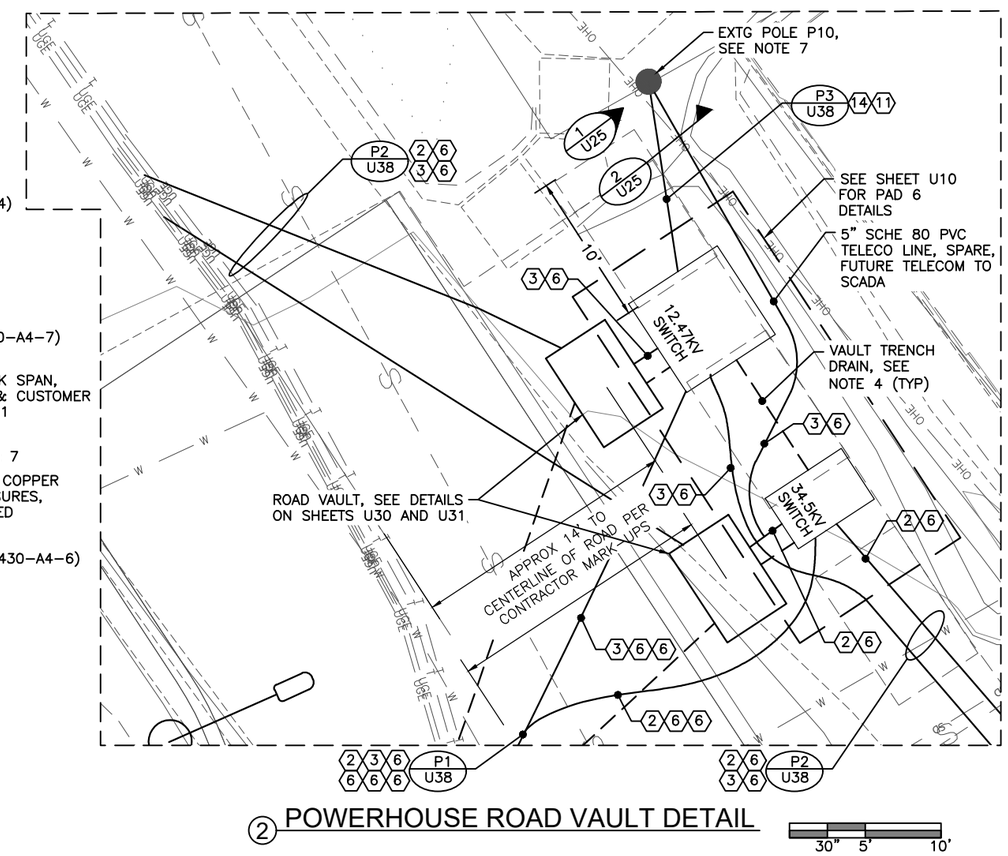

2 POWERHOUSE ROAD VAULT DETAIL

CN
10/23/2024

PLANS DEVELOPED BY:
MORRIS ENGINEERING GROUP, INC
2375 JORDAN AVE #7
JUNEAU, AK 99801
907–789–3350
AECL 1010

STATE OF ALASKA 49TH Mark G. Morris May 31, 2024 No. EE 8613 REGISTERED PROFESSIONAL ENGINEER

STATE OF ALASKA DEPARTMENT OF TRANSPORTATION AND PUBLIC FACILITIES
6860 GLACIER HIGHWAY, JUNEAU, AK 99801
(907) 465–1763

UTILITY RELOCATION FOR KETCHIKAN AREA BRIDGES

HERRING COVE SITE PLAN – NEW POWERHOUSE ROAD

FILE y:\102 state of ak\44 utility relocation design for ketchikan bridges\Working Drawings\00072_U1.dwg | DATE 5/30/2024 12:56 | LAYOUT U8 | DESIGNED MGM | CHECKED MGM | DRAFTED JODI

NO.	DATE	REVISION	STATE	PROJECT DESIGNATION	YEAR	SHEET NO.	TOTAL SHEETS
1	5/2024	AS-BUILT					
AS-BUILT DRAWING PREPARED FROM CONTRACTOR PROVIDED REDLINE WHICH MAY NOT BE CORRECT			ALASKA	0902043/SFHWY00072	2021	U9	45

SHEET NOTES:

1. SEE SHEET U5 FOR KEYNOTES APPLICABLE TO THIS SHEET.
2. BETWEEN EACH UNDERGROUND ELECTRICAL AND TELECOM/TV BASEMENT AND VAULT, PROVIDE A CONDUIT DRAIN TO REMOVE WATER. TIE ADJACENT STRUCTURES TOGETHER WITH A DRAIN AND RUN ANOTHER DRAIN TO DAYLIGHT AS REQUIRED. SLOPE CONDUITS TO DRAIN, SEE INDIVIDUAL EQUIPMENT DETAILS FOR MORE ON THE DRAINS. COORDINATE DRAIN ROUTING WITH CIVIL CONTRACTOR.
3. THERE ARE NUMEROUS EXISTING UNDERGROUND UTILITIES AND INFRASTRUCTURE TO REMAIN. NOT ALL ARE SHOWN ON THE PLANS BUT ALL NEED TO BE PROTECTED AND MAINTAINED THROUGHOUT PROJECT. CONTRACTOR SHALL CALL FOR LOCATES, DIG WITH CAUTION, AND COORDINATE ALL WORK WITH LOCAL UTILITIES. OTHER TRADES, ALASKA DOT&PF, AND CITY OF KETCHIKAN. SO AS TO IDENTIFY AND WORK AROUND UTILITIES TO REMAIN.
4. TRENCH DETAIL REFERENCES ARE CALLED OUT ON THE SITE PLANS AND ARE DEPICTED ON SHEET U38. THE CONTRACTOR IS RESPONSIBLE TO LAYOUT THE CONDUIT TRENCHES THROUGHOUT THE SITE IN COORDINATION WITH GENERAL CONSTRUCTION, FINAL LOCATIONS OF ALL EQUIPMENT AND VAULTS, AND AS NEEDED TO ADJUST TO SITE CONDITIONS NOT CAPTURED IN THE DESIGN DOCUMENTS. KEEP CONDUITS FROM CROSSING ONE ANOTHER AS MUCH AS POSSIBLE, MAINTAIN SEPARATION AND DEPTH DIMENSIONS INDICATED, AND ADJUST SECTIONS DEPICTED IN THE SET AS REQUIRED. THERE WILL BE CASES WHERE A TRENCH REFERENCE ON A SITE PLAN MAY BE MISSING CONDUITS PLANNED IN THAT AREA (i.e. 2" STREET LIGHTING CONDUITS THAT ARE SERVING AREA LIGHT POLES). IN SUCH CASES THE CONTRACTOR IS EXPECTED TO INCLUDE THOSE CONDUITS IN THE OVERALL TRENCH AND ADJUST THE WORK AS REQUIRED.
5. CONDUITS FROM PAD 4 UNDERGROUND ACROSS EXISTING AND NEW BRIDGE TO PAD 5 OR PAD 6 AS APPLICABLE. WORK TO OCCUR IN CONCORDANCE WITH BRIDGE CONSTRUCTION STAGES 0, 1 AND 2. SEE SHEETS U7A–U7C. FOR STAGES AND ADDITIONAL ROUTING INFORMATION.

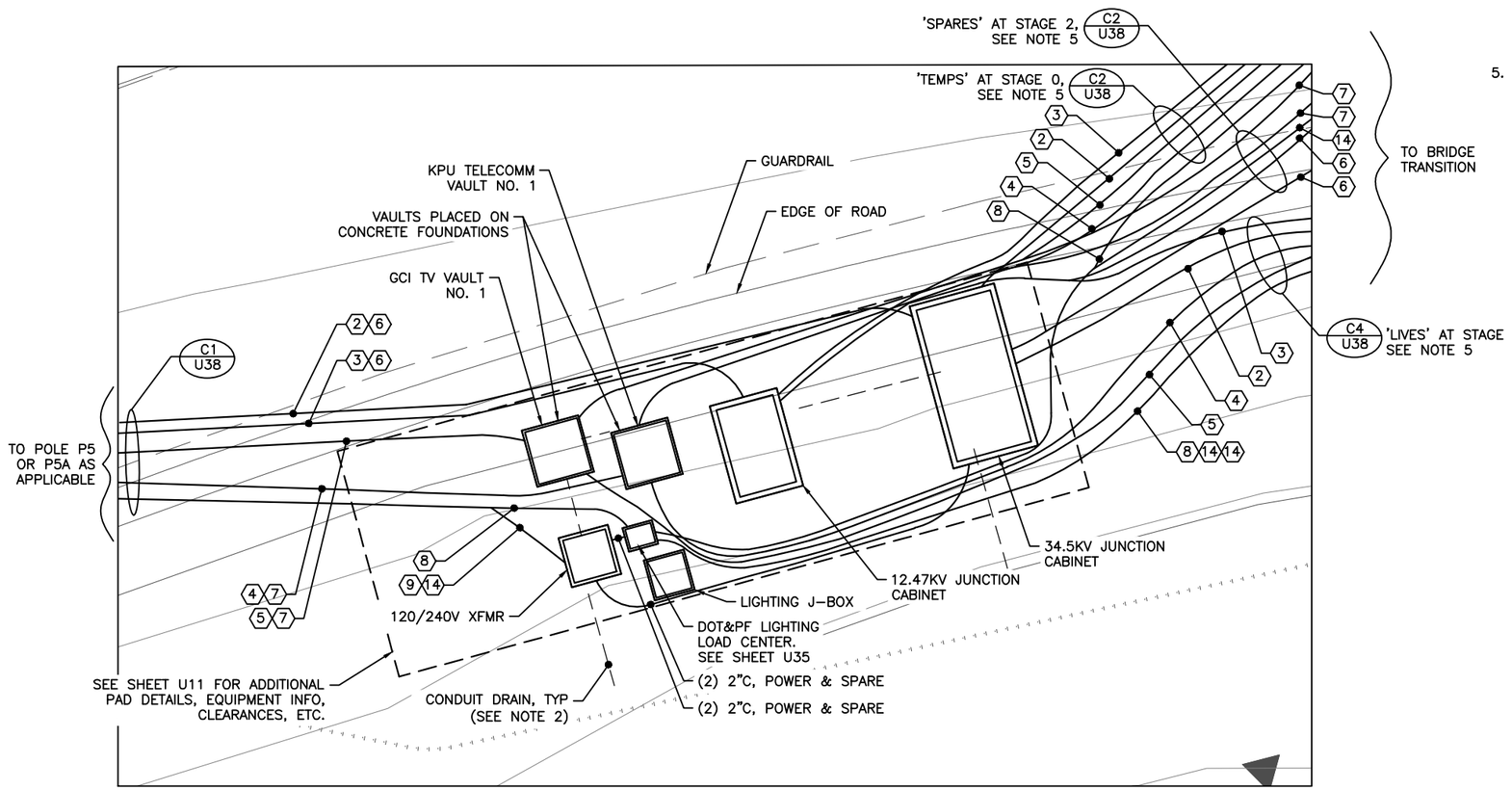

1 PAD 4 - DETAIL

30" 5' 10'

CN
10/23/2024

PLANS DEVELOPED BY:
MORRIS ENGINEERING GROUP, INC
2375 JORDAN AVE #7
JUNEAU, AK 99801
907–789–3350
AECL 1010

STATE OF ALASKA 49TH Mark G. Morris May 31, 2024 No. EE 8613 REGISTERED PROFESSIONAL ENGINEER

STATE OF ALASKA DEPARTMENT OF TRANSPORTATION AND PUBLIC FACILITIES
6860 GLACIER HIGHWAY, JUNEAU, AK 99801
(907) 465–1763

UTILITY RELOCATION FOR KETCHIKAN AREA BRIDGES

UTILITY PAD 4 DETAILS

FILE y:\102 state of ak\44 utility relocation design for ketchikan bridges\Working Drawings\00072_U1.dwg | DATE 5/30/2024 12:56 | LAYOUT U9 | DESIGNED MGM | CHECKED MGM | DRAFTED JODI

NO.	DATE	REVISION	STATE	PROJECT DESIGNATION	YEAR	SHEET NO.	TOTAL SHEETS
1	5/2024	AS-BUILT					
AS-BUILT DRAWING PREPARED FROM CONTRACTOR PROVIDED REDLINE WHICH MAY NOT BE CORRECT			ALASKA	0902043/SFHWY00072	2021	U10	45

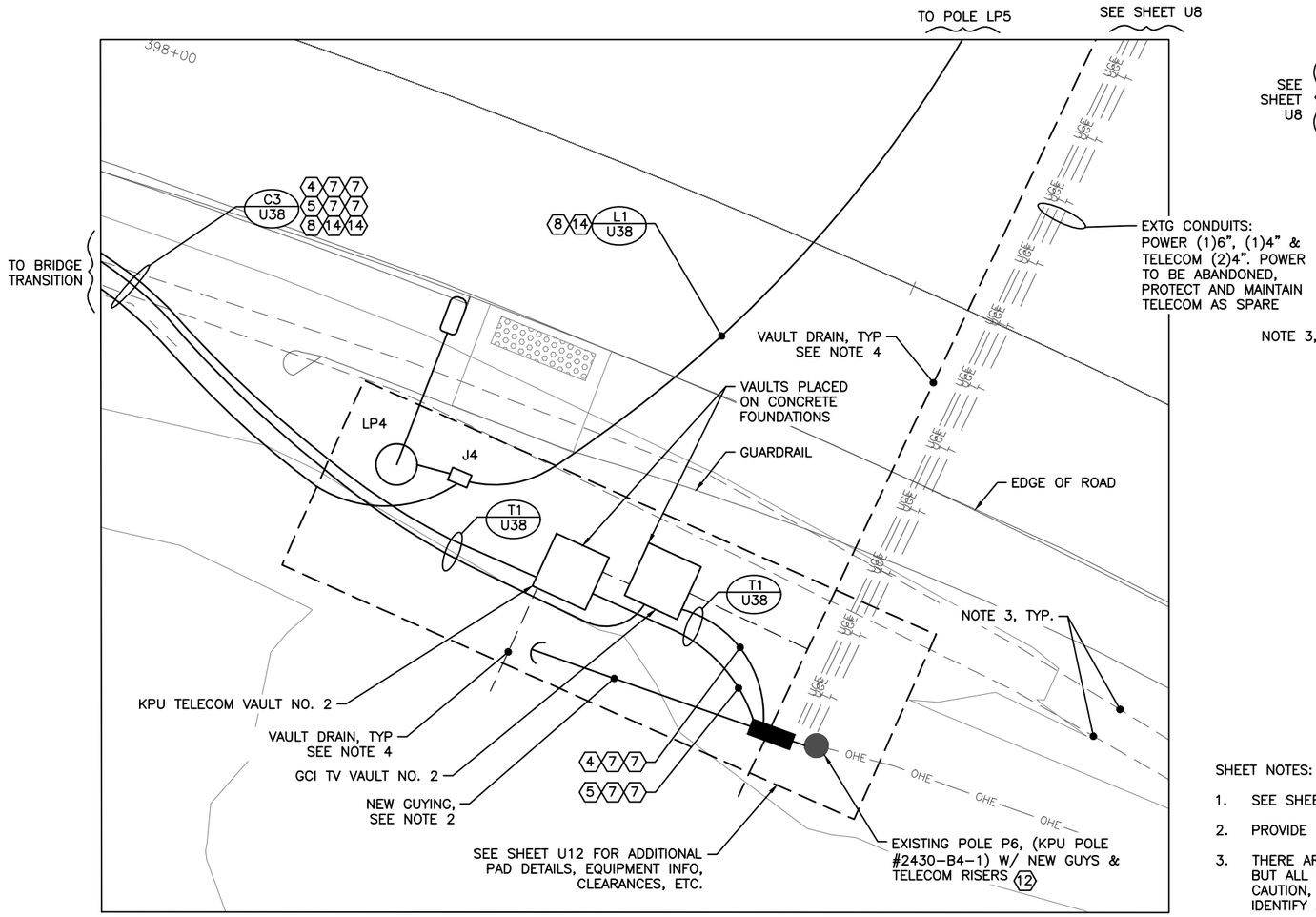

1 PAD 5 - DETAIL

30" 5' 10'

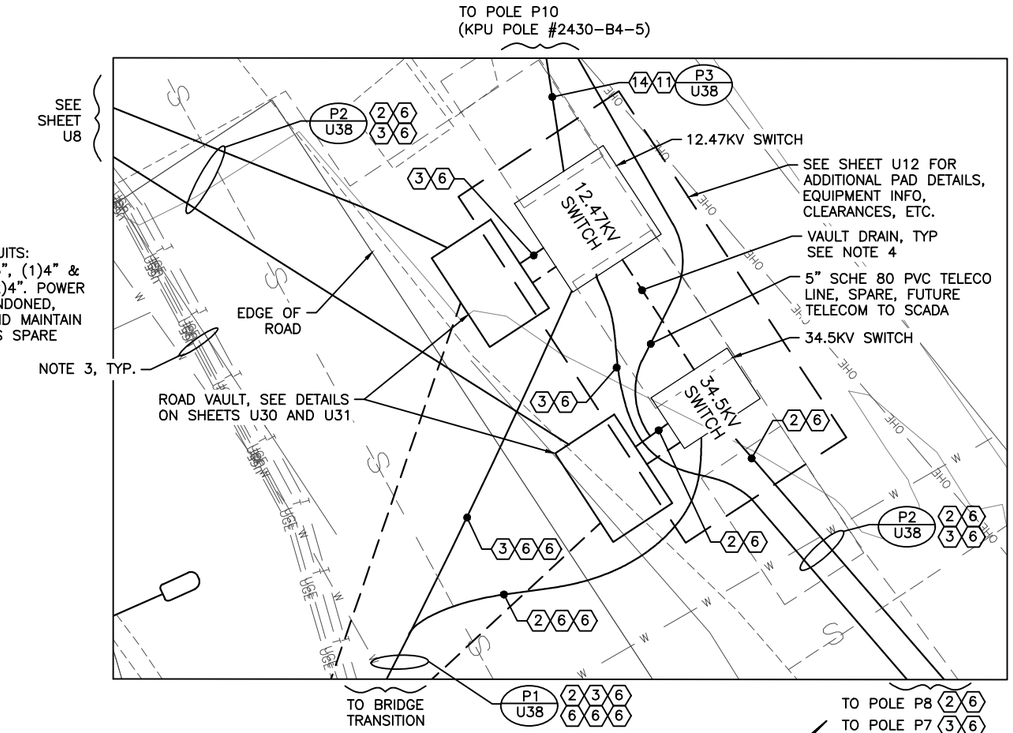

2 PAD 6 - DETAIL

30" 5' 10'

SHEET NOTES:

1. SEE SHEET U5 FOR KEYNOTES APPLICABLE TO THIS SHEET.
2. PROVIDE NEW GUYING AT POLE, SEE SHEET U12 FOR INFORMATION.
3. THERE ARE NUMEROUS EXISTING UNDERGROUND UTILITIES AND INFRASTRUCTURE TO REMAIN. NOT ALL ARE SHOWN ON THE PLANS BUT ALL NEED TO BE PROTECTED AND MAINTAINED THROUGHOUT PROJECT. CONTRACTOR SHALL CALL FOR LOCATES, DIG WITH CAUTION, AND COORDINATE ALL WORK WITH LOCAL UTILITIES. OTHER TRADES, ALASKA DOT&PF, AND CITY OF KETCHIKAN. SO AS TO IDENTIFY AND WORK AROUND UTILITIES TO REMAIN.
4. BETWEEN EACH UNDERGROUND ELECTRICAL AND TELECOM/TV BASEMENT AND VAULT, PROVIDE A CONDUIT DRAIN TO REMOVE WATER. TIE ADJACENT STRUCTURES TOGETHER WITH A DRAIN AND RUN ANOTHER DRAIN TO DAYLIGHT AS REQUIRED. SLOPE CONDUITS TO DRAIN, SEE INDIVIDUAL EQUIPMENT DETAILS FOR MORE ON THE DRAINS. COORDINATE DRAIN ROUTING WITH CIVIL CONTRACTOR.
5. TRENCH DETAIL REFERENCES ARE CALLED OUT ON THE SITE PLANS AND ARE DEPICTED ON SHEET U38. THE CONTRACTOR IS RESPONSIBLE TO LAYOUT THE CONDUIT TRENCHES THROUGHOUT THE SITE IN COORDINATION WITH GENERAL CONSTRUCTION, FINAL LOCATIONS OF ALL EQUIPMENT AND VAULTS, AND AS NEEDED TO ADJUST TO SITE CONDITIONS NOT CAPTURED IN THE DESIGN DOCUMENTS. KEEP CONDUITS FROM CROSSING ONE ANOTHER AS MUCH AS POSSIBLE, MAINTAIN SEPARATION AND DEPTH DIMENSIONS INDICATED, AND ADJUST SECTIONS DEPICTED IN THE SET AS REQUIRED. THERE WILL BE CASES WHERE A TRENCH REFERENCE ON A SITE PLAN MAY BE MISSING CONDUITS PLANNED IN THAT AREA (i.e. 2" STREET LIGHTING CONDUITS THAT ARE SERVING AREA LIGHT POLES). IN SUCH CASES THE CONTRACTOR IS EXPECTED TO INCLUDE THOSE CONDUITS IN THE OVERALL TRENCH AND ADJUST THE WORK AS REQUIRED.

CN
10/23/2024

PLANS DEVELOPED BY:
MORRIS ENGINEERING GROUP, INC
2375 JORDAN AVE #7
JUNEAU, AK 99801
907-789-3350
AECL 1010

STATE OF ALASKA 49TH Mark G. Morris May 31, 2024 No. EE 8613 REGISTERED PROFESSIONAL ENGINEER

STATE OF ALASKA DEPARTMENT OF TRANSPORTATION AND PUBLIC FACILITIES
6860 GLACIER HIGHWAY, JUNEAU, AK 99801
(907) 465-1763

UTILITY RELOCATION FOR KETCHIKAN AREA BRIDGES

UTILITY PAD 5 & 6 DETAILS

FILE | s:\102 state of ak\44 utility relocation design for ketchikan bridges\Working Drawings\00072_U1.dwg | DATE | 5/30/2024 12:56 | LAYOUT | U10 | DESIGNED | MGM | CHECKED | MGM | DRAFTED | JODI

NO.	DATE	REVISION	STATE	PROJECT DESIGNATION	YEAR	SHEET NO.	TOTAL SHEETS
1	5/2024	AS-BUILT					
AS-BUILT DRAWING PREPARED FROM CONTRACTOR PROVIDED REDLINE WHICH MAY NOT BE CORRECT			ALASKA	0902043/SFHWY00072	2021	U11	45

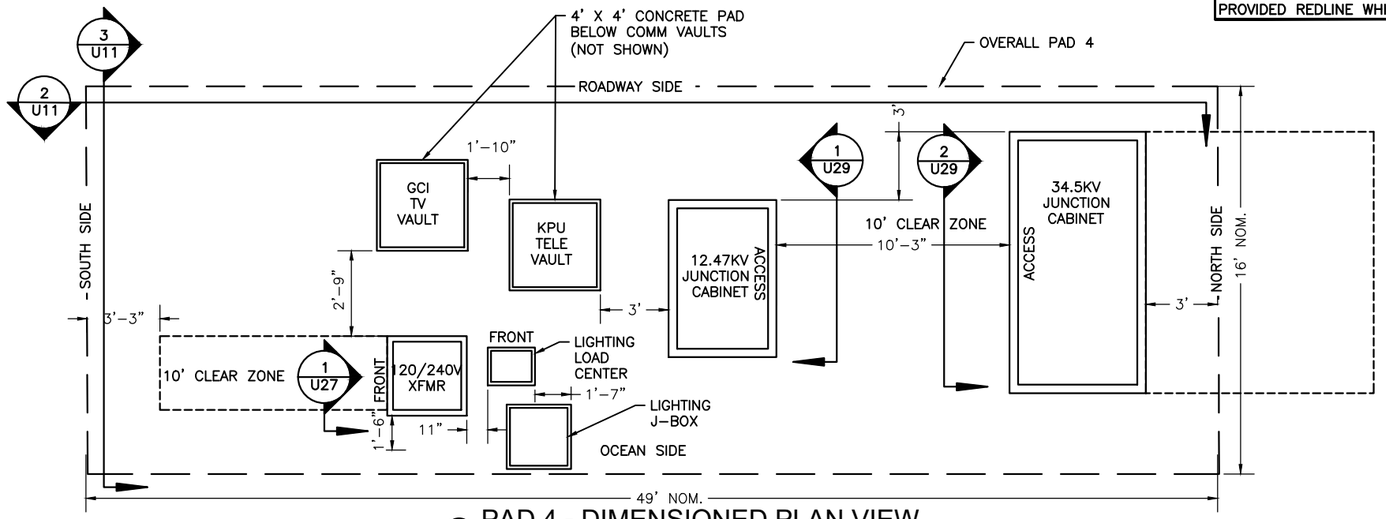

1 PAD 4 - DIMENSIONED PLAN VIEW

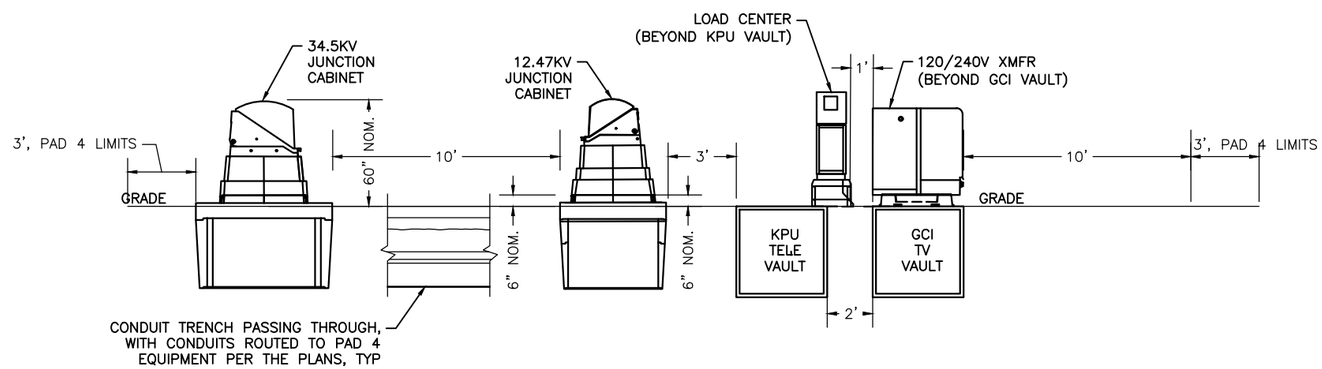

2 PAD 4 - ROADWAY PARALLEL SECTION

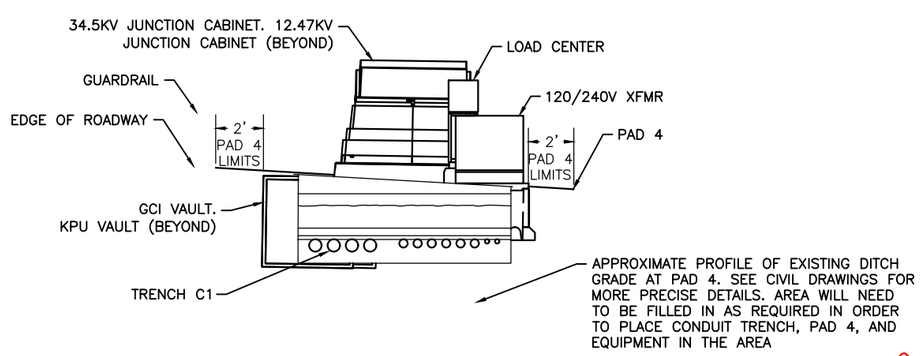

3 PAD 4 - ROADWAY CROSS SECTION

CN
10/23/2024

PLANS DEVELOPED BY:
MORRIS ENGINEERING GROUP, INC
2375 JORDAN AVE #7
JUNEAU, AK 99801
907-789-3350
AECL 1010

STATE OF ALASKA 49TH
Mark G. Morris
May 31, 2024
No. EE 8613
REGISTERED PROFESSIONAL ENGINEER

STATE OF ALASKA DEPARTMENT OF TRANSPORTATION AND PUBLIC FACILITIES
6860 GLACIER HIGHWAY, JUNEAU, AK 99801
(907) 465-1763

UTILITY RELOCATION FOR KETCHIKAN AREA BRIDGES

UTILITY PAD 4 - ROADWAY SECTIONS & PAD ELEVATIONS

FILE y:\102 state of ak\44 utility relocation design for ketchikan bridges\Working Drawings\UTILITY PAD 1 & PAD 2 ROADWAY CROSS SECTIONS.dwg | LAYOUT U11 | 10/29/2024 17:56 | DESIGNED MGM | CHECKED MGM | DRAFTED JODI

NO.	DATE	REVISION	STATE	PROJECT DESIGNATION	YEAR	SHEET NO.	TOTAL SHEETS
1	5/2024	AS-BUILT					
AS-BUILT DRAWING PREPARED FROM CONTRACTOR PROVIDED REDLINE WHICH MAY NOT BE CORRECT			ALASKA	0902043/SFHWY00072	2021	U12	45

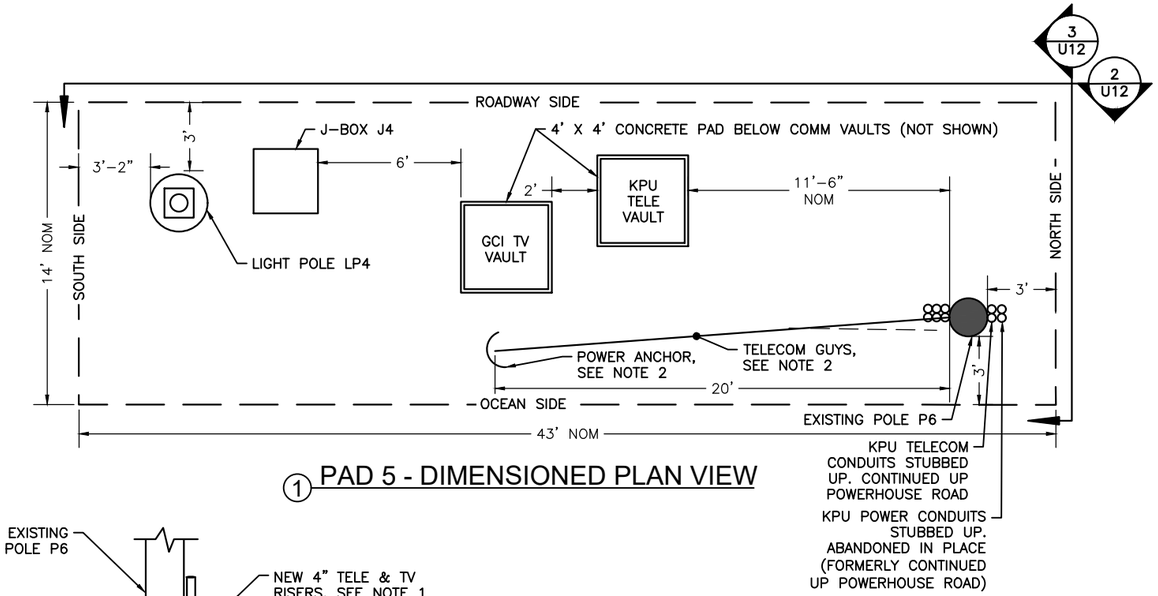

1 PAD 5 - DIMENSIONED PLAN VIEW

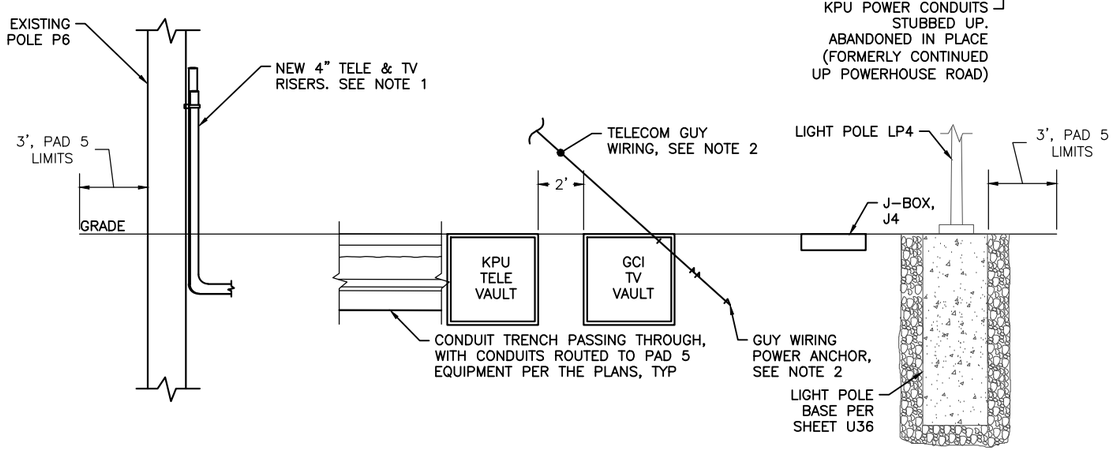

2 PAD 5 - ROADWAY PARALLEL SECTION

SHEET NOTES:

1. PROVIDE (2) 4" TELEPHONE, (2) 4" TV CONDUIT RISERS AT POLE P6. GENERAL ARRANGEMENT AND POLE SETUPS PER POLE P5A DETAILS ON SHEET U20.
2. PROVIDE COMMUNICATION GUYING WORK AND GENERAL ARRANGEMENT PER POLE P2 DETAILS ON SHEET U19

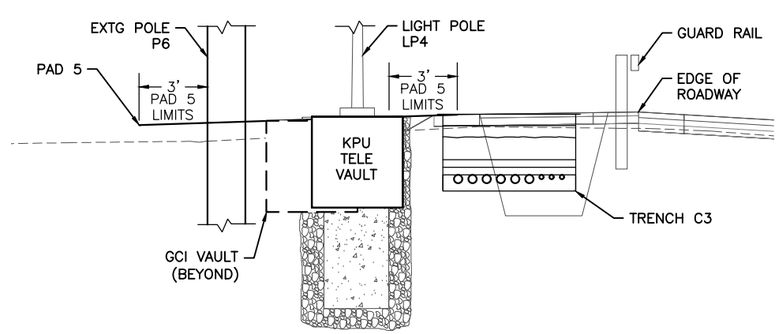

3 PAD 5 - ROADWAY CROSS SECTION

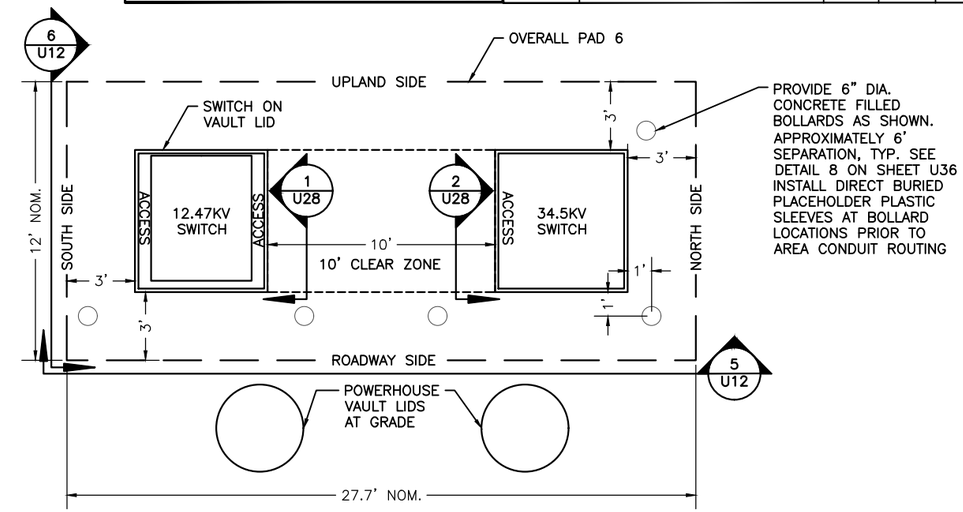

4 PAD 6 - DIMENSIONED PLAN VIEW

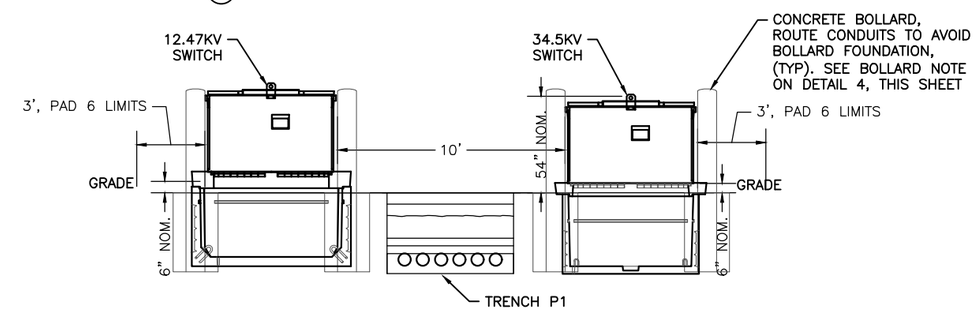

5 PAD 6 - ROADWAY PARALLEL SECTION

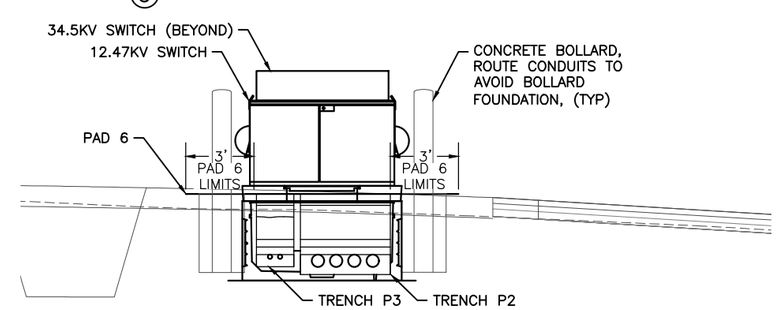

6 PAD 6 - ROADWAY CROSS SECTION

CN
10/23/2024

PLANS DEVELOPED BY:
MORRIS ENGINEERING GROUP, INC
2375 JORDAN AVE #7
JUNEAU, AK 99801
907-789-3350
AECL 1010

STATE OF ALASKA 49TH Mark G. Morris May 31, 2024 No. EE 8613 REGISTERED PROFESSIONAL ENGINEER

STATE OF ALASKA DEPARTMENT OF TRANSPORTATION AND PUBLIC FACILITIES
6860 GLACIER HIGHWAY, JUNEAU, AK 99801
(907) 465-1763

UTILITY RELOCATION FOR KETCHIKAN AREA BRIDGES

UTILITY PAD 5 & 6 - ROADWAY SECTIONS & PAD ELEVATONS

FILE | DESIGNED MGM | CHECKED MGM | DRAFTED JODI | LAYOUT U12 | 8/29/2024 17:56 | CONTROL

NO.	DATE	REVISION	STATE	PROJECT DESIGNATION	YEAR	SHEET NO.	TOTAL SHEETS
1	5/2024	AS-BUILT					
AS-BUILT DRAWING PREPARED FROM CONTRACTOR PROVIDED REDLINE WHICH MAY NOT BE CORRECT			ALASKA	0902043/SFHWY00072	2021	U13	45

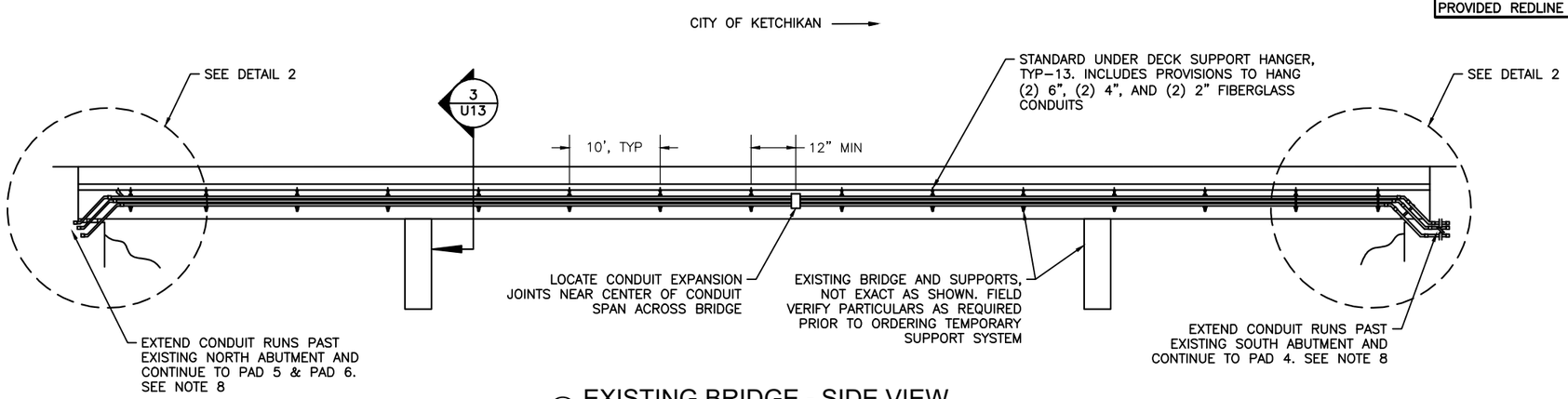

1 EXISTING BRIDGE - SIDE VIEW
NO SCALE

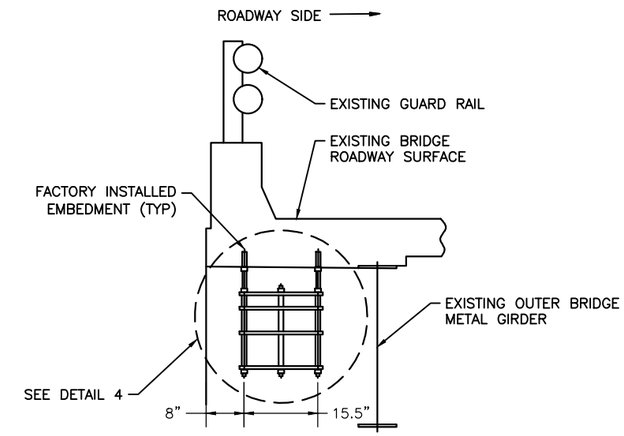

3 BRIDGE HANGERS - ENLARGED SECTION
NO SCALE

SHEET NOTES:

1. PROVIDE FIBERGLASS CONDUIT, SUPPORT HANGERS, ALL ASSOCIATED FITTINGS, AND MOUNTING HARDWARE THE ENTIRE LENGTH OF BRIDGE. ALL NON-METALLIC COMPONENTS SHALL BE LIGHT GRAY COLORED.
2. HANGER SYSTEM SHALL MEET MINIMUM TENSILE, FLEXURAL, AND COMPRESSIVE STRENGTH REQUIREMENTS OF ASTM D638, D790, D695, ETC. PROVIDE ALL 316L STAINLESS STEEL MOUNTING HARDWARE, BRACKETS, ETC. ALL METALLIC ELEMENTS ASSOCIATED WITH THE FIBERGLASS CONDUIT SYSTEM SHALL BE 316L STAINLESS STEEL. PROVIDE CONDUX INTERNATIONAL HANGER SYSTEM OR EQUAL. SEE NOTE 9.
3. MEET NEC REQUIREMENTS FOR CONDUIT SUPPORT SEPARATION. 10 FEET IS RECOMMENDED AS SHOWN HERE, 11 FEET SEPARATION MAXIMUM.
4. ALL CONDUITS ALONG BRIDGE SHALL BE FIBERGLASS MEETING TC-14A REQUIREMENTS.
5. ALL FIBERGLASS CONDUIT JOINTS SHALL BE EPOXY BELL AND SPIGOT.
6. ALL BRIDGE WORK TO BE COORDINATED WITH STRUCTURAL ENGINEER AND OVERALL BRIDGE DESIGN AND LAYOUT. THIS INCLUDES PRECISE LAYOUT OF SUPPORTS, ABUTMENT SLEEVE POSITIONS, CONDUIT EXTENSIONS PAST ABUTMENT INTO ROADWAY, HANGAR EMBEDMENT INTO CONCRETE DECK, ETC. STRUCTURAL ENGINEER MUST APPROVE SUBMITTALS PRIOR TO ORDERING. SEE NOTE 9.
7. PROVIDE EXPANSION JOINT ON WATER SIDE OF ABUTMENT INTERFACE. EXTEND FIBERGLASS CONDUIT 5 FEET PAST ABUTMENT INTO ROAD BEFORE TRANSITIONING TO SCHEDULE 80 PVC CONDUIT. EXPANSION JOINTS SHALL BE O-RING SLIDING SLEEVE TYPE WITH 8" OF TRAVEL, NOMINAL. PROVIDE ADDITIONAL SUPPORTS AT JOINT AS REQUIRED. DETAIL 1 ON SHEET U37 HAS A DEPICTION OF THE EXPANSION JOINTS BELOW THE BRIDGE.
8. CONDUIT WORK ACROSS EXISTING BRIDGE AND THE NEW BRIDGE WILL BE INSTALLED IN A SPECIFIC SEQUENCE THROUGH STAGES '0', '1' AND '2'. SEE SHEETS U7A-U7C FOR MORE ON THE STAGES OF CONSTRUCTION INVOLVED.
9. THE COMPLETE DESIGN OF THE UNDER BRIDGE FIBERGLASS CONDUIT SUPPORT SYSTEM IS NOT DEPICTED ON THIS SHEET. NUMEROUS ELEMENTS ARE REQUIRED NOT DETAILED HERE (CONCRETE SETTING PLUGS, CONDUIT STOP COUPLINGS, THREADED ADAPTERS, HDG BOLTS, NUTS, WASHERS, EPOXY KIT & APPLICATION GUN, ETC.) CONTRACTOR SHALL WORK WITH HANGER MANUFACTURER TO DEVELOP A COMPLETE BILL OF MATERIAL, WORK THROUGH LAYOUT AND INSTALLATION DETAILS AS REQUIRED, ETC. COORDINATE WITH BRIDGE CONTRACTOR AS NEEDED.

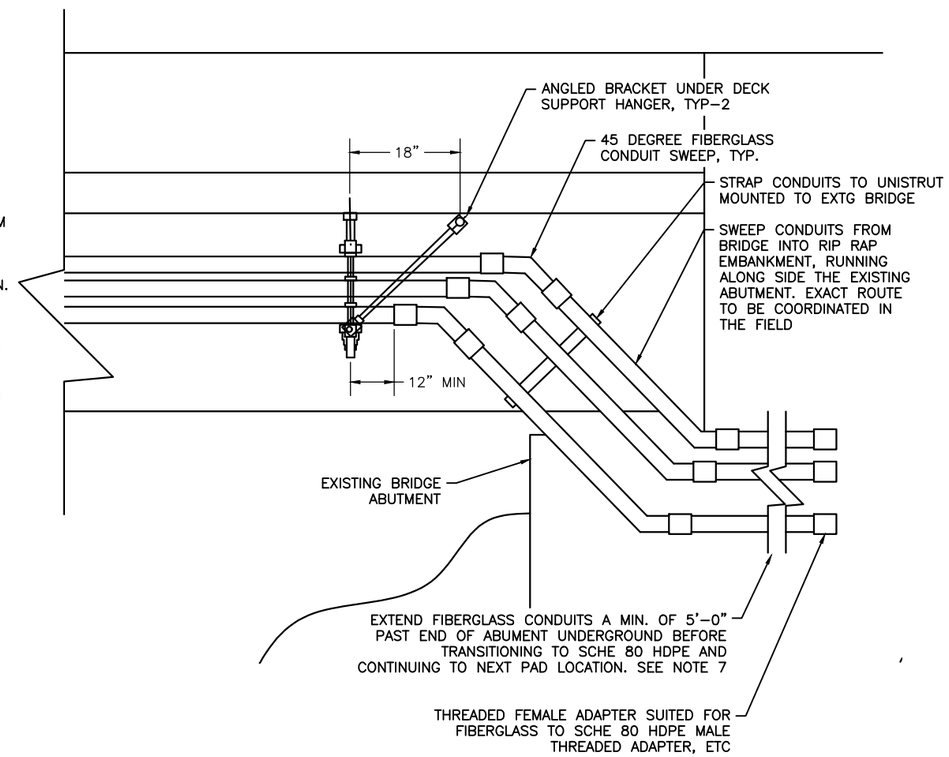

2 ENLARGED BRIDGE - SECTION VIEW
NO SCALE

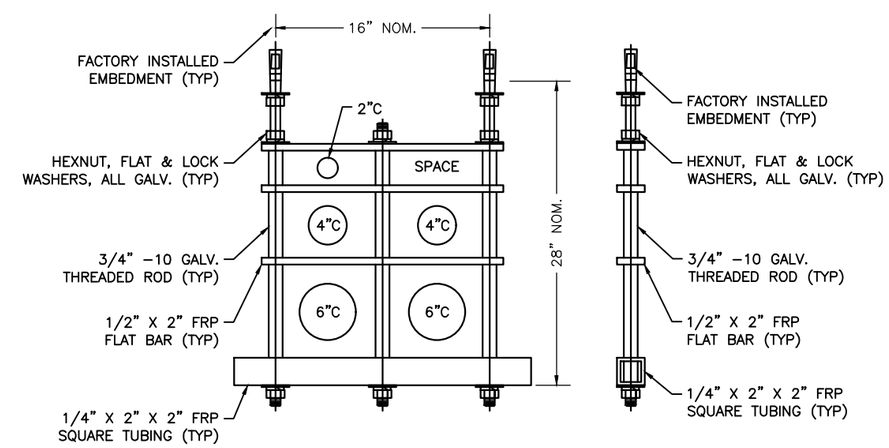

4 TEMPORARY BRIDGE HANGERS - DETAIL
NO SCALE

CN
10/23/2024

PLANS DEVELOPED BY:
MORRIS ENGINEERING GROUP, INC
2375 JORDAN AVE #7
JUNEAU, AK 99801
907-789-3350
AECL 1010

STATE OF ALASKA 49TH Mark G. Morris May 31, 2024 No. EE 8613 REGISTERED PROFESSIONAL ENGINEER

STATE OF ALASKA DEPARTMENT OF TRANSPORTATION AND PUBLIC FACILITIES
6860 GLACIER HIGHWAY, JUNEAU, AK 99801
(907) 465-1763

UTILITY RELOCATION FOR KETCHIKAN AREA BRIDGES

EXISTING BRIDGE TEMP CONDUIT SECTIONS & DETAILS

FILE | s:\102 state of ak\44 utility relocation design for ketchikan bridges\Working Drawings\UTILITY PAD 1 & PAD 2 ROADWAY CROSS SECTIONS.dwg | LAYOUT | U13 | 04/29/2024 17:56 | DESIGNED | MGM | CHECKED | MGM | DRAFTED | JODI

NO.	DATE	REVISION	STATE	PROJECT DESIGNATION	YEAR	SHEET NO.	TOTAL SHEETS
1	5/2024	AS-BUILT					
AS-BUILT DRAWING PREPARED FROM CONTRACTOR PROVIDED REDLINE WHICH MAY NOT BE CORRECT			ALASKA	0902043/SFHWY00072	2021	U14	45

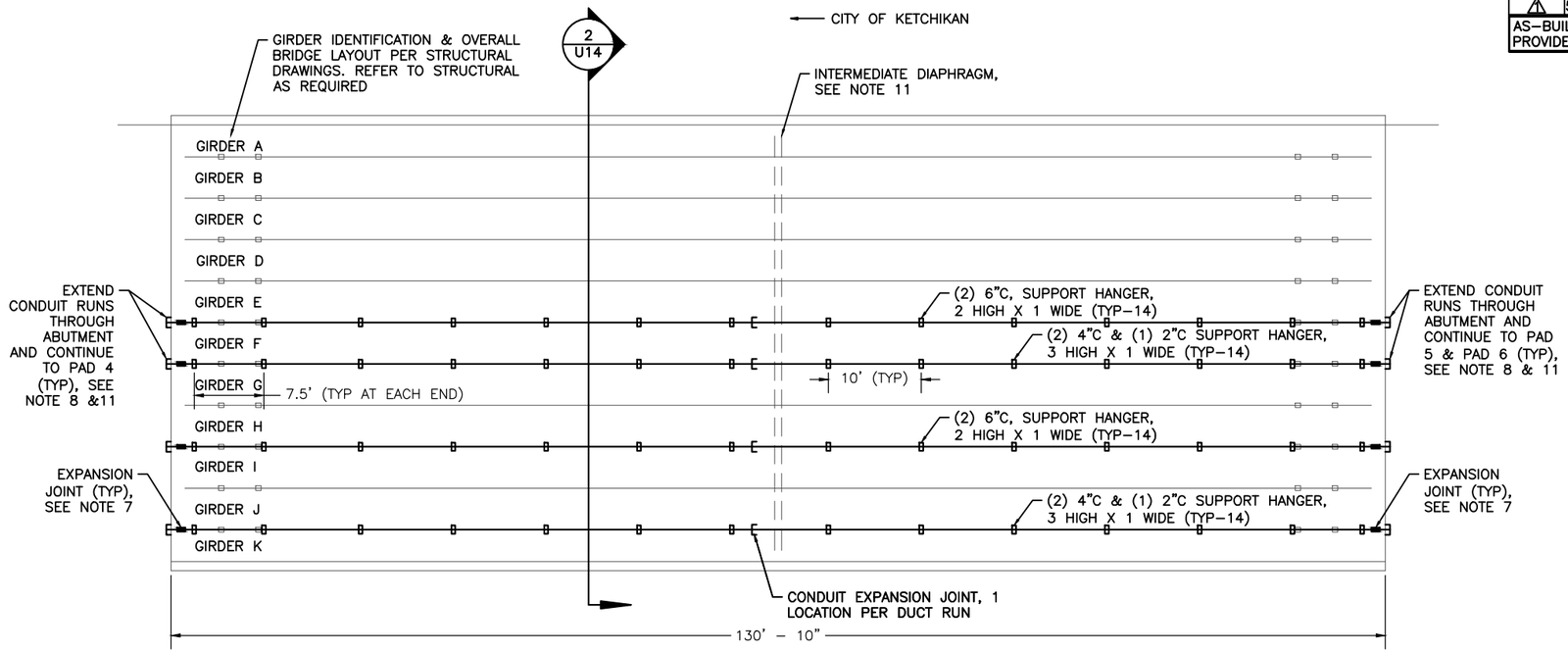

1 BRIDGE HANGERS - PLAN VIEW

4' 8' 16'

SHEET NOTES:

1. PROVIDE FIBERGLASS CONDUIT, SUPPORT HANGERS, ALL ASSOCIATED FITTINGS, AND MOUNTING HARDWARE THE ENTIRE LENGTH OF BRIDGE. ALL NON-METALLIC COMPONENTS LIGHT GRAY COLORED.
2. HANGER SYSTEMS SHALL MEET MINIMUM TENSILE, FLEXURAL, AND COMPRESSIVE STRENGTH REQUIREMENTS OF ASTM D638, D790, D695, ETC. PROVIDE ALL 316L STAINLESS STEEL MOUNTING HARDWARE, BRACKETS, ETC. ALL METALLIC ELEMENTS ASSOCIATED WITH THE FIBERGLASS CONDUIT SYSTEM SHALL BE 316L STAINLESS STEEL. PROVIDE CONDUX INTERNATIONAL HANGER SYSTEM OR EQUAL. SEE NOTE 10.
3. MEET NEC REQUIREMENTS FOR CONDUIT SUPPORT SEPARATION. 10 FEET IS RECOMMENDED AS SHOWN HERE, 11 FEET SEPARATION MAXIMUM.
4. ALL CONDUITS ALONG UNDERSIDE OF BRIDGE SHALL BE FIBERGLASS MEETING TC-14A REQUIREMENTS.
5. FIBERGLASS CONDUIT JOINTS SHALL BE EPOXY BELL AND SPIGOT.
6. ALL BRIDGE WORK TO BE COORDINATED WITH STRUCTURAL ENGINEER AND OVERALL BRIDGE DESIGN AND LAYOUT. THIS INCLUDES PRECISE LAYOUT OF SUPPORTS, ABUTMENT SLEEVE POSITIONS, CONDUIT EXTENSIONS PAST ABUTMENT INTO ROADWAY, HANGAR EMBEDMENT INTO CONCRETE DECK, ETC. STRUCTURAL ENGINEER MUST APPROVE SUBMITTALS PRIOR TO ORDERING. SEE NOTE 10.
7. PROVIDE EXPANSION JOINT ON WATER SIDE OF ABUTMENT INTERFACE. EXTEND FIBERGLASS CONDUIT 5 FEET PAST ABUTMENT INTO ROAD BEFORE TRANSITIONING TO SCHEDULE 80 HDPE CONDUIT. EXPANSION JOINTS SHALL BE O-RING SLIDING SLEEVE TYPE WITH 8" OF TRAVEL, NOMINAL. PROVIDE ADDITIONAL SUPPORTS AT JOINT AS REQUIRED. SEE DETAIL 1 ON SHEET U37 FOR EXAMPLE DEPICTION OF AN EXPANSION JOINT BELOW THE BRIDGE.
8. STRUCTURAL WILL PROVIDE A UTILIDUCT SLEEVE THROUGH ABUTMENT FOR CONDUIT ROUTING. WRAP CONDUITS WITHIN ABUTMENT IN 2 LAYERS OF BUILDING PAPER AND GROUT ANNULUS BETWEEN CONDUITS AND SLEEVE FULL.
9. CONDUIT WORK ACROSS EXISTING BRIDGE AND THE NEW BRIDGE WILL BE INSTALLED IN A SPECIFIC SEQUENCE THROUGH STAGES '0', '1' AND '2'. SEE SHEETS U7A-U7C FOR MORE ON THE STAGES OF CONSTRUCTION INVOLVED.
10. THE COMPLETE DESIGN OF THE UNDER BRIDGE FIBERGLASS CONDUIT SUPPORT SYSTEM IS NOT DEPICTED ON THIS SHEET. NUMEROUS ELEMENTS ARE REQUIRED NOT DETAILED HERE (CONCRETE SETTING PLUGS, CONDUIT STOP COUPLINGS, THREADED ADAPTERS, HDG BOLTS, NUTS, WASHERS, EPOXY KIT & APPLICATION GUN, ETC.) CONTRACTOR SHALL WORK WITH HANGER MANUFACTURER TO DEVELOP A COMPLETE BILL OF MATERIAL, WORK THROUGH LAYOUT AND INSTALLATION DETAILS AS REQUIRED, ETC. COORDINATE WITH BRIDGE CONTRACTOR AS NEEDED.
11. ENSURE THAT CONDUITS RUNNING ALONG THE BRIDGE HANGERS ARE POSITIONED TO BE CENTERED AS MUCH AS POSSIBLE THROUGH THE ABUTMENT SLEEVE AND INTERMEDIATE DIAPHRAGM.

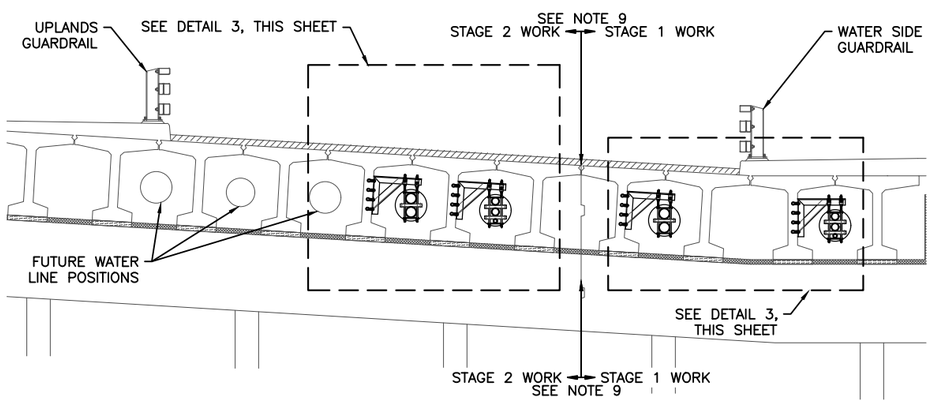

2 BRIDGE HANGERS - SECTION VIEW

2' 4' 8'

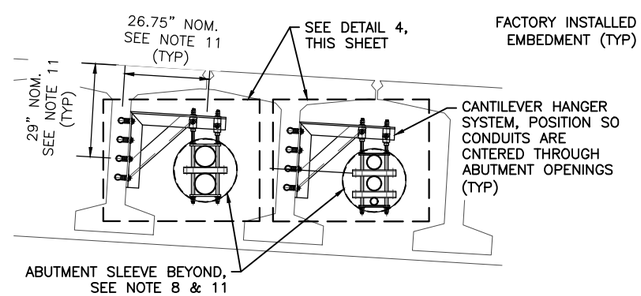

3 BRIDGE HANGERS - ENLARGED SECTION

NO SCALE

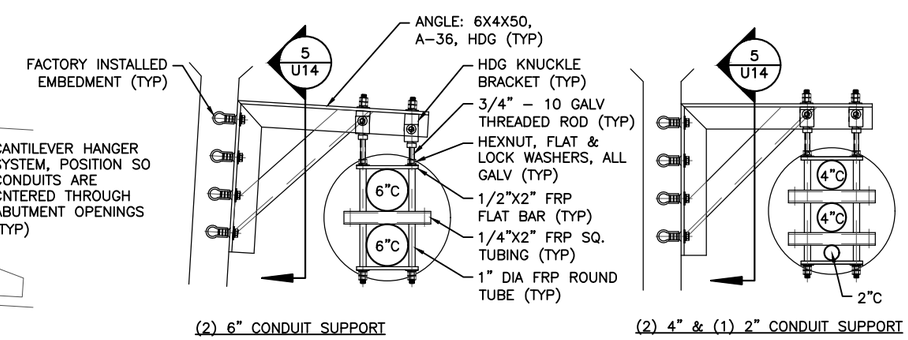

DETAIL 4 NOTE: ALL CALLOUTS APPLY TO BOTH HANGER SETUPS SHOWN.

4 BRIDGE HANGERS - DETAIL

NO SCALE

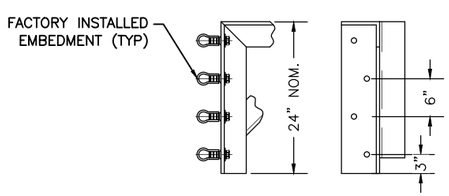

5 BRIDGE HANGERS - CANTILEVER SECTION

NO SCALE

CN
10/23/2024

PLANS DEVELOPED BY:
MORRIS ENGINEERING GROUP, INC
2375 JORDAN AVE #7
JUNEAU, AK 99801
907-789-3350
AECL 1010

STATE OF ALASKA 49TH Mark G. Morris May 31, 2024 No. EE 8613 REGISTERED PROFESSIONAL ENGINEER

STATE OF ALASKA DEPARTMENT OF TRANSPORTATION AND PUBLIC FACILITIES
6860 GLACIER HIGHWAY, JUNEAU, AK 99801
(907) 465-1763

UTILITY RELOCATION FOR KETCHIKAN AREA BRIDGES

NEW BRIDGE CONDUIT SECTIONS & DETAILS

FILE | DESIGNED MGM | CHECKED MGM | DRAFTED JODI | LAYOUT U14 | 6/29/2024 17:56 | ~~CONDUITS~~ | ~~6/29/2024~~ | ~~CROSS SECTIONS~~ | ~~6/29/2024~~ | ~~PLANS~~ | ~~6/29/2024~~ | ~~PROFILE~~ | ~~6/29/2024~~ | ~~PLAN~~ | ~~6/29/2024~~ | ~~PLAN~~ | ~~6/29/2024~~ | ~~PLAN

NO.	DATE	REVISION	STATE	PROJECT DESIGNATION	YEAR	SHEET NO.	TOTAL SHEETS
1	5/2024	AS-BUILT					
AS-BUILT DRAWING PREPARED FROM CONTRACTOR PROVIDED REDLINE WHICH MAY NOT BE CORRECT			ALASKA	0902043/SFHWY00072	2021	U15	45

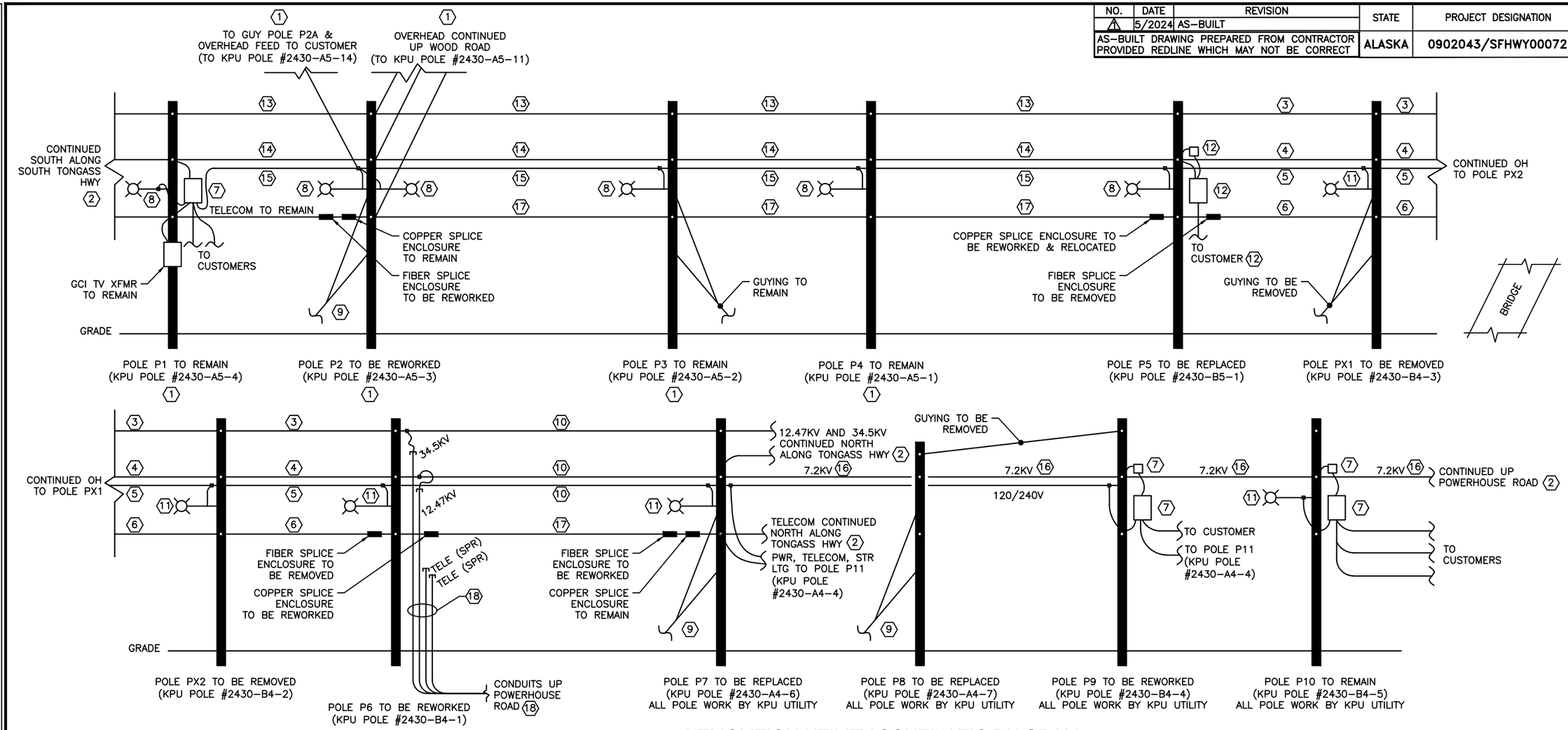

1 DEMOLITION UTILITY SCHEMATIC DIAGRAM

SHEET NOTES:

1. THIS SCHEMATIC DEPICTS OVERALL OVERHEAD DISTRIBUTION OF POWER AND TELECOM ALONG SOUTH TONGASS HIGHWAY WITHIN THE PROJECT AREA. SEE SITE PLANS FOR MORE SPECIFICS AND EXTENTS.
2. THIS SCHEMATIC IS A GENERAL REFERENCE ONLY AND SHOULD BE USED AS SUCH. VERIFY ONSITE ALL EXISTING POLE ELEMENTS, NOT ALL ELEMENTS ARE SHOWN.
3. ALL DEMOLITION WORK SHALL BE COORDINATED WITH KPU, GCI, AND DOT&PF PROJECT MANAGER PRIOR TO COMMENCEMENT OF WORK. TEMPORARY FACILITIES WILL BE PROVIDED BUT ARE NOT SHOWN ON THIS SCHEMATIC.
4. NEW POWER UTILITY WORK PER SCHEMATIC ON SHEET U16, NEW TELECOM UTILITY WORK PER SCHEMATIC ON SHEET U39.
5. THE OVERHEAD NEUTRAL CONDUCTORS ARE NOT DEPICTED AT THE UTILITY POLES ON THE SCHEMATIC DIAGRAMS.

KEYNOTES:

1. UTILITY POLE AND POLE MOUNTED ELEMENTS TO REMAIN, UNLESS NOTED OTHERWISE. PROTECT AND MAINTAIN AS REQUIRED.
2. OVERHEAD UTILITIES CONTINUE PAST PROJECT LIMITS. PROTECT AND MAINTAIN AS REQUIRED.
3. 34.5KV OVERHEAD POWER UTILITY LINES TO BE REMOVED. THESE LINES ARE AT THE TOP OF THE POLE.
4. 12.47KV OVERHEAD POWER UTILITY LINES TO BE REMOVED. THESE LINES ARE BELOW THE 34.5KV LINES.
5. STREET LIGHTING CIRCUIT TO BE REMOVED. THESE LINES ARE BELOW THE 12.47KV LINES.
6. TELECOM AND TELEVISION UTILITY LINES TO BE REMOVED. THESE LINES ARE BELOW ALL POWER LINES.
7. FUSED CUTOUT AND SINGLE PHASE STEP-DOWN POLE MOUNTED TRANSFORMER SERVING CUSTOMER LOADS AND STREET LIGHTING TO REMAIN, FUSED CUTOUT TO BE REFED FROM 7200V SERVICE FROM PAD 6 12.47KV SWITCH.
8. POLE MOUNTED STREET LIGHT MASTS AND FIXTURES TO BE REPLACED IN PLACE WITH NEW MAST AND LED LIGHT.
9. POLE GUYS TO BE REMOVED AND REPLACED WITH NEW CONFIGURATION.
10. AT POLE P6, KPU POWER UTILITY WILL DISCONNECT AND REMOVE THE EXISTING 34.5KV AND 12.47KV OVERHEAD, AND THE STREET LIGHTING CIRCUIT THAT RUNS TO POLE P7.
11. DISCONNECT AND REMOVE LIGHT FIXTURE AND MAST ARM.
12. POLE MOUNTED FUSED CUTOUT AND TRANSFORMER TO BE REMOVED, CUSTOMER OVERHEAD DROP TO BE REFED FROM PAD 4 TRANSFORMER.
13. 34.5KV OVERHEAD POWER UTILITY LINES TO REMAIN. THESE ARE AT THE TOP OF THE POLE. LINES TO BE REWORKED AT POLE LOCATIONS AS NOTED ON THE RENOVATION SCHEMATIC AND PLANS.
14. 12.47KV OVERHEAD POWER UTILITY LINES TO REMAIN. THESE ARE AT THE TOP OF THE POLE. LINES TO BE REWORKED AT POLE LOCATIONS AS NOTED ON THE RENOVATION SCHEMATIC AND PLANS.
15. STREET LIGHTING CIRCUIT TO REMAIN. CIRCUIT WILL BE REFED FROM PAD 4 LIGHTING LOAD CENTER.
16. THE 12.47KV OVERHEAD SERVES A SINGLE PHASE 7.2KV CIRCUIT THAT RUNS FROM POLE P7 TO P9 TO P10, THEN CONTINUES UP POWERHOUSE ROAD. THIS 7.2KV CIRCUIT TO BE REFED FROM A DEDICATED CIRCUIT FROM THE 12.47KV SWITCH AT PAD 6 VIA NEW RISER TO POLE P10. 7.2KV SPAN FROM POLE P7 TO POLE P9 TO BE REMOVED.
17. TELECOM: FIBER TO BE REPLACED IN PLACE, COPPER TO REMAIN. TELEVISION: COAX TO BE REPLACED IN PLACE. SEE SHEET U39 FOR RENOVATION SCHEMATIC, AND U41 FOR CIRCUIT DIAGRAM.
18. 4" AND 6" POWER RISERS (LIVE) AND 4" TELECOM RISERS (SPARE) RUN UNDERGROUND UP POWERHOUSE ROAD. CONDUITS TO BE REWORKED DURING POWERHOUSE VAULT INSTALLATION WORK. SEE RENOVATION PLANS FOR MORE INFORMATION. POWER CONDUITS TO BE ABANDONED IN PLACE, TELECOM TO REMAIN AS SPARES. REMOVE 12.47KV AND 34.5KV FEEDERS FROM POLE AND REROUTE INTO VAULT IN POWERHOUSE ROAD. SEE SHEETS U17, AND U30A-U31.

CN
10/23/2024

PLANS DEVELOPED BY:
MORRIS ENGINEERING GROUP, INC
2375 JORDAN AVE #7
JUNEAU, AK 99801
907-789-3350
AECL 1010

STATE OF ALASKA 49TH
Mark G. Morris
May 31, 2024
No. EE 8613
REGISTERED PROFESSIONAL ENGINEER

STATE OF ALASKA DEPARTMENT OF TRANSPORTATION AND PUBLIC FACILITIES
6860 GLACIER HIGHWAY, JUNEAU, AK 99801
(907) 465-1763

UTILITY RELOCATION FOR KETCHIKAN AREA BRIDGES

DEMOLITION UTILITY SCHEMATIC DIAGRAM

FILE y:\102 state of ak\44 utility relocation design for ketchikan bridges\Working Drawings\DEMOLITION UTILITY SCHEMATIC DIAGRAM.dwg | DATE 4/26/2024 14:43 | LAYOUT U15 | DESIGNED MGM | CHECKED MGM | DRAFTED NADJA

NO.	DATE	REVISION	STATE	PROJECT DESIGNATION	YEAR	SHEET NO.	TOTAL SHEETS
1	5/2024	AS-BUILT	ALASKA	0902043/SFHWY00072	2021	U16	45

AS-BUILT DRAWING PREPARED FROM CONTRACTOR PROVIDED REDLINE WHICH MAY NOT BE CORRECT

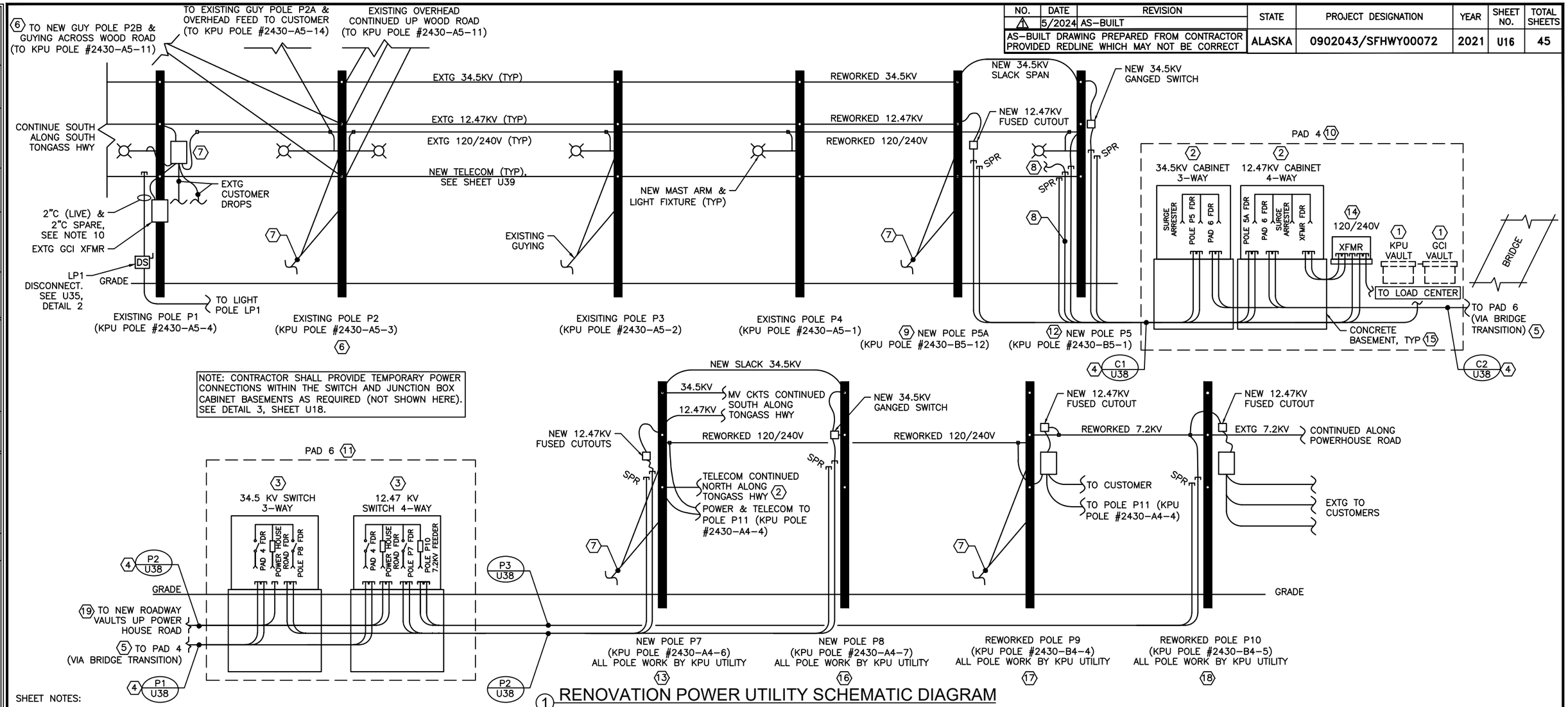

1 RENOVATION POWER UTILITY SCHEMATIC DIAGRAM

SHEET NOTES:

1. SEE SHEET U15 FOR DEMOLITION UTILITY SCHEMATIC.
2. THIS SCHEMATIC DEPICTS EXISTING OVERHEAD UTILITY WORK AND NEW UNDERGROUND POWER DISTRIBUTION WORK. SEE SITE PLANS FOR MORE SPECIFICS AND EXTENTS.
3. THIS SCHEMATIC IS A GENERAL REFERENCE ONLY AND SHOULD BE USED AS SUCH. VERIFY ONSITE ALL EXISTING POLE ELEMENTS, NOT ALL ELEMENTS ARE SHOWN.
4. NEARLY ALL NEW POWER CONDUIT TRENCHES HAVE ACCOMPANYING TELECOM CONDUITS WITHIN THE SAME TRENCH. SEE SITE PLANS FOR SPECIFIC TRENCH LOCATIONS, AND SHEET U38 FOR TRENCH PROFILES.
5. THE OVERHEAD NEUTRAL CONDUCTORS ARE NOT DEPICTED AT THE UTILITY POLES ON THE SCHEMATIC DIAGRAMS. SEE ENLARGED POLE ELEVATIONS FOR COMPLETE INFORMATION ON POLE TOP EQUIPMENT, CONDUIT RISERS, CONDUCTORS, AND GENERAL ARRANGEMENT OF POWER AND TELECOM.
6. UNDERGROUND CONDUCTORS AND CABLES NOT DEPICTED IN THIS SCHEMATIC. SEE SINGLE LINE DIAGRAM ON SHEET U17 FOR CIRCUIT INFORMATION.
7. NEW STREET LIGHTING CIRCUITS, LIGHT POLES, AND LOAD CENTER NOT DEPICTED IN DETAIL ON THIS SHEET. SEE SITE PLANS AND LIGHTING SHEETS U34–U36 FOR INFORMATION ON THE NEW LIGHTING SYSTEM.
8. LABEL ALL MV CABLES ON THE PROJECT PER DETAIL 2, SHEET U18.
9. PROVIDE POWER UTILITY GROUNDING PER SINGLE LINE DIAGRAMS AND CABINET AND SWITCH ELEVATIONS. GROUNDING NOT SHOWING HERE.
10. PROVIDE 2" CONDUIT RISERS AT POLE P1 FOR STREET LIGHTING CIRCUIT PER GENERAL ARRANGEMENTS AND MATERIALS FOR RISERS ON POLE P5A SHEET U20.

KEYNOTES:

1. NEW UTILITY PAD HAS POWER AND TELECOM EQUIPMENT. TELECOM EQUIPMENT OUTLINES SHOWN HERE REFERENCE ONLY. SEE TELECOM UTILITY SCHEMATIC ON SHEET U39 FOR ADJACENT TELECOM UTILITY WORK.
2. SEE SHEET U29 FOR JUNCTION CABINET ELEVATIONS.
3. SEE SHEET U28 FOR SWITCH ELEVATIONS.
4. CONDUITS TRANSITION FROM ONE COMMON TRENCH PROFILE TO ANOTHER BETWEEN END POINTS. SEE SITE PLANS FOR MORE DETAILS.
5. CONDUITS SPLIT INTO SEPARATE BAYS IN ROUTING ACROSS UNDERSIDE OF BRIDGE. SEE SHEETS U13–U14 FOR BRIDGE DETAILS.
6. SEE SHEET U19 FOR POLE P2 AND P2B DETAILS.
7. PROVIDE NEW GUYING FOR EXISTING POLES. SEE POLE SPECIFIC DETAILS FOR REQUIREMENTS.
8. NEW UNDERGROUND 120V SINGLE PHASE FEEDER TO RE-SERVE EXISTING O/H CUSTOMER CIRCUITS, STREET LIGHT AT POLE UP1, AND GCI POLE TRANSFORMER. PROVIDE FEEDER SPLICES VIA WATERPROOF CONNECTORS AT TOP OF CONDUIT RISER TO RE-SERVE THESE LOADS. COORDINATE WITH UTILITIES.
9. SEE SHEET U20 FOR ENLARGED POLE P5A DETAIL.
10. SEE SHEET U9 FOR ENLARGED PAD DETAIL.
11. SEE SHEET U10 FOR ENLARGED PAD DETAIL.
12. SEE SHEET U21 FOR ENLARGED POLE P5 DETAIL.
13. SEE SHEET U22 FOR ENLARGED POLE P7 DETAIL.
14. SEE SHEET U27 FOR PAD MOUNT TRANSFORMER DETAILS.
15. PROVIDE CONCRETE BASEMENTS BELOW EACH POWER TRANSFORMER, SWITCH, AND JUNCTION CABINET. SEE SHEETS U27–U29 FOR BASEMENT INFORMATION.
16. SEE SHEET U23 FOR ENLARGED POLE P8 DETAIL.
17. SEE SHEET U24 FOR ENLARGED POLE P9 DETAIL.
18. SEE SHEET U25 FOR ENLARGED POLE P10 DETAIL.
19. SEE ROADWAY VAULT DETAILS ON SHEETS U30A–U31.

CN 10/23/2024

PLANS DEVELOPED BY:
MORRIS ENGINEERING GROUP, INC
2375 JORDAN AVE #7
JUNEAU, AK 99801
907-789-3350
AECL 1010

STATE OF ALASKA 49TH Mark G. Morris May 31, 2024 No. EE 8613 REGISTERED PROFESSIONAL ENGINEER

STATE OF ALASKA DEPARTMENT OF TRANSPORTATION AND PUBLIC FACILITIES
6860 GLACIER HIGHWAY, JUNEAU, AK 99801
(907) 465-1763

UTILITY RELOCATION FOR KETCHIKAN AREA BRIDGES

RENOVATION POWER UTILITY SCHEMATIC DIAGRAM

FILE | DESIGNED MGM | CHECKED MGM | DRAFTED EMILEE | LAYOUT U16 | FILE s:\102 state of ak\44 utility relocation design for ketchikan bridges\Working Drawings\RENOVATION POWER UTILITY SCHEMATIC DIAGRAM.dgn | 5/24/2024 13:44

NO.	DATE	REVISION	STATE	PROJECT DESIGNATION	YEAR	SHEET NO.	TOTAL SHEETS
1	5/2024	AS-BUILT	ALASKA	0902043/SFHWY00072	2021	U17	45
AS-BUILT DRAWING PREPARED FROM CONTRACTOR PROVIDED REDLINE WHICH MAY NOT BE CORRECT							

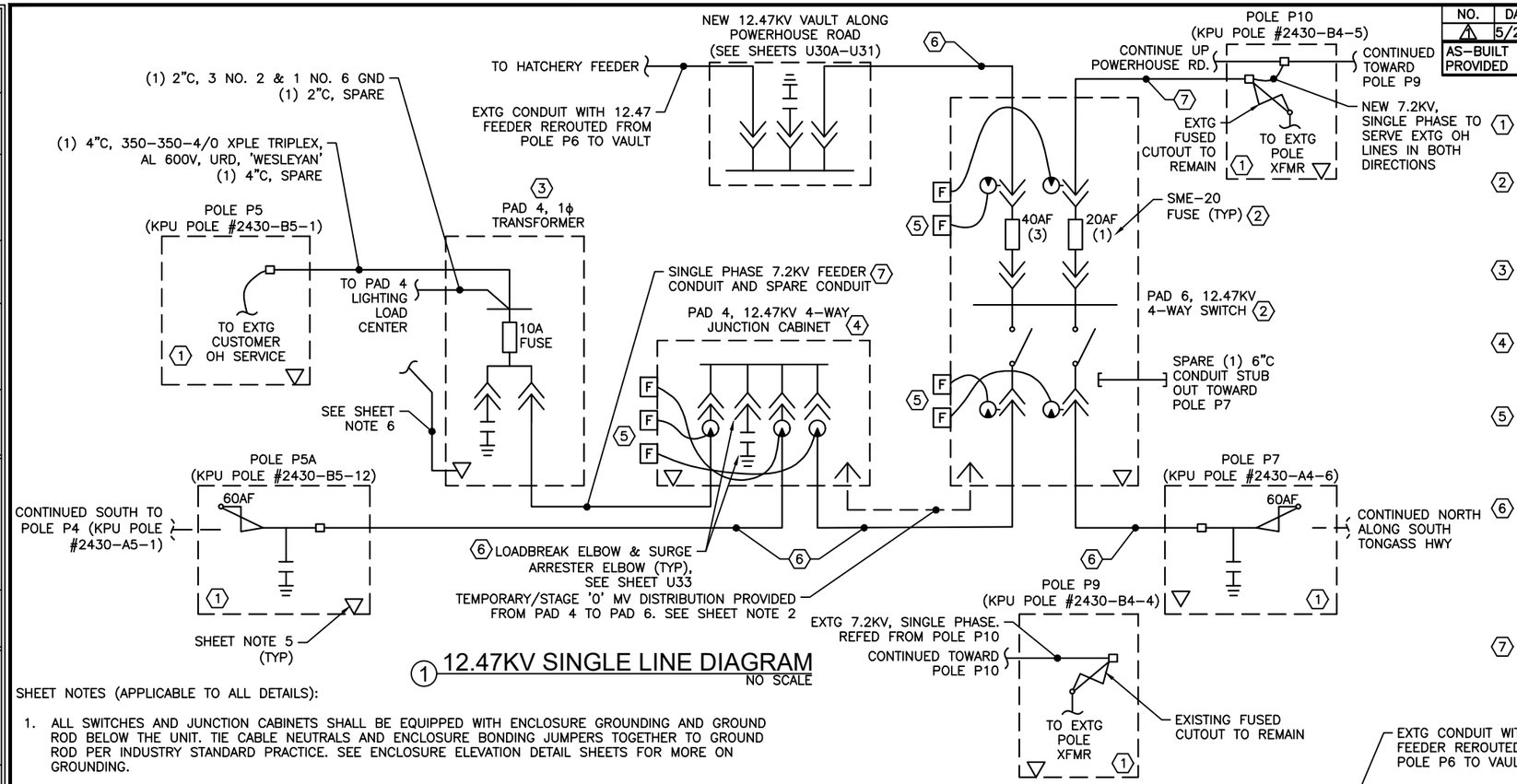

1 12.47KV SINGLE LINE DIAGRAM
NO SCALE

KEYNOTES (APPLICABLE TO DETAIL 1):

1. POLE MOUNTED FUSED CUTOUTS, GANGED SWITCH, SURGE ARRESTERS, RISER CONNECTIONS, ETC., ARE SHOWN ON SPECIFIC POLE ELEVATION DETAILS. SEE SHEET U20–U25 FOR SPECIFIC POLE ELEVATIONS AND FURTHER DETAILS. ALL WORK AT POLES P7, P8, P9, AND P10 BY KPU UTILITY.
2. PROVIDE PAD MOUNTED, 14.4KV RATED, 4–WAY UTILITY SWITCH. UNIT SHALL BE 600A CONTINUOUS RATED, 95 BIL, 65KA PEAK, 25KA RMS SYM. RATED. ALL STAINLESS STEEL CONSTRUCTION. COMPLETE WITH 200A LOADBREAK BUSHINGS AND SME–20 FUSES. PROVIDE S&C PME–9 SWITCH OR EQUAL. PROVIDE FUSES AS SHOWN AND WITH ONE COMPLETE SPARE SET OF FUSES. MOUNT ON CONCRETE BASEMENT PER DETAIL ON SHEET U28. SEE KEYNOTE 6 BELOW FOR LOADBREAK INFORMATION.
3. PROVIDE SINGLE PHASE PAD MOUNTED TRANSFORMER TO SERVE MULTIPLE CUSTOMER LOADS AND STREET LIGHTING LOAD CENTER. MOUNT ON CONCRETE BASEMENT. SEE SHEET U27 FOR COMPLETE DETAILS AND SPECIFICATIONS OF THE TRANSFORMER AND ASSOCIATED WORK. PROVIDE WITH SPARE FUSE.
4. PROVIDE PAD MOUNTED FIBERGLASS JUNCTION CABINETS COMPLETE WITH CPS 200 AMP LOADBREAK JUNCTIONS AND SURGE ARRESTER. MULTI–POINT JUNCTIONS WITH PROVISIONS FOR SURGE ARRESTER AS WELL AS MV DISTRIBUTION. SEE SHEET U29 FOR COMPLETE CABINET INFORMATION. SEE KEYNOTE 6 BELOW FOR LOADBREAK AND ARRESTER INFORMATION.
5. PROVIDE FAULT CIRCUIT INDICATORS (FCIs) AT EACH JUNCTION CABINET. CONNECT AN FCI TO EACH ELBOW AT THE JUNCTION BARS PER ELBOW DETAILS ON SHEET U32 AND U33. PROVIDE WITH REMOTE LED INDICATORS FIELD INSTALLED ON THE OUTSIDE OF THE CABINET FOR VISUAL CONFIRMATION OF FAULT WITHOUT OPENING CABINET. INSTALL INDICATORS PER DETAIL 3, ON SHEET U28. PROVIDE CPS S.T.A.R. FCIs #STVTA SERIES OR EQUAL.
6. (1) 6"C, 12.47KV FEEDER CIRCUIT AND (1) 6"C, SPARE. 12.47KV CIRCUIT SHALL CONSIST OF 3 NO. 1/0 AWG COPPER CONDUCTORS, MV–105, 220 MIL, 15KV RATED WITH FULL CONCENTRIC NEUTRAL, AND 133% SHIELDING. PROVIDE OKONITE OKOGUARD #141–23–9517 CONDUCTORS OR EQUAL. PROVIDE 15KV RATED, 200A LOADBREAK ELBOWS AT CABLE TERMINATION POINTS, CPS #LEJ215DD06 OR EQUAL. SEE SHEET U33 FOR ADDITIONAL LOADBREAK INFORMATION. PROVIDE 9KV RATED (7.65KV MCOV) SURGE ARRESTER ELBOWS AT JUNCTION CABINETS, CPS #3238018C09M OR EQUAL. MOUNT ONE SURGE ELBOW PER JUNCTION BAR IN THE JUNCTION CABINETS.
7. (1) 2"C, WITH (1) 12.47KV MV CABLE AS SPECIFIED IN KEYNOTE 6 ABOVE, (1) 2"C SPARE.

SHEET NOTES (APPLICABLE TO ALL DETAILS):

1. ALL SWITCHES AND JUNCTION CABINETS SHALL BE EQUIPPED WITH ENCLOSURE GROUNDING AND GROUND ROD BELOW THE UNIT. TIE CABLE NEUTRALS AND ENCLOSURE BONDING JUMPERS TOGETHER TO GROUND ROD PER INDUSTRY STANDARD PRACTICE. SEE ENCLOSURE ELEVATION DETAIL SHEETS FOR MORE ON GROUNDING.
2. TEMPORARY FEEDERS BETWEEN PAD 4 AND PAD WILL BE INSTALLED DURING BRIDGE STAGE 0 WORK, AFTER REPLACED WITH STAGE 1 FEEDER CONNECTIONS AS NOTED ON SHEETS U7A–U7C. ONLY FINAL FEEDER CONFIGURATIONS SHOWN HERE.
3. NEATLY TRAIN ALL CONDUCTORS AND CABLING WITHIN EACH BASEMENT, SWITCH, AND JUNCTION CABINET TO ALLOW FOR ROUTINE MOVEMENT OF ELBOWS AND SERVICE WORK. COORDINATE WITH KPU UTILITY TO DETERMINE REQUIREMENTS FOR CABLE LOOPS, CABLE MANAGEMENT, AND OTHER LAYOUT AND LOGISTICAL CABLE EXPECTATIONS.
4. ALL CABLES SHALL BE PULLED WITHIN MANUFACTURER REQUIREMENTS FOR MAX PULLING TENSIONS AND CONDUIT SIDEWALL PRESSURES. SEE SHEET U18 FOR DISCUSSION OF PULLING DIRECTIONS, GENERAL EXPECTATIONS, USE OF LUBRICANTS, ETC.
5. PROVIDE GROUNDING ELECTRODES INTO THE EARTH (▽) AT EACH CONCRETE BASEMENT AND UTILITY POLE. AT EACH ELECTRODE LOCATION, BOND ALL CONCENTRIC NEUTRALS, LIGHTING SURGE ARRESTER ELBOWS, AND BASEMENT/SWITCH CABINET GROUNDING PROVISIONS TOGETHER TO THE ELECTRODE. FOLLOW NESC GROUNDING REQUIREMENTS FOR MEDIUM VOLTAGE UNDERGROUND DISTRIBUTION. SEE SHEETS U27–U29 FOR MORE ON GROUNDING AT ENCLOSURES, BASEMENTS, ETC.
6. PER NESC BONDING REQUIREMENTS, BOND ALL METALLIC ENCLOSURES WITHIN 6 FEET OF THE PAD TRANSFORMER TOGETHER. PROVIDE DIRECT BURIED, STRANDED COPPER GROUNDING ELECTRODE CONDUCTOR BETWEEN THE TRANSFORMER AND LIGHTING LOAD CENTER GROUNDING PROVISIONS AND BOND TOGETHER.
7. LABEL ALL MV CABLES ON THE PROJECT PER DETAIL 2, SHEET U18.
8. ALL WORK AT POLES P7, P8, P9, AND P10 BY KPU UTILITY.
9. CONTRACTOR SHALL PROVIDE TEMPORARY POWER CONNECTIONS WITHIN THE SWITCH AND JUNCTION BOX CABINET BASEMENTS AS REQUIRED (NOT SHOWN HERE). SEE DETAIL 3, SHEET U18.

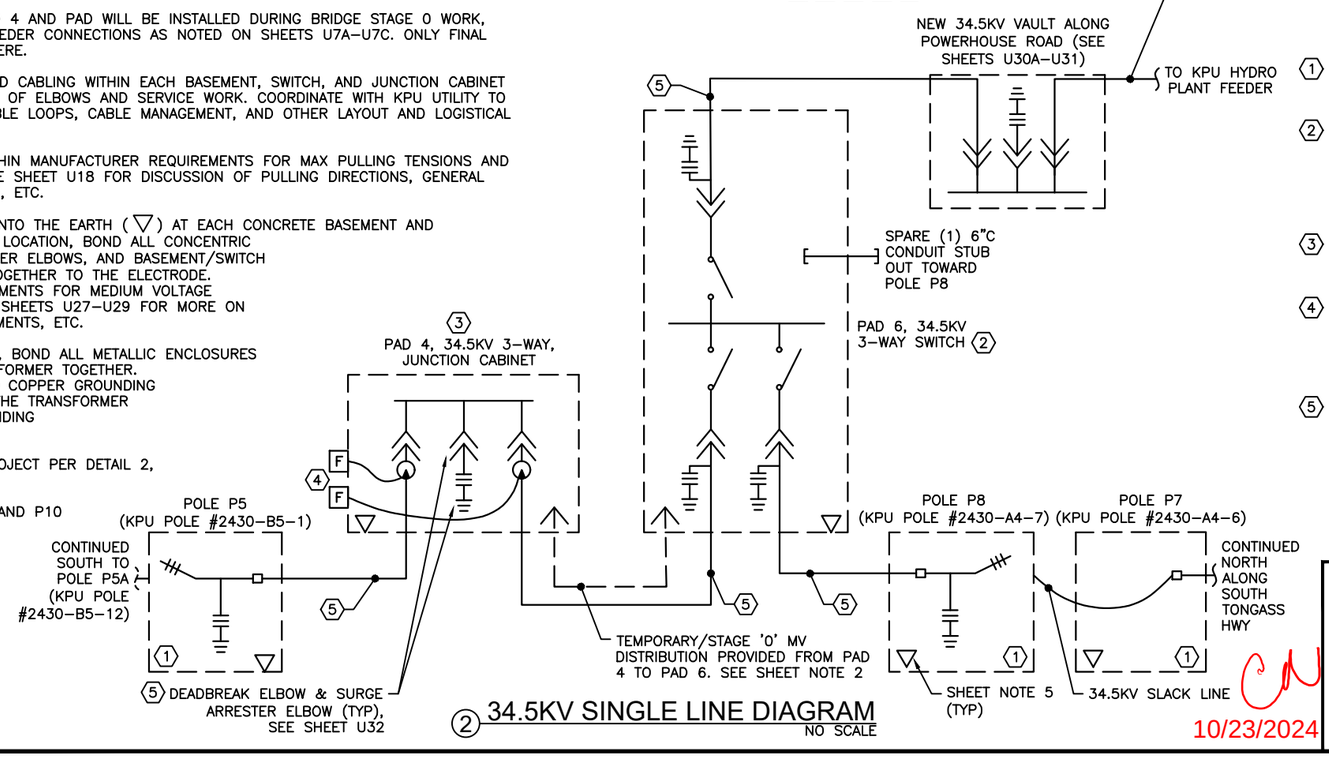

2 34.5KV SINGLE LINE DIAGRAM
NO SCALE

KEYNOTES (APPLICABLE TO DETAIL 2):

1. POLE MOUNTED FUSED CUTOUTS GANGED SWITCH, SURGE ARRESTERS, RISER CONNECTIONS, ETC., ARE SHOWN ON SPECIFIC POLE ELEVATION DETAILS. SEE SHEETS U20–U25 FOR SPECIFIC POLE ELEVATIONS AND FURTHER DETAILS.
2. PROVIDE PAD MOUNTED, 35KV RATED, 3–WAY UTILITY SWITCH. UNIT SHALL CONSIST OF SOLID DIELECTRIC INSULATED OPERATORS, 600A CONTINUOUS RATED, 150 BIL, 70KA PEAK, 20KA RMS SYM. RATED. ALL STAINLESS STEEL CONSTRUCTION. COMPLETE WITH 600A DEADBREAK BUSHINGS WITH VOLTAGE SENSORS, CONTROL POWER TRANSFORMER, AND FCI'S FACTORY INSTALLED. PROVIDE G&W TRIDENT–S SWITCH OR EQUAL. MOUNT ON CONCRETE BASEMENT PER DETAIL ON SHEET U28. SEE KEYNOTE 5 BELOW FOR DEADBREAK INFORMATION.
3. PROVIDE PAD MOUNTED FIBERGLASS JUNCTION CABINETS COMPLETE WITH CPS 600 AMP DEADBREAK JUNCTIONS AND SURGE ARRESTER. SEE SHEET U29 FOR COMPLETE CABINET INFORMATION. SEE KEYNOTE 5 BELOW FOR DEADBREAK AND ARRESTER INFORMATION.
4. PROVIDE FAULT CIRCUIT INDICATORS (FCIs) AT EACH JUNCTION CABINET. CONNECT AN FCI TO EACH ELBOW AT THE JUNCTION PER ELBOW DETAILS ON SHEET U33. PROVIDE WITH REMOTE LED INDICATORS FIELD INSTALLED ON THE OUTSIDE OF THE CABINET FOR VISUAL CONFIRMATION OF FAULT WITHOUT OPENING CABINET. INSTALL INDICATORS PER DETAIL 3 ON SHEET U29. PROVIDE CPS S.T.A.R. FCIs #STVTA SERIES OR EQUAL.
5. (1) 6"C, 34.5KV FEEDER CIRCUIT AND (1) 6"C, SPARE. 34.5KV CIRCUIT SHALL CONSIST OF 3 NO. 500 KCMIL COPPER CONDUCTORS, MV–105, 420 MIL, 35KV RATED WITH 1/3 CONCENTRIC NEUTRAL, AND 133% SHIELDING. PROVIDE OKONITE OKOGUARD #140–23–9947 CONDUCTORS OR EQUAL. PROVIDE 35KV RATED, 600A DEADBREAK ELBOWS AT CABLE TERMINATION POINTS, CPS #BT635U22C1T. SEE SHEET U32 FOR ADDITIONAL DEADBREAK INFORMATION. PROVIDE 27KV RATED (22KV MCOV) SURGE ARRESTER ELBOWS AT JUNCTION CABINETS AND SWITCHES, CPS #DCEA635M27. MOUNT ONE SURGE ELBOW TO THE BACK OF EACH PHASE CONDUCTOR ELBOW AT THE SWITCHES, AND ONE PER JUNCTION BAR IN THE JUNCTION CABINET.

10/23/2024

PLANS DEVELOPED BY:
MORRIS ENGINEERING GROUP, INC
2375 JORDAN AVE #7
JUNEAU, AK 99801
907–789–3350
AECL 1010

STATE OF ALASKA 49TH
Mark G. Morris
May 31, 2024
No. EE 8613
REGISTERED PROFESSIONAL ENGINEER

STATE OF ALASKA DEPARTMENT OF TRANSPORTATION AND PUBLIC FACILITIES
6860 GLACIER HIGHWAY, JUNEAU, AK 99801
(907) 465–1763

UTILITY RELOCATION FOR KETCHIKAN AREA BRIDGES

POWER UTILITY RENOVATION SINGLE LINE DIAGRAM

FILE | y:\102 state of ak\44 utility relocation design for ketchikan bridges\Working Drawings\POWER UTILITY RENOVATION SINGLE LINE DIAGRAM.dwg | 5/24/2024 13:45 | LAYOUT | U17 | DESIGNED | MGM | CHECKED | MGM | DRAFTED | EMILEE

NO.	DATE	REVISION	STATE	PROJECT DESIGNATION	YEAR	SHEET NO.	TOTAL SHEETS
1	5/2024	AS-BUILT					
AS-BUILT DRAWING PREPARED FROM CONTRACTOR PROVIDED REDLINE WHICH MAY NOT BE CORRECT			ALASKA	0902043/SFHWY00072	2021	U18	45

NOTE:

PULLING DIRECTIONS SHOWN PROVE TO PUT LESS STRESS ON CABLES AND CONDUIT. HOWEVER, OPPOSITE DIRECTION IS WITHIN LIMITS AND MAY BE UTILIZED AT CONTRACTOR'S OPINION.

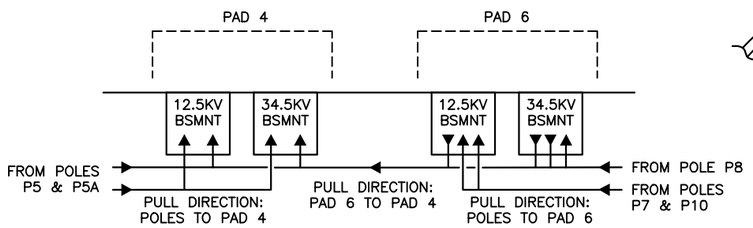

1 MEDIUM VOLTAGE CABLE PULLING DIAGRAM

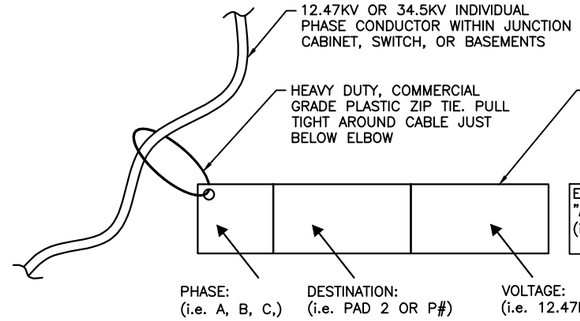

EXAMPLE CABLE LABEL NUMBERING:
"A–PAD 6–12.47KV"
(i.e. PHASE 'A' CONDUCTOR TO PAD 6, 12.47KV CKT)

NOTES (APPLICABLE TO DETAIL 2):

1. PROVIDE LABELS WITHIN 18" OF EACH ELBOW AT ALL JUNCTION CABINETS AND SWITCHES.
2. POSITION LABELS SO THEY FACE OUTWARDS TOWARDS SERVICE ELECTRICIAN.

2 MEDIUM VOLTAGE CABLE LABELING

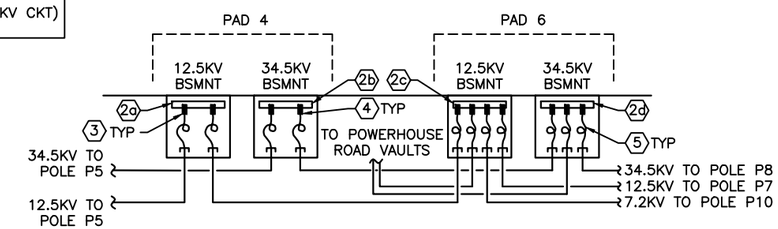

3 MEDIUM VOLTAGE TEMPORARY VAULT SETUPS

4 HDPE CONDUIT SPECIFICATION & INSTALLATION NOTES

NOTES (APPLICABLE TO DETAIL 1):

1. RECOMMENDED PULLING DIRECTION FOR MEDIUM VOLTAGE CABLES ARE SHOWN HERE. THIS APPLIES TO 12.47KV AND 34.5KV CABLES. TECHNICAL DATA USED IN PULLING CALCS INCLUDE:
   a. COEFFICIENT OF FRICTION: 0.35
   b. AMPLE LUBRICATION USED (SEE NOTES 2,3,4)
   c. BACK TENSION: 100 POUNDS
   d. 6" SCHEDULE 80 MIN I.D.: 5.657 INCHES
   e. 4" SCHEDULE 80 MIN I.D.: 3.746 INCHES
   f. MAX ALLOWABLE CABLE TENSION: 2500 LBS/FT (1/0), 10,000 LBS/FT (500 KCMIL)
   g. MAX ALLOWABLE SIDEWALL PRESSURE: 500 LBS/FT (1/0), 2000 LBS/FT (500 KCMIL)
   h. CONDUIT ELBOW RADII: 24 INCHES (MINIMUM)
2. CONTRACTOR IS EXPECTED TO UTILIZE LIBERAL AMOUNTS OF PULLING LUBRICANT. THIS INCLUDES COMPLETE LUBRICATION OF THE CONDUIT SYSTEM PRIOR TO CABLE PULLING, AS WELL AS LUBRICATION APPLIED DURING THE CABLE PULLING EFFORT. RECOMMENDED LUBRICANT QUANTITY PER INDUSTRY STANDARD EQUATION: Q = k X L X D (Q–QUANTITY IN GALLONS, k–0.0015, L–LENGTH OF CONDUIT RUN IN FEET, D–ID OF CONDUIT IN INCHES).
3. THE CABLE PULLING LUBRICANT SHALL PROVIDE EXCELLENT FRICTION REDUCTION WITH SLOW DRYING, GOOD CLING AND WETTING CHARACTERISTICS THROUGH LONG PULLS AND MULTIPLE BENDS. THE LUBRICANT SHALL LEAVE MINIMAL NONCOMBUSTIBLE RESIDUE, AND SHALL BE NON–STAINING. IT SHALL BE COMPATIBLE WITH ALL CABLE JACKET TYPES USED ON THIS PROJECT. CABLE JACKET COMPATIBILITY SHALL BE TESTED WITH THE SPECIFIC JACKET MATERIAL USED ON EACH CABLE AND TEST DATA SHALL BE PROVIDED BY THE CABLE MANUFACTURER OR LUBRICANT MANUFACTURER. LUBRICANT SHALL BE UL LISTED, MEET IEEE 1210 STRESS CRACKING AND VOLUME RESISTIVITY REQUIREMENTS. PROVIDE POLYWATER LZ LUBRICANT OR EQUAL.
4. CONTRACTOR IS EXPECTED TO PRE–LUBRICATE ALL CONDUITS THROUGHOUT THE PROJECT PRIOR TO PULLING IN CABLES AND CONDUCTORS. UTILIZE BAG PACKAGES, POLYWATER 'FRONT END PACKS' OR EQUAL. THESE PACKAGES ATTACH TO THE WINCH LINE AND PRE–LUBRICATE THE CONDUIT INNER SURFACES AS THEY ARE PULLED THROUGH THE CONDUIT. IN ADDITION, CONTRACTOR IS TO LUBRICATE THE CABLES AND CONDUCTORS AS THEY ARE FED INTO THE CONDUIT SYSTEM DURING THE PULLING WORK. FOLLOW MANUFACTURER INSTRUCTIONS.
5. CAREFULLY CONSIDER THE USE OF PULLING EYES AND BOLTS, BASKET GRIPS, AND CABLE SHEAVES IN THE PULLING PROCESS. CONTRACTOR IS EXPECTED TO IMPLEMENT NECESSARY PULLING MEANS AND METHODS TO MINIMIZE CABLE TENSIONS AND CONDUIT SIDEWALL PRESSURES. CONSIDER THE AMBIENT TEMPERATURES, WEATHER CONDITIONS, AND OTHER SITE FACTORS WHEN PLANNING THE WORK. IN ALL CASES, PULLING EFFORTS SHALL NOT RESULT IN EXCESSIVE CABLE TENSIONS BASED ON MANUFACTURER CABLE DATA SHEETS. CONTRACTOR SHALL REFER TO THE OKONITE 'YELLOW BOOK' TITLED 'INSTALLATION PRACTICES FOR CABLE RACEWAY SYSTEMS' FOR GENERAL GUIDELINES AND EXPECTATIONS OF THE OVERALL PULLING PROCESS PLANNING, DESIGN, AND SUCCESSFUL IMPLEMENTATION.
6. LABEL ALL MV CABLES ON THE PROJECT PER DETAIL 2, THIS SHEET.

GENERAL REQUIREMENTS AND STANDARDS:

1. PROVIDE HDPE CONDUIT THAT MEETS THE FOLLOWING STANDARDS: ASTM F2160, NEMA TC 7, AND UL 651A, ALL LATEST EDITIONS.
2. HDPE CONDUIT SHALL BE FURNISHED, PREPARED, AND INSTALLED IN ACCORDANCE WITH THE PLASTIC PIPE INSTITUTE (PPI) INDUSTRY STANDARD TECHNICAL NOTES INCLUDING:
   a. TN–47, 'PIPE STIFFNESS AND DEFLECTION TESTING OF COILABLE HDPE CONDUIT AS RELATED TO BURIAL DEPTH'. LATEST EDITION.
   b. TN–50, 'GUIDE TO SPECIFYING HDPE CONDUIT', LATEST EDITION.
   c. TN–58, 'HDPE CONDUIT AND DUCT HANDLING GUIDE', LATEST EDITION.

   THE CONTRACTOR SHALL REVIEW THIS LITERATURE TO FAMILIARIZE HIMSELF WITH THE EXPECTED TREATMENT, PREPARATION, AND INSTALLATION OF HDPE CONDUIT UTILIZED ON THE PROJECT.

INSTALLATION CONSIDERATIONS:

1. SOLID PRESSURE ON UNDERGROUND CONDUIT RESULTS FROM THE COMBINATION OF SOIL WEIGHT AND SURFACE LOADS. AS BACKFILL IS PLACED AROUND AND OVER HDPE CONDUIT, THE SOIL PRESSURE INCREASES AND THE PIPE DEFLECTS VERTICALLY AND EXPANDS LATERALLY INTO THE SURROUNDING SOIL. THE MAGNITUDE OF THE DEFLECTION AND THE STRESS DEPENDS NOT ONLY ON THE PIPE'S PROPERTIES BUT ALSO ON THE PROPERTIES OF THE SURROUNDING SOIL. THE MAGNITUDE OF DEFLECTION AND STRESS MUST BE KEPT SAFELY WITHIN HDPE PIPE'S PERFORMANCE LIMITS. EXCESSIVE DEFLECTION MAY CAUSE LOSS OF STABILITY AND FLOW RESTRICTION, WHILE EXCESSIVE COMPRESSIVE STRESS MAY CAUSE WALL CRUSHING OR RING BUCKLING.
2. IN ORDER TO ACHIEVE PROPER, LONG TERM PERFORMANCE OF UNDERGROUND HDPE CONDUIT, THE FOLLOWING IS REQUIRED:
   a. HDPE PIPE IS MADE FROM HIGH QUALITY, STRESS–RATED PE MATERIAL.
   b. THE EMBEDMENT MATERIAL MUST BE COARSE–GRAINED, COMPACTED TO 95% PER MODIFIED PROCTOR DENSITY METHOD, AND SHALL HAVE A MODULUS OF ELASTICITY ('E') OF A LEAST 1000 PSI.
   c. THE NATIVE SOIL MUST BE STABLE WITH A UNIT WEIGHT NOT TO EXCEED 120 PCF.
   d. THE HDPE CONDUIT IS INSTALLED PER MANUFACTURER REQUIREMENTS AND RECOMMENDATIONS FOR CONTROLLING SHEAR, BENDING LOADS, AND MINIMUM BENDING RADIUS.
   e. CONDUITS MUST BE INSTALLED PER ASTM D2321 FOR NOM–PRESSURE PIPES.
   f. LIMIT CONDUIT DEFLECTIONS TO 7.5% OR LESS.
   g. MAINTAIN THE MINIMUM BEDDING BELOW CONDUIT AND BACKFILL ABOVE THE CONDUIT, AS DEPICTED IN THE PROJECT TRENCH DETAILS. IN ALL CASES, MAINTAIN A MINIMUM OF 4 INCHES OF TAMPED BEDDING MATERIAL BELOW AND ABOVE THE CONDUIT.
   h. USE A VIBRATION TAMPER FOR COMPACTION WORK, NOT AN IMPACT TAMPER.

   THE CONTRACTOR IS EXPECTED TO VERIFY SITE AND INSTALLATION CONDITIONS AS NECESSARY TO ADHERE TO MANUFACTURER REQUIREMENTS FOR PROPER HDPE CONDUIT INSTALLATION. WHEN MANUFACTURER DOES NOT SPECIFICALLY ADDRESS A INSTALLATION QUESTION OR ASPECT, ADHERE TO INDUSTRY BEST PRACTICES AS OUTLINED IN THE PPI TECHNICAL NOTES REFERENCED ABOVE.
3. AS MUCH AS POSSIBLE, UTILIZE LARGE SWEEPING BENDS INSTEAD OF TIGHTER BENDS. MINIMUM BENDING RADIUS IS 11 TIMES THE O.D. OF THE CONDUIT.

CONDUIT SPECIFICATIONS:

1. HDPE CONDUIT SHALL BE MADE FROM HIGH QUALITY, STRESS–RATED PE MATERIAL WITH MINIMUM MODULUS VALUE OF 80,000 PSI AND MINIMUM TENSILE STRENGTH OF 3,000 PSI PER ASTM D 3350 REQUIREMENTS.
2. HDPE SHALL BE UL 651A LISTED, SCHEDULE 80, SUITABLE FOR UNDERGROUND OPEN TRENCH CONSTRUCTION METHODS.
3. HDPE RESIN PER ASTM D 3350 STANDARDS.
4. PROVIDE HDPE COUPLINGS, CONNECTORS, AND END PLUGS AS REQUIRED AND FROM THE SAME MANUFACTURER AS THE HDPE CONDUIT ITSELF. PROVIDE TRANSITION COUPLINGS TO FIBERGLASS, AND EXPANSION COUPLINGS AS REQUIRED.
5. PROVIDE DURALINE STANDARD UL 651A SCHEDULE 80 HDPE OR EQUAL.

NOTES (APPLICABLE TO DETAIL 3):

1. DURING CONSTRUCTION TEMPORARY UNDERGROUND MV CABLE SPLICES ARE ANTICIPATED PRIOR TO PAD MOUNT SWITCHES AND JUNCTION CABINETS ARRIVE ONSITE. PROVIDE TEMPORARY CONNECTIONS VIA BASEMENT MOUNTED JUNCTION BARS AND ELBOWS AS DESCRIBED IN THIS DETAIL OR APPROVED EQUAL CONFIGURATION.

(2a) PROVIDE (3) 2–POSITION LOADBREAK J–BARS MOUNTED TO CONCRETE WALL OF BASEMENT. ADJUSTABLE, STAINLESS STEEL, 200A. 15KV CLASS J–BARS WITH UP TO 90° OF TILT IN 10° INCREMENTS. INCLUDES PARKING STANDS AND DRAIN WIRE CLAMP. COOPER POWER SYSTEMS (CPS) LJ215C2B OR EQUAL. STAGGER J–BARS AS REQUIRED TO ALLOW ELBOWS TO LAND AND CABLES TO BE TRAINED PROPERLY.

(2b) PROVIDE (3) 2–POSITION DEADBREAK J–BARS MOUNTED TO CONCRETE WALL OF BASEMENT. ADJUSTABLE, STAINLESS STEEL, 600A, 35KV CLASS J–BARS WITH UP TO 45° OF TILT IN 10° INCREMENTS. INCLUDES PARKING STANDS AND DRAIN WIRE CLAMP. CPS DJ635C2B OR EQUAL. STAGGER J–BARS AS REQUIRED TO ALLOW ELBOWS TO LAND AND CABLES TO BE TRAINED PROPERLY.

(2c) PROVIDE (3) 4–POSITION LOADBREAK J–BARS MOUNTED TO CONCRETE WALL OF BASEMENT. ADJUSTABLE, STAINLESS STEEL, 200A. 15KV CLASS J–BARS WITH UP TO 90° OF TILT IN 10° INCREMENTS. INCLUDES PARKING STANDS AND DRAIN WIRE CLAMP. COOPER POWER SYSTEMS (CPS) LJ215C4B OR EQUAL. STAGGER J–BARS AS REQUIRED TO ALLOW ELBOWS TO LAND AND CABLES TO BE TRAINED PROPERLY.

(2d) PROVIDE (3) 3–POSITION DEADBREAK J–BARS MOUNTED TO CONCRETE WALL OF BASEMENT. ADJUSTABLE, STAINLESS STEEL, 600A, 35KV CLASS J–BARS WITH UP TO 45° OF TILT IN 10° INCREMENTS. INCLUDES PARKING STANDS AND DRAIN WIRE CLAMP. CPS DJ635C3B OR EQUAL. STAGGER J–BARS AS REQUIRED TO ALLOW ELBOWS TO LAND AND CABLES TO BE TRAINED PROPERLY.

(3) PROVIDE 200A, 15KV RATED LOADBREAKS ON THE J–BARS. SEE SHEET U17 FOR LOADBREAK REQUIREMENTS AND SHEET U33 FOR LOADBREAK DETAIL.

(4) PROVIDE 600A, 35KV RATED DEADBREAKERS ON THE J–BARS. SEE SHEET U17 FOR DEADBREAK REQUIREMENTS AND SHEET U32 FOR DEADBREAK DETAIL.

(5) PROVIDE SUFFICIENT CABLE SLACK FOR ALL FEEDEERS IN BASEMENTS TO ALLOW THEM TO BE EXTENDED UP TO THE FINAL POSITIONS ON THE SWITCHES AND JUNCTION CABINETS ABOVE GROUND. COIL CABLES NEATLY IN THE BASEMENTS. PROVIDE LABELS ON ALL CABLES PER DETAIL 2, THIS SHEET.

CN 10/23/2024

PLANS DEVELOPED BY:
MORRIS ENGINEERING GROUP, INC
2375 JORDAN AVE #7
JUNEAU, AK 99801
907–789–3350
AECL 1010

STATE OF ALASKA 49TH Mark G. Morris May 31, 2024 No. EE 8613 REGISTERED PROFESSIONAL ENGINEER

STATE OF ALASKA DEPARTMENT OF TRANSPORTATION AND PUBLIC FACILITIES
6860 GLACIER HIGHWAY, JUNEAU, AK 99801
(907) 465–1763

UTILITY RELOCATION FOR KETCHIKAN AREA BRIDGES

MEDIUM VOLTAGE CABLE DETAILS & CONDUIT SPECS

FILE | >:\102 state of ak\44 utility relocation design for ketchikan bridges\Working Drawings\POWER UTILITY DEMOLITION SINGLE LINE DIAGRAM.dwg | LAYOUT | U18 | DESIGNED | MGM | CHECKED | MGM | DRAFTED | NADJA
PLOTTED BY: 4/26/2024 14:43

NO.	DATE	REVISION	STATE	PROJECT DESIGNATION	YEAR	SHEET NO.	TOTAL SHEETS
1	5/2024	AS-BUILT	ALASKA	0902043/SFHWY00072	2021	U19	45
AS-BUILT DRAWING PREPARED FROM CONTRACTOR PROVIDED REDLINE WHICH MAY NOT BE CORRECT							

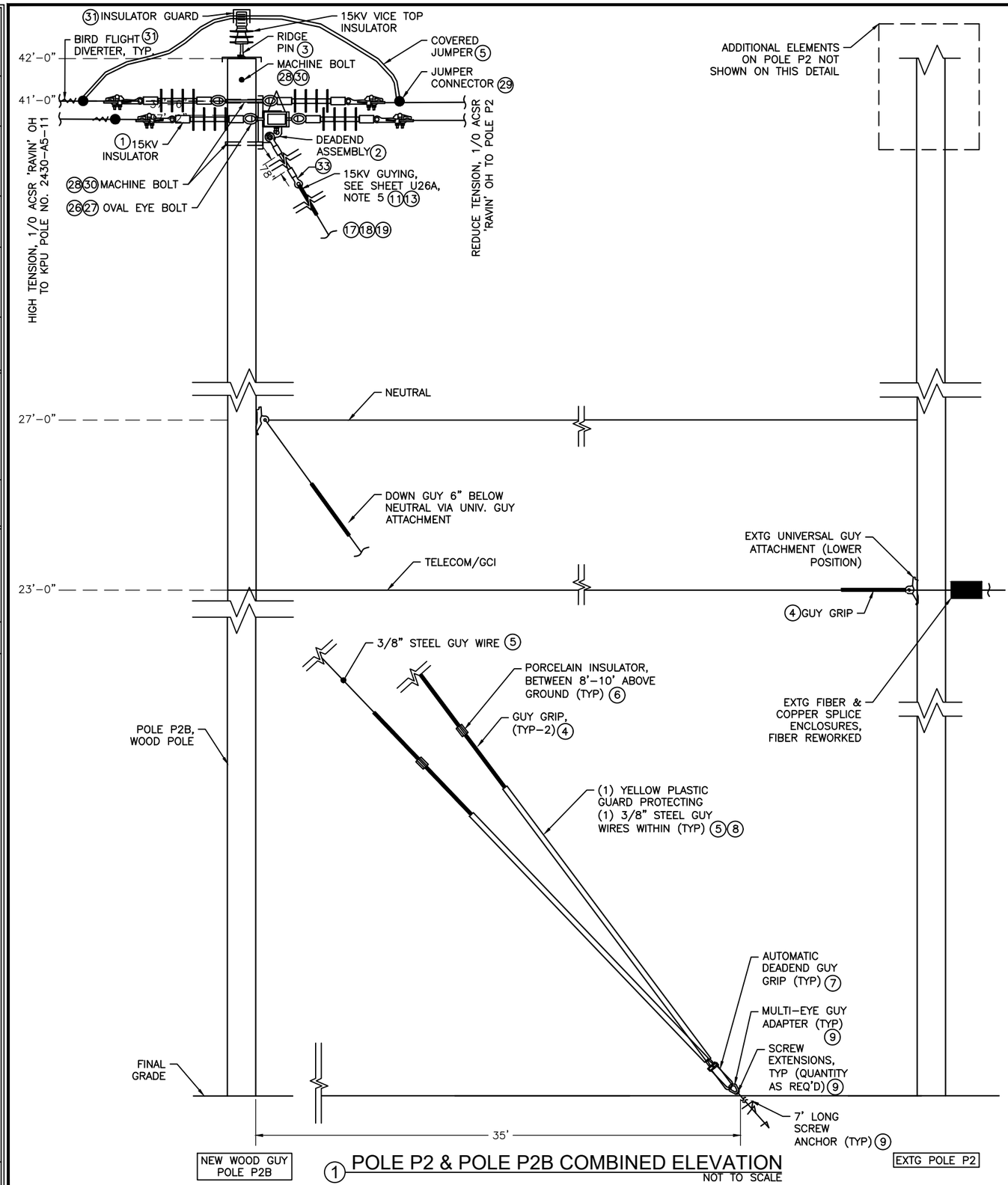

1 POLE P2 & POLE P2B COMBINED ELEVATION
NOT TO SCALE

EXTG POLE P2 & NEW POLE P2B - MATERIAL LIST

REF ID	QUANTITY	DESCRIPTION	BRAND (NOTE 2)	PART NUMBER
1	1	45 FOOT LONG, CLASS 2 WOOD POLE, DOUGLAS FIR, 8" DIA. AT TOP	NOTE 3	NOTE 3
2	5	(1) 5/8" X 10" BOLT, (2) 2-1/4" X (2)-1/4" CURVED WASHERS, (2) LOCKNUTS	MPS	J8810 BOLT, J1075 WASHERS, J8583 LOCKNUTS
3	5	UNIVERSAL GUY ATTACHMENT, DUCTILE IRON, HOT DIPPED GALV.	MPS	MGA-345-A
4	9	FORMED DEADEND WIRE GUY GRIP, 3/8" EHS, 35" APPLIED LENGTH	MPS	DE-S1107
5	AS REQ'D	GALV STEEL GUY WIRE, 3/8", 7W STRAND		
6	2	PORCELAIN GUY STRAIN INSULATOR	MPS	L502
7	2	AUTOMATIC GUY DEADEND, 3/16" BAIL, WITH INSTALL BAIL	MPS	(2) DE-S1108 GRIPS & (2) 5202 VISES
8	2	8FT. POLYETHYLENE GUY MARKER, YELLOW	MPS	J5718
9	2	POWER INSTALL SCREW ANCHOR KIT, SQ SHAFT, 21K LBS RATED, 10 FT. LONG	CU	#SS5 SERIES (NOTE 4)
10	1	GUY STRAIN INSULATOR, 21K LBS RATED, 78" ROD SILICONE COATED	MPS	GYCTE21-78-SC

1. THE MATERIAL LIST IS NOT MEANT TO BE COMPREHENSIVE. THE CONTRACTOR SHALL DO A FULL TAKE OFF FROM THE PLANS AND NOT DEPEND ON THIS LIST ALONE.
2. BRAND ABBREVS: AF = ALUMA-FORM, CPS = COPPER POWER SYSTEMS, CU = CHANCE UTILITY, HEN = HENDRICKS, HUB = HUBBELL, MPS = MACLEAN POWER SYSTEMS, PP = PREFORMED PRODUCTS, SIE = SIEMENS, SW = SOUTHWIRE.
3. SEE SHEET U26B FOR NEW WOOD POLE SPECIFICATIONS, TECHNICAL REQUIREMENTS, APPROVED MANUFACTURERS, ETC.
4. EACH SQUARE SHAFT, POWER SCREW ANCHOR ASSEMBLY IS A KIT CONSISTING OF:
   (1) SCREW HEAD LEADER
   (MULTIPLE) EXTENSION BARS
   (1)GUY ADAPTER
   PROVIDE NUMBER OF EXTENSION BARS NEEDED BASED ON INSTALLATION CONDITIONS.
   PROVIDE EACH GUY ADAPTER WITH TWO (2) GUY EYES AND ONE (1) PULLING EYE.
5. COMPLETE ARRANGEMENT OF GUYING FROM POLE TO ANCHOR IN GROUND NOTE SHOWN ON POLE DETAIL THIS SHEET FOR GENERAL DEPICTION OF WHAT IS REQUIRED. COORDINATE EXACT CONFIGURATION NEEDED PRIOR TO WORK.
6. KPU UTILITY STOCKS MANY OF THE COMMON POLE ELEMENTS NEEDED ON THIS PROJECT. COORDINATE AS REQUIRED TO ENSURE COMPLIANCE.

WILDLIFE PROTECTION GENERAL NOTE (APPLICABLE TO POWER UTILITY POLES: P5, P5A, P7, P8, P9, P10):

1. ALL NEW OVERHEAD ELECTRICAL IN THE PROJECT WILL BE DESIGNED AND ARRANGED TO MAXIMIZE WILDLIFE PROTECTION FROM THE HAZARDS OF OVERHEAD ELECTRICAL LINES. MEASURES SUCH AS: NON-RATED ARRESTER WIRE INSULATION (I.E. COVERED WIRE), 60"+ PHASE CONDUCTOR SEPARATION, AND TERMINAL WILDLIFE GUARDS ON ALL EXPOSED ELECTRICAL 'TOPS' WILL BE INCLUDED IN THE DESIGN AND CONSTRUCTION AS MUCH AS POSSIBLE. ALL PROPOSED SOLUTIONS PROVIDED SHALL BE IN CONJUNCTION WITH DOT&PF AND KPU UTILITY REQUIREMENTS AND SUBJECT TO REVIEW.

   PROTECTIVE ELEMENTS THAT SHALL BE INCLUDED ARE NOT ALL SHOWN ON THE UTILITY POLE DETAIL SHEETS BUT ALL SHALL BE PROVIDED FOR COMPLETE PROTECTION. ELEMENTS INCLUDE, BUT ARE NOT LIMITED TO, THE FOLLOWING:

   - ARRESTER GUARDS
   - FUSED CUTOUT GUARDS
   - TERMINATOR GUARDS
   - PIN INSULATOR GUARDS
   - PERCH PREVENTERS (ON PUPI ARMS & EQUIPMENT MOUNTS)
   - BIRD FLIGHT DIVERTERS

   PROVIDE BIRD FLIGHT DIVERTER 'PIGTAILS' ON ALL TOPS OF POLE OVERHEAD POWER LINES ACROSS ENTIRE PROJECT, INCLUDING BETWEEN POLES AT EITHER END OF THE PROJECT TO THE NEXT POLE NOT WITHIN PROJECT SCOPE. EVENLY SPACE THEM PER KPU UTILITY TYPICAL REQUIREMENTS.

   PROVIDE RELIAGUARD, PREFORMED LINE PRODUCTS, OR APPROVED AS REQUIRED WILDLIFE PROTECTION ELEMENTS.

CN
10/23/2024

PLANS DEVELOPED BY:
MORRIS ENGINEERING GROUP, INC
2375 JORDAN AVE #7
JUNEAU, AK 99801
907-789-3350
AECL 1010

STATE OF ALASKA 49TH Mark G. Morris May 31, 2024 No. EE 8613 REGISTERED PROFESSIONAL ENGINEER

STATE OF ALASKA DEPARTMENT OF TRANSPORTATION AND PUBLIC FACILITIES
6860 GLACIER HIGHWAY, JUNEAU, AK 99801
(907) 465-1763

UTILITY RELOCATION FOR KETCHIKAN AREA BRIDGES

POLE P2 & P2B ELEVATIONS (KPU #2430-A5-3 & #2430-A5-10)

FILE | J:\102 state of ak\44 utility relocation design for ketchikan bridges\Working Drawings\15 KV RISER POLE AND SWITCH CONFIGURATION.dwg | LAYOUT | 5/24/2024 13:51 | DESIGNED MGM | CHECKED MGM | DRAFTED EMILEE

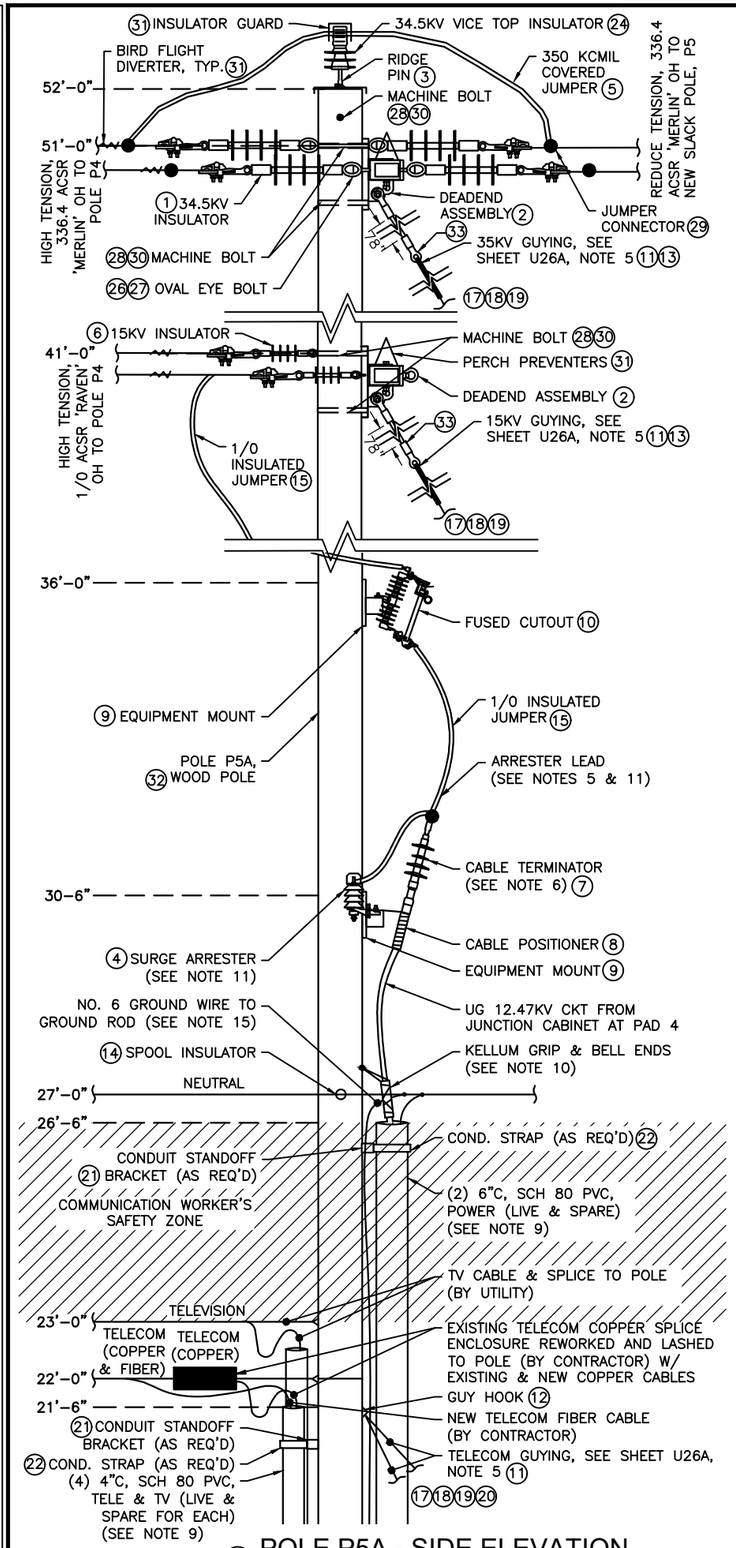

1 POLE P5A - SIDE ELEVATION
12.47KV
NOT TO SCALE

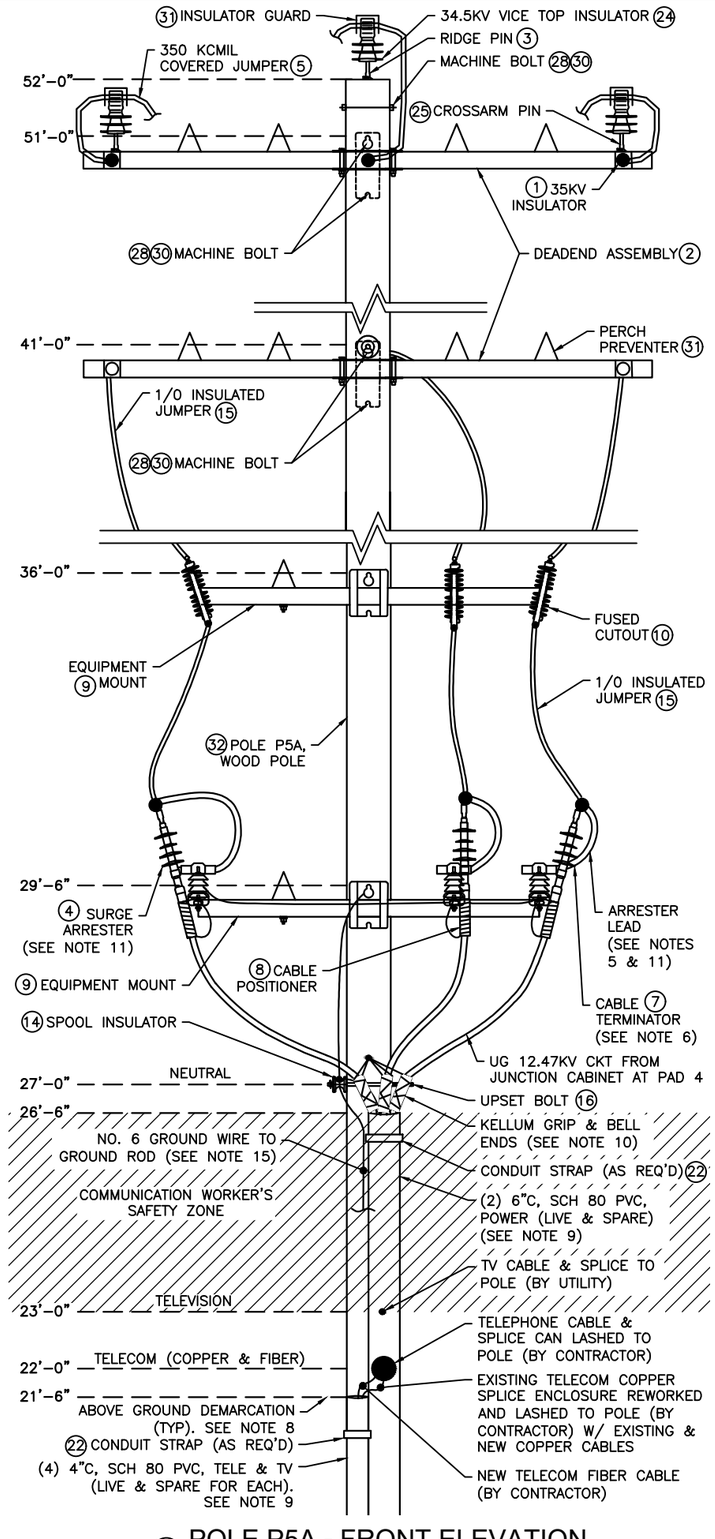

2 POLE P5A - FRONT ELEVATION
12.47KV
NOT TO SCALE

NO.	DATE	REVISION	STATE	PROJECT DESIGNATION	YEAR	SHEET NO.	TOTAL SHEETS
1	5/2024	AS-BUILT					
AS-BUILT DRAWING PREPARED FROM CONTRACTOR PROVIDED REDLINE WHICH MAY NOT BE CORRECT			ALASKA	0902043/SFHWY00072	2021	U20	45

NOTES:

1. ALL NUMBERS INSIDE CIRCLES REFER TO SHEET U26A FOR MATERIALS TABLE. SEE TABLE FOR MATERIAL DESCRIPTIONS, QUANTITIES, MANUFACTURERS, ETC. COMMODITY MATERIALS ARE SHOWN AS PRODUCTS OF MACLEAN POWER SYSTEMS, BUT MAY BE SUBSTITUTED FOR IDENTICAL MATERIALS OF OTHER MANUFACTURERS.
2. UTILITY POLES, POLE MOUNTED EQUIPMENT, POWER CABLES, COMMUNICATION CABLES, POLE SUPPORTS, GUYS, GROUNDING, AND CONDUIT RISERS SHALL ALL ADHERE TO MINIMUM CLEARANCES AS SPECIFIED IN THE LATEST EDITION OF THE NATIONAL ELECTRICAL SAFETY CODE (NESC, ANSI STANDARD C2) AS ADOPTED BY THE STATE OF ALASKA AND LOCAL AGENCIES, THE AFFECTED UTILITIES AND ALL REQUIREMENTS OF STATE AND LOCAL AGENCIES.
3. CODE REQUIRED CLEARANCES AND DIMENSIONS ARE THE MINIMUM ALLOWED IN THIS PROJECT. PROVIDE ADDITIONAL DISTANCES AS DIMENSIONED SPECIFICALLY ON THIS SHEET.
4. ADHERE TO KETCHIKAN PUBLIC UTILITIES/ELECTRIC (KPU/E) CONSTRUCTION SPECIFICATION STANDARDS. NOTES ON THIS PAGE ARE BORROWED, IN PART, FROM THOSE STANDARDS. BUT NOT ALL KPU/E STANDARDS ARE NOTED HEREIN. THE CONTRACTOR SHALL REVIEW KPU/E STANDARDS PRIOR TO COMMENCING WORK ASSOCIATED WITH THE PROJECT. CONTRACTOR SHALL PROMPTLY BRING TO THE ATTENTION OF THE ENGINEER SALIENT CONFLICTS BETWEEN THESE PLANS AND SPECIFICATIONS AND THE KPU/E CONSTRUCTION SPECIFICATION STANDARDS.
5. ALL SURGE ARRESTER LEADS SHALL BE KEPT AS SHORT AND AS STRAIGHT AS PRACTICABLE. WHERE POSSIBLE, TOTAL ARRESTER LEAD LENGTH (IN AND OUT) SHALL NOT EXCEED 30".
6. NO POWER CABLE BENDS ARE PERMITTED WITHIN 12" OF THE CABLE TERMINAL BASE ABOVE THE CONDUIT RISER.
7. ALL LIVE PARTS AT UTILITY POLE SHALL HAVE A MINIMUM 20' CLEARANCE ABOVE FINISHED GRADE. MAINTAIN A MINIMUM OF 6" SEPARATION BETWEEN THE NEUTRAL CONDUCTOR AND ALL OTHER CABLES.
8. DURING SUBMITTAL PROCESS, CONTRACTOR SHALL PROVIDE POLE ELEVATION DETAILS SIMILAR TO WHAT IS SHOWN ON THIS SHEET THAT CALL OUT SPECIFIC EQUIPMENT AND ALL SPACING DIMENSIONS PLANNED FOR THE INSTALLED POLE BASED ON SUBMITTED PRODUCTS. SUBMITTED DETAILS SHALL BE TO SCALE. ELEVATIONS SHALL INCLUDE ABOVE GRADE HEIGHT MARKERS SO THAT OVERALL ARRANGEMENT CAN BE REVIEWED AND APPROVED. ORDERING OF PRODUCTS AND ONSITE WORK SHALL NOT COMMENCE UNTIL SUBMITTED POLE ELEVATIONS ARE REVIEWED AND APPROVED BY THE ENGINEER AND THE KPU/E UTILITY MANAGER OR DESIGNEE.
9. CONDUIT ELBOWS AT GRADE AND THE FIRST 10' OF CONDUIT RISERS ABOVE GRADE SHALL BE RIGID STEEL CONDUIT. TRANSITION TO SCHEDULE 80 PVC ABOVE THAT POINT.
10. PROVIDE A STAINLESS-STEEL CABLE GRIP SUPPORT AND CONDUIT BELL ENDS AT TOP OF CONDUIT FOR EACH 15 KV CONDUCTOR CABLE, SECURE TO POLE WITH MACHINE BOLT AND WASHER AS REQUIRED. PROVIDE KELLUM GRIPS, HUBBEL #02406011 OR EQUAL.
11. SURGE ARRESTER SHALL BE WIRED IN PARALLEL WITH PHASE JUMPER, OR TERMINATOR (OR OTHER PROTECTED EQUIPMENT, ONE ARRESTER PER PHASE. PROVIDE EACH ARRESTER WITH WILDLIFE PROTECTIVE TOP CAP. ARRESTERS EQUIPPED WITH ~30" OF ARRESTER LEAD WIRE, TRAIN LEAD WIRE TO BE AS SHORT AND STRAIGHT AS POSSIBLE. INSTALL LEAD WIRE WITHIN AN OVERALL RUBBER INSULATION MATERIAL.
12. COORDINATE ARRANGEMENT OF POLE ASSEMBLIES, EQUIPMENT, AND STRUCTURES AT TOP OF POLE WITH KPU/E. NOT ALL DIMENSIONS ARE SHOWN ON THIS SHEET.
13. TO LIMIT THE LIKELIHOOD OF CORROSION DUE TO DISSIMILAR METALS, CONNECTIONS SHALL ALL BE CONFIGURED SO THAT IN ALL CASES OF ALUMINUM-TO-COPPER CONDUCTOR CONNECTIONS, THE ASSOCIATED CONNECTORS SHALL ALLOW FOR THE ALUMINUM PORTION OF THE CONNECTION TO PHYSICALLY BE ABOVE THE COPPER PORTION OF THE CONNECTIONS.
14. IN GENERAL, FOR CLARITY, SIDE VIEW (ELEVATION) DEPICTIONS INCLUDES ONLY ONE OR TWO OF THREE PHASES. PROVIDE THE OTHER PHASE CONNECTIONS IN A NEAT, SYMMETRICAL AND SIMILAR MANNER, CONSISTENT WITH THE DEPICTED PHASES, NOT ALL PHASE EQUIPMENT, CONNECTIONS, ETC. ARE SHOWN ON THE SIDE (ELEVATION) VIEW DETAIL.
15. FOR EACH INSTALLED SURGE ARRESTER, INSTALL A NO. 6 BARE, SOFT DRAWN, SOLID, CU GROUND WIRE FROM THE GROUND CONNECTION OF THE ARRESTER DIRECTLY TO THE MULTI-GROUNDED NEUTRAL (SYSTEM NEUTRAL) AND THE POLE GROUND CONDUCTOR. BOND THE COPPER CONCENTRIC NEUTRAL OF ALL MEDIUM VOLTAGE CABLE AND THE SHIELD FROM EACH OF THE CABLE TERMINATORS TOGETHER AND BOND ALL THREE TERMINATOR GROUNDS TOGETHER AND CONTINUE THIS CONDUCTOR TO THE SYSTEM NEUTRAL. BOND ALL GROUND CONDUCTORS AT THAT LOCATION. CONTINUE THE POLE GROUND CONDUCTOR DOWN THE POLE TO THE DRIVEN POLE GROUND ROD. VERTICAL GROUND WIRES SHALL BE STAPLED TO POLE AS REQUIRED AND NEATLY TRAINED. THE LOWEST 10' OF THE GROUND WIRE SHALL BE PROTECTED BY WOOD OR PLASTIC MOLDING, EXPRESSLY DESIGNED AND MANUFACTURED FOR THE PURPOSE. NOT ALL GROUND WIRING SEGMENTS ARE DEPICTED ON THE DETAILS ON THIS SHEET BUT ALL SHALL BE CONSISTENT WITH INDUSTRY PRACTICES AND PROVIDED AS DESCRIBED.

CN
10/23/2024

PLANS DEVELOPED BY:
MORRIS ENGINEERING GROUP, INC
2375 JORDAN AVE #7
JUNEAU, AK 99801
907-789-3350
AECL 1010

STATE OF ALASKA 49TH
Mark G. Morris
May 31, 2024
No. EE 8613
REGISTERED PROFESSIONAL ENGINEER

STATE OF ALASKA DEPARTMENT OF TRANSPORTATION AND PUBLIC FACILITIES
6860 GLACIER HIGHWAY, JUNEAU, AK 99801
(907) 465-1763

UTILITY RELOCATION FOR KETCHIKAN AREA BRIDGES

POLE P5A ELEVATIONS
(KPU #2430-B5-12)

FILE | y:\102 state of ak\44 utility relocation design for ketchikan bridges\Working Drawings\15 KV RISER POLE AND SWITCH CONFIGURATION.DWG | 5/24/2024 13:51 | LAYOUT | U20 | DESIGNED | MGM | CHECKED | MGM | DRAFTED | EMILEE

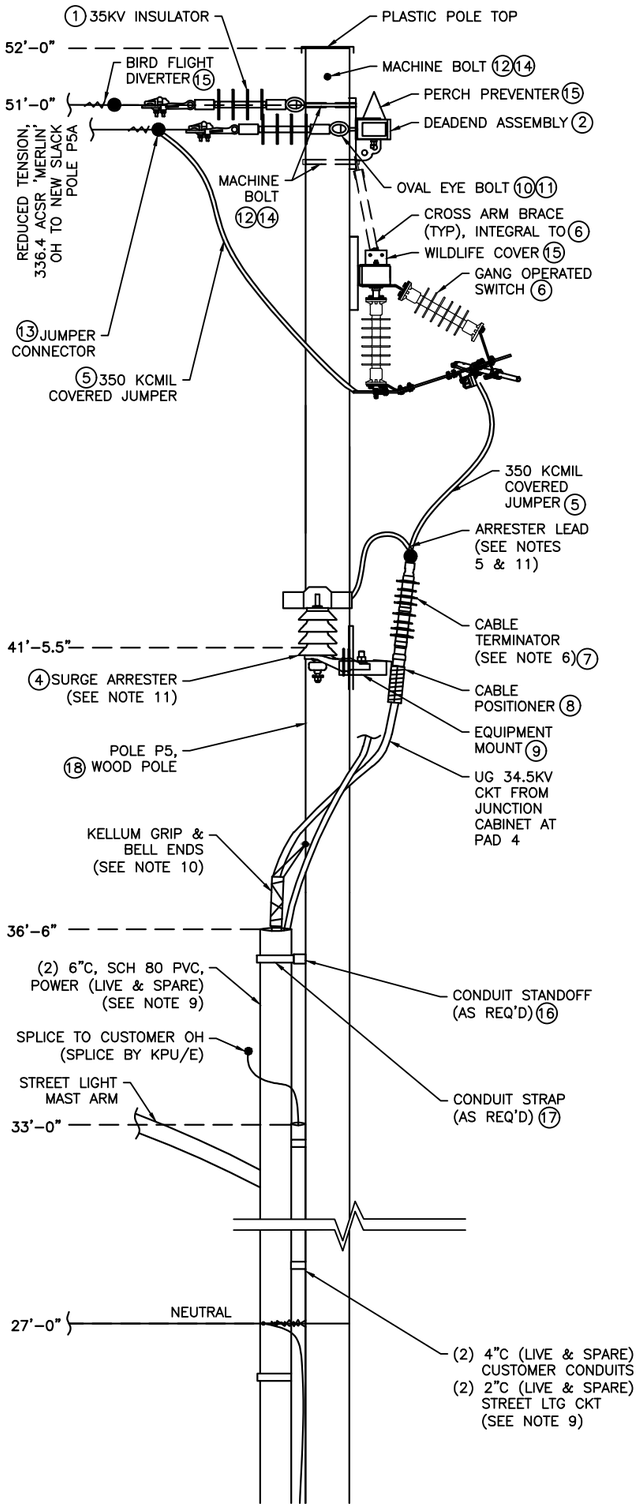

1 POLE P5 - SIDE ELEVATION
34.5KV
NOT TO SCALE

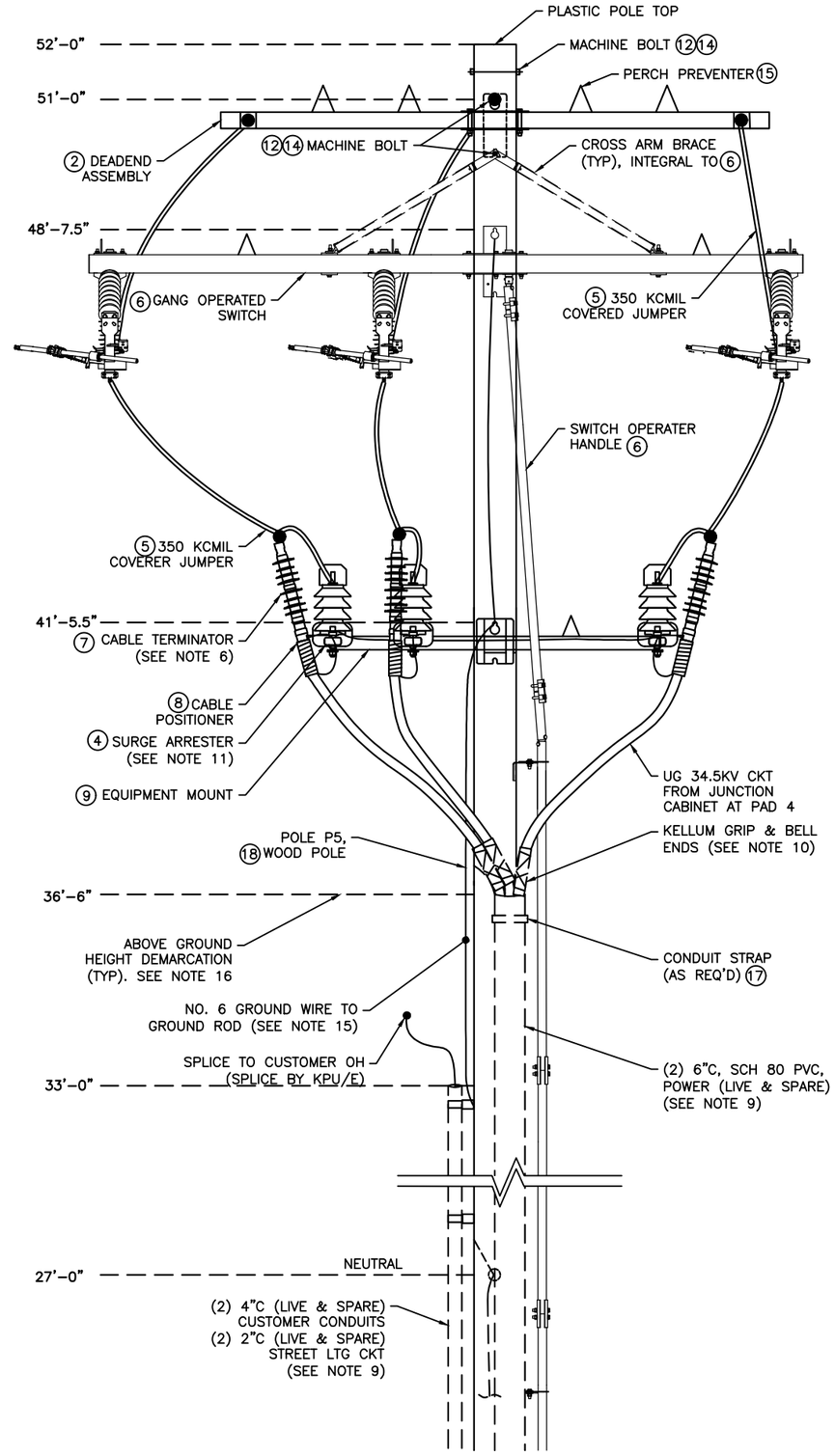

2 POLE P5 - FRONT ELEVATION
34.5KV
NOT TO SCALE

NO.	DATE	REVISION	STATE	PROJECT DESIGNATION	YEAR	SHEET NO.	TOTAL SHEETS
1	5/2024	AS-BUILT	ALASKA	0902043/SFHWY00072	2021	U21	45
AS-BUILT DRAWING PREPARED FROM CONTRACTOR PROVIDED REDLINE WHICH MAY NOT BE CORRECT							

NOTES:

1. ALL NUMBERS INSIDE CIRCLES REFER TO SHEET U26A FOR MATERIALS TABLE. SEE TABLE FOR MATERIAL DESCRIPTIONS, QUANTITIES, MANUFACTURERS, ETC. COMMODITY MATERIALS ARE SHOWN AS PRODUCTS OF MACLEAN POWER SYSTEMS, BUT MAY BE SUBSTITUTED FOR IDENTICAL MATERIALS OF OTHER MANUFACTURERS.
2. UTILITY POLES, POLE MOUNTED EQUIPMENT, POWER CABLES, COMMUNICATION CABLES, POLE SUPPORTS, GUYS, GROUNDING, AND CONDUIT RISERS SHALL ALL ADHERE TO MINIMUM CLEARANCES AS SPECIFIED IN THE LATEST EDITION OF THE NATIONAL ELECTRICAL SAFETY CODE (NESC, ANSI STANDARD C2) AS ADOPTED BY THE STATE OF ALASKA AND LOCAL AGENCIES, THE AFFECTED UTILITIES AND ALL REQUIREMENTS OF STATE AND LOCAL AGENCIES.
3. CODE REQUIRED CLEARANCES AND DIMENSIONS ARE THE MINIMUM ALLOWED IN THIS PROJECT. PROVIDE ADDITIONAL DISTANCES AS DIMENSIONED SPECIFICALLY ON THIS SHEET.
4. ADHERE TO KETCHIKAN PUBLIC UTILITIES/ELECTRIC (KPU/E) CONSTRUCTION SPECIFICATION STANDARDS. NOTES ON THIS PAGE ARE BORROWED, IN PART, FROM THOSE STANDARDS. BUT NOT ALL KPU/E STANDARDS ARE NOTED HEREIN. THE CONTRACTOR SHALL REVIEW KPU/E STANDARDS PRIOR TO COMMENCING WORK ASSOCIATED WITH THE PROJECT. CONTRACTOR SHALL PROMPTLY BRING TO THE ATTENTION OF THE ENGINEER SALIENT CONFLICTS BETWEEN THESE PLANS AND SPECIFICATIONS AND THE KPU/E CONSTRUCTION SPECIFICATION STANDARDS.
5. ALL SURGE ARRESTER LEADS SHALL BE KEPT AS SHORT AND AS STRAIGHT AS PRACTICABLE. WHERE POSSIBLE, TOTAL ARRESTER LEAD LENGTH (IN AND OUT) SHALL NOT EXCEED 30".
6. NO POWER CABLE BENDS ARE PERMITTED WITHIN 12" OF THE CABLE TERMINAL BASE ABOVE THE CONDUIT RISER.
7. ALL LIVE PARTS AT UTILITY POLE SHALL HAVE A MINIMUM 20' CLEARANCE ABOVE FINISHED GRADE. MAINTAIN A MINIMUM OF 6" SEPARATION BETWEEN THE NEUTRAL CONDUCTOR AND ALL OTHER CABLES.
8. UTILITY POLE P5 HAS A STREET LIGHTING MAST ARM AND LED FIXTURE NOT SHOWING ON THIS ELEVATION (BELOW THE AREA SHOWN)
9. CONDUIT ELBOWS AT GRADE AND THE FIRST 10' OF CONDUIT RISERS ABOVE GRADE SHALL BE RIGID STEEL CONDUIT. TRANSITION TO SCHEDULE 80 PVC ABOVE THAT POINT.
10. PROVIDE A STAINLESS-STEEL CABLE GRIP SUPPORT AND CONDUIT BELL ENDS AT TOP OF CONDUIT FOR EACH 35 KV CONDUCTOR CABLE, SECURE TO POLE WITH MACHINE BOLT AND WASHER AS REQUIRED. PROVIDE KELLUM GRIPS, HUBBEL #02406013 OR EQUAL.
11. SURGE ARRESTER SHALL BE WIRED IN PARALLEL WITH PHASE JUMPER, OR TERMINATOR (OR OTHER PROTECTED EQUIPMENT, ONE ARRESTER PER PHASE. PROVIDE EACH ARRESTER WITH WILDLIFE PROTECTIVE TOP CAP. ARRESTERS EQUIPPED WITH ~30" OF ARRESTER LEAD WIRE, TRAIN LEAD WIRE TO BE AS SHORT AND STRAIGHT AS POSSIBLE. INSTALL LEAD WIRE WITHIN AN OVERALL RUBBER INSULATION MATERIAL.
12. COORDINATE ARRANGEMENT OF POLE ASSEMBLIES, EQUIPMENT, AND STRUCTURES AT TOP OF POLE WITH KPU/E. NOT ALL DIMENSIONS ARE SHOWN ON THIS SHEET.
13. TO LIMIT THE LIKELIHOOD OF CORROSION DUE TO DISSIMILAR METALS, CONNECTIONS SHALL ALL BE CONFIGURED SO THAT IN ALL CASES OF ALUMINUM-TO-COPPER CONDUCTOR CONNECTIONS, THE ASSOCIATED CONNECTORS SHALL ALLOW FOR THE ALUMINUM PORTION OF THE CONNECTION TO PHYSICALLY BE ABOVE THE COPPER PORTION OF THE CONNECTIONS.
14. IN GENERAL, FOR CLARITY, SIDE VIEW (ELEVATION) DEPICTIONS INCLUDES ONLY ONE OR TWO OF THREE PHASES. PROVIDE THE OTHER PHASE CONNECTIONS IN A NEAT, SYMMETRICAL AND SIMILAR MANNER, CONSISTENT WITH THE DEPICTED PHASES, NOT ALL PHASE EQUIPMENT, CONNECTIONS, ETC. ARE SHOWN ON THE SIDE (ELEVATION) VIEW DETAIL.
15. FOR EACH INSTALLED SURGE ARRESTER, INSTALL A NO. 6 BARE, SOFT DRAWN, SOLID, CU GROUND WIRE FROM THE GROUND CONNECTION OF THE ARRESTER DIRECTLY TO THE MULTI-GROUNDED NEUTRAL (SYSTEM NEUTRAL) AND THE POLE GROUND CONDUCTOR. BOND THE COPPER CONCENTRIC NEUTRAL OF ALL MEDIUM VOLTAGE CABLE AND THE SHIELD FROM EACH OF THE CABLE TERMINATORS TOGETHER AND BOND ALL THREE TERMINATOR GROUNDS TOGETHER AND CONTINUE THIS CONDUCTOR TO THE SYSTEM NEUTRAL. BOND ALL GROUND CONDUCTORS AT THAT LOCATION. CONTINUE THE POLE GROUND CONDUCTOR DOWN THE POLE TO THE DRIVEN POLE GROUND ROD. VERTICAL GROUND WIRES SHALL BE STAPLED TO POLE AS REQUIRED AND NEATLY TRAINED. THE LOWEST 10' OF THE GROUND WIRE SHALL BE PROTECTED BY WOOD OR PLASTIC MOLDING, EXPRESSLY DESIGNED AND MANUFACTURED FOR THE PURPOSE. NOT ALL GROUND WIRING SEGMENTS ARE DEPICTED ON THE DETAILS ON THIS SHEET BUT ALL SHALL BE CONSISTENT WITH INDUSTRY PRACTICES AND PROVIDED AS DESCRIBED.
16. DURING SUBMITTAL PROCESS, CONTRACTOR SHALL PROVIDE POLE ELEVATION DETAILS SIMILAR TO WHAT IS SHOWN ON THIS SHEET THAT CALL OUT SPECIFIC EQUIPMENT AND ALL SPACING DIMENSIONS PLANNED FOR THE INSTALLED POLE BASED ON SUBMITTED PRODUCTS. SUBMITTED DETAILS SHALL BE TO SCALE. ELEVATIONS SHALL INCLUDE ABOVE GRADE HEIGHT MARKERS SO THAT OVERALL ARRANGEMENT CAN BE REVIEWED AND APPROVED. ORDERING OF PRODUCTS AND ONSITE WORK SHALL NOT COMMENCE UNTIL SUBMITTED POLE ELEVATIONS ARE REVIEWED AND APPROVED BY THE ENGINEER AND THE KPU/E UTILITY MANAGER OR DESIGNEE.

CN
10/23/2024

PLANS DEVELOPED BY:
MORRIS ENGINEERING GROUP, INC
2375 JORDAN AVE #7
JUNEAU, AK 99801
907-789-3350
AECL 1010

STATE OF ALASKA 49TH
Mark G. Morris
May 31, 2024
No. EE 8613
REGISTERED PROFESSIONAL ENGINEER

STATE OF ALASKA DEPARTMENT OF TRANSPORTATION AND PUBLIC FACILITIES
6860 GLACIER HIGHWAY, JUNEAU, AK 99801
(907) 465-1763

UTILITY RELOCATION FOR KETCHIKAN AREA BRIDGES

POLE P5 ELEVATIONS
(KPU #2430-B5-1)

FILE | y:\102 state of ak\44 utility relocation design for ketchikan bridges\Working Drawings\15 KV RISER POLE AND SWITCH CONFIGURATION.dwg | LAYOUT U21 | 5/24/2024 13:51 | DESIGNED MGM | CHECKED MGM | DRAFTED EMILEE

NO.	DATE	REVISION	STATE	PROJECT DESIGNATION	YEAR	SHEET NO.	TOTAL SHEETS
1	5/2024	AS-BUILT					
AS-BUILT DRAWING PREPARED FROM CONTRACTOR PROVIDED REDLINE WHICH MAY NOT BE CORRECT			ALASKA	0902043/SFHWY00072	2021	U22	45

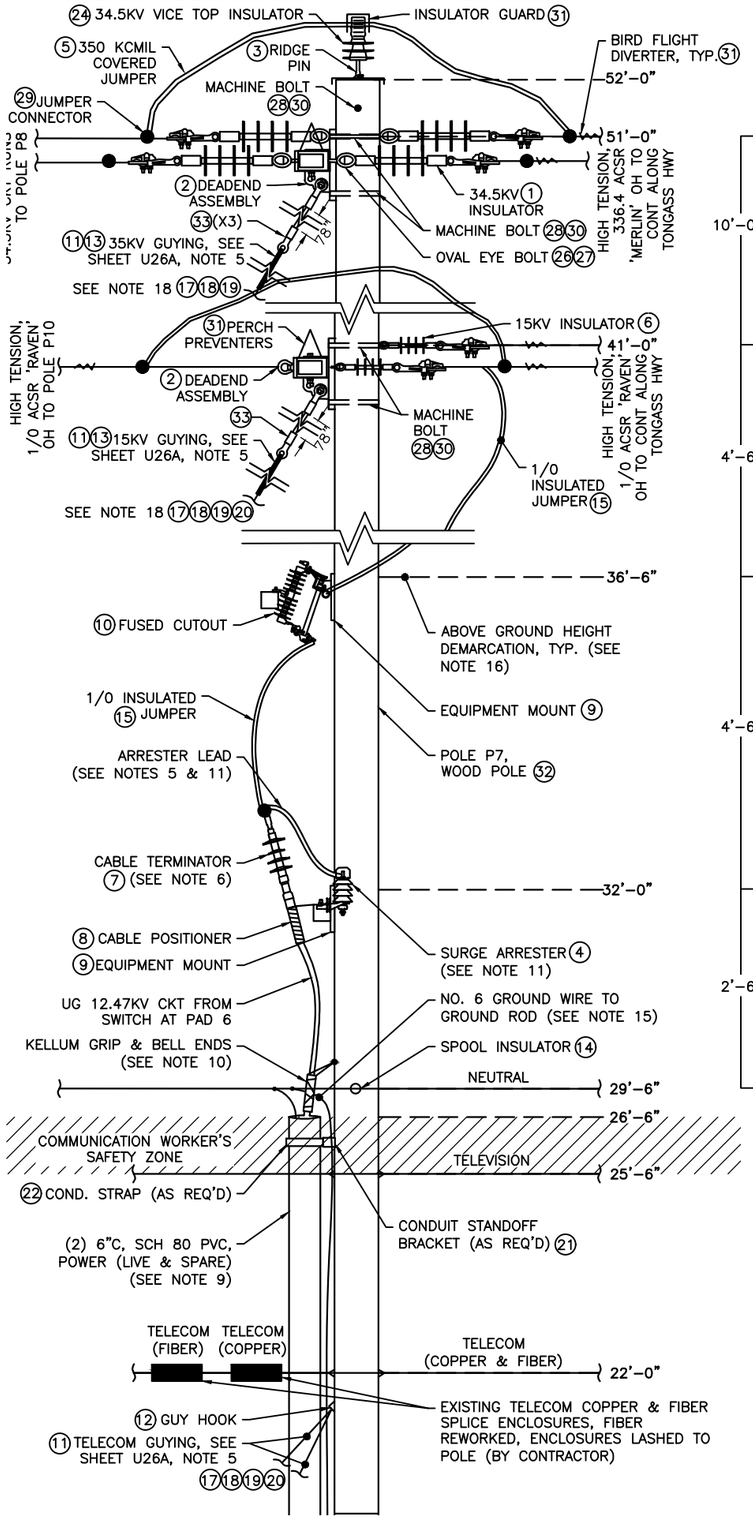

1 POLE P7 - SIDE ELEVATION
12.47KV
NOT TO SCALE

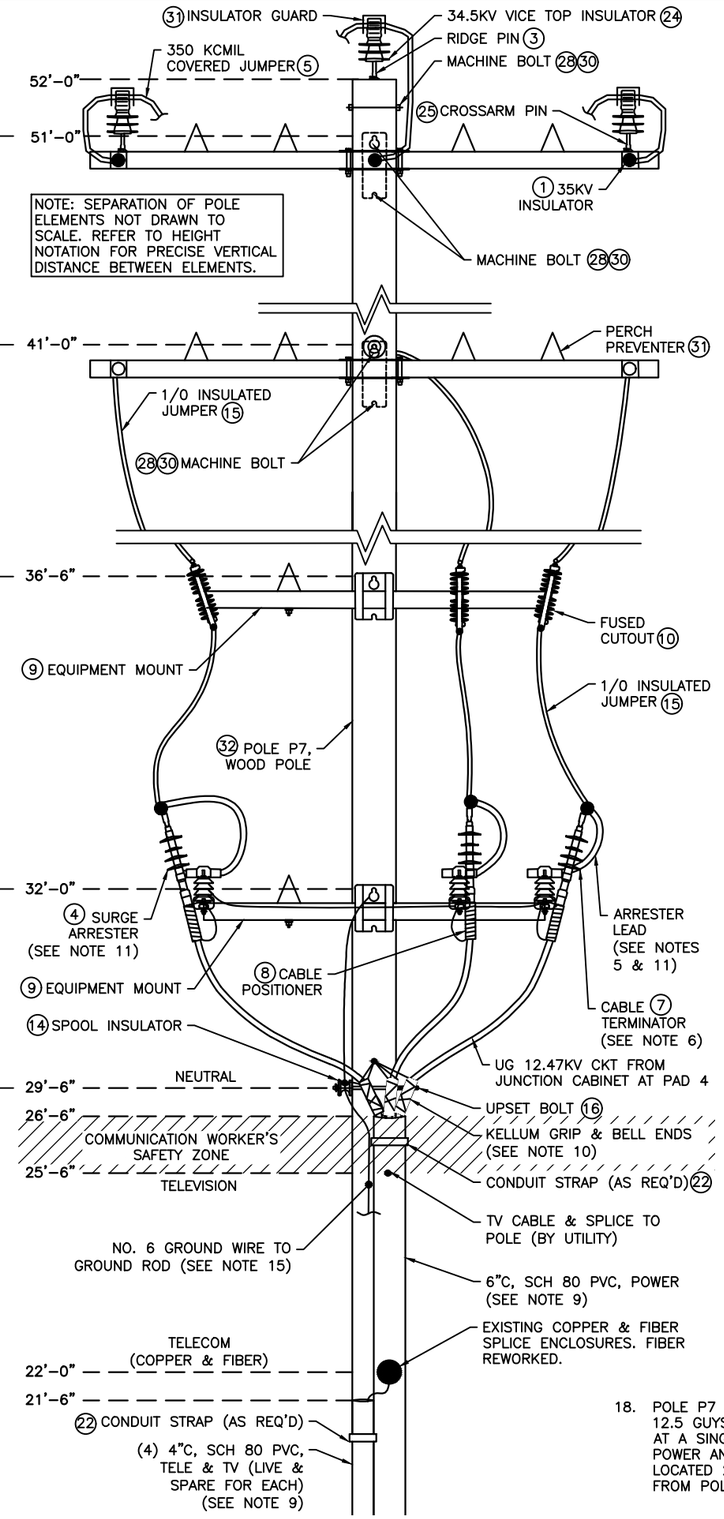

2 POLE P7 - FRONT ELEVATION
12.47KV
NOT TO SCALE

NOTES:

1. ALL NUMBERS INSIDE CIRCLES REFER TO SHEET U26A FOR MATERIALS TABLE. SEE TABLE FOR MATERIAL DESCRIPTIONS, QUANTITIES, MANUFACTURERS, ETC. COMMODITY MATERIALS ARE SHOWN AS PRODUCTS OF MACLEAN POWER SYSTEMS, BUT MAY BE SUBSTITUTED FOR IDENTICAL MATERIALS OF OTHER MANUFACTURERS.
2. UTILITY POLES, POLE MOUNTED EQUIPMENT, POWER CABLES, COMMUNICATION CABLES, POLE SUPPORTS, GUYS, GROUNDING, AND CONDUIT RISERS SHALL ALL ADHERE TO MINIMUM CLEARANCES AS SPECIFIED IN THE LATEST EDITION OF THE NATIONAL ELECTRICAL SAFETY CODE (NESC, ANSI STANDARD C2) AS ADOPTED BY THE STATE OF ALASKA AND LOCAL AGENCIES, THE AFFECTED UTILITIES AND ALL REQUIREMENTS OF STATE AND LOCAL AGENCIES.
3. CODE REQUIRED CLEARANCES AND DIMENSIONS ARE THE MINIMUM ALLOWED IN THIS PROJECT. PROVIDE ADDITIONAL DISTANCES AS DIMENSIONED SPECIFICALLY ON THISSHEET.
4. ADHERE TO KETCHIKAN PUBLIC UTILITIES/ELECTRIC (KPU/E) CONSTRUCTION SPECIFICATION STANDARDS. NOTES ON THIS PAGE ARE BORROWED, IN PART, FROM THOSE STANDARDS. BUT NOT ALL KPU/E STANDARDS ARE NOTED HEREIN. THE CONTRACTOR SHALL REVIEW KPU/E STANDARDS PRIOR TO COMMENCING WORK ASSOCIATED WITH THE PROJECT. CONTRACTOR SHALL PROMPTLY BRING TO THE ATTENTION OF THE ENGINEER SALIENT CONFLICTS BETWEEN THESE PLANS AND SPECIFICATIONS AND THE KPU/E CONSTRUCTION SPECIFICATION STANDARDS.
5. ALL SURGE ARRESTER LEADS SHALL BE KEPT AS SHORT AND AS STRAIGHT AS PRACTICABLE. WHERE POSSIBLE, TOTAL ARRESTER LEAD LENGTH (IN AND OUT) SHALL NOT EXCEED 30".
6. NO POWER CABLE BENDS ARE PERMITTED WITHIN 12" OF THE CABLE TERMINAL BASE ABOVE THE CONDUIT RISER.
7. ALL LIVE PARTS AT UTILITY POLE SHALL HAVE A MINIMUM 20' CLEARANCE ABOVE FINISHED GRADE. MAINTAIN A MINIMUM OF 6" SEPARATION BETWEEN THE NEUTRAL CONDUCTOR AND ALL OTHER CABLES.
8. MAINTAIN ALL COMMUNICATION CABLES (TELEPHONE AND TELEVISION) BELOW THE POWER CABLES WITHIN A DEDICATED SPACE. MAINTAIN THE "COMMUNICATION WORKERS' SAFETY ZONE" AS REQUIRED BY THE NESC.
9. CONDUIT ELBOWS AT GRADE AND THE FIRST 10' OF CONDUIT RISERS ABOVE GRADE SHALL BE RIGID STEEL CONDUIT. TRANSITION TO SCHEDULE 80 PVC ABOVE THAT POINT.
10. PROVIDE A STAINLESS-STEEL CABLE GRIP SUPPORT AND CONDUIT BELL ENDS AT TOP OF CONDUIT FOR EACH 15KV CONDUCTOR CABLE, SECURE TO POLE WITH MACHINE BOLT AND WASHER AS REQUIRED. PROVIDE KELLUM GRIPS, HUBBEL #02406011 OR EQUAL.
11. SURGE ARRESTER SHALL BE WIRED IN PARALLEL WITH PHASE JUMPER, OR TERMINATOR (OR OTHER PROTECTED EQUIPMENT, ONE ARRESTER PER PHASE. PROVIDE EACH ARRESTER WITH WILDLIFE PROTECTIVE TOP CAP. ARRESTERS EQUIPPED WITH ~30" OF ARRESTER LEAD WIRE, TRAIN LEAD WIRE TO BE AS SHORT AND STRAIGHT AS POSSIBLE. INSTALL LEAD WIRE WITHIN AN OVERALL RUBBER INSULATION MATERIAL.
12. COORDINATE ARRANGEMENT OF POLE ASSEMBLIES, EQUIPMENT, AND STRUCTURES AT TOP OF POLE WITH KPU/E. NOT ALL DIMENSIONS ARE SHOWN ON THIS SHEET.
13. TO LIMIT THE LIKELIHOOD OF CORROSION DUE TO DISSIMILAR METALS, CONNECTIONS SHALL ALL BE CONFIGURED SO THAT IN ALL CASES OF ALUMINUM-TO-COPPER CONDUCTOR CONNECTIONS, THE ASSOCIATED CONNECTORS SHALL ALLOW FOR THE ALUMINUM PORTION OF THE CONNECTION TO PHYSICALLY BE ABOVE THE COPPER PORTION OF THE CONNECTIONS.
14. IN GENERAL, FOR CLARITY, SIDE VIEW (ELEVATION) DEPICTIONS INCLUDES ONLY ONE OR TWO OF THREE PHASES. PROVIDE THE OTHER PHASE CONNECTIONS IN A NEAT, SYMMETRICAL AND SIMILAR MANNER, CONSISTENT WITH THE DEPICTED PHASES, NOT ALL PHASE EQUIPMENT, CONNECTIONS, ETC. ARE SHOWN ON THE SIDE (ELEVATION) VIEW DETAIL.
15. FOR EACH INSTALLED SURGE ARRESTER, INSTALL A NO. 6 BARE, SOFT DRAWN, SOLID, CU GROUND WIRE FROM THE GROUND CONNECTION OF THE ARRESTER DIRECTLY TO THE MULTI-GROUNDED NEUTRAL (SYSTEM NEUTRAL) AND THE POLE GROUND CONDUCTOR. BOND THE COPPER CONCENTRIC NEUTRAL OF ALL MEDIUM VOLTAGE CABLE AND THE SHIELD FROM EACH OF THE CABLE TERMINATORS TOGETHER AND BOND ALL THREE TERMINATOR GROUNDS TOGETHER AND CONTINUE THIS CONDUCTOR TO THE SYSTEM NEUTRAL. BOND ALL GROUND CONDUCTORS AT THAT LOCATION. CONTINUE THE POLE GROUND CONDUCTOR DOWN THE POLE TO THE DRIVEN POLE GROUND ROD. VERTICAL GROUND WIRES SHALL BE STAPLED TO POLE AS REQUIRED AND NEATLY TRAINED. THE LOWEST 10' OF THE GROUND WIRE SHALL BE PROTECTED BY WOOD OR PLASTIC MOLDING, EXPRESSLY DESIGNED AND MANUFACTURED FOR THE PURPOSE. NOT ALL GROUND WIRING SEGMENTS ARE DEPICTED ON THE DETAILS ON THIS SHEET BUT ALL SHALL BE CONSISTENT WITH INDUSTRY PRACTICES AND PROVIDED AS DESCRIBED.
16. DURING SUBMITTAL PROCESS, CONTRACTOR SHALL PROVIDE POLE ELEVATION DETAILS SIMILAR TO WHAT IS SHOWN ON THIS SHEET THAT CALL OUT SPECIFIC EQUIPMENT AND ALL SPACING DIMENSIONS PLANNED FOR THE INSTALLED POLE BASED ON SUBMITTED PRODUCTS. SUBMITTED DETAILS SHALL BE TO SCALE. ELEVATIONS SHALL INCLUDE ABOVE GRADE HEIGHT MARKERS SO THAT OVERALL ARRANGEMENT CAN BE REVIEWED AND APPROVED. ORDERING OF PRODUCTS AND ONSITE WORK SHALL NOT COMMENCE UNTIL SUBMITTED POLE ELEVATIONS ARE REVIEWED AND APPROVED BY THE ENGINEER AND THE KPU/E UTILITY MANAGER OR DESIGNEE.
17. ALL DEMOLITION AND NEW WORK AT THIS POLE BY KPU ELECTRIC UTILITY IN COORDINATION WITH CONTRACTOR AND OVERALL PROJECT PHASING. KPU WILL PERFORM THIER WORK PER THESE PLANS AND SPECIFICATIONS BUT ALL MATERIAL AND LABOR REQUIRED IS BY KPU UTILITY, NOT BY CONTRACTOR. COORDINATE WITH KPU AS REQUIRED. COORDINATE WITH KPU TELECOMMUNICATIONS AND GCI TELEVISION UTILITIES AS REQUIRED. SEE DETAIL 2, SHEET U5 FOR GENERAL PHASING REQUIREMENTS AND UTILITY CONTACT INFORMATION.
18. POLE P7 34.5 AND 12.5 GUYS TERMINATE AT A SINGLE COMMON POWER ANCHOR LOCATED 27 FEET FROM POLE BASE.

CN
10/23/2024

PLANS DEVELOPED BY:
MORRIS ENGINEERING GROUP, INC
2375 JORDAN AVE #7
JUNEAU, AK 99801
907-789-3350
AECL 1010

STATE OF ALASKA 49TH
Mark G. Morris
May 31, 2024
No. EE 8613
REGISTERED PROFESSIONAL ENGINEER

STATE OF ALASKA DEPARTMENT OF TRANSPORTATION AND PUBLIC FACILITIES
6860 GLACIER HIGHWAY, JUNEAU, AK 99801
(907) 465-1763

UTILITY RELOCATION FOR KETCHIKAN AREA BRIDGES

POLE P7 ELEVATIONS
(KPU #2430-A4-6)

FILE | y:\102 state of ak\44 utility relocation design for ketchikan bridges\Working Drawings\15 KV RISER POLE AND SWITCH CONFIGURATI | LAYOUT U22 | 5/24/2024 13:51 | DESIGNED MGM | CHECKED MGM | DRAFTED EMILEE

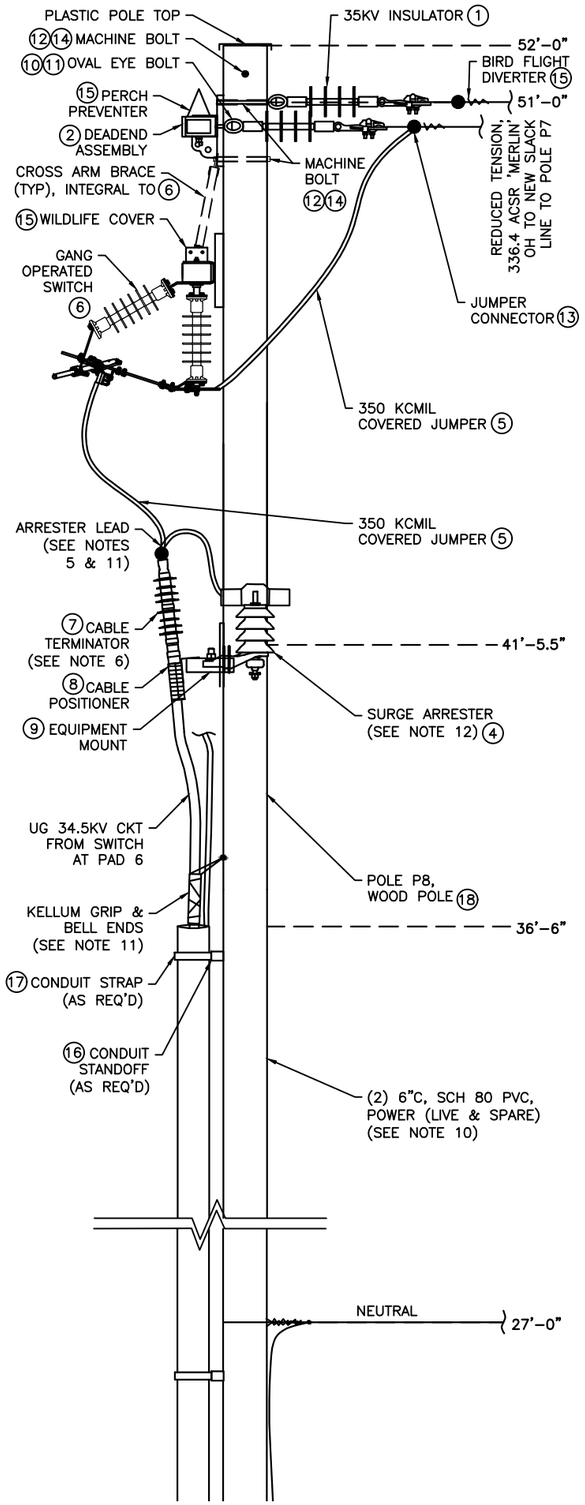

1 POLE P8 - SIDE ELEVATION
34.5KV
NOT TO SCALE

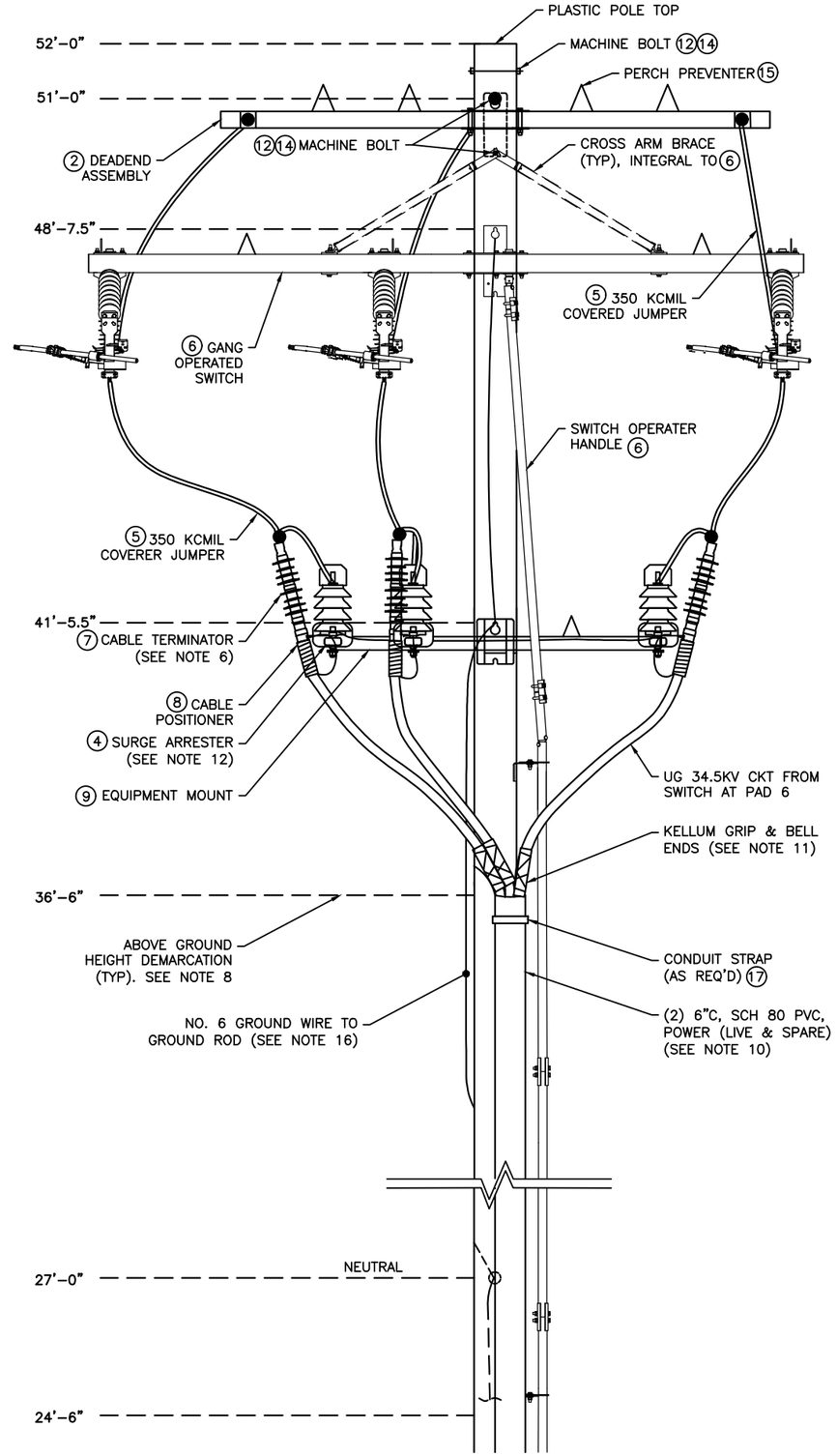

2 POLE P8 - FRONT ELEVATION
34.5KV
NOT TO SCALE

NO.	DATE	REVISION	STATE	PROJECT DESIGNATION	YEAR	SHEET NO.	TOTAL SHEETS
1	5/2024	AS-BUILT					
AS-BUILT DRAWING PREPARED FROM CONTRACTOR PROVIDED REDLINE WHICH MAY NOT BE CORRECT			ALASKA	0902043/SFHWY00072	2021	U23	45

NOTES:

1. ALL NUMBERS INSIDE CIRCLES REFER TO SHEET U26A FOR MATERIALS TABLE. SEE TABLE FOR MATERIAL DESCRIPTIONS, QUANTITIES, MANUFACTURERS, ETC. COMMODITY MATERIALS ARE SHOWN AS PRODUCTS OF MACLEAN POWER SYSTEMS, BUT MAY BE SUBSTITUTED FOR IDENTICAL MATERIALS OF OTHER MANUFACTURERS.
2. UTILITY POLES, POLE MOUNTED EQUIPMENT, POWER CABLES, COMMUNICATION CABLES, POLE SUPPORTS, GUYS, GROUNDING, AND CONDUIT RISERS SHALL ALL ADHERE TO MINIMUM CLEARANCES AS SPECIFIED IN THE LATEST EDITION OF THE NATIONAL ELECTRICAL SAFETY CODE (NESC, ANSI STANDARD C2) AS ADOPTED BY THE STATE OF ALASKA AND LOCAL AGENCIES, THE AFFECTED UTILITIES AND ALL REQUIREMENTS OF STATE AND LOCAL AGENCIES.
3. CODE REQUIRED CLEARANCES AND DIMENSIONS ARE THE MINIMUM ALLOWED IN THIS PROJECT. PROVIDE ADDITIONAL DISTANCES AS DIMENSIONED SPECIFICALLY ON THIS SHEET.
4. ADHERE TO KETCHIKAN PUBLIC UTILITIES/ELECTRIC (KPU/E) CONSTRUCTION SPECIFICATION STANDARDS. NOTES ON THIS PAGE ARE BORROWED, IN PART, FROM THOSE STANDARDS. BUT NOT ALL KPU/E STANDARDS ARE NOTED HEREIN. THE CONTRACTOR SHALL REVIEW KPU/E STANDARDS PRIOR TO COMMENCING WORK ASSOCIATED WITH THE PROJECT. CONTRACTOR SHALL PROMPTLY BRING TO THE ATTENTION OF THE ENGINEER SALIENT CONFLICTS BETWEEN THESE PLANS AND SPECIFICATIONS AND THE KPU/E CONSTRUCTION SPECIFICATION STANDARDS.
5. ALL SURGE ARRESTER LEADS SHALL BE KEPT AS SHORT AND AS STRAIGHT AS PRACTICABLE. WHERE POSSIBLE, TOTAL ARRESTER LEAD LENGTH (IN AND OUT) SHALL NOT EXCEED 30'.
6. NO POWER CABLE BENDS ARE PERMITTED WITHIN 12" OF THE CABLE TERMINAL BASE ABOVE THE CONDUIT RISER.
7. ALL LIVE PARTS AT UTILITY POLE SHALL HAVE A MINIMUM 20' CLEARANCE ABOVE FINISHED GRADE. MAINTAIN A MINIMUM OF 6" SEPARATION BETWEEN THE NEUTRAL CONDUCTOR AND ALL OTHER CABLES.
8. DURING SUBMITTAL PROCESS, CONTRACTOR SHALL PROVIDE POLE ELEVATION DETAILS SIMILAR TO WHAT IS SHOWN ON THIS SHEET THAT CALL OUT SPECIFIC EQUIPMENT AND ALL SPACING DIMENSIONS PLANNED FOR THE INSTALLED POLE BASED ON SUBMITTED PRODUCTS. SUBMITTED DETAILS SHALL BE TO SCALE. ELEVATIONS SHALL INCLUDE ABOVE GRADE HEIGHT MARKERS SO THAT OVERALL ARRANGEMENT CAN BE REVIEWED AND APPROVED. ORDERING OF PRODUCTS AND ONSITE WORK SHALL NOT COMMENCE UNTIL SUBMITTED POLE ELEVATIONS ARE REVIEWED AND APPROVED BY THE ENGINEER AND THE KPU/E UTILITY MANAGER OR DESIGNEE.
9. MAINTAIN ALL COMMUNICATION CABLES (TELEPHONE AND TELEVISION) BELOW THE POWER CABLES WITHIN A DEDICATED SPACE. MAINTAIN THE "COMMUNICATION WORKERS' SAFETY ZONE" AS REQUIRED BY THE NESC BETWEEN THE HIGHEST ELEVATION OF THE COMMUNICATIONS ZONE AND THE LOWEST ELEVATION OF THE POWER ZONE ON THE POLE.
10. CONDUIT ELBOWS AT GRADE AND THE FIRST 10' OF CONDUIT RISERS ABOVE GRADE SHALL BE RIGID STEEL CONDUIT TRANSITION TO SCHEDULE 80 PVC ABOVE THAT POINT.
11. PROVIDE A STAINLESS-STEEL CABLE GRIP SUPPORT AND CONDUIT BELL ENDS AT TOP OF CONDUIT FOR EACH 35 KV CONDUCTOR CABLE, SECURE TO POLE WITH MACHINE BOLT AND WASHER AS REQUIRED. PROVIDE KELLUM GRIPS, HUBBEL #02406013 OR EQUAL.
12. SURGE ARRESTER SHALL BE WIRED IN PARALLEL WITH PHASE JUMPER, OR TERMINATOR (OR OTHER PROTECTED EQUIPMENT, ONE ARRESTER PER PHASE. PROVIDE EACH ARRESTER WITH WILDLIFE PROTECTIVE TOP CAP. ARRESTERS EQUIPPED WITH ~30" OF ARRESTER LEAD WIRE, TRAIN LEAD WIRE TO BE AS SHORT AND STRAIGHT AS POSSIBLE. INSTALL LEAD WIRE WITHIN AN OVERALL RUBBER INSULATION MATERIAL.
13. COORDINATE ARRANGEMENT OF POLE ASSEMBLIES, EQUIPMENT, AND STRUCTURES AT TOP OF POLE WITH KPU/E. NOT ALL DIMENSIONS ARE SHOWN ON THIS SHEET.
14. TO LIMIT THE LIKELIHOOD OF CORROSION DUE TO DISSIMILAR METALS, CONNECTIONS SHALL ALL BE CONFIGURED SO THAT IN ALL CASES OF ALUMINUM-TO-COPPER CONDUCTOR CONNECTIONS, THE ASSOCIATED CONNECTORS SHALL ALLOW FOR THE ALUMINUM PORTION OF THE CONNECTION TO PHYSICALLY BE ABOVE THE COPPER PORTION OF THE CONNECTIONS.
15. IN GENERAL, FOR CLARITY, SIDE VIEW (ELEVATION) DEPICTIONS INCLUDES ONLY ONE OR TWO OF THREE PHASES. PROVIDE THE OTHER PHASE CONNECTIONS IN A NEAT, SYMMETRICAL AND SIMILAR MANNER, CONSISTENT WITH THE DEPICTED PHASES, NOT ALL PHASE EQUIPMENT, CONNECTIONS, ETC. ARE SHOWN ON THE SIDE (ELEVATION) VIEW DETAIL.
16. FOR EACH INSTALLED SURGE ARRESTER, INSTALL A NO. 6 BARE, SOFT DRAWN, SOLID, CU GROUND WIRE FROM THE GROUND CONNECTION OF THE ARRESTER DIRECTLY TO THE MULTI-GROUNDED NEUTRAL (SYSTEM NEUTRAL) AND THE POLE GROUND CONDUCTOR. BOND THE COPPER CONCENTRIC NEUTRAL OF ALL MEDIUM VOLTAGE CABLE AND THE SHIELD FROM EACH OF THE CABLE TERMINATORS TOGETHER AND BOND ALL THREE TERMINATOR GROUNDS TOGETHER AND CONTINUE THIS CONDUCTOR TO THE SYSTEM NEUTRAL. BOND ALL GROUND CONDUCTORS AT THAT LOCATION. CONTINUE THE POLE GROUND CONDUCTOR DOWN THE POLE TO THE DRIVEN POLE GROUND ROD. VERTICAL GROUND WIRES SHALL BE STAPLED TO POLE AS REQUIRED AND NEATLY TRAINED. THE LOWEST 10' OF THE GROUND WIRE SHALL BE PROTECTED BY WOOD OR PLASTIC MOLDING, EXPRESSLY DESIGNED AND MANUFACTURED FOR THE PURPOSE. NOT ALL GROUND WIRING SEGMENTS ARE DEPICTED ON THE DETAILS ON THIS SHEET BUT ALL SHALL BE CONSISTENT WITH INDUSTRY PRACTICES AND PROVIDED AS DESCRIBED.
17. ALL DEMOLITION AND NEW WORK AT THIS POLE BY KPU ELECTRIC UTILITY IN COORDINATION WITH CONTRACTOR AND OVERALL PROJECT PHASING. KPU WILL PERFORM THIER WORK PER THESE PLANS AND SPECIFICATIONS BUT ALL MATERIAL AND LABOR REQUIRED IS BY KPU UTILITY, NOT BY CONTRACTOR. COORDINATE WITH KPU AS REQUIRED. COORDINATE WITH KPU TELECOMMUNICATIONS AND GCI TELEVISION UTILITIES AS REQUIRED. SEE DETAIL 2, SHEET U5 FOR GENERAL PHASING REQUIREMENTS AND UTILITY CONTACT INFORMATION.

CN
10/23/2024

PLANS DEVELOPED BY:
MORRIS ENGINEERING GROUP, INC
2375 JORDAN AVE #7
JUNEAU, AK 99801
907-789-3350
AECL 1010

STATE OF ALASKA 49TH
Mark G. Morris
May 31, 2024
No. EE 8613
REGISTERED PROFESSIONAL ENGINEER

STATE OF ALASKA, DEPARTMENT OF TRANSPORTATION AND PUBLIC FACILITIES
6860 GLACIER HIGHWAY, JUNEAU, AK 99801
(907) 465-1763

UTILITY RELOCATION FOR KETCHIKAN AREA BRIDGES

POLE P8 ELEVATIONS
(KPU #2430-A4-7)

FILE | >:\102 state of ak\44 utility relocation design for ketchikan bridges\Working Drawings\15 KV RISER POLE AND SWITCH CONFIGURATION.dwg | 5/24/2024 13:51 | LAYOUT: U23 | DESIGNED: MGM | CHECKED: MGM | DRAFTED: EMILEE

NO.	DATE	REVISION	STATE	PROJECT DESIGNATION	YEAR	SHEET NO.	TOTAL SHEETS
1	5/2024	AS-BUILT					
AS-BUILT DRAWING PREPARED FROM CONTRACTOR PROVIDED REDLINE WHICH MAY NOT BE CORRECT			ALASKA	0902043/SFHWY00072	2021	U24	45

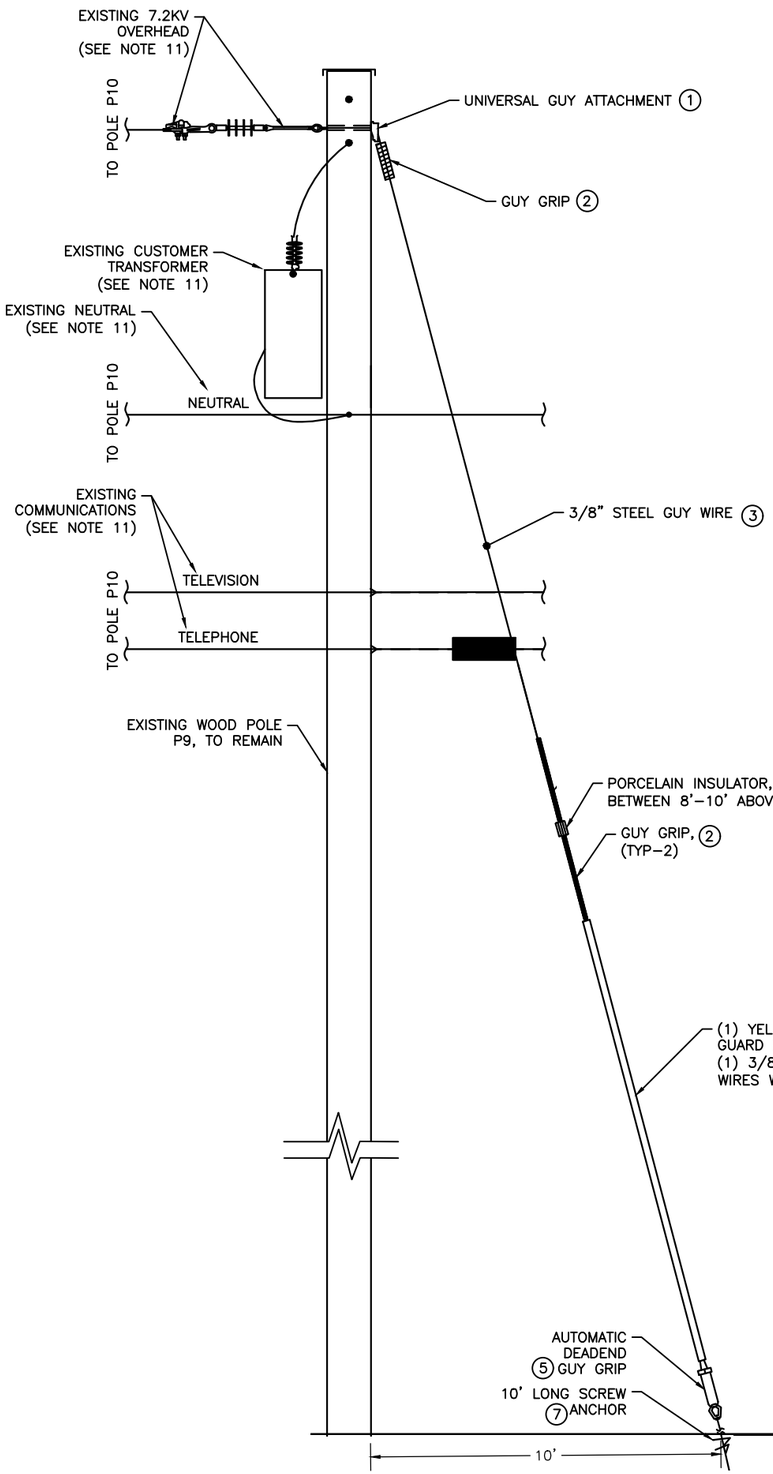

1 POLE P9 - SIDE ELEVATION
12.47KV
NOT TO SCALE

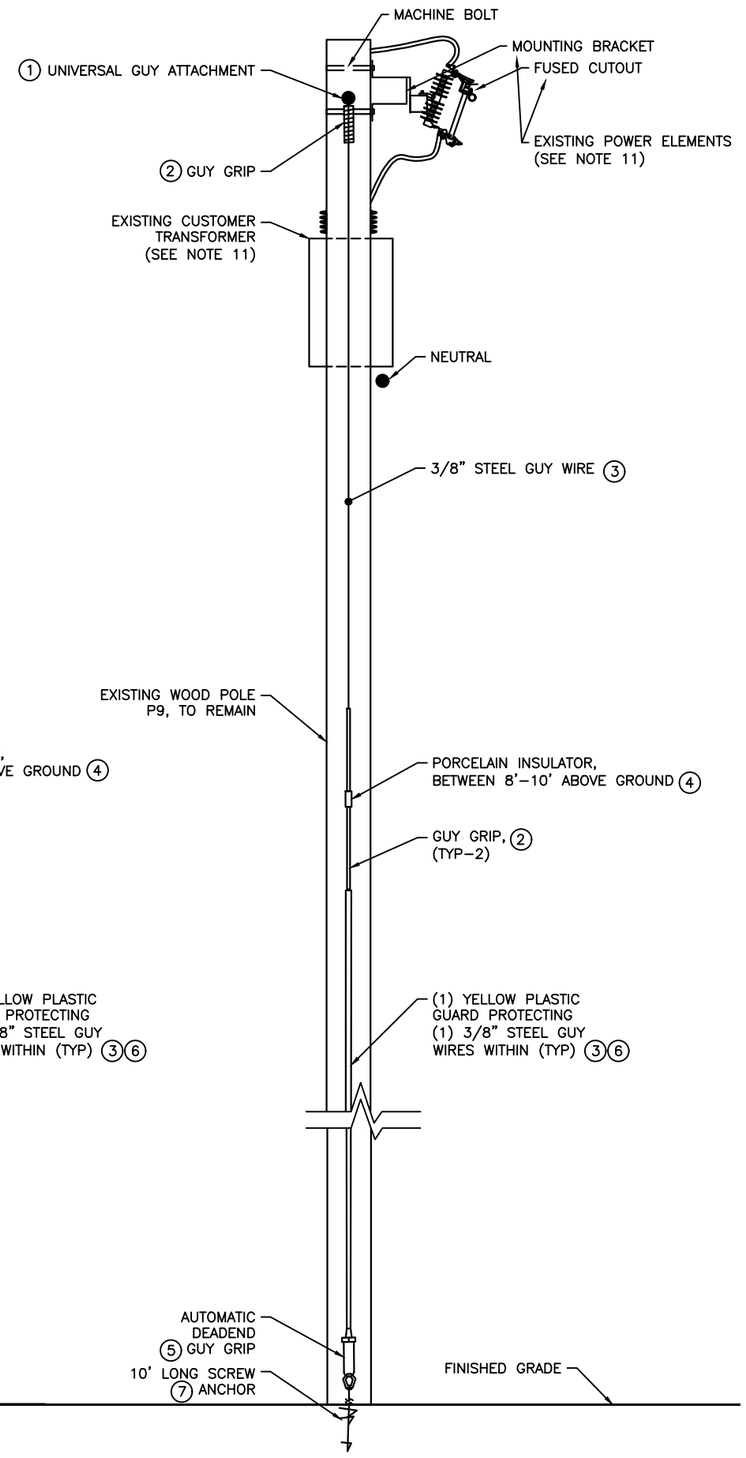

2 POLE P9 - FRONT ELEVATION
12.47KV
NOT TO SCALE

NOTES:

1. ALL NUMBERS INSIDE CIRCLES REFER TO SHEET U26A FOR MATERIALS TABLE. SEE TABLE FOR MATERIAL DESCRIPTIONS, QUANTITIES, MANUFACTURERS, ETC. COMMODITY MATERIALS ARE SHOWN AS PRODUCTS OF MACLEAN POWER SYSTEMS, BUT MAY BE SUBSTITUTED FOR IDENTICAL MATERIALS OF OTHER MANUFACTURERS.
2. UTILITY POLES, POLE MOUNTED EQUIPMENT, POWER CABLES, COMMUNICATION CABLES, POLE SUPPORTS, GUYS, GROUNDING, AND CONDUIT RISERS SHALL ALL ADHERE TO MINIMUM CLEARANCES AS SPECIFIED IN THE LATEST EDITION OF THE NATIONAL ELECTRICAL SAFETY CODE (NESC, ANSI STANDARD C2) AS ADOPTED BY THE STATE OF ALASKA AND LOCAL AGENCIES, THE AFFECTED UTILITIES AND ALL REQUIREMENTS OF STATE AND LOCAL AGENCIES.
3. CODE REQUIRED CLEARANCES AND DIMENSIONS ARE THE MINIMUM ALLOWED IN THIS PROJECT. PROVIDE ADDITIONAL DISTANCES AS DIMENSIONED SPECIFICALLY ON THIS SHEET.
4. ADHERE TO KETCHIKAN PUBLIC UTILITIES/ELECTRIC (KPU/E) CONSTRUCTION SPECIFICATION STANDARDS. NOTES ON THIS PAGE ARE BORROWED, IN PART, FROM THOSE STANDARDS. BUT NOT ALL KPU/E STANDARDS ARE NOTED HEREIN. THE CONTRACTOR SHALL REVIEW KPU/E STANDARDS PRIOR TO COMMENCING WORK ASSOCIATED WITH THE PROJECT. CONTRACTOR SHALL PROMPTLY BRING TO THE ATTENTION OF THE ENGINEER SALIENT CONFLICTS BETWEEN THESE PLANS AND SPECIFICATIONS AND THE KPU/E CONSTRUCTION SPECIFICATION STANDARDS.
5. ALL LIVE PARTS AT UTILITY POLE SHALL HAVE A MINIMUM 20' CLEARANCE ABOVE FINISHED GRADE. MAINTAIN A MINIMUM OF 6" SEPARATION BETWEEN THE NEUTRAL CONDUCTOR AND ALL OTHER CABLES.
6. MAINTAIN ALL COMMUNICATION CABLES (TELEPHONE AND TELEVISION) BELOW THE POWER CABLES WITHIN A DEDICATED SPACE. MAINTAIN THE "COMMUNICATION WORKERS' SAFETY ZONE" AS REQUIRED BY THE NESC.
7. COORDINATE ARRANGEMENT OF POLE ASSEMBLIES, EQUIPMENT, AND STRUCTURES AT TOP OF POLE WITH KPU/E. NOT ALL DIMENSIONS ARE SHOWN ON THIS SHEET.
8. TO LIMIT THE LIKELIHOOD OF CORROSION DUE TO DISSIMILAR METALS, CONNECTIONS SHALL ALL BE CONFIGURED SO THAT IN ALL CASES OF ALUMINUM-TO-COPPER CONDUCTOR CONNECTIONS, THE ASSOCIATED CONNECTORS SHALL ALLOW FOR THE ALUMINUM PORTION OF THE CONNECTION TO PHYSICALLY BE ABOVE THE COPPER PORTION OF THE CONNECTIONS.
9. IN GENERAL, FOR CLARITY, SIDE VIEW (ELEVATION) DEPICTIONS INCLUDES ONLY ONE OR TWO OF THREE PHASES. PROVIDE THE OTHER PHASE CONNECTIONS IN A NEAT, SYMMETRICAL AND SIMILAR MANNER, CONSISTENT WITH THE DEPICTED PHASES, NOT ALL PHASE EQUIPMENT, CONNECTIONS, ETC. ARE SHOWN ON THE SIDE (ELEVATION) VIEW DETAIL.
10. DURING SUBMITTAL PROCESS, CONTRACTOR SHALL PROVIDE POLE ELEVATION DETAILS SIMILAR TO WHAT IS SHOWN ON THIS SHEET THAT CALL OUT SPECIFIC EQUIPMENT AND ALL SPACING DIMENSIONS PLANNED FOR THE INSTALLED POLE BASED ON SUBMITTED PRODUCTS. SUBMITTED DETAILS SHALL BE TO SCALE. ELEVATIONS SHALL INCLUDE ABOVE GRADE HEIGHT MARKERS SO THAT OVERALL ARRANGEMENT CAN BE REVIEWED AND APPROVED. ORDERING OF PRODUCTS AND ONSITE WORK SHALL NOT COMMENCE UNTIL SUBMITTED POLE ELEVATIONS ARE REVIEWED AND APPROVED BY THE ENGINEER AND THE KPU/E UTILITY MANAGER OR DESIGNEE.
11. ALL DEMOLITION AND NEW WORK AT THIS POLE BY KPU ELECTRIC UTILITY IN COORDINATION WITH CONTRACTOR AND OVERALL PROJECT PHASING. KPU WILL PERFORM THIER WORK PER THESE PLANS AND SPECIFICATIONS BUT ALL MATERIAL AND LABOR REQUIRED IS BY KPU UTILITY, NOT BY CONTRACTOR. COORDINATE WITH KPU AS REQUIRED. COORDINATE WITH KPU TELECOMMUNICATIONS AND GCI TELEVISION UTILITIES AS REQUIRED. SEE DETAIL 2, SHEET U5 FOR GENERAL PHASING REQUIREMENTS AND UTILITY CONTACT INFORMATION.

CN
10/23/2024

PLANS DEVELOPED BY:
MORRIS ENGINEERING GROUP, INC
2375 JORDAN AVE #7
JUNEAU, AK 99801
907-789-3350
AECL 1010

STATE OF ALASKA 49TH
Mark G. Morris
May 31, 2024
No. EE 8613
REGISTERED PROFESSIONAL ENGINEER

STATE OF ALASKA DEPARTMENT OF TRANSPORTATION AND PUBLIC FACILITIES
6860 GLACIER HIGHWAY, JUNEAU, AK 99801
(907) 465-1763

UTILITY RELOCATION FOR KETCHIKAN AREA BRIDGES

POLE P9 ELEVATIONS
(KPU #2430-B4-4)

FILE | y:\102 state of ak\44 utility relocation design for ketchikan bridges\Working Drawings\15 KV RISER POLE AND SWITCH CONFIGURATIONS.dwg | LAYOUT U24 | 5/24/2024 13:51 | DESIGNED MGM | CHECKED MGM | DRAFTED EMILEE

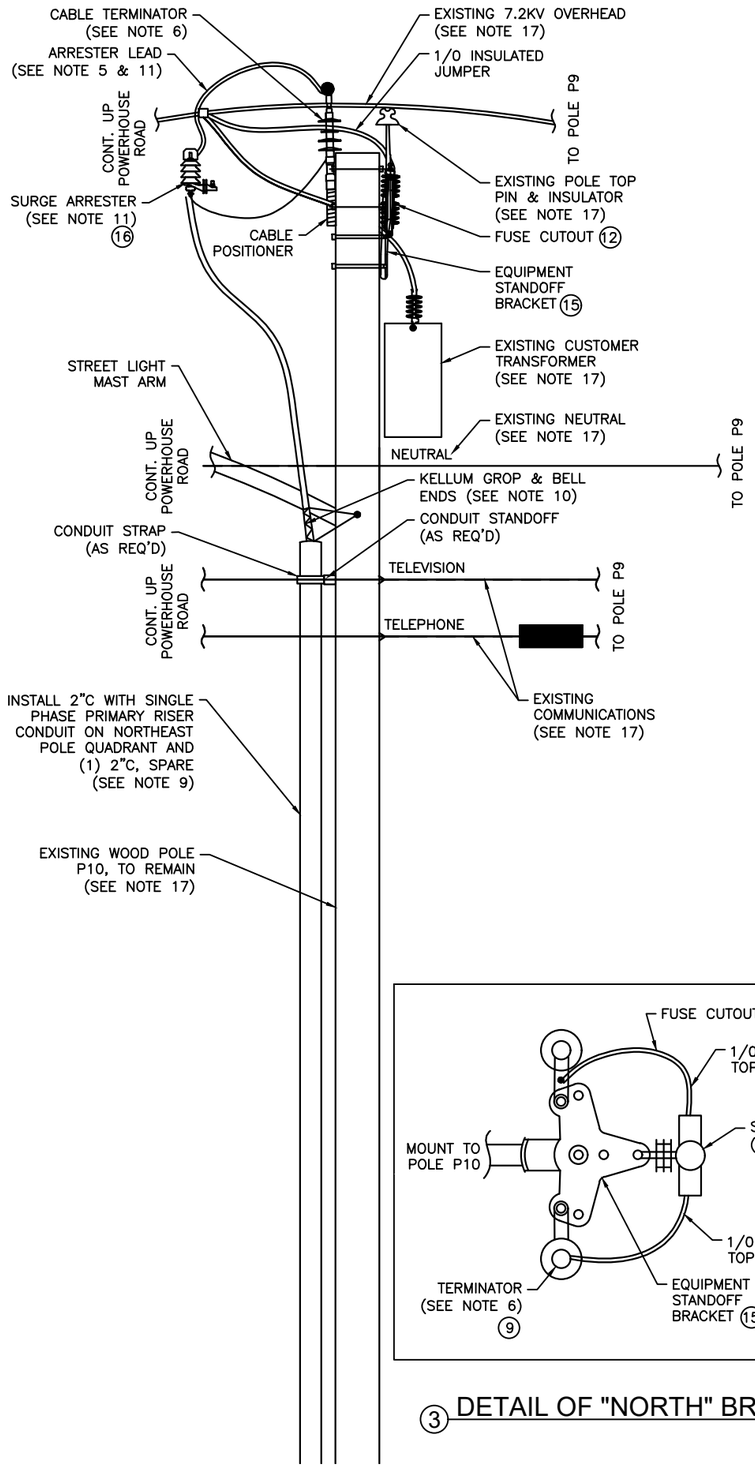

1 POLE P10 - SIDE ELEVATION
12.47KV
NOT TO SCALE

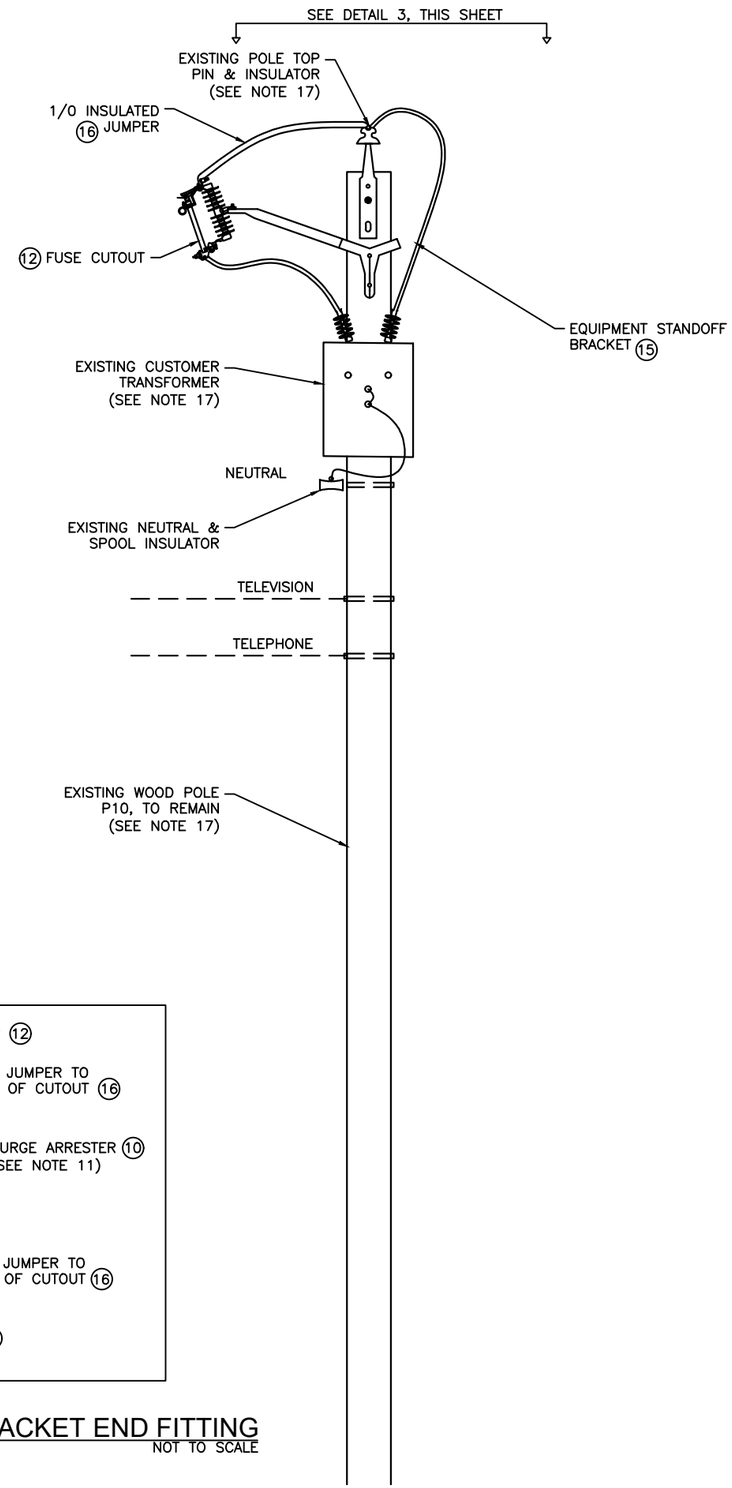

2 POLE P10 - FRONT ELEVATION
12.47KV
NOT TO SCALE

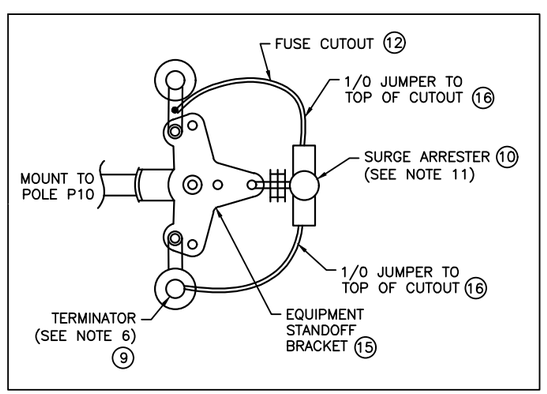

3 DETAIL OF "NORTH" BRACKET END FITTING
NOT TO SCALE

NO.	DATE	REVISION	STATE	PROJECT DESIGNATION	YEAR	SHEET NO.	TOTAL SHEETS
1	5/2024	AS-BUILT					
AS-BUILT DRAWING PREPARED FROM CONTRACTOR PROVIDED REDLINE WHICH MAY NOT BE CORRECT			ALASKA	0902043/SFHWY00072	2021	U25	45

NOTES:

1. ALL NUMBERS INSIDE CIRCLES REFER TO SHEET U26A FOR MATERIALS TABLE. SEE TABLE FOR MATERIAL DESCRIPTIONS, QUANTITIES, MANUFACTURERS, ETC. COMMODITY MATERIALS ARE SHOWN AS PRODUCTS OF MACLEAN POWER SYSTEMS, BUT MAY BE SUBSTITUTED FOR IDENTICAL MATERIALS OF OTHER MANUFACTURERS.
2. UTILITY POLES, POLE MOUNTED EQUIPMENT, POWER CABLES, COMMUNICATION CABLES, POLE SUPPORTS, GUYS, GROUNDING, AND CONDUIT RISERS SHALL ALL ADHERE TO MINIMUM CLEARANCES AS SPECIFIED IN THE LATEST EDITION OF THE NATIONAL ELECTRICAL SAFETY CODE (NESC, ANSI STANDARD C2) AS ADOPTED BY THE STATE OF ALASKA AND LOCAL AGENCIES, THE AFFECTED UTILITIES AND ALL REQUIREMENTS OF STATE AND LOCAL AGENCIES.
3. CODE REQUIRED CLEARANCES AND DIMENSIONS ARE THE MINIMUM ALLOWED IN THIS PROJECT. PROVIDE ADDITIONAL DISTANCES AS DIMENSIONED SPECIFICALLY ON THIS SHEET.
4. ADHERE TO KETCHIKAN PUBLIC UTILITIES/ELECTRIC (KPU/E) CONSTRUCTION SPECIFICATION STANDARDS. NOTES ON THIS PAGE ARE BORROWED, IN PART, FROM THOSE STANDARDS. BUT NOT ALL KPU/E STANDARDS ARE NOTED HEREIN. THE CONTRACTOR SHALL REVIEW KPU/E STANDARDS PRIOR TO COMMENCING WORK ASSOCIATED WITH THE PROJECT. CONTRACTOR SHALL PROMPTLY BRING TO THE ATTENTION OF THE ENGINEER SALIENT CONFLICTS BETWEEN THESE PLANS AND SPECIFICATIONS AND THE KPU/E CONSTRUCTION SPECIFICATION STANDARDS.
5. ALL SURGE ARRESTER LEADS SHALL BE KEPT AS SHORT AND AS STRAIGHT AS PRACTICABLE. WHERE POSSIBLE, TOTAL ARRESTER LEAD LENGTH (IN AND OUT) SHALL NOT EXCEED 30".
6. NO POWER CABLE BENDS ARE PERMITTED WITHIN 12" OF THE CABLE TERMINAL BASE ABOVE THE CONDUIT RISER.
7. ALL LIVE PARTS AT UTILITY POLE SHALL HAVE A MINIMUM 20' CLEARANCE ABOVE FINISHED GRADE. MAINTAIN A MINIMUM OF 6" SEPARATION BETWEEN THE NEUTRAL CONDUCTOR AND ALL OTHER CABLES.
8. MAINTAIN ALL COMMUNICATION CABLES (TELEPHONE AND TELEVISION) BELOW THE POWER CABLES WITHIN A DEDICATED SPACE. MAINTAIN THE "COMMUNICATION WORKERS' SAFETY ZONE" AS REQUIRED BY THE NESC.
9. CONDUIT ELBOWS AT GRADE AND THE FIRST 10' OF CONDUIT RISERS ABOVE GRADE SHALL BE RIGID STEEL CONDUIT. TRANSITION TO SCHEDULE 80 PVC ABOVE THAT POINT.
10. PROVIDE A STAINLESS-STEEL CABLE GRIP SUPPORT AND CONDUIT BELL ENDS AT TOP OF CONDUIT FOR EACH 15KV CONDUCTOR CABLE, SECURE TO POLE WITH MACHINE BOLT AND WASHER AS REQUIRED. PROVIDE KELLUM GRIPS, HUBBEL #02406011 OR EQUAL.
11. SURGE ARRESTER SHALL BE WIRED IN PARALLEL WITH PHASE JUMPER, OR TERMINATOR (OR OTHER PROTECTED EQUIPMENT, ONE ARRESTER PER PHASE. PROVIDE EACH ARRESTER WITH WILDLIFE PROTECTIVE TOP CAP. ARRESTERS EQUIPPED WITH ~30" OF ARRESTER LEAD WIRE, TRAIN LEAD WIRE TO BE AS SHORT AND STRAIGHT AS POSSIBLE. INSTALL LEAD WIRE WITHIN AN OVERALL RUBBER INSULATION MATERIAL.
12. COORDINATE ARRANGEMENT OF POLE ASSEMBLIES, EQUIPMENT, AND STRUCTURES AT TOP OF POLE WITH KPU/E. NOT ALL DIMENSIONS ARE SHOWN ON THIS SHEET.
13. TO LIMIT THE LIKELIHOOD OF CORROSION DUE TO DISSIMILAR METALS, CONNECTIONS SHALL ALL BE CONFIGURED SO THAT IN ALL CASES OF ALUMINUM-TO-COPPER CONDUCTOR CONNECTIONS, THE ASSOCIATED CONNECTORS SHALL ALLOW FOR THE ALUMINUM PORTION OF THE CONNECTION TO PHYSICALLY BE ABOVE THE COPPER PORTION OF THE CONNECTIONS.
14. IN GENERAL, FOR CLARITY, SIDE VIEW (ELEVATION) DEPICTIONS INCLUDES ONLY ONE OR TWO OF THREE PHASES. PROVIDE THE OTHER PHASE CONNECTIONS IN A NEAT, SYMMETRICAL AND SIMILAR MANNER, CONSISTENT WITH THE DEPICTED PHASES, NOT ALL PHASE EQUIPMENT, CONNECTIONS, ETC. ARE SHOWN ON THE SIDE (ELEVATION) VIEW DETAIL.
15. FOR EACH INSTALLED SURGE ARRESTER, INSTALL A NO. 6 BARE, SOFT DRAWN, SOLID, CU GROUND WIRE FROM THE GROUND CONNECTION OF THE ARRESTER DIRECTLY TO THE MULTI-GROUNDED NEUTRAL (SYSTEM NEUTRAL) AND THE POLE GROUND CONDUCTOR. BOND THE COPPER CONCENTRIC NEUTRAL OF ALL MEDIUM VOLTAGE CABLE AND THE SHIELD FROM EACH OF THE CABLE TERMINATORS TOGETHER AND BOND ALL THREE TERMINATOR GROUNDS TOGETHER AND CONTINUE THIS CONDUCTOR TO THE SYSTEM NEUTRAL. BOND ALL GROUND CONDUCTORS AT THAT LOCATION. CONTINUE THE POLE GROUND CONDUCTOR DOWN THE POLE TO THE DRIVEN POLE GROUND ROD. VERTICAL GROUND WIRES SHALL BE STAPLED TO POLE AS REQUIRED AND NEATLY TRAINED. THE LOWEST 10' OF THE GROUND WIRE SHALL BE PROTECTED BY WOOD OR PLASTIC MOLDING, EXPRESSLY DESIGNED AND MANUFACTURED FOR THE PURPOSE. NOT ALL GROUND WIRING SEGMENTS ARE DEPICTED ON THE DETAILS ON THIS SHEET BUT ALL SHALL BE CONSISTENT WITH INDUSTRY PRACTICES AND PROVIDED AS DESCRIBED.
16. DURING SUBMITTAL PROCESS, CONTRACTOR SHALL PROVIDE POLE ELEVATION DETAILS SIMILAR TO WHAT IS SHOWN ON THIS SHEET THAT CALL OUT SPECIFIC EQUIPMENT AND ALL SPACING DIMENSIONS PLANNED FOR THE INSTALLED POLE BASED ON SUBMITTED PRODUCTS. SUBMITTED DETAILS SHALL BE TO SCALE. ELEVATIONS SHALL INCLUDE ABOVE GRADE HEIGHT MARKERS SO THAT OVERALL ARRANGEMENT CAN BE REVIEWED AND APPROVED. ORDERING OF PRODUCTS AND ONSITE WORK SHALL NOT COMMENCE UNTIL SUBMITTED POLE ELEVATIONS ARE REVIEWED AND APPROVED BY THE ENGINEER AND THE KPU/E UTILITY MANAGER OR DESIGNEE.
17. ALL DEMOLITION AND NEW WORK AT THIS POLE BY KPU ELECTRIC UTILITY IN COORDINATION WITH CONTRACTOR AND OVERALL PROJECT PHASING. KPU WILL PERFORM THIER WORK PER THESE PLANS AND SPECIFICATIONS BUT ALL MATERIAL AND LABOR REQUIRED IS BY KPU UTILITY, NOT BY CONTRACTOR. COORDINATE WITH KPU AS REQUIRED. COORDINATE WITH KPU TELECOMMUNICATIONS AND GCI TELEVISION UTILITIES AS REQUIRED. SEE DETAIL 2, SHEET U5 FOR GENERAL PHASING REQUIREMENTS AND UTILITY CONTACT INFORMATION.

CN
10/23/2024

PLANS DEVELOPED BY:
MORRIS ENGINEERING GROUP, INC
2375 JORDAN AVE #7
JUNEAU, AK 99801
907-789-3350
AECL 1010

STATE OF ALASKA 49TH
Mark G. Morris
May 31, 2024
No. EE 8613
REGISTERED PROFESSIONAL ENGINEER

STATE OF ALASKA DEPARTMENT OF TRANSPORTATION AND PUBLIC FACILITIES
6860 GLACIER HIGHWAY, JUNEAU, AK 99801
(907) 465-1763

UTILITY RELOCATION FOR KETCHIKAN AREA BRIDGES

POLE P10 ELEVATIONS
(KPU #2430-B4-5)

FILE y:\102 state of ak\44 utility relocation design for ketchikan bridges\Working Drawings\15 KV RISER POLE AND SWITCH CONFIGURATIONS.DWG | 5/24/2024 13:51 | LAYOUT U25 | DESIGNED MGM | CHECKED MGM | DRAFTED EMILEE

NO.	DATE	REVISION	STATE	PROJECT DESIGNATION	YEAR	SHEET NO.	TOTAL SHEETS
1	5/2024	AS-BUILT					
AS-BUILT DRAWING PREPARED FROM CONTRACTOR PROVIDED REDLINE WHICH MAY NOT BE CORRECT			ALASKA	0902043/SFHWY00072	2021	U26A	45

POLE P5A & P7 - MATERIAL LIST (SEE SHEETS U20 & U22 FOR POLE DETAILS)

REF NO.	QUANTITY	DESCRIPTION	MANF	PART NO.
1	6	35KV DEADEND INSULATOR & BOLTED DEADEND CLAMP	MPS	DS-35M & ASD-45-N
2	2	FIBERGLASS DEADEND ASSEMBLY, 6" X 4" X 120", 10KLBS CAPACITY (MIN)	PUPI	DA3000120E4B9X
3	1	RIDGE PIN WITH MOUNTING HARDWARE	MPS	J203Z
4	3	SURGE ARRESTER - MOV, 15KV	CPS	URS09058X1A1A1A
5	3	COVERED JUMPER CONDUCTOR, 350KCMIL, CU, RHH/RHW-2/USE-2, LENGTH AS REQ'D.	SW	KPU STOCK #19220.00, SEE NOTE 6
6	3	15KV DEADEND INSULATOR & BOLTED DEADEND CLAMP	MPS	DS-15M & ASD-34-N
7	3	15KV CABLE TERMINATOR	3M	7653-S-4
8	3	CABLE POSITIONER	AF	CS-820
9	2	EQUIPMENT MOUNT, SEE NOTE 6	AF	W4CA-72-6, KPU STOCK #10365.00
10	3	FUSED CUTOUT, TYPE C POLYMER PARALLEL GROOVE CLAMP, SS, 200A, 15KV	HUB	CP710143SP_S
11	AS REQ'D	GALVANIZED STEEL GUY WIRE, 3/8", 7W STRAND, COLOR GREEN (PWR & TELE)	PP	GDE-1108
12	1	POLE GUY HOOK ATTACHMENT, SEE NOTE 5 & NOTE 6	MPS	P-135-AXW, KPU STOCK #15442.00
13	2	PUPI ARM ANCHOR SHACKLE, 11/16" RADIUS EYE, 7/8" OPENING, STEEL	MPS	J2742
14	1	SPOOL INSULATOR, PORCELAIN, 5/8" DIAMETER	MPS	J101
15	6	COVERED JUMPER CONDUCTOR, 1/0 AWG, CU, RHH/RHW-2/USE-2, LENGTH AS REQ'D.	SW	KPU STOCK #19420.00, SEE NOTE 6
16	1	UPSET BOLT, 13K LBS MIN. TENSION STRENGTH, 14" SHANK	MPS	J2348-1/2
17	2	PLASTIC GUY MARKER, YELLOW, 8 FOOT LENGTH, SEE NOTE 5	PP	PG-5718
18	4	AUTOMATIC GUY DEADEND, 7/16" BAIL WITH INSTALL BAIL (PWR & TELE)	MPS	DES-1108 GRIP & (2) 5203L VISES
19	2	POWER INSTALL SCREW ANCHOR KIT, SQUARE SHAFT, 37KLBS RATING, 7 FOOT LONG	CU	SS5 SERIES (SEE NOTE 4)
20	2	PORCELAIN INSULATOR (TELE & TV)	MPS	L504
21	AS REQ'D	CONDUIT STANDOFF BRACKET, HDG (USED FOR BOTH 4" & 6" RISERS)	GIW	24" GALV BRACKET 1-5/8" STRUT BACK TO BACK
22	AS REQ'D	CONDUIT RISER STRAP, HDG	AF	STK SERIES, STK-4 & STK-6
23	1	NOT USED	HEN	HPI-15VTP
24	1	35KV VISE TOP POLYMER INSULATOR	HEN	HPI-35VTP
25	2	LONG SHANK CROSSARM PIN - 1" THREADS	MPS	J203Z
26	1	5/8" OVAL EYE NUT	MPS	J1092
27	1	5/8" X 14" OVAL EYE BOLT	MPS	J9414
28	2	(1) 5/8" X 14" MACHINE BOLT, (2) 2-1/4" X 2/14" CURVED WASHERS	MPS	(1) J8814 & (2) J1075
29	6	336.4 ACSR TO 350KCMIL CU CONNECTOR (MATCH KPU REQUIREMENTS)		AS REQ'D, COORD. WITH KPU
30	2	3" X 3" X 1/4" CURVED WASHER	MPS	J113
31	AS REQ'D	WILDLIFE PROTECTION ELEMENTS, AS REQUIRED		SEE WILDLIFE NOTE, SHEET U19
32	1	60 FOOT LONG, CLASS 2 WOOD POLE, DOUGLAS FIR, 8" DIA. AT TOP.		SEE NOTE 3
33	1	GUY STRAIN INSULATOR, 21K LBS RATED, 78" ROD SILICONE COATED	MPS	GYCTE21-78-SC

POLE P5 & P8 - MATERIAL LIST (SEE SHEETS U21 & U23 FOR POLE DETAILS)

REF NO.	QUANTITY	DESCRIPTION	MANF	PART NO.
1	3	35KV DEADEND INSULATOR & BOLTED DEADEND CLAMP	MPS	DS-35M & ASD-45-N
2	1	FIBERGLASS DEADEND ASSEMBLY, 6" X 4" X 120", 10KLBS CAPACITY (MIN)	PUPI	DA3000120E4B9X
3		NOT USED		
4	3	SURGE ARRESTER, MOV, 36KV	CPS	URT36140X1A1A1A
5	6	COVERED JUMPER CONDUCTOR, 350KCMIL, CU, RHH/RHW-2/USE-2, LENGTH AS REQ'D	SW	KPU STOCK #19220.00, SEE NOTE 6
6	1	MANUAL, GROUP-OPERATED SWITCH, 900A, 38KV, 200KV BIL RATED	SIE	984UF-45ARKMRW
7	3	35KV CABLE TERMINATOR	3M	7665-S-8
8	3	CABLE POSITIONER	AF	CS-820
9	1	EQUIPMENT MOUNT, SEE NOTE 6	AF	W4CA-72-6, KPU STOCK #10365.00
10	1	5/8" OVAL EYE NUT	MPS	J1092
11	1	5/8" X 14" OVAL EYE BOLT	MPS	J9414
12	3	(1) 5/8" X 14" MACHINE BOLT, (2) 2-1/4" X 2/14" CURVED WASHERS	MPS	(1) J8814 & (2) J1075
13	3	336.4 ACSR TO 350KCMIL CU CONNECTOR (MATCH KPU REQUIREMENTS)		AS REQ'D, COORD. WITH KPU
14	3	3" X 3" X 1/4" CURVED WASHER	MPS	J113
15	AS REQ'D	WILDLIFE PROTECTION ELEMENTS, AS REQUIRED		SEE WILDLIFE NOTE, SHEET U19
16	AS REQ'D	CONDUIT STANDOFF BRACKET, HDG (USED FOR BOTH 4" & 6" RISERS)	AF	6-CSO-12
17	AS REQ'D	CONDUIT RISER STRAP, HDG	AF	STK SERIES, STK-4 & STK-6
18	1	60 FOOT LONG, CLASS 2 WOOD POLE, DOUGLAS FIR, 8" DIA. AT TOP.		SEE NOTE 3

POLE P9 & P10 - MATERIAL LIST (SEE SHEETS U24 & U25 FOR POLE DETAILS)

REF NO.	QUANTITY	DESCRIPTION	MANF	PART NO.
1	1	UNIVERSAL GUY ATTACHMENT, DUCTILE IRON, HOT DIPPED GALV.	MPS	MGA-345-A
2	3	FORMED DEADEND WIRE GUY GRIP, 3/8" EHS, 35" APPLIED LENGTH	MPS	DE-S1107
3	AS REQ'D	GALV STEEL GUY WIRE, 3/8", 7W STRAND		
4	1	PORCELAIN GUY STRAIN INSULATOR	MPS	L502
5	1	AUTOMATIC GUY DEADEND, 3/16" BAIL, WITH INSTALL BAIL	MPS	(2) DE-S1108 GRIPS & (2) 5202 VISES
6	1	8FT. POLYETHYLENE GUY MARKER, YELLOW	MPS	J5718
7	1	POWER INSTALL SCREW ANCHOR KIT, SQ SHAFT, 21K LBS RATED, 10 FT. LONG	CU	#SS5 SERIES (NOTE 4)
8	1	GUY STRAIN INSULATOR, 21K LBS RATED, 78" ROD SILICONE COATED	MPS	GYCTE21-78-SC
9	1	15KV CABLE TERMINATOR	3M	7642-S-2-T1
10	1	SURGE ARRESTER - ZINC OXIDE, RISER POLE STYLE, 9KV	MPS	ZRP0090000101_#P
11	1	CABLE POSITIONER	AF	CS-820
12	1	FUSED CUTOUT, TYPE C POLYMER PARALLEL GROOVE CLAMP, 100A, 10KA	MPS	SC15HS110_D
13	AS REQ'D	CONDUIT STANDOFF BRACKET, HDG (USED FOR BOTH 4" & 6" RISERS)	AF	6-CSO-12
14	AS REQ'D	CONDUIT RISER STRAP, HDG	AF	STK SERIES, STK-4 & STK-6
15	1	15 DEG. EQUIPMENT STANDOFF BRACKET, 2 PHASE, 3 POSITION, 'T' END FITTING	MPS	G2MAA148AT-SC-F
16	1	COVERED JUMPER CONDUCTOR, 1/0 AWG, CU, RHH/RHW-2/USE-2, LENGTH AS REQ'D.	SW	KPU STOCK #19420.00, SEE NOTE 6

TABLE NOTES:

1. THE MATERIAL LIST IS NOT MEANT TO BE COMPREHENSIVE. THE CONTRACTOR SHALL DO A FULL TAKE OFF FROM THE PLANS AND NOT DEPEND ON THIS LIST ALONE.
2. BRAND ABBREVS: AF = ALUMA-FORM, CPS = COPPER POWER SYSTEMS, CU = CHANCE UTILITY, HEN = HENDRICKS, HUB = HUBBELL, MPS = MACLEAN POWER SYSTEMS, PP = PREFORMED PRODUCTS, SIE = SIEMENS, SW = SOUTHWIRE, GIW = GHEEN IRRIGATION WORKS
3. SEE SHEET U26B FOR NEW WOOD POLE SPECIFICATIONS, TECHNICAL REQUIREMENTS, APPROVED MANUFACTURERS, ETC.
4. EACH SQUARE SHAFT, POWER SCREW ANCHOR ASSEMBLY IS A KIT CONSISTING OF:
   (1) SCREW HEAD LEADER
   (MULTIPLE) EXTENSION BARS
   (1) GUY ADAPTER
   PROVIDE NUMBER OF EXTENSION BARS NEEDED BASED ON INSTALLATION CONDITIONS.
   PROVIDE EACH GUY ADAPTER WITH TWO (2) GUY EYES AND ONE (1) PULLING EYE.
5. COMPLETE ARRANGEMENT OF GUYING FROM POLE TO ANCHOR IN GROUND NOTE SHOWN ON POLE DETAIL SHEETS. SEE SHEET U19 FOR GENERAL DEPICTION OF WHAT IS REQUIRED. COORDINATE EXACT CONFIGURATION NEEDED PRIOR TO WORK.
6. KPU UTILITY STOCKS MANY OF THE COMMON POLE ELEMENTS NEEDED ON THIS PROJECT. COORDINATE AS REQUIRED TO ENSURE COMPLIANCE.

CN
10/23/2024

PLANS DEVELOPED BY:
MORRIS ENGINEERING GROUP, INC
2375 JORDAN AVE #7
JUNEAU, AK 99801
907-789-3350
AECL 1010

STATE OF ALASKA 49TH
Mark G. Morris
May 31, 2024
No. EE 8613
REGISTERED PROFESSIONAL ENGINEER

STATE OF ALASKA DEPARTMENT OF TRANSPORTATION AND PUBLIC FACILITIES
6860 GLACIER HIGHWAY, JUNEAU, AK 99801
(907) 465-1763

UTILITY RELOCATION FOR KETCHIKAN AREA BRIDGES

UTILITY POLE MATERIAL LISTS

FILE | y:\102 state of ak\44 utility relocation design for ketchikan bridges\Working Drawings\MATERIAL LIST.dwg | DATE | 5/2/2024 14:43 | LAYOUT | U26A | DESIGNED | MGM | CHECKED | MGM | DRAFTED | NADJA

NO.	DATE	REVISION	STATE	PROJECT DESIGNATION	YEAR	SHEET NO.	TOTAL SHEETS
1	5/2024	AS-BUILT					
AS-BUILT DRAWING PREPARED FROM CONTRACTOR PROVIDED REDLINE WHICH MAY NOT BE CORRECT			ALASKA	0902043/SFHWY00072	2021	U26B	45

UTILITY POLE & STRUCTURAL REQUIREMENTS:

GENERAL REQUIREMENTS:

1. THE FOLLOWING UTILITY POLE REQUIREMENTS ARE MINIMUMS. KPU ELECTRIC CONSTRUCTION STANDARDS ARE ALSO TO BE REVIEWED AND FOLLOWED AND MAY BE MORE STRINGENT THAN REQUIREMENTS BELOW.

2. THE DESIGN AND OPERATION OF THE PROJECT UTILITY POLE AND ALL POLE MOUNTED STRUCTURES, GUYS, AND ASSOCIATED MATERIALS SHALL MEET THE MINIMUM CLEARANCES AND STRENGTH AS SPECIFIED IN THE LATEST EDITION OF THE NATIONAL ELECTRICAL SAFETY CODE (NESC, ANSI STANDARD C2) AS ADOPTED BY THE STATE OF ALASKA AND LOCAL AGENCIES, THE AFFECTED UTILITIES AND ALL REQUIREMENTS OF STATE AND LOCAL AGENCIES. ALL NESC LOAD CASES THAT APPLY SHALL BE MET.

3. SWITCH STRUCTURES ARE TO BE MOUNTED ON THE UTILITY POLE. THE STRUCTURAL DESIGN SHALL HAVE ADEQUATE STRENGTH AND RIGIDITY TO ENSURE THE RELIABLE OPERATION OF THE LINE AND SWITCHES.

4. THE UTILITY POLE SUPPORTS NON-ELECTRIC FACILITIES (TELECOMMUNICATIONS, FIBER-OPTIC CABLES, ETC.) AND SHALL BE CAPABLE OF RESISTING THE STRUCTURAL LOADS RESULTING FROM THESE FACILITIES WITHIN THE STRENGTH REQUIREMENTS. THE LOCATING OF SUCH NON-ELECTRIC FACILITIES ON UTILITY POLES SHALL NOT JEOPARDIZE THE OPERATION, MAINTENANCE, AND RELIABILITY OF THE ELECTRIC SUPPLY LINES. PRIOR TO INSTALLATION OF NON-POWER FACILITIES, COORDINATE WITH KPU ELECTRIC TO REVIEW AND EVALUATE SUCH FACILITIES.

5. THE CONTRACTOR IS RESPONSIBLE TO PROVIDE A POLE LOADING ANALYSIS (PLA) THAT IS SIGNED AND SEALED BY A STRUCTURAL ENGINEER LICENSED IN THE STATE OF ALASKA. ANALYSIS SHALL CONFIRM THE CHOSEN POLE, POLE STRUCTURES, GUYS, AND MATERIALS MEET THE MINIMUM LOADING AND STRENGTH REQUIREMENTS IN ACCORDANCE WITH PROJECT SPECIFICATIONS, KPU ELECTRIC STANDARDS, AND ALL APPLICABLE AND CITED CODES AND REFERENCES.

6. APPROVED POLE & POLE TREATMENT COMPANIES:

   a) STELLA-JONES CORP. (MCFARLAND CASCADE)
   b) BELL POLE & LUMBER
   c)THE OESER COMPANY

UTILITY POLE GENERAL REQUIREMENTS:

1. POLE SHALL MEET ALL PERTINENT REQUIREMENTS OF ANSI 05.1-LATEST REVISION, AND AMERICAN WOOD PROTECTION ASSOCIATION (AWPA) STANDARDS T1-10 AND U1-10, LATEST REVISIONS.

2. POLE SHALL BE TREATED IN ACCORDANCE WITH THE AWPA AND ANSI REQUIREMENTS. POLE SHALL BE TREATED WITH PENTACHLOROPHENOL PER AWPA P8-9A TO A MINIMUM NET RETENTION OF 0.60 POUNDS PER CUBIC FOOT PER AWPA U1 FOR POLE COMMODITY SPECIFICATION D, CATEGORY 4B.

3. CONTRACTOR MUST OBTAIN A CERTIFICATE OF TREATMENT OR A LETTER FROM A SUPPLIER INDICATING THAT THE POLE WAS TREATED IN ACCORDANCE WITH AWPA AND ANSI REQUIREMENTS.

4. POLE SPECIFICATIONS:

   a) POLE SPECIES: DOUGLAS FIR
   b) LENGTH: 60' TYPICAL, SEE POLE DETAILS FOR VARIATIONS
   c) MINIMUM DIMENSIONS (DIAMETER): 29 INCHES AT TOP, 47.5 INCHES SIX FEET FROM BUTT
   d) POLE CLASS: CLASS 2

CLEARANCE REQUIREMENTS:

1. WIRE-TO-GROUND: THE MINIMUM ALLOWED CLEARANCE BETWEEN THE LOWEST ELECTRIC SUPPLY LINE CONDUCTOR(S) SHALL MEET THE REQUIRED NESC MINIMUM PLUS ADDITIONAL DISTANCES AS NOTED IN THE PLANS. THE NESC MINIMUM SHALL BE CALCULATED WITH THE CONDUCTOR AT MAXIMUM OPERATING VOLTAGE AND THE MAXIMUM OPERATING TEMPERATURE OR MAXIMUM CONDUCTOR LOADING. THE MINIMUM CLEARANCES SHOULD TAKE INTO ACCOUNT THE LIMITATION OF A 5-MA SHOCK CURRENT AS GIVEN IN NESC RULE 232D3C. ALL AREAS BENEATH THE LINE SHALL BE ASSUMED TO ALLOW VEHICLE ACCESS BENEATH THE LINE.

2. WIRE-TO-SIGNS, STRUCTURES, ETC., UNDER THE WIRES: THE MINIMUM ALLOWED CLEARANCE FROM LOWEST/NEAREST PHASE CONDUCTOR SHALL MEET THE REQUIRED NESC MINIMUM PLUS ADDITIONAL DISTANCES NOTED IN THE PLANS. THE NESC MINIMUM SHALL BE CALCULATED WITH THE CONDUCTOR AT MAXIMUM OPERATING VOLTAGE, THE MAXIMUM OPERATING TEMPERATURE, AND MAXIMUM NESC WIND DISPLACEMENT. ONLY ADOT&PF APPROVED INFRASTRUCTURE IS PERMITTED IN THE RIGHT-OF-WAY.

3. WIRE-TO-SUPPORT-STRUCTURES: THE MINIMUM CLEARANCES BETWEEN THE PHASE CONDUCTORS AND THE SUPPORTING POLE SHALL NOT BE LESS THAN DIMENSIONS SHOWN ON THE PLANS. THESE CLEARANCES ARE TO APPLY FOR ALL ANTICIPATED CONDUCTOR POSITIONS FROM AN EVERYDAY CONDITION TO A DISPLACED CONDITION DUE TO A 9 PSF WIND AT 60° F (BASED ON UTILITY PRACTICE) THESE CLEARANCES DO NOT HAVE ANY ADDERS PROVIDED FOR BIRDS OR OTHER ANIMALS, BUT ARE BASED UPON SWITCHING SURGE VALUES.

4. WIRE-TO-WIRE: CLEARANCE BETWEEN THE BOTTOM ELECTRIC SUPPLY CONDUCTOR AND ANY LOWER WIRE SHALL MEET THE REQUIRED CLEARANCE OF NESC RULE 233 AND 235 AS A MINIMUM. WHEN THE LOWER WIRE IS A NON-ELECTRIC SUPPLY WIRE, THEN THE CLEARANCE SHOULD BE AT LEAST 8 FEET FOR VOLTAGES LESS THAN OR EQUAL TO 230 KV. THESE CLEARANCES SHOULD BE CALCULATED WITH THE ELECTRIC SUPPLY CONDUCTOR AT MAXIMUM OPERATING TEMPERATURES OR HEAVY ICE, WHICHEVER PROVIDES GREATER CONDUCTOR SAG, AND THE NON-ELECTRIC SUPPLY CONDUCTOR AT 0°F. LINE CROSSING CLEARANCES SHALL MATCH REQUIREMENTS OF WIRE-TO-WIRE CLEARANCES NOTED ABOVE.

5. LINE SAG: FOR PURPOSES OF CLEARANCES TO OBJECTS UNDER THE LINE, THE CONDUCTOR WILL BE ASSUMED TO OPERATE AT OR ABOVE MINIMUM AND MAXIMUM TEMPERATURES FOR TYPE 336.4 ACSR (CODE WORD: MERLIN) OVERHEAD ELECTRIC SUPPLY CABLE. CONTACT KPU ELECTRIC FOR SPECIFIC TEMPERATURE RANGES. WHILE THE LINE CONDUCTOR MAY BE DESIGNED TO OPERATE AT A LOWER TEMPERATURE, THE LINE SHALL BE SAGGED ASSUMING THE CONDUCTOR TEMPERATURE IS AT OR ABOVE THE MINIMUM SHOWN. FOR DESIGNED OPERATING TEMPERATURES ABOVE THE MINIMUM SHOWN, AND STILL BELOW THE MAXIMUM, THE LINE SAG AND CLEARANCES WILL BE CALCULATED FOR THAT OPERATING TEMPERATURE AFTER ROUNDING UP TO THE NEAREST 10°C. IN NO CASE WILL A CONDUCTOR OPERATING TEMPERATURE BE ALLOWED ABOVE THE MAXIMUM SHOWN IN THE TABLE.

6. WILDLIFE PROTECTION ELEMENTS SHALL BE PROVIDED AS REQUIRED TO FULLY PROTECT RAPTORS AND OTHER WILDLIFE FROM HARM AT OR AROUND THE ELECTRIC FACILITIES. SEE POLE DETAILS ON SHEET U19 FOR MORE ON REQUIRED WILDLIFE PROTECTION.

DESIGN LOADING CONDITIONS:

1. DEAD-END STRUCTURES: WHERE THE PHASE CONDUCTORS AND STATIC WIRES ARE ATTACHED TO THE STRUCTURE BY USE OF DEAD-END INSULATORS AND HARDWARE AND WHERE THE ABILITY OF THE STRUCTURE TO RESIST A CONDITION WHERE ALL WIRES ARE BROKEN ON ONE SIDE UNDER FULL LOADING IS REQUIRED. BOTH INTACT AND BROKEN CONDUCTOR CONDITIONS SHALL BE EVALUATED IN THE DESIGN OF THESE STRUCTURES.

2. POLE CONSTRUCTION GRADE: THE PROVISIONS OF NESC GRADE B CONSTRUCTION SHALL APPLY.

3. LOADING DISTRICT: THE PROVISIONS OF NESC HEAVY LOADING DISTRICT SHALL APPLY.

4. ICE AND WIND LOADING: THE PROVISIONS OF NESC FOR EXTREME ICE WITH CONCURRENT WIND SHALL APPLY. THE ICE AND WIND LOAD FACTORS SHALL BE 1.00. THE PROVISION IN NESC PERMITTING EXCLUSION OF STRUCTURES LESS THAN 60 FT. IN HEIGHT FROM EXTREME WIND CRITERIA SHALL NOT APPLY.

5. LONGITUDINAL LOADING: ALL CONDUCTORS AND STATIC WIRES ARE TO BE INTACT ON ONE SIDE OF THE STRUCTURE ONLY. LOAD FACTOR OF 1.00.

6. FOUNDATION LOADING: THE ULTIMATE STRENGTH OF OVERTURNING MOMENT AND UPLIFT FOUNDATIONS SHALL BE NOT LESS THAN 1.25 TIMES THE DESIGN FACTORED LOAD REACTIONS OF THE STRUCTURE. THE ULTIMATE STRENGTH OF FOUNDATIONS SUBJECTED PRIMARILY TO COMPRESSION LOAD SHALL BE NOT LESS THAN 1.10 TIMES THE DESIGN FACTORED LOAD REACTIONS OF THE STRUCTURE. FOUNDATIONS DESIGNED BY ROTATION OR PIER DEFLECTION PERFORMANCE CRITERIA SHALL USE UNFACTORED STRUCTURE REACTIONS FOR DETERMINATION OF THE FOUNDATION PERFORMANCE BUT SHALL USE FACTORED REACTIONS FOR THE 1.25 TIMES ULTIMATE STRENGTH CHECK.

7. GUYING OR BRACING: POLE SHALL BE PROPERLY GUYED AGAINST THE PULL OF OVERHEAD CONDUCTORS. SEE SHEETS U19-U25 FOR TYPICAL GUY ASSEMBLIES. THE POLE LOADING ANALYSIS SHALL ACCOUNT FOR GUYING OF DEAD-END STRUCTURE.

INSULATION & GROUNDING REQUIREMENTS:

1. INSULATION REQUIREMENTS: THE INSULATION SYSTEM FOR THE ELECTRIC SUPPLY LINE SHALL HAVE VALUES IN EXCESS OF THE LEAKAGE DISTANCE, 60 HZ WET, AND CRITICAL IMPULSE FLASHOVER OF THE SYSTEM. CERAMIC OR GLASS INSULATORS SHALL BE USED FOR STRAIN APPLICATIONS.

2. GROUNDING: THIS SYSTEM IS TO BE MEASURED ON THE INDIVIDUAL STRUCTURE PRIOR TO THE INSTALLATION OF ANY OVERHEAD CONDUCTORS OR WIRES. THE MAXIMUM ACCEPTABLE RESISTANCE MEASUREMENT OF THIS GROUNDING SYSTEM IS 25 OHMS. THE GROUNDING SYSTEM MAY INCLUDE RADIAL COUNTERPOISE WIRES, EQUIPOTENTIAL RINGS, OR BOTH. KPU ELECTRIC SHALL APPROVE ALL GROUNDING METHODS, AND CONNECTIONS TO THE GROUNDING SYSTEM THAT ARE BELOW GRADE. THESE RESISTANCE REQUIREMENTS ARE TO ASSURE ACCEPTABLE LIGHTNING PERFORMANCE ON THE LINE AS WELL AS PROVIDE FOR THE SAFE GROUNDING OF THE LINE BY CONSTRUCTION AND MAINTENANCE FORCES.

   INDIVIDUAL STRUCTURE GROUNDING MEASUREMENTS WILL BE ALLOWED TO EXCEED THE 25 OR 15 OHMS REQUIRED ONLY IF THE AVERAGE VALUE FOR THE 5 ADJACENT STRUCTURES ALONG THE LINE IS LESS THAN THE 25 OR 15 OHM RESTRICTION. DURING RECONDUCTORING PROJECTS, EVERY OPPORTUNITY SHOULD BE TAKEN TO VERIFY STRUCTURE GROUNDING RESISTANCE. TO DO THIS THE STATIC WIRES AND OTHER CONDUCTORS MAY NEED TO BE INSULATED FROM THE STRUCTURE.

3. LIGHTNING PROTECTION: PROVIDE LIGHTNING PROTECTION IN THE FORM OF SURGE ARRESTERS, ONE PER EACH PHASE, AT THE POLE. ARRESTERS SHALL BE WIRED IN PARALLEL AND CONNECTED BETWEEN THE OVERHEAD ELECTRIC SUPPLY LINES AND THE CABLE RISER TERMINATORS. SEE SHEET U26A FOR SPECIFIC QUANTITIES AND DESCRIPTIONS OF ARRESTERS. VERIFY PLACEMENT WITH CITY OF KETCHIKAN. IN NO CASE WILL CHEMICAL GROUND TREATMENTS BE ALLOWED TO IMPROVE STRUCTURE GROUNDING.

CN
10/23/2024

PLANS DEVELOPED BY:
MORRIS ENGINEERING GROUP, INC
2375 JORDAN AVE #7
JUNEAU, AK 99801
907-789-3350
AECL 1010

STATE OF ALASKA 49TH
Mark G. Morris
May 31, 2024
No. EE 8613
REGISTERED PROFESSIONAL ENGINEER

STATE OF ALASKA DEPARTMENT OF TRANSPORTATION AND PUBLIC FACILITIES
6860 GLACIER HIGHWAY, JUNEAU, AK 99801
(907) 465-1763

UTILITY RELOCATION FOR KETCHIKAN AREA BRIDGES

UTILITY WOOD POLE SPECIFICATION

FILE | y:\102 state of ak\44 utility relocation design for ketchikan bridges\Working Drawings\U26B WOOD POLE SPECIFICATIONS.dwg | DATE | 4/26/2024 14:43 | LAYOUT | U26B | DESIGNED | MGM | CHECKED | MGM | DRAFTED | JODI

NO.	DATE	REVISION	STATE	PROJECT DESIGNATION	YEAR	SHEET NO.	TOTAL SHEETS
1	5/2024	AS-BUILT					
AS-BUILT DRAWING PREPARED FROM CONTRACTOR PROVIDED REDLINE WHICH MAY NOT BE CORRECT			ALASKA	0902043/SFHWY00072	2021	U27	45

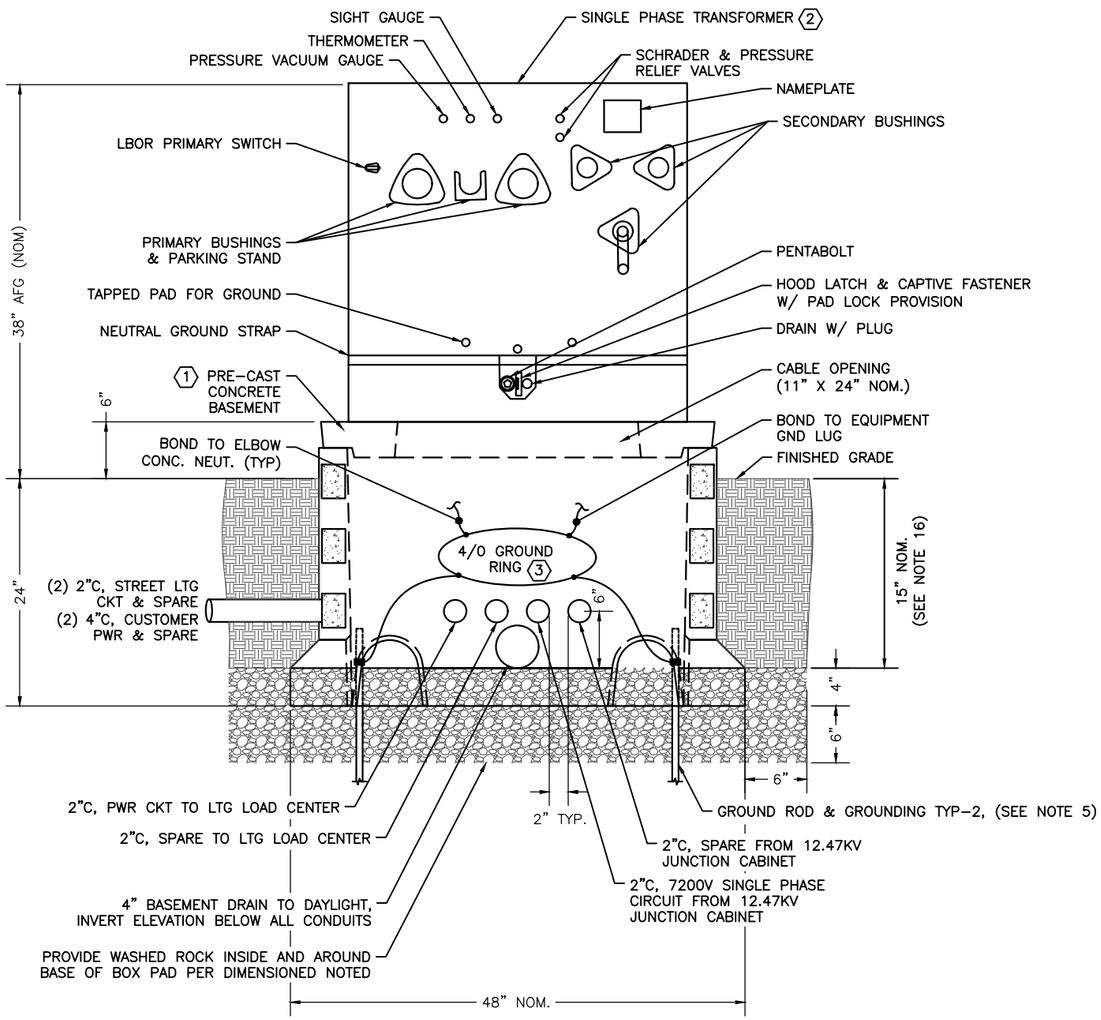

1 TRANSFORMER PAD DETAIL
AT PAD 4

SHEET NOTES:

1. PROVIDE EXCAVATION AS REQUIRED TO ENSURE GRAVEL TO DEPTH SHOWN ON DETAIL CAN BE PROVIDED AT BOTTOM OF TRANSFORMER BASEMENT. DIG A HOLE APPROXIMATELY 6" DEEPER AND 12" WIDER THEN THE BOTTOM FLANGE DIMENSIONS OF THE BASEMENT. FOLLOW MANUFACTURER INSTRUCTIONS.
2. DUE TO LIMITED CONDUIT DEPTH, THE TRANSFORMER BASEMENT CONDUIT PENETRATIONS SHALL BE ALONG THE SIDEWALLS AS INDICATED HERE. REVIEW PENETRATION LOCATIONS AND ENSURE PENETRATIONS DO NOT REDUCE STRUCTURAL INTEGRITY OF BASEMENT. LOCATIONS SHOWN MAY NEED TO BE ADJUSTED, COORDINATE WITH BASEMENT MANUFACTURER.
3. ALL CONDUITS EXPOSED ABOVE BASEMENT GRAVEL SHALL BE VERTICAL. PROVIDE ALL SPARE CONDUITS WITH PULL STRINGS AND EDPM RUBBER STOPPERS (NOT SIMPLY PLASTIC CAPS). COORDINATE CONDUIT STUB-UP LOCATIONS WITH EXACT TRANSFORMER FOOTPRINT.
4. COORDINATE WITH KPU UTILITY, ENGINEER, AND INSPECTOR TO ALLOW FOR ANY REQUIRED INSPECTIONS BEFORE, DURING AND AFTER CONSTRUCTION OF PAD.
5. AT EACH POWER EQUIPMENT CONCRETE BASEMENT PROVIDE GROUNDING PER UTILITY REQUIREMENTS. THIS INCLUDES (2) 5/8" X 8' COPPER CLAD STEEL GROUND RODS WITH BRONZE GROUND ROD CLAMPS USING NON-GALVANIC LOCKING BOLTS. ROUTE A 4/0 AWG BRAIDED, BARE COPPER SOLID GROUND LOOP WITHIN THE BASEMENT CAVITY AND BOND TO BASEMENT AND ABOVEGROUND EQUIPMENT (TRANSFORMER, JUNCTION CABINET, OR SWITCH) GROUNDING PROVISIONS. POND GROUND RODS AND GROUND RING TO ELBOW CONCENTRIC NEUTRALS AND LIGHTING ARRESTER ELBOWS. SEE NOTE 7.
6. TRANSFORMER IS ANTICIPATED TO BE APPROXIMATELY 38" X 38" FOOTPRINT. PROVIDE PAD AS REQUIRED SUCH THAT PAD EXTENDS AT LEAST 4" PAST TRANSFORMER ON ALL SIDES. PAD TO PROJECT ABOVE FINISHED GRADE AS SHOWN ON DETAILS.
7. LEAVE SUFFICIENT SLACK IN NEUTRAL EXTENSION AND GROUND BUS WIRING TO FACILITATE REMOVAL AND PARKING OF PRIMARY CABLES AND LOADBREAKS. DO NOT TIGHTLY BUNDLE BLEED WIRES AND COMMON PARALLEL GROUNDING WIRING SO THAT CABLES CAN BE FREELY REPOSITIONED. NEATLY TRAIN AND ROUTE GROUND BUS WIRING IN FRONT OF PRIMARY CABLES.
8. PROVIDE SUFFICIENT SLACK IN PRIMARY AND SECONDARY FEEDERS TO ALLOW FREE MOVEMENT OF CABLES ON AND OFF BUSHING WELLS AND PARKING STANDS WITHOUT STRAINING THE CABLES AND TO ALLOW FOR FLEXIBLE ROUTING OF CABLES FROM BASEMENT BELOW.
9. WHERE TANK HAS MULTIPLE GROUND LUGS EXTEND GROUND BUS THROUGH ALL LUGS IN SERIES VIA A NO. 6 BARE COPPER WIRE.
10. AT PRIMARY ELBOW JACKETED CONCENTRIC NEUTRALS ATTACH A NEUTRAL STRAND TO GROUNDING EYE ON ELBOW (EYE NOT SHOWN HERE). SEE DETAIL 2, SHEET U33. CONNECT REMAINING NEUTRAL BUNDLE TO SYSTEM GROUND BUS. SEE NOTE 14.
11. TRANSFORMER SHALL BE PLACED SYMMETRICAL ON TOP OF BASEMENT.
12. MAINTAIN 10' OF CLEARANCE IN FRONT OF TRANSFORMER FRONT ACCESS.
13. TOP OF TRANSFORMER BASEMENT TO BE SMOOTH AND LEVEL PRIOR TO TRANSFORMER INSTALLATION. MOUNT TRANSFORMER TO BASEMENT WITH STAINLESS STEEL MOUNTING HARDWARE PER MANUFACTURER REQUIREMENTS.
14. LOADBREAK ELBOW HOUSINGS SHALL BE CAREFULLY ASSEMBLED AND PROPERLY FITTED INTO TRANSFORMER BUSHING WELLS. SEE SHEET U33 FOR LOADBREAK DETAIL. ELBOWS AND CONDUCTORS INSIDE TRANSFORMER NOT SHOWN ON THIS SHEET.
15. LABEL ALL MV CABLES ON THE PROJECT PER DETAIL 2, SHEET U18.
16. CONDUIT DEPTHS WILL SHALLOW AS THEY APPROACH AND ENTER THE SIDES OF THE EQUIPMENT BASEMENTS. MAINTAIN TRENCH DEPTHS PER SHEET U38 WHEREVER POSSIBLE.
17. STUB ALL CONDUITS INTO BASEMENTS A DISTANCE OF 2" IN FROM THE INSIDE FACE OF THE BASEMENT WALL.

KEYNOTES:

1. PRE-CAST CONCRETE BASEMENT WITH OPEN BOTTOM. 48" X 48" X 30" NOMINAL, WITH 11" X 25" NOMINAL CABLE OPENING. OLD CASTLE #4242-PTV OR EQUAL. OVERALL DEPTH AS SHOWN WITH PROJECTION ABOVE GRADE. COORDINATE FINAL SELECTION PROCESS WITH TRANSFORMER SELECTION TO ENSURE FOOTPRINT AND CABLE OPENING ALIGNMENTS. CAREFULLY CUT CONDUIT PENETRATIONS INTO BASEMENT WALLS OR USE KNOCKOUTS WHERE AVAILABLE.

2. PROVIDE 7.2KV:120/240V, SINGLE PHASE, 75 KVA, PAD MOUNTED TRANSFORMER. UNIT SHALL INCLUDE DUAL HIGH VOLTAGE BUSHING WELLS AND INSERTS, STICK-OPERATED, LOOP-FEED, LBOR SWITCH. ADDITIONAL FEATURES AS NOTED ON THE DETAIL. PROVIDE ARRESTER ELBOW IN SECOND BUSHING WELL AND INSERT. MUNSELL GREEN COLOR AND PCB-FREE (0 PPM) MINERAL OIL PER ASTM D3487. PROVIDE ABB MTR MAXI-PAK SERIES OR EQUAL.

   TRANSFORMER SHALL ADHERE TO THE FOLLOWING MINIMUM REQUIREMENTS:
   a) STANDARDS: IEEE C57.12.00, C57.12.25, C57.12.28, C57.12.34, AND C57.12.90. ADDITIONALLY MEET ALL APPLICABLE NESC, ANSI, AND U.S. DOE 2016 EFFICIENCY REQUIREMENTS.
   b) BASIC LIGHTING IMPULSE INSULATION (BIL) RATING: 95KV
   c) AVERAGE WINDING RISE (AWR): 65 DEG C ABOVE AMBIENT @ TRANSFORMER RATING
   d) CONSTRUCTION: ALL STEEL HARDWARE AND WELDS EXPOSED TO EXTERIOR SHALL BE 304 STAINLESS STEEL. TRANSFORMER SHALL BE SUITABLE FOR INSTALLATION IN A MARINE ENVIRONMENT.
   e) TERMINALS: PRIMARY SIDE LOOP-FEED CONFIGURATION WITH 200A BUSHING WELLS AND INSERTS. SECONDARY SIDE SPADE TERMINALS, TIN PLATED COPPER, AND SHALL HAVE NUMBER OF HOLES NEEDED FOR SECONDARY CONNECTIONS PLUS AN ADDITIONAL (2) SPARE HOLES.
   f) TAPS: PRIMARY WINDING DE-ENERGIZED OPERATION TAP CHANGER, WITH (2) TAPS @ 2.5% ABOVE AND (2) TAPS @ 2.5% BELOW RATED VOLTAGE.
   g) CERTIFICATION: PROVIDE EVIDENCE THAT DESIGN PASSED THE SHORT CIRCUIT CRITERIA PER ANSI C57.12.00 AND C57.12.90.

3. BOND ALL METAL EQUIPMENT ENCLOSURES, CABLE ELBOW CONCENTRIC NEUTRALS, GROUND RODS, ETC. TOGETHER VIA A GROUND RING WITHIN THE BASEMENT OF THE EQUIPMENT.

CN
10/23/2024

PLANS DEVELOPED BY:
MORRIS ENGINEERING GROUP, INC
2375 JORDAN AVE #7
JUNEAU, AK 99801
907-789-3350
AECL 1010

STATE OF ALASKA 49TH Mark G. Morris May 31, 2024 No. EE 8613 REGISTERED PROFESSIONAL ENGINEER

STATE OF ALASKA DEPARTMENT OF TRANSPORTATION AND PUBLIC FACILITIES
6860 GLACIER HIGHWAY, JUNEAU, AK 99801
(907) 465-1763

UTILITY RELOCATION FOR KETCHIKAN AREA BRIDGES

TRANSFORMER DETAILS

FILE | y:\02 state of ak\44 utility relocation design for ketchikan bridges\Working Drawings\TRANSFORMER DETAIL.dwg | DATE | 4/26/2024 14:43 | LAYOUT | U27 | DESIGNED | MGM | CHECKED | MGM | DRAFTED | NADJA

NO.	DATE	REVISION	STATE	PROJECT DESIGNATION	YEAR	SHEET NO.	TOTAL SHEETS
1	5/2024	AS-BUILT					
AS-BUILT DRAWING PREPARED FROM CONTRACTOR PROVIDED REDLINE WHICH MAY NOT BE CORRECT			ALASKA	0902043/SFHWY00072	2021	U28	45

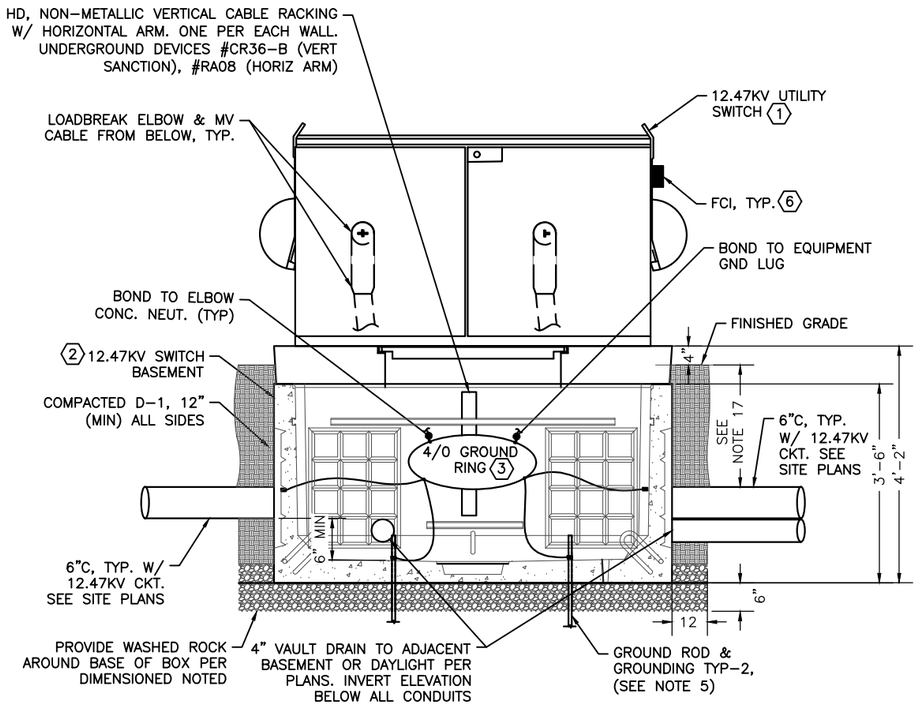

(1) 12.47KV SWITCH - DETAIL
AT PAD 6

CONDUITS VARY AT EACH PAD. SEE SITE PLANS, SINGLE-LINES, FOR SPECIFIC CONDUIT SIZES AND COUNTS.

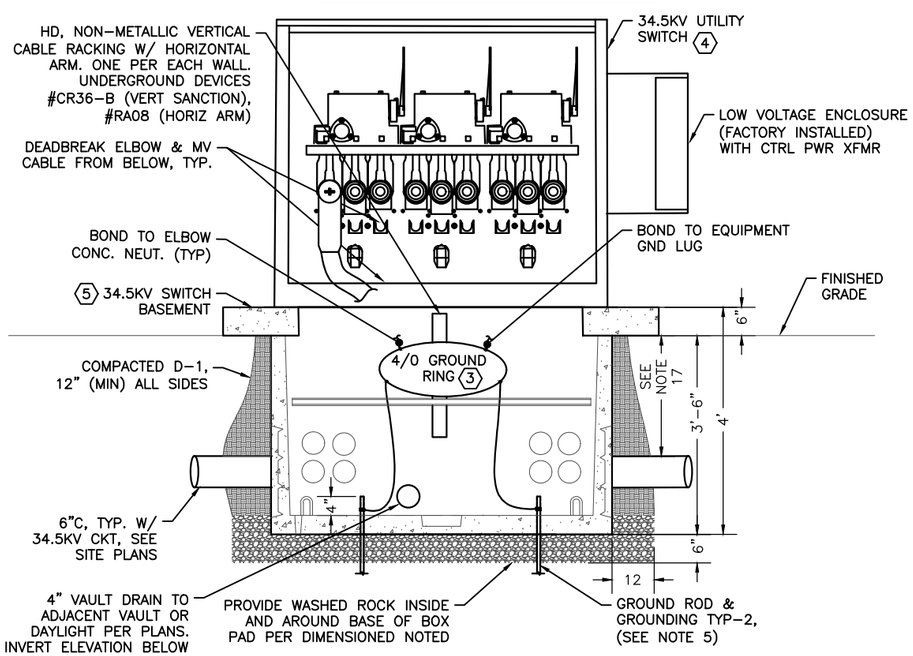

(2) 34.5KV SWITCH DETAIL
AT PAD 6

SHEET NOTES:

1. PROVIDE EXCAVATION AS REQUIRED TO ENSURE GRAVEL TO DEPTH SHOWN ON DETAIL. DIG A HOLE APPROXIMATELY 6" DEEPER AND 12" WIDER THEN THE BOTTOM DIMENSIONS OF THE BASEMENT. FOLLOW MANUFACTURER INSTRUCTIONS.
2. DUE TO LIMITED CONDUIT DEPTH, THE BASEMENT CONDUIT PENETRATIONS SHALL BE ALONG THE SIDEWALLS AS INDICATED HERE. REVIEW PENETRATION LOCATIONS AND ENSURE PENETRATIONS DO NOT REDUCE STRUCTURAL INTEGRITY OF BASEMENT. LOCATIONS SHOWN MAY NEED TO BE ADJUSTED. COORDINATE WITH MANUFACTURER.
3. PROVIDE ALL SPARE CONDUITS WITH PULL STRINGS AND EDPM RUBBER STOPPERS (NOT SIMPLY PLASTIC CAPS). COORDINATE CONDUIT STUB-UP LOCATIONS WITH EXACT SWITCH FOOTPRINT.
4. COORDINATE WITH KPU UTILITY, ENGINEER, AND INSPECTOR TO ALLOW FOR ANY REQUIRED INSPECTIONS BEFORE, DURING AND AFTER CONSTRUCTION OF PAD.
5. AT EACH POWER EQUIPMENT BASEMENT PROVIDE GROUNDING PER UTILITY REQUIREMENTS. THIS INCLUDES (2) 5/8" X 8' COPPER CLAD STEEL GROUND RODS WITH BRONZE GROUND ROD CLAMPS USING NON-GALVANIC LOCKING BOLTS. ROUTE A 4/0 AWG BRAIDED, BARE COPPER SOLID GROUND LOOP WITHIN THE BASEMENT CAVITY AND BOND TO BASEMENT AND ABOVEGROUND EQUIPMENT (TRANSFORMER, JUNCTION CABINET, OR SWITCH) GROUNDING PROVISIONS. BOND GROUND RODS AND GROUND RING TO ELBOW CONCENTRIC NEUTRALS AND LIGHTING ARRESTER ELBOWS. SEE NOTE 7.
6. PROVIDE BASEMENT AS REQUIRED SUCH THAT IT EXTENDS AT LEAST 2" PAST SWITCH ON ALL SIDES. BASEMENT TO PROJECT ABOVE FINISHED GRADE AS SHOWN ON DETAILS.
7. LEAVE SUFFICIENT SLACK IN NEUTRAL EXTENSION AND GROUND BUS WIRING TO FACILITATE REMOVAL AND PARKING OF CABLES. DO NOT TIGHTLY BUNDLE BLEED WIRES AND COMMON PARALLEL GROUNDING WIRING SO THAT CABLES CAN BE FREELY REPOSITIONED. NEATLY TRAIN AND ROUTE GROUND BUS WIRING IN FRONT OF PRIMARY CABLES.
8. PROVIDE SUFFICIENT SLACK IN FEEDERS TO ALLOW FREE MOVEMENT OF CABLES ON AND OFF BUSHING WELLS AND PARKING STANDS WITHOUT STRAINING THE CABLES AND TO ALLOW FOR FLEXIBLE ROUTING OF CABLES FROM BASEMENT BELOW.
9. WHERE SWITCH HAS MULTIPLE GROUND LUGS EXTEND GROUND BUS THROUGH ALL LUGS IN SERIES VIA A NO. 6 BARE COPPER WIRE.
10. AT ELBOW JACKETED CONCENTRIC NEUTRALS ATTACH A NEUTRAL STRAND TO GROUNDING EYE ON ELBOW (EYE NOT SHOWN HERE). SEE DETAILS ON SHEETS U32 AND U33. CONNECT REMAINING NEUTRAL BUNDLE TO SYSTEM GROUND BUS. SEE NOTE 14.
11. SWITCH SHALL BE PLACED SYMMETRICAL ON TOP OF BASEMENT.
12. MAINTAIN 10' OF CLEARANCE IN FRONT OF SWITCH DOORS.
13. TOP OF SWITCH BASEMENT TO BE SMOOTH AND LEVEL PRIOR TO SWITCH INSTALLATION. MOUNT SWITCH TO BASEMENT WITH STAINLESS STEEL MOUNTING HARDWARE PER MANUFACTURER REQUIREMENTS.
14. DEADBREAK AND LOADBREAK ELBOW ASSEMBLIES SHALL BE CAREFULLY ASSEMBLED AND PROPERLY FITTED INTO BUSHING WELLS. SEE SHEETS U32 AND U33 FOR DETAILS.
15. THERE ARE MULTIPLE CONDUITS AND DRAINS AT EACH SWITCH BASEMENT. NOT ALL ARE DEPICTED ON THIS SHEET. SEE SITE PLANS FOR ADDITIONAL INFORMATION.
16. LABEL ALL MV CABLES ON THE PROJECT PER DETAIL 2, SHEET U18.
17. CONDUIT DEPTHS WILL SHALLOW AS THEY APPROACH AND ENTER THE SIDES OF THE EQUIPMENT BASEMENTS. MAINTAIN TRENCH DEPTHS PER SHEET U38 WHEREVER POSSIBLE.
18. PROVIDE BENTONITE WATERSTOP AT ALL BASEMENT SEAMS AND INTERFACES BETWEEN SURFACES.
19. COAT ALL SURFACES ON BASEMENT WITH 1/8" COAT OF SONNEBORN HYDROCIDE MASTIC DAMPPROOFING, COMPLETELY INSIDE AND OUTSIDE OF BASEMENT. INCLUDE COATING ON ALL EXTERIOR PULLING IRON HARDWARE.
20. DETAILS ON THIS SHEET DEPICT GENERAL LAYOUT AND FEATURES OF CAST-IN-PLACE CONCRETE BASEMENTS WITH PRECAST CONCRETE LID, RISER, AND MANHOLES, CONTRACTOR MAY CONSIDER ALTERNATIVE DESIGNS IF SUBMITTED AND APPROVED BY AKDOT&PF PROJECT MANAGER.
21. STUB ALL CONDUITS INTO THE BASEMENT A DISTANCE OF 2" FROM THE INSIDE FACE OF THE BASEMENT.

KEYNOTES:

(1) 4-WAY PAD MOUNTED UTILITY SWITCH MOUNTED TO BASEMENT. SEE SHEET U17, DETAIL 1, KEYNOTE 2 FOR DETAILS.

(2) PRE-CAST CONCRETE BASEMENT WITH SOLID BOTTOM. 84" X 84" X 50" NOMINAL, WITH DUAL 12" X 69" NOMINAL CABLE OPENING IN LID. OLD CASTLE #774-LA OR EQUAL. OVERALL DEPTH AS SHOWN WITH PROJECTION ABOVE GRADE. COORDINATE FINAL SELECTION PROCESS WITH SWITCH SELECTION TO ENSURE FOOTPRINT AND CABLE OPENING ALIGNMENTS. CAREFULLY CUT CONDUIT PENETRATIONS INTO BASEMENT WALLS OR USE KNOCKOUTS WHERE AVAILABLE.

(3) BOND ALL METAL EQUIPMENT ENCLOSURES, CABLE ELBOW CONCENTRIC NEUTRALS, GROUND RODS, ETC. TOGETHER VIA A GROUND RING WITHIN BASEMENT OF THE EQUIPMENT.

(4) 3-WAY PAD MOUNTED UTILITY SWITCH MOUNTED TO BASEMENT. SEE SHEET U17, DETAIL 2, KEYNOTE 2 FOR DETAILS.

(5) PRE-CAST CONCRETE BASEMENT WITH SOLID BOTTOM. 72" X 48" X 48" NOMINAL, WITH A 92" X 78", 6" THICK LID WITH 12" X 60" CABLE OPENING IN LID. OLD CASTLE #664-LAA VAULT WITH CUSTOM LID OR EQUAL. OVERALL DEPTH AS SHOWN WITH PROJECTION ABOVE GRADE. COORDINATE FINAL SELECTION PROCESS WITH SWITCH SELECTION TO ENSURE FOOTPRINT AND CABLE OPENING ALIGNMENTS. CAREFULLY CUT CONDUIT PENETRATIONS INTO BASEMENT WALLS OR USE KNOCKOUTS WHERE AVAILABLE.

(6) PROVIDE FAULT CIRCUIT INDICATORS (FCI) WITHIN ENCLOSURE, ONE PER MV CABLE ELBOW INSTALLED. SEE SHEET U17 FOR MORE FCI DETAILS AND SHEET U33 FOR ELBOW INSTALLATION DETAIL. ROUTE FCI REMOTE LED INDICATOR CABLE TO REMOTE DISPLAY ASSEMBLY INSTALLED THROUGH THE SIDE OF THE ENCLOSURE. SEE DETAIL 3, THIS SHEET FOR ASSEMBLY INFO. GANG DISPLAY ON SIDE OF ENCLOSURE AND LABEL WITH PERMANENT, PHENOLIC LABELS. COORDINATE EXACT REMOTE INDICATOR PLACEMENT ON ENCLOSURE AND INDICATOR LABELS WITH UTILITY. ADEQUATE ROOM SHALL BE PROVIDED BETWEEN PLACARDS SO LEGIBLE LABELS CAN BE APPLIED, COORDINATE WITH UTILITY.

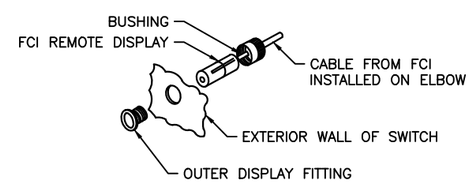

(3) FCI REMOTE INDICATOR
(TYPICAL – ONE PER MV ELBOW INSIDE ENCLOSURE)

CN 10/23/2024

PLANS DEVELOPED BY:
MORRIS ENGINEERING GROUP, INC
2375 JORDAN AVE #7
JUNEAU, AK 99801
907-789-3350
AECL 1010

STATE OF ALASKA 49TH
Mark G. Morris
May 31, 2024
No. EE 8613
REGISTERED PROFESSIONAL ENGINEER

STATE OF ALASKA DEPARTMENT OF TRANSPORTATION AND PUBLIC FACILITIES
6860 GLACIER HIGHWAY, JUNEAU, AK 99801
(907) 465-1763

UTILITY RELOCATION FOR KETCHIKAN AREA BRIDGES

POWER UTILITY SWITCH DETAILS

FILE y:\102 state of ak\44 utility relocation design for ketchikan bridges\Working Drawings\POWER UTILITY VAULT DETAILS.dwg | DATE 5/24/2024 13:53 | LAYOUT U28 | DESIGNED MGM | CHECKED MGM | DRAFTED EMILEE

NO.	DATE	REVISION	STATE	PROJECT DESIGNATION	YEAR	SHEET NO.	TOTAL SHEETS
1	5/2024	AS-BUILT					
AS-BUILT DRAWING PREPARED FROM CONTRACTOR PROVIDED REDLINE WHICH MAY NOT BE CORRECT			ALASKA	0902043/SFHWY00072	2021	U29	45

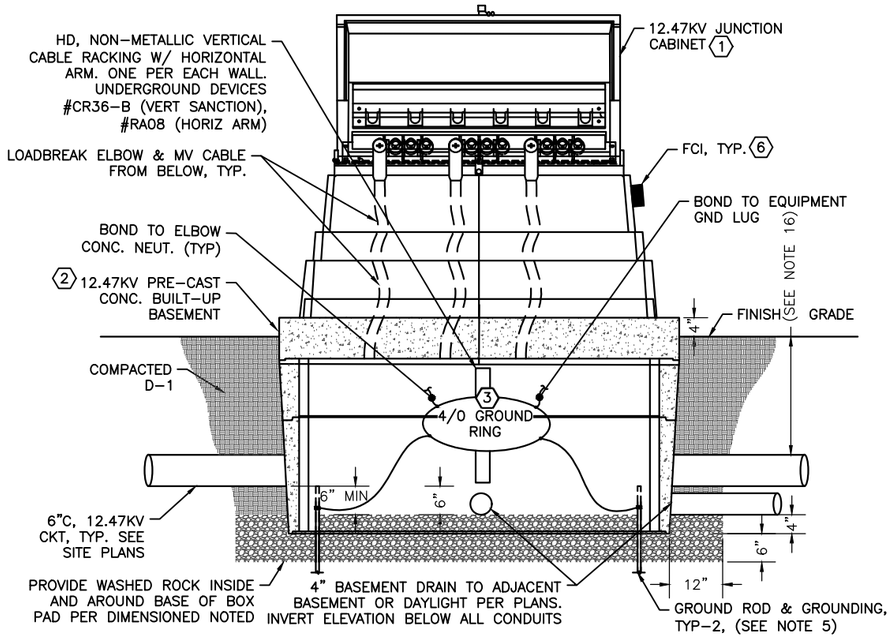

1 12.47KV CABINET DETAIL

AT PAD 4

CONDUITS VARY AT EACH PAD. SEE SITE PLANS, SINGLE-LINES, FOR SPECIFIC CONDUIT SIZES AND COUNTS.

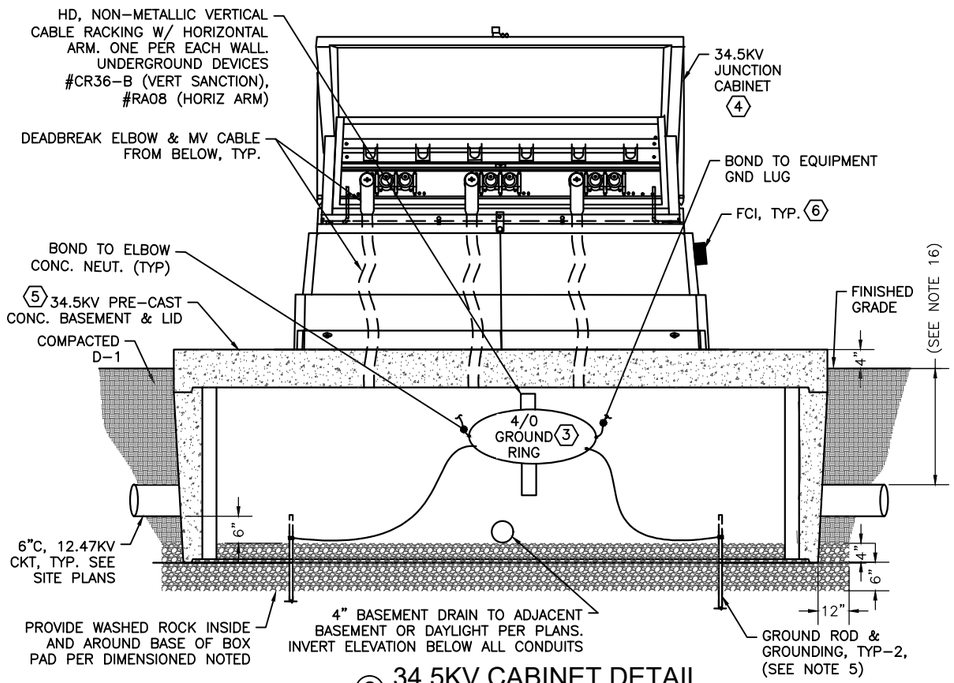

2 34.5KV CABINET DETAIL

AT PAD 4

SHEET NOTES:

1. PROVIDE EXCAVATION AS REQUIRED TO ENSURE GRAVEL TO DEPTH SHOWN ON DETAIL. DIG A HOLE APPROXIMATELY 6" DEEPER AND 12" WIDER THEN THE BOTTOM DIMENSIONS OF THE BASEMENT. FOLLOW MANUFACTURER INSTRUCTIONS.
2. DUE TO LIMITED CONDUIT DEPTH, THE BASEMENT CONDUIT PENETRATIONS SHALL BE ALONG THE SIDEWALLS AS INDICATED HERE. REVIEW PENETRATION LOCATIONS AND ENSURE PENETRATIONS DO NOT REDUCE STRUCTURAL INTEGRITY OF BASEMENT. LOCATIONS SHOWN MAY NEED TO BE ADJUSTED. COORDINATE WITH MANUFACTURER.
3. PROVIDE ALL SPARE CONDUITS WITH PULL STRINGS AND EDPM RUBBER STOPPERS (NOT SIMPLY PLASTIC CAPS). COORDINATE CONDUIT STUB-UP LOCATIONS WITH EXACT SWITCH FOOTPRINT.
4. COORDINATE WITH KPU UTILITY, ENGINEER, AND INSPECTOR TO ALLOW FOR ANY REQUIRED INSPECTIONS BEFORE, DURING AND AFTER CONSTRUCTION OF PAD.
5. AT EACH POWER EQUIPMENT BASEMENT PROVIDE GROUNDING PER UTILITY REQUIREMENTS. THIS INCLUDES (2) 5/8" X 8' COPPER CLAD STEEL GROUND RODS WITH BRONZE GROUND ROD CLAMPS USING NON-GALVANIC LOCKING BOLTS. ROUTE A 4/0 AWG BRAIDED, BARE COPPER SOLID GROUND LOOP WITHIN THE BASEMENT CAVITY AND BOND TO BASEMENT AND ABOVEGROUND EQUIPMENT (TRANSFORMER, JUNCTION CABINET, OR SWITCH) GROUNDING PROVISIONS. BOND GROUND RODS AND GROUND RING TO ELBOW CONCENTRIC NEUTRALS AND LIGHTING ARRESTER ELBOWS. SEE NOTE 7.
6. PROVIDE BASEMENT AS REQUIRED SUCH THAT BASEMENT EXTENDS AT LEAST 2" PAST JUNCTION ON ALL SIDES. BASEMENT, TO PROJECT ABOVE FINISHED GRADE AS SHOWN ON DETAILS.
7. LEAVE SUFFICIENT SLACK IN NEUTRAL EXTENSION AND GROUND BUS WIRING TO FACILITATE REMOVAL AND PARKING OF CABLES. DO NOT TIGHTLY BUNDLE BLEED WIRES AND COMMON PARALLEL GROUNDING WIRING SO THAT CABLES CAN BE FREELY REPOSITIONED. NEATLY TRAIN AND ROUTE GROUND BUS WIRING IN FRONT OF PRIMARY CABLES.
8. PROVIDE SUFFICIENT SLACK IN FEEDERS TO ALLOW FREE MOVEMENT OF CABLES ON AND OFF BUSHING WELLS AND PARKING STANDS WITHOUT STRAINING THE CABLES AND TO ALLOW FOR FLEXIBLE ROUTING OF CABLES FROM BASEMENT BELOW.
9. WHERE JUNCTION HAS MULTIPLE GROUND LUGS EXTEND GROUND BUS THROUGH ALL LUGS IN SERIES VIA A NO. 6 BARE COPPER WIRE.
10. AT ELBOW JACKETED CONCENTRIC NEUTRALS ATTACH A NEUTRAL STRAND TO GROUNDING EYE ON ELBOW (EYE NOT SHOWN HERE). SEE DETAILS ON SHEETS U32 AND U33. CONNECT REMAINING NEUTRAL BUNDLE TO SYSTEM GROUND BUS. SEE NOTE 14.
11. JUNCTION SHALL BE PLACED SYMMETRICAL ON TOP OF BASEMENT.
12. MAINTAIN 10' OF CLEARANCE IN FRONT OF SWITCH DOORS.
13. TOP OF JUNCTION BASEMENT TO BE SMOOTH AND LEVEL PRIOR TO SWITCH INSTALLATION. MOUNT SWITCH TO BASEMENT WITH STAINLESS STEEL MOUNTING HARDWARE PER MANUFACTURER REQUIREMENTS.
14. DEADBREAK AND LOADBREAK ELBOW ASSEMBLIES SHALL BE CAREFULLY ASSEMBLY AND PROPERLY FITTED INTO BUSHING WELLS. SEE SHEETS U32 AND U33 FOR DETAILS.
15. LABEL ALL MV CABLES ON THE PROJECT PER DETAIL 2, SHEET U18.
16. CONDUIT DEPTHS WILL SHALLOW AS THEY APPROACH AND ENTER THE SIDES OF THE EQUIPMENT BASEMENTS. MAINTAIN TRENCH DEPTHS PER SHEET U38 WHEREVER POSSIBLE.
17. THERE ARE MULTIPLE CONDUITS AND DRAINS AT EACH SWITCH BASEMENT. NOT ALL ARE DEPICTED ON THIS SHEET. SEE SITE PLANS FOR ADDITIONAL INFORMATION.
18. PROVIDE BENTONITE WATERSTOP AT ALL BASEMENT SEAMS AND INTERFACES BETWEEN SURFACES.
19. COAT ALL SURFACES ON BASEMENT WITH 1/8" COAT OF SONNEBORN HYDROCIDE MASTIC DAMPPROOFING, COMPLETELY INSIDE AND OUTSIDE OF BASEMENT. INCLUDE COATING ON ALL EXTERIOR PULLING IRON HARDWARE.
20. DETAILS ON THIS SHEET DEPICT GENERAL LAYOUT AND FEATURES OF CAST-IN-PLACE CONCRETE BASEMENTS WITH PRECAST CONCRETE LID, RISER, AND MANHOLES, CONTRACTOR MAY CONSIDER ALTERNATIVE DESIGNS IF SUBMITTED AND APPROVED BY AKDOT&PF PROJECT MANAGER.
21. STUB ALL CONDUITS INTO THE BASEMENT A DISTANCE OF 2" FROM THE INSIDE FACE OF THE BASEMENT WALL.

KEYNOTES:

1. PAD MOUNTED FIBERGLASS JUNCTION CABINET, 15KV RATED, WITH MULTI-POINT JUNCTION, PARKING STANDS, AND ALL STAINLESS STEEL BAR AND HARDWARE CONSTRUCTION. INCLUDES PROVISIONS FOR 200A LOADBREAKS AND A SURGE ARRESTER PER JUNCTION. UV AND FIRE RESISTANT, CHOPPER GLASS AND WOVEN ROVING LAMINATE CONSTRUCTION WITH ENCAPULATED 2' X 4' STRUCTURAL REINFORCEMENT. MUNSEL GREEN COLOR WITH GROUNDING LUGS, PENTA-BOLT AND PAD LOCK PROVISIONS. PROVIDE NORDIC FIBERGLASS #ND-552454-MG-PA58-4152-W3A OR EQUAL.
2. DUAL PRE-CAST CONCRETE BASEMENTS (1-24" TALL, 1-12" TALL), 6" THICK WALLS, WITH OPEN BOTTOM. 84" X 56" FOOTPRINT, NOMINAL. INCLUDES ONE 6" THICK LID. LID WITH A SINGLE 20" X 60" NOMINAL CABLE OPENING IN LID. OLD CASTLE #57R-24 AND 57R-12 WITH LID OR EQUAL. OVERALL DEPTH AS SHOWN WITH PROJECTION ABOVE GRADE. COORDINATE FINAL SELECTION PROCESS WITH SWITCH SELECTION TO ENSURE FOOTPRINT AND CABLE OPENING ALIGNMENTS. CAREFULLY CUT CONDUIT PENETRATIONS INTO BASEMENT WALLS OR USE KNOCKOUTS WHERE AVAILABLE.
3. BOND ALL METAL EQUIPMENT ENCLOSURES, CABLE ELBOW CONCENTRIC NEUTRALS, GROUND RODS, ETC. TOGETHER VIA A GROUND RING WITHIN BASEMENT OF THE EQUIPMENT.
4. PAD MOUNTED FIBERGLASS JUNCTION CABINET, 35KV RATED, WITH MULTI-POINT JUNCTION, PARKING STANDS, AND ALL STAINLESS STEEL BAR AND HARDWARE CONSTRUCTION. INCLUDES PROVISIONS FOR 600A DEADBREAKS AND A SURGE ARRESTER PER JUNCTION. UV AND FIRE RESISTANT, CHOPPER GLASS AND WOVEN ROVING FIBERGLASS LAMINATE CONSTRUCTION WITH ENCAPULATED 2' X 4' STRUCTURAL REINFORCEMENT. MUNSEL GREEN COLOR WITH GROUNDING LUGS, PENTA-BOLT AND PAD LOCK PROVISIONS. PROVISIONS. PROVIDE NORDIC FIBERGLASS #ND-683054-MG-PA71-42564-W3E OR EQUAL.
5. PRE-CAST CONCRETE BASEMENT, 6" THICK WALLS, WITH OPENED BOTTOM. 134" X 68" X 36" NOMINAL WITH 8" THICK LID. LID WITH A SINGLE 20" X 60" NOMINAL CABLE OPENING IN LID. OLD CASTLE #5106-3X WITH LID OR EQUAL. OVERALL DEPTH AS SHOWN WITH PROJECTION ABOVE GRADE. COORDINATE FINAL SELECTION PROCESS WITH SWITCH SELECTION TO ENSURE FOOTPRINT AND CABLE OPENING ALIGNMENTS. CAREFULLY CUT CONDUIT PENETRATIONS INTO BASEMENT WALLS OR USE KNOCKOUTS WHERE AVAILABLE.
6. PROVIDE FAULT CIRCUIT INDICTORS (FCI) WITHIN EACH ENCLOSURE, ONE PER MV CABLE ELBOW INSTALLED. SEE SHEET U17 FOR MORE FCI DETAILS AND SHEETS U32 AND U33 FOR ELBOW INSTALLATION DETAIL. ROUTE FCI REMOTE LED INDICATOR CABLE TO REMOTE DISPLAY ASSEMBLY INSTALLED THROUGH THE SIDE OF THE ENCLOSURE. SEE DETAIL 3, THIS SHEET FOR ASSEMBLY INFO. GANG DISPLAYS ON SIDE OF ENCLOSURE AND LABEL WITH PERMANENT, PHENOLIC LABELS. COORDINATE EXACT REMOTE PLACEMENT ON ENCLOSURE AND INDICATOR LABELS WITH UTILITY. ADEQUATE ROOM SHALL BE PROVIDED BETWEEN PLACARDS SO LEGIBLE LABELS CAN BE APPLIED, COORDINATE WITH UTILITY.

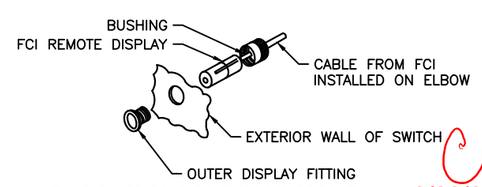

3 FCI REMOTE INDICATOR

(TYPICAL – ONE PER MV ELBOW INSIDE ENCLOSURE)

CN 10/23/2024

PLANS DEVELOPED BY:
MORRIS ENGINEERING GROUP, INC
2375 JORDAN AVE #7
JUNEAU, AK 99801
907-789-3350
AECL 1010

STATE OF ALASKA 49TH Mark G. Morris May 31, 2024 No. EE 8613 REGISTERED PROFESSIONAL ENGINEER

STATE OF ALASKA DEPARTMENT OF TRANSPORTATION AND PUBLIC FACILITIES
6860 GLACIER HIGHWAY, JUNEAU, AK 99801
(907) 465-1763

UTILITY RELOCATION FOR KETCHIKAN AREA BRIDGES

POWER UTILITY SECTIONALIZING CABINET DETAILS

FILE y:\102 state of ak\44 utility relocation design for ketchikan bridges\Working Drawings\POWER UTILITY SECTIONALIZING CABINET DETAILS.dgn | LAYOUT U29 | 5/2/2024 14:51 | DESIGNED MGM | CHECKED MGM | DRAFTED NADJA

NO.	DATE	REVISION	STATE	PROJECT DESIGNATION	YEAR	SHEET NO.	TOTAL SHEETS
1	5/2024	AS-BUILT					
AS-BUILT DRAWING PREPARED FROM CONTRACTOR PROVIDED REDLINE WHICH MAY NOT BE CORRECT			ALASKA	0902043/SFHWY00072	2021	U30A	45

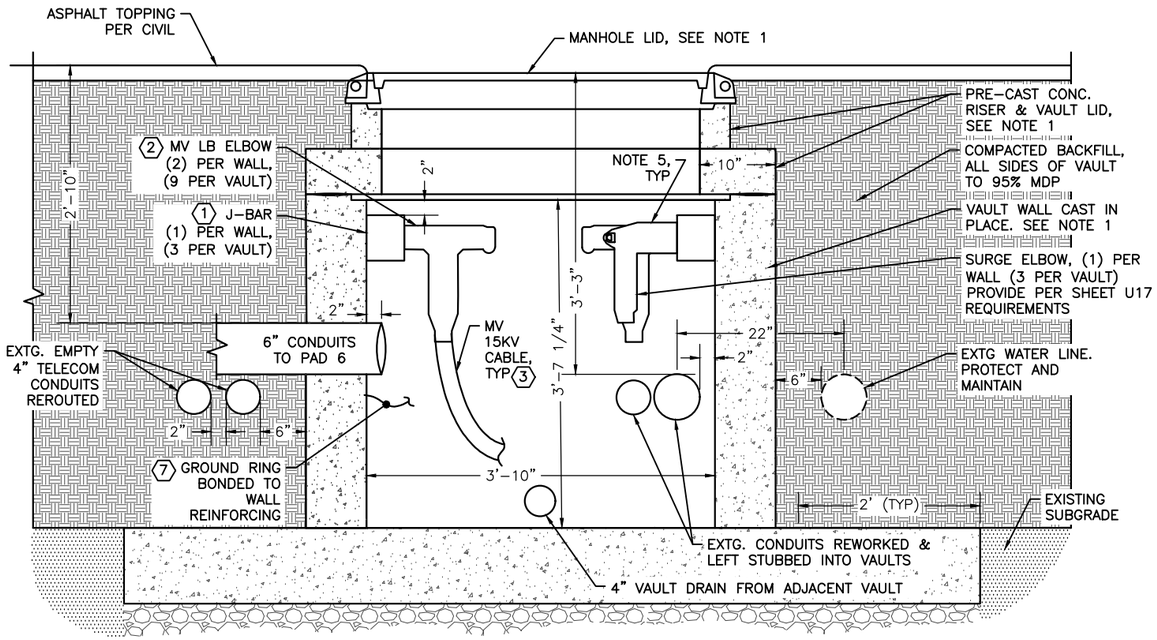

1 POWERHOUSE VAULT - SECTION (TYP)

(SHOWING 12.47KV VAULT, SAME SETUP FOR 34.5KV VAULT)

SHEET NOTES (APPLICABLE TO ALL DETAILS):

1. SEE SHEET U30B FOR STRUCTURAL DIMENSIONS, DETAILS, AND SPECIFICATIONS PERTAINING TO THE CAST IN PLACE VAULT WALLS, LIDS, RISERS, AND MANHOLE COVERS.
2. ABBREVIATION USED ON THIS SHEET: 'MV LB' = MEDIUM VOLTAGE LOADBREAK, 'MV DB'' = MEDIUM VOLTAGE DEADBREAK.
3. DETAILS ON SHEETS U30A, U30B, AND U31 DEPICT GENERAL LAYOUT AND FEATURES OF CAST-IN-PLACE CONCRETE VAULTS WITH PRECAST CONCRETE LID, RISER, AND MANHOLES. CONTRACTOR MAY CONSIDER ALTERNATIVE DESIGNS IF SUBMITTED AND APPROVED BY AKDOT PROJECT MANAGER.
4. PROVIDE SCREENS ON DRAIN ENDS, SEE SHEET U30B.
5. J-BAR AND ELBOW LOCATIONS, HEIGHTS, ORIENTATIONS, ETC. MUST ALLOW FOR ROUTINE WORKING OF CABLING FROM WITHIN THE VAULT. ADJUST FROM WHAT IS SHOWN AS REQUIRED. KPU AND DESIGN ENGINEER MUST SIGN OFF ON PLANNED ARRANGEMENT PRIOR TO FINAL INSTALLATION.

KEY NOTES (APPLICABLE TO ALL DETAILS):

1. PROVIDE A 3-POSITION LOADBREAK JUNCTION BAR MOUNTED ON THREE OF THE FOUR VAULT WALLS. STAINLESS STEEL, 200A, 15KV CLASS JUNCTIONS. INCLUDES PARKING STANDS AND DRAIN WIRE CLAMPS. PROVIDE COOPER POWER SYSTEMS (CPS) LJ215C3B OR EQUAL. COORDINATE FINAL WALL LOCATION, SEE GENERAL NOTE 5 ABOVE.
2. ALL 12.47KV CABLES TO TERMINATE ON LOADBREAK ELBOWS MOUNTED TO JUNCTION BARS. COORDINATE ARRANGEMENT OF ELBOWS IN ACCORDANCE WITH KPU UTILITY REQUIREMENTS. LOADBREAK ELBOWS TO MEET REQUIREMENTS AS NOTED FOR LOADBREAKS DESCRIBED ON SHEET U17, DETAIL 1.
3. ALL 12.47KV CABLES TO ADHERE TO CABLE REQUIREMENTS DESCRIBED ON SHEET U17, DETAIL 1. ALL CABLES TO BE CAREFULLY ROUTED WITHIN VAULT TO MINIMIZE CABLE AND LOADBREAK ELBOW STRESS. TRAIN CABLES TO MEET MINIMUM BENDING RADIUS REQUIREMENTS. SEE SHEET U31 FOR ROUTING DEPICTION.
4. PROVIDE A 3-POSITION COPPER DEADBREAK JUNCTION BAR MOUNTED ON THREE OF THE FOUR VAULT WALLS. STAINLESS STEEEL, 600A, 35KV CLASS JUNCTIONS. INCLUDES PARKING STANDS AND DRAIN WIRE CLAMPS. PROVIDE COOPER POWER SYSTEMS (CPS) DJ635C3B OR EQUAL. COORDINATE FINAL WALL LOCATION, SEE GENERAL NOTE 5 ABOVE.
5. ALL 34.5KV CABLES TO TERMINATE ON DEADBREAK ELBOWS MOUNTED TO JUNCTION BARS. COORDINATE ARRANGEMENT OF ELBOWS TO MEET REQUIREMENTS AS NOTED FOR DEADBREAKS DESCRIBED ON SHEET U17, DETAIL 2.
6. ALL 34.5KV CABLES TO ADHERE TO CABLE REQUIREMENTS DESCRIBED ON SHEET U17, DETAIL 2. ALL CABLE IS TO BE CAREFULLY ROUTED WITHIN VAULT TO MINIMIZE CABLE AND DEADBREAK ELBOW STRESS. TRAIN CABLES TO MEET MINIMUM BENDING RADIUS REQUIREMENTS. SEE SHEET U31 FOR ROUTING DEPICTION
7. AT EACH POWERHOUSE VAULT, PROVIDE GROUNDING PER UTILITY REQUIREMENTS. A 4/0 AWG BRAIDED, BARE COPPER GROUND LOOP WITHIN EACH VAULT. LOOP TO BE BONDED TO A 4/0 BARE COPPER GROUND EMBEDDED INTO THE WALL BONDED TO WALL REINFORCING (2 LOCATIONS). BOND TO EACH DRAIN WIRE CONNECTION SUPPLIED ON EACH JUNCTION BAR. BOND ALL JUNCTION BAR DRAIN WIRE CONNECTIONS TO ELBOW CONCENTRIC NEUTRALS PER KPU REQUIREMENTS. SEE SHEET U31 FOR ADDITIONAL LOCATION INFORMATION. ROUTE GROUND RING ALONG VAULT RACKING OFF OF VAULT FLOOR.

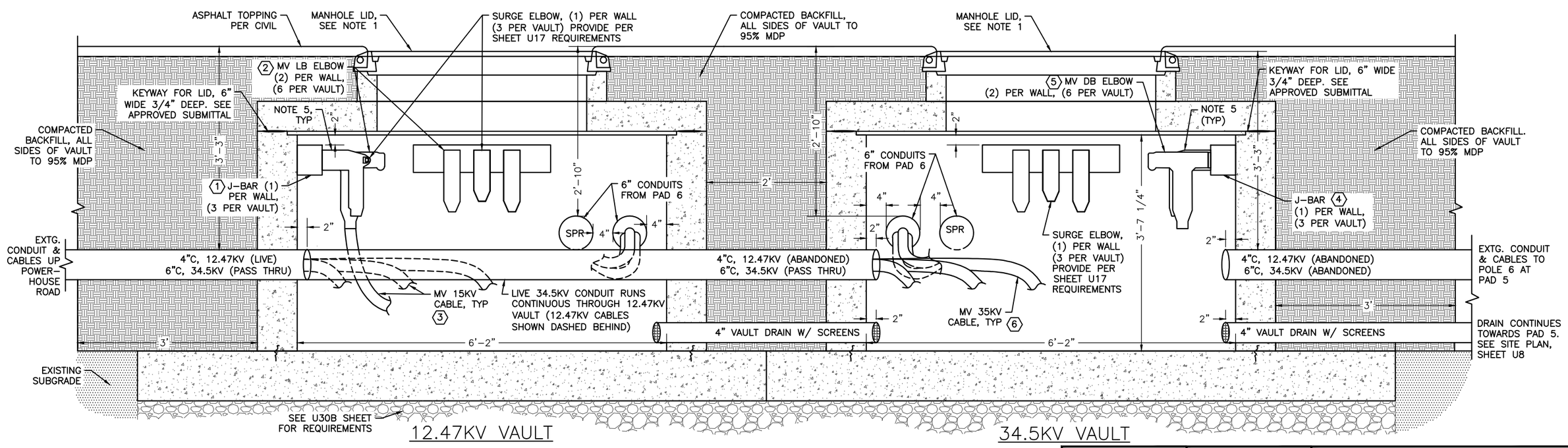

2 POWERHOUSE VAULTS - ELEVATION

CN
10/23/2024

PLANS DEVELOPED BY:
MORRIS ENGINEERING GROUP, INC
2375 JORDAN AVE #7
JUNEAU, AK 99801
907-789-3350
AECL 1010

STATE OF ALASKA 49TH
Mark G. Morris
May 31, 2024
No. EE 8613
REGISTERED PROFESSIONAL ENGINEER

STATE OF ALASKA DEPARTMENT OF TRANSPORTATION AND PUBLIC FACILITIES
6860 GLACIER HIGHWAY, JUNEAU, AK 99801
(907) 465-1763

UTILITY RELOCATION FOR KETCHIKAN AREA BRIDGES

POWERHOUSE VAULT ELECTRICAL DETAILS

FILE y:\102 state of ak\44 utility relocation design for ketchikan bridges\Working Drawings\U30A POWERHOUSE VAULT ELECTRICAL DETAILS.dwg | 5/24/2024 13:57 | LAYOUT U30A | DESIGNED MGM | CHECKED MGM | DRAFTED EMILEE

NO.	DATE	REVISION	STATE	PROJECT DESIGNATION	YEAR	SHEET NO.	TOTAL SHEETS
1	5/2024	AS-BUILT					
		AS-BUILT DRAWING PREPARED FROM CONTRACTOR PROVIDED REDLINE WHICH MAY NOT BE CORRECT	ALASKA	0902043/SFHWY00072	2021	U30B	45

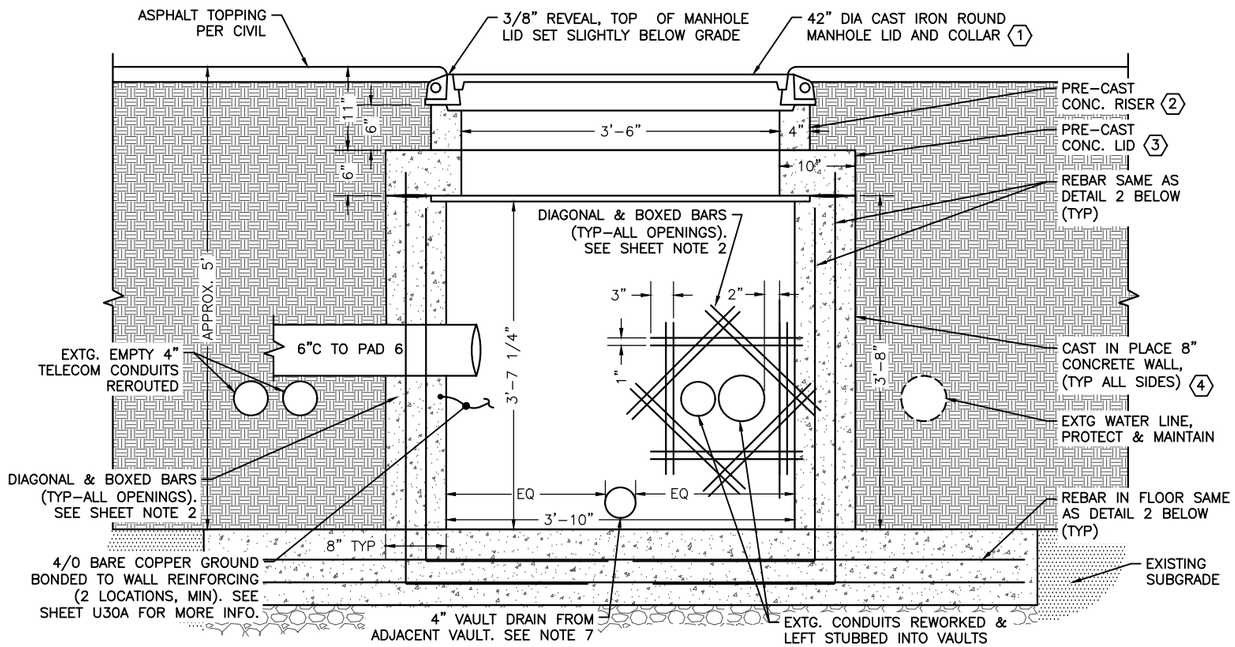

(1) POWERHOUSE VAULT - SECTION (TYP - STRUCTURAL)

(SHOWING 12.47KV VAULT, SAME SETUP FOR 34.5KV VAULT)

SHEET NOTES (APPLICABLE TO ALL DETAILS):

1. SEE SHEET U30A AND U31 FOR ELECTRICAL DIMENSIONS, DETAILS, AND SPECIFICATIONS PERTAINING AND ASSOCIATED WITH WORK WITHIN THE POWERHOUSE VAULTS.
2. FRAME EACH CONDUIT PENETRATION WITHIN THE POURED VAULT WALLS WITH (2) NO. 5 DIAGONAL AND BOXED BARS. DIMENSIONS BETWEEN PARALLEL BARS AND OVERALL SEGMENT LENGTHS SHOULD BE ADDED DIAMETER OF THE CONDUIT PAIRS PLUS 10". BARS APPROPRIATELY CENTERED WITH SPACING BETWEEN BARS AS SHOWN ON DETAIL 1.
3. PROVIDE BENTONITE WATERSTOP AT ALL VAULT SEAMS AND INTERFACES BETWEEN SURFACES.
4. COAT ALL SURFACES AND SIDES OF POURED VAULT, PRECAST LID, AND PRECAST RISER WITH NON-FIBERED, ASPHALT EMULSION SEALER AND DAMPPROOFER. NON-FLAMMABLE, CORROSION AND CRACK RESISTANT COATING APPLICABLE FOR BELOW-GRADE FOUNDATIONS AND WALLS. HENRY HE107 OR EQUAL. APPLY A MINIMUM OF (1) 1/16" COAT, FILLING ALL CREVICES AND GROOVES. ENSURE COATING IS CONTINUOUS WITH NO BREAKS OR PINHOLES. SPREAD ALL AROUND JOINTS, GROOVES, AND SLOTS AND INTO ALL CORNERS, OVER PULLING HARDWARE, ETC.
5. DETAILS ON SHEETS U30A, U30B, AND U31 DEPICT GENERAL LAYOUT AND FEATURES OF CAST-IN-PLACE CONCRETE VAULTS WITH PRECAST CONCRETE LID, RISER, AND MANHOLES, CONTRACTOR MAY CONSIDER ALTERNATIVE DESIGNS IF SUBMITTED AND APPROVED BY AKDOT&PF PROJECT MANAGER.
6. MAINTAIN A 3" EMBEDDMENT DEPTH AND STOP SHORT DISTANCE FOR ALL REBAR IN THE WALLS, IN ALL DIRECTIONS.
7. PROVIDE STAINLESS STEEL MESH SCREEN ON DRAIN ENDS.

KEY NOTES (APPLICABLE TO ALL DETAILS):

(1) PROVIDE 42" I.D. ROUND MANHOLE LID, LID RING, AND COLLAR, OLD CASTLE OR EQUAL. INSET JUST BELOW FINISHED GRADE AS NOTED.

(2) PROVIDE 6" TALL PRE-CAST CONCRETE RISER. NOMINAL FOOTPRINT 7'-6" X 5'-2" X 6" THICK. OLD CASTLE #57R6-CLX OR EQUAL.

(3) PROVIDE 6" TALL PRE-CAST CONCRETE COVER. NOMINAL FOOTPRINT 7'-6" X 5'-2" X 6" THICK WITH 42" DIAMETER HOLE. OLD CASTLE #57-CLX-42C OR EQUAL. PIN TO POURED WALLS AS INDICATED.

(4) PROVIDE CAST-IN-PLACE WALLS AND FLOORS WITH THICKNESS AND REINFORCING AS NOTED HERE. 3500 PSI CONCRETE MINIMUM. PROVIDE OPENING BLOCK OUTS FOR CONDUITS (NEW AND EXISTING) AND OPENING BOXED REINFORCING AS INDICATED. PIN POURED WALLS TO PRE-CAST LID AND TO FLOOR BELOW.

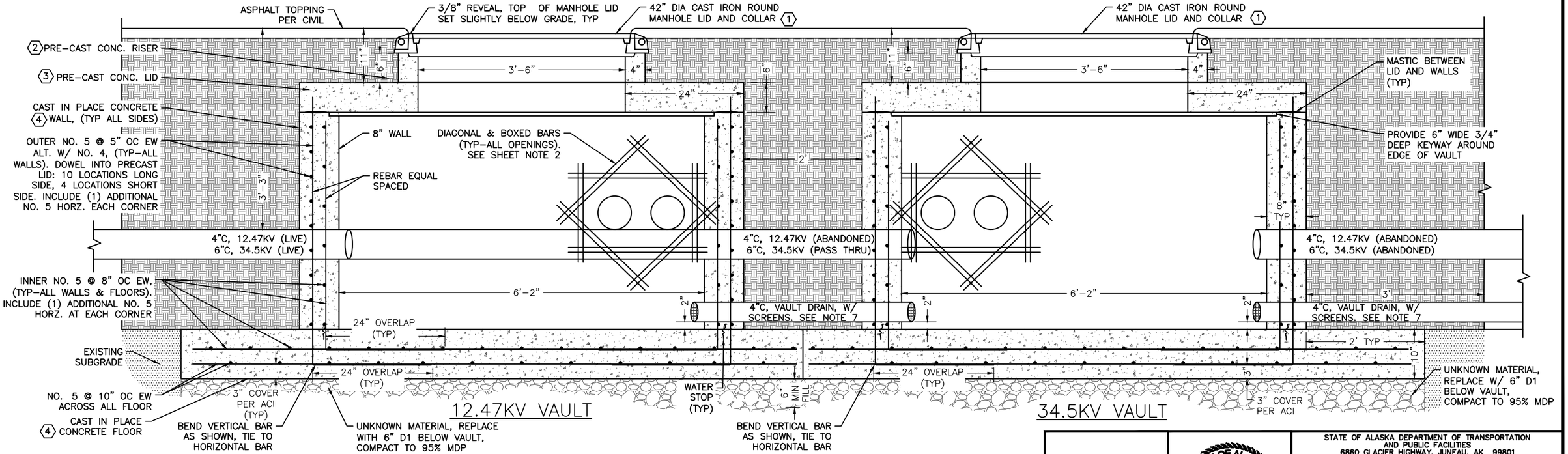

(2) POWERHOUSE VAULTS - ELEVATION (STRUCTURAL)

EW = EACH WAY
ALT = ALTERNATELY

CN
10/23/2024

PLANS DEVELOPED BY:
MORRIS ENGINEERING GROUP, INC
2375 JORDAN AVE #7
JUNEAU, AK 99801
907-789-3350
AECL 1010

STATE OF ALASKA 49TH
Mark G. Morris
May 31, 2024
No. EE 8613
REGISTERED PROFESSIONAL ENGINEER

STATE OF ALASKA DEPARTMENT OF TRANSPORTATION AND PUBLIC FACILITIES
6860 GLACIER HIGHWAY, JUNEAU, AK 99801
(907) 465-1763

UTILITY RELOCATION FOR KETCHIKAN AREA BRIDGES

POWERHOUSE VAULT STRUCTURAL DETAILS

FILE | > \102 state of ak\44 utility relocation design for ketchikan bridges\Working Drawings\U30A POWERHOUSE VAULT ELECTRICAL DETAILS.dwg | 5/24/2024 13:57 | LAYOUT | U30B | DESIGNED | MGM | CHECKED | MGM | DRAFTED | EMILEE

NO.	DATE	REVISION	STATE	PROJECT DESIGNATION	YEAR	SHEET NO.	TOTAL SHEETS
1	5/2024	AS-BUILT					
AS-BUILT DRAWING PREPARED FROM CONTRACTOR PROVIDED REDLINE WHICH MAY NOT BE CORRECT			ALASKA	0902043/SFHWY00072	2021	U31	45

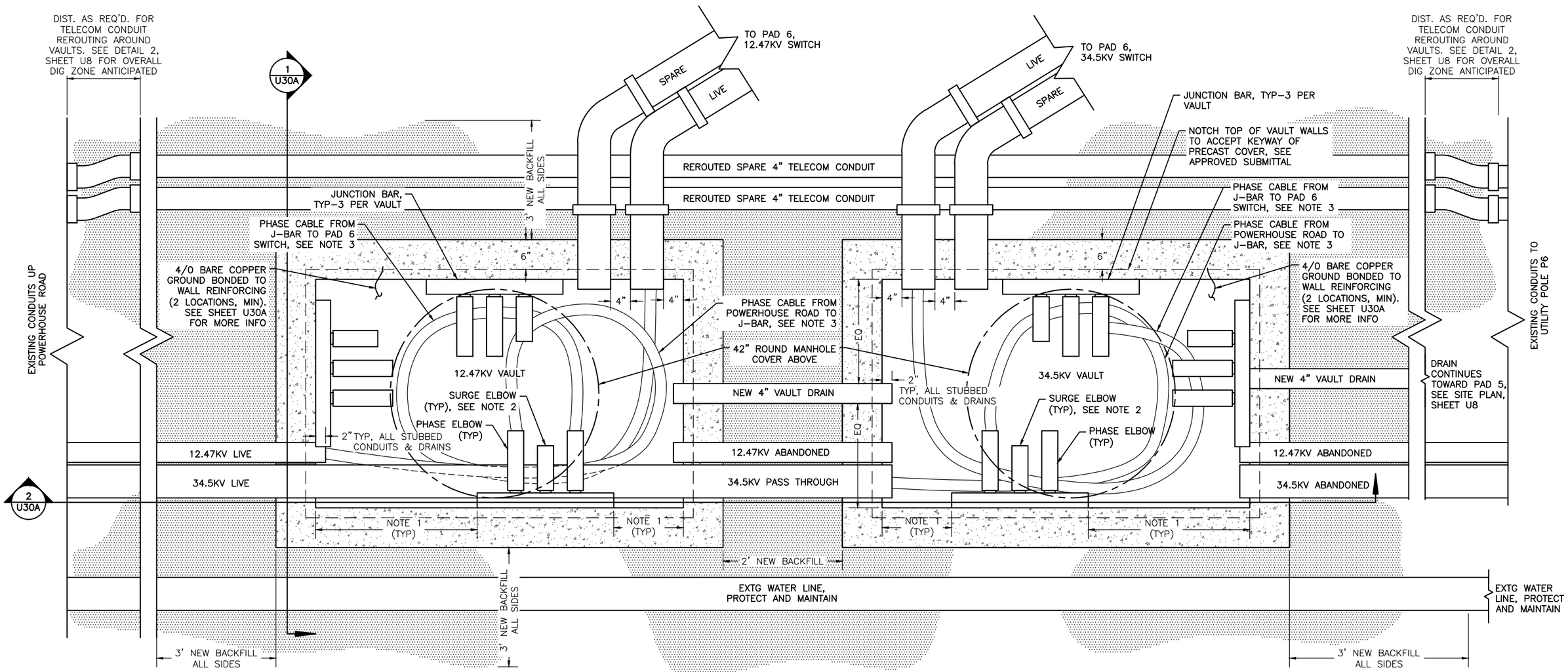

1 POWERHOUSE VAULTS - ENLARGED PLAN

NOTES:

1. STAGGER THE J-BAR POSITIONS TO MAXIMIZE CABLE BENDING AND TRAINING SPACE AROUND THE VAULT. ADJUST FROM WHAT IS SHOWN HERE AS PRACTICAL.
2. COORDINATE POSITIONS OF THE SURGE ELBOW TO MAXIMIZE ELBOW SEPARATION AND INCREASE CABLE BENDING AND TRAINING SPACE AROUND THE VAULT. ADJUST FROM WHAT IS SHOWN HERE AS PRACTICAL.
3. EXAMPLE CABLE ROUTED ALONG FLOOR IS SHOWN. ONLY A FEW CABLES DEPICTED. ADHERE TO MINIMUM BENDING RADIUS IN ALL INSTANCES PER OKONITE HANDBOOK. ARRANGE ROUTING AS REQUIRED AND ADJUST FROM WHAT IS SHOWN HERE AS PRACTICAL. PROVIDE LABEL TAGS ON ALL CABLES PER DETAIL 2, SHEET U18.
4. COMPACT ALL BACKFILL TO 95% OF MDP, ALL SIDES AND BELOW FLOOR OF BOTH VAULTS.

CN
10/23/2024

PLANS DEVELOPED BY:
MORRIS ENGINEERING GROUP, INC
2375 JORDAN AVE #7
JUNEAU, AK 99801
907-789-3350
AECL 1010

STATE OF ALASKA 49TH
Mark G. Morris
May 31, 2024
No. EE 8613
REGISTERED PROFESSIONAL ENGINEER

STATE OF ALASKA DEPARTMENT OF TRANSPORTATION AND PUBLIC FACILITIES
6860 GLACIER HIGHWAY, JUNEAU, AK 99801
(907) 465-1763

UTILITY RELOCATION FOR KETCHIKAN AREA BRIDGES

POWERHOUSE VAULTS - ENLARGED PLAN

FILE | y:\102 state of ak\44 utility relocation design for ketchikan bridges\Working Drawings\U31 POWERHOUSE VAULTS - ENLARGED PLAN.DWG | 5/24/2024 13:56 | LAYOUT | U31 | DESIGNED | MGM | CHECKED | MGM | DRAFTED | EMILEE

NO.	DATE	REVISION	STATE	PROJECT DESIGNATION	YEAR	SHEET NO.	TOTAL SHEETS
1	5/2024	AS-BUILT					
AS-BUILT DRAWING PREPARED FROM CONTRACTOR PROVIDED REDLINE WHICH MAY NOT BE CORRECT			ALASKA	0902043/SFHWY00072	2021	U32	45

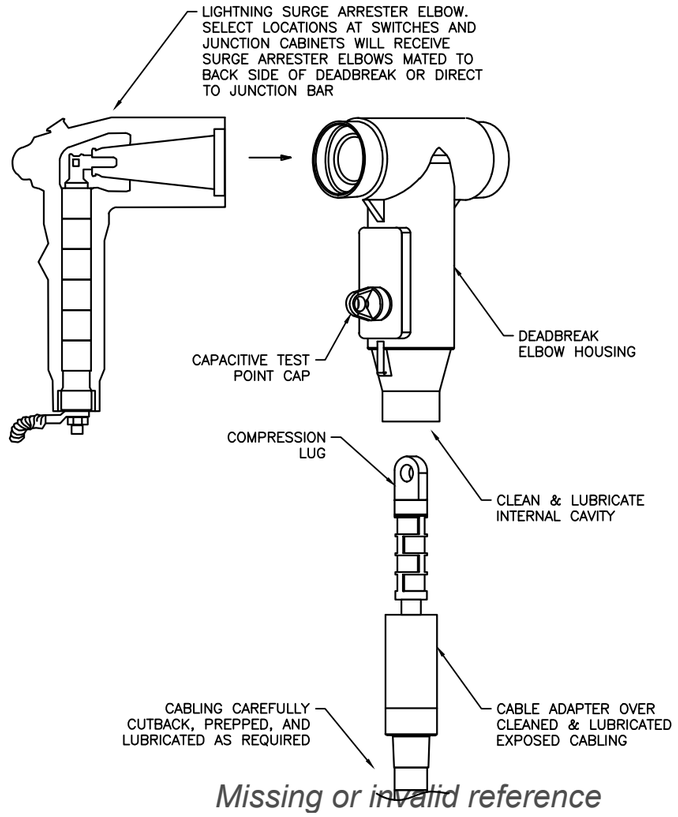

Missing or invalid reference

1 DEADBREAK - PRE-INSERT
NO SCALE

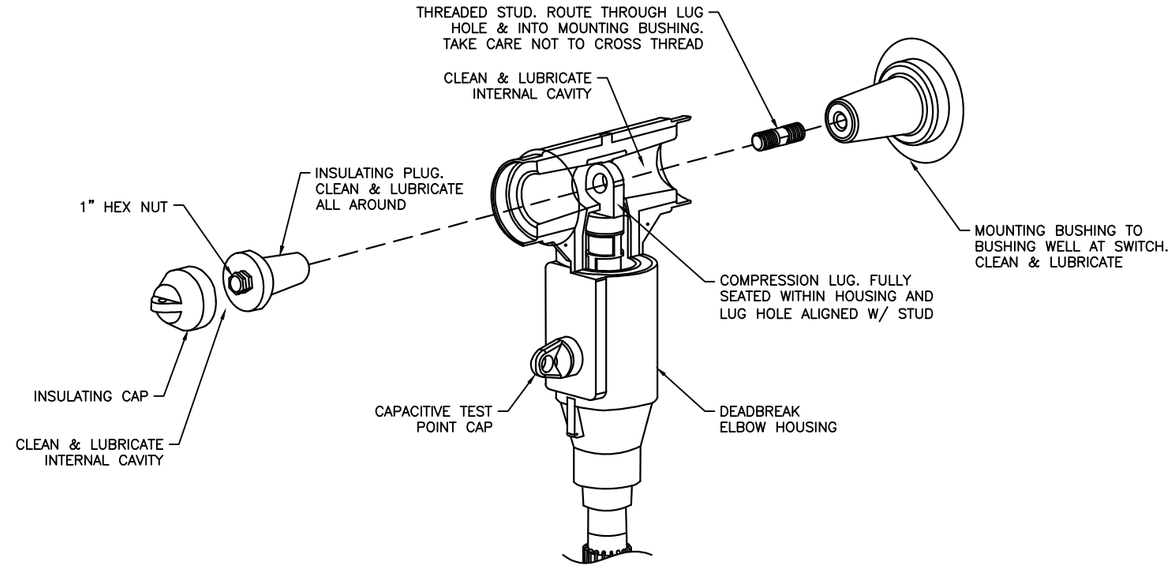

2 DEADBREAK - INSERT
NO SCALE

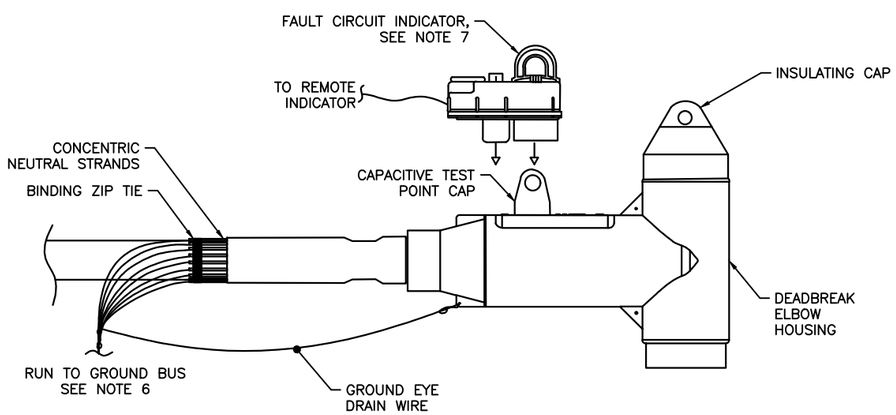

3 DEADBREAK - ASSEMBLED
NO SCALE

NOTES:

1. SEE SPECIFICATIONS FOR FULL REQUIREMENTS OF MEDIUM VOLTAGE CABLE, CABLE DEADBREAKS, AND CABLE GROUNDING.

2. PRIOR TO INSTALL, CONFIRM ALL PARTS AND PIECES ARE UNDAMAGED, CABLES AND MATING COMPONENTS ARE PROPERLY FITTED, AND CHECK THAT STUD THREADS TO COMPRESSION LUG WITH NO RESISTANCE. IF RESISTANCE IS ENCOUNTERED PRIOR TO FULL ASSEMBLY, CHECK FOR DAMAGE AND REPLACE COMPONENTS AS NECESSARY.

3. NOTES INCLUDED ON THIS SHEET ARE GENERIC IN NATURE AND FOR GENERAL INSTRUCTION ONLY. FOLLOW MANUFACTURER WRITTEN REQUIREMENTS.

4. GENERAL NOTES FOR CABLE TERMINATION WORK:
   a. SYSTEM SHALL BE DE-ENERGIZED DURING INSTALLATION.
   b. EACH DEADBREAK KIT SHALL BE PROVIDED COMPLETE FROM FACTORY, ALL KIT COMPONENTS NEW AND FROM ONE MANUFACTURER.
   c. MINIMUM KIT CONTENTS SHALL INCLUDE: 600A DEADBREAK ELBOW HOUSING INSULATION PLUG & CAP, CABLE ADAPTER AND ASSEMBLY AID, SILICONE LUBRICANT, THREADED STUD, SHEAR BOLT OR COMPRESSION LUG, CRIME AND COMPRESSION CHART, INSTRUCTIONS.

5. THERE ARE MANY DISTINCT AND VITAL STEPS IN PREPARING AND TERMINATING CABLES AND DEADBREAKS. BELOW IS A SIMPLE DESCRIPTION OF STEPS ANTICIPATED IN THE PROCESS. CONTRACTOR SHALL HAVE ONLY EXPERIENCED STAFF PERFORM WORK TERMINATING MEDIUM VOLTAGE CABLES AND ASSEMBLING DEADBREAKS. THIS LIST IS PROVIDED TO STRESS THAT THIS WORK IS NOT TO BE DONE BY UNQUALIFIED LINEMEN. UTILIZE ONLY LINEMEN QUALIFIED FOR CABLE SPLICE AND TERMINATION TYPE WORK. KPU TO TERMINATE ALL FINAL CONNECTIONS.

   ANTICIPATED DEADBREAK CONNECTION STEPS INCLUDE:
   a. PREPARING CABLES (I.E. MEASURING AND CUTTING BACK OUTER JACKET, CONCENTRIC NEUTRAL, SEMI-CON, AND INSULATION LAYERS).
   b. MATING THE COMPRESSION LUG TO STUD (I.E. SECURING LUG ONTO CABLE, INSERTING LUGGED CABLE INTO ELBOW, INSERTING AND THREADING STUD INTO LUGGED ELBOW).
   c. ELBOW AND CABLE GROUNDING (I.E. GROUND WIRE TO ELBOW GROUND EYE, GROUND WIRE TO EXPOSED NEUTRAL AND BRAID, BRAID COUPLED TO GROUND BUS IN SWITCH).

6. SEE SHEETS U28 AND U29 FOR SWITCH AND JUNCTION CABINET ELEVATIONS WITH ADDITIONAL NOTES ON MEDIUM VOLTAGE CABLE GROUNDING AND GROUND BUS CONFIGURATIONS.

7. PROVIDE FAULT CIRCUIT INDICATORS (FCIs) AT EACH DEADBREAK ELBOW IN THE JUNCTION CABINET. SEE SHEET U17 FOR DETAILS ON THE FCI UNITS. INSTALL INDICATORS AT THE CAPACITIVE TESTING POINT OF THE ELBOW PER MANUFACTURER REQUIREMENTS. ROUTE REMOTE INDICATOR CABLING FROM EACH FCI TO REMOTE INDICATOR MOUNTED TO OUTER ENCLOSURE, SEE DETAIL 3, SHEET U29 FOR MOUNTING DETAIL.

8. LABEL ALL MV CABLES ON THE PROJECT PER DETAIL 2, SHEET U18.

CN
10/23/2024

PLANS DEVELOPED BY:
MORRIS ENGINEERING GROUP, INC
2375 JORDAN AVE #7
JUNEAU, AK 99801
907-789-3350
AECL 1010

STATE OF ALASKA 49TH
Mark G. Morris
May 31, 2024
No. EE 8613
REGISTERED PROFESSIONAL ENGINEER

STATE OF ALASKA DEPARTMENT OF TRANSPORTATION AND PUBLIC FACILITIES
6860 GLACIER HIGHWAY, JUNEAU, AK 99801
(907) 465-1763

UTILITY RELOCATION FOR KETCHIKAN AREA BRIDGES

DEADBREAK ELBOW DETAILS

FILE | y:\102 state of ak\44 utility relocation design for ketchikan bridges\Working Drawings\POWER UTILITY LOADBREAK & MISC. DETAILS.dwg | DATE | 4/26/2024 14:49 | LAYOUT | U32 | DESIGNED | MGM | CHECKED | MGM | DRAFTED | JODI

NO.	DATE	REVISION	STATE	PROJECT DESIGNATION	YEAR	SHEET NO.	TOTAL SHEETS
1	5/2024	AS-BUILT					
AS-BUILT DRAWING PREPARED FROM CONTRACTOR PROVIDED REDLINE WHICH MAY NOT BE CORRECT			ALASKA	0902043/SFHWY00072	2021	U33	45

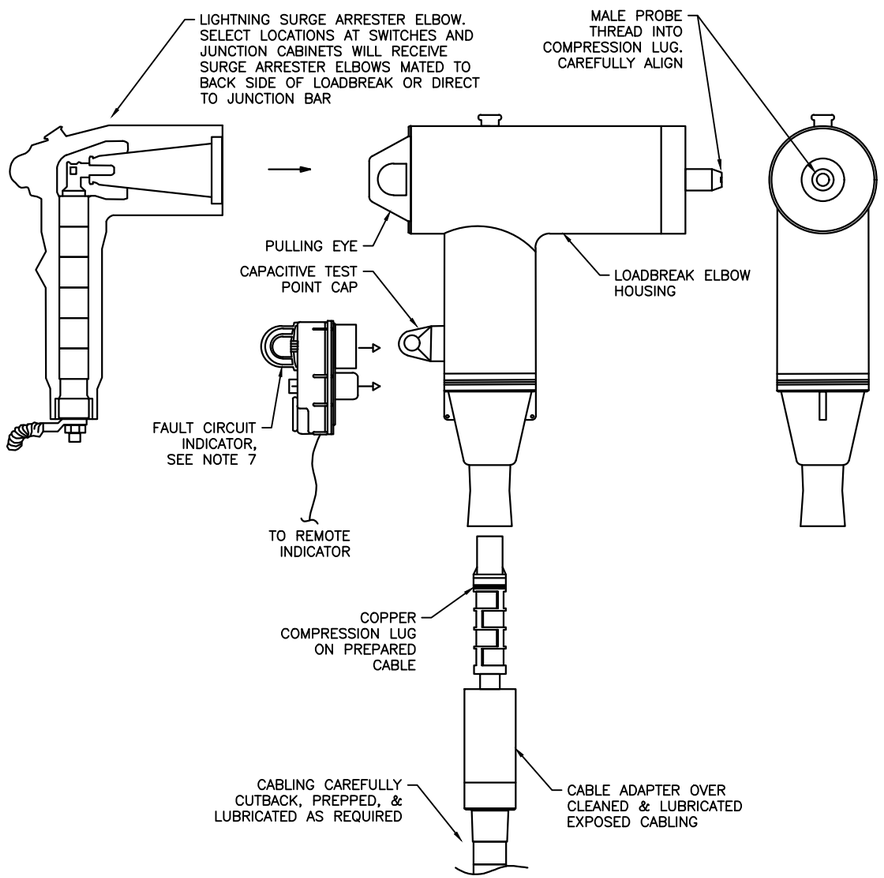

1 LOADBREAK - PRE-INSERT
NO SCALE

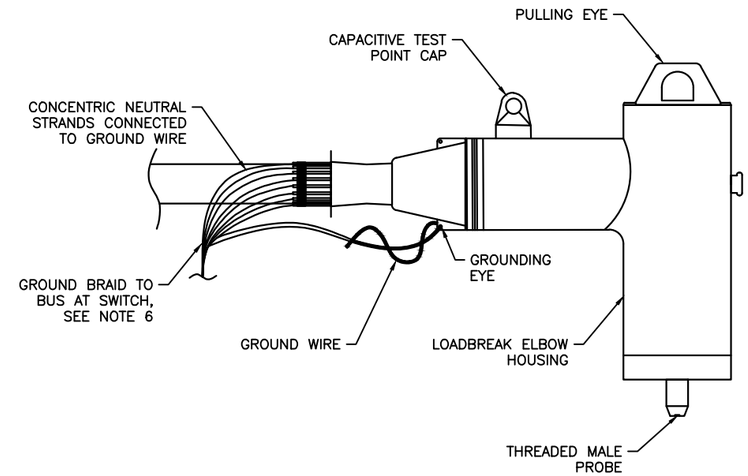

2 LOADBREAK - ASSEMBLED
NO SCALE

NOTES:

1. SEE SPECIFICATIONS FOR FULL REQUIREMENTS OF MEDIUM VOLTAGE CABLE, LOADBREAKS, AND CABLE GROUNDING.
2. PRIOR TO INSTALL, CONFIRM ALL PARTS AND PIECES ARE UNDAMAGED, CABLES AND MATING COMPONENTS ARE PROPERLY FITTED, AND CHECK THAT PROBE THREADS TO COMPRESSION LUG WITH NO RESISTANCE. IF RESISTANCE IS ENCOUNTERED PRIOR TO FULL ASSEMBLY, CHECK FOR DAMAGE AND REPLACE COMPONENTS AS NECESSARY.
3. NOTES INCLUDED ON THIS SHEET ARE GENERIC IN NATURE AND FOR GENERAL INSTRUCTION ONLY. FOLLOW MANUFACTURER WRITTEN REQUIREMENTS.
4. GENERAL NOTES FOR CABLE TERMINATION WORK:
   a. SYSTEM SHALL BE DE-ENERGIZED DURING INSTALLATION.
   b. EACH LOADBREAK KIT SHALL BE PROVIDED COMPLETE FROM FACTORY, ALL KIT COMPONENTS NEW AND FROM ONE MANUFACTURER.
   c. MINIMUM KIT CONTENTS SHALL INCLUDE: 200A LOADBREAK ELBOW, MALE CONTACT PROBE, COMPRESSION LUG, INSTALLATION WRENCH, SILICONE LUBRICANT, MASTICK, COPPER BRAID, COLD SHRINK TUBE, AND INSTRUCTIONS.
5. THERE ARE MANY DISTINCT AND VITAL STEPS IN PREPARING AND TERMINATING CABLES AND LOADBREAKS. BELOW IS A SIMPLE DESCRIPTION OF STEPS ANTICIPATED IN THE PROCESS. CONTRACTOR SHALL HAVE ONLY EXPERIENCED STAFF PERFORM WORK TERMINATING MEDIUM VOLTAGE CABLES AND ASSEMBLING LOADBREAKS. THIS LIST IS PROVIDED TO STRESS THAT THIS WORK IS NOT TO BE DONE BY UNQUALIFIED LINEMEN. UTILIZE ONLY LINEMEN QUALIFIED FOR CABLE SPLICE AND TERMINATION TYPE WORK. KPU TO TERMINATE ALL FINAL CONNECTIONS.

   ANTICIPATED LOADBREAK CONNECTION STEPS INCLUDE:
   a. PREPARING CABLES (I.E. MEASURING AND CUTTING BACK OUTER JACKET, CONCENTRIC NEUTRAL, SEMI-CON, AND INSULATION LAYERS).
   b. MATING THE COMPRESSION LUG TO MALE PROBE (I.E. SECURING LUG ONTO CABLE, INSERTING LUGGED CABLE INTO ELBOW, INSERTING AND THREADING MALE PROBE INTO LUGGED ELBOW).
   c. ELBOW AND CABLE GROUNDING (I.E. GROUND WIRE TO ELBOW GROUND EYE, GROUND WIRE TO EXPOSED NEUTRAL AND BRAID, BRAID COUPLED TO GROUND BUS IN SWITCH).
6. SEE SHEET U28 AND U29 FOR SWITCH AND JUNCTION CABINET ELEVATIONS WITH ADDITIONAL NOTES ON MEDIUM VOLTAGE CABLE GROUNDING AND GROUND BUS CONFIGURATIONS.
7. PROVIDE FAULT CIRCUIT INDICATORS (FCIs) AT EACH LOADBREAK ELBOW IN THE SWITCHES AND JUNCTION CABINETS ON THE PROJECT. SEE SHEET U17 FOR DETAILS ON THE FCI UNITS. INSTALL INDICATORS AT THE CAPACITIVE TESTING POINT OF THE ELBOW PER MANUFACTURER REQUIREMENTS. ROUTE REMOTE INDICATOR CABLING FROM EACH FCI TO REMOTE INDICATOR MOUNTED TO OUTER ENCLOSURE, SEE SHEETS U28 AND U29 FOR MOUNTING DETAIL.
8. LABEL ALL MV CABLES ON THE PROJECT PER DETAIL 2, SHEET U18.

CN
10/23/2024

PLANS DEVELOPED BY:
MORRIS ENGINEERING GROUP, INC
2375 JORDAN AVE #7
JUNEAU, AK 99801
907-789-3350
AECL 1010

STATE OF ALASKA 49TH
Mark G. Morris
May 31, 2024
No. EE 8613
REGISTERED PROFESSIONAL ENGINEER

STATE OF ALASKA DEPARTMENT OF TRANSPORTATION AND PUBLIC FACILITIES
6860 GLACIER HIGHWAY, JUNEAU, AK 99801
(907) 465-1763

UTILITY RELOCATION FOR KETCHIKAN AREA BRIDGES

LOADBREAK ELBOW DETAILS

FILE y:\102 state of ak\44 utility relocation design for ketchikan bridges\Working Drawings\U33 LOADBREAK DETAILS.dwg | DATE 4/26/2024 14:42 | LAYOUT U33 | DESIGNED MGM | CHECKED MGM | DRAFTED JODI

NO.	DATE	REVISION	STATE	PROJECT DESIGNATION	YEAR	SHEET NO.	TOTAL SHEETS
1	5/2024	AS-BUILT					
AS-BUILT DRAWING PREPARED FROM CONTRACTOR PROVIDED REDLINE WHICH MAY NOT BE CORRECT			ALASKA	0902043/SFHWY00072	2021	U34	45

DEMOLITION POLE SUMMARY

NO.	MAST-ARM LENGTH	LUMINAIRE MOUTING HEIGHT	STATION	OFFSET	KPU POLE NO.	LUMINAIRE TYPE
PX1	UNK	30'	395+47.30	21.56'LT	2430-B4-3	150W HPS
PX2	UNK	30'	397+04.36	25.96'RT	2430-B4-2	150W HPS

KPU UTILITY HAS FIRST RIGHTS TO SALVAGEABLE LIGHT FIXTURE AND POLE COMPONENTS. COORDINATE WITH KPU PRIOR TO DEMOLITION. OTHERWISE, FOLLOW ALL RECYCLING AND DISPOSAL REQUIREMENTS OF STATE OF ALASKA AND CITY OF KETCHIKAN PROJECTS.

ELECTROLIER SUMMARY

NO.	MAST-ARM LENGTH	LUMINAIRE MOUTING HEIGHT (d)	LUMINAIRE TYPE	STATION (b)(e)	OFFSET (b)(e)	POLE BASE ELEVATION (a)	REMARKS (c)
LP1	12'	30'	B	387+87.09	31.24'RT	24.800	NEW POLE AND LUMINAIRE, DISC. AT POLE P1
LP2	10'	30'	D	395+46.61	25.03'RT	23.998	NEW POLE AT BRIDGE AND LUMINAIRE
LP3	10'	30'	B	396+85.84	25.03'RT	27.736	NEW POLE AT BRIDGE AND LUMINAIRE
LP4	10'	30'	B	398+20.98	25.16'RT	31.699	NEW POLE AND LUMINAIRE
LP5	8'	30'	B	398+36.51	50.27'LT	34.400	NEW POLE AND LUMINAIRE
LP6	10'	30'	B	399+22.90	21.01'LT	32.813	NEW POLE AND LUMINAIRE

a. CONTRACTOR TO FIELD VERIFY FINAL GRADE ELEVATIONS AT EACH POLE POSITION PRIOR TO WORK. ELEVATION AT CENTER OF POLE BASE UNLESS NOTED OTHERWISE. ELEVATION GIVEN TO TOP OF LIGHT POLE CONCRETE FOUNDATION.
b. STATION AND OFFSET INFORMATION GIVEN TO CENTER OF LIGHT POLE BASE.
c. ALL POLE AND MAST ARMS ORIENTATED SO THAT MAST ARM IS PERPENDICULAR TO ROADWAY ADJACENT TO BASE LOCATION.
d. LUMINAIRE MOUNTING HEIGHT IS FROM FISHED GRADE. POLES AT BRIDGE ARE MOUNTED BELOW ROADWAY, POLE HEIGHTS AS REQUIRED.
e. STATION AND OFFSET ARE FOR GENERAL REFERENCE, SEE DOT&PF DRAWINGS FOR STREET LIGHT FOUNDATION SUMMARY FOR STATION, OFFSET, AND ELEVATION.

LIGHT POLE JUNCTION BOX SUMMARY

NO.	STATION (c)	OFFSET (c)	ELEVATION (a,b)	REMARKS
J1	387+87.70	31.18'RT	24.99	FOR LP1
J2	N/A, ON BRIDGE			FOR LP2
J3	N/A, ON BRIDGE			FOR LP3
J4	398+25.57	24.41'RT	31.74	FOR LP4
J5	398+39.58	45.65'LT	34.40	FOR LP5
J6	399+37.91	18.10'LT	32.73	FOR LP6

a. CONTRACTOR TO FIELD VERIFY FINAL GRADE ELEVATION AT BOX POSITION PRIOR TO WORK. ELEVATION AT CENTER OF BOX LID UNLESS NOTED OTHERWISE.
b. COORDINATE WITH GENERAL CONTRACTOR TO ADJUST JUNCTION BOXES SO THAT THE TOP OF EACH JUNCTION BOX IS FLUSH WITH FINISHED GRADE.
c. BOX STATIONS AND OFFSETS TAKEN TO CENTER OF BOX.

UTILITY POLE SUMMARY

NO.	MAST-ARM LENGTH (a,b)	LUMINAIRE MOUNTING HEIGHT	LUMINAIRE TYPE	STATION	OFFSET	KPU POLE NO.	REMARKS
P1	12'	NOTE "c"	A	386+69.34	31.03'RT	2430-A5-4	EXISTING POLE, REPLACE LUMINAIRE W/ LP1 DISC.
P2	10'/14'	NOTE "c"	B/C	388+60.02	52.63'LT	2430-A5-3	EXISTING POLE, REPLACE LUMINAIRES
P2A	–	–	–	388+56.18	96.38'LT	2430-A5-14	EXISTING GUY POLE
P2B	–	–	–	387+86.25	49.31'LT	2430-A5-10	NEW GUY POLE, SEE NOTE "d"
P3	12'	NOTE "c"	A	390+12.05	20.40'LT	2430-A5-2	EXISTING POLE, REPLACE LUMINAIRE
P4	12'	NOTE "c"	A	391+62.64	23.08'LT	2430-A5-1	EXISTING POLE, REPLACE LUMINAIRE
P5	10'	NOTE "c"	D	393+51.67	24.29'LT	2430-B5-1	REMOVE & REPLACE W/ NEW POLE & LUMINAIRE
P5A	–	–	–	393+24.82	26.24'LT	2430-B5-12	NEW POLE, SEE NOTE "d"
P6	–	–	–	398+57.13	31.78'RT	2430-B4-1	EXISTING POLE W/ NEW GUYS, REMOVE LUMINAIRE
P7	–	–	–	400+70.27	28.50'LT	2430-A4-6	REMOVE & REPLACE W/ NEW POLE & GUYING
P8	–	–	–	400+45.47	38.35'LT	2430-A4-7	REMOVE & REPLACE W/ NEW POLE
P9	–	–	–	400+20.63	41.27'LT	2430-B4-4	EXISTING POLE W/ NEW GUYING
P10	–	–	–	398+46.99	102.73'LT	2430-B4-5	EXISTING POLE, REMOVE LUMINAIRE
P11	12'	NOTE "c"	A	400+70.06	22.92'RT	2430-A4-4	EXISTING POLE, REPLACE LUMINAIRE

a. CONTRACTOR TO VERIFY EXISTING MAST ARM MOUNTING REQUIREMENTS TO FIT NEW LUMINAIRE TO MAST ARM. COORDINATE WITH KPU UTILITY.
b. ALL POLES AND MAST ARMS ORIENTATED SO THAT MAST ARM IS PERPENDICULAR TO ROADWAY ADJACENT TO BASE LOCATION.
c. REPLACE ALL EXISTING MAST ARMS AND FIXTURES IN PLACE WITH NEW.
d. NEW WOOD UTILITY POLE STATION AND SET INFORMATION FOR GENERAL REFERENCE, SEE DOT&PF DRAWINGS FOR EXACT STATION AND OFFSET. COORDINATE FINAL LOCATIONS WITH KPU ELECTRIC PRIOR TO WORK.
e. STATION AND OFFSET FOR EXISTING POLES TO REMAIN ARE FOR GENERAL REFERENCE ONLY.

ELECTROLIER SCHEDULE

LUMINAIRE TYPE	DESCRIPTION	OPTICAL PERFORMANCE	MANUFACTURER		
		LED	BRAND		PART NO.
A	ROADWAY LUMINAIRE WITH FOUR MOUNTING BOLTS TO A 2-3/8" OD MAST ARM. DIE CAST ALUMINUM HOUSING, POLYESTER POWDER COAT, 120-277V, ANSI C136.41 7 PIN WITH SHORTING CAP, BUBBLE LEVEL, IP66, DOOR GROUNDING TETHER, TOOL-LESS ENTRY, QUICK DISCONNECTS.	3,000K, 11,000 LUMENS MIN, 98 WATTS MAX, TYPE 2 DISTRIBUTION	(OR)	GE	ERLH-0-11-B3-30-D GRAY ABGIL055
				AEL	ATB2 40BLEDE70 MVOLT R2 BLHK P7SH
B	ROADWAY LUMINAIRE WITH FOUR MOUNTING BOLTS TO A 2-3/8" OD MAST ARM. DIE CAST ALUMINUM HOUSING, POLYESTER POWDER COAT, 120-277V, ANSI C136.41 7 PIN WITH SHORTING CAP, BUBBLE LEVEL, IP66, DOOR GROUNDING TETHER, TOOL-LESS ENTRY, QUICK DISCONNECTS.	3,000K, 11,000 LUMENS MIN, 98 WATTS MAX, TYPE 3 DISTRIBUTION	(OR)	GE	ERLH-0-11-C3-30-D GRAY ABGIL055
				AEL	ATB2 40BLEDE70 MVOLT R3 BLHK P7SH
C	ROADWAY LUMINAIRE WITH FOUR MOUNTING BOLTS TO A 2-3/8" OD MAST ARM. DIE CAST ALUMINUM HOUSING, POLYESTER POWDER COAT, 120-277V, ANSI C136.41 7 PIN WITH SHORTING CAP, BUBBLE LEVEL, IP66, DOOR GROUNDING TETHER, TOOL-LESS ENTRY, QUICK DISCONNECTS.	3,000K, 11,000 LUMENS MIN, 98 WATTS MAX, TYPE 4 DISTRIBUTION	(OR)	GE	ERLH-0-11-D3-30-D GRAY ABGIL055
				AEL	ATB2 40BLEDE70 MVOLT R4 BLHK P7SH
D	ROADWAY LUMINAIRE WITH FOUR MOUNTING BOLTS TO A 2-3/8" OD MAST ARM. DIE CAST ALUMINUM HOUSING, POLYESTER POWDER COAT, 120-277V, ANSI C136.41 7 PIN WITH SHORTING CAP, BUBBLE LEVEL, IP66, DOOR GROUNDING TETHER, TOOL-LESS ENTRY, QUICK DISCONNECTS.	3,000K, 15,300 LUMENS MIN, 149 WATTS MAX, TYPE 2 DISTRIBUTION	(OR)	GE	ERLH-0-16-B3-30-D GRAY ABGIL055
				AEL	ATB2 60BLEDE70 MVOLT R2 BLHK P7SH

PROVIDE THE LUMINAIRES SHOWN OR APPROVED EQUAL. A SUBSTITUTE LUMINAIRE SHALL HAVE EQUIVALENT PHOTOMETRIC PERFORMANCE AS WELL AS THE SAME QUALITY, FEATURES, FUNCTIONALITY, ATTRIBUTES, ETC. AS THE SPECIFIED LUMINAIRE INCLUDING THE REQUIREMENTS SHOWN ON THE PLANS AND INCLUDED IN THE SPECIFICATIONS. IF IT DOES NOT, IT WILL BE REJECTED AS AN EQUAL TO THE SPECIFIED LUMINAIRE. PHOTOMETRIC FILES SHALL BE PROVIDED (*.IES) ALONG WITH CATALOG CUT SHEETS DURING SUBMITTALS AND THE LIGHTING DESIGN WILL BE CHECKED BY THE DESIGNER USING THE SUBSTITUTE LUMINAIRE. IF AN EQUIVALENT LIGHT LEVEL AND UNIFORMITY AS WELL AS GLARE CONTROL IS NOT ACHIEVED, THE SUBSTITUTE LUMINAIRE WILL BE REJECTED AS AN EQUAL TO THE SPECIFIED LUMINAIRE.

UTILITY EQUIPMENT SCHEDULE

(FOR COORDINATION ONLY)

DESCRIPTION	PAD	STATION (b)	OFFEST (b)	ELEVATION (a)	REMARKS
34.5KV JUNCTION CABINET	4	394+65.55	22.91'RT	29.30	W/ CONCRETE BASEMENT
12.47KV JUNCTION CABINET	4	394+49.08	23.71'RT	29.53	W/ CONCRETE BASEMENT
KPU TELECOM VAULT NO. 1	4	394+41.44	22.14'RT	29.37	VAULT
GCI TV VAULT NO. 1	4	394+35.33	20.22'RT	29.35	VAULT
LIGHTING LOAD CENTER	4	394+39.30	27.42'RT	28.99	W/ CONCRETE BASE
120/240V TRANSFORMER	4	394+35.33	27.74'RT	28.87	W/ CONCRETE BASEMENT
LIGHTING J-BOX	4	394+40.50	30.55'RT		
GCI TV VAULT NO. 2	5	398+42.01	25.67'RT	31.62	VAULT
KPU TELECOM VAULT NO. 2	5	398+35.59	27.55'RT	31.52	VAULT
KPU 34.5KV SWITCH NO. 1	6	398+62.92	81.90'LT	35.09	W/ CONCRETE BASEMENT
KPU 12.47KV SWITCH NO. 2	6	398+51.62	90.31'LT	35.69	W/ CONCRETE BASEMENT
34.5KV POWERHOUSE VAULT		398+26.59	82.39'LT	35.09	VAULT, W/ RECESSED LID
12.47KV POWERHOUSE VAULT		398+20.54	87.14'LT	35.16	VAULT, W/ RECESSED LID

a. ELEVATION GIVEN TO TOP OF CONCRETE SLAB WHERE EQUIPMENT IS MOUNTED OR TO FINISHED GRADE. ADJUST TOP OF BASEMENT STRUCTURE PER DETAIL.
b. STATION & OFFSET GIVEN TO CENTER OF EQUIPMENT BASEMENT OR CONCRETE SLAB LOCATION.

ELECTROLIER GENERAL NOTES:

1. EACH NEW ELECTROLIER SHALL HAVE A JUNCTION BOX INSTALLED ADJACENT TO THE FOUNDATION AS SHOWN IN THE POLE AND JUNCTION BOX WIRING DETAIL SHEET U36, UNLESS NOTED OTHERWISE.
2. PROVIDE JUNCTION BOXES PER SUMMARIES ON THIS SHEET. SEE AK DOT&PF STANDARD DRAWING L-23.01 AND DETAILS ON SHEET U36.
3. NEW ELECTROLIER FOUNDATIONS SHALL BE PER AK DOT&PF STANDARD DRAWING L-30.11. SEE SHEET U36 FOR POLE BASE FOUNDATION DETAIL.
4. ILLUMINATION CIRCUIT WIRES SHALL BE NO. 8 AWG. 4-CONDUCTOR CABLE WITH COPPER CONDUCTORS, XHHW INSULATION, AND AN OVERALL PVC JACKET.
5. PROVIDE ELECTROLIERS PER DETAILS ON SHEET U36, ELECTROLIER SUMMARY TABLES ON THIS SHEET, AND AK DOT&PF STANDARD DRAWING L-03.10.
6. COORDINATE WITH GENERAL CONTRACTOR TO ADJUST JUNCTION BOXES SO THAT THE TOP OF EACH JUNCTION BOX IS FLUSH WITH FINISHED GRADE.
7. PROVIDE GROUNDING BUSHING ON CONDUIT ENTERING JUNCTION BOXES, POLES, AND AS REQUIRED PER THE NEC.
8. SIZE POLE WITH MAST ARM AND LUMINAIRE AS REQUIRED FOR SUSTAINED WINDS OF 100 MPH AND GUSTS TO 120 MPH, EXPOSURE B (2003).

CN
10/23/2024

PLANS DEVELOPED BY:
MORRIS ENGINEERING GROUP, INC
2375 JORDAN AVE #7
JUNEAU, AK 99801
907-789-3350
AECL 1010

STATE OF ALASKA 49TH
Mark G. Morris
May 31, 2024
No. EE 8613
REGISTERED PROFESSIONAL ENGINEER

STATE OF ALASKA DEPARTMENT OF TRANSPORTATION AND PUBLIC FACILITIES
6860 GLACIER HIGHWAY, JUNEAU, AK 99801
(907) 465-1763

UTILITY RELOCATION FOR KETCHIKAN AREA BRIDGES

SCHEDULES

FILE y:\102 state of ak\44 utility relocation design for ketchikan bridges\Working Drawings\SCHEDULES.dwg | DATE 5/29/2024 13:01 | LAYOUT U34 | DESIGNED MGM | CHECKED MGM | DRAFTED JODI

NO.	DATE	REVISION	STATE	PROJECT DESIGNATION	YEAR	SHEET NO.	TOTAL SHEETS
1	5/2024	AS-BUILT					
AS-BUILT DRAWING PREPARED FROM CONTRACTOR PROVIDED REDLINE WHICH MAY NOT BE CORRECT			ALASKA	0902043/SFHWY00072	2021	U35	45

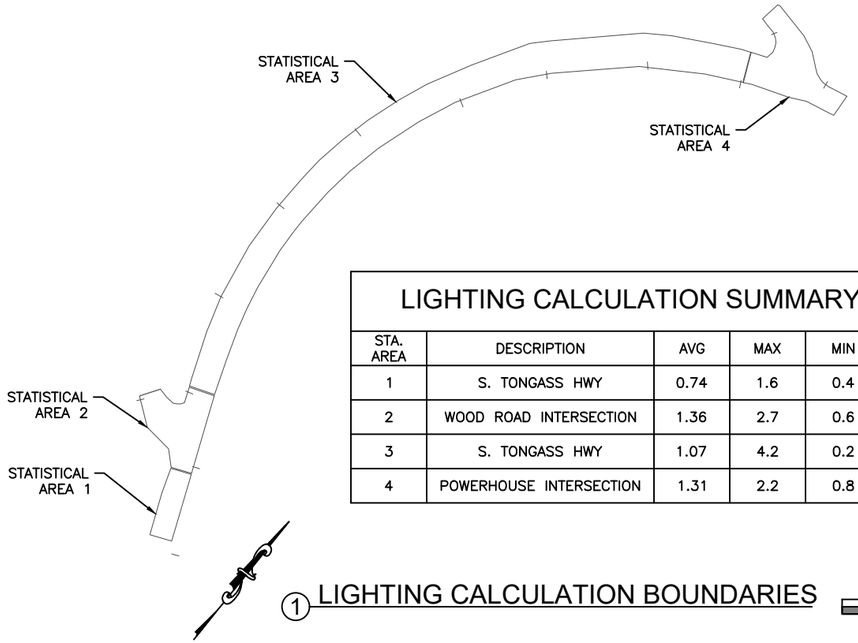

LIGHTING CALCULATION SUMMARY (fc)

STA. AREA	DESCRIPTION	AVG	MAX	MIN	AVG/MIN
1	S. TONGASS HWY	0.74	1.6	0.4	1.85
2	WOOD ROAD INTERSECTION	1.36	2.7	0.6	2.27
3	S. TONGASS HWY	1.07	4.2	0.2	5.35
4	POWERHOUSE INTERSECTION	1.31	2.2	0.8	1.64

1 LIGHTING CALCULATION BOUNDARIES

50' 100' 200'

NOTES (APPLICABLE TO DETAIL 1):

1. CALCULATIONS FOR ROADWAY BETWEEN INTERSECTIONS ARE IN FOOT CANDLES.
2. TABLE VALUES BASED ON IESNA RP-08-14 GUIDELINES FOR ROADWAY AND INTERSECTION LIGHTING.
3. RANGES ARE PER TABLE 12.1 OF RP-08 (ILLUMINANCE FOR INTERSECTIONS) AND ASSUMES 'COLLECTOR/LOCAL' FUNCTIONAL CLASSIFICATION AND BETWEEN 'LOW' AND 'MEDIUM' PEDESTRIAN AREA CLASSIFICATIONS.
4. CALCULATIONS MUST EXTEND THROUGH THE 'TRAFFIC CONFLICT AREA' AT THE INTERSECTION AS DEFINED BY RP-08.
5. MEET OR EXCEED THE PROVIDED LIGHT LEVELS WITHIN EACH SEGMENT OF THE PROJECT AREA. PROVIDE CALCULATIONS AS PART OF THE SUBMITTALS PROCESS.
6. CONTRACTOR SHALL PROVIDE TEMPORARY LIGHTING AS REQUIRED DURING PROJECT CONSTRUCTION. SEE KEYNOTE 18, SHEET U5 FOR MORE INFORMATION.
7. PROVIDE ROADWAY LIGHTING PER RP-08-14, 2013 EDITION.

SUMMARY OF LIGHTING LOAD CENTER: NO. 1

(ALL NEW LOADS)

LOAD CENTER TYPE 1A

LOCATION DATA: STA. 394+38.99, 27.18'RT
LOAD CENTER: NEW AT PAD 4
POWER SOURCE: NEW UTILITY TRANSFORMER AT PAD 4
PHOTOELECTRIC CONTROL: YES, MOUNTED TO LOAD CENTER

SERVICE VOLTAGE: 1 PHASE, 3 WIRE, 240V, 60HZ
INTERRUPTING CAPACITY OF CIRCUIT BREAKERS-SERIES RATED: 10,000AIC
PROVIDE METER SOCKET: YES
SERVICE AMPS: 100A

MAIN BREAKER A: 240V, 2 POLE, 100A
PANEL A RATING: 120/240V, 1 PHASE, 3 WIRE, 125A (MIN.)
CONTACTOR: 240V, 2 POLE, 100A

LOAD PANEL A SUMMARY

CIRCUIT NUMBER	DESCRIPTION	KVA LOAD	BREAKER	
			AMPS	POLES
1,3	SPARE 2-POLE BREAKER	0.0	20	2
2	SPARE BREAKER	0.0	20	1
4	SPARE BREAKER	0.0	20	1
5	CONTRACTOR CONTROL BREAKER	0.0	15	1
5,7	SPARE 2-POLE BREAKER	0.0	20	2
6,8	SPARE 2-POLE BREAKER	0.0	20	2
9,11	2-POLE BREAKER SPACE	–	–	2
10,12	STREET LIGHTING CIRCUIT #1	0.750	20	2
13,15	2-POLE BREAKER SPACE	–	–	2
14,16	SPARE 2-POLE BREAKER	0.0	20	2

NOTES:

1. STATION AND OFFSET INFORMATION GIVEN TO CENTER OF LOAD CENTER.
2. EXCAVATE AND BACKFILL 12" MIN ALL SIDES OF LOAD CENTER BASE.
3. SEE DOT&PF STANDARD DETAIL L-25-01.
4. PE CELL IS POWERED FROM CONTACTOR.

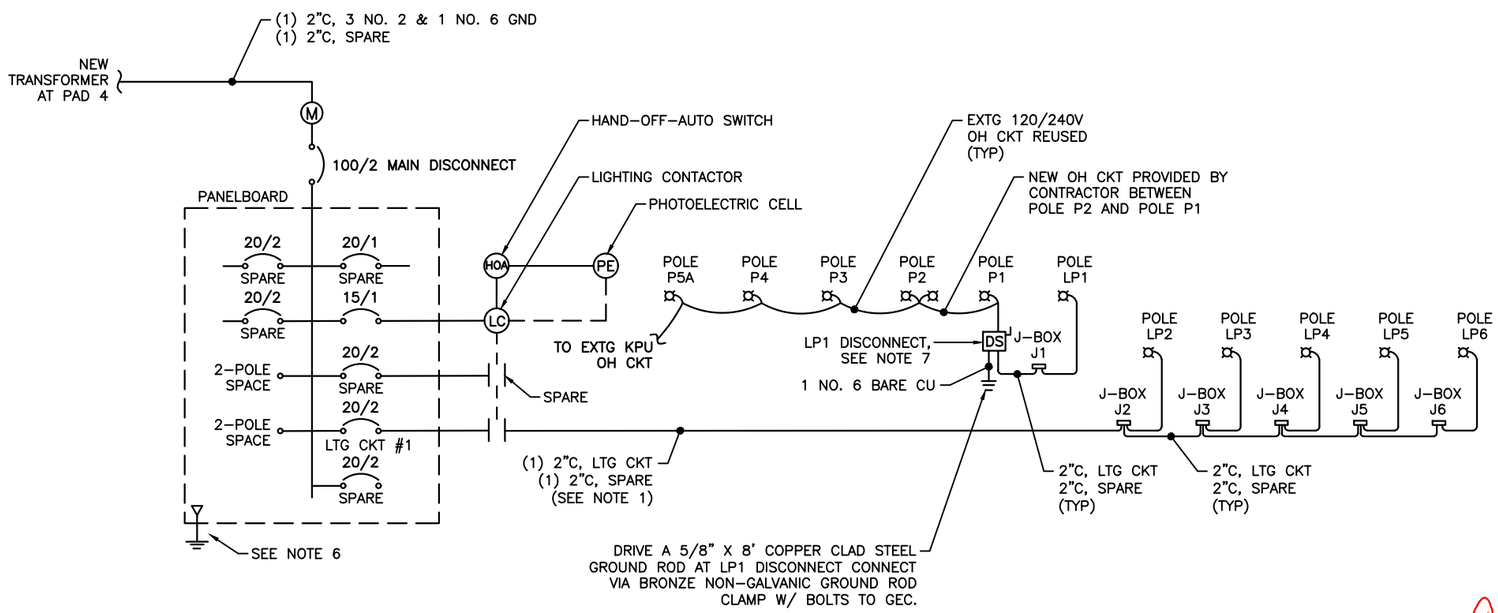

2 CONTROLLER SCHEMATIC
NO SCALE

NOTES (APPLICABLE TO DETAIL 2):

1. PROVIDE NO. 8, 4-CONDUCTOR CABLES, WITH GROUND, TO EACH LIGHT FIXTURE. PROVIDE CIRCUIT SPLICES AT JUNCTION BOXES AS REQUIRED. RUN A SPARE CONDUIT INTO EACH LIGHT POLE BASE.
2. PROVIDE CIRCUIT LABELING AT ALL JUNCTION BOXES AND ACCESSIBLE SPICE POINTS.
3. PROVIDE ALL SPARE CONDUITS WITH PULLSTRINGS.
4. LABEL LOAD CENTER PANEL CIRCUITS.
5. NOT ALL DETAILS AND REQUIREMENTS FOR THE LIGHTING LOAD CENTER ARE NOTED IN THE PLANS AND SPECIFICATIONS. REFER TO ALASKA DOT&PF STANDARD DESIGN DRAWING L-25.01 & L-25.00 (2020 EDITION) FOR ADDITIONAL REQUIREMENTS OF THE TYPE 1A LIGHTING LOAD CENTER.
6. GROUND THE LOAD CENTER TO CONCRETE FOUNDATION REINFORCING PER CODE AND AS REQUIRED PER DRAWING L-25.01 (SEE NOTE 5 ABOVE). ESTABLISH NEUTRAL-TO-GROUND BOND AT PANEL, MAINTAIN N-G ISOLATION THEREAFTER.
7. PROVIDE A 30A, FUSED DISCONNECT AT UTILITY POLE P1. DISCONNECT SHALL ACT AS DEMARCATION POINT BETWEEN KPU AND DOT&PF FACILITIES. NEMA 4X, SS, 240V RATED, WITH LOCKABLE HANDLE AND NEUTRAL KIT. SQUARE D H221DS WITH SN03 NEUTRAL KIT OR EQUAL. PROVIDE WITH CLASS CC TIME-DELAY FUSE MATCHED TO SIZE OF FUSE WITHIN LP1 POLE FUSE HOLDER. SEE DETAIL 9, SHEET U36 FOR MOUNTING AND MORE INFORMATION.

CN
10/23/2024

PLANS DEVELOPED BY:
MORRIS ENGINEERING GROUP, INC
2375 JORDAN AVE #7
JUNEAU, AK 99801
907-789-3350
AECL 1010

STATE OF ALASKA 49TH
Mark G. Morris
May 31, 2024
No. EE 8613
REGISTERED PROFESSIONAL ENGINEER

STATE OF ALASKA DEPARTMENT OF TRANSPORTATION AND PUBLIC FACILITIES
6860 GLACIER HIGHWAY, JUNEAU, AK 99801
(907) 465-1763

UTILITY RELOCATION FOR KETCHIKAN AREA BRIDGES

LIGHTING LOAD CENTER SUMMARY, SCHEMATIC & CALCS.

FILE | y:\102 state of ak\44 utility relocation design for ketchikan bridges\Working Drawings\LOAD CENTER SUMMARIES.dwg | DATE | 5/24/2024 13:57 | LAYOUT | U35 | DESIGNED | MGM | CHECKED | MGM | DRAFTED | EMILEE

NO.	DATE	REVISION	STATE	PROJECT DESIGNATION	YEAR	SHEET NO.	TOTAL SHEETS
1	5/2024	AS-BUILT	ALASKA	0902043/SFHWY00072	2021	U36	45
AS-BUILT DRAWING PREPARED FROM CONTRACTOR PROVIDED REDLINE WHICH MAY NOT BE CORRECT							

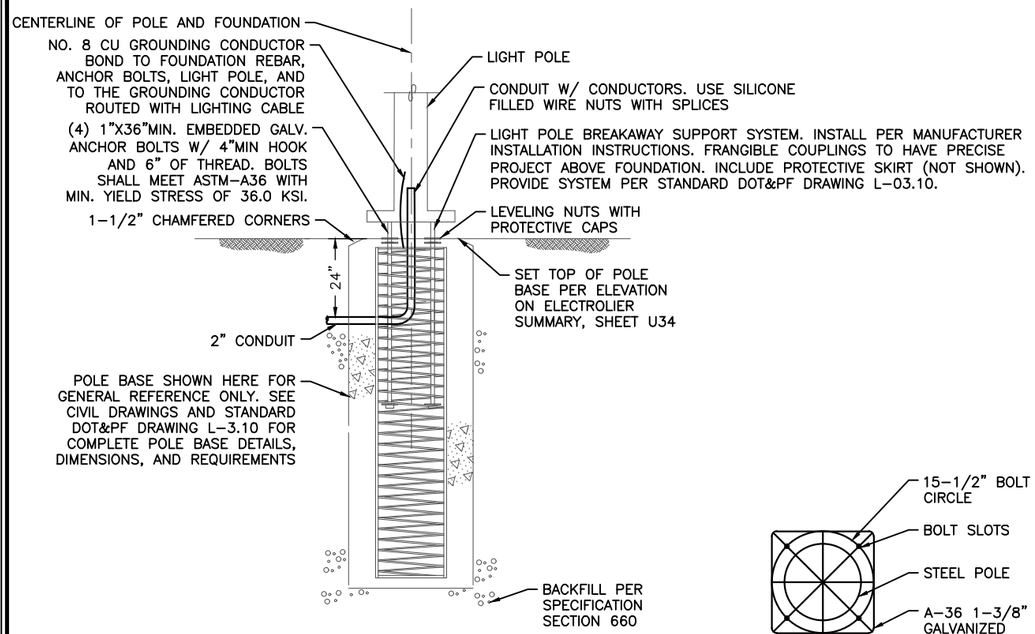

① POLE BASE FOUNDATION DETAIL
NO SCALE

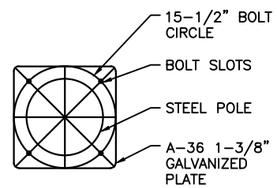

② BOLT CIRCLE DETAIL
NO SCALE

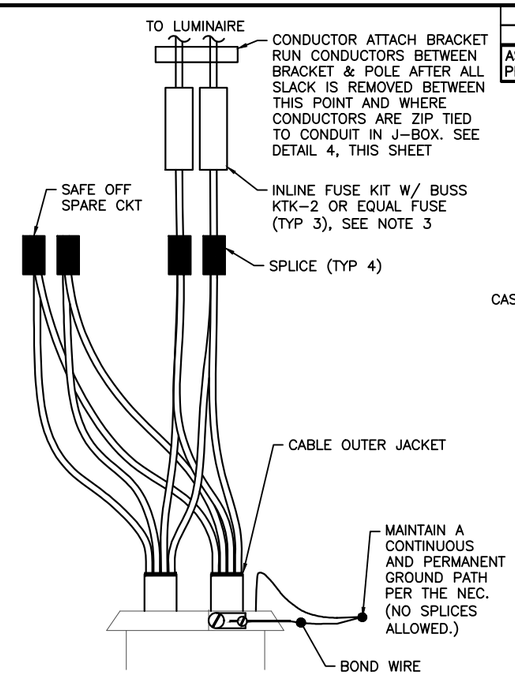

③ POLE WIRING DETAIL
NO SCALE

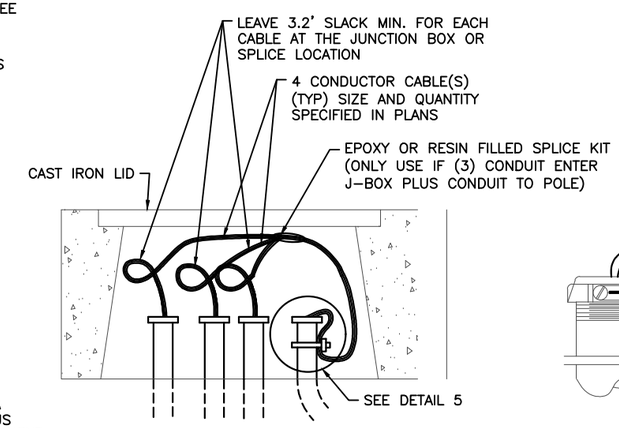

④ JUNCTION BOX DETAIL
NO SCALE

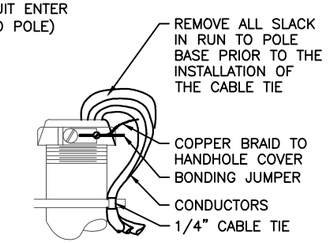

⑤ JUNCTION BOX GROUNDING DETAIL
NO SCALE

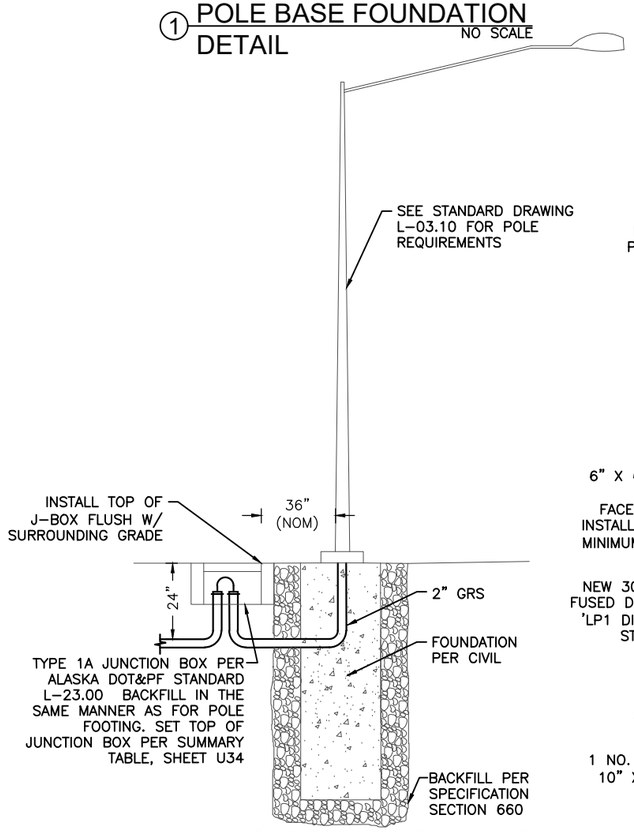

⑥ ELECTROLIER MOUNTING DETAIL
NO SCALE

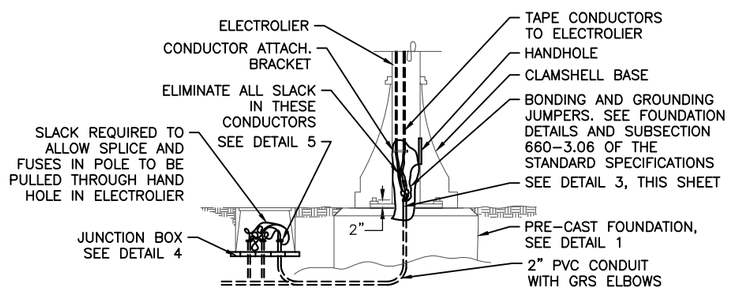

⑦ LIGHTING SYSTEM POLE AND JUNCTION BOX WIRING DETAIL
NO SCALE

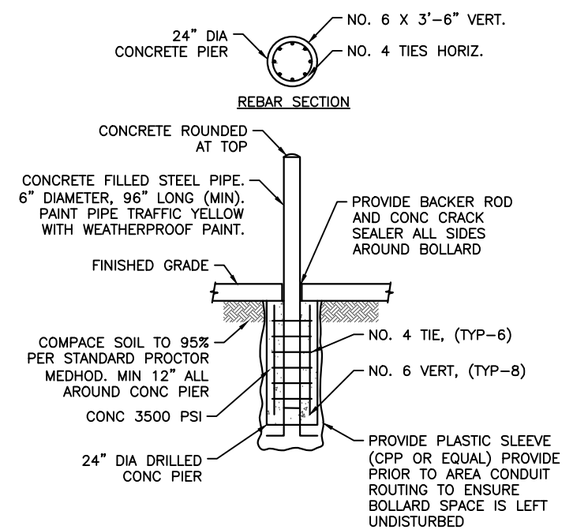

⑧ CONCRETE BOLLARD DETAIL
AT PAD 6 — NO SCALE

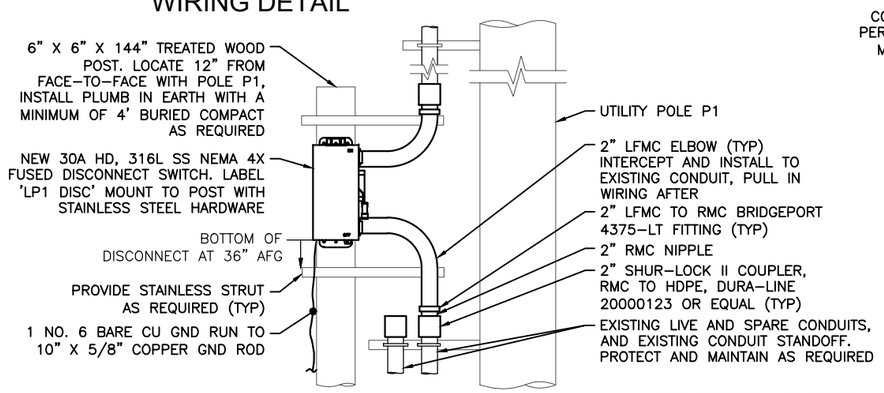

⑨ LIGHT POLE LP1 DISCONNECT DETAIL (AT POLE P1)
NO SCALE

NOTE: SEE DETAIL 2, SHEET U35 FOR MORE INFO ON DISCONNECT, GROUND ROD, AND CIRCUITING.

SHEET NOTES:

1. ALL SPLICES SHALL BE IN BASE OF POLE.
2. PROVIDE GROUNDING BUSHINGS ON CONDUIT. BOND GROUNDING CONDUCTOR ROUTED WITH LIGHTING CABLE TO GROUNDING BUSHINGS AND STEEL COVER, AND ROUTE TO LIGHT POLE BASE.
3. PROVIDE DOUBLE FUSED CONNECTOR KITS IN BASE OF POLE. SECTION NO. 1791-DF OR EQUAL. THE FUSES SHALL BE BUSS KTK-5 FAST ACTING DUAL FERRULE TYPE OR APPROVED EQUAL.
4. LOCATE THE LIGHT POLES AND JUNCTION BOXES WHERE SHOWN ON TABLES ON SHEET U34.
5. SIZE POLE WITH LUMINAIRE FOR 100 MPH SUSTAINED WINDS WITH GUSTS TO 120 MPH, EXPOSURE B (IBC 2003).
6. PROVIDE FUSE KITS IN EACH POLE BASE.
7. PROVIDE GROUNDING BUSHINGS ON CONDUIT.
8. SPLICE IN JUNCTION BOX ONLY WHEN CIRCUIT BRANCHES IN TWO DIRECTIONS (3 OR MORE CONDUIT PLUS CONDUIT TO LIGHT POLE). OTHERWISE SPLICE CABLES IN LIGHT POLE PER DETAIL 7. USE RESIN FILLED SPLICE KITS WHEN SPLICING IN JUNCTION BOXES.
9. BOND GROUNDING CONDUCTORS THAT ARE IN CONDUIT TO GROUNDING BUSHINGS AND TO JUNCTION BOX LID BONDING JUMPER.

CN
10/23/2024

PLANS DEVELOPED BY:
MORRIS ENGINEERING GROUP, INC
2375 JORDAN AVE #7
JUNEAU, AK 99801
907-789-3350
AECL 1010

STATE OF ALASKA 49TH
Mark G. Morris
May 31, 2024
No. EE 8613
REGISTERED PROFESSIONAL ENGINEER

STATE OF ALASKA DEPARTMENT OF TRANSPORTATION AND PUBLIC FACILITIES
6860 GLACIER HIGHWAY, JUNEAU, AK 99801
(907) 465-1763

UTILITY RELOCATION FOR KETCHIKAN AREA BRIDGES

ELECTROLIER, JUNCTION BOX, & BOLLARD DETAILS

FILE | y:\102 state of ak\44 utility relocation design for ketchikan bridges\Working Drawings\ELECTROLIER & JUNCTION BOX DETAILS.dwg | DATE | 5/24/2024 14:00 | LAYOUT | U36 | DESIGNED | MGM | CHECKED | MGM | DRAFTED | EMILEE

NO.	DATE	REVISION	STATE	PROJECT DESIGNATION	YEAR	SHEET NO.	TOTAL SHEETS
1	5/2024	AS-BUILT					
AS-BUILT DRAWING PREPARED FROM CONTRACTOR PROVIDED REDLINE WHICH MAY NOT BE CORRECT			ALASKA	0902043/SFHWY00072	2021	U37	45

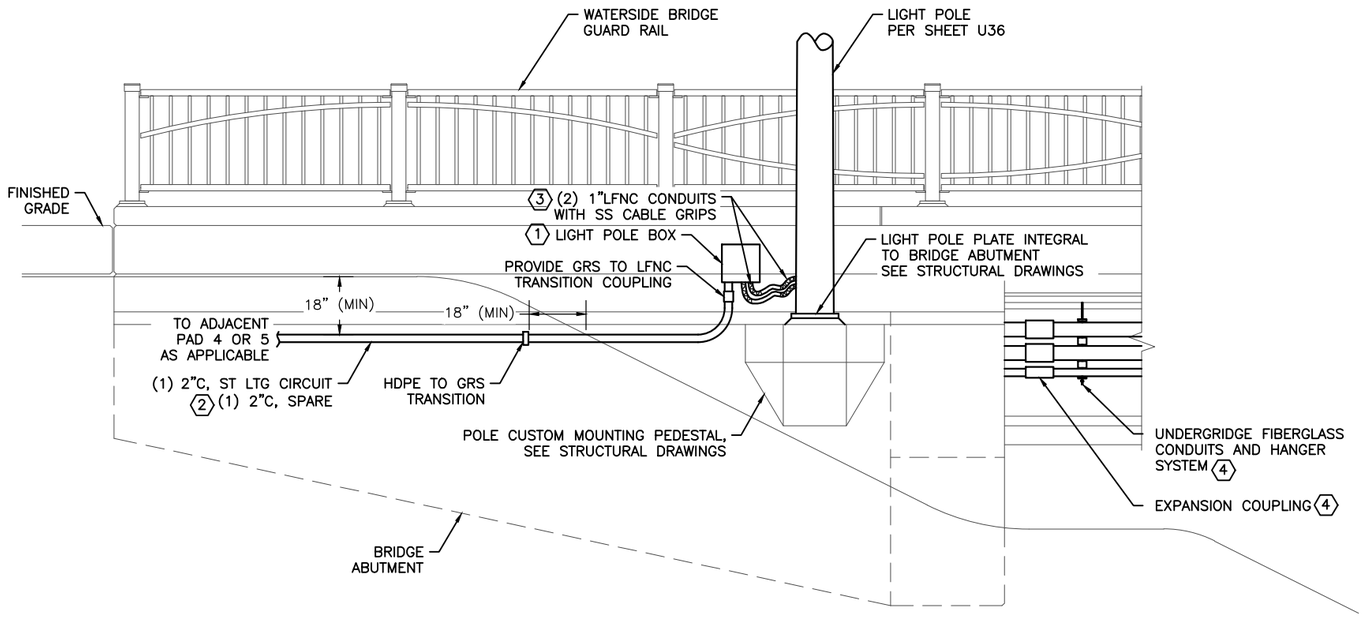

1 BRIDGE ELECTROLIER
(APPLIES TO POLES LP2 & LP3)

6" 1' 2' 4'

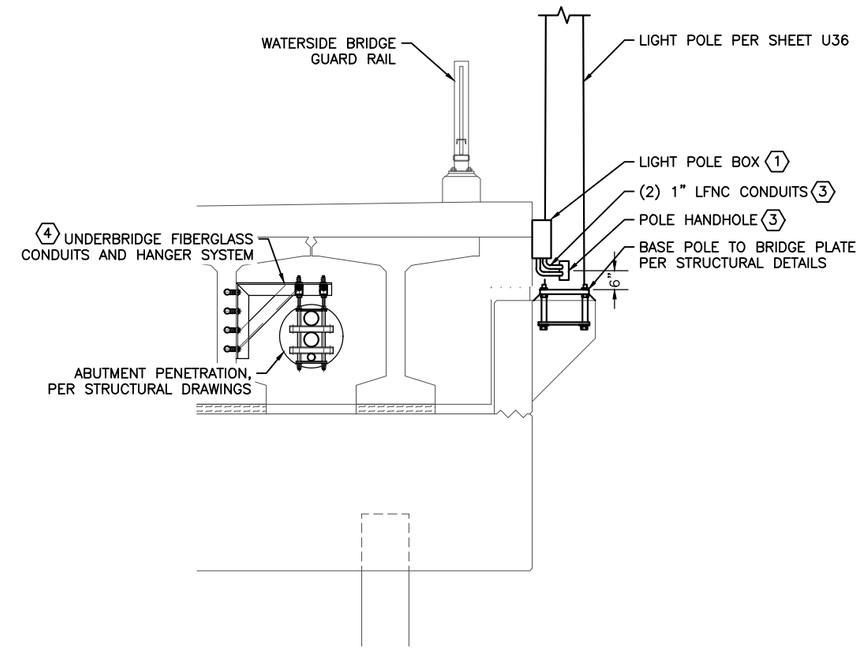

2 BRIDGE ELECTROLIER - SECTION
(APPLIES TO POLES LP2 & LP3)

6" 1' 2' 4'

SHEET NOTES:

1. DETAILS ON THIS PAGE ARE TYPICAL FOR BOTH BRIDGE ELECTROLIERS.
2. COORDINATE ALL WORK WITH BRIDGE CONTRACTOR, CIVIL, AND STRUCTURAL DRAWINGS.

KEYNOTES:

1. PROVIDE A SURFACE MOUNTED LIGHT POLE JUNCTION BOX ADJACENT TO POLE MOUNTING PEDESTAL. 12" X 12" X 6", NEMA 4X, STAINLESS STEEL 316 ENCLOSURE WITH HINGED LID. LOCATE LIGHT POLE FUSING, WITHIN THIS BOX. COORDINATE LOCATION WITH BRIDGE CONTRACTOR, MOUNT AS HIGH ABOVE ADJACENT SLOPED GRADE AS PRACTICAL. MOUNT TO CUT STAINLESS STEEL SUPPORT CHANNEL SEGMENTS ATTACHED TO THE ABUTMENT WALL.
2. PROVIDE CONDUITS UNDERGROUND TO BOX FROM LAST LIGHT POLE JUNCTION BOX. TRANSITION UNDERGROUND CONDUITS HDPE TO GRS PRIOR TO EXITING THE SLOPE AS INDICTED.
3. PROVIDE LFNC CONDUIT FROM BOX ON ABUTMENT TO LIGHT POLE. TERMINATE CONDUITS ONTO POLE HANDHOLE LID. PROVIDE STRAIN RELIEF GRIPS FOR THE FLEX CONDUIT SEGMENTS, KELLUM GRIPS OR EQUAL, AT BOTH ENDS OF THE SEGMENTS.
4. UNDERBRIDGE FIBERGLASS CONDUITS AND HANGERS SHOWN HERE FOR GENERAL REFERENCE ONLY. INSTALLED IN STAGES PER SHEETS U7A–U7C. SEE SHEET U14 FOR HANGER SYSTEM DETAILS.

CN
10/23/2024

PLANS DEVELOPED BY:
MORRIS ENGINEERING GROUP, INC
2375 JORDAN AVE #7
JUNEAU, AK 99801
907–789–3350
AECL 1010

STATE OF ALASKA 49TH
Mark G. Morris
May 31, 2024
No. EE 8613
REGISTERED PROFESSIONAL ENGINEER

STATE OF ALASKA DEPARTMENT OF TRANSPORTATION AND PUBLIC FACILITIES
6860 GLACIER HIGHWAY, JUNEAU, AK 99801
(907) 465–1763

UTILITY RELOCATION FOR KETCHIKAN AREA BRIDGES

BRIDGE ELECTROLIER & JUNCTION BOX DETAILS

FILE y:\102 state of ak\44 utility relocation design for ketchikan bridges\Working Drawings\BRIDGE ELECTROLIER & JUNCTION BOX DETAILS.DWG | LAYOUT U37 | 5/24/2024 14:00 | DESIGNED MGM | CHECKED MGM | DRAFTED EMILEE

NO.	DATE	REVISION	STATE	PROJECT DESIGNATION	YEAR	SHEET NO.	TOTAL SHEETS
1	5/2024	AS-BUILT					
AS-BUILT DRAWING PREPARED FROM CONTRACTOR PROVIDED REDLINE WHICH MAY NOT BE CORRECT			ALASKA	0902043/SFHWY00072	2021	U38	45

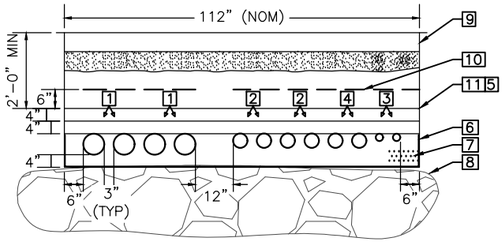

① TRENCH C1 DETAIL
NO SCALE

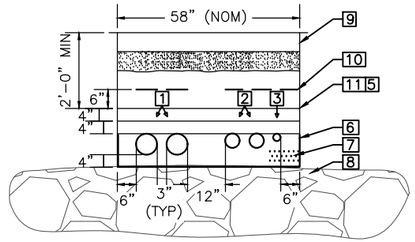

② TRENCH C2 DETAIL
NO SCALE

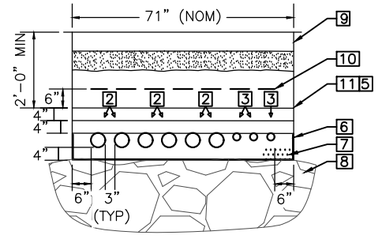

③ TRENCH C3 DETAIL
NO SCALE

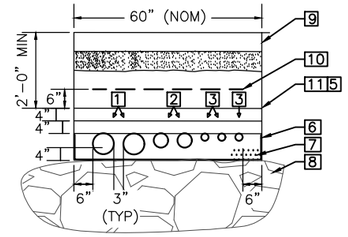

④ TRENCH C4 DETAIL
NO SCALE

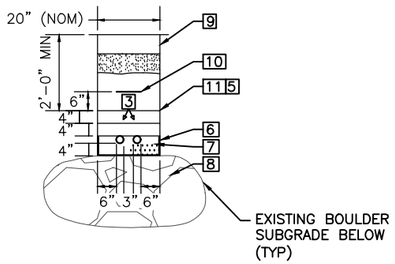

⑤ TRENCH L1 DETAIL
NO SCALE

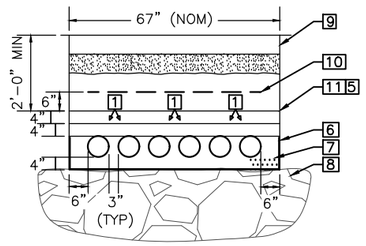

⑥ TRENCH P1 DETAIL
NO SCALE

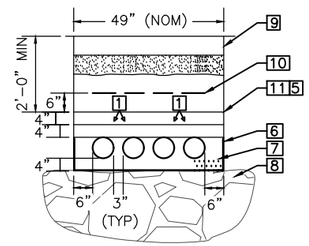

⑦ TRENCH P2 DETAIL
NO SCALE

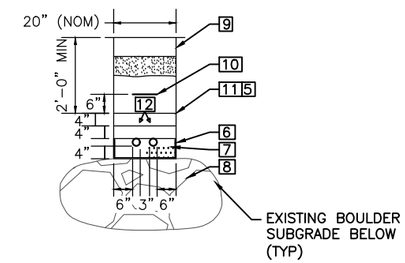

⑧ TRENCH P3 DETAIL
NO SCALE

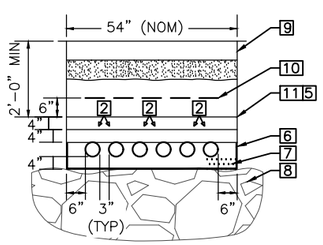

⑨ TRENCH T1 DETAIL
NO SCALE

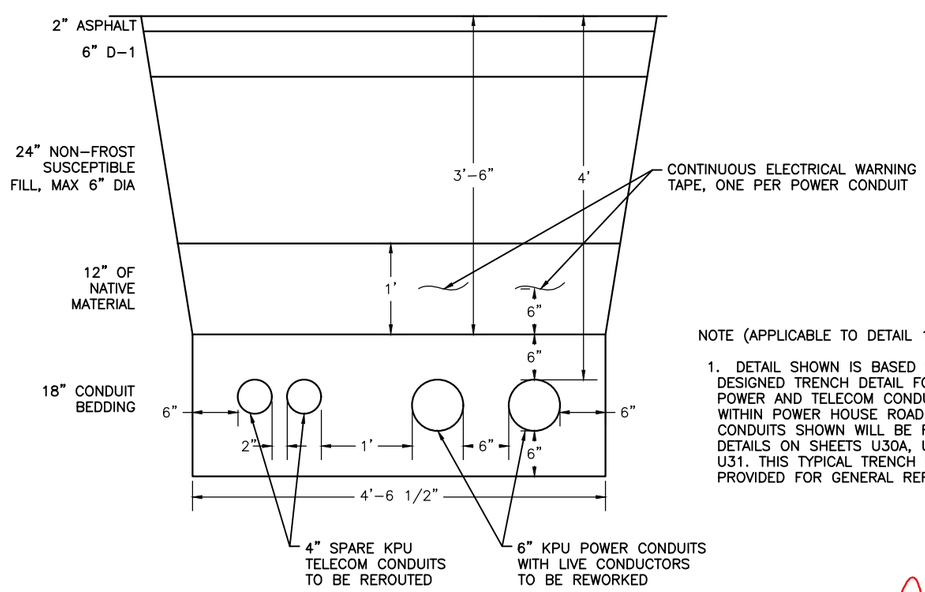

⑩ EXISTING POWERHOUSE ROADWAY TRENCH DETAIL
NO SCALE

NOTE (APPLICABLE TO DETAIL 10):

1. DETAIL SHOWN IS BASED ON THE DESIGNED TRENCH DETAIL FOR EXISTING POWER AND TELECOM CONDUITS THAT RUN WITHIN POWER HOUSE ROAD. THE FOUR CONDUITS SHOWN WILL BE REWORKED PER DETAILS ON SHEETS U30A, U30B, AND U31. THIS TYPICAL TRENCH DETAIL IS PROVIDED FOR GENERAL REFERENCE ONLY.

SHEET NOTES:

1. ALL DIMENSIONS SHOWN ARE MINIMUM. TRENCH DETAILS ARE NOT TO SCALE. DO NOT SCALE FROM DETAILS.
2. INDIVIDUAL CONDUIT DIAMETERS (2", 4", 6") ARE NOT ACCURATELY SIZED ON THE TRENCH DETAILS. DETAILS ON THIS SHEET EMPHASIZE SPACING OF CONDUITS, NOT THE SIZE OF THE CONDUITS THEMSELVES.
3. SEE CIVIL SHEETS FOR TYPICAL SECTIONS UNDER PAVED AREAS, ROADWAY CROSS SECTIONS, ETC.
4. IN ALL CASES, MEDIUM VOLTAGE POWER CONDUITS (12.47KV & 34.5KV) IN TRENCH SHALL BE SEPARATED FROM ALL OTHER CONDUITS BY 12" MINIMUM.
5. THROUGHOUT THE SITE, CONDUITS CROSS AND SEPARATE FROM COMMON TRENCHES. SEE SITE PLANS FOR SPECIFIC LOCATIONS. CROSSING CONDUITS WILL REQUIRE SPECIAL CONSIDERATION TO ENSURE MINIMUM SEPARATIONS ARE MAINTAINED. ALL CONDUIT CROSSING POINTS SHALL BE DOCUMENTED IN THE AS-BUILTS.
6. SEE SITE PLANS FOR TRENCH DETAIL CALLOUTS.
7. CONDUIT ARRANGEMENTS MAY VARY FROM WHAT IS SHOWN. CONDUITS MAY BE MIRRORED WITHIN A TRENCH, MV CONDUITS MIRRORED, TELECOM CONDUITS MIRRORED, ETC. CONTRACTOR IS EXPECTED TO ARRANGE CONDUITS IN EACH TRENCH TO MINIMIZE CROSSING CONDUITS. TO MINIMIZE NUMBER OF TRENCHES NEEDED, ETC. IN ALL CASES, MINIMUM SEPARATIONS SHOWN MUST BE MAINTAINED.
8. SOME KEYNOTES ON SHEET U5 REFERENCE CABLES APPLICABLE TO THIS SHEET.

SHEET KEYNOTES:

1. 6" MEDIUM VOLTAGE POWER UTILITY CONDUITS OR SPARE(S).
2. 4" TELEPHONE & TELEVISION UTILITY CONDUITS OR SPARE(S).
3. 2" STREET LIGHTING CONDUIT OR SPARE(S).
4. 4" CUSTOMER SERVICE CONDUIT OR SPARE.
5. 4" CONCRETE CAP. EXTEND 6" BEYOND CONDUIT WIDTH WITHIN THE TRENCH, BOTH SIDES, THE ENTIRE LENGTH OF THE TRENCH.
6. PROVIDE TWO LAYERS OF HEAVY DUTY, COMMERCIAL GRADE FILTER FABRIC LINER ON BOTH SIDES AND THE BOTTOM OF THE CONDUIT TRENCH D-1 MATERIAL AREA.
7. BEDDING PER CIVIL SPECS (COMPACTED D-1).
8. REQUIRED CONDUIT DEPTH WILL LIKELY REQUIRE DRILLING/BLASTING BOULDERS.
9. ROADWAY, SEE CIVIL SHEETS.
10. DETECTABLE UNDERGROUND ELECTRICAL UTILITY MARKING TAPES (REEF TERRA TAPE OR SCOTCH SERIES 400 BARRICADE TAPE). RED TAPE OVER POWER & ORANGE TAPE OVER COMMUNICATIONS.
11. SELECT MATERIAL, TYPE W, SEE CIVIL SHEETS.
12. 2" MEDIUM VOLTAGE POWER UTILITY CONDUITS OR SPARE(S).

CN
10/23/2024

PLANS DEVELOPED BY:
MORRIS ENGINEERING GROUP, INC
2375 JORDAN AVE #7
JUNEAU, AK 99801
907-789-3350
AECL 1010

STATE OF ALASKA 49TH
Mark G. Morris
May 31, 2024
No. EE 8613
REGISTERED PROFESSIONAL ENGINEER

STATE OF ALASKA DEPARTMENT OF TRANSPORTATION AND PUBLIC FACILITIES
6860 GLACIER HIGHWAY, JUNEAU, AK 99801
(907) 465-1763

UTILITY RELOCATION FOR KETCHIKAN AREA BRIDGES

TRENCH DETAILS

FILE | y:\102 state of ak\44 utility relocation design for ketchikan bridges\Working Drawings\TRENCH DETAILS.dwg | DATE | 4/26/2024 14:42 | LAYOUT | U38 | DESIGNED | MGM | CHECKED | MGM | DRAFTED | NADJA

NO.	DATE	REVISION	STATE	PROJECT DESIGNATION	YEAR	SHEET NO.	TOTAL SHEETS
1	5/2024	AS-BUILT					
AS-BUILT DRAWING PREPARED FROM CONTRACTOR PROVIDED REDLINE WHICH MAY NOT BE CORRECT			ALASKA	0902043/SFHWY00072	2021	U39	45

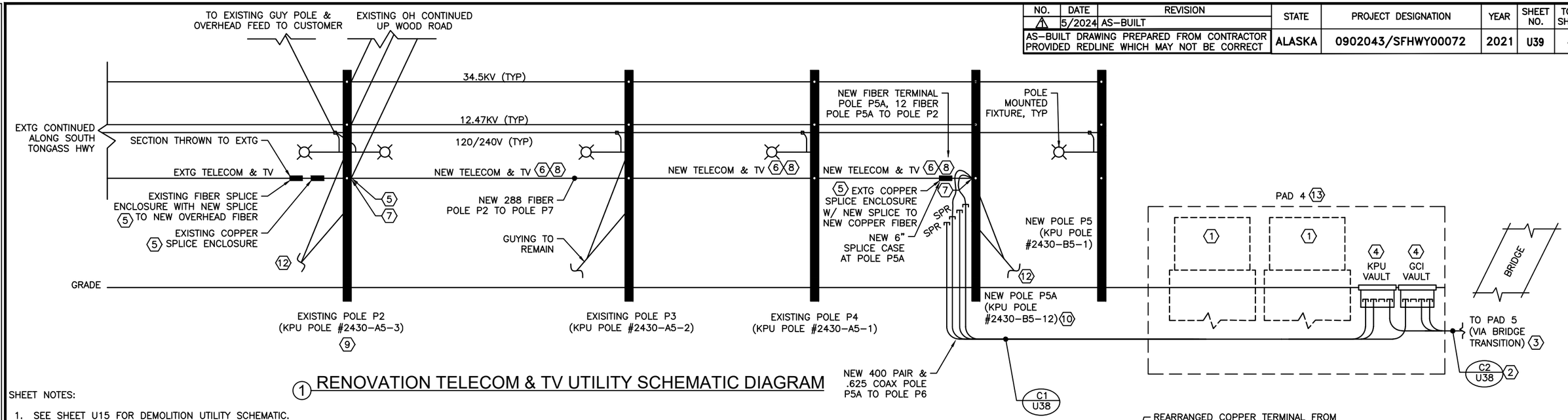

1 RENOVATION TELECOM & TV UTILITY SCHEMATIC DIAGRAM

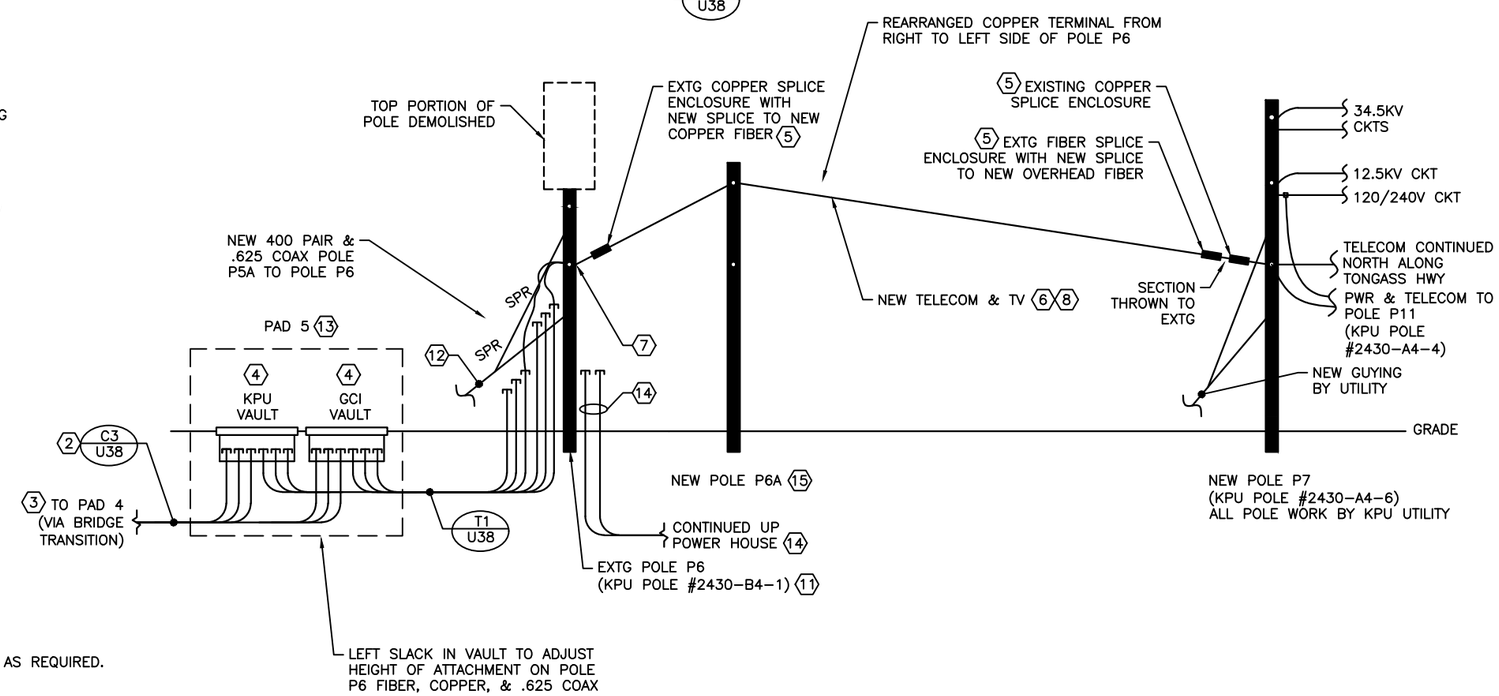

SHEET NOTES:

1. SEE SHEET U15 FOR DEMOLITION UTILITY SCHEMATIC.
2. THIS SCHEMATIC DEPICTS REMAINING EXISTING OVERHEAD UTILITY WORK AND NEW UNDERGROUND TELECOM AND TV DISTRIBUTION WORK ALONG SOUTH TONGASS HIGHWAY WITHIN THE PROJECT AREA. SEE SITE PLANS FOR MORE SPECIFICS AND EXTENTS.
3. THIS SCHEMATIC IS A GENERAL REFERENCE ONLY AND SHOULD BE USED AS SUCH. VERIFY ONSITE ALL EXISTING POLE ELEMENTS, NOT ALL ELEMENTS ARE SHOWN.
4. NEARLY ALL NEW TELECOM AND TV CONDUIT TRENCHES HAVE ACCOMPANYING POWER CONDUITS WITHIN THE SAME TRENCH. SEE SITE PLANS FOR SPECIFIC TRENCH LOCATIONS, AND SHEET U38 FOR TRENCH PROFILES.
5. TELECOMMUNICATIONS AND TV UNDERGROUND CONDUCTORS AND CABLES NOT SHOWN ON THIS SHEET. ALL NEW TELECOM CONDUCTOR AND CABLE FURNISHED AND INSTALLED BY CONTRACTOR.
6. TELECOM AND TV CABLES AND CONDUITS AT NEW VAULTS TO BE LABELED. SEE SHEET U41 FOR LABELING REQUIREMENTS.
7. PROVIDE UTILITY CABLE SLACK CABLE COILS PER COIL TABLE, THIS SHEET.

KEYNOTES:

1. UTILITY PAD HAS POWER AND TELECOM AND TV EQUIPMENT. POWER EQUIPMENT OUTLINES SHOWN FOR GENERAL REFERENCE ONLY. SEE RENOVATION POWER UTILITY SCHEMATIC ON SHEET U16 FOR ADJACENT POWER UTILITY WORK.
2. CONDUITS TRANSITION FROM ONE COMMON TRENCH PROFILE TO ANOTHER BETWEEN END POINTS. SEE SITE PLANS FOR MORE DETAILS.
3. CONDUITS SPLIT INTO SEPARATE BAYS IN ROUTING ACROSS UNDERSIDE OF BRIDGE. SEE SHEETS U7A–U7C AND U14 FOR BRIDGE DETAILS.
4. SEE SHEET U41 FOR VAULT DETAIL.
5. KPU TELECOM FIBER SPLICES TO OCCUR AT EXISTING SPLICE ENCLOSURES AT POLES P2 AND P7. COPPER SPLICES TO OCCUR AT EXISTING ENCLOSURES AT POLES P5A AND P6. CABLE SPLICES, TERMINATIONS, AND TESTING BY CONTRACTOR. COORDINATE WITH UTILITY AS REQUIRED.
6. PROVIDE NEW FIBER, COPPER TO REMAIN, KPU TELECOM OVERHEAD. SEE DETAIL 1, SHEET U41 FOR DETAILS.
7. GCI TELEVISION CABLE TO SPLICES TO OCCUR AT POLES P2, P5A, P6, AND P7. SPLICES BY GCI. COORDINATE AS REQUIRED.
8. PROVIDE NEW TV COAXIAL CABLE OVERHEAD. SEE DETAIL 1, SHEET U41 FOR DETAILS.
9. RENOVATED OVERHEAD AT EXISTING POLE P2 PER DETAILS ON SHEET U19.
10. NEW OVERHEAD AT NEW POLE P5A PER DETAILS ON SHEET U21.
11. RENOVATED OVERHEAD AT EXISTING POLE P6 PER DETAILS ON SHEETS U15 AND U16.
12. PROVIDE NEW GUYING FOR POLE. SEE POLE SPECIFIC DETAILS FOR REQUIREMENTS.
13. SEE ENLARGED PAD DETAILS ON SHEET U11 (PAD 4) AND SHEET U12 (PAD 5) FOR LAYOUT INFORMATION.
14. 4" TELECOM RISERS (SPARE) RUN UNDERGROUND UP POWERHOUSE ROAD. CONDUITS TO BE REWORKED DURING POWERHOUSE VAULT INSTALLATION WORK. SEE SHEET U18 FOR MORE INFORMATION. POWER CONDUITS TO BE ABANDONED IN PLACE, TELECOM TO REMAIN AS SPARES.
15. PROVIDE A WOOD TELECOM POLE P6A TO ALLOW FOR REROUTING OF TELECOM OVERHEAD TO A HIGHER ELEVATION ABOVE ROADWAY. SEE SHEETS U8, U39, AND U39A FOR MORE INFORMATION.

CN
10/23/2024

PLANS DEVELOPED BY:
MORRIS ENGINEERING GROUP, INC
2375 JORDAN AVE #7
JUNEAU, AK 99801
907-789-3350
AECL 1010

STATE OF ALASKA 49TH
Mark G. Morris
May 31, 2024
No. EE 8613
REGISTERED PROFESSIONAL ENGINEER

STATE OF ALASKA DEPARTMENT OF TRANSPORTATION AND PUBLIC FACILITIES
6860 GLACIER HIGHWAY, JUNEAU, AK 99801
(907) 465-1763

UTILITY RELOCATION FOR KETCHIKAN AREA BRIDGES

RENOVATION TELECOM & TV UTILITY SCHEMATIC DIAGRAM

FILE y:\102 state of ak\44 utility relocation design for ketchikan bridges\Working Drawings\RISER DIAGRAM – TV.dwg | DATE 5/24/2024 14:01 | LAYOUT U39 | DESIGNED MGM | CHECKED MGM | DRAFTED EMILEE

NO.	DATE	REVISION	STATE	PROJECT DESIGNATION	YEAR	SHEET NO.	TOTAL SHEETS
1	5/2024	AS-BUILT					
AS-BUILT DRAWING PREPARED FROM CONTRACTOR PROVIDED REDLINE WHICH MAY NOT BE CORRECT			ALASKA	0902043/SFHWY00072	2021	U39A	45

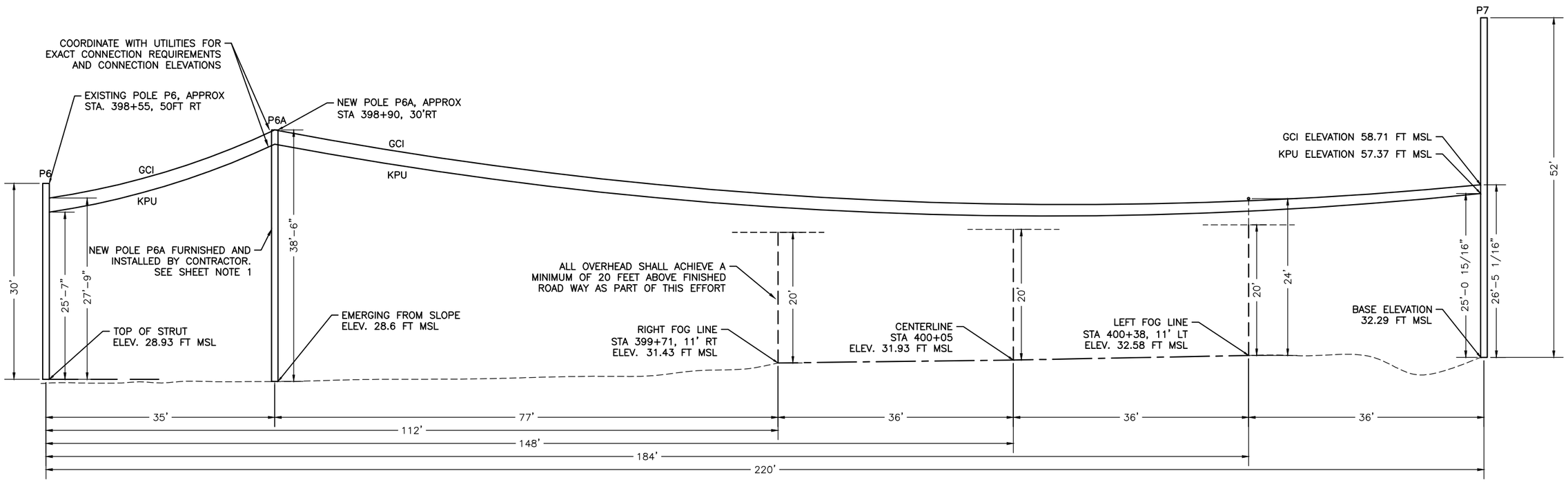

1 P6 TO P6A TO P7 COMM SPAN REWORK

2' 4' 8' 16'

SHEET NOTES:

1. PROVIDE A WOOD TELECO UTILITY POLE P6A BETWEEN POLE P6 AND P7 WHERE NOTED. POLE SHALL BE A 45 FOOT, CLASS 2 WOOD POLE MEETING THE GENERAL REQUIREMENTS FOUND ON SHEET U26B. BURY THE POLE 6.5 FEET BELOW GRADE. PROVIDE POLE COMPACTION AS REQUIRED PER STANDARD UTILITY INDUSTRY PRACTICE. ENSURE POLE IS INSTALLED PLUMB.
2. CONTRACTOR SHALL COORDINATE WITH GCI AND KPU TELECOM ENGINEERS TO REROUTE THE OVERHEAD LINES BETWEEN POLE P6 AND P7 TO POLE P6A. OVERHEAD SHALL BE RAISED SO THAT A MINIMUM OF 20 FEET ABOVE FINISHED PAVEMENT IS ACHIEVED FOR THE OVERHEAD AS IT CROSSES THE HIGHWAY.
3. ALL LOCATIONS, DISTANCES, DIMENSIONS AND ELEVATIONS NOTED ON THIS PAGE ARE NOMINAL AND BASED ON DRAWINGS, IN THE FIELD MEASUREMENTS, ETC. CONTRACTOR TO CONFIRM LOCATIONS, DISTANCES, DIMENSIONS AND ELEVATIONS AS REQUIRED.
4. SEE SHEETS U8, U39, U41 FOR MORE INFORMATION.

CN
10/23/2024

PLANS DEVELOPED BY:
MORRIS ENGINEERING GROUP, INC
2375 JORDAN AVE #7
JUNEAU, AK 99801
907-789-3350
AECL 1010

STATE OF ALASKA 49TH
Mark G. Morris
May 31, 2024
No. EE 8613
REGISTERED PROFESSIONAL ENGINEER

STATE OF ALASKA DEPARTMENT OF TRANSPORTATION AND PUBLIC FACILITIES
6860 GLACIER HIGHWAY, JUNEAU, AK 99801
(907) 465-1763

UTILITY RELOCATION FOR KETCHIKAN AREA BRIDGES

P6 TO P6A TO P7 TELECOM SPAN

FILE | y:\102 state of ak\44 utility relocation design for ketchikan bridges\Working Drawings\RISER DIAGRAM - TV.dwg | DATE | 5/24/2024 14:01 | LAYOUT | U39A | DESIGNED | MGM | CHECKED | MGM | DRAFTED | EMILEE

NO.	DATE	REVISION	STATE	PROJECT DESIGNATION	YEAR	SHEET NO.	TOTAL SHEETS
1	5/2024	AS-BUILT					
AS-BUILT DRAWING PREPARED FROM CONTRACTOR PROVIDED REDLINE WHICH MAY NOT BE CORRECT			ALASKA	0902043/SFHWY00072	2021	U40	45

CN 10/23/2024

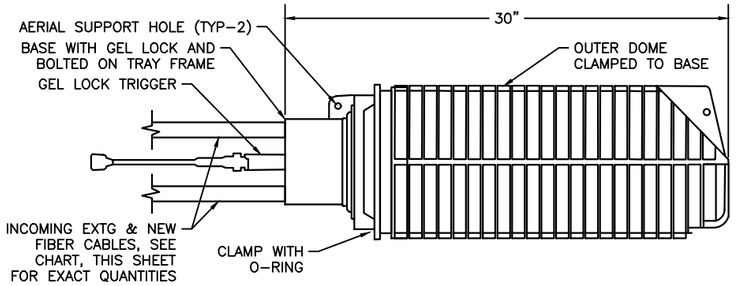

OUTSIDE ELEVATION

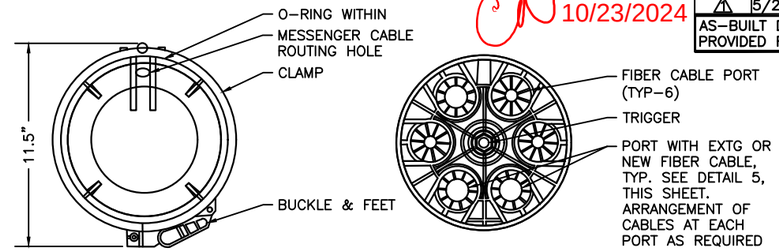

OVERALL SECTION

GEL BLOCK OUTER PROFILE

1 FIBER SPLICE ENCLOSURE END CROSS SECTIONS

NOT TO SCALE

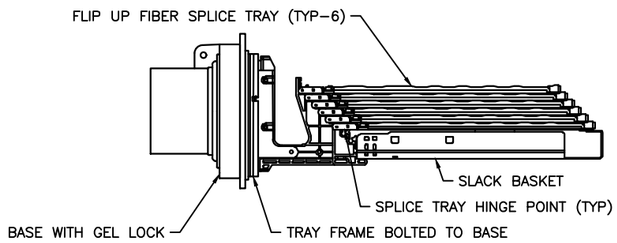

INSIDE ELEVATION

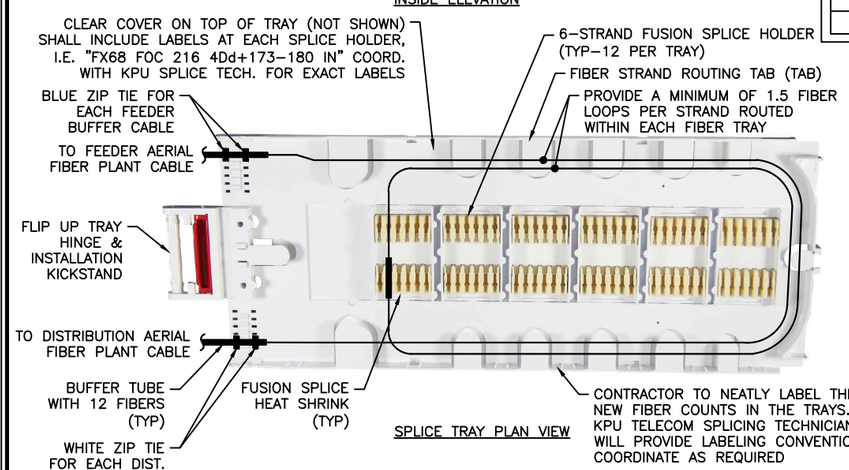

SPLICE TRAY PLAN VIEW

2 FIBER SPLICE ENCLOSURE & TRAY DETAILS

NOT TO SCALE

NOTE: SPLICE TRAY IS DEPICTED WITH A SINGLE EXISTING TO NEW STRAND SPLICE. THERE WILL BE MANY SPLICES PER TRAY. NEATLY TRAIN AND ORGANIZE SPLICES AND PERFORM ALL NEW SPLICING WORK PER INDUSTRY STANDARDS, KPU TELECOM STANDARDS, AND APPLICABLE RUS BULLETINS.

POLE P2 FIBER SPLICE ENCLOSURE NOTES				
CABLE ID	STRANDS		CABLE ID	STRANDS
A	145–172	SPLICED TO	B	1–28
A	1–144	SPLICED TO	C	1–144
A	173–216	SPLICED TO	D	173–216

POLE P5A COPPER SPLICE ENCLOSURE NOTES				
CABLE ID	STRANDS		CABLE ID	STRANDS
A	178–189	SPLICED TO	B	4–15
A	1–177	SPLICED TO	C	1–177
A	190–400	SPLICED TO	C	190–400

POLE P7 FIBER SPLICE ENCLOSURE NOTES				
CABLE ID	STRANDS		CABLE ID	STRANDS
A	109–136	SPLICED TO	B	1–28
A	137–140	SPLICED TO	C	1–4
A	1–108	SPLICED TO	D	1–108
A	141–144	SPLICED TO	D	141–144

POLE P6 COPPER SPLICE ENCLOSURE NOTES				
CABLE ID	STRANDS		CABLE ID	STRANDS
A	178–189	SPLICED TO	B	4–15
A	1–177	SPLICED TO	C	1–177
A	190–400	SPLICED TO	C	190–400

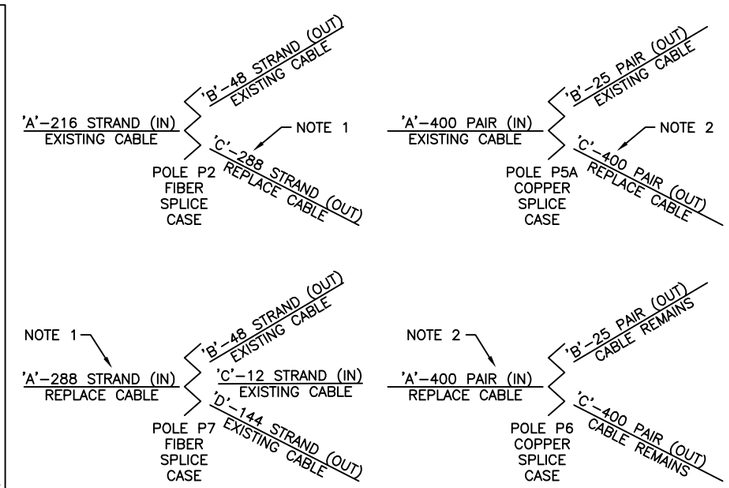

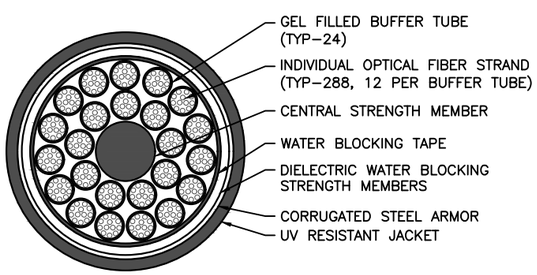

3 FIBER CABLE CROSS SECTION

NOT TO SCALE

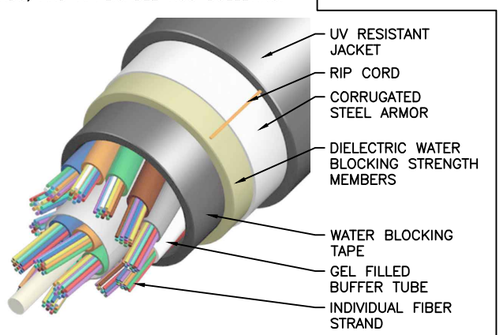

4 FIBER CABLE ISOMETRIC

DETAIL 5 NOTES:

1. REPLACE THE 216-STAND TETHERED FIBER CABLE WITH NEW 288-STRAND FIBER. SEE NOTE 11. CABLE SHALL BE RAN CONTINUOUS WITH NO SPLICES BETWEEN THE EXISTING AERIAL SPLICE ENCLOSURES.
2. REPLACE THE 400-PAIR COPPER CABLE WITH NEW 400-PAIR CABLE. SEE NOTE 11. CABLE SHALL BE RAN CONTINUOUS WITH NO SPLICES BETWEEN THE EXISTING AERIAL SPLICE ENCLOSURES.
3. EXTG 216-STRAND FIBER IS CORNING FLEXNAP TETHERED.
4. EXTG 48-STRAND FIBER IS CORNING FLEXNAP TETHERED.
5. EXTG 12-STRAND FIBER IS SUPERIOR ESSEX #120123T01.
6. EXTG 144-STRAND FIBER IS SUPERIOR ESSEX #121443T01.
7. EXTG 400-PAIR COPPER CABLE IS SUPERIOR ESSEX #01-112-40.
8. EXTG 25-PAIR COPPER CABLE IS SUPERIOR ESSEX #01-097-40.
9. STORE ALL SPARE FIBER STRANDS WITHIN SPLICE BASKETS PER MANUFACTUER INSTRUCTIONS. STORE ALL SPARE COPPER PAIRS WITHIN SPLICE ENCLOSURES PER MANUFACTURER INSTRUCTIONS.

5 TELECOM SPLICING INSTRUCTIONS

GENERAL COPPER AND FIBER SPLICING NOTES:

1. REFER TO SPECIFICATION SECTION 680 FOR COMPLETE REQUIREMENTS OF FIBER CABLE SPLICING THIS INCLUDES SYSTEM INSTALLER QUALIFICATIONS AND CABLE TESTING AND VERIFICATION REQUIREMENTS.
2. KPU TELECOMMUNICATION UTILITY WILL PROVIDE NO PHYSICAL WORK. HOWEVER, KPU WILL BE INVOLVED AND HAVE FINAL APPROVAL FOR ALL TELECOMMUNICATION (FIBER AND COPPER SYSTEM) RELATED PROJECT DECISIONS. THEY WILL BE INCLUDED IN ALL QUESTIONS & ANSWERS (ASIs, RFIs, CPRs, COs) DESIGN INTENT CLARIFICATIONS, SUBMITTAL REVIEWS, ONSITE AND TELECONFERENCE MEETINGS, AND WILL REVIEW AND APPROVE ALL TESTING AND PERFORMANCE CHECKOUT PROCESSES. SEE SHEET U5 FOR KPU TELECOM UTILITY CONTACT INFORMATION.
3. ALL FIBER AND COPPER CABLE PLANT INSTALLATION WORK INCLUDING SPLICING, CABLE MANAGEMENT, GROUNDING & BONDING, ETC. SHALL ADHERE TO RUS BULLETIN 1753F-201 AND 1753F-401 AS APPLICABLE, AS WELL AS MANUFACTURER INSTALLATION INSTRUCTIONS, AND ESTABLISHED TELECOMMUNICATION INDUSTRY BEST PRACTICES.
4. SEE DETAIL 5, THIS SHEET, FOR EXACT QUANTITIES OF EXISTING CABLES AND NEW CABLES TO BE SPLICED WITHIN EACH EXISTING COPPER AND FIBER SPLICE ENCLOSURE. ALL ENCLOSURES USED ON THIS PROJECT ARE EXISTING.
5. THE EXISTING COPPER AND FIBER SPLICE ENCLOSURES, AND AERIAL COPPER AND FIBER CABLES ARE AS NOTED BELOW. VERIFY EXACT ARRANGEMENTS WITH KPU TELECOM PRIOR TO WORK AND TO DETERMINE IF ANY REPLACEMENT OR ADDITIONAL COMPONENTS ARE REQUIRED:
   a. EXISTING FIBER SPLICE ENCLOSURES: COMMSCOPE #FOSC450-D6-6-NT-0-T6V
   b. EXISTING FIBER SPLICE TRAYS: COMMSCOPE #FOSC-ACC-D-TRAY-72-KIT
   c. EXISTING COPPER SPLICE ENCLOSURES: PREFORMED LINE PRODUCTS ARMADILLO 6.5 STAINLESS STEEL KIT #8000626.
   d. EXISTING AERIAL FIBER CABLES: SEE DETAIL 5, THIS SHEET.
   e. EXISTING AERIAL COPPER CABLES: SEE DETAIL 5, THIS SHEET.
6. THE EXISTING COPPER PLANT SPLICE ENCLOSURES ARE PRESSURIZED. THE EXISTING ENCLOSURES SHALL BE PROPERLY SEALED AND RE-PRESSURIZED AND TESTED FOR LEAKS. ALL ENCLOSURES USED ON THIS PROJECT ARE EXISTING.
7. ALL FIBER SPLICING WORK SHALL OCCUR AT GRADE UTILIZING THE EXISTING SLACK LOOPS ON THE POLES TO LOWER THE FIBER SPLICE ENCLOSURES TO GRADE. ALL COPPER SPLICING WORK SHALL OCCUR AT THE POLES ABOVEGRADE UTILIZING A BUCKET TRUCK OR EQUAL FOR ACCESS. PROTECT ALL EXPOSED CABLE SPLICES AND OPENED SPLICE ENCLOSURES FROM WEATHER AND DEBRIS WHEN SPLICING VIA TEMPORARY SHELTERS, ETC. AS REQUIRED AND PER STANDARD INDUSTRY PRACTICE.
8. MESSENGER CABLES WILL BE REUSED WHERE POSSIBLE, REPLACED AS NEEDED. DELASH AND RELASH TO EXISTING CABLES, LASH TO NEW CABLES, AND SECURE MESSENGERS TO POLES VIA APPROVED HARDWARE.
9. GROUNDING TO OCCUR AT ALL APPLICABLE POLES, EXISTING GROUNDING TO BE REUSED WHERE POSSIBLE. BONDING IS REQUIRED AT ALL COPPER SPLICE ENCLOSURES AND SHALL BE TESTED PER RUS 1753F-201 STANDARD.
10. ALL COPPER AND FIBER SPLICES SHALL BE AERIAL, NO BURIED SPLICES. ALL SPLICE WORK TO OCCUR IN THE EXISTING SPLICE ENCLOSURES.
11. NEW FIBER CABLE SHALL BE SINGLE MODE, 288-STRAND, LOOSE TUBE, ARMORER CABLE SUITED FOR OUTDOOR INSTALLATIONS (AERIAL & U/G DUCT). SUPERIOR ESSEX #12288310Y OR EQUAL.
12. NEW COPPER CABLE SHALL BE SHIELDED, 24 AWG, 400-PAIR, PRESSURIZED CABLE SUITABLE FOR OUTDOOR INSTALLATIONS (AERIAL & U/G DUCT). SUPERIOR ESSEX #01-112-40 OR EQUAL.

GENERAL FIBER CABLE PREP & SPLICE NOTES (APPLICABLE TO DETAILS 3 & 4):

1. SEE THE GENERAL SPLICING NOTES ON THIS SHEET FOR ADDITIONAL APPLICATION NOTES.
2. SUGGESTED STORAGE LENGTH FOR EACH BUFFER TUBE WITHIN THE FIBER SPLICE ENCLOSURE SLACK BASKET: 110 INCHES.
3. SUGGESTED STRENGTH MEMBER CUT LENGTH FOR MOUNTING WITHIN THE FIBER SPLICE ENCLOSURE BASE ASSEMBLY: 2.5 INCHES.
4. PROVIDE A MINIMUM OF 1.5 LOOPS OF INDIVIDUAL FIBER STRANDS WITHIN EACH SPLICE TRAY IN THE FIBER SPLICE ENCLOSURE.
5. FIBER CABLES HAVE MANY LAYERS AND IMPORTANT INTERNAL ELEMENTS, AS INDICATED BY DETAILS 3 AND 4 ON THIS SHEET. FIBER CABLES SHALL BE CAREFULLY CUT BACK, LAYERS TRIMMED, BUFFER TUBES EXPOSED, AND FIBER STRANDS CUT, PREPPED, ROUTED, AND SPLICED PER MANUFACTURER WRITTEN INSTRUCTIONS, STANDARD INDUSTRY PRACTICE, AND APPLICABLE RUS BULLETINS.
6. EXACT FIBER CABLE CONSTRUCTION, DIAMETER, AND INTERNAL ARRANGEMENT MAY DIFFER FROM WHAT IS SHOWN ON THIS SHEET. REFER TO MANUFACTURER INSTRUCTIONS.

PLANS DEVELOPED BY:
MORRIS ENGINEERING GROUP, INC
2375 JORDAN AVE #7
JUNEAU, AK 99801
907-789-3350
AECL 1010

STATE OF ALASKA 49TH
Mark G. Morris
May 31, 2024
No. EE 8613
REGISTERED PROFESSIONAL ENGINEER

STATE OF ALASKA DEPARTMENT OF TRANSPORTATION AND PUBLIC FACILITIES
6860 GLACIER HIGHWAY, JUNEAU, AK 99801
(907) 465-1763

UTILITY RELOCATION FOR KETCHIKAN AREA BRIDGES

FIBER CABLE SPLICE DETAILS

FILE y:\102 state of ak\44 utility relocation design for ketchikan bridges\Working Drawings\U40 TELECOM & TV UTILITY VAULT DETAIL.dwg DATE 4/26/2024 14:44 LAYOUT U40 DESIGNED MGM CHECKED MGM DRAFTED JODI

NO.	DATE	REVISION	STATE	PROJECT DESIGNATION	YEAR	SHEET NO.	TOTAL SHEETS
1	5/2024	AS-BUILT					
AS-BUILT DRAWING PREPARED FROM CONTRACTOR PROVIDED REDLINE WHICH MAY NOT BE CORRECT			ALASKA	0902043/SFHWY00072	2021	U41	45

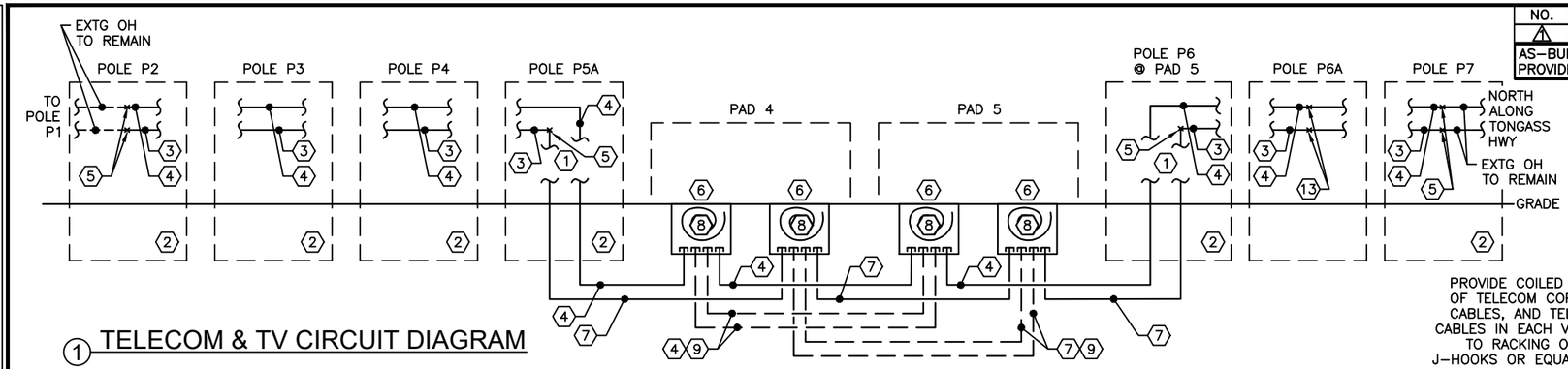

1 TELECOM & TV CIRCUIT DIAGRAM

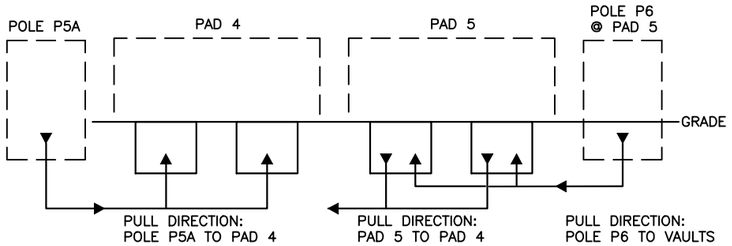

2 TELECOM & TV PULLING DIAGRAM

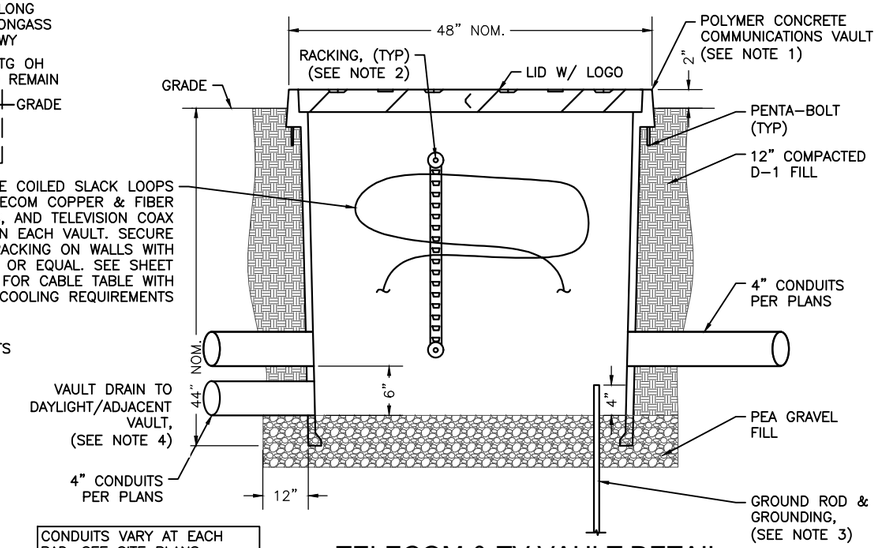

CONDUITS VARY AT EACH PAD. SEE SITE PLANS, SINGLE-LINES, FOR SPECIFIC CONDUIT SIZES AND COUNTS.

3 TELECOM & TV VAULT DETAIL

AT PADS 4 & 5

KEYNOTES (APPLICABLE TO DETAIL 1):

1. TELECOM & TV RISERS UP POLE. PROVIDE SUFFICIENT COIL OF CABLE AT TOP OF RISER PER UTILITY REQUIREMENTS. SEE SHEET U20 FOR POLE P5A DETAILS AND SHEET U39 FOR POLE P6 DETAILS.
2. COORDINATE WITH UTILITIES ON PROPER SUPPORTS, CABLE SLACK AND CABLE TRAINING ALONG UTILITY POLES.
3. TV CABLING, (1) 75 OHM TRUNK COAXIAL CABLE FOR AERIAL APPLICATIONS. COMMSCOPE #5309003. LASH TO UTILITY POLES PER POLE DETAILS AND GCI REQUIREMENTS.
4. (1) 4"C, SPARE AND (1) 4"C WITH TELECOM CABLING (1) 288-STRAND FIBER CABLES AND (1) 400-PAIR 24 AWG COPPER CABLE SUPERIOR ESSEX #12288310Y FIBER AND SUPERIOR ESSEX #01-112-40 COPPER CABLE. ROUTE CABLE OVERHEAD ALONG UTILITY POLES AND ALONG RACKING IN VAULTS UNDERGROUND.
5. CABLES TO BE SPLICED AT UTILITY POLE. COORDINATE WORK WITH UTILITIES. ALL KPU TELECOMM COPPER AND FIBER CABLE SPLICING, TERMINATIONS, AND TESTING BY CONTRACTOR. ALL GCI TELEVISION COAXIAL CABLE SPLICE WORK BY UTILITY.
6. PROVIDE 4' X 4' X 4' (NOM.) TELECOM AND TV VAULT AT EQUIPMENT PADS. POLYMER CONCRETE ASSEMBLY, TIER 22 TRAFFIC RATED, STAINLESS STEEL BOLTS, NO FLOOR, WITH CABLE RACKS AND RACKING ARMS ALL SIDES, WITH 'CATV' OR 'TELEPHONE' LABELS ON LID AS APPLICABLE. NEWBASIS #PCA484848-90097 OR EQUAL. SEE SHEET U40 FOR MORE INFORMATION.
7. (1) 4"C, SPARE AND (1) 4"C WITH TV CABLING, (1) 75 OHM TRUNK COAXIAL CABLE, FLOODED FOR UNDERGROUND USE. COMMSCOPE #5309003. ROUTE BETWEEN FROM POLE RISERS AND IN UNDERGROUND CONDUITS AND ALONG RACKING IN VAULTS UNDERGROUND.
8. CONTRACTOR TO PROVIDE SUFFICIENT TELECOM AND TV SLACK CABLE COILED AND PREPARED WITHIN EACH UNDERGROUND VAULT. COORDINATE WITH UTILITY ON FINAL LENGTH REQUIREMENTS AND HOW TO LEAVE CABLE ENDS OF UTILITIES. ASSUME ONE FULL COIL OF EACH CABLE FOR BIDDING PURPOSES.
9. BRIDGE WORK WILL BE COMPLETED IN STAGES. THREE SEPARATE RUNS OF TELECOM AND TV CABLES WILL BE PROVIDED TO CROSS THE EXISTING & NEW SECTIONS OF BRIDGE DURING CONSTRUCTION, EACH USED AS APPLICABLE IN SEQUENCE. SEE SHEETS U7A-U7C FOR INFORMATION.
10. PROVIDE UTILITY CABLE SLACK CABLE COILS PER COILS TABLES ON SHEET U39.
11. CONDUIT DETAILS, TRENCH DETAILS, AND ROUTING ACROSS SITE NOT INDICATED HERE. SEE SHEET U38 FOR TYPICAL TRENCH DETAILS, AND SITE PLAN SHEETS FOR CONDUIT AND OVERALL ROUTING.
12. TELECOM AND TV CABLE PULLING WORK MUST ADHERE TO MANUFACTURER REQUIREMENTS FOR CABLE MAXIMUM PULLING TENSIONS, CABLE BENDING RADII, AND CONDUIT SIDEWALL PRESSURES. SEE DETAIL 2, THIS SHEET FOR CABLE PULLING REQUIREMENTS.
13. COORDINATE WITH GCI AND KPU TELECOM TO REROUTE OVERHEAD BETWEEN POLE P6 AND P7 TO NEW POLE P6A. CABLE ELEVATIONS SHALL BE RAISED BY CONNECTING HIGH ON POLE P6A. SEE SHEET U39A FOR MORE INFORMATION.
14. TELECOM CABLES SHALL BE LABELED WITHIN EACH VAULT. PROVIDE PLASTIC, WEATHERPROOF PLACARDS WITH DESCRIPTIONS ATTACHED VIA ZIP TIES TO THE TELECOM COPPER AND FIBER CABLE COILS WITHIN EACH VAULT, (1) LABEL PER EVERY 20 FEET OF COIL. LABEL DESCRIPTIONS TO BE CONFIRMED WITH TELECOM UTILITY BUT WILL GENERALLY DESCRIBE 'TONGASS – NORTH MAIN COPPER', 'TONGASS – NORTH MAIN FIBER', ETC. PROVIDE LABELS AT SPARE CONDUIT NIPPLES IN VAULT. TELEVISION DOES NOT REQUIRE CABLE OR CONDUIT LABELING OF ANY KIND.
15. PROVIDE INFRASTRUCTURE GROUNDING AND BONDING AT ALL TELECOM AND TELEVISION VAULTS, JUNCTION BOX, AND PEDESTALS. SEE DETAIL 3, THIS SHEET, FOR DETAILS.

NOTES (APPLICABLE TO DETAIL 2):

1. PULLING DIRECTIONS SHOWN HERE PROVE TO PUT LESS STRESS ON CABLES AND CONDUIT. HOWEVER, OPPOSITE DIRECTIONS IS WITHIN LIMITS AND MAY BE UTILIZED AT CONTRACTOR'S OPTION.
2. RECOMMENDED PULLING DIRECTION FOR TELECOM AND TV CABLES ARE SHOWN HERE.
   ASSUMPTIONS USED IN PULLING CALCS INCLUDE:
   a. COEFFICIENT OF FRICTION: 0.35
   b. AMPLE LUBRICATION USED (SEE NOTES 2,3,4)
   c. BACK TENSION: 100 POUNDS
   d. 4" SCHEDULE 80 MIN I.D.: 3.746 INCHES
   e. 2" SCHEDULE 80 MIN I.D.: 1.887 INCHES
   f. MAX ALLOWABLE CABLE TENSION: 600 LBS
   g. MAX ALLOWABLE SIDEWALL PRESSURE: 500 POUNDS/FT
   h. CONDUIT ELBOW RADII: 24 INCHES (MINIMUM)
3. PROVIDE HDP CONDUITS THROUGHOUT, HDPE PER SHEET U18 REQUIREMENTS.
4. SEE SHEET U18, DETAIL 1, NOTES 2-5 FOR ADDITIONAL PULLING AND LUBRICATION NOTES APPLICABLE TO TELECOM & TV WORK.

TELECOM & TELEVISION SLACK COIL TABLE

LOCATION	TELECOM-COPPER	TELECOM-FIBER	TELEVISION-COAX
POLE P2	N/A, EXTG CABLE	120 FT MIN, NOTE 7	10 FT MIN, NOTE 7
POLE P5A	10 FT MIN, NOTE 7 & 8	6 FT MIN, NOTE 8	10 FT MIN, NOTES 7 & 8
POLE P6	10 FT MIN, NOTE 7 & 8	6 FT MIN, NOTE 8	10 FT MIN, NOTES 7 & 8
POLE P7	N/A, EXTG CABLE	120 FT MIN, NOTE 7	10 FT MIN, NOTE 7
PAD 4 VAULT	NOTE 6	NOTE 6	NOTE 6
PAD 5 VAULT	NOTE 6	NOTE 6	NOTE 6

TABLE NOTES:

1. PROVIDE CABLE COIL LENGTHS AS SHOWN AT EACH LOCATION.
2. PROTECT CABLE COIL ENDS FROM DAMAGE.
3. PROPERLY SUPPORT COILS IN VAULTS ON THE RACKS, AND AT THE UTILITY POLES AS REQUIRED.
4. ROUTE ALL CABLES ALONG THE WALLS WITHIN THE VAULTS SO THEY ARE NOT A TRIPPING HAZARD.
5. A PRE-CONSTRUCTION MEETING WITH ALL UTILITIES SHALL BE CONDUCTED BEFORE BEGINNING WORK.
6. GCI AND KPU TELECOM DO NOT REQUIRE A SPECIFIC LENGTH OF COILED CABLE PER LOCATION. CABLE IS TO BE PULLED STRAIGHT THROUGH VAULTS AND BOXES WITH FORMING AROUND VAULT WALLS SO AS NOT TO PASS CABLE THROUGH CENTER OF VAULT.
7. SPLICE TO OCCUR AT THIS POLE, COORDINATE EXACT SLACK AMOUNT AND CONFIGURATION WITH UTILITY. FIBER SPLICING TO OCCUR AT GRADE, COPPER & COAX SPLICING ABOVEGROUND. UTILIZE EXISTING SNOW SHOES FOR ROUTING OF SLACK CABLE AT MOUNTING HEIGHT AS REQUIRED.
8. CABLES TRANSITION TO NEW UNDERGROUND AT THIS POLE. COORDINATE EXACT SLACK AMOUNT AND CONFIGURATION WITH UTILITY.

NOTES (APPLICABLE TO DETAIL 3):

1. PROVIDE 4' X 4' POLYMER CONCRETE VAULTS FOR TELECOMMUNICATIONS AND TELEVISION UNDERGROUND UTILITIES WHERE SHOWN ON THE SITE PLANS. SEE DETAIL 1, THIS SHEET, FOR SPECIFICS ON THE VAULT.
2. CABLES WITHIN VAULTS SHALL BE CAREFULLY AND SECURELY HUNG FROM RACKING ALONG THE WALLS. SEE DETAIL 1, THIS SHEET, FOR SPECIFICS ON CABLE COILS. RACKING SHALL BE HD, NON-METALLIC VERTICAL CABLE RACKING WITH HORIZONTAL ARM. ONE SET PER EACH WALL. UNDERGROUND DEVICES #CR36-B (VERTICAL STANCTION), #RA08 (HORIZONTAL ARM)
3. AT EACH AND EVERY TELECOM, AND TELEVISION VAULT, PROVIDE GROUNDING PER UTILITY REQUIREMENTS. THIS INCLUDES A 5/8" X 8' COPPER CLAD STEEL GROUND ROD WITH BRONZE GROUND ROD CLAMPS USING NON-GALVANIC LOCKING BOLT. ROUTE A NO. 6 BARE COPPER SOLID GROUND LOOP WITHIN CAVITY AND BOND TO VAULT, GROUND LUGS AS REQUIRED. THIS WORK INCLUDES BONDING TO ADJACENT POWER GROUNDING SCHEME AT PAD 4 PER NESC REQUIREMENTS.
4. PROVIDE A 4" SCHEDULE 80 PVC CONDUIT DRAIN BETWEEN ADJACENT TELECOM/TV VAULTS AND FROM EITHER VAULT TO NEAREST DAYLIGHT SLOPED AREA NEARBY. SEE SITE PLANS FOR GENERAL DRAIN ROUTING. SLOPE CONDUITS TO DRAIN.
5. CABLES TO VAULTS FURNISHED AND INSTALLED BY CONTRACTOR, CABLES NOT SHOWN ON THIS SHEET. CABLE SPLICES BY OTHERS.
6. TELECOM CABLES SHALL BE LABELED WITHIN EACH VAULT. PROVIDE PLASTIC, WEATHERPROOF PLACARDS WITH DESCRIPTIONS ATTACHED VIA ZIP TIES TO THE TELECOM COPPER AND FIBER CABLE COILS WITHIN EACH VAULT. ONE LABEL PER EVERY 20 FEET OF COIL. LABEL DESCRIPTIONS TO BE CONFIRMED WITH TELECOM UTILITY BUT WILL GENERALLY DESCRIBE 'TONGASS – NORTH MAIN COPPER', 'TONGASS – NORTH MAIN FIBER', ETC. PROVIDE LABELS AT SPARE CONDUIT NIPPLES IN VAULT ALSO. TELEVISION DOES NOT REQUIRE CABLE OR CONDUIT LABELING OF ANY KIND.

CN 10/23/2024

PLANS DEVELOPED BY:
MORRIS ENGINEERING GROUP, INC
2375 JORDAN AVE #7
JUNEAU, AK 99801
907-789-3350
AECL 1010

STATE OF ALASKA 49TH Mark G. Morris No. EE 8613 May 31, 2024 REGISTERED PROFESSIONAL ENGINEER

STATE OF ALASKA DEPARTMENT OF TRANSPORTATION AND PUBLIC FACILITIES
6860 GLACIER HIGHWAY, JUNEAU, AK 99801
(907) 465-1763

UTILITY RELOCATION FOR KETCHIKAN AREA BRIDGES

TELECOM & TV CKT, PULLING DIAGRAMS, VAULT DETAIL, & COIL TABLE

FILE y:\102 state of ak\44 utility relocation design for ketchikan bridges\Working Drawings\U41 TELECOM & TV CIRCUIT & PULLING DIAGRAMS.dgn | LAYOUT U41 | 5/29/2024 11:32 | DESIGNED MGM | CHECKED MGM | DRAFTED JODI

State of Alaska

GOVERNOR MIKE DUNLEAVY

Submittal Cover Sheet

Department of Transportation Public Facilities
SOUTHCOAST REGION
Construction Section

Project: KTN- HERRING COVE BRIDGE IMPROVEMENTS	Project No: 0902043/SFHWY00072
Contractor: Hamilton Construction Alaska	Submittal No. 00501-0007.3
Date Response Sent: 11/26/2021	Reviewed By: Bob Lundell, P.E. CM sign for BL

A	AAN	R&R	R	I	R&RasN	INC	CA
Approved	Approved as Noted	Revise and Resubmit	Rejected	Informational	Revisit & Resubmit as Noted	Incomplete	Conditionally Approved

Item No.	Item	Contract Documents	A	AAN	R&R	R	I	R&R asN	INC	CA
507.0007.0000	Precast Concrete Member, Lagging	501-3.13.1								X

Comments/Anticipated Response:
The shop drawings are conditionally approved pending approval of the Mix Design. With approval of the Mix Design the attached shop drawings are Approved as Noted.

- Missing from the shop drawings was the reference to the approved mix design
- The lifting anchors are P77R in place of P72
- To be resolved with a future submittal will be for the removal of the lifting anchors

The manufacturing for acceptance of the precast lagging panels must not begin until the concrete mix design is approved. Please note that to meet the requirements of Subsection 105-1.02 please provide 2. one set of reproducible transparencies (mylars) of the final shop drawing.

HERRING COVE BRIDGE

KTN HERRING COVE BRIDGE IMPROVEMENTS
PROJECT NO. 0902043 / SFHWY00072
SOUTH TONGASS HIGHWAY
NEAR KETCHIKAN
ALASKA

APPROVED AS NOTED
BRIDGE DESIGN SECTION
ALASKA DEPARTMENT OF TRANSPORTATION
AND PUBLIC FACILITIES
Reviewed for conformance with basic details and dimensions of the contract plans. Accuracy of information supplied by the fabricator is not guaranteed.
By NWM Date 11/15/21

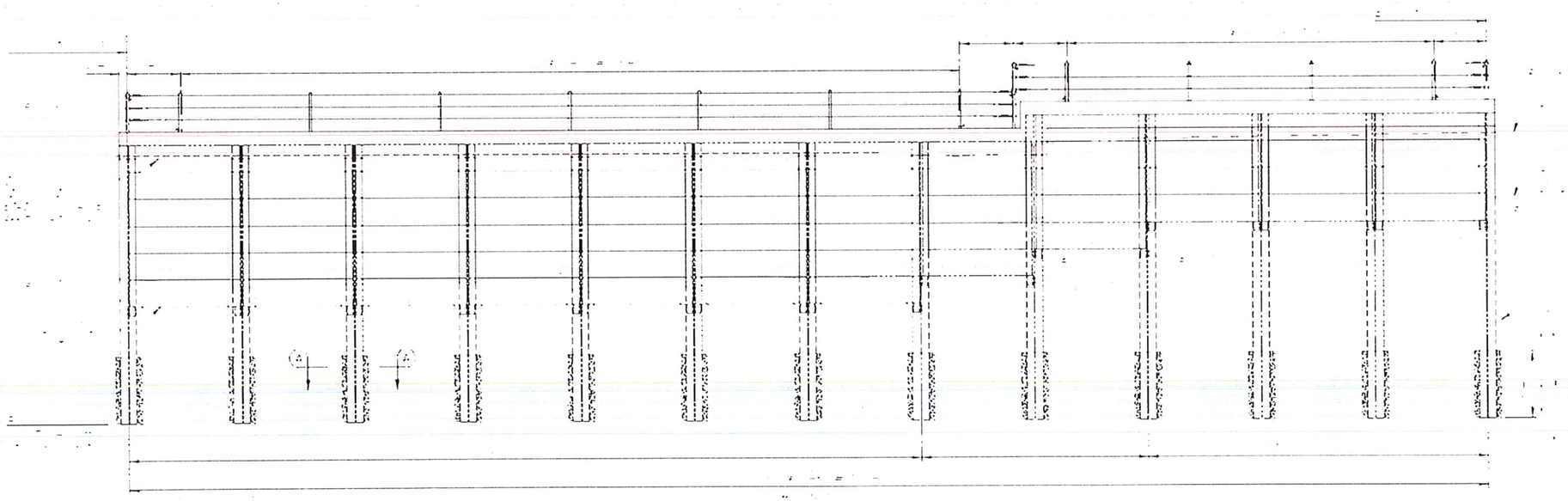

ELEVATION

KNIFE RIVER
AN MDU RESOURCES COMPANY
922 N. CARNAHAN RD.
SPOKANE VALLEY, WA 99212
PH: (509) 536-3300

PROJECT INFO:
HERRING COVE BRIDGE
NEAR KETCHIKAN
ALASKA

OWNER: STATE OF ALASKA

ENG: STATE OF ALASKA
NICHOLAS MURRAY
PH: (907) 465-2975
EMAIL: -

CONTR: HAMILTON CONSTRUCTION
JOHN SZYMIK
PH: (907) 746-5328
EMAIL: jszymik@hamil.com

ENGINEER'S SEAL:

STATUS:
SUBMITTED FOR APPROVAL
11/15/2021
KNIFE RIVER PRESTRESS

REV. #	REVISION	BY / DATE
1		
2		
0		

DRAWN	DATE	CHECKED	DATE
PELPHREY	10/26/2021	–	XX/XX/21

PROJECT # 17546

PRODUCT TYPE: LAGGING PANELS

TITLE: COVER

DRAWING #	SHEET	OF
1	1	2

HERRING COVE BRIDGE

KTN HERRING COVE BRIDGE IMPROVEMENTS
PROJECT NO. 0902043 / SFHWY00072
SOUTH TONGASS HIGHWAY
NEAR KETCHIKAN
ALASKA

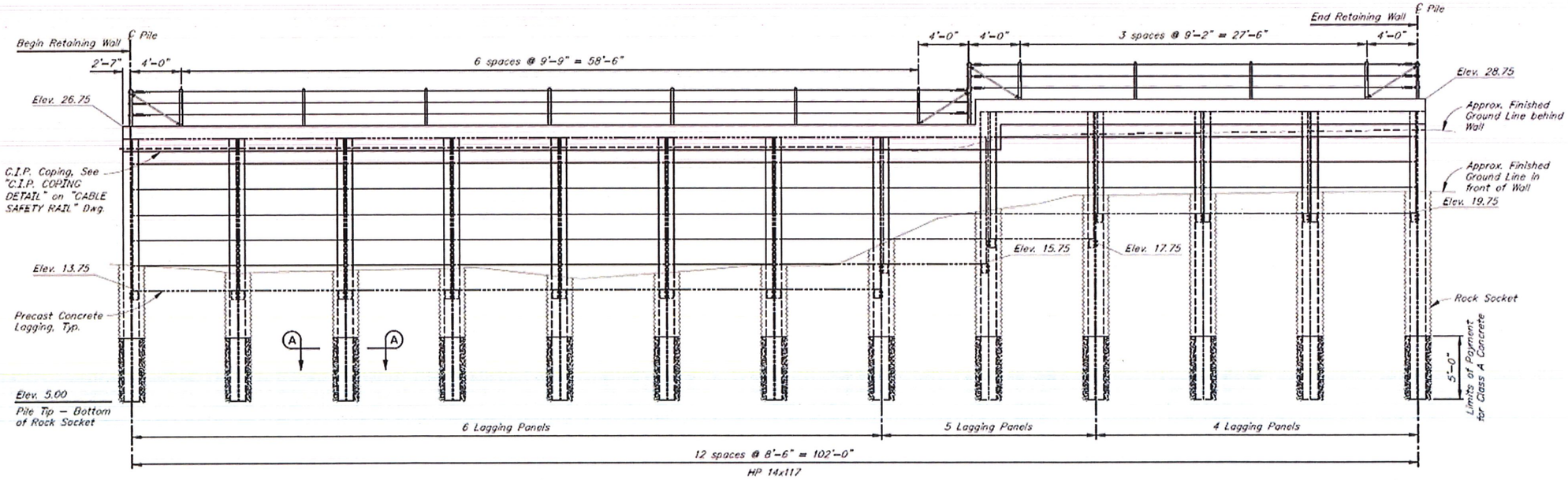

ELEVATION

KNIFE RIVER
AN MDU RESOURCES COMPANY
922 N. CARNAHAN RD.
SPOKANE VALLEY, WA 99212
PH: (509) 536-3300

PROJECT INFO:
HERRING COVE BRIDGE
NEAR KETCHIKAN
ALASKA

OWNER: STATE OF ALASKA

ENG: STATE OF ALASKA
NICHOLAS MURRAY
PH: (907) 465-2975
EMAIL: -

CONTR: HAMILTON CONSTRUCTION
JOHN SZYMIK
PH: (907) 746-5328
EMAIL: jszymlk@hamll.com

ENGINEER'S SEAL:

STATUS:
SUBMITTED FOR APPROVAL
11/15/2021
KNIFE RIVER PRESTRESS

REV. #	REVISION	BY / DATE
0		

DRAWN	DATE	CHECKED	DATE
PELPHREY	10/26/2021	–	XX/XX/21

PROJECT # 17546

PRODUCT TYPE: LAGGING PANELS

TITLE: COVER

DRAWING #	SHEET	OF
1	1	2

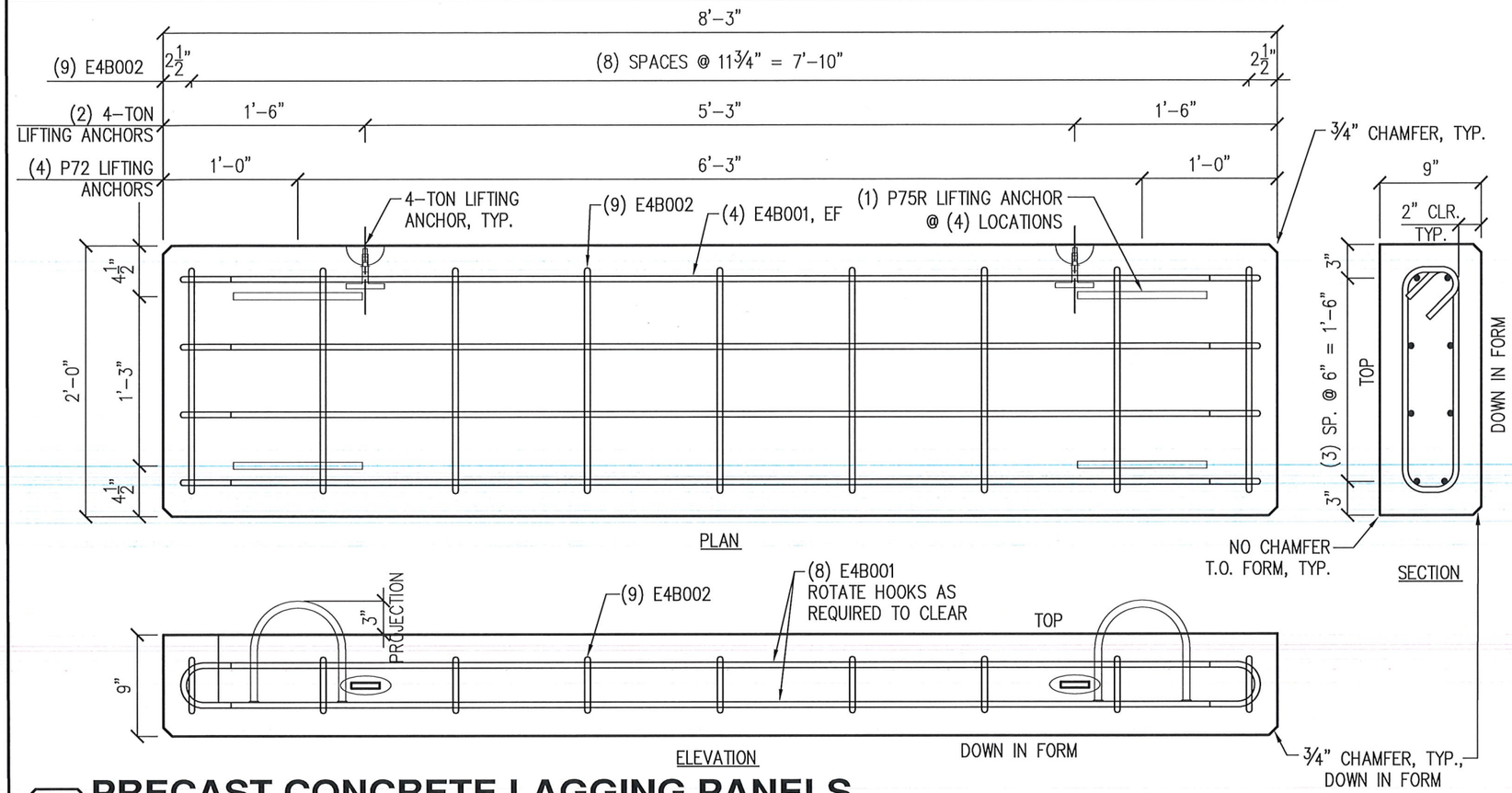

1/2 PRECAST CONCRETE LAGGING PANELS

SCALE: 1"=1'-0"
CAST (64) PRECAST LAGGING PANELS

FINISH INFO: CLASS 3 – LIGHT TROWEL

1. CAST CONCRETE, VIBRATE AS NEEDED, AND SCREED TO GRADE.
2. HAND FLOAT ENTIRE SURFACE USING MAGNESIUM FLOAT.
3. FLOAT ENTIRE SURFACE AGAIN USING THE FRESNO TO ASSURE THE SURFACE IS LEVEL AND TRUE TO GRADE.
4. COMPLETE ONE MORE PASS WITH THE FRESNO. HAND TROWEL EDGES AND AREAS AROUND LIFTING LOOPS/HARDWARE SMOOTH. SURFACE SHOULD BE SMOOTH AND TRUE TO GRADE WITH MINIMAL VISIBLE PORES, SOME SHALLOW TROWEL MARKS, BUT NO SHINE.
5. PROTECT THE FINISHED SURFACE DURING CURING.

NOTES

1) CONCRETE STRENGTH @ STRIPPING: 3500 PSI
   @ 28-DAYS: 5000 PSI
2) KNIFE RIVER MIX DESIGN NO.:
3) PRODUCT FINISH: CLASS 3 – LIGHT TROWEL
4) CONCRETE VOLUME: 0.5 CUBIC YARDS EACH
5) WEIGHT: 2.0 KIPS
6) LIFTING: FACE: P75R LIFTING ANCHOR TOP: 4-TON P94 T-ANCHOR
7) INSPECTION: MAYES TESTING
8) ALL REINFORCING STEEL SHALL CONFORM TO REQUIREMENTS OF ASTM A706 GRADE 60.
9) DO NOT SHIP UNTIL:
   – 28-DAY CONCRETE COMPRESSIVE STRENGTH IS REACHED.
10) BUY AMERICA ACT: APPLIES

REINFORCEMENT SCHEDULE

MARK	SIZE	DESCRIPTION	ASTM	QTY EACH	QTY TOTAL
E4B001	#4	8'-0" 4" STD. 180° HOOK EPOXY	A706	8	512
E4B002	#4	1'-8" 5" 4½" STD. 135° HOOK EPOXY	A706	9	576

WEIGHT TOTAL REBAR (FOR (64) PIECES) = 4,992 LBS
CAGE WEIGHT (FOR (1) PIECE) = 78 LBS

MATERIALS

1)	CONCRETE:	32.0	CUBIC YARDS
2)	LIFTING:	256	P75R 7/16" X 9" WALL LIFTING ANCHOR (DAYTON SUPERIOR) (GALV.)
		128	4-TON X 5¼" P94 FLEET-LIFT T-ANCHOR FL850 (DAYTON SUPERIOR) (GALV.)

HANDLING

TYPE	DISTANCE FROM EACH END
LIFTING	SEE DETAIL 1/2
STORAGE	SUPPORT AT FACE LIFTING LOCATIONS
SHIPPING	BUNK AT FACE LIFTING LOCATIONS

KNIFE RIVER
AN MDU RESOURCES COMPANY
922 N CARNAHAN
SPOKANE VALLEY, WA 99212
PH:(509) 536-3300
FAX:(509) 536-3305
23505 PEORIA RD.
HARRISBURG, OR 97446
PH: (541) 995-4100
FAX: (541) 995-9447

TITLE: PRECAST LAGGING PANELS
JOB & LOCATION: HERRING COVE BRIDGE NEAR KETCHIKAN, ALASKA

DRAWN	J. PELPHREY	DATE 10/22/2021
HANDLING	S. WESTMAN	DATE 11/04/2021
CHECKED	S. WESTMAN	DATE 11/04/2021

SUBMITTED FOR APPROVAL
11/15/2021
KNIFE RIVER PRESTRESS

NO.	REVISIONS	DATE

THIS DOCUMENT IS THE PROPERTY OF KNIFE RIVER. IT IS CONFIDENTIAL, SUBMITTED FOR REFERENCE PURPOSES ONLY, AND SHALL NOT BE USED IN ANY WAY INJURIOUS TO THE INTERESTS OF, OR WITHOUT THE WRITTEN PERMISSION OF KNIFE RIVER. COPYRIGHT © 2021 KNIFE RIVER ALL RIGHTS RESERVED

QTY. 64
MK. # LP-1
PROJECT NO. 17546
PRODUCT TYPE LAGGING PANELS
SHEET 2 OF 2

Work\Knife River\221145 Herring Cove Bridge\04 AutoCAD\17546 Herring Cove Bridge (S2) – Lagging Panels.dwg

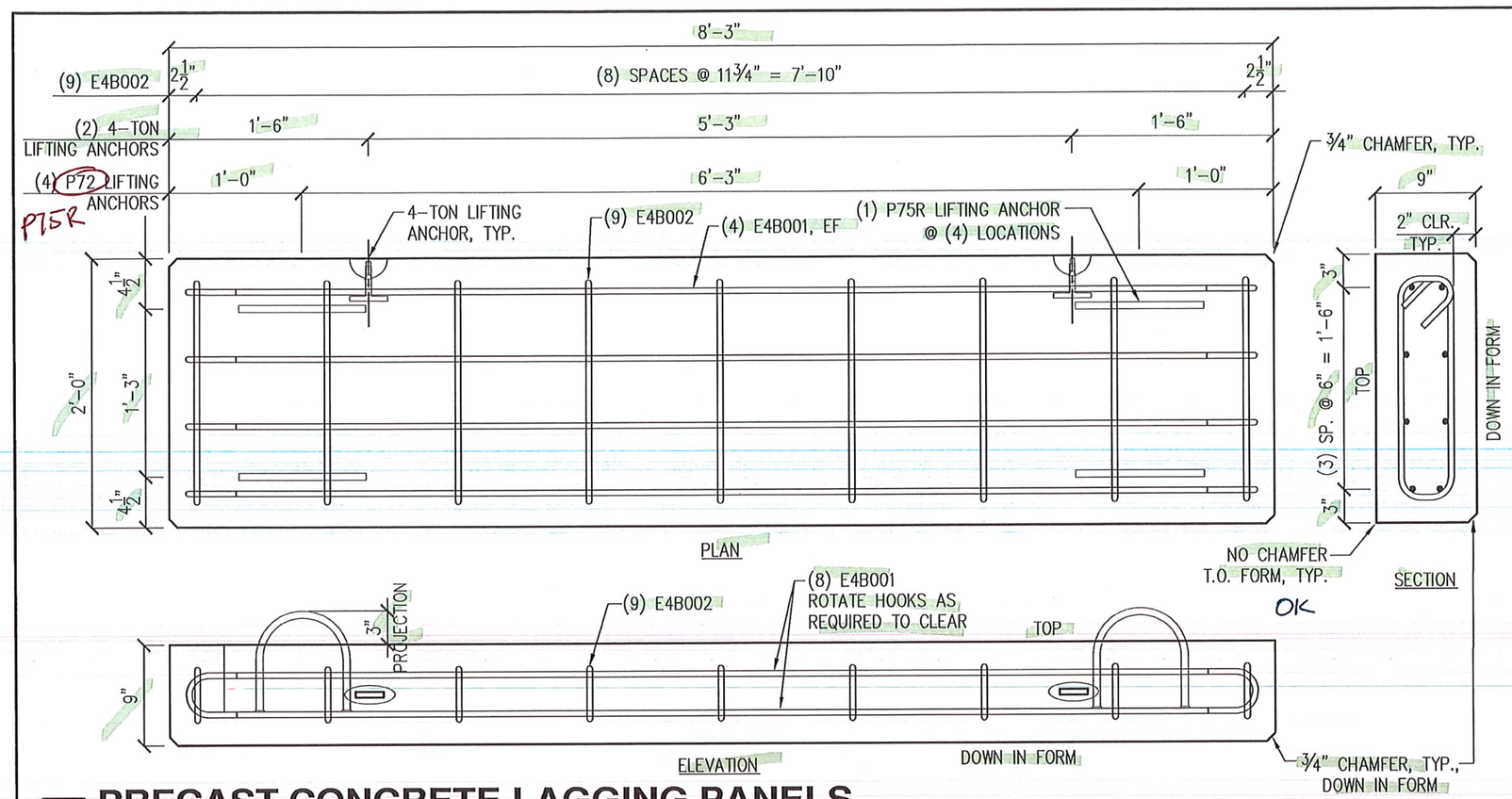

PRECAST CONCRETE LAGGING PANELS

1
2

SCALE: 1"=1'-0"
CAST (64) PRECAST LAGGING PANELS

FINISH INFO: CLASS 3 – LIGHT TROWEL

1. CAST CONCRETE, VIBRATE AS NEEDED, AND SCREED TO GRADE.
2. HAND FLOAT ENTIRE SURFACE USING MAGNESIUM FLOAT.
3. FLOAT ENTIRE SURFACE AGAIN USING THE FRESNO TO ASSURE THE SURFACE IS LEVEL AND TRUE TO GRADE.
4. COMPLETE ONE MORE PASS WITH THE FRESNO. HAND TROWEL EDGES AND AREAS AROUND LIFTING LOOPS/HARDWARE SMOOTH. SURFACE SHOULD BE SMOOTH AND TRUE TO GRADE WITH MINIMAL VISIBLE PORES, SOME SHALLOW TROWEL MARKS, BUT NO SHINE.
5. PROTECT THE FINISHED SURFACE DURING CURING.

NOTES

1) CONCRETE STRENGTH @ STRIPPING: 3500 PSI
   @ 28-DAYS: 5000 PSI
2) KNIFE RIVER MIX DESIGN NO.:
3) PRODUCT FINISH: CLASS 3 – LIGHT TROWEL
4) CONCRETE VOLUME: 0.5 CUBIC YARDS EACH
5) WEIGHT: 2.0 KIPS
6) LIFTING: FACE: P75R LIFTING ANCHOR TOP: 4-TON P94 T-ANCHOR
7) INSPECTION: MAYES TESTING
8) ALL REINFORCING STEEL SHALL CONFORM TO REQUIREMENTS OF ASTM A706 GRADE 60.
9) DO NOT SHIP UNTIL:
   – 28-DAY CONCRETE COMPRESSIVE STRENGTH IS REACHED.
10) BUY AMERICA ACT: APPLIES

APPROVED AS NOTED
BRIDGE DESIGN SECTION
ALASKA DEPARTMENT OF TRANSPORTATION AND PUBLIC FACILITIES
Reviewed for conformance with basic details and dimensions of the contract plans. Accuracy of information supplied by the fabricator is not guaranteed.

REINFORCEMENT SCHEDULE

MARK	SIZE	DESCRIPTION	ASTM	QTY EACH	QTY TOTAL
E4B001	#4	8'-0" 4" STD. 180° HOOK EPOXY	A706	8	512
E4B002	#4	1'-8" 5" 4½" STD. 135° HOOK EPOXY	A706	9	576

WEIGHT TOTAL REBAR (FOR (64) PIECES) = 4,992 LBS
CAGE WEIGHT (FOR (1) PIECE) = 78 LBS

MATERIALS

By NWM Date 11/15/21

1) CONCRETE: 32.0 CUBIC YARDS
2) LIFTING: 256 P75R 7/16" X 9" WALL LIFTING ANCHOR (DAYTON SUPERIOR) (GALV.)
   128 4-TON X 5¼" P94 FLEET-LIFT T-ANCHOR FL850 (DAYTON SUPERIOR) (GALV.)

HANDLING

TYPE	DISTANCE FROM EACH END
LIFTING	SEE DETAIL 1/2
STORAGE	SUPPORT AT FACE LIFTING LOCATIONS
SHIPPING	BUNK AT FACE LIFTING LOCATIONS

KNIFE RIVER
AN NIDU RESOURCES COMPANY
922 N CARNAHAN
SPOKANE VALLEY, WA 99212
PH:(509) 536-3300
FAX:(509) 536-3305
23505 PEORIA RD.
HARRISBURG, OR 97446
PH: (541) 995-4100
FAX: (541) 995-9447

TITLE: PRECAST LAGGING PANELS
JOB & LOCATION: HERRING COVE BRIDGE NEAR KETCHIKAN, ALASKA

DRAWN	J. PELPHREY	DATE 10/22/2021
HANDLING	S. WESTMAN	DATE 11/04/2021
CHECKED	S. WESTMAN	DATE 11/04/2021

SUBMITTED FOR APPROVAL
11/15/2021
KNIFE RIVER PRESTRESS

NO. | REVISIONS | DATE

THIS DOCUMENT IS THE PROPERTY OF KNIFE RIVER. IT IS CONFIDENTIAL, SUBMITTED FOR REFERENCE PURPOSES ONLY, AND SHALL NOT BE USED IN ANY WAY INJURIOUS TO THE INTERESTS OF, OR WITHOUT THE WRITTEN PERMISSION OF KNIFE RIVER. COPYRIGHT © 2021 KNIFE RIVER ALL RIGHTS RESERVED

QTY. 64
MK. # LP-1
PROJECT NO. 17546
PRODUCT TYPE LAGGING PANELS
SHEET 2 OF 2

Work\Knife River\221145 Herring Cove Bridge\04 AutoCAD\17546 Herring Cove Bridge (S2) – Lagging Panels.dwg

State of Alaska

GOVERNOR MIKE DUNLEAVY

Submittal Comments

Department of Transportation Public Facilities
SOUTHCOAST REGION
Construction Section

Project: KTN- HERRING COVE BRIDGE IMPROVEMENTS	Project No: 0902043/SFHWY00072
Contractor: DS Brown	Submittal No. 00502-001
Date Response Sent: 11/23/2021	Reviewed By: Bob Lundell, P.E. sign for BL

A	AAN	R&R	R	I	R&RasN	INC	CA
Approved	Approved as Noted	Revise and Resubmit	Rejected	Informational	Revisit & Resubmit as Noted	Incomplete	Conditionally Approved

Item No.	Item	Contract Documents	A	AAN	R&R	R	I	R&R asN	INC	CA
501.007.0000	Elastomeric Bearing Pad	516-3.02 Bearing-Pad Shop Drawings	X							

Comments/Anticipated Response:

DS Brown's Elastomeric Bearing Pad Shop Drawings are approved. The Contractor is required to provide one set of reproducible transparencies of the final shop drawings.

Department of Transportation & Public Facilities
Statewide Design & Engineering Services Division
Phone: 907-465-8890
Fax: 907-465-3124

MEMORANDUM

TO: Bob Lundell
Project Engineer
DOWL Engineers

DATE: November 23, 2021

FILE: 253

FROM: Richard A. Pratt, PE, SE RAP
Chief Bridge Engineer

RE: Herring Cove Bridge Improvements
0902043/SFHWY00072

CONTACT: Nicholas Murray, PE, SE
(907) 465-8898
nicholas.murray@alaska.gov

SUBJECT: Elastomeric Bearing Pads-Approved

We have received an electronic copy of DS Brown's Elastomeric Bearing Pad Shop Drawings totaling one page with RFV on November 22, 2021. The drawings are marked "Approved".

As indicated in Section 105-1.02 of the contract specifications, the Contractor is required to provide one set of reproducible transparencies (polyester film commonly referred to as mylars) of the final shop drawings. Please have the mylars sent to this office (address below) for the permanent records.

State of Alaska Bridge Section
c/o Nicholas Murray
PO Box 112500
Juneau, AK 99811-2500

NWM/bm

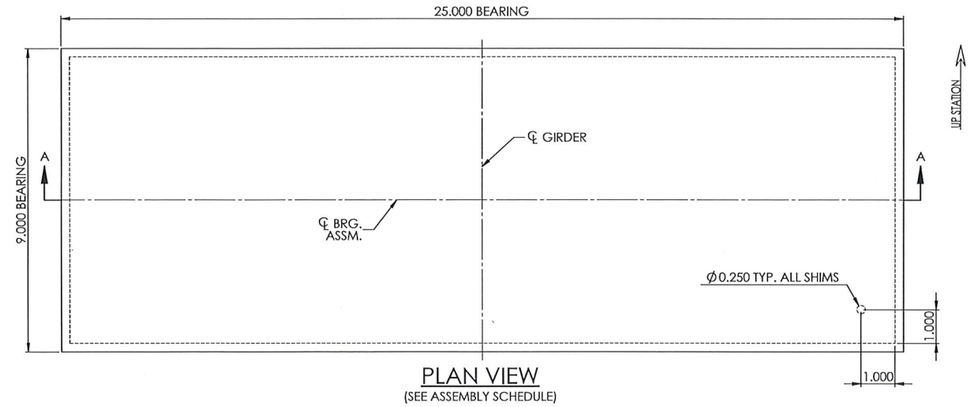

PLAN VIEW
(SEE ASSEMBLY SCHEDULE)

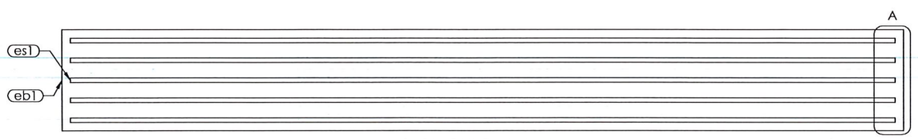

SECTION A-A

ASSEMBLY SCHEDULE		
MK	LOCATION	QTY.
1A	ABUTS	22
1SA	SAMPLE	3

LOAD DATA (KIPS)	
DEAD LOAD	88
LIVE LOAD	63

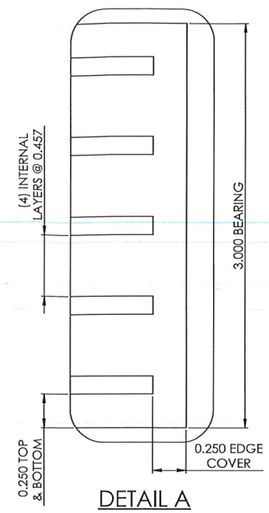

DETAIL A

NO.	MK	QTY.	Thick	Dia.	Width	Length	Part	Material	Coating	Remarks	WT	Oracle Seed
1	1A	22					VERSIFLEX ELASTOMERIC BEARING				72.0	1103AT-A^
1.1	eb1	1	3.000		25.000	9.000	Elastomeric Bearing	115 PSI +/- 15% GR. 5 Natural Rubber	Plain		32.3	
1.2	es1	5	10 GA.		24.500	8.500	Shim (internal)	A1011 GR. 36	Plain		8.0	
2	1SA	3					VERSIFLEX ELASTOMERIC BEARING			SAMPLES TO LAB	72.0	1103AT-A^
2.1	eb1	1	3.000		25.000	9.000	Elastomeric Bearing	115 PSI +/- 15% GR. 5 Natural Rubber	Plain		32.3	
2.2	es1	5	10 GA.		24.500	8.500	Shim (internal)	A1011 GR. 36	Plain		8.0	

TOLERANCE TABLE	
DESCRIPTION	TOLERANCE (INCHES U.N.O.)
ELASTOMERIC BEARING DESIGN THICKNESS ≤ 1.250"	-0, +0.1181
ELASTOMERIC BEARING DESIGN THICKNESS > 1.250"	-0, +0.2362
ELASTOMERIC BEARING PLAN DIMENSIONS ≤ 36"	-0, +0.2362
ELASTOMERIC BEARING PLAN DIMENSIONS > 36"	-0, +0.4724
THICKNESS OF INDIVIDUAL LAYERS OF ELASTOMER (LAMINATED BEARINGS ONLY) AT ANY POINT WITHIN THE BEARING	±0.1181
VARIATION FROM A PLANE PARALLEL TO THE THEORETICAL SURFACE (AS DETERMINED BY MEASUREMENTS AT THE EDGE OF THE BEARINGS) (PARALLELISM):	
TOP & BOTTOM	±0.005 RAD
SIDES	±0.2362
POSITION OF EXPOSED CONNECTION MEMBERS	±0.1181
ELASTOMERIC COVER: TOP & BOTTOM	-0.032, +0.118
ELASTOMERIC EDGE COVER	-0, +1/8

SEE RFV1

APPROVED
BRIDGE DESIGN SECTION
ALASKA DEPARTMENT OF TRANSPORTATION
AND PUBLIC FACILITIES
Reviewed for conformance with basic details and dimensions of the contract plans. Accuracy of information supplied by the fabricator is not guaranteed.
By NWM Date 11/23/21

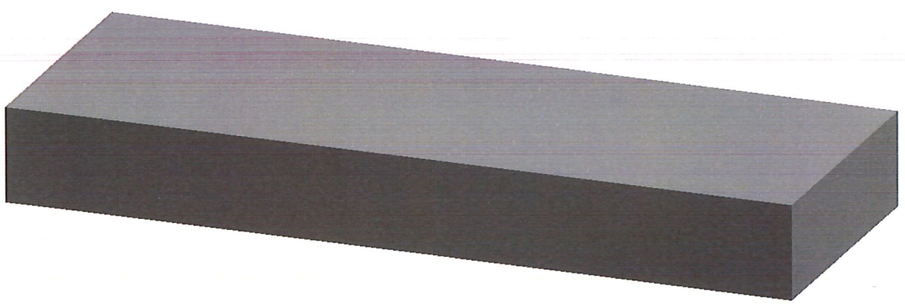

GENERAL NOTES:

1. ALL MATERIALS SHALL CONFORM TO THE STATE OF ALASKA DEPARTMENT OF TRANSPORTATION 2020 STANDARD SPECIFICATIONS FOR HIGHWAY CONSTRUCTION.
2. THESE SHOP DRAWINGS WERE PREPARED IN ACCORDANCE WITH THE CONTRACT PLANS AND SPECIFICATIONS. THE D.S. BROWN COMPANY DOES NOT ACCEPT LIABILITY FOR THE DESIGN OF THE PRODUCTS DETAILED IN THESE SHOP DRAWINGS.
3. THE D.S. BROWN COMPANY TO SUPPLY ONLY THE PARTS SHOWN ON THESE DRAWINGS.
4. THE BEARINGS SHALL BE SAMPLED AND TESTED IN ACCORDANCE WITH AASHTO M251, COMPRESSIVE STIFFNESS TEST NOT REQUIRED.
5. EXPOSED LAMINATES ON THE OUTSIDE SURFACES OF THE PAD, APPARENT AS A RESULT OF MANUFACTURING TECHNIQUES, SHALL BE SEALED FLUSH ON THE FINISHED BEARING PAD WITH A BONDED VULCANIZED PATCH CONSISTING OF MATERIAL EQUIVALENT TO THAT USED IN THE MANUFACTURING OF THE PAD.
6. WELDING PROCEDURES, IF APPLICABLE, SHALL BE ESTABLISHED BY THE CONTRACTOR TO RESTRICT THE MAXIMUM TEMPERATURE REACHED BY SURFACES IN CONTACT WITH THE ELASTOMER TO 200°F (93°C). TEMPERATURES SHALL BE DETERMINED BY TEMPERATURE INDICATING WAX PENCILS OR OTHER SUITABLE MEANS.

REV.	DESCRIPTION	DATE	DET.	CKD.

D.S. BROWN
A GIBRALTAR INDUSTRIES COMPANY
THE D.S. BROWN COMPANY
300 E. CHERRY STREET
NORTH BALTIMORE, OHIO 45872
419.257.3561
FAX: 419.257.0332
WWW.DSBROWN.COM

LOCATION — HERRING COVE BRIDGE
BRIDGE NO. — 253
PROJECT — 0902043/SFHWY00072
—
P.O. NO. — 1925-004CD
—
CUSTOMER — HAMILTON CONSTRUCTION CO

DESCRIPTION:	SCALE	DRAWN BY	CHECKED BY	DATE	
VERSIFLEX ELASTOMERIC BEARING	N.T.S.	CAK	ARP	11/21	-
ALASKA	PROJECT NUMBER: 4002141	PRODUCT CODE: 1103	UNITS: INCHES		SHEET: 01

FILE SAVED: 11/22/2021 1:53:03 PM

The D.S. Brown Company
300 East Cherry Street
North Baltimore, OH 45872
(419) 257-3561
(419) 257-0332 [Engineering Fax #]

D.S. BROWN
A GIBRALTAR INDUSTRIES COMPANY

Request for Variance

Date Sent:
Response Requested by: **ASAP**
DS Brown File Name: #####-####-RFV#
(File name format: DS Brown Project # - Product Code – RFV# or #####-####-RFV#)

Contractor:	Hamilton Construction Co.
To:	Chris Duty
Project Description:	KTN | Herring Cove Bridge
Project #:	0902043/SFHWY00072
E-mail Address:	cduty@hamil.com
Phone:	
DS Brown Project #:	4002141
Reply to:	Craig Kirsteins
E-mail Address:	ckirsteins@dsbrown.com
Phone Number:	
Subject:	Shim cover

Explanation:

1. **DSB request the top and bottom cover tolerance be modified to -0.032", +0.118"**

Department of Transportation & Public Facilities
Statewide Design & Engineering Services Division
Phone: 907-465-8890
Fax: 907-465-3124

MEMORANDUM

TO: Eric Strong PE
Project Engineer
DOWL Engineers

FROM: Elmer Marx, PE, SE
Acting Chief Bridge Engineer

CONTACT: Nicholas Murray, PE SE
(907) 465-8898
nicholas.murray@alaska.gov

DATE: October 19th, 2022

FILE: 253

RE: Herring Cove Bridge Improvements
0902043/SFHWY00072

SUBJECT: Misc. Epoxy Rebar Shop Drawings- Approved

We have received an electronic copy of JD Steel's shop drawings totaling 1 pages and dated 10/13/22 on 10/17/22. The drawings are marked "Approved."

As indicated in Section 105-1.02 of the contract specifications, the Contractor is required to provide one set of reproducible transparencies (polyester film commonly referred to as mylars) of the final shop drawings. Please have the mylars sent to this office (address below) for the permanent records.

State of Alaska Bridge Section
c/o Nicholas Murray
PO Box 112500
Juneau, AK 99811-2500

Please let me know if you have any questions.

NWM/bm

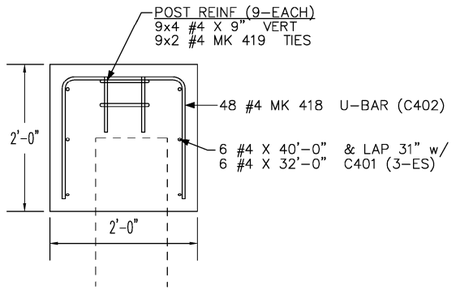

COPING SECTION

(69–7 l.f.)

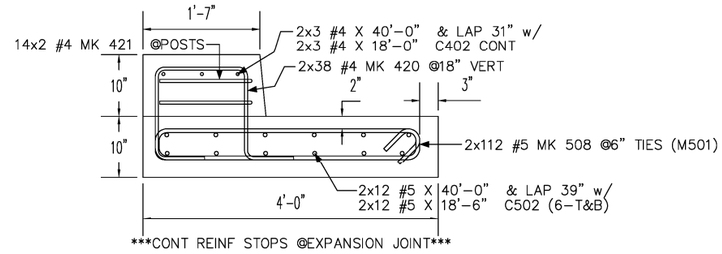

MOMENT SLAB SECTION

(2 EA. X 55–3 LONG)

APPROVED
BRIDGE DESIGN SECTION
ALASKA DEPARTMENT OF TRANSPORTATION
AND PUBLIC FACILITIES
Reviewed for conformance with basic details and dimensions of the contract plans. Accuracy of information supplied by the fabricator is not guaranteed.
By NWM Date 10/19/22

Release Number: 43

BAR LIST

Bar Mark	Qty	Size	Total Length	Type	'A'	'B'	'C'	'D'	'E'	'F'	'G'	'H'	'J'	'K'	'O'	'R'
418	48	#4	5'–0"	17		1'–8"	1'–8"	1'–8"								
419	18	#4	2'–7"	T3			2'–1"				0'–6"				0'–8"	
420	76	#4	5'–1"	S5	0'–8"	1'–3"	1'–3"	1'–3"			0'–8"					
421	28	#4	3'–10"	17		1'–3"	1'–4"	1'–3"								
508	224	#5	8'–11"	T1	0'–5 X"	3'–7"	0'–5"	3'–7"	0'–5"		0'–5 X"					

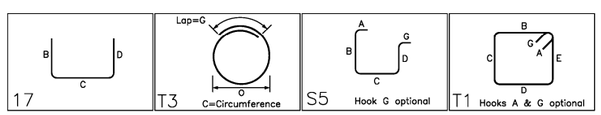

ALL REINF. = A706, GRADE 60

ALL REINF ON THIS DWG IS
EPOXY
COATED REBAR

3	
2	
1	
0	FOR APPROVAL

REVISIONS	DATE	BY
	10/13/2022	ACS

THE FULL INTENT & PURPOSE OF THIS PLACING DRAWING IS THE FABRICATION & PLACING OF REINFORCING STEEL BARS ONLY. ALL OTHER ITEMS SHOWN ARE FOR COORDINATION BETWEEN THE ARCHITECT, ENGINEER, CONTRACTOR OR ANY OTHER SUB-TRADE. REINFORCING STEEL PLACING DRAWINGS SHOULD NOT BE USED IN CONJUNCTION WITH CONTRACT DRAWINGS & SPECIFICATIONS. ELEVATIONS & DIMENSIONS SHOWN ON THIS DRAWING ARE FOR DETAILING PURPOSES ONLY & SHOULD NOT BE USED FOR CONSTRUCTION UNLESS VERIFIED BY ARCHITECT, ENGINEER, OR CONTRACTOR.

JD Steel Co., Inc.
511 E. STEEL LOOP
PALMER, AK, U.S.A. 99645
PHONE: (907) 746-6750
FAX: (907) 746-6755
http://www.jdsteel.com
STEEL CO. INC.
An Employee-Owned Company

LOCATION KETCHIKAN
ARCHITECT
ENGINEER
CUSTOMER HAMILTON
DRAWN BY ACS

PROJECT HERRING COVE GRIDGE
NO. SFHY00072/0902043

TITLE OF DRAWING COPING & MOMENT SLAB REINFORCING DETAILS

PROJECT NO. D210262

DRAWING NO. 05

Plotted by AARON on 10/13/2022 at 08:08:44 AM

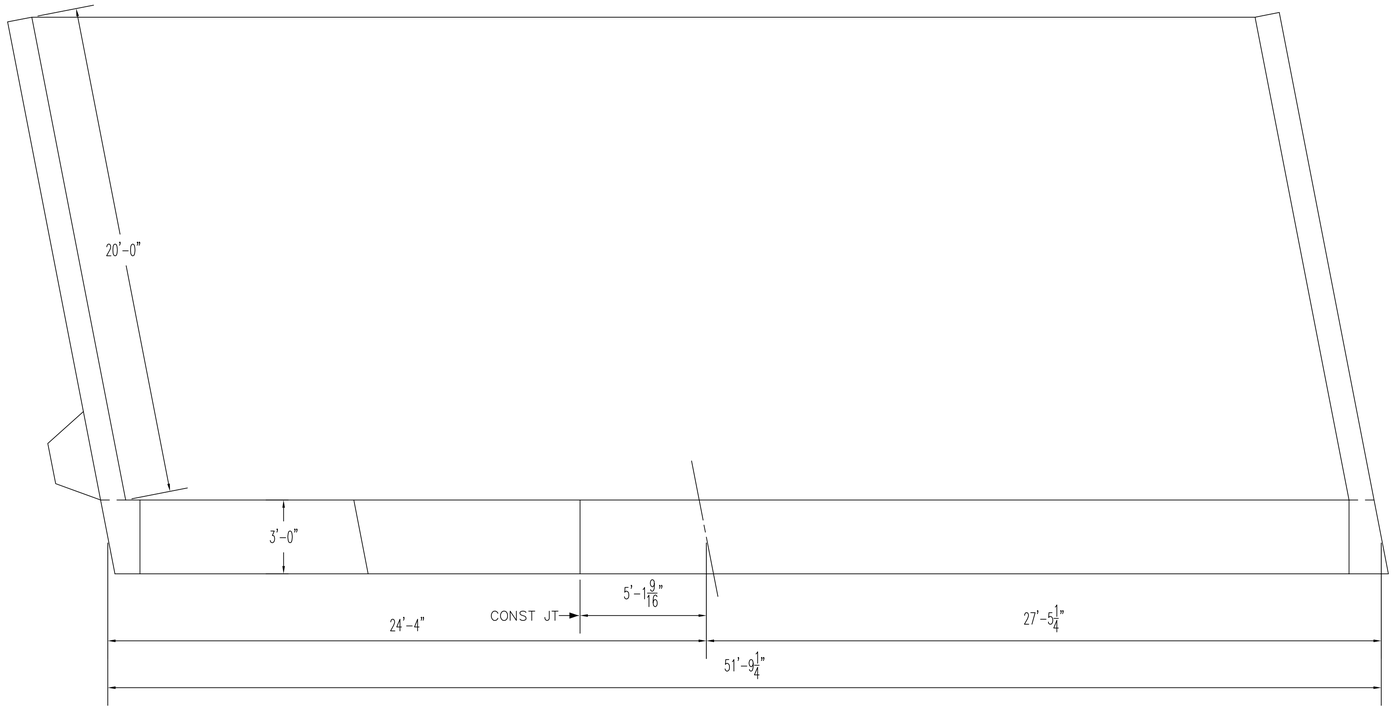

TYP ABUTMENT PLAN

ABUT. 1 SHOWN & ABUT. 2 MIRROR

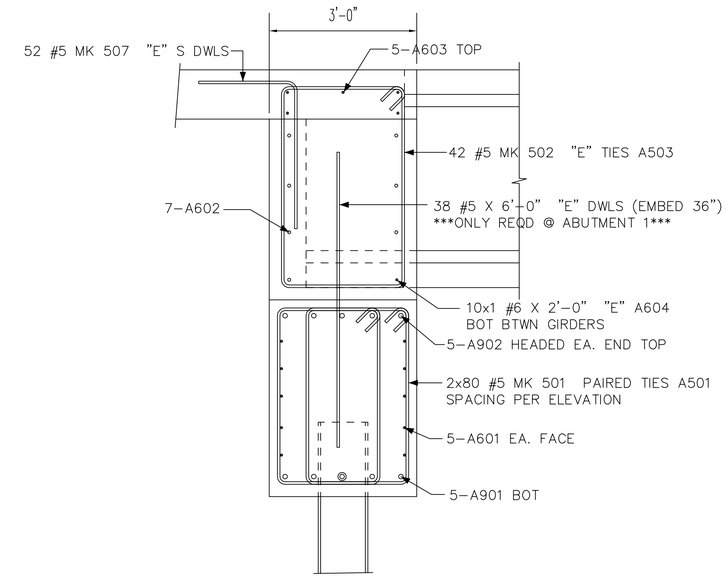

TYP ABUTMENT SECTION

APPROVED AS NOTED
BRIDGE DESIGN SECTION
ALASKA DEPARTMENT OF TRANSPORTATION
AND PUBLIC FACILITIES
Reviewed for conformance with basic details and dimensions of the contract plans. Accuracy of information supplied by the fabricator is not guaranteed.
By PG Date 6/21/22

FIELD CUT REINF @UTILIDUCTS

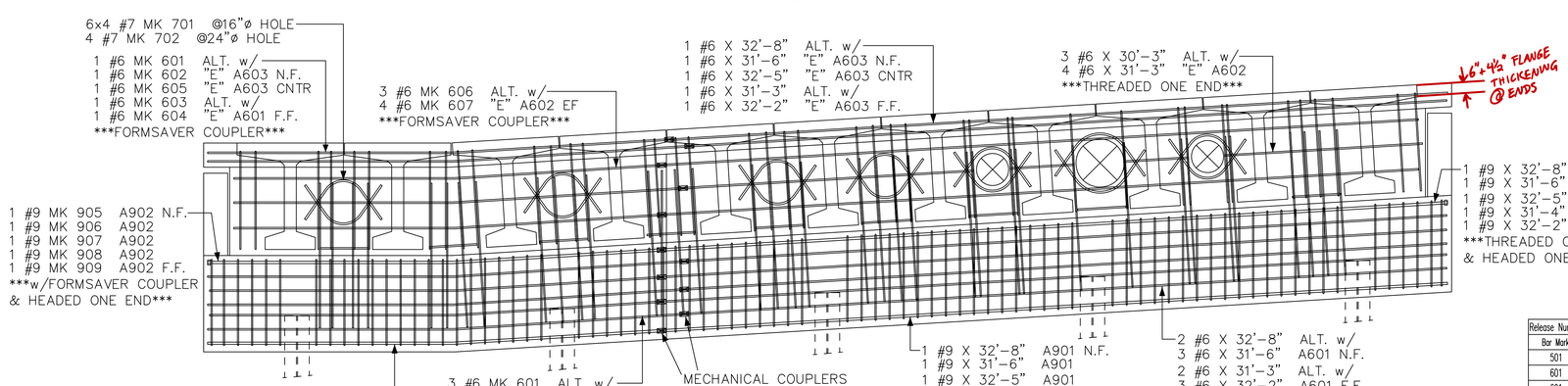

TYP ABUTMENT ELEVATION

ABUT. 1 SHOWN & ABUT. 2 MIRROR

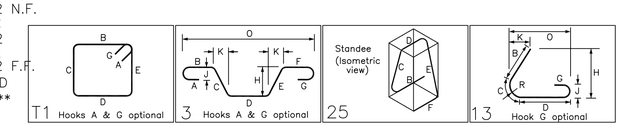

QTY'S SHOWN FOR ONE ABUTMENT (2-REQD)

ALL REINF. = A706, GRADE 60

ALL REINF ON THIS DWG IS
BLACK/UNCOATED
UNO BY "E"=EPOXY

Release Number: 01

BAR LIST

Bar Mark	Qty	Size	Total Length	Type	'A'	'B'	'C'	'D'	'E'	'F'	'G'	'H'	'J'	'K'	'O'	'R'
501	160	#5	12'-3"	T1	0'-5 X"	3'-7"	2'-1"	3'-7"	2'-1"		0'-5 X"					
601	1	#6	19'-11 X"	3		10'-2 X"	9'-9 X"					0'-8 X"		9'-9"	19'-11 X"	
601	3	#6	19'-11 X"	3		10'-2 X"	9'-9 X"					0'-8 X"		9'-9"	19'-11 X"	
602	1	#6	18'-10 X"	3		10'-2"	8'-8 X"					0'-7 X"		8'-8"	18'-10"	
602	2	#6	18'-10 X"	3		10'-2"	8'-8 X"					0'-7 X"		8'-8"	18'-10"	
603	1	#6	20'-2 X"	3		10'-2"	10'-0 X"					0'-8 X"		10'-0"	20'-2"	
603	3	#6	20'-2 X"	3		10'-2"	10'-0 X"					0'-8 X"		10'-0"	20'-2"	
604	1	#6	19'-4 X"	3		10'-2"	9'-2 X"					0'-7 X"		9'-2"	19'-4"	
604	2	#6	19'-4 X"	3		10'-2"	9'-2 X"					0'-7 X"		9'-2"	19'-4"	
605	1	#6	19'-0 X"	3		10'-2"	8'-10 X"					0'-7 X"		8'-10 X"	19'-0 X"	
606	3	#6	18'-10 X"	3		8'-10"	10'-0 X"					0'-8 X"		10'-0"	18'-10"	
607	4	#6	17'-11 X"	3		9'-2"	8'-9 X"					0'-7 X"		8'-9 X"	17'-11 X"	
905	2	#9	18'-9 X"	3		10'-2"	8'-7 X"					0'-7 X"		8'-7 X"	18'-9 X"	
906	2	#9	19'-11 X"	3		10'-2"	9'-9 X"					0'-8 X"		9'-9"	19'-11"	
907	2	#9	19'-0 X"	3		10'-2"	8'-10 X"					0'-7 X"		8'-10 X"	19'-0 X"	
908	2	#9	20'-2 X"	3		10'-2"	10'-0 X"					0'-8 X"		10'-0"	20'-2"	
909	2	#9	19'-3 X"	3		10'-2"	9'-1 X"					0'-7 X"		9'-1 X"	19'-3 X"	
301	42	#3	4'-6 X"	25		1'-6"	0'-4 X"	0'-10"	0'-4 X"	1'-6"		0'-4 X"		0'-2"		
~~502~~	42	#5	14'-10" 14'-1"	T1	0'-5 X"	14'-5½" 4'-1"	2'-6"	14'-5½" 4'-1"	2'-6"		0'-5 X"					
701	24	#7	4'-8 X"	13		1'-5 X"	1'-9"	1'-6"				2'-7 X"		0'-6 X"	2'-5"	0'-11"
702	4	#7	5'-4 X"	13		1'-5 X"	2'-4 X"	1'-6"				3'-1"		0'-7"	2'-9"	1'-3"

Adjust the bar for increased girder depth at abutments
ALSO ADJUST +4½" EACH VERT. LEG
401a-u
503a-e
504a-e
901
902a-e

3	PER ENGINEER REVIEW / RESUBMIT	06/16/2022 ACS
2	PER CUSTOMER REVIEW	05/17/2022 ACS
1	FOR APPROVAL	04/28/2022 ACS
0	REVISIONS	DATE BY

THE FULL INTENT & PURPOSE OF THIS PLACING DRAWING IS THE FABRICATION & PLACING OF REINFORCING STEEL BARS ONLY. IT IS NOT INTENDED AS A MEANS OF COMMUNICATION BETWEEN THE ARCHITECT, ENGINEER, CONTRACTOR OR ANY OTHER SUB-TRADE. REINFORCING STEEL PLACING DRAWINGS ARE TO BE USED IN CONJUNCTION WITH CONTRACT DRAWINGS & SPECIFICATIONS. CLUTCHING A PLACING DRAWING ONLY WILL NOT SUFFICE FOR DETAILING PURPOSES ONLY & SHOULD NOT BE USED FOR CONSTRUCTION UNLESS VERIFIED BY ARCHITECT, ENGINEER OR CONTRACTOR.

JD Steel Co., Inc.
511 E STEEL LOOP
PALMER, AK, U.S.A. 99645
PHONE: (907) 746-6750
FAX: (907) 746-6755
http://www.jdsteel.com

LOCATION KETCHIKAN
ARCHITECT
ENGINEER
CUSTOMER HAMILTON
DRAWN BY ACS

PROJECT HERRING COVE GRIDGE
NO. SFHY00072/0902043
TITLE OF DRAWING ABUTMENT REINFORCING DETAILS

PROJECT NO. D210262

DRAWING NO. 01

Plotted by AARON on 06/16/2022 at 12:44:12 PM

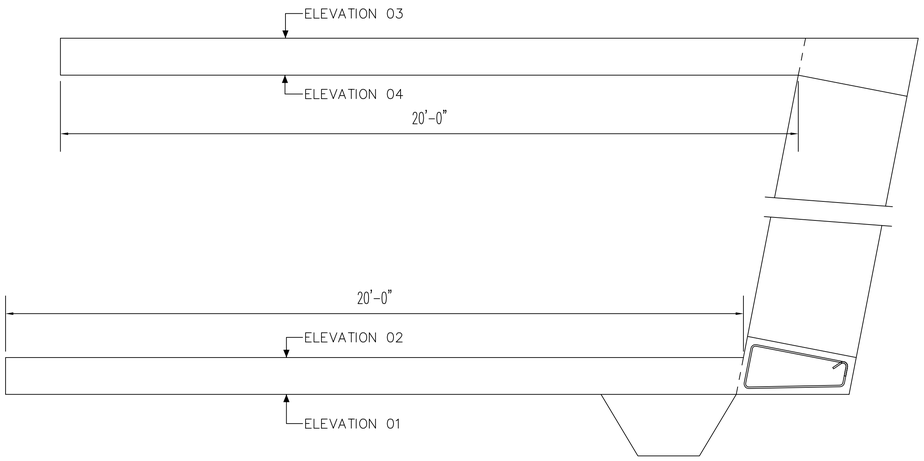

TYP WINGWALL PLAN

Release Number: 10

BAR LIST

Bar Mark	Qty	Size	Total Length	Type	'A'	'B'	'C'	'D'	'E'	'F'	'G'	'H'	'J'	'K'	'O'	'R'
401a	4	#4	2'-11½" 2'-7"			2'-7"										
Varies To																
401u	4	#4	7'-3½" 6'-11"			6'-11"										
402	18	#4	7'-11 ¼"	T8	0'-4 ½"	2'-8"	1'-2 ½"	2'-8 ¼"	0'-8"		0'-4 ½"	2'-8"		0'-6 ½"		
503a	1	#5	6'-10"			6'-10"										
Varies To																
503e	1	#5	20'-4"			20'-4"										
504a	1	#5	7'-0"			7'-0"										
Varies To																
504e	1	#5	20'-8"			20'-8"										
505	3	#5	8'-4"	3		1'-0"	2'-6"	1'-4"	2'-6"	1'-0"		2'-2"		1'-3"	5'-10"	
506	4	#5	7'-3 ¼"	16	1'-0"	2'-4"	0'-8"	3'-3 ¼"				2'-4"		2'-3 ½"	2'-11 ½"	
901	1	#9	22'-11"	3		20'-1 ¾"	2'-9 ¼"					0'-8 ¼"		2'-8 ¼"	22'-10"	
902a	2	#9	7'-0"			7'-0"										
Varies To																
902e	2	#9	20'-6"			20'-6"										
903	2	#9	23'-1 ¼"	3		20'-4"	2'-9 ¼"					0'-8 ¼"		2'-8 ¼"	23'-0 ¼"	
904	1	#9	23'-3 ¼"	3		20'-6 ¼"	2'-9"					0'-8"		2'-8 ¼"	23'-2 ½"	

CHECK IF ADJUSTMENT NEEDED DUE TO FLANGE THICKENING

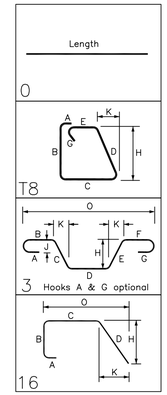

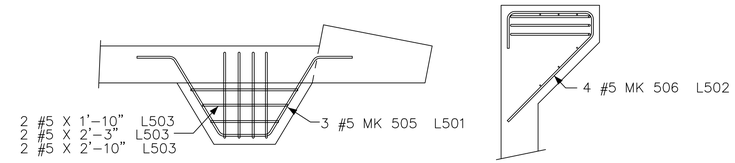

CORBEL DETAILS

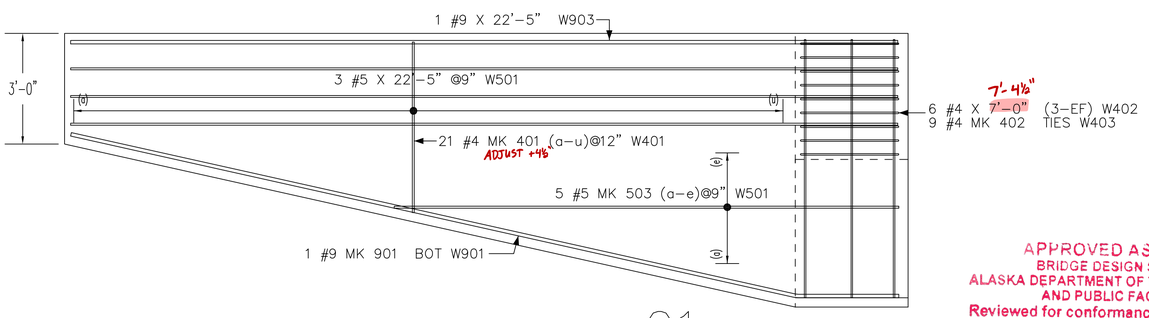

WINGWALL ELEVATION 01

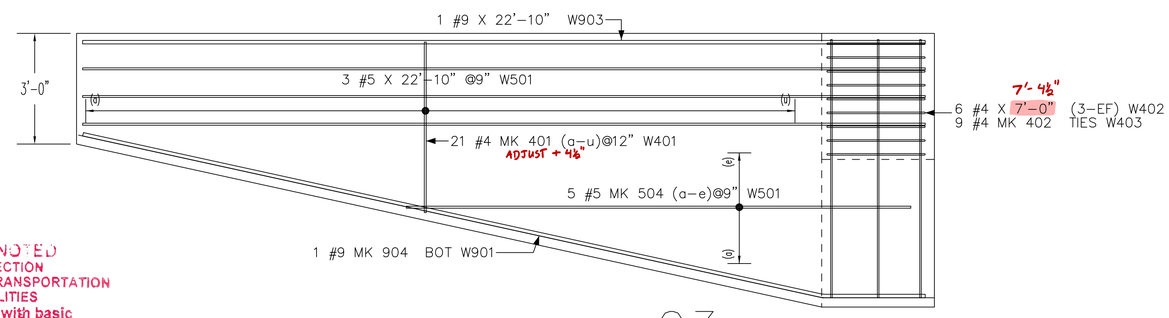

WINGWALL ELEVATION 03

APPROVED AS NOTED
BRIDGE DESIGN SECTION
ALASKA DEPARTMENT OF TRANSPORTATION
AND PUBLIC FACILITIES
Reviewed for conformance with basic details and dimensions of the contract plans. Accuracy of information supplied by the fabricator is not guaranteed.
By KG Date 6/21/22

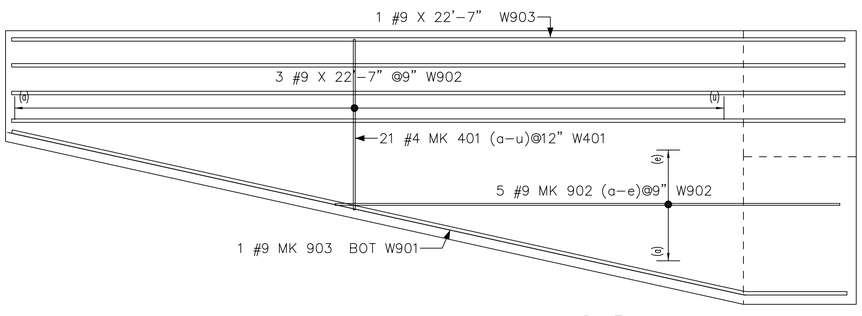

WINGWALL ELEVATION 02

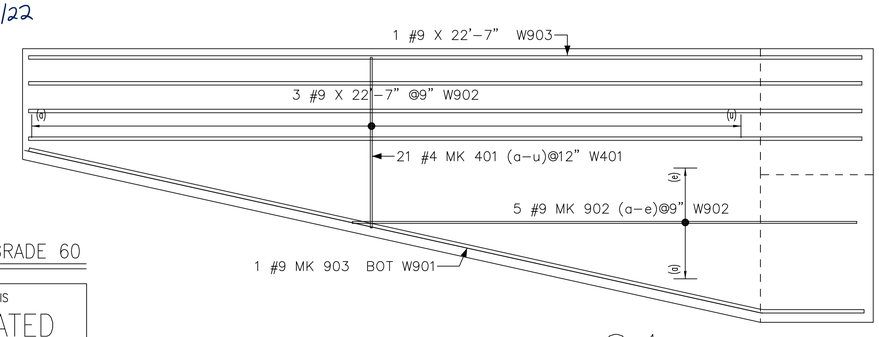

WINGWALL ELEVATION 04

ALL REINF. = A706, GRADE 60

ALL REINF ON THIS DWG IS
BLACK/UNCOATED
UNO BY "E"=EPOXY

3	PER ENGINEER REVIEW / RESUBMIT	06/16/2022	ACS
2	PER CUSTOMER REVIEW	05/17/2022	ACS
1	FOR APPROVAL	04/28/2022	ACS
0	REVISIONS	DATE	BY

THE FULL INTENT & PURPOSE OF THIS PLACING DRAWING IS THE FABRICATION & PLACING OF REINFORCING STEEL BARS ONLY & MUST BE USED AS A MEANS OF COMMUNICATION BETWEEN THE ARCHITECT, ENGINEER, CONTRACTOR OR ANY OTHER SUB-TRADE. REINFORCING STEEL SHOWN ON THIS DRAWING IS TO BE FABRICATED IN CONJUNCTION WITH CONTRACT DRAWINGS & SPECIFICATIONS. ELEVATIONS & DIMENSIONS SHOWN ON THIS DRAWING ARE FOR DETAILING PURPOSES ONLY & SHOULD NOT BE USED FOR CONSTRUCTION UNLESS VERIFIED BY ARCHITECT, ENGINEER, OR CONTRACTOR.

JD Steel Co., Inc.
511 E. STEEL COP
PALMER, AK, U.S.A. 99645
PHONE: (907) 746-6750
FAX: (907) 746-6755
http://www.jdsteel.com

LOCATION: KETCHIKAN
ARCHITECT
ENGINEER
CUSTOMER: HAMILTON
DRAWN BY: ACS

PROJECT: HERRING COVE GRIDGE
NO. SFHY00072/0902043

TITLE OF DRAWING: WINGWALL REINFORCING DETAILS

PROJECT NO. D210262

DRAWING NO. 02

Plotted by AARON on 06/16/2022 at 09:14:10 AM

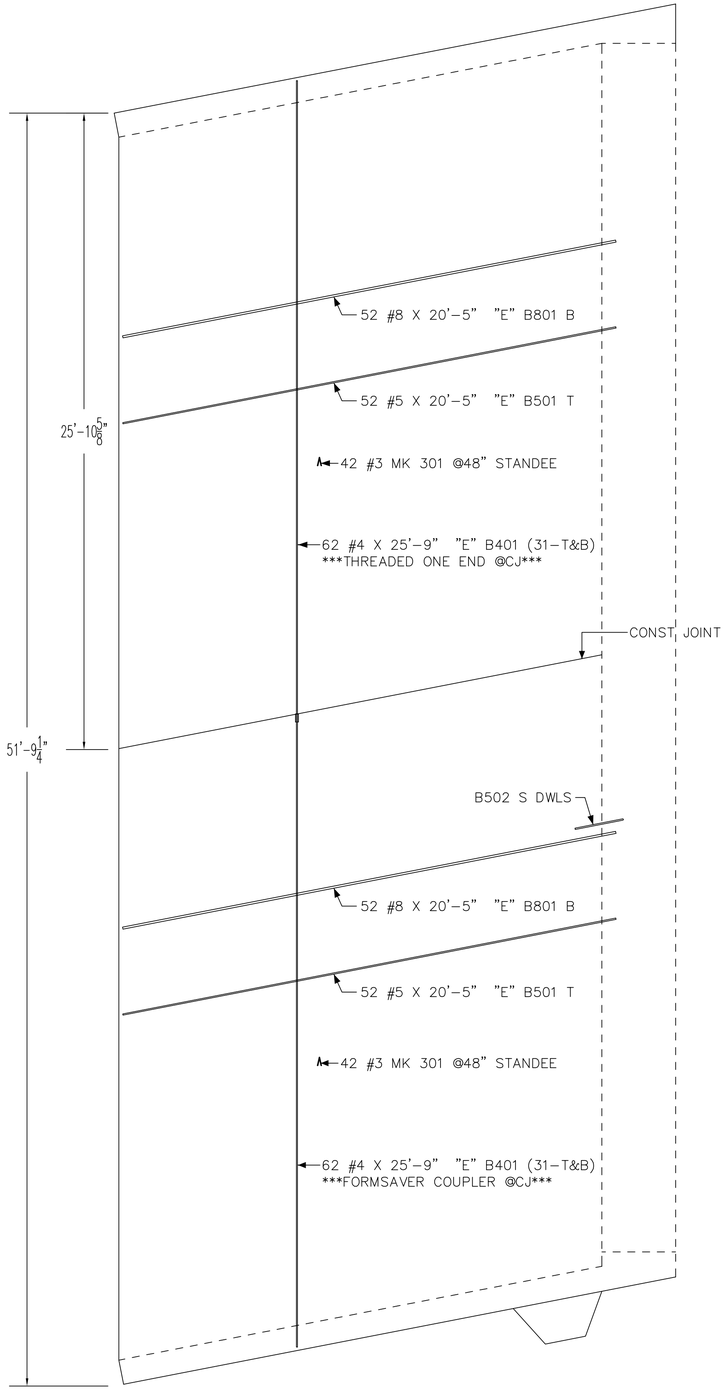

APPROACH SLAB REINF PLAN

(2-EACH)

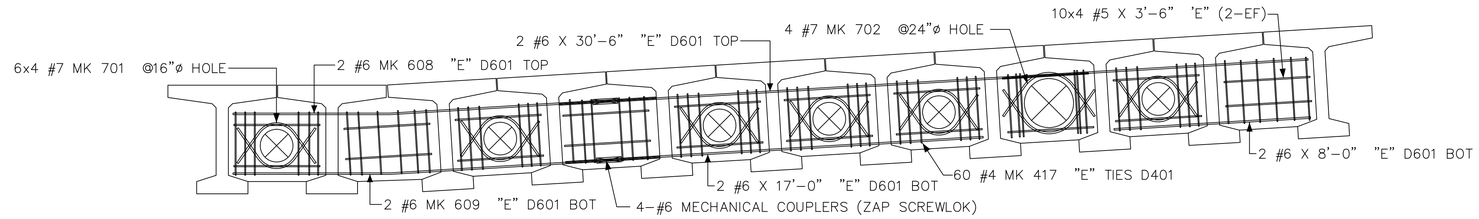

DIAPHRAGM ELEVATION

(1-EACH)

BAR LIST

Release Number: 20

Bar Mark	Qty	Size	Total Length	Type	'A'	'B'	'C'	'D'	'E'	'F'	'G'	'H'	'J'	'K'	'O'	'R'
301	42	#3	4'-6 1/4"	25		1'-6"	0'-4 1/4"	0'-10"	0'-4 1/4"	1'-6"		0'-4 1/4"		0'-2"		
417	60	#4	6'-9"	T1	0'-4 1/4"	2'-7"	0'-5"	2'-7"	0'-5"		0'-4 1/4"					
507	52	#5	5'-0"	17		2'-0"	3'-0"									
608	2	#6	17'-2 1/4"	3		6'-4 1/4"	10'-9 1/4"					0'-8 1/4"		10'-9 1/4"	17'-2"	
609	2	#6	17'-4 1/4"	3		6'-4 1/4"	10'-11 1/4"					0'-8 1/4"		10'-11 1/4"	17'-4"	
701	24	#7	4'-8 1/4"	13		1'-5 1/4"	1'-9"	1'-6"				2'-7 1/4"		0'-6 1/4"	2'-5"	0'-11"
702	4	#7	5'-4 1/4"	13		1'-5 1/4"	2'-4 1/4"	1'-6"				3'-1"		0'-7"	2'-9"	1'-3"

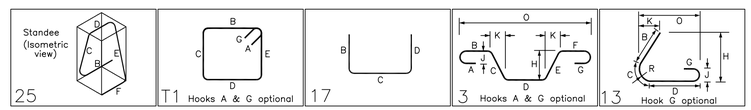

BAR LIST

Release Number: 40

Bar Mark	Qty	Size	Total Length	Type	'A'	'B'	'C'	'D'	'E'	'F'	'G'	'H'	'J'	'K'	'O'	'R'
415	85	#4	1'-10"	17		0'-6"	1'-4"									
416	85	#4	2'-1"	17		0'-9"	1'-4"									
403a	1	#4	8'-4"			8'-4"										
Varies To																
403t	1	#4	10'-2"			10'-2"										
404a	1	#4	8'-4"			8'-4"										
Varies To																
404t	1	#4	10'-2"			10'-2"										
405a	2	#4	8'-4"			8'-4"										
Varies To																
405am	2	#4	11'-2"			11'-2"										
406a	2	#4	7'-3"			7'-3"										
Varies To																
406av	2	#4	11'-5"			11'-5"										
407a	2	#4	10'-7"			10'-7"										
Varies To																
407k	2	#4	11'-5"			11'-5"										
408	10	#4	5'-8"	17		2'-6"	0'-8"	2'-6"								
409	28	#4	6'-5"	T1	0'-4 1/4"	2'-2"	0'-8"	2'-2"	0'-8"		0'-4 1/4"					
410	28	#4	5'-3"	T1	0'-4 1/4"	1'-7"	0'-8"	1'-7"	0'-8"		0'-4 1/4"					
411	56	#4	4'-9"	S5	0'-6"	1'-1"	1'-1"	1'-1"			1'-0"					
412	88	#4	3'-10"	17		1'-3"	1'-4"	1'-3"								
413	170	#4	4'-4" 3'-8"	S5	0'-6" 1'-1"	0'-9"	0'-8" 1'-1"	0'-9"			1'-0"					
414	170	#4	3'-11"	S5	0'-6"	0'-7"	1'-3"	0'-7"			1'-0"					

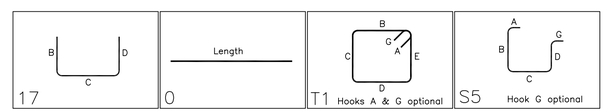

APPROVED AS NOTED
BRIDGE DESIGN SECTION
ALASKA DEPARTMENT OF TRANSPORTATION
AND PUBLIC FACILITIES
Reviewed for conformance with basic details and dimensions of the contract plans. Accuracy of information supplied by the fabricator is not guaranteed.
By JG Date 6/21/22

ALL REINF. = A706, GRADE 60

ALL REINF ON THIS DWG IS
BLACK/UNCOATED
UNO BY "E"=EPOXY

3	PER ENGINEER REVIEW / RESUBMIT	06/16/2022	ACS
2	PER CUSTOMER REVIEW	05/17/2022	ACS
1	FOR APPROVAL	04/28/2022	ACS
0	REVISIONS	DATE	BY

THE FULL INTENT & PURPOSE OF THIS PLACING DRAWING IS THE FABRICATION & PLACING OF REINFORCING STEEL BARS TO ALL DETAILS AS SHOWN. ANY DISCREPANCIES, COMMUNICATION BETWEEN THE ARCHITECT- ENGINEER, CONSTRUCTOR, OR ANY OTHER SUB-TRADE, REINFORCING STEEL FABRICATOR & INSTALLER, MUST BE RESOLVED IN CONJUNCTION WITH CONTRACT DRAWINGS & SPECIFICATIONS. ELEVATIONS & MARKING DIAGRAMS SHOWN ARE FOR DETAILING PURPOSES ONLY & SHOULD NOT BE USED FOR CONSTRUCTION UNLESS VERIFIED BY ARCHITECT, ENGINEER, OR CONTRACTOR.

JD Steel Co., Inc.
511 E. STEEL LOOP
PALMER, AK, U.S.A. 99645
PHONE: (907) 746-6750
FAX: (907) 746-6755
http://www.jdsteel.com
STEEL CO. INC.
The Employee Owned Company

LOCATION KETCHIKAN
ARCHITECT
ENGINEER
CUSTOMER HAMILTON
DRAWN BY ACS

PROJECT HERRING COVE GRIDGE
NO. SFHY00072/0902043
TITLE OF DRAWING APPROACH & DIAPHRAGM REINF DETAILS

PROJECT NO. D210262

DRAWING NO. 03

Plotted by AARON on 06/16/2022 at 10:06:45 AM

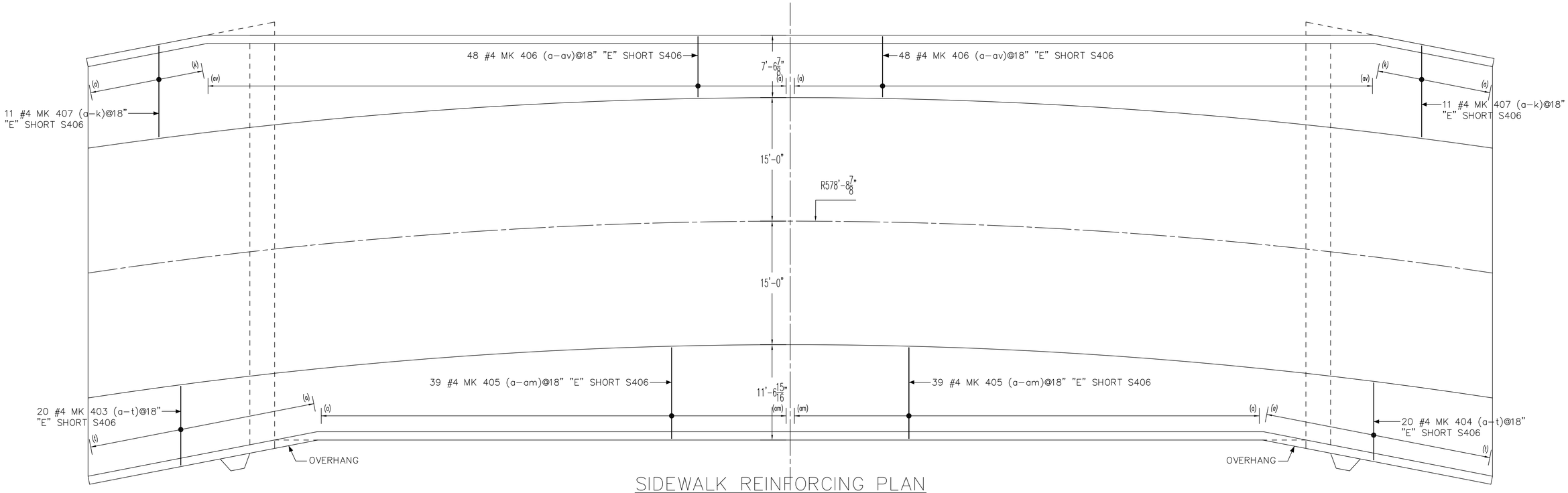

SIDEWALK REINFORCING PLAN

APPROVED AS NOTED
BRIDGE DESIGN SECTION
ALASKA DEPARTMENT OF TRANSPORTATION
AND PUBLIC FACILITIES
Reviewed for conformance with basic details and dimensions of the contract plans. Accuracy of information supplied by the fabricator is not guaranteed.
By JG Date 6/21/22

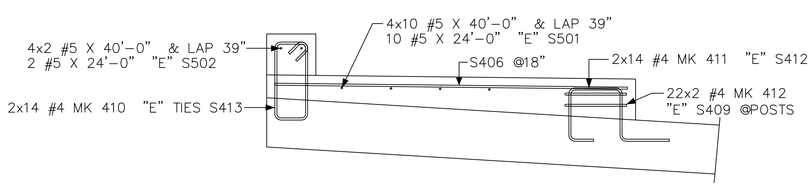

LEFT SIDEWALK SECTION @APPROACH

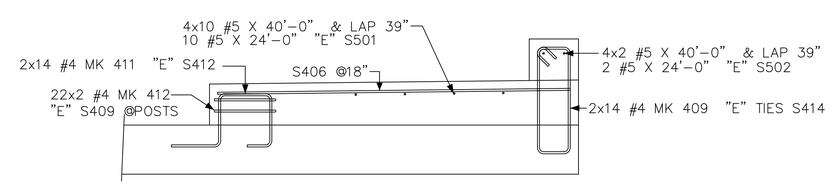

RIGHT SIDEWALK SECTION @APPROACH

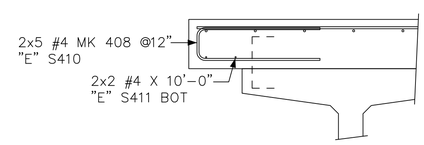

SECTION @OVERHANG

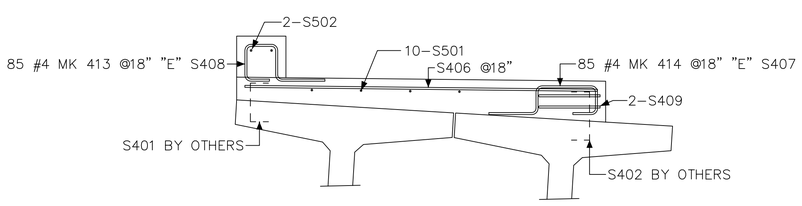

LEFT SIDEWALK SECTION @BRIDGE

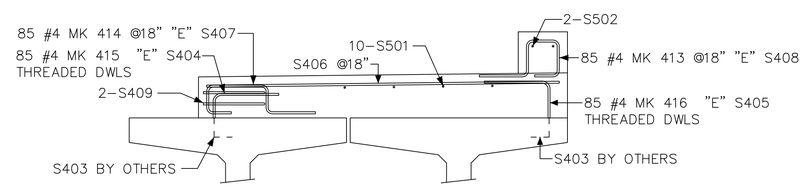

RIGHT SIDEWALK SECTION @BRIDGE

YES, CHANGE TO 13" AS SHOWN IN REBAR TABLE
ENG. S406 VERT LEGS NEED TO BE 13" / 8" PER THE SCHEDULE ON SHT N18 ARE TOO SHORT
S406

ALL REINF. = A706, GRADE 60

ALL REINF ON THIS DWG IS
BLACK/UNCOATED
UNO BY "E"=EPOXY

3	PER ENGINEER REVIEW / RESUBMIT	06/16/2022 ACS
2	PER CUST REVIEW	05/17/2022 ACS
1	FOR APPROVAL	04/28/2022 ACS
0	REVISIONS	DATE BY

THE FULL INTENT & PURPOSE OF THIS PLACING DRAWING IS THE FABRICATION & PLACING OF REINFORCING STEEL BARS ONLY. IT MUST BE USED AS A WAY OF COMMUNICATION BETWEEN THE ARCHITECT, ENGINEER, CONTRACTOR, OR ANY OTHER SUB-TRADE. REINFORCING STEEL DRAWINGS MUST BE USED IN CONJUNCTION WITH CONTRACT DRAWINGS & SPECIFICATIONS. (1) DETAIL & INDEXED DRAWINGS ONLY WHEN ARE MARKED FOR DETAILING PURPOSES ONLY & SHOULD NOT BE USED FOR CONSTRUCTION UNLESS VERIFIED BY ARCHITECT, ENGINEER, OR OWNERS.

JD Steel Co., Inc.
511 E. STEEL LOOP
PALMER, AK, U.S.A., 99645
PHONE: (907) 746-6750
FAX: (907) 746-6755
http://www.jdsteel.com
STEEL CO. INC.
The Employee Owned Company

LOCATION KETCHIKAN
ARCHITECT
ENGINEER
CUSTOMER HAMILTON
DRAWN BY ACS

PROJECT HERRING COVE GRIDGE
NO. SFHY00072/0902043
TITLE OF DRAWING SIDEWALK REINFORCING DETAILS

PROJECT NO. D210262

DRAWING NO. 04

Plotted by AARON on 06/16/2022 at 10:07:32 AM

State of Alaska

GOVERNOR MIKE DUNLEAVY

Submittal Cover Sheet

Department of Transportation Public Facilities
SOUTHCOAST REGION
Construction Section

Project: KTN- HERRING COVE BRIDGE IMPROVEMENTS	Project No: 0902043/SFHWY00072
Contractor: Hamilton Construction Alaska	Submittal No. 502-005 Precast Girder Shop Drawings
Date Response Sent: 02/10/2022	Reviewed By: Bob Lundell, P.E. Recoverable Signature X Bob Lundell Signed by: 2d66350b-1634-445f-b1d5-d5b87bea066b

A	AAN	R&R	R	I	R&RasN	INC	CA
Approved	Approved as Noted	Revise and Resubmit	Rejected	Informational	Revisit & Resubmit as Noted	Incomplete	Conditionally Approved

Item No.	Item	Contract Documents	A	AAN	R&R	R	I	R&R asN	INC	CA
501.0007.0000	Precast Concrete Member, 129'-0" Decked Bulb Tee	502-3.01	X							

Comments/Anticipated Response:

Department of Transportation & Public Facilities
Statewide Design & Engineering Services Division
Phone: 907-465-8890
Fax: 907-465-3124

MEMORANDUM

TO: Bob Lundell
Project Engineer
DOWL Engineers

DATE: February 9, 2022

FILE: 253

FROM: Richard A. Pratt, PE, SE RAP
Chief Bridge Engineer

RE: Herring Cove Bridge Improvements
0902043/SFHWY00072

CONTACT: Nicholas Murray, PE SE
(907) 465-8898
nicholas.murray@alaska.gov

SUBJECT: Precast Girders-Approved

We have received an electronic copy of Knife River's shop drawings totaling 26 pages (including memorandum) and dated 2/3/22 on 2/4/22. The drawings are marked "Approved".

As indicated in Section 105-1.02 of the contract specifications, the Contractor is required to provide one set of reproducible transparencies (polyester film commonly referred to as mylars) of the final shop drawings. Please have the mylars sent to this office (address below) for the permanent records.

State of Alaska Bridge Section
c/o Nicholas Murray
PO Box 112500
Juneau, AK 99811-2500

We are providing electronic copies via email for your distribution to the Contractor, fabricator and the Department's QA inspector.

NWM/bm

HERRING COVE BRIDGE

KTN HERRING COVE BRIDGE IMPROVEMENTS
PROJECT NO. 0902043 / SFHWY00072
SOUTH TONGASS HIGHWAY
NEAR KETCHIKAN
ALASKA

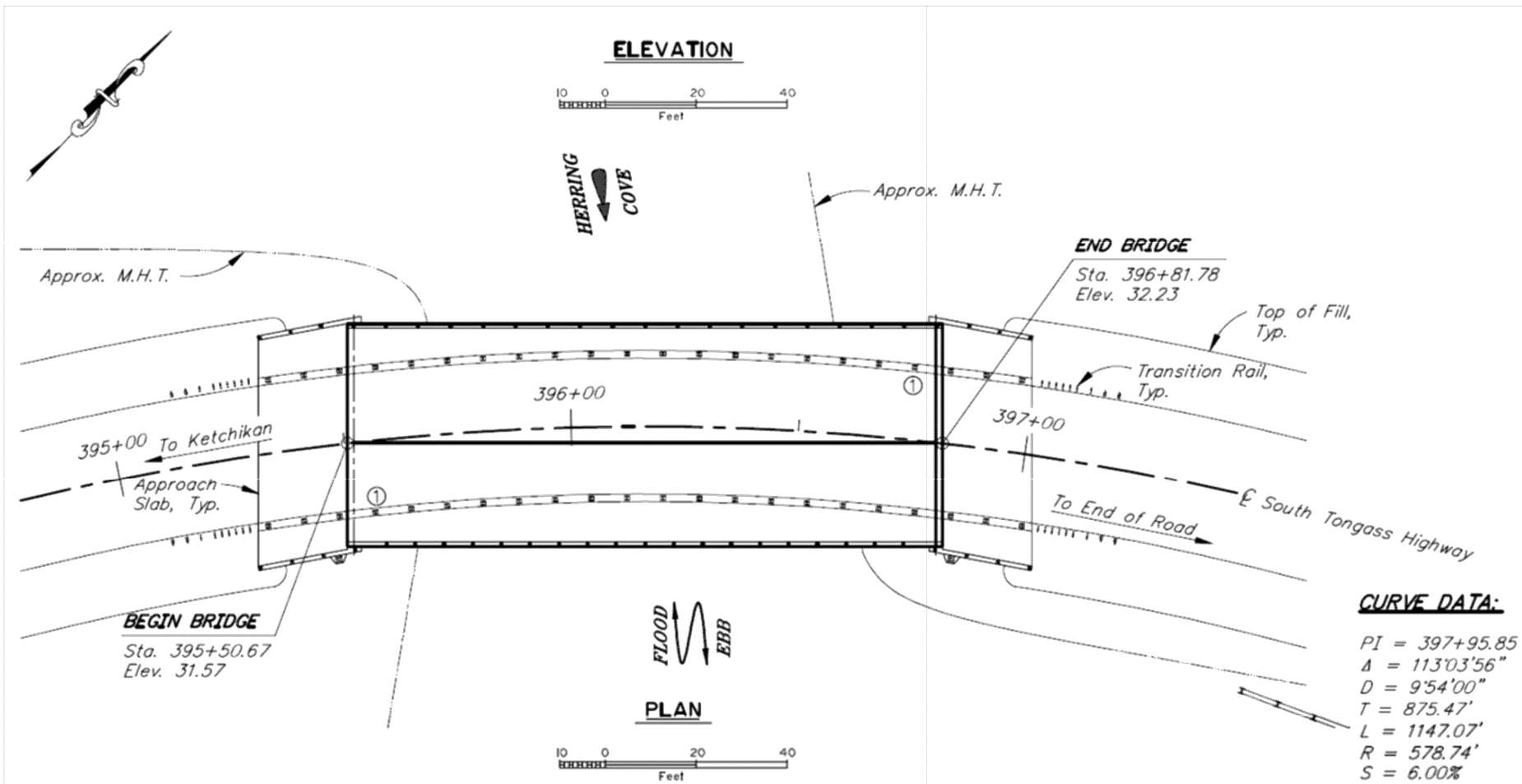

KNIFE RIVER
AN MDU RESOURCES COMPANY
922 N. CARNAHAN RD.
SPOKANE VALLEY, WA 99212
PH: (509) 536-3300

PROJECT INFO:
HERRING COVE BRIDGE
NEAR KETCHIKAN
ALASKA

OWNER: STATE OF ALASKA

ENG: STATE OF ALASKA
NICHOLAS MURRAY
PH: (907) 465-2975
EMAIL: nicholas.murray@alaska.gov

CONTR: HAMILTON CONSTRUCTION
JOHN SZYMIK
PH: (907) 746-5328
EMAIL: jszymik@hamil.com

ENGINEER'S SEAL:

STATUS:
REVISED
FOR APPROVAL
02/03/2022
KNIFE RIVER PRESTRESS

REV. #	REVISION	BY / DATE
1		
2		
0		

DRAWN	DATE	CHECKED	DATE
PELPHREY	10/19/2021	NM	01/14/22

PROJECT # 17545

PRODUCT TYPE DBT53

TITLE COVER

DRAWING #	SHEET	OF
1	1	25

NOTES

1) CONCRETE STRENGTH:
   @ TRANSFER: 6500 PSI
   @ 28-DAYS: 8500 PSI

2) MIX DESIGN: 386

3) PRODUCT FINISH: CONTRACTOR VERIFY
   TOP: CLASS 8 – COARSE BROOM FINISH
   UNDER LEFT SW: CLASS 7 – ROUGH FINISH
   EXTERIOR: SACK
   OTHER: FORM
   ENDS: CUT STRANDS FLUSH W/END OF GIRDER & EPOXY COAT EXCEPT FOR EXTENDED STRANDS (SEE DETAILS 1/5 & 1/8)

4) CONCRETE VOLUME & GIRDER WEIGHT (PER GIRDER):
   VOLUME: INTERIOR 28.9 CY EXTERIOR 29.1 CY
   WEIGHT: INTERIOR 128.8 KIPS EXTERIOR 129.7 KIPS

5) LIFTING: (4) ½"ø LIFTING LOOPS @ (4) LOCATIONS

6) INSPECTION: MAYES TESTING

7) THEORETICAL CAMBER (FROM BOTTOM OF GIRDER)
   AT TRANSFER: 2.8"
   AT ERECTION (90 DAYS): 5.4"
   AFTER APPLIED LOADS (D120): 4.5"
   (SEE DETAIL 1/2)

8) ALL REINFORCING STEEL EXCEPT PRESTRESS SHALL CONFORM TO REQUIREMENTS OF ASTM A706, GRADE 60.

9) DO NOT SHIP UNTIL:
   –7 DAYS AFTER CASTING.
   –28-DAY CONCRETE COMPRESSIVE STRENGTH IS REACHED.

11) BUY AMERICA ACT: APPLIES

HANDLING

TYPE	DISTANCE FROM EACH END
LIFTING	5'–0"
STORAGE	1'–6"
SHIPPING	15'–0"

DESIGN NOTES (AS TAKEN FROM THE CONTRACT PLANS):

DESIGN:.....AASHTO LRFD BRIDGE DESIGN SPECIFICATIONS, 9TH EDITION, WITH LATEST INTERIM SPECIFICATIONS.

SEISMIC DESIGN PER AASHTO GUIDE SPECIFICATIONS FOR LRFD SEISMIC BRIDGE DESIGN, 2011 WITH LATEST INTERIM REVISIONS.

LIVE LOAD:.....HL–93

DEAD LOAD:.....INCLUDES 50 PSF FOR ALL WEARING SURFACES.

STRUCTURAL STEEL:.....ASTM A709, GRADE 36T3, F_Y = 36,000 PSI
GALVANIZE STRUCTURAL STEEL IN ACCORDANCE WITH AASHTO M111 UNLESS SHOWN OTHERWISE.

MATERIALS

1) CONCRETE:	318.3	CUBIC YARDS
2) STRAND:	57,310	L.F. 0.6"ø GRADE 270, 7 WIRE LOW RELAXATION STRAND (ASTM A416)
3) HOLDDOWNS:	66	TYPE "HD6A" HOLDDOWN
4) WELDMENTS:	640	SEE DETAIL: 2/5
5) INSERTS:	22	1"ø X 1'–0" B–2 COIL INSERT DAYTON SUPERIOR (MECH. PLATED)
	82	¾"ø X 6" B–16 COIL INSERT DAYTON SUPERIOR (MECH. PLATED)
	224	¾"ø X 3½" F–42 NC INSERT DAYTON SUPERIOR (MECH. PLATED)
	8 4	1"ø X 4⅝" F–62 NC INSERT DAYTON SUPERIOR (MECH. PLATED)
6) LIFTING LOOPS:	176	SEE DETAIL 3/9

FINISH INFO: CLASS 7 – ROUGHENED SURFACE

1. CAST CONCRETE AND VIBRATE, AS NECESSARY, TO SLIGHTLY BELOW DESIRED GRADE.
2. ADD ADDITIONAL CONCRETE, VIBRATE, AND RAKE AS NECESSARY TO ACHIEVE A FINAL AND UNIFORM GRADE. ENSURE A ROUGH SURFACE REMAINS.
3. PROTECT THE FINISHED SURFACE DURING CURING.

FINISH INFO: CLASS 8 – BROOM

1. PERFORM A CLASS 2 MEDIUM TROWEL FINISH.
2. GO OVER THE ENTIRE SURFACE USING AN APPROPRIATE BROOM IN THE TRANSVERSE DIRECTION. THE BROOM MARKS SHALL BE UNIFORM IN DEPTH, STRAIGHT AND LAP AT EACH PASS. THE DIFFERENT BROOMS INCLUDE:
   A. COARSE BROOM – USED FOR BRIDGE AND PARKING DECKS THAT ARE THE FINAL DRIVING SURFACE FOR TRACTION.
3. PROTECT THE SURFACE DURING CURING.

CONTRACTOR VERIFY

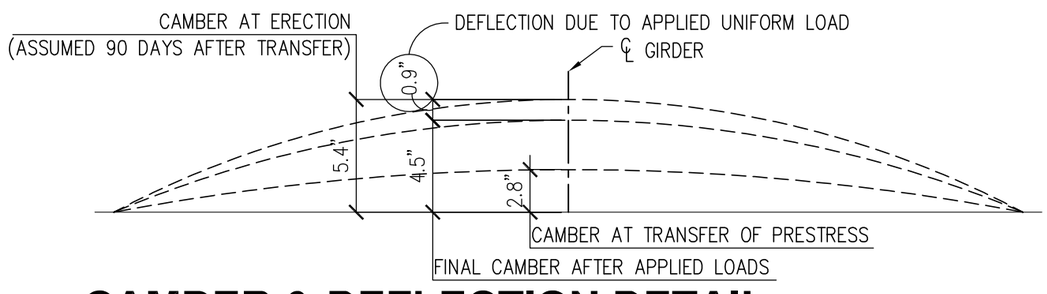

1/2 **CAMBER & DEFLECTION DETAIL**

SCALE: N.T.S

CAMBER COMPUTED USING PGSUPER SOFTWARE. DEFLECTION BASED ON AN APPLIED UNIFORM LOAD OF 225 LB/FT, AS DETAILED ON DWG. NO. 15 OF THE CONTRACT PLANS.

KNIFE RIVER
AN MDU RESOURCES COMPANY
922 N CARNAHAN
SPOKANE VALLEY, WA 99212
PH:(509) 536–3300
FAX:(509) 536–3305
23505 PEORIA RD.
HARRISBURG, OR 97446
PH: (541) 995–4100
FAX: (541) 995–9447

TITLE: NOTES –

JOB & LOCATION: HERRING COVE BRIDGE NEAR KETCHIKAN, ALASKA

DRAWN	J. PELPHREY	DATE 10/19/2021
HANDLING	J. PELPHREY	DATE 11/24/2021
CHECKED	S. WESTMAN	DATE 12/09/2021

REVISED FOR APPROVAL
02/03/2022
KNIFE RIVER PRESTRESS

NO.	REVISIONS	DATE

THIS DOCUMENT IS THE PROPERTY OF KNIFE RIVER. IT IS CONFIDENTIAL, SUBMITTED FOR REFERENCE PURPOSES ONLY, AND SHALL NOT BE USED IN ANY WAY INJURIOUS TO THE INTERESTS OF, OR WITHOUT THE WRITTEN PERMISSION OF KNIFE RIVER. COPYRIGHT © 2021 KNIFE RIVER ALL RIGHTS RESERVED

QTY. -
MK. # -
PROJECT NO. 17545
PRODUCT TYPE DBT53
SHEET 2 OF 25

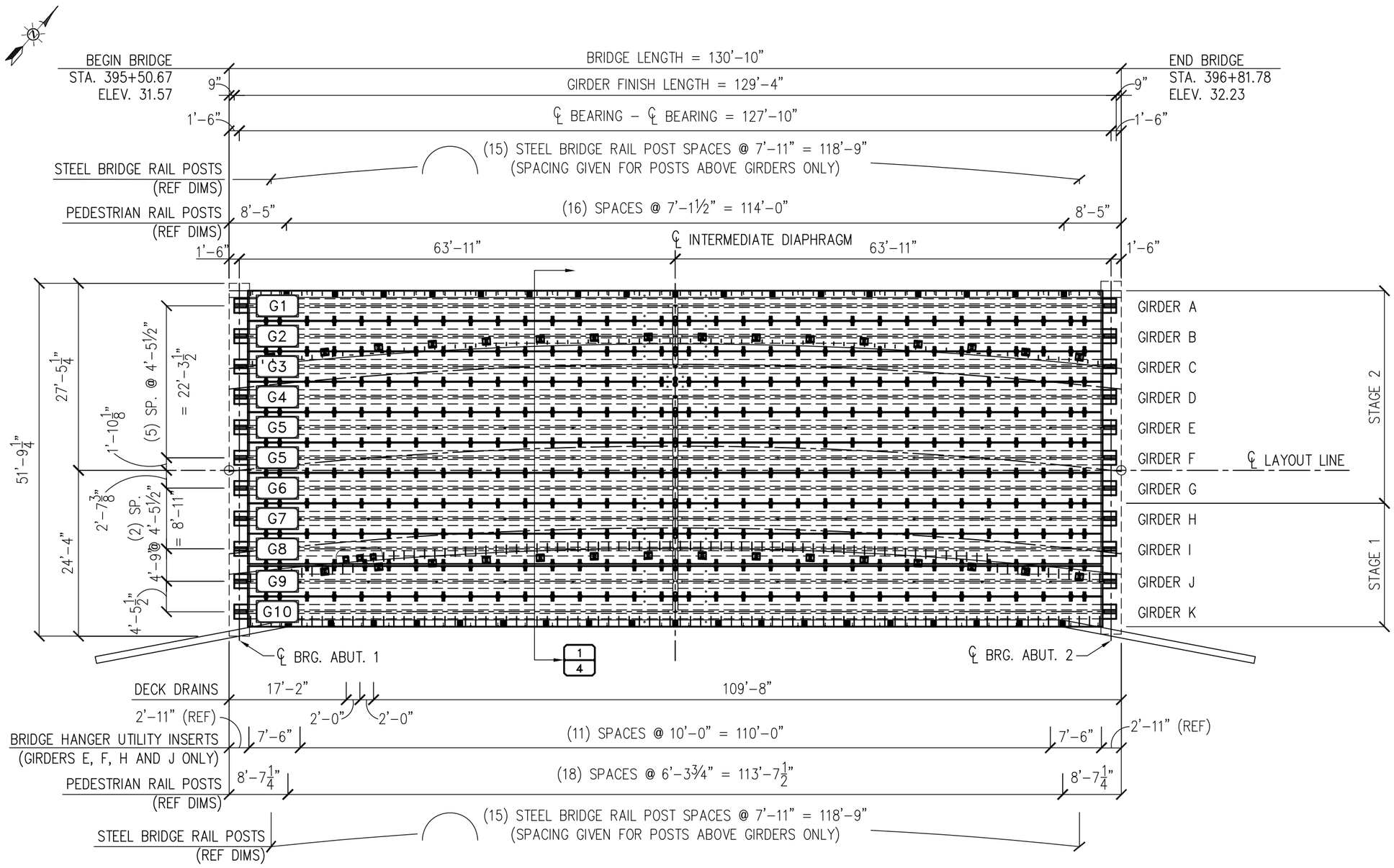

FRAMING PLAN

1/3 SCALE: 1/16"=1'-0"

NOTE: THE RADIUS FOR THE SOUTH TONGASS HIGHWAY ℄ IS 578.74'. THE LANE, SHOULDER, CURB & SIDEWALK LINES ARE OFFSETS FROM THIS LINE. THE CHORD LINE BETWEEN ℄ BEARINGS = THE LAYOUT LINE.

KNIFE RIVER
AN MDU RESOURCES COMPANY
922 N CARNAHAN
SPOKANE VALLEY, WA 99212
PH:(509) 536-3300
FAX:(509) 536-3305
23505 PEORIA RD.
HARRISBURG, OR 97446
PH: (541) 995-4100
FAX: (541) 995-9447

TITLE: FRAMING PLAN

JOB & LOCATION: HERRING COVE BRIDGE NEAR KETCHIKAN, ALASKA

DRAWN: J. PELPHREY	DATE: 10/19/2021	REVISED FOR APPROVAL 02/03/2022 KNIFE RIVER PRESTRESS
HANDLING: J. PELPHREY	DATE: 11/24/2021	
CHECKED: S. WESTMAN	DATE: 12/09/2021	

NO.	REVISIONS	DATE

THIS DOCUMENT IS THE PROPERTY OF KNIFE RIVER. IT IS CONFIDENTIAL, SUBMITTED FOR REFERENCE PURPOSES ONLY, AND SHALL NOT BE USED IN ANY WAY INJURIOUS TO THE INTERESTS OF, OR WITHOUT THE WRITTEN PERMISSION OF KNIFE RIVER. COPYRIGHT © 2021 KNIFE RIVER ALL RIGHTS RESERVED

QTY. -

MK. # -

PROJECT NO. 17545

PRODUCT TYPE DBT53

SHEET 3 OF 25

Work\Knife River\221145 Herring Cove Bridge\04 AutoCAD\17545 Herring Cove Bridge (S2).dwg

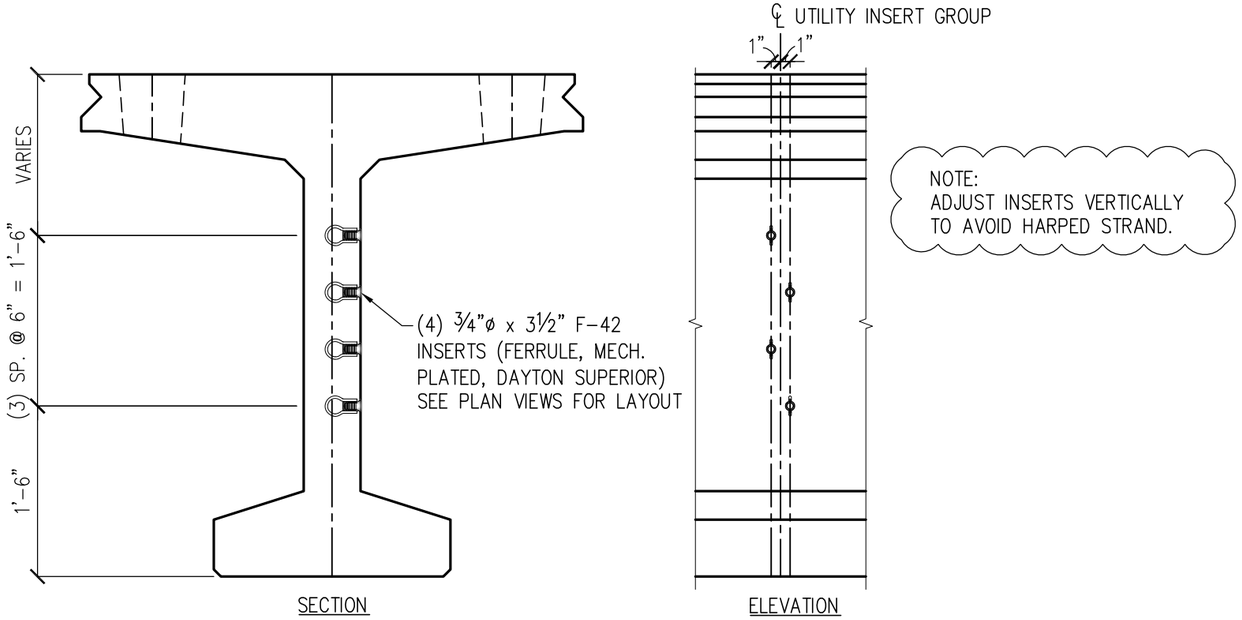

2/4 UTILITY INSERT DETAIL

SCALE: ¾"=1'-0"

NOTE: GIRDER E, F, H, J ONLY

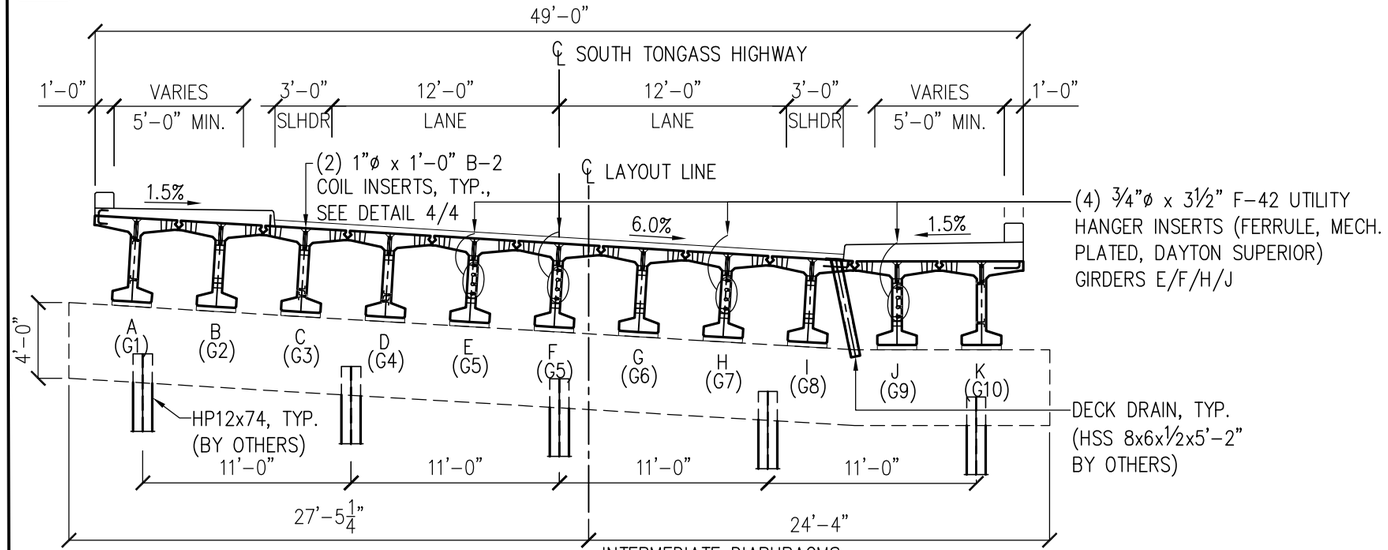

INTERMEDIATE DIAPHRAGMS

INTERIOR GIRDERS: (2) 6"ø HOLES THROUGH WEB (GIRDERS B, E, F, G, H, I, J)
(1) 6"ø HOLE THROUGH WEB + (1) 1"ø x 4⅝" F-62 NC
INSERT, EACH FACE (GIRDERS C & D)

EXTERIOR GIRDERS: (2) 1"ø x 4⅝" F-62 NC INSERTS (INTERIOR FACE ONLY)

1/4 BRIDGE SECTION

SCALE: ⅛"=1'-0"

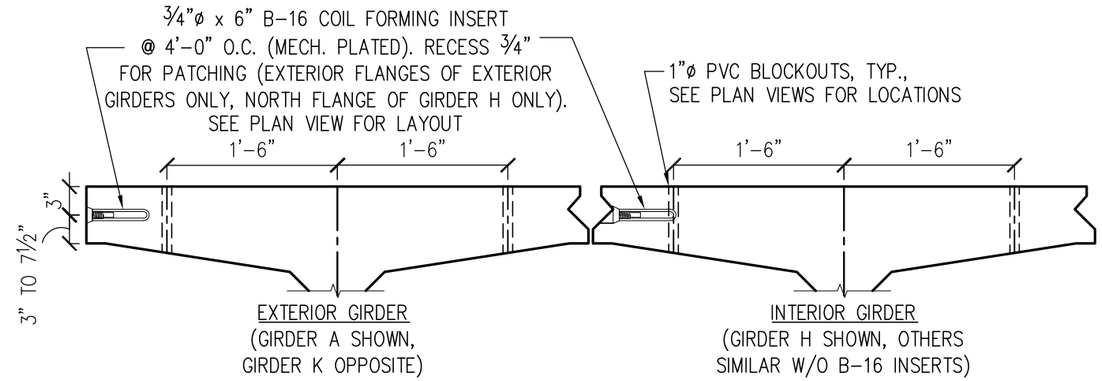

3/4 CONTRACTOR FORMING

SCALE: ¾"=1'-0"

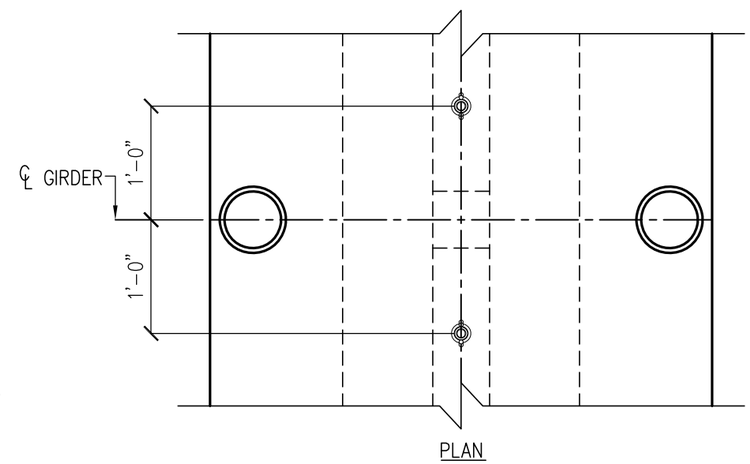

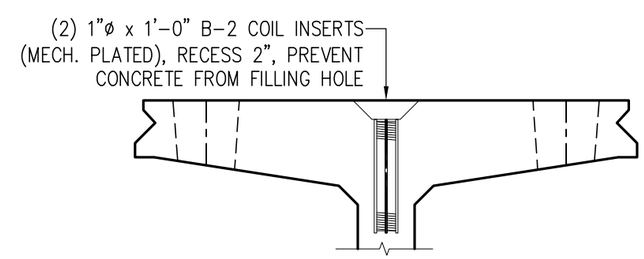

4/4 B-2 COIL INSERT DETAIL

SCALE: ¾"=1'-0"

KNIFE RIVER
AN MDU RESOURCES COMPANY

922 N CARNAHAN
SPOKANE VALLEY, WA 99212
PH:(509) 536-3300
FAX:(509) 536-3305

23505 PEORIA RD.
HARRISBURG, OR 97446
PH: (541) 995-4100
FAX: (541) 995-9447

TITLE: DECK SECTION & DETAILS

JOB & LOCATION: HERRING COVE BRIDGE NEAR KETCHIKAN, ALASKA

DRAWN: J. PELPHREY	DATE: 10/19/2021	REVISED FOR APPROVAL 02/03/2022 KNIFE RIVER PRESTRESS
HANDLING: J. PELPHREY	DATE: 11/24/2021	
CHECKED: S. WESTMAN	DATE: 12/09/2021	

NO.	REVISIONS	DATE

THIS DOCUMENT IS THE PROPERTY OF KNIFE RIVER. IT IS CONFIDENTIAL, SUBMITTED FOR REFERENCE PURPOSES ONLY, AND SHALL NOT BE USED IN ANY WAY INJURIOUS TO THE INTERESTS OF, OR WITHOUT THE WRITTEN PERMISSION OF KNIFE RIVER. COPYRIGHT © 2021 KNIFE RIVER ALL RIGHTS RESERVED

QTY. -

MK. # -

PROJECT NO. 17545

PRODUCT TYPE DBT53

SHEET 4 OF 25

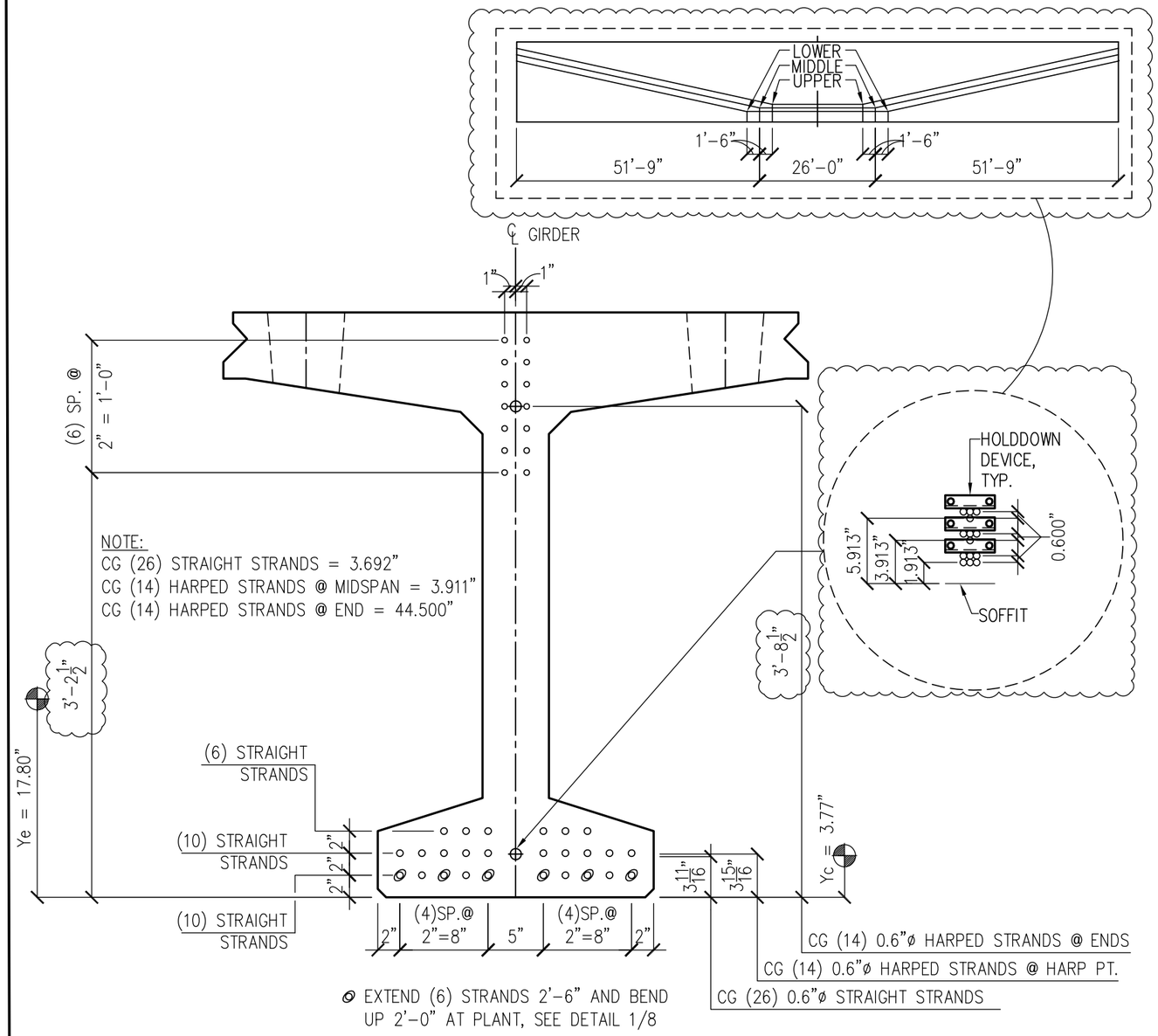

1/5 STRAND PATTERN

SCALE: 1"=1'-0"

(40) 0.6"ø GRADE 270 KSI LOW RELAXATION STRAND, PULL TO 0.70 fpu (41.0 KIP) EACH

DETAILS SYMMETRICAL ABOUT THE CENTERLINE UNLESS OTHERWISE NOTED.

CUT STRAND FLUSH W/ EACH END OF BEAM EXCEPTED WHERE NOTED.

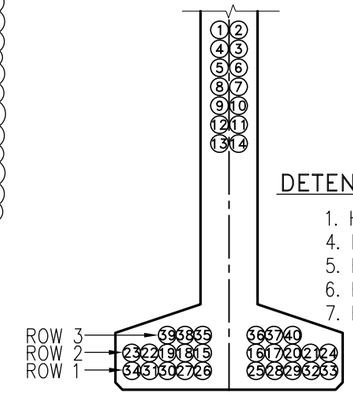

DETENSIONING SEQUENCE

1. HARP AT ENDS.
4. HARP AT HOLDDOWN.
5. ROW 2 STRAIGHT AT ENDS.
6. ROW 1 STRAIGHT AT ENDS.
7. ROW 3 STRAIGHT AT ENDS.

4/5 STRESSING DETAIL

SCALE: 3/4"=1'-0"

STRESS & DETENSION STRANDS IN A SYSTEMATIC ORDER ABOUT GIRDER CENTER LINE.

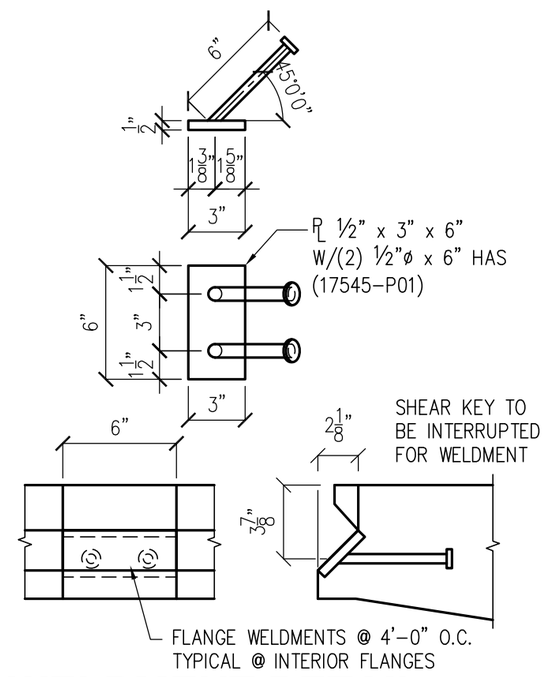

2/5 WELDMENT DETAIL

SCALE: 1 1/2"=1'-0"

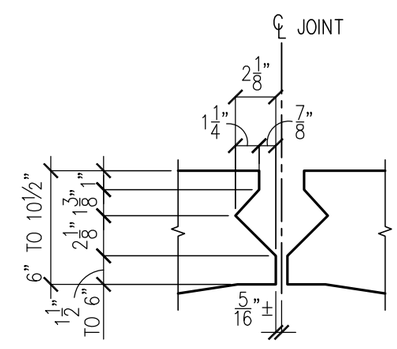

3/5 SHEAR KEY DETAIL

SCALE: 1 1/2"=1'-0"

NOTE: INTERIOR FLANGES ONLY

KNIFE RIVER
AN MDU RESOURCES COMPANY

922 N CARNAHAN
SPOKANE VALLEY, WA 99212
PH:(509) 536-3300
FAX:(509) 536-3305

23505 PEORIA RD.
HARRISBURG, OR 97446
PH: (541) 995-4100
FAX: (541) 995-9447

TITLE: STRAND PATTERN & DETAILS

JOB & LOCATION: HERRING COVE BRIDGE NEAR KETCHIKAN, ALASKA

DRAWN	J. PELPHREY	DATE 10/19/2021
HANDLING	J. PELPHREY	DATE 11/24/2021
CHECKED	S. WESTMAN	DATE 12/09/2021

REVISED FOR APPROVAL
02/03/2022
KNIFE RIVER PRESTRESS

NO.	REVISIONS	DATE

THIS DOCUMENT IS THE PROPERTY OF KNIFE RIVER. IT IS CONFIDENTIAL, SUBMITTED FOR REFERENCE PURPOSES ONLY, AND SHALL NOT BE USED IN ANY WAY INJURIOUS TO THE INTERESTS OF, OR WITHOUT THE WRITTEN PERMISSION OF KNIFE RIVER. COPYRIGHT © 2021 KNIFE RIVER ALL RIGHTS RESERVED

QTY. -

MK. # -

PROJECT NO. 17545

PRODUCT TYPE DBT53

SHEET 5 OF 25

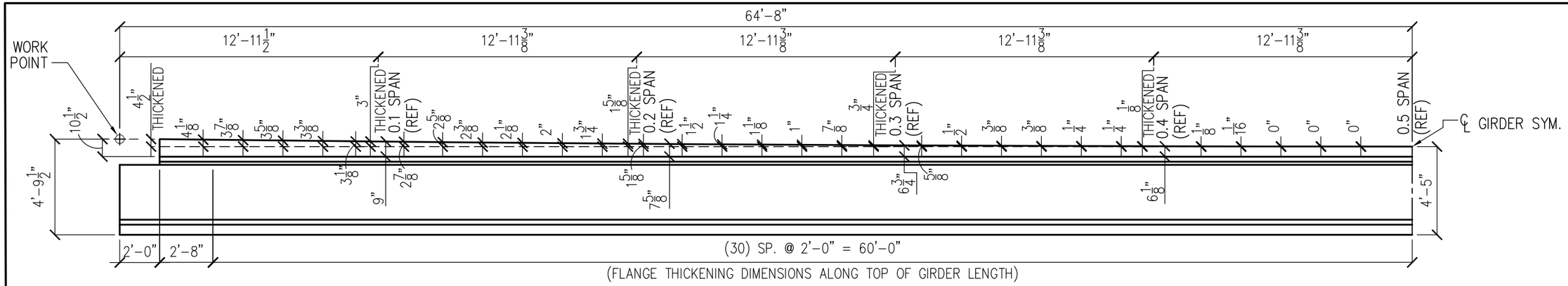

4/6 GIRDER TOP FLANGE THICKENING ELEVATION

SCALE: 3/16"=1'-0" NOTE: BATTER NOT SHOWN FOR CLARITY

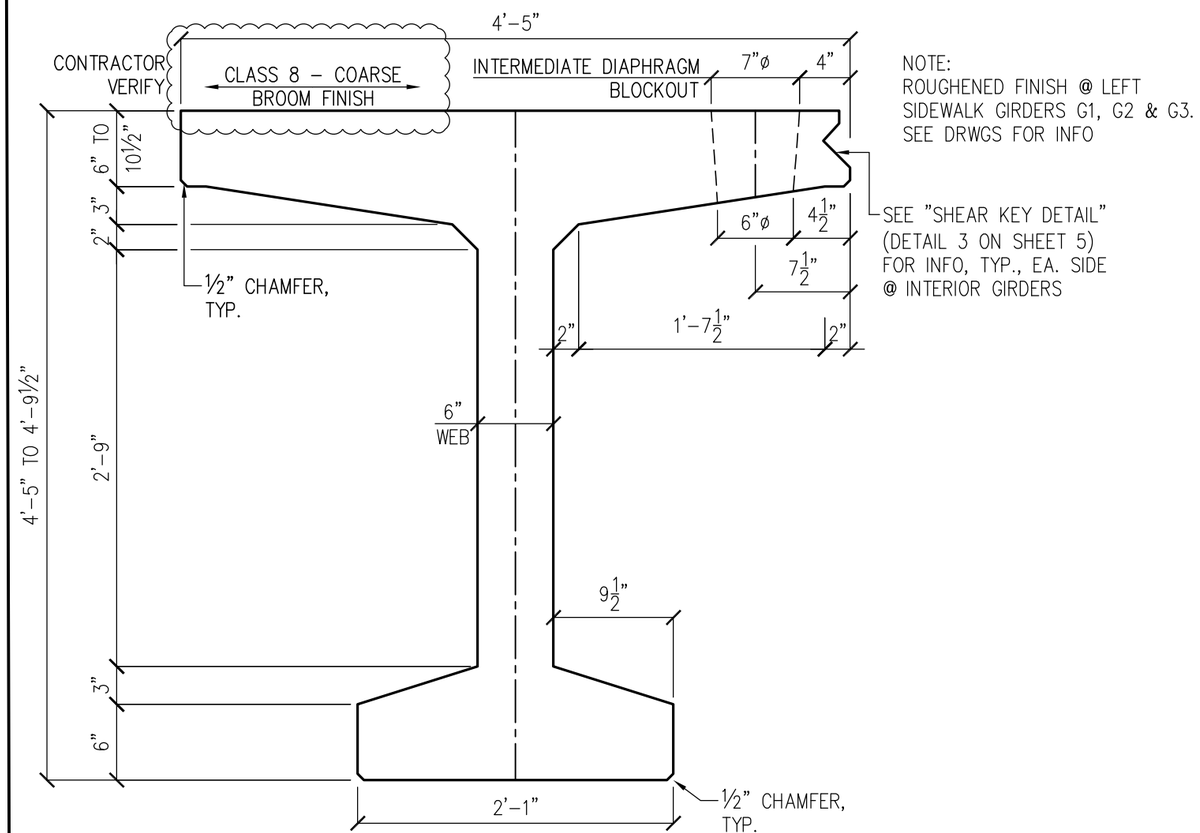

1/6 SECTION GEOMETRY

SCALE: 1"=1'-0" EXTERIOR GIRDER SHOWN, INTERIOR SIMILAR.

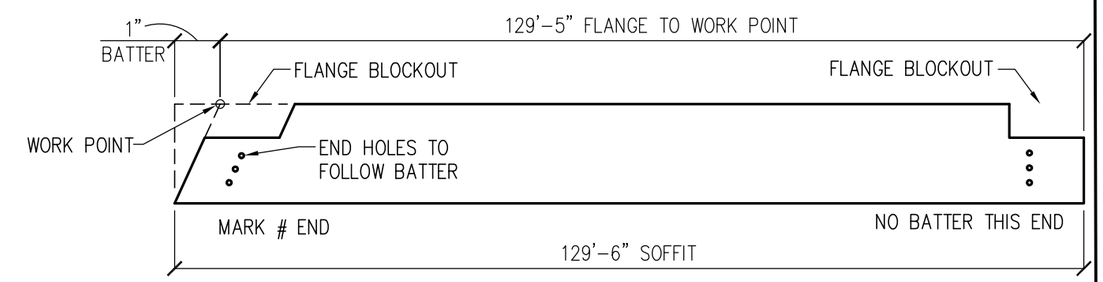

2/6 END DETAIL

SCALE: N.T.S

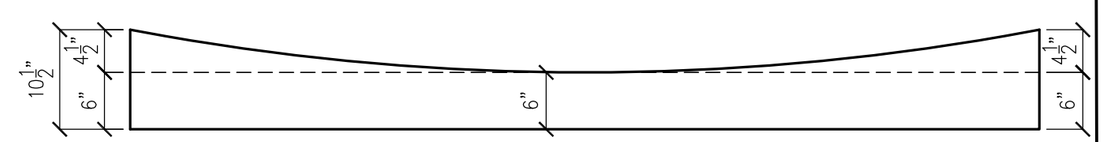

3/6 GIRDER TOP FLANGE THICKENING

SCALE: N.T.S SIDEWALK BARS TO FOLLOW PROFILE OF TOP OF TOP FLANGE.

KNIFE RIVER
AN MDU RESOURCES COMPANY
922 N CARNAHAN
SPOKANE VALLEY, WA 99212
PH:(509) 536-3300
FAX:(509) 536-3305
23505 PEORIA RD.
HARRISBURG, OR 97446
PH: (541) 995-4100
FAX: (541) 995-9447

TITLE: SECTION GEOMETRY

JOB & LOCATION: HERRING COVE BRIDGE NEAR KETCHIKAN, ALASKA

DRAWN J. PELPHREY	DATE 10/19/2021	REVISED FOR APPROVAL 02/03/2022 KNIFE RIVER PRESTRESS
HANDLING J. PELPHREY	DATE 11/24/2021	
CHECKED S. WESTMAN	DATE 12/09/2021	

NO.	REVISIONS	DATE

THIS DOCUMENT IS THE PROPERTY OF KNIFE RIVER. IT IS CONFIDENTIAL, SUBMITTED FOR REFERENCE PURPOSES ONLY, AND SHALL NOT BE USED IN ANY WAY INJURIOUS TO THE INTERESTS OF, OR WITHOUT THE WRITTEN PERMISSION OF KNIFE RIVER. COPYRIGHT © 2021 KNIFE RIVER ALL RIGHTS RESERVED

QTY. -

MK. # -

PROJECT NO. 17545

PRODUCT TYPE DBT53

SHEET 6 OF 25

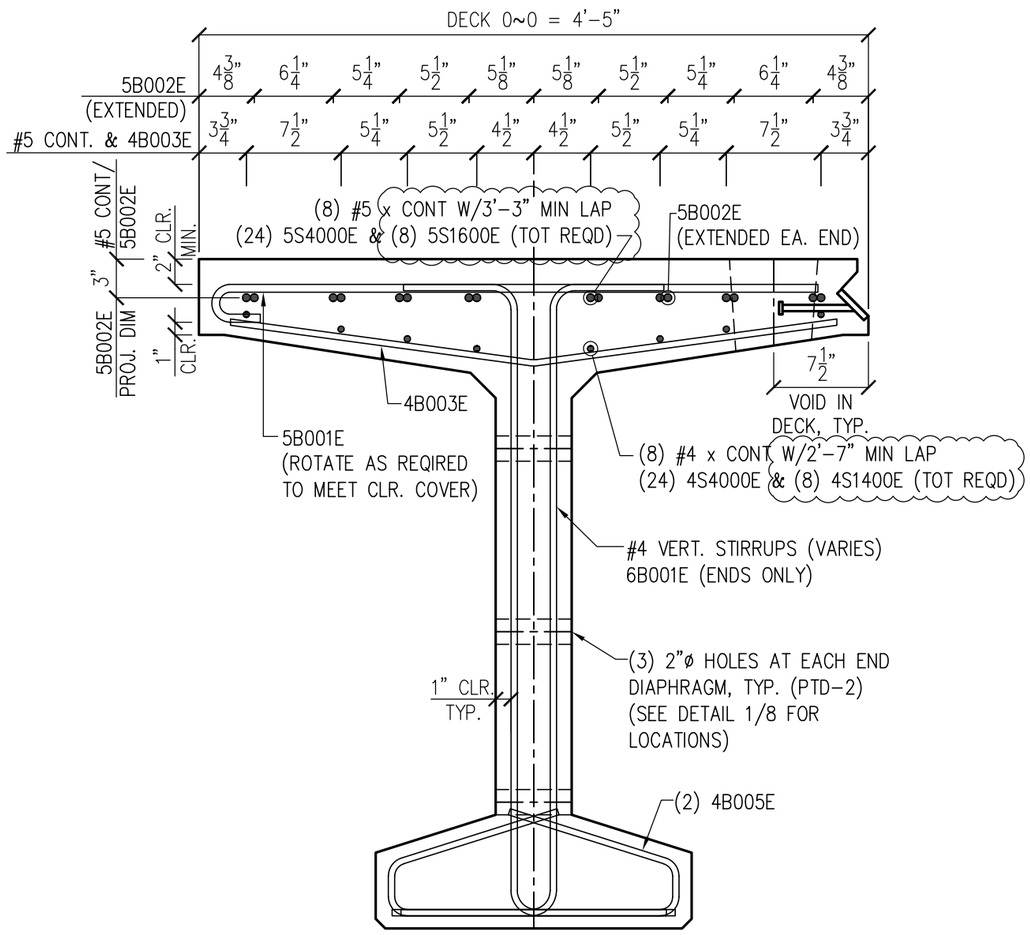

1 / 7 **REINFORCEMENT (EXT. GIRDER)**

SCALE: 1"=1'-0"

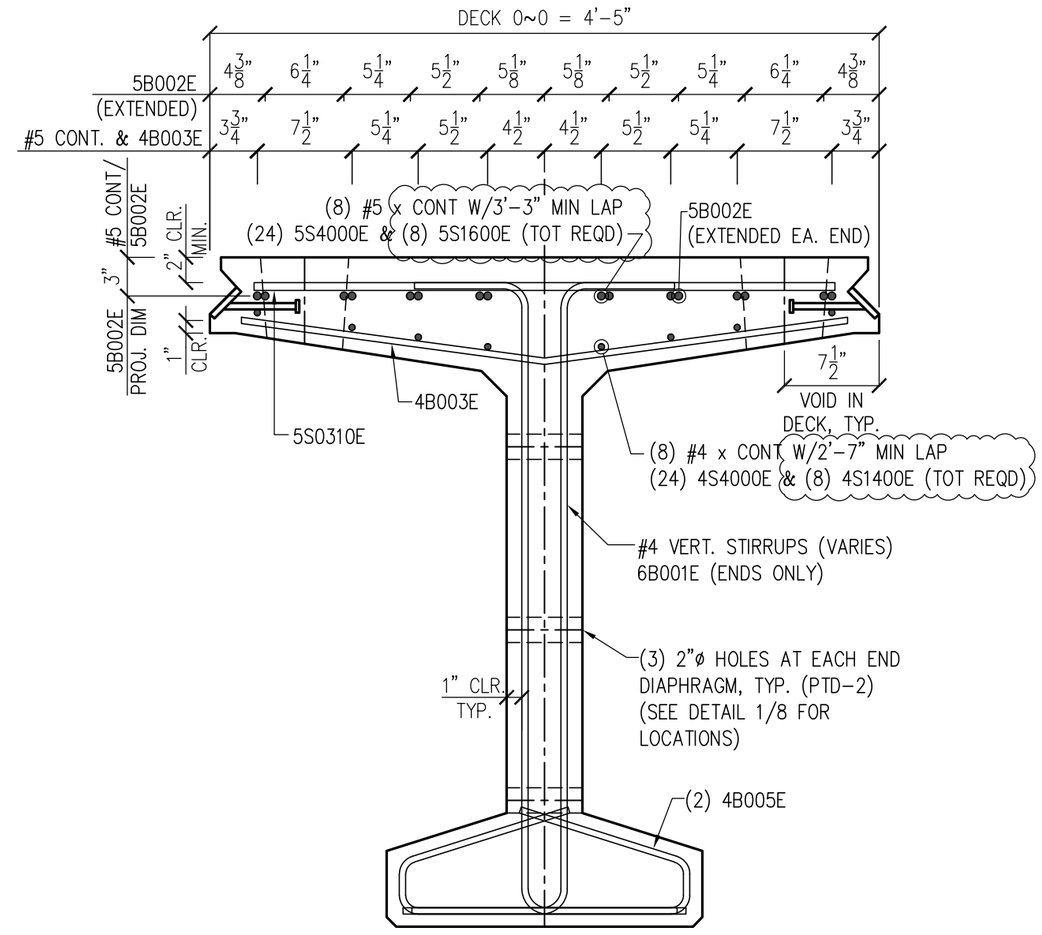

2 / 7 **REINFORCEMENT (INT. GIRDER)**

SCALE: 1"=1'-0"

KNIFE RIVER
AN MDU RESOURCES COMPANY
922 N CARNAHAN
SPOKANE VALLEY, WA 99212
PH:(509) 536-3300
FAX:(509) 536-3305
23505 PEORIA RD.
HARRISBURG, OR 97446
PH: (541) 995-4100
FAX: (541) 995-9447

TITLE: **REINFORCEMENT SECTIONS**

JOB & LOCATION: **HERRING COVE BRIDGE NEAR KETCHIKAN, ALASKA**

DRAWN	J. PELPHREY	DATE 10/19/2021
HANDLING	J. PELPHREY	DATE 11/24/2021
CHECKED	S. WESTMAN	DATE 12/09/2021

REVISED FOR APPROVAL
02/03/2022
KNIFE RIVER PRESTRESS

NO.	REVISIONS	DATE

THIS DOCUMENT IS THE PROPERTY OF KNIFE RIVER. IT IS CONFIDENTIAL, SUBMITTED FOR REFERENCE PURPOSES ONLY, AND SHALL NOT BE USED IN ANY WAY INJURIOUS TO THE INTERESTS OF, OR WITHOUT THE WRITTEN PERMISSION OF KNIFE RIVER. COPYRIGHT © 2021 KNIFE RIVER ALL RIGHTS RESERVED

QTY. -

MK. # -

PROJECT NO. 17545

PRODUCT TYPE DBT53

SHEET 7 OF 25

Work\Knife River\221145 Herring Cove Bridge\04 AutoCAD\17545 Herring Cove Bridge (S2).dwg

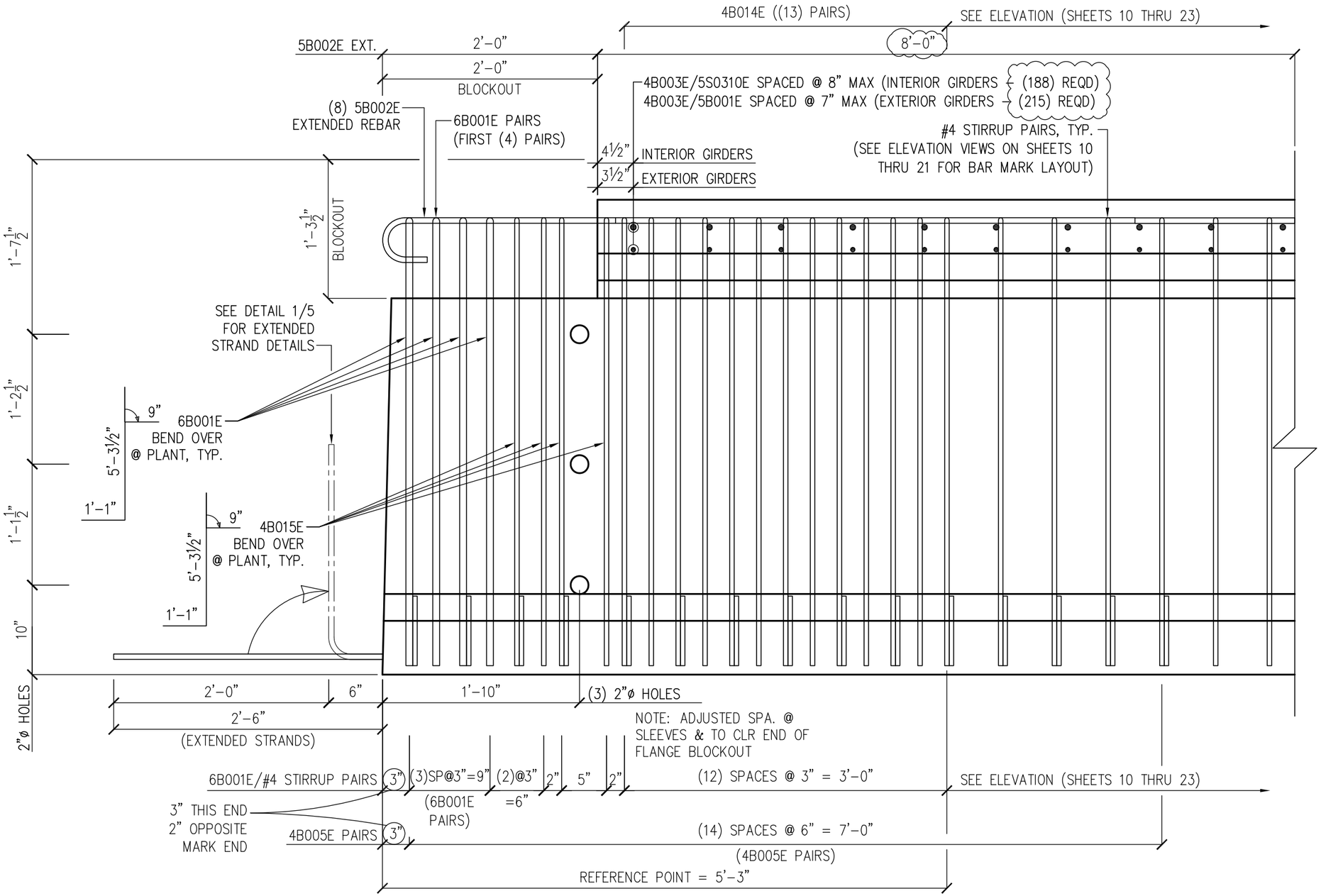

1
8

END REINFORCEMENT ELEVATION

SCALE: 1"=1'-0"

NOTE: BATTER NOT SHOWN FOR CLARITY (SEE DETAIL 2/6).

KNIFE RIVER
AN MDU RESOURCES COMPANY

922 N CARNAHAN
SPOKANE VALLEY, WA 99212
PH:(509) 536-3300
FAX:(509) 536-3305

23505 PEORIA RD.
HARRISBURG, OR 97446
PH: (541) 995-4100
FAX: (541) 995-9447

TITLE: REINFORCEMENT ELEVATION –	DRAWN: J. PELPHREY	DATE: 10/19/2021	REVISED FOR APPROVAL 02/03/2022 KNIFE RIVER PRESTRESS
JOB & LOCATION: HERRING COVE BRIDGE NEAR KETCHIKAN, ALASKA	HANDLING: J. PELPHREY	DATE: 11/24/2021	
	CHECKED: S. WESTMAN	DATE: 12/09/2021	

NO.	REVISIONS	DATE

THIS DOCUMENT IS THE PROPERTY OF KNIFE RIVER. IT IS CONFIDENTIAL, SUBMITTED FOR REFERENCE PURPOSES ONLY, AND SHALL NOT BE USED IN ANY WAY INJURIOUS TO THE INTERESTS OF, OR WITHOUT THE WRITTEN PERMISSION OF KNIFE RIVER. COPYRIGHT © 2021 KNIFE RIVER ALL RIGHTS RESERVED

QTY. -	PROJECT NO. 17545
MK. # -	PRODUCT TYPE DBT53
	SHEET 8 OF 25

Work\Knife River\221145 Herring Cove Bridge\04 AutoCAD\17545 Herring Cove Bridge (S2).dwg

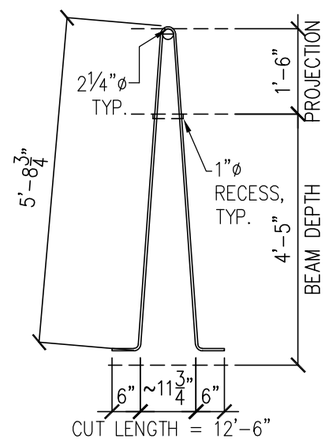

3/9 LIFTING LOOP

SCALE: ⅜"=1'-0"
(8) EACH END OF EACH BEAM

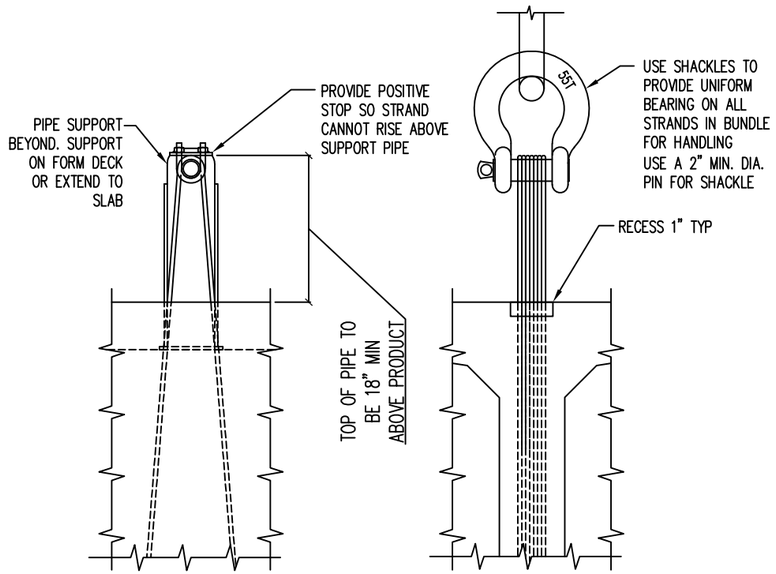

4/9 LIFTING DETAIL

SCALE: N.T.S.

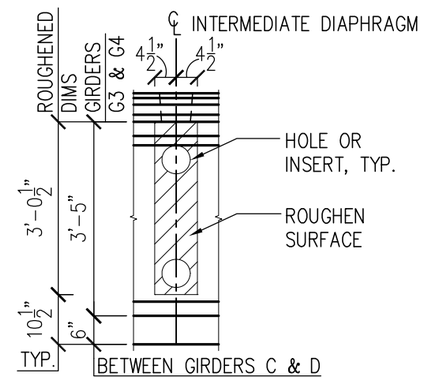

5/9 INT. DIA. ELEV.

SCALE: ⅜"=1'-0"

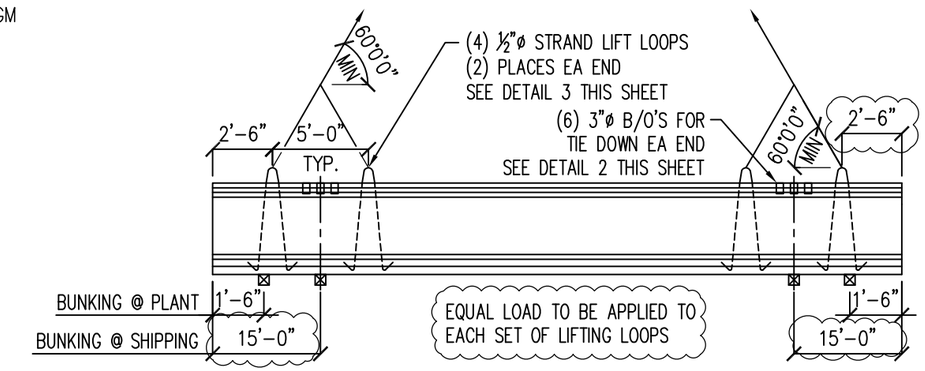

6/9 GIRDER LIFTING & BUNKING

SCALE: N.T.S.

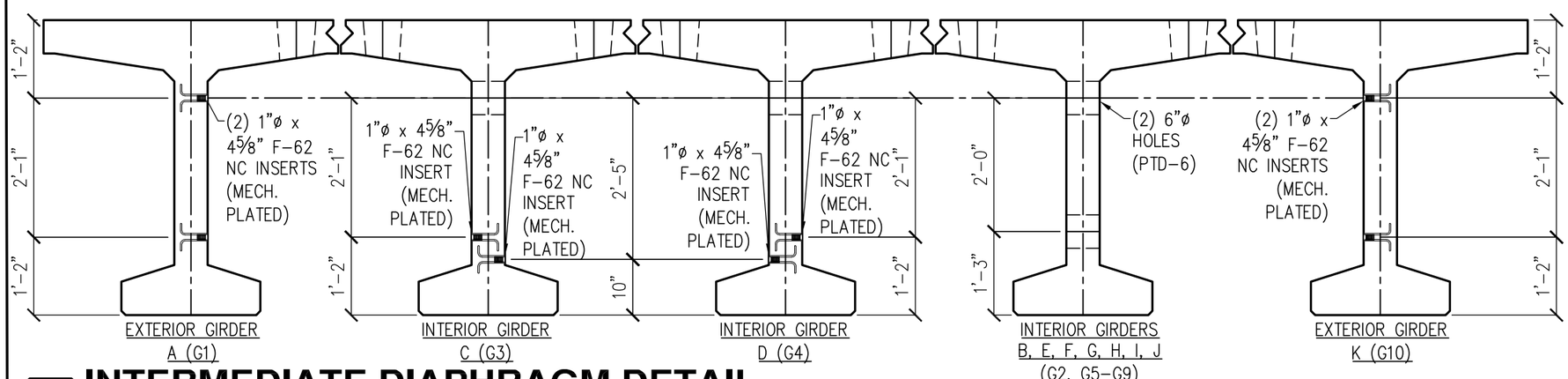

1/9 INTERMEDIATE DIAPHRAGM DETAIL

SCALE: ½"=1'-0"

NOTE: SEE DETAIL 5/9 FOR ROUGHENING INFORMATION

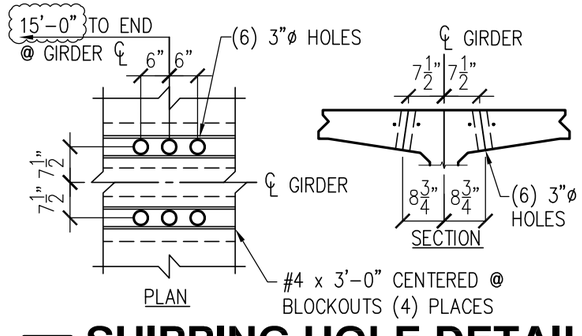

2/9 SHIPPING HOLE DETAIL

SCALE: ⅜"=1'-0"

KNIFE RIVER
AN MDU RESOURCES COMPANY
922 N CARNAHAN
SPOKANE VALLEY, WA 99212
PH:(509) 536-3300
FAX:(509) 536-3305
23505 PEORIA RD.
HARRISBURG, OR 97446
PH: (541) 995-4100
FAX: (541) 995-9447

TITLE: **DETAILS** –

JOB & LOCATION: **HERRING COVE BRIDGE NEAR KETCHIKAN, ALASKA**

DRAWN	J. PELPHREY	DATE 10/19/2021
HANDLING	J. PELPHREY	DATE 11/24/2021
CHECKED	S. WESTMAN	DATE 12/09/2021

REVISED FOR APPROVAL
02/03/2022
KNIFE RIVER PRESTRESS

NO.	REVISIONS	DATE

THIS DOCUMENT IS THE PROPERTY OF KNIFE RIVER. IT IS CONFIDENTIAL, SUBMITTED FOR REFERENCE PURPOSES ONLY, AND SHALL NOT BE USED IN ANY WAY INJURIOUS TO THE INTERESTS OF, OR WITHOUT THE WRITTEN PERMISSION OF KNIFE RIVER. COPYRIGHT © 2021 KNIFE RIVER ALL RIGHTS RESERVED

QTY. -
MK. # -

PROJECT NO. 17545
PRODUCT TYPE DBT53
SHEET 9 OF 25

Work\Knife River\221145 Herring Cove Bridge\04 AutoCAD\17545 Herring Cove Bridge (S2).dwg

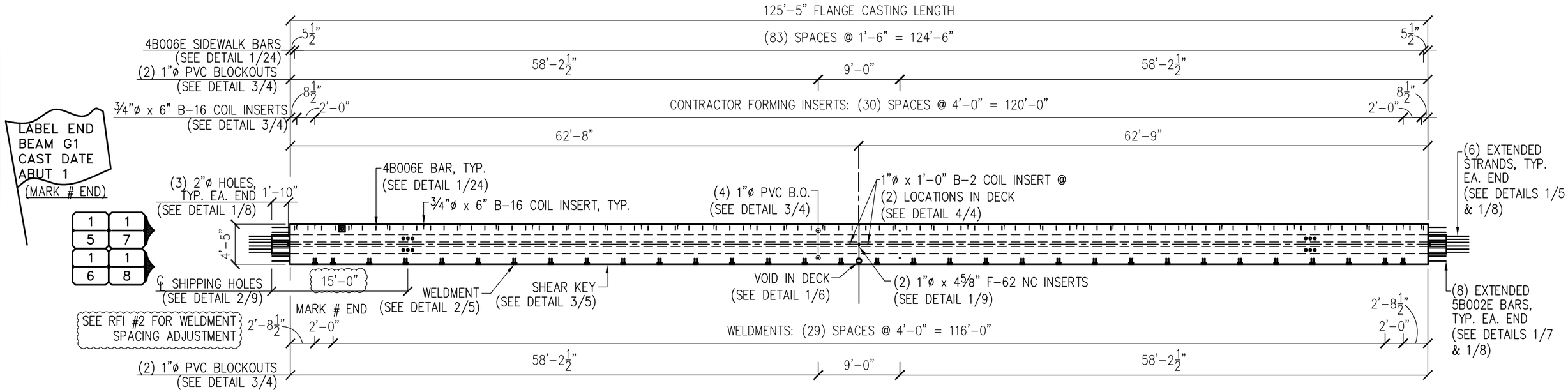

1/10 PLAN VIEW G1

SCALE: 3/32"=1'-0"

PRODUCE (1) G1 GIRDER

NOTE: USE (215) 5B001E BARS & (215) 4B003E BARS (NOT SHOWN FOR CLARITY, SEE DETAILS 1/7 & 1/8).
CLASS 7 "ROUGH FINISH" APPLIED TO ENTIRE TOP SURFACE FOR SIDEWALK.

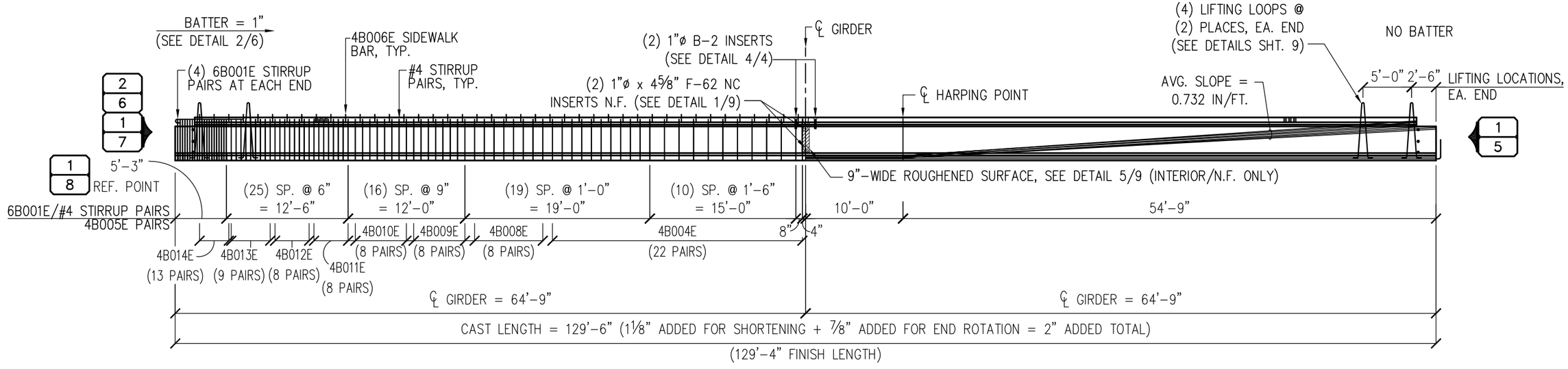

2/10 ELEVATION

SCALE: 3/32"=1'-0"

KNIFE RIVER
AN MDU RESOURCES COMPANY
922 N CARNAHAN
SPOKANE VALLEY, WA 99212
PH:(509) 536-3300
FAX:(509) 536-3305
23505 PEORIA RD.
HARRISBURG, OR 97446
PH: (541) 995-4100
FAX: (541) 995-9447

TITLE: PLAN & ELEVATION, GIRDER G1	DRAWN: J. PELPHREY	DATE: 10/19/2021	REVISED FOR APPROVAL 02/03/2022 KNIFE RIVER PRESTRESS
JOB & LOCATION: HERRING COVE BRIDGE NEAR KETCHIKAN, ALASKA	HANDLING: J. PELPHREY	DATE: 11/24/2021	
	CHECKED: S. WESTMAN	DATE: 12/09/2021	

NO.	REVISIONS	DATE

THIS DOCUMENT IS THE PROPERTY OF KNIFE RIVER. IT IS CONFIDENTIAL, SUBMITTED FOR REFERENCE PURPOSES ONLY, AND SHALL NOT BE USED IN ANY WAY INJURIOUS TO THE INTERESTS OF, OR WITHOUT THE WRITTEN PERMISSION OF KNIFE RIVER. COPYRIGHT © 2021 KNIFE RIVER ALL RIGHTS RESERVED

QTY. -
MK. # -
PROJECT NO. 17545
PRODUCT TYPE DBT53
SHEET 10 OF 25

Work\Knife River\221145 Herring Cove Bridge\04 AutoCAD\17545 Herring Cove Bridge (S2).dwg

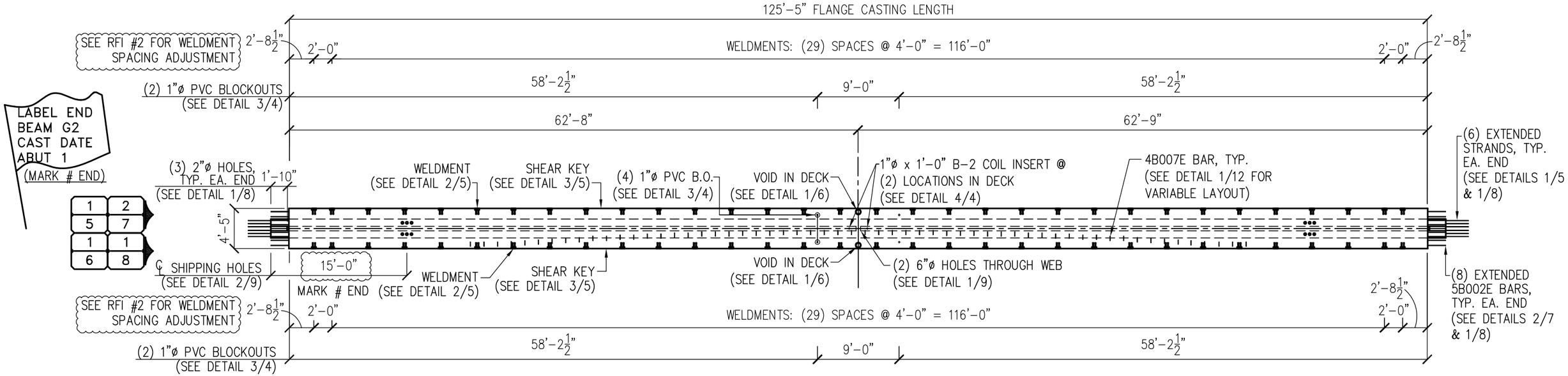

1/11 PLAN VIEW G2

SCALE: 3/32"=1'-0"

PRODUCE (1) G2 GIRDER

NOTE: USE (188) 5S0310E BARS & (188) 4B003E BARS (NOT SHOWN FOR CLARITY, SEE DETAILS 2/7 & 1/8).
CLASS 7 "ROUGH FINISH" APPLIED TO PORTIONS OF THE TOP SURFACE FOR SIDEWALK, SEE DETAIL 2/12 FOR DIMENSIONS.

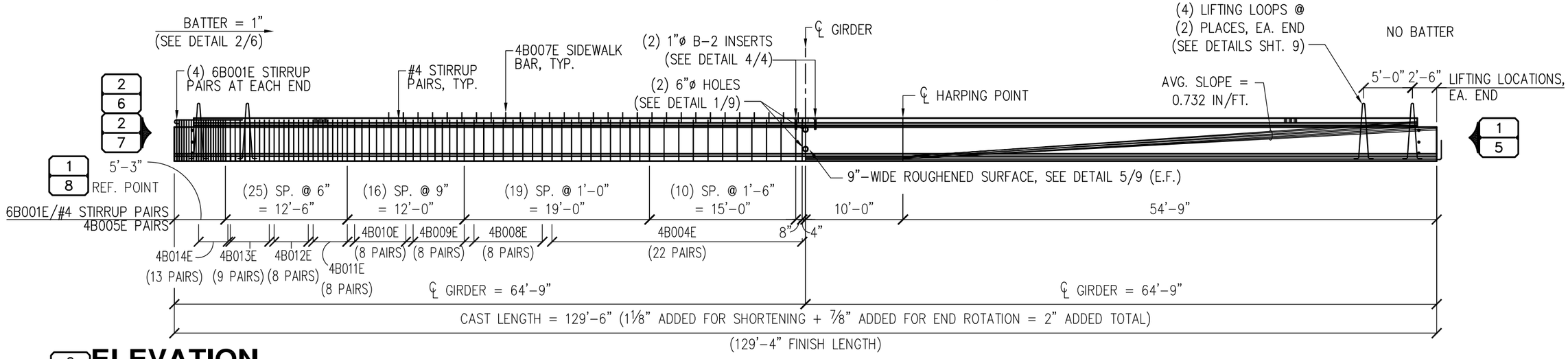

2/11 ELEVATION

SCALE: 3/32"=1'-0"

KNIFE RIVER
AN MDU RESOURCES COMPANY

922 N CARNAHAN
SPOKANE VALLEY, WA 99212
PH:(509) 536-3300
FAX:(509) 536-3305

23505 PEORIA RD.
HARRISBURG, OR 97446
PH: (541) 995-4100
FAX: (541) 995-9447

TITLE: **PLAN & ELEVATION** GIRDER G2

JOB & LOCATION: **HERRING COVE BRIDGE NEAR KETCHIKAN, ALASKA**

DRAWN	J. PELPHREY	DATE 10/19/2021
HANDLING	J. PELPHREY	DATE 11/24/2021
CHECKED	S. WESTMAN	DATE 12/09/2021

REVISED FOR APPROVAL
02/03/2022
KNIFE RIVER PRESTRESS

NO.	REVISIONS	DATE

THIS DOCUMENT IS THE PROPERTY OF KNIFE RIVER. IT IS CONFIDENTIAL, SUBMITTED FOR REFERENCE PURPOSES ONLY, AND SHALL NOT BE USED IN ANY WAY INJURIOUS TO THE INTERESTS OF, OR WITHOUT THE WRITTEN PERMISSION OF KNIFE RIVER. COPYRIGHT © 2021 KNIFE RIVER ALL RIGHTS RESERVED

QTY. -
MK. # -

PROJECT NO. 17545
PRODUCT TYPE DBT53
SHEET 11 OF 25

Work\Knife River\221145 Herring Cove Bridge\04 AutoCAD\17545 Herring Cove Bridge (S2).dwg

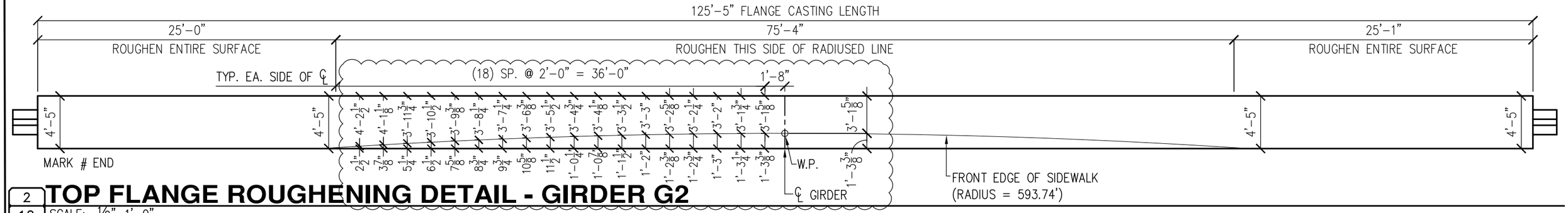

2/12 TOP FLANGE ROUGHENING DETAIL - GIRDER G2

SCALE: 1/8"=1'-0"

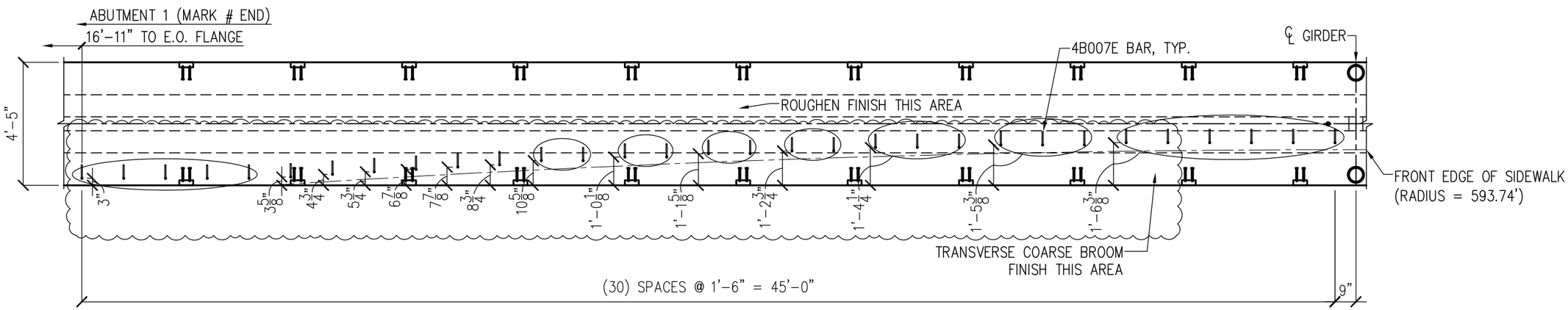

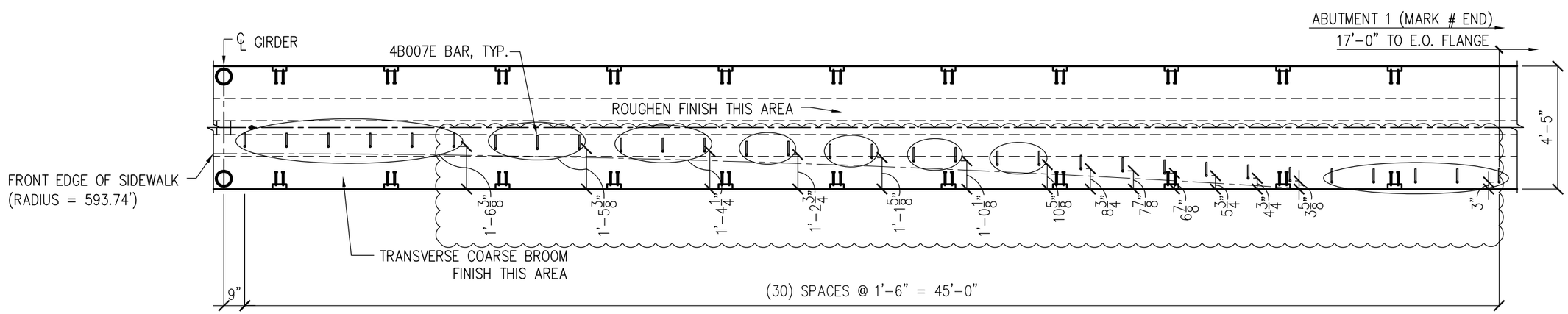

1/12 PLAN VIEW GIRDER G2 - 4B007E (S402 REF) LAYOUT DETAIL

SCALE: 1/4"=1'-0"

NOTE: MEASUREMENTS TAKEN ALONG THE TOP FLANGE. SEE DETAIL 2/24 FOR EMBEDMENT & PROJECTION DIMENSIONS.

KNIFE RIVER
AN MDU RESOURCES COMPANY

922 N CARNAHAN
SPOKANE VALLEY, WA 99212
PH:(509) 536-3300
FAX:(509) 536-3305

23505 PEORIA RD.
HARRISBURG, OR 97446
PH: (541) 995-4100
FAX: (541) 995-9447

TITLE: PLAN VIEW SIDEWALK BARS GIRDER G2	DRAWN: J. PELPHREY	DATE: 10/19/2021	REVISED FOR APPROVAL 02/03/2022 KNIFE RIVER PRESTRESS
JOB & LOCATION: HERRING COVE BRIDGE NEAR KETCHIKAN, ALASKA	HANDLING: J. PELPHREY	DATE: 11/24/2021	
	CHECKED: S. WESTMAN	DATE: 12/09/2021	

NO.	REVISIONS	DATE

THIS DOCUMENT IS THE PROPERTY OF KNIFE RIVER. IT IS CONFIDENTIAL, SUBMITTED FOR REFERENCE PURPOSES ONLY, AND SHALL NOT BE USED IN ANY WAY INJURIOUS TO THE INTERESTS OF, OR WITHOUT THE WRITTEN PERMISSION OF KNIFE RIVER. COPYRIGHT © 2021 KNIFE RIVER ALL RIGHTS RESERVED

QTY. -	PROJECT NO. 17545
MK. # -	PRODUCT TYPE DBT53
	SHEET 12 OF 25

Work\Knife River\221145 Herring Cove Bridge\04 AutoCAD\17545 Herring Cove Bridge (S2).dwg

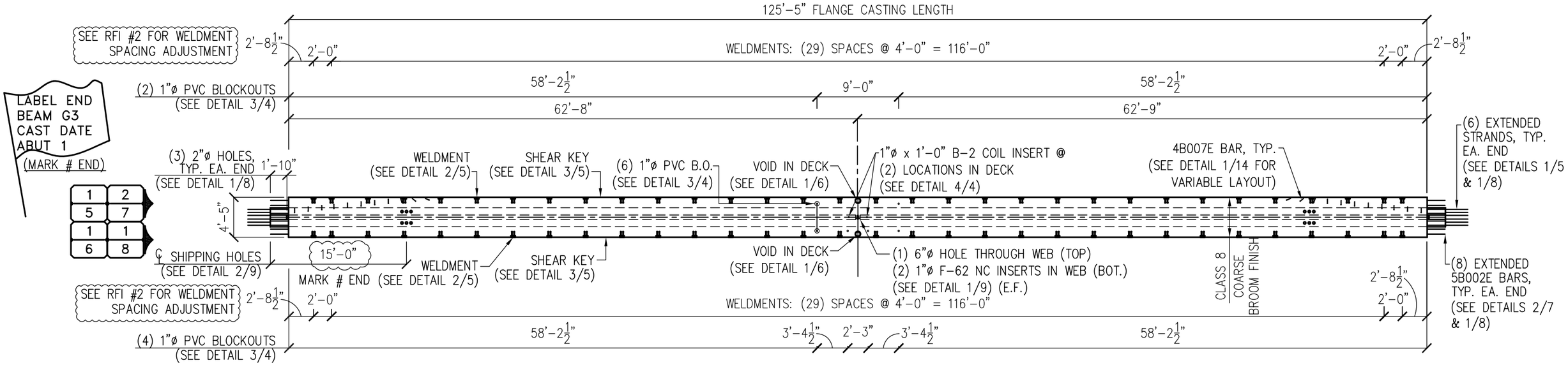

1/13 PLAN VIEW G3

SCALE: 3/32"=1'-0"

PRODUCE (1) G3 GIRDER

NOTE: USE (188) 5S0310E BARS & (188) 4B003E BARS (NOT SHOWN FOR CLARITY, SEE DETAILS 2/7 & 1/8).
CLASS 7 "ROUGH FINISH" APPLIED TO PORTIONS OF THE TOP SURFACE FOR SIDEWALK, SEE DETAIL 2/14 FOR DIMENSIONS.

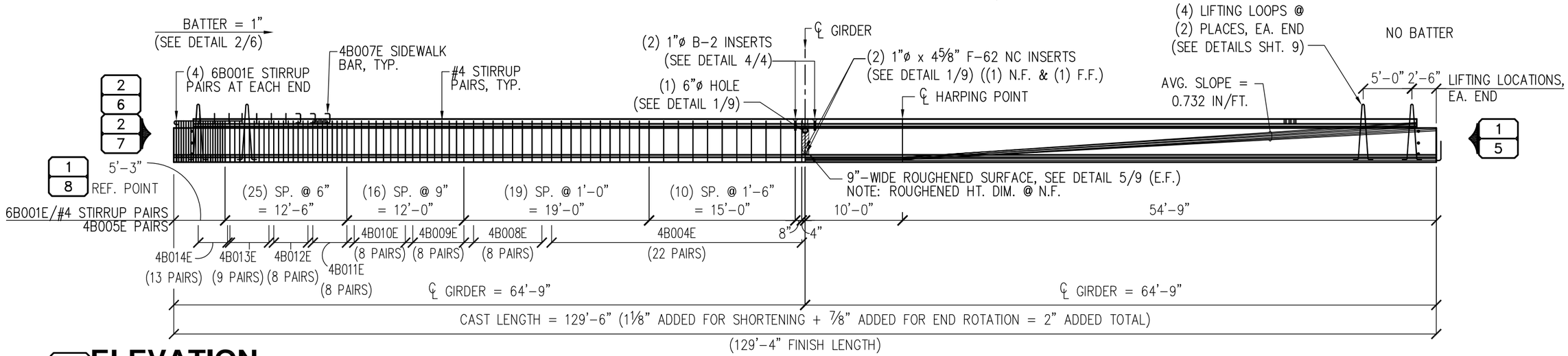

2/13 ELEVATION

SCALE: 3/32"=1'-0"

KNIFE RIVER
AN MDU RESOURCES COMPANY

922 N CARNAHAN
SPOKANE VALLEY, WA 99212
PH:(509) 536-3300
FAX:(509) 536-3305

23505 PEORIA RD.
HARRISBURG, OR 97446
PH: (541) 995-4100
FAX: (541) 995-9447

TITLE: **PLAN & ELEVATION** GIRDER G3

JOB & LOCATION: **HERRING COVE BRIDGE NEAR KETCHIKAN, ALASKA**

DRAWN	J. PELPHREY	DATE 10/19/2021
HANDLING	J. PELPHREY	DATE 11/24/2021
CHECKED	S. WESTMAN	DATE 12/09/2021

REVISED FOR APPROVAL
02/03/2022
KNIFE RIVER PRESTRESS

NO.	REVISIONS	DATE

THIS DOCUMENT IS THE PROPERTY OF KNIFE RIVER. IT IS CONFIDENTIAL, SUBMITTED FOR REFERENCE PURPOSES ONLY, AND SHALL NOT BE USED IN ANY WAY INJURIOUS TO THE INTERESTS OF, OR WITHOUT THE WRITTEN PERMISSION OF KNIFE RIVER. COPYRIGHT © 2021 KNIFE RIVER ALL RIGHTS RESERVED

QTY. -
MK. # -

PROJECT NO. 17545
PRODUCT TYPE DBT53
SHEET 13 OF 25

Work\Knife River\221145 Herring Cove Bridge\04 AutoCAD\17545 Herring Cove Bridge (S2).dwg

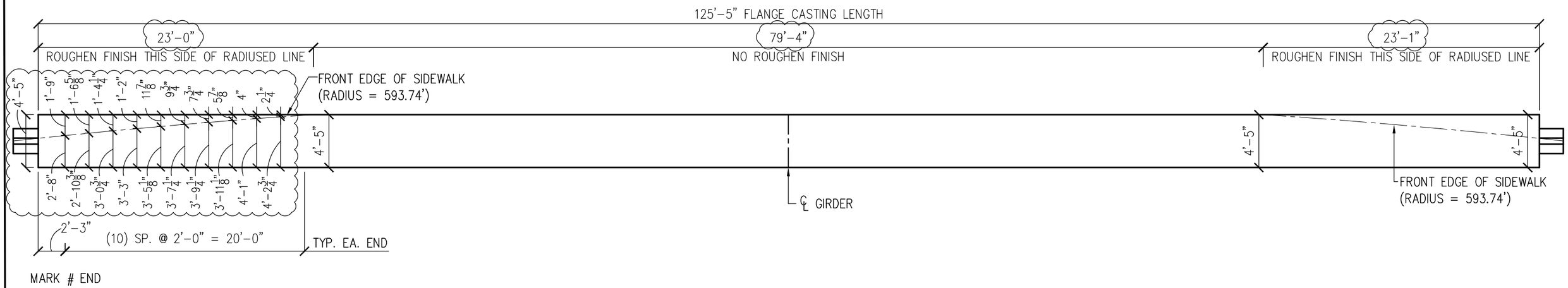

2/14 TOP FLANGE ROUGHENING DETAIL - GIRDER G3

SCALE: 1/8"=1'-0"

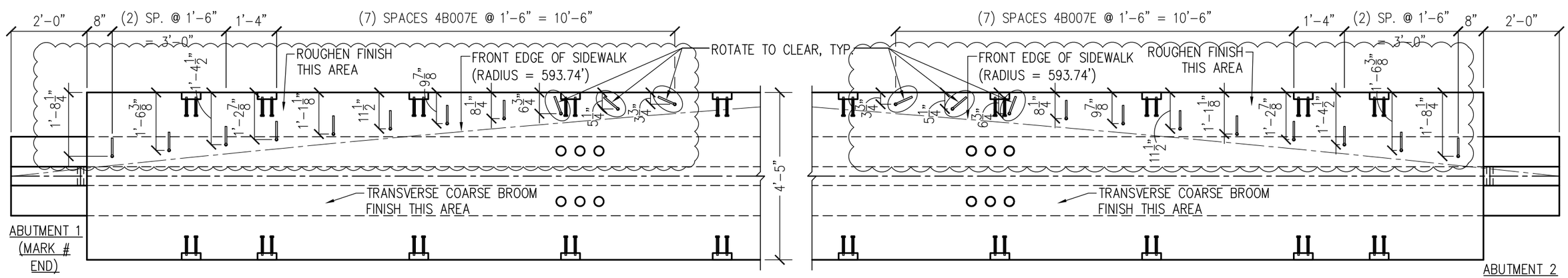

1/14 PLAN VIEW GIRDER G3 - 4B007E (S402 REF) LAYOUT DETAIL

SCALE: 3/8"=1'-0"

NOTE: MEASUREMENTS TAKEN ALONG THE TOP FLANGE. SEE DETAIL 2/24 FOR EMBEDMENT & PROJECTION DIMENSIONS.
ROTATE 4B007E BARS AS NECESSARY FOR FIT.

KNIFE RIVER
AN MDU RESOURCES COMPANY
922 N CARNAHAN
SPOKANE VALLEY, WA 99212
PH:(509) 536-3300
FAX:(509) 536-3305
23505 PEORIA RD.
HARRISBURG, OR 97446
PH: (541) 995-4100
FAX: (541) 995-9447

TITLE: PLAN VIEW SIDEWALK BARS
GIRDER G3

JOB & LOCATION: HERRING COVE BRIDGE NEAR KETCHIKAN, ALASKA

DRAWN: J. PELPHREY	DATE: 10/19/2021	REVISED FOR APPROVAL
HANDLING: J. PELPHREY	DATE: 11/24/2021	02/03/2022
CHECKED: S. WESTMAN	DATE: 12/09/2021	KNIFE RIVER PRESTRESS

NO.	REVISIONS	DATE

THIS DOCUMENT IS THE PROPERTY OF KNIFE RIVER. IT IS CONFIDENTIAL, SUBMITTED FOR REFERENCE PURPOSES ONLY, AND SHALL NOT BE USED IN ANY WAY INJURIOUS TO THE INTERESTS OF, OR WITHOUT THE WRITTEN PERMISSION OF KNIFE RIVER. COPYRIGHT © 2021 KNIFE RIVER ALL RIGHTS RESERVED

QTY. -
MK. # -
PROJECT NO. 17545
PRODUCT TYPE DBT53
SHEET 14 OF 25

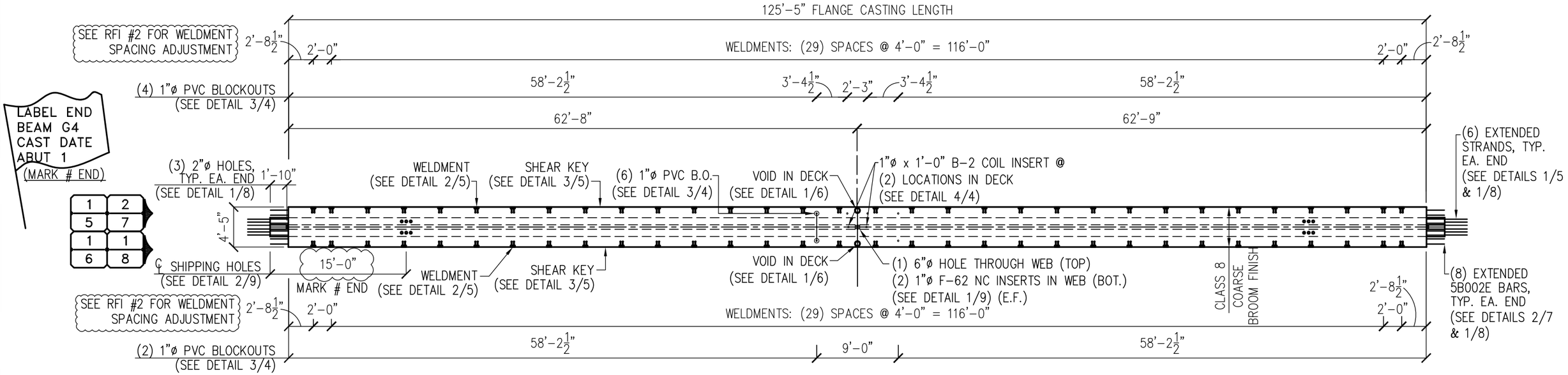

1/15 PLAN VIEW

G4 PRODUCE (1) G4 GIRDER

SCALE: 3/32"=1'-0"

NOTE: USE (188) 5S0310E BARS & (188) 4B003E BARS (NOT SHOWN FOR CLARITY, SEE DETAILS 2/7 & 1/8).

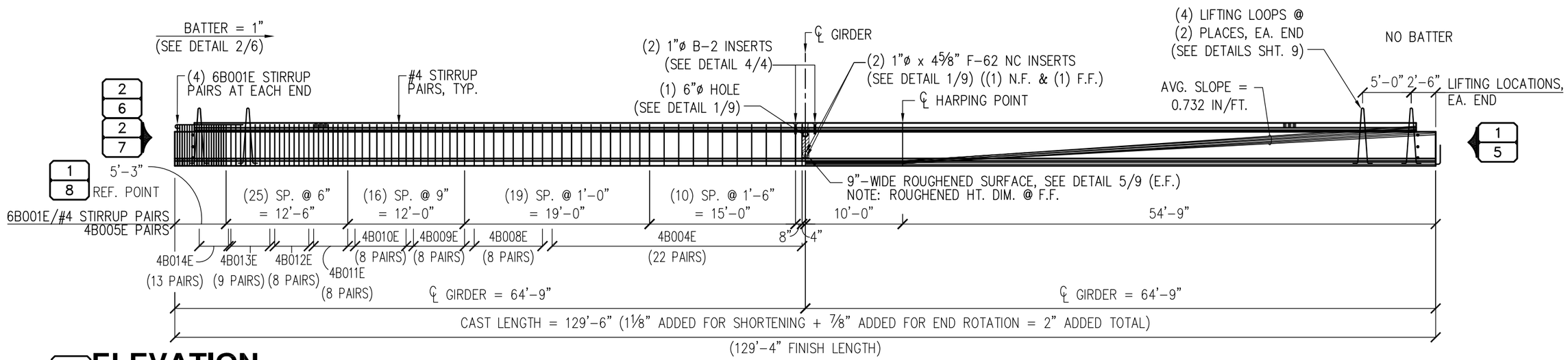

2/15 ELEVATION

SCALE: 3/32"=1'-0"

KNIFE RIVER
AN MDU RESOURCES COMPANY

922 N CARNAHAN
SPOKANE VALLEY, WA 99212
PH:(509) 536-3300
FAX:(509) 536-3305

23505 PEORIA RD.
HARRISBURG, OR 97446
PH: (541) 995-4100
FAX: (541) 995-9447

TITLE: **PLAN & ELEVATION** — GIRDER G4

JOB & LOCATION: **HERRING COVE BRIDGE NEAR KETCHIKAN, ALASKA**

DRAWN	J. PELPHREY	DATE 10/19/2021
HANDLING	J. PELPHREY	DATE 11/24/2021
CHECKED	S. WESTMAN	DATE 12/09/2021

REVISED FOR APPROVAL
02/03/2022
KNIFE RIVER PRESTRESS

NO.	REVISIONS	DATE

THIS DOCUMENT IS THE PROPERTY OF KNIFE RIVER. IT IS CONFIDENTIAL, SUBMITTED FOR REFERENCE PURPOSES ONLY, AND SHALL NOT BE USED IN ANY WAY INJURIOUS TO THE INTERESTS OF, OR WITHOUT THE WRITTEN PERMISSION OF KNIFE RIVER. COPYRIGHT © 2021 KNIFE RIVER ALL RIGHTS RESERVED

QTY. -

MK. # -

PROJECT NO. 17545

PRODUCT TYPE DBT53

SHEET 15 OF 25

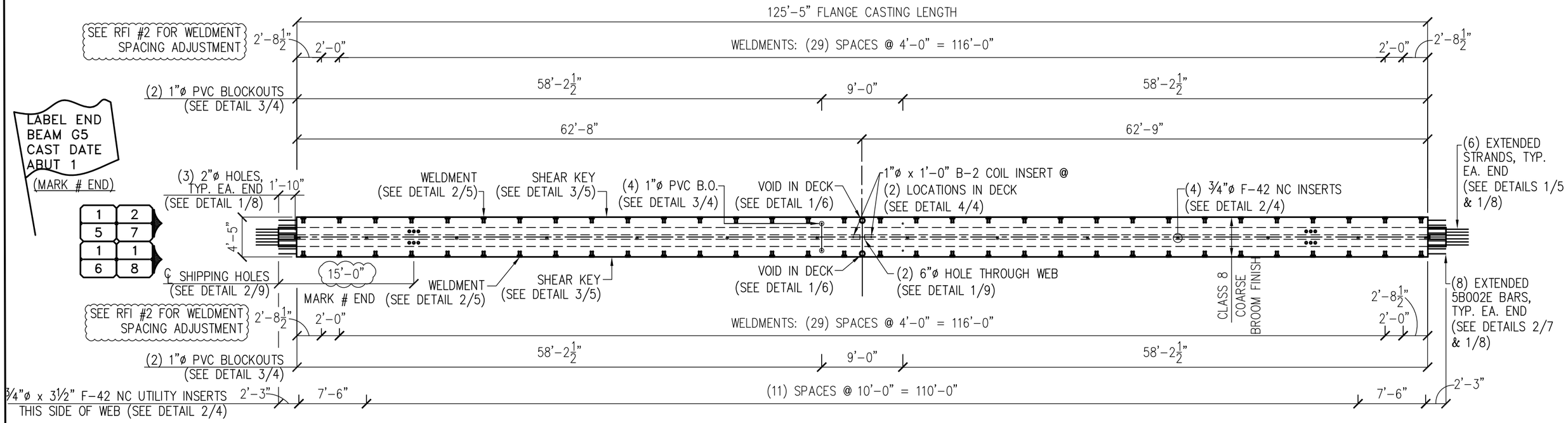

1/16 PLAN VIEW

G5 G5 PRODUCE (2) G5 GIRDERS

SCALE: 3/32"=1'-0"

NOTE: USE (188) 5S0310E BARS & (188) 4B003E BARS (NOT SHOWN FOR CLARITY, SEE DETAILS 2/7 & 1/8).

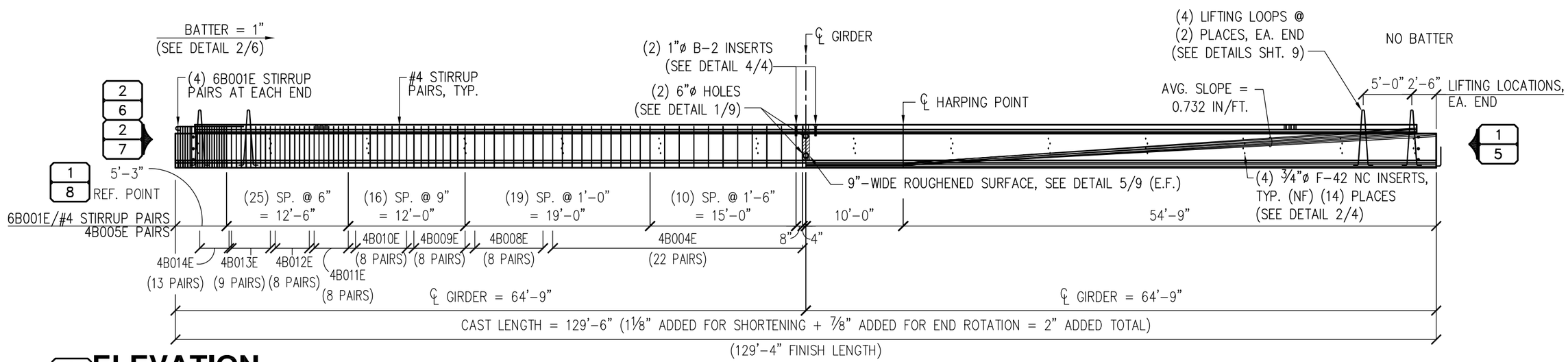

2/16 ELEVATION

SCALE: 3/32"=1'-0"

KNIFE RIVER
AN MDU RESOURCES COMPANY
922 N CARNAHAN
SPOKANE VALLEY, WA 99212
PH:(509) 536-3300
FAX:(509) 536-3305
23505 PEORIA RD.
HARRISBURG, OR 97446
PH: (541) 995-4100
FAX: (541) 995-9447

TITLE: **PLAN & ELEVATION** GIRDER G5

JOB & LOCATION: **HERRING COVE BRIDGE NEAR KETCHIKAN, ALASKA**

DRAWN	J. PELPHREY	DATE 10/19/2021
HANDLING	J. PELPHREY	DATE 11/24/2021
CHECKED	S. WESTMAN	DATE 12/09/2021

REVISED FOR APPROVAL
02/03/2022
KNIFE RIVER PRESTRESS

NO.	REVISIONS	DATE

THIS DOCUMENT IS THE PROPERTY OF KNIFE RIVER. IT IS CONFIDENTIAL, SUBMITTED FOR REFERENCE PURPOSES ONLY, AND SHALL NOT BE USED IN ANY WAY INJURIOUS TO THE INTERESTS OF, OR WITHOUT THE WRITTEN PERMISSION OF KNIFE RIVER. COPYRIGHT © 2021 KNIFE RIVER ALL RIGHTS RESERVED

QTY. -
MK. # -
PROJECT NO. 17545
PRODUCT TYPE DBT53
SHEET 16 OF 25

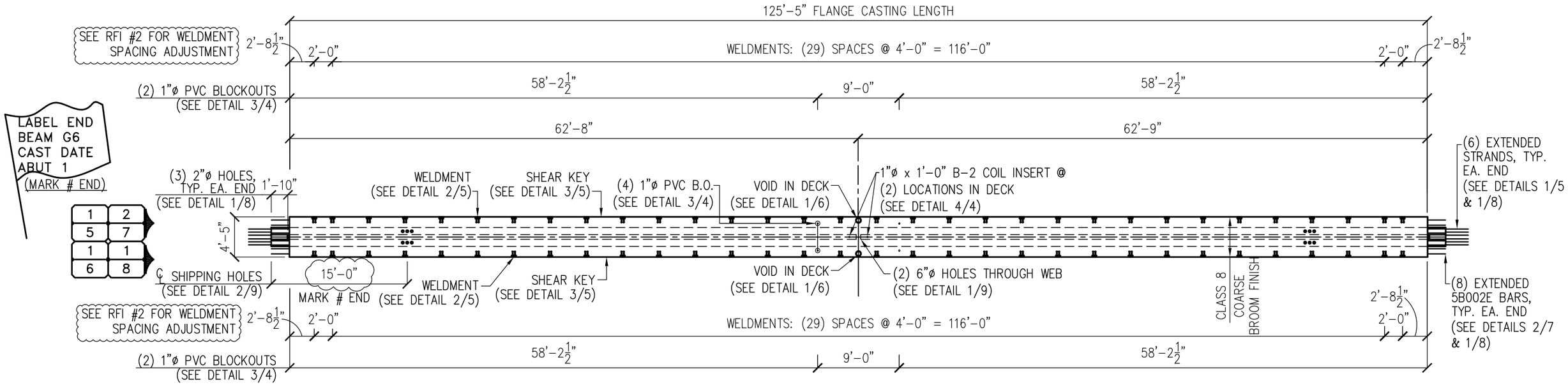

1/17 PLAN VIEW G6

PRODUCE (1) G6 GIRDER

SCALE: 3/32"=1'-0"

NOTE: USE (188) 5S0310E BARS & (188) 4B003E BARS (NOT SHOWN FOR CLARITY, SEE DETAILS 2/7 & 1/8).

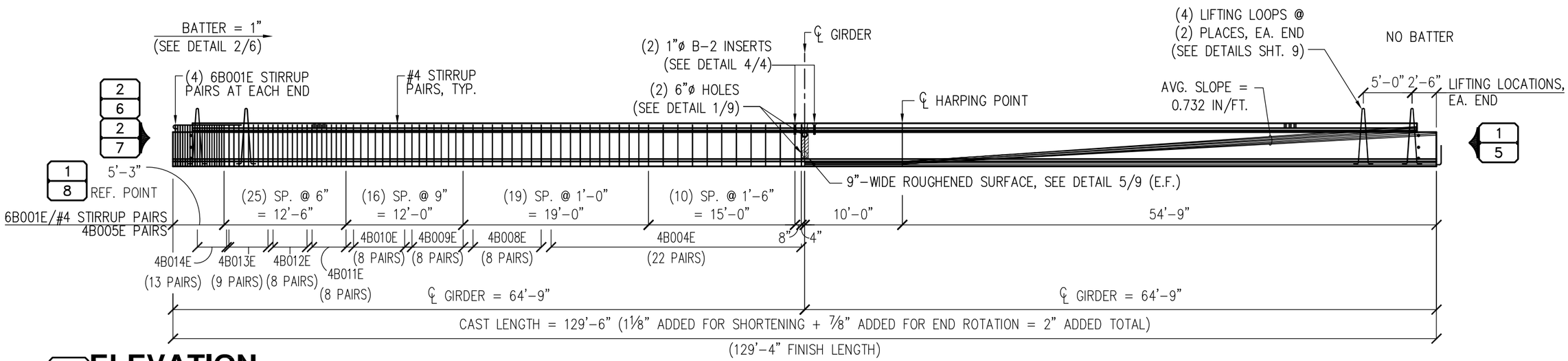

2/17 ELEVATION

SCALE: 3/32"=1'-0"

KNIFE RIVER
AN MDU RESOURCES COMPANY

922 N CARNAHAN
SPOKANE VALLEY, WA 99212
PH: (509) 536-3300
FAX: (509) 536-3305

23505 PEORIA RD.
HARRISBURG, OR 97446
PH: (541) 995-4100
FAX: (541) 995-9447

TITLE: **PLAN & ELEVATION**
GIRDER G6

JOB & LOCATION: **HERRING COVE BRIDGE NEAR KETCHIKAN, ALASKA**

DRAWN	J. PELPHREY	DATE 10/19/2021
HANDLING	J. PELPHREY	DATE 11/24/2021
CHECKED	S. WESTMAN	DATE 12/09/2021

REVISED FOR APPROVAL
02/03/2022
KNIFE RIVER PRESTRESS

NO.	REVISIONS	DATE

THIS DOCUMENT IS THE PROPERTY OF KNIFE RIVER. IT IS CONFIDENTIAL, SUBMITTED FOR REFERENCE PURPOSES ONLY, AND SHALL NOT BE USED IN ANY WAY INJURIOUS TO THE INTERESTS OF, OR WITHOUT THE WRITTEN PERMISSION OF KNIFE RIVER. COPYRIGHT © 2021 KNIFE RIVER ALL RIGHTS RESERVED

QTY. -
MK. # -

PROJECT NO. 17545
PRODUCT TYPE DBT53
SHEET 17 OF 25

Work\Knife River\221145 Herring Cove Bridge\04 AutoCAD\17545 Herring Cove Bridge (S2).dwg

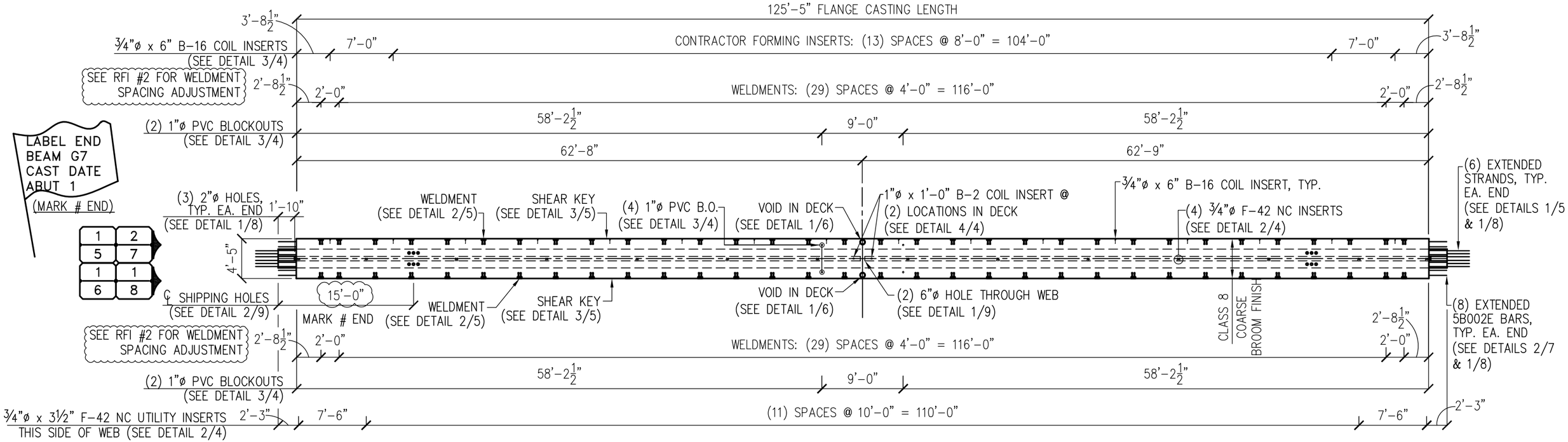

1/18 PLAN VIEW G7

SCALE: 3/32"=1'-0"

PRODUCE (1) G7 GIRDER

NOTE: USE (188) 5S0310E BARS & (188) 4B003E BARS (NOT SHOWN FOR CLARITY, SEE DETAILS 2/7 & 1/8).

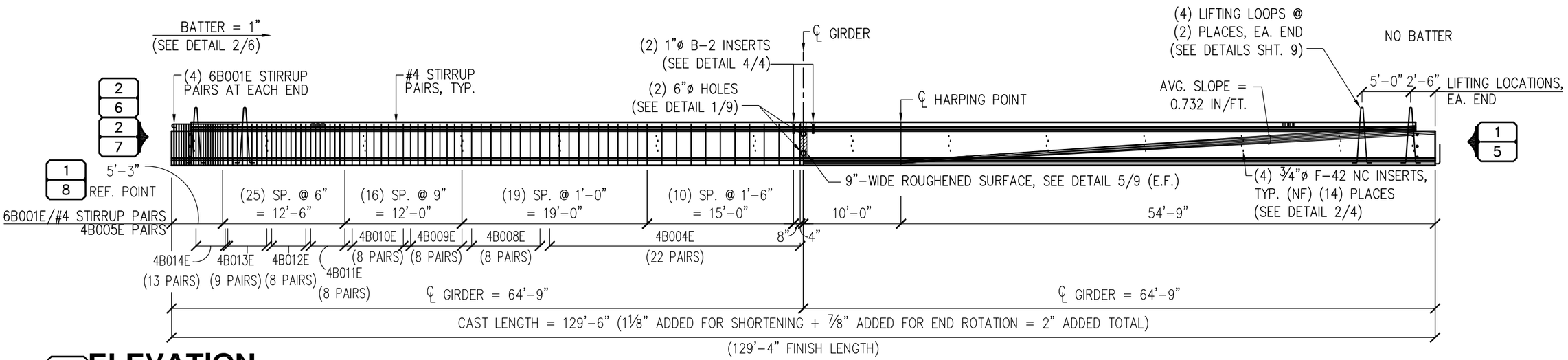

2/18 ELEVATION

SCALE: 3/32"=1'-0"

KNIFE RIVER
AN MDU RESOURCES COMPANY

922 N CARNAHAN
SPOKANE VALLEY, WA 99212
PH:(509) 536-3300
FAX:(509) 536-3305

23505 PEORIA RD.
HARRISBURG, OR 97446
PH: (541) 995-4100
FAX: (541) 995-9447

TITLE: **PLAN & ELEVATION** GIRDER G7

JOB & LOCATION: **HERRING COVE BRIDGE NEAR KETCHIKAN, ALASKA**

DRAWN	J. PELPHREY	DATE 10/19/2021
HANDLING	J. PELPHREY	DATE 11/24/2021
CHECKED	S. WESTMAN	DATE 12/09/2021

REVISED FOR APPROVAL
02/03/2022
KNIFE RIVER PRESTRESS

NO.	REVISIONS	DATE

THIS DOCUMENT IS THE PROPERTY OF KNIFE RIVER. IT IS CONFIDENTIAL, SUBMITTED FOR REFERENCE PURPOSES ONLY, AND SHALL NOT BE USED IN ANY WAY INJURIOUS TO THE INTERESTS OF, OR WITHOUT THE WRITTEN PERMISSION OF KNIFE RIVER. COPYRIGHT © 2021 KNIFE RIVER ALL RIGHTS RESERVED

QTY. -

MK. # -

PROJECT NO. 17545

PRODUCT TYPE DBT53

SHEET 18 OF 25

Work\Knife River\221145 Herring Cove Bridge\04 AutoCAD\17545 Herring Cove Bridge (S2).dwg

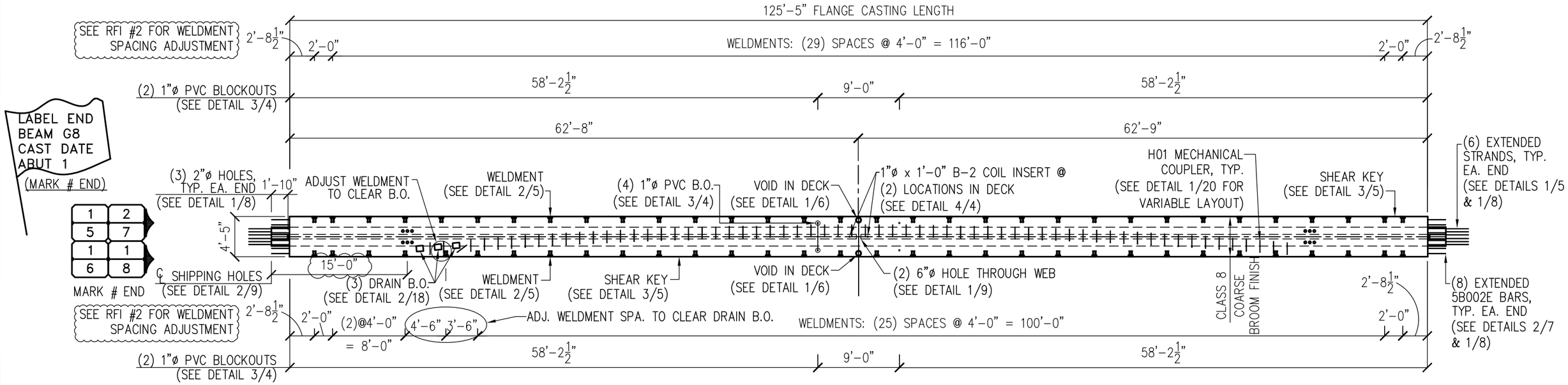

1/19 PLAN VIEW G8

PRODUCE (1) G8 GIRDER

SCALE: 3/32"=1'-0"

NOTE: USE (188) 5S0310E BARS & (188) 4B003E BARS (NOT SHOWN FOR CLARITY, SEE DETAILS 2/7 & 1/8).

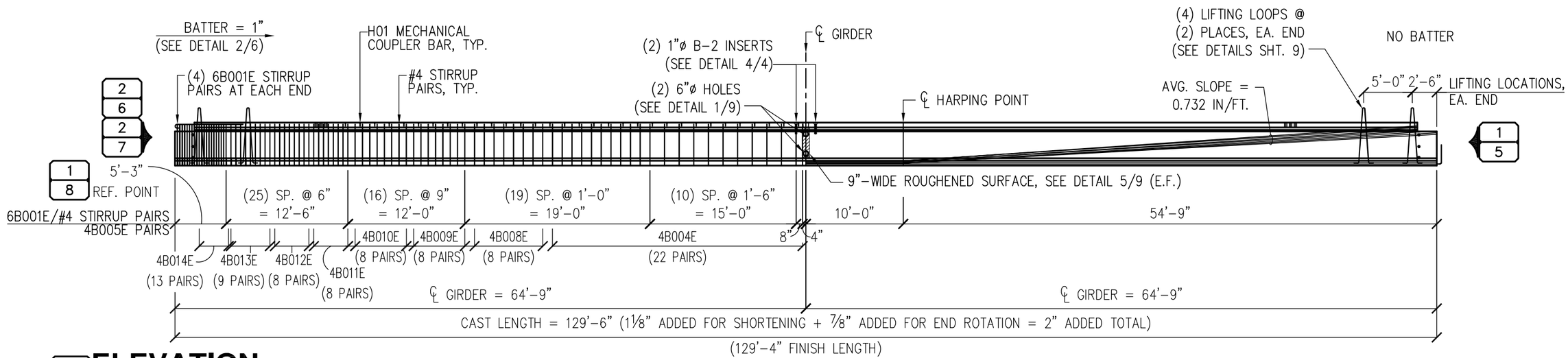

2/19 ELEVATION

SCALE: 3/32"=1'-0"

KNIFE RIVER
AN MDU RESOURCES COMPANY
922 N CARNAHAN
SPOKANE VALLEY, WA 99212
PH:(509) 536-3300
FAX:(509) 536-3305
23505 PEORIA RD.
HARRISBURG, OR 97446
PH: (541) 995-4100
FAX: (541) 995-9447

TITLE: **PLAN & ELEVATION** GIRDER G8

JOB & LOCATION: **HERRING COVE BRIDGE NEAR KETCHIKAN, ALASKA**

DRAWN	J. PELPHREY	DATE 10/19/2021
HANDLING	J. PELPHREY	DATE 11/24/2021
CHECKED	S. WESTMAN	DATE 12/09/2021

REVISED FOR APPROVAL
02/03/2022
KNIFE RIVER PRESTRESS

NO.	REVISIONS	DATE

THIS DOCUMENT IS THE PROPERTY OF KNIFE RIVER. IT IS CONFIDENTIAL, SUBMITTED FOR REFERENCE PURPOSES ONLY, AND SHALL NOT BE USED IN ANY WAY INJURIOUS TO THE INTERESTS OF, OR WITHOUT THE WRITTEN PERMISSION OF KNIFE RIVER. COPYRIGHT © 2021 KNIFE RIVER ALL RIGHTS RESERVED

QTY. -

MK. # -

PROJECT NO. 17545

PRODUCT TYPE DBT53

SHEET 19 OF 25

Work\Knife River\221145 Herring Cove Bridge\04 AutoCAD\17545 Herring Cove Bridge (S2).dwg

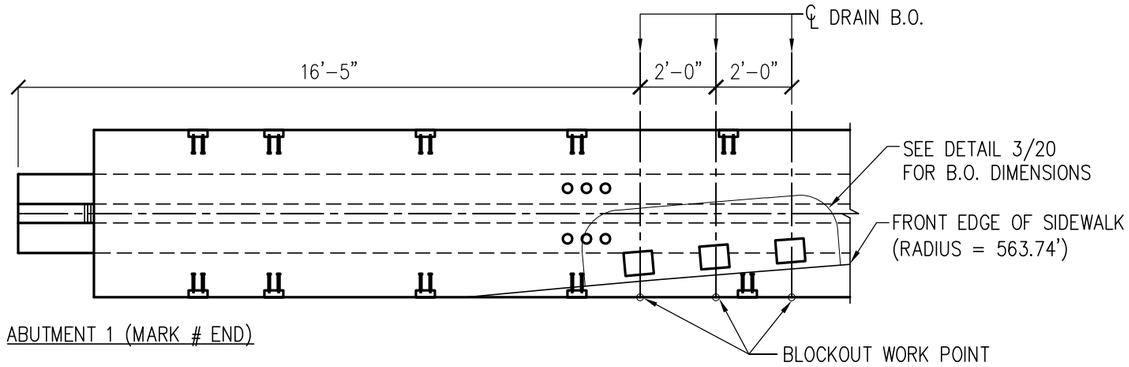

2/20 PLAN VIEW GIRDER G8 - DRAIN BLOCKOUTS

SCALE: 1/4"=1'-0"

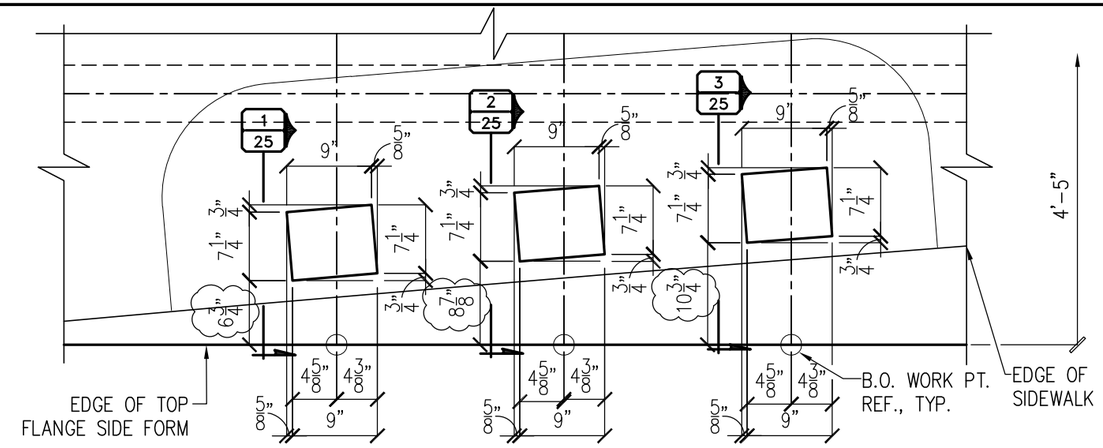

3/20 DRAIN BLOCKOUT DETAIL

SCALE: 3/4"=1'-0" GIRDER 1 ONLY (G8)

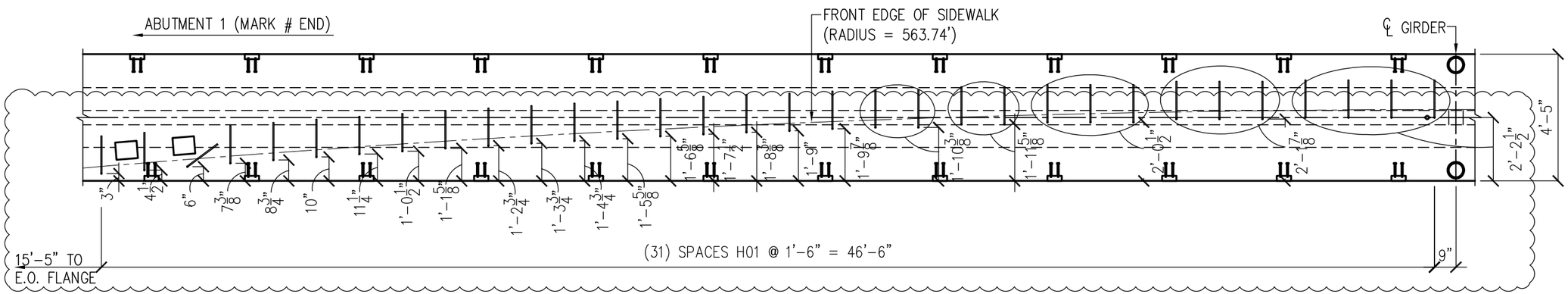

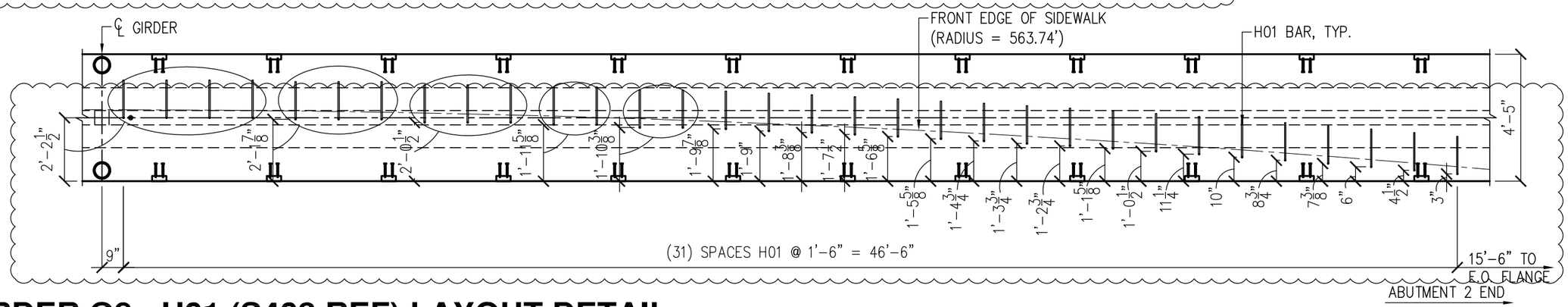

1/20 PLAN VIEW GIRDER G8 - H01 (S403 REF) LAYOUT DETAIL

SCALE: 1/4"=1'-0"

NOTE: MEASUREMENTS TAKEN ALONG THE TOP FLANGE. SEE DETAIL 3/24 FOR EMBEDMENT & PROJECTION DIMENSIONS.
ROTATE H01 BARS AS NECESSARY FOR FIT.

KNIFE RIVER
AN MDU RESOURCES COMPANY

922 N CARNAHAN
SPOKANE VALLEY, WA 99212
PH:(509) 536-3300
FAX:(509) 536-3305

23505 PEORIA RD.
HARRISBURG, OR 97446
PH: (541) 995-4100
FAX: (541) 995-9447

TITLE: **PLAN VIEW BARS & B.O.'S**
GIRDER G8

JOB & LOCATION: **HERRING COVE BRIDGE NEAR KETCHIKAN, ALASKA**

DRAWN: J. PELPHREY	DATE: 10/19/2021	REVISED FOR APPROVAL 02/03/2022 KNIFE RIVER PRESTRESS
HANDLING: J. PELPHREY	DATE: 11/24/2021	
CHECKED: S. WESTMAN	DATE: 12/09/2021	

NO.	REVISIONS	DATE

THIS DOCUMENT IS THE PROPERTY OF KNIFE RIVER. IT IS CONFIDENTIAL, SUBMITTED FOR REFERENCE PURPOSES ONLY, AND SHALL NOT BE USED IN ANY WAY INJURIOUS TO THE INTERESTS OF, OR WITHOUT THE WRITTEN PERMISSION OF KNIFE RIVER. COPYRIGHT © 2021 KNIFE RIVER ALL RIGHTS RESERVED

QTY. -
MK. # -

PROJECT NO. 17545
PRODUCT TYPE DBT53
SHEET 20 OF 25

Work\Knife River\221145 Herring Cove Bridge\04 AutoCAD\17545 Herring Cove Bridge (S2).dwg

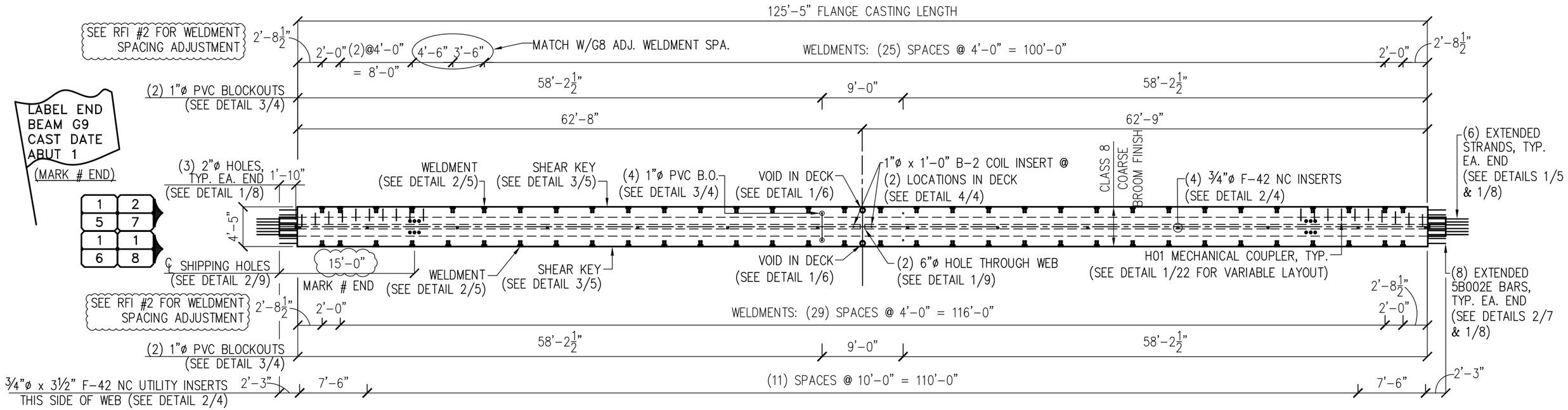

1/21 PLAN VIEW

G9 PRODUCE (1) G9 GIRDER

SCALE: 3/32"=1'-0"

NOTE: USE (188) 5S0310E BARS & (188) 4B003E BARS (NOT SHOWN FOR CLARITY, SEE DETAILS 2/7 & 1/8).

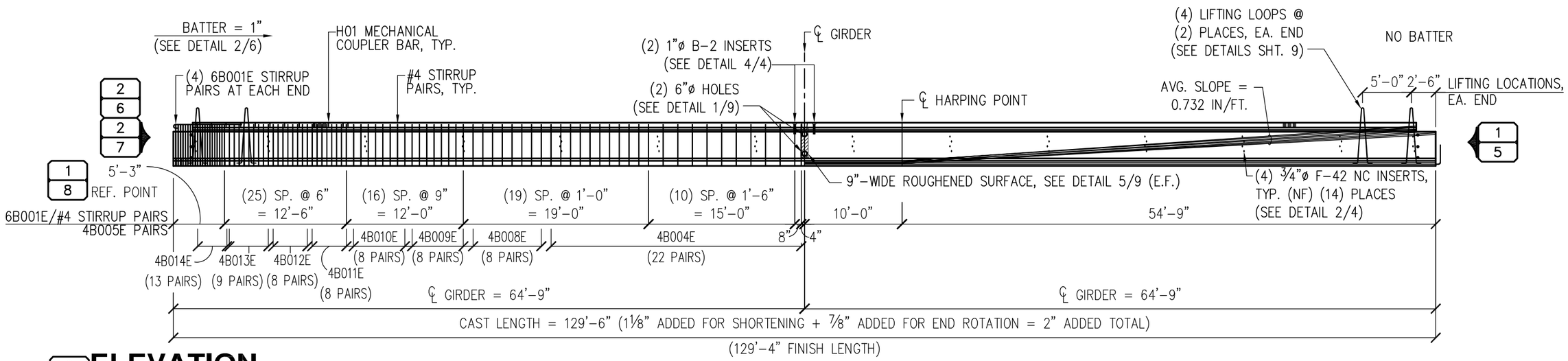

2/21 ELEVATION

SCALE: 3/32"=1'-0"

KNIFE RIVER
AN MDU RESOURCES COMPANY
922 N CARNAHAN
SPOKANE VALLEY, WA 99212
PH: (509) 536-3300
FAX: (509) 536-3305
23505 PEORIA RD.
HARRISBURG, OR 97446
PH: (541) 995-4100
FAX: (541) 995-9447

TITLE: **PLAN & ELEVATION** GIRDER G9

JOB & LOCATION: **HERRING COVE BRIDGE NEAR KETCHIKAN, ALASKA**

DRAWN	J. PELPHREY	DATE 10/19/2021
HANDLING	J. PELPHREY	DATE 11/24/2021
CHECKED	S. WESTMAN	DATE 12/09/2021

REVISED FOR APPROVAL
02/03/2022
KNIFE RIVER PRESTRESS

NO.	REVISIONS	DATE

THIS DOCUMENT IS THE PROPERTY OF KNIFE RIVER. IT IS CONFIDENTIAL, SUBMITTED FOR REFERENCE PURPOSES ONLY, AND SHALL NOT BE USED IN ANY WAY INJURIOUS TO THE INTERESTS OF, OR WITHOUT THE WRITTEN PERMISSION OF KNIFE RIVER. COPYRIGHT © 2021 KNIFE RIVER ALL RIGHTS RESERVED

QTY. -

MK. # -

PROJECT NO. 17545

PRODUCT TYPE DBT53

Work\Knife River\221145 Herring Cove Bridge\04 AutoCAD\17545 Herring Cove Bridge (S2).dwg

ABUTMENT 1 (MARK # END)

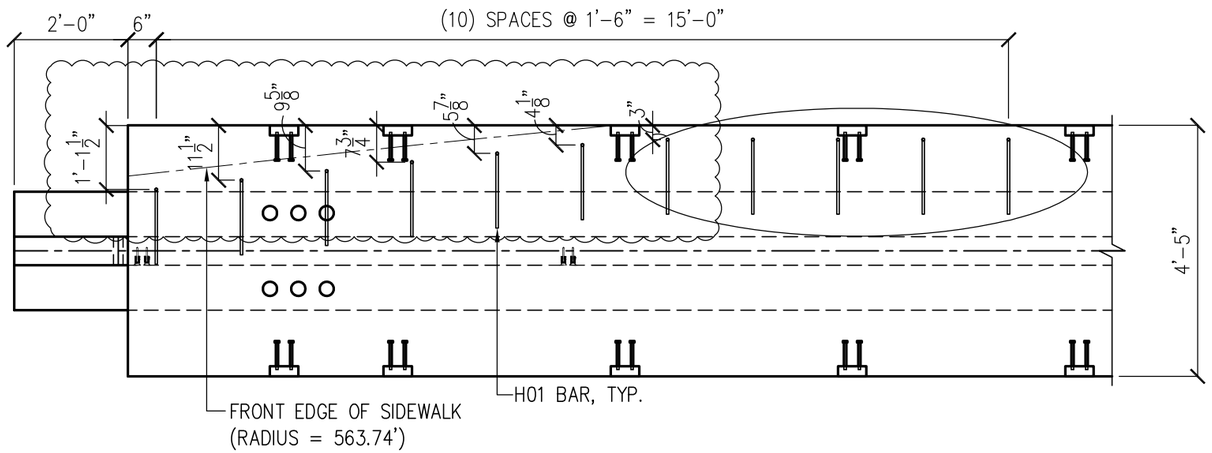

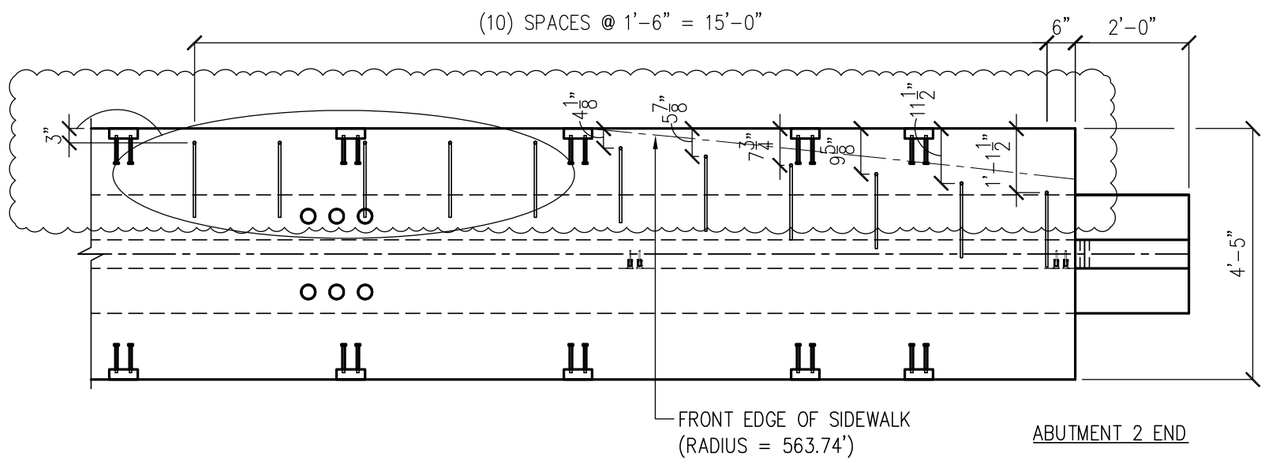

ABUTMENT 2 END

1/22 PLAN VIEW GIRDER G9 - H01 (S403 REF) LAYOUT DETAIL

SCALE: 3/8"=1'-0"

NOTE: MEASUREMENTS TAKEN ALONG THE TOP FLANGE. SEE DETAIL 3/24 FOR EMBEDMENT & PROJECTION DIMENSIONS. ROTATE H01 BARS AS NECESSARY FOR FIT.

KNIFE RIVER
AN MDU RESOURCES COMPANY

922 N CARNAHAN
SPOKANE VALLEY, WA 99212
PH:(509) 536-3300
FAX:(509) 536-3305

23505 PEORIA RD.
HARRISBURG, OR 97446
PH: (541) 995-4100
FAX: (541) 995-9447

TITLE
PLAN VIEW SW BARS & B.O.'S
GIRDER G9

JOB & LOCATION
HERRING COVE BRIDGE
NEAR KETCHIKAN, ALASKA

DRAWN	J. PELPHREY	DATE 10/19/2021
HANDLING	J. PELPHREY	DATE 11/24/2021
CHECKED	S. WESTMAN	DATE 12/09/2021

REVISED
FOR APPROVAL
02/03/2022
KNIFE RIVER PRESTRESS

NO.	REVISIONS	DATE

THIS DOCUMENT IS THE PROPERTY OF KNIFE RIVER. IT IS CONFIDENTIAL, SUBMITTED FOR REFERENCE PURPOSES ONLY, AND SHALL NOT BE USED IN ANY WAY INJURIOUS TO THE INTERESTS OF, OR WITHOUT THE WRITTEN PERMISSION OF KNIFE RIVER. COPYRIGHT © 2021 KNIFE RIVER ALL RIGHTS RESERVED

QTY. -

MK. # -

PROJECT NO. 17545

PRODUCT TYPE DBT53

Work\Knife River\221145 Herring Cove Bridge\04 AutoCAD\17545 Herring Cove Bridge (S2).dwg

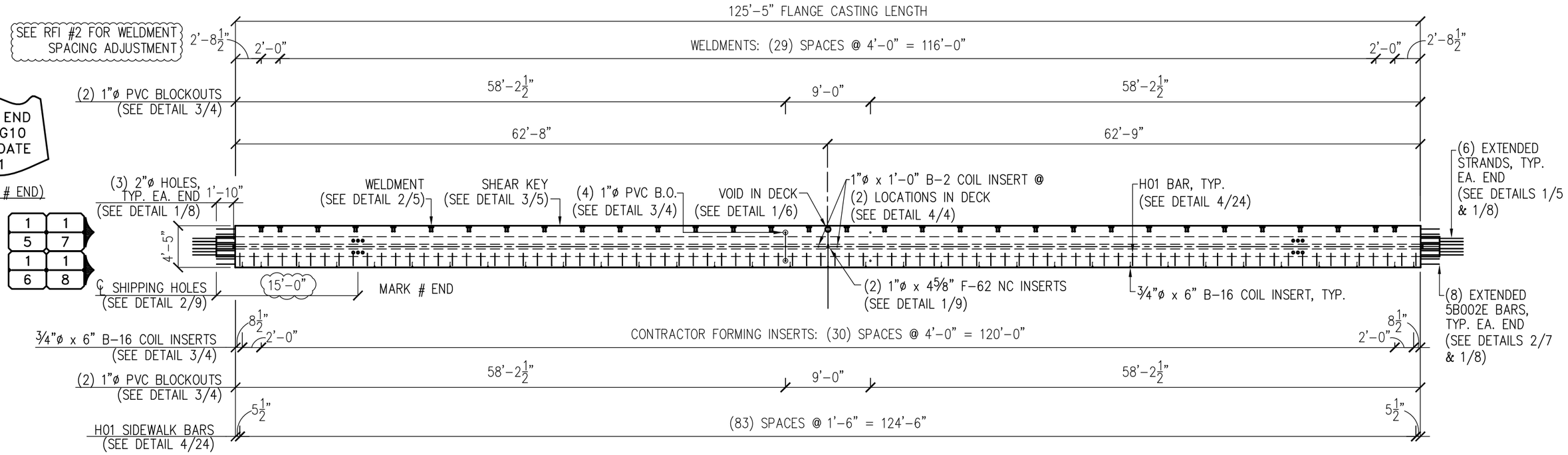

1/23 PLAN VIEW G10

SCALE: 3/32"=1'-0"

PRODUCE (1) G10 GIRDER

NOTE: USE (215) 5S0310E BARS & (215) 4B003E BARS (NOT SHOWN FOR CLARITY, SEE DETAILS 2/7 & 1/8).

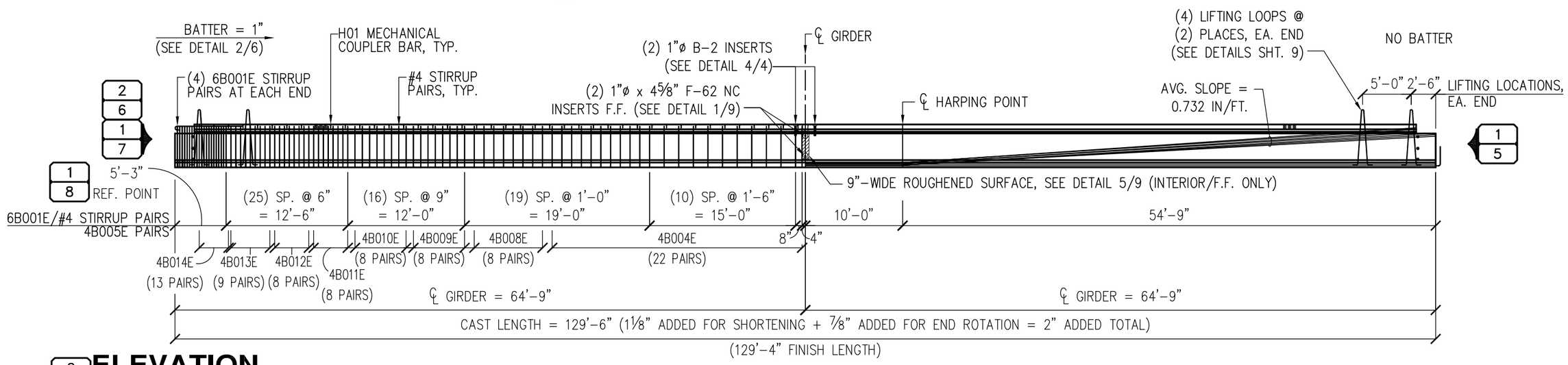

2/23 ELEVATION

SCALE: 3/32"=1'-0"

KNIFE RIVER
AN MDU RESOURCES COMPANY

922 N CARNAHAN
SPOKANE VALLEY, WA 99212
PH:(509) 536-3300
FAX:(509) 536-3305

23505 PEORIA RD.
HARRISBURG, OR 97446
PH: (541) 995-4100
FAX: (541) 995-9447

TITLE: **PLAN & ELEVATION** GIRDER G10

JOB & LOCATION: **HERRING COVE BRIDGE NEAR KETCHIKAN, ALASKA**

DRAWN	J. PELPHREY	DATE 10/19/2021
HANDLING	J. PELPHREY	DATE 11/24/2021
CHECKED	S. WESTMAN	DATE 12/09/2021

REVISED FOR APPROVAL
02/03/2022
KNIFE RIVER PRESTRESS

NO.	REVISIONS	DATE

THIS DOCUMENT IS THE PROPERTY OF KNIFE RIVER. IT IS CONFIDENTIAL, SUBMITTED FOR REFERENCE PURPOSES ONLY, AND SHALL NOT BE USED IN ANY WAY INJURIOUS TO THE INTERESTS OF, OR WITHOUT THE WRITTEN PERMISSION OF KNIFE RIVER. COPYRIGHT © 2021 KNIFE RIVER ALL RIGHTS RESERVED

QTY. -

MK. # -

PROJECT NO. 17545

PRODUCT TYPE DBT53

SHEET 23 OF 25

Work\Knife River\221145 Herring Cove Bridge\04 AutoCAD\17545 Herring Cove Bridge (S2).dwg

REINFORCEMENT SCHEDULE

MARK	SIZE	DESCRIPTION	ASTM	QTY EACH	QTY TOTAL
G401 (REF) 4B003E	#4	4'-0"; 2'-0¼"; 3¾"; 2'-0"; EPOXY	A706	INT: 188 EXT: 215	2122
G402 (REF)	#4	(3) #4 x 40'-0" (4S4000E) MIN. SPLICE = 2'-7" EPOXY	A706	24	264
G402 (REF)	#4	(1) #4 x 14'-0" (4S1400E) MIN. SPLICE = 2'-7" EPOXY	A706	8	88
SHIPPING HOLE BARS	#4	(8) #4 x 3'-0" (4S0300E) EPOXY	A706	8	88
G403 (REF)	#4	9"; "B" (SEE TABLE); 1'-1"; EPOXY	A706	SEE TABLE	SEE TABLE
G403 (REF) 4B015E	#4	5'-3½"; 1'-1"; EPOXY	A706	16	176
G404 (REF) 4B005E	#4	1'-1⅜"; 1'-2"; 4½"; 1'-10"; 4"; EPOXY	A706	60	660
G501 (REF) 5S0310E	#5	3'-10"; EPOXY	A706	188	1692
G501X (REF) 5B001E	#5	4'-0"; 5"; 5"; STD. 180° HOOK; EPOXY	A706	215	430
G502 (REF)	#5	(3) #5 x 40'-0" (5S4000E) MIN. SPLICE = 3'-3" EPOXY	A706	24	264
G502 (REF)	#5	(1) #5 x 16'-0" (5S1600E) MIN. SPLICE = 3'-3" EPOXY	A706	8	88
G502B (REF) 5B002E	#5	10'-0"; 5"; 5"; STD. 180° HOOK; EPOXY	A706	16	176
G601 (REF) 6B001E	#6	5'-3½"; 1'-1"; EPOXY	A706	16	176

REINFORCEMENT SCHEDULE

MARK	SIZE	DESCRIPTION	ASTM	QTY EACH	QTY TOTAL
S401 (REF) 4B006E	#4	6"; 9"; 6"; EPOXY	A706	84 GIRDER A (G1) ONLY	84
S402 (REF) 4B007E	#4	6"; 1'-0"; 6"; EPOXY	A706	GIRDER B (G2): 62 GIRDER C (G3): 22	84
S403 (REF) 17545-H01	#4	4½"; 1'-4"; DAYTON SUPERIOR D-368 TAPER-LOCK FORM SAVER EPOXY	A706	GIRDER I (G6): 64 GIRDER J (G7): 22 GIRDER K (G8): 84	170

BLACK WEIGHT = 0 LBS CAGE WEIGHT = 5,148 LBS
EPOXY WEIGHT = 56,629 LBS TOTAL REBAR WEIGHT = 56,629 LBS

TABLE:

MARK	"B" DIM	QTY EACH	QTY TOTAL
4B004E	4'-2"	88	968
4B008E	4'-2½"	32	352
4B009E	4'-3½"	32	352
4B010E	4'-4"	32	352
4B011E	4'-4½"	32	352
4B012E	4'-5"	32	352
4B013E	4'-5½"	36	396
4B014E	4'-6"	52	572

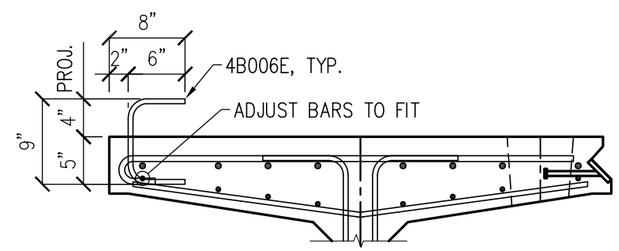

1/24 4B006E BAR DETAIL

SCALE: ¾"=1'-0" (S401 BAR REF)
INSTALL 4B006E BARS IN GIRDER A (G1)

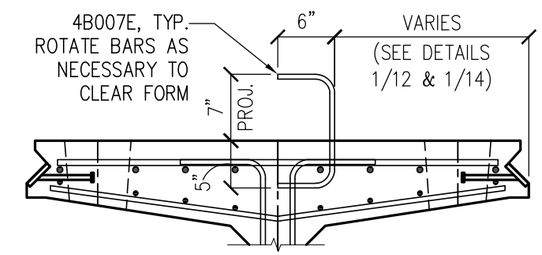

2/24 4B007E BAR DETAIL

SCALE: ¾"=1'-0" (S402 BAR REF)
INSTALL 4B007E BARS IN GIRDERS B & C (G2 & G3)

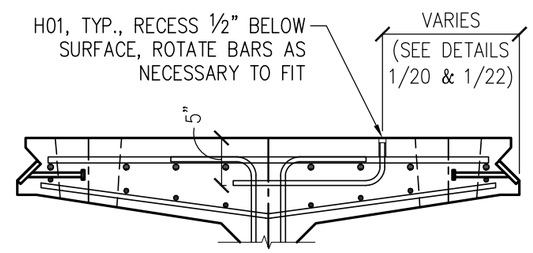

3/24 H01 BAR DETAIL A

SCALE: ¾"=1'-0" (S403 BAR REF)
INSTALL H01 BARS IN GIRDERS I & J (G8 & G9)

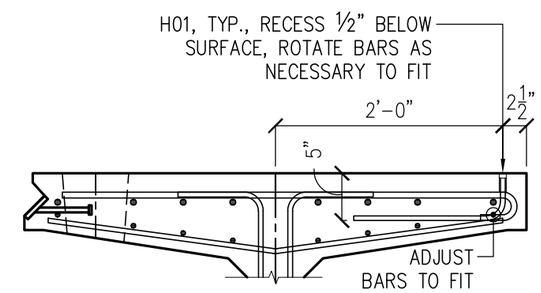

4/24 H01 BAR DETAIL B

SCALE: ¾"=1'-0" (S403 BAR REF)
INSTALL H01 BARS IN GIRDER K (G10)

KNIFE RIVER
AN MDU RESOURCES COMPANY
922 N CARNAHAN
SPOKANE VALLEY, WA 99212
PH:(509) 536-3300
FAX:(509) 536-3305
23505 PEORIA RD.
HARRISBURG, OR 97446
PH: (541) 995-4100
FAX: (541) 995-9447

TITLE: REINF. SCHEDULE & DETAILS

JOB & LOCATION: HERRING COVE BRIDGE NEAR KETCHIKAN, ALASKA

DRAWN	J. PELPHREY	DATE	10/19/2021
HANDLING	J. PELPHREY	DATE	11/24/2021
CHECKED	S. WESTMAN	DATE	12/09/2021

REVISED FOR APPROVAL
02/03/2022
KNIFE RIVER PRESTRESS

NO.	REVISIONS	DATE

THIS DOCUMENT IS THE PROPERTY OF KNIFE RIVER. IT IS CONFIDENTIAL, SUBMITTED FOR REFERENCE PURPOSES ONLY, AND SHALL NOT BE USED IN ANY WAY INJURIOUS TO THE INTERESTS OF, OR WITHOUT THE WRITTEN PERMISSION OF KNIFE RIVER. COPYRIGHT © 2021 KNIFE RIVER ALL RIGHTS RESERVED

QTY. -
MK. # -
PROJECT NO. 17545
PRODUCT TYPE DBT53
SHEET 24 OF 25

Work\Knife River\221145 Herring Cove Bridge\04 AutoCAD\17545 Herring Cove Bridge (S2).dwg

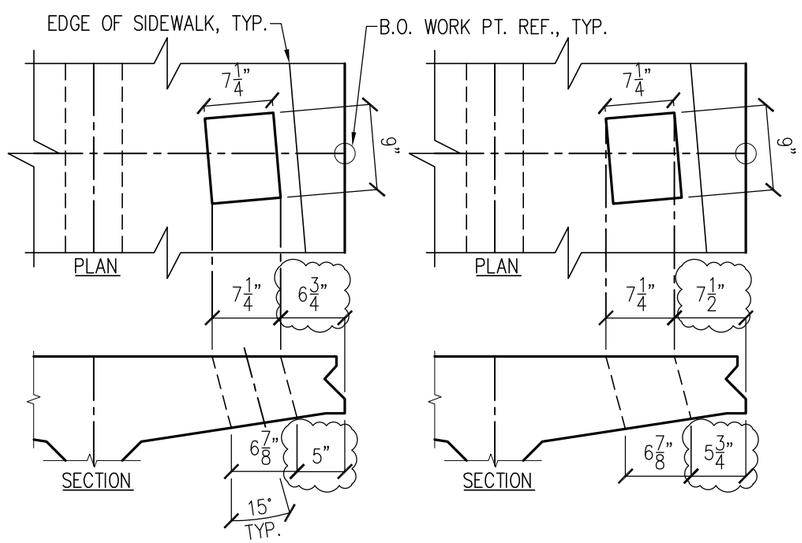

1/25 DRAIN BLOCKOUT SECTION 1

SCALE: 3/4"=1'-0" GIRDER I ONLY (G8)

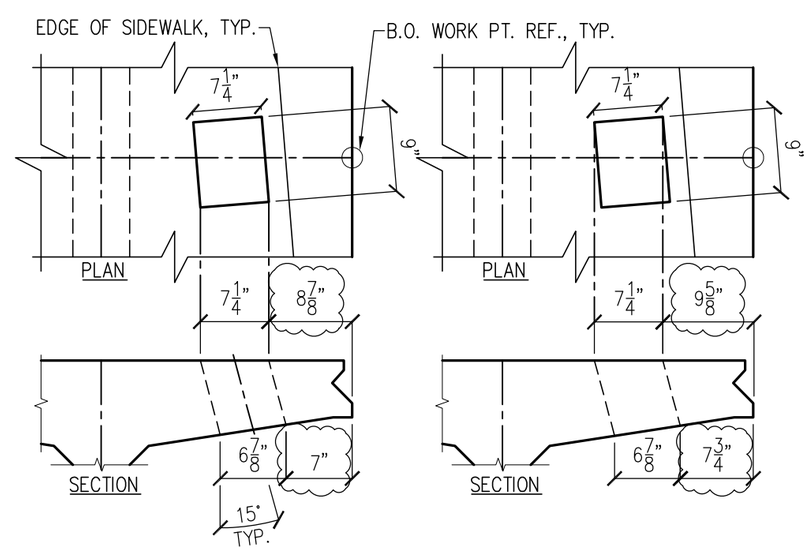

2/25 DRAIN BLOCKOUT SECTION 2

SCALE: 3/4"=1'-0" GIRDER I ONLY (G8)

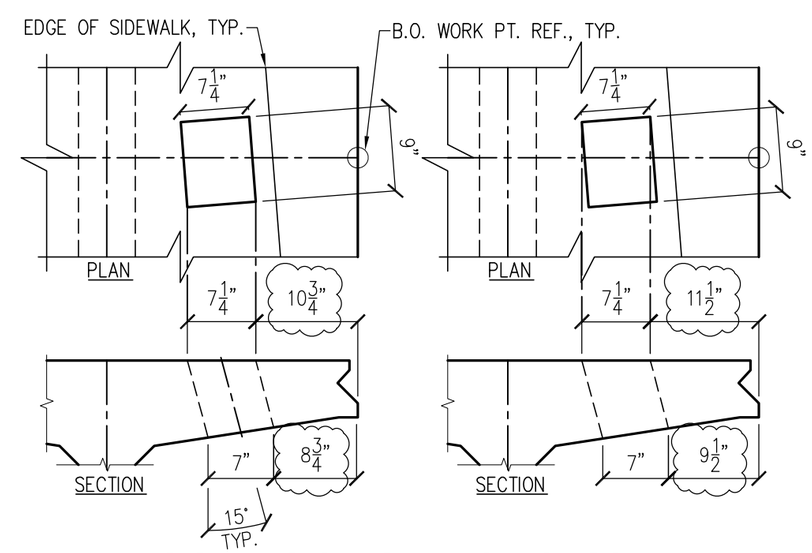

3/25 DRAIN BLOCKOUT SECTION 3

SCALE: 3/4"=1'-0" GIRDER I ONLY (G8)

KNIFE RIVER
AN MDU RESOURCES COMPANY
922 N CARNAHAN
SPOKANE VALLEY, WA 99212
PH:(509) 536-3300
FAX:(509) 536-3305
23505 PEORIA RD.
HARRISBURG, OR 97446
PH: (541) 995-4100
FAX: (541) 995-9447

TITLE
DETAILS
–

JOB & LOCATION
HERRING COVE BRIDGE
NEAR KETCHIKAN, ALASKA

DRAWN J. PELPHREY	DATE 10/19/2021	REVISED FOR APPROVAL
HANDLING J. PELPHREY	DATE 11/24/2021	02/03/2022
CHECKED S. WESTMAN	DATE 12/09/2021	KNIFE RIVER PRESTRESS

NO.	REVISIONS	DATE

THIS DOCUMENT IS THE PROPERTY OF KNIFE RIVER. IT IS CONFIDENTIAL, SUBMITTED FOR REFERENCE PURPOSES ONLY, AND SHALL NOT BE USED IN ANY WAY INJURIOUS TO THE INTERESTS OF, OR WITHOUT THE WRITTEN PERMISSION OF KNIFE RIVER. COPYRIGHT © 2021 KNIFE RIVER ALL RIGHTS RESERVED

QTY. -
MK. # -
PROJECT NO. 17545
PRODUCT TYPE DBT53
SHEET 25 OF 25

Work\Knife River\221145 Herring Cove Bridge\04 AutoCAD\17545 Herring Cove Bridge (S2).dwg

State of Alaska

GOVERNOR MIKE DUNLEAVY

Submittal Cover Sheet

Department of Transportation Public Facilities
SOUTHCOAST REGION
Construction Section

Project: KTN- HERRING COVE BRIDGE IMPROVEMENTS	Project No: 0902043/SFHWY00072
Contractor: Hamilton Construction Alaska	Submittal No. 502-006 Precast Girder, Revision
Date Response Sent: 04/15/2022	Reviewed By: Bob Lundell, P.E. Recoverable Signature X Bob Lundell Signed by: 2d66350b-1634-445f-b1d5-d5b87bea066b

A	AAN	R&R	R	I	R&RasN	INC	CA
Approved	Approved as Noted	Revise and Resubmit	Rejected	Informational	Revisit & Resubmit as Noted	Incomplete	Conditionally Approved

Item No.	Item	Contract Documents	A	AAN	R&R	R	I	R&R asN	INC	CA
501.0007.0000	Precast Girder	502-3.01		X						

Comments/Anticipated Response:

- This submittal is approved as noted based off of Nick Murray's comments:
  - Drop in inserts should be plated or stainless.
  - Carbon steel inserts are not acceptable.
  - Drop-in anchors must meet Buy America. Please provide documentation.

HAMILTON CONSTRUCTION ALASKA
CONTRACTORS & ENGINEERS

04.13.2022

State of Alaska Department of Transportation and Public Facilities
PO Box 112506
Juneau, AK 99811-2506

RE: KTN: Herring Cove Bridge Improvements
Contract Number: 0902043/SFHWY00072

Precast Girder Corrective Actions

Bob Lundell,

Please find the attached corrective actions from Knife River.

Sincerely,

Chris Duty

Chris Duty
Project Manager

12078 N. Glenn Hwy P.O. Box 309 • Sutton, AK 99674 • (907) 746-5307 • Fax: (907) 746-5330
www.hamil.com • An Equal Opportunity Employer

Spokane Plant
922 N. Carnahan Road
Spokane Valley, WA 99212
Phone: (509) 536-3300 • Fax: (509) 536-3313

Request For Resolution #1

To: Hamilton Construction
From: Todd Barfuss P.E., Knife River

RE: KTN Herring Cove Bridge, Knife River Project #17544

Description of Problem: On girder MK # G9, (2) threaded utility inserts are missing.

- The bottom insert at the 6th set from the MK END
- The top insert at the 8th set from the MK END

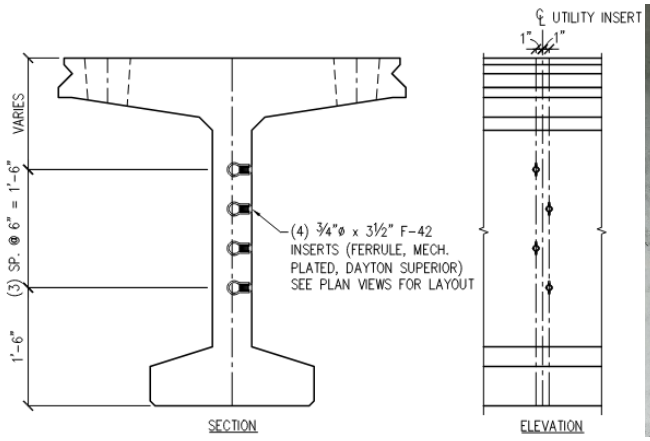

Proposed Fix: Knife River proposes replacing the missing inserts with the 3/4" drop-in anchors shown on the following pages. The inserts will be installed in the designed location, per manufacturers recommendations.

Drop-in inserts should be at least plated or stainless. Carbon steel inserts are not consistent with other embedded anchors.

Do drop-in anchors meets Buy America requirements?

-NWM 4.15.22

KNIFE RIVER
AN MDU RESOURCES COMPANY

Spokane Plant
922 N. Carnahan Road
Spokane Valley, WA 99212
Phone: (509) 536-3300 • Fax: (509) 536-3313

Request For Resolution #2

To: Hamilton Construction
From: Todd Barfuss P.E., Knife River

RE: KTN Herring Cove Bridge, Knife River Project #17544

Description of Problem: On girder MK # G6, one weld plate is missing. This is the 6th plate from the end opposite the MK END.

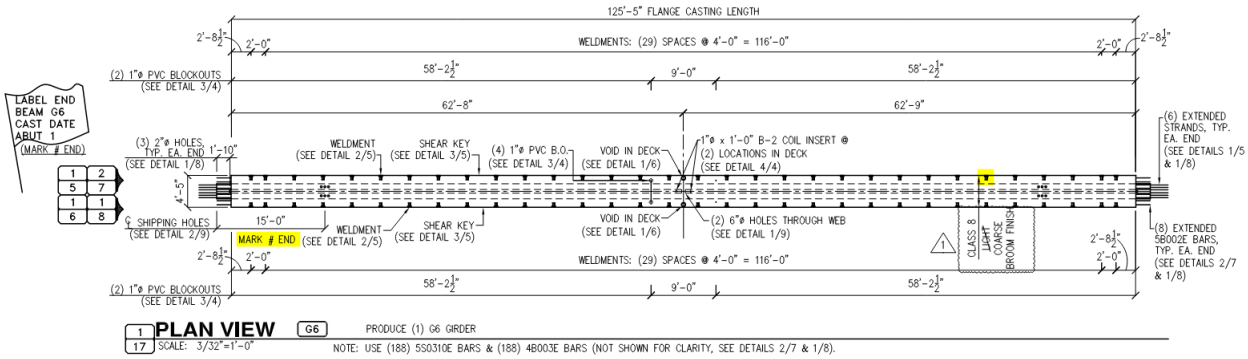

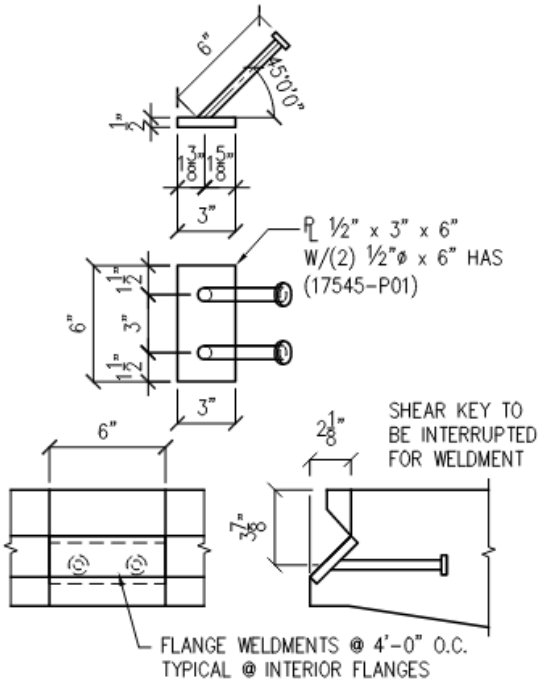

Proposed Fix: Knife River proposes post-installing a weld plate according to the detail shown below and on the following page. A post-installed plate will not be flush to the concrete as if it had been cast in, but will provide adequate clearance within the shear key for connection welding.

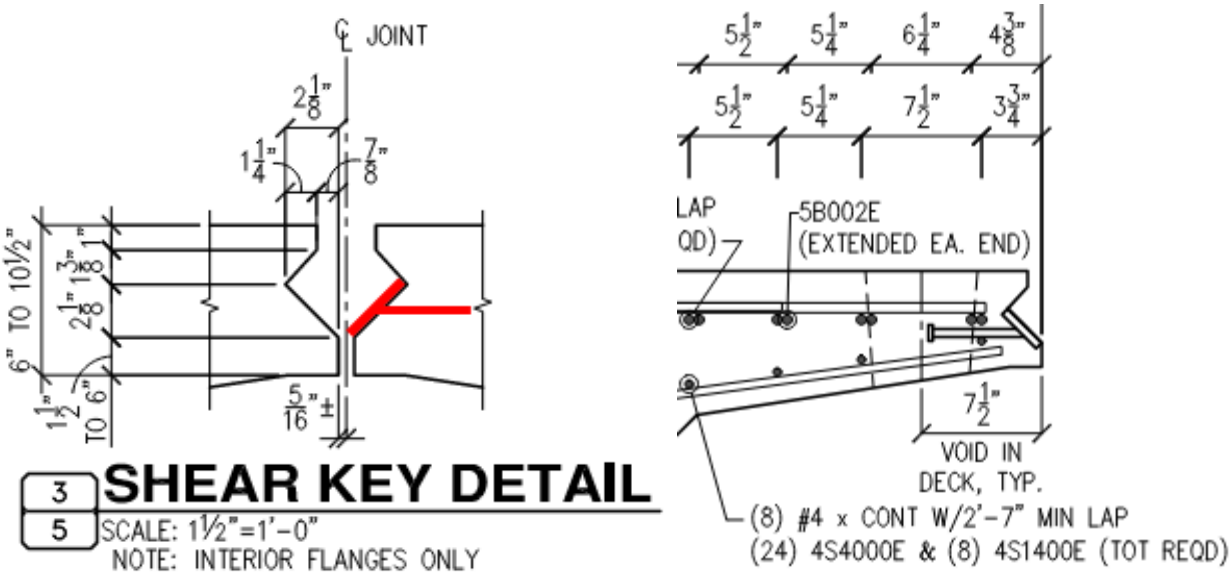

POST-INSTALLED WELD PLATE

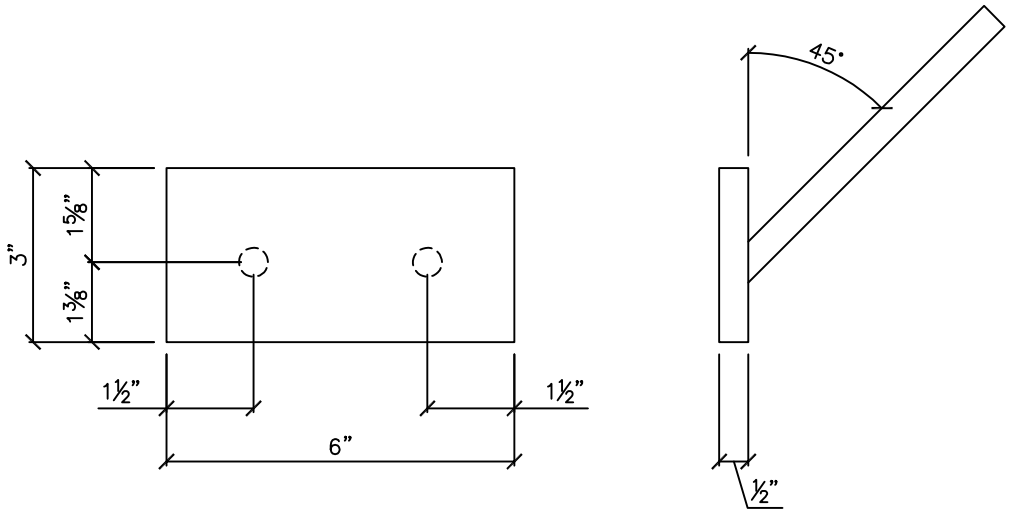

MATERIAL

PL ½" x 3" x 6" W/ (2) ½" ø x 6" DBA

INSTALLATION

DRILL (2) ⅝"ø x 6½" DEEP HOLES
LOCATED AS SHOWN ABOVE

EPOXY BARS/PLATE ONTO KEYWAY
USING SIMPSON AT-XP HIGH STRENGTH ADHESIVE

PRELIM. DATE	JOB NO.	SHEET NO.
ISSUED	**17544**	
DRAFTER TB	**KTN Herring Cove Bridge**	KNIFE RIVER AN MDU RESOURCES COMPANY

THIS DOCUMENT IS THE PROPERTY OF KNIFE RIVER. IT IS CONFIDENTIAL, SUBMITTED FOR REFERENCE PURPOSES ONLY, AND SHALL NOT BE USED IN ANY WAY INJURIOUS TO THE INTERESTS OF, OR WITHOUT THE WRITTEN PERMISSION OF KNIFE RIVER. COPYRIGHT © 2022 KNIFE RIVER. ALL RIGHTS RESERVED

HAMILTON CONSTRUCTION ALASKA
CONTRACTORS & ENGINEERS

06.07.2022

State of Alaska Department of Transportation and Public Facilities
PO Box 112506
Juneau, AK 99811-2506

RE: KTN: Herring Cove Bridge Improvements
Contract Number: 0902043/SFHWY00072

APPROVED

NWM 6/10/22

Precast Girder Corrective Action 2 REV.1

Bob Lundell,

Please find the attached revised corrective action from Knife River.

Sincerely,

Chris Duty

Chris Duty
Project Manager

12078 N. Glenn Hwy P.O. Box 309 • Sutton, AK 99674 • (907) 746-5307 • Fax: (907) 746-5330
www.hamil.com • An Equal Opportunity Employer

Spokane Plant
922 N. Carnahan Road
Spokane Valley, WA 99212
Phone: (509) 536-3300 • Fax: (509) 536-3313

Request For Resolution #2 Rev 01

To: Hamilton Construction
From: Todd Barfuss P.E., Knife River

RE: KTN Herring Cove Bridge, Knife River Project #17544

Description of Problem: An RFR #2 was sent out and approved regarding a missing weld plate on girder MK # G6. As the work began, it was discovered that the plate is not missing, but was cast approximately 3/4" below the surface of the concrete.

Proposed Fix: Knife River proposes adding a shim plate according to the detail shown on the following page. Additionally, the gap in the concrete around the plate will be patched using Dayton Superior 1107 Advantage Grout, shown on the following pages.

SHIM PLATE

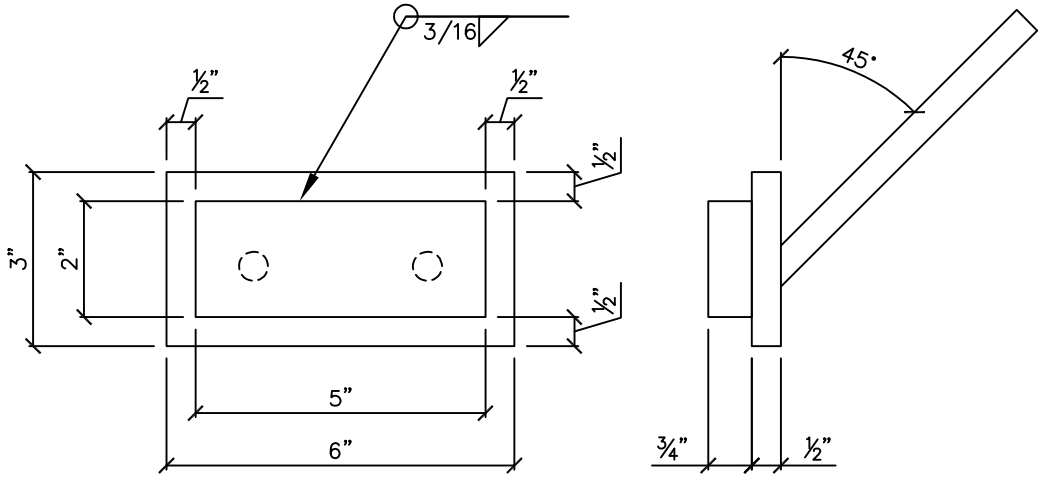

MATERIAL

PL ¾" x 2" x 5" SHIM PLATE (A36)

INSTALLATION

WELD SHIM PLATE AS SHOWN ABOVE

FILL GAP AROUND PLATE FLUSH TO FACE OF CONCRETE
USING DAYTON SUPERIOR 1107 GROUT

PRELIM. DATE	JOB NO.	SHEET NO.
ISSUED	**17544** **KTN Herring Cove Bridge**	KNIFE RIVER AN MDU RESOURCES COMPANY
DRAFTER TB		

THIS DOCUMENT IS THE PROPERTY OF KNIFE RIVER. IT IS CONFIDENTIAL, SUBMITTED FOR REFERENCE PURPOSES ONLY, AND SHALL NOT BE USED IN ANY WAY INJURIOUS TO THE INTERESTS OF, OR WITHOUT THE WRITTEN PERMISSION OF KNIFE RIVER. COPYRIGHT © 2022 KNIFE RIVER. ALL RIGHTS RESERVED

State of Alaska

GOVERNOR MIKE DUNLEAVY

Submittal Cover Sheet

Department of Transportation Public Facilities
SOUTHCOAST REGION
Construction Section

Project: KTN- HERRING COVE BRIDGE IMPROVEMENTS	Project No: 0902043/SFHWY00072
Contractor: Hamilton Construction Alaska	Submittal No. 507-006 Bridge Plaque
Date Response Sent: 12/16/2022	Reviewed By: Eric Strong, P.E. Recoverable Signature X Eric Strong Signed by: 2d66350b-1634-445f-b1d5-d5b87bea066b

A	AAN	R&R	R	IO	R&RasN	INC	CA
Approved	Approved as Noted	Revise and Resubmit	Rejected	Informational Only	Revisit & Resubmit as Noted	Incomplete	Conditionally Approved

Item No.	Item	Contract Documents	A	AAN	R&R	R	IO	R&R asN	INC	CA
507.0001.0003	Bridge Plaque	NA	X							

Comments/Anticipated Response:

ORDER #:6314005	CUSTOMER PO #:63141	SALESPERSON:Lorne B @ ext. 2503	DATE: 12/14/2022	Page: 1/1

CAST PLAQUE

MATERIAL	- BRONZE
SIZE	- 5"W X 3"H
QTY	- 2
DEPTH	- Painted Edges-5/16"thick Cast
SHAPE	- Radius Corner
COPY	- Raised Copy
FINISH	- Bead Blast w/Polished Surface
BORDER	- Border Per Art
COLOR	- No Paint on Plaque
STYLE	- Per Artfile Supplied
CLEAR	- Gloss
MOUNT	- (4) #6 CS MACH SCREWS WITH NUTS
ROSETTES	- No Rosettes Required
PATTERN	- No

RAISED
BRONZE

RECESSED
No paint on plaque

Matching specs to previous order 5683267, new text

VERSION:1

Artist: Jana Lein | ext 1973

RTF: 2161535

Department of Transportation & Public Facilities
Statewide Design & Engineering Services Division
Phone: 907-465-8890
Fax: 907-465-3124

MEMORANDUM

TO: Eric Strong PE
Project Engineer
DOWL Engineers

FROM: Elmer Marx, PE, SE
Acting Chief Bridge Engineer

CONTACT: Nicholas Murray, PE SE
(907) 465-8898
nicholas.murray@alaska.gov

DATE: October 19th, 2022

FILE: 253

RE: Herring Cove Bridge Improvements
0902043/SFHWY00072

SUBJECT: 3 Tube Railing Shop Drawings- Approved as Noted

We have received an electronic copy of Beko's Welding's revised shop drawings totaling 12 pages (including cover sheet) and dated 10/13/22 on 10/17/22. The drawings are marked "Approved as Noted." This updated version supersedes the original "Approved as Noted" set of 3 Tube Railing Shop Drawings dated 3/10/22.

As indicated in Section 105-1.02 of the contract specifications, the Contractor is required to provide one set of reproducible transparencies (polyester film commonly referred to as mylars) of the final shop drawings. Please have the mylars sent to this office (address below) for the permanent records.

State of Alaska Bridge Section
c/o Nicholas Murray
PO Box 112500
Juneau, AK 99811-2500

Please let me know if you have any questions.

NWM/bm

BEKO'S WELDING, INC.

P.O. BOX 1075
1100 S. BERG PARKWAY
CANBY, OR 97013

RICK BEKO
PHONE: (503) 266-3507
FAX: (503) 266-3500

DATE: 10/13/2022

CONTRACT #:

TO: HAMILTON CONSTRUCTION

PROJECT: HERRING COVE BRIDGE
(SOUTH TONGASS HIGHWAY)

ITEMS	COPIES	DATE	DESCRIPTION
1	1	10/12/2022 10/13/2022	THREE TUBE STEEL BRIDGE RAILING

_____ AS YOU REQUESTED

_____ FOR YOUR INFORMATION

___X___ FOR YOUR APPROVAL

_____ FOR YOUR REVIEW

_____ RETURN REQUESTED

SINCERELY,

RICK BEKO
VICE PRESIDENT

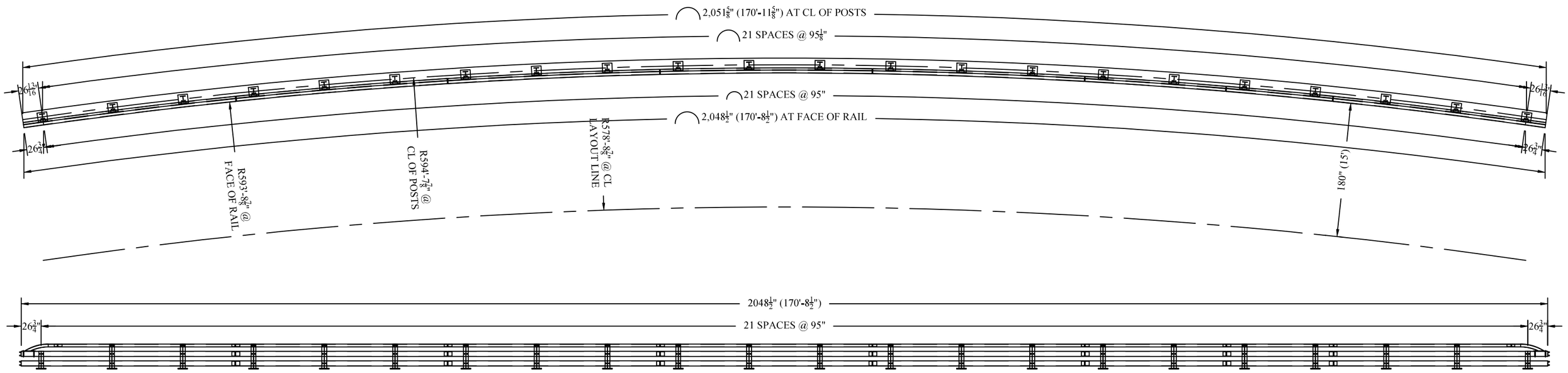

POST LAYOUT DETAIL (NORTH SIDE)
HERRING COVE BRIDGE (SOUTH TONGASS HIGHWAY)
LOOKING AT FACE OF RAIL

RADIUS END	TYPE 1A TUBE	TYPE 2A TUBE	TYPE 3A TUBE	TYPE 4A TUBE	TYPE 1A TUBE	RADIUS END
1LT REQUIRED	1 REQUIRED	4 REQUIRED	1 REQUIRED	1 REQUIRED	1 REQUIRED	1RT REQUIRED
	TYPE 1B TUBE	TYPE 2B TUBE	TYPE 3B TUBE	TYPE 4B TUBE	TYPE 1B TUBE	
	1 REQUIRED	4 REQUIRED	1 REQUIRED	1 REQUIRED	1 REQUIRED	
	TYPE 1C TUBE	TYPE 2B TUBE	TYPE 3B TUBE	TYPE 4B TUBE	TYPE 1C TUBE	
	1 REQUIRED	4 REQUIRED	1 REQUIRED	1 REQUIRED	1 REQUIRED	

TUBE LAYOUT DETAIL (NORTH SIDE)
HERRING COVE BRIDGE (SOUTH TONGASS HIGHWAY)
LOOKING AT FACE OF RAIL

APPROVED AS NOTED
BRIDGE DESIGN SECTION
ALASKA DEPARTMENT OF TRANSPORTATION
AND PUBLIC FACILITIES
Reviewed for conformance with basic details and dimensions of the contract plans. Accuracy of information supplied by the fabricator is not guaranteed.
By NWM Date 10/19/22

GALVANIZED ASTM 123

Beko's WELDING INC.
P.O Box 1075
1100 S. Berg Parkway
Canby, OR 97013
Dick & Rick Beko
(503) 266-3507
(503) 266-3500 (Fax)
Bekosoffice@Canby.com

ALASKA DEPARTMENT OF TRANSPORTATION

BRIDGE NO: 253	CONTRACT NO: SFHWY00072/0902043	ZC
DATE: 10/13/22	HAMILTON	
HERRING COVE BRIDGE (SOUTH TONGASS HIGHWAY)		
THREE TUBE RAIL	DRAWING NUMBER: 1 OF 11	

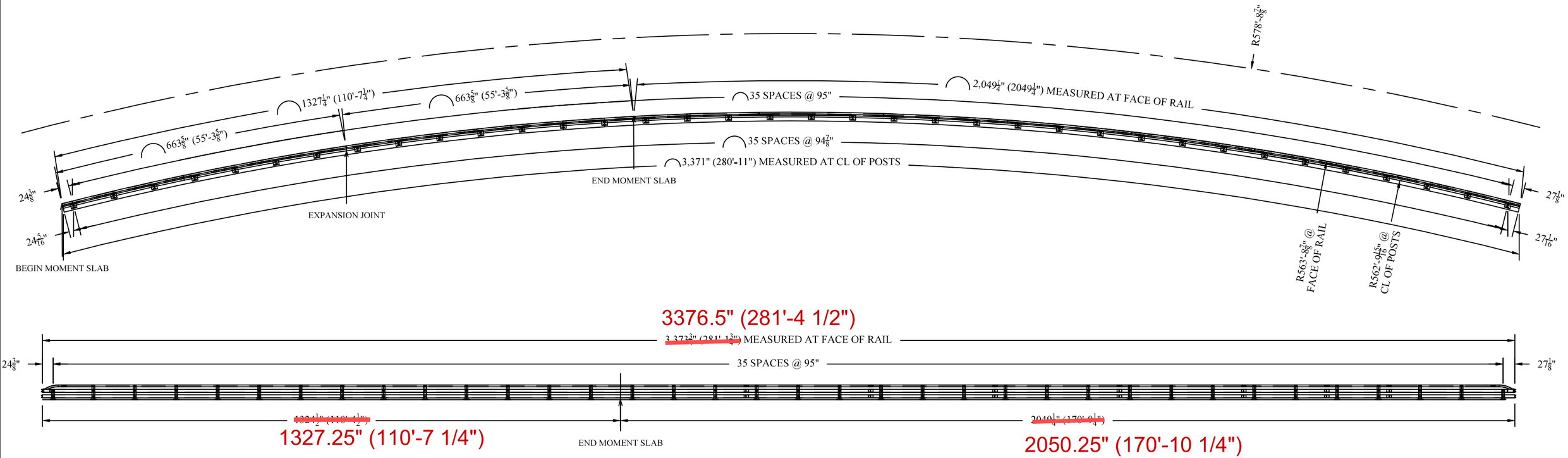

POST LAYOUT DETAIL (SOUTH SIDE)
HERRING COVE BRIDGE (SOUTH TONGASS HIGHWAY)
LOOKING AT BACK OF RAIL

RADIUS END	TYPE 5A TUBE	TYPE 6A TUBE	TYPE 7A TUBE	TYPE 8A TUBE	TYPE 9A TUBE	TYPE 10A TUBE	RADIUS END
1LT REQUIRED	1 REQUIRED	2 REQUIRED	6 REQUIRED	1 REQUIRED	1 REQUIRED	1 REQUIRED	1RT REQUIRED
	TYPE 5B TUBE	TYPE 6B TUBE	TYPE 7B TUBE	TYPE 8B TUBE	TYPE 9B TUBE	TYPE 10B TUBE	
	1 REQUIRED	2 REQUIRED	6 REQUIRED	1 REQUIRED	1 REQUIRED	1 REQUIRED	
	TYPE 5B TUBE	TYPE 5B TUBE	TYPE 7B TUBE	TYPE 8B TUBE	TYPE 9B TUBE	TYPE 10C TUBE	
	1 REQUIRED	2 REQUIRED	6 REQUIRED	1 REQUIRED	1 REQUIRED	1 REQUIRED	

TUBE LAYOUT DETAIL (SOUTH SIDE)
HERRING COVE BRIDGE (SOUTH TONGASS HIGHWAY)
LOOKING AT BACK OF RAIL

APPROVED AS NOTED
BRIDGE DESIGN SECTION
ALASKA DEPARTMENT OF TRANSPORTATION
AND PUBLIC FACILITIES
Reviewed for conformance with basic details and dimensions of the contract plans. Accuracy of information supplied by the fabricator is not guaranteed.
By NWM Date 10/19/22

GALVANIZED ASTM 123

Beko's WELDING INC.
P.O Box 1075
1100 S. Berg Parkway
Canby, OR 97013
Dick & Rick Beko
(503) 266-3507
(503) 266-3500 (Fax)
Bekosoffice@Canby.com

ALASKA DEPARTMENT OF TRANSPORTATION

BRIDGE NO: 253	CONTRACT NO: SFHWY00072/0902043	ZC
DATE: 10/13/22	HAMILTON	
HERRING COVE BRIDGE (SOUTH TONGASS HIGHWAY)		
THREE TUBE RAIL	DRAWING NUMBER: 2 OF 11	

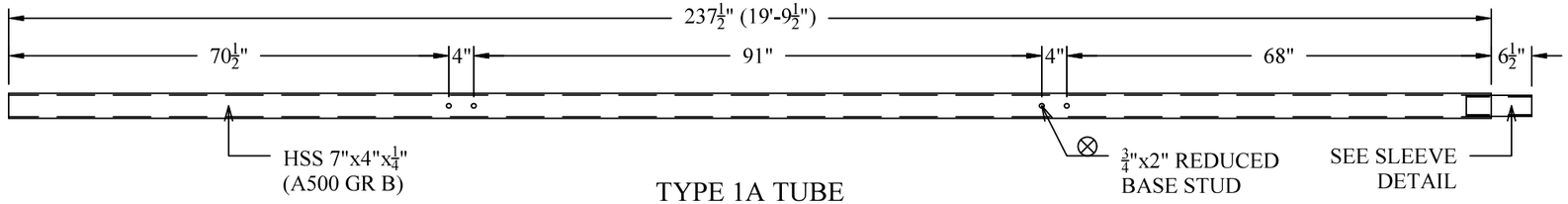

TYPE 1A TUBE
2 REQUIRED

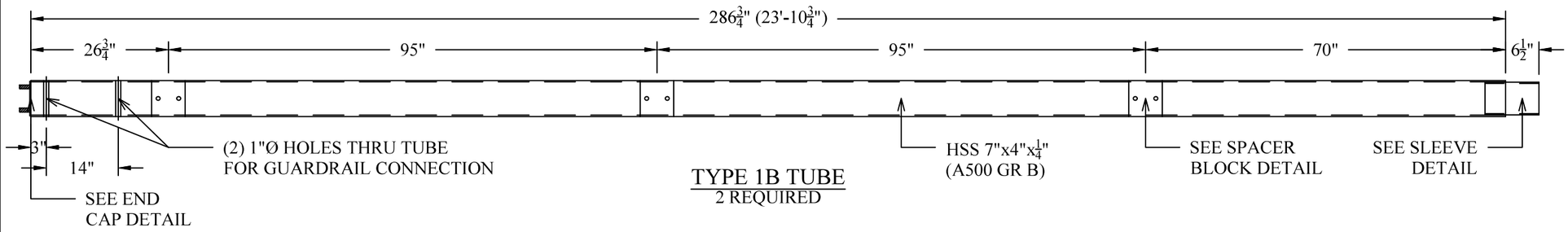

TYPE 1B TUBE
2 REQUIRED

NOTE:
RADIUS TUBES TO
R593'-8⅞" @ FACE OF RAIL

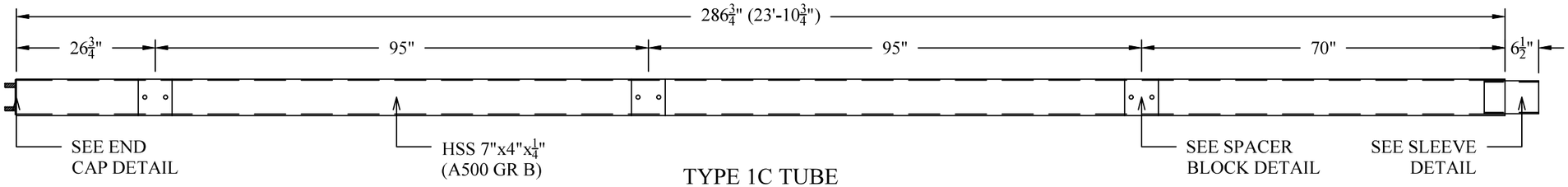

TYPE 1C TUBE
2 REQUIRED

APPROVED AS NOTED
BRIDGE DESIGN SECTION
ALASKA DEPARTMENT OF TRANSPORTATION
AND PUBLIC FACILITIES
Reviewed for conformance with basic details and dimensions of the contract plans. Accuracy of information supplied by the fabricator is not guaranteed.
By NWM Date 10/19/22

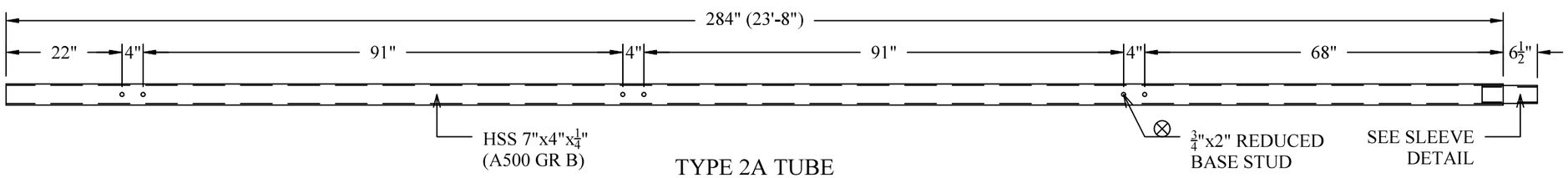

TYPE 2A TUBE
3 REQUIRED

Beko's WELDING INC.
P.O Box 1075
1100 S. Berg Parkway
Canby, OR 97013
Dick & Rick Beko
(503) 266-3507
(503) 266-3500 (Fax)
Bekosoffice@Canby.com

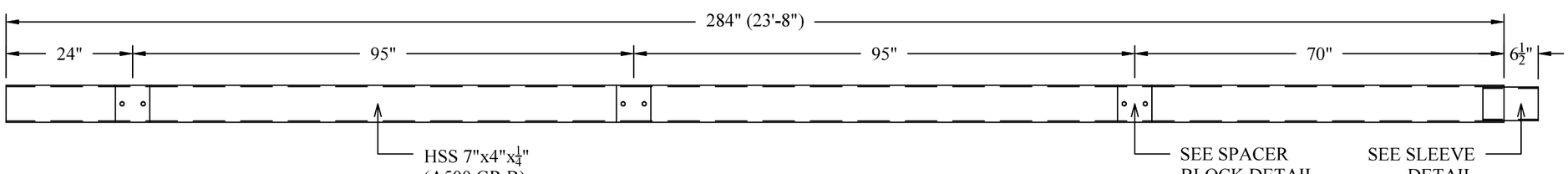

TYPE 2B TUBE
6 REQUIRED

GALVANIZED ASTM 123

ALASKA DEPARTMENT OF TRANSPORTATION		
BRIDGE NO: 253	CONTRACT NO: SFHWY00072/0902043	ZC
DATE: 10/13/22	HAMILTON	
HERRING COVE BRIDGE (SOUTH TONGASS HIGHWAY)		
THREE TUBE RAIL	DRAWING NUMBER: 3 OF 11	

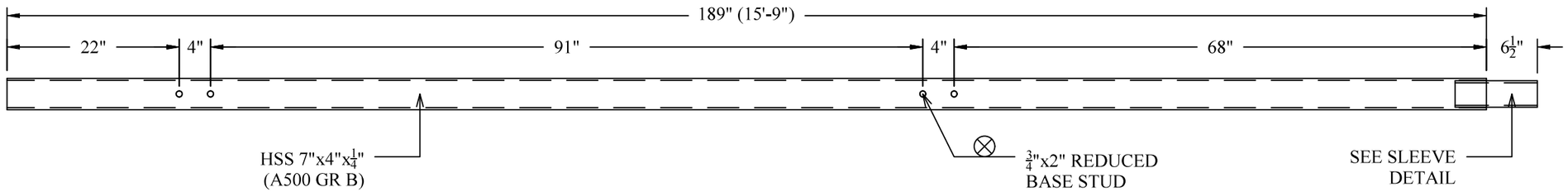

TYPE 3A TUBE
1 REQUIRED

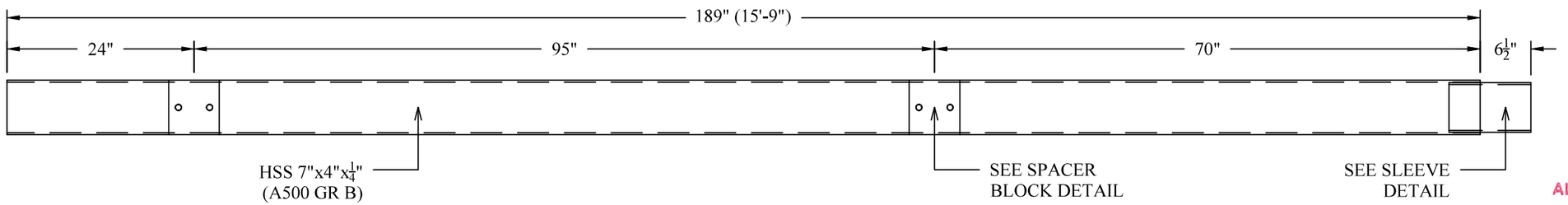

TYPE 3B TUBE
2 REQUIRED

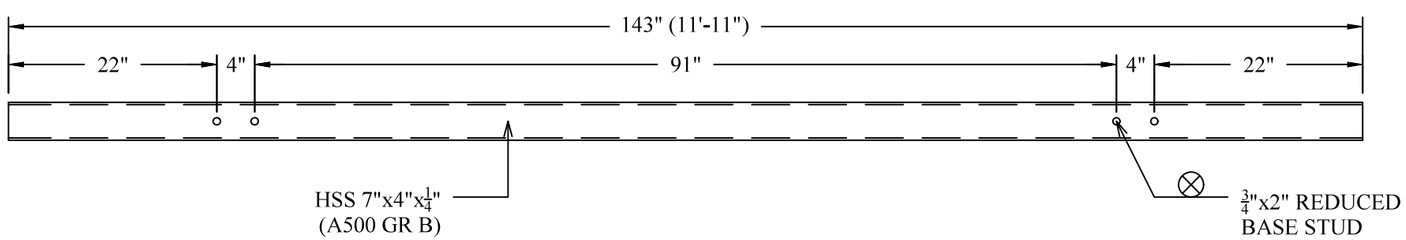

TYPE 4A TUBE
1 REQUIRED

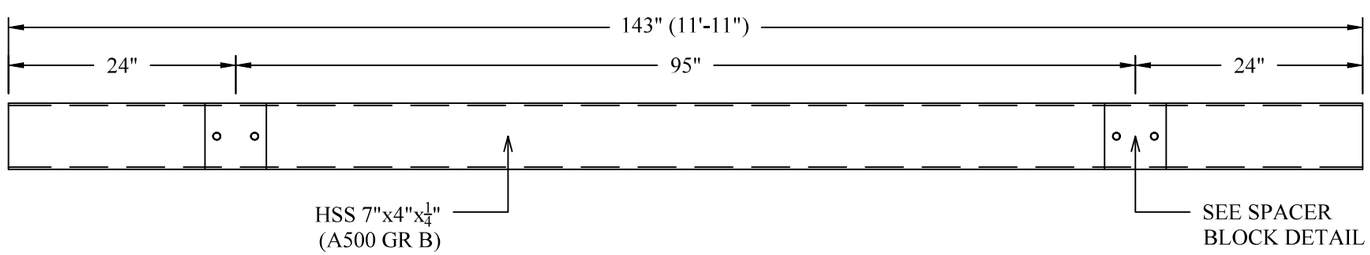

TYPE 4B TUBE
2 REQUIRED

APPROVED AS NOTED
BRIDGE DESIGN SECTION
ALASKA DEPARTMENT OF TRANSPORTATION
AND PUBLIC FACILITIES
Reviewed for conformance with basic details and dimensions of the contract plans. Accuracy of information supplied by the fabricator is not guaranteed.
By NWM Date 10/19/22

NOTE:
RADIUS TUBES TO
R593'-8⅞" @ FACE OF RAIL

GALVANIZED ASTM 123

Beko's WELDING INC.
P.O Box 1075
1100 S. Berg Parkway
Canby, OR 97013
Dick & Rick Beko
(503) 266-3507
(503) 266-3500 (Fax)
Bekosoffice@Canby.com

ALASKA DEPARTMENT OF TRANSPORTATION		
BRIDGE NO: 253	CONTRACT NO: SFHWY00072/0902043	ZC
DATE: 10/13/22	HAMILTON	
HERRING COVE BRIDGE (SOUTH TONGASS HIGHWAY)		
THREE TUBE RAIL	DRAWING NUMBER: 4 OF 11	

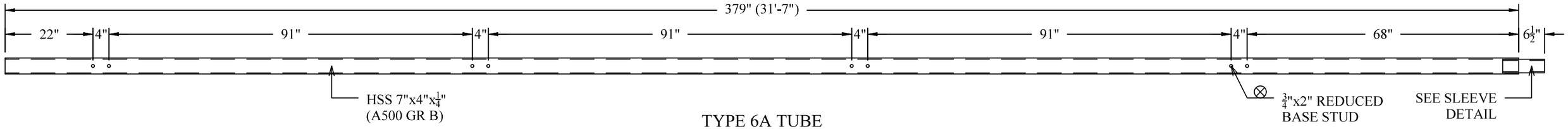

TYPE 6A TUBE
2 REQUIRED

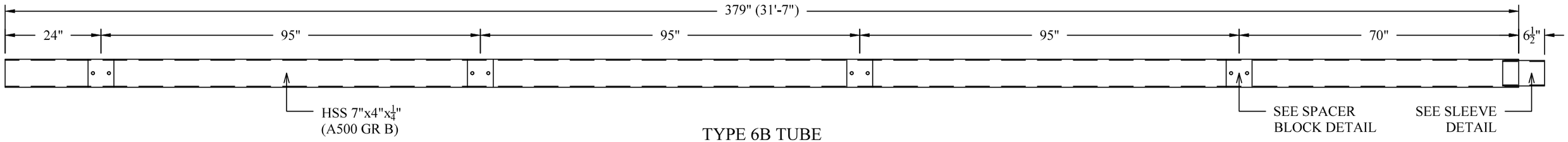

TYPE 6B TUBE
4 REQUIRED

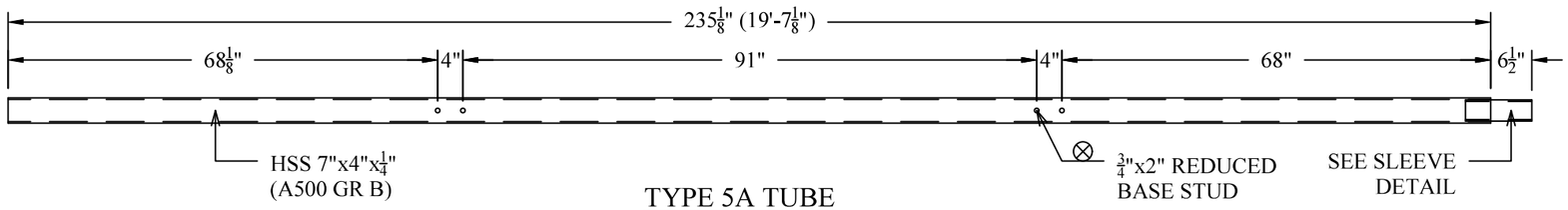

TYPE 5A TUBE
1 REQUIRED

APPROVED AS NOTED
BRIDGE DESIGN SECTION
ALASKA DEPARTMENT OF TRANSPORTATION
AND PUBLIC FACILITIES
Reviewed for conformance with basic details and dimensions of the contract plans. Accuracy of information supplied by the fabricator is not guaranteed.

By NWM Date 10/19/22

NOTE:
RADIUS TUBES TO R563'-$1\frac{7}{8}$" @ STUD SIDE OF RAIL

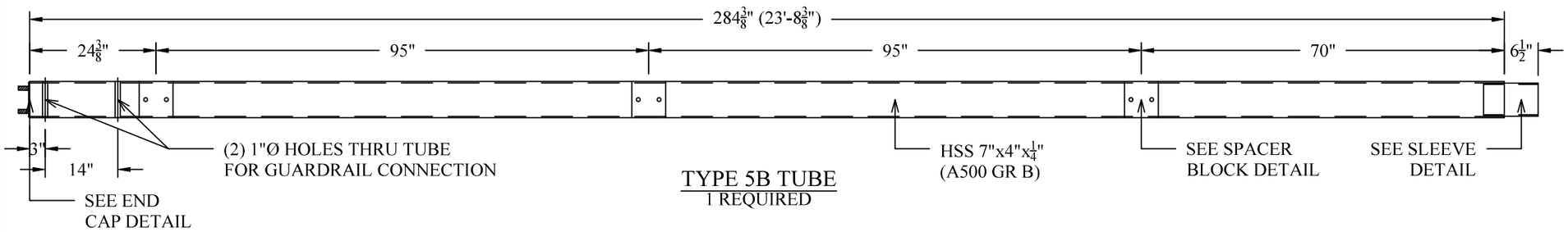

TYPE 5B TUBE
1 REQUIRED

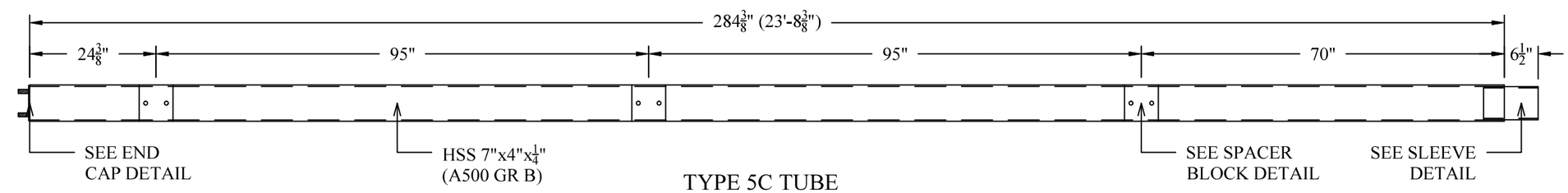

TYPE 5C TUBE
1 REQUIRED

GALVANIZED ASTM 123

Beko's WELDING INC.
P.O Box 1075
1100 S. Berg Parkway
Canby, OR 97013
Dick & Rick Beko
(503) 266-3507
(503) 266-3500 (Fax)
Bekosoffice@Canby.com

ALASKA DEPARTMENT OF TRANSPORTATION		
BRIDGE NO: 253	CONTRACT NO: SFHWY00072/0902043	ZC
DATE: 10/13/22	HAMILTON	
HERRING COVE BRIDGE (SOUTH TONGASS HIGHWAY)		
THREE TUBE RAIL	DRAWING NUMBER: 5 OF 11	

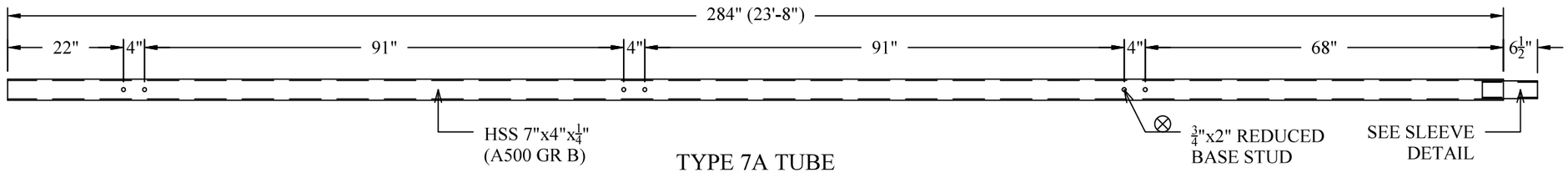

TYPE 7A TUBE
6 REQUIRED

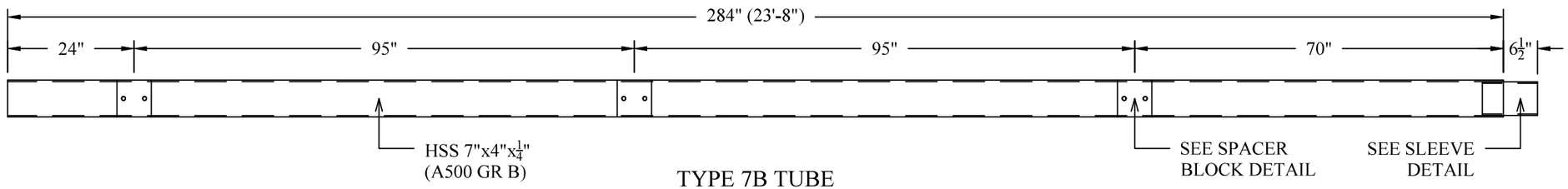

TYPE 7B TUBE
12 REQUIRED

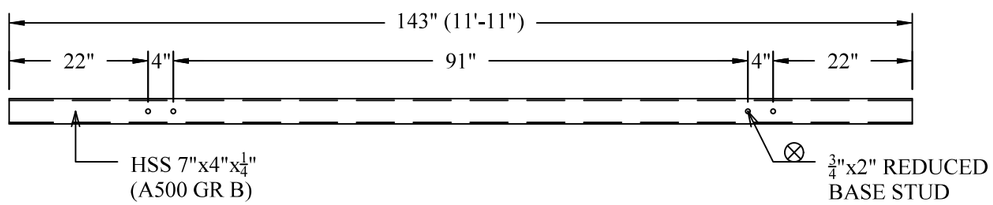

TYPE 9A TUBE
1 REQUIRED

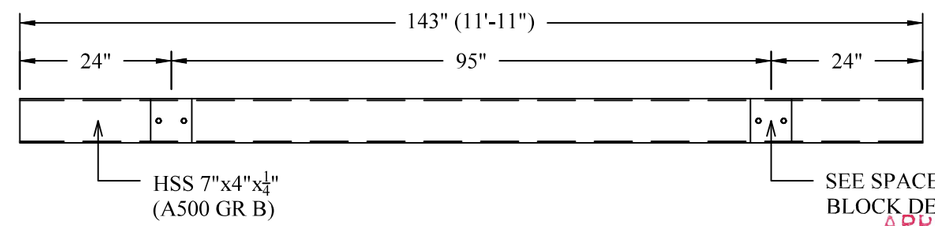

TYPE 9B TUBE
2 REQUIRED

APPROVED AS NOTED
BRIDGE DESIGN SECTION
ALASKA DEPARTMENT OF TRANSPORTATION
AND PUBLIC FACILITIES
Reviewed for conformance with basic details and dimensions of the contract plans. Accuracy of information supplied by the fabricator is not guaranteed.
By NWM Date 10/19/22

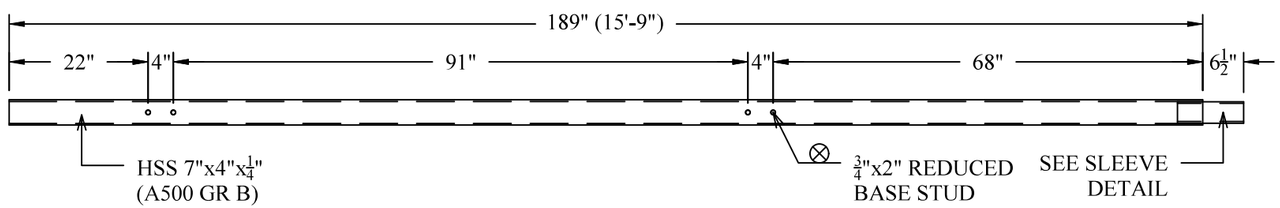

TYPE 8A TUBE
1 REQUIRED

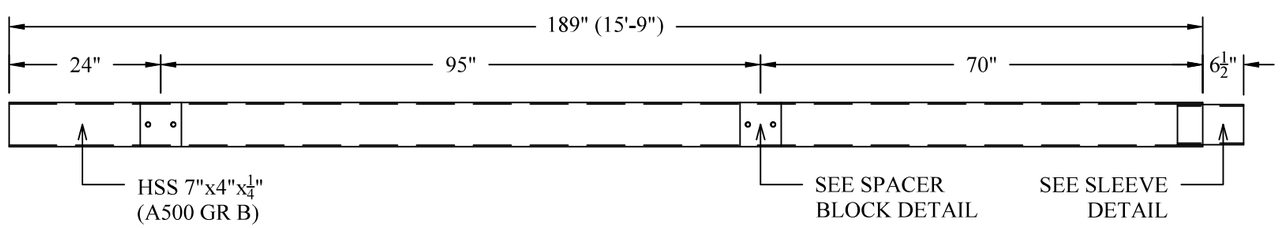

TYPE 8B TUBE
2 REQUIRED

GALVANIZED ASTM 123

Beko's WELDING INC.
P.O Box 1075
1100 S. Berg Parkway
Canby, OR 97013
Dick & Rick Beko
(503) 266-3507
(503) 266-3500 (Fax)
Bekosoffice@Canby.com

ALASKA DEPARTMENT OF TRANSPORTATION		
BRIDGE NO: 253	CONTRACT NO: SFHWY00072/0902043	ZC
DATE: 10/13/22	HAMILTON	
HERRING COVE BRIDGE (SOUTH TONGASS HIGHWAY)		
THREE TUBE RAIL	DRAWING NUMBER: 6 OF 11	

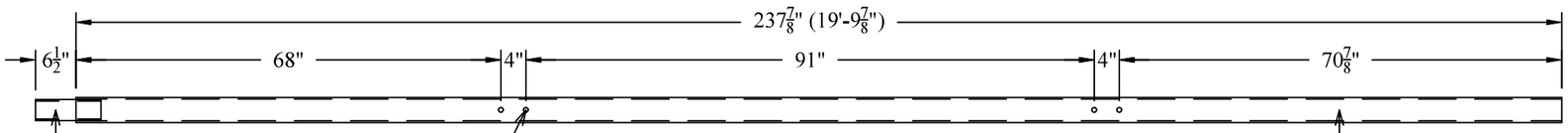

TYPE 10A TUBE
1 REQUIRED

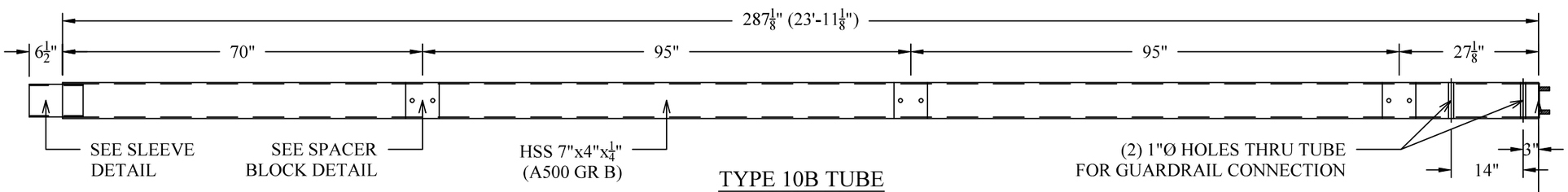

TYPE 10B TUBE
1 REQUIRED

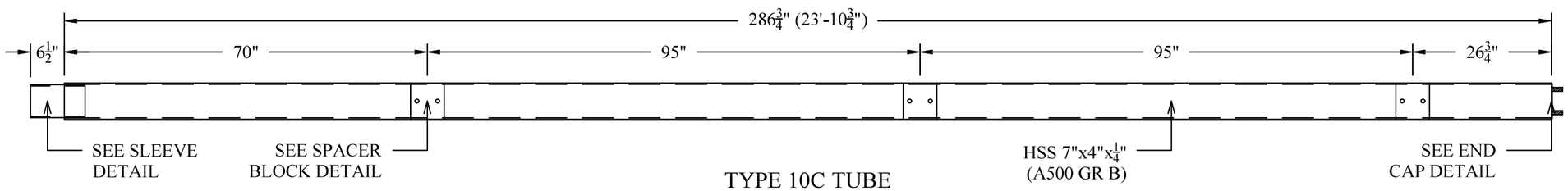

TYPE 10C TUBE
1 REQUIRED

APPROVED AS NOTED
BRIDGE DESIGN SECTION
ALASKA DEPARTMENT OF TRANSPORTATION AND PUBLIC FACILITIES
Reviewed for conformance with basic details and dimensions of the contract plans. Accuracy of information supplied by the fabricator is not guaranteed.
By NWM Date 10/19/22

Beko's WELDING INC.
P.O Box 1075
1100 S. Berg Parkway
Canby, OR 97013
Dick & Rick Beko
(503) 266-3507
(503) 266-3500 (Fax)
Bekosoffice@Canby.com

GALVANIZED ASTM 123

ALASKA DEPARTMENT OF TRANSPORTATION		
BRIDGE NO: 253	CONTRACT NO: SFHWY00072/0902043	ZC
DATE: 10/13/22	HAMILTON	
HERRING COVE BRIDGE (SOUTH TONGASS HIGHWAY)		
THREE TUBE RAIL	DRAWING NUMBER: 7 OF 11	

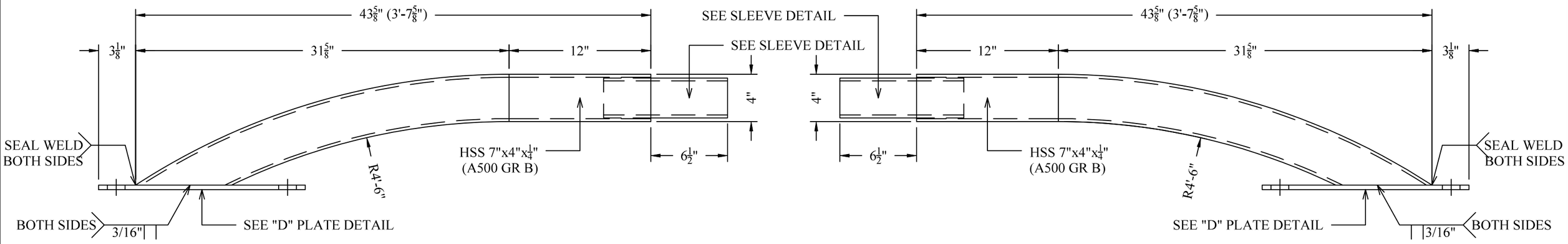

LEFT

RIGHT

RADIUS END

2LT/2RT REQUIRED

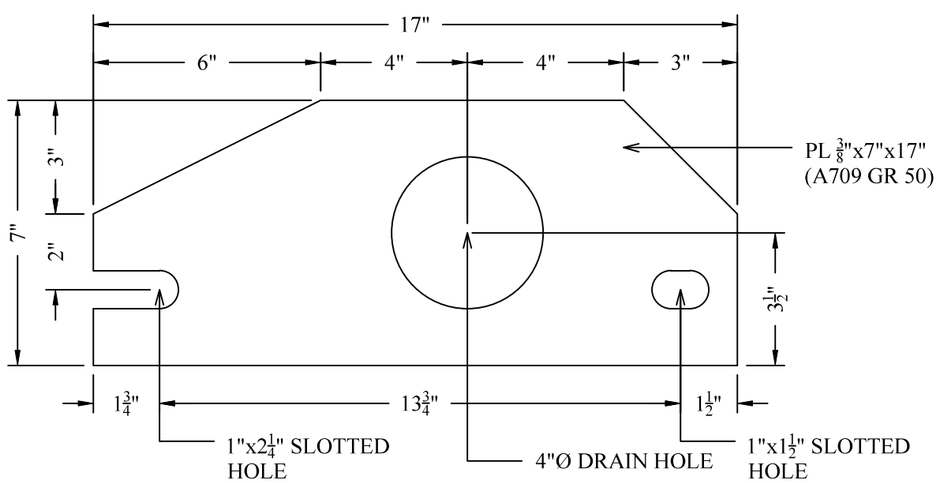

PLATE "D" DETAIL (RIGHT)

2 REQUIRED

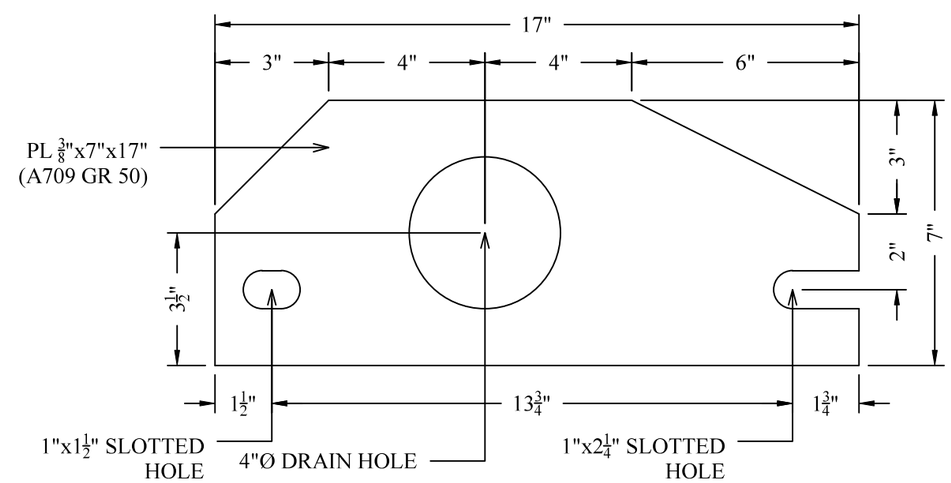

PLATE "D" DETAIL (LEFT)

2 REQUIRED

APPROVED AS NOTED
BRIDGE DESIGN SECTION
ALASKA DEPARTMENT OF TRANSPORTATION
AND PUBLIC FACILITIES
Reviewed for conformance with basic details and dimensions of the contract plans. Accuracy of information supplied by the fabricator is not guaranteed.

By NWM Date 10/19/22

Beko's WELDING INC.
P.O Box 1075
1100 S. Berg Parkway
Canby, OR 97013
Dick & Rick Beko
(503) 266-3507
(503) 266-3500 (Fax)
Bekosoffice@Canby.com

GALVANIZED ASTM 123

ALASKA DEPARTMENT OF TRANSPORTATION		
BRIDGE NO: 253	CONTRACT NO: SFHWY00072/0902043	ZC
DATE: 10/13/22	HAMILTON	
HERRING COVE BRIDGE (SOUTH TONGASS HIGHWAY)		
THREE TUBE RAIL		DRAWING NUMBER: 8 OF 11

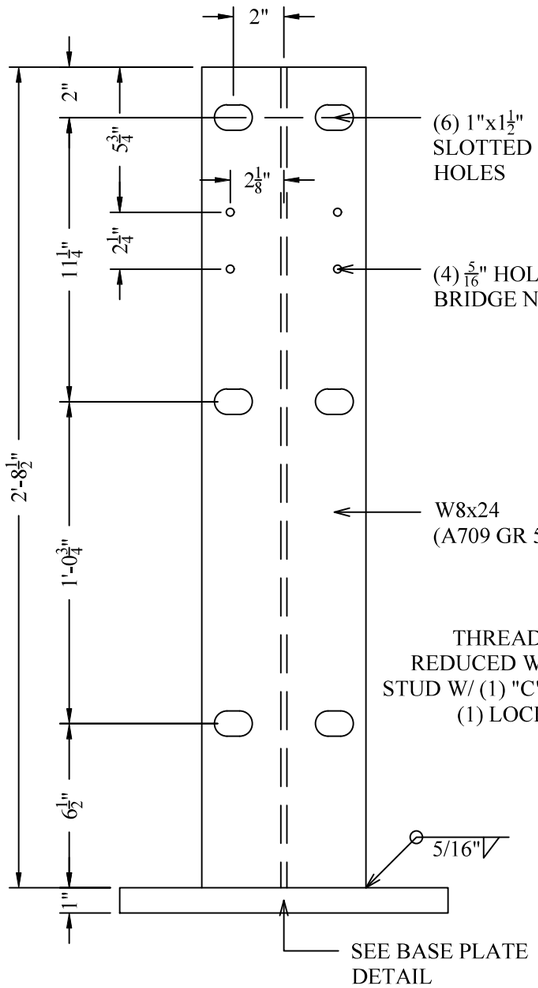

POST DETAIL
52 REQ. W/O BRIDGE PLATE HOLES
2 REQ. W/ BRIDGE PLATE HOLES

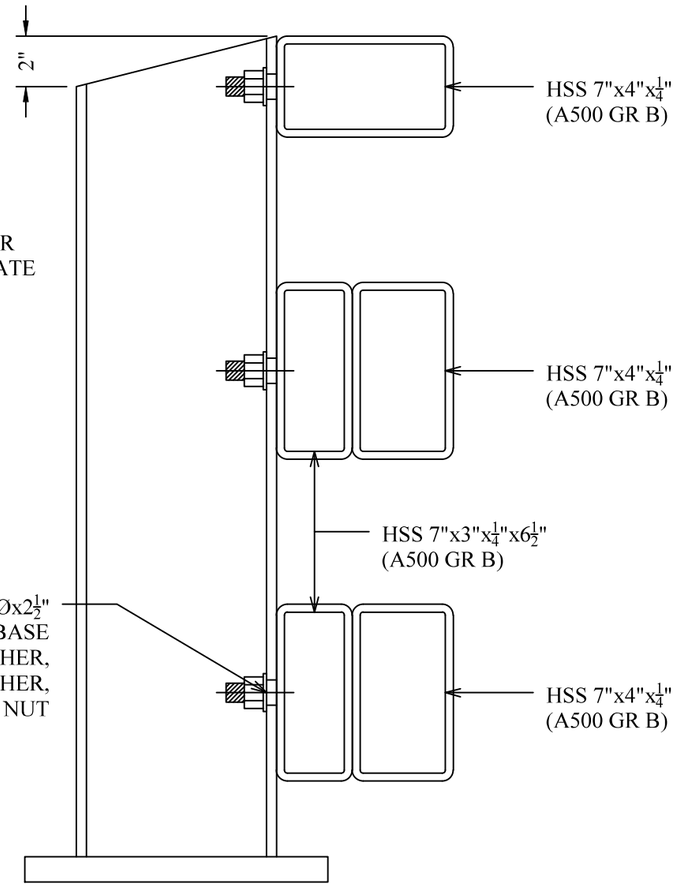

POST DETAIL (SIDE VIEW)

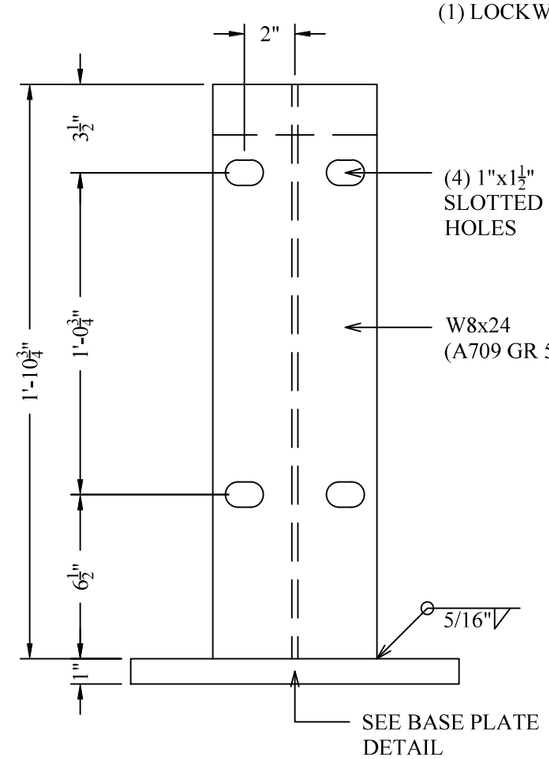

POST DETAIL
4 REQUIRED

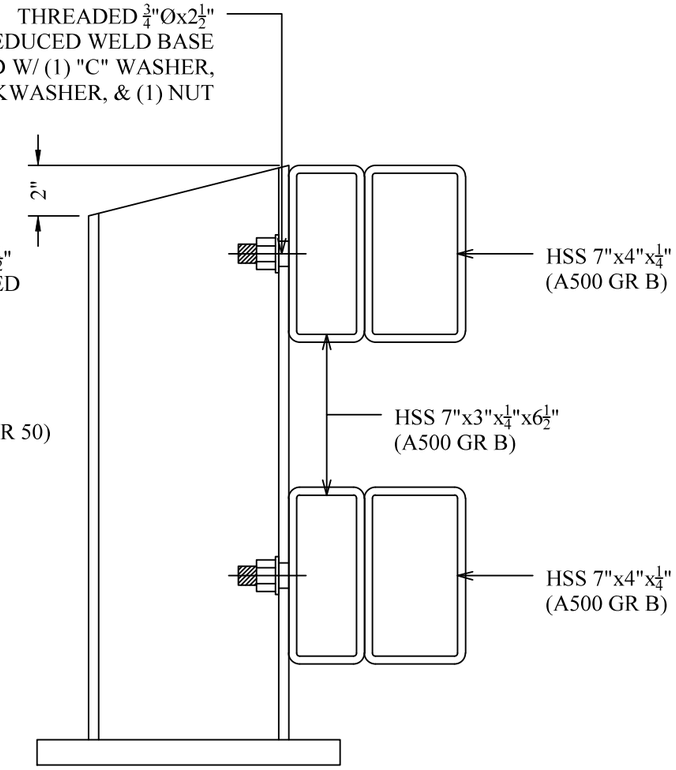

POST DETAIL (SIDE VIEW)

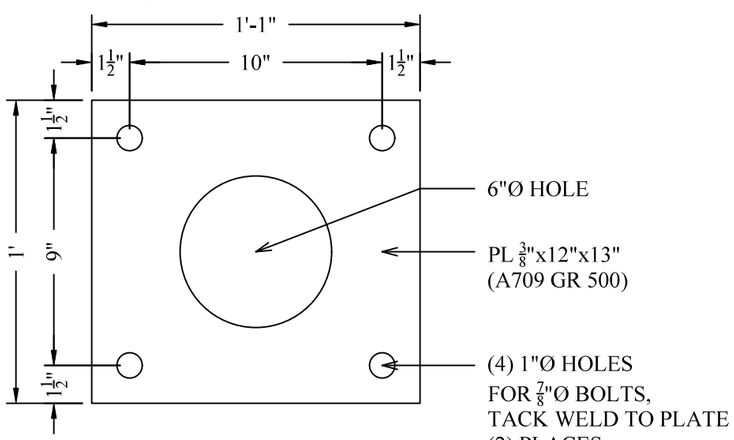

ANCHOR PLATE DETAIL
68 REQUIRED

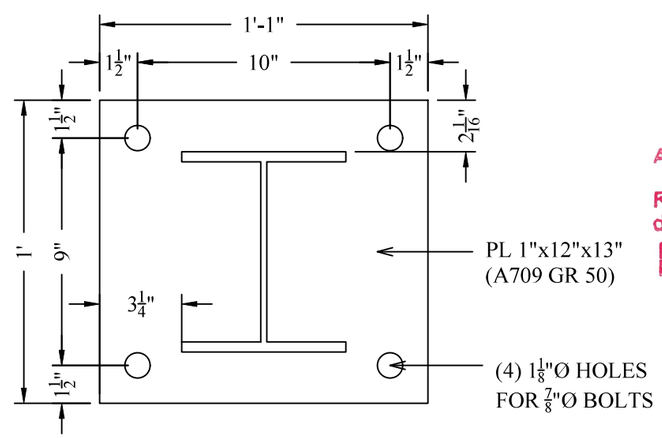

BASE PLATE DETAIL
68 REQUIRED

APPROVED AS NOTED
BRIDGE DESIGN SECTION
ALASKA DEPARTMENT OF TRANSPORTATION AND PUBLIC FACILITIES
Reviewed for conformance with basic details and dimensions of the contract plans. Accuracy of information supplied by the fabricator is not guaranteed.
By NWM Date 10/19/22

GALVANIZED ASTM 123

Beko's WELDING INC.
P.O Box 1075
1100 S. Berg Parkway
Canby, OR 97013
Dick & Rick Beko
(503) 266-3507
(503) 266-3500 (Fax)
Bekosoffice@Canby.com

ALASKA DEPARTMENT OF TRANSPORTATION		
BRIDGE NO: 253	CONTRACT NO: SFHWY00072/0902043	ZC
DATE: 10/13/22	HAMILTON	
HERRING COVE BRIDGE (SOUTH TONGASS HIGHWAY)		
THREE TUBE RAIL		DRAWING NUMBER: 9 OF 11

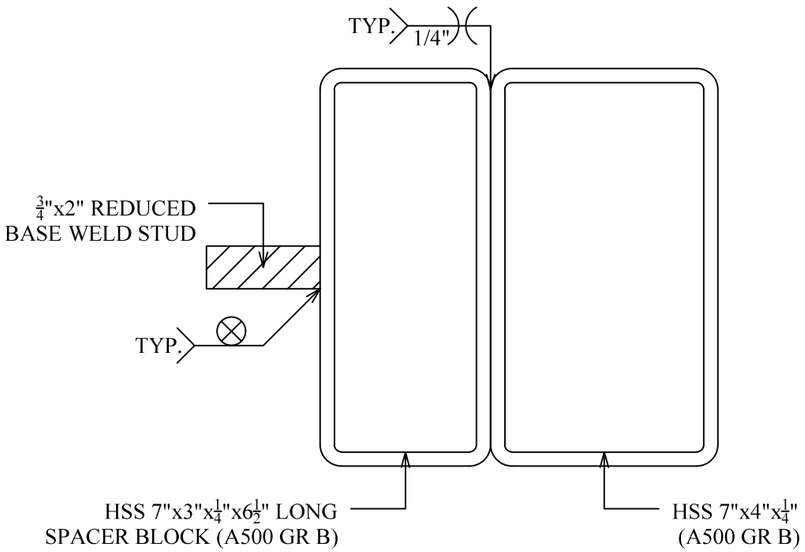

SPACER BLOCK DETAIL
116 REQUIRED

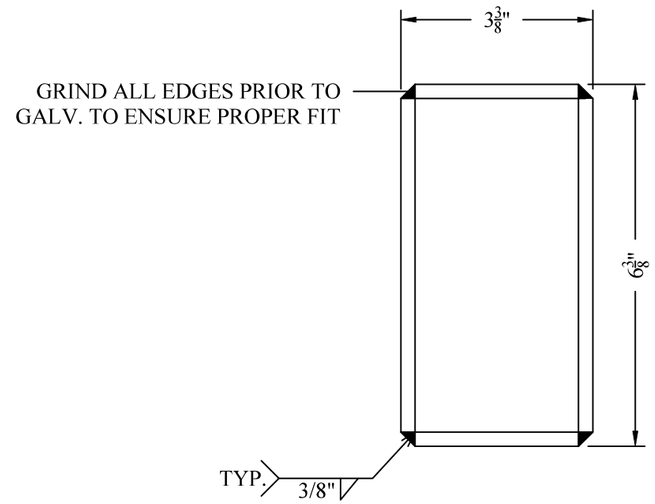

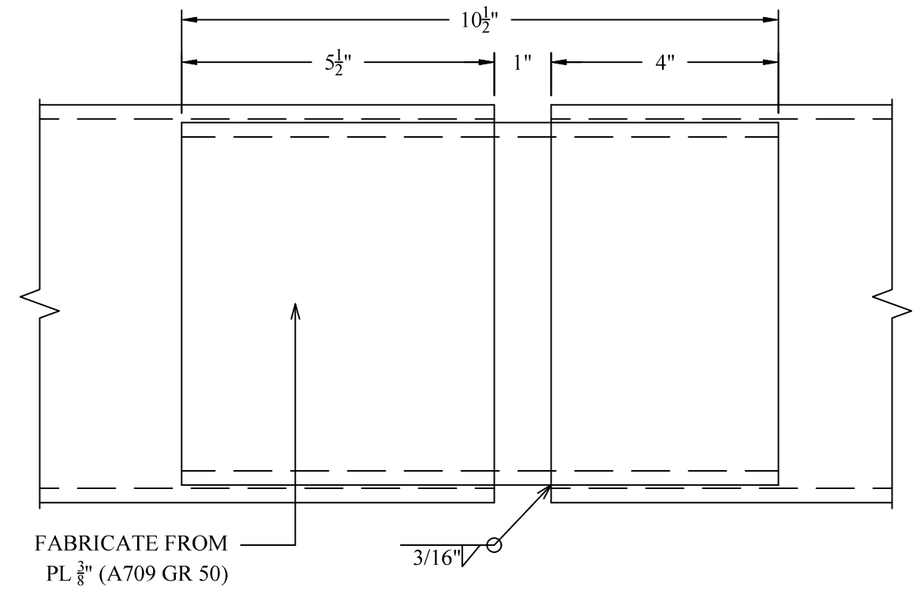

SLEEVE DETAIL
58 REQUIRED

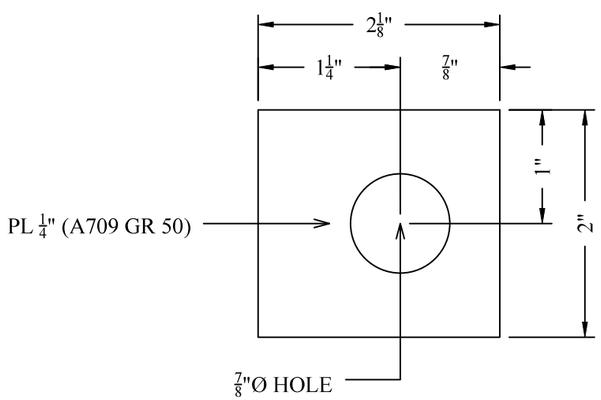

"C" WASHER DETAIL
256 REQUIRED

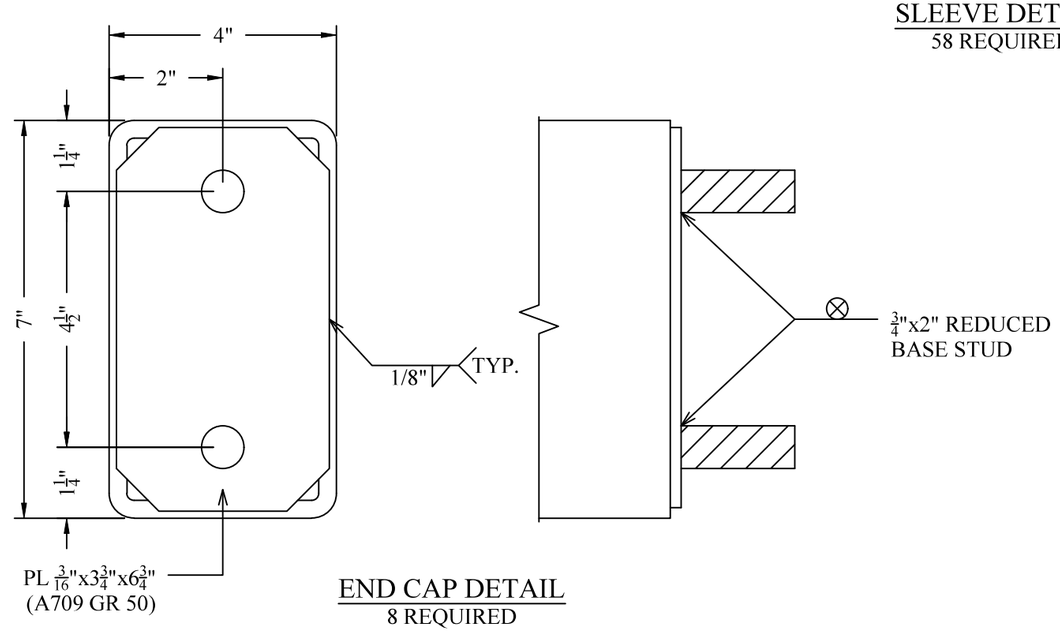

END CAP DETAIL
8 REQUIRED

GALVANIZED ASTM 123

APPROVED AS NOTED
BRIDGE DESIGN SECTION
ALASKA DEPARTMENT OF TRANSPORTATION
AND PUBLIC FACILITIES
Reviewed for conformance with basic details and dimensions of the contract plans. Accuracy of information supplied by the fabricator is not guaranteed.
By NWM Date 10/19/22

Beko's WELDING INC.
P.O Box 1075
1100 S. Berg Parkway
Canby, OR 97013
Dick & Rick Beko
(503) 266-3507
(503) 266-3500 (Fax)
Bekosoffice@Canby.com

ALASKA DEPARTMENT OF TRANSPORTATION		
BRIDGE NO: 253	CONTRACT NO: SFHWY00072/0902043	ZC
DATE: 10/13/22	HAMILTON	
HERRING COVE BRIDGE (SOUTH TONGASS HIGHWAY)		
THREE TUBE RAIL	DRAWING NUMBER: 10 OF 11	

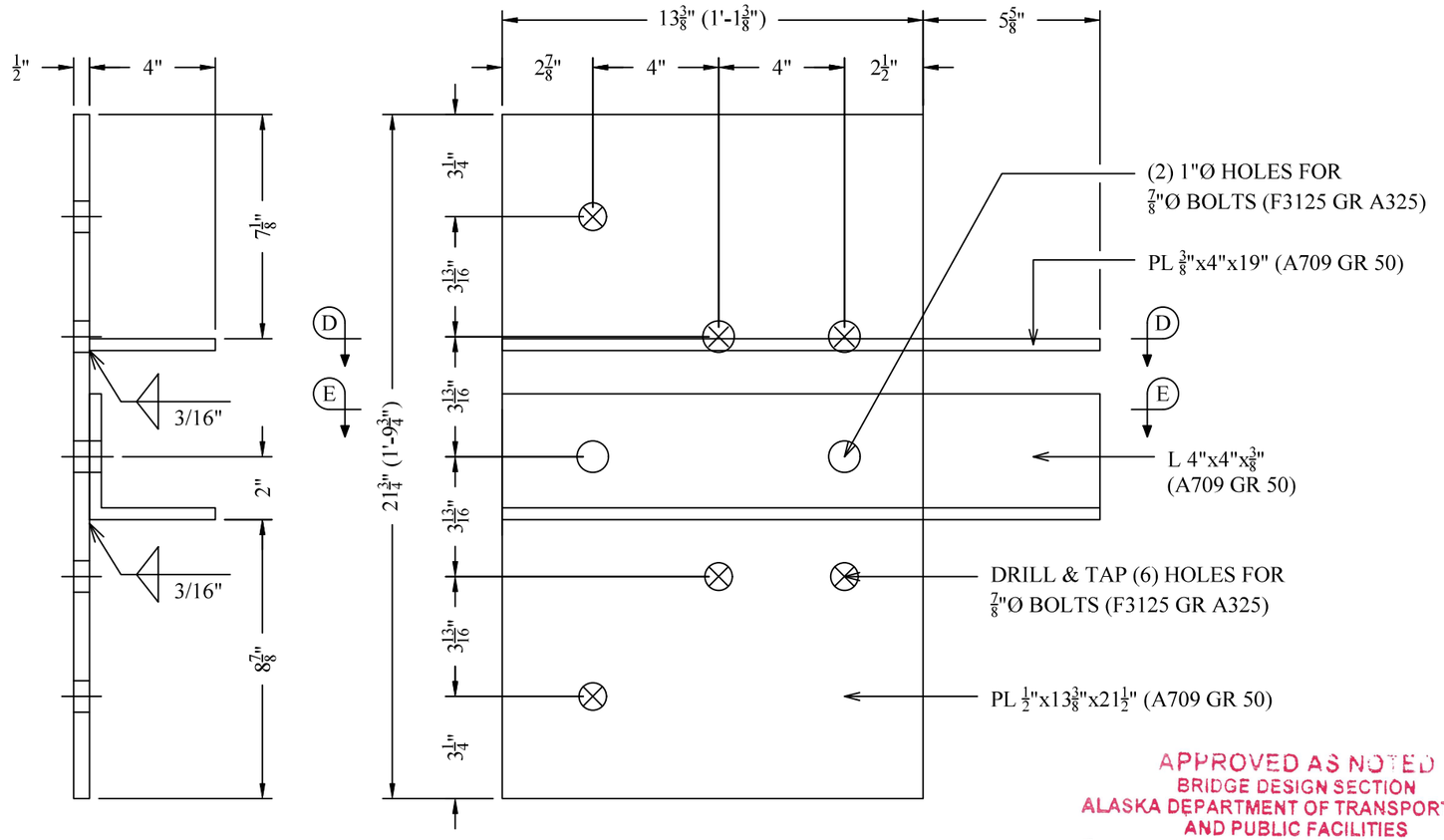

GUARDRAIL CONNECTION DETAIL
2LT/2RT REQUIRED

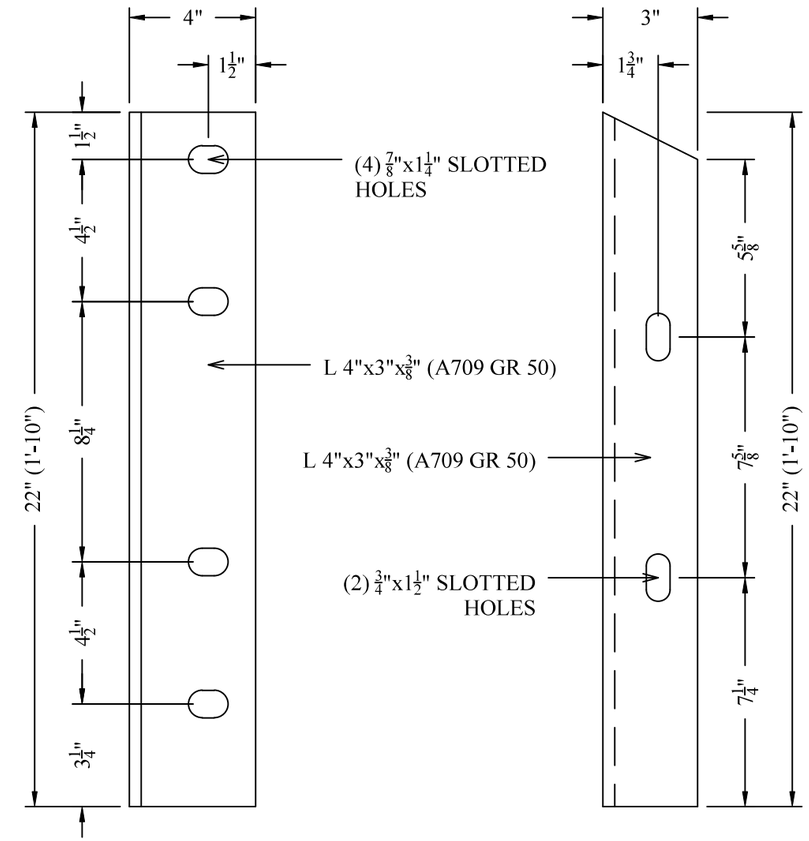

GUARDRAIL CONNECTION ANGLE DETAIL
2LT/2RT REQUIRED

APPROVED AS NOTED
BRIDGE DESIGN SECTION
ALASKA DEPARTMENT OF TRANSPORTATION
AND PUBLIC FACILITIES
Reviewed for conformance with basic details and dimensions of the contract plans. Accuracy of information supplied by the fabricator is not guaranteed.
By NWM Date 10/19/22

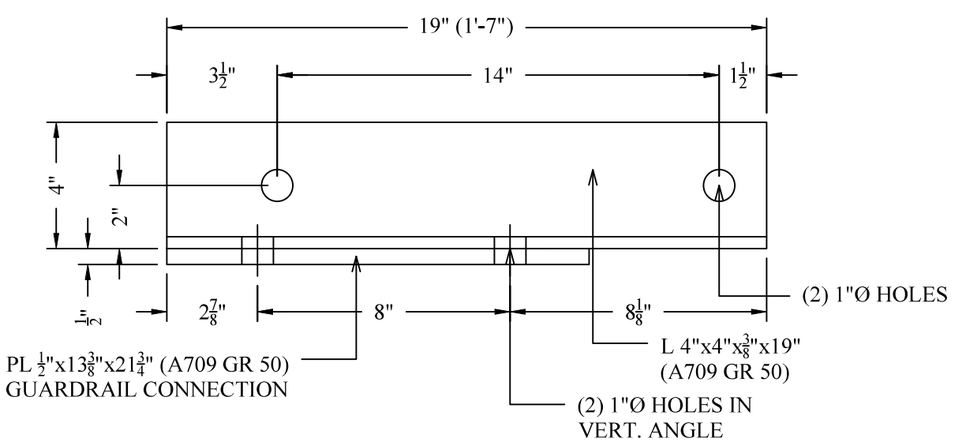

SECTION E-E

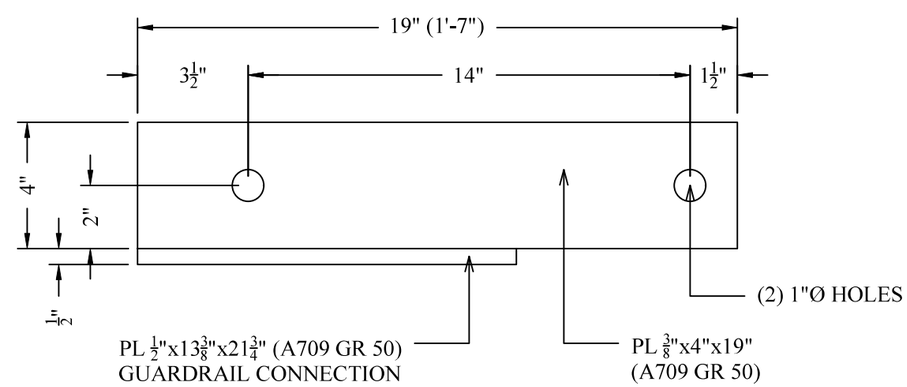

SECTION D-D

GALVANIZED ASTM 123

Beko's WELDING INC.
P.O Box 1075
1100 S. Berg Parkway
Canby, OR 97013
Dick & Rick Beko
(503) 266-3507
(503) 266-3500 (Fax)
Bekosoffice@Canby.com

ALASKA DEPARTMENT OF TRANSPORTATION		
BRIDGE NO: 253	CONTRACT NO: SFHWY00072/0902043	ZC
DATE: 10/13/22	HAMILTON	
HERRING COVE BRIDGE (SOUTH TONGASS HIGHWAY)		
THREE TUBE RAIL	DRAWING NUMBER: 11 OF 11	

State of Alaska

GOVERNOR MIKE DUNLEAVY

Submittal Cover Sheet

Department of Transportation Public Facilities
SOUTHCOAST REGION
Construction Section

Project: KTN- HERRING COVE BRIDGE IMPROVEMENTS	Project No: 0902043/SFHWY00072
Contractor: Hamilton Construction Alaska	Submittal No. 507-002 Three Tube Railing Shop Drawing
Date Response Sent: 03/10/2022	Reviewed By: Bob Lundell, P.E. Recoverable Signature X Bob Lundell Signed by: 2d66350b-1634-445f-b1d5-d5b87bea066b

A	AAN	R&R	R	IO	R&RasN	INC	CA
Approved	Approved as Noted	Revise and Resubmit	Rejected	Informational Only	Revisit & Resubmit as Noted	Incomplete	Conditionally Approved

Item No.	Item	Contract Documents	A	AAN	R&R	R	IO	R&R asN	INC	CA
507.0001.0003	Steel Bridge Railing, 3-Tube	722		X						

Comments/Anticipated Response:

- Review comments on shop drawings from Richard Pratt.

Department of Transportation & Public Facilities
Statewide Design & Engineering Services Division
Phone: 907-465-8890
Fax: 907-465-3124

MEMORANDUM

TO: Bob Lundell
Project Engineer
DOWL Engineers

FROM: CM for Richard A. Pratt, PE, SE
Chief Bridge Engineer

CONTACT: Nicholas Murray, PE SE
(907) 465-8898
nicholas.murray@alaska.gov

DATE: March 10, 2022

FILE: 253

RE: Herring Cove Bridge Improvements
0902043/SFHWY00072

SUBJECT: Pedestrian Railing / 3 Tube Railing-Approved

We have received an electronic copy of Beko's shop drawings totaling 21 pages (including memorandum) and dated3/3/22. The drawings are marked "Approved as Noted".

As indicated in Section 105-1.02 of the contract specifications, the Contractor is required to provide one set of reproducible transparencies (polyester film commonly referred to as mylars) of the final shop drawings. Please have the mylars sent to this office (address below) for the permanent records.

State of Alaska Bridge Section
c/o Nicholas Murray
PO Box 112500
Juneau, AK 99811-2500

We are providing electronic copies via email for your distribution to the Contractor, fabricator and the Department's QA inspector.

NWM/bm

Beko's WELDING, INC.

P.O. Box 1075
1100 S. Berg Parkway
Canby, OR 97013

Dick and Rick Beko
(503) 266-3507
(503) 266-3500 Fax

Date: 3/3/2022

Project: KTN Herring Cove Bridge (South Tongass Highway)

File:

Subject: Three Tube Rail, Pedestrian Rail, & Pipe Handrail

To: Hamilton Construction

Item	Copies	Date	Description
1	1	3/3/2022	Three Tube Rail, Pedestrian Rail, & Pipe Handrail

_____ As You Requested

_____ For Your Information

__X__ For Your Approval

_____ For Your Review

_____ Return Requested

Reviewed
By Chris Duty
03/03/2022 11:52:52 AM

Sincerely,

Rick Beko
Vice President

APPROVED AS NOTED
BRIDGE DESIGN SECTION
ALASKA DEPARTMENT OF TRANSPORTATION
AND PUBLIC FACILITIES
Reviewed for conformance with basic details and dimensions of the contract plans. Accuracy of information supplied by the fabricator is not guaranteed.

By DAG Date 03/10/22

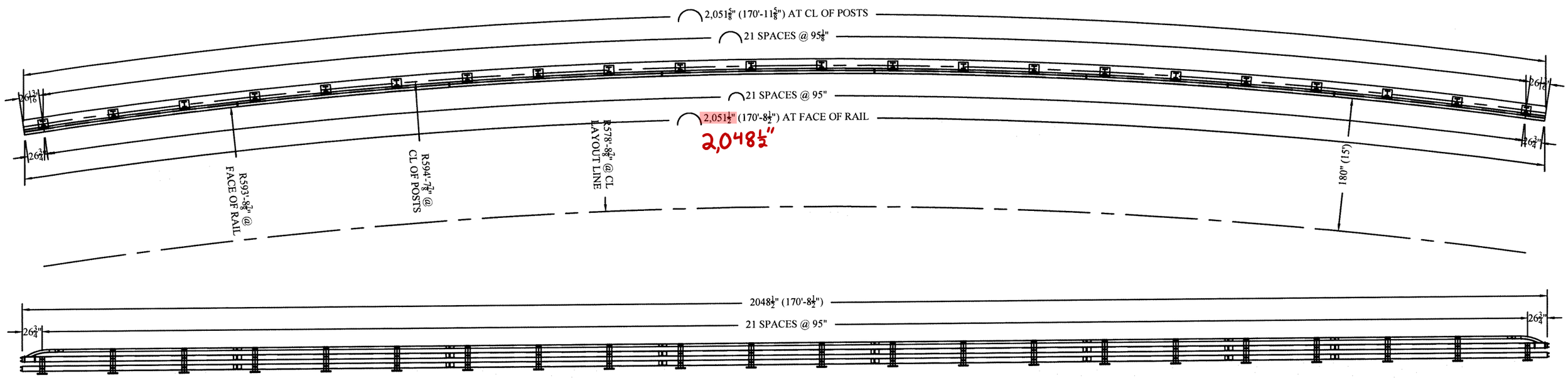

POST LAYOUT DETAIL (NORTH SIDE)
HERRING COVE BRIDGE (SOUTH TONGASS HIGHWAY)
LOOKING AT FACE OF RAIL

RADIUS END 1LT REQUIRED	TYPE 1A TUBE 1 REQUIRED	TYPE 2A TUBE 4 REQUIRED	TYPE 3A TUBE 1 REQUIRED	TYPE 4A TUBE 1 REQUIRED	TYPE 1A TUBE 1 REQUIRED	RADIUS END 1RT REQUIRED
	TYPE 1B TUBE 1 REQUIRED	TYPE 2B TUBE 4 REQUIRED	TYPE 3B TUBE 1 REQUIRED	TYPE 4B TUBE 1 REQUIRED	TYPE 1B TUBE 1 REQUIRED	
	TYPE 1C TUBE 1 REQUIRED	TYPE 2B TUBE 4 REQUIRED	TYPE 3B TUBE 1 REQUIRED	TYPE 4B TUBE 1 REQUIRED	TYPE 1C TUBE 1 REQUIRED	

TUBE LAYOUT DETAIL (NORTH SIDE)
HERRING COVE BRIDGE (SOUTH TONGASS HIGHWAY)
LOOKING AT FACE OF RAIL

APPROVED AS NOTED
BRIDGE DESIGN SECTION
ALASKA DEPARTMENT OF TRANSPORTATION
AND PUBLIC FACILITIES
Reviewed for conformance with basic details and dimensions of the contract plans. Accuracy of information supplied by the fabricator is not guaranteed.
By DAG Date 03/10/22

All Subsequent Pages ⇓

GALVANIZED ASTM 123

Beko's WELDING INC.
P.O Box 1075
1100 S. Berg Parkway
Canby, OR 97013
Dick & Rick Beko
(503) 266-3507
(503) 266-3500 (Fax)
Bekosoffice@Canby.com

ALASKA DEPARTMENT OF TRANSPORTATION

BRIDGE NO: 253	CONTRACT NO: SFHWY00072/0902043	ZC
DATE: 3/3/22	HAMILTON	
HERRING COVE BRIDGE (SOUTH TONGASS HIGHWAY)		
THREE TUBE RAIL	DRAWING NUMBER: 10 OF 24	

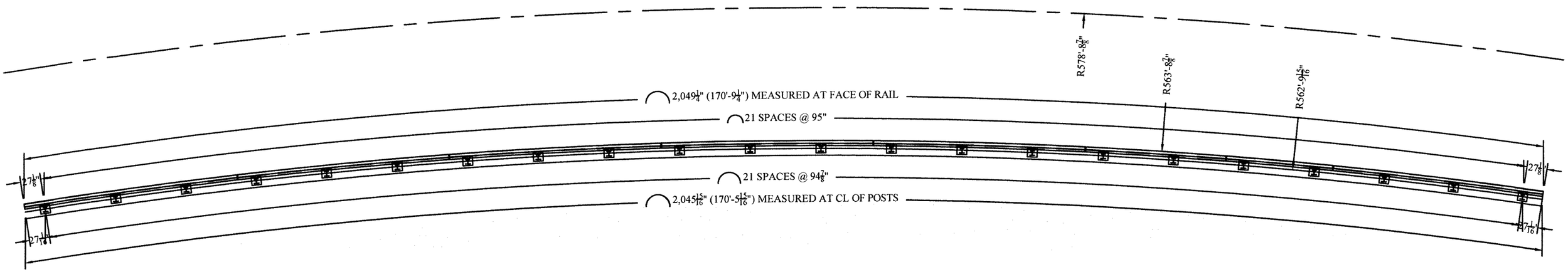

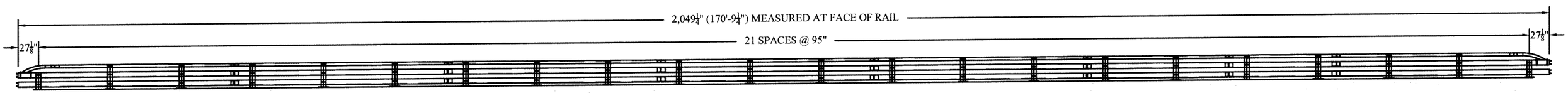

POST LAYOUT DETAIL (SOUTH SIDE)
HERRING COVE BRIDGE (SOUTH TONGASS HIGHWAY)
LOOKING AT BACK OF RAIL

RADIUS END 1LT REQUIRED	TYPE 5A TUBE 1 REQUIRED	TYPE 6A TUBE 4 REQUIRED	TYPE 7A TUBE 1 REQUIRED	TYPE 8A TUBE 1 REQUIRED	TYPE 5A TUBE 1 REQUIRED	RADIUS END 1RT REQUIRED
	TYPE 5B TUBE 1 REQUIRED	TYPE 6B TUBE 4 REQUIRED	TYPE 7B TUBE 1 REQUIRED	TYPE 8B TUBE 1 REQUIRED	TYPE 5B TUBE 1 REQUIRED	
	TYPE 5C TUBE 1 REQUIRED	TYPE 6B TUBE 4 REQUIRED	TYPE 7B TUBE 1 REQUIRED	TYPE 8B TUBE 1 REQUIRED	TYPE 5C TUBE 1 REQUIRED	

TUBE LAYOUT DETAIL (SOUTH SIDE)
HERRING COVE BRIDGE (SOUTH TONGASS HIGHWAY)
LOOKING AT BACK OF RAIL

APPROVED AS NOTED
BRIDGE DESIGN SECTION
ALASKA DEPARTMENT OF TRANSPORTATION
AND PUBLIC FACILITIES
Reviewed for conformance with basic details and dimensions of the contract plans. Accuracy of information supplied by the fabricator is not guaranteed.
By PAG Date 03/10/22

GALVANIZED ASTM 123

Beko's WELDING INC.
P.O Box 1075
1100 S. Berg Parkway
Canby, OR 97013
Dick & Rick Beko
(503) 266-3507
(503) 266-3500 (Fax)
Bekosoffice@Canby.com

ALASKA DEPARTMENT OF TRANSPORTATION

BRIDGE NO:	CONTRACT NO:	ZC
DATE: 3/3/22	HAMILTON	
HERRING COVE BRIDGE (SOUTH TONGASS HIGHWAY)		
THREE TUBE RAIL	DRAWING NUMBER: 11 OF 24	

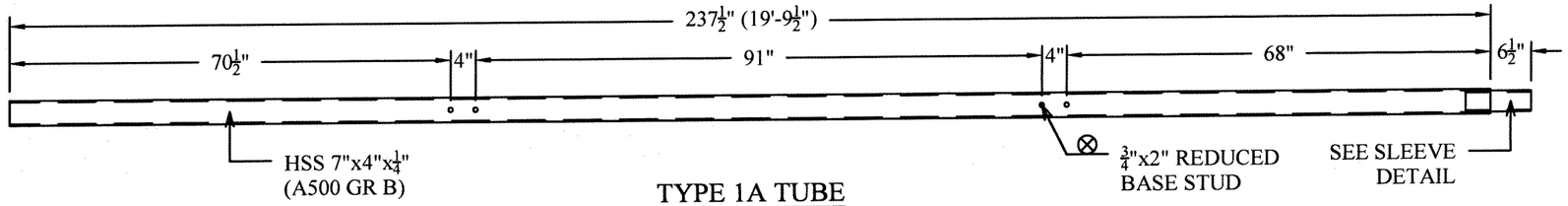

TYPE 1A TUBE
2 REQUIRED

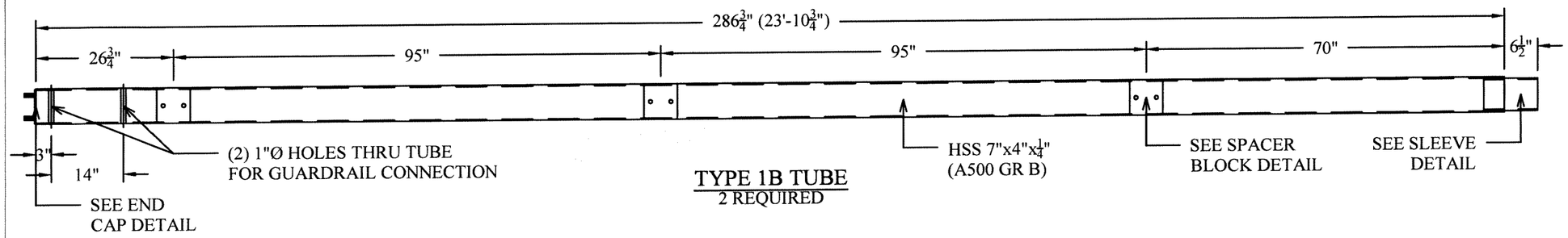

TYPE 1B TUBE
2 REQUIRED

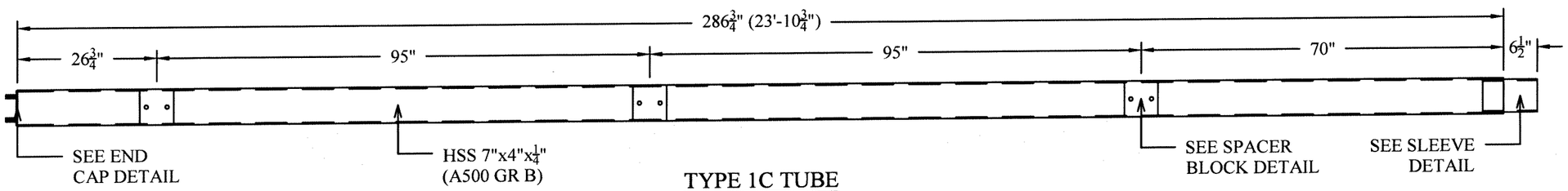

TYPE 1C TUBE
2 REQUIRED

NOTE:
RADIUS TUBES TO
R593'-8⅞" @ FACE OF RAIL

APPROVED AS NOTED
BRIDGE DESIGN SECTION
ALASKA DEPARTMENT OF TRANSPORTATION
AND PUBLIC FACILITIES
Reviewed for conformance with basic details and dimensions of the contract plans. Accuracy of information supplied by the fabricator is not guaranteed.
By DAG Date 03/10/22

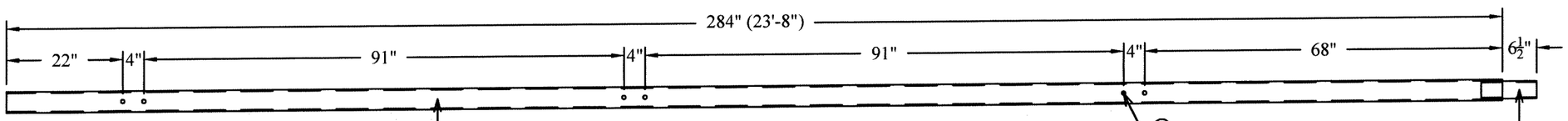

TYPE 2A TUBE
3 REQUIRED

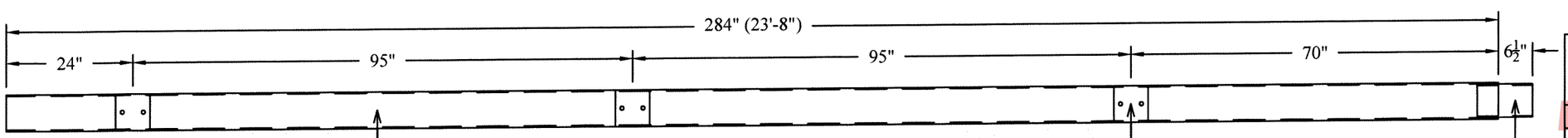

TYPE 2B TUBE
6 REQUIRED

GALVANIZED ASTM 123

Beko's WELDING INC.
P.O Box 1075
1100 S. Berg Parkway
Canby, OR 97013
Dick & Rick Beko
(503) 266-3507
(503) 266-3500 (Fax)
Bekosoffice@Canby.com

ALASKA DEPARTMENT OF TRANSPORTATION

BRIDGE NO:	CONTRACT NO:	ZC
DATE: 3/3/22	HAMILTON	
HERRING COVE BRIDGE (SOUTH TONGASS HIGHWAY)		
THREE TUBE RAIL	DRAWING NUMBER: 12 OF 24	

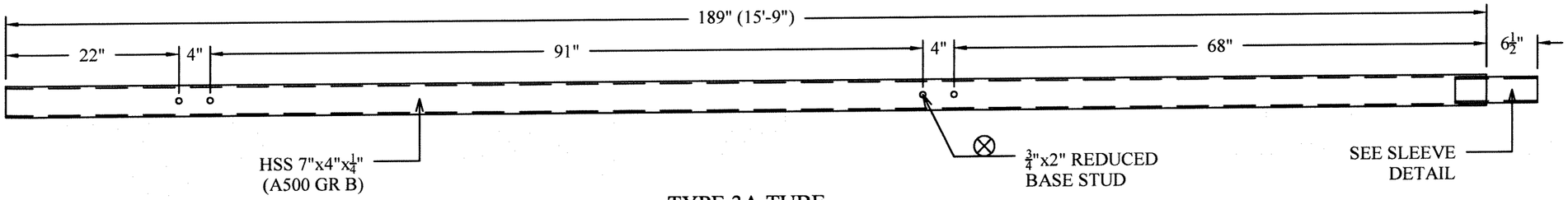

TYPE 3A TUBE
1 REQUIRED

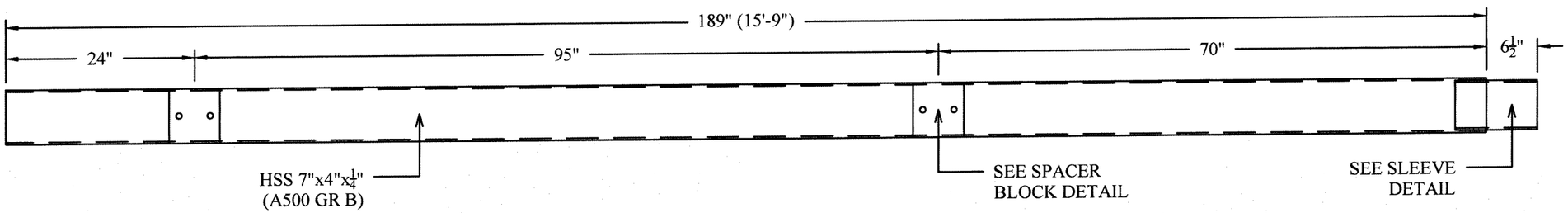

TYPE 3B TUBE
2 REQUIRED

APPROVED AS NOTED
BRIDGE DESIGN SECTION
ALASKA DEPARTMENT OF TRANSPORTATION
AND PUBLIC FACILITIES
Reviewed for conformance with basic details and dimensions of the contract plans. Accuracy of information supplied by the fabricator is not guaranteed.
By DAG Date 03/10/22

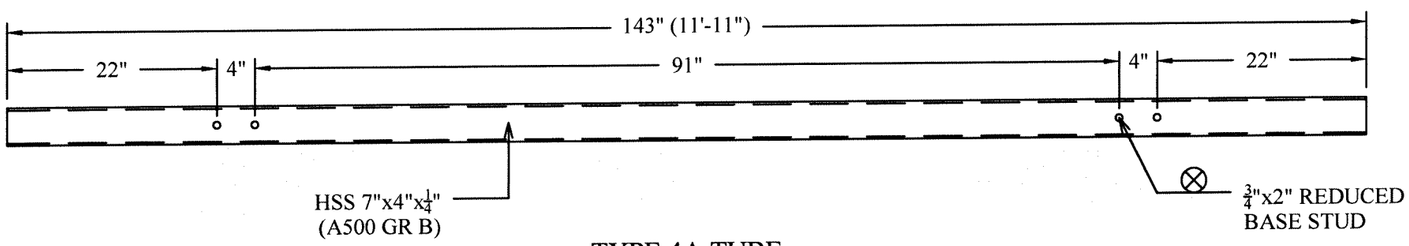

TYPE 4A TUBE
1 REQUIRED

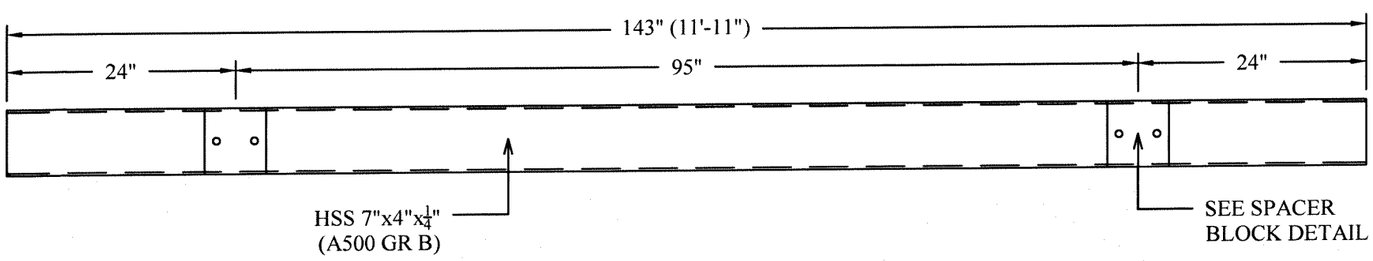

TYPE 4B TUBE
2 REQUIRED

NOTE:
RADIUS TUBES TO
R593'-8⅞" @ FACE OF RAIL

GALVANIZED ASTM 123

Beko's WELDING INC.
P.O Box 1075
1100 S. Berg Parkway
Canby, OR 97013
Dick & Rick Beko
(503) 266-3507
(503) 266-3500 (Fax)
Bekosoffice@Canby.com

ALASKA DEPARTMENT OF TRANSPORTATION		
BRIDGE NO:	CONTRACT NO:	ZC
DATE: 3/3/22	HAMILTON	
HERRING COVE BRIDGE (SOUTH TONGASS HIGHWAY)		
THREE TUBE RAIL	DRAWING NUMBER: 13 OF 24	

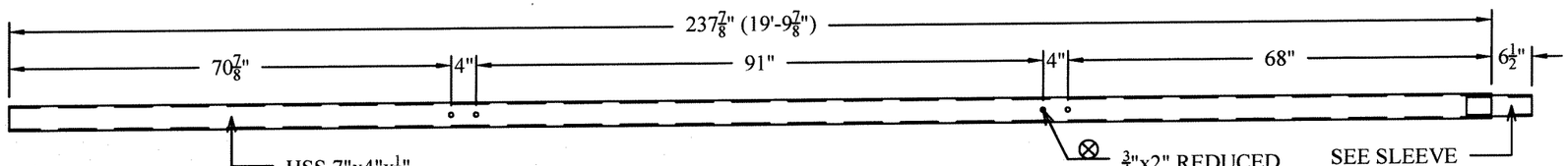

TYPE 5A TUBE
2 REQUIRED

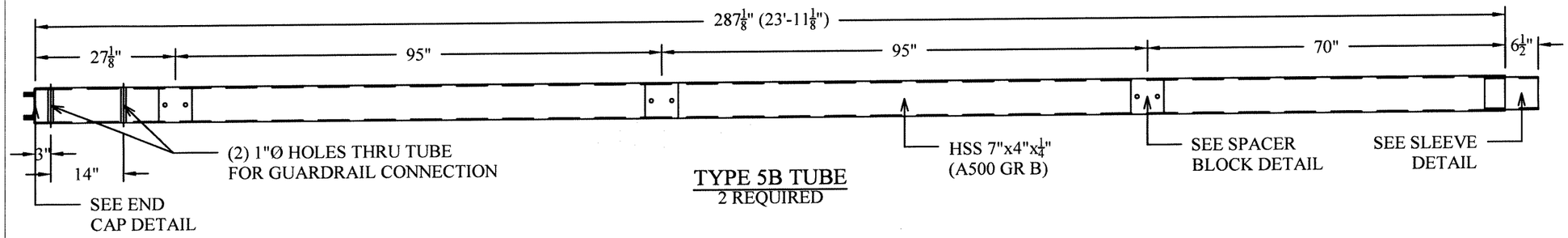

TYPE 5B TUBE
2 REQUIRED

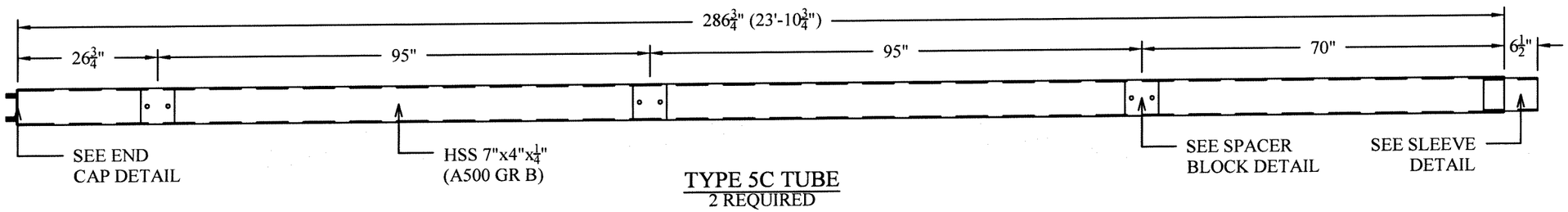

TYPE 5C TUBE
2 REQUIRED

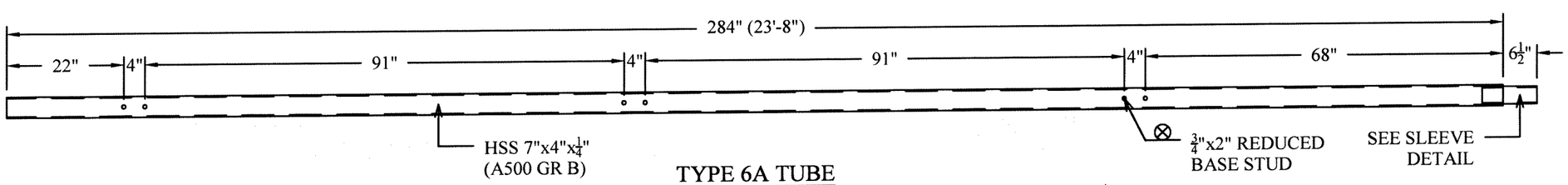

TYPE 6A TUBE
3 REQUIRED

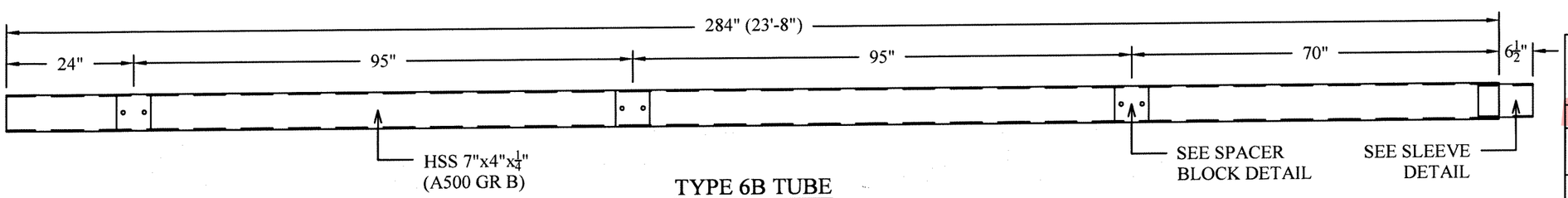

TYPE 6B TUBE
6 REQUIRED

GALVANIZED ASTM 123

NOTE:
RADIUS TUBES TO R563'-1 7/8" @ STUD SIDE OF RAIL

APPROVED AS NOTED
BRIDGE DESIGN SECTION
ALASKA DEPARTMENT OF TRANSPORTATION
AND PUBLIC FACILITIES
Reviewed for conformance with basic details and dimensions of the contract plans. Accuracy of information supplied by the fabricator is not guaranteed.
By PAG Date 03/10/22

Beko's WELDING INC.
P.O Box 1075
1100 S. Berg Parkway
Canby, OR 97013
Dick & Rick Beko
(503) 266-3507
(503) 266-3500 (Fax)
Bekosoffice@Canby.com

ALASKA DEPARTMENT OF TRANSPORTATION		
BRIDGE NO:	CONTRACT NO:	ZC
DATE: 3/3/22	HAMILTON	
HERRING COVE BRIDGE (SOUTH TONGASS HIGHWAY)		
THREE TUBE RAIL	DRAWING NUMBER: 14 OF 24	

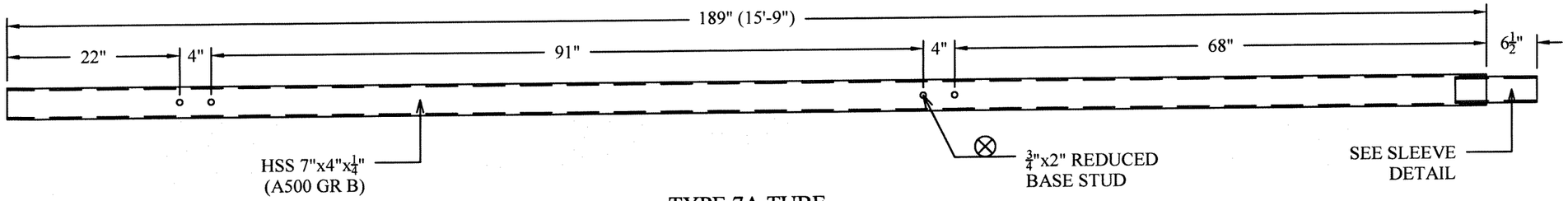

TYPE 7A TUBE
1 REQUIRED

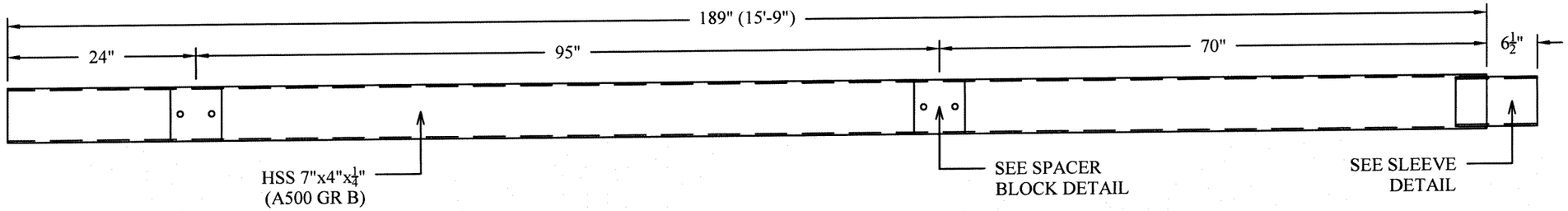

TYPE 7B TUBE
2 REQUIRED

APPROVED AS NOTED
BRIDGE DESIGN SECTION
ALASKA DEPARTMENT OF TRANSPORTATION
AND PUBLIC FACILITIES
Reviewed for conformance with basic details and dimensions of the contract plans. Accuracy of information supplied by the fabricator is not guaranteed.
By DAG Date 03/10/22

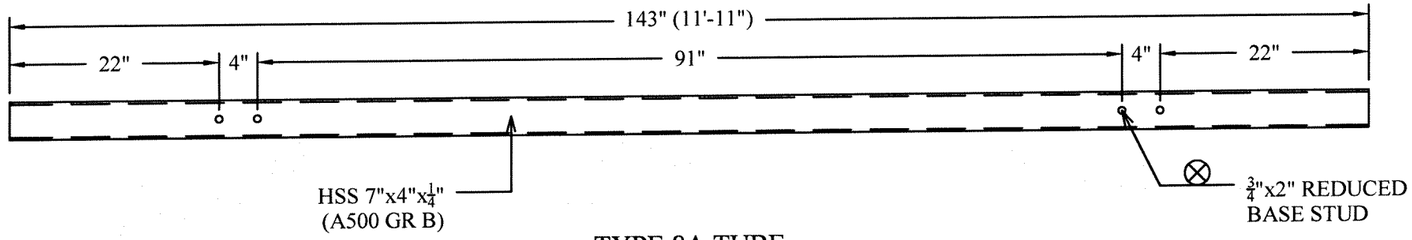

TYPE 8A TUBE
1 REQUIRED

NOTE:
RADIUS TUBES TO R563'-1⅞" @ STUD SIDE OF RAIL

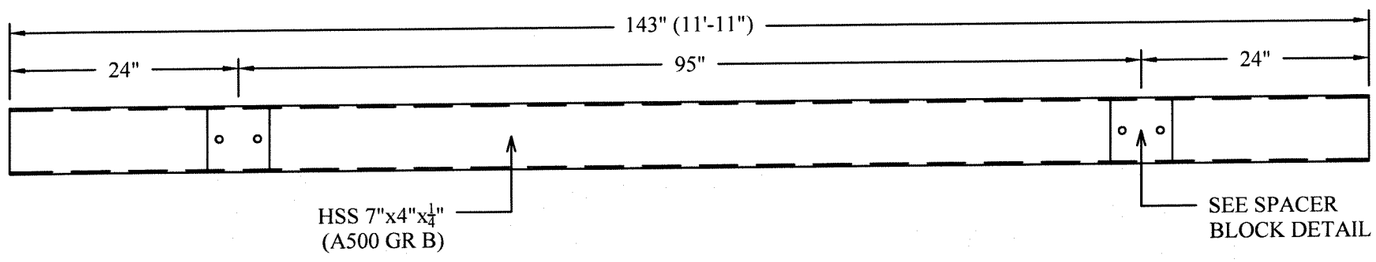

TYPE 8B TUBE
2 REQUIRED

GALVANIZED ASTM 123

Beko's WELDING INC.
P.O Box 1075
1100 S. Berg Parkway
Canby, OR 97013
Dick & Rick Beko
(503) 266-3507
(503) 266-3500 (Fax)
Bekosoffice@Canby.com

ALASKA DEPARTMENT OF TRANSPORTATION		
BRIDGE NO:	CONTRACT NO:	ZC
DATE: 3/3/22	HAMILTON	
HERRING COVE BRIDGE (SOUTH TONGASS HIGHWAY)		
THREE TUBE RAIL		DRAWING NUMBER: 15 OF 24

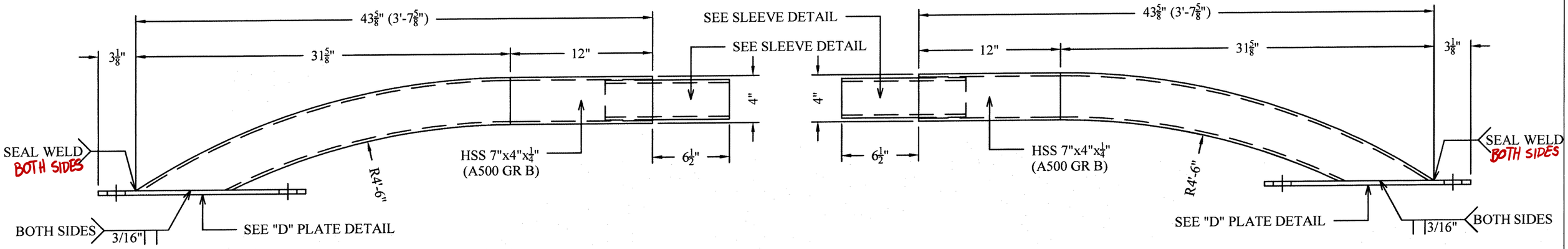

LEFT

RIGHT

RADIUS END

2LT/2RT REQUIRED

APPROVED AS NOTED
BRIDGE DESIGN SECTION
ALASKA DEPARTMENT OF TRANSPORTATION
AND PUBLIC FACILITIES
Reviewed for conformance with basic details and dimensions of the contract plans. Accuracy of information supplied by the fabricator is not guaranteed.
By DAG Date 03/10/22

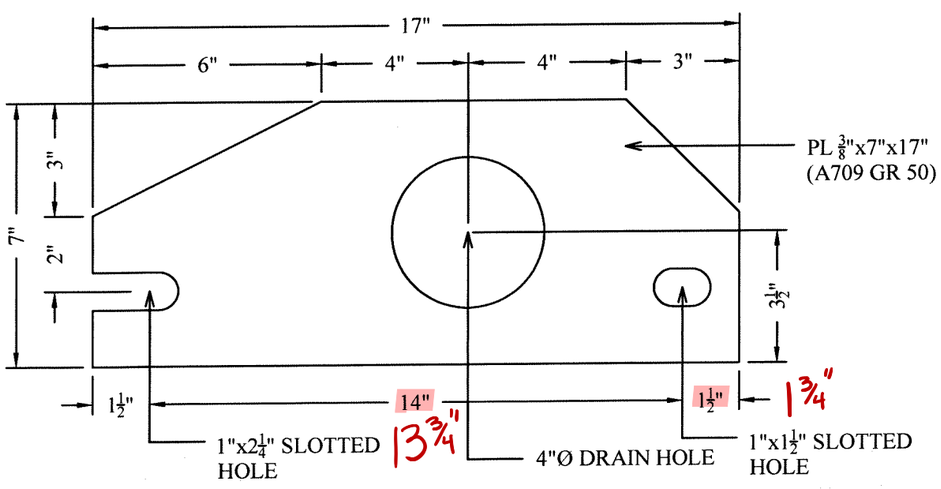

PLATE "D" DETAIL (LEFT)
2 REQUIRED (RIGHT)

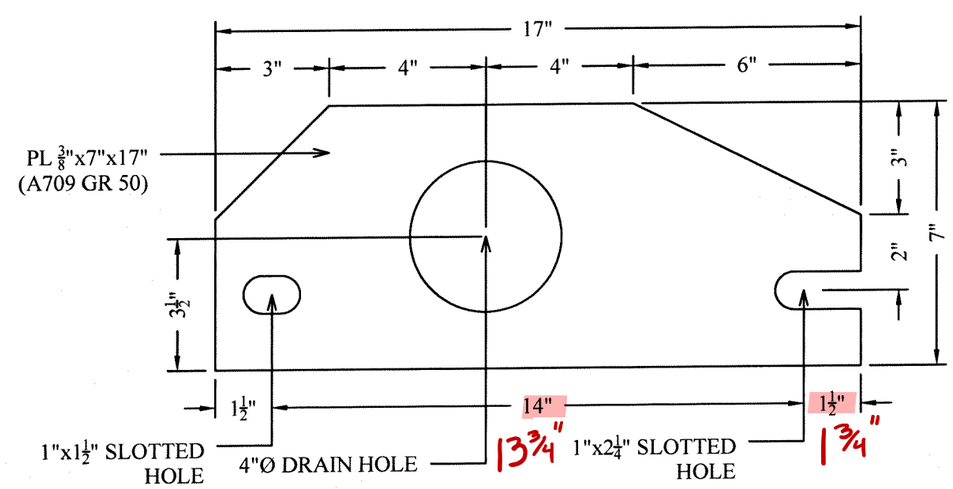

PLATE "D" DETAIL (RIGHT)
2 REQUIRED (LEFT)

GALVANIZED ASTM 123

Beko's WELDING INC.
P.O Box 1075
1100 S. Berg Parkway
Canby, OR 97013
Dick & Rick Beko
(503) 266-3507
(503) 266-3500 (Fax)
Bekosoffice@Canby.com

ALASKA DEPARTMENT OF TRANSPORTATION		
BRIDGE NO:	CONTRACT NO:	ZC
DATE: 3/3/22	HAMILTON	
HERRING COVE BRIDGE (SOUTH TONGASS HIGHWAY)		
THREE TUBE RAIL	DRAWING NUMBER: 16 OF 24	

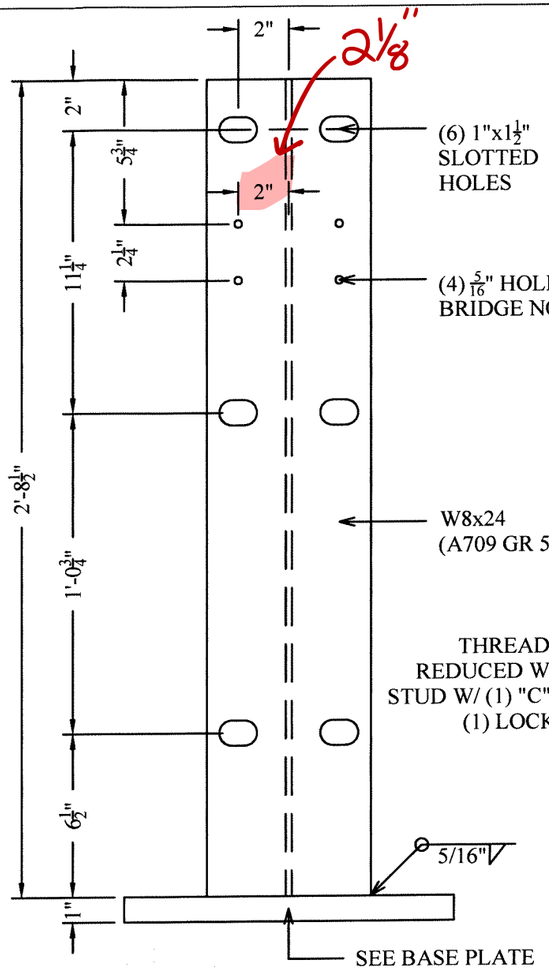

POST DETAIL
38 REQ. W/O BRIDGE PLATE HOLES
2 REQ. W/ BRIDGE PLATE HOLES

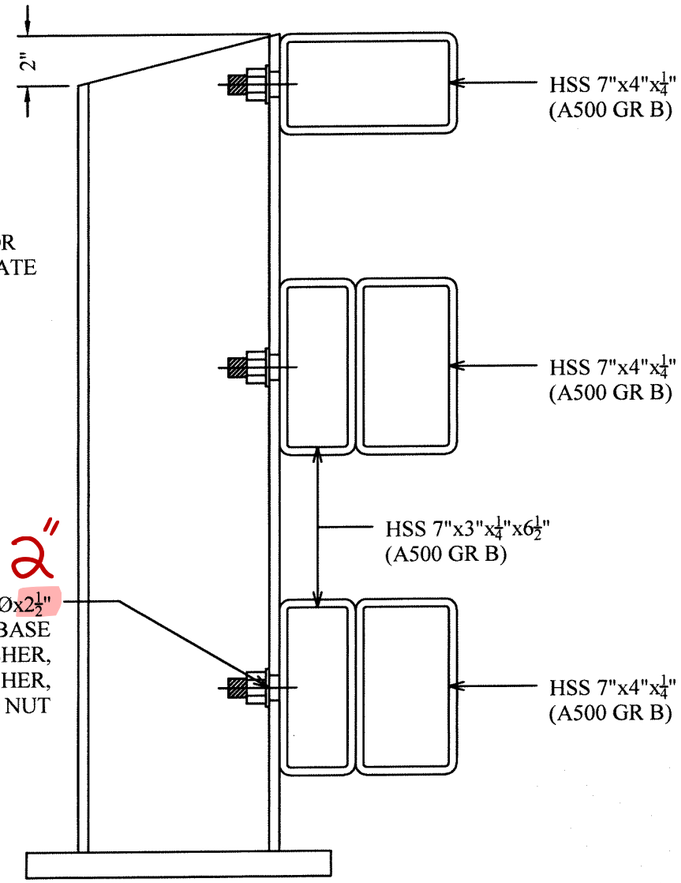

POST DETAIL (SIDE VIEW)

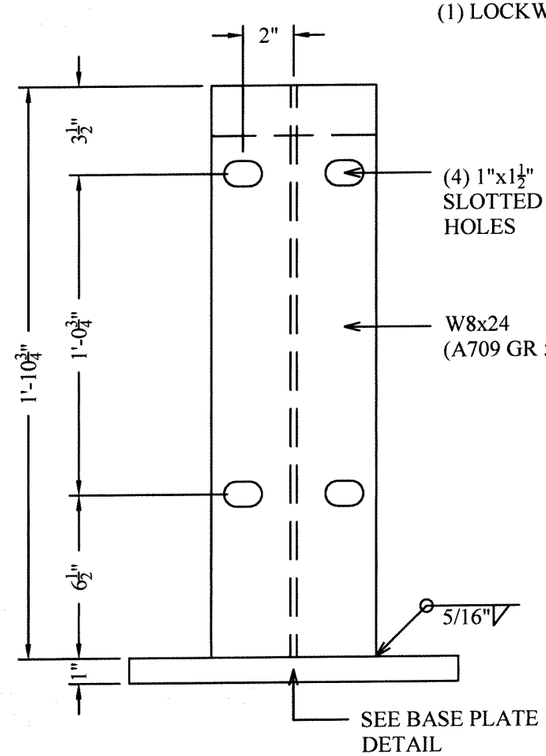

POST DETAIL
4 REQUIRED

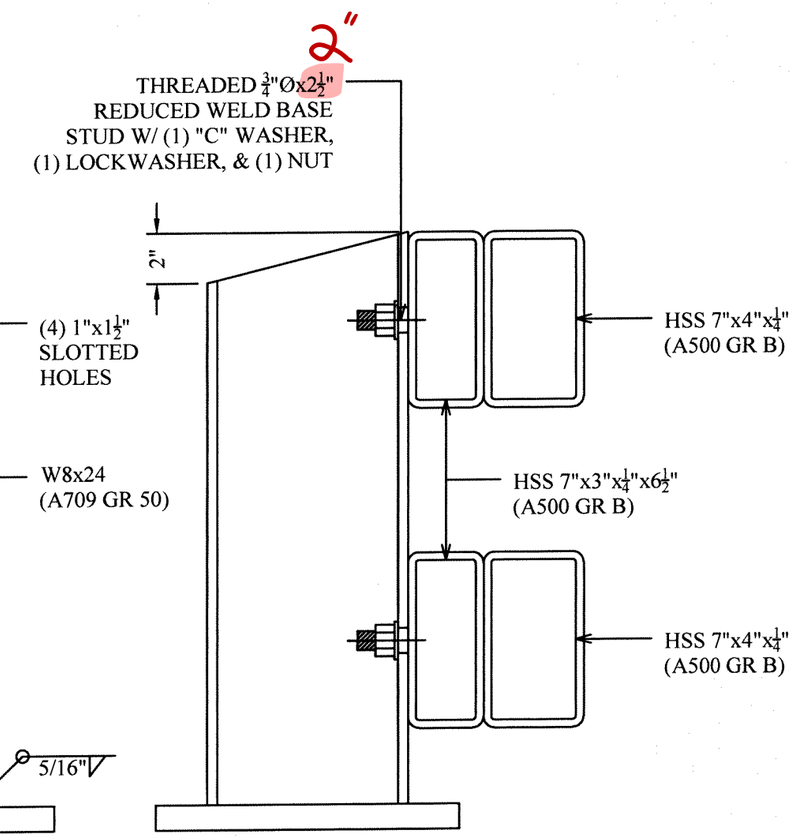

POST DETAIL (SIDE VIEW)

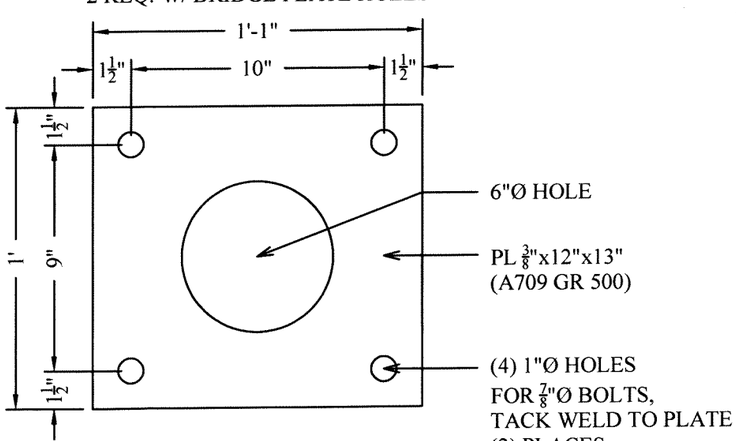

ANCHOR PLATE DETAIL
44 REQUIRED

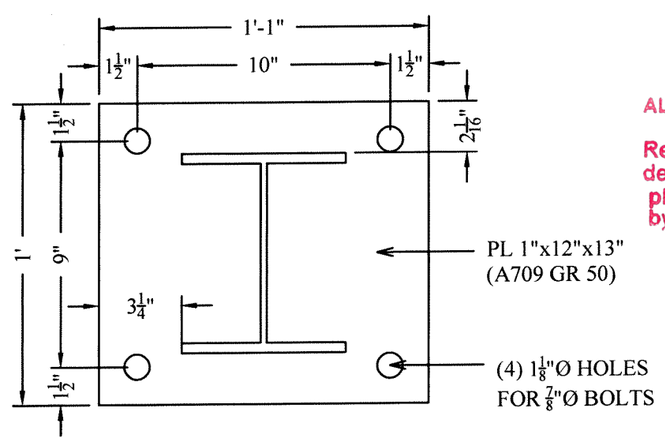

BASE PLATE DETAIL
44 REQUIRED

APPROVED AS NOTED
BRIDGE DESIGN SECTION
ALASKA DEPARTMENT OF TRANSPORTATION AND PUBLIC FACILITIES
Reviewed for conformance with basic details and dimensions of the contract plans. Accuracy of information supplied by the fabricator is not guaranteed.
By PAG Date 03/10/22

GALVANIZED ASTM 123

Beko's WELDING INC.
P.O Box 1075
1100 S. Berg Parkway
Canby, OR 97013
Dick & Rick Beko
(503) 266-3507
(503) 266-3500 (Fax)
Bekosoffice@Canby.com

ALASKA DEPARTMENT OF TRANSPORTATION

BRIDGE NO:	CONTRACT NO:	ZC
DATE: 3/3/22	HAMILTON	
HERRING COVE BRIDGE (SOUTH TONGASS HIGHWAY)		
THREE TUBE RAIL		DRAWING NUMBER: 17 OF 24

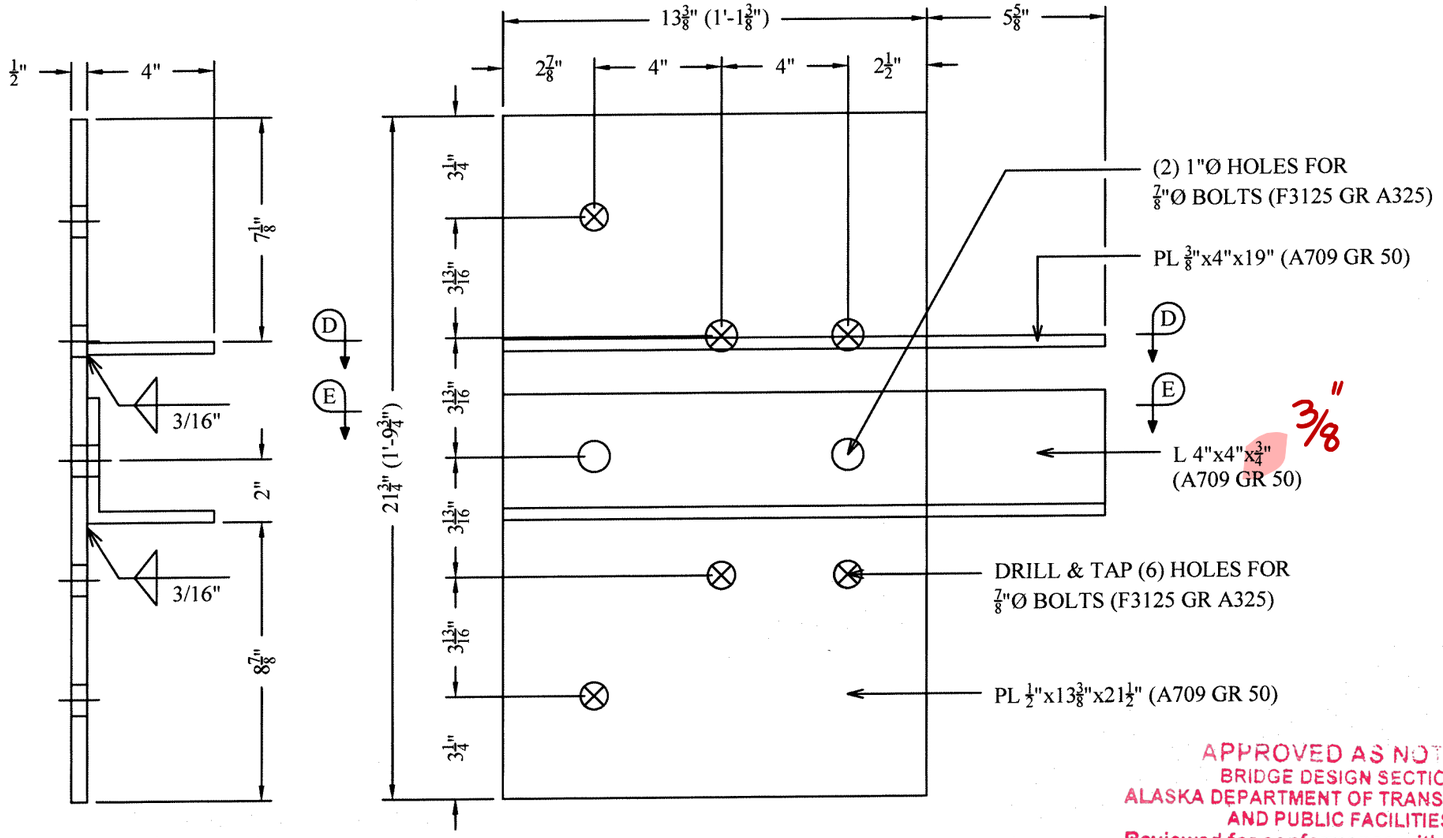

GUARDRAIL CONNECTION DETAIL
2LT/2RT REQUIRED

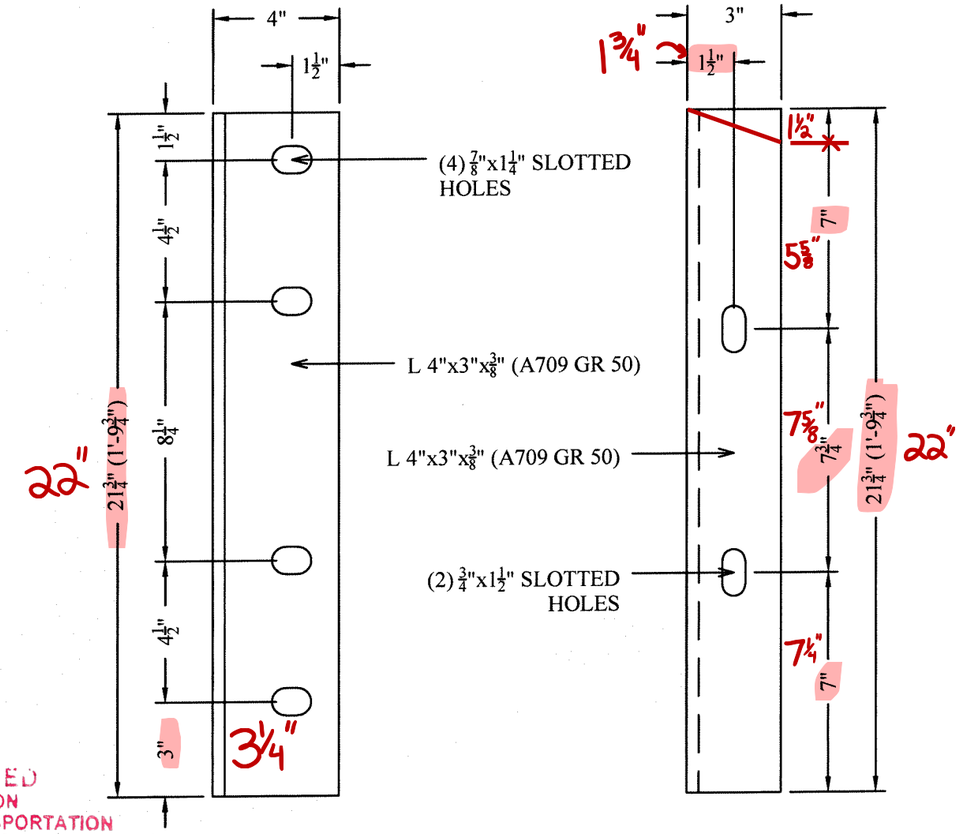

GUARDRAIL CONNECTION ANGLE DETAIL
2LT/2RT REQUIRED

APPROVED AS NOTED
BRIDGE DESIGN SECTION
ALASKA DEPARTMENT OF TRANSPORTATION
AND PUBLIC FACILITIES
Reviewed for conformance with basic details and dimensions of the contract plans. Accuracy of information supplied by the fabricator is not guaranteed.
By DAG Date 03/10/22

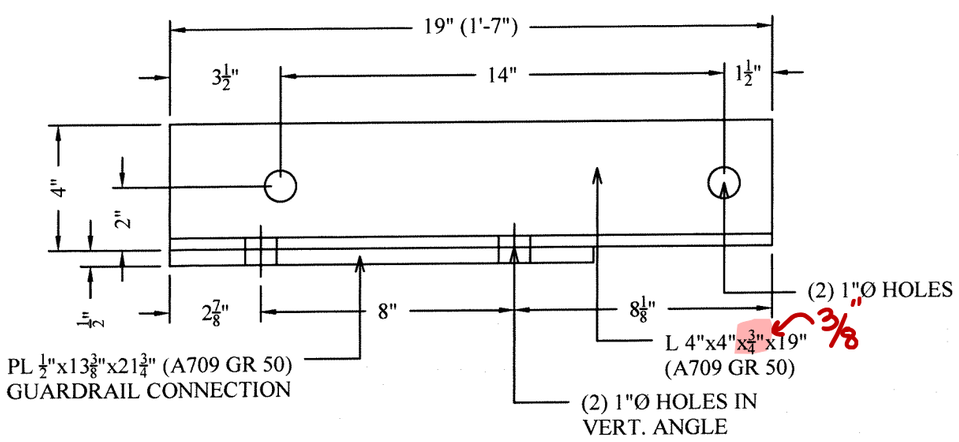

SECTION E-E

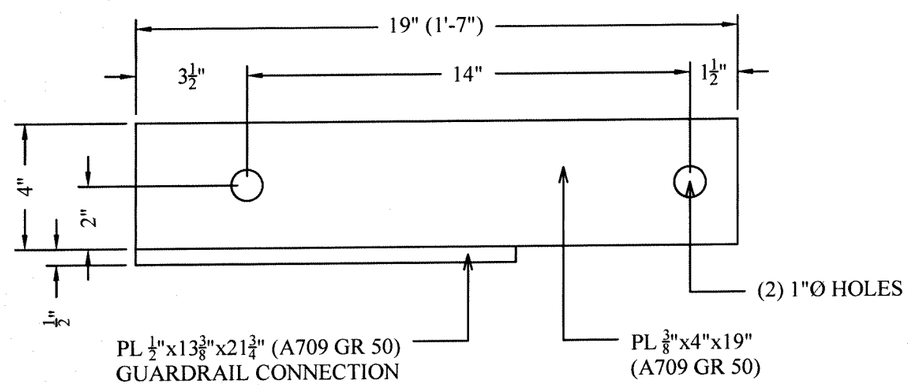

SECTION D-D

GALVANIZED ASTM 123

Beko's WELDING INC.
P.O Box 1075
1100 S. Berg Parkway
Canby, OR 97013
Dick & Rick Beko
(503) 266-3507
(503) 266-3500 (Fax)
Bekosoffice@Canby.com

ALASKA DEPARTMENT OF TRANSPORTATION		
BRIDGE NO:	CONTRACT NO:	ZC
DATE: 3/3/22	HAMILTON	
HERRING COVE BRIDGE (SOUTH TONGASS HIGHWAY)		
THREE TUBE RAIL	DRAWING NUMBER: 18 OF 24	

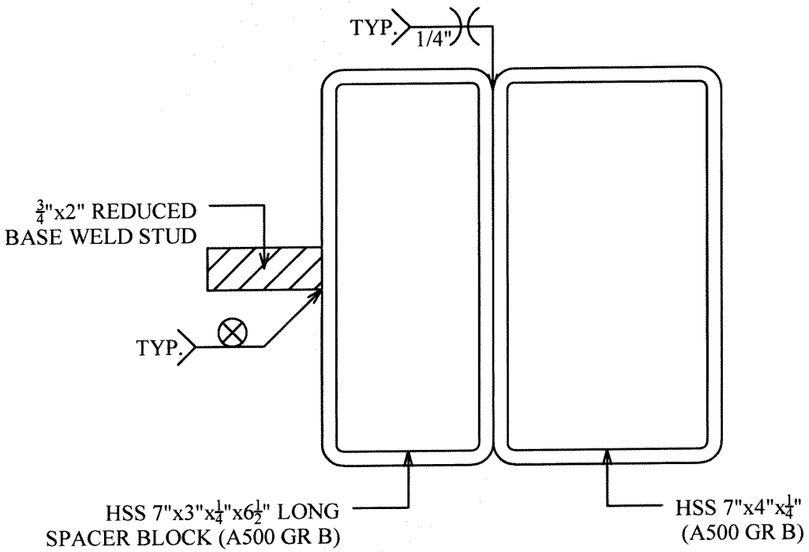

SPACER BLOCK DETAIL
88 REQUIRED

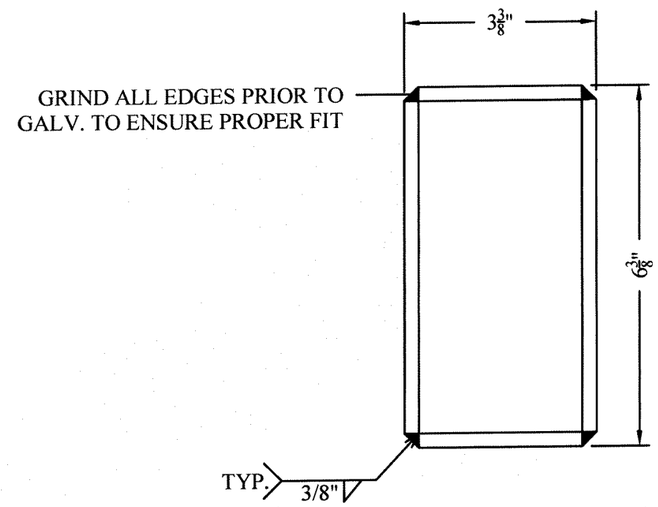

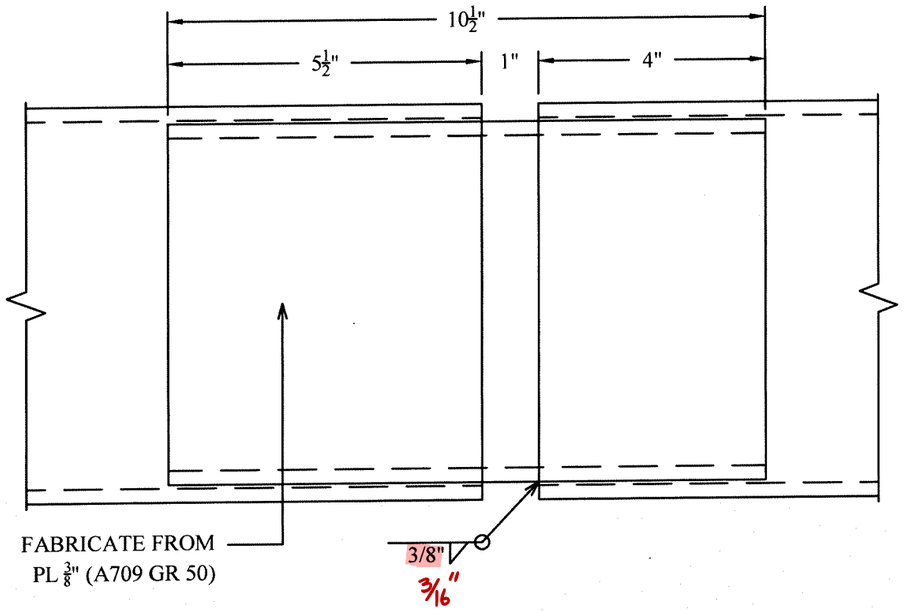

SLEEVE DETAIL
46 REQUIRED

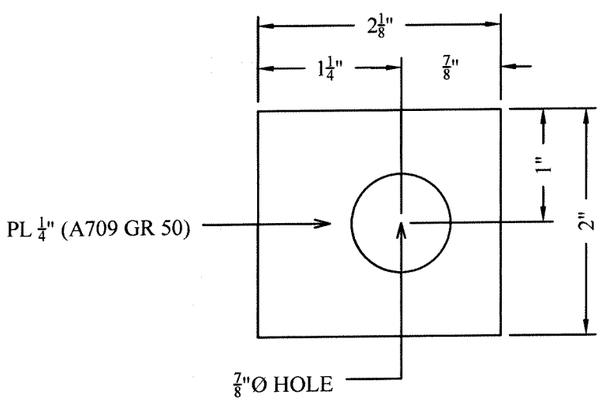

"C" WASHER DETAIL
256 REQUIRED

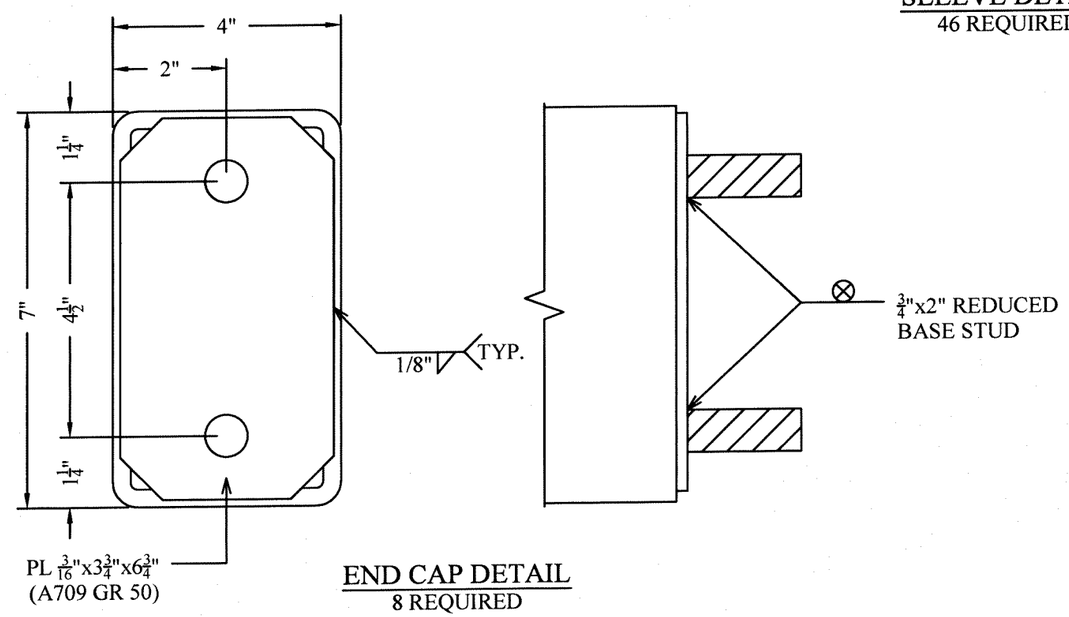

END CAP DETAIL
8 REQUIRED

GALVANIZED ASTM 123

APPROVED AS NOTED
BRIDGE DESIGN SECTION
ALASKA DEPARTMENT OF TRANSPORTATION AND PUBLIC FACILITIES
Reviewed for conformance with basic details and dimensions of the contract plans. Accuracy of information supplied by the fabricator is not guaranteed.
By VAG Date 03/10/22

Beko's WELDING INC.
P.O Box 1075
1100 S. Berg Parkway
Canby, OR 97013
Dick & Rick Beko
(503) 266-3507
(503) 266-3500 (Fax)
Bekosoffice@Canby.com

ALASKA DEPARTMENT OF TRANSPORTATION		
BRIDGE NO:	CONTRACT NO:	ZC
DATE: 3/3/22	HAMILTON	
HERRING COVE BRIDGE (SOUTH TONGASS HIGHWAY)		
THREE TUBE RAIL		DRAWING NUMBER: 19 OF 24

State of Alaska

GOVERNOR MIKE DUNLEAVY

Submittal Cover Sheet

Department of Transportation Public Facilities
SOUTHCOAST REGION
Construction Section

Project: KTN- HERRING COVE BRIDGE IMPROVEMENTS	Project No: 0902043/SFHWY00072
Contractor: Hamilton Construction Alaska	Submittal No. 507-001 Pedestrian Railing Shop Drawing
Date Response Sent: 03/10/2022	Reviewed By: Bob Lundell, P.E. Recoverable Signature X Bob Lundell Signed by: 2d66350b-1634-445f-b1d5-d5b87bea066b

A	AAN	R&R	R	IO	R&RasN	INC	CA
Approved	Approved as Noted	Revise and Resubmit	Rejected	Informational Only	Revisit & Resubmit as Noted	Incomplete	Conditionally Approved

Item No.	Item	Contract Documents	A	AAN	R&R	R	IO	R&R asN	INC	CA
507.0001.0003	Steel Bridge Railing, 3-Tube	722		X						

Comments/Anticipated Response:

- Review comments on shop drawings from Richard Pratt.

Department of Transportation & Public Facilities
Statewide Design & Engineering Services Division
Phone: 907-465-8890
Fax: 907-465-3124

MEMORANDUM

TO: Bob Lundell
Project Engineer
DOWL Engineers

FROM: CM for Richard A. Pratt, PE, SE
Chief Bridge Engineer

CONTACT: Nicholas Murray, PE SE
(907) 465-8898
nicholas.murray@alaska.gov

DATE: March 10, 2022

FILE: 253

RE: Herring Cove Bridge Improvements
0902043/SFHWY00072

SUBJECT: Pedestrian Railing / 3 Tube Railing-Approved

We have received an electronic copy of Beko's shop drawings totaling 21 pages (including memorandum) and dated3/3/22. The drawings are marked "Approved as Noted".

As indicated in Section 105-1.02 of the contract specifications, the Contractor is required to provide one set of reproducible transparencies (polyester film commonly referred to as mylars) of the final shop drawings. Please have the mylars sent to this office (address below) for the permanent records.

State of Alaska Bridge Section
c/o Nicholas Murray
PO Box 112500
Juneau, AK 99811-2500

We are providing electronic copies via email for your distribution to the Contractor, fabricator and the Department's QA inspector.

NWM/bm

Beko's WELDING, INC.

P.O. Box 1075
1100 S. Berg Parkway
Canby, OR 97013

Dick and Rick Beko
(503) 266-3507
(503) 266-3500 Fax

Date: 3/3/2022

Project: KTN Herring Cove Bridge (South Tongass Highway)

File:

Subject: Three Tube Rail, Pedestrian Rail, & Pipe Handrail

To: Hamilton Construction

Item	Copies	Date	Description
1	1	3/3/2022	Three Tube Rail, Pedestrian Rail, & Pipe Handrail

_____ As You Requested

_____ For Your Information

__X__ For Your Approval

_____ For Your Review

_____ Return Requested

Reviewed
By Chris Duty
03/03/2022 11:52:18 AM

Sincerely,

Rick Beko
Vice President

APPROVED AS NOTED
BRIDGE DESIGN SECTION
ALASKA DEPARTMENT OF TRANSPORTATION
AND PUBLIC FACILITIES
Reviewed for conformance with basic details and dimensions of the contract plans. Accuracy of information supplied by the fabricator is not guaranteed.

By PAG Date 03/10/22

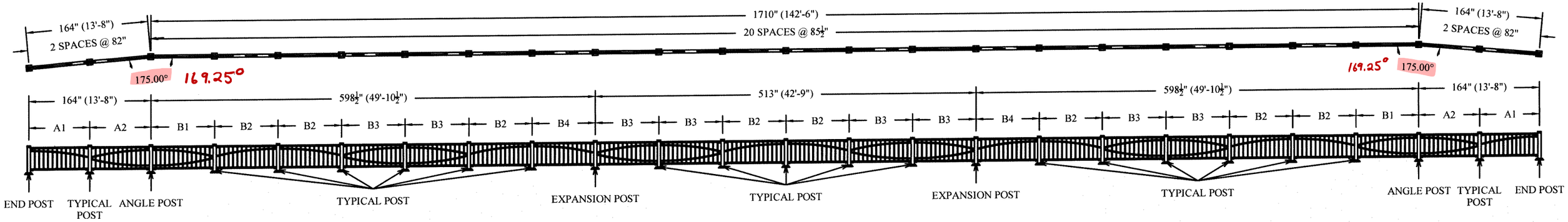

POST & PANEL LAYOUT DETAIL (NORTH SIDE)
KTN HERRING COVER BRIDGE IMPROVEMENTS
LOOKING AT FACE OF RAIL

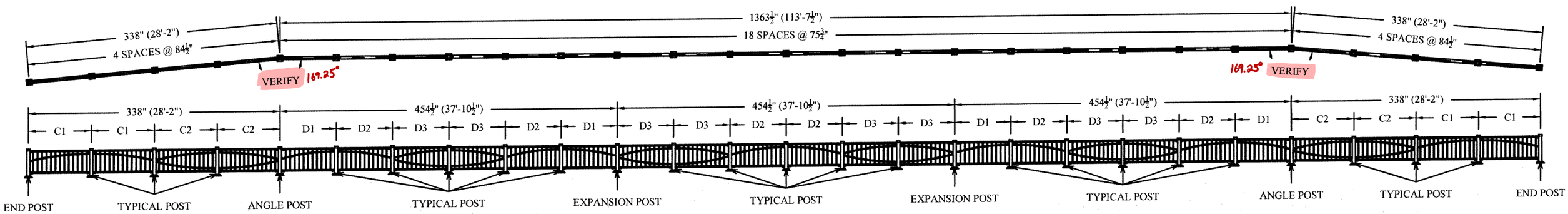

POST & PANEL LAYOUT DETAIL (SOUTH SIDE)
KTN HERRING COVER BRIDGE IMPROVEMENTS
LOOKING AT BACK OF RAIL

Beko's WELDING INC.
P.O Box 1075
1100 S. Berg Parkway
Canby, OR 97013
Dick & Rick Beko
(503) 266-3507
(503) 266-3500 (Fax)
Bekosoffice@Canby.com

APPROVED AS NOTED
BRIDGE DESIGN SECTION
ALASKA DEPARTMENT OF TRANSPORTATION
AND PUBLIC FACILITIES
Reviewed for conformance with basic details and dimensions of the contract plans. Accuracy of information supplied by the fabricator is not guaranteed.
By PAG Date 03/10/22

All Subsequent Pages

ALASKA DEPARTMENT OF TRANSPORTATION		
BRIDGE NO: 253	CONTRACT NO: SFHWY00072/0902043	ZC
DATE: 3/3/22	HAMILTON	
HERRING COVE BRIDGE (SOUTH TONGASS HIGHWAY)		
PEDESTRIAN RAILING		DRAWING NUMBER: 1 OF 24

GALVANIZED ASTM 123

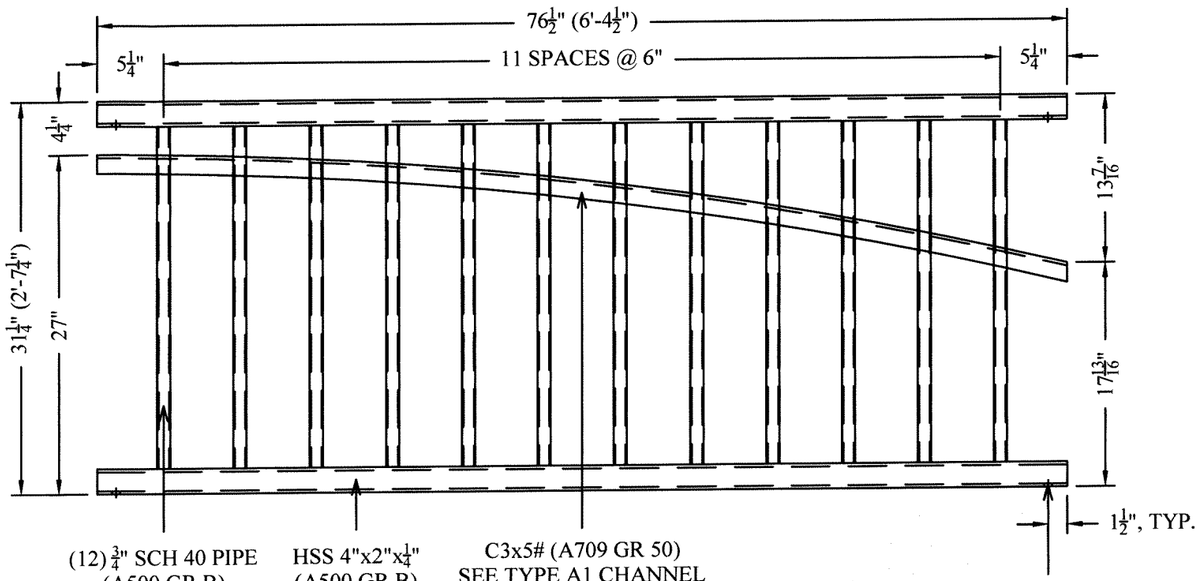

TYPE A1 PANEL
2 REQUIRED

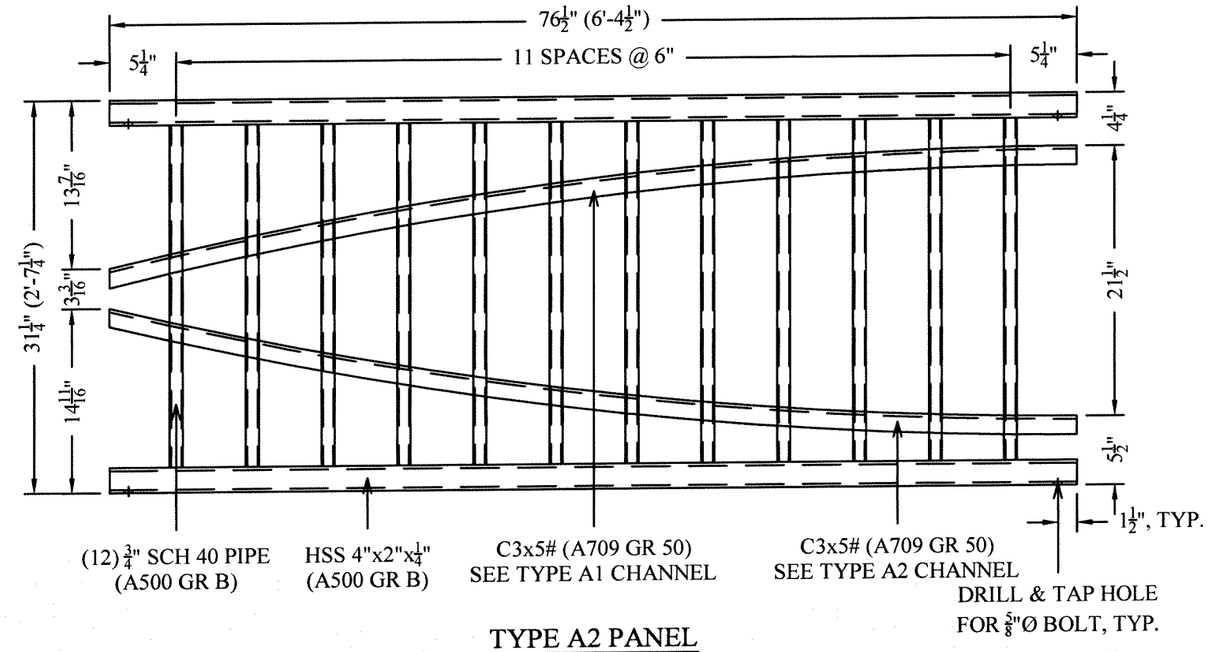

TYPE A2 PANEL
2 REQUIRED

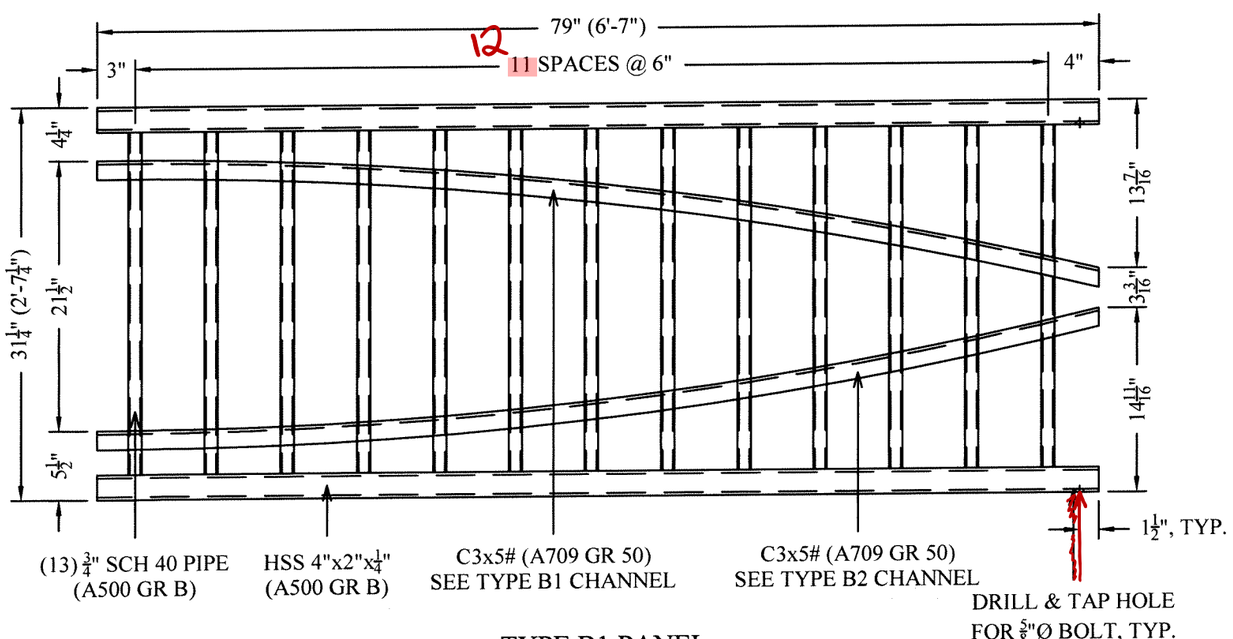

TYPE B1 PANEL
2 REQUIRED

APPROVED AS NOTED
BRIDGE DESIGN SECTION
ALASKA DEPARTMENT OF TRANSPORTATION
AND PUBLIC FACILITIES
Reviewed for conformance with basic details and dimensions of the contract plans. Accuracy of information supplied by the fabricator is not guaranteed.
By DAG Date 03/10/22

GALVANIZED ASTM 123

Beko's WELDING INC.
P.O Box 1075
1100 S. Berg Parkway
Canby, OR 97013
Dick & Rick Beko
(503) 266-3507
(503) 266-3500 (Fax)
Bekosoffice@Canby.com

ALASKA DEPARTMENT OF TRANSPORTATION		
BRIDGE NO:	CONTRACT NO:	ZC
DATE: 3/3/22	HAMILTON	
HERRING COVE BRIDGE (SOUTH TONGASS HIGHWAY)		
PEDESTRIAN RAILING		DRAWING NUMBER: 2 OF 24

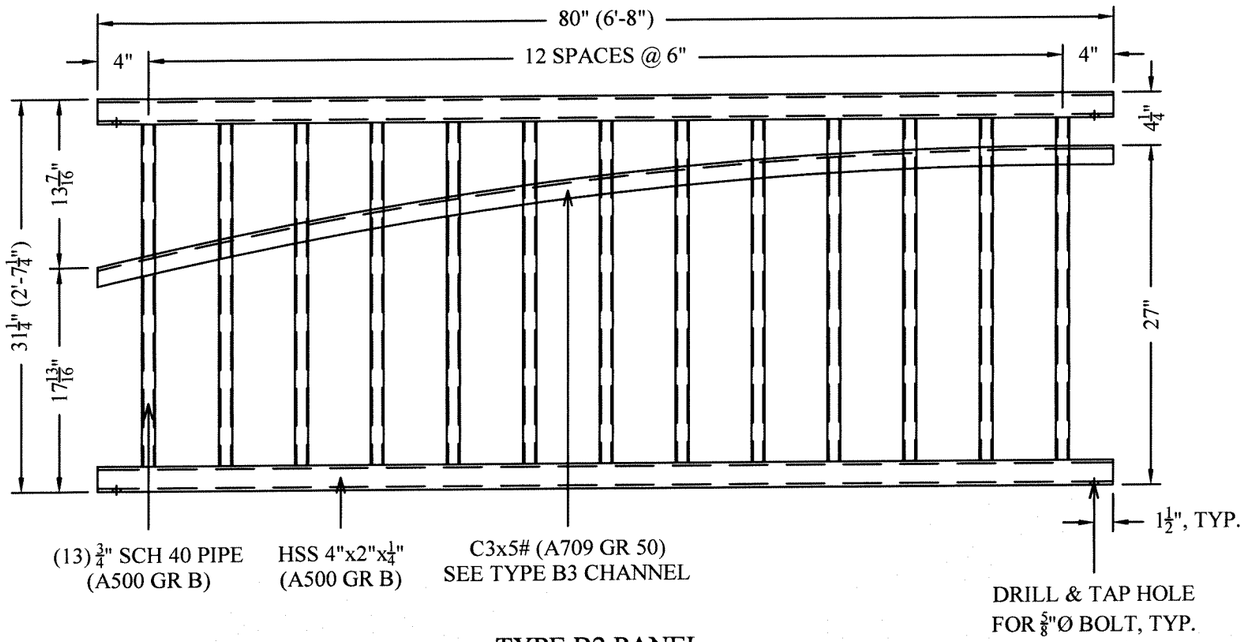

TYPE B2 PANEL
8 REQUIRED

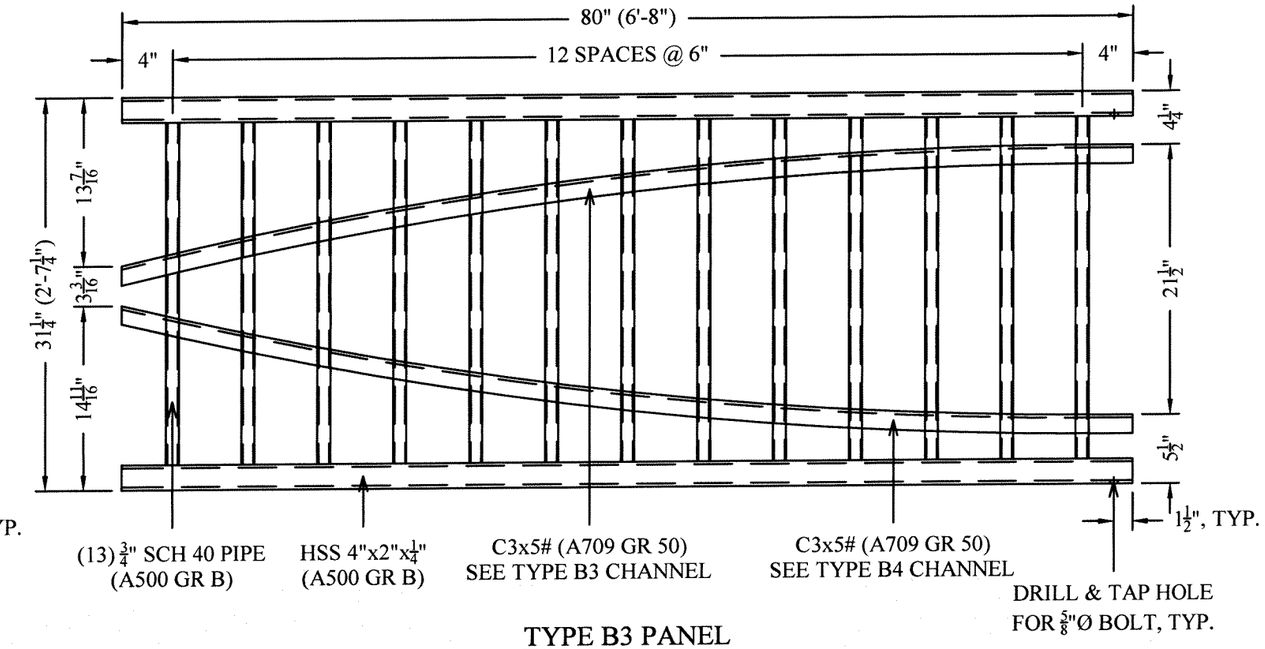

TYPE B3 PANEL
8 REQUIRED

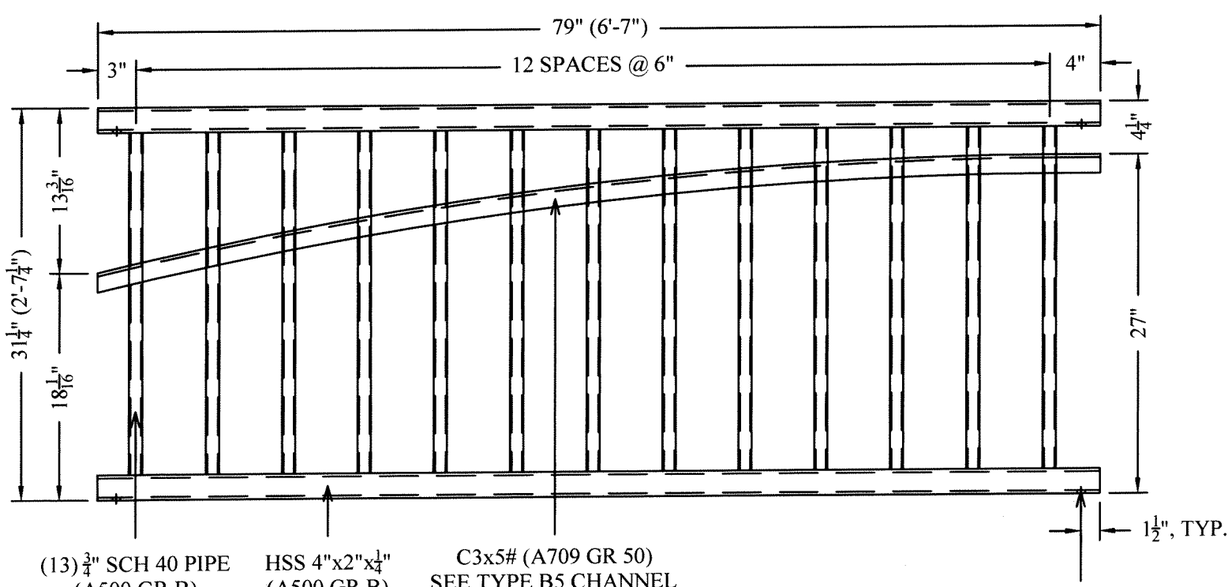

TYPE B4 PANEL
2 REQUIRED

APPROVED AS NOTED
BRIDGE DESIGN SECTION
ALASKA DEPARTMENT OF TRANSPORTATION
AND PUBLIC FACILITIES
Reviewed for conformance with basic details and dimensions of the contract plans. Accuracy of information supplied by the fabricator is not guaranteed.
By DAG Date 03/10/22

GALVANIZED ASTM 123

Beko's WELDING INC.
P.O Box 1075
1100 S. Berg Parkway
Canby, OR 97013
Dick & Rick Beko
(503) 266-3507
(503) 266-3500 (Fax)
Bekosoffice@Canby.com

ALASKA DEPARTMENT OF TRANSPORTATION		
BRIDGE NO:	CONTRACT NO:	ZC
DATE: 3/3/22	HAMILTON	
HERRING COVE BRIDGE (SOUTH TONGASS HIGHWAY)		
PEDESTRIAN RAILING		DRAWING NUMBER: 3 OF 24

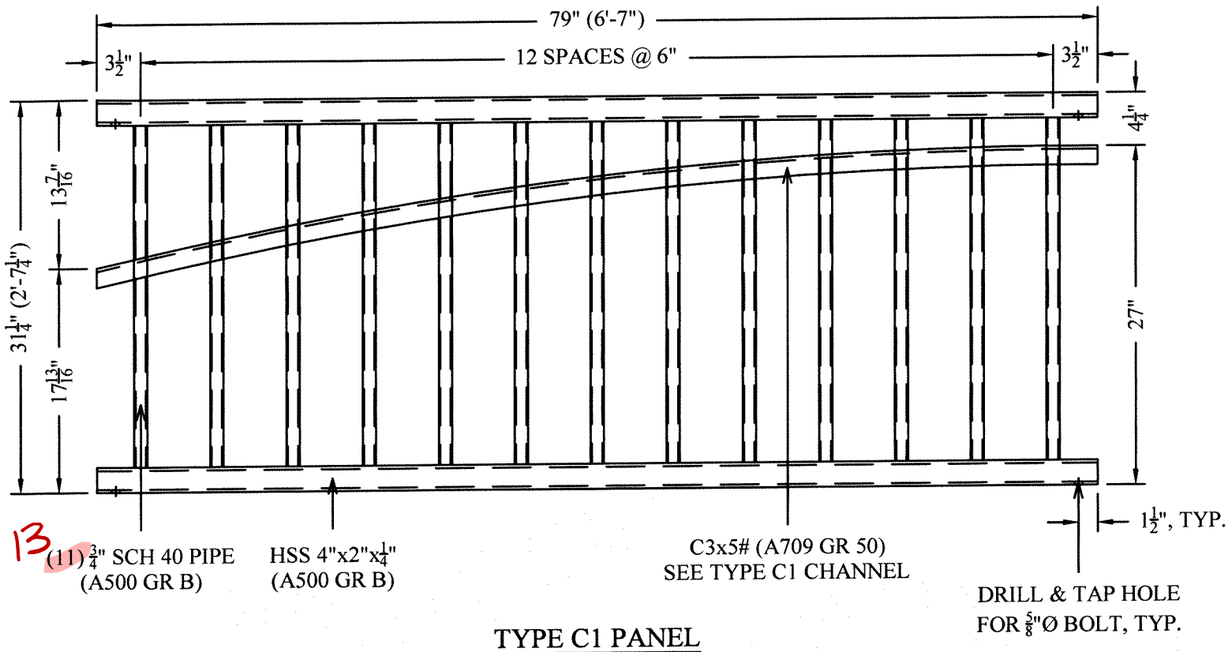

TYPE C1 PANEL
4 REQUIRED

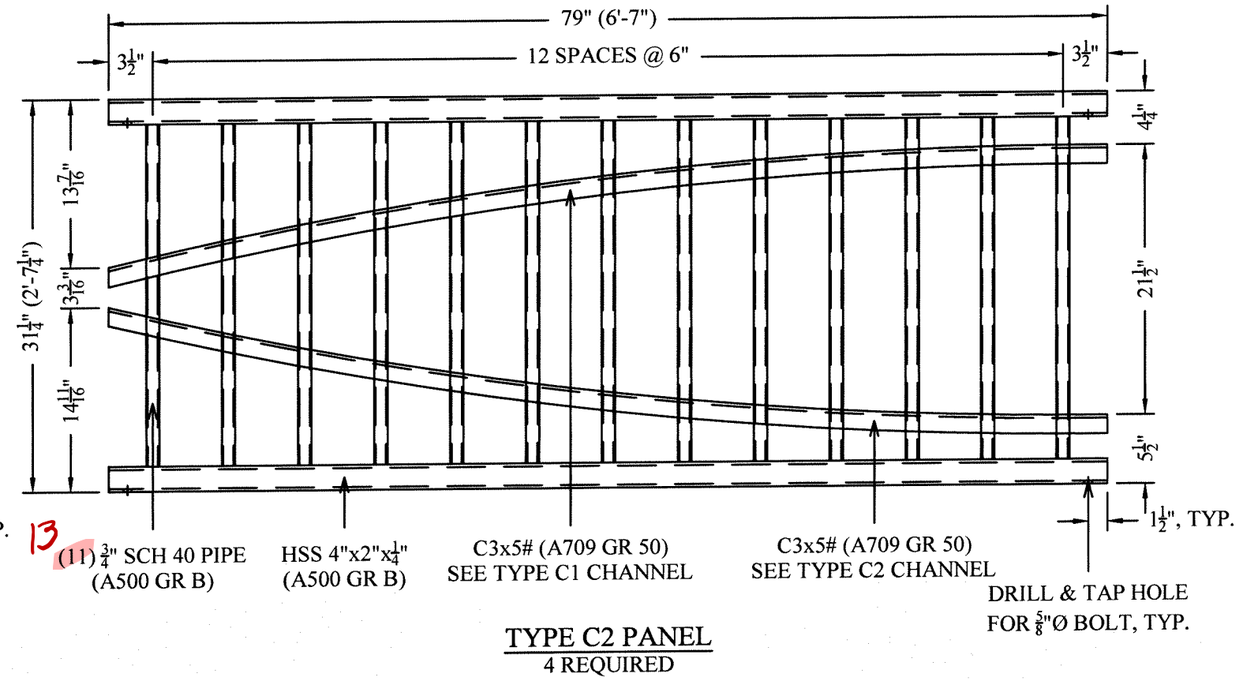

TYPE C2 PANEL
4 REQUIRED

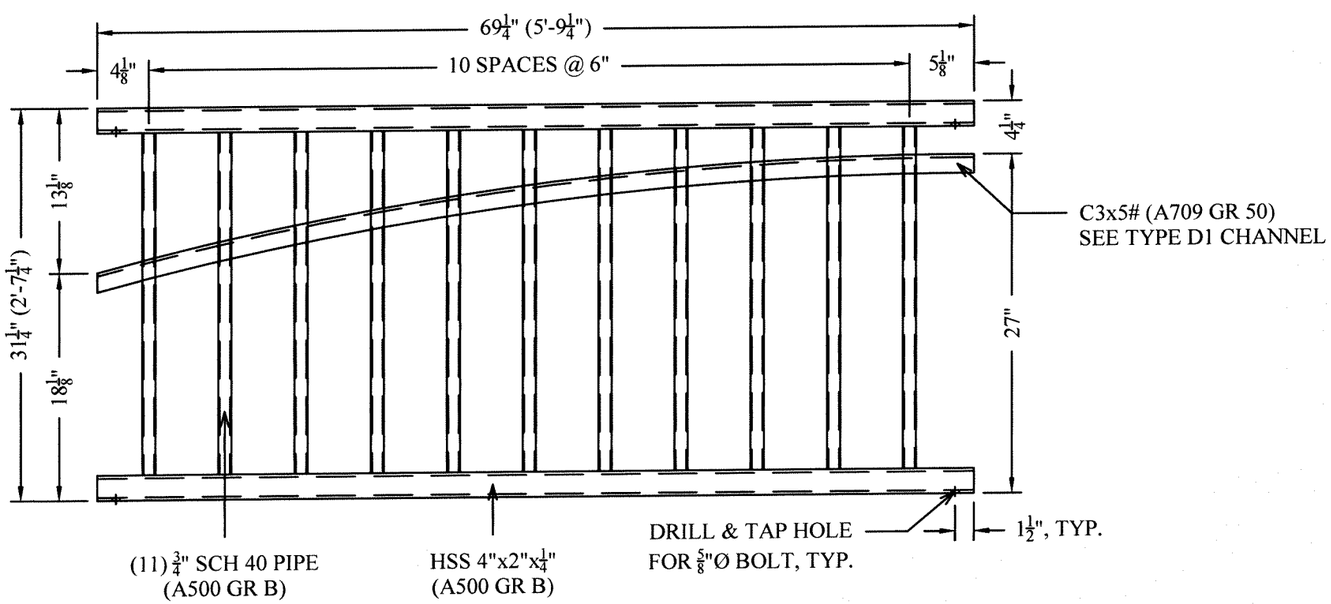

TYPE D1 PANEL
4 REQUIRED

APPROVED AS NOTED
BRIDGE DESIGN SECTION
ALASKA DEPARTMENT OF TRANSPORTATION
AND PUBLIC FACILITIES
Reviewed for conformance with basic details and dimensions of the contract plans. Accuracy of information supplied by the fabricator is not guaranteed.
By DAG Date 03/10/22

GALVANIZED ASTM 123

Beko's WELDING INC.
P.O Box 1075
1100 S. Berg Parkway
Canby, OR 97013
Dick & Rick Beko
(503) 266-3507
(503) 266-3500 (Fax)
Bekosoffice@Canby.com

ALASKA DEPARTMENT OF TRANSPORTATION		
BRIDGE NO:	CONTRACT NO:	ZC
DATE: 3/3/22	HAMILTON	
HERRING COVE BRIDGE (SOUTH TONGASS HIGHWAY)		
PEDESTRIAN RAILING		DRAWING NUMBER: 4 OF 24

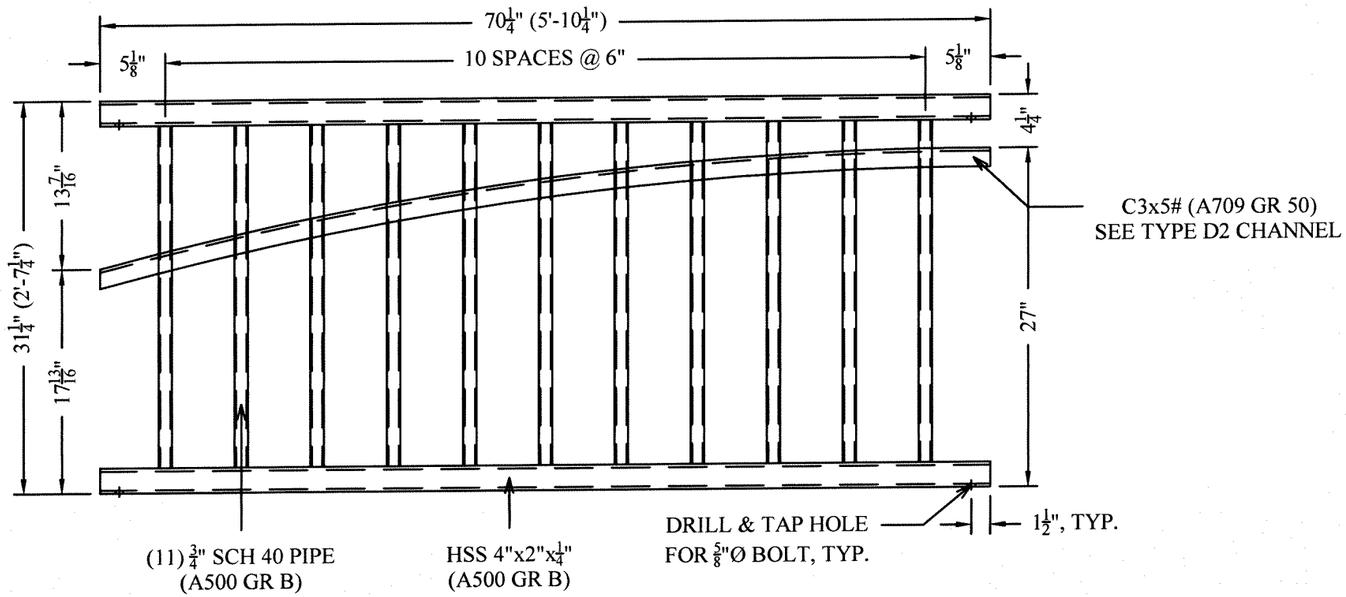

TYPE D2 PANEL
6 REQUIRED

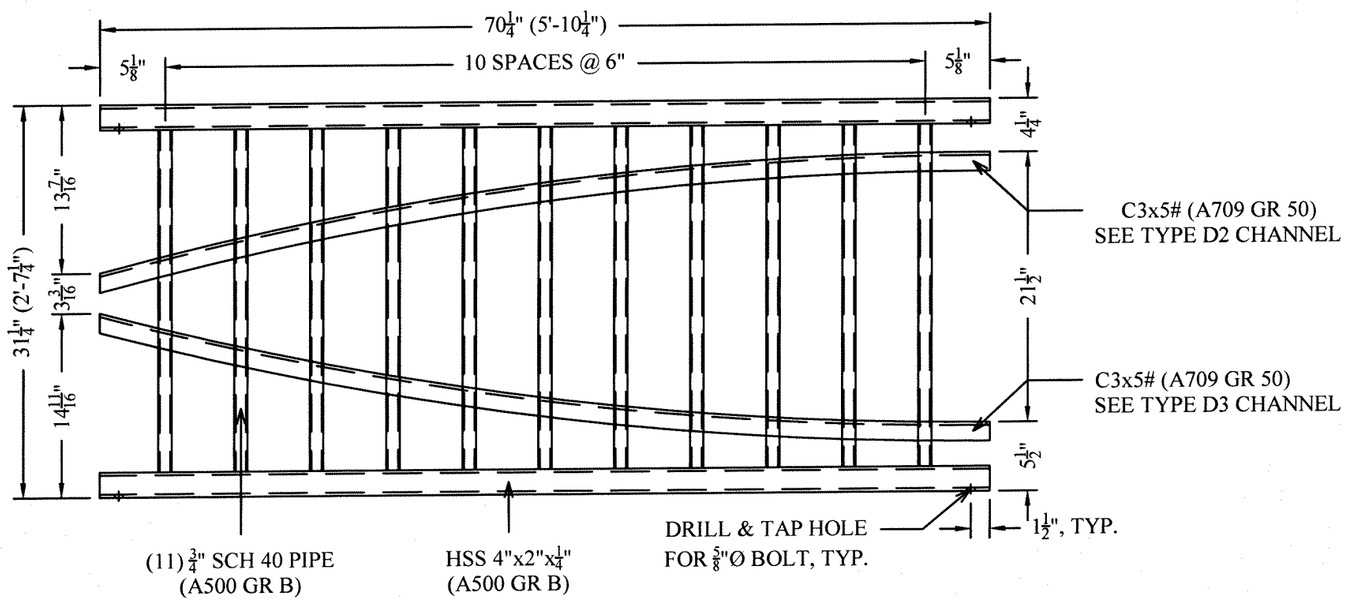

TYPE D3 PANEL
8 REQUIRED

APPROVED AS NOTED
BRIDGE DESIGN SECTION
ALASKA DEPARTMENT OF TRANSPORTATION
AND PUBLIC FACILITIES
Reviewed for conformance with basic details and dimensions of the contract plans. Accuracy of information supplied by the fabricator is not guaranteed.
By DAG Date 03/10/22

GALVANIZED ASTM 123

Beko's WELDING INC.
P.O Box 1075
1100 S. Berg Parkway
Canby, OR 97013
Dick & Rick Beko
(503) 266-3507
(503) 266-3500 (Fax)
Bekosoffice@Canby.com

ALASKA DEPARTMENT OF TRANSPORTATION		
BRIDGE NO:	CONTRACT NO:	ZC
DATE: 3/3/22	HAMILTON	
HERRING COVE BRIDGE (SOUTH TONGASS HIGHWAY)		
PEDESTRIAN RAILING	DRAWING NUMBER: 5 OF 24	

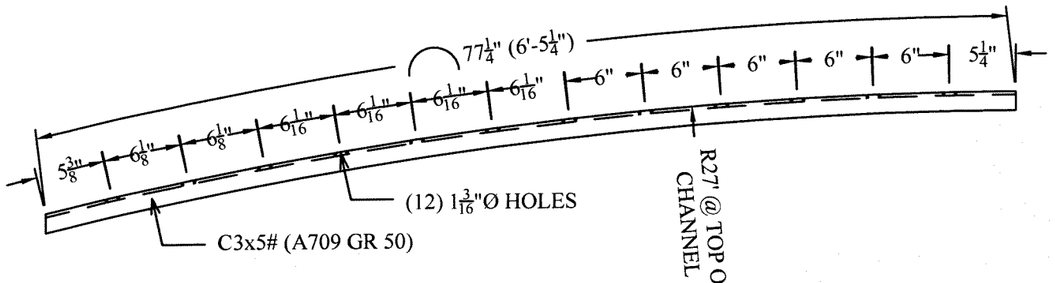

TYPE A1 CHANNEL
4 REQUIRED

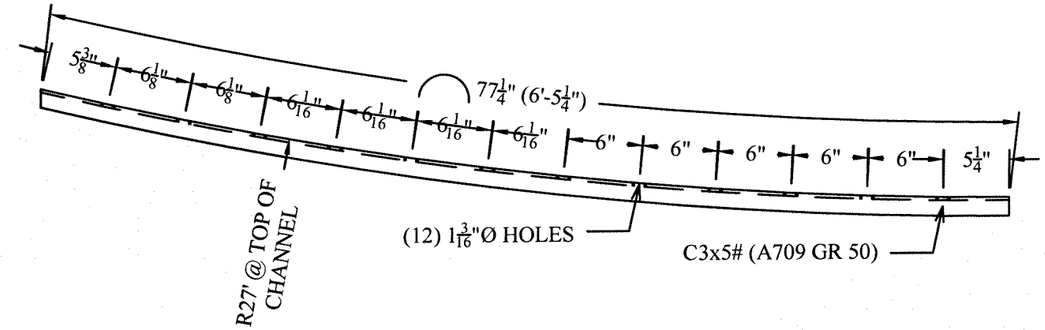

TYPE A2 CHANNEL
2 REQUIRED

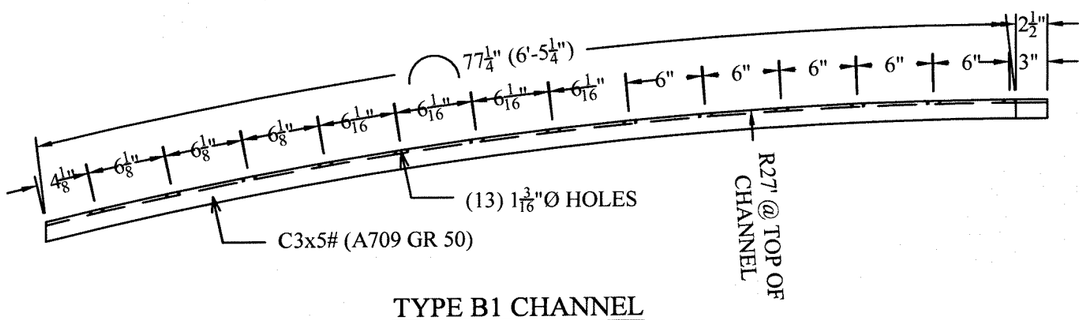

TYPE B1 CHANNEL
2 REQUIRED

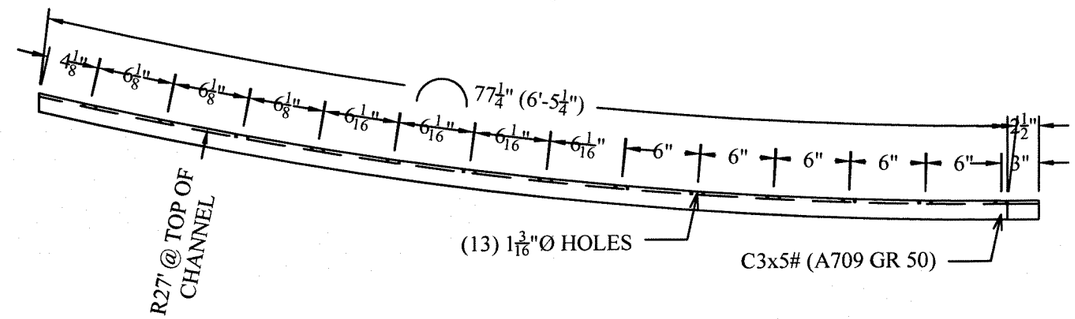

TYPE B2 CHANNEL
2 REQUIRED

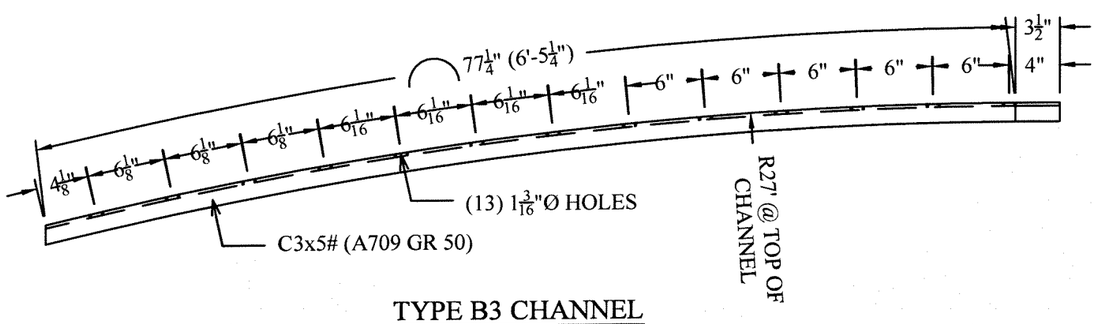

TYPE B3 CHANNEL
16 REQUIRED

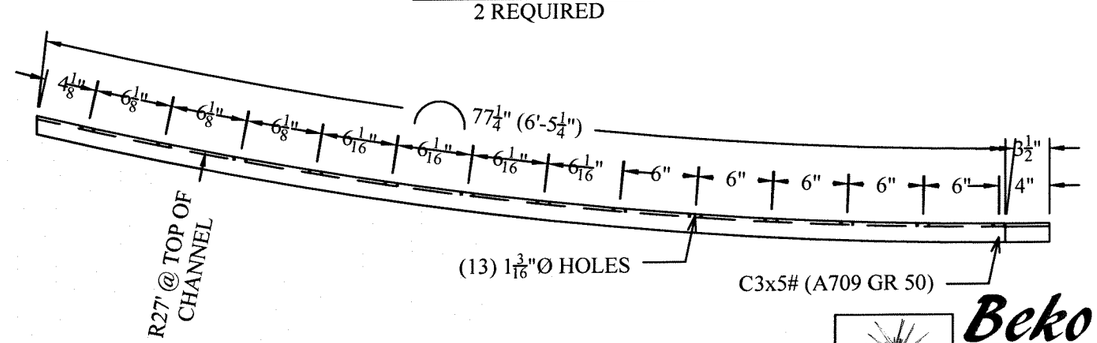

TYPE B4 CHANNEL
8 REQUIRED

APPROVED AS NOTED
BRIDGE DESIGN SECTION
ALASKA DEPARTMENT OF TRANSPORTATION
AND PUBLIC FACILITIES
Reviewed for conformance with basic details and dimensions of the contract plans. Accuracy of information supplied by the fabricator is not guaranteed.
By PAG Date 03/10/22

GALVANIZED ASTM 123

Beko's WELDING INC.
P.O Box 1075
1100 S. Berg Parkway
Canby, OR 97013
Dick & Rick Beko
(503) 266-3507
(503) 266-3500 (Fax)
Bekosoffice@Canby.com

ALASKA DEPARTMENT OF TRANSPORTATION		
BRIDGE NO:	CONTRACT NO:	ZC
DATE: 3/3/22	HAMILTON	
HERRING COVE BRIDGE (SOUTH TONGASS HIGHWAY)		
PEDESTRIAN RAILING	DRAWING NUMBER: 6 OF 24	

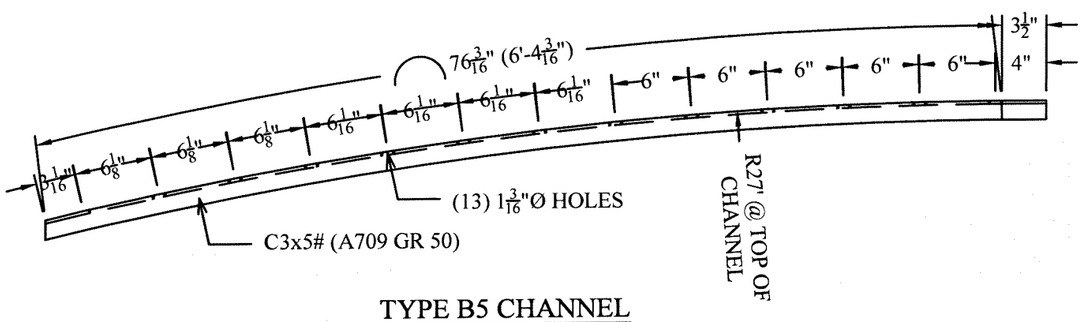

TYPE B5 CHANNEL
2 REQUIRED

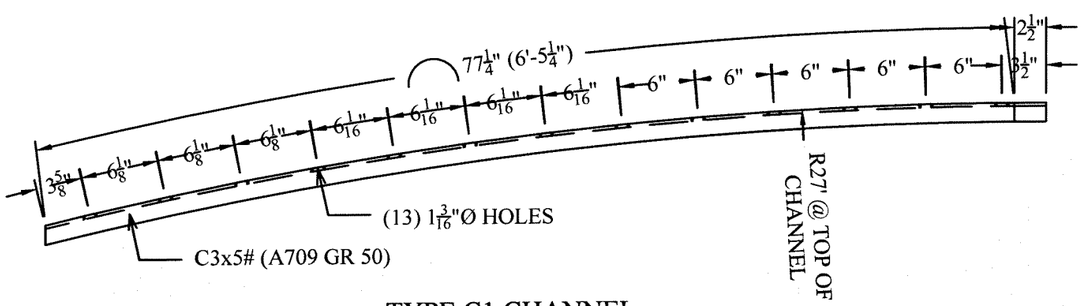

TYPE C1 CHANNEL
8 REQUIRED

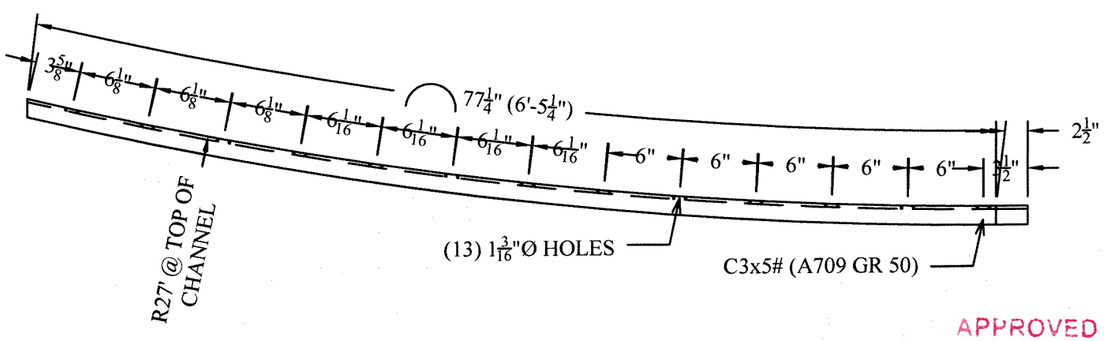

TYPE C2 CHANNEL
4 REQUIRED

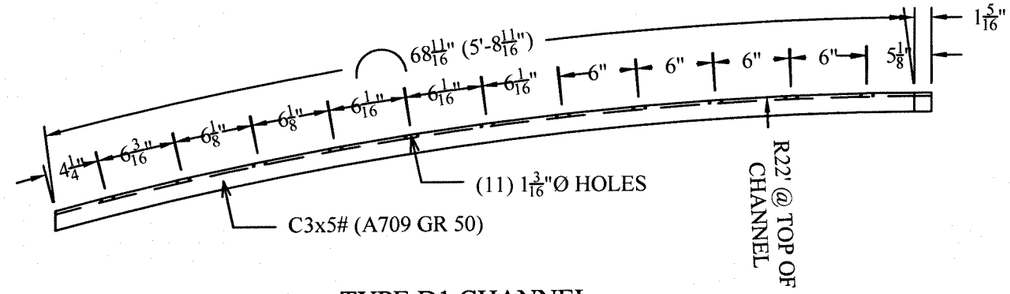

TYPE D1 CHANNEL
4 REQUIRED

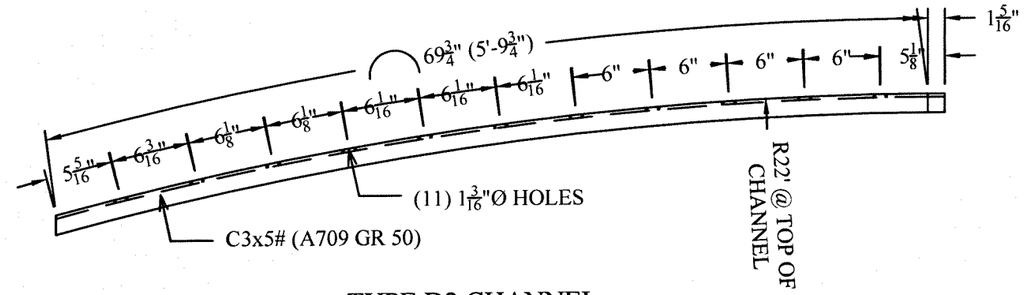

TYPE D2 CHANNEL
14 REQUIRED

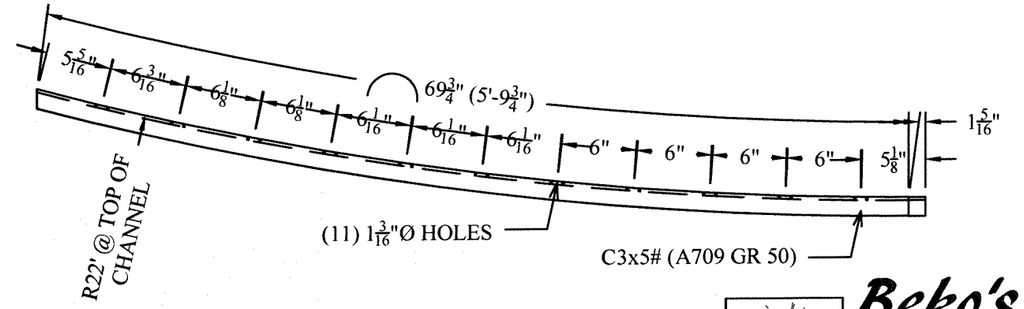

TYPE D3 CHANNEL
8 REQUIRED

APPROVED AS NOTED
BRIDGE DESIGN SECTION
ALASKA DEPARTMENT OF TRANSPORTATION
AND PUBLIC FACILITIES
Reviewed for conformance with basic details and dimensions of the contract plans. Accuracy of information supplied by the fabricator is not guaranteed.
By DAG Date 03/10/22

GALVANIZED ASTM 123

Beko's WELDING INC.
P.O Box 1075
1100 S. Berg Parkway
Canby, OR 97013
Dick & Rick Beko
(503) 266-3507
(503) 266-3500 (Fax)
Bekosoffice@Canby.com

ALASKA DEPARTMENT OF TRANSPORTATION		
BRIDGE NO:	CONTRACT NO:	ZC
DATE: 3/3/22	HAMILTON	
HERRING COVE BRIDGE (SOUTH TONGASS HIGHWAY)		
PEDESTRIAN RAILING		DRAWING NUMBER: 7 OF 24

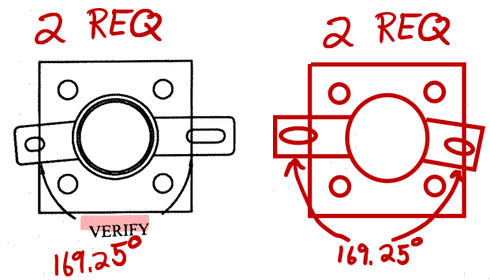

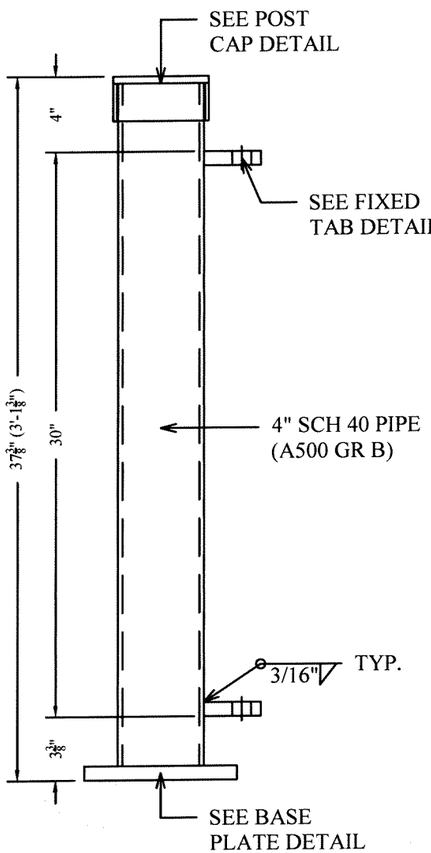

END POST DETAIL
4 REQUIRED

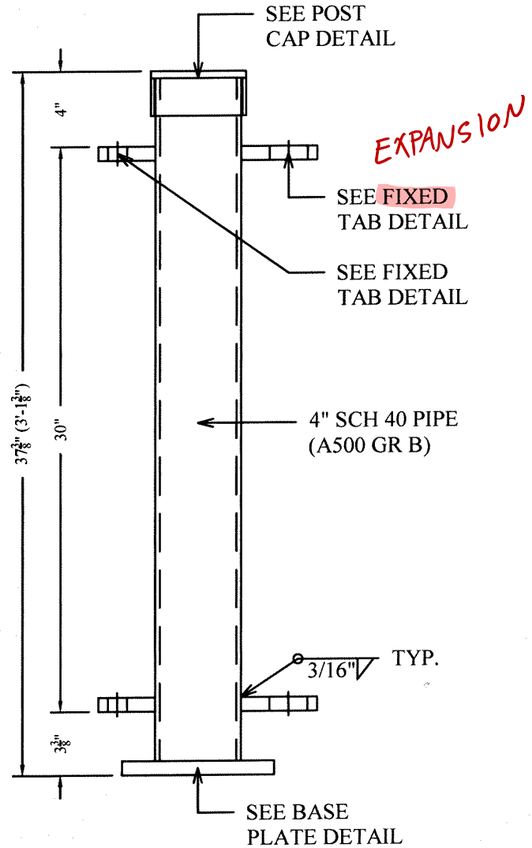

ANGLE POST DETAIL
4 REQUIRED

2 OF EACH ORIENTATION REQUIRED

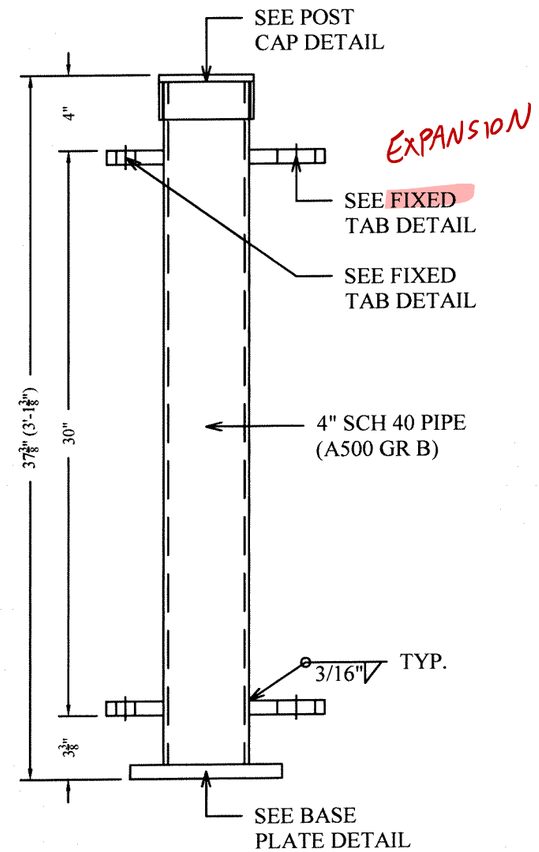

EXPANSION POST DETAIL
4 REQUIRED

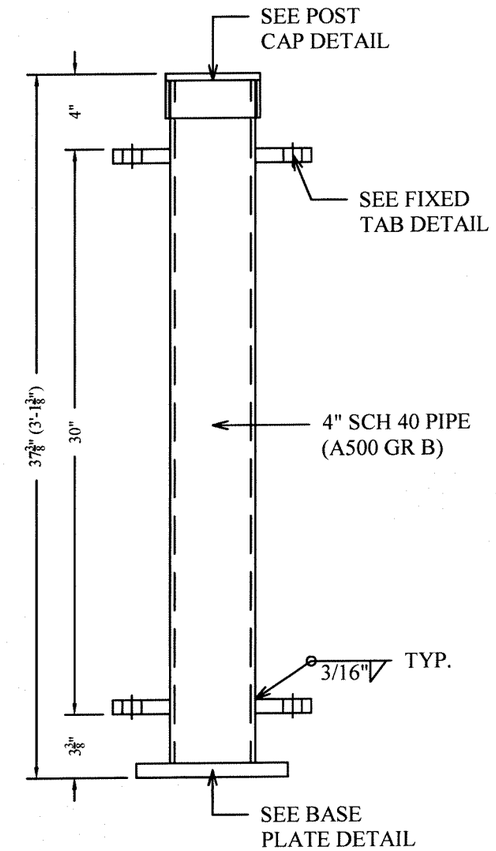

TYPICAL POST DETAIL
40 REQUIRED

APPROVED AS NOTED
BRIDGE DESIGN SECTION
ALASKA DEPARTMENT OF TRANSPORTATION
AND PUBLIC FACILITIES
Reviewed for conformance with basic details and dimensions of the contract plans. Accuracy of information supplied by the fabricator is not guaranteed.
By DAG Date 03/10/22

GALVANIZED ASTM 123

Beko's WELDING INC.
P.O Box 1075
1100 S. Berg Parkway
Canby, OR 97013
Dick & Rick Beko
(503) 266-3507
(503) 266-3500 (Fax)
Bekosoffice@Canby.com

ALASKA DEPARTMENT OF TRANSPORTATION		
BRIDGE NO:	CONTRACT NO:	ZC
DATE: 3/3/22	HAMILTON	
HERRING COVE BRIDGE (SOUTH TONGASS HIGHWAY)		
PEDESTRIAN RAILING	DRAWING NUMBER: 8 OF 24	

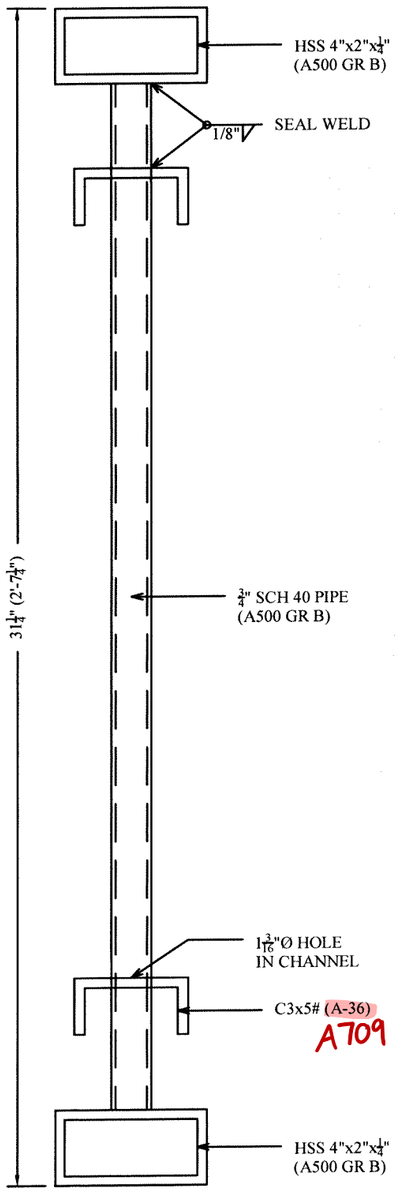

SECTION B-B

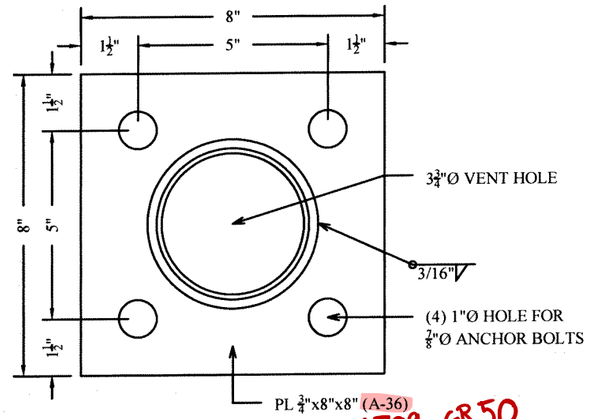

BASE PLATE DETAIL
52 REQUIRED

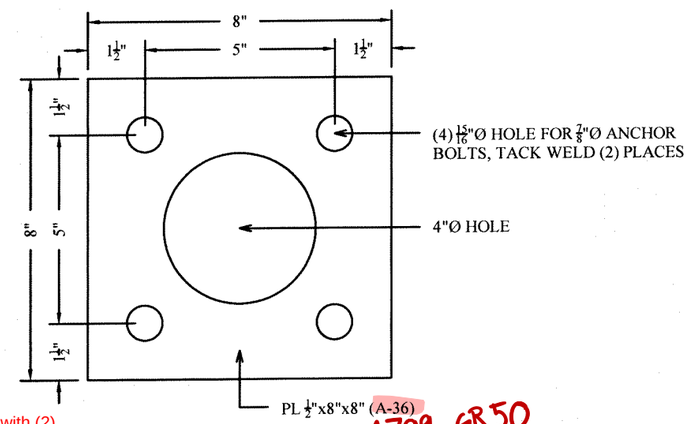

ANCHOR PLATE DETAIL
52 REQUIRED

Replace 1/8" seal weld with (2) 1/4" drilled and tapped holes, and (2) 1/4" stainless steel set screw. Tapped holes will be on center on corresponding sides.

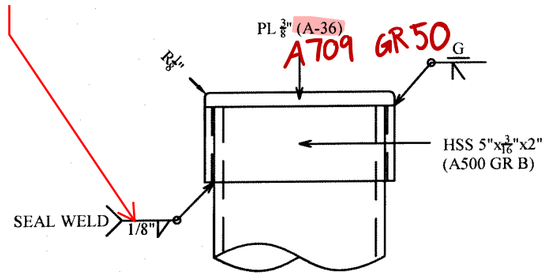

POST CAP DETAIL
52 REQUIRED

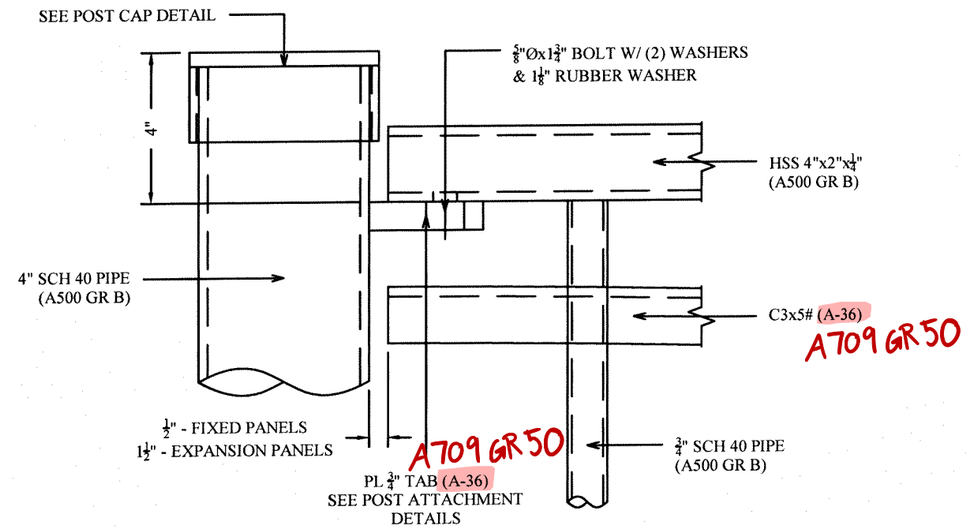

CONNECTION DETAIL

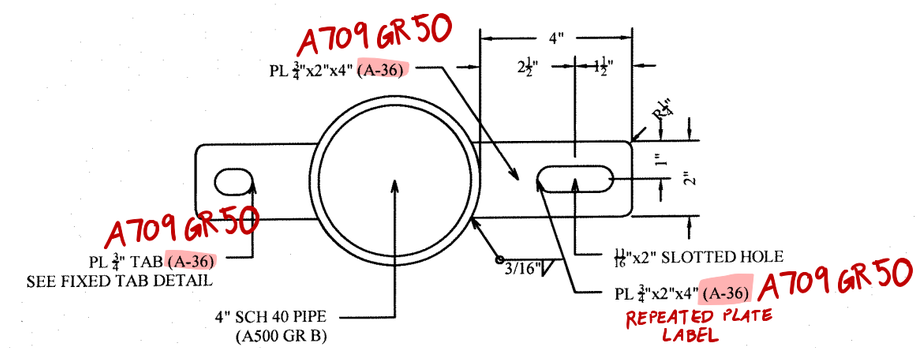

POST ATTACHMENT - EXPANSION TAB
16 EXPANSION TABS REQUIRED

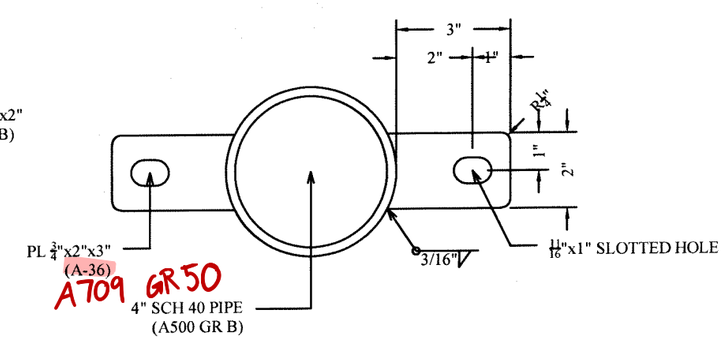

POST ATTACHMENT - FIXED TAB
184 FIXED TABS REQUIRED

GALVANIZED ASTM 123

APPROVED AS NOTED
BRIDGE DESIGN SECTION
ALASKA DEPARTMENT OF TRANSPORTATION
AND PUBLIC FACILITIES
Reviewed for conformance with basic details and dimensions of the contract plans. Accuracy of information supplied by the fabricator is not guaranteed.
By PAG Date 03/10/22

Beko's WELDING INC.
P.O Box 1075
1100 S. Berg Parkway
Canby, OR 97013
Dick & Rick Beko
(503) 266-3507
(503) 266-3500 (Fax)
Bekosoffice@Canby.com

ALASKA DEPARTMENT OF TRANSPORTATION		
BRIDGE NO:	CONTRACT NO:	ZC
DATE: 3/3/22	HAMILTON	
HERRING COVE BRIDGE (SOUTH TONGASS HIGHWAY)		
PEDESTRIAN RAILING	DRAWING NUMBER: 9 OF 24	

State of Alaska

GOVERNOR MIKE DUNLEAVY

Submittal Cover Sheet

Department of Transportation Public Facilities
SOUTHCOAST REGION
Construction Section

Project: KTN- HERRING COVE BRIDGE IMPROVEMENTS	Project No: 0902043/SFHWY00072
Contractor: Hamilton Construction Alaska	Submittal No. 507-003 Cable Railing Shop Drawing
Date Response Sent: 04/06/2022	Reviewed By: Bob Lundell, P.E. Recoverable Signature X Bob Lundell Signed by: 2d66350b-1634-445f-b1d5-d5b87bea066b

A	AAN	R&R	R	IO	R&RasN	INC	CA
Approved	Approved as Noted	Revise and Resubmit	Rejected	Informational Only	Revisit & Resubmit as Noted	Incomplete	Conditionally Approved

Item No.	Item	Contract Documents	A	AAN	R&R	R	IO	R&R asN	INC	CA
507.0001.0003	Bridge Barriers and Railing	507-3.01		X						

Comments/Anticipated Response:

- Review comments on shop drawings from Nick Murray.

BEKO'S WELDING, INC.

P.O. BOX 1075
1100 S. BERG PARKWAY
CANBY, OR 97013

RICK BEKO
PHONE: (503) 266-3507
FAX: (503) 266-3500

DATE: 03/18/2022

CONTRACT #:
SFHWY00072/0902043

TO: HAMILTON CONSTRUCTION

PROJECT: KTN HERRING COVE
(SOUTH TONGASS HIGHWAY)

ITEMS	COPIES	DATE	DESCRIPTION
1	1	03/18/2022	CABLE RAILING

_____ AS YOU REQUESTED

_____ FOR YOUR INFORMATION

___X___ FOR YOUR APPROVAL

_____ FOR YOUR REVIEW

_____ RETURN REQUESTED

Reviewed
By Chris Duty
03/18/2022 12:00:29 PM

SINCERELY,

RICK BEKO
VICE PRESIDENT

APPROVED AS NOTED
BRIDGE DESIGN SECTION
ALASKA DEPARTMENT OF TRANSPORTATION
AND PUBLIC FACILITIES
Reviewed for conformance with basic details and dimensions of the contract plans. Accuracy of information supplied by the fabricator is not guaranteed.
By DG Date 4-6-22

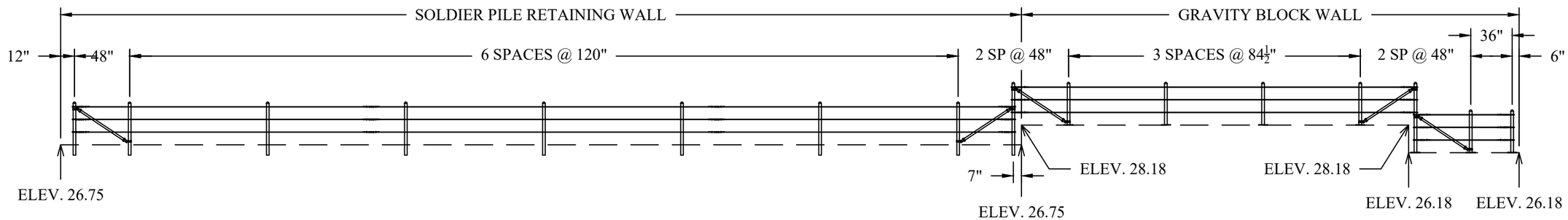

POST SPACING DETAIL

KTN HERRING COVE

Per the plan sheets, the turnbuckles are required to be staggered. Note 1 on sheet M5.

The locations of the Intermediate turnbuckles must be adjusted so that no space between the posts has more than 1 turnbuckle directly adjacent vertically. See the new locations as an example in the redlines on the Layout Detail below.

This will also require an adjustment in required cable lengths.

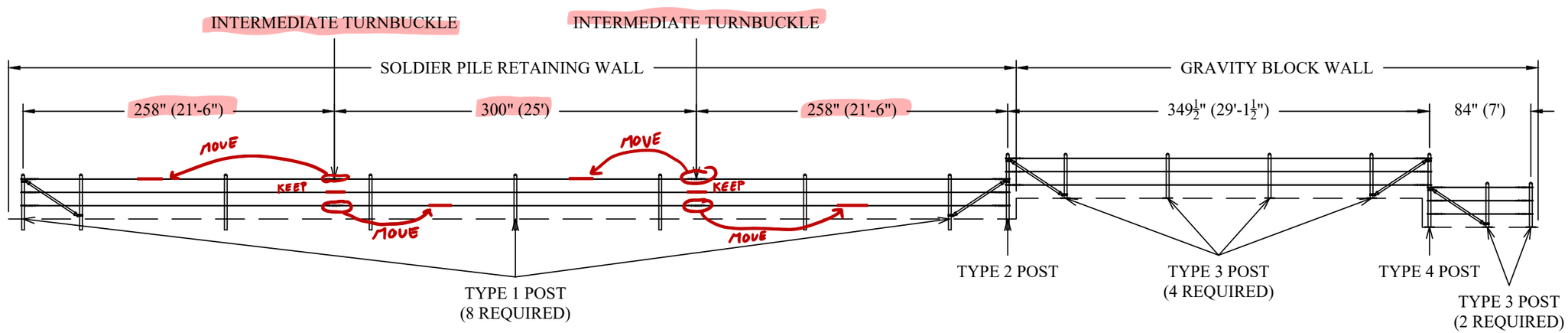

POST & CABLE LAYOUT DETAIL

KTN HERRING COVE

APPROVED AS NOTED
BRIDGE DESIGN SECTION
ALASKA DEPARTMENT OF TRANSPORTATION
AND PUBLIC FACILITIES
Reviewed for conformance with basic details and dimensions of the contract plans. Accuracy of information supplied by the fabricator is not guaranteed.
By PG Date 4-6-22

GALVANIZED ASTM 123

Beko's WELDING INC.
P.O Box 1075
1100 S. Berg Parkway
Canby, OR 97013
Dick & Rick Beko
(503) 266-3507
(503) 266-3500 (Fax)
Bekosoffice@Canby.com

ALASKA DEPARTMENT OF TRANSPORTATION		
BRIDGE NO:	CONTRACT NO: SFHWY00072/0902043	ZC
DATE: 3/18/22	HAMILTON	
HERRING COVE BRIDGE (SOUTH TONGASS HIGHWAY)		
CABLE RAIL		DRAWING NUMBER: 1 OF 3

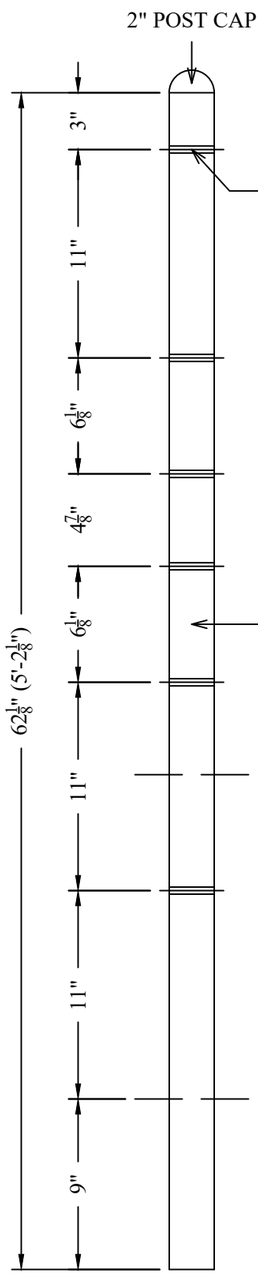

TYPE 2 POST DETAIL
1 REQUIRED

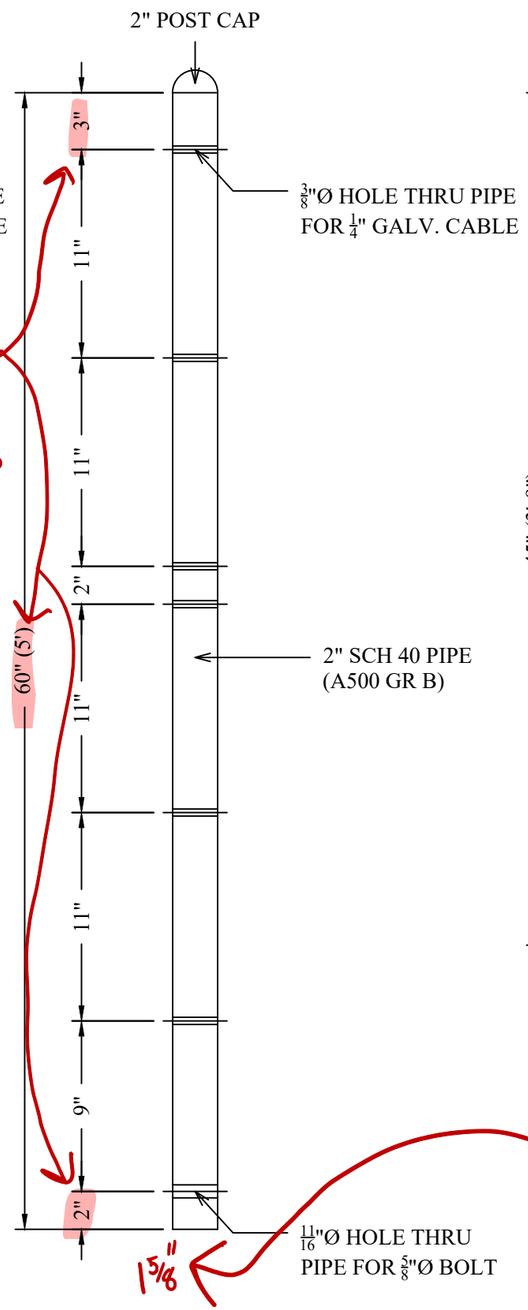

TYPE 4 POST DETAIL
1 REQUIRED

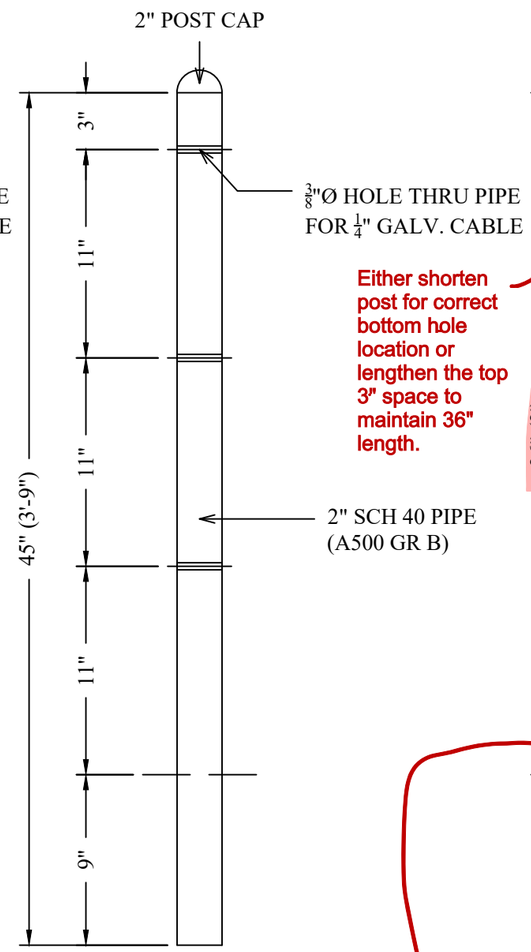

TYPE 1 POST DETAIL
8 REQUIRED

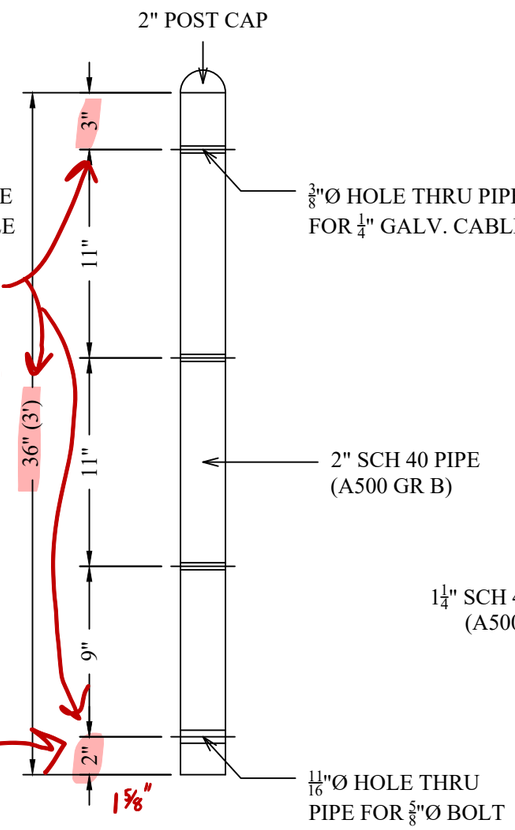

TYPE 3 POST DETAIL
6 REQUIRED

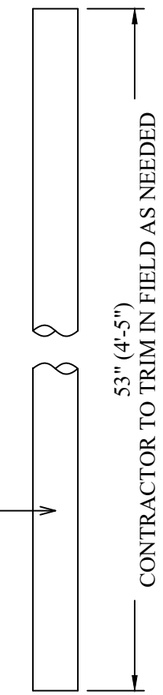

BRACE RAIL DETAIL
12 REQUIRED

No connecting hardware shown for the brace details. Also, only 5 needed as shown on plans, so why is the quantity 12?

If the hole is drilled at this location, it will not fit up with the provided dimensions in the "Post Mounting Bracket Detail" on the next page. The thickness of the baseplate needs to be subtracted to allow for proper fit up.

APPROVED AS NOTED
BRIDGE DESIGN SECTION
ALASKA DEPARTMENT OF TRANSPORTATION AND PUBLIC FACILITIES
Reviewed for conformance with basic details and dimensions of the contract plans. Accuracy of information supplied by the fabricator is not guaranteed.
By PG Date 4-6-22

GALVANIZED ASTM 123

Beko's WELDING INC.
P.O Box 1075
1100 S. Berg Parkway
Canby, OR 97013
Dick & Rick Beko
(503) 266-3507
(503) 266-3500 (Fax)
Bekosoffice@Canby.com

ALASKA DEPARTMENT OF TRANSPORTATION

BRIDGE NO:	CONTRACT NO: SFHWY00072/0902043	ZC
DATE: 3/18/22	HAMILTON	
HERRING COVE BRIDGE (SOUTH TONGASS HIGHWAY)		
CABLE RAIL		DRAWING NUMBER: 2 OF 3

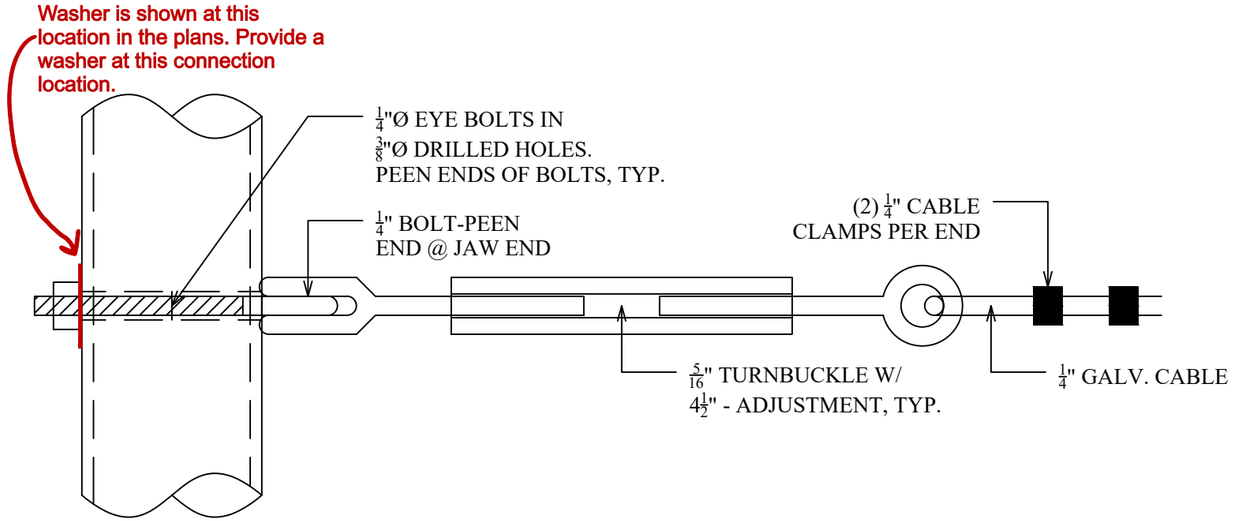

CABLE ATTACHMENT DETAIL @ END POST

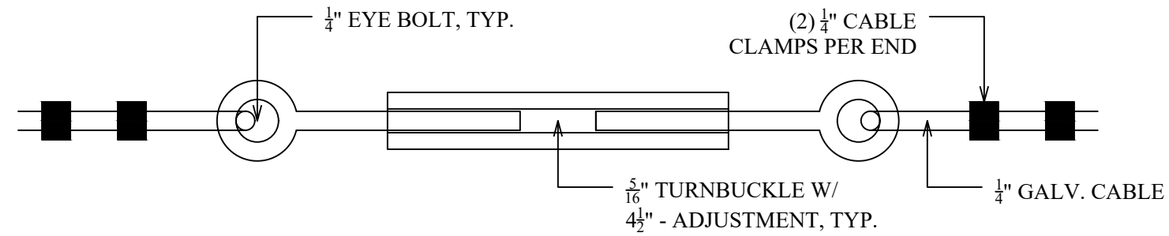

CABLE ATTACHMENT DETAIL @ INTERMEDIATE TURNBUCKLE

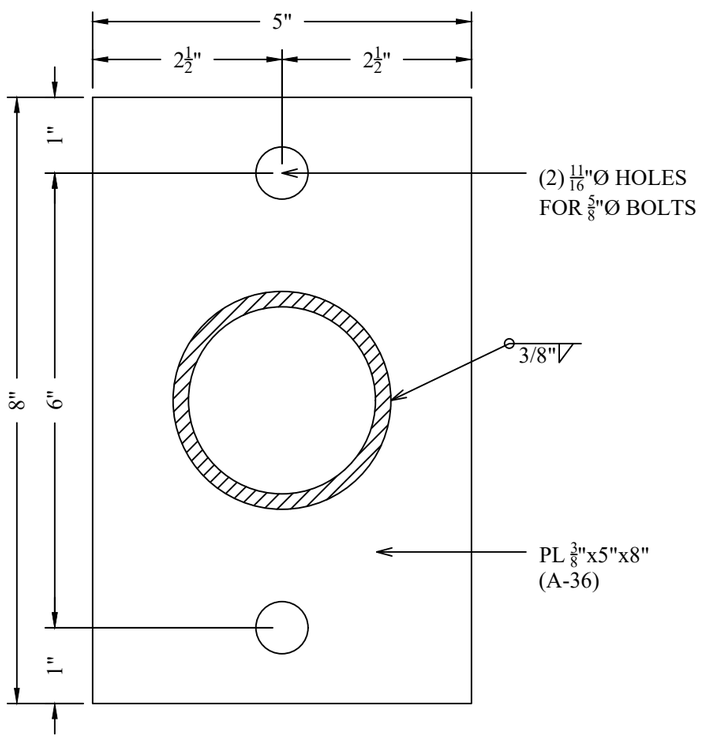

BASE PLATE DETAIL
7 REQUIRED

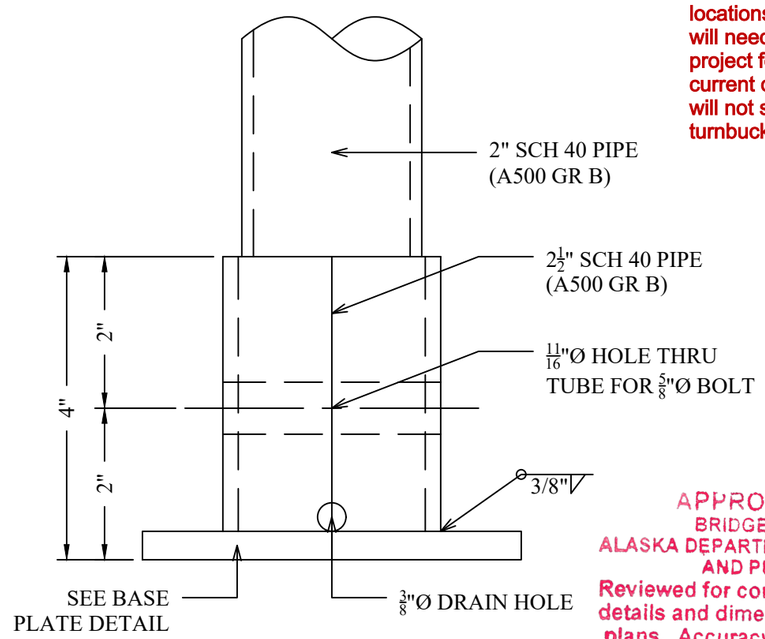

POST MOUNTING BRACKET DETAIL
7 REQUIRED

Provided cable lengths will either need to be adjusted to match new turnbuckle locations, or sufficient length will need to be provided to the project for field fitting. The current quantities and lengths will not suffice for new turnbuckle locations required.

CABLE HARDWARE LIST:

48 - $\frac{1}{4}$" EYE BOLTS
24 - TURNBUCKLES
18 - $\frac{1}{4}$" JAW ENDS
60 - $\frac{1}{4}$" CABLE CLAMPS
6 - $\frac{1}{4}$"x300" LONG GALV. CABLE
3 - $\frac{1}{4}$"x258" LONG GALV. CABLE
3 - $\frac{1}{4}$"x$349\frac{1}{2}$" LONG GALV. CABLE
3 - $\frac{1}{4}$"x84" LONG GALV. CABLE
12 - BRACE RAIL ENDS FOR $1\frac{1}{4}$" PIPE

Field fitting of Brace Rail Ends is acceptable, but why 12 lengths when only 5 are required per plan? Also, there is no connecting hardware for the attachement of the braces to the surrounding posts included in this list.

APPROVED AS NOTED
BRIDGE DESIGN SECTION
ALASKA DEPARTMENT OF TRANSPORTATION AND PUBLIC FACILITIES
Reviewed for conformance with basic details and dimensions of the contract plans. Accuracy of information supplied by the fabricator is not guaranteed.
By DG Date 4-6-22

GALVANIZED ASTM 123

Beko's WELDING INC.
P.O Box 1075
1100 S. Berg Parkway
Canby, OR 97013
Dick & Rick Beko
(503) 266-3507
(503) 266-3500 (Fax)
Bekosoffice@Canby.com

ALASKA DEPARTMENT OF TRANSPORTATION		
BRIDGE NO:	CONTRACT NO: SFHWY00072/0902043	ZC
DATE: 3/18/22	HAMILTON	
HERRING COVE BRIDGE (SOUTH TONGASS HIGHWAY)		
PIPE HANDRAIL		DRAWING NUMBER: 3 OF 3

State of Alaska

GOVERNOR MIKE DUNLEAVY

Submittal Cover Sheet

Department of Transportation Public Facilities
SOUTHCOAST REGION
Construction Section

Project: KTN- HERRING COVE BRIDGE IMPROVEMENTS	Project No: 0902043/SFHWY00072
Contractor: Hamilton Construction Alaska	Submittal No. 625-003 Pipe Handrail Shop Drawings
Date Response Sent: 4/27/2023	Reviewed By: Eric Strong, P.E.

A	**AAN**	**R&R**	**R**	**I**	**R&RasN**	**INC**	**CA**
Approved	Approved as Noted	Revise and Resubmit	Rejected	Informational	Revisit & Resubmit as Noted	Incomplete	Conditionally Approved

Item No.	**Item**	**Contract Documents**	**A**	**AAN**	**R&R**	**R**	**I**	**R&R asN**	**INC**	**CA**
625.0001.0000	Pipe Handrail	625	X							

Comments/Anticipated Response: None

HAMILTON CONSTRUCTION ALASKA
CONTRACTORS & ENGINEERS

04.24.2023

State of Alaska Department of Transportation and Public Facilities
PO Box 112506
Juneau, AK 99811-2506

RE: KTN: Herring Cove Bridge Improvements
Contract Number: 0902043/SFHWY00072

Pipe Handrail shop drawings REV 2

Eric Strong,

Please see attached Pipe handrail shop drawings REV 2.

Sincerely,

Curtis Clowar

Curtis Clowar
Project Engineer

BEKO'S WELDING, INC.

P.O. BOX 1075
1100 S. BERG PARKWAY
CANBY, OR 97013

RICK BEKO
PHONE: (503) 266-3507
FAX: (503) 266-3500

DATE: 04/24/2023

CONTRACT #:

TO: HAMILTON CONSTRUCTION

PROJECT: HERRING COVE BRIDGE
(SOUTH TONGASS HIGHWAY)

ITEMS	COPIES	DATE	DESCRIPTION
1	1	~~04/19/2023~~ 04/24/2023	PIPE HANDRAIL

_____ AS YOU REQUESTED

_____ FOR YOUR INFORMATION

___X___ FOR YOUR APPROVAL

_____ FOR YOUR REVIEW

_____ RETURN REQUESTED

SINCERELY,

RICK BEKO
VICE PRESIDENT

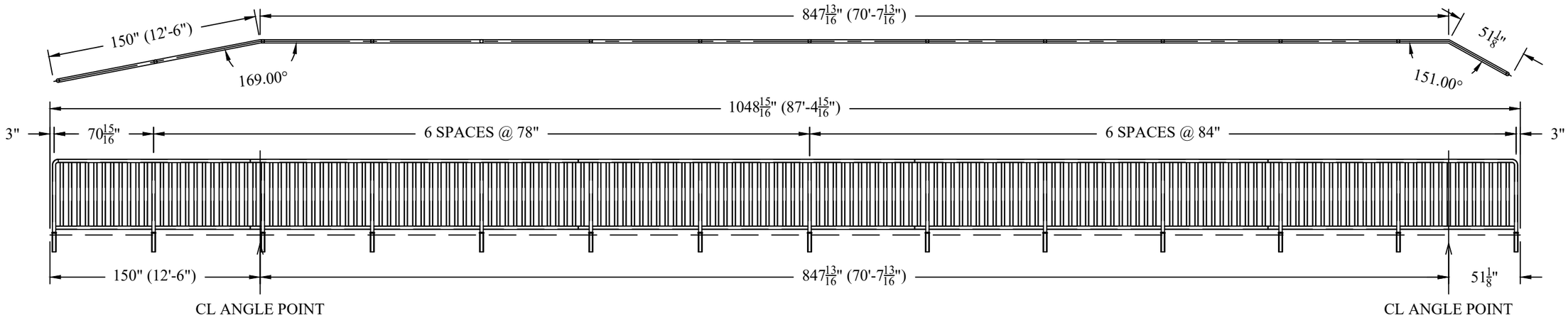

POST LAYOUT DETAIL (RIGHT SIDE)
KTN HERRING COVE BRIDGE IMPROVEMENTS

TYPE A PANEL	TYPE B PANEL	TYPE C PANEL	TYPE D PANEL	TYPE E PANEL
1 REQUIRED	1 REQUIRED	1 REQUIRED	1 REQUIRED	1 REQUIRED

PANEL LAYOUT DETAIL (RIGHT SIDE)
KTN HERRING COVE BRIDGE IMPROVEMENTS

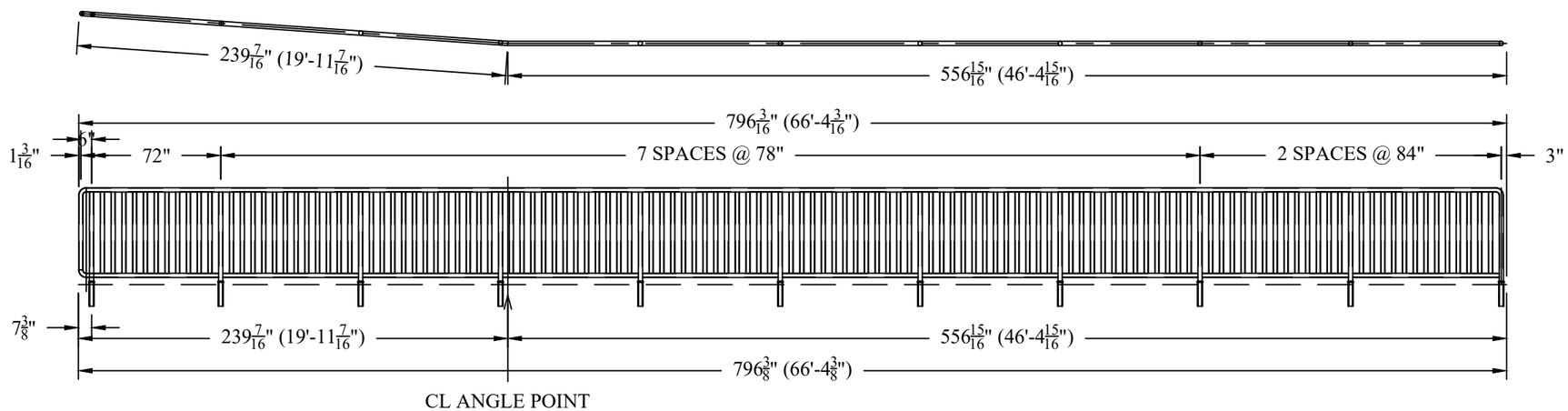

POST LAYOUT DETAIL (LEFT SIDE)
KTN HERRING COVE BRIDGE IMPROVEMENTS

TYPE 1 PANEL	TYPE 2 PANEL	TYPE 3 PANEL	TYPE 4 PANEL
1 REQUIRED	1 REQUIRED	2 REQUIRED	1 REQUIRED

PANEL LAYOUT DETAIL (LEFT SIDE)
KTN HERRING COVE BRIDGE IMPROVEMENTS

GALVANIZED ASTM 123

Beko's WELDING INC.
P.O Box 1075
1100 S. Berg Parkway
Canby, OR 97013
Rick Beko & Paul Madeira
(503) 266-3507
(503) 266-3500 (Fax)
Bekosoffice@Canby.com

ALASKA DEPARTMENT OF TRANSPORTATION		
BRIDGE NO: 253	CONTRACT NO: SFHWY00072/0902043	ZC
DATE: 4/24/23	HAMILTON	
HERRING COVE BRIDGE (SOUTH TONGASS HIGHWAY)		
PIPE HANDRAIL	DRAWING NUMBER: 1 OF 6	

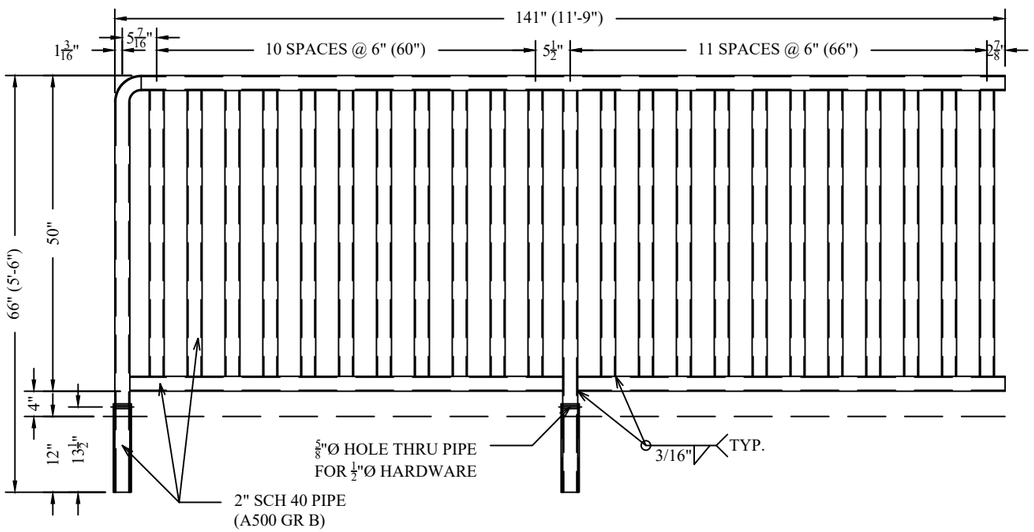

TYPE A PANEL
1 REQUIRED

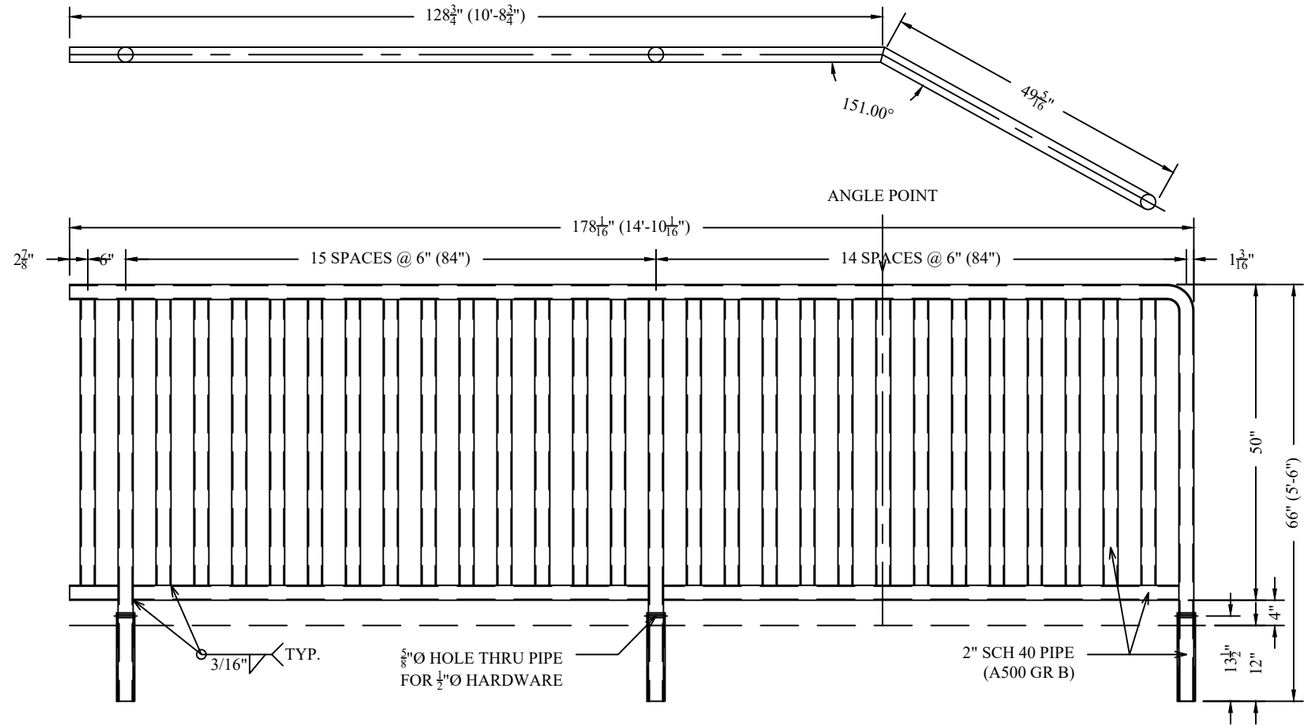

TYPE E PANEL
1 REQUIRED

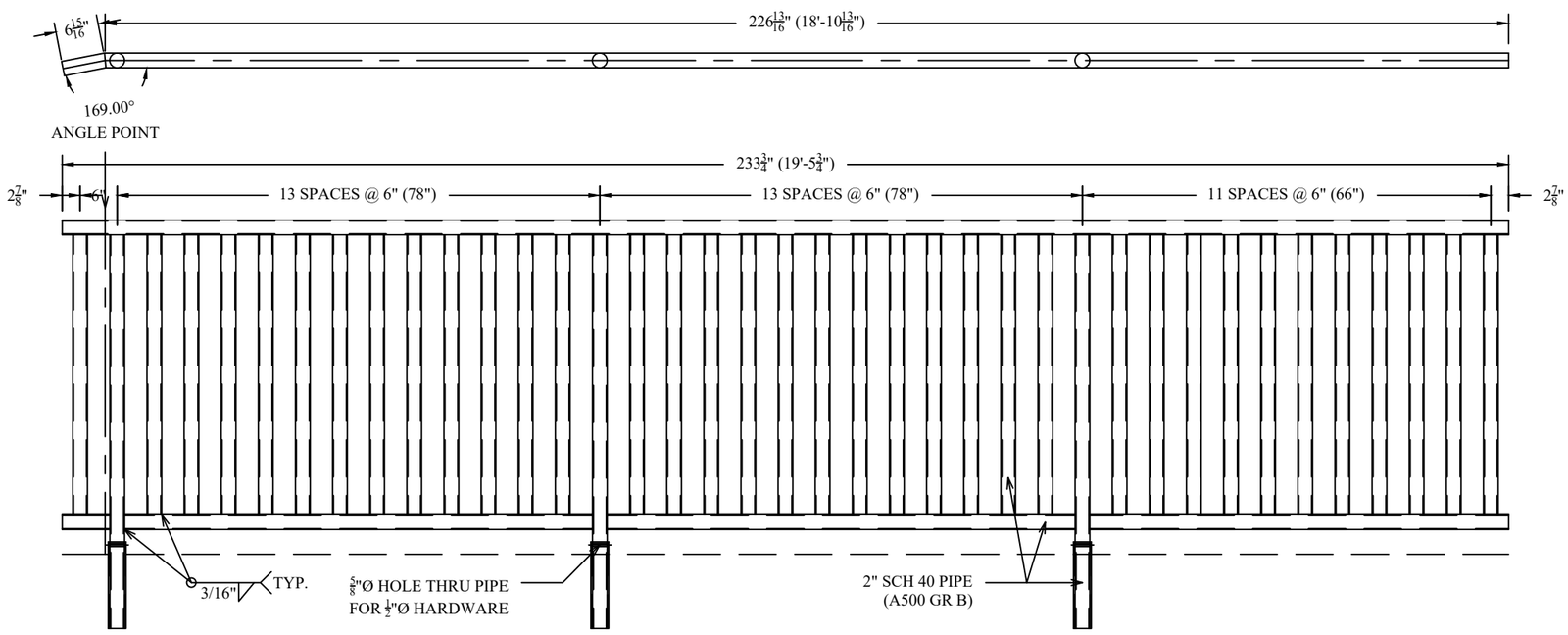

TYPE B PANEL
1 REQUIRED

GALVANIZED ASTM 123

Beko's WELDING INC.
P.O Box 1075
1100 S. Berg Parkway
Canby, OR 97013
Rick Beko & Paul Madeira
(503) 266-3507
(503) 266-3500 (Fax)
Bekosoffice@Canby.com

ALASKA DEPARTMENT OF TRANSPORTATION		
BRIDGE NO: 253	CONTRACT NO: SFHWY00072/0902043	ZC
DATE: 4/24/23	HAMILTON	
HERRING COVE BRIDGE (SOUTH TONGASS HIGHWAY)		
PIPE HANDRAIL		DRAWING NUMBER: 2 OF 6

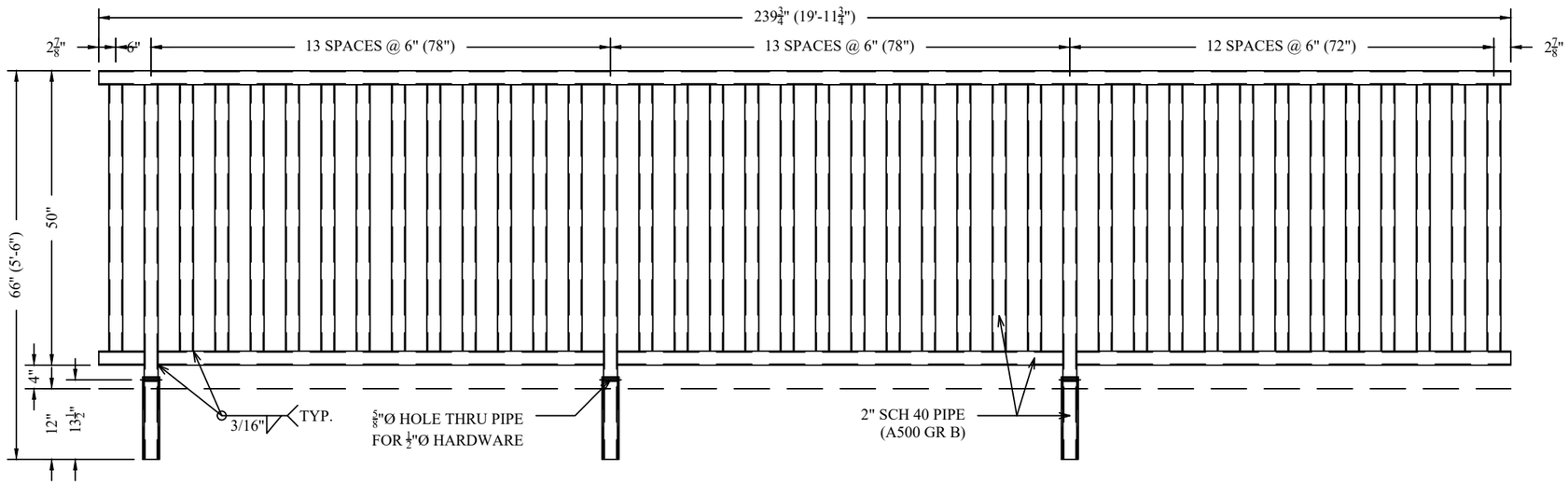

TYPE C PANEL
1 REQUIRED

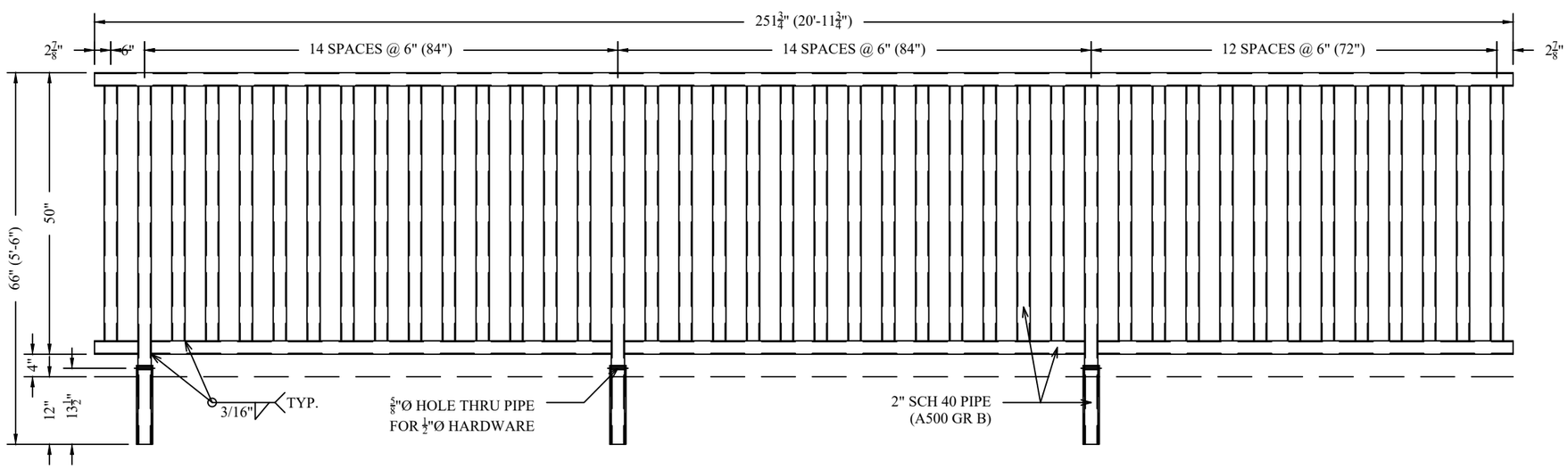

TYPE D PANEL
1 REQUIRED

GALVANIZED ASTM 123

Beko's WELDING INC.
P.O Box 1075
1100 S. Berg Parkway
Canby, OR 97013
Rick Beko & Paul Madeira
(503) 266-3507
(503) 266-3500 (Fax)
Bekosoffice@Canby.com

ALASKA DEPARTMENT OF TRANSPORTATION		
BRIDGE NO: 253	CONTRACT NO: SFHWY00072/0902043	ZC
DATE: 4/24/23	HAMILTON	
HERRING COVE BRIDGE (SOUTH TONGASS HIGHWAY)		
PIPE HANDRAIL		DRAWING NUMBER: 3 OF 6

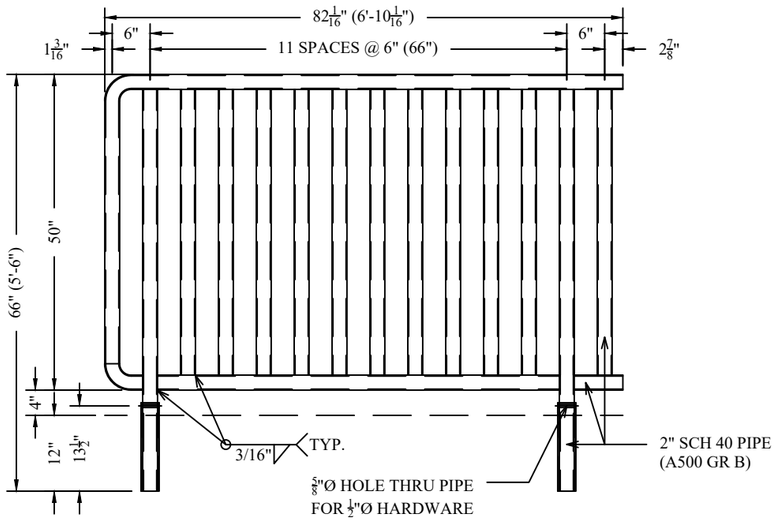

TYPE 1 PANEL
1 REQUIRED

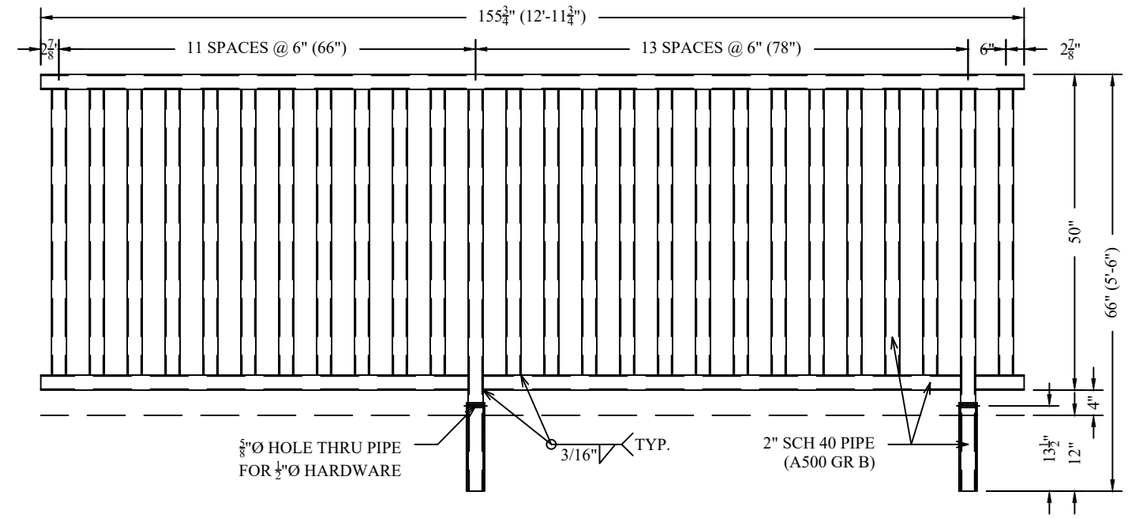

TYPE 3 PANEL
2 REQUIRED

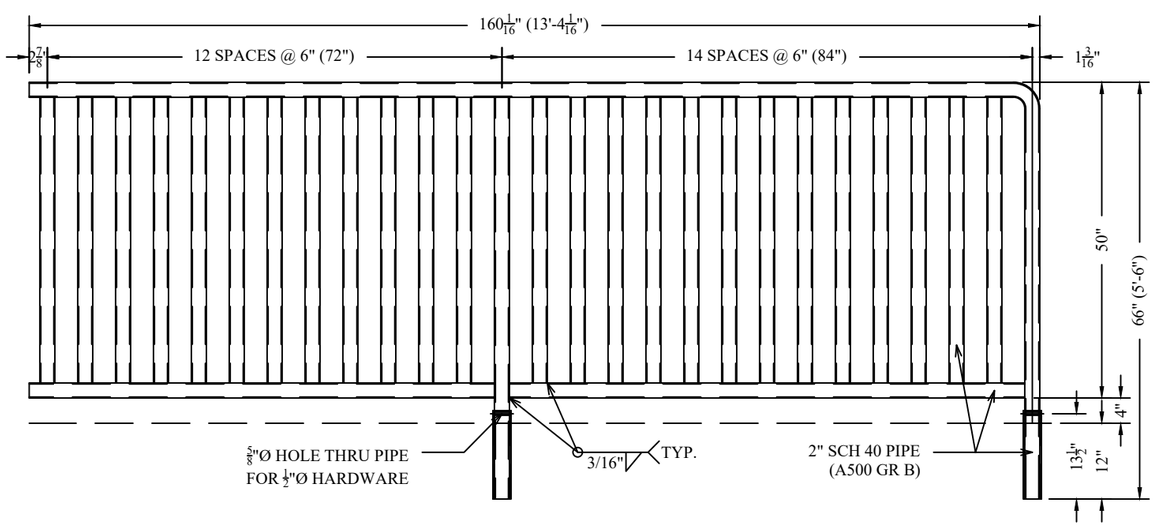

TYPE 4 PANEL
1 REQUIRED

GALVANIZED ASTM 123

Beko's WELDING INC.
P.O Box 1075
1100 S. Berg Parkway
Canby, OR 97013
Rick Beko & Paul Madeira
(503) 266-3507
(503) 266-3500 (Fax)
Bekosoffice@Canby.com

ALASKA DEPARTMENT OF TRANSPORTATION		
BRIDGE NO: 253	CONTRACT NO: SFHWY00072/0902043	ZC
DATE: 4/24/23	HAMILTON	
HERRING COVE BRIDGE (SOUTH TONGASS HIGHWAY)		
PIPE HANDRAIL		DRAWING NUMBER: 4 OF 6

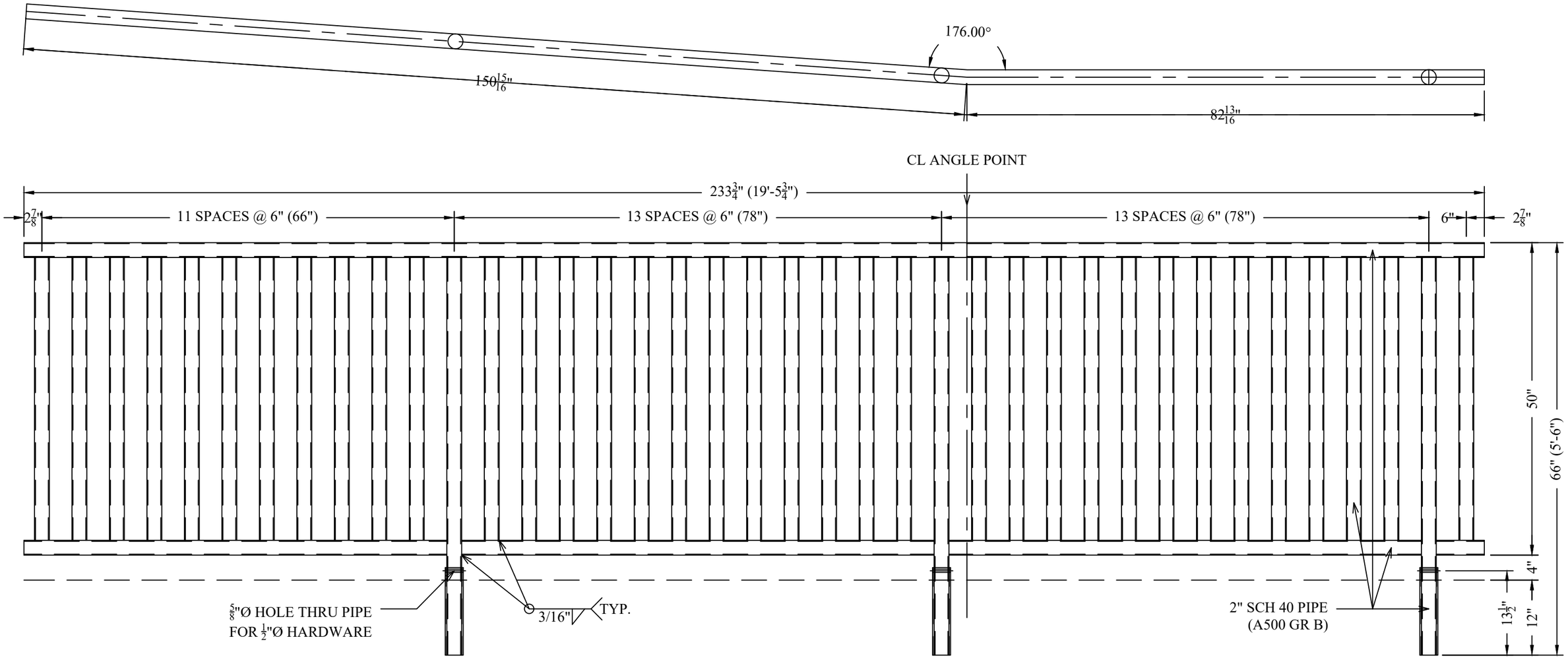

TYPE 2 PANEL
1 REQUIRED

Beko's WELDING INC.
P.O Box 1075
1100 S. Berg Parkway
Canby, OR 97013
Rick Beko & Paul Madeira
(503) 266-3507
(503) 266-3500 (Fax)
Bekosoffice@Canby.com

ALASKA DEPARTMENT OF TRANSPORTATION		
BRIDGE NO: 253	CONTRACT NO: SFHWY00072/0902043	ZC
DATE: 4/24/23	HAMILTON	
HERRING COVE BRIDGE (SOUTH TONGASS HIGHWAY)		
PIPE HANDRAIL		DRAWING NUMBER: 5 OF 6

GALVANIZED ASTM 123

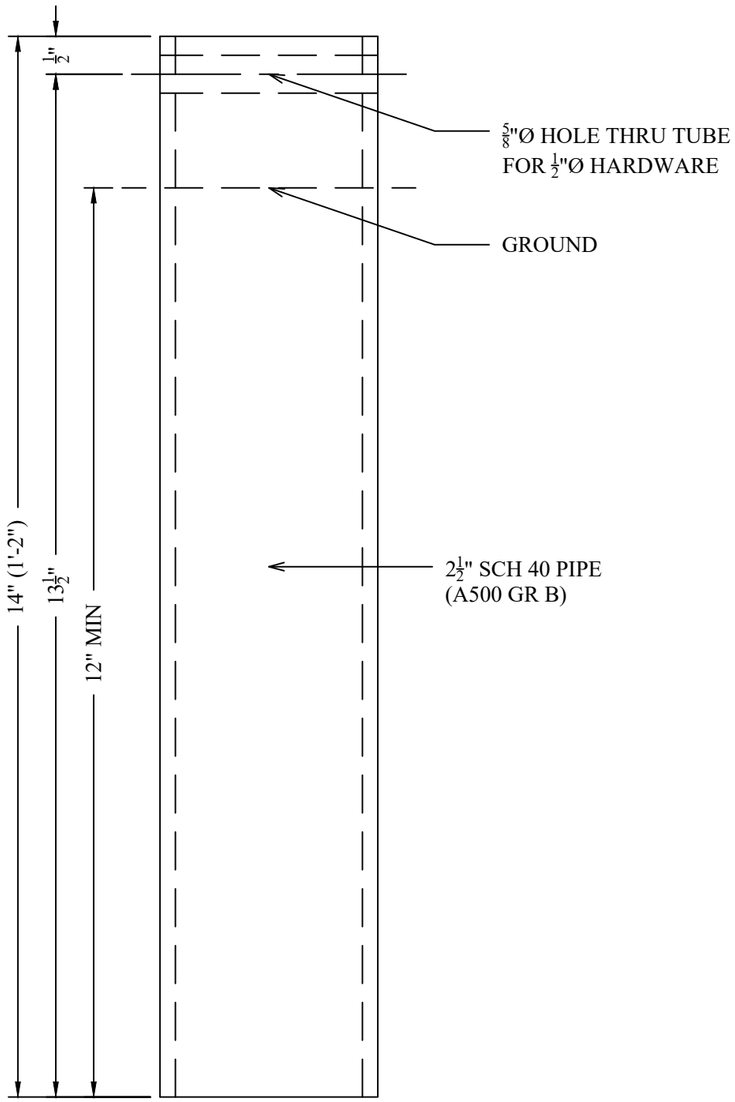

PIPE SLEEVE DETAIL
25 REQUIRED

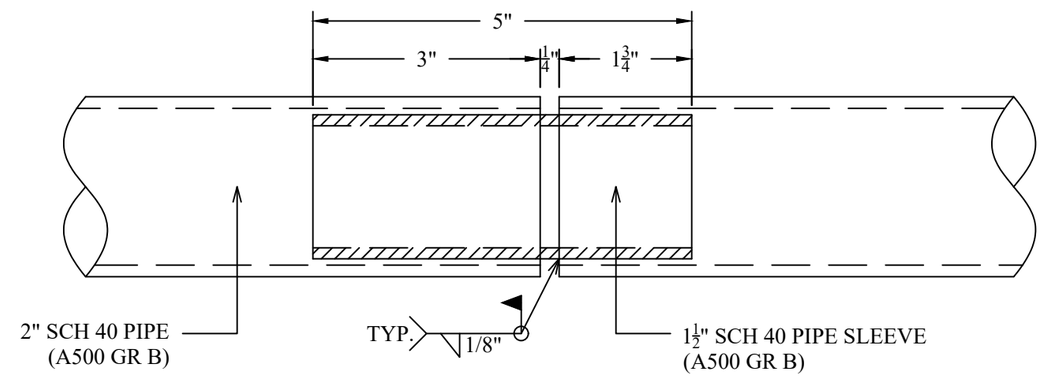

SLIP JOINT DETAIL
16 REQUIRED

GALVANIZED ASTM 123

Beko's WELDING INC.
P.O Box 1075
1100 S. Berg Parkway
Canby, OR 97013
Dick & Rick Beko
(503) 266-3507
(503) 266-3500 (Fax)
Bekosoffice@Canby.com

ALASKA DEPARTMENT OF TRANSPORTATION		
BRIDGE NO: 253	CONTRACT NO: SFHWY00072/0902043	ZC
DATE: 4/24/23	HAMILTON	
HERRING COVE BRIDGE (SOUTH TONGASS HIGHWAY)		
PIPE HANDRAIL		DRAWING NUMBER: 6 OF 6

State of Alaska

GOVERNOR MIKE DUNLEAVY

Submittal Cover Sheet

Department of Transportation Public Facilities
SOUTHCOAST REGION
Construction Section

Project: KTN- HERRING COVE BRIDGE IMPROVEMENTS	Project No: 0902043/SFHWY00072
Contractor: Hamilton Construction Alaska	Submittal No. 606-001 Guardrail Material
Date Response Sent: 08/31/2022	Reviewed By: Eric Strong, P.E. Recoverable Signature X Eric Strong Signed by: 2d66350b-1634-445f-b1d5-d5b87bea066b

A	AAN	R&R	R	I	R&RasN	INC	CA
Approved	Approved as Noted	Revise and Resubmit	Rejected	Informational	Revisit & Resubmit as Noted	Incomplete	Conditionally Approved

Item No.	Item	Contract Documents	A	AAN	R&R	R	I	R&R asN	INC	CA
606.0001.0000	Guardrail material package submittal for 606.001,606.0013,and 606.0016		X							

Comments/Anticipated Response:

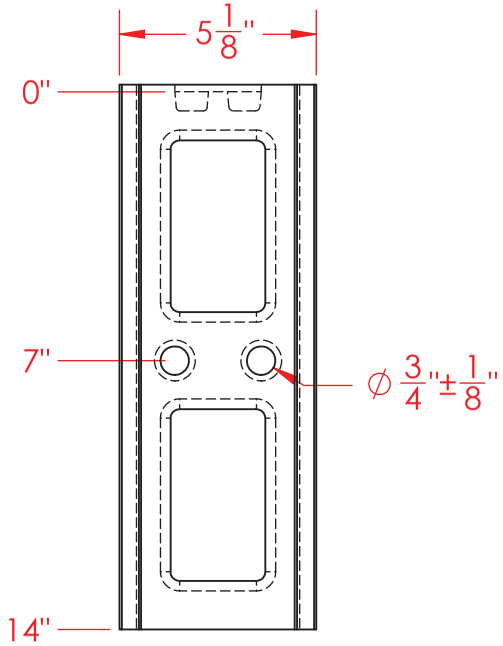

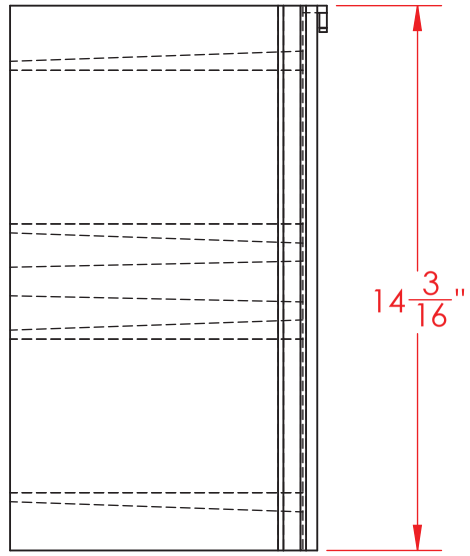

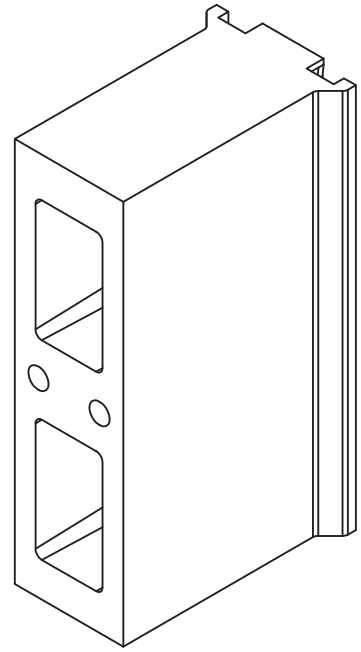

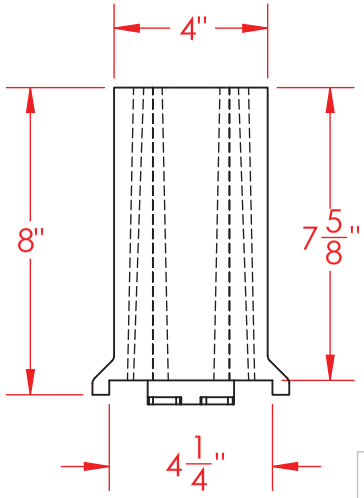

MONDO Polymer Technologies™

FHWA NCHRP 350 APPROVAL HSA-10/B-39A

FHWA MASH ELIGIBILITY HSST/B-39D

MONDO MODEL NO.

GB14SH(1)

PROPRIETARY AND CONFIDENTIAL

THE INFORMATION CONTAINED IN THIS DRAWING IS THE SOLE PROPERTY OF MONDO POLYMER TECHNOLOGIES. ANY REPRODUCTION IN PART OR AS A WHOLE WITHOUT THE WRITTEN PERMISSION OF MONDO POLYMER TECHNOLOGIES IS PROHIBITED.

UNLESS OTHERWISE SPECIFIED:

DIMENSIONS ARE IN INCHES
TOLERANCES:
BOLT HOLES +/- 1/8"
ALL OTHERS +/- 1/4"

MATERIAL: RECYCLED THERMOPLASTIC POLYOLEFIN

	NAME	DATE
DRAWN	RICK H	4/28/16
REVISION		

COMMENTS:

SIZE	DWG. NO.	REV
A		

SCALE: 1:5 | SHEET 1 OF 1

State of Alaska DOT&PF Qualified Products List printed on 03/02/2021

Ref#	Product	Manufacturer	Section	Product Type	Expires
24685	MSKT	Road Systems Inc.	710 Fence and Guardrail	710-2.11 1. Parallel Terminal	02-04-2023

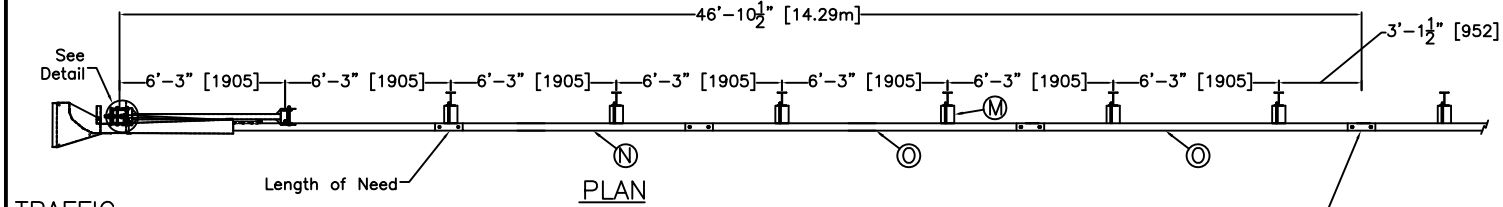

PLAN

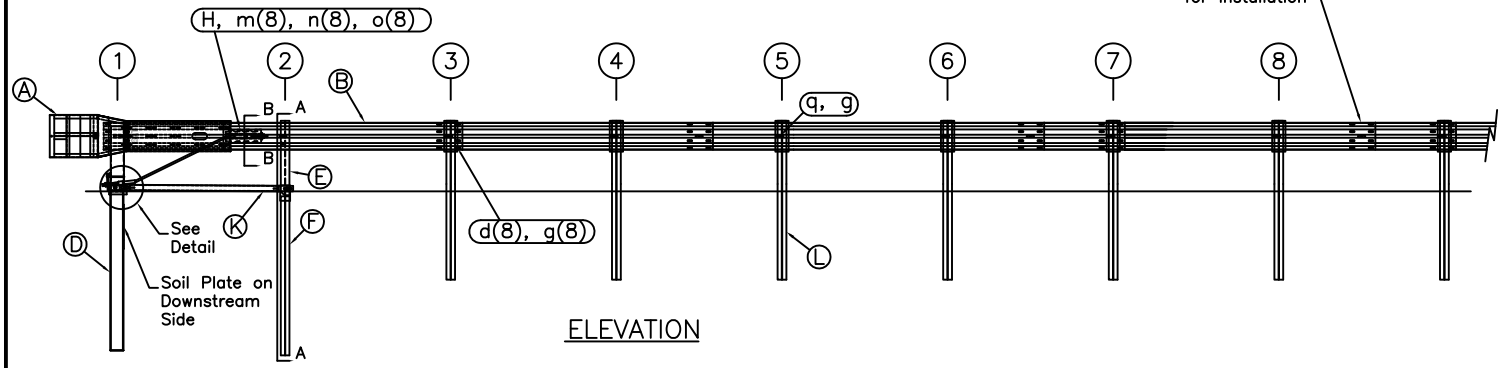

ELEVATION

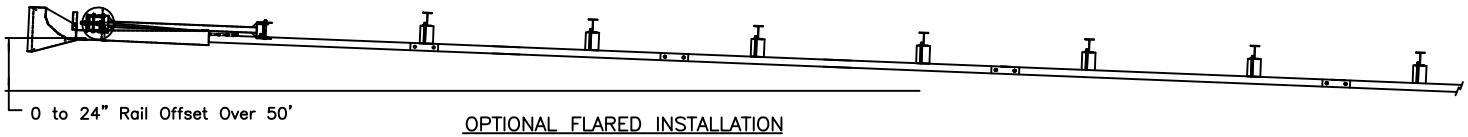

OPTIONAL FLARED INSTALLATION
25:1 maximum flare rate

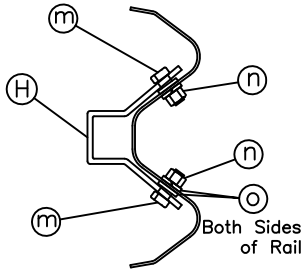

SECTION B–B
Anchor Bracket

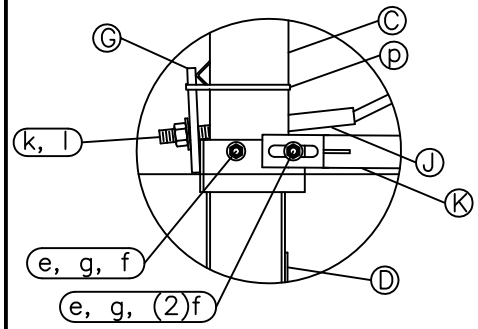

Post #1 Connection Detail

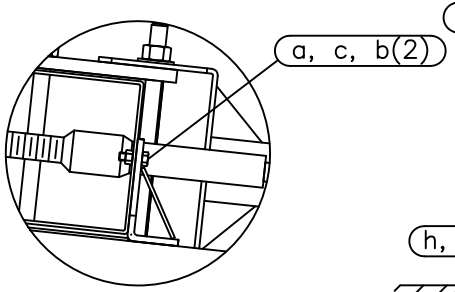

Impact Head Connection Detail

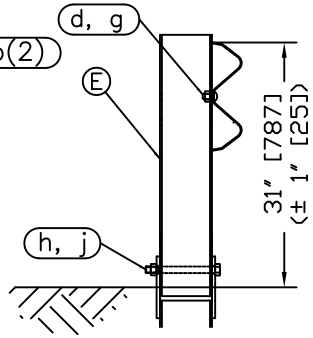

SECTION A–A
Post #2

ITEM	QTY	BILL OF MATERIALS	ITEM NO.
A	1	IMPACT HEAD	MS3000
B	1	W–BEAM GUARDRAIL END SECTION, 12 Ga.	SF1303
C	1	FIRST POST TOP (6X6X⅛" Tube)	MTPHP1A
D	1	FIRST POST BOTTOM (6' W6X15)	MTPHP1B
E	1	SECOND POST ASSEMBLY TOP	UHP2A
F	1	SECOND POST ASSEMBLY BOTTOM	HP2B
G	1	BEARING PLATE	E750
H	1	CABLE ANCHOR BOX	S760
J	1	BCT CABLE ANCHOR ASSEMBLY	E770
K	1	STRUT	MS785
L	6	6x9 (6x8.5) STEEL POST	P621
M	6	RECYCLED PLASTIC BLOCK OR EQUIV.	CBSP–14
N	1	W–BEAM MGS RAIL SECTION (9'–4 1/2")	G12025
O	2	W–BEAM MGS RAIL SECTION (12'–6")	G1203A
HARDWARE (ALL DIMENSIONS IN INCHES)			
a	2	5/16 x 1 HEX BOLT GRD 5	B5160104A
b	4	5/16 WASHER	W0516
c	2	5/16 HEX NUT	N0516
d	25	5/8 Dia. x 1 1/4 SPLICE BOLT (POST #2)	B580122
e	2	5/8 Dia. x 9 HEX BOLT A449	B580904A
f	3	5/8 WASHER	W050
g	33	5/8 Dia. H.G.R NUT	N050
h	1	3/4 Dia. x 8 1/2 HEX BOLT GRD A449	B340854A
j	1	3/4 Dia. HEX NUT	N030
k	2	1 ANCHOR CABLE HEX NUT	N100
l	2	1 ANCHOR CABLE WASHER	W100
m	8	1/2 RSI SHOULDER BOLT W/WASHER	SB12A
n	8	1/2 STRUCTURAL NUT	N012A
o	8	1/2 STRUCTURAL WASHER	W012A
p	1	BEARING PLATE RETAINER TIE	CT–100ST
q	6	5/8" x 10" H.G.R. BOLT	B581002

GENERAL NOTES:

1. All bolts, nuts, cable assemblies, cable anchors and bearing plates shall be galvanized.
2. The lower sections of the Posts 1&2 shall not protrude more than 4 in [100] above the ground (measured along a 5' [1.5m] cord longitudinal to the system). Site grading may be necessary to meet this requirement.
3. The lower section of the hinged post should not be driven with the upper post attached. If the post is placed in a drilled hole, the backfill material must be satisfactorily compacted to prevent settlement.
4. When competent rock is encountered, a 12" [300] Ø post hole, 20 in. [500] deep cored into the rock surface may be used if approved by the engineer for Posts 1 and/or 2. Granular material will be placed in the bottom of the hole, approximately 2.5" [60] deep to provide drainage. The first and/or second post can be field cut to length, placed in the hole and backfilled with suitable backfill. The soil plate may be trimmed if required.
5. The breakaway cable assembly must be taut. A locking device (vice grips or channel lock pliers) should be used to prevent the cable from twisting when tightening nuts.

RSI
Road Systems, Inc.
Big Spring, TX
Phone: 432-263-2435
or Phone: 330-346-0721

MSKT-SP-MGS
Terminal (8" Blocks)
Test Level 3

Sheet:	Date:	By:
1	05/20/17	JRR

Drawing Name:	Scale:	Rev:
MSKT-SP-MGS8	None	0

G-32.01

SHEET | of |

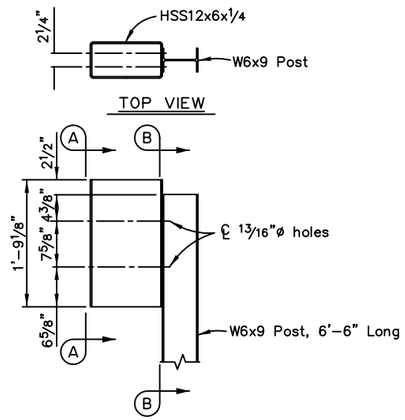

THRIE BEAM STEEL BLOCKOUT - LONG

See Note 4 for additional details

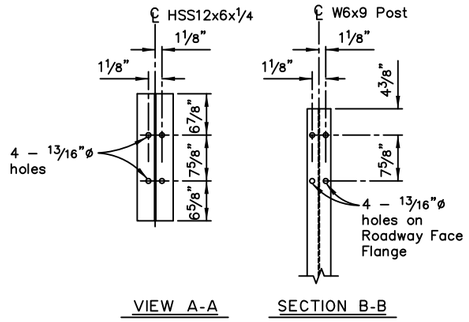

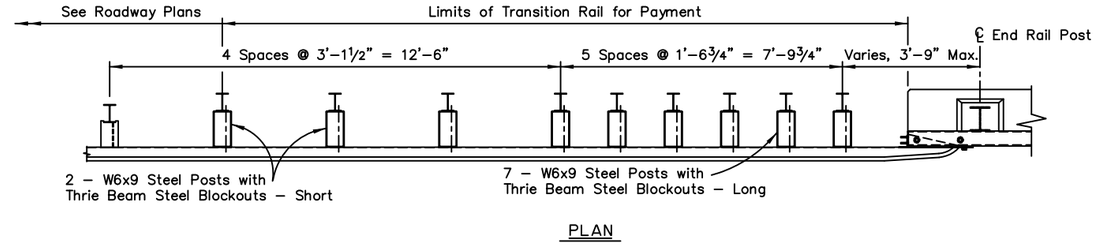

PLAN

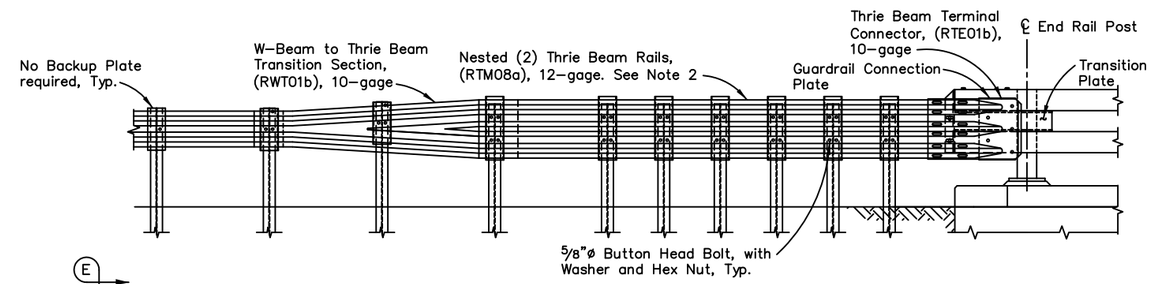

ELEVATION

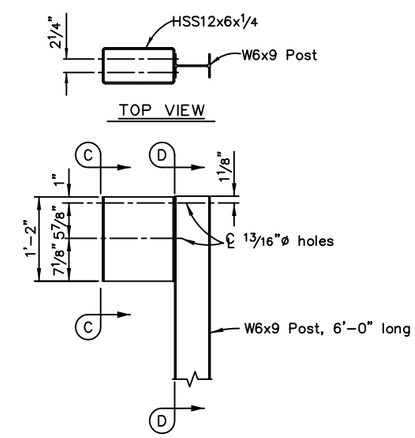

THRIE BEAM STEEL BLOCKOUT - SHORT

See Note 4 for additional details

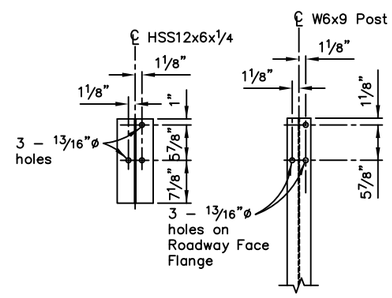

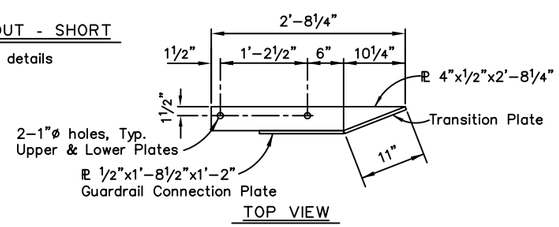

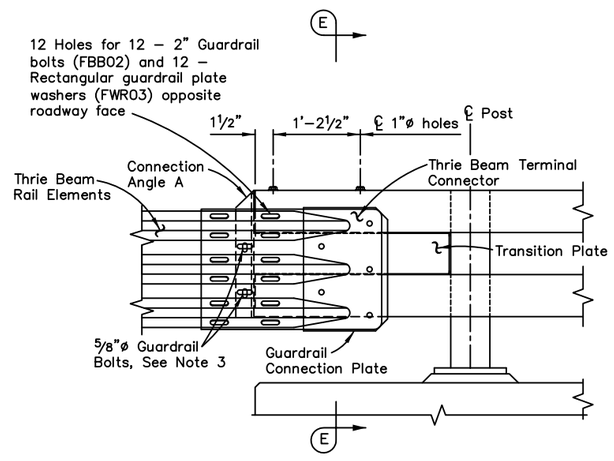

TRANSITION CONNECTION - ELEVATION

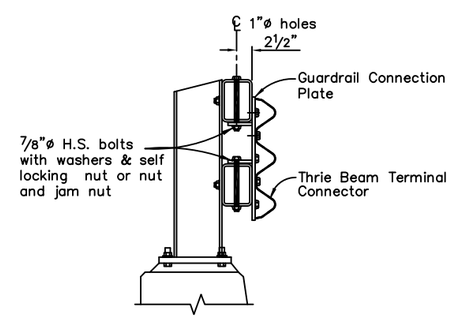

SECTION E-E

NOTES:

1. Use AASHTO M 180 for all guardrail and guardrail hardware. Use H.S. Bolts conforming to ASTM F3125 Grade A325. All other steel conforms to ASTM A709 Grade 50.
2. Lap approach guardrail to prevent snags from oncoming traffic.
3. Provide 4½" horizontal slots in approach guardrail. Adjust guardrail bolts for sliding fit.
4. Conform to G–00, G–05 and G–10 of the Standard Plans for all guardrail details not shown.

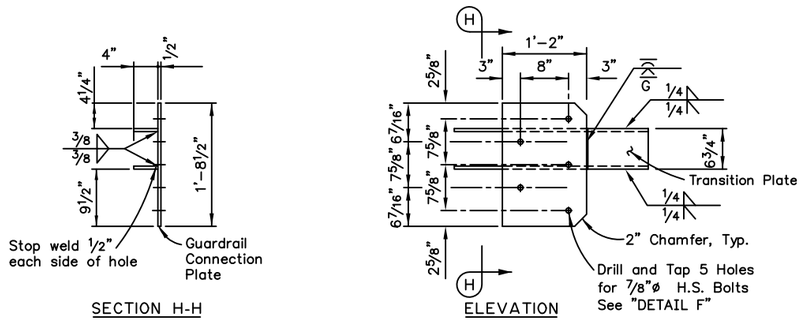

GUARDRAIL CONNECTION PLATE DETAILS

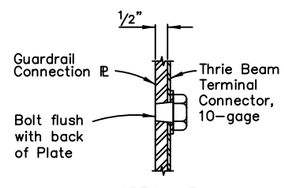

DETAIL F

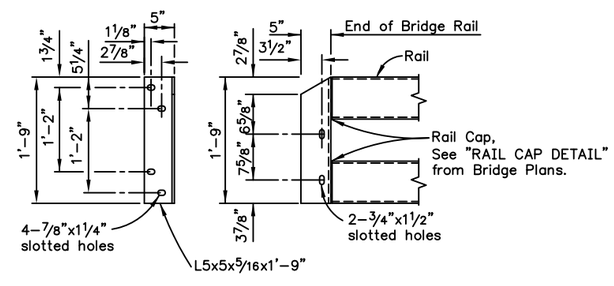

CONNECTION ANGLE A

No Scale

State of Alaska DOT&PF
ALASKA STANDARD PLAN

MASH BRIDGE RAIL
THRIE BEAM TRANSITION

Adopted as an Alaska Standard Plan by: Carolyn Morehouse
Carolyn Morehouse, P.E.
Chief Engineer

Adoption Date: 08/06/2020

Last Code and Stds. Review
By: SEM Date: 07/17/2020

Next Code and Standards Review date: 07/17/2030

G–32.01

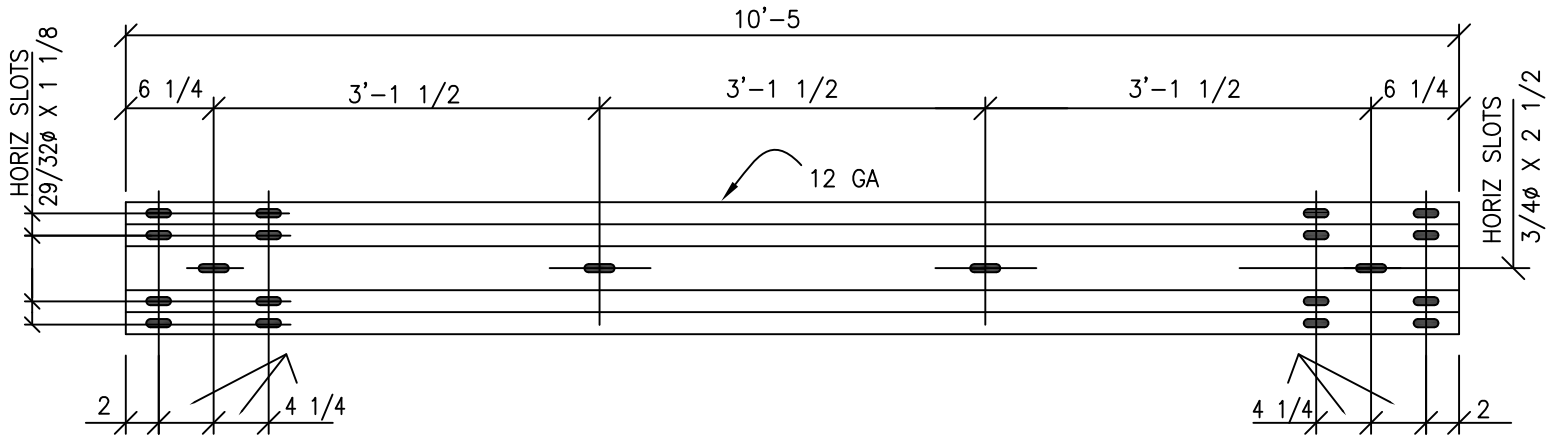

W-BEAM RAILS - MK G110.31

MK	QTY.	MATERIAL DESCRIPTION	LENGTH FT.	LENGTH IN.	WT
G110.31		12 GA. PANEL	9	4 1/2	
		Galvanized	SHIP WT.		

12 / 9'-4 1/2 / 3'-1 1/2 PANEL

SCALE: NONE	APPROVED BY: OP	DRAWN BY: KD
DATE:		JOB NO.

UIS, INC.
LINDON, UTAH

FOR:

DRAWING NO. G110.31

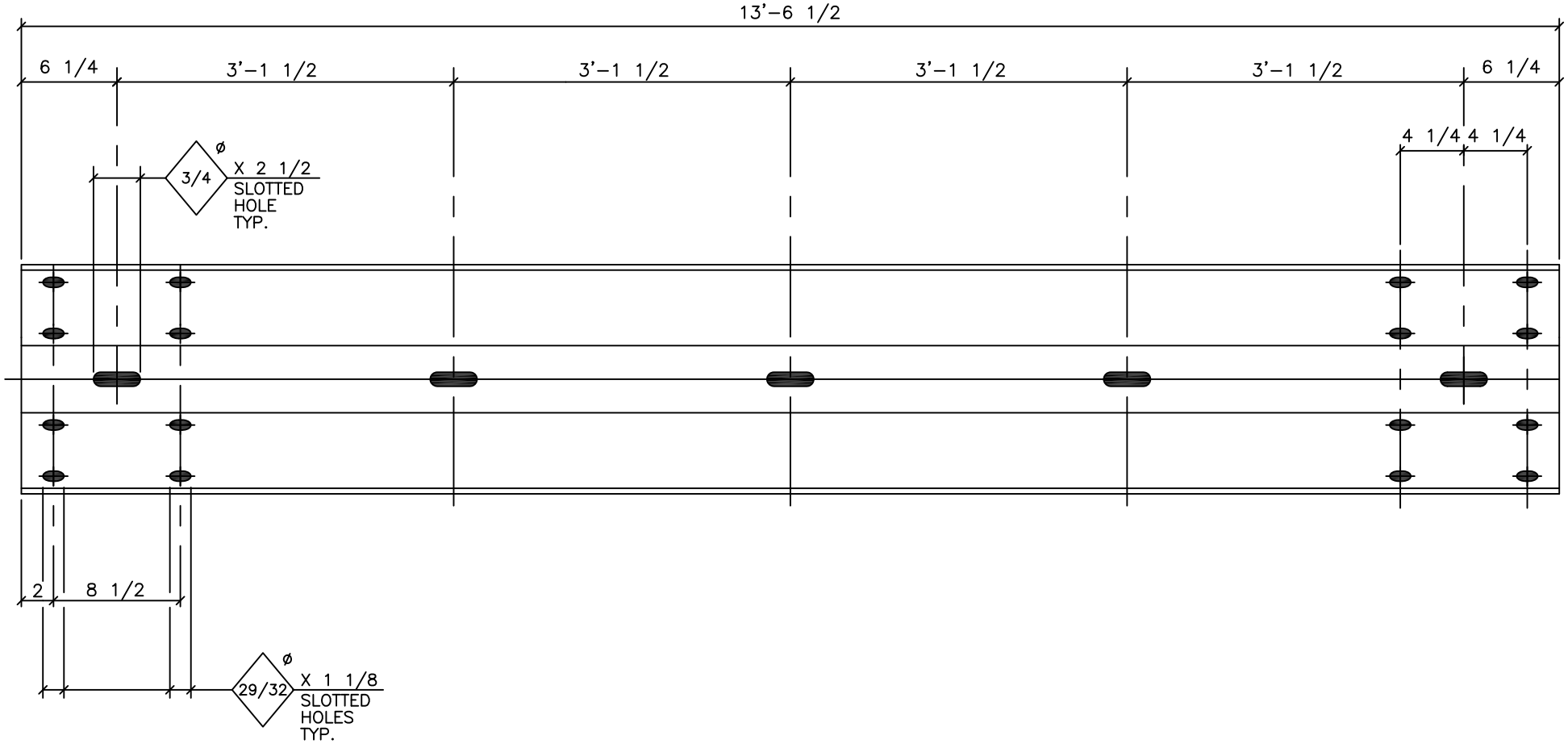

PC G112

REQ'D

89 LB. EA.

MK	QTY.	MATERIAL DESCRIPTION	LENGTH FT.	LENGTH IN.	WT
G112		12 GA. PANEL	12	6	
		SHIP WT.			

12/12'-6/3'-1 1/2

SCALE: NONE	APPROVED BY: OP	DRAWN BY: LFM
DATE:		JOB NO.

UNIVERSAL INDUSTRIAL SALES
LINDON, UTAH

FOR:

DRAWING NO. G112

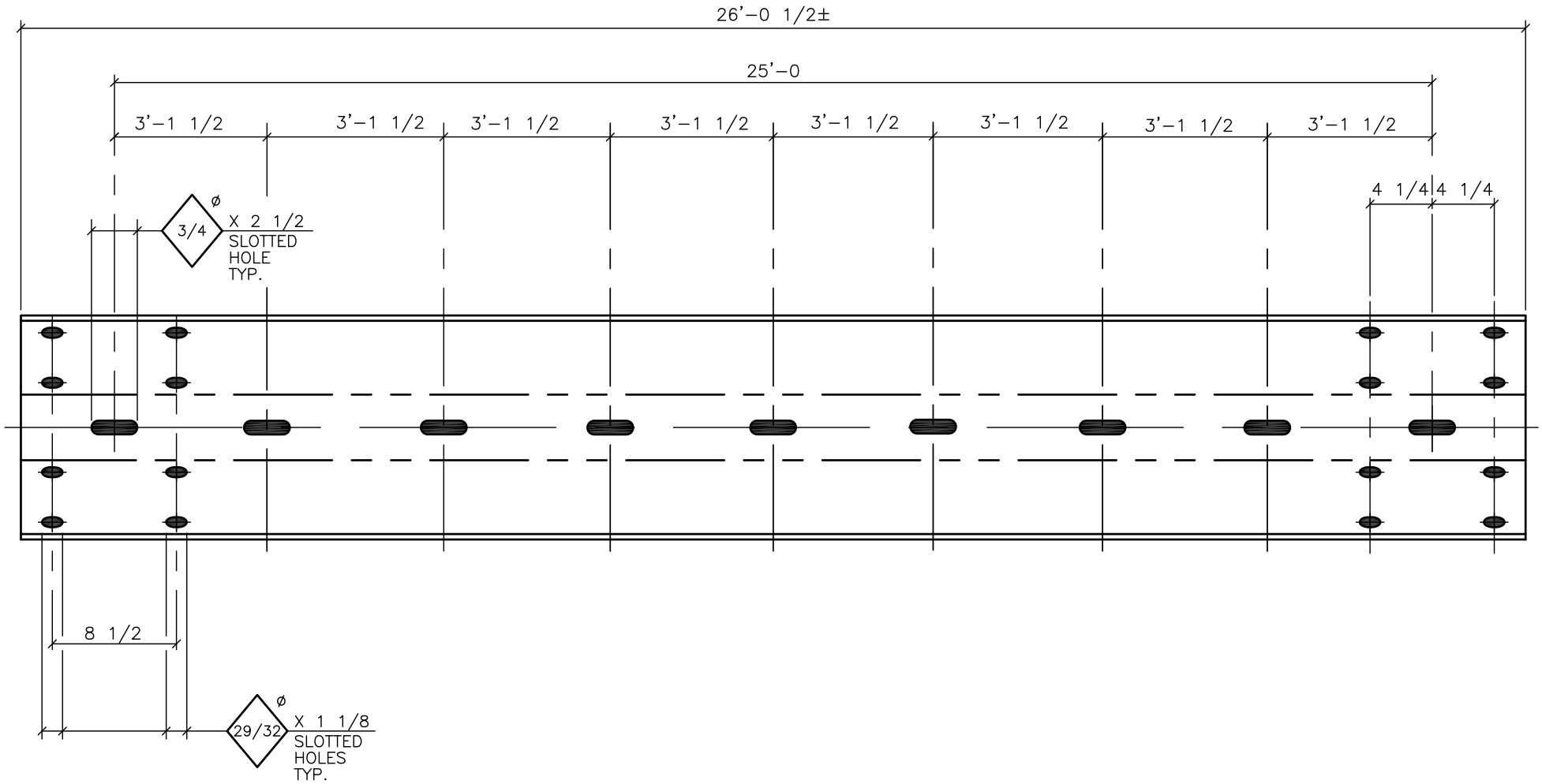

PC G116

REQ'D

170 LB. EA.

MK	QTY.	MATERIAL DESCRIPTION	LENGTH FT.	LENGTH IN.	WT
G116		12 GA. STD. PANEL	25	0	
		SHIP WT.			

12/25'-0/3'-1 1/2 STD PANEL

SCALE: NONE	APPROVED BY: OP	DRAWN BY: KD
DATE:		JOB NO.

UIS, INC.
LINDON, UTAH

FOR:	DRAWING NO. G116

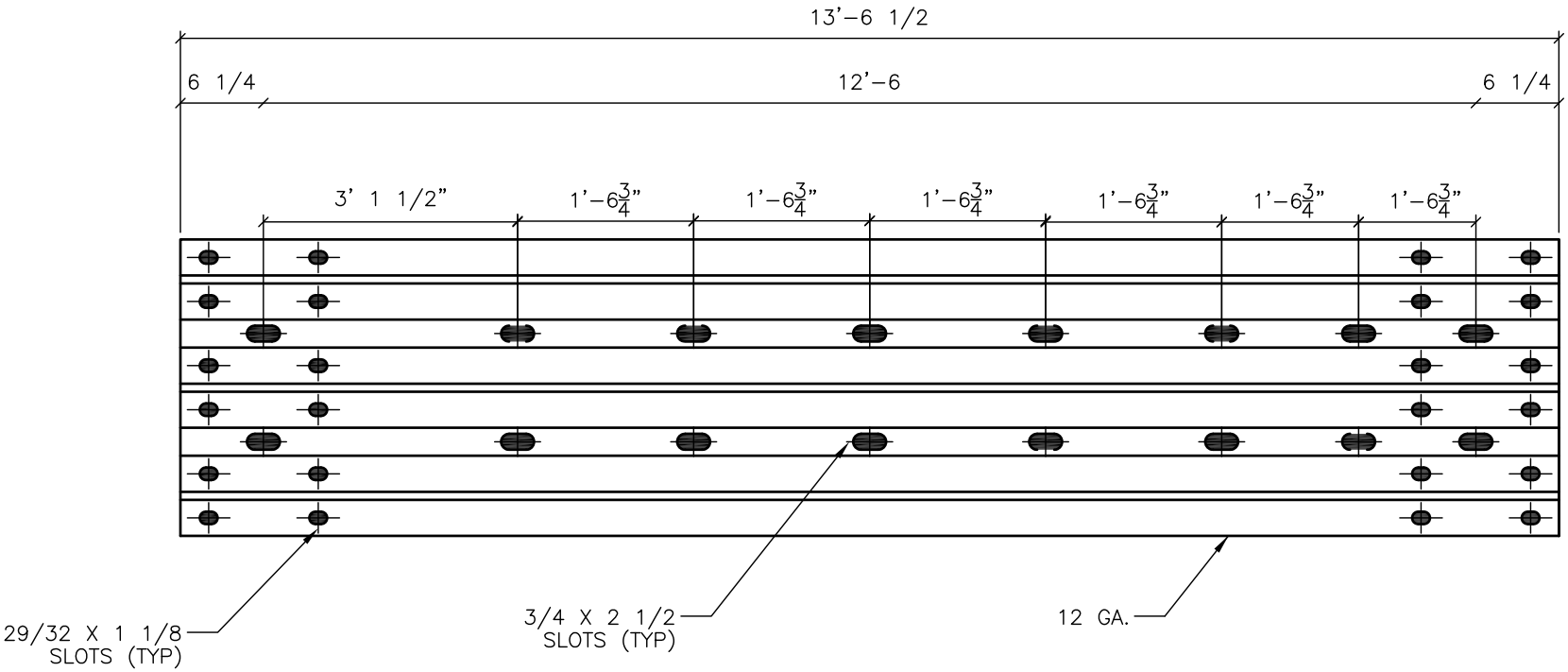

MATERIALS PER AASHTO-M180

MK	QTY.	MATERIAL DESCRIPTION

T12/12'-6/1@3'1-1/2", 6@1' 6-3/4" THRIE BEAM PANEL

SCALE: NONE	APPROVED BY: OP	DRAWN BY: KD
DATE:		JOB NO.

UNIVERSAL INDUSTRIAL SALES
LINDON, UTAH

FOR:	PRODUCT CODE: G152.12

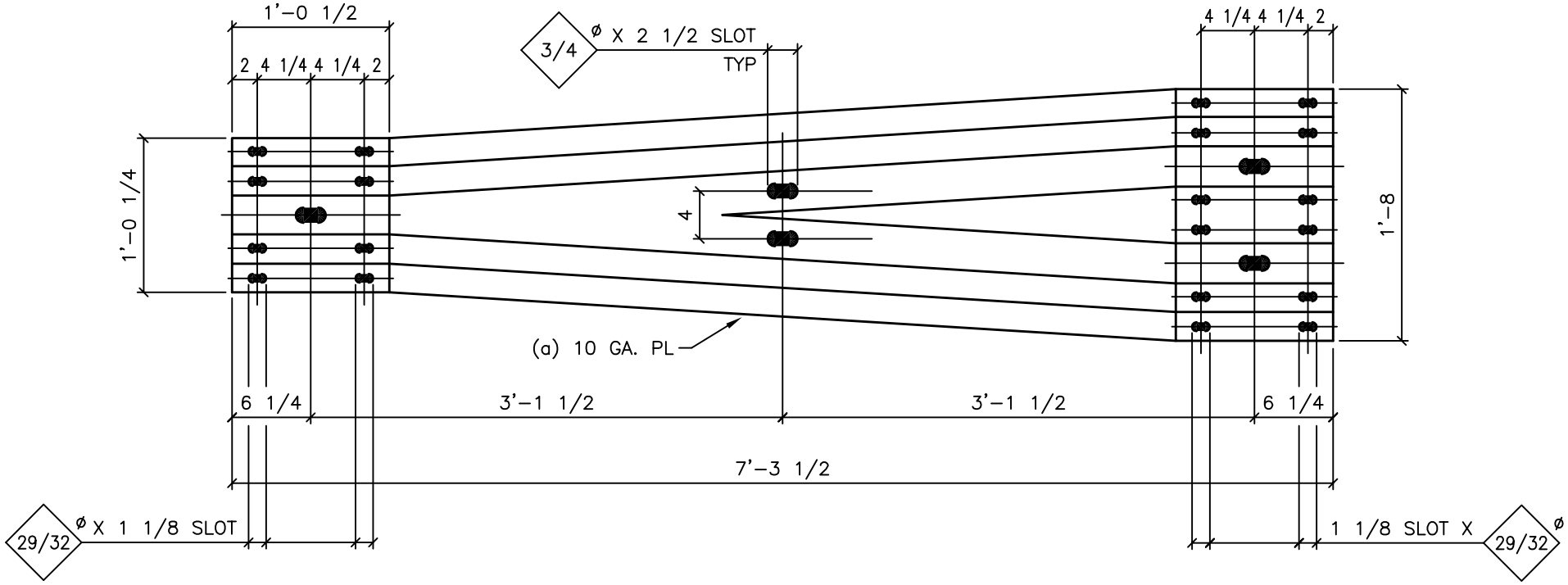

PC G172

MATERIALS PER AASHTO M 180
GALVANIZE AFTER FABRICATION

MK	QTY.	MATERIAL DESCRIPTION	LENGTH FT.	LENGTH IN.	WT
a		10 GA. TRANSITION – SYMETRICAL	7	3 1/2	77.5

TRANSITION – SYMETRICAL

SCALE: NONE	APPROVED BY: OP	DRAWN BY: SW
DATE:		JOB NO.

UNIVERSAL ROLL FORMING, INC.
LINDON, UTAH

FOR:	DRAWING NO. G172

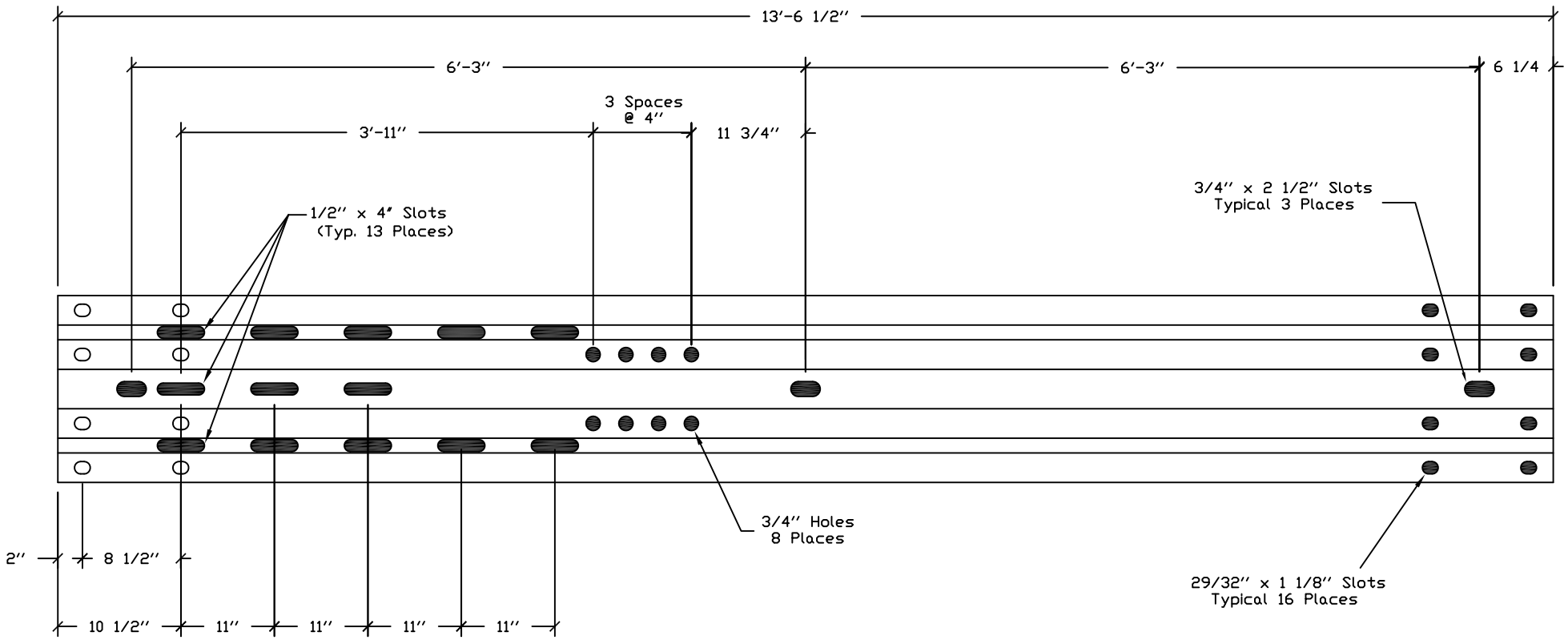

*NOTE
8 SPLICE HOLES OPTIONAL
THIS END

PANELS

PRODUCT CODE NO. G269

SKT-350 AND FLEAT 350 ANCHOR PANEL 12'-6		
SCALE NONE	APPROVED BY OP	DRAWN BY DN
DATE		JOB
UNIVERSAL INDUSTRIAL SALES LINDON, UTAH		
FOR:		DRAWING NUMBER G269

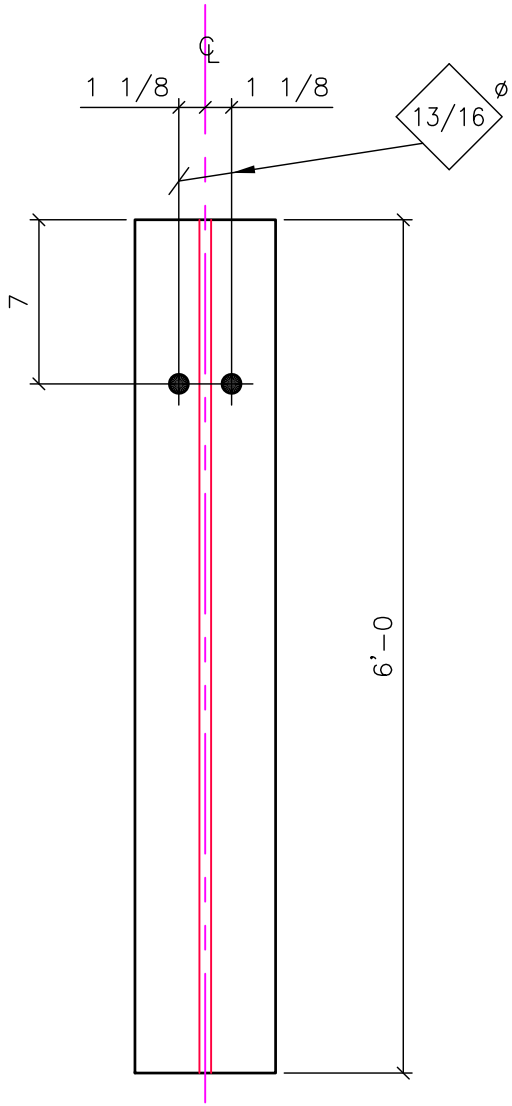

- ☐ Create Work Order
- ☒ Has prep/ sales kit
- ☐ Production Log (Jason S.) w/ Link
- ☐ Issue Material, Verify Material Costs, & Add Comments

MTL	MK	QTY.	MATERIAL DESCRIPTION	LENGTH FT.	LENGTH IN.	WT
WF06.08			W 6 x 8.5	6	0	54
				SHIP WT.		54

W6 x 8.5 x 6'-0" Post (Punched @ 7")

SCALE: NONE	APPROVED BY: M.S.	DRAWN BY: JW
DATE:		REVISED: TH 11/3/17

UNIVERSAL INDUSTRIAL SALES
LINDON, UTAH

JOB:	W.O.	QUOTE NO.	DRAWING NO.
	ROUTER: 5240	193	P102.1

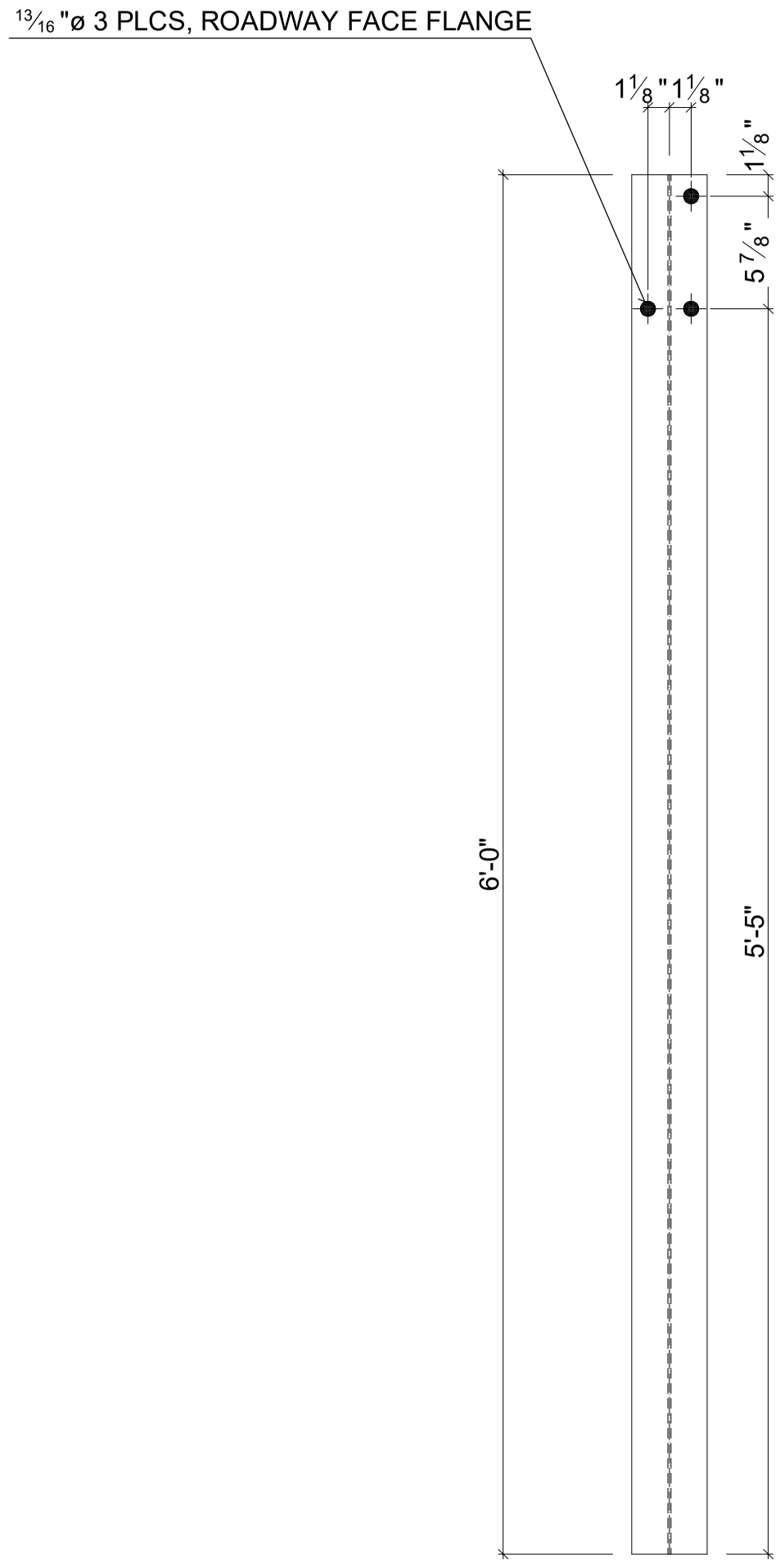

BILL OF MATERIAL

MARK.	NO. REQ'D	P/C	DESCRIPTION	LENGTH FT.	LENGTH IN.	REMARKS
	1	W06.08	W6x8.5	6	0	

FIELD HARDWARE

NO. REQ'D	P/C	DESCRIPTION	LENGTH FT.	LENGTH IN.

Rev.	Description	By	Date

MATERIAL SPECS. ***DOMESTIC MATERIAL***
ASTM A572 Gr.50

COATING GALVANIZE AFTER FAB PER ASTM A123

SHEET 1 OF 1

DESCRIPTION
W6 x 8.5 x 6'-6" Post (Punched @ 4 3/8", and 12")

Part Number
P102.82

QTY REQUIRED
##

ROUTER 37425 QUOTE 74029

DETAILED BY ArsB DATE 4/21/2021

CHECKED BY MCS DATE 4/21/2021

CUSTOMER X

PROJECT X

UNIVERSAL INDUSTRIAL SALES
P.O. BOX 699
PLEASANT GROVE, UTAH 84062
PHONE: 801-785-0505
www.uisutah.com

SALES ORDER NO. 000000

DRAWING NUMBER x

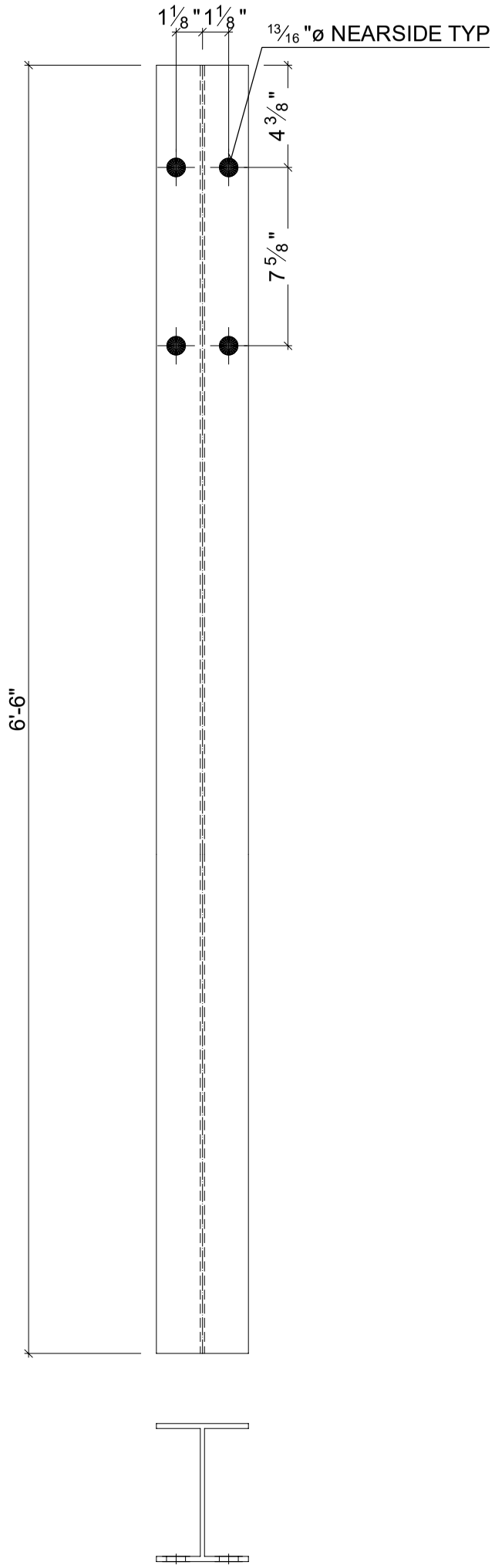

BILL OF MATERIAL

MARK.	NO. REQ'D	P/C	DESCRIPTION	LENGTH FT.	LENGTH IN.	REMARKS
	1	WF06.08	W6x8.5	6	6	

FIELD HARDWARE

NO. REQ'D	P/C	DESCRIPTION	LENGTH FT.	LENGTH IN.

Rev.	Description	By	Date

MATERIAL SPECS. ***DOMESTIC MATERIAL***
ASTM A572 Gr.50

COATING GALVANIZE AFTER FAB PER ASTM A123

SHEET 1 OF 1

DESCRIPTION
W6 x 8.5 x 6'–6" Post (Punched @ 4 3/8", and 12")

Part Number
P102.83

QTY REQUIRED
##

ROUTER 37425 QUOTE 74029
DETAILED BY ArsB DATE 4/21/2021
CHECKED BY MCS DATE 4/21/2021
CUSTOMER X
PROJECT X

UNIVERSAL INDUSTRIAL SALES
P.O. BOX 699
PLEASANT GROVE, UTAH 84062
PHONE: 801–785–0505
www.uisutah.com

SALES ORDER NO. 000000
DRAWING NUMBER x

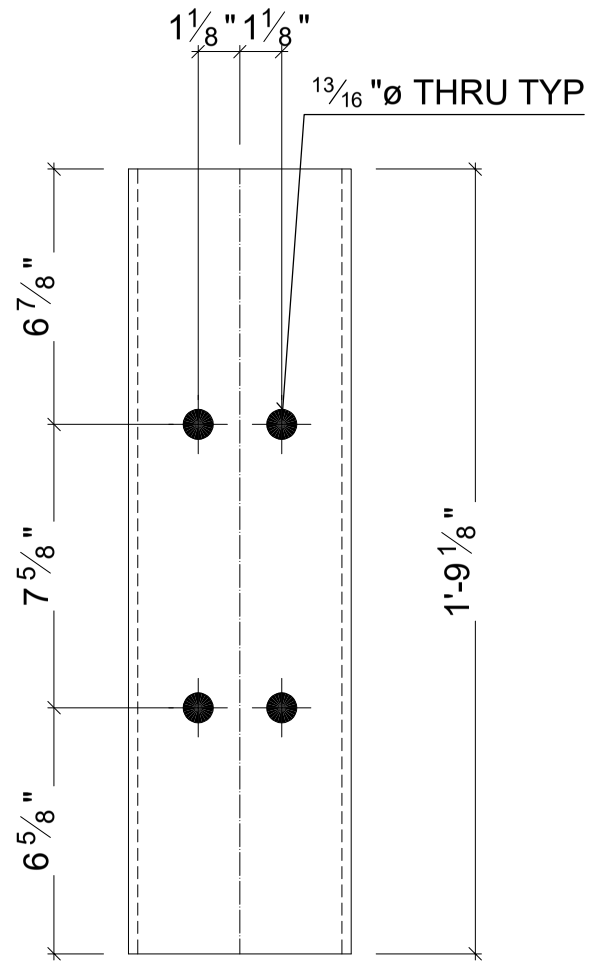

FRONT VIEW

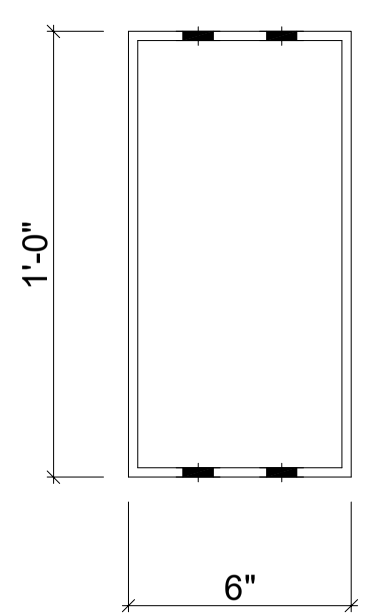

TOP VIEW

BILL OF MATERIAL

MARK.	NO. REQ'D	P/C	DESCRIPTION	LENGTH FT.	LENGTH IN.	REMARKS
		TSR267	HSS 12"x6"x1/4"	1	9 1/8	

FIELD HARDWARE

NO. REQ'D	P/C	DESCRIPTION	LENGTH FT.	LENGTH IN.

Rev.	Description	By	Date

MATERIAL SPECS. ***DOMESTIC MATERIAL***
ASTM A500 Gr.B

COATING GALVANIZE AFTER FAB PER ASTM A123

SHEET 1 OF 1

DESCRIPTION
(AK) TSR 1/4" x 6" x 12" x 1'-9 1/8" Steel Blockout

Part Number
P242.1

QTY REQUIRED
##

ROUTER 37427 QUOTE 74031
DETAILED BY ArsB DATE 4/21/2021
CHECKED BY MCS DATE 4/21/2021
CUSTOMER X
PROJECT X

UNIVERSAL INDUSTRIAL SALES
P.O. BOX 699
PLEASANT GROVE, UTAH 84062
PHONE: 801-785-0505
www.uisutah.com

SALES ORDER NO. 000000
DRAWING NUMBER x

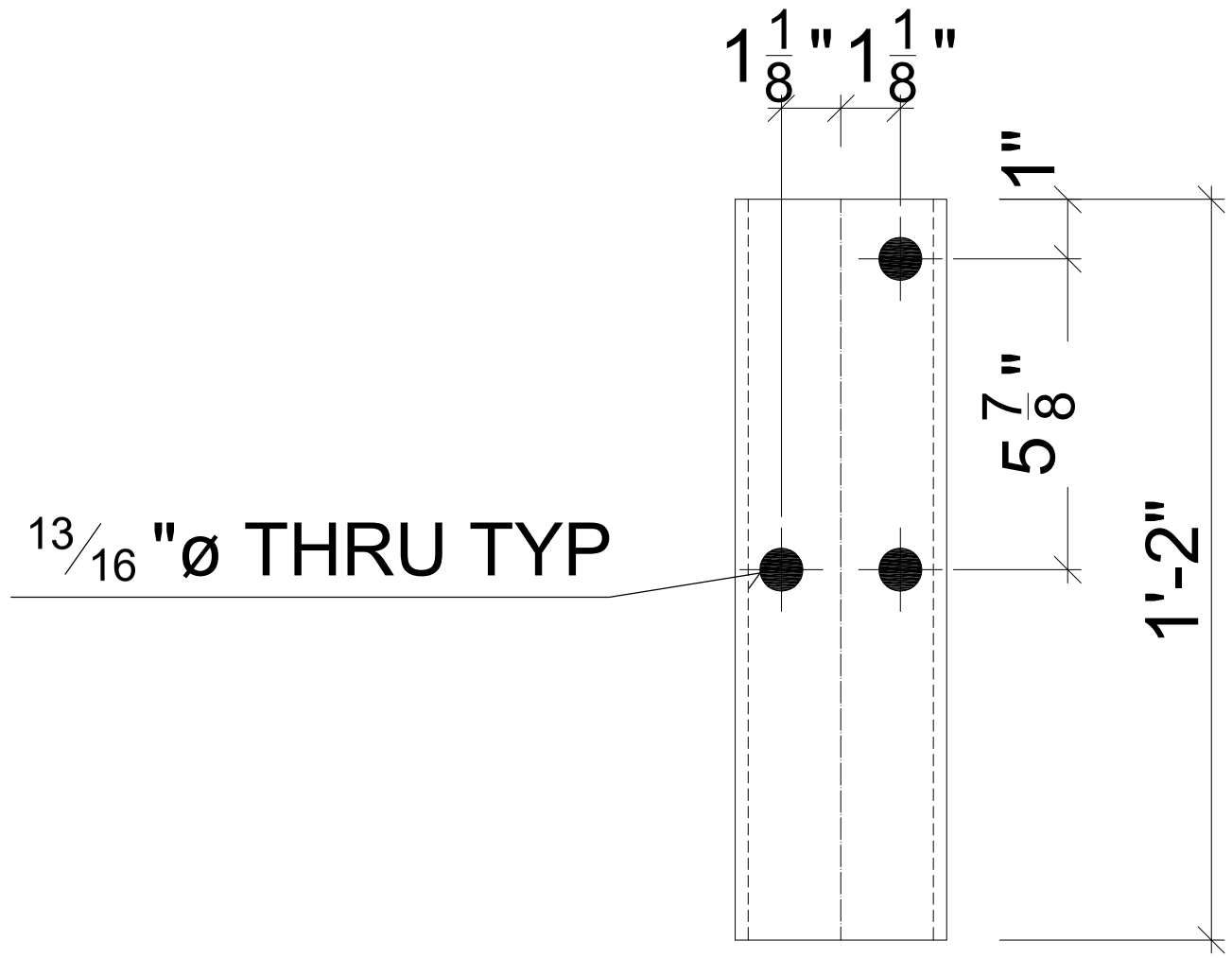

FRONT VIEW

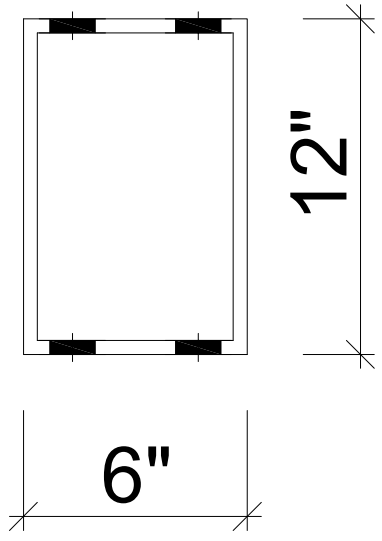

TOP VIEW

BILL OF MATERIAL

MARK.	NO. REQ'D	P/C	DESCRIPTION	LENGTH FT.	LENGTH IN.	REMARKS
	1	TSR267	HSS 12"x6"x1/4"	1	2	

FIELD HARDWARE

NO. REQ'D	P/C	DESCRIPTION	LENGTH FT.	LENGTH IN.

Rev.	Description	By	Date

MATERIAL SPECS. ***DOMESTIC MATERIAL***
ASTM A500 Gr.B

COATING GALVANIZE AFTER FAB PER ASTM A123

SHEET 1 OF 1

DESCRIPTION
(AK) TSR 1/4" x 6" x 12" x 1'-2" Steel Blockout

Part Number
P242

QTY REQUIRED
##

ROUTER 37426 | QUOTE 74030
DETAILED BY ArsB | DATE 4/21/2021
CHECKED BY MCS | DATE 4/21/2021
CUSTOMER X
PROJECT X

UNIVERSAL INDUSTRIAL SALES
P.O. BOX 699
PLEASANT GROVE, UTAH 84062
PHONE: 801-785-0505
www.uisutah.com

SALES ORDER NO. 000000
DRAWING NUMBER x

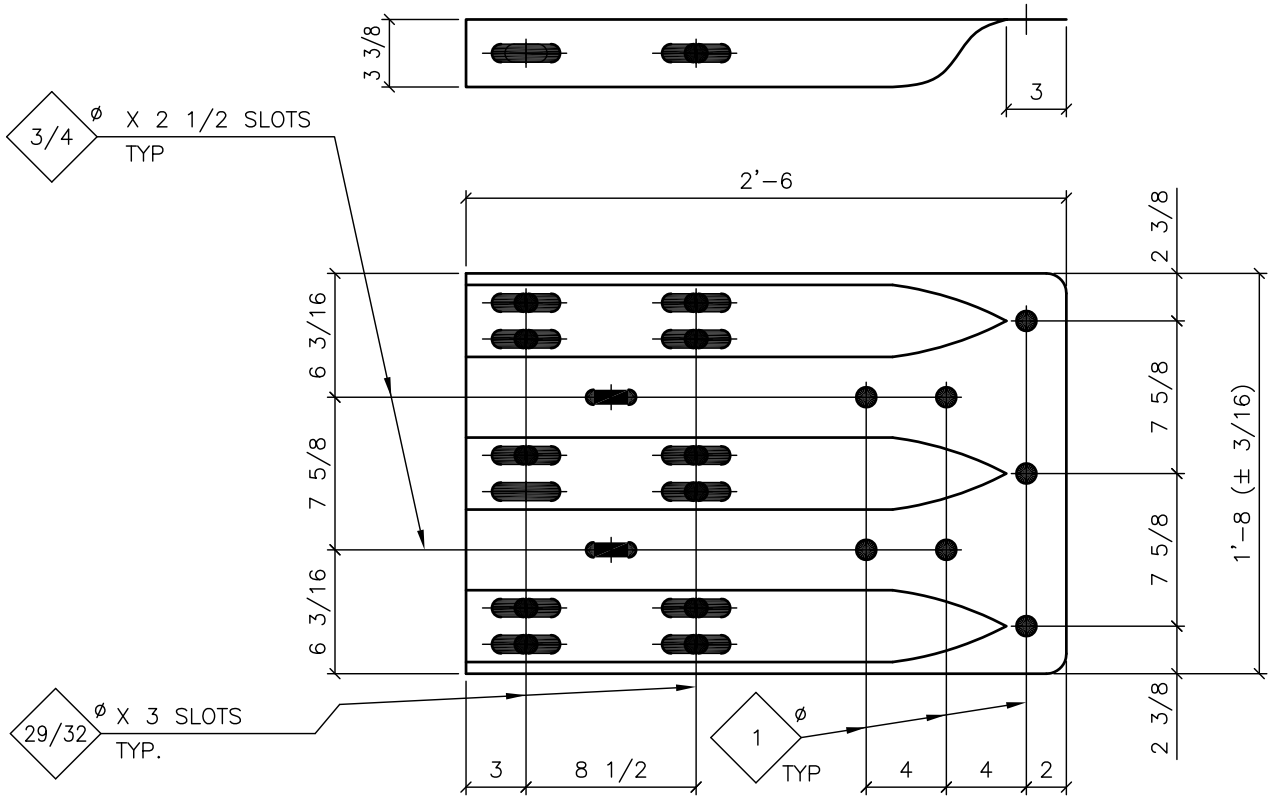

PC T110

MK	QTY.	MATERIAL DESCRIPTION	LENGTH FT.	LENGTH IN.	WT
T110		10 GA THRIE BEAM BRIDGE SHOE	2	6	24

10 GA THRIE BEAM BRIDGE SHOE

SCALE: NONE	APPROVED BY: OP	DRAWN BY: JW
DATE:		JOB NO.

UNIVERSAL INDUSTRIAL SALES
LINDON, UTAH

FOR:	DRAWING NO. T110

State of Alaska

GOVERNOR MIKE DUNLEAVY

Submittal Cover Sheet

Department of Transportation Public Facilities
SOUTHCOAST REGION
Construction Section

Project: KTN- HERRING COVE BRIDGE IMPROVEMENTS	Project No: 0902043/SFHWY00072
Contractor: Hamilton Construction Alaska	Submittal No. 606-003 Guardrail Materials
Date Response Sent: 02/22/2022	Reviewed By: Eric Strong, P.E. Recoverable Signature X Eric Strong Signed by: 2d66350b-1634-445f-b1d5-d5b87bea066b

A	**AAN**	**R&R**	**R**	**I**	**R&RasN**	**INC**	**CA**
Approved	Approved as Noted	Revise and Resubmit	Rejected	Informational	Revisit & Resubmit as Noted	Incomplete	Conditionally Approved

Item No.	Item	Contract Documents	A	AAN	R&R	R	I	R&R asN	INC	CA
606.0001.0000	W-Beam Guardrail	606-3.10		X						

Comments/Anticipated Response:

- Approved as noted according to the attached edited plans.

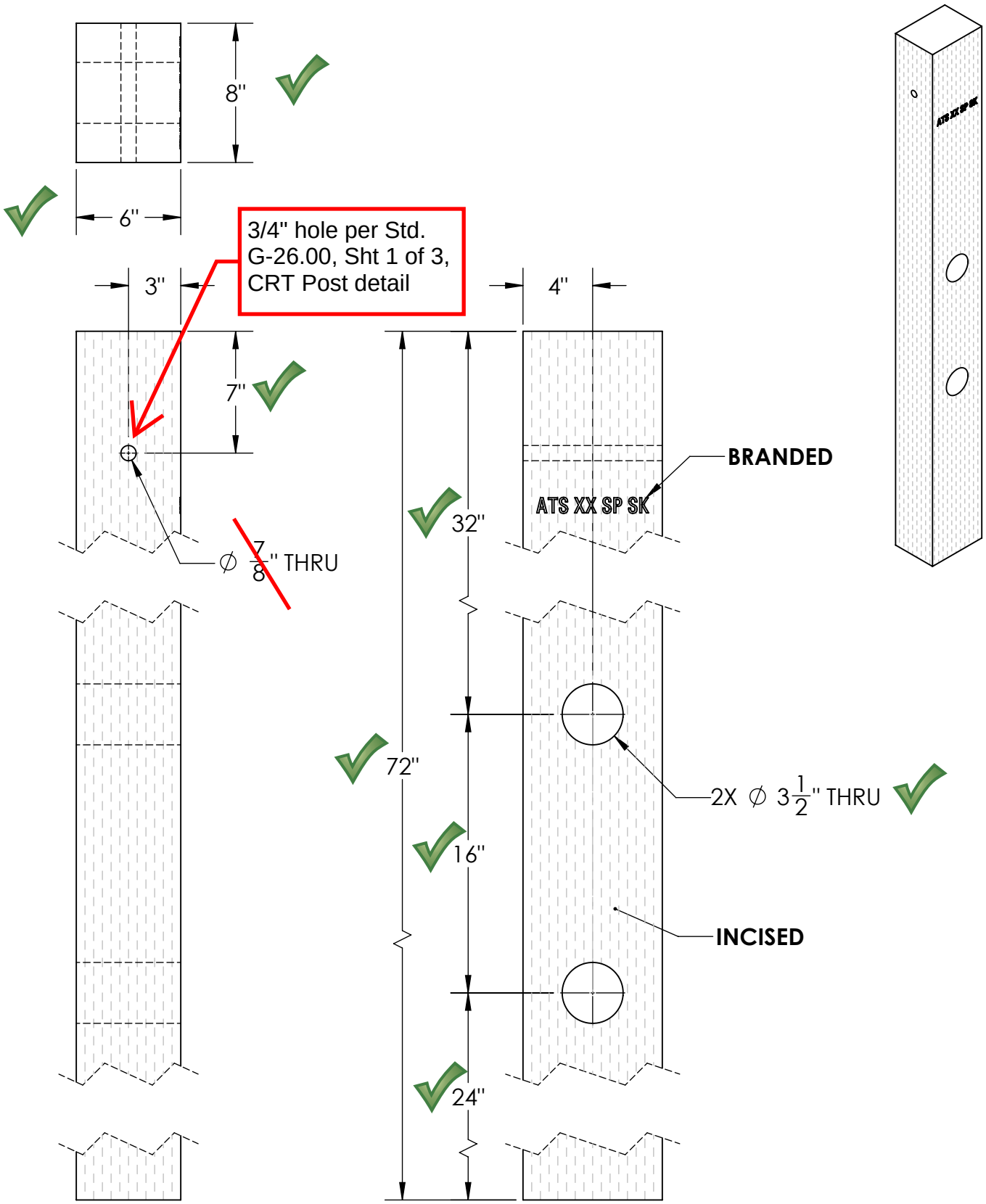

American Timber and Steel

4832 PLANK RD · PO BOX 767
NORWALK, OH 44857
800-668-1610 · AMTIM.COM

DESCRIPTION: MG 6X8- 6' CRT 32" POST RAW			
DRAWN BY: JET	APPROVED BY: TWH	PART NUMBER: MG06080-6003	
DATE: 7/5/22	REVISION: A		

PROPRIETARY AND CONFIDENTIAL: The information contained in this drawing is the sole property of American Timber and Steel CO., Inc. Any reproduction in part or as whole without written permission of American Timber and Steel CO., Inc. is prohibited.

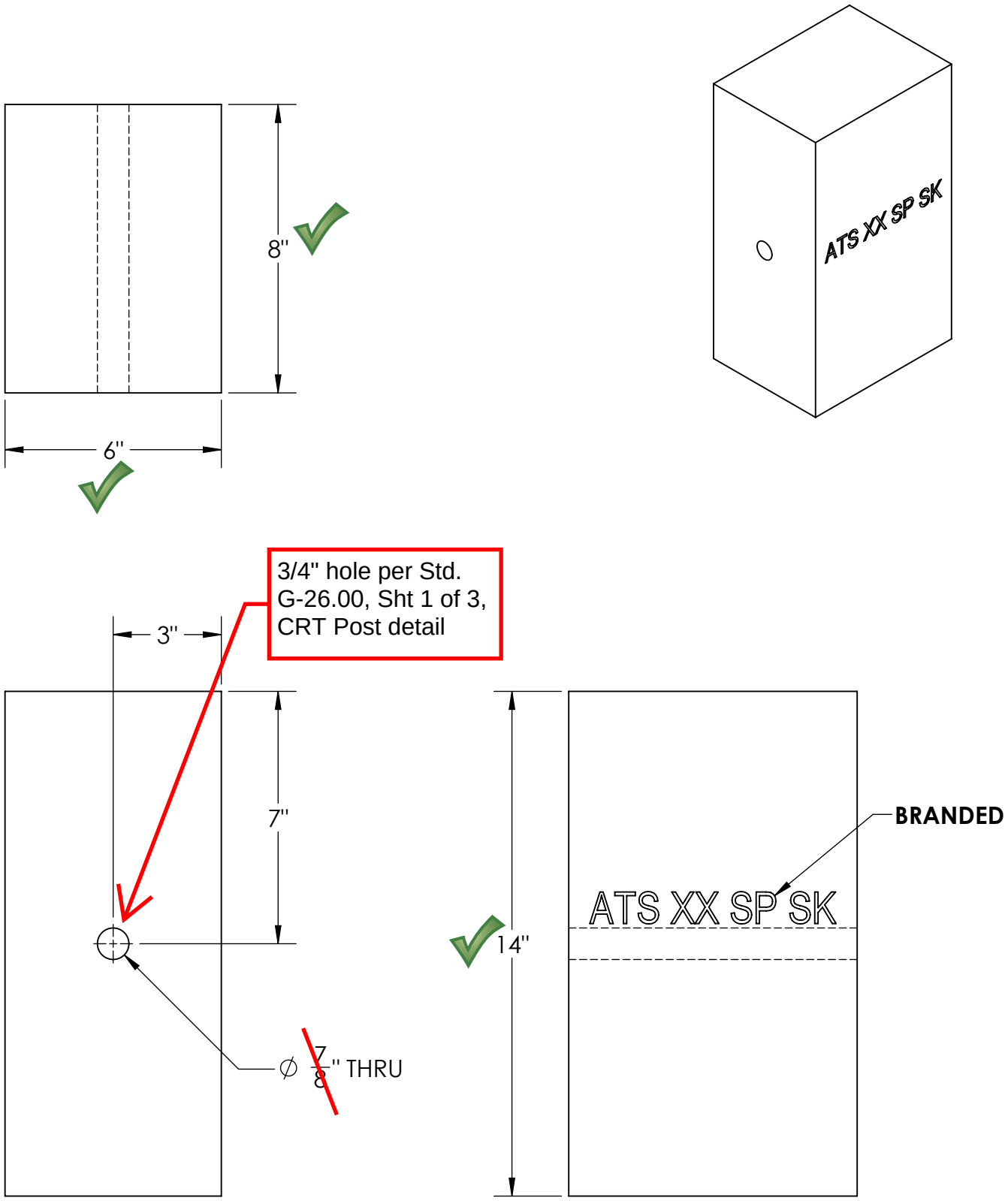

American Timber and Steel
4832 PLANK RD · PO BOX 767
NORWALK, OH 44857
800-668-1610 · AMTIM.COM

DESCRIPTION: MW 6X8-14" 1 HOLE BLOCK RAW			
DRAWN BY: JET	APPROVED BY: TWH	PART NUMBER: MW06081-4001	
DATE: 7/21/22	REVISION: A		

PROPRIETARY AND CONFIDENTIAL: The information contained in this drawing is the sole property of American Timber and Steel CO., Inc. Any reproduction in part or as whole without written permission of American Timber and Steel CO., Inc. is prohibited.

State of Alaska

GOVERNOR MIKE DUNLEAVY

Submittal Cover Sheet

Department of Transportation Public Facilities
SOUTHCOAST REGION
Construction Section

Project: KTN- HERRING COVE BRIDGE IMPROVEMENTS	Project No: 0902043/SFHWY00072
Contractor: Hamilton Construction Alaska	Submittal No. 606-004 Guardrail Downstream Anchors
Date Response Sent: 4/3/2023	Reviewed By: Eric Strong, P.E.

A	**AAN**	**R&R**	**R**	**I**	**R&RasN**	**INC**	**CA**
Approved	Approved as Noted	Revise and Resubmit	Rejected	Informational	Revisit & Resubmit as Noted	Incomplete	Conditionally Approved

Item No.	Item	Contract Documents	A	AAN	R&R	R	I	R&R asN	INC	CA
606.0006.0000	W-Beam Guardrail	606-3.10		X						

Comments/Anticipated Response:

- Be sure to submit the 25D-62 Buy America Form. Each steel/iron item listed on Page 5 of this submittal will need to go under “Description of Material Manufactured in US” with the quantities. If you run out of room please attach a Page 2.

HAMILTON CONSTRUCTION ALASKA
CONTRACTORS & ENGINEERS

03.26.2023

State of Alaska Department of Transportation and Public Facilities
PO Box 112506
Juneau, AK 99811-2506

RE: KTN: Herring Cove Bridge Improvements
Contract Number: 0902043/SFHWY00072

Guardrail Down Stream Anchor Material Approval Submittal

Eric Strong,

Please find the attached submittal from Glacier State requesting material approvals for the added downstream anchors.

Sincerely,

Chris Duty

Chris Duty
Project Manager

Glacier State Contractors
www.glacierstate.net Juneau, AK (907) 789-4976
Excavation | Site Development | Utilities | Erosion Control
P.O. Box 32894 • Juneau, AK 99803 • Fax: 907.789.3357

LETTER OF TRANSMITTAL

Date: 3/25/2023

To: Hamilton Construction Alaska Co

Attn: Chris Duty
Re: **KTN Herring Cove Bridge Improvements**
Project No. 0902043/SFHWY00072

The following documents are being transmitted:

[ ] Plans [ ] Specifications [ ] Subcontract

[ ] Shop Drawings [X] Submittals [ ] Change Order [ ] Other:

Number	Date	Description
GSC 5.1	3/25/2023	606.0020.0000 Downstream End Anchors

These documents are transmitted:

[ ] For your review [ ] As requested [ ] Approved as submitted [X] For your review & approval

[ ] For your use [ ] Approved as noted [ ] Returned for correction [ ] Other:

Comments:

Copy to: James Mason

Signed: Nick Ramseth

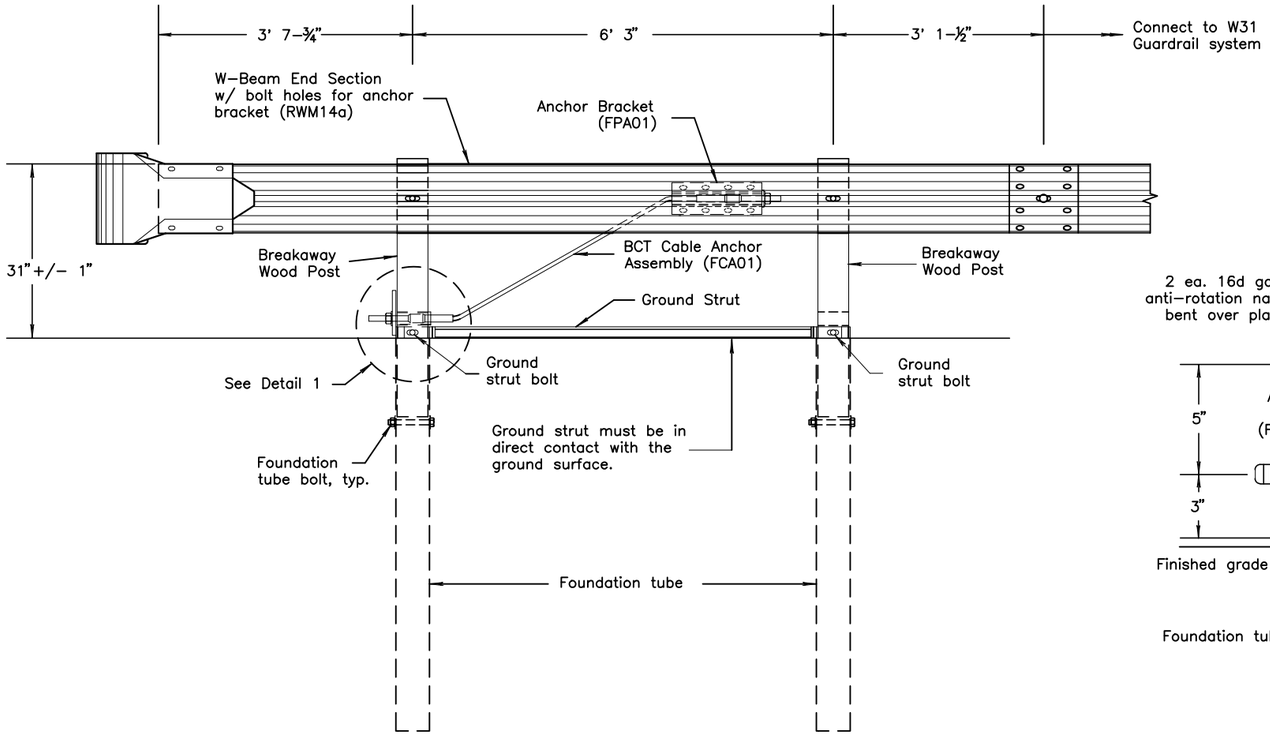

ELEVATION

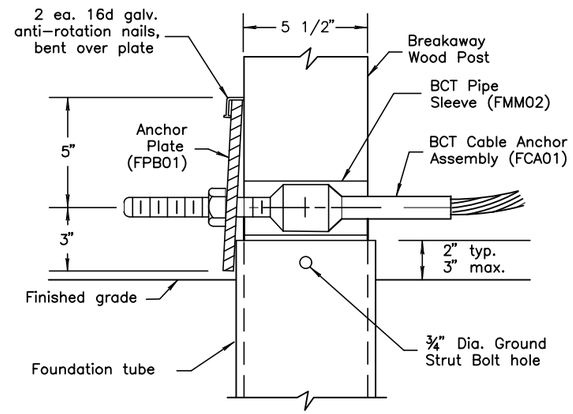

DETAIL 1

(Ground strut not shown for clarity)

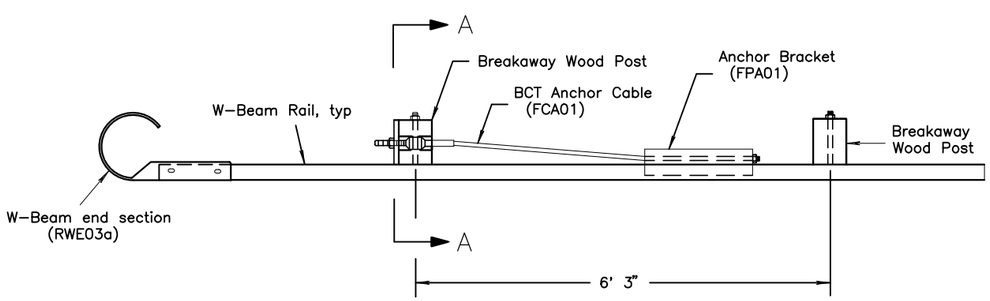

PLAN VIEW

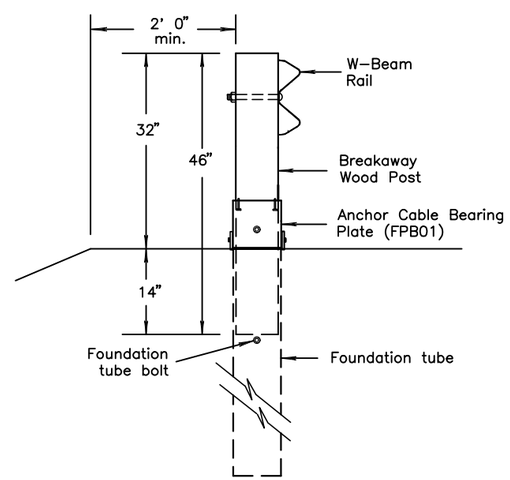

SECTION A-A

CONSTRUCTION NOTES

1. All covered hardware must comply with Task Force 13 (TF13) Guide to Standardized Roadside Safety Hardware online publication. Designators are given in parenthesis, when possible.
2. End section bolts and nuts have the same material requirements as splice bolts.
3. Foundation tube bolts are are 7/8" diameter ASTM A307 hex head. Foundation tube bolts require an ASTM A563 A nut and two ASTM F844 7/8" diameter flat washers. Install one washer under bolt head and one under nut.
4. Anchor bracket and strut bolts are are 5/8" diameter ASTM A307 hex head. Foundation tube bolts require ASTM A563 A nut and two ASTM F844 7/8" diameter flat washers. Install one washer under bolt head and one under nut.

State of Alaska DOT&PF
ALASKA STANDARD PLAN

W31 DOWNSTREAM END ANCHOR

Adopted as an Alaska Standard Plan by: Carolyn Morehouse
Carolyn Morehouse, P.E.
Chief Engineer

Adoption Date: 7/17/2020

Last Code and Stds. Review
By: KLK Date: 7/8/2020

Next Code and Standards Review Date: 7/8/2030

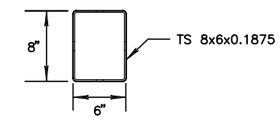

PLAN VIEW

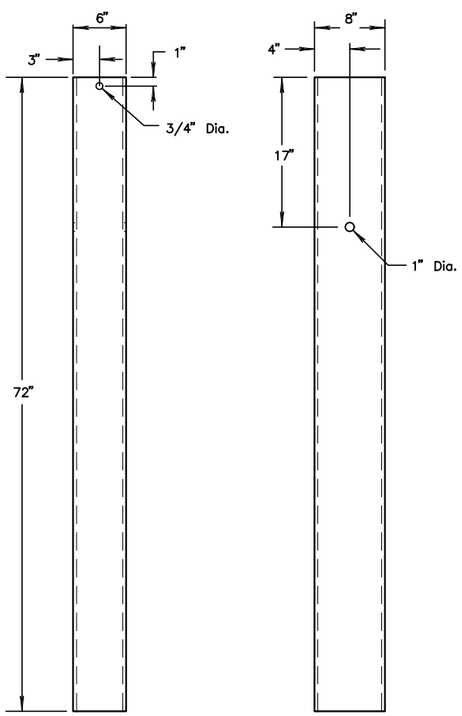

FRONT VIEW SIDE VIEW

FOUNDATION TUBE

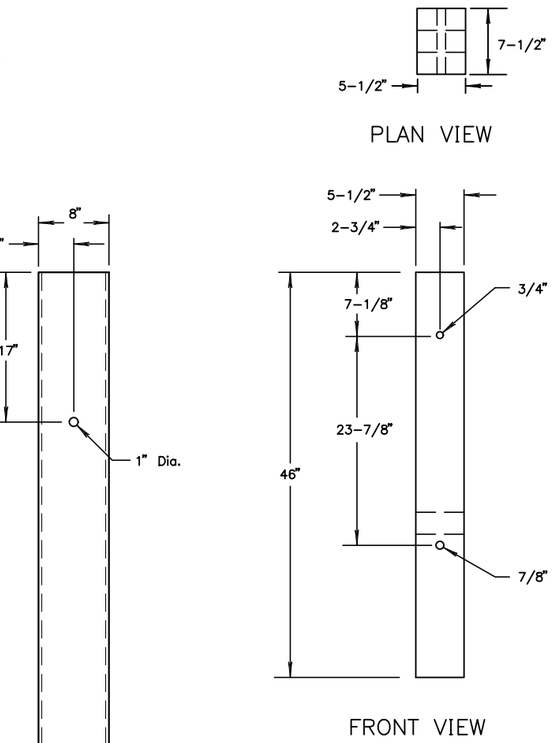

PLAN VIEW

FRONT VIEW SIDE VIEW

BREAKAWAY WOOD POST

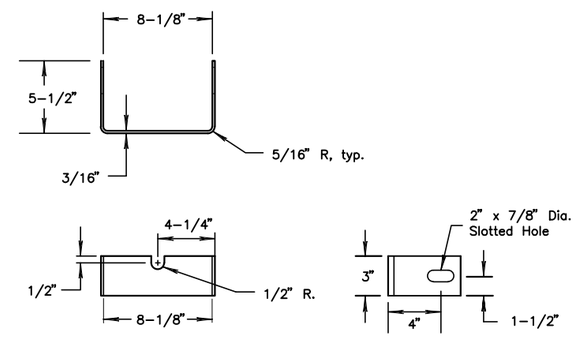

YOKE DETAIL

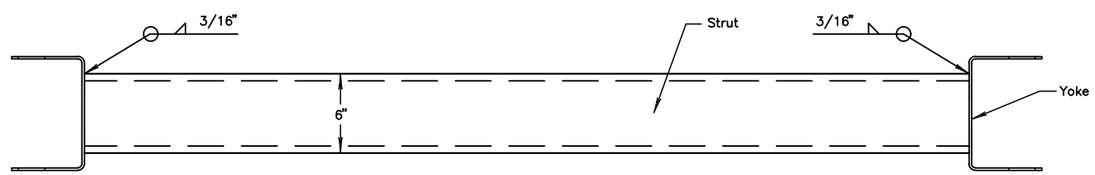

PLAN VIEW

GROUND STRUT SECTION

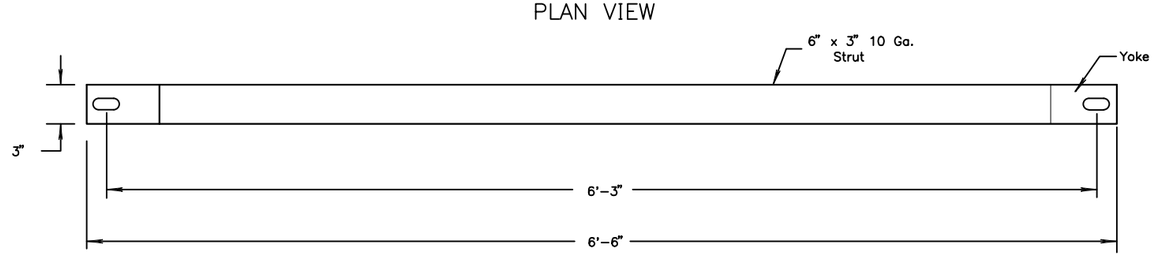

FRONT VIEW

GROUND STRUT DETAIL

CONSTRUCTION NOTES

1. All covered hardware must comply with Task Force 13 (TF13) Guide to Standardized Roadside Safety Hardware online publication. Designators are given in parenthesis, when possible.

State of Alaska DOT&PF
ALASKA STANDARD PLAN

W31 DOWNSTREAM
END ANCHOR

Adopted as an Alaska Standard Plan by: Carolyn Morehouse
Carolyn Morehouse, P.E.
Chief Engineer

Adoption Date: 7/17/2020

Last Code and Stds. Review
By: KLK Date: 7/8/2020

Next Code and Standards Review Date: 7/8/2030

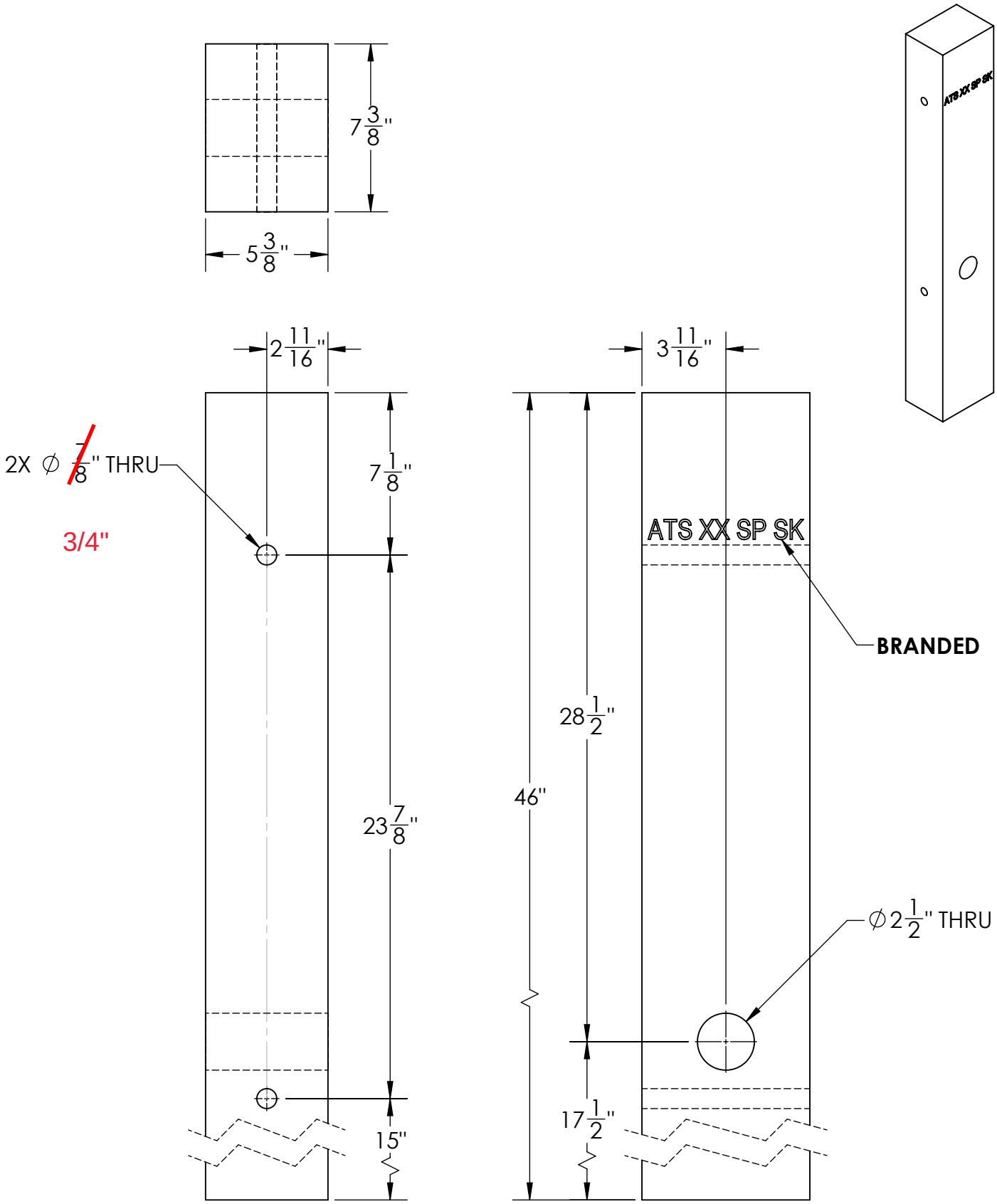

American Timber and Steel
4832 PLANK RD · PO BOX 767
NORWALK, OH 44857
800-668-1610 · AMTIM.COM

DESCRIPTION:	OH 6X8-46" TYPE II B/A RAW
DRAWN BY:	JET
APPROVED BY:	TWH
DATE:	10/31/22
REVISION:	A
PART NUMBER:	OH06084-6002

PROPRIETARY AND CONFIDENTIAL: The information contained in this drawing is the sole property of American Timber and Steel CO., Inc. Any reproduction in part or as whole without written permission of American Timber and Steel CO., Inc. is prohibited.

State of Alaska

GOVERNOR MIKE DUNLEAVY

Submittal Cover Sheet

Department of Transportation Public Facilities
SOUTHCOAST REGION
Construction Section

Project: KTN- HERRING COVE BRIDGE IMPROVEMENTS	Project No: 0902043/SFHWY00072
Contractor: Hamilton Construction Alaska	Submittal No. 606-009 Parallel Guardrail Terminal, crash worthiness, Test Level 2, MSKT
Date Response Sent: 6/17/2023	Reviewed By: Eric Strong, P.E.

A	**AAN**	**R&R**	**R**	**I**	**R&RasN**	**INC**	**CA**
Approved	Approved as Noted	Revise and Resubmit	Rejected	Informational	Revisit & Resubmit as Noted	Incomplete	Conditionally Approved

Item No.	Item	Contract Documents	A	AAN	R&R	R	I	R&R asN	INC	CA
606.0013.0000	Parallel Guardrail Terminal	Spec 606, Std Mod 606		X						

Comments/Anticipated Response:

- Approved for installation at approximately Station 397+91 to 398+16, Right.

HAMILTON CONSTRUCTION ALASKA
CONTRACTORS & ENGINEERS

06.7.2023

State of Alaska Department of Transportation and Public Facilities
PO Box 112506
Juneau, AK 99811-2506

RE: KTN: Herring Cove Bridge Improvements
Contract Number: 0902043/SFHWY00072

Submittal – Guardrail level 2 crash test worthiness MSKT

Eric Strong,

Please see attached **Guardrail level 2 crash test worthiness MSKT**

Sincerely,

Curtis Clowar

Curtis Clowar
Project Engineer

12078 N. Glenn Hwy P.O. Box 309 • Sutton, AK 99674 • (907) 746-5307 • Fax: (907) 746-5330
www.hamil.com • An Equal Opportunity Employer

ITEM	QTY	BILL OF MATERIALS	ITEM NO.
A	1	IMPACT HEAD	MS3000
B	1	W-BEAM GUARDRAIL END SECTION, 12 Ga.	SF1303
C	1	FIRST POST TOP (6X6X$\frac{1}{8}$" Tube)	MTPHP1A
D	1	FIRST POST BOTTOM (6' W6X15)	MTPHP1B
E	1	SECOND POST ASSEMBLY TOP	UHP2A
F	1	SECOND POST ASSEMBLY BOTTOM	HP2B
G	1	BEARING PLATE	E750
H	1	CABLE ANCHOR BOX	S760
J	1	BCT CABLE ANCHOR ASSEMBLY	E770
K	1	STRUT	MS785
HARDWARE (ALL DIMENSIONS IN INCHES)			
a	2	5/16 x 1 HEX BOLT GRD 5	B5160104A
b	4	5/16 WASHER	W0516
c	2	5/16 HEX NUT	N0516
d	9	5/8 Dia. x 1 1/4 SPLICE BOLT (POST #2)	B580122
e	2	5/8 Dia. x 9 HEX BOLT GRD 5	B580904A
f	3	5/8 WASHER	W050
g	11	5/8 Dia. H.G.R NUT	N050
h	1	3/4 Dia. x 8 1/2 HEX BOLT GRD A449	B340854A
j	1	3/4 Dia. HEX NUT	N030
k	2	1 ANCHOR CABLE HEX NUT	N100
l	2	1 ANCHOR CABLE WASHER	W100
m	8	1/2 RSI SHOULDER BOLT W/WASHER	SB12A
n	8	1/2 STRUCTURAL NUT	N012A
o	8	1/2 STRUCTURAL WASHER	W012A
p	1	BEARING PLATE RETAINER TIE	CT-100ST

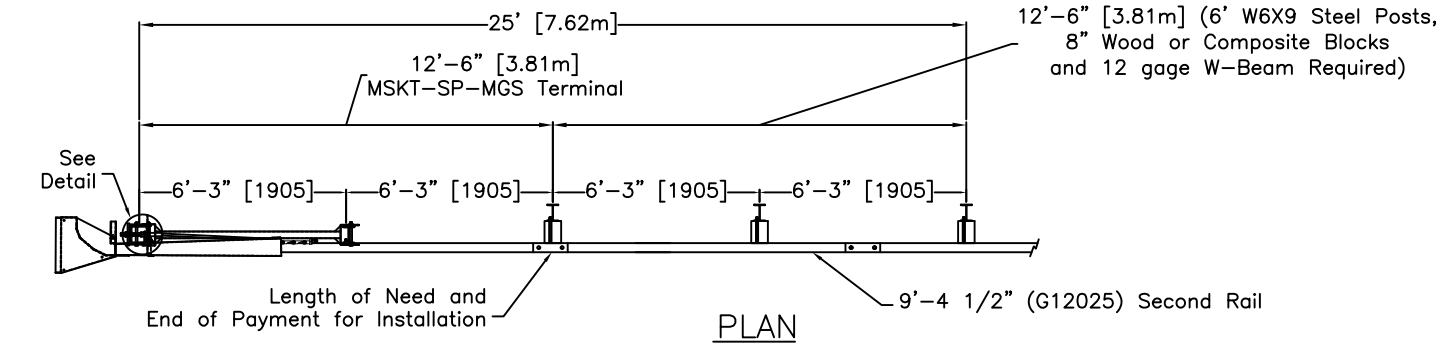

PLAN

TRAFFIC

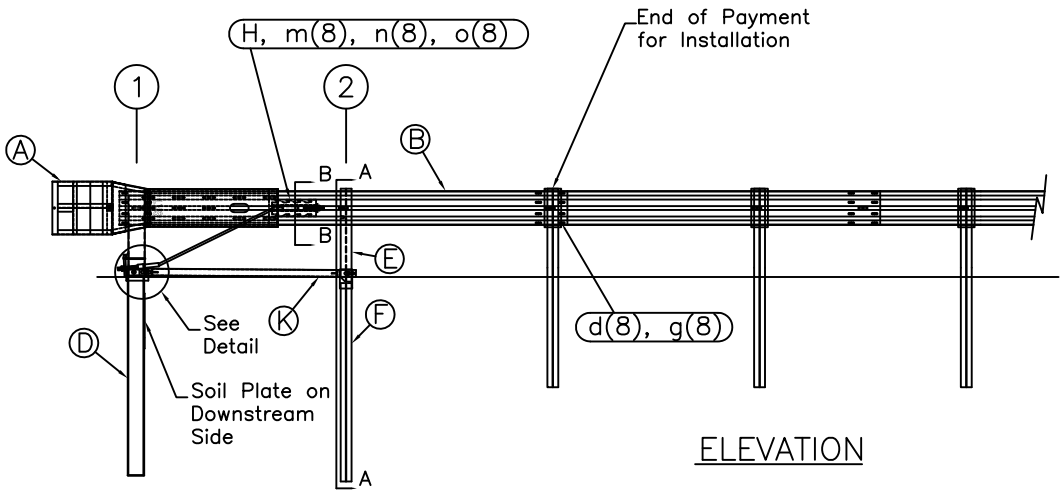

ELEVATION

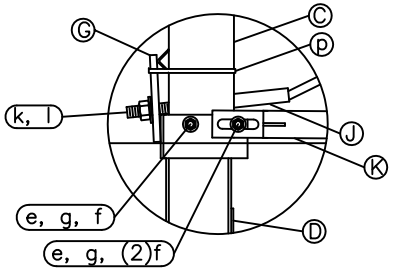

Post #1 Connection Detail

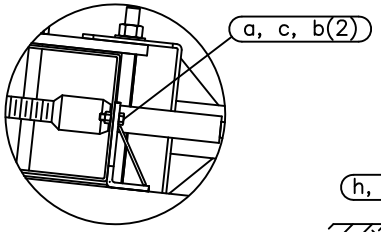

Impact Head Connection Detail

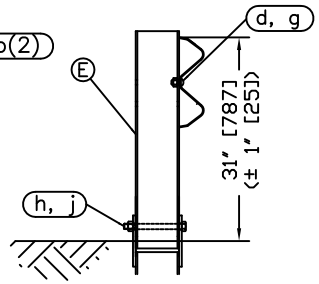

SECTION A-A
Post #2

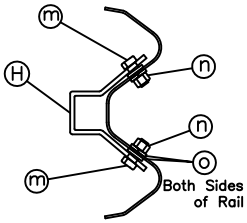

SECTION B-B
Anchor Bracket

GENERAL NOTES:

1. All bolts, nuts, cable assemblies, cable anchors and bearing plates shall be galvanized.
2. The lower sections of the Posts 1&2 shall not protrude more than 4 in [100] above the ground (measured along a 5' [1.5m] cord). Site grading may be necessary to meet this requirement.
3. The lower section of the hinged post should not be driven with the upper post attached. If the post is placed in a drilled hole, the backfill material must be satisfactorily compacted to prevent settlement.
4. When competent rock is encountered, a 12" [300] Ø post hole, 20 in. [500] deep cored into the rock surface may be used if approved by the engineer for Posts 1 and/or 2. Granular material will be placed in the bottom of the hole, approximately 2.5" [60] deep to provide drainage. The first and/or second post can be field cut to length, placed in the hole and backfilled with suitable backfill. The soil plate may be trimmed if required.
5. The breakaway cable assembly must be taut. A locking device (vice grips or channel lock pliers) should be used to prevent the cable from twisting when tightening nuts.

RSI
Road Systems, Inc.
Big Spring, TX
Phone: 432-263-2435
or Phone: 330-346-0721

MSKT-SP-MGS
Terminal
Test Level 2

Sheet:	Date:	By:
1	07/30/16	JRR

Drawing Name:	Scale:	Rev:
MSKT-SP-MGS-TL2	None	0

State of Alaska

GOVERNOR MIKE DUNLEAVY

Submittal Cover Sheet

Department of Transportation Public Facilities
SOUTHCOAST REGION
Construction Section

Project: KTN- HERRING COVE BRIDGE IMPROVEMENTS	Project No: 0902043/SFHWY00072
Contractor: Hamilton Construction Alaska	Submittal No. 0615-002 Standard Signs Shop Drawing REV 1
Date Response Sent: 4/28/2023	Reviewed By: Eric Strong, P.E.

A	**AAN**	**R&R**	**R**	**I**	**R&RasN**	**INC**	**CA**
Approved	Approved as Noted	Revise and Resubmit	Rejected	Informational	Revisit & Resubmit as Noted	Incomplete	Conditionally Approved

Item No.	Item	Contract Documents	A	AAN	R&R	R	I	R&R asN	INC	CA
615.0001.0000	Standard Sign	Spec 615, Sheet H5		X						

Comments/Anticipated Response:

- Font for Signs #9 and #11 “Herring Cove” shall be E Mod, per the Standard Sign Summary table, Sheet H5.
- Signs shall be 2-sided as noted in the Standard Sign Summary table, Sheet H5.
- Signs shall comply with Specification Section 615 *Standard Signs*.

Date: 4/28/2023

Customer Name: Curtis Clowar

Created By: Casey Sharp

Work Order#: xxx

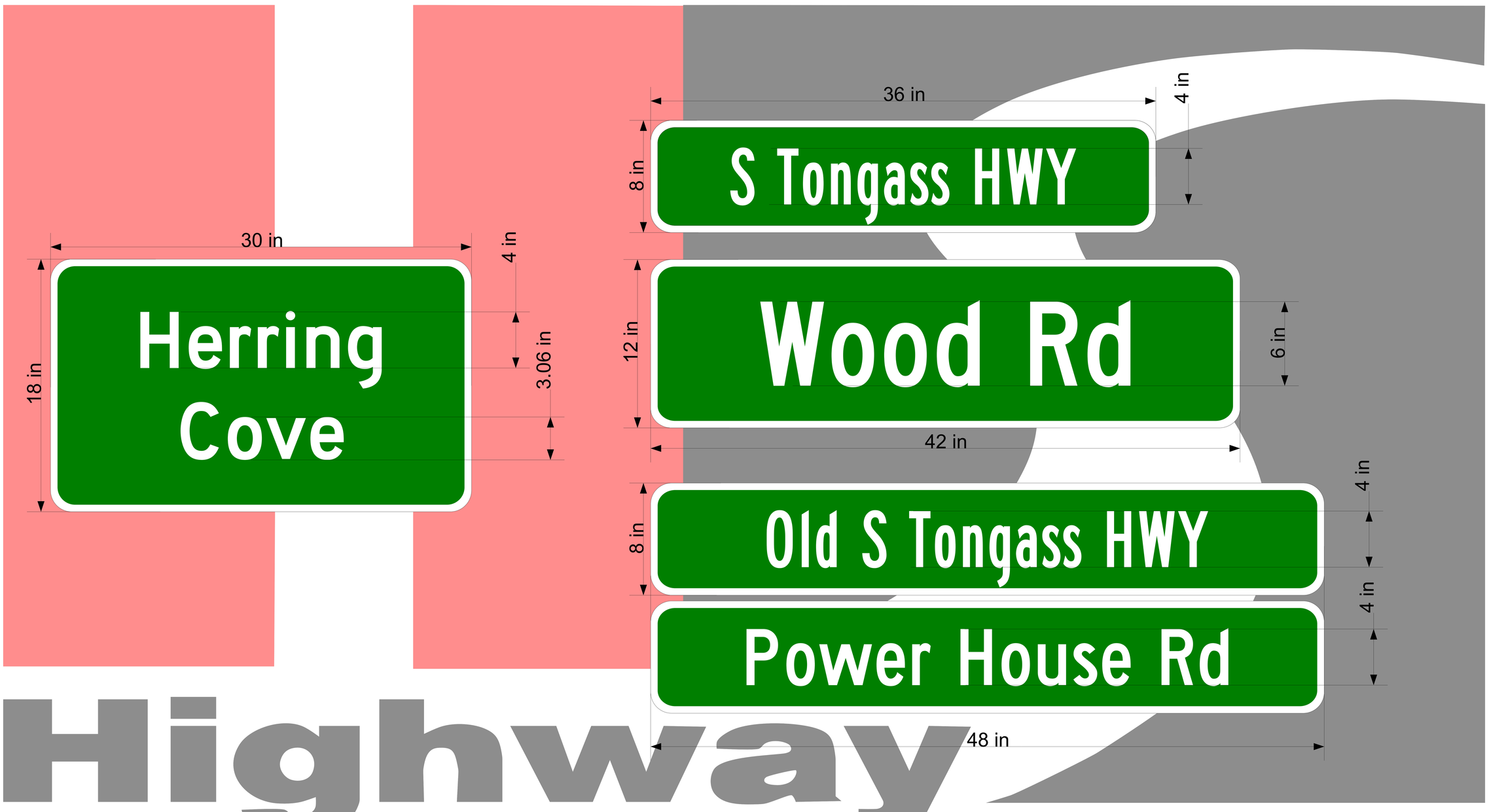

Highway SPECIALTIES

Sheeting Type: HIP-W

Substrate: .080 Aluminum

Overlay: 3M Vinyl

Font: FHWA Series B,C,D

Color: White on Green

Corners:

- [x] Radius
- [ ] Non Radius

Face Appearance:

- [x] Single Faced
- [x] Double Faced

State of Alaska

GOVERNOR MIKE DUNLEAVY

Submittal Cover Sheet

Department of Transportation Public Facilities
SOUTHCOAST REGION
Construction Section

Project: KTN- HERRING COVE BRIDGE IMPROVEMENTS	Project No: 0902043/SFHWY00072
Contractor: Hamilton Construction Alaska	Submittal No. 530-001 Gravity Block Wall Block Drawings
Date Response Sent: 05/11/2022	Reviewed By: Bob Lundell, P.E. Recoverable Signature X Bob Lundell Signed by: 2d66350b-1634-445f-b1d5-d5b87bea066b

A	AAN	R&R	R	I	R&RasN	INC	CA
Approved	Approved as Noted	Revise and Resubmit	Rejected	Informational	Revisit & Resubmit as Noted	Incomplete	Conditionally Approved

Item No.	Item	Contract Documents	A	AAN	R&R	R	I	R&R asN	INC	CA
530.2000.0000	Gravity Block Wall	IWA 2	X							

Comments/Anticipated Response:

KNOB STYLE SPECIFICATION SHEETS

All blocks will be cast with Class A Concrete as approved on the project.
Blocks will be Fabricated by Eddystone Rock & ReadyMix in Ketchikan, AK

KNOB STYLE 24 X 24 X 48 FULL BLOCK

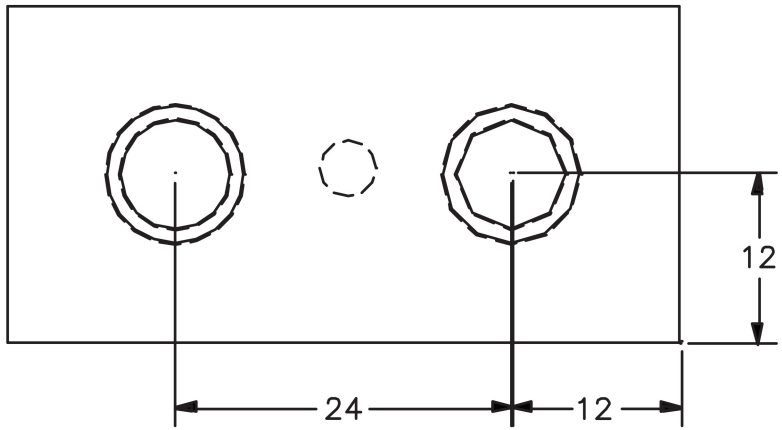

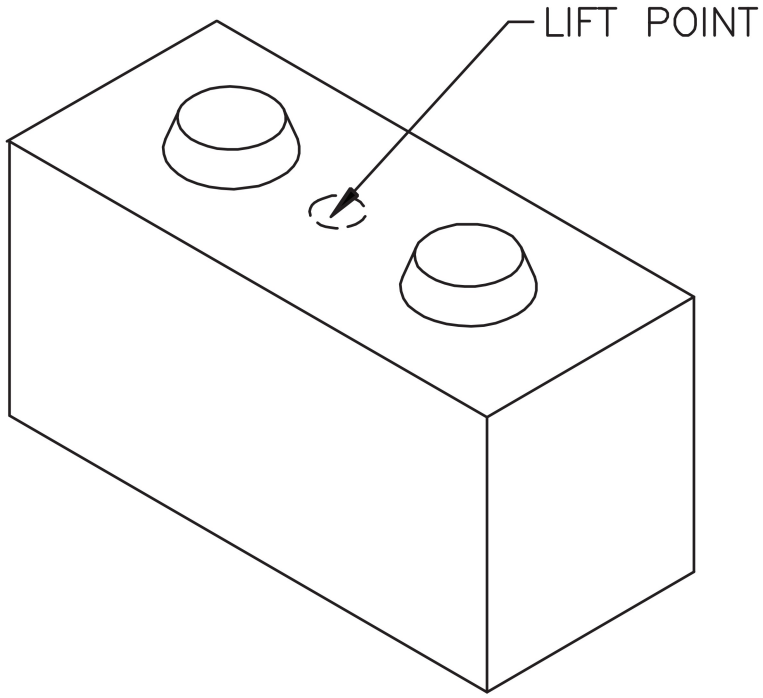

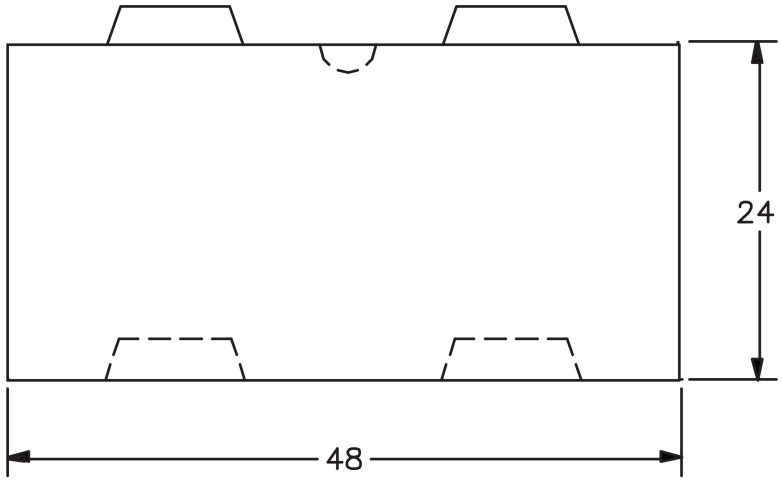

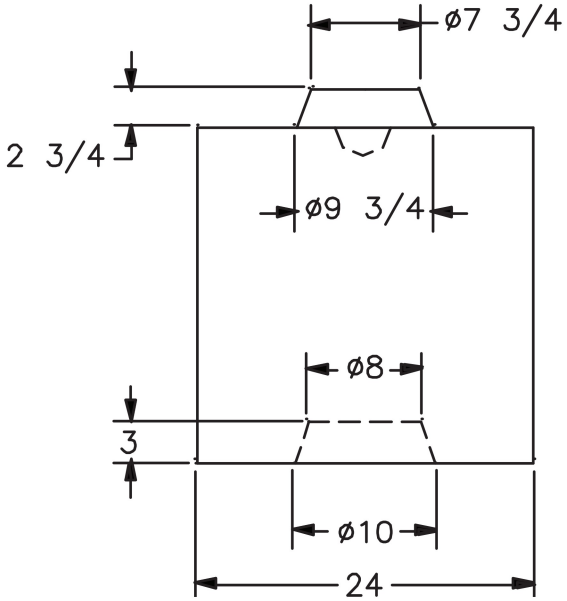

WEIGHT: 2,400 Lbs.
VOLUME: 16.00 Cft

THIS DRAWING CONTAINS CONFIDENTIAL AND PROPRIETARY INFORMATION OF WORLD BLOCK INCORPORATED. NOT TO BE USED BY OR DISCLOSED TO ANY OTHER INDIVIDUAL OR LEGAL ENTITY WITHOUT AUTHORIZATION OF A REPRESENTATIVE OF WORLD BLOCK INCORPORATED

STANDARD TOLERANCES & NOTES UNLESS OTHERWISE SPECIFIED | DIMENSIONS ARE IN INCHES | DRAWN BY RAJ | DATE 08/12 | WORLD BLOCK INCORPORATED

KNOB STYLE 24 X 24 X 24 HALF BLOCK

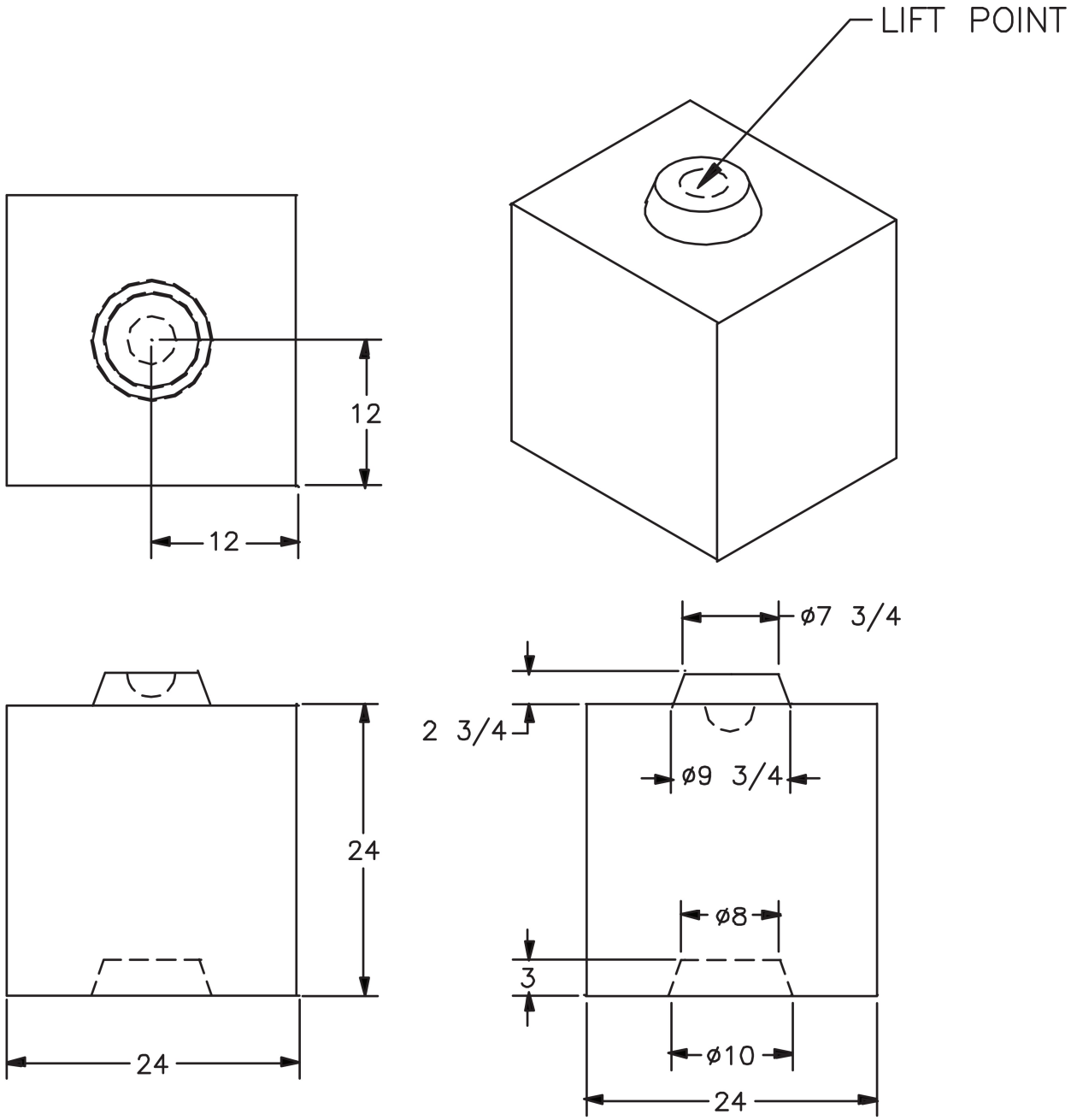

WEIGHT: 1,200 Lbs.
VOLUME: 8.00 Cft

THIS DRAWING CONTAINS CONFIDENTIAL AND PROPRIETARY INFORMATION OF WORLD BLOCK INCORPORATED. NOT TO BE USED BY OR DISCLOSED TO ANY OTHER INDIVIDUAL OR LEGAL ENTITY WITHOUT AUTHORIZATION OF A REPRESENTATIVE OF WORLD BLOCK INCORPORATED

STANDARD TOLERANCES & NOTES UNLESS OTHERWISE SPECIFIED | DIMENSIONS ARE IN INCHES | DRAWN BY RAJ | DATE 08/12 | WORLD BLOCK INCORPORATED

KNOB STYLE 12 X 24 X 48 FULL TOP CAP

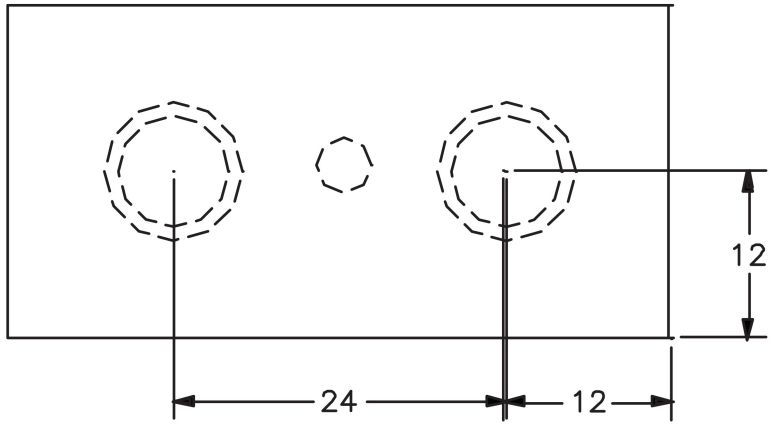

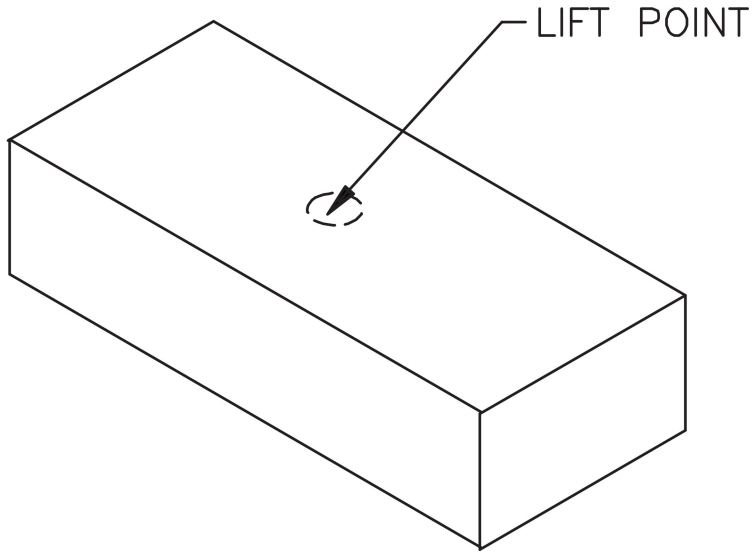

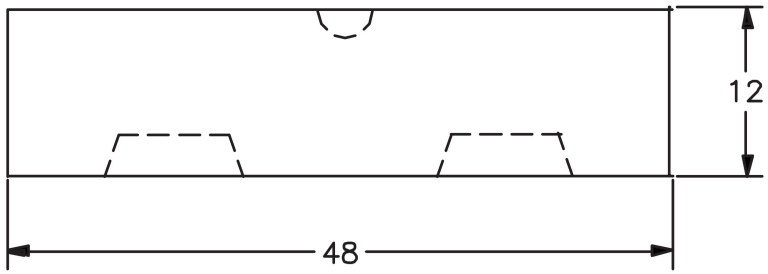

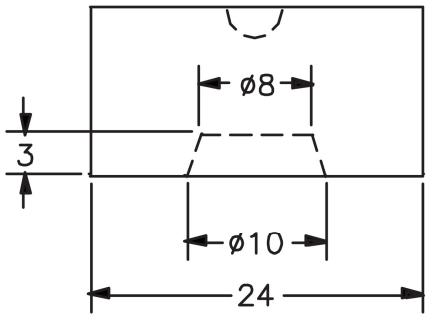

WEIGHT: 1,200 Lbs.
VOLUME: 8.00 Cft

THIS DRAWING CONTAINS CONFIDENTIAL AND PROPRIETARY INFORMATION OF WORLD BLOCK INCORPORATED. NOT TO BE USED BY OR DISCLOSED TO ANY OTHER INDIVIDUAL OR LEGAL ENTITY WITHOUT AUTHORIZATION OF A REPRESENTATIVE OF WORLD BLOCK INCORPORATED

STANDARD TOLERANCES & NOTES UNLESS OTHERWISE SPECIFIED | DIMENSIONS ARE IN INCHES | DRAWN BY RAJ | DATE 08/12 | WORLD BLOCK INCORPORATED

State of Alaska

GOVERNOR MIKE DUNLEAVY

Submittal Cover Sheet

Department of Transportation Public Facilities
SOUTHCOAST REGION
Construction Section

Project: KTN- HERRING COVE BRIDGE IMPROVEMENTS	Project No: 0902043/SFHWY00072
Contractor: Hamilton Construction Alaska	Submittal No. 00687-028 Bridge Hangers, Revision 2
Date Response Sent: 01/10/2022	Reviewed By: Bob Lundell, P.E. Recoverable Signature X Bob Lundell Signed by: 2d66350b-1634-445f-b1d5-d5b87bea066b

A	**AAN**	**R&R**	**R**	**I**	**R&RasN**	**INC**	**CA**
Approved	Approved as Noted	Revise and Resubmit	Rejected	Informational	Revisit & Resubmit as Noted	Incomplete	Conditionally Approved

Item No.	Item	Contract Documents	A	AAN	R&R	R	I	R&R asN	INC	CA
687.2000.0000	Power Utility Relocation	687-3.03	X							

Comments/Anticipated Response:

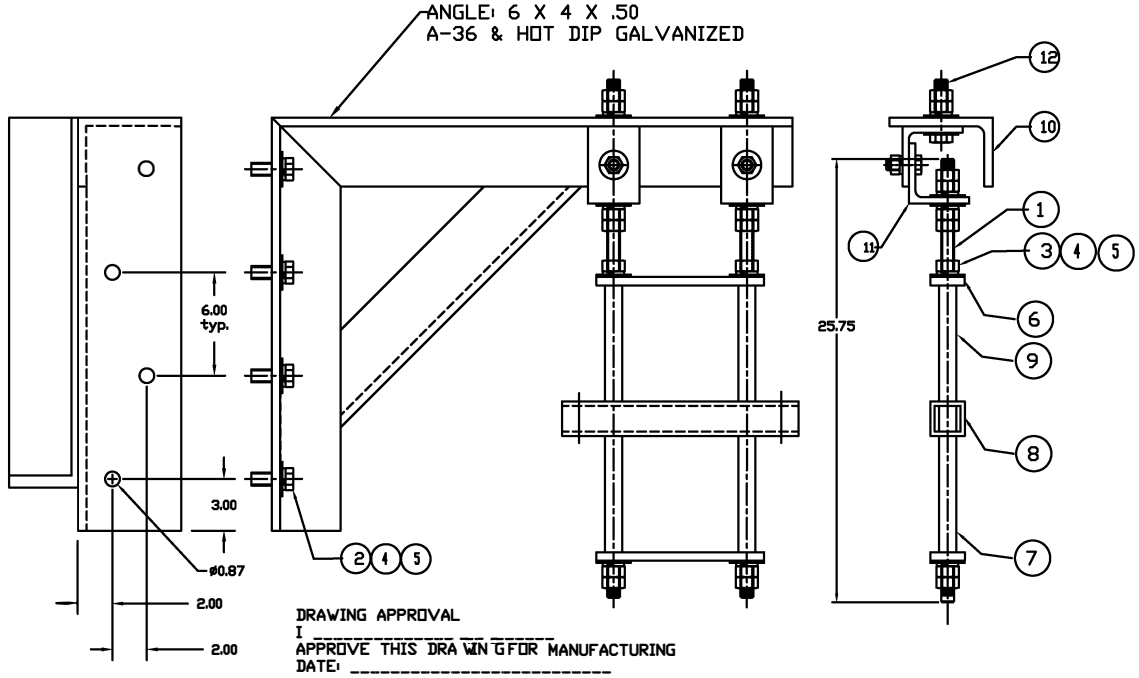

REVISIONS				
ZONE	REV	DESCRIPTION	DATE	APPROVED

Condux International, Inc. Support hanger meet the following specifications

Fiberglass Items
- Flat Bar: ½ x 2.0
- Round Tube: 1.0" O.D. .105 wall
- Square Tube: 2 x 2 x 1/4

Fiberglass reinforced with polyester resin with surface veil for better weathering, resin shall contains u.v. inhibitor. Fiberglass is made with continuous strand mat and uni-directional roving.

light gray in color
- Tensile Strength (ASTM D 638) 30,000 PSI
- Tensile Modules (ASTM D 638) 2.3E6 PSI
- Flexural Strength (ASTM D 790) 30,000 PSI
- Flexural Modules (ASTM D 790) 2.3E6 PSI
- Compressive Strength (ASTM D 695 20,000 PSI
- Compressive Modules 1.4E6 PSI
- Yield shear strength 2000 PSI
- Barcol hardness 50
- Dielectric strength (ASTM D 149) 200 VPM Min.

Galvanized Hardware Items

Threaded Rod
- Threaded rod meets (ASTM/ASME B1.1)
- (ASTM A307 Grade A) (Tensile Strength 60,000 PSI)
- Galvanized meet (ASTM A153)

Hexnut
- Hexnut meets (ANSI/ASME B1.1)
- (ASTM 563) (Grade 2 SAE J995) (Tensile Strength 68,000 PSI
- Galvanized meets (ASTM A153, Class C)

Flatwasher
- Flatwasher meets (ANSI/ASME B18.22.1)
- Galvanized Meets (ASTM A153, Class D)

Lockwasher
- Lockwasher meets (ANSI/ASME B18.21.1)
- Galvanizing meets (ASTM A153, Class D)

Angle mounting bracket
- Angle 6.0 x 4.0 x .50 meeting A-36
- Galvanize Meets (ASTM A123)

Knuckle Angle bracket
- Angle 3.5 x 3.5 x .37 meeting A-36
- Galvanize Meets (ASTM A123)

Note:
ALL MEASUREMENTS ARE IN INCHES UNLESS NOTED OTHERWISE

ITEM	PART NO.	DESCRIPTION	LENGTH	QTY
12	02005503	CAP SCREW: 3/4-10UNC GALV.	3.5	2
11	08639230	KNUCKLE FITTING HDG		2
10	TBA	WALL MOUNT BRACKET HDG		1
9	00122700	RD. TUBE: 1" O.D. FIBERGLASS	6.75	2
8	00134600	SQ. TUBE: 2" X 1/4" WALL FIBERGLASS	13.75	1
7	00122700	RD. TUBE: 1" O.D. FIBERGLASS	6.75	2
6	00122800	FLATBAR: 1/2 X 2.0 FIBERGLASS	7.75	2
5	02124003	FLAT WASHER: 3/4 GALV.		16
4	02123903	LOCK WASHER: 3/4 GALV.		14
3	02123803	HEX HEAD NUT: 3/4-10UNC GALV.		18
2	02129103	CAP SCREW: 3/4-10UNC GALV.	2.0	4
1	00122902	THREADED ROD: 3/4-10UNC GALV.	25.75	2

BILL OF MATERIALS

HANGER OPTION R3
CONDUIT RUN A & C
2 HIGH X 1 WIDE
FIBERGLASS AND
GALVANIZED OPENING
FOR TWO 6" DUCTS

CONDUX INTERNATIONAL, INC.
MANKATO MN
PH. 800-533-2077

PROJECT: HERRIN COVE BRIDGE
SOUTH TONGASS HWY
BRIDGE # 253

WEIGHT: .00 LBS

QUOTE NO. 3995273708

SIZE	FSCM NO.	DWG NO.	REV
		TBA	4.0

SCALE 1/2 | DATE: 12/28/2020 | SHEET 2 OF 3

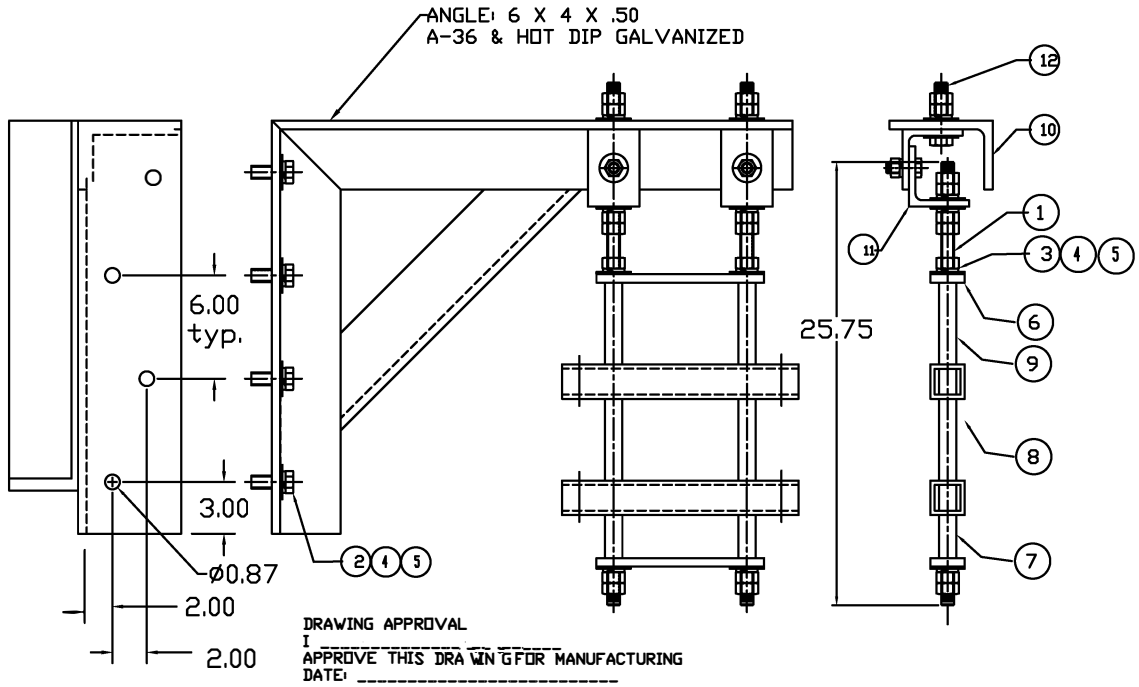

DRAWING APPROVAL
I _____ _____
APPROVE THIS DRA WIN G FOR MANUFACTURING
DATE: _____

REVISIONS				
ZONE	REV	DESCRIPTION	DATE	APPROVED

Condux International, Inc. Support hanger meet the following specifications

Fiberglass Items
- Flat Bar: ½ x 2.0
- Round Tube: 1.0" O.D. .105 wall
- Square Tube: 2 x 2 x 1/4

Fiberglass reinforced with polyester resin with surface veil for better weathering, resin shall contains u.v. inhibitor. Fiberglass is made with continuous strand mat and uni-directional roving.
light gray in color
- Tensile Strength (ASTM D 638) 30,000 PSI
- Tensile Modules (ASTM D 638) 2.3E6 PSI
- Flexural Strength (ASTM D 790) 30,000 PSI
- Flexural Modules (ASTM D 790) 2.3E6 PSI
- Compressive Strength (ASTM D 695 20,000 PSI
- Compressive Modules 1.4E6 PSI
- Yield shear strength 2000 PSI
- Barcol hardness 50
- Dielectric strength (ASTM D 149) 200 VPM Min.

Galvanized Hardware Items

Threaded Rod
- Threaded rod meets (ASTM/ASME B1.1)
- (ASTM A307 Grade A) (Tensile Strength 60,000 PSI)
- Galvanized meet (ASTM A153)

Hexnut
- Hexnut meets (ANSI/ASME B1.1)
- (ASTM 563) (Grade 2 SAE J995) (Tensile Strength 68,000 PSI
- Galvanized meets (ASTM A153, Class C)

Flatwasher
- Flatwasher meets (ANSI/ASME B18.22.1)
- Galvanized Meets (ASTM A153, Class D)

Lockwasher
- Lockwasher meets (ANSI/ASME B18.21.1)
- Galvanizing meets (ASTM A153, Class D)

Angle mounting bracket
- Angle 6.0 x 4.0 x .50 meeting A-36
- Galvanize Meets (ASTM A123)

Knuckle Angle bracket
- Angle 3.5 x 3.5 x .37 meeting A-36
- Galvanize Meets (ASTM A123)

Note:
ALL MEASUREMENTS ARE IN INCHES UNLESS NOTED OTHERWISE

ITEM	PART NO.	DESCRIPTION	LENGTH	QTY
12	02005503	CAP SCREW: 3/4-10UNC GALV.	3.5	2
11	08639230	KNUCKLE FITTING HDG		2
10	TBA	WALL MOUNT BRACKET HDG		1
9	00122700	RD. TUBE: 1" O.D. FIBERGLASS	6.75	2
8	00134600	SQ. TUBE: 2" X 1/4" WALL FIBERGLASS	13.75	1
7	00122700	RD. TUBE: 1" O.D. FIBERGLASS	6.75	2
6	00122800	FLATBAR: 1/2 X 2.0 FIBERGLASS	7.75	2
5	02124003	FLAT WASHER: 3/4 GALV.		16
4	02123903	LOCK WASHER: 3/4 GALV.		14
3	02123803	HEX HEAD NUT: 3/4-10UNC GALV.		18
2	02129103	CAP SCREW: 3/4-10UNC GALV.	2.0	4
1	00122902	THREADED ROD: 3/4-10UNC GALV.	25.75	2

BILL OF MATERIALS

HANGER OPTION R3
CONDUIT RUN B & D
3 HIGH X 1 WIDE
FIBERGLASS AND
GALVANIZED OPENING
FOR TWO 4" & ONE 2"
DUCTS

WEIGHT: .00 LBS

QUOTE NO. 3995273708

CONDUX INTERNATIONAL, INC.
MANKATO MN
PH. 800-533-2077

PROJECT: HERRIN COVE BRIDGE
SOUTH TONGASS HWY
BRIDGE # 253

SIZE	FSCM NO.	DWG NO.	REV
		TBA	4.0

SCALE 1/2 | DATE: 12/28/2020 | SHEET 2 OF 3

REVISIONS				
ZONE	REV	DESCRIPTION	DATE	APPROVED
	4.0	ADDED KNUCKLE FITTING TO TOP OF CONDUIT HANGER	12-29-2021	BRIAN

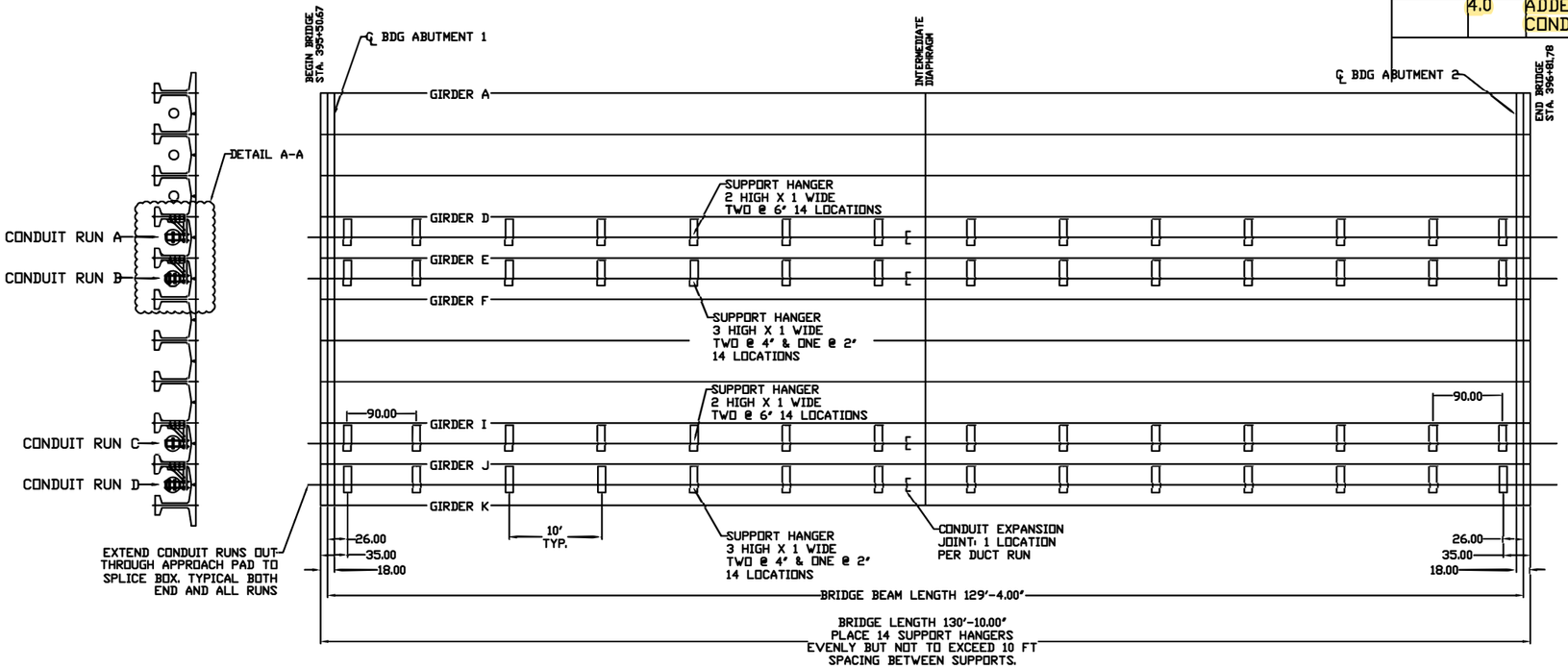

SCOPE OF WORK:

INSTALL CONDUIT SUPPORT HANGERS, TEN RUNS OF FIBERGLASS CONDUIT AND FITTINGS THE ENTIRE LENGTH OF BRIDGE. EXTEND CONDUIT RUNS MINIMUM OF FIVE (5) FEET PAST THE APPROACH SLAB. ACTUAL TERMINATION POINT TO BE DETERMINED BY OWNER.

General Construction, Hanger and Conduit Notes.

1.0 Recommended spacing between Support is 10 foot. Maximum 11ft.
2.0 Support Hanger Material shall be manufactured using fiberglass and steel galvanized threaded rod components. Brackets A36 steel hot dip galvanized.
3.0 Conduit is 6", 4" and 2" inch fiberglass with wall thickness .110", .096" & .070" meeting NEMA TC-14A
4.0 Conduit joints shall be epoxy bell and spigot.
5.0 Conduit expansion joints shall be o-ring sliding sleeve with provision for 8 inch of travel.
6.0 Conduit support hanger weight 890 LBS total
Fiberglass Conduit weight 1,660 LBS total

NOTES:

1. ALL MATERIALS REQUIRED FOR THE PLACEMENT OF THIS UNDER BRIDGE CONDUIT SYSTEM WILL BE PROVIDED BY OWNER.

2. THE CONTRACTOR WILL NOTIFY OWNER A MINIMUM OF 60 DAYS PRIOR TO REQUIRING THE MATERIALS TO BE ON SITE.

3. SUPPORT HANGERS, MANUFACTURED FROM CONDUX INTERNATIONAL, INC. OF MANKATO MN, PHONE: 1-800-533-2077 QUOTE NO. 3995262379 PURCHASED THROUGH OWNER.

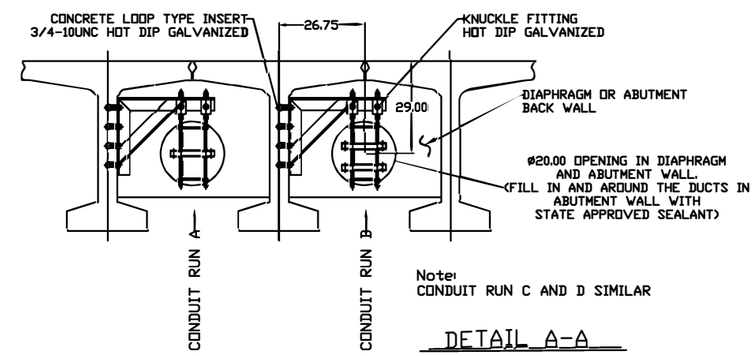

Note:
CONDUIT RUN C AND D SIMILAR

DETAIL A-A

CONDUIT RUN A
BILL OF MATERIALS DESCRIPTION

ITEM NO.	PART NO.	DESCRIPTION	QTY	UNIT
1	TBA	CONDUIT SUPPORT HANGER: 2 HIGH X 1 WIDE FIBERGLASS AND HOT DIP GALVANIZED. OPENING FOR TWO 6" DUCTS	14	EA.
2	08409911	CONCRETE LOOP TYPE INSERT: 3/4-10UNC	56	EA.
3	08558300	CONCRETE SETTING PLUG: 3/4-10UNC	56	EA.
4	08460066	CONDUIT FIBERGLASS: 6" (6.60 O.D. X .110 WALL MEETING NEMA TC-14A	280	FT.
5	08460166	CONDUIT STOP COUPLING: 6" FGL	4	EA.
6	08460466	CONDUIT EXPANSION JOINT O-RING TYPE: 6" FGL	2	EA.
7	08461566	CONDUIT THREADED ADAPTER: 6" FGL	4	EA.
8	08463402	CONDUIT EPOXY KIT	5	EA.
9	02288990	DISPENSER EPOXY KIT GUN	1	EA.

CONDUIT RUN C
BILL OF MATERIALS DESCRIPTION

ITEM NO.	PART NO.	DESCRIPTION	QTY	UNIT
1	TBA	CONDUIT SUPPORT HANGER: 2 HIGH X 1 WIDE FIBERGLASS AND HOT DIP GALVANIZED. OPENING FOR TWO 6" DUCTS	14	EA.
2	08409911	CONCRETE LOOP TYPE INSERT: 3/4-10UNC	56	EA.
3	08558300	CONCRETE SETTING PLUG: 3/4-10UNC	56	EA.
4	08460066	CONDUIT FIBERGLASS: 6" (6.60 O.D. X .110 WALL MEETING NEMA TC-14A	280	FT.
5	08460166	CONDUIT STOP COUPLING: 6" FGL	4	EA.
6	08460466	CONDUIT EXPANSION JOINT O-RING TYPE: 6" FGL	2	EA.
7	08461566	CONDUIT THREADED ADAPTER: 6" FGL	4	EA.
8	08463402	CONDUIT EPOXY KIT	5	EA.
9	02288990	DISPENSER EPOXY KIT GUN	1	EA.

CONDUIT RUN B
BILL OF MATERIALS DESCRIPTION

ITEM NO.	PART NO.	DESCRIPTION	QTY	UNIT
1	TBA	CONDUIT SUPPORT HANGER: 3 HIGH X 1 WIDE FIBERGLASS AND HOT DIP GALVANIZED. OPENING FOR TWO 4" AND ONE 2" DUCTS	14	EA.
2	08409911	CONCRETE LOOP TYPE INSERT: 3/4-10UNC	56	EA.
3	08558300	CONCRETE SETTING PLUG: 3/4-10UNC	56	EA.
4	08470044	CONDUIT FIBERGLASS: 4" (4.51 O.D. X .096 WALL) MEETING NEMA TC-14A	280	FT.
5	08470144	CONDUIT STOP COUPLING: 4" FGL	4	EA.
6	08470444	CONDUIT EXPANSION JOINT O-RING TYPE: 4" FGL	2	EA.
7	08471544	CONDUIT THREADED ADAPTER: 4" FGL	4	EA.
8	08460024	CONDUIT FIBERGLASS: 2" (2.37 O.D. X .070 WALL) MEETING NEMA TC-14A	140	FT.
9	08460124	CONDUIT STOP COUPLING: 2" FGL	2	EA.
10	08460424	CONDUIT EXPANSION JOINT O-RING TYPE: 2" FGL	1	EA.
11	08461524	CONDUIT THREADED ADAPTER: 2" FGL	2	EA.
12	08463402	CONDUIT EPOXY KIT	3	EA.
13	02288990	DISPENSER EPOXY KIT GUN	1	EA.

CONDUIT RUN D
BILL OF MATERIALS DESCRIPTION

ITEM NO.	PART NO.	DESCRIPTION	QTY	UNIT
1	TBA	CONDUIT SUPPORT HANGER: 3 HIGH X 1 WIDE FIBERGLASS AND HOT DIP GALVANIZED. OPENING FOR TWO 4" AND ONE 2" DUCTS	14	EA.
2	08409911	CONCRETE LOOP TYPE INSERT: 3/4-10UNC	56	EA.
3	08558300	CONCRETE SETTING PLUG: 3/4-10UNC	56	EA.
4	08470044	CONDUIT FIBERGLASS: 4" (4.51 O.D. X .096 WALL) MEETING NEMA TC-14A	280	FT.
5	08470144	CONDUIT STOP COUPLING: 4" FGL	4	EA.
6	08470444	CONDUIT EXPANSION JOINT O-RING TYPE: 4" FGL	2	EA.
7	08471544	CONDUIT THREADED ADAPTER: 4" FGL	4	EA.
8	08460024	CONDUIT FIBERGLASS: 2" (2.37 O.D. X .070 WALL) MEETING NEMA TC-14A	140	FT.
9	08460124	CONDUIT STOP COUPLING: 2" FGL	2	EA.
10	08460424	CONDUIT EXPANSION JOINT O-RING TYPE: 2" FGL	1	EA.
11	08461524	CONDUIT THREADED ADAPTER: 2" FGL	2	EA.
12	08463402	CONDUIT EPOXY KIT	3	EA.
13	02288990	DISPENSER EPOXY KIT GUN	1	EA.

Layout of support hangers and conduit and fittings

CONDUX INTERNATIONAL, INC.
MANKATO MN
PH. 800-533-2077

Project: HERRING COVE BRIDGE
SOUTH TONGASS HIGHWAY
BRIDGE # 253

WEIGHT: 0.0 LBS EA

QUOTE NO. 3995273708

SIZE	FSCM NO.	DWG NO.	REV
		TBA	4.0

SCALE 1/2 | DATE: 08-10-2020 | SHEET 1 OF 3

State of Alaska

GOVERNOR MIKE DUNLEAVY

Submittal Cover Sheet

Department of Transportation Public Facilities
SOUTHCOAST REGION
Construction Section

Project: KTN- HERRING COVE BRIDGE IMPROVEMENTS	Project No: 0902043/SFHWY00072
Contractor: Hamilton Construction Alaska	Submittal No. 627-003 Waterline Modifications Plan
Date Response Sent: 05/11/2022	Reviewed By: Bob Lundell, P.E. Recoverable Signature X Bob Lundell Signed by: 2d66350b-1634-445f-b1d5-d5b87bea066b

A	AAN	R&R	R	I	R&RasN	INC	CA
Approved	Approved as Noted	Revise and Resubmit	Rejected	Informational	Revisit & Resubmit as Noted	Incomplete	Conditionally Approved

Item No.	Item	Contract Documents	A	AAN	R&R	R	I	R&R asN	INC	CA
627.2018.0000	Relocate, Water Main	627-3.10					X			

Comments/Anticipated Response:

KTN HERRING COVE BRIDGE IMPROVEMENTS WATER LINE MODIFICATIONS

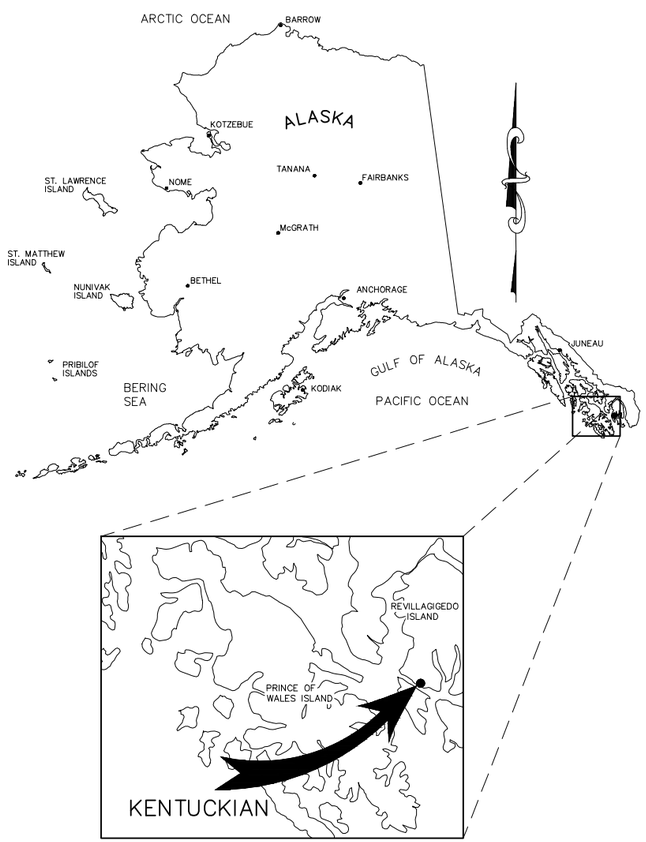

PROJECT LOCATION MAP

NOT TO SCALE

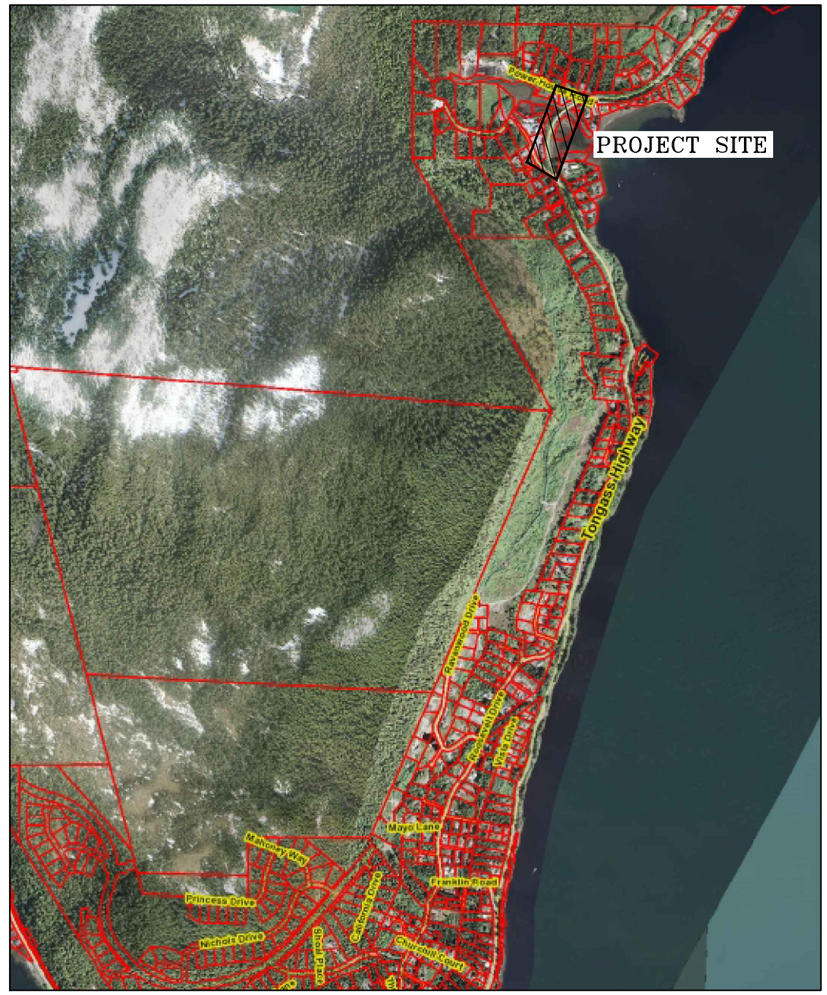

PROJECT VICINITY MAP

NOT TO SCALE

Reviewed
By Chris Duty
04/25/2022 3:40:42 PM

SHEET INDEX

1	TITLE SHEET
2	LEGEND AND GENERAL NOTES
3	OVERVIEW SITE MAP
4	WOOD ROAD WATERLINE UPGRADES
5	HERRING COVE BRIDGE WATERLINE UPGRADES SITE PLAN
6	HERRING COVE BRIDGE WATERLINE UPGRADES PROFILE
7	DETAILS

PROJECT NARRATIVE

THE ALASKA DEPARTMENT OF TRANSPORTATION AND PUBLIC UTILITIES IS CURRENTLY CONDUCTING A PROJECT AT HERRING COVE IN KETCHIKAN, ALASKA. THIS PROJECT CONSISTS OF REPLACING THE EXISTING HERRING COVE BRIDGE AS WELL AS ROADWAY IMPROVEMENTS FROM WOOD ROAD TO POWERHOUSE ROAD. AS PART OF THIS OVERALL PROJECT, THE CONTRACTOR NEEDS TO CONDUCT SOME SUBSIDIARY EXISTING WATER LINE MODIFICATIONS.

THESE MODIFICATIONS INCLUDE REROUTING THE EXISTING WATER MAIN AROUND A NEW CULVERT AT WOOD ROAD, REMOVING AND INSTALLING A NEW FIRE HYDRANT NEAR WOOD ROAD, AND REROUTING THE DRINKING AND RAW WATER LINES AT BOTH ABUTMENTS OF THE NEW HERRING COVE BRIDGE.

REVISIONS:

KTN HERRING COVE BRIDGE IMPROVEMENTS WATER LINE MODIFICATIONS

STATUS:

100% DESIGN

DRAWN BY: JPT
CHECKED BY: JPT
DATE: 4/22/2022
PROJECT #: 222703

R&M ENGINEERING-KETCHIKAN, INC.
7180 REVILLA ROAD, SUITE 300
KETCHIKAN, ALASKA 99901
PH: 907.225.7187
www.ketchikanengineer.com
AELC 576

STATE OF ALASKA 49th
JOEL P. TEUNE
121948
REGISTERED PROFESSIONAL ENGINEER

SHEET DESCRIPTION:
TITLE SHEET

1

SHEET:
01 of 07

GENERAL NOTES

HORIZONTAL DATA:

THE BASIS OF COORDINATES IN THIS DRAWING WAS DERIVED FROM THE INFORMATION SHOWN ON SHEET A4 OF THE STATE OF ALASKA DEPARTMENT OF TRANSPORTATION & PUBLIC FACILITIES KTN HERRING COVE BRIDGE IMPROVEMENTS PROJECT NO. 0902043/SFHWY00072.

VERTICAL DATA:

THE BASIS OF ELEVATIONS IN THIS DRAWING WAS DERIVED FROM THE INFORMATION SHOWN ON SHEET A4 OF THE STATE OF ALASKA DEPARTMENT OF TRANSPORTATION & PUBLIC FACILITIES KTN HERRING COVE BRIDGE IMPROVEMENTS PROJECT NO. 0902043/SFHWY00072.

GENERAL NOTES:

1) ALL UTILITIES SHOWN WERE LOCATED FROM SURFACE EVIDENCE AND UTILITY LOCATES PERFORMED BY THE CONTRACTOR. ALL EXISTING UTILITIES SHOWN IN THIS DRAWING ARE APPROXIMATE ONLY AND SHOULD BE FIELD VERIFIED WHENEVER POSSIBLE.

2) THE PROPERTY LINES SHOWN ON THIS SURVEY DO NOT CONSTITUTE A COMPLETE BOUNDARY RESOLUTION AND SHOULD ONLY BE USED AS APPROXIMATE WHEN PLACING NEW PERMANENT STRUCTURES. FURTHERMORE, THIS COMPANY WAS NOT PROVIDED A TITLE REPORT TO AID IN DEPICTING ALL EXISTING EASEMENTS THAT MAY EXIST.

3) THESE PLANS RELIED UPON DRAWINGS SUPPLIED TO THIS COMPANY BY AKDOT&PF. THESE DRAWING CONTAINED PROPERTY LINE INFORMATION, EXISTING GRADE CONTOURS, UTILITIES, AND LOCATIONS OF OTHER FEATURES.

4) THE PROFILES SHOWN IN THESE PLANS HAVE A VERTICAL EXAGGERATION OF 2.0.

5) WATER DISTRIBUTION SYSTEM CONSTRUCTION SHALL BE ACCORDANCE WITH THESE PLANS, THE KETCHIKAN GATEWAY BOROUGH STANDARD SPECIFICATIONS, AND ADEC REGULATIONS AS CONTAINED IN 18–AAC–80, DRINKING WATER.

6) ALL TRENCHING, COMPACTION, AND AGGREGATES SHALL BE COMPLETED IN ACCORDANCE WITH THE AKDOT&PF STANDARD SPECIFICATIONS UNLESS OTHERWISE NOTED.

7) MAINTAIN MINIMUM 10 FOOT HORIZONTAL, AND 18 INCH VERTICAL SEPARATION BETWEEN SEWER AND WATER MAIN LINES AT ANY POINT UNLESS OTHERWISE NOTED IN PLANS.

8) WATER MAINS SHALL CROSS OVER THE TOP OF SEWER MAINS WITH 18 INCHES OF SEPARATION BETWEEN OUTSIDE EDGES OF THE PIPES. THE WATER LINE JOINTS SHALL BE AT LEAST 9 FEET FROM THE SEWER JOINTS. SEE DETAILS.

9) WATER PIPE SHALL BE 4710 RESIN SDR11 HDPE PIPE OR OTHER NSF 60 APPROVED RESIN.

10) DO NOT CHANGE UTILITY DESIGN, LINE, GRADE, SIZE, MATERIALS, ETC. WITHOUT APPROVAL FROM THE DESIGN ENGINEER.

11) THE WATER LINE DESIGN IS BASED ON HDPE PIPE WITH AN ALLOWABLE BENDING RADIUS = 10–D. THE CONTRACTOR SHALL SUBMIT ALIGNMENT SHOP DRAWINGS IF SELECTED HDPE PIPE MANUFACTURER'S ALLOWABLE BENDING RADIUS IS GREATER.

12) MAINTAIN 4' MINIMUM COVER ON WATER MAINS UNLESS OTHERWISE SPECIFIED.

13) SUBMITTALS – THE CONTRACTOR SHALL SUBMIT DATA SHEETS FOR ALL CONSTRUCTION MATERIALS TO THE KETCHIKAN GATEWAY BOROUGH PUBLIC WORKS DEPARTMENT AND OBTAIN WRITTEN APPROVAL FOR THE CONSTRUCTION MATERIALS PRIOR TO PURCHASING AND INSTALLING THEM. THE CONSTRUCTION MATERIALS INCLUDE BUT ARE NOT LIMITED TO ALL PIPE, FITTINGS, VALVES, CURB STOPS, CORPORATION STOPS, TAPPING SADDLES, MANHOLES, FRAMES & LIDS, CLEANOUTS, AND HYDRANTS.

LEGEND

FEATURE DESCRIPTION	EXISTING	PROPOSED
PROPERTY LINE		N/A
PROPERTY LINE (INFORMATIONAL)		N/A
CENTERLINE		
CONCRETE		AS NOTED
ASPHALT		AS NOTED
BUILDING LINE		
BUILDING OVERHANG		AS NOTED
EDGE OF ASPHALT/CONCRETE		(PATCH)
EDGE OF GRAVEL		N/A
TOP/TOE/DITCH (GENERAL)		N/A
OVERHEAD UTILITY LINE	XOH XOH XOH XOH	N/A
UNDERGROUDN UTILITY LINE	UGP UGP UGP UGP	N/A
STORM DRAIN	XSD XSD XSD XSD	SD SD SD SD
SEWER LINE	XSS XSS XSS XSS	SS SS SS SS
SEWER LINE (RECORD)	SS(R) SS(R)	N/A
SANITARY SEWER PRESSURE LINE	XFM XFM XFM	FM FM FM FM
SEWER SERVICE	N/A	S SERV S SERV S SERV
WATER LINE	XW XW XW XW	W W W W W
WATER SERVICE	N/A	W SERV W SERV W SERV
WATER LINE (RECORD)	W(R) W(R) W(R)	N/A
RAW SALTWATER LINE	SRAW SRAW	N/A
FUEL/GAS LINE	G G G G G	N/A
FENCE	X X X X X	
GUARD RAIL		N/A
MAJOR CONTOUR		N/A
MINOR CONTOUR		N/A
POSSIBLE UNKNOWN LINE DETECTED BY GPR	? ? ?	

NOTE: LINE WEIGHTS VARY BETWEEN SHEETS

FEATURE DESCRIPTION	EXISTING	PROPOSED
UTILITY POLE		
GUY ANCHOR		N/A
CONTROL POINT (AS NOTED)		N/A
FOUND MONUMENT (AS NOTED)		N/A
STORM DRAIN MANHOLE		
STORM CATCH BASIN		
STORM CLEANOUT	CO	CO
SANITARY SEWER MANHOLE	S	S
SANITARY SEWER CLEANOUT	CO	CO
BOLLARD/POST (TYPE AS NOTED)		
WATER VALVE	WV	
FIRE HYDRANT		
LIGHT POLE		N/A
ELECTRICAL METER	EM	N/A
SIGN		N/A
TEST PIT	TP	N/A
ROCK WALL		

REVISIONS:

KTN HERRING COVE BRIDGE IMPROVEMENTS WATER LINE MODIFICATIONS

STATUS:

100% DESIGN

DRAWN BY: JPT
CHECKED BY: JPT
DATE: 4/22/2022
PROJECT #: 222703

R&M ENGINEERING-KETCHIKAN, INC.
7180 REVILLA ROAD, SUITE 300
KETCHIKAN, ALASKA 99901
PH: 907.225.7187
www.ketchikanengineer.com
AELC 576

STATE OF ALASKA 49th JOEL P. TEUNE 121948 REGISTERED PROFESSIONAL ENGINEER

SHEET DESCRIPTION:
LEGEND

2

SHEET:
02 of 07

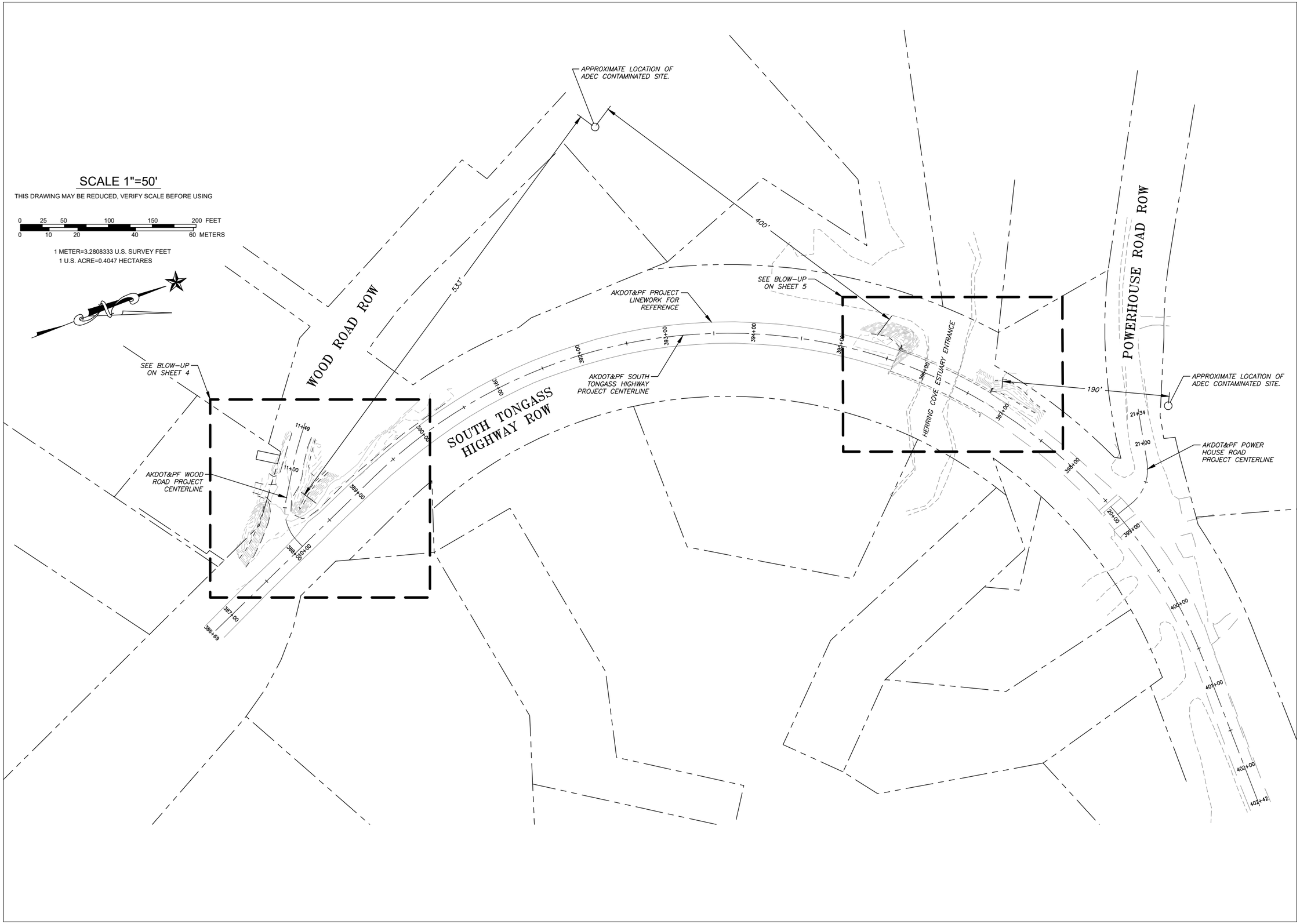

REVISIONS:

KTN HERRING COVE BRIDGE IMPROVEMENTS WATER LINE MODIFICATIONS

STATUS:

100% DESIGN

DRAWN BY: JPT
CHECKED BY: JPT
DATE: 4/22/2022
PROJECT #: 222703

R&M ENGINEERING-KETCHIKAN, INC.
7180 REVILLA ROAD, SUITE 300
KETCHIKAN, ALASKA 99901
PH: 907.225.7187
www.ketchikanengineer.com
AELC 576

STATE OF ALASKA 49th
JOEL P. TEUNE
121948
REGISTERED PROFESSIONAL ENGINEER

SHEET DESCRIPTION:
OVERVIEW SITE PLAN

3

SHEET:
03 of 07

PLAN

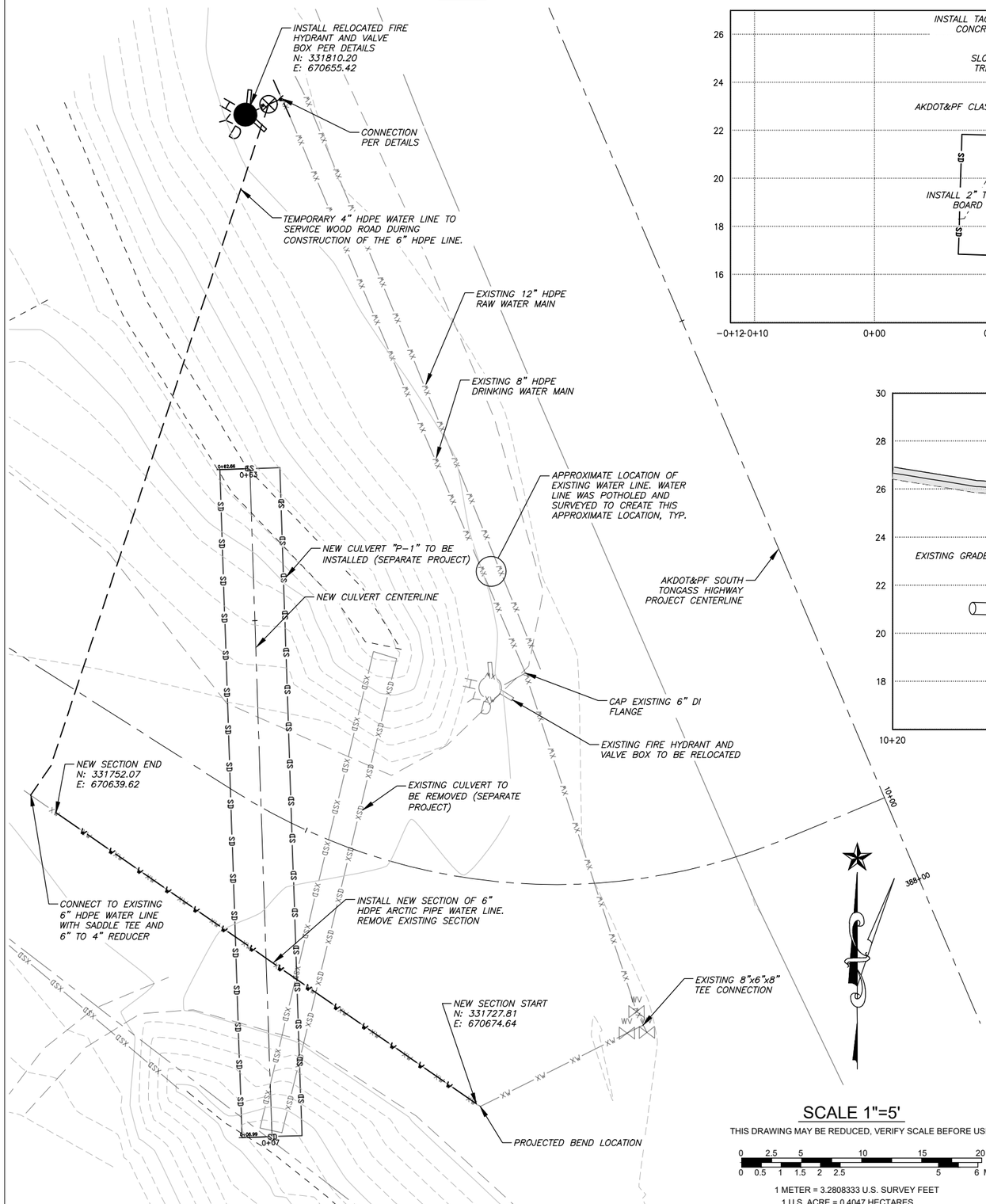

P-1 PROFILE

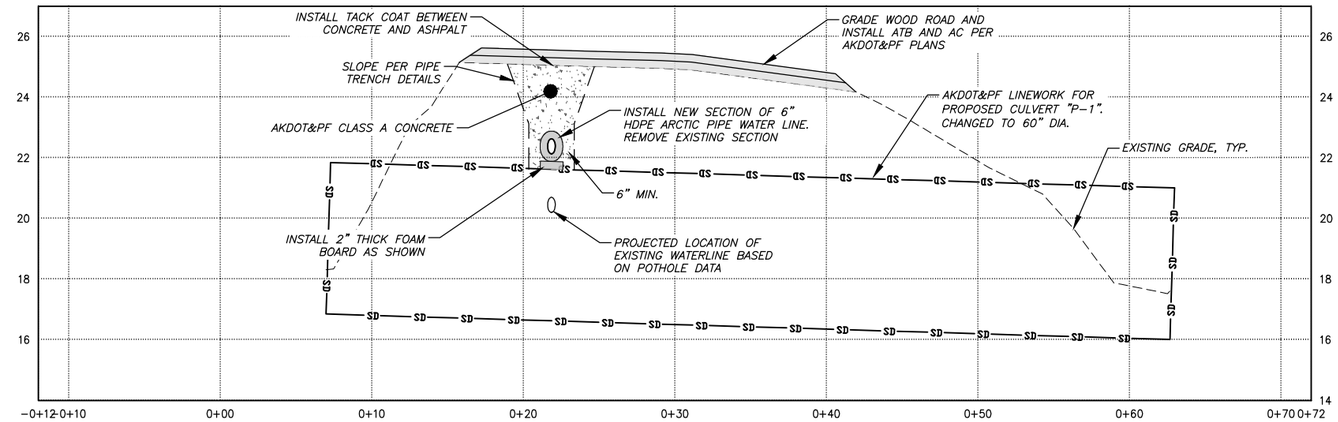

WOOD ROAD CL PROFILE

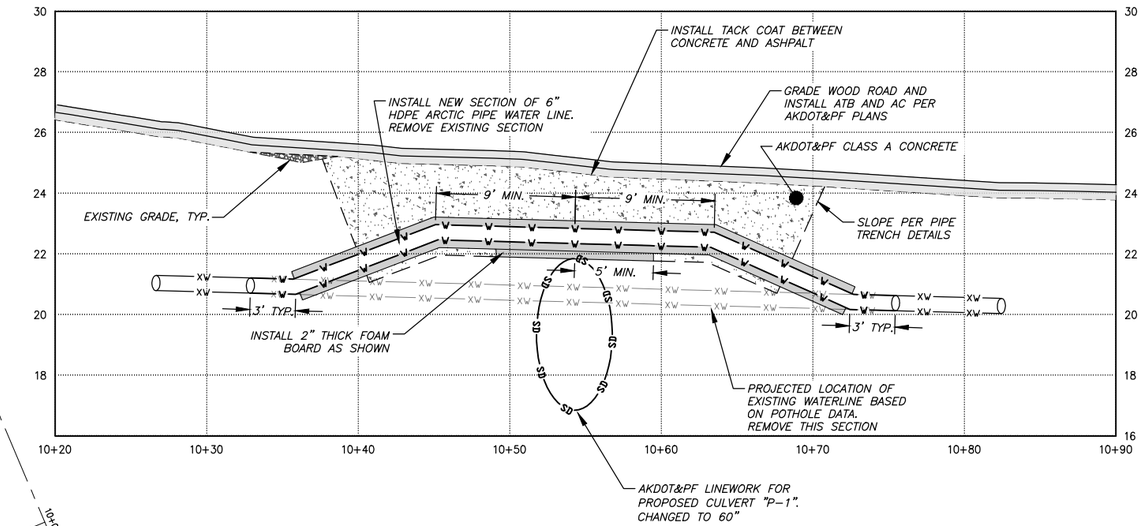

NOTES:

1) FOAM BOARD INSULATION SHALL BE BE DOW HI-60 EXTRUDED POLYSTYRENE (BLUE BOARD) OR APPROVED EQUAL. THE CONTRACTOR MAY SUBSTITUTE 6" THICK FOAM BOARD INSULATION ON ALL SIDES OF THE NEW WATER LINE SECTION IN LIEU OF ARCTIC PIPE. THE PIPE MUST BE INSULATED IN THE AREAS SHOWN.

2) THE CONTRACTOR SHALL CONNECT TO THE EXISTING HDPE PIPE BY ELECTROFUSION COUPLINGS OR MECHANICAL JOINTS. ALL NEW BENDS SHALL BE 22.5° OR 45° BUTT-WELDED JOINTS.

3) ALL THRUST BLOCKS SHALL BE CONSTRUCTED IN ACCORDANCE WITH DETAIL 2/E4 AS SHOWN ON AKDOT&PF KTN HERRING COVE BRIDGE IMPROVEMENTS PROJECT NO. 0902043/SFHWY00072. ALLOW CONCRETE TO CURE A MIN. OF THREE DAYS PRIOR TO RELOCATION.

4) ALL NEW MATERIALS SHALL BE CLEANED AND DISINFECTED IN ACCORDANCE WITH THE AMERICAN WATER WORKS ASSOCIATION (AWWA) GUIDANCE. CONTRACTOR SHALL DISINFECT PRIOR TO MAKING CONNECTION. AFTER INSTALLATION, CONTRACTOR SHALL FLUSH TO THE NEAREST HYDRANT.

5) ALL NEW PIPE INSTALLED SHALL BE VISUALLY INSPECTED FOR LEAKS AT LINE PRESSURE. VERIFICATION OF RESTRAINT REQUIREMENTS AND VISUAL INSPECTION WILL BE PERFORMED BY THE ENGINEER PRIOR TO PIPE BURIAL.

SCALE 1"=5'

THIS DRAWING MAY BE REDUCED, VERIFY SCALE BEFORE USING

0 2.5 5 10 15 20 FEET

0 0.5 1 1.5 2 2.5 5 6 METERS

1 METER = 3.2808333 U.S. SURVEY FEET

1 U.S. ACRE = 0.4047 HECTARES

REVISIONS:

KTN HERRING COVE BRIDGE IMPROVEMENTS WATER LINE MODIFICATIONS

STATUS:

100% DESIGN

DRAWN BY: JPT
CHECKED BY: JPT
DATE: 4/22/2022
PROJECT #: 222703

R&M ENGINEERING-KETCHIKAN, INC.
7180 REVILLA ROAD, SUITE 300
KETCHIKAN, ALASKA 99901
PH: 907.225.7187
www.ketchikanengineer.com
AELC 576

STATE OF ALASKA 49th JOEL P. TEUNE 121948 PROFESSIONAL ENGINEER

SHEET DESCRIPTION:

WOOD ROAD WATER LINE MODIFICATIONS

4

SHEET:

04 of 07

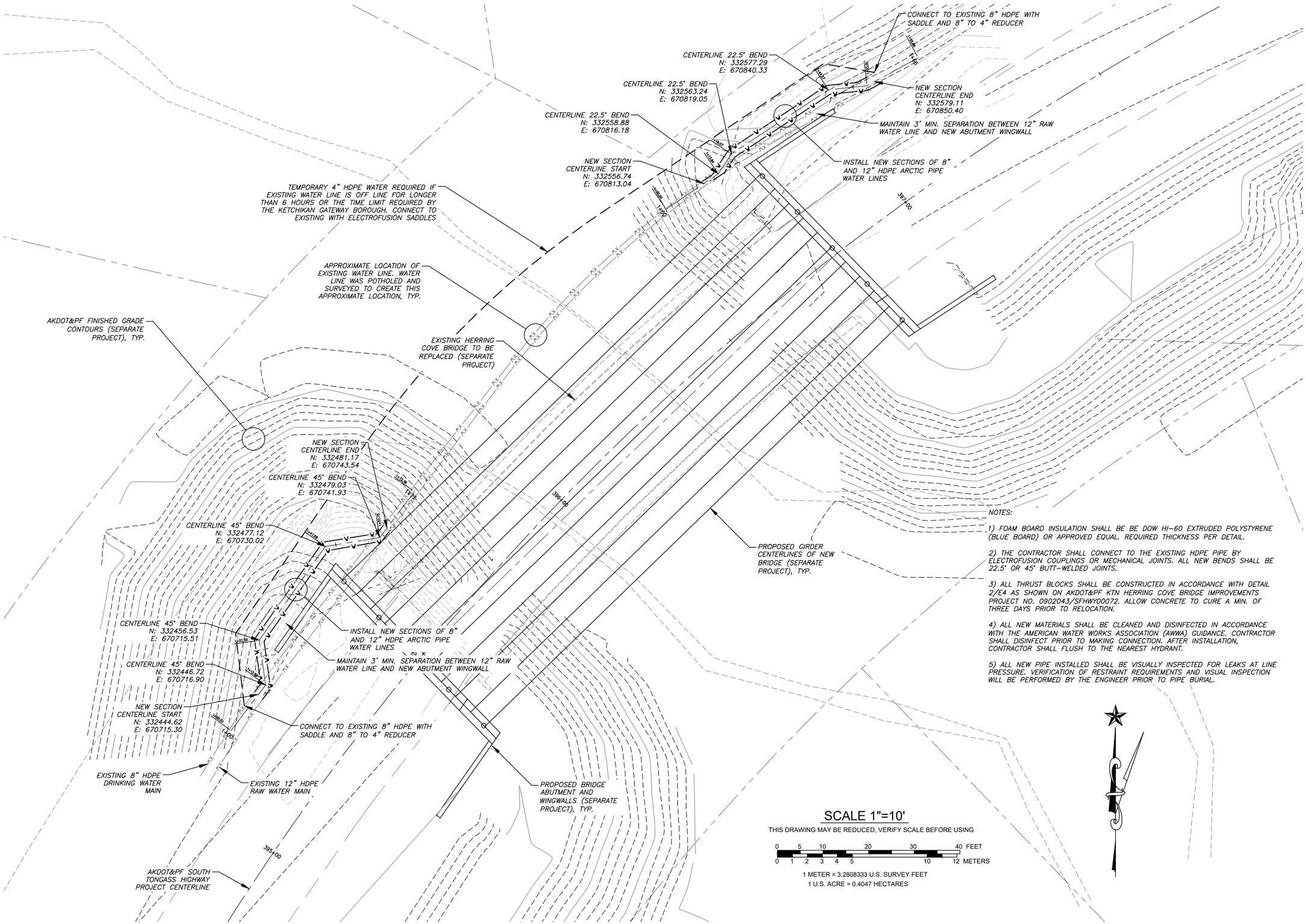

NOTES:

1) FOAM BOARD INSULATION SHALL BE BE DOW HI-60 EXTRUDED POLYSTYRENE (BLUE BOARD) OR APPROVED EQUAL. REQUIRED THICKNESS PER DETAIL.

2) THE CONTRACTOR SHALL CONNECT TO THE EXISTING HDPE PIPE BY ELECTROFUSION COUPLINGS OR MECHANICAL JOINTS. ALL NEW BENDS SHALL BE 22.5° OR 45° BUTT-WELDED JOINTS.

3) ALL THRUST BLOCKS SHALL BE CONSTRUCTED IN ACCORDANCE WITH DETAIL 2/E4 AS SHOWN ON AKDOT&PF KTN HERRING COVE BRIDGE IMPROVEMENTS PROJECT NO. 0902043/SFHWY00072. ALLOW CONCRETE TO CURE A MIN. OF THREE DAYS PRIOR TO RELOCATION.

4) ALL NEW MATERIALS SHALL BE CLEANED AND DISINFECTED IN ACCORDANCE WITH THE AMERICAN WATER WORKS ASSOCIATION (AWWA) GUIDANCE. CONTRACTOR SHALL DISINFECT PRIOR TO MAKING CONNECTION. AFTER INSTALLATION, CONTRACTOR SHALL FLUSH TO THE NEAREST HYDRANT.

5) ALL NEW PIPE INSTALLED SHALL BE VISUALLY INSPECTED FOR LEAKS AT LINE PRESSURE. VERIFICATION OF RESTRAINT REQUIREMENTS AND VISUAL INSPECTION WILL BE PERFORMED BY THE ENGINEER PRIOR TO PIPE BURIAL.

REVISIONS:

KTN HERRING COVE BRIDGE IMPROVEMENTS WATER LINE MODIFICATIONS

STATUS:

100% DESIGN

DRAWN BY: JPT
CHECKED BY: JPT
DATE: 4/22/2022
PROJECT #: 222703

R&M ENGINEERING-KETCHIKAN, INC.
7180 REVILLA ROAD, SUITE 300
KETCHIKAN, ALASKA 99901
PH: 907.225.7187
www.ketchikanengineer.com
AELC 576

STATE OF ALASKA 49th
JOEL P. TEUNE 121948
PROFESSIONAL ENGINEER

SHEET DESCRIPTION:
HERRING COVE BRIDGE WATERLINE MOD. SITE PLAN

5

SHEET:
05 of 07

SOUTHWEST ABUTMENT WATERLINE PROFILE

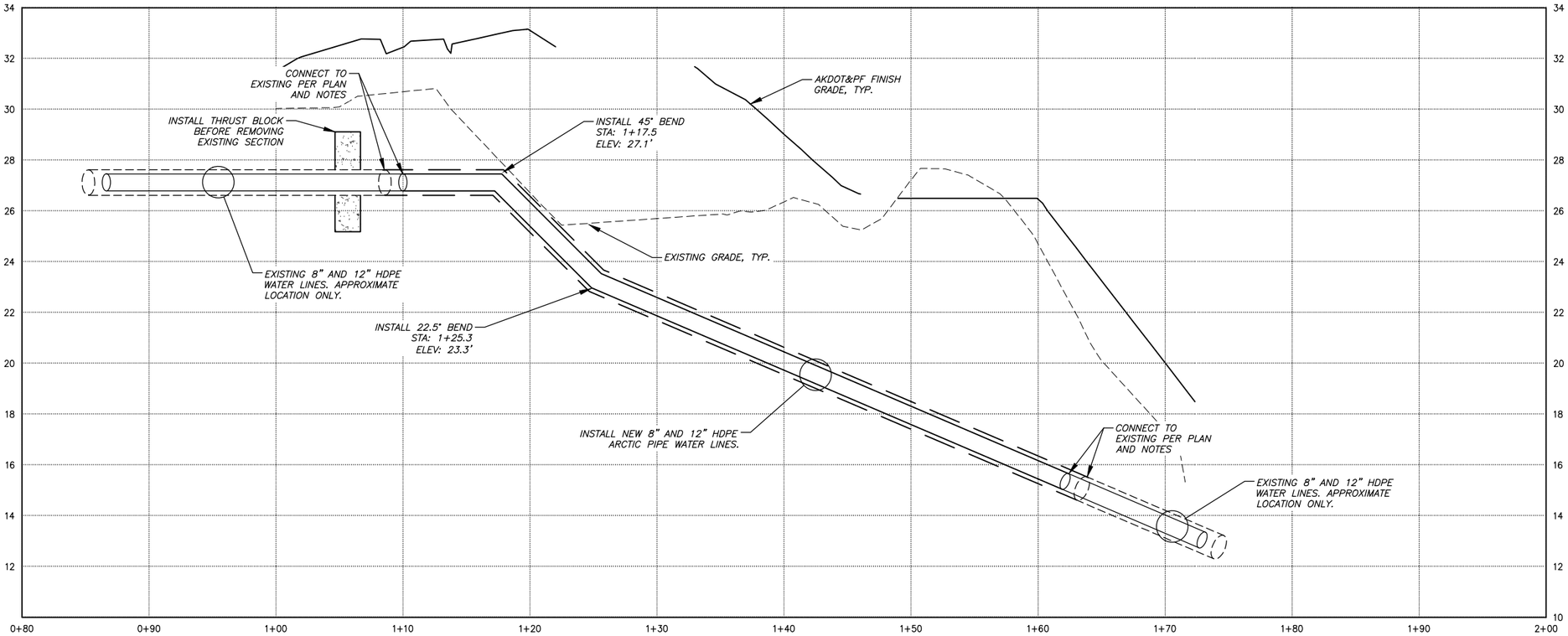

NORTHEAST ABUTMENT WATERLINE PROFILE

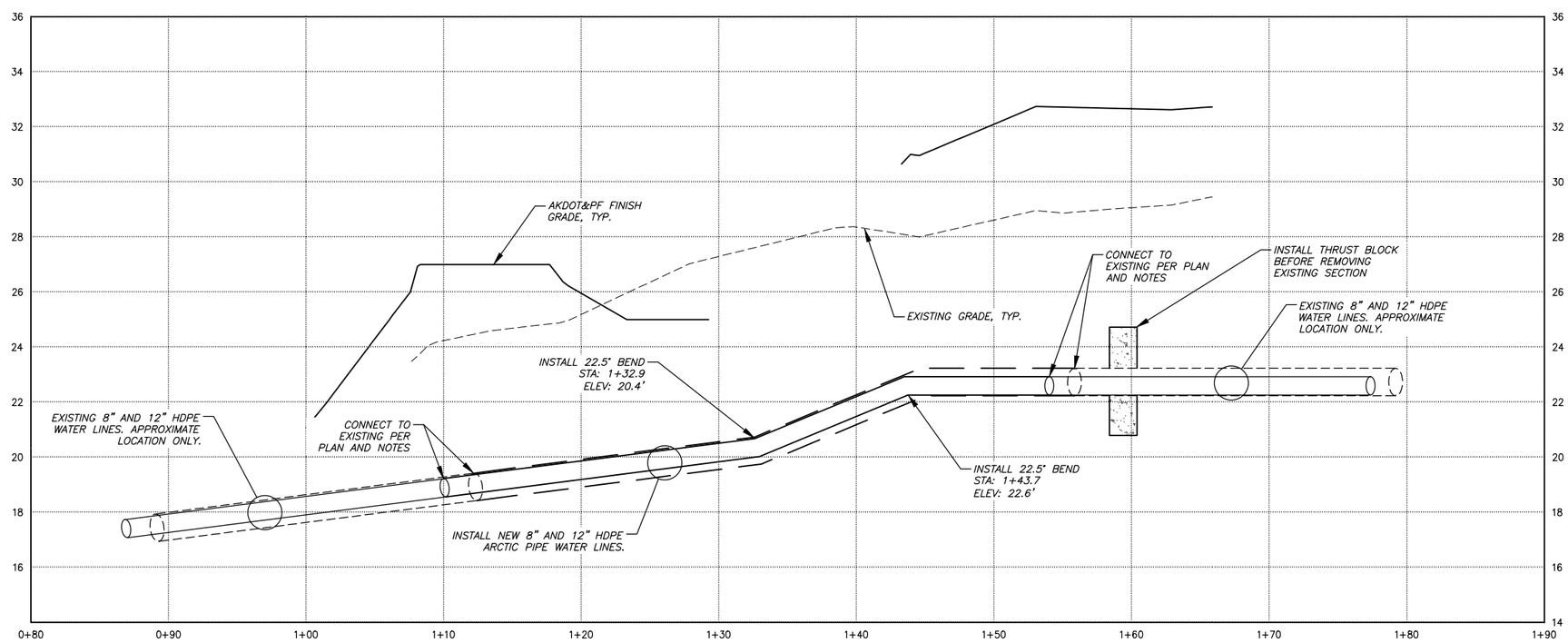

REVISIONS:

KTN HERRING COVE BRIDGE IMPROVEMENTS WATER LINE MODIFICATIONS

STATUS:

100% DESIGN

DRAWN BY: JPT
CHECKED BY: JPT
DATE: 4/22/2022
PROJECT #: 222703

R&M ENGINEERING-KETCHIKAN, INC.
7180 REVILLA ROAD, SUITE 300
KETCHIKAN, ALASKA 99901
PH: 907.225.7187
www.ketchikanengineer.com
AELC 576

STATE OF ALASKA 49th JOEL P. TEUNE 121948 REGISTERED PROFESSIONAL ENGINEER

SHEET DESCRIPTION:
HERRING COVE BRIDGE WATERLINE MOD. PROFILES

6

SHEET:
06 of 07

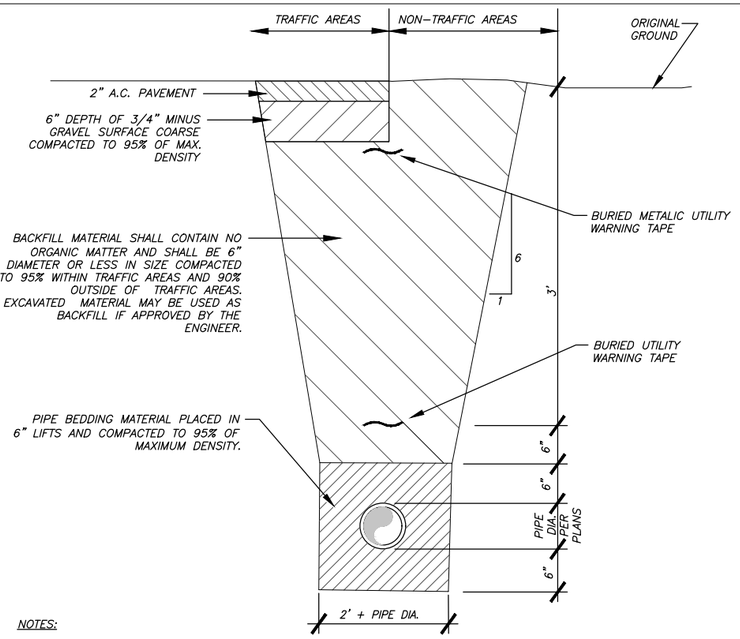

NOTES:

1. BACKFILL MATERIAL SHALL BE PLACED IN 12" MAXIMUM LIFTS.
2. TRENCH EXCAVATION AND SHORING SHALL COMPLY WITH LOCAL, STATE, AND OSHA REGULATIONS AND REQUIREMENTS.
3. INDICATED SLOPE IS FOR PAY QUANTITY DETERMINATION ONLY FOR IMPORTED BACKFILL GRAVEL AND RESURFACING REQUIREMENTS.
4. IF UNSUITABLE PIPE FOUNDATION MATERIAL IS ENCOUNTERED DURING EXCAVATION, ENGINEER MAY DIRECT THE CONTRACTOR TO OVER-EXCAVATE AND BACKFILL WITH SUITABLE MATERIAL.
5. THE DITCH LINE, IF ONE EXISTS, SHALL BE RESHAPED IN SUCH A MANNER TO ALLOW POSITIVE DRAINAGE TO MATCH PRE-CONSTRUCTION CONDITIONS.

1/7 TYPICAL TRENCH DETAIL

NOT TO SCALE

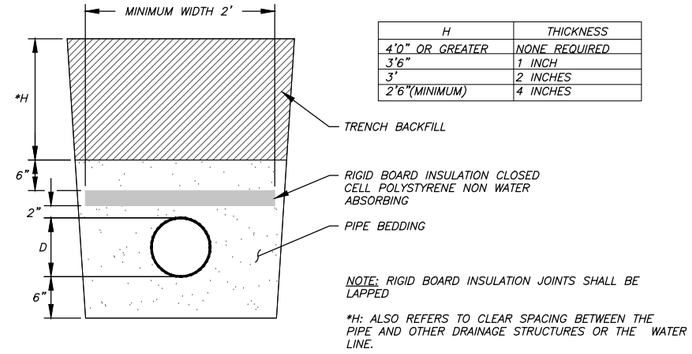

H	THICKNESS
4'0" OR GREATER	NONE REQUIRED
3'6"	1 INCH
3'	2 INCHES
2'6"(MINIMUM)	4 INCHES

NOTE: RIGID BOARD INSULATION JOINTS SHALL BE LAPPED

*H: ALSO REFERS TO CLEAR SPACING BETWEEN THE PIPE AND OTHER DRAINAGE STRUCTURES OR THE WATER LINE.

2/7 PIPE INSULATION REQUIREMENTS

NOT TO SCALE

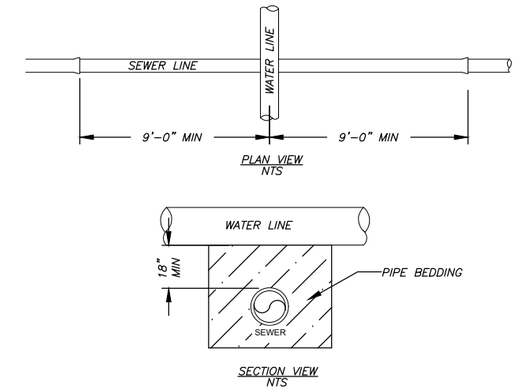

3/7 WATER MAIN CROSSING SEWER

NOT TO SCALE

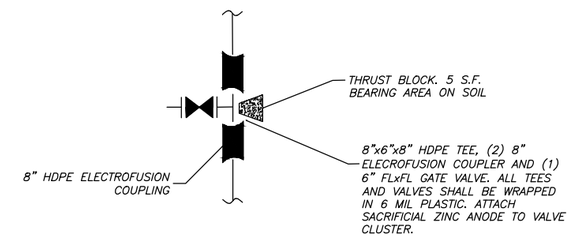

SHEET 4 – HYDRANT CONNECTION

NOTES:

1. SQ. FT. OF CONC. THRUST AREA BASED ON 200 PSI INTERNAL PRESSURE, SAFE SOIL BEARING OF 3,000 PSF AND A SAFETY FACTOR OF 1.5.
2. BEARING AREA MAY VARY IN SIZE TO SUIT DIFFERENT INTERNAL PRESSURES, DIFFERENT SOIL BEARING VALUES AND SITE CONDITIONS OF ENGINEERS APPROVAL.
3. CONCRETE BLOCKING SHALL BE CAST IN PLACE & HAVE A MIN. OF 1/4 SQ. FT. BEARING AGAINST THE FITTINGS.
4. BLOCK SHALL BE CLEAR OF ALL JOINTS TO PERMIT
5. THRUST BLOCKS NOT REQUIRED AT FITTINGS EXCEPT WHERE INDICATED.
6. 6 MIL POLYETHYLENE MUST BE INSTALLED BETWEEN CONC. THRUST BLOCK & PIPE.
7. MECHANICAL RESTRAINT MAY BE INSTALLED IN LIEU OF THRUST BLOCKS.

6/7 HYDRANT CONNECTION

NOT TO SCALE

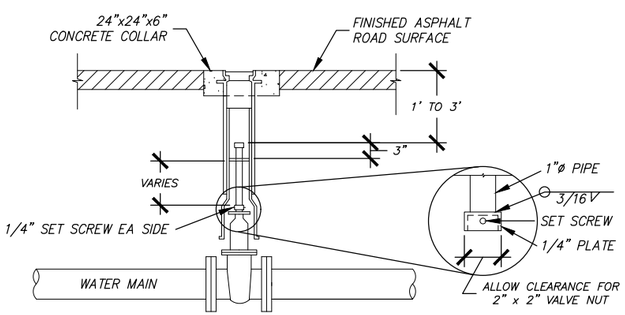

NOTES:

1. NEW VALVE BOX TO ALLOW FOR 12" MINIMUM VERTICAL ADJUSTMENT
2. THREADED VALVE BOX SECTIONS ARE NOT ALLOWED. CONTRACTOR SHALL REMOVE THREADED PORTIONS OF THE VALVE BOX WITH CUT-OFF SAW
3. CONTRACTOR SHALL APPLY GREASE TO ALL INTERFACES BETWEEN VALVE BOX SECTIONS.
4. COMPACTION AROUND VALVE BOX INSTALLATION IS CRITICAL. CONTRACTOR SHALL EMPLOY MECHANICAL TAMPING METHODS TO ENSURE THAT MATERIAL AROUND VALVE BOX REACHES 95% OF MAXIMUM COMPACTION.
5. CONTRACTOR SHALL INSTALL A 6" MINIMUM THICKNESS OF D-1 BEDDING AROUND VALVE BOX DURING BACKFILL.
6. EXTENSION IS REQUIRED ON ALL VALVES WHERE OPERATING NUT IS 4.5' OR MORE BELOW FINISHED SURFACE.

4/7 TYPICAL MAIN LINE VALVE W/ OPERATING ROD

NOT TO SCALE

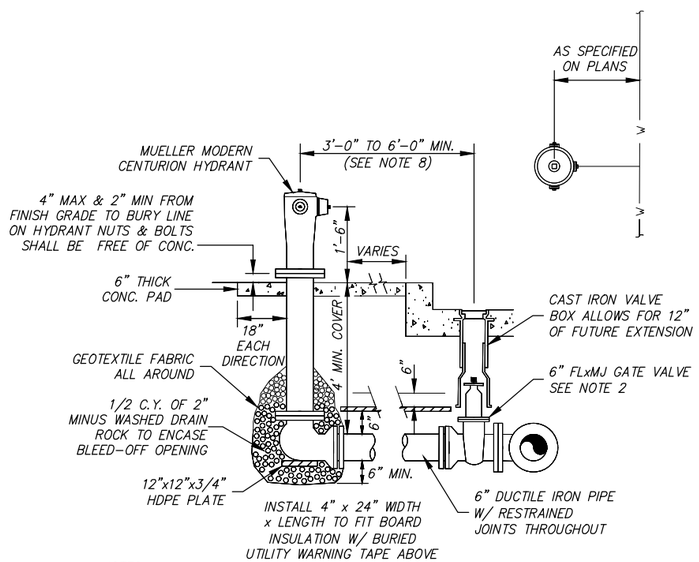

NOTES:

1. ALL BOLT THREADS TO BE GREASED PRIOR TO INSTALLATION.
2. MECHANICAL RESTRAINED JOINTS TO BE USED THROUGHOUT.
3. HYDRANT PAINT SHALL BE SPECIFIED BY THE ENGINEER.
4. DOUBLE DIPPED GALVANIZED NUTS AND BOLTS SHALL BE FREE OF CONCRETE.
5. PLACE BURIED UTILITY WARNING TAPE 6" ABOVE THE HYDRANT LEAD
6. THRUST BLOCK MAY BE OMITTED IF PIPE BEYOND VALVE IS CONNECTED TOGETHER W/ RESTRAINED JOINTS 40 FEET EACH WAY.
7. D-1 MUST BE PLACED AROUND ALL VALVE BOXES.
8. HYDRANT VALVE OFFSET TO BE 3' TO 6' MIN. AND LOCATED OUTSIDE OF TRAVEL LANES.

5/7 TYPICAL FIRE HYDRANT DETAIL

NOT TO SCALE

REVISIONS:

KTN HERRING COVE BRIDGE IMPROVEMENTS WATER LINE MODIFICATIONS

STATUS:

100% DESIGN

DRAWN BY: JPT
CHECKED BY: JPT
DATE: 4/22/2022
PROJECT #: 222703

R&M ENGINEERING-KETCHIKAN, INC.
7180 REVILLA ROAD, SUITE 300
KETCHIKAN, ALASKA 99901
PH: 907.225.7187
www.ketchikanengineer.com
AELC 576

STATE OF ALASKA 49th JOEL P. TEUNE 121948 REGISTERED PROFESSIONAL ENGINEER

SHEET DESCRIPTION:

DETAILS

SHEET:

7

07 of 07

State of Alaska

GOVERNOR MIKE DUNLEAVY

Submittal Cover Sheet

Department of Transportation Public Facilities
SOUTHCOAST REGION
Construction Section

Project: KTN- HERRING COVE BRIDGE IMPROVEMENTS	Project No: 0902043/SFHWY00072
Contractor: Hamilton Construction Alaska	Submittal No. 627-001 Valve Box Top and Bottoms
Date Response Sent: 03/07/2022	Reviewed By: Bob Lundell, P.E. Recoverable Signature X Bob Lundell Signed by: 2d66350b-1634-445f-b1d5-d5b87bea066b

A	AAN	R&R	R	I	R&RasN	INC	CA
Approved	Approved as Noted	Revise and Resubmit	Rejected	Informational	Revisit & Resubmit as Noted	Incomplete	Conditionally Approved

Item No.	Item	Contract Documents	A	AAN	R&R	R	I	R&R asN	INC	CA
627.0003.0000	Install Valve Box	627-3.05								X

Comments/Anticipated Response:

- The submittal states that the 8555 Valve Box Bottom has a dipped coating. Prior to installation please provide if the dipped coating is to be bituminous as is to be found during field inspection.

HAMILTON CONSTRUCTION ALASKA
CONTRACTORS & ENGINEERS

02.16.2022

State of Alaska Department of Transportation and Public Facilities
PO Box 112506
Juneau, AK 99811-2506

RE: KTN: Herring Cove Bridge Improvements
Contract Number: 0902043/SFHWY00072

Water System Valve Box top and bottoms

Bob Lundell,

Please find the attached material submittal for valve boxes from Secon.

Sincerely,

Chris Duty

Chris Duty
Project Manager

8555 Valve Box Bottom

24" Valve Box Bottom

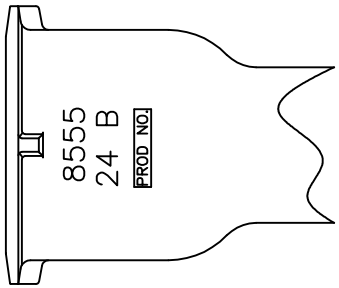

VIEW OF BACK SIDE LETTERING

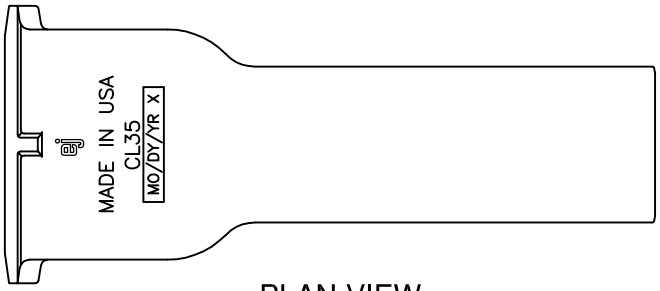

PLAN VIEW

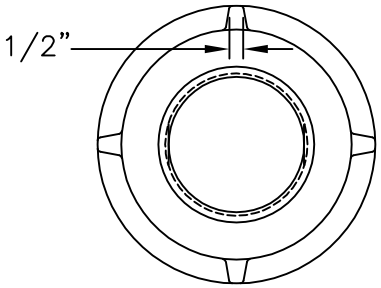

END VIEW

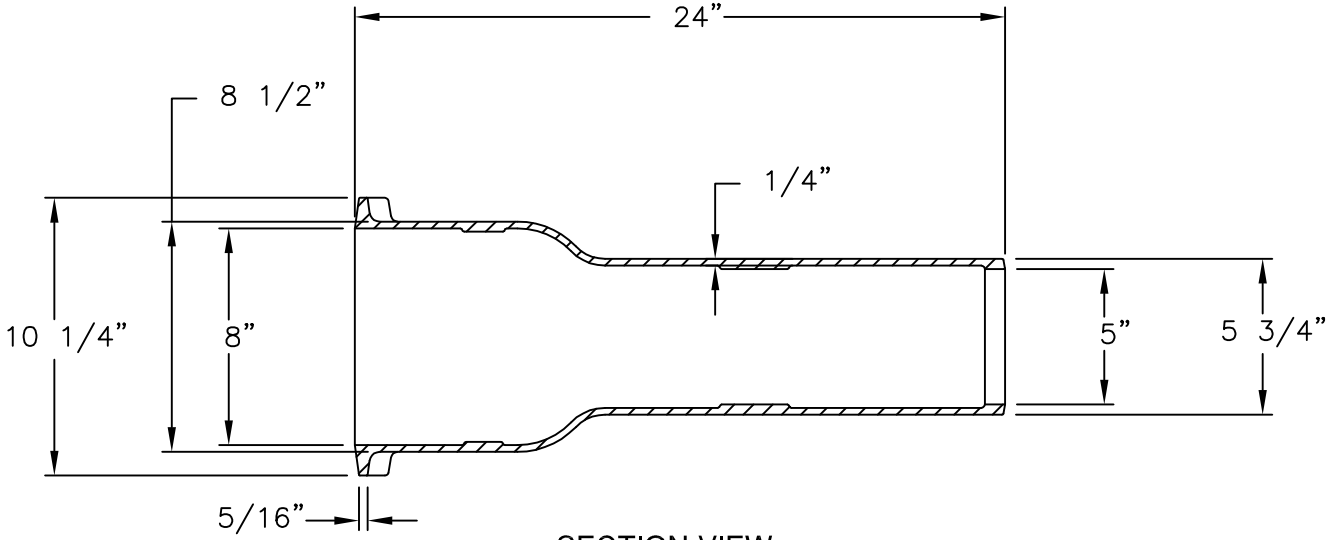

SECTION VIEW

Product Number

85556024

Design Features

-Materials
Gray Iron (CL35B)
-Design Load
Heavy Duty
-Open Area
n/a
-Coating
Dipped
-√ Designates Machined Surface

Certification

- ASTM A48
- AASHTO M306
-
-Country of Origin: USA

Drawing Revision

02/15/2002 Designer: TCL
8/9/2017 Revised By: DAE

Disclaimer

Weights (lbs./kg) dimensions (inches/mm) and drawings provided for your guidance. We reserve the right to modify specifications without prior notice.

CONFIDENTIAL: This drawing is the property of EJ GROUP, Inc., and embodies confidential information, registered marks, patents, trade secret information, and/or know how that is the property of EJ GROUP, Inc. Copyright © 2011 EJ GROUP, Inc. All rights reserved.

Contact

800 626 4653
ejco.com

3664 Valve Box Cover

EJIW VB Lid

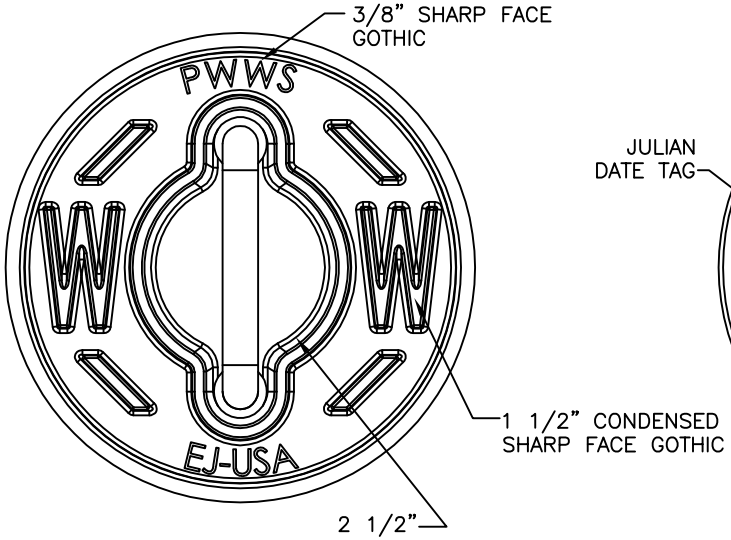

PLAN VIEW

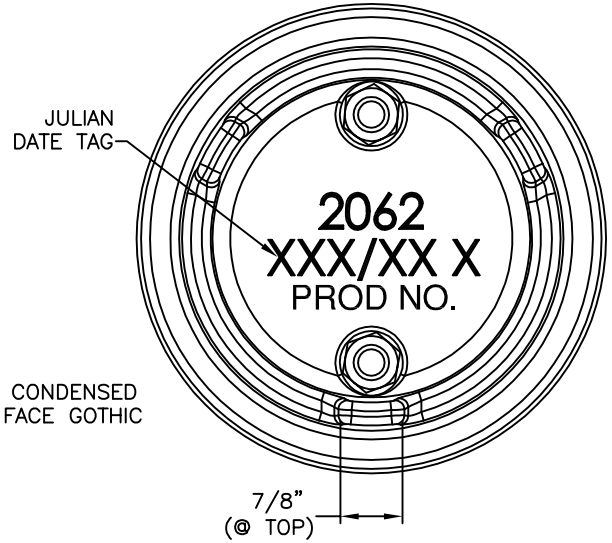

BOTTOM VIEW

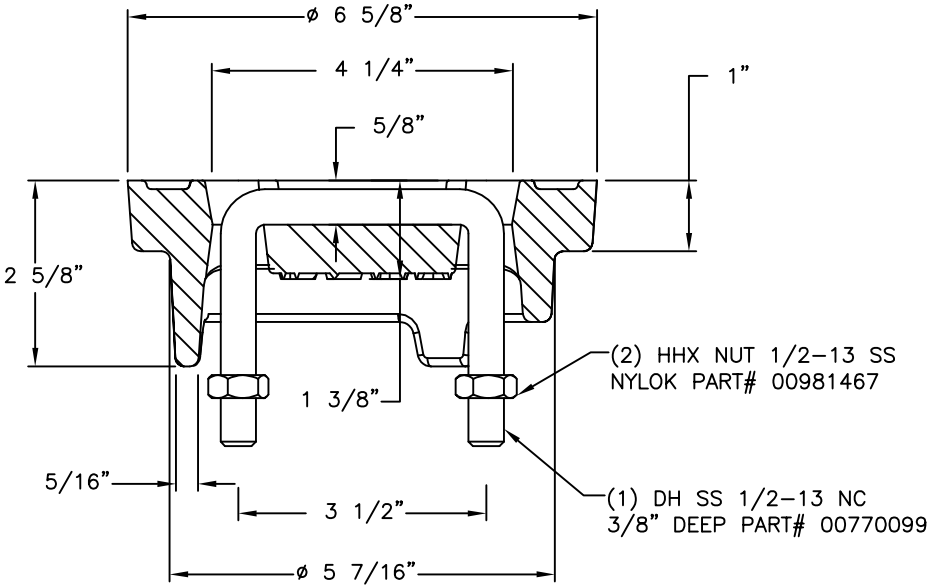

SECTION VIEW

Product Number

00366420

Design Features

-Materials
Gray Iron (CL35B)
-Design Load
Heavy Duty
-Open Area
n/a
-Coating
Undipped
-√ Designates Machined Surface

Certification

- ASTM A48
-
-
-Country of Origin: USA

Drawing Revision

1/3/2005 Designer: TCL
2/25/2019 Revised By: DAE

Disclaimer

Weights (lbs./kg) dimensions (inches/mm) and drawings provided for your guidance. We reserve the right to modify specifications without prior notice.

CONFIDENTIAL: This drawing is the property of EJ GROUP, Inc., and embodies confidential information, registered marks, patents, trade secret information, and/or know how that is the property of EJ GROUP, Inc.
Copyright © 2012 EJ GROUP, Inc.
All rights reserved.

Contact

800 626 4653
ejco.com

366418T Valve Box Top

EJIW VB Top

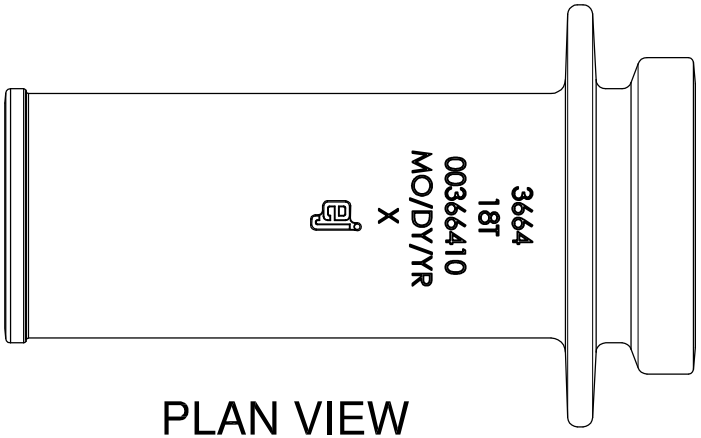

PLAN VIEW

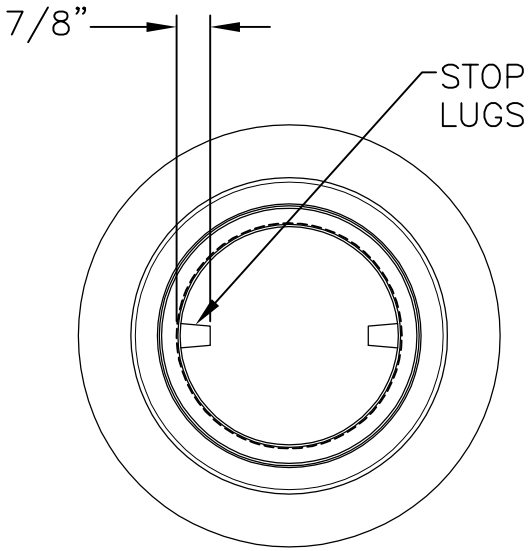

TOP VIEW

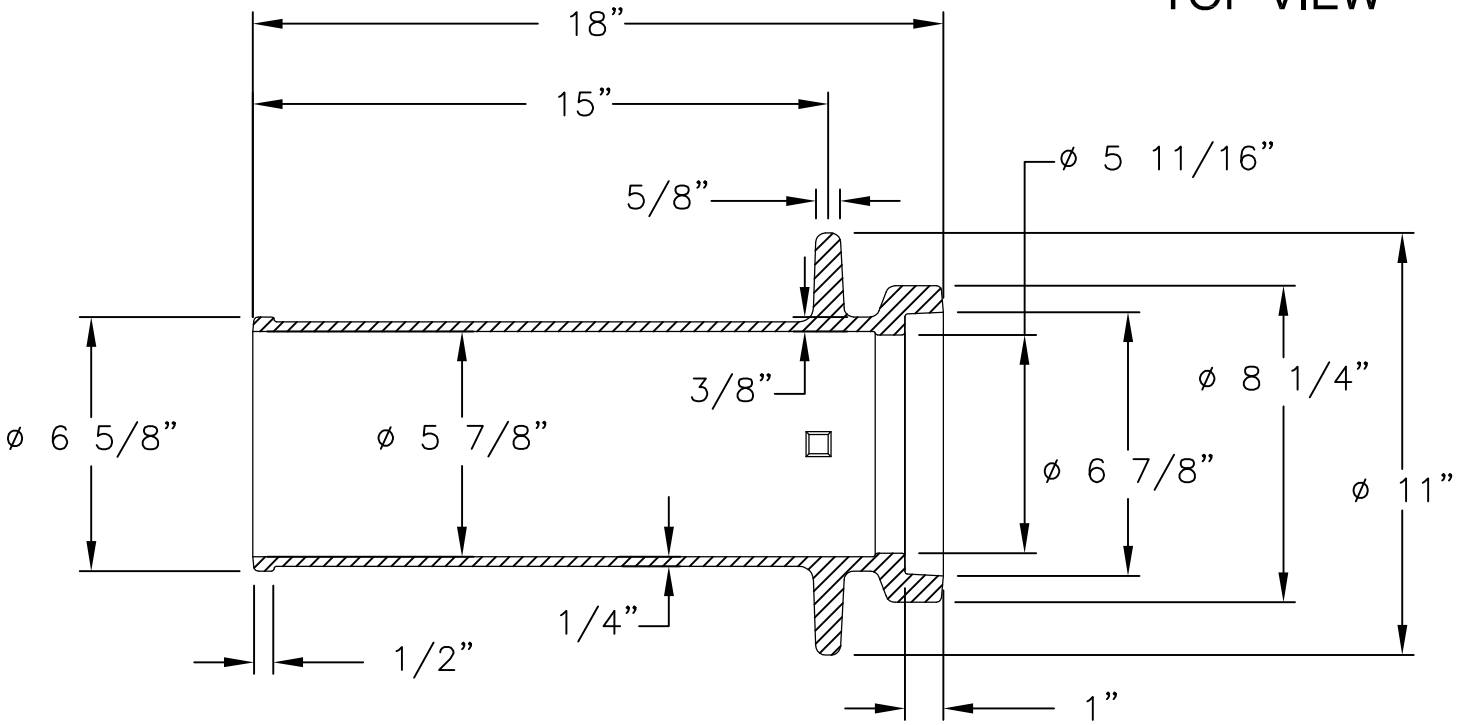

SECTION VIEW

Product Number

00366410

Design Features

-Materials
Gray Iron (CL35B)
-Design Load
Heavy Duty
-Open Area
n/a
-Coating
Undipped
-√ Designates Machined Surface

Certification

- ASTM A48
-
-
-Country of Origin: USA

Drawing Revision

5/25/2004 Designer: TCL
1/21/2016 Revised By: MAH

Disclaimer

Weights (lbs./kg) dimensions (inches/mm) and drawings provided for your guidance. We reserve the right to modify specifications without prior notice.

CONFIDENTIAL: This drawing is the property of EJ GROUP, Inc., and embodies confidential information, registered marks, patents, trade secret information, and/or know how that is the property of EJ GROUP, Inc. Copyright © 2012 EJ GROUP, Inc. All rights reserved.

Contact

800 626 4653
ejco.com

State of Alaska

GOVERNOR MIKE DUNLEAVY

Submittal Cover Sheet

Department of Transportation Public Facilities
SOUTHCOAST REGION
Construction Section

Project: KTN- HERRING COVE BRIDGE IMPROVEMENTS	Project No: 0902043/SFHWY00072
Contractor: Hamilton Construction Alaska	Submittal No. 603-003 Storm Drain Frame and Cover
Date Response Sent: 01/28/2022	Reviewed By: Bob Lundell, P.E. X OM sign for BL

A	AAN	R&R	R	I	R&RasN	INC	CA
Approved	Approved as Noted	Revise and Resubmit	Rejected	Informational	Revisit & Resubmit as Noted	Incomplete	Conditionally Approved

Item No.	Item	Contract Documents	A	AAN	R&R	R	I	R&R asN	INC	CA
604.0001.0000	Storm Sewer Manhole	604-3.01	X							

Comments/Anticipated Response:

HAMILTON CONSTRUCTION ALASKA
CONTRACTORS & ENGINEERS

01.24.2022

State of Alaska Department of Transportation and Public Facilities
PO Box 112506
Juneau, AK 99811-2506

RE: KTN: Herring Cove Bridge Improvements
Contract Number: 0902043/SFHWY00072

Storm Drain Frame and Cover

Bob Lundell,

Please find the attached drawing for the storm drain frame and lid.

Sincerely,

Chris Duty

Chris Duty
Project Manager

1324C Cover

EJ 1324 Cover

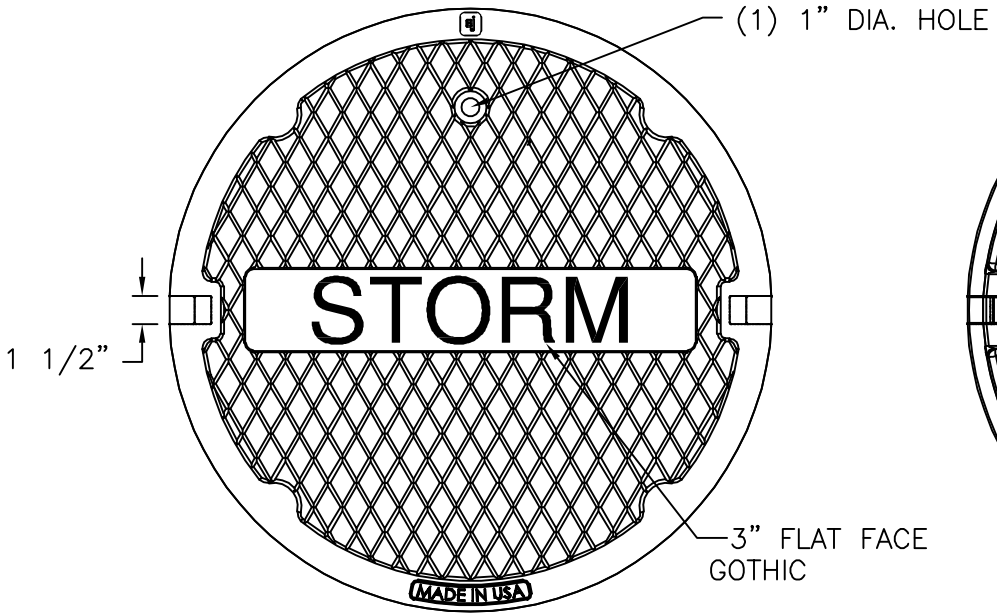

PLAN VIEW

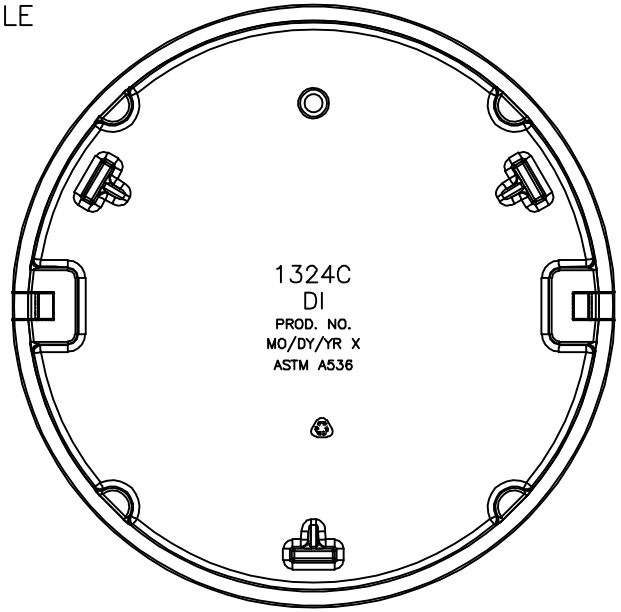

BOTTOM VIEW

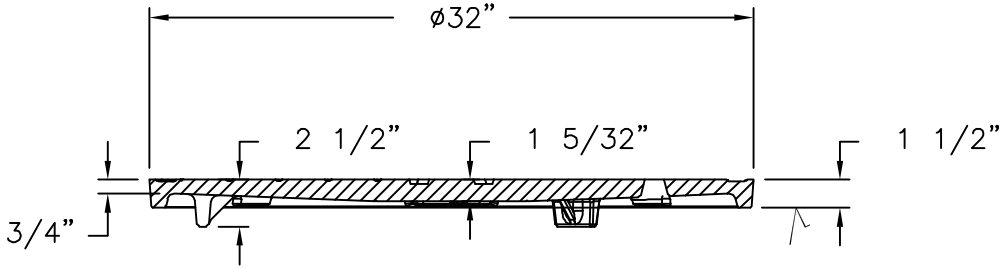

SECTION VIEW

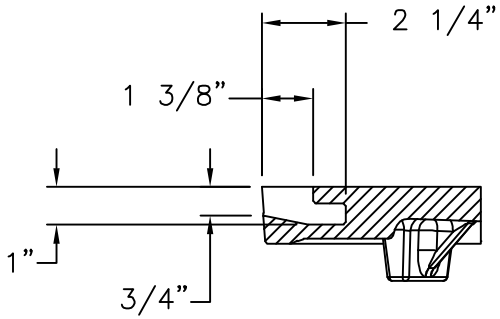

PICKHOLE DETAIL

Product Number

00132424

Design Features

-Materials
Ductile Iron (70-50-05)
-Design Load
Extra Heavy Duty
-Open Area
n/a
-Coating
Dipped
- √ Designates Machined Surface

Certification

- ASTM A536
-
-
-Country of Origin: USA

Drawing Revision

2/4/2015 Designer: KH
8/10/2020 Revised By: MAH

Disclaimer

Weights (lbs./kg) dimensions (inches/mm) and drawings provided for your guidance. We reserve the right to modify specifications without prior notice.

CONFIDENTIAL: This drawing is the property of EJ GROUP, Inc., and embodies confidential information, registered marks, patents, trade secret information, and/or know how that is the property of EJ GROUP, Inc. Copyright © 2015 EJ GROUP, Inc. All rights reserved.

Contact

800 626 4653
ejco.com

1324Z Frame

EJ 1324 Frame

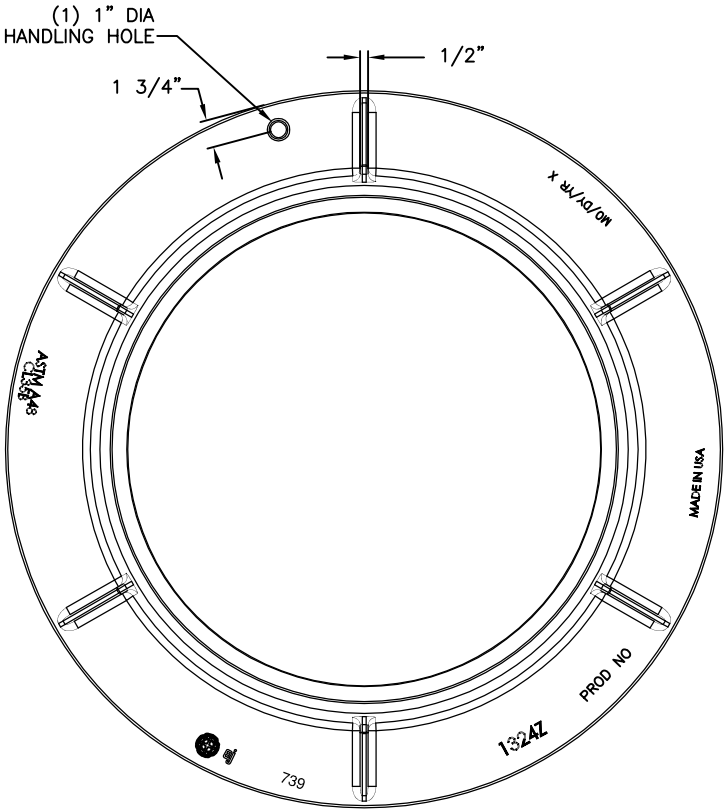

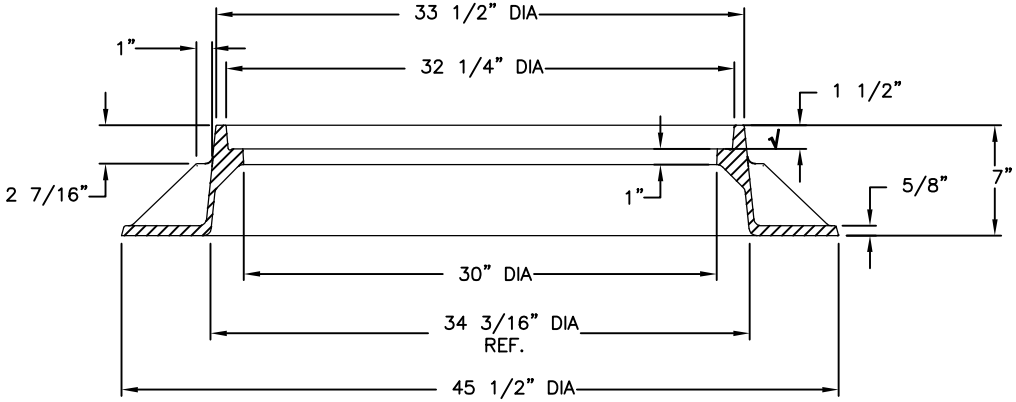

SECTION

Product Number

00132410

Design Features

-Materials
Gray Iron (CL35B)
-Design Load
Heavy Duty
-Open Area
n/a
-Coating
Dipped
- √ Designates Machined Surface

Certification

- ASTM A48
-
-
-Country of Origin: USA

Drawing Revision

02/20/2006 Designer: DEW
05/02/2014 Revised By: DAE

Disclaimer

Weights (lbs./kg) dimensions (inches/mm) and drawings provided for your guidance. We reserve the right to modify specifications without prior notice.

CONFIDENTIAL: This drawing is the property of EJ GROUP, Inc., and embodies confidential information, registered marks, patents, trade secret information, and/or know how that is the property of EJ GROUP, Inc. Copyright © 2012 EJ GROUP, Inc. All rights reserved.

Contact

800 626 4653
ejco.com

State of Alaska

GOVERNOR MIKE DUNLEAVY

Submittal Cover Sheet

Department of Transportation Public Facilities
SOUTHCOAST REGION
Construction Section

Project: KTN- HERRING COVE BRIDGE IMPROVEMENTS	Project No: 0902043/SFHWY00072
Contractor: Hamilton Construction Alaska	Submittal No. 603-004 Storm Drain Steps and Hand-Holds
Date Response Sent: 01/28/2022	Reviewed By: Bob Lundell, P.E. X

A	AAN	R&R	R	I	R&RasN	INC	CA
Approved	Approved as Noted	Revise and Resubmit	Rejected	Informational	Revisit & Resubmit as Noted	Incomplete	Conditionally Approved

Item No.	Item	Contract Documents	A	AAN	R&R	R	I	R&R asN	INC	CA
604.0001.0000	Storm Sewer Manhole	604-3.01	X							

Comments/Anticipated Response:

HAMILTON CONSTRUCTION ALASKA
CONTRACTORS & ENGINEERS

01.24.2022

State of Alaska Department of Transportation and Public Facilities
PO Box 112506
Juneau, AK 99811-2506

RE: KTN: Herring Cove Bridge Improvements
Contract Number: 0902043/SFHWY00072

Storm Drain Steps and Hand-Holds

Bob Lundell,

Please find the attached drawing for the storm drain steps/hand-holds.

Sincerely,

Chris Duty

Chris Duty
Project Manager

12078 N. Glenn Hwy P.O. Box 309 • Sutton, AK 99674 • (907) 746-5307 • Fax: (907) 746-5330
www.hamil.com • An Equal Opportunity Employer

P-14938

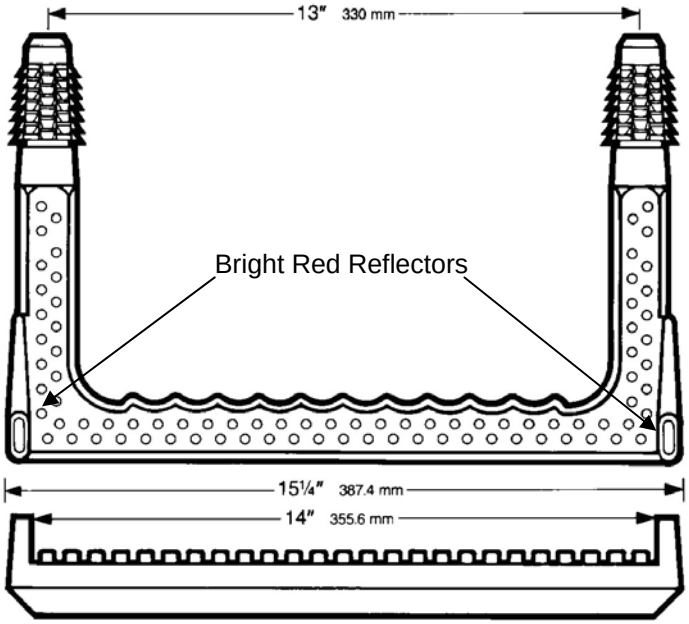

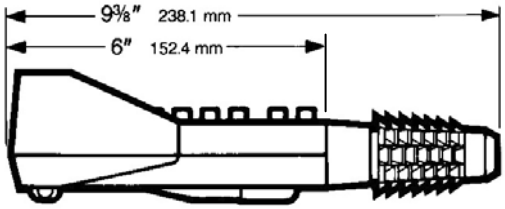

SPECIFICATIONS
All Lane Poly Steps meet the requirements of ASTM C-478 and AASHTO M-199. The polypropylene conforms to ASTM D-4101. The ½” Grade 60 reinforcing bar meets ASTM A-615.

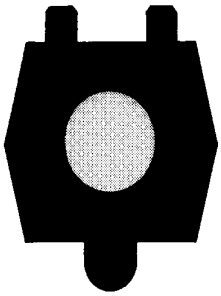

RUNG

LANE POLYPROPYLENE MANHOLE STEPS

LANE INTERNATIONAL CORPORATION

P.O. Box 925 • 10758 S.W. Manhasset Dr. • Tualatin, OR 97062 • 503-692-9860 • 800-666-0076
Fax 503-692-9863 • www.laneinternational.com

HAND HOLD

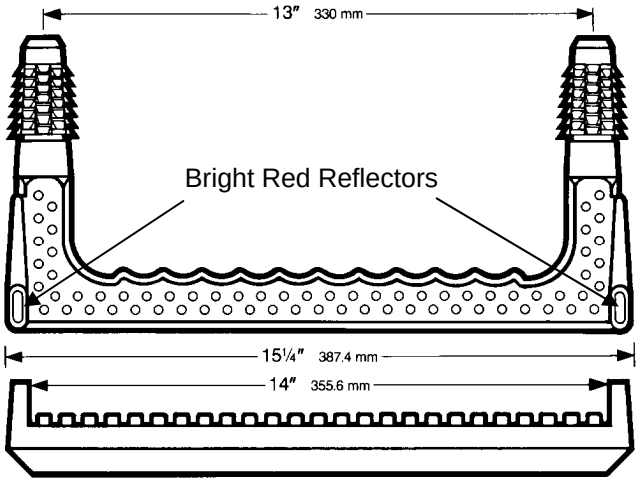

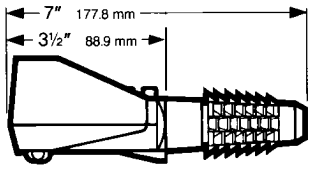

Hand Hold Step

SPECIFICATIONS
All Lane Poly Steps meet the requirements of ASTM C-478 and AASHTO M-199. The polypropylene conforms to ASTM D-4101. The ½” Grade 60 reinforcing bar meets ASTM A-615

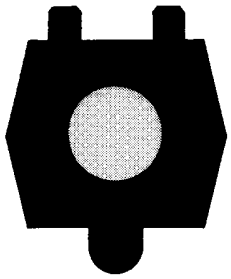

RUNG
½" Grade 60 Rebar

LANE POLYPROPYLENE MANHOLE STEPS

LANE INTERNATIONAL CORPORATION

P.O. Box 925 • 10758 S.W. Manhasset Dr. • Tualatin, OR 97062 • 503-692-9860 • 800-666-0076
Fax 503-692-9863 • www.laneinternational.com

State of Alaska

GOVERNOR MIKE DUNLEAVY

Submittal Cover Sheet

Department of Transportation Public Facilities
SOUTHCOAST REGION
Construction Section

Project: KTN- HERRING COVE BRIDGE IMPROVEMENTS	Project No: 0902043/SFHWY00072
Contractor: Hamilton Construction Alaska	Submittal No. 501-012- Utiliduct End Cap
Date Response Sent: 4/26/2023	Reviewed By: Eric Strong, P.E.

A Approved	**AAN** Approved as Noted	**R&R** Revise and Resubmit	**R** Rejected	**I** Informational	**R&RasN** Revisit & Resubmit as Noted	**INC** Incomplete	**CA** Conditionally Approved

Item No.	Item	Contract Documents	A	AAN	R&R	R	I	R&R asN	INC	CA
N/A	Utiliduct Caps	501-5.01	X							

Comments/Anticipated Response:

HAMILTON CONSTRUCTION ALASKA
CONTRACTORS & ENGINEERS

04.25.2023

State of Alaska Department of Transportation and Public Facilities
PO Box 112506
Juneau, AK 99811-2506

RE: KTN: Herring Cove Bridge Improvements
Contract Number: 0902043/SFHWY00072

Utiliducts end cap specifications

Eric Strong,

Please see utiliduct end cap specifications from polylok.

Sincerely,

Curtis Clowar

Curtis Clowar
Project Engineer

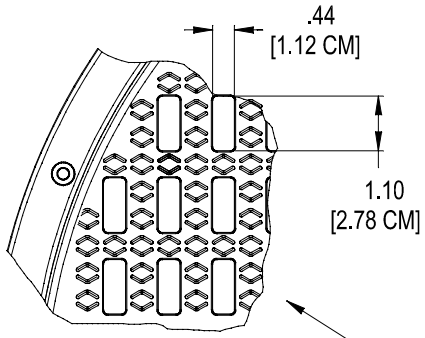

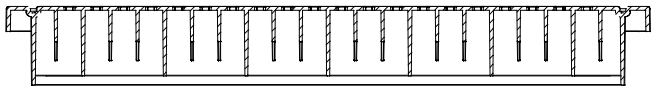

SECTION A-A

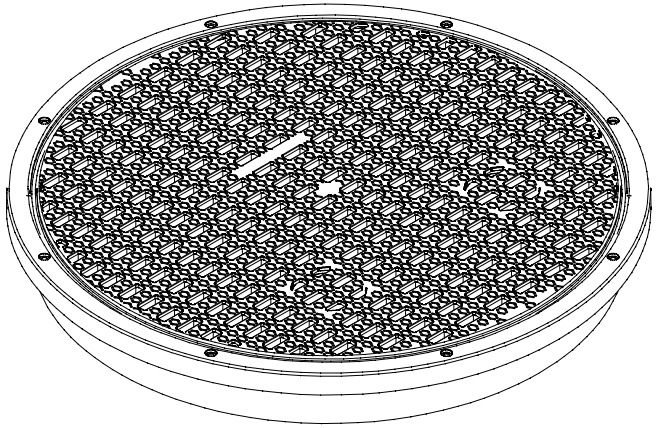

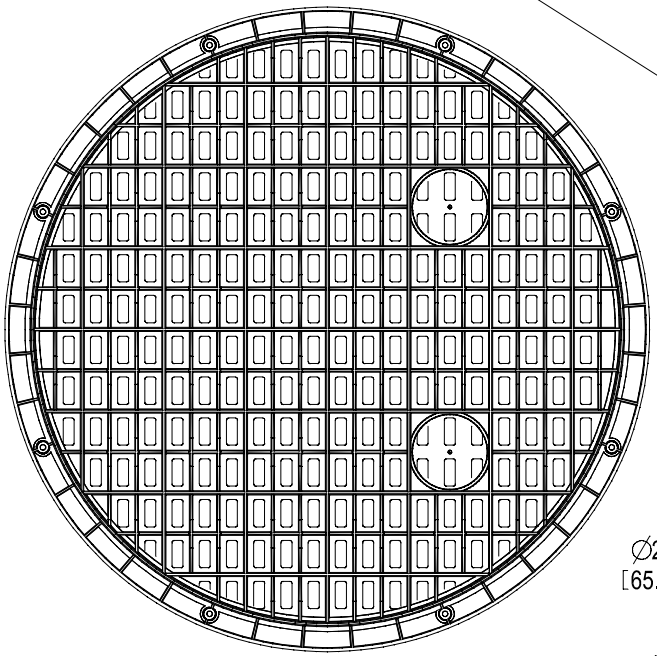

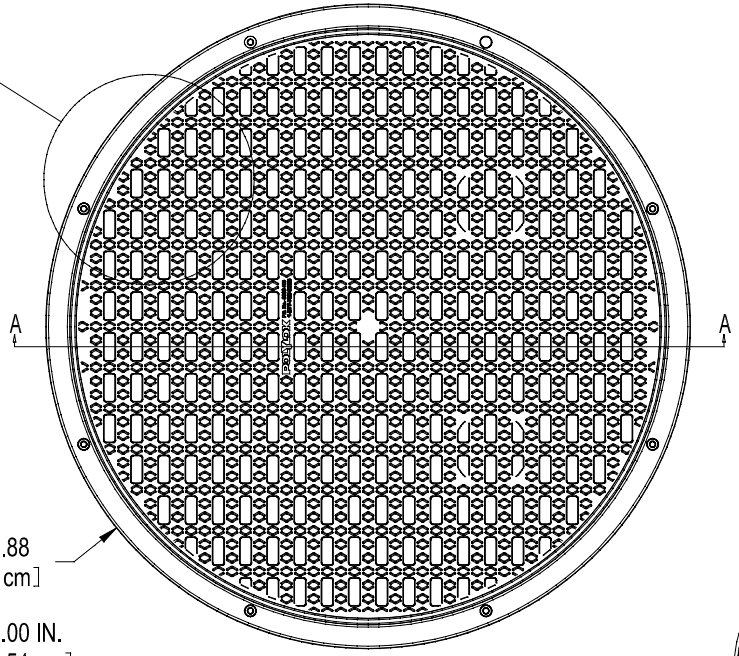

BOTTOM DETAIL FITS POLYLOK
PART NO. - 3008
3008-R12
3008-R12B
3009-AR
3009-RTR24
3008-RP
AND ALL 24" SMOOTH WALL
CORRUGATED AND RIBBED PIPE

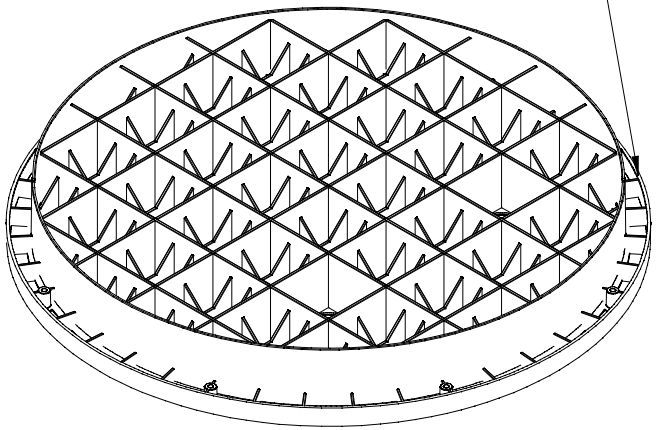

1.00 IN.
[2.54 cm]

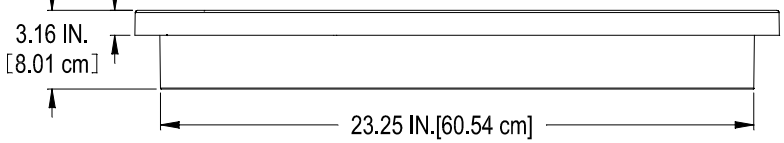

POLYLOK 24" GRATE
PART NO. 3008-G24
MATERIAL - HDPE
COLOR - GREEN
OPEN AREA - 110.59 SQ.IN. [713.5 SQ.CM]

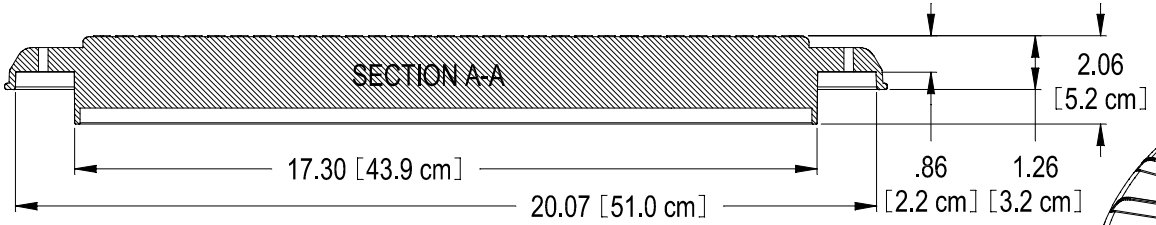

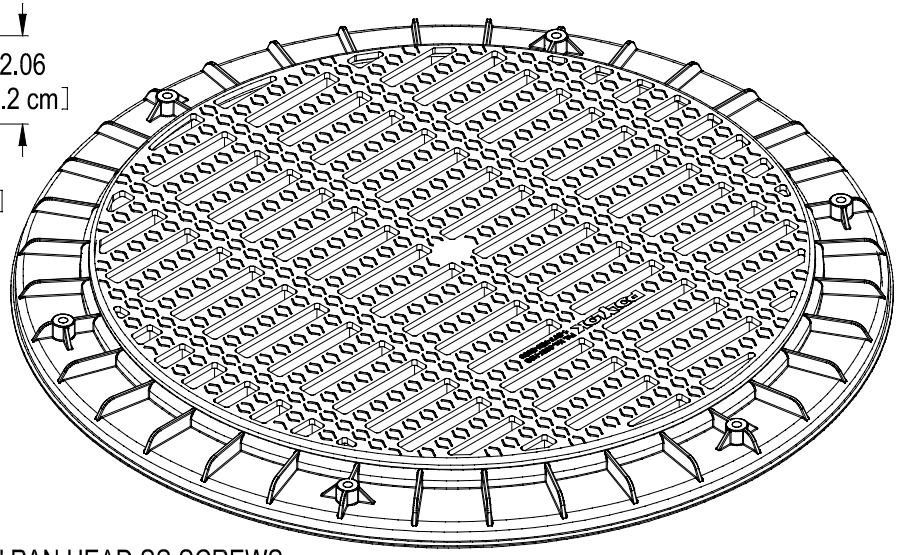

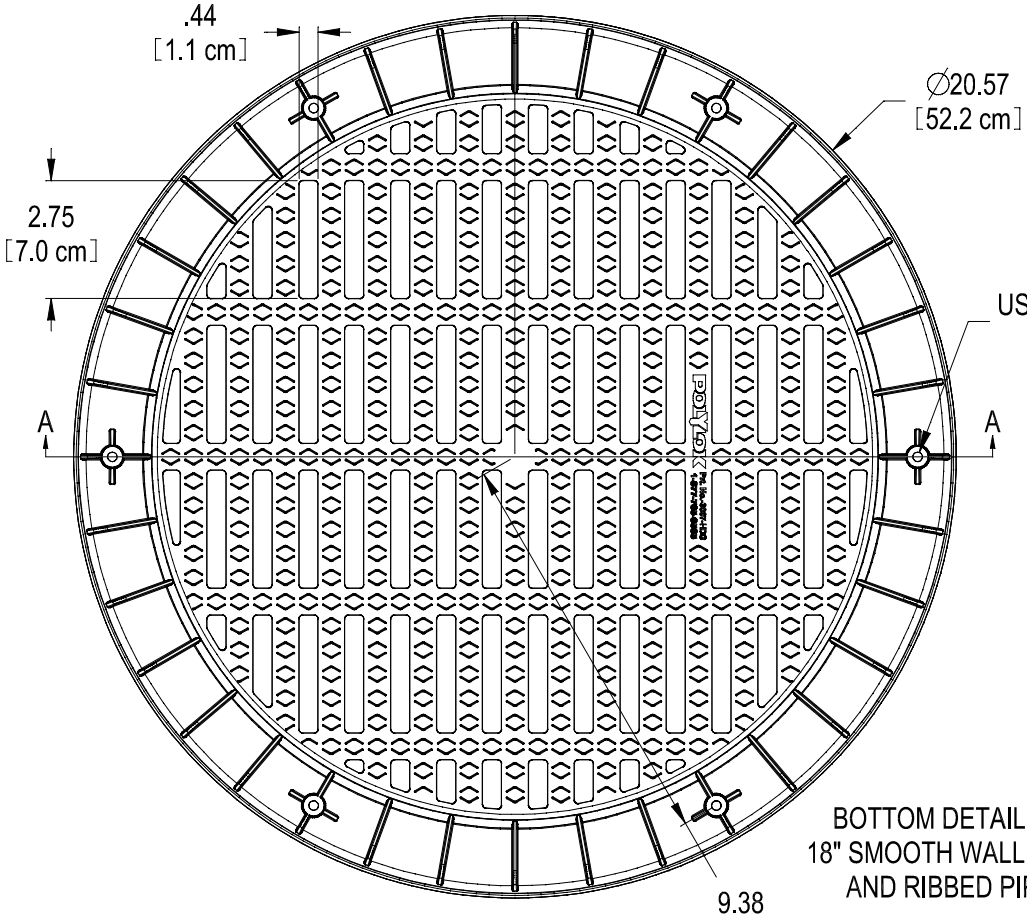

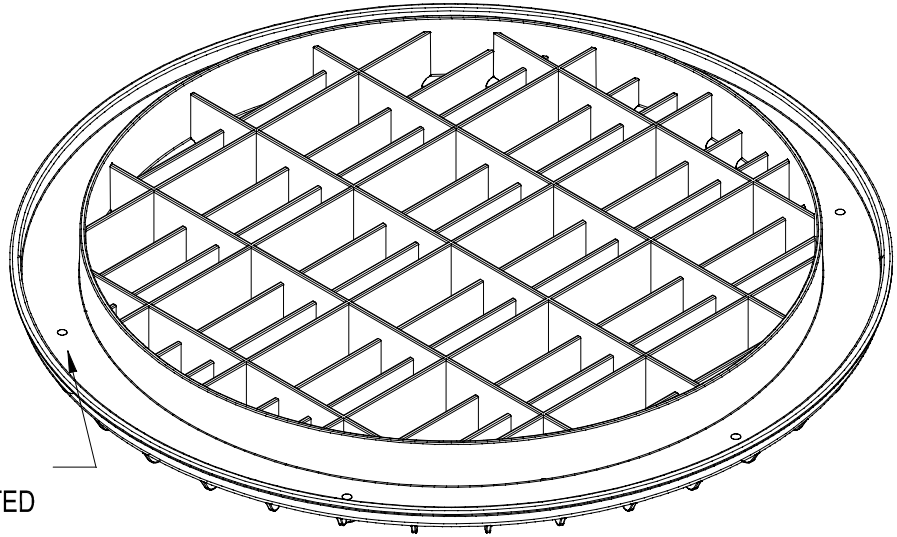

BOTTOM DETAIL FITS ALL
18" SMOOTH WALL CORRUGATED
AND RIBBED PIPE

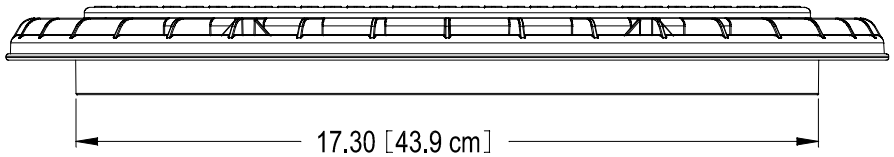

POLYLOK 18" HEAVY DUTY GRATE
PART NO. 3007-HDG
MATERIAL - HDPE
COLOR - GREEN
OPEN AREA - 71.94 SQ.IN. [464 SQ.CM.]

State of Alaska

GOVERNOR MIKE DUNLEAVY

Submittal Cover Sheet

Department of Transportation Public Facilities
SOUTHCOAST REGION
Construction Section

Project: KTN- HERRING COVE BRIDGE IMPROVEMENTS	Project No: 0902043/SFHWY00072
Contractor: Hamilton Construction Alaska	Submittal No. 660-008 Electrolier Foundation Shop Drawings
Date Response Sent: 01/27/2022	Reviewed By: Bob Lundell, P.E. X QM sign for BL

A	AAN	R&R	R	I	R&RasN	INC	CA
Approved	Approved as Noted	Revise and Resubmit	Rejected	Informational	Revisit & Resubmit as Noted	Incomplete	Conditionally Approved

Item No.	Item	Contract Documents	A	AAN	R&R	R	I	R&R asN	INC	CA
660.0007.0000	Temp Signal System Complete		X							

Comments/Anticipated Response:

Transmittal Form

To: Bob Lundell, P.E.
Project Engineer
DOWL

MEG Project: 102-44
DOT Project: 0902043 / SFHWY00072
KTN Herring Cove Bridge Improvements
Date: 1/27/22
Subject: Submittal Review

We are sending you enclosed via: **email** Original to follow _____yes __X__no

Copies:	Date:	Description:
1	1/27/22	660 Electrolier Foundation Submittal

These are transmitted: ___ For your use ___ For review ___ For Approval

_X_Conforms ___ Conforms w/ revisions ___Non-Conforming (Revise and resubmit)

See attached submittal for comments.

Thank you,

Mark Morris, P.E.
Principal
Morris Engineering Group, INC

ELECTROLIER FOUNDATION SHOP DRAWING

REVIEWED
Chris Duty,11:51:38,26/1/2022

L-30.11

SHEET 1 of 1

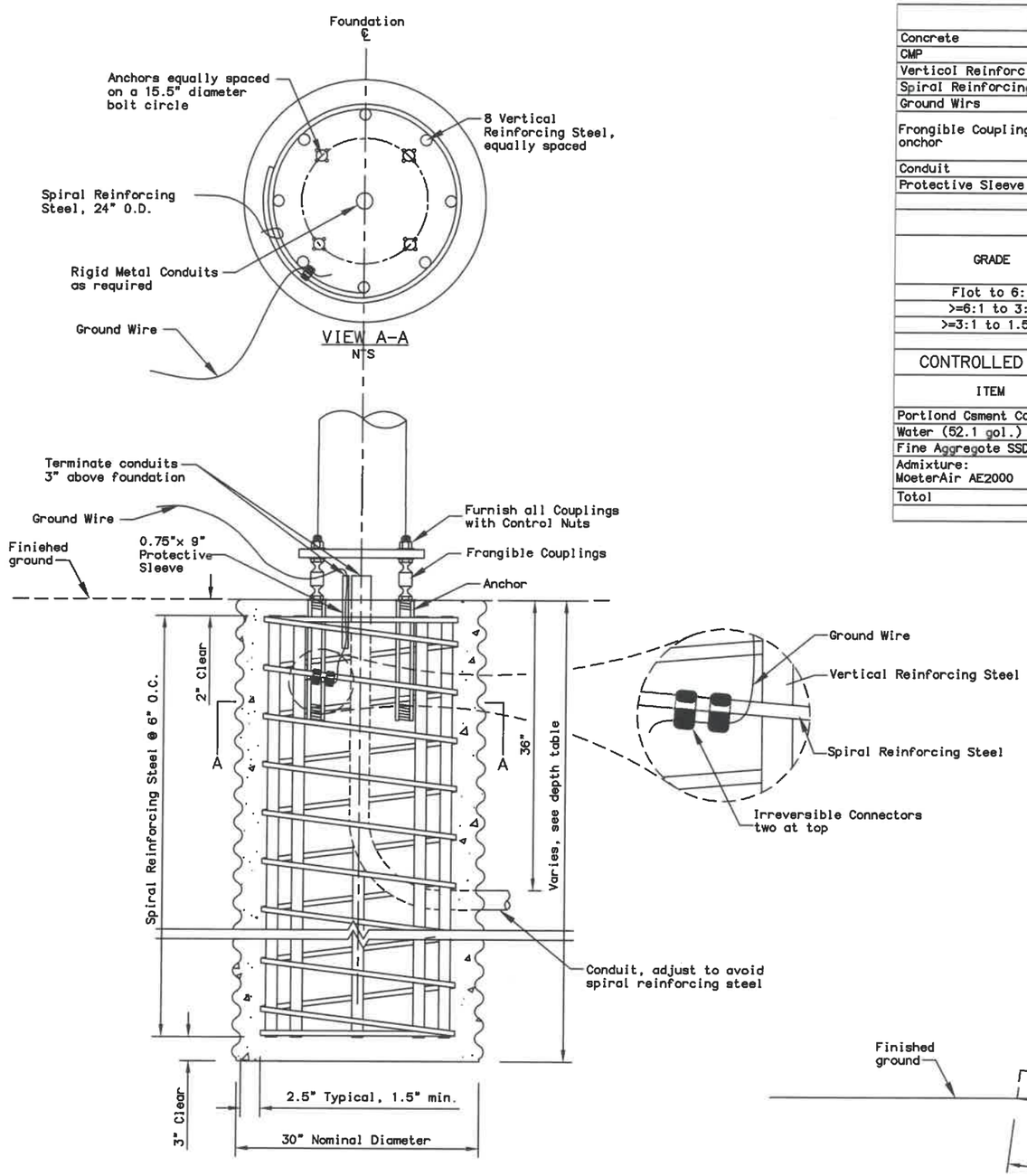

FOUNDATION DETAILS
(Skirt omitted for clarity)

MATERIAL REQUIREMENTS		
Concrete	Class A	f'c = 4000 psi
CMP	AASHTO M218	14 ga.
Vertical Reinforcing Steel	AASHTO M31 #11	GR 60
Spiral Reinforcing Steel	AASHTO M31 #5	GR 60
Ground Wire		#4 AWG
Frangible Coupling and anchor	NCHRP 350 TL3 (See note 11)	Vu = 5.5 kips Tu = 43.2 kips
Conduit	Sch 40	RMC
Protective Sleeve	Sch 40	PVC

DEPTH TABLE		
GRADE	FOUNDATION DEPTH BY APPLICATION (ft.)	
	ELECTROLIER * SEE NOTE 9	BREAKAWAY TRAFFIC SIGNAL
Flat to 6:1	8	6.5
>=6:1 to 3:1	9	7
>=3:1 to 1.5:1	10	8

CONTROLLED LOW STRENGTH MATERIAL MIX DESIGN		
ITEM	BATCHING QUANTITIES PER CYD BATCH (lbs.)	APPLICABLE SPECS.
Portland Cement Concrete	188	701-2.01
Water (52.1 gal.)	435	712-2.01
Fine Aggregate SSD	3041	703-2.01
Admixture: MasterAir AE2000	2.0 oz.	711-2.02
Total	3664	

MORRIS ENGINEERING GROUP INC.

CONFORMS TO DESIGN CONCEPT

This shop drawing or cut sheet has been reviewed for general conformance with design concept only and does not relieve the contractor or vendor of responsibility for conformance with design drawings and specifications, all of which have priority over this shop drawing or cut sheet.

Brian Meyers P.E.
Morris Engineering Group, LLC
1/27/22

Approved as submitted.

DESIGN NOTES:

Design Standard: 2013 Standard Specifications for Structural Supports for Highway Signs, Luminaires and Traffic Signals with 2019 interim.

Design Load: 1,000 lbs axial, 2,000 lbs shear, 50,000 ft-lbs moment.

NOTES:

1. This foundation is approved for electrolier and breakaway traffic signal applications in cohesionless soils with an N1-60 value of 10 or greater per AASHTO T-206, "Standard Penetration Test" (SPT). This foundation shall not be used if any of the following are encountered; water table above the bottom of foundation, very loose soils, organic soils, cohesive soils (clay), or soils susceptible to frost jacking. If any of these conditions are encountered, stop foundation work and contact the Engineer.
2. Place foundation in drilled or excavated hole with centerline of foundation located at the station, offset, and elevation specified in plans. Set foundation to satisfy the conditions depicted in clearance detail.
3. Form the foundation in corrugated metal pipe conforming to Subsection 707-2.01 of the Specifications.
4. Provide 1.5 extra turns at each end of the spiral reinforcing steel. Reinforcing steel shall not be spliced. Tie vertical reinforcing steel to each intersection of the spiral reinforcing steel.
5. Connect ground wire near the top of spiral reinforcing steel with two irreversible connectors as shown. Fasten connectors according to the manufacturers' recommendations including the use of manufacturer specified tools. The ground wire may be bare solid, stranded, or braided copper. Protect ground wire with protective sleeve as shown and fill with silicon sealant.
6. Complete all concrete work in conformance with Sections 501, 503, and 660 of the Specifications. Use a tube or tremie with a hopper head or other approved device when dropping concrete more than 5 feet per Subsection 501-3.05. Vibrate concrete during placement by mechanical vibration per Subsection 501-3.06. Ensure anchor threads are protected from contact with concrete during pour.
7. Backfill and compact according to Section 205, and Subsections 203-3.04 and 660-3.01 of the Specifications. Use select material, Type A or controlled low strength material as backfill material. Ensure area below foundation meets compaction requirements and is free of loose material and debris prior to concrete work.
8. Install all anchors according to the manufacturer's written installation instructions. Anchors shall be installed plumb. Anchors greater than 1:40 out-of-plumb will result in foundation rejection.
9. When used for electrolier reduce the foundation depth 1 foot when there is no luminaire arm or the luminaire arm is less than or equal to 12 feet.
10. Grade in depth table refers to fill slopes. If foundation is in a cut slope assume flat grade in table. To determine grade in fill slopes, use the most severe grade found within an 8 foot radius of the center of the foundation.
11. The frangible coupling referenced in this ASP is NCHRP 350 compliant. There is no MASH compliant device available at this time. See SPDR report for more info.
12. Special grading detail and/or shielding may be required to maintain 4" maximum clear distance.

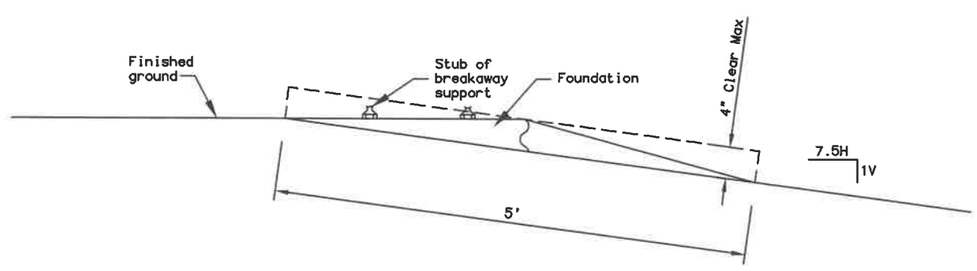

CLEARANCE DETAIL
(See note 12)

State of Alaska DOT&PF
ALASKA STANDARD PLAN

CONCRETE STREET LIGHT POLE FOUNDATION

Adopted as an Alaska Standard Plan by: Carolyn Morehouse
Carolyn Morehouse, P.E.
Chief Engineer

Adoption Date: 7/17/2020

Last Code and Stds. Review
By: KLK,MJM Date: 7/8/2020

Next Code and Standards Review Date: 7/8/2030

L-30.11

State of Alaska

GOVERNOR MIKE DUNLEAVY

Submittal Cover Sheet

Department of Transportation Public Facilities
SOUTHCOAST REGION
Construction Section

Project: KTN- HERRING COVE BRIDGE IMPROVEMENTS	Project No: 0902043/SFHWY00072
Contractor: Hamilton Construction Alaska	Submittal No. 0660-006 Temporary Signal and Lighting Systems
Date Response Sent: 01/13/2022	Reviewed By: Bob Lundell, P.E. X DM sign for BL

A	AAN	R&R	R	I	R&RasN	INC	CA
Approved	Approved as Noted	Revise and Resubmit	Rejected	Informational	Revisit & Resubmit as Noted	Incomplete	Conditionally Approved

Item No.	Item	Contract Documents	A	AAN	R&R	R	I	R&R asN	INC	CA
660.0007.0000	Temporary Signal System	660-1.03	X							

Comments/Anticipated Response:

Transmittal Form

To: Bob Lundell, P.E.
Project Engineer
DOWL

MEG Project: 102-44
DOT Project: 0902043 / SFHWY00072
KTN Herring Cove Bridge Improvements
Date: 1/13/22
Subject: Submittal Review

We are sending you enclosed via: **email** Original to follow _____yes __X__no

Copies:	Date:	Description:
1	1/13/22	660-1.03 Temporary Signal_Lighting Systems Submittal

These are transmitted: ___ For your use ___ For review ___ For Approval

_X_Conforms ___ Conforms w/ revisions ___Non-Conforming (Revise and resubmit)

See attached submittal for comments.

Thank you,

Mark Morris, P.E.
Principal
Morris Engineering Group, INC

CHATHAM ELECTRIC

A QUANTA SERVICES COMPANY

REVIEWED
Chris Duty,14:28:37,11/1/2022

State of Alaska
Department of Transportation and Public Facilities
KTN: Herring Cove Bridge Improvements;
0902043/SFHWY00072

Submittals

SECTION 660-1.03

TEMPORARY SIGNAL & LIGHTING SYSTEMS

MORRIS ENGINEERING GROUP INC.

CONFORMS TO DESIGN CONCEPT
This shop drawing or cut sheet has been reviewed for general conformance with design concept only and does not relieve the contractor or vendor of responsibility for conformance with design drawings and specifications, all of which have priority over this shop drawing or cut sheet.

Brian Meyers, P.E.
Morris Engineering Group, LLC
1/13/22

Approved as submitted.

COFFMAN ENGINEERS

December 3, 2021

Mr. Richard Wilson
Alaska Architectural Lighting
5401 Cordova St #202
Anchorage, AK 99518

Subject: Electrolier Poles for Ketchikan Herring Cove Bridge Improvement Project

Dear Mr. Wilson:

We have reviewed the structural calculations and working drawings for the electrolier poles for the Ketchikan Herring Cove Bridge Improvement Project.

The following items, provided by Millerbernd Manufacturing Co., were reviewed and we take no exception to them:

- State of Alaska, Herring Cove – MMC #200705, Design Calculations, 11/17/21
- Drawing no. AK-ELEC-30-8-5100, titled "SHIP POLE LIGHT RD 11GAX28'4 W/8'0 LUM"
- Drawing no. 1057116, titled "WLDMT POLE LIGHT 11GAX28'4 (11GAX9.11X5.15X28'4)"
- Drawing no. 1057118, titled "WLDMT RD ARM K STYLE 8'0"
- Drawing no. AK-ELEC-30-10-5100, titled "SHIP POLE LIGHT RD 11GAX28'0 W/10'0 LUM"
- Drawing no. 1048975, titled "WLDMT POLE LIGHT 11GAX28'0 (11GAX9.07X5.15X28'0)"
- Drawing no. 1054219, titled "WLDMT ARM LUM K-STYLE 11GAX10'0 (11GAX4.03X2.67X9'9)"
- Drawing no. AK-ELEC-30-12-5100, titled "SHIP POLE LIGHT RD 11GAX27'1 W/12'0 LUM"
- Drawing no. 1057121, titled "WLDMT POLE LIGHT 11GAX27'1 (11gaX9.53X5.74X27'-1)"
- Drawing no. 1054216, titled "WLDMT ARM LUM K-STYLE 11GAX12'0 (11GAX4.34X2.65X12'0)"
- Drawing titled "Pole-Safe Model No. 5100 Breakaway Support System for Light Poles"
- Drawing titled "Pole-Safe Skirt Details Breakaway Support System for Light Poles"
- Drawing no. PS-TBA-5100-1, titled "Type B Female Anchor For Use with Pole-Safe Model 5100"

Please call if you have any questions.

Sincerely,

Matthew Stielstra, P.E., S.E.
Principal, Civil/Structural Engineering

STATE OF ALASKA
49 TH
MATTHEW C. STIELSTRA
12/03/2021
No. SE13701
REGISTERED PROFESSIONAL ENGINEER

Enclosure: Copy of reviewed Millerbernd calculations and drawings

REVISIONS			
REV.	DESCRIPTION	DATE	DRFT

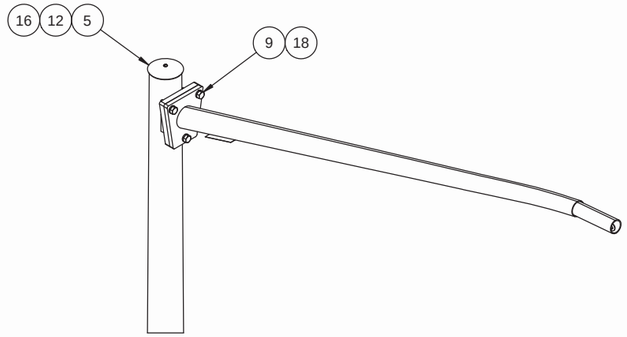

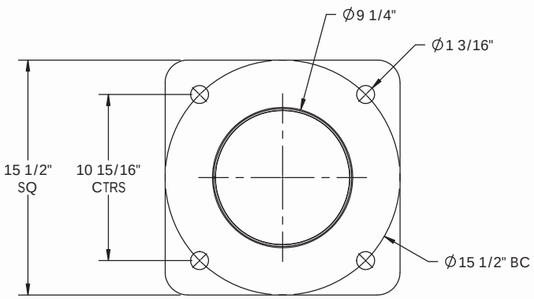

SECTION A-A
SCALE 1 : 10

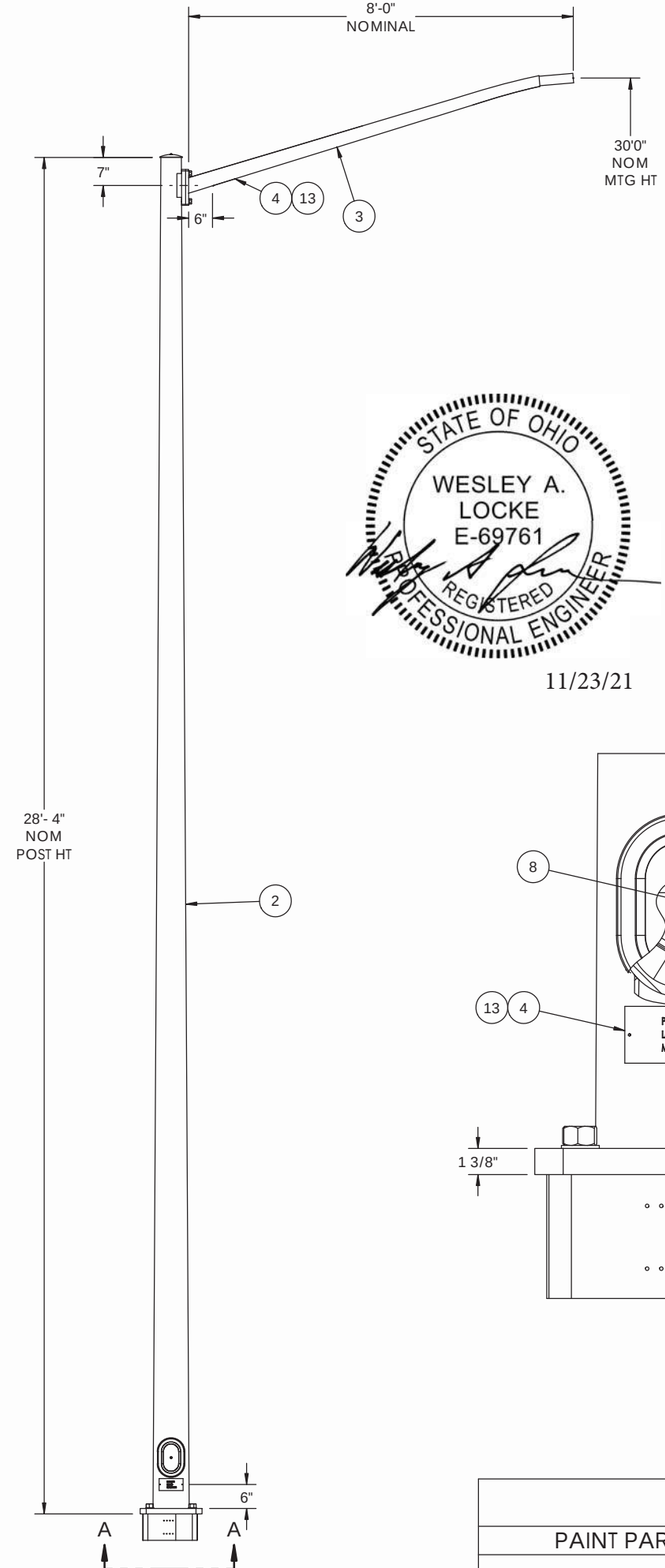

STATE OF OHIO
WESLEY A. LOCKE
E-69761
REGISTERED
PROFESSIONAL ENGINEER

11/23/21

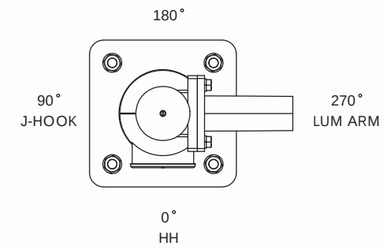

TOP VIEW

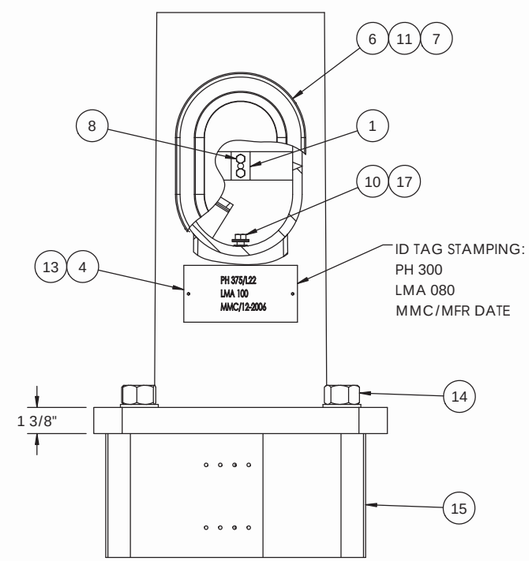

ITEM NO.	PART NUMBER	DESCRIPTION	QTY PER	ASSY	FINISH
1	1022152	CONDUCTOR ATTACHMT PLATE 1/8 X 1" X 1 1/2	1	X	
2	1057116	WLDMT POLE LIGHT 11GAX28'4 (11GAX9.11X5.15X28'4)	1		X
3	1057118	WLDMT RD ARM K STYLE 8'0 11GAX3.74X2.7X8'-0"	1		X
4	500A1186-2	ID TAG	2	X	
5	8800193-55	CAP CAP FITS 4.75 - 5.25 POLE DIA	1		X
6	8800211	COVER HH M34 5X8	1		X
7	8800697	M34 (5 X 8) HH LATCH	1		
8	BOLTA1/4-20X3/4A	BOLT HX HD 1-4-20NC X 3-4 F593C SS	2	X	
9	BOLTA3-4-10X1-3-4B	BOLT HX HD 3-4-10NC X 1 3/4 A325GV	3		
10	BOLTA3/8-16X3/4A	BOLT HX HD 3-8-16NC X 3-4 F593C SS	1	X	
11	SCRWB5/16-18X2"SS	SCRW TPPHXSKBTHD 5-16-18NC X 2" 304 SS ASTM 593 CW1	1		
12	SCRWN1/4-20X3"SS	SCRWSLTDRHDMACH 1-4-20NCX3 ASME B18.6.3 SS	1		
13	SCRWY#2X3/16ZC	U-DRIVE SCRW 3/16(DRIVE IN TYPE)F1941M ZC	4	X	
14	TRANSPO 5100 W-HARDWARE	TRANSPO 5100 W/HRDWR NUT, 3 FLWSHRS (SET OF 4)	4		
15	TRANSPO-SPMKDN SKIRT ASSEMBLY-5	POLE SAFE SKIRT	1		
16	WASHFLAT1/4SS	WASHER FLAT 1/4 SS 5/8 OD ASME B18.22.1 SS	1		
17	WASHFLAT3/8BRASS-001	WASHFLAT3-8BRASS-001	2	X	
18	WASHLOCK3/4GV	WASHER LOCK 3/4 ANSI B18.21.1 GV	3		

MATERIAL SPECIFICATIONS

POST: ASTM A572 GR 50
BASE PLATE: ASTM A709 GR 36
MAST ARM: N/A
MOUNTING PLATE: ASTM A709 GR 36
LUMINAIRE ARM: ASTM A572 GR 50
HARDWARE FINISH: ASTM A153
ANCHOR BOLTS: *SIZE:* 1"

DESIGN CRITERIA

2013 *AASHTO STANDARD SPECIFICATIONS FOR STRUCTURAL SUPPORTS ON HIGHWAY SIGNS, LUMINAIRES & TRAFFIC SIGNALS.*

WINDS: 100 *MPH* 1.3 GUST
FATIGUE CAT: N/A
NATURAL WIND GUST: N/A
VORTEX SHED: N/A
GALLOPING: N/A
TRUCK GUST: N/A

WELD SPECIFICATION

THE POST AND MAST ARM TO BE A TAPERED TUBE FABRICATION WITH ONE SUBMERGED ARC LONGITUDINAL SEAM WELD WITH 100% PENETRATION 6" FROM BASE PLATE AND 60% FOR REMAINDER. GAS METAL ARC WELDING PROCESS WITH 60% PENETRATION MAY BE USED FOR REMAINDER OF WELDED FABRICATION.

WELD TESTING: 100% OF ALL WELDS VISUAL TESTED (VT), 100% OF ALL COMPLETE JOINT PENETRATION (CJP) WELDS ULTRASONIC TESTED (UT) BASED ON THE THINNEST MATING MATERIAL: (PER AASHTO 2013 5.15.5-WELD INSP) THICKNESS.
< 6MM (0.25 IN) MT
≥ 6MM (0.25 IN UT
A RANDOM 30% OF ALL FILLET WELDS AND PARTIAL JOINT PENETRATION (PJP) LONGITUDINAL SEAM WELDS MAGNETIC PARTICLE TESTED (MT).

FINISH SPECIFICATION

GALV. OR PRIME COAT: HOT DIP GALV PER ASTM A123
FINISH COAT:
COLOR:
FEDERAL OR RAL SPEC.:
WEIGHT W/GALV.: 416.1
WEIGHT W/GALV.&PAINT: 432.744
WEIGHT W/PAINT:
SURFACE AREA: 19302.5
GAL. OF PAINT: 0.742404

FINISH

PAINT PART #	DESCRIPTION	QTY
		REF

MILLERBERND
622 6TH ST. SO.
WINSTED, MN 55395

THIS DOCUMENT CONTAINS CONFIDENTIAL INFORMATION AND IS THE PROPERTY OF MILLERBERND MFG AND MAY NOT BE COPIED, REPRODUCED OR DISCLOSED IN ANY MATTER WITHOUT THE EXPRESS WRITTEN CONSENT FROM MILLERBERND MFG

SALES ORDER NO.:	QTY:	STATE:	SHEET
200705	1	AK	1 OF 1

DESCRIPTION:
SHIP POLE LIGHT RD 11GAX28'4 W/8'0 LUM

EST. WEIGHT:	DRAWING NO:
416.1	AK-ELEC-30-8-5100

PROJECT NAME:
Herring Cove

PROJECT LOCATION:
AK

DWN BY: TRAVIS K.	DATE: 11-16-2021
CHK BY:	DATE:

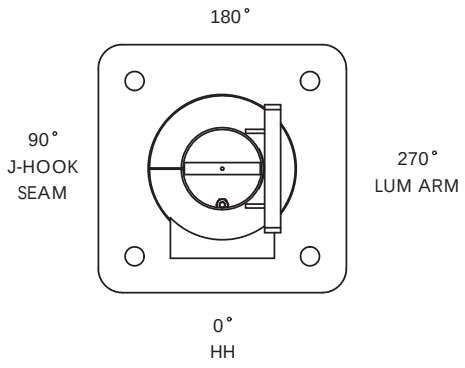

TOP VIEW

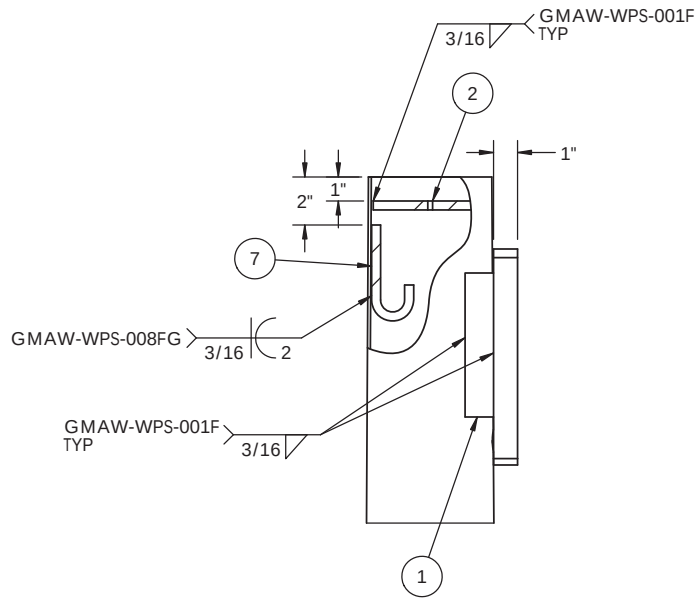

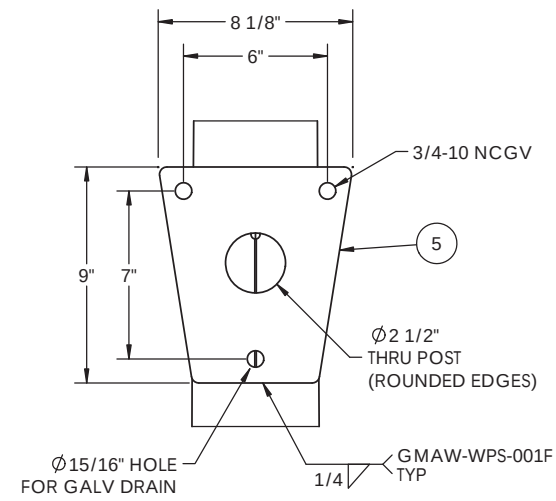

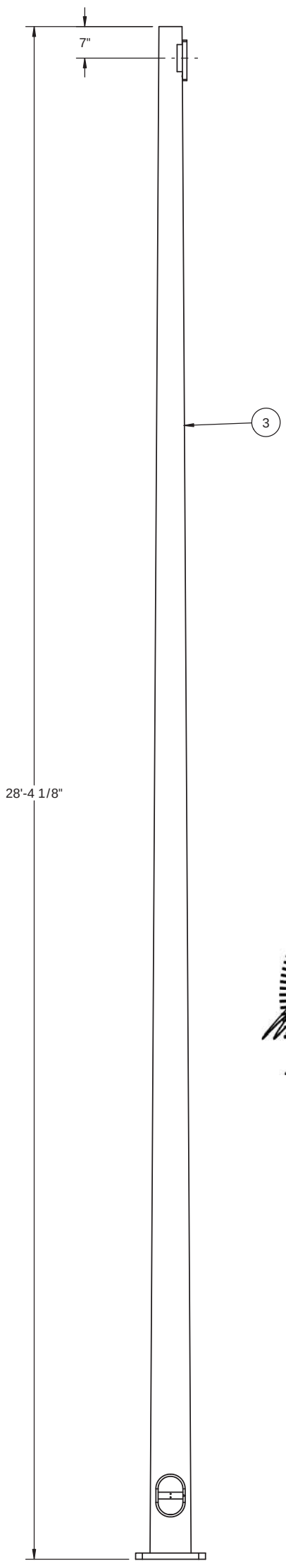

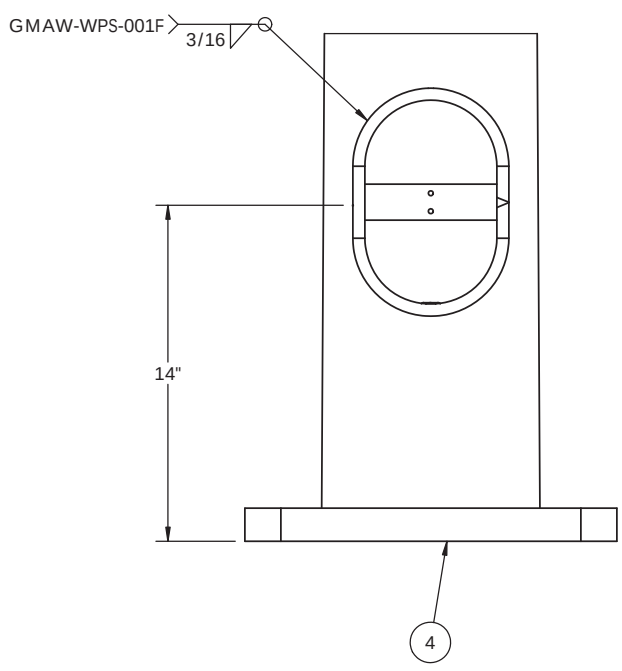

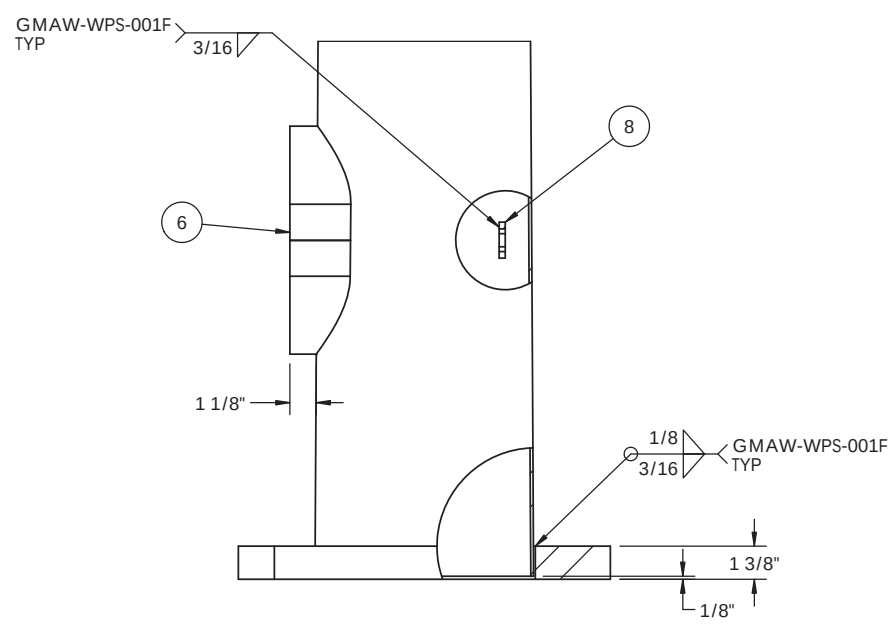

11/23/21

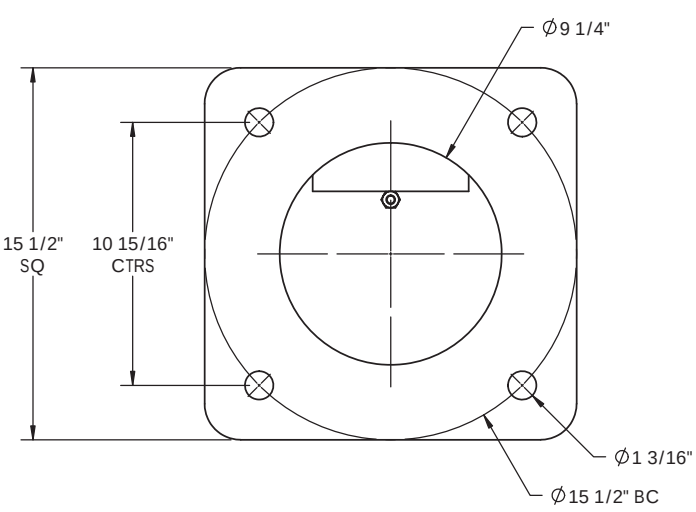

ITEM NO.	PART NUMBER	DESCRIPTION	QTY.
1	1010426	GUSSET RECT 1/4x6	2
2	1045459	BAR CABLE SUPPORT 3/8 X 4.75	1
3	1057119	SHAFT SCKT RD 11gaX9.11X5.14X28'-4	1
4	1048991	BASE SQ 1 3/8 x 15 1/2"	1
5	500A351	MTG PL 1"x9" 3 HOLE	1
6	8800219	WLDMT FRAME HH M34 5 x 8 1/2TKx3"DP	1
7	8800317	J-HOOK 3/8 DIA X 4" HGT X 1 1/4 TAIL	1
8	SKA431-1	CONDUCTOR MTG PLATE 1/4 X 1 1/2 X 5 1/2	1

THIS DOCUMENT CONTAINS CONFIDENTIAL INFORMATION AND IS THE PROPERTY OF MILLERBERND MFG AND MAY NOT BE COPIED, REPRODUCED OR DISCLOSED IN ANY MATTER WITHOUT THE EXPRESS WRITTEN CONSENT FROM MILLERBERND MFG

MILLERBERND
622 6TH ST. SO.
WINSTED, MN 55395

DWN: TRAVIS K. DATE: 11-16-2021

CHK BY: DATE:

MATERIAL: SEE BOM

DESCRIPTION: WLDMT POLE LIGHT 11GAX28'4 (11GAX9.11X5.15X28'4)

WEIGHT:	SURFACE AREA:	SCALE:	DRWG NO.:	SHEET	
344.1 LBS.	15768.4 SQ IN	1:30	1057116	1 OF 1	B

REVISIONS			
REV.	DESCRIPTION	DATE	DRFT

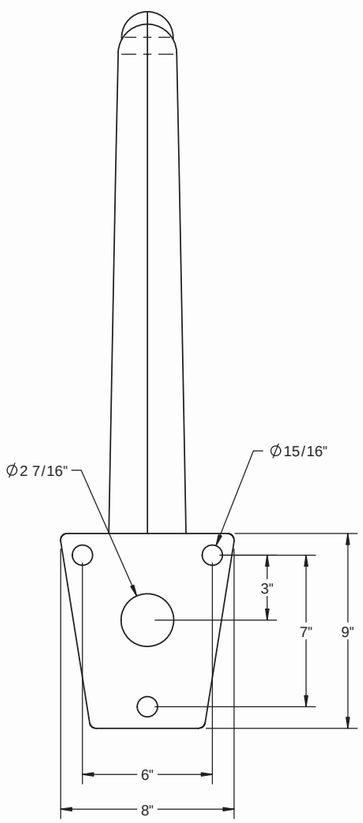

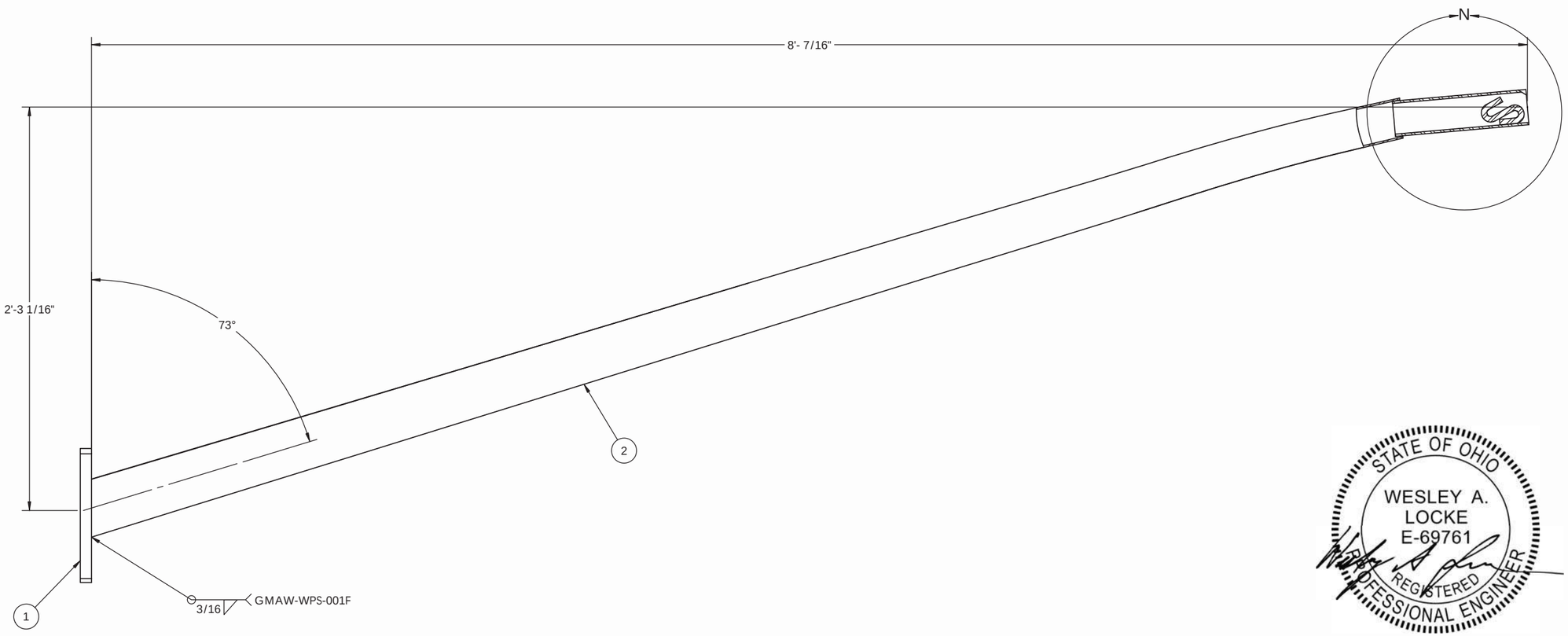

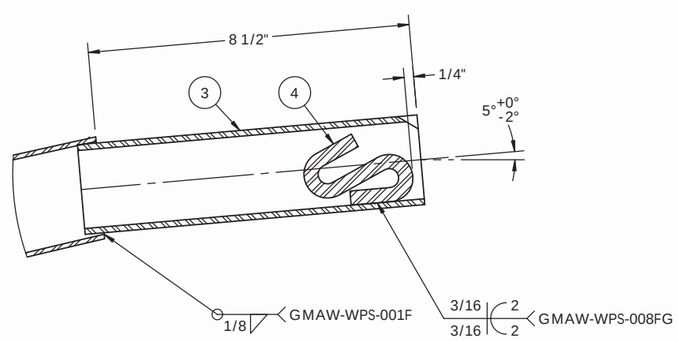

DETAIL N
SCALE 1 : 4

STATE OF OHIO
WESLEY A. LOCKE
E-69761
REGISTERED
PROFESSIONAL ENGINEER

11/23/21

ITEM NO.	PART NUMBER	DESCRIPTION	QTY.
1	500A350	MASTARM PLATE	1
2	1057117	SHAFT LUM	1
3	500A381-9	PIPE A500-B-001-NV (2" SCH 40) 9" LONG	1
4	9900051	S-HOOK (REF 500A158-1)	1

THIS DOCUMENT CONTAINS CONFIDENTIAL INFORMATION AND IS THE PROPERTY OF MILLERBERND MFG AND MAY NOT BE COPIED, REPRODUCED OR DISCLOSED IN ANY MATTER WITHOUT THE EXPRESS WRITTEN CONSENT FROM MILLERBERND MFG

MILLERBERND
622 6TH ST. SO.
WINSTED, MN 55395

DWN: TRAVIS K. DATE: 11-16-2021
CHK BY: DATE:
MATERIAL:

DESCRIPTION:
WLDMT RD ARM K STYLE 8'0

WEIGHT:	SURFACE AREA:	SCALE:	DRWG NO.:	SHEET	
44.57 LBS.	2065.38 SQ IN	1:128	1057118	1 OF 1	B

REVISIONS			
REV.	DESCRIPTION	DATE	DRFT

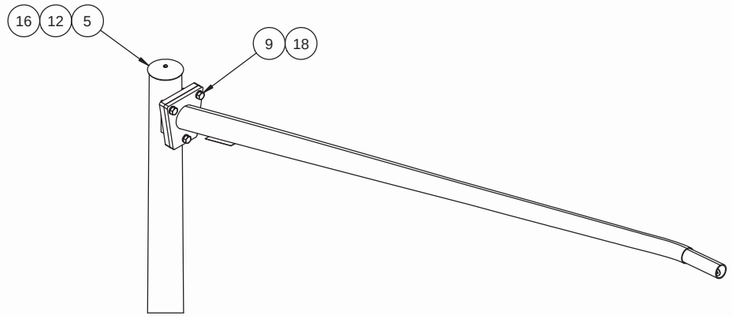

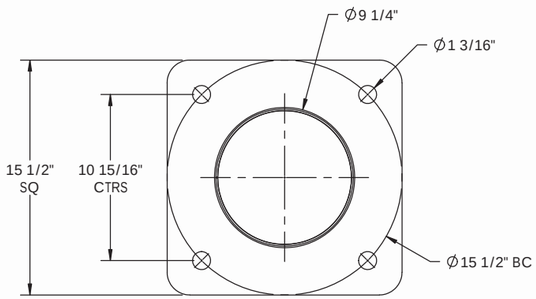

SECTION A-A
SCALE 1 : 10

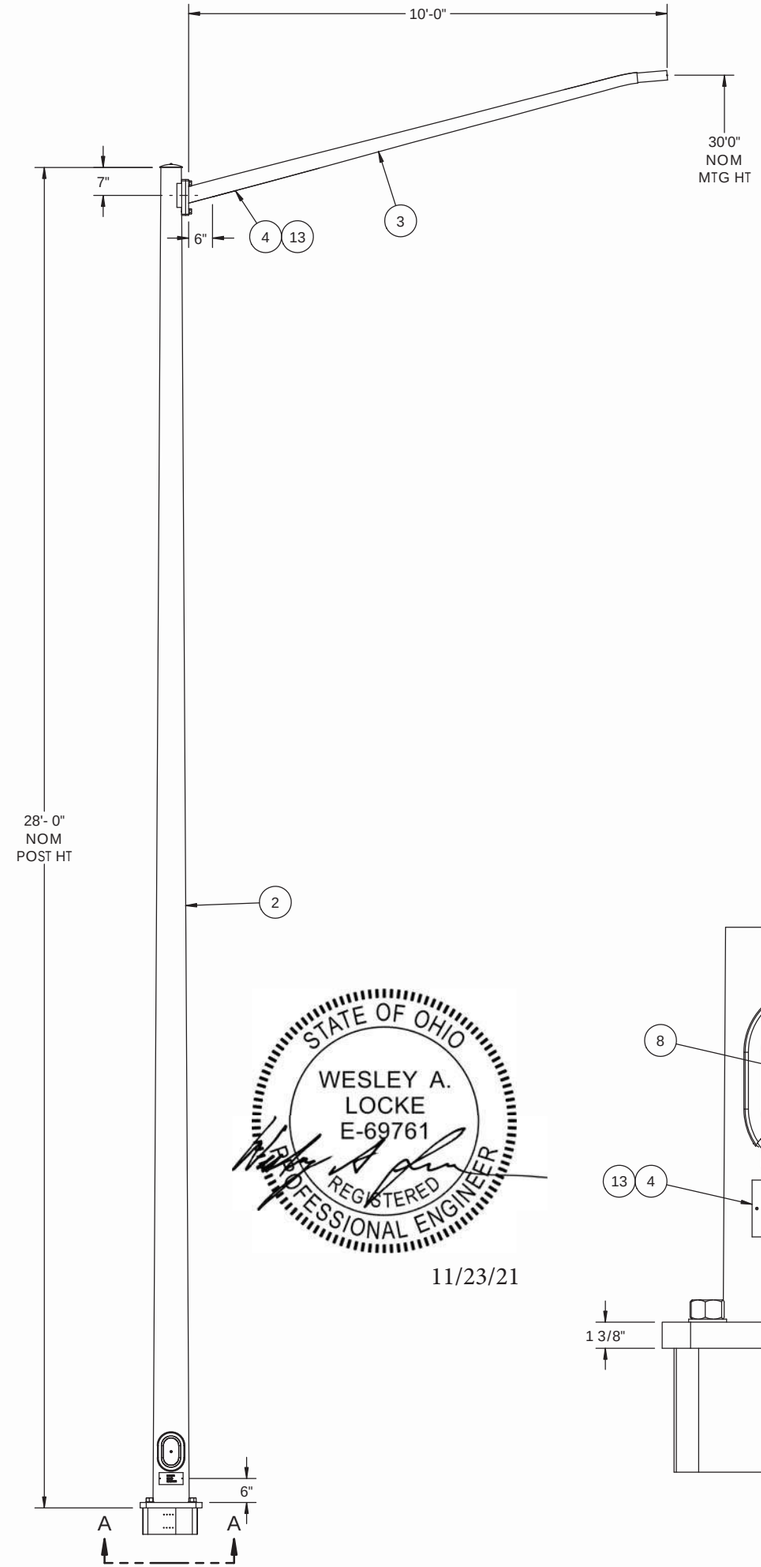

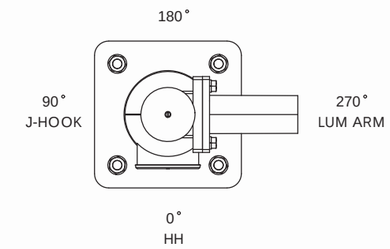

TOP VIEW

11/23/21

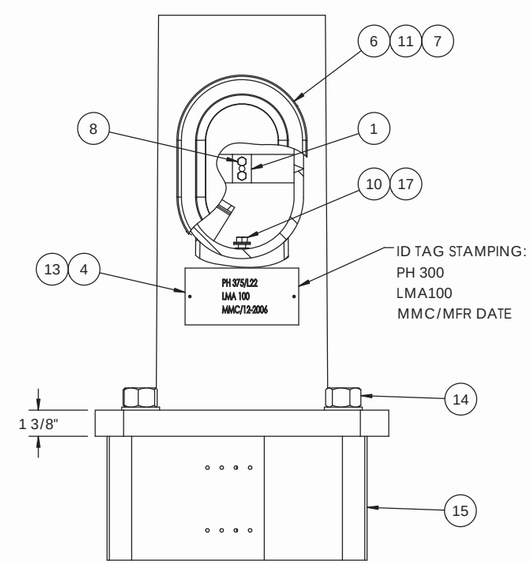

ITEM NO.	PART NUMBER	DESCRIPTION	QTY PER	ASSY	FINISH
1	1022152	CONDUCTOR ATTACHMT PLATE 1/8 X 1" X 1 1/2	1	X	
2	1048975	WLDMT POLE LIGHT 11GAX28'0 (11GAX9.07X5.15X28'0)	1		X
3	1054219	WLDMT ARM LUM K-STYLE 11GAX10'0 (11GAX4.03X2.67X9'9)	1		X
4	500A1186-2	ID TAG	2	X	
5	8800193-55	CAP CAP FITS 4.75 - 5.25 POLE DIA	1		X
6	8800211	COVER HH M34 5X8	1		X
7	8800697	M34 (5 X 8) HH LATCH	1		
8	BOLTA1/4-20X3/4A	BOLT HX HD 1-4-20NC X 3-4 F593C SS	2	X	
9	BOLTA3-4-10X1-3-4B	BOLT HX HD 3-4-10NC X 1 3/4 A325GV	3		
10	BOLTA3/8-16X3/4A	BOLT HX HD 3-8-16NC X 3-4 F593C SS	1	X	
11	SCRWB5/16-18X2"SS	SCRW TPPHXSKBTHD 5-16-18NC X 2" 304 SS ASTM 593 CW1	1		
12	SCRWN1/4-20X3"SS	SCRWSLTDRHDMACH 1-4-20NCX3 ASME B18.6.3 SS	1		
13	SCRWY#2X3/16ZC	U-DRIVE SCRW 3/16(DRIVE IN TYPE)F1941M ZC	4	X	
14	TRANSPO 5100 W-HARDWARE	TRANSPO 5100 W/HRDWR NUT, 3 FLWSHRS (SET OF 4)	4		
15	TRANSPO-SPMKDN SKIRT ASSEMBLY-5	POLE SAFE SKIRT	1		
16	WASHFLAT1/4SS	WASHER FLAT 1/4 SS 5/8 OD ASME B18.22.1 SS	1		
17	WASHFLAT3/8BRASS-001	WASHFLAT3-8BRASS-001	2	X	
18	WASHLOCK3/4GV	WASHER LOCK 3/4 ANSI B18.21.1 GV	3		

MATERIAL SPECIFICATIONS

POST: ASTM A572 GR 50
BASE PLATE: ASTM A709 GR 36
MAST ARM: N/A
MOUNTING PLATE: ASTM A709 GR 36
LUMINAIRE ARM: ASTM A572 GR 50
HARDWARE FINISH: ASTM A153
ANCHOR BOLTS: *SIZE:* 1"

DESIGN CRITERIA

2013 *AASHTO STANDARD SPECIFICATIONS FOR STRUCTURAL SUPPORTS ON HIGHWAY SIGNS, LUMINAIRES & TRAFFIC SIGNALS.*

WINDS: 100 *MPH* 1.3 GUST *VORTEX SHED:* N/A
FATIGUE CAT: N/A *GALLOPING:* N/A
NATURAL WIND GUST: N/A *TRUCK GUST:* N/A

WELD SPECIFICATION

THE POST AND MAST ARM TO BE A TAPERED TUBE FABRICATION WITH ONE SUBMERGED ARC LONGITUDINAL SEAM WELD WITH 100% PENETRATION 6" FROM BASE PLATE AND 60% FOR REMAINDER. GAS METAL ARC WELDING PROCESS WITH 60% PENETRATION MAY BE USED FOR REMAINDER OF WELDED FABRICATION.

WELD TESTING: 100% OF ALL WELDS VISUAL TESTED (VT), 100% OF ALL COMPLETE JOINT PENETRATION (CJP) WELDS ULTRASONIC TESTED (UT) BASED ON THE THINNEST MATING MATERIAL: (PER AASHTO 2013 5.15.5-WELD INSP) THICKNESS.
< 6MM (0.25 IN) MT
≥ 6MM (0.25 IN UT
A RANDOM 30% OF ALL FILLET WELDS AND PARTIAL JOINT PENETRATION (PJP) LONGITUDINAL SEAM WELDS MAGNETIC PARTICLE TESTED (MT).

FINISH SPECIFICATION

GALV. OR PRIME COAT: HOT DIP GALV PER ASTM A123
FINISH COAT:
COLOR:
FEDERAL OR RAL SPEC.:
WEIGHT W/GALV.: 422.7
WEIGHT W/GALV.&PAINT: 439.608
WEIGHT W/PAINT:
SURFACE AREA: 19692.6
GAL. OF PAINT: 0.757408

MILLERBERND
622 6TH ST. SO.
WINSTED, MN 55395

THIS DOCUMENT CONTAINS CONFIDENTIAL INFORMATION AND IS THE PROPERTY OF MILLERBERND MFG AND MAY NOT BE COPIED, REPRODUCED OR DISCLOSED IN ANY MATTER WITHOUT THE EXPRESS WRITTEN CONSENT FROM MILLERBERND MFG

SALES ORDER NO.:	QTY:	STATE:	SHEET
200705	4	AK	1 OF 1

DESCRIPTION:
SHIP POLE LIGHT RD 11GAX28'0 W/10'0 LUM

EST. WEIGHT:	DRAWING NO:
422.7	AK-ELEC-30-10-5100

PROJECT NAME:

Herring Cove

PROJECT LOCATION:
AK

DWN BY: TRAVIS K.	DATE: 11-16-2021
CHK BY:	DATE:

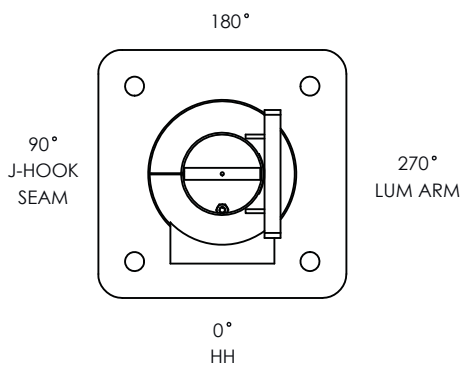

TOP VIEW

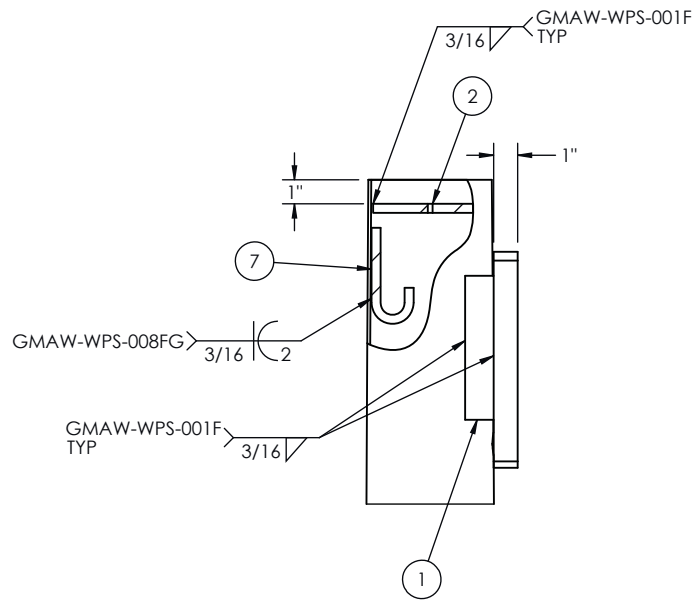

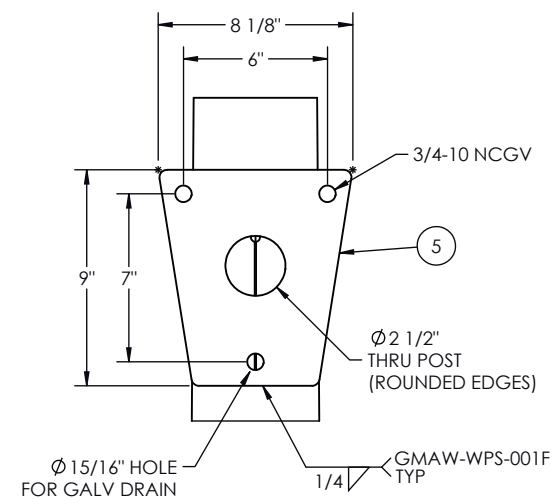

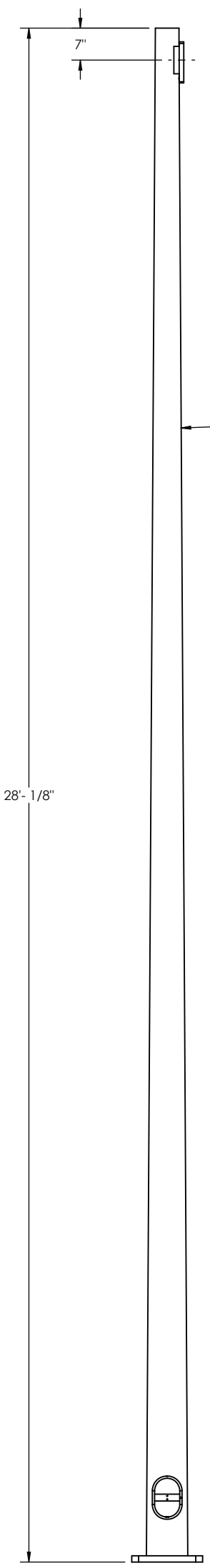

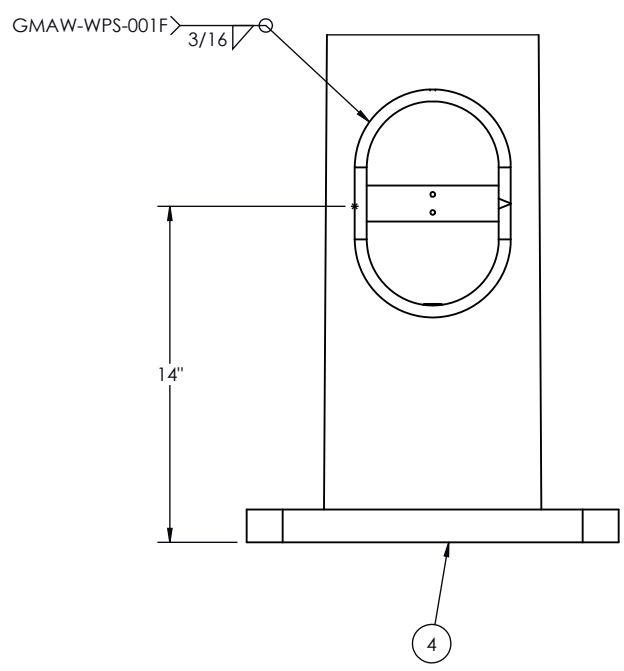

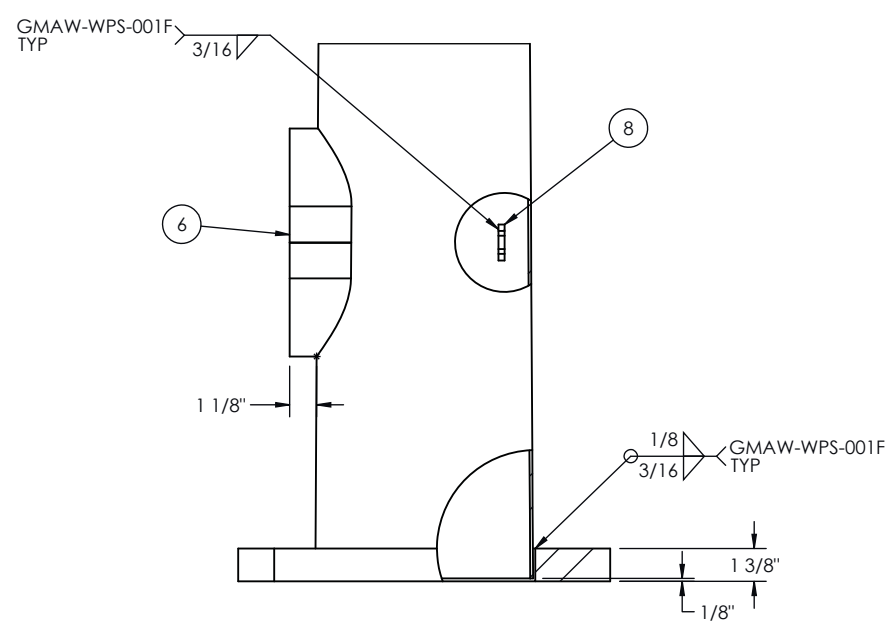

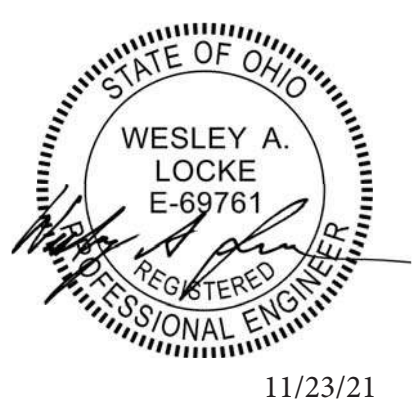

11/23/21

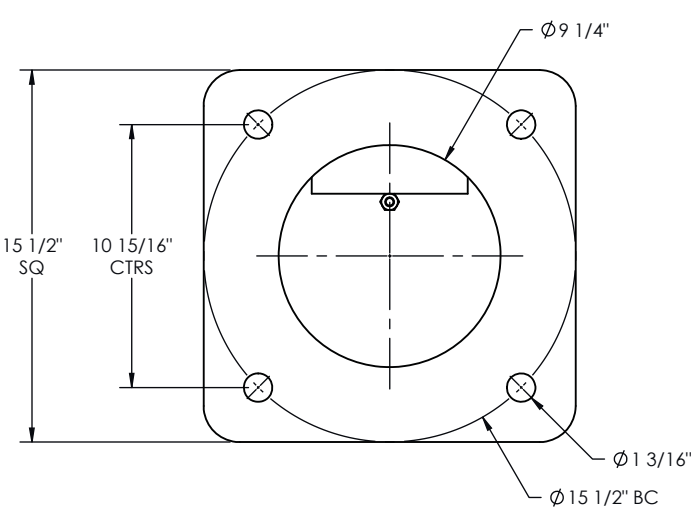

ITEM NO.	PART NUMBER	DESCRIPTION	QTY.
1	1010426	GUSSET RECT 1/4x6	2
2	1045459	BAR CABLE SUPPORT 3/8 X 4.75	1
3	1048977	SHAFT SCKT RD 11gaX9.07X5.15X28'-0	1
4	1048991	BASE SQ 1 3/8 x 15 1/2"	1
5	500A351	MTG PL 1"x9" 3 HOLE	1
6	8800219	WLDMT FRAME HH M34 5 x 8 1/2TKx3"DP	1
7	8800317	J-HOOK 3/8 DIA X 4" HGT X 1 1/4 TAIL	1
8	SKA431-1	CONDUCTOR MTG PLATE 1/4 X 1 1/2 X 5 1/2	1

THIS DOCUMENT CONTAINS CONFIDENTIAL INFORMATION AND IS THE PROPERTY OF MILLERBERND MFG AND MAY NOT BE COPIED, REPRODUCED OR DISCLOSED IN ANY MATTER WITHOUT THE EXPRESS WRITTEN CONSENT FROM MILLERBERND MFG

MILLERBERND
622 6TH ST. SO.
WINSTED, MN 55395

DWN: MARK S. DATE: 06-28-2021

CHK BY: DATE:

MATERIAL: SEE BOM

DESCRIPTION: WLDMT POLE LIGHT 11GAX28'0 (11GAX9.07X5.15X28'0)

WEIGHT:	SURFACE AREA:	SCALE:	DRWG NO.:	SHEET	
340.6 LBS.	15560.0 SQ IN	1:30	1048975	1 OF 1	B

REVISIONS			
REV.	DESCRIPTION	DATE	DRFT

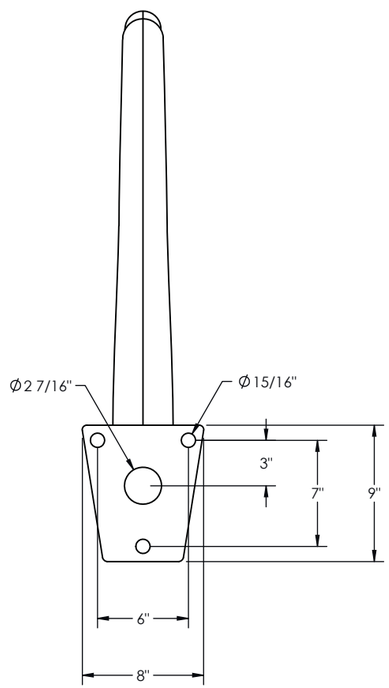

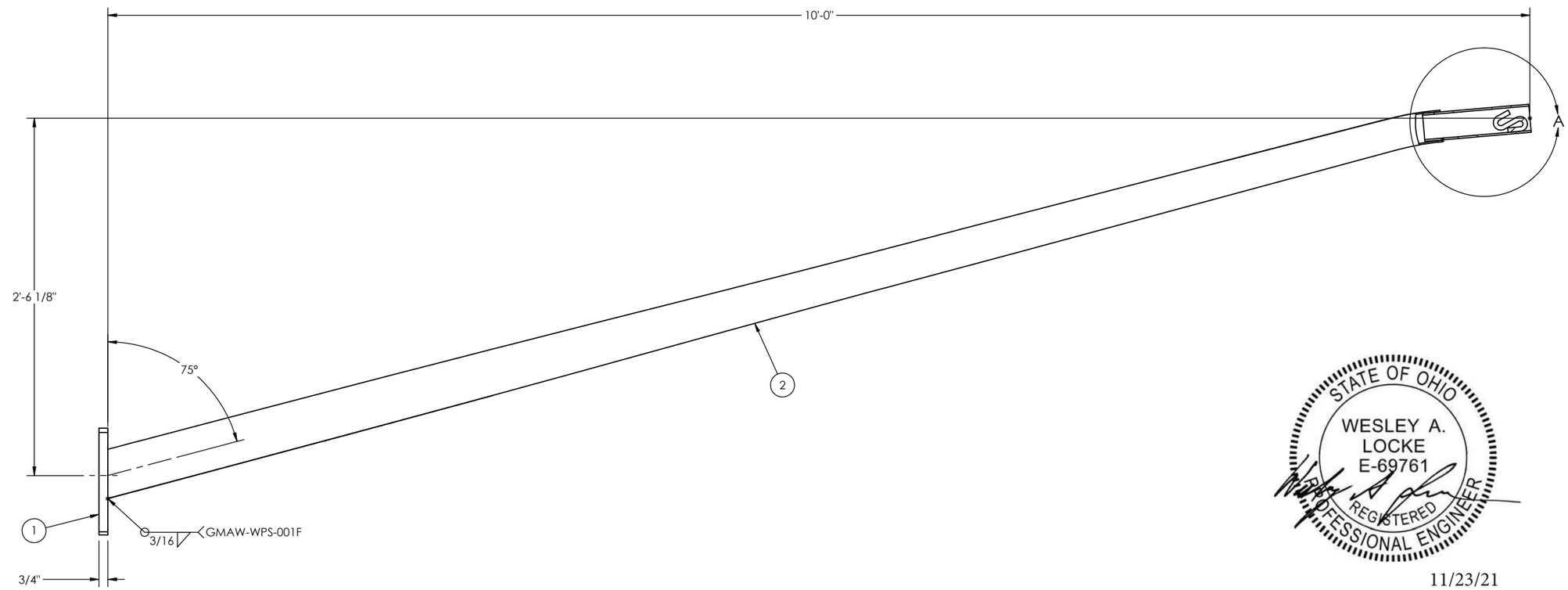

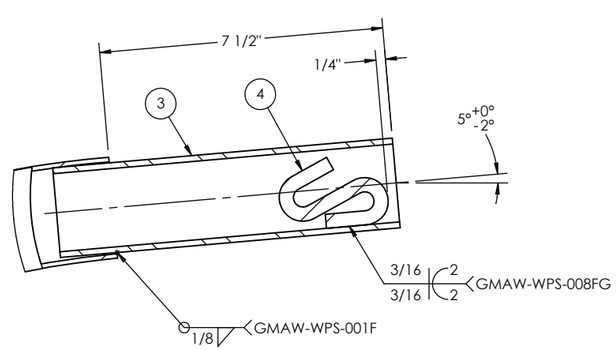

DETAIL A
SCALE 1 : 4

STATE OF OHIO
WESLEY A. LOCKE
E-69761
REGISTERED
PROFESSIONAL ENGINEER

11/23/21

ITEM NO.	PART NUMBER	DESCRIPTION	QTY.
1	1010516	MTG PLT ARM 3-BOLT 3/4X8X9 CENTER HOLE 2 7/16 DIA	1
2	1054220	SHAFT LUM RD	1
3	500A381-9	PIPE A500-B-001-NV (2" SCH 40) 9" LONG	1
4	9900051	S-HOOK (REF 500A158-1)	1

THIS DOCUMENT CONTAINS CONFIDENTIAL INFORMATION AND IS THE PROPERTY OF MILLERBERND MFG AND MAY NOT BE COPIED, REPRODUCED OR DISCLOSED IN ANY MATTER WITHOUT THE EXPRESS WRITTEN CONSENT FROM MILLERBERND MFG

MILLERBERND
622 6TH ST. SO.
WINSTED, MN 55395

DWN: MARK S. DATE: 06-28-2021
CHK BY: DATE:
MATERIAL:

DESCRIPTION:
WLDMT ARM LUM K-STYLE 11GAX10'0
(11GAX4.03X2.67X9'9)

WEIGHT:	SURFACE AREA:	SCALE:	DRWG NO.:	SHEET	
54.70 LBS.	2663.80 SQ IN	1:10	1054219	1 OF 1	B

REVISIONS			
REV.	DESCRIPTION	DATE	DRFT

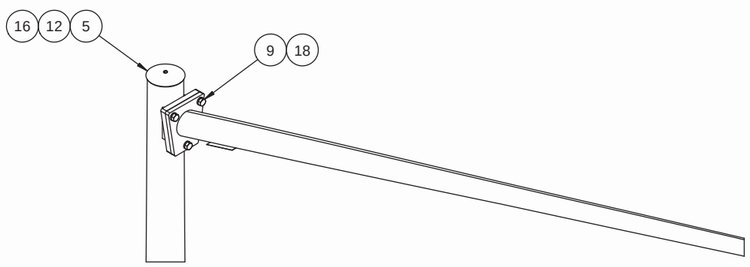

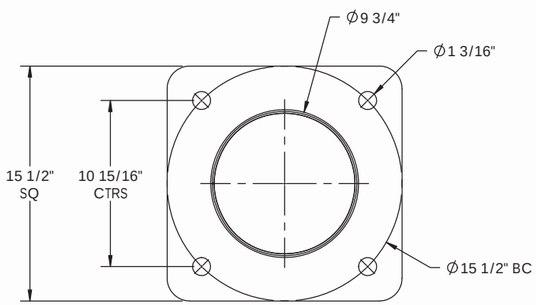

SECTION A-A
SCALE 1 : 10

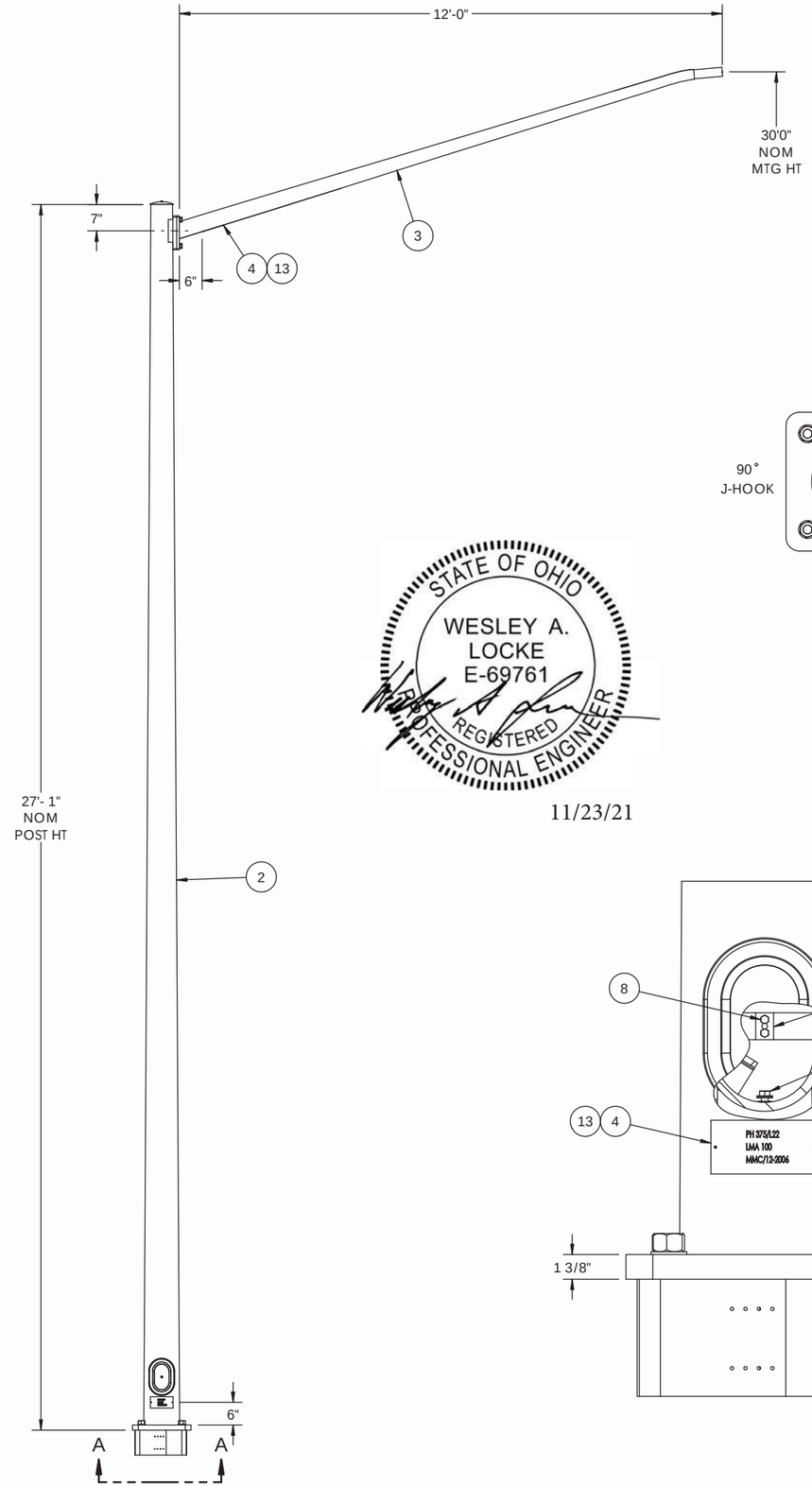

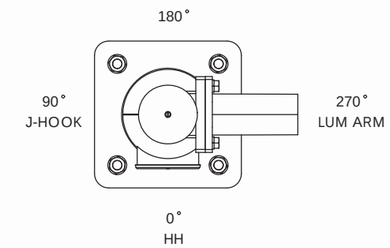

TOP VIEW

STATE OF OHIO
WESLEY A. LOCKE
E-69761
REGISTERED
PROFESSIONAL ENGINEER

11/23/21

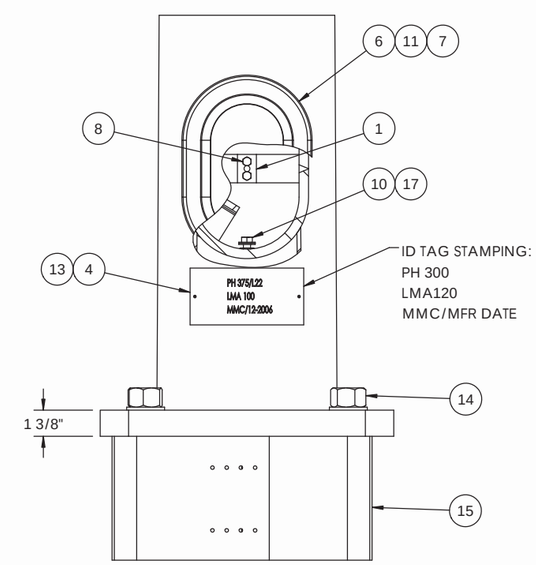

ITEM NO.	PART NUMBER	DESCRIPTION	QTY PER	ASSY	FINISH
1	1022152	CONDUCTOR ATTACHMT PLATE 1/8 X 1" X 1 1/2	1	X	
2	1057121	WLDMT POLE LIGHT 11GAX27'1 (11gaX9.53X5.74X27'-1)	1		X
3	1054216	WLDMT ARM LUM K-STYLE 11GAX12'0 (11GAX4.34X2.65X12'0)	1		X
4	500A1186-2	ID TAG	2	X	
5	8800193-6	CAP CAP FITS 5.25 - 5.75 POLE DIA	1		X
6	8800211	COVER HH M34 5X8	1		X
7	8800697	M34 (5 X 8) HH LATCH	1		
8	BOLTA1/4-20X3/4A	BOLT HX HD 1-4-20NC X 3-4 F593C SS	2	X	
9	BOLTA3-4-10X1-3-4B	BOLT HX HD 3-4-10NC X 1 3/4 A325GV	3		
10	BOLTA3/8-16X3/4A	BOLT HX HD 3-8-16NC X 3-4 F593C SS	1	X	
11	SCRWB5/16-18X2"SS	SCRW TPPHXSKBTHD 5-16-18NC X 2" 304 SS ASTM 593 CW1	1		
12	SCRWN1/4-20X3"SS	SCRWSLTDRHDMACH 1-4-20NCX3 ASME B18.6.3 SS	1		
13	SCRWY#2X3/16ZC	U-DRIVE SCRW 3/16(DRIVE IN TYPE)F1941M ZC	4	X	
14	TRANSPO 5100 W-HARDWARE	TRANSPO 5100 W/HRDWR NUT, 3 FLWSHRS (SET OF 4)	4		
15	TRANSPO-SPMKDN SKIRT ASSEMBLY-5	POLE SAFE SKIRT	1		
16	WASHFLAT1/4SS	WASHER FLAT 1/4 SS 5/8 OD ASME B18.22.1 SS	1		
17	WASHFLAT3/8BRASS-001	WASHFLAT3-8BRASS-001	2	X	
18	WASHLOCK3/4GV	WASHER LOCK 3/4 ANSI B18.21.1 GV	3		

MATERIAL SPECIFICATIONS

POST: ASTM A572 GR 50
BASE PLATE: ASTM A709 GR 36
MAST ARM: N/A
MOUNTING PLATE: ASTM A709 GR 36
LUMINAIRE ARM: ASTM A572 GR 50
HARDWARE FINISH: ASTM A153
ANCHOR BOLTS: *SIZE:* 1"

DESIGN CRITERIA

2013 *AASHTO STANDARD SPECIFICATIONS FOR STRUCTURAL SUPPORTS ON HIGHWAY SIGNS, LUMINAIRES & TRAFFIC SIGNALS.*

WINDS: 100 *MPH* 1.3 GUST *VORTEX SHED:* N/A
FATIGUE CAT: N/A *GALLOPING:* N/A
NATURAL WIND GUST: N/A *TRUCK GUST:* N/A

WELD SPECIFICATION

THE POST AND MAST ARM TO BE A TAPERED TUBE FABRICATION WITH ONE SUBMERGED ARC LONGITUDINAL SEAM WELD WITH 100% PENETRATION 6" FROM BASE PLATE AND 60% FOR REMAINDER. GAS METAL ARC WELDING PROCESS WITH 60% PENETRATION MAY BE USED FOR REMAINDER OF WELDED FABRICATION.

WELD TESTING: 100% OF ALL WELDS VISUAL TESTED (VT), 100% OF ALL COMPLETE JOINT PENETRATION (CJP) WELDS ULTRASONIC TESTED (UT) BASED ON THE THINNEST MATING MATERIAL: (PER AASHTO 2013 5.15.5-WELD INSP) THICKNESS.
< 6MM (0.25 IN) MT
≥ 6MM (0.25 IN UT
A RANDOM 30% OF ALL FILLET WELDS AND PARTIAL JOINT PENETRATION (PJP) LONGITUDINAL SEAM WELDS MAGNETIC PARTICLE TESTED (MT).

FINISH SPECIFICATION

GALV. OR PRIME COAT: HOT DIP GALV PER ASTM A123
FINISH COAT:
COLOR:
FEDERAL OR RAL SPEC.:
WEIGHT W/GALV.: 441.4
WEIGHT W/GALV.&PAINT: 459.056
WEIGHT W/PAINT:
SURFACE AREA: 20948.9
GAL. OF PAINT: 0.805727

MILLERBERND
622 6TH ST. SO.
WINSTED, MN 55395

THIS DOCUMENT CONTAINS CONFIDENTIAL INFORMATION AND IS THE PROPERTY OF MILLERBERND MFG AND MAY NOT BE COPIED, REPRODUCED OR DISCLOSED IN ANY MATTER WITHOUT THE EXPRESS WRITTEN CONSENT FROM MILLERBERND MFG

SALES ORDER NO.:	QTY:	STATE:	SHEET
200705	1	AK	1 OF 1

DESCRIPTION:
SHIP POLE LIGHT RD 11GAX27'1 W/12'0 LUM

EST. WEIGHT:	DRAWING NO:
441.4	AK-ELEC-30-12-5100

PROJECT NAME:
Herring Cove

PROJECT LOCATION:
AK

DWN BY: TRAVIS K.	DATE: 11-17-2021
CHK BY:	DATE:

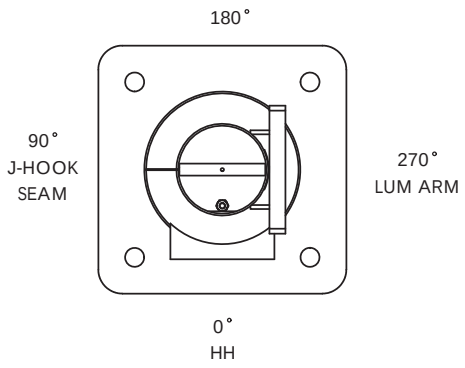

TOP VIEW

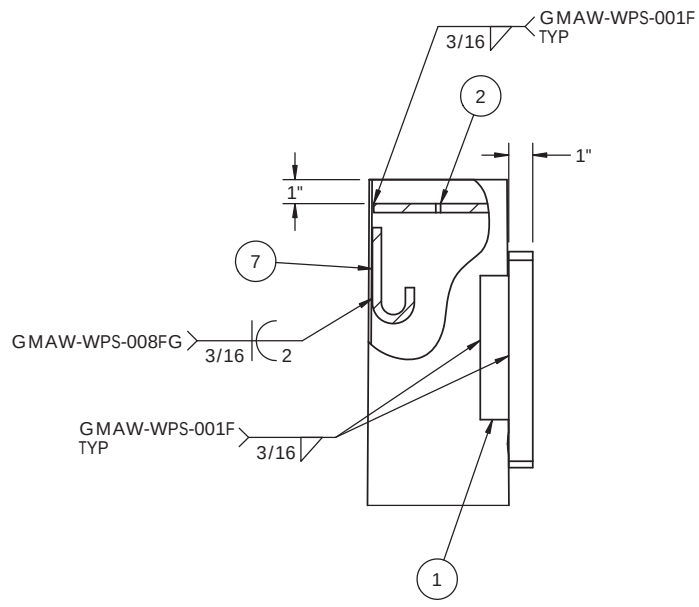

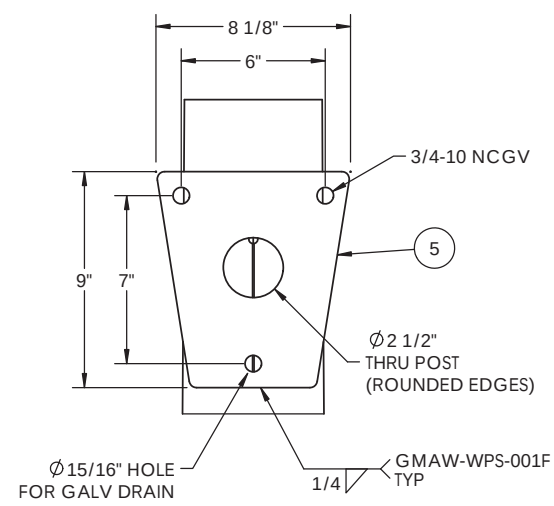

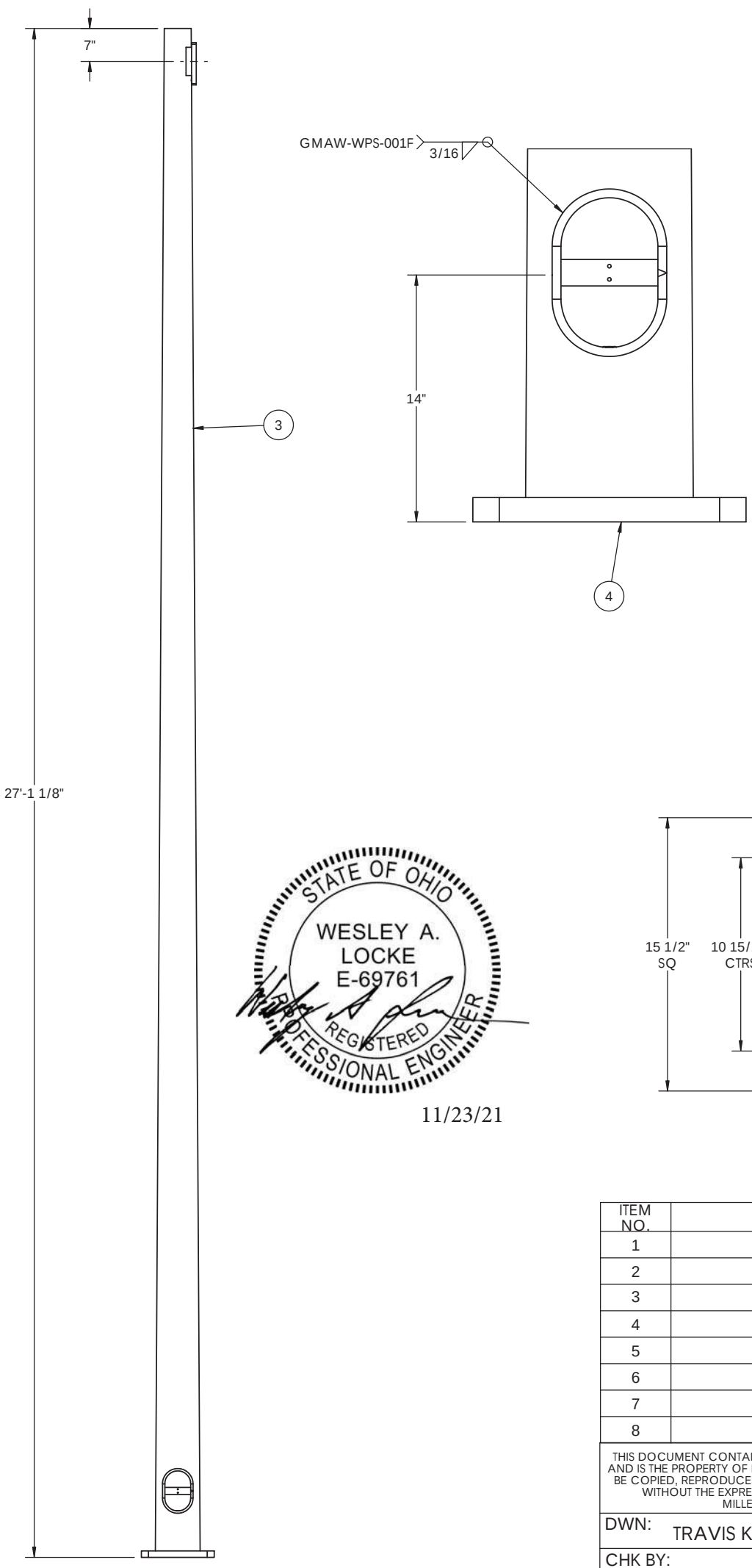

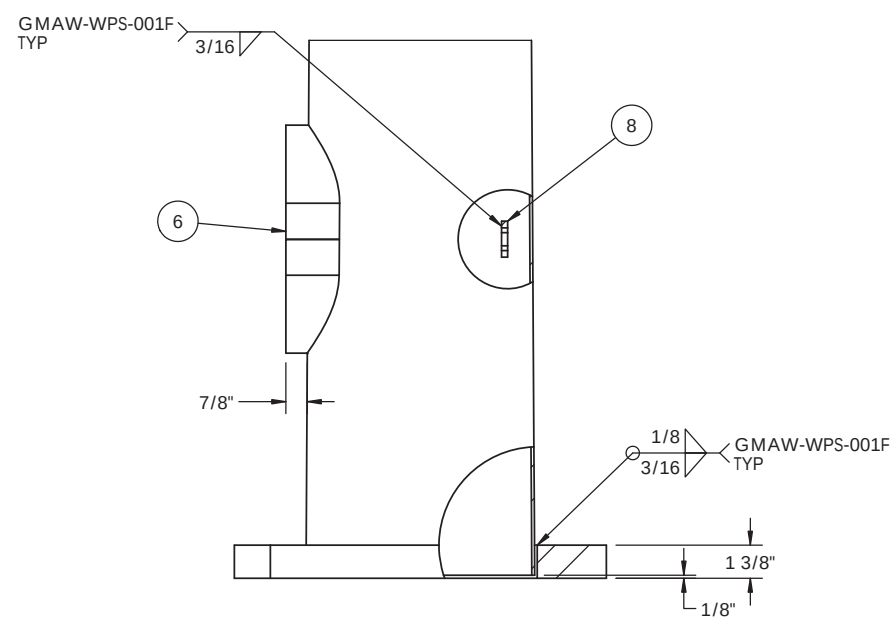

11/23/21

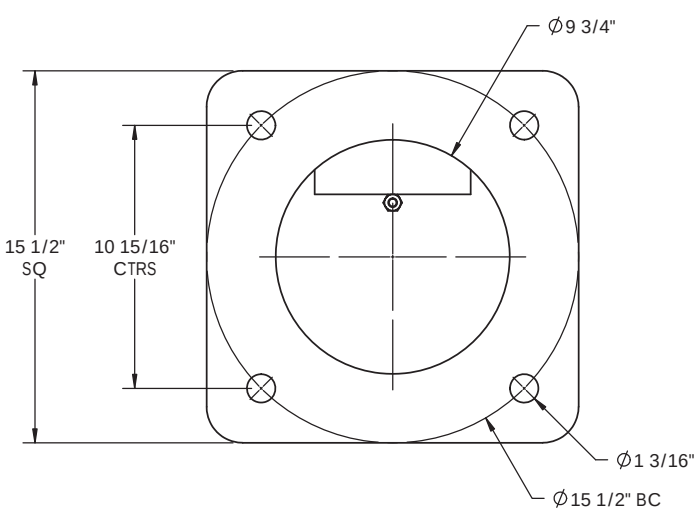

ITEM NO.	PART NUMBER	DESCRIPTION	QTY.
1	1010426	GUSSET RECT 1/4x6	2
2	1045869	BAR CABLE SUPPORT 3/8 X 5.375	1
3	1057122	SHAFT SCKT RD 11gaX9.53X5.74X27'-1	1
4	1057123	BASE SQ 1 3/8 x 15 1/2"	1
5	500A351	MTG PL 1"x9" 3 HOLE	1
6	8800219	WLDMT FRAME HH M34 5 x 8 1/2TKx3"DP	1
7	8800317	J-HOOK 3/8 DIA X 4" HGT X 1 1/4 TAIL	1
8	SKA431-1	CONDUCTOR MTG PLATE 1/4 X 1 1/2 X 5 1/2	1

THIS DOCUMENT CONTAINS CONFIDENTIAL INFORMATION AND IS THE PROPERTY OF MILLERBERND MFG AND MAY NOT BE COPIED, REPRODUCED OR DISCLOSED IN ANY MATTER WITHOUT THE EXPRESS WRITTEN CONSENT FROM MILLERBERND MFG

MILLERBERND
622 6TH ST. SO.
WINSTED, MN 55395

DWN: TRAVIS K. DATE: 11-17-2021

CHK BY: DATE:

MATERIAL: SEE BOM

DESCRIPTION: WLDMT POLE LIGHT 11GAX27'1 (11gaX9.53X5.74X27'-1)

WEIGHT:	SURFACE AREA:	SCALE:	DRWG NO.:	SHEET	
347.7 LBS.	16137.9 SQ IN	1:30	1057121	1 OF 1	B

REVISIONS			
REV.	DESCRIPTION	DATE	DRFT

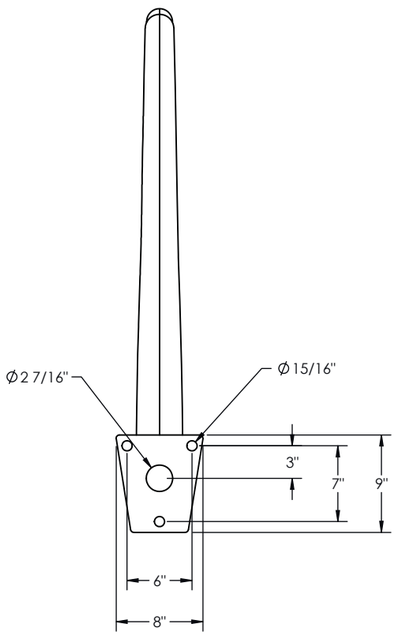

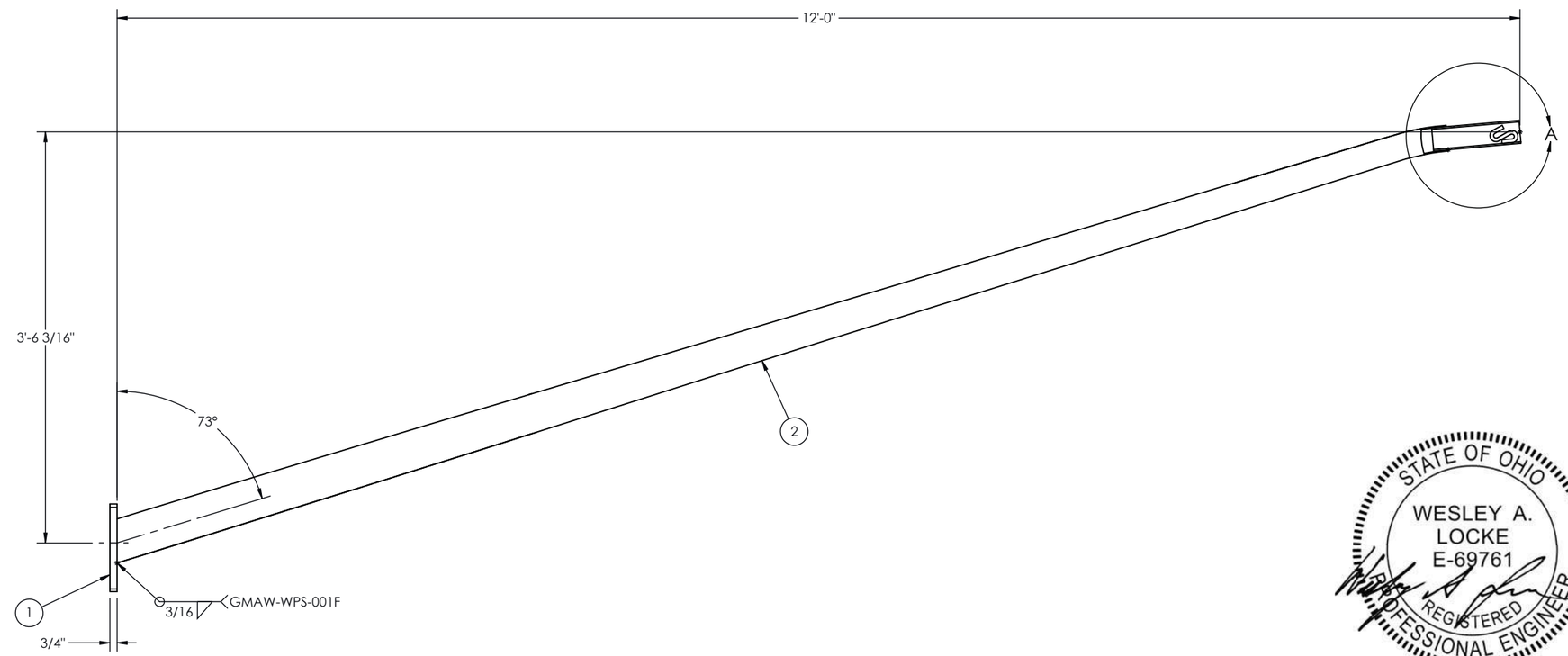

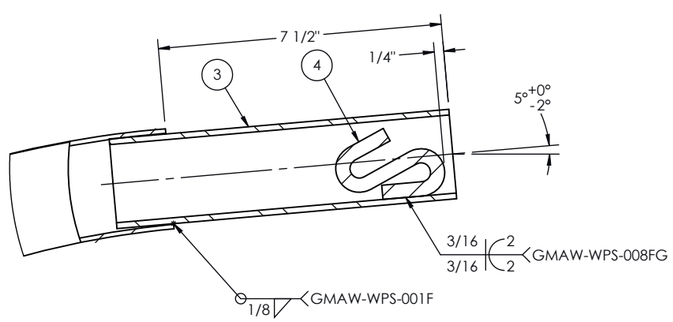

DETAIL A
SCALE 1 : 4

STATE OF OHIO
WESLEY A. LOCKE
E-69761
REGISTERED
PROFESSIONAL ENGINEER

11/23/21

ITEM NO.	PART NUMBER	DESCRIPTION	QTY.
1	1041187	MASTARM PLATE	1
2	1054217	SHAFT LUM RD	1
3	500A381-9	PIPE A500-B-001-NV (2" SCH 40) 9" LONG	1
4	9900051	S-HOOK (REF 500A158-1)	1

THIS DOCUMENT CONTAINS CONFIDENTIAL INFORMATION AND IS THE PROPERTY OF MILLERBERND MFG AND MAY NOT BE COPIED, REPRODUCED OR DISCLOSED IN ANY MATTER WITHOUT THE EXPRESS WRITTEN CONSENT FROM MILLERBERND MFG

MILLERBERND
622 6TH ST. SO.
WINSTED, MN 55395

DWN: MARK S. DATE: 07-06-2021
CHK BY: DATE:
MATERIAL:

DESCRIPTION:
WLDMT ARM LUM K-STYLE 11GAX12'0
(11GAX4.34X2.65X12'0)

WEIGHT:	SURFACE AREA:	SCALE:	DRWG NO.:	SHEET	
66.03 LBS.	3332.86 SQ IN	1:14	1054216	1 OF 1	B

STATE OF OHIO
WESLEY A. LOCKE
E-69761
REGISTERED
PROFESSIONAL ENGINEER

11/23/21

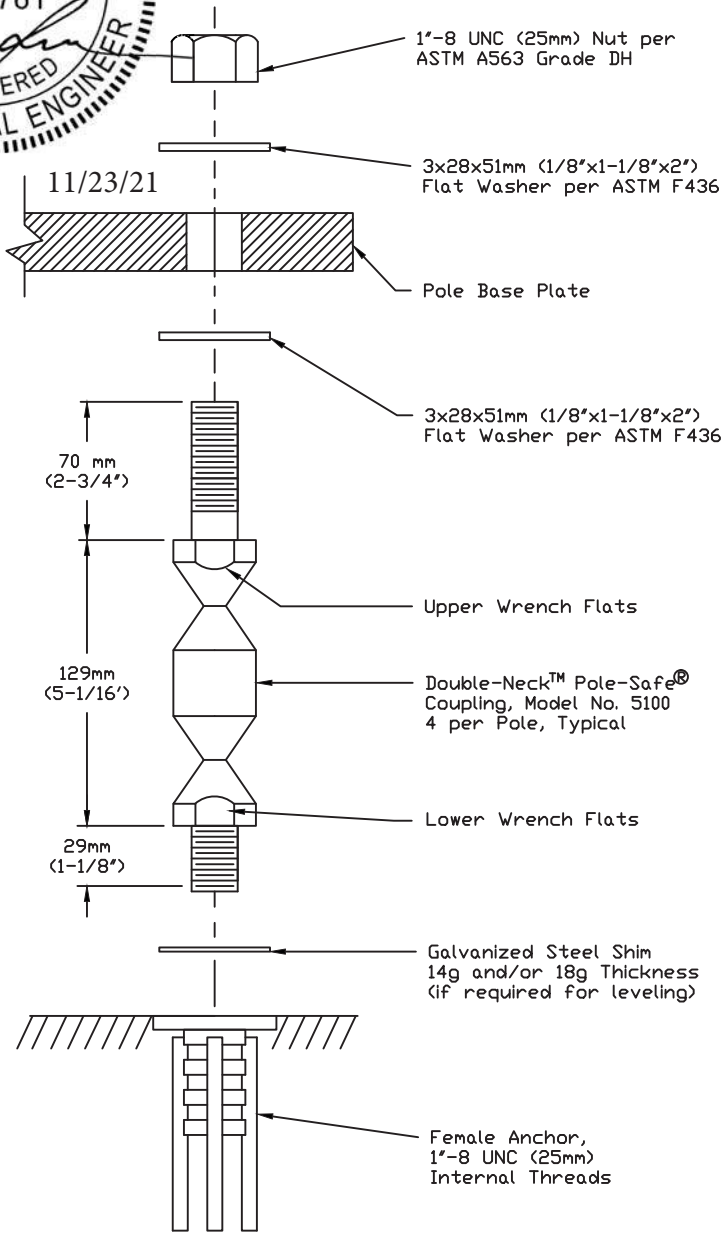

Patent No. 5,474,408 & 6,056,471 6/00

SPECIFICATIONS

Performance Criteria:

1. Double-Neck™ Pole-Safe® conforms to AASHTO "Standard specifications for Structural Supports for Highway Signs, Luminaires and Traffic Signals."
2. Double-Neck™ Pole-Safe® has been crash-tested and FHWA approved in accordance with the requirements of NCHRP Report 350, "Recommended Procedures for the Safety Performance Evaluation of Highway Features."
3. Maximum Allowable Pole Mass = 450 kg (992 lb.) (total, including fixtures).

Physical Properties per Coupling:

1. Ultimate Tensile Strength = 221.5 kN (49.8 kips), minimum.
2. Tensile Yield Strength = 192.0 kN (43.2 kips), minimum.
3. Ultimate Restrained shear Strength = 24.5 kN (5.5 kips), minimum.

Corrosion Protection:

1. All Double-Neck™ Pole-Safe® couplings, nuts, bolts, washers, and shims are galvanized after fabrication in accordance with ASTM A153.

QTY 6 (SET OF 4)

JOB MMC SO# 200705 / Herring Cove

Pole-Safe® Model No. 5100
Breakaway Support System for Light Poles

TRANSPO® INDUSTRIES, Inc.
The Smart Solutions Company
20 Jones Street
New Rochelle, NY 10801
914-636-1000

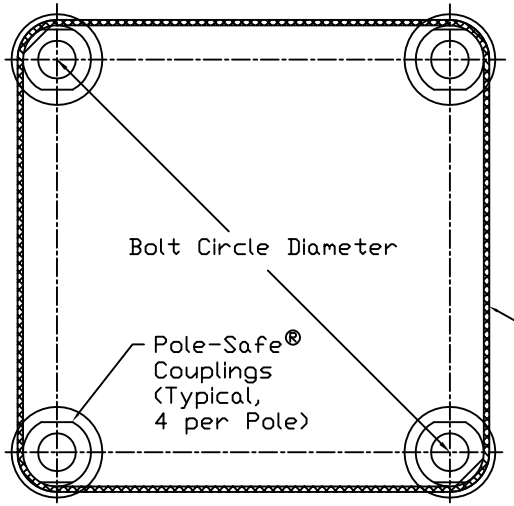

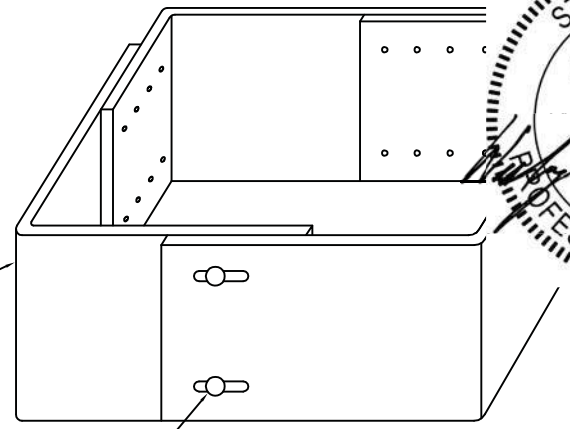

STATE OF OHIO
WESLEY A. LOCKE
E-69761
REGISTERED
PROFESSIONAL ENGINEER
11/23/21

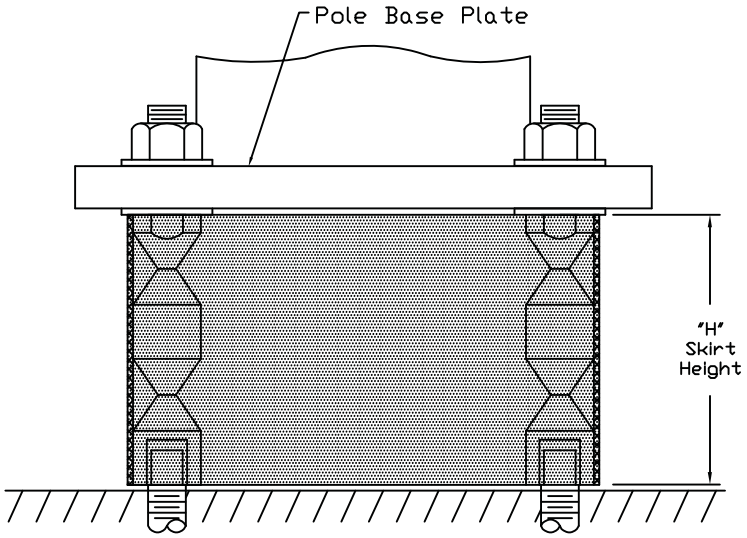

Pole-Safe® Model No.	QTY (SET OF 4 WITH 8 SCREWS)	Bolt Circle Diameter: Skirt Part No. 254 mm to 380 mm (10" TO 15" BC)	Bolt Circle Diameter: Skirt Part No. 380 mm to 500 mm (15" TO 20" BC)	"H" Skirt Height mm (in.)
4062		SPMKDN-4	—	146 (5-3/4)
		—	SPMKDN-4L	
4075		SPMKDN-4	—	146 (5-3/4)
		—	SPMKDN-4L	
4100		SPMKDN-5	—	168 (6-5/8)
		—	SPMKDN-5L	
4125		SPMKDN-5	—	168 (6-5/8)
		—	SPMKDN-5L	
5062		SPMKDN-1	—	108 (4-1/4)
		—	SPMKDN-1L	
5075		SPMKDN-1	—	108 (4-1/4)
		—	SPMKDN-1L	
5100		SPMKDN-2	—	127 (5")
	6	—	SPMKDN-2L	
5125		SPMKDN-3	—	133 (5-1/4)
		—	SPMKDN-3L	

INTALLATION INSTRUCTIONS

1. Place 4 skirt panels around Pole-Safe Couplings using overlap configuration shown. All 4 sides of the skirt box should have 2 slots facing outside.
2. Thread 8 sheet metal screws through the outside slots into the closest corresponding holes in the adjacent inside panel.
3. Position panels snug against the Pole-Safe Couplings.
4. Tighten all 8 sheet metal screws

JOB MMC SO# 200705 / Herring Cove

Pole-Safe® Skirt Details
Breakaway Support System for Light Poles

TRANSPO® INDUSTRIES, Inc.
The Smart Solutions Company
20 Jones Street
New Rochelle, NY 10801
914-636-1000

MMC SO# 200705 / Herring Cove
QTY: 6 SETS OF 4

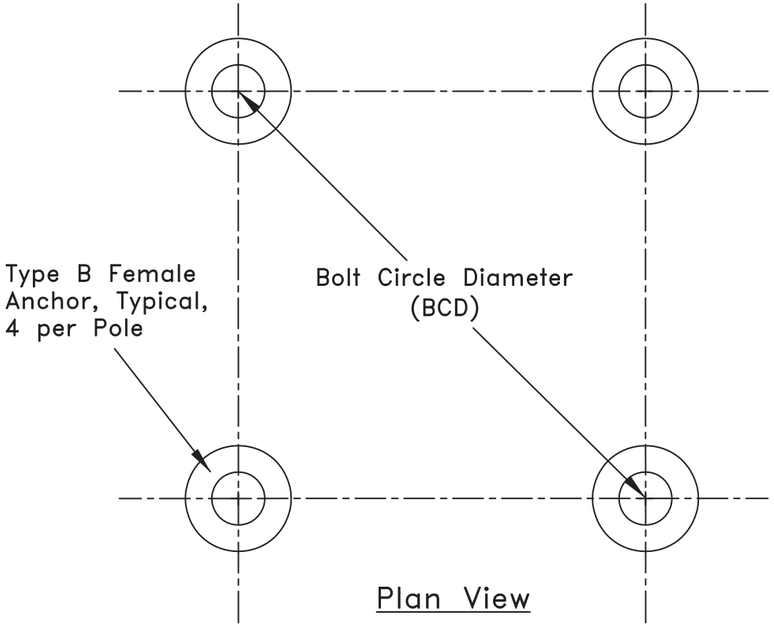

TYPICAL ANCHOR LAYOUT

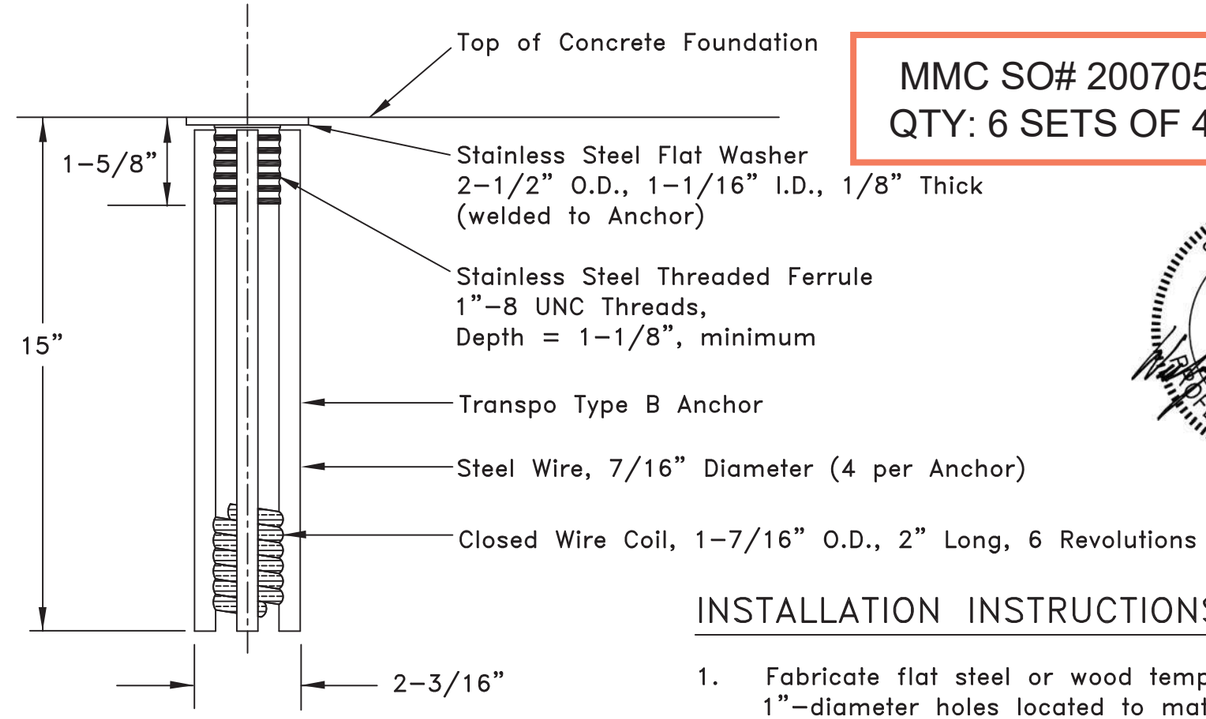

ANCHOR DETAILS

(4 per Pole)

11/23/21

INSTALLATION INSTRUCTIONS:

1. Fabricate flat steel or wood template with four (4) 1"-diameter holes located to match the specified bolt pattern of the pole base plate.
2. Attach four (4) Pole-Safe Type B Female Anchors to template using four (4) 1"-diameter bolts. Ensure that each Anchor Washer is flush and snug against the bottom of the template.
3. Lower Anchor Assembly into fresh concrete foundation, and vibrate into position such that the tops of the Anchor Washers are flush with the finished top surface of the foundation.
4. Support template such that all Anchors are level and in their proper positions.
5. Allow concrete to cure, and then remove bolts and template from the top of the foundation.

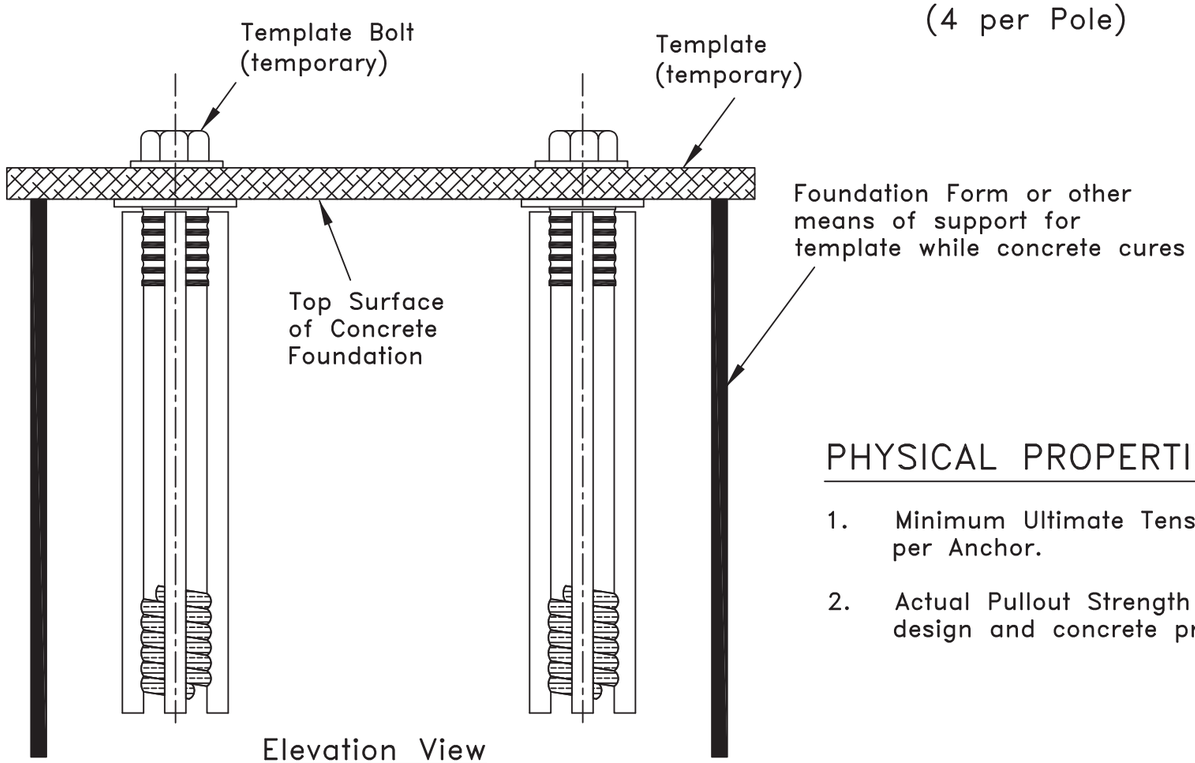

PHYSICAL PROPERTIES:

1. Minimum Ultimate Tensile Load = 60.0 kips per Anchor.
2. Actual Pullout Strength depends on foundation design and concrete properties.

M2M PART # TRANSPO-SBABPK

TRANSPO® INDUSTRIES, Inc.
The Smart Solutions Company
20 Jones Street
New Rochelle, NY 10801
914-636-1000
www.transpo.com

Type B Female Anchor

For Use with Pole-Safe Model 5100

Scale: Not To Scale	Date: December 2005
Drawing No. PS-TBA-5100-1	Sheet: 1 of 1

State of Alaska

GOVERNOR MIKE DUNLEAVY

Submittal Cover Sheet

Department of Transportation Public Facilities
SOUTHCOAST REGION
Construction Section

Project: KTN- HERRING COVE BRIDGE IMPROVEMENTS	Project No: 0902043/SFHWY00072
Contractor: Hamilton Construction Alaska	Submittal No. 00680-005 Comm Vault Footers
Date Response Sent: 05/27/2022	Reviewed By: Bob Lundell, P.E. 5/27/2022 X Bob Lundell Signed by: Nathen Strife

A	AAN	R&R	R	I	R&RasN	INC	CA
Approved	Approved as Noted	Revise and Resubmit	Rejected	Informational	Revisit & Resubmit as Noted	Incomplete	Conditionally Approved

Item No.	Item	Contract Documents	A	AAN	R&R	R	I	R&R asN	INC	CA
680.2000.0000	Telecommunications Utility Relocation	687-2.01		X						

Comments/Anticipated Response:

1.) For construction following the attached plans. The engineered drawing is for the re-design of the comm vaults at Pad 4 and Pad 5 that have not yet arrived on the project that will allow the project to move forward.

Communication Vault Footer Plan (Permanent solution for delayed comm vaults)

REVIEWED
Chris Duty,16:51:43,20/5/2022

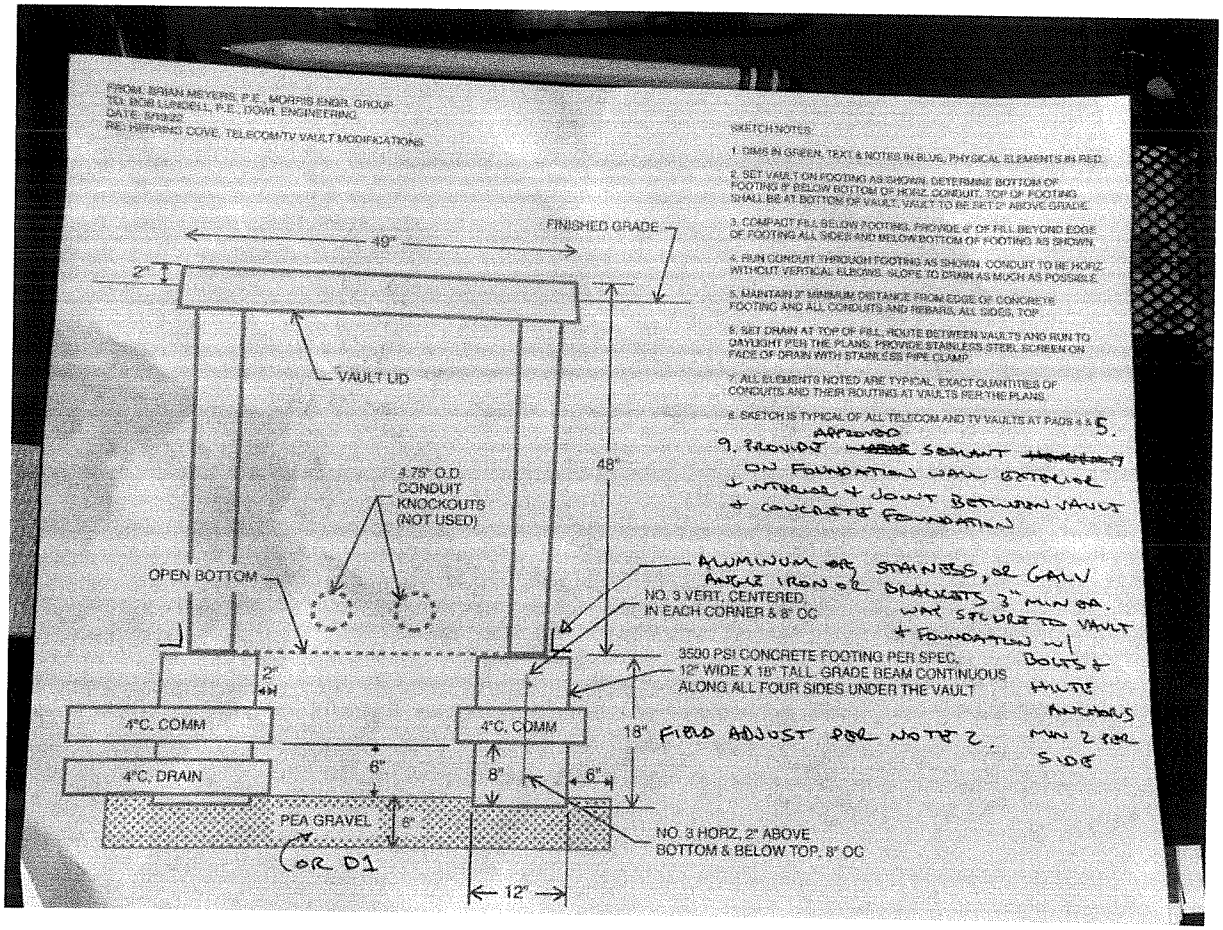

Bob Lundell

To: Chris Duty
Cc: Eric Voorhees; Nathen Strife; Blake Aro; Brian Meyers; Mark Morris
Subject: KTN Herring Cove Bridge 0902043/SFHWY00072: Submittal 0680-005 Telecommunication Utility Relocation
Attachments: Comm vault footers (1).pdf

This submittal is approved for construction as noted below:

- Modify the rebar schedule such as a second No. 3 horizontal and vertical reinforcement will be added and spaced 6 inches apart and 3 inches from the edges.
- The outside run of the rebar must be placed so as not to interfere with the future placement of the Hilti Anchors.
- The bolting system into the vault structure must be as recommended and approved by the vault manufacturer.
- The contact area between the footing and the vault bottom must be sealed as recommended by the vault manufacture and may involve a gasket and a bituminous coating.
- The concrete footing will be waterproofed as approved and provided for the other concrete vaults.
- The final formed dimensions are the responsibility of the Contractor for the top of the footing to match the bottom of the vault and centered on the footing that will allow for the placement and full contact of the angle irons.
- ~~It cannot be located where the field data and strength breaks from the Power House Road Vault cast-in-place pour for Class W were submitted for final approval of the Class W mix design.~~
- The drawing indicates that the existing conduit for the communication cables will be cast-in-place and a spool will not be used.
- The pea gravel will be the same as approved and used on the other vaults.

Revisit & Resubmit as Noted to Submittal Exchange with legible added notes and the modified rebar schedule. The final drawing will be provided as informational to Southcoast DOT as a design engineer-of-record amendment as applicable to Sheets U9 to U12.

I understand the final design drawings and resubmittal will be provided by Morris Engineering.

Bob Lundell, PE
Project Engineer

DOWL

(907) 562-2000 | office
(907) 865-1265 | direct
(907) 290-0032 | cell

dowl.com

Bob Lundell

From: Brian Meyers <brian@morrisengineeringgroup.com>
Sent: Tuesday, May 24, 2022 8:54 AM
To: Bob Lundell; Dylan Maughn; Blake Aro
Subject: [EXT] Fwd: Herring Cove sketch
Attachments: image001.jpg; 20220523 TELECOMM & TV VAULT SKETCH.pdf

WARNING: *External Sender - use caution when clicking links and opening attachments.*

Revised telecom sketch with angle iron to secure vault to footing, d-1 or pea gravel, etc.

This could be shared with Hamilton for review. MEG is good with this design.

Brian

Sent from my iPhone

Begin forwarded message:

> **From:** Jodi Watts <jodi@morrisengineeringgroup.com>
> **Date:** May 24, 2022 at 11:39:54 AM CDT
> **To:** Brian Meyers <brian@morrisengineeringgroup.com>
> **Cc:** Brad Dybdahl <brad@morrisengineeringgroup.com>, Mark Morris <mark@morrisengineeringgroup.com>
> **Subject: Herring Cove sketch**
>
> Brian,
>
> See attached sketch for your review and send out if acceptable.
>
> *Jodi Watts*
> Office/Production Manager
> 2375 Jordan Ave #7 | Juneau, AK 99801 | Office: 907-789-3350

FROM: BRIAN MEYERS, P.E., MORRIS ENGINEERING GROUP
TO: BOB LUNDELL, P.E., DOWL ENGINEERING
DATE: 5/23/22
RE: HERRING COVE, TELECOM/TV VAULT MODIFICATIONS.

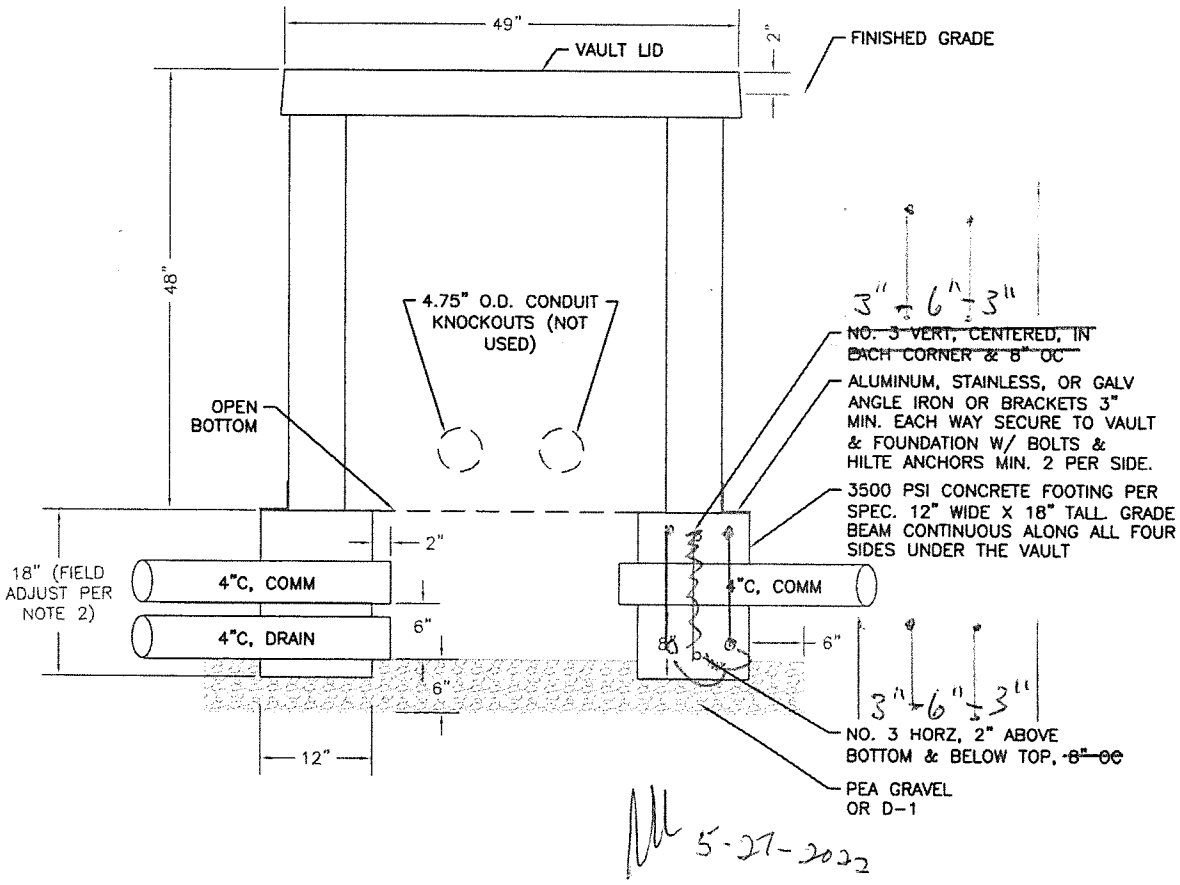

5-27-2022

SKETCH NOTES:

1. DIMENSIONS IN GREEN, TEXT & NOTES IN BLUE, PHYSICAL ELEMENTS IN RED.
2. SET VAULT ON FOOTING AS SHOWN. DETERMINE BOTTOM OF FOOTING 8" BELOW BOTTOM OF HORIZONTAL CONDUIT. TOP OF FOOTING SHALL BE AT BOTTOM OF VAULT. VAULT TO BE SET 2" ABOVE GRADE.
3. COMPACT FILL BELOW FOOTING. PROVIDE 6" OF FILL BEYOND EDGE OF FOOTING ALL SIDES AND BELOW BOTTOM OF FOOTING AS SHOWN.
4. RUN CONDUIT THROUGH FOOTING AS SHOWN. CONDUIT TO BE HORIZONTAL WITHOUT VERTICAL ELBOWS. SLOPE TO DRAIN AS MUCH AS POSSIBLE.
5. MAINTAIN 2" MINIMUM DISTANCE FROM EDGE OF CONCRETE FOOTING AND ALL CONDUITS AND REBARS, ALL SIDES, TOP.
6. SET DRAIN A TOP OF FILL. ROUTE BETWEEN VAULTS AND RUN TO DAYLIGHT PER THE PLANS. PROVIDE STAINLESS STEEL SCREEN ON FACE OF DRAIN WITH STAINLESS PIPE CLAMP.
7. ALL ELEMENTS NOTED ARE TYPICAL. EXACT QUANTITIES OF CONDUITS AND THEIR ROUTING AT VAULTS PER THE PLANS.
8. SKETCH IS TYPICAL OF ALL TELECOM AND TV VAULTS AT PADS 4 & 5.
9. PROVIDE APPROVED SEALANT ON FOUNDATION WALL EXTERIOR, INTERIOR, AND JOINTS BETWEEN VAULT AND CONCRETE FOUNDATION.

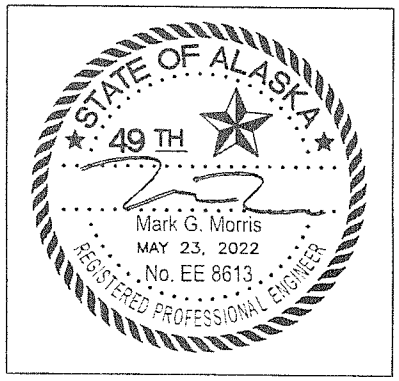

State of Alaska

GOVERNOR MIKE DUNLEAVY

Submittal Cover Sheet

Department of Transportation Public Facilities
SOUTHCOAST REGION
Construction Section

Project: KTN- HERRING COVE BRIDGE IMPROVEMENTS	Project No: 0902043/SFHWY00072
Contractor: Hamilton Construction Alaska	Submittal No. 0687-034 Power Vaults, Revision 2
Date Response Sent: 01/17/2022	Reviewed By: Bob Lundell, P.E. X OM sign for BL

A	AAN	R&R	R	I	R&RasN	INC	CA
Approved	Approved as Noted	Revise and Resubmit	Rejected	Informational	Revisit & Resubmit as Noted	Incomplete	Conditionally Approved

Item No.	Item	Contract Documents	A	AAN	R&R	R	I	R&R asN	INC	CA
687.2000.0000	Power Utility Relocation	687-3.04	X							

Comments/Anticipated Response:

Transmittal Form

To: Bob Lundell, P.E.
Project Engineer
DOWL

MEG Project: 102-44
DOT Project: 0902043 / SFHWY00072
KTN Herring Cove Bridge Improvements
Date: 1/17/22
Subject: Submittal Review

We are sending you enclosed via: **email** Original to follow _____yes __X__no

Copies:	Date:	Description:
1	1/17/22	687-3.04 MV vault re-submittal

These are transmitted: ___ For your use ___ For review ___ For Approval

__X_Conforms ___ Conforms w/ revisions ___Non-Conforming (Revise and resubmit)

See attached submittal for comments.

Thank you,

Mark Morris, P.E.
Principal
Morris Engineering Group, INC

4242-PTV

Xfmr Vault

VAULT
No. 4242-2125-PTV
SNOHOMISH COUNTY P.U.D.
STANDARD #V0301
1,800 lbs

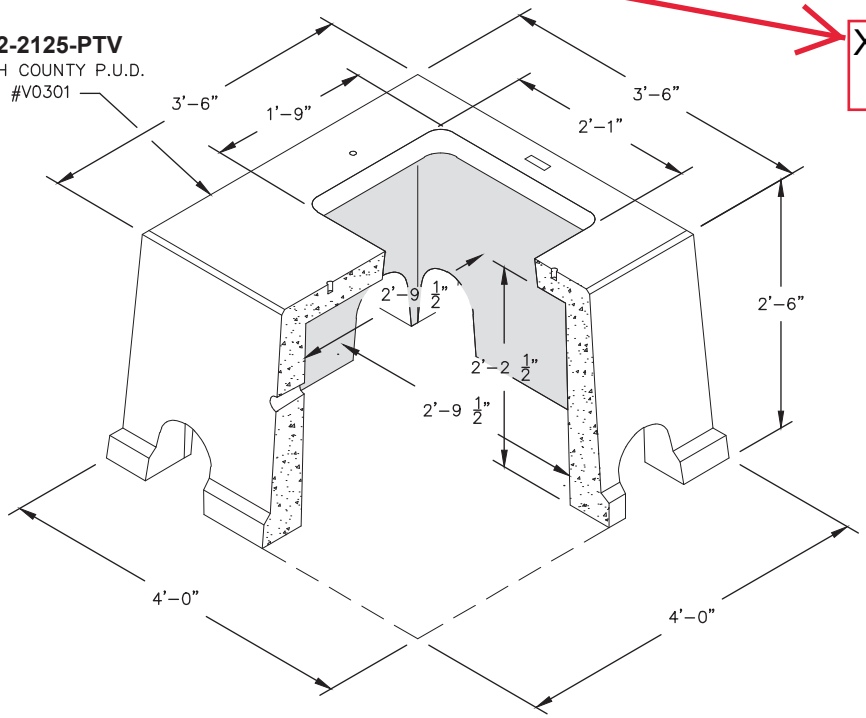

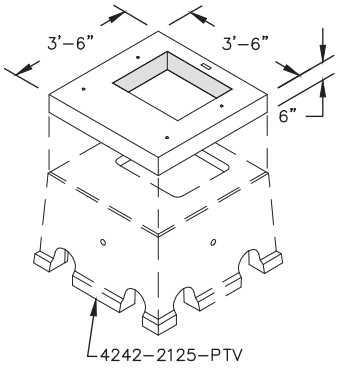

6" RISER
No. 4242-2125-R6
SNOHOMISH COUNTY P.U.D.
STANDARD
650 lbs

VAULT
No. 4242-1125-PTV
SNOHOMISH COUNTY P.U.D.
STANDARD #V0300
1,850 lbs

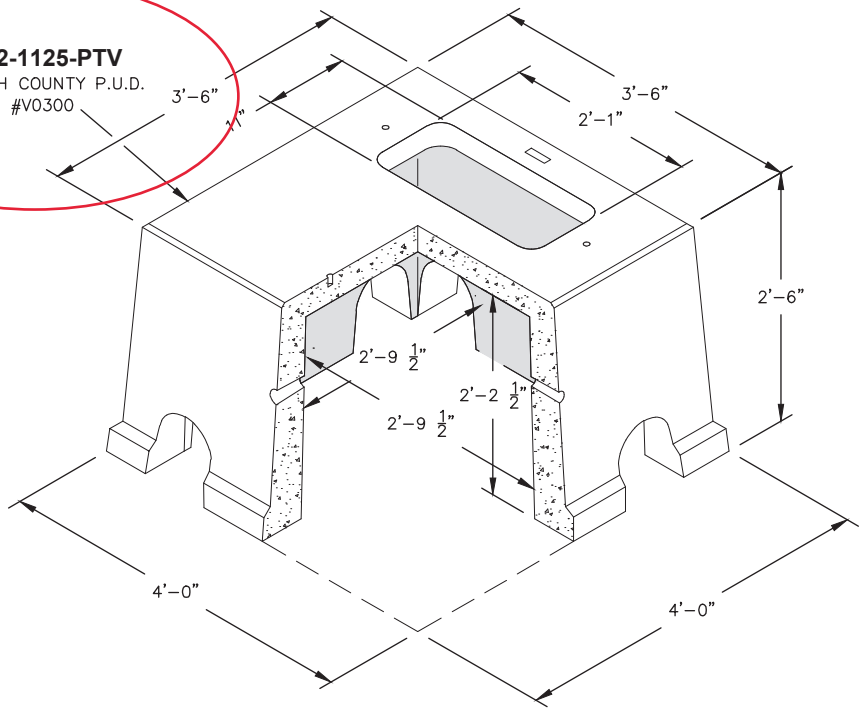

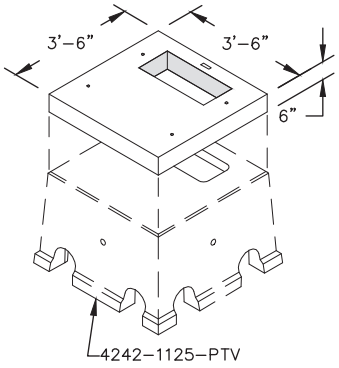

6" RISER
No. 4242-1125-R6
SNOHOMISH COUNTY P.U.D.
STANDARD
780 lbs

Non Skid Covers Available

FOR DETAILS, SEE REVERSE>>

Items Shown Are Subject To Change Without Notice
Issue Date: April 2016

© 1980-2016 Oldcastle Precast, Inc.

Mailing Address
PO Box 588
Auburn, WA 98071

Phone: 800-892-1538
Fax: 253-735-4201
Email: opauburn@oldcastle.com

opauburn.com

4242-PTV

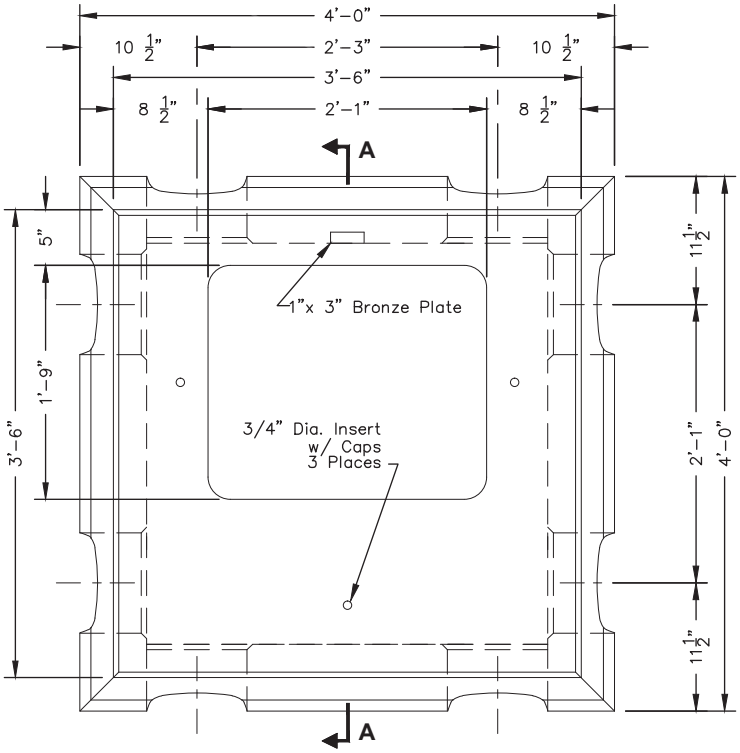

PLAN VIEW

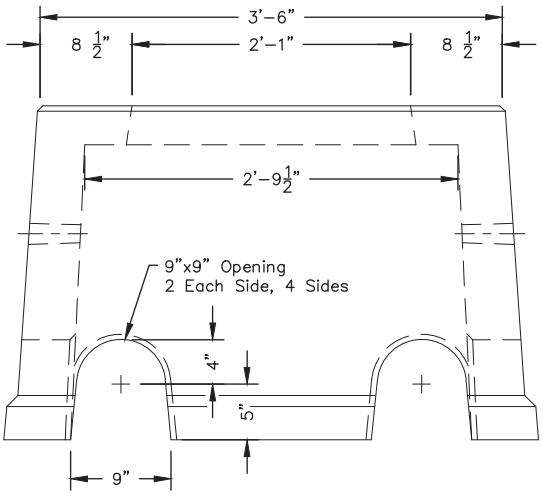

SIDE VIEW

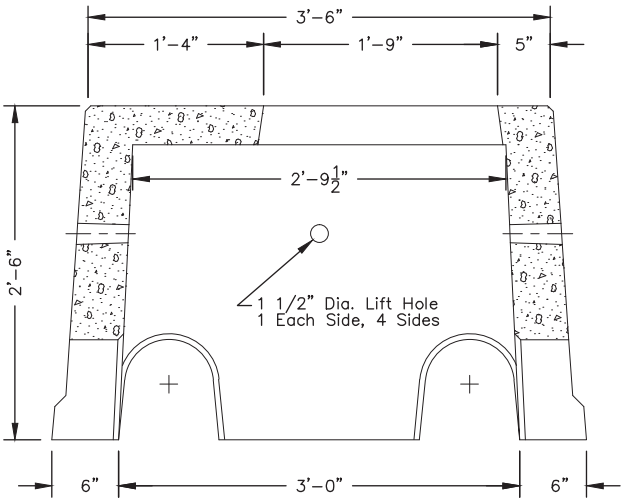

SECTION AA

SCALE: 3/4" = 1'-0"

© 1980-2016 Oldcastle Precast, Inc.

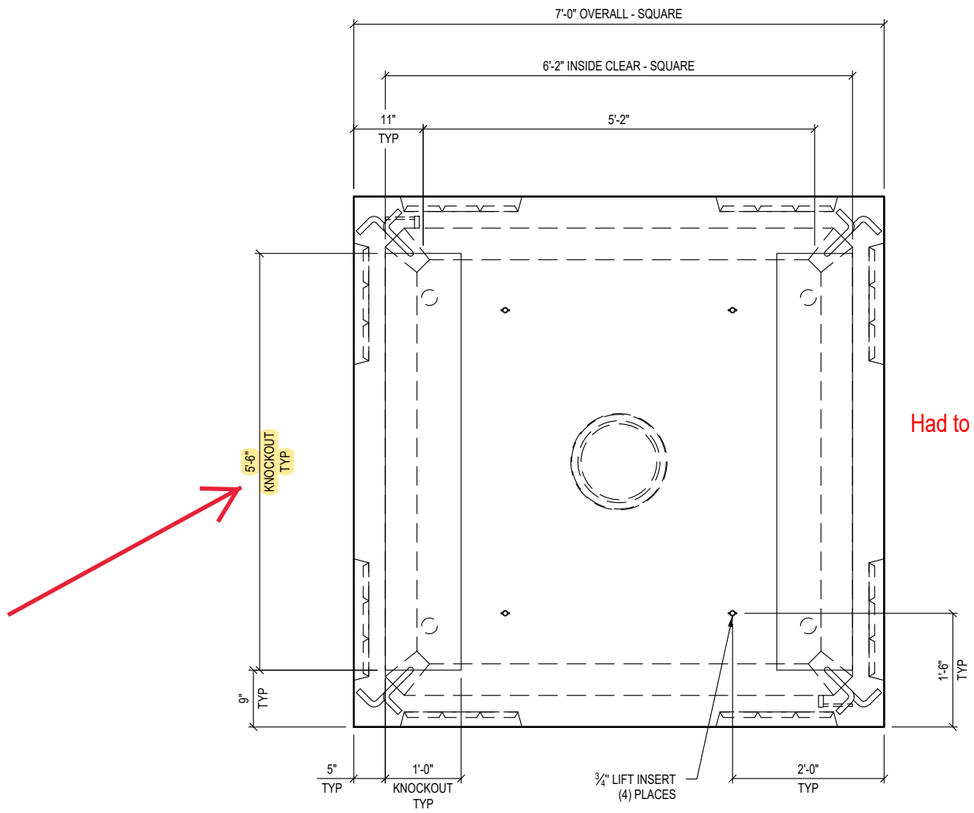

Had to change window opening to facilitate anchor bolts & allign with vault walls

PLAN VIEW A

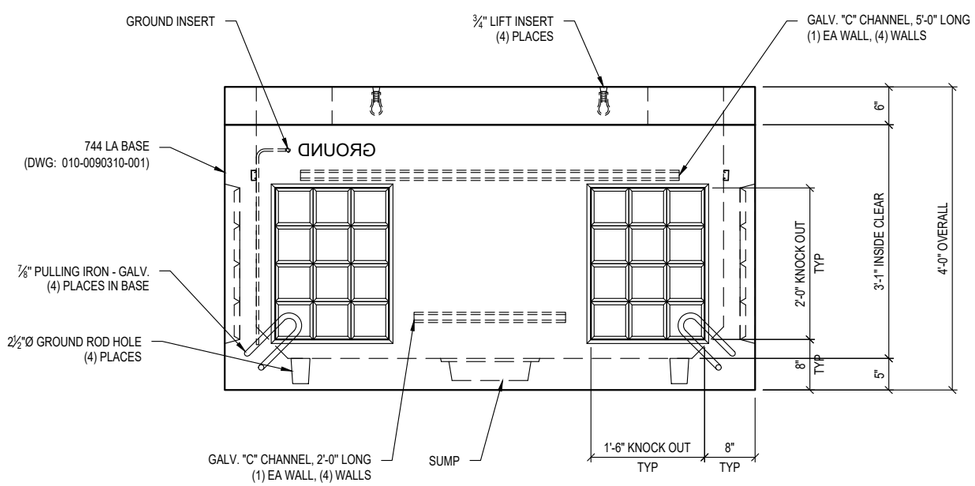

VIEW A

STRUCTURAL NOTES

1. CONCRETE:	28 DAY COMPRESSIVE STRENGTH f'c = 7,000 psi
2. REBAR:	ASTM A-615 OR A-706 GRADE 60
3. WWF:	ASTM A-1064 GRADE 65
4. DESIGN:	ACI-318-11 BUILDING CODE
5. LOADS:	ASTM C-857 "MINIMUM STRUCTURAL DESIGN LOADING FOR UNDERGROUND PRECAST CONCRETE UTILITY STRUCTURES" LOADS AND LOAD DISTRIBUTIONS PER AASHTO HB-17 300 psf (NON TRAFFIC) 30% IMPACT FOR LESS THAN 2'-0" SOIL COVER 120 pcf SOIL DENSITY 40 pcf E.F.P. LATERAL SOIL PRESSURE ABOVE WATERTABLE 80 pcf E.F.P. LATERAL SOIL PRESSURE BELOW WATERTABLE 80 psf LIVE LOAD SURCHARGE ABOVE 8'-0" SOIL DEPTH TOP OF VAULT AT THE FINISHED GRADE . WATERTABLE 5'-0" BELOW FINISHED GRADE (ASSUMED)
6. TOLERANCES:	ASTM C-858 "STANDARD SPECIFICATION FOR UNDERGROUND PRECAST CONCRETE UTILITY STRUCTURES"

GENERAL NOTES

1. CUSTOMER TO:
   VERIFY ALL VAULT FEATURES

SHIPPING WEIGHT

776 TOP w/BO	2,850 LBS
774 LA BASE	7,800 LBS
TOTAL	10,650 LBS

Oldcastle Precast
P.O. BOX 588 AUBURN, WA 98071-0588
PHONE: 800-892-1538 FAX: 253-735-4201

THIS DOCUMENT IS THE PROPERTY OF OLDCASTLE PRECAST, INC. IT IS CONFIDENTIAL, SUBMITTED FOR REFERENCE PURPOSES ONLY, AND SHALL NOT BE USED IN ANY WAY INJURIOUS TO THE INTERESTS OF, OR WITHOUT THE WRITTEN PERMISSION OF OLDCASTLE PRECAST, INC.
COPYRIGHT © 2021 OLDCASTLE PRECAST, INC. ALL RIGHTS RESERVED.

12.47 KV SWITCH
7-0L x 7-0W x 4-0H (OVERALL)
HERRING COVE BRIDGE IMPROVEMENT
SEATTLE, WA

CUSTOMER
CHATHAM ELECTRIC INC.

DATE	SALES	DRAWN	ENGINEER	CHECKED	SALES ORDER
01/07/2022	KS	TA			S183488

DRAWING NUMBER	REVISION	SHEET
010-S183488-001	A REV DATE 1/11/2022	1 OF 1

REVISION	DESCRIPTION	BY
A	CHANGED BO LOCATIONS	TA

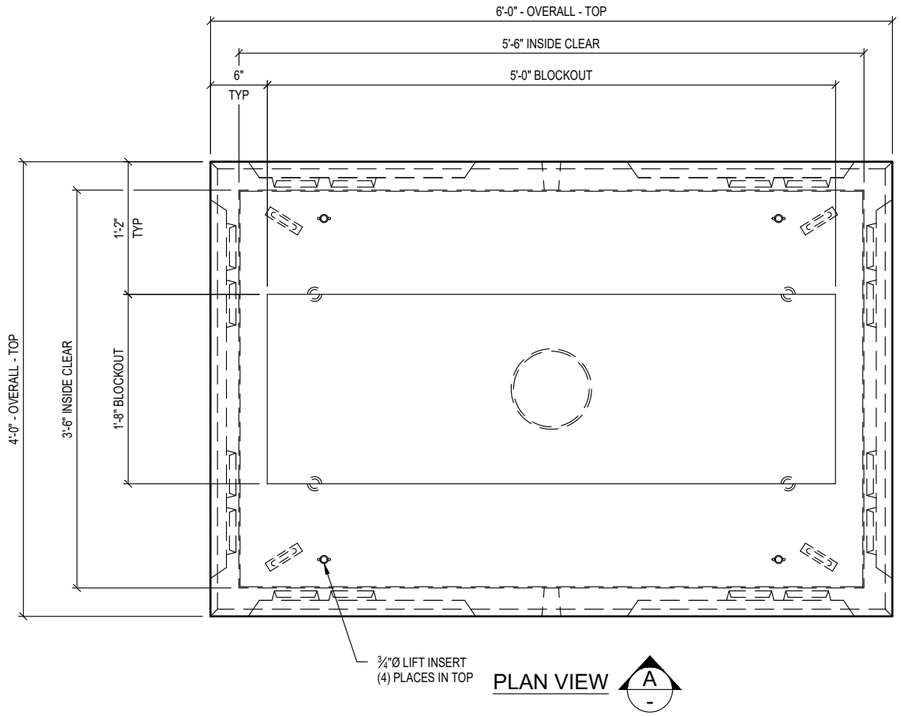

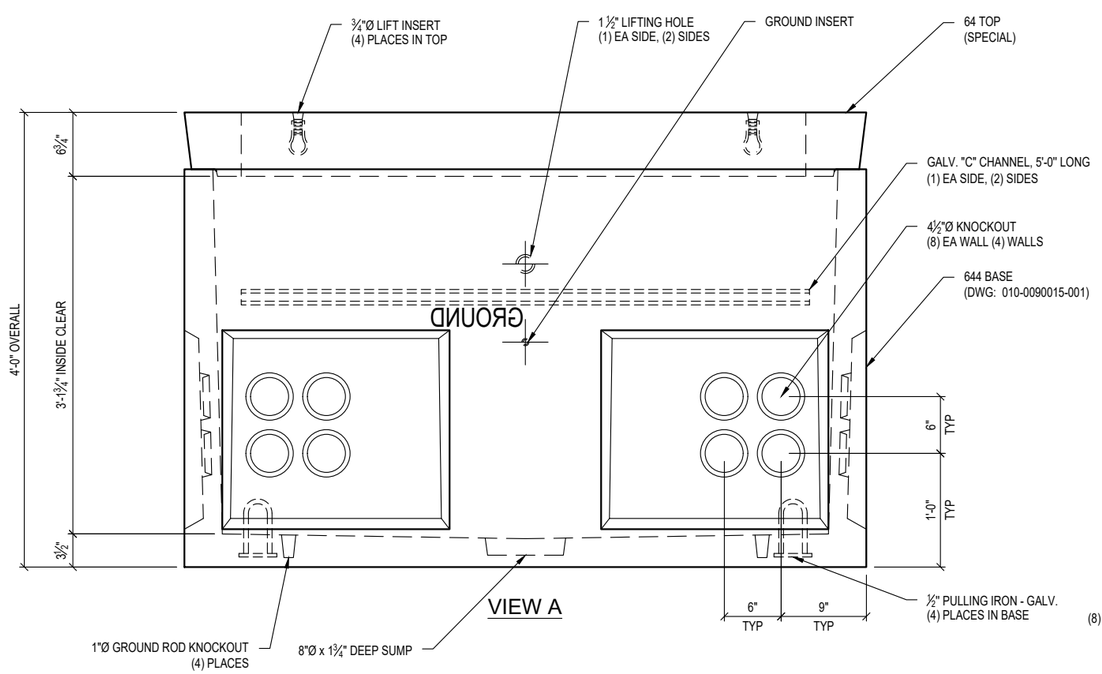

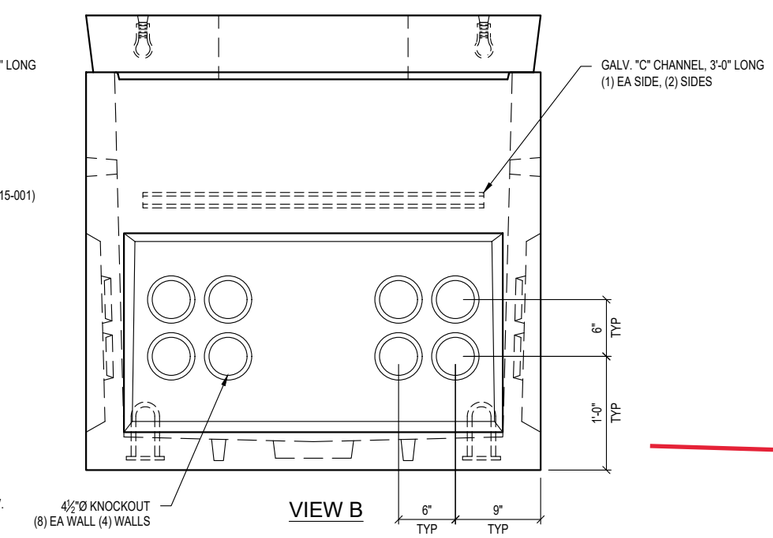

STRUCTURAL NOTES

1. CONCRETE:	28 DAY COMPRESSIVE STRENGTH f'c = 7,000 psi
2. REBAR:	ASTM A-615 OR A-706 GRADE 60
3. WWF:	ASTM A-1064 GRADE 65
4. DESIGN:	ACI-318-11 BUILDING CODE
5. LOADS:	ASTM C-857 "MINIMUM STRUCTURAL DESIGN LOADING FOR UNDERGROUND PRECAST CONCRETE UTILITY STRUCTURES" LOADS AND LOAD DISTRIBUTIONS PER AASHTO HB-17 300 psf (NON TRAFFIC) 30% IMPACT FOR LESS THAN 2'-0" SOIL COVER 120 pcf SOIL DENSITY 40 pcf E.F.P. LATERAL SOIL PRESSURE ABOVE WATERTABLE 80 pcf E.F.P. LATERAL SOIL PRESSURE BELOW WATERTABLE 80 psf LIVE LOAD SURCHARGE ABOVE 8'-0" SOIL DEPTH TOP OF VAULT AT THE FINISHED GRADE . WATERTABLE 5'-0" BELOW FINISHED GRADE (ASSUMED)
6. TOLERANCES:	ASTM C-858 "STANDARD SPECIFICATION FOR UNDERGROUND PRECAST CONCRETE UTILITY STRUCTURES"

GENERAL NOTES

1. CUSTOMER TO:
   VERIFY ALL VAULT FEATURES

SHIPPING WEIGHT

64 TOP w/BO	1,225 LBS
644 BASE	3,610 LBS
TOTAL	4,835 LBS

REVISION	DESCRIPTION	BY

Oldcastle Precast
P.O. BOX 588 AUBURN, WA 98071-0588
PHONE: 800-892-1538 FAX: 253-735-4201

THIS DOCUMENT IS THE PROPERTY OF OLDCASTLE PRECAST, INC. IT IS CONFIDENTIAL, SUBMITTED FOR REFERENCE PURPOSES ONLY, AND SHALL NOT BE USED IN ANY WAY INJURIOUS TO THE INTERESTS OF, OR WITHOUT THE WRITTEN PERMISSION OF OLDCASTLE PRECAST, INC.
COPYRIGHT © 2018 OLDCASTLE PRECAST, INC. ALL RIGHTS RESERVED.

644 - 34.5 KV SWITCH VAULT
5-6L x 3-6W x 3-2H (INSIDE CLEAR)
HERRING COVE BRIDGE IMPROVEMENT
SEATTLE, WA

CUSTOMER
CHATHAM ELECTRIC INC.

DATE	SALES	DRAWN	ENGINEER	CHECKED	SALES ORDER
12/09/2021	KS	TA			S183488

DRAWING NUMBER	REVISION	SHEET
010-S183488-002	REV DATE	1 OF 1

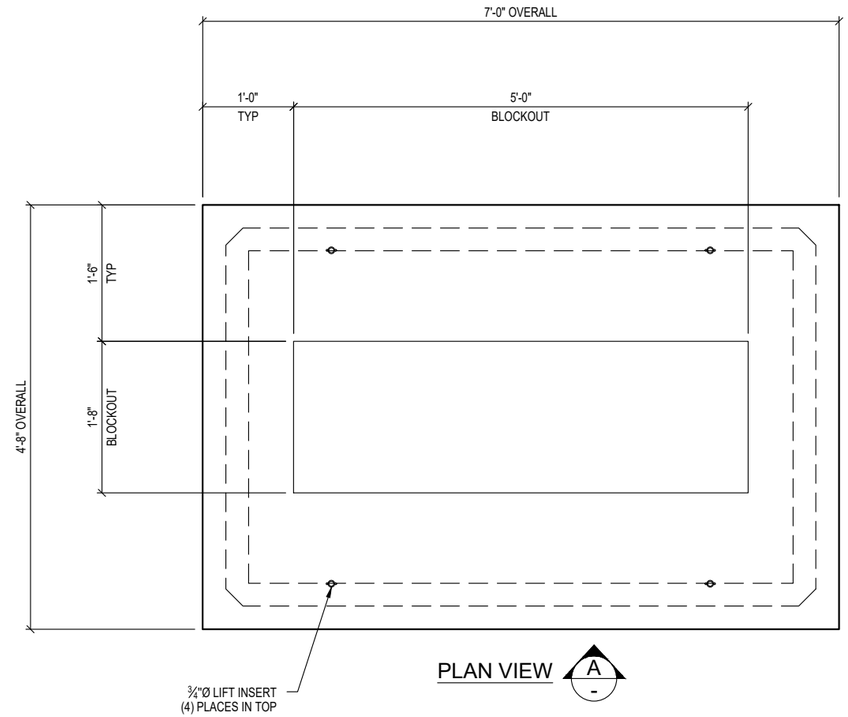

PLAN VIEW A -

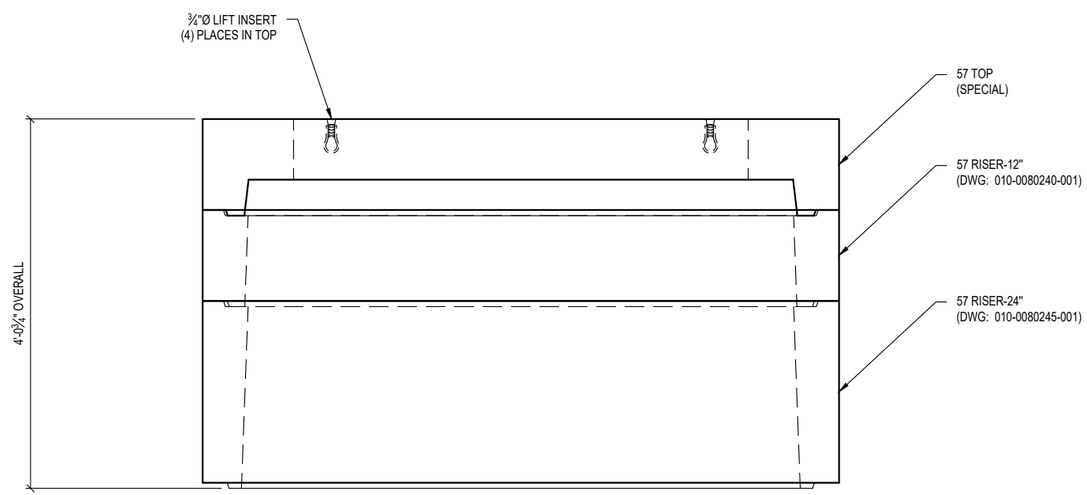

VIEW A

STRUCTURAL NOTES

1. CONCRETE:	28 DAY COMPRESSIVE STRENGTH f'c = 7,000 psi
2. REBAR:	ASTM A-615 OR A-706 GRADE 60
3. WWF:	ASTM A-1064 GRADE 65
4. DESIGN:	ACI-318-11 BUILDING CODE
5. LOADS:	ASTM C-857 "MINIMUM STRUCTURAL DESIGN LOADING FOR UNDERGROUND PRECAST CONCRETE UTILITY STRUCTURES" 300 psf (NON TRAFFIC) 40 pcf E.F.P. LATERAL SOIL PRESSURE ABOVE WATERTABLE 80 pcf E.F.P. LATERAL SOIL PRESSURE BELOW WATERTABLE 80 psf LIVE LOAD SURCHARGE ABOVE 8'-0" SOIL DEPTH TOP OF VAULT AT THE FINISHED GRADE . WATERTABLE 5'-0" BELOW FINISHED GRADE (ASSUMED)
6. TOLERANCES:	ASTM C-858 "STANDARD SPECIFICATION FOR UNDERGROUND PRECAST CONCRETE UTILITY STRUCTURES"

GENERAL NOTES

1. CUSTOMER TO:
   VERIFY ALL VAULT FEATURES

SHIPPING WEIGHT

57 TOP w/BO	3,020LBS
57R-12"	1,545 LBS
57R-24"	2,955 LBS
TOTAL	7,520 LBS

Oldcastle Precast
P.O. BOX 588 AUBURN, WA 98071-0588
PHONE: 800-892-1538 FAX: 253-735-4201

THIS DOCUMENT IS THE PROPERTY OF OLDCASTLE PRECAST, INC. IT IS CONFIDENTIAL, SUBMITTED FOR REFERENCE PURPOSES ONLY, AND SHALL NOT BE USED IN ANY WAY INJURIOUS TO THE INTERESTS OF, OR WITHOUT THE WRITTEN PERMISSION OF OLDCASTLE PRECAST, INC.
COPYRIGHT © 2021 OLDCASTLE PRECAST, INC. ALL RIGHTS RESERVED.

12.47 KV CABINET
7-0L x 4-8W x 4-1H (OVERALL)
HERRING COVE BRIDGE IMPROVEMENT
SEATTLE, WA

CUSTOMER
CHATHAM ELECTRIC INC.

DATE	SALES	DRAWN	ENGINEER	CHECKED	SALES ORDER
12/09/2021	KS	TA			S183488

DRAWING NUMBER	REVISION / REV DATE	SHEET
010-S183488-003		1 OF 1

REVISION	DESCRIPTION	BY

RISER EXTENSIONS

RISER EXTENSIONS
FOR USE WITH VAULTS
444–LA
446–LA
447–LA

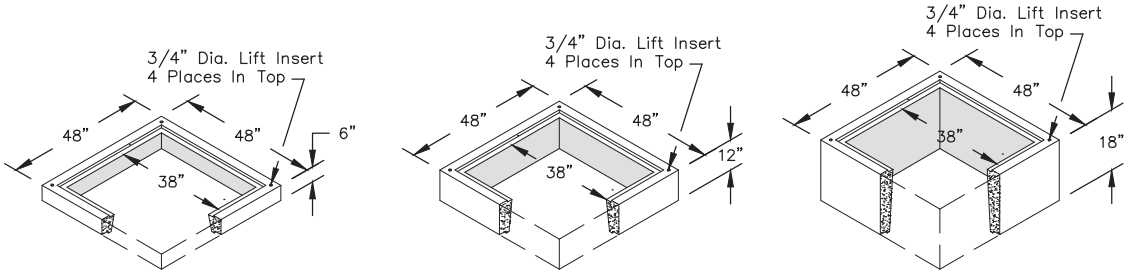

No. 44R-6
6" RISER
441 lbs

No. 44R-12
12" RISER
858 lbs

No. 44R-18
18" RISER
1,259 lbs

RISER EXTENSIONS
FOR USE WITH VAULTS
504–LA
506–LA
507–LA

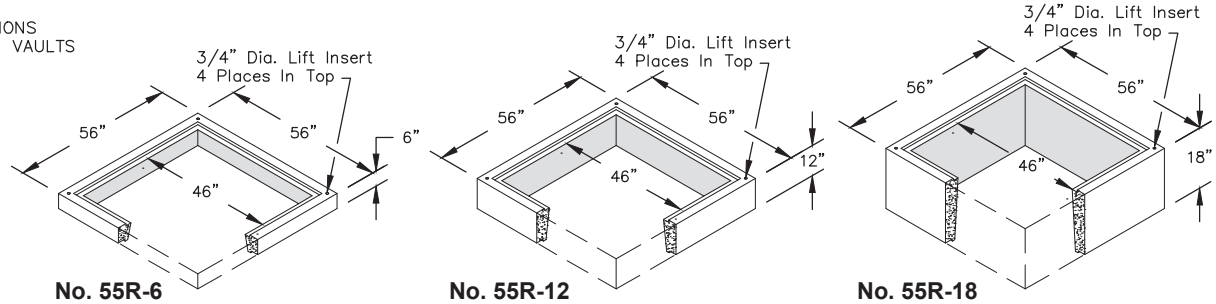

No. 55R-6
6" RISER
541 lbs

No. 55R-12
12" RISER
1,104 lbs

No. 55R-18
18" RISER
1,861 lbs

RISER EXTENSIONS
FOR USE WITH
VAULTS
644–LA
660–TA

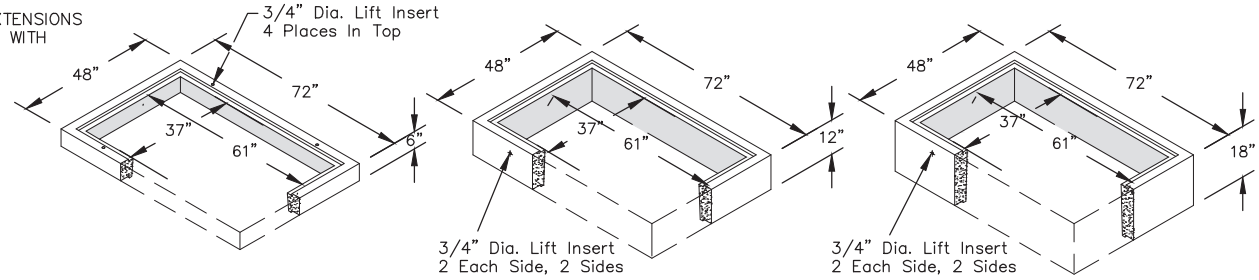

No. 64R-6
6" RISER
657 lbs

No. 64R-12
12" RISER
1,336 lbs

No. 64R-18
18" RISER
2,151 lbs

RISER EXTENSION
FOR USE WITH
VAULTS
575–LA
577–LA

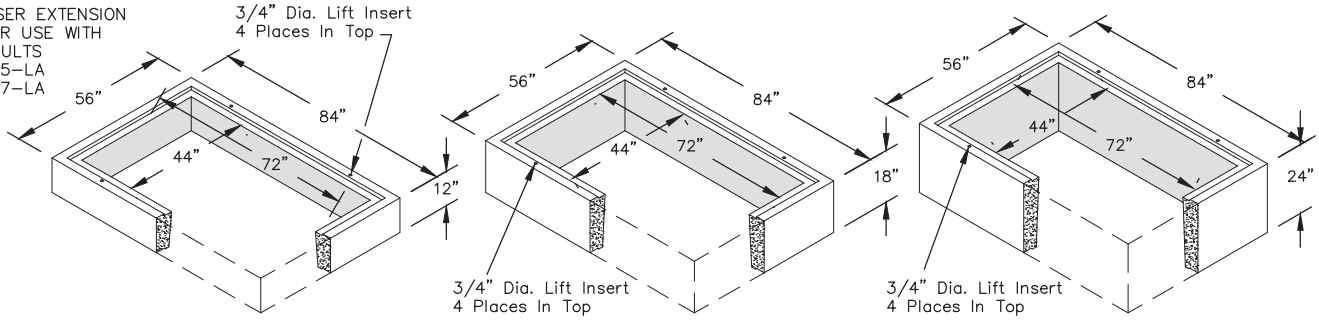

No. 57R-12
12" RISER
1,545 lbs

No. 57R-18
18" RISER
2,273 lbs

No. 57R-24
24" RISER
2,955 lbs

57R-12 & 57R-24 will be used for the 12.4kV cabinet. This shows 6" wall thickness

FOR DETAILS, SEE REVERSE>>

Items Shown Are Subject To Change Without Notice
Issue Date: April 2016

© 1969-2016 Oldcastle Precast, Inc.

Mailing Address
PO Box 588
Auburn, WA 98071

Phone: 800-892-1538
Fax: 253-735-4201
Email: opauburn@oldcastle.com

opauburn.com

RISER EXTENSIONS

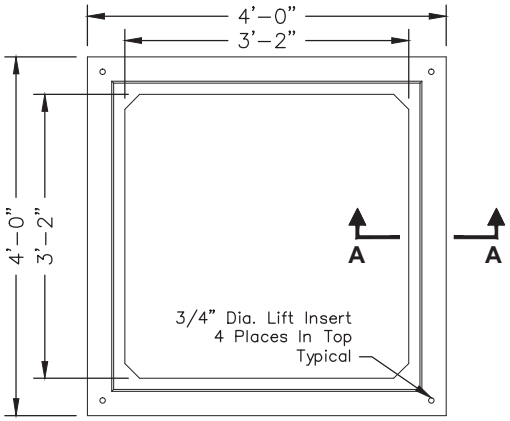

44R RISER

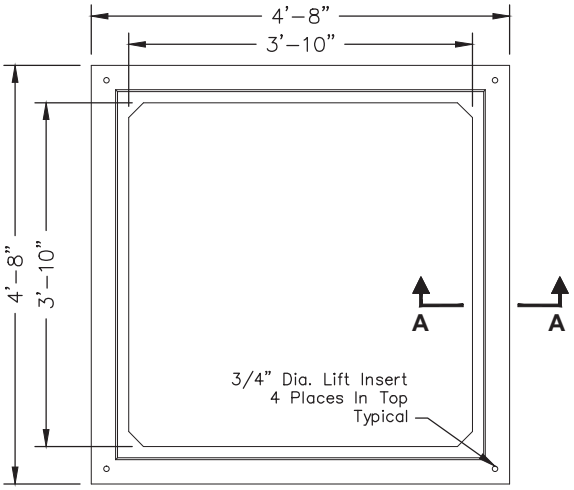

55R RISER

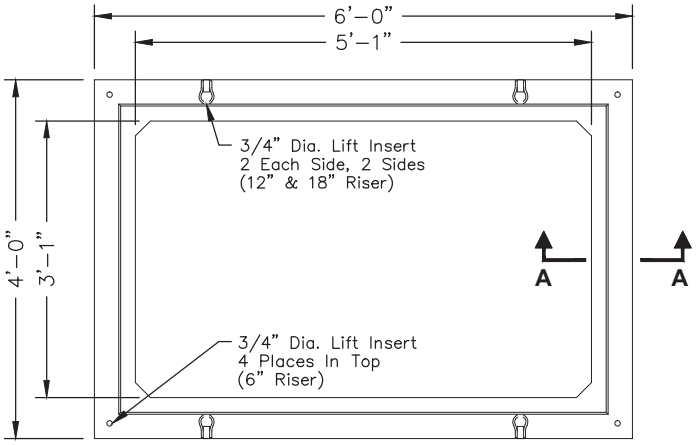

64R RISER

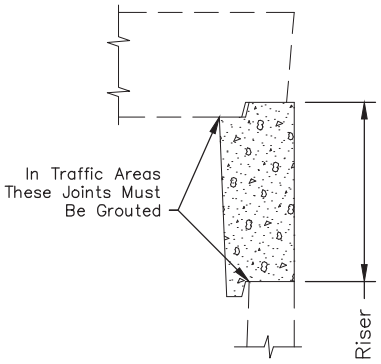

SECTION AA

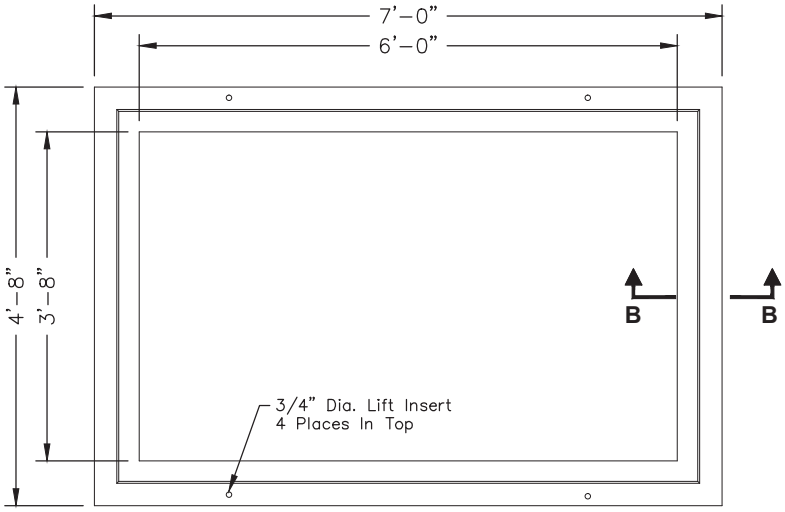

57R RISER

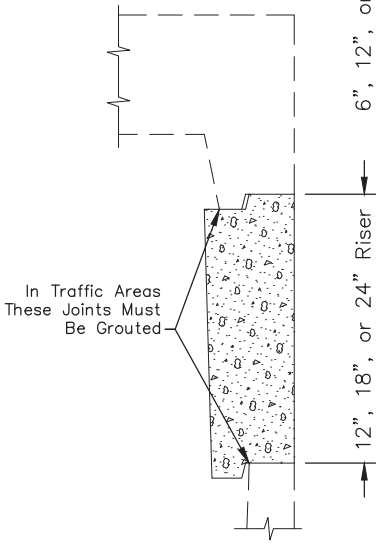

SECTION BB

57R-12 & 57R-24 will be used for the 12.4kV cabinet. This shows 6" wall thickness

SCALE: 1/2" = 1'-0"

© 1969-2016 Oldcastle Precast, Inc.

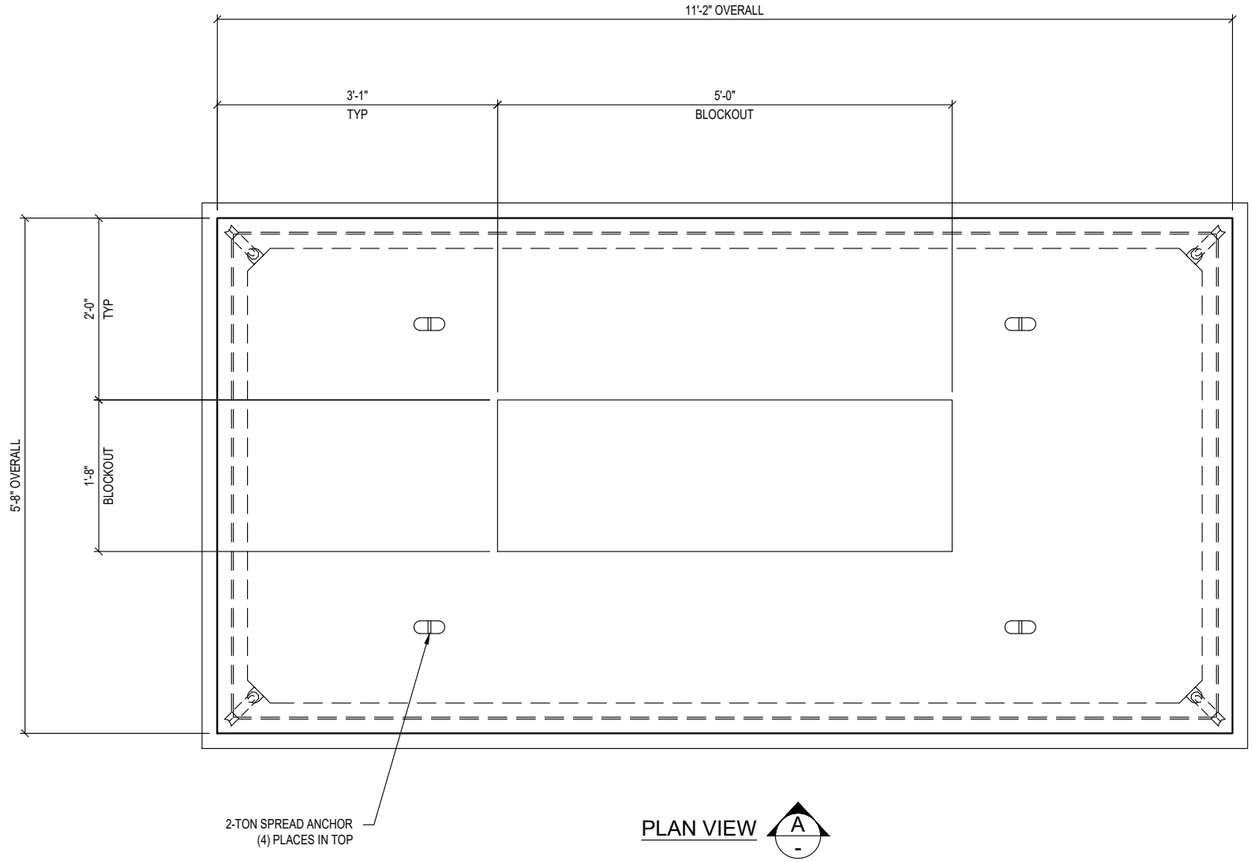

PLAN VIEW A

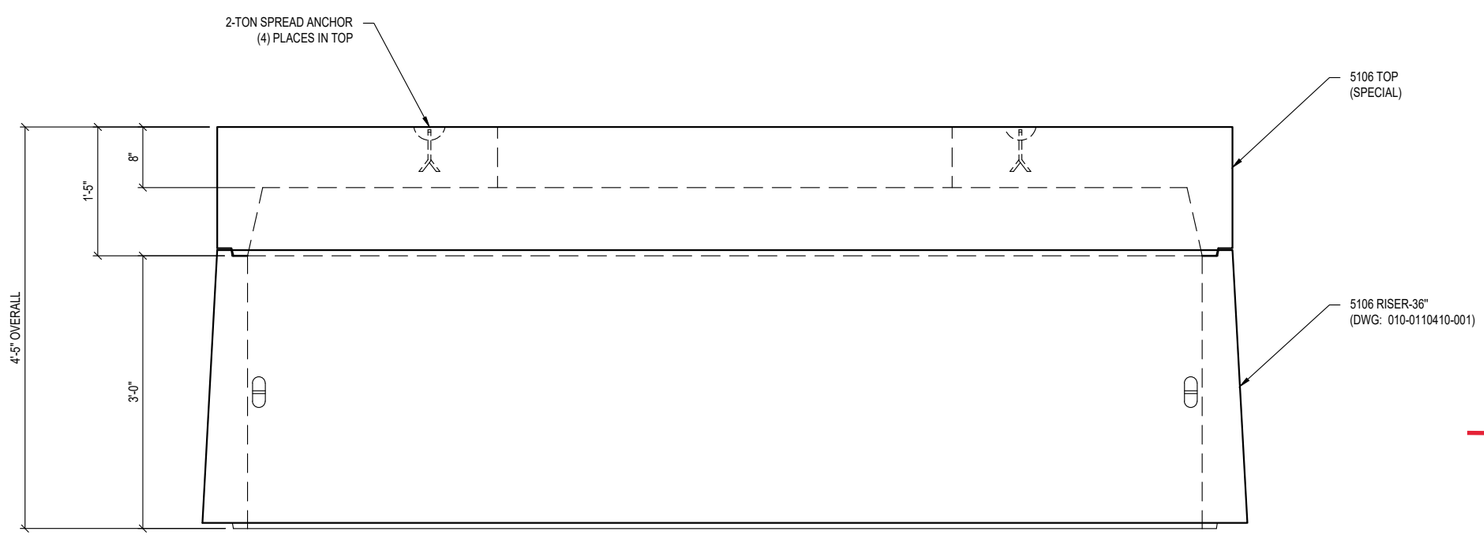

VIEW A

STRUCTURAL NOTES

1. CONCRETE:	28 DAY COMPRESSIVE STRENGTH f'c = 6,000 psi
2. REBAR:	ASTM A-615 OR A-706 GRADE 60
3. WWF:	ASTM A-1064 GRADE 65
4. DESIGN:	ACI-318-11 BUILDING CODE
5. LOADS:	ASTM C-857 "MINIMUM STRUCTURAL DESIGN LOADING FOR UNDERGROUND PRECAST CONCRETE UTILITY STRUCTURES" 300 psf (NON TRAFFIC) 40 pcf E.F.P. LATERAL SOIL PRESSURE ABOVE WATERTABLE 80 pcf E.F.P. LATERAL SOIL PRESSURE BELOW WATERTABLE 80 psf LIVE LOAD SURCHARGE ABOVE 8'-0" SOIL DEPTH TOP OF VAULT AT THE FINISHED GRADE . WATERTABLE 5'-0" BELOW FINISHED GRADE (ASSUMED)
6. TOLERANCES:	ASTM C-858 "STANDARD SPECIFICATION FOR UNDERGROUND PRECAST CONCRETE UTILITY STRUCTURES"

GENERAL NOTES

1. CUSTOMER TO:
   VERIFY ALL VAULT FEATURES

SHIPPING WEIGHT

5106 TOP w/BO	6,975 LBS
5106 R-36"	6,147 LBS
TOTAL	13,122 LBS

REVISION	DESCRIPTION	BY

Oldcastle Precast
P.O. BOX 588 AUBURN, WA 98071-0588
PHONE: 800-892-1538 FAX: 253-735-4201

THIS DOCUMENT IS THE PROPERTY OF OLDCASTLE PRECAST, INC. IT IS CONFIDENTIAL, SUBMITTED FOR REFERENCE PURPOSES ONLY, AND SHALL NOT BE USED IN ANY WAY INJURIOUS TO THE INTERESTS OF, OR WITHOUT THE WRITTEN PERMISSION OF OLDCASTLE PRECAST, INC. COPYRIGHT © 2021 OLDCASTLE PRECAST, INC. ALL RIGHTS RESERVED.

34.5 KV CABINET
11-2L x 5-8W x 4-5H (OVERALL)
HERRING COVE BRIDGE IMPROVEMENT
SEATTLE, WA

CUSTOMER
CHATHAM ELECTRIC INC.

DATE	SALES	DRAWN	ENGINEER	CHECKED	SALES ORDER
12/09/2021	KS	TA			S183488

DRAWING NUMBER	REVISION	SHEET
010-S183488-004	REV DATE	1 OF 1

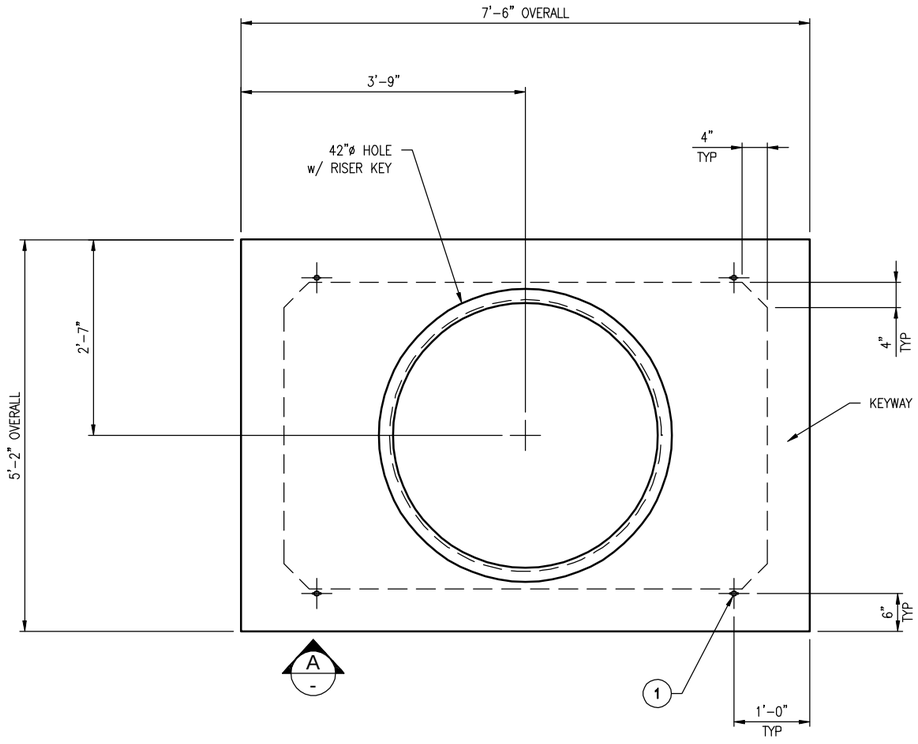

PLAN VIEW
LAYOUT (SHOWN AS POURED)

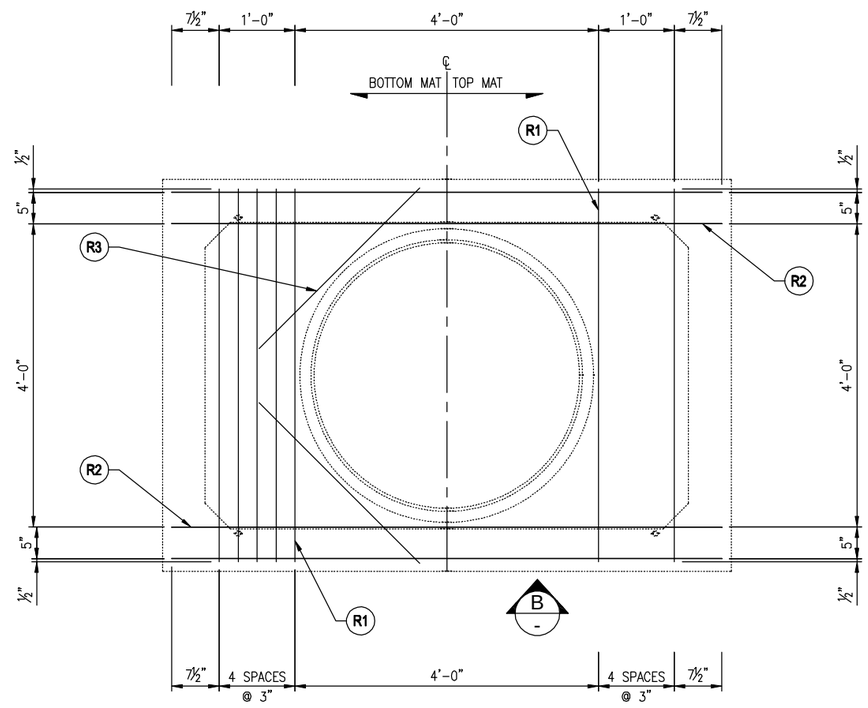

PLAN VIEW
REINFORCEMENT (SHOWN AS POURED)

PRODUCT WEIGHT

2,300 LBS

SHOP NOTES

1. NO STEEL FORM EXISTS; USE WOOD FORM FOR ALL FEATURES
2. FORM DIAGONAL DISTANCE: 9'-1¼"
3. CONCRETE FINISH: BROOM FINISH WITH MACHINED EDGES

BILL OF MATERIALS

#	QUANTITY	DESCRIPTION	ITEM #
1	4 ea	INSERT LOOP FERR 3/4"	5100100
	0.56 yds	CONCRETE MIX – SCC	5010000
	3.47 bar	REBAR #4 X 40' A706/GR60	5510030
	0.56 yds	STEEL UPPER CONTINUOUS HIGH CHAIR	9300070
	20	WOOD & STEEL FORMING CHARGE	9300050

REINFORCEMENT CUT LIST

#	QTY	MATERIAL	LENGTH	SHAPE
R1	14	#4 REBAR A706/GR60	4'-11"	STR
R2	8	#4 REBAR A706/GR60	7'- 3"	STR
R3	4	#4 REBAR A706/GR60	3'- 0"	STR

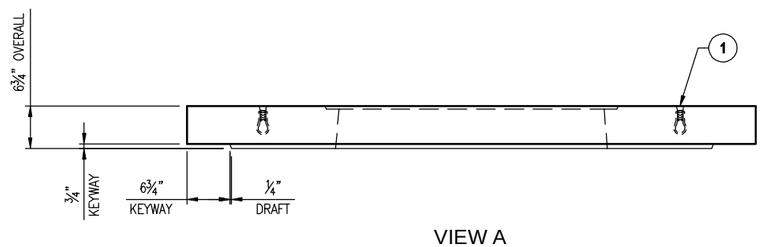

VIEW A

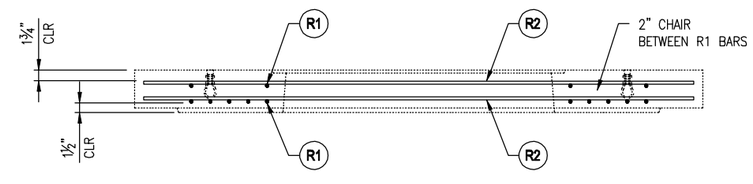

VIEW B

B	ADDED REINFORCEMENT TOP MAT	MLF
REVISION	DESCRIPTION	BY

Oldcastle Precast®
P.O. BOX 589 AUBURN, WA 98071-0589
PHONE: 800-862-1538 FAX: 253-735-4201

OCUMENT IS THE PROPERTY OF OLDCASTLE PRECAST, INC.
FIDENTIAL, SUBMITTED FOR REFERENCE PURPOSES ONLY, AND SHALL NOT BE USED
Y WAY INJURIOUS TO THE INTERESTS OF,
HOUT THE WRITTEN PERMISSION OF OLDCASTLE PRECAST, INC.
GHT © 2006 OLDCASTLE PRECAST, INC. ALL RIGHTS RESERVED.

C CLX COVER SLAB w/ KEY

Cover for Powerhouse Vault

R

TE	SALES	DRAWN	ENGINEER	CHECKED	SALES ORDER
/06		WS			

DRAWING NUMBER	REVISION	SHEET
010-0080275-001	B REV DATE 10/12/15	1 OF 1

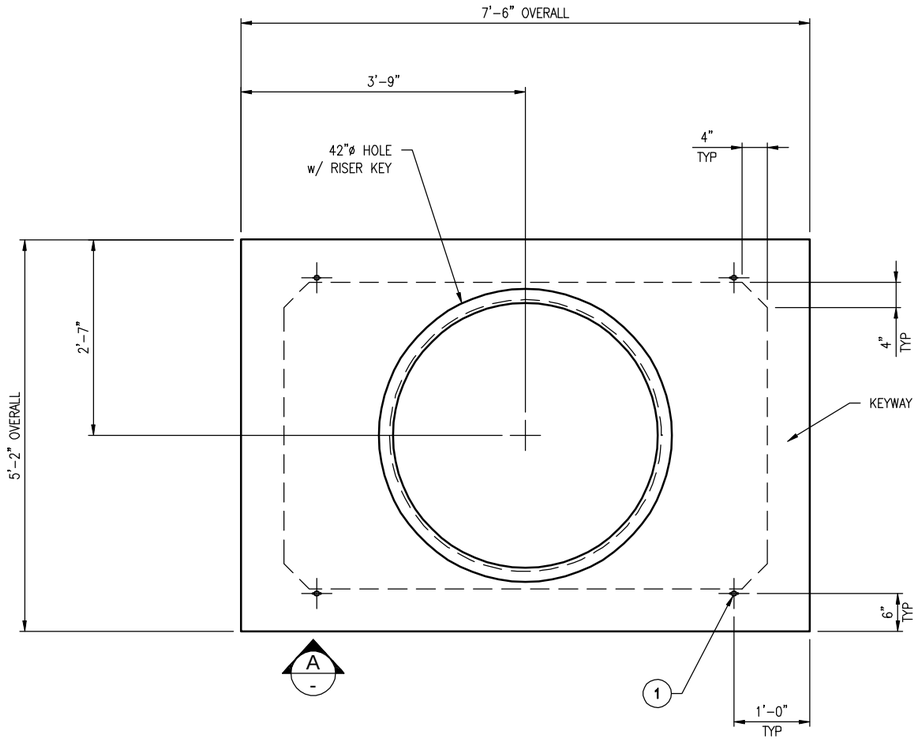

PLAN VIEW
LAYOUT (SHOWN AS POURED)

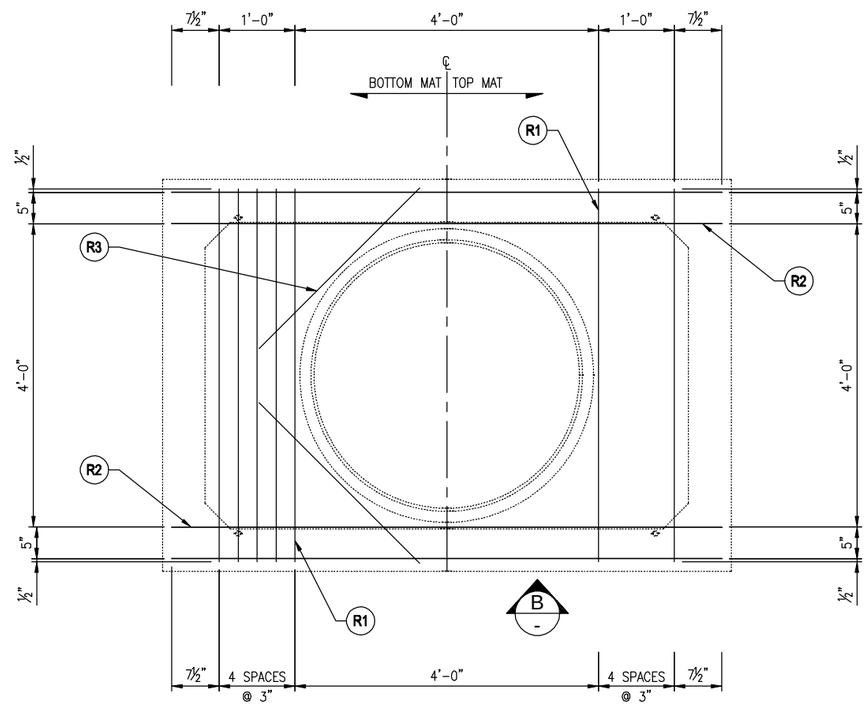

PLAN VIEW
REINFORCEMENT (SHOWN AS POURED)

PRODUCT WEIGHT

2,300 LBS

SHOP NOTES

1. NO STEEL FORM EXISTS; USE WOOD FORM FOR ALL FEATURES
2. FORM DIAGONAL DISTANCE: 9'-1¼"
3. CONCRETE FINISH: BROOM FINISH WITH MACHINED EDGES

BILL OF MATERIALS

#	QUANTITY	DESCRIPTION	ITEM #
1	4 ea	INSERT LOOP FERR 3/4"	5100100
	0.56 yds	CONCRETE MIX – SCC	5010000
	3.47 bar	REBAR #4 X 40' A706/GR60	5510030
	0.56 yds	STEEL UPPER CONTINUOUS HIGH CHAIR	9300070
	20	WOOD & STEEL FORMING CHARGE	9300050

REINFORCEMENT CUT LIST

#	QTY	MATERIAL	LENGTH	SHAPE
R1	14	#4 REBAR A706/GR60	4'-11"	STR
R2	8	#4 REBAR A706/GR60	7'- 3"	STR
R3	4	#4 REBAR A706/GR60	3'- 0"	STR

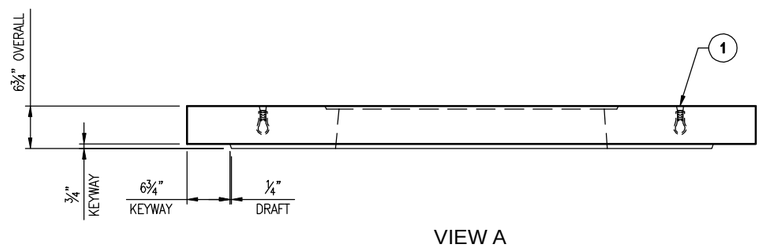

VIEW A

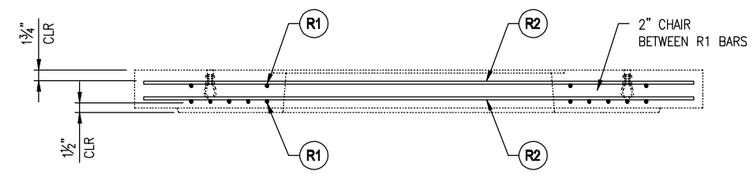

VIEW B

B	ADDED REINFORCEMENT TOP MAT	MLF
REVISION	DESCRIPTION	BY

Oldcastle Precast®
P.O. BOX 589 AUBURN, WA 98071-0589
PHONE: 800-862-1538 FAX: 253-735-4201

OCUMENT IS THE PROPERTY OF OLDCASTLE PRECAST, INC.
FIDENTIAL, SUBMITTED FOR REFERENCE PURPOSES ONLY, AND SHALL NOT BE USED
Y WAY INJURIOUS TO THE INTERESTS OF,
HOUT THE WRITTEN PERMISSION OF OLDCASTLE PRECAST, INC.
GHT © 2006 OLDCASTLE PRECAST, INC. ALL RIGHTS RESERVED.

C CLX COVER SLAB w/ KEY

Cover for Powerhouse Vault

R

TE	SALES	DRAWN	ENGINEER	CHECKED	SALES ORDER
/06		WS			

DRAWING NUMBER	REVISION	SHEET
010-0080275-001	B REV DATE 10/12/15	1 OF 1

A-1470

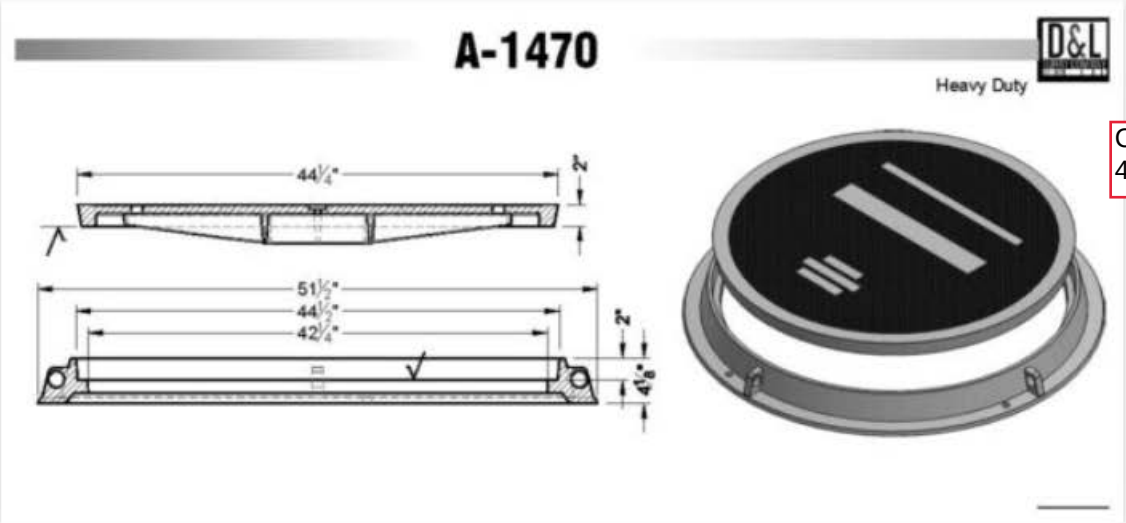

Casting for Powerhouse Vault
42" Electric

SKU: A-1470

CATEGORIES: Cast Iron, Manhole Covers and Rings, Pacific Northwest Region, Region, Washington

TAG: Heavy Duty

REGIONS: N/A

COVER SIZE:

RING SIZE:

ADDITIONAL INFO:

ROUND RISERS

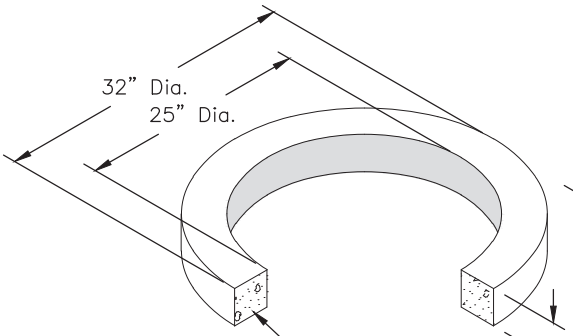

25" DIA. RISER
No. 2502 (2" RISER)
60 lbs.

No. 2504 (4" RISER)
120 lbs.

No. 2506 (6" RISER)
180 lbs.

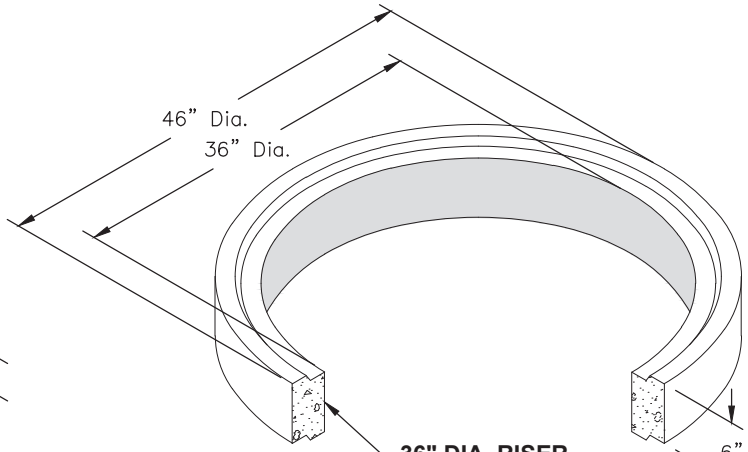

36" DIA. RISER
No. 3606 (6" RISER)
340 lbs.

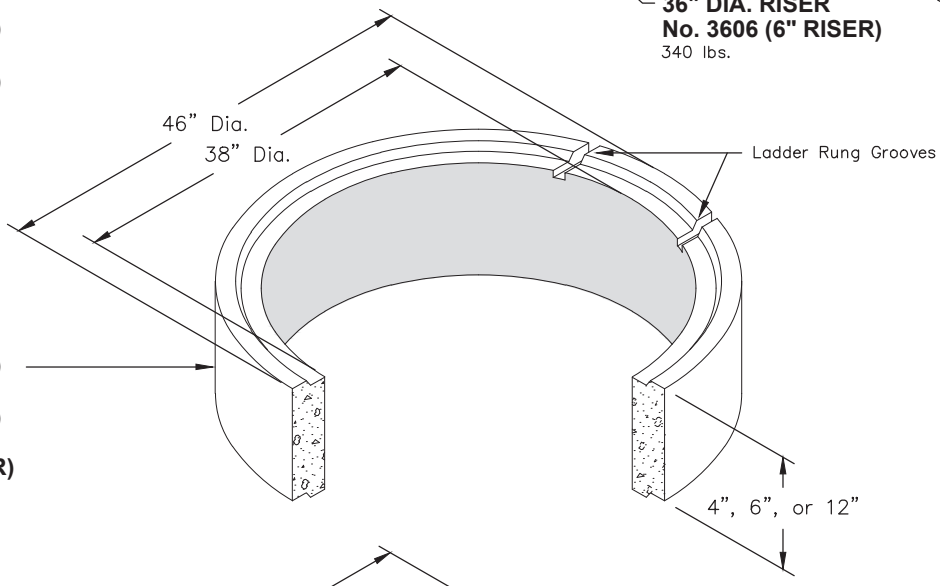

38" DIA. RISER
No. 3804 (4" RISER)
190 lbs.

No. 3806 (6" RISER)
280 lbs.

No. 3812 (12" RISER)
540 lbs.

Riser for Powerhouse Vault 4206

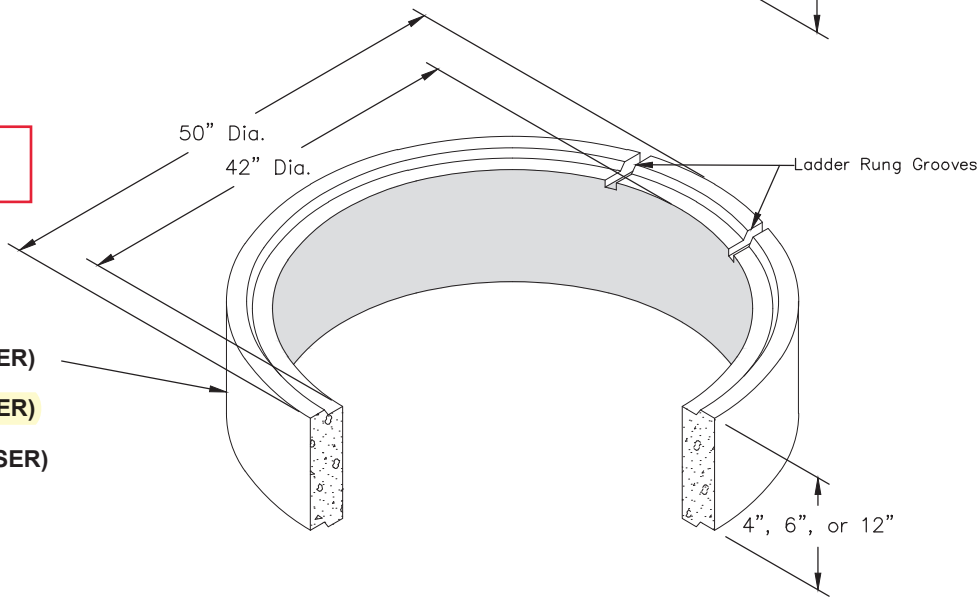

42" DIA. RISER
No. 4204 (4" RISER)
220 lbs.

No. 4206 (6" RISER)
340 lbs.

No. 4212 (12" RISER)
650 lbs.

Items Shown Are Subject To Change Without Notice
Issue Date: April 2016

© 1996-2016 Oldcastle Precast, Inc.

Mailing Address
PO Box 588
Auburn, WA 98071

Phone: 800-892-1538
Fax: 253-735-4201
Email: opauburn@oldcastle.com

State of Alaska

GOVERNOR MIKE DUNLEAVY

Submittal Cover Sheet

Department of Transportation Public Facilities
SOUTHCOAST REGION
Construction Section

Project: KTN- HERRING COVE BRIDGE IMPROVEMENTS	Project No: 0902043/SFHWY00072
Contractor: Hamilton Construction Alaska	Submittal No. 687-066 35kV Switch
Date Response Sent: 07/11/2022	Reviewed By: Bob Lundell, P.E. Recoverable Signature X Bob Lundell Signed by: 2d66350b-1634-445f-b1d5-d5b87bea066b

A	AAN	R&R	R	I	R&RasN	INC	CA
Approved	Approved as Noted	Revise and Resubmit	Rejected	Informational	Revisit & Resubmit as Noted	Incomplete	Conditionally Approved

Item No.	Item	Contract Documents	A	AAN	R&R	R	I	R&R asN	INC	CA
687.2000.0000	Power Utility Relocation	687-3.04		X						

Comments/Anticipated Response:

- Morris Engineering will be researching and providing a solution for the required longer and wider vault cover to match the dimensions of the switch. Examples of solutions would involve a replacement vault cover or a steel plate bolted to the existing vault cover.
- Please provide the anticipated delivery of the switch FOB Ketchikan.

Transmittal Form

To: Bob Lundell, P.E.
Project Engineer
DOWL

MEG Project: 102-44
DOT Project: 0902043 / SFHWY00072
KTN Herring Cove Bridge Improvements
Date: 7/8/22
Subject: Submittal Review

We are sending you enclosed via: **email** Original to follow _____yes __X__no

Copies:	Date:	Description:
1	7/8/22	687-066 35 kV Pad 6 Switch Submittal

These are transmitted: ___ For your use ___ For review ___ For Approval

___Conforms _X_ Conforms w/ revisions ___Non-Conforming (Revise and resubmit)

Thank you,

Mark Morris, P.E.
Principal
Morris Engineering Group, INC

CONFORMS TO DESIGN CONCEPT WITH REVISIONS AS SHOWN
This shop drawing or cut sheet has been reviewed for general conformance with design concept only and does not relieve the contractor or vendor of responsibility for conformance with design drawings and specifications, all of which have priority over this shop drawing or cut sheet.

Brian Meyers, P.E.
Morris Engineering Group, LLC
7/8/22

Approved with following notes:

1. Larger than anticipated switch footprint will require modifications to Pad 6 switch concrete pad. Further discussions to follow.

FINAL REVIEW	
SH	AC
JQ	

REVISIONS				
REV.	ECO	ENG	DES	DATE
A	583616	NSZ	SH	6-21-22

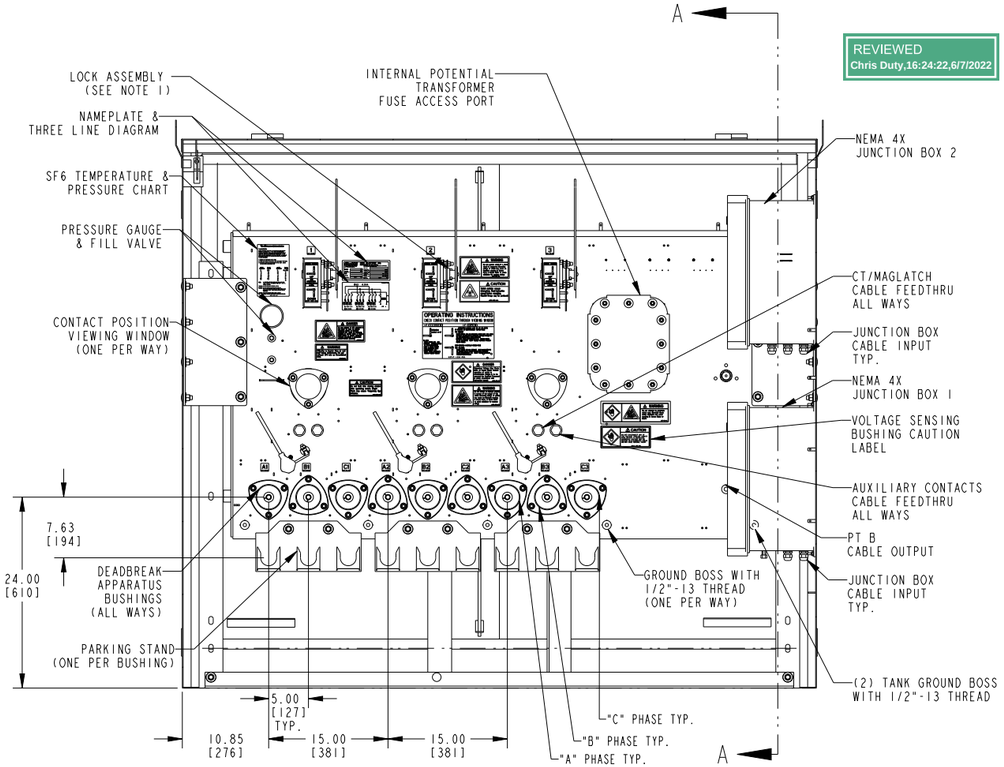

FRONT VIEW

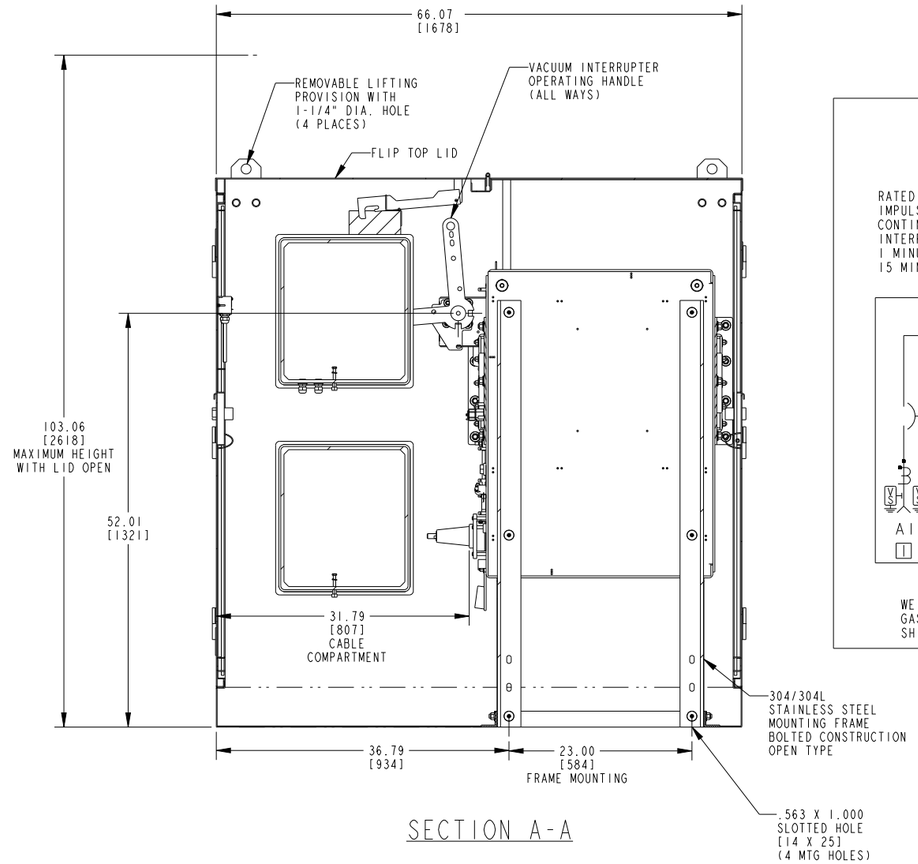

SECTION A-A

SWITCH ELECTRICAL INFORMATION

SEE NOTES FOR LIMITATIONS

	WAYS 1, 2 & 3
RATED VOLTAGE (MAXIMUM)-SEE NOTE 7	34.5 KV
IMPULSE LEVEL (BIL)	150 KV
CONTINUOUS CURRENT, RMS SYM	SEE THREE LINE
INTERRUPTING CURRENT, RMS SYM	12.5 KA
1 MINUTE WITHSTAND, 60 HZ AC	SEE NOTE 7
15 MINUTE WITHSTAND, DC	SEE NOTE 7

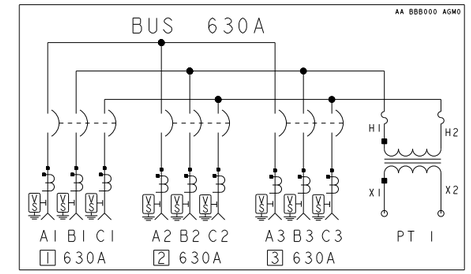

THREE LINE DIAGRAM

WEIGHT WITH GAS APPROX	2800	LBS/	1273	KG
GAS REQUIRED APPROX	27.0	LBS/	12.3	KG
SHIPPING WEIGHT APPROX	3300	LBS/	1500	KG

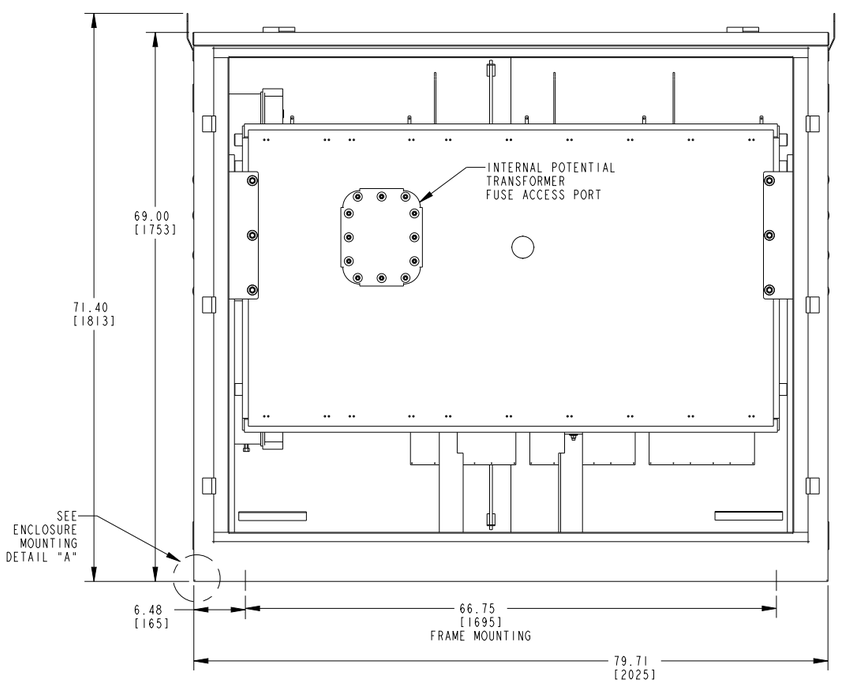

BACK VIEW

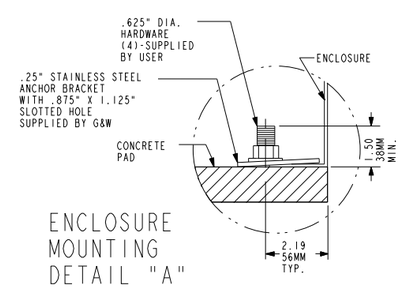

ENCLOSURE MOUNTING DETAIL "A"

ENTRANCES	BUSHING ELECTRICAL CHARACTERISTICS	IEEE 386 INTERFACE
WAY 1	38KV 630A DEADBREAK APPARATUS BUSHING	INTERFACE 13
WAY 2	38KV 630A DEADBREAK APPARATUS BUSHING	INTERFACE 13
WAY 3	38KV 630A DEADBREAK APPARATUS BUSHING	INTERFACE 13

PRINT IDENTIFICATION

DATE 7-1-2022 G&W NO. 100486

CUSTOMER ANIXTER INC

ORDER NO. 2242007-00

[X] FOR RECORD ITEM NO. 1

[ ] FOR APPROVAL-NO MORE WORK TO BE DONE UNTIL APPROVAL IS RECEIVED

* ALL PRIMARY DIMENSIONS ARE IN INCHES.
ALL SECONDARY DIMENSIONS ARE IN MILLIMETERS.

ALL DRAWING CHANGES MUST BE MADE ON CAD. ANY MANUAL CHANGES WILL VOID DRAWING.

PNI30-396-12-30F

34.5KV 3 WAY SF6 GAS SWITCH

G&W ELECTRIC Co.

CAT. NO.: PNI30-396-12-30F			DRAWING NO.		REV
ENG/DES: NSZ	AC	DATE: Mar-10-22	D9498 0173 ACE		A
APPR BY: RSP		DATE: Mar-10-22	SCALE:	SHEET: 1 of 2	

DWG. NO.: D9498 0173 ACE
This drawing and the information thereon are and remain the property of G&W and are not to be copied, reproduced or disclosed to others without the expressed written consent of G&W.
3D MODEL MC ERRORS | 3D MODEL LAST CHECKED Fri Dec 07 2018 14:23:20 GMT-0600 STANDARD
DRAWING MC ERRORS 2 | DRAWING LAST CHECKED Fri Dec 07 2018 14:24:21 GMT-0600 STANDARD
SHEET 1 of 2

This drawing and the information thereon are and remain the property of G&W and are not to be copied, reproduced or disclosed to others without the expressed written consent of G&W.

DWG. NO.: D9498 0173 ACE

FINAL REVIEW	
SH	AC
JQ	

REVISIONS				
REV.	ECO	ENG	DES	DATE
A	583616	NSZ	SH	6-21-22

NOTES:

1. ALL WAYS ARE EQUIPPED WITH INTERNAL SPRING OPERATORS AND EXTERNAL PROVISIONS FOR PADLOCKING IN ALL POSITIONS.

2. 1/4" THICK 316/316L STAINLESS STEEL TANK, WELDED CONSTRUCTION, PAINTED ASA 70 LIGHT GRAY.

3. 316 STAINLESS STEEL ENCLOSURE FINISHED MUNSELL NO. 7GY3.29/1.5 PADMOUNT GREEN. ENCLOSURE IS DESIGNED PER APPLICABLE SECTIONS OF ANSI/IEEE C37.74 AND ANSI C57.12.29. DRAWING IS TYPICAL AND SHOWS OVERALL DIMENSIONS ONLY. CONSTRUCTION DETAILS MAY VARY FROM THOSE DEPICTED.

4. SWITCH IS EQUIPPED WITH INTERNAL 1000:1 CURRENT TRANSFORMERS ON ALL WAYS.

5. WHEN ELBOWS, INSERTS, AND ANY OTHER ACCESSORIES ARE CONNECTED TO THE SWITCH, THE RATINGS OF EACH CONNECTED ASSEMBLY WILL BE THAT OF THE LOWEST RATED COMPONENT OF THE ASSEMBLY.

6. ALL WAYS ARE EQUIPPED WITH TWO AUXILIARY FORM C CONTACTS. THE CONTACTS ARE WIRED TO JUNCTION BOX 1 FOR CUSTOMER USE. EACH FORM C CONTACT CAN BE WIRED AS A 52A OR 52B.

7. THE SWITCH IS EQUIPPED WITH ONE ABB TYPE VIZ-20 PT MOUNTED WITHIN THE SWITCH TANK. THE PT IS DESIGNED FOR USE ON A 34500V PHASE TO PHASE SYSTEM AND HAS A 313.63:1 RATIO, A 1000VA OUTPUT, RATED 200KV BIL AND IS ABB PART NUMBER 7883A40G07. THE PT PRIMARY IS FACTORY CONNECTED BETWEEN BUSES B AND C AS SHOWN ON THE 3 LINE DIAGRAM. THE PT 120VAC PHASE TO GROUND SECONDARY IS FACTORY CONNECTED TO JUNCTION BOX 1.

   IN ACCORDANCE WITH ANSI C57.13, SWITCHES EQUIPPED WITH PT MOUNTED WITHIN THE SWITCH TANK ARE NOT TO BE ENERGIZED ABOVE THE NAMEPLATE RATINGS OR SUBJECT TO DC VOLTAGE TESTING. IN ADDITION, THE AC 1 MINUTE WITHSTAND TEST VOLTAGE IS DECREASED TO THE PT DESIGN VOLTAGE OF 34500V PHASE TO PHASE.

8. SWITCH IS EQUIPPED WITH VOLTAGE SENSING BUSHINGS FOR LOW ENERGY ANALOG VOLTAGE SENSING AND PHASING TEST PINS ON ALL WAYS. THE BUSHINGS ARE TERMINATED AT THE TERMINAL BLOCK WITHIN JUNCTION BOX 1 FOR FUTURE USE USING SHIELDED TWISTED PAIR CABLE. VOLTAGE SENSING DESIGNED TO WORK ON SYSTEMS WITH NOMINAL PRIMARY VOLTAGES BETWEEN 4.6 - 21.9KV PHASE TO GROUND. MAXIMUM OUTPUT OF VOLTAGE SENSING IS 8 VAC WITH A 5000:1 RATIO.

9. SWITCH IS EQUIPPED WITH TWO FIBERGLASS NEMA 4X JUNCTION BOXES. JUNCTION BOX 1 INCLUDES DUAL 120VAC INPUTS, 600W POWER SUPPLY, 3 STACK OF TIBS, AND A 50 POSITION TERMINAL BLOCK. JUNCTION BOX 1 CONTAINS CUSTOMER CONNECTIONS FOR AUXILIARY CONTACTS FOR ALL WAYS, VOLTAGE SENSING FOR ALL WAYS, TRIP COMMAND FOR ALL WAYS, AND POTENTIAL TRANSFORMER SECONDARY CONNECTION. JUCTION BOX 2 INCLUDES THREE ABB FT-1F TEST SWITCHES AND A 20 POSITION TERMINAL BLOCK. JUNCTION BOX 2 CONTAINS CUSTOMER CONNECTIONS FOR INTERNAL CURRENT TRANSFORMERS FOR ALL WAYS.

10. MOUNTING INFORMATION: THE FRAME OF THE SWITCH MUST BE ANCHORED TO THE PAD. THE FRAME IS EQUIPPED WITH (4) SLOTTED ANCHORING HOLES. EACH MEASURING 9/16"X 1". THE LOCATIONS OF THESE HOLES, REFERRED TO AS "FRAME MOUNTING" ARE SHOWN IN THE FRONT VIEW AND SECTION A-A. THE PAD MOUNT ENCLOSURE SHOULD BE SECURED TO THE PAD TO PROVIDE IT WITH ADDITIONAL STABILITY. EACH PAD MOUNT ENCLOSURE IS SHIPPED WITH 4 SECURING BRACKETS THAT ARE TO BE USED FOR THIS PURPOSE. THE SECURING BRACKETS CAN BE INSTALLED ANYWHERE ALONG THE INNER EDGE OF THE ENCLOSURE. SEE ENCLOSURE MOUNTING DETAIL "A" AND THE PLAN VIEW FOR MORE DETAILS ABOUT SECURING THE PAD MOUNT ENCLOSURE TO THE PAD.

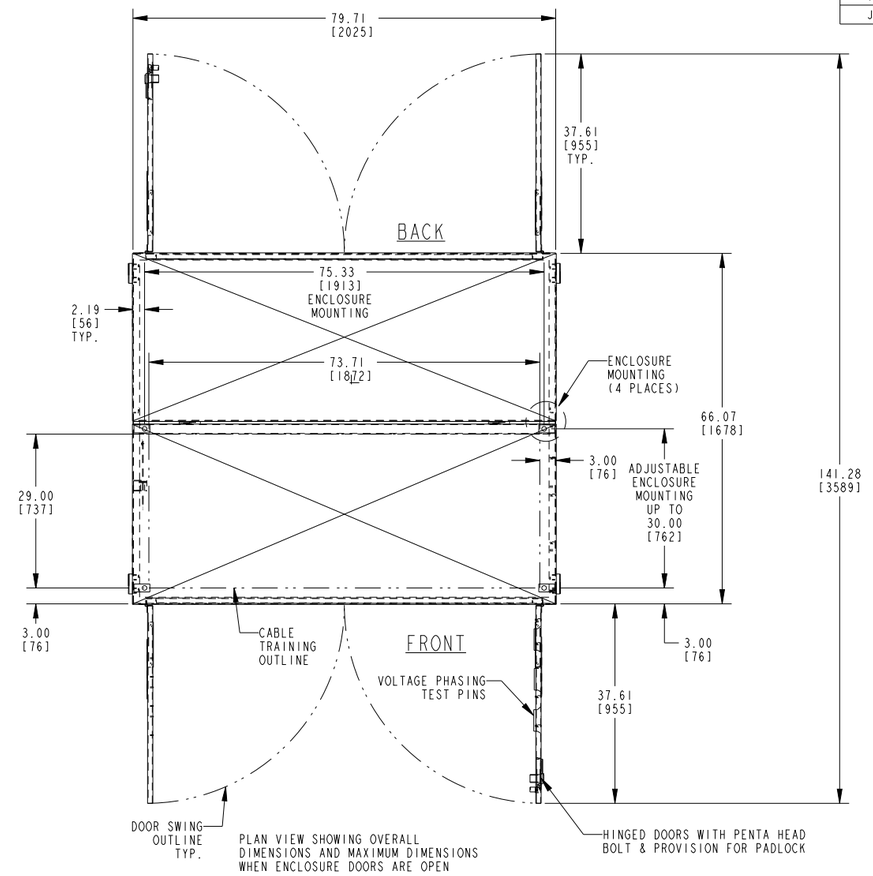

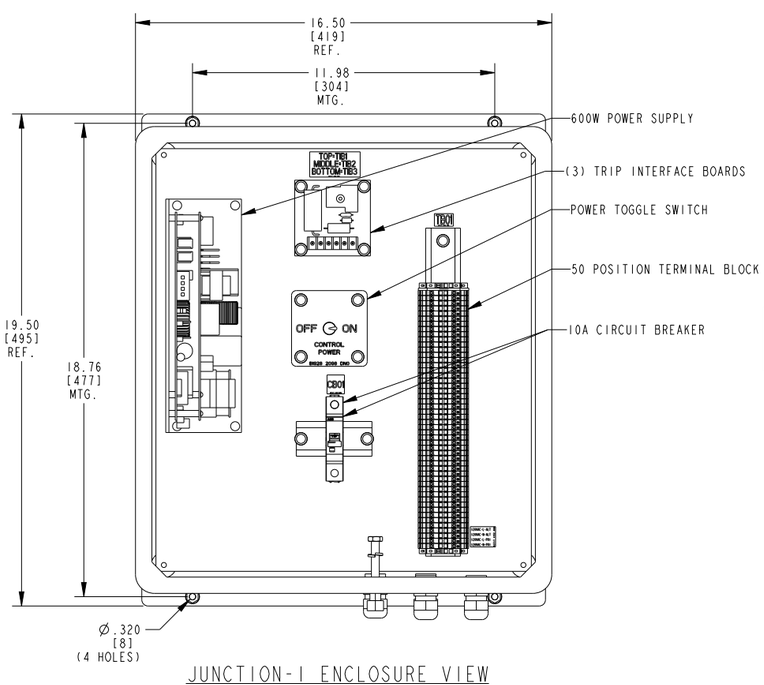

JUNCTION-1 ENCLOSURE VIEW

(WITH DOOR HIDDEN FOR CLARITY)

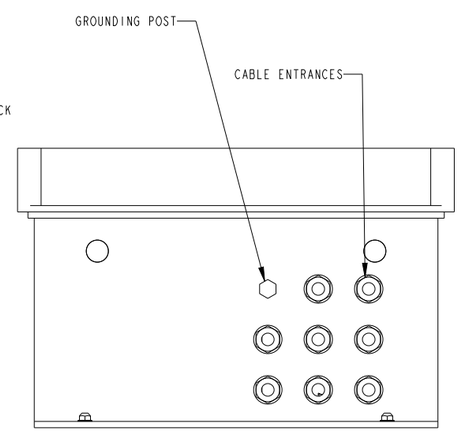

BOTTOM VIEW

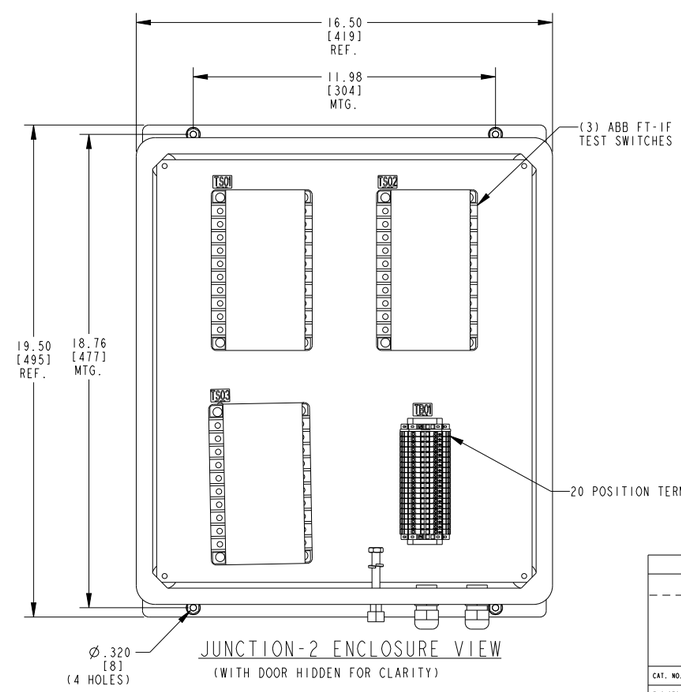

JUNCTION-2 ENCLOSURE VIEW

(WITH DOOR HIDDEN FOR CLARITY)

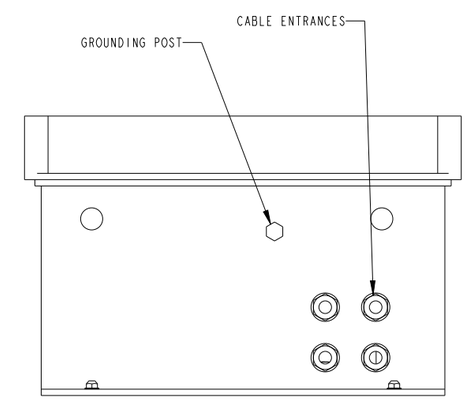

BOTTOM VIEW

* ALL PRIMARY DIMENSIONS ARE IN INCHES.
ALL SECONDARY DIMENSIONS ARE IN MILLIMETERS.

ALL DRAWING CHANGES MUST BE MADE ON CAD. ANY MANUAL CHANGES WILL VOID DRAWING.

PN130-396-12-30F

34.5KV 3 WAY SF6 GAS SWITCH

G&W ELECTRIC Co.

CAT. NO.: PN130-396-12-30F			DRAWING NO.		REV
ENG/DES: NSZ	AC	DATE: Mar-10-22	D9498 0173 ACE		A
APPR BY: RSP		DATE: Mar-10-22	SCALE:	SHEET: 2 of 2	

3D MODEL MC ERRORS 1 | 3D MODEL LAST CHECKED Fri Dec 07 2018 14:25:20 GMT-0600 STANDARD
DRAWING MC ERRORS 2 | DRAWING LAST CHECKED Fri Dec 07 2018 14:24:21 GMT-0600 STANDARD | SHEET 2 of 2

G&W Order 100486 ANIXTER INC Junction Box 1 Drawing Package

1.) B1344-0054-ARA, JBOX PNI30 AUX/MAG/VS/PT (6 PAGES)
2.) B1344-0052-TE0, PT WIRING (1 PAGE)
3.) B1344-0054-HJ0 FAULT INTERRUPTER LOGIC (1 PAGE)
4.) B1344-0054-ARB, JBOX PNI31 CT/MAG (5 PAGES)

G&W Electric Company
305 W. Crossroads Pkwy
Bolingbrook, IL 60440-4938 USA

T: +1 708.388.5010
F: +1 708.388.0755
gwelectric.com

ISO 9001 Certified ISO 14001 Certified

FINAL REVIEW	

TABLE OF CONTENTS

DESCRIPTION	SHEET REFERENCE
LEGEND	02
ONE LINE DIAGRAM	03
JUNCTION BOX WIRING	04
JUNCTION BOX WIRING	05
JUNCTION BOX WIRING	06
POTENTIAL TRANSFORMER DIAGRAM	B13440052TE0
FAULT INTERRUPRT LOGIC DIAGRAM	B13440053HJ0
JBOX PNI30 CT/MAG	B13440054ARB

JUNCTION BOX 1 WIRING

SYMBOLS:

- # — SPECIAL NOTE DESIGNATOR (WHERE # = NUMBER)
- CW — CUSTOMER WIRED CONNECTION
- FW — FIELD WIRED CONNECTION
- * — CONTACT AVAILABLE FOR CUSTOMER USE
- ABB — CURRENT TRANSFORMERS (CTS) ARE TO BE WIRED TO THE HINGE SIDE OF THE TEST SWITCH SO THAT THE CTS ARE SHORTED WHEN THE TEST SWITCH IS IN THE OPEN/SHORTED POSITION.
- SECU — CURRENT TRANSFORMERS (CTS) ARE TO BE WIRED TO THE EVEN-NUMBERED SIDE OF THE TEST SWITCH CTS ARE SHORTED WHEN THE DISCONNECT PINS ARE INSERTED INTO THE CENTER SLOTS OF THE TEST SWITCH.
- ARROW DESIGNATES WIRE LEAVES CURRENT SHEET
- WIRES CONNECT AT THIS JUNCTURE
- WIRES DO NOT CONNECT AT THIS JUNCTURE
- CAPACITOR
- CURRENT TRANSFORMER
- OR — RELAY INPUT
- ANALOG VOLTAGE INPUT
- ANALOG CURRENT INPUT
- H1 H2 X1 X2 OR — POTENTIAL TRANSFORMER
- FUSE
- MAGNETIC LATCH
- OR — NORMALLY OPEN CONTACT
- OR — NORMALLY CLOSED CONTACT
- LIGHT EMITTING DIODE
- DIODE
- GROUND
- RESISTOR

NOTES:

POWER REQUIREMENT:

2.0 A AT 120VAC STEADY STATE FOR CONTROL CABINET
JUNCTION BOX IS DESIGNED TO PROVIDE EXTERNAL POWER AND PROVISIONS FOR UP TO THREE VI CONTROLLED FAULT INTERRUPTER MECHANISMS.

SPECIAL NOTE REFERENCES:

1. MAGLATCH SIGNALS FROM JUNCTION BOX 2 (SEE B13440054ARB)
2. CUSTOMER DRY TRIP CONTACTS

SHOWN IN OFF POSITION

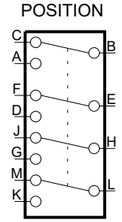

SHOWN IN OFF POSITION

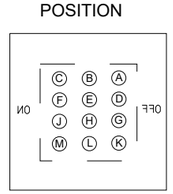

PRINT IDENTIFICATION

DATE 7-1-2022 G&W NO. 100486

CUSTOMER ANIXTER INC

ORDER NO. 2242007-00

[X] FOR RECORD ITEM NO. 1

[ ] FOR APPROVAL-NO MORE WORK TO BE DONE UNTIL APPROVAL IS RECEIVED

ALL DRAWING CHANGES MUST BE MADE ON CAD. ANY MANUAL CHANGES WILL VOID DRAWING.

JBOX PNI30 AUX/MAG/VS/PT

This drawing and the information thereon are and remain the property of G&W and are not to be copied, reproduced or disclosed to others without the expressed written consent of G&W

G&W ELECTRIC Co.

REV.	ECO	ENG	DES	DATE
A	583890	JPB	JPB	6/23/22

REVISIONS

USED ON: D9498 0173 ACE			DRAWING NO. B1344 0054 ARA	REV A
ENG/DES: JPB	JPB	DATE: 2/17/22		
APPR BY: AJ		DATE: 3/8/22	SCALE:	SHEET: 1 OF 6

LEGEND

JUNCTION BOX 1 WIRING

FINAL REVIEW	

WIRE COLORS AND CABLE/HARNESS DESIGNATIONS:

WIRES LEAVING SHEET NOMENCLATURE:
SHEET NUMBER [ZONE X, ZONE Y] (DESTINATION POINT)
EXAMPLE: 10 [B, 4] (MIB1-J1-01)

BLK = BLACK	BLU = BLUE
WHI = WHITE	ORG = ORANGE
RED = RED	BRN = BROWN
GRN = GREEN	VLT = VIOLET
YEL = YELLOW	GRY = GRAY

XXX/XXX = PRIMARY COLOR/SECONDARY COLOR TRACE
EXAMPLE: RED/BLK = RED WITH BLACK TRACE

XXX10 = 10 PIN HARNESS WITH XXX COLOR HEATSHRINK
XXX12 = 12 PIN HARNESS WITH XXX COLOR HEATSHRINK
EXAMPLE: BLK10 = 10 PIN HARNESS WITH BLACK HEATSHRINK

#CBL X = CABLE USED TO CONNECT COMPONENTS WITHIN CONTROL CABINET (WHERE # = NUMBER OF CONDUCTORS WITHIN CABLE, AND X = SEQUENTIAL CABLE NUMBER USED IN DESIGN).

- (AUX) AUX = AUXILIARY CONTACT CABLE (10/C)
- (AUX-IF) AUX-IF = INTERNAL FEEDBACK AUXILIARY CONTACT CABLE FOR MOTOR CONTROL USE (10/C)
- (AUX/VB) AUX/VB = AUXILIARY CONTACT AND VISIBLE BREAK CONTACT CABLE (10/C)
- (AVS) AVS = ANALOG VOLTAGE SENSING CABLE (16/C)
- (CNTL) CNTL = MAGNETIC ACTUATOR CONTROL CABLE (10/C)
- (CT/MAG) CT/MAG = INTERNAL THREE PHASE CURRENT TRANSFORMER SECONDARY AND MAGNETIC LATCH CABLE (10/C)
- (CTX) CTX = EXTERNAL CURRENT TRANSFORMER CABLE (2/C) (WHERE X = PHASE)
- (CT) CT = INTERNAL CURRENT TRANSFORMER CABLE (10/C)
- (DS) DS = DENSITY SWITCH (2/C)
- (DVS) DVS = DIGITAL VOLTAGE SENSING CABLE (4/C)
- (EP/ET) EP/ET = EXTERNAL POWER / EXTERNAL TRIP (4/C)
- (EVSX) EVSX =EXTERNAL VOLTAGE SENSOR CABLE (2/C) (WHERE X = PHASE)
- (FCI) FCI = FAULTED CIRCUIT INDICATOR CABLE (4/C)
- (LPWD) LPWD = LOW PRESSURE WARNING DEVICE CABLE (2/C)
- (MAG) MAG = MAGNETIC LATCH CABLE (4/C)
- (M) MOTOR = MOTOR CABLE (10/C)
- (PT#) PT# = POTENTIAL TRANSFORMER SECONDARY CABLE (2/C) (WHERE # = NUMBER)
- (PWR) PWR = POWER CABLE (3/C)
- (VB) VB = VISIBLE BREAK CONTACT CABLE (10/C)
- (VS) VS = LOW ENERGY ANALOG VOLTAGE SENSING CABLE (4/C)
- (VSB) VSB = VOLTAGE SENSING BUSHING CABLE (4/C)
- [AUX] AUXILIARY CONTACTS (TRIDENT WITH SAFEVU)
- [VB] VISIBLE BREAK CONTACTS (TRIDENT WITH SAFEVU)
- (CBL#) CBL# = CABLE (10/C) (WHERE # = NUMBER OF CABLE)
- SERIAL = SERIAL COMMUNICATION CABLE
- FIBER = FIBER OPTIC COMMUNICATION CABLE
- RJ45 = COPPER ETHERNET CABLE

DEVICES AND CONNECTIONS:

PS#-BATT = 600W POWER SUPPLY BATTERY CONNECTIONS (WHERE # = NUMBER OF POWER SUPPLY)
PS#-DC = 600W POWER SUPPLY DC CONNECTIONS (WHERE # = NUMBER OF POWER SUPPLY)
PS# ALT SOURCE = 600W POWER SUPPLY ALTERNATE 120VAC SOURCE (WHERE # = NUMBER OF POWER SUPPLY)
PS# PRI SOURCE = 600W POWER SUPPLY PRIMARY 120VAC SOURCE (WHERE # = NUMBER OF POWER SUPPLY)
PS#-F1 = 600W POWER SUPPLY PRIMARY SOURCE FUSE (WHERE # = NUMBER OF POWER SUPPLY)
PS#-F2 = 600W POWER SUPPLY ALTERNATE SOURCE FUSE (WHERE # = NUMBER OF POWER SUPPLY)
PS#-F3 = 600W POWER SUPPLY 24VDC SOURCE FUSE (WHERE # = NUMBER OF POWER SUPPLY)
PS#-SW1 = 600W POWER SUPPLY PUSH BUTTON TO PERFORM MANUAL BATTERY TEST (WHERE # = NUMBER OF POWER SUPPLY)
BATT#A = BATTERY A OF BATTERY BANK # (WHERE # = NUMBER OF BATTERY BANK)
BATT#B = BATTERY B OF BATTERY BANK # (WHERE # = NUMBER OF BATTERY BANK)
12V = 12V SEALED LEAD ACID BATTERY
CB# = CIRCUIT BREAKER (WHERE # = NUMBER OF CIRCUIT BREAKER)
DC-DC# = DC-TO-DC VOLTAGE CONVERTER (WHERE # = NUMBER OF DC CONVERTER)
FB# = FUSE BLOCK (WHERE # = NUMBER OF FUSE BLOCK)
HMI# = HUMAN MACHINE INTERFACE (WHERE # = NUMBER OF HUMAN MACHINE INTERFACE)
K# = ELECTROMECHANICAL INTERPOSING RELAY (WHERE # = NUMBER OF ELECTROMECHANICAL INTERPOSING RELAY)
LED# = LIGHT EMITTING DIODE (WHERE # = NUMBER OF LIGHT EMITTING DIODE)
LOR# = LOCK OUT RELAY (WHERE # = NUMBER OF LOCK OUT RELAY)
LRSS# = LOCAL REMOTE SELECTOR SWITCH (WHERE # = NUMBER OF LOCAL REMOTE SELECTOR SWITCH)
MIB# = MOTOR INTERFACE BOARD (WHERE # = NUMBER OF MOTOR INTERFACE BOARD)
PB# = PUSH BUTTON (WHERE # = NUMBER OF PUSH BUTTON)
SSW# = SELECTOR SWITCH (WHERE # = NUMBER OF SELECTOR SWITCH)
TB# = TERMINAL BLOCK # (WHERE # = NUMBER OF TERMINAL BLOCK)
TGPWR = CONTROL POWER TOGGLE SWITCH
THERMOSTAT# = THERMOSTAT (WHERE # = NUMBER OF THERMOSTAT)
TIB# = TRIP INTERFACE BOARD (WHERE # = NUMBER OF TRIP INTERFACE BOARD)
TS# = TEST SWITCH (WHERE # = NUMBER OF TEST SWITCH)
VSR# = VOLTAGE SEEKING RELAY (WHERE # = NUMBER OF VOLTAGE SEEKING RELAY)

JUMPERS FOR 24VDC PS1 ARE RED.
JUMPERS FOR 120VAC LINE ARE RED.
JUMPERS FOR 0VDC PS1 ARE BLACK.
JUMPERS FOR 120VAC NEUTRAL ARE WHITE.

ALL DRAWING CHANGES MUST BE MADE ON CAD. ANY MANUAL CHANGES WILL VOID DRAWING.

JBOX PNI30 AUX/MAG/VS/PT

This drawing and the information thereon are and remain the property of G&W and are not to be copied, reproduced or disclosed to others without the expressed written consent of G&W

G&W ELECTRIC Co.

USED ON: D9498 0173 ACE				DRAWING NO. B1344 0054 ARA	REV A
ENG/DES: JPB	JPB	DATE: 2/17/22			
APPR BY: AJ		DATE: 3/8/22		SCALE:	SHEET: 2 OF 6

ONE LINE DIAGRAM

JUNCTION BOX 1 WIRING

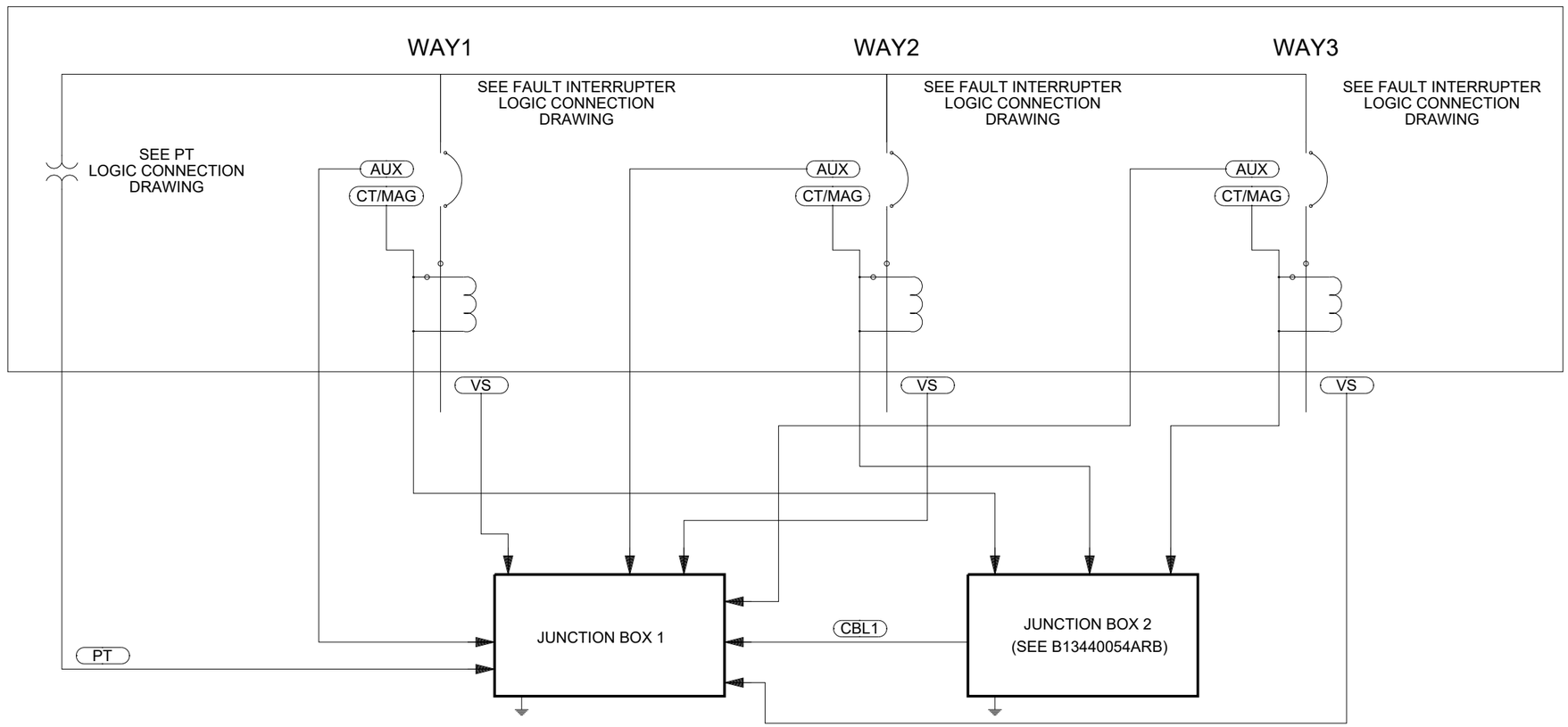

LEGEND:

- FAULT INTERRUPTER MECHANISM
- LOADBREAK MECHANISM
- G&W WIRED CONNECTION
- CUSTOMER WIRED CONNECTION
- CONNECTORIZED INTERFACE
- HARDWIRED INTERFACE
- FIELD WIRED CONNECTION

ALL DRAWING CHANGES MUST BE MADE ON CAD. ANY MANUAL CHANGES WILL VOID DRAWING.

JBOX PNI30 AUX/MAG/VS/PT

This drawing and the information thereon are and remain the property of G&W and are not to be copied, reproduced or disclosed to others without the expressed written consent of G&W

G&W ELECTRIC Co.

USED ON: D9498 0173 ACE			DRAWING NO. B1344 0054 ARA		REV A
ENG/DES: JPB	JPB	DATE: 2/17/22			
APPR BY: AJ		DATE: 3/8/22	SCALE:	SHEET: 3 OF 6	

JUNCTION BOX WIRING

FINAL REVIEW

JUNCTION BOX 1 WIRING

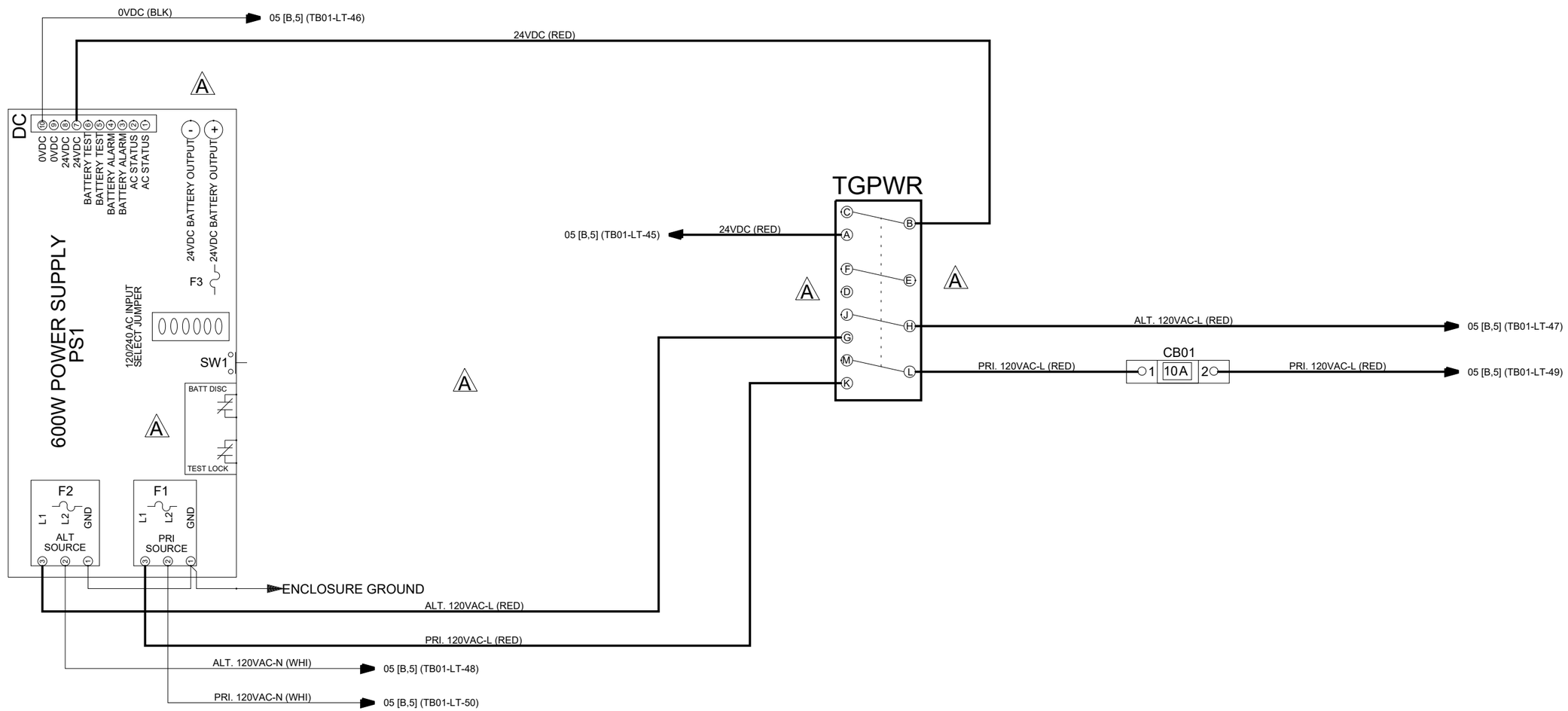

ALL DRAWING CHANGES MUST BE MADE ON CAD. ANY MANUAL CHANGES WILL VOID DRAWING.

JBOX PNI30 AUX/MAG/VS/PT

This drawing and the information thereon are and remain the property of G&W and are not to be copied, reproduced or disclosed to others without the expressed written consent of G&W

G&W ELECTRIC Co.

USED ON: D9498 0173 ACE				DRAWING NO. B1344 0054 ARA	REV A
ENG/DES: JPB	JPB	DATE: 2/17/22			
APPR BY: AJ		DATE: 3/8/22		SCALE:	SHEET: 4 OF 6

JUNCTION BOX WIRING

FINAL REVIEW

JUNCTION BOX 1 WIRING

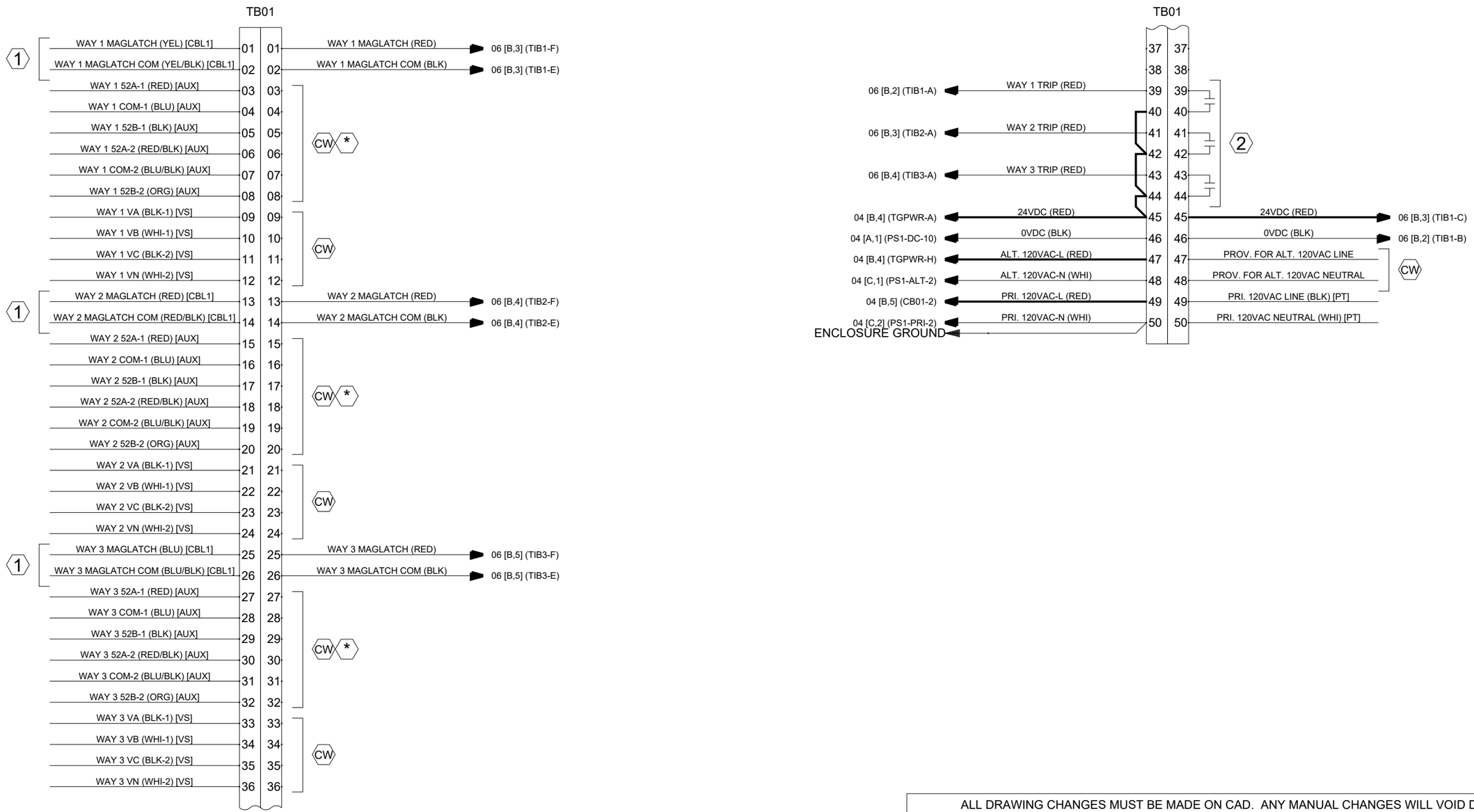

ALL DRAWING CHANGES MUST BE MADE ON CAD. ANY MANUAL CHANGES WILL VOID DRAWING.

JBOX PNI30 AUX/MAG/VS/PT

This drawing and the information thereon are and remain the property of G&W and are not to be copied, reproduced or disclosed to others without the expressed written consent of G&W

G&W ELECTRIC Co.

USED ON: D9498 0173 ACE				DRAWING NO. B1344 0054 ARA	REV A
ENG/DES: JPB	JPB	DATE: 2/17/22			
APPR BY: AJ		DATE: 3/8/22		SCALE:	SHEET: 5 OF 6

JUNCTION BOX WIRING

JUNCTION BOX 1 WIRING

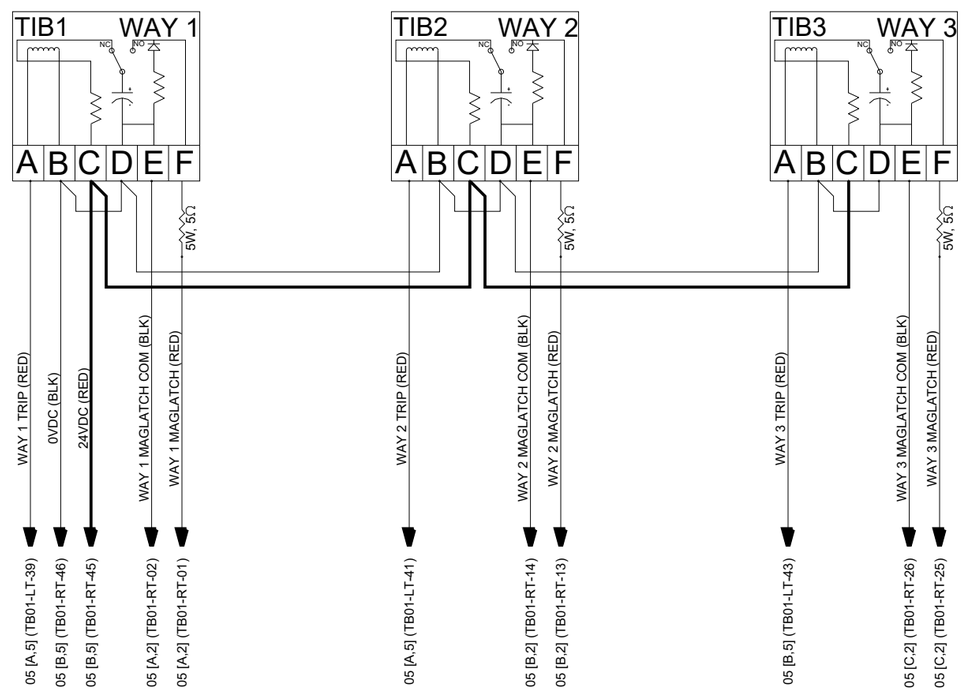

ALL DRAWING CHANGES MUST BE MADE ON CAD. ANY MANUAL CHANGES WILL VOID DRAWING.

JBOX PNI30 AUX/MAG/VS/PT

This drawing and the information thereon are and remain the property of G&W and are not to be copied, reproduced or disclosed to others without the expressed written consent of G&W

G&W ELECTRIC Co.

USED ON: D9498 0173 ACE				DRAWING NO. B1344 0054 ARA	REV A
ENG/DES: JPB	JPB	DATE: 2/17/22			
APPR BY: AJ		DATE: 3/8/22		SCALE:	SHEET: 6 OF 6

FINAL REVIEW	

REVISIONS				
REV.	EC0	ENG	DES	DATE
A	577105	AG	AG	4/22/22

DWG. NO.: B1344 0052 TE0

This drawing and the information thereon are and remain the property of G&W and are not to be copied, reproduced or disclosed to others without the expressed written consent of G&W.

PT CONNECTIONS

JUNCTION BOX 1 WIRING

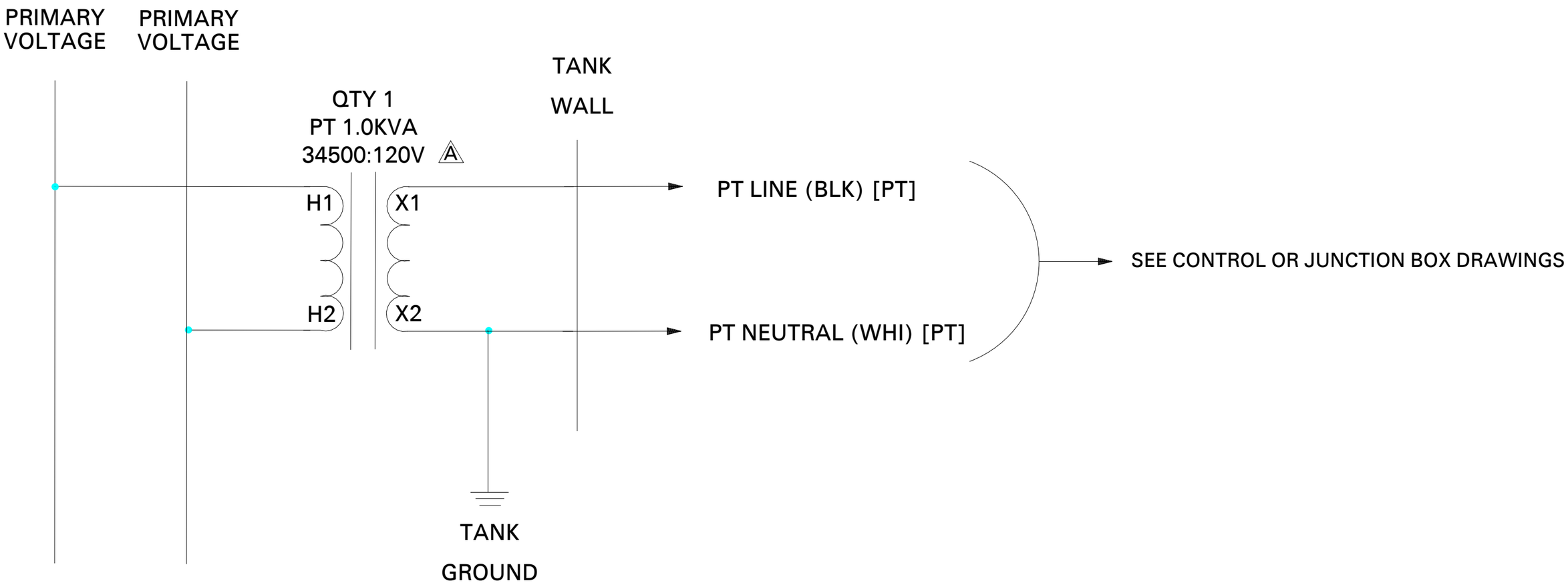

G&W WIRED CONNECTIONS

ALL DRAWING CHANGES MUST BE MADE ON CAD. ANY MANUAL CHANGES WILL VOID DRAWING.

PT INT DELTA 34500 1

G&W ELECTRIC Co.

USED ON:	D9498 0173 ACE			DRAWING NO.	REV
ENG/DES:	JPB	JPB	DATE: 2/18/22	B1344 0052 TE0	A
APPR BY:	AP		DATE: 2/18/22	SCALE:	SHEET: 1 OF 1

FAULT INTERRUPTER LOGIC CONNECTIONS (PER WAY)

DESIGN REVIEW TEAM	

REVISIONS		
REV	CHANGE ORDER	DATE
A	377264 - KCL	2/6/18

JUNCTION BOX 1 WIRING

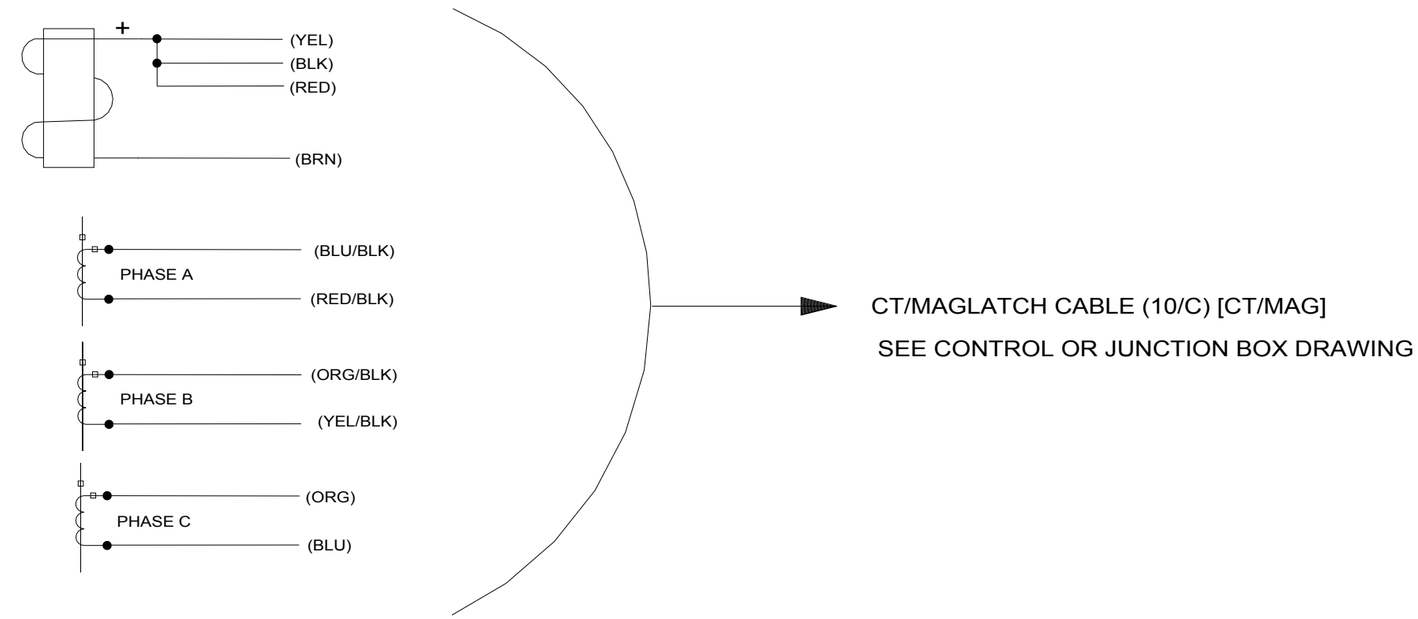

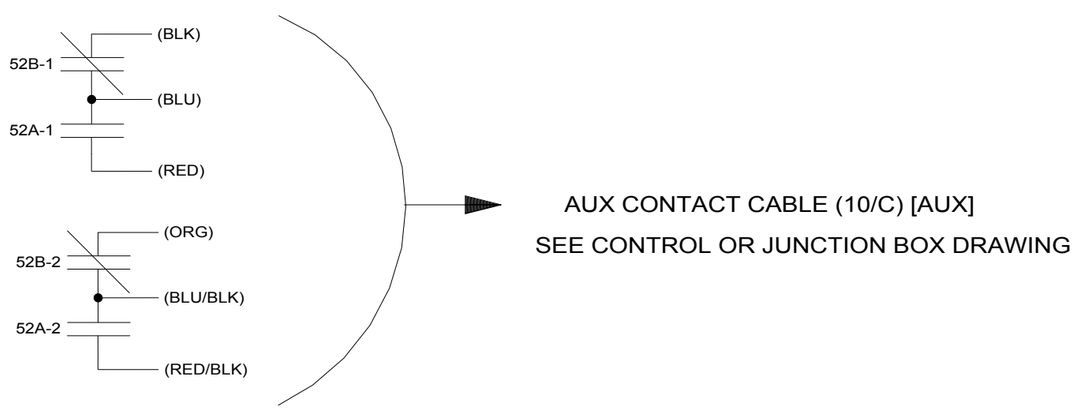

SURFACE TREATMENT	LG NI AUX 2 CT			G&W
				G&W ELECTRIC CO
TOLERANCE UNLESS OTHERWISE SPECIFIED	DRAWN BY: RH	DATE: 4/20/15	DRAWING NO.	REV
FRACTIONAL %%p .XX %%p.060 .XXX %%p.015 .XXXX %%p.005 ANGULAR %%p1/2"	APPR. BY: SRF	DATE: 4/20/15	B13440053HJ0	A
	MAT'L		SCALE:	SHEET: 1 OF 1

DWG NO. B13440053HJ0

DATE:

TOOL ENG. APPR. BY:

THIS DRAWING AND THE INFORMATION CONTAINED THEREON ARE AND REMAIN THE PROPERTY OF G&W AND ARE NOT TO BE COPIED, REPRODUCED OR DISCLOSED TO OTHERS WITHOUT THE EXPRESS WRITTEN CONSENT OF G&W.

FINAL REVIEW	

TABLE OF CONTENTS

DESCRIPTION	SHEET REFERENCE
LEGEND	02
ONE LINE DIAGRAM	03
JUNCTION BOX WIRING	04
JUNCTION BOX WIRING	05
POTENTIAL TRANSFORMER DIAGRAM	B13440052TE0
FAULT INTERRUPRT LOGIC DIAGRAM	B13440053HJ0
JBOX PNI30 AUX/MAG/VS/PT	B13440054ARA

JUNCTION BOX 1 WIRING

SYMBOLS:

- # — SPECIAL NOTE DESIGNATOR (WHERE # = NUMBER)
- CW — CUSTOMER WIRED CONNECTION
- FW — FIELD WIRED CONNECTION
- * — CONTACT AVAILABLE FOR CUSTOMER USE
- ABB — CURRENT TRANSFORMERS (CTS) ARE TO BE WIRED TO THE HINGE SIDE OF THE TEST SWITCH SO THAT THE CTS ARE SHORTED WHEN THE TEST SWITCH IS IN THE OPEN/SHORTED POSITION.
- SECU — CURRENT TRANSFORMERS (CTS) ARE TO BE WIRED TO THE EVEN-NUMBERED SIDE OF THE TEST SWITCH CTS ARE SHORTED WHEN THE DISCONNECT PINS ARE INSERTED INTO THE CENTER SLOTS OF THE TEST SWITCH.
- ARROW DESIGNATES WIRE LEAVES CURRENT SHEET
- WIRES CONNECT AT THIS JUNCTURE
- WIRES DO NOT CONNECT AT THIS JUNCTURE
- CAPACITOR
- CURRENT TRANSFORMER
- OR — RELAY INPUT
- ANALOG VOLTAGE INPUT
- ANALOG CURRENT INPUT
- H1 H2 X1 X2 OR — POTENTIAL TRANSFORMER
- FUSE
- MAGNETIC LATCH
- OR — NORMALLY OPEN CONTACT
- OR — NORMALLY CLOSED CONTACT
- LIGHT EMITTING DIODE
- DIODE
- GROUND
- RESISTOR

NOTES:

POWER REQUIREMENT:

2.0 A AT 120VAC STEADY STATE FOR CONTROL CABINET
JUNCTION BOX IS DESIGNED TO PROVIDE EXTERNAL POWER AND PROVISIONS FOR UP TO THREE VI CONTROLLED FAULT INTERRUPTER MECHANISMS.

SPECIAL NOTE REFERENCES:

1 MAGLATCH SIGNALS TO JUNCTION BOX 1 (SEE B13440054ARA)

SHOWN IN OFF POSITION

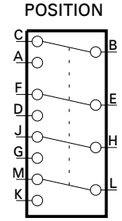

SHOWN IN OFF POSITION

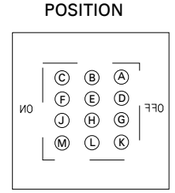

PRINT IDENTIFICATION

DATE _____ G&W NO. _____

CUSTOMER _____

ORDER NO. _____

☐ FOR RECORD ITEM NO. ____

☐ FOR APPROVAL-NO MORE WORK TO BE DONE UNTIL APPROVAL IS RECEIVED

ALL DRAWING CHANGES MUST BE MADE ON CAD. ANY MANUAL CHANGES WILL VOID DRAWING.

JBOX PNI30 CT/MAG

This drawing and the information thereon are and remain the property of G&W and are not to be copied, reproduced or disclosed to others without the expressed written consent of G&W

G&W ELECTRIC Co.

REV.	ECO	ENG	DES	DATE

REVISIONS

USED ON:	D9498 0173 ACE			DRAWING NO.	REV
ENG/DES:	JPB	JPB	DATE: 2/18/22	B1344 0054 ARB	
APPR BY:			DATE:	SCALE:	SHEET: 1 OF 5

LEGEND

JUNCTION BOX 1 WIRING

FINAL REVIEW

WIRE COLORS AND CABLE/HARNESS DESIGNATIONS:

WIRES LEAVING SHEET NOMENCLATURE:
SHEET NUMBER [ZONE X, ZONE Y] (DESTINATION POINT)
EXAMPLE: 10 [B, 4] (MIB1-J1-01)

BLK = BLACK	BLU = BLUE
WHI = WHITE	ORG = ORANGE
RED = RED	BRN = BROWN
GRN = GREEN	VLT = VIOLET
YEL = YELLOW	GRY = GRAY

XXX/XXX = PRIMARY COLOR/SECONDARY COLOR TRACE
EXAMPLE: RED/BLK = RED WITH BLACK TRACE

XXX10 = 10 PIN HARNESS WITH XXX COLOR HEATSHRINK
XXX12 = 12 PIN HARNESS WITH XXX COLOR HEATSHRINK
EXAMPLE: BLK10 = 10 PIN HARNESS WITH BLACK HEATSHRINK

#CBL X = CABLE USED TO CONNECT COMPONENTS WITHIN CONTROL CABINET (WHERE # = NUMBER OF CONDUCTORS WITHIN CABLE, AND X = SEQUENTIAL CABLE NUMBER USED IN DESIGN).

- (AUX) AUX = AUXILIARY CONTACT CABLE (10/C)
- (AUX-IF) AUX-IF = INTERNAL FEEDBACK AUXILIARY CONTACT CABLE FOR MOTOR CONTROL USE (10/C)
- (AUX/VB) AUX/VB = AUXILIARY CONTACT AND VISIBLE BREAK CONTACT CABLE (10/C)
- (AVS) AVS = ANALOG VOLTAGE SENSING CABLE (16/C)
- (CNTL) CNTL = MAGNETIC ACTUATOR CONTROL CABLE (10/C)
- (CT/MAG) CT/MAG = INTERNAL THREE PHASE CURRENT TRANSFORMER SECONDARY AND MAGNETIC LATCH CABLE (10/C)
- (CTX) CTX = EXTERNAL CURRENT TRANSFORMER CABLE (2/C) (WHERE X = PHASE)
- (CT) CT = INTERNAL CURRENT TRANSFORMER CABLE (10/C)
- (DS) DS = DENSITY SWITCH (2/C)
- (DVS) DVS = DIGITAL VOLTAGE SENSING CABLE (4/C)
- (EP/ET) EP/ET = EXTERNAL POWER / EXTERNAL TRIP (4/C)
- (EVSX) EVSX =EXTERNAL VOLTAGE SENSOR CABLE (2/C) (WHERE X = PHASE)
- (FCI) FCI = FAULTED CIRCUIT INDICATOR CABLE (4/C)
- (LPWD) LPWD = LOW PRESSURE WARNING DEVICE CABLE (2/C)
- (MAG) MAG = MAGNETIC LATCH CABLE (4/C)
- (M) MOTOR = MOTOR CABLE (10/C)
- (PT#) PT# = POTENTIAL TRANSFORMER SECONDARY CABLE (2/C) (WHERE # = NUMBER)
- (PWR) PWR = POWER CABLE (3/C)
- (VB) VB = VISIBLE BREAK CONTACT CABLE (10/C)
- (VS) VS = LOW ENERGY ANALOG VOLTAGE SENSING CABLE (4/C)
- (VSB) VSB = VOLTAGE SENSING BUSHING CABLE (4/C)
- [AUX] AUXILIARY CONTACTS (TRIDENT WITH SAFEVU)
- [VB] VISIBLE BREAK CONTACTS (TRIDENT WITH SAFEVU)
- (CBL#) CBL# = CABLE (10/C) (WHERE # = NUMBER OF CABLE)
- SERIAL = SERIAL COMMUNICATION CABLE
- FIBER = FIBER OPTIC COMMUNICATION CABLE
- RJ45 = COPPER ETHERNET CABLE

DEVICES AND CONNECTIONS:

PS#-BATT = 600W POWER SUPPLY BATTERY CONNECTIONS (WHERE # = NUMBER OF POWER SUPPLY)
PS#-DC = 600W POWER SUPPLY DC CONNECTIONS (WHERE # = NUMBER OF POWER SUPPLY)
PS# ALT SOURCE = 600W POWER SUPPLY ALTERNATE 120VAC SOURCE (WHERE # = NUMBER OF POWER SUPPLY)
PS# PRI SOURCE = 600W POWER SUPPLY PRIMARY 120VAC SOURCE (WHERE # = NUMBER OF POWER SUPPLY)
PS#-F1 = 600W POWER SUPPLY PRIMARY SOURCE FUSE (WHERE # = NUMBER OF POWER SUPPLY)
PS#-F2 = 600W POWER SUPPLY ALTERNATE SOURCE FUSE (WHERE # = NUMBER OF POWER SUPPLY)
PS#-F3 = 600W POWER SUPPLY 24VDC SOURCE FUSE (WHERE # = NUMBER OF POWER SUPPLY)
PS#-SW1 = 600W POWER SUPPLY PUSH BUTTON TO PERFORM MANUAL BATTERY TEST (WHERE # = NUMBER OF POWER SUPPLY)
BATT#A = BATTERY A OF BATTERY BANK # (WHERE # = NUMBER OF BATTERY BANK)
BATT#B = BATTERY B OF BATTERY BANK # (WHERE # = NUMBER OF BATTERY BANK)
12V = 12V SEALED LEAD ACID BATTERY
CB# = CIRCUIT BREAKER (WHERE # = NUMBER OF CIRCUIT BREAKER)
DC-DC# = DC-TO-DC VOLTAGE CONVERTER (WHERE # = NUMBER OF DC CONVERTER)
FB# = FUSE BLOCK (WHERE # = NUMBER OF FUSE BLOCK)
HMI# = HUMAN MACHINE INTERFACE (WHERE # = NUMBER OF HUMAN MACHINE INTERFACE)
K# = ELECTROMECHANICAL INTERPOSING RELAY (WHERE # = NUMBER OF ELECTROMECHANICAL INTERPOSING RELAY)
LED# = LIGHT EMITTING DIODE (WHERE # = NUMBER OF LIGHT EMITTING DIODE)
LOR# = LOCK OUT RELAY (WHERE # = NUMBER OF LOCK OUT RELAY)
LRSS# = LOCAL REMOTE SELECTOR SWITCH (WHERE # = NUMBER OF LOCAL REMOTE SELECTOR SWITCH)
MIB# = MOTOR INTERFACE BOARD (WHERE # = NUMBER OF MOTOR INTERFACE BOARD)
PB# = PUSH BUTTON (WHERE # = NUMBER OF PUSH BUTTON)
SSW# = SELECTOR SWITCH (WHERE # = NUMBER OF SELECTOR SWITCH)
TB# = TERMINAL BLOCK # (WHERE # = NUMBER OF TERMINAL BLOCK)
TGPWR = CONTROL POWER TOGGLE SWITCH
THERMOSTAT# = THERMOSTAT (WHERE # = NUMBER OF THERMOSTAT)
TIB# = TRIP INTERFACE BOARD (WHERE # = NUMBER OF TRIP INTERFACE BOARD)
TS# = TEST SWITCH (WHERE # = NUMBER OF TEST SWITCH)
VSR# = VOLTAGE SEEKING RELAY (WHERE # = NUMBER OF VOLTAGE SEEKING RELAY)

JUMPERS FOR 24VDC PS1 ARE RED.
JUMPERS FOR 120VAC LINE ARE RED.
JUMPERS FOR 0VDC PS1 ARE BLACK.
JUMPERS FOR 120VAC NEUTRAL ARE WHITE.

ALL DRAWING CHANGES MUST BE MADE ON CAD. ANY MANUAL CHANGES WILL VOID DRAWING.

JBOX PNI30 CT/MAG

This drawing and the information thereon are and remain the property of G&W and are not to be copied, reproduced or disclosed to others without the expressed written consent of G&W

G&W ELECTRIC Co.

USED ON: D9498 0173 ACE			DRAWING NO. B1344 0054 ARB		REV
ENG/DES: JPB	JPB	DATE: 2/18/22			
APPR BY:		DATE:	SCALE:	SHEET: 2 OF 5	

ONE LINE DIAGRAM

JUNCTION BOX 1 WIRING

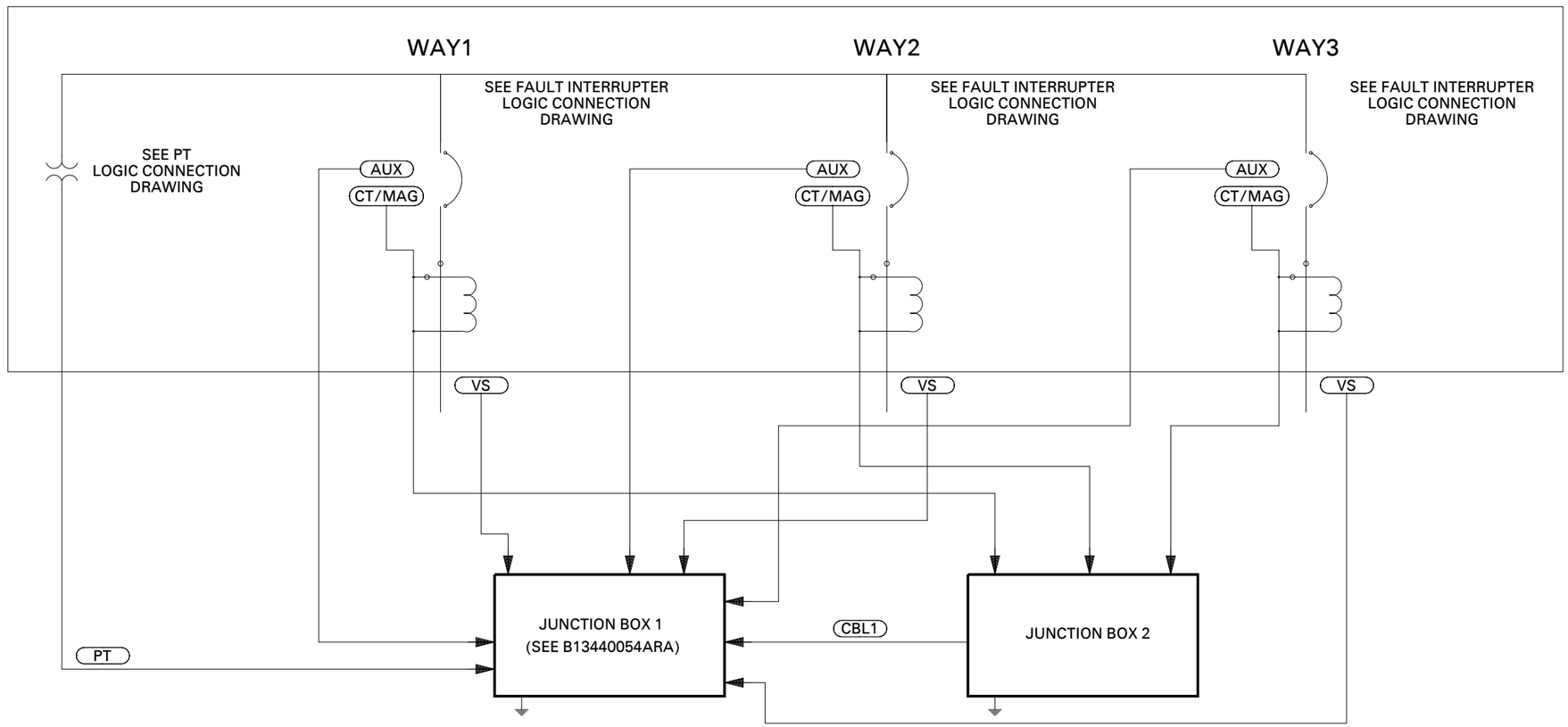

LEGEND:

- FAULT INTERRUPTER MECHANISM
- LOADBREAK MECHANISM
- G&W WIRED CONNECTION
- CUSTOMER WIRED CONNECTION
- CONNECTORIZED INTERFACE
- HARDWIRED INTERFACE
- FIELD WIRED CONNECTION

ALL DRAWING CHANGES MUST BE MADE ON CAD. ANY MANUAL CHANGES WILL VOID DRAWING.

JBOX PNI30 CT/MAG

This drawing and the information thereon are and remain the property of G&W and are not to be copied, reproduced or disclosed to others without the expressed written consent of G&W

G&W ELECTRIC Co.

USED ON:	D9498 0173 ACE		DRAWING NO.		REV
ENG/DES:	JPB	JPB	DATE: 2/18/22	B1344 0054 ARB	
APPR BY:			DATE:	SCALE:	SHEET: 3 OF 5

JUNCTION BOX WIRING

FINAL REVIEW	

JUNCTION BOX 1 WIRING

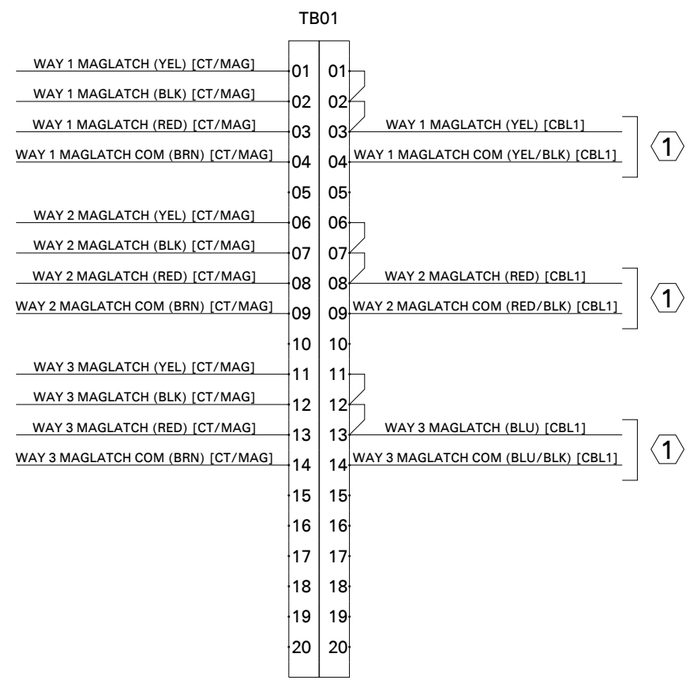

ALL DRAWING CHANGES MUST BE MADE ON CAD. ANY MANUAL CHANGES WILL VOID DRAWING.

JBOX PNI30 CT/MAG

This drawing and the information thereon are and remain the property of G&W and are not to be copied, reproduced or disclosed to others without the expressed written consent of G&W

G&W ELECTRIC Co.

USED ON:	D9498 0173 ACE			DRAWING NO. B1344 0054 ARB	REV
ENG/DES:	JPB	JPB	DATE: 2/18/22		
APPR BY:			DATE:	SCALE:	SHEET: 4 OF 5

JUNCTION BOX WIRING

FINAL REVIEW	

JUNCTION BOX 1 WIRING

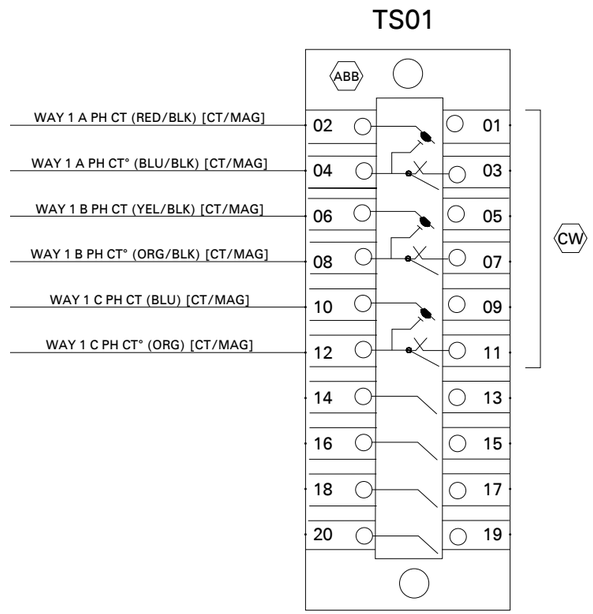

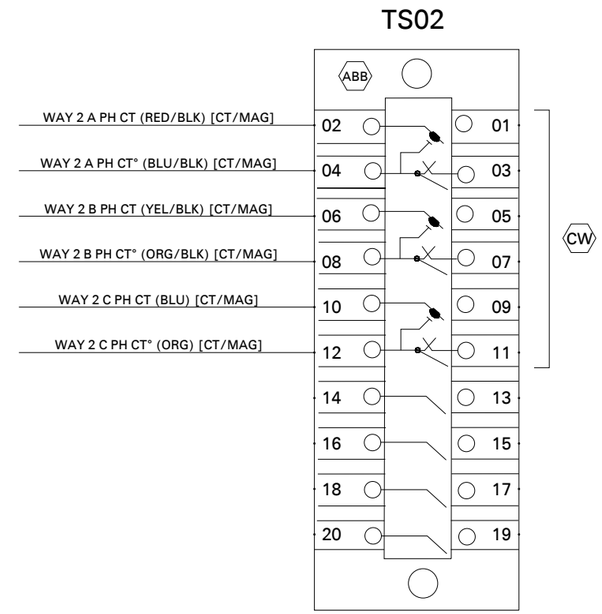

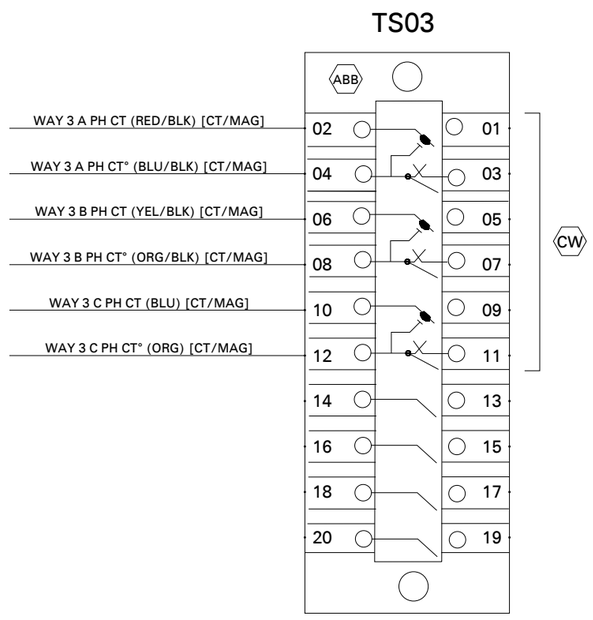

ALL DRAWING CHANGES MUST BE MADE ON CAD. ANY MANUAL CHANGES WILL VOID DRAWING.

JBOX PNI30 CT/MAG

This drawing and the information thereon are and remain the property of G&W and are not to be copied, reproduced or disclosed to others without the expressed written consent of G&W

G&W ELECTRIC Co.

USED ON: D9498 0173 ACE				DRAWING NO. B1344 0054 ARB	REV
ENG/DES:	JPB	JPB	DATE: 2/18/22		
APPR BY:			DATE:	SCALE:	SHEET: 5 OF 5

G&W Order 100486 ANIXTER INC Junction Box 2 Drawing Package

1.) B1344-0054-ARB, JBOX PNI31 CT/MAG (5 PAGES)
2.) B1344-0052-TE0, PT WIRING (1 PAGE)
3.) B1344-0054-HJ0 FAULT INTERRUPTER LOGIC (1 PAGE)
4.) B1344-0054-ARA, JBOX PNI30 AUX/MAG/VS/PT (6 PAGES)

G&W Electric Company
305 W. Crossroads Pkwy
Bolingbrook, IL 60440-4938 USA

T: +1 708.388.5010
F: +1 708.388.0755
gwelectric.com

ISO 9001 Certified ISO 14001 Certified

JUNCTION BOX 2 WIRING

TABLE OF CONTENTS

DESCRIPTION	SHEET REFERENCE
LEGEND	02
ONE LINE DIAGRAM	03
JUNCTION BOX WIRING	04
JUNCTION BOX WIRING	05
POTENTIAL TRANSFORMER DIAGRAM	B13440052TE0
FAULT INTERRUPRT LOGIC DIAGRAM	B13440053HJ0
JBOX PNI30 AUX/MAG/VS/PT	B13440054ARA

SYMBOLS:

- # — SPECIAL NOTE DESIGNATOR (WHERE # = NUMBER)
- CW — CUSTOMER WIRED CONNECTION
- FW — FIELD WIRED CONNECTION
- * — CONTACT AVAILABLE FOR CUSTOMER USE
- ABB — CURRENT TRANSFORMERS (CTS) ARE TO BE WIRED TO THE HINGE SIDE OF THE TEST SWITCH SO THAT THE CTS ARE SHORTED WHEN THE TEST SWITCH IS IN THE OPEN/SHORTED POSITION.
- SECU — CURRENT TRANSFORMERS (CTS) ARE TO BE WIRED TO THE EVEN-NUMBERED SIDE OF THE TEST SWITCH CTS ARE SHORTED WHEN THE DISCONNECT PINS ARE INSERTED INTO THE CENTER SLOTS OF THE TEST SWITCH.
- ARROW DESIGNATES WIRE LEAVES CURRENT SHEET
- WIRES CONNECT AT THIS JUNCTURE
- WIRES DO NOT CONNECT AT THIS JUNCTURE
- CAPACITOR
- CURRENT TRANSFORMER
- OR — RELAY INPUT
- ANALOG VOLTAGE INPUT
- ANALOG CURRENT INPUT
- H1 H2 X1 X2 OR — POTENTIAL TRANSFORMER
- FUSE
- MAGNETIC LATCH
- OR — NORMALLY OPEN CONTACT
- OR — NORMALLY CLOSED CONTACT
- LIGHT EMITTING DIODE
- DIODE
- GROUND
- RESISTOR

NOTES:

POWER REQUIREMENT:

2.0 A AT 120VAC STEADY STATE FOR CONTROL CABINET
JUNCTION BOX IS DESIGNED TO PROVIDE EXTERNAL POWER AND PROVISIONS FOR UP TO THREE VI CONTROLLED FAULT INTERRUPTER MECHANISMS.

SPECIAL NOTE REFERENCES:

1 MAGLATCH SIGNALS TO JUNCTION BOX 1 (SEE B13440054ARA)

SHOWN IN OFF POSITION

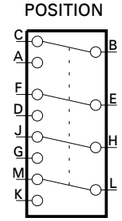

SHOWN IN OFF POSITION

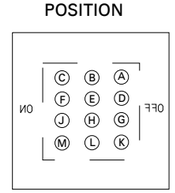

FINAL REVIEW

PRINT IDENTIFICATION
DATE 7-6-2022 G&W NO. 100486
CUSTOMER ANIXTER INC
ORDER NO. 2242007-00
[X] FOR RECORD ITEM NO. 1
[ ] FOR APPROVAL-NO MORE WORK TO BE DONE UNTIL APPROVAL IS RECEIVED

ALL DRAWING CHANGES MUST BE MADE ON CAD. ANY MANUAL CHANGES WILL VOID DRAWING.

JBOX PNI30 CT/MAG

This drawing and the information thereon are and remain the property of G&W and are not to be copied, reproduced or disclosed to others without the expressed written consent of G&W

G&W ELECTRIC Co.

REV.	ECO	ENG	DES	DATE

REVISIONS

USED ON: D9498 0173 ACE			DRAWING NO. B1344 0054 ARB	REV
ENG/DES: JPB	JPB	DATE: 2/18/22		
APPR BY:		DATE:	SCALE:	SHEET: 1 OF 5

LEGEND

JUNCTION BOX 2 WIRING

FINAL REVIEW	

WIRE COLORS AND CABLE/HARNESS DESIGNATIONS:

WIRES LEAVING SHEET NOMENCLATURE:
SHEET NUMBER [ZONE X, ZONE Y] (DESTINATION POINT)
EXAMPLE: 10 [B, 4] (MIB1-J1-01)

BLK = BLACK	BLU = BLUE
WHI = WHITE	ORG = ORANGE
RED = RED	BRN = BROWN
GRN = GREEN	VLT = VIOLET
YEL = YELLOW	GRY = GRAY

XXX/XXX = PRIMARY COLOR/SECONDARY COLOR TRACE
EXAMPLE: RED/BLK = RED WITH BLACK TRACE

XXX10 = 10 PIN HARNESS WITH XXX COLOR HEATSHRINK
XXX12 = 12 PIN HARNESS WITH XXX COLOR HEATSHRINK
EXAMPLE: BLK10 = 10 PIN HARNESS WITH BLACK HEATSHRINK

#CBL X = CABLE USED TO CONNECT COMPONENTS WITHIN CONTROL CABINET (WHERE # = NUMBER OF CONDUCTORS WITHIN CABLE, AND X = SEQUENTIAL CABLE NUMBER USED IN DESIGN).

- (AUX) AUX = AUXILIARY CONTACT CABLE (10/C)
- (AUX-IF) AUX-IF = INTERNAL FEEDBACK AUXILIARY CONTACT CABLE FOR MOTOR CONTROL USE (10/C)
- (AUX/VB) AUX/VB = AUXILIARY CONTACT AND VISIBLE BREAK CONTACT CABLE (10/C)
- (AVS) AVS = ANALOG VOLTAGE SENSING CABLE (16/C)
- (CNTL) CNTL = MAGNETIC ACTUATOR CONTROL CABLE (10/C)
- (CT/MAG) CT/MAG = INTERNAL THREE PHASE CURRENT TRANSFORMER SECONDARY AND MAGNETIC LATCH CABLE (10/C)
- (CTX) CTX = EXTERNAL CURRENT TRANSFORMER CABLE (2/C) (WHERE X = PHASE)
- (CT) CT = INTERNAL CURRENT TRANSFORMER CABLE (10/C)
- (DS) DS = DENSITY SWITCH (2/C)
- (DVS) DVS = DIGITAL VOLTAGE SENSING CABLE (4/C)
- (EP/ET) EP/ET = EXTERNAL POWER / EXTERNAL TRIP (4/C)
- (EVSX) EVSX =EXTERNAL VOLTAGE SENSOR CABLE (2/C) (WHERE X = PHASE)
- (FCI) FCI = FAULTED CIRCUIT INDICATOR CABLE (4/C)
- (LPWD) LPWD = LOW PRESSURE WARNING DEVICE CABLE (2/C)
- (MAG) MAG = MAGNETIC LATCH CABLE (4/C)
- (M) MOTOR = MOTOR CABLE (10/C)
- (PT#) PT# = POTENTIAL TRANSFORMER SECONDARY CABLE (2/C) (WHERE # = NUMBER)
- (PWR) PWR = POWER CABLE (3/C)
- (VB) VB = VISIBLE BREAK CONTACT CABLE (10/C)
- (VS) VS = LOW ENERGY ANALOG VOLTAGE SENSING CABLE (4/C)
- (VSB) VSB = VOLTAGE SENSING BUSHING CABLE (4/C)
- [AUX] AUXILIARY CONTACTS (TRIDENT WITH SAFEVU)
- [VB] VISIBLE BREAK CONTACTS (TRIDENT WITH SAFEVU)
- (CBL#) CBL# = CABLE (10/C) (WHERE # = NUMBER OF CABLE)
- SERIAL = SERIAL COMMUNICATION CABLE
- FIBER = FIBER OPTIC COMMUNICATION CABLE
- RJ45 = COPPER ETHERNET CABLE

DEVICES AND CONNECTIONS:

PS#-BATT = 600W POWER SUPPLY BATTERY CONNECTIONS (WHERE # = NUMBER OF POWER SUPPLY)
PS#-DC = 600W POWER SUPPLY DC CONNECTIONS (WHERE # = NUMBER OF POWER SUPPLY)
PS# ALT SOURCE = 600W POWER SUPPLY ALTERNATE 120VAC SOURCE (WHERE # = NUMBER OF POWER SUPPLY)
PS# PRI SOURCE = 600W POWER SUPPLY PRIMARY 120VAC SOURCE (WHERE # = NUMBER OF POWER SUPPLY)
PS#-F1 = 600W POWER SUPPLY PRIMARY SOURCE FUSE (WHERE # = NUMBER OF POWER SUPPLY)
PS#-F2 = 600W POWER SUPPLY ALTERNATE SOURCE FUSE (WHERE # = NUMBER OF POWER SUPPLY)
PS#-F3 = 600W POWER SUPPLY 24VDC SOURCE FUSE (WHERE # = NUMBER OF POWER SUPPLY)
PS#-SW1 = 600W POWER SUPPLY PUSH BUTTON TO PERFORM MANUAL BATTERY TEST (WHERE # = NUMBER OF POWER SUPPLY)
BATT#A = BATTERY A OF BATTERY BANK # (WHERE # = NUMBER OF BATTERY BANK)
BATT#B = BATTERY B OF BATTERY BANK # (WHERE # = NUMBER OF BATTERY BANK)
12V = 12V SEALED LEAD ACID BATTERY
CB# = CIRCUIT BREAKER (WHERE # = NUMBER OF CIRCUIT BREAKER)
DC-DC# = DC-TO-DC VOLTAGE CONVERTER (WHERE # = NUMBER OF DC CONVERTER)
FB# = FUSE BLOCK (WHERE # = NUMBER OF FUSE BLOCK)
HMI# = HUMAN MACHINE INTERFACE (WHERE # = NUMBER OF HUMAN MACHINE INTERFACE)
K# = ELECTROMECHANICAL INTERPOSING RELAY (WHERE # = NUMBER OF ELECTROMECHANICAL INTERPOSING RELAY)
LED# = LIGHT EMITTING DIODE (WHERE # = NUMBER OF LIGHT EMITTING DIODE)
LOR# = LOCK OUT RELAY (WHERE # = NUMBER OF LOCK OUT RELAY)
LRSS# = LOCAL REMOTE SELECTOR SWITCH (WHERE # = NUMBER OF LOCAL REMOTE SELECTOR SWITCH)
MIB# = MOTOR INTERFACE BOARD (WHERE # = NUMBER OF MOTOR INTERFACE BOARD)
PB# = PUSH BUTTON (WHERE # = NUMBER OF PUSH BUTTON)
SSW# = SELECTOR SWITCH (WHERE # = NUMBER OF SELECTOR SWITCH)
TB# = TERMINAL BLOCK # (WHERE # = NUMBER OF TERMINAL BLOCK)
TGPWR = CONTROL POWER TOGGLE SWITCH
THERMOSTAT# = THERMOSTAT (WHERE # = NUMBER OF THERMOSTAT)
TIB# = TRIP INTERFACE BOARD (WHERE # = NUMBER OF TRIP INTERFACE BOARD)
TS# = TEST SWITCH (WHERE # = NUMBER OF TEST SWITCH)
VSR# = VOLTAGE SEEKING RELAY (WHERE # = NUMBER OF VOLTAGE SEEKING RELAY)

JUMPERS FOR 24VDC PS1 ARE RED.
JUMPERS FOR 120VAC LINE ARE RED.
JUMPERS FOR 0VDC PS1 ARE BLACK.
JUMPERS FOR 120VAC NEUTRAL ARE WHITE.

ALL DRAWING CHANGES MUST BE MADE ON CAD. ANY MANUAL CHANGES WILL VOID DRAWING.

JBOX PNI30 CT/MAG

This drawing and the information thereon are and remain the property of G&W and are not to be copied, reproduced or disclosed to others without the expressed written consent of G&W

G&W ELECTRIC Co.

USED ON: D9498 0173 ACE			DRAWING NO. B1344 0054 ARB		REV
ENG/DES: JPB	JPB	DATE: 2/18/22			
APPR BY:		DATE:	SCALE:	SHEET: 2 OF 5	

ONE LINE DIAGRAM

JUNCTION BOX 2 WIRING

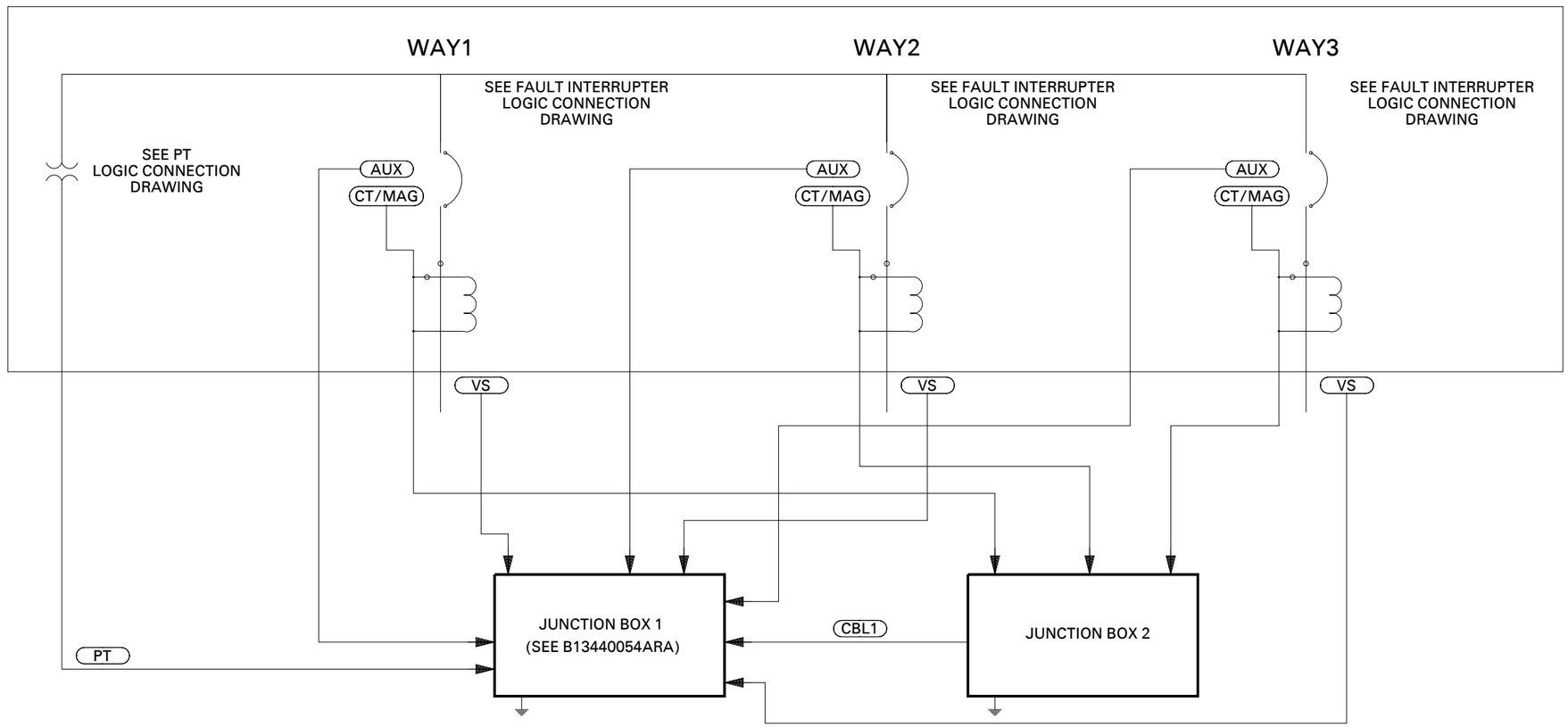

LEGEND:

- FAULT INTERRUPTER MECHANISM
- LOADBREAK MECHANISM
- G&W WIRED CONNECTION
- CUSTOMER WIRED CONNECTION
- CONNECTORIZED INTERFACE
- HARDWIRED INTERFACE
- FIELD WIRED CONNECTION

ALL DRAWING CHANGES MUST BE MADE ON CAD. ANY MANUAL CHANGES WILL VOID DRAWING.

JBOX PNI30 CT/MAG

This drawing and the information thereon are and remain the property of G&W and are not to be copied, reproduced or disclosed to others without the expressed written consent of G&W

G&W ELECTRIC Co.

USED ON:	D9498 0173 ACE		DRAWING NO.		REV
ENG/DES:	JPB	JPB	DATE: 2/18/22	B1344 0054 ARB	
APPR BY:			DATE:	SCALE:	SHEET: 3 OF 5

JUNCTION BOX WIRING

FINAL REVIEW	

JUNCTION BOX 2 WIRING

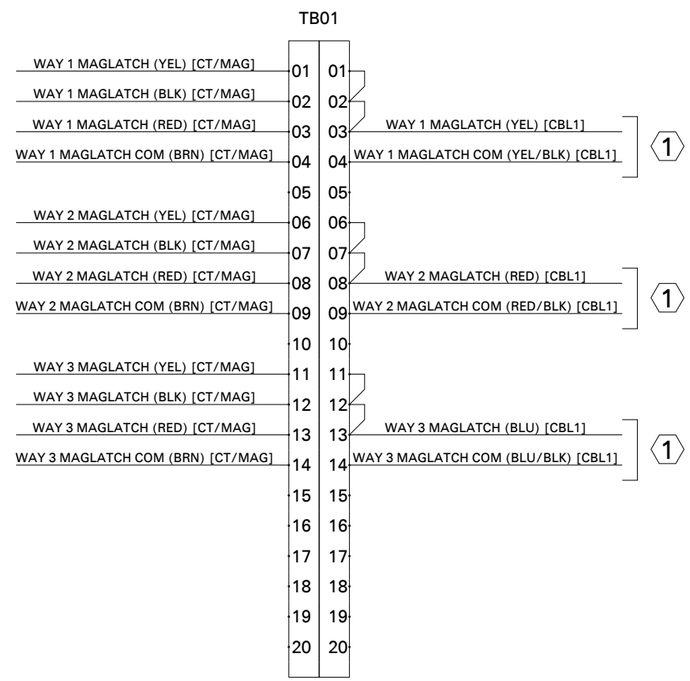

ALL DRAWING CHANGES MUST BE MADE ON CAD. ANY MANUAL CHANGES WILL VOID DRAWING.

JBOX PNI30 CT/MAG

This drawing and the information thereon are and remain the property of G&W and are not to be copied, reproduced or disclosed to others without the expressed written consent of G&W

G&W ELECTRIC Co.

USED ON:	D9498 0173 ACE			DRAWING NO. B1344 0054 ARB	REV
ENG/DES:	JPB	JPB	DATE: 2/18/22		
APPR BY:			DATE:	SCALE:	SHEET: 4 OF 5

JUNCTION BOX WIRING

JUNCTION BOX 2 WIRING

FINAL REVIEW

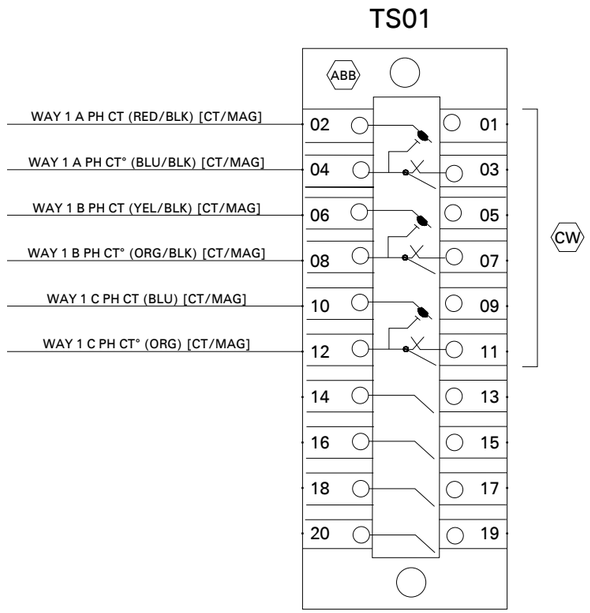

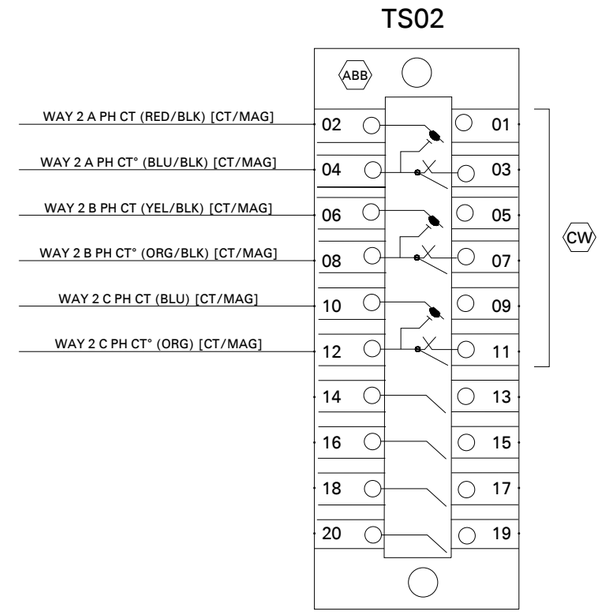

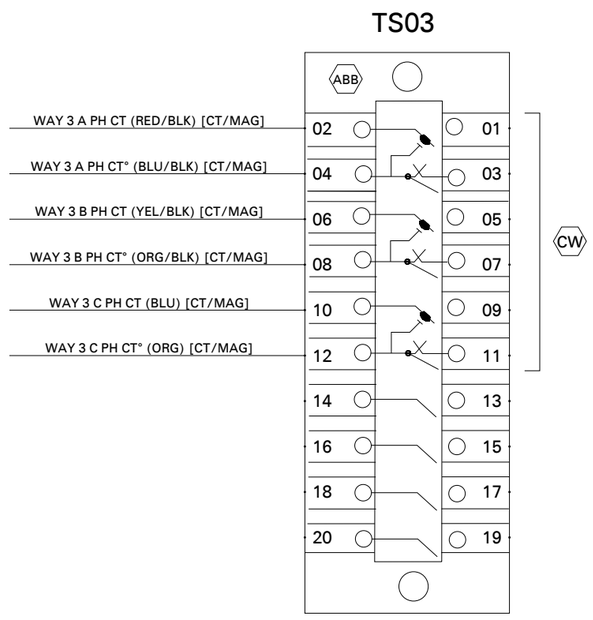

ALL DRAWING CHANGES MUST BE MADE ON CAD. ANY MANUAL CHANGES WILL VOID DRAWING.

JBOX PNI30 CT/MAG

This drawing and the information thereon are and remain the property of G&W and are not to be copied, reproduced or disclosed to others without the expressed written consent of G&W

G&W ELECTRIC Co.

USED ON: D9498 0173 ACE				DRAWING NO. B1344 0054 ARB	REV
ENG/DES:	JPB	JPB	DATE: 2/18/22		
APPR BY:			DATE:	SCALE:	SHEET: 5 OF 5

FAULT INTERRUPTER LOGIC CONNECTIONS (PER WAY)

JUNCTION BOX 2 WIRING

DESIGN REVIEW TEAM	

REVISIONS		
REV	CHANGE ORDER	DATE
A	377264 - KCL	2/6/18

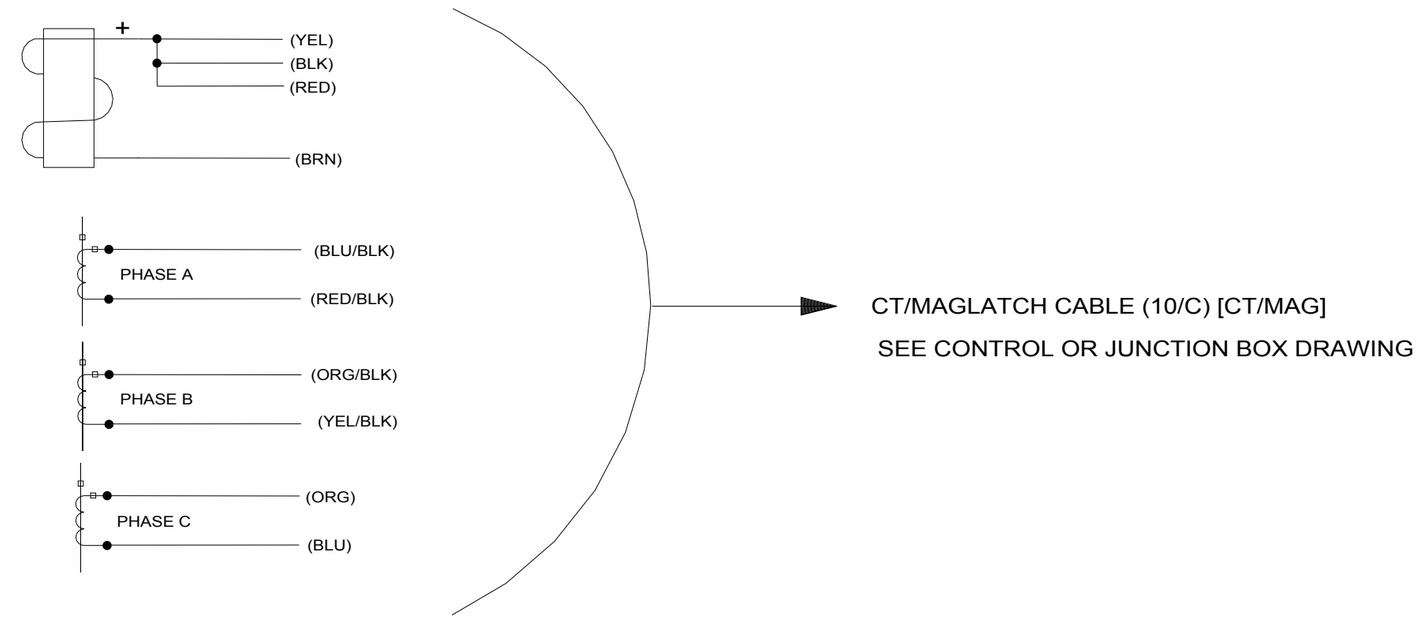

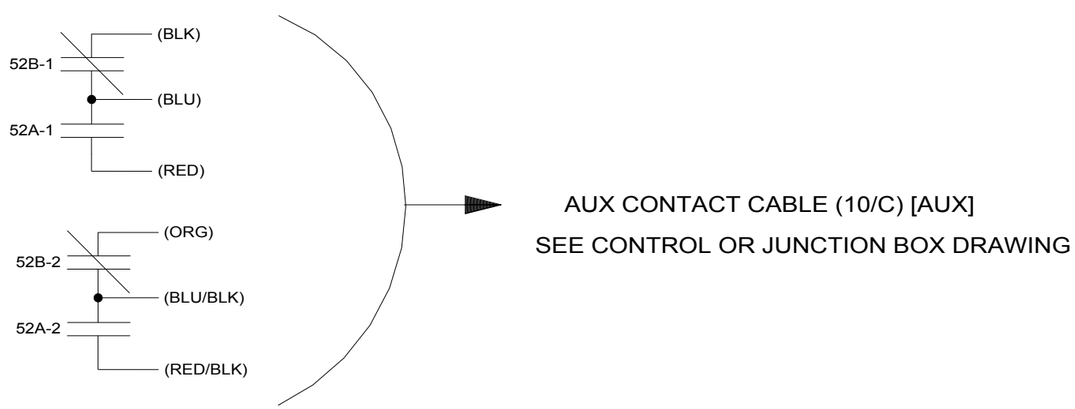

SURFACE TREATMENT	LG NI AUX 2 CT		G&W ELECTRIC CO
TOLERANCE UNLESS OTHERWISE SPECIFIED	DRAWN BY: RH	DATE: 4/20/15	DRAWING NO. B13440053HJ0 — REV A
FRACTIONAL %%p .XX %%p.060 .XXX %%p.015 .XXXX %%p.005 ANGULAR %%p1/2"	APPR. BY: SRF	DATE: 4/20/15	
	MAT'L		SCALE: — SHEET: 1 OF 1 A

DWG NO. B13440053HJ0

DATE:

TOOL ENG. APPR. BY:

THIS DRAWING AND THE INFORMATION CONTAINED THEREON ARE AND REMAIN THE PROPERTY OF G&W AND ARE NOT TO BE COPIED, REPRODUCED OR DISCLOSED TO OTHERS WITHOUT THE EXPRESS WRITTEN CONSENT OF G&W.

FINAL REVIEW	

REVISIONS				
REV.	EC0	ENG	DES	DATE
A	577105	AG	AG	4/22/22

DWG. NO.: B1344 0052 TE0

This drawing and the information thereon are and remain the property of G&W and are not to be copied, reproduced or disclosed to others without the expressed written consent of G&W.

JUNCTION BOX 2 WIRING

PT CONNECTIONS

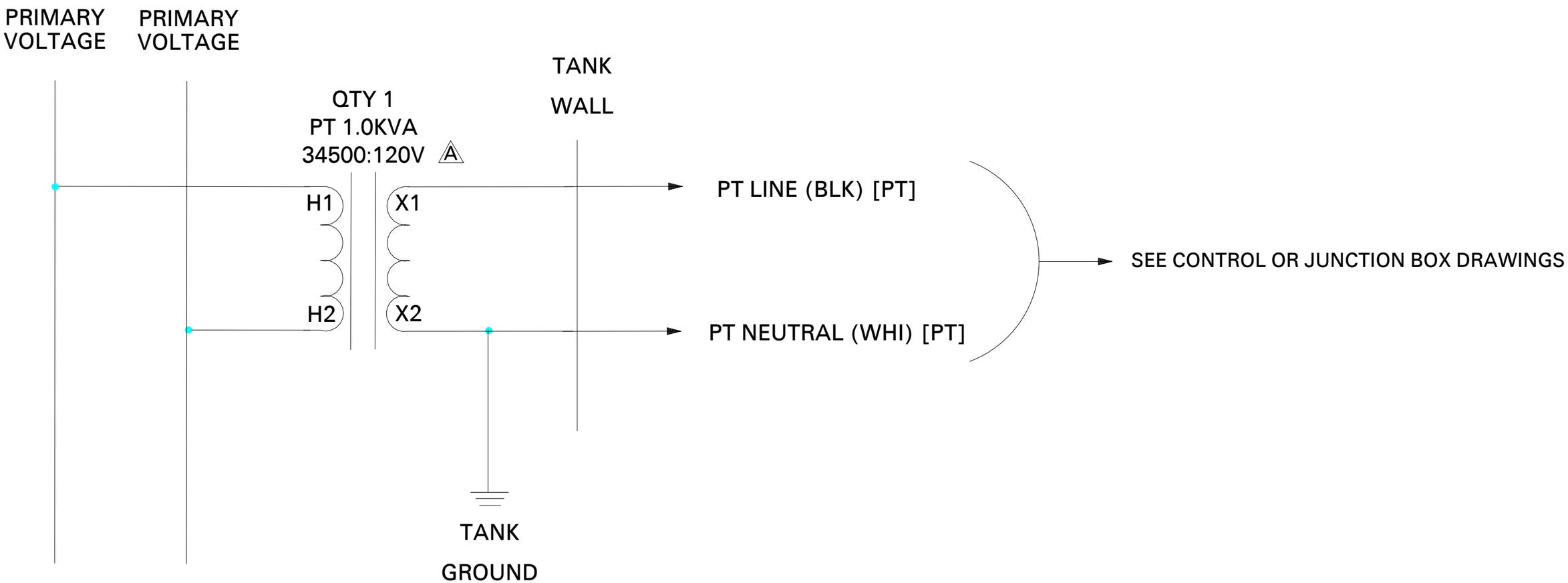

G&W WIRED CONNECTIONS

ALL DRAWING CHANGES MUST BE MADE ON CAD. ANY MANUAL CHANGES WILL VOID DRAWING.

PT INT DELTA 34500 1

G&W ELECTRIC Co.

USED ON:	D9498 0173 ACE			DRAWING NO.	REV
ENG/DES:	JPB	JPB	DATE: 2/18/22	B1344 0052 TE0	A
APPR BY:	AP		DATE: 2/18/22	SCALE:	SHEET: 1 OF 1

Printed on 2022.04.25 at 2:42 PM.

JUNCTION BOX 2 WIRING

FINAL REVIEW

TABLE OF CONTENTS

DESCRIPTION	SHEET REFERENCE
LEGEND	02
ONE LINE DIAGRAM	03
JUNCTION BOX WIRING	04
JUNCTION BOX WIRING	05
JUNCTION BOX WIRING	06
POTENTIAL TRANSFORMER DIAGRAM	B13440052TE0
FAULT INTERRUPRT LOGIC DIAGRAM	B13440053HJ0
JBOX PNI30 CT/MAG	B13440054ARB

SYMBOLS:

- # — SPECIAL NOTE DESIGNATOR (WHERE # = NUMBER)
- CW — CUSTOMER WIRED CONNECTION
- FW — FIELD WIRED CONNECTION
- * — CONTACT AVAILABLE FOR CUSTOMER USE
- ABB — CURRENT TRANSFORMERS (CTS) ARE TO BE WIRED TO THE HINGE SIDE OF THE TEST SWITCH SO THAT THE CTS ARE SHORTED WHEN THE TEST SWITCH IS IN THE OPEN/SHORTED POSITION.
- SECU — CURRENT TRANSFORMERS (CTS) ARE TO BE WIRED TO THE EVEN-NUMBERED SIDE OF THE TEST SWITCH CTS ARE SHORTED WHEN THE DISCONNECT PINS ARE INSERTED INTO THE CENTER SLOTS OF THE TEST SWITCH.
- ARROW DESIGNATES WIRE LEAVES CURRENT SHEET
- WIRES CONNECT AT THIS JUNCTURE
- WIRES DO NOT CONNECT AT THIS JUNCTURE
- CAPACITOR
- CURRENT TRANSFORMER
- OR — RELAY INPUT
- ANALOG VOLTAGE INPUT
- ANALOG CURRENT INPUT
- H1 H2 X1 X2 OR — POTENTIAL TRANSFORMER
- FUSE
- MAGNETIC LATCH
- OR — NORMALLY OPEN CONTACT
- OR — NORMALLY CLOSED CONTACT
- LIGHT EMITTING DIODE
- DIODE
- GROUND
- RESISTOR

NOTES:

POWER REQUIREMENT:

2.0 A AT 120VAC STEADY STATE FOR CONTROL CABINET
JUNCTION BOX IS DESIGNED TO PROVIDE EXTERNAL POWER AND PROVISIONS FOR UP TO THREE VI CONTROLLED FAULT INTERRUPTER MECHANISMS.

SPECIAL NOTE REFERENCES:

1. MAGLATCH SIGNALS FROM JUNCTION BOX 2 (SEE B13440054ARB)
2. CUSTOMER DRY TRIP CONTACTS

SHOWN IN OFF POSITION

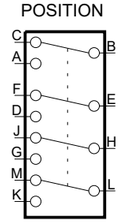

SHOWN IN OFF POSITION

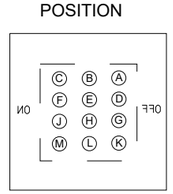

PRINT IDENTIFICATION

DATE _____ G&W NO. _____

CUSTOMER _____

ORDER NO. _____

☐ FOR RECORD ITEM NO. ____

☐ FOR APPROVAL-NO MORE WORK TO BE DONE UNTIL APPROVAL IS RECEIVED

ALL DRAWING CHANGES MUST BE MADE ON CAD. ANY MANUAL CHANGES WILL VOID DRAWING.

JBOX PNI30 AUX/MAG/VS/PT

This drawing and the information thereon are and remain the property of G&W and are not to be copied, reproduced or disclosed to others without the expressed written consent of G&W

G&W ELECTRIC Co.

REV.	ECO	ENG	DES	DATE
A	583890	JPB	JPB	6/23/22

REVISIONS

USED ON:	D9498 0173 ACE			
ENG/DES:	JPB	JPB	DATE:	2/17/22
APPR BY:	AJ		DATE:	3/8/22

DRAWING NO. B1344 0054 ARA

REV A

SCALE:

SHEET: 1 OF 6

LEGEND

JUNCTION BOX 2 WIRING

FINAL REVIEW	

WIRE COLORS AND CABLE/HARNESS DESIGNATIONS:

WIRES LEAVING SHEET NOMENCLATURE:
SHEET NUMBER [ZONE X, ZONE Y] (DESTINATION POINT)
EXAMPLE: 10 [B, 4] (MIB1-J1-01)

BLK = BLACK	BLU = BLUE
WHI = WHITE	ORG = ORANGE
RED = RED	BRN = BROWN
GRN = GREEN	VLT = VIOLET
YEL = YELLOW	GRY = GRAY

XXX/XXX = PRIMARY COLOR/SECONDARY COLOR TRACE
EXAMPLE: RED/BLK = RED WITH BLACK TRACE

XXX10 = 10 PIN HARNESS WITH XXX COLOR HEATSHRINK
XXX12 = 12 PIN HARNESS WITH XXX COLOR HEATSHRINK
EXAMPLE: BLK10 = 10 PIN HARNESS WITH BLACK HEATSHRINK

#CBL X = CABLE USED TO CONNECT COMPONENTS WITHIN CONTROL CABINET (WHERE # = NUMBER OF CONDUCTORS WITHIN CABLE, AND X = SEQUENTIAL CABLE NUMBER USED IN DESIGN).

- (AUX) AUX = AUXILIARY CONTACT CABLE (10/C)
- (AUX-IF) AUX-IF = INTERNAL FEEDBACK AUXILIARY CONTACT CABLE FOR MOTOR CONTROL USE (10/C)
- (AUX/VB) AUX/VB = AUXILIARY CONTACT AND VISIBLE BREAK CONTACT CABLE (10/C)
- (AVS) AVS = ANALOG VOLTAGE SENSING CABLE (16/C)
- (CNTL) CNTL = MAGNETIC ACTUATOR CONTROL CABLE (10/C)
- (CT/MAG) CT/MAG = INTERNAL THREE PHASE CURRENT TRANSFORMER SECONDARY AND MAGNETIC LATCH CABLE (10/C)
- (CTX) CTX = EXTERNAL CURRENT TRANSFORMER CABLE (2/C) (WHERE X = PHASE)
- (CT) CT = INTERNAL CURRENT TRANSFORMER CABLE (10/C)
- (DS) DS = DENSITY SWITCH (2/C)
- (DVS) DVS = DIGITAL VOLTAGE SENSING CABLE (4/C)
- (EP/ET) EP/ET = EXTERNAL POWER / EXTERNAL TRIP (4/C)
- (EVSX) EVSX =EXTERNAL VOLTAGE SENSOR CABLE (2/C) (WHERE X = PHASE)
- (FCI) FCI = FAULTED CIRCUIT INDICATOR CABLE (4/C)
- (LPWD) LPWD = LOW PRESSURE WARNING DEVICE CABLE (2/C)
- (MAG) MAG = MAGNETIC LATCH CABLE (4/C)
- (M) MOTOR = MOTOR CABLE (10/C)
- (PT#) PT# = POTENTIAL TRANSFORMER SECONDARY CABLE (2/C) (WHERE # = NUMBER)
- (PWR) PWR = POWER CABLE (3/C)
- (VB) VB = VISIBLE BREAK CONTACT CABLE (10/C)
- (VS) VS = LOW ENERGY ANALOG VOLTAGE SENSING CABLE (4/C)
- (VSB) VSB = VOLTAGE SENSING BUSHING CABLE (4/C)
- [AUX] AUXILIARY CONTACTS (TRIDENT WITH SAFEVU)
- [VB] VISIBLE BREAK CONTACTS (TRIDENT WITH SAFEVU)
- (CBL#) CBL# = CABLE (10/C) (WHERE # = NUMBER OF CABLE)
- SERIAL = SERIAL COMMUNICATION CABLE
- FIBER = FIBER OPTIC COMMUNICATION CABLE
- RJ45 = COPPER ETHERNET CABLE

DEVICES AND CONNECTIONS:

PS#-BATT = 600W POWER SUPPLY BATTERY CONNECTIONS (WHERE # = NUMBER OF POWER SUPPLY)
PS#-DC = 600W POWER SUPPLY DC CONNECTIONS (WHERE # = NUMBER OF POWER SUPPLY)
PS# ALT SOURCE = 600W POWER SUPPLY ALTERNATE 120VAC SOURCE (WHERE # = NUMBER OF POWER SUPPLY)
PS# PRI SOURCE = 600W POWER SUPPLY PRIMARY 120VAC SOURCE (WHERE # = NUMBER OF POWER SUPPLY)
PS#-F1 = 600W POWER SUPPLY PRIMARY SOURCE FUSE (WHERE # = NUMBER OF POWER SUPPLY)
PS#-F2 = 600W POWER SUPPLY ALTERNATE SOURCE FUSE (WHERE # = NUMBER OF POWER SUPPLY)
PS#-F3 = 600W POWER SUPPLY 24VDC SOURCE FUSE (WHERE # = NUMBER OF POWER SUPPLY)
PS#-SW1 = 600W POWER SUPPLY PUSH BUTTON TO PERFORM MANUAL BATTERY TEST (WHERE # = NUMBER OF POWER SUPPLY)
BATT#A = BATTERY A OF BATTERY BANK # (WHERE # = NUMBER OF BATTERY BANK)
BATT#B = BATTERY B OF BATTERY BANK # (WHERE # = NUMBER OF BATTERY BANK)
12V = 12V SEALED LEAD ACID BATTERY
CB# = CIRCUIT BREAKER (WHERE # = NUMBER OF CIRCUIT BREAKER)
DC-DC# = DC-TO-DC VOLTAGE CONVERTER (WHERE # = NUMBER OF DC CONVERTER)
FB# = FUSE BLOCK (WHERE # = NUMBER OF FUSE BLOCK)
HMI# = HUMAN MACHINE INTERFACE (WHERE # = NUMBER OF HUMAN MACHINE INTERFACE)
K# = ELECTROMECHANICAL INTERPOSING RELAY (WHERE # = NUMBER OF ELECTROMECHANICAL INTERPOSING RELAY)
LED# = LIGHT EMITTING DIODE (WHERE # = NUMBER OF LIGHT EMITTING DIODE)
LOR# = LOCK OUT RELAY (WHERE # = NUMBER OF LOCK OUT RELAY)
LRSS# = LOCAL REMOTE SELECTOR SWITCH (WHERE # = NUMBER OF LOCAL REMOTE SELECTOR SWITCH)
MIB# = MOTOR INTERFACE BOARD (WHERE # = NUMBER OF MOTOR INTERFACE BOARD)
PB# = PUSH BUTTON (WHERE # = NUMBER OF PUSH BUTTON)
SSW# = SELECTOR SWITCH (WHERE # = NUMBER OF SELECTOR SWITCH)
TB# = TERMINAL BLOCK # (WHERE # = NUMBER OF TERMINAL BLOCK)
TGPWR = CONTROL POWER TOGGLE SWITCH
THERMOSTAT# = THERMOSTAT (WHERE # = NUMBER OF THERMOSTAT)
TIB# = TRIP INTERFACE BOARD (WHERE # = NUMBER OF TRIP INTERFACE BOARD)
TS# = TEST SWITCH (WHERE # = NUMBER OF TEST SWITCH)
VSR# = VOLTAGE SEEKING RELAY (WHERE # = NUMBER OF VOLTAGE SEEKING RELAY)

JUMPERS FOR 24VDC PS1 ARE RED.
JUMPERS FOR 120VAC LINE ARE RED.

JUMPERS FOR 0VDC PS1 ARE BLACK.
JUMPERS FOR 120VAC NEUTRAL ARE WHITE.

ALL DRAWING CHANGES MUST BE MADE ON CAD. ANY MANUAL CHANGES WILL VOID DRAWING.

JBOX PNI30 AUX/MAG/VS/PT

This drawing and the information thereon are and remain the property of G&W and are not to be copied, reproduced or disclosed to others without the expressed written consent of G&W

G&W ELECTRIC Co.

USED ON: D9498 0173 ACE				DRAWING NO. B1344 0054 ARA	REV A
ENG/DES: JPB	JPB	DATE: 2/17/22			
APPR BY: AJ		DATE: 3/8/22		SCALE:	SHEET: 2 OF 6

ONE LINE DIAGRAM

JUNCTION BOX 2 WIRING

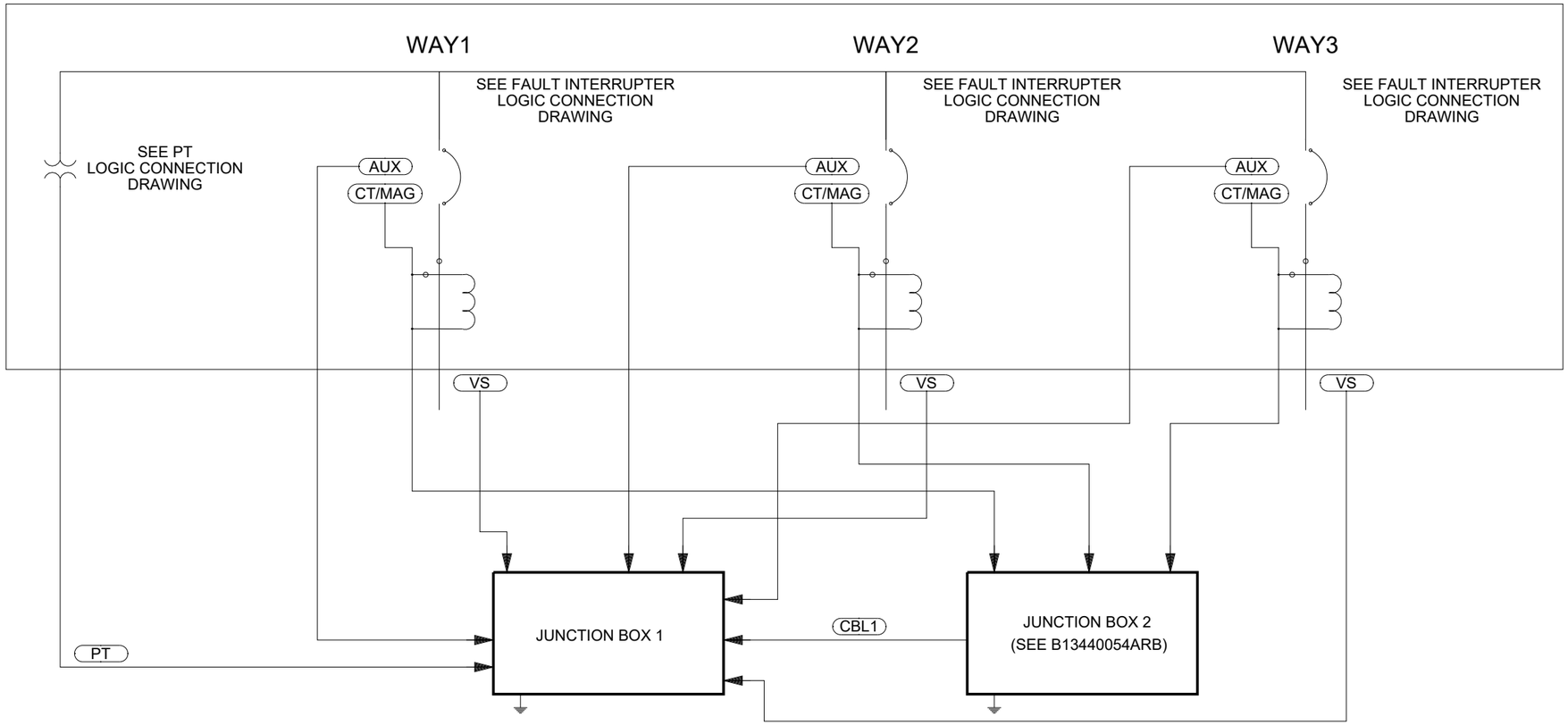

LEGEND:

- FAULT INTERRUPTER MECHANISM
- LOADBREAK MECHANISM
- G&W WIRED CONNECTION
- CUSTOMER WIRED CONNECTION
- CONNECTORIZED INTERFACE
- HARDWIRED INTERFACE
- FIELD WIRED CONNECTION

ALL DRAWING CHANGES MUST BE MADE ON CAD. ANY MANUAL CHANGES WILL VOID DRAWING.

JBOX PNI30 AUX/MAG/VS/PT

This drawing and the information thereon are and remain the property of G&W and are not to be copied, reproduced or disclosed to others without the expressed written consent of G&W

G&W ELECTRIC Co.

USED ON:	D9498 0173 ACE		DRAWING NO.		REV
ENG/DES:	JPB	JPB	DATE: 2/17/22	B1344 0054 ARA	A
APPR BY:	AJ		DATE: 3/8/22	SCALE:	SHEET: 3 OF 6

JUNCTION BOX WIRING

JUNCTION BOX 2 WIRING

FINAL REVIEW

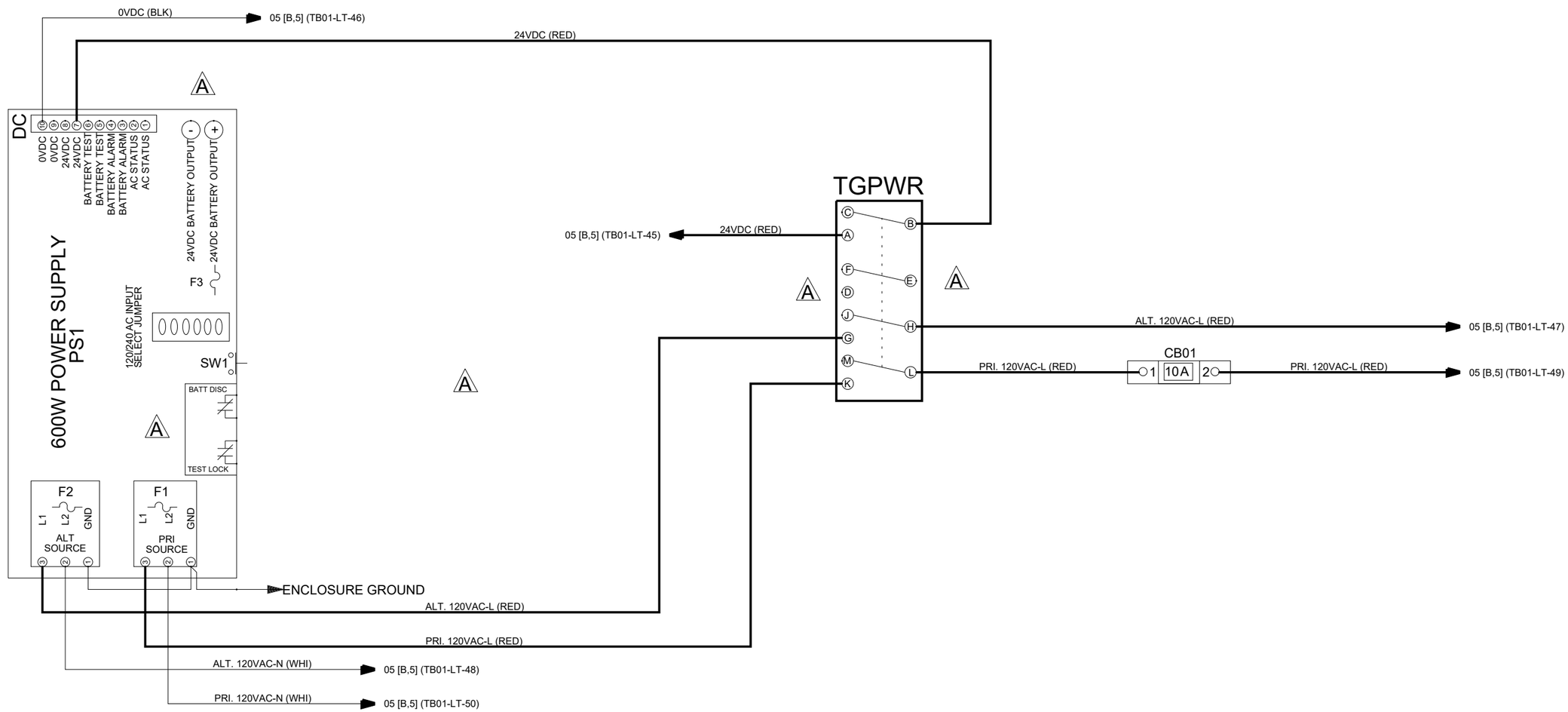

ALL DRAWING CHANGES MUST BE MADE ON CAD. ANY MANUAL CHANGES WILL VOID DRAWING.

JBOX PNI30 AUX/MAG/VS/PT

This drawing and the information thereon are and remain the property of G&W and are not to be copied, reproduced or disclosed to others without the expressed written consent of G&W

G&W ELECTRIC Co.

USED ON: D9498 0173 ACE				DRAWING NO. B1344 0054 ARA	REV A
ENG/DES: JPB	JPB	DATE: 2/17/22			
APPR BY: AJ		DATE: 3/8/22		SCALE:	SHEET: 4 OF 6

JUNCTION BOX WIRING

JUNCTION BOX 2 WIRING

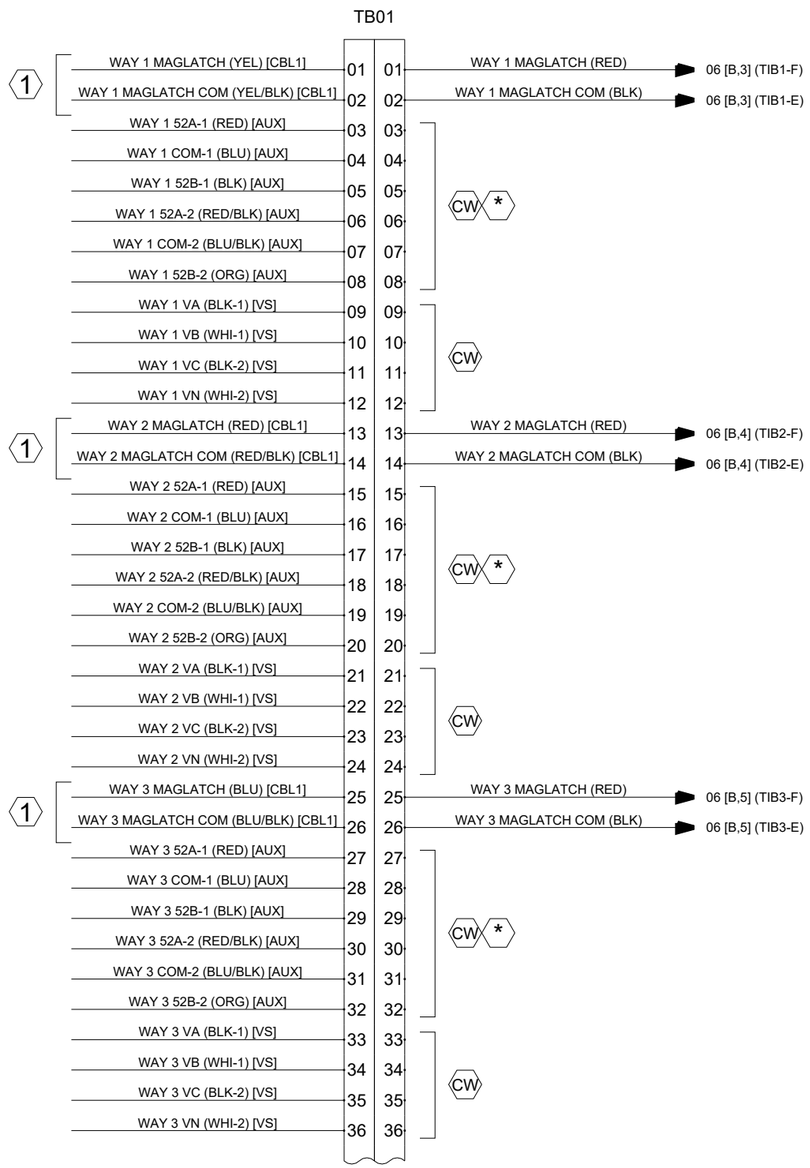

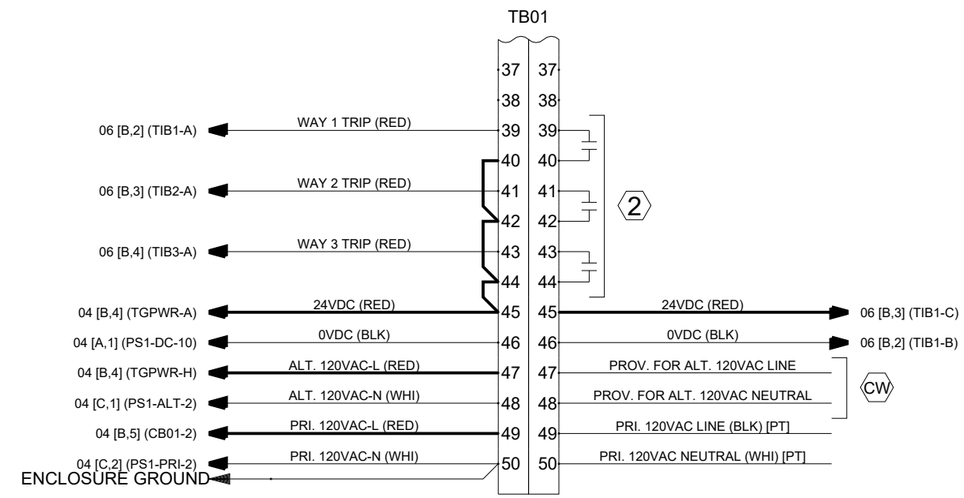

FINAL REVIEW

ALL DRAWING CHANGES MUST BE MADE ON CAD. ANY MANUAL CHANGES WILL VOID DRAWING.

JBOX PNI30 AUX/MAG/VS/PT

This drawing and the information thereon are and remain the property of G&W and are not to be copied, reproduced or disclosed to others without the expressed written consent of G&W

G&W ELECTRIC Co.

USED ON: D9498 0173 ACE				DRAWING NO. B1344 0054 ARA	REV A
ENG/DES: JPB	JPB	DATE: 2/17/22			
APPR BY: AJ		DATE: 3/8/22		SCALE:	SHEET: 5 OF 6

Printed on 2022.07.06 at 6:30 AM.

JUNCTION BOX WIRING

JUNCTION BOX 2 WIRING

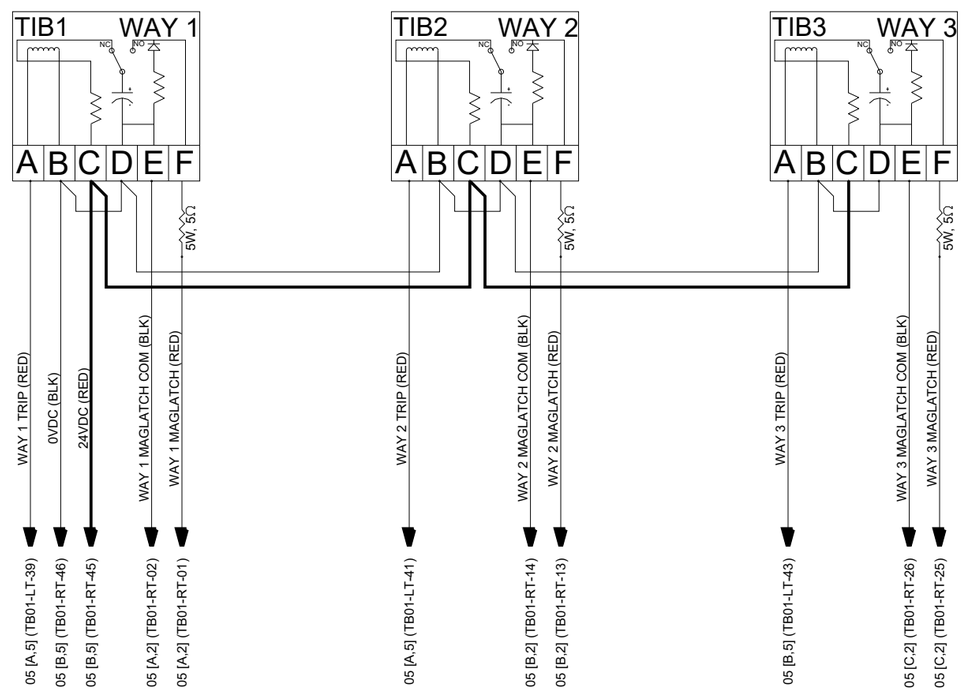

ALL DRAWING CHANGES MUST BE MADE ON CAD. ANY MANUAL CHANGES WILL VOID DRAWING.

JBOX PNI30 AUX/MAG/VS/PT

This drawing and the information thereon are and remain the property of G&W and are not to be copied, reproduced or disclosed to others without the expressed written consent of G&W

G&W ELECTRIC Co.

USED ON:	D9498 0173 ACE			DRAWING NO.	REV
ENG/DES:	JPB	JPB	DATE: 2/17/22	B1344 0054 ARA	A
APPR BY:	AJ		DATE: 3/8/22	SCALE:	SHEET: 6 OF 6

State of Alaska

GOVERNOR MIKE DUNLEAVY

Submittal Cover Sheet

Department of Transportation Public Facilities
SOUTHCOAST REGION
Construction Section

Project: KTN- HERRING COVE BRIDGE IMPROVEMENTS	Project No: 0902043/SFHWY00072
Contractor: Hamilton Construction Alaska	Submittal No. 687-073: Pad 6 35kV Switch Vault Lid
Date Response Sent: 12/10/2022	Reviewed By: Eric Strong, P.E. Recoverable Signature X Eric Strong Signed by: 2d66350b-1634-445f-b1d5-d5b87bea066b

A	AAN	R&R	R	I	R&RasN	INC	CA
Approved	Approved as Noted	Revise and Resubmit	Rejected	Informational	Revisit & Resubmit as Noted	Incomplete	Conditionally Approved

Item No.	Item	Contract Documents	A	AAN	R&R	R	I	R&R asN	INC	CA
687.2000.0000	Pad 6 35kV Vault Lid	687-3.07	X							

Comments/Anticipated Response:

- Reviewed and approved by Brian Meyers.

Transmittal Form

To: Eric Strong, P.E.
Project Engineer
DOWL

MEG Project: 102-44
DOT Project: 0902043 / SFHWY00072
KTN Herring Cove Bridge Improvements
Date: 12/10/22
Subject: Submittal Review

We are sending you enclosed via: **email** Original to follow _____yes __X__no

Copies:	Date:	Description:
1	12/10/22	687-073 Power Submittal - Pad 6 35kV Switch Vault Lid

These are transmitted: ___ For your use ___ For review ___ For Approval

_X_Conforms ___ Conforms w/ revisions ___Non-Conforming (Revise and resubmit)

See attached submittal for comments.

Thank you,

Mark Morris, P.E.
Principal
Morris Engineering Group, INC

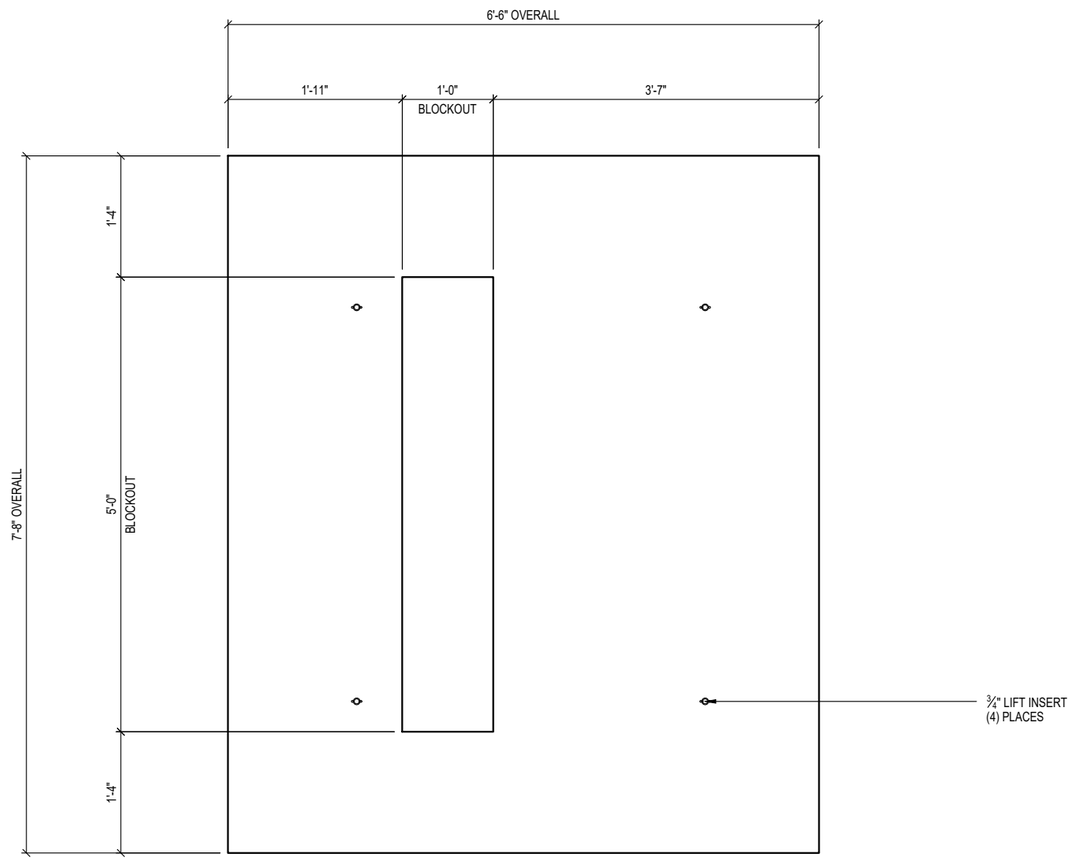

PLAN VIEW A -

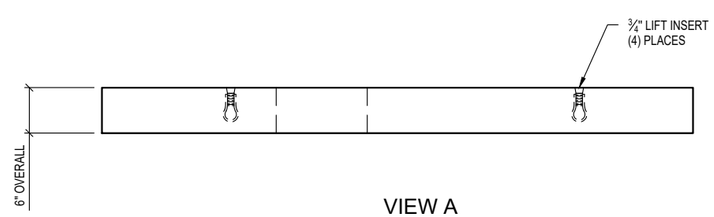

VIEW A

STRUCTURAL NOTES

1. CONCRETE:	28 DAY COMPRESSIVE STRENGTH f'c = 6,000 psi
2. REBAR:	ASTM A-615 OR A-706 GRADE 60
3. WWF:	ASTM A-1064 GRADE 65
4. DESIGN:	ACI-318-11 BUILDING CODE
5. LOADS:	ASTM C-857 "MINIMUM STRUCTURAL DESIGN LOADING FOR UNDERGROUND PRECAST CONCRETE UTILITY STRUCTURES" 300 psf UNIFORM LIVE LOAD TOP OF THE PAD AT FINISHED GRADE
6. TOLERANCES:	ASTM C-858 "STANDARD SPECIFICATION FOR UNDERGROUND PRECAST CONCRETE UTILITY STRUCTURES"

GENERAL NOTES

1. CUSTOMER TO:
   VERIFY ALL PAD FEATURES

PRODUCTION WEIGHT

7892-1260 PAD 3,365 LBS

Approved as submitted.

MORRIS ENGINEERING GROUP INC.

CONFORMS TO DESIGN CONCEPT

This shop drawing or cut sheet has been reviewed for general conformance with design concept only and does not relieve the contractor or vendor of responsibility for conformance with design drawings and specifications, all of which have priority over this shop drawing or cut sheet.

Brian Meyers P.E.
Morris Engineering Group, LLC
12/10/22

Oldcastle Infrastructure™
A CRH COMPANY
P.O. BOX 588 AUBURN, WA 98071-0588
PHONE: 800-892-1538 FAX: 253-735-4201

THIS DOCUMENT IS THE PROPERTY OF OLDCASTLE INFRASTRUCTURE IT IS CONFIDENTIAL, SUBMITTED FOR REFERENCE PURPOSES ONLY, AND SHALL NOT BE USED IN ANY WAY INJURIOUS TO THE INTERESTS OF, OR WITHOUT THE WRITTEN PERMISSION OF OLDCASTLE INFRASTRUCTURE
COPYRIGHT © 2022 OLDCASTLE INFRASTRUCTURE. ALL RIGHTS RESERVED.

7892-1260 PAD w/ BO
CUSTOMER LAYOUT
KETCHIKAN HERRING COVE.
SEATTLE, WA

CUSTOMER
CHATHAM ELECTRIC INC.

DATE	SALES	DRAWN	ENGINEER	CHECKED	SALES ORDER
12/06/2022	KS	TA	----		S195994

DRAWING NUMBER	REVISION	SHEET
010-S195994- 001	REV DATE	1 OF 1

REVISION	DESCRIPTION	BY

CHATHAM
ELECTRIC

A QUANTA SERVICES COMPANY

State of Alaska
Department of Transportation and Public Facilities
KTN: Herring Cove Bridge Improvements;
0902043/SFHWY00072

Submittals

SECTION 661

ELECTRICAL LOAD CENTERS

ALASKA DOT TYPE 1A LOAD CENTER

COMPONENT SCHEDULE

1. UTILITY LANDING PAD: 100A CU BUS, 1 PHASE, 3 WIRE

2. METERBASE: 100 AMP, 4 JAW, MANUAL BYPASS TYPE, B-LINE #U121314
(VERIFY METERING ARRANGEMENT WITH THE SERVING UTILITY)

3. PANELBOARD: 120/240 VAC, 100 AMP COPPER BUS (W/RATING LABEL), 1 PHASE, 3 WIRE, 18 CKT,
MAIN BREAKER: 100 AMP FRAME, 100 AMP TRIP, BACK-FED EATON BAB2100
BOLT-ON BRANCH BREAKERS, EATON TYPE BAB
   - 2 - 20/2 LTG 1 & 2
   - 1 - 2 POLE PREPARED SPACE
   - 1 - 1 POLE PREPARED SPACE
   - 2 - 20/2 SPARES
   - 2 - 20/1 SPARES
   - 1 - 15/1 CONTROL CKT BRANCH

(CONFIRM BREAKER SCHEDULE PRIOR TO RELEASE. PLAN SHEET U35 CALLS FOR 16CKTS PLUS A MAIN, BUT LISTS 17 SPACES PLUS A MAIN. CKT. NUMBER 5 IS PRINTED TWICE. ONCE FOR CONTACTOR CONTROL, AND AGAIN AS PART OF A SPARE 2 POLE PREPARED SPACE)

4. CONTACTOR: NEMA LIGHTING RATED, 30 A, 4 POLE, 120 VAC COIL,
SQUARE D 8903LO40V02, 1 – REQUIRED

5. PHOTO ELECTRIC CELL: 1800 WATT, 120 VAC, TWIST LOCK, ALR #SST-IES
MOUNTED ON ¾" GALVANIZED CONDUIT 36" ABOVE CABINET

6. PHOTO-CELL BYPASS SWITCH, 3 POSITION, HAND OFF AUTO,
SCHNEIDER ELECTRIC 9001KS43B, 1 REQUIRED, CONTACT BLOCK 9001KA1, 3 REQUIRED

CABINET:

CONSTRUCTION: NEMA TYPE 3R, OUTDOOR PADMOUNT, #12 GAUGE PRE-GALVANIZED STEEL CONSTRUCTION, OPEN BOTTOM FRAMED WITH 2" ANGLE, 2 SCREENED AND GASKETED VENTS, CABINET GROUND WITH #6AWG BONDING WIRE TO NEUTRAL

DOORS:HEAVY-DUTY CONCEALED HINGES (LIFT-OFF TYPE), STAINLESS STEEL VAULT HANDLES WITH ROLLER RODS THAT PROVIDE 3-POINT COMPRESSION ON CLOSED CELL NEOPRENE GASKET, PADLOCKABLE DISTRIBUTION DOOR WITH CARD HOLDER, HINGED PADLOCKABLE EUSERC #308 STYLE TILT BACK METER HOOD WITH HANDLE AND (2) 4" x 4" POLISHED WIRE GLASS WINDOWS

DEADFRONT: HINGED AND SECURED WITH QUARTER-TURN FASTENERS, ENGRAVED PHENOLIC BREAKER NAMEPLATES

FINISH: ASA 61 POLYESTER POWDER COAT OVER ZINC PRIME INSIDE AND OUT. DEADFRONT WHITE

1 – REQUIRED

UL LISTED PER STANDARD #508A
"SUITABLE FOR USE AS SERVICE ENTRANCE"

HERRING COVE
ELECTRICAL SERVICE
GRAYBAR P.O.# 4521030740
CATHAM ELECTRIC
11-18-21 S.A.B. S.O.# 67551

SKYLINE ELECTRIC & MFG. COMPANY
INCORPORATED

Switchboards
Panelboards
Steel Cabinets
UL Registered

Metal Punching . . Forming . . Welding
Industrial Control Panels
3619 7TH AVENUE SOUTH
SEATTLE, WASHINGTON 98134

TELEPHONE (206) 682-4422

FAX (206) 682-0927

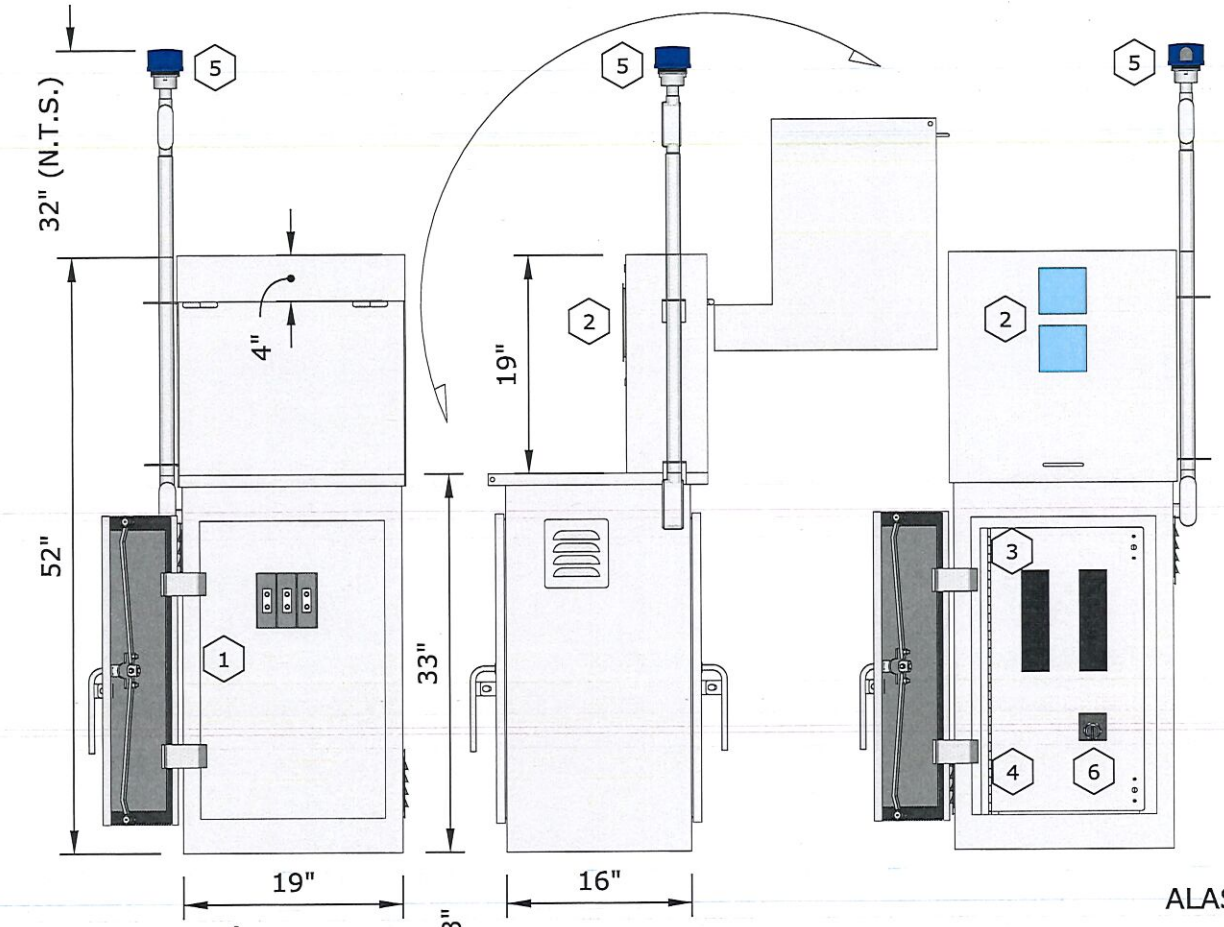

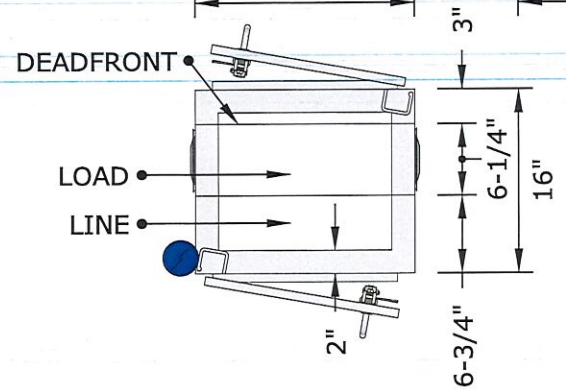

WIRING DIAGRAM
120/240VAC
1Ø, 3W

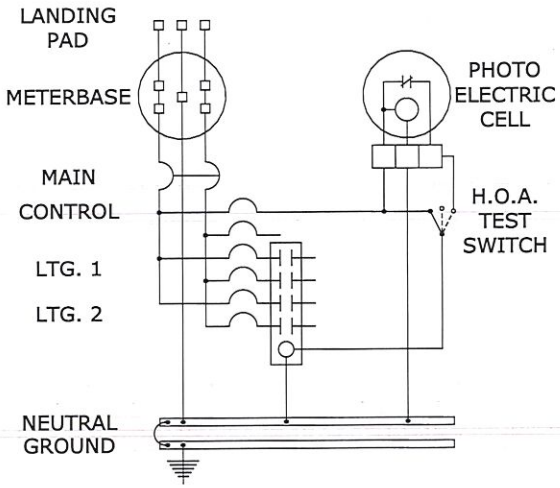

ALASKA DOT&PF TYPE A1 LOAD CENTER
LIGHTING LOAD CENTER: NO 1
PROJECT 0908043/SFHWY00072
SHEET NO U35

⬡ SEE COMPONENT SCHEDULE AND CABINET SPECIFICATIONS.

1 REQUIRED

HERRING COVE
GRAYBAR *for* CATHAM ELECTRIC

SKYLINE ELECTRIC & MFG. CO.

SCALE	DATE / DRAWN BY	DRAWING NO.
3/4" = 1' 0"	11-18-21 / S.A.B.	67551

NO.	DATE	REVISION	STATE	PROJECT DESIGNATION	YEAR	SHEET NO.	TOTAL SHEETS
1	5/2024	AS-BUILT	ALASKA	0902043/SFHWY00072	2021	U1	45

AS-BUILT DRAWING PREPARED FROM CONTRACTOR PROVIDED REDLINE WHICH MAY NOT BE CORRECT

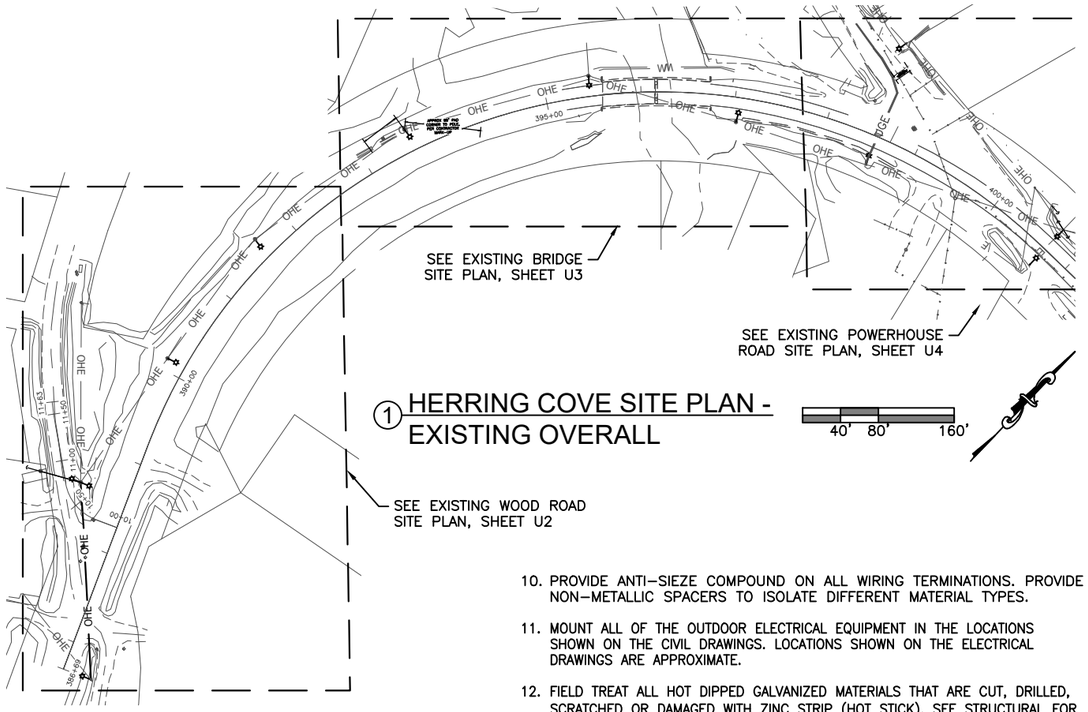

1 HERRING COVE SITE PLAN - EXISTING OVERALL

GENERAL NOTES (APPLICABLE TO THE ENTIRE ELECTRICAL SET OF PLANS AND SPECIFICATIONS, ALL SHEETS U1–U41, AND ALL SPECIFICATION SECTIONS):

1. PERFORM ALL WORK PER NATIONAL ELECTRICAL CODE (NEC), 2020 EDITION. PERFORM ALL WORK PER NATIONAL ELECTRICAL SAFETY CODE (NESC), 2017 EDITION.

2. PERFORM ALL WORK NEEDED, WORK EXPLICITLY SHOWN, WORK IMPLIED, AND WORK REQUIRED THAT IS NOT SPECIFICALLY NOTED, AS REQUIRED TO PROVIDE COMPLETE AND FULLY FUNCTIONAL POWER, TELECOM, TELEVISION, AND STREET LIGHTING SYSTEMS.

3. COORDINATE WITH ALL UTILITIES TO ALLOW THEM TO PERFORM THEIR WORK. UTILITY WORK WILL BE PAID FOR BY OTHERS. DO NOT INSTALL ANYTHING IN CONFLICT WITH UTILITIES. BRING ALL CONFLICTS TO THE ATTENTION OF THE ENGINEER. OBTAIN LOCATES BEFORE WORKING. COORDINATE ALL OUTAGES WITH UTILITIES. ALL SWITCHING AND CLEARANCE ORDERS BY KPU. SEE NOTE 22, THIS SHEET FOR WORK OUTSIDE CONTRACTORS SCOPE.

4. UNLESS OTHERWISE NOTED, ALL UNDERGROUND CONDUITS SHALL BE SCHEDULE 80 HDPE, ALL CONDUIT ACROSS BRIDGE SECTIONS SHALL BE FIBERGLASS, AND ALL ABOVE GROUND CONDUITS SHALL BE GRS. INSTALL CONDUITS IN TRENCHES PER DETAILS ON SHEET U38. SEE SHEET U18 FOR MORE ON REQUIREMENTS OF HDPE CONDUIT AND INSTALLATION.

5. STREET LIGHT WIRING SHALL BE IN CABLE WITH COPPER CONDUCTOR, 600V RATED XHHW INSULATION, AND OVERALL PVC JACKET. PROVIDE ADDITIONAL BARE GROUND. USE BARE GROUND TO GROUND TYPE 1A JUNCTION BOXES, LIGHT POLES, FOUNDATIONS, ETC. BOND GROUND INSIDE CABLE TO LIGHT POLES.

6. LOCATE EQUIPMENT WHERE SHOWN ON THE SUMMARY TABLES, SEE SHEET U34. COORDINATE WITH CIVIL. SEE NOTE 11, THIS SHEET.

7. THE EXISTING STREET LIGHTING, UTILITIES, ETC. CIRCUITING IS BASED ON THE ORIGINAL DRAWINGS AND MAY NOT BE WHERE SHOWN. OBTAIN PRIVATE LOCATES BEFORE CONSTRUCTION AND PROTECT CONDUIT, EQUIPMENT, ETC. TO REMAIN. ADJUST NEW CONDUIT ROUTING AS REQUIRED TO INTERCEPT, EXTEND, AND RE–USE EXISTING CONDUIT, ETC.

8. ALL WORK IS NEW UNLESS OTHERWISE NOTED.

9. ALL PART NUMBERS ARE GIVEN AS A GUIDE TO WHAT MATERIAL IS BEING SPECIFIED. THEY ARE BASED UPON INFORMATION AVAILABLE DURING DESIGN AND MAY NOT BE ACCURATE. VERIFY ALL PART NUMBERS DURING BIDDING AND CHANGE AS REQUIRED TO CONFORM TO DRAWINGS AND SPECIFICATIONS. THE DRAWINGS SHALL NOT BE USED AS A BILL OF MATERIALS.

10. PROVIDE ANTI–SIEZE COMPOUND ON ALL WIRING TERMINATIONS. PROVIDE NON–METALLIC SPACERS TO ISOLATE DIFFERENT MATERIAL TYPES.

11. MOUNT ALL OF THE OUTDOOR ELECTRICAL EQUIPMENT IN THE LOCATIONS SHOWN ON THE CIVIL DRAWINGS. LOCATIONS SHOWN ON THE ELECTRICAL DRAWINGS ARE APPROXIMATE.

12. FIELD TREAT ALL HOT DIPPED GALVANIZED MATERIALS THAT ARE CUT, DRILLED, SCRATCHED OR DAMAGED WITH ZINC STRIP (HOT STICK). SEE STRUCTURAL FOR FIELD TREATMENT.

13. ALL LOW VOLTAGE CONDUCTORS SHALL BE COPPER, ALL CABLE INSULATION SHALL BE 600V RATED, AND SHALL BE TYPE XHHW. ALL CABLES SHALL BE THE TYPE SPECIFIED, NO SUBSTITUTIONS.

14. USE 316 STAINLESS STEEL BOLTS, WASHERS, ETC. TO MOUNT ELECTRICAL EQUIPMENT AND STRUT CHANNEL. ALL FASTENERS AND OTHER EXPOSED HARDWARE SHALL BE 316 STAINLESS STEEL.

15. SEAL ALL PENETRATIONS IN ELECTRICAL EQUIPMENT WITH UL LISTED HARDWARE FOR SUCH USE. USE RUBBER OR SILICONE WASHERS IN ADDITION TO STAINLESS STEEL WASHERS.

16. PROJECT WILL BE COMPLETED IN PHASES IN CLOSE COORDINATION WITH GENERAL CONSTRUCTION AND CIVIL ACTIVITIES. AN OVERALL PROJECT PHASING PLAN IS REQUIRED. SEE SHEET U5 FOR MORE ON PHASING PLAN REQUIREMENTS.

17. PROVIDE OXIDE INHIBITING COMPOUND ON ALL ELECTRICAL CONNECTIONS. BURNDY PENTROX TYPE A OR E AS REQUIRED.

18. DRILL A 1/4" HOLE IN ALL CONDUIT ELBOWS INSTALLED UNDERGROUND AND LOW POINTS OF UNDERGROUND CONDUIT TO ALLOW THEM TO DRAIN. DRILL THE HOLES PRIOR TO INSTALLATION. DEBURR THE HOLES AND FIELD TREAT HOT DIPPED GALVANIZED ELBOWS PRIOR TO INSTALLATION. SEE NOTE 12.

19. COORDINATE WITH OTHER TRADES TO PERFORM THE ELECTRICAL WORK. STUDY THE OTHER PLANSETS TO UNDERSTAND HOW OTHER WORK IMPACTS THE ELECTRICAL WORK AND HOW TO INSTALL THE ELECTRICAL EQUIPMENT AND MATERIALS. INSTALL EQUIPMENT AND MATERIALS AS SHOWN ON THE DRAWINGS AND AS REQUIRED TO PROVIDE A COMPLETE AND OPERATIONAL SYSTEM. STUDY THE DRAWINGS, COORDINATE WITH OTHER TRADES, DETERMINE HOW AND PROVIDE ALL WORK (MATERIALS AND LABOR) TO MOUNT EQUIPMENT, ROUTE CONDUIT, ROUTE CABLES AND WIRING, AND ALL OTHER DETAILS OF THE INSTALLATION IN ORDER TO PROVIDE A COMPLETE AND OPERATIONAL SYSTEM. PROVIDE BACKING PLATES, BLOCKING, MOUNTING HARDWARE, NECESSARY PRODUCT ACCESSORIES AND OPTIONS, SUPPORTS, STRUCTURAL CHANNEL, AS REQUIRED.

20. NOTIFY OTHER TRADES AND COORDINATE WITH THEM THE SEQUENCE OF INSTALLING THE ELECTRICAL WORK. IF PORTIONS OF OTHER WORK HAS TO WAIT UNTIL THE ELECTRICAL WORK IS DONE, VERIFY ADEQUATE TIME IS ALLOTTED IN THE CONSTRUCTION SCHEDULE TO ALLOW THE ELECTRICAL WORK TO BE DONE AND MAKE SURE OTHER TRADES HONOR THE SCHEDULE TO ALLOW THE ELECTRICAL WORK TO BE DONE. IT IS UP TO THE GENERAL CONTRACTOR AND ALL SUB–CONTRACTORS TO WORK TOGETHER AS REQUIRED TO PROVIDE THE WORK SHOWN ON THE CONTRACT DOCUMENTS.

21. CONDUIT SPACING SHALL BE STRICTLY ENFORCED AND SHALL ADHERE TO SPECIFIC TRENCH SECTION NOTED IN EACH INSTANCE. TRENCH ROUTES AND WIDTHS SHOWN ON THE SITE PLANS ARE GRAPHICAL IN NATURE ONLY AND NOT TO SCALE. SEE SHEET U38 FOR TRENCH DETAILS.

22. OVERALL PROJECT SCOPE – POWER: PROVIDE ALL MEDIUM VOLTAGE POWER UTILITY WORK ON THE PROJECT, UNLESS NOTED OTHERWISE. THIS INCLUDES DEMOLITION OF OVERHEAD FACILITIES, RECONFIGURATION OF EXISTING OVERHEAD FACILITIES, AND COORDINATION REQUIRED WITH KPU ELECTRIC. THIS INCLUDES ALL NEW CONDUIT, CONDUCTORS, AND BOXES REQUIRED FOR THE NEW UNDERGROUND DISTRIBUTION SYSTEM, INCLUDING ALL CABLE ELBOW ASSEMBLIES, SPLICES, TERMINATIONS, ETC. THIS INCLUDES ALL POLE INFRASTRUCTURE, EQUIPMENT, MOUNTS, AND ACCESSORIES FOR THE EXISTING TO REMAIN POLES AND THE NEW POLES ON THE PROJECT. WORK INCLUDES ALL PAD MOUNTED SWITCHES, JUNCTION CABINETS, CONCRETE BASEMENTS, TRANSFORMERS, PEDESTALS, AND ASSOCIATED CABLE CONNECTION COMPONENTS, SURGE ARRESTERS, GROUNDING, EQUIPMENT ACCESSORIES, ETC. AS NOTED ON THE PLANS. WORK INCLUDES THE NEW VAULTS IN POWERHOUSE ROAD AND ALL ASSOCIATED CIRCUIT WORK.

ALL CABLING SHALL BE PULLED CONTINUOUS, WITHOUT SPLICES OR TAPS, BETWEEN POLES AND PADS, AND FROM PAD TO PAD. PROVIDE ALL ELECTRICAL WORK REQUIRED, WHETHER SHOWN OR NOT SHOWN, FOR COMPLETE AND FULLY FUNCTIONAL 12.47KV AND 34.5KV UNDERGROUND ELECTRICAL DISTRIBUTION.

CONTRACTOR SHALL PROVIDE TEMPORARY POWER CONNECTIONS DURING CONSTRUCTION. SEE DETAIL 3, SHEET U18.

WORK NOT WITHIN THE CONTRACTOR'S SCOPE INCLUDES: ALL POLE DEMOLITION AND NEW WORK AT POLES P7–P10. ALL UNDERGROUND TO THESE POLES BY CONTRACTOR. SEE PHASING NOTES ON SHEET U5 FOR UTILITY CONTACT INFORMATION.

23. OVERALL PROJECT SCOPE – TELECOM: PROVIDE ALL TELECOMMUNICATION (TELEPHONE) WORK ON THE PROJECT, UNLESS NOTED OTHERWISE. THIS INCLUDES ALL DEMOLITION OF OVERHEAD FACILITIES, RECONFIGURATION OF EXISTING OVERHEAD FACILITIES, AND COORDINATION REQUIRED WITH KPU TELECOMMUNICATIONS. THIS INCLUDES ALL NEW CONDUIT, COPPER CABLES, FIBER CABLES, BOXES, AND VAULTS REQUIRED FOR THE NEW UNDERGROUND DISTRIBUTION SYSTEM. ALL CABLES WILL BE PROVIDED, PULLED AND SPLICED, TERMINATED, AND TESTED BY THE CONTRACTOR. WORK INCLUDES ALL POLE CONDUIT RISER AND CABLE WORK, THE EXISTING TO REMAIN POLES, AND THE NEW POLE ON THE PROJECT. WORK INCLUDES ALL PAD MOUNTED AND UNDERGROUND EQUIPMENT AND VAULTS, INCLUDING ALL TELECOMMUNICATIONS GROUNDING NEEDED.

ALL CABLING SHALL BE PULLED CONTINUOUS, WITHOUT SPLICES OR TAPS, BETWEEN POLES AND PADS, AND FROM PAD TO PAD. PROVIDE ALL TELECOMMUNICATIONS WORK REQUIRED, WHETHER SHOWN OR NOT SHOWN, FOR COMPLETE AND FULLY INSTALLED COPPER AND FIBER OPTICAL UNDERGROUND DISTRIBUTION SYSTEM. CONTRACTOR IS RESPONSIBLE FOR ALL COPPER AND FIBER CABLE SPLICING AND TERMINATION WORK.

WORK NOT WITHIN THE CONTRACTOR'S SCOPE INCLUDES: NONE, PROVIDE ALL TELECOMMUNICATIONS WORK ON THE PROJECT. COORDINATE WITH KPU TELECOMMUNICATIONS TO ALLOW THEM TO REVIEW AND APPROVE THE COPPER AND FIBER CABLE BUILDS. SEE PHASING NOTES ON SHEET U5 FOR UTILITY CONTACT INFORMATION.

24. OVERALL PROJECT SCOPE – TELEVISION: PROVIDE ALL TELEVISION WORK ON THE PROJECT, UNLESS NOTED OTHERWISE. THIS INCLUDES ALL DEMOLITION OF OVERHEAD FACILITIES, RECONFIGURATION OF EXISTING OVERHEAD FACILITIES, AND COORDINATION REQUIRED WITH GCI UTILITY. THIS INCLUDES ALL NEW CONDUIT, COAXIAL CABLES, AND VAULTS REQUIRED FOR THE NEW UNDERGROUND DISTRIBUTION SYSTEM. ALL CABLES WILL BE PROVIDED, PULLED AND LEFT COILED AS NOTED, TERMINATIONS BY GCI. WORK INCLUDES ALL POLE CONDUIT RISER AND CABLE WORK, THE EXISTING TO REMAIN POLES, AND THE NEW POLE ON THE PROJECT. WORK INCLUDES ALL PAD MOUNTED AND UNDERGROUND EQUIPMENT AND VAULTS, INCLUDING ALL TELEVISION GROUNDING NEEDED.

ALL CABLING SHALL BE PULLED CONTINUOUS, WITHOUT SPLICES OR TAPS, BETWEEN POLES AND PADS, AND FROM PAD TO PAD. PROVIDE ALL TELECOMMUNICATIONS WORK REQUIRED, WHETHER SHOWN OR NOT SHOWN, FOR COMPLETE AND FULLY INSTALLED COAXIAL UNDERGROUND DISTRIBUTION SYSTEM.

WORK NOT WITHIN THE CONTRACTOR'S SCOPE INCLUDES: ALL TELEVISION COAXIAL CABLE SPLICING, TERMINATIONS, CONNECTIONS, TESTING, ETC. ALL SUCH WORK AND THE ACTIVATION OF THE COAXIAL TELEVISION SYSTEM IS BY GCI. SEE PHASING NOTES ON SHEET U5 FOR UTILITY CONTACT INFORMATION.

25. OVERALL PROJECT SCOPE – STREET LIGHTING: PROVIDE ALL STREET LIGHTING WORK ON THE PROJECT, UNLESS NOTED OTHERWISE. THIS INCLUDES ALL DEMOLITION OF OVERHEAD FACILITIES, RECONFIGURATION OF EXISTING OVERHEAD FACILITIES, AND COORDINATION REQUIRED WITH KPU UTILITY. THIS INCLUDES ALL NEW CONDUIT, COPPER POWER CONDUCTORS AND CABLES, JUNCTION BOXES, LIGHT POLES, LIGHT FIXTURES, LIGHT POLE BASES, GROUNDING, SURGE AND FUSE PROTECTION, ETC. AS REQUIRED FOR THE NEW UNDERGROUND STREET LIGHTING SYSTEM. WORK INCLUDES A COMPLETE AND FULLY FUNCTIONAL DOT&PF STANDARD TYPE 1A LIGHTING LOAD CENTER, AND WORK INCLUDES ALL STREET LIGHTING GROUNDING REQUIRED AND NOTED. AS WELL, WORK INCLUDES ALL TEMPORARY ROADWAY LIGHTING REQUIRED DURING CONSTRUCTION.

ALL STREET LIGHTING CIRCUITS SHALL BE PULLED CONTINUOUS, WITHOUT SPLICES OR TAPS, BETWEEN POLES, JUNCTION BOXES, AND LIGHTING LOAD CENTER AS REQUIRED. PROVIDE ALL LIGHTING WORK REQUIRED, WHETHER SHOWN OR NOT SHOWN, FOR COMPLETE AND FULLY FUNCTIONAL DOT&PF STREET LIGHTING SYSTEM.

NOTE: SEE SHEET U2 FOR THE SYMBOL LEGEND.

SEE DOT&PF WEBSITE FOR STANDARDS. SEE BELOW:

STANDARD DETAILS THAT APPLY ON PROJECT:
L–03.10 LIGHTING STANDARD
L–23.02 JUNCTION BOXES FOR ELECTROLIER
L–25.01 TYPE 1A LOAD CENTER
L–30.11 CONCRETE STREET LIGHT POLE FOUNDATION

CN
7/24/2024

SHEET INDEX

SHEET NO.	SHEET TITLE
U1	HERRING COVE SITE PLAN – EXISTING OVERALL
U2	HERRING COVE SITE PLAN – EXISTING WOOD ROAD
U3	HERRING COVE SITE PLAN – EXISTING BRIDGE
U4	HERRING COVE SITE PLAN – EXISTING POWERHOUSE ROAD
U5	HERRING COVE SITE PLAN – NEW OVERALL & PHASING PLAN
U6	HERRING COVE SITE PLAN – NEW WOOD ROAD
U7A	HERRING COVE SITE PLAN – BRIDGE WORK – STAGE 0
U7B	HERRING COVE SITE PLAN – BRIDGE WORK – STAGE 1
U7C	HERRING COVE SITE PLAN – BRIDGE WORK – STAGE 2
U8	HERRING COVE SITE PLAN – NEW POWERHOUSE ROAD
U9	UTILITY PAD 4 DETAILS
U10	UTILITY PAD 5 & 6 DETAILS
U11	UTILITY PAD 4 – ROADWAY SECTIONS & PAD ELEVATIONS
U12	UTILITY PAD 5 & 6 – ROADWAY SECTIONS & PAD ELEVATONS
U13	EXISTING BRIDGE TEMP CONDUIT SECTIONS & DETAILS
U14	NEW BRIDGE CONDUIT SECTIONS & DETAILS
U15	DEMOLITION UTILITY SCHEMATIC DIAGRAM
U16	RENOVATION POWER UTILITY SCHEMATIC DIAGRAM
U17	POWER UTILITY RENOVATION SINGLE LINE DIAGRAM
U18	MEDIUM VOLTAGE CABLE DETAILS & CONDUIT SPECS
U19	POLE P2 & P2B ELEVATIONS (KPU#2430–A5–3 & KPU#2430–A5–10)
U20	POLE P5A ELEVATIONS (KPU#2430–B5–12)
U21	POLE P5 ELEVATIONS (KPU#2430–B5–1)
U22	POLE P7 ELEVATIONS (KPU#2430–A4–6)
U23	POLE P8 ELEVATIONS (KPU#2430–A4–7)
U24	POLE P9 ELEVATIONS (KPU#2430–B4–4)
U25	POLE P10 ELEVATIONS (KPU#2430–B4–5)
U26A	UTILITY POLE MATERIAL LISTS
U26B	UTILITY WOOD POLE SPECIFICATION
U27	TRANSFORMER DETAILS
U28	POWER UTILITY SWITCH DETAILS
U29	POWER UTILITY SECTIONALIZING CABINET DETAILS
U30A	POWERHOUSE VAULT ELECTRICAL DETAILS
U30B	POWERHOUSE VAULT STRUCTURAL DETAILS
U31	POWERHOUSE VAULTS – ENLARGED PLAN
U32	DEADBREAK ELBOW DETAILS
U33	LOADBREAK ELBOW DETAILS
U34	SCHEDULES
U35	LIGHTING LOAD CENTER SUMMARY, SCHEMATIC & CALCS.
U36	ELECTROLIER, JUNCTION BOX, & BOLLARD DETAILS
U37	BRIDGE ELECTROLIER & JUNCTION BOX DETAILS
U38	TRENCH DETAILS
U39	RENOVATION TELECOM & TV UTILITY SCHEMATIC DIAGRAM
U40	FIBER CABLE SPLICE DETAILS
U41	TELECOM & TV CKT, PULLING DIAGRAMS, VAULT DETAIL, & COIL TABLE

PLANS DEVELOPED BY:
MORRIS ENGINEERING GROUP, INC
2375 JORDAN AVE #7
JUNEAU, AK 99801
907–789–3350
AECL 1010

STATE OF ALASKA 49TH
Mark G. Morris
May 31, 2024
No. EE 8613
REGISTERED PROFESSIONAL ENGINEER

STATE OF ALASKA DEPARTMENT OF TRANSPORTATION AND PUBLIC FACILITIES
6860 GLACIER HIGHWAY, JUNEAU, AK 99801
(907) 465–1763

UTILITY RELOCATION FOR KETCHIKAN AREA BRIDGES

HERRING COVE SITE PLAN – EXISTING OVERALL

FILE | y:\102 state of ak\44 utility relocation design for ketchikan bridges\Working Drawings\00072_U1.dwg | DATE | 5/30/2024 12:56 | LAYOUT | U1 | DESIGNED | MGM | CHECKED | MGM | DRAFTED | JODI

NO.	DATE	REVISION	STATE	PROJECT DESIGNATION	YEAR	SHEET NO.	TOTAL SHEETS
1	5/2024	AS-BUILT					
AS-BUILT DRAWING PREPARED FROM CONTRACTOR PROVIDED REDLINE WHICH MAY NOT BE CORRECT			ALASKA	0902043/SFHWY00072	2021	U2	45

DEMOLITION NOTES (APPLICABLE TO SHEETS U2–U4):

1. AT EXISTING POLES TO REMAIN, GUYING WILL BE REPLACED BY CONTRACTOR AND REWORKING OF OVERHEAD CONNECTIONS SHALL BE BY CONTRACTOR WITH UTILITY SUPPORT. ALL SUCH WORK SHALL BE COORDINATED WITH KPU POWER UTILITY. KPU TELECOM UTILITY, AND GCI TELEVISION UTILITY.
2. REMOVE STREET LIGHTING AND EQUIPMENT MOUNTED TO POLES THAT ARE TO BE DEMOLISHED. KPU POWER HAS FIRST RIGHTS TO SALVAGEABLE MATERIALS AND EQUIPMENT.
3. NO DEMOLITION WORK SHALL BEGIN WITHOUT A WRITTEN AND APPROVED PHASING PLAN THAT INCLUDES DETAILS ON HOW TO MAINTAIN TEMPORARY UTILITIES TO ALL CUSTOMERS THROUGHOUT THE PROJECT. PHASING PLAN GENERAL REQUIREMENTS PER SHEET U5.
4. SOME SITE OVERHEAD UTILITIES ARE TO REMAIN. PROTECT AND MAINTAIN AS REQUIRED.
5. ALL WORK SHALL BE COORDINATED WITH KPU POWER, KPU TELECOMMUNICATIONS, AND GCI TELEVISION UTILITY COMPANIES. SOME WORK IN THE OVERALL PROJECT IS BY UTILITIES, SEE SCOPE DESCRIPTIONS ON SHEET U1.

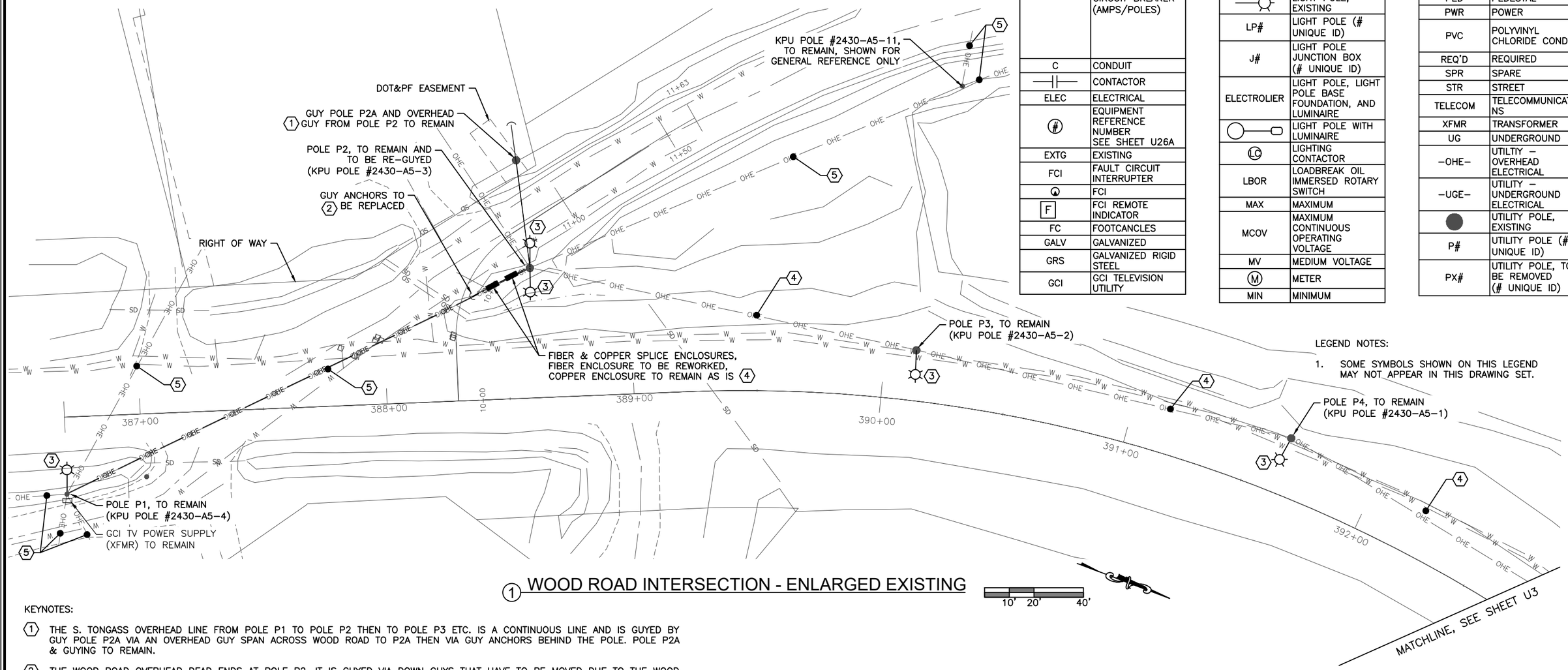

1 WOOD ROAD INTERSECTION - ENLARGED EXISTING

10' 20' 40'

LEGEND	
AFG	ABOVE FINISHED GRADE
BSMNT	BASEMENT
CU	BARE COPPER
CKT	CIRCUIT
C/B	CIRCUIT BREAKER
20/1	CIRCUIT BREAKER (AMPS/POLES)
C	CONDUIT
	CONTACTOR
ELEC	ELECTRICAL
#	EQUIPMENT REFERENCE NUMBER SEE SHEET U26A
EXTG	EXISTING
FCI	FAULT CIRCUIT INTERRUPTER
	FCI
F	FCI REMOTE INDICATOR
FC	FOOTCANCLES
GALV	GALVANIZED
GRS	GALVANIZED RIGID STEEL
GCI	GCI TELEVISION UTILITY

LEGEND	
GND	GROUND
GFI	GROUND FAULT INTERRUPTER
ID	INNER DIAMETER
J–BOX	JUNCTION BOX
KPU	KETCHIKAN PUBLIC UTILITY
#	KEYNOTE
LTG	LIGHTING
	LIGHT POLE, EXISTING
LP#	LIGHT POLE (# UNIQUE ID)
J#	LIGHT POLE JUNCTION BOX (# UNIQUE ID)
ELECTROLIER	LIGHT POLE, LIGHT POLE BASE FOUNDATION, AND LUMINAIRE
	LIGHT POLE WITH LUMINAIRE
LC	LIGHTING CONTACTOR
LBOR	LOADBREAK OIL IMMERSED ROTARY SWITCH
MAX	MAXIMUM
MCOV	MAXIMUM CONTINUOUS OPERATING VOLTAGE
MV	MEDIUM VOLTAGE
M	METER
MIN	MINIMUM

LEGEND	
NEC	NATIONAL ELECTRIC CODE
NESC	NATIONAL ELECTRICAL SAFETY CODE
NEUT	NEUTRAL
NO	NUMBER
OD	OUTSIDE DIAMETER
OH	OVERHEAD
PED	PEDESTAL
PWR	POWER
PVC	POLYVINYL CHLORIDE CONDUIT
REQ'D	REQUIRED
SPR	SPARE
STR	STREET
TELECOM	TELECOMMUNICATIONS
XFMR	TRANSFORMER
UG	UNDERGROUND
–OHE–	UTILTIY – OVERHEAD ELECTRICAL
–UGE–	UTILITY – UNDERGROUND ELECTRICAL
	UTILITY POLE, EXISTING
P#	UTILITY POLE (# UNIQUE ID)
PX#	UTILITY POLE, TO BE REMOVED (# UNIQUE ID)

LEGEND NOTES:

1. SOME SYMBOLS SHOWN ON THIS LEGEND MAY NOT APPEAR IN THIS DRAWING SET.

KEYNOTES:

1. THE S. TONGASS OVERHEAD LINE FROM POLE P1 TO POLE P2 THEN TO POLE P3 ETC. IS A CONTINUOUS LINE AND IS GUYED BY GUY POLE P2A VIA AN OVERHEAD GUY SPAN ACROSS WOOD ROAD TO P2A THEN VIA GUY ANCHORS BEHIND THE POLE. POLE P2A & GUYING TO REMAIN.
2. THE WOOD ROAD OVERHEAD DEAD ENDS AT POLE P2. IT IS GUYED VIA DOWN GUYS THAT HAVE TO BE MOVED DUE TO THE WOOD ROAD REALIGNMENT. TO REPLACE THESE DOWN GUYS (34.5KV & 12.47KV) A NEW GUY POLE P2B AND DOWN GUYS ARE NEEDED ACROSS WOOD ROAD TO THE SOUTH. THIS CREATES AN ANGLE WITH THE WOOD ROAD OVERHEAD REQUIRING A SECOND SET OF DOWN GUYS, SEE SHEET U6 FOR POLE P2 NEW GUYING WORK.
3. LUMINAIRE AND MAST ARM MOUNTED TO UTILITY POLE TO BE REPLACED IN PLACE WITH NEW. SEE SHEETS U35 & U36 FOR DETAILS. OVERHEAD STREET LIGHTING CIRCUITS TO REMAIN AND BE RE–FED FROM NEW LIGHTING LOAD CENTER AT PAD 4.
4. OVERHEAD POWER AND STREET LIGHTING TO REMAIN. TELECOM: FIBER TO BE REPLACED IN PLACE, COPPER TO REMAIN. TELEVISION: COAX TO BE REPLACED IN PLACE. SEE SHEET U15 FOR DEMO SCHEMATIC, SHEET U39 FOR RENOVATION SCHEMATIC, AND U41 FOR CIRCUIT DIAGRAM.
5. OVERHEAD POWER, STREET LIGHTING, TELECOM, AND TV LINES TO REMAIN. PROTECT AND MAINTAIN AS REQUIRED. EXACT QUANTITIES AND CONFIGURATIONS NOT NOTED HERE.

CN
7/24/2024

PLANS DEVELOPED BY:
MORRIS ENGINEERING GROUP, INC
2375 JORDAN AVE #7
JUNEAU, AK 99801
907–789–3350
AECL 1010

STATE OF ALASKA 49TH Mark G. Morris May 31, 2024 No. EE 8613 REGISTERED PROFESSIONAL ENGINEER

STATE OF ALASKA DEPARTMENT OF TRANSPORTATION AND PUBLIC FACILITIES
6860 GLACIER HIGHWAY, JUNEAU, AK 99801
(907) 465–1763

UTILITY RELOCATION FOR KETCHIKAN AREA BRIDGES

HERRING COVE SITE PLAN – EXISTING WOOD ROAD

FILE y:\102 state of ak\44 utility relocation design for ketchikan bridges\Working Drawings\00072_U1.dwg | DATE 5/30/2024 12:56 | LAYOUT U2 | DESIGNED MGM | CHECKED MGM | DRAFTED JODI

NO.	DATE	REVISION	STATE	PROJECT DESIGNATION	YEAR	SHEET NO.	TOTAL SHEETS
1	5/2024	AS-BUILT					
AS-BUILT DRAWING PREPARED FROM CONTRACTOR PROVIDED REDLINE WHICH MAY NOT BE CORRECT			ALASKA	0902043/SFHWY00072	2021	U3	45

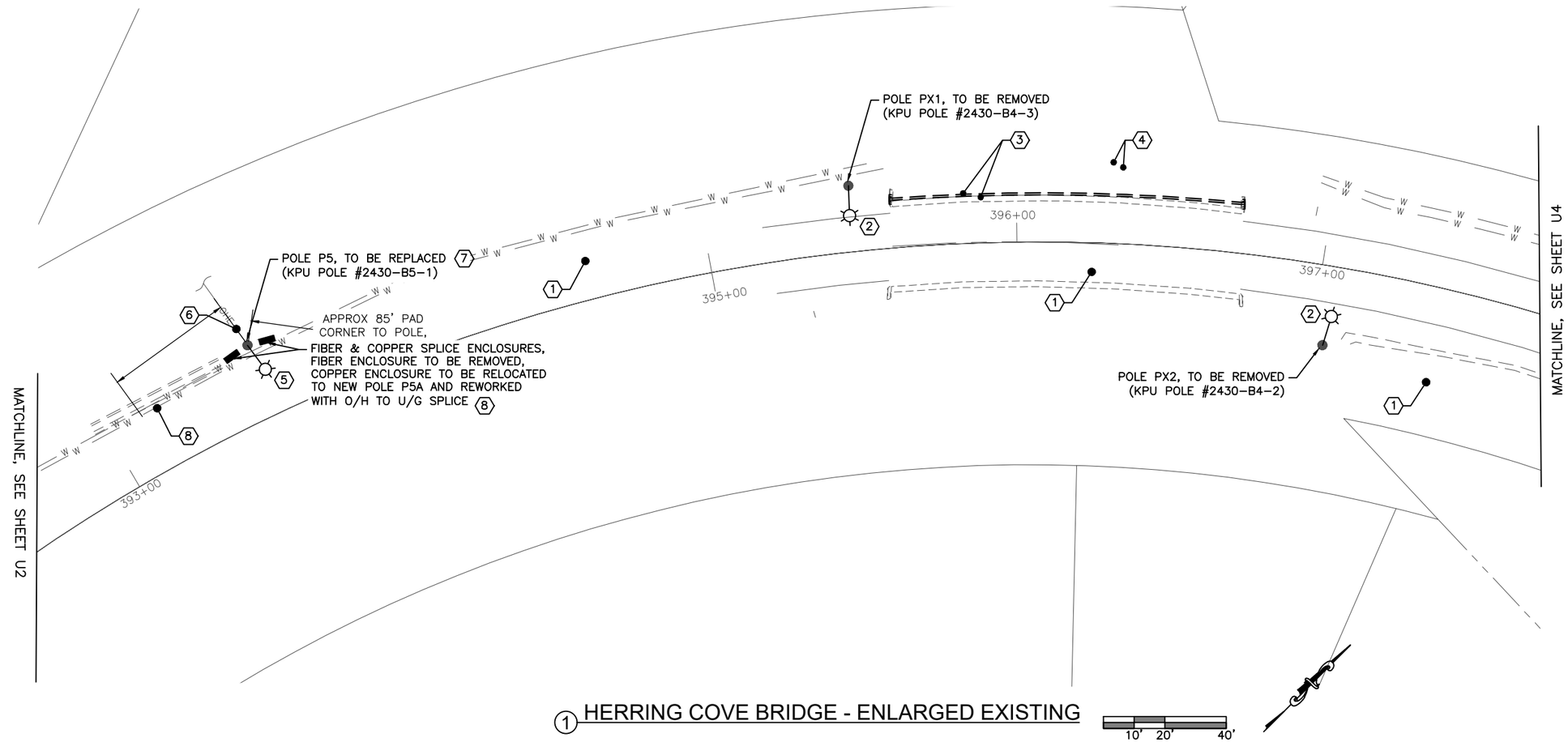

1 HERRING COVE BRIDGE - ENLARGED EXISTING

SHEET NOTES:

1. SEE SHEET U2 FOR NOTES APPLICABLE TO THIS PAGE.

KEYNOTES:

1. OVERHEAD LINES TO BE REMOVED BY CONTRACTOR. COORDINATE WITH UTILITIES.
2. REMOVE LIGHT FIXTURE AND MAST ARM.
3. NEW CONDUITS SHALL BE PROVIDED ALONG EXISTING BRIDGE AS PART OF STAGE 0 WORK. SEE SHEETS U7A–U7C FOR BRIDGE WORK DETAILS.
4. THERE ARE NUMEROUS EXISTING UNDERGROUND UTILITIES AND INFRASTRUCTURE TO REMAIN. NOT ALL ARE SHOWN ON THE PLANS BUT ALL NEED TO BE PROTECTED AND MAINTAINED THROUGHOUT PROJECT. CONTRACTOR SHALL CALL FOR LOCATES, DIG WITH CAUTION, AND COORDINATE ALL WORK WITH LOCAL UTILITIES, OTHER TRADES, ALASKA DOT&PF, AND CITY OF KETCHIKAN, SO AS TO IDENTIFY AND WORK AROUND UTILITIES TO REMAIN.
5. LUMINAIRE AND MAST ARM MOUNTED TO UTILITY POLE TO BE REPLACED IN PLACE WITH NEW. SEE SHEETS U35 & U36 FOR DETAILS. OVERHEAD STREET LIGHTING CIRCUITS TO REMAIN AND BE RE–FED FROM NEW LIGHTING LOAD CENTER AT PAD 4.
6. SECONDARY OVERHEAD SERVICE TO CUSTOMER FROM POLE MOUNTED TRANSFORMER AT POLE P5 (TRANSFORMER NOT SHOWN HERE). OVERHEAD TO BE REFED FROM NEW PAD MOUNT TRANSFORMER AT PAD 4, POLE TRANSFORMER TO BE REMOVED.
7. OVERHEAD UTILITIES WILL TRANSITION TO UNDERGROUND SOUTH OF THE BRIDGE AT EXISTING POLE P5 AND NEW POLE P5A SHOWN IN THE RENOVATION PLANS.
8. OVERHEAD POWER (MV CIRCUITS, SECONDARIES, AND STREET LIGHTING) TO BE RECONFIGURED ONTO NEW POLES, TELECOM: FIBER TO BE REPLACED IN PLACE, SOUTHWARD COPPER TO REMAIN, NORTHWARD TO BE REPLACED. TELEVISION: COAX TO BE REPLACED IN PLACE. SEE SHEET U15 FOR DEMO SCHEMATIC, SHEET U39 FOR RENOVATION SCHEMATIC, AND U41 FOR CIRCUIT DIAGRAM.

CN
7/24/2024

PLANS DEVELOPED BY:
MORRIS ENGINEERING GROUP, INC
2375 JORDAN AVE #7
JUNEAU, AK 99801
907–789–3350
AECL 1010

STATE OF ALASKA 49TH
Mark G. Morris
May 31, 2024
No. EE 8613
REGISTERED PROFESSIONAL ENGINEER

STATE OF ALASKA DEPARTMENT OF TRANSPORTATION AND PUBLIC FACILITIES
6860 GLACIER HIGHWAY, JUNEAU, AK 99801
(907) 465–1763

UTILITY RELOCATION FOR KETCHIKAN AREA BRIDGES

HERRING COVE SITE PLAN – EXISTING BRIDGE

FILE	DATE	LAYOUT	DESIGNED	CHECKED	DRAFTED
y:\102 state of ak\44 utility relocation design for ketchikan bridges\Working Drawings\00072_U1.dwg	5/30/2024 12:56	U3	MGM	MGM	JODI

NO.	DATE	REVISION	STATE	PROJECT DESIGNATION	YEAR	SHEET NO.	TOTAL SHEETS
1	5/2024	AS-BUILT					
AS-BUILT DRAWING PREPARED FROM CONTRACTOR PROVIDED REDLINE WHICH MAY NOT BE CORRECT			ALASKA	0902043/SFHWY00072	2021	U4	45

SHEET NOTE:

1. SEE SHEET U2 FOR NOTES APPLICABLE TO THIS PAGE.

KEYNOTES:

1. OVERHEAD LINES TO BE REMOVED BY CONTRACTOR. COORDINATE WITH UTILITIES.
2. OVERHEAD LINES TO BE RECONFIGURED BY UTILITY. PROTECT AND MAINTAIN AS REQUIRED. COORDINATE WITH UTILITIES.
3. POLE TO REMAIN AND BE REWORKED AS REQUIRED. ALL WORK BY KPU UTILITIES PER DETAILS IN THIS DRAWINGS PACKAGE.
4. POLE TO BE REPLACED AS REQUIRED. ALL WORK BY KPU UTILITIES PER DETAILS IN THIS DRAWINGS PACKAGE.
5. REMOVE LIGHT FIXTURE AND MAST ARM.
6. THERE ARE NUMEROUS EXISTING UNDERGROUND UTILITIES AND INFRASTRUCTURE TO REMAIN. NOT ALL ARE SHOWN ON THE PLANS BUT ALL NEED TO BE PROTECTED AND MAINTAINED THROUGHOUT PROJECT. CONTRACTOR SHALL CALL FOR LOCATES, DIG WITH CAUTION, AND COORDINATE ALL WORK WITH LOCAL UTILITIES, OTHER TRADES, ALASKA DOT&PF, AND CITY OF KETCHIKAN, SO AS TO IDENTIFY AND WORK AROUND UTILITIES TO REMAIN.
7. LUMINAIRE AND MAST ARM MOUNTED TO UTILITY POLE TO BE REPLACED IN PLACE WITH NEW. SEE SHEETS U35 & U36 FOR DETAILS.
8. LIVE UNDERGROUND 12.47KV & 34.5KV POWER CIRCUITS, AND SPARE TELECOM CONDUITS ROUTED UP POWERHOUSE ROAD FROM THE OVERHEAD TRANSITION AT POLE P6. LINES WILL BE REWORKED INTO AND PAST NEW VAULTS IN POWERHOUSE ROAD. SEE SHEET U8 FOR DETAILS.
9. SEE SHEET U15 FOR TELECOM DEMO SCHEMATIC, SHEET U39 FOR RENOVATION SCHEMATIC, AND U41 FOR CIRCUIT DIAGRAM.

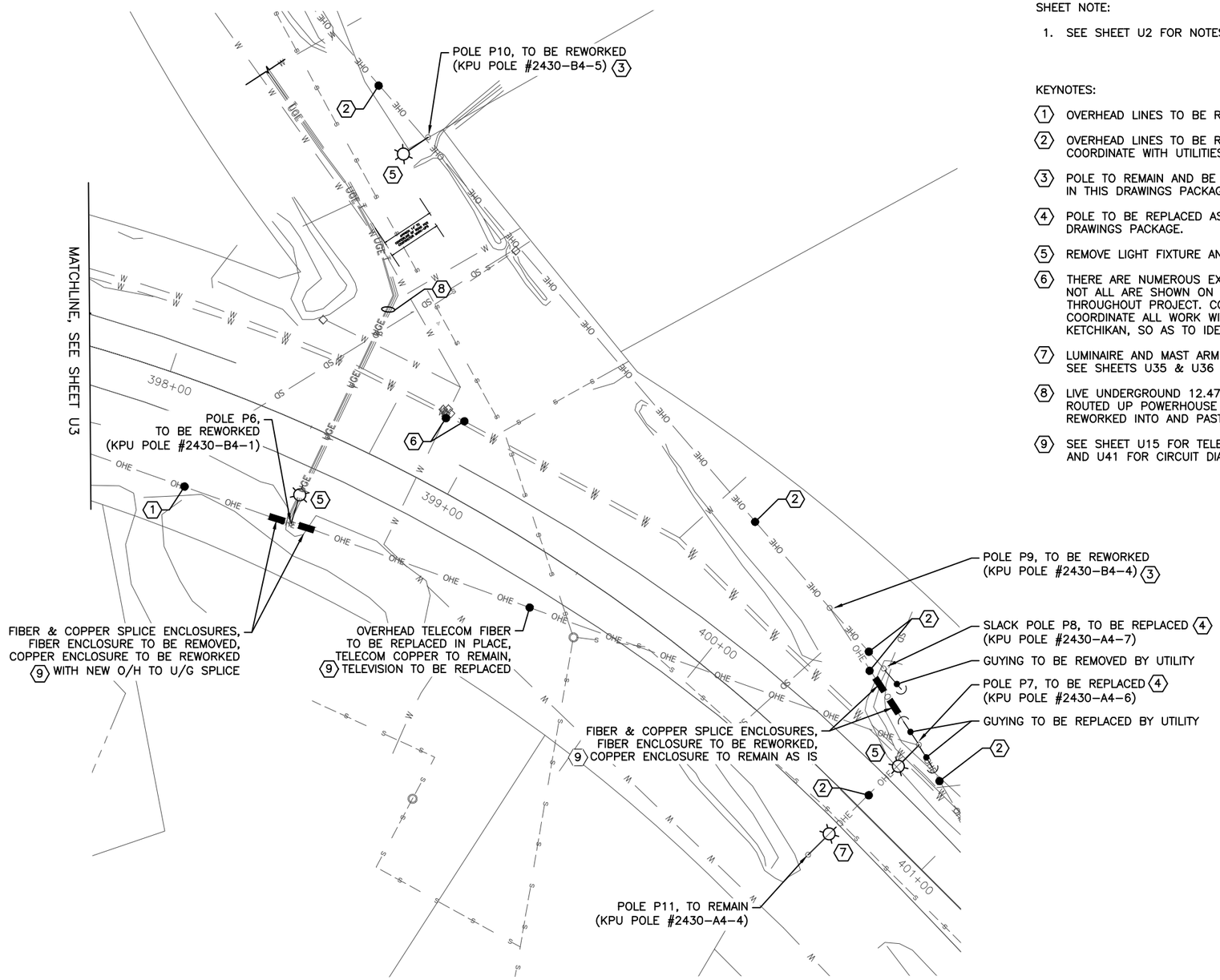

1 POWERHOUSE ROAD INTERSECTION - ENLARGED EXISTING

10' 20' 40'

CN
7/24/2024

PLANS DEVELOPED BY:
MORRIS ENGINEERING GROUP, INC
2375 JORDAN AVE #7
JUNEAU, AK 99801
907-789-3350
AECL 1010

STATE OF ALASKA 49TH Mark G. Morris May 31, 2024 No. EE 8613 REGISTERED PROFESSIONAL ENGINEER

STATE OF ALASKA DEPARTMENT OF TRANSPORTATION AND PUBLIC FACILITIES
6860 GLACIER HIGHWAY, JUNEAU, AK 99801
(907) 465-1763

UTILITY RELOCATION FOR KETCHIKAN AREA BRIDGES

HERRING COVE SITE PLAN – EXISTING POWERHOUSE ROAD

FILE y:\102 state of ak\44 utility relocation design for ketchikan bridges\Working Drawings\00072_U1.dwg | DATE 5/30/2024 12:56 | LAYOUT U4 | DESIGNED MGM | CHECKED MGM | DRAFTED JODI

NO.	DATE	REVISION	STATE	PROJECT DESIGNATION	YEAR	SHEET NO.	TOTAL SHEETS
1	5/2024	AS-BUILT					
AS-BUILT DRAWING PREPARED FROM CONTRACTOR PROVIDED REDLINE WHICH MAY NOT BE CORRECT			ALASKA	0902043/SFHWY00072	2021	U5	45

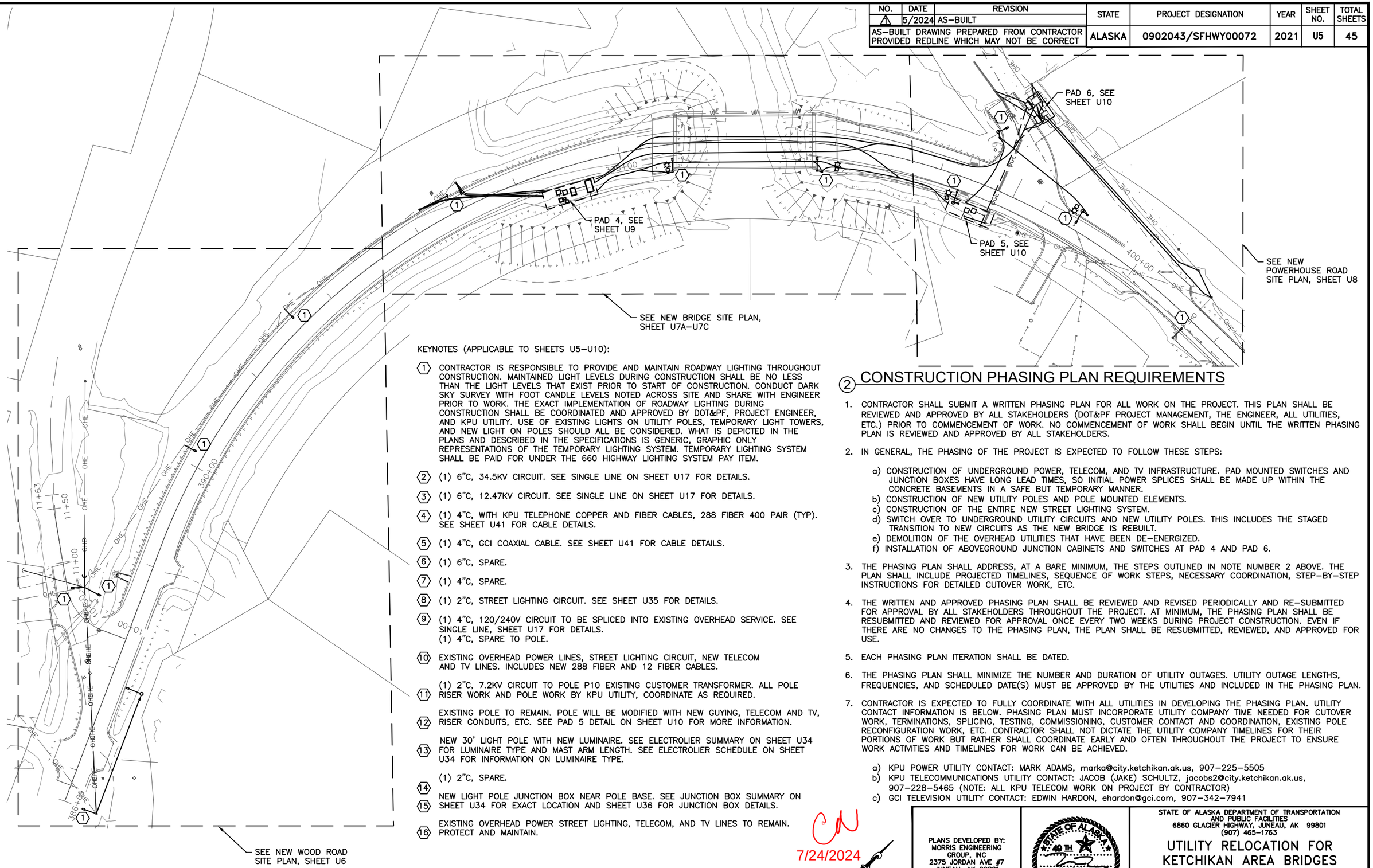

KEYNOTES (APPLICABLE TO SHEETS U5–U10):

1. CONTRACTOR IS RESPONSIBLE TO PROVIDE AND MAINTAIN ROADWAY LIGHTING THROUGHOUT CONSTRUCTION. MAINTAINED LIGHT LEVELS DURING CONSTRUCTION SHALL BE NO LESS THAN THE LIGHT LEVELS THAT EXIST PRIOR TO START OF CONSTRUCTION. CONDUCT DARK SKY SURVEY WITH FOOT CANDLE LEVELS NOTED ACROSS SITE AND SHARE WITH ENGINEER PRIOR TO WORK. THE EXACT IMPLEMENTATION OF ROADWAY LIGHTING DURING CONSTRUCTION SHALL BE COORDINATED AND APPROVED BY DOT&PF, PROJECT ENGINEER, AND KPU UTILITY. USE OF EXISTING LIGHTS ON UTILITY POLES, TEMPORARY LIGHT TOWERS, AND NEW LIGHT ON POLES SHOULD ALL BE CONSIDERED. WHAT IS DEPICTED IN THE PLANS AND DESCRIBED IN THE SPECIFICATIONS IS GENERIC, GRAPHIC ONLY REPRESENTATIONS OF THE TEMPORARY LIGHTING SYSTEM. TEMPORARY LIGHTING SYSTEM SHALL BE PAID FOR UNDER THE 660 HIGHWAY LIGHTING SYSTEM PAY ITEM.
2. (1) 6"C, 34.5KV CIRCUIT. SEE SINGLE LINE ON SHEET U17 FOR DETAILS.
3. (1) 6"C, 12.47KV CIRCUIT. SEE SINGLE LINE ON SHEET U17 FOR DETAILS.
4. (1) 4"C, WITH KPU TELEPHONE COPPER AND FIBER CABLES, 288 FIBER 400 PAIR (TYP). SEE SHEET U41 FOR CABLE DETAILS.
5. (1) 4"C, GCI COAXIAL CABLE. SEE SHEET U41 FOR CABLE DETAILS.
6. (1) 6"C, SPARE.
7. (1) 4"C, SPARE.
8. (1) 2"C, STREET LIGHTING CIRCUIT. SEE SHEET U35 FOR DETAILS.
9. (1) 4"C, 120/240V CIRCUIT TO BE SPLICED INTO EXISTING OVERHEAD SERVICE. SEE SINGLE LINE, SHEET U17 FOR DETAILS.
   (1) 4"C, SPARE TO POLE.
10. EXISTING OVERHEAD POWER LINES, STREET LIGHTING CIRCUIT, NEW TELECOM AND TV LINES. INCLUDES NEW 288 FIBER AND 12 FIBER CABLES.
11. (1) 2"C, 7.2KV CIRCUIT TO POLE P10 EXISTING CUSTOMER TRANSFORMER. ALL POLE RISER WORK AND POLE WORK BY KPU UTILITY, COORDINATE AS REQUIRED.
12. EXISTING POLE TO REMAIN. POLE WILL BE MODIFIED WITH NEW GUYING, TELECOM AND TV, RISER CONDUITS, ETC. SEE PAD 5 DETAIL ON SHEET U10 FOR MORE INFORMATION.
13. NEW 30' LIGHT POLE WITH NEW LUMINAIRE. SEE ELECTROLIER SUMMARY ON SHEET U34 FOR LUMINAIRE TYPE AND MAST ARM LENGTH. SEE ELECTROLIER SCHEDULE ON SHEET U34 FOR INFORMATION ON LUMINAIRE TYPE.
14. (1) 2"C, SPARE.
15. NEW LIGHT POLE JUNCTION BOX NEAR POLE BASE. SEE JUNCTION BOX SUMMARY ON SHEET U34 FOR EXACT LOCATION AND SHEET U36 FOR JUNCTION BOX DETAILS.
16. EXISTING OVERHEAD POWER STREET LIGHTING, TELECOM, AND TV LINES TO REMAIN. PROTECT AND MAINTAIN.

1 HERRING COVE SITE PLAN - NEW OVERALL

20' 40' 80'

2 CONSTRUCTION PHASING PLAN REQUIREMENTS

1. CONTRACTOR SHALL SUBMIT A WRITTEN PHASING PLAN FOR ALL WORK ON THE PROJECT. THIS PLAN SHALL BE REVIEWED AND APPROVED BY ALL STAKEHOLDERS (DOT&PF PROJECT MANAGEMENT, THE ENGINEER, ALL UTILITIES, ETC.) PRIOR TO COMMENCEMENT OF WORK. NO COMMENCEMENT OF WORK SHALL BEGIN UNTIL THE WRITTEN PHASING PLAN IS REVIEWED AND APPROVED BY ALL STAKEHOLDERS.
2. IN GENERAL, THE PHASING OF THE PROJECT IS EXPECTED TO FOLLOW THESE STEPS:
   a) CONSTRUCTION OF UNDERGROUND POWER, TELECOM, AND TV INFRASTRUCTURE. PAD MOUNTED SWITCHES AND JUNCTION BOXES HAVE LONG LEAD TIMES, SO INITIAL POWER SPLICES SHALL BE MADE UP WITHIN THE CONCRETE BASEMENTS IN A SAFE BUT TEMPORARY MANNER.
   b) CONSTRUCTION OF NEW UTILITY POLES AND POLE MOUNTED ELEMENTS.
   c) CONSTRUCTION OF THE ENTIRE NEW STREET LIGHTING SYSTEM.
   d) SWITCH OVER TO UNDERGROUND UTILITY CIRCUITS AND NEW UTILITY POLES. THIS INCLUDES THE STAGED TRANSITION TO NEW CIRCUITS AS THE NEW BRIDGE IS REBUILT.
   e) DEMOLITION OF THE OVERHEAD UTILITIES THAT HAVE BEEN DE–ENERGIZED.
   f) INSTALLATION OF ABOVEGROUND JUNCTION CABINETS AND SWITCHES AT PAD 4 AND PAD 6.
3. THE PHASING PLAN SHALL ADDRESS, AT A BARE MINIMUM, THE STEPS OUTLINED IN NOTE NUMBER 2 ABOVE. THE PLAN SHALL INCLUDE PROJECTED TIMELINES, SEQUENCE OF WORK STEPS, NECESSARY COORDINATION, STEP–BY–STEP INSTRUCTIONS FOR DETAILED CUTOVER WORK, ETC.
4. THE WRITTEN AND APPROVED PHASING PLAN SHALL BE REVIEWED AND REVISED PERIODICALLY AND RE–SUBMITTED FOR APPROVAL BY ALL STAKEHOLDERS THROUGHOUT THE PROJECT. AT MINIMUM, THE PHASING PLAN SHALL BE RESUBMITTED AND REVIEWED FOR APPROVAL ONCE EVERY TWO WEEKS DURING PROJECT CONSTRUCTION. EVEN IF THERE ARE NO CHANGES TO THE PHASING PLAN, THE PLAN SHALL BE RESUBMITTED, REVIEWED, AND APPROVED FOR USE.
5. EACH PHASING PLAN ITERATION SHALL BE DATED.
6. THE PHASING PLAN SHALL MINIMIZE THE NUMBER AND DURATION OF UTILITY OUTAGES. UTILITY OUTAGE LENGTHS, FREQUENCIES, AND SCHEDULED DATE(S) MUST BE APPROVED BY THE UTILITIES AND INCLUDED IN THE PHASING PLAN.
7. CONTRACTOR IS EXPECTED TO FULLY COORDINATE WITH ALL UTILITIES IN DEVELOPING THE PHASING PLAN. UTILITY CONTACT INFORMATION IS BELOW. PHASING PLAN MUST INCORPORATE UTILITY COMPANY TIME NEEDED FOR CUTOVER WORK, TERMINATIONS, SPLICING, TESTING, COMMISSIONING, CUSTOMER CONTACT AND COORDINATION, EXISTING POLE RECONFIGURATION WORK, ETC. CONTRACTOR SHALL NOT DICTATE THE UTILITY COMPANY TIMELINES FOR THEIR PORTIONS OF WORK BUT RATHER SHALL COORDINATE EARLY AND OFTEN THROUGHOUT THE PROJECT TO ENSURE WORK ACTIVITIES AND TIMELINES FOR WORK CAN BE ACHIEVED.
   a) KPU POWER UTILITY CONTACT: MARK ADAMS, marka@city.ketchikan.ak.us, 907–225–5505
   b) KPU TELECOMMUNICATIONS UTILITY CONTACT: JACOB (JAKE) SCHULTZ, jacobs2@city.ketchikan.ak.us, 907–228–5465 (NOTE: ALL KPU TELECOM WORK ON PROJECT BY CONTRACTOR)
   c) GCI TELEVISION UTILITY CONTACT: EDWIN HARDON, ehardon@gci.com, 907–342–7941

CN
7/24/2024

PLANS DEVELOPED BY:
MORRIS ENGINEERING GROUP, INC
2375 JORDAN AVE #7
JUNEAU, AK 99801
907–789–3350
AECL 1010

STATE OF ALASKA 49TH Mark G. Morris May 31, 2024 No. EE 8613 REGISTERED PROFESSIONAL ENGINEER

STATE OF ALASKA DEPARTMENT OF TRANSPORTATION AND PUBLIC FACILITIES
6860 GLACIER HIGHWAY, JUNEAU, AK 99801
(907) 465–1763

UTILITY RELOCATION FOR KETCHIKAN AREA BRIDGES

HERRING COVE SITE PLAN – NEW OVERALL & PHASING PLAN

FILE y:\02 state of ak\44 utility relocation design for ketchikan bridges\Working Drawings\00072_U1.dwg | DATE 5/30/2024 12:56 | LAYOUT U5 | DESIGNED MGM | CHECKED MGM | DRAFTED JODI

NO.	DATE	REVISION	STATE	PROJECT DESIGNATION	YEAR	SHEET NO.	TOTAL SHEETS
1	5/2024	AS-BUILT	ALASKA	0902043/SFHWY00072	2021	U6	45
AS-BUILT DRAWING PREPARED FROM CONTRACTOR PROVIDED REDLINE WHICH MAY NOT BE CORRECT							

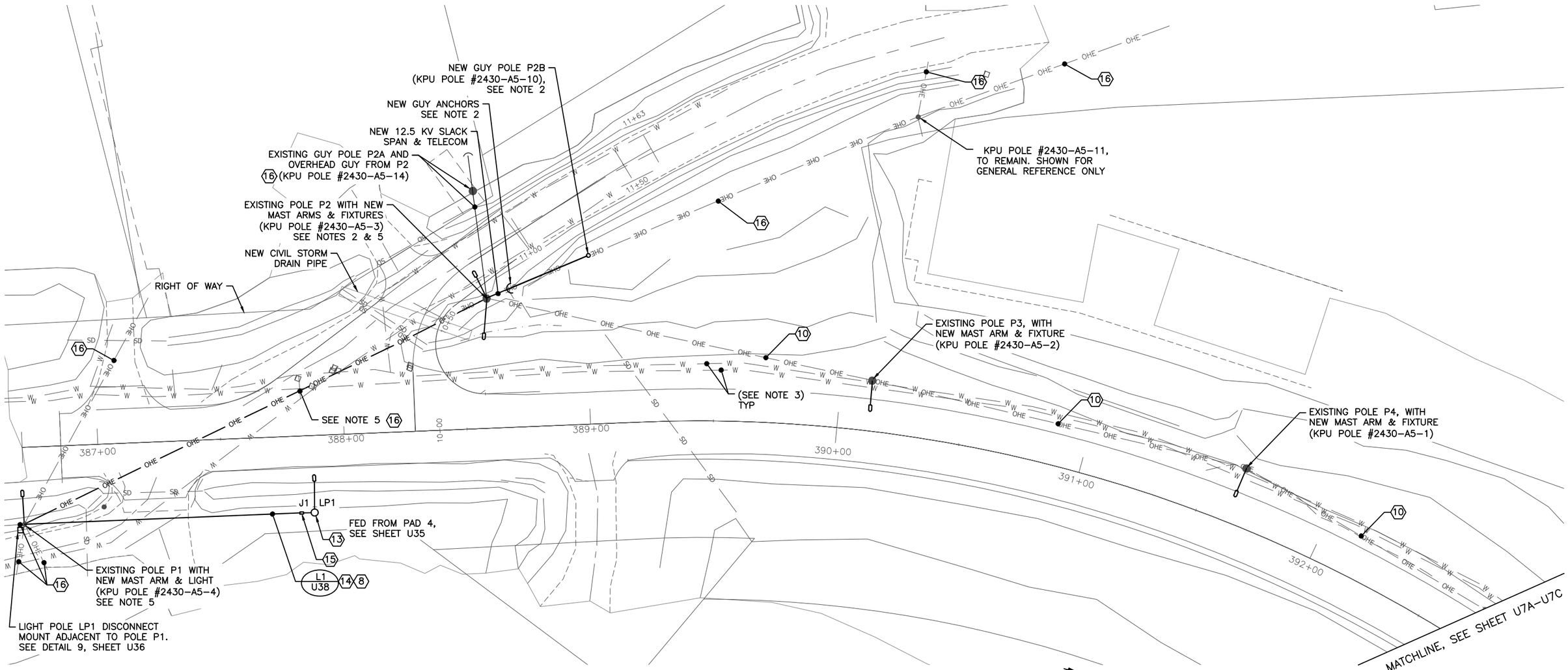

(1) WOOD ROAD INTERSECTION - ENLARGED NEW

10' 20' 40'

SHEET NOTES:

1. SEE SHEET U5 FOR KEYNOTES APPLICABLE TO THIS SHEET.
2. PROVIDE NEW GUYING AT POLE, SEE POLE DETAIL SHEET U19 FOR INFORMATION.
3. THERE ARE NUMEROUS EXISTING UNDERGROUND UTILITIES AND INFRASTRUCTURE TO REMAIN. NOT ALL ARE SHOWN ON THE PLANS BUT ALL NEED TO BE PROTECTED AND MAINTAINED THROUGHOUT PROJECT. CONTRACTOR SHALL CALL FOR LOCATES, DIG WITH CAUTION, AND COORDINATE ALL WORK WITH LOCAL UTILITIES. OTHER TRADES, ALASKA DOT&PF, AND CITY OF KETCHIKAN. SO AS TO IDENTIFY AND WORK AROUND UTILITIES TO REMAIN.
4. COORDINATE EXACT GUY POSITION WITH NEW STORM DRAIN PIPE NOTED ON THIS SHEET. ADJUST ANCHOR DISTANCE FROM WHAT IS SHOWN ON SHEET U19 AS REQUIRED BASED ON FINAL PIPE LOCATION.
5. EXTEND OVERHEAD DUPLEX WIRE AS REQUIRED OVERHEAD BETWEEN POLE P2 TO POLE P1 TO SERVE LP1 DISCONNECT AT BASE OF POLE. EXTEND THE CIRCUIT FROM POLE P1 NEW STREET LIGHT UNDERGROUND TO LIGHT POLE LP1 AS REQUIRED WITH NEW CONDUIT RISERS ON POLE P1 UNDERGROUND TO JUNCTION BOX J1.

CN
7/24/2024

PLANS DEVELOPED BY:
MORRIS ENGINEERING GROUP, INC
2375 JORDAN AVE #7
JUNEAU, AK 99801
907-789-3350
AECL 1010

STATE OF ALASKA 49TH Mark G. Morris May 31, 2024 No. EE 8613 REGISTERED PROFESSIONAL ENGINEER

STATE OF ALASKA DEPARTMENT OF TRANSPORTATION AND PUBLIC FACILITIES
6860 GLACIER HIGHWAY, JUNEAU, AK 99801
(907) 465-1763

UTILITY RELOCATION FOR KETCHIKAN AREA BRIDGES

HERRING COVE SITE PLAN - NEW WOOD ROAD

FILE y:\102 state of ak\44 utility relocation design for ketchikan bridges\Working Drawings\00072_J1.dwg | DATE 5/30/2024 12:56 | LAYOUT U6 | DESIGNED MGM | CHECKED MGM | DRAFTED JODI

NO.	DATE	REVISION	STATE	PROJECT DESIGNATION	YEAR	SHEET NO.	TOTAL SHEETS
1	5/2024	AS-BUILT					
AS-BUILT DRAWING PREPARED FROM CONTRACTOR PROVIDED REDLINE WHICH MAY NOT BE CORRECT			ALASKA	0902043/SFHWY00072	2021	U7A	45

CN
7/24/2024

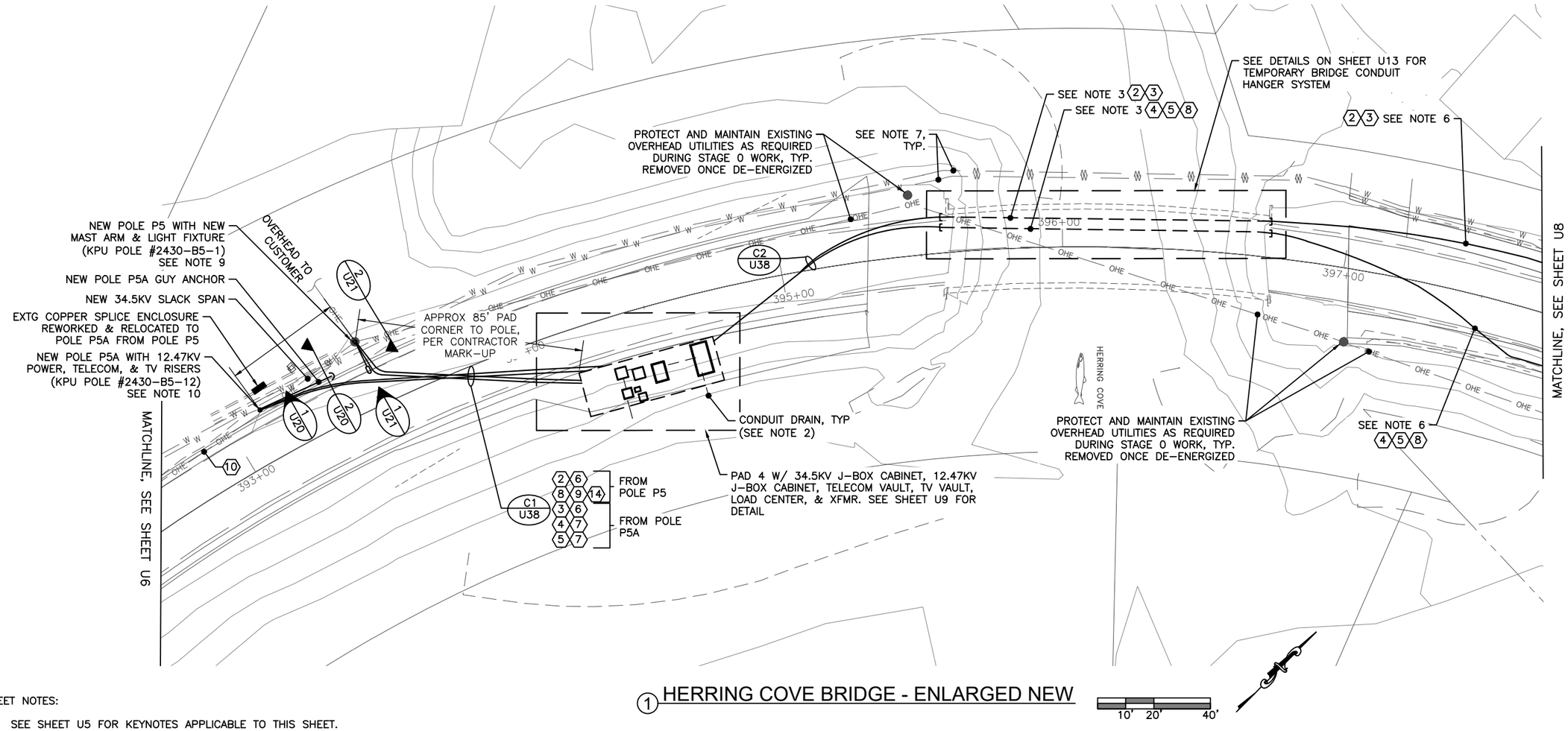

1 HERRING COVE BRIDGE - ENLARGED NEW

10' 20' 40'

SHEET NOTES:

1. SEE SHEET U5 FOR KEYNOTES APPLICABLE TO THIS SHEET.
2. BETWEEN EACH UNDERGROUND ELECTRICAL AND TELECOM/TV BASEMENT AND VAULT, PROVIDE A CONDUIT DRAIN TO REMOVE WATER. TIE ADJACENT STRUCTURES TOGETHER WITH A DRAIN AND RUN ANOTHER DRAIN TO DAYLIGHT AS REQUIRED. SLOPE CONDUITS TO DRAIN. SEE INDIVIDUAL EQUIPMENT DETAILS FOR MORE ON THE DRAINS. COORDINATE DRAIN ROUTING WITH CIVIL CONTRACTOR.
3. FIBERGLASS CONDUITS ADDED TO EXISTING BRIDGE FOR TEMPORARY UNDERGROUND CIRCUITS NEEDED DURING CONSTRUCTION. SEE SHEET U13 FOR TEMPORARY BRIDGE WORK. CONTINUE CONDUITS TO PAD 4, PAD 5, AND PAD 6 EQUIPMENT CONNECTIONS AS REQUIRED. THESE NEW CONDUITS AT EXISTING BRIDGE WILL BE DEMOLISHED AND CORRESPONDING SECTIONS UNDER ROADWAY ABANDONED AS BRIDGE REPLACEMENT IS COMPLETED.
4. THIS SHEET DEPICTS BRIDGE STAGE 0 ELECTRICAL WORK. STAGE 0 WORK INCLUDES ESTABLISHING UNDERGROUND POWER, TELECOM, TV, AND STREET LIGHTING UNDERGROUND ACROSS THE PROJECT SITE, AS WELL AS ACROSS THE EXISTING BRIDGE. THIS WORK IS TO BE COMPLETED BEFORE DEMOLISHING THE EXISTING OVERHEAD ON SITE. STAGE 0 CIRCUITS ACROSS THE EXISTING BRIDGE SHOWN ON THIS SHEET WILL BE ENERGIZED AND USED UNTIL STAGE 1 BRIDGE WORK IS COMPLETE; AFTER WHICH ALL UNDERGROUND SHOWN HERE, FROM PAD 4 TO PADS 5 AND 6, WILL BE DISCONNECTED AND REMOVED WITH CONDUITS DEMOLISHED OR ABANDONED AS APPLICABLE.
5. THERE ARE TWO ADDITIONAL STAGES ASSOCIATED WITH WORK BETWEEN PAD 4 AND PADS 5 AND 6. SEE SHEETS U7B AND U7C FOR MORE INFORMATION.
6. CONDUITS INDICATED HERE ARE PART OF A LARGER COLLECTION OF CONDUITS IN ONE OVERALL TRENCH THAT HEADS NORTH TO PAD 5 OR PAD 6 AS APPLICABLE. ONLY CONDUITS ASSOCIATED WITH BRIDGE STAGE 0 WORK ARE INDICATED ON THIS SHEET. SEE SHEETS U7B AND U7C FOR MORE CONDUIT WORK.
7. THERE ARE NUMEROUS EXISTING UNDERGROUND UTILITIES AND INFRASTRUCTURE TO REMAIN. NOT ALL ARE SHOWN ON THE PLANS BUT ALL NEED TO BE PROTECTED AND MAINTAINED THROUGHOUT PROJECT. CONTRACTOR SHALL CALL FOR LOCATES, DIG WITH CAUTION, AND COORDINATE ALL WORK WITH LOCAL UTILITIES. OTHER TRADES, ALASKA DOT&PF, AND CITY OF KETCHIKAN. SO AS TO IDENTIFY AND WORK AROUND UTILITIES TO REMAIN.
8. TRENCH DETAIL REFERENCES ARE CALLED OUT ON THE SITE PLANS AND ARE DEPICTED ON SHEET U38. THE CONTRACTOR IS RESPONSIBLE TO LAYOUT THE CONDUIT TRENCHES THROUGHOUT THE SITE IN COORDINATION WITH GENERAL CONSTRUCTION, FINAL LOCATIONS OF ALL EQUIPMENT AND VAULTS, AND AS NEEDED TO ADJUST TO SITE CONDITIONS NOT CAPTURED IN THE DESIGN DOCUMENTS. KEEP CONDUITS FROM CROSSING ONE ANOTHER AS MUCH AS POSSIBLE, MAINTAIN SEPARATION AND DEPTH DIMENSIONS INDICATED, AND ADJUST SECTIONS DEPICTED IN THE SET AS REQUIRED. THERE WILL BE CASES WHERE A TRENCH REFERENCE ON A SITE PLAN MAY BE MISSING CONDUITS PLANNED IN THAT AREA (i.e. 2" STREET LIGHTING CONDUITS THAT ARE SERVING AREA LIGHT POLES). IN SUCH CASES THE CONTRACTOR IS EXPECTED TO INCLUDE THOSE CONDUITS IN THE OVERALL TRENCH AND ADJUST THE WORK AS REQUIRED.
9. REPLACE EXISTING POLE P5 IN PLACE WITH NEW. SEE SHEET U21 FOR POLE P5 DETAILS. POLE TO BE SET AND OVERHEAD LINES CUTOVER AS PART OF BRIDGE STAGE 0 WORK. COORDINATE AS PART OF OVERALL PHASING PLAN, SEE DETAIL 2, SHEET U5.
10. PROVIDE NEW POLE P5A ADJACENT TO POLE P5. TO AVOID EXISTING WATERLINES IN THE AREA POLE P5A IS TO BE OFFSET A MINIMUM OF 6 FEET FROM CENTER OF POLE TO NEAREST EDGE OF WATER PIPES PRESENT. FIELD VERIFY AS REQUIRED PRIOR TO WORK. SEE SHEET U20 FOR POLE P5A DETAILS. POLE TO BE SET AND OVERHEAD LINES CUTOVER AS PART OF BRIDGE STAGE 0 WORK. COORDINATE AS PART OF OVERALL PHASING PLAN, SEE DETAIL 2, SHEET U5.

PLANS DEVELOPED BY:
MORRIS ENGINEERING GROUP, INC
2375 JORDAN AVE #7
JUNEAU, AK 99801
907-789-3350
AECL 1010

STATE OF ALASKA 49TH
Mark G. Morris
May 31, 2024
No. EE 8613
REGISTERED PROFESSIONAL ENGINEER

STATE OF ALASKA DEPARTMENT OF TRANSPORTATION AND PUBLIC FACILITIES
6860 GLACIER HIGHWAY, JUNEAU, AK 99801
(907) 465-1763

UTILITY RELOCATION FOR KETCHIKAN AREA BRIDGES

HERRING COVE SITE PLAN - BRIDGE WORK - STAGE 0

FILE y:\102 state of ak\44 utility relocation design for ketchikan bridges\Working Drawings\00072_U1.dwg | DATE 5/30/2024 12:56 | LAYOUT U7A | DESIGNED MGM | CHECKED MGM | DRAFTED JODI

NO.	DATE	REVISION	STATE	PROJECT DESIGNATION	YEAR	SHEET NO.	TOTAL SHEETS
1	5/2024	AS-BUILT	ALASKA	0902043/SFHWY00072	2021	U7B	45
AS-BUILT DRAWING PREPARED FROM CONTRACTOR PROVIDED REDLINE WHICH MAY NOT BE CORRECT							

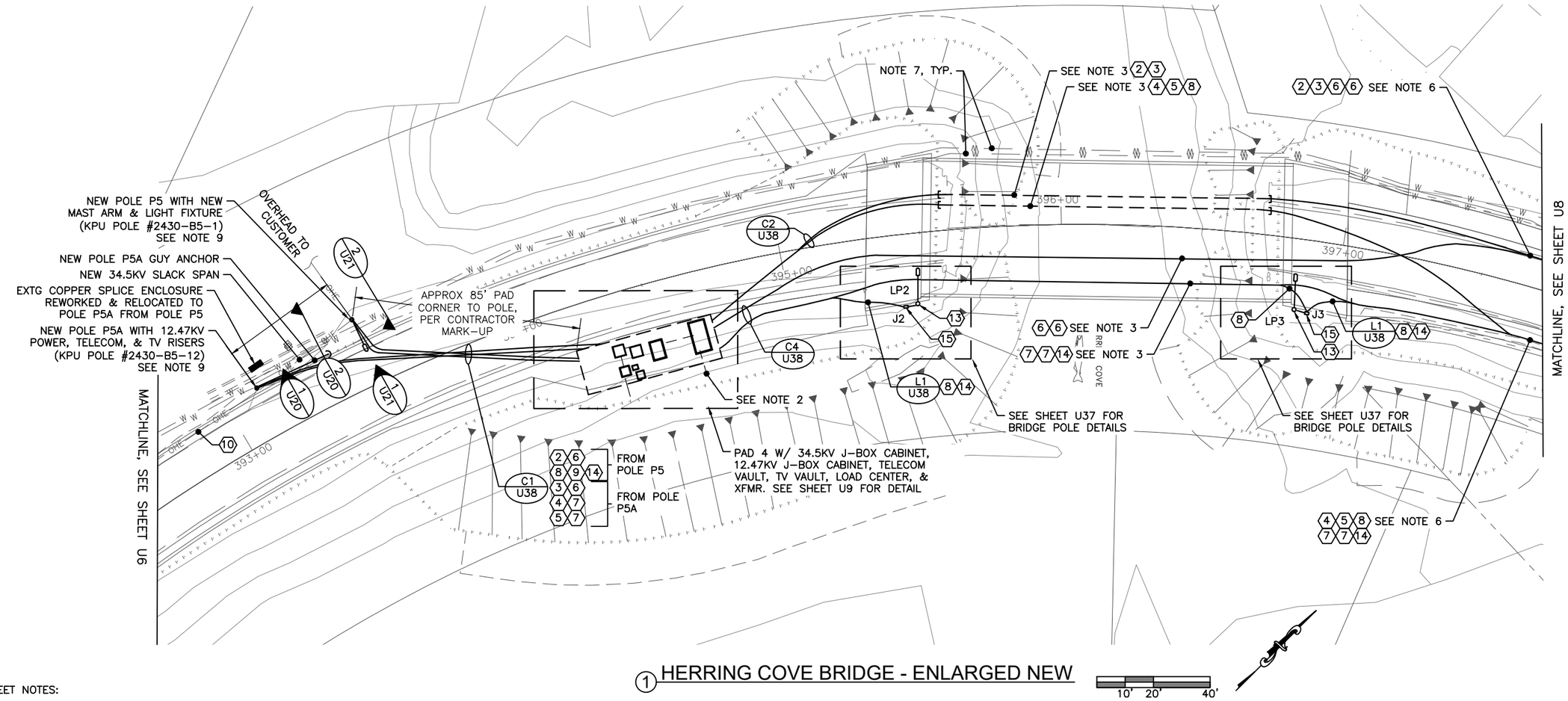

1 HERRING COVE BRIDGE - ENLARGED NEW

SHEET NOTES:

1. SEE SHEET U5 FOR KEYNOTES APPLICABLE TO THIS SHEET.
2. INCLUDE DRAINS BETWEEN UNDERGROUND STRUCTURES PER NOTE 2, SHEET U7A.
3. UPLAND SIDE CONDUITS AT EXISTING BRIDGE INSTALLED AND ENERGIZED AS PART OF BRIDGE STAGE 0 WORK, SEE SHEET U7A. WATER SIDE CONDUITS AT NEW BRIDGE BUILT AS PART OF STAGE 1 INSTALLED AS SPARE AND THEN ENERGIZED DURING A CUTOVER DURING STAGE 1. AFTER CUTOVER, UPLAND SIDE CONDUITS AND CIRCUITS WILL BE DEMOLISHED OR ABANDONED IN PLACE AS APPLICABLE. SEE DETAILS ON SHEET U14 FOR NEW BRIDGE CONDUIT WORK. CONTRACTOR TO VERIFY ONSITE CONDITIONS AS REQUIRED TO DEVELOP HANGER SYSTEM SPECIFICS (EMBEDMENT, HANGER SPACING, ETC.)
4. THIS SHEET DEPICTS BRIDGE STAGE 1 ELECTRICAL WORK. STAGE 1 WORK INCLUDES CONTINUED USE OF STAGE 0 UNDERGROUND ACROSS THE UPLANDS PORTION OF THE EXISTING BRIDGE AND ESTABLISHING UNDERGROUND POWER, TELECOM, TV, AND STREET LIGHTING UNDERGROUND ACROSS THE WATERSIDE PORTION OF THE NEW BRIDGE SEGMENT. THIS WORK IS TO BE COMPLETED AND NEW WATERSIDE CIRCUITS ENERGIZED BEFORE DEMOLISHING THE EXISTING BRIDGE SEGMENT CIRCUITS INSTALLED AS PART OF STAGE 0. ONCE STAGE 1 NEW CIRCUITS SHOWN HERE ARE ENERGIZED, THEY SHALL REMAIN AS THE PERMANENT CIRCUITS UNDERGROUND THROUGH THE END OF CONSTRUCTION. STAGE 0 CONDUITS AND CIRCUITS SHALL BE DEMOLISHED AND ABANDONED ONLY AFTER STAGE 1 CIRCUITS ARE ENERGIZED. STAGE 1 WORK ALSO INCLUDES COMPLETION OF THE BRIDGE STREET LIGHTING WORK DEPICTED HERE, INCLUDING TYING POLES INTO THE STREET LIGHTING CIRCUITS AND INTO THE NEW LIGHTING LOAD CENTER.
5. THERE ARE TWO ADDITIONAL STAGES ASSOCIATED WITH WORK BETWEEN PAD 4, PAD 5, AND PAD 6. SEE SHEETS U7A AND U7C FOR MORE INFORMATION.
6. CONDUITS INDICATED HERE ARE PART OF A LARGER COLLECTION OF CONDUITS IN ONE OVERALL TRENCH THAT HEADS NORTH TO PAD 5 OR PAD 6 AS APPLICABLE. ONLY CONDUITS ASSOCIATED WITH STAGE 0 AND STAGE 1 WORK INDICATED ON THIS SHEET. SEE SHEET U7C FOR MORE CONDUIT WORK.
7. THERE ARE NUMEROUS EXISTING UNDERGROUND UTILITIES AND INFRASTRUCTURE TO REMAIN. NOT ALL ARE SHOWN ON THE PLANS BUT ALL NEED TO BE PROTECTED AND MAINTAINED THROUGHOUT PROJECT. CONTRACTOR SHALL CALL FOR LOCATES, DIG WITH CAUTION, AND COORDINATE ALL WORK WITH LOCAL UTILITIES, OTHER TRADES, ALASKA DOT&PF, AND CITY OF KETCHIKAN, SO AS TO IDENTIFY AND WORK AROUND UTILITIES TO REMAIN.
8. TRENCH DETAIL REFERENCES ARE CALLED OUT ON THE SITE PLANS AND ARE DEPICTED ON SHEET U38. THE CONTRACTOR IS RESPONSIBLE TO LAYOUT THE CONDUIT TRENCHES THROUGHOUT THE SITE IN COORDINATION WITH GENERAL CONSTRUCTION, FINAL LOCATIONS OF ALL EQUIPMENT AND VAULTS, AND AS NEEDED TO ADJUST TO SITE CONDITIONS NOT CAPTURED IN THE DESIGN DOCUMENTS. KEEP CONDUITS FROM CROSSING ONE ANOTHER AS MUCH AS POSSIBLE, MAINTAIN SEPARATION AND DEPTH DIMENSIONS INDICATED, AND ADJUST SECTIONS DEPICTED IN THE SET AS REQUIRED. THERE WILL BE CASES WHERE A TRENCH REFERENCE ON A SITE PLAN MAY BE MISSING CONDUITS PLANNED IN THAT AREA (i.e. 2" STREET LIGHTING CONDUITS THAT ARE SERVING AREA LIGHT POLES). IN SUCH CASES THE CONTRACTOR IS EXPECTED TO INCLUDE THOSE CONDUITS IN THE OVERALL TRENCH AND ADJUST THE WORK AS REQUIRED.
9. SEE SHEET U7A FOR DETAILS ABOUT EACH POLE.

CN
7/24/2024

PLANS DEVELOPED BY:
MORRIS ENGINEERING GROUP, INC
2375 JORDAN AVE #7
JUNEAU, AK 99801
907-789-3350
AECL 1010

STATE OF ALASKA 49TH Mark G. Morris May 31, 2024 No. EE 8613 REGISTERED PROFESSIONAL ENGINEER

STATE OF ALASKA DEPARTMENT OF TRANSPORTATION AND PUBLIC FACILITIES
6860 GLACIER HIGHWAY, JUNEAU, AK 99801
(907) 465-1763

UTILITY RELOCATION FOR KETCHIKAN AREA BRIDGES

HERRING COVE SITE PLAN - BRIDGE WORK - STAGE 1

FILE	DATE	LAYOUT	DESIGNED	CHECKED	DRAFTED
y:\102 state of ak\44 utility relocation design for ketchikan bridges\Working Drawings\00072_U1.dwg	5/30/2024 12:56	U7B	MGM	MGM	JODI

NO.	DATE	REVISION	STATE	PROJECT DESIGNATION	YEAR	SHEET NO.	TOTAL SHEETS
1	5/2024	AS-BUILT	ALASKA	0902043/SFHWY00072	2021	U7C	45
AS-BUILT DRAWING PREPARED FROM CONTRACTOR PROVIDED REDLINE WHICH MAY NOT BE CORRECT							

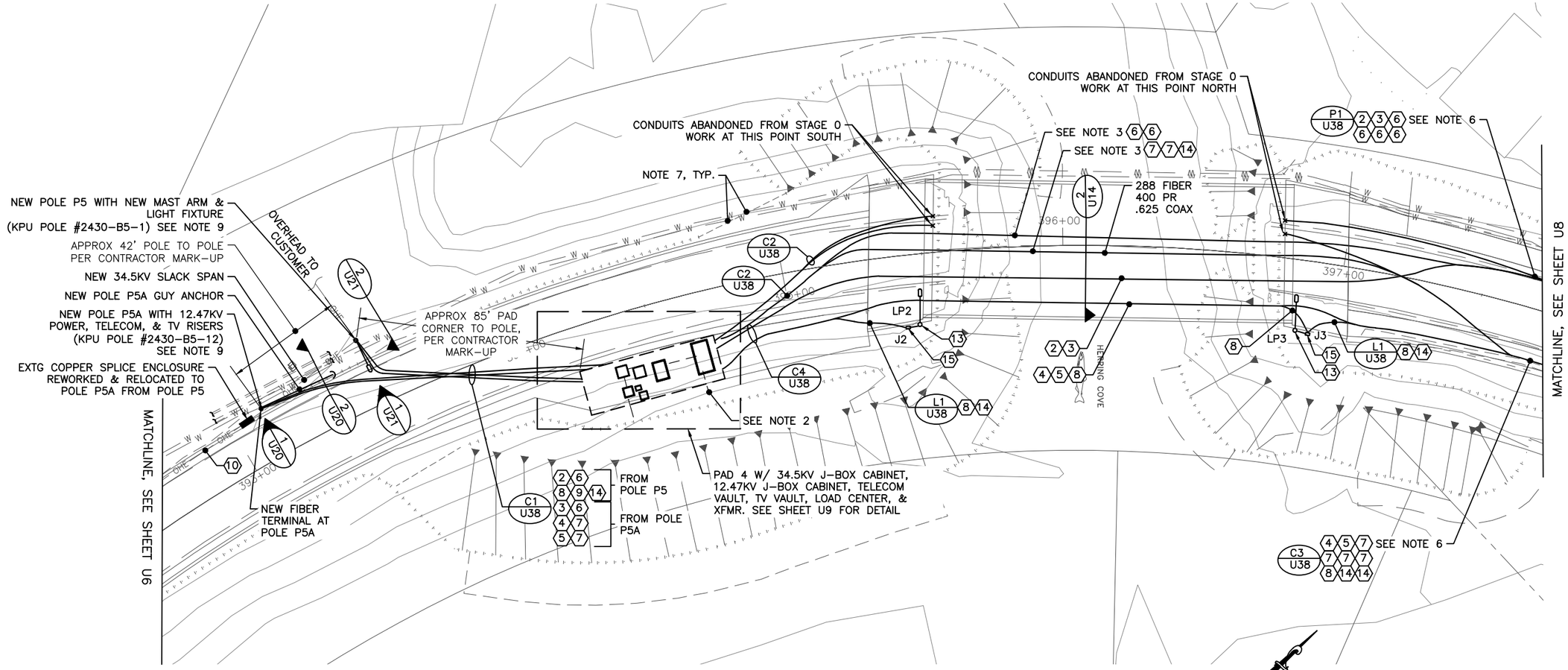

1 HERRING COVE BRIDGE - ENLARGED NEW

10' 20' 40'

SHEET NOTES:

1. SEE SHEET U5 FOR KEYNOTES APPLICABLE TO THIS SHEET.
2. INCLUDE DRAINS BETWEEN UNDERGROUND STRUCTURES PER NOTE 2, SHEET U7A.
3. CONDUITS INSTALLED AS PART OF BRIDGE STAGE 2 (FINAL STAGE) WORK SHOWN ON THIS SHEET WILL BE SET AS SPARE CONDUITS AND REMAIN SO THROUGH END OF CONSTRUCTION. SEE DETAILS ON SHEET U14 FOR NEW BRIDGE WORK. PROVIDE ALL SPARES WITH PULLSTRINGS.
4. THIS SHEET DEPICTS BRIDGE STAGE 2 ELECTRICAL WORK. STAGE 2 WORK IS THE FINAL STAGE OF WORK. THIS STAGE INCLUDES CONTINUED USE OF STAGE 1 UNDERGROUND ACROSS THE WATERSIDE PORTION OF THE NEW BRIDGE AND INCLUDES INSTALLATION OF NEW UNDERGROUND SPARE POWER, TELECOM, TV, AND STREET LIGHTING CONDUITS ACROSS THE UPLANDS SIDE PORTION OF THE NEW BRIDGE SEGMENT. NEW CONDUITS INSTALLED SHALL BE SPARES, SEE NOTE 3.
5. THEE ARE TWO ADDITIONAL STAGES ASSOCIATED WITH WORK BETWEEN PAD 4 AND PADS 5 AND 6. SEE SHEETS U7A AND U7B FOR MORE INFORMATION.
6. CONDUITS INDICATED HERE INCLUDE THE COMPLETE COLLECTION OF CONDUITS INSTALLED VIA STAGE 0, 1, AND 2 WORK IN THIS AREA. CONDUITS PROVIDED AS PART OF STAGE 0 WORK WILL BE ABANDONED WITHIN THEIR RESPECTIVE TRENCHES. LABEL AND PLUG ABANDONED CONDUITS AT BOTH ENDS PRIOR TO SUBSTANTIAL COMPLETION.
7. THERE ARE NUMEROUS EXISTING UNDERGROUND UTILITIES AND INFRASTRUCTURE TO REMAIN. NOT ALL ARE SHOWN ON THE PLANS BUT ALL NEED TO BE PROTECTED AND MAINTAINED THROUGHOUT PROJECT. CONTRACTOR SHALL CALL FOR LOCATES, DIG WITH CAUTION, AND COORDINATE ALL WORK WITH LOCAL UTILITIES, OTHER TRADES, ALASKA DOT&PF, AND CITY OF KETCHIKAN, SO AS TO IDENTIFY AND WORK AROUND UTILITIES TO REMAIN.
8. TRENCH DETAIL REFERENCES ARE CALLED OUT ON THE SITE PLANS AND ARE DEPICTED ON SHEET U38. THE CONTRACTOR IS RESPONSIBLE TO LAYOUT THE CONDUIT TRENCHES THROUGHOUT THE SITE IN COORDINATION WITH GENERAL CONSTRUCTION, FINAL LOCATIONS OF ALL EQUIPMENT AND VAULTS, AND AS NEEDED TO ADJUST TO SITE CONDITIONS NOT CAPTURED IN THE DESIGN DOCUMENTS. KEEP CONDUITS FROM CROSSING ONE ANOTHER AS MUCH AS POSSIBLE, MAINTAIN SEPARATION AND DEPTH DIMENSIONS INDICATED, AND ADJUST SECTIONS DEPICTED IN THE SET AS REQUIRED. THERE WILL BE CASES WHERE A TRENCH REFERENCE ON A SITE PLAN MAY BE MISSING CONDUITS PLANNED IN THAT AREA (i.e. 2" STREET LIGHTING CONDUITS THAT ARE SERVING AREA LIGHT POLES). IN SUCH CASES THE CONTRACTOR IS EXPECTED TO INCLUDE THOSE CONDUITS IN THE OVERALL TRENCH AND ADJUST THE WORK AS REQUIRED.
9. SEE SHEET U7A FOR DETAILS ABOUT EACH POLE.

CN
7/24/2024

PLANS DEVELOPED BY:
MORRIS ENGINEERING GROUP, INC
2375 JORDAN AVE #7
JUNEAU, AK 99801
907-789-3350
AECL 1010

STATE OF ALASKA 49TH Mark G. Morris May 31, 2024 No. EE 8613 REGISTERED PROFESSIONAL ENGINEER

STATE OF ALASKA DEPARTMENT OF TRANSPORTATION AND PUBLIC FACILITIES
6860 GLACIER HIGHWAY, JUNEAU, AK 99801
(907) 465-1763

UTILITY RELOCATION FOR KETCHIKAN AREA BRIDGES

HERRING COVE SITE PLAN - BRIDGE WORK - STAGE 2

FILE y:\102 state of ak\44 utility relocation design for ketchikan bridges\Working Drawings\00072_U1.dwg | DATE 5/30/2024 12:56 | LAYOUT U7C | DESIGNED MGM | CHECKED MGM | DRAFTED JODI

NO.	DATE	REVISION	STATE	PROJECT DESIGNATION	YEAR	SHEET NO.	TOTAL SHEETS
1	5/2024	AS-BUILT					
AS-BUILT DRAWING PREPARED FROM CONTRACTOR PROVIDED REDLINE WHICH MAY NOT BE CORRECT			ALASKA	0902043/SFHWY00072	2021	U8	45

SHEET NOTES:

1. SEE SHEET U5 FOR KEYNOTES APPLICABLE TO THIS SHEET.
2. PROVIDE NEW GUYING AT POLE, SEE SHEET U22 FOR POLE P7 DETAILS AND SHEET U24 FOR POLE P9 DETAILS.
3. THERE ARE NUMEROUS EXISTING UNDERGROUND UTILITIES AND INFRASTRUCTURE TO REMAIN. NOT ALL ARE SHOWN ON THE PLANS BUT ALL NEED TO BE PROTECTED AND MAINTAINED THROUGHOUT PROJECT. CONTRACTOR SHALL CALL FOR LOCATES, DIG WITH CAUTION, AND COORDINATE ALL WORK WITH LOCAL UTILITIES, OTHER TRADES, ALASKA DOT&PF, AND CITY OF KETCHIKAN, SO AS TO IDENTIFY AND WORK AROUND UTILITIES TO REMAIN.
4. BETWEEN EACH UNDERGROUND ELECTRICAL AND TELECOM/TV BASEMENT AND VAULT, PROVIDE A CONDUIT DRAIN TO REMOVE WATER (LINE DASHED ON THIS SHEET). TIE ADJACENT STRUCTURES TOGETHER WITH A DRAIN AND RUN ANOTHER DRAIN TO DAYLIGHT AT PAD 5. SLOPE CONDUITS TO DRAIN, SEE INDIVIDUAL EQUIPMENT DETAILS FOR MORE ON THE DRAINS. COORDINATE DRAIN ROUTING WITH CIVIL CONTRACTOR.
5. TRENCH DETAIL REFERENCES ARE CALLED OUT ON THE SITE PLANS AND ARE DEPICTED ON SHEET U38. THE CONTRACTOR IS RESPONSIBLE TO LAYOUT THE CONDUIT TRENCHES THROUGHOUT THE SITE IN COORDINATION WITH GENERAL CONSTRUCTION, FINAL LOCATIONS OF ALL EQUIPMENT AND VAULTS, AND AS NEEDED TO ADJUST TO SITE CONDITIONS NOT CAPTURED IN THE DESIGN DOCUMENTS. KEEP CONDUITS FROM CROSSING ONE ANOTHER AS MUCH AS POSSIBLE, MAINTAIN SEPARATION AND DEPTH DIMENSIONS INDICATED, AND ADJUST SECTIONS DEPICTED IN THE SET AS REQUIRED. THERE WILL BE CASES WHERE A TRENCH REFERENCE ON A SITE PLAN MAY BE MISSING CONDUITS PLANNED IN THAT AREA (i.e. 2" STREET LIGHTING CONDUITS THAT ARE SERVING AREA LIGHT POLES). IN SUCH CASES THE CONTRACTOR IS EXPECTED TO INCLUDE THOSE CONDUITS IN THE OVERALL TRENCH AND ADJUST THE WORK AS REQUIRED.
6. EXISTING CONDUITS TO POLE P6: (1) 6" POWER, (1) 4" POWER. (2) 4" TELECOM. THE POWER CONDUITS TO RISERS AT POLE P6 TO BE REROUTED TO THE VAULTS. THE REMAINDER OF THE CONDUIT SHALL BE ABANDONED IN PLACE. SPARE TELECOM CONDUITS TO BE PROTECTED AND MAINTAINED. SEE SHEET U38 FOR EXISTING POWERHOUSE ROAD TRENCH DETAIL.
7. ALL WORK AT AND ON POLES P7–P10 BY KPU UTILITY PER PROJECT PLANS AND SPECIFICATIONS. ALL UNDERGROUND TO THE POLES BY CONTRACTOR. SEE SHEETS U22–U25 FOR POLES P7–P10 DETAILS.
8. TV AND TELEPHONE OVERHEAD LINES ROUTED AND CONNECTED TO NEW POLE P6A. SEE SHEET U39A FOR MORE INFORMATION.

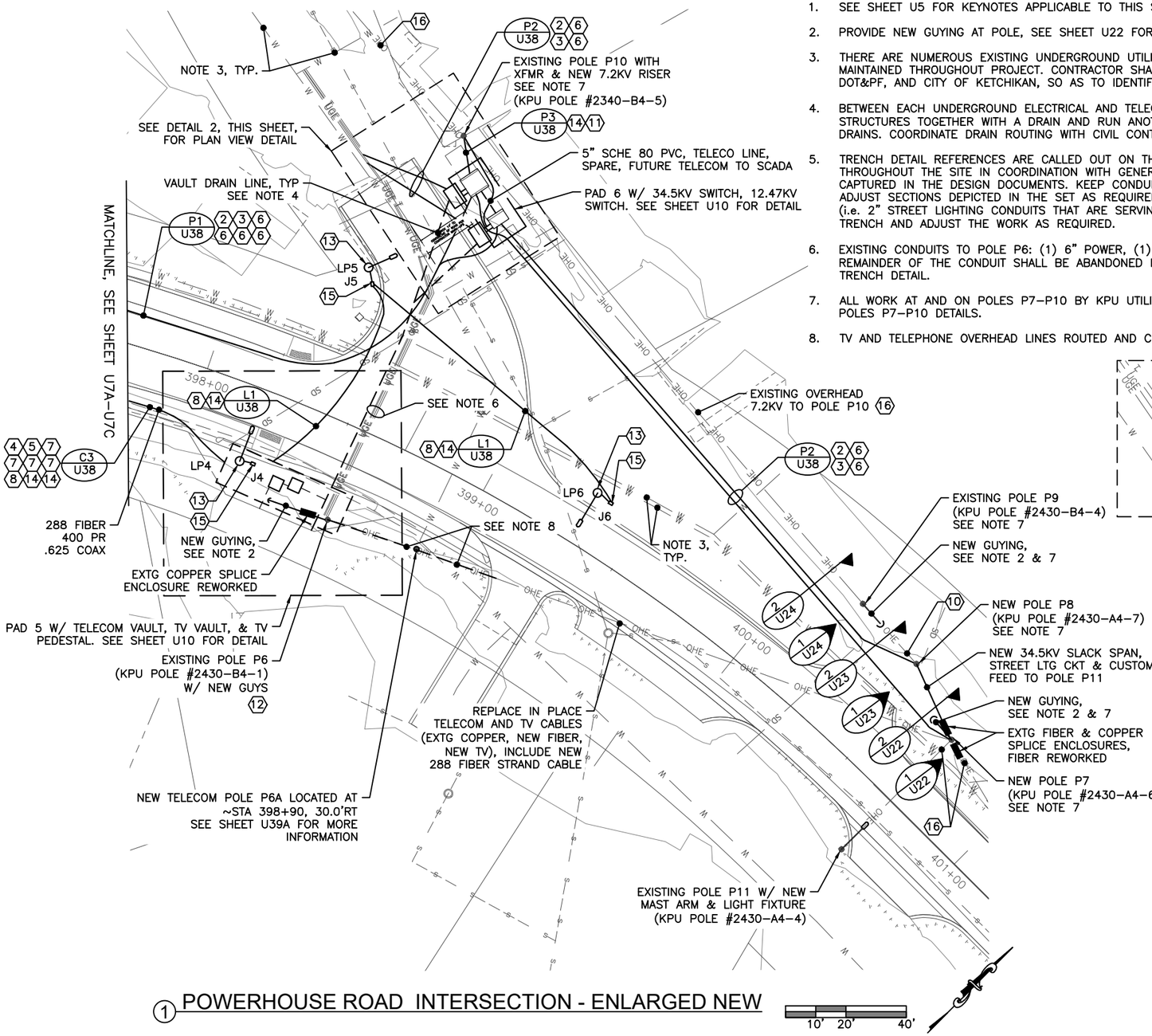

1 POWERHOUSE ROAD INTERSECTION - ENLARGED NEW

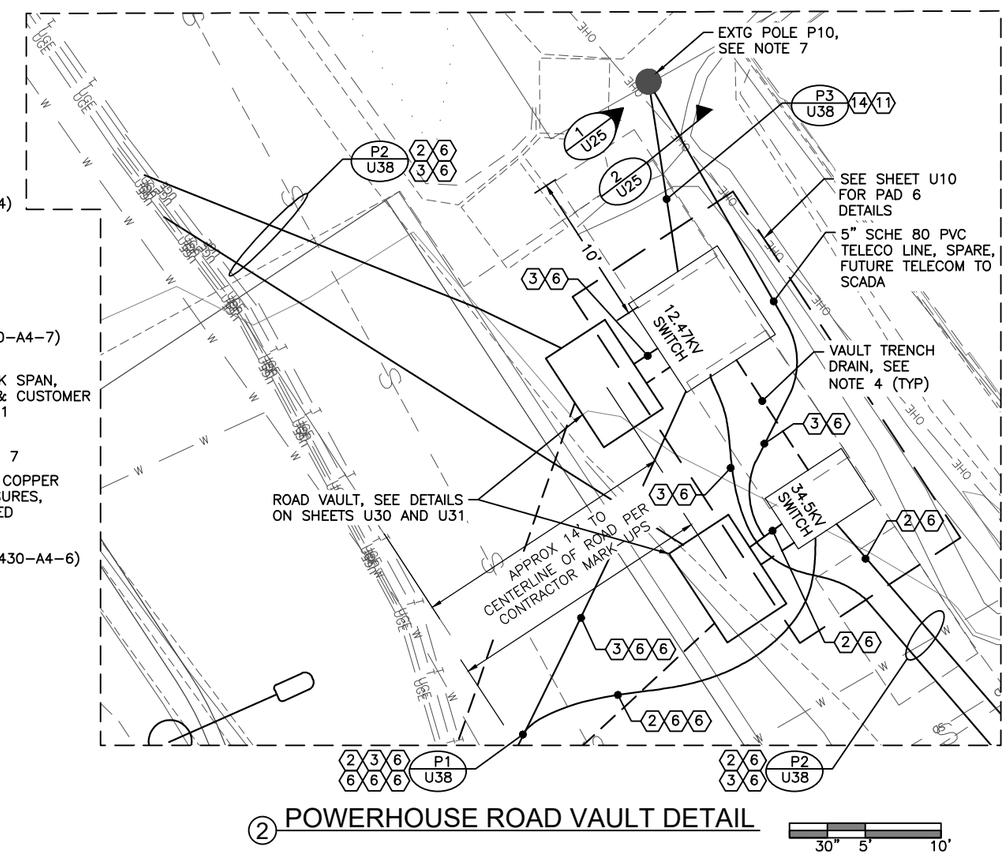

2 POWERHOUSE ROAD VAULT DETAIL

CN
7/24/2024

PLANS DEVELOPED BY:
MORRIS ENGINEERING GROUP, INC
2375 JORDAN AVE #7
JUNEAU, AK 99801
907–789–3350
AECL 1010

STATE OF ALASKA 49TH Mark G. Morris May 31, 2024 No. EE 8613 REGISTERED PROFESSIONAL ENGINEER

STATE OF ALASKA DEPARTMENT OF TRANSPORTATION AND PUBLIC FACILITIES
6860 GLACIER HIGHWAY, JUNEAU, AK 99801
(907) 465–1763

UTILITY RELOCATION FOR KETCHIKAN AREA BRIDGES

HERRING COVE SITE PLAN – NEW POWERHOUSE ROAD

FILE y:\02 state of ak\44 utility relocation design for ketchikan bridges\Working Drawings\00072_U1.dwg | DATE 5/30/2024 12:56 | LAYOUT U8 | DESIGNED MGM | CHECKED MGM | DRAFTED JODI

NO.	DATE	REVISION	STATE	PROJECT DESIGNATION	YEAR	SHEET NO.	TOTAL SHEETS
1	5/2024	AS-BUILT					
AS-BUILT DRAWING PREPARED FROM CONTRACTOR PROVIDED REDLINE WHICH MAY NOT BE CORRECT			ALASKA	0902043/SFHWY00072	2021	U9	45

SHEET NOTES:

1. SEE SHEET U5 FOR KEYNOTES APPLICABLE TO THIS SHEET.
2. BETWEEN EACH UNDERGROUND ELECTRICAL AND TELECOM/TV BASEMENT AND VAULT, PROVIDE A CONDUIT DRAIN TO REMOVE WATER. TIE ADJACENT STRUCTURES TOGETHER WITH A DRAIN AND RUN ANOTHER DRAIN TO DAYLIGHT AS REQUIRED. SLOPE CONDUITS TO DRAIN, SEE INDIVIDUAL EQUIPMENT DETAILS FOR MORE ON THE DRAINS. COORDINATE DRAIN ROUTING WITH CIVIL CONTRACTOR.
3. THERE ARE NUMEROUS EXISTING UNDERGROUND UTILITIES AND INFRASTRUCTURE TO REMAIN. NOT ALL ARE SHOWN ON THE PLANS BUT ALL NEED TO BE PROTECTED AND MAINTAINED THROUGHOUT PROJECT. CONTRACTOR SHALL CALL FOR LOCATES, DIG WITH CAUTION, AND COORDINATE ALL WORK WITH LOCAL UTILITIES. OTHER TRADES, ALASKA DOT&PF, AND CITY OF KETCHIKAN. SO AS TO IDENTIFY AND WORK AROUND UTILITIES TO REMAIN.
4. TRENCH DETAIL REFERENCES ARE CALLED OUT ON THE SITE PLANS AND ARE DEPICTED ON SHEET U38. THE CONTRACTOR IS RESPONSIBLE TO LAYOUT THE CONDUIT TRENCHES THROUGHOUT THE SITE IN COORDINATION WITH GENERAL CONSTRUCTION, FINAL LOCATIONS OF ALL EQUIPMENT AND VAULTS, AND AS NEEDED TO ADJUST TO SITE CONDITIONS NOT CAPTURED IN THE DESIGN DOCUMENTS. KEEP CONDUITS FROM CROSSING ONE ANOTHER AS MUCH AS POSSIBLE, MAINTAIN SEPARATION AND DEPTH DIMENSIONS INDICATED, AND ADJUST SECTIONS DEPICTED IN THE SET AS REQUIRED. THERE WILL BE CASES WHERE A TRENCH REFERENCE ON A SITE PLAN MAY BE MISSING CONDUITS PLANNED IN THAT AREA (i.e. 2" STREET LIGHTING CONDUITS THAT ARE SERVING AREA LIGHT POLES). IN SUCH CASES THE CONTRACTOR IS EXPECTED TO INCLUDE THOSE CONDUITS IN THE OVERALL TRENCH AND ADJUST THE WORK AS REQUIRED.
5. CONDUITS FROM PAD 4 UNDERGROUND ACROSS EXISTING AND NEW BRIDGE TO PAD 5 OR PAD 6 AS APPLICABLE. WORK TO OCCUR IN CONCORDANCE WITH BRIDGE CONSTRUCTION STAGES 0, 1 AND 2. SEE SHEETS U7A–U7C. FOR STAGES AND ADDITIONAL ROUTING INFORMATION.

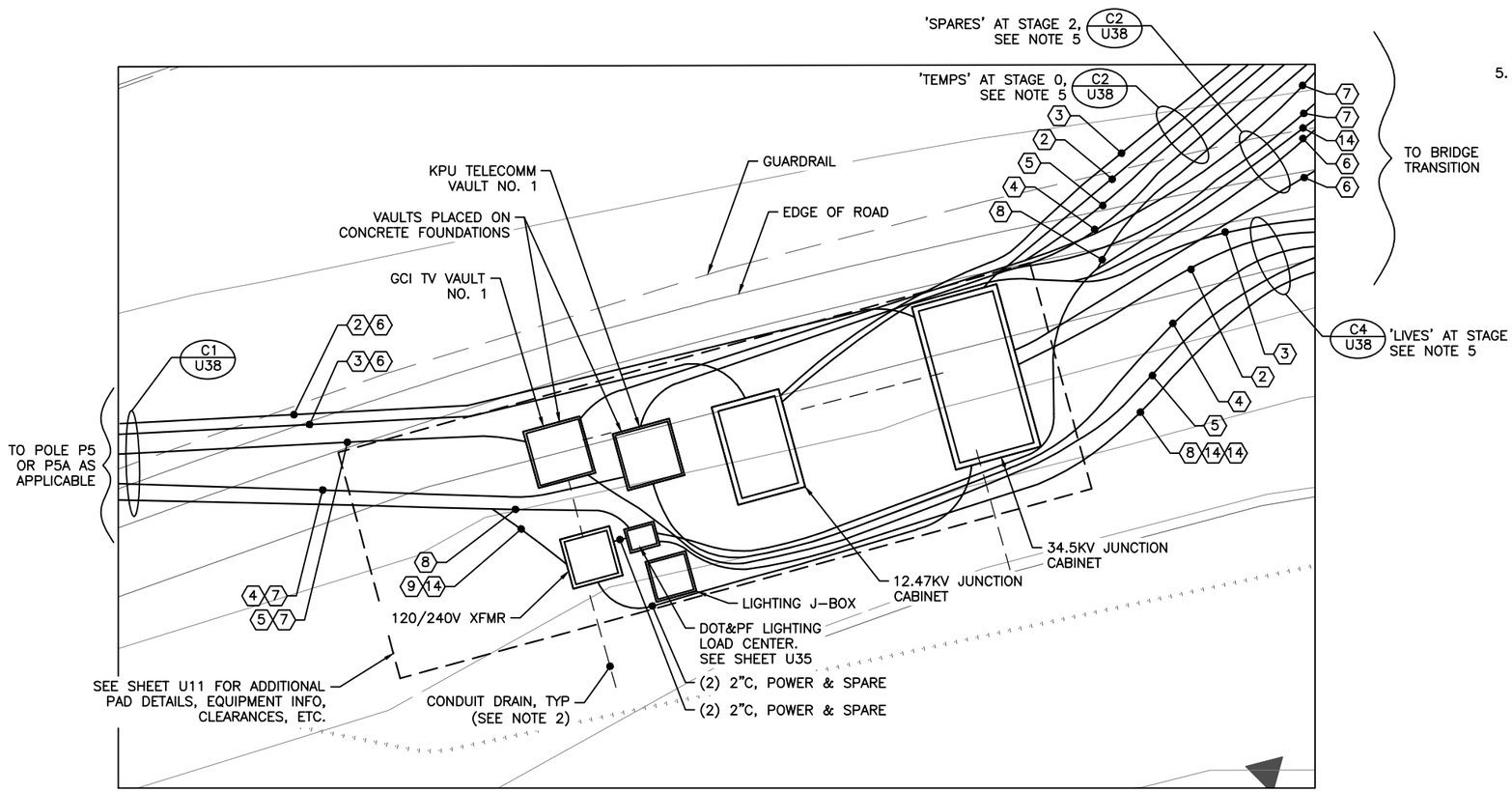

1 PAD 4 - DETAIL

30" 5' 10'

CN
7/24/2024

PLANS DEVELOPED BY:
MORRIS ENGINEERING GROUP, INC
2375 JORDAN AVE #7
JUNEAU, AK 99801
907–789–3350
AECL 1010

STATE OF ALASKA 49TH Mark G. Morris May 31, 2024 No. EE 8613 REGISTERED PROFESSIONAL ENGINEER

STATE OF ALASKA DEPARTMENT OF TRANSPORTATION AND PUBLIC FACILITIES
6860 GLACIER HIGHWAY, JUNEAU, AK 99801
(907) 465–1763

UTILITY RELOCATION FOR KETCHIKAN AREA BRIDGES

UTILITY PAD 4 DETAILS

FILE y:\102 state of ak\44 utility relocation design for ketchikan bridges\Working Drawings\00072_U1.dwg | DATE 5/30/2024 12:56 | LAYOUT U9 | DESIGNED MGM | CHECKED MGM | DRAFTED JODI

NO.	DATE	REVISION	STATE	PROJECT DESIGNATION	YEAR	SHEET NO.	TOTAL SHEETS
1	5/2024	AS-BUILT					
AS-BUILT DRAWING PREPARED FROM CONTRACTOR PROVIDED REDLINE WHICH MAY NOT BE CORRECT			ALASKA	0902043/SFHWY00072	2021	U10	45

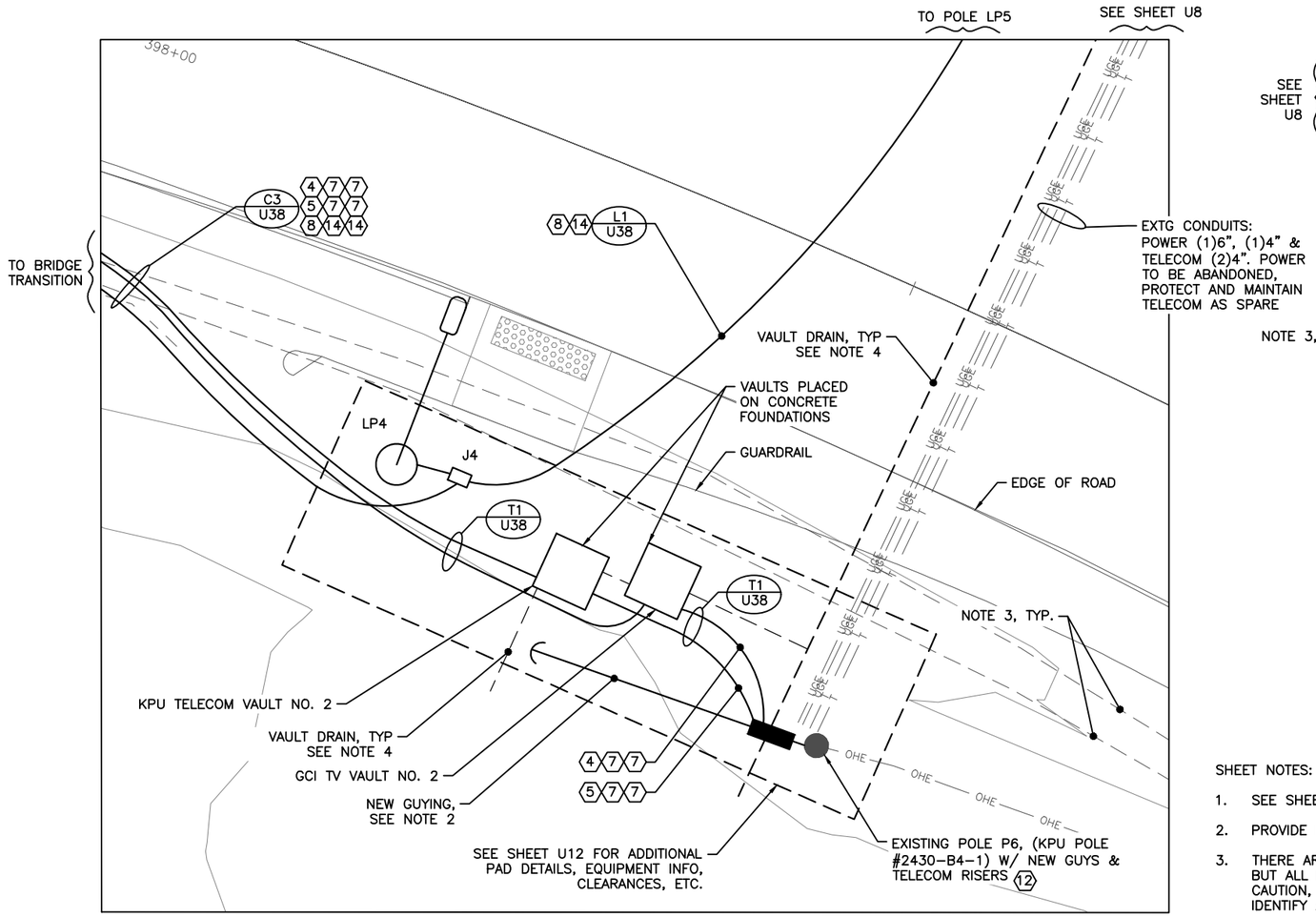

1 PAD 5 - DETAIL

30" 5' 10'

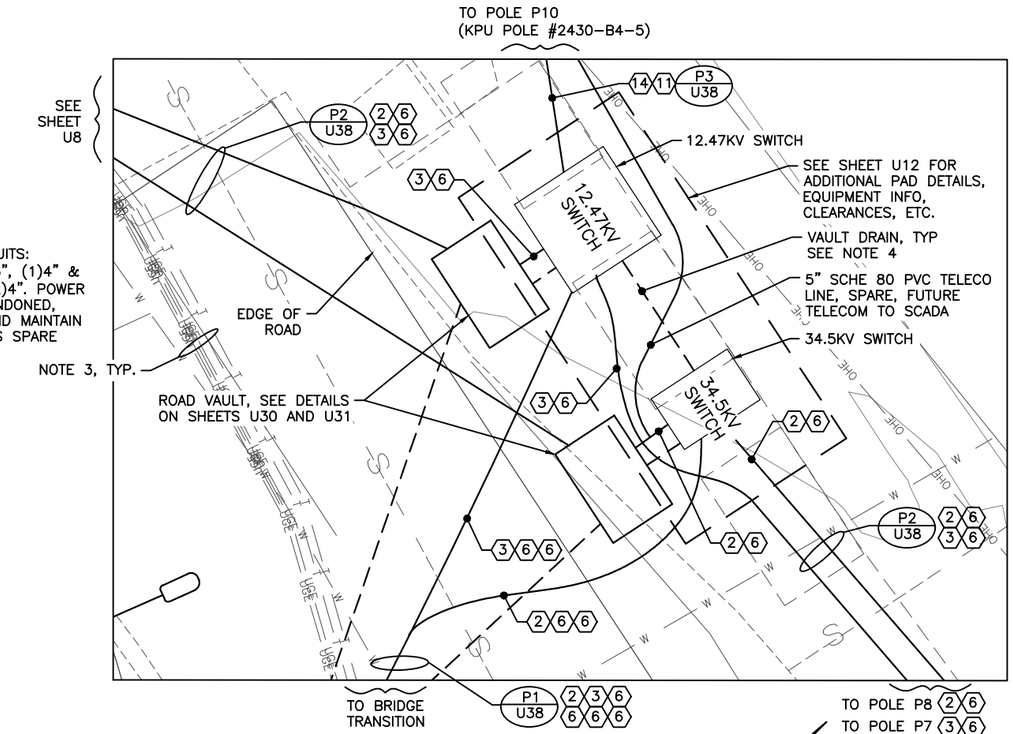

2 PAD 6 - DETAIL

30" 5' 10'

SHEET NOTES:

1. SEE SHEET U5 FOR KEYNOTES APPLICABLE TO THIS SHEET.
2. PROVIDE NEW GUYING AT POLE, SEE SHEET U12 FOR INFORMATION.
3. THERE ARE NUMEROUS EXISTING UNDERGROUND UTILITIES AND INFRASTRUCTURE TO REMAIN. NOT ALL ARE SHOWN ON THE PLANS BUT ALL NEED TO BE PROTECTED AND MAINTAINED THROUGHOUT PROJECT. CONTRACTOR SHALL CALL FOR LOCATES, DIG WITH CAUTION, AND COORDINATE ALL WORK WITH LOCAL UTILITIES. OTHER TRADES, ALASKA DOT&PF, AND CITY OF KETCHIKAN. SO AS TO IDENTIFY AND WORK AROUND UTILITIES TO REMAIN.
4. BETWEEN EACH UNDERGROUND ELECTRICAL AND TELECOM/TV BASEMENT AND VAULT, PROVIDE A CONDUIT DRAIN TO REMOVE WATER. TIE ADJACENT STRUCTURES TOGETHER WITH A DRAIN AND RUN ANOTHER DRAIN TO DAYLIGHT AS REQUIRED. SLOPE CONDUITS TO DRAIN, SEE INDIVIDUAL EQUIPMENT DETAILS FOR MORE ON THE DRAINS. COORDINATE DRAIN ROUTING WITH CIVIL CONTRACTOR.
5. TRENCH DETAIL REFERENCES ARE CALLED OUT ON THE SITE PLANS AND ARE DEPICTED ON SHEET U38. THE CONTRACTOR IS RESPONSIBLE TO LAYOUT THE CONDUIT TRENCHES THROUGHOUT THE SITE IN COORDINATION WITH GENERAL CONSTRUCTION, FINAL LOCATIONS OF ALL EQUIPMENT AND VAULTS, AND AS NEEDED TO ADJUST TO SITE CONDITIONS NOT CAPTURED IN THE DESIGN DOCUMENTS. KEEP CONDUITS FROM CROSSING ONE ANOTHER AS MUCH AS POSSIBLE, MAINTAIN SEPARATION AND DEPTH DIMENSIONS INDICATED, AND ADJUST SECTIONS DEPICTED IN THE SET AS REQUIRED. THERE WILL BE CASES WHERE A TRENCH REFERENCE ON A SITE PLAN MAY BE MISSING CONDUITS PLANNED IN THAT AREA (i.e. 2" STREET LIGHTING CONDUITS THAT ARE SERVING AREA LIGHT POLES). IN SUCH CASES THE CONTRACTOR IS EXPECTED TO INCLUDE THOSE CONDUITS IN THE OVERALL TRENCH AND ADJUST THE WORK AS REQUIRED.

CN
7/24/2024

PLANS DEVELOPED BY:
MORRIS ENGINEERING GROUP, INC
2375 JORDAN AVE #7
JUNEAU, AK 99801
907-789-3350
AECL 1010

STATE OF ALASKA 49TH Mark G. Morris May 31, 2024 No. EE 8613 REGISTERED PROFESSIONAL ENGINEER

STATE OF ALASKA DEPARTMENT OF TRANSPORTATION AND PUBLIC FACILITIES
6860 GLACIER HIGHWAY, JUNEAU, AK 99801
(907) 465-1763

UTILITY RELOCATION FOR KETCHIKAN AREA BRIDGES

UTILITY PAD 5 & 6 DETAILS

FILE | s:\102 state of ak\44 utility relocation design for ketchikan bridges\Working Drawings\00072_U1.dwg | DATE | 5/30/2024 12:56 | LAYOUT | U10 | DESIGNED | MGM | CHECKED | MGM | DRAFTED | JODI

NO.	DATE	REVISION	STATE	PROJECT DESIGNATION	YEAR	SHEET NO.	TOTAL SHEETS
1	5/2024	AS-BUILT					
AS-BUILT DRAWING PREPARED FROM CONTRACTOR PROVIDED REDLINE WHICH MAY NOT BE CORRECT			ALASKA	0902043/SFHWY00072	2021	U11	45

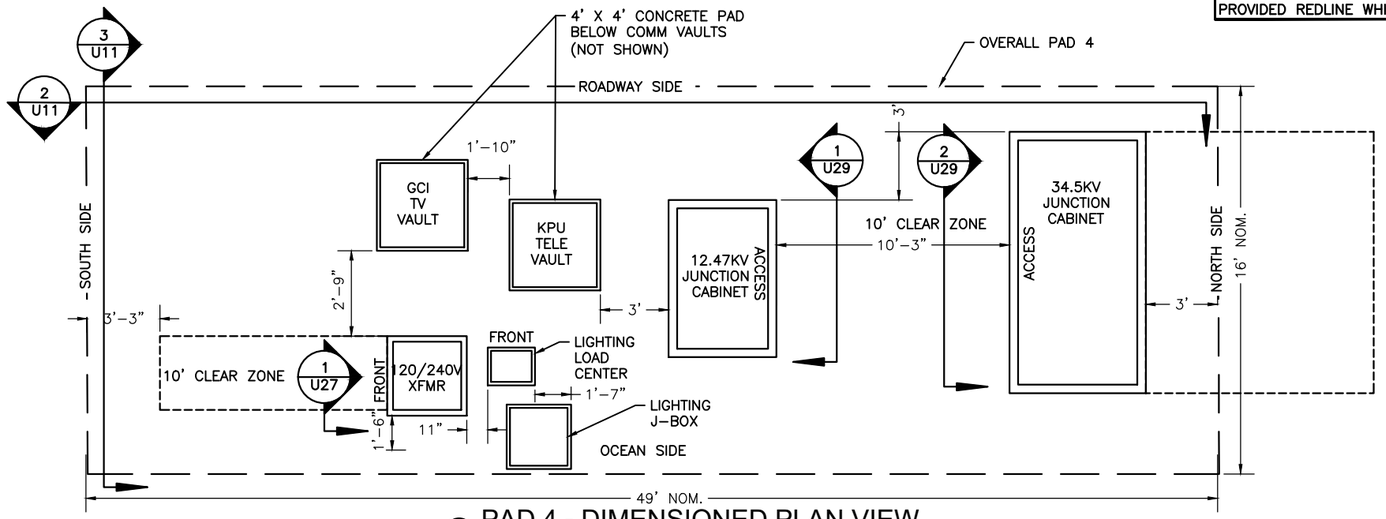

1 PAD 4 - DIMENSIONED PLAN VIEW

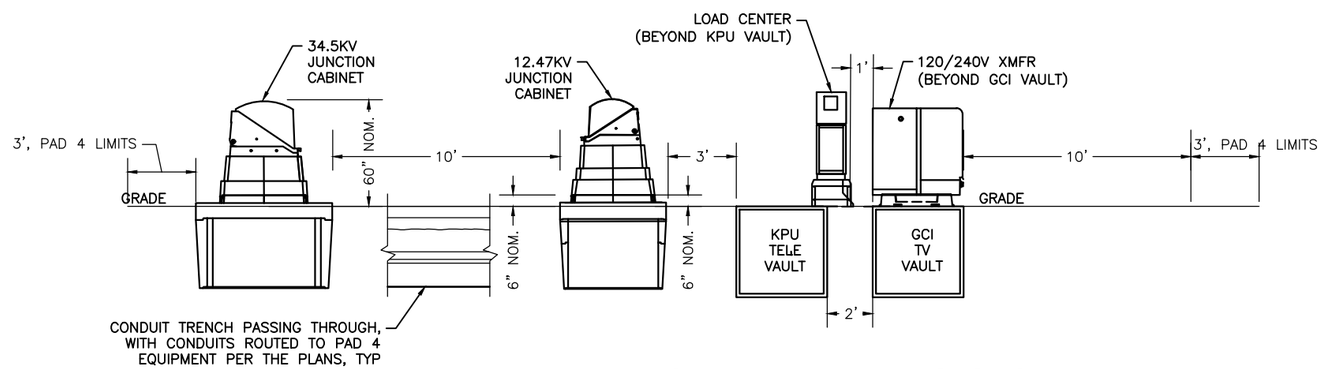

2 PAD 4 - ROADWAY PARALLEL SECTION

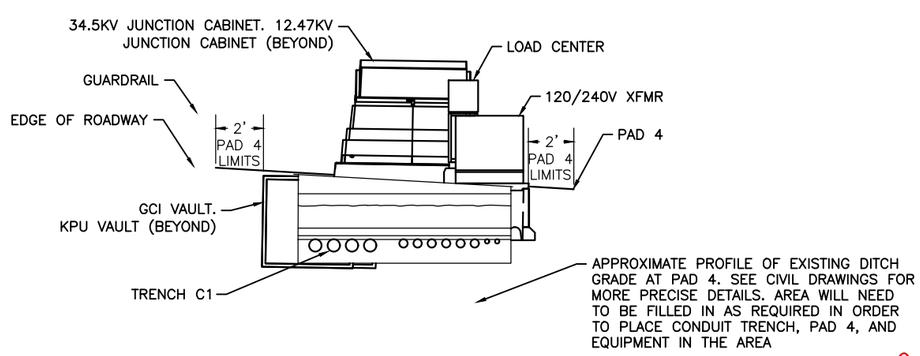

3 PAD 4 - ROADWAY CROSS SECTION

CN
7/24/2024

PLANS DEVELOPED BY:
MORRIS ENGINEERING GROUP, INC
2375 JORDAN AVE #7
JUNEAU, AK 99801
907-789-3350
AECL 1010

STATE OF ALASKA 49TH
Mark G. Morris
May 31, 2024
No. EE 8613
REGISTERED PROFESSIONAL ENGINEER

STATE OF ALASKA DEPARTMENT OF TRANSPORTATION AND PUBLIC FACILITIES
6860 GLACIER HIGHWAY, JUNEAU, AK 99801
(907) 465-1763

UTILITY RELOCATION FOR KETCHIKAN AREA BRIDGES

UTILITY PAD 4 - ROADWAY SECTIONS & PAD ELEVATIONS

FILE y:\102 state of ak\44 utility relocation design for ketchikan bridges\Working Drawings\UTILITY PAD 1 & PAD 2 ROADWAY CROSS SECTIONS.dwg | LAYOUT U11 | 07/29/2024 17:56 | DESIGNED MGM | CHECKED MGM | DRAFTED JODI

NO.	DATE	REVISION	STATE	PROJECT DESIGNATION	YEAR	SHEET NO.	TOTAL SHEETS
1	5/2024	AS-BUILT					
AS-BUILT DRAWING PREPARED FROM CONTRACTOR PROVIDED REDLINE WHICH MAY NOT BE CORRECT			ALASKA	0902043/SFHWY00072	2021	U12	45

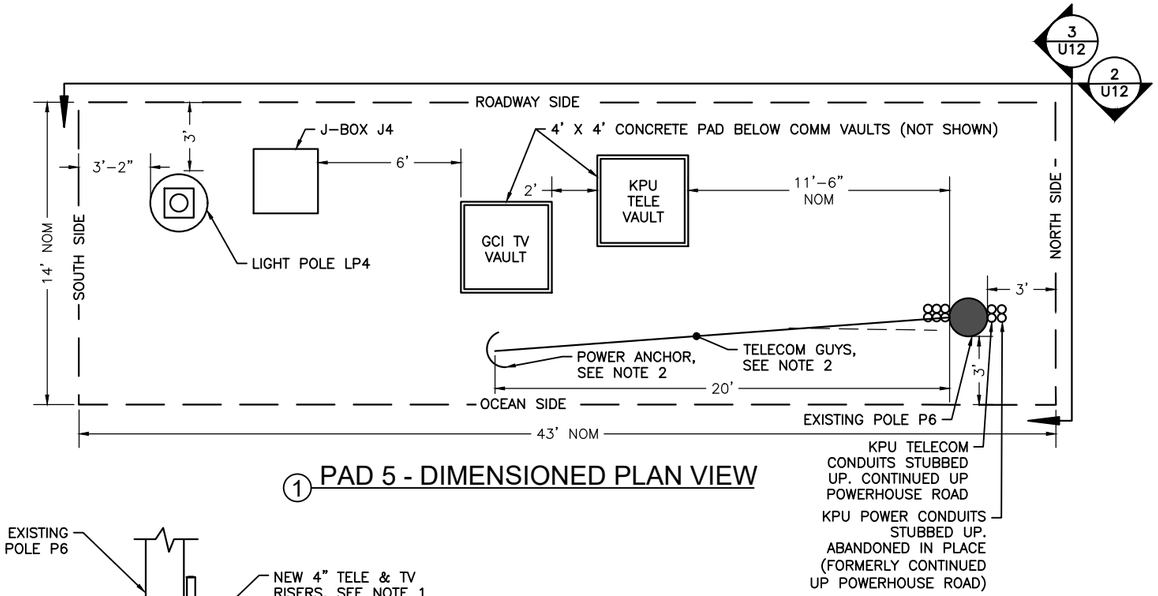

1 PAD 5 - DIMENSIONED PLAN VIEW

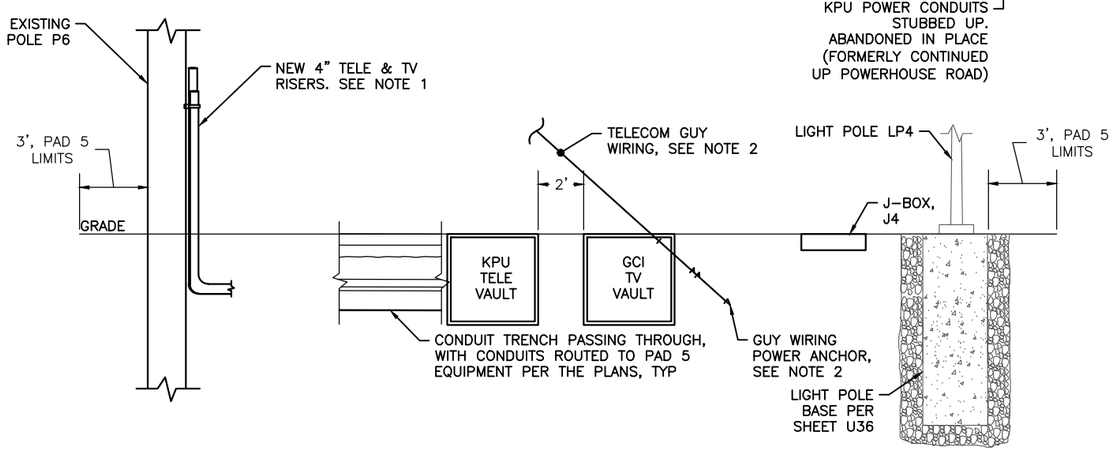

2 PAD 5 - ROADWAY PARALLEL SECTION

SHEET NOTES:

1. PROVIDE (2) 4" TELEPHONE, (2) 4" TV CONDUIT RISERS AT POLE P6. GENERAL ARRANGEMENT AND POLE SETUPS PER POLE P5A DETAILS ON SHEET U20.
2. PROVIDE COMMUNICATION GUYING WORK AND GENERAL ARRANGEMENT PER POLE P2 DETAILS ON SHEET U19

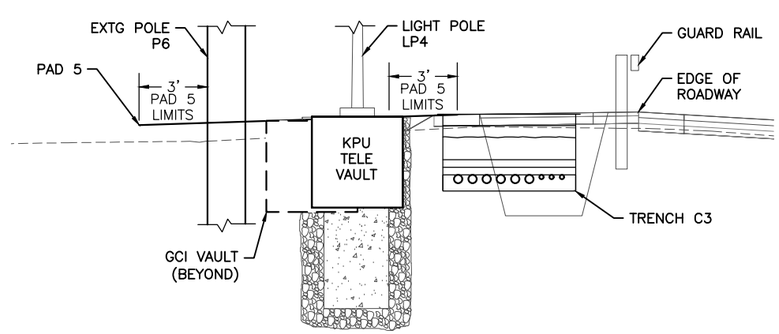

3 PAD 5 - ROADWAY CROSS SECTION

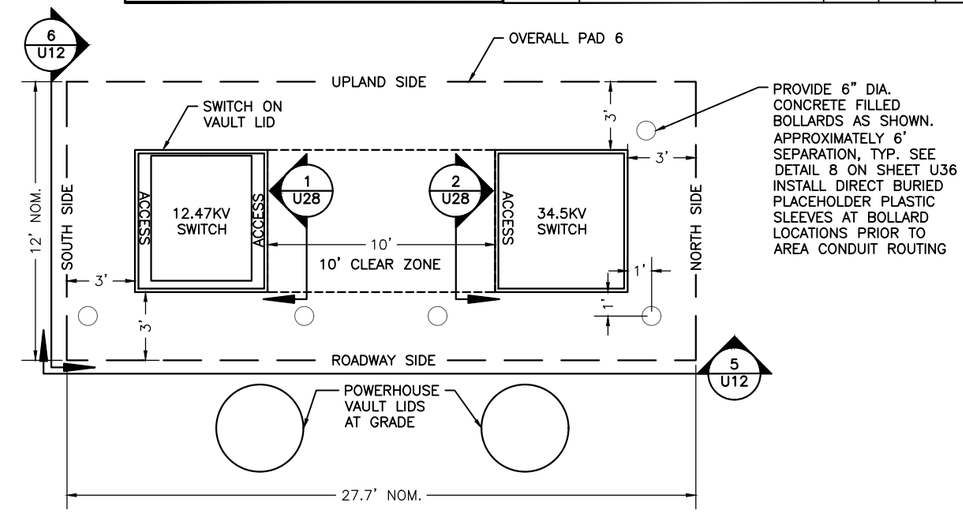

4 PAD 6 - DIMENSIONED PLAN VIEW

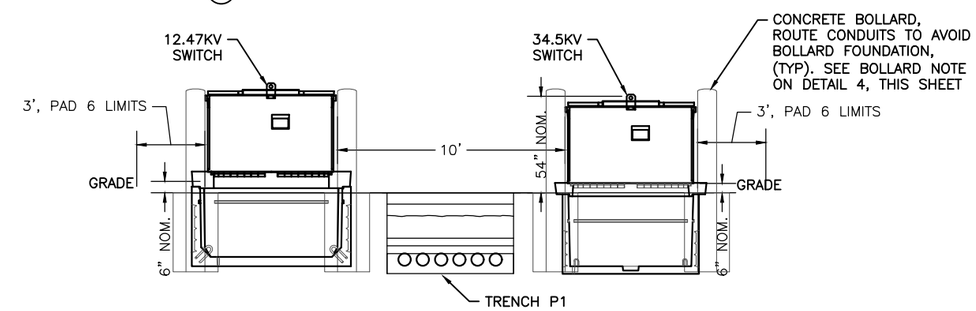

5 PAD 6 - ROADWAY PARALLEL SECTION

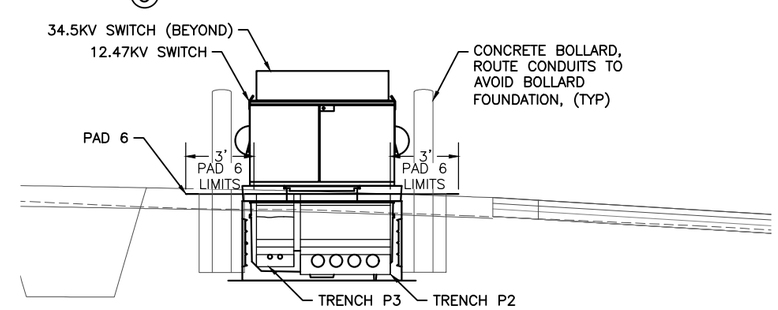

6 PAD 6 - ROADWAY CROSS SECTION

CN
7/24/2024

PLANS DEVELOPED BY:
MORRIS ENGINEERING GROUP, INC
2375 JORDAN AVE #7
JUNEAU, AK 99801
907-789-3350
AECL 1010

STATE OF ALASKA 49TH Mark G. Morris May 31, 2024 No. EE 8613 REGISTERED PROFESSIONAL ENGINEER

STATE OF ALASKA DEPARTMENT OF TRANSPORTATION AND PUBLIC FACILITIES
6860 GLACIER HIGHWAY, JUNEAU, AK 99801
(907) 465-1763

UTILITY RELOCATION FOR KETCHIKAN AREA BRIDGES

UTILITY PAD 5 & 6 - ROADWAY SECTIONS & PAD ELEVATONS

FILE | J:\102 state of ak\44 utility relocation design for ketchikan bridges\Working Drawings\UTILITY PAD 1 & PAD 2 ROADWAY CROSS SECTIONS.dwg | LAYOUT | U12 | 7/29/2024 17:56 | DESIGNED | MGM | CHECKED | MGM | DRAFTED | JODI

NO.	DATE	REVISION	STATE	PROJECT DESIGNATION	YEAR	SHEET NO.	TOTAL SHEETS
1	5/2024	AS-BUILT					
AS-BUILT DRAWING PREPARED FROM CONTRACTOR PROVIDED REDLINE WHICH MAY NOT BE CORRECT			ALASKA	0902043/SFHWY00072	2021	U13	45

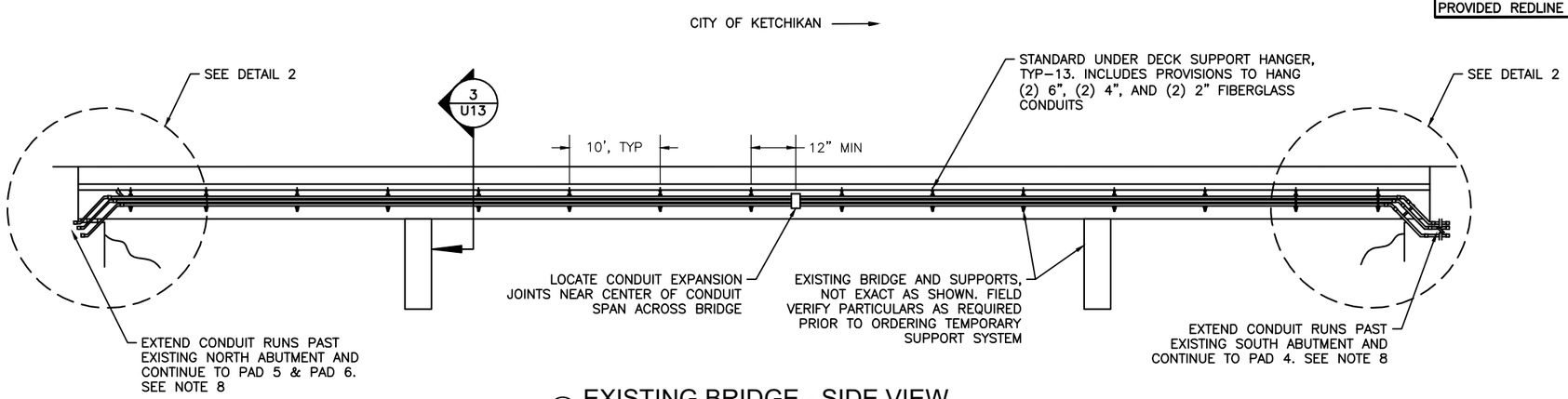

1 EXISTING BRIDGE - SIDE VIEW
NO SCALE

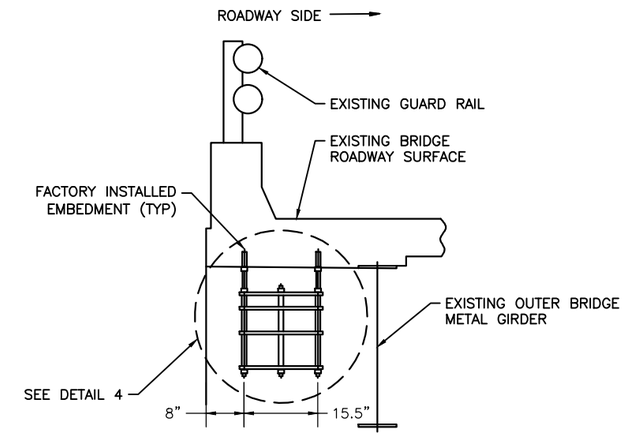

3 BRIDGE HANGERS - ENLARGED SECTION
NO SCALE

SHEET NOTES:

1. PROVIDE FIBERGLASS CONDUIT, SUPPORT HANGERS, ALL ASSOCIATED FITTINGS, AND MOUNTING HARDWARE THE ENTIRE LENGTH OF BRIDGE. ALL NON-METALLIC COMPONENTS SHALL BE LIGHT GRAY COLORED.
2. HANGER SYSTEM SHALL MEET MINIMUM TENSILE, FLEXURAL, AND COMPRESSIVE STRENGTH REQUIREMENTS OF ASTM D638, D790, D695, ETC. PROVIDE ALL 316L STAINLESS STEEL MOUNTING HARDWARE, BRACKETS, ETC. ALL METALLIC ELEMENTS ASSOCIATED WITH THE FIBERGLASS CONDUIT SYSTEM SHALL BE 316L STAINLESS STEEL. PROVIDE CONDUX INTERNATIONAL HANGER SYSTEM OR EQUAL. SEE NOTE 9.
3. MEET NEC REQUIREMENTS FOR CONDUIT SUPPORT SEPARATION. 10 FEET IS RECOMMENDED AS SHOWN HERE, 11 FEET SEPARATION MAXIMUM.
4. ALL CONDUITS ALONG BRIDGE SHALL BE FIBERGLASS MEETING TC-14A REQUIREMENTS.
5. ALL FIBERGLASS CONDUIT JOINTS SHALL BE EPOXY BELL AND SPIGOT.
6. ALL BRIDGE WORK TO BE COORDINATED WITH STRUCTURAL ENGINEER AND OVERALL BRIDGE DESIGN AND LAYOUT. THIS INCLUDES PRECISE LAYOUT OF SUPPORTS, ABUTMENT SLEEVE POSITIONS, CONDUIT EXTENSIONS PAST ABUTMENT INTO ROADWAY, HANGAR EMBEDMENT INTO CONCRETE DECK, ETC. STRUCTURAL ENGINEER MUST APPROVE SUBMITTALS PRIOR TO ORDERING. SEE NOTE 9.
7. PROVIDE EXPANSION JOINT ON WATER SIDE OF ABUTMENT INTERFACE. EXTEND FIBERGLASS CONDUIT 5 FEET PAST ABUTMENT INTO ROAD BEFORE TRANSITIONING TO SCHEDULE 80 PVC CONDUIT. EXPANSION JOINTS SHALL BE O-RING SLIDING SLEEVE TYPE WITH 8" OF TRAVEL, NOMINAL. PROVIDE ADDITIONAL SUPPORTS AT JOINT AS REQUIRED. DETAIL 1 ON SHEET U37 HAS A DEPICTION OF THE EXPANSION JOINTS BELOW THE BRIDGE.
8. CONDUIT WORK ACROSS EXISTING BRIDGE AND THE NEW BRIDGE WILL BE INSTALLED IN A SPECIFIC SEQUENCE THROUGH STAGES '0', '1' AND '2'. SEE SHEETS U7A-U7C FOR MORE ON THE STAGES OF CONSTRUCTION INVOLVED.
9. THE COMPLETE DESIGN OF THE UNDER BRIDGE FIBERGLASS CONDUIT SUPPORT SYSTEM IS NOT DEPICTED ON THIS SHEET. NUMEROUS ELEMENTS ARE REQUIRED NOT DETAILED HERE (CONCRETE SETTING PLUGS, CONDUIT STOP COUPLINGS, THREADED ADAPTERS, HDG BOLTS, NUTS, WASHERS, EPOXY KIT & APPLICATION GUN, ETC.) CONTRACTOR SHALL WORK WITH HANGER MANUFACTURER TO DEVELOP A COMPLETE BILL OF MATERIAL, WORK THROUGH LAYOUT AND INSTALLATION DETAILS AS REQUIRED, ETC. COORDINATE WITH BRIDGE CONTRACTOR AS NEEDED.

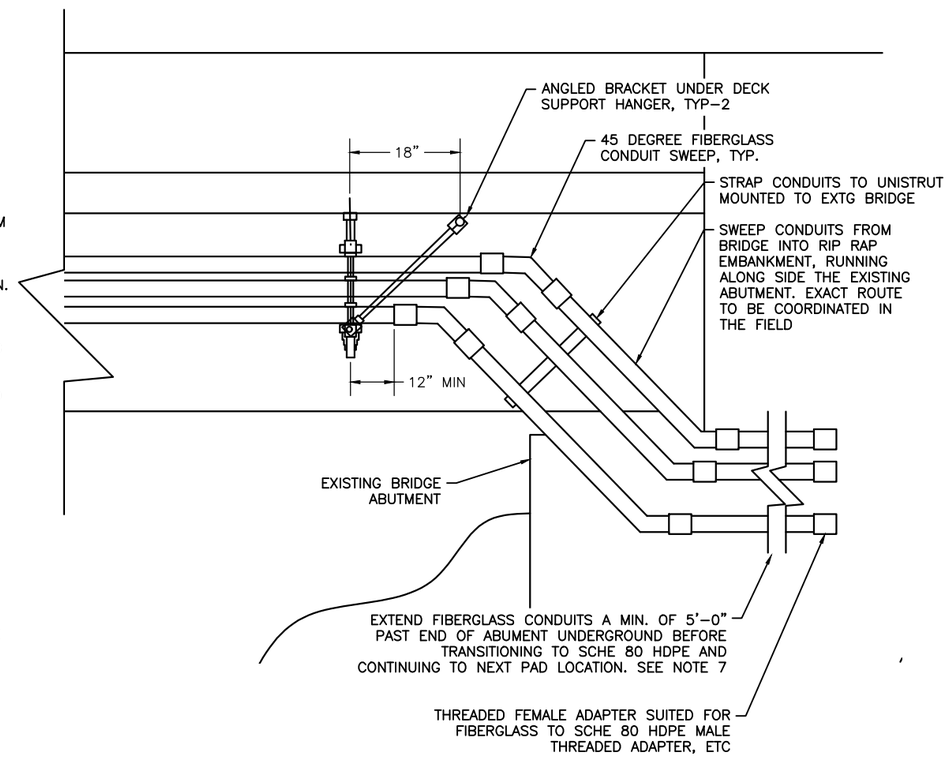

2 ENLARGED BRIDGE - SECTION VIEW
NO SCALE

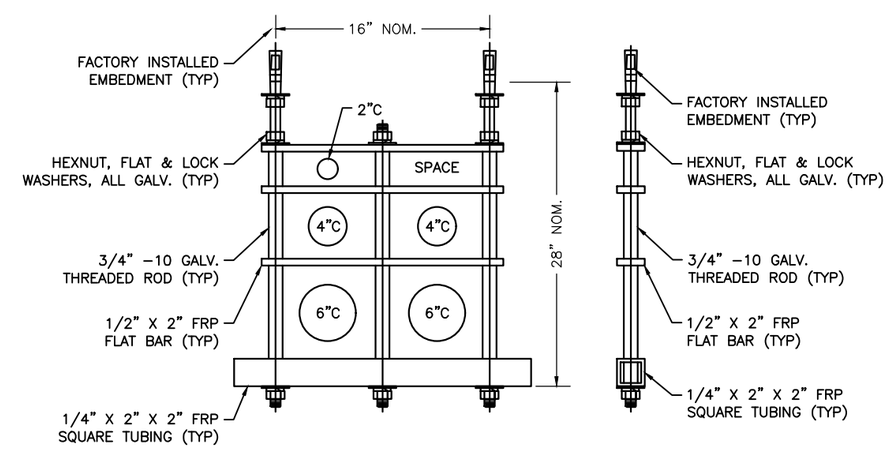

4 TEMPORARY BRIDGE HANGERS - DETAIL
NO SCALE

CN
7/24/2024

PLANS DEVELOPED BY:
MORRIS ENGINEERING GROUP, INC
2375 JORDAN AVE #7
JUNEAU, AK 99801
907-789-3350
AECL 1010

STATE OF ALASKA 49TH Mark G. Morris May 31, 2024 No. EE 8613 REGISTERED PROFESSIONAL ENGINEER

STATE OF ALASKA DEPARTMENT OF TRANSPORTATION AND PUBLIC FACILITIES
6860 GLACIER HIGHWAY, JUNEAU, AK 99801
(907) 465-1763

UTILITY RELOCATION FOR KETCHIKAN AREA BRIDGES

EXISTING BRIDGE TEMP CONDUIT SECTIONS & DETAILS

FILE | J:\102 state of ak\44 utility relocation design for ketchikan bridges\Working Drawings\UTILITY PAD 1 & PAD 2 ROADWAY CROSS SECTIONS.dwg | LAYOUT | U13 | 7/29/2024 17:56 | DESIGNED | MGM | CHECKED | MGM | DRAFTED | JODI

NO.	DATE	REVISION	STATE	PROJECT DESIGNATION	YEAR	SHEET NO.	TOTAL SHEETS
1	5/2024	AS-BUILT					
AS-BUILT DRAWING PREPARED FROM CONTRACTOR PROVIDED REDLINE WHICH MAY NOT BE CORRECT			ALASKA	0902043/SFHWY00072	2021	U14	45

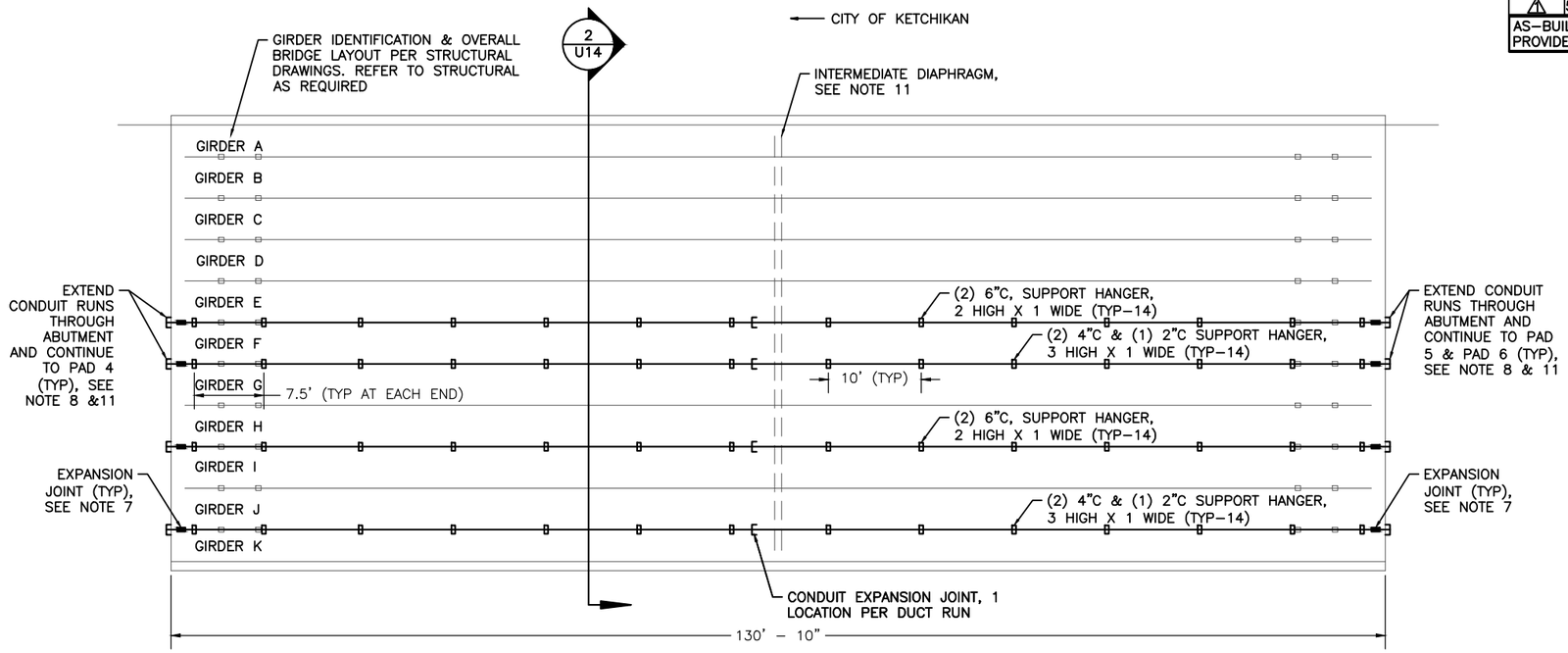

1 BRIDGE HANGERS - PLAN VIEW

4' 8' 16'

SHEET NOTES:

1. PROVIDE FIBERGLASS CONDUIT, SUPPORT HANGERS, ALL ASSOCIATED FITTINGS, AND MOUNTING HARDWARE THE ENTIRE LENGTH OF BRIDGE. ALL NON-METALLIC COMPONENTS LIGHT GRAY COLORED.
2. HANGER SYSTEMS SHALL MEET MINIMUM TENSILE, FLEXURAL, AND COMPRESSIVE STRENGTH REQUIREMENTS OF ASTM D638, D790, D695, ETC. PROVIDE ALL 316L STAINLESS STEEL MOUNTING HARDWARE, BRACKETS, ETC. ALL METALLIC ELEMENTS ASSOCIATED WITH THE FIBERGLASS CONDUIT SYSTEM SHALL BE 316L STAINLESS STEEL. PROVIDE CONDUX INTERNATIONAL HANGER SYSTEM OR EQUAL. SEE NOTE 10.
3. MEET NEC REQUIREMENTS FOR CONDUIT SUPPORT SEPARATION. 10 FEET IS RECOMMENDED AS SHOWN HERE, 11 FEET SEPARATION MAXIMUM.
4. ALL CONDUITS ALONG UNDERSIDE OF BRIDGE SHALL BE FIBERGLASS MEETING TC-14A REQUIREMENTS.
5. FIBERGLASS CONDUIT JOINTS SHALL BE EPOXY BELL AND SPIGOT.
6. ALL BRIDGE WORK TO BE COORDINATED WITH STRUCTURAL ENGINEER AND OVERALL BRIDGE DESIGN AND LAYOUT. THIS INCLUDES PRECISE LAYOUT OF SUPPORTS, ABUTMENT SLEEVE POSITIONS, CONDUIT EXTENSIONS PAST ABUTMENT INTO ROADWAY, HANGAR EMBEDMENT INTO CONCRETE DECK, ETC. STRUCTURAL ENGINEER MUST APPROVE SUBMITTALS PRIOR TO ORDERING. SEE NOTE 10.
7. PROVIDE EXPANSION JOINT ON WATER SIDE OF ABUTMENT INTERFACE. EXTEND FIBERGLASS CONDUIT 5 FEET PAST ABUTMENT INTO ROAD BEFORE TRANSITIONING TO SCHEDULE 80 HDPE CONDUIT. EXPANSION JOINTS SHALL BE O-RING SLIDING SLEEVE TYPE WITH 8" OF TRAVEL, NOMINAL. PROVIDE ADDITIONAL SUPPORTS AT JOINT AS REQUIRED. SEE DETAIL 1 ON SHEET U37 FOR EXAMPLE DEPICTION OF AN EXPANSION JOINT BELOW THE BRIDGE.
8. STRUCTURAL WILL PROVIDE A UTILIDUCT SLEEVE THROUGH ABUTMENT FOR CONDUIT ROUTING. WRAP CONDUITS WITHIN ABUTMENT IN 2 LAYERS OF BUILDING PAPER AND GROUT ANNULUS BETWEEN CONDUITS AND SLEEVE FULL.
9. CONDUIT WORK ACROSS EXISTING BRIDGE AND THE NEW BRIDGE WILL BE INSTALLED IN A SPECIFIC SEQUENCE THROUGH STAGES '0', '1' AND '2'. SEE SHEETS U7A-U7C FOR MORE ON THE STAGES OF CONSTRUCTION INVOLVED.
10. THE COMPLETE DESIGN OF THE UNDER BRIDGE FIBERGLASS CONDUIT SUPPORT SYSTEM IS NOT DEPICTED ON THIS SHEET. NUMEROUS ELEMENTS ARE REQUIRED NOT DETAILED HERE (CONCRETE SETTING PLUGS, CONDUIT STOP COUPLINGS, THREADED ADAPTERS, HDG BOLTS, NUTS, WASHERS, EPOXY KIT & APPLICATION GUN, ETC.) CONTRACTOR SHALL WORK WITH HANGER MANUFACTURER TO DEVELOP A COMPLETE BILL OF MATERIAL, WORK THROUGH LAYOUT AND INSTALLATION DETAILS AS REQUIRED, ETC. COORDINATE WITH BRIDGE CONTRACTOR AS NEEDED.
11. ENSURE THAT CONDUITS RUNNING ALONG THE BRIDGE HANGERS ARE POSITIONED TO BE CENTERED AS MUCH AS POSSIBLE THROUGH THE ABUTMENT SLEEVE AND INTERMEDIATE DIAPHRAGM.

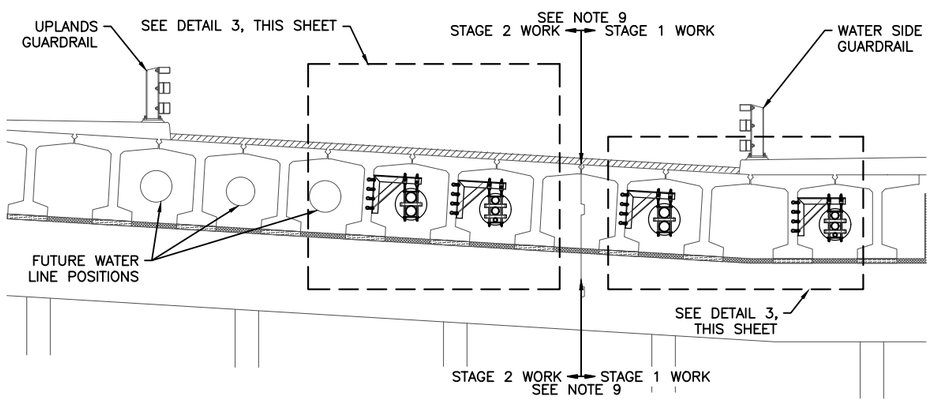

2 BRIDGE HANGERS - SECTION VIEW

2' 4' 8'

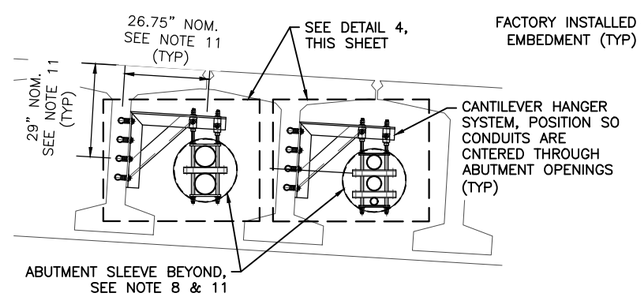

3 BRIDGE HANGERS - ENLARGED SECTION

NO SCALE

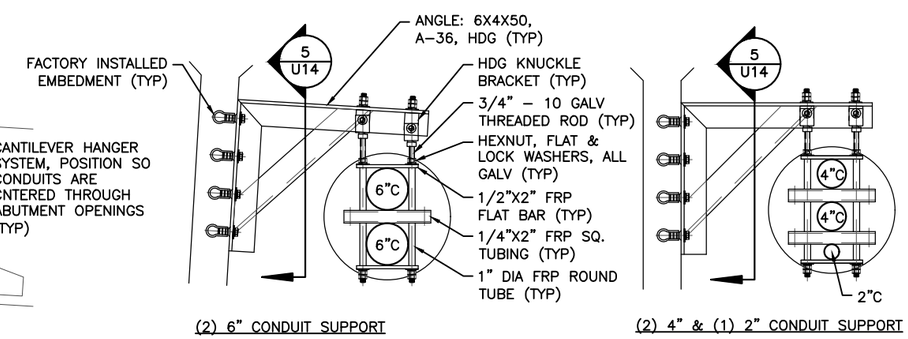

DETAIL 4 NOTE: ALL CALLOUTS APPLY TO BOTH HANGER SETUPS SHOWN.

4 BRIDGE HANGERS - DETAIL

NO SCALE

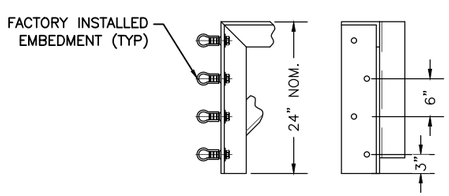

5 BRIDGE HANGERS - CANTILEVER SECTION

NO SCALE

CN
7/24/2024

PLANS DEVELOPED BY:
MORRIS ENGINEERING GROUP, INC
2375 JORDAN AVE #7
JUNEAU, AK 99801
907-789-3350
AECL 1010

STATE OF ALASKA 49TH
Mark G. Morris
May 31, 2024
No. EE 8613
REGISTERED PROFESSIONAL ENGINEER

STATE OF ALASKA DEPARTMENT OF TRANSPORTATION AND PUBLIC FACILITIES
6860 GLACIER HIGHWAY, JUNEAU, AK 99801
(907) 465-1763

UTILITY RELOCATION FOR KETCHIKAN AREA BRIDGES

NEW BRIDGE CONDUIT SECTIONS & DETAILS

FILE | s:\102 state of ak\44 utility relocation design for ketchikan bridges\Working Drawings\UTILITY PAD 1 & PAD 2 ROADWAY CROSS SECTIONS.dwg | 6/29/2024 17:56 | LAYOUT | U14 | DESIGNED | MGM | CHECKED | MGM | DRAFTED | JODI

NO.	DATE	REVISION	STATE	PROJECT DESIGNATION	YEAR	SHEET NO.	TOTAL SHEETS
1	5/2024	AS-BUILT					
AS-BUILT DRAWING PREPARED FROM CONTRACTOR PROVIDED REDLINE WHICH MAY NOT BE CORRECT			ALASKA	0902043/SFHWY00072	2021	U15	45

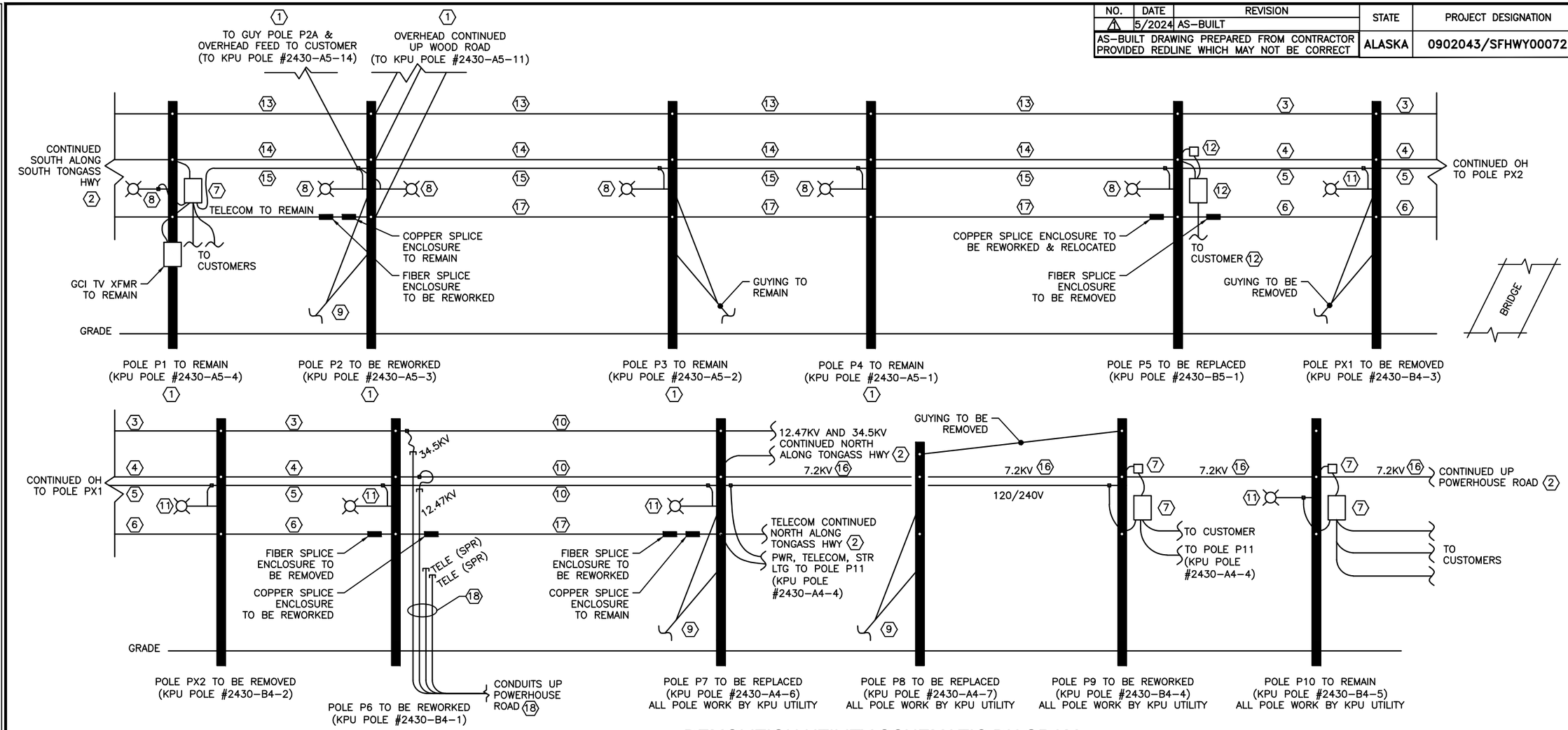

1 DEMOLITION UTILITY SCHEMATIC DIAGRAM

SHEET NOTES:

1. THIS SCHEMATIC DEPICTS OVERALL OVERHEAD DISTRIBUTION OF POWER AND TELECOM ALONG SOUTH TONGASS HIGHWAY WITHIN THE PROJECT AREA. SEE SITE PLANS FOR MORE SPECIFICS AND EXTENTS.
2. THIS SCHEMATIC IS A GENERAL REFERENCE ONLY AND SHOULD BE USED AS SUCH. VERIFY ONSITE ALL EXISTING POLE ELEMENTS, NOT ALL ELEMENTS ARE SHOWN.
3. ALL DEMOLITION WORK SHALL BE COORDINATED WITH KPU, GCI, AND DOT&PF PROJECT MANAGER PRIOR TO COMMENCEMENT OF WORK. TEMPORARY FACILITIES WILL BE PROVIDED BUT ARE NOT SHOWN ON THIS SCHEMATIC.
4. NEW POWER UTILITY WORK PER SCHEMATIC ON SHEET U16, NEW TELECOM UTILITY WORK PER SCHEMATIC ON SHEET U39.
5. THE OVERHEAD NEUTRAL CONDUCTORS ARE NOT DEPICTED AT THE UTILITY POLES ON THE SCHEMATIC DIAGRAMS.

KEYNOTES:

1. UTILITY POLE AND POLE MOUNTED ELEMENTS TO REMAIN, UNLESS NOTED OTHERWISE. PROTECT AND MAINTAIN AS REQUIRED.
2. OVERHEAD UTILITIES CONTINUE PAST PROJECT LIMITS. PROTECT AND MAINTAIN AS REQUIRED.
3. 34.5KV OVERHEAD POWER UTILITY LINES TO BE REMOVED. THESE LINES ARE AT THE TOP OF THE POLE.
4. 12.47KV OVERHEAD POWER UTILITY LINES TO BE REMOVED. THESE LINES ARE BELOW THE 34.5KV LINES.
5. STREET LIGHTING CIRCUIT TO BE REMOVED. THESE LINES ARE BELOW THE 12.47KV LINES.
6. TELECOM AND TELEVISION UTILITY LINES TO BE REMOVED. THESE LINES ARE BELOW ALL POWER LINES.
7. FUSED CUTOUT AND SINGLE PHASE STEP-DOWN POLE MOUNTED TRANSFORMER SERVING CUSTOMER LOADS AND STREET LIGHTING TO REMAIN, FUSED CUTOUT TO BE REFED FROM 7200V SERVICE FROM PAD 6 12.47KV SWITCH.
8. POLE MOUNTED STREET LIGHT MASTS AND FIXTURES TO BE REPLACED IN PLACE WITH NEW MAST AND LED LIGHT.
9. POLE GUYS TO BE REMOVED AND REPLACED WITH NEW CONFIGURATION.
10. AT POLE P6, KPU POWER UTILITY WILL DISCONNECT AND REMOVE THE EXISTING 34.5KV AND 12.47KV OVERHEAD, AND THE STREET LIGHTING CIRCUIT THAT RUNS TO POLE P7.
11. DISCONNECT AND REMOVE LIGHT FIXTURE AND MAST ARM.
12. POLE MOUNTED FUSED CUTOUT AND TRANSFORMER TO BE REMOVED, CUSTOMER OVERHEAD DROP TO BE REFED FROM PAD 4 TRANSFORMER.
13. 34.5KV OVERHEAD POWER UTILITY LINES TO REMAIN. THESE ARE AT THE TOP OF THE POLE. LINES TO BE REWORKED AT POLE LOCATIONS AS NOTED ON THE RENOVATION SCHEMATIC AND PLANS.
14. 12.47KV OVERHEAD POWER UTILITY LINES TO REMAIN. THESE ARE AT THE TOP OF THE POLE. LINES TO BE REWORKED AT POLE LOCATIONS AS NOTED ON THE RENOVATION SCHEMATIC AND PLANS.
15. STREET LIGHTING CIRCUIT TO REMAIN. CIRCUIT WILL BE REFED FROM PAD 4 LIGHTING LOAD CENTER.
16. THE 12.47KV OVERHEAD SERVES A SINGLE PHASE 7.2KV CIRCUIT THAT RUNS FROM POLE P7 TO P9 TO P10, THEN CONTINUES UP POWERHOUSE ROAD. THIS 7.2KV CIRCUIT TO BE REFED FROM A DEDICATED CIRCUIT FROM THE 12.47KV SWITCH AT PAD 6 VIA NEW RISER TO POLE P10. 7.2KV SPAN FROM POLE P7 TO POLE P9 TO BE REMOVED.
17. TELECOM: FIBER TO BE REPLACED IN PLACE, COPPER TO REMAIN. TELEVISION: COAX TO BE REPLACED IN PLACE. SEE SHEET U39 FOR RENOVATION SCHEMATIC, AND U41 FOR CIRCUIT DIAGRAM.
18. 4" AND 6" POWER RISERS (LIVE) AND 4" TELECOM RISERS (SPARE) RUN UNDERGROUND UP POWERHOUSE ROAD. CONDUITS TO BE REWORKED DURING POWERHOUSE VAULT INSTALLATION WORK. SEE RENOVATION PLANS FOR MORE INFORMATION. POWER CONDUITS TO BE ABANDONED IN PLACE, TELECOM TO REMAIN AS SPARES. REMOVE 12.47KV AND 34.5KV FEEDERS FROM POLE AND REROUTE INTO VAULT IN POWERHOUSE ROAD. SEE SHEETS U17, AND U30A-U31.

CN
7/24/2024

PLANS DEVELOPED BY:
MORRIS ENGINEERING GROUP, INC
2375 JORDAN AVE #7
JUNEAU, AK 99801
907-789-3350
AECL 1010

STATE OF ALASKA 49TH
Mark G. Morris
May 31, 2024
No. EE 8613
REGISTERED PROFESSIONAL ENGINEER

STATE OF ALASKA DEPARTMENT OF TRANSPORTATION AND PUBLIC FACILITIES
6860 GLACIER HIGHWAY, JUNEAU, AK 99801
(907) 465-1763

UTILITY RELOCATION FOR KETCHIKAN AREA BRIDGES

DEMOLITION UTILITY SCHEMATIC DIAGRAM

FILE y:\102 state of ak\44 utility relocation design for ketchikan bridges\Working Drawings\DEMOLITION UTILITY SCHEMATIC DIAGRAM.dwg | DATE 4/26/2024 14:43 | LAYOUT U15 | DESIGNED MGM | CHECKED MGM | DRAFTED NADJA

NO.	DATE	REVISION	STATE	PROJECT DESIGNATION	YEAR	SHEET NO.	TOTAL SHEETS
1	5/2024	AS-BUILT	ALASKA	0902043/SFHWY00072	2021	U16	45

AS-BUILT DRAWING PREPARED FROM CONTRACTOR PROVIDED REDLINE WHICH MAY NOT BE CORRECT

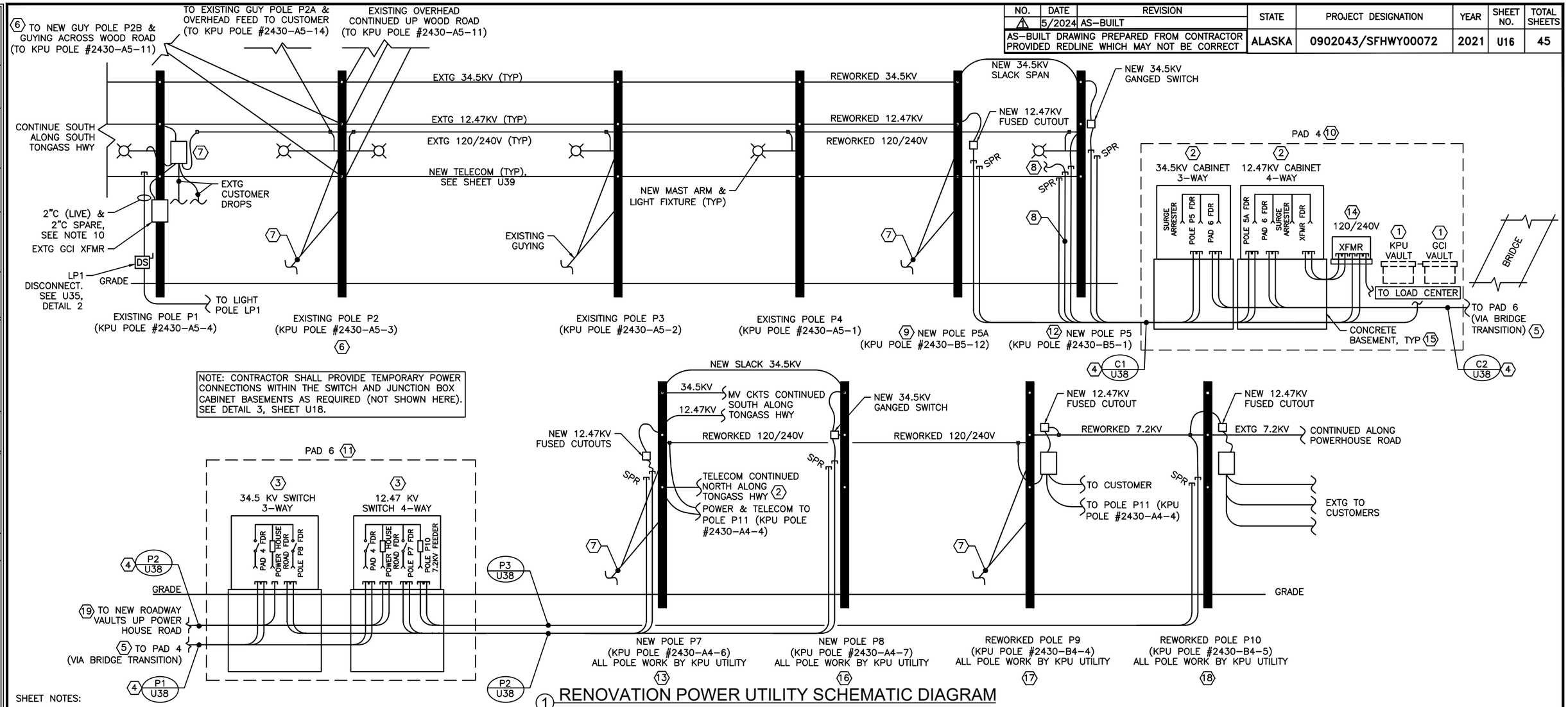

NOTE: CONTRACTOR SHALL PROVIDE TEMPORARY POWER CONNECTIONS WITHIN THE SWITCH AND JUNCTION BOX CABINET BASEMENTS AS REQUIRED (NOT SHOWN HERE). SEE DETAIL 3, SHEET U18.

1 RENOVATION POWER UTILITY SCHEMATIC DIAGRAM

SHEET NOTES:

1. SEE SHEET U15 FOR DEMOLITION UTILITY SCHEMATIC.
2. THIS SCHEMATIC DEPICTS EXISTING OVERHEAD UTILITY WORK AND NEW UNDERGROUND POWER DISTRIBUTION WORK. SEE SITE PLANS FOR MORE SPECIFICS AND EXTENTS.
3. THIS SCHEMATIC IS A GENERAL REFERENCE ONLY AND SHOULD BE USED AS SUCH. VERIFY ONSITE ALL EXISTING POLE ELEMENTS, NOT ALL ELEMENTS ARE SHOWN.
4. NEARLY ALL NEW POWER CONDUIT TRENCHES HAVE ACCOMPANYING TELECOM CONDUITS WITHIN THE SAME TRENCH. SEE SITE PLANS FOR SPECIFIC TRENCH LOCATIONS, AND SHEET U38 FOR TRENCH PROFILES.
5. THE OVERHEAD NEUTRAL CONDUCTORS ARE NOT DEPICTED AT THE UTILITY POLES ON THE SCHEMATIC DIAGRAMS. SEE ENLARGED POLE ELEVATIONS FOR COMPLETE INFORMATION ON POLE TOP EQUIPMENT, CONDUIT RISERS, CONDUCTORS, AND GENERAL ARRANGEMENT OF POWER AND TELECOM.
6. UNDERGROUND CONDUCTORS AND CABLES NOT DEPICTED IN THIS SCHEMATIC. SEE SINGLE LINE DIAGRAM ON SHEET U17 FOR CIRCUIT INFORMATION.
7. NEW STREET LIGHTING CIRCUITS, LIGHT POLES, AND LOAD CENTER NOT DEPICTED IN DETAIL ON THIS SHEET. SEE SITE PLANS AND LIGHTING SHEETS U34–U36 FOR INFORMATION ON THE NEW LIGHTING SYSTEM.
8. LABEL ALL MV CABLES ON THE PROJECT PER DETAIL 2, SHEET U18.
9. PROVIDE POWER UTILITY GROUNDING PER SINGLE LINE DIAGRAMS AND CABINET AND SWITCH ELEVATIONS. GROUNDING NOT SHOWING HERE.
10. PROVIDE 2" CONDUIT RISERS AT POLE P1 FOR STREET LIGHTING CIRCUIT PER GENERAL ARRANGEMENTS AND MATERIALS FOR RISERS ON POLE P5A SHEET U20.

KEYNOTES:

1. NEW UTILITY PAD HAS POWER AND TELECOM EQUIPMENT. TELECOM EQUIPMENT OUTLINES SHOWN HERE REFERENCE ONLY. SEE TELECOM UTILITY SCHEMATIC ON SHEET U39 FOR ADJACENT TELECOM UTILITY WORK.
2. SEE SHEET U29 FOR JUNCTION CABINET ELEVATIONS.
3. SEE SHEET U28 FOR SWITCH ELEVATIONS.
4. CONDUITS TRANSITION FROM ONE COMMON TRENCH PROFILE TO ANOTHER BETWEEN END POINTS. SEE SITE PLANS FOR MORE DETAILS.
5. CONDUITS SPLIT INTO SEPARATE BAYS IN ROUTING ACROSS UNDERSIDE OF BRIDGE. SEE SHEETS U13–U14 FOR BRIDGE DETAILS.
6. SEE SHEET U19 FOR POLE P2 AND P2B DETAILS.
7. PROVIDE NEW GUYING FOR EXISTING POLES. SEE POLE SPECIFIC DETAILS FOR REQUIREMENTS.
8. NEW UNDERGROUND 120V SINGLE PHASE FEEDER TO RE-SERVE EXISTING O/H CUSTOMER CIRCUITS, STREET LIGHT AT POLE UP1, AND GCI POLE TRANSFORMER. PROVIDE FEEDER SPLICES VIA WATERPROOF CONNECTORS AT TOP OF CONDUIT RISER TO RE-SERVE THESE LOADS. COORDINATE WITH UTILITIES.
9. SEE SHEET U20 FOR ENLARGED POLE P5A DETAIL.
10. SEE SHEET U9 FOR ENLARGED PAD DETAIL.
11. SEE SHEET U10 FOR ENLARGED PAD DETAIL.
12. SEE SHEET U21 FOR ENLARGED POLE P5 DETAIL.
13. SEE SHEET U22 FOR ENLARGED POLE P7 DETAIL.
14. SEE SHEET U27 FOR PAD MOUNT TRANSFORMER DETAILS.
15. PROVIDE CONCRETE BASEMENTS BELOW EACH POWER TRANSFORMER, SWITCH, AND JUNCTION CABINET. SEE SHEETS U27–U29 FOR BASEMENT INFORMATION.
16. SEE SHEET U23 FOR ENLARGED POLE P8 DETAIL.
17. SEE SHEET U24 FOR ENLARGED POLE P9 DETAIL.
18. SEE SHEET U25 FOR ENLARGED POLE P10 DETAIL.
19. SEE ROADWAY VAULT DETAILS ON SHEETS U30A–U31.

CN 7/24/2024

PLANS DEVELOPED BY:
MORRIS ENGINEERING GROUP, INC
2375 JORDAN AVE #7
JUNEAU, AK 99801
907-789-3350
AECL 1010

STATE OF ALASKA 49TH Mark G. Morris May 31, 2024 No. EE 8613 REGISTERED PROFESSIONAL ENGINEER

STATE OF ALASKA DEPARTMENT OF TRANSPORTATION AND PUBLIC FACILITIES
6860 GLACIER HIGHWAY, JUNEAU, AK 99801
(907) 465-1763

UTILITY RELOCATION FOR KETCHIKAN AREA BRIDGES

RENOVATION POWER UTILITY SCHEMATIC DIAGRAM

FILE | DESIGNED MGM | CHECKED MGM | DRAFTED EMILEE | LAYOUT U16 | 5/24/2024 13:44

NO.	DATE	REVISION	STATE	PROJECT DESIGNATION	YEAR	SHEET NO.	TOTAL SHEETS
1	5/2024	AS-BUILT					
		AS-BUILT DRAWING PREPARED FROM CONTRACTOR PROVIDED REDLINE WHICH MAY NOT BE CORRECT	ALASKA	0902043/SFHWY00072	2021	U17	45

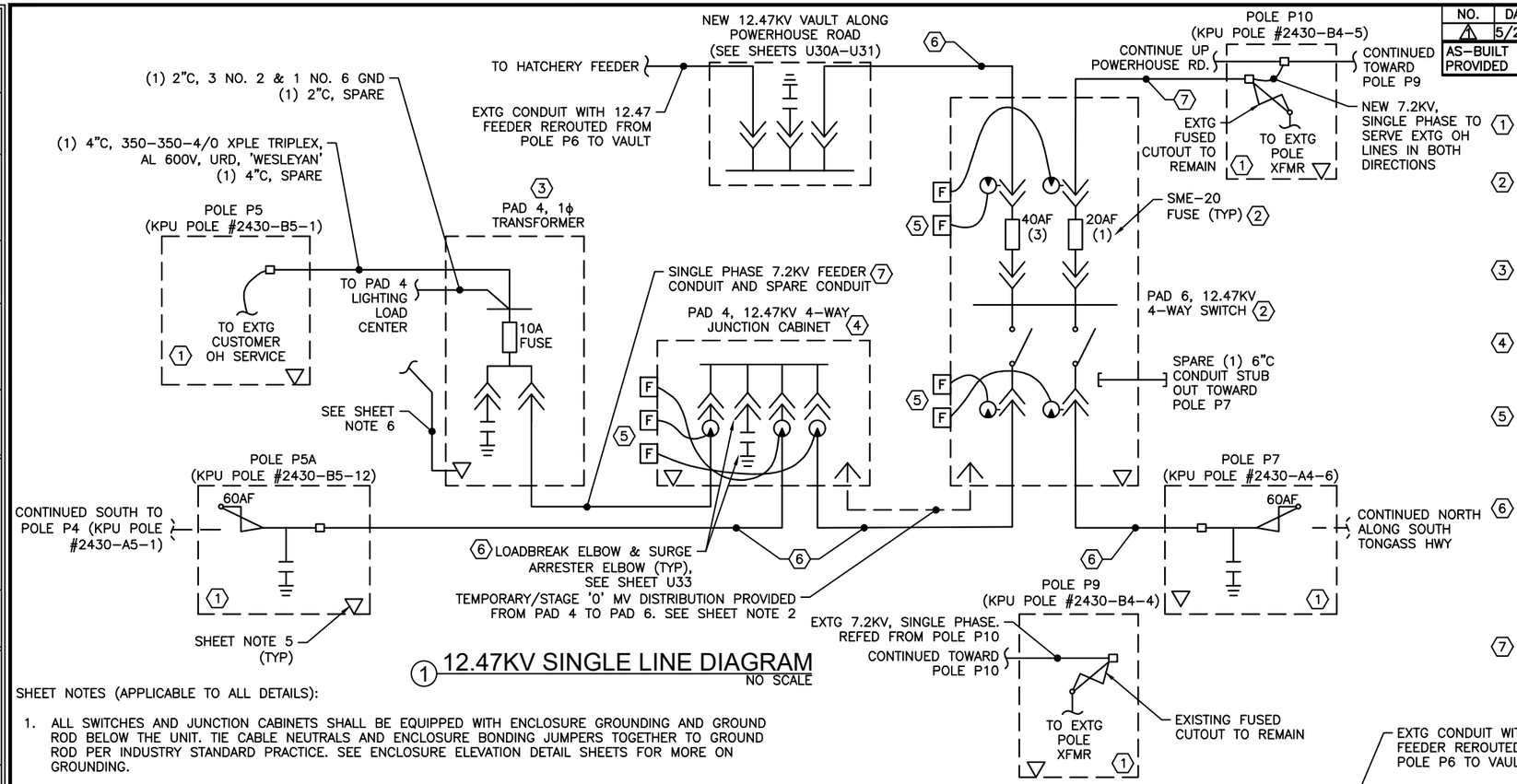

1 12.47KV SINGLE LINE DIAGRAM
NO SCALE

KEYNOTES (APPLICABLE TO DETAIL 1):

1. POLE MOUNTED FUSED CUTOUTS, GANGED SWITCH, SURGE ARRESTERS, RISER CONNECTIONS, ETC., ARE SHOWN ON SPECIFIC POLE ELEVATION DETAILS. SEE SHEET U20–U25 FOR SPECIFIC POLE ELEVATIONS AND FURTHER DETAILS. ALL WORK AT POLES P7, P8, P9, AND P10 BY KPU UTILITY.
2. PROVIDE PAD MOUNTED, 14.4KV RATED, 4–WAY UTILITY SWITCH. UNIT SHALL BE 600A CONTINUOUS RATED, 95 BIL, 65KA PEAK, 25KA RMS SYM. RATED. ALL STAINLESS STEEL CONSTRUCTION. COMPLETE WITH 200A LOADBREAK BUSHINGS AND SME–20 FUSES. PROVIDE S&C PME–9 SWITCH OR EQUAL. PROVIDE FUSES AS SHOWN AND WITH ONE COMPLETE SPARE SET OF FUSES. MOUNT ON CONCRETE BASEMENT PER DETAIL ON SHEET U28. SEE KEYNOTE 6 BELOW FOR LOADBREAK INFORMATION.
3. PROVIDE SINGLE PHASE PAD MOUNTED TRANSFORMER TO SERVE MULTIPLE CUSTOMER LOADS AND STREET LIGHTING LOAD CENTER. MOUNT ON CONCRETE BASEMENT. SEE SHEET U27 FOR COMPLETE DETAILS AND SPECIFICATIONS OF THE TRANSFORMER AND ASSOCIATED WORK. PROVIDE WITH SPARE FUSE.
4. PROVIDE PAD MOUNTED FIBERGLASS JUNCTION CABINETS COMPLETE WITH CPS 200 AMP LOADBREAK JUNCTIONS AND SURGE ARRESTER. MULTI–POINT JUNCTIONS WITH PROVISIONS FOR SURGE ARRESTER AS WELL AS MV DISTRIBUTION. SEE SHEET U29 FOR COMPLETE CABINET INFORMATION. SEE KEYNOTE 6 BELOW FOR LOADBREAK AND ARRESTER INFORMATION.
5. PROVIDE FAULT CIRCUIT INDICATORS (FCIs) AT EACH JUNCTION CABINET. CONNECT AN FCI TO EACH ELBOW AT THE JUNCTION BARS PER ELBOW DETAILS ON SHEET U32 AND U33. PROVIDE WITH REMOTE LED INDICATORS FIELD INSTALLED ON THE OUTSIDE OF THE CABINET FOR VISUAL CONFIRMATION OF FAULT WITHOUT OPENING CABINET. INSTALL INDICATORS PER DETAIL 3, ON SHEET U28. PROVIDE CPS S.T.A.R. FCIs #STVTA SERIES OR EQUAL.
6. (1) 6"C, 12.47KV FEEDER CIRCUIT AND (1) 6"C, SPARE. 12.47KV CIRCUIT SHALL CONSIST OF 3 NO. 1/0 AWG COPPER CONDUCTORS, MV–105, 220 MIL, 15KV RATED WITH FULL CONCENTRIC NEUTRAL, AND 133% SHIELDING. PROVIDE OKONITE OKOGUARD #141–23–9517 CONDUCTORS OR EQUAL. PROVIDE 15KV RATED, 200A LOADBREAK ELBOWS AT CABLE TERMINATION POINTS, CPS #LEJ215DD06 OR EQUAL. SEE SHEET U33 FOR ADDITIONAL LOADBREAK INFORMATION. PROVIDE 9KV RATED (7.65KV MCOV) SURGE ARRESTER ELBOWS AT JUNCTION CABINETS, CPS #3238018C09M OR EQUAL. MOUNT ONE SURGE ELBOW PER JUNCTION BAR IN THE JUNCTION CABINETS.
7. (1) 2"C, WITH (1) 12.47KV MV CABLE AS SPECIFIED IN KEYNOTE 6 ABOVE, (1) 2"C SPARE.

SHEET NOTES (APPLICABLE TO ALL DETAILS):

1. ALL SWITCHES AND JUNCTION CABINETS SHALL BE EQUIPPED WITH ENCLOSURE GROUNDING AND GROUND ROD BELOW THE UNIT. TIE CABLE NEUTRALS AND ENCLOSURE BONDING JUMPERS TOGETHER TO GROUND ROD PER INDUSTRY STANDARD PRACTICE. SEE ENCLOSURE ELEVATION DETAIL SHEETS FOR MORE ON GROUNDING.
2. TEMPORARY FEEDERS BETWEEN PAD 4 AND PAD WILL BE INSTALLED DURING BRIDGE STAGE 0 WORK, AFTER REPLACED WITH STAGE 1 FEEDER CONNECTIONS AS NOTED ON SHEETS U7A–U7C. ONLY FINAL FEEDER CONFIGURATIONS SHOWN HERE.
3. NEATLY TRAIN ALL CONDUCTORS AND CABLING WITHIN EACH BASEMENT, SWITCH, AND JUNCTION CABINET TO ALLOW FOR ROUTINE MOVEMENT OF ELBOWS AND SERVICE WORK. COORDINATE WITH KPU UTILITY TO DETERMINE REQUIREMENTS FOR CABLE LOOPS, CABLE MANAGEMENT, AND OTHER LAYOUT AND LOGISTICAL CABLE EXPECTATIONS.
4. ALL CABLES SHALL BE PULLED WITHIN MANUFACTURER REQUIREMENTS FOR MAX PULLING TENSIONS AND CONDUIT SIDEWALL PRESSURES. SEE SHEET U18 FOR DISCUSSION OF PULLING DIRECTIONS, GENERAL EXPECTATIONS, USE OF LUBRICANTS, ETC.
5. PROVIDE GROUNDING ELECTRODES INTO THE EARTH (▽) AT EACH CONCRETE BASEMENT AND UTILITY POLE. AT EACH ELECTRODE LOCATION, BOND ALL CONCENTRIC NEUTRALS, LIGHTING SURGE ARRESTER ELBOWS, AND BASEMENT/SWITCH CABINET GROUNDING PROVISIONS TOGETHER TO THE ELECTRODE. FOLLOW NESC GROUNDING REQUIREMENTS FOR MEDIUM VOLTAGE UNDERGROUND DISTRIBUTION. SEE SHEETS U27–U29 FOR MORE ON GROUNDING AT ENCLOSURES, BASEMENTS, ETC.
6. PER NESC BONDING REQUIREMENTS, BOND ALL METALLIC ENCLOSURES WITHIN 6 FEET OF THE PAD TRANSFORMER TOGETHER. PROVIDE DIRECT BURIED, STRANDED COPPER GROUNDING ELECTRODE CONDUCTOR BETWEEN THE TRANSFORMER AND LIGHTING LOAD CENTER GROUNDING PROVISIONS AND BOND TOGETHER.
7. LABEL ALL MV CABLES ON THE PROJECT PER DETAIL 2, SHEET U18.
8. ALL WORK AT POLES P7, P8, P9, AND P10 BY KPU UTILITY.
9. CONTRACTOR SHALL PROVIDE TEMPORARY POWER CONNECTIONS WITHIN THE SWITCH AND JUNCTION BOX CABINET BASEMENTS AS REQUIRED (NOT SHOWN HERE). SEE DETAIL 3, SHEET U18.

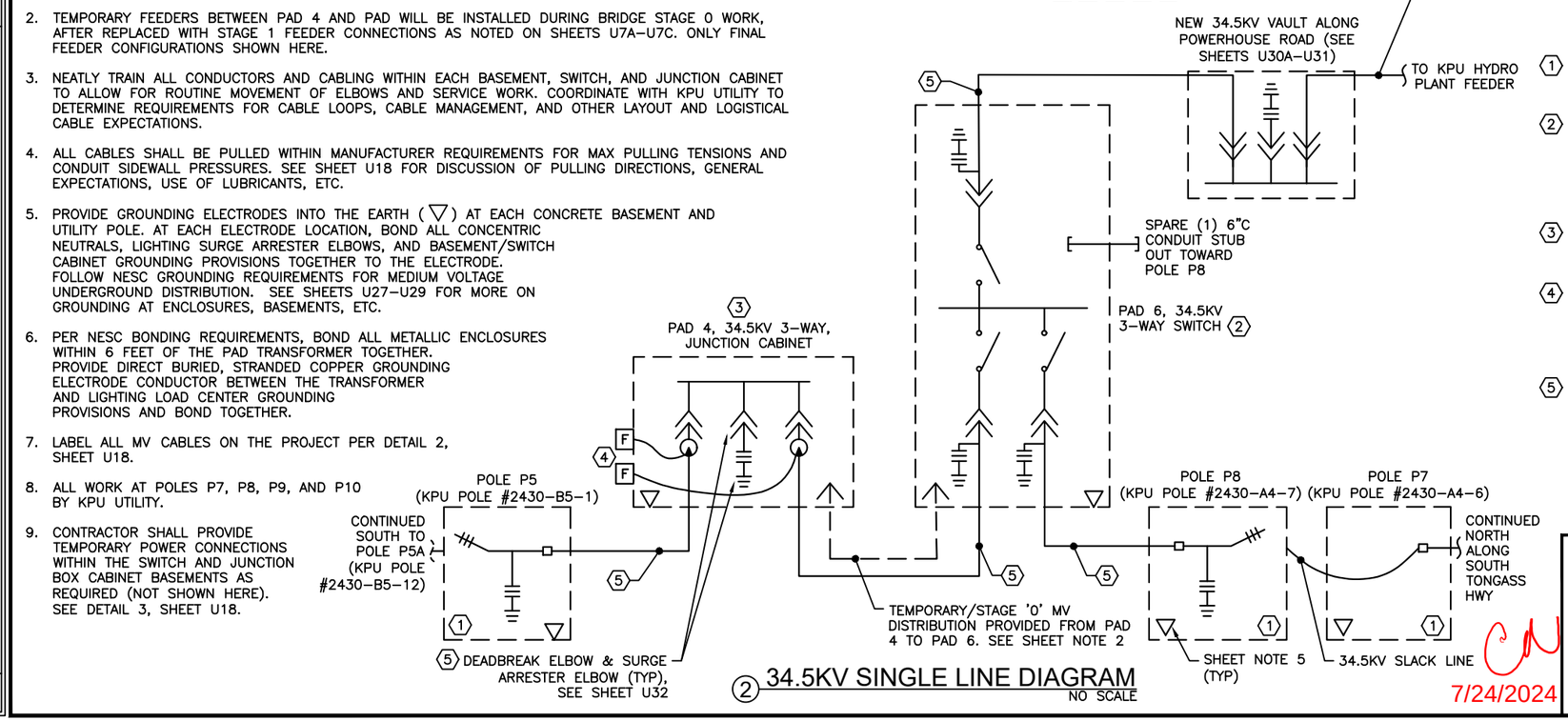

2 34.5KV SINGLE LINE DIAGRAM
NO SCALE

KEYNOTES (APPLICABLE TO DETAIL 2):

1. POLE MOUNTED FUSED CUTOUTS GANGED SWITCH, SURGE ARRESTERS, RISER CONNECTIONS, ETC., ARE SHOWN ON SPECIFIC POLE ELEVATION DETAILS. SEE SHEETS U20–U25 FOR SPECIFIC POLE ELEVATIONS AND FURTHER DETAILS.
2. PROVIDE PAD MOUNTED, 35KV RATED, 3–WAY UTILITY SWITCH. UNIT SHALL CONSIST OF SOLID DIELECTRIC INSULATED OPERATORS, 600A CONTINUOUS RATED, 150 BIL, 70KA PEAK, 20KA RMS SYM. RATED. ALL STAINLESS STEEL CONSTRUCTION. COMPLETE WITH 600A DEADBREAK BUSHINGS WITH VOLTAGE SENSORS, CONTROL POWER TRANSFORMER, AND FCI'S FACTORY INSTALLED. PROVIDE G&W TRIDENT–S SWITCH OR EQUAL. MOUNT ON CONCRETE BASEMENT PER DETAIL ON SHEET U28. SEE KEYNOTE 5 BELOW FOR DEADBREAK INFORMATION.
3. PROVIDE PAD MOUNTED FIBERGLASS JUNCTION CABINETS COMPLETE WITH CPS 600 AMP DEADBREAK JUNCTIONS AND SURGE ARRESTER. SEE SHEET U29 FOR COMPLETE CABINET INFORMATION. SEE KEYNOTE 5 BELOW FOR DEADBREAK AND ARRESTER INFORMATION.
4. PROVIDE FAULT CIRCUIT INDICATORS (FCIs) AT EACH JUNCTION CABINET. CONNECT AN FCI TO EACH ELBOW AT THE JUNCTION PER ELBOW DETAILS ON SHEET U33. PROVIDE WITH REMOTE LED INDICATORS FIELD INSTALLED ON THE OUTSIDE OF THE CABINET FOR VISUAL CONFIRMATION OF FAULT WITHOUT OPENING CABINET. INSTALL INDICATORS PER DETAIL 3 ON SHEET U29. PROVIDE CPS S.T.A.R. FCIs #STVTA SERIES OR EQUAL.
5. (1) 6"C, 34.5KV FEEDER CIRCUIT AND (1) 6"C, SPARE. 34.5KV CIRCUIT SHALL CONSIST OF 3 NO. 500 KCMIL COPPER CONDUCTORS, MV–105, 420 MIL, 35KV RATED WITH 1/3 CONCENTRIC NEUTRAL, AND 133% SHIELDING. PROVIDE OKONITE OKOGUARD #140–23–9947 CONDUCTORS OR EQUAL. PROVIDE 35KV RATED, 600A DEADBREAK ELBOWS AT CABLE TERMINATION POINTS, CPS #BT635U22C1T. SEE SHEET U32 FOR ADDITIONAL DEADBREAK INFORMATION. PROVIDE 27KV RATED (22KV MCOV) SURGE ARRESTER ELBOWS AT JUNCTION CABINETS AND SWITCHES, CPS #DCEA635M27. MOUNT ONE SURGE ELBOW TO THE BACK OF EACH PHASE CONDUCTOR ELBOW AT THE SWITCHES, AND ONE PER JUNCTION BAR IN THE JUNCTION CABINET.

7/24/2024

PLANS DEVELOPED BY:
MORRIS ENGINEERING GROUP, INC
2375 JORDAN AVE #7
JUNEAU, AK 99801
907–789–3350
AECL 1010

STATE OF ALASKA 49TH
Mark G. Morris
May 31, 2024
No. EE 8613
REGISTERED PROFESSIONAL ENGINEER

STATE OF ALASKA DEPARTMENT OF TRANSPORTATION AND PUBLIC FACILITIES
6860 GLACIER HIGHWAY, JUNEAU, AK 99801
(907) 465–1763

UTILITY RELOCATION FOR KETCHIKAN AREA BRIDGES

POWER UTILITY RENOVATION SINGLE LINE DIAGRAM

FILE y:\102 state of ak\44 utility relocation design for ketchikan bridges\Working Drawings\POWER UTILITY RENOVATION SINGLE LINE DIAGRAM.DWG | LAYOUT U17 | 5/24/2024 13:45 | DESIGNED MGM | CHECKED MGM | DRAFTED EMILEE

NO.	DATE	REVISION	STATE	PROJECT DESIGNATION	YEAR	SHEET NO.	TOTAL SHEETS
1	5/2024	AS-BUILT					
AS-BUILT DRAWING PREPARED FROM CONTRACTOR PROVIDED REDLINE WHICH MAY NOT BE CORRECT			ALASKA	0902043/SFHWY00072	2021	U18	45

NOTE:

PULLING DIRECTIONS SHOWN PROVE TO PUT LESS STRESS ON CABLES AND CONDUIT. HOWEVER, OPPOSITE DIRECTION IS WITHIN LIMITS AND MAY BE UTILIZED AT CONTRACTOR'S OPINION.

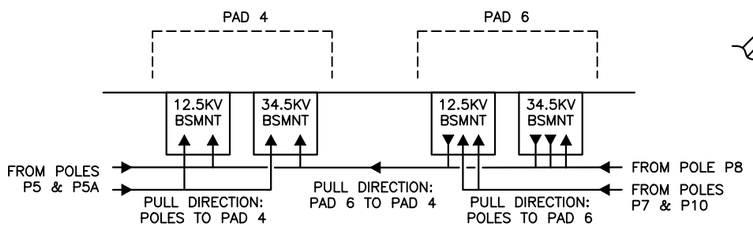

1 MEDIUM VOLTAGE CABLE PULLING DIAGRAM

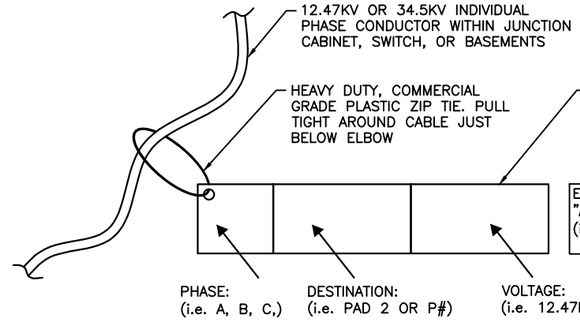

EXAMPLE CABLE LABEL NUMBERING:
"A–PAD 6–12.47KV"
(i.e. PHASE 'A' CONDUCTOR TO PAD 6, 12.47KV CKT)

NOTES (APPLICABLE TO DETAIL 2):

1. PROVIDE LABELS WITHIN 18" OF EACH ELBOW AT ALL JUNCTION CABINETS AND SWITCHES.
2. POSITION LABELS SO THEY FACE OUTWARDS TOWARDS SERVICE ELECTRICIAN.

2 MEDIUM VOLTAGE CABLE LABELING

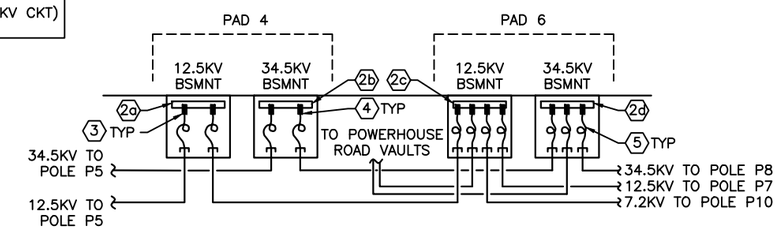

3 MEDIUM VOLTAGE TEMPORARY VAULT SETUPS

4 HDPE CONDUIT SPECIFICATION & INSTALLATION NOTES

NOTES (APPLICABLE TO DETAIL 1):

1. RECOMMENDED PULLING DIRECTION FOR MEDIUM VOLTAGE CABLES ARE SHOWN HERE. THIS APPLIES TO 12.47KV AND 34.5KV CABLES. TECHNICAL DATA USED IN PULLING CALCS INCLUDE:
   a. COEFFICIENT OF FRICTION: 0.35
   b. AMPLE LUBRICATION USED (SEE NOTES 2,3,4)
   c. BACK TENSION: 100 POUNDS
   d. 6" SCHEDULE 80 MIN I.D.: 5.657 INCHES
   e. 4" SCHEDULE 80 MIN I.D.: 3.746 INCHES
   f. MAX ALLOWABLE CABLE TENSION: 2500 LBS/FT (1/0), 10,000 LBS/FT (500 KCMIL)
   g. MAX ALLOWABLE SIDEWALL PRESSURE: 500 LBS/FT (1/0), 2000 LBS/FT (500 KCMIL)
   h. CONDUIT ELBOW RADII: 24 INCHES (MINIMUM)
2. CONTRACTOR IS EXPECTED TO UTILIZE LIBERAL AMOUNTS OF PULLING LUBRICANT. THIS INCLUDES COMPLETE LUBRICATION OF THE CONDUIT SYSTEM PRIOR TO CABLE PULLING, AS WELL AS LUBRICATION APPLIED DURING THE CABLE PULLING EFFORT. RECOMMENDED LUBRICANT QUANTITY PER INDUSTRY STANDARD EQUATION: Q = k X L X D (Q–QUANTITY IN GALLONS, k–0.0015, L–LENGTH OF CONDUIT RUN IN FEET, D–ID OF CONDUIT IN INCHES).
3. THE CABLE PULLING LUBRICANT SHALL PROVIDE EXCELLENT FRICTION REDUCTION WITH SLOW DRYING, GOOD CLING AND WETTING CHARACTERISTICS THROUGH LONG PULLS AND MULTIPLE BENDS. THE LUBRICANT SHALL LEAVE MINIMAL NONCOMBUSTIBLE RESIDUE, AND SHALL BE NON–STAINING. IT SHALL BE COMPATIBLE WITH ALL CABLE JACKET TYPES USED ON THIS PROJECT. CABLE JACKET COMPATIBILITY SHALL BE TESTED WITH THE SPECIFIC JACKET MATERIAL USED ON EACH CABLE AND TEST DATA SHALL BE PROVIDED BY THE CABLE MANUFACTURER OR LUBRICANT MANUFACTURER. LUBRICANT SHALL BE UL LISTED, MEET IEEE 1210 STRESS CRACKING AND VOLUME RESISTIVITY REQUIREMENTS. PROVIDE POLYWATER LZ LUBRICANT OR EQUAL.
4. CONTRACTOR IS EXPECTED TO PRE–LUBRICATE ALL CONDUITS THROUGHOUT THE PROJECT PRIOR TO PULLING IN CABLES AND CONDUCTORS. UTILIZE BAG PACKAGES, POLYWATER 'FRONT END PACKS' OR EQUAL. THESE PACKAGES ATTACH TO THE WINCH LINE AND PRE–LUBRICATE THE CONDUIT INNER SURFACES AS THEY ARE PULLED THROUGH THE CONDUIT. IN ADDITION, CONTRACTOR IS TO LUBRICATE THE CABLES AND CONDUCTORS AS THEY ARE FED INTO THE CONDUIT SYSTEM DURING THE PULLING WORK. FOLLOW MANUFACTURER INSTRUCTIONS.
5. CAREFULLY CONSIDER THE USE OF PULLING EYES AND BOLTS, BASKET GRIPS, AND CABLE SHEAVES IN THE PULLING PROCESS. CONTRACTOR IS EXPECTED TO IMPLEMENT NECESSARY PULLING MEANS AND METHODS TO MINIMIZE CABLE TENSIONS AND CONDUIT SIDEWALL PRESSURES. CONSIDER THE AMBIENT TEMPERATURES, WEATHER CONDITIONS, AND OTHER SITE FACTORS WHEN PLANNING THE WORK. IN ALL CASES, PULLING EFFORTS SHALL NOT RESULT IN EXCESSIVE CABLE TENSIONS BASED ON MANUFACTURER CABLE DATA SHEETS. CONTRACTOR SHALL REFER TO THE OKONITE 'YELLOW BOOK' TITLED 'INSTALLATION PRACTICES FOR CABLE RACEWAY SYSTEMS' FOR GENERAL GUIDELINES AND EXPECTATIONS OF THE OVERALL PULLING PROCESS PLANNING, DESIGN, AND SUCCESSFUL IMPLEMENTATION.
6. LABEL ALL MV CABLES ON THE PROJECT PER DETAIL 2, THIS SHEET.

GENERAL REQUIREMENTS AND STANDARDS:

1. PROVIDE HDPE CONDUIT THAT MEETS THE FOLLOWING STANDARDS: ASTM F2160, NEMA TC 7, AND UL 651A, ALL LATEST EDITIONS.
2. HDPE CONDUIT SHALL BE FURNISHED, PREPARED, AND INSTALLED IN ACCORDANCE WITH THE PLASTIC PIPE INSTITUTE (PPI) INDUSTRY STANDARD TECHNICAL NOTES INCLUDING:
   a. TN–47, 'PIPE STIFFNESS AND DEFLECTION TESTING OF COILABLE HDPE CONDUIT AS RELATED TO BURIAL DEPTH'. LATEST EDITION.
   b. TN–50, 'GUIDE TO SPECIFYING HDPE CONDUIT', LATEST EDITION.
   c. TN–58, 'HDPE CONDUIT AND DUCT HANDLING GUIDE', LATEST EDITION.

   THE CONTRACTOR SHALL REVIEW THIS LITERATURE TO FAMILIARIZE HIMSELF WITH THE EXPECTED TREATMENT, PREPARATION, AND INSTALLATION OF HDPE CONDUIT UTILIZED ON THE PROJECT.

INSTALLATION CONSIDERATIONS:

1. SOLID PRESSURE ON UNDERGROUND CONDUIT RESULTS FROM THE COMBINATION OF SOIL WEIGHT AND SURFACE LOADS. AS BACKFILL IS PLACED AROUND AND OVER HDPE CONDUIT, THE SOIL PRESSURE INCREASES AND THE PIPE DEFLECTS VERTICALLY AND EXPANDS LATERALLY INTO THE SURROUNDING SOIL. THE MAGNITUDE OF THE DEFLECTION AND THE STRESS DEPENDS NOT ONLY ON THE PIPE'S PROPERTIES BUT ALSO ON THE PROPERTIES OF THE SURROUNDING SOIL. THE MAGNITUDE OF DEFLECTION AND STRESS MUST BE KEPT SAFELY WITHIN HDPE PIPE'S PERFORMANCE LIMITS. EXCESSIVE DEFLECTION MAY CAUSE LOSS OF STABILITY AND FLOW RESTRICTION, WHILE EXCESSIVE COMPRESSIVE STRESS MAY CAUSE WALL CRUSHING OR RING BUCKLING.
2. IN ORDER TO ACHIEVE PROPER, LONG TERM PERFORMANCE OF UNDERGROUND HDPE CONDUIT, THE FOLLOWING IS REQUIRED:
   a. HDPE PIPE IS MADE FROM HIGH QUALITY, STRESS–RATED PE MATERIAL.
   b. THE EMBEDMENT MATERIAL MUST BE COARSE–GRAINED, COMPACTED TO 95% PER MODIFIED PROCTOR DENSITY METHOD, AND SHALL HAVE A MODULUS OF ELASTICITY ('E') OF A LEAST 1000 PSI.
   c. THE NATIVE SOIL MUST BE STABLE WITH A UNIT WEIGHT NOT TO EXCEED 120 PCF.
   d. THE HDPE CONDUIT IS INSTALLED PER MANUFACTURER REQUIREMENTS AND RECOMMENDATIONS FOR CONTROLLING SHEAR, BENDING LOADS, AND MINIMUM BENDING RADIUS.
   e. CONDUITS MUST BE INSTALLED PER ASTM D2321 FOR NOM–PRESSURE PIPES.
   f. LIMIT CONDUIT DEFLECTIONS TO 7.5% OR LESS.
   g. MAINTAIN THE MINIMUM BEDDING BELOW CONDUIT AND BACKFILL ABOVE THE CONDUIT, AS DEPICTED IN THE PROJECT TRENCH DETAILS. IN ALL CASES, MAINTAIN A MINIMUM OF 4 INCHES OF TAMPED BEDDING MATERIAL BELOW AND ABOVE THE CONDUIT.
   h. USE A VIBRATION TAMPER FOR COMPACTION WORK, NOT AN IMPACT TAMPER.

   THE CONTRACTOR IS EXPECTED TO VERIFY SITE AND INSTALLATION CONDITIONS AS NECESSARY TO ADHERE TO MANUFACTURER REQUIREMENTS FOR PROPER HDPE CONDUIT INSTALLATION. WHEN MANUFACTURER DOES NOT SPECIFICALLY ADDRESS A INSTALLATION QUESTION OR ASPECT, ADHERE TO INDUSTRY BEST PRACTICES AS OUTLINED IN THE PPI TECHNICAL NOTES REFERENCED ABOVE.
3. AS MUCH AS POSSIBLE, UTILIZE LARGE SWEEPING BENDS INSTEAD OF TIGHTER BENDS. MINIMUM BENDING RADIUS IS 11 TIMES THE O.D. OF THE CONDUIT.

CONDUIT SPECIFICATIONS:

1. HDPE CONDUIT SHALL BE MADE FROM HIGH QUALITY, STRESS–RATED PE MATERIAL WITH MINIMUM MODULUS VALUE OF 80,000 PSI AND MINIMUM TENSILE STRENGTH OF 3,000 PSI PER ASTM D 3350 REQUIREMENTS.
2. HDPE SHALL BE UL 651A LISTED, SCHEDULE 80, SUITABLE FOR UNDERGROUND OPEN TRENCH CONSTRUCTION METHODS.
3. HDPE RESIN PER ASTM D 3350 STANDARDS.
4. PROVIDE HDPE COUPLINGS, CONNECTORS, AND END PLUGS AS REQUIRED AND FROM THE SAME MANUFACTURER AS THE HDPE CONDUIT ITSELF. PROVIDE TRANSITION COUPLINGS TO FIBERGLASS, AND EXPANSION COUPLINGS AS REQUIRED.
5. PROVIDE DURALINE STANDARD UL 651A SCHEDULE 80 HDPE OR EQUAL.

NOTES (APPLICABLE TO DETAIL 3):

1. DURING CONSTRUCTION TEMPORARY UNDERGROUND MV CABLE SPLICES ARE ANTICIPATED PRIOR TO PAD MOUNT SWITCHES AND JUNCTION CABINETS ARRIVE ONSITE. PROVIDE TEMPORARY CONNECTIONS VIA BASEMENT MOUNTED JUNCTION BARS AND ELBOWS AS DESCRIBED IN THIS DETAIL OR APPROVED EQUAL CONFIGURATION.

(2a) PROVIDE (3) 2–POSITION LOADBREAK J–BARS MOUNTED TO CONCRETE WALL OF BASEMENT. ADJUSTABLE, STAINLESS STEEL, 200A. 15KV CLASS J–BARS WITH UP TO 90° OF TILT IN 10° INCREMENTS. INCLUDES PARKING STANDS AND DRAIN WIRE CLAMP. COOPER POWER SYSTEMS (CPS) LJ215C2B OR EQUAL. STAGGER J–BARS AS REQUIRED TO ALLOW ELBOWS TO LAND AND CABLES TO BE TRAINED PROPERLY.

(2b) PROVIDE (3) 2–POSITION DEADBREAK J–BARS MOUNTED TO CONCRETE WALL OF BASEMENT. ADJUSTABLE, STAINLESS STEEL, 600A, 35KV CLASS J–BARS WITH UP TO 45° OF TILT IN 10° INCREMENTS. INCLUDES PARKING STANDS AND DRAIN WIRE CLAMP. CPS DJ635C2B OR EQUAL. STAGGER J–BARS AS REQUIRED TO ALLOW ELBOWS TO LAND AND CABLES TO BE TRAINED PROPERLY.

(2c) PROVIDE (3) 4–POSITION LOADBREAK J–BARS MOUNTED TO CONCRETE WALL OF BASEMENT. ADJUSTABLE, STAINLESS STEEL, 200A. 15KV CLASS J–BARS WITH UP TO 90° OF TILT IN 10° INCREMENTS. INCLUDES PARKING STANDS AND DRAIN WIRE CLAMP. COOPER POWER SYSTEMS (CPS) LJ215C4B OR EQUAL. STAGGER J–BARS AS REQUIRED TO ALLOW ELBOWS TO LAND AND CABLES TO BE TRAINED PROPERLY.

(2d) PROVIDE (3) 3–POSITION DEADBREAK J–BARS MOUNTED TO CONCRETE WALL OF BASEMENT. ADJUSTABLE, STAINLESS STEEL, 600A, 35KV CLASS J–BARS WITH UP TO 45° OF TILT IN 10° INCREMENTS. INCLUDES PARKING STANDS AND DRAIN WIRE CLAMP. CPS DJ635C3B OR EQUAL. STAGGER J–BARS AS REQUIRED TO ALLOW ELBOWS TO LAND AND CABLES TO BE TRAINED PROPERLY.

(3) PROVIDE 200A, 15KV RATED LOADBREAKS ON THE J–BARS. SEE SHEET U17 FOR LOADBREAK REQUIREMENTS AND SHEET U33 FOR LOADBREAK DETAIL.

(4) PROVIDE 600A, 35KV RATED DEADBREAKERS ON THE J–BARS. SEE SHEET U17 FOR DEADBREAK REQUIREMENTS AND SHEET U32 FOR DEADBREAK DETAIL.

(5) PROVIDE SUFFICIENT CABLE SLACK FOR ALL FEEDEERS IN BASEMENTS TO ALLOW THEM TO BE EXTENDED UP TO THE FINAL POSITIONS ON THE SWITCHES AND JUNCTION CABINETS ABOVE GROUND. COIL CABLES NEATLY IN THE BASEMENTS. PROVIDE LABELS ON ALL CABLES PER DETAIL 2, THIS SHEET.

CN 7/24/2024

PLANS DEVELOPED BY:
MORRIS ENGINEERING GROUP, INC
2375 JORDAN AVE #7
JUNEAU, AK 99801
907–789–3350
AECL 1010

STATE OF ALASKA 49TH Mark G. Morris May 31, 2024 No. EE 8613 REGISTERED PROFESSIONAL ENGINEER

STATE OF ALASKA DEPARTMENT OF TRANSPORTATION AND PUBLIC FACILITIES
6860 GLACIER HIGHWAY, JUNEAU, AK 99801
(907) 465–1763

UTILITY RELOCATION FOR KETCHIKAN AREA BRIDGES

MEDIUM VOLTAGE CABLE DETAILS & CONDUIT SPECS

FILE | >:\102 state of ak\44 utility relocation design for ketchikan bridges\Working Drawings\POWER UTILITY DEMOLITION SINGLE LINE DIAGRAMS.dwg | LAYOUT | U18 | DESIGNED | MGM | CHECKED | MGM | DRAFTED | NADJA
PLOTTED BY 4/26/2024 14:43

NO.	DATE	REVISION	STATE	PROJECT DESIGNATION	YEAR	SHEET NO.	TOTAL SHEETS
1	5/2024	AS-BUILT	ALASKA	0902043/SFHWY00072	2021	U19	45

AS-BUILT DRAWING PREPARED FROM CONTRACTOR PROVIDED REDLINE WHICH MAY NOT BE CORRECT

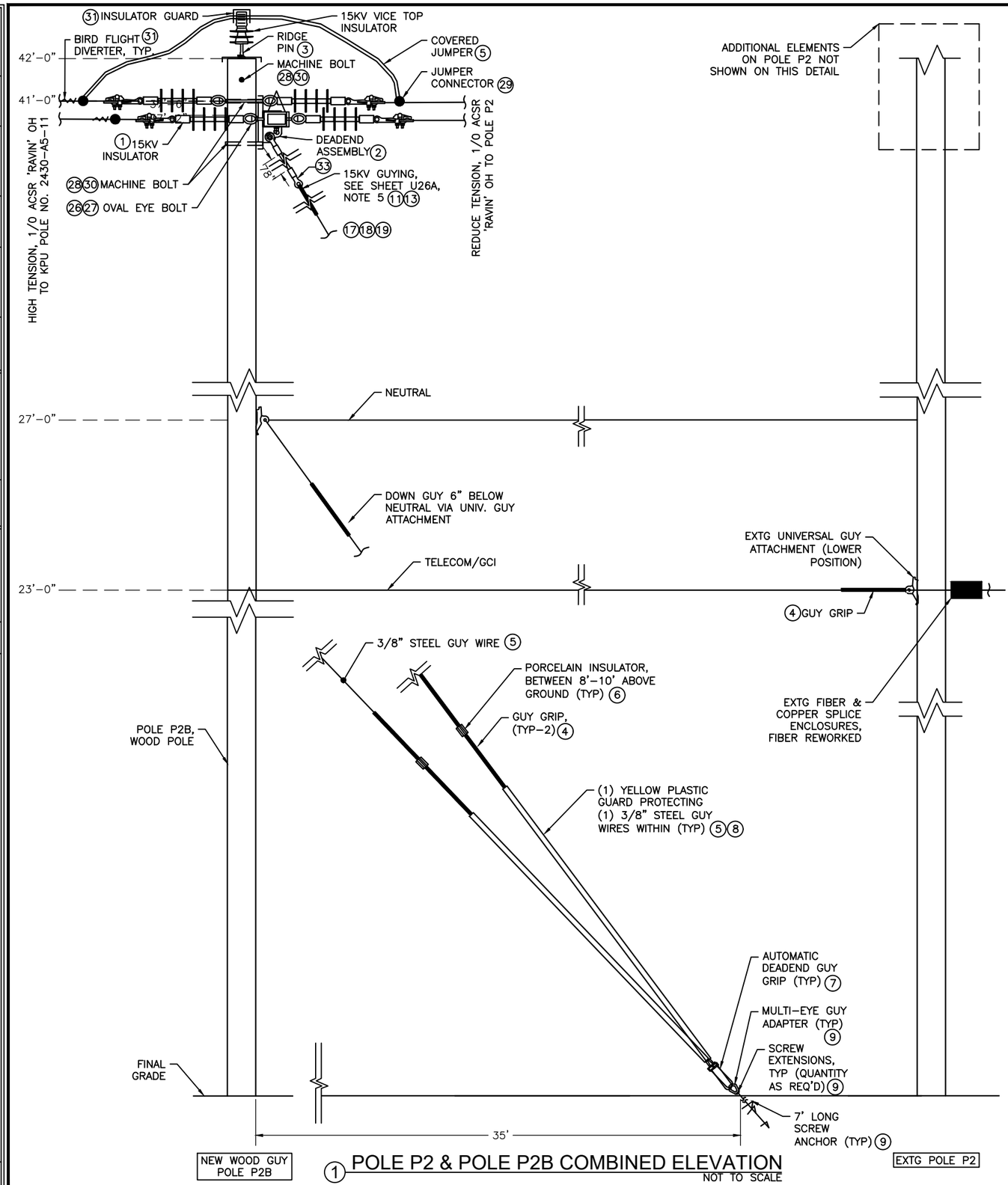

1 POLE P2 & POLE P2B COMBINED ELEVATION
NOT TO SCALE

EXTG POLE P2 & NEW POLE P2B - MATERIAL LIST

REF ID	QUANTITY	DESCRIPTION	BRAND (NOTE 2)	PART NUMBER
1	1	45 FOOT LONG, CLASS 2 WOOD POLE, DOUGLAS FIR, 8" DIA. AT TOP	NOTE 3	NOTE 3
2	5	(1) 5/8" X 10" BOLT, (2) 2-1/4" X (2)-1/4" CURVED WASHERS, (2) LOCKNUTS	MPS	J8810 BOLT, J1075 WASHERS, J8583 LOCKNUTS
3	5	UNIVERSAL GUY ATTACHMENT, DUCTILE IRON, HOT DIPPED GALV.	MPS	MGA-345-A
4	9	FORMED DEADEND WIRE GUY GRIP, 3/8" EHS, 35" APPLIED LENGTH	MPS	DE-S1107
5	AS REQ'D	GALV STEEL GUY WIRE, 3/8", 7W STRAND		
6	2	PORCELAIN GUY STRAIN INSULATOR	MPS	L502
7	2	AUTOMATIC GUY DEADEND, 3/16" BAIL, WITH INSTALL BAIL	MPS	(2) DE-S1108 GRIPS & (2) 5202 VISES
8	2	8FT. POLYETHYLENE GUY MARKER, YELLOW	MPS	J5718
9	2	POWER INSTALL SCREW ANCHOR KIT, SQ SHAFT, 21K LBS RATED, 10 FT. LONG	CU	#SS5 SERIES (NOTE 4)
10	1	GUY STRAIN INSULATOR, 21K LBS RATED, 78" ROD SILICONE COATED	MPS	GYCTE21-78-SC

1. THE MATERIAL LIST IS NOT MEANT TO BE COMPREHENSIVE. THE CONTRACTOR SHALL DO A FULL TAKE OFF FROM THE PLANS AND NOT DEPEND ON THIS LIST ALONE.
2. BRAND ABBREVS: AF = ALUMA-FORM, CPS = COPPER POWER SYSTEMS, CU = CHANCE UTILITY, HEN = HENDRICKS, HUB = HUBBELL, MPS = MACLEAN POWER SYSTEMS, PP = PREFORMED PRODUCTS, SIE = SIEMENS, SW = SOUTHWIRE.
3. SEE SHEET U26B FOR NEW WOOD POLE SPECIFICATIONS, TECHNICAL REQUIREMENTS, APPROVED MANUFACTURERS, ETC.
4. EACH SQUARE SHAFT, POWER SCREW ANCHOR ASSEMBLY IS A KIT CONSISTING OF:
   (1) SCREW HEAD LEADER
   (MULTIPLE) EXTENSION BARS
   (1)GUY ADAPTER
   PROVIDE NUMBER OF EXTENSION BARS NEEDED BASED ON INSTALLATION CONDITIONS.
   PROVIDE EACH GUY ADAPTER WITH TWO (2) GUY EYES AND ONE (1) PULLING EYE.
5. COMPLETE ARRANGEMENT OF GUYING FROM POLE TO ANCHOR IN GROUND NOTE SHOWN ON POLE DETAIL THIS SHEET FOR GENERAL DEPICTION OF WHAT IS REQUIRED. COORDINATE EXACT CONFIGURATION NEEDED PRIOR TO WORK.
6. KPU UTILITY STOCKS MANY OF THE COMMON POLE ELEMENTS NEEDED ON THIS PROJECT. COORDINATE AS REQUIRED TO ENSURE COMPLIANCE.

WILDLIFE PROTECTION GENERAL NOTE (APPLICABLE TO POWER UTILITY POLES: P5, P5A, P7, P8, P9, P10):

1. ALL NEW OVERHEAD ELECTRICAL IN THE PROJECT WILL BE DESIGNED AND ARRANGED TO MAXIMIZE WILDLIFE PROTECTION FROM THE HAZARDS OF OVERHEAD ELECTRICAL LINES. MEASURES SUCH AS: NON-RATED ARRESTER WIRE INSULATION (I.E. COVERED WIRE), 60"+ PHASE CONDUCTOR SEPARATION, AND TERMINAL WILDLIFE GUARDS ON ALL EXPOSED ELECTRICAL 'TOPS' WILL BE INCLUDED IN THE DESIGN AND CONSTRUCTION AS MUCH AS POSSIBLE. ALL PROPOSED SOLUTIONS PROVIDED SHALL BE IN CONJUNCTION WITH DOT&PF AND KPU UTILITY REQUIREMENTS AND SUBJECT TO REVIEW.

   PROTECTIVE ELEMENTS THAT SHALL BE INCLUDED ARE NOT ALL SHOWN ON THE UTILITY POLE DETAIL SHEETS BUT ALL SHALL BE PROVIDED FOR COMPLETE PROTECTION. ELEMENTS INCLUDE, BUT ARE NOT LIMITED TO, THE FOLLOWING:

   - ARRESTER GUARDS
   - FUSED CUTOUT GUARDS
   - TERMINATOR GUARDS
   - PIN INSULATOR GUARDS
   - PERCH PREVENTERS (ON PUPI ARMS & EQUIPMENT MOUNTS)
   - BIRD FLIGHT DIVERTERS

   PROVIDE BIRD FLIGHT DIVERTER 'PIGTAILS' ON ALL TOPS OF POLE OVERHEAD POWER LINES ACROSS ENTIRE PROJECT, INCLUDING BETWEEN POLES AT EITHER END OF THE PROJECT TO THE NEXT POLE NOT WITHIN PROJECT SCOPE. EVENLY SPACE THEM PER KPU UTILITY TYPICAL REQUIREMENTS.

   PROVIDE RELIAGUARD, PREFORMED LINE PRODUCTS, OR APPROVED AS REQUIRED WILDLIFE PROTECTION ELEMENTS.

7/24/2024

PLANS DEVELOPED BY:
MORRIS ENGINEERING GROUP, INC
2375 JORDAN AVE #7
JUNEAU, AK 99801
907-789-3350
AECL 1010

STATE OF ALASKA 49TH Mark G. Morris May 31, 2024 No. EE 8613 REGISTERED PROFESSIONAL ENGINEER

STATE OF ALASKA DEPARTMENT OF TRANSPORTATION AND PUBLIC FACILITIES
6860 GLACIER HIGHWAY, JUNEAU, AK 99801
(907) 465-1763

UTILITY RELOCATION FOR KETCHIKAN AREA BRIDGES

POLE P2 & P2B ELEVATIONS (KPU #2430-A5-3 & #2430-A5-10)

FILE | J:\102 state of ak\44 utility relocation design for ketchikan bridges\Working Drawings\15 KV RISER POLE AND SWITCH CONFIGURATION.dwg | LAYOUT | 5/24/2024 13:51 | DESIGNED MGM | CHECKED MGM | DRAFTED EMILEE

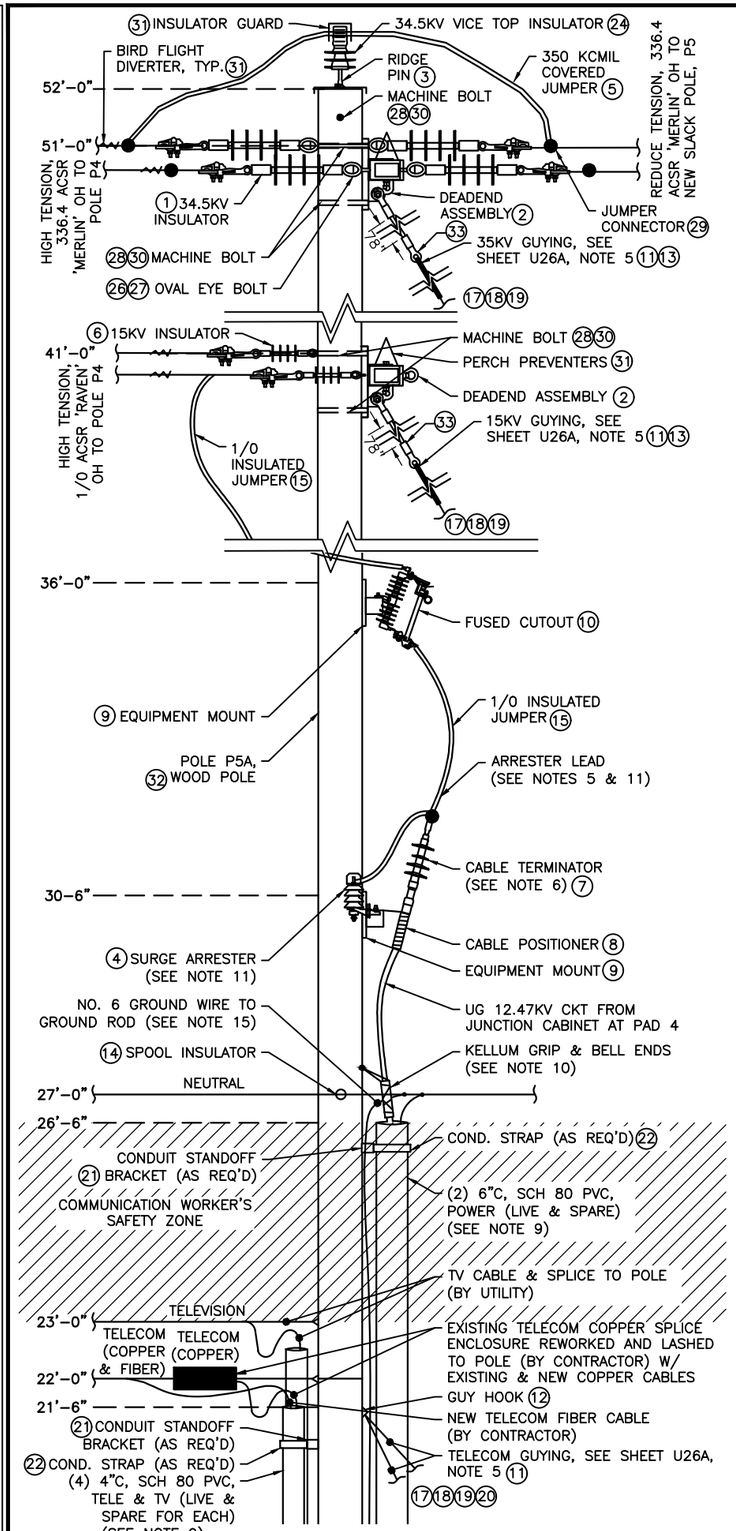

1 POLE P5A - SIDE ELEVATION
12.47KV
NOT TO SCALE

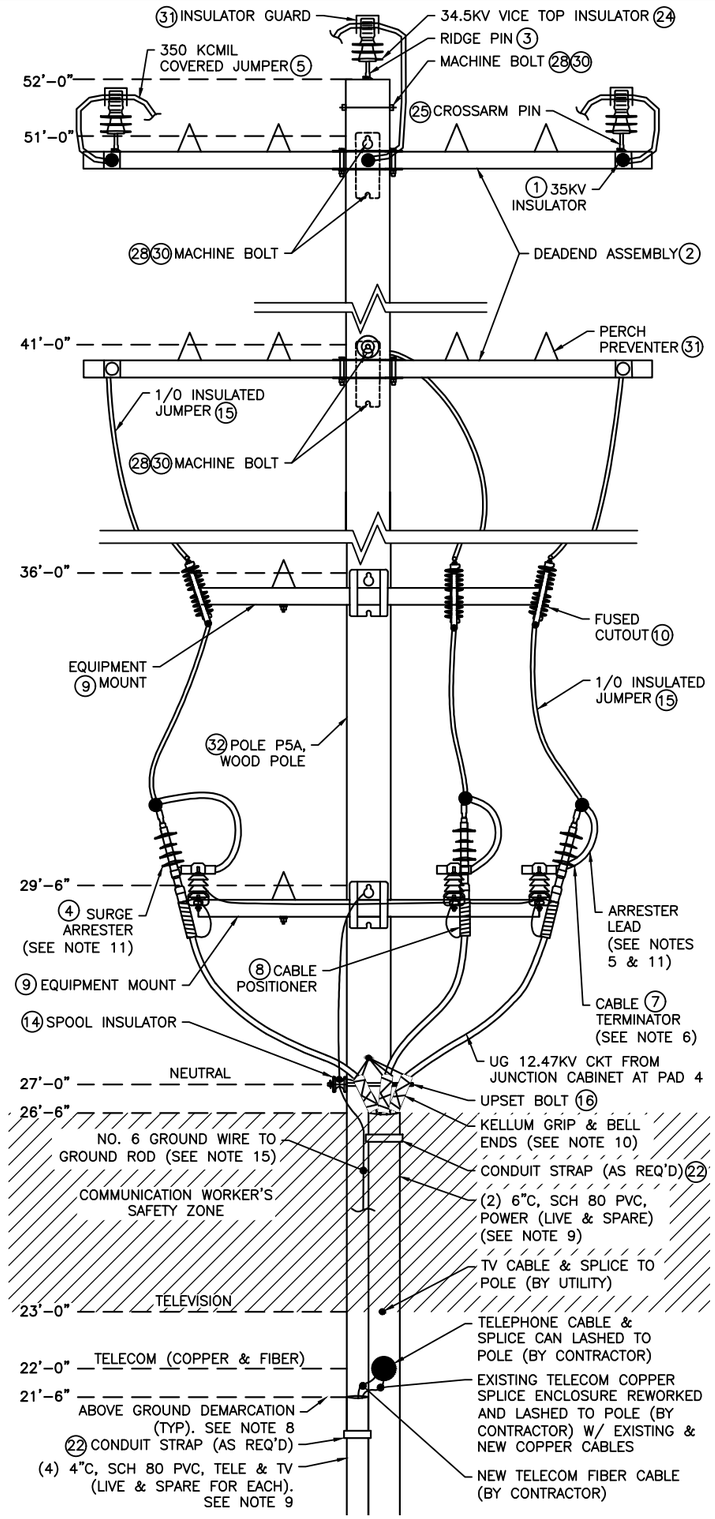

2 POLE P5A - FRONT ELEVATION
12.47KV
NOT TO SCALE

NO.	DATE	REVISION	STATE	PROJECT DESIGNATION	YEAR	SHEET NO.	TOTAL SHEETS
1	5/2024	AS-BUILT					
AS-BUILT DRAWING PREPARED FROM CONTRACTOR PROVIDED REDLINE WHICH MAY NOT BE CORRECT			ALASKA	0902043/SFHWY00072	2021	U20	45

NOTES:

1. ALL NUMBERS INSIDE CIRCLES REFER TO SHEET U26A FOR MATERIALS TABLE. SEE TABLE FOR MATERIAL DESCRIPTIONS, QUANTITIES, MANUFACTURERS, ETC. COMMODITY MATERIALS ARE SHOWN AS PRODUCTS OF MACLEAN POWER SYSTEMS, BUT MAY BE SUBSTITUTED FOR IDENTICAL MATERIALS OF OTHER MANUFACTURERS.
2. UTILITY POLES, POLE MOUNTED EQUIPMENT, POWER CABLES, COMMUNICATION CABLES, POLE SUPPORTS, GUYS, GROUNDING, AND CONDUIT RISERS SHALL ALL ADHERE TO MINIMUM CLEARANCES AS SPECIFIED IN THE LATEST EDITION OF THE NATIONAL ELECTRICAL SAFETY CODE (NESC, ANSI STANDARD C2) AS ADOPTED BY THE STATE OF ALASKA AND LOCAL AGENCIES, THE AFFECTED UTILITIES AND ALL REQUIREMENTS OF STATE AND LOCAL AGENCIES.
3. CODE REQUIRED CLEARANCES AND DIMENSIONS ARE THE MINIMUM ALLOWED IN THIS PROJECT. PROVIDE ADDITIONAL DISTANCES AS DIMENSIONED SPECIFICALLY ON THIS SHEET.
4. ADHERE TO KETCHIKAN PUBLIC UTILITIES/ELECTRIC (KPU/E) CONSTRUCTION SPECIFICATION STANDARDS. NOTES ON THIS PAGE ARE BORROWED, IN PART, FROM THOSE STANDARDS. BUT NOT ALL KPU/E STANDARDS ARE NOTED HEREIN. THE CONTRACTOR SHALL REVIEW KPU/E STANDARDS PRIOR TO COMMENCING WORK ASSOCIATED WITH THE PROJECT. CONTRACTOR SHALL PROMPTLY BRING TO THE ATTENTION OF THE ENGINEER SALIENT CONFLICTS BETWEEN THESE PLANS AND SPECIFICATIONS AND THE KPU/E CONSTRUCTION SPECIFICATION STANDARDS.
5. ALL SURGE ARRESTER LEADS SHALL BE KEPT AS SHORT AND AS STRAIGHT AS PRACTICABLE. WHERE POSSIBLE, TOTAL ARRESTER LEAD LENGTH (IN AND OUT) SHALL NOT EXCEED 30".
6. NO POWER CABLE BENDS ARE PERMITTED WITHIN 12" OF THE CABLE TERMINAL BASE ABOVE THE CONDUIT RISER.
7. ALL LIVE PARTS AT UTILITY POLE SHALL HAVE A MINIMUM 20' CLEARANCE ABOVE FINISHED GRADE. MAINTAIN A MINIMUM OF 6" SEPARATION BETWEEN THE NEUTRAL CONDUCTOR AND ALL OTHER CABLES.
8. DURING SUBMITTAL PROCESS, CONTRACTOR SHALL PROVIDE POLE ELEVATION DETAILS SIMILAR TO WHAT IS SHOWN ON THIS SHEET THAT CALL OUT SPECIFIC EQUIPMENT AND ALL SPACING DIMENSIONS PLANNED FOR THE INSTALLED POLE BASED ON SUBMITTED PRODUCTS. SUBMITTED DETAILS SHALL BE TO SCALE. ELEVATIONS SHALL INCLUDE ABOVE GRADE HEIGHT MARKERS SO THAT OVERALL ARRANGEMENT CAN BE REVIEWED AND APPROVED. ORDERING OF PRODUCTS AND ONSITE WORK SHALL NOT COMMENCE UNTIL SUBMITTED POLE ELEVATIONS ARE REVIEWED AND APPROVED BY THE ENGINEER AND THE KPU/E UTILITY MANAGER OR DESIGNEE.
9. CONDUIT ELBOWS AT GRADE AND THE FIRST 10' OF CONDUIT RISERS ABOVE GRADE SHALL BE RIGID STEEL CONDUIT. TRANSITION TO SCHEDULE 80 PVC ABOVE THAT POINT.
10. PROVIDE A STAINLESS-STEEL CABLE GRIP SUPPORT AND CONDUIT BELL ENDS AT TOP OF CONDUIT FOR EACH 15 KV CONDUCTOR CABLE, SECURE TO POLE WITH MACHINE BOLT AND WASHER AS REQUIRED. PROVIDE KELLUM GRIPS, HUBBEL #02406011 OR EQUAL.
11. SURGE ARRESTER SHALL BE WIRED IN PARALLEL WITH PHASE JUMPER, OR TERMINATOR (OR OTHER PROTECTED EQUIPMENT, ONE ARRESTER PER PHASE. PROVIDE EACH ARRESTER WITH WILDLIFE PROTECTIVE TOP CAP. ARRESTERS EQUIPPED WITH ~30" OF ARRESTER LEAD WIRE, TRAIN LEAD WIRE TO BE AS SHORT AND STRAIGHT AS POSSIBLE. INSTALL LEAD WIRE WITHIN AN OVERALL RUBBER INSULATION MATERIAL.
12. COORDINATE ARRANGEMENT OF POLE ASSEMBLIES, EQUIPMENT, AND STRUCTURES AT TOP OF POLE WITH KPU/E. NOT ALL DIMENSIONS ARE SHOWN ON THIS SHEET.
13. TO LIMIT THE LIKELIHOOD OF CORROSION DUE TO DISSIMILAR METALS, CONNECTIONS SHALL ALL BE CONFIGURED SO THAT IN ALL CASES OF ALUMINUM-TO-COPPER CONDUCTOR CONNECTIONS, THE ASSOCIATED CONNECTORS SHALL ALLOW FOR THE ALUMINUM PORTION OF THE CONNECTION TO PHYSICALLY BE ABOVE THE COPPER PORTION OF THE CONNECTIONS.
14. IN GENERAL, FOR CLARITY, SIDE VIEW (ELEVATION) DEPICTIONS INCLUDES ONLY ONE OR TWO OF THREE PHASES. PROVIDE THE OTHER PHASE CONNECTIONS IN A NEAT, SYMMETRICAL AND SIMILAR MANNER, CONSISTENT WITH THE DEPICTED PHASES, NOT ALL PHASE EQUIPMENT, CONNECTIONS, ETC. ARE SHOWN ON THE SIDE (ELEVATION) VIEW DETAIL.
15. FOR EACH INSTALLED SURGE ARRESTER, INSTALL A NO. 6 BARE, SOFT DRAWN, SOLID, CU GROUND WIRE FROM THE GROUND CONNECTION OF THE ARRESTER DIRECTLY TO THE MULTI-GROUNDED NEUTRAL (SYSTEM NEUTRAL) AND THE POLE GROUND CONDUCTOR. BOND THE COPPER CONCENTRIC NEUTRAL OF ALL MEDIUM VOLTAGE CABLE AND THE SHIELD FROM EACH OF THE CABLE TERMINATORS TOGETHER AND BOND ALL THREE TERMINATOR GROUNDS TOGETHER AND CONTINUE THIS CONDUCTOR TO THE SYSTEM NEUTRAL. BOND ALL GROUND CONDUCTORS AT THAT LOCATION. CONTINUE THE POLE GROUND CONDUCTOR DOWN THE POLE TO THE DRIVEN POLE GROUND ROD. VERTICAL GROUND WIRES SHALL BE STAPLED TO POLE AS REQUIRED AND NEATLY TRAINED. THE LOWEST 10' OF THE GROUND WIRE SHALL BE PROTECTED BY WOOD OR PLASTIC MOLDING, EXPRESSLY DESIGNED AND MANUFACTURED FOR THE PURPOSE. NOT ALL GROUND WIRING SEGMENTS ARE DEPICTED ON THE DETAILS ON THIS SHEET BUT ALL SHALL BE CONSISTENT WITH INDUSTRY PRACTICES AND PROVIDED AS DESCRIBED.

CN
7/24/2024

PLANS DEVELOPED BY:
MORRIS ENGINEERING GROUP, INC
2375 JORDAN AVE #7
JUNEAU, AK 99801
907-789-3350
AECL 1010

STATE OF ALASKA 49TH
Mark G. Morris
May 31, 2024
No. EE 8613
REGISTERED PROFESSIONAL ENGINEER

STATE OF ALASKA DEPARTMENT OF TRANSPORTATION AND PUBLIC FACILITIES
6860 GLACIER HIGHWAY, JUNEAU, AK 99801
(907) 465-1763

UTILITY RELOCATION FOR KETCHIKAN AREA BRIDGES

POLE P5A ELEVATIONS (KPU #2430-B5-12)

FILE | y:\102 state of ak\44 utility relocation design for ketchikan bridges\Working Drawings\15 KV RISER POLE AND SWITCH CONFIGURATIONS.DWG | 5/24/2024 13:51 | LAYOUT | U20 | DESIGNED | MGM | CHECKED | MGM | DRAFTED | EMILEE

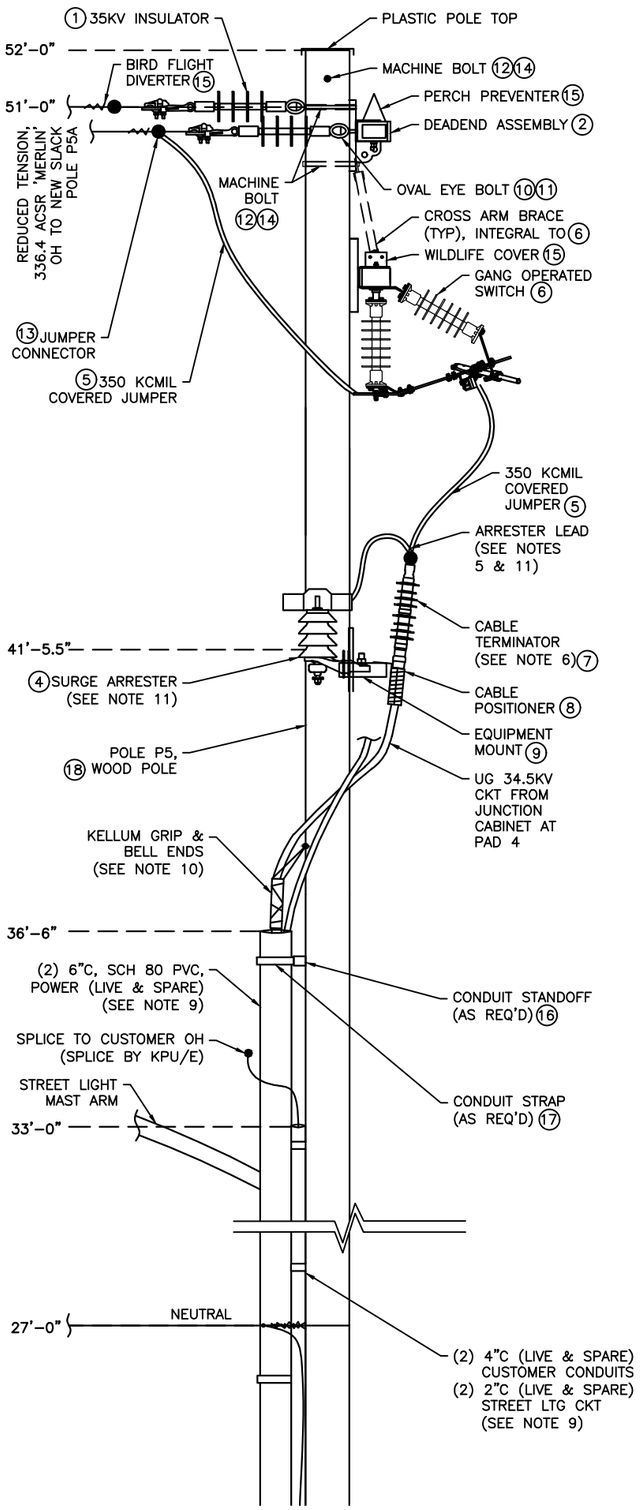

1 POLE P5 - SIDE ELEVATION
34.5KV
NOT TO SCALE

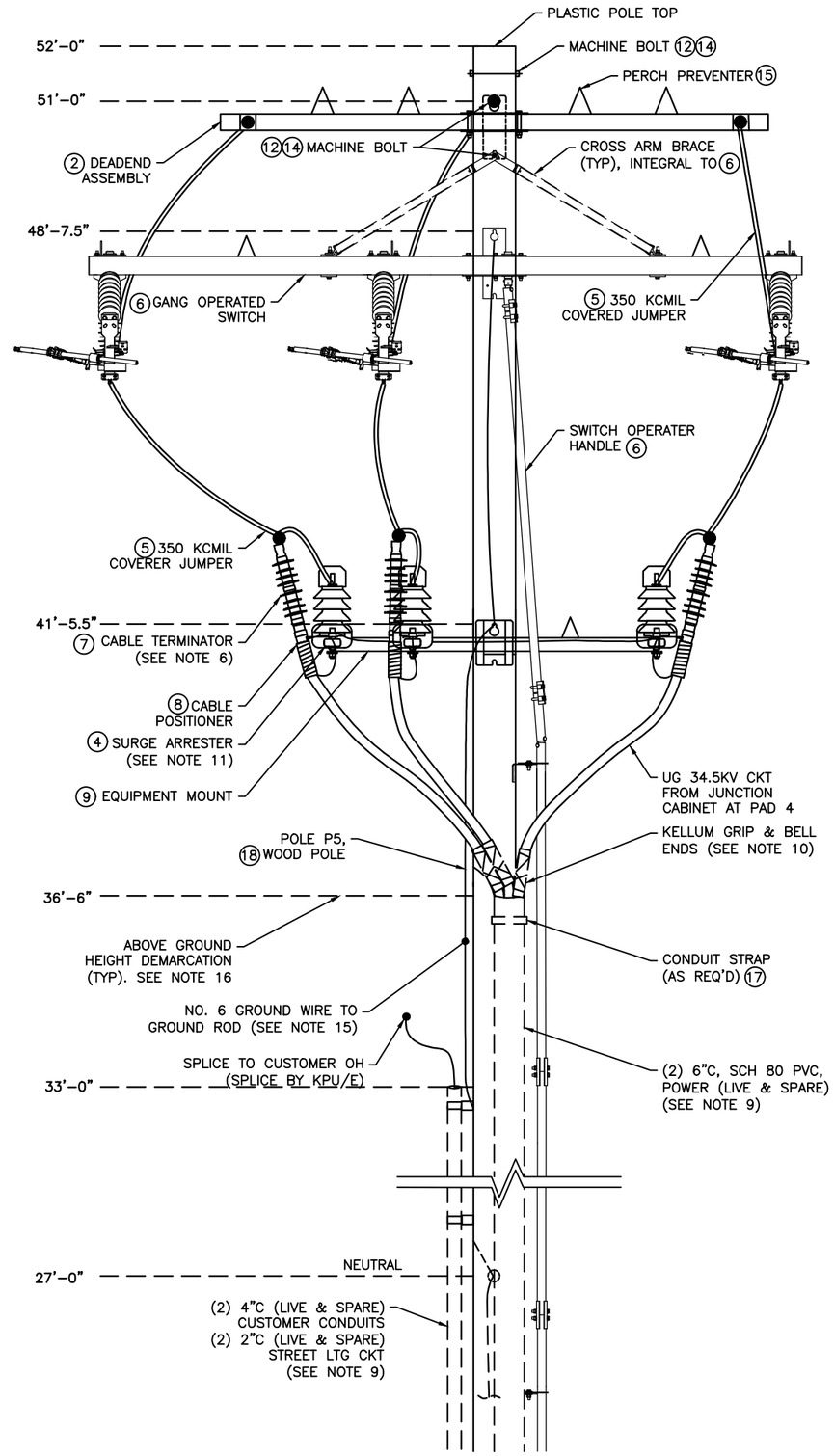

2 POLE P5 - FRONT ELEVATION
34.5KV
NOT TO SCALE

NO.	DATE	REVISION	STATE	PROJECT DESIGNATION	YEAR	SHEET NO.	TOTAL SHEETS
1	5/2024	AS-BUILT					
AS-BUILT DRAWING PREPARED FROM CONTRACTOR PROVIDED REDLINE WHICH MAY NOT BE CORRECT			ALASKA	0902043/SFHWY00072	2021	U21	45

NOTES:

1. ALL NUMBERS INSIDE CIRCLES REFER TO SHEET U26A FOR MATERIALS TABLE. SEE TABLE FOR MATERIAL DESCRIPTIONS, QUANTITIES, MANUFACTURERS, ETC. COMMODITY MATERIALS ARE SHOWN AS PRODUCTS OF MACLEAN POWER SYSTEMS, BUT MAY BE SUBSTITUTED FOR IDENTICAL MATERIALS OF OTHER MANUFACTURERS.
2. UTILITY POLES, POLE MOUNTED EQUIPMENT, POWER CABLES, COMMUNICATION CABLES, POLE SUPPORTS, GUYS, GROUNDING, AND CONDUIT RISERS SHALL ALL ADHERE TO MINIMUM CLEARANCES AS SPECIFIED IN THE LATEST EDITION OF THE NATIONAL ELECTRICAL SAFETY CODE (NESC, ANSI STANDARD C2) AS ADOPTED BY THE STATE OF ALASKA AND LOCAL AGENCIES, THE AFFECTED UTILITIES AND ALL REQUIREMENTS OF STATE AND LOCAL AGENCIES.
3. CODE REQUIRED CLEARANCES AND DIMENSIONS ARE THE MINIMUM ALLOWED IN THIS PROJECT. PROVIDE ADDITIONAL DISTANCES AS DIMENSIONED SPECIFICALLY ON THIS SHEET.
4. ADHERE TO KETCHIKAN PUBLIC UTILITIES/ELECTRIC (KPU/E) CONSTRUCTION SPECIFICATION STANDARDS. NOTES ON THIS PAGE ARE BORROWED, IN PART, FROM THOSE STANDARDS. BUT NOT ALL KPU/E STANDARDS ARE NOTED HEREIN. THE CONTRACTOR SHALL REVIEW KPU/E STANDARDS PRIOR TO COMMENCING WORK ASSOCIATED WITH THE PROJECT. CONTRACTOR SHALL PROMPTLY BRING TO THE ATTENTION OF THE ENGINEER SALIENT CONFLICTS BETWEEN THESE PLANS AND SPECIFICATIONS AND THE KPU/E CONSTRUCTION SPECIFICATION STANDARDS.
5. ALL SURGE ARRESTER LEADS SHALL BE KEPT AS SHORT AND AS STRAIGHT AS PRACTICABLE. WHERE POSSIBLE, TOTAL ARRESTER LEAD LENGTH (IN AND OUT) SHALL NOT EXCEED 30".
6. NO POWER CABLE BENDS ARE PERMITTED WITHIN 12" OF THE CABLE TERMINAL BASE ABOVE THE CONDUIT RISER.
7. ALL LIVE PARTS AT UTILITY POLE SHALL HAVE A MINIMUM 20' CLEARANCE ABOVE FINISHED GRADE. MAINTAIN A MINIMUM OF 6" SEPARATION BETWEEN THE NEUTRAL CONDUCTOR AND ALL OTHER CABLES.
8. UTILITY POLE P5 HAS A STREET LIGHTING MAST ARM AND LED FIXTURE NOT SHOWING ON THIS ELEVATION (BELOW THE AREA SHOWN)
9. CONDUIT ELBOWS AT GRADE AND THE FIRST 10' OF CONDUIT RISERS ABOVE GRADE SHALL BE RIGID STEEL CONDUIT. TRANSITION TO SCHEDULE 80 PVC ABOVE THAT POINT.
10. PROVIDE A STAINLESS-STEEL CABLE GRIP SUPPORT AND CONDUIT BELL ENDS AT TOP OF CONDUIT FOR EACH 35 KV CONDUCTOR CABLE, SECURE TO POLE WITH MACHINE BOLT AND WASHER AS REQUIRED. PROVIDE KELLUM GRIPS, HUBBEL #02406013 OR EQUAL.
11. SURGE ARRESTER SHALL BE WIRED IN PARALLEL WITH PHASE JUMPER, OR TERMINATOR (OR OTHER PROTECTED EQUIPMENT, ONE ARRESTER PER PHASE. PROVIDE EACH ARRESTER WITH WILDLIFE PROTECTIVE TOP CAP. ARRESTERS EQUIPPED WITH ~30" OF ARRESTER LEAD WIRE, TRAIN LEAD WIRE TO BE AS SHORT AND STRAIGHT AS POSSIBLE. INSTALL LEAD WIRE WITHIN AN OVERALL RUBBER INSULATION MATERIAL.
12. COORDINATE ARRANGEMENT OF POLE ASSEMBLIES, EQUIPMENT, AND STRUCTURES AT TOP OF POLE WITH KPU/E. NOT ALL DIMENSIONS ARE SHOWN ON THIS SHEET.
13. TO LIMIT THE LIKELIHOOD OF CORROSION DUE TO DISSIMILAR METALS, CONNECTIONS SHALL ALL BE CONFIGURED SO THAT IN ALL CASES OF ALUMINUM-TO-COPPER CONDUCTOR CONNECTIONS, THE ASSOCIATED CONNECTORS SHALL ALLOW FOR THE ALUMINUM PORTION OF THE CONNECTION TO PHYSICALLY BE ABOVE THE COPPER PORTION OF THE CONNECTIONS.
14. IN GENERAL, FOR CLARITY, SIDE VIEW (ELEVATION) DEPICTIONS INCLUDES ONLY ONE OR TWO OF THREE PHASES. PROVIDE THE OTHER PHASE CONNECTIONS IN A NEAT, SYMMETRICAL AND SIMILAR MANNER, CONSISTENT WITH THE DEPICTED PHASES, NOT ALL PHASE EQUIPMENT, CONNECTIONS, ETC. ARE SHOWN ON THE SIDE (ELEVATION) VIEW DETAIL.
15. FOR EACH INSTALLED SURGE ARRESTER, INSTALL A NO. 6 BARE, SOFT DRAWN, SOLID, CU GROUND WIRE FROM THE GROUND CONNECTION OF THE ARRESTER DIRECTLY TO THE MULTI-GROUNDED NEUTRAL (SYSTEM NEUTRAL) AND THE POLE GROUND CONDUCTOR. BOND THE COPPER CONCENTRIC NEUTRAL OF ALL MEDIUM VOLTAGE CABLE AND THE SHIELD FROM EACH OF THE CABLE TERMINATORS TOGETHER AND BOND ALL THREE TERMINATOR GROUNDS TOGETHER AND CONTINUE THIS CONDUCTOR TO THE SYSTEM NEUTRAL. BOND ALL GROUND CONDUCTORS AT THAT LOCATION. CONTINUE THE POLE GROUND CONDUCTOR DOWN THE POLE TO THE DRIVEN POLE GROUND ROD. VERTICAL GROUND WIRES SHALL BE STAPLED TO POLE AS REQUIRED AND NEATLY TRAINED. THE LOWEST 10' OF THE GROUND WIRE SHALL BE PROTECTED BY WOOD OR PLASTIC MOLDING, EXPRESSLY DESIGNED AND MANUFACTURED FOR THE PURPOSE. NOT ALL GROUND WIRING SEGMENTS ARE DEPICTED ON THE DETAILS ON THIS SHEET BUT ALL SHALL BE CONSISTENT WITH INDUSTRY PRACTICES AND PROVIDED AS DESCRIBED.
16. DURING SUBMITTAL PROCESS, CONTRACTOR SHALL PROVIDE POLE ELEVATION DETAILS SIMILAR TO WHAT IS SHOWN ON THIS SHEET THAT CALL OUT SPECIFIC EQUIPMENT AND ALL SPACING DIMENSIONS PLANNED FOR THE INSTALLED POLE BASED ON SUBMITTED PRODUCTS. SUBMITTED DETAILS SHALL BE TO SCALE. ELEVATIONS SHALL INCLUDE ABOVE GRADE HEIGHT MARKERS SO THAT OVERALL ARRANGEMENT CAN BE REVIEWED AND APPROVED. ORDERING OF PRODUCTS AND ONSITE WORK SHALL NOT COMMENCE UNTIL SUBMITTED POLE ELEVATIONS ARE REVIEWED AND APPROVED BY THE ENGINEER AND THE KPU/E UTILITY MANAGER OR DESIGNEE.

CN
7/24/2024

PLANS DEVELOPED BY:
MORRIS ENGINEERING GROUP, INC
2375 JORDAN AVE #7
JUNEAU, AK 99801
907-789-3350
AECL 1010

STATE OF ALASKA 49TH
Mark G. Morris
May 31, 2024
No. EE 8613
REGISTERED PROFESSIONAL ENGINEER

STATE OF ALASKA DEPARTMENT OF TRANSPORTATION AND PUBLIC FACILITIES
6860 GLACIER HIGHWAY, JUNEAU, AK 99801
(907) 465-1763

UTILITY RELOCATION FOR KETCHIKAN AREA BRIDGES

POLE P5 ELEVATIONS
(KPU #2430-B5-1)

FILE | y:\102 state of ak\44 utility relocation design for ketchikan bridges\Working Drawings\15 KV RISER POLE AND SWITCH CONFIGURATION.dwg | LAYOUT | U21 | 5/24/2024 13:51 | DESIGNED | MGM | CHECKED | MGM | DRAFTED | EMILEE

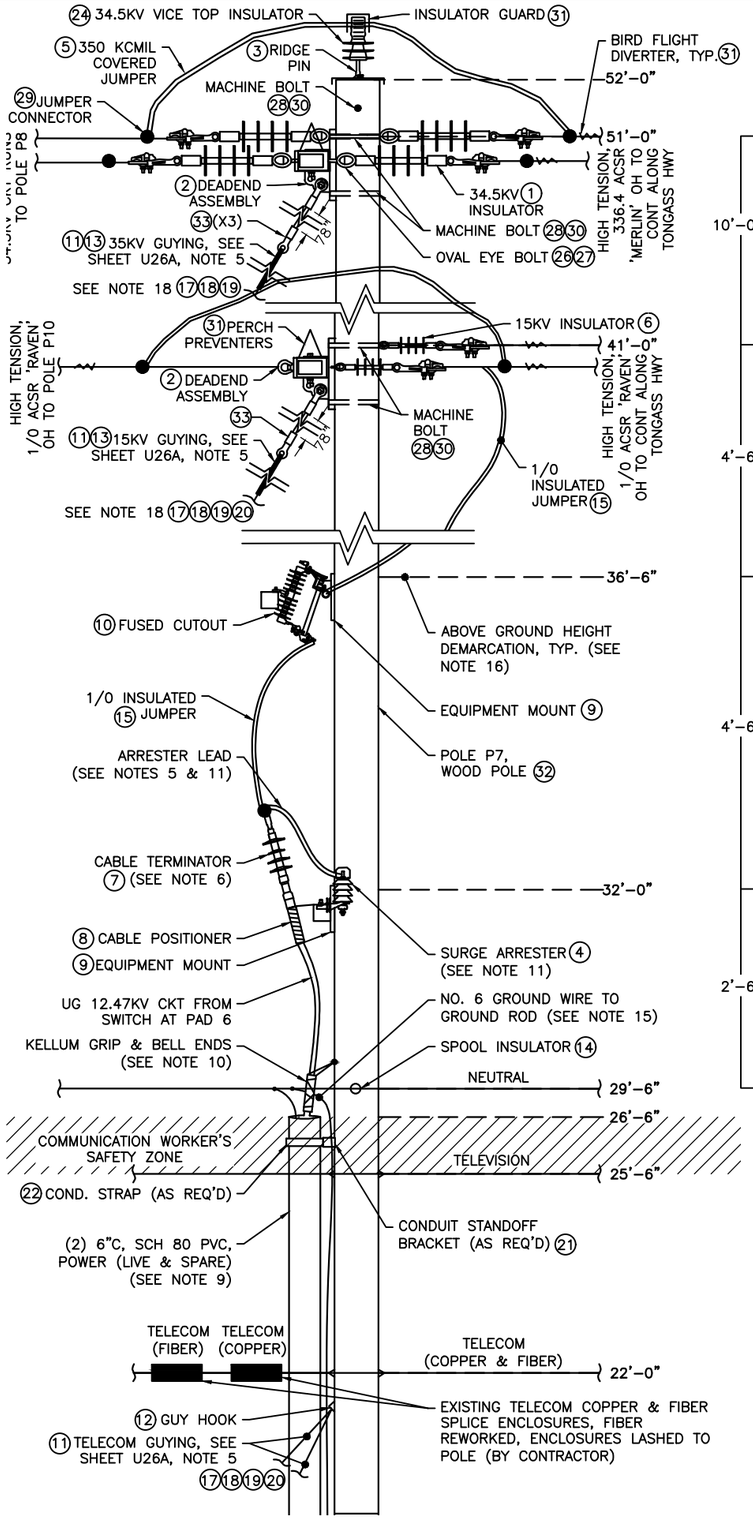

1 POLE P7 - SIDE ELEVATION
12.47KV
NOT TO SCALE

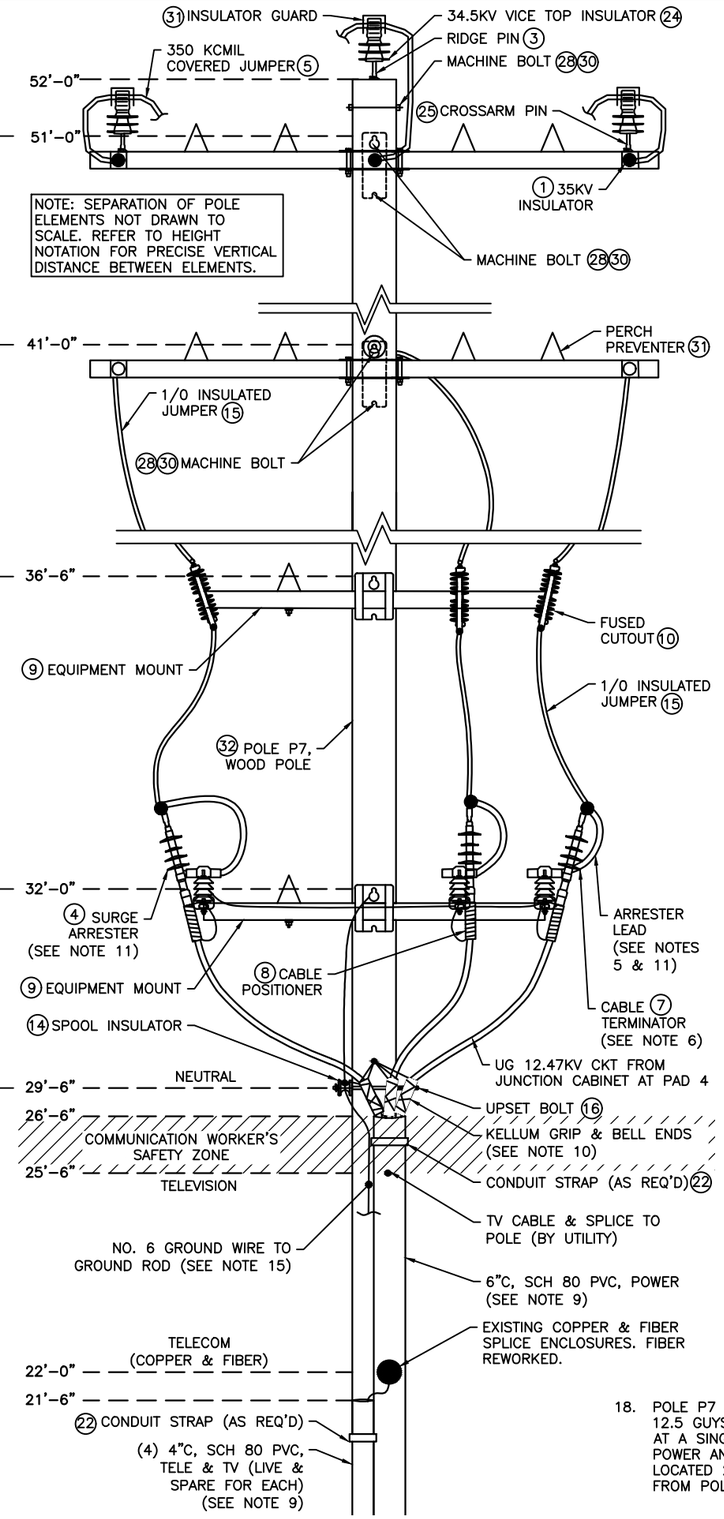

2 POLE P7 - FRONT ELEVATION
12.47KV
NOT TO SCALE

NO.	DATE	REVISION	STATE	PROJECT DESIGNATION	YEAR	SHEET NO.	TOTAL SHEETS
1	5/2024	AS-BUILT					
AS-BUILT DRAWING PREPARED FROM CONTRACTOR PROVIDED REDLINE WHICH MAY NOT BE CORRECT			ALASKA	0902043/SFHWY00072	2021	U22	45

NOTES:

1. ALL NUMBERS INSIDE CIRCLES REFER TO SHEET U26A FOR MATERIALS TABLE. SEE TABLE FOR MATERIAL DESCRIPTIONS, QUANTITIES, MANUFACTURERS, ETC. COMMODITY MATERIALS ARE SHOWN AS PRODUCTS OF MACLEAN POWER SYSTEMS, BUT MAY BE SUBSTITUTED FOR IDENTICAL MATERIALS OF OTHER MANUFACTURERS.
2. UTILITY POLES, POLE MOUNTED EQUIPMENT, POWER CABLES, COMMUNICATION CABLES, POLE SUPPORTS, GUYS, GROUNDING, AND CONDUIT RISERS SHALL ALL ADHERE TO MINIMUM CLEARANCES AS SPECIFIED IN THE LATEST EDITION OF THE NATIONAL ELECTRICAL SAFETY CODE (NESC, ANSI STANDARD C2) AS ADOPTED BY THE STATE OF ALASKA AND LOCAL AGENCIES, THE AFFECTED UTILITIES AND ALL REQUIREMENTS OF STATE AND LOCAL AGENCIES.
3. CODE REQUIRED CLEARANCES AND DIMENSIONS ARE THE MINIMUM ALLOWED IN THIS PROJECT. PROVIDE ADDITIONAL DISTANCES AS DIMENSIONED SPECIFICALLY ON THISSHEET.
4. ADHERE TO KETCHIKAN PUBLIC UTILITIES/ELECTRIC (KPU/E) CONSTRUCTION SPECIFICATION STANDARDS. NOTES ON THIS PAGE ARE BORROWED, IN PART, FROM THOSE STANDARDS. BUT NOT ALL KPU/E STANDARDS ARE NOTED HEREIN. THE CONTRACTOR SHALL REVIEW KPU/E STANDARDS PRIOR TO COMMENCING WORK ASSOCIATED WITH THE PROJECT. CONTRACTOR SHALL PROMPTLY BRING TO THE ATTENTION OF THE ENGINEER SALIENT CONFLICTS BETWEEN THESE PLANS AND SPECIFICATIONS AND THE KPU/E CONSTRUCTION SPECIFICATION STANDARDS.
5. ALL SURGE ARRESTER LEADS SHALL BE KEPT AS SHORT AND AS STRAIGHT AS PRACTICABLE. WHERE POSSIBLE, TOTAL ARRESTER LEAD LENGTH (IN AND OUT) SHALL NOT EXCEED 30".
6. NO POWER CABLE BENDS ARE PERMITTED WITHIN 12" OF THE CABLE TERMINAL BASE ABOVE THE CONDUIT RISER.
7. ALL LIVE PARTS AT UTILITY POLE SHALL HAVE A MINIMUM 20' CLEARANCE ABOVE FINISHED GRADE. MAINTAIN A MINIMUM OF 6" SEPARATION BETWEEN THE NEUTRAL CONDUCTOR AND ALL OTHER CABLES.
8. MAINTAIN ALL COMMUNICATION CABLES (TELEPHONE AND TELEVISION) BELOW THE POWER CABLES WITHIN A DEDICATED SPACE. MAINTAIN THE "COMMUNICATION WORKERS' SAFETY ZONE" AS REQUIRED BY THE NESC.
9. CONDUIT ELBOWS AT GRADE AND THE FIRST 10' OF CONDUIT RISERS ABOVE GRADE SHALL BE RIGID STEEL CONDUIT. TRANSITION TO SCHEDULE 80 PVC ABOVE THAT POINT.
10. PROVIDE A STAINLESS-STEEL CABLE GRIP SUPPORT AND CONDUIT BELL ENDS AT TOP OF CONDUIT FOR EACH 15KV CONDUCTOR CABLE, SECURE TO POLE WITH MACHINE BOLT AND WASHER AS REQUIRED. PROVIDE KELLUM GRIPS, HUBBEL #02406011 OR EQUAL.
11. SURGE ARRESTER SHALL BE WIRED IN PARALLEL WITH PHASE JUMPER, OR TERMINATOR (OR OTHER PROTECTED EQUIPMENT, ONE ARRESTER PER PHASE. PROVIDE EACH ARRESTER WITH WILDLIFE PROTECTIVE TOP CAP. ARRESTERS EQUIPPED WITH ~30" OF ARRESTER LEAD WIRE, TRAIN LEAD WIRE TO BE AS SHORT AND STRAIGHT AS POSSIBLE. INSTALL LEAD WIRE WITHIN AN OVERALL RUBBER INSULATION MATERIAL.
12. COORDINATE ARRANGEMENT OF POLE ASSEMBLIES, EQUIPMENT, AND STRUCTURES AT TOP OF POLE WITH KPU/E. NOT ALL DIMENSIONS ARE SHOWN ON THIS SHEET.
13. TO LIMIT THE LIKELIHOOD OF CORROSION DUE TO DISSIMILAR METALS, CONNECTIONS SHALL ALL BE CONFIGURED SO THAT IN ALL CASES OF ALUMINUM-TO-COPPER CONDUCTOR CONNECTIONS, THE ASSOCIATED CONNECTORS SHALL ALLOW FOR THE ALUMINUM PORTION OF THE CONNECTION TO PHYSICALLY BE ABOVE THE COPPER PORTION OF THE CONNECTIONS.
14. IN GENERAL, FOR CLARITY, SIDE VIEW (ELEVATION) DEPICTIONS INCLUDES ONLY ONE OR TWO OF THREE PHASES. PROVIDE THE OTHER PHASE CONNECTIONS IN A NEAT, SYMMETRICAL AND SIMILAR MANNER, CONSISTENT WITH THE DEPICTED PHASES, NOT ALL PHASE EQUIPMENT, CONNECTIONS, ETC. ARE SHOWN ON THE SIDE (ELEVATION) VIEW DETAIL.
15. FOR EACH INSTALLED SURGE ARRESTER, INSTALL A NO. 6 BARE, SOFT DRAWN, SOLID, CU GROUND WIRE FROM THE GROUND CONNECTION OF THE ARRESTER DIRECTLY TO THE MULTI-GROUNDED NEUTRAL (SYSTEM NEUTRAL) AND THE POLE GROUND CONDUCTOR. BOND THE COPPER CONCENTRIC NEUTRAL OF ALL MEDIUM VOLTAGE CABLE AND THE SHIELD FROM EACH OF THE CABLE TERMINATORS TOGETHER AND BOND ALL THREE TERMINATOR GROUNDS TOGETHER AND CONTINUE THIS CONDUCTOR TO THE SYSTEM NEUTRAL. BOND ALL GROUND CONDUCTORS AT THAT LOCATION. CONTINUE THE POLE GROUND CONDUCTOR DOWN THE POLE TO THE DRIVEN POLE GROUND ROD. VERTICAL GROUND WIRES SHALL BE STAPLED TO POLE AS REQUIRED AND NEATLY TRAINED. THE LOWEST 10' OF THE GROUND WIRE SHALL BE PROTECTED BY WOOD OR PLASTIC MOLDING, EXPRESSLY DESIGNED AND MANUFACTURED FOR THE PURPOSE. NOT ALL GROUND WIRING SEGMENTS ARE DEPICTED ON THE DETAILS ON THIS SHEET BUT ALL SHALL BE CONSISTENT WITH INDUSTRY PRACTICES AND PROVIDED AS DESCRIBED.
16. DURING SUBMITTAL PROCESS, CONTRACTOR SHALL PROVIDE POLE ELEVATION DETAILS SIMILAR TO WHAT IS SHOWN ON THIS SHEET THAT CALL OUT SPECIFIC EQUIPMENT AND ALL SPACING DIMENSIONS PLANNED FOR THE INSTALLED POLE BASED ON SUBMITTED PRODUCTS. SUBMITTED DETAILS SHALL BE TO SCALE. ELEVATIONS SHALL INCLUDE ABOVE GRADE HEIGHT MARKERS SO THAT OVERALL ARRANGEMENT CAN BE REVIEWED AND APPROVED. ORDERING OF PRODUCTS AND ONSITE WORK SHALL NOT COMMENCE UNTIL SUBMITTED POLE ELEVATIONS ARE REVIEWED AND APPROVED BY THE ENGINEER AND THE KPU/E UTILITY MANAGER OR DESIGNEE.
17. ALL DEMOLITION AND NEW WORK AT THIS POLE BY KPU ELECTRIC UTILITY IN COORDINATION WITH CONTRACTOR AND OVERALL PROJECT PHASING. KPU WILL PERFORM THIER WORK PER THESE PLANS AND SPECIFICATIONS BUT ALL MATERIAL AND LABOR REQUIRED IS BY KPU UTILITY, NOT BY CONTRACTOR. COORDINATE WITH KPU AS REQUIRED. COORDINATE WITH KPU TELECOMMUNICATIONS AND GCI TELEVISION UTILITIES AS REQUIRED. SEE DETAIL 2, SHEET U5 FOR GENERAL PHASING REQUIREMENTS AND UTILITY CONTACT INFORMATION.
18. POLE P7 34.5 AND 12.5 GUYS TERMINATE AT A SINGLE COMMON POWER ANCHOR LOCATED 27 FEET FROM POLE BASE.

CN
7/24/2024

PLANS DEVELOPED BY:
MORRIS ENGINEERING GROUP, INC
2375 JORDAN AVE #7
JUNEAU, AK 99801
907-789-3350
AECL 1010

STATE OF ALASKA 49TH
Mark G. Morris
May 31, 2024
No. EE 8613
REGISTERED PROFESSIONAL ENGINEER

STATE OF ALASKA DEPARTMENT OF TRANSPORTATION AND PUBLIC FACILITIES
6860 GLACIER HIGHWAY, JUNEAU, AK 99801
(907) 465-1763

UTILITY RELOCATION FOR KETCHIKAN AREA BRIDGES

POLE P7 ELEVATIONS
(KPU #2430-A4-6)

FILE | y:\102 state of ak\44 utility relocation design for ketchikan bridges\Working Drawings\15 KV RISER POLE AND SWITCH CONFIGURATI | LAYOUT U22 | 5/24/2024 13:51 | DESIGNED MGM | CHECKED MGM | DRAFTED EMILEE

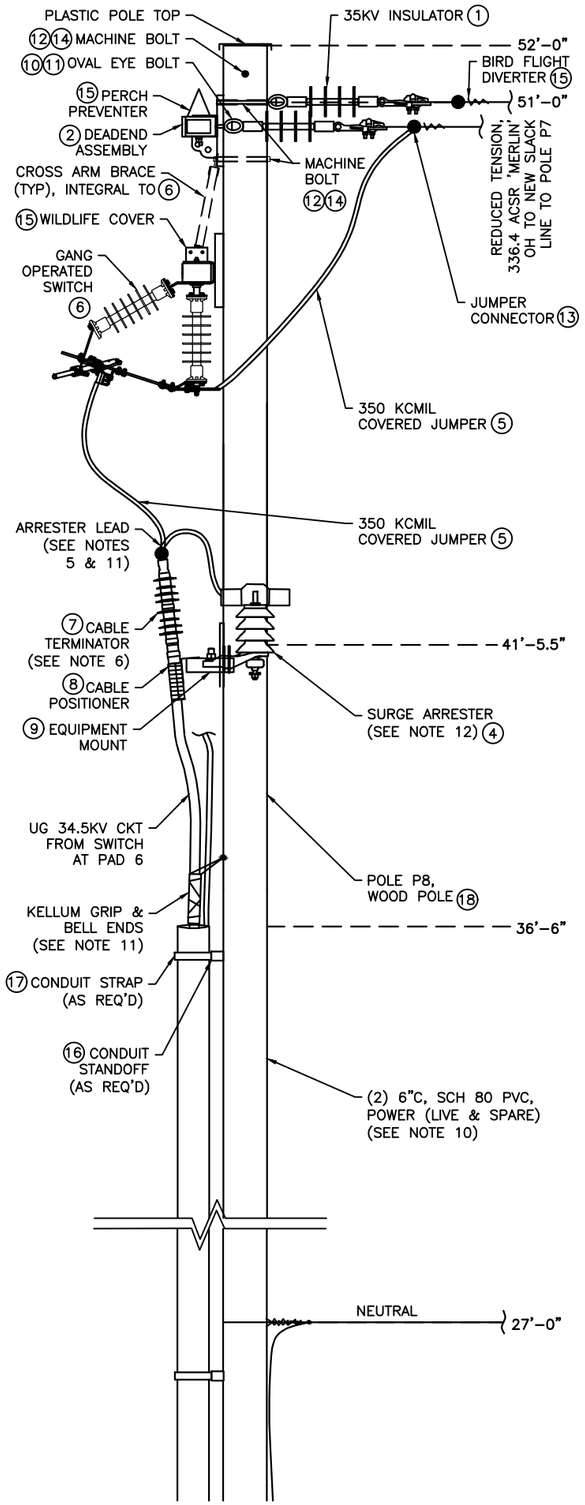

(1) POLE P8 - SIDE ELEVATION
34.5KV
NOT TO SCALE

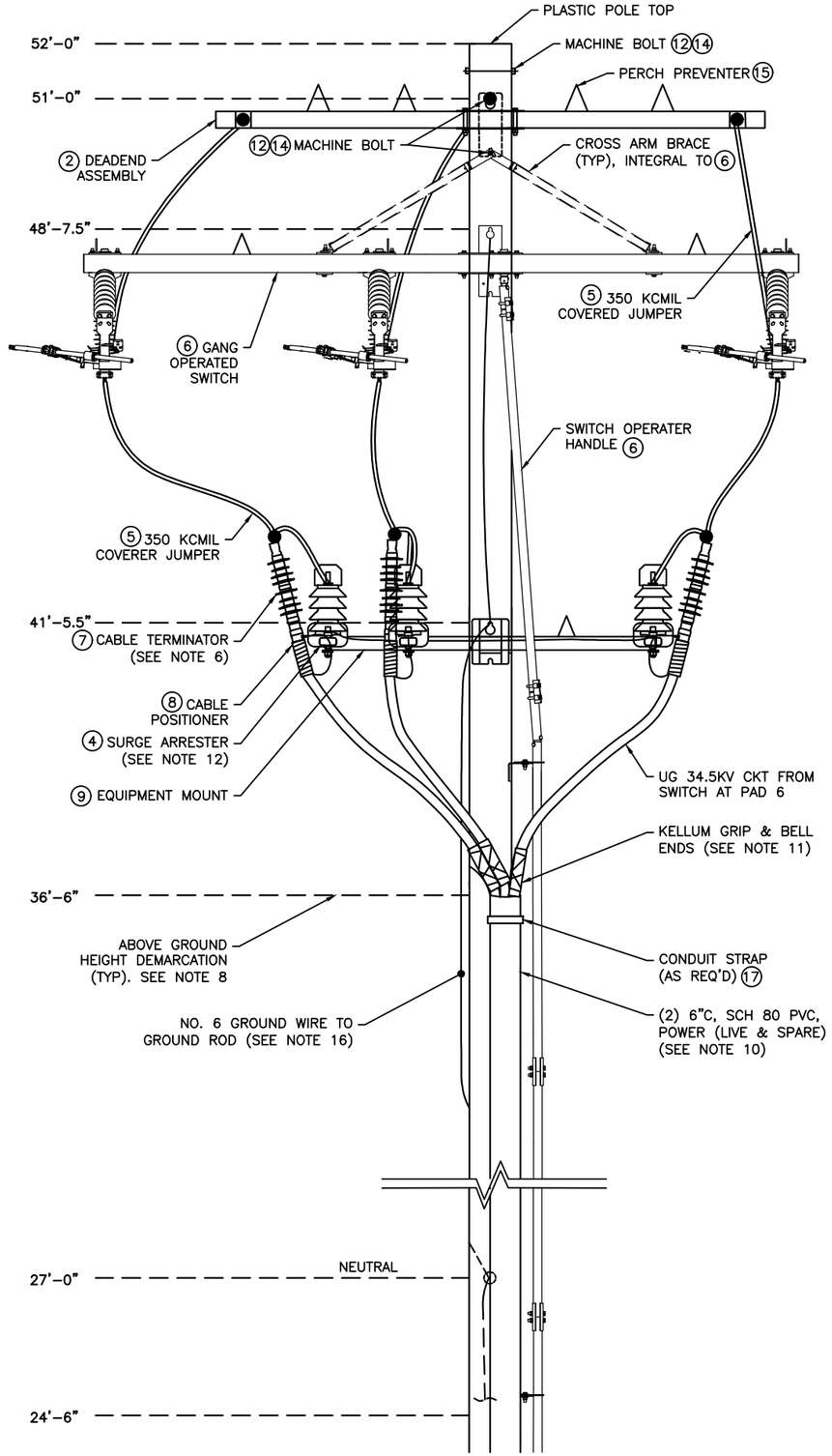

(2) POLE P8 - FRONT ELEVATION
34.5KV
NOT TO SCALE

NO.	DATE	REVISION	STATE	PROJECT DESIGNATION	YEAR	SHEET NO.	TOTAL SHEETS
1	5/2024	AS-BUILT					
AS-BUILT DRAWING PREPARED FROM CONTRACTOR PROVIDED REDLINE WHICH MAY NOT BE CORRECT			ALASKA	0902043/SFHWY00072	2021	U23	45

NOTES:

1. ALL NUMBERS INSIDE CIRCLES REFER TO SHEET U26A FOR MATERIALS TABLE. SEE TABLE FOR MATERIAL DESCRIPTIONS, QUANTITIES, MANUFACTURERS, ETC. COMMODITY MATERIALS ARE SHOWN AS PRODUCTS OF MACLEAN POWER SYSTEMS, BUT MAY BE SUBSTITUTED FOR IDENTICAL MATERIALS OF OTHER MANUFACTURERS.
2. UTILITY POLES, POLE MOUNTED EQUIPMENT, POWER CABLES, COMMUNICATION CABLES, POLE SUPPORTS, GUYS, GROUNDING, AND CONDUIT RISERS SHALL ALL ADHERE TO MINIMUM CLEARANCES AS SPECIFIED IN THE LATEST EDITION OF THE NATIONAL ELECTRICAL SAFETY CODE (NESC, ANSI STANDARD C2) AS ADOPTED BY THE STATE OF ALASKA AND LOCAL AGENCIES, THE AFFECTED UTILITIES AND ALL REQUIREMENTS OF STATE AND LOCAL AGENCIES.
3. CODE REQUIRED CLEARANCES AND DIMENSIONS ARE THE MINIMUM ALLOWED IN THIS PROJECT. PROVIDE ADDITIONAL DISTANCES AS DIMENSIONED SPECIFICALLY ON THIS SHEET.
4. ADHERE TO KETCHIKAN PUBLIC UTILITIES/ELECTRIC (KPU/E) CONSTRUCTION SPECIFICATION STANDARDS. NOTES ON THIS PAGE ARE BORROWED, IN PART, FROM THOSE STANDARDS. BUT NOT ALL KPU/E STANDARDS ARE NOTED HEREIN. THE CONTRACTOR SHALL REVIEW KPU/E STANDARDS PRIOR TO COMMENCING WORK ASSOCIATED WITH THE PROJECT. CONTRACTOR SHALL PROMPTLY BRING TO THE ATTENTION OF THE ENGINEER SALIENT CONFLICTS BETWEEN THESE PLANS AND SPECIFICATIONS AND THE KPU/E CONSTRUCTION SPECIFICATION STANDARDS.
5. ALL SURGE ARRESTER LEADS SHALL BE KEPT AS SHORT AND AS STRAIGHT AS PRACTICABLE. WHERE POSSIBLE, TOTAL ARRESTER LEAD LENGTH (IN AND OUT) SHALL NOT EXCEED 30'.
6. NO POWER CABLE BENDS ARE PERMITTED WITHIN 12" OF THE CABLE TERMINAL BASE ABOVE THE CONDUIT RISER.
7. ALL LIVE PARTS AT UTILITY POLE SHALL HAVE A MINIMUM 20' CLEARANCE ABOVE FINISHED GRADE. MAINTAIN A MINIMUM OF 6" SEPARATION BETWEEN THE NEUTRAL CONDUCTOR AND ALL OTHER CABLES.
8. DURING SUBMITTAL PROCESS, CONTRACTOR SHALL PROVIDE POLE ELEVATION DETAILS SIMILAR TO WHAT IS SHOWN ON THIS SHEET THAT CALL OUT SPECIFIC EQUIPMENT AND ALL SPACING DIMENSIONS PLANNED FOR THE INSTALLED POLE BASED ON SUBMITTED PRODUCTS. SUBMITTED DETAILS SHALL BE TO SCALE. ELEVATIONS SHALL INCLUDE ABOVE GRADE HEIGHT MARKERS SO THAT OVERALL ARRANGEMENT CAN BE REVIEWED AND APPROVED. ORDERING OF PRODUCTS AND ONSITE WORK SHALL NOT COMMENCE UNTIL SUBMITTED POLE ELEVATIONS ARE REVIEWED AND APPROVED BY THE ENGINEER AND THE KPU/E UTILITY MANAGER OR DESIGNEE.
9. MAINTAIN ALL COMMUNICATION CABLES (TELEPHONE AND TELEVISION) BELOW THE POWER CABLES WITHIN A DEDICATED SPACE. MAINTAIN THE "COMMUNICATION WORKERS' SAFETY ZONE" AS REQUIRED BY THE NESC BETWEEN THE HIGHEST ELEVATION OF THE COMMUNICATIONS ZONE AND THE LOWEST ELEVATION OF THE POWER ZONE ON THE POLE.
10. CONDUIT ELBOWS AT GRADE AND THE FIRST 10' OF CONDUIT RISERS ABOVE GRADE SHALL BE RIGID STEEL CONDUIT TRANSITION TO SCHEDULE 80 PVC ABOVE THAT POINT.
11. PROVIDE A STAINLESS-STEEL CABLE GRIP SUPPORT AND CONDUIT BELL ENDS AT TOP OF CONDUIT FOR EACH 35 KV CONDUCTOR CABLE, SECURE TO POLE WITH MACHINE BOLT AND WASHER AS REQUIRED. PROVIDE KELLUM GRIPS, HUBBEL #02406013 OR EQUAL.
12. SURGE ARRESTER SHALL BE WIRED IN PARALLEL WITH PHASE JUMPER, OR TERMINATOR (OR OTHER PROTECTED EQUIPMENT, ONE ARRESTER PER PHASE. PROVIDE EACH ARRESTER WITH WILDLIFE PROTECTIVE TOP CAP. ARRESTERS EQUIPPED WITH ~30" OF ARRESTER LEAD WIRE, TRAIN LEAD WIRE TO BE AS SHORT AND STRAIGHT AS POSSIBLE. INSTALL LEAD WIRE WITHIN AN OVERALL RUBBER INSULATION MATERIAL.
13. COORDINATE ARRANGEMENT OF POLE ASSEMBLIES, EQUIPMENT, AND STRUCTURES AT TOP OF POLE WITH KPU/E. NOT ALL DIMENSIONS ARE SHOWN ON THIS SHEET.
14. TO LIMIT THE LIKELIHOOD OF CORROSION DUE TO DISSIMILAR METALS, CONNECTIONS SHALL ALL BE CONFIGURED SO THAT IN ALL CASES OF ALUMINUM-TO-COPPER CONDUCTOR CONNECTIONS, THE ASSOCIATED CONNECTORS SHALL ALLOW FOR THE ALUMINUM PORTION OF THE CONNECTION TO PHYSICALLY BE ABOVE THE COPPER PORTION OF THE CONNECTIONS.
15. IN GENERAL, FOR CLARITY, SIDE VIEW (ELEVATION) DEPICTIONS INCLUDES ONLY ONE OR TWO OF THREE PHASES. PROVIDE THE OTHER PHASE CONNECTIONS IN A NEAT, SYMMETRICAL AND SIMILAR MANNER, CONSISTENT WITH THE DEPICTED PHASES, NOT ALL PHASE EQUIPMENT, CONNECTIONS, ETC. ARE SHOWN ON THE SIDE (ELEVATION) VIEW DETAIL.
16. FOR EACH INSTALLED SURGE ARRESTER, INSTALL A NO. 6 BARE, SOFT DRAWN, SOLID, CU GROUND WIRE FROM THE GROUND CONNECTION OF THE ARRESTER DIRECTLY TO THE MULTI-GROUNDED NEUTRAL (SYSTEM NEUTRAL) AND THE POLE GROUND CONDUCTOR. BOND THE COPPER CONCENTRIC NEUTRAL OF ALL MEDIUM VOLTAGE CABLE AND THE SHIELD FROM EACH OF THE CABLE TERMINATORS TOGETHER AND BOND ALL THREE TERMINATOR GROUNDS TOGETHER AND CONTINUE THIS CONDUCTOR TO THE SYSTEM NEUTRAL. BOND ALL GROUND CONDUCTORS AT THAT LOCATION. CONTINUE THE POLE GROUND CONDUCTOR DOWN THE POLE TO THE DRIVEN POLE GROUND ROD. VERTICAL GROUND WIRES SHALL BE STAPLED TO POLE AS REQUIRED AND NEATLY TRAINED. THE LOWEST 10' OF THE GROUND WIRE SHALL BE PROTECTED BY WOOD OR PLASTIC MOLDING, EXPRESSLY DESIGNED AND MANUFACTURED FOR THE PURPOSE. NOT ALL GROUND WIRING SEGMENTS ARE DEPICTED ON THE DETAILS ON THIS SHEET BUT ALL SHALL BE CONSISTENT WITH INDUSTRY PRACTICES AND PROVIDED AS DESCRIBED.
17. ALL DEMOLITION AND NEW WORK AT THIS POLE BY KPU ELECTRIC UTILITY IN COORDINATION WITH CONTRACTOR AND OVERALL PROJECT PHASING. KPU WILL PERFORM THIER WORK PER THESE PLANS AND SPECIFICATIONS BUT ALL MATERIAL AND LABOR REQUIRED IS BY KPU UTILITY, NOT BY CONTRACTOR. COORDINATE WITH KPU AS REQUIRED. COORDINATE WITH KPU TELECOMMUNICATIONS AND GCI TELEVISION UTILITIES AS REQUIRED. SEE DETAIL 2, SHEET U5 FOR GENERAL PHASING REQUIREMENTS AND UTILITY CONTACT INFORMATION.

CN
7/24/2024

PLANS DEVELOPED BY:
MORRIS ENGINEERING GROUP, INC
2375 JORDAN AVE #7
JUNEAU, AK 99801
907-789-3350
AECL 1010

STATE OF ALASKA 49TH
Mark G. Morris
May 31, 2024
No. EE 8613
REGISTERED PROFESSIONAL ENGINEER

STATE OF ALASKA, DEPARTMENT OF TRANSPORTATION AND PUBLIC FACILITIES
6860 GLACIER HIGHWAY, JUNEAU, AK 99801
(907) 465-1763

UTILITY RELOCATION FOR KETCHIKAN AREA BRIDGES

POLE P8 ELEVATIONS
(KPU #2430-A4-7)

FILE | >:\102 state of ak\44 utility relocation design for ketchikan bridges\Working Drawings\15 KV RISER POLE AND SWITCH CONFIGURATION.dwg | 5/24/2024 13:51 | LAYOUT | U23 | DESIGNED | MGM | CHECKED | MGM | DRAFTED | EMILEE

NO.	DATE	REVISION	STATE	PROJECT DESIGNATION	YEAR	SHEET NO.	TOTAL SHEETS
1	5/2024	AS-BUILT					
AS-BUILT DRAWING PREPARED FROM CONTRACTOR PROVIDED REDLINE WHICH MAY NOT BE CORRECT			ALASKA	0902043/SFHWY00072	2021	U24	45

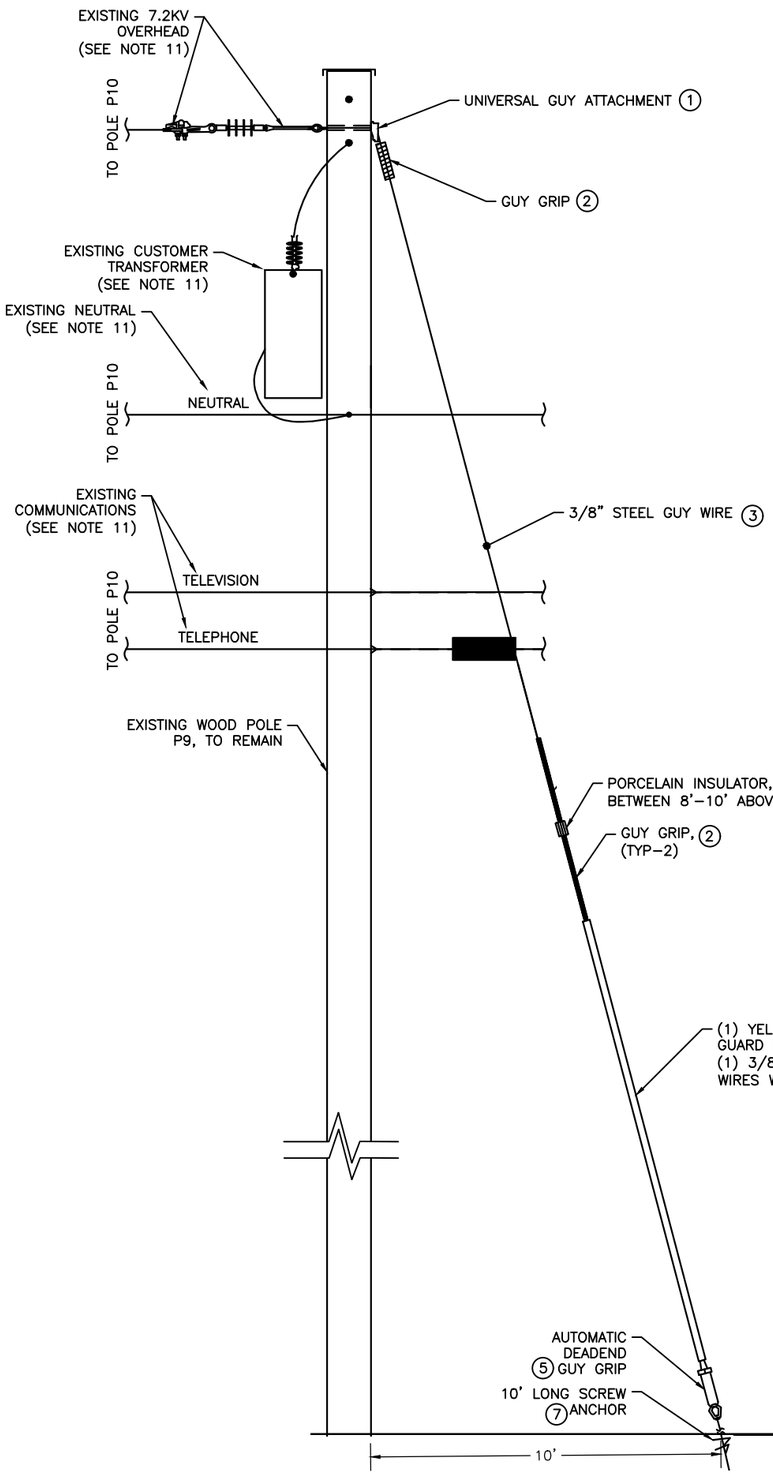

1 POLE P9 - SIDE ELEVATION
12.47KV
NOT TO SCALE

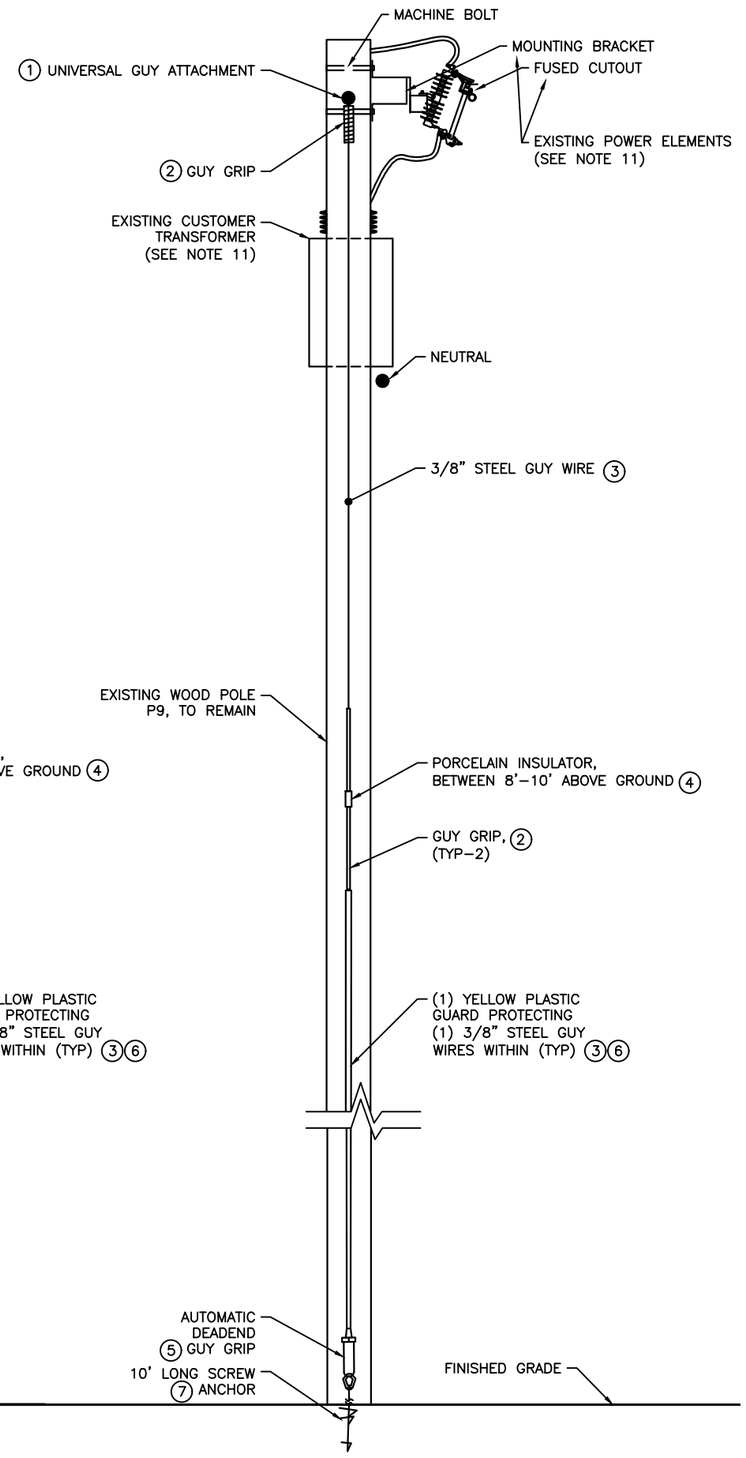

2 POLE P9 - FRONT ELEVATION
12.47KV
NOT TO SCALE

NOTES:

1. ALL NUMBERS INSIDE CIRCLES REFER TO SHEET U26A FOR MATERIALS TABLE. SEE TABLE FOR MATERIAL DESCRIPTIONS, QUANTITIES, MANUFACTURERS, ETC. COMMODITY MATERIALS ARE SHOWN AS PRODUCTS OF MACLEAN POWER SYSTEMS, BUT MAY BE SUBSTITUTED FOR IDENTICAL MATERIALS OF OTHER MANUFACTURERS.
2. UTILITY POLES, POLE MOUNTED EQUIPMENT, POWER CABLES, COMMUNICATION CABLES, POLE SUPPORTS, GUYS, GROUNDING, AND CONDUIT RISERS SHALL ALL ADHERE TO MINIMUM CLEARANCES AS SPECIFIED IN THE LATEST EDITION OF THE NATIONAL ELECTRICAL SAFETY CODE (NESC, ANSI STANDARD C2) AS ADOPTED BY THE STATE OF ALASKA AND LOCAL AGENCIES, THE AFFECTED UTILITIES AND ALL REQUIREMENTS OF STATE AND LOCAL AGENCIES.
3. CODE REQUIRED CLEARANCES AND DIMENSIONS ARE THE MINIMUM ALLOWED IN THIS PROJECT. PROVIDE ADDITIONAL DISTANCES AS DIMENSIONED SPECIFICALLY ON THIS SHEET.
4. ADHERE TO KETCHIKAN PUBLIC UTILITIES/ELECTRIC (KPU/E) CONSTRUCTION SPECIFICATION STANDARDS. NOTES ON THIS PAGE ARE BORROWED, IN PART, FROM THOSE STANDARDS. BUT NOT ALL KPU/E STANDARDS ARE NOTED HEREIN. THE CONTRACTOR SHALL REVIEW KPU/E STANDARDS PRIOR TO COMMENCING WORK ASSOCIATED WITH THE PROJECT. CONTRACTOR SHALL PROMPTLY BRING TO THE ATTENTION OF THE ENGINEER SALIENT CONFLICTS BETWEEN THESE PLANS AND SPECIFICATIONS AND THE KPU/E CONSTRUCTION SPECIFICATION STANDARDS.
5. ALL LIVE PARTS AT UTILITY POLE SHALL HAVE A MINIMUM 20' CLEARANCE ABOVE FINISHED GRADE. MAINTAIN A MINIMUM OF 6" SEPARATION BETWEEN THE NEUTRAL CONDUCTOR AND ALL OTHER CABLES.
6. MAINTAIN ALL COMMUNICATION CABLES (TELEPHONE AND TELEVISION) BELOW THE POWER CABLES WITHIN A DEDICATED SPACE. MAINTAIN THE "COMMUNICATION WORKERS' SAFETY ZONE" AS REQUIRED BY THE NESC.
7. COORDINATE ARRANGEMENT OF POLE ASSEMBLIES, EQUIPMENT, AND STRUCTURES AT TOP OF POLE WITH KPU/E. NOT ALL DIMENSIONS ARE SHOWN ON THIS SHEET.
8. TO LIMIT THE LIKELIHOOD OF CORROSION DUE TO DISSIMILAR METALS, CONNECTIONS SHALL ALL BE CONFIGURED SO THAT IN ALL CASES OF ALUMINUM-TO-COPPER CONDUCTOR CONNECTIONS, THE ASSOCIATED CONNECTORS SHALL ALLOW FOR THE ALUMINUM PORTION OF THE CONNECTION TO PHYSICALLY BE ABOVE THE COPPER PORTION OF THE CONNECTIONS.
9. IN GENERAL, FOR CLARITY, SIDE VIEW (ELEVATION) DEPICTIONS INCLUDES ONLY ONE OR TWO OF THREE PHASES. PROVIDE THE OTHER PHASE CONNECTIONS IN A NEAT, SYMMETRICAL AND SIMILAR MANNER, CONSISTENT WITH THE DEPICTED PHASES, NOT ALL PHASE EQUIPMENT, CONNECTIONS, ETC. ARE SHOWN ON THE SIDE (ELEVATION) VIEW DETAIL.
10. DURING SUBMITTAL PROCESS, CONTRACTOR SHALL PROVIDE POLE ELEVATION DETAILS SIMILAR TO WHAT IS SHOWN ON THIS SHEET THAT CALL OUT SPECIFIC EQUIPMENT AND ALL SPACING DIMENSIONS PLANNED FOR THE INSTALLED POLE BASED ON SUBMITTED PRODUCTS. SUBMITTED DETAILS SHALL BE TO SCALE. ELEVATIONS SHALL INCLUDE ABOVE GRADE HEIGHT MARKERS SO THAT OVERALL ARRANGEMENT CAN BE REVIEWED AND APPROVED. ORDERING OF PRODUCTS AND ONSITE WORK SHALL NOT COMMENCE UNTIL SUBMITTED POLE ELEVATIONS ARE REVIEWED AND APPROVED BY THE ENGINEER AND THE KPU/E UTILITY MANAGER OR DESIGNEE.
11. ALL DEMOLITION AND NEW WORK AT THIS POLE BY KPU ELECTRIC UTILITY IN COORDINATION WITH CONTRACTOR AND OVERALL PROJECT PHASING. KPU WILL PERFORM THIER WORK PER THESE PLANS AND SPECIFICATIONS BUT ALL MATERIAL AND LABOR REQUIRED IS BY KPU UTILITY, NOT BY CONTRACTOR. COORDINATE WITH KPU AS REQUIRED. COORDINATE WITH KPU TELECOMMUNICATIONS AND GCI TELEVISION UTILITIES AS REQUIRED. SEE DETAIL 2, SHEET U5 FOR GENERAL PHASING REQUIREMENTS AND UTILITY CONTACT INFORMATION.

7/24/2024

PLANS DEVELOPED BY:
MORRIS ENGINEERING GROUP, INC
2375 JORDAN AVE #7
JUNEAU, AK 99801
907-789-3350
AECL 1010

STATE OF ALASKA 49TH
Mark G. Morris
May 31, 2024
No. EE 8613
REGISTERED PROFESSIONAL ENGINEER

STATE OF ALASKA DEPARTMENT OF TRANSPORTATION AND PUBLIC FACILITIES
6860 GLACIER HIGHWAY, JUNEAU, AK 99801
(907) 465-1763

UTILITY RELOCATION FOR KETCHIKAN AREA BRIDGES

POLE P9 ELEVATIONS
(KPU #2430-B4-4)

FILE | y:\102 state of ak\44 utility relocation design for ketchikan bridges\Working Drawings\15 KV RISER POLE AND SWITCH CONFIGURATIONS.dwg | LAYOUT U24 | 5/24/2024 13:51 | DESIGNED MGM | CHECKED MGM | DRAFTED EMILEE

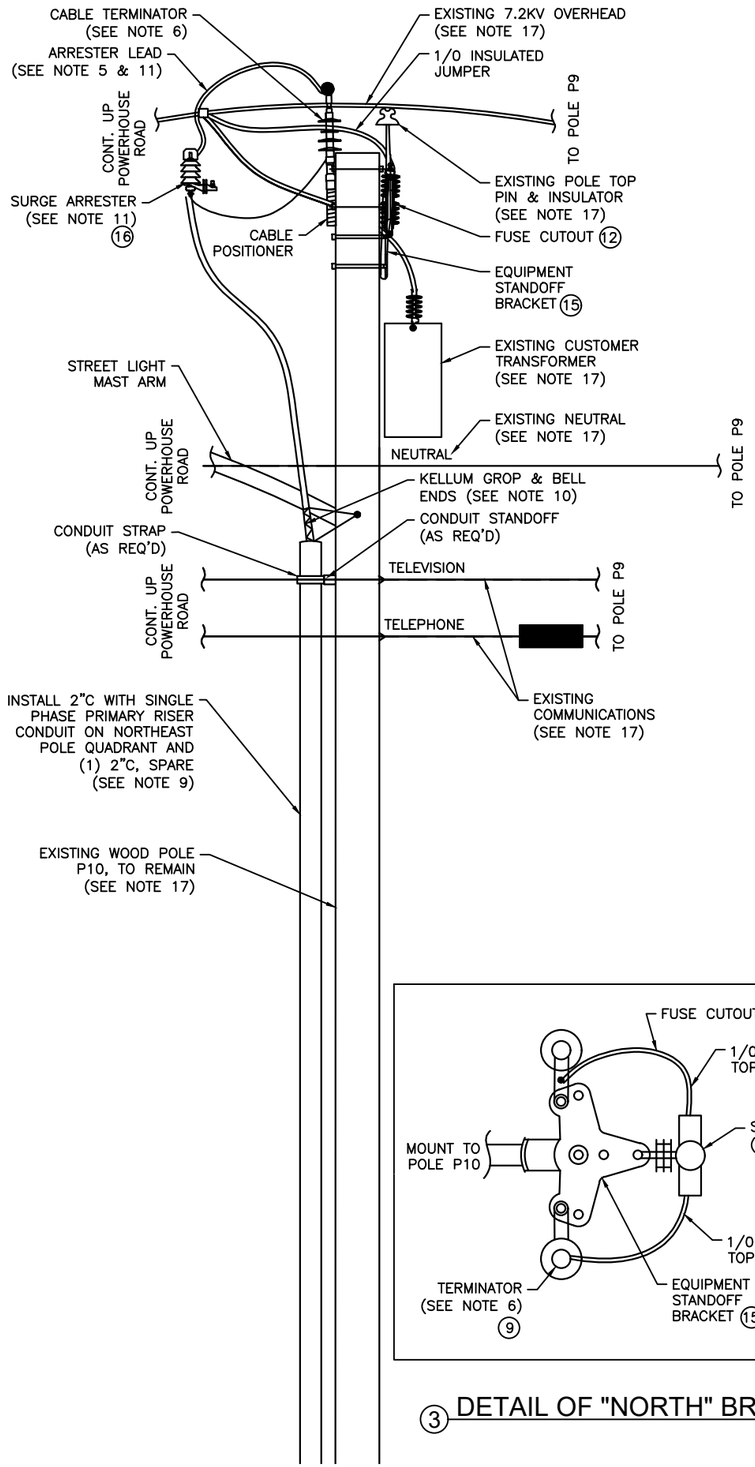

1 POLE P10 - SIDE ELEVATION
12.47KV
NOT TO SCALE

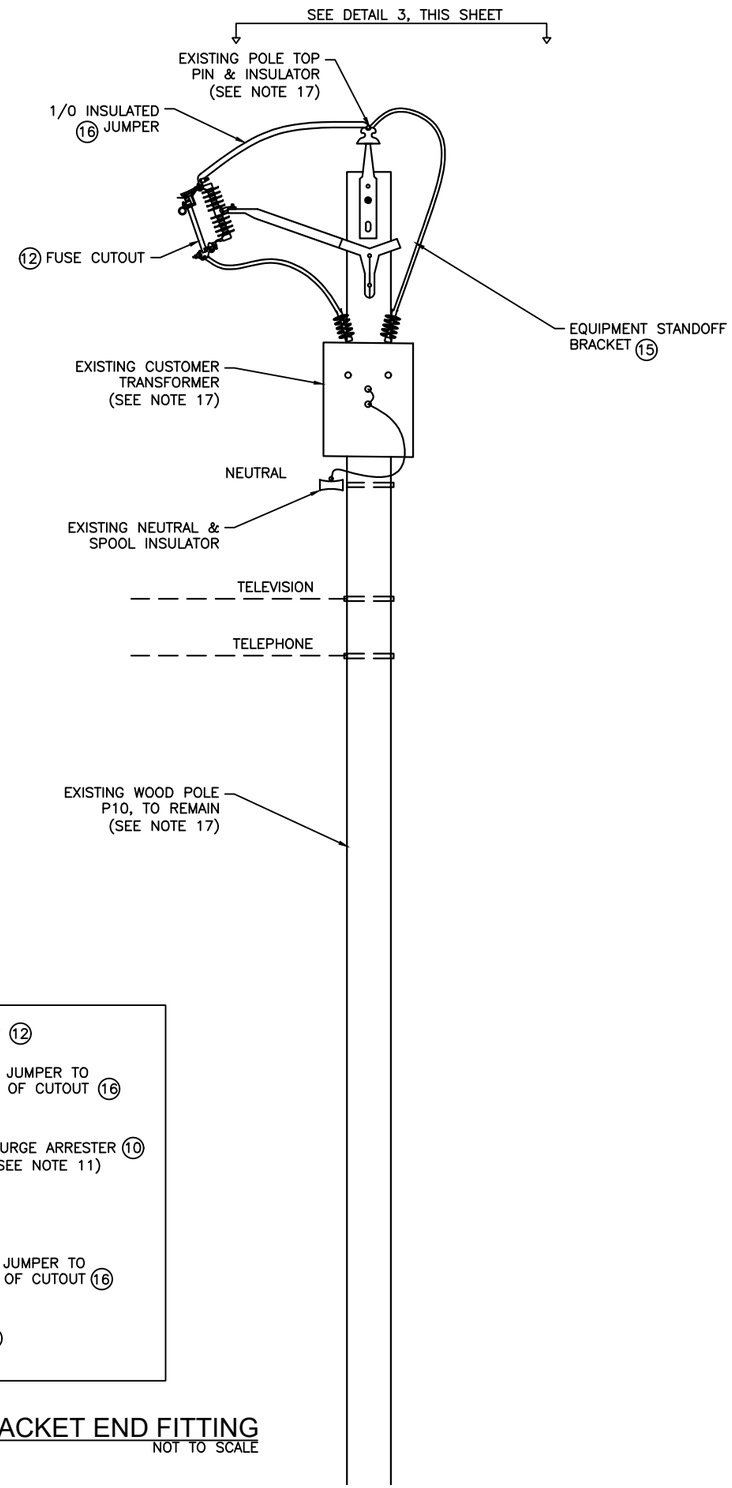

2 POLE P10 - FRONT ELEVATION
12.47KV
NOT TO SCALE

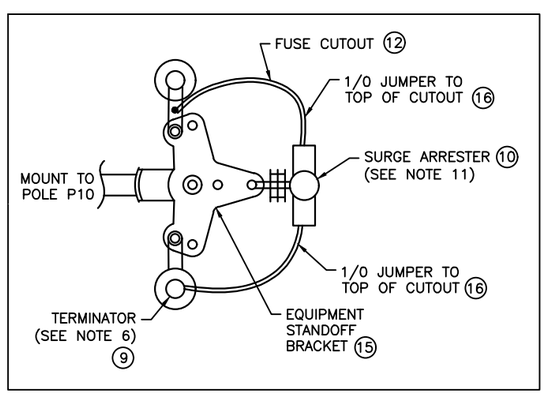

3 DETAIL OF "NORTH" BRACKET END FITTING
NOT TO SCALE

NO.	DATE	REVISION	STATE	PROJECT DESIGNATION	YEAR	SHEET NO.	TOTAL SHEETS
1	5/2024	AS-BUILT					
AS-BUILT DRAWING PREPARED FROM CONTRACTOR PROVIDED REDLINE WHICH MAY NOT BE CORRECT			ALASKA	0902043/SFHWY00072	2021	U25	45

NOTES:

1. ALL NUMBERS INSIDE CIRCLES REFER TO SHEET U26A FOR MATERIALS TABLE. SEE TABLE FOR MATERIAL DESCRIPTIONS, QUANTITIES, MANUFACTURERS, ETC. COMMODITY MATERIALS ARE SHOWN AS PRODUCTS OF MACLEAN POWER SYSTEMS, BUT MAY BE SUBSTITUTED FOR IDENTICAL MATERIALS OF OTHER MANUFACTURERS.
2. UTILITY POLES, POLE MOUNTED EQUIPMENT, POWER CABLES, COMMUNICATION CABLES, POLE SUPPORTS, GUYS, GROUNDING, AND CONDUIT RISERS SHALL ALL ADHERE TO MINIMUM CLEARANCES AS SPECIFIED IN THE LATEST EDITION OF THE NATIONAL ELECTRICAL SAFETY CODE (NESC, ANSI STANDARD C2) AS ADOPTED BY THE STATE OF ALASKA AND LOCAL AGENCIES, THE AFFECTED UTILITIES AND ALL REQUIREMENTS OF STATE AND LOCAL AGENCIES.
3. CODE REQUIRED CLEARANCES AND DIMENSIONS ARE THE MINIMUM ALLOWED IN THIS PROJECT. PROVIDE ADDITIONAL DISTANCES AS DIMENSIONED SPECIFICALLY ON THIS SHEET.
4. ADHERE TO KETCHIKAN PUBLIC UTILITIES/ELECTRIC (KPU/E) CONSTRUCTION SPECIFICATION STANDARDS. NOTES ON THIS PAGE ARE BORROWED, IN PART, FROM THOSE STANDARDS. BUT NOT ALL KPU/E STANDARDS ARE NOTED HEREIN. THE CONTRACTOR SHALL REVIEW KPU/E STANDARDS PRIOR TO COMMENCING WORK ASSOCIATED WITH THE PROJECT. CONTRACTOR SHALL PROMPTLY BRING TO THE ATTENTION OF THE ENGINEER SALIENT CONFLICTS BETWEEN THESE PLANS AND SPECIFICATIONS AND THE KPU/E CONSTRUCTION SPECIFICATION STANDARDS.
5. ALL SURGE ARRESTER LEADS SHALL BE KEPT AS SHORT AND AS STRAIGHT AS PRACTICABLE. WHERE POSSIBLE, TOTAL ARRESTER LEAD LENGTH (IN AND OUT) SHALL NOT EXCEED 30".
6. NO POWER CABLE BENDS ARE PERMITTED WITHIN 12" OF THE CABLE TERMINAL BASE ABOVE THE CONDUIT RISER.
7. ALL LIVE PARTS AT UTILITY POLE SHALL HAVE A MINIMUM 20' CLEARANCE ABOVE FINISHED GRADE. MAINTAIN A MINIMUM OF 6" SEPARATION BETWEEN THE NEUTRAL CONDUCTOR AND ALL OTHER CABLES.
8. MAINTAIN ALL COMMUNICATION CABLES (TELEPHONE AND TELEVISION) BELOW THE POWER CABLES WITHIN A DEDICATED SPACE. MAINTAIN THE "COMMUNICATION WORKERS' SAFETY ZONE" AS REQUIRED BY THE NESC.
9. CONDUIT ELBOWS AT GRADE AND THE FIRST 10' OF CONDUIT RISERS ABOVE GRADE SHALL BE RIGID STEEL CONDUIT. TRANSITION TO SCHEDULE 80 PVC ABOVE THAT POINT.
10. PROVIDE A STAINLESS-STEEL CABLE GRIP SUPPORT AND CONDUIT BELL ENDS AT TOP OF CONDUIT FOR EACH 15KV CONDUCTOR CABLE, SECURE TO POLE WITH MACHINE BOLT AND WASHER AS REQUIRED. PROVIDE KELLUM GRIPS, HUBBEL #02406011 OR EQUAL.
11. SURGE ARRESTER SHALL BE WIRED IN PARALLEL WITH PHASE JUMPER, OR TERMINATOR (OR OTHER PROTECTED EQUIPMENT, ONE ARRESTER PER PHASE. PROVIDE EACH ARRESTER WITH WILDLIFE PROTECTIVE TOP CAP. ARRESTERS EQUIPPED WITH ~30" OF ARRESTER LEAD WIRE, TRAIN LEAD WIRE TO BE AS SHORT AND STRAIGHT AS POSSIBLE. INSTALL LEAD WIRE WITHIN AN OVERALL RUBBER INSULATION MATERIAL.
12. COORDINATE ARRANGEMENT OF POLE ASSEMBLIES, EQUIPMENT, AND STRUCTURES AT TOP OF POLE WITH KPU/E. NOT ALL DIMENSIONS ARE SHOWN ON THIS SHEET.
13. TO LIMIT THE LIKELIHOOD OF CORROSION DUE TO DISSIMILAR METALS, CONNECTIONS SHALL ALL BE CONFIGURED SO THAT IN ALL CASES OF ALUMINUM-TO-COPPER CONDUCTOR CONNECTIONS, THE ASSOCIATED CONNECTORS SHALL ALLOW FOR THE ALUMINUM PORTION OF THE CONNECTION TO PHYSICALLY BE ABOVE THE COPPER PORTION OF THE CONNECTIONS.
14. IN GENERAL, FOR CLARITY, SIDE VIEW (ELEVATION) DEPICTIONS INCLUDES ONLY ONE OR TWO OF THREE PHASES. PROVIDE THE OTHER PHASE CONNECTIONS IN A NEAT, SYMMETRICAL AND SIMILAR MANNER, CONSISTENT WITH THE DEPICTED PHASES, NOT ALL PHASE EQUIPMENT, CONNECTIONS, ETC. ARE SHOWN ON THE SIDE (ELEVATION) VIEW DETAIL.
15. FOR EACH INSTALLED SURGE ARRESTER, INSTALL A NO. 6 BARE, SOFT DRAWN, SOLID, CU GROUND WIRE FROM THE GROUND CONNECTION OF THE ARRESTER DIRECTLY TO THE MULTI-GROUNDED NEUTRAL (SYSTEM NEUTRAL) AND THE POLE GROUND CONDUCTOR. BOND THE COPPER CONCENTRIC NEUTRAL OF ALL MEDIUM VOLTAGE CABLE AND THE SHIELD FROM EACH OF THE CABLE TERMINATORS TOGETHER AND BOND ALL THREE TERMINATOR GROUNDS TOGETHER AND CONTINUE THIS CONDUCTOR TO THE SYSTEM NEUTRAL. BOND ALL GROUND CONDUCTORS AT THAT LOCATION. CONTINUE THE POLE GROUND CONDUCTOR DOWN THE POLE TO THE DRIVEN POLE GROUND ROD. VERTICAL GROUND WIRES SHALL BE STAPLED TO POLE AS REQUIRED AND NEATLY TRAINED. THE LOWEST 10' OF THE GROUND WIRE SHALL BE PROTECTED BY WOOD OR PLASTIC MOLDING, EXPRESSLY DESIGNED AND MANUFACTURED FOR THE PURPOSE. NOT ALL GROUND WIRING SEGMENTS ARE DEPICTED ON THE DETAILS ON THIS SHEET BUT ALL SHALL BE CONSISTENT WITH INDUSTRY PRACTICES AND PROVIDED AS DESCRIBED.
16. DURING SUBMITTAL PROCESS, CONTRACTOR SHALL PROVIDE POLE ELEVATION DETAILS SIMILAR TO WHAT IS SHOWN ON THIS SHEET THAT CALL OUT SPECIFIC EQUIPMENT AND ALL SPACING DIMENSIONS PLANNED FOR THE INSTALLED POLE BASED ON SUBMITTED PRODUCTS. SUBMITTED DETAILS SHALL BE TO SCALE. ELEVATIONS SHALL INCLUDE ABOVE GRADE HEIGHT MARKERS SO THAT OVERALL ARRANGEMENT CAN BE REVIEWED AND APPROVED. ORDERING OF PRODUCTS AND ONSITE WORK SHALL NOT COMMENCE UNTIL SUBMITTED POLE ELEVATIONS ARE REVIEWED AND APPROVED BY THE ENGINEER AND THE KPU/E UTILITY MANAGER OR DESIGNEE.
17. ALL DEMOLITION AND NEW WORK AT THIS POLE BY KPU ELECTRIC UTILITY IN COORDINATION WITH CONTRACTOR AND OVERALL PROJECT PHASING. KPU WILL PERFORM THIER WORK PER THESE PLANS AND SPECIFICATIONS BUT ALL MATERIAL AND LABOR REQUIRED IS BY KPU UTILITY, NOT BY CONTRACTOR. COORDINATE WITH KPU AS REQUIRED. COORDINATE WITH KPU TELECOMMUNICATIONS AND GCI TELEVISION UTILITIES AS REQUIRED. SEE DETAIL 2, SHEET U5 FOR GENERAL PHASING REQUIREMENTS AND UTILITY CONTACT INFORMATION.

7/24/2024

PLANS DEVELOPED BY:
MORRIS ENGINEERING GROUP, INC
2375 JORDAN AVE #7
JUNEAU, AK 99801
907-789-3350
AECL 1010

STATE OF ALASKA 49TH
Mark G. Morris
May 31, 2024
No. EE 8613
REGISTERED PROFESSIONAL ENGINEER

STATE OF ALASKA DEPARTMENT OF TRANSPORTATION AND PUBLIC FACILITIES
6860 GLACIER HIGHWAY, JUNEAU, AK 99801
(907) 465-1763

UTILITY RELOCATION FOR KETCHIKAN AREA BRIDGES

POLE P10 ELEVATIONS
(KPU #2430-B4-5)

FILE y:\102 state of ak\44 utility relocation design for ketchikan bridges\Working Drawings\15 KV RISER POLE AND SWITCH CONFIGURATIONS.DWG | 5/24/2024 13:51 | LAYOUT U25 | DESIGNED MGM | CHECKED MGM | DRAFTED EMILEE

NO.	DATE	REVISION	STATE	PROJECT DESIGNATION	YEAR	SHEET NO.	TOTAL SHEETS
1	5/2024	AS-BUILT					
AS-BUILT DRAWING PREPARED FROM CONTRACTOR PROVIDED REDLINE WHICH MAY NOT BE CORRECT			ALASKA	0902043/SFHWY00072	2021	U26A	45

POLE P5A & P7 - MATERIAL LIST (SEE SHEETS U20 & U22 FOR POLE DETAILS)

REF NO.	QUANTITY	DESCRIPTION	MANF	PART NO.
1	6	35KV DEADEND INSULATOR & BOLTED DEADEND CLAMP	MPS	DS-35M & ASD-45-N
2	2	FIBERGLASS DEADEND ASSEMBLY, 6" X 4" X 120", 10KLBS CAPACITY (MIN)	PUPI	DA3000120E4B9X
3	1	RIDGE PIN WITH MOUNTING HARDWARE	MPS	J203Z
4	3	SURGE ARRESTER - MOV, 15KV	CPS	URS09058X1A1A1A
5	3	COVERED JUMPER CONDUCTOR, 350KCMIL, CU, RHH/RHW-2/USE-2, LENGTH AS REQ'D.	SW	KPU STOCK #19220.00, SEE NOTE 6
6	3	15KV DEADEND INSULATOR & BOLTED DEADEND CLAMP	MPS	DS-15M & ASD-34-N
7	3	15KV CABLE TERMINATOR	3M	7653-S-4
8	3	CABLE POSITIONER	AF	CS-820
9	2	EQUIPMENT MOUNT, SEE NOTE 6	AF	W4CA-72-6, KPU STOCK #10365.00
10	3	FUSED CUTOUT, TYPE C POLYMER PARALLEL GROOVE CLAMP, SS, 200A, 15KV	HUB	CP710143SP_S
11	AS REQ'D	GALVANIZED STEEL GUY WIRE, 3/8", 7W STRAND, COLOR GREEN (PWR & TELE)	PP	GDE-1108
12	1	POLE GUY HOOK ATTACHMENT, SEE NOTE 5 & NOTE 6	MPS	P-135-AXW, KPU STOCK #15442.00
13	2	PUPI ARM ANCHOR SHACKLE, 11/16" RADIUS EYE, 7/8" OPENING, STEEL	MPS	J2742
14	1	SPOOL INSULATOR, PORCELAIN, 5/8" DIAMETER	MPS	J101
15	6	COVERED JUMPER CONDUCTOR, 1/0 AWG, CU, RHH/RHW-2/USE-2, LENGTH AS REQ'D.	SW	KPU STOCK #19420.00, SEE NOTE 6
16	1	UPSET BOLT, 13K LBS MIN. TENSION STRENGTH, 14" SHANK	MPS	J2348-1/2
17	2	PLASTIC GUY MARKER, YELLOW, 8 FOOT LENGTH, SEE NOTE 5	PP	PG-5718
18	4	AUTOMATIC GUY DEADEND, 7/16" BAIL WITH INSTALL BAIL (PWR & TELE)	MPS	DES-1108 GRIP & (2) 5203L VISES
19	2	POWER INSTALL SCREW ANCHOR KIT, SQUARE SHAFT, 37KLBS RATING, 7 FOOT LONG	CU	SS5 SERIES (SEE NOTE 4)
20	2	PORCELAIN INSULATOR (TELE & TV)	MPS	L504
21	AS REQ'D	CONDUIT STANDOFF BRACKET, HDG (USED FOR BOTH 4" & 6" RISERS)	GIW	24" GALV BRACKET 1-5/8" STRUT BACK TO BACK
22	AS REQ'D	CONDUIT RISER STRAP, HDG	AF	STK SERIES, STK-4 & STK-6
23	1	NOT USED	HEN	HPI-15VTP
24	1	35KV VISE TOP POLYMER INSULATOR	HEN	HPI-35VTP
25	2	LONG SHANK CROSSARM PIN - 1" THREADS	MPS	J203Z
26	1	5/8" OVAL EYE NUT	MPS	J1092
27	1	5/8" X 14" OVAL EYE BOLT	MPS	J9414
28	2	(1) 5/8" X 14" MACHINE BOLT, (2) 2-1/4" X 2/14" CURVED WASHERS	MPS	(1) J8814 & (2) J1075
29	6	336.4 ACSR TO 350KCMIL CU CONNECTOR (MATCH KPU REQUIREMENTS)		AS REQ'D, COORD. WITH KPU
30	2	3" X 3" X 1/4" CURVED WASHER	MPS	J113
31	AS REQ'D	WILDLIFE PROTECTION ELEMENTS, AS REQUIRED		SEE WILDLIFE NOTE, SHEET U19
32	1	60 FOOT LONG, CLASS 2 WOOD POLE, DOUGLAS FIR, 8" DIA. AT TOP.		SEE NOTE 3
33	1	GUY STRAIN INSULATOR, 21K LBS RATED, 78" ROD SILICONE COATED	MPS	GYCTE21-78-SC

POLE P5 & P8 - MATERIAL LIST (SEE SHEETS U21 & U23 FOR POLE DETAILS)

REF NO.	QUANTITY	DESCRIPTION	MANF	PART NO.
1	3	35KV DEADEND INSULATOR & BOLTED DEADEND CLAMP	MPS	DS-35M & ASD-45-N
2	1	FIBERGLASS DEADEND ASSEMBLY, 6" X 4" X 120", 10KLBS CAPACITY (MIN)	PUPI	DA3000120E4B9X
3		NOT USED		
4	3	SURGE ARRESTER, MOV, 36KV	CPS	URT36140X1A1A1A
5	6	COVERED JUMPER CONDUCTOR, 350KCMIL, CU, RHH/RHW-2/USE-2, LENGTH AS REQ'D	SW	KPU STOCK #19220.00, SEE NOTE 6
6	1	MANUAL, GROUP-OPERATED SWITCH, 900A, 38KV, 200KV BIL RATED	SIE	984UF-45ARKMRW
7	3	35KV CABLE TERMINATOR	3M	7665-S-8
8	3	CABLE POSITIONER	AF	CS-820
9	1	EQUIPMENT MOUNT, SEE NOTE 6	AF	W4CA-72-6, KPU STOCK #10365.00
10	1	5/8" OVAL EYE NUT	MPS	J1092
11	1	5/8" X 14" OVAL EYE BOLT	MPS	J9414
12	3	(1) 5/8" X 14" MACHINE BOLT, (2) 2-1/4" X 2/14" CURVED WASHERS	MPS	(1) J8814 & (2) J1075
13	3	336.4 ACSR TO 350KCMIL CU CONNECTOR (MATCH KPU REQUIREMENTS)		AS REQ'D, COORD. WITH KPU
14	3	3" X 3" X 1/4" CURVED WASHER	MPS	J113
15	AS REQ'D	WILDLIFE PROTECTION ELEMENTS, AS REQUIRED		SEE WILDLIFE NOTE, SHEET U19
16	AS REQ'D	CONDUIT STANDOFF BRACKET, HDG (USED FOR BOTH 4" & 6" RISERS)	AF	6-CSO-12
17	AS REQ'D	CONDUIT RISER STRAP, HDG	AF	STK SERIES, STK-4 & STK-6
18	1	60 FOOT LONG, CLASS 2 WOOD POLE, DOUGLAS FIR, 8" DIA. AT TOP.		SEE NOTE 3

POLE P9 & P10 - MATERIAL LIST (SEE SHEETS U24 & U25 FOR POLE DETAILS)

REF NO.	QUANTITY	DESCRIPTION	MANF	PART NO.
1	1	UNIVERSAL GUY ATTACHMENT, DUCTILE IRON, HOT DIPPED GALV.	MPS	MGA-345-A
2	3	FORMED DEADEND WIRE GUY GRIP, 3/8" EHS, 35" APPLIED LENGTH	MPS	DE-S1107
3	AS REQ'D	GALV STEEL GUY WIRE, 3/8", 7W STRAND		
4	1	PORCELAIN GUY STRAIN INSULATOR	MPS	L502
5	1	AUTOMATIC GUY DEADEND, 3/16" BAIL, WITH INSTALL BAIL	MPS	(2) DE-S1108 GRIPS & (2) 5202 VISES
6	1	8FT. POLYETHYLENE GUY MARKER, YELLOW	MPS	J5718
7	1	POWER INSTALL SCREW ANCHOR KIT, SQ SHAFT, 21K LBS RATED, 10 FT. LONG	CU	#SS5 SERIES (NOTE 4)
8	1	GUY STRAIN INSULATOR, 21K LBS RATED, 78" ROD SILICONE COATED	MPS	GYCTE21-78-SC
9	1	15KV CABLE TERMINATOR	3M	7642-S-2-T1
10	1	SURGE ARRESTER - ZINC OXIDE, RISER POLE STYLE, 9KV	MPS	ZRP0090000101_#P
11	1	CABLE POSITIONER	AF	CS-820
12	1	FUSED CUTOUT, TYPE C POLYMER PARALLEL GROOVE CLAMP, 100A, 10KA	MPS	SC15HS110_D
13	AS REQ'D	CONDUIT STANDOFF BRACKET, HDG (USED FOR BOTH 4" & 6" RISERS)	AF	6-CSO-12
14	AS REQ'D	CONDUIT RISER STRAP, HDG	AF	STK SERIES, STK-4 & STK-6
15	1	15 DEG. EQUIPMENT STANDOFF BRACKET, 2 PHASE, 3 POSITION, 'T' END FITTING	MPS	G2MAA148AT-SC-F
16	1	COVERED JUMPER CONDUCTOR, 1/0 AWG, CU, RHH/RHW-2/USE-2, LENGTH AS REQ'D.	SW	KPU STOCK #19420.00, SEE NOTE 6

TABLE NOTES:

1. THE MATERIAL LIST IS NOT MEANT TO BE COMPREHENSIVE. THE CONTRACTOR SHALL DO A FULL TAKE OFF FROM THE PLANS AND NOT DEPEND ON THIS LIST ALONE.
2. BRAND ABBREVS: AF = ALUMA-FORM, CPS = COPPER POWER SYSTEMS, CU = CHANCE UTILITY, HEN = HENDRICKS, HUB = HUBBELL, MPS = MACLEAN POWER SYSTEMS, PP = PREFORMED PRODUCTS, SIE = SIEMENS, SW = SOUTHWIRE, GIW = GHEEN IRRIGATION WORKS
3. SEE SHEET U26B FOR NEW WOOD POLE SPECIFICATIONS, TECHNICAL REQUIREMENTS, APPROVED MANUFACTURERS, ETC.
4. EACH SQUARE SHAFT, POWER SCREW ANCHOR ASSEMBLY IS A KIT CONSISTING OF:
   (1) SCREW HEAD LEADER
   (MULTIPLE) EXTENSION BARS
   (1) GUY ADAPTER
   PROVIDE NUMBER OF EXTENSION BARS NEEDED BASED ON INSTALLATION CONDITIONS.
   PROVIDE EACH GUY ADAPTER WITH TWO (2) GUY EYES AND ONE (1) PULLING EYE.
5. COMPLETE ARRANGEMENT OF GUYING FROM POLE TO ANCHOR IN GROUND NOTE SHOWN ON POLE DETAIL SHEETS. SEE SHEET U19 FOR GENERAL DEPICTION OF WHAT IS REQUIRED. COORDINATE EXACT CONFIGURATION NEEDED PRIOR TO WORK.
6. KPU UTILITY STOCKS MANY OF THE COMMON POLE ELEMENTS NEEDED ON THIS PROJECT. COORDINATE AS REQUIRED TO ENSURE COMPLIANCE.

CN
7/24/2024

PLANS DEVELOPED BY:
MORRIS ENGINEERING GROUP, INC
2375 JORDAN AVE #7
JUNEAU, AK 99801
907-789-3350
AECL 1010

STATE OF ALASKA 49TH
Mark G. Morris
May 31, 2024
No. EE 8613
REGISTERED PROFESSIONAL ENGINEER

STATE OF ALASKA DEPARTMENT OF TRANSPORTATION AND PUBLIC FACILITIES
6860 GLACIER HIGHWAY, JUNEAU, AK 99801
(907) 465-1763

UTILITY RELOCATION FOR KETCHIKAN AREA BRIDGES

UTILITY POLE MATERIAL LISTS

FILE | y:\102 state of ak\44 utility relocation design for ketchikan bridges\Working Drawings\MATERIAL LIST.dwg | DATE | 5/2/2024 14:43 | LAYOUT | U26A | DESIGNED | MGM | CHECKED | MGM | DRAFTED | NADJA

NO.	DATE	REVISION	STATE	PROJECT DESIGNATION	YEAR	SHEET NO.	TOTAL SHEETS
1	5/2024	AS-BUILT					
AS-BUILT DRAWING PREPARED FROM CONTRACTOR PROVIDED REDLINE WHICH MAY NOT BE CORRECT			ALASKA	0902043/SFHWY00072	2021	U26B	45

UTILITY POLE & STRUCTURAL REQUIREMENTS:

GENERAL REQUIREMENTS:

1. THE FOLLOWING UTILITY POLE REQUIREMENTS ARE MINIMUMS. KPU ELECTRIC CONSTRUCTION STANDARDS ARE ALSO TO BE REVIEWED AND FOLLOWED AND MAY BE MORE STRINGENT THAN REQUIREMENTS BELOW.

2. THE DESIGN AND OPERATION OF THE PROJECT UTILITY POLE AND ALL POLE MOUNTED STRUCTURES, GUYS, AND ASSOCIATED MATERIALS SHALL MEET THE MINIMUM CLEARANCES AND STRENGTH AS SPECIFIED IN THE LATEST EDITION OF THE NATIONAL ELECTRICAL SAFETY CODE (NESC, ANSI STANDARD C2) AS ADOPTED BY THE STATE OF ALASKA AND LOCAL AGENCIES, THE AFFECTED UTILITIES AND ALL REQUIREMENTS OF STATE AND LOCAL AGENCIES. ALL NESC LOAD CASES THAT APPLY SHALL BE MET.

3. SWITCH STRUCTURES ARE TO BE MOUNTED ON THE UTILITY POLE. THE STRUCTURAL DESIGN SHALL HAVE ADEQUATE STRENGTH AND RIGIDITY TO ENSURE THE RELIABLE OPERATION OF THE LINE AND SWITCHES.

4. THE UTILITY POLE SUPPORTS NON-ELECTRIC FACILITIES (TELECOMMUNICATIONS, FIBER-OPTIC CABLES, ETC.) AND SHALL BE CAPABLE OF RESISTING THE STRUCTURAL LOADS RESULTING FROM THESE FACILITIES WITHIN THE STRENGTH REQUIREMENTS. THE LOCATING OF SUCH NON-ELECTRIC FACILITIES ON UTILITY POLES SHALL NOT JEOPARDIZE THE OPERATION, MAINTENANCE, AND RELIABILITY OF THE ELECTRIC SUPPLY LINES. PRIOR TO INSTALLATION OF NON-POWER FACILITIES, COORDINATE WITH KPU ELECTRIC TO REVIEW AND EVALUATE SUCH FACILITIES.

5. THE CONTRACTOR IS RESPONSIBLE TO PROVIDE A POLE LOADING ANALYSIS (PLA) THAT IS SIGNED AND SEALED BY A STRUCTURAL ENGINEER LICENSED IN THE STATE OF ALASKA. ANALYSIS SHALL CONFIRM THE CHOSEN POLE, POLE STRUCTURES, GUYS, AND MATERIALS MEET THE MINIMUM LOADING AND STRENGTH REQUIREMENTS IN ACCORDANCE WITH PROJECT SPECIFICATIONS, KPU ELECTRIC STANDARDS, AND ALL APPLICABLE AND CITED CODES AND REFERENCES.

6. APPROVED POLE & POLE TREATMENT COMPANIES:

   a) STELLA-JONES CORP. (MCFARLAND CASCADE)
   b) BELL POLE & LUMBER
   c)THE OESER COMPANY

UTILITY POLE GENERAL REQUIREMENTS:

1. POLE SHALL MEET ALL PERTINENT REQUIREMENTS OF ANSI 05.1-LATEST REVISION, AND AMERICAN WOOD PROTECTION ASSOCIATION (AWPA) STANDARDS T1-10 AND U1-10, LATEST REVISIONS.

2. POLE SHALL BE TREATED IN ACCORDANCE WITH THE AWPA AND ANSI REQUIREMENTS. POLE SHALL BE TREATED WITH PENTACHLOROPHENOL PER AWPA P8-9A TO A MINIMUM NET RETENTION OF 0.60 POUNDS PER CUBIC FOOT PER AWPA U1 FOR POLE COMMODITY SPECIFICATION D, CATEGORY 4B.

3. CONTRACTOR MUST OBTAIN A CERTIFICATE OF TREATMENT OR A LETTER FROM A SUPPLIER INDICATING THAT THE POLE WAS TREATED IN ACCORDANCE WITH AWPA AND ANSI REQUIREMENTS.

4. POLE SPECIFICATIONS:

   a) POLE SPECIES: DOUGLAS FIR
   b) LENGTH: 60' TYPICAL, SEE POLE DETAILS FOR VARIATIONS
   c) MINIMUM DIMENSIONS (DIAMETER): 29 INCHES AT TOP, 47.5 INCHES SIX FEET FROM BUTT
   d) POLE CLASS: CLASS 2

CLEARANCE REQUIREMENTS:

1. WIRE-TO-GROUND: THE MINIMUM ALLOWED CLEARANCE BETWEEN THE LOWEST ELECTRIC SUPPLY LINE CONDUCTOR(S) SHALL MEET THE REQUIRED NESC MINIMUM PLUS ADDITIONAL DISTANCES AS NOTED IN THE PLANS. THE NESC MINIMUM SHALL BE CALCULATED WITH THE CONDUCTOR AT MAXIMUM OPERATING VOLTAGE AND THE MAXIMUM OPERATING TEMPERATURE OR MAXIMUM CONDUCTOR LOADING. THE MINIMUM CLEARANCES SHOULD TAKE INTO ACCOUNT THE LIMITATION OF A 5-MA SHOCK CURRENT AS GIVEN IN NESC RULE 232D3C. ALL AREAS BENEATH THE LINE SHALL BE ASSUMED TO ALLOW VEHICLE ACCESS BENEATH THE LINE.

2. WIRE-TO-SIGNS, STRUCTURES, ETC., UNDER THE WIRES: THE MINIMUM ALLOWED CLEARANCE FROM LOWEST/NEAREST PHASE CONDUCTOR SHALL MEET THE REQUIRED NESC MINIMUM PLUS ADDITIONAL DISTANCES NOTED IN THE PLANS. THE NESC MINIMUM SHALL BE CALCULATED WITH THE CONDUCTOR AT MAXIMUM OPERATING VOLTAGE, THE MAXIMUM OPERATING TEMPERATURE, AND MAXIMUM NESC WIND DISPLACEMENT. ONLY ADOT&PF APPROVED INFRASTRUCTURE IS PERMITTED IN THE RIGHT-OF-WAY.

3. WIRE-TO-SUPPORT-STRUCTURES: THE MINIMUM CLEARANCES BETWEEN THE PHASE CONDUCTORS AND THE SUPPORTING POLE SHALL NOT BE LESS THAN DIMENSIONS SHOWN ON THE PLANS. THESE CLEARANCES ARE TO APPLY FOR ALL ANTICIPATED CONDUCTOR POSITIONS FROM AN EVERYDAY CONDITION TO A DISPLACED CONDITION DUE TO A 9 PSF WIND AT 60° F (BASED ON UTILITY PRACTICE) THESE CLEARANCES DO NOT HAVE ANY ADDERS PROVIDED FOR BIRDS OR OTHER ANIMALS, BUT ARE BASED UPON SWITCHING SURGE VALUES.

4. WIRE-TO-WIRE: CLEARANCE BETWEEN THE BOTTOM ELECTRIC SUPPLY CONDUCTOR AND ANY LOWER WIRE SHALL MEET THE REQUIRED CLEARANCE OF NESC RULE 233 AND 235 AS A MINIMUM. WHEN THE LOWER WIRE IS A NON-ELECTRIC SUPPLY WIRE, THEN THE CLEARANCE SHOULD BE AT LEAST 8 FEET FOR VOLTAGES LESS THAN OR EQUAL TO 230 KV. THESE CLEARANCES SHOULD BE CALCULATED WITH THE ELECTRIC SUPPLY CONDUCTOR AT MAXIMUM OPERATING TEMPERATURES OR HEAVY ICE, WHICHEVER PROVIDES GREATER CONDUCTOR SAG, AND THE NON-ELECTRIC SUPPLY CONDUCTOR AT 0°F. LINE CROSSING CLEARANCES SHALL MATCH REQUIREMENTS OF WIRE-TO-WIRE CLEARANCES NOTED ABOVE.

5. LINE SAG: FOR PURPOSES OF CLEARANCES TO OBJECTS UNDER THE LINE, THE CONDUCTOR WILL BE ASSUMED TO OPERATE AT OR ABOVE MINIMUM AND MAXIMUM TEMPERATURES FOR TYPE 336.4 ACSR (CODE WORD: MERLIN) OVERHEAD ELECTRIC SUPPLY CABLE. CONTACT KPU ELECTRIC FOR SPECIFIC TEMPERATURE RANGES. WHILE THE LINE CONDUCTOR MAY BE DESIGNED TO OPERATE AT A LOWER TEMPERATURE, THE LINE SHALL BE SAGGED ASSUMING THE CONDUCTOR TEMPERATURE IS AT OR ABOVE THE MINIMUM SHOWN. FOR DESIGNED OPERATING TEMPERATURES ABOVE THE MINIMUM SHOWN, AND STILL BELOW THE MAXIMUM, THE LINE SAG AND CLEARANCES WILL BE CALCULATED FOR THAT OPERATING TEMPERATURE AFTER ROUNDING UP TO THE NEAREST 10°C. IN NO CASE WILL A CONDUCTOR OPERATING TEMPERATURE BE ALLOWED ABOVE THE MAXIMUM SHOWN IN THE TABLE.

6. WILDLIFE PROTECTION ELEMENTS SHALL BE PROVIDED AS REQUIRED TO FULLY PROTECT RAPTORS AND OTHER WILDLIFE FROM HARM AT OR AROUND THE ELECTRIC FACILITIES. SEE POLE DETAILS ON SHEET U19 FOR MORE ON REQUIRED WILDLIFE PROTECTION.

DESIGN LOADING CONDITIONS:

1. DEAD-END STRUCTURES: WHERE THE PHASE CONDUCTORS AND STATIC WIRES ARE ATTACHED TO THE STRUCTURE BY USE OF DEAD-END INSULATORS AND HARDWARE AND WHERE THE ABILITY OF THE STRUCTURE TO RESIST A CONDITION WHERE ALL WIRES ARE BROKEN ON ONE SIDE UNDER FULL LOADING IS REQUIRED. BOTH INTACT AND BROKEN CONDUCTOR CONDITIONS SHALL BE EVALUATED IN THE DESIGN OF THESE STRUCTURES.

2. POLE CONSTRUCTION GRADE: THE PROVISIONS OF NESC GRADE B CONSTRUCTION SHALL APPLY.

3. LOADING DISTRICT: THE PROVISIONS OF NESC HEAVY LOADING DISTRICT SHALL APPLY.

4. ICE AND WIND LOADING: THE PROVISIONS OF NESC FOR EXTREME ICE WITH CONCURRENT WIND SHALL APPLY. THE ICE AND WIND LOAD FACTORS SHALL BE 1.00. THE PROVISION IN NESC PERMITTING EXCLUSION OF STRUCTURES LESS THAN 60 FT. IN HEIGHT FROM EXTREME WIND CRITERIA SHALL NOT APPLY.

5. LONGITUDINAL LOADING: ALL CONDUCTORS AND STATIC WIRES ARE TO BE INTACT ON ONE SIDE OF THE STRUCTURE ONLY. LOAD FACTOR OF 1.00.

6. FOUNDATION LOADING: THE ULTIMATE STRENGTH OF OVERTURNING MOMENT AND UPLIFT FOUNDATIONS SHALL BE NOT LESS THAN 1.25 TIMES THE DESIGN FACTORED LOAD REACTIONS OF THE STRUCTURE. THE ULTIMATE STRENGTH OF FOUNDATIONS SUBJECTED PRIMARILY TO COMPRESSION LOAD SHALL BE NOT LESS THAN 1.10 TIMES THE DESIGN FACTORED LOAD REACTIONS OF THE STRUCTURE. FOUNDATIONS DESIGNED BY ROTATION OR PIER DEFLECTION PERFORMANCE CRITERIA SHALL USE UNFACTORED STRUCTURE REACTIONS FOR DETERMINATION OF THE FOUNDATION PERFORMANCE BUT SHALL USE FACTORED REACTIONS FOR THE 1.25 TIMES ULTIMATE STRENGTH CHECK.

7. GUYING OR BRACING: POLE SHALL BE PROPERLY GUYED AGAINST THE PULL OF OVERHEAD CONDUCTORS. SEE SHEETS U19-U25 FOR TYPICAL GUY ASSEMBLIES. THE POLE LOADING ANALYSIS SHALL ACCOUNT FOR GUYING OF DEAD-END STRUCTURE.

INSULATION & GROUNDING REQUIREMENTS:

1. INSULATION REQUIREMENTS: THE INSULATION SYSTEM FOR THE ELECTRIC SUPPLY LINE SHALL HAVE VALUES IN EXCESS OF THE LEAKAGE DISTANCE, 60 HZ WET, AND CRITICAL IMPULSE FLASHOVER OF THE SYSTEM. CERAMIC OR GLASS INSULATORS SHALL BE USED FOR STRAIN APPLICATIONS.

2. GROUNDING: THIS SYSTEM IS TO BE MEASURED ON THE INDIVIDUAL STRUCTURE PRIOR TO THE INSTALLATION OF ANY OVERHEAD CONDUCTORS OR WIRES. THE MAXIMUM ACCEPTABLE RESISTANCE MEASUREMENT OF THIS GROUNDING SYSTEM IS 25 OHMS. THE GROUNDING SYSTEM MAY INCLUDE RADIAL COUNTERPOISE WIRES, EQUIPOTENTIAL RINGS, OR BOTH. KPU ELECTRIC SHALL APPROVE ALL GROUNDING METHODS, AND CONNECTIONS TO THE GROUNDING SYSTEM THAT ARE BELOW GRADE. THESE RESISTANCE REQUIREMENTS ARE TO ASSURE ACCEPTABLE LIGHTNING PERFORMANCE ON THE LINE AS WELL AS PROVIDE FOR THE SAFE GROUNDING OF THE LINE BY CONSTRUCTION AND MAINTENANCE FORCES.

   INDIVIDUAL STRUCTURE GROUNDING MEASUREMENTS WILL BE ALLOWED TO EXCEED THE 25 OR 15 OHMS REQUIRED ONLY IF THE AVERAGE VALUE FOR THE 5 ADJACENT STRUCTURES ALONG THE LINE IS LESS THAN THE 25 OR 15 OHM RESTRICTION. DURING RECONDUCTORING PROJECTS, EVERY OPPORTUNITY SHOULD BE TAKEN TO VERIFY STRUCTURE GROUNDING RESISTANCE. TO DO THIS THE STATIC WIRES AND OTHER CONDUCTORS MAY NEED TO BE INSULATED FROM THE STRUCTURE.

3. LIGHTNING PROTECTION: PROVIDE LIGHTNING PROTECTION IN THE FORM OF SURGE ARRESTERS, ONE PER EACH PHASE, AT THE POLE. ARRESTERS SHALL BE WIRED IN PARALLEL AND CONNECTED BETWEEN THE OVERHEAD ELECTRIC SUPPLY LINES AND THE CABLE RISER TERMINATORS. SEE SHEET U26A FOR SPECIFIC QUANTITIES AND DESCRIPTIONS OF ARRESTERS. VERIFY PLACEMENT WITH CITY OF KETCHIKAN. IN NO CASE WILL CHEMICAL GROUND TREATMENTS BE ALLOWED TO IMPROVE STRUCTURE GROUNDING.

CN
7/24/2024

PLANS DEVELOPED BY:
MORRIS ENGINEERING GROUP, INC
2375 JORDAN AVE #7
JUNEAU, AK 99801
907-789-3350
AECL 1010

STATE OF ALASKA 49TH
Mark G. Morris
May 31, 2024
No. EE 8613
REGISTERED PROFESSIONAL ENGINEER

STATE OF ALASKA DEPARTMENT OF TRANSPORTATION AND PUBLIC FACILITIES
6860 GLACIER HIGHWAY, JUNEAU, AK 99801
(907) 465-1763

UTILITY RELOCATION FOR KETCHIKAN AREA BRIDGES

UTILITY WOOD POLE SPECIFICATION

FILE | y:\102 state of ak\44 utility relocation design for ketchikan bridges\Working Drawings\U26B WOOD POLE SPECIFICATIONS.dwg | DATE | 4/26/2024 14:43 | LAYOUT | U26B | DESIGNED | MGM | CHECKED | MGM | DRAFTED | JODI

NO.	DATE	REVISION	STATE	PROJECT DESIGNATION	YEAR	SHEET NO.	TOTAL SHEETS
1	5/2024	AS-BUILT					
AS-BUILT DRAWING PREPARED FROM CONTRACTOR PROVIDED REDLINE WHICH MAY NOT BE CORRECT			ALASKA	0902043/SFHWY00072	2021	U27	45

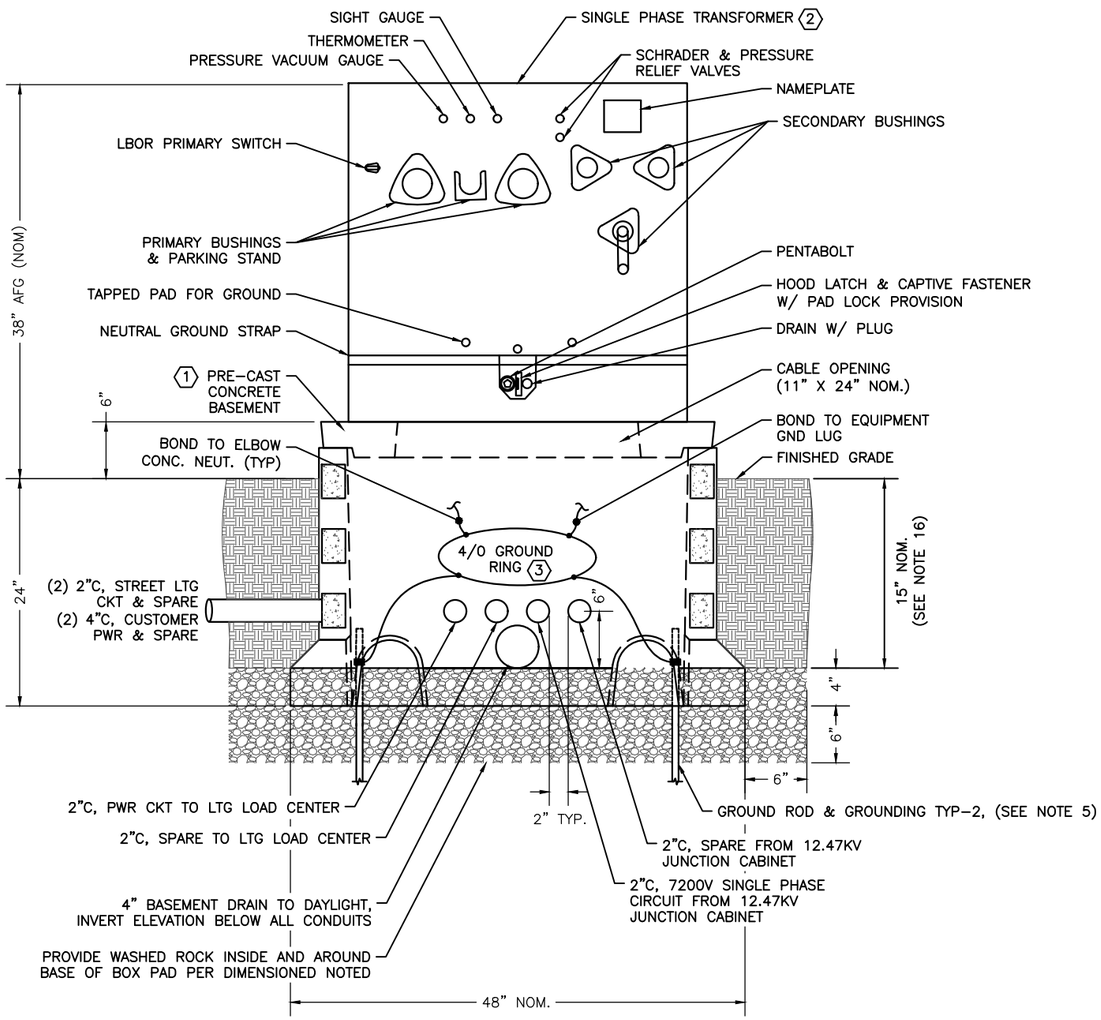

1 TRANSFORMER PAD DETAIL
AT PAD 4

SHEET NOTES:

1. PROVIDE EXCAVATION AS REQUIRED TO ENSURE GRAVEL TO DEPTH SHOWN ON DETAIL CAN BE PROVIDED AT BOTTOM OF TRANSFORMER BASEMENT. DIG A HOLE APPROXIMATELY 6" DEEPER AND 12" WIDER THEN THE BOTTOM FLANGE DIMENSIONS OF THE BASEMENT. FOLLOW MANUFACTURER INSTRUCTIONS.
2. DUE TO LIMITED CONDUIT DEPTH, THE TRANSFORMER BASEMENT CONDUIT PENETRATIONS SHALL BE ALONG THE SIDEWALLS AS INDICATED HERE. REVIEW PENETRATION LOCATIONS AND ENSURE PENETRATIONS DO NOT REDUCE STRUCTURAL INTEGRITY OF BASEMENT. LOCATIONS SHOWN MAY NEED TO BE ADJUSTED, COORDINATE WITH BASEMENT MANUFACTURER.
3. ALL CONDUITS EXPOSED ABOVE BASEMENT GRAVEL SHALL BE VERTICAL. PROVIDE ALL SPARE CONDUITS WITH PULL STRINGS AND EDPM RUBBER STOPPERS (NOT SIMPLY PLASTIC CAPS). COORDINATE CONDUIT STUB-UP LOCATIONS WITH EXACT TRANSFORMER FOOTPRINT.
4. COORDINATE WITH KPU UTILITY, ENGINEER, AND INSPECTOR TO ALLOW FOR ANY REQUIRED INSPECTIONS BEFORE, DURING AND AFTER CONSTRUCTION OF PAD.
5. AT EACH POWER EQUIPMENT CONCRETE BASEMENT PROVIDE GROUNDING PER UTILITY REQUIREMENTS. THIS INCLUDES (2) 5/8" X 8' COPPER CLAD STEEL GROUND RODS WITH BRONZE GROUND ROD CLAMPS USING NON-GALVANIC LOCKING BOLTS. ROUTE A 4/0 AWG BRAIDED, BARE COPPER SOLID GROUND LOOP WITHIN THE BASEMENT CAVITY AND BOND TO BASEMENT AND ABOVEGROUND EQUIPMENT (TRANSFORMER, JUNCTION CABINET, OR SWITCH) GROUNDING PROVISIONS. POND GROUND RODS AND GROUND RING TO ELBOW CONCENTRIC NEUTRALS AND LIGHTING ARRESTER ELBOWS. SEE NOTE 7.
6. TRANSFORMER IS ANTICIPATED TO BE APPROXIMATELY 38" X 38" FOOTPRINT. PROVIDE PAD AS REQUIRED SUCH THAT PAD EXTENDS AT LEAST 4" PAST TRANSFORMER ON ALL SIDES. PAD TO PROJECT ABOVE FINISHED GRADE AS SHOWN ON DETAILS.
7. LEAVE SUFFICIENT SLACK IN NEUTRAL EXTENSION AND GROUND BUS WIRING TO FACILITATE REMOVAL AND PARKING OF PRIMARY CABLES AND LOADBREAKS. DO NOT TIGHTLY BUNDLE BLEED WIRES AND COMMON PARALLEL GROUNDING WIRING SO THAT CABLES CAN BE FREELY REPOSITIONED. NEATLY TRAIN AND ROUTE GROUND BUS WIRING IN FRONT OF PRIMARY CABLES.
8. PROVIDE SUFFICIENT SLACK IN PRIMARY AND SECONDARY FEEDERS TO ALLOW FREE MOVEMENT OF CABLES ON AND OFF BUSHING WELLS AND PARKING STANDS WITHOUT STRAINING THE CABLES AND TO ALLOW FOR FLEXIBLE ROUTING OF CABLES FROM BASEMENT BELOW.
9. WHERE TANK HAS MULTIPLE GROUND LUGS EXTEND GROUND BUS THROUGH ALL LUGS IN SERIES VIA A NO. 6 BARE COPPER WIRE.
10. AT PRIMARY ELBOW JACKETED CONCENTRIC NEUTRALS ATTACH A NEUTRAL STRAND TO GROUNDING EYE ON ELBOW (EYE NOT SHOWN HERE). SEE DETAIL 2, SHEET U33. CONNECT REMAINING NEUTRAL BUNDLE TO SYSTEM GROUND BUS. SEE NOTE 14.
11. TRANSFORMER SHALL BE PLACED SYMMETRICAL ON TOP OF BASEMENT.
12. MAINTAIN 10' OF CLEARANCE IN FRONT OF TRANSFORMER FRONT ACCESS.
13. TOP OF TRANSFORMER BASEMENT TO BE SMOOTH AND LEVEL PRIOR TO TRANSFORMER INSTALLATION. MOUNT TRANSFORMER TO BASEMENT WITH STAINLESS STEEL MOUNTING HARDWARE PER MANUFACTURER REQUIREMENTS.
14. LOADBREAK ELBOW HOUSINGS SHALL BE CAREFULLY ASSEMBLED AND PROPERLY FITTED INTO TRANSFORMER BUSHING WELLS. SEE SHEET U33 FOR LOADBREAK DETAIL. ELBOWS AND CONDUCTORS INSIDE TRANSFORMER NOT SHOWN ON THIS SHEET.
15. LABEL ALL MV CABLES ON THE PROJECT PER DETAIL 2, SHEET U18.
16. CONDUIT DEPTHS WILL SHALLOW AS THEY APPROACH AND ENTER THE SIDES OF THE EQUIPMENT BASEMENTS. MAINTAIN TRENCH DEPTHS PER SHEET U38 WHEREVER POSSIBLE.
17. STUB ALL CONDUITS INTO BASEMENTS A DISTANCE OF 2" IN FROM THE INSIDE FACE OF THE BASEMENT WALL.

KEYNOTES:

1 PRE-CAST CONCRETE BASEMENT WITH OPEN BOTTOM. 48" X 48" X 30" NOMINAL, WITH 11" X 25" NOMINAL CABLE OPENING. OLD CASTLE #4242-PTV OR EQUAL. OVERALL DEPTH AS SHOWN WITH PROJECTION ABOVE GRADE. COORDINATE FINAL SELECTION PROCESS WITH TRANSFORMER SELECTION TO ENSURE FOOTPRINT AND CABLE OPENING ALIGNMENTS. CAREFULLY CUT CONDUIT PENETRATIONS INTO BASEMENT WALLS OR USE KNOCKOUTS WHERE AVAILABLE.

2 PROVIDE 7.2KV:120/240V, SINGLE PHASE, 75 KVA, PAD MOUNTED TRANSFORMER. UNIT SHALL INCLUDE DUAL HIGH VOLTAGE BUSHING WELLS AND INSERTS, STICK-OPERATED, LOOP-FEED, LBOR SWITCH. ADDITIONAL FEATURES AS NOTED ON THE DETAIL. PROVIDE ARRESTER ELBOW IN SECOND BUSHING WELL AND INSERT. MUNSELL GREEN COLOR AND PCB-FREE (0 PPM) MINERAL OIL PER ASTM D3487. PROVIDE ABB MTR MAXI-PAK SERIES OR EQUAL.

TRANSFORMER SHALL ADHERE TO THE FOLLOWING MINIMUM REQUIREMENTS:
- a) STANDARDS: IEEE C57.12.00, C57.12.25, C57.12.28, C57.12.34, AND C57.12.90. ADDITIONALLY MEET ALL APPLICABLE NESC, ANSI, AND U.S. DOE 2016 EFFICIENCY REQUIREMENTS.
- b) BASIC LIGHTING IMPULSE INSULATION (BIL) RATING: 95KV
- c) AVERAGE WINDING RISE (AWR): 65 DEG C ABOVE AMBIENT @ TRANSFORMER RATING
- d) CONSTRUCTION: ALL STEEL HARDWARE AND WELDS EXPOSED TO EXTERIOR SHALL BE 304 STAINLESS STEEL. TRANSFORMER SHALL BE SUITABLE FOR INSTALLATION IN A MARINE ENVIRONMENT.
- e) TERMINALS: PRIMARY SIDE LOOP-FEED CONFIGURATION WITH 200A BUSHING WELLS AND INSERTS. SECONDARY SIDE SPADE TERMINALS, TIN PLATED COPPER, AND SHALL HAVE NUMBER OF HOLES NEEDED FOR SECONDARY CONNECTIONS PLUS AN ADDITIONAL (2) SPARE HOLES.
- f) TAPS: PRIMARY WINDING DE-ENERGIZED OPERATION TAP CHANGER, WITH (2) TAPS @ 2.5% ABOVE AND (2) TAPS @ 2.5% BELOW RATED VOLTAGE.
- g) CERTIFICATION: PROVIDE EVIDENCE THAT DESIGN PASSED THE SHORT CIRCUIT CRITERIA PER ANSI C57.12.00 AND C57.12.90.

3 BOND ALL METAL EQUIPMENT ENCLOSURES, CABLE ELBOW CONCENTRIC NEUTRALS, GROUND RODS, ETC. TOGETHER VIA A GROUND RING WITHIN THE BASEMENT OF THE EQUIPMENT.

CN
7/24/2024

PLANS DEVELOPED BY:
MORRIS ENGINEERING GROUP, INC
2375 JORDAN AVE #7
JUNEAU, AK 99801
907-789-3350
AECL 1010

STATE OF ALASKA 49TH Mark G. Morris May 31, 2024 No. EE 8613 REGISTERED PROFESSIONAL ENGINEER

STATE OF ALASKA DEPARTMENT OF TRANSPORTATION AND PUBLIC FACILITIES
6860 GLACIER HIGHWAY, JUNEAU, AK 99801
(907) 465-1763

UTILITY RELOCATION FOR KETCHIKAN AREA BRIDGES

TRANSFORMER DETAILS

FILE | y:\02 state of ak\44 utility relocation design for ketchikan bridges\Working Drawings\TRANSFORMER DETAIL.dwg | DATE | 4/26/2024 14:43 | LAYOUT | U27 | DESIGNED | MGM | CHECKED | MGM | DRAFTED | NADJA

NO.	DATE	REVISION	STATE	PROJECT DESIGNATION	YEAR	SHEET NO.	TOTAL SHEETS
1	5/2024	AS-BUILT					
AS-BUILT DRAWING PREPARED FROM CONTRACTOR PROVIDED REDLINE WHICH MAY NOT BE CORRECT			ALASKA	0902043/SFHWY00072	2021	U28	45

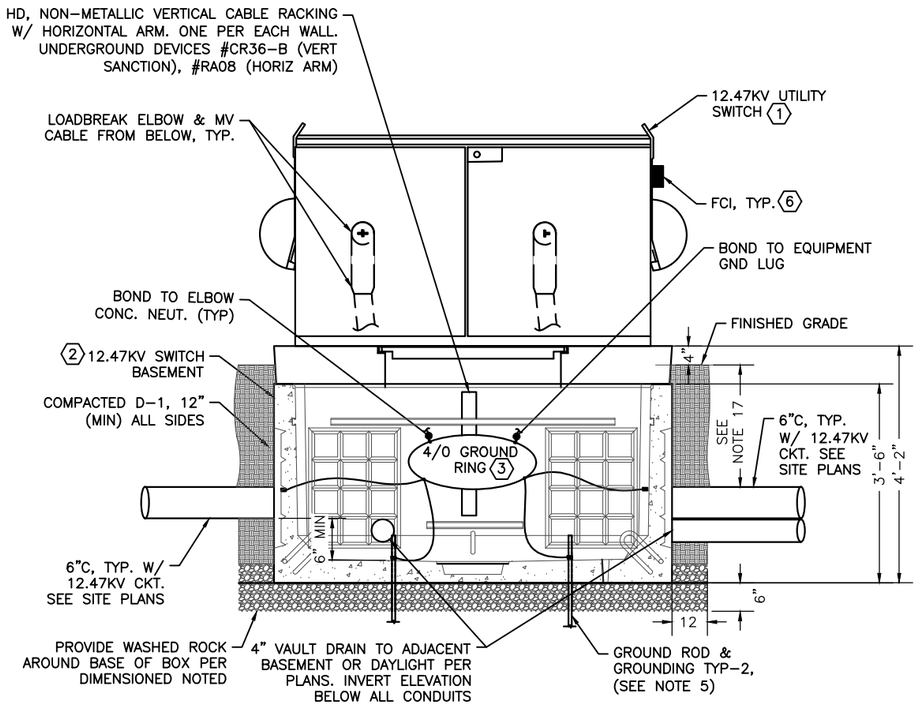

(1) 12.47KV SWITCH - DETAIL
AT PAD 6

CONDUITS VARY AT EACH PAD. SEE SITE PLANS, SINGLE-LINES, FOR SPECIFIC CONDUIT SIZES AND COUNTS.

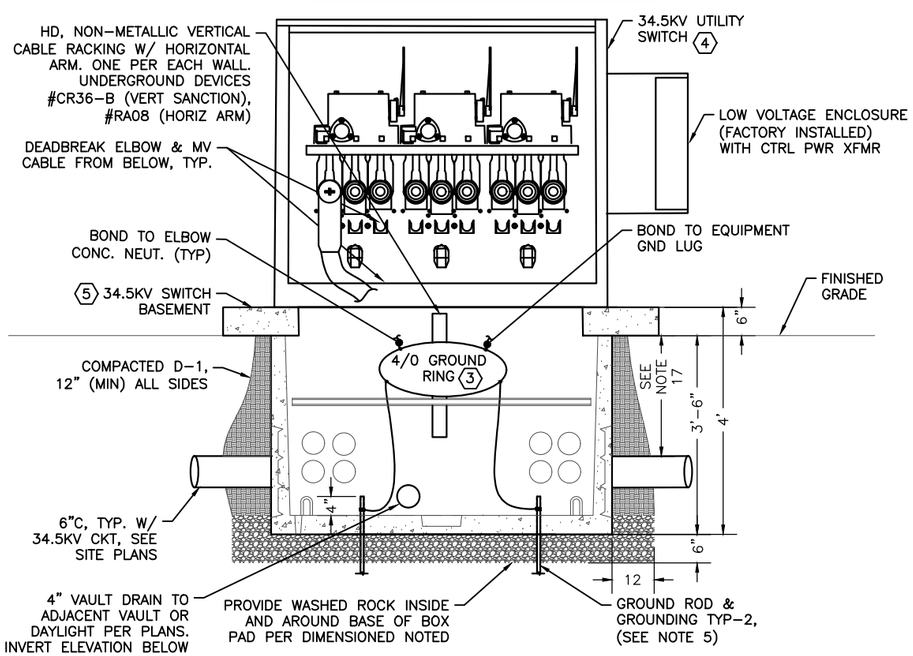

(2) 34.5KV SWITCH DETAIL
AT PAD 6

SHEET NOTES:

1. PROVIDE EXCAVATION AS REQUIRED TO ENSURE GRAVEL TO DEPTH SHOWN ON DETAIL. DIG A HOLE APPROXIMATELY 6" DEEPER AND 12" WIDER THEN THE BOTTOM DIMENSIONS OF THE BASEMENT. FOLLOW MANUFACTURER INSTRUCTIONS.
2. DUE TO LIMITED CONDUIT DEPTH, THE BASEMENT CONDUIT PENETRATIONS SHALL BE ALONG THE SIDEWALLS AS INDICATED HERE. REVIEW PENETRATION LOCATIONS AND ENSURE PENETRATIONS DO NOT REDUCE STRUCTURAL INTEGRITY OF BASEMENT. LOCATIONS SHOWN MAY NEED TO BE ADJUSTED. COORDINATE WITH MANUFACTURER.
3. PROVIDE ALL SPARE CONDUITS WITH PULL STRINGS AND EDPM RUBBER STOPPERS (NOT SIMPLY PLASTIC CAPS). COORDINATE CONDUIT STUB-UP LOCATIONS WITH EXACT SWITCH FOOTPRINT.
4. COORDINATE WITH KPU UTILITY, ENGINEER, AND INSPECTOR TO ALLOW FOR ANY REQUIRED INSPECTIONS BEFORE, DURING AND AFTER CONSTRUCTION OF PAD.
5. AT EACH POWER EQUIPMENT BASEMENT PROVIDE GROUNDING PER UTILITY REQUIREMENTS. THIS INCLUDES (2) 5/8" X 8' COPPER CLAD STEEL GROUND RODS WITH BRONZE GROUND ROD CLAMPS USING NON-GALVANIC LOCKING BOLTS. ROUTE A 4/0 AWG BRAIDED, BARE COPPER SOLID GROUND LOOP WITHIN THE BASEMENT CAVITY AND BOND TO BASEMENT AND ABOVEGROUND EQUIPMENT (TRANSFORMER, JUNCTION CABINET, OR SWITCH) GROUNDING PROVISIONS. BOND GROUND RODS AND GROUND RING TO ELBOW CONCENTRIC NEUTRALS AND LIGHTING ARRESTER ELBOWS. SEE NOTE 7.
6. PROVIDE BASEMENT AS REQUIRED SUCH THAT IT EXTENDS AT LEAST 2" PAST SWITCH ON ALL SIDES. BASEMENT TO PROJECT ABOVE FINISHED GRADE AS SHOWN ON DETAILS.
7. LEAVE SUFFICIENT SLACK IN NEUTRAL EXTENSION AND GROUND BUS WIRING TO FACILITATE REMOVAL AND PARKING OF CABLES. DO NOT TIGHTLY BUNDLE BLEED WIRES AND COMMON PARALLEL GROUNDING WIRING SO THAT CABLES CAN BE FREELY REPOSITIONED. NEATLY TRAIN AND ROUTE GROUND BUS WIRING IN FRONT OF PRIMARY CABLES.
8. PROVIDE SUFFICIENT SLACK IN FEEDERS TO ALLOW FREE MOVEMENT OF CABLES ON AND OFF BUSHING WELLS AND PARKING STANDS WITHOUT STRAINING THE CABLES AND TO ALLOW FOR FLEXIBLE ROUTING OF CABLES FROM BASEMENT BELOW.
9. WHERE SWITCH HAS MULTIPLE GROUND LUGS EXTEND GROUND BUS THROUGH ALL LUGS IN SERIES VIA A NO. 6 BARE COPPER WIRE.
10. AT ELBOW JACKETED CONCENTRIC NEUTRALS ATTACH A NEUTRAL STRAND TO GROUNDING EYE ON ELBOW (EYE NOT SHOWN HERE). SEE DETAILS ON SHEETS U32 AND U33. CONNECT REMAINING NEUTRAL BUNDLE TO SYSTEM GROUND BUS. SEE NOTE 14.
11. SWITCH SHALL BE PLACED SYMMETRICAL ON TOP OF BASEMENT.
12. MAINTAIN 10' OF CLEARANCE IN FRONT OF SWITCH DOORS.
13. TOP OF SWITCH BASEMENT TO BE SMOOTH AND LEVEL PRIOR TO SWITCH INSTALLATION. MOUNT SWITCH TO BASEMENT WITH STAINLESS STEEL MOUNTING HARDWARE PER MANUFACTURER REQUIREMENTS.
14. DEADBREAK AND LOADBREAK ELBOW ASSEMBLIES SHALL BE CAREFULLY ASSEMBLED AND PROPERLY FITTED INTO BUSHING WELLS. SEE SHEETS U32 AND U33 FOR DETAILS.
15. THERE ARE MULTIPLE CONDUITS AND DRAINS AT EACH SWITCH BASEMENT. NOT ALL ARE DEPICTED ON THIS SHEET. SEE SITE PLANS FOR ADDITIONAL INFORMATION.
16. LABEL ALL MV CABLES ON THE PROJECT PER DETAIL 2, SHEET U18.
17. CONDUIT DEPTHS WILL SHALLOW AS THEY APPROACH AND ENTER THE SIDES OF THE EQUIPMENT BASEMENTS. MAINTAIN TRENCH DEPTHS PER SHEET U38 WHEREVER POSSIBLE.
18. PROVIDE BENTONITE WATERSTOP AT ALL BASEMENT SEAMS AND INTERFACES BETWEEN SURFACES.
19. COAT ALL SURFACES ON BASEMENT WITH 1/8" COAT OF SONNEBORN HYDROCIDE MASTIC DAMPPROOFING, COMPLETELY INSIDE AND OUTSIDE OF BASEMENT. INCLUDE COATING ON ALL EXTERIOR PULLING IRON HARDWARE.
20. DETAILS ON THIS SHEET DEPICT GENERAL LAYOUT AND FEATURES OF CAST-IN-PLACE CONCRETE BASEMENTS WITH PRECAST CONCRETE LID, RISER, AND MANHOLES, CONTRACTOR MAY CONSIDER ALTERNATIVE DESIGNS IF SUBMITTED AND APPROVED BY AKDOT&PF PROJECT MANAGER.
21. STUB ALL CONDUITS INTO THE BASEMENT A DISTANCE OF 2" FROM THE INSIDE FACE OF THE BASEMENT.

KEYNOTES:

(1) 4-WAY PAD MOUNTED UTILITY SWITCH MOUNTED TO BASEMENT. SEE SHEET U17, DETAIL 1, KEYNOTE 2 FOR DETAILS.

(2) PRE-CAST CONCRETE BASEMENT WITH SOLID BOTTOM. 84" X 84" X 50" NOMINAL, WITH DUAL 12" X 69" NOMINAL CABLE OPENING IN LID. OLD CASTLE #774-LA OR EQUAL. OVERALL DEPTH AS SHOWN WITH PROJECTION ABOVE GRADE. COORDINATE FINAL SELECTION PROCESS WITH SWITCH SELECTION TO ENSURE FOOTPRINT AND CABLE OPENING ALIGNMENTS. CAREFULLY CUT CONDUIT PENETRATIONS INTO BASEMENT WALLS OR USE KNOCKOUTS WHERE AVAILABLE.

(3) BOND ALL METAL EQUIPMENT ENCLOSURES, CABLE ELBOW CONCENTRIC NEUTRALS, GROUND RODS, ETC. TOGETHER VIA A GROUND RING WITHIN BASEMENT OF THE EQUIPMENT.

(4) 3-WAY PAD MOUNTED UTILITY SWITCH MOUNTED TO BASEMENT. SEE SHEET U17, DETAIL 2, KEYNOTE 2 FOR DETAILS.

(5) PRE-CAST CONCRETE BASEMENT WITH SOLID BOTTOM. 72" X 48" X 48" NOMINAL, WITH A 92" X 78", 6" THICK LID WITH 12" X 60" CABLE OPENING IN LID. OLD CASTLE #664-LAA VAULT WITH CUSTOM LID OR EQUAL. OVERALL DEPTH AS SHOWN WITH PROJECTION ABOVE GRADE. COORDINATE FINAL SELECTION PROCESS WITH SWITCH SELECTION TO ENSURE FOOTPRINT AND CABLE OPENING ALIGNMENTS. CAREFULLY CUT CONDUIT PENETRATIONS INTO BASEMENT WALLS OR USE KNOCKOUTS WHERE AVAILABLE.

(6) PROVIDE FAULT CIRCUIT INDICATORS (FCI) WITHIN ENCLOSURE, ONE PER MV CABLE ELBOW INSTALLED. SEE SHEET U17 FOR MORE FCI DETAILS AND SHEET U33 FOR ELBOW INSTALLATION DETAIL. ROUTE FCI REMOTE LED INDICATOR CABLE TO REMOTE DISPLAY ASSEMBLY INSTALLED THROUGH THE SIDE OF THE ENCLOSURE. SEE DETAIL 3, THIS SHEET FOR ASSEMBLY INFO. GANG DISPLAY ON SIDE OF ENCLOSURE AND LABEL WITH PERMANENT, PHENOLIC LABELS. COORDINATE EXACT REMOTE INDICATOR PLACEMENT ON ENCLOSURE AND INDICATOR LABELS WITH UTILITY. ADEQUATE ROOM SHALL BE PROVIDED BETWEEN PLACARDS SO LEGIBLE LABELS CAN BE APPLIED, COORDINATE WITH UTILITY.

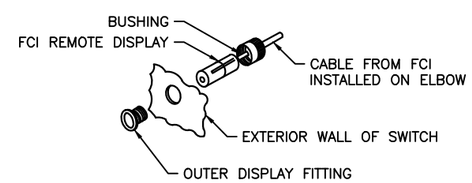

(3) FCI REMOTE INDICATOR
(TYPICAL – ONE PER MV ELBOW INSIDE ENCLOSURE)

CN 7/24/2024

PLANS DEVELOPED BY:
MORRIS ENGINEERING GROUP, INC
2375 JORDAN AVE #7
JUNEAU, AK 99801
907-789-3350
AECL 1010

STATE OF ALASKA 49TH
Mark G. Morris
May 31, 2024
No. EE 8613
REGISTERED PROFESSIONAL ENGINEER

STATE OF ALASKA DEPARTMENT OF TRANSPORTATION AND PUBLIC FACILITIES
6860 GLACIER HIGHWAY, JUNEAU, AK 99801
(907) 465-1763

UTILITY RELOCATION FOR KETCHIKAN AREA BRIDGES

POWER UTILITY SWITCH DETAILS

FILE y:\102 state of ak\44 utility relocation design for ketchikan bridges\Working Drawings\POWER UTILITY VAULT DETAILS.dwg | DATE 5/24/2024 13:53 | LAYOUT U28 | DESIGNED MGM | CHECKED MGM | DRAFTED EMILEE

NO.	DATE	REVISION	STATE	PROJECT DESIGNATION	YEAR	SHEET NO.	TOTAL SHEETS
1	5/2024	AS-BUILT					
AS-BUILT DRAWING PREPARED FROM CONTRACTOR PROVIDED REDLINE WHICH MAY NOT BE CORRECT			ALASKA	0902043/SFHWY00072	2021	U29	45

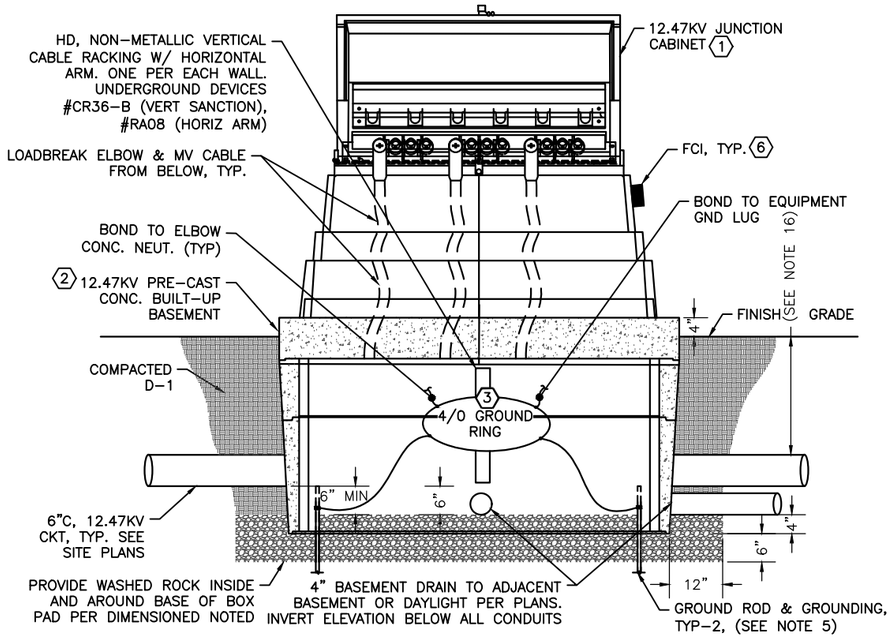

1 12.47KV CABINET DETAIL

AT PAD 4

CONDUITS VARY AT EACH PAD. SEE SITE PLANS, SINGLE-LINES, FOR SPECIFIC CONDUIT SIZES AND COUNTS.

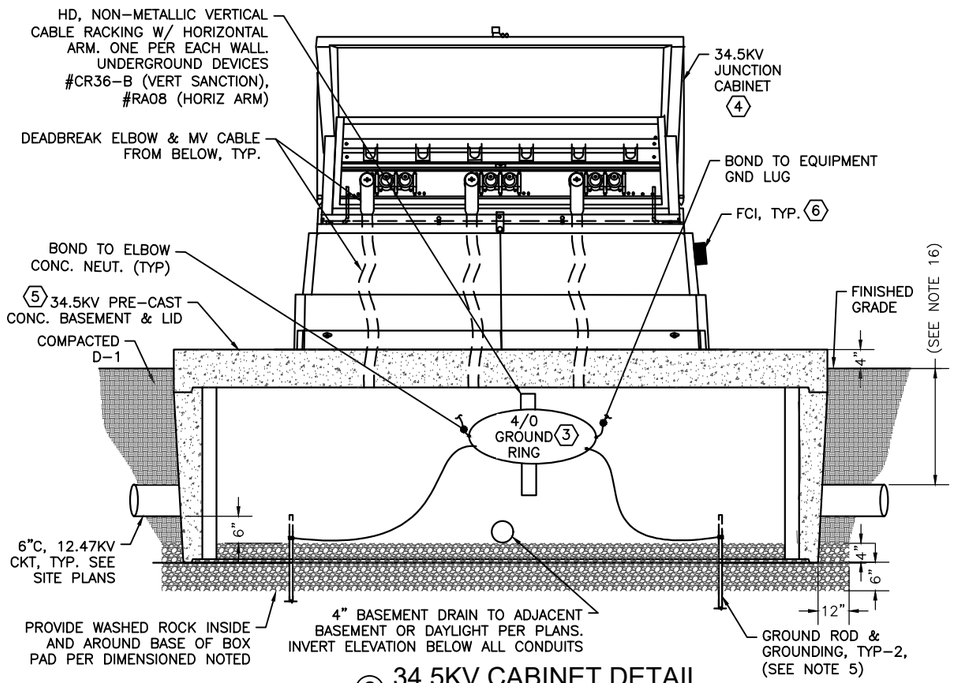

2 34.5KV CABINET DETAIL

AT PAD 4

SHEET NOTES:

1. PROVIDE EXCAVATION AS REQUIRED TO ENSURE GRAVEL TO DEPTH SHOWN ON DETAIL. DIG A HOLE APPROXIMATELY 6" DEEPER AND 12" WIDER THEN THE BOTTOM DIMENSIONS OF THE BASEMENT. FOLLOW MANUFACTURER INSTRUCTIONS.
2. DUE TO LIMITED CONDUIT DEPTH, THE BASEMENT CONDUIT PENETRATIONS SHALL BE ALONG THE SIDEWALLS AS INDICATED HERE. REVIEW PENETRATION LOCATIONS AND ENSURE PENETRATIONS DO NOT REDUCE STRUCTURAL INTEGRITY OF BASEMENT. LOCATIONS SHOWN MAY NEED TO BE ADJUSTED. COORDINATE WITH MANUFACTURER.
3. PROVIDE ALL SPARE CONDUITS WITH PULL STRINGS AND EDPM RUBBER STOPPERS (NOT SIMPLY PLASTIC CAPS). COORDINATE CONDUIT STUB-UP LOCATIONS WITH EXACT SWITCH FOOTPRINT.
4. COORDINATE WITH KPU UTILITY, ENGINEER, AND INSPECTOR TO ALLOW FOR ANY REQUIRED INSPECTIONS BEFORE, DURING AND AFTER CONSTRUCTION OF PAD.
5. AT EACH POWER EQUIPMENT BASEMENT PROVIDE GROUNDING PER UTILITY REQUIREMENTS. THIS INCLUDES (2) 5/8" X 8' COPPER CLAD STEEL GROUND RODS WITH BRONZE GROUND ROD CLAMPS USING NON-GALVANIC LOCKING BOLTS. ROUTE A 4/0 AWG BRAIDED, BARE COPPER SOLID GROUND LOOP WITHIN THE BASEMENT CAVITY AND BOND TO BASEMENT AND ABOVEGROUND EQUIPMENT (TRANSFORMER, JUNCTION CABINET, OR SWITCH) GROUNDING PROVISIONS. BOND GROUND RODS AND GROUND RING TO ELBOW CONCENTRIC NEUTRALS AND LIGHTING ARRESTER ELBOWS. SEE NOTE 7.
6. PROVIDE BASEMENT AS REQUIRED SUCH THAT BASEMENT EXTENDS AT LEAST 2" PAST JUNCTION ON ALL SIDES. BASEMENT, TO PROJECT ABOVE FINISHED GRADE AS SHOWN ON DETAILS.
7. LEAVE SUFFICIENT SLACK IN NEUTRAL EXTENSION AND GROUND BUS WIRING TO FACILITATE REMOVAL AND PARKING OF CABLES. DO NOT TIGHTLY BUNDLE BLEED WIRES AND COMMON PARALLEL GROUNDING WIRING SO THAT CABLES CAN BE FREELY REPOSITIONED. NEATLY TRAIN AND ROUTE GROUND BUS WIRING IN FRONT OF PRIMARY CABLES.
8. PROVIDE SUFFICIENT SLACK IN FEEDERS TO ALLOW FREE MOVEMENT OF CABLES ON AND OFF BUSHING WELLS AND PARKING STANDS WITHOUT STRAINING THE CABLES AND TO ALLOW FOR FLEXIBLE ROUTING OF CABLES FROM BASEMENT BELOW.
9. WHERE JUNCTION HAS MULTIPLE GROUND LUGS EXTEND GROUND BUS THROUGH ALL LUGS IN SERIES VIA A NO. 6 BARE COPPER WIRE.
10. AT ELBOW JACKETED CONCENTRIC NEUTRALS ATTACH A NEUTRAL STRAND TO GROUNDING EYE ON ELBOW (EYE NOT SHOWN HERE). SEE DETAILS ON SHEETS U32 AND U33. CONNECT REMAINING NEUTRAL BUNDLE TO SYSTEM GROUND BUS. SEE NOTE 14.
11. JUNCTION SHALL BE PLACED SYMMETRICAL ON TOP OF BASEMENT.
12. MAINTAIN 10' OF CLEARANCE IN FRONT OF SWITCH DOORS.
13. TOP OF JUNCTION BASEMENT TO BE SMOOTH AND LEVEL PRIOR TO SWITCH INSTALLATION. MOUNT SWITCH TO BASEMENT WITH STAINLESS STEEL MOUNTING HARDWARE PER MANUFACTURER REQUIREMENTS.
14. DEADBREAK AND LOADBREAK ELBOW ASSEMBLIES SHALL BE CAREFULLY ASSEMBLY AND PROPERLY FITTED INTO BUSHING WELLS. SEE SHEETS U32 AND U33 FOR DETAILS.
15. LABEL ALL MV CABLES ON THE PROJECT PER DETAIL 2, SHEET U18.
16. CONDUIT DEPTHS WILL SHALLOW AS THEY APPROACH AND ENTER THE SIDES OF THE EQUIPMENT BASEMENTS. MAINTAIN TRENCH DEPTHS PER SHEET U38 WHEREVER POSSIBLE.
17. THERE ARE MULTIPLE CONDUITS AND DRAINS AT EACH SWITCH BASEMENT. NOT ALL ARE DEPICTED ON THIS SHEET. SEE SITE PLANS FOR ADDITIONAL INFORMATION.
18. PROVIDE BENTONITE WATERSTOP AT ALL BASEMENT SEAMS AND INTERFACES BETWEEN SURFACES.
19. COAT ALL SURFACES ON BASEMENT WITH 1/8" COAT OF SONNEBORN HYDROCIDE MASTIC DAMPPROOFING, COMPLETELY INSIDE AND OUTSIDE OF BASEMENT. INCLUDE COATING ON ALL EXTERIOR PULLING IRON HARDWARE.
20. DETAILS ON THIS SHEET DEPICT GENERAL LAYOUT AND FEATURES OF CAST-IN-PLACE CONCRETE BASEMENTS WITH PRECAST CONCRETE LID, RISER, AND MANHOLES, CONTRACTOR MAY CONSIDER ALTERNATIVE DESIGNS IF SUBMITTED AND APPROVED BY AKDOT&PF PROJECT MANAGER.
21. STUB ALL CONDUITS INTO THE BASEMENT A DISTANCE OF 2" FROM THE INSIDE FACE OF THE BASEMENT WALL.

KEYNOTES:

1. PAD MOUNTED FIBERGLASS JUNCTION CABINET, 15KV RATED, WITH MULTI-POINT JUNCTION, PARKING STANDS, AND ALL STAINLESS STEEL BAR AND HARDWARE CONSTRUCTION. INCLUDES PROVISIONS FOR 200A LOADBREAKS AND A SURGE ARRESTER PER JUNCTION. UV AND FIRE RESISTANT, CHOPPER GLASS AND WOVEN ROVING LAMINATE CONSTRUCTION WITH ENCAPULATED 2' X 4' STRUCTURAL REINFORCEMENT. MUNSEL GREEN COLOR WITH GROUNDING LUGS, PENTA-BOLT AND PAD LOCK PROVISIONS. PROVIDE NORDIC FIBERGLASS #ND-552454-MG-PA58-4152-W3A OR EQUAL.
2. DUAL PRE-CAST CONCRETE BASEMENTS (1-24" TALL, 1-12" TALL), 6" THICK WALLS, WITH OPEN BOTTOM. 84" X 56" FOOTPRINT, NOMINAL. INCLUDES ONE 6" THICK LID. LID WITH A SINGLE 20" X 60" NOMINAL CABLE OPENING IN LID. OLD CASTLE #57R-24 AND 57R-12 WITH LID OR EQUAL. OVERALL DEPTH AS SHOWN WITH PROJECTION ABOVE GRADE. COORDINATE FINAL SELECTION PROCESS WITH SWITCH SELECTION TO ENSURE FOOTPRINT AND CABLE OPENING ALIGNMENTS. CAREFULLY CUT CONDUIT PENETRATIONS INTO BASEMENT WALLS OR USE KNOCKOUTS WHERE AVAILABLE.
3. BOND ALL METAL EQUIPMENT ENCLOSURES, CABLE ELBOW CONCENTRIC NEUTRALS, GROUND RODS, ETC. TOGETHER VIA A GROUND RING WITHIN BASEMENT OF THE EQUIPMENT.
4. PAD MOUNTED FIBERGLASS JUNCTION CABINET, 35KV RATED, WITH MULTI-POINT JUNCTION, PARKING STANDS, AND ALL STAINLESS STEEL BAR AND HARDWARE CONSTRUCTION. INCLUDES PROVISIONS FOR 600A DEADBREAKS AND A SURGE ARRESTER PER JUNCTION. UV AND FIRE RESISTANT, CHOPPER GLASS AND WOVEN ROVING FIBERGLASS LAMINATE CONSTRUCTION WITH ENCAPULATED 2' X 4' STRUCTURAL REINFORCEMENT. MUNSEL GREEN COLOR WITH GROUNDING LUGS, PENTA-BOLT AND PAD LOCK PROVISIONS. PROVISIONS. PROVIDE NORDIC FIBERGLASS #ND-683054-MG-PA71-42564-W3E OR EQUAL.
5. PRE-CAST CONCRETE BASEMENT, 6" THICK WALLS, WITH OPENED BOTTOM. 134" X 68" X 36" NOMINAL WITH 8" THICK LID. LID WITH A SINGLE 20" X 60" NOMINAL CABLE OPENING IN LID. OLD CASTLE #5106-3X WITH LID OR EQUAL. OVERALL DEPTH AS SHOWN WITH PROJECTION ABOVE GRADE. COORDINATE FINAL SELECTION PROCESS WITH SWITCH SELECTION TO ENSURE FOOTPRINT AND CABLE OPENING ALIGNMENTS. CAREFULLY CUT CONDUIT PENETRATIONS INTO BASEMENT WALLS OR USE KNOCKOUTS WHERE AVAILABLE.
6. PROVIDE FAULT CIRCUIT INDICTORS (FCI) WITHIN EACH ENCLOSURE, ONE PER MV CABLE ELBOW INSTALLED. SEE SHEET U17 FOR MORE FCI DETAILS AND SHEETS U32 AND U33 FOR ELBOW INSTALLATION DETAIL. ROUTE FCI REMOTE LED INDICATOR CABLE TO REMOTE DISPLAY ASSEMBLY INSTALLED THROUGH THE SIDE OF THE ENCLOSURE. SEE DETAIL 3, THIS SHEET FOR ASSEMBLY INFO. GANG DISPLAYS ON SIDE OF ENCLOSURE AND LABEL WITH PERMANENT, PHENOLIC LABELS. COORDINATE EXACT REMOTE PLACEMENT ON ENCLOSURE AND INDICATOR LABELS WITH UTILITY. ADEQUATE ROOM SHALL BE PROVIDED BETWEEN PLACARDS SO LEGIBLE LABELS CAN BE APPLIED, COORDINATE WITH UTILITY.

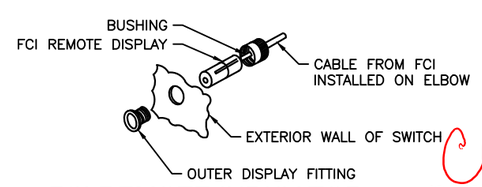

3 FCI REMOTE INDICATOR

(TYPICAL – ONE PER MV ELBOW INSIDE ENCLOSURE)

CN 7/24/2024

PLANS DEVELOPED BY:
MORRIS ENGINEERING GROUP, INC
2375 JORDAN AVE #7
JUNEAU, AK 99801
907-789-3350
AECL 1010

STATE OF ALASKA 49TH Mark G. Morris May 31, 2024 No. EE 8613 REGISTERED PROFESSIONAL ENGINEER

STATE OF ALASKA DEPARTMENT OF TRANSPORTATION AND PUBLIC FACILITIES
6860 GLACIER HIGHWAY, JUNEAU, AK 99801
(907) 465-1763

UTILITY RELOCATION FOR KETCHIKAN AREA BRIDGES

POWER UTILITY SECTIONALIZING CABINET DETAILS

FILE y:\102 state of ak\44 utility relocation design for ketchikan bridges\Working Drawings\POWER UTILITY SECTIONALIZING CABINET DETAILS.dgn | LAYOUT U29 | 5/2/2024 14:51 | DESIGNED MGM | CHECKED MGM | DRAFTED NADJA

NO.	DATE	REVISION	STATE	PROJECT DESIGNATION	YEAR	SHEET NO.	TOTAL SHEETS
1	5/2024	AS-BUILT					
AS-BUILT DRAWING PREPARED FROM CONTRACTOR PROVIDED REDLINE WHICH MAY NOT BE CORRECT			ALASKA	0902043/SFHWY00072	2021	U30A	45

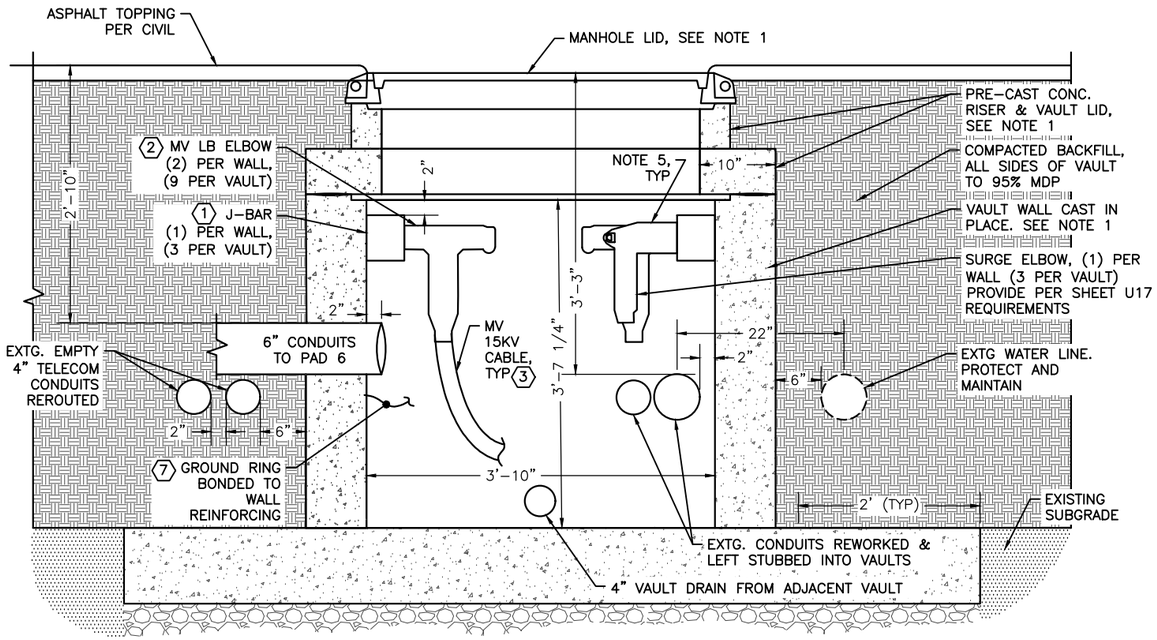

1 POWERHOUSE VAULT - SECTION (TYP)

(SHOWING 12.47KV VAULT, SAME SETUP FOR 34.5KV VAULT)

SHEET NOTES (APPLICABLE TO ALL DETAILS):

1. SEE SHEET U30B FOR STRUCTURAL DIMENSIONS, DETAILS, AND SPECIFICATIONS PERTAINING TO THE CAST IN PLACE VAULT WALLS, LIDS, RISERS, AND MANHOLE COVERS.
2. ABBREVIATION USED ON THIS SHEET: 'MV LB' = MEDIUM VOLTAGE LOADBREAK, 'MV DB'' = MEDIUM VOLTAGE DEADBREAK.
3. DETAILS ON SHEETS U30A, U30B, AND U31 DEPICT GENERAL LAYOUT AND FEATURES OF CAST-IN-PLACE CONCRETE VAULTS WITH PRECAST CONCRETE LID, RISER, AND MANHOLES. CONTRACTOR MAY CONSIDER ALTERNATIVE DESIGNS IF SUBMITTED AND APPROVED BY AKDOT PROJECT MANAGER.
4. PROVIDE SCREENS ON DRAIN ENDS, SEE SHEET U30B.
5. J-BAR AND ELBOW LOCATIONS, HEIGHTS, ORIENTATIONS, ETC. MUST ALLOW FOR ROUTINE WORKING OF CABLING FROM WITHIN THE VAULT. ADJUST FROM WHAT IS SHOWN AS REQUIRED. KPU AND DESIGN ENGINEER MUST SIGN OFF ON PLANNED ARRANGEMENT PRIOR TO FINAL INSTALLATION.

KEY NOTES (APPLICABLE TO ALL DETAILS):

1. PROVIDE A 3-POSITION LOADBREAK JUNCTION BAR MOUNTED ON THREE OF THE FOUR VAULT WALLS. STAINLESS STEEL, 200A, 15KV CLASS JUNCTIONS. INCLUDES PARKING STANDS AND DRAIN WIRE CLAMPS. PROVIDE COOPER POWER SYSTEMS (CPS) LJ215C3B OR EQUAL. COORDINATE FINAL WALL LOCATION, SEE GENERAL NOTE 5 ABOVE.
2. ALL 12.47KV CABLES TO TERMINATE ON LOADBREAK ELBOWS MOUNTED TO JUNCTION BARS. COORDINATE ARRANGEMENT OF ELBOWS IN ACCORDANCE WITH KPU UTILITY REQUIREMENTS. LOADBREAK ELBOWS TO MEET REQUIREMENTS AS NOTED FOR LOADBREAKS DESCRIBED ON SHEET U17, DETAIL 1.
3. ALL 12.47KV CABLES TO ADHERE TO CABLE REQUIREMENTS DESCRIBED ON SHEET U17, DETAIL 1. ALL CABLES TO BE CAREFULLY ROUTED WITHIN VAULT TO MINIMIZE CABLE AND LOADBREAK ELBOW STRESS. TRAIN CABLES TO MEET MINIMUM BENDING RADIUS REQUIREMENTS. SEE SHEET U31 FOR ROUTING DEPICTION.
4. PROVIDE A 3-POSITION COPPER DEADBREAK JUNCTION BAR MOUNTED ON THREE OF THE FOUR VAULT WALLS. STAINLESS STEEEL, 600A, 35KV CLASS JUNCTIONS. INCLUDES PARKING STANDS AND DRAIN WIRE CLAMPS. PROVIDE COOPER POWER SYSTEMS (CPS) DJ635C3B OR EQUAL. COORDINATE FINAL WALL LOCATION, SEE GENERAL NOTE 5 ABOVE.
5. ALL 34.5KV CABLES TO TERMINATE ON DEADBREAK ELBOWS MOUNTED TO JUNCTION BARS. COORDINATE ARRANGEMENT OF ELBOWS TO MEET REQUIREMENTS AS NOTED FOR DEADBREAKS DESCRIBED ON SHEET U17, DETAIL 2.
6. ALL 34.5KV CABLES TO ADHERE TO CABLE REQUIREMENTS DESCRIBED ON SHEET U17, DETAIL 2. ALL CABLE IS TO BE CAREFULLY ROUTED WITHIN VAULT TO MINIMIZE CABLE AND DEADBREAK ELBOW STRESS. TRAIN CABLES TO MEET MINIMUM BENDING RADIUS REQUIREMENTS. SEE SHEET U31 FOR ROUTING DEPICTION
7. AT EACH POWERHOUSE VAULT, PROVIDE GROUNDING PER UTILITY REQUIREMENTS. A 4/0 AWG BRAIDED, BARE COPPER GROUND LOOP WITHIN EACH VAULT. LOOP TO BE BONDED TO A 4/0 BARE COPPER GROUND EMBEDDED INTO THE WALL BONDED TO WALL REINFORCING (2 LOCATIONS). BOND TO EACH DRAIN WIRE CONNECTION SUPPLIED ON EACH JUNCTION BAR. BOND ALL JUNCTION BAR DRAIN WIRE CONNECTIONS TO ELBOW CONCENTRIC NEUTRALS PER KPU REQUIREMENTS. SEE SHEET U31 FOR ADDITIONAL LOCATION INFORMATION. ROUTE GROUND RING ALONG VAULT RACKING OFF OF VAULT FLOOR.

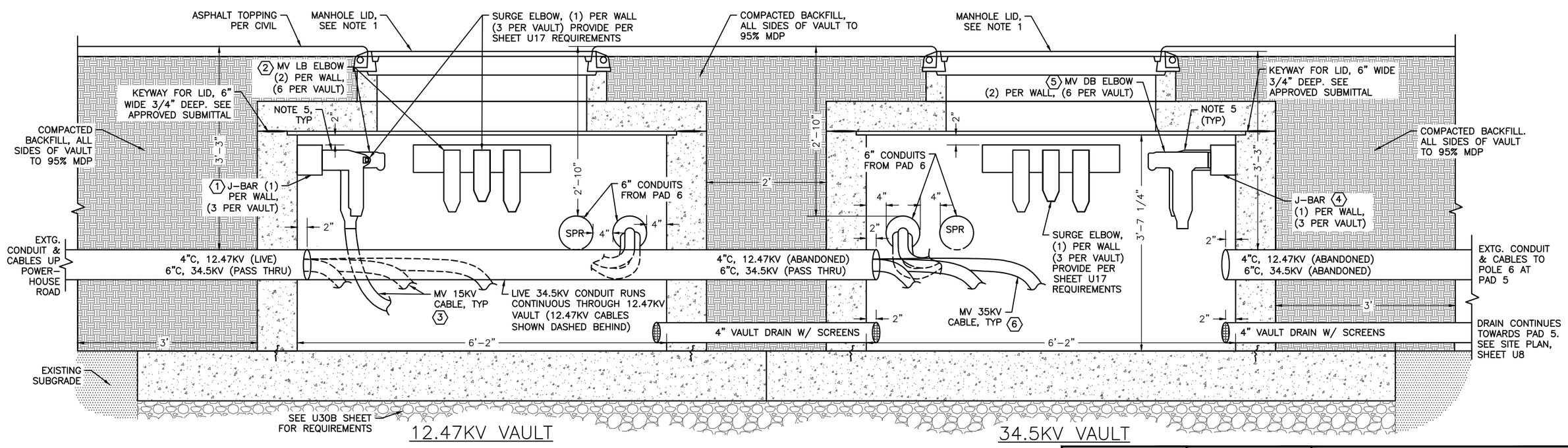

2 POWERHOUSE VAULTS - ELEVATION

CN
7/24/2024

PLANS DEVELOPED BY:
MORRIS ENGINEERING GROUP, INC
2375 JORDAN AVE #7
JUNEAU, AK 99801
907-789-3350
AECL 1010

STATE OF ALASKA 49TH
Mark G. Morris
May 31, 2024
No. EE 8613
REGISTERED PROFESSIONAL ENGINEER

STATE OF ALASKA DEPARTMENT OF TRANSPORTATION AND PUBLIC FACILITIES
6860 GLACIER HIGHWAY, JUNEAU, AK 99801
(907) 465-1763

UTILITY RELOCATION FOR KETCHIKAN AREA BRIDGES

POWERHOUSE VAULT ELECTRICAL DETAILS

FILE y:\102 state of ak\44 utility relocation design for ketchikan bridges\Working Drawings\U30A POWERHOUSE VAULT ELECTRICAL DETAILS.dwg | 5/24/2024 13:57 | LAYOUT U30A | DESIGNED MGM | CHECKED MGM | DRAFTED EMILEE

NO.	DATE	REVISION	STATE	PROJECT DESIGNATION	YEAR	SHEET NO.	TOTAL SHEETS
1	5/2024	AS-BUILT					
		AS-BUILT DRAWING PREPARED FROM CONTRACTOR PROVIDED REDLINE WHICH MAY NOT BE CORRECT	ALASKA	0902043/SFHWY00072	2021	U30B	45

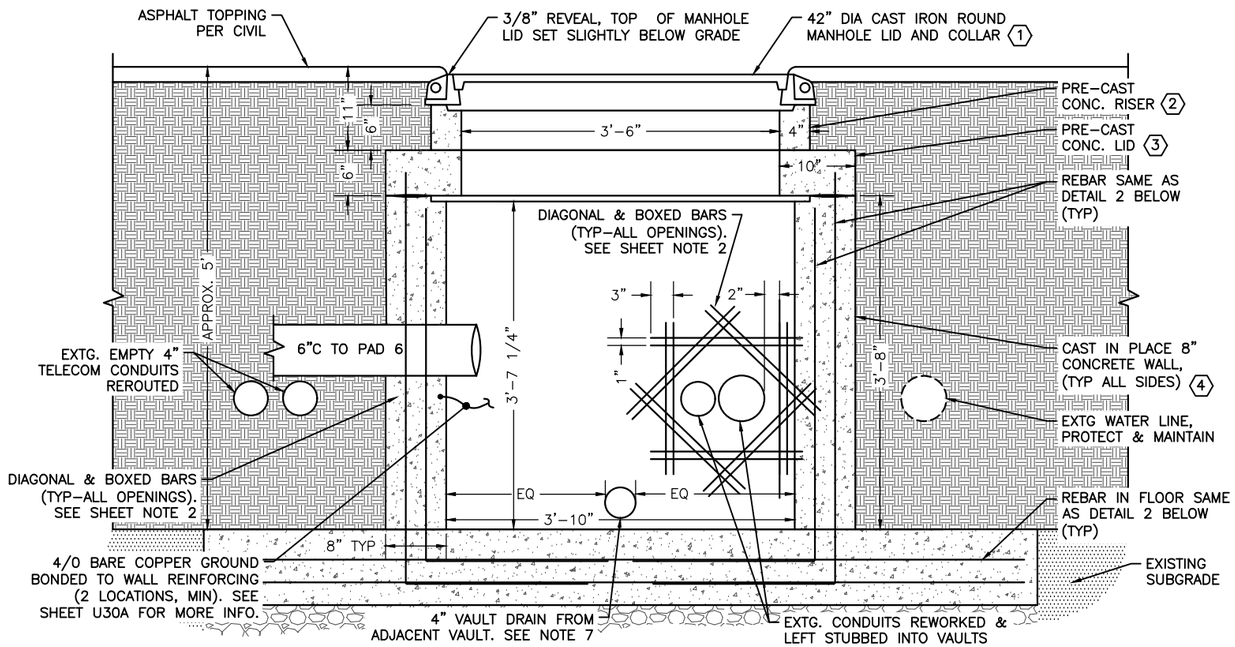

(1) POWERHOUSE VAULT - SECTION (TYP - STRUCTURAL)

(SHOWING 12.47KV VAULT, SAME SETUP FOR 34.5KV VAULT)

SHEET NOTES (APPLICABLE TO ALL DETAILS):

1. SEE SHEET U30A AND U31 FOR ELECTRICAL DIMENSIONS, DETAILS, AND SPECIFICATIONS PERTAINING AND ASSOCIATED WITH WORK WITHIN THE POWERHOUSE VAULTS.
2. FRAME EACH CONDUIT PENETRATION WITHIN THE POURED VAULT WALLS WITH (2) NO. 5 DIAGONAL AND BOXED BARS. DIMENSIONS BETWEEN PARALLEL BARS AND OVERALL SEGMENT LENGTHS SHOULD BE ADDED DIAMETER OF THE CONDUIT PAIRS PLUS 10". BARS APPROPRIATELY CENTERED WITH SPACING BETWEEN BARS AS SHOWN ON DETAIL 1.
3. PROVIDE BENTONITE WATERSTOP AT ALL VAULT SEAMS AND INTERFACES BETWEEN SURFACES.
4. COAT ALL SURFACES AND SIDES OF POURED VAULT, PRECAST LID, AND PRECAST RISER WITH NON-FIBERED, ASPHALT EMULSION SEALER AND DAMPPROOFER. NON-FLAMMABLE, CORROSION AND CRACK RESISTANT COATING APPLICABLE FOR BELOW-GRADE FOUNDATIONS AND WALLS. HENRY HE107 OR EQUAL. APPLY A MINIMUM OF (1) 1/16" COAT, FILLING ALL CREVICES AND GROOVES. ENSURE COATING IS CONTINUOUS WITH NO BREAKS OR PINHOLES. SPREAD ALL AROUND JOINTS, GROOVES, AND SLOTS AND INTO ALL CORNERS, OVER PULLING HARDWARE, ETC.
5. DETAILS ON SHEETS U30A, U30B, AND U31 DEPICT GENERAL LAYOUT AND FEATURES OF CAST-IN-PLACE CONCRETE VAULTS WITH PRECAST CONCRETE LID, RISER, AND MANHOLES, CONTRACTOR MAY CONSIDER ALTERNATIVE DESIGNS IF SUBMITTED AND APPROVED BY AKDOT&PF PROJECT MANAGER.
6. MAINTAIN A 3" EMBEDDMENT DEPTH AND STOP SHORT DISTANCE FOR ALL REBAR IN THE WALLS, IN ALL DIRECTIONS.
7. PROVIDE STAINLESS STEEL MESH SCREEN ON DRAIN ENDS.

KEY NOTES (APPLICABLE TO ALL DETAILS):

(1) PROVIDE 42" I.D. ROUND MANHOLE LID, LID RING, AND COLLAR, OLD CASTLE OR EQUAL. INSET JUST BELOW FINISHED GRADE AS NOTED.

(2) PROVIDE 6" TALL PRE-CAST CONCRETE RISER. NOMINAL FOOTPRINT 7'-6" X 5'-2" X 6" THICK. OLD CASTLE #57R6-CLX OR EQUAL.

(3) PROVIDE 6" TALL PRE-CAST CONCRETE COVER. NOMINAL FOOTPRINT 7'-6" X 5'-2" X 6" THICK WITH 42" DIAMETER HOLE. OLD CASTLE #57-CLX-42C OR EQUAL. PIN TO POURED WALLS AS INDICATED.

(4) PROVIDE CAST-IN-PLACE WALLS AND FLOORS WITH THICKNESS AND REINFORCING AS NOTED HERE. 3500 PSI CONCRETE MINIMUM. PROVIDE OPENING BLOCK OUTS FOR CONDUITS (NEW AND EXISTING) AND OPENING BOXED REINFORCING AS INDICATED. PIN POURED WALLS TO PRE-CAST LID AND TO FLOOR BELOW.

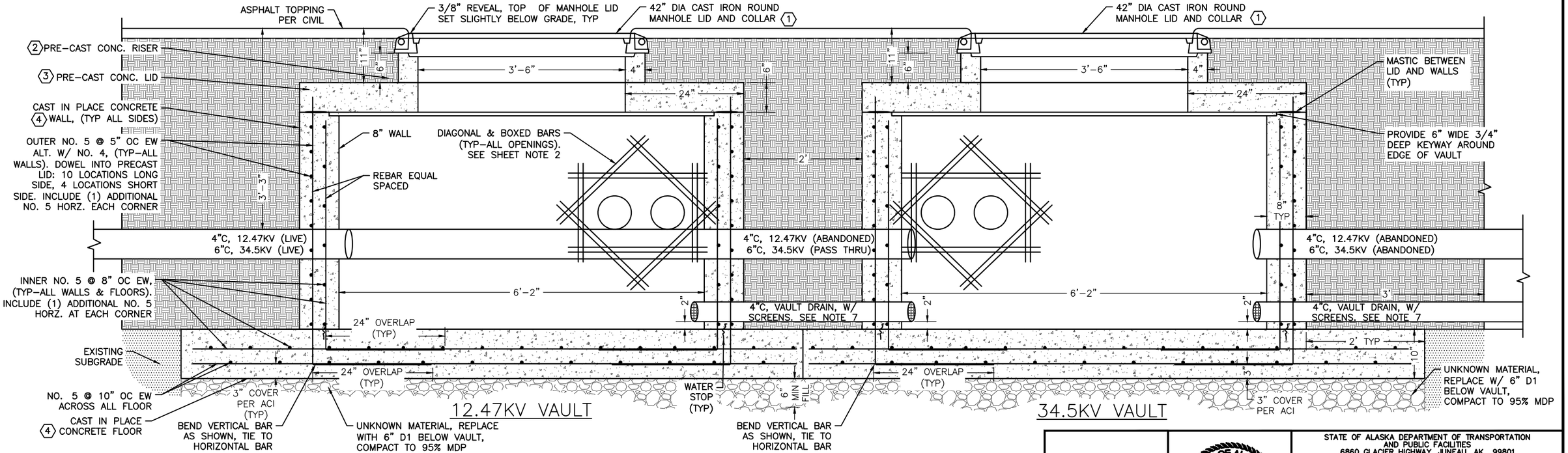

(2) POWERHOUSE VAULTS - ELEVATION (STRUCTURAL)

EW = EACH WAY
ALT = ALTERNATELY

CN
7/24/2024

PLANS DEVELOPED BY:
MORRIS ENGINEERING GROUP, INC
2375 JORDAN AVE #7
JUNEAU, AK 99801
907-789-3350
AECL 1010

STATE OF ALASKA 49TH
Mark G. Morris
May 31, 2024
No. EE 8613
REGISTERED PROFESSIONAL ENGINEER

STATE OF ALASKA DEPARTMENT OF TRANSPORTATION AND PUBLIC FACILITIES
6860 GLACIER HIGHWAY, JUNEAU, AK 99801
(907) 465-1763

UTILITY RELOCATION FOR KETCHIKAN AREA BRIDGES

POWERHOUSE VAULT STRUCTURAL DETAILS

FILE | > \102 state of ak\44 utility relocation design for ketchikan bridges\Working Drawings\U30A POWERHOUSE VAULT ELECTRICAL DETAILS.dwg | 5/24/2024 13:57 | LAYOUT | U30B | DESIGNED | MGM | CHECKED | MGM | DRAFTED | EMILEE

NO.	DATE	REVISION	STATE	PROJECT DESIGNATION	YEAR	SHEET NO.	TOTAL SHEETS
1	5/2024	AS-BUILT					
AS-BUILT DRAWING PREPARED FROM CONTRACTOR PROVIDED REDLINE WHICH MAY NOT BE CORRECT			ALASKA	0902043/SFHWY00072	2021	U31	45

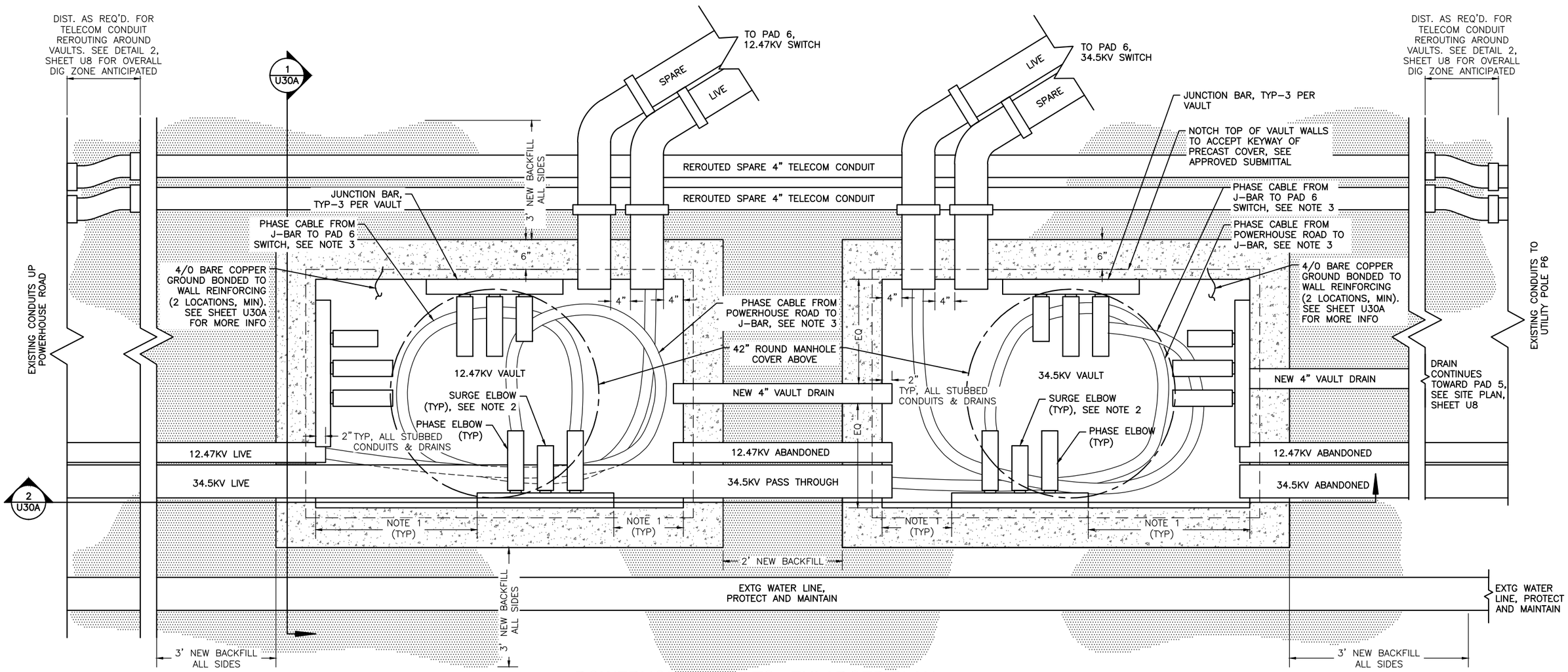

1 POWERHOUSE VAULTS - ENLARGED PLAN

NOTES:

1. STAGGER THE J-BAR POSITIONS TO MAXIMIZE CABLE BENDING AND TRAINING SPACE AROUND THE VAULT. ADJUST FROM WHAT IS SHOWN HERE AS PRACTICAL.
2. COORDINATE POSITIONS OF THE SURGE ELBOW TO MAXIMIZE ELBOW SEPARATION AND INCREASE CABLE BENDING AND TRAINING SPACE AROUND THE VAULT. ADJUST FROM WHAT IS SHOWN HERE AS PRACTICAL.
3. EXAMPLE CABLE ROUTED ALONG FLOOR IS SHOWN. ONLY A FEW CABLES DEPICTED. ADHERE TO MINIMUM BENDING RADIUS IN ALL INSTANCES PER OKONITE HANDBOOK. ARRANGE ROUTING AS REQUIRED AND ADJUST FROM WHAT IS SHOWN HERE AS PRACTICAL. PROVIDE LABEL TAGS ON ALL CABLES PER DETAIL 2, SHEET U18.
4. COMPACT ALL BACKFILL TO 95% OF MDP, ALL SIDES AND BELOW FLOOR OF BOTH VAULTS.

CN
7/24/2024

PLANS DEVELOPED BY:
MORRIS ENGINEERING GROUP, INC
2375 JORDAN AVE #7
JUNEAU, AK 99801
907-789-3350
AECL 1010

STATE OF ALASKA 49TH
Mark G. Morris
May 31, 2024
No. EE 8613
REGISTERED PROFESSIONAL ENGINEER

STATE OF ALASKA DEPARTMENT OF TRANSPORTATION AND PUBLIC FACILITIES
6860 GLACIER HIGHWAY, JUNEAU, AK 99801
(907) 465-1763

UTILITY RELOCATION FOR KETCHIKAN AREA BRIDGES

POWERHOUSE VAULTS - ENLARGED PLAN

FILE | y:\102 state of ak\44 utility relocation design for ketchikan bridges\Working Drawings\U31 POWERHOUSE VAULTS - ENLARGED PLAN.DWG | 5/24/2024 13:56 | LAYOUT | U31 | DESIGNED | MGM | CHECKED | MGM | DRAFTED | EMILEE

NO.	DATE	REVISION	STATE	PROJECT DESIGNATION	YEAR	SHEET NO.	TOTAL SHEETS
1	5/2024	AS-BUILT					
AS-BUILT DRAWING PREPARED FROM CONTRACTOR PROVIDED REDLINE WHICH MAY NOT BE CORRECT			ALASKA	0902043/SFHWY00072	2021	U32	45

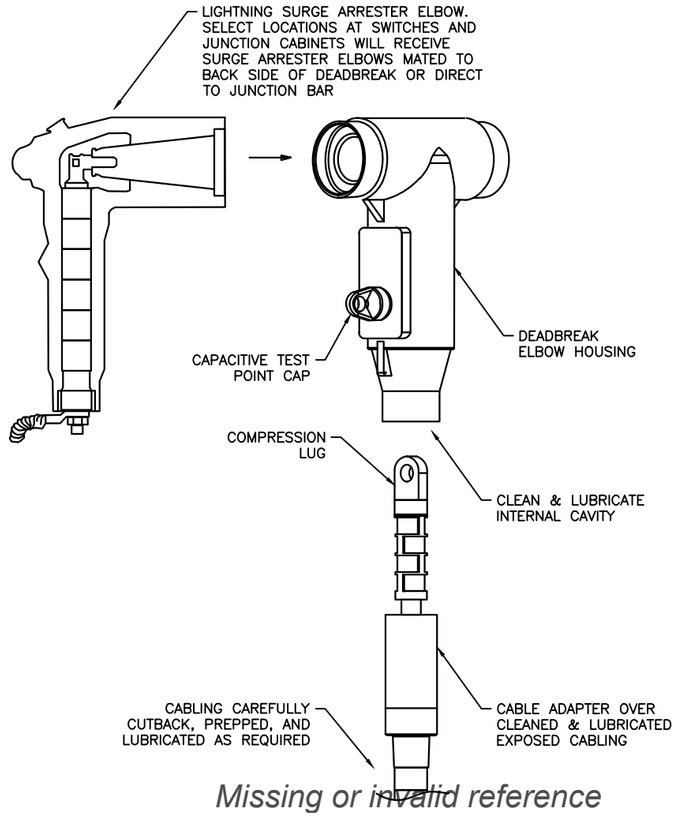

Missing or invalid reference

1 DEADBREAK - PRE-INSERT
NO SCALE

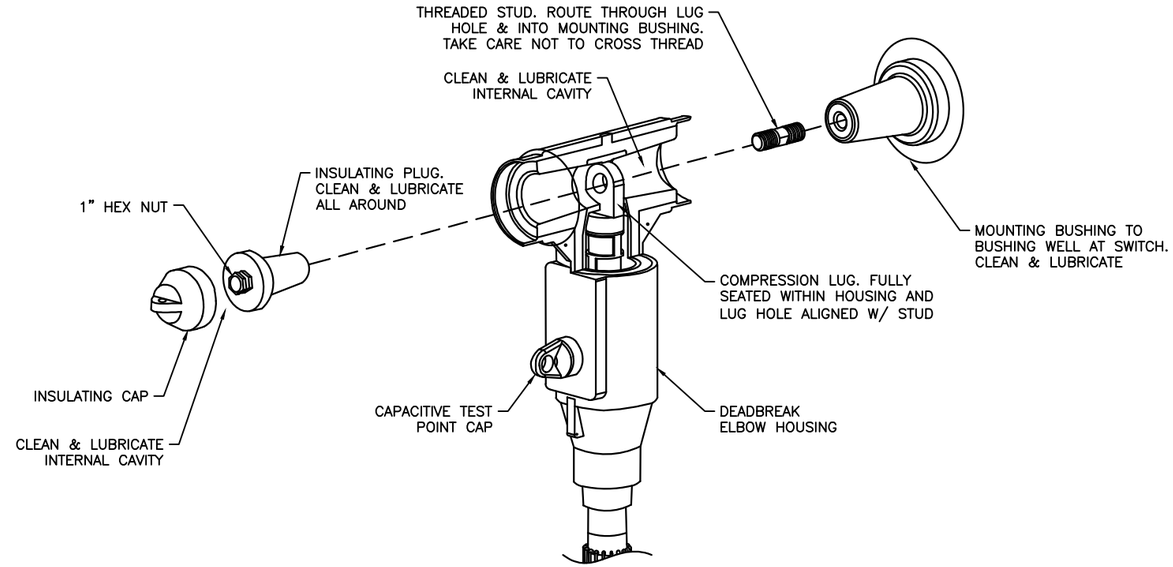

2 DEADBREAK - INSERT
NO SCALE

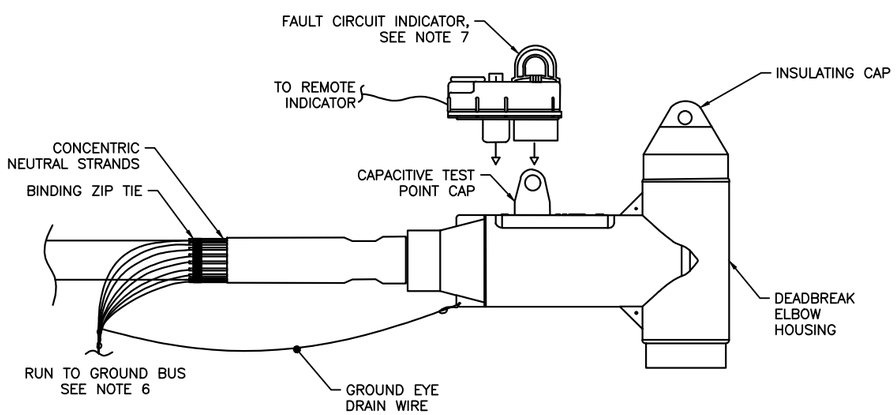

3 DEADBREAK - ASSEMBLED
NO SCALE

NOTES:

1. SEE SPECIFICATIONS FOR FULL REQUIREMENTS OF MEDIUM VOLTAGE CABLE, CABLE DEADBREAKS, AND CABLE GROUNDING.

2. PRIOR TO INSTALL, CONFIRM ALL PARTS AND PIECES ARE UNDAMAGED, CABLES AND MATING COMPONENTS ARE PROPERLY FITTED, AND CHECK THAT STUD THREADS TO COMPRESSION LUG WITH NO RESISTANCE. IF RESISTANCE IS ENCOUNTERED PRIOR TO FULL ASSEMBLY, CHECK FOR DAMAGE AND REPLACE COMPONENTS AS NECESSARY.

3. NOTES INCLUDED ON THIS SHEET ARE GENERIC IN NATURE AND FOR GENERAL INSTRUCTION ONLY. FOLLOW MANUFACTURER WRITTEN REQUIREMENTS.

4. GENERAL NOTES FOR CABLE TERMINATION WORK:
   a. SYSTEM SHALL BE DE-ENERGIZED DURING INSTALLATION.
   b. EACH DEADBREAK KIT SHALL BE PROVIDED COMPLETE FROM FACTORY, ALL KIT COMPONENTS NEW AND FROM ONE MANUFACTURER.
   c. MINIMUM KIT CONTENTS SHALL INCLUDE: 600A DEADBREAK ELBOW HOUSING INSULATION PLUG & CAP, CABLE ADAPTER AND ASSEMBLY AID, SILICONE LUBRICANT, THREADED STUD, SHEAR BOLT OR COMPRESSION LUG, CRIME AND COMPRESSION CHART, INSTRUCTIONS.

5. THERE ARE MANY DISTINCT AND VITAL STEPS IN PREPARING AND TERMINATING CABLES AND DEADBREAKS. BELOW IS A SIMPLE DESCRIPTION OF STEPS ANTICIPATED IN THE PROCESS. CONTRACTOR SHALL HAVE ONLY EXPERIENCED STAFF PERFORM WORK TERMINATING MEDIUM VOLTAGE CABLES AND ASSEMBLING DEADBREAKS. THIS LIST IS PROVIDED TO STRESS THAT THIS WORK IS NOT TO BE DONE BY UNQUALIFIED LINEMEN. UTILIZE ONLY LINEMEN QUALIFIED FOR CABLE SPLICE AND TERMINATION TYPE WORK. KPU TO TERMINATE ALL FINAL CONNECTIONS.

   ANTICIPATED DEADBREAK CONNECTION STEPS INCLUDE:
   a. PREPARING CABLES (I.E. MEASURING AND CUTTING BACK OUTER JACKET, CONCENTRIC NEUTRAL, SEMI-CON, AND INSULATION LAYERS).
   b. MATING THE COMPRESSION LUG TO STUD (I.E. SECURING LUG ONTO CABLE, INSERTING LUGGED CABLE INTO ELBOW, INSERTING AND THREADING STUD INTO LUGGED ELBOW).
   c. ELBOW AND CABLE GROUNDING (I.E. GROUND WIRE TO ELBOW GROUND EYE, GROUND WIRE TO EXPOSED NEUTRAL AND BRAID, BRAID COUPLED TO GROUND BUS IN SWITCH).

6. SEE SHEETS U28 AND U29 FOR SWITCH AND JUNCTION CABINET ELEVATIONS WITH ADDITIONAL NOTES ON MEDIUM VOLTAGE CABLE GROUNDING AND GROUND BUS CONFIGURATIONS.

7. PROVIDE FAULT CIRCUIT INDICATORS (FCIs) AT EACH DEADBREAK ELBOW IN THE JUNCTION CABINET. SEE SHEET U17 FOR DETAILS ON THE FCI UNITS. INSTALL INDICATORS AT THE CAPACITIVE TESTING POINT OF THE ELBOW PER MANUFACTURER REQUIREMENTS. ROUTE REMOTE INDICATOR CABLING FROM EACH FCI TO REMOTE INDICATOR MOUNTED TO OUTER ENCLOSURE, SEE DETAIL 3, SHEET U29 FOR MOUNTING DETAIL.

8. LABEL ALL MV CABLES ON THE PROJECT PER DETAIL 2, SHEET U18.

CN
7/24/2024

PLANS DEVELOPED BY:
MORRIS ENGINEERING GROUP, INC
2375 JORDAN AVE #7
JUNEAU, AK 99801
907-789-3350
AECL 1010

STATE OF ALASKA 49TH
Mark G. Morris
May 31, 2024
No. EE 8613
REGISTERED PROFESSIONAL ENGINEER

STATE OF ALASKA DEPARTMENT OF TRANSPORTATION AND PUBLIC FACILITIES
6860 GLACIER HIGHWAY, JUNEAU, AK 99801
(907) 465-1763

UTILITY RELOCATION FOR KETCHIKAN AREA BRIDGES

DEADBREAK ELBOW DETAILS

FILE | y:\102 state of ak\44 utility relocation design for ketchikan bridges\Working Drawings\POWER UTILITY LOADBREAK & MISC. DETAILS.dwg | DATE | 4/26/2024 14:49 | LAYOUT | U32 | DESIGNED | MGM | CHECKED | MGM | DRAFTED | JODI

NO.	DATE	REVISION	STATE	PROJECT DESIGNATION	YEAR	SHEET NO.	TOTAL SHEETS
1	5/2024	AS-BUILT					
AS-BUILT DRAWING PREPARED FROM CONTRACTOR PROVIDED REDLINE WHICH MAY NOT BE CORRECT			ALASKA	0902043/SFHWY00072	2021	U33	45

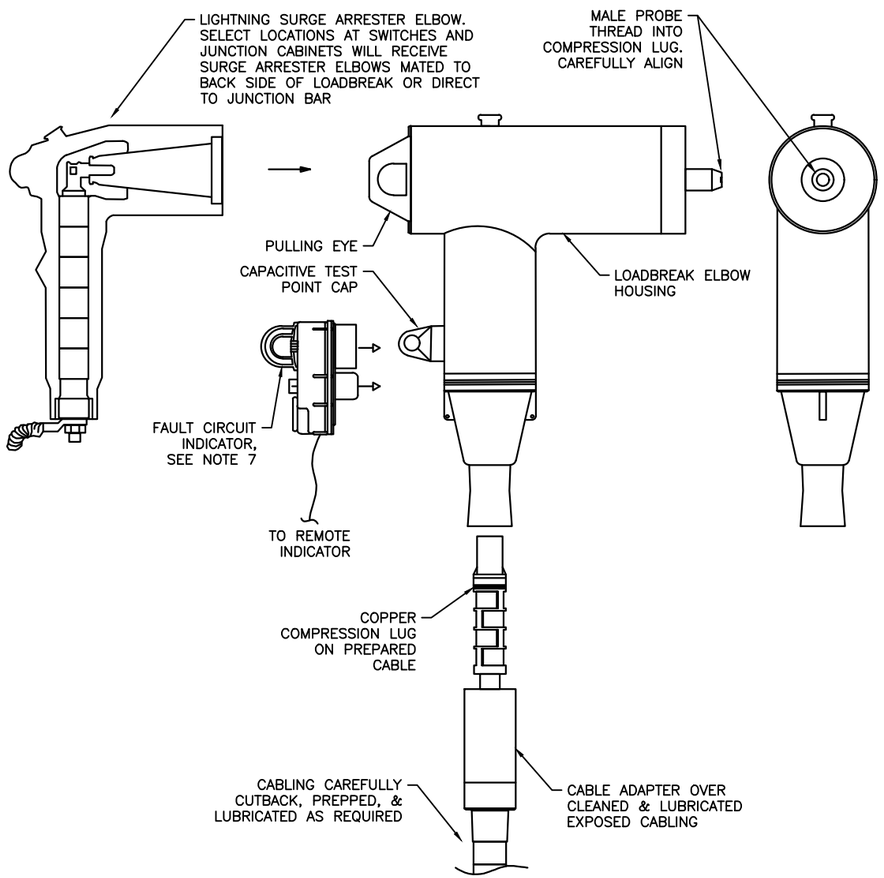

1 LOADBREAK - PRE-INSERT
NO SCALE

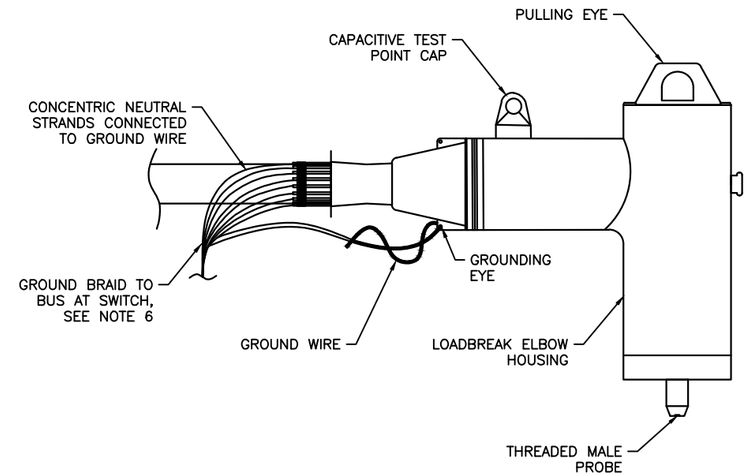

2 LOADBREAK - ASSEMBLED
NO SCALE

NOTES:

1. SEE SPECIFICATIONS FOR FULL REQUIREMENTS OF MEDIUM VOLTAGE CABLE, LOADBREAKS, AND CABLE GROUNDING.
2. PRIOR TO INSTALL, CONFIRM ALL PARTS AND PIECES ARE UNDAMAGED, CABLES AND MATING COMPONENTS ARE PROPERLY FITTED, AND CHECK THAT PROBE THREADS TO COMPRESSION LUG WITH NO RESISTANCE. IF RESISTANCE IS ENCOUNTERED PRIOR TO FULL ASSEMBLY, CHECK FOR DAMAGE AND REPLACE COMPONENTS AS NECESSARY.
3. NOTES INCLUDED ON THIS SHEET ARE GENERIC IN NATURE AND FOR GENERAL INSTRUCTION ONLY. FOLLOW MANUFACTURER WRITTEN REQUIREMENTS.
4. GENERAL NOTES FOR CABLE TERMINATION WORK:
   a. SYSTEM SHALL BE DE-ENERGIZED DURING INSTALLATION.
   b. EACH LOADBREAK KIT SHALL BE PROVIDED COMPLETE FROM FACTORY, ALL KIT COMPONENTS NEW AND FROM ONE MANUFACTURER.
   c. MINIMUM KIT CONTENTS SHALL INCLUDE: 200A LOADBREAK ELBOW, MALE CONTACT PROBE, COMPRESSION LUG, INSTALLATION WRENCH, SILICONE LUBRICANT, MASTICK, COPPER BRAID, COLD SHRINK TUBE, AND INSTRUCTIONS.
5. THERE ARE MANY DISTINCT AND VITAL STEPS IN PREPARING AND TERMINATING CABLES AND LOADBREAKS. BELOW IS A SIMPLE DESCRIPTION OF STEPS ANTICIPATED IN THE PROCESS. CONTRACTOR SHALL HAVE ONLY EXPERIENCED STAFF PERFORM WORK TERMINATING MEDIUM VOLTAGE CABLES AND ASSEMBLING LOADBREAKS. THIS LIST IS PROVIDED TO STRESS THAT THIS WORK IS NOT TO BE DONE BY UNQUALIFIED LINEMEN. UTILIZE ONLY LINEMEN QUALIFIED FOR CABLE SPLICE AND TERMINATION TYPE WORK. KPU TO TERMINATE ALL FINAL CONNECTIONS.

   ANTICIPATED LOADBREAK CONNECTION STEPS INCLUDE:
   a. PREPARING CABLES (I.E. MEASURING AND CUTTING BACK OUTER JACKET, CONCENTRIC NEUTRAL, SEMI-CON, AND INSULATION LAYERS).
   b. MATING THE COMPRESSION LUG TO MALE PROBE (I.E. SECURING LUG ONTO CABLE, INSERTING LUGGED CABLE INTO ELBOW, INSERTING AND THREADING MALE PROBE INTO LUGGED ELBOW).
   c. ELBOW AND CABLE GROUNDING (I.E. GROUND WIRE TO ELBOW GROUND EYE, GROUND WIRE TO EXPOSED NEUTRAL AND BRAID, BRAID COUPLED TO GROUND BUS IN SWITCH).
6. SEE SHEET U28 AND U29 FOR SWITCH AND JUNCTION CABINET ELEVATIONS WITH ADDITIONAL NOTES ON MEDIUM VOLTAGE CABLE GROUNDING AND GROUND BUS CONFIGURATIONS.
7. PROVIDE FAULT CIRCUIT INDICATORS (FCIs) AT EACH LOADBREAK ELBOW IN THE SWITCHES AND JUNCTION CABINETS ON THE PROJECT. SEE SHEET U17 FOR DETAILS ON THE FCI UNITS. INSTALL INDICATORS AT THE CAPACITIVE TESTING POINT OF THE ELBOW PER MANUFACTURER REQUIREMENTS. ROUTE REMOTE INDICATOR CABLING FROM EACH FCI TO REMOTE INDICATOR MOUNTED TO OUTER ENCLOSURE, SEE SHEETS U28 AND U29 FOR MOUNTING DETAIL.
8. LABEL ALL MV CABLES ON THE PROJECT PER DETAIL 2, SHEET U18.

CN
7/24/2024

PLANS DEVELOPED BY:
MORRIS ENGINEERING GROUP, INC
2375 JORDAN AVE #7
JUNEAU, AK 99801
907-789-3350
AECL 1010

STATE OF ALASKA 49TH
Mark G. Morris
May 31, 2024
No. EE 8613
REGISTERED PROFESSIONAL ENGINEER

STATE OF ALASKA DEPARTMENT OF TRANSPORTATION AND PUBLIC FACILITIES
6860 GLACIER HIGHWAY, JUNEAU, AK 99801
(907) 465-1763

UTILITY RELOCATION FOR KETCHIKAN AREA BRIDGES

LOADBREAK ELBOW DETAILS

FILE y:\102 state of ak\44 utility relocation design for ketchikan bridges\Working Drawings\U33 LOADBREAK DETAILS.dwg | DATE 4/26/2024 14:42 | LAYOUT U33 | DESIGNED MGM | CHECKED MGM | DRAFTED JODI

NO.	DATE	REVISION	STATE	PROJECT DESIGNATION	YEAR	SHEET NO.	TOTAL SHEETS
1	5/2024	AS-BUILT					
AS-BUILT DRAWING PREPARED FROM CONTRACTOR PROVIDED REDLINE WHICH MAY NOT BE CORRECT			ALASKA	0902043/SFHWY00072	2021	U34	45

DEMOLITION POLE SUMMARY

NO.	MAST-ARM LENGTH	LUMINAIRE MOUTING HEIGHT	STATION	OFFSET	KPU POLE NO.	LUMINAIRE TYPE
PX1	UNK	30'	395+47.30	21.56'LT	2430-B4-3	150W HPS
PX2	UNK	30'	397+04.36	25.96'RT	2430-B4-2	150W HPS

KPU UTILITY HAS FIRST RIGHTS TO SALVAGEABLE LIGHT FIXTURE AND POLE COMPONENTS. COORDINATE WITH KPU PRIOR TO DEMOLITION. OTHERWISE, FOLLOW ALL RECYCLING AND DISPOSAL REQUIREMENTS OF STATE OF ALASKA AND CITY OF KETCHIKAN PROJECTS.

ELECTROLIER SUMMARY

NO.	MAST-ARM LENGTH	LUMINAIRE MOUTING HEIGHT (d)	LUMINAIRE TYPE	STATION (b)(e)	OFFSET (b)(e)	POLE BASE ELEVATION (a)	REMARKS (c)
LP1	12'	30'	B	387+87.09	31.24'RT	24.800	NEW POLE AND LUMINAIRE, DISC. AT POLE P1
LP2	10'	30'	D	395+46.61	25.03'RT	23.998	NEW POLE AT BRIDGE AND LUMINAIRE
LP3	10'	30'	B	396+85.84	25.03'RT	27.736	NEW POLE AT BRIDGE AND LUMINAIRE
LP4	10'	30'	B	398+20.98	25.16'RT	31.699	NEW POLE AND LUMINAIRE
LP5	8'	30'	B	398+36.51	50.27'LT	34.400	NEW POLE AND LUMINAIRE
LP6	10'	30'	B	399+22.90	21.01'LT	32.813	NEW POLE AND LUMINAIRE

a. CONTRACTOR TO FIELD VERIFY FINAL GRADE ELEVATIONS AT EACH POLE POSITION PRIOR TO WORK. ELEVATION AT CENTER OF POLE BASE UNLESS NOTED OTHERWISE. ELEVATION GIVEN TO TOP OF LIGHT POLE CONCRETE FOUNDATION.
b. STATION AND OFFSET INFORMATION GIVEN TO CENTER OF LIGHT POLE BASE.
c. ALL POLE AND MAST ARMS ORIENTATED SO THAT MAST ARM IS PERPENDICULAR TO ROADWAY ADJACENT TO BASE LOCATION.
d. LUMINAIRE MOUNTING HEIGHT IS FROM FISHED GRADE. POLES AT BRIDGE ARE MOUNTED BELOW ROADWAY, POLE HEIGHTS AS REQUIRED.
e. STATION AND OFFSET ARE FOR GENERAL REFERENCE, SEE DOT&PF DRAWINGS FOR STREET LIGHT FOUNDATION SUMMARY FOR STATION, OFFSET, AND ELEVATION.

LIGHT POLE JUNCTION BOX SUMMARY

NO.	STATION (c)	OFFSET (c)	ELEVATION (a,b)	REMARKS
J1	387+87.70	31.18'RT	24.99	FOR LP1
J2	N/A, ON BRIDGE			FOR LP2
J3	N/A, ON BRIDGE			FOR LP3
J4	398+25.57	24.41'RT	31.74	FOR LP4
J5	398+39.58	45.65'LT	34.40	FOR LP5
J6	399+37.91	18.10'LT	32.73	FOR LP6

a. CONTRACTOR TO FIELD VERIFY FINAL GRADE ELEVATION AT BOX POSITION PRIOR TO WORK. ELEVATION AT CENTER OF BOX LID UNLESS NOTED OTHERWISE.
b. COORDINATE WITH GENERAL CONTRACTOR TO ADJUST JUNCTION BOXES SO THAT THE TOP OF EACH JUNCTION BOX IS FLUSH WITH FINISHED GRADE.
c. BOX STATIONS AND OFFSETS TAKEN TO CENTER OF BOX.

UTILITY POLE SUMMARY

NO.	MAST-ARM LENGTH (a,b)	LUMINAIRE MOUNTING HEIGHT	LUMINAIRE TYPE	STATION	OFFSET	KPU POLE NO.	REMARKS
P1	12'	NOTE "c"	A	386+69.34	31.03'RT	2430-A5-4	EXISTING POLE, REPLACE LUMINAIRE W/ LP1 DISC.
P2	10'/14'	NOTE "c"	B/C	388+60.02	52.63'LT	2430-A5-3	EXISTING POLE, REPLACE LUMINAIRES
P2A	–	–	–	388+56.18	96.38'LT	2430-A5-14	EXISTING GUY POLE
P2B	–	–	–	387+86.25	49.31'LT	2430-A5-10	NEW GUY POLE, SEE NOTE "d"
P3	12'	NOTE "c"	A	390+12.05	20.40'LT	2430-A5-2	EXISTING POLE, REPLACE LUMINAIRE
P4	12'	NOTE "c"	A	391+62.64	23.08'LT	2430-A5-1	EXISTING POLE, REPLACE LUMINAIRE
P5	10'	NOTE "c"	D	393+51.67	24.29'LT	2430-B5-1	REMOVE & REPLACE W/ NEW POLE & LUMINAIRE
P5A	–	–	–	393+24.82	26.24'LT	2430-B5-12	NEW POLE, SEE NOTE "d"
P6	–	–	–	398+57.13	31.78'RT	2430-B4-1	EXISTING POLE W/ NEW GUYS, REMOVE LUMINAIRE
P7	–	–	–	400+70.27	28.50'LT	2430-A4-6	REMOVE & REPLACE W/ NEW POLE & GUYING
P8	–	–	–	400+45.47	38.35'LT	2430-A4-7	REMOVE & REPLACE W/ NEW POLE
P9	–	–	–	400+20.63	41.27'LT	2430-B4-4	EXISTING POLE W/ NEW GUYING
P10	–	–	–	398+46.99	102.73'LT	2430-B4-5	EXISTING POLE, REMOVE LUMINAIRE
P11	12'	NOTE "c"	A	400+70.06	22.92'RT	2430-A4-4	EXISTING POLE, REPLACE LUMINAIRE

a. CONTRACTOR TO VERIFY EXISTING MAST ARM MOUNTING REQUIREMENTS TO FIT NEW LUMINAIRE TO MAST ARM. COORDINATE WITH KPU UTILITY.
b. ALL POLES AND MAST ARMS ORIENTATED SO THAT MAST ARM IS PERPENDICULAR TO ROADWAY ADJACENT TO BASE LOCATION.
c. REPLACE ALL EXISTING MAST ARMS AND FIXTURES IN PLACE WITH NEW.
d. NEW WOOD UTILITY POLE STATION AND SET INFORMATION FOR GENERAL REFERENCE, SEE DOT&PF DRAWINGS FOR EXACT STATION AND OFFSET. COORDINATE FINAL LOCATIONS WITH KPU ELECTRIC PRIOR TO WORK.
e. STATION AND OFFSET FOR EXISTING POLES TO REMAIN ARE FOR GENERAL REFERENCE ONLY.

ELECTROLIER SCHEDULE

LUMINAIRE TYPE	DESCRIPTION	OPTICAL PERFORMANCE	MANUFACTURER		
		LED	BRAND		PART NO.
A	ROADWAY LUMINAIRE WITH FOUR MOUNTING BOLTS TO A 2-3/8" OD MAST ARM. DIE CAST ALUMINUM HOUSING, POLYESTER POWDER COAT, 120-277V, ANSI C136.41 7 PIN WITH SHORTING CAP, BUBBLE LEVEL, IP66, DOOR GROUNDING TETHER, TOOL-LESS ENTRY, QUICK DISCONNECTS.	3,000K, 11,000 LUMENS MIN, 98 WATTS MAX, TYPE 2 DISTRIBUTION	(OR)	GE	ERLH-0-11-B3-30-D GRAY ABGIL055
				AEL	ATB2 40BLEDE70 MVOLT R2 BLHK P7SH
B	ROADWAY LUMINAIRE WITH FOUR MOUNTING BOLTS TO A 2-3/8" OD MAST ARM. DIE CAST ALUMINUM HOUSING, POLYESTER POWDER COAT, 120-277V, ANSI C136.41 7 PIN WITH SHORTING CAP, BUBBLE LEVEL, IP66, DOOR GROUNDING TETHER, TOOL-LESS ENTRY, QUICK DISCONNECTS.	3,000K, 11,000 LUMENS MIN, 98 WATTS MAX, TYPE 3 DISTRIBUTION	(OR)	GE	ERLH-0-11-C3-30-D GRAY ABGIL055
				AEL	ATB2 40BLEDE70 MVOLT R3 BLHK P7SH
C	ROADWAY LUMINAIRE WITH FOUR MOUNTING BOLTS TO A 2-3/8" OD MAST ARM. DIE CAST ALUMINUM HOUSING, POLYESTER POWDER COAT, 120-277V, ANSI C136.41 7 PIN WITH SHORTING CAP, BUBBLE LEVEL, IP66, DOOR GROUNDING TETHER, TOOL-LESS ENTRY, QUICK DISCONNECTS.	3,000K, 11,000 LUMENS MIN, 98 WATTS MAX, TYPE 4 DISTRIBUTION	(OR)	GE	ERLH-0-11-D3-30-D GRAY ABGIL055
				AEL	ATB2 40BLEDE70 MVOLT R4 BLHK P7SH
D	ROADWAY LUMINAIRE WITH FOUR MOUNTING BOLTS TO A 2-3/8" OD MAST ARM. DIE CAST ALUMINUM HOUSING, POLYESTER POWDER COAT, 120-277V, ANSI C136.41 7 PIN WITH SHORTING CAP, BUBBLE LEVEL, IP66, DOOR GROUNDING TETHER, TOOL-LESS ENTRY, QUICK DISCONNECTS.	3,000K, 15,300 LUMENS MIN, 149 WATTS MAX, TYPE 2 DISTRIBUTION	(OR)	GE	ERLH-0-16-B3-30-D GRAY ABGIL055
				AEL	ATB2 60BLEDE70 MVOLT R2 BLHK P7SH

PROVIDE THE LUMINAIRES SHOWN OR APPROVED EQUAL. A SUBSTITUTE LUMINAIRE SHALL HAVE EQUIVALENT PHOTOMETRIC PERFORMANCE AS WELL AS THE SAME QUALITY, FEATURES, FUNCTIONALITY, ATTRIBUTES, ETC. AS THE SPECIFIED LUMINAIRE INCLUDING THE REQUIREMENTS SHOWN ON THE PLANS AND INCLUDED IN THE SPECIFICATIONS. IF IT DOES NOT, IT WILL BE REJECTED AS AN EQUAL TO THE SPECIFIED LUMINAIRE. PHOTOMETRIC FILES SHALL BE PROVIDED (*.IES) ALONG WITH CATALOG CUT SHEETS DURING SUBMITTALS AND THE LIGHTING DESIGN WILL BE CHECKED BY THE DESIGNER USING THE SUBSTITUTE LUMINAIRE. IF AN EQUIVALENT LIGHT LEVEL AND UNIFORMITY AS WELL AS GLARE CONTROL IS NOT ACHIEVED, THE SUBSTITUTE LUMINAIRE WILL BE REJECTED AS AN EQUAL TO THE SPECIFIED LUMINAIRE.

UTILITY EQUIPMENT SCHEDULE

(FOR COORDINATION ONLY)

DESCRIPTION	PAD	STATION (b)	OFFEST (b)	ELEVATION (a)	REMARKS
34.5KV JUNCTION CABINET	4	394+65.55	22.91'RT	29.30	W/ CONCRETE BASEMENT
12.47KV JUNCTION CABINET	4	394+49.08	23.71'RT	29.53	W/ CONCRETE BASEMENT
KPU TELECOM VAULT NO. 1	4	394+41.44	22.14'RT	29.37	VAULT
GCI TV VAULT NO. 1	4	394+35.33	20.22'RT	29.35	VAULT
LIGHTING LOAD CENTER	4	394+39.30	27.42'RT	28.99	W/ CONCRETE BASE
120/240V TRANSFORMER	4	394+35.33	27.74'RT	28.87	W/ CONCRETE BASEMENT
LIGHTING J-BOX	4	394+40.50	30.55'RT		
GCI TV VAULT NO. 2	5	398+42.01	25.67'RT	31.62	VAULT
KPU TELECOM VAULT NO. 2	5	398+35.59	27.55'RT	31.52	VAULT
KPU 34.5KV SWITCH NO. 1	6	398+62.92	81.90'LT	35.09	W/ CONCRETE BASEMENT
KPU 12.47KV SWITCH NO. 2	6	398+51.62	90.31'LT	35.69	W/ CONCRETE BASEMENT
34.5KV POWERHOUSE VAULT		398+26.59	82.39'LT	35.09	VAULT, W/ RECESSED LID
12.47KV POWERHOUSE VAULT		398+20.54	87.14'LT	35.16	VAULT, W/ RECESSED LID

a. ELEVATION GIVEN TO TOP OF CONCRETE SLAB WHERE EQUIPMENT IS MOUNTED OR TO FINISHED GRADE. ADJUST TOP OF BASEMENT STRUCTURE PER DETAIL.
b. STATION & OFFSET GIVEN TO CENTER OF EQUIPMENT BASEMENT OR CONCRETE SLAB LOCATION.

ELECTROLIER GENERAL NOTES:

1. EACH NEW ELECTROLIER SHALL HAVE A JUNCTION BOX INSTALLED ADJACENT TO THE FOUNDATION AS SHOWN IN THE POLE AND JUNCTION BOX WIRING DETAIL SHEET U36, UNLESS NOTED OTHERWISE.
2. PROVIDE JUNCTION BOXES PER SUMMARIES ON THIS SHEET. SEE AK DOT&PF STANDARD DRAWING L-23.01 AND DETAILS ON SHEET U36.
3. NEW ELECTROLIER FOUNDATIONS SHALL BE PER AK DOT&PF STANDARD DRAWING L-30.11. SEE SHEET U36 FOR POLE BASE FOUNDATION DETAIL.
4. ILLUMINATION CIRCUIT WIRES SHALL BE NO. 8 AWG. 4-CONDUCTOR CABLE WITH COPPER CONDUCTORS, XHHW INSULATION, AND AN OVERALL PVC JACKET.
5. PROVIDE ELECTROLIERS PER DETAILS ON SHEET U36, ELECTROLIER SUMMARY TABLES ON THIS SHEET, AND AK DOT&PF STANDARD DRAWING L-03.10.
6. COORDINATE WITH GENERAL CONTRACTOR TO ADJUST JUNCTION BOXES SO THAT THE TOP OF EACH JUNCTION BOX IS FLUSH WITH FINISHED GRADE.
7. PROVIDE GROUNDING BUSHING ON CONDUIT ENTERING JUNCTION BOXES, POLES, AND AS REQUIRED PER THE NEC.
8. SIZE POLE WITH MAST ARM AND LUMINAIRE AS REQUIRED FOR SUSTAINED WINDS OF 100 MPH AND GUSTS TO 120 MPH, EXPOSURE B (2003).

CN
7/24/2024

PLANS DEVELOPED BY:
MORRIS ENGINEERING GROUP, INC
2375 JORDAN AVE #7
JUNEAU, AK 99801
907-789-3350
AECL 1010

STATE OF ALASKA 49TH
Mark G. Morris
May 31, 2024
No. EE 8613
REGISTERED PROFESSIONAL ENGINEER

STATE OF ALASKA DEPARTMENT OF TRANSPORTATION AND PUBLIC FACILITIES
6860 GLACIER HIGHWAY, JUNEAU, AK 99801
(907) 465-1763

UTILITY RELOCATION FOR KETCHIKAN AREA BRIDGES

SCHEDULES

FILE y:\102 state of ak\44 utility relocation design for ketchikan bridges\Working Drawings\SCHEDULES.dwg | DATE 5/29/2024 13:01 | LAYOUT U34 | DESIGNED MGM | CHECKED MGM | DRAFTED JODI

NO.	DATE	REVISION	STATE	PROJECT DESIGNATION	YEAR	SHEET NO.	TOTAL SHEETS
1	5/2024	AS-BUILT					
AS-BUILT DRAWING PREPARED FROM CONTRACTOR PROVIDED REDLINE WHICH MAY NOT BE CORRECT			ALASKA	0902043/SFHWY00072	2021	U35	45

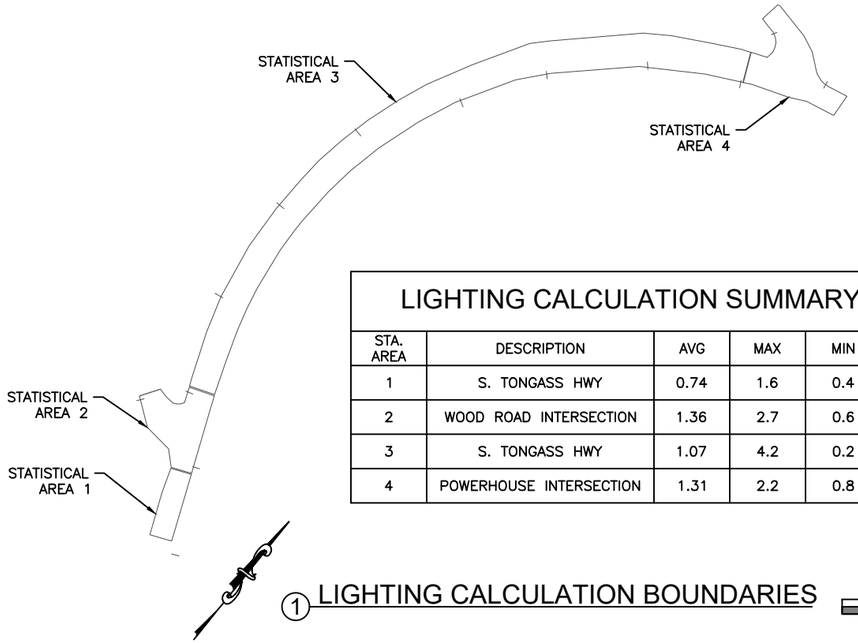

LIGHTING CALCULATION SUMMARY (fc)

STA. AREA	DESCRIPTION	AVG	MAX	MIN	AVG/MIN
1	S. TONGASS HWY	0.74	1.6	0.4	1.85
2	WOOD ROAD INTERSECTION	1.36	2.7	0.6	2.27
3	S. TONGASS HWY	1.07	4.2	0.2	5.35
4	POWERHOUSE INTERSECTION	1.31	2.2	0.8	1.64

1 LIGHTING CALCULATION BOUNDARIES

50' 100' 200'

NOTES (APPLICABLE TO DETAIL 1):

1. CALCULATIONS FOR ROADWAY BETWEEN INTERSECTIONS ARE IN FOOT CANDLES.
2. TABLE VALUES BASED ON IESNA RP-08-14 GUIDELINES FOR ROADWAY AND INTERSECTION LIGHTING.
3. RANGES ARE PER TABLE 12.1 OF RP-08 (ILLUMINANCE FOR INTERSECTIONS) AND ASSUMES 'COLLECTOR/LOCAL' FUNCTIONAL CLASSIFICATION AND BETWEEN 'LOW' AND 'MEDIUM' PEDESTRIAN AREA CLASSIFICATIONS.
4. CALCULATIONS MUST EXTEND THROUGH THE 'TRAFFIC CONFLICT AREA' AT THE INTERSECTION AS DEFINED BY RP-08.
5. MEET OR EXCEED THE PROVIDED LIGHT LEVELS WITHIN EACH SEGMENT OF THE PROJECT AREA. PROVIDE CALCULATIONS AS PART OF THE SUBMITTALS PROCESS.
6. CONTRACTOR SHALL PROVIDE TEMPORARY LIGHTING AS REQUIRED DURING PROJECT CONSTRUCTION. SEE KEYNOTE 18, SHEET U5 FOR MORE INFORMATION.
7. PROVIDE ROADWAY LIGHTING PER RP-08-14, 2013 EDITION.

SUMMARY OF LIGHTING LOAD CENTER: NO. 1

(ALL NEW LOADS)

LOAD CENTER TYPE 1A

LOCATION DATA: STA. 394+38.99, 27.18'RT
LOAD CENTER: NEW AT PAD 4
POWER SOURCE: NEW UTILITY TRANSFORMER AT PAD 4
PHOTOELECTRIC CONTROL: YES, MOUNTED TO LOAD CENTER

SERVICE VOLTAGE: 1 PHASE, 3 WIRE, 240V, 60HZ
INTERRUPTING CAPACITY OF CIRCUIT BREAKERS-SERIES RATED: 10,000AIC
PROVIDE METER SOCKET: YES
SERVICE AMPS: 100A

MAIN BREAKER A: 240V, 2 POLE, 100A
PANEL A RATING: 120/240V, 1 PHASE, 3 WIRE, 125A (MIN.)
CONTACTOR: 240V, 2 POLE, 100A

LOAD PANEL A SUMMARY

CIRCUIT NUMBER	DESCRIPTION	KVA LOAD	BREAKER	
			AMPS	POLES
1,3	SPARE 2-POLE BREAKER	0.0	20	2
2	SPARE BREAKER	0.0	20	1
4	SPARE BREAKER	0.0	20	1
5	CONTRACTOR CONTROL BREAKER	0.0	15	1
5,7	SPARE 2-POLE BREAKER	0.0	20	2
6,8	SPARE 2-POLE BREAKER	0.0	20	2
9,11	2-POLE BREAKER SPACE	–	–	2
10,12	STREET LIGHTING CIRCUIT #1	0.750	20	2
13,15	2-POLE BREAKER SPACE	–	–	2
14,16	SPARE 2-POLE BREAKER	0.0	20	2

NOTES:

1. STATION AND OFFSET INFORMATION GIVEN TO CENTER OF LOAD CENTER.
2. EXCAVATE AND BACKFILL 12" MIN ALL SIDES OF LOAD CENTER BASE.
3. SEE DOT&PF STANDARD DETAIL L-25-01.
4. PE CELL IS POWERED FROM CONTACTOR.

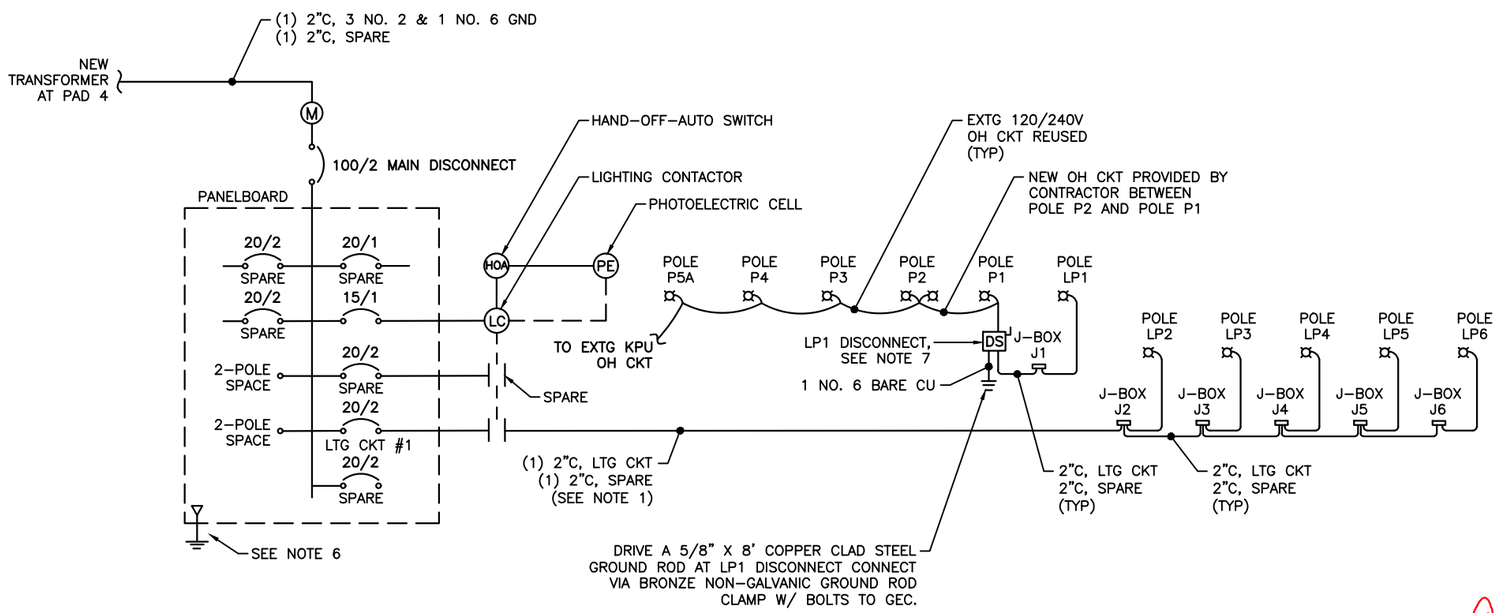

2 CONTROLLER SCHEMATIC
NO SCALE

NOTES (APPLICABLE TO DETAIL 2):

1. PROVIDE NO. 8, 4-CONDUCTOR CABLES, WITH GROUND, TO EACH LIGHT FIXTURE. PROVIDE CIRCUIT SPLICES AT JUNCTION BOXES AS REQUIRED. RUN A SPARE CONDUIT INTO EACH LIGHT POLE BASE.
2. PROVIDE CIRCUIT LABELING AT ALL JUNCTION BOXES AND ACCESSIBLE SPICE POINTS.
3. PROVIDE ALL SPARE CONDUITS WITH PULLSTRINGS.
4. LABEL LOAD CENTER PANEL CIRCUITS.
5. NOT ALL DETAILS AND REQUIREMENTS FOR THE LIGHTING LOAD CENTER ARE NOTED IN THE PLANS AND SPECIFICATIONS. REFER TO ALASKA DOT&PF STANDARD DESIGN DRAWING L-25.01 & L-25.00 (2020 EDITION) FOR ADDITIONAL REQUIREMENTS OF THE TYPE 1A LIGHTING LOAD CENTER.
6. GROUND THE LOAD CENTER TO CONCRETE FOUNDATION REINFORCING PER CODE AND AS REQUIRED PER DRAWING L-25.01 (SEE NOTE 5 ABOVE). ESTABLISH NEUTRAL-TO-GROUND BOND AT PANEL, MAINTAIN N-G ISOLATION THEREAFTER.
7. PROVIDE A 30A, FUSED DISCONNECT AT UTILITY POLE P1. DISCONNECT SHALL ACT AS DEMARCATION POINT BETWEEN KPU AND DOT&PF FACILITIES. NEMA 4X, SS, 240V RATED, WITH LOCKABLE HANDLE AND NEUTRAL KIT. SQUARE D H221DS WITH SN03 NEUTRAL KIT OR EQUAL. PROVIDE WITH CLASS CC TIME-DELAY FUSE MATCHED TO SIZE OF FUSE WITHIN LP1 POLE FUSE HOLDER. SEE DETAIL 9, SHEET U36 FOR MOUNTING AND MORE INFORMATION.

CN
7/24/2024

PLANS DEVELOPED BY:
MORRIS ENGINEERING GROUP, INC
2375 JORDAN AVE #7
JUNEAU, AK 99801
907-789-3350
AECL 1010

STATE OF ALASKA 49TH Mark G. Morris May 31, 2024 No. EE 8613 REGISTERED PROFESSIONAL ENGINEER

STATE OF ALASKA DEPARTMENT OF TRANSPORTATION AND PUBLIC FACILITIES
6860 GLACIER HIGHWAY, JUNEAU, AK 99801
(907) 465-1763

UTILITY RELOCATION FOR KETCHIKAN AREA BRIDGES

LIGHTING LOAD CENTER SUMMARY, SCHEMATIC & CALCS.

FILE	DATE	LAYOUT	DESIGNED	CHECKED	DRAFTED
y:\102 state of ak\44 utility relocation design for ketchikan bridges\Working Drawings\LOAD CENTER SUMMARIES.dwg	5/24/2024 13:57	U35	MGM	MGM	EMILEE

NO.	DATE	REVISION	STATE	PROJECT DESIGNATION	YEAR	SHEET NO.	TOTAL SHEETS
1	5/2024	AS-BUILT					
AS-BUILT DRAWING PREPARED FROM CONTRACTOR PROVIDED REDLINE WHICH MAY NOT BE CORRECT			ALASKA	0902043/SFHWY00072	2021	U36	45

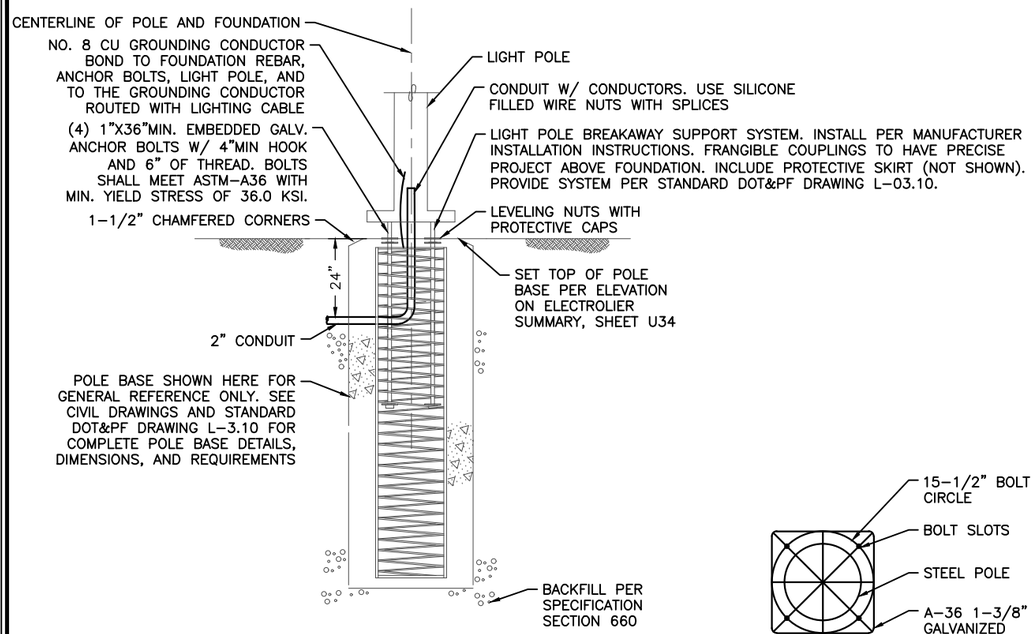

1 POLE BASE FOUNDATION DETAIL
NO SCALE

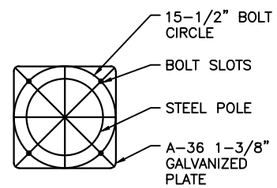

2 BOLT CIRCLE DETAIL
NO SCALE

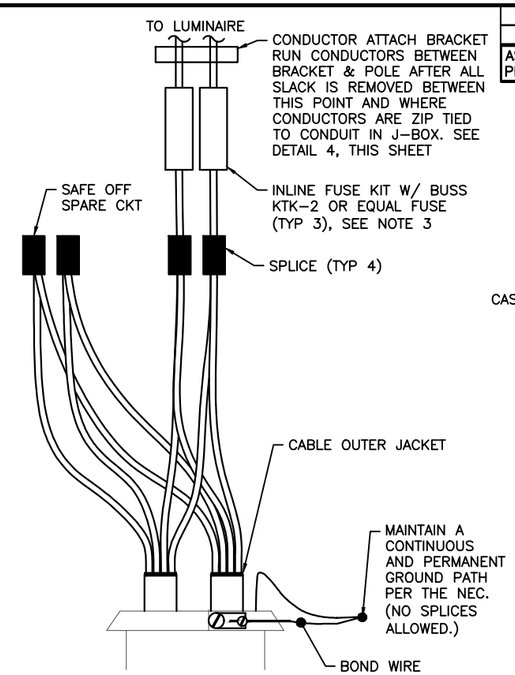

3 POLE WIRING DETAIL
NO SCALE

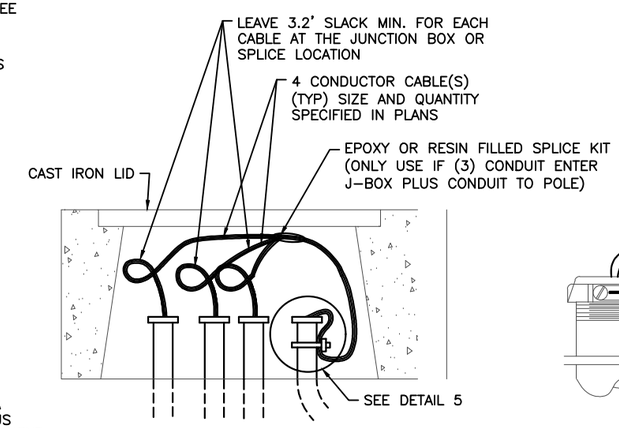

4 JUNCTION BOX DETAIL
NO SCALE

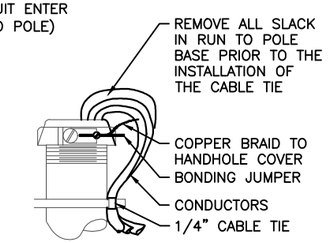

5 JUNCTION BOX GROUNDING DETAIL
NO SCALE

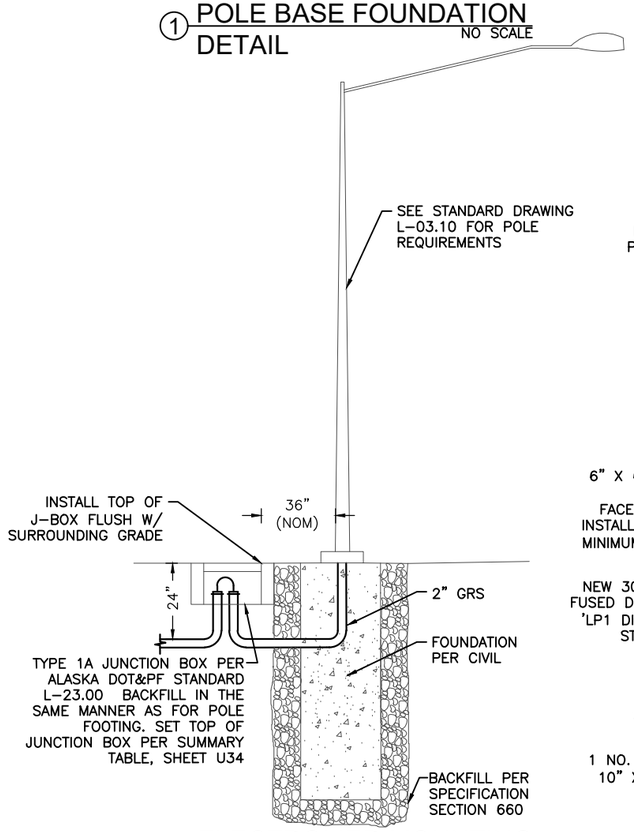

6 ELECTROLIER MOUNTING DETAIL
NO SCALE

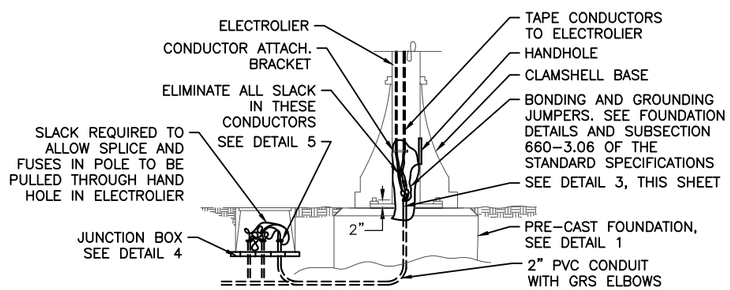

7 LIGHTING SYSTEM POLE AND JUNCTION BOX WIRING DETAIL
NO SCALE

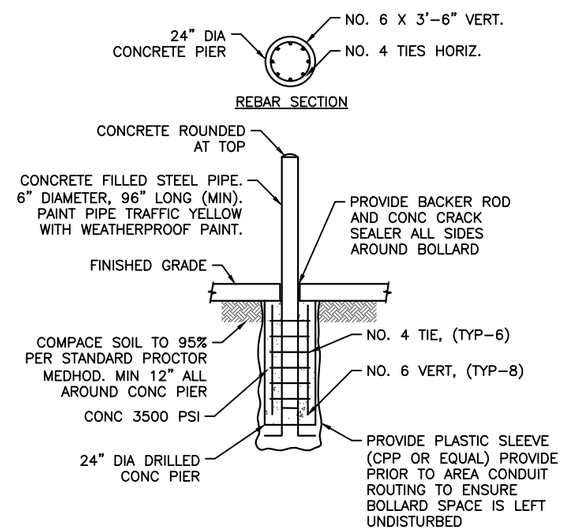

8 CONCRETE BOLLARD DETAIL
AT PAD 6 NO SCALE

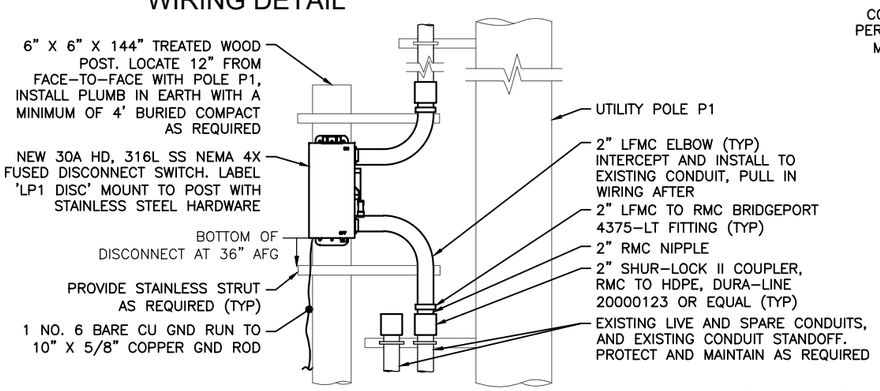

9 LIGHT POLE LP1 DISCONNECT DETAIL (AT POLE P1)
NO SCALE

NOTE: SEE DETAIL 2, SHEET U35 FOR MORE INFO ON DISCONNECT, GROUND ROD, AND CIRCUITING.

SHEET NOTES:

1. ALL SPLICES SHALL BE IN BASE OF POLE.
2. PROVIDE GROUNDING BUSHINGS ON CONDUIT. BOND GROUNDING CONDUCTOR ROUTED WITH LIGHTING CABLE TO GROUNDING BUSHINGS AND STEEL COVER, AND ROUTE TO LIGHT POLE BASE.
3. PROVIDE DOUBLE FUSED CONNECTOR KITS IN BASE OF POLE. SECTION NO. 1791-DF OR EQUAL. THE FUSES SHALL BE BUSS KTK-5 FAST ACTING DUAL FERRULE TYPE OR APPROVED EQUAL.
4. LOCATE THE LIGHT POLES AND JUNCTION BOXES WHERE SHOWN ON TABLES ON SHEET U34.
5. SIZE POLE WITH LUMINAIRE FOR 100 MPH SUSTAINED WINDS WITH GUSTS TO 120 MPH, EXPOSURE B (IBC 2003).
6. PROVIDE FUSE KITS IN EACH POLE BASE.
7. PROVIDE GROUNDING BUSHINGS ON CONDUIT.
8. SPLICE IN JUNCTION BOX ONLY WHEN CIRCUIT BRANCHES IN TWO DIRECTIONS (3 OR MORE CONDUIT PLUS CONDUIT TO LIGHT POLE). OTHERWISE SPLICE CABLES IN LIGHT POLE PER DETAIL 7. USE RESIN FILLED SPLICE KITS WHEN SPLICING IN JUNCTION BOXES.
9. BOND GROUNDING CONDUCTORS THAT ARE IN CONDUIT TO GROUNDING BUSHINGS AND TO JUNCTION BOX LID BONDING JUMPER.

CN
7/24/2024

PLANS DEVELOPED BY:
MORRIS ENGINEERING GROUP, INC
2375 JORDAN AVE #7
JUNEAU, AK 99801
907-789-3350
AECL 1010

STATE OF ALASKA 49TH Mark G. Morris May 31, 2024 No. EE 8613 REGISTERED PROFESSIONAL ENGINEER

STATE OF ALASKA DEPARTMENT OF TRANSPORTATION AND PUBLIC FACILITIES
6860 GLACIER HIGHWAY, JUNEAU, AK 99801
(907) 465-1763

UTILITY RELOCATION FOR KETCHIKAN AREA BRIDGES

ELECTROLIER, JUNCTION BOX, & BOLLARD DETAILS

FILE | y:\102 state of ak\44 utility relocation design for ketchikan bridges\Working Drawings\ELECTROLIER & JUNCTION BOX DETAILS.dwg | DATE | 5/24/2024 14:00 | LAYOUT | U36 | DESIGNED | MGM | CHECKED | MGM | DRAFTED | EMILEE

NO.	DATE	REVISION	STATE	PROJECT DESIGNATION	YEAR	SHEET NO.	TOTAL SHEETS
1	5/2024	AS-BUILT					
AS-BUILT DRAWING PREPARED FROM CONTRACTOR PROVIDED REDLINE WHICH MAY NOT BE CORRECT			ALASKA	0902043/SFHWY00072	2021	U37	45

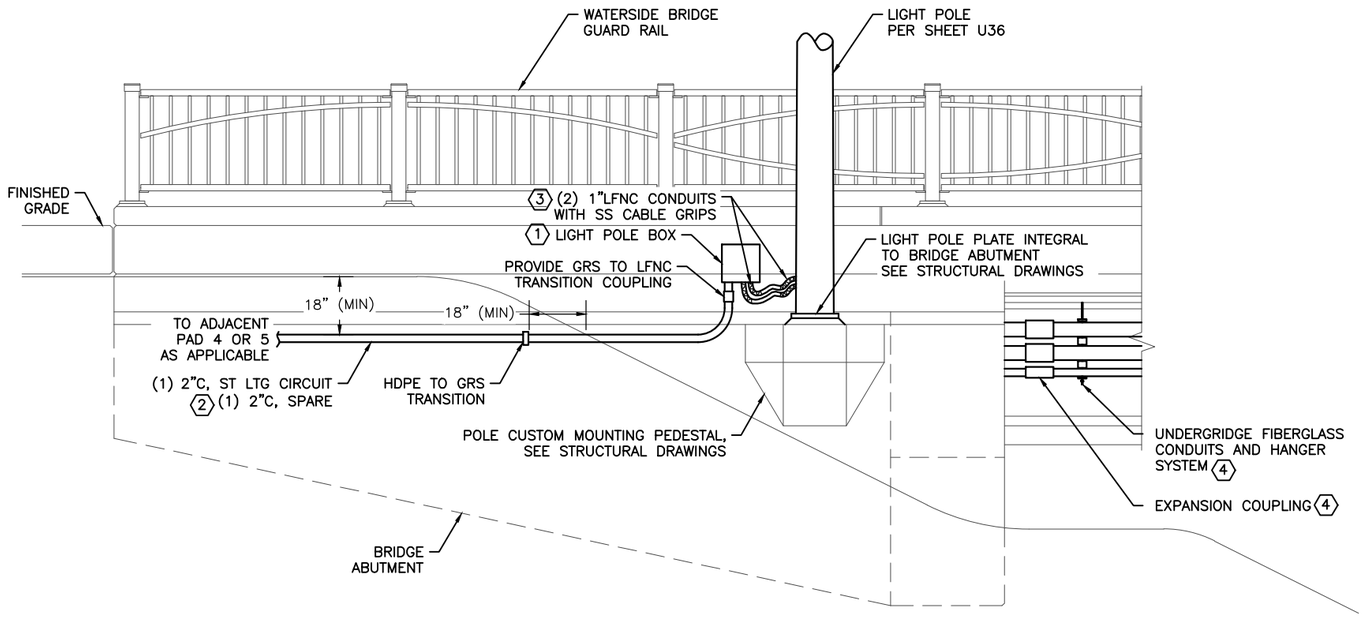

1 BRIDGE ELECTROLIER
(APPLIES TO POLES LP2 & LP3)

6" 1' 2' 4'

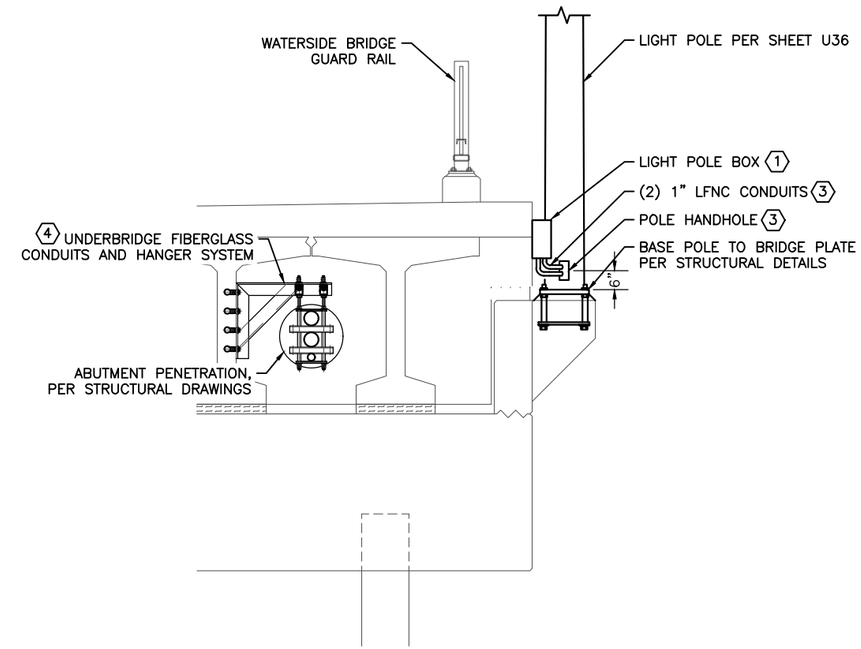

2 BRIDGE ELECTROLIER - SECTION
(APPLIES TO POLES LP2 & LP3)

6" 1' 2' 4'

SHEET NOTES:

1. DETAILS ON THIS PAGE ARE TYPICAL FOR BOTH BRIDGE ELECTROLIERS.
2. COORDINATE ALL WORK WITH BRIDGE CONTRACTOR, CIVIL, AND STRUCTURAL DRAWINGS.

KEYNOTES:

1. PROVIDE A SURFACE MOUNTED LIGHT POLE JUNCTION BOX ADJACENT TO POLE MOUNTING PEDESTAL. 12" X 12" X 6", NEMA 4X, STAINLESS STEEL 316 ENCLOSURE WITH HINGED LID. LOCATE LIGHT POLE FUSING, WITHIN THIS BOX. COORDINATE LOCATION WITH BRIDGE CONTRACTOR, MOUNT AS HIGH ABOVE ADJACENT SLOPED GRADE AS PRACTICAL. MOUNT TO CUT STAINLESS STEEL SUPPORT CHANNEL SEGMENTS ATTACHED TO THE ABUTMENT WALL.
2. PROVIDE CONDUITS UNDERGROUND TO BOX FROM LAST LIGHT POLE JUNCTION BOX. TRANSITION UNDERGROUND CONDUITS HDPE TO GRS PRIOR TO EXITING THE SLOPE AS INDICTED.
3. PROVIDE LFNC CONDUIT FROM BOX ON ABUTMENT TO LIGHT POLE. TERMINATE CONDUITS ONTO POLE HANDHOLE LID. PROVIDE STRAIN RELIEF GRIPS FOR THE FLEX CONDUIT SEGMENTS, KELLUM GRIPS OR EQUAL, AT BOTH ENDS OF THE SEGMENTS.
4. UNDERBRIDGE FIBERGLASS CONDUITS AND HANGERS SHOWN HERE FOR GENERAL REFERENCE ONLY. INSTALLED IN STAGES PER SHEETS U7A–U7C. SEE SHEET U14 FOR HANGER SYSTEM DETAILS.

CN
7/24/2024

PLANS DEVELOPED BY:
MORRIS ENGINEERING GROUP, INC
2375 JORDAN AVE #7
JUNEAU, AK 99801
907–789–3350
AECL 1010

STATE OF ALASKA 49TH
Mark G. Morris
May 31, 2024
No. EE 8613
REGISTERED PROFESSIONAL ENGINEER

STATE OF ALASKA DEPARTMENT OF TRANSPORTATION AND PUBLIC FACILITIES
6860 GLACIER HIGHWAY, JUNEAU, AK 99801
(907) 465–1763

UTILITY RELOCATION FOR KETCHIKAN AREA BRIDGES

BRIDGE ELECTROLIER & JUNCTION BOX DETAILS

FILE y:\102 state of ak\44 utility relocation design for ketchikan bridges\Working Drawings\BRIDGE ELECTROLIER & JUNCTION BOX DETAILS.DWG | LAYOUT U37 | 5/24/2024 14:00 | DESIGNED MGM | CHECKED MGM | DRAFTED EMILEE

NO.	DATE	REVISION	STATE	PROJECT DESIGNATION	YEAR	SHEET NO.	TOTAL SHEETS
1	5/2024	AS-BUILT					
AS-BUILT DRAWING PREPARED FROM CONTRACTOR PROVIDED REDLINE WHICH MAY NOT BE CORRECT			ALASKA	0902043/SFHWY00072	2021	U38	45

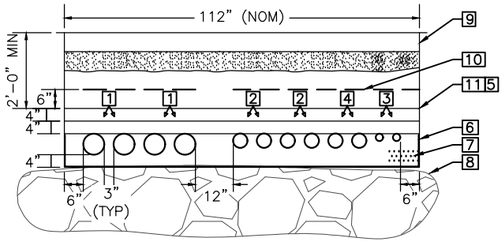

① TRENCH C1 DETAIL
NO SCALE

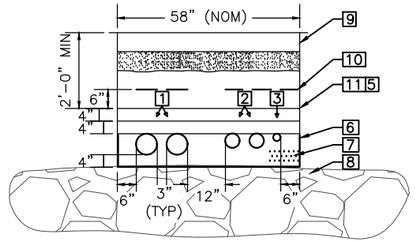

② TRENCH C2 DETAIL
NO SCALE

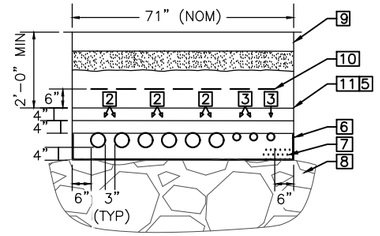

③ TRENCH C3 DETAIL
NO SCALE

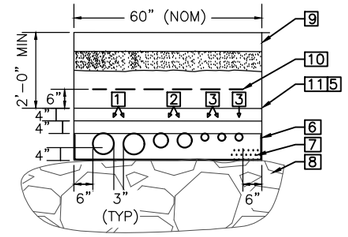

④ TRENCH C4 DETAIL
NO SCALE

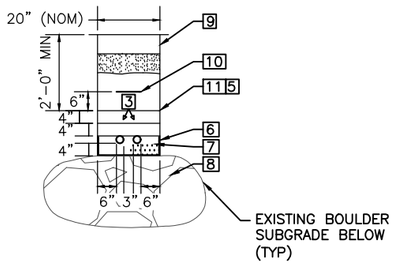

⑤ TRENCH L1 DETAIL
NO SCALE

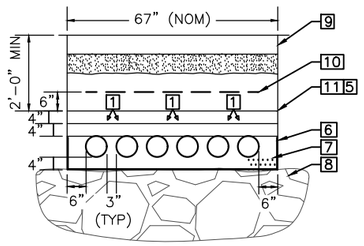

⑥ TRENCH P1 DETAIL
NO SCALE

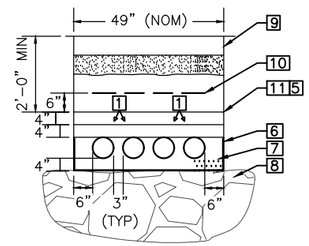

⑦ TRENCH P2 DETAIL
NO SCALE

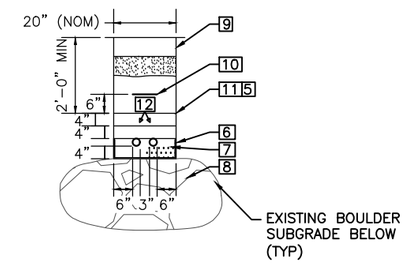

⑧ TRENCH P3 DETAIL
NO SCALE

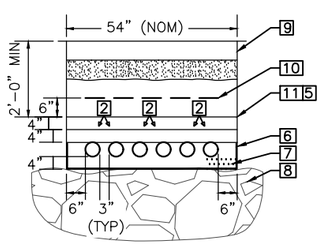

⑨ TRENCH T1 DETAIL
NO SCALE

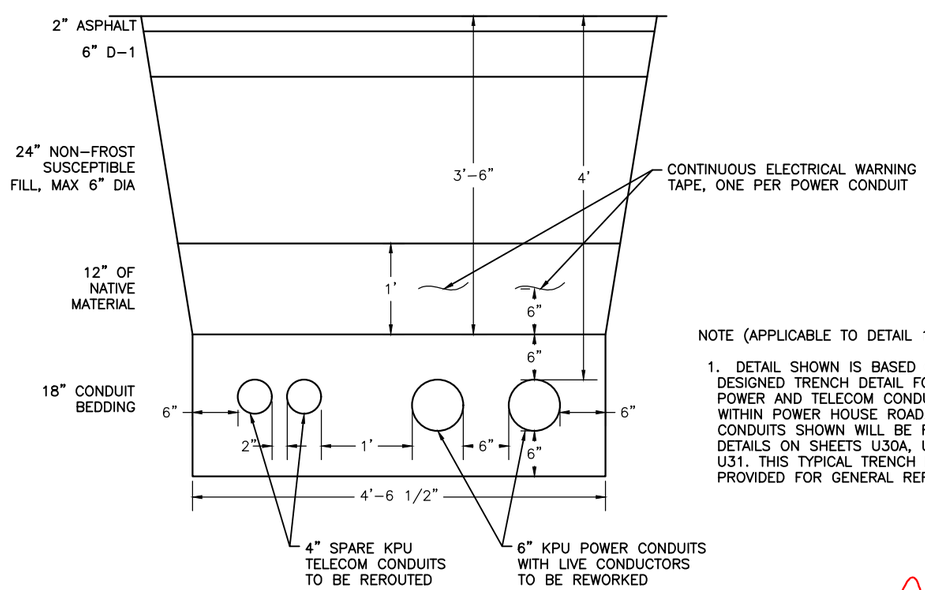

⑩ EXISTING POWERHOUSE ROADWAY TRENCH DETAIL
NO SCALE

NOTE (APPLICABLE TO DETAIL 10):

1. DETAIL SHOWN IS BASED ON THE DESIGNED TRENCH DETAIL FOR EXISTING POWER AND TELECOM CONDUITS THAT RUN WITHIN POWER HOUSE ROAD. THE FOUR CONDUITS SHOWN WILL BE REWORKED PER DETAILS ON SHEETS U30A, U30B, AND U31. THIS TYPICAL TRENCH DETAIL IS PROVIDED FOR GENERAL REFERENCE ONLY.

SHEET NOTES:

1. ALL DIMENSIONS SHOWN ARE MINIMUM. TRENCH DETAILS ARE NOT TO SCALE. DO NOT SCALE FROM DETAILS.
2. INDIVIDUAL CONDUIT DIAMETERS (2", 4", 6") ARE NOT ACCURATELY SIZED ON THE TRENCH DETAILS. DETAILS ON THIS SHEET EMPHASIZE SPACING OF CONDUITS, NOT THE SIZE OF THE CONDUITS THEMSELVES.
3. SEE CIVIL SHEETS FOR TYPICAL SECTIONS UNDER PAVED AREAS, ROADWAY CROSS SECTIONS, ETC.
4. IN ALL CASES, MEDIUM VOLTAGE POWER CONDUITS (12.47KV & 34.5KV) IN TRENCH SHALL BE SEPARATED FROM ALL OTHER CONDUITS BY 12" MINIMUM.
5. THROUGHOUT THE SITE, CONDUITS CROSS AND SEPARATE FROM COMMON TRENCHES. SEE SITE PLANS FOR SPECIFIC LOCATIONS. CROSSING CONDUITS WILL REQUIRE SPECIAL CONSIDERATION TO ENSURE MINIMUM SEPARATIONS ARE MAINTAINED. ALL CONDUIT CROSSING POINTS SHALL BE DOCUMENTED IN THE AS-BUILTS.
6. SEE SITE PLANS FOR TRENCH DETAIL CALLOUTS.
7. CONDUIT ARRANGEMENTS MAY VARY FROM WHAT IS SHOWN. CONDUITS MAY BE MIRRORED WITHIN A TRENCH, MV CONDUITS MIRRORED, TELECOM CONDUITS MIRRORED, ETC. CONTRACTOR IS EXPECTED TO ARRANGE CONDUITS IN EACH TRENCH TO MINIMIZE CROSSING CONDUITS. TO MINIMIZE NUMBER OF TRENCHES NEEDED, ETC. IN ALL CASES, MINIMUM SEPARATIONS SHOWN MUST BE MAINTAINED.
8. SOME KEYNOTES ON SHEET U5 REFERENCE CABLES APPLICABLE TO THIS SHEET.

SHEET KEYNOTES:

1. 6" MEDIUM VOLTAGE POWER UTILITY CONDUITS OR SPARE(S).
2. 4" TELEPHONE & TELEVISION UTILITY CONDUITS OR SPARE(S).
3. 2" STREET LIGHTING CONDUIT OR SPARE(S).
4. 4" CUSTOMER SERVICE CONDUIT OR SPARE.
5. 4" CONCRETE CAP. EXTEND 6" BEYOND CONDUIT WIDTH WITHIN THE TRENCH, BOTH SIDES, THE ENTIRE LENGTH OF THE TRENCH.
6. PROVIDE TWO LAYERS OF HEAVY DUTY, COMMERCIAL GRADE FILTER FABRIC LINER ON BOTH SIDES AND THE BOTTOM OF THE CONDUIT TRENCH D-1 MATERIAL AREA.
7. BEDDING PER CIVIL SPECS (COMPACTED D-1).
8. REQUIRED CONDUIT DEPTH WILL LIKELY REQUIRE DRILLING/BLASTING BOULDERS.
9. ROADWAY, SEE CIVIL SHEETS.
10. DETECTABLE UNDERGROUND ELECTRICAL UTILITY MARKING TAPES (REEF TERRA TAPE OR SCOTCH SERIES 400 BARRICADE TAPE). RED TAPE OVER POWER & ORANGE TAPE OVER COMMUNICATIONS.
11. SELECT MATERIAL, TYPE W, SEE CIVIL SHEETS.
12. 2" MEDIUM VOLTAGE POWER UTILITY CONDUITS OR SPARE(S).

CN
7/24/2024

PLANS DEVELOPED BY:
MORRIS ENGINEERING GROUP, INC
2375 JORDAN AVE #7
JUNEAU, AK 99801
907-789-3350
AECL 1010

STATE OF ALASKA 49TH
Mark G. Morris
May 31, 2024
No. EE 8613
REGISTERED PROFESSIONAL ENGINEER

STATE OF ALASKA DEPARTMENT OF TRANSPORTATION AND PUBLIC FACILITIES
6860 GLACIER HIGHWAY, JUNEAU, AK 99801
(907) 465-1763

UTILITY RELOCATION FOR KETCHIKAN AREA BRIDGES

TRENCH DETAILS

FILE | y:\102 state of ak\44 utility relocation design for ketchikan bridges\Working Drawings\TRENCH DETAILS.dwg | DATE | 4/26/2024 14:42 | LAYOUT | U38 | DESIGNED | MGM | CHECKED | MGM | DRAFTED | NADJA

NO.	DATE	REVISION	STATE	PROJECT DESIGNATION	YEAR	SHEET NO.	TOTAL SHEETS
1	5/2024	AS-BUILT					
AS-BUILT DRAWING PREPARED FROM CONTRACTOR PROVIDED REDLINE WHICH MAY NOT BE CORRECT			ALASKA	0902043/SFHWY00072	2021	U39	45

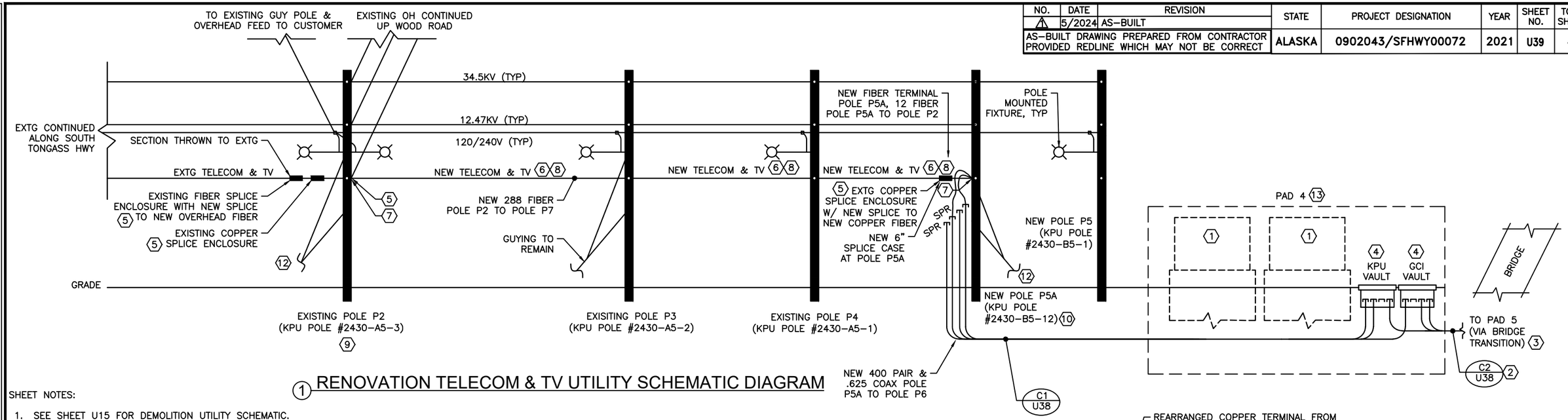

1 RENOVATION TELECOM & TV UTILITY SCHEMATIC DIAGRAM

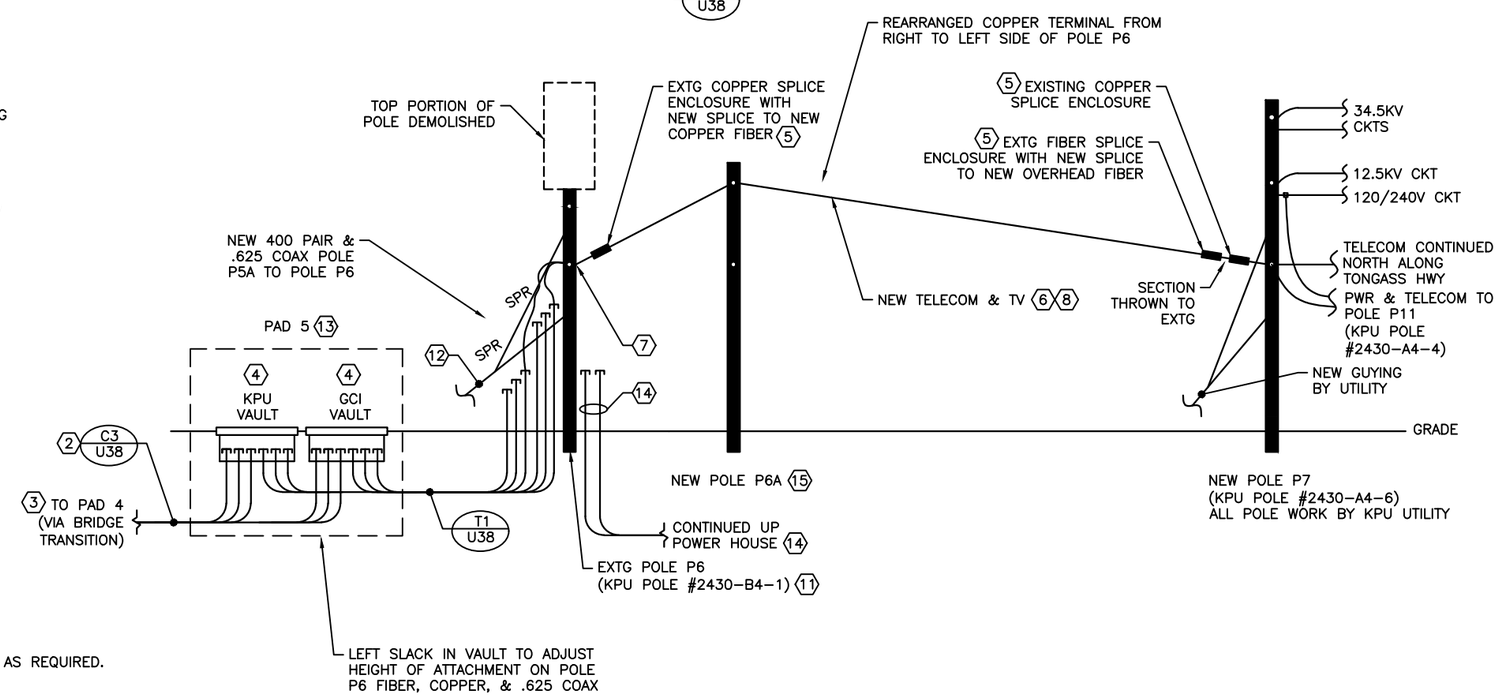

SHEET NOTES:

1. SEE SHEET U15 FOR DEMOLITION UTILITY SCHEMATIC.
2. THIS SCHEMATIC DEPICTS REMAINING EXISTING OVERHEAD UTILITY WORK AND NEW UNDERGROUND TELECOM AND TV DISTRIBUTION WORK ALONG SOUTH TONGASS HIGHWAY WITHIN THE PROJECT AREA. SEE SITE PLANS FOR MORE SPECIFICS AND EXTENTS.
3. THIS SCHEMATIC IS A GENERAL REFERENCE ONLY AND SHOULD BE USED AS SUCH. VERIFY ONSITE ALL EXISTING POLE ELEMENTS, NOT ALL ELEMENTS ARE SHOWN.
4. NEARLY ALL NEW TELECOM AND TV CONDUIT TRENCHES HAVE ACCOMPANYING POWER CONDUITS WITHIN THE SAME TRENCH. SEE SITE PLANS FOR SPECIFIC TRENCH LOCATIONS, AND SHEET U38 FOR TRENCH PROFILES.
5. TELECOMMUNICATIONS AND TV UNDERGROUND CONDUCTORS AND CABLES NOT SHOWN ON THIS SHEET. ALL NEW TELECOM CONDUCTOR AND CABLE FURNISHED AND INSTALLED BY CONTRACTOR.
6. TELECOM AND TV CABLES AND CONDUITS AT NEW VAULTS TO BE LABELED. SEE SHEET U41 FOR LABELING REQUIREMENTS.
7. PROVIDE UTILITY CABLE SLACK CABLE COILS PER COIL TABLE, THIS SHEET.

KEYNOTES:

1. UTILITY PAD HAS POWER AND TELECOM AND TV EQUIPMENT. POWER EQUIPMENT OUTLINES SHOWN FOR GENERAL REFERENCE ONLY. SEE RENOVATION POWER UTILITY SCHEMATIC ON SHEET U16 FOR ADJACENT POWER UTILITY WORK.
2. CONDUITS TRANSITION FROM ONE COMMON TRENCH PROFILE TO ANOTHER BETWEEN END POINTS. SEE SITE PLANS FOR MORE DETAILS.
3. CONDUITS SPLIT INTO SEPARATE BAYS IN ROUTING ACROSS UNDERSIDE OF BRIDGE. SEE SHEETS U7A–U7C AND U14 FOR BRIDGE DETAILS.
4. SEE SHEET U41 FOR VAULT DETAIL.
5. KPU TELECOM FIBER SPLICES TO OCCUR AT EXISTING SPLICE ENCLOSURES AT POLES P2 AND P7. COPPER SPLICES TO OCCUR AT EXISTING ENCLOSURES AT POLES P5A AND P6. CABLE SPLICES, TERMINATIONS, AND TESTING BY CONTRACTOR. COORDINATE WITH UTILITY AS REQUIRED.
6. PROVIDE NEW FIBER, COPPER TO REMAIN, KPU TELECOM OVERHEAD. SEE DETAIL 1, SHEET U41 FOR DETAILS.
7. GCI TELEVISION CABLE TO SPLICES TO OCCUR AT POLES P2, P5A, P6, AND P7. SPLICES BY GCI. COORDINATE AS REQUIRED.
8. PROVIDE NEW TV COAXIAL CABLE OVERHEAD. SEE DETAIL 1, SHEET U41 FOR DETAILS.
9. RENOVATED OVERHEAD AT EXISTING POLE P2 PER DETAILS ON SHEET U19.
10. NEW OVERHEAD AT NEW POLE P5A PER DETAILS ON SHEET U21.
11. RENOVATED OVERHEAD AT EXISTING POLE P6 PER DETAILS ON SHEETS U15 AND U16.
12. PROVIDE NEW GUYING FOR POLE. SEE POLE SPECIFIC DETAILS FOR REQUIREMENTS.
13. SEE ENLARGED PAD DETAILS ON SHEET U11 (PAD 4) AND SHEET U12 (PAD 5) FOR LAYOUT INFORMATION.
14. 4" TELECOM RISERS (SPARE) RUN UNDERGROUND UP POWERHOUSE ROAD. CONDUITS TO BE REWORKED DURING POWERHOUSE VAULT INSTALLATION WORK. SEE SHEET U18 FOR MORE INFORMATION. POWER CONDUITS TO BE ABANDONED IN PLACE, TELECOM TO REMAIN AS SPARES.
15. PROVIDE A WOOD TELECOM POLE P6A TO ALLOW FOR REROUTING OF TELECOM OVERHEAD TO A HIGHER ELEVATION ABOVE ROADWAY. SEE SHEETS U8, U39, AND U39A FOR MORE INFORMATION.

CN
7/24/2024

PLANS DEVELOPED BY:
MORRIS ENGINEERING GROUP, INC
2375 JORDAN AVE #7
JUNEAU, AK 99801
907-789-3350
AECL 1010

STATE OF ALASKA 49TH
Mark G. Morris
May 31, 2024
No. EE 8613
REGISTERED PROFESSIONAL ENGINEER

STATE OF ALASKA DEPARTMENT OF TRANSPORTATION AND PUBLIC FACILITIES
6860 GLACIER HIGHWAY, JUNEAU, AK 99801
(907) 465-1763

UTILITY RELOCATION FOR KETCHIKAN AREA BRIDGES

RENOVATION TELECOM & TV UTILITY SCHEMATIC DIAGRAM

FILE | y:\102 state of ak\44 utility relocation design for ketchikan bridges\Working Drawings\RISER DIAGRAM - TV.dwg | DATE | 5/24/2024 14:01 | LAYOUT | U39 | DESIGNED | MGM | CHECKED | MGM | DRAFTED | EMILEE

NO.	DATE	REVISION	STATE	PROJECT DESIGNATION	YEAR	SHEET NO.	TOTAL SHEETS
1	5/2024	AS-BUILT					
AS-BUILT DRAWING PREPARED FROM CONTRACTOR PROVIDED REDLINE WHICH MAY NOT BE CORRECT			ALASKA	0902043/SFHWY00072	2021	U39A	45

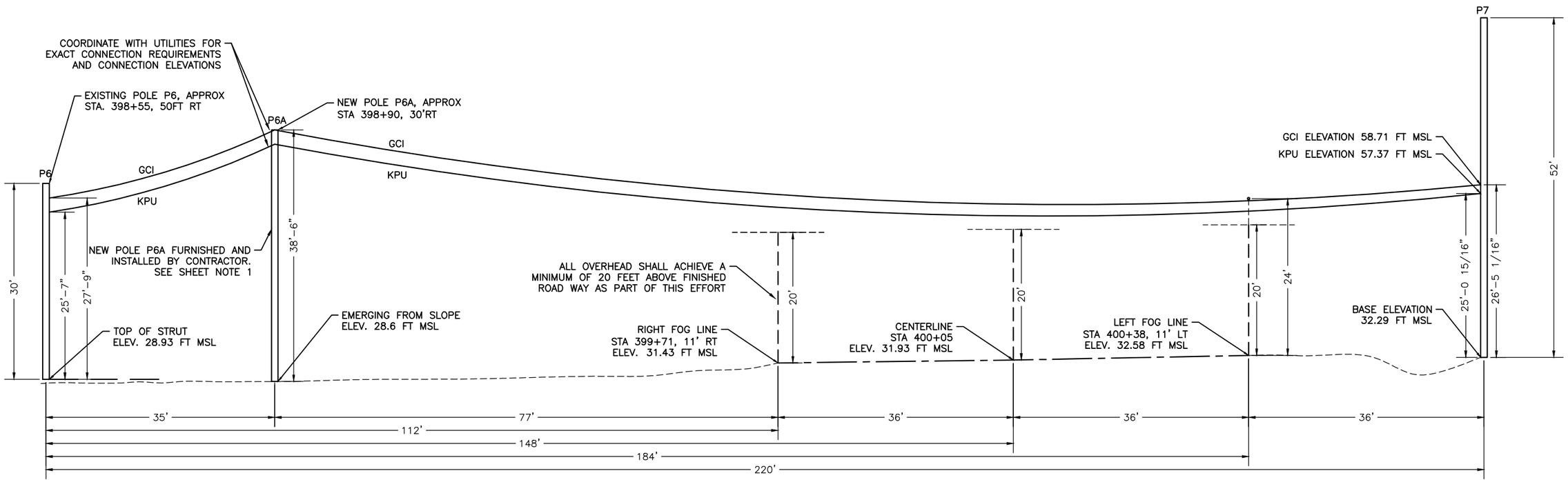

1 P6 TO P6A TO P7 COMM SPAN REWORK

2' 4' 8' 16'

SHEET NOTES:

1. PROVIDE A WOOD TELECO UTILITY POLE P6A BETWEEN POLE P6 AND P7 WHERE NOTED. POLE SHALL BE A 45 FOOT, CLASS 2 WOOD POLE MEETING THE GENERAL REQUIREMENTS FOUND ON SHEET U26B. BURY THE POLE 6.5 FEET BELOW GRADE. PROVIDE POLE COMPACTION AS REQUIRED PER STANDARD UTILITY INDUSTRY PRACTICE. ENSURE POLE IS INSTALLED PLUMB.
2. CONTRACTOR SHALL COORDINATE WITH GCI AND KPU TELECOM ENGINEERS TO REROUTE THE OVERHEAD LINES BETWEEN POLE P6 AND P7 TO POLE P6A. OVERHEAD SHALL BE RAISED SO THAT A MINIMUM OF 20 FEET ABOVE FINISHED PAVEMENT IS ACHIEVED FOR THE OVERHEAD AS IT CROSSES THE HIGHWAY.
3. ALL LOCATIONS, DISTANCES, DIMENSIONS AND ELEVATIONS NOTED ON THIS PAGE ARE NOMINAL AND BASED ON DRAWINGS, IN THE FIELD MEASUREMENTS, ETC. CONTRACTOR TO CONFIRM LOCATIONS, DISTANCES, DIMENSIONS AND ELEVATIONS AS REQUIRED.
4. SEE SHEETS U8, U39, U41 FOR MORE INFORMATION.

CN
7/24/2024

PLANS DEVELOPED BY:
MORRIS ENGINEERING GROUP, INC
2375 JORDAN AVE #7
JUNEAU, AK 99801
907-789-3350
AECL 1010

STATE OF ALASKA 49TH
Mark G. Morris
May 31, 2024
No. EE 8613
REGISTERED PROFESSIONAL ENGINEER

STATE OF ALASKA DEPARTMENT OF TRANSPORTATION AND PUBLIC FACILITIES
6860 GLACIER HIGHWAY, JUNEAU, AK 99801
(907) 465-1763

UTILITY RELOCATION FOR KETCHIKAN AREA BRIDGES

P6 TO P6A TO P7 TELECOM SPAN

FILE	DATE	LAYOUT	DESIGNED	CHECKED	DRAFTED
y:\102 state of ak\44 utility relocation design for ketchikan bridges\Working Drawings\RISER DIAGRAM - TV.dwg	5/24/2024 14:01	U39A	MGM	MGM	EMILEE

NO.	DATE	REVISION	STATE	PROJECT DESIGNATION	YEAR	SHEET NO.	TOTAL SHEETS
1	5/2024	AS-BUILT	ALASKA	0902043/SFHWY00072	2021	U40	45
AS-BUILT DRAWING PREPARED FROM CONTRACTOR PROVIDED REDLINE WHICH MAY NOT BE CORRECT							

CN 7/24/2024

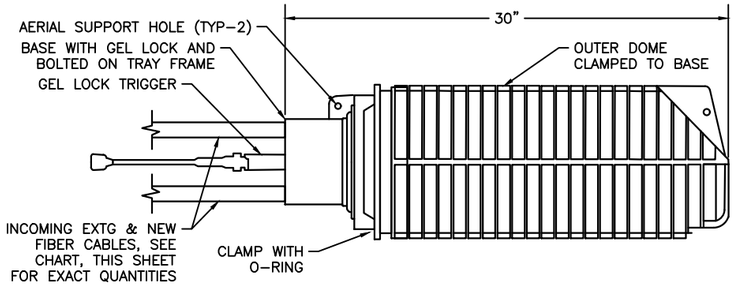

OUTSIDE ELEVATION

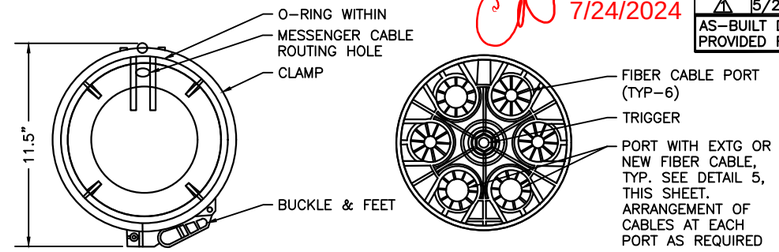

OVERALL SECTION

GEL BLOCK OUTER PROFILE

1 FIBER SPLICE ENCLOSURE END CROSS SECTIONS

NOT TO SCALE

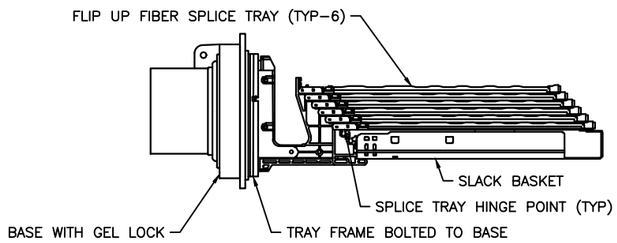

INSIDE ELEVATION

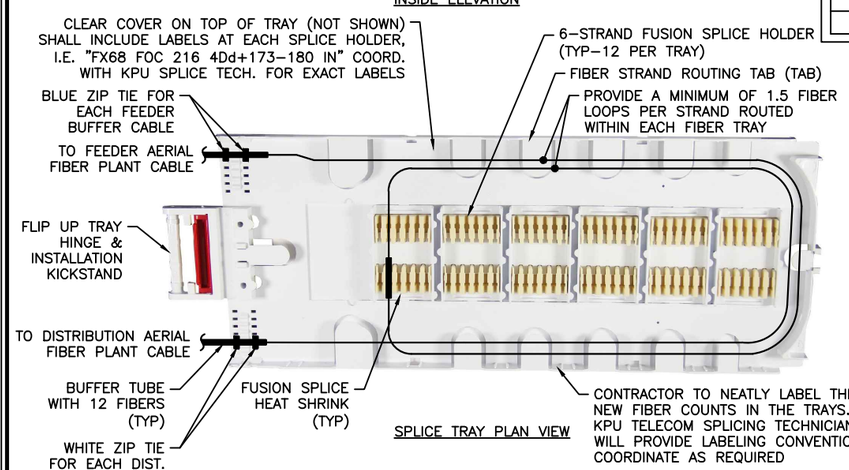

SPLICE TRAY PLAN VIEW

2 FIBER SPLICE ENCLOSURE & TRAY DETAILS

NOT TO SCALE

NOTE: SPLICE TRAY IS DEPICTED WITH A SINGLE EXISTING TO NEW STRAND SPLICE. THERE WILL BE MANY SPLICES PER TRAY. NEATLY TRAIN AND ORGANIZE SPLICES AND PERFORM ALL NEW SPLICING WORK PER INDUSTRY STANDARDS, KPU TELECOM STANDARDS, AND APPLICABLE RUS BULLETINS.

POLE P2 FIBER SPLICE ENCLOSURE NOTES				
CABLE ID	STRANDS		CABLE ID	STRANDS
A	145–172	SPLICED TO	B	1–28
A	1–144	SPLICED TO	C	1–144
A	173–216	SPLICED TO	D	173–216

POLE P5A COPPER SPLICE ENCLOSURE NOTES				
CABLE ID	STRANDS		CABLE ID	STRANDS
A	178–189	SPLICED TO	B	4–15
A	1–177	SPLICED TO	C	1–177
A	190–400	SPLICED TO	C	190–400

POLE P7 FIBER SPLICE ENCLOSURE NOTES				
CABLE ID	STRANDS		CABLE ID	STRANDS
A	109–136	SPLICED TO	B	1–28
A	137–140	SPLICED TO	C	1–4
A	1–108	SPLICED TO	D	1–108
A	141–144	SPLICED TO	D	141–144

POLE P6 COPPER SPLICE ENCLOSURE NOTES				
CABLE ID	STRANDS		CABLE ID	STRANDS
A	178–189	SPLICED TO	B	4–15
A	1–177	SPLICED TO	C	1–177
A	190–400	SPLICED TO	C	190–400

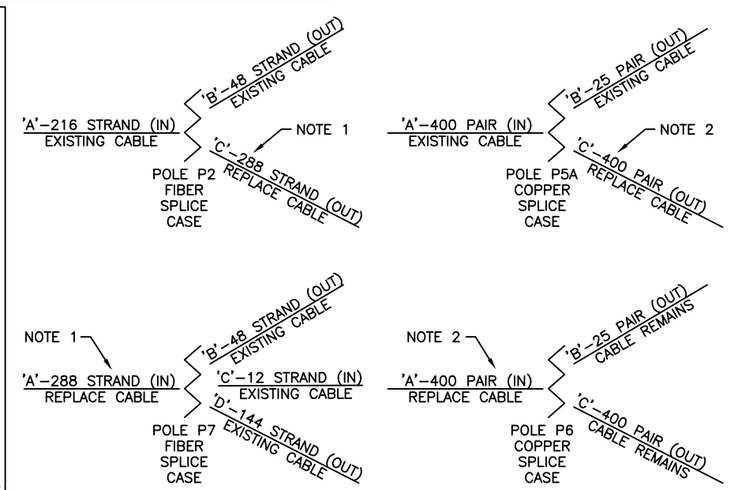

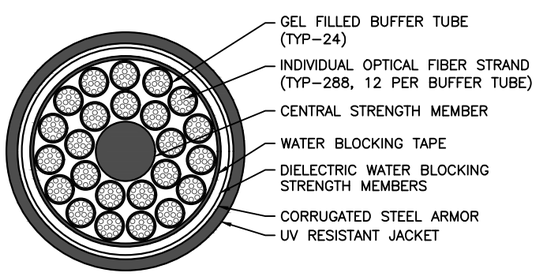

3 FIBER CABLE CROSS SECTION

NOT TO SCALE

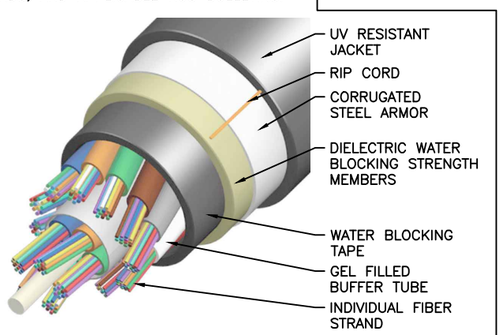

4 FIBER CABLE ISOMETRIC

DETAIL 5 NOTES:

1. REPLACE THE 216-STAND TETHERED FIBER CABLE WITH NEW 288-STRAND FIBER. SEE NOTE 11. CABLE SHALL BE RAN CONTINUOUS WITH NO SPLICES BETWEEN THE EXISTING AERIAL SPLICE ENCLOSURES.
2. REPLACE THE 400-PAIR COPPER CABLE WITH NEW 400-PAIR CABLE. SEE NOTE 11. CABLE SHALL BE RAN CONTINUOUS WITH NO SPLICES BETWEEN THE EXISTING AERIAL SPLICE ENCLOSURES.
3. EXTG 216-STRAND FIBER IS CORNING FLEXNAP TETHERED.
4. EXTG 48-STRAND FIBER IS CORNING FLEXNAP TETHERED.
5. EXTG 12-STRAND FIBER IS SUPERIOR ESSEX #120123T01.
6. EXTG 144-STRAND FIBER IS SUPERIOR ESSEX #121443T01.
7. EXTG 400-PAIR COPPER CABLE IS SUPERIOR ESSEX #01-112-40.
8. EXTG 25-PAIR COPPER CABLE IS SUPERIOR ESSEX #01-097-40.
9. STORE ALL SPARE FIBER STRANDS WITHIN SPLICE BASKETS PER MANUFACTUER INSTRUCTIONS. STORE ALL SPARE COPPER PAIRS WITHIN SPLICE ENCLOSURES PER MANUFACTURER INSTRUCTIONS.

5 TELECOM SPLICING INSTRUCTIONS

GENERAL COPPER AND FIBER SPLICING NOTES:

1. REFER TO SPECIFICATION SECTION 680 FOR COMPLETE REQUIREMENTS OF FIBER CABLE SPLICING THIS INCLUDES SYSTEM INSTALLER QUALIFICATIONS AND CABLE TESTING AND VERIFICATION REQUIREMENTS.
2. KPU TELECOMMUNICATION UTILITY WILL PROVIDE NO PHYSICAL WORK. HOWEVER, KPU WILL BE INVOLVED AND HAVE FINAL APPROVAL FOR ALL TELECOMMUNICATION (FIBER AND COPPER SYSTEM) RELATED PROJECT DECISIONS. THEY WILL BE INCLUDED IN ALL QUESTIONS & ANSWERS (ASIs, RFIs, CPRs, COs) DESIGN INTENT CLARIFICATIONS, SUBMITTAL REVIEWS, ONSITE AND TELECONFERENCE MEETINGS, AND WILL REVIEW AND APPROVE ALL TESTING AND PERFORMANCE CHECKOUT PROCESSES. SEE SHEET U5 FOR KPU TELECOM UTILITY CONTACT INFORMATION.
3. ALL FIBER AND COPPER CABLE PLANT INSTALLATION WORK INCLUDING SPLICING, CABLE MANAGEMENT, GROUNDING & BONDING, ETC. SHALL ADHERE TO RUS BULLETIN 1753F-201 AND 1753F-401 AS APPLICABLE, AS WELL AS MANUFACTURER INSTALLATION INSTRUCTIONS, AND ESTABLISHED TELECOMMUNICATION INDUSTRY BEST PRACTICES.
4. SEE DETAIL 5, THIS SHEET, FOR EXACT QUANTITIES OF EXISTING CABLES AND NEW CABLES TO BE SPLICED WITHIN EACH EXISTING COPPER AND FIBER SPLICE ENCLOSURE. ALL ENCLOSURES USED ON THIS PROJECT ARE EXISTING.
5. THE EXISTING COPPER AND FIBER SPLICE ENCLOSURES, AND AERIAL COPPER AND FIBER CABLES ARE AS NOTED BELOW. VERIFY EXACT ARRANGEMENTS WITH KPU TELECOM PRIOR TO WORK AND TO DETERMINE IF ANY REPLACEMENT OR ADDITIONAL COMPONENTS ARE REQUIRED:
   a. EXISTING FIBER SPLICE ENCLOSURES: COMMSCOPE #FOSC450-D6-6-NT-0-T6V
   b. EXISTING FIBER SPLICE TRAYS: COMMSCOPE #FOSC-ACC-D-TRAY-72-KIT
   c. EXISTING COPPER SPLICE ENCLOSURES: PREFORMED LINE PRODUCTS ARMADILLO 6.5 STAINLESS STEEL KIT #8000626.
   d. EXISTING AERIAL FIBER CABLES: SEE DETAIL 5, THIS SHEET.
   e. EXISTING AERIAL COPPER CABLES: SEE DETAIL 5, THIS SHEET.
6. THE EXISTING COPPER PLANT SPLICE ENCLOSURES ARE PRESSURIZED. THE EXISTING ENCLOSURES SHALL BE PROPERLY SEALED AND RE-PRESSURIZED AND TESTED FOR LEAKS. ALL ENCLOSURES USED ON THIS PROJECT ARE EXISTING.
7. ALL FIBER SPLICING WORK SHALL OCCUR AT GRADE UTILIZING THE EXISTING SLACK LOOPS ON THE POLES TO LOWER THE FIBER SPLICE ENCLOSURES TO GRADE. ALL COPPER SPLICING WORK SHALL OCCUR AT THE POLES ABOVEGRADE UTILIZING A BUCKET TRUCK OR EQUAL FOR ACCESS. PROTECT ALL EXPOSED CABLE SPLICES AND OPENED SPLICE ENCLOSURES FROM WEATHER AND DEBRIS WHEN SPLICING VIA TEMPORARY SHELTERS, ETC. AS REQUIRED AND PER STANDARD INDUSTRY PRACTICE.
8. MESSENGER CABLES WILL BE REUSED WHERE POSSIBLE, REPLACED AS NEEDED. DELASH AND RELASH TO EXISTING CABLES, LASH TO NEW CABLES, AND SECURE MESSENGERS TO POLES VIA APPROVED HARDWARE.
9. GROUNDING TO OCCUR AT ALL APPLICABLE POLES, EXISTING GROUNDING TO BE REUSED WHERE POSSIBLE. BONDING IS REQUIRED AT ALL COPPER SPLICE ENCLOSURES AND SHALL BE TESTED PER RUS 1753F-201 STANDARD.
10. ALL COPPER AND FIBER SPLICES SHALL BE AERIAL, NO BURIED SPLICES. ALL SPLICE WORK TO OCCUR IN THE EXISTING SPLICE ENCLOSURES.
11. NEW FIBER CABLE SHALL BE SINGLE MODE, 288-STRAND, LOOSE TUBE, ARMORER CABLE SUITED FOR OUTDOOR INSTALLATIONS (AERIAL & U/G DUCT). SUPERIOR ESSEX #12288310Y OR EQUAL.
12. NEW COPPER CABLE SHALL BE SHIELDED, 24 AWG, 400-PAIR, PRESSURIZED CABLE SUITABLE FOR OUTDOOR INSTALLATIONS (AERIAL & U/G DUCT). SUPERIOR ESSEX #01-112-40 OR EQUAL.

GENERAL FIBER CABLE PREP & SPLICE NOTES (APPLICABLE TO DETAILS 3 & 4):

1. SEE THE GENERAL SPLICING NOTES ON THIS SHEET FOR ADDITIONAL APPLICATION NOTES.
2. SUGGESTED STORAGE LENGTH FOR EACH BUFFER TUBE WITHIN THE FIBER SPLICE ENCLOSURE SLACK BASKET: 110 INCHES.
3. SUGGESTED STRENGTH MEMBER CUT LENGTH FOR MOUNTING WITHIN THE FIBER SPLICE ENCLOSURE BASE ASSEMBLY: 2.5 INCHES.
4. PROVIDE A MINIMUM OF 1.5 LOOPS OF INDIVIDUAL FIBER STRANDS WITHIN EACH SPLICE TRAY IN THE FIBER SPLICE ENCLOSURE.
5. FIBER CABLES HAVE MANY LAYERS AND IMPORTANT INTERNAL ELEMENTS, AS INDICATED BY DETAILS 3 AND 4 ON THIS SHEET. FIBER CABLES SHALL BE CAREFULLY CUT BACK, LAYERS TRIMMED, BUFFER TUBES EXPOSED, AND FIBER STRANDS CUT, PREPPED, ROUTED, AND SPLICED PER MANUFACTURER WRITTEN INSTRUCTIONS, STANDARD INDUSTRY PRACTICE, AND APPLICABLE RUS BULLETINS.
6. EXACT FIBER CABLE CONSTRUCTION, DIAMETER, AND INTERNAL ARRANGEMENT MAY DIFFER FROM WHAT IS SHOWN ON THIS SHEET. REFER TO MANUFACTURER INSTRUCTIONS.

PLANS DEVELOPED BY:
MORRIS ENGINEERING GROUP, INC
2375 JORDAN AVE #7
JUNEAU, AK 99801
907-789-3350
AECL 1010

STATE OF ALASKA 49TH Mark G. Morris May 31, 2024 No. EE 8613 REGISTERED PROFESSIONAL ENGINEER

STATE OF ALASKA DEPARTMENT OF TRANSPORTATION AND PUBLIC FACILITIES
6860 GLACIER HIGHWAY, JUNEAU, AK 99801
(907) 465-1763

UTILITY RELOCATION FOR KETCHIKAN AREA BRIDGES

FIBER CABLE SPLICE DETAILS

FILE y:\102 state of ak\44 utility relocation design for ketchikan bridges\Working Drawings\U40 TELECOM & TV UTILITY VAULT DETAIL.dwg DATE 4/26/2024 14:44 LAYOUT U40 DESIGNED MGM CHECKED MGM DRAFTED JODI

NO.	DATE	REVISION	STATE	PROJECT DESIGNATION	YEAR	SHEET NO.	TOTAL SHEETS
1	5/2024	AS-BUILT					
AS-BUILT DRAWING PREPARED FROM CONTRACTOR PROVIDED REDLINE WHICH MAY NOT BE CORRECT			ALASKA	0902043/SFHWY00072	2021	U41	45

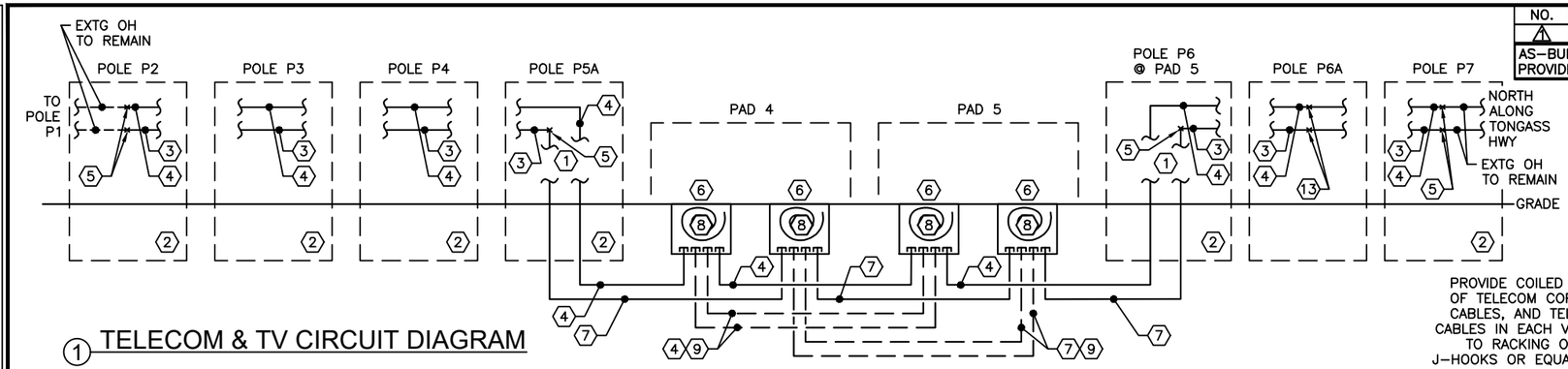

1 TELECOM & TV CIRCUIT DIAGRAM

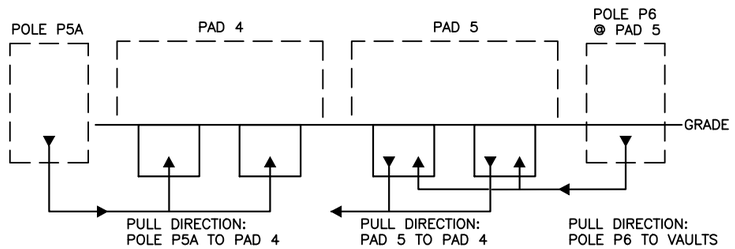

2 TELECOM & TV PULLING DIAGRAM

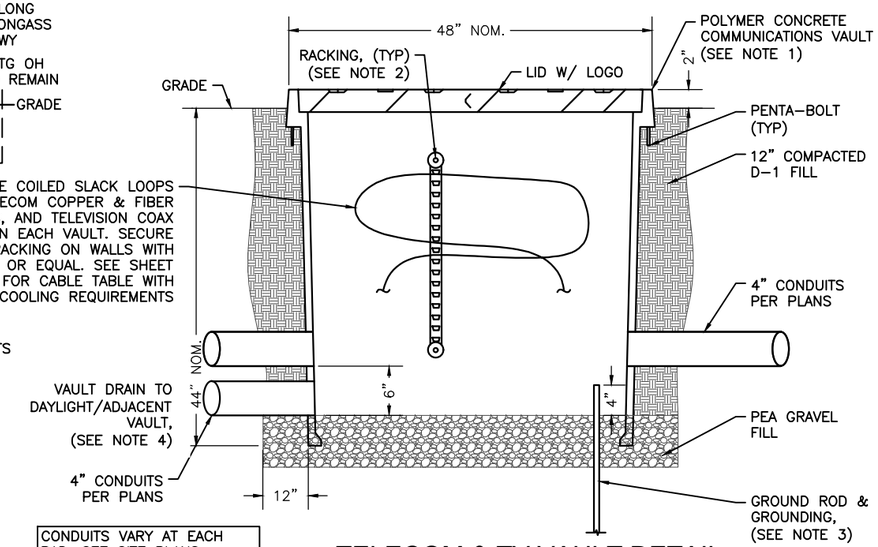

CONDUITS VARY AT EACH PAD. SEE SITE PLANS, SINGLE-LINES, FOR SPECIFIC CONDUIT SIZES AND COUNTS.

3 TELECOM & TV VAULT DETAIL

AT PADS 4 & 5

KEYNOTES (APPLICABLE TO DETAIL 1):

1. TELECOM & TV RISERS UP POLE. PROVIDE SUFFICIENT COIL OF CABLE AT TOP OF RISER PER UTILITY REQUIREMENTS. SEE SHEET U20 FOR POLE P5A DETAILS AND SHEET U39 FOR POLE P6 DETAILS.
2. COORDINATE WITH UTILITIES ON PROPER SUPPORTS, CABLE SLACK AND CABLE TRAINING ALONG UTILITY POLES.
3. TV CABLING, (1) 75 OHM TRUNK COAXIAL CABLE FOR AERIAL APPLICATIONS. COMMSCOPE #5309003. LASH TO UTILITY POLES PER POLE DETAILS AND GCI REQUIREMENTS.
4. (1) 4"C, SPARE AND (1) 4"C WITH TELECOM CABLING (1) 288-STRAND FIBER CABLES AND (1) 400-PAIR 24 AWG COPPER CABLE SUPERIOR ESSEX #12288310Y FIBER AND SUPERIOR ESSEX #01-112-40 COPPER CABLE. ROUTE CABLE OVERHEAD ALONG UTILITY POLES AND ALONG RACKING IN VAULTS UNDERGROUND.
5. CABLES TO BE SPLICED AT UTILITY POLE. COORDINATE WORK WITH UTILITIES. ALL KPU TELECOMM COPPER AND FIBER CABLE SPLICING, TERMINATIONS, AND TESTING BY CONTRACTOR. ALL GCI TELEVISION COAXIAL CABLE SPLICE WORK BY UTILITY.
6. PROVIDE 4' X 4' X 4' (NOM.) TELECOM AND TV VAULT AT EQUIPMENT PADS. POLYMER CONCRETE ASSEMBLY, TIER 22 TRAFFIC RATED, STAINLESS STEEL BOLTS, NO FLOOR, WITH CABLE RACKS AND RACKING ARMS ALL SIDES, WITH 'CATV' OR 'TELEPHONE' LABELS ON LID AS APPLICABLE. NEWBASIS #PCA484848-90097 OR EQUAL. SEE SHEET U40 FOR MORE INFORMATION.
7. (1) 4"C, SPARE AND (1) 4"C WITH TV CABLING, (1) 75 OHM TRUNK COAXIAL CABLE, FLOODED FOR UNDERGROUND USE. COMMSCOPE #5309003. ROUTE BETWEEN FROM POLE RISERS AND IN UNDERGROUND CONDUITS AND ALONG RACKING IN VAULTS UNDERGROUND.
8. CONTRACTOR TO PROVIDE SUFFICIENT TELECOM AND TV SLACK CABLE COILED AND PREPARED WITHIN EACH UNDERGROUND VAULT. COORDINATE WITH UTILITY ON FINAL LENGTH REQUIREMENTS AND HOW TO LEAVE CABLE ENDS OF UTILITIES. ASSUME ONE FULL COIL OF EACH CABLE FOR BIDDING PURPOSES.
9. BRIDGE WORK WILL BE COMPLETED IN STAGES. THREE SEPARATE RUNS OF TELECOM AND TV CABLES WILL BE PROVIDED TO CROSS THE EXISTING & NEW SECTIONS OF BRIDGE DURING CONSTRUCTION, EACH USED AS APPLICABLE IN SEQUENCE. SEE SHEETS U7A-U7C FOR INFORMATION.
10. PROVIDE UTILITY CABLE SLACK CABLE COILS PER COILS TABLES ON SHEET U39.
11. CONDUIT DETAILS, TRENCH DETAILS, AND ROUTING ACROSS SITE NOT INDICATED HERE. SEE SHEET U38 FOR TYPICAL TRENCH DETAILS, AND SITE PLAN SHEETS FOR CONDUIT AND OVERALL ROUTING.
12. TELECOM AND TV CABLE PULLING WORK MUST ADHERE TO MANUFACTURER REQUIREMENTS FOR CABLE MAXIMUM PULLING TENSIONS, CABLE BENDING RADII, AND CONDUIT SIDEWALL PRESSURES. SEE DETAIL 2, THIS SHEET FOR CABLE PULLING REQUIREMENTS.
13. COORDINATE WITH GCI AND KPU TELECOM TO REROUTE OVERHEAD BETWEEN POLE P6 AND P7 TO NEW POLE P6A. CABLE ELEVATIONS SHALL BE RAISED BY CONNECTING HIGH ON POLE P6A. SEE SHEET U39A FOR MORE INFORMATION.
14. TELECOM CABLES SHALL BE LABELED WITHIN EACH VAULT. PROVIDE PLASTIC, WEATHERPROOF PLACARDS WITH DESCRIPTIONS ATTACHED VIA ZIP TIES TO THE TELECOM COPPER AND FIBER CABLE COILS WITHIN EACH VAULT, (1) LABEL PER EVERY 20 FEET OF COIL. LABEL DESCRIPTIONS TO BE CONFIRMED WITH TELECOM UTILITY BUT WILL GENERALLY DESCRIBE 'TONGASS – NORTH MAIN COPPER', 'TONGASS – NORTH MAIN FIBER', ETC. PROVIDE LABELS AT SPARE CONDUIT NIPPLES IN VAULT. TELEVISION DOES NOT REQUIRE CABLE OR CONDUIT LABELING OF ANY KIND.
15. PROVIDE INFRASTRUCTURE GROUNDING AND BONDING AT ALL TELECOM AND TELEVISION VAULTS, JUNCTION BOX, AND PEDESTALS. SEE DETAIL 3, THIS SHEET, FOR DETAILS.

NOTES (APPLICABLE TO DETAIL 2):

1. PULLING DIRECTIONS SHOWN HERE PROVE TO PUT LESS STRESS ON CABLES AND CONDUIT. HOWEVER, OPPOSITE DIRECTIONS IS WITHIN LIMITS AND MAY BE UTILIZED AT CONTRACTOR'S OPTION.
2. RECOMMENDED PULLING DIRECTION FOR TELECOM AND TV CABLES ARE SHOWN HERE.
   ASSUMPTIONS USED IN PULLING CALCS INCLUDE:
   a. COEFFICIENT OF FRICTION: 0.35
   b. AMPLE LUBRICATION USED (SEE NOTES 2,3,4)
   c. BACK TENSION: 100 POUNDS
   d. 4" SCHEDULE 80 MIN I.D.: 3.746 INCHES
   e. 2" SCHEDULE 80 MIN I.D.: 1.887 INCHES
   f. MAX ALLOWABLE CABLE TENSION: 600 LBS
   g. MAX ALLOWABLE SIDEWALL PRESSURE: 500 POUNDS/FT
   h. CONDUIT ELBOW RADII: 24 INCHES (MINIMUM)
3. PROVIDE HDP CONDUITS THROUGHOUT, HDPE PER SHEET U18 REQUIREMENTS.
4. SEE SHEET U18, DETAIL 1, NOTES 2-5 FOR ADDITIONAL PULLING AND LUBRICATION NOTES APPLICABLE TO TELECOM & TV WORK.

TELECOM & TELEVISION SLACK COIL TABLE

LOCATION	TELECOM-COPPER	TELECOM-FIBER	TELEVISION-COAX
POLE P2	N/A, EXTG CABLE	120 FT MIN, NOTE 7	10 FT MIN, NOTE 7
POLE P5A	10 FT MIN, NOTE 7 & 8	6 FT MIN, NOTE 8	10 FT MIN, NOTES 7 & 8
POLE P6	10 FT MIN, NOTE 7 & 8	6 FT MIN, NOTE 8	10 FT MIN, NOTES 7 & 8
POLE P7	N/A, EXTG CABLE	120 FT MIN, NOTE 7	10 FT MIN, NOTE 7
PAD 4 VAULT	NOTE 6	NOTE 6	NOTE 6
PAD 5 VAULT	NOTE 6	NOTE 6	NOTE 6

TABLE NOTES:

1. PROVIDE CABLE COIL LENGTHS AS SHOWN AT EACH LOCATION.
2. PROTECT CABLE COIL ENDS FROM DAMAGE.
3. PROPERLY SUPPORT COILS IN VAULTS ON THE RACKS, AND AT THE UTILITY POLES AS REQUIRED.
4. ROUTE ALL CABLES ALONG THE WALLS WITHIN THE VAULTS SO THEY ARE NOT A TRIPPING HAZARD.
5. A PRE-CONSTRUCTION MEETING WITH ALL UTILITIES SHALL BE CONDUCTED BEFORE BEGINNING WORK.
6. GCI AND KPU TELECOM DO NOT REQUIRE A SPECIFIC LENGTH OF COILED CABLE PER LOCATION. CABLE IS TO BE PULLED STRAIGHT THROUGH VAULTS AND BOXES WITH FORMING AROUND VAULT WALLS SO AS NOT TO PASS CABLE THROUGH CENTER OF VAULT.
7. SPLICE TO OCCUR AT THIS POLE, COORDINATE EXACT SLACK AMOUNT AND CONFIGURATION WITH UTILITY. FIBER SPLICING TO OCCUR AT GRADE, COPPER & COAX SPLICING ABOVEGROUND. UTILIZE EXISTING SNOW SHOES FOR ROUTING OF SLACK CABLE AT MOUNTING HEIGHT AS REQUIRED.
8. CABLES TRANSITION TO NEW UNDERGROUND AT THIS POLE. COORDINATE EXACT SLACK AMOUNT AND CONFIGURATION WITH UTILITY.

NOTES (APPLICABLE TO DETAIL 3):

1. PROVIDE 4' X 4' POLYMER CONCRETE VAULTS FOR TELECOMMUNICATIONS AND TELEVISION UNDERGROUND UTILITIES WHERE SHOWN ON THE SITE PLANS. SEE DETAIL 1, THIS SHEET, FOR SPECIFICS ON THE VAULT.
2. CABLES WITHIN VAULTS SHALL BE CAREFULLY AND SECURELY HUNG FROM RACKING ALONG THE WALLS. SEE DETAIL 1, THIS SHEET, FOR SPECIFICS ON CABLE COILS. RACKING SHALL BE HD, NON-METALLIC VERTICAL CABLE RACKING WITH HORIZONTAL ARM. ONE SET PER EACH WALL. UNDERGROUND DEVICES #CR36-B (VERTICAL STANCTION), #RA08 (HORIZONTAL ARM)
3. AT EACH AND EVERY TELECOM, AND TELEVISION VAULT, PROVIDE GROUNDING PER UTILITY REQUIREMENTS. THIS INCLUDES A 5/8" X 8' COPPER CLAD STEEL GROUND ROD WITH BRONZE GROUND ROD CLAMPS USING NON-GALVANIC LOCKING BOLT. ROUTE A NO. 6 BARE COPPER SOLID GROUND LOOP WITHIN CAVITY AND BOND TO VAULT, GROUND LUGS AS REQUIRED. THIS WORK INCLUDES BONDING TO ADJACENT POWER GROUNDING SCHEME AT PAD 4 PER NESC REQUIREMENTS.
4. PROVIDE A 4" SCHEDULE 80 PVC CONDUIT DRAIN BETWEEN ADJACENT TELECOM/TV VAULTS AND FROM EITHER VAULT TO NEAREST DAYLIGHT SLOPED AREA NEARBY. SEE SITE PLANS FOR GENERAL DRAIN ROUTING. SLOPE CONDUITS TO DRAIN.
5. CABLES TO VAULTS FURNISHED AND INSTALLED BY CONTRACTOR, CABLES NOT SHOWN ON THIS SHEET. CABLE SPLICES BY OTHERS.
6. TELECOM CABLES SHALL BE LABELED WITHIN EACH VAULT. PROVIDE PLASTIC, WEATHERPROOF PLACARDS WITH DESCRIPTIONS ATTACHED VIA ZIP TIES TO THE TELECOM COPPER AND FIBER CABLE COILS WITHIN EACH VAULT. ONE LABEL PER EVERY 20 FEET OF COIL. LABEL DESCRIPTIONS TO BE CONFIRMED WITH TELECOM UTILITY BUT WILL GENERALLY DESCRIBE 'TONGASS – NORTH MAIN COPPER', 'TONGASS – NORTH MAIN FIBER', ETC. PROVIDE LABELS AT SPARE CONDUIT NIPPLES IN VAULT ALSO. TELEVISION DOES NOT REQUIRE CABLE OR CONDUIT LABELING OF ANY KIND.

7/24/2024

PLANS DEVELOPED BY:
MORRIS ENGINEERING GROUP, INC
2375 JORDAN AVE #7
JUNEAU, AK 99801
907-789-3350
AECL 1010

STATE OF ALASKA 49TH Mark G. Morris May 31, 2024 No. EE 8613 REGISTERED PROFESSIONAL ENGINEER

STATE OF ALASKA DEPARTMENT OF TRANSPORTATION AND PUBLIC FACILITIES
6860 GLACIER HIGHWAY, JUNEAU, AK 99801
(907) 465-1763

UTILITY RELOCATION FOR KETCHIKAN AREA BRIDGES

TELECOM & TV CKT, PULLING DIAGRAMS, VAULT DETAIL, & COIL TABLE

FILE y:\102 state of ak\44 utility relocation design for ketchikan bridges\Working Drawings\U41 TELECOM & TV CIRCUIT & PULLING DIAGRAMS.dgn | LAYOUT U41 | 5/29/2024 11:32 | DESIGNED MGM | CHECKED MGM | DRAFTED JODI