As - Builts - 2016

# State of Alaska

## Department of Transportation and Public Facilities Southcoast Region

January 13, 2016

The undersigned hereby certifies that this duplicated document is an exact and true copy of the original.
Cody Sutton

# KETCHIKAN FERRY TERMINAL IMPROVEMENTS

## PROJECT No. SAMHS00015 / 0911007

RECEIVED
JUN 08 2017
DOT&PF SR Const

| TIDAL DATA | |
|---|---|
| HTL | +19.7' |
| MHW | +14.6' |
| MLLW | 0.0' |
| ELW | −5.3' |

| THE FOLLOWING STANDARD DRAWINGS APPLY TO THIS PROJECT | |
|---|---|
| G-46.11 | |

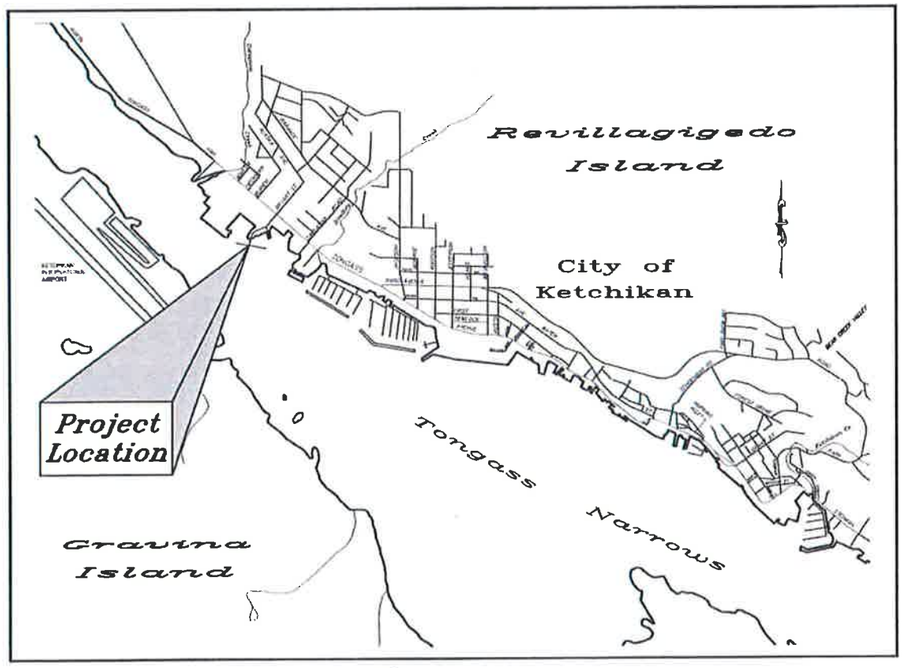


SITE MAP

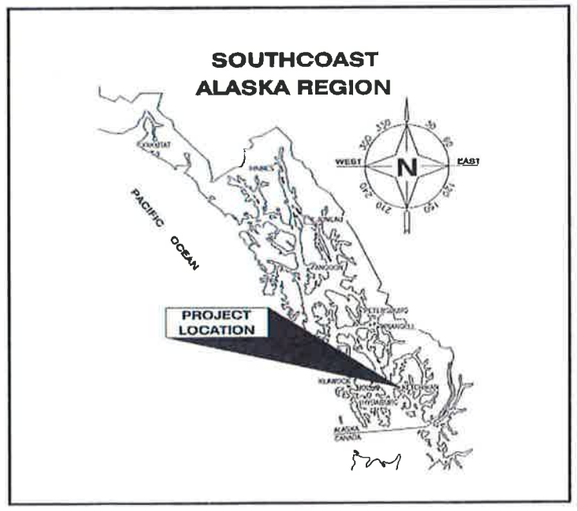


REGIONAL MAP

SHEET INDEX

| SHEET NO. | DESCRIPTION |
|---|---|
| 01 | TITLE SHEET |
| 02 | GENERAL NOTES & QUANTITIES |
| 03 | EXISTING SITE PLAN & SURVEY CONTROL |
| 04 | NEW SITE PLAN & PILE TABLE |
| 05 | MARINE LAYOUT |
| 06–11 | 4–PILE DOLPHIN (E6 & W6) |
| 12–19 | 6–PILE DOLPHIN (W5) |
| 20 | CATWALK & W4 MODIFICATIONS |
| 21 | ANODES |
| 22–24 | COVERED WALK |
| 25 | WATER & SEWER UTILITIES |
| 26–28 | ELECTRIC |

As - Built Plans

Contractor: Turnagain
Project Engineer: Mandi Bolshakoff
Begin Construction: July 6, 2016
End Construction: Sept 9, 2016

PATH: Q:\KTN\67466\PLANSET\MF\01 – TITLE SHEET.DWG TAB:1

STATE OF ALASKA
DEPARTMENT OF TRANSPORTATION & PUBLIC FACILITIES
SOUTHCOAST REGION

STATE OF ALASKA 49th DAVID H. LOWELL CE-12614 REGISTERED PROFESSIONAL ENGINEER

APPROVED: 10/28/15
FOR REGIONAL PRE-CONSTRUCTION ENGINEER DATE
L. PAT CARROLL, P.E.

APPROVED: Chuck Correa 10/29/15
DIRECTOR OF DESIGN & CONSTRUCTION, SOUTHCOAST REGION DATE
CHUCK CORREA, P.E.

CERTIFIED TRUE & CORRECT AS-BUILT OF ACTUAL FIELD CONDITION:

CONSTRUCTION PROJECT MANAGER DATE

| STATE | PROJECT DESIGNATION | YEAR | SHEET NO. | TOTAL SHEETS |
|---|---|---|---|---|
| ALASKA | SAMHS00015 | 2015 | 1 | 28 |

Project As-Built Drawings have been reviewed by the Project Engineer and represent to the best of my knowledge the project as constructed.
PE MP Date 5-20-17

Addendum #2; Attachment #3

# ESTIMATE OF QUANTITIES

| ITEM # | ITEM DESCRIPTION | PAY UNIT | QTY |
|---|---|---|---|
| | BASIC BID | | |
| 202 (1) | DEMOLITION & REMOVAL | LUMP SUM | ALL REQ'D |
| 202 (13) | TERMINAL CLOSURE PRICE WITHHOLDING | CONTINGENT SUM | ALL REQ'D |
| 504 (1) | 4-PILE DOLPHIN CAP (E6) | EACH | 1 |
| 504 (2) | 4-PILE DOLPHIN CAP (W6) | EACH | 1 |
| 504 (3) | 4-PILE DOLPHIN FENDER SYSTEM | EACH | 2 |
| 504 (4) | 6-PILE DOLPHIN CAP (W5) | EACH | 1 |
| 504 (5) | 6-PILE DOLPHIN FENDER SYSTEM (W5) | EACH | 1 |
| 504 (6) | RELOCATE EXISTING 28' CATWALK | LUMP SUM | ALL REQ'D |
| 504 (7) | NEW COVERED WALKWAY | LUMP SUM | ALL REQ'D |
| 505 (1) | 30" x 1/2" WALL PIPE PILE, FURNISHED | LINEAR FOOT | 1873 |
| 505 (2) | 30" x 1/2" WALL PIPE PILE, DRIVEN | EACH | 14 |
| 505 (3) | 150 lb PILE ANODE | EACH | 21 |
| 608 (7) | CONCRETE SIDEWALK | LUMP SUM | ALL REQ'D |
| 614 (2) | CONCRETE BARRIER | LUMP SUM | ALL REQ'D |
| 628 (1) | SEWER AND WATER UTILITIES | LUMP SUM | ALL REQ'D |
| 640 (1) | MOBILIZATION AND DEMOBILIZATION | LUMP SUM | ALL REQ'D |
| 640 (4) | WORKER MEALS AND LODGING, OR PER DIEM | LUMP SUM | ALL REQ'D |
| 642 (1) | CONSTRUCTION SURVEYING | LUMP SUM | ALL REQ'D |
| 643 (2) | TRAFFIC MAINTENANCE 1 | LUMP SUM | ALL REQ'D |
| 647 (1) | MARINE MAMMAL MONITORING | LUMP SUM | ALL REQ'D |
| 662 (1) | ELECTRICAL POWER AND LIGHTING SYSTEM | LUMP SUM | ALL REQ'D |
| | | | |
| | ADDITIVE ALTERNATE A | | |
| 505 (3A) | 150 lb PILE ANODE | EACH | 116 |

NEW ITEMS

| | | | |
|---|---|---|---|
| 106(1) | Buy America Dispute Settlement | Lump Sum | ALL REQ'D |
| 110(1A) | Buy America Equitable Adjustment | Lump Sum | ALL REQ'D |
| 202(2) | Extra Demolition & Removal of Existing W5 | Lump Sum | ALL REQ'D |
| 504(8) | W5 Dolphin Pile System Additions | Lump Sum | ALL REQ'D |
| 662(1a) | Electrical Power and Lighting System | Lump Sum | ALL REQ'D |

## REFERENCE LEGEND

VIEW TITLE — X — # ## — VIEW NAME / VIEW DESCRIPTION

DRAWING TITLE/ SUBTITLE — VIEW NAME / VIEW DESCRIPTION

ELEVATION VIEW

SECTION VIEW

DETAIL CALLOUT

DETAIL TAG

IN VIEW TITLE:
# SHEET NUMBER OF THE TITLED VIEW OR DASH MARK WHEN DETAIL CALLOUT IS ON THE SAME SHEET
## SHEET NUMBER OF THE DETAIL CALLOUT OR DASH MARK WHEN CALLOUT IS ON THE SAME SHEET

* SHEET NUMBER WHERE DETAIL IS LOCATED WHEN ON A DIFFERENT SHEET OR DASH MARK WHEN ON THE SAME SHEET
** SHEET NUMBER WHERE THE CALLOUT CUT IS MADE OR DASH MARK WHEN ON THE SAME SHEET

## ABBREVIATIONS

| | |
|---|---|
| AASHTO | AMERICAN ASSOC OF STATE HIGHWAY & TRANSPORTATION OFFICIALS |
| ABUT | ABUTMENT |
| ACZA | AMMONIACAL COPPER ZINC ARSENATE |
| AISC | AMERICAN INSTITUE OF STEEL CONSTRUCTION |
| ALUM | ALUMINUM |
| APF | ASSOCIATED PILE AND FITTING |
| API | AMERICAN PETROLEUM INSTITUTE |
| ASCE | AMERICAN SOCIETY OF CIVIL ENGINEERS |
| ASTM | AMERICAN SOCIETY FOR TESING & MATERIALS |
| ASSY | ASSEMBLY |
| ATS | ALASKA TIDELAND SURVEY |
| AWS | AMERICAN WELDING SOCIETY |
| BOP | BEGINNING OF PROJECT |
| BRG | BEARING |
| BTM | BOTTOM |
| BTWN | BETWEEN |
| C/C | CENTER TO CENTER |
| CJP | COMPLETE JOINT PENETRATION |
| CL | CENTERLINE |
| CLR | CLEAR |
| CNTR | CENTER |
| CONC | CONCRETE |
| CS | CONTINGENT SUM |
| CTSK | COUNTERSINK |
| CU | CUBIC |
| CVN | CHARPY V-NOTCH |
| DBL | DOUBLE |
| DL | DEAD LOAD |
| DS | DISCONNECT SWITCH |
| EA | EACH |
| ECON HD | ECONOMY HEAD |
| ELEV | ELEVATION |
| EQ | EQUAL |
| EST | ESTIMATED |
| FNMC-A | LIQUIDTIGHT FLEXIBLE NON METALLIC CONDUIT, TYPE A |
| FB | FLAT BAR |
| FS | FAR SIDE |
| FT | FOOT |
| FVF | FAST VEHICLE FERRY |
| GA | GAUGE |
| GALV | GALVANIZED |
| GR | GRADE |
| GRMC | GALVANIZED STEEL RIGID METAL CONDUIT |
| HDG | HOT DIP GALVANIZE |
| HDPE | HIGH DENSITY POLYETHYLENE PLASTIC |
| HRZ | HORIZONTAL |
| HSS | HOLLOW STRUCTURAL SECTION |
| J-BOX | JUNCTION BOX |
| LB FITTING | TYPE LB CONDUIT OUTLET BODY |
| LF | LINEAR FEET |
| LS | LUMP SUM |
| MI | MALLEABLE IRON |
| M/V | MARINE VESSEL |
| NOAA | NATIONAL OCEANIC AND ATMOSPHERIC ADMINISTRATION |
| NOS | NUMBERS |
| NS | NON-SHRINKING, OR NEAR SIDE |
| OC | ON CENTER |
| OD | OUTSIDE DIAMETER |
| OPP | OPPOSITE |
| PL | PLATE |
| PP | PIPE PILE |
| PSI | POUNDS PER SQUARE INCH |
| QTY | QUANTITY |
| R | RADIUS |
| REQ'D | REQUIRED |
| SDR | STANDARD DIMENSION RATIO |
| SEI | STRUCTURAL ENGINEERING INSTITUTE |
| SS | STAINLESS STEEL |
| STD | STANDARD |
| SYMM | SYMMETRIC |
| T FITTING | TYPE T CONDUIT OUTLET BODY |
| T&B | TOP AND BOTTOM |
| TYP | TYPICAL |
| UHMW | ULTRA HIGH MOLECULAR WEIGHT POLYETHYLENE PLASTIC |
| UON | UNLESS OTHERWISE NOTED |
| WP | WORK POINT |
| XS | EXTRA STRONG (SCHEDULE 80 PIPE) |
| XXS | DOUBLE EXTRA STRONG (SCHEDULE 120 PIPE) |

## GENERAL NOTES

**DESIGN SPECIFICATIONS**
PER CONTRACT DOCUMENTS FOR PROJECT NO. SAMHS00015

DESIGN STANDARDS: AISC STEEL CONSTRUCTION MANUAL 14TH ED. LRFD
ASCE/SEI STANDARD 7-10, MINIMUM DESIGN LOADS FOR BUILDINGS AND OTHER STRUCTURES, 2010

DESIGN LOADS: BERTHING (PERPENDICULAR): 100 FT-KIPS (4-PILE DOLPHIN)
150 FT-KIPS (6-PILE DOLPHIN)
MOORING (ANY DIRECTION): 80 KIPS

DESIGN VESSELS: IFA M/V STIKINE/PRINCE OF WALES, AMHS M/V LITUYA & FVF (4-PILE DOLPHIN)
AMHS ALL VESSELS (6-PILE DOLPHIN)

**MATERIALS**

| | | |
|---|---|---|
| STEEL SHAPE & PLATES: | PLATES FOR BRIDGE MODS – | ASTM A709 GR 50 |
| | PLATES & SHAPES – | ASTM A36, UNLESS OTHERWISE NOTED |
| | HOLLOW STRUCTURAL SECTIONS – | ASTM A500 GR B |
| | HP – | ASTM A572 GR 50 |
| | PIPE – | ASTM A53 GR B |
| | STAINLESS STEEL – | ASTM A276 TYPE 316 |
| | W – | ASTM A992, ASTM A709 |
| | LADDER RUNGS – | ASTM A706 GR 60 |

PILING: STEEL – API 5L X52, OR ASTM A252 GR 3, OR ASTM A709 GR 50
FABRICATED TO API 2B

GRATING: 1" DEEP MOLDED FIBERGLASS 1"x4" RECTANGULAR GRATING WITH GRIT SURFACE

PLASTIC: ULTRA HIGH MOLECULAR WEIGHT POLYETHYLENE PLASTIC ASTM D4020

FASTENERS: PER SPECS

CONCRETE: CLASS A

GROUT: PER 701-2.03 1

STEEL REINFORCEMENT: ASTM A615 GR 60

**PROTECTIVE COATINGS**
ALL STEEL, PILING, & WELDMENTS: GALVANIZED AFTER FABRICATION PER SPECS, UNLESS OTHERWISE NOTED

FIELD REPAIR OF EXISTING COATINGS: DAMAGED GALVANIZED AND PAINT COATINGS SHALL BE REPAIRED PER SPEC 504-3.03.

**PILING**
DIAMETER & WALL THICKNESS AS PER PILING TABLE & PLANS
DRIVING SHOES REQUIRED ON ALL PILES, APF 14001 OR EQUAL

**WELDS**
ALL WELDING SHALL BE PERFORMED BY CERTIFIED PERSONS IN ACCORDANCE WITH AWS D1.1 AND D1.5 AS APPLICABLE.

DO NOT SCALE FROM THESE DRAWINGS USE DIMENSIONS

DESIGNED BY: D. LOWELL
STATE OF ALASKA 49th DAVID H. LOWELL CE-12614 REGISTERED PROFESSIONAL ENGINEER
11/25/15
CHECKED BY: STAFF
DRAWN BY: STAFF

STATE OF ALASKA
DEPARTMENT OF TRANSPORTATION & PUBLIC FACILITIES
SOUTHCOAST REGION

**KETCHIKAN FERRY TERMINAL IMPROVEMENTS**

**ESTIMATE OF QUANTITIES & GENERAL NOTES**

PATH: Q:\KTN\67466\MF\ADMIN\ADVERTISEMENT\ADDENDUM\FAXADDENDUM2\02 – GENERAL NOTES & QUA
TAB: 2 Wednesday, November 25, 2015 11:55:36 AM

| REVISIONS NO. | DATE | DESCRIPTION | PROJECT DESIGNATION | YEAR | SHEET NO. | TOTAL SHEETS |
|---|---|---|---|---|---|---|
| 1 | 11/25/15 | REVISED NOTES & ESTIMATE | SAMHS00015 | 2015 | 2 | 28 |

Project As-Built Drawings have been reviewed by the Project Engineer and represent to the best of my knowledge the project as constructed.
PE CW Date 5-20-17

## SURVEY CONTROL

| POINT # | NORTHING | EASTING | ELEVATION | DESCRIPTION |
|---|---|---|---|---|
| 119 | 92316.47 | 96865.90 | 24.11 | SURVSPIKE |
| 120 | 92094.89 | 96960.46 | 23.20 | PK |
| 121 | 92090.50 | 96639.37 | 22.11 | ALCAP2" |
| 122 | 92718.32 | 96967.74 | 32.82 | ALCAP2" |

The vertical datum for the survey control shown is elevation above Mean Lower Low Water = 0.0 feet and established from the N.O.A.A. N.O.S. published tidal datum at Ketchikan - Tongass Narrows 9450460, Tidal Epoch 1983 -2001.

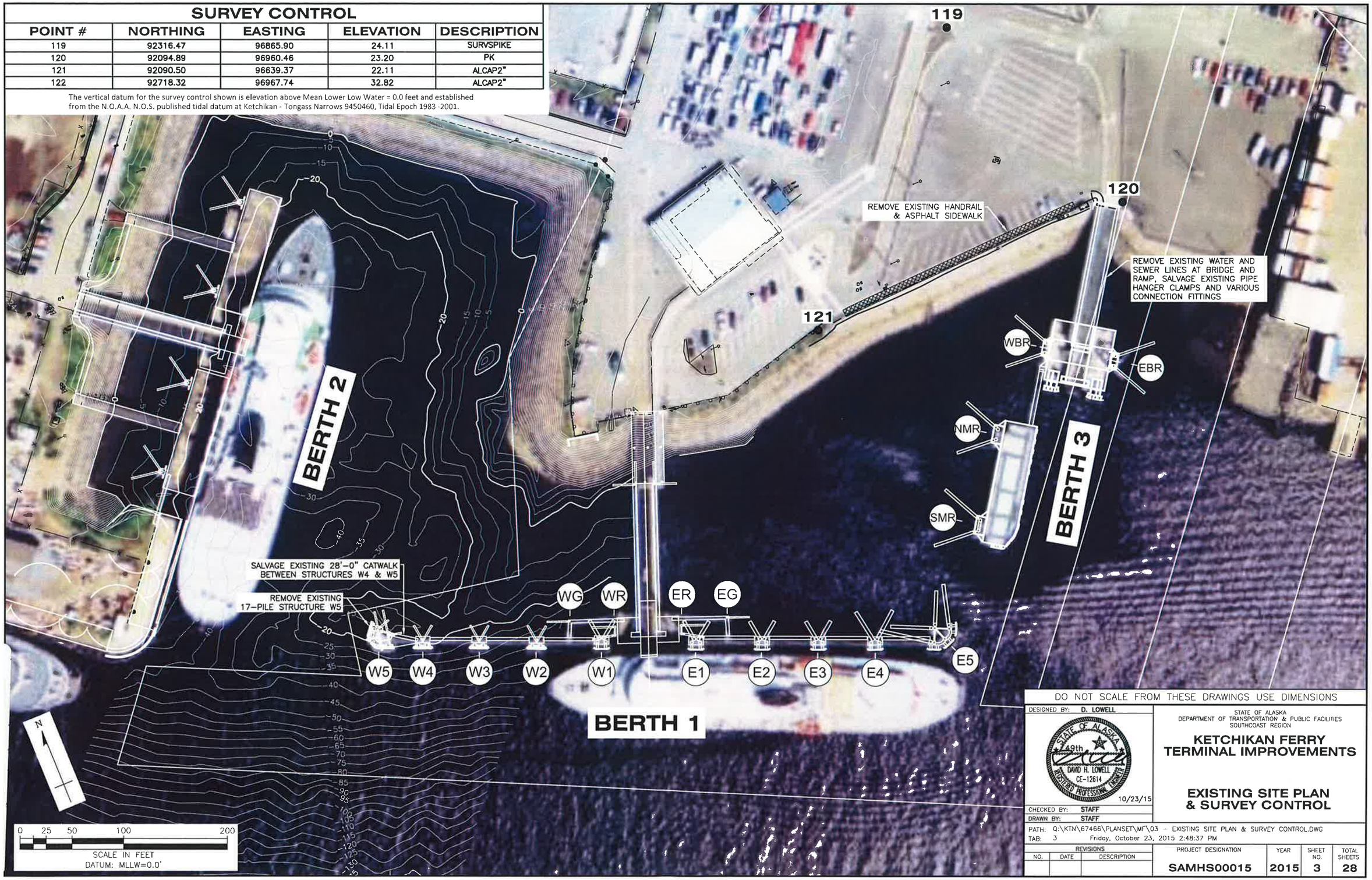


DO NOT SCALE FROM THESE DRAWINGS USE DIMENSIONS

DESIGNED BY: D. LOWELL

STATE OF ALASKA 49th DAVID H. LOWELL CE-12614 REGISTERED PROFESSIONAL ENGINEER 10/23/15

CHECKED BY: STAFF

DRAWN BY: STAFF

STATE OF ALASKA
DEPARTMENT OF TRANSPORTATION & PUBLIC FACILITIES
SOUTHCOAST REGION

**KETCHIKAN FERRY TERMINAL IMPROVEMENTS**

**EXISTING SITE PLAN & SURVEY CONTROL**

PATH: Q:\KTN\67466\PLANSET\MF\03 - EXISTING SITE PLAN & SURVEY CONTROL.DWG
TAB: 3 Friday, October 23, 2015 2:48:37 PM

| REVISIONS | | | PROJECT DESIGNATION | YEAR | SHEET NO. | TOTAL SHEETS |
|---|---|---|---|---|---|---|
| NO. | DATE | DESCRIPTION | SAMHS00015 | 2015 | 3 | 28 |

Project As-Built Drawings have been reviewed by the Project Engineer and represent to the best of my knowledge the project as constructed.

PE MP Date 5-2017

Addendum #1; Attachment #1

## PILE DATA

| STRUCTURE | PILE | SIZE | ULTIMATE CAPACITY (kips) | | ELEVATION (ft) | | | EST. LENGTH (ft) |
|---|---|---|---|---|---|---|---|---|
| | | | UPLIFT | BEARING | EST. MUDLINE | MIN. TIP | CUTOFF | 30"Øx1/2" |
| E6 | V1 | 30"øx1/2" | 100 | 110 | −49 | ~~−110~~ -98 | +23.0 | 133 |
| | V2 | 30"øx1/2" | 100 | 110 | −48 | ~~−110~~ -97 | +23.0 | 133 |
| | B1 | 30"øx1/2" | 100 | 110 | −53 | ~~−115~~ -96 | +29.9 | 153 |
| | B2 | 30"øx1/2" | 100 | 110 | −48 | ~~−110~~ -97 | +29.9 | 148 |
| W5 | V1 | 30"øx1/2" | 295 | 225 | −20 | ~~−120~~ -119 | +23.0 | 143 |
| | V2 | 30"øx1/2" | 295 | 225 | −20 | ~~−120~~ -119 | +23.0 | 143 |
| | V3 | 30"øx1/2" | 295 | 225 | −20 | ~~−120~~ -119 | +23.0 | 143 |
| | B1 | 30"øx1/2" | 270 | 520 | −15 | ~~−115~~ -117 | +30.1 | 153 |
| | B2 | 30"øx1/2" | 270 | 520 | −12 | ~~−115~~ -111 | +30.1 | 153 |
| | B3 | 30"øx1/2" | 270 | 520 | −13 | ~~−115~~ -113 | +30.1 | 153 |
| W6 | V1 | 30"øx1/2" | 100 | 110 | −15 | ~~−75~~ -77 | +23.0 | 98 |
| | V2 | 30"øx1/2" | 100 | 110 | −15 | ~~−78~~ -76 | +23.0 | 98 |
| | B1 | 30"øx1/2" | 100 | 110 | −15 | ~~−75~~ -76 | +29.9 | 111 |
| | B2 | 30"øx1/2" | 100 | 110 | −13 | ~~−75~~ -76 | +29.9 | 111 |
| | | | | | | | EST. TOTAL LENGTH (ft) | 1873 |

## PILE DATA TABLE NOTES:

1. ALL PILE WORK SHALL BE PER SECTION 505. PILE INSTALLATION SHALL BE CONDUCTED WITH THE ENGINEER OR DEPARTMENT'S REPRESENTATIVE PRESENT.
2. DRIVE ALL PILES TO REFUSAL OR ESTIMATED TIP ELEVATION.
3. MAXIMUM DRIVING RESISTANCE IS THE ULTIMATE BEARING CAPACITY PLUS OVERDRIVING TO REACH MINIMUM TIP ELEVATION.
4. ALL PILES SHALL BE FITTED WITH OPEN-END DRIVING SHOES, APF 14001 OR EQUAL.

## CONSTRUCTION LIMITATIONS AND SEQUENCING NOTES:

1. CONSTRUCTION PHASING PLAN – PRIOR TO STARTING ANY FIELD WORK, THE CONTRACTOR SHALL PROVIDE A DETAILED CONSTRUCTION PHASING PLAN PER SECTION 202 OF THE SPECIFICATIONS. THE PHASING PLAN SHALL DESCRIBE THE SEQUENCE AND METHODS FOR CONSTRUCTING THE WORK. NO WORK SHALL COMMENCE ON SITE UNTIL THE CONSTRUCTION PHASING PLAN HAS BEEN APPROVED BY THE ENGINEER. 1
2. ENVIRONMENTAL COMMITMENTS – REFERENCE APPENDIX B AND SECTION 641 OF THE SPECIFICATIONS FOR ENVIRONMENTAL WORK RESTRICTIONS.
3. WORK TIMES – SEQUENCE ALL WORK TO MAINTAIN SAFE USE OF THE FACILITIES BY SCHEDULED FERRY VESSELS. COORDINATE WITH AMHS FOR THE LATEST FERRY SCHEDULES AND UPDATES WHEN SCHEDULING CONSTRUCTION ACTIVITIES.
4. UNAUTHORIZED TERMINAL CLOSURES – FOR EACH OCCURRENCE THAT A SCHEDULED AMHS VESSEL IS PREVENTED FROM USING THE FACILITY AS A RESULT OF THE CONTRACTORS OPERATIONS, A TERMINAL CLOSURE PRICE WITHHOLDING (DEDUCTION IN CONTRACT PAYMENTS) WILL BE ASSESSED UNDER BID ITEM 202(13).
5. CLEAR ACCESS TO BERTH – PRIOR TO SCHEDULED AMHS FERRY ARRIVALS, MOVE OR STORE ALL EQUIPMENT & MATERIALS IN LOCATIONS THAT WILL NOT AFFECT SAFE VESSEL ACCESS, BERTHING, VEHICLE, AND PEDESTRIAN TRANSFER OPERATIONS.

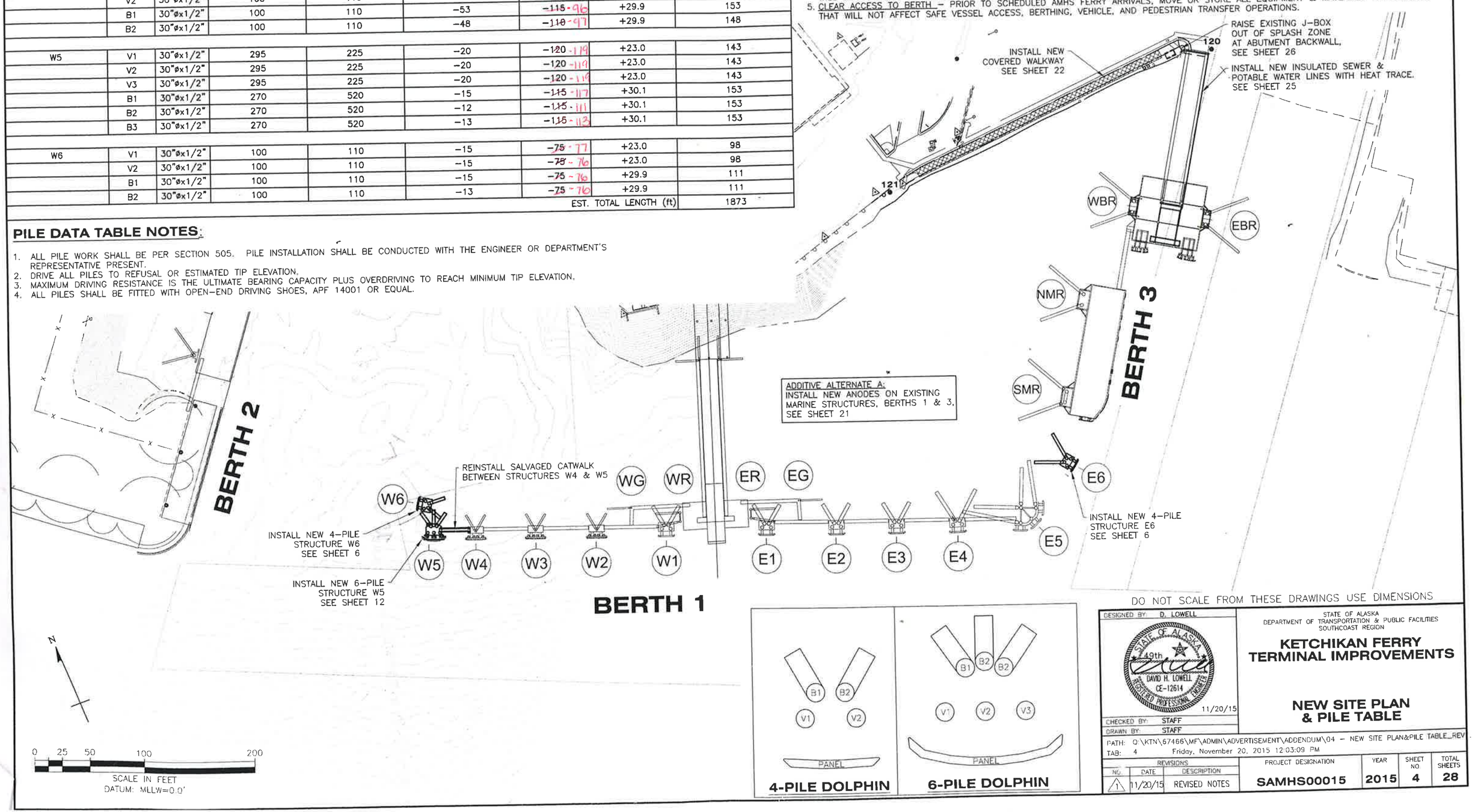


DO NOT SCALE FROM THESE DRAWINGS USE DIMENSIONS

DESIGNED BY: D. LOWELL
STATE OF ALASKA 49th DAVID H. LOWELL CE-12614 REGISTERED PROFESSIONAL ENGINEER
11/20/15
CHECKED BY: STAFF
DRAWN BY: STAFF

STATE OF ALASKA
DEPARTMENT OF TRANSPORTATION & PUBLIC FACILITIES
SOUTHCOAST REGION

**KETCHIKAN FERRY TERMINAL IMPROVEMENTS**

**NEW SITE PLAN & PILE TABLE**

PATH: Q:\KTN\67466\MF\ADMIN\ADVERTISEMENT\ADDENDUM\04 – NEW SITE PLAN&PILE TABLE_REV.DG
TAB: 4 Friday, November 20, 2015 12:03:09 PM

| REVISIONS NO. | DATE | DESCRIPTION | PROJECT DESIGNATION | YEAR | SHEET NO. | TOTAL SHEETS |
|---|---|---|---|---|---|---|
| 1 | 11/20/15 | REVISED NOTES | SAMHS00015 | 2015 | 4 | 28 |

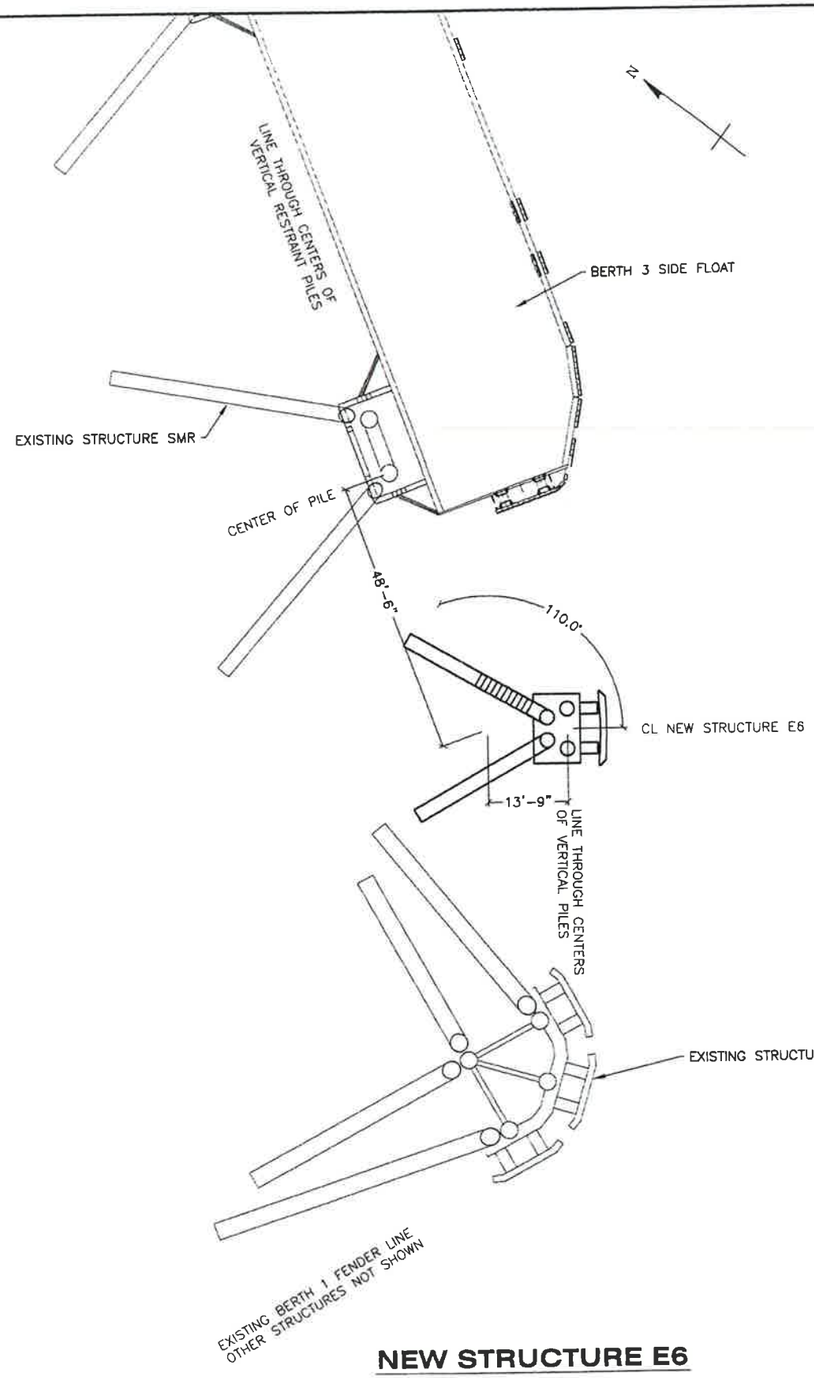


## NEW STRUCTURE E6

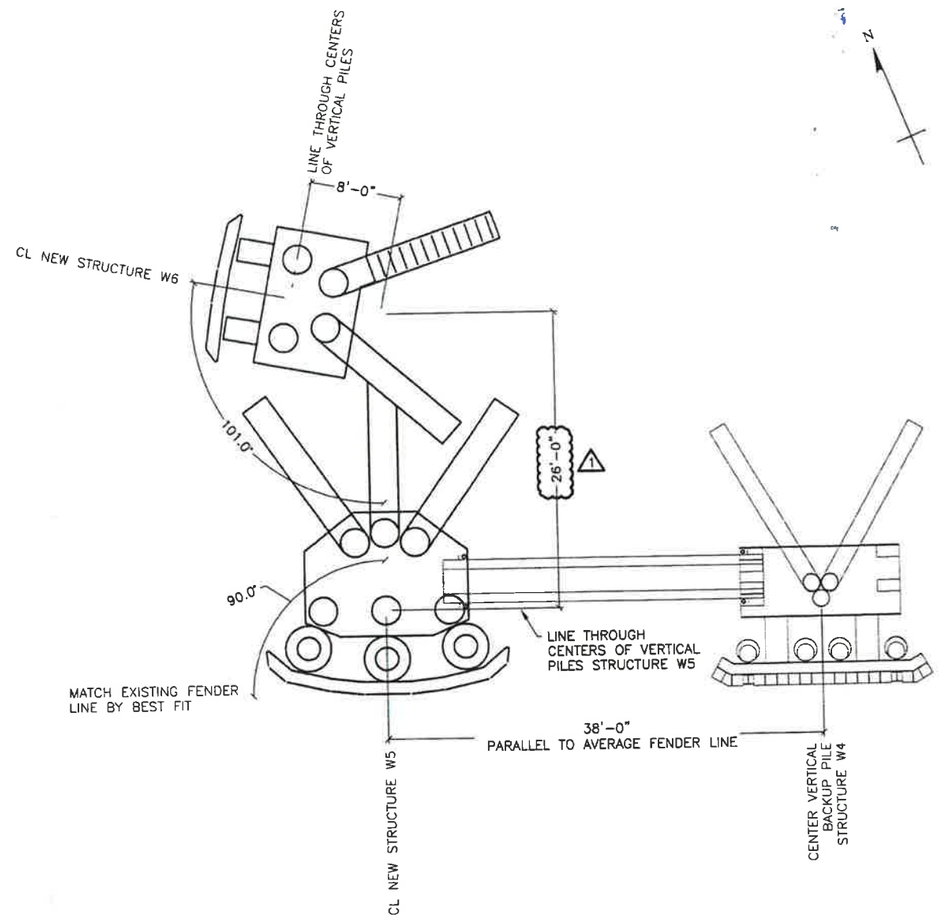


## NEW STRUCTURES W5 & W6

DO NOT SCALE FROM THESE DRAWINGS USE DIMENSIONS

DESIGNED BY: D. LOWELL

STATE OF ALASKA
DAVID H. LOWELL
CE-12614
REGISTERED PROFESSIONAL ENGINEER
2/9/16

CHECKED BY: STAFF
DRAWN BY: STAFF

STATE OF ALASKA
DEPARTMENT OF TRANSPORTATION & PUBLIC FACILITIES
SOUTHCOAST REGION

**KETCHIKAN FERRY TERMINAL IMPROVEMENTS**

**MARINE LAYOUT**

PATH: Q:\KTN\67466\MF\CONSTRUCTION\RFP\DRAWING REVS\04-05 - NEW SITE PLAN&PILE TABLE & MA
TAB: 5 Tuesday, February 09, 2016 1:59:54 PM

| REVISIONS | | | PROJECT DESIGNATION | YEAR | SHEET NO. | TOTAL SHEETS |
|---|---|---|---|---|---|---|
| NO. | DATE | DESCRIPTION | | | | |
| 1 | 2/9/16 | REVISE W6 LAYOUT POINT | SAMHS00015 | 2015 | 5 | 28 |

Project As-Built Drawings have been reviewed by the Project Engineer and represent to the best of my knowledge the project as constructed.

PE MP Date 5-20-17

V1

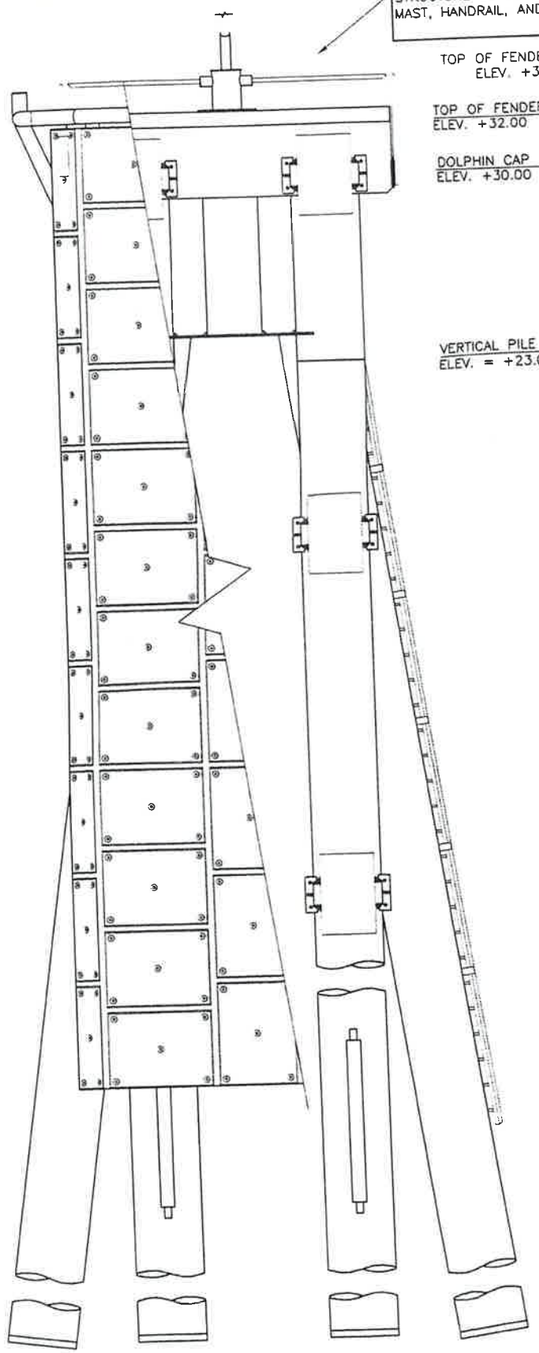


## 4-PILE DOLPHIN - E6 & W6
### FRONT ELEVATION

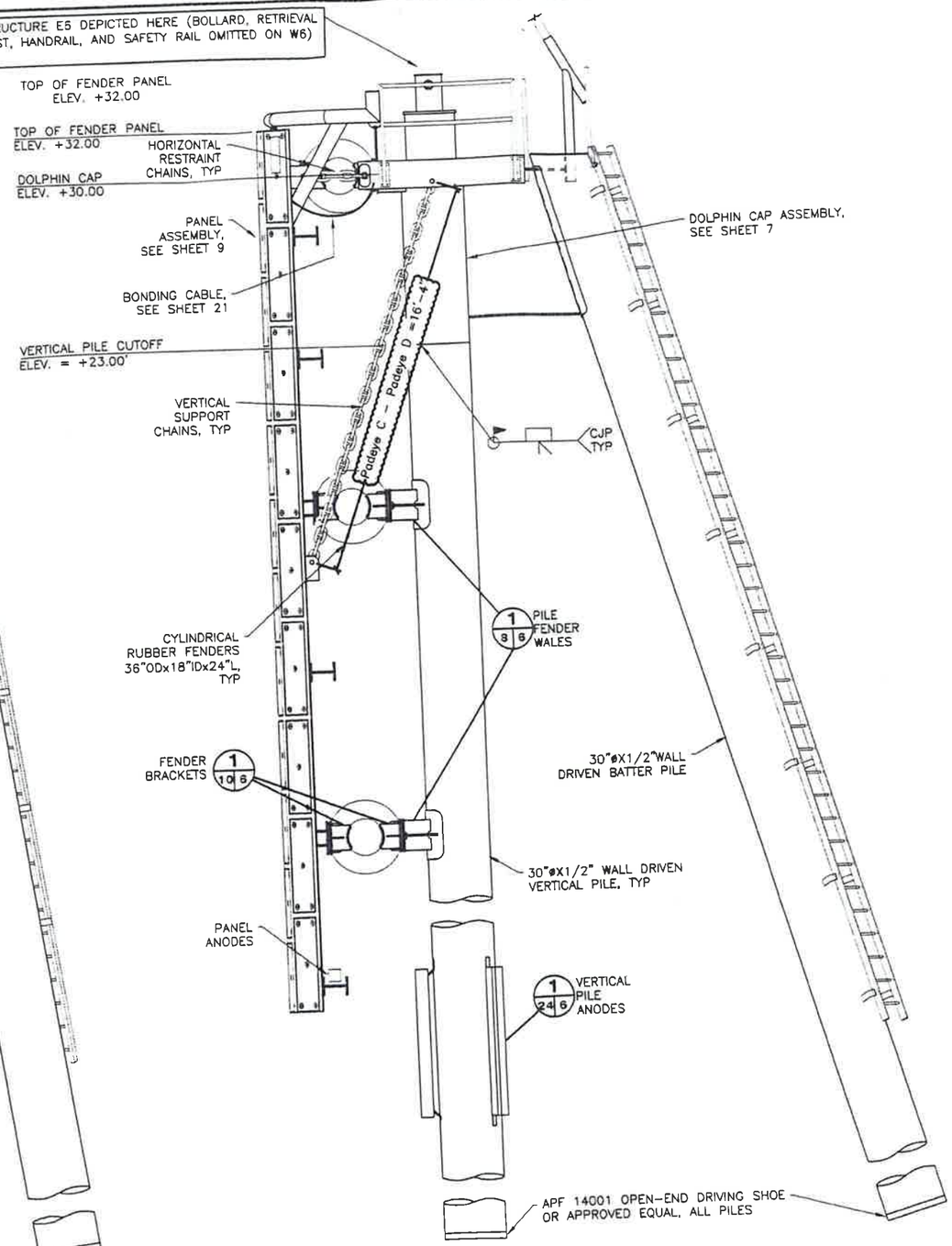


## 4-PILE DOLPHIN - E6 & W6
### SIDE ELEVATION

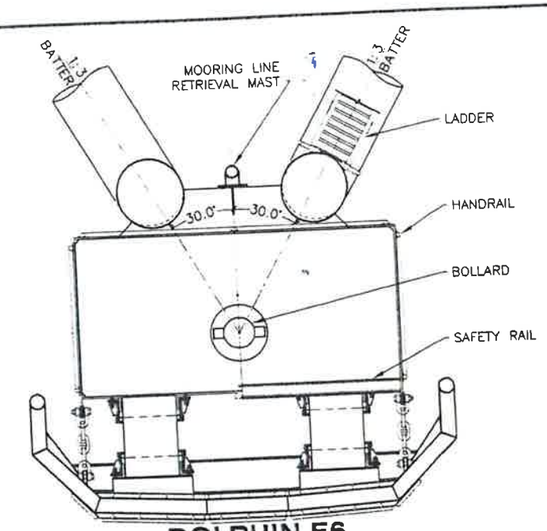


## DOLPHIN E6
### PLAN

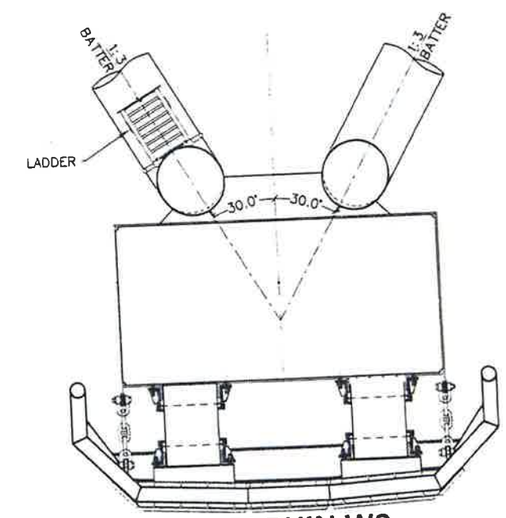


## DOLPHIN W6
### PLAN

DO NOT SCALE FROM THESE DRAWINGS USE DIMENSIONS

DESIGNED BY: D. LOWELL

STATE OF ALASKA 49th DAVID H. LOWELL CE-12614 REGISTERED PROFESSIONAL ENGINEER

2/29/16

CHECKED BY: STAFF

DRAWN BY: STAFF

PATH Q:\KTN\67466\MF\CONSTRUCTION\RFI\DRAWING REVS\06-11 4PILE DOLPHIN_REV2 2.29.16.DWG

TAB: 6 Monday, February 29, 2016 3:24:33 PM

STATE OF ALASKA
DEPARTMENT OF TRANSPORTATION & PUBLIC FACILITIES
SOUTHCOAST REGION

**KETCHIKAN FERRY TERMINAL IMPROVEMENTS**

**4-PILE DOLPHIN STRUCTURES E6 & W6**

| REVISIONS | | |
|---|---|---|
| NO. | DATE | DESCRIPTION |

| PROJECT DESIGNATION | YEAR | SHEET NO. | TOTAL SHEETS |
|---|---|---|---|
| SAMHS00015 | 2015 | 6 | 28 |

Project As-Built Drawings have been reviewed by the Project Engineer and represent to the best of my knowledge the project as constructed.

PE MP Date 5-20-17

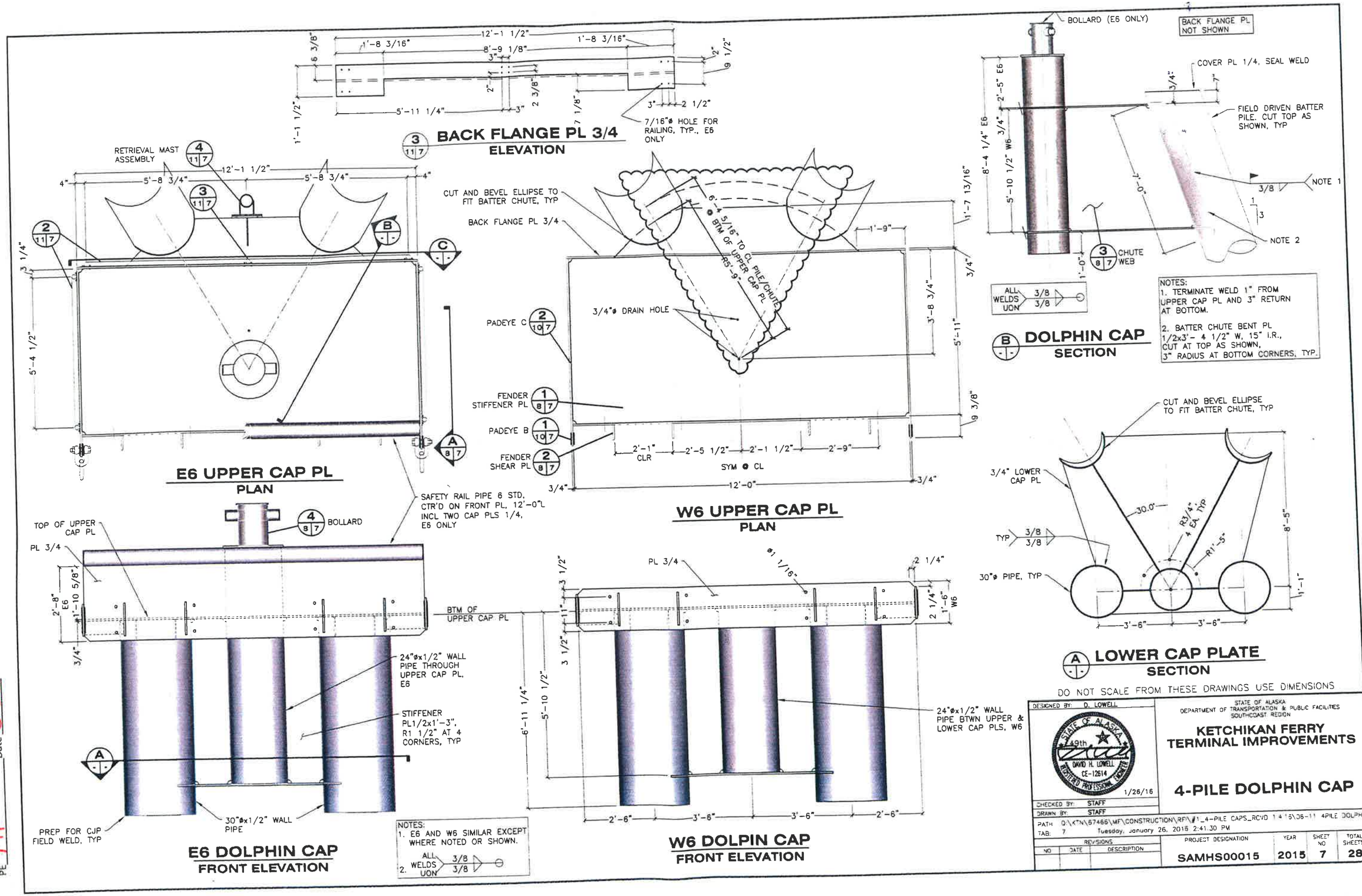


Project As-Built Drawings have been reviewed by the Project Engineer and represent to the best of my knowledge the project as constructed.

PE MP Date 5-2017

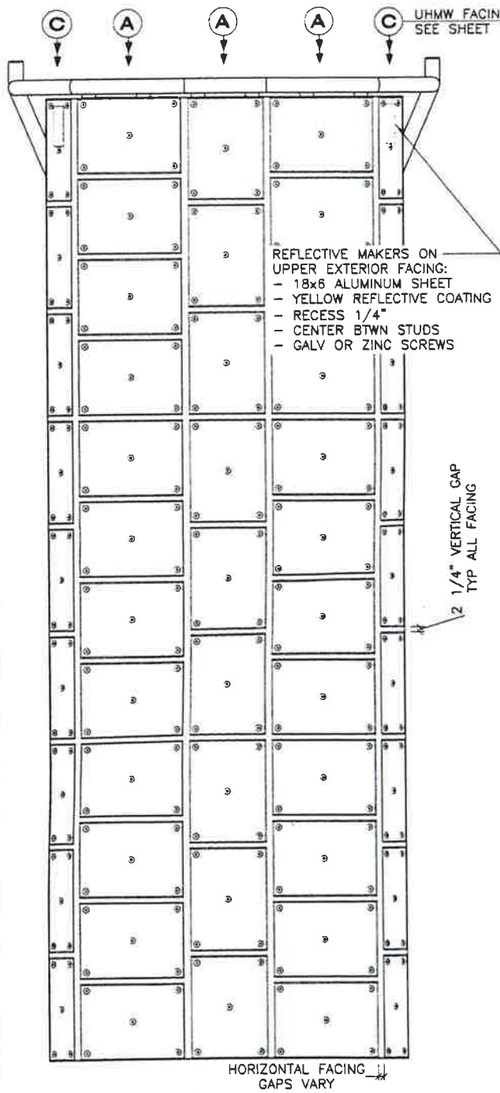


**PANEL**
**FRONT ELEVATION**

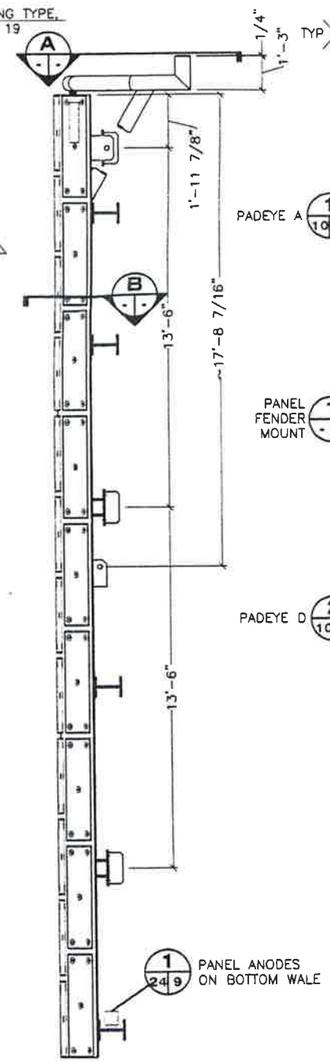


**PANEL**
**SIDE ELEVATION**

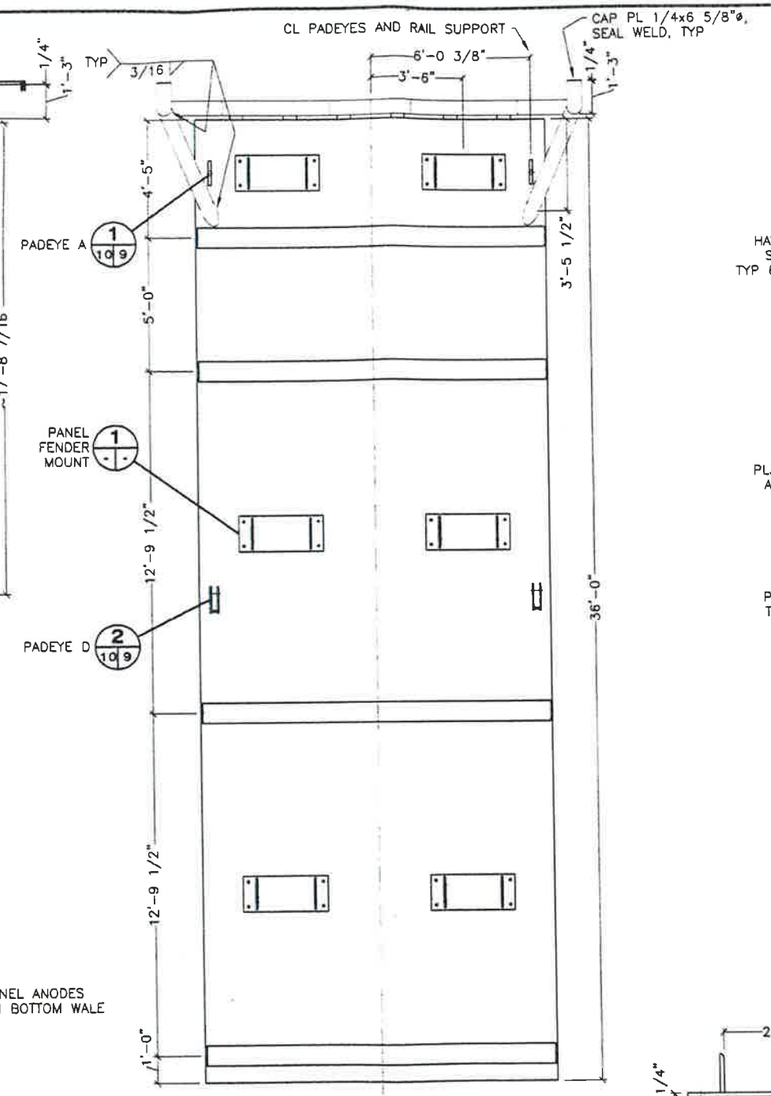


**PANEL**
**BACK ELEVATION**

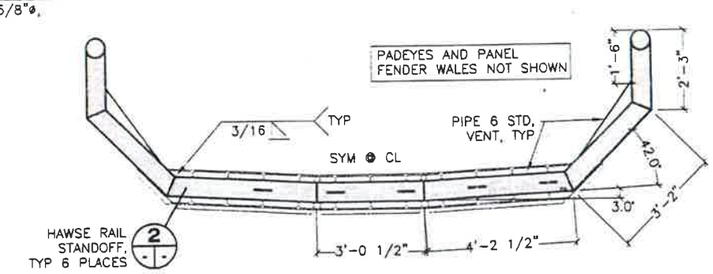


**A HAWSE RAIL**
**PLAN**

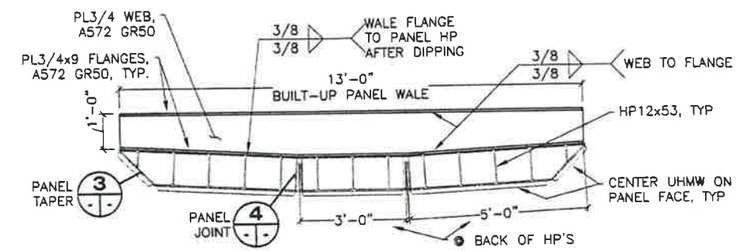


**B PANEL WALE**
**PLAN**

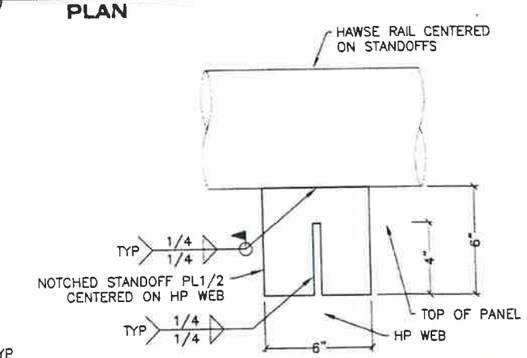


**2 HAWSE RAIL STANDOFF**
**DETAIL - ELEVATION VIEW**

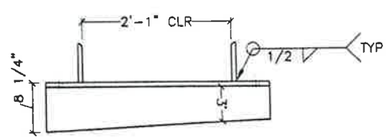


**PLAN**

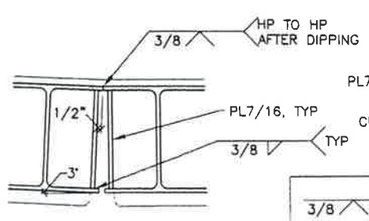


**4 PANEL JOINT**
**DETAIL - PLAN VIEW**

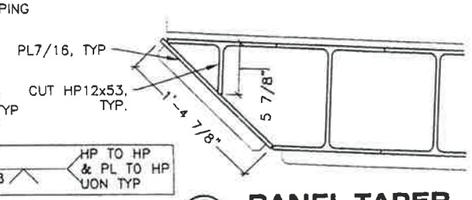


**3 PANEL TAPER**
**DETAIL - PLAN VIEW**

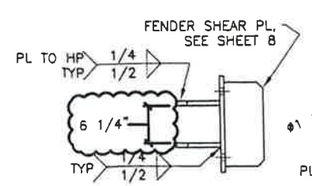


**SIDE ELEVATION**

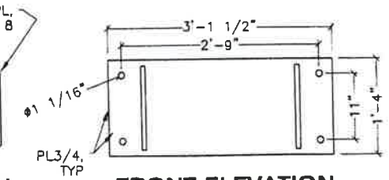


**FRONT ELEVATION**

**1 PANEL FENDER MOUNT**
**DETAIL**

DO NOT SCALE FROM THESE DRAWINGS USE DIMENSIONS

| | |
|---|---|
| DESIGNED BY: D. LOWELL | STATE OF ALASKA DEPARTMENT OF TRANSPORTATION & PUBLIC FACILITIES SOUTHCOAST REGION |
| STATE OF ALASKA 49th DAVID H. LOWELL CE-12614 REGISTERED PROFESSIONAL ENGINEER 1/26/16 | **KETCHIKAN FERRY TERMINAL IMPROVEMENTS** |
| CHECKED BY: STAFF | **4-PILE DOLPHIN FENDER PANEL** |
| DRAWN BY: STAFF | |
| PATH: Q:\KTN\67466\MF\CONSTRUCTION\RF\DRAWING REVS\06-11 4PILE DOLPHIN.DWG | |
| TAB: 9 Tuesday, January 26, 2016 3:47:13 PM | |

| REVISIONS NO | DATE | DESCRIPTION | PROJECT DESIGNATION | YEAR | SHEET NO. | TOTAL SHEETS |
|---|---|---|---|---|---|---|
| | | | SAMHS00015 | 2015 | 9 | 28 |

Project As-Built Drawings have been reviewed by the Project Engineer and represent to the best of my knowledge the project as constructed.

PE MJH Date 5-20-17

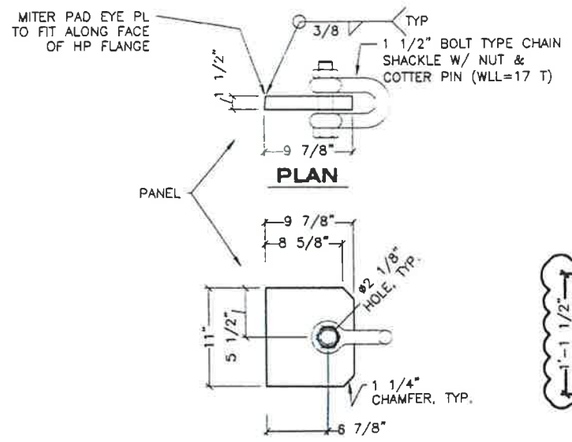


1 / 10 9 **PADEYE TYPE A DETAIL**

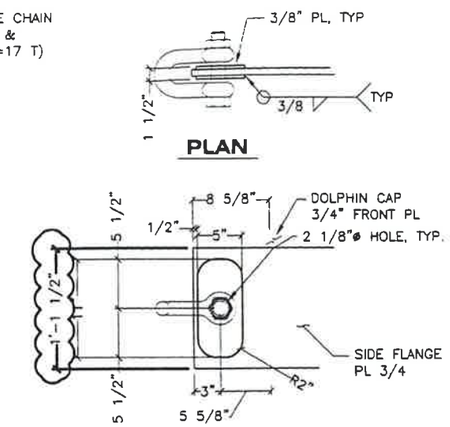


1 / 10 7 **PADEYE TYPE B DETAIL**

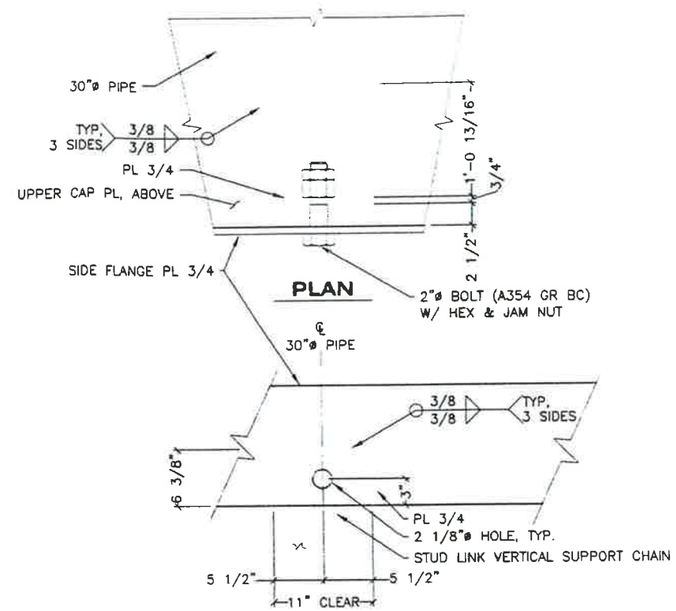


**SIDE ELEVATION**

2 / 10 7 **PADEYE TYPE C DETAIL**

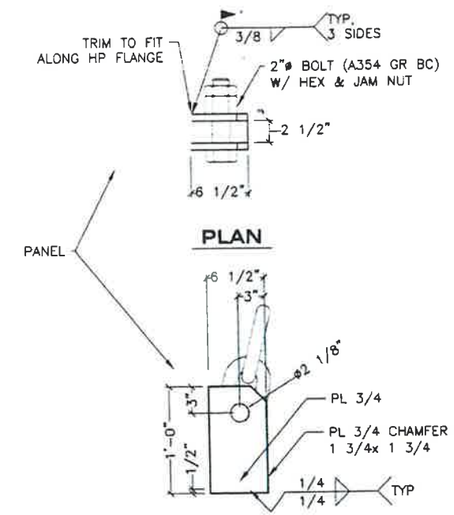


2 / 10 9 **PADEYE TYPE D DETAIL**

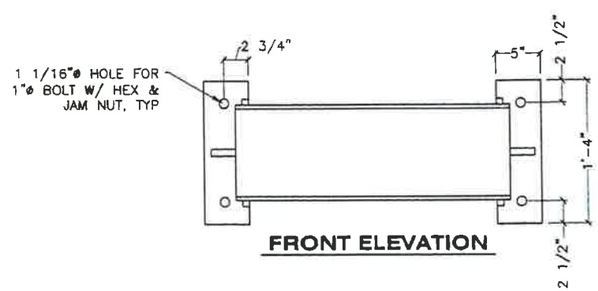


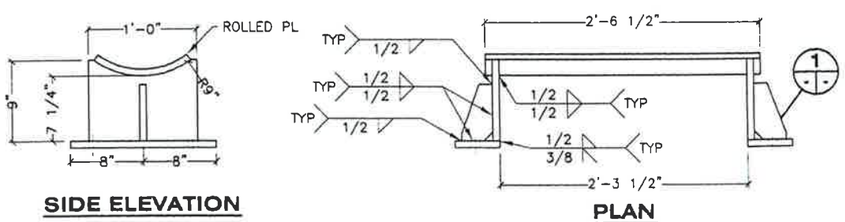


1 / 10 6 **FENDER BRACKET DETAIL ALL PL 3/4**

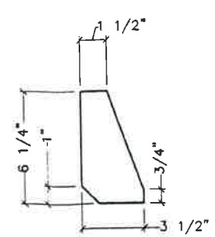


1 / - - **STIFFENER DETAIL**

DO NOT SCALE FROM THESE DRAWINGS USE DIMENSIONS

DESIGNED BY: D. LOWELL
CHECKED BY: STAFF
DRAWN BY: STAFF

STATE OF ALASKA
DEPARTMENT OF TRANSPORTATION & PUBLIC FACILITIES
SOUTHCOAST REGION

**KETCHIKAN FERRY TERMINAL IMPROVEMENTS**

**4-PILE DOLPHIN FENDER DETAILS**

STATE OF ALASKA 49th DAVID H. LOWELL CE-12614 REGISTERED PROFESSIONAL ENGINEER 1/26/16

PATH: Q:\KTN\67466\MF\CONSTRUCTION\RFI\DRAWING REVS\06-11 4PILE DOLPHIN.DWG
TAB: 10 Tuesday, January 26, 2016 4:36:24 PM

| REVISIONS | | | PROJECT DESIGNATION | YEAR | SHEET NO | TOTAL SHEETS |
|---|---|---|---|---|---|---|
| NO | DATE | DESCRIPTION | SAMHS00015 | 2015 | 10 | 28 |

Project As-Built Drawings have been reviewed by the Project Engineer and represent to the best of my knowledge the project as constructed.

PE MP Date 5-20-17

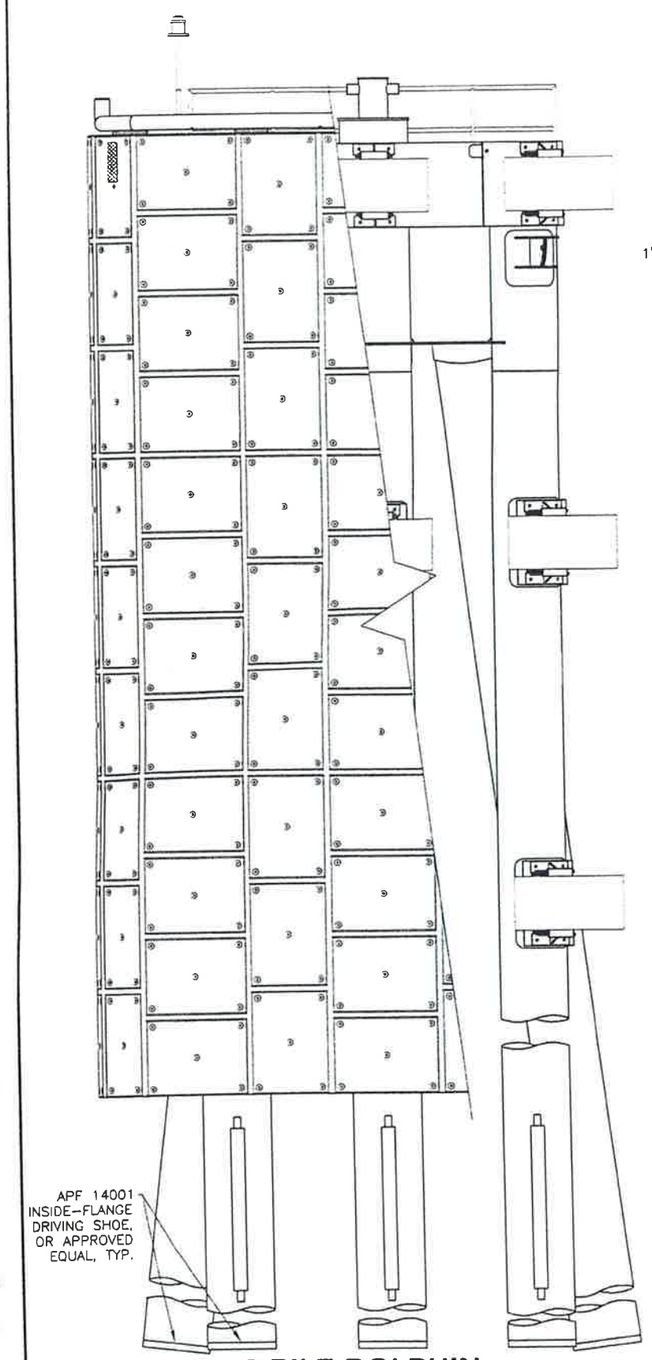


**6 PILE DOLPHIN**
**FRONT ELEVATION**

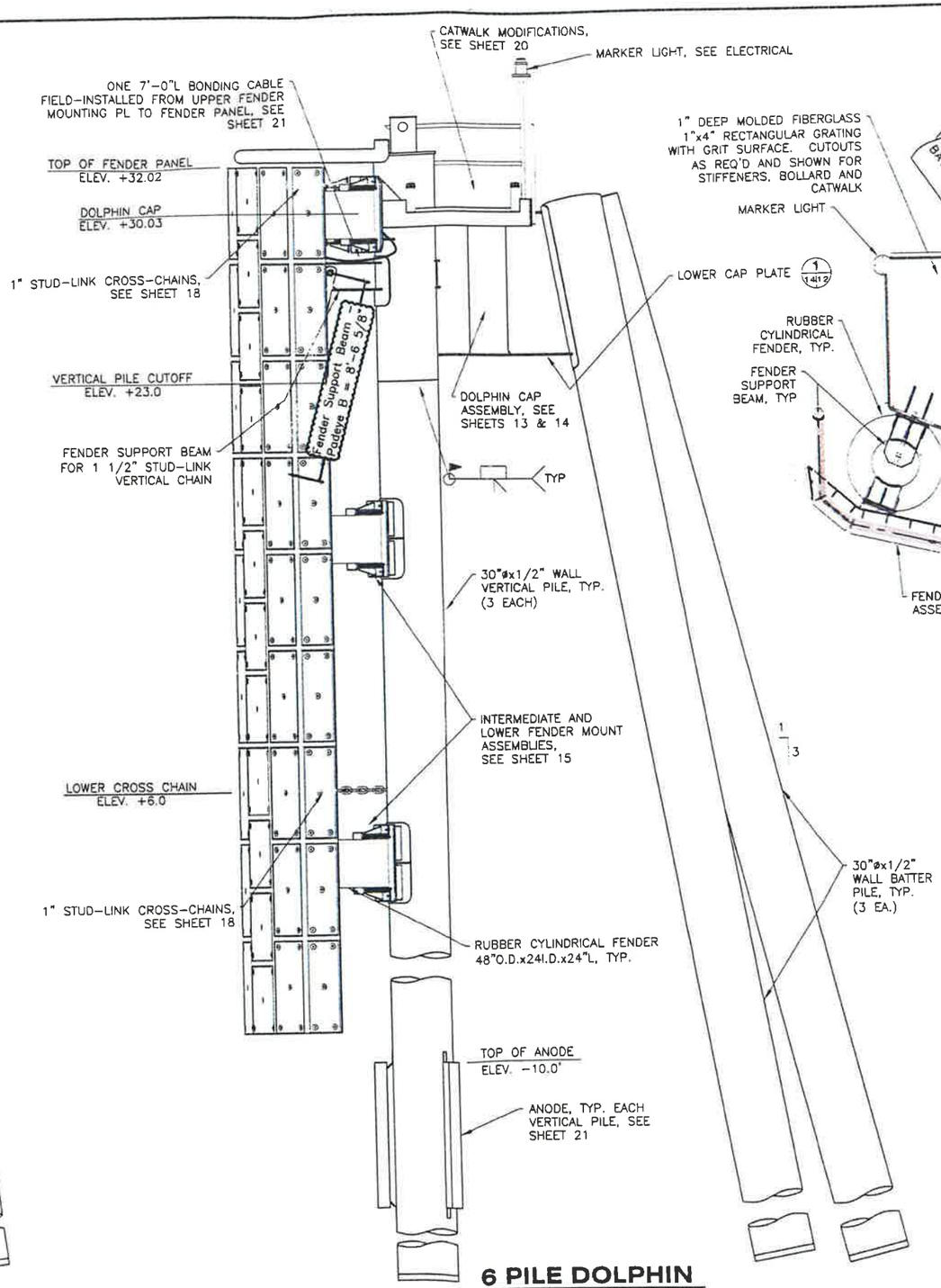


**6 PILE DOLPHIN**
**SIDE ELEVATION**

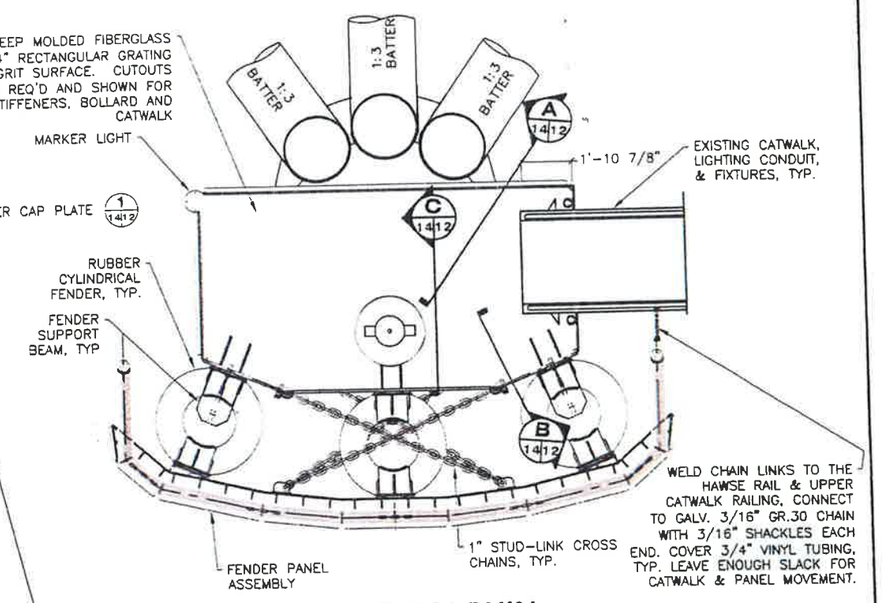


**6 PILE DOLPHIN**
**PLAN**

DO NOT SCALE FROM THESE DRAWINGS USE DIMENSIONS

| | |
|---|---|
| DESIGNED BY: D. LOWELL | STATE OF ALASKA DEPARTMENT OF TRANSPORTATION & PUBLIC FACILITIES SOUTHCOAST REGION |
| STATE OF ALASKA 49th DAVID H. LOWELL CE-12614 REGISTERED PROFESSIONAL ENGINEER 3/1/16 | **KETCHIKAN FERRY TERMINAL IMPROVEMENTS** |
| CHECKED BY: STAFF | **PLAN & ELEVATION W5 - 6 PILE DOLPHIN** |
| DRAWN BY: STAFF | |
| PATH: Q:\KTN\67466\MF\CONSTRUCTION\RFI\DRAWING REVS\14_W5 - 6 PILE DOLPHIN_REV3 2.29.16.DWG | |
| TAB: 12 Tuesday, March 01, 2016 11:29:00 AM | |

| REVISIONS | | | PROJECT DESIGNATION | YEAR | SHEET NO | TOTAL SHEETS |
|---|---|---|---|---|---|---|
| NO | DATE | DESCRIPTION | SAMHS00015 | 2015 | 12 | 28 |

Project As-Built Drawings have been reviewed by the Project Engineer and represent to the best of my knowledge the project as constructed.

PE MC Date 5.30.17

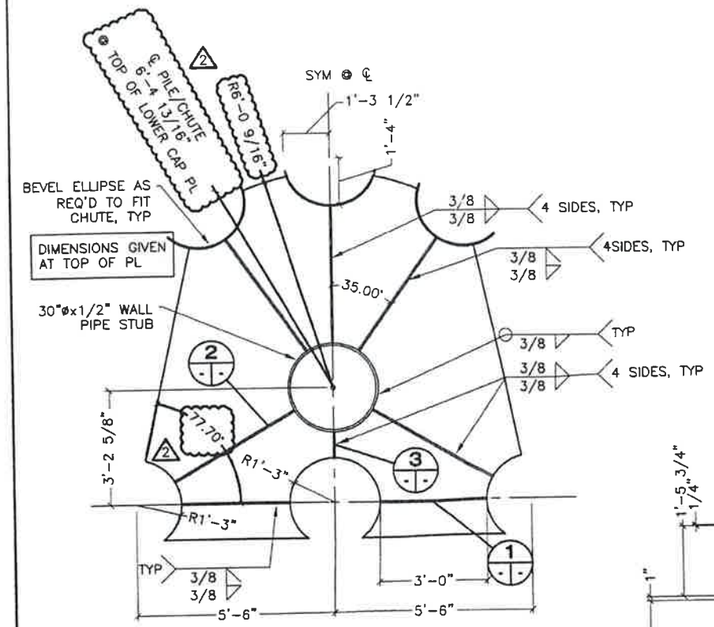


1 / 14|12 **LOWER CAP PL**
**PLAN**

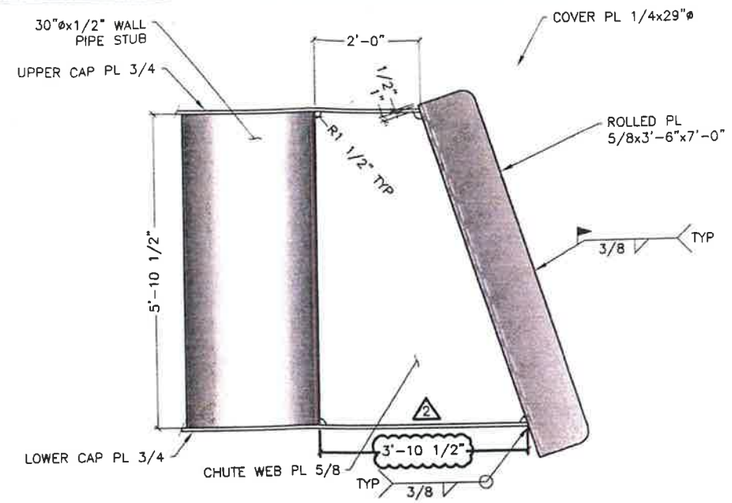


A / 14|12 **BATTER CHUTE**
**SECTION**

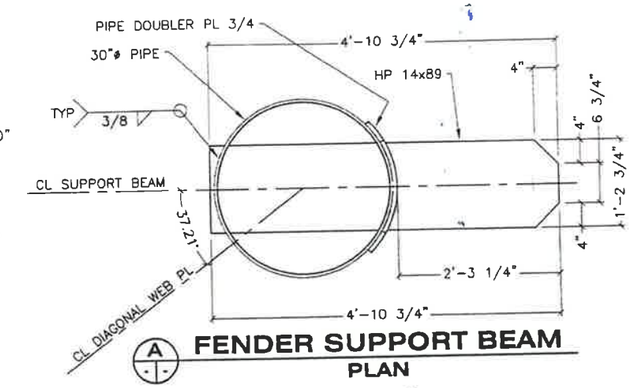


A / - | - **FENDER SUPPORT BEAM**
**PLAN**

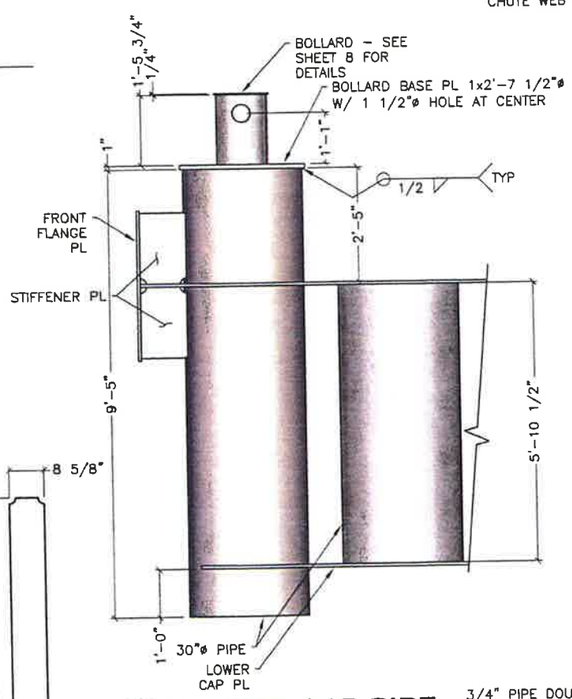


C / 14|12 **CENTER CAP PIPE**
**ELEVATION VIEW**

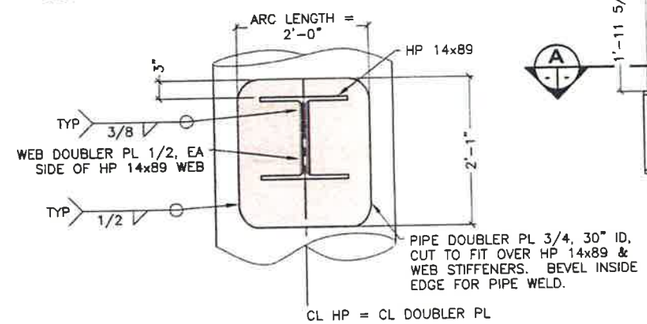


B / - | - **FENDER SUPPORT BEAM**
**FRONT ELEVATION**

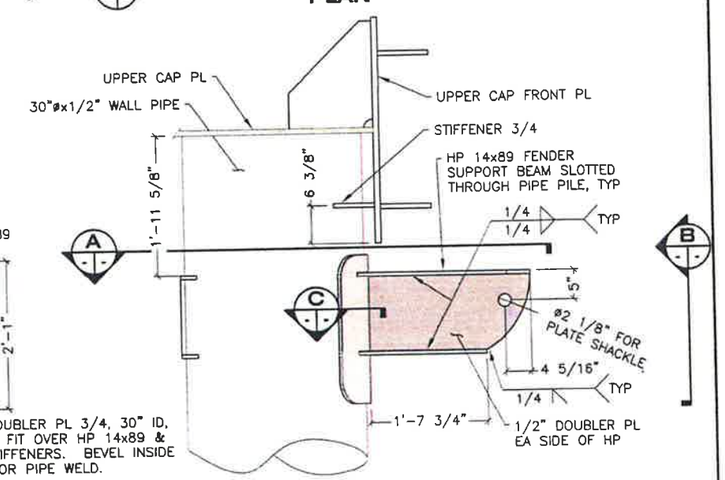


B / 14|12 **FENDER SUPPORT BEAM**
**SIDE ELEVATION**

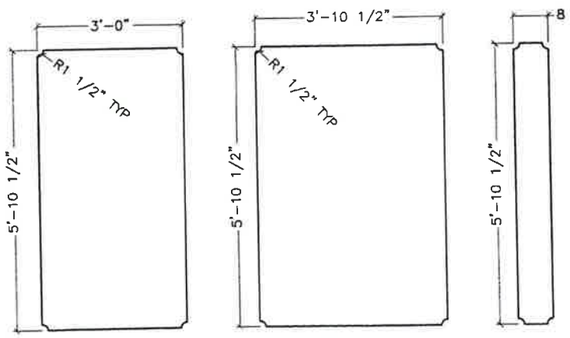


1 / - | - FRONT  2 / - | - DIAGONAL  3 / - | - INTERIOR

**DOLPHIN CAP ASSEMBLY WEB PL'S 5/8**
**DETAILS**

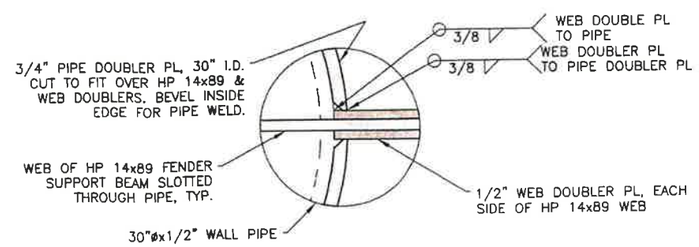


C / - | - **DOUBLER PLATE CONNECTION**
**SECTION**

DO NOT SCALE FROM THESE DRAWINGS USE DIMENSIONS

DESIGNED BY: D. LOWELL
STATE OF ALASKA 49th DAVID H. LOWELL CE-12614 REGISTERED PROFESSIONAL ENGINEER
1/29/16
CHECKED BY: STAFF
DRAWN BY: STAFF

STATE OF ALASKA
DEPARTMENT OF TRANSPORTATION & PUBLIC FACILITIES
SOUTHCOAST REGION

**KETCHIKAN FERRY TERMINAL IMPROVEMENTS**

**CAP ASSEMBLY & SUPPORT BEAM**
**W5 - 6 PILE DOLPHIN**

PATH: Q:\KTN\67466\MF\CONSTRUCTION\RFI\DRAWING REVS\14_W5 - 6 PILE DOLPHIN_REV2 1.29.16.DWG
TAB: 14 Friday, January 29, 2016 2:08:01 PM

| REVISIONS NO. | DATE | DESCRIPTION | PROJECT DESIGNATION | YEAR | SHEET NO | TOTAL SHEETS |
|---|---|---|---|---|---|---|
| 2 | 1/29/16 | RFI003 | SAMHS00015 | 2015 | 14 | 28 |

Project As-Built Drawings have been reviewed by the Project Engineer and represent to the best of my knowledge the project as constructed.

PE MO Date 5-20-17

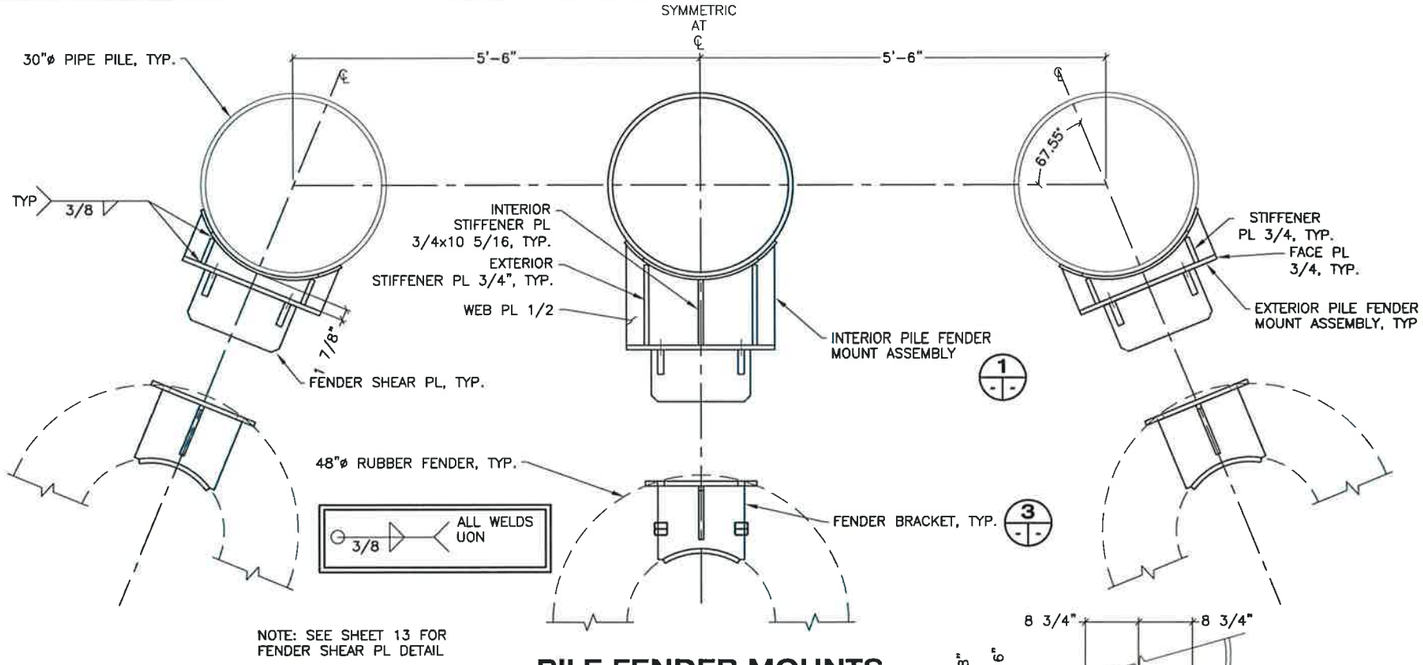


NOTE: SEE SHEET 13 FOR FENDER SHEAR PL DETAIL

## PILE FENDER MOUNTS
### PLAN

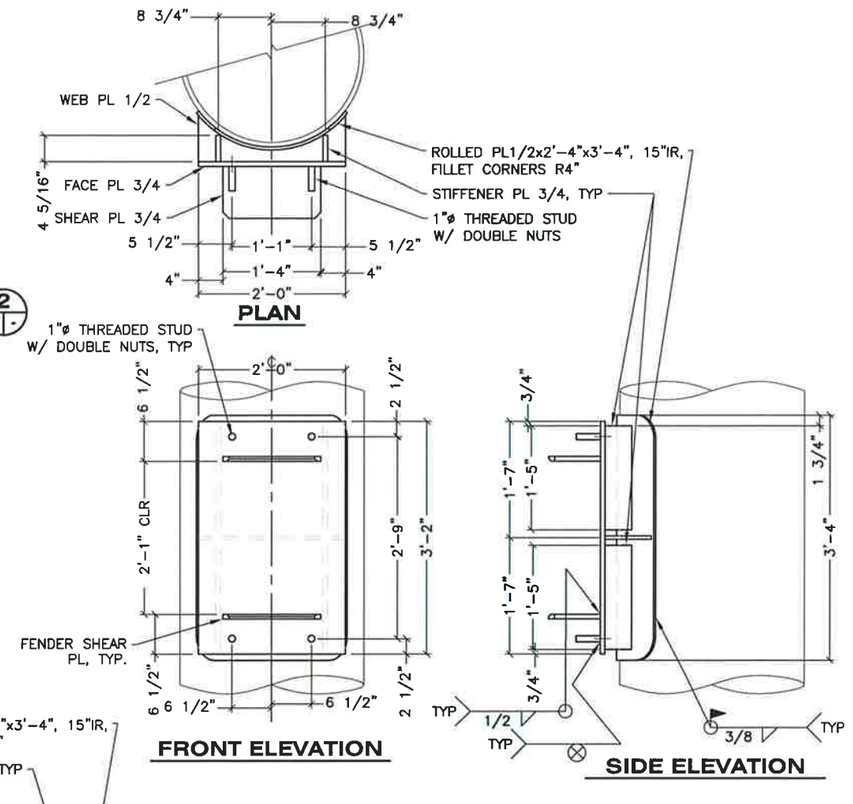


### PLAN

### FRONT ELEVATION

### SIDE ELEVATION

## 2 EXTERIOR PILE FENDER MOUNT

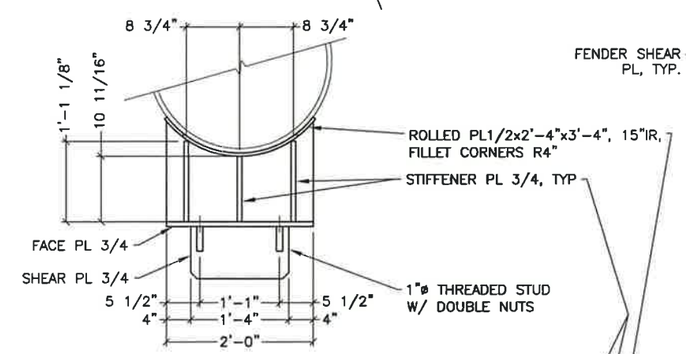


### PLAN

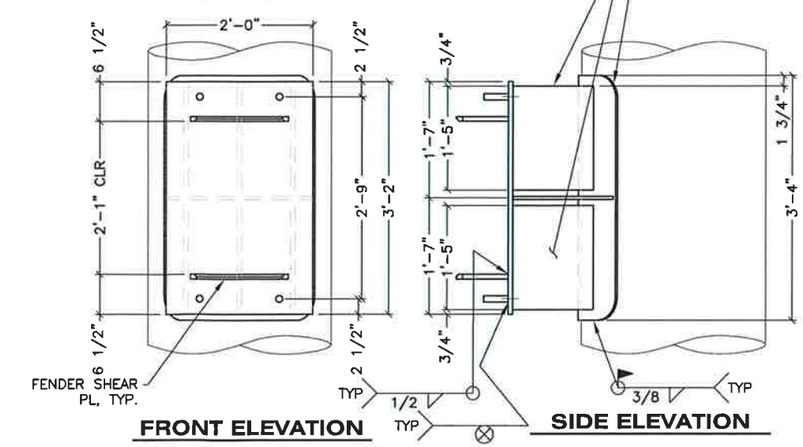


### FRONT ELEVATION

### SIDE ELEVATION

## 1 INTERIOR PILE FENDER MOUNT

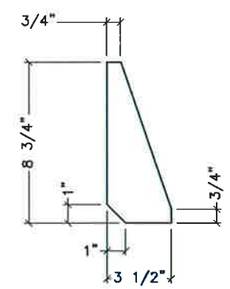


## 4 STIFFENER DETAIL

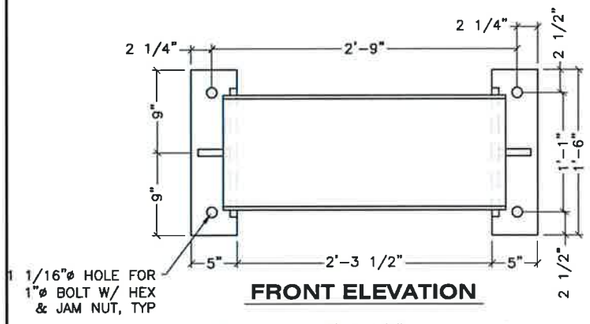


### FRONT ELEVATION

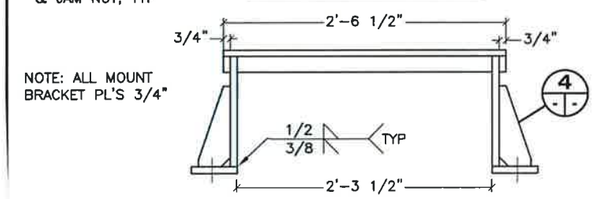


NOTE: ALL MOUNT BRACKET PL'S 3/4"

### PLAN

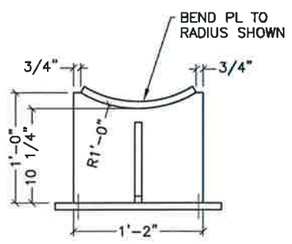


ALL MOUNT BRACKET WELDS EON 1/2

## 3 FENDER MOUNT BRACKET DETAIL

DO NOT SCALE FROM THESE DRAWINGS USE DIMENSIONS

DESIGNED BY: D. LOWELL

STATE OF ALASKA 49th DAVID H. LOWELL CE-12614 REGISTERED PROFESSIONAL ENGINEER 10/26/15

CHECKED BY: STAFF
DRAWN BY: STAFF

STATE OF ALASKA
DEPARTMENT OF TRANSPORTATION & PUBLIC FACILITIES
SOUTHCOAST REGION

**KETCHIKAN FERRY TERMINAL IMPROVEMENTS**

**FENDER MOUNT DETAILS**
**W5 - 6 PILE DOLPHIN**

PATH: Q:\KTN\67466\PLANSET\MF\12-19 W5 - 6 PILE DOLPHIN.DWG
TAB: 15 Monday, October 26, 2015 2:22:46 PM

| REVISIONS | | | PROJECT DESIGNATION | YEAR | SHEET NO. | TOTAL SHEETS |
|---|---|---|---|---|---|---|
| NO. | DATE | DESCRIPTION | SAMHS00015 | 2015 | 15 | 28 |

Project As-Built Drawings have been reviewed by the Project Engineer and represent to the best of my knowledge the project as constructed.

PE MP Date 5.20.17

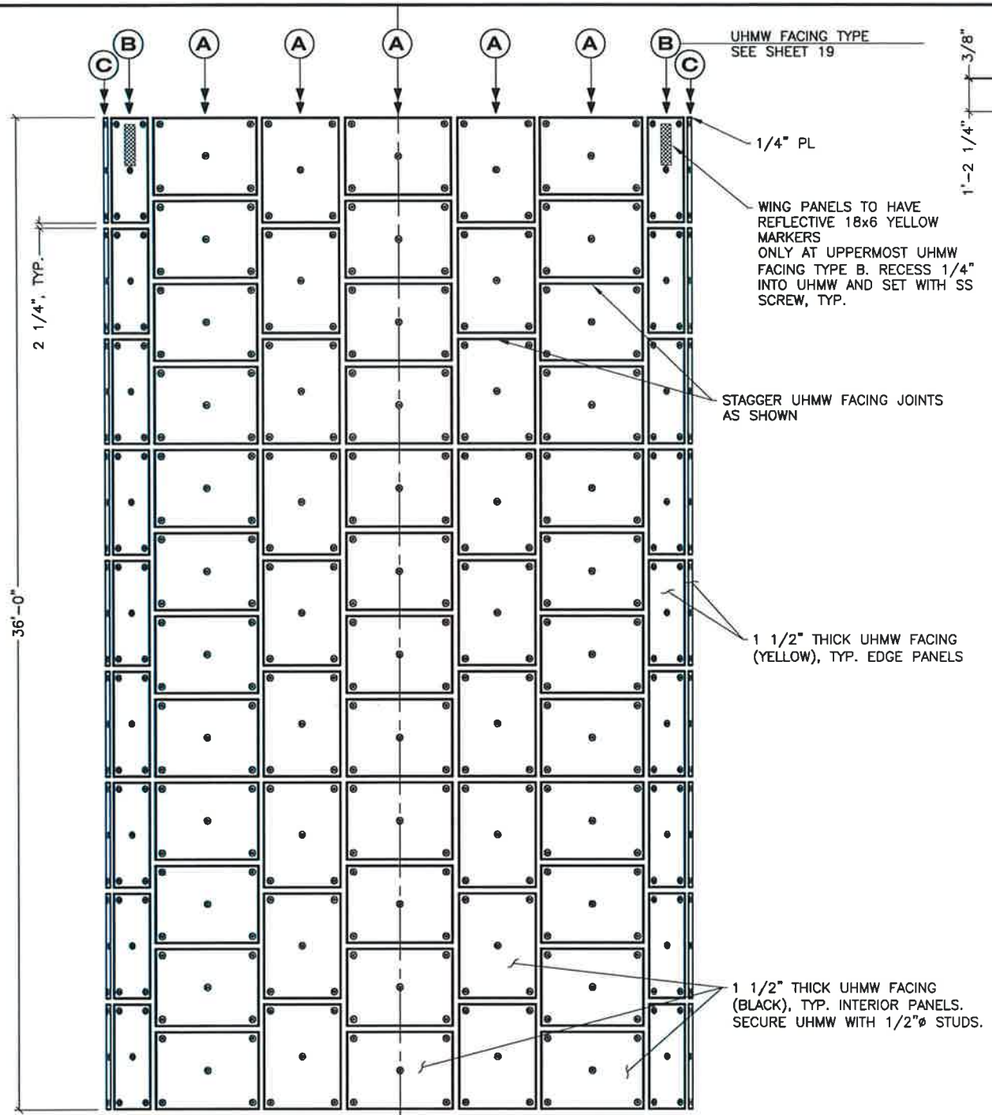


## UHMW FACING
### FRONT ELEVATION
SYMMETRIC ABOUT ℄

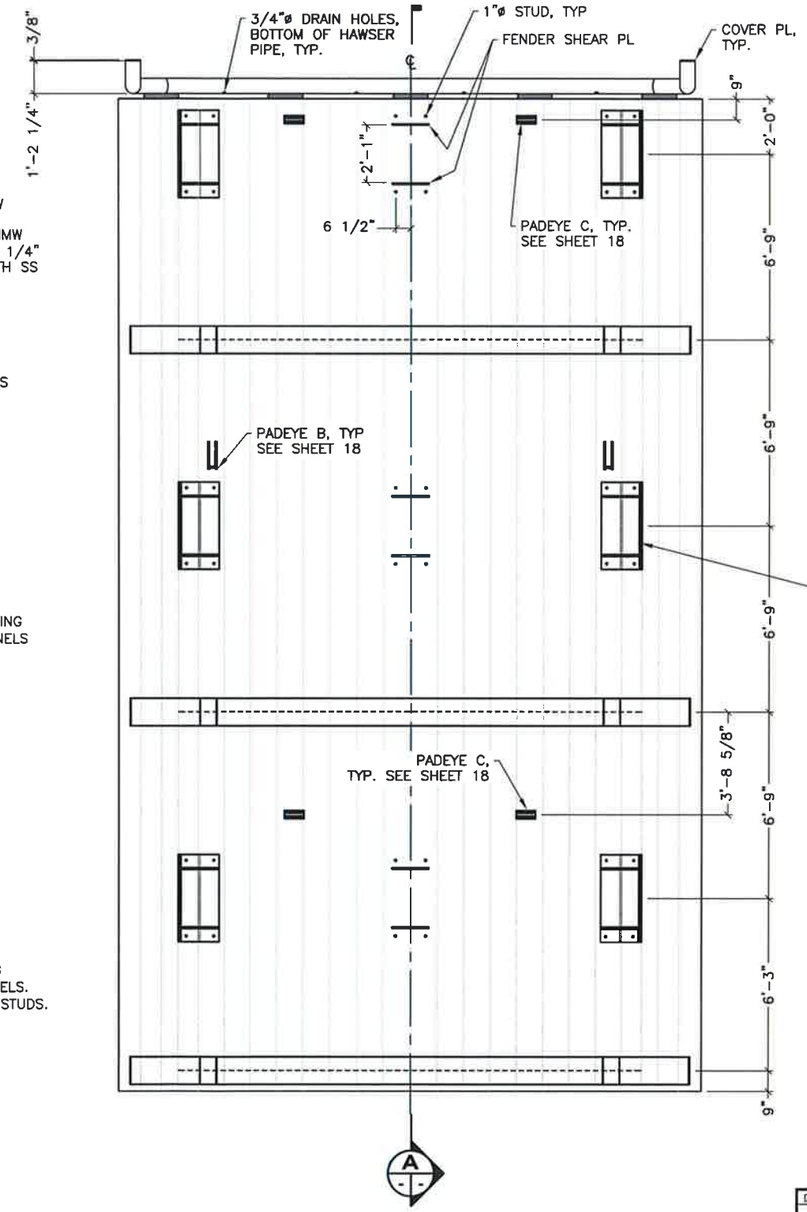


## FENDER PANEL
### BACK ELEVATION

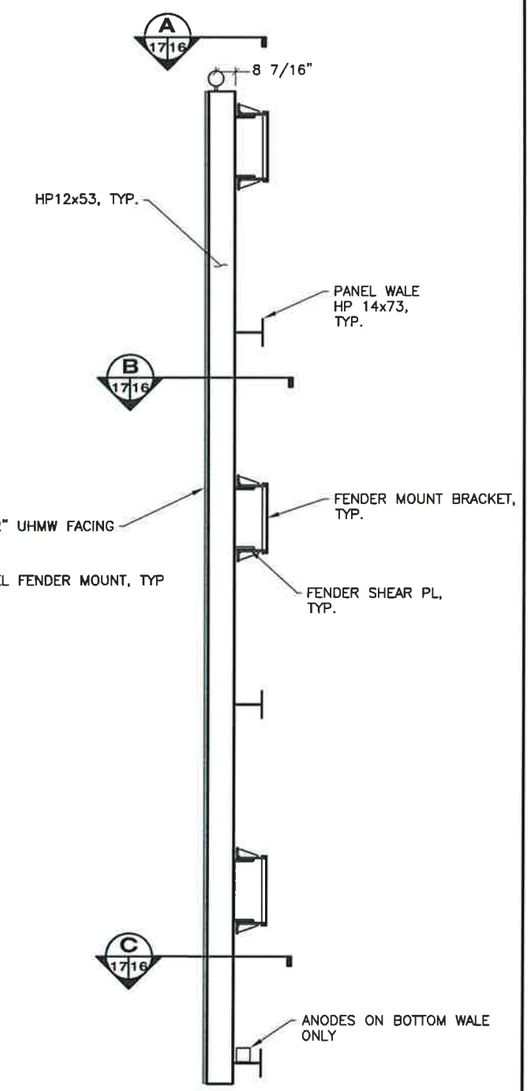


## A FENDER PANEL
### SECTION

DO NOT SCALE FROM THESE DRAWINGS USE DIMENSIONS

DESIGNED BY: D. LOWELL
CHECKED BY: STAFF
DRAWN BY: STAFF

STATE OF ALASKA 49th DAVID H. LOWELL CE-12614 REGISTERED PROFESSIONAL ENGINEER
10/27/15

STATE OF ALASKA
DEPARTMENT OF TRANSPORTATION & PUBLIC FACILITIES
SOUTHCOAST REGION

**KETCHIKAN FERRY TERMINAL IMPROVEMENTS**

**FENDER PANEL**
**W5 - 6 PILE DOLPHIN**

PATH: Q:\KTN\67466\PLANSET\MF\12-19 W5 - 6 PILE DOLPHIN.DWG
TAB: 16 Tuesday, October 27, 2015 10:34:15 AM

| REVISIONS | | | PROJECT DESIGNATION | YEAR | SHEET NO. | TOTAL SHEETS |
|---|---|---|---|---|---|---|
| NO. | DATE | DESCRIPTION | SAMHS00015 | 2015 | 16 | 28 |

Project As-Built Drawings have been reviewed by the Project Engineer and represent to the best of my knowledge the project as constructed.

PE MW Date 5.20.17

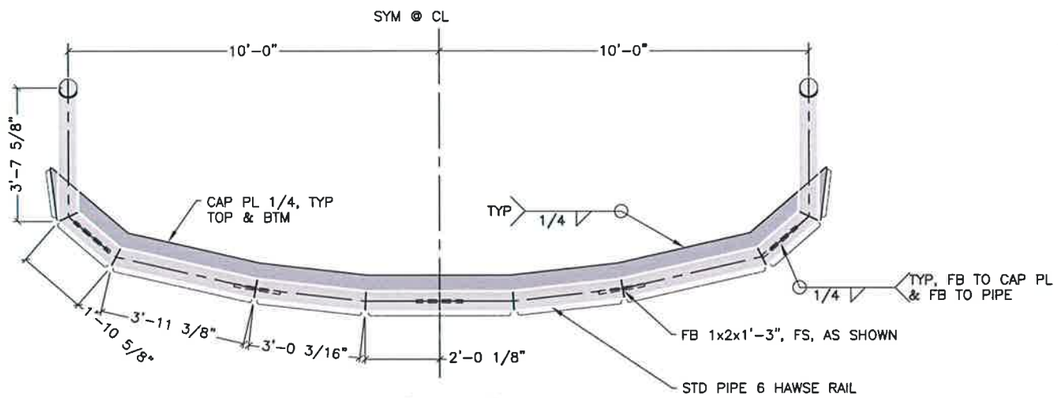


## A 17/16 HAWSE RAIL
PLAN

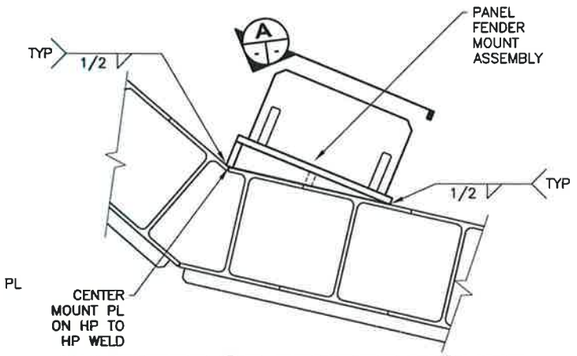


## 1 EXTERIOR FENDER MOUNT
DETAIL

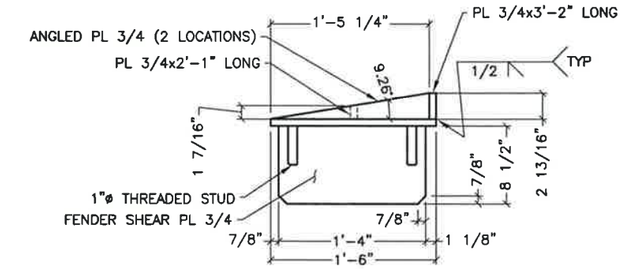


## PLAN

1/2 1/2 TYP, ALL WELDS UON

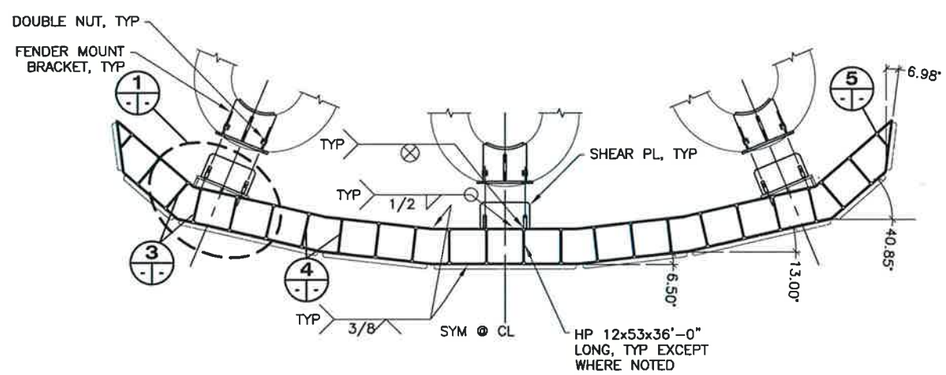


## B 17/16 FENDER PANEL
SECTION

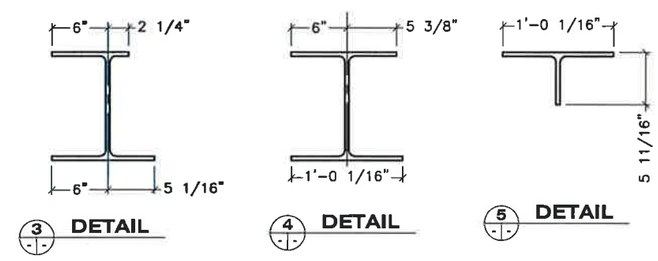


3 DETAIL 4 DETAIL 5 DETAIL

## MODIFIED HP 12x53'S

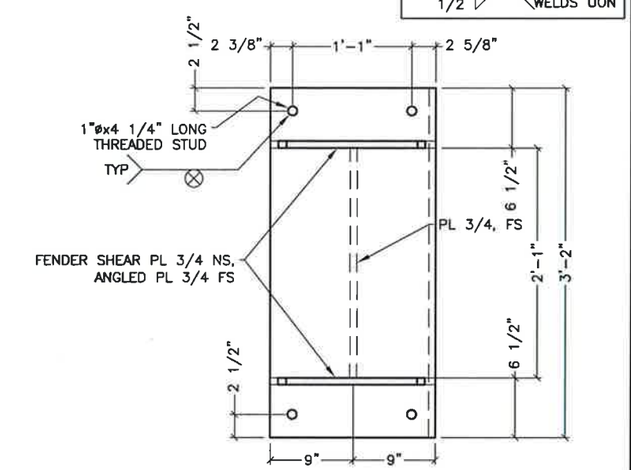


## A PANEL EXTERIOR FENDER MOUNT
FRONT ELEVATION

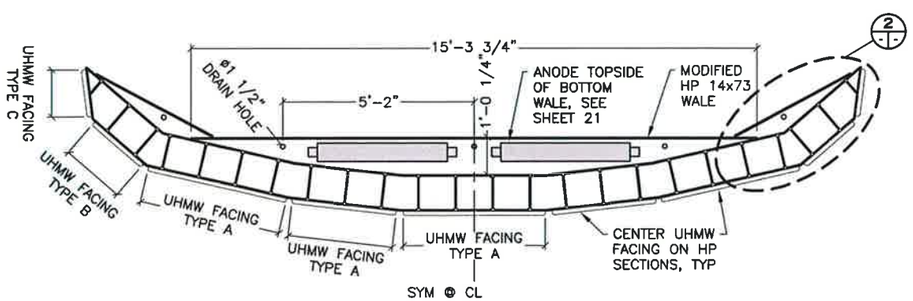


## C 17/16 FENDER PANEL @ LOWER WALE
SECTION

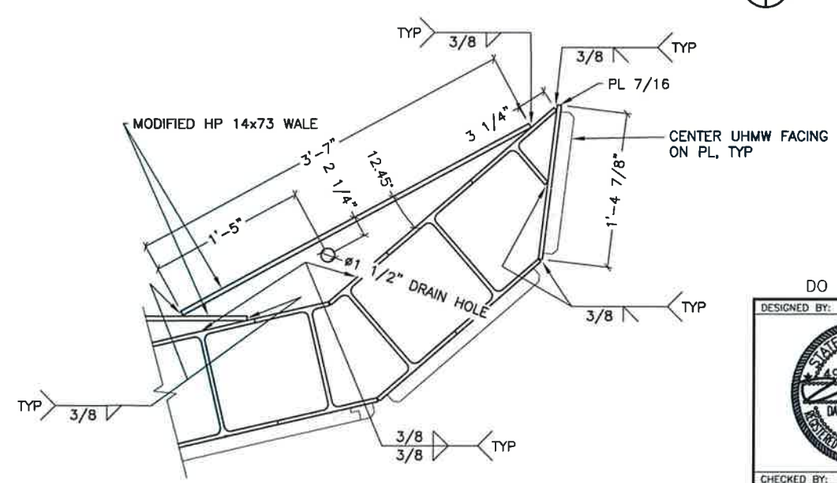


## 2 FENDER PANEL WALE
DETAIL

DO NOT SCALE FROM THESE DRAWINGS USE DIMENSIONS

DESIGNED BY: D. LOWELL
CHECKED BY: STAFF
DRAWN BY: STAFF

STATE OF ALASKA 49th DAVID H. LOWELL CE-12614 REGISTERED PROFESSIONAL ENGINEER 10/27/15

STATE OF ALASKA
DEPARTMENT OF TRANSPORTATION & PUBLIC FACILITIES
SOUTHCOAST REGION

**KETCHIKAN FERRY TERMINAL IMPROVEMENTS**

**FENDER PANEL DETAILS**
**W5 - 6 PILE DOLPHIN**

PATH: Q:\KTN\67466\PLANSET\MF\12-19 W5 - 6 PILE DOLPHIN.DWG
TAB: 17 Tuesday, October 27, 2015 10:35:46 AM

| REVISIONS | | | PROJECT DESIGNATION | YEAR | SHEET NO. | TOTAL SHEETS |
|---|---|---|---|---|---|---|
| NO. | DATE | DESCRIPTION | SAMHS00015 | 2015 | 17 | 28 |

Project As-Built Drawings have been reviewed by the Project Engineer and represent to the best of my knowledge the project as constructed.

PE MP Date 5.20.17

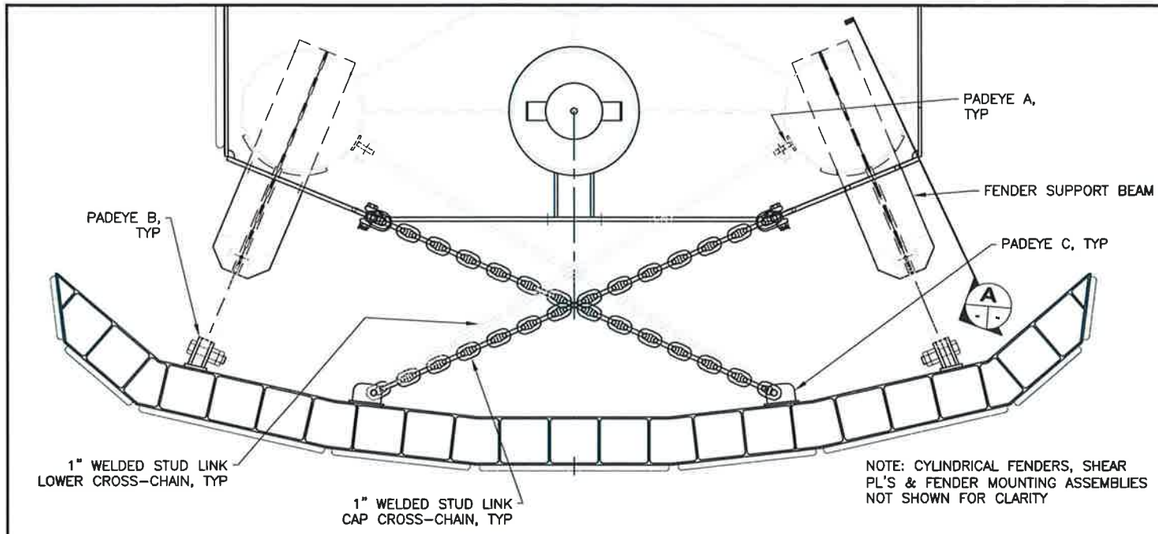


## CROSS CHAINS AND FENDER SUPPORT BEAM
### PLAN

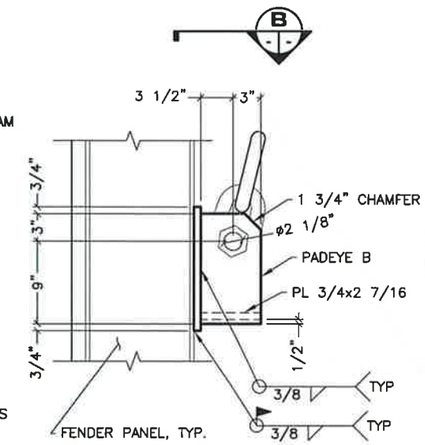


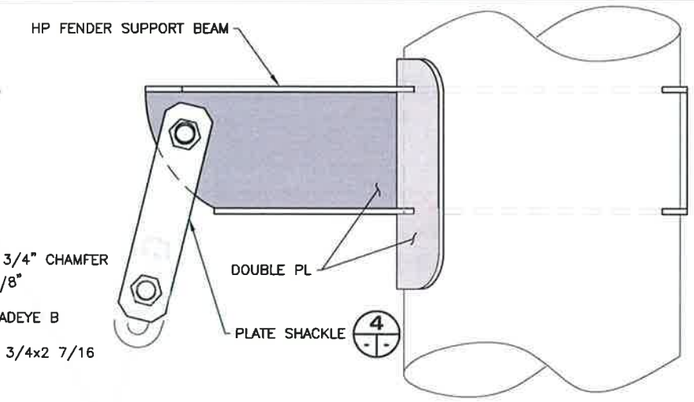


## A FENDER SUPPORT BEAM
### SIDE ELEVATION

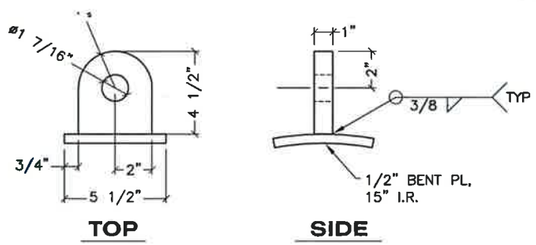


## 1 PADEYE A
### DETAIL

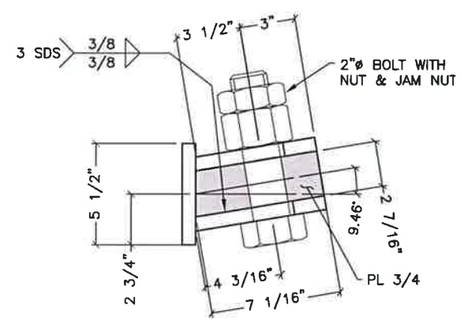


## B PADEYE B
### PLAN
ALL PL 3/4

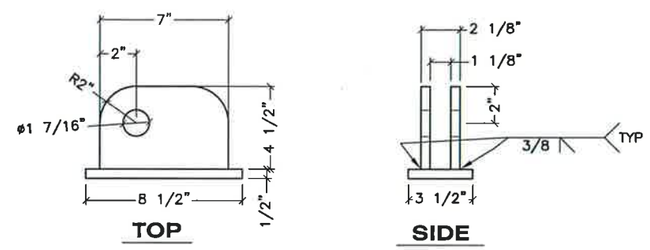


## 2 PADEYE C
### DETAIL
ALL PL 1/2

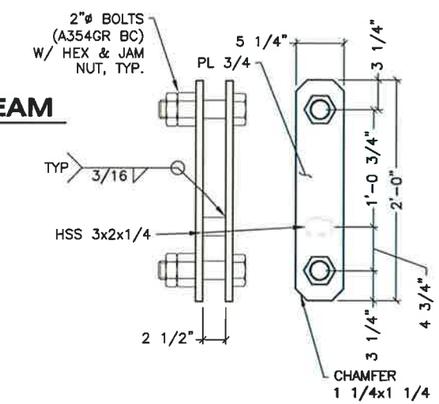


## 4 PLATE SHACKLE
### DETAIL

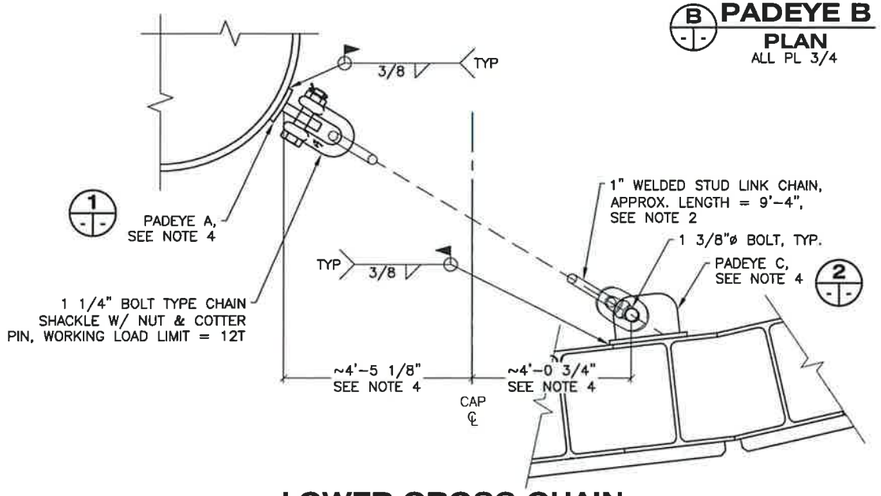


## LOWER CROSS CHAIN
### PLAN

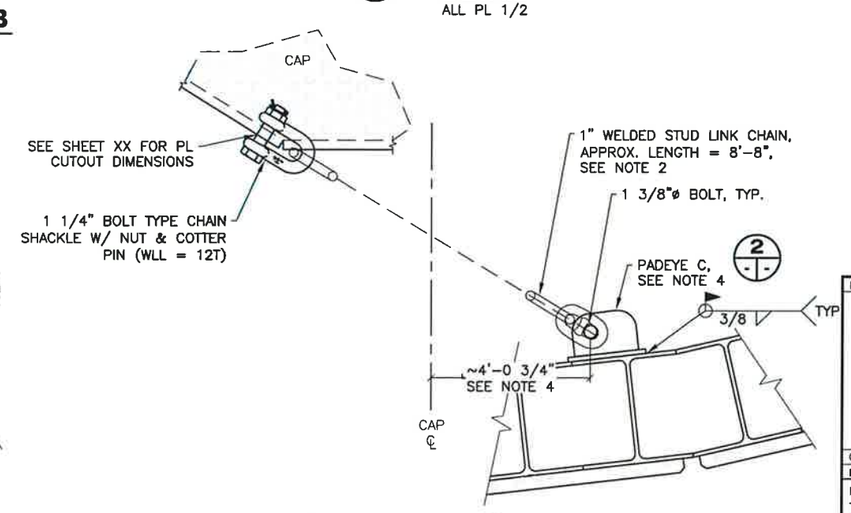


## CAP CROSS-CHAIN
### PLAN

NOTES:

1) STUD MAY BE REMOVED IN END LINKS OF CROSS CHAINS TO PASS SHACKLE. DO NOT REMOVE STUDS IN VERTICAL CHAIN.

2) INSTALL CHAIN FREE OF TWISTS. DO NOT TWIST CHAIN TO ADJUST LENGTH.

3) FIELD LOCATE PADEYE "B" SO THAT FENDER PANEL IS AT, OR JUST ABOVE, DESIGN ELEVATION.

4) FIELD LOCATE PADEYE TYPES "A" AND "C" SO CROSS CHAINS ARE LESS THAN TAUT, SLIGHTLY SLACK.

DO NOT SCALE FROM THESE DRAWINGS USE DIMENSIONS

DESIGNED BY: D. LOWELL
CHECKED BY: STAFF
DRAWN BY: STAFF

STATE OF ALASKA, 49th, DAVID H. LOWELL, CE-12614, REGISTERED PROFESSIONAL ENGINEER — 10/26/15

STATE OF ALASKA
DEPARTMENT OF TRANSPORTATION & PUBLIC FACILITIES
SOUTHCOAST REGION

**KETCHIKAN FERRY TERMINAL IMPROVEMENTS**

**FENDER SUPPORT DETAILS**
**W5 - 6 PILE DOLPHIN**

PATH: Q:\KTN\67466\PLANSET\MF\12-19 W5 - 6 PILE DOLPHIN.DWG
TAB: 18 Monday, October 26, 2015 2:27:35 PM

| REVISIONS | | | PROJECT DESIGNATION | YEAR | SHEET NO. | TOTAL SHEETS |
|---|---|---|---|---|---|---|
| NO. | DATE | DESCRIPTION | SAMHS00015 | 2015 | 18 | 28 |

Project As-built Drawings have been reviewed by the Project Engineer and represent to the best of my knowledge the project as constructed.

P.E. MP Date 5.20.17

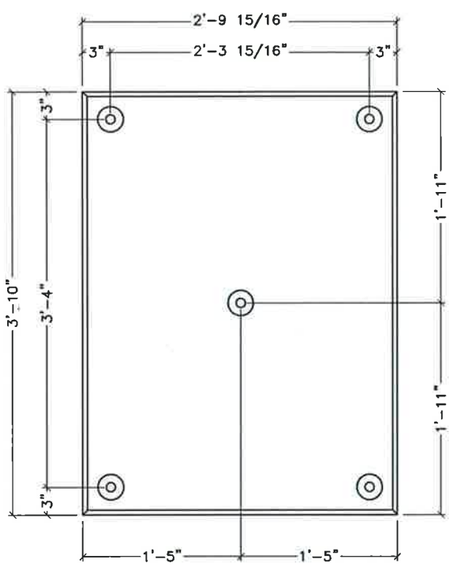


## UHMW TYPE A

BLACK IN COLOR

| | |
|---|---|
| E6 | 33 |
| W5 | 54 |
| W6 | 33 |
| TOTAL | 120 |

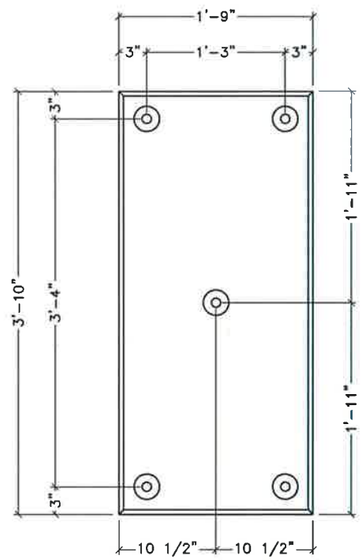


## UHMW TYPE B

YELLOW IN COLOR

| | |
|---|---|
| W5 | 18 |
| TOTAL | 18 |

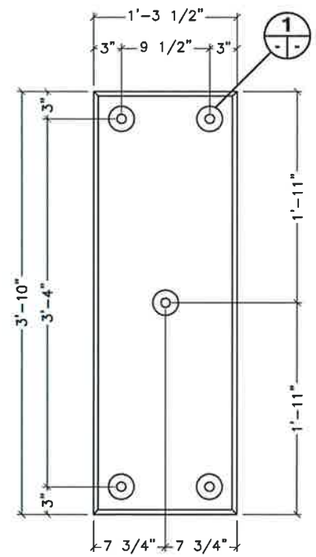


## UHMW TYPE C

YELLOW IN COLOR

| | |
|---|---|
| E6 | 18 |
| W5 | 18 |
| W6 | 18 |
| TOTAL | 54 |

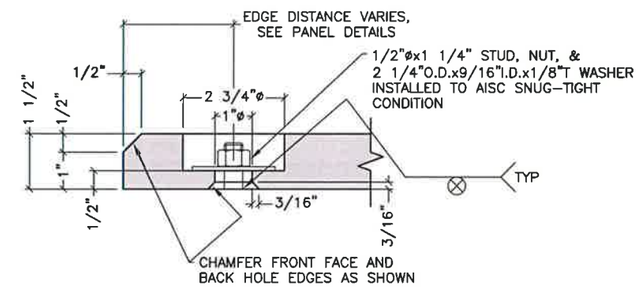


## 1 UHMW FASTENER DETAIL

DO NOT SCALE FROM THESE DRAWINGS USE DIMENSIONS

DESIGNED BY: D. LOWELL

STATE OF ALASKA
49th
DAVID H. LOWELL
CE-12614
REGISTERED PROFESSIONAL ENGINEER

10/26/15

CHECKED BY: STAFF
DRAWN BY: STAFF

STATE OF ALASKA
DEPARTMENT OF TRANSPORTATION & PUBLIC FACILITIES
SOUTHCOAST REGION

**KETCHIKAN FERRY TERMINAL IMPROVEMENTS**

**DOLPHIN FENDER UHMW FACING**

PATH: Q:\KTN\67466\PLANSET\MF\12-19 W5 - 6 PILE DOLPHIN.DWG
TAB: 19 Monday, October 26, 2015 2:28:07 PM

| REVISIONS | | | PROJECT DESIGNATION | YEAR | SHEET NO. | TOTAL SHEETS |
|---|---|---|---|---|---|---|
| NO. | DATE | DESCRIPTION | SAMHS00015 | 2015 | 19 | 28 |

Project As-Built Drawings have been reviewed by the Project Engineer and represent to the best of my knowledge the project as constructed.

PE MP Date 5.20.17

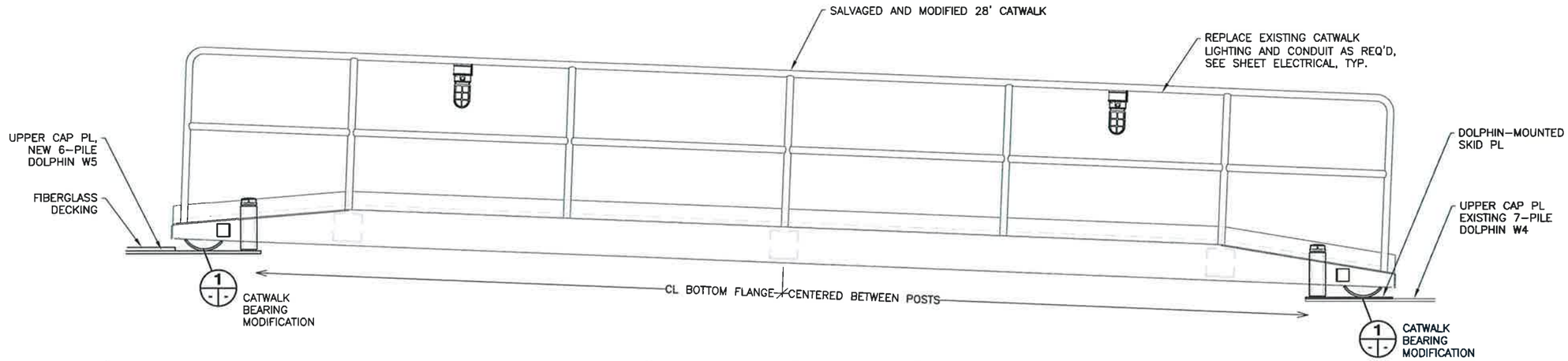


## CATWALK MODIFICATION
### ELEVATION LOOKING SHOREWARD

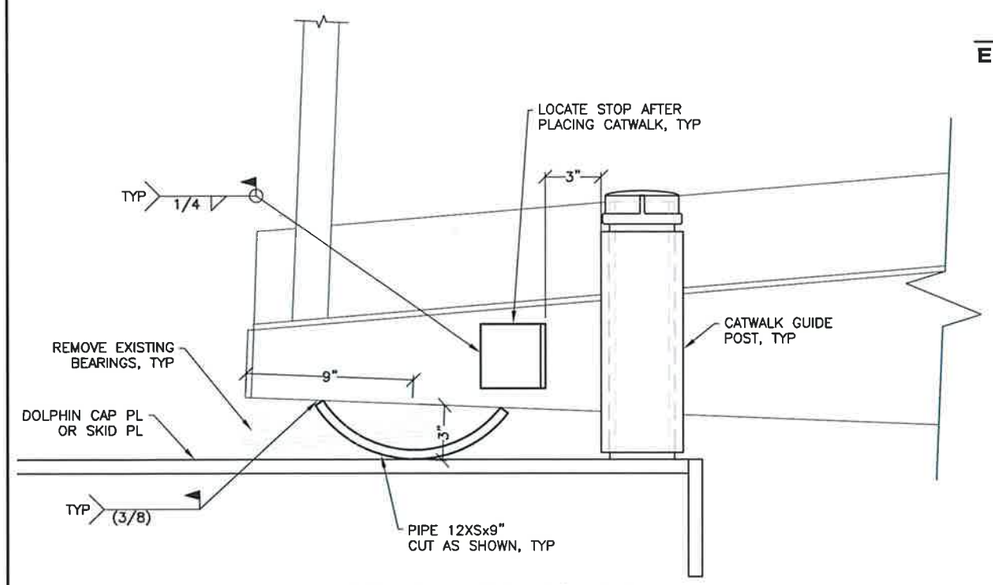


## 1 CATWALK BEARINGS
### TYP ELEVATION
DETAILS SIMILAR BOTH ENDS

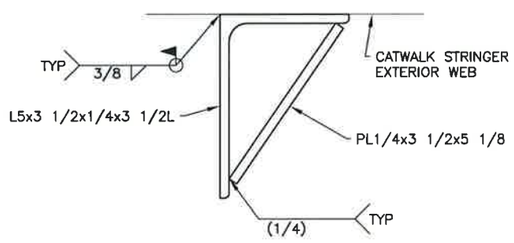


## CATWALK STOP
### PLAN

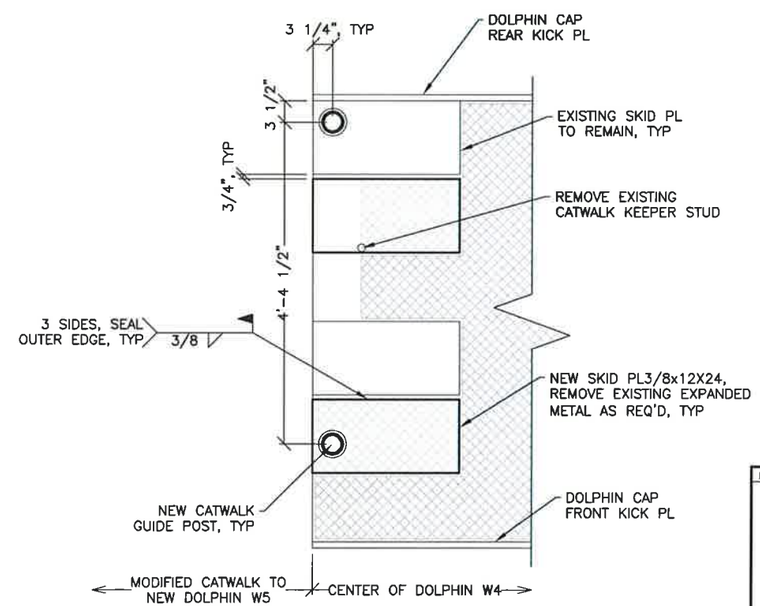


## DOLPHIN W4 MODIFICATION
### PLAN

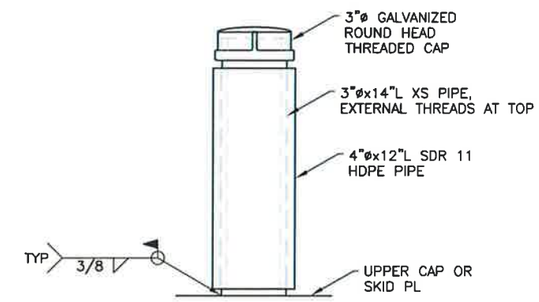


## 1 CATWALK GUIDE POST
2013
### ELEVATION

DO NOT SCALE FROM THESE DRAWINGS USE DIMENSIONS

DESIGNED BY: D. LOWELL
CHECKED BY: STAFF
DRAWN BY: STAFF
STATE OF ALASKA 49th DAVID H. LOWELL CE-12614 REGISTERED PROFESSIONAL ENGINEER
10/26/15

STATE OF ALASKA
DEPARTMENT OF TRANSPORTATION & PUBLIC FACILITIES
SOUTHCOAST REGION

**KETCHIKAN FERRY TERMINAL IMPROVEMENTS**

**CATWALK & W4 MODIFICATIONS**

PATH: Q:\KTN\67466\PLANSET\MF\20 – CATWALK & W4 MODS.DWG
TAB: 20 Monday, October 26, 2015 2:50:41 PM

| REVISIONS | | | PROJECT DESIGNATION | YEAR | SHEET NO. | TOTAL SHEETS |
|---|---|---|---|---|---|---|
| NO. | DATE | DESCRIPTION | SAMHS00015 | 2015 | 20 | 28 |

Project As-Built Drawings have been reviewed by the Project Engineer and represent to the best of my knowledge the project as constructed.

PE MP Date 5.20.17

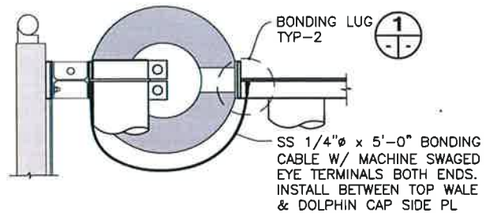


## PANEL BONDING CABLE
ELEVATION

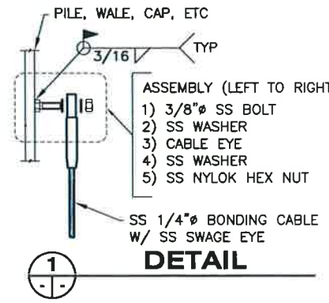


## DETAIL

**NEW W6 & E6**
6 PER STRUCTURE,12 TOTAL

**NEW W5**
9 TOTAL

## BERTH 1
PILE ANODES

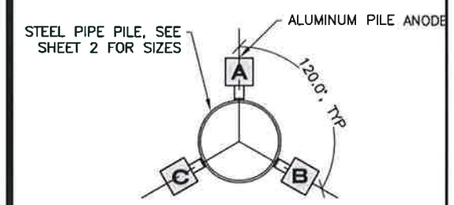


ORIENT AS DEPICTED PER STRUCTURE

## PLAN

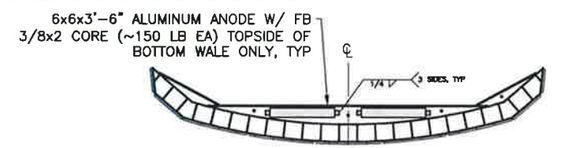


**DOLPHIN W5**
2 TOTAL

ALL THREE NEW PANELS TO HAVE BONDING CABLES

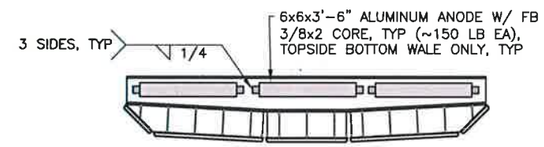


**DOLPHINS E6 & W6**
3 PER STRUCTURE. 6 TOTAL

## BERTH 1
FENDER PANEL ANODES

## BASIC BID
21 PILE ANODES, 8 FENDER PANEL ANODES, 3 BONDING CABLES

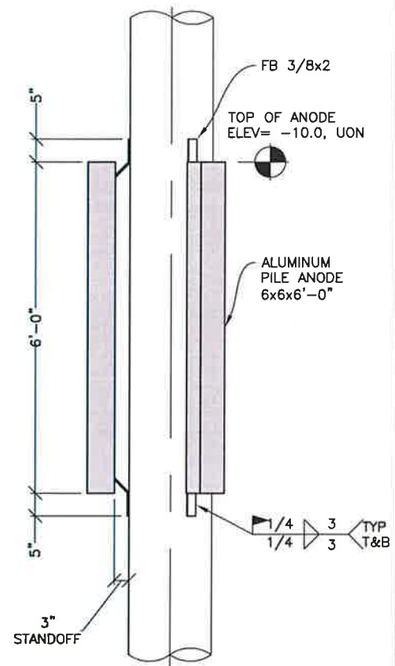


## ELEVATION

## 1/24/6 ANODES DETAIL

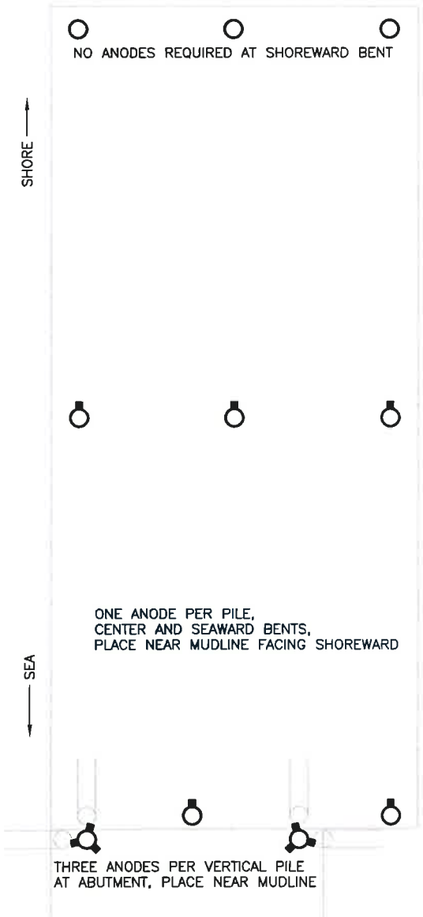


## EXISTING APPROACH TRESTLE & ABUTMENT
11 TOTAL

**EXISTING ER & WR**
6 PER STRUCTURE, 12 TOTAL

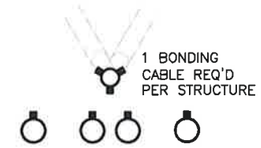


**EXISTING W2, W3, & W4**
7 PER STRUCTURE, 21 TOTAL

**EXISTING EG & WG**
3 PER STRUCTURE, 6 TOTAL

**EXISTING E1, E2, E3, E4, & W1**
6 PER STRUCTURE, 30 TOTAL

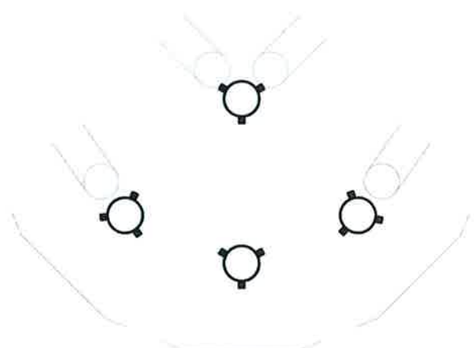

**EXISTING E5**
12 TOTAL

## BERTH 1
PILE ANODES

**EXISTING EBR & WBR**
6 PER STRUCTURE, 12 TOTAL

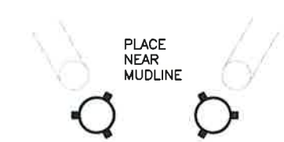


**EXISTING NMR & SMR**
6 PER STRUCTURE, 12 TOTAL

## BERTH 3
PILE ANODES

## ADDITIVE ALTERNATE A
116 PILE ANODES, 3 BONDING CABLES

DO NOT SCALE FROM THESE DRAWINGS USE DIMENSIONS

DESIGNED BY: D. LOWELL
STATE OF ALASKA 49th DAVID H. LOWELL CE-12614 REGISTERED PROFESSIONAL ENGINEER
10/27/15
CHECKED BY: STAFF
DRAWN BY: STAFF

STATE OF ALASKA
DEPARTMENT OF TRANSPORTATION & PUBLIC FACILITIES
SOUTHCOAST REGION

**KETCHIKAN FERRY TERMINAL IMPROVEMENTS**

**ANODES**

PATH: Q:\KTN\67466\PLANSET\MF\21 - ANODES.DWG
TAB: 21 Tuesday, October 27, 2015 10:37:43 AM

| REVISIONS | | | PROJECT DESIGNATION | YEAR | SHEET NO. | TOTAL SHEETS |
|---|---|---|---|---|---|---|
| NO. | DATE | DESCRIPTION | SAMHS00015 | 2015 | 21 | 28 |

**Project bid documents have been reviewed by the Project Engineer and represent to the best of my knowledge the project as constructed.**

PE MF Date 5/2017

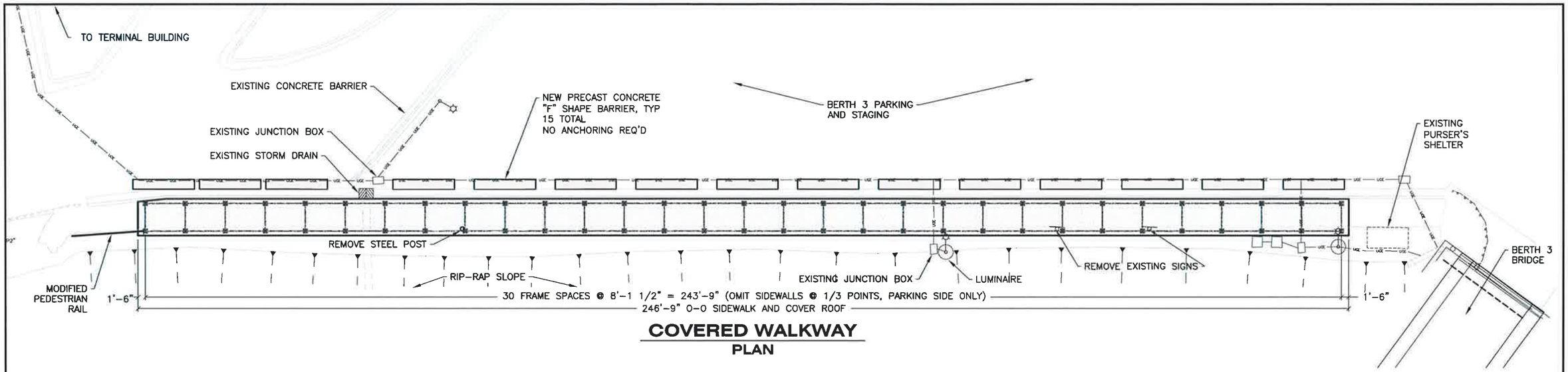


## COVERED WALKWAY
### PLAN

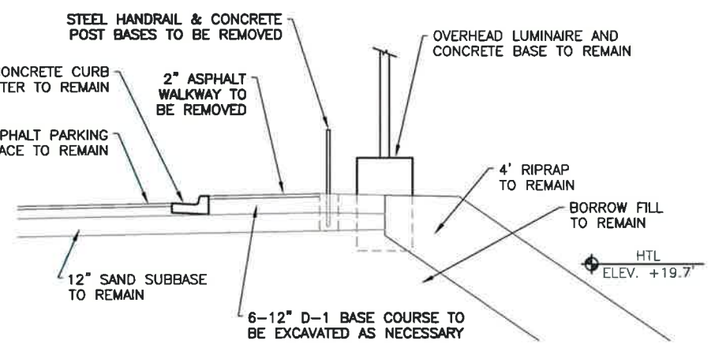


## EXISTING CONDITIONS AND REMOVAL
### TYP SECTION

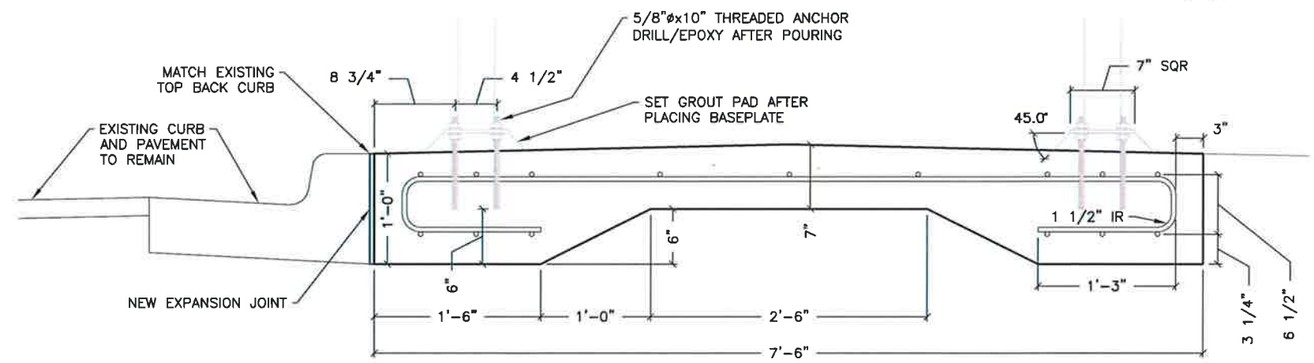


ALL REINFORCEMENT #4 BAR

## CONCRETE SIDEWALK
### TYP SECTION

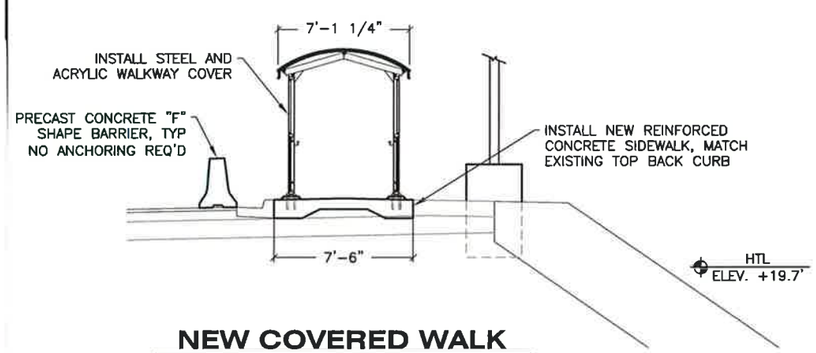


## NEW COVERED WALK
### TYP SECTION

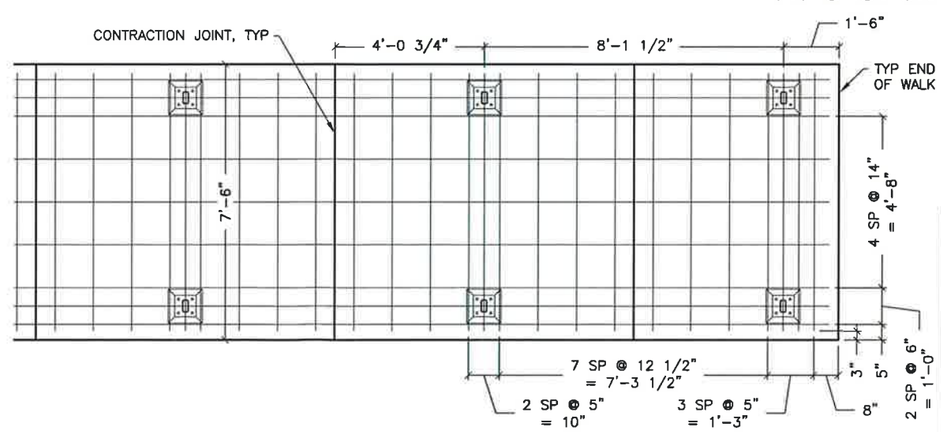


## REINFORCEMENT LAYOUT
### TYP PLAN

DO NOT SCALE FROM THESE DRAWINGS USE DIMENSIONS

DESIGNED BY: D. LOWELL
STATE OF ALASKA 49th DAVID H. LOWELL CE-12614 REGISTERED PROFESSIONAL ENGINEER
10/26/15
CHECKED BY: STAFF
DRAWN BY: STAFF

STATE OF ALASKA
DEPARTMENT OF TRANSPORTATION & PUBLIC FACILITIES
SOUTHCOAST REGION

**KETCHIKAN FERRY TERMINAL IMPROVEMENTS**

**SIDEWALK DETAILS**

PATH: Q:\KTN\67466\PLANSET\MF\22-24 - COVERED WALK.DWG
TAB: 22 Monday, October 26, 2015 3:15:44 PM

| REVISIONS | | | PROJECT DESIGNATION | YEAR | SHEET NO. | TOTAL SHEETS |
|---|---|---|---|---|---|---|
| NO. | DATE | DESCRIPTION | SAMHS00015 | 2015 | 22 | 28 |

Project As-Built Drawings have been reviewed by the Project Engineer and represent to the best of my knowledge the project as constructed.

PE MP Date 5.20.17

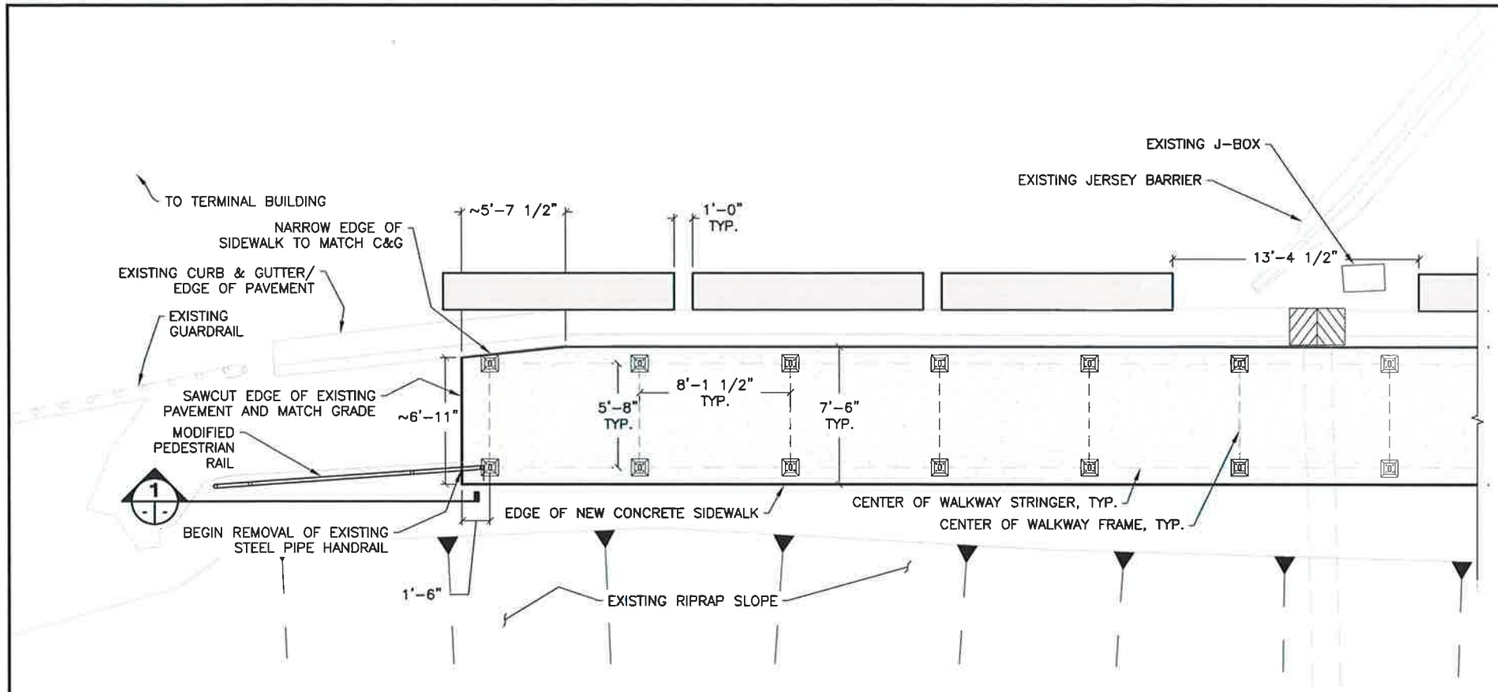


## WALKWAY TERMINAL END
### PLAN

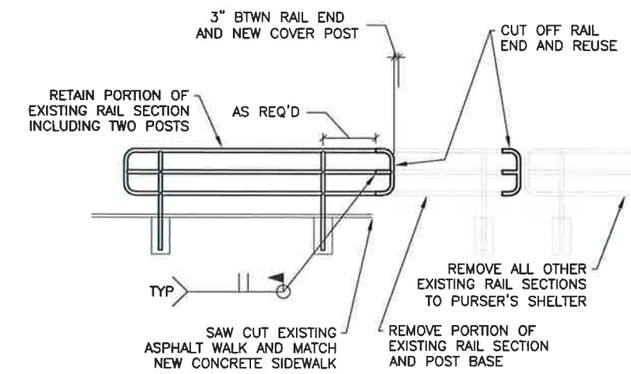


## HANDRAIL
### ELEVATION

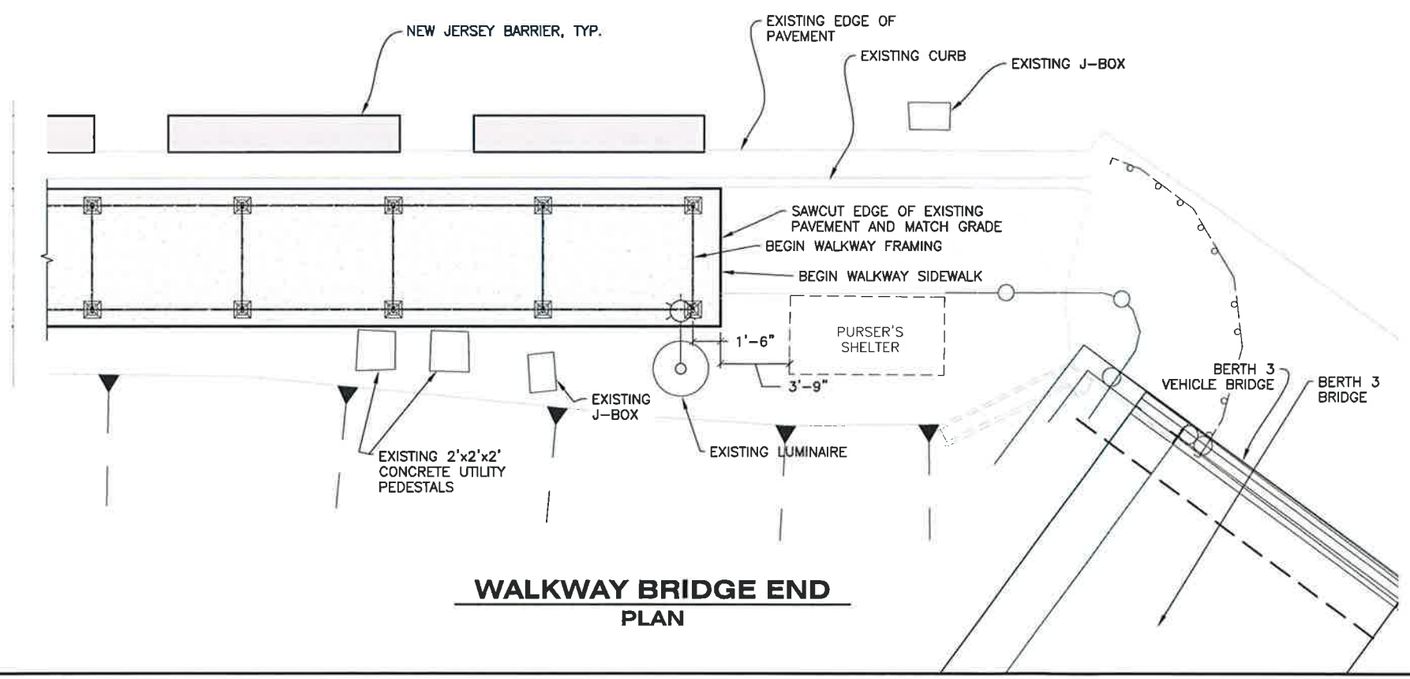


## WALKWAY BRIDGE END
### PLAN

DO NOT SCALE FROM THESE DRAWINGS USE DIMENSIONS

DESIGNED BY: D. LOWELL
CHECKED BY: STAFF
DRAWN BY: STAFF

STATE OF ALASKA 49th DAVID H. LOWELL CE-12614 REGISTERED PROFESSIONAL ENGINEER
10/26/15

STATE OF ALASKA
DEPARTMENT OF TRANSPORTATION & PUBLIC FACILITIES
SOUTHCOAST REGION

**KETCHIKAN FERRY TERMINAL IMPROVEMENTS**

**247' COVERED WALKWAY**

PATH: Q:\KTN\67466\PLANSET\MF\22-24 – COVERED WALK.DWG
TAB: 23 Monday, October 26, 2015 3:17:07 PM

| REVISIONS | | | PROJECT DESIGNATION | YEAR | SHEET NO. | TOTAL SHEETS |
|---|---|---|---|---|---|---|
| NO. | DATE | DESCRIPTION | SAMHS00015 | 2015 | 23 | 28 |

Project As-Built Drawings have been reviewed by the Project Engineer and represent to the best of my knowledge the project as constructed.

PE MC Date 5-20-17

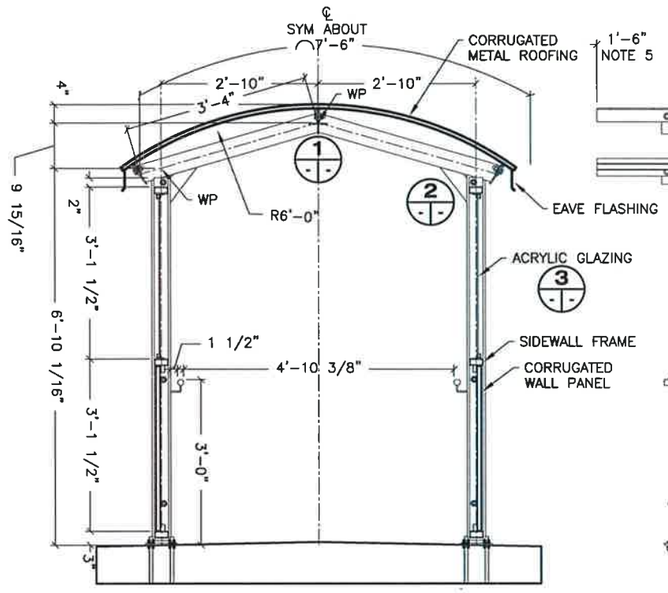


## TYPICAL SECTION

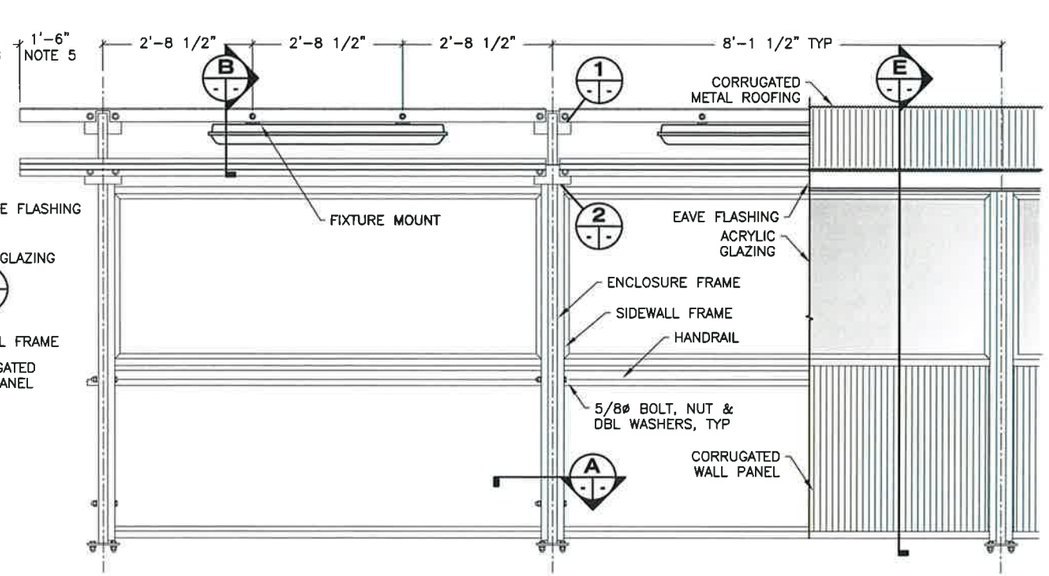


## ELEVATION

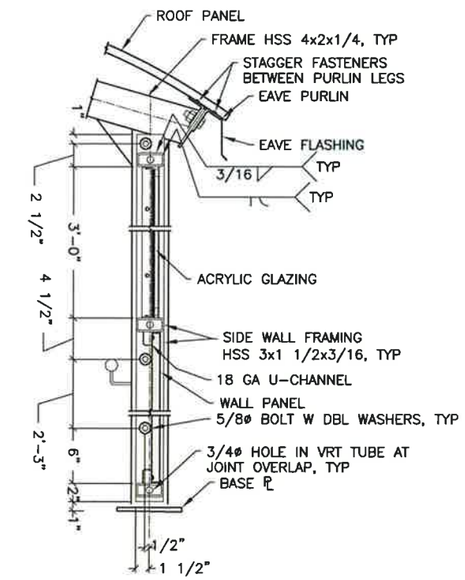


## E SIDE WALL SECTION

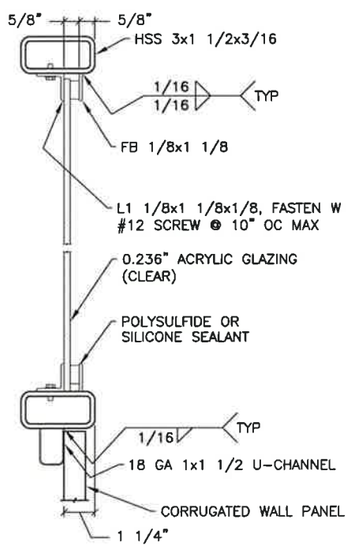


## 3 ACRYLIC GLAZING DETAIL

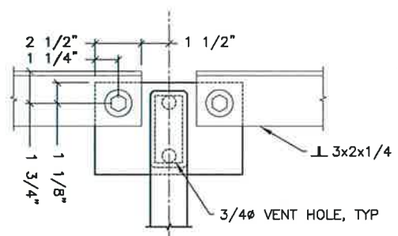


## SIDE ELEVATION

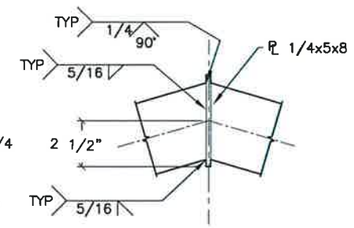


## FRONT ELEVATION

## 1 PEAK DETAIL

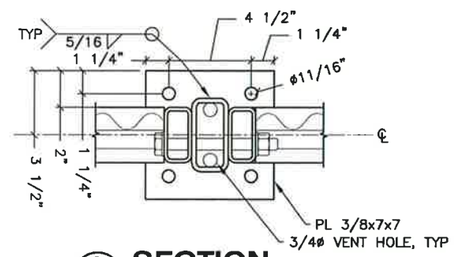


## A SECTION

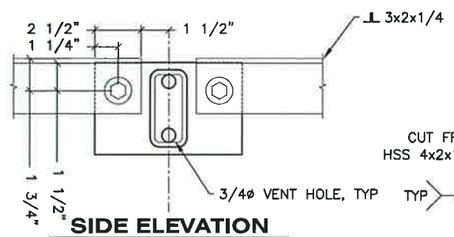


## SIDE ELEVATION

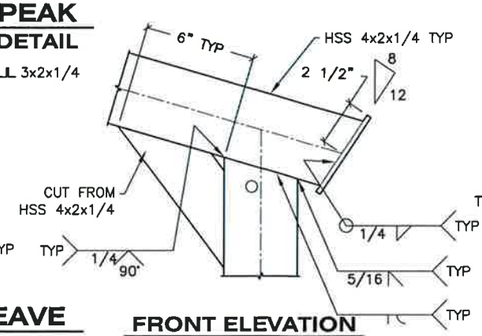


## FRONT ELEVATION

## 2 EAVE DETAIL

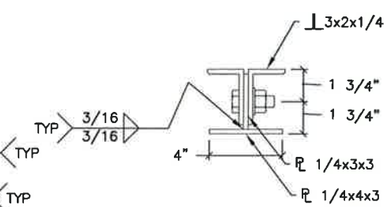


## B SECTION

NOTES:

1. ROOF PANELS ARE 24 GA. 7/8" x 2 11/16" CORRUGATED STEEL SHEET METAL WITH 42 3/4" COVERAGE. MACHINE CURVE ROOF PANELS, DO NOT FORM IN THE FIELD.

   WALL PANELS ARE 24 GA. 7/8" x 2 11/16" CORRUGATED STEEL SHEET METAL WITH 45 3/8" COVERAGE.
2. PANELS ROLLED FROM HOT DIP GALVANIZED SHEET METAL PER ASTM A653 – G90.
3. INSTALL USING GALVANIZED FASTENERS OF SIZE AND SPACING RECOMMENDED BY THE PANEL MANUFACTURER, BUT NOT LESS THAN:
   PANEL TO PURLIN #12 – 5/16" HEX HEAD
   PANEL TO 18 GA SUPPORTS #14 – 5/16" HEX HEAD
4. LENGTH MAY BE ADJUSTED TO MATCH PANEL LAYOUT.
5. SUBMIT SHOP DRAWINGS OF PANELS, TRIM, INSTALLATION LAYOUT AND FASTENER SCHEDULE FOR REVIEW.

DO NOT SCALE FROM THESE DRAWINGS USE DIMENSIONS

DESIGNED BY: D. LOWELL
STATE OF ALASKA 49th DAVID H. LOWELL CE-12614 REGISTERED PROFESSIONAL ENGINEER
10/26/15
CHECKED BY: STAFF
DRAWN BY: STAFF

STATE OF ALASKA
DEPARTMENT OF TRANSPORTATION & PUBLIC FACILITIES
SOUTHCOAST REGION

**KETCHIKAN FERRY TERMINAL IMPROVEMENTS**

**247' COVERED WALKWAY**

PATH: Q:\KTN\67466\PLANSET\MF\22-24 – COVERED WALK.DWG
TAB: 24 Monday, October 26, 2015 3:25:27 PM

| REVISIONS | | | PROJECT DESIGNATION | YEAR | SHEET NO. | TOTAL SHEETS |
|---|---|---|---|---|---|---|
| NO. | DATE | DESCRIPTION | SAMHS00015 | 2015 | 24 | 28 |

Project As-Built Drawings have been reviewed by the Project Engineer and represent to the best of my knowledge the project as constructed.

PE MP Date 5.20.17

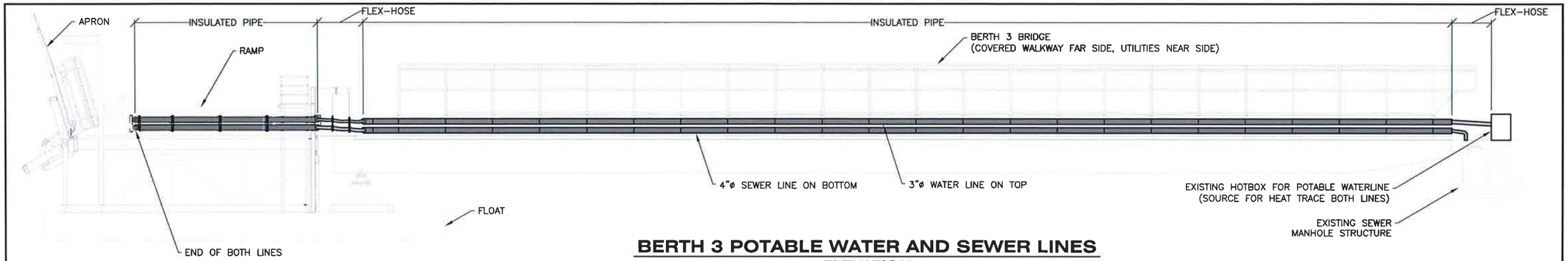


## BERTH 3 POTABLE WATER AND SEWER LINES
### ELEVATION

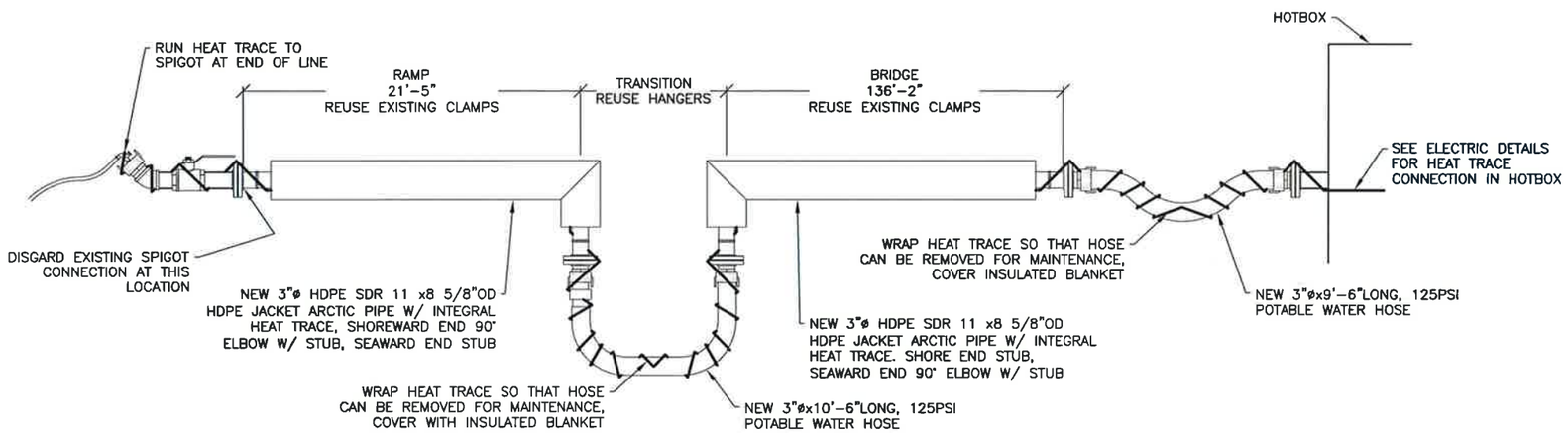


## POTABLE WATER
### SCHEMATIC

REPLACE FLEX-HOSES, HOSE CLAMPS, INSULATED HDPE PIPE, AND REQ'D HDPE BUTT-FUSED STUBS. INSTALL NEW HEAT TRACE ON BOTH POTABLE WATER AND SEWER LINES FROM EXISTING HOTBOX ON SHORE TO END OF LINES AT SEAWARD END.

VERIFY COMPATIBILITY OF NEW LINES WITH SALVAGED HANGER CLAMPS.

SALVAGE AND REUSE EXISTING FLANGES, CAM-AND-GROOVE HOSE COUPLINGS AND CAPS, SWIVEL HOSE COUPLINGS, STEEL PIPE STUBS AND ELBOWS, VALVES, AND PIPE AND HOSE HANGER ASSEMBLIES.

SEE PHOTOS INCLUDED IN BID DOCUMENTS FOR AS-BUILT CONDITIONS.

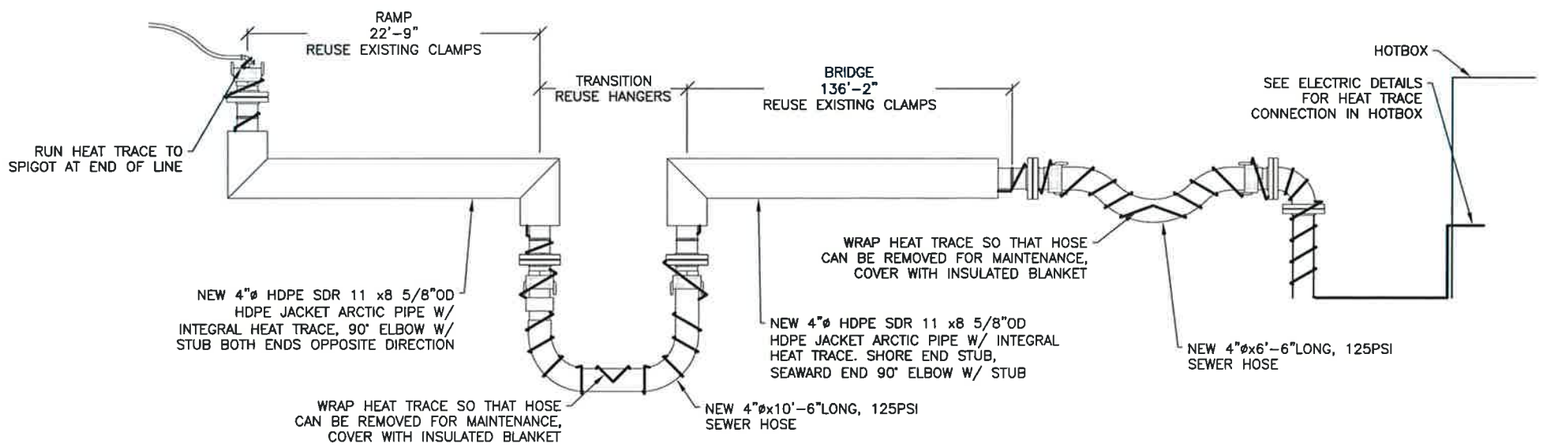


## SEWER
### SCHEMATIC

DO NOT SCALE FROM THESE DRAWINGS USE DIMENSIONS

DESIGNED BY: D. LOWELL

STATE OF ALASKA 49th DAVID H. LOWELL CE-12614 REGISTERED PROFESSIONAL ENGINEER

10/26/15

CHECKED BY: STAFF

DRAWN BY: STAFF

STATE OF ALASKA
DEPARTMENT OF TRANSPORTATION & PUBLIC FACILITIES
SOUTHCOAST REGION

**KETCHIKAN FERRY TERMINAL IMPROVEMENTS**

**UTILITIES**

PATH: Q:\KTN\67466\PLANSET\MF\25 - UTILITIES.DWG
TAB: 25 Monday, October 26, 2015 3:27:31 PM

| REVISIONS | | | PROJECT DESIGNATION | YEAR | SHEET NO. | TOTAL SHEETS |
|---|---|---|---|---|---|---|
| NO. | DATE | DESCRIPTION | | | | |
| | | | SAMHS00015 | 2015 | 25 | 28 |

Project As-Built Drawings have been reviewed by the Project Engineer and represent to the best of my knowledge the project as constructed.

PE MP Date 5-20-17

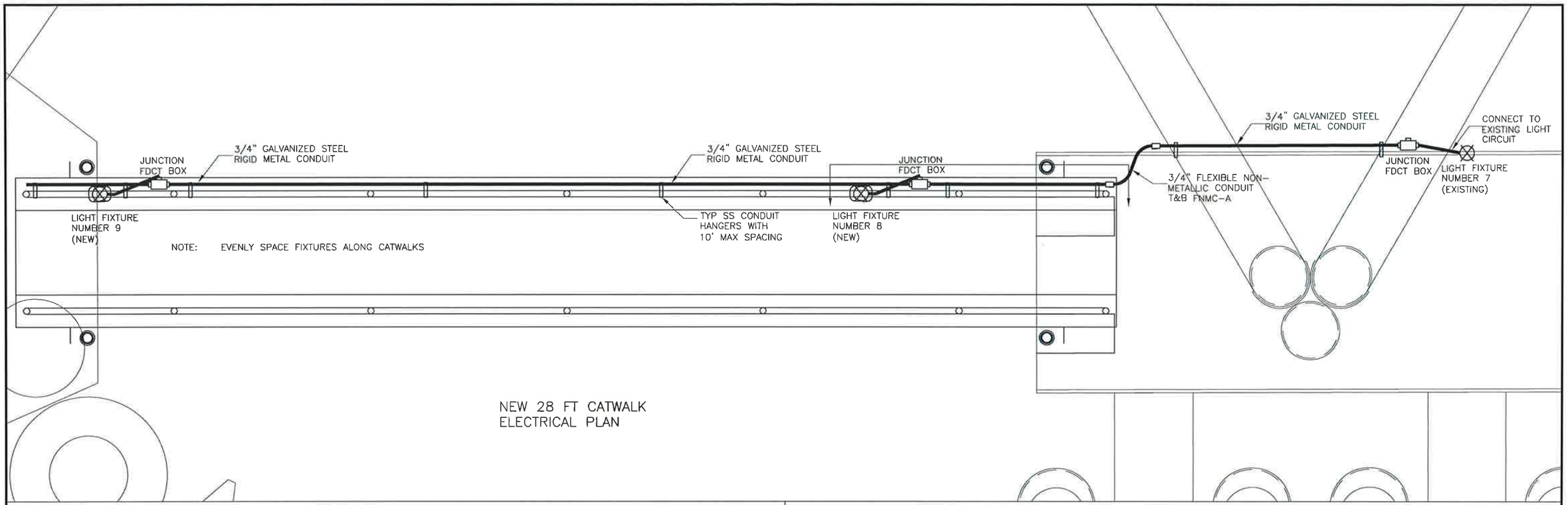


NEW 28 FT CATWALK
ELECTRICAL PLAN

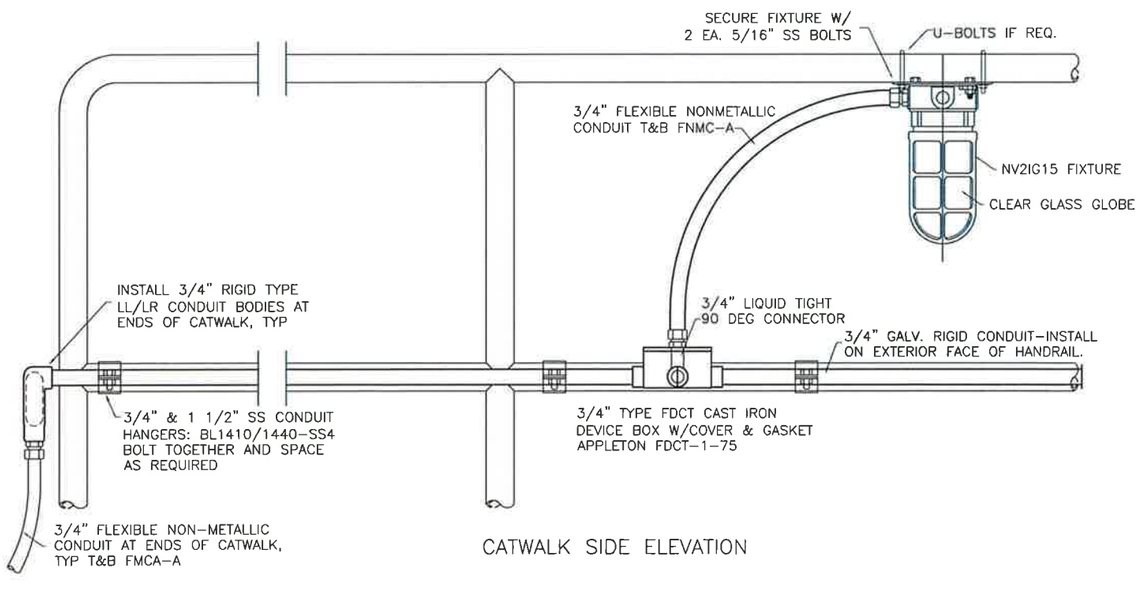


CATWALK SIDE ELEVATION

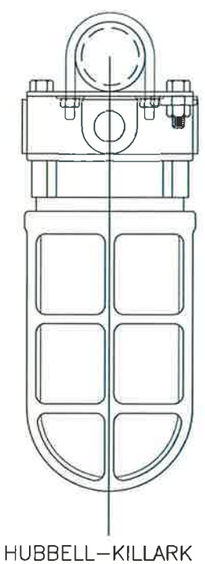

HUBBELL-KILLARK
NV2IG15XSG NON-METALLIC
CEILING LIGHT FIXTURE
13-26 W CFL BULBS

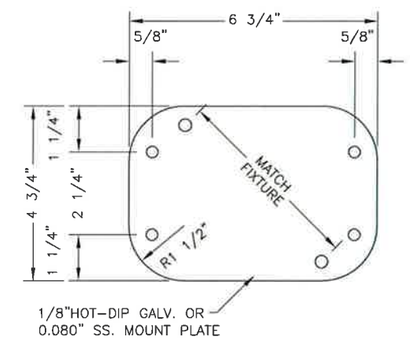


MOUNTING PLATE DETAIL

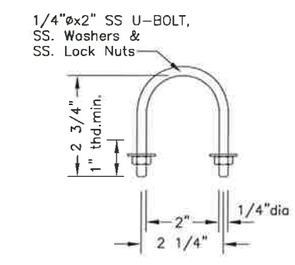


U-BOLT DETAIL
TWO REQUIRED

DO NOT SCALE FROM THESE DRAWINGS USE DIMENSIONS

| | |
|---|---|
| CHECKED BY: FMC | STATE OF ALASKA<br>DEPARTMENT OF TRANSPORTATION & PUBLIC FACILITIES<br>SOUTHCOAST REGION |
| STATE OF ALASKA 49th Frank Michael Carson 8/21/15 Frank Michael Carson EE-5604 REGISTERED PROFESSIONAL ENGINEER | MARINE<br>KETCHIKAN FERRY TERMINAL<br>IMPROVEMENTS<br>**ELECTRICAL PLANS** |
| DESIGNED BY: FMC | |
| DRAWN BY: FMC | |

PATH: C:\USERS\MIKE\DOCUMENTS\KETCHIKAN FERRY TERMINAL\67466 KTN_ELECTRICAL_PLANS_28.DWG
TAB: 28 Monday, August 24, 2015 8:01:35 AM MIKE

| REVISIONS | | | PROJECT DESIGNATION | YEAR | SHEET NO. | TOTAL SHEETS |
|---|---|---|---|---|---|---|
| NO. | DATE | DESCRIPTION | SAMHS00015 | 2015 | 28 | 28 |

Project As-Built Drawings have been reviewed by the Project Engineer and represent to the best of my knowledge the project as constructed.

PE MP Date 5.20.17

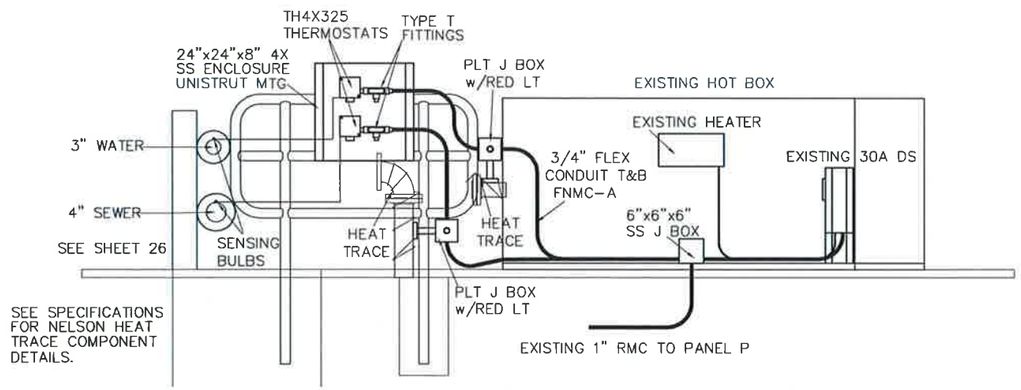


NELSON HEAT TRACE-HOT BOX ELEVATION

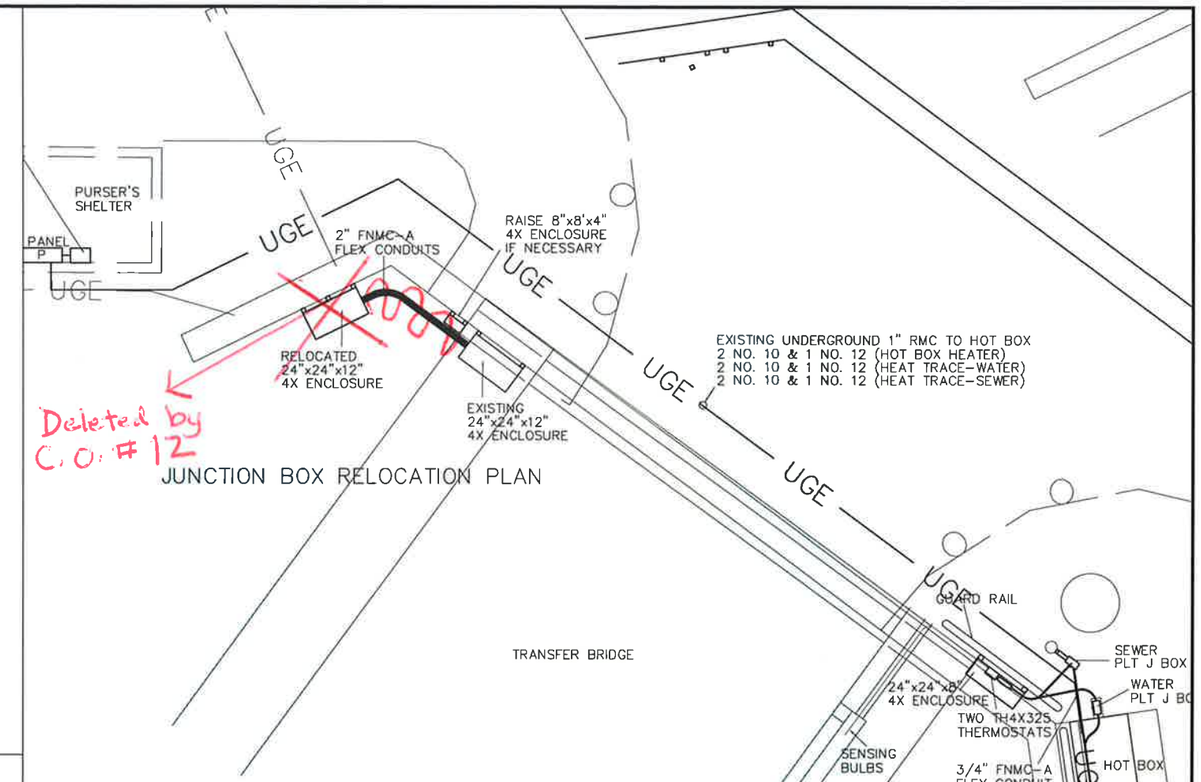


JUNCTION BOX RELOCATION PLAN

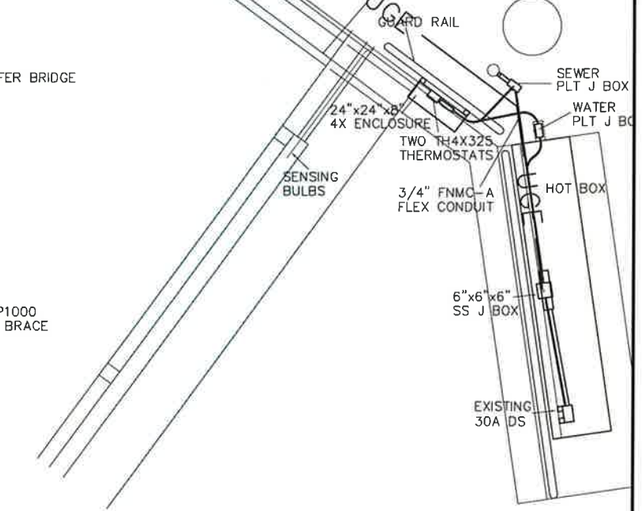


HEAT TRACE AND HOT BOX PLAN

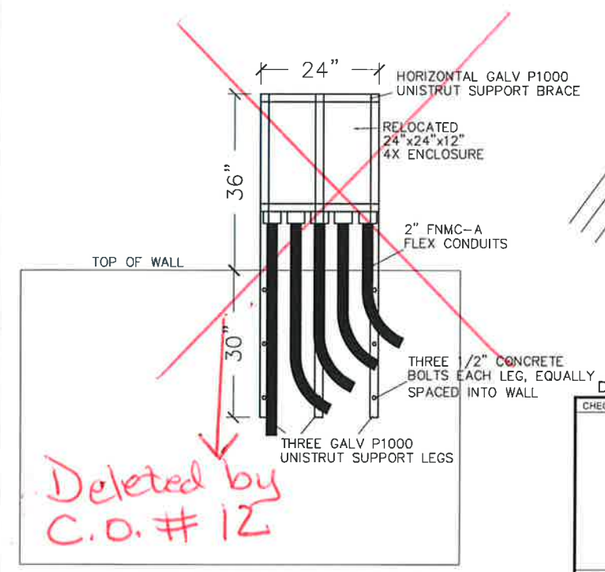


JUNCTION BOX RELOCATION ELEVATION

## PANEL P SCHEDULE

VOLTAGE: 208/120 V 4 WIRE
LOCATION: PURSER BLDG

TYPE: 225 A MAIN CKT BREAKER
MAIN: 100 A SPACES: 42

| CKT | WIRE | DESCRIPTION | CB | KVA CKT | A PH | B PH | C PH | CKT | CB | DESCRIPTION | WIRE | CKT |
|---|---|---|---|---|---|---|---|---|---|---|---|---|
| 1 | -- | Bridge&Ramp Lts | 20/2 | 0.6 | 1.2 | | | 0.6 | 20/1 | Pursers Bldg Recs | -- | 2 |
| 3 | -- | PE Cell Only | -- | 0.6 | | 0.7 | | 0.1 | 20/1 | Pursers Bldg Lts | -- | 4 |
| 5 | -- | Under Ramp Lts | 20/2 | 0.1 | | | 1.4 | 1.3 | 20/2 | 2500W Unit Heater | -- | 6 |
| 7 | -- | ---- | -- | 0.1 | 1.4 | | | 1.3 | -- | ---- | -- | 8 |
| 9 | -- | Float Deck Lts | 20/2 | 0.6 | | 0.7 | | 0.1 | 20/1 | Telephone Board | -- | 10 |
| 11 | -- | PE Cell Only | -- | 0.6 | | | 1.3 | 0.7 | 20/2 | Heat Trace Water | 2/#10 | 12 |
| 13 | -- | Flt Water Safety Lts | 20/2 | 0.5 | 1.2 | | | 0.7 | -- | GFI Circuit Breaker | | 14 |
| 15 | -- | PE Cell Only | -- | 0.5 | | 1.2 | | 0.7 | 20/2 | Heat Trace Sewer | 2/#10 | 16 |
| 17 | -- | Walkway Lts-PE Cell | 20/1 | 0.2 | | | 0.9 | 0.7 | -- | GFI Circuit Breaker | | 18 |
| 19 | -- | Bridge & Ramp Lts | 20/2 | 0.6 | 1.2 | | | 0.6 | 20/1 | Berth 3 Walkway A | 2/#10 | 20 |
| 21 | -- | PE Cell & Clock | -- | 0.6 | | 1.2 | | 0.6 | 20/1 | Berth 3 Walkway B | 2/#10 | 22 |
| 23 | -- | Float Deck Lts | 20/2 | 0.5 | | | 0.5 | 0.0 | 20/1 | Unknown | 2/#12 | 24 |
| 25 | -- | PE Cell & Clock | -- | 0.5 | 0.5 | | | 0.0 | -- | ---- | -- | 26 |
| 27 | -- | Walkway Lts&Clock | 20/1 | 0.4 | | 0.4 | | 0.0 | -- | ---- | -- | 28 |
| 29 | 2/#10 | Hot Box | 20/1 | 1.5 | | | 1.5 | 0.0 | -- | ---- | -- | 30 |
| 31 | -- | Purser Bldg Ext Rec | 20/1 | 0.2 | 0.2 | | | 0.0 | -- | ---- | -- | 32 |
| 33 | -- | Spare | 20/1 | 0.0 | | 0.0 | | 0.0 | -- | ---- | -- | 34 |
| 35 | -- | Spare | 20/1 | 0.0 | | | 0.0 | 0.0 | -- | ---- | -- | 36 |
| 37 | -- | Spare | 20/1 | 0.0 | 0.0 | | | 0.0 | -- | ---- | -- | 38 |
| 39 | -- | Spare | 20/1 | 0.0 | | 0.0 | | 0.0 | -- | ---- | -- | 40 |
| 41 | -- | Spare | 20/1 | 0.0 | | | 0.0 | 0.0 | -- | ---- | -- | 42 |
| | | | | TOTAL | 5.7 | 4.2 | 5.6 | | | | | |

SECUR LC 10

OPER LC 8

LIGHTING CONTACTORS

Project As-Built Drawings have been reviewed by the Project Engineer and represent to the best of my knowledge the project as constructed.

PE FMC Date 5-20-17

DO NOT SCALE FROM THESE DRAWINGS USE DIMENSIONS

CHECKED BY: FMC

STATE OF ALASKA 49th Frank Michael Carson EE-5604 REGISTERED PROFESSIONAL ENGINEER 8/21/15

DESIGNED BY: FMC
DRAWN BY: FMC

STATE OF ALASKA
DEPARTMENT OF TRANSPORTATION & PUBLIC FACILITIES
SOUTHCOAST REGION

MARINE
KETCHIKAN FERRY TERMINAL
IMPROVEMENTS

**ELECTRICAL PLANS**

PATH: C:\USERS\MIKE\DOCUMENTS\KETCHIKAN FERRY TERMINAL\67466 KTN_ELECTRICAL_PLANS_26-27.DWG
TAB: 27 Monday, August 24, 2015 7:52:06 AM MIKE

| REVISIONS NO. | DATE | DESCRIPTION | PROJECT DESIGNATION | YEAR | SHEET NO. | TOTAL SHEETS |
|---|---|---|---|---|---|---|
| | | | SAMHS00015 | 2015 | 27 | 28 |

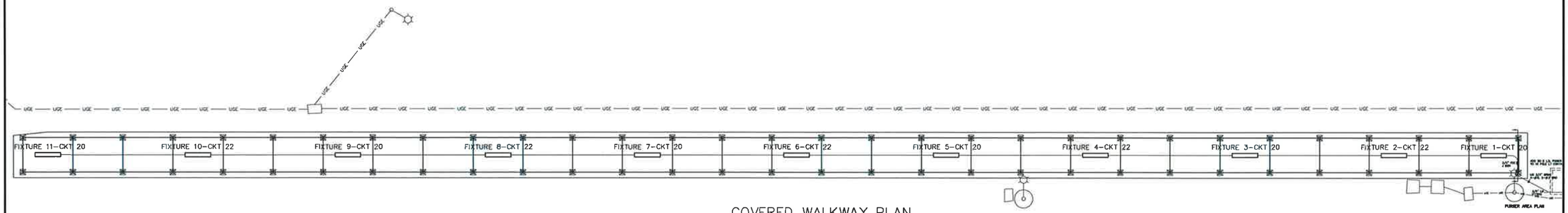


COVERED WALKWAY PLAN

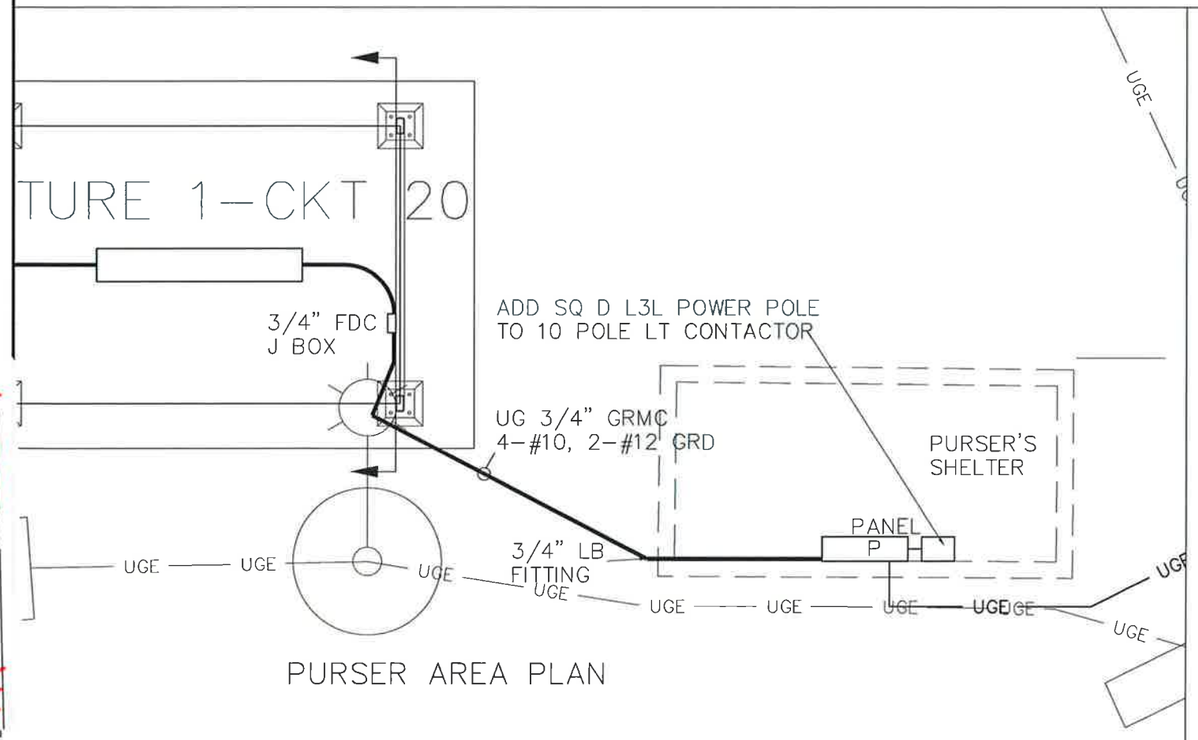


PURSER AREA PLAN

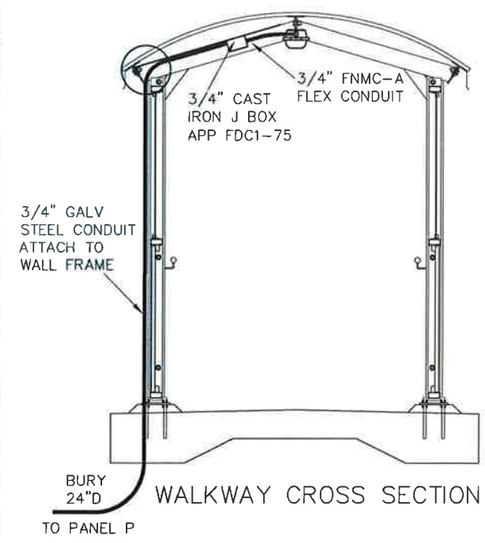


WALKWAY CROSS SECTION

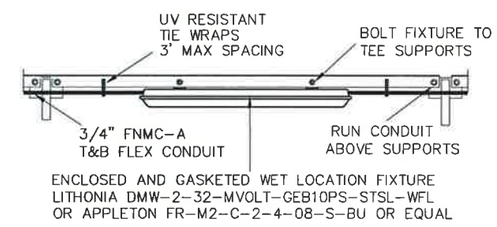


FIXTURE DETAIL

DO NOT SCALE FROM THESE DRAWINGS USE DIMENSIONS

CHECKED BY: FMC

STATE OF ALASKA 49th Frank Michael Carson EE-5604 REGISTERED PROFESSIONAL ENGINEER 8/21/15

DESIGNED BY: FMC
DRAWN BY: FMC

STATE OF ALASKA
DEPARTMENT OF TRANSPORTATION & PUBLIC FACILITIES
SOUTHCOAST REGION

MARINE
KETCHIKAN FERRY TERMINAL
IMPROVEMENTS

**ELECTRICAL PLANS**

PATH: C:\USERS\MIKE\DOCUMENTS\KETCHIKAN FERRY TERMINAL\67466 KTN_ELECTRICAL_PLANS_26-27.DWG
TAB: 26 Monday, August 24, 2015 7:57:07 AM MIKE

| REVISIONS | | |
|---|---|---|
| NO. | DATE | DESCRIPTION |
| | | |

| PROJECT DESIGNATION | YEAR | SHEET NO. | TOTAL SHEETS |
|---|---|---|---|
| SAMHS00015 | 2015 | 26 | 28 |

Project As-Built Drawings have been reviewed by the Project Engineer and represent to the best of my knowledge the project as constructed.

PE MP Date 5.20.17

# G-46.11

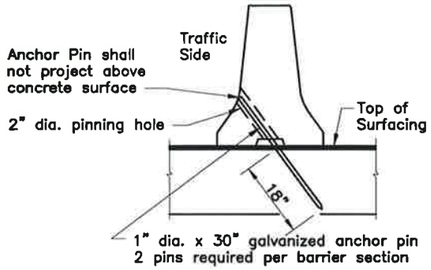


PINNING CONCRETE BARRIER TO ROADWAY
(Use when required by plans or as directed)

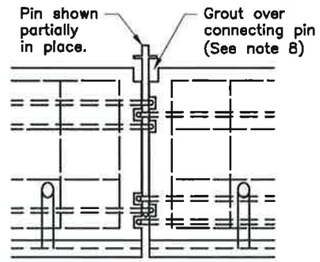


SECTION C–C
For details not shown see End Views A–A and B–B

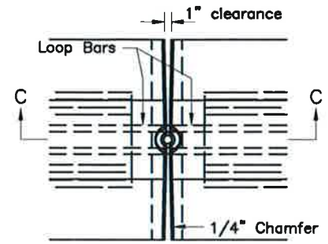


PLAN
For details not shown see End Views A–A and B–B

CONNECTING PIN AND LOOP CONNECTION

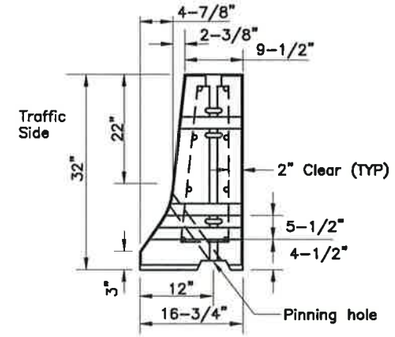


SHOULDER BARRIER

* Dimensions marked thus are to the intersection point of the barrier slopes.

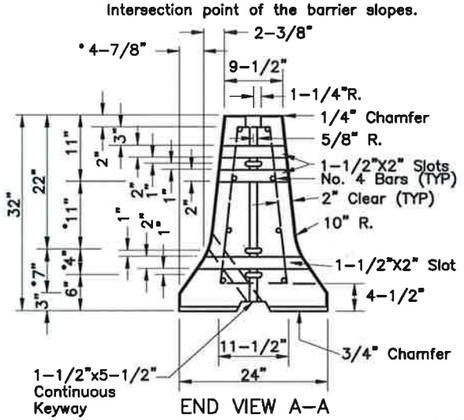


END VIEW A–A

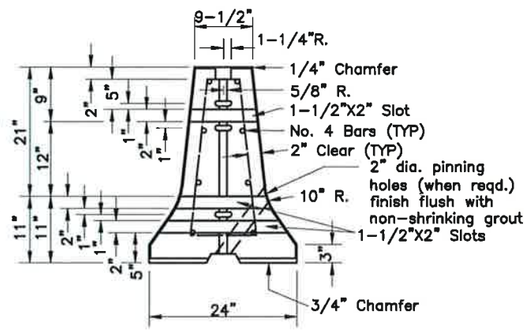


END VIEW B–B

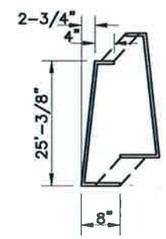


MEDIAN BARRIER STIRRUP
No. 4 REBAR

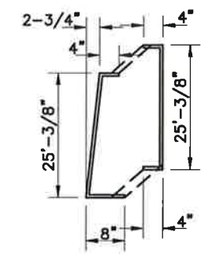


SHOULDER BARRIER STIRRUP
No. 4 REBAR

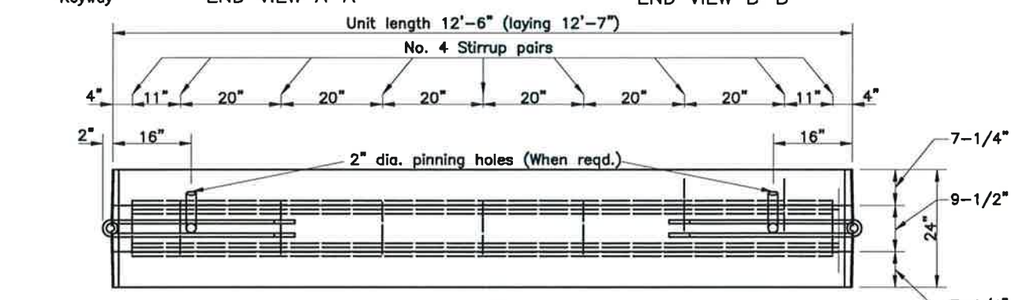


PLAN

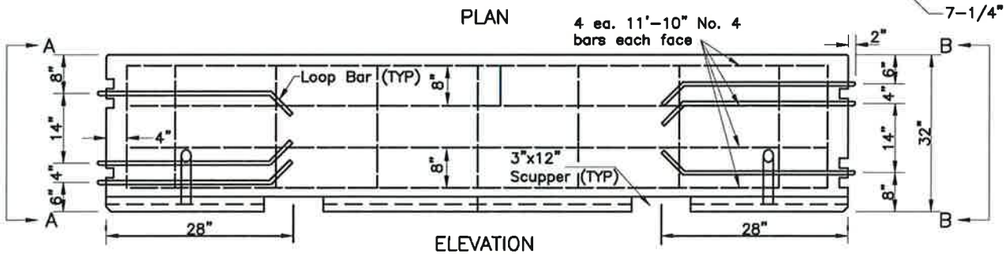


ELEVATION
MEDIAN BARRIER

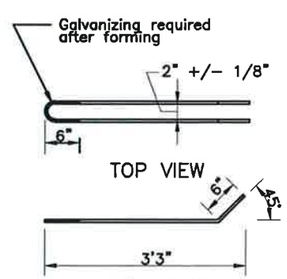


TOP VIEW
SIDE VIEW
LOOP BAR
3/4" DIA. (A36)
LOOP BAR DETAIL

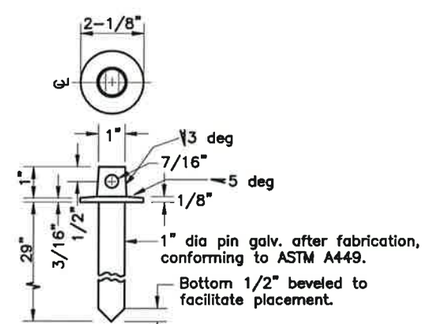


CONNECTING PIN DETAIL

## GENERAL NOTES

1. Barriers may be used for temporary and permanent applications.
2. Provide 36" unobstructed smooth deflection area behind barrier for unanchored applications. Provide 12" unobstructed smooth deflection area behind barrier for anchored applications.
3. When anchored, install anchor pins on the side facing traffic. Precast barrier used as permanent median barrier in medians less than 8' in width shall be anchored to the roadway. When anchored in medians, install anchor pins on both sides of the barrier.
4. Provide 2" clearance between all metal reinforcement and the nearest face of concrete unless otherwise shown.
5. Normal use of precast barrier units is restricted to curvatures with radii greater than 770'.
6. Use narrow base shoulder barrier only at locations with full height backfill or equivalent structural support placed behind barrier.
7. When scuppers are not required plug them with a minimum 2" of grout.
8. Concrete grout for grouting over pins, pinning holes or grouting of scuppers shall be a non-shrinking grout, weak in strength and of thick consistency.
9. This precast concrete barrier is NCHRP 350 TL-3 approved.

| REVISIONS | | |
|---|---|---|
| Date | Description | By |
| 4/28/10 | Correct Dims, Note 1 | KJS |
| | | |
| | | |
| | | |

Sheet 1 of 2

State of Alaska
Department of Transportation & Public Facilities

PRECAST CONCRETE "F" SHAPE BARRIER

APPROVED
Date 5/31/12

Project As-Built Drawings have been reviewed by the Project Engineer and represent to the best of my knowledge the project as constructed.
PE _____ Date 5.30.17

G-46.11 Sheet 1 of 2

# G-46.11

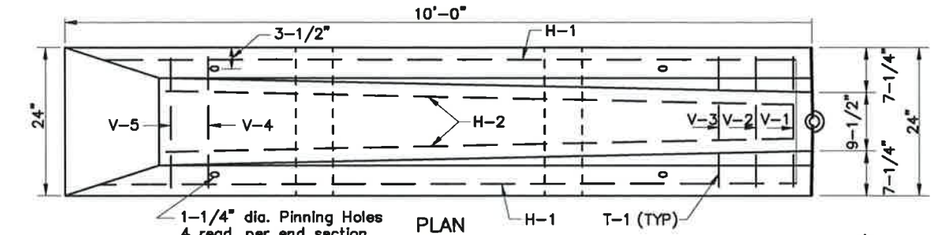


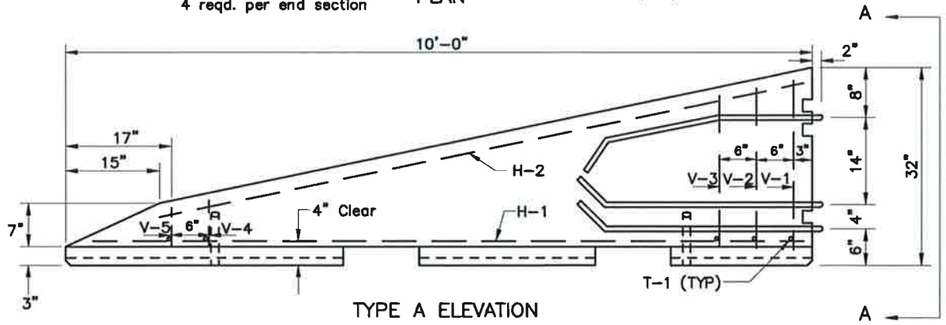


TYPE A ELEVATION

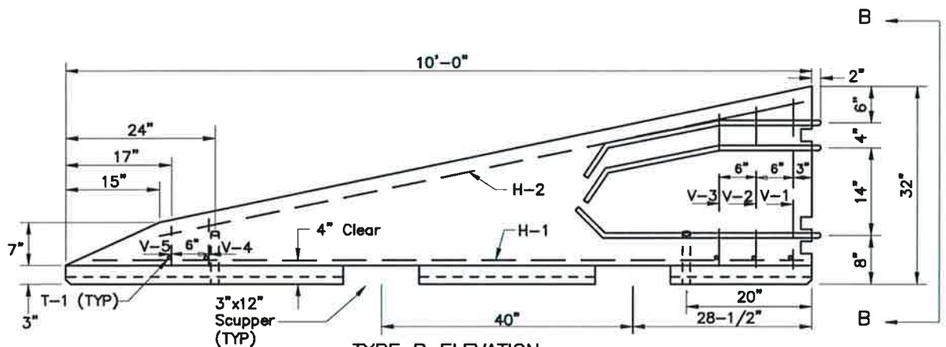


TYPE B ELEVATION

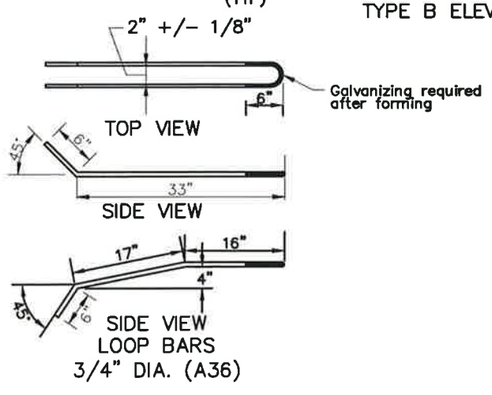


REINFORCEMENT DETAIL

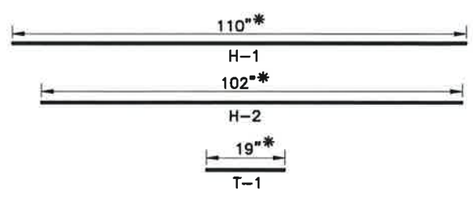


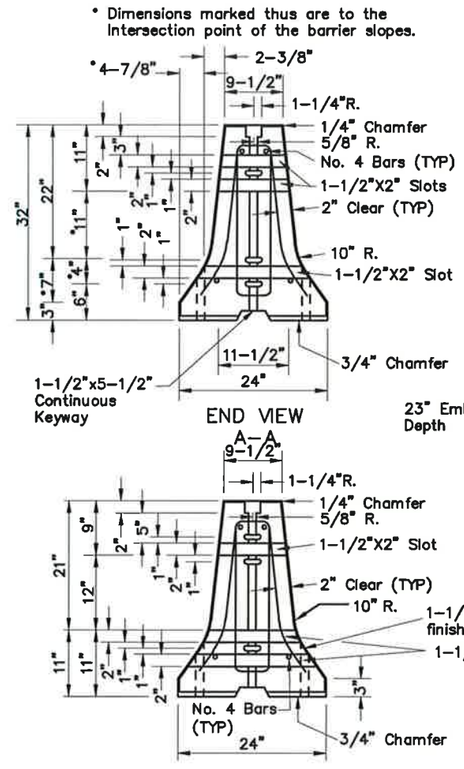


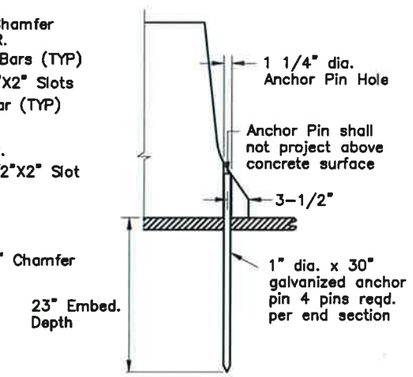


ANCHOR PIN
PLACEMENT DETAIL

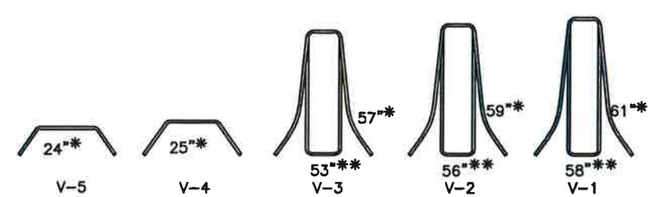


*Length of No. 4 Rebar **Length of No. 4 Rebar (Inner Core)

REINFORCING STEEL

## GENERAL NOTES

1. Use tapered end sections only where:
   a. Barriers terminate outside the clear zone, or
   b. The regulatory speed limit is 25 MPH or below, or 30 MPH if the Engineer determines NCHRP 350 or MASH compliant end treatments are unfeasible.
2. Use air entrained concrete with minimum compressive strength of 3,000 p.s.i.
3. Provide a minimum of two inches clear cover for reinforcing steel bars except as shown otherwise.
4. Galvanize all exposed hardware in accordance with AASHTO M 232.
5. Provide reinforcing steel bars conforming to AASHTO M 31-86, grade 60.
6. Provide anchor pins conforming to AASHTO M 183 steel.
7. Provide connecting pins conforming to AASHTO M 164-86.
8. Provide four anchor pins per unit.

| REVISIONS | | |
|---|---|---|
| Date | Description | By |
| 4/28/10 | Correct dimensioning | KJS |
| | | |
| | | |
| | | |

Sheet 2 of 2

State of Alaska
Department of Transportation
& Public Facilities

PRECAST CONCRETE
"F" SHAPE BARRIER
TAPERED END SECTION

APPROVED
Date 5/31/12

Project As-Built Drawings have been reviewed by the Project Engineer and represent to the best of my knowledge the project as constructed.

PE MP Date 5.20.17

G-46.11 Sheet 2 of 2