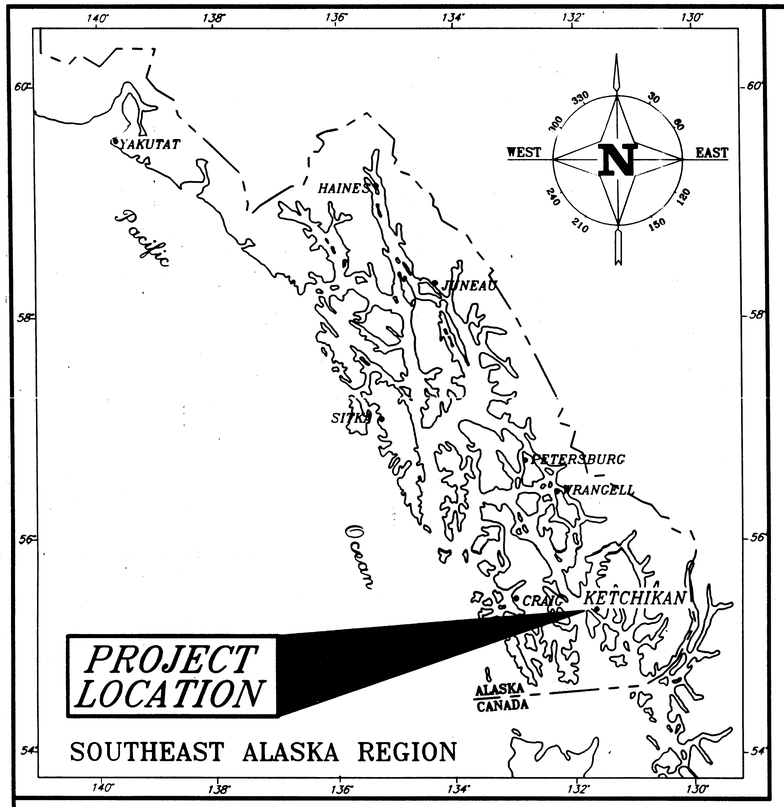

STATE OF ALASKA
DEPARTMENT OF TRANSPORTATION AND PUBLIC FACILITIES
SOUTHEAST REGION
DESIGN AND CONSTRUCTION DIVISION

KETCHIKAN

HERRING COVE & KETCHIKAN CREEK BRIDGES

STP-0902(21)
PROJECT NO. 72020

INDEX OF SHEETS

SHEET NO.	DESCRIPTION
1	TITLE SHEET
2	ESTIMATE OF QUANTITIES
3	HERRING COVE BRIDGE
4–10	KETCHIKAN CREEK BRIDGE
11–12	TRAFFIC CONTROL PLANS

THE FOLLOWING STANDARD DRAWINGS APPLY TO THIS PROJECT:

A-1SE, C-01.03, C-02.01

P:\KTN\72020-96\Asbuilt

As-Built Plans

Swallins Const. 3/97 to 8/97

Allen Sheppard, Project Engineer

DESIGN DESIGNATION

	BR. #724	BR. #253
ADT 1996	10,600	[illegible]
ADT 2016	12,900	600
DHV 12% (2016)	1,548	72
% T	4.0	4.0
V	20	40
PEAK PEDESTRIAN HOUR 1995	350	–

PROJECT SUMMARY

	BR. #724	BR. #253
CDS ROUTE NO.	291400	291400
CDS MILEPOINT	2.35	11.50

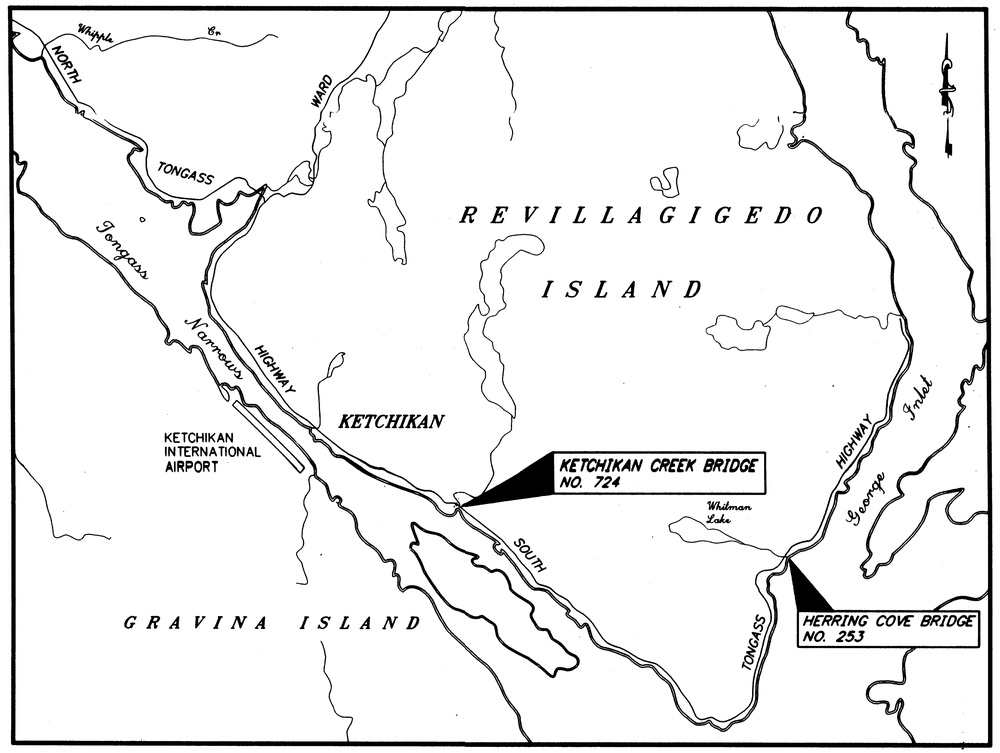

VICINITY MAP

STATE OF ALASKA
DEPARTMENT OF TRANSPORTATION AND PUBLIC FACILITIES
SOUTHEAST REGION DESIGN SECTION

APPROVED _____ Date 10/21/96
Regional Preconstruction Engineer

APPROVED _____ Date 10/21/96
Director, S.E. Region Design & Construction

PROJECT NUMBER:	ENGINEER'S SEAL
72020	STATE OF ALASKA 49th Alan J. Steininger CE-6440 REGISTERED PROFESSIONAL ENGINEER
DATE: 1996	
SHEET 1 OF 12	

PATH: P:\KTN\72020\DR\-1SHT PLOT: P:\-LIB\-PLOT\PLOTF.PCP(1) OR PLOTH.PCP(2)

ESTIMATE OF QUANTITIES

ITEM NO.	ITEM	UNIT	QUANTITY
120(1)	DBE ADJUSTMENT	CONTINGENT SUM	ALL REQ'D.
202(1)	REMOVAL OF STRUCTURES & OBSTRUCTIONS	LUMP SUM	ALL REQ'D.
203(5)	BORROW, TYPE "A"	CUBIC YARD	~~18~~ 15.11
501(2)	CLASS A-A CONCRETE (APPROX. 14.6 CY)	LUMP SUM	ALL REQ'D.
501(8)	BACKWALL EXTENSION (APPROX. 0.9 CY)	LUMP SUM	ALL REQ'D.
501(9)	PIER REPAIR (APPROX. 0.1 CY)	LUMP SUM	ALL REQ'D.
503(2)	EPOXY COATED REINFORCING STEEL (APPROXIMATELY 1,580 POUNDS)	LUMP SUM	ALL REQ'D.
504(3)	STRUCTURAL STEEL SIDEWALK BRACKET MEMBERS (APPROXIMATELY 5,730 POUNDS)	LUMP SUM	ALL REQ'D.
504(4)	REPLACEMENT OF DETERIORATED RIVETS	EACH	~~390~~ 532
507(2)	PEDESTRIAN RAILING	LINEAR FOOT	197
507(3)	TIMBER BRIDGE RAILING	LINEAR FOOT	248
511(1)	CRACK REPAIR	LINEAR FOOT	~~15~~ 17.1
513(1)	PAINTING STEEL STRUCTURES	LUMP SUM	ALL REQ'D.
611(1)	RIPRAP, CLASS II	CUBIC YARD	~~25~~ 30.19
631(2)	GEOTEXTILE, EROSION CONTROL, CLASS "A"	SQUARE YARD	~~50~~ 79.44
640(1)	MOBILIZATION & DEMOBILIZATION	LUMP SUM	ALL REQ'D.
641(3)	EROSION & POLLUTION CONTROL	CONTINGENT SUM	ALL REQ'D.
643(2)	TRAFFIC MAINTENANCE	LUMP SUM	ALL REQ'D.
643(3)	PERMANENT CONSTRUCTION SIGNING	LUMP SUM	ALL REQ'D.
643(4)	CONSTRUCTION SIGN	EACH PER DAY	~~308~~ 1620
643(5)	TYPE II BARRICADE	EACH PER DAY	~~56~~ 333
643(7)	TRAFFIC CONE	EACH PER DAY	~~672~~ 3340
643(8)	DRUM	EACH PER DAY	~~210~~ 883
643(15)	FLAGGING	MAN-HOUR	~~280~~ 283
504(5)	Downstream Sidewalk Stringer Replacement CO#1	LS	24,693.34
504(6)	C.O.#2 Temporary Pedestrian Bridge	LS	18,562.50
501(10)	CO#3 Abutment Repair	LS	9,789.48
504(7)	C.O.#4 Upstream Sidewalk Replacement	LS	79,821.02

NOTE: DO NOT SCALE FROM THESE PLANS-USE DIMENSIONS

PATH: P:\KTN\72020\DR\-EST		
PLOT: P:\-LIB\-PLOT\PLOTF.PCP(1) OR PLOTH.PCP(2)		
BY:	DATE:	DESCRIPTION OF CHANGE:
RECORD OF REVISIONS		

STATE OF ALASKA
DEPARTMENT OF TRANSPORTATION AND PUBLIC FACILITIES
SOUTHEAST REGION DESIGN & CONSTRUCTION

KETCHIKAN ALASKA

KTN- HERRING COVE & KETCHIKAN CREEK BRIDGES
STP-0902(21) ~ 72020
ESTIMATE OF QUANTITIES

DESIGNED BY: D. KROMAREK	PROJECT NO. 72020
DRAWN BY: D. KROMAREK	DATE: 5/23/1996
CHECKED BY: A. STEININGER	SHEET 2 OF 12

STATE OF ALASKA 49th Alan J. Steininger CE-6440 REGISTERED PROFESSIONAL ENGINEER

STATE	PROJECT DESIGNATION	YEAR	SHEET NO.	TOTAL SHEETS
ALASKA	STP-0902(21)	1996	3	

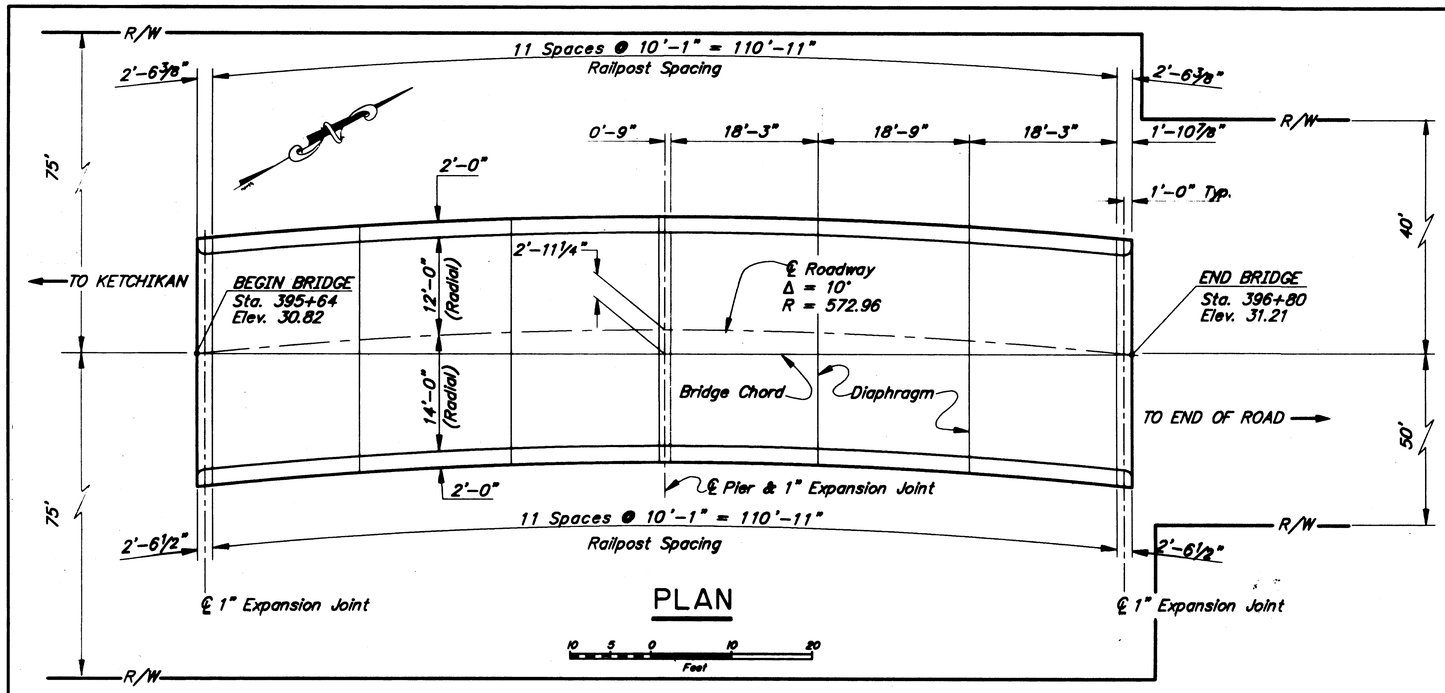

PLAN

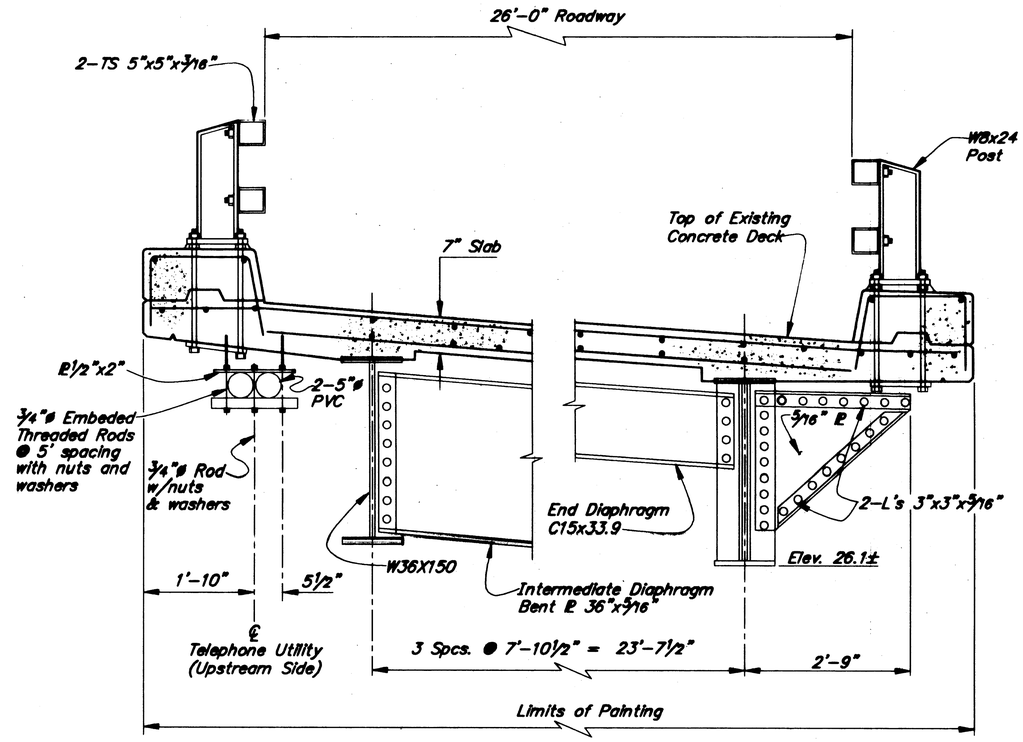

EXISTING TYPICAL SECTION

12 6 0 1 2 3
In. Feet

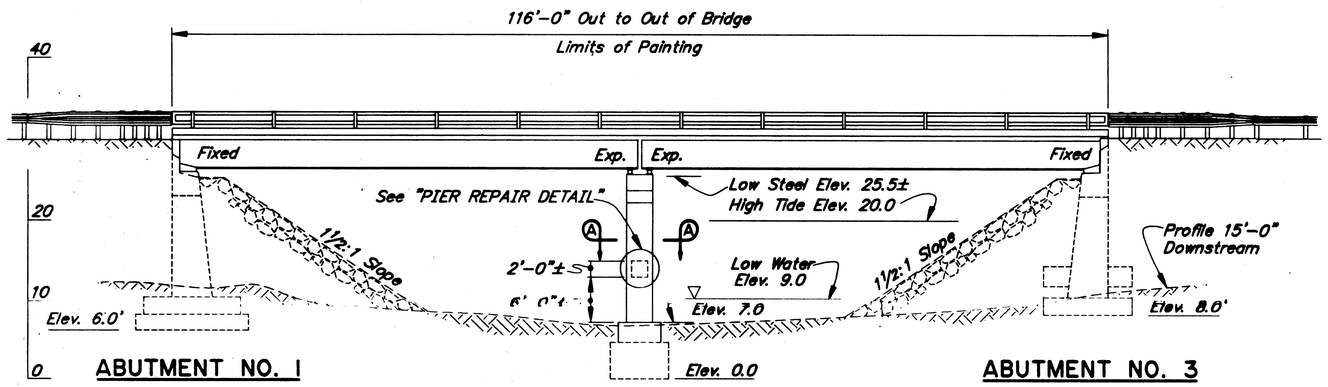

PIER NO. 2

ELEVATION

10 5 0 10 20
Feet

DRAWING INDEX

TITLE	DWG. NO.
GENERAL LAYOUT	1

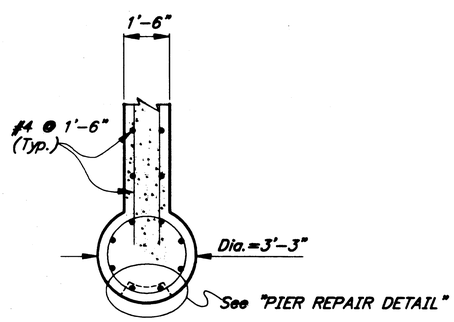

SECTION A-A

12 0 1 2 3 4
In. Feet

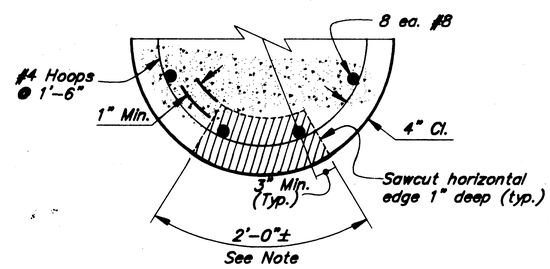

PIER REPAIR DETAIL

No Scale

NOTE

Remove unsound concrete at downstream face of Pier. Sandblast clean rusty rebar. Approximate extent of repair equals 2'-0" x 2'-0" x 0'-6 1/2" deep. Form repair area and pump replacement Class "A" concrete.

STATE OF ALASKA 49TH Stephen H. Lee CE-8456 REGISTERED PROFESSIONAL ENGINEER

HERRING COVE BRIDGE

ROUTE NO. FAS 902

GENERAL LAYOUT

STATE of ALASKA
DEPARTMENT of TRANSPORTATION and PUBLIC FACILITIES
JUNEAU, ALASKA

ISSUE NO. 253

DWG. NO. 1

STATE	PROJECT DESIGNATION	YEAR	SHEET NO.	TOTAL SHEETS
ALASKA	STP-0902(21)	1996	4	

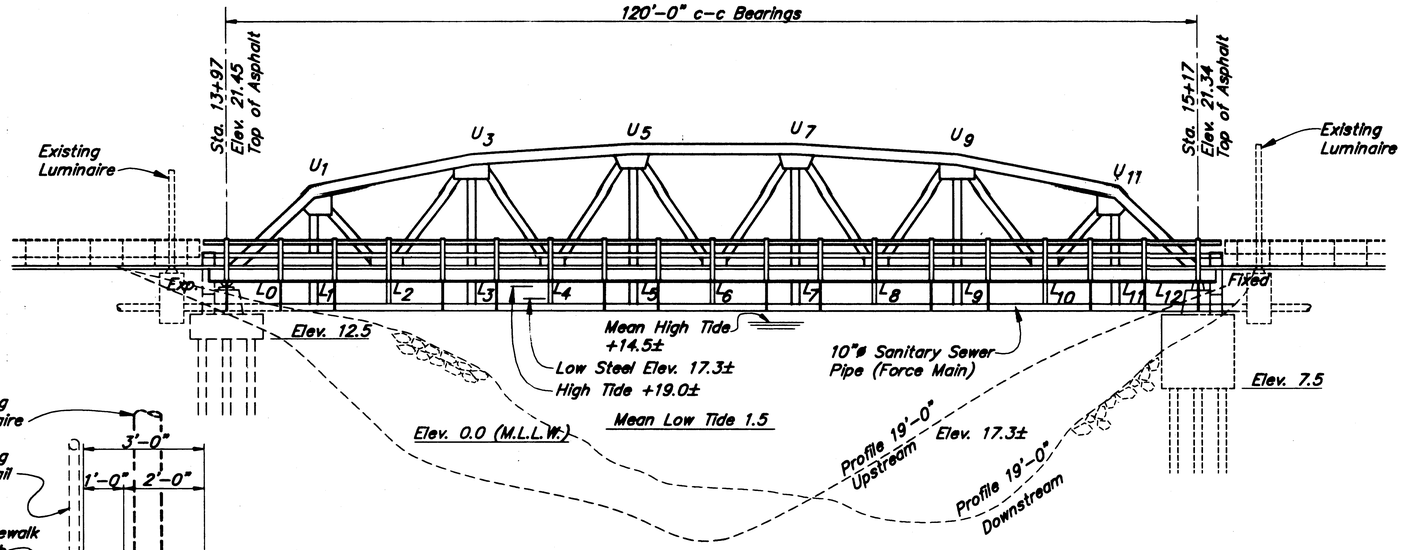

ELEVATION

10 5 0 10 20
Feet

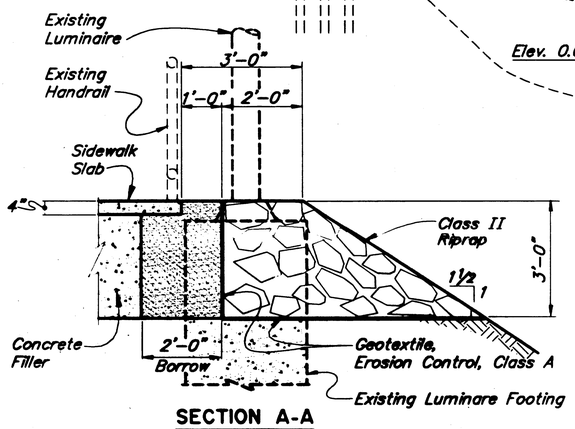

SECTION A-A

12 6 0 1 2 3 4
In. Feet

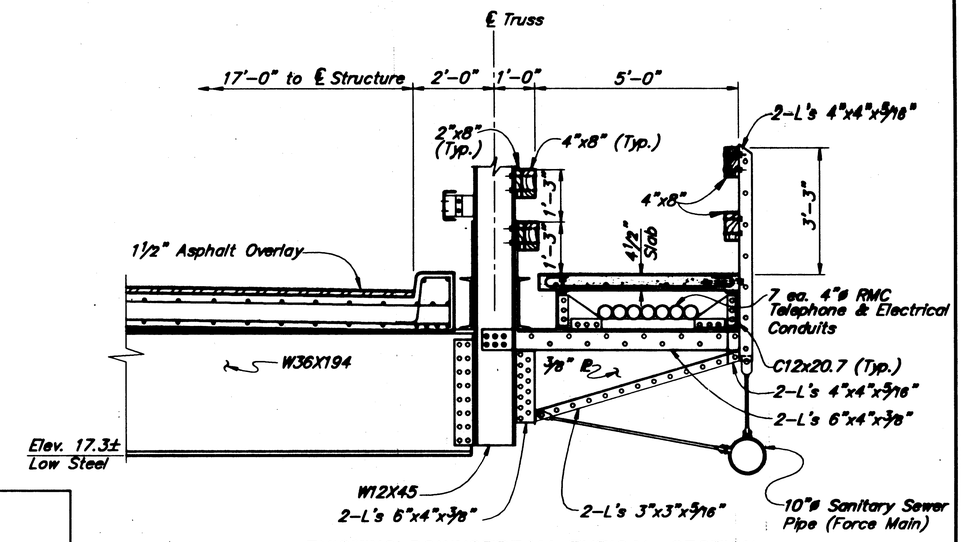

EXISTING DOWNSTREAM TYPICAL SECTION

$L_2, L_4, L_6, L_8, L_{10}$

12 6 0 1 2 3 4
In. Feet

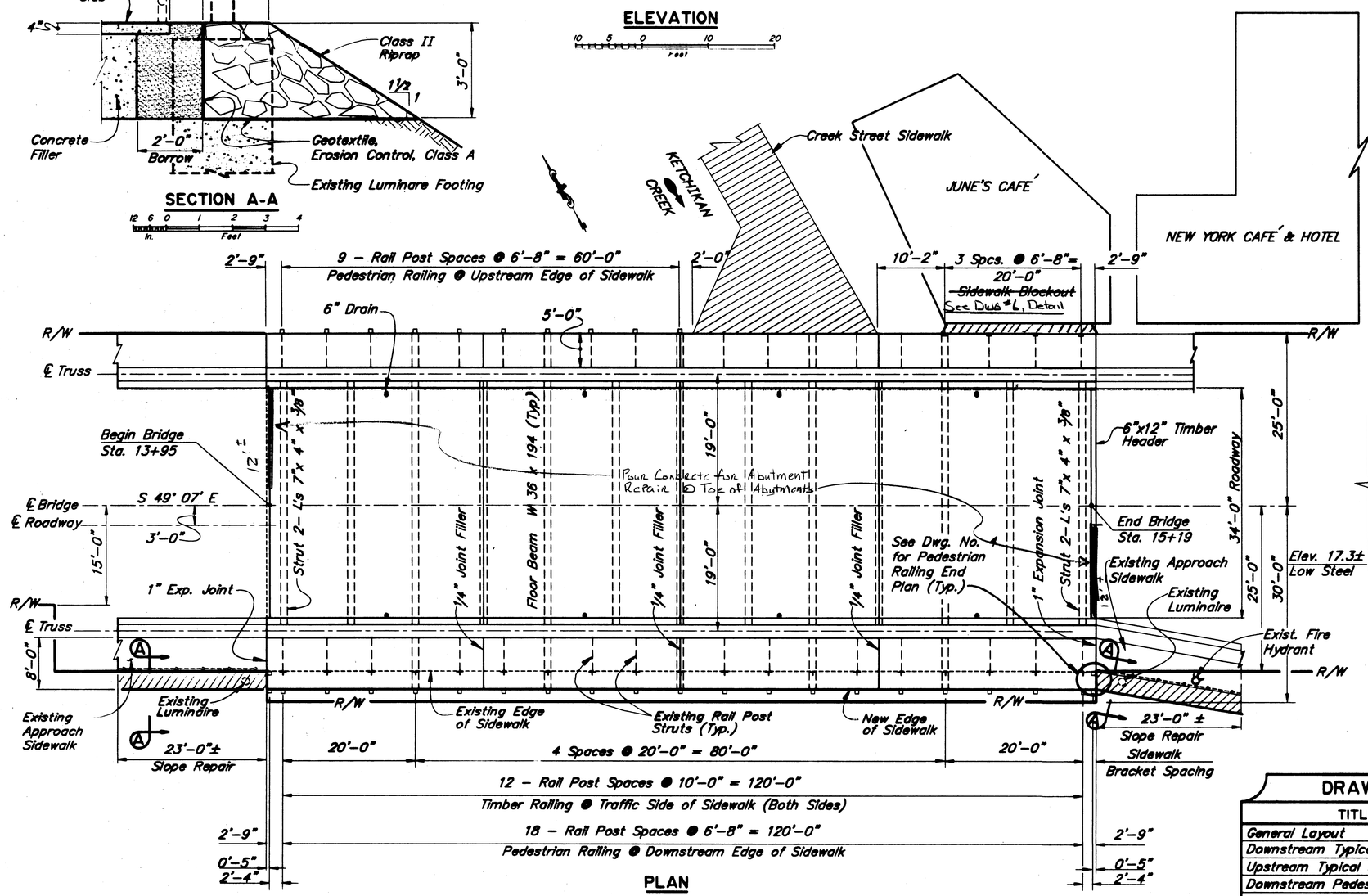

PLAN

10 5 0 10 20
Feet

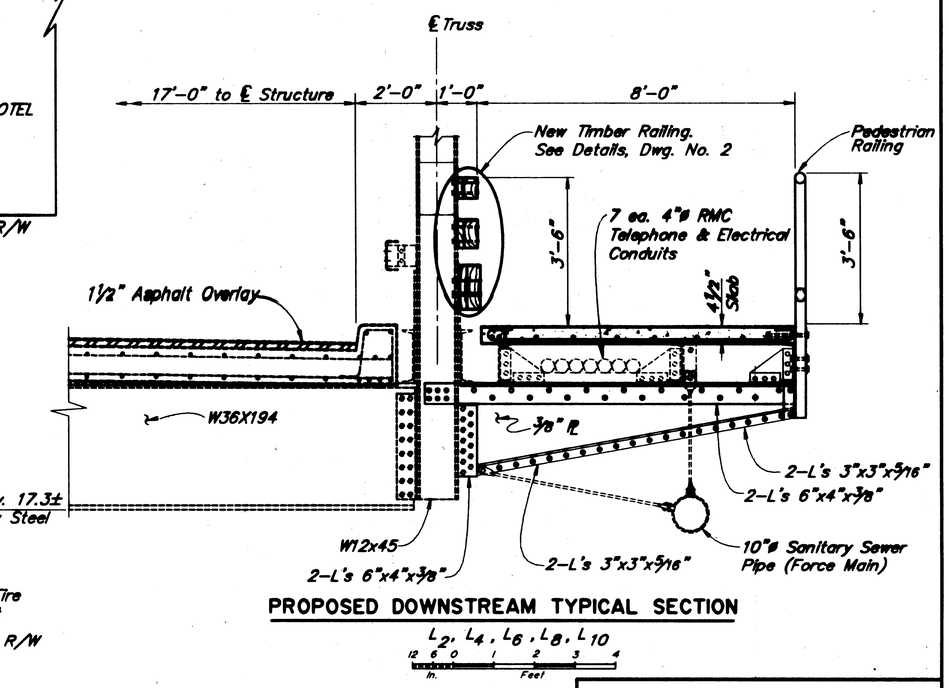

PROPOSED DOWNSTREAM TYPICAL SECTION

$L_2, L_4, L_6, L_8, L_{10}$

12 6 0 1 2 3 4
In. Feet

DRAWING INDEX

TITLE	DWG. NO.
General Layout	1
Downstream Typical Section	2
Upstream Typical Section	3
Downstream Pedestrian Railing	4-5
Upstream Pedestrian Railing	6
Abutment Details	7

STATE OF ALASKA 49TH
Stephen H. Lee
CE-5456
9/24/96
PROFESSIONAL ENGINEER

Designed By: SHL
Detail Check By: EDM
Design Check By: EDM

P:\724\724-1
9/24/1996 14:6
Plot Scale = 10.00
Drawn or Revised By: CSH

KETCHIKAN CREEK BRIDGE
ROUTE NO. FAU 902
GENERAL LAYOUT

STATE of ALASKA
DEPARTMENT of TRANSPORTATION and PUBLIC FACILITIES
JUNEAU, ALASKA

SHEET NO. T24
FED. NO. 1

STATE	PROJECT DESIGNATION	YEAR	SHEET NO.	TOTAL SHEETS
ALASKA	STP-0902(21)	1996	5	

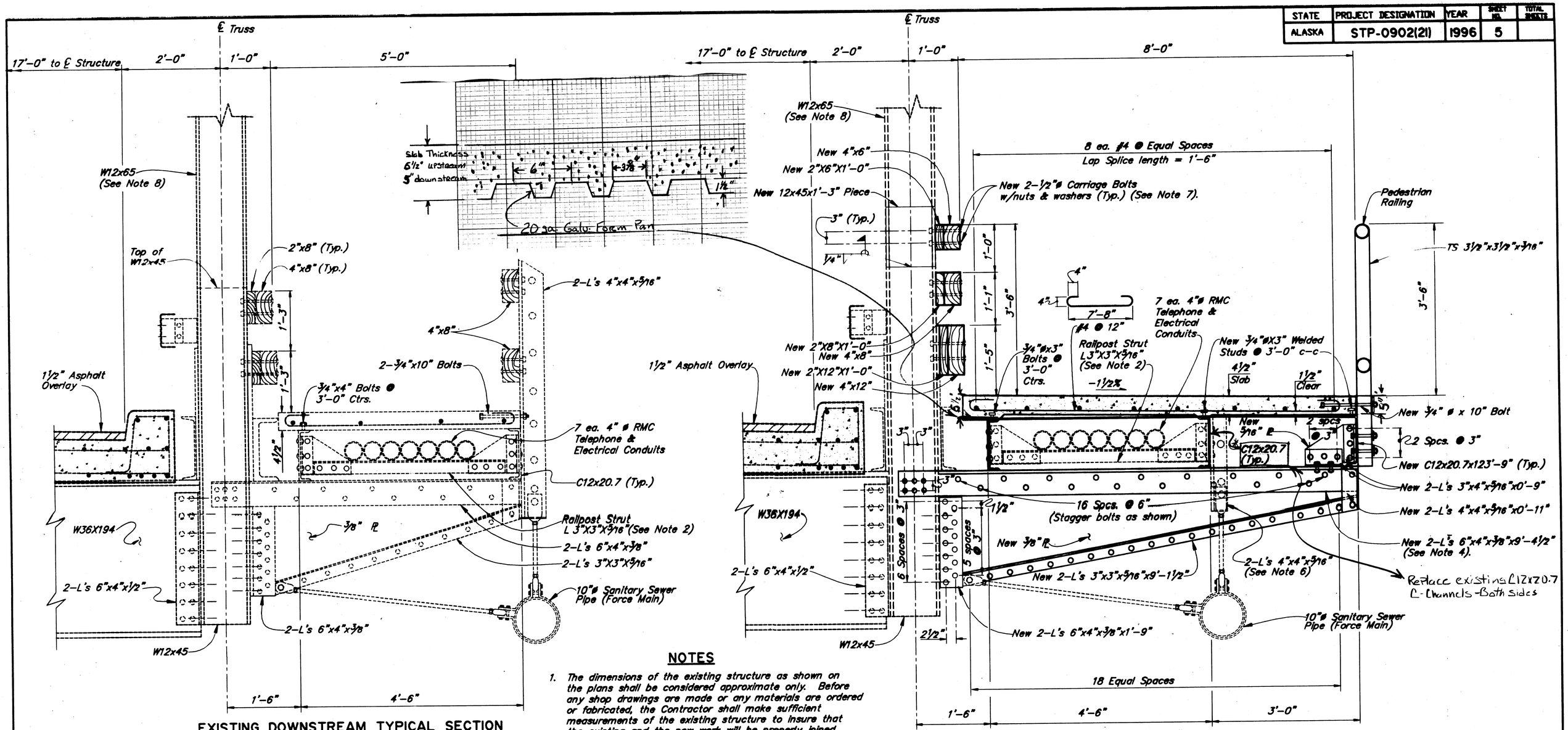

EXISTING DOWNSTREAM TYPICAL SECTION

PROPOSED DOWNSTREAM TYPICAL SECTION

$L_2, L_4, L_6, L_8, L_{10}$

NOTES

1. The dimensions of the existing structure as shown on the plans shall be considered approximate only. Before any shop drawings are made or any materials are ordered or fabricated, the Contractor shall make sufficient measurements of the existing structure to insure that the existing and the new work will be properly joined, and furnish these measurements to the Engineer.
2. Existing railpost struts are omitted at sidewalk bracket locations.
3. New sidewalk bracket members shall be bolted in place with galvanized ⅞" ø A325 bolts. Minimum edge distance equals 1¼ inches. All structural steel shall be A36 except as noted. Detach no more than one existing sidewalk bracket assembly at one time.
4. Cut horizontal leg of angles to fit existing slots at W12x45.
5. Reinforcing steel shall be epoxy coated Grade 60. Slab Concrete shall be Class AA, f'c=4,000 psi.
6. Cut existing railpost angles to clear bottom of slab at railpost strut locations to maintain utility connection. Detach no more than one horizontal utility brace at one time. Utility service shall not be interrupted.

   Remove and dispose existing railposts at sidewalk bracket locations.
7. Field drill ½"ø holes in new timber railing for ½"ø carriage bolts. Timber railing shall be No.1 Douglas Fir. Field drill 9/16"ø holes in existing W12x65 for ½"ø carriage bolts.
8. Existing vertical member is W12x65 at lower chord panel points L_1, L_3, L_5, L_7, L_9, and L_{11}.

GENERAL NOTES

SPECIFICATIONS:

Design:.....AASHTO Standard Specifications for Highway Bridges, 1996 edition with latest Interim Specifications.

Construction:.....State of Alaska Standard Specifications for Highway Construction 1988, with Standard Modifications and Special Provisions.

Live Load.....85 psf or H5-44 Truck for Sidewalk Slab, Stringers and Brackets

Dead Load.....No allowance for future paving.

DESIGN UNIT STRESSES:

Structural Steel.....A36: Fy = 36,000 psi
Fs = 20,000 psi

STRUCTURAL MATERIALS:

Structural Steel.....All Structural Steel shall be A36 unless otherwise noted.

STATE OF ALASKA 49TH Stephen H. Lee CE-5456 9/24/96 REGISTERED PROFESSIONAL ENGINEER

Designed By: SHL
Detail Check By: EBW
Design Check By: CEM

F:\724\724-5
9/24/1996 14:9
Plot Scale = 1.00
Drawn or Revised By: CEM

KETCHIKAN CREEK BRIDGE

ROUTE NO. FAU 902

DOWNSTREAM TYPICAL SECTION

STATE of ALASKA
DEPARTMENT of TRANSPORTATION and PUBLIC FACILITIES
JUNEAU, ALASKA

[redacted]

SHEET NO. 724
SHEET NO. 2

STATE	PROJECT DESIGNATION	YEAR	SHEET NO.	TOTAL SHEETS
ALASKA	STP-0902(21)	1996	6	

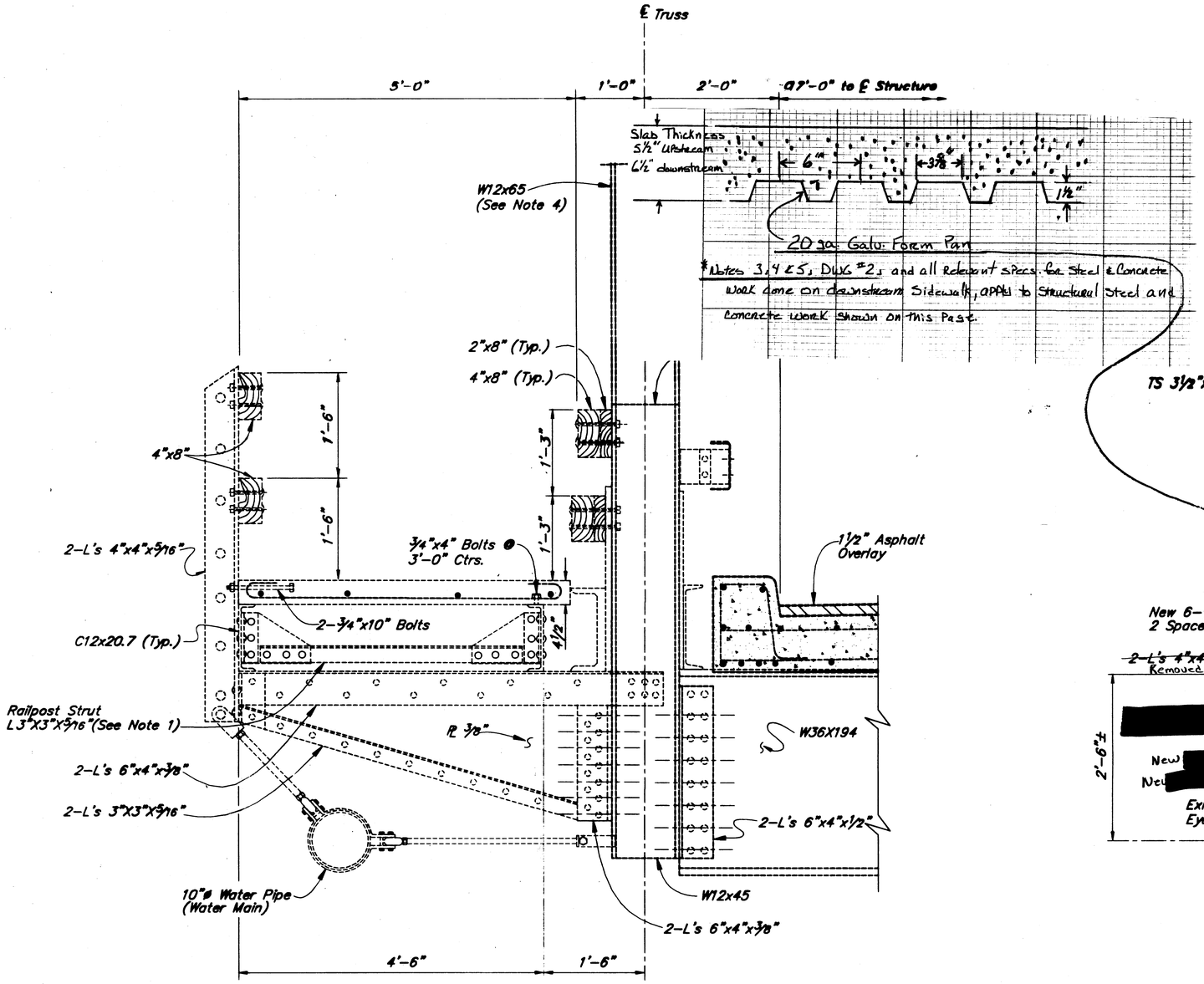

EXISTING UPSTREAM TYPICAL SECTION

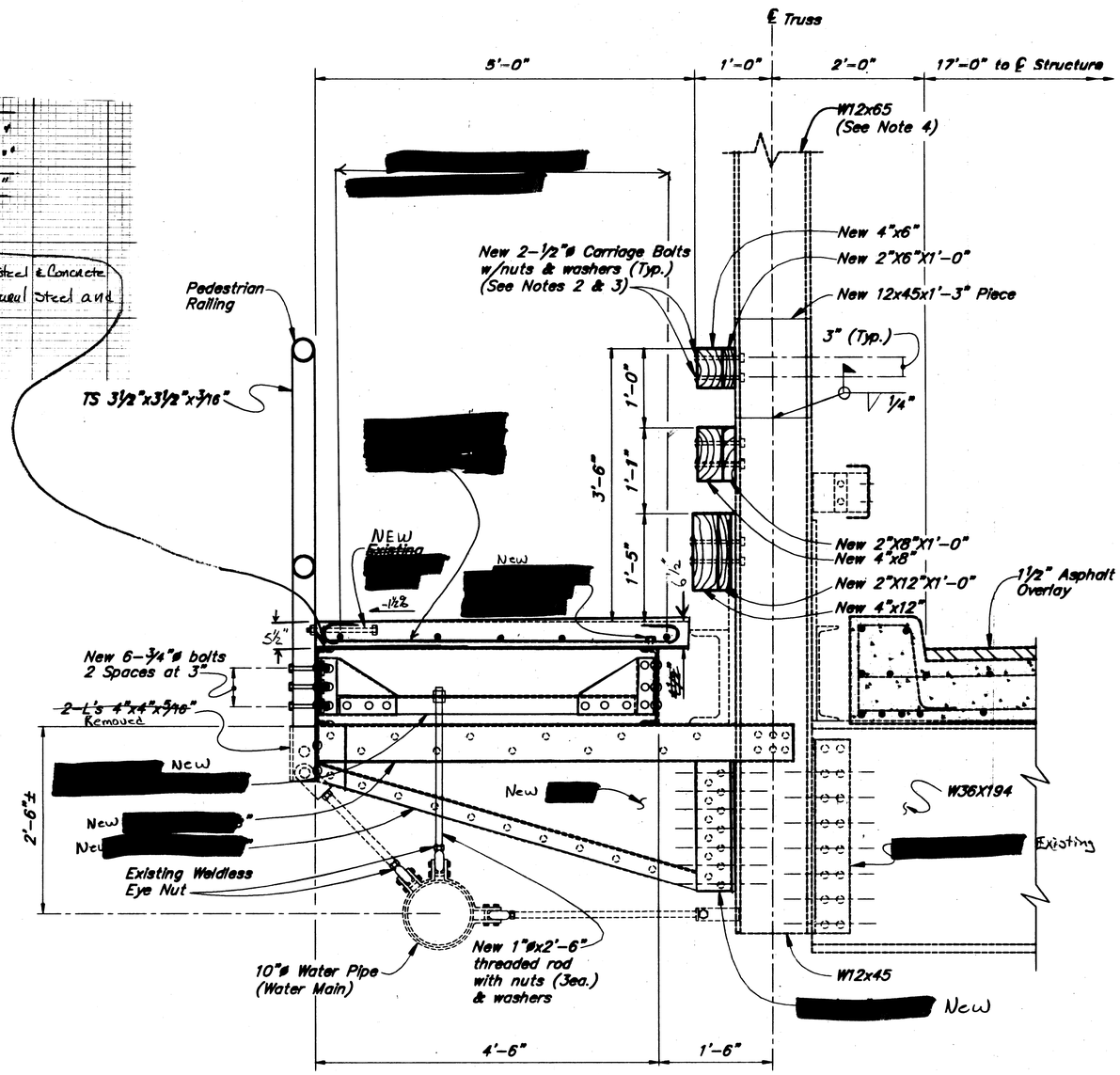

PROPOSED UPSTREAM TYPICAL SECTION

$L_2, L_4, L_6, L_8, L_{10}$

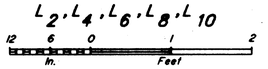

NOTES

1. Existing railpost struts are omitted at sidewalk bracket locations.
2. Field drill ½"ø holes in new timber railing for ½"ø carriage bolts. Timber railing shall be No. 1 Douglas Fir.
3. Field drill 9/16"ø holes in existing W12x65 for ½"ø Carriage Bolts.
4. Existing vertical member is W12x65 at lower chord panel points L_1, L_3, L_5, L_7, L_9, and L_{11}.
5. Cut existing railpost angles flush with bottom of C12x20.7 at sidewalk bracket locations (2 ea.) to maintain utility connection.
6. Remove and dispose existing railposts at railpost strut locations (10 ea.) and at the South end sidewalk bracket location (1 ea). Remove and dispose existing diagonal utility rod and clevis at railpost strut locations (7 ea.). Detach no more than one diagonal utility brace at one time.

   Install new vertical utility connection to railpost strut. Field drill 1 1/16"ø hole in railpost strut for galvanized 1"ø threaded rod (A36) utility attachment. Minimum thread length equal 6 inches. Utility service shall not be interrupted.

[redacted] Replace all existing upstream Sidewalk Structural Steel & Concrete

Designed By: SHL
Detail Check By: EDN
Design Check By: EDN

F:\724\724-3
9/24/1996 14:38
Plot Scale = 1.00
Drawn or Revised By: CSH

KETCHIKAN CREEK BRIDGE

ROUTE NO. FAU 902

UPSTREAM TYPICAL SECTION

STATE of ALASKA
DEPARTMENT of TRANSPORTATION and PUBLIC FACILITIES
JUNEAU, ALASKA

BRIDGE NO. 724
DWG. NO. 3

STATE	PROJECT DESIGNATION	YEAR	SHEET NO.	TOTAL SHEETS
ALASKA	STP-0902(21)	1996	7	

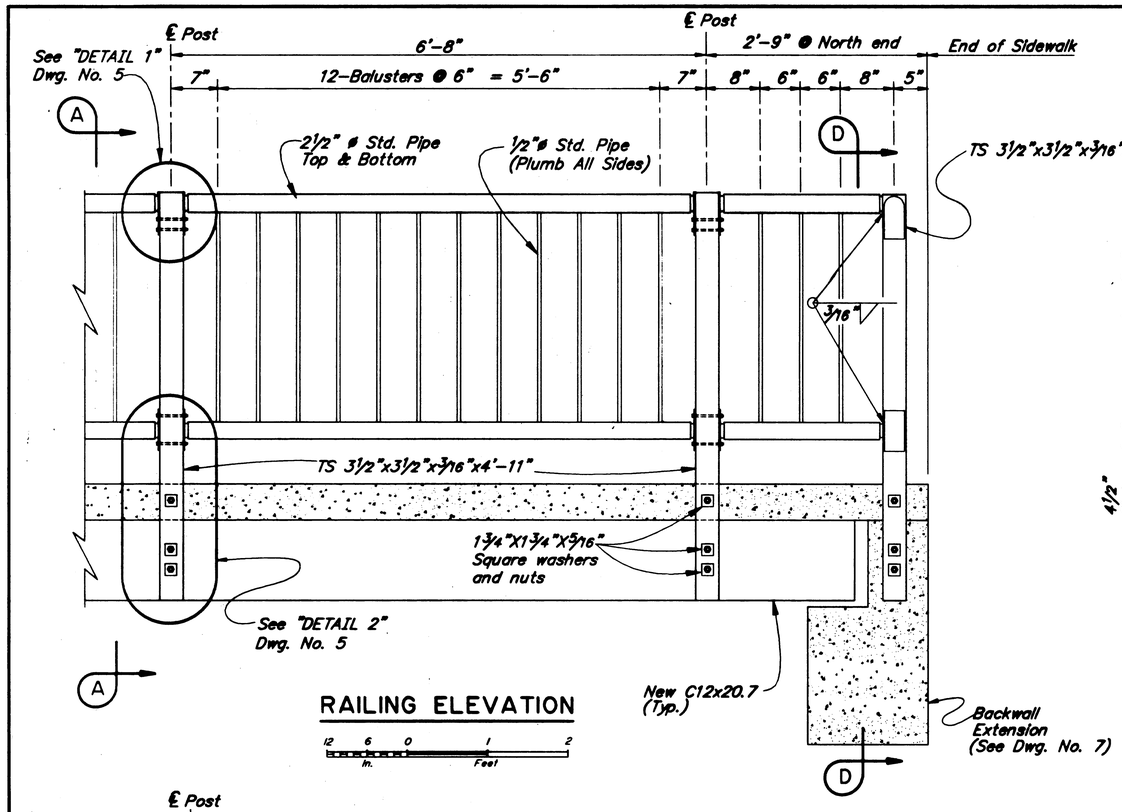

RAILING ELEVATION

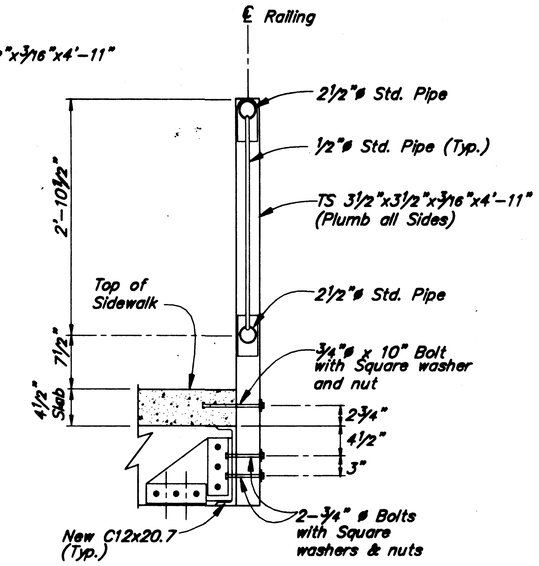

SECTION A-A

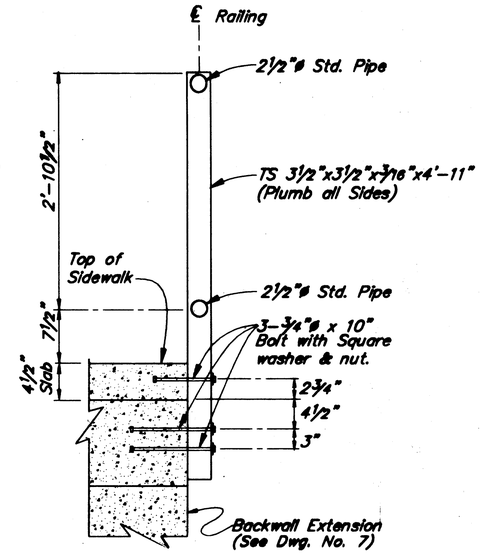

SECTION D-D

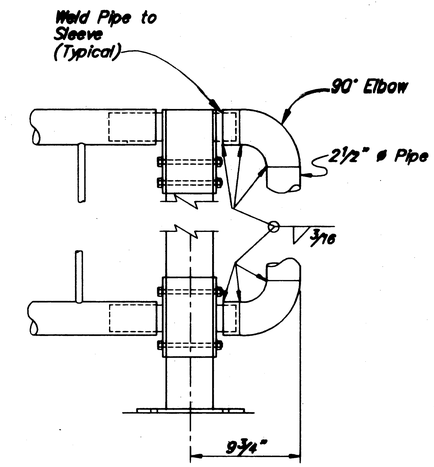

END SECTION DETAIL

NO SCALE

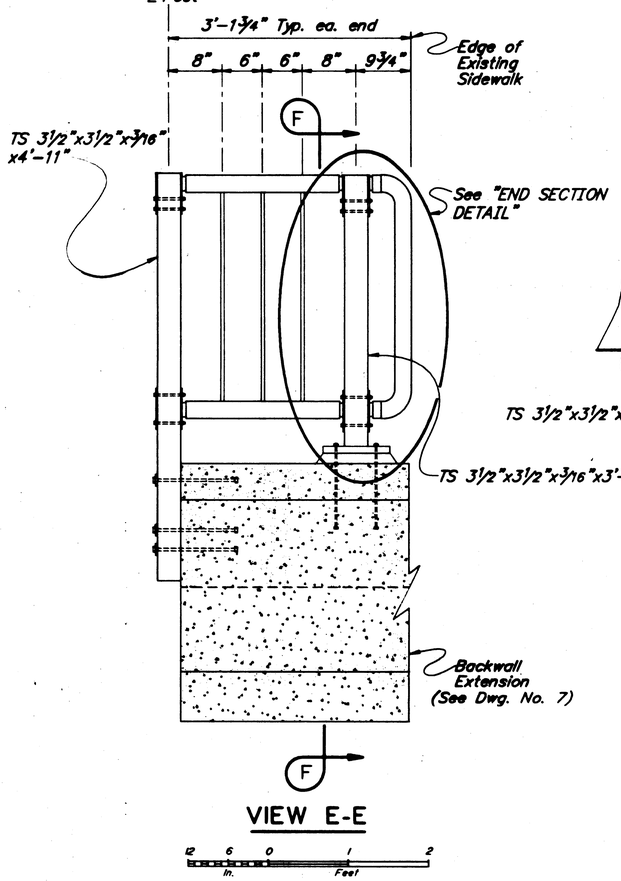

VIEW E-E

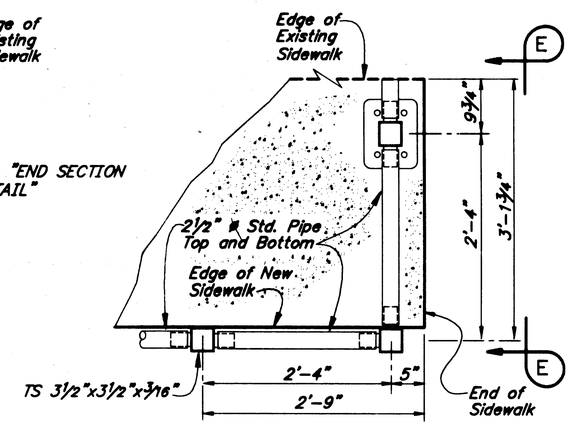

RAILING END PLAN

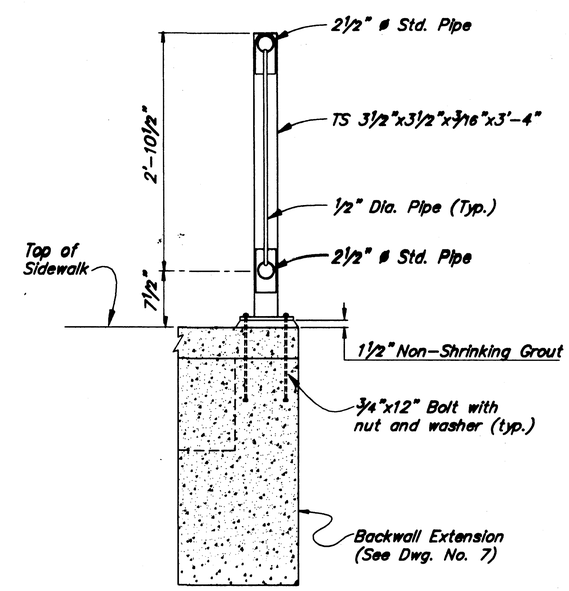

SECTION F-F

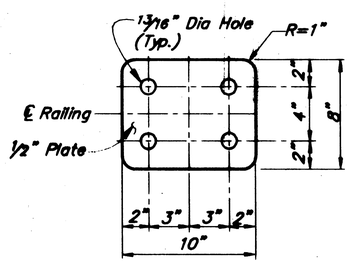

BASE PLATE

NO SCALE

NOTES

1. See "PLAN VIEW" Dwg. No. 1 for railpost longitudinal spacing.
2. The railing panels shall be prefabricated.
3. Galvanized steel damaged by field cutting or welding (when permitted by the Engineer) shall be repaired in accordance with AASHTO Specification M36.

Designed By: SHL
Detail Check By: EDM
Design Check By: EDM

P:\724\724-4
8/8/1996 13:0
Plot Scale = 1.00
Drawn or Revised By: CSA

KETCHIKAN CREEK BRIDGE
ROUTE NO. FAU 902

DOWNSTREAM PEDESTRIAN RAILING

STATE of ALASKA
DEPARTMENT of TRANSPORTATION and PUBLIC FACILITIES
JUNEAU, ALASKA

PROJ. NO. 724
DWG. NO. 4

STATE	PROJECT DESIGNATION	YEAR	SHEET NO.	TOTAL SHEETS
ALASKA	STP-0902(21)	1996	8	

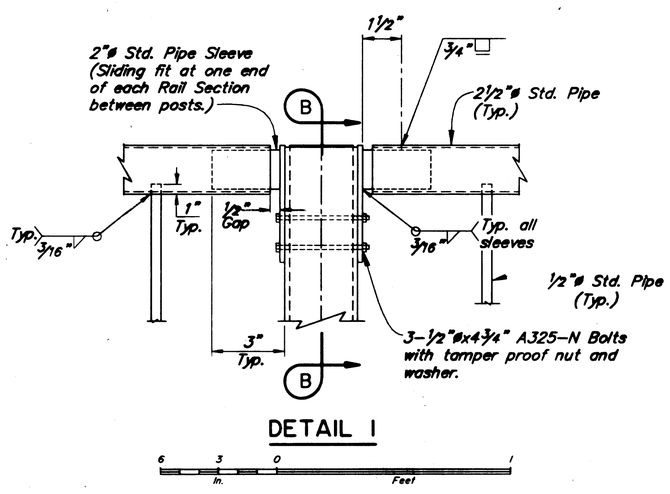

DETAIL 1

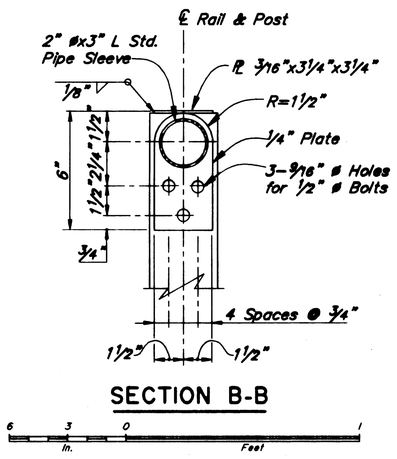

SECTION B-B

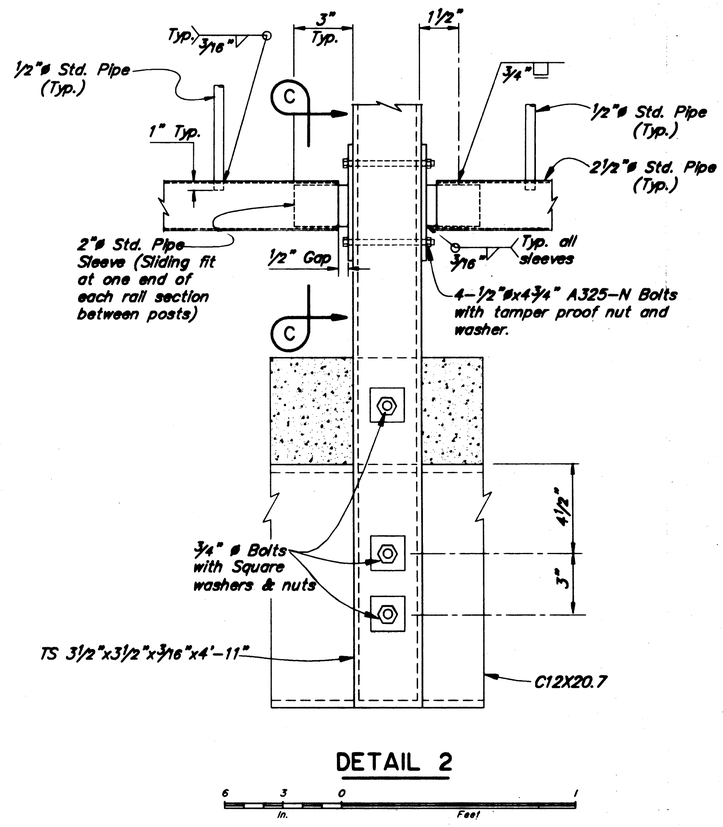

DETAIL 2

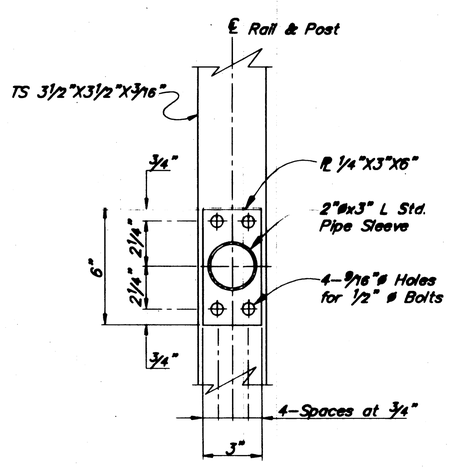

SECTION C-C

KETCHIKAN CREEK BRIDGE
ROUTE NO. FAU 902
DOWNSTREAM PEDESTRIAN RAILING

STATE of ALASKA
DEPARTMENT of TRANSPORTATION and PUBLIC FACILITIES
JUNEAU, ALASKA

BRIDGE NO. 724
BDA NO. 5

Designed By: SHL
Detail Check By: EDM
Design Check By: EDM

P:\724\724-5
9/5/1996 1:3:2
Plot Scale = 1.00
Drawn or Revised By: CDM

STATE	PROJECT DESIGNATION	YEAR	SHEET NO.	TOTAL SHEETS
ALASKA	STP-0902(21)	1996	9	

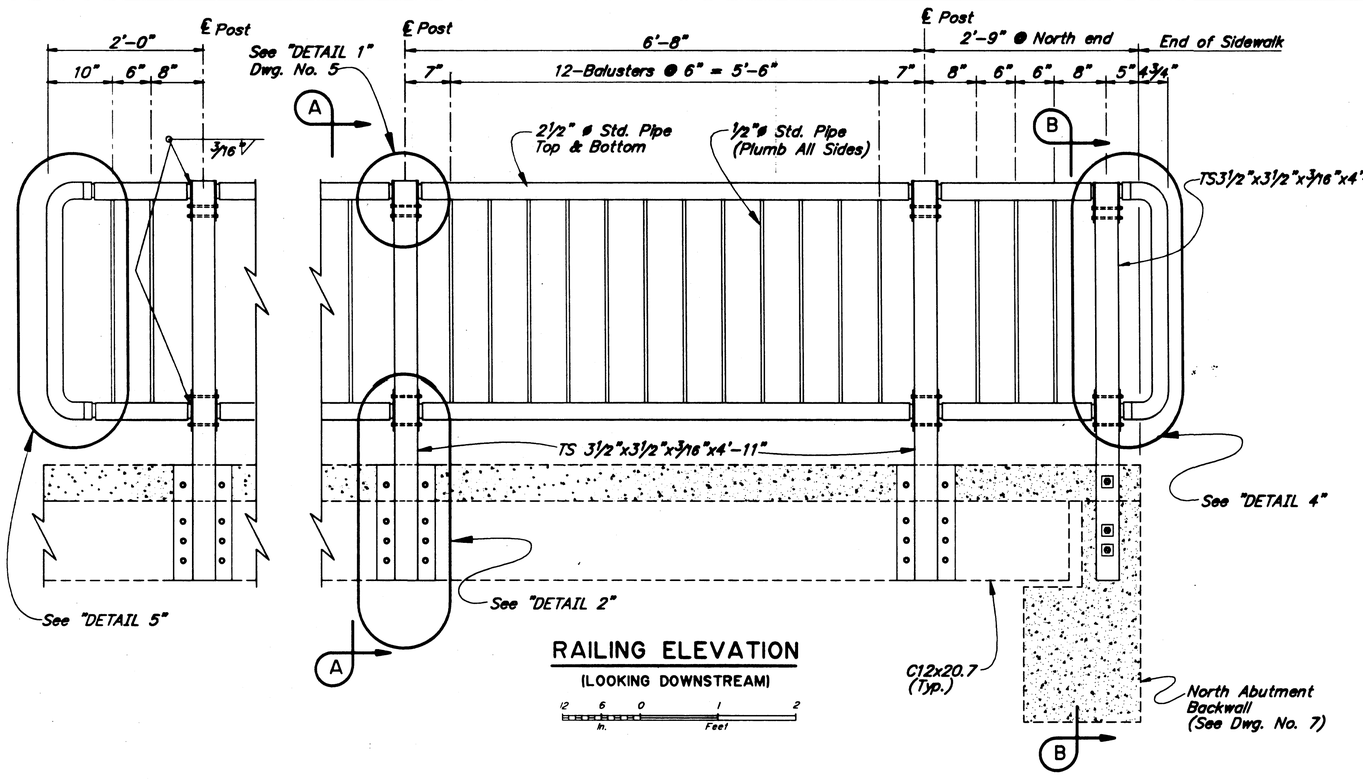

RAILING ELEVATION
(LOOKING DOWNSTREAM)

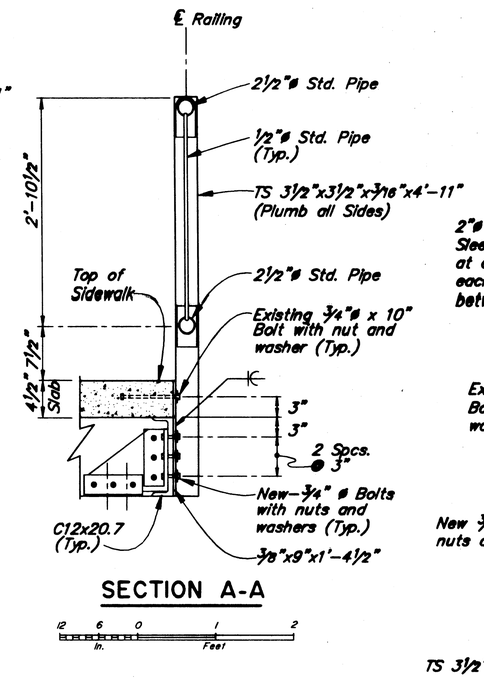

SECTION A-A

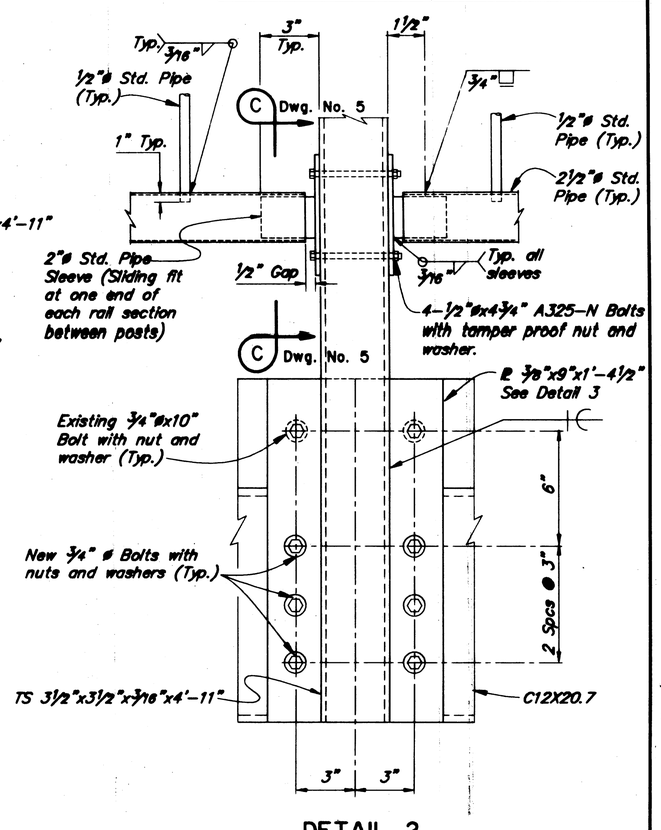

DETAIL 2

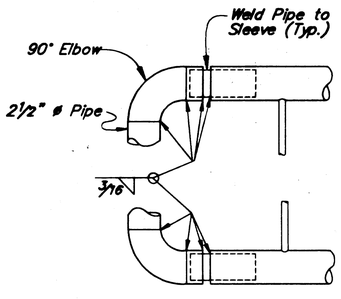

DETAIL 5
NO SCALE

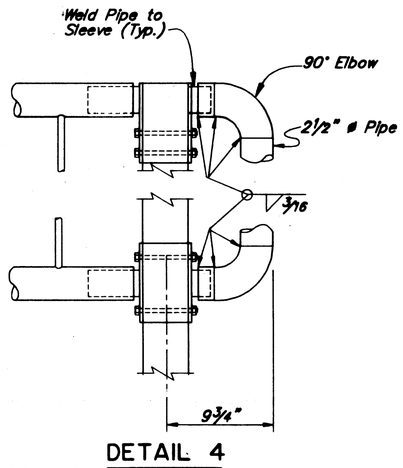

DETAIL 4
NO SCALE

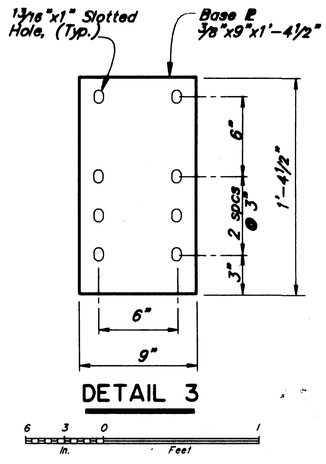

DETAIL 3

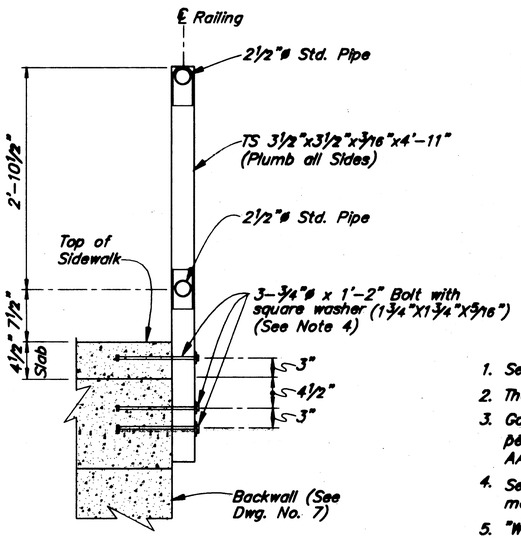

SECTION B-B

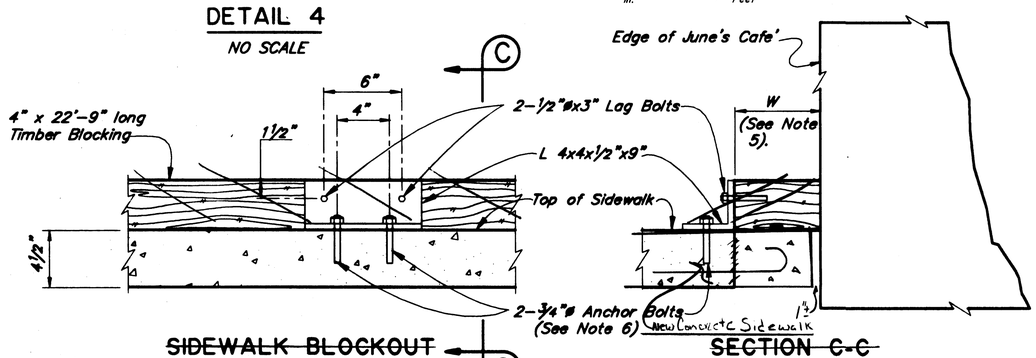

~~SIDEWALK BLOCKOUT~~
NO SCALE

~~SECTION C-C~~
NO SCALE

Delete Blockout - New Sidewalk formed & poured to within 1" of Building

NOTES

1. See "PLAN VIEW" Dwg. No. 1 for railpost longitudinal spacing.
2. The railing panels shall be prefabricated.
3. Galvanized steel damaged by field cutting or welding (when permitted by the Engineer) shall be repaired in accordance with AASHTO Specification M36.
4. Set in 1" ø x 9" drilled holes. Fill annulus with epoxy resin mortar conforming to AASHTO M235, Type 1, Grade 3, Class B.
5. "W" varies 3¼" to 7½"
6. Anchor angle into sidewalk with 2-¾" ø x 4¼" long galvanized wedge type self anchoring bolts in ¾" ø holes.

STATE OF ALASKA 49TH Stephen H. Lee CE-5456 3/8/96

Designed By: SHL
Detail Check By: EEW
Design Check By: EEW

F:\T24\T24-6
9/24/1996 14:50
Plot Scale = 1.00
Drawn or Revised By: CDH

KETCHIKAN CREEK BRIDGE
ROUTE NO. FAU 902
UPSTREAM
PEDESTRIAN RAILING

STATE of ALASKA
DEPARTMENT of TRANSPORTATION and PUBLIC FACILITIES
JUNEAU, ALASKA

BRIDGE NO. T24
SHEET NO. 6

STATE	PROJECT DESIGNATION	YEAR	SHEET NO.	TOTAL SHEETS
ALASKA	STP-0902(21)	1996	10	

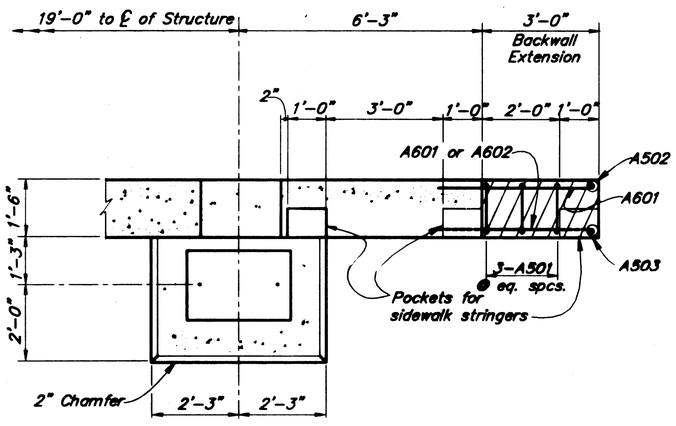

PLAN

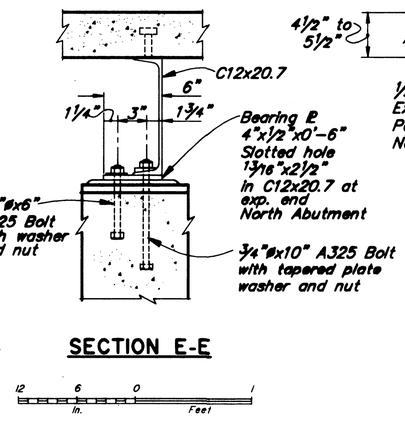

SECTION E-E

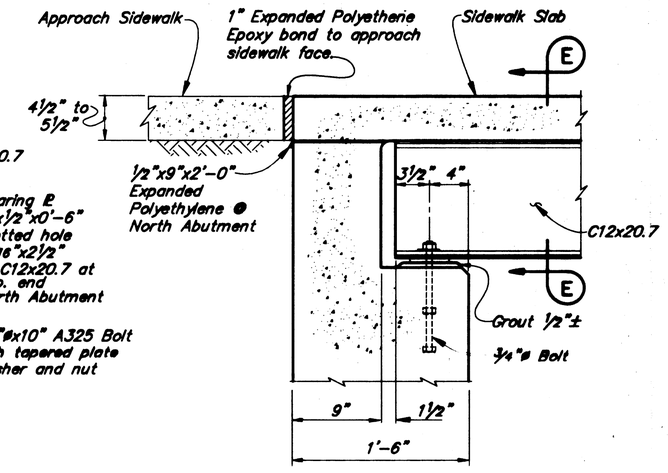

SIDEWALK STRINGER BEARING

REINFORCING SCHEDULE

MARK	SIZE	NO.	LENGTH	TYPE
A501	5	6	8'-2"	Bent
A502	5	2	2'-5"	——
A503	5	2	1'-4"	——
* A601	6	14	4'-11"	Bent
A602	6	2	1'-10"	——

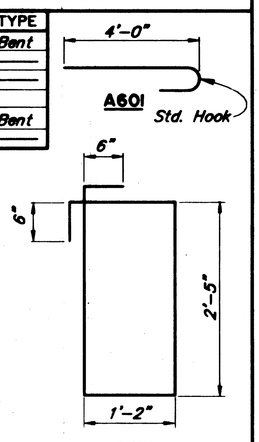

* Set in 1" ø x 1'-2" deep drilled holes. Fill with epoxy resin mortar conforming to AASHTO M235, Type 1, Grade 3, Class B.

Reinforcing Steel shall be epoxy coated Grade 60.

Backwall Extension concrete shall be Class A, f'c=3,000 psi.

CRACK REPAIR LOCATIONS

1. Approximate location of crack at South Abutment, downstream side.
2. ~~Approximate location of crack at North Abutment, downstream side, exterior face.~~ Cracked Corner Removed and Recast with Backwall Extension
3. Approximate location of crack at North Abutment, downstream side, exterior face.
4. Approximate location of crack @ North Abutment downstream side, exterior face.

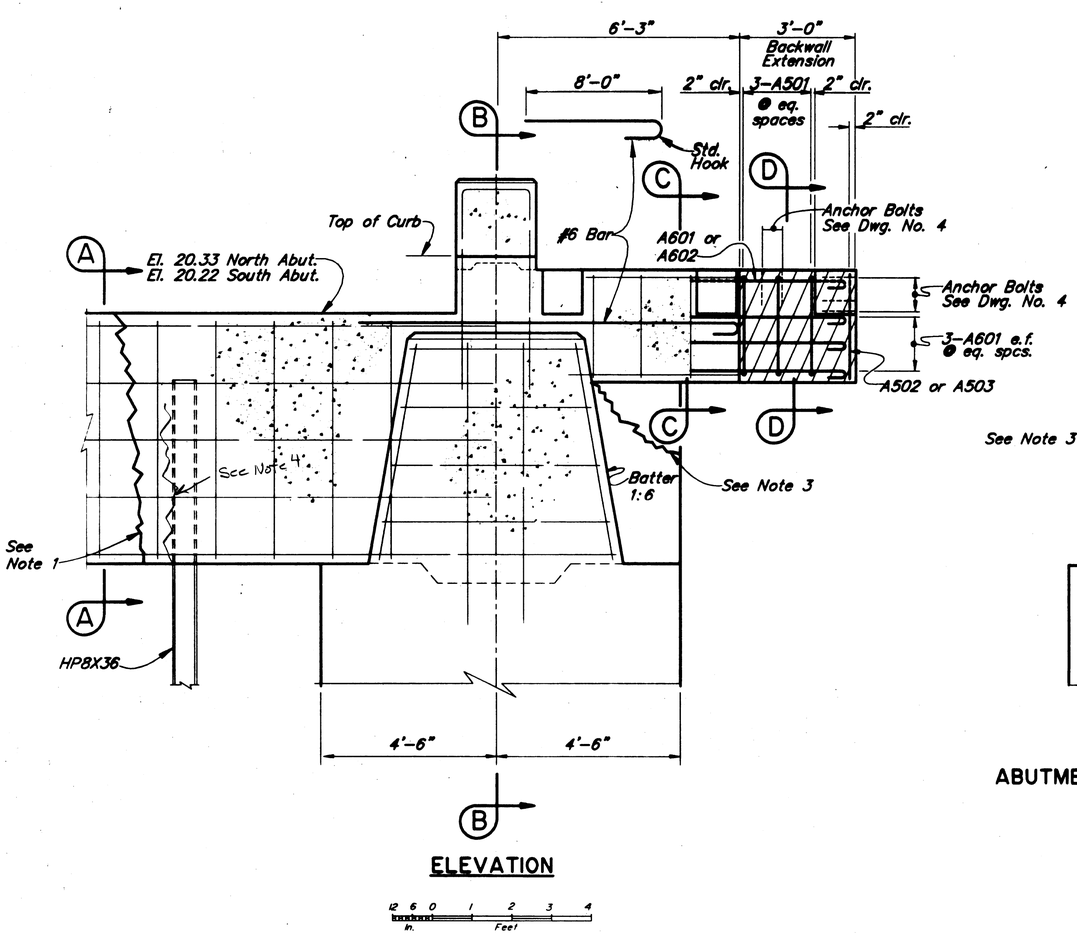

ELEVATION

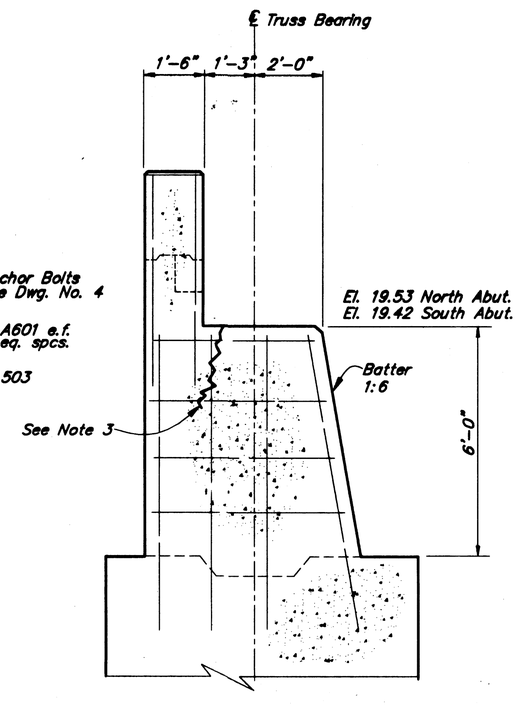

SECTION B-B
ABUTMENT PEDESTAL & WALL DETAIL

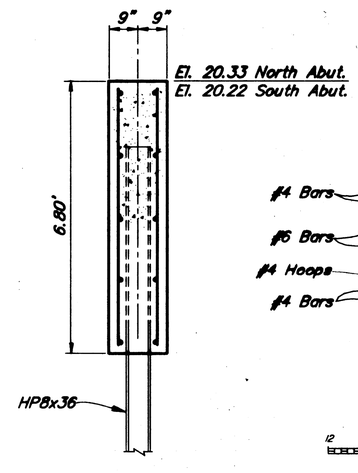

SECTION A-A

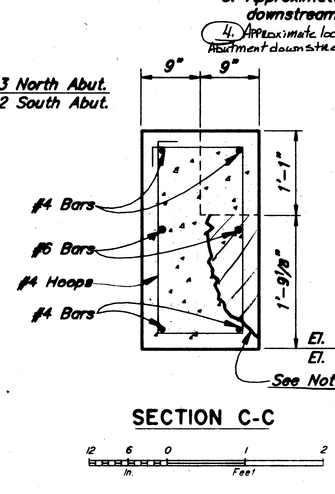

SECTION C-C

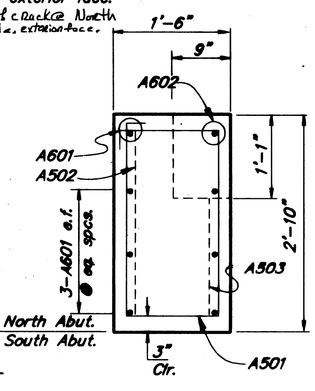

SECTION D-D

Designed By: SHL
Detail Check By: EBM
Design Check By: EBM

P:\724\724-7
9/24/1996 14:26
Plot Scale = 1.00
Drawn or Revised By: CSH

KETCHIKAN CREEK BRIDGE
ROUTE NO. FAU 902
ABUTMENT DETAILS

STATE of ALASKA
DEPARTMENT of TRANSPORTATION and PUBLIC FACILITIES
JUNEAU, ALASKA

DWG NO. T24
SHT. NO. 7

TRAFFIC CONTROL NOTES

1. A MINIMUM OF ONE LANE SHALL BE MAINTAINED AT ALL TIMES, THROUGH ALL WORK AREAS.
2. TWO LANES SHALL BE MAINTAINED AT ALL TIMES IN NON-WORK AREAS AND DURING NON-WORKING HOURS.
3. TEMPORARY DRIVING LANES SHALL HAVE A MINIMUM WIDTH OF 10'-0".
4. CONSTRUCTION SIGNING SHALL BE IN PLACE ONLY WHEN THE CONDITIONS EXIST FOR WHICH THE SIGNS ARE INTENDED.
5. FLOOD LIGHTS SHALL BE PROVIDED FOR FLAGGER STATIONS DURING NIGHT OPERATIONS.
6. A SINGLE FLAGGER MAY BE APPROVED BY THE ENGINEER IF THE ENTIRE WORK AREA IS LESS THAN 300' AND VISIBLE FROM THE FLAGGER STATION.
7. CHANNELIZATION DEVICES IF USED AT NIGHT SHALL BE LIT IN ACCORDANCE WITH THE ALASKA TRAFFIC MANUAL.
8. PERMANENT CONSTRUCTION SIGNING SHALL BE ERECTED AT EITHER BRIDGE IF WORK AT THE SITE LASTS LONGER THAN TWO WEEKS.
9. THE CONTRACTOR SHALL PROTECT PEDESTRIANS FROM FUMES, DUST, DEBRIS, OR WATER THAT ARE THE RESULT OF THIS CONSTRUCTION ACTIVITY.
10. IT IS THE INTENT OF THIS TRAFFIC CONTROL PLAN (TCP) TO ILLUSTRATE SOME, NOT ALL, OF THE TRAFFIC CONTROL SETUPS WHICH WILL BE REQUIRED ON THIS PROJECT. PLANS FOR CONFIGURATIONS NOT COVERED BY THE TCP SHALL BE CREATED BY THE CONTRACTOR AND SUBMITTED TO THE ENGINEER FOR APPROVAL. WHERE APPROPRIATE, THEY SHALL INCORPORATE APPLICABLE PORTIONS OF DETAILS ON THESE SHEETS.

HERRING COVE BRIDGE & KETCHIKAN CREEK BRIDGE

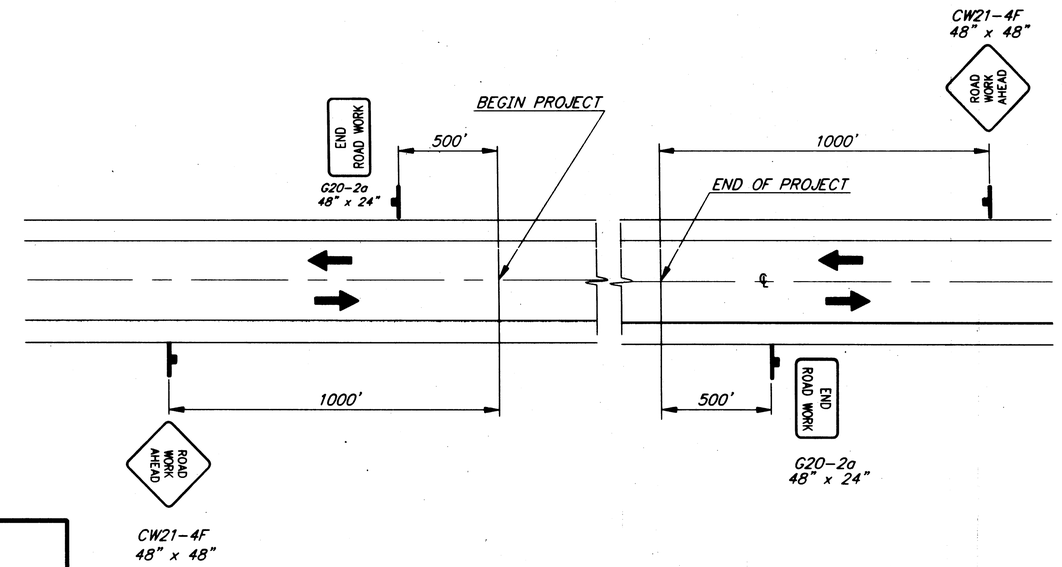

PERMANENT CONSTRUCTION SIGNING

LEGEND

- SIGN
- CONE
- DRUM
- TYPE III BARRICADE
- FLAGGING STATION

KETCHIKAN CREEK TCP NOTES

1. TWO LANES OF TRAFFIC SHALL BE MAINTAINED AT ALL TIMES EXCEPT DURING SHORT PERIODS OF SETUP OR TAKE-DOWN OF SCAFFOLDING OR EQUIPMENT. DURING THOSE TIMES THE SINGLE LANE CLOSURE, DOUBLE FLAGGER SET-UP SHALL BE USED.
2. SINGLE LANE CLOSURES SHALL ONLY BE ALLOWED DURING NON-PEAK HOURS (8:30 AM TO NOON AND 7 PM TO 7 AM). HOWEVER IF A SINGLE LANE CLOSURE DURING THESE HOURS RESULTS IN VEHICLE STOP TIMES EXCEEDING THREE MINUTES, THE CLOSURE SHALL BE REMOVED AND THE WORK RE-SCHEDULED FOR A LESS BUSY HOUR.
3. PEDESTRIAN TRAFFIC ON AT LEAST ONE SIDE OF THE BRIDGE SHALL BE MAINTAINED AT ALL TIMES. ACCESS TO THE KETCHIKAN CREEK BOARDWALK SHALL BE MAINTAINED AT ALL TIMES EXCEPT FOR SHUTDOWNS NOT TO EXCEED TWO HOURS.
4. WHERE PEDESTRIANS ARE ROUTED ACROSS TONGASS AVENUE, THE CROSSWALK SHALL BE AT AN EXISTING CURB CUT OR A TEMPORARY CURB RAMP MEETING ADA REQUIREMENTS SHALL BE PROVIDED.

HERRING COVE TCP NOTES

1. THE SINGLE LANE CLOSURE, YIELD SIGN SET-UP MAY BE USED WHEN A DRIVER STOPPED AT THE YEILD SIGN HAS UNOBSTRUCTED VISION OF APPROACHING VEHICLES WHICH ARE 500 FEET AWAY, OR CLOSER.
2. IF EQUIPMENT PARKED ON THE BRIDGE OR OTHER OBSTRUCTIONS REDUCE SIGHT DISTANCE BELOW 500 FEET, THE SINGLE LANE CLOSURE. DOUBLE FLAGGER SET-UP SHALL BE USED.

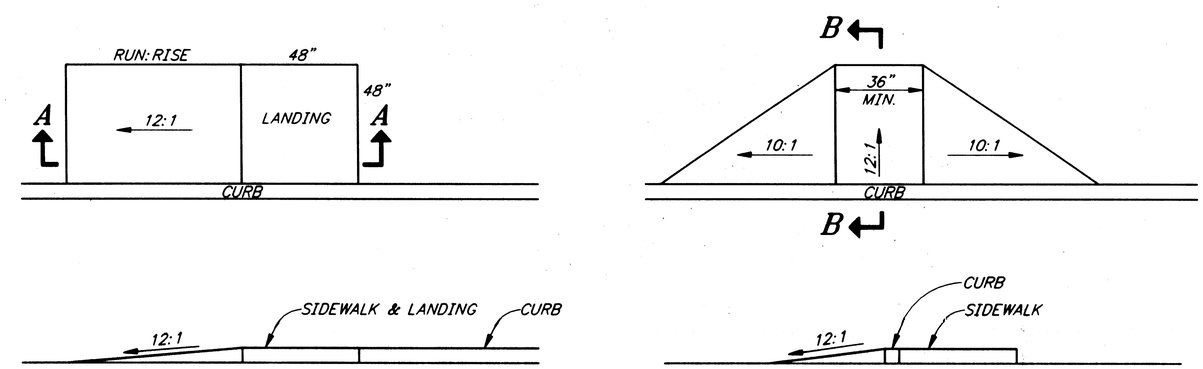

SECTION A-A **SECTION B-B**

EXAMPLES OF ADA RAMPS

NOTE: DO NOT SCALE FROM THESE PLANS-USE DIMENSIONS

PATH:	P:\KTN\72020\DR\-TCP1	
PLOT:	P:\-LIB\-PLOT\PLOTF.PCP(1) OR PLOTH.PCP(2)	
BY:	DATE:	DESCRIPTION OF CHANGE:

RECORD OF REVISIONS

STATE OF ALASKA
DEPARTMENT OF TRANSPORTATION AND PUBLIC FACILITIES
SOUTHEAST REGION DESIGN & CONSTRUCTION

KETCHIKAN

KTN- HERRING COVE & KETCHIKAN CREEK BRIDGES
STP-0902(21) ~ 72020

TRAFFIC CONTROL PLAN

ALASKA

DESIGNED BY: K. MATTSON	PROJECT NO. 72020
DRAWN BY: K. MATTSON	DATE: 1996
CHECKED BY: K. SMITH	SHEET 11 OF 12

STATE OF ALASKA 49th Kurtis Smith CE-7347 REGISTERED PROFESSIONAL ENGINEER

KETCHIKAN CREEK BRIDGE TWO-WAY TRAFFIC

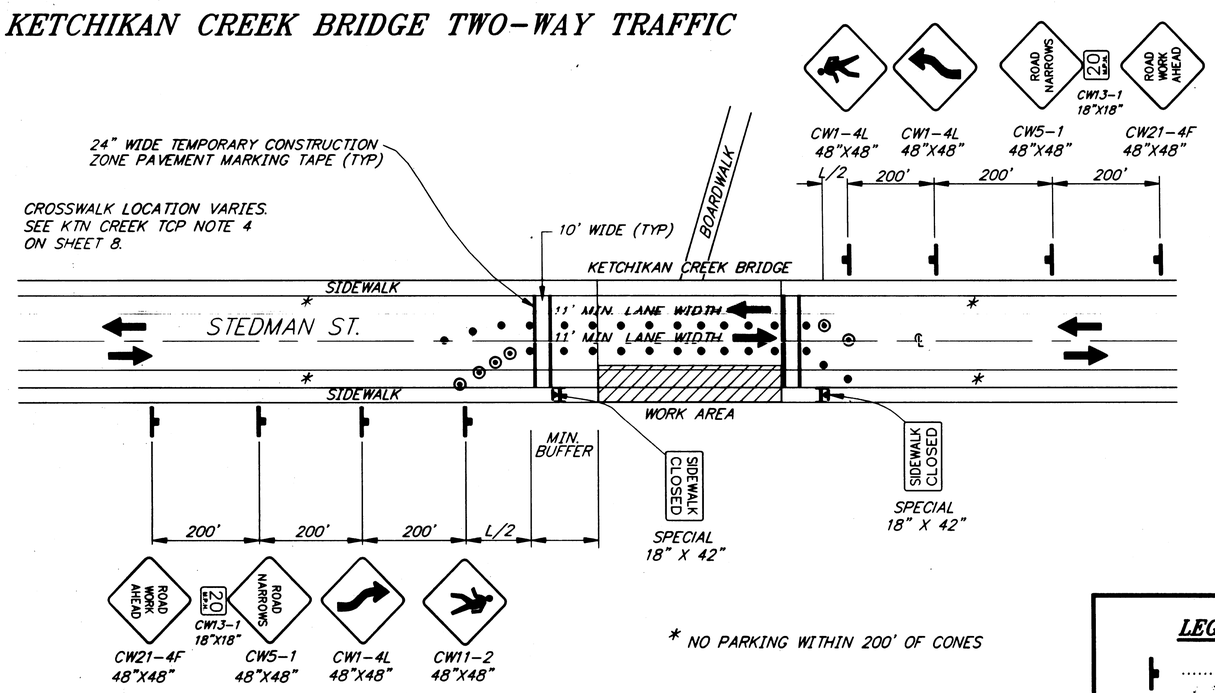

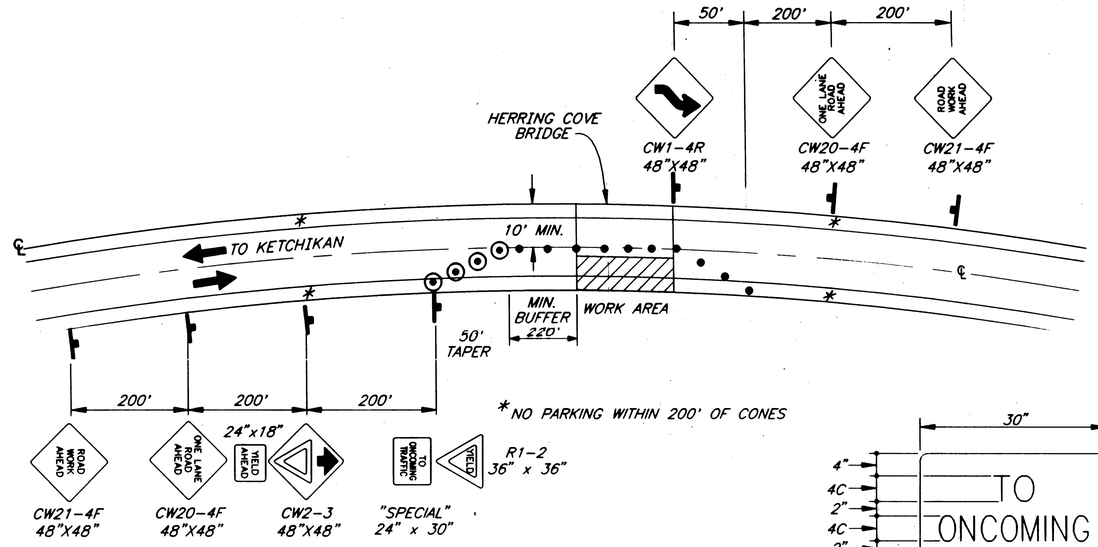

TWO LANE ROAD - SINGLE LANE CLOSURE
YIELD SIGN

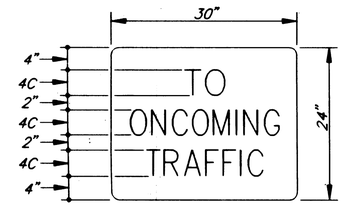

SPECIAL SIGN DETAIL

LEGEND

- SIGN
- CONE
- DRUM
- TYPE II BARRICADE
- FLAGGING STATION

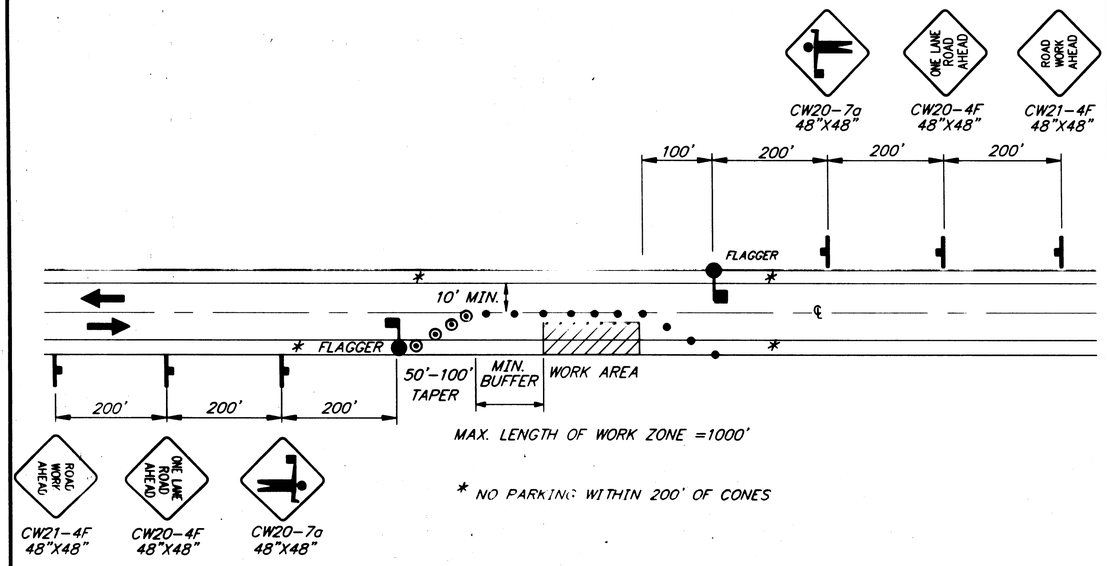

TWO LANE ROAD - SINGLE LANE CLOSURE
DOUBLE FLAGGER

FORMULAS FOR L (TAPER LENGTH)

40 MPH OR LESS $L = \frac{WxS^2}{60}$

45 MPH OR GREATER $L = WxS$

WHERE W= WIDTH OF OFFSET
S= POSTED SPEED LIMIT OR ANTICIPATED OPERATING SPEED

MINIMUM DRUM OR CONE SPACING = 20 FT

MIN. BUFFER	
S	LENGTH
20	35
25	55
30	85
35	120
40	170
45	220
50	280
55	335
60	415
65	485

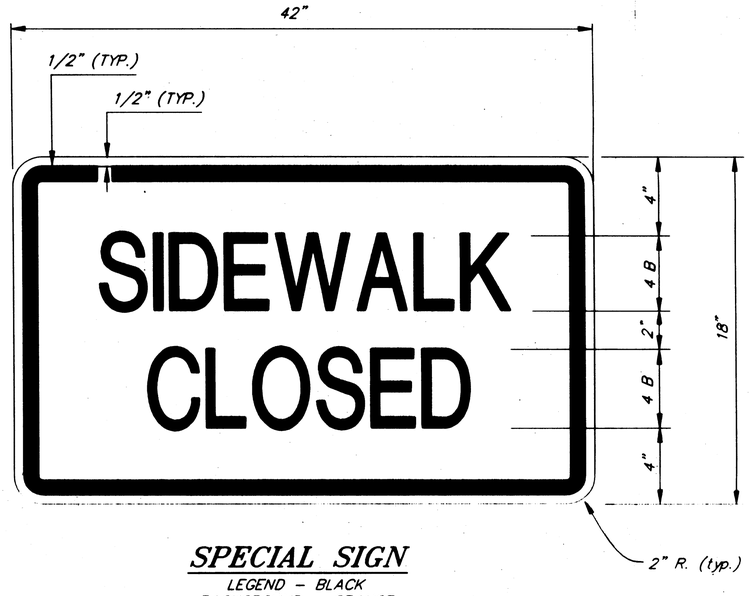

SPECIAL SIGN

LEGEND - BLACK
BACKGROUND - ORANGE

PATH:	P:\KTN\72020\DR\-TCP2	
PLOT:	P:\-LIB\-PLOT\PLOTF.PCP(1) OR PLOTH.PCP(2)	
BY:	DATE:	DESCRIPTION OF CHANGE:

RECORD OF REVISIONS

STATE OF ALASKA
DEPARTMENT OF TRANSPORTATION AND PUBLIC FACILITIES
SOUTHEAST REGION DESIGN & CONSTRUCTION

KETCHIKAN — KTN- HERRING COVE & KETCHIKAN CREEK BRIDGES — ALASKA
STP-0902(21) ~ 72020
TRAFFIC CONTROL PLAN

DESIGNED BY: K. MATTSON	PROJECT NO. 72020
DRAWN BY: K. MATTSON	DATE: 1996
CHECKED BY: K. SMITH	SHEET 12 OF 12

STATE OF ALASKA 49th Kurtis Smith CE-7347 REGISTERED PROFESSIONAL ENGINEER