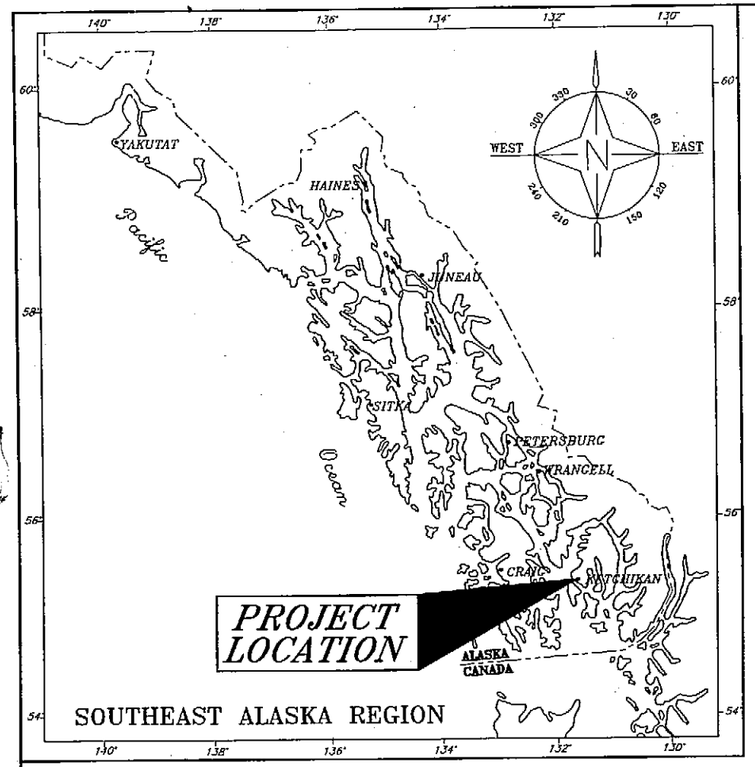

STATE OF ALASKA
DEPARTMENT OF TRANSPORTATION AND PUBLIC FACILITIES
SOUTHEAST REGION
DESIGN AND CONSTRUCTION DIVISION

KETCHIKAN, ALASKA

KETCHIKAN AIRPORT SEAPLANE FLOAT RECONSTRUCTION

PROJECT NO. 68742

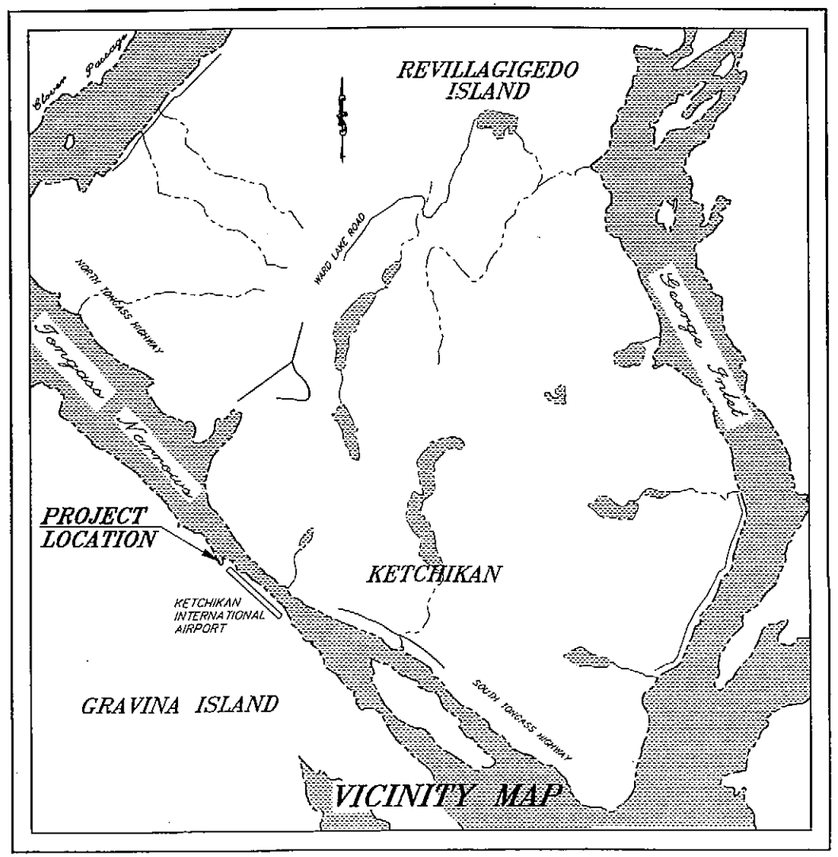

VICINITY MAP

INDEX OF SHEETS

SHEET NO.	DESCRIPTION
1	TITLE SHEET
2	QUANTITIES & GENERAL NOTES
3	EXISTING PLAN
4	PROJECT LAYOUT
5	BRIDGE SUPPORT FLOAT FRAME LAYOUT
6	BRIDGE SUPPORT FLOAT HULL REINFORCEMENT
7	BRIDGE SUPPORT FLOAT FRAME DETAILS
8	BRIDGE SUPPORT FLOAT MISC. DETAILS
9	RESTRAINT FLOAT PLAN
10	RESTRAINT FLOAT DETAILS
11	MISC. DETAILS
12	AS-BUILT, PEDESTRIAN & VEHICLE BRIDGE DETAILS
13	AS-BUILT, BRIDGE SECTION DETAILS
14	AS-BUILT, BRIDGE SUPPORT FLOAT
15	AS-BUILT, TYPICAL FLOAT MODULE DETAILS
16	AS-BUILT, FLOAT CONNECTION DETAILS

AS-Built Plans

Begin: 10-11-04 END: 10-16-04

Project Engineer: Jack Lee

Contractor: Western Dock & Bridge

STATE OF ALASKA
DEPARTMENT OF TRANSPORTATION
AND
PUBLIC FACILITIES
SOUTHEAST REGION DESIGN SECTION

APPROVED _____ Date 5/3/04
Patrick J. Kemp, P.E., Regional Preconstruction Engineer

APPROVED _____ Date 5/3/04
Gary L. Paxton, Director, S.E. Region

PROJECT NUMBER:	ENGINEER'S SEAL
68742	STATE OF ALASKA 49th Bern A Sovikko CE-6466 PROFESSIONAL ENGINEER
DATE: 2004	4-27-04
SHEET 1 OF 16	

O:\Marine\Ktn Seaplane Repair 2002\Planset\001 Ktn SP Bridge Float - Title w sig block.dwg

ESTIMATE OF QUANTITIES

KETCHIKAN SEAPLANE BRIDGE FLOAT REPAIR

ITEM NO.	ITEM	ESTIMATED QUANTITIES	UNIT
G-100a	Mobilization and Demobilization	All Req'd	L.S.
M-300a	New Steel Bridge Support Float	All Req'd	L.S.
M-300b	New Steel Pipe Restraint Float	All Req'd	L.S.
P-158a	Erosion and Pollution Control Administration	All Req'd	L.S.
P-158b	Temporary Erosion and Pollution Control	All Req'd	C.S.
P-165a	Removal of Structures and Obstructions	All Req'd	L.S.

GENERAL NOTES

Specifications: Per Contract Documents for Project No. 68742

Construction: Per Contract Documents for Project No. 68742

Design Standards: AKDOT/PF & SOUTHEAST REGION MARINE ENGINEERING DESIGN STANDARDS

Design Loads:

Float Restraint Structures: Current @ 2 knots
Wave Loading: 4' x 4 sec wave
Wind Load: 25 psf x Projected Area of Bridge

Seaplane Float: Current @ 2 knots
Wave Loading: 4' x 4 sec wave
AASHTO H10-44

Vehicle Bridge: AASHTO H10-44
Pedestrian Ramps: LL - 85 psf

Design Unit Stresses:

Steel:

A36	F_s = 20 Ksi
A252 Gr. 2	F_s = 19.25 Ksi
A500 Gr. B	F_s = 25 Ksi
A572	F_s = 27 Ksi
A108	F_s = 29 Ksi
A608 Gr. D	F_s = 30 Ksi

Materials:

Steel:

Tube Sections	A500 Gr. B
Pile	A252 Gr. 2 (with A36 properties), A501 or A53, Gr. B, type E or S
Pipe	A53, Gr. B, type E or S
Stainless	Type 302, 304 or 316

All other shall be A36 or A572 as noted.

Protective Coatings:

All steel shall be galvanized after fabrication unless specified otherwise

Glulam Timbers: Repair per specifications.

Steel float exterior shall be coated per System 1 of the technical specifications.

As-Built Drawings :

Are Available For Inspection By Prospective Bidders At The Southeast Region D & C Offices, 6860 Glacier Highway, In Juneau, AK. Contact Bern Sovikko or Bill Nelson At (907)465-8945.

NOTE: The new steel bridge support float is a replacement for the existing glulam timber float. The steel float as detailed has six watertight compartments for leveling with fresh water ballast.
A fabricated steel float with similar design characteristics may be an acceptable option. If the Contractor elects to utilize a another steel float design, he shall submit design computations, plans and specifications for approval. The float must not be pile restrained. If the alternate is not accepted the contractor must construct the float as designed at the bid amount. If an alternate system is used, there shall be no increased cost to the State.

NOTE: DO NOT SCALE FROM THESE PLANS, USE DIMENSIONS

STATE OF ALASKA 49th Bern A. Sovikko CE-6465 REGISTERED PROFESSIONAL ENGINEER 4-27-04

PATH: O:\Marine\Ktn Seaplane Repair 2002\Planset\002 Ktn SP Brdg Flt - Quant.dwg

BY:	DATE:	DESCRIPTION OF CHANGE:

RECORD OF REVISIONS

STATE OF ALASKA
DEPARTMENT OF TRANSPORTATION AND PUBLIC FACILITIES
SOUTHEAST REGION DESIGN & CONSTRUCTION

KETCHIKAN ALASKA
KETCHIKAN AIRPORT SEAPLANE FLOAT RECONSTRUCTION
PROJECT NO. 68742
QUANTITIES & GENERAL NOTES

DESIGNED BY:	BN	PROJECT NO.	68742
DRAWN BY:	BN	DATE:	2004
CHECKED BY:	BAS	SHEET 2 OF 16	

BASIS OF CONTROL

HORIZONTAL CONTROL

THE BASIS OF HORIZONTAL CONTROL FOR THIS PROJECT IS THE RECORD BEARING OF S. 44°21'58"E. BETWEEN A 3" ALUMINUM MONUMENT AT PT 234+94.89, LOCATED IN THE ASPHALT IN FRONT OF THE TERMINAL BUILDING, AND A 2" BRASS CAP AT PT 48 STA. 244+01.44, LOCATED IN THE SERVICE ROAD BY THE RAMP TO THE SEAPLANE FACILITY.

THE BASIS OF COORDINATES IS THE MONUMENT AT PT 234+94.89 WITH PROJECT COORDINATES OF N. 10648.451, E. 19365.739.

VERTICAL CONTROL

THE BASIS OF VERTICAL CONTROL FOR THIS PROJECT IS THE MONUMENT AT PT 234+94.89 WITH AN ACCEPTED ELEVATION OF 43.44' ABOVE MLLW. THIS OBERSERVATION WAS DERIVED FROM A SERIES OF TIDAL OBSERVATIONS TAKEN ON OCT. 29 & 30, 1986. CONTRACTOR TO VERIFY.

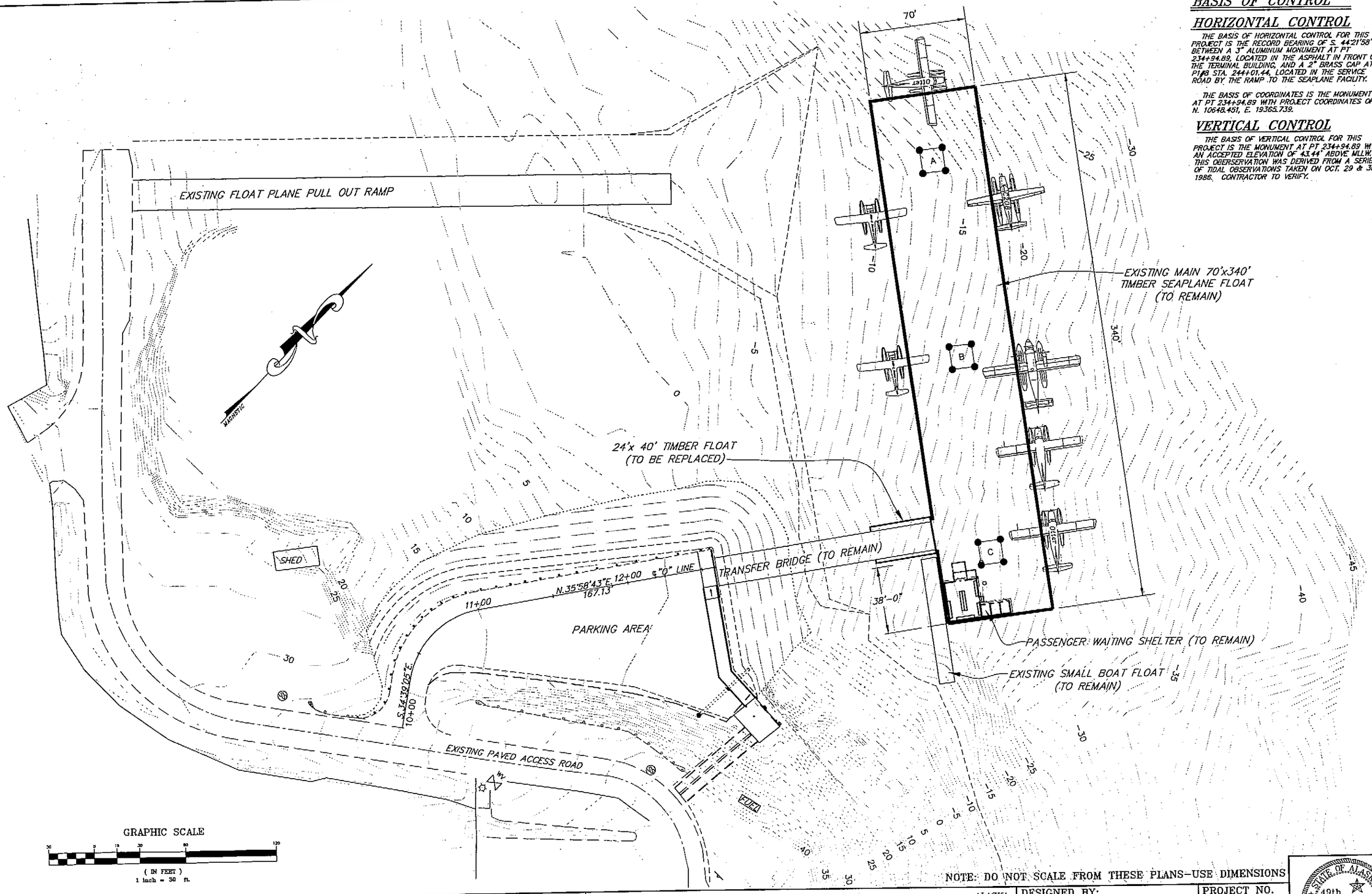

NOTE: DO NOT SCALE FROM THESE PLANS–USE DIMENSIONS

PATH: Q:\Marine\Ktn Seaplane Repair 2002\Planset\003 Ktn SP Brdg Flt – Plan.dwg	STATE OF ALASKA DEPARTMENT OF TRANSPORTATION AND PUBLIC FACILITIES SOUTHEAST REGION DESIGN & CONSTRUCTION	KETCHIKAN — KETCHIKAN AIRPORT SEAPLANE FLOAT RECONSTRUCTION PROJECT NO. 68742 — ALASKA
PLOT:		EXISTING PLAN
BY: / DATE: / DESCRIPTION OF CHANGE:		
RECORD OF REVISIONS		

DESIGNED BY: BN	PROJECT NO. 68742
DRAWN BY: BN	DATE: 2004
CHECKED BY: BAS	SHEET 3 OF 16

STATE OF ALASKA 49th Brian A. Savikko CE-6466 REGISTERED PROFESSIONAL ENGINEER

4-27-04

Notes:
Electrical/Comm utilities located along the east side of the bridge will need to be disconnected and reconnected to allow removal and replacement of the existing timber bridge float.

Supply New galvanized pipe support bracket to be field welded onto the east side apron handrail. The electrical cables shall be supported by two trolling springs & stainless steel mesh strain relief grips from the new bracket. The support bracket should standoff from the handrail (brace as req'd) to allow the flexible electrical cables movement safe from binding or abrasion.

After the support float has been located, the existing steel skids on seaplane float must be relocated and secured to align with the bridge apron.

ACCESS HATCHES: New Access Hatches shall be Baier oval, flush, plain, type"C" commercial, aluminum w/ galv. steel rim or equal and installed per manufacturer's recommendations. Contact information at:
Baier Hatch Co, Inc., 16901 Wood-Red Road, Woodinville, WA 98072
Ph: 1-800-455-3917

BALLAST: Bridge support float shall be ballasted with fresh water to ~1'-6" freeboard all around with all structures installed.

PROTECTIVE COATINGS: Exterior of bridge support float shall be System 1 with non-skid deck per Technical Specifications or equal, applied after fabrication. Interior of support float shall have one coat of zinc rich primer. Support float attachments and assemblies shall be galvanized after fabrication. Restraint float members, frames & collars shall be hot-dip galvanized.

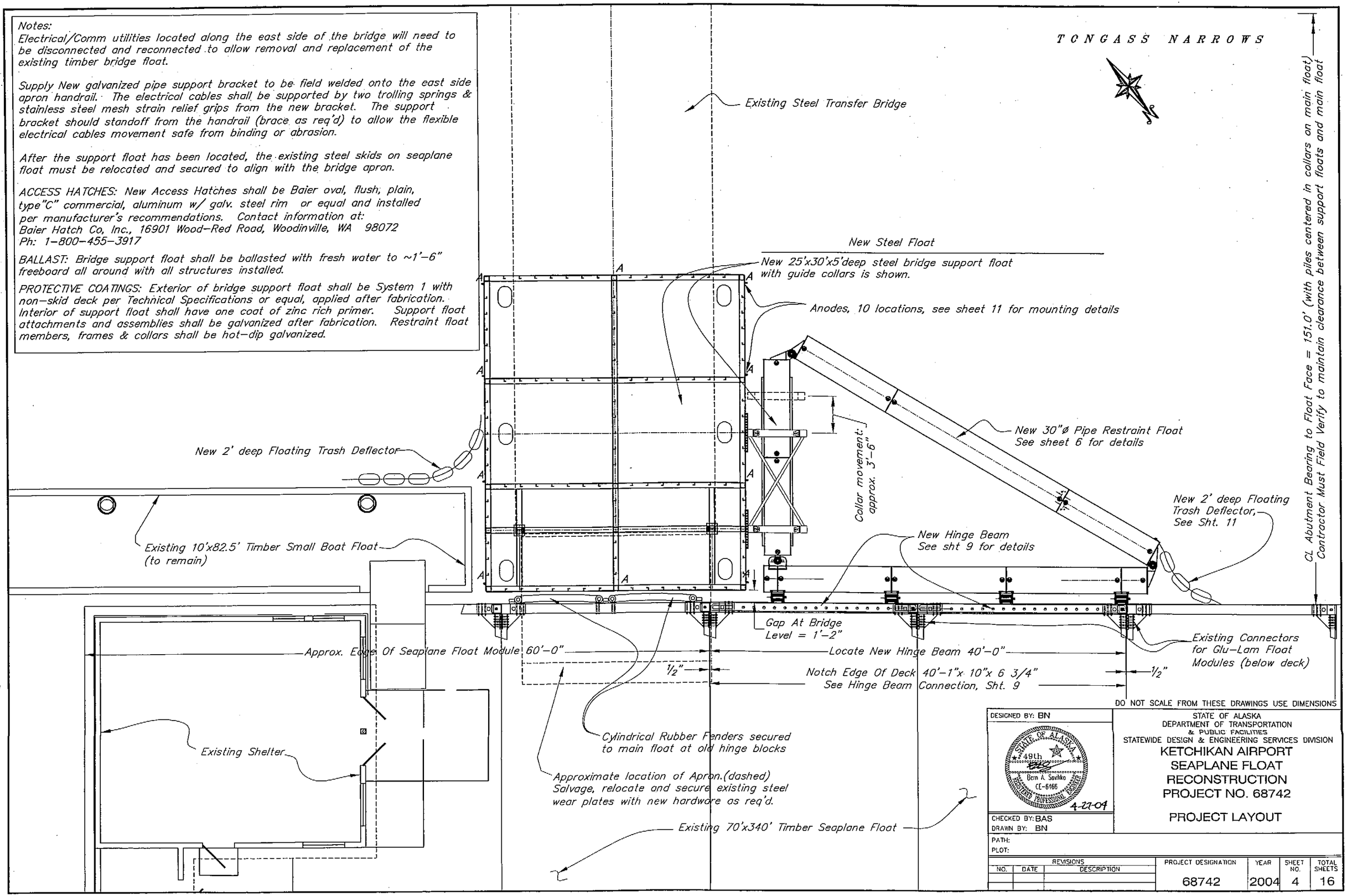

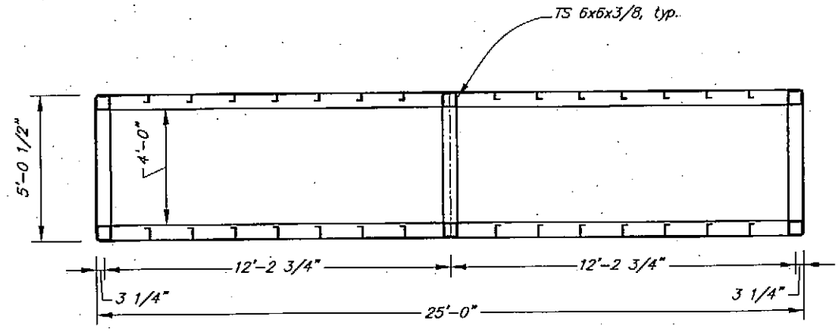

Float, Section A

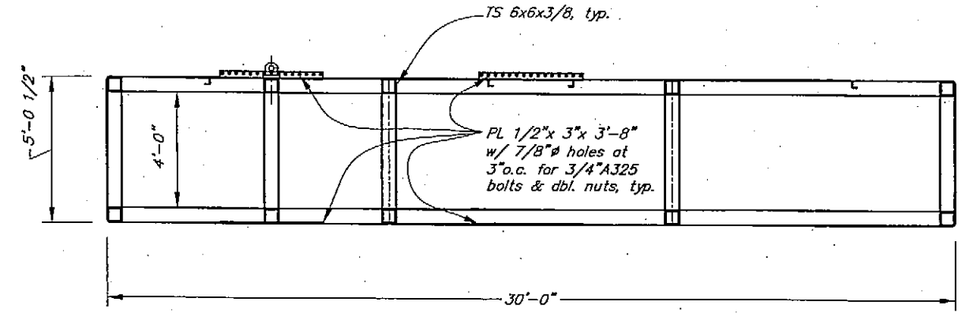

Float, Side Elevation At C

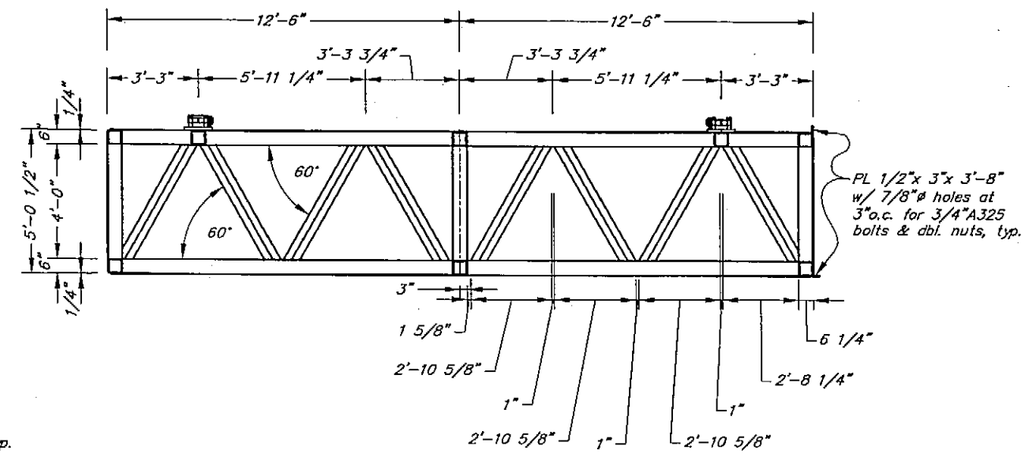

Float, Section B

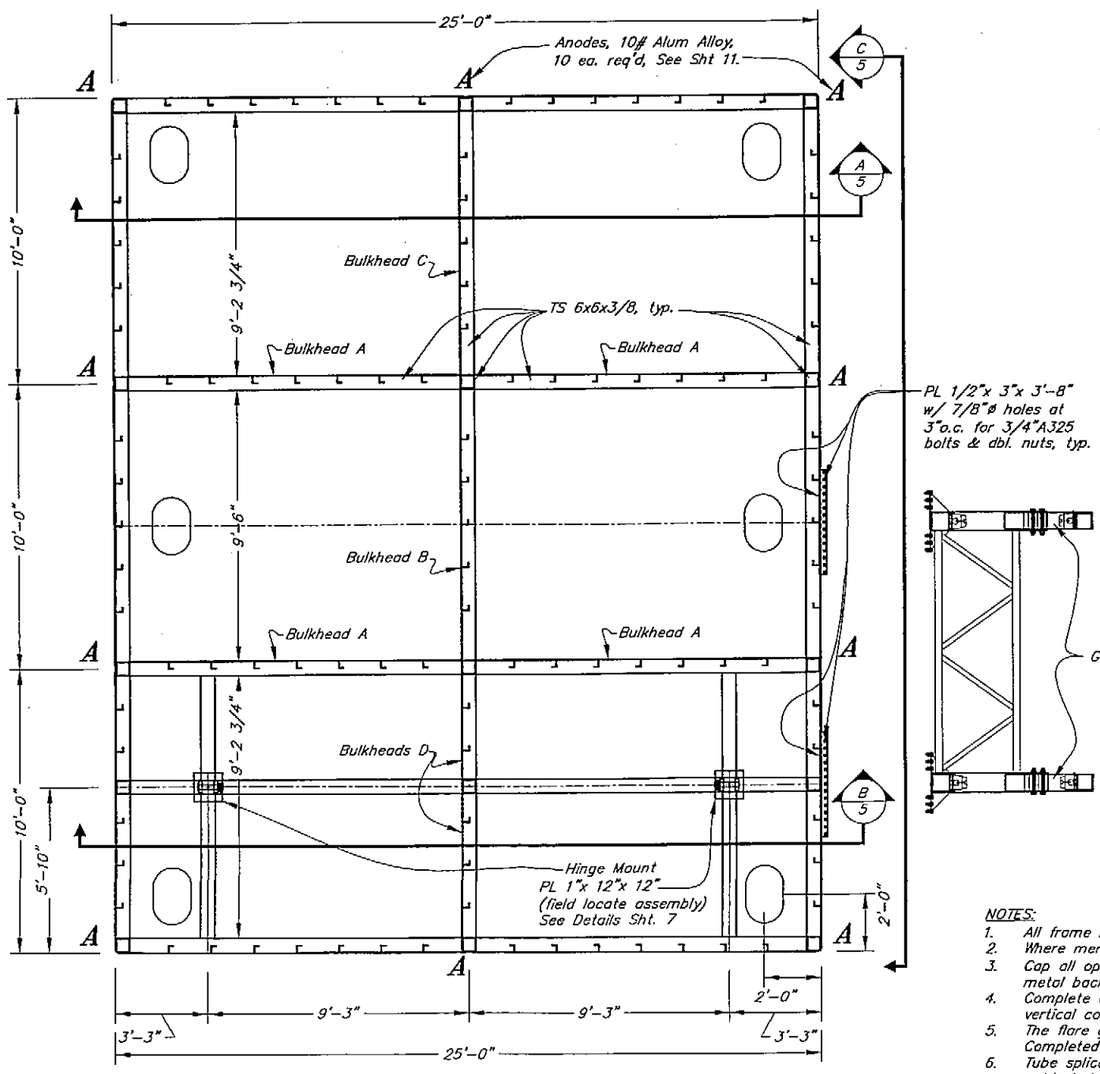

Float, Top Plan

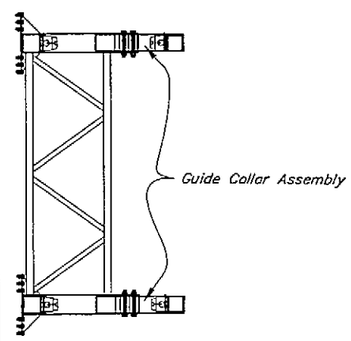

NOTES:

1. All frame members are TS 6x6x3/8
2. Where members intersect the longest member is continuous.
3. Cap all open ends with 1/4" plate and use full penetration metal backed groove welds.
4. Complete all welds for top and bottom frames before adding vertical columns.
5. The flare groove welds covered by columns Must Be Completed and shall be ground flat for fit-up.
6. Tube splices must be full penetration metal backed groove welds but are allowed at any location.

DO NOT SCALE FROM THESE DRAWINGS USE DIMENSIONS

DESIGNED BY: BN

STATE OF ALASKA
49th
Bern A. Savikko
CE-6465
REGISTERED PROFESSIONAL ENGINEER
4-27-04

CHECKED BY: BAS
DRAWN BY: BN

STATE OF ALASKA
DEPARTMENT OF TRANSPORTATION
& PUBLIC FACILITIES
STATEWIDE DESIGN & ENGINEERING SERVICES DIVISION

KETCHIKAN AIRPORT
SEAPLANE FLOAT
RECONSTRUCTION
PROJECT NO. 68742

BRIDGE SUPPORT FLOAT
FRAME LAYOUT

PATH:
PLOT:

REVISIONS			PROJECT DESIGNATION	YEAR	SHEET NO.	TOTAL SHEETS
NO.	DATE	DESCRIPTION				
			68742	2004	5	16

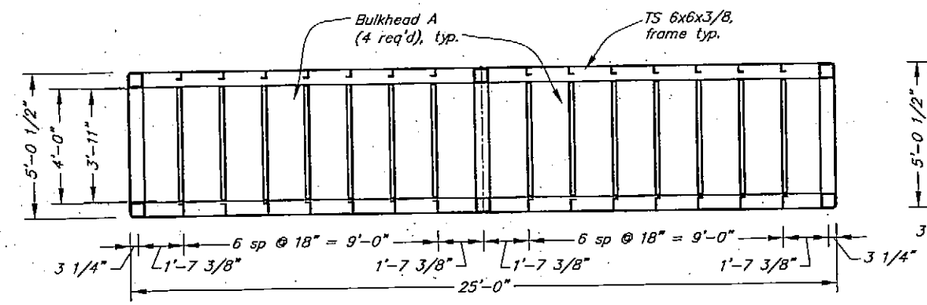

Float, Section A

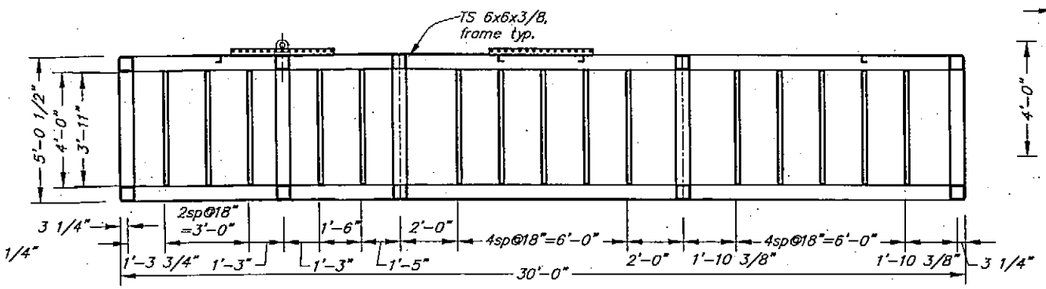

Float, Side View

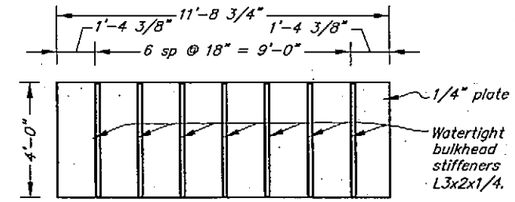

Bulkhead A (4 req'd)

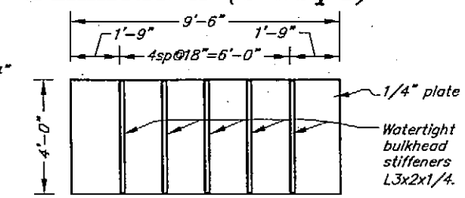

Bulkhead B (1 req'd)

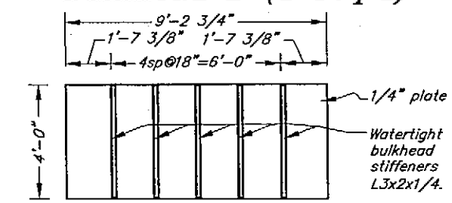

Bulkhead C (2 req'd)

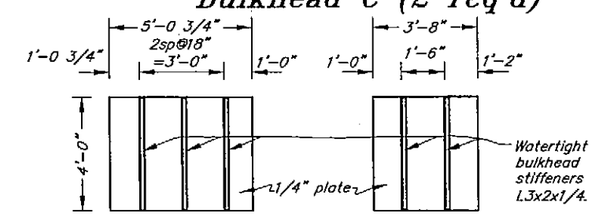

2 Pc. Bulkhead D (1 req'd)

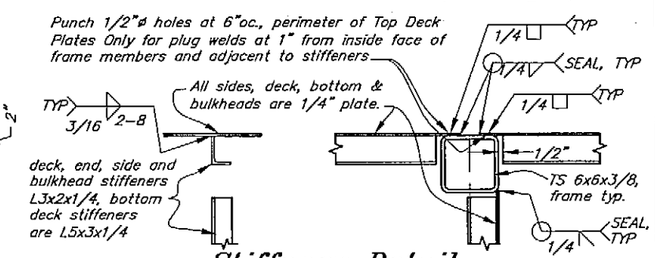

Stiffener Detail

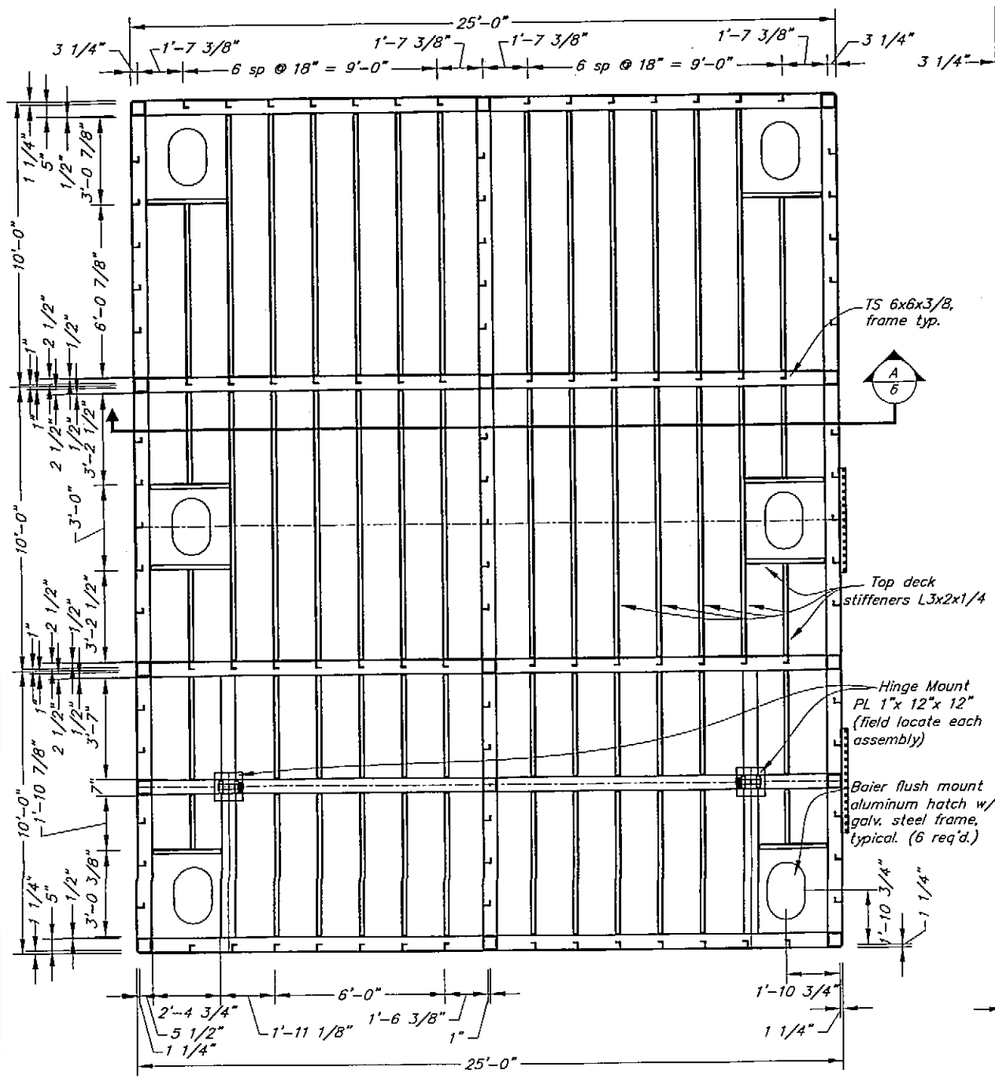

Float, Top Plan

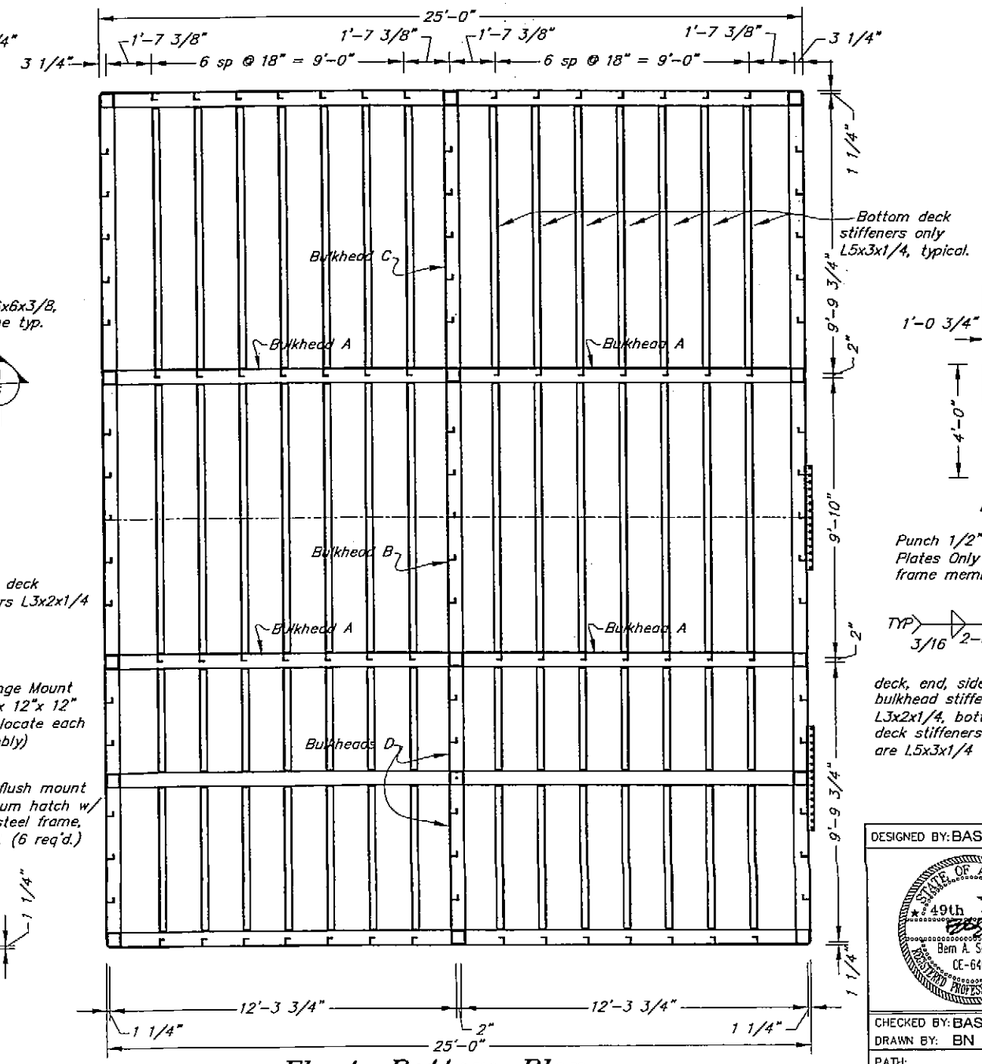

Float, Bottom Plan

DO NOT SCALE FROM THESE DRAWINGS USE DIMENSIONS

DESIGNED BY: BAS

STATE OF ALASKA 49th Bern A. Savikko CE-6466 REGISTERED PROFESSIONAL ENGINEER 4-27-04

CHECKED BY: BAS
DRAWN BY: BN

STATE OF ALASKA
DEPARTMENT OF TRANSPORTATION
& PUBLIC FACILITIES
STATEWIDE DESIGN & ENGINEERING SERVICES DIVISION

KETCHIKAN AIRPORT
SEAPLANE FLOAT
RECONSTRUCTION
PROJECT NO. 68742

BRIDGE SUPPORT FLOAT
HULL REINFORCEMENT

PATH:
PLOT:

REVISIONS			PROJECT DESIGNATION	YEAR	SHEET NO.	TOTAL SHEETS
NO.	DATE	DESCRIPTION				
			68742	2004	6	16

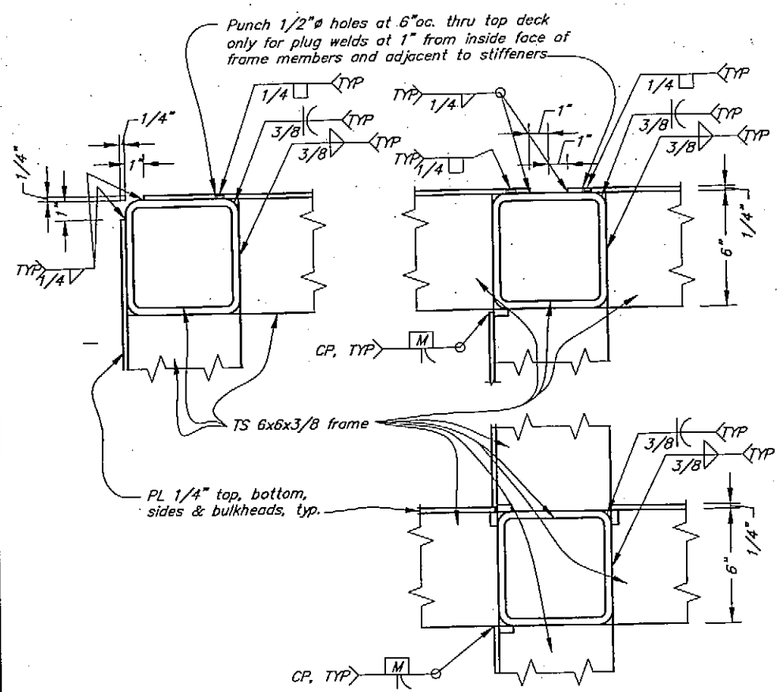

Bridge Float Frame Details

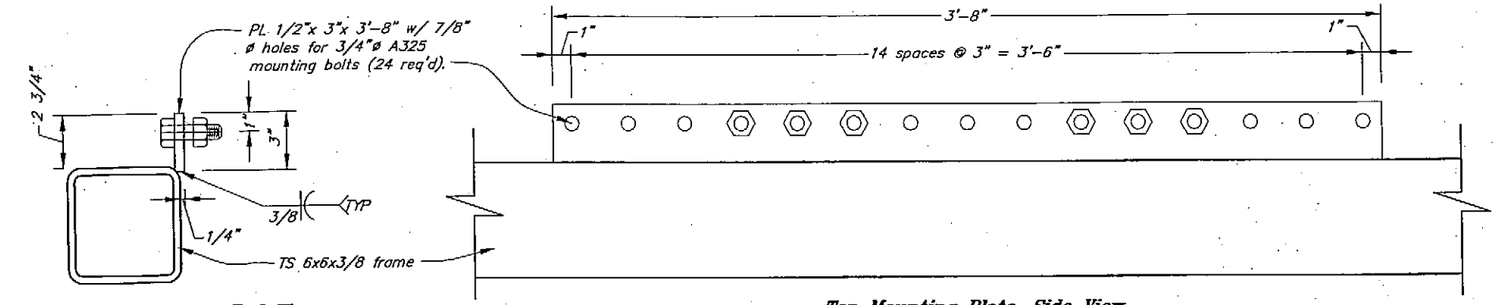

Top Mounting Plate, End View

Top Mounting Plate, Side View

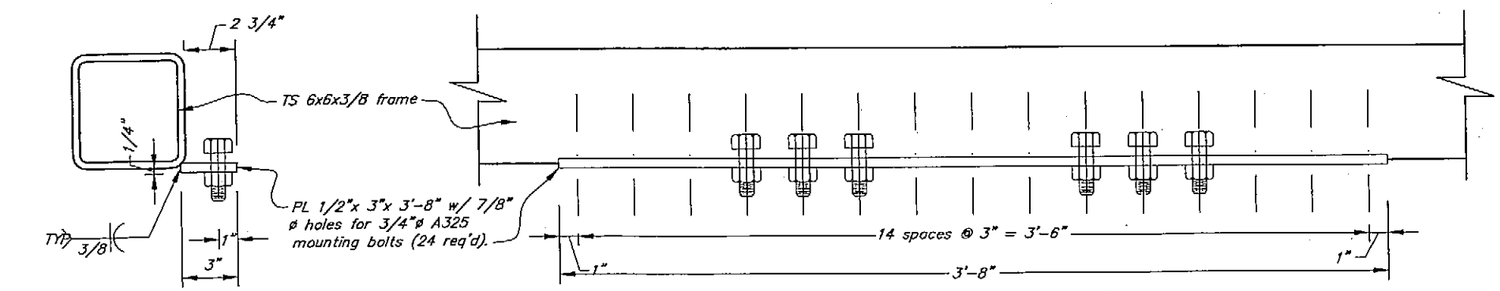

Lower Mounting Plate, End View

Lower Mounting Plate, Side View

Bridge Float Guide Collar, Mounting Plate Detail

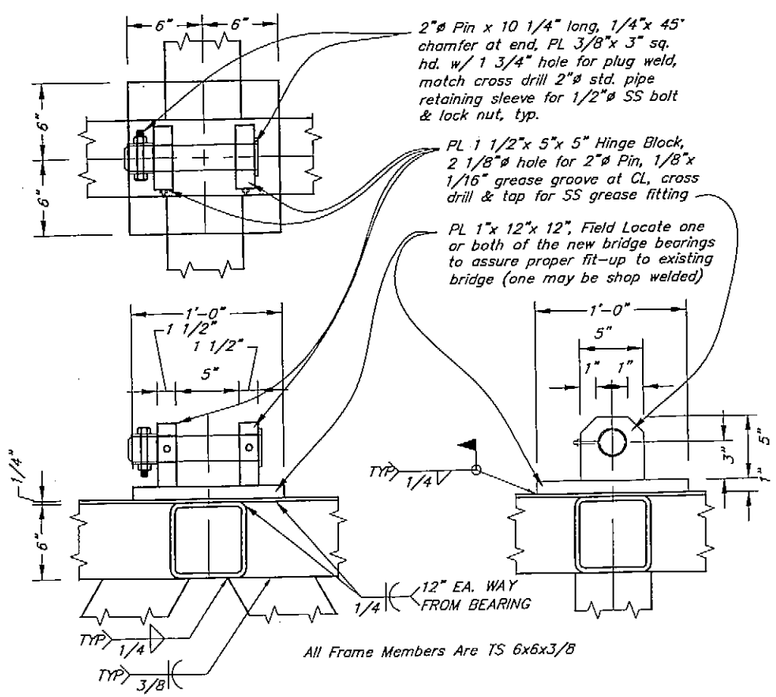

Bridge Bearing & Internal Truss Detail

DO NOT SCALE FROM THESE DRAWINGS USE DIMENSIONS

DESIGNED BY: BN

STATE OF ALASKA 49th Bern A. Sonkko CE-6466 REGISTERED PROFESSIONAL ENGINEER

4-22-04

CHECKED BY: BAS

DRAWN BY: BN

PATH:

PLOT:

STATE OF ALASKA
DEPARTMENT OF TRANSPORTATION
& PUBLIC FACILITIES
STATEWIDE DESIGN & ENGINEERING SERVICES DIVISION

KETCHIKAN AIRPORT
SEAPLANE FLOAT
RECONSTRUCTION
PROJECT NO. 68742

BRIDGE SUPPORT FLOAT
FRAME DETAILS

REVISIONS			PROJECT DESIGNATION	YEAR	SHEET NO.	TOTAL SHEETS
NO.	DATE	DESCRIPTION				
			68742	2004	7	16

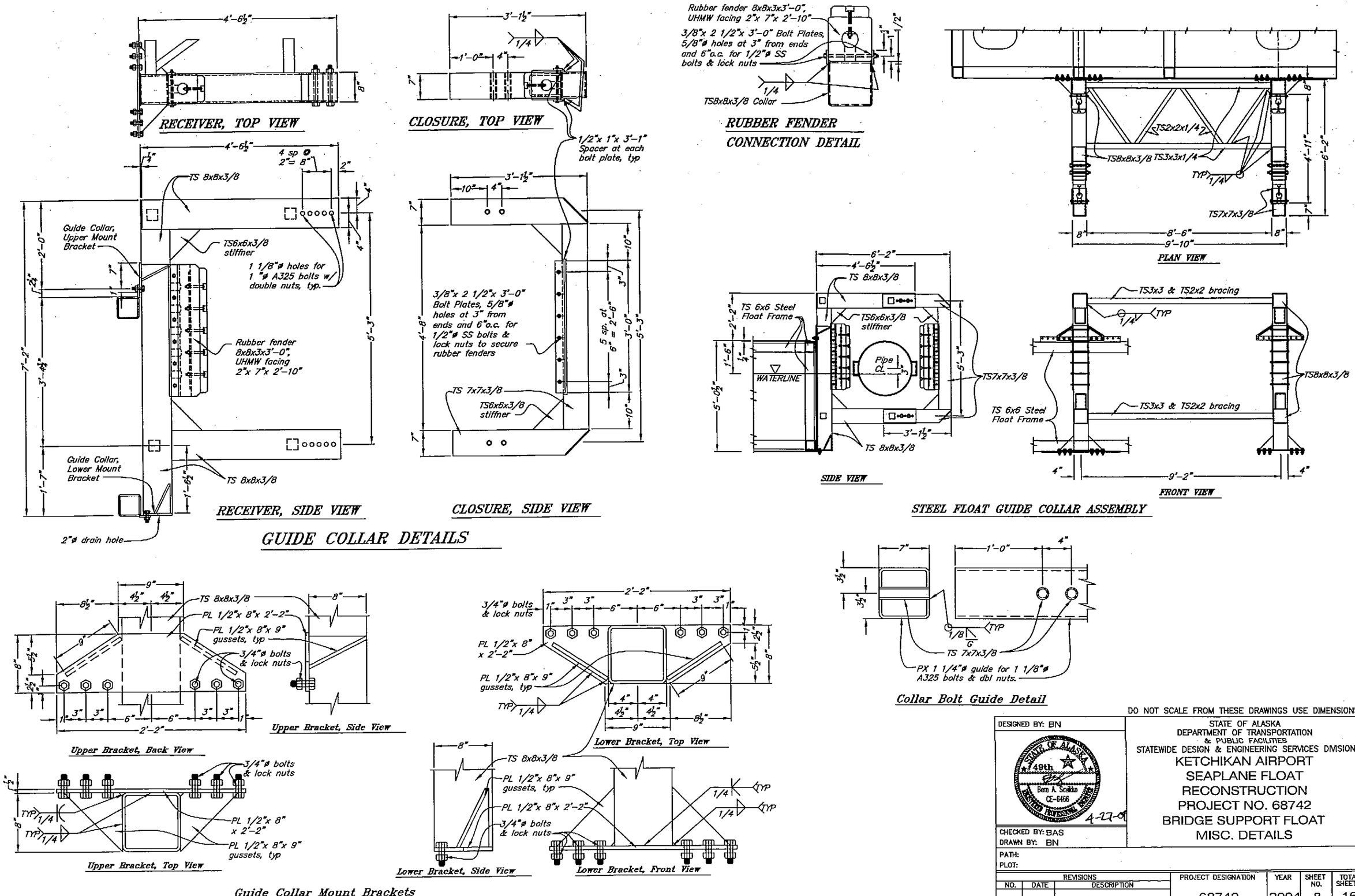

DO NOT SCALE FROM THESE DRAWINGS USE DIMENSIONS

DESIGNED BY: BN

STATE OF ALASKA
DEPARTMENT OF TRANSPORTATION & PUBLIC FACILITIES
STATEWIDE DESIGN & ENGINEERING SERVICES DIVISION

KETCHIKAN AIRPORT
SEAPLANE FLOAT
RECONSTRUCTION
PROJECT NO. 68742
BRIDGE SUPPORT FLOAT
MISC. DETAILS

STATE OF ALASKA 49th Bern A. Savikko CE-6466 REGISTERED PROFESSIONAL ENGINEER 4-27-09

CHECKED BY: BAS
DRAWN BY: BN
PATH:
PLOT:

REVISIONS			PROJECT DESIGNATION	YEAR	SHEET NO.	TOTAL SHEETS
NO.	DATE	DESCRIPTION	68742	2004	8	16

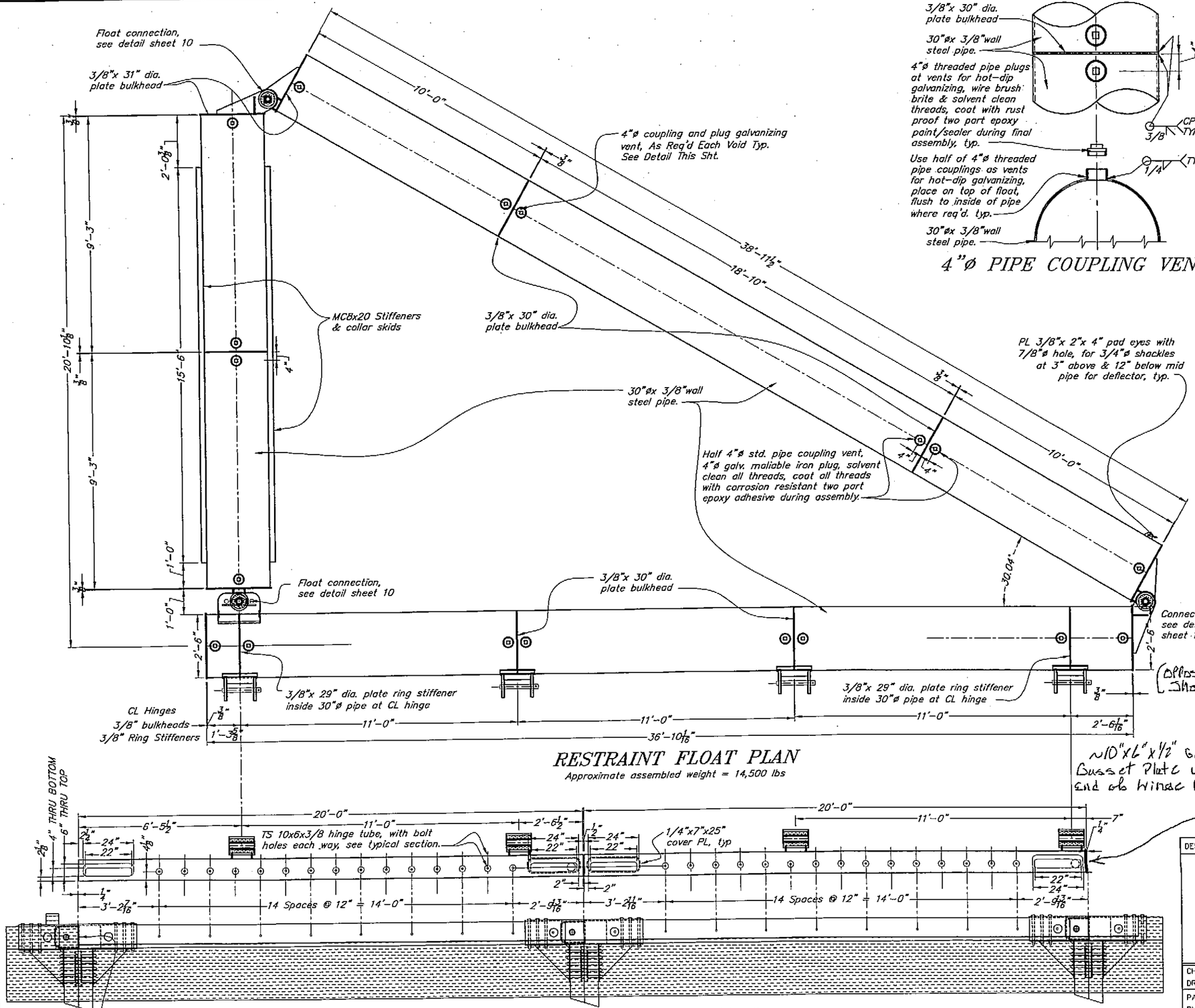

RESTRAINT FLOAT PLAN

Approximate assembled weight = 14,500 lbs

4"Ø PIPE COUPLING VENT

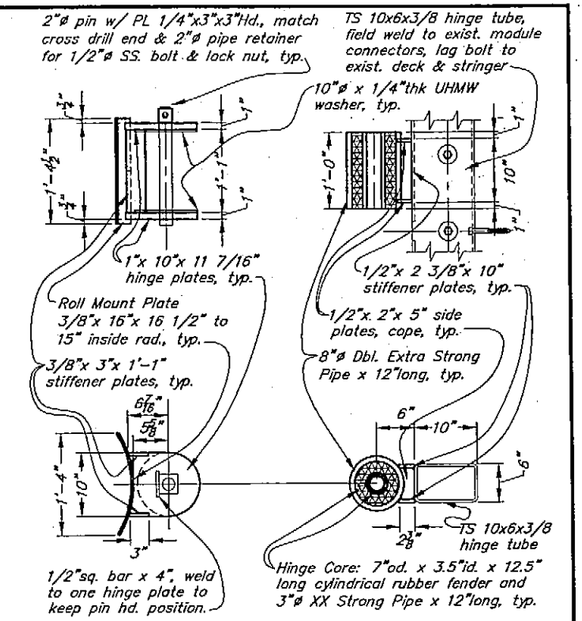

HINGE DETAILS

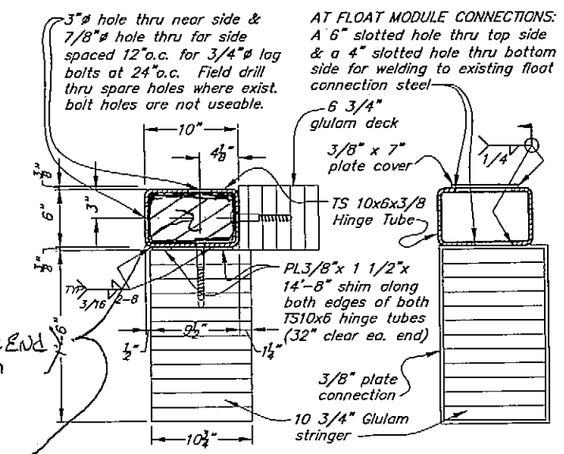

HINGE BEAM CONNECTION

Notch existing 6 3/4" glulam deck 9 1/2" in from edge of float 40'-1", drill a 1"dia. hole at corners & avoid cutting into adjacent timber. Apply three brush coats of copper napthanate to cut timber faces. Secure TS10x6 hinge beam to both stringer & deck w/ 3/4"øx 6" hex lag bolts at 24"o.c. Try to reuse existing holes, but if exist. bolts break use a new hole at 12" offset.

HINGE BEAM PLAN

DO NOT SCALE FROM THESE DRAWINGS USE DIMENSIONS

DESIGNED BY: BN

STATE OF ALASKA 49th Ben A. Savikko CE-6466 REGISTERED PROFESSIONAL ENGINEER 4-22-04

CHECKED BY: BAS
DRAWN BY: BN

STATE OF ALASKA
DEPARTMENT OF TRANSPORTATION
& PUBLIC FACILITIES
STATEWIDE DESIGN & ENGINEERING SERVICES DIVISION

KETCHIKAN AIRPORT
SEAPLANE FLOAT
RECONSTRUCTION
PROJECT NO. 68742

RESTRAINT FLOAT PLAN

PATH: O:\Marine\Ktn Seaplane Repair 2002\Planset\009 Ktn SP Brdg Flt - Restraint Flt Pln.dwg
PLOT:

REVISIONS			PROJECT DESIGNATION	YEAR	SHEET NO.	TOTAL SHEETS
NO.	DATE	DESCRIPTION	68742	2004	9	16

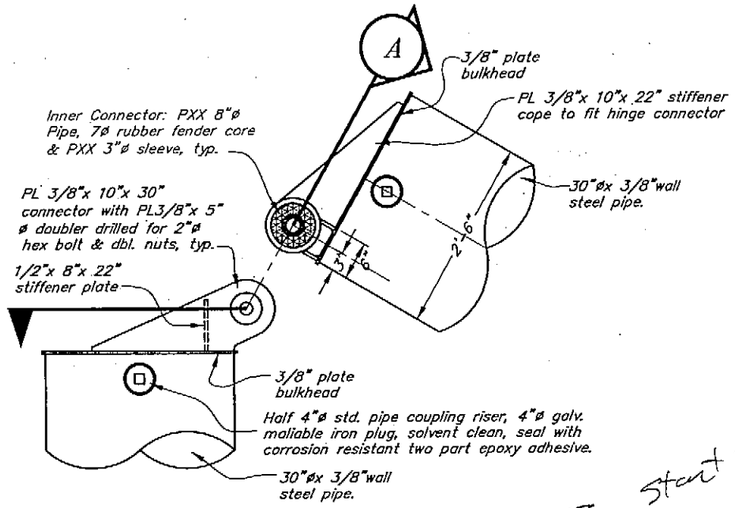

CONNECTOR HINGE DETAIL 2

Start to Right of ℄

NOTE: COMPLETE ALL BULKHEAD WELDS, FULL PENETRATION & CONTINUOUS TO FORM A SEALED FLOAT CELL PRIOR TO ATTACHING ANY PLATES OR HINGES ACROSS JOINTS.

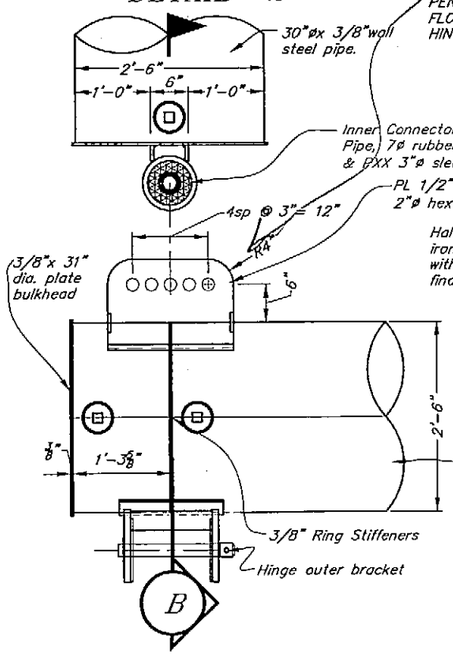

CONNECTOR HINGE DETAIL 1

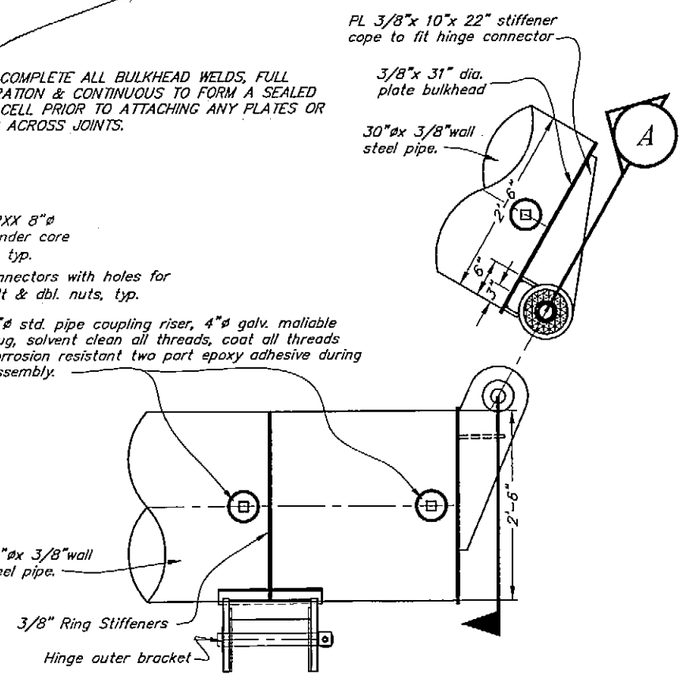

CONNECTOR HINGE DETAIL 3

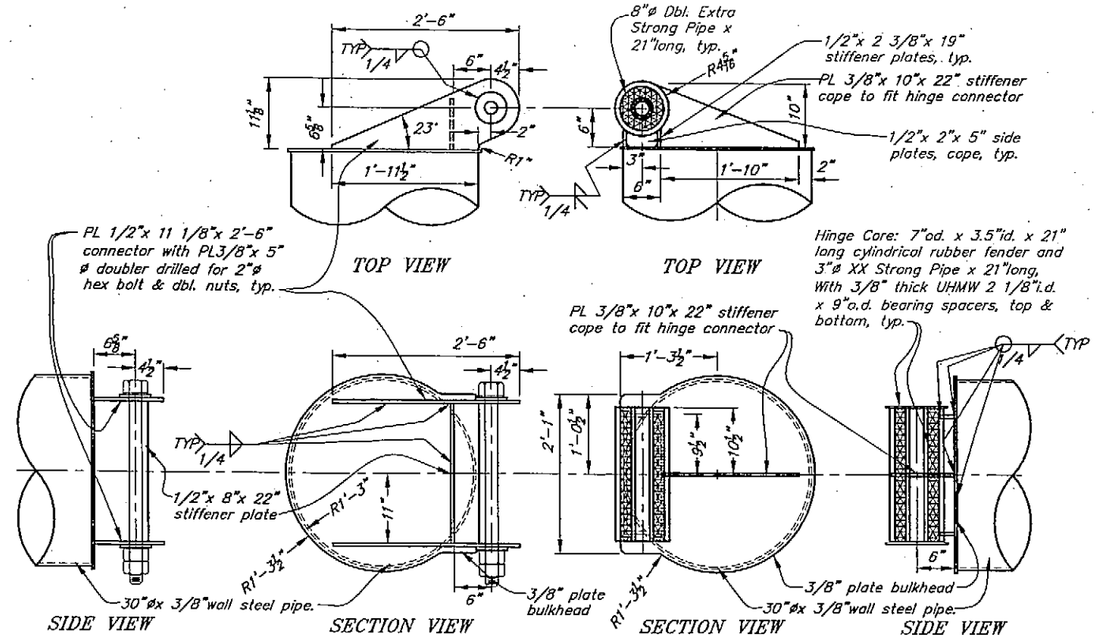

SECTION (A)

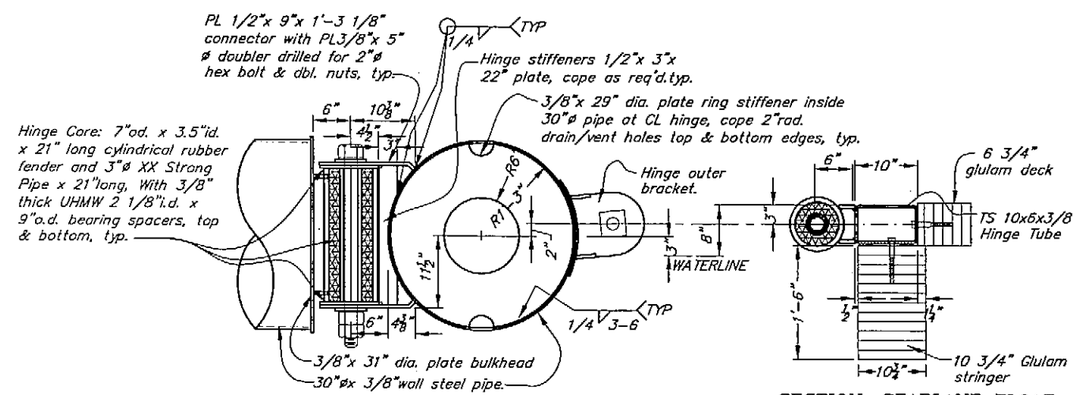

SECTION (B)

SECTION, SEAPLANE FLOAT

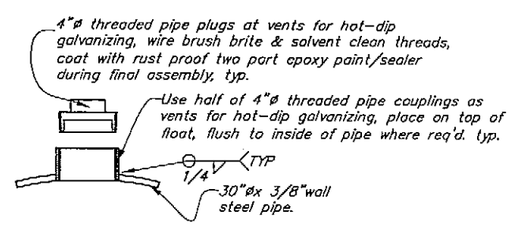

BALAST & GALV. VENT DETAIL

DO NOT SCALE FROM THESE DRAWINGS USE DIMENSIONS

DESIGNED BY: BN

STATE OF ALASKA 49th Bern A. Sovilko CE-6466 REGISTERED PROFESSIONAL ENGINEER 4-27-09

CHECKED BY: BAS
DRAWN BY: BN

STATE OF ALASKA
DEPARTMENT OF TRANSPORTATION
& PUBLIC FACILITIES
STATEWIDE DESIGN & ENGINEERING SERVICES DIVISION

KETCHIKAN AIRPORT
SEAPLANE FLOAT
RECONSTRUCTION
PROJECT NO. 68742

RESTRAINT FLOAT DETAILS

PATH: Q:\Marine\Ktn Seaplane Repair 2002\Planset\010 Ktn SP Bldg Flt - Restraint Flt Dtls.dwg
PLOT:

REVISIONS			PROJECT DESIGNATION	YEAR	SHEET NO.	TOTAL SHEETS
NO.	DATE	DESCRIPTION	68742	2004	10	16

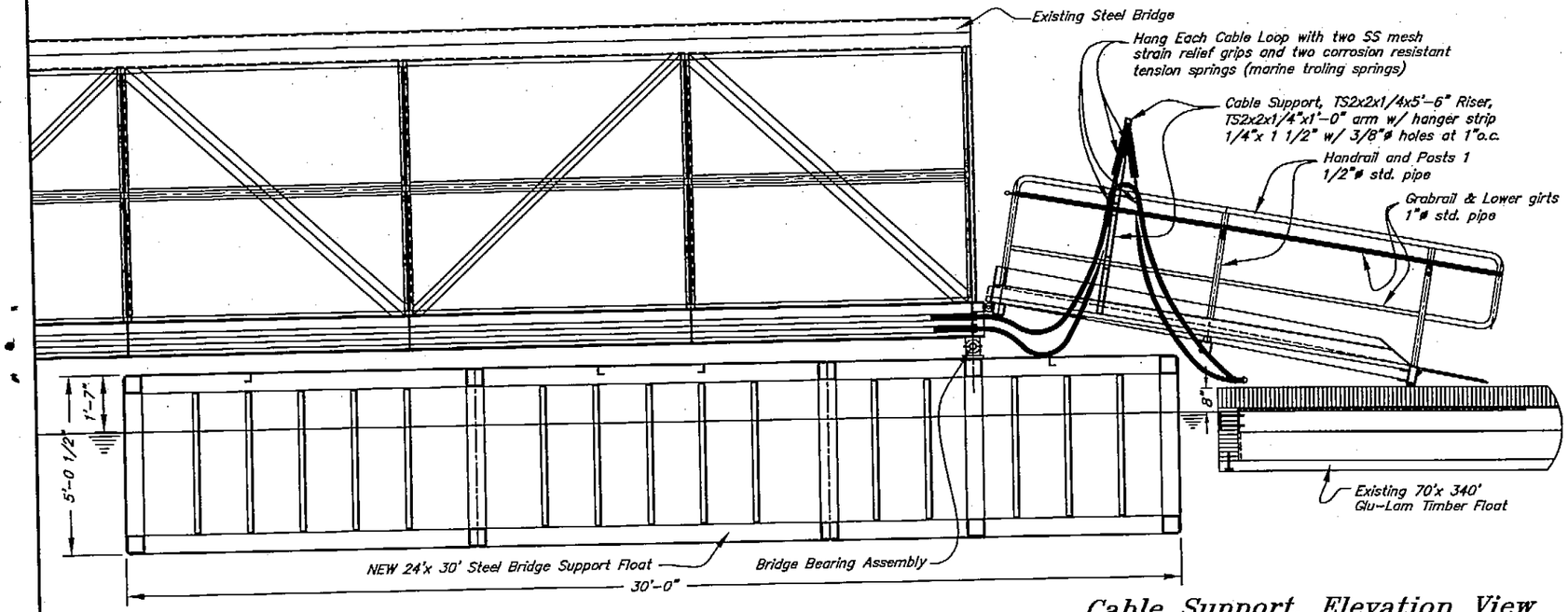

Cable Support, Elevation View

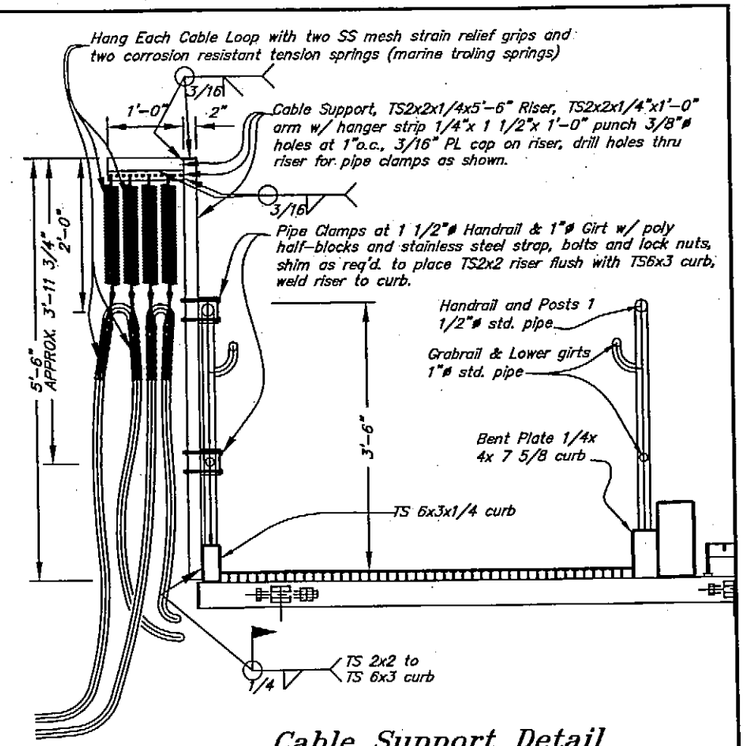

Cable Support Detail

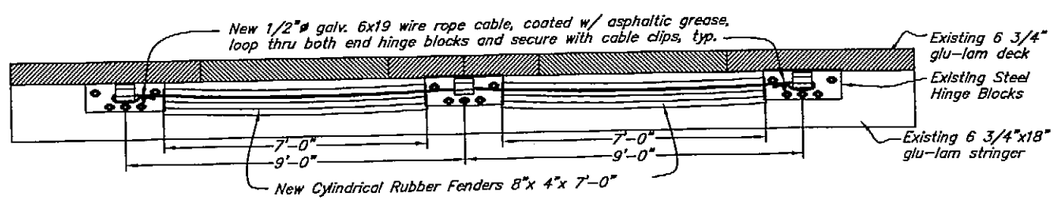

SEAPLANE FLOAT HINGE BUMPER DETAIL

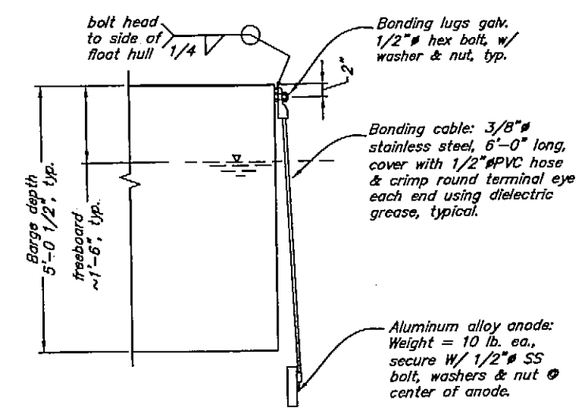

Steel Float Anode Detail (10 req'd.)

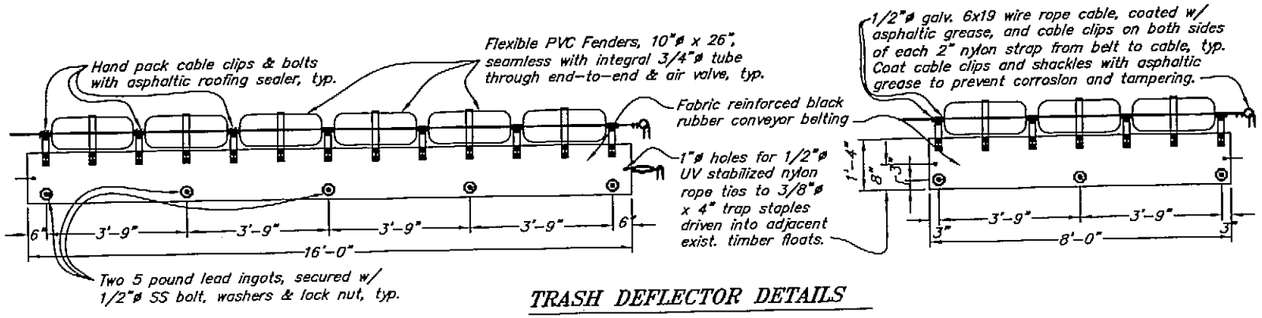

TRASH DEFLECTOR DETAILS

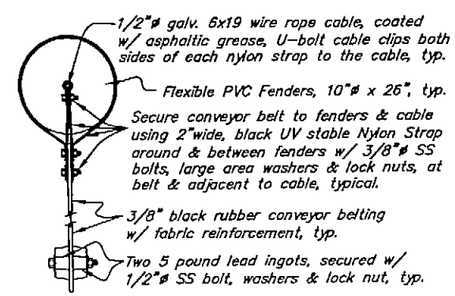

TRASH DEFLECTOR – END VIEW

DO NOT SCALE FROM THESE DRAWINGS USE DIMENSIONS

DESIGNED BY: BN

STATE OF ALASKA 49th Bern A. Savikko CE-6466 PROFESSIONAL ENGINEER 4-27-01

CHECKED BY: BAS
DRAWN BY: BN
PATH:
PLOT:

STATE OF ALASKA
DEPARTMENT OF TRANSPORTATION & PUBLIC FACILITIES
STATEWIDE DESIGN & ENGINEERING SERVICES DIVISION

KETCHIKAN AIRPORT
SEAPLANE FLOAT
RECONSTRUCTION
PROJECT NO. 68742

MISC. DETAILS

REVISIONS			PROJECT DESIGNATION	YEAR	SHEET NO.	TOTAL SHEETS
NO.	DATE	DESCRIPTION				
			68742	2004	11	16

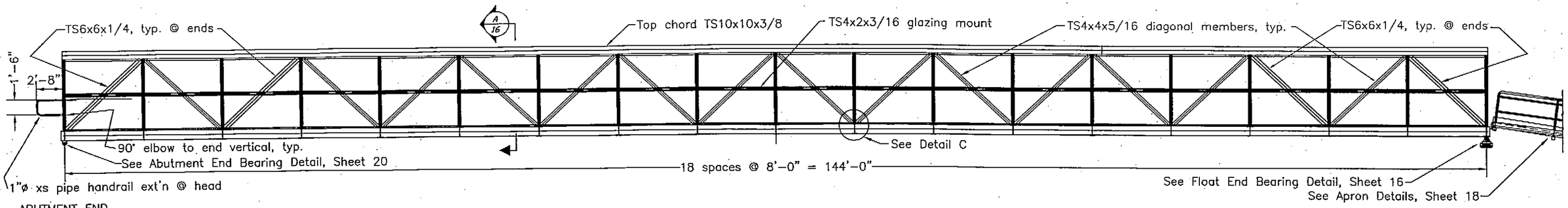

ELEVATION

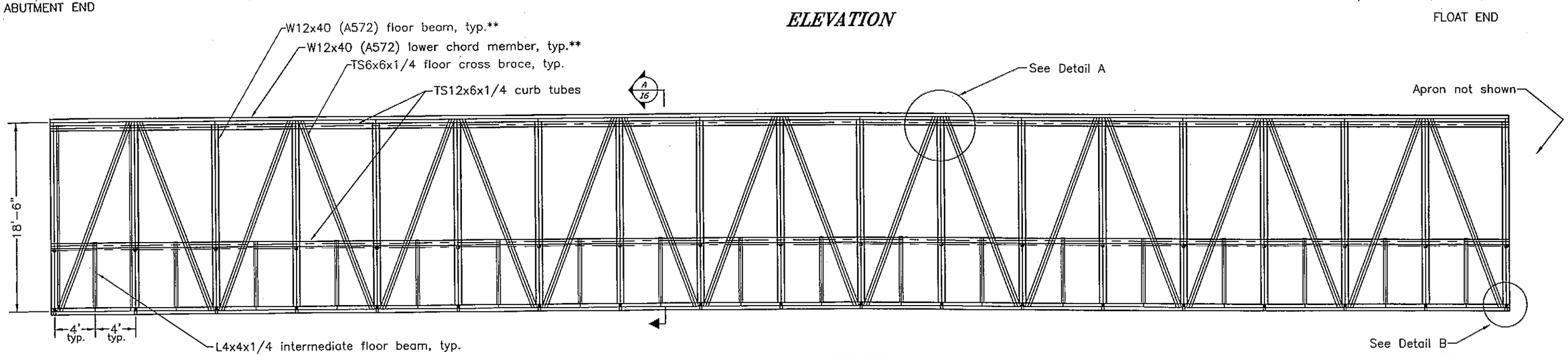

PLAN

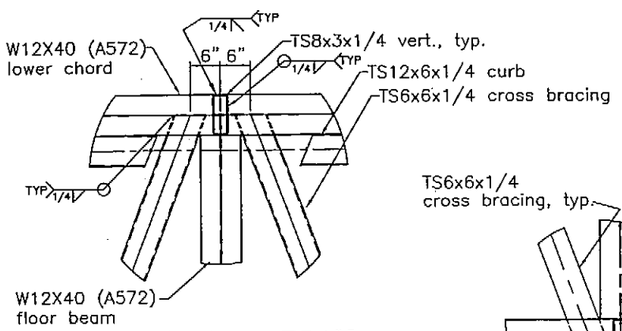

DETAIL A – PLAN

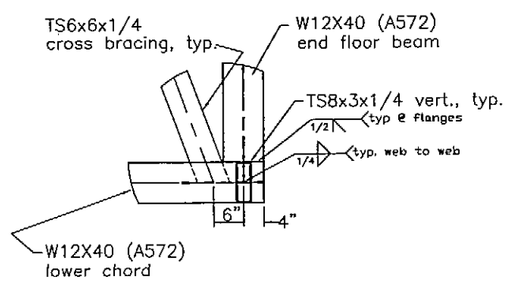

DETAIL B – PLAN

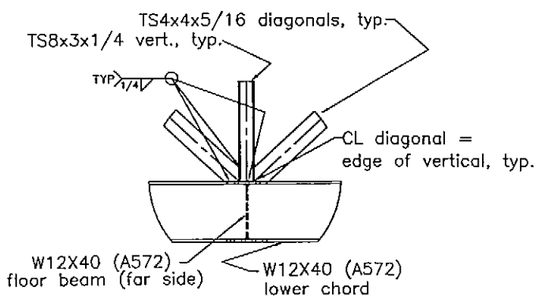

DETAIL C – ELEVATION

NOTES

1. Design live load = 85 psf pedestrian live load and H10 vehicle load
2. Design wind load = 40 psf transverse to the structure
3. All seamless pipe shall conform to ASTM A–53, Grade B or ASTM A–500 and shall be painted, unless specified to be galvanized
4. All shapes and plates shall conform to ASTM A36 (unless specified otherwise) and shall be galvanized.
5. Ship assembled.
6. No stringer or pipe splices may be located in middle third of gangway.
7. Camber to compensate for dead load deflection (approx. +2.25" @ midspan).
8. Approx. weight = 120,000 lbs.
9. Paint entire structure after assembly and prior to installation of glazing. Paint shall be System 5, Section 303.
10. All welds joining tubular members and cover or end plates to be seal weld.

** 11. The following members are considered main members subject to tensile stress and require Charpy Impact Testing. See Section 302 of the specifications.
A. Lower chord members
B. Floor beams
In addition, the lower chord members are considered fracture critical and require a fracture control plan. See Section 302 of the specifications.

AS–BUILT INFORMATION

PROJECT NO. 68742 SHEET 12 OF 16

NOTE: DO NOT SCALE FROM THESE PLANS–USE DIMENSIONS

PATH: O:\Marine\Kin Seaplane Repair 2002\Phase1\012 Kin SP Brdg Flt – As-Blt Bridge.dwg

BY:	DATE:	DESCRIPTION OF CHANGE:

RECORD OF REVISIONS

STATE OF ALASKA
DEPARTMENT OF TRANSPORTATION AND PUBLIC FACILITIES
SOUTHEAST REGION DESIGN & CONSTRUCTION

KETCHIKAN — KETCHIKAN AIRPORT SEAPLANE FACILITY RECONSTRUCTION — ALASKA
PROJECT NO. A.I.P. 3-02-0144-0996/71952

PEDESTRIAN AND VECHICLE ACCESS BRIDGE

DESIGNED BY: BAS	PROJECT NO. ~~71952~~
DRAWN BY: BAS	DATE: ~~MARCH, 1998~~
CHECKED BY: JAL	~~SHEET 16 OF 17~~

STATE OF ALASKA 49TH BERN A. SAVIKKO CE-6466 REGISTERED PROFESSIONAL ENGINEER

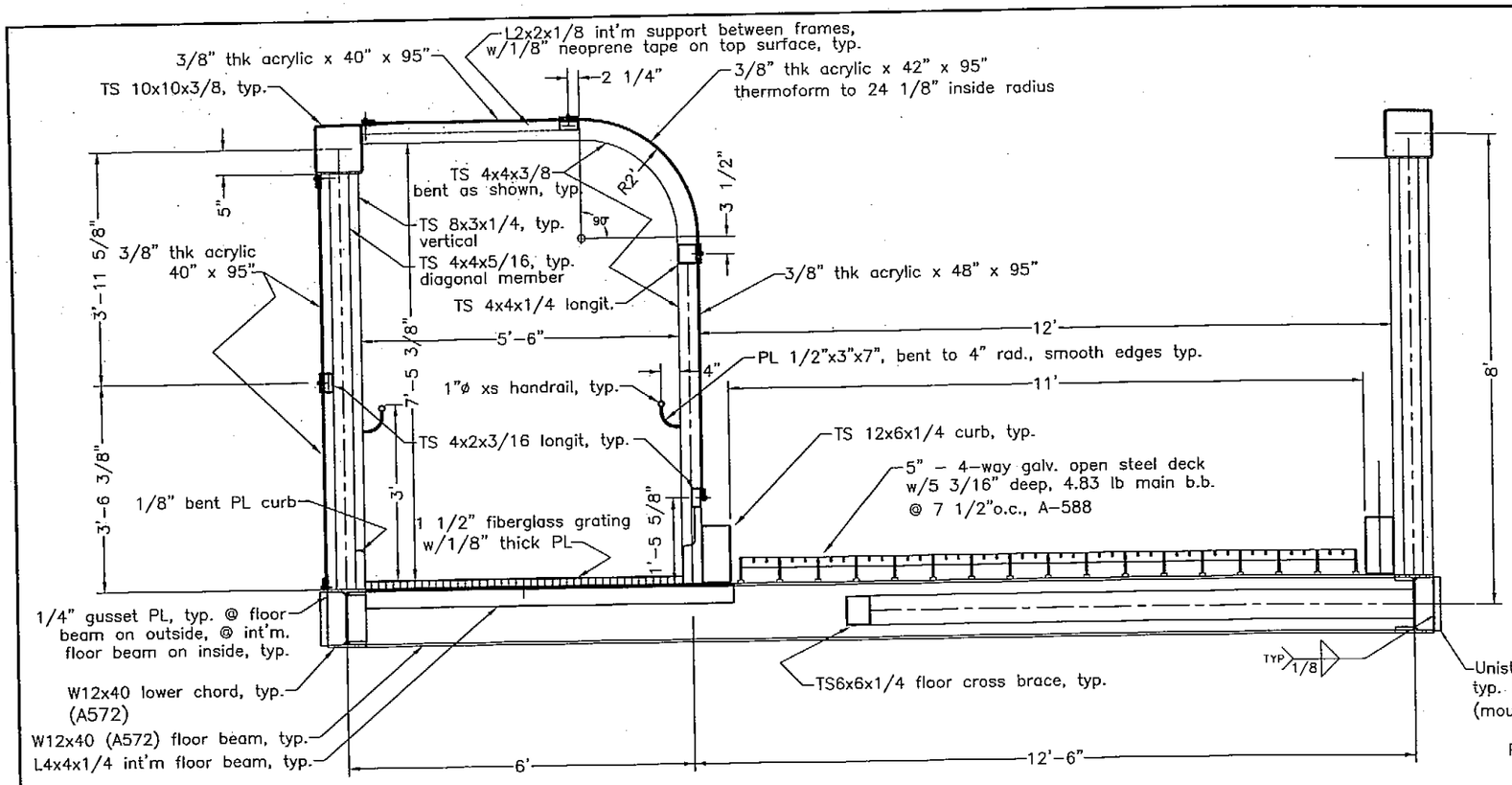

TYPICAL SECTION A

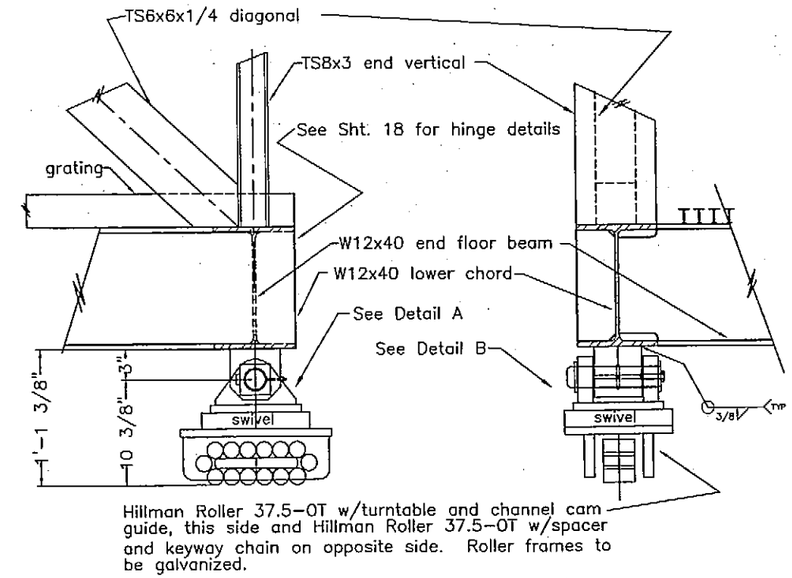

SIDE VIEW

FRONT END VIEW

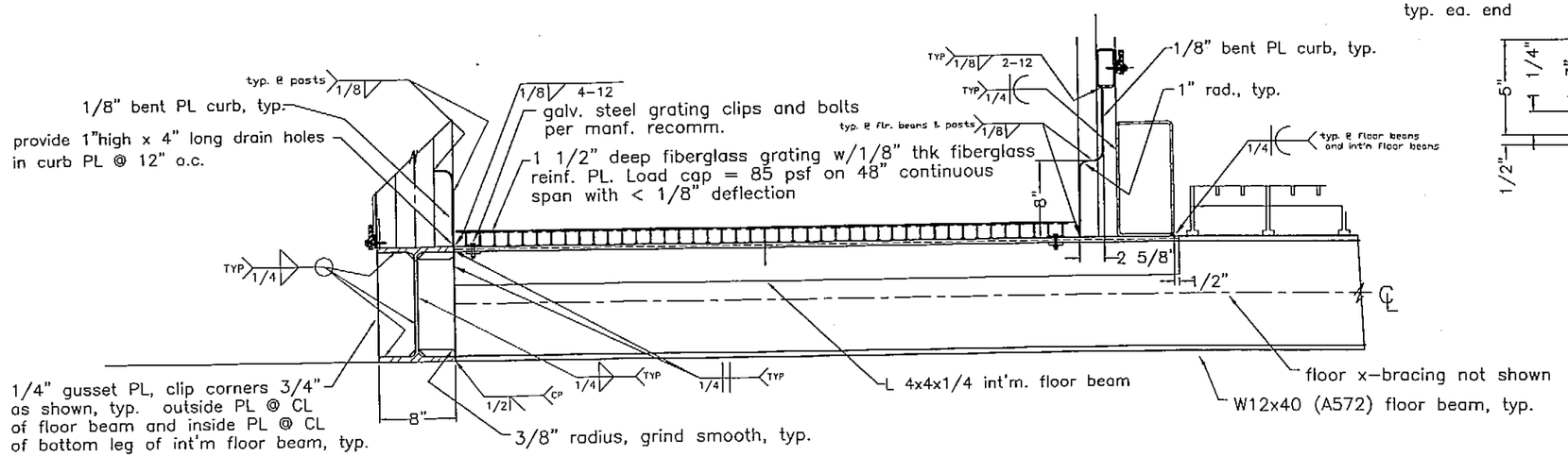

FLOOR BEAM DETAILS – ELEVATION

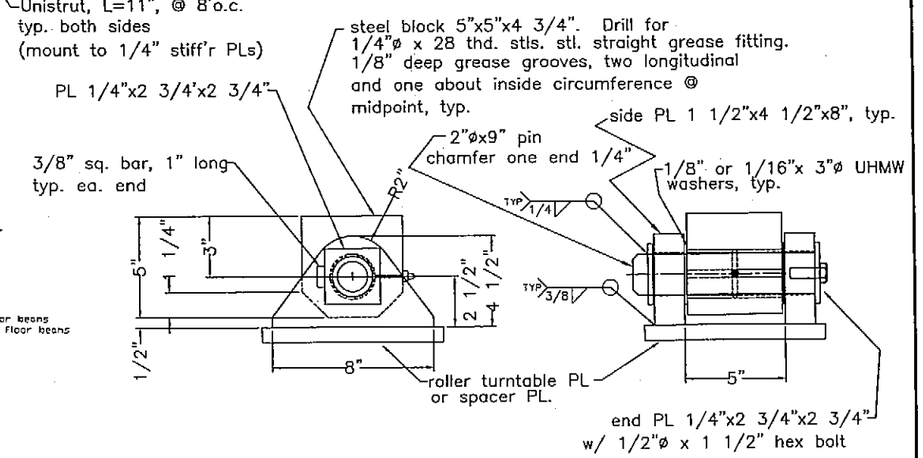

DETAIL A

DETAIL B

FLOAT END BEARING DETAIL

(one bearing w/turntable, other w/spacer)

AS-BUILT INFORMATION

PROJECT NO. 68742 SHEET 13 OF 16

NOTE: DO NOT SCALE FROM THESE PLANS-USE DIMENSIONS

PATH: D:\BAS\sheet16.DWG		
BY:	DATE:	DESCRIPTION OF CHANGE:

RECORD OF REVISIONS

STATE OF ALASKA
DEPARTMENT OF TRANSPORTATION AND PUBLIC FACILITIES
SOUTHEAST REGION DESIGN & CONSTRUCTION

KETCHIKAN

KETCHIKAN AIRPORT
SEAPLANE FACILITY RECONSTRUCTION
PROJECT NO. A.I.P. ~~3-03-0144-0006/71953~~

SECTION DETAILS

ALASKA

DESIGNED BY: BAS	PROJECT NO. ~~71950~~
DRAWN BY: BAS	DATE: ~~MARCH, 1996~~
CHECKED BY: JAL	~~SHEET 16 OF 44~~

STATE OF ALASKA 49TH BERN A. SHOKKO CE-6466 REGISTERED PROFESSIONAL ENGINEER

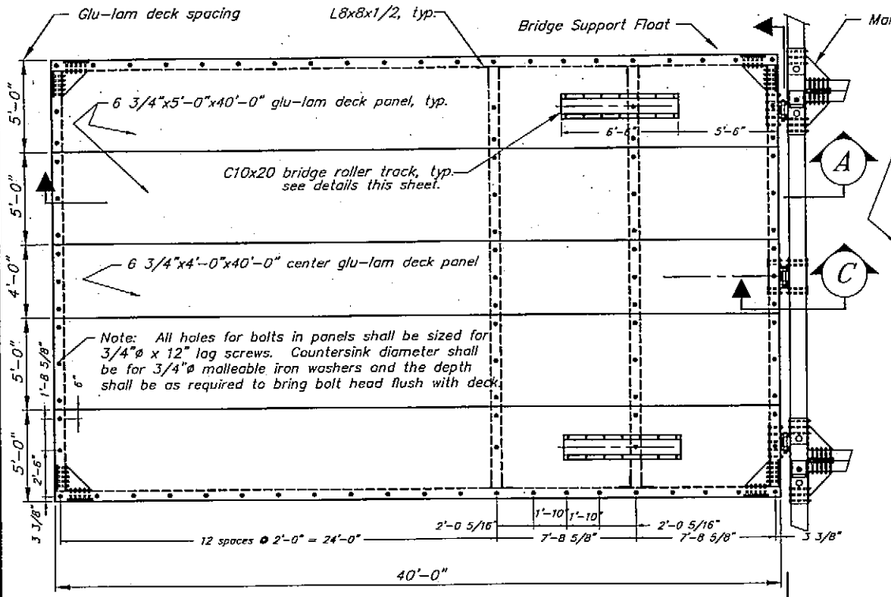

FRAMING LAYOUT

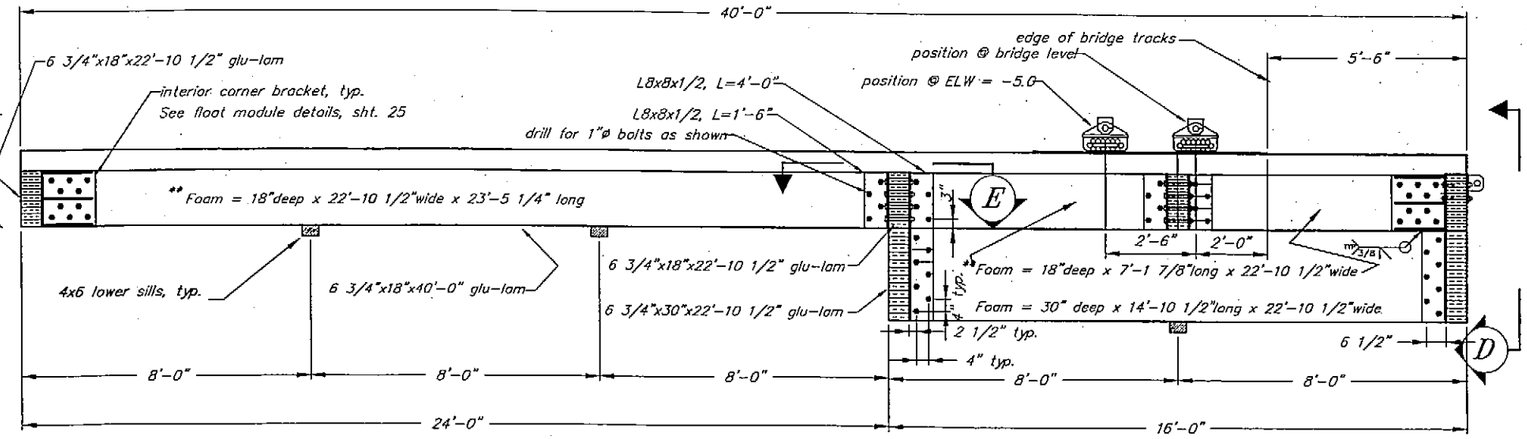

SECTION (A)

**Foam dimensions are overall. Individual foam block size is Contractor's option

diaphragm bolt in outside bolt hole when stringer bolts are on inside bolt line. Alternate stringer and diaphragm bolt lines to avoid conflict, typ.

PLAN (E)

notch bottom side of deck to allow for top PL, typ.

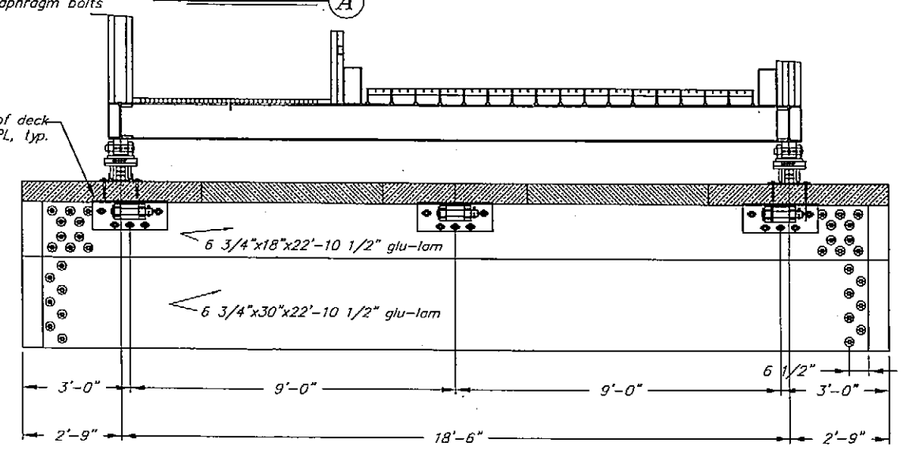

ELEVATION (D)

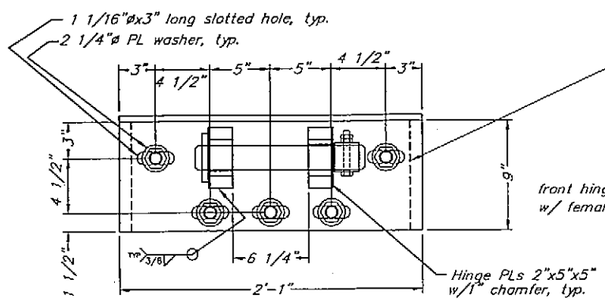

FLOAT HINGE PL

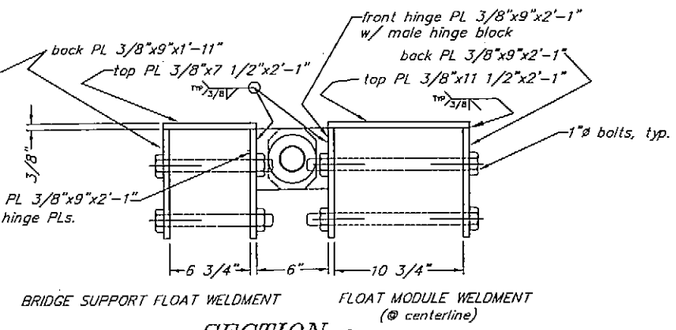

SECTION (C)

NOTE: Male hinge blocks @ ends of float module are welded to male/female corner connection weldments

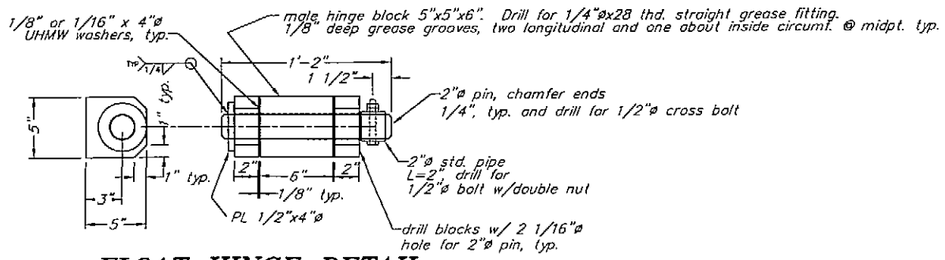

FLOAT HINGE DETAIL

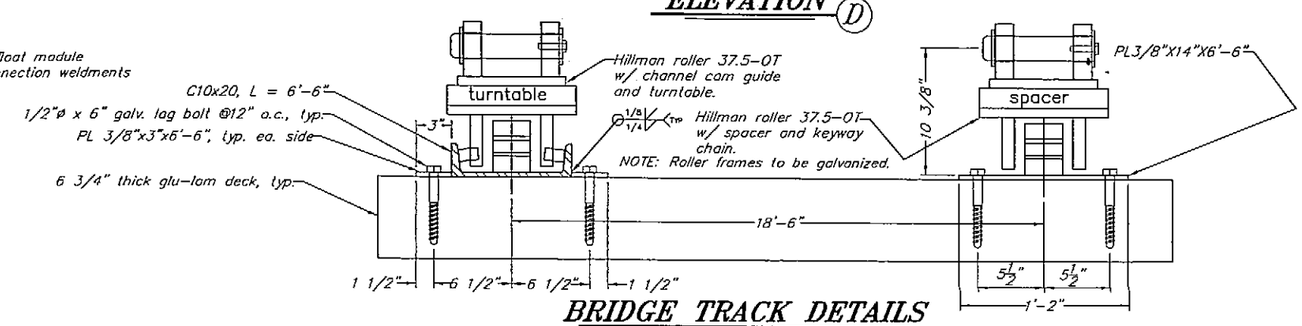

BRIDGE TRACK DETAILS

AS-BUILT INFORMATION

PROJECT NO. 68742 SHEET 14 OF 16

NOTE: DO NOT SCALE FROM THESE PLANS-USE DIMENSIONS

PATH: D:\BAS\KTN-SP\SHEET21.DWG		
BY:	DATE:	DESCRIPTION OF CHANGE:

RECORD OF REVISIONS

STATE OF ALASKA
DEPARTMENT OF TRANSPORTATION AND PUBLIC FACILITIES
SOUTHEAST REGION DESIGN & CONSTRUCTION

KETCHIKAN — ALASKA

KETCHIKAN AIRPORT
SEAPLANE FACILITY RECONSTRUCTION
PROJECT NO. A.I.P. ~~3-02-0144-0996/71952~~
BRIDGE SUPPORT FLOAT

DESIGNED BY: BAS	PROJECT NO. ~~71952~~
DRAWN BY: BAS	DATE: ~~MAY, 1996~~
CHECKED BY: JAL	~~SHEET 21 OF 44~~

ENGINEER'S SEAL
STATE OF ALASKA 49TH
Bern A. Sonika CE-6466
REGISTERED PROFESSIONAL ENGINEER

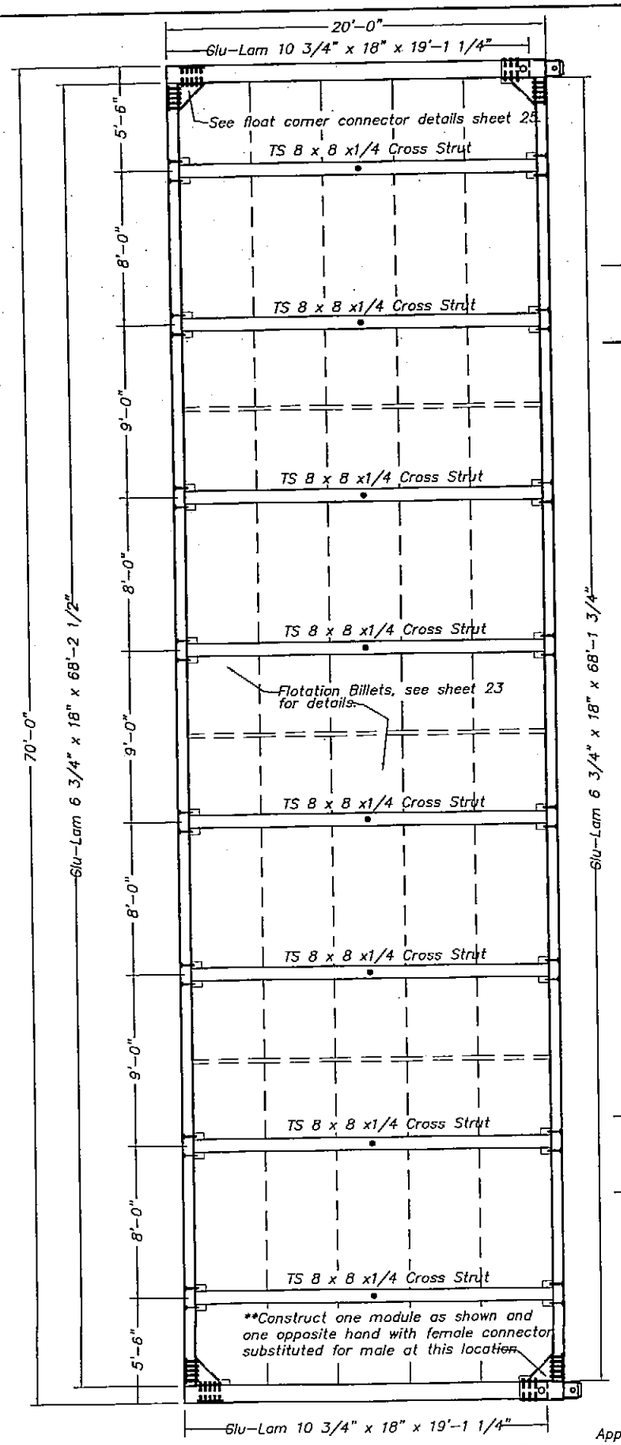

END FLOAT MODULE
(**2 Required)

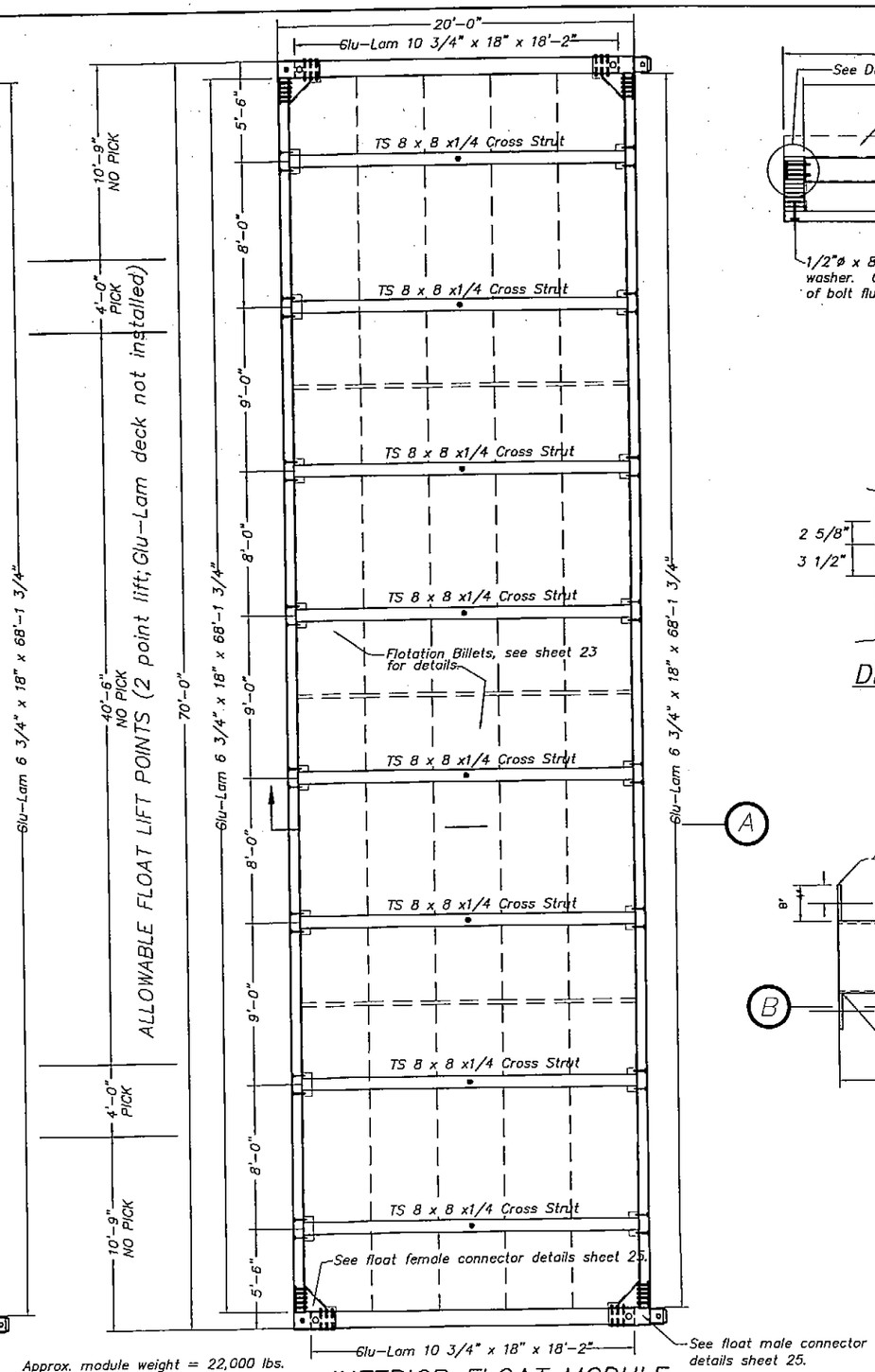

Approx. module weight = 22,000 lbs.

INTERIOR FLOAT MODULE
(15 Required)

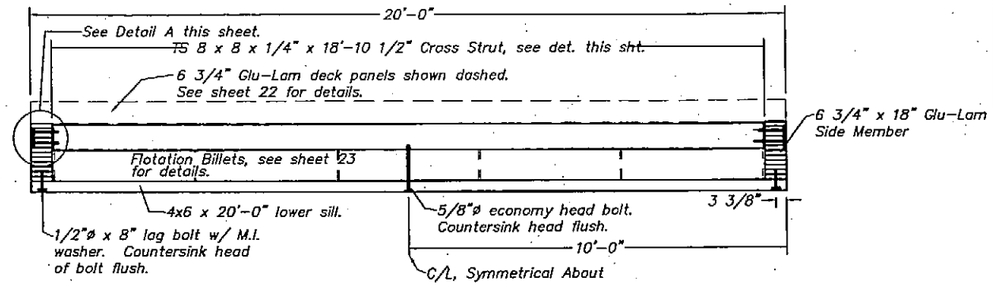

SECTION A

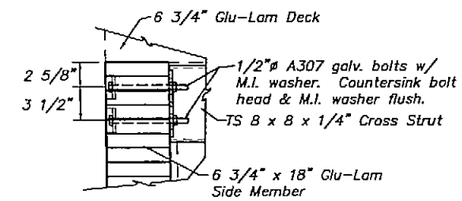

DETAIL A

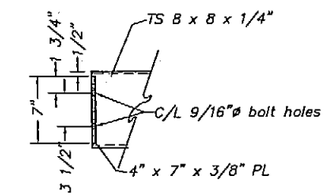

SECTIONAL ELEV. B

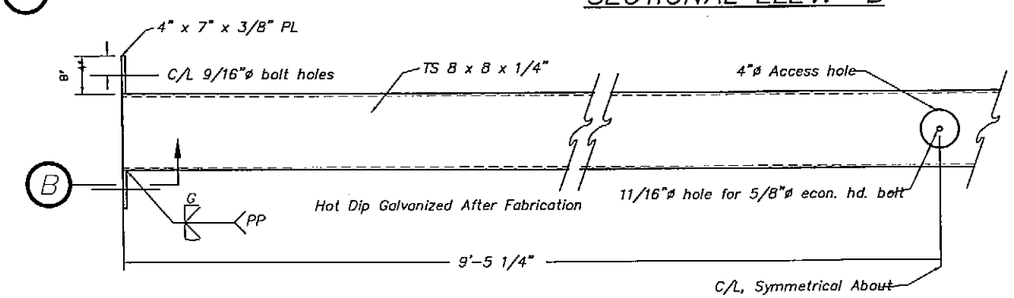

CROSS STRUT – PLAN

Contractor Note: Float prefabrication details shown may or may not reflect fabrication details required by other attachments. This drawing should be coordinated with other sheets and details found elsewhere.

AS-BUILT INFORMATION

PROJECT NO. 68742 SHEET 15 OF 16

NOTE: DO NOT SCALE FROM THESE PLANS-USE DIMENSIONS

PATH: P:\KTN\71952\MF\SHEET24		
BY:	DATE:	DESCRIPTION OF CHANGE:

RECORD OF REVISIONS

STATE OF ALASKA
DEPARTMENT OF TRANSPORTATION AND PUBLIC FACILITIES
SOUTHEAST REGION DESIGN & CONSTRUCTION

KETCHIKAN ALASKA
KETCHIKAN AIRPORT SEAPLANE FACILITY RECONSTRUCTION
PROJECT NO. A.I.P. ~~3-02-0144-0996/71952~~
TYPICAL FLOAT MODULE DETAILS

DESIGNED BY:	JAL	PROJECT NO.	~~71952~~
DRAWN BY:	JAL	DATE:	~~MAY 1996~~
CHECKED BY:	JDB		~~SHEET 24 OF 44~~

STATE OF ALASKA 49th James A. Lovell CE-5587 REGISTERED PROFESSIONAL ENGINEER

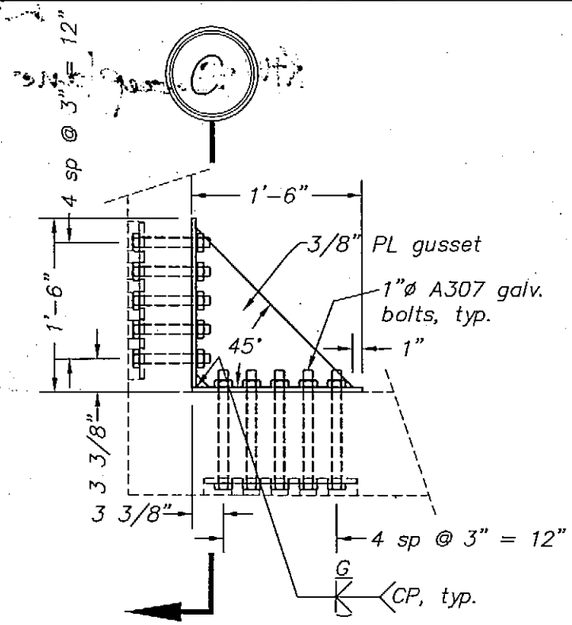

CORNER CONNECTOR
PLAN

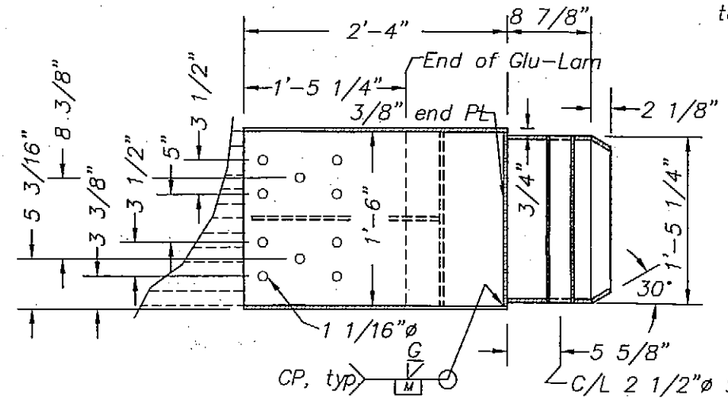

SECTION A

Note: Chamfer edges of Glu-Lams as required to clear backing plates for welds.

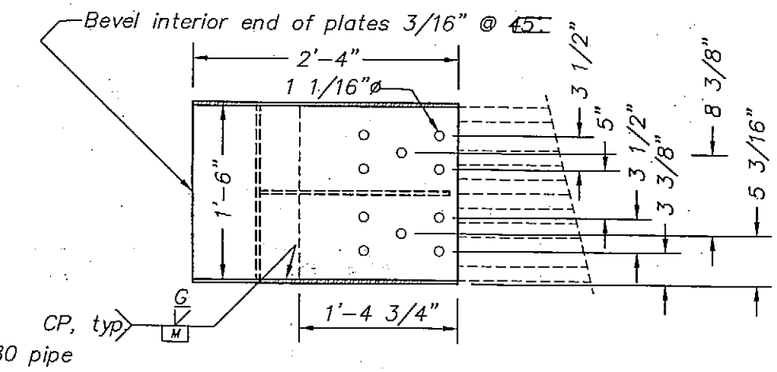

SECTION B

Note: All plate is 3/8" A36. Hot dip galvanize assembly subsequent to fabrication.

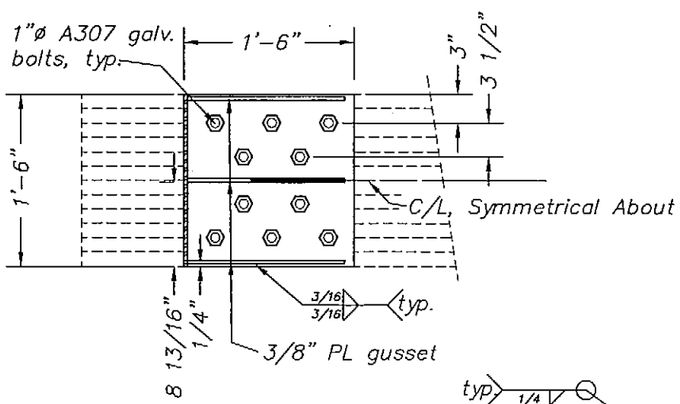

SECTION C

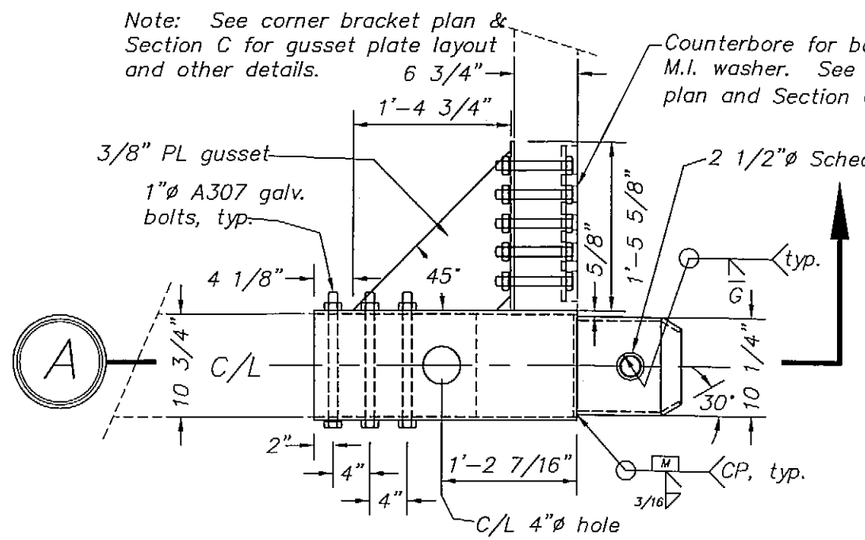

MALE CONNECTOR
PLAN

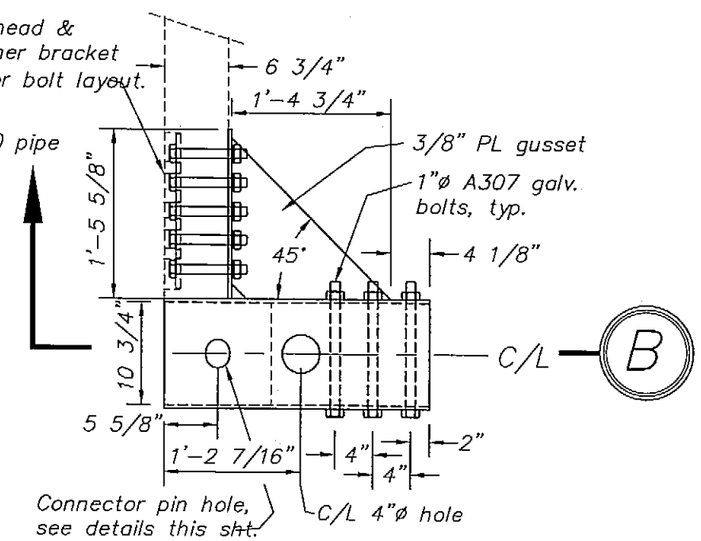

FEMALE CONNECTOR
PLAN

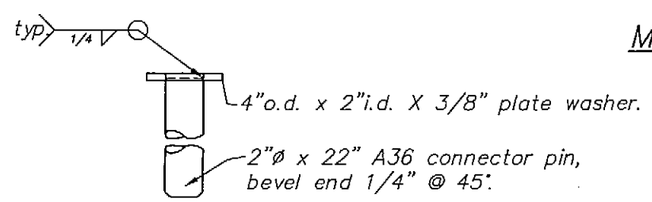

CONNECTOR PIN

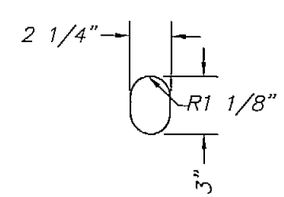

CONNECTOR PIN HOLE

AS-BUILT INFORMATION

PROJECT NO. 68742 SHEET 16 OF 16

NOTE: DO NOT SCALE FROM THESE PLANS-USE DIMENSIONS

PATH: P:\KTN\71952\MF\SHEET25		
BY:	DATE:	DESCRIPTION OF CHANGE:
RECORD OF REVISIONS		

STATE OF ALASKA
DEPARTMENT OF TRANSPORTATION AND PUBLIC FACILITIES
SOUTHEAST REGION DESIGN & CONSTRUCTION

KETCHIKAN ALASKA
KETCHIKAN AIRPORT SEAPLANE FACILITY RECONSTRUCTION
PROJECT NO. A.I.P. ~~3-02-0144-0996/71952~~
FLOAT CONNECTION DETAILS

DESIGNED BY:	JAL	PROJECT NO.	~~71952~~
DRAWN BY:	JAL	DATE:	~~MAY 1996~~
CHECKED BY:	JDB	~~SHEET 25 OF 44~~	

STATE OF ALASKA 49th James A. Lynch CE-5597 REGISTERED PROFESSIONAL ENGINEER