State of Alaska

Department of Transportation and Public Facilities

Statewide Design and Engineering Services Division

KETCHIKAN, ALASKA VIADUCTS REHABILITATION STAGE II NH-0902(34)/68571

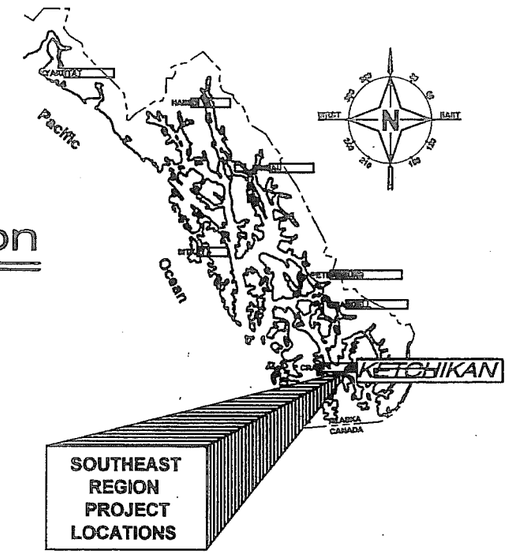

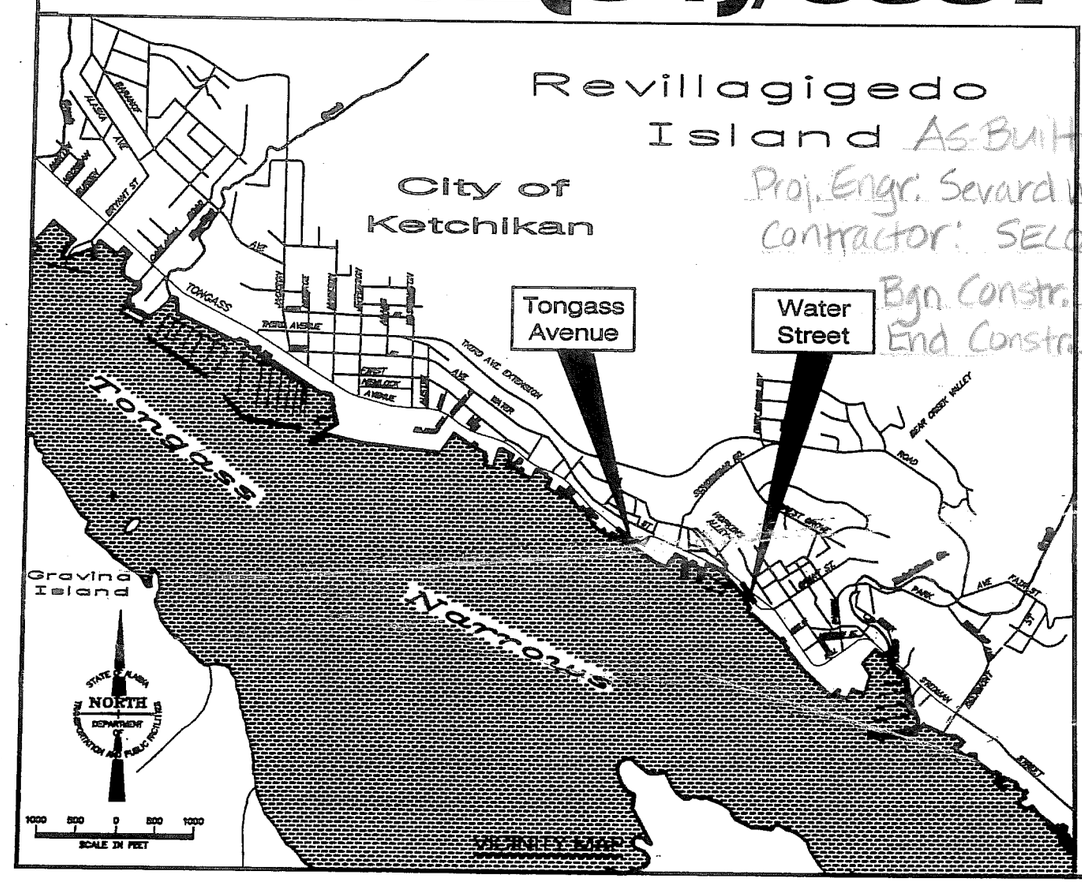

As-Built Plans
Proj. Engr: Sevard Wagenius
Contractor: SECON
Bgn. Constr. 2-11-10
End Constr. 1-13-12

ALASKA DOT&PF ECONOMIC STIMULUS PROJECT PUTTING ALASKANS TO WORK

TIDAL DATA

ESTIMATED EXTREME HIGH WATER	=	20.8 FT.
MEAN HIGHER HIGH WATER	=	15.4 FT.
MEAN HIGH WATER	=	14.5 FT.
MEAN TIDE WATER	=	8.0 FT.
MEAN LOW WATER	=	4.5 FT.
MEAN LOWER LOW WATER	=	0.0 FT.
ESTIMATED EXTREME LOW WATER	=	5.0 FT.

INDEX

SHEET NO.	DESCRIPTION
T 1.0	TITLE SHEET
T 1.1	GENERAL INFORMATION
T 1.2	ESTIMATE OF QUANTITIES
T.C. 2.0-2.1	TRAFFIC CONTROL
S-1.0	STRUCTURAL SCOPE OF WORK & GENERAL NOTES
S-2.0	TONGASS AVENUE STRUCTURAL REPAIR PLAN
S-2.1	WATER STREET STRUCTURAL REPAIR PLAN
S 3.0-3.3	TONGASS AVENUE REPAIR DETAILS
S 3.4-3.14	WATER STREET REPAIR DETAILS
S 4.0-4.2	TONGASS AVE. & WATER STREET MISC. REPAIRS
CP 1.0-1.1	TONGASS AVENUE CORROSION CONTROL
CP 1.2-1.3	WATER STREET CORROSION CONTROL
CP 2.0	TONGASS AVENUE LAYOUT PLAN
CP 2.1	WATER STREET LAYOUT PLAN
CP 3.0-3.9	TONGASS AVENUE BENTS
CP 3.10-3.15	WATER STREET BENTS
CP 4.0-4.4	PILE JACKET DETAILS
CP 4.5-4.6	GIRDER SECTION & MISCELLANEOUS DETAILS
CP 4.7-4.8	TRANSITION CAP DETAILS
CP 5.0-5.4	CONCRETE REPAIR
CP 5.5	RETAINING WALL DETAILS
CP 6.0-6.3	TONGASS AVENUE WIRING DIAGRAMS
CP 6.4-6.5	WATER STREET WIRING DIAGRAMS
Q 1	STAGING AREA SITE PLAN
CPT9A-T37	Tongass Avenue Electrical Asbuilts
CPW24-W76	Water Street Electrical Asbuilts

THE FOLLOWING STANDARD DRAWINGS APPLY TO THIS PROJECT:

A-1
C-04.11

PATH: r:cad/ketchikanviaduct-2009

PLOT: PSPACE OR MSPACE: 1=1(F)

STATE OF ALASKA
DEPARTMENT OF TRANSPORTATION & PUBLIC FACILITIES
DESIGN & ENGINEERING SERVICES DIVISION-SOUTHEAST REGION

STATE OF ALASKA 149th Mark D. Figley CE-8050

RECOMMENDED FOR APPROVAL:

Victor Winters — DATE 8-29-09
SOUTHEAST REGION PRE-CONSTRUCTION ENGINEER

APPROVED: Gary L. Davis — DATE 8-24-09
DIRECTOR, SOUTHEAST REGION

CERTIFIED TRUE & CORRECT AS-BUILT OF ACTUAL FIELD CONDITION: 10/29/13
CONSTRUCTION PROJECT MANAGER — DATE

T-1.0	PROJECT DESIGNATION	YEAR	SHEET NO.	TOTAL SHEETS
	NH-0902(34) / 68571	2009	1	70

ABBREVIATIONS

A.B.	=	ANCHOR BOLT
ABAN	=	ABANDONED
ABV	=	ABOVE
ABUT	=	ABUTMENT
AC	=	ASPHALT CONCRETE
ADDL	=	ADDITIONAL
ADJ	=	ADJACENT
ADOT&PF	=	ALASKA DEPARTMENT OF TRANSPORTATION & PUBLIC FACILITIES
AHD	=	AHEAD
AK	=	ALASKA
ALT	=	ALTERNATE
A	=	AMP
APPROX	=	APPROXIMATE
ARCH	=	ARCHITECTURAL
AVE	=	AVENUE
AVG	=	AVERAGE
BB	=	BEGINNING OF BRIDGE
BOT	=	BOTTOM
BLDG	=	BUILDING
BLW	=	BELOW
BR	=	BRIDGE
BRG	=	BEARING
CANT	=	CANTILEVERED
CIP	=	CAST-IN-PLACE
C-C	=	CENTER TO CENTER
CL	=	CENTERLINE
CLR	=	CLEAR
cm	=	CENTIMETER
COL	=	COLUMN
CONC	=	CONCRETE
CONN	=	CONNECTION
CS	=	CONTINGENT SUM
CONST	=	CONSTRUCTION
CONT	=	CONTINUOUS
CU	=	COPPER
CM	=	CUBIC METER
DBL	=	DOUBLE
DIP	=	DUCTILE IRON PIPE
DIA	=	DIAMETER
DIAG	=	DIAGONAL
DIAPH	=	DIAPHRAGM
DIM	=	DIMENSION
DIST	=	DISTANCE
DTR	=	DETOUR
DWG	=	DRAWING
DWL	=	DOWEL
EA	=	EACH
EB	=	END OF BRIDGE
E.F.	=	EACH FACE
EL, ELEV	=	ELEVATION
EMBD	=	EMBEDDED
ENG	=	ENGINEER
EQ	=	EQUAL
E.S.	=	EACH SIDE
EXIST	=	EXISTING
EXP	=	EXPANSION
EXPD	=	EXPANDED
EXT	=	EXTERIOR
FE	=	FINISHED ELEVATION
FAB	=	FABRICATION
FND	=	FOUNDATION
FIN	=	FINISH(ED)
FLEX	=	FLEXIBLE
FLG	=	FLANGE
FM	=	FORCE MAIN
FT	=	FOOT
FTG	=	FOOTING
GALV	=	GALVANIZED
G	=	GRAM
GRD	=	GRADE
HORZ	=	HORIZONTAL
HS	=	HIGH STRENGTH
HWY	=	HIGHWAY
I.D.	=	INSIDE DIAMETER
I.F.	=	INSIDE FACE
IN	=	INCH
INT	=	INTERIOR
JNT	=	JOINT
KG	=	KILOGRAM
KGCM	=	KILOGRAMS PER CUBIC
	=	METER
KPU	=	KETCHIKAN PUBLIC UTILITIES
L	=	LITER
LONG	=	LONGITUDINAL
LM	=	LINEAL METERS
LS	=	LUMP SUM
LT	=	LEFT
M	=	METER (DIST. MEAS.)
MATL	=	MATERIAL
MAX	=	MAXIMUM
MEAS	=	MEASURE(MENT)
MECH	=	MECHANICAL
MISC	=	MISCELLANEOUS
MFR	=	MANUFACTURER
mG	=	MILLIGRAM
MH	=	MANHOLE
MHHW	=	MEAN HIGH HIGH WATER
MHW	=	MEAN HIGH WATER
MIN	=	MINIMUM
MLLW	=	MEAN LOW LOW WATER
MLW	=	MEAN LOW WATER
mm	=	MILLIMETER
MPa	=	MEGA PASCAL
MSDS	=	MFR SAFETY DATA SHEET
MSE	=	MECHANICALLY STABILIZED EARTH
MTL	=	MATERIAL
N	=	NEWTON
NO	=	NUMBER
N.S.	=	NEAR SIDE
N.T.S.	=	NOT TO SCALE
O.C.	=	ON CENTER
O.D.	=	OUTSIDE DIAMETER
O.F.	=	OUTSIDE FACE
O.H.	=	OVERHANG
OPNG	=	OPENING
OPP	=	OPPOSITE
ORNT	=	ORIENTATE(ION)
PAR	=	PARALLEL
P/C	=	PRE-CAST
PERP	=	PERPENDICULAR
PG	=	PROFILE GRADE
PPM	=	PARTS PER MILLION
PPT	=	PARTS PER THOUSAND
P/S	=	PRE-STRESSED
PVC	=	POLY VINYL CHLORIDE
PVMT	=	PAVEMENT
QTY	=	QUANTITY
R	=	RADIUS
R/C	=	REINFORCED CONCRETE
RDWY	=	ROADWAY
REBAR	=	REINFORCED STEEL
REF	=	REFERENCE
REINF	=	REINFORCED
REQD	=	REQUIRED
ROW	=	RIGHT-OF-WAY
RT	=	RIGHT
SCHD	=	SCHEDULE
SHT	=	SHEET
SIM	=	SIMILAR
SM	=	SQUARE METER
SPC	=	SPACE(ING)
SPRT	=	SUPPORT
SQ	=	SQUARE
SS	=	SANITARY SEWER
SSD	=	SATURATED SURFACE DRY
STD	=	STANDARD
ST	=	STREET
STA	=	STATION
STIR	=	STIRRUP
STL	=	STEEL
STRUC	=	STRUCTURE(AL)
SYM	=	SYMETRICAL
S/W	=	SIDEWALK
TEMP	=	TEMPERATURE
TEMP	=	TEMPORARY
THRD	=	THREADED
THRU	=	THROUGH
T.O.	=	TOP OF
TRANS	=	TRANSVERSE
TEL	=	TELEPHONE
TYP	=	TYPICAL
UBC	=	UNIFORM BLDG CODE
VERT	=	VERTICAL
V	=	VOLT
VFY	=	VERIFY
W	=	WATER
W/	=	WITH
W/C	=	WATER CEMENT RATIO
W.P.	=	WORK POINT
WWF	=	WELDED WIRE FABRIC

SYMBOLS USED AS ABBREVIATIONS

&	=	AND
@	=	AT
℄	=	CENTERLINE
ø	=	DIAMETER
'	=	FOOT
"	=	INCH
ℙ	=	PLATE
±	=	PLUS OR MINUS
M2	=	SQUARE METER
M3	=	CUBIC METER

SHEET INDEX

T	**TITLE & GENERAL INFORMATION**
T-1.0	COVER
T-1.1	PROJECT GENERAL INFORMATION
T-1.2	ESTIMATE OF QUANTITIES & GENERAL NOTES
TC	**TRAFFIC CONTROL**
TC-2.0	TRAFFIC CONTROL PLAN DETAILS
TC-2.1	TRAFFIC CONTROL DETAILS
TC-2.2	TRAFFIC CONTROL DETAILS
S	**STRUCTURAL**
S-1.0	GENERAL NOTES & SCOPE OF WORK PLAN
	PLANS
S-2.0	TONGASS AVE. STRUCTURAL REPAIRS SCOPE PLAN
S-2.1	WATER ST. STRUCTURAL REPAIRS SCOPE PLAN
S-3.0	TONGASS AVE. BENT 6 REPAIR
S-3.1	TONGASS AVE. BENT 5 REPAIR
	PILASTER REPAIRS
S-3.2	TONGASS AVE. EXISTING BENT 2A PILASTER REPAIR
S-3.3	TONGASS AVE.EXISTING BENT 3A PILASTER REPAIR
S-3.4	WATER ST. EXISTING BENT 65 PILASTER REPAIR
S-3.5	WATER ST. EXISTING BENT 66 PILASTER REPAIR
S-3.6	WATER ST. EXISTING BENT 67 PILASTER REPAIR
S-3.7	WATER ST. EXISTING BENT 68 PILASTER REPAIR
S-3.8	WATER ST. EXISTING BENT 69 PILASTER REPAIR
S-3.9	WATER ST. EXISTING BENT 70 PILASTER REPAIR
S-3.10	WATER ST. EXISTING BENT 71 PILASTER REPAIR
S-3.11	WATER ST. EXISTING BENT 72 PILASTER REPAIR
S-3.12	WATER ST. EXISTING BENT 73 PILASTER REPAIR
S-3.131	WATER ST. EXISTING BENT 74 PILASTER REPAIR
S-3.14	WATER ST. EXISTING BENT 75 PILASTER REPAIR
	MISCELLANEOUS REPAIRS
S-4.0	TONGASS AVE. MISC. CONCRETE REPAIRS
S-4.1	TONGASS AVE. BEARING REPLACEMENT DETAILS
S-4.2	WATER ST. MISC. CONCRETE REPAIR DETAILS
CP	**CORROSION CONTROL**
CP-1.0	TONGASS AVENUE WORK PLAN
CP-1.1	TONGASS AVE. CORROSION CONTROL PLAN
CP-1.2	WATER STREET WORK PLAN
CP-1.3	WATER ST. CORROSION CONTROL PLAN
	PLANS
CP-2.0	TONGASS AVENUE LAYOUT PLAN
CP-2.1	WATER STREET LAYOUT PLAN
	ELEVATIONS
	TONGASS AVENUE VIADUCT
CP-3.0	ELEVATION VIEW - BENTS 10-9
CP-3.1	ELEVATION VIEW - BENTS 8-7
CP-3.2	ELEVATION VIEW - BENTS 6-5
CP-3.3	ELEVATION VIEW - BENTS 4-3
CP-3.4	ELEVATION VIEW - BENTS 2-1
CP-3.5	ELEVATION VIEW - BENTS 1A-2A
CP-3.6	ELEVATION VIEW - BENTS 3A-4A
CP-3.7	ELEVATION VIEW - BENTS 5A-6A
CP-3.8	ELEVATION VIEW - BENTS 7A-8A
CP-3.9	ELEVATION VIEW - BENTS 9A
	WATER STREET VIADUCT
CP-3.10	ELEVATION VIEW - BENTS 65-66
CP-3.11	ELEVATION VIEW - BENTS 67-68
CP-3.12	ELEVATION VIEW - BENTS 69-70
CP-3.13	ELEVATION VIEW - BENTS 71-72
CP-3.14	ELEVATION VIEW - BENTS 73-74
CP-3.15	ELEVATION VIEW - BENTS 75-76
CP	**CORROSION CONTROL CONT.**
	CATHODIC PROTECTION JACKET
CP-4.0	PILE JACKET & SUBMERGED ANODE DETAILS
CP-4.1	PILE JACKETS & SECTIONS
CP-4.2	PILASTER JACKET & SECTION
CP-4.3	CORNER PILASTER JACKET & SECTION
CP-4.4	SQUARE PILE JACKET & SECTION
CP-4.5	INTERMEDIATE GIRDER SECTION & MISC. DETAILS
CP-4.6	INTERMEDIATE GIRDER SECTION & BEAM
CP-4.7	TRANSITION CAP SECTION
CP-4.8	TRANSITION CAP SECTION & BEAM
	CORROSION CONTROL DETAILS
CP-5.0	HORIZONTAL CONCRETE REPAIR
CP-5.1	THERMAL SPRAY ANODE CONNECTION
CP-5.2	JUNCTION BOX OR TEST STATION DETAILS
CP-5.3	REBAR BONDING DETAILS
CP-5.4	PRESTRESSED WIRE
CP-5.5	RETAINING WALL DETAILS
	VIADUCT WIRING FOR SPANS
CP-6.0	TONGASS AVE. PRESTRESSED SPAN W/REFERENCE CELLS
CP-6.1	TONGASS AVE. PRESTRESSED SPAN, NO REFERENCE CELLS
CP-6.2	TONGASS AVE. FLAT SPAN W/REFERENCE CELLS
CP-6.3	TONGASS AVE. FLAT SPAN, NO REFERENCE CELLS
CP-6.4	WATER STREET WITH REFERENCE CELLS
CP-6.5	WATER STREET, NO REFERENCE CELLS
	STAGING AREAS
Q1	STAGING AREA SITE PLANS

ELEVATIONS, BENCHMARKS AND DIMENSIONS ARE BASED ON "AS-BUILT" PLANS. VERIFY ALL CONTROLLING FIELD DIMENSIONS BEFORE ORDERING OR FABRICATING ANY MATERIAL.

DESIGNED BY: M. FIGLEY

STATE OF ALASKA
DEPARTMENT OF TRANSPORTATION
& PUBLIC FACILITIES
STATEWIDE DESIGN & ENGINEERING SERVICES DIVISION

KTN-VIADUCTS
REHABILITATION
PROJECT NO. 68571

CHECKED BY:
DRAWN/REVISED BY: R. SNYDER

PROJECT GENERAL INFORMATION

PATH:
PLOT: PSPACE: 1=1(F) OR MSPACE: 1=1(F)

T-1.1

REVISIONS			PROJECT DESIGNATION	YEAR	SHEET NO.	TOTAL SHEETS
NO.	DATE	DESCRIPTION	NH-0902(34)	2009	2	70

ESTIMATE OF QUANTITIES

ITEM NO.	ITEM	PAY UNIT	ESTIMATED QUANTITIES
501 (8)	Core Holes	Each	~~70~~ 91
501 (9)	Drill and Bond Dowels	Each	~~87~~ 98
507 (6)	Replace Rail Bolts	Lump Sum	All Req'd
516 (1)	Replace Bearings	Each	~~31~~ 11
520 (1)	Furnish Epoxy Injection Compounds	Gallon	~~32~~ 18
520 (2)	Inject Cracks	Foot	~~220~~ 95.3
640 (1)	Mobilization and Demobilization	Lump Sum	All Req'd
640 (4)	Worker's Meals and lodging or Per Diem	Lump Sum	All Req'd
640 (30)	Public Information Program	Lump Sum	All Req'd
641 (1)	Erosion And Pollution Control Administration	Lump Sum	All Req'd
641 (3)	Erosion And Pollution Control	Lump Sum	All Req'd
643 (2)	Traffic Maintenance	Lump Sum	All Req'd
643 (15)	Flagging	Hour	32
643 (25)	Traffic Control	Contingent Sum	All Req'd
644 (1)	Field Office	Lump Sum	All Req'd
644 (6)	Vehicles	Lump Sum	All Req'd
645 (1)	Training Program – Trainers/Apprentices	Labor Hr.	500
646 (2)	CPM Scheduling	Bi Monthly	~~24~~ 25
681(1)	Provide Work Platform	Lump Sum	All Req'd
681(2)	Provide Enclosure	Lump Sum	All Req'd
681(3)	Enclosure Price Adjustment	Contingent Sum	All Req'd
682(1)	Training of Contractor Personnel	Lump Sum	All Req'd
683 (1)	Locate Near Surface Metal	Lump Sum	All Req'd
683 (2)	Remove Near Surface Metal<3/8" Avg. Dia.	Each	~~10,000~~ 14,397
683 (3)	Remove Near Surface Metal>3/8" Avg. Dia.	Each	~~1,000~~ 2,548
683 (4)	Replace Damaged Concrete	Square Foot	~~3,175~~ 4663
684 (1)	Basic Continuity Check	Lump Sum	All Req'd
684 (2)	Girder End Continuity	Each	~~85~~ 70
684 (3)	Establish Continuity	Each	~~400~~ 1,672
684 (4)	Install Structure Negative Connections	Each	~~300~~ 326
684 (5)	Reference Electrodes	Each	~~12~~ 13
684 (6)	Main Junction Box	Each	~~109~~ 101 - See electrical as-builts
684 (7)	Install Primary Anode Terminal Plates	Each	~~210~~ 134
684 (8)	Rewire Tongass Ave. & Water Str. Bent Spars	Lump Sum	All Req'd
686 (1)	Prepare Metallized Anode Surfaces	Lump Sum	All Req'd
686 (2)	Install Spray Metallized Anodes	Lump Sum	All Req'd
686 (3)	Isolate Metallized Anodes, Existing W.S. Caps	Lump Sum	All Req'd
687 (1)	Install Pile Jackets	Lump Sum	All Req'd
687 (2)	Install Pile Cap Jackets	Lump Sum	All Req'd
687 (3)	Cut Wetting Holes in Existing Jackets	Lump Sum	All Req'd
688 (1)	Install Submerged Ingot Anodes	Lump Sum	All Req'd

GENERAL NOTES

The Water Street Viaduct was constructed in 1955, with construction of Tongass Avenue following in 1956. The roadways are approximately 60 feet wide, including sidewalks. The two viaducts carry essentially all north/south traffic through Ketchikan. Therefore, preservation of the traffic carrying capacity is essential for local transportation and a critical component of this construction work.

The Water Street Viaduct is constructed of steel H–piles encased in cast–in–place concrete. The piles caps are composed of one of two precast elements. The deck is composed of precast concrete beam and deck panels, with short sections of the deck slab–on–grade. The Tongass Avenue spans employ precast prestressed concrete piles and cast–in–place caps. The girder spans are carried by precast prestressed concrete beams.

Areas of the bottom of the deck, beams, bents, retaining wall surfaces, and piles have been damaged by corrosion of the embedded reinforcing steel. The corrosion of the reinforcing steel has resulted from exposure to salt water and deicing salts. The objective of this project is to repair spalled and delaminated concrete and to install corrosion protection in the form of cathodic protection systems. The various systems and installation requirements are described in the Standard Specifications and these Special Provisions. The locations and details for installation are shown in the Plans. The drawings do not show adjacent structures or buildings. The contractor shall confine his work operations to within the ROW, unless other access is shown on the plans, or is approved by the Engineer. The ROW lines are vertical lines on the left and right edges of the viaduct structure, unless otherwise shown on the plans.The contractor shall familiarize his/herself with project conditions and access.

OVERALL SCOPE

Loose and damaged concrete shall be removed and galvanic cathodic protection systems shall be installed to prevent future corrosion. When the systems are energized, an electric field will be established. Corrosion of the galvanic anode material will provide protective current to the embedded steel. This current flow will also move chloride ions away from the steel surface.

Marine Traffic:

The waterway adjacent to the project is a very high traffic volume marine area. Contractor's schedule shall consider marine activities such as arrival and departures, prop wash and other potential hazards from marine traffic.

Tides:

The tidal range in Ketchikan, Alaska can exceed 24 feet. High tides can reach to almost +20 feet. Storms can push the water level even higher. The successful Contractor should be prepared for potential flood levels at +22 feet. The average elevation of the bottom of a Water Street Viaduct pile cap is +18.2 feet. The average elevation of the bottom of a Tongass Avenue prestressed girder bearing cap is +16.8 feet. It is critical that the Contractor is aware of the construction access problems the Ketchikan tides will present. At times the tides will completely prevent construction access to the underside of the two viaducts. The Contractor must obtain accurate tide prediction data and carefully utilize that information in planning the construction schedule. Failure to adequately address local tide variations will severely impact the vast majority of the work. Work and materials required to allow productive construction work in the presence of the Ketchikan's large tidal range will be supplied by the Contractor at no additional cost to the Owner.

Rainfall:

The City of Ketchikan's average annual rainfall is about 162 inches. It is essential that the Contractor include handling or redirecting the flow of run–off rainwater from the roadway, sidewalks and surrounding buildings and wharves in accordance with Section 689. For the metallizing to properly adhere to concrete, the concrete must be dry. Scuppers, drains, joints and cracks may allow rain run–off water to wet previously prepared surfaces. The run–off water may also present problems with short–circuit detecting equipment used to control zinc metallizing power output. The Contractor must anticipate there will be construction problems related to Ketchikan's heavy rainfall and make allowances to control rainfall run–off water. Work and materials required to allow productive construction work in the presence of the heavy Ketchikan rainfall will be supplied by the Contractor at no additional cost to the Department.

Weather:

It is not unusual to have periods with overnight lows below 32° F. anytime between September through May.

ELEVATIONS, BENCHMARKS AND DIMENSIONS ARE BASED ON "AS–BUILT" PLANS. VERIFY ALL CONTROLLING FIELD DIMENSIONS BEFORE ORDERING OR FABRICATING ANY MATERIAL.

DESIGNED BY: M. FIGLEY

STATE OF ALASKA 49th Mark D. Figley CE-8050 REGISTERED PROFESSIONAL ENGINEER

CHECKED BY: G. IMBSEN

DRAWN/REVISED BY: R.S., R.G.

STATE OF ALASKA
DEPARTMENT OF TRANSPORTATION
& PUBLIC FACILITIES
STATEWIDE DESIGN & ENGINEERING SERVICES DIVISION

KTN-VIADUCTS
REHABILITATION
PROJECT NO. 68571

ESTIMATE OF QUANTITIES

PATH:
PLOT: PSPACE: 1=1(F) OR MSPACE: 1=1(F)

T-1.2

REVISIONS			PROJECT DESIGNATION	YEAR	SHEET NO.	TOTAL SHEETS
NO.	DATE	DESCRIPTION	NH-0902(34)	2009	3	70

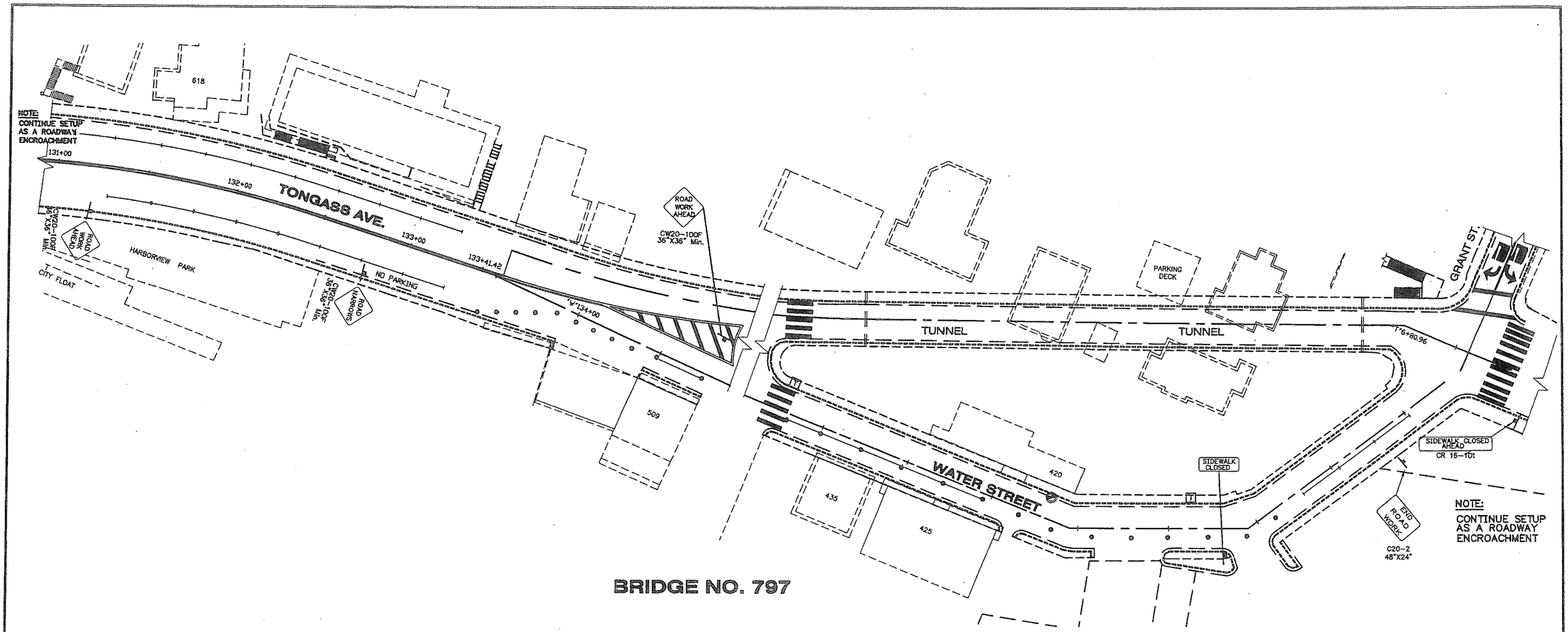

BRIDGE NO. 797

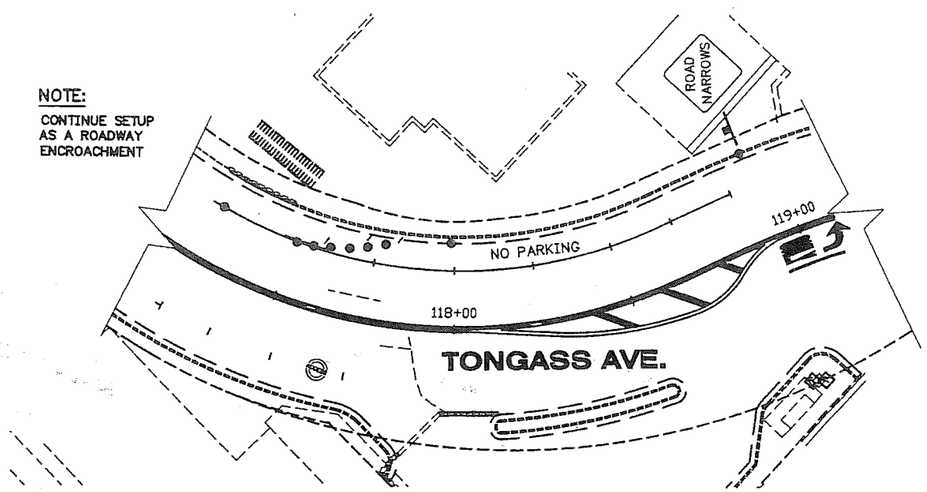

BRIDGE NO. 987

ELEVATIONS, BENCHMARKS AND DIMENSIONS ARE BASED ON "AS-BUILT" PLANS. VERIFY ALL CONTROLLING FIELD DIMENSIONS BEFORE ORDERING OR FABRICATING ANY MATERIAL.

DESIGNED BY: CAROLYN MOREHOUSE

STATE OF ALASKA 49th Carolyn Morehouse CE-4832 7/15/09

CHECKED BY: C. Drexler
DRAWN/REVISED BY: R.S., R.G.

STATE OF ALASKA
DEPARTMENT OF TRANSPORTATION & PUBLIC FACILITIES
STATEWIDE DESIGN & ENGINEERING SERVICES DIVISION

KTN-VIADUCTS REHABILITATION
PROJECT NO. 68571

TRAFFIC CONTROL PLAN DETAILS

PATH:
PLOT: PSPACE: 1=1(F) OR MSPACE: 1=1(F)

TC-2.0

REVISIONS			PROJECT DESIGNATION	YEAR	SHEET NO.	TOTAL SHEETS
NO.	DATE	DESCRIPTION	NH-0902(34)	2009	4	70

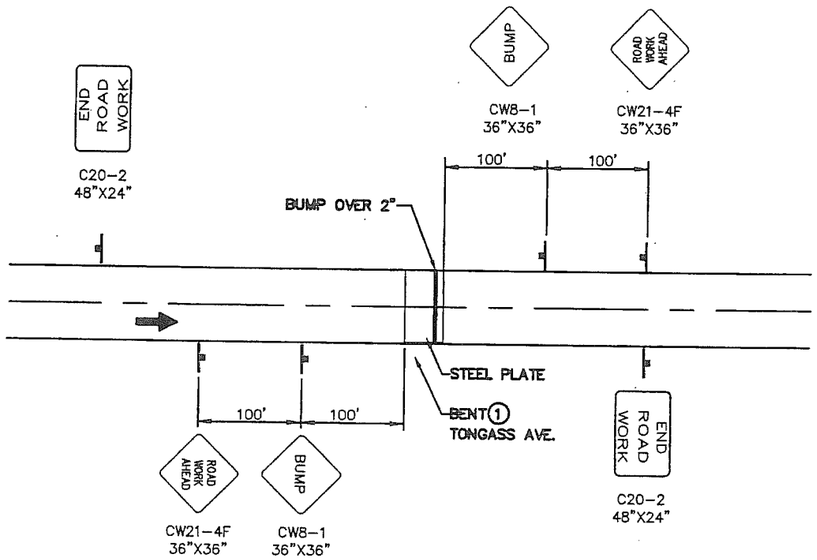

VIADUCT REPAIR

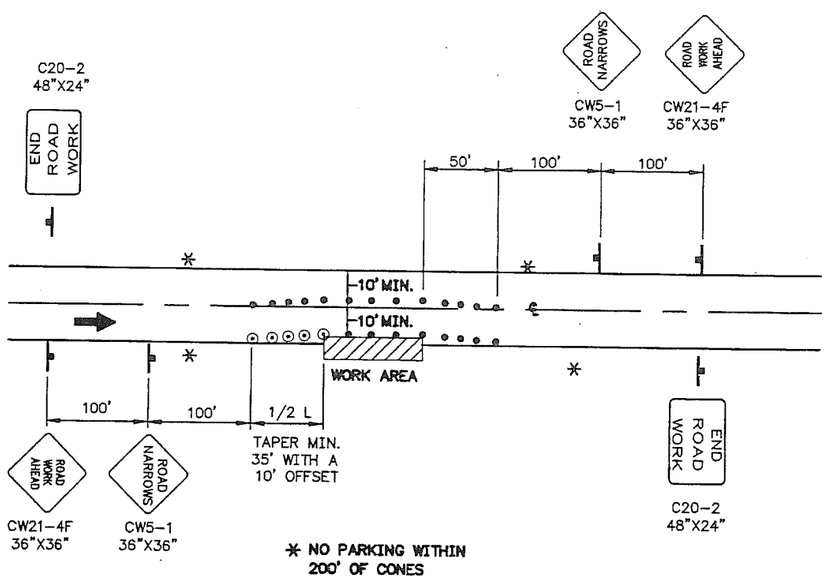

ROADWAY ENCROACHMENT

NOTE: IF ONLY ONE LANE IS EFFECTED BY ROAD WORK (THAT IS, THE CONES ALONG THE WORK AREA ARE NO CLOSER THAN 10' TO CENTERLINE) THE CENTERLINE CONES FOR THE OPPOSING LANE MAY BE DELETED.

TRAFFIC CONTROL NOTES

1. FLAGGER MAY BE NEEDED AT BRIDGE 997. SEE TYPICAL MUTCD (TA-10). DELAY MAY NOT EXCEED 3 MINUTES OR ENGINEER MAY REQUIRE NIGHT TIME OPERATIONS.
2. SPEED LIMIT IS 20 MPH WITH AVERAGE ANNUAL DAILY TRAFFIC AT 17,000 VEHICLES PER DAY.
3. PEDESTRIAN DETOURS MAY BE NECESSARY. SEE STANDARD DRAWING C-03.10 FOR DETAILS.
4. ALL SIGNS ARE DESIGNED PER ALASKA SIGN DESIGN SPECIFICATION FOR CONVENTIONAL ROADWAY.

WHERE: $L = \frac{W \times S^2}{60}$

L = LENGTH OF TAPER (FT.)
W = WIDTH OF OFFSET (FT.)
S = SPEED (MPH)

LEGEND

- SIGN
- CONE
- DRUM
- TYPE III BARRICADE
- FLAGGING STATION

ELEVATIONS, BENCHMARKS AND DIMENSIONS ARE BASED ON "AS-BUILT" PLANS. VERIFY ALL CONTROLLING FIELD DIMENSIONS BEFORE ORDERING OR FABRICATING ANY MATERIAL.

DESIGNED BY: CAROLYN MOREHOUSE

STATE OF ALASKA 49th Carolyn Morehouse CE-4832 7/15/09

CHECKED BY: C. Drouin
DRAWN/REVISED BY: R.S., R.G.

STATE OF ALASKA
DEPARTMENT OF TRANSPORTATION
& PUBLIC FACILITIES
STATEWIDE DESIGN & ENGINEERING SERVICES DIVISION

KTN-VIADUCTS
REHABILITATION
PROJECT NO. 68571

TRAFFIC CONTROL PLAN

PATH: R:\cad\KETCHIKANVIADUCT-2009\KETCH. VIADUCT 2009\T-1(2).dwg
PLOT: PSPACE: 1=1(F) OR MSPACE: 1=1(F)

TC-2.1

REVISIONS			PROJECT DESIGNATION	YEAR	SHEET NO.	TOTAL SHEETS
NO.	DATE	DESCRIPTION	NH-0902(34)	2009	5	70

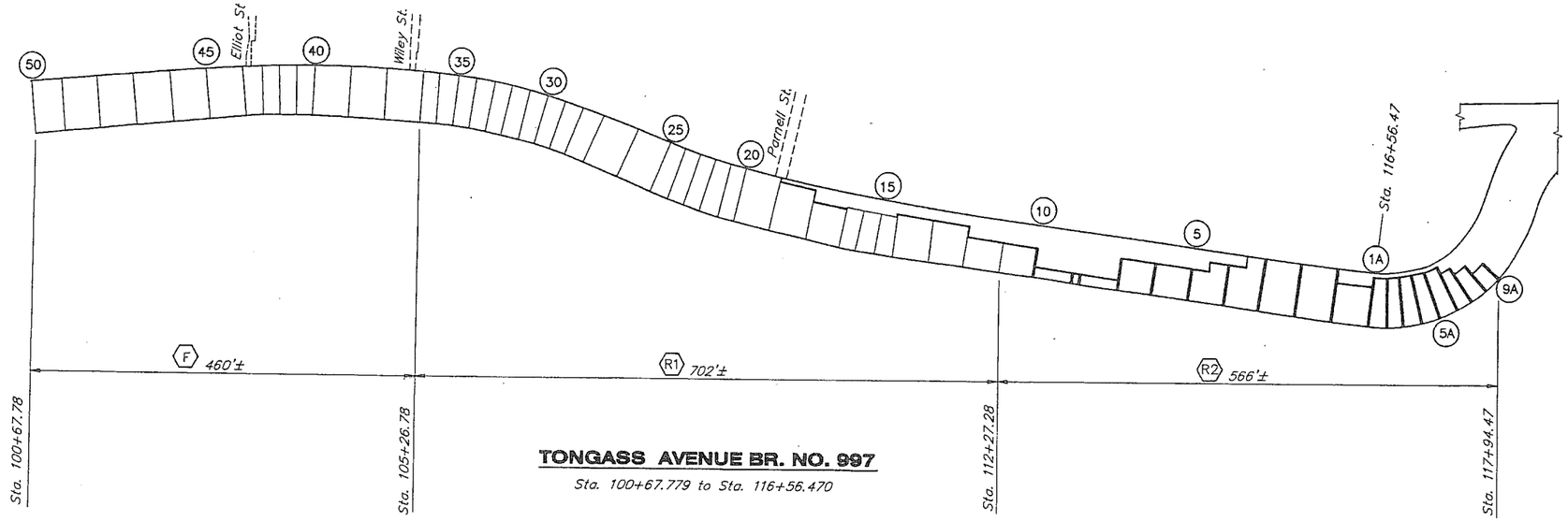

TONGASS AVENUE BR. NO. 997

Sta. 100+67.779 to Sta. 116+56.470

"S" CURVE

Sta. 116+56.470 to Sta. 117+94.469

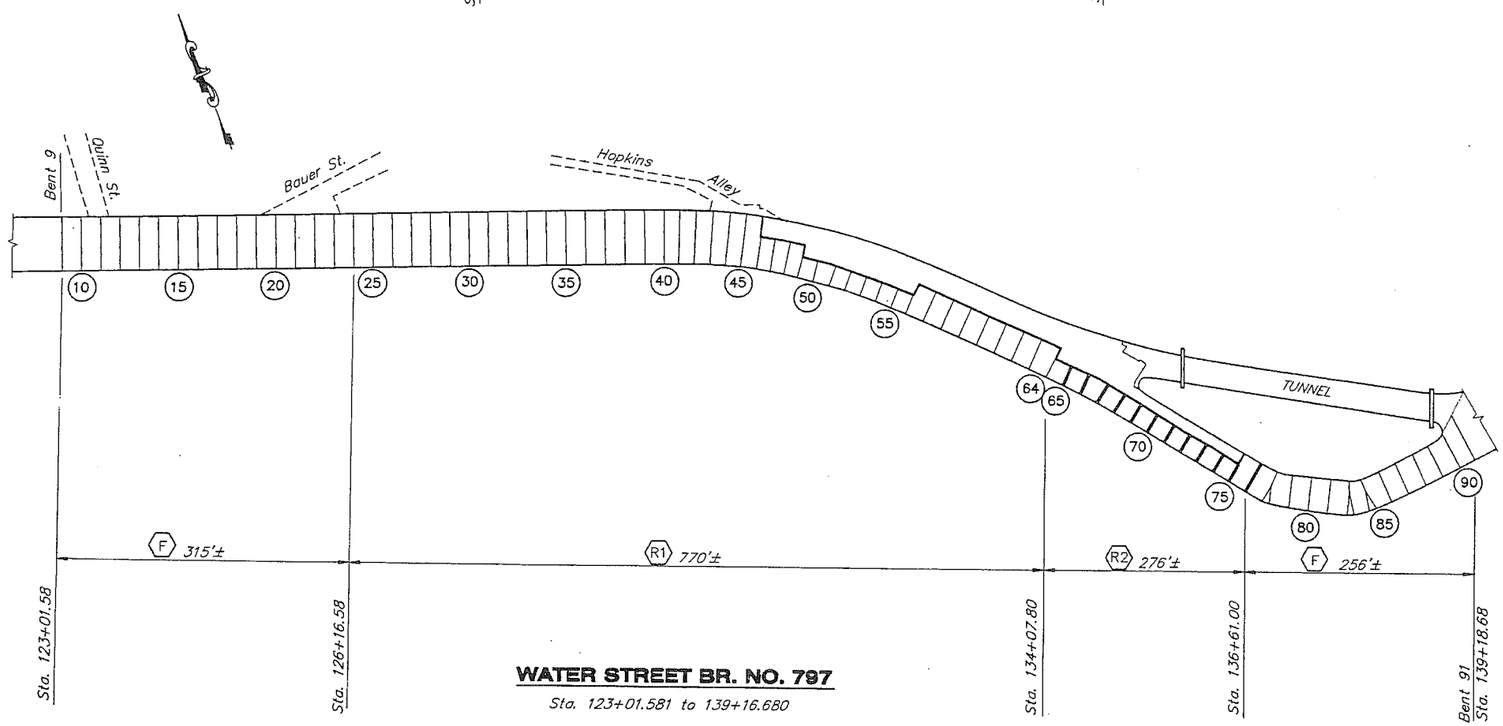

WATER STREET BR. NO. 797

Sta. 123+01.581 to 139+16.680

GENERAL NOTES

Design: ..... AASHTO Standard Specifications for Highway Bridges, 17th Edition, 2002, with the latest Interim Specifications.

Live Load: HS20

Concrete: ..... Use Class "A" Concrete unless otherwise noted. f'c = 4000 psi

Reinforcing Steel: ... Use ASTM A706. Fy = 60,000 psi 2" clear cover to all reinforcing steel unless otherwise shown.

Structural Steel: .... Use ASTM A709, Grade 50 unless otherwise noted. Fy = 50,000 psi. Galvanize all steeli after fabrication except as noted.

LEGEND

= Earth

(xx) = Bent Number

(R1) = Completed Rehabilitation

(R2) = Rehabilitation this contract

(F) = Fill (Future)

(BR) = Bearing Replacement

ELEVATIONS, BENCHMARKS AND DIMENSIONS ARE BASED ON "AS-BUILT" PLANS. VERIFY ALL CONTROLLING FIELD DIMENSIONS BEFORE ORDERING OR FABRICATING ANY MATERIAL.

DESIGNED BY: GEORGE IMBSEN

STATE OF ALASKA 49TH George H. Imbsen No. 4366-E REGISTERED PROFESSIONAL ENGINEER

CHECKED BY: Mark Figley

DRAWN/REVISED BY: C.S.A.

STATE OF ALASKA
DEPARTMENT OF TRANSPORTATION & PUBLIC FACILITIES
STATEWIDE DESIGN & ENGINEERING SERVICES DIVISION

KTN-VIADUCTS REHABILITATION PROJECT NO. 68571

STRUCTURAL SCOPE OF WORK AND GENERAL NOTES

PATH:

PLOT:

S-1.0

REVISIONS			PROJECT DESIGNATION	YEAR	SHEET NO.	TOTAL SHEETS
NO.	DATE	DESCRIPTION	NH-0902(34)	2009	6	70

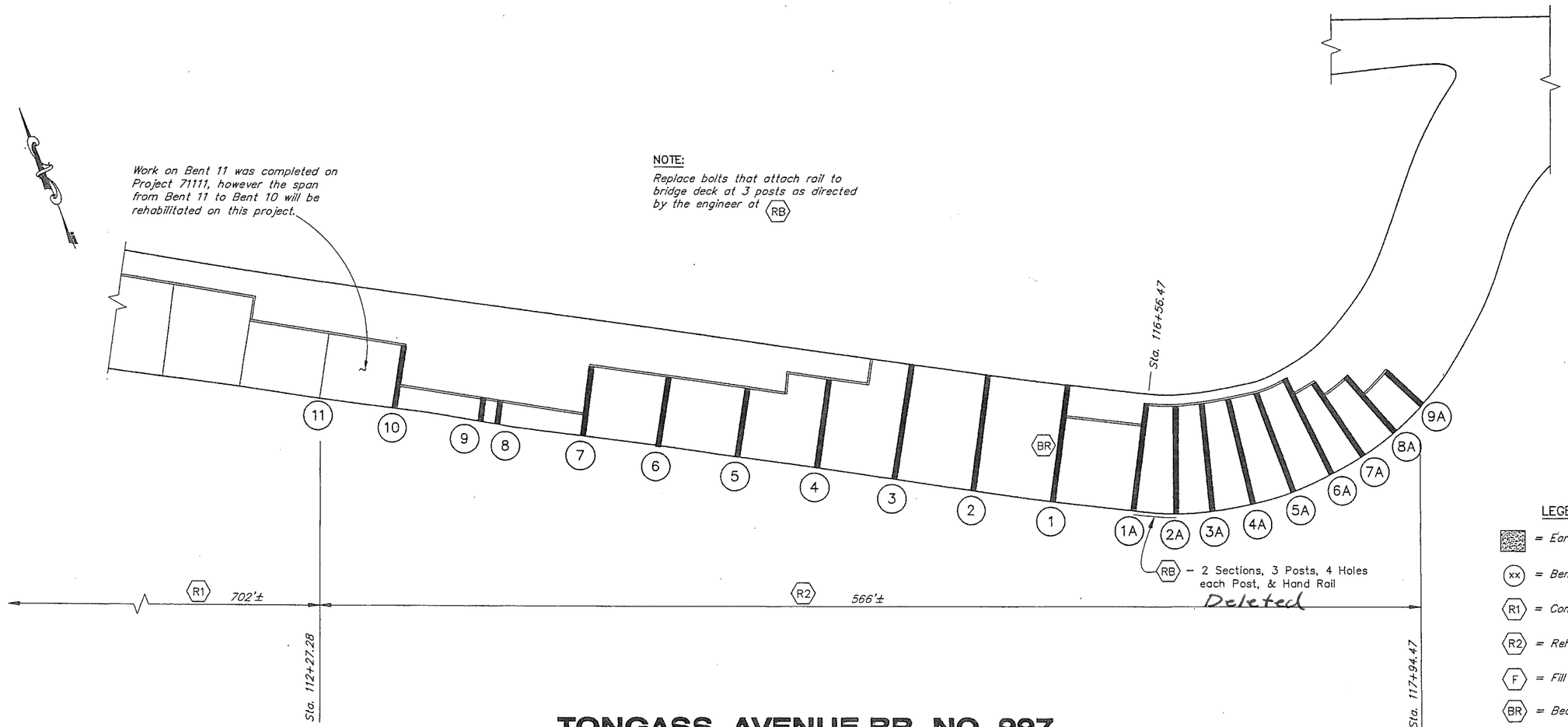

TONGASS AVENUE BR. NO. 997

LEGEND

- = Earth
- (xx) = Bent Number
- (R1) = Completed Rehabilitation
- (R2) = Rehabilitation this contract
- (F) = Fill (Future)
- (BR) = Bearing Replacement
- (RB) = Rail Bolts

ELEVATIONS, BENCHMARKS AND DIMENSIONS ARE BASED ON "AS-BUILT" PLANS. VERIFY ALL CONTROLLING FIELD DIMENSIONS BEFORE ORDERING OR FABRICATING ANY MATERIAL.

DESIGNED BY: GEORGE IMBSEN

STATE OF ALASKA 49TH George H. Imbsen No. 4369-E REGISTERED PROFESSIONAL ENGINEER

CHECKED BY: Mark Figley

DRAWN/REVISED BY: C.S.A.

STATE OF ALASKA
DEPARTMENT OF TRANSPORTATION
& PUBLIC FACILITIES
STATEWIDE DESIGN & ENGINEERING SERVICES DIVISION

KTN-VIADUCTS
REHABILITATION
PROJECT NO. 68571

TONGASS AVE. STRUCTURAL
REPAIR PLAN

PATH:
PLOT:

S-2.0

REVISIONS			PROJECT DESIGNATION	YEAR	SHEET NO.	TOTAL SHEETS
NO.	DATE	DESCRIPTION	NH-0902(34)	2009	7	70

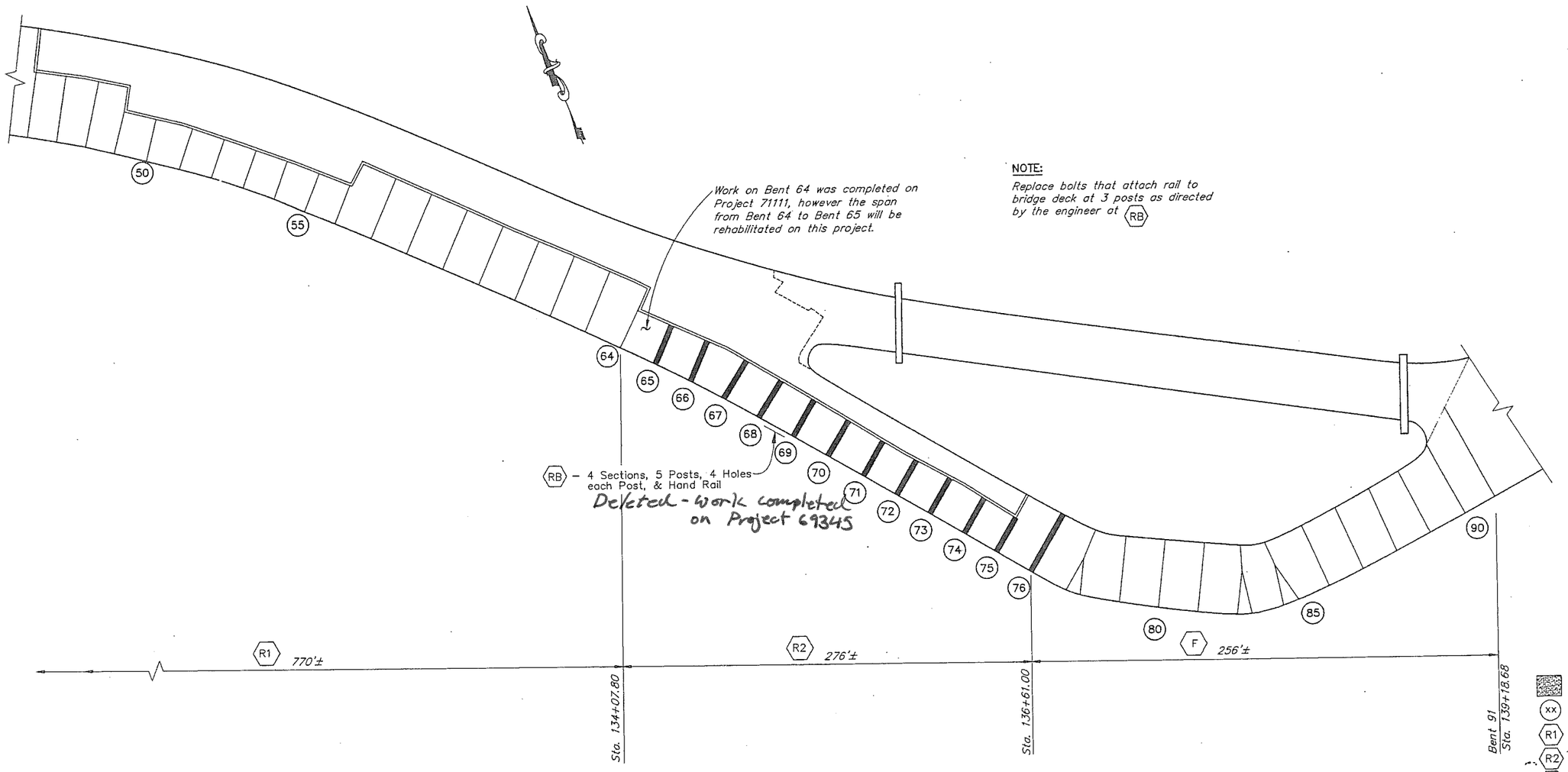

LEGEND

- = Earth
- xx = Bent Number
- R1 = Completed Rehabilitation
- R2 = Rehabilitation this contract
- F = Fill (Future)
- BR = Bearing Replacement
- RB = Rail Bolts

WATER STREET BRIDGE. NO. 797

ELEVATIONS, BENCHMARKS AND DIMENSIONS ARE BASED ON "AS-BUILT" PLANS. VERIFY ALL CONTROLLING FIELD DIMENSIONS BEFORE ORDERING OR FABRICATING ANY MATERIAL.

DESIGNED BY: George Imbsen

STATE OF ALASKA 49TH George H. Imbsen No. 4385-E REGISTERED PROFESSIONAL ENGINEER

CHECKED BY: Mark Figley

DRAWN/REVISED BY: R.S., R.G.

STATE OF ALASKA
DEPARTMENT OF TRANSPORTATION & PUBLIC FACILITIES
STATEWIDE DESIGN & ENGINEERING SERVICES DIVISION

KTN-VIADUCTS REHABILITATION
PROJECT NO. 68571
WATER STREET STRUCTURAL REPAIR PLAN

PATH:
PLOT: PSPACE 1=1(F) OR MSPACE 1=1(F)

S-2.1

REVISIONS			PROJECT DESIGNATION	YEAR	SHEET NO.	TOTAL SHEETS
NO.	DATE	DESCRIPTION	NH-0902(34)	2009	8	70

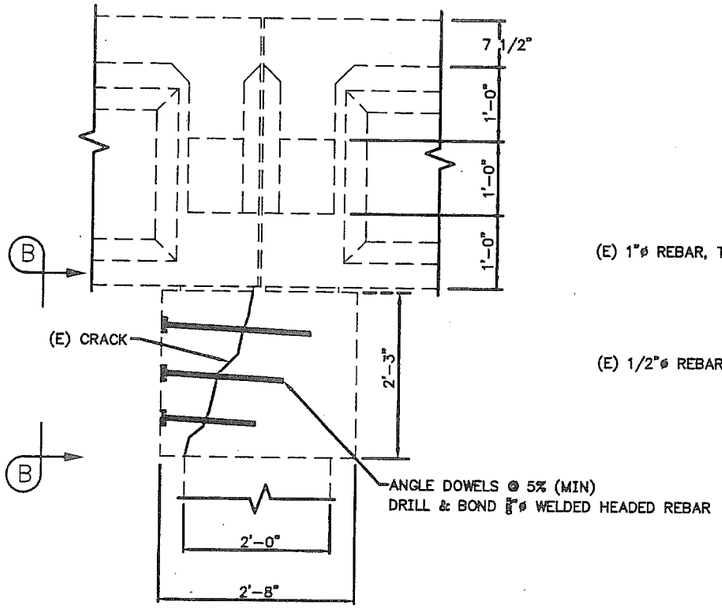

VIEW A-A

12 6 0 1 2
In. Feet

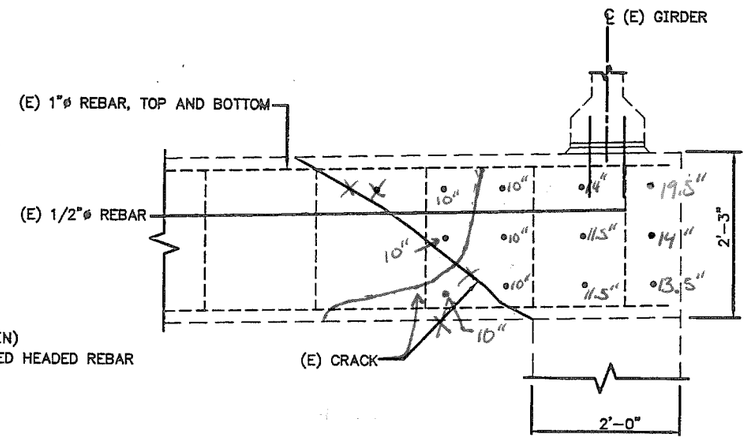

12 Dowels Total

VIEW B-B

12 6 0 1 2
In. Feet

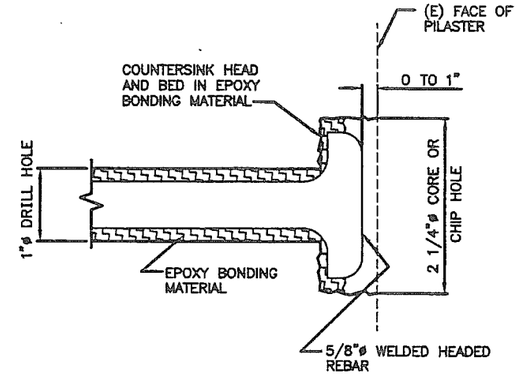

WELDED HEADED REBAR

LEGEND

- - - - - DENOTES EXISTING

——— DENOTES NEW CONSTRUCTION

DENOTES GROUNDLINE

(E) EXISTING

SPALL

NEW CONCRETE

EPOXY BONDING MATERIAL

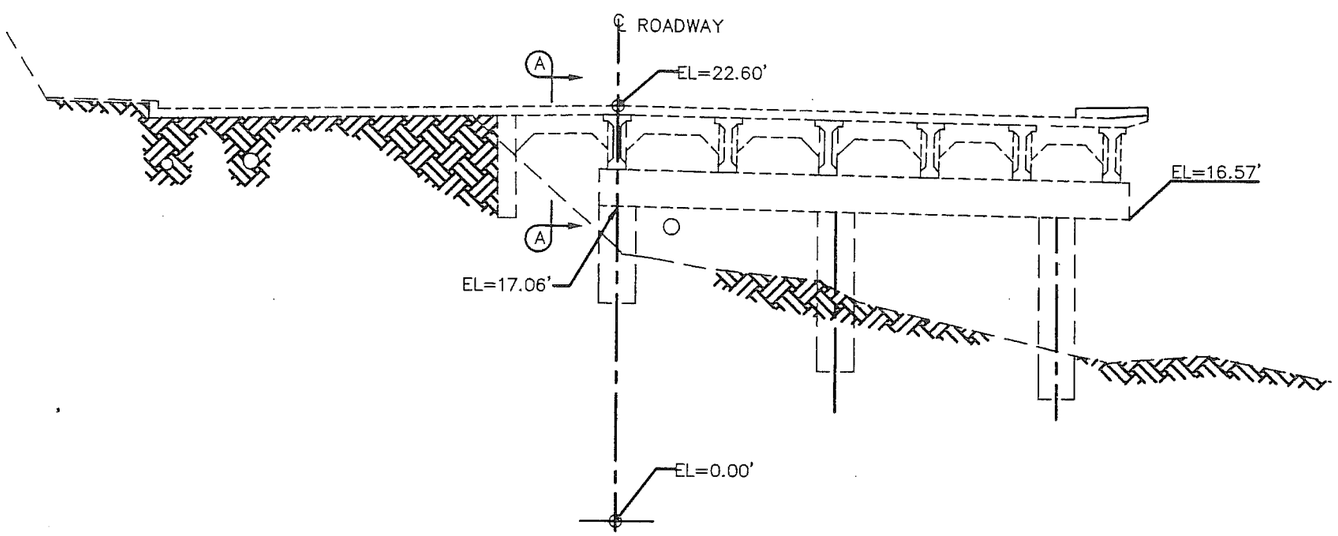

BENT 6

NOTES

1. REPAIR ALL SPALLS AND DELAMINATIONS AS OUTLINED IN THE SPECIFICATIONS BEFORE JACKETING.
2. EXACT LOCATION OF DOWELS WILL BE DETERMINED IN ACCORDANCE WITH SECTION 5.01-3.08 OF THE SPECIFICATIONS.
3. COMPLETE INSTALLATION OF WELDED HEADED REINFORCEMENT BEFORE INJECTING CRACK WITH EPOXY.
4. TEMPORARY SHORING WILL BE REQUIRED.

ELEVATIONS, BENCHMARKS AND DIMENSIONS ARE BASED ON "AS-BUILT" PLANS. VERIFY ALL CONTROLLING FIELD DIMENSIONS BEFORE ORDERING OR FABRICATING ANY MATERIAL.

DESIGNED BY: G. IMBSEN

STATE OF ALASKA
DEPARTMENT OF TRANSPORTATION
& PUBLIC FACILITIES
STATEWIDE DESIGN & ENGINEERING SERVICES DIVISION

KTN-VIADUCTS
REHABILITATION
PROJECT NO. 68571

CHECKED BY: M. FIGLEY
DRAWN/REVISED BY: R.S., R/G. C.A.

TONGASS AVENUE
BENT #6 REPAIR

PATH:
PLOT: PSPACE 1=1(F) OR MSPACE 1=1(F)

S-3.0

REVISIONS			PROJECT DESIGNATION	YEAR	SHEET NO.	TOTAL SHEETS
NO.	DATE	DESCRIPTION	NH-0902(34)	2009	9	70

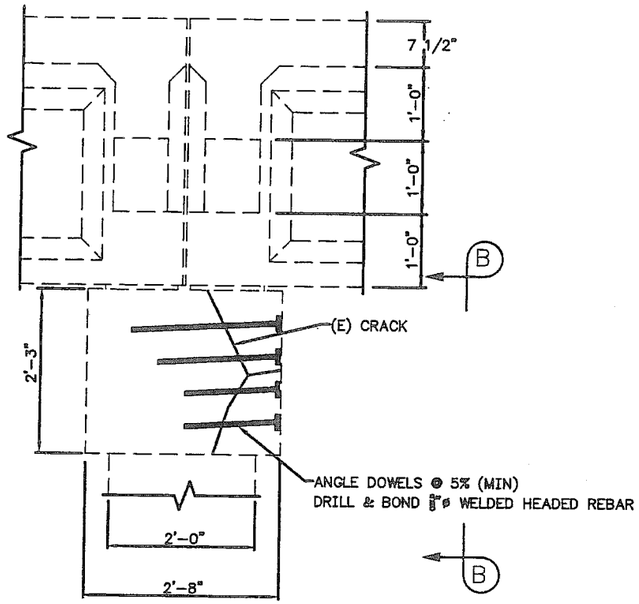

VIEW A-A

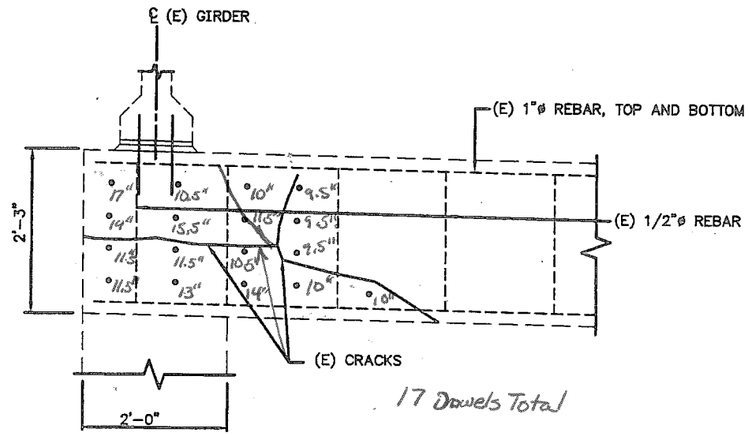

VIEW B-B

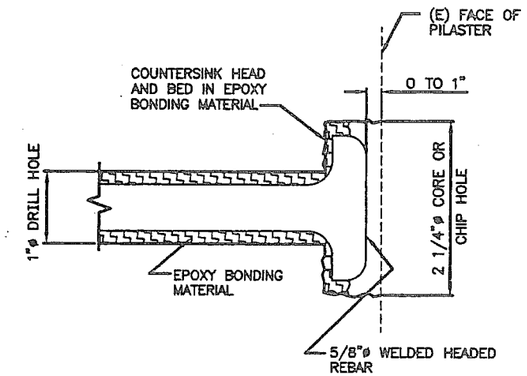

WELDED HEADED REBAR

LEGEND

- - - - - DENOTES EXISTING
——— DENOTES NEW CONSTRUCTION
DENOTES GROUNDLINE
(E) EXISTING
SPALL
NEW CONCRETE
EPOXY BONDING MATERIAL

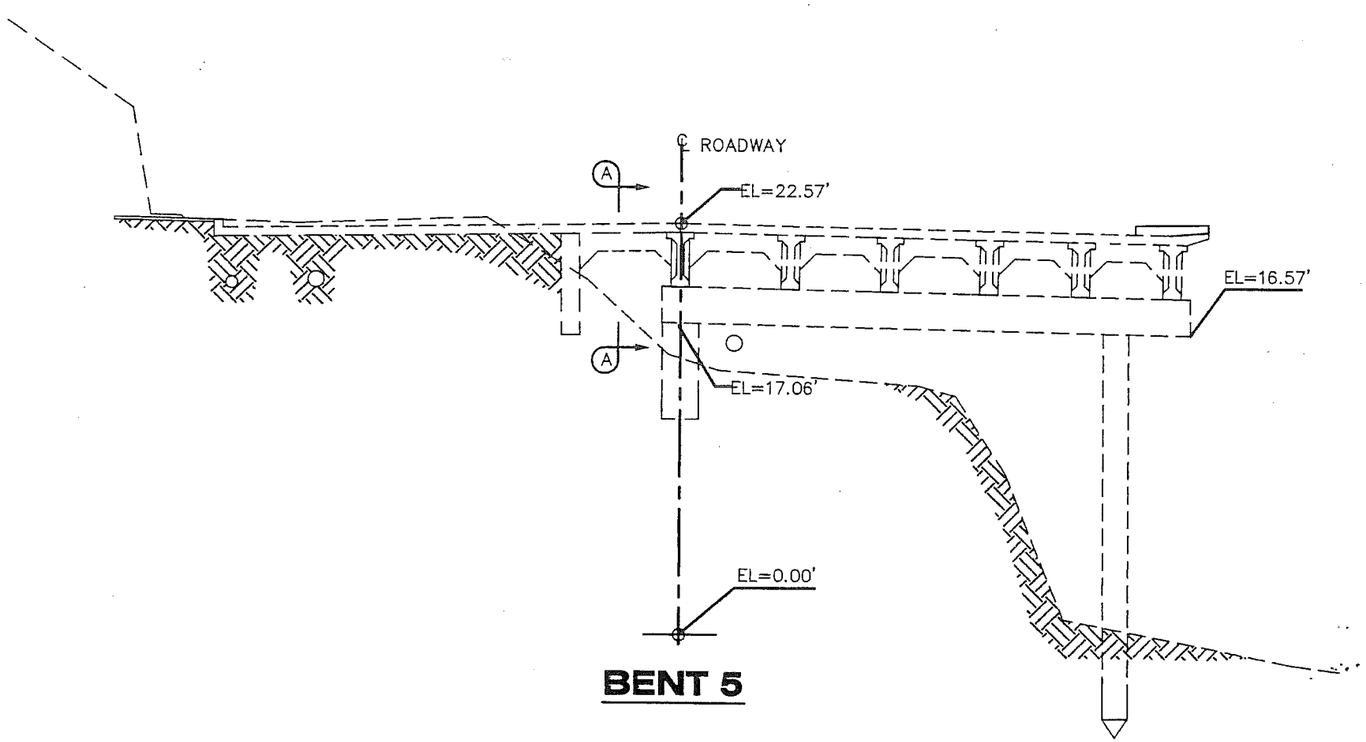

BENT 5

NOTES

1. REPAIR ALL SPALLS AND DELAMINATIONS AS OUTLINED IN THE SPECIFICATIONS BEFORE JACKETING.
2. EXACT LOCATION OF DOWELS WILL BE DETERMINED IN ACCORDANCE WITH SECTION 5.01-3.08 OF THE SPECIFICATIONS.
3. COMPLETE INSTALLATION OF WELDED HEADED REINFORCEMENT BEFORE INJECTING CRACK WITH EPOXY.
4. TEMPORARY SHORING WILL BE REQUIRED.

ELEVATIONS, BENCHMARKS AND DIMENSIONS ARE BASED ON "AS-BUILT" PLANS. VERIFY ALL CONTROLLING FIELD DIMENSIONS BEFORE ORDERING OR FABRICATING ANY MATERIAL.

DESIGNED BY: G. IMBSEN

STATE OF ALASKA
DEPARTMENT OF TRANSPORTATION
& PUBLIC FACILITIES
STATEWIDE DESIGN & ENGINEERING SERVICES DIVISION

KTN-VIADUCTS
REHABILITATION
PROJECT NO. 68571

CHECKED BY: M. FIGLEY
DRAWN/REVISED BY: R.S., R.G./C.A.

TONGASS AVENUE
BENT #5 REPAIR

PATH:
PLOT: PSPACE 1=1(F) OR MSPACE 1=1(F)

S-3.1

REVISIONS			PROJECT DESIGNATION	YEAR	SHEET NO.	TOTAL SHEETS
NO.	DATE	DESCRIPTION	NH-0902(34)	2009	10	70

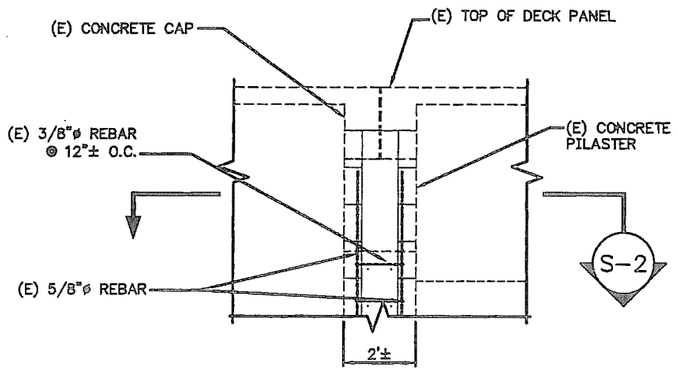

SECTION S-1

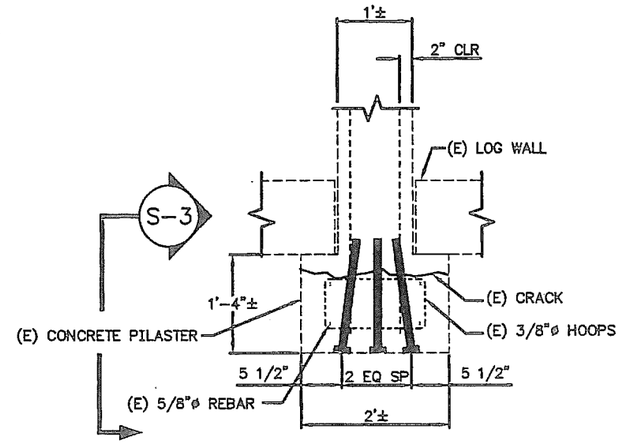

SECTION
CRACK REPAIR S-2

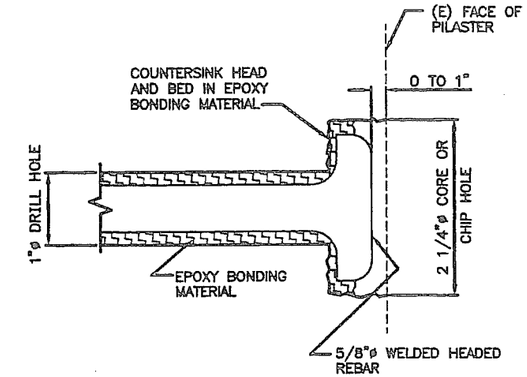

WELDED HEADED REBAR

Welded Headed Reinforcement

Deleted

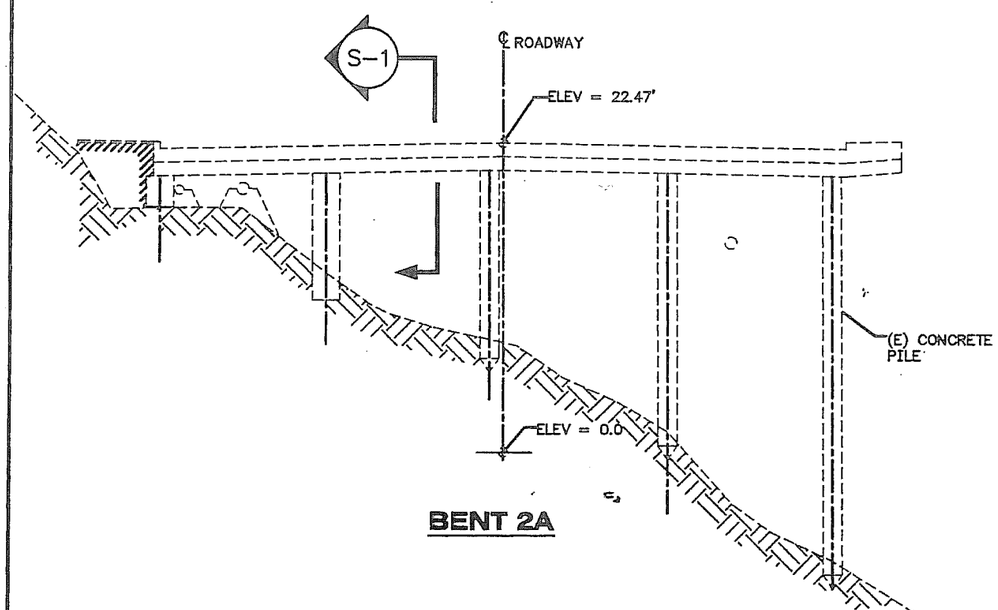

BENT 2A

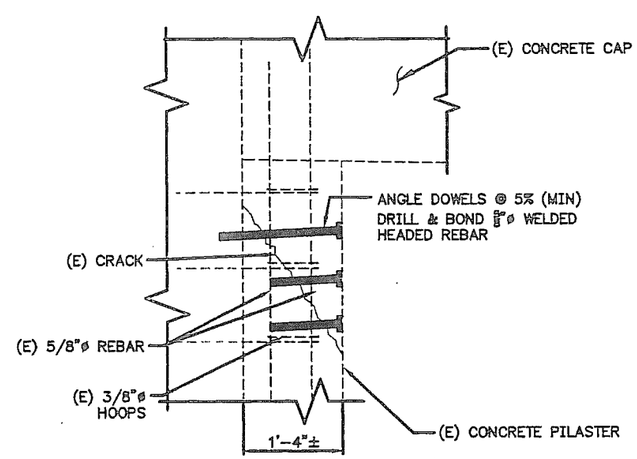

SECTION
CRACK REPAIR S-3

LEGEND

- DENOTES EXISTING
- DENOTES NEW CONSTRUCTION
- DENOTES GROUNDLINE
- (E) EXISTING
- SPALL
- NEW CONCRETE
- EPOXY BONDING MATERIAL

NOTES

1. REPAIR ALL SPALLS AND DELAMINATIONS AS OUTLINED IN THE SPECIFICATIONS BEFORE JACKETING.
2. EXACT LOCATION OF DOWELS WILL BE DETERMINED IN ACCORDANCE WITH SECTION 5.01-3.08 OF THE SPECIFICATIONS.
3. COMPLETE INSTALLATION OF WELDED HEADED REINFORCEMENT BEFORE INJECTING CRACK WITH EPOXY.

ELEVATIONS, BENCHMARKS AND DIMENSIONS ARE BASED ON "AS-BUILT" PLANS. VERIFY ALL CONTROLLING FIELD DIMENSIONS BEFORE ORDERING OR FABRICATING ANY MATERIAL.

DESIGNED BY: G. IMBSEN

STATE OF ALASKA 49th George H. Imbsen No. 4396-E

CHECKED BY: M. FIGLEY
DRAWN/REVISED BY: R.S., R.G. C.A.

STATE OF ALASKA
DEPARTMENT OF TRANSPORTATION
& PUBLIC FACILITIES
STATEWIDE DESIGN & ENGINEERING SERVICES DIVISION

KTN-VIADUCTS
REHABILITATION
PROJECT NO. 68571

TONGASS AVENUE
BENT #2A
PILASTER REPAIR

PATH:
PLOT: PSPACE 1=1(F) OR MSPACE 1=1(F)

S-3.2

REVISIONS			PROJECT DESIGNATION	YEAR	SHEET NO.	TOTAL SHEETS
NO.	DATE	DESCRIPTION				
			NH-0902(34)	2009	11	70

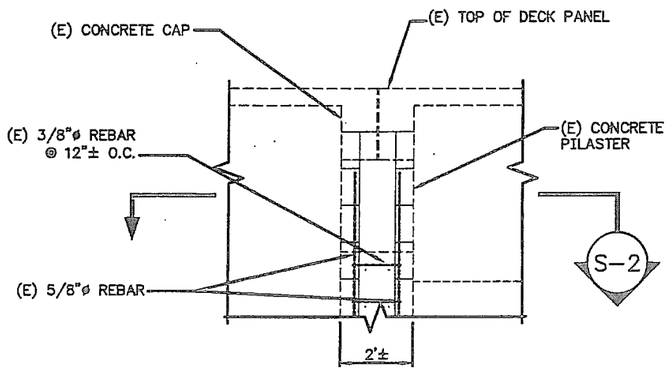

SECTION S-1

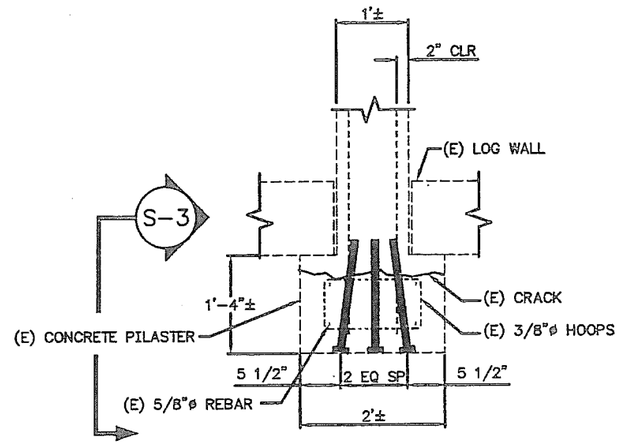

SECTION S-2
CRACK REPAIR

Welded Headed Reinforcement
Deleted

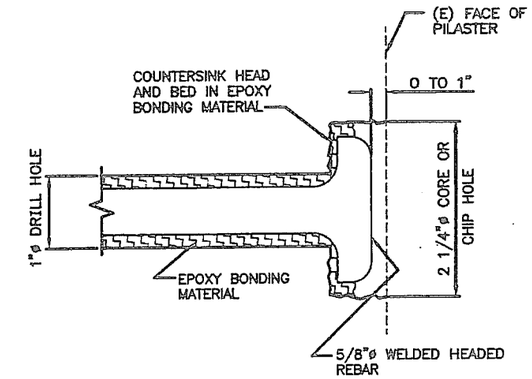

WELDED HEADED REBAR

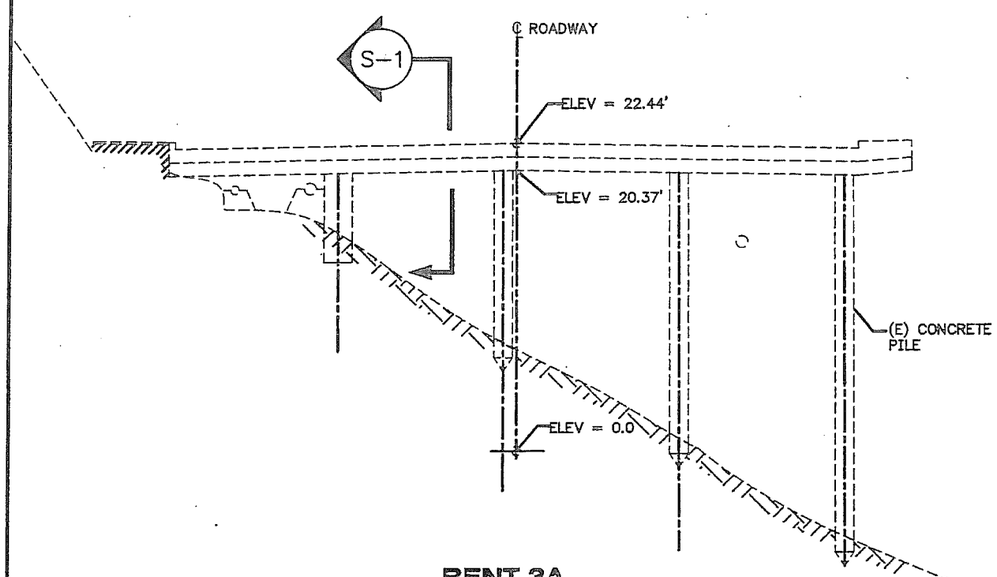

BENT 3A

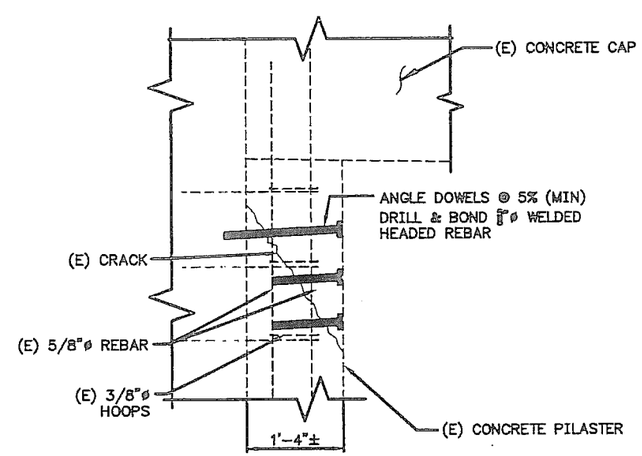

SECTION S-3
CRACK REPAIR

LEGEND

- - - - - - DENOTES EXISTING
——— DENOTES NEW CONSTRUCTION
DENOTES GROUNDLINE
(E) EXISTING
SPALL
NEW CONCRETE
EPOXY BONDING MATERIAL

NOTES

1. REPAIR ALL SPALLS AND DELAMINATIONS AS OUTLINED IN THE SPECIFICATIONS BEFORE JACKETING.
2. EXACT LOCATION OF DOWELS WILL BE DETERMINED IN ACCORDANCE WITH SECTION 5.01-3.08 OF THE SPECIFICATIONS.
3. COMPLETE INSTALLATION OF WELDED HEADED REINFORCEMENT BEFORE INJECTING CRACK WITH EPOXY.

ELEVATIONS, BENCHMARKS AND DIMENSIONS ARE BASED ON "AS-BUILT" PLANS. VERIFY ALL CONTROLLING FIELD DIMENSIONS BEFORE ORDERING OR FABRICATING ANY MATERIAL.

DESIGNED BY: G. IMBSEN
CHECKED BY: M. FIGLEY
DRAWN/REVISED BY: R.S., R.G., C.A.

STATE OF ALASKA
DEPARTMENT OF TRANSPORTATION
& PUBLIC FACILITIES
STATEWIDE DESIGN & ENGINEERING SERVICES DIVISION

KTN-VIADUCTS
REHABILITATION
PROJECT NO. 68571

TONGASS AVENUE
BENT #3A
PILASTER REPAIR

PATH:
PLOT: PSPACE 1=1(F) OR MSPACE 1=1(F)

S-3.3

REVISIONS			PROJECT DESIGNATION	YEAR	SHEET NO.	TOTAL SHEETS
NO.	DATE	DESCRIPTION	NH-0902(34)	2009	12	70

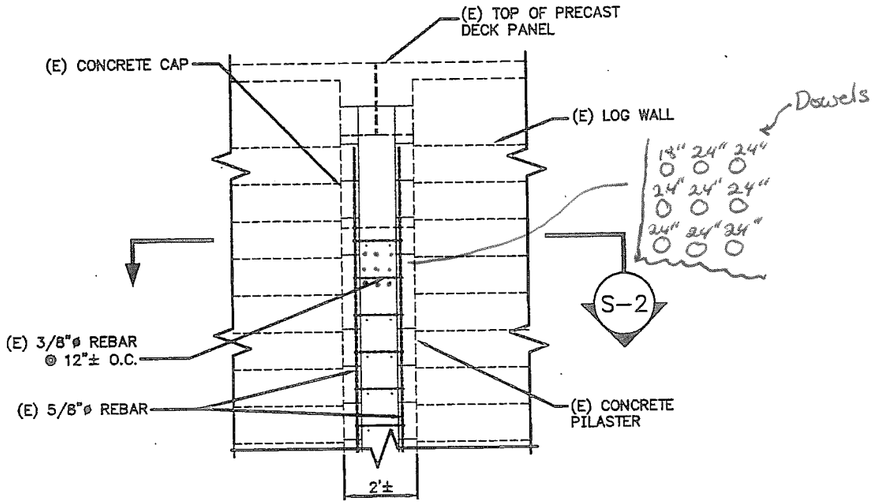

SECTION S-1

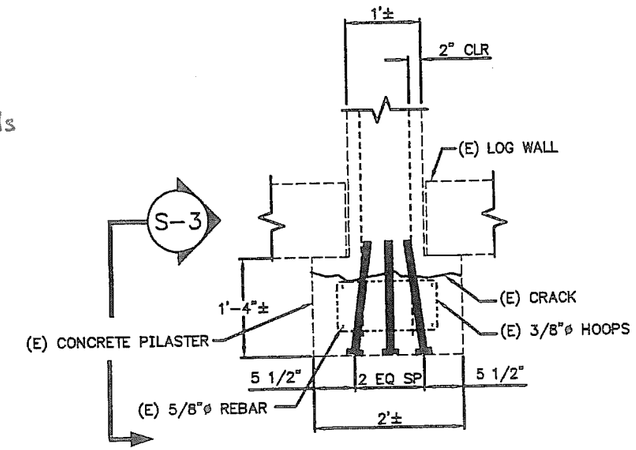

SECTION S-2
CRACK REPAIR

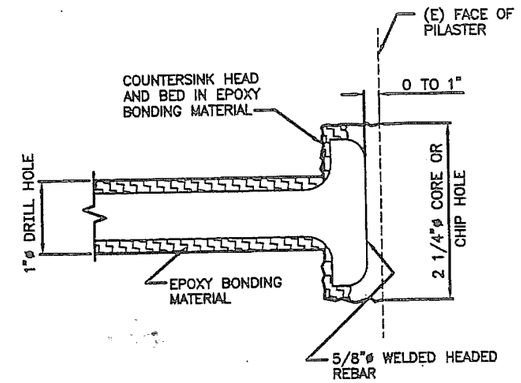

WELDED HEADED REBAR

LEGEND

- - - - - DENOTES EXISTING

——— DENOTES NEW CONSTRUCTION

DENOTES GROUNDLINE

(E) EXISTING

SPALL

NEW CONCRETE

EPOXY BONDING MATERIAL

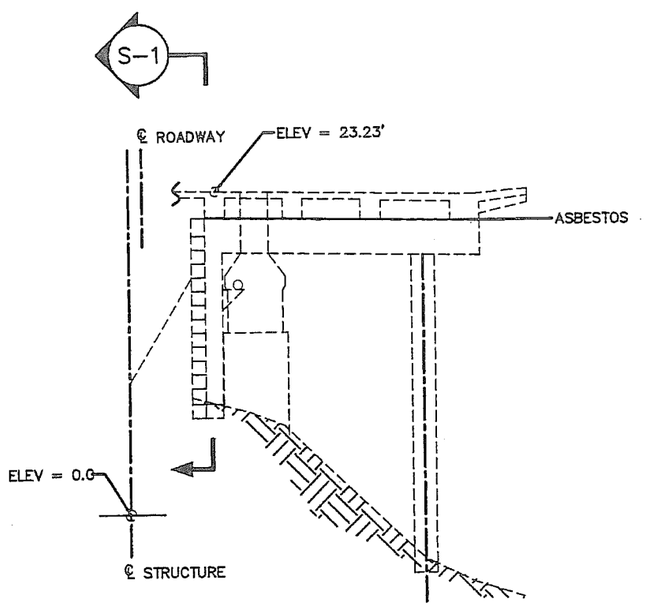

BENT 65

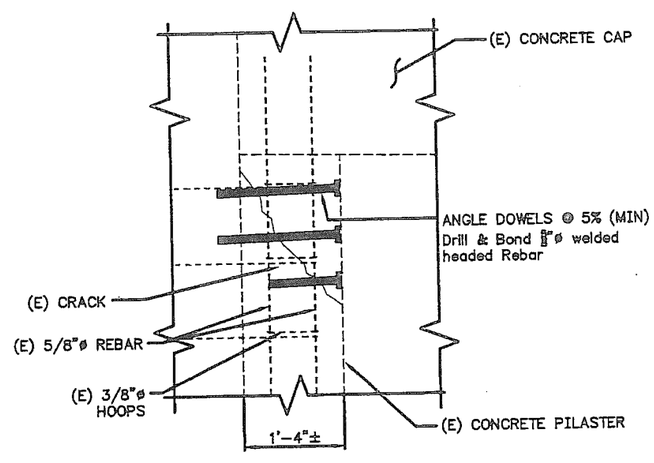

SECTION S-3
CRACK REPAIR

NOTES

1. REPAIR ALL SPALLS AND DELAMINATIONS AS OUTLINED IN THE SPECIFICATIONS BEFORE JACKETING.
2. EXACT LOCATION OF DOWELS WILL BE DETERMINED IN ACCORDANCE WITH SECTION 5.01-3.08 OF THE SPECIFICATIONS.
3. COMPLETE INSTALLATION OF WELDED HEADED REINFORCEMENT BEFORE INJECTING CRACK WITH EPOXY.

ELEVATIONS, BENCHMARKS AND DIMENSIONS ARE BASED ON "AS-BUILT" PLANS. VERIFY ALL CONTROLLING FIELD DIMENSIONS BEFORE ORDERING OR FABRICATING ANY MATERIAL.

DESIGNED BY: G. IMBSEN
CHECKED BY: M. FIGLEY
DRAWN/REVISED BY: R.S., R.G., C.A.

STATE OF ALASKA
DEPARTMENT OF TRANSPORTATION & PUBLIC FACILITIES
STATEWIDE DESIGN & ENGINEERING SERVICES DIVISION

KTN-VIADUCTS REHABILITATION
PROJECT NO. 68571
WATER STREET
BENT #65
PILASTER REPAIR

PATH:
PLOT: PSPACE 1=1(F) OR MSPACE 1=1(F)

S-3.4

REVISIONS			PROJECT DESIGNATION	YEAR	SHEET NO.	TOTAL SHEETS
NO.	DATE	DESCRIPTION	NH-0902(34)	2009	13	70

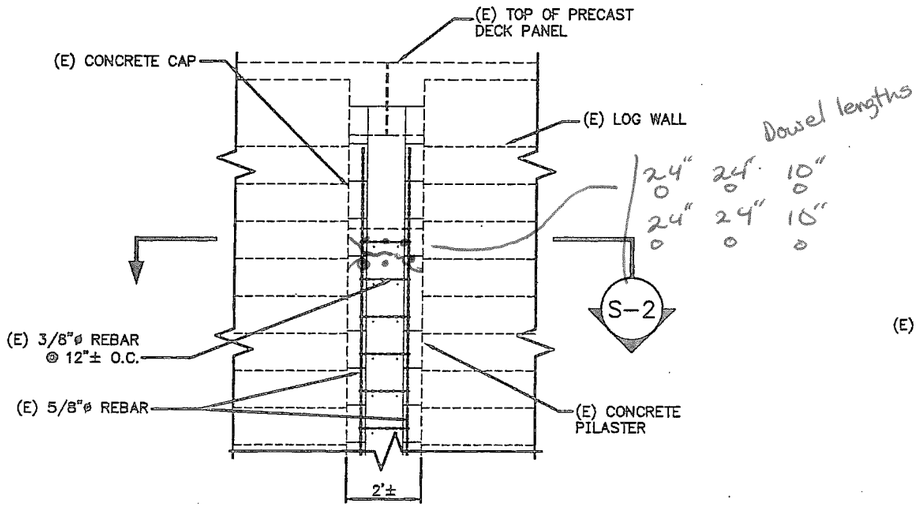

SECTION S-1

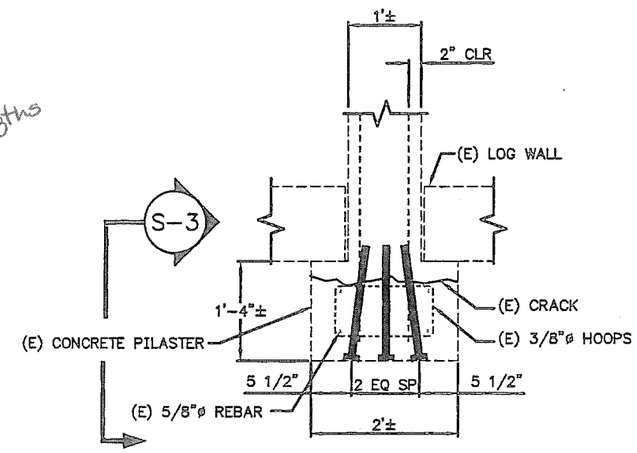

SECTION S-2
CRACK REPAIR

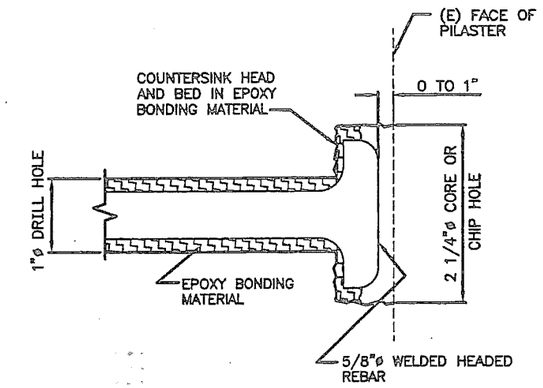

WELDED HEADED REBAR

LEGEND

- - - - - DENOTES EXISTING
——— DENOTES NEW CONSTRUCTION
DENOTES GROUNDLINE
(E) EXISTING
SPALL
NEW CONCRETE
EPOXY BONDING MATERIAL

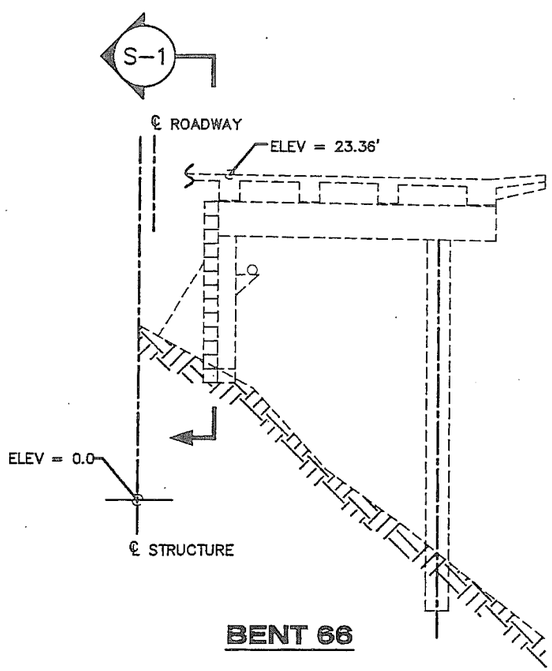

BENT 66

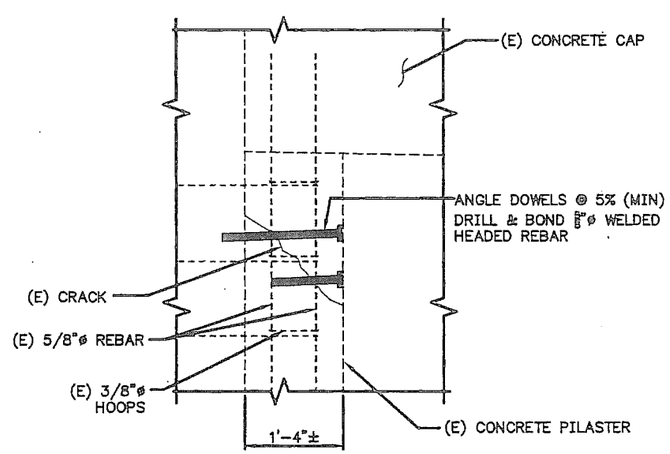

SECTION S-3
CRACK REPAIR

NOTES

1. REPAIR ALL SPALLS AND DELAMINATIONS AS OUTLINED IN THE SPECIFICATIONS BEFORE JACKETING.
2. EXACT LOCATION OF DOWELS WILL BE DETERMINED IN ACCORDANCE WITH SECTION 5.01-3.08 OF THE SPECIFICATIONS.
3. COMPLETE INSTALLATION OF WELDED HEADED REINFORCEMENT BEFORE INJECTING CRACK WITH EPOXY.

ELEVATIONS, BENCHMARKS AND DIMENSIONS ARE BASED ON "AS-BUILT" PLANS. VERIFY ALL CONTROLLING FIELD DIMENSIONS BEFORE ORDERING OR FABRICATING ANY MATERIAL.

DESIGNED BY: G. IMBSEN
CHECKED BY: M. FIGLEY
DRAWN/REVISED BY: R.S.,R.C.,C.A.

STATE OF ALASKA
DEPARTMENT OF TRANSPORTATION & PUBLIC FACILITIES
STATEWIDE DESIGN & ENGINEERING SERVICES DIVISION

KTN-VIADUCTS REHABILITATION
PROJECT NO. 68571
WATER STREET
BENT #66
PILASTER REPAIR

PATH:
PLOT: PSPACE 1=1(F) OR MSPACE 1=1(F)

S-3.5

REVISIONS			PROJECT DESIGNATION	YEAR	SHEET NO.	TOTAL SHEETS
NO.	DATE	DESCRIPTION	NH-0902(34)	2009	14	70

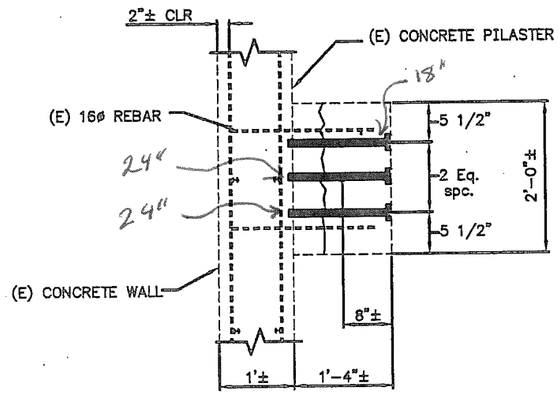

SECTION S-1
CRACK REPAIR

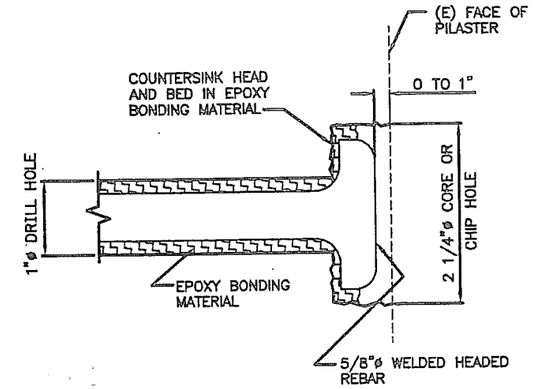

WELDED HEADED REBAR

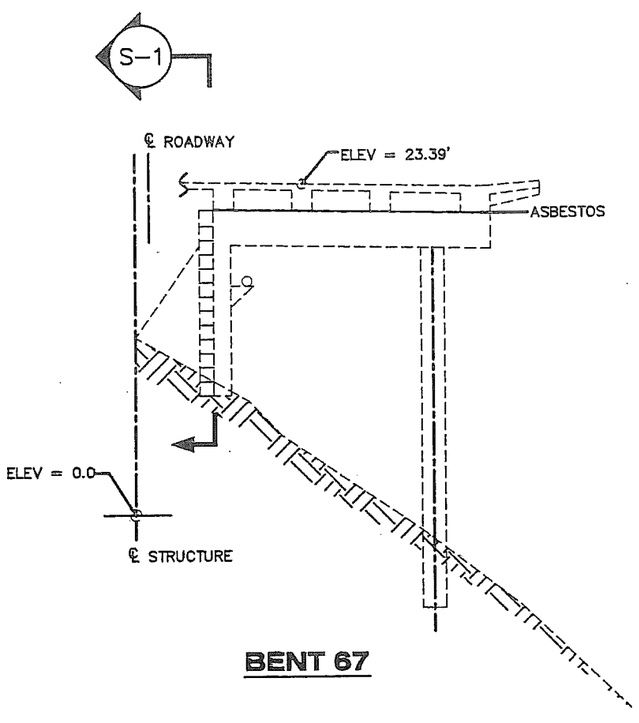

BENT 67

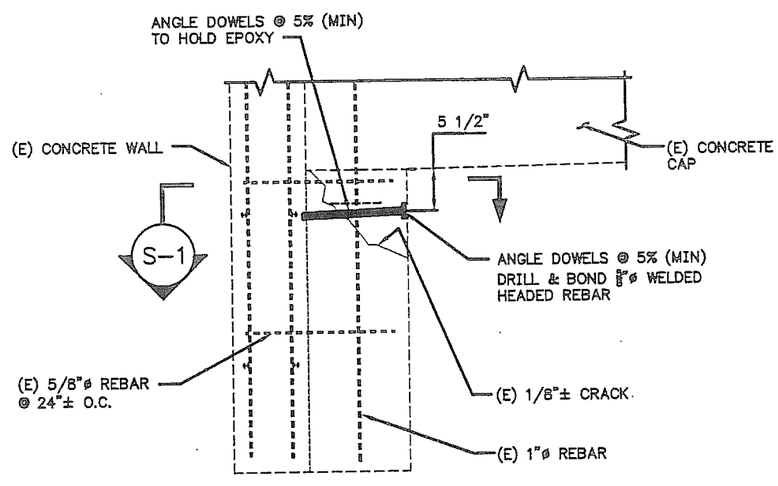

DETAIL 'A'
CRACK REPAIR

LEGEND

- - - - - - DENOTES EXISTING
——— DENOTES NEW CONSTRUCTION
DENOTES GROUNDLINE
(E) EXISTING
SPALL
NEW CONCRETE
EPOXY BONDING MATERIAL

NOTES

1. REPAIR ALL SPALLS AND DELAMINATIONS AS OUTLINED IN THE SPECIFICATIONS BEFORE JACKETING.
2. EXACT LOCATION OF DOWELS WILL BE DETERMINED IN ACCORDANCE WITH SECTION 5.01-3.08 OF THE SPECIFICATIONS.
3. COMPLETE INSTALLATION OF WELDED HEADED REINFORCEMENT BEFORE INJECTING CRACK WITH EPOXY.

ELEVATIONS, BENCHMARKS AND DIMENSIONS ARE BASED ON "AS-BUILT" PLANS. VERIFY ALL CONTROLLING FIELD DIMENSIONS BEFORE ORDERING OR FABRICATING ANY MATERIAL.

DESIGNED BY: G. IMBSEN

STATE OF ALASKA 49th George H. Imbsen No. 4385-F

CHECKED BY: M. FIGLEY
DRAWN/REVISED BY: R.S., R.G., C.A.

STATE OF ALASKA
DEPARTMENT OF TRANSPORTATION & PUBLIC FACILITIES
STATEWIDE DESIGN & ENGINEERING SERVICES DIVISION

KTN-VIADUCTS REHABILITATION
PROJECT NO. 68571
WATER STREET
BENT #67
PILASTER REPAIR

PATH:
PLOT: PSPACE 1=1(F) OR MSPACE 1=1(F)

S-3.6

REVISIONS			PROJECT DESIGNATION	YEAR	SHEET NO.	TOTAL SHEETS
NO.	DATE	DESCRIPTION	NH-0902(34)	2009	15	70

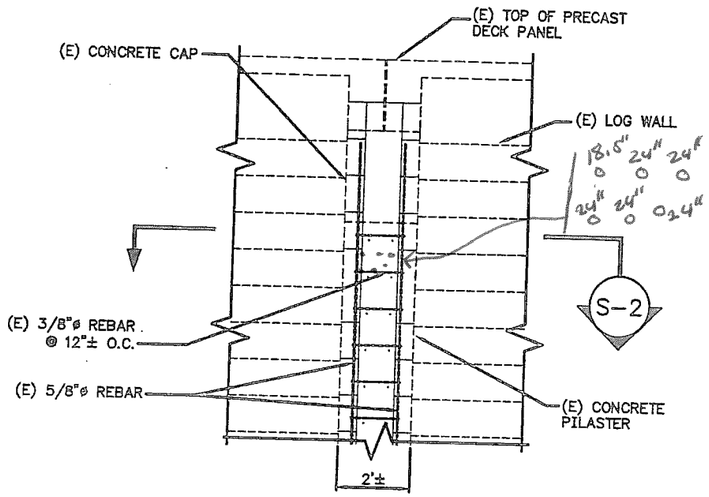

SECTION S-1

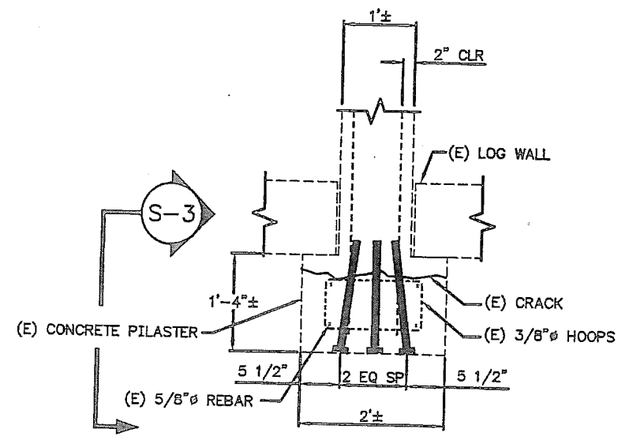

SECTION CRACK REPAIR S-2

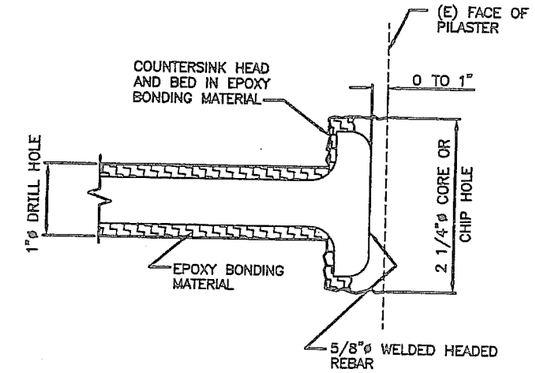

WELDED HEADED REBAR

LEGEND

- - - - - - DENOTES EXISTING

——— DENOTES NEW CONSTRUCTION

DENOTES GROUNDLINE

(E) EXISTING

SPALL

NEW CONCRETE

EPOXY BONDING MATERIAL

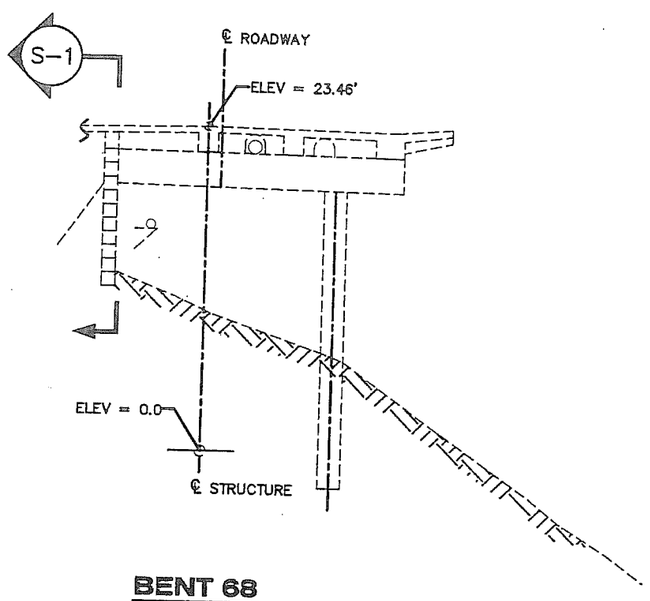

BENT 68

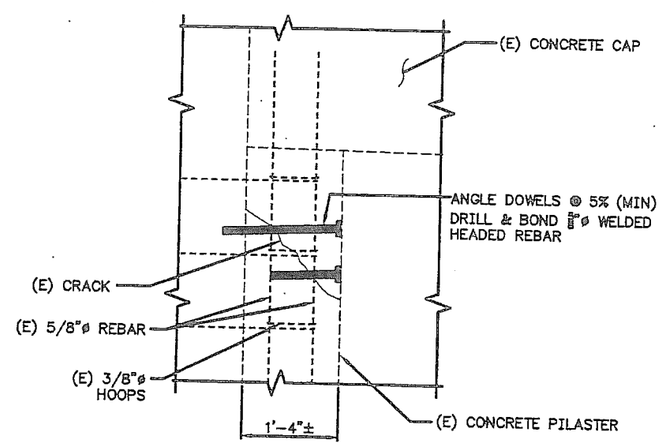

SECTION CRACK REPAIR S-3

NOTES

1. REPAIR ALL SPALLS AND DELAMINATIONS AS OUTLINED IN THE SPECIFICATIONS BEFORE JACKETING.
2. EXACT LOCATION OF DOWELS WILL BE DETERMINED IN ACCORDANCE WITH SECTION 5.01-3.08 OF THE SPECIFICATIONS.
3. COMPLETE INSTALLATION OF WELDED HEADED REINFORCEMENT BEFORE INJECTING CRACK WITH EPOXY.

ELEVATIONS, BENCHMARKS AND DIMENSIONS ARE BASED ON "AS-BUILT" PLANS. VERIFY ALL CONTROLLING FIELD DIMENSIONS BEFORE ORDERING OR FABRICATING ANY MATERIAL.

DESIGNED BY: G. IMBSEN

STATE OF ALASKA 49th George H. Imbsen No. CE-E

CHECKED BY: M. FIGLEY

DRAWN/REVISED BY: R.S., R.O., C.A.

STATE OF ALASKA
DEPARTMENT OF TRANSPORTATION & PUBLIC FACILITIES
STATEWIDE DESIGN & ENGINEERING SERVICES DIVISION

KTN-VIADUCTS REHABILITATION
PROJECT NO. 68571
WATER STREET
BENT #68
PILASTER REPAIR

PATH:
PLOT: PSPACE 1=1(F) OR MSPACE 1=1(F)

S-3.7

REVISIONS			PROJECT DESIGNATION	YEAR	SHEET NO.	TOTAL SHEETS
NO.	DATE	DESCRIPTION				
			NH-0902(34)	2009	16	70

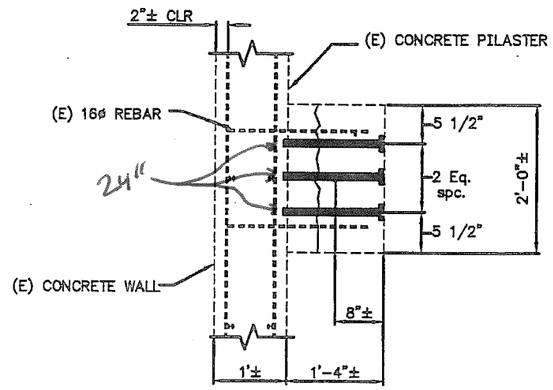

SECTION CRACK REPAIR (S-1)

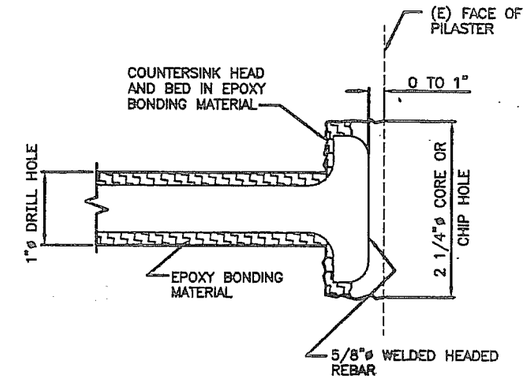

WELDED HEADED REBAR

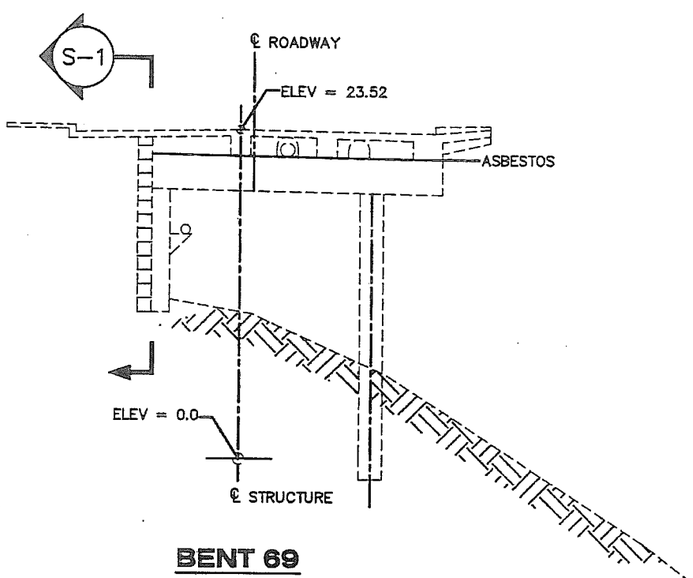

BENT 69

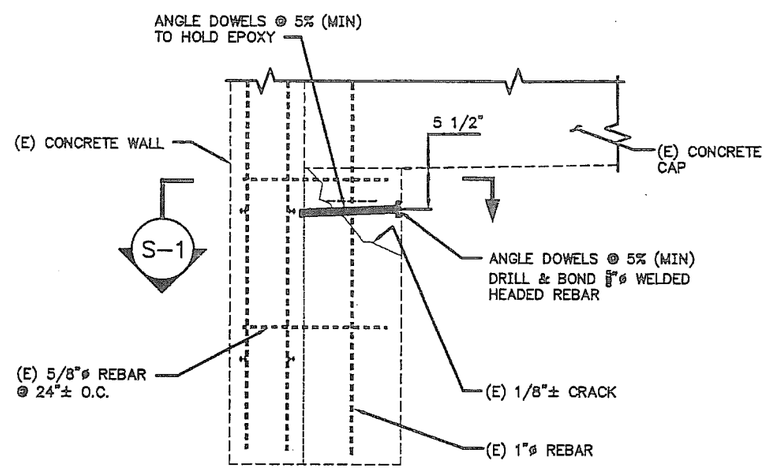

DETAIL 'A' CRACK REPAIR

LEGEND

- - - - - DENOTES EXISTING
——— DENOTES NEW CONSTRUCTION
DENOTES GROUNDLINE
(E) EXISTING
SPALL
NEW CONCRETE
EPOXY BONDING MATERIAL

NOTES

1. REPAIR ALL SPALLS AND DELAMINATIONS AS OUTLINED IN THE SPECIFICATIONS BEFORE JACKETING.
2. EXACT LOCATION OF DOWELS WILL BE DETERMINED IN ACCORDANCE WITH SECTION 5.01-3.08 OF THE SPECIFICATIONS.
3. COMPLETE INSTALLATION OF WELDED HEADED REINFORCEMENT BEFORE INJECTING CRACK WITH EPOXY.

ELEVATIONS, BENCHMARKS AND DIMENSIONS ARE BASED ON "AS-BUILT" PLANS. VERIFY ALL CONTROLLING FIELD DIMENSIONS BEFORE ORDERING OR FABRICATING ANY MATERIAL.

DESIGNED BY: G. IMBSEN

STATE OF ALASKA
DEPARTMENT OF TRANSPORTATION
& PUBLIC FACILITIES
STATEWIDE DESIGN & ENGINEERING SERVICES DIVISION

KTN-VIADUCTS
REHABILITATION
PROJECT NO. 68571

WATER STREET
BENT #69
PILASTER REPAIR

CHECKED BY: M. FIGLEY
DRAWN/REVISED BY: R.S., R.C.C.A.

PATH:
PLOT: PSPACE 1=1(F) OR MSPACE 1=1(F)

S-3.8

REVISIONS			PROJECT DESIGNATION	YEAR	SHEET NO.	TOTAL SHEETS
NO.	DATE	DESCRIPTION				
			NH-0902(34)	2009	17	70

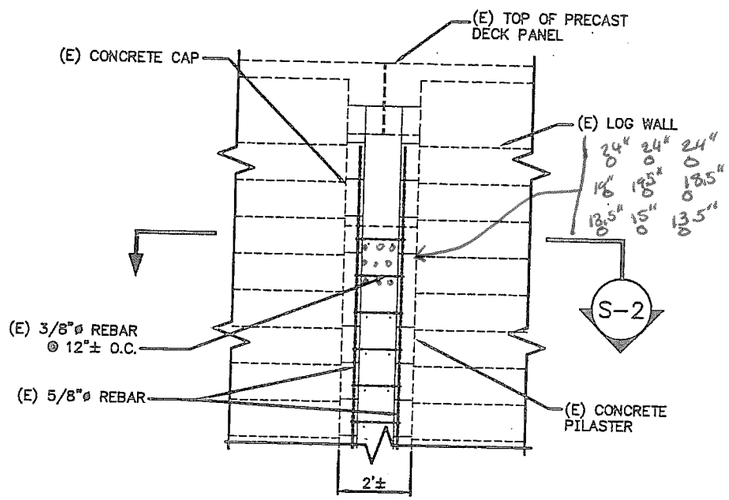

SECTION S-1

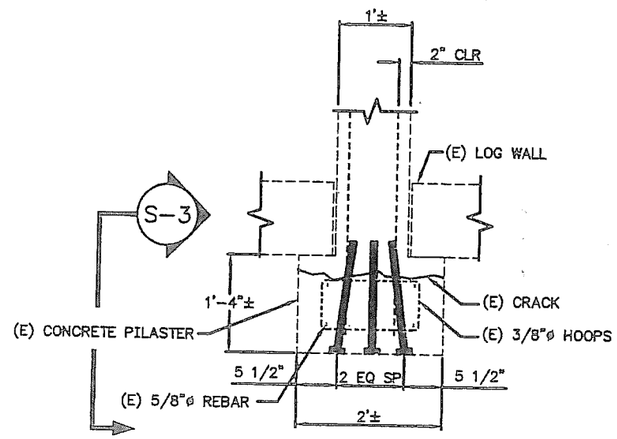

SECTION CRACK REPAIR S-2

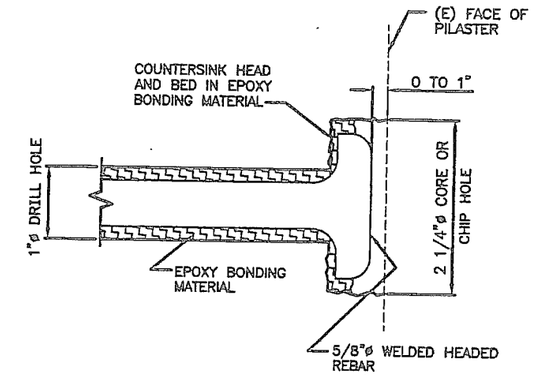

WELDED HEADED REBAR

LEGEND

- - - - - DENOTES EXISTING
——— DENOTES NEW CONSTRUCTION
DENOTES GROUNDLINE
(E) EXISTING
SPALL
NEW CONCRETE
EPOXY BONDING MATERIAL

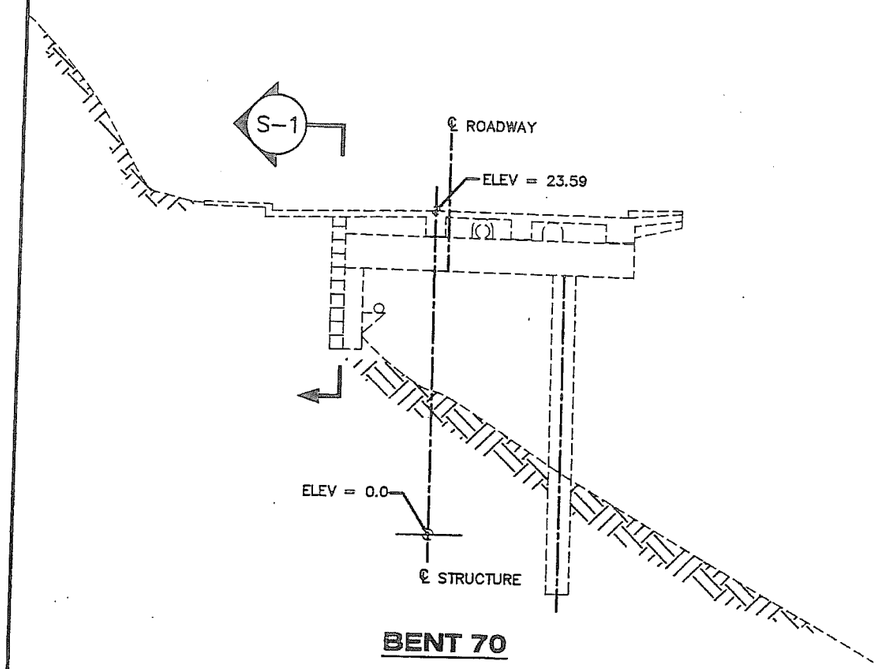

BENT 70

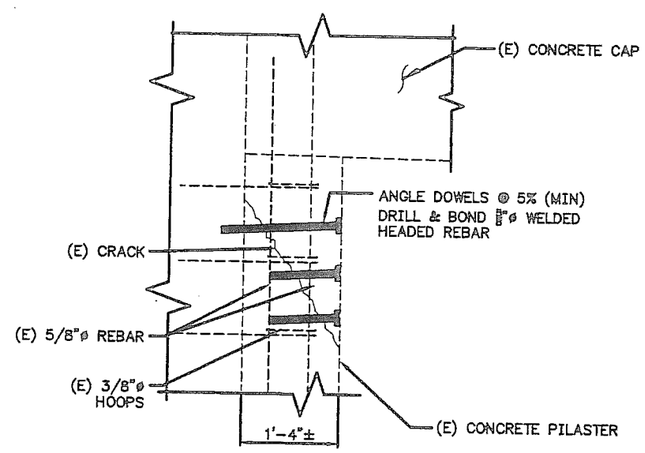

SECTION CRACK REPAIR S-3

NOTES

1. REPAIR ALL SPALLS AND DELAMINATIONS AS OUTLINED IN THE SPECIFICATIONS BEFORE JACKETING.
2. EXACT LOCATION OF DOWELS WILL BE DETERMINED IN ACCORDANCE WITH SECTION 5.01-3.08 OF THE SPECIFICATIONS.
3. COMPLETE INSTALLATION OF WELDED HEADED REINFORCEMENT BEFORE INJECTING CRACK WITH EPOXY.

ELEVATIONS, BENCHMARKS AND DIMENSIONS ARE BASED ON "AS-BUILT" PLANS. VERIFY ALL CONTROLLING FIELD DIMENSIONS BEFORE ORDERING OR FABRICATING ANY MATERIAL.

DESIGNED BY: G. IMBSEN

STATE OF ALASKA
DEPARTMENT OF TRANSPORTATION & PUBLIC FACILITIES
STATEWIDE DESIGN & ENGINEERING SERVICES DIVISION

KTN-VIADUCTS REHABILITATION
PROJECT NO. 68571
WATER STREET
BENT #70
PILASTER REPAIR

CHECKED BY: M. FIGLEY
DRAWN/REVISED BY: R.S., R.C., C.A.

PATH:
PLOT: PSPACE 1=1(F) OR MSPACE 1=1(F)

S-3.9

REVISIONS			PROJECT DESIGNATION	YEAR	SHEET NO.	TOTAL SHEETS
NO.	DATE	DESCRIPTION	NH-0902(34)	2009	18	70

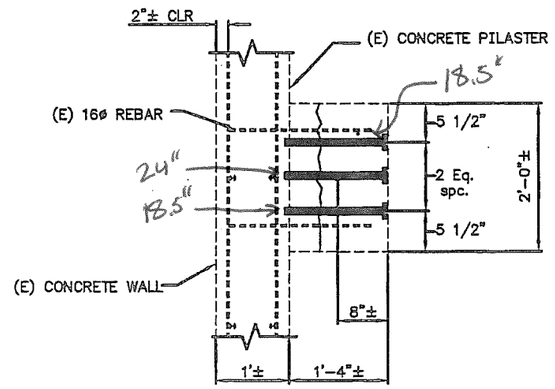

SECTION S-1
CRACK REPAIR

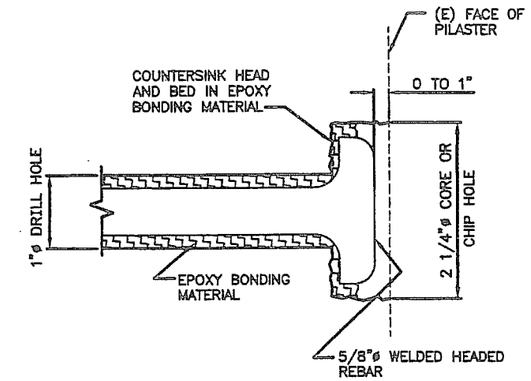

WELDED HEADED REBAR

LEGEND

- - - - - DENOTES EXISTING
——— DENOTES NEW CONSTRUCTION
DENOTES GROUNDLINE
(E) EXISTING
SPALL
NEW CONCRETE
EPOXY BONDING MATERIAL

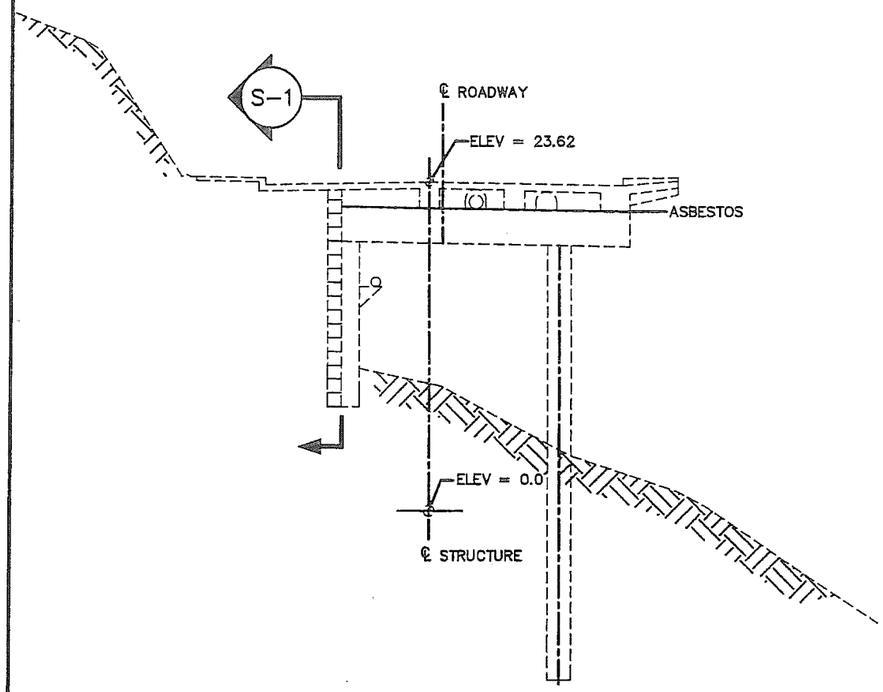

BENT 71

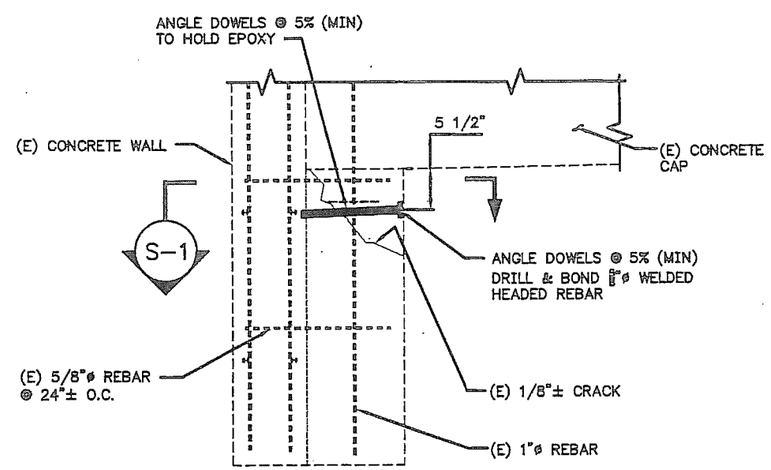

DETAIL 'A'
CRACK REPAIR

NOTES

1. REPAIR ALL SPALLS AND DELAMINATIONS AS OUTLINED IN THE SPECIFICATIONS BEFORE JACKETING.
2. EXACT LOCATION OF DOWELS WILL BE DETERMINED IN ACCORDANCE WITH SECTION 5.01-3.08 OF THE SPECIFICATIONS.
3. COMPLETE INSTALLATION OF WELDED HEADED REINFORCEMENT BEFORE INJECTING CRACK WITH EPOXY.

ELEVATIONS, BENCHMARKS AND DIMENSIONS ARE BASED ON "AS-BUILT" PLANS. VERIFY ALL CONTROLLING FIELD DIMENSIONS BEFORE ORDERING OR FABRICATING ANY MATERIAL.

DESIGNED BY: G. IMBSEN

STATE OF ALASKA
DEPARTMENT OF TRANSPORTATION
& PUBLIC FACILITIES
STATEWIDE DESIGN & ENGINEERING SERVICES DIVISION

KTN-VIADUCTS
REHABILITATION
PROJECT NO. 68571

WATER STREET
BENT #71
PILASTER REPAIR

CHECKED BY: M. FIGLEY
DRAWN/REVISED BY: R.S., R.G., C.A.

PATH:
PLOT: PSPACE 1=1(F) OR MSPACE 1=1(F)

S-3.10

REVISIONS			PROJECT DESIGNATION	YEAR	SHEET NO.	TOTAL SHEETS
NO.	DATE	DESCRIPTION				
			NH-0902(34)	2009	19	70

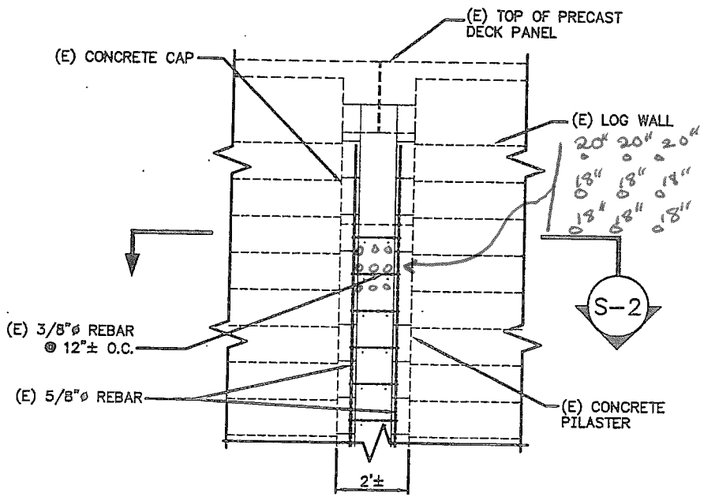

SECTION S-1

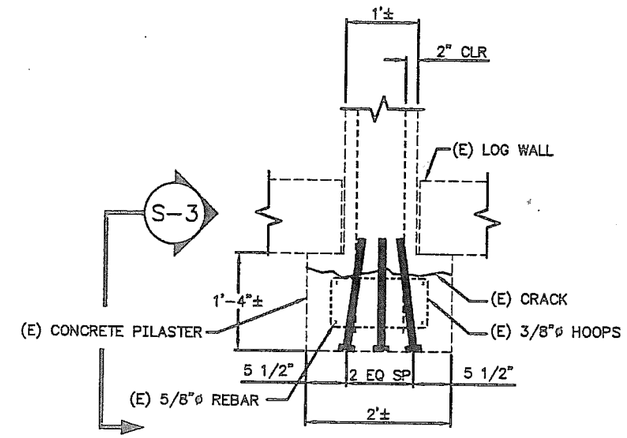

SECTION CRACK REPAIR S-2

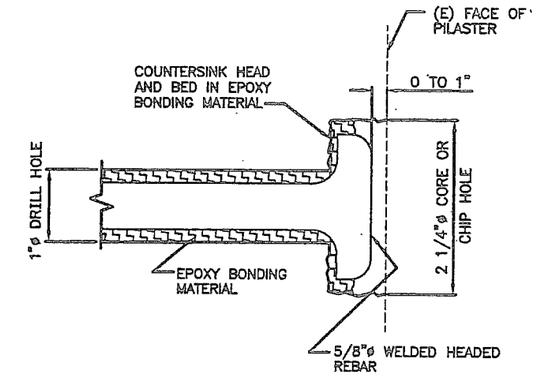

WELDED HEADED REBAR

LEGEND

- - - - - DENOTES EXISTING
——— DENOTES NEW CONSTRUCTION
DENOTES GROUNDLINE
(E) EXISTING
SPALL
NEW CONCRETE
EPOXY BONDING MATERIAL

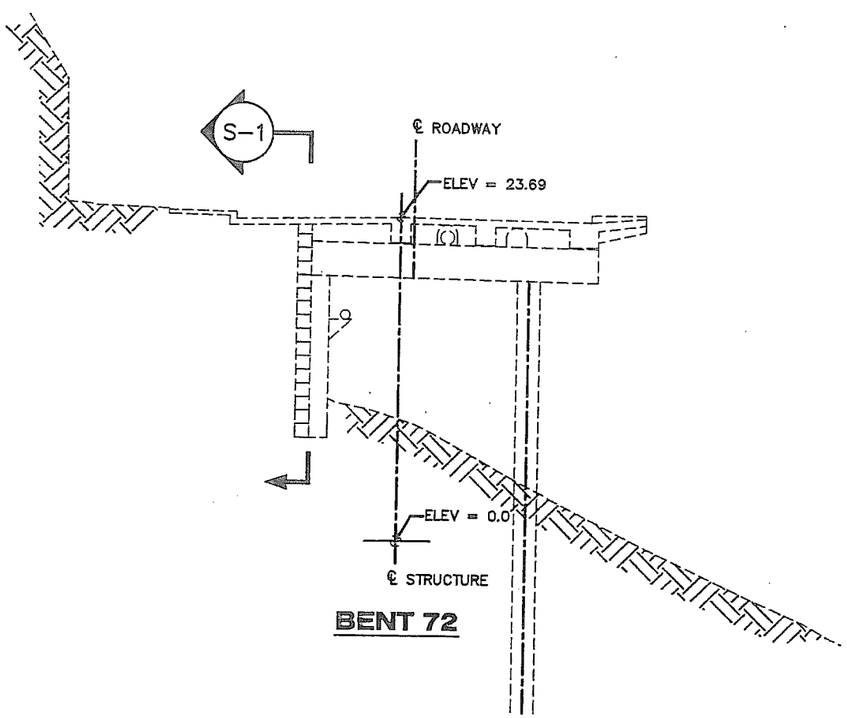

BENT 72

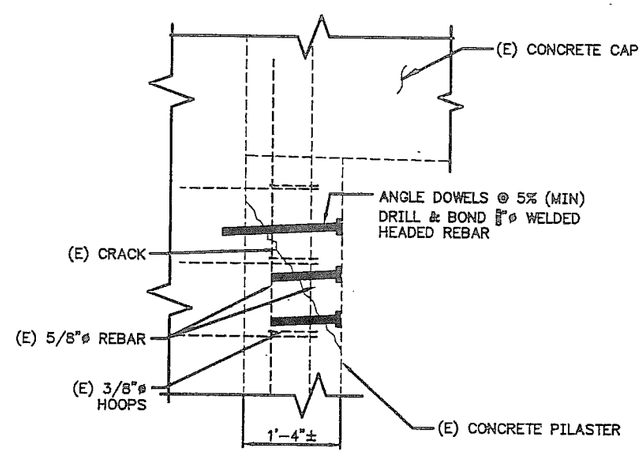

SECTION CRACK REPAIR S-3

NOTES

1. REPAIR ALL SPALLS AND DELAMINATIONS AS OUTLINED IN THE SPECIFICATIONS BEFORE JACKETING.
2. EXACT LOCATION OF DOWELS WILL BE DETERMINED IN ACCORDANCE WITH SECTION 5.01-3.08 OF THE SPECIFICATIONS.
3. COMPLETE INSTALLATION OF WELDED HEADED REINFORCEMENT BEFORE INJECTING CRACK WITH EPOXY.

ELEVATIONS, BENCHMARKS AND DIMENSIONS ARE BASED ON "AS-BUILT" PLANS. VERIFY ALL CONTROLLING FIELD DIMENSIONS BEFORE ORDERING OR FABRICATING ANY MATERIAL.

DESIGNED BY: G. IMBSEN

STATE OF ALASKA
DEPARTMENT OF TRANSPORTATION & PUBLIC FACILITIES
STATEWIDE DESIGN & ENGINEERING SERVICES DIVISION

KTN-VIADUCTS REHABILITATION
PROJECT NO. 68571
WATER STREET
BENT #72
PILASTER REPAIR

CHECKED BY: M. FIGLEY
DRAWN/REVISED BY: R.S., R.G., C.A.

PATH:
PLOT: PSPACE 1=1(F) OR MSPACE 1=1(F)

S-3.11

REVISIONS			PROJECT DESIGNATION	YEAR	SHEET NO.	TOTAL SHEETS
NO.	DATE	DESCRIPTION	NH-0902(34)	2009	20	70

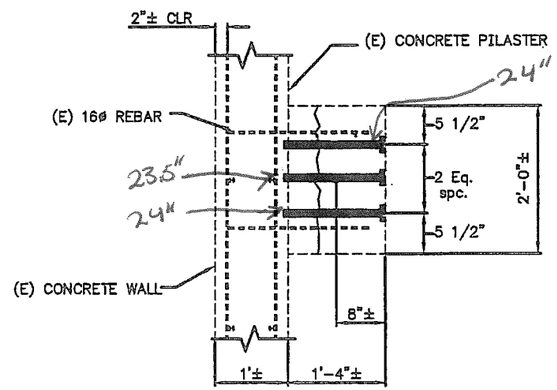

SECTION CRACK REPAIR (S-1)

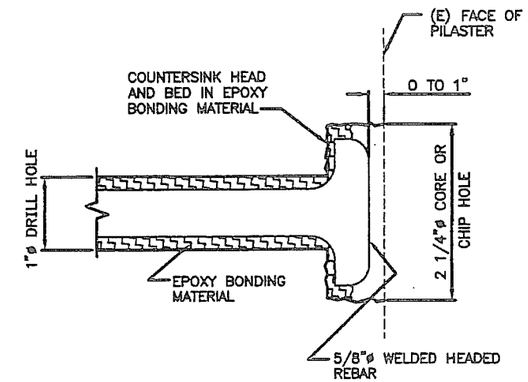

WELDED HEADED REBAR

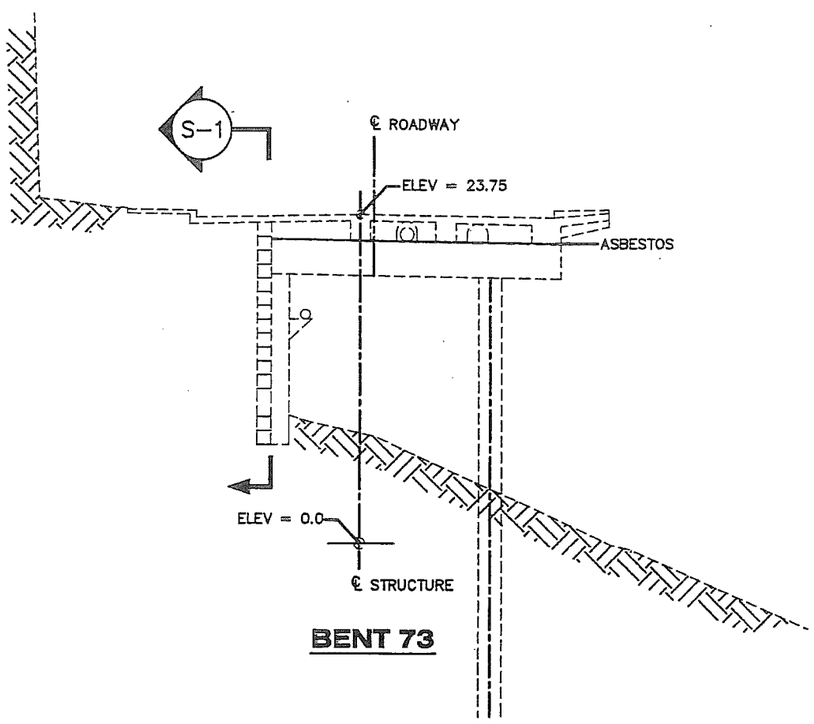

BENT 73

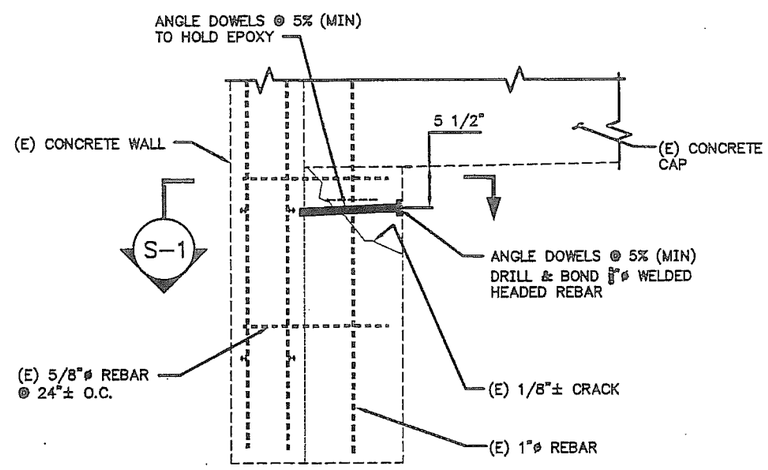

DETAIL 'A' CRACK REPAIR

LEGEND

- - - - - - DENOTES EXISTING
——— DENOTES NEW CONSTRUCTION
DENOTES GROUNDLINE
(E) EXISTING
SPALL
NEW CONCRETE
EPOXY BONDING MATERIAL

NOTES

1. REPAIR ALL SPALLS AND DELAMINATIONS AS OUTLINED IN THE SPECIFICATIONS BEFORE JACKETING.
2. EXACT LOCATION OF DOWELS WILL BE DETERMINED IN ACCORDANCE WITH SECTION 5.01-3.08 OF THE SPECIFICATIONS.
3. COMPLETE INSTALLATION OF WELDED HEADED REINFORCEMENT BEFORE INJECTING CRACK WITH EPOXY.

ELEVATIONS, BENCHMARKS AND DIMENSIONS ARE BASED ON "AS-BUILT" PLANS. VERIFY ALL CONTROLLING FIELD DIMENSIONS BEFORE ORDERING OR FABRICATING ANY MATERIAL.

DESIGNED BY: G. IMBSEN
CHECKED BY: M. FIGLEY
DRAWN/REVISED BY: R.S., R/G., C.A.

STATE OF ALASKA
DEPARTMENT OF TRANSPORTATION & PUBLIC FACILITIES
STATEWIDE DESIGN & ENGINEERING SERVICES DIVISION

KTN-VIADUCTS REHABILITATION
PROJECT NO. 68571
WATER STREET
BENT #73
PILASTER REPAIR

PATH:
PLOT: PSPACE 1=1(F) OR MSPACE 1=1(F)

S-3.12

REVISIONS			PROJECT DESIGNATION	YEAR	SHEET NO.	TOTAL SHEETS
NO.	DATE	DESCRIPTION				
			NH-0902(34)	2009	21	70

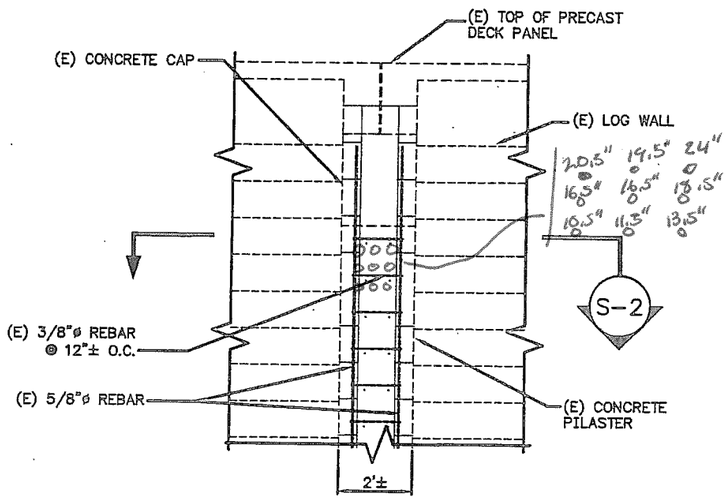

SECTION S-1

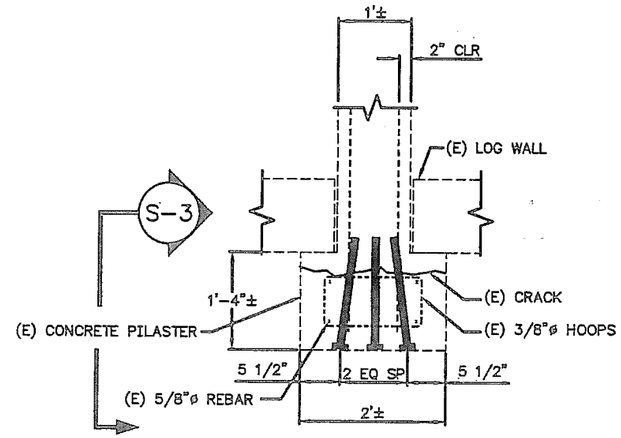

SECTION S-2
CRACK REPAIR

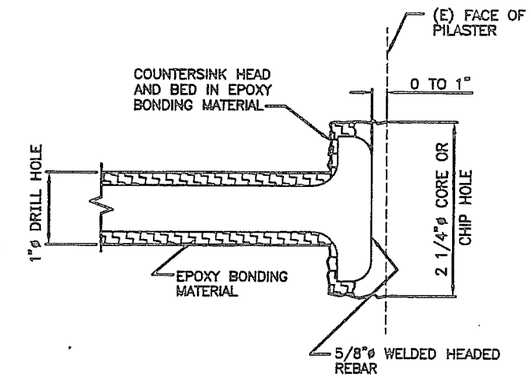

WELDED HEADED REBAR

LEGEND

- - - - - DENOTES EXISTING
——— DENOTES NEW CONSTRUCTION
DENOTES GROUNDLINE
(E) EXISTING
SPALL
NEW CONCRETE
EPOXY BONDING MATERIAL

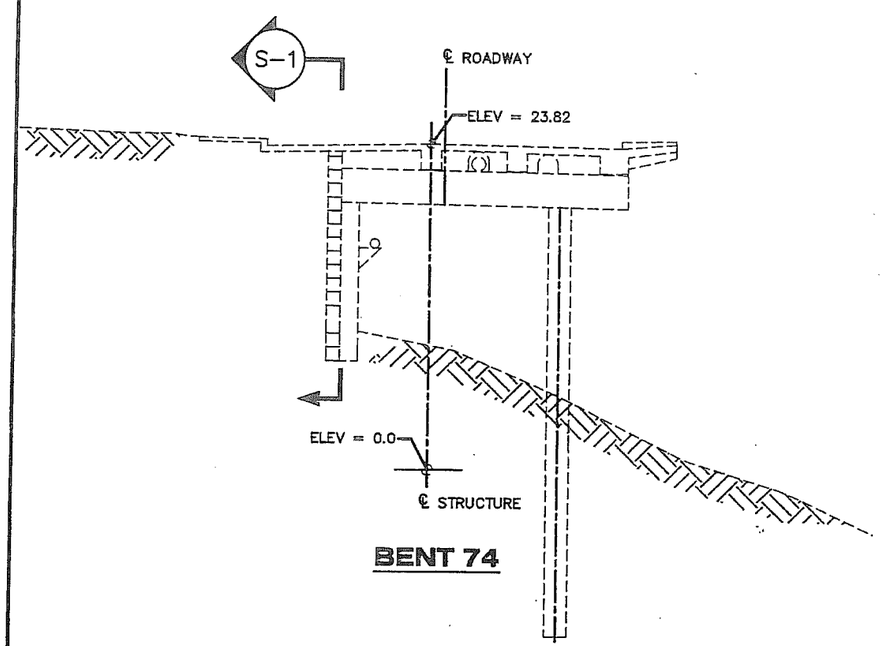

BENT 74

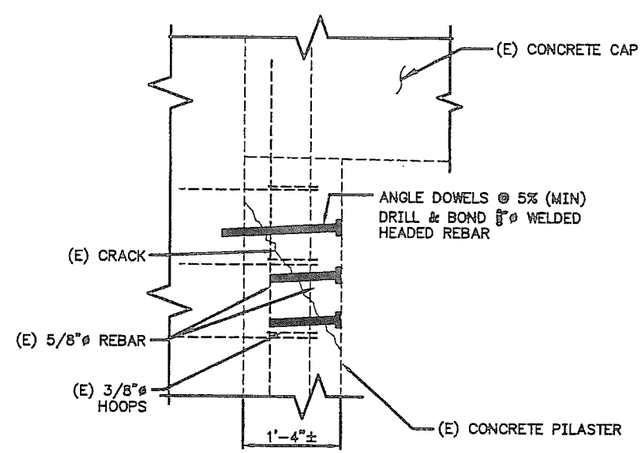

SECTION S-3
CRACK REPAIR

NOTES

1. REPAIR ALL SPALLS AND DELAMINATIONS AS OUTLINED IN THE SPECIFICATIONS BEFORE JACKETING.
2. EXACT LOCATION OF DOWELS WILL BE DETERMINED IN ACCORDANCE WITH SECTION 5.01-3.08 OF THE SPECIFICATIONS.
3. COMPLETE INSTALLATION OF WELDED HEADED REINFORCEMENT BEFORE INJECTING CRACK WITH EPOXY.

ELEVATIONS, BENCHMARKS AND DIMENSIONS ARE BASED ON "AS-BUILT" PLANS. VERIFY ALL CONTROLLING FIELD DIMENSIONS BEFORE ORDERING OR FABRICATING ANY MATERIAL.

DESIGNED BY: G. IMBSEN
CHECKED BY: M. FIGLEY
DRAWN/REVISED BY: R.S., R.C., C.A.

STATE OF ALASKA
DEPARTMENT OF TRANSPORTATION & PUBLIC FACILITIES
STATEWIDE DESIGN & ENGINEERING SERVICES DIVISION

KTN-VIADUCTS REHABILITATION
PROJECT NO. 68571

WATER STREET BENT #74 PILASTER REPAIR

PATH:
PLOT: PSPACE 1=1(F) OR MSPACE 1=1(F)

S-3.13

REVISIONS			PROJECT DESIGNATION	YEAR	SHEET NO.	TOTAL SHEETS
NO.	DATE	DESCRIPTION	NH-0902(34)	2009	22	70

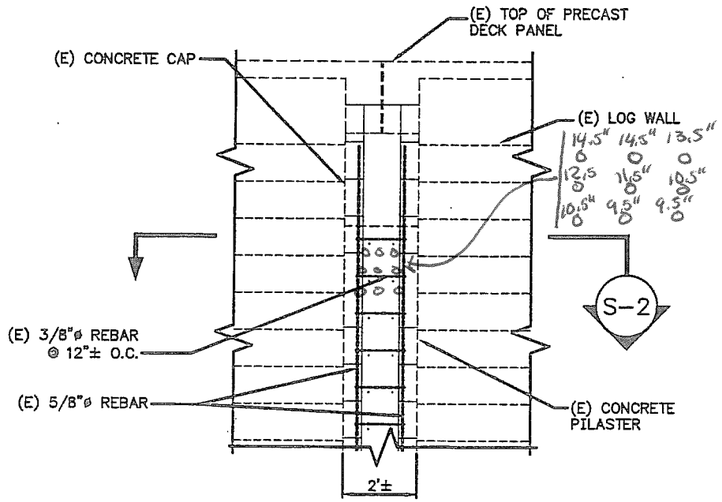

SECTION S-1

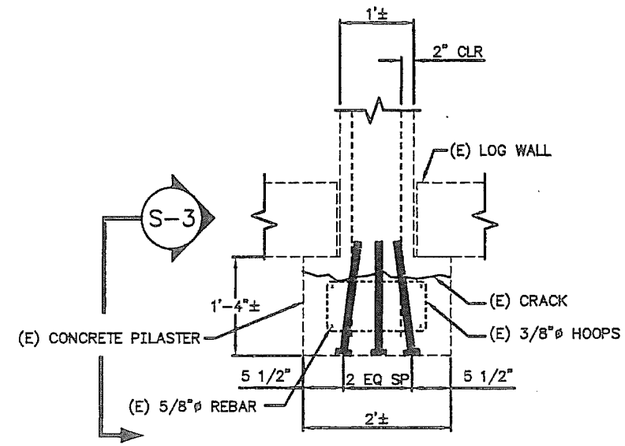

SECTION CRACK REPAIR S-2

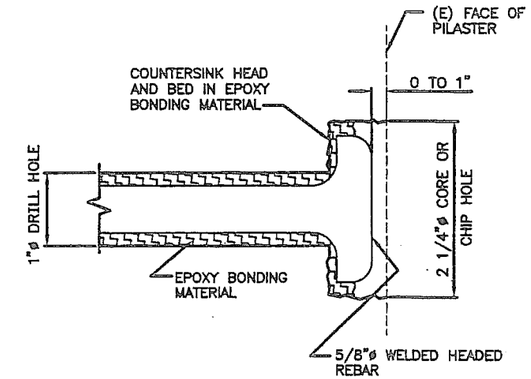

WELDED HEADED REBAR

LEGEND

- - - - - - DENOTES EXISTING
——— DENOTES NEW CONSTRUCTION
DENOTES GROUNDLINE
(E) EXISTING
SPALL
NEW CONCRETE
EPOXY BONDING MATERIAL

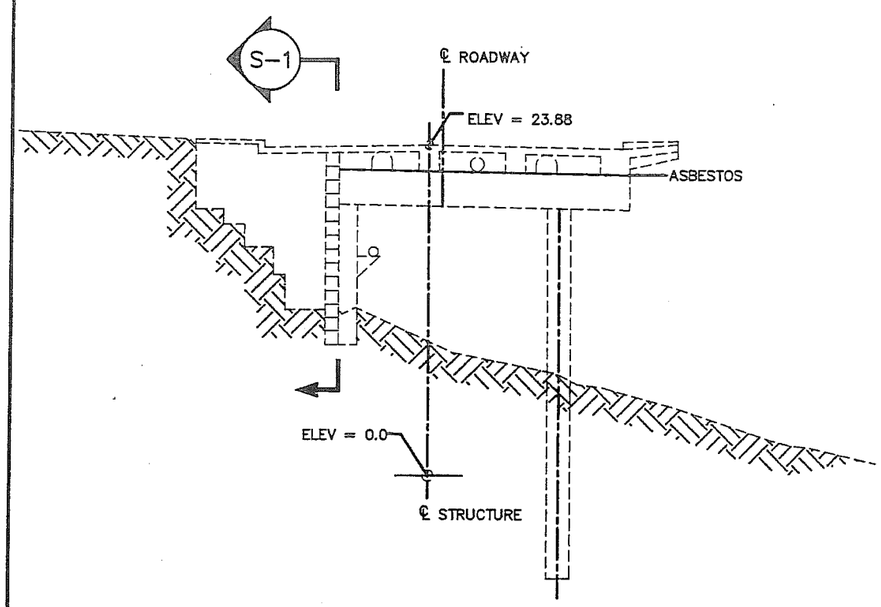

BENT 75

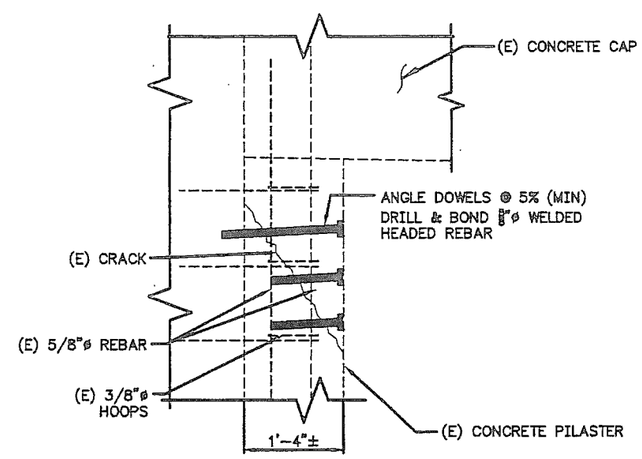

SECTION CRACK REPAIR S-3

NOTES

1. REPAIR ALL SPALLS AND DELAMINATIONS AS OUTLINED IN THE SPECIFICATIONS BEFORE JACKETING.
2. EXACT LOCATION OF DOWELS WILL BE DETERMINED IN ACCORDANCE WITH SECTION 5.01-3.08 OF THE SPECIFICATIONS.
3. COMPLETE INSTALLATION OF WELDED HEADED REINFORCEMENT BEFORE INJECTING CRACK WITH EPOXY.

ELEVATIONS, BENCHMARKS AND DIMENSIONS ARE BASED ON "AS-BUILT" PLANS. VERIFY ALL CONTROLLING FIELD DIMENSIONS BEFORE ORDERING OR FABRICATING ANY MATERIAL.

DESIGNED BY: G. IMBSEN
CHECKED BY: M. FIGLEY
DRAWN/REVISED BY: R.S., R.G., C.A.

STATE OF ALASKA
DEPARTMENT OF TRANSPORTATION & PUBLIC FACILITIES
STATEWIDE DESIGN & ENGINEERING SERVICES DIVISION

KTN-VIADUCTS REHABILITATION
PROJECT NO. 68571

WATER STREET BENT #75 PILASTER REPAIR

PATH:
PLOT: PSPACE 1=1(F) OR MSPACE 1=1(F)

S-3.14

REVISIONS			PROJECT DESIGNATION	YEAR	SHEET NO.	TOTAL SHEETS
NO.	DATE	DESCRIPTION	NH-0902(34)	2009	23	70

MISCELLANEOUS CONCRETE REPAIRS TO TONGASS AVENUE VIADUCT

BENT/ SPAN**	CAP, PILES, DECK, GIRDER, DIAPHRAGMS SPALL/DELAM (FT)	CAP, PILES, GIRDER, DIAPHRAGMS CRACKS (FT)
10	80	3
9	10	
8	20	
7	80	3
6	80	22
5	90	22
4	100	0
3	140	6
2	140	6
1	140	
1A	100	
2A	240	9
3A	275	4
4A	200	6
5A	200	
6A	150	6
7A	150	5
8A	150	6
9A	120	13
TOTAL *	2465	105

* These quantities are estimates based on visual inspection and quantities encountered in previous work. The actual quantities will be determined as part of the bid item work.

** Span numbers between Bents 1 through 10 are numbered as the lower bent number supporting the span. Span numbers between Bents 1 through 9A are numbered with the higher "A" number, the span between Bents 1 & 1A being Span 1A.

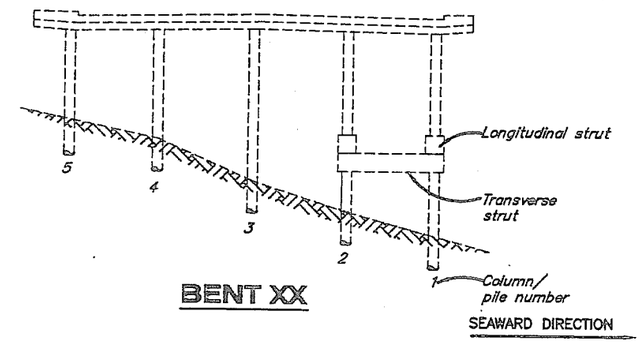

LEGEND

(E) = Existing
----- = Existing
——— = Proposed

NOTES:

1. Inject cracks identified in table as outlined in Alaska Specification Special Provisions.
2. Repair all spalls and delaminations identified in table as outlined in Alaska Specification Special Provisions before jacketing. Vertical surfaces that will be jacketed need not be hand patched.

ELEVATIONS, BENCHMARKS AND DIMENSIONS ARE BASED ON "AS-BUILT" PLANS. VERIFY ALL CONTROLLING FIELD DIMENSIONS BEFORE ORDERING OR FABRICATING ANY MATERIAL.

DESIGNED BY: George Imbsen

STATE OF ALASKA
DEPARTMENT OF TRANSPORTATION
& PUBLIC FACILITIES
STATEWIDE DESIGN & ENGINEERING SERVICES DIVISION

KTN-VIADUCTS
REHABILITATION
PROJECT NO. 68571

TONGASS AVENUE MISCELLANEOUS CONCRETE REPAIRS

CHECKED BY: Mark Figley
DRAWN/REVISED BY: R.S., R.G.

PATH:
PLOT: PSPACE 1=1(F) OR MSPACE 1=1(F)

S-4.0

REVISIONS			PROJECT DESIGNATION	YEAR	SHEET NO.	TOTAL SHEETS
NO.	DATE	DESCRIPTION	NH-0902(34)	2009	24	70

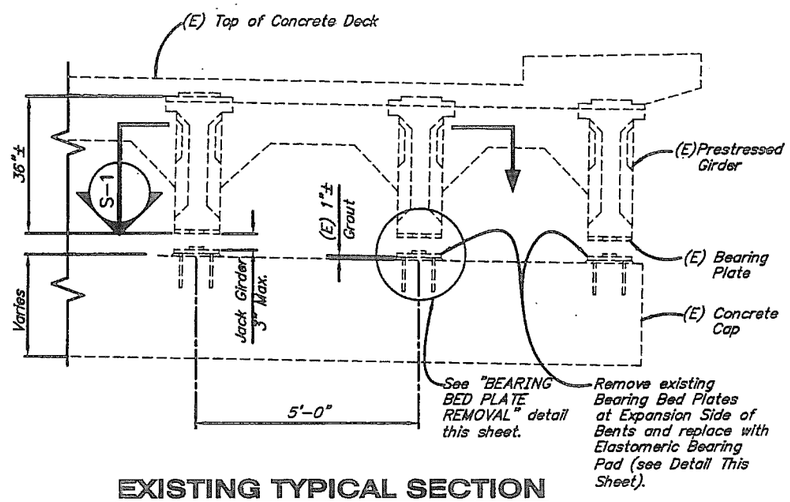

EXISTING TYPICAL SECTION

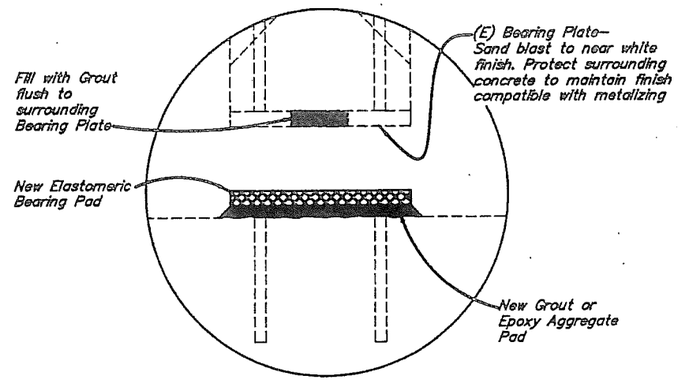

NEW BEARING PAD INSTALLATION

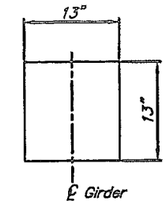

ELASTOMERIC PAD

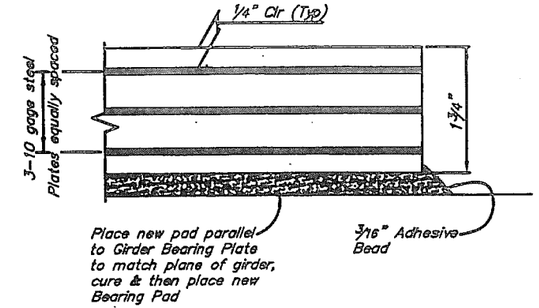

ELASTOMERIC PAD SECTION

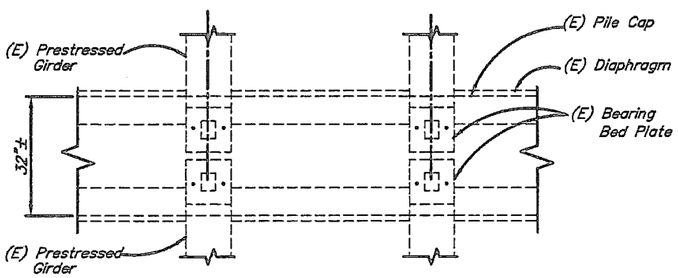

SECTION @ BENTS S-1

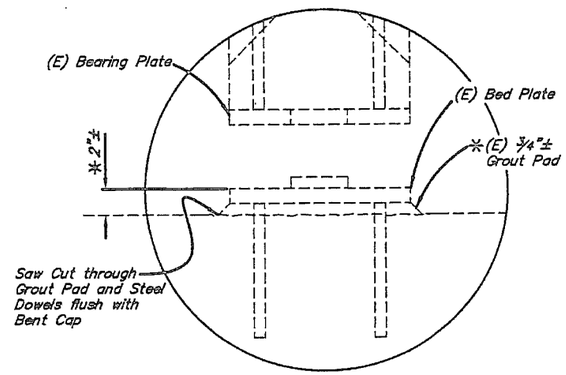

BEARING BED PLATE REMOVAL

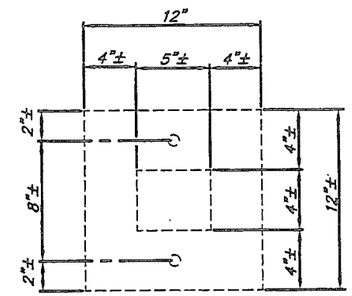

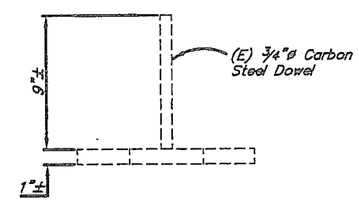

EXISTING BEARING PLATE

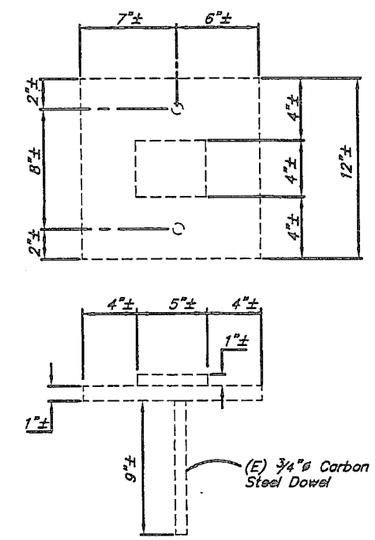

EXISTING BEARING BED PLATE

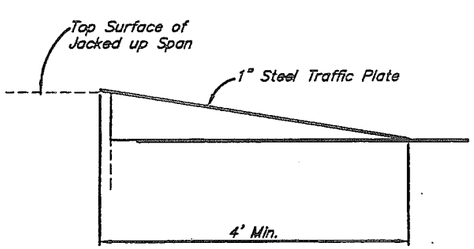

DECK STEP WEDGE

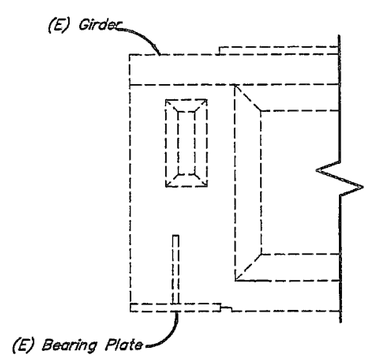

GIRDER END

LEGEND

(E) = Existing
- - - - - = Existing
——— = Proposed

NOTES:

Elevations, Bearings and Dimensions are based on "AS-BUILT" plans. Verify all controlling field dimensions before ordering or fabricating any material.

Hot dip galvanize all shims after fabrication.

* Field verify dimensions for replacement with elastomeric pad thickness as shown.

ELEVATIONS, BENCHMARKS AND DIMENSIONS ARE BASED ON "AS-BUILT" PLANS. VERIFY ALL CONTROLLING FIELD DIMENSIONS BEFORE ORDERING OR FABRICATING ANY MATERIAL.

DESIGNED BY: George Imbsen

STATE OF ALASKA
DEPARTMENT OF TRANSPORTATION & PUBLIC FACILITIES
STATEWIDE DESIGN & ENGINEERING SERVICES DIVISION

KTN-VIADUCTS REHABILITATION PROJECT NO. 68571

TONGASS AVE. BEARING REPLACEMENT

CHECKED BY: Mark Figley
DRAWN/REVISED BY: R.S., R.G.

PATH:
PLOT: PSPACE 1=1(F) OR MSPACE 1=1(F)

S-4.1

REVISIONS			PROJECT DESIGNATION	YEAR	SHEET NO.	TOTAL SHEETS
NO.	DATE	DESCRIPTION	NH-0902(34)	2009	25	70

MISCELLANEOUS CONCRETE REPAIRS TO WATER STREET VIADUCT

BENT/SPAN **	BENT & SPAN	
	SPALL/DELAM (FT^2)	CRACKS (FT)
64	20	
65	65	14
66	45	8
67	55	7
68	65	12
69	65	15
70	65	15
71	65	7
72	55	7
73	55	7
74	45	7
75	45	7
76	150	9
TOTAL *	710	115

NOTE:

* These quantities are estimates based on visual inspection and quantities encountered in previous work. The actual quantities will be determined as part of the bid item work.

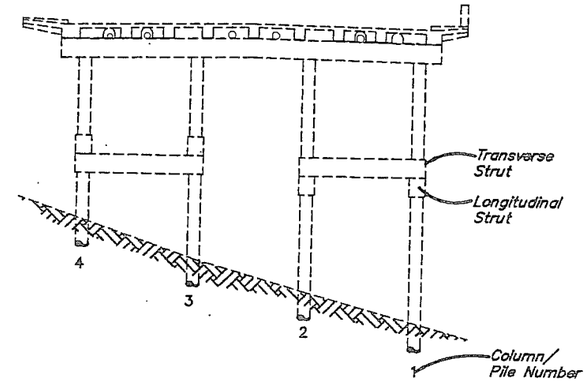

BENT XX

SEAWARD DIRECTION

LEGEND

(E) = Existing

----- = Existing

——— = Proposed

NOTES:

1. Inject cracks identified in table as outlined in Ak. Specification Special Provisions.
2. Repair all spalls and delaminations identified in table as outlined in Ak. Specification Special Provisions before jacketing. Vertical surfaces that will be jacketed need not be hand patched.

** Spans are numbered to the lower bent number supporting the span.

ELEVATIONS, BENCHMARKS AND DIMENSIONS ARE BASED ON "AS-BUILT" PLANS. VERIFY ALL CONTROLLING FIELD DIMENSIONS BEFORE ORDERING OR FABRICATING ANY MATERIAL.

DESIGNED BY: George Imbsen

STATE OF ALASKA
DEPARTMENT OF TRANSPORTATION
& PUBLIC FACILITIES
STATEWIDE DESIGN & ENGINEERING SERVICES DIVISION

KTN-VIADUCTS
REHABILITATION
PROJECT NO. 68571

WATER STREET MISCELLANEOUS CONCRETE REPAIRS

STATE OF ALASKA
George H. Imbsen
No. 4366-E
REGISTERED PROFESSIONAL ENGINEER

CHECKED BY: Mark Figley
DRAWN/REVISED BY: R.S., R.G.

PATH:
PLOT: PSPACE 1=1(F) OR MSPACE 1=1(F)

S-4.2

REVISIONS			PROJECT DESIGNATION	YEAR	SHEET NO.	TOTAL SHEETS
NO.	DATE	DESCRIPTION	NH-0902(34)	2009	26	70

NOTES:

1. IN ACCORDANCE WITH SUB SECTION 108-1.05 OF THE SPECIFICATIONS, THE ENGINEER WILL ORDER THE CONTRACTOR TO REMOVE WORKERS WHO WILLINGLY OR NEGLEGENTLY CAUSE OR ALLOW DEBRIS FROM SPRAY METALLIZATION OR SAND BLASTING TO ENTER THE WETLANDS OF TONGASS NARROWS.
2. METALLIZE ALL DECK AND SIDEWALK SOFFIT, LONGITUDINAL BEAMS, GIRDERS, DIAPHRAGMS AND CROSS-BRACES IN THE AREAS SHOWN. PILE CAPS THAT DO NOT HAVE A JACKET WILL BE METALLIZED.
3. ALL METALLIZING SHALL BE IN ACCORDANCE WITH THE SPECIFICATIONS.
4. INSTALL PILE AND CAP JACKETS AT THE LOCATIONS INDICTED ON THE PLANS AND IN ACCORDANCE WITH THE SPECIFICATIONS.
5. INSTALL REFERENCE CELLS ON TONGASS AVENUE IN ACCORDANCE WITH THE SPECIFICATIONS AT LOCATIONS SELECTED BASED ON THE REINFORCEMENT POTENTIAL SURVEY. SEE CP-5.1.
6. USE DUCT TAPE, OR SIMILAR PRODUCT, TO MASK EACH CATHODICALLY PROTECTED PILE CAP FROM THE ADJACENT SOFFIT AND GIRDER SYSTEMS. TO FACILITATE ESTABLISHING TEST AREAS, THE ENGINEER RESERVES THE RIGHT TO REQUIRE ADDITIONAL MASKING AT NO ADDITIONAL COST TO THE OWNER.
7. COMPLETE ALL BEARING PAD WORK PRIOR TO INSTALLING CATHODIC PROTECTION EQUIPMENT IN THOSE LOCATIONS.

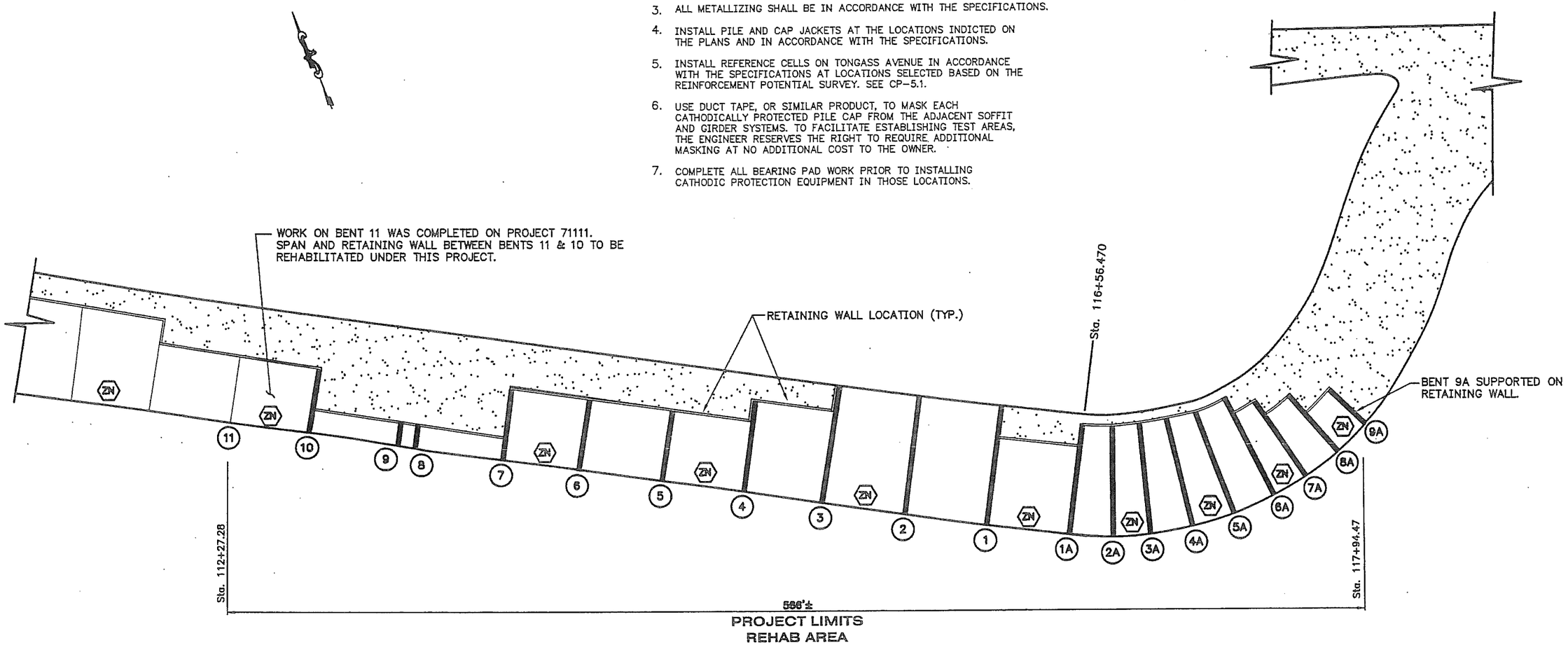

SEE S-1.0 FOR LOCATION OF CP PREVIOUS REWORK

LEGEND

- EARTH
- (XX) BENT NUMBER
- (PI) PILASTER INJECTION
- (PR) PILASTER REPAIR
- (ZN) SOIL & SEDIMENT ZINC SAMPLING PER SPECIFICATIONS

TONGASS AVENUE BR. NO. 997

ELEVATIONS, BENCHMARKS AND DIMENSIONS ARE BASED ON "AS-BUILT" PLANS. VERIFY ALL CONTROLLING FIELD DIMENSIONS BEFORE ORDERING OR FABRICATING ANY MATERIAL.

DESIGNED BY: M. FIGLEY

STATE OF ALASKA
DEPARTMENT OF TRANSPORTATION & PUBLIC FACILITIES
STATEWIDE DESIGN & ENGINEERING SERVICES DIVISION

KTN-VIADUCTS REHABILITATION
PROJECT NO. 68571

TONGASS AVENUE CORROSION CONTROL WORK PLAN

CHECKED BY: G. IMBSEN
DRAWN/REVISED BY: R.S., R.G.

PATH:
PLOT: PSPACE 1=1(F) OR MSPACE 1=1(F)

CP-1.0

REVISIONS			PROJECT DESIGNATION	YEAR	SHEET NO.	TOTAL SHEETS
NO.	DATE	DESCRIPTION				
			NH-0902(34)	2009	27	70

CORROSION CONTROL ELEMENTS FOR TONGASS AVENUE VIADUCT

BENT/SPAN	METALLIZE (FT²) RETAINING WALL	METALLIZE (FT²) CAP-DECK-S/W GIRDER-DIAPH	CAP JACKET (JKT)	PILE JKT SQUARE 4 FT.	PILE JKT SQUARE 6 FT.	PILE JKT ROUND 4 FT.	PILE JKT ROUND 6 FT.	PILASTER JKT 4 FT.	BULK ANODES 93 LBS.
10	200	3,305	1	1		1			1
9	200	915	1 *						1 FOR BOTH BENTS
8	100	120	1 *						
7	80	915	1 *						1
6	80	3,100	1	3					2
5	80	3,100	1	1		1			2
4	80	3,875	1	2		1		1	2
3	150	5,035	1	2		3			2
2	0	5,680	1	2		3			2
1	0	5,680	1			3			2
1A	120	4,300	1			3			2
2A	60	1,075					3	1	2
3A	60	1,075			1		3	1	2
4A	0	1,075			1		3		2
5A	0	1,075			1		3		2
6A	80	1,075			2		1	1	2
7A	80	900			2		1	1	2
8A	80	740					3		1
9A	80	630							1
TOTAL	1,530	43,670	11	11	6	15	19	5	32
TOTAL	45,200								

* = NON STANDARD CAP

NOTE:

1. NEAR SURFACE METAL WILL NOT BE REMOVED FROM RETAINING WALL.
2. PILE CAPS THAT DO NOT HAVE A JACKET WILL BE METALLIZED.
3. WITH THE ENGINEER'S APPROVAL, PILE/PILASTER/CORNER JACKETS MAY BE SHORTER THAN SHOWN TO AVOID CONFLICT WITH GROUND ELEVATIONS.
4. ALL JACKETS WILL HAVE WETTING HOLES CUT IN. SEE CP 4.1 & CP 4.5.

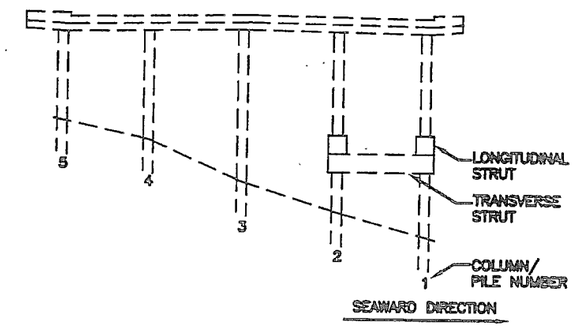

BENT XX

LEGEND

— — — DENOTES EXISTING

——— DENOTES NEW CONSTRUCTION

(E) EXISTING

NOTES

INSTALL CATHODIC PROTECTION EQUIPMENT IN ACCORDANCE WITH THE SPECIFICATIONS. COMPLETE CONCRETE REPAIRS, DISCUSSED ELSEWHERE, BEFORE INSTALLING JACKETS.

MODIFY THE JACKETS TO FIT AROUND EXISTING UTILITIES, HANGERS AND BRACKETS. SEE SPECIFICATIONS.

ELEVATIONS, BENCHMARKS AND DIMENSIONS ARE BASED ON "AS-BUILT" PLANS. VERIFY ALL CONTROLLING FIELD DIMENSIONS BEFORE ORDERING OR FABRICATING ANY MATERIAL.

DESIGNED BY: M. FIGLEY

STATE OF ALASKA 49th Mark D. Figley CE-8050

CHECKED BY: G. IMBSEN

DRAWN/REVISED BY: R.S., R.G.

STATE OF ALASKA
DEPARTMENT OF TRANSPORTATION & PUBLIC FACILITIES
STATEWIDE DESIGN & ENGINEERING SERVICES DIVISION

KTN-VIADUCTS REHABILITATION
PROJECT NO. 68571
TONGASS AVENUE CORROSION CONTROL WORK PLAN

PATH:
PLOT: PSPACE 1=1(F) OR MSPACE 1=1(F)

CP-1.1

REVISIONS NO.	DATE	DESCRIPTION	PROJECT DESIGNATION	YEAR	SHEET NO.	TOTAL SHEETS
			NH-0902(34)	2009	28	70

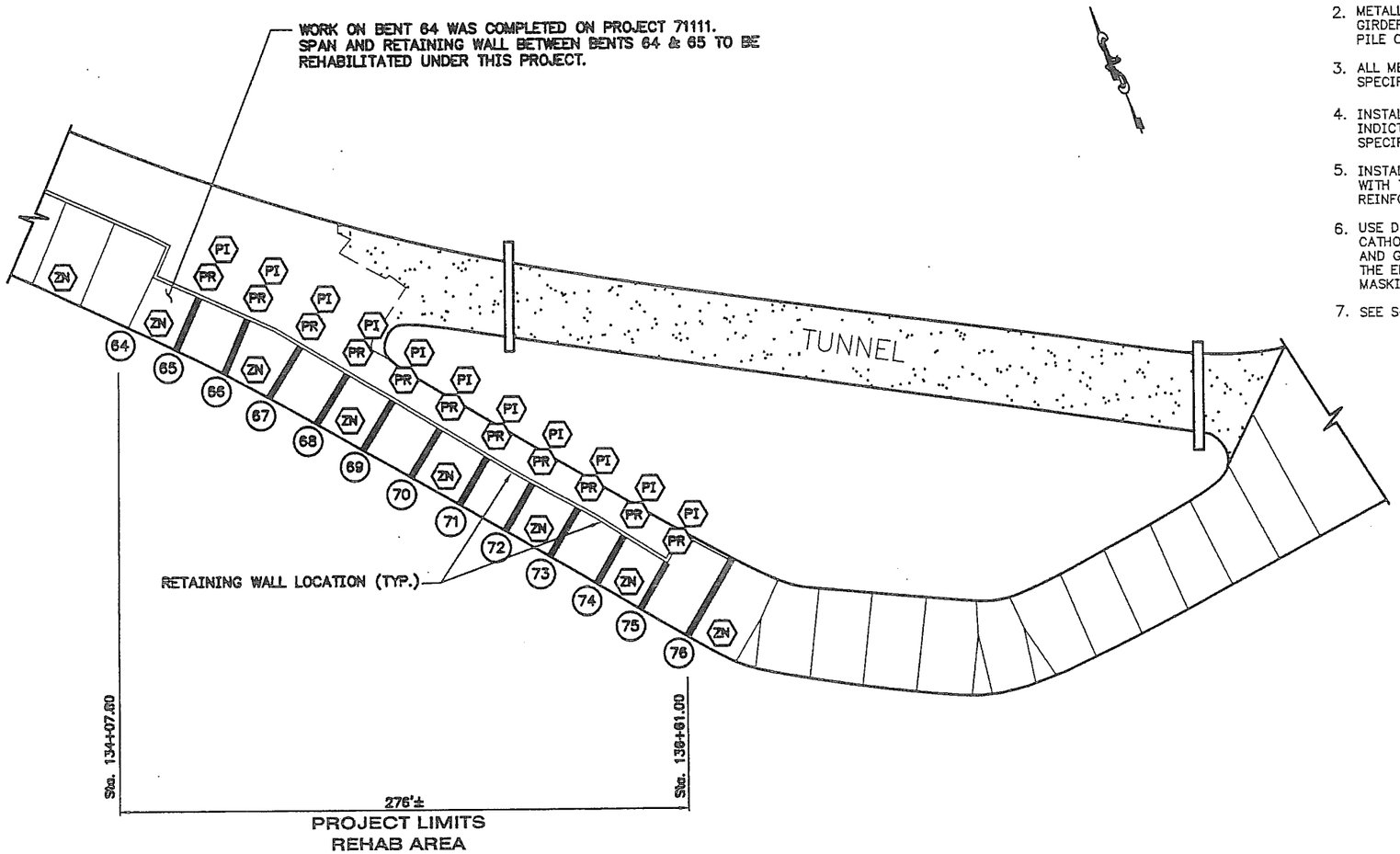

NOTES:

1. IN ACCORDANCE WITH SUB SECTION 108-1.05 OF THE SPECIFICATIONS, THE ENGINEER WILL ORDER THE CONTRACTOR TO REMOVE WORKERS WHO WILLINGLY OR NEGLEGENTLY CAUSE OR ALLOW DEBRIS FROM SPRAY METALLIZATION OR SAND BLASTING TO ENTER THE WETLANDS OF TONGASS NARROWS.
2. METALLIZE ALL DECK AND SIDEWALK SOFFIT, LONGITUDINAL BEAMS, GIRDERS, DIAPHRAGMS AND CROSS-BRACES IN THE AREAS SHOWN. PILE CAPS THAT DO NOT HAVE A JACKET WILL BE METALLIZED.
3. ALL METALLIZING SHALL BE ACCORDANCE WITH THE SPECIFICATIONS.
4. INSTALL PILE, PILASTER AND CORNER JACKETS AT THE LOCATIONS INDICTED ON THE PLANS AND IN ACCORDANCE WITH THE SPECIFICATIONS.
5. INSTALL REFERENCE CELLS ON WATER STREET IN ACCORDANCE WITH THE SPECIFICATIONS AT LOCATIONS SELECTED BASED ON THE REINFORCEMENT POTENTIAL SURVEY. SEE CP-5.1.
6. USE DUCT TAPE, OR SIMILAR PRODUCT, TO MASK EACH CATHODICALLY PROTECTED PILE CAP FROM THE ADJACENT SOFFIT AND GIRDER SYSTEMS. TO FACILITATE ESTABLISHING TEST AREAS, THE ENGINEER RESERVES THE RIGHT TO REQUIRE ADDITIONAL MASKING AT NO ADDITIONAL COST TO THE DEPARTMENT.
7. SEE S-1.0 FOR LOCATION OF PREVIOUS PROJECT REWORK.

WATER STREET BR. NO. 797

LEGEND

- EARTH
- (XX) BENT NUMBER
- (PI) PILASTER INJECTION
- (PR) PILASTER REPAIR
- (ZN) SOIL & SEDIMENT ZINC SAMPLING PER SPECIFICATIONS

ELEVATIONS, BENCHMARKS AND DIMENSIONS ARE BASED ON "AS-BUILT" PLANS. VERIFY ALL CONTROLLING FIELD DIMENSIONS BEFORE ORDERING OR FABRICATING ANY MATERIAL.

DESIGNED BY: M. FIGLEY

STATE OF ALASKA
DEPARTMENT OF TRANSPORTATION & PUBLIC FACILITIES
STATEWIDE DESIGN & ENGINEERING SERVICES DIVISION

KTN-VIADUCTS REHABILITATION
PROJECT NO. 68571
WATER STREET CORROSION CONTROL WORK PLAN

CHECKED BY: G. IMBSEN
DRAWN/REVISED BY: R.S., R.G.

PATH:
PLOT: PSPACE 1=1(F) OR MSPACE 1=1(F)

CP-1.2

REVISIONS			PROJECT DESIGNATION	YEAR	SHEET NO.	TOTAL SHEETS
NO.	DATE	DESCRIPTION	NH-0902(34)	2009	29	70

CORROSION CONTROL ELEMENTS FOR WATER STREET VIADUCT

BENT/SPAN	METALLIZE (FT^2) RETAINING WALL	DECK-S/W	CAP	PILE JKT. 6 FT.	SQUARE PILE JKT. 6 FT.	CORNER JKT. 6 FT.	PILASTER JKT. 6 FT.	BULK ANODES 93 LBS.
64	126	636	–	1			1	2
65	126	636	131	1			1	2
66	126	636	131	1			1	2
67	126	636	131	1			1	2
68	126	636	131	1			1	2
69	126	636	131	1			1	2
70	126	636	131	1			1	2
71	126	636	131	1			1	2
72	126	636	131	1			1	2
73	126	636	131	1			1	2
74	126	636	131	1			1	2
75	126	880	131	1		1		2
76	126	–	188	1	1			2
TOTAL	1,512	7,876	1,629	13	1	1	11	26
TOTAL	11,017							

1. WITH THE ENGINEER'S APPROVAL; PILE/PILASTER/CORNER JACKETS MAY BE SHORTER THAN SHOWN TO AVOID CONFLICT WITH GROUND ELEVATION.

2. ALL JACKETS WILL HAVE WETTING HOLES CUT IN. SEE CP 4.1 & CP 4.5.

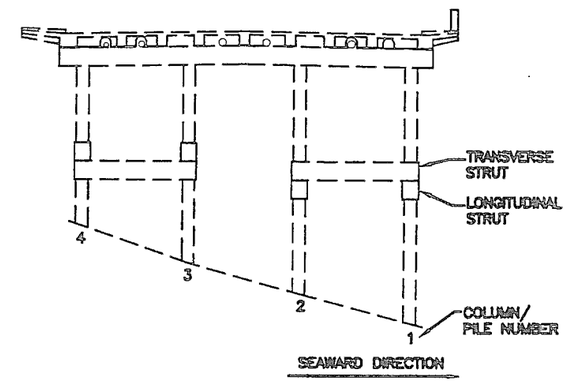

BENT XX

LEGEND

— — — DENOTES EXISTING

——— DENOTES NEW CONSTRUCTION

(E) EXISTING

NOTES

INSTALL CATHODIC PROTECTION EQUIPMENT IN ACCORDANCE WITH THE SPECIFICATIONS. COMPLETE CONCRETE REPAIRS, DISCUSSED ELSEWHERE, BEFORE INSTALLING JACKETS.

MODIFY THE JACKETS TO FIT AROUND EXISTING UTILITIES, HANGERS AND BRACKETS. SEE SPECIFICATIONS.

ELEVATIONS, BENCHMARKS AND DIMENSIONS ARE BASED ON "AS-BUILT" PLANS. VERIFY ALL CONTROLLING FIELD DIMENSIONS BEFORE ORDERING OR FABRICATING ANY MATERIAL.

DESIGNED BY: M. FIGLEY

STATE OF ALASKA 49th Mark D. Figley CE-8050

CHECKED BY: G. IMBSEN

DRAWN/REVISED BY: R.S., R.G.

STATE OF ALASKA
DEPARTMENT OF TRANSPORTATION
& PUBLIC FACILITIES
STATEWIDE DESIGN & ENGINEERING SERVICES DIVISION

KTN-VIADUCTS
REHABILITATION
PROJECT NO. 68571
WATER STREET
CORROSION CONTROL
WORK PLAN

PATH:
PLOT: PSPACE 1=1(F) OR MSPACE 1=1(F)

CP-1.3

REVISIONS NO.	DATE	DESCRIPTION	PROJECT DESIGNATION	YEAR	SHEET NO.	TOTAL SHEETS
			NH-0902(34)	2009	30	70

NOTES:

1. BENT 11 HAS BEEN REHABILITATED AS PART OF PROJECT 71111 HOWEVER, THE SPAN BETWEEN BENTS 10 AND 11 WILL BE REHABILITATED UNDER THIS PROJECT.
2. ALL DRAINS HAVE AN OUTLET THAT WILL DRAIN THROUGH WORK AREA.
3. REMOVE WATER FROM DECK DRAINS FOR ENVIRONMENTAL REQUIREMENTS AND PRODUCT SPECIFICATION REQUIREMENTS.

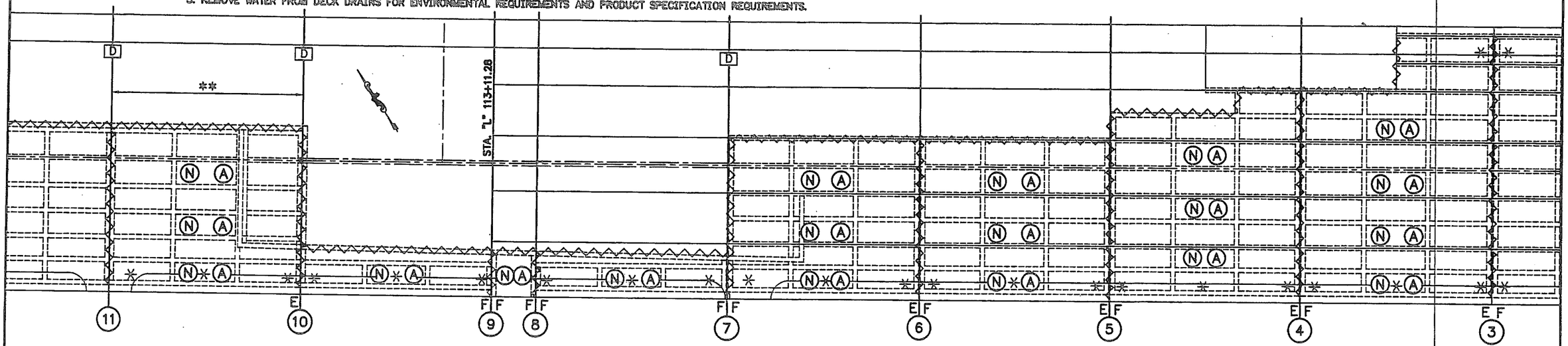

LEGEND:

E = NEW EXPANSION BEARINGS THIS BENT
F = FIXED
(N) = SYSTEM NEGATIVE
(A) = ANODE CONNECTION
[D] = 1"X2' RECTANGULAR DECK DRAIN
✳ = DECK DRAIN W/4" PIPE OUTLET
~~~ = JOINTS WHERE LEAKING MAY OCCUR

GENERAL NOTE:
JOINTS BETWEEN SPANS LEAK WATER.
SEAL JOINTS BEFORE ZINCING, NO SPAN WILL BE ZINCED UNTIL THE JOINTS ARE SEALED.

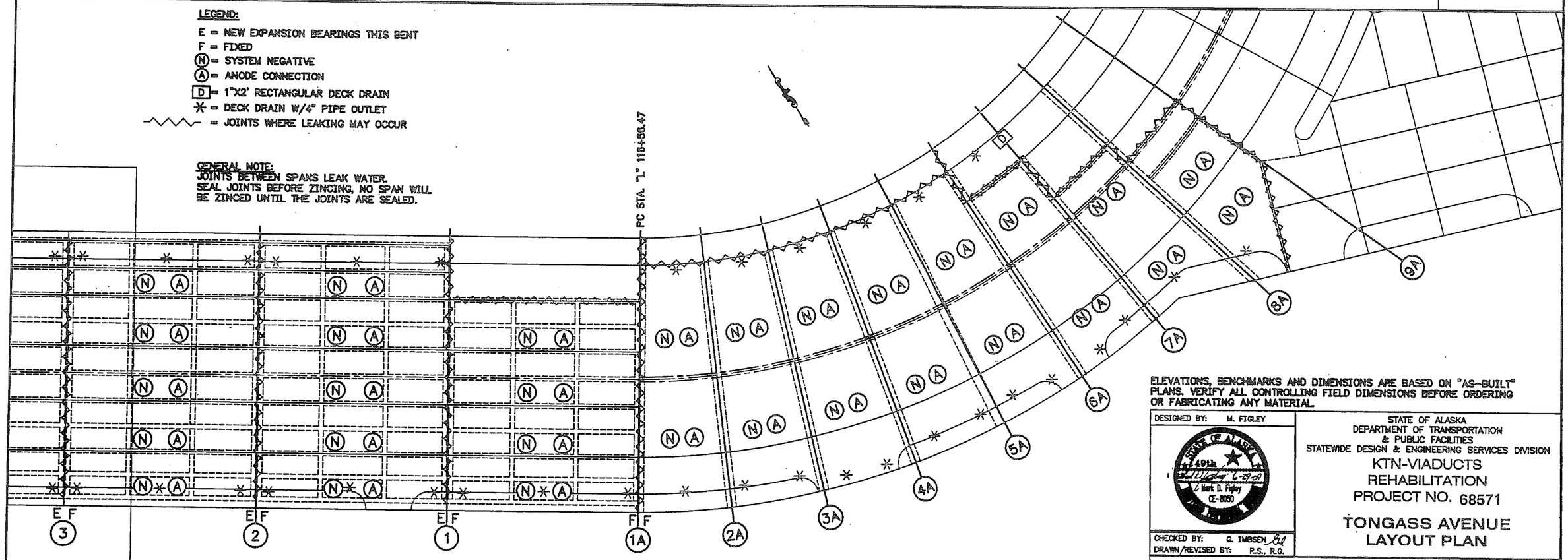

ELEVATIONS, BENCHMARKS AND DIMENSIONS ARE BASED ON "AS-BUILT" PLANS. VERIFY ALL CONTROLLING FIELD DIMENSIONS BEFORE ORDERING OR FABRICATING ANY MATERIAL.

DESIGNED BY: M. FIGLEY

STATE OF ALASKA
DEPARTMENT OF TRANSPORTATION
& PUBLIC FACILITIES
STATEWIDE DESIGN & ENGINEERING SERVICES DIVISION

KTN-VIADUCTS
REHABILITATION
PROJECT NO. 68571

TONGASS AVENUE
LAYOUT PLAN

CHECKED BY: G. IMBSEN
DRAWN/REVISED BY: R.S., R.G.

PATH:
PLOT: PSPACE 1=1(F) OR MSPACE 1=1(F)

CP-2.0

REVISIONS			PROJECT DESIGNATION	YEAR	SHEET NO.	TOTAL SHEETS
NO.	DATE	DESCRIPTION	NH-0902(34)	2009	31	70
~~~

NOTES:

1. BENT 64 HAS BEEN REHABILITATED ON PROJECT 71111, SPAN 76 AHEAD WILL BE A FUTURE FILL SECTION.
2. ALL DRAINS HAVE AN OUTLET THAT WILL DRAIN THROUGH WORK AREA.
3. REMOVE WATER FROM DECK DRAINS FOR ENVIRONMENTAL REQUIREMENTS AND PRODUCT SPECIFICATION REQUIREMENTS.

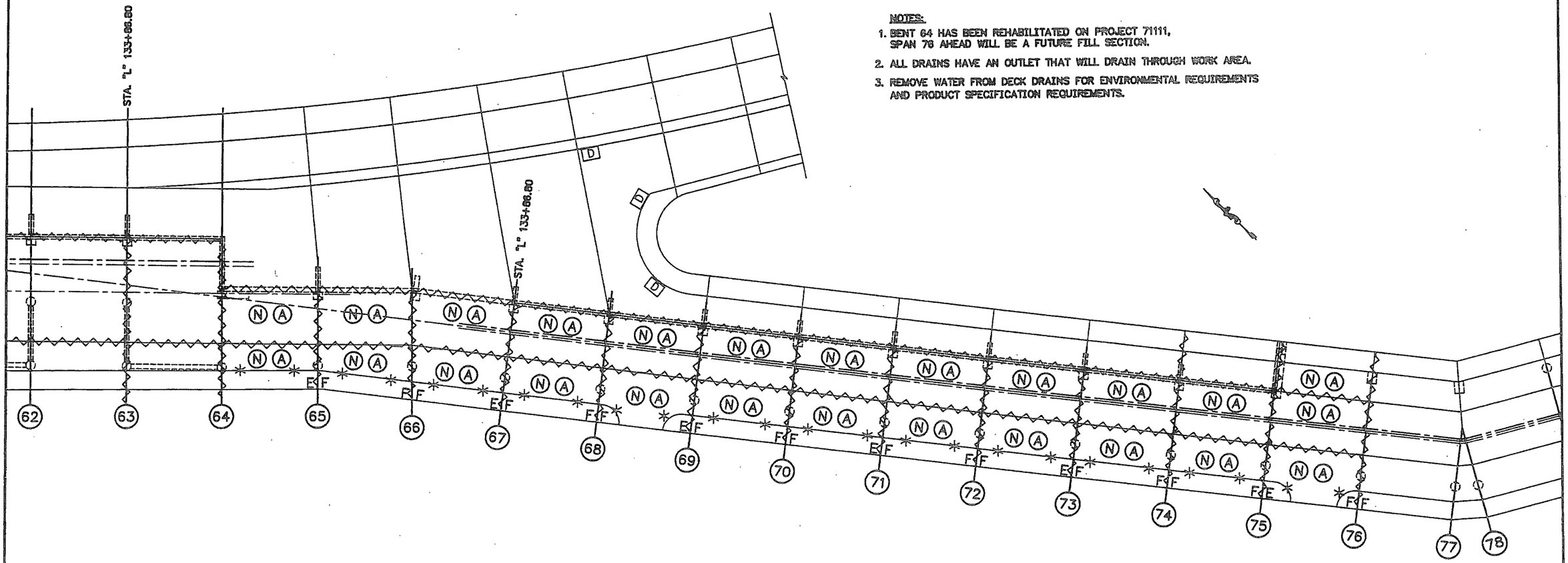

LEGEND:

E = NEW EXPANSION BEARINGS THIS BENT
F = FIXED
(N) = SYSTEM NEGATIVE
(A) = ANODE CONNECTION
[D] = 1"X2' RECTANGULAR DECK DRAIN
✳ = DECK DRAIN W/4" PIPE OUTLET
~~~ = JOINTS WHERE LEAKING MAY OCCUR

GENERAL NOTES:

1. ASBESTOS IS PRESENT IN EXPANSION JOINT SIDE OF BENT. SEE SPECIFICATIONS.
2. JOINTS BETWEEN SPANS LEAK WATER. SEAL JOINTS BEFORE ZINCING, NO SPAN WILL BE ZINCED UNTIL THE JOINTS ARE SEALED.

ELEVATIONS, BENCHMARKS AND DIMENSIONS ARE BASED ON "AS-BUILT" PLANS. VERIFY ALL CONTROLLING FIELD DIMENSIONS BEFORE ORDERING OR FABRICATING ANY MATERIAL.

DESIGNED BY: M. FIGLEY

STATE OF ALASKA 49th Mark D. Figley CE-8050

CHECKED BY: G. IMBSEN
DRAWN/REVISED BY: R.S., R.G.

STATE OF ALASKA
DEPARTMENT OF TRANSPORTATION
& PUBLIC FACILITIES
STATEWIDE DESIGN & ENGINEERING SERVICES DIVISION

KTN-VIADUCTS
REHABILITATION
PROJECT NO. 68571

WATER STREET
LAYOUT PLAN

PATH:
PLOT: PSPACE 1=1(F) OR MSPACE 1=1(F)

CP-2.1

REVISIONS			PROJECT DESIGNATION	YEAR	SHEET NO.	TOTAL SHEETS
NO.	DATE	DESCRIPTION	NH-0902(34)	2009	32	70
~~~

BENT 10 NOTE:

BENT 11 WAS REHABILITATED ON PROJECT 71111, HOWEVER, THE SPAN FROM BENT 10 TO BENT 11 WILL BE SPRAY METALLIZED UNDER THIS PROJECT.

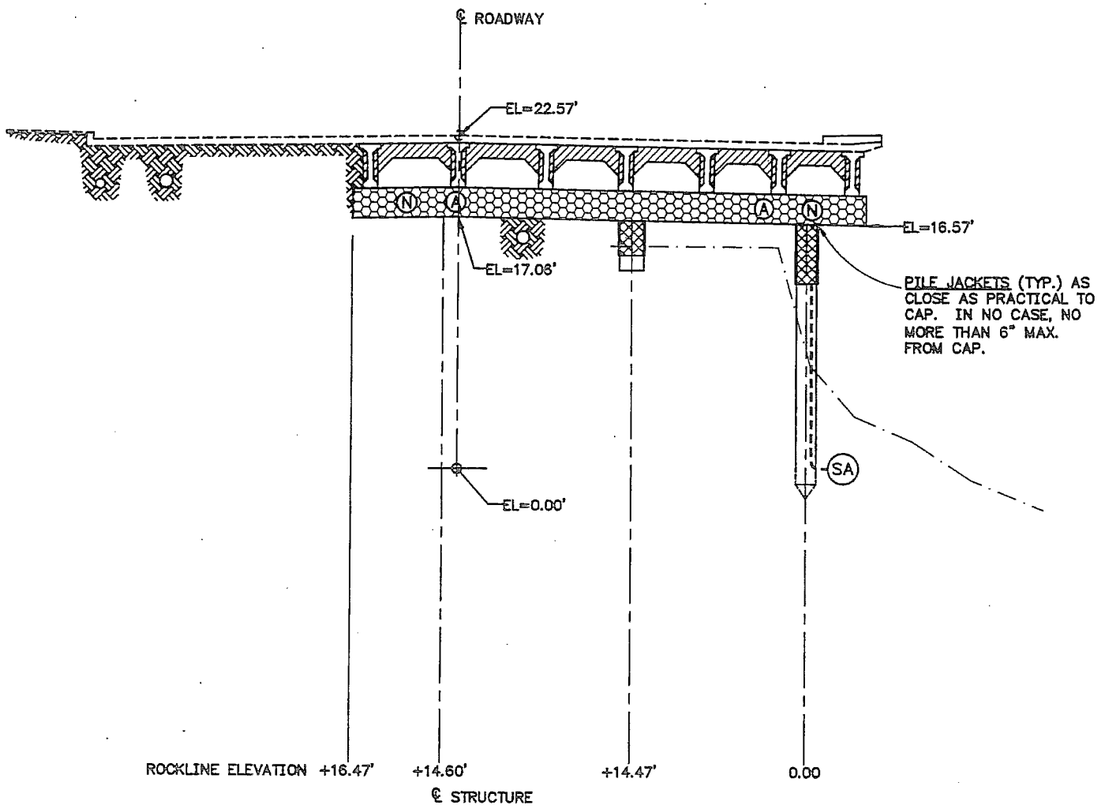

BENT 10

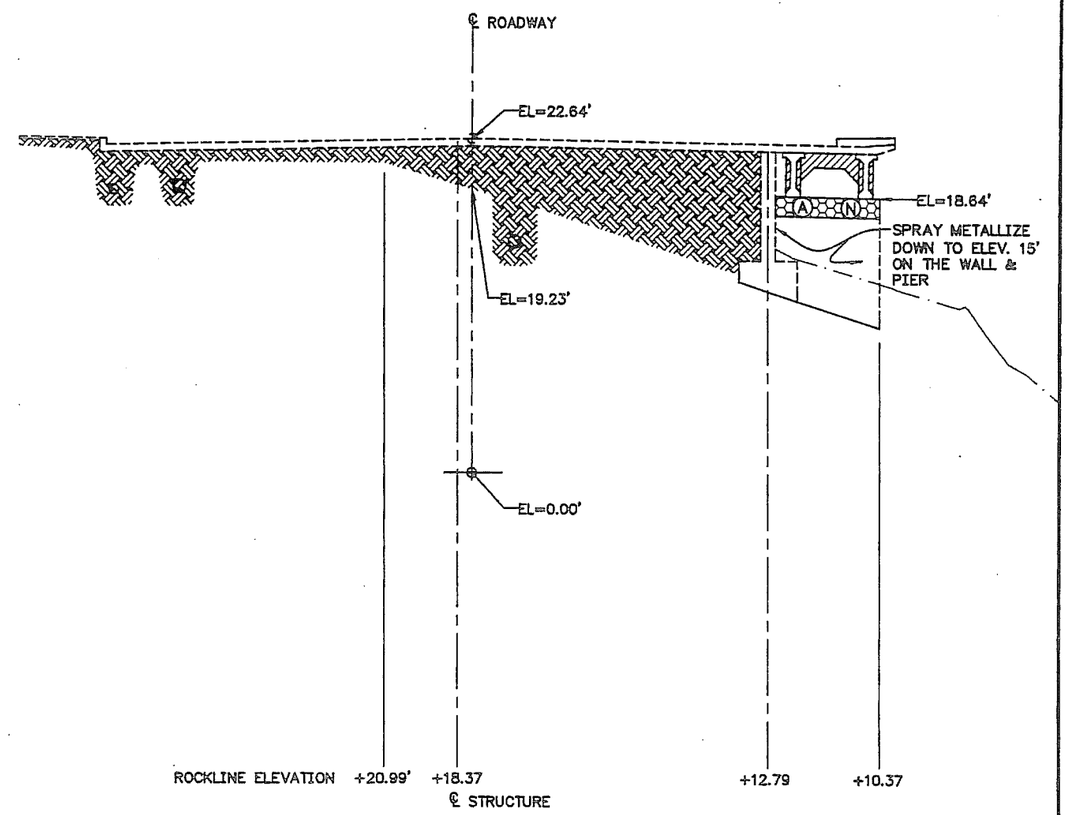

BENT 9

TONGASS AVENUE

10 5 0 10

SCALE IN FEET

LEGEND

- SURVEY-MUDLINE
- 1999 MUDLINE
- 1955 ROCKLINE
- (N) SYSTEM NEGATIVE
- (A) ANODE TERMINAL PLATE
- (SA) SUBMERGED ANODE
- CAP JACKET
- PILE JACKET
- THERMAL SPRAY

NOTES:

1. MODIFY GENERAL JACKET CONFIGURATION TO FIT AROUND EXISTING UTILITIES.
2. IN SOME LOCATIONS EXISTING UTILITIES AND SERVICE LINES MAY BE CONGESTED. PROTECT EXISTING UTILITY PROPERTY WHILE COMPLETING THE REQUIRED OF THIS WORK.
3. REFER TO DETAILS FOR DIMENSIONS.
4. GIRDER END CONNECTION REQUIRED AT ONE END OF EACH PRESTRESSED GIRDER.
5. ONE SYSTEM NEGATIVE REQUIRED TOP OF EACH PILE OR PILASTER.

ELEVATIONS, BENCHMARKS AND DIMENSIONS ARE BASED ON "AS-BUILT" PLANS. VERIFY ALL CONTROLLING FIELD DIMENSIONS BEFORE ORDERING OR FABRICATING ANY MATERIAL.

DESIGNED BY: M. FIGLEY

STATE OF ALASKA
49th
CE-8050

CHECKED BY: G. IMBSEN
DRAWN/REVISED BY: R.S., R.G.

STATE OF ALASKA
DEPARTMENT OF TRANSPORTATION
& PUBLIC FACILITIES
STATEWIDE DESIGN & ENGINEERING SERVICES DIVISION

KTN-VIADUCTS
REHABILITATION
PROJECT NO. 68571

Tongass Avenue
Bents 10 & 9

PATH:
PLOT: PSPACE 1=1(F) OR MSPACE 1=1(F)

CP-3.0

REVISIONS			PROJECT DESIGNATION	YEAR	SHEET NO.	TOTAL SHEETS
NO.	DATE	DESCRIPTION				
			NH-0902(34)	2009	33	70

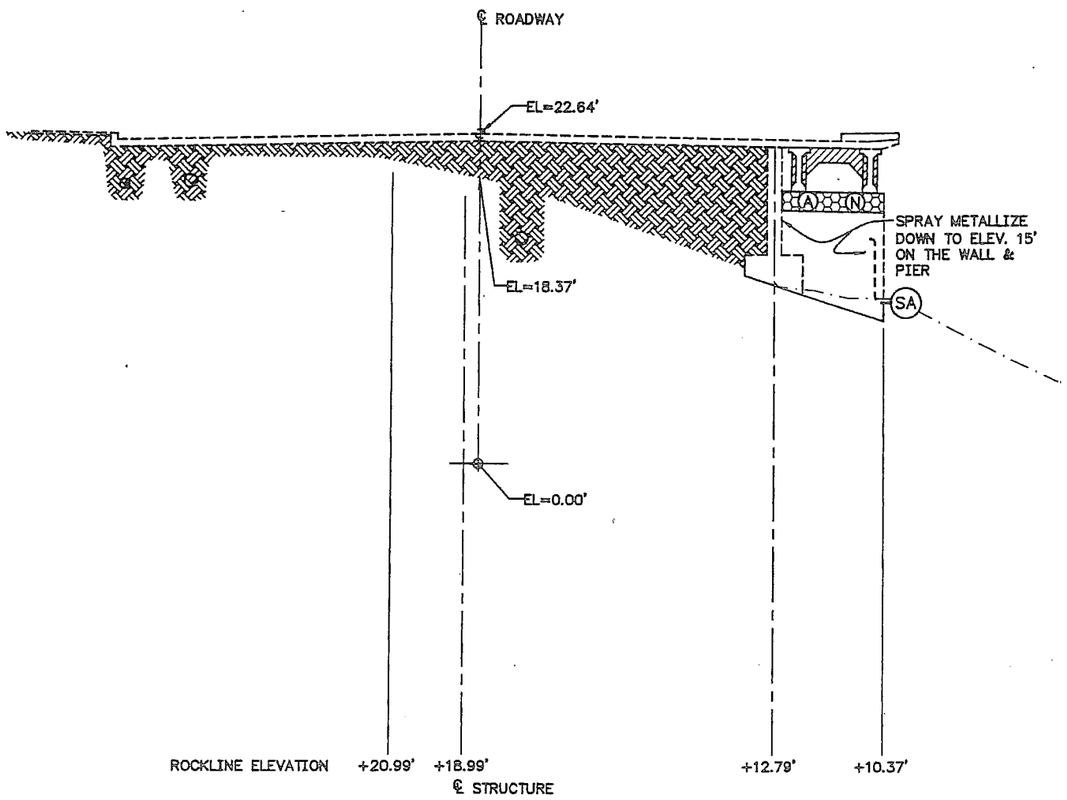

BENT 8

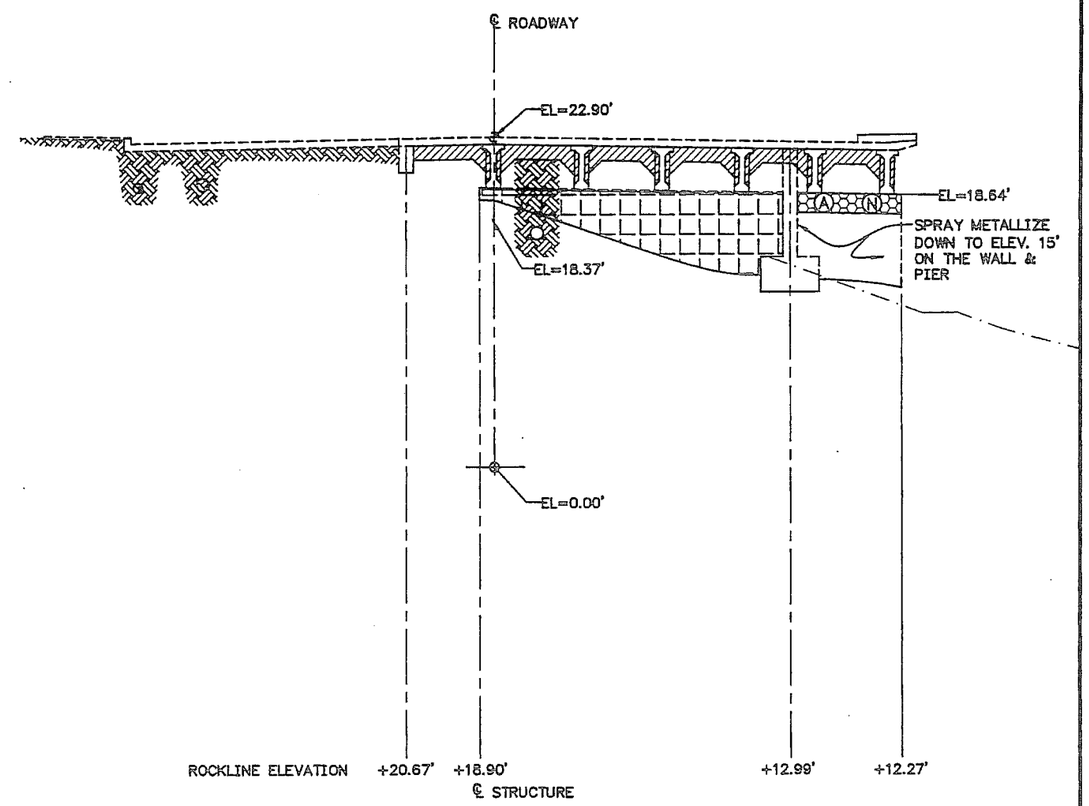

BENT 7

TONGASS AVENUE

10 5 0 10

SCALE IN FEET

LEGEND

- SURVEY-MUDLINE
- 1999 MUDLINE
- 1955 ROCKLINE
- (N) SYSTEM NEGATIVE
- (A) ANODE TERMINAL PLATE
- (SA) SUBMERGED ANODE
- CAP JACKET
- PILE JACKET
- THERMAL SPRAY

NOTES:

1. MODIFY GENERAL JACKET CONFIGURATION TO FIT AROUND EXISTING UTILITIES.
2. IN SOME LOCATIONS EXISTING UTILITIES AND SERVICE LINES MAY BE CONGESTED. PROTECT EXISTING UTILITY PROPERTY WHILE COMPLETING THE REQUIRED OF THIS WORK.
3. REFER TO DETAILS FOR DIMENSIONS.
4. GIRDER END CONNECTION REQUIRED AT ONE END OF EACH PRESTRESSED GIRDER.
5. ONE SYSTEM NEGATIVE REQUIRED TOP OF EACH PILE OR PILASTER.

ELEVATIONS, BENCHMARKS AND DIMENSIONS ARE BASED ON "AS-BUILT" PLANS. VERIFY ALL CONTROLLING FIELD DIMENSIONS BEFORE ORDERING OR FABRICATING ANY MATERIAL.

DESIGNED BY: M. FIGLEY

STATE OF ALASKA 49th Mark D. Figley CE-8050

CHECKED BY: G. IMBSEN

DRAWN/REVISED BY: R.S., R.G.

STATE OF ALASKA
DEPARTMENT OF TRANSPORTATION
& PUBLIC FACILITIES
STATEWIDE DESIGN & ENGINEERING SERVICES DIVISION

KTN-VIADUCTS
REHABILITATION
PROJECT NO. 68571

Tongass Avenue
Bents 8 & 7

PATH:
PLOT: PSPACE 1=1(F) OR MSPACE 1=1(F)

CP-3.1

REVISIONS			PROJECT DESIGNATION	YEAR	SHEET NO.	TOTAL SHEETS
NO.	DATE	DESCRIPTION	NH-0902(34)	2009	34	70

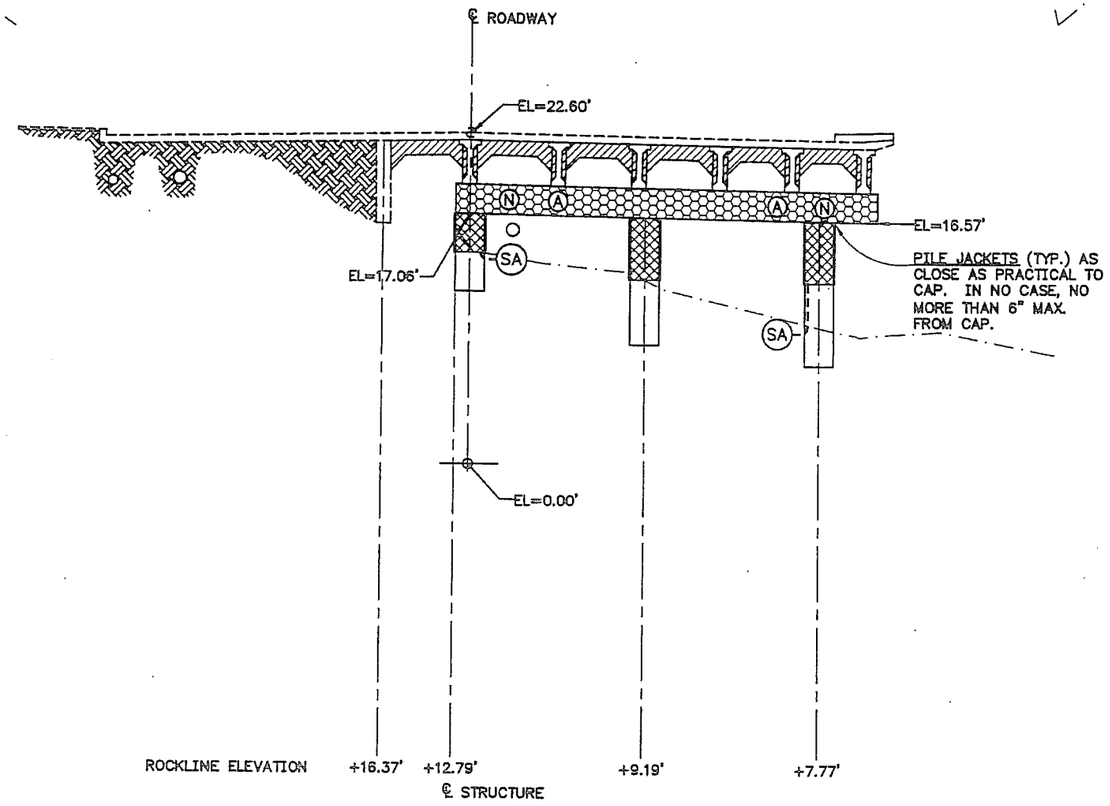

BENT 6

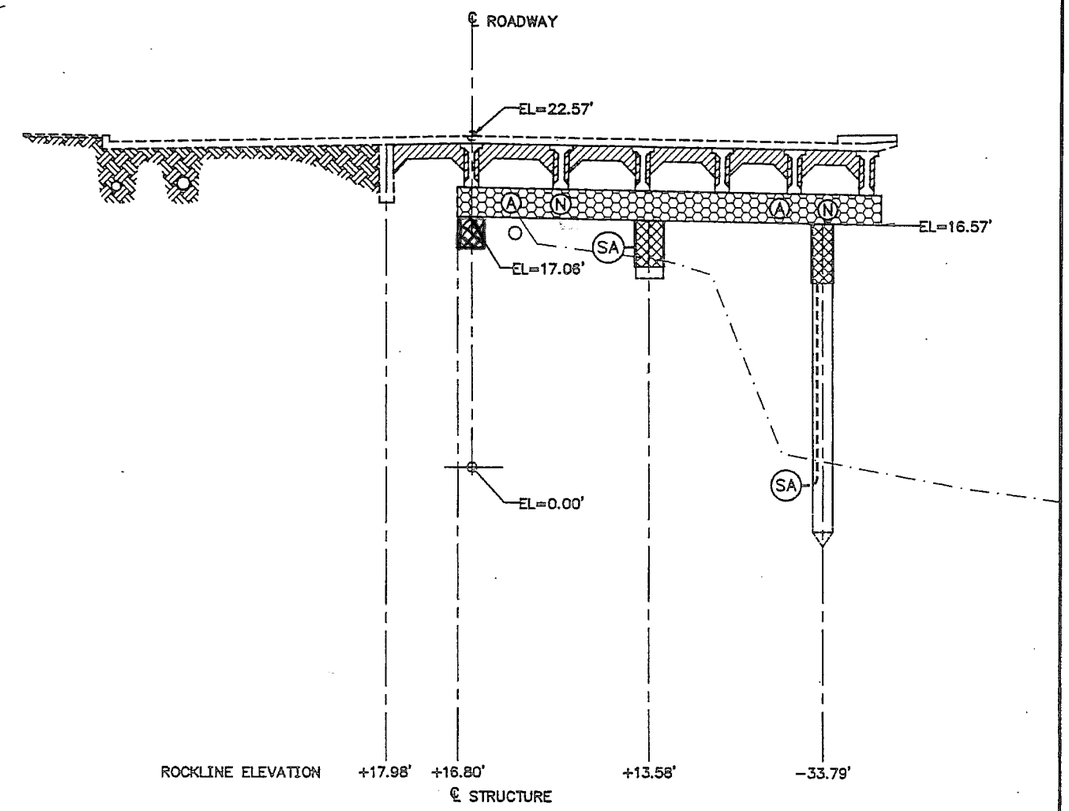

BENT 5

TONGASS AVENUE

10 5 0 10

SCALE IN FEET

LEGEND

- SURVEY-MUDLINE
- 1999 MUDLINE
- 1955 ROCKLINE
- (N) SYSTEM NEGATIVE
- (A) ANODE TERMINAL PLATE
- (SA) SUBMERGED ANODE
- CAP JACKET
- PILE JACKET
- THERMAL SPRAY

NOTES:

1. MODIFY GENERAL JACKET CONFIGURATION TO FIT AROUND EXISTING UTILITIES.
2. IN SOME LOCATIONS EXISTING UTILITIES AND SERVICE LINES MAY BE CONGESTED. PROTECT EXISTING UTILITY PROPERTY WHILE COMPLETING THE REQUIRED OF THIS WORK.
3. REFER TO DETAILS FOR DIMENSIONS.
4. GIRDER END CONNECTION REQUIRED AT ONE END OF EACH PRESTRESSED GIRDER.
5. ONE SYSTEM NEGATIVE REQUIRED TOP OF EACH PILE OR PILASTER.

ELEVATIONS, BENCHMARKS AND DIMENSIONS ARE BASED ON "AS-BUILT" PLANS. VERIFY ALL CONTROLLING FIELD DIMENSIONS BEFORE ORDERING OR FABRICATING ANY MATERIAL.

DESIGNED BY: M. FIGLEY

STATE OF ALASKA 49th Mark D. Figley CE-8050

CHECKED BY: G. IMBSEN

DRAWN/REVISED BY: R.S., R.G.

STATE OF ALASKA
DEPARTMENT OF TRANSPORTATION
& PUBLIC FACILITIES
STATEWIDE DESIGN & ENGINEERING SERVICES DIVISION

KTN-VIADUCTS
REHABILITATION
PROJECT NO. 68571

Tongass Avenue
Bents 6 & 5

PATH:

PLOT: PSPACE 1=1(F) OR MSPACE 1=1(F)

CP-3.2

REVISIONS			PROJECT DESIGNATION	YEAR	SHEET NO.	TOTAL SHEETS
NO.	DATE	DESCRIPTION	NH-0902(34)	2009	35	70

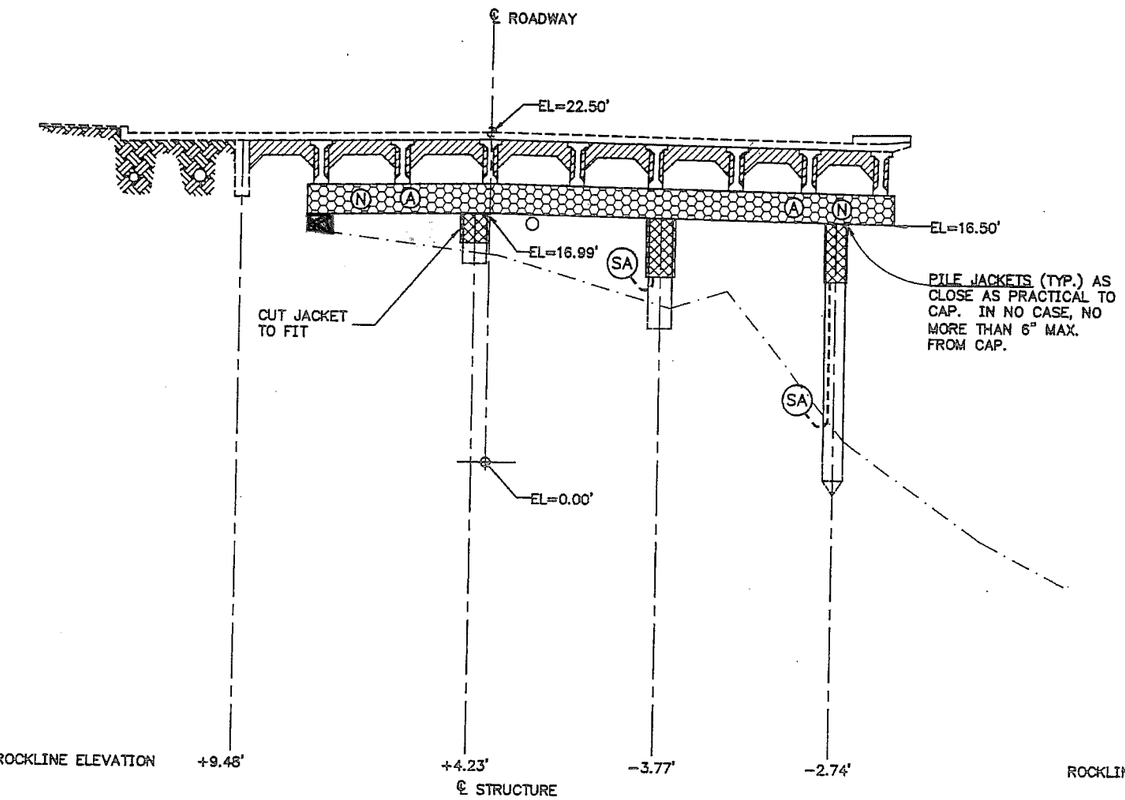

BENT 4

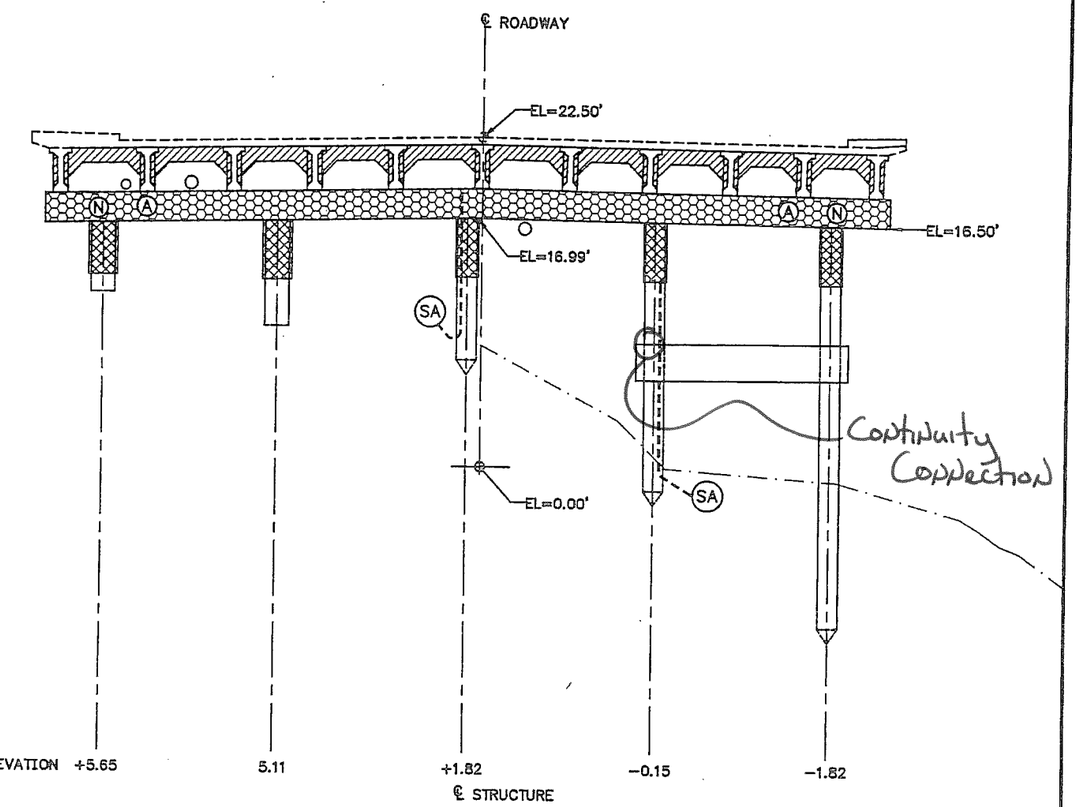

BENT 3

TONGASS AVENUE

10 5 0 10

SCALE IN FEET

LEGEND

- SURVEY-MUDLINE
- 1999 MUDLINE
- 1955 ROCKLINE
- (N) SYSTEM NEGATIVE
- (A) ANODE TERMINAL PLATE
- (SA) SUBMERGED ANODE
- CAP JACKET
- PILE JACKET
- THERMAL SPRAY

NOTES:

1. MODIFY GENERAL JACKET CONFIGURATION TO FIT AROUND EXISTING UTILITIES.
2. IN SOME LOCATIONS EXISTING UTILITIES AND SERVICE LINES MAY BE CONGESTED. PROTECT EXISTING UTILITY PROPERTY WHILE COMPLETING THE REQUIRED OF THIS WORK.
3. REFER TO DETAILS FOR DIMENSIONS.
4. GIRDER END CONNECTION REQUIRED AT ONE END OF EACH PRESTRESSED GIRDER.
5. ONE SYSTEM NEGATIVE REQUIRED TOP OF EACH PILE OR PILASTER.

ELEVATIONS, BENCHMARKS AND DIMENSIONS ARE BASED ON "AS-BUILT" PLANS. VERIFY ALL CONTROLLING FIELD DIMENSIONS BEFORE ORDERING OR FABRICATING ANY MATERIAL.

DESIGNED BY: M. FIGLEY

STATE OF ALASKA
DEPARTMENT OF TRANSPORTATION
& PUBLIC FACILITIES
STATEWIDE DESIGN & ENGINEERING SERVICES DIVISION

KTN-VIADUCTS
REHABILITATION
PROJECT NO. 68571

Tongass Avenue
Bents 4 & 3

CHECKED BY: G. IMBSEN
DRAWN/REVISED BY: R.S., R.G.

PATH:
PLOT: PSPACE 1=1(F) OR MSPACE 1=1(F)

CP-3.3

REVISIONS			PROJECT DESIGNATION	YEAR	SHEET NO.	TOTAL SHEETS
NO.	DATE	DESCRIPTION	NH-0902(34)	2009	36	70

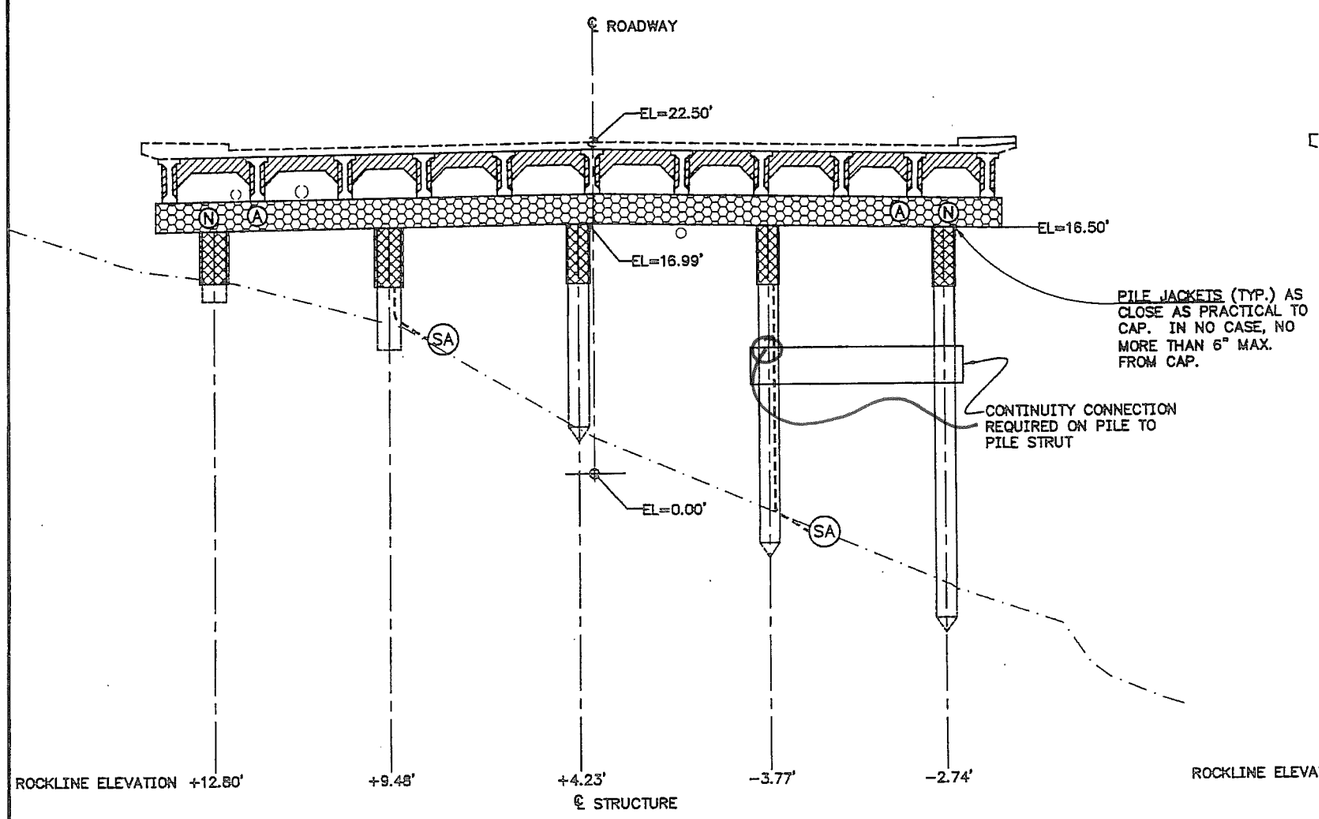

BENT 2

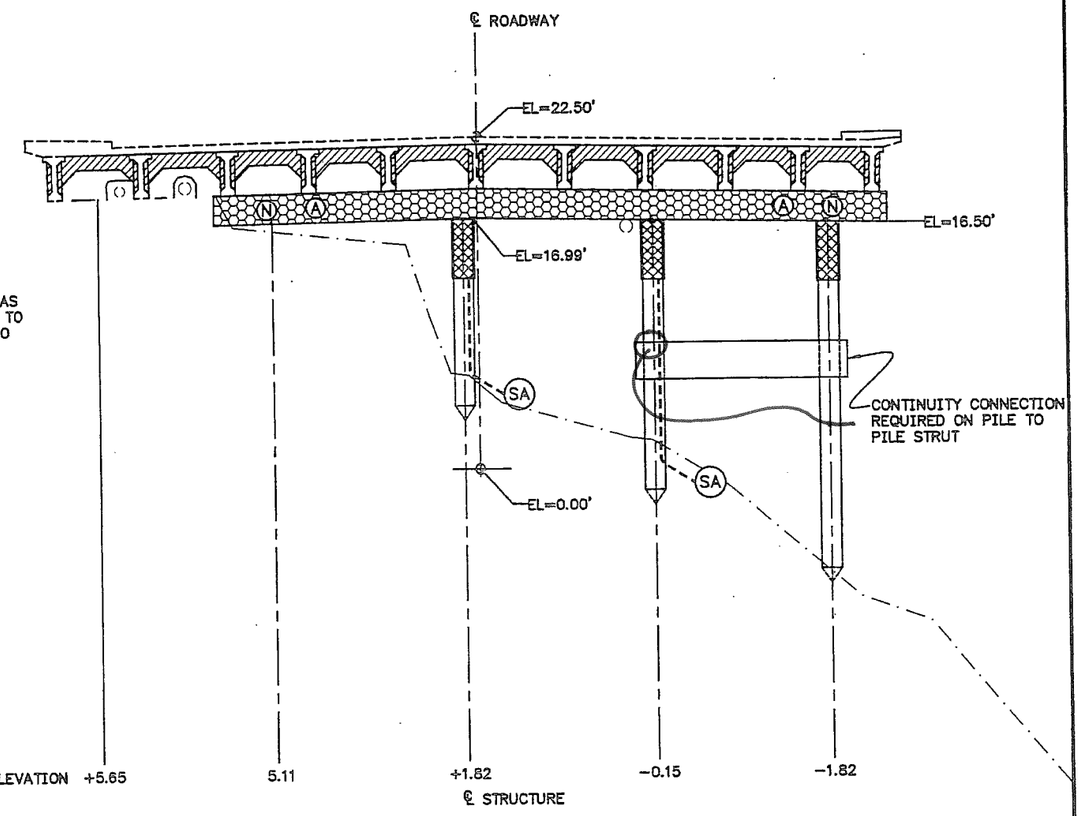

BENT 1

TONGASS AVENUE

10 5 0 10
SCALE IN FEET

LEGEND

- SURVEY-MUDLINE
- 1999 MUDLINE
- 1955 ROCKLINE
- (N) SYSTEM NEGATIVE
- (A) ANODE TERMINAL PLATE
- (SA) SUBMERGED ANODE
- CAP JACKET
- PILE JACKET
- THERMAL SPRAY

NOTES:

1. MODIFY GENERAL JACKET CONFIGURATION TO FIT AROUND EXISTING UTILITIES.
2. IN SOME LOCATIONS EXISTING UTILITIES AND SERVICE LINES MAY BE CONGESTED. PROTECT EXISTING UTILITY PROPERTY WHILE COMPLETING THE REQUIRED OF THIS WORK.
3. REFER TO DETAILS FOR DIMENSIONS.
4. GIRDER END CONNECTION REQUIRED AT ONE END OF EACH PRESTRESSED GIRDER.
5. ONE SYSTEM NEGATIVE REQUIRED TOP OF EACH PILE OR PILASTER.

ELEVATIONS, BENCHMARKS AND DIMENSIONS ARE BASED ON "AS-BUILT" PLANS. VERIFY ALL CONTROLLING FIELD DIMENSIONS BEFORE ORDERING OR FABRICATING ANY MATERIAL.

DESIGNED BY: M. FIGLEY
CHECKED BY: G. IMBSEN
DRAWN/REVISED BY: R.S., R.G.

STATE OF ALASKA
DEPARTMENT OF TRANSPORTATION & PUBLIC FACILITIES
STATEWIDE DESIGN & ENGINEERING SERVICES DIVISION

KTN-VIADUCTS REHABILITATION
PROJECT NO. 68571

Tongass Avenue
Bents 2 & 1

PATH:
PLOT: PSPACE 1=1(F) OR MSPACE 1=1(F)

CP-3.4

REVISIONS			PROJECT DESIGNATION	YEAR	SHEET NO.	TOTAL SHEETS
NO.	DATE	DESCRIPTION	NH-0902(34)	2009	37	70

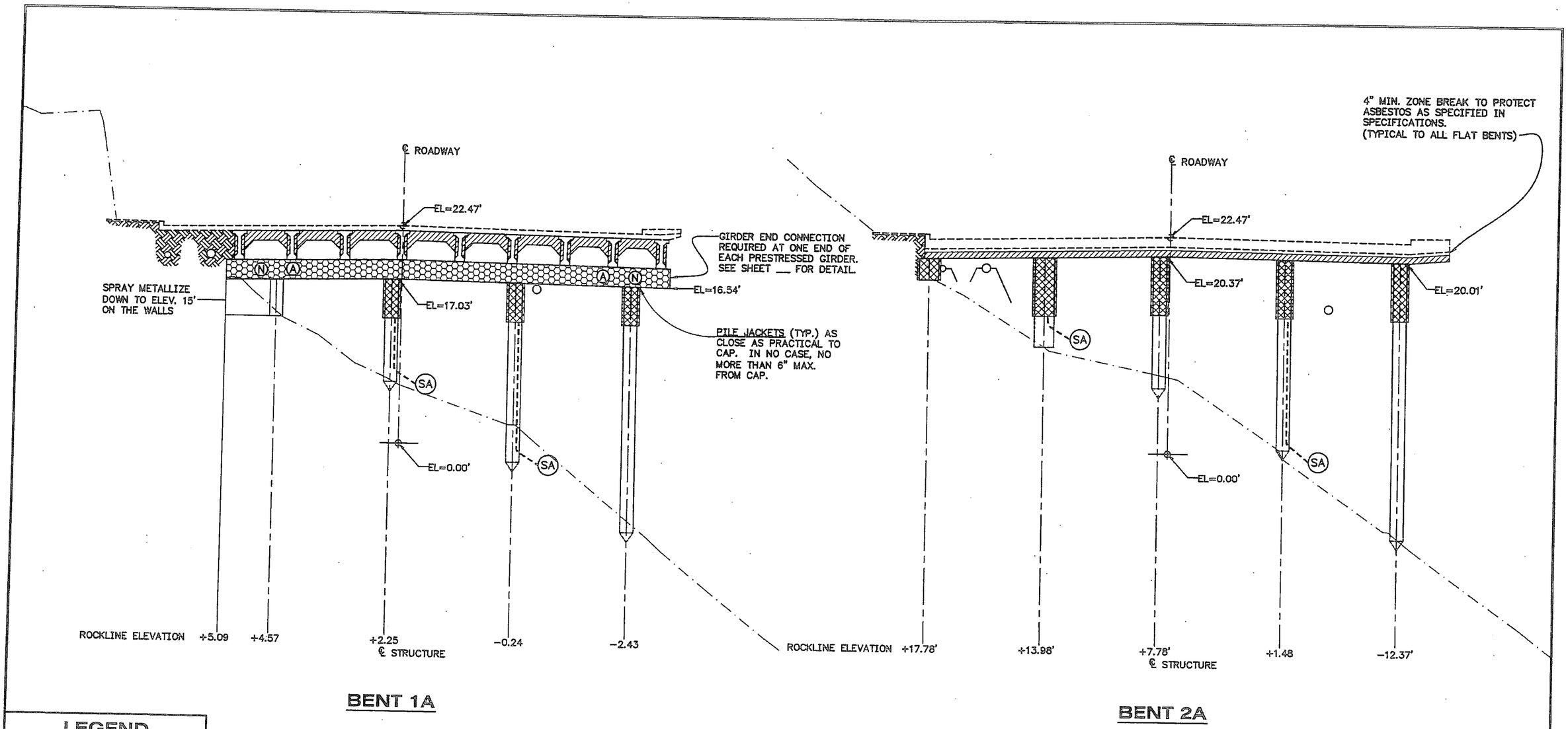

LEGEND

- SURVEY-MUDLINE
- 1999 MUDLINE
- 1955 ROCKLINE
- (N) SYSTEM NEGATIVE
- (A) ANODE TERMINAL PLATE
- (SA) SUBMERGED ANODE
- CAP JACKET
- PILE JACKET
- THERMAL SPRAY

NOTES:

1. MODIFY GENERAL JACKET CONFIGURATION TO FIT AROUND EXISTING UTILITIES.
2. IN SOME LOCATIONS EXISTING UTILITIES AND SERVICE LINES MAY BE CONGESTED. PROTECT EXISTING UTILITY PROPERTY WHILE COMPLETING THE REQUIRED OF THIS WORK.
3. REFER TO DETAILS FOR DIMENSIONS.
4. GIRDER END CONNECTION REQUIRED AT ONE END OF EACH PRESTRESSED GIRDER.
5. ONE SYSTEM NEGATIVE REQUIRED TOP OF EACH PILE OR PILASTER.

ELEVATIONS, BENCHMARKS AND DIMENSIONS ARE BASED ON "AS-BUILT" PLANS. VERIFY ALL CONTROLLING FIELD DIMENSIONS BEFORE ORDERING OR FABRICATING ANY MATERIAL.

DESIGNED BY: M. FIGLEY

STATE OF ALASKA
DEPARTMENT OF TRANSPORTATION & PUBLIC FACILITIES
STATEWIDE DESIGN & ENGINEERING SERVICES DIVISION

KTN-VIADUCTS REHABILITATION
PROJECT NO. 68571

Tongass Avenue
Bents 1A & 2A

CHECKED BY: G. IMBSEN
DRAWN/REVISED BY: R.S., R.G.

PATH:
PLOT: PSPACE 1=1(F) OR MSPACE 1=1(F)

CP-3.5

REVISIONS			PROJECT DESIGNATION	YEAR	SHEET NO.	TOTAL SHEETS
NO.	DATE	DESCRIPTION	NH-0902(34)	2009	38	70

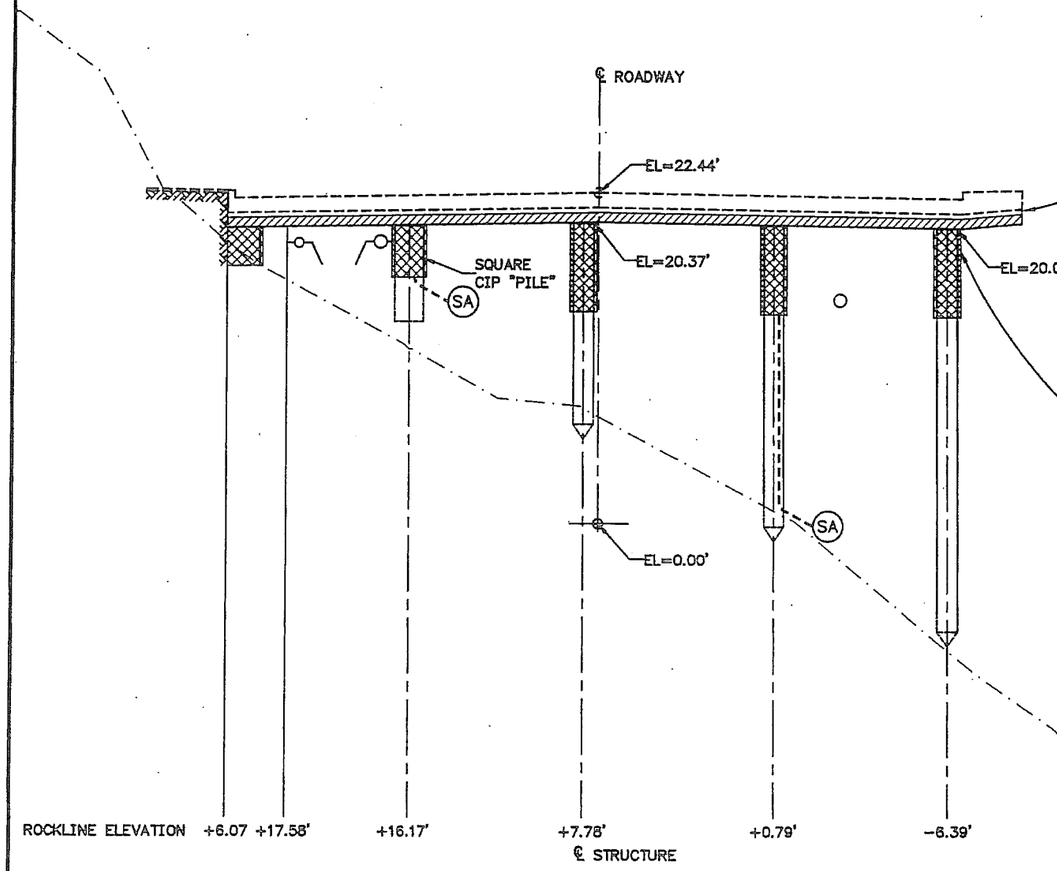

BENT 3A

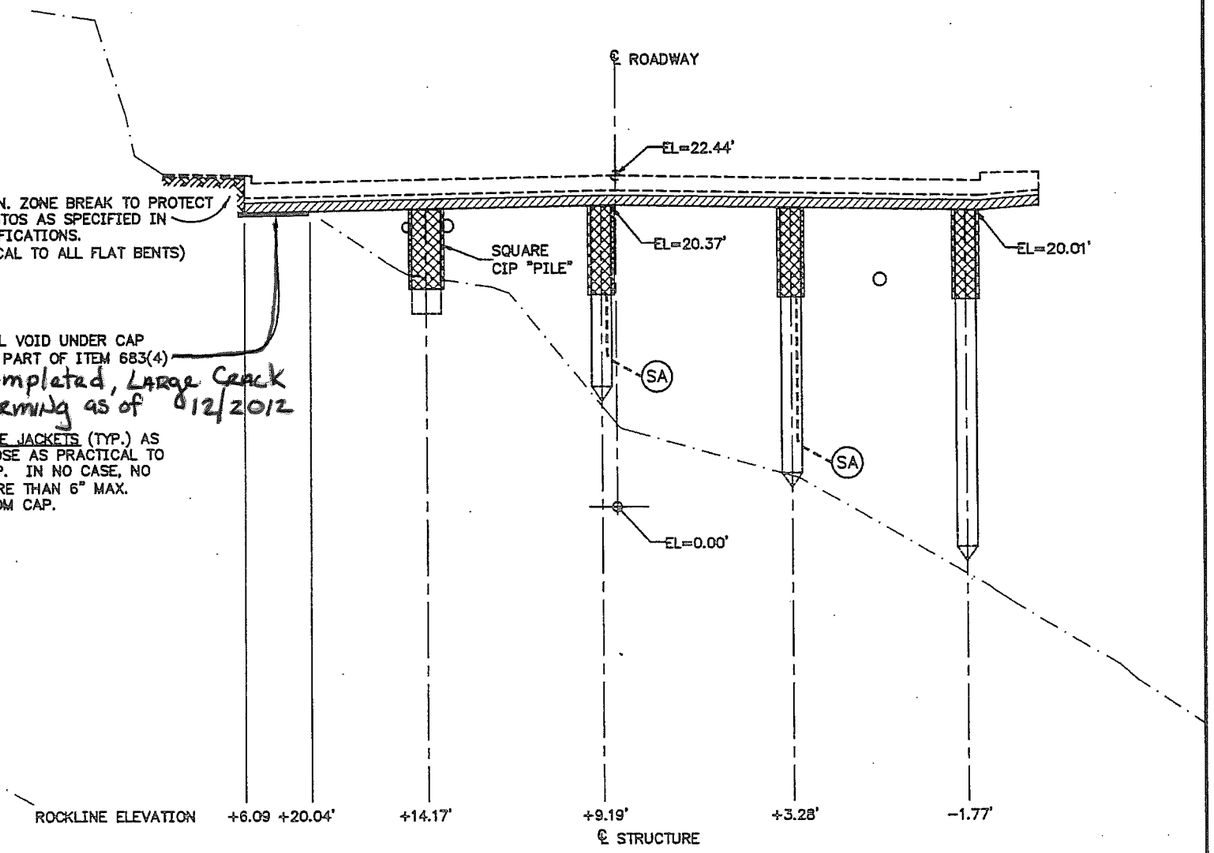

BENT 4A

TONGASS AVENUE

10 5 0 10

SCALE IN FEET

LEGEND

- SURVEY-MUDLINE
- 1999 MUDLINE
- 1955 ROCKLINE
- (N) SYSTEM NEGATIVE
- (A) ANODE TERMINAL PLATE
- (SA) SUBMERGED ANODE
- CAP JACKET
- PILE JACKET
- THERMAL SPRAY

NOTES:

1. MODIFY GENERAL JACKET CONFIGURATION TO FIT AROUND EXISTING UTILITIES.
2. IN SOME LOCATIONS EXISTING UTILITIES AND SERVICE LINES MAY BE CONGESTED. PROTECT EXISTING UTILITY PROPERTY WHILE COMPLETING THE REQUIRED OF THIS WORK.
3. REFER TO DETAILS FOR DIMENSIONS.
4. GIRDER END CONNECTION REQUIRED AT ONE END OF EACH PRESTRESSED GIRDER.
5. ONE SYSTEM NEGATIVE REQUIRED TOP OF EACH PILE OR PILASTER.

ELEVATIONS, BENCHMARKS AND DIMENSIONS ARE BASED ON "AS-BUILT" PLANS. VERIFY ALL CONTROLLING FIELD DIMENSIONS BEFORE ORDERING OR FABRICATING ANY MATERIAL.

DESIGNED BY: M. FIGLEY

STATE OF ALASKA
DEPARTMENT OF TRANSPORTATION
& PUBLIC FACILITIES
STATEWIDE DESIGN & ENGINEERING SERVICES DIVISION

KTN-VIADUCTS
REHABILITATION
PROJECT NO. 68571

CHECKED BY: G. IMBSEN
DRAWN/REVISED BY: R.S., R.G.

Tongass Avenue
Bents 3A & 4A

PATH:
PLOT: PSPACE 1=1(F) OR MSPACE 1=1(F)

CP-3.6

REVISIONS			PROJECT DESIGNATION	YEAR	SHEET NO.	TOTAL SHEETS
NO.	DATE	DESCRIPTION				
			NH-0902(34)	2009	39	70

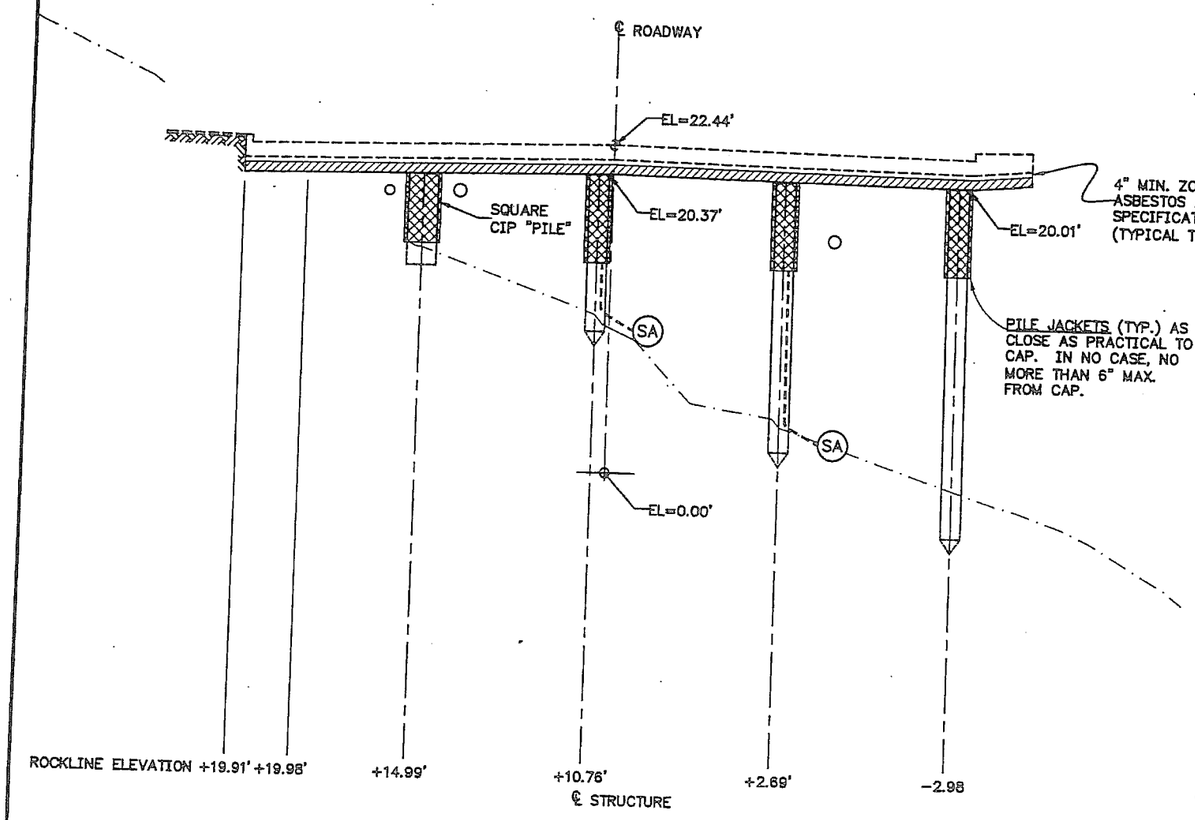

BENT 5A

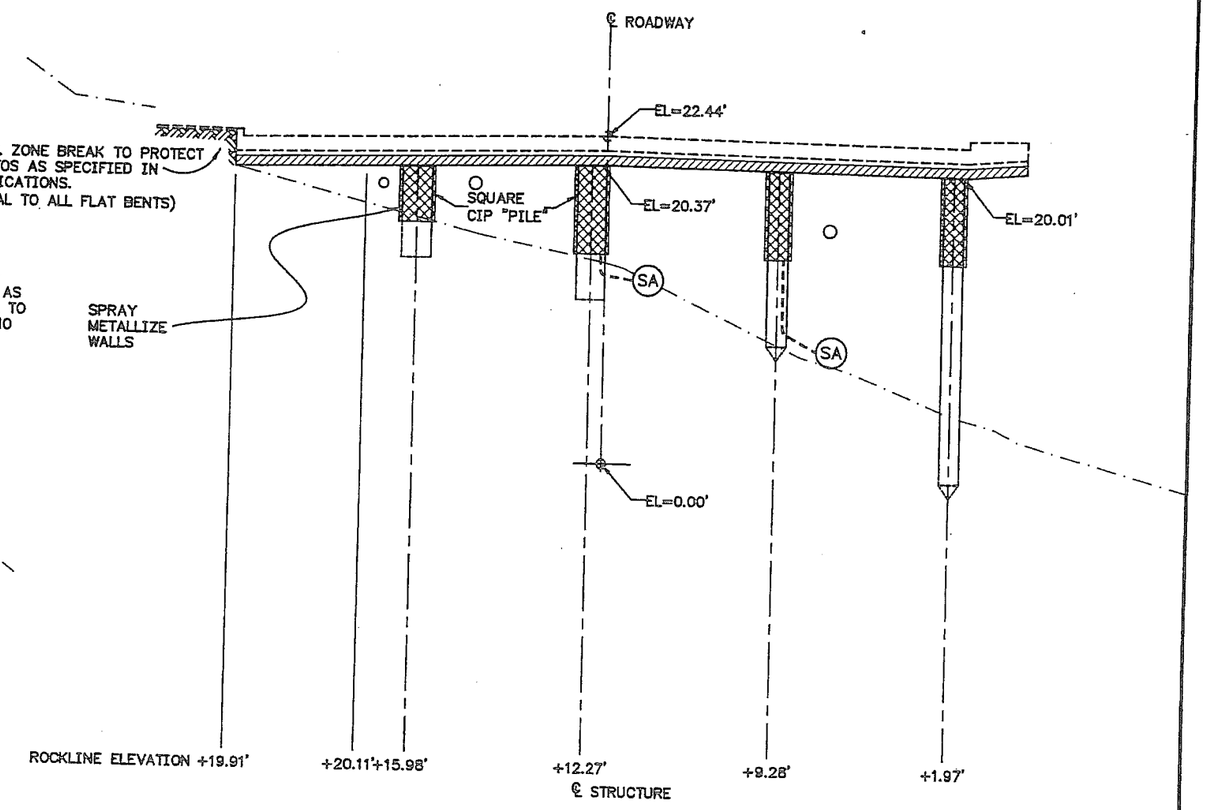

BENT 6A

TONGASS AVENUE

10 5 0 10
SCALE IN FEET

LEGEND

- SURVEY-MUDLINE
- 1999 MUDLINE
- 1955 ROCKLINE
- (N) SYSTEM NEGATIVE
- (A) ANODE TERMINAL PLATE
- (SA) SUBMERGED ANODE
- CAP JACKET
- PILE JACKET
- THERMAL SPRAY

NOTES:

1. MODIFY GENERAL JACKET CONFIGURATION TO FIT AROUND EXISTING UTILITIES.
2. IN SOME LOCATIONS EXISTING UTILITIES AND SERVICE LINES MAY BE CONGESTED. PROTECT EXISTING UTILITY PROPERTY WHILE COMPLETING THE REQUIRED OF THIS WORK.
3. REFER TO DETAILS FOR DIMENSIONS.
4. GIRDER END CONNECTION REQUIRED AT ONE END OF EACH PRESTRESSED GIRDER.
5. ONE SYSTEM NEGATIVE REQUIRED TOP OF EACH PILE OR PILASTER.

ELEVATIONS, BENCHMARKS AND DIMENSIONS ARE BASED ON "AS-BUILT" PLANS. VERIFY ALL CONTROLLING FIELD DIMENSIONS BEFORE ORDERING OR FABRICATING ANY MATERIAL.

DESIGNED BY: M. FIGLEY

STATE OF ALASKA
DEPARTMENT OF TRANSPORTATION & PUBLIC FACILITIES
STATEWIDE DESIGN & ENGINEERING SERVICES DIVISION

KTN-VIADUCTS REHABILITATION
PROJECT NO. 68571

CHECKED BY: G. IMBSEN
DRAWN/REVISED BY: R.S., R.G.

Tongass Avenue
Bents 5A & 6A

PATH:
PLOT: PSPACE 1=1(F) OR MSPACE 1=1(F)

CP-3.7

REVISIONS			PROJECT DESIGNATION	YEAR	SHEET NO.	TOTAL SHEETS
NO.	DATE	DESCRIPTION	NH-0902(34)	2009	40	70

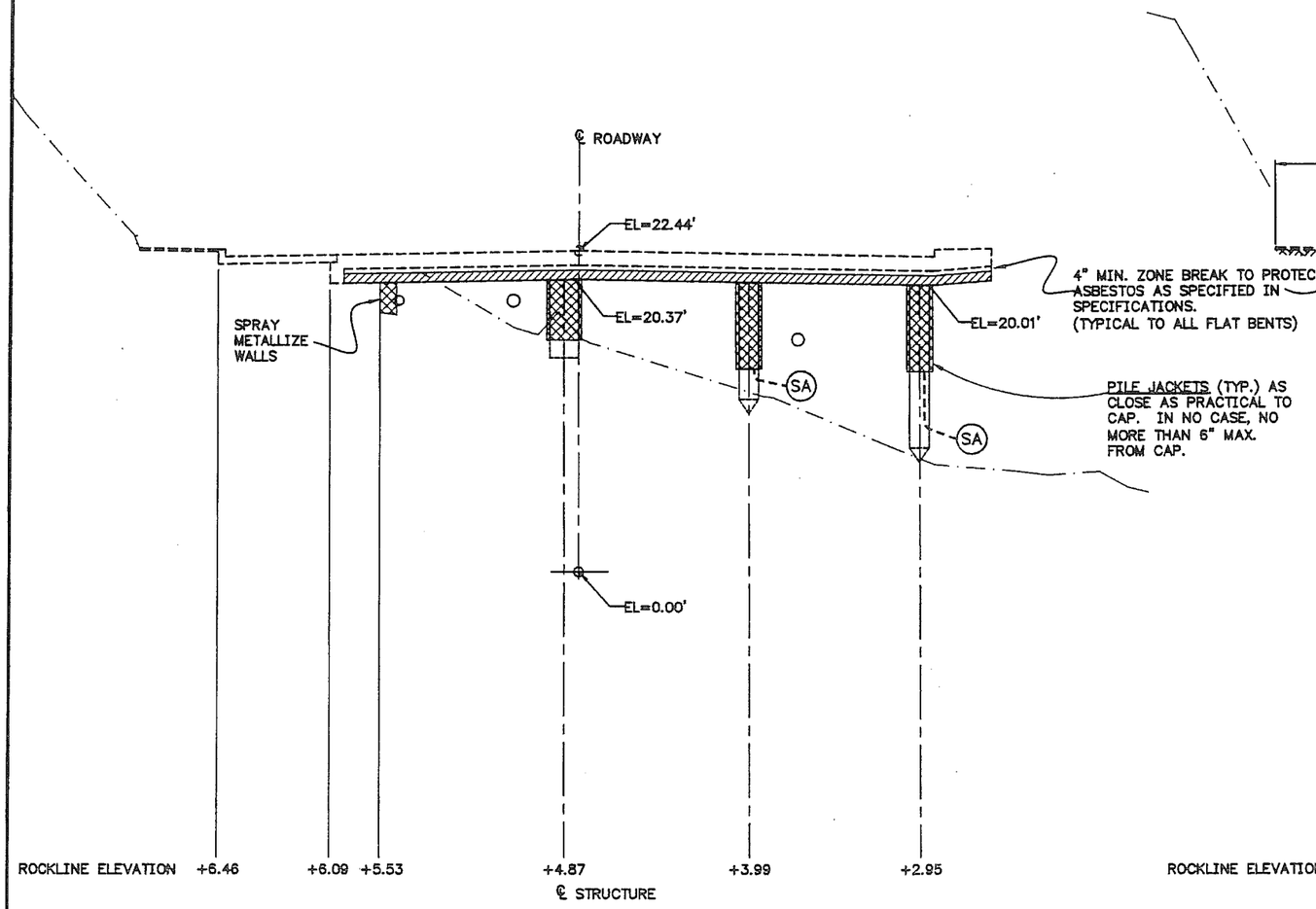

BENT 7A

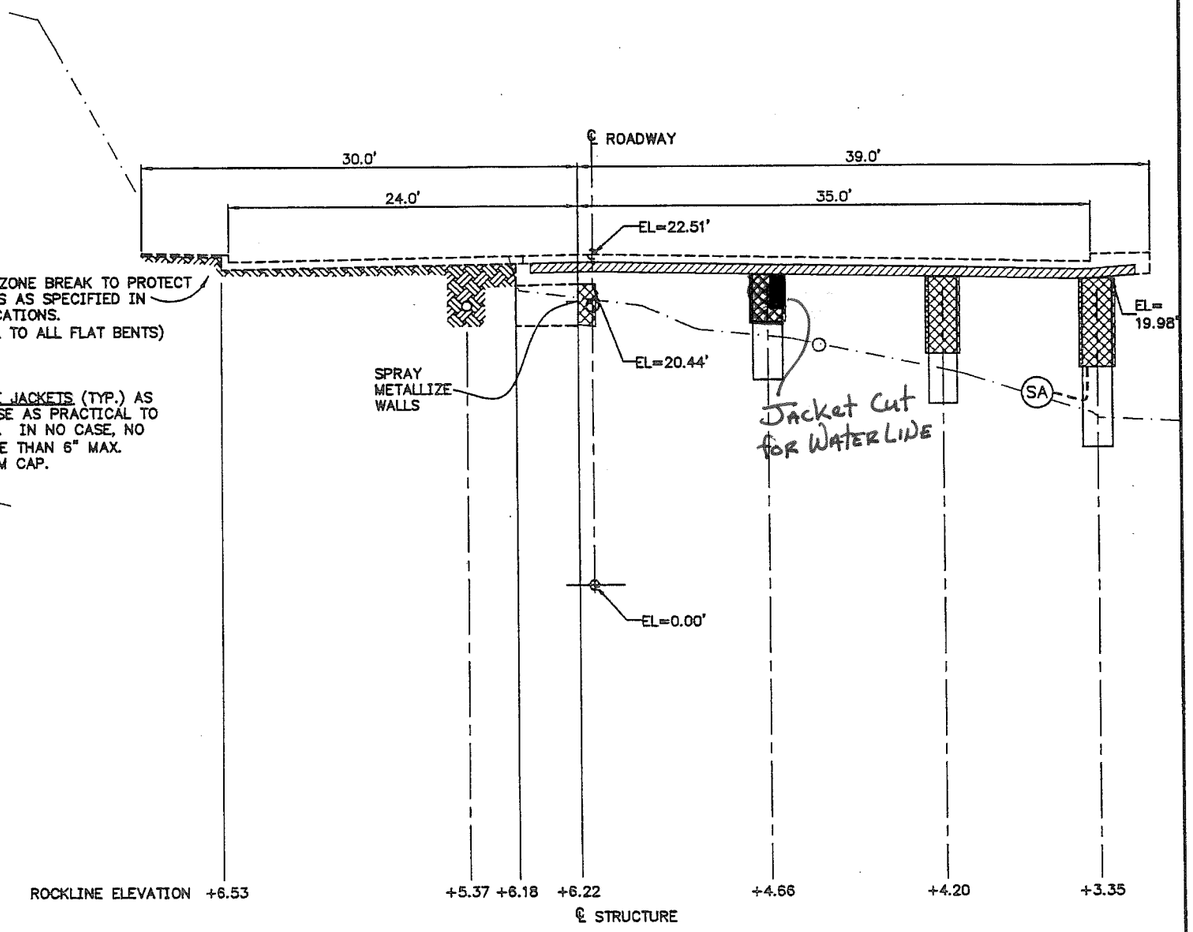

BENT 8A

TONGASS AVENUE

10 5 0 10
SCALE IN FEET

LEGEND

- SURVEY-MUDLINE
- 1999 MUDLINE
- 1955 ROCKLINE
- (N) SYSTEM NEGATIVE
- (A) ANODE TERMINAL PLATE
- (SA) SUBMERGED ANODE
- CAP JACKET
- PILE JACKET
- THERMAL SPRAY

NOTES:

1. MODIFY GENERAL JACKET CONFIGURATION TO FIT AROUND EXISTING UTILITIES.
2. IN SOME LOCATIONS EXISTING UTILITIES AND SERVICE LINES MAY BE CONGESTED. PROTECT EXISTING UTILITY PROPERTY WHILE COMPLETING THE REQUIRED OF THIS WORK.
3. REFER TO DETAILS FOR DIMENSIONS.
4. GIRDER END CONNECTION REQUIRED AT ONE END OF EACH PRESTRESSED GIRDER.
5. ONE SYSTEM NEGATIVE REQUIRED TOP OF EACH PILE OR PILASTER.

ELEVATIONS, BENCHMARKS AND DIMENSIONS ARE BASED ON "AS-BUILT" PLANS. VERIFY ALL CONTROLLING FIELD DIMENSIONS BEFORE ORDERING OR FABRICATING ANY MATERIAL.

DESIGNED BY: M. FIGLEY

STATE OF ALASKA 49th Mark D. Figley CE-8050

CHECKED BY: G. IMBSEN
DRAWN/REVISED BY: R.S., R.G.

STATE OF ALASKA
DEPARTMENT OF TRANSPORTATION
& PUBLIC FACILITIES
STATEWIDE DESIGN & ENGINEERING SERVICES DIVISION

KTN-VIADUCTS
REHABILITATION
PROJECT NO. 68571

Tongass Avenue
Bents 7A & 8A

PATH:
PLOT: PSPACE 1=1(F) OR MSPACE 1=1(F)

CP-3.8

REVISIONS			PROJECT DESIGNATION	YEAR	SHEET NO.	TOTAL SHEETS
NO.	DATE	DESCRIPTION	NH-0902(34)	2009	41	70

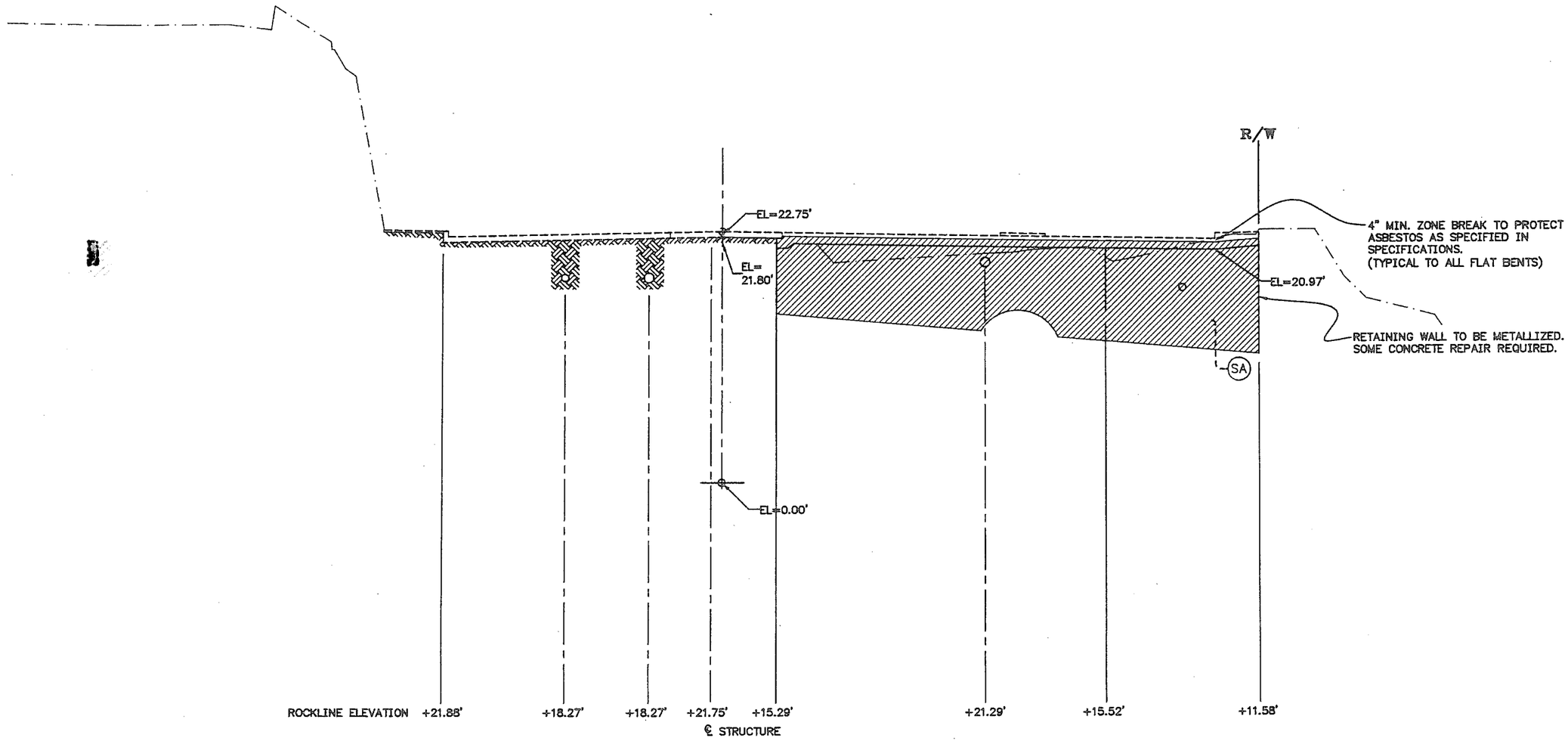

BENT 9A

TONGASS AVENUE

10 5 0 10

SCALE IN FEET

LEGEND

- SURVEY-MUDLINE
- 1999 MUDLINE
- 1955 ROCKLINE
- (N) SYSTEM NEGATIVE
- (A) ANODE TERMINAL PLATE
- (SA) SUBMERGED ANODE
- CAP JACKET
- PILE JACKET
- THERMAL SPRAY

NOTES:

1. MODIFY GENERAL JACKET CONFIGURATION TO FIT AROUND EXISTING UTILITIES.
2. IN SOME LOCATIONS EXISTING UTILITIES AND SERVICE LINES MAY BE CONGESTED. PROTECT EXISTING UTILITY PROPERTY WHILE COMPLETING THE REQUIRED OF THIS WORK.
3. REFER TO DETAILS FOR DIMENSIONS.
4. GIRDER END CONNECTION REQUIRED AT ONE END OF EACH PRESTRESSED GIRDER.
5. ONE SYSTEM NEGATIVE REQUIRED TOP OF EACH PILE OR PILASTER.

ELEVATIONS, BENCHMARKS AND DIMENSIONS ARE BASED ON "AS-BUILT" PLANS. VERIFY ALL CONTROLLING FIELD DIMENSIONS BEFORE ORDERING OR FABRICATING ANY MATERIAL.

DESIGNED BY: M. FIGLEY

STATE OF ALASKA
49th
Mark W. Figley
CE-8050

CHECKED BY: G. IMBSEN
DRAWN/REVISED BY: R.S., R.G.

STATE OF ALASKA
DEPARTMENT OF TRANSPORTATION
& PUBLIC FACILITIES
STATEWIDE DESIGN & ENGINEERING SERVICES DIVISION

KTN-VIADUCTS
REHABILITATION
PROJECT NO. 68571

Tongass Avenue
Bent 9A

PATH:
PLOT: PSPACE 1=1(F) OR MSPACE 1=1(F)

CP-3.9

REVISIONS			PROJECT DESIGNATION	YEAR	SHEET NO.	TOTAL SHEETS
NO.	DATE	DESCRIPTION	NH-0902(34)	2009	42	70

BENT 65 NOTES:

1. BENT 64 WAS REHABILITATED ON PROJECT 71111, HOWEVER, THE SPAN FROM BENT 64 TO BENT 65 WILL BE SPRAY METALLIZED UNDER THIS PROJECT.
2. THERE IS A GRAVITY SEWER MANHOLE STRUCTURE BETWEEN BENTS 64 AND 65. WORK DECK MUST BE BUILT AROUND THIS STRUCTURE.
3. WORK AROUND SEAWARD BUILDING, TIE BACK CABLES.

NOTE:

AT THESE BENT/SPAN LOCATIONS, ALL WORK ON ITEMS 681(1), 681(2), 683(1), 683(2), 683(3), 683(4), 684(1), 684(2), 684(3), 684(4), 684(5), 684(7), 686(1), 686(2), AND 687(1) MUST BE COMPLETED BETWEEN OCTOBER 1ST. AND MAY 1ST.

BENT 66 NOTE:

WORK AROUND SEAWARD BUILDING, TIE BACK CABLES.

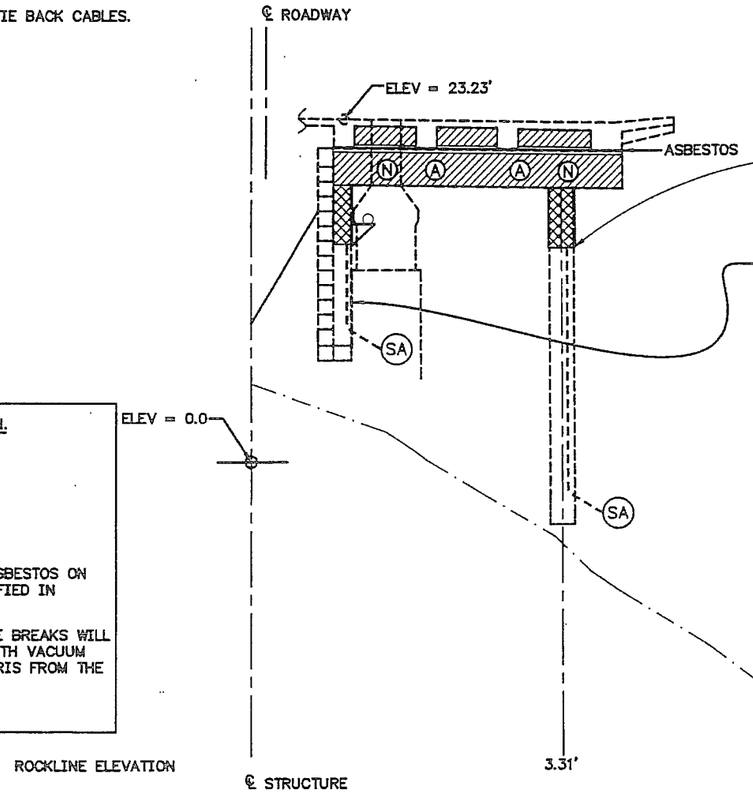

BENT 65

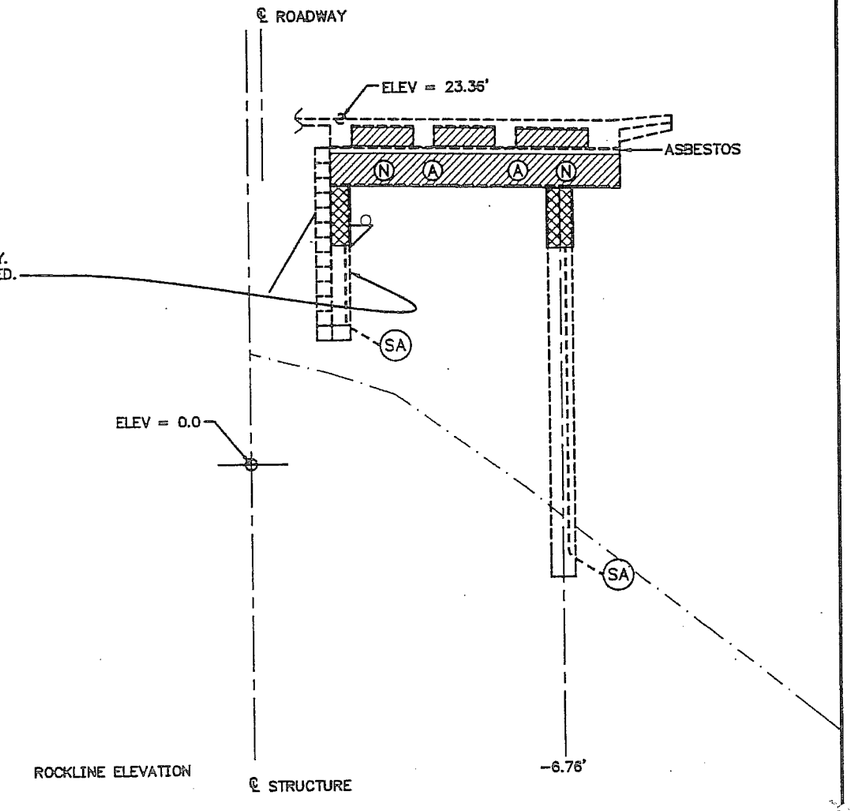

BENT 66

PILE JACKETS (TYP.) AS CLOSE AS PRACTICAL TO CAP. IN NO CASE, NO MORE THAN 6" MAX. FROM CAP.

SPRAY METALLIZE DOWN TO ELEV. 15' ON WALL ONLY. PILASTERS ARE JACKETED & MUST NOT BE METALIZED. PILASTER REPAIR NEEDED.

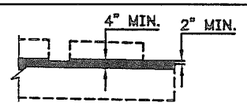

DETAIL

ZONE BREAK NOTE:

ZONE BREAK ON ALL SIDES. PROTECT ASBESTOS ON ALL BENTS ON WATER STREET AS SPECIFIED IN SPECIFICATIONS.

ANY ZINC REMOVAL REQUIRED FOR ZONE BREAKS WILL BE DONE WITHIN THE ENCLOSURE OR WITH VACUUM CONNECTED TOOLS TO COLLECT ALL DEBRIS FROM THE REMOVAL OPERATIONS.

LEGEND

- SURVEY-MUDLINE
- 1999 MUDLINE
- 1955 ROCKLINE
- (N) SYSTEM NEGATIVE
- (A) ANODE TERMINAL PLATE
- (SA) SUBMERGED ANODE
- CAP JACKET
- PILE JACKET
- THERMAL SPRAY

NOTES:

1. ASBESTOS IS PRESENT IN EXPANSION SIDE OF JOINT. SPECIAL HANDLING IS REQUIRED. SEE SPECIFICATIONS.
2. MODIFY GENERAL JACKET CONFIGURATION TO FIT AROUND EXISTING UTILITIES.
3. IN SOME LOCATIONS EXISTING UTILITIES AND SERVICE LINES MAY BE CONGESTED. PROTECT EXISTING UTILITY PROPERTY WHILE COMPLETING THE REQUIRED WORK.
4. REFER TO DETAILS FOR DIMENSIONS.
5. ONE SYSTEM NEGATIVE REQUIRED TOP OF EACH PILE OR PILASTER.

WATER STREET

10 5 0 10

SCALE IN FEET

ELEVATIONS, BENCHMARKS AND DIMENSIONS ARE BASED ON "AS-BUILT" PLANS. VERIFY ALL CONTROLLING FIELD DIMENSIONS BEFORE ORDERING OR FABRICATING ANY MATERIAL.

DESIGNED BY: M. FIGLEY

CHECKED BY: G. IMBSEN

DRAWN/REVISED BY: R.S., R.G.

STATE OF ALASKA
DEPARTMENT OF TRANSPORTATION
& PUBLIC FACILITIES
STATEWIDE DESIGN & ENGINEERING SERVICES DIVISION

KTN-VIADUCTS
REHABILITATION
PROJECT NO. 68571

Water Street
Bents 65 & 66

PATH:
PLOT: PSPACE 1=1(F) OR MSPACE 1=1(F)

CP-3.10

REVISIONS			PROJECT DESIGNATION	YEAR	SHEET NO.	TOTAL SHEETS
NO.	DATE	DESCRIPTION	NH-0902(34)	2009	43	70

NOTE:

WORK AROUND SEAWARD BUILDING, TIE BACK CABLES.

NOTE:

AT THESE BENT/SPAN LOCATIONS, ALL WORK ON ITEMS 681(1), 681(2), 683(1), 683(2), 683(3), 683(4), 684(1), 684(2), 684(3), 684(4), 684(5), 684(7), 686(1), 686(2), AND 687(1) MUST BE COMPLETED BETWEEN OCTOBER 1ST. AND MAY 1ST.

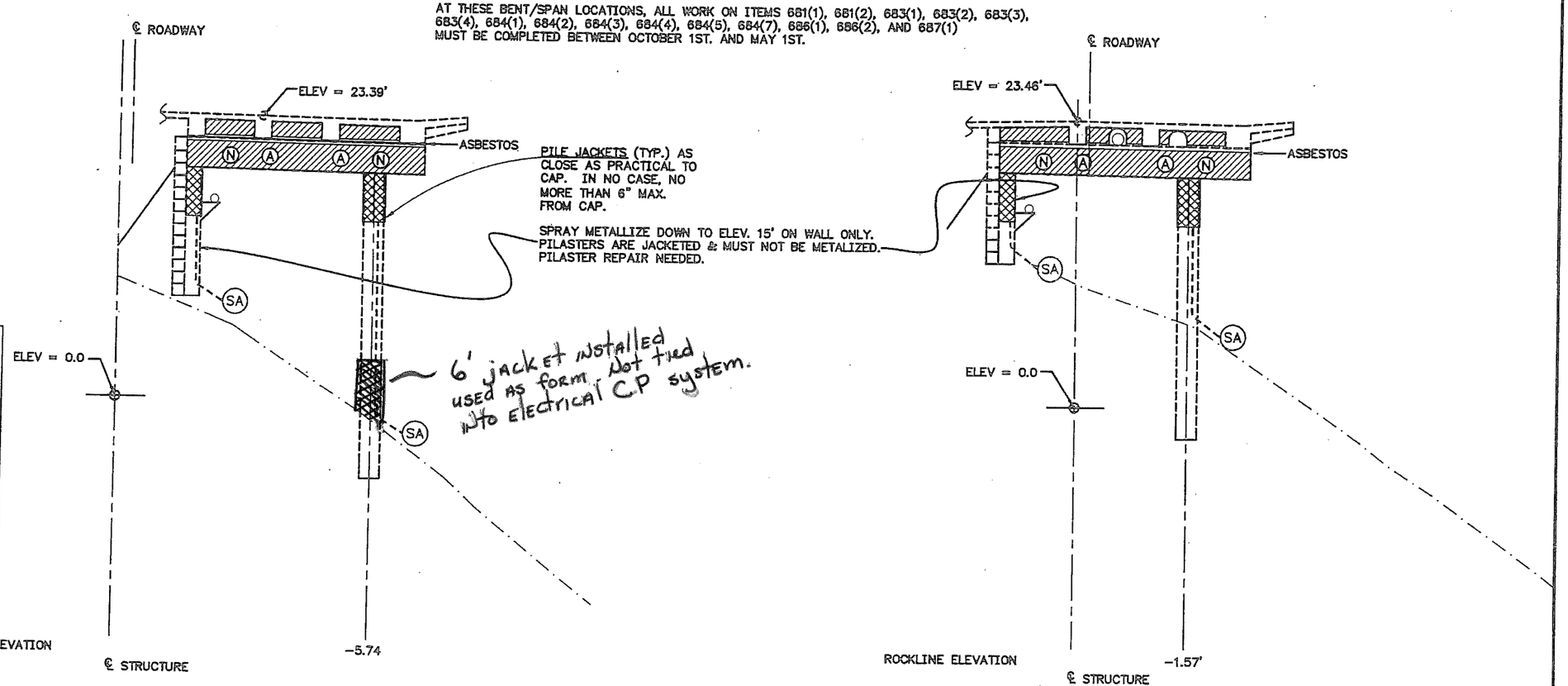

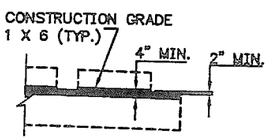

DETAIL

ZONE BREAK NOTE:

ZONE BREAK ON ALL SIDES. PROTECT ASBESTOS ON ALL BENTS ON WATER STREET AS SPECIFIED IN SPECIFICATIONS.

ANY ZINC REMOVAL REQUIRED FOR ZONE BREAKS WILL BE DONE WITHIN THE ENCLOSURE OR WITH VACUUM CONNECTED TOOLS TO COLLECT ALL DEBRIS FROM THE REMOVAL OPERATIONS.

BENT 67

BENT 68

WATER STREET

10 5 0 10

SCALE IN FEET

LEGEND

- SURVEY-MUDLINE
- 1999 MUDLINE
- 1955 ROCKLINE
- (N) SYSTEM NEGATIVE
- (A) ANODE TERMINAL PLATE
- (SA) SUBMERGED ANODE
- CAP JACKET
- PILE JACKET
- THERMAL SPRAY

NOTES:

1. ASBESTOS IS PRESENT IN EXPANSION SIDE OF JOINT. SPECIAL HANDLING IS REQUIRED. SEE SPECIFICATIONS.
2. MODIFY GENERAL JACKET CONFIGURATION TO FIT AROUND EXISTING UTILITIES.
3. IN SOME LOCATIONS EXISTING UTILITIES AND SERVICE LINES MAY BE CONGESTED. PROTECT EXISTING UTILITY PROPERTY WHILE COMPLETING THE REQUIRED WORK.
4. REFER TO DETAILS FOR DIMENSIONS.
5. ONE SYSTEM NEGATIVE REQUIRED TOP OF EACH PILE OR PILASTER.

ELEVATIONS, BENCHMARKS AND DIMENSIONS ARE BASED ON "AS-BUILT" PLANS. VERIFY ALL CONTROLLING FIELD DIMENSIONS BEFORE ORDERING OR FABRICATING ANY MATERIAL.

DESIGNED BY: M. FIGLEY

CHECKED BY: G. IMBSEN

DRAWN/REVISED BY: R.S., R.G.

STATE OF ALASKA
DEPARTMENT OF TRANSPORTATION
& PUBLIC FACILITIES
STATEWIDE DESIGN & ENGINEERING SERVICES DIVISION

KTN-VIADUCTS
REHABILITATION
PROJECT NO. 68571

Water Street
Bents 67 & 68

PATH:
PLOT: PSPACE 1=1(F) OR MSPACE 1=1(F)

CP-3.11

REVISIONS			PROJECT DESIGNATION	YEAR	SHEET NO.	TOTAL SHEETS
NO.	DATE	DESCRIPTION	NH-0902(34)	2009	44	70

NOTE:

AT THESE BENT/SPAN LOCATIONS, ALL WORK ON ITEMS 681(1), 681(2), 683(1), 683(2), 683(3), 683(4), 684(1), 684(2), 684(3), 684(4), 684(5), 684(7), 686(1), 686(2), AND 687(1) MUST BE COMPLETED BETWEEN OCTOBER 1ST. AND MAY 1ST.

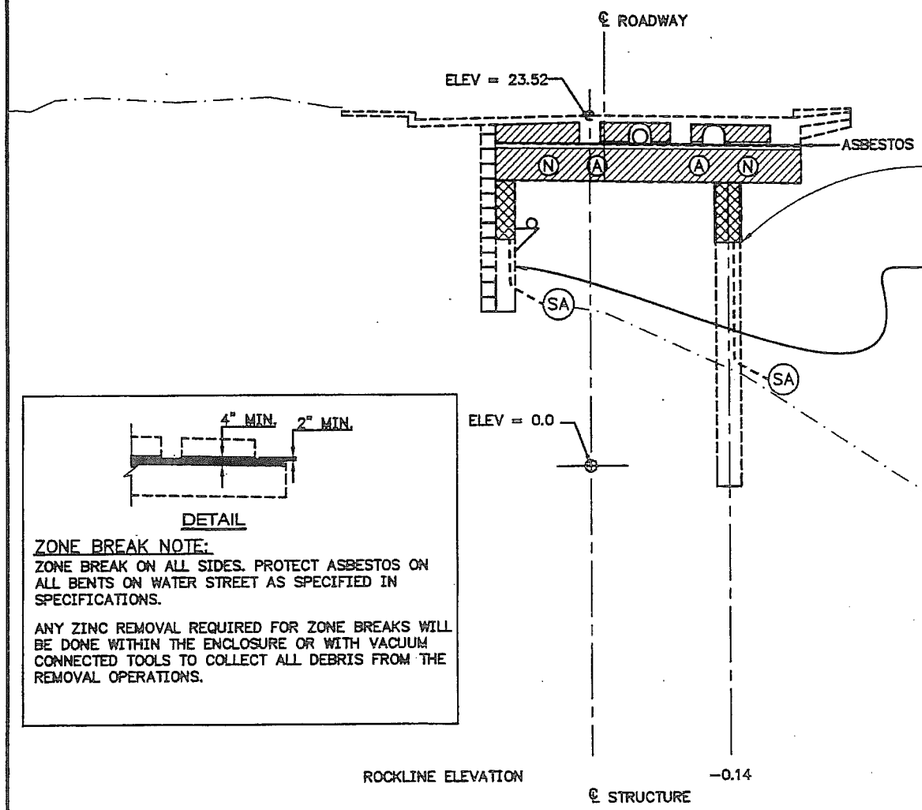

BENT 69

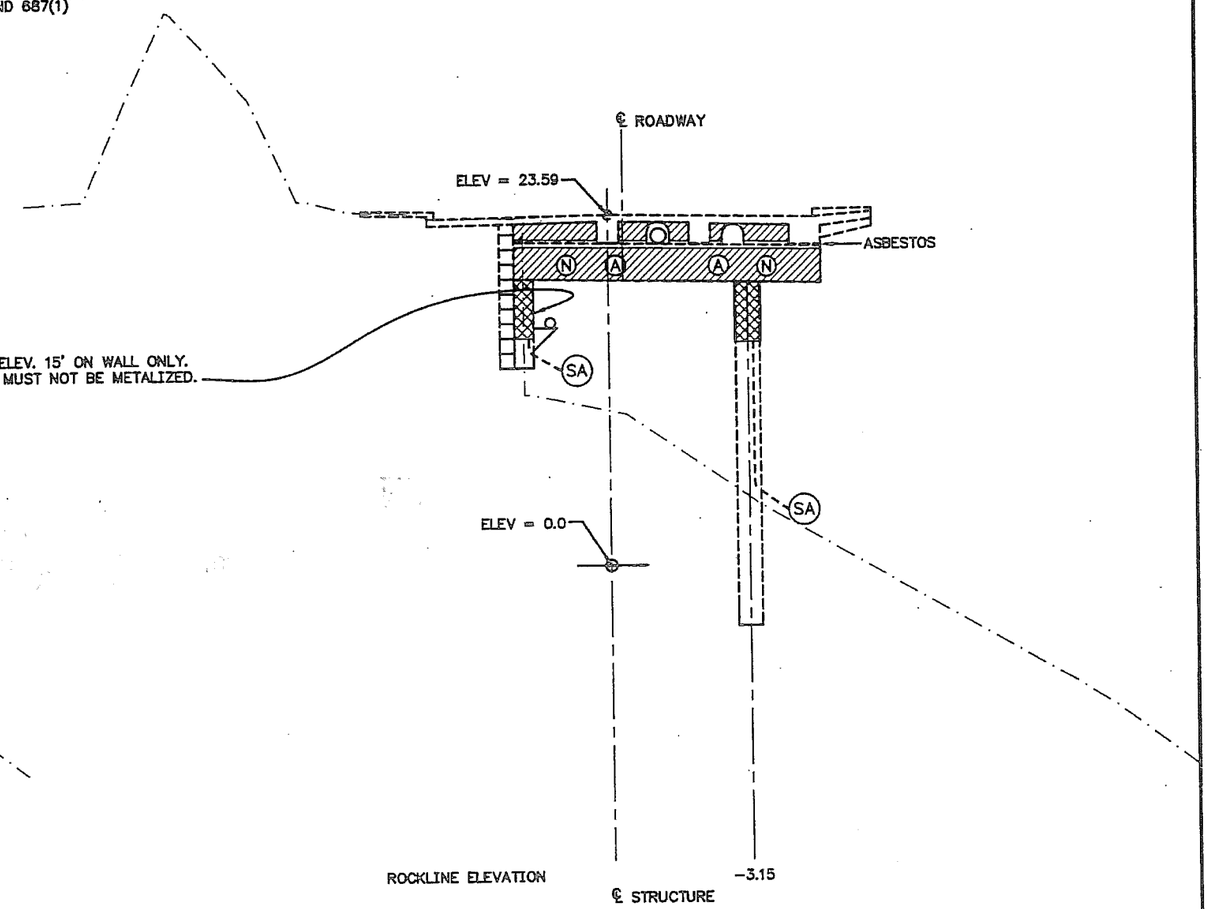

BENT 70

PILE JACKETS (TYP.) AS CLOSE AS PRACTICAL TO CAP. IN NO CASE, NO MORE THAN 6" MAX. FROM CAP.

SPRAY METALLIZE DOWN TO ELEV. 15' ON WALL ONLY. PILASTERS ARE JACKETED & MUST NOT BE METALIZED. PILASTER REPAIR NEEDED.

DETAIL

ZONE BREAK NOTE:

ZONE BREAK ON ALL SIDES. PROTECT ASBESTOS ON ALL BENTS ON WATER STREET AS SPECIFIED IN SPECIFICATIONS.

ANY ZINC REMOVAL REQUIRED FOR ZONE BREAKS WILL BE DONE WITHIN THE ENCLOSURE OR WITH VACUUM CONNECTED TOOLS TO COLLECT ALL DEBRIS FROM THE REMOVAL OPERATIONS.

WATER STREET

10 5 0 10

SCALE IN FEET

LEGEND

- SURVEY-MUDLINE
- 1999 MUDLINE
- 1955 ROCKLINE
- (N) SYSTEM NEGATIVE
- (A) ANODE TERMINAL PLATE
- (SA) SUBMERGED ANODE
- CAP JACKET
- PILE JACKET
- THERMAL SPRAY

NOTES:

1. ASBESTOS IS PRESENT IN EXPANSION SIDE OF JOINT. SPECIAL HANDLING IS REQUIRED. SEE SPECIFICATIONS.
2. MODIFY GENERAL JACKET CONFIGURATION TO FIT AROUND EXISTING UTILITIES.
3. IN SOME LOCATIONS EXISTING UTILITIES AND SERVICE LINES MAY BE CONGESTED. PROTECT EXISTING UTILITY PROPERTY WHILE COMPLETING THE REQUIRED WORK.
4. REFER TO DETAILS FOR DIMENSIONS.
5. ONE SYSTEM NEGATIVE REQUIRED TOP OF EACH PILE OR PILASTER.

ELEVATIONS, BENCHMARKS AND DIMENSIONS ARE BASED ON "AS-BUILT" PLANS. VERIFY ALL CONTROLLING FIELD DIMENSIONS BEFORE ORDERING OR FABRICATING ANY MATERIAL.

DESIGNED BY: M. FIGLEY

CHECKED BY: G. IMBSEN

DRAWN/REVISED BY: R.S., R.G.

STATE OF ALASKA
DEPARTMENT OF TRANSPORTATION
& PUBLIC FACILITIES
STATEWIDE DESIGN & ENGINEERING SERVICES DIVISION

KTN-VIADUCTS
REHABILITATION
PROJECT NO. 68571

Water Street
Bents 69 & 70

PATH:
PLOT: PSPACE 1=1(F) OR MSPACE 1=1(F)

CP-3.12

REVISIONS			PROJECT DESIGNATION	YEAR	SHEET NO.	TOTAL SHEETS
NO.	DATE	DESCRIPTION				
			NH-0902(34)	2009	45	70

NOTE:

AT THESE BENT/SPAN LOCATIONS, ALL WORK ON ITEMS 681(1), 681(2), 683(1), 683(2), 683(3), 683(4), 684(1), 684(2), 684(3), 684(4), 684(5), 684(7), 686(1), 686(2), AND 687(1) MUST BE COMPLETED BETWEEN OCTOBER 1ST. AND MAY 1ST.

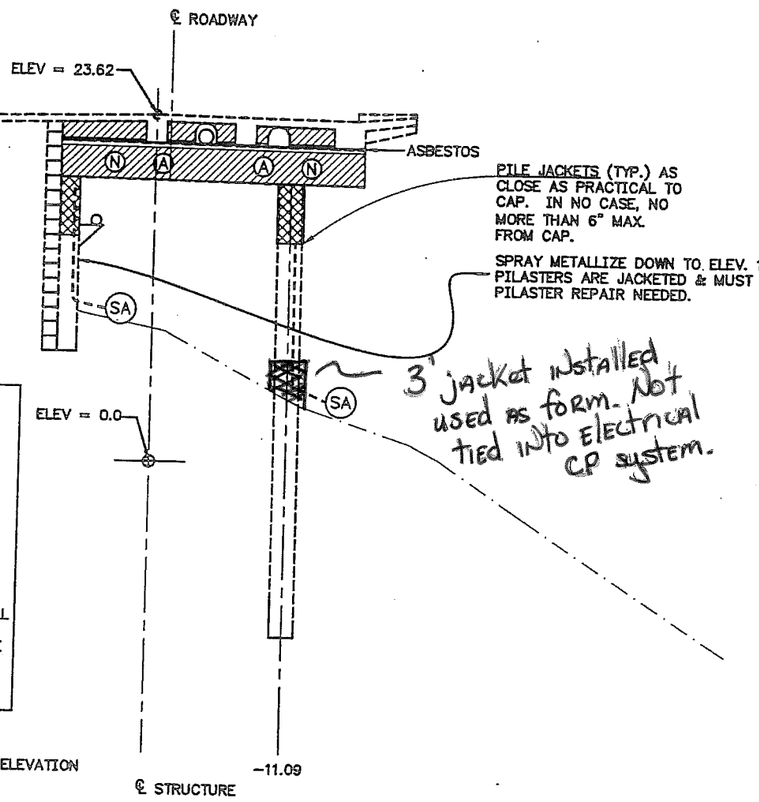

PILE JACKETS (TYP.) AS CLOSE AS PRACTICAL TO CAP. IN NO CASE, NO MORE THAN 6" MAX. FROM CAP.

SPRAY METALLIZE DOWN TO ELEV. 15' ON WALL ONLY. PILASTERS ARE JACKETED & MUST NOT BE METALIZED. PILASTER REPAIR NEEDED.

3' jacket installed used as form. Not tied into Electrical CP system.

BENT 71

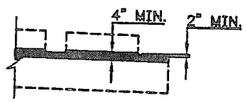

DETAIL

ZONE BREAK NOTE:

ZONE BREAK ON ALL SIDES. PROTECT ASBESTOS ON ALL BENTS ON WATER STREET AS SPECIFIED IN SPECIFICATIONS.

ANY ZINC REMOVAL REQUIRED FOR ZONE BREAKS WILL BE DONE WITHIN THE ENCLOSURE OR WITH VACUUM CONNECTED TOOLS TO COLLECT ALL DEBRIS FROM THE REMOVAL OPERATIONS.

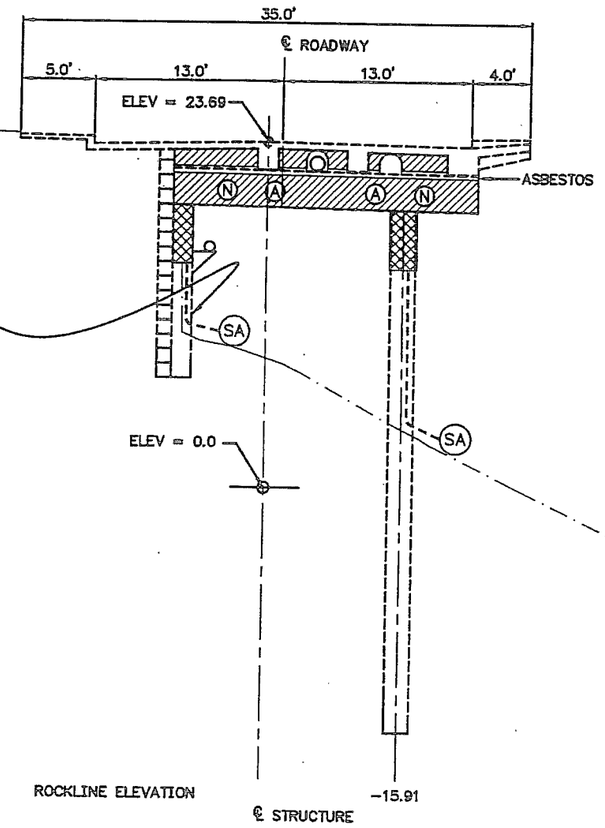

BENT 72

WATER STREET

10 5 0 10

SCALE IN FEET

LEGEND

- SURVEY-MUDLINE
- 1999 MUDLINE
- 1955 ROCKLINE
- (N) SYSTEM NEGATIVE
- (A) ANODE TERMINAL PLATE
- (SA) SUBMERGED ANODE
- CAP JACKET
- PILE JACKET
- THERMAL SPRAY

NOTES:

1. ASBESTOS IS PRESENT IN EXPANSION SIDE OF JOINT. SPECIAL HANDLING IS REQUIRED. SEE SPECIFICATIONS.
2. MODIFY GENERAL JACKET CONFIGURATION TO FIT AROUND EXISTING UTILITIES.
3. IN SOME LOCATIONS EXISTING UTILITIES AND SERVICE LINES MAY BE CONGESTED. PROTECT EXISTING UTILITY PROPERTY WHILE COMPLETING THE REQUIRED WORK.
4. REFER TO DETAILS FOR DIMENSIONS.
5. ONE SYSTEM NEGATIVE REQUIRED TOP OF EACH PILE OR PILASTER.

ELEVATIONS, BENCHMARKS AND DIMENSIONS ARE BASED ON "AS-BUILT" PLANS. VERIFY ALL CONTROLLING FIELD DIMENSIONS BEFORE ORDERING OR FABRICATING ANY MATERIAL.

DESIGNED BY: M. FIGLEY

CHECKED BY: G. IMBSEN

DRAWN/REVISED BY: R.S., R.G.

STATE OF ALASKA
DEPARTMENT OF TRANSPORTATION
& PUBLIC FACILITIES
STATEWIDE DESIGN & ENGINEERING SERVICES DIVISION

KTN-VIADUCTS
REHABILITATION
PROJECT NO. 68571

Water Street
Bents 71 & 72

PATH:
PLOT: PSPACE 1=1(F) OR MSPACE 1=1(F)

CP-3.13

REVISIONS			PROJECT DESIGNATION	YEAR	SHEET NO.	TOTAL SHEETS
NO.	DATE	DESCRIPTION	NH-0902(34)	2009	46	70

NOTE:

AT THESE BENT/SPAN LOCATIONS, ALL WORK ON ITEMS 681(1), 681(2), 683(1), 683(2), 683(3), 683(4), 684(1), 684(2), 684(3), 684(4), 684(5), 684(7), 686(1), 686(2), AND 687(1) MUST BE COMPLETED BETWEEN OCTOBER 1ST. AND MAY 1ST.

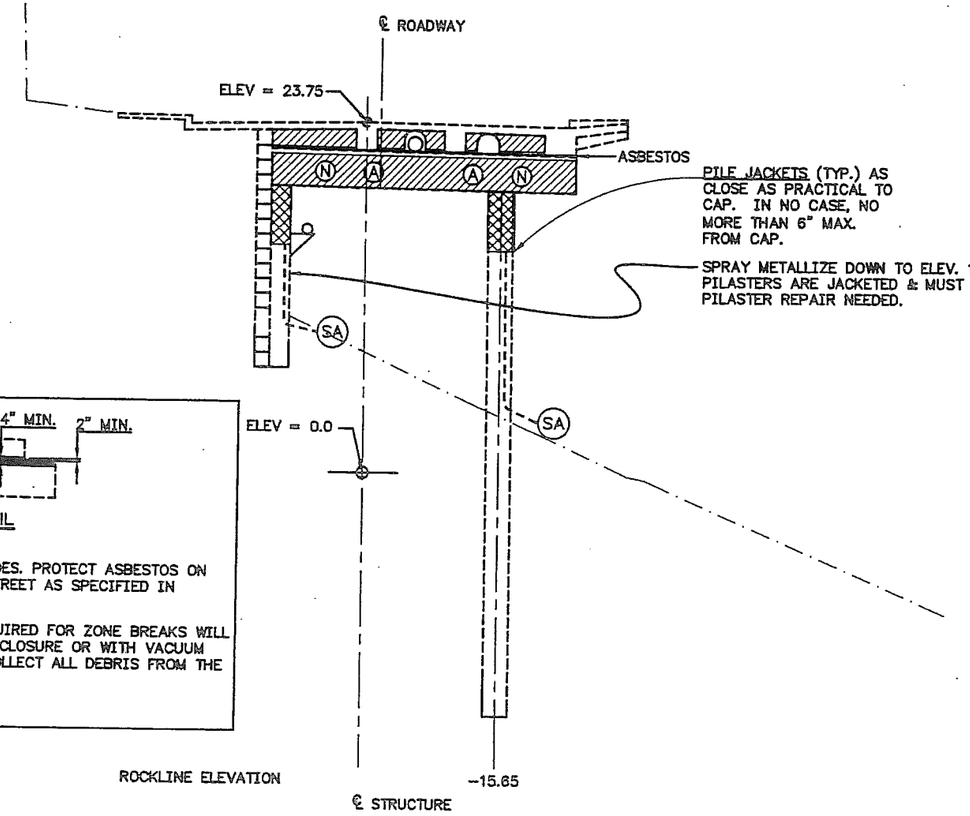

BENT 73

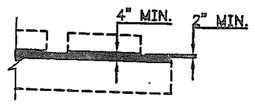

DETAIL

ZONE BREAK NOTE:

ZONE BREAK ON ALL SIDES. PROTECT ASBESTOS ON ALL BENTS ON WATER STREET AS SPECIFIED IN SPECIFICATIONS.

ANY ZINC REMOVAL REQUIRED FOR ZONE BREAKS WILL BE DONE WITHIN THE ENCLOSURE OR WITH VACUUM CONNECTED TOOLS TO COLLECT ALL DEBRIS FROM THE REMOVAL OPERATIONS.

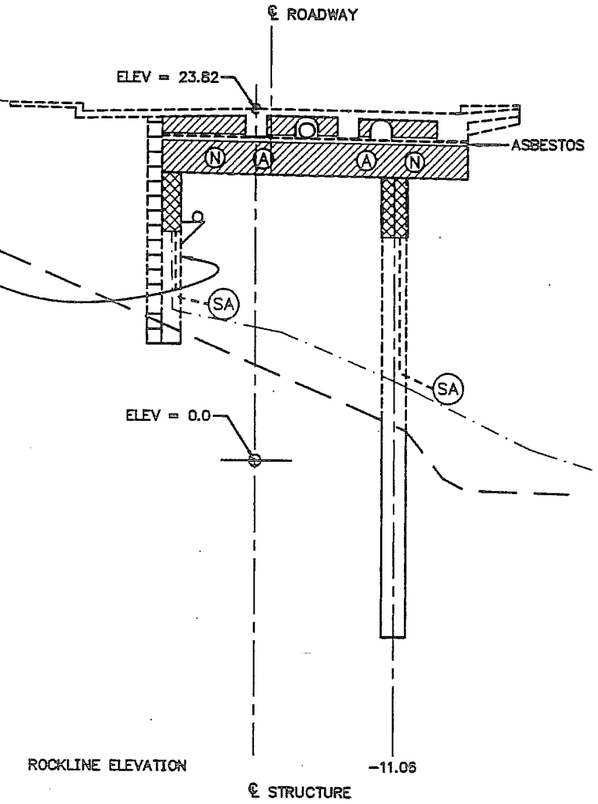

BENT 74

WATER STREET

10 5 0 10

SCALE IN FEET

LEGEND

- SURVEY-MUDLINE
- 1999 MUDLINE
- 1955 ROCKLINE
- (N) SYSTEM NEGATIVE
- (A) ANODE TERMINAL PLATE
- (SA) SUBMERGED ANODE
- CAP JACKET
- PILE JACKET
- THERMAL SPRAY

NOTES:

1. ASBESTOS IS PRESENT IN EXPANSION SIDE OF JOINT. SPECIAL HANDLING IS REQUIRED. SEE SPECIFICATIONS.
2. MODIFY GENERAL JACKET CONFIGURATION TO FIT AROUND EXISTING UTILITIES.
3. IN SOME LOCATIONS EXISTING UTILITIES AND SERVICE LINES MAY BE CONGESTED. PROTECT EXISTING UTILITY PROPERTY WHILE COMPLETING THE REQUIRED WORK.
4. REFER TO DETAILS FOR DIMENSIONS.
5. ONE SYSTEM NEGATIVE REQUIRED TOP OF EACH PILE OR PILASTER.

ELEVATIONS, BENCHMARKS AND DIMENSIONS ARE BASED ON "AS-BUILT" PLANS. VERIFY ALL CONTROLLING FIELD DIMENSIONS BEFORE ORDERING OR FABRICATING ANY MATERIAL.

DESIGNED BY: M. FIGLEY

CHECKED BY: G. IMBSEN

DRAWN/REVISED BY: R.S., R.G.

STATE OF ALASKA
DEPARTMENT OF TRANSPORTATION
& PUBLIC FACILITIES
STATEWIDE DESIGN & ENGINEERING SERVICES DIVISION

KTN-VIADUCTS
REHABILITATION
PROJECT NO. 68571

Water Street
Bents 73 & 74

PATH:
PLOT: PSPACE 1=1(F) OR MSPACE 1=1(F)

CP-3.14

REVISIONS			PROJECT DESIGNATION	YEAR	SHEET NO.	TOTAL SHEETS
NO.	DATE	DESCRIPTION	NH-0902(34)	2009	47	70

NOTE:

AT THESE BENT/SPAN LOCATIONS, ALL WORK ON ITEMS 681(1), 681(2), 683(1), 683(2), 683(3), 683(4), 684(1), 684(2), 684(3), 684(4), 684(5), 684(7), 686(1), 686(2), AND 687(1) MUST BE COMPLETED BETWEEN OCTOBER 1ST. AND MAY 1ST.

BENT 76 NOTE:

BENT 76 IS THE END OF REHABILITATION. SPAN 76 AHEAD WILL BE A FILL SECTION. FORM BOARDS IN SPAN NEED TO BE REMOVED.

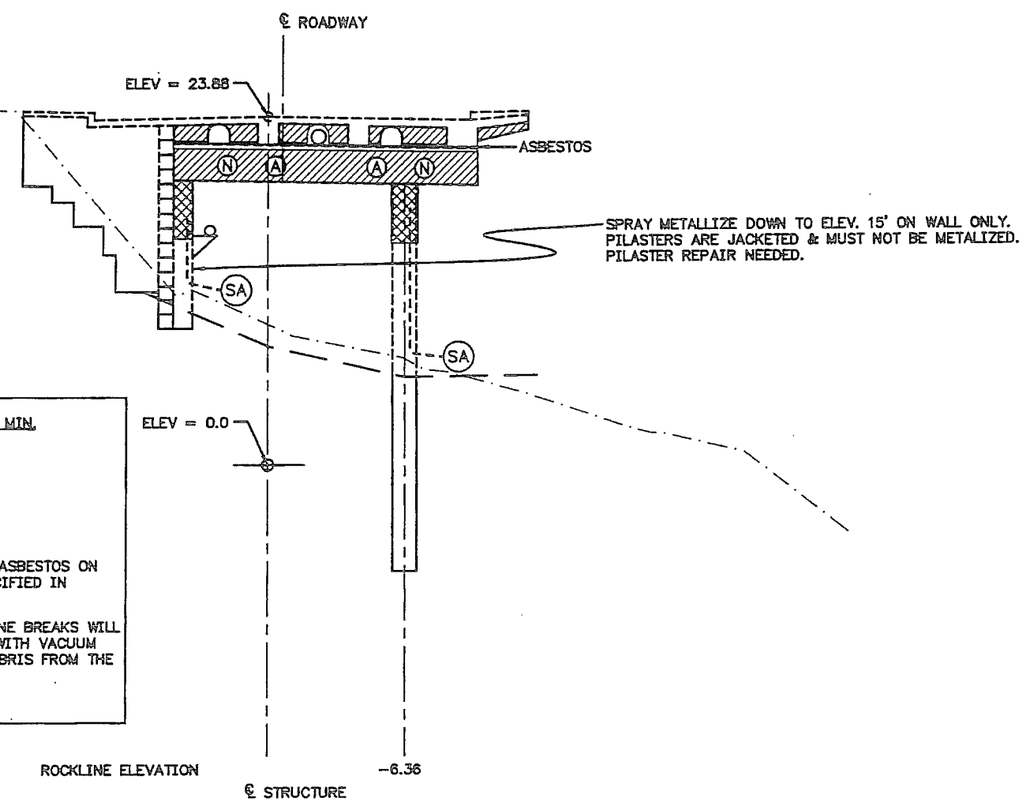

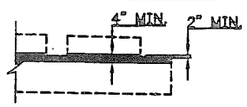

DETAIL

ZONE BREAK NOTE:

ZONE BREAK ON ALL SIDES. PROTECT ASBESTOS ON ALL BENTS ON WATER STREET AS SPECIFIED IN SPECIFICATIONS.

ANY ZINC REMOVAL REQUIRED FOR ZONE BREAKS WILL BE DONE WITHIN THE ENCLOSURE OR WITH VACUUM CONNECTED TOOLS TO COLLECT ALL DEBRIS FROM THE REMOVAL OPERATIONS.

BENT 75

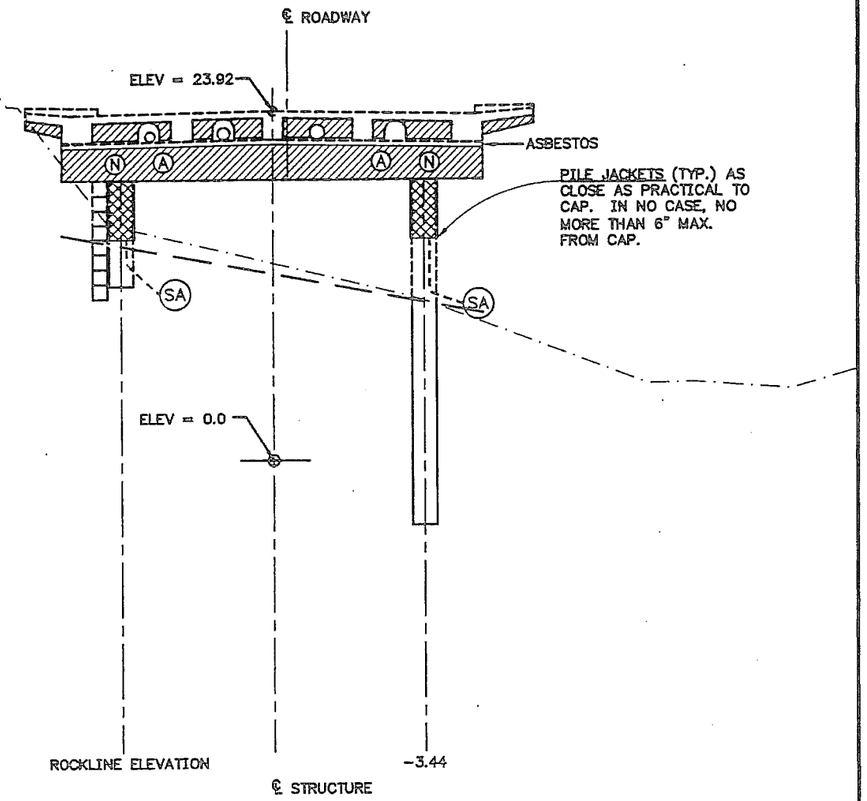

BENT 76

WATER STREET

10 5 0 10

SCALE IN FEET

LEGEND

- SURVEY-MUDLINE
- 1999 MUDLINE
- 1955 ROCKLINE
- (N) SYSTEM NEGATIVE
- (A) ANODE TERMINAL PLATE
- (SA) SUBMERGED ANODE
- CAP JACKET
- PILE JACKET
- THERMAL SPRAY

NOTES:

1. ASBESTOS IS PRESENT IN EXPANSION SIDE OF JOINT. SPECIAL HANDLING IS REQUIRED. SEE SPECIFICATIONS.
2. MODIFY GENERAL JACKET CONFIGURATION TO FIT AROUND EXISTING UTILITIES.
3. IN SOME LOCATIONS EXISTING UTILITIES AND SERVICE LINES MAY BE CONGESTED. PROTECT EXISTING UTILITY PROPERTY WHILE COMPLETING THE REQUIRED WORK.
4. REFER TO DETAILS FOR DIMENSIONS.
5. ONE SYSTEM NEGATIVE REQUIRED TOP OF EACH PILE OR PILASTER.

ELEVATIONS, BENCHMARKS AND DIMENSIONS ARE BASED ON "AS-BUILT" PLANS. VERIFY ALL CONTROLLING FIELD DIMENSIONS BEFORE ORDERING OR FABRICATING ANY MATERIAL.

DESIGNED BY: M. FIGLEY

CHECKED BY: G. IMBSEN

DRAWN/REVISED BY: R.S., R.G.

STATE OF ALASKA
DEPARTMENT OF TRANSPORTATION
& PUBLIC FACILITIES
STATEWIDE DESIGN & ENGINEERING SERVICES DIVISION

KTN-VIADUCTS
REHABILITATION
PROJECT NO. 68571

Water Street
Bents 75 & 76

PATH:
PLOT: PSPACE 1=1(F) OR MSPACE 1=1(F)

CP-3.15

REVISIONS			PROJECT DESIGNATION	YEAR	SHEET NO.	TOTAL SHEETS
NO.	DATE	DESCRIPTION	NH-0902(34)	2009	48	70

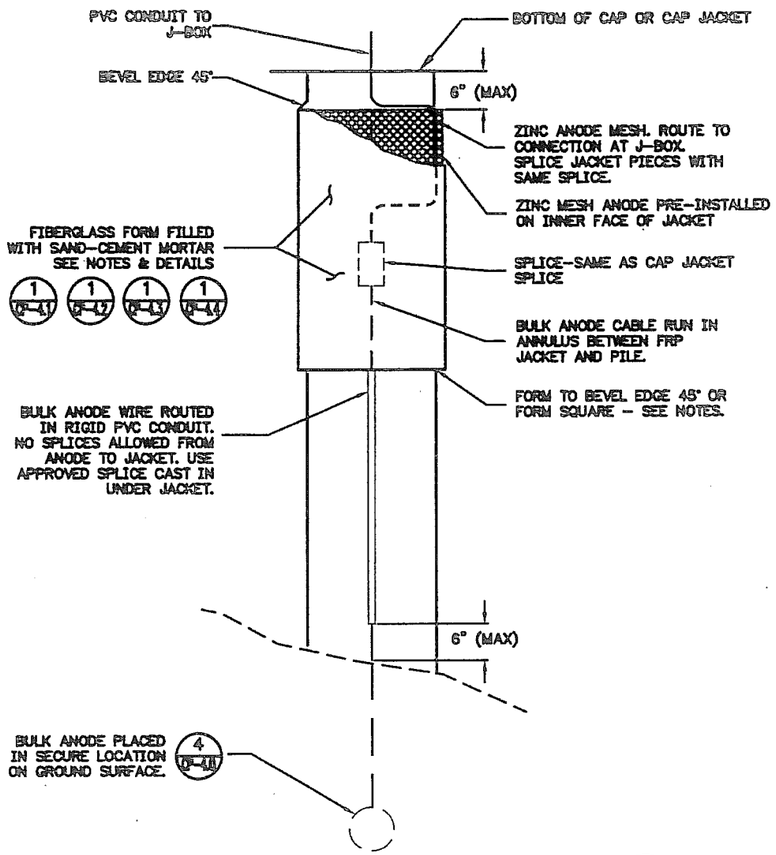

JACKET ANODE ELEVATION (1)

N.T.S.

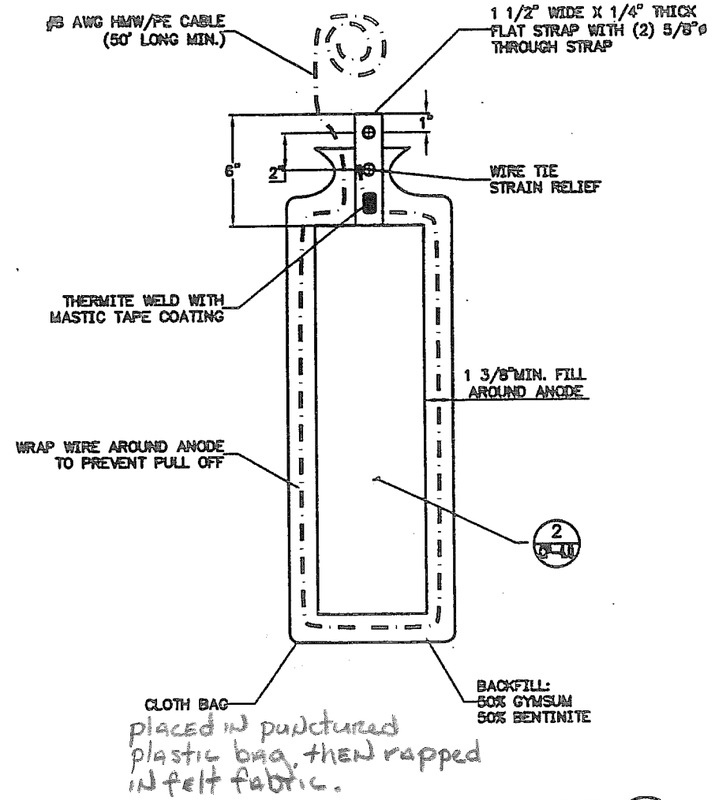

placed in punctured plastic bag, then wrapped in felt fabric.

TYPICAL SUBMERGED ANODE (3)

N.T.S.

NOTES:

1. SUBMIT MIX DESIGN AND PLACEMENT PLAN FOR APPROVAL, AT LEAST 14 DAYS PRIOR TO CONCRETING.

2. THE JACKETS AS INSTALLED SHALL CONFORM TO THE PILE THEY SURROUND. USE STRONGBACKS AND WALES TO PREVENT THE FIBERGLASS JACKETS FROM BOWING OR DISTORTING DURING CONCRETING OPERATIONS. ANY JOINTS BETWEEN THE FIBERGLASS JACKET AND FORMWORK SHALL NOT LEAK OR BURST DURING CONCRETING OPERATIONS.

3. INSTALLING FORMWORK AT THE BOTTOM OF THE FIBERGLASS JACKET, MAY BE REQUIRED.

4. THE SEAMS OF THE FIBERGLASS JACKET SHALL NOT LEAK OR BURST DURING CONCRETING OPERATIONS.

5. IT IS CRITICAL THAT THE MORTAR BE FULLY CONSOLIDATED AND ENCASE THE EXPANDED ZINC MESH.

6. ALL VIBRATING MUST BE PERFORMED BY WORKERS EXPERIENCED IN THE PLACEMENT OF ARCHITECTURAL CONCRETE.

7. USE HAND TOOLS TO BEVEL TOP EDGE OF MORTAR. FORMWORK USED AT THE BOTTOM MAY PRODUCE EITHER A SQUARE OR 45° BEVEL EDGE THAT MIRRORS THE TOP EDGE. THE BOTTOM MORTAR EDGE SHALL BE SQUARE AND FREE FROM BUG HOLES, HONEYCOMBING OR OTHER PLACEMENT DEFECTS.

8. THE JACKET ANODE SHALL BE OF A TYPE WITH A MINIMUM OF 5-YEARS DOCUMENTED SUCCESSFUL PERFORMANCE, SUCH AS AN ALLTRISTA LIFEJACKET OR AN APPROVED EQUAL.

9. RUN THE BULK ANODE CABLE AND CONDUIT AS DIRECTED TO AVOID FUTURE DRAINAGE FROM THE DRIFT.

10. SECURE THE CONDUIT TO CIP PILES OR PILASTERS WITH PUC CLAMP. APPROVED 2-HOLE CONDUIT 18" O.C.

11. SECURE THE CONDUIT TO PRESTRESSED PILES WITH LOCKING NYLON TIES (3/4"). USE COLLARS OR HUBS GLUED TO CONDUIT TO SECURE TIES AGAINST VERTICAL SLIPPAGE. SET TIES 18" O.C.

12. ANY ANODES MOVED OR SUSPENDED BY THEIR LEAD WIRES WILL BE REJECTED ON THE SPOT AND WILL NOT BE INSTALLED AS PART OF THE WORK. THE MISHANDLED ANODES WILL BE REPLACED AT NO ADDITIONAL COST TO THE DEPARTMENT.

13. THE PREPACKAGED BULK ANODE SHALL BE INSTALLED, ALL REBAR CONNECTIONS, REFERENCE ELECTRODE (IF PRESENT), CABLES AND CONDUIT FOR EACH JACKET SHALL BE INSTALLED AND INSPECTED PRIOR TO FILLING THE ANNULUS BETWEEN THE JACKET AND THE PILE WITH CONCRETE.

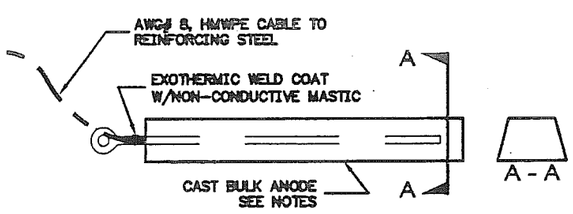

BULK JACKET ANODE (2)

N.T.S.

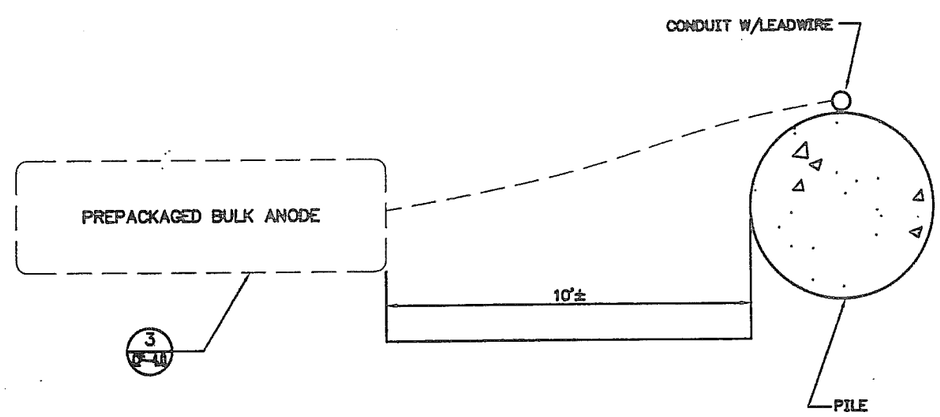

BULK ANODE PLAN VIEW (4)

N.T.S.

ELEVATIONS, BENCHMARKS AND DIMENSIONS ARE BASED ON "AS-BUILT" PLANS. VERIFY ALL CONTROLLING FIELD DIMENSIONS BEFORE ORDERING OR FABRICATING ANY MATERIAL.

DESIGNED BY: M. FIGLEY

CHECKED BY: G. IMBSEN

DRAWN/REVISED BY: R.S., R.G.

STATE OF ALASKA
DEPARTMENT OF TRANSPORTATION & PUBLIC FACILITIES
STATEWIDE DESIGN & ENGINEERING SERVICES DIVISION

KTN-VIADUCTS REHABILITATION
PROJECT NO. 68571
PILE JACKET & SUBMERGED ANODE DETAILS

PATH:
PLOT: PSPACE 1=1(F), OR MSPACE 1=1(F)

CP-4.0

REVISIONS			PROJECT DESIGNATION	YEAR	SHEET NO.	TOTAL SHEETS
NO.	DATE	DESCRIPTION	NH-0902(34)	2009	49	70

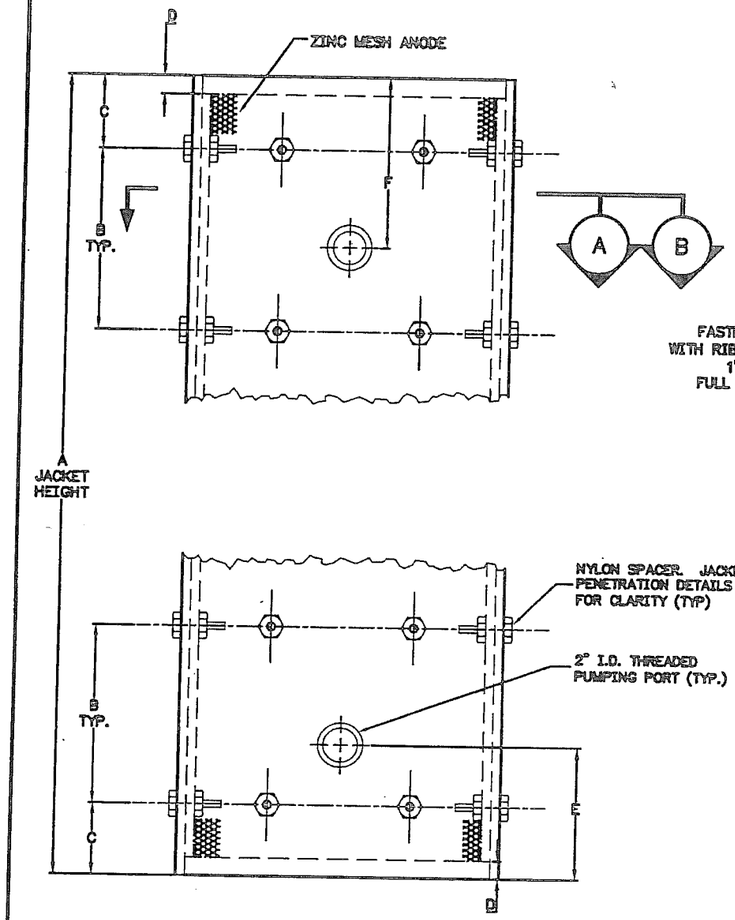

PILE JACKET ELEVATION (1)

N.T.S.

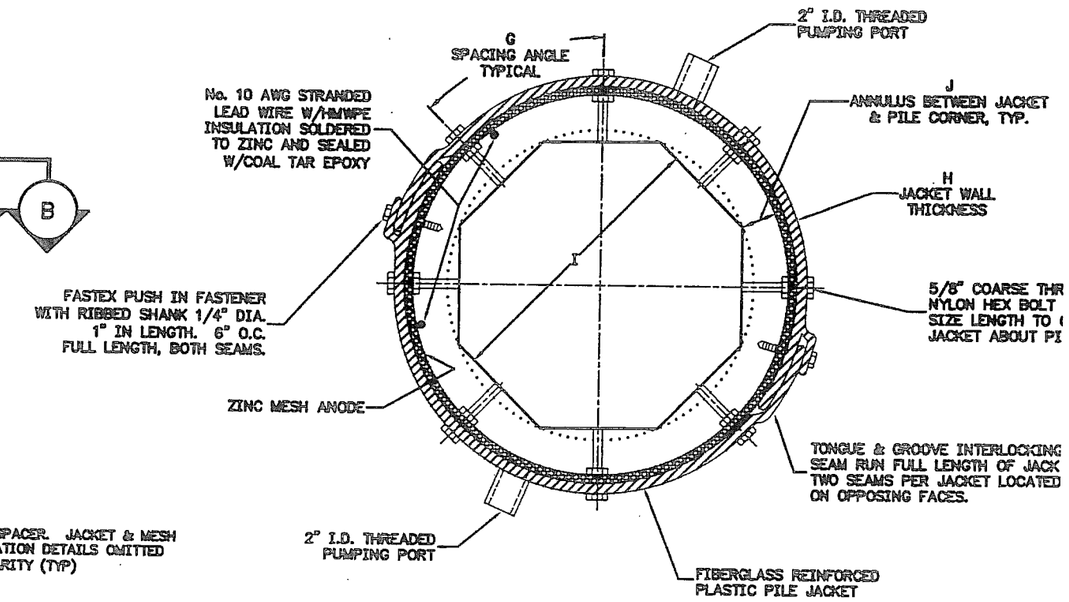

TONGASS AVENUE VIADUCT PILE JACKET (A)

N.T.S.
VIEW ROTATED CLOCKWISE 22.5 DEG.

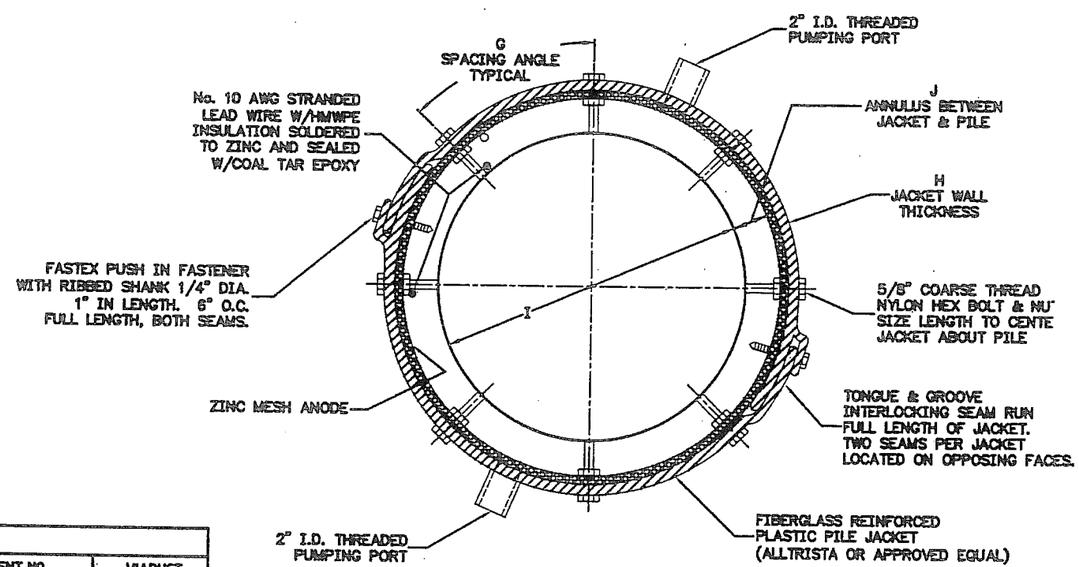

WATER STREET VIADUCT PILE JACKET (B)

N.T.S.
VIEW ROTATED CLOCKWISE 22.5 DEG.

NOTES:

1. SEE SHEETS CP-1.1 & CP-1.3 FOR GENERAL LAYOUT.
2. EACH PILE JACKET CONSISTS OF A RIGHT AND LEFT HALF.
3. ASSEMBLE JACKETS SO THAT LEAD WIRES ARE ON THE SAME SIDE OF THE PILE.
4. INSIDE JACKET SURFACE MUST BE ROUGHENED ACCORDING TO SPECIFICATION.
5. IT IS COMMON THAT THE TOPS OF TONGASS AVENUE PILES HAVE CAST-IN-PLACE EXTENSIONS. THESE EXTENSIONS MAY REQUIRE MINOR ADJUSTMENTS IN JACKET CONFIGURATIONS. SEE SPECIFICATION.
6. COMPLETELY FILL THE ENTIRE ANNULUS BETWEEN THE FIBERGLASS JACKET AND STRUCTURE WITH GROUT.
7. THE PUMPING PORT LOCATIONS ARE OPTIONAL. ALTERNATE METHODS/PROCEDURE MAY BE SUBMITTED FOR APPROVAL, INCLUDING PORTS OR AIR VENTS LOCATIONS IF USED.
8. WETTING HOLES ARE TO BE CUT IN JACKETS AFTER GROUT IS PUMPED AND SET AS FOLLOWS:
   - A. 2" diameter holes in fiberglass jacket equally spaced around circumference.
   - B. Three holes each row for round, pilaster, buttressed and corner plates.
   - C. Four holes each row for square jackets.
   - D. 4 foot jackets require 1 row of holes.
   - E. 6 foot jackets require 2 rows of holes.
   - F. 8 foot jackets require 3 rows of holes.

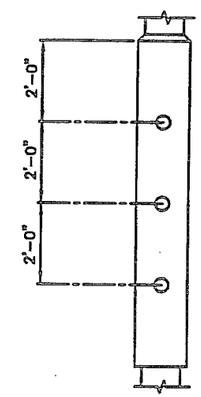

WETTING HOLES, TYP.

N.T.S.

ELEVATIONS, BENCHMARKS AND DIMENSIONS ARE BASED ON "AS-BUILT" PLANS. VERIFY ALL CONTROLLING FIELD DIMENSIONS BEFORE ORDERING OR FABRICATING ANY MATERIAL.

* = SEE SHEETS CP 1.1 & CP 1.3

DIMENSIONS											
A	B	C	D	E	F	G	H	I	J	BENT NO.	VIADUCT
* 4'	16"	4"	2"	19"	6"	45°	3/16"	16 1/2"	2"	* ALL BENTS	WATER ST.
* 4'	16"	4"	2"	19"	6"	45°	3/16"	16 1/2"	2"	* ALL BENTS	TONGASS AVE.

DESIGNED BY: M. FIGLEY

CHECKED BY: G. IMBSEN

DRAWN/REVISED BY: R.S., R.G.

STATE OF ALASKA
DEPARTMENT OF TRANSPORTATION & PUBLIC FACILITIES
STATEWIDE DESIGN & ENGINEERING SERVICES DIVISION

KTN-VIADUCTS REHABILITATION
PROJECT NO. 68571

PILE JACKETS AND SECTIONS

PATH:
PLOT: PSPACE 1=1(F) OR MSPACE 1=1(F)

CP-4.1

REVISIONS		
NO.	DATE	DESCRIPTION

PROJECT DESIGNATION	YEAR	SHEET NO.	TOTAL SHEETS
NH-0902(34)	2009	50	70

DIMENSIONS																			
A	B	C	D	E	F	G	H	I	J	K	L	M	N	O	P	Q	R	BENT NO.	VIADUCT
*	16"	4"	2"	6"	6"	6"	12"	4"	8"	12"	2"	8"	24"	16"	2"	1/4"	2"	* 65-74	WATER STREET
* = SEE SHEETS CP 1.1 & CP 1.3.																		* 4, 2A, 3A, 6A, 7A	TONGASS AVE.

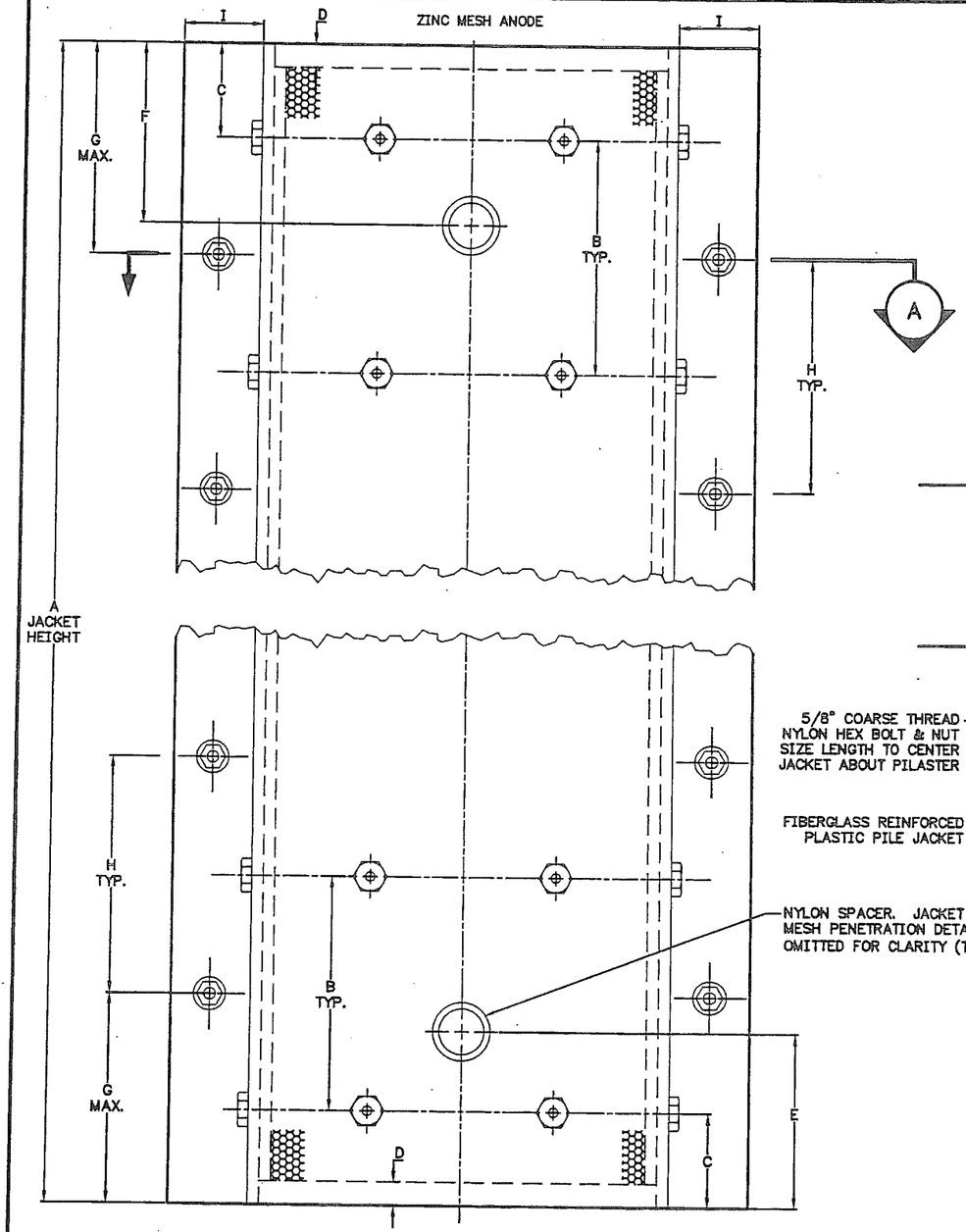

PILASTER JACKET ELEVATION (1)

N.T.S.

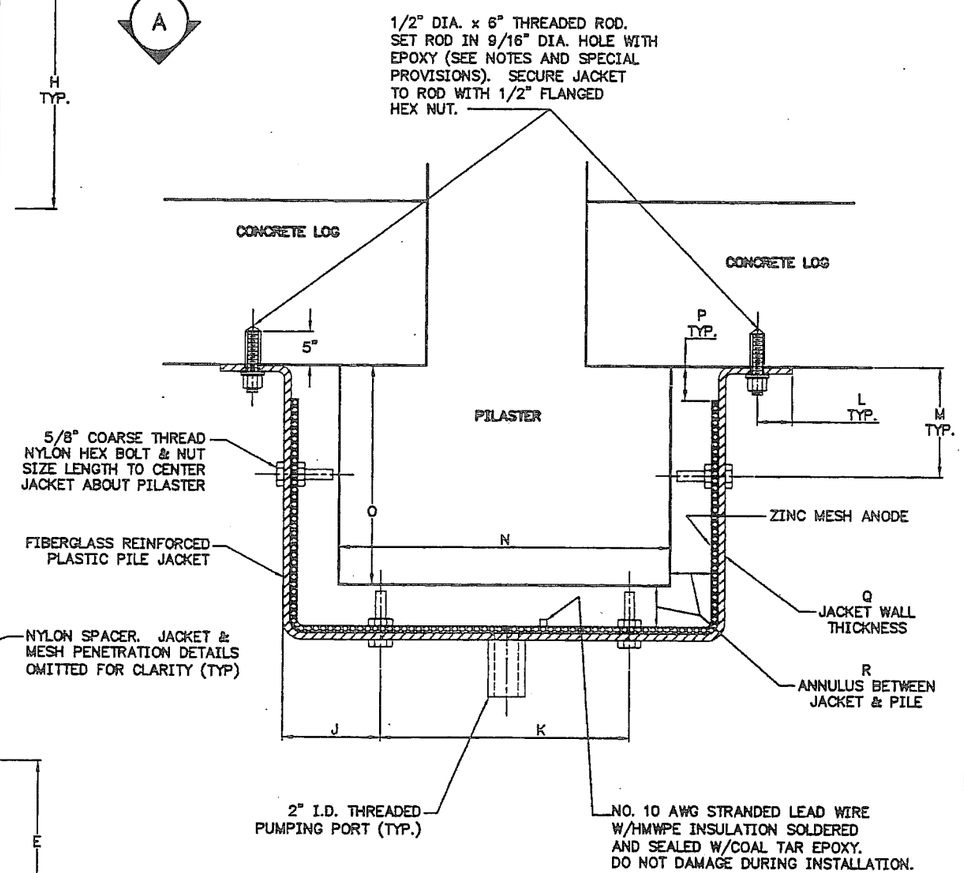

PILASTER JACKET SECTION (A)

N.T.S.

NOTES:

1. SEE SHEET CP-1.3 FOR GENERAL LAYOUT.

2. INSIDE JACKET SURFACE MUST BE ROUGHENED ACCORDING TO SPECIFICATIONS.

3. THREADED ROD MUST BE INSTALLED AND EPOXY FULLY CURED BEFORE PLACING AND SECURING JACKET.

4. FOLLOW SPECIFICATIONS THE EPOXY RESIN MANUFACTURER'S DIRECTIONS DURING SURFACE PREPARATION, STORAGE, SAFE AND PROPER USE, MIXING AND APPLICATION OF THE EPOXY RESIN. STRICTLY FOLLOW ANY TEMPERATURE OR MOISTURE RESTRICTIONS, REQUIREMENTS OR LIMITATIONS.

5. DRILL HOLE FOR THREADED ROD ALONG HORIZONTAL CENTERLINE OF INTERSECTING CONCRETE LOGS.

6. THREADED ROD MUST BE INSTALLED IN A CLEAN AND DRY HOLE.

7. TO INSTALL THREADED ROD:
   a) DRILL HOLE;
   b) CLEAN HOLE W/NYLON BRUSH--DO NOT USE METAL BRUSH;
   c) BLOWOUT HOLE WITH DRY COMPRESSED AIR;
   d) STARTING AT THE DEEPEST END, FILL HOLE TO APPROXIMATELY 1/2 DEPTH W/EPOXY;
   e) INSERT ROD TO DEPTH WITH TWISTING MOTION; CAREFULLY REMOVE EXCESS AND KEEP NON-EMBEDDED THREADS CLEAN.

8. INSTALL THE THREADED ROD IMMEDIATELY AFTER HOLE SURFACE PREPARATION, OR THE HOLE MUST BE RE-CLEANED (DRIED IF NECESSARY).

9. COMPLETELY FILL THE ENTIRE ANNULUS BETWEEN THE FIBERGLASS JACKET AND STRUCTURE WITH GROUT.

10. THE PUMPING PORT LOCATIONS ARE OPTIONAL. ALTERNATE METHODS/PROCEDURE MAY BE SUBMITTED FOR APPROVAL, INCLUDING PORTS OR AIR VENTS LOCATIONS IF USED.

11. WETTING HOLES REQUIRED. SEE NOTE 8 & DETAIL ON SHEET CP-4.1.

ELEVATIONS, BENCHMARKS AND DIMENSIONS ARE BASED ON "AS-BUILT" PLANS. VERIFY ALL CONTROLLING FIELD DIMENSIONS BEFORE ORDERING OR FABRICATING ANY MATERIAL.

DESIGNED BY: M. FIGLEY

STATE OF ALASKA
49th
Mark D. Figley
CE-8050

CHECKED BY: G. IMBSEN
DRAWN/REVISED BY: R.S., R.G.

STATE OF ALASKA
DEPARTMENT OF TRANSPORTATION
& PUBLIC FACILITIES
STATEWIDE DESIGN & ENGINEERING SERVICES DIVISION

KTN-VIADUCTS
REHABILITATION
PROJECT NO. 68571

PILE JACKETS
AND SECTION

PATH:
PLOT: PSPACE 1=1(F) OR MSPACE 1=1(F)

CP-4.2

REVISIONS			PROJECT DESIGNATION	YEAR	SHEET NO.	TOTAL SHEETS
NO.	DATE	DESCRIPTION	NH-0902(34)	2009	51	70

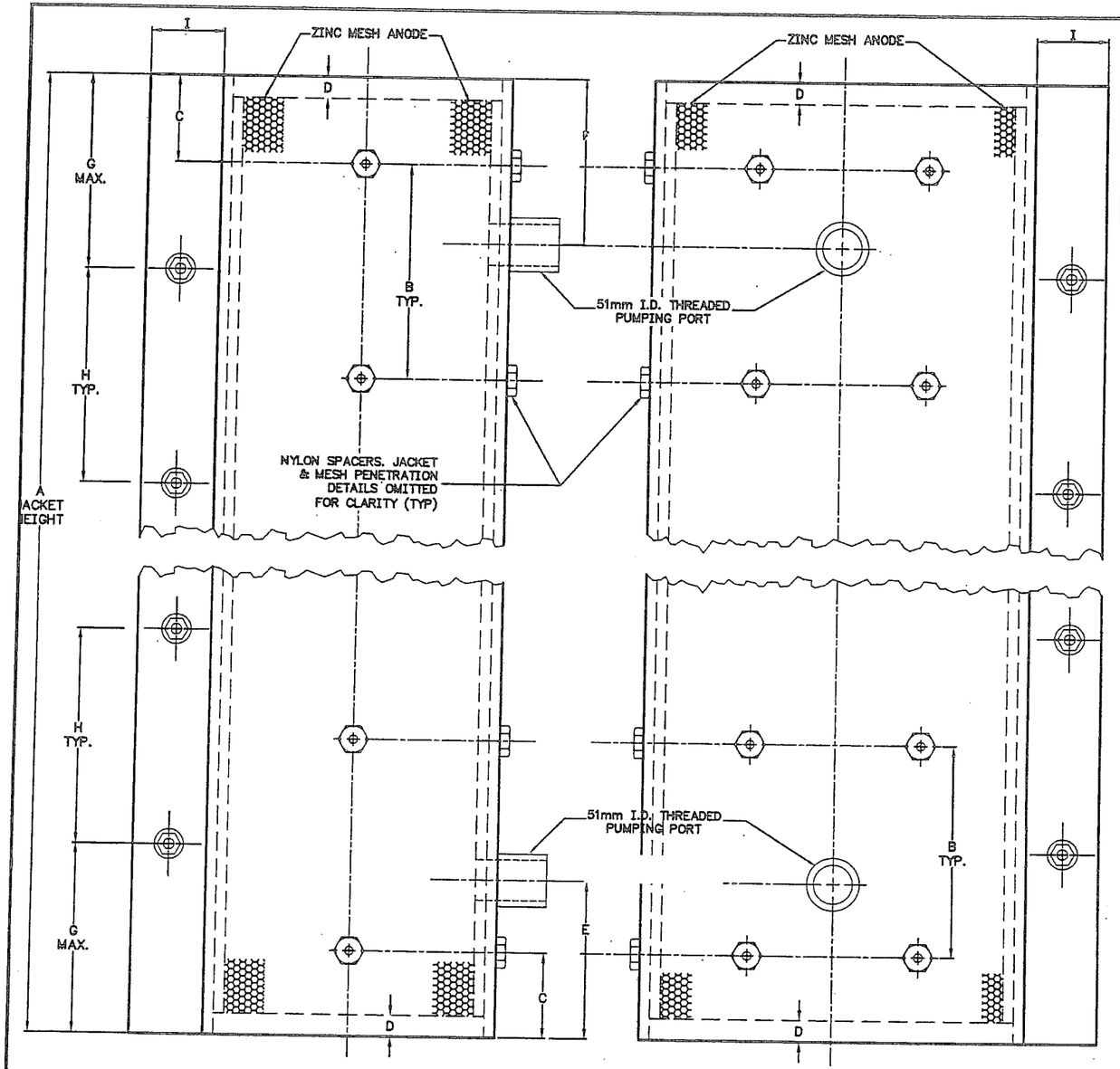

CORNER JACKET SIDE VIEW (1)

N.T.S.

CORNER JACKET ELEVATION (2)

N.T.S.

DIMENSIONS																			
A	B	C	D	E	F	G	H	I	J	K	L	M	N	O	P	Q	R	BENT NO.	VIADUCT
✳	15"	4"	2"	6"	6"	6"	12"	4"	8"	12"	2"	19"	24"	16"	2"	1/4"	2"	✳	WATER STREET
✳ = SEE SHEETS CP 1.1 & CP 1.3.																			TONGASS AVE.

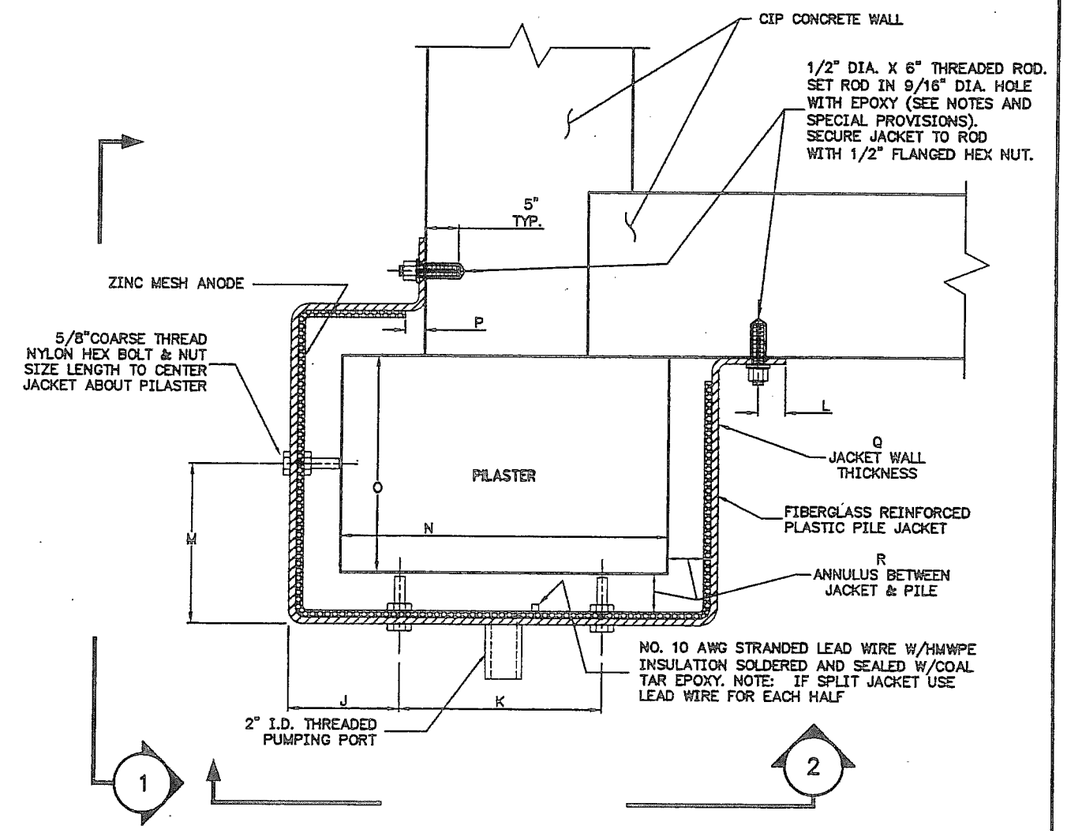

CORNER JACKET SECTION

N.T.S.

NOTES:

1. SEE SHEET CP-1.3 FOR GENERAL LAYOUT.

2. INSIDE JACKET SURFACE MUST BE ROUGHENED ACCORDING TO SPECIFICATIONS.

3. THREADED ROD MUST BE INSTALLED AND EPOXY FULLY CURED BEFORE PLACING AND SECURING JACKET.

4. FOLLOW SPECIFICATIONS THE EPOXY RESIN MANUFACTURER'S DIRECTIONS DURING SURFACE PREPARATION, STORAGE, SAFE AND PROPER USE, MIXING AND APPLICATION OF THE EPOXY RESIN. STRICTLY FOLLOW ANY TEMPERATURE OR MOISTURE RESTRICTIONS, REQUIREMENTS OR LIMITATIONS.

5. DRILL HOLE FOR THREADED ROD ALONG HORIZONTAL CENTERLINE OF INTERSECTING CONCRETE LOGS.

6. THREADED ROD MUST BE INSTALLED IN A CLEAN AND DRY HOLE.

7. TO INSTALL THREADED ROD:
   a) DRILL HOLE;
   b) CLEAN HOLE W/NYLON BRUSH---DO NOT USE METAL BRUSH;
   c) BLOWOUT HOLE WITH DRY COMPRESSED AIR;
   d) STARTING AT THE DEEPEST END, FILL HOLE TO APPROXIMATELY 1/2 DEPTH W/EPOXY;
   e) INSERT ROD TO DEPTH WITH TWISTING MOTION; CAREFULLY REMOVE EXCESS AND KEEP NON-EMBEDDED THREADS CLEAN.

8. INSTALL THE THREADED ROD IMMEDIATELY AFTER HOLE SURFACE PREPARATION, OR THE HOLE MUST BE RE-CLEANED (DRIED IF NECESSARY).

9. COMPLETELY FILL THE ENTIRE ANNULUS BETWEEN THE FIBERGLASS JACKET AND STRUCTURE WITH GROUT.

10. THE PUMPING PORT LOCATIONS ARE OPTIONAL. ALTERNATE METHODS/PROCEDURE MAY BE SUBMITTED FOR APPROVAL, INCLUDING PORTS OR AIR VENTS LOCATIONS IF USED.

11. WETTING HOLE REQ'D. SEE NOTE 8 & DETAIL ON SHEET CP-4.1.

ELEVATIONS, BENCHMARKS AND DIMENSIONS ARE BASED ON "AS-BUILT" PLANS. VERIFY ALL CONTROLLING FIELD DIMENSIONS BEFORE ORDERING OR FABRICATING ANY MATERIAL.

DESIGNED BY: M. FIGLEY

STATE OF ALASKA
DEPARTMENT OF TRANSPORTATION
& PUBLIC FACILITIES
STATEWIDE DESIGN & ENGINEERING SERVICES DIVISION

KTN-VIADUCTS
REHABILITATION
PROJECT NO. 68571

CORNER PILASTER JACKET AND SECTION

CHECKED BY: G. IMBSEN
DRAWN/REVISED BY: R.S., R.G.

PATH:
PLOT: PSPACE 1=1(F) OR MSPACE 1=1(F)

CP-4.3

REVISIONS			PROJECT DESIGNATION	YEAR	SHEET NO.	TOTAL SHEETS
NO.	DATE	DESCRIPTION	NH-0902(34)	2009	52	70

DIMENSIONS												
A	B	C	D	E	F	G	H	I	J	K	BENT NO.	VIADUCT
*	13"	4"	2"	6"	6"	2'	6"	12"	2"	1/4"	*	TONGASS AVE. & WATER ST.

* SEE SHEETS CP 1.1 & CP 1.3

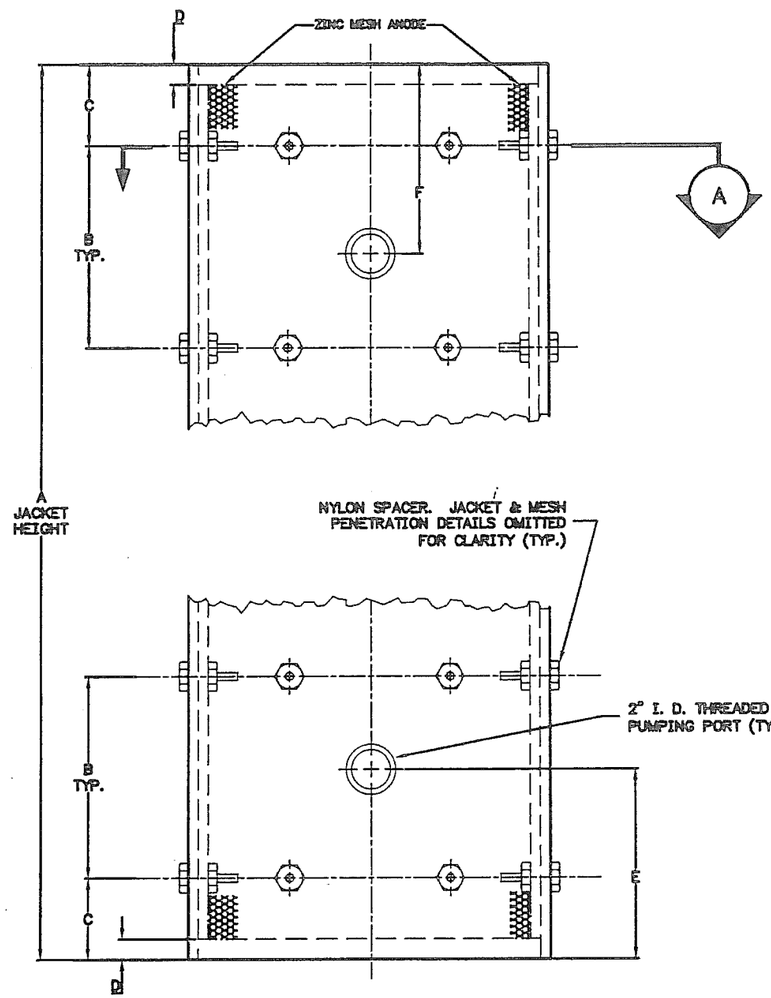

SQUARE PILE JACKET ELEVATION (1)

N.T.S.

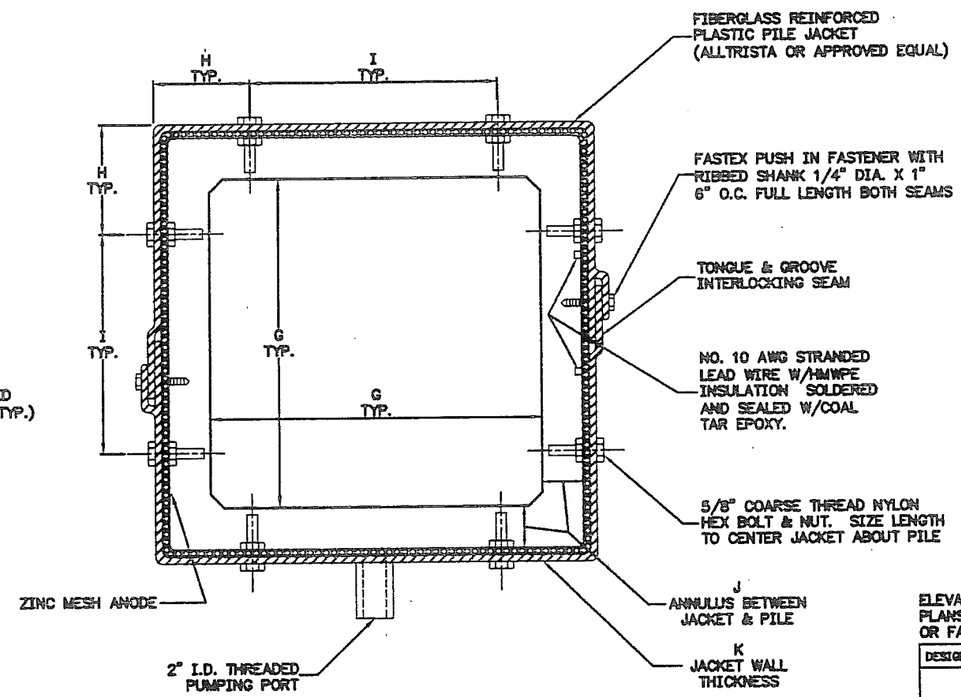

SQUARE PILE JACKET SECTION (A)

N.T.S.

NOTES:

1. SEE SHEETS CP-1.1 & CP-1.3 FOR GENERAL LAYOUT.
2. EACH PILE JACKET CONSISTS OF A RIGHT AND LEFT HALF.
3. ASSEMBLE JACKETS SO THAT LEAD WIRES ARE ON THE SAME SIDE OF THE PILE.
4. INSIDE JACKET SURFACE MUST BE ROUGHENED ACCORDING TO THE SPECIFICATIONS.
5. COMPLETELY FILL THE ENTIRE ANNULUS BETWEEN THE FIBERGLASS JACKET AND STRUCTURE WITH GROUT.
6. THE PUMPING PORT LOCATIONS ARE OPTIONAL. ALTERNATE METHODS/PROCEDURE MAY BE SUBMITTED FOR APPROVAL, INCLUDING PORTS OR AIR VENTS LOCATIONS IF USED.
7. WETTING HOLES REQ'D. SEE DETAIL ON CP-4.5.

ELEVATIONS, BENCHMARKS AND DIMENSIONS ARE BASED ON "AS-BUILT" PLANS. VERIFY ALL CONTROLLING FIELD DIMENSIONS BEFORE ORDERING OR FABRICATING ANY MATERIAL.

DESIGNED BY: M. FIGLEY

CHECKED BY: G. IMBSEN

DRAWN/REVISED BY: R.S., R.G.

STATE OF ALASKA
DEPARTMENT OF TRANSPORTATION
& PUBLIC FACILITIES
STATEWIDE DESIGN & ENGINEERING SERVICES DIVISION

KTN-VIADUCTS
REHABILITATION
PROJECT NO. 68571

SQUARE PILE JACKET
AND SECTION

PATH:
PLOT: PSPACE 1=1(F) OR MSPACE 1=1(F)

CP-4.4

REVISIONS			PROJECT DESIGNATION	YEAR	SHEET NO.	TOTAL SHEETS
NO.	DATE	DESCRIPTION				
			NH-0902(34)	2009	53	70

DIMENSIONS									
A	B	C	D	E	F	G	H	CAP	VIADUCT
32"	27"	2"	6"	20"	9"	18"	1/4"	INTERMEDIATE	TONGASS AVE.

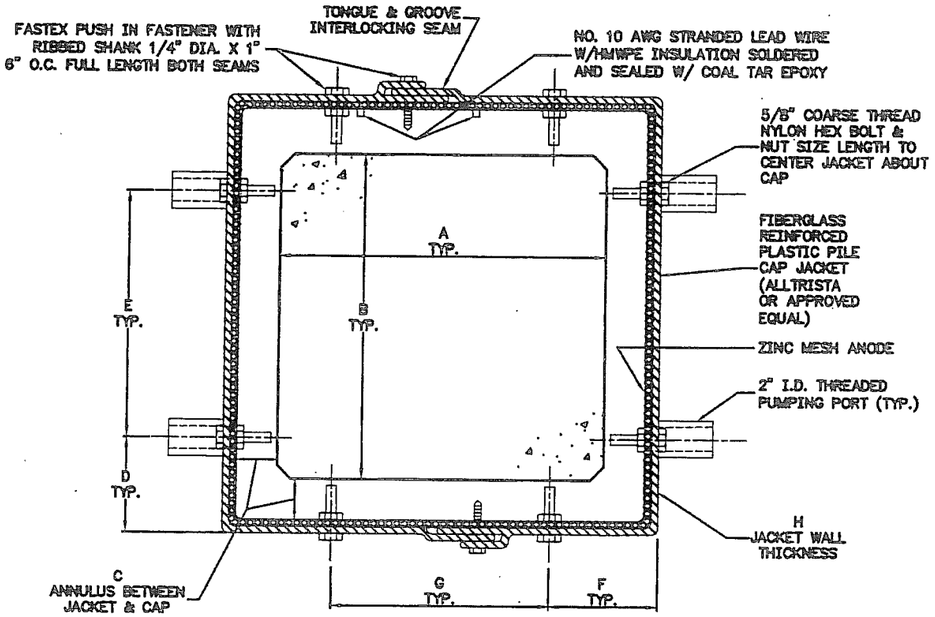

INTERMEDIATE GIRDER CAP TYPICAL SECTION

N.T.S.

1

JACKET / GROUT NOTES:

1. INSIDE JACKET SURFACE MUST BE ROUGHENED ACCORDING TO SPECIAL PROVISIONS.

2. COMPLETELY FILL THE ENTIRE ANNULUS BETWEEN THE FIBERGLASS JACKET AND STRUCTURE WITH GROUT.

3. THE PUMPING PORT LOCATIONS ARE OPTIONAL. ALTERNATE METHODS/PROCEDURE MAY BE SUBMITTED FOR APPROVAL, INCLUDING PORTS OR AIR VENTS LOCATIONS IF USED.

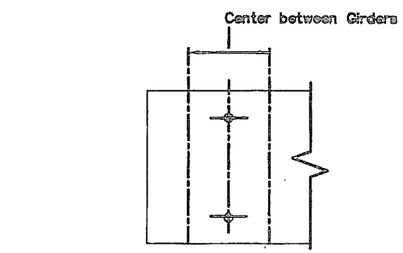

CAP TOP VIEW

n.t.s.

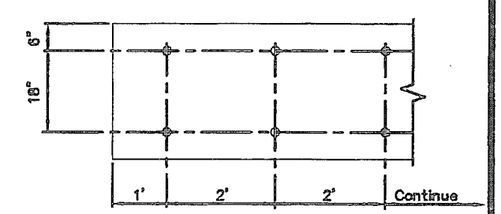

CAP SIDE VIEW
(Typ. both sides)

WETTING HOLES LAYOUT

n.t.s.

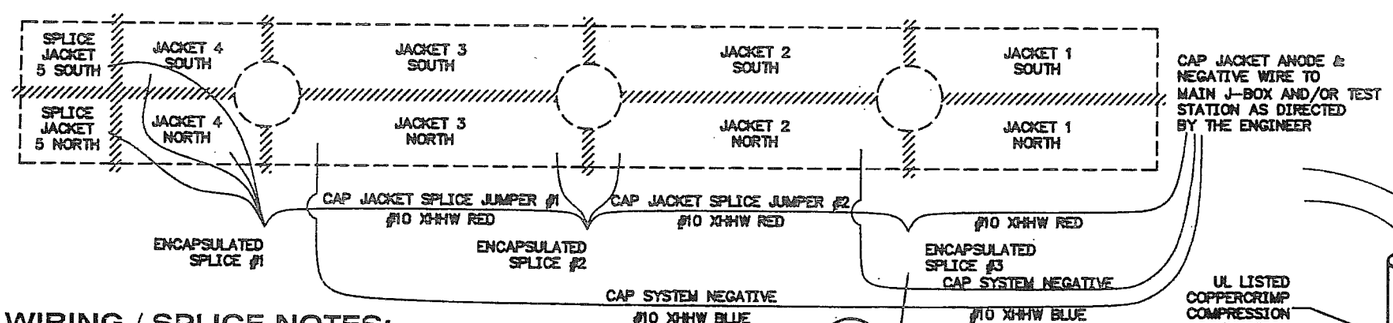

WIRING / SPLICE NOTES:

1. ALL ENCAPSULATED SPLICES FOR THE CAP JACKETS, PILE JACKETS, AND SUBMERGED ANODES SHALL BE CRIMPED WITH COPPER BUTT SPLICES OR C-TAP COMPONENTS, WRAPPED WITH A DOUBLE LAYER OF 600 VOLT ELECTRICAL TAPE AND FULLY ENCAPSULATED WITH SCOTCHCAST 2104 OR APPROVED EQUAL PER THE MANUFACTURER'S RECOMMENDATION.

2. THE PVC PIPE MOLD SIZE AND NUMBER OF WIRES IS CONTINGENT ON THE LOCATION.

3. ALL ENCAPSULATED SPLICES AND RELATED WIRE RUNS TO BE ENCASED IN EITHER THE CAP OR PILE JACKET CONCRETE.

4. CONTINUITY OF SPLICES MUST BE VERIFIED AND APPROVED PRIOR TO PUMPING CONCRETE INTO JACKETS.

CAP JACKET WIRING & SPLICE DETAIL

N.T.S.

4

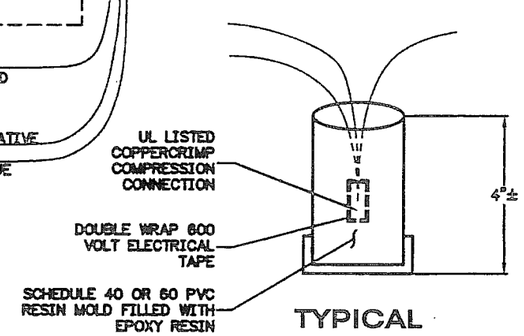

TYPICAL ENCAPSULATED SPLICE

N.T.S.

A

ELEVATIONS, BENCHMARKS AND DIMENSIONS ARE BASED ON "AS-BUILT" PLANS. VERIFY ALL CONTROLLING FIELD DIMENSIONS BEFORE ORDERING OR FABRICATING ANY MATERIAL.

DESIGNED BY: M. FIGLEY

CHECKED BY: G. IMBSEN

DRAWN/REVISED BY: R.S., R.G.

STATE OF ALASKA
DEPARTMENT OF TRANSPORTATION & PUBLIC FACILITIES
STATEWIDE DESIGN & ENGINEERING SERVICES DIVISION

KTN-VIADUCTS REHABILITATION
PROJECT NO. 68571

INTERMEDIATE GIRDER SECTION DETAIL & MISCELLANEOUS DETAILS

PATH:
PLOT: PSPACE 1=1(F) OR MSPACE 1=1(F)

CP-4.5

REVISIONS		
NO.	DATE	DESCRIPTION

PROJECT DESIGNATION	YEAR	SHEET NO.	TOTAL SHEETS
NH-0902(34)	2009	54	70

DIMENSIONS											
A	B	C	D	E	F	G	H	I	J	CAP	VIADUCT
32"	27"	2"	6"	16"	9"	18"	1/4"	16"	2"	INTERMEDIATE	TONGASS AVE.

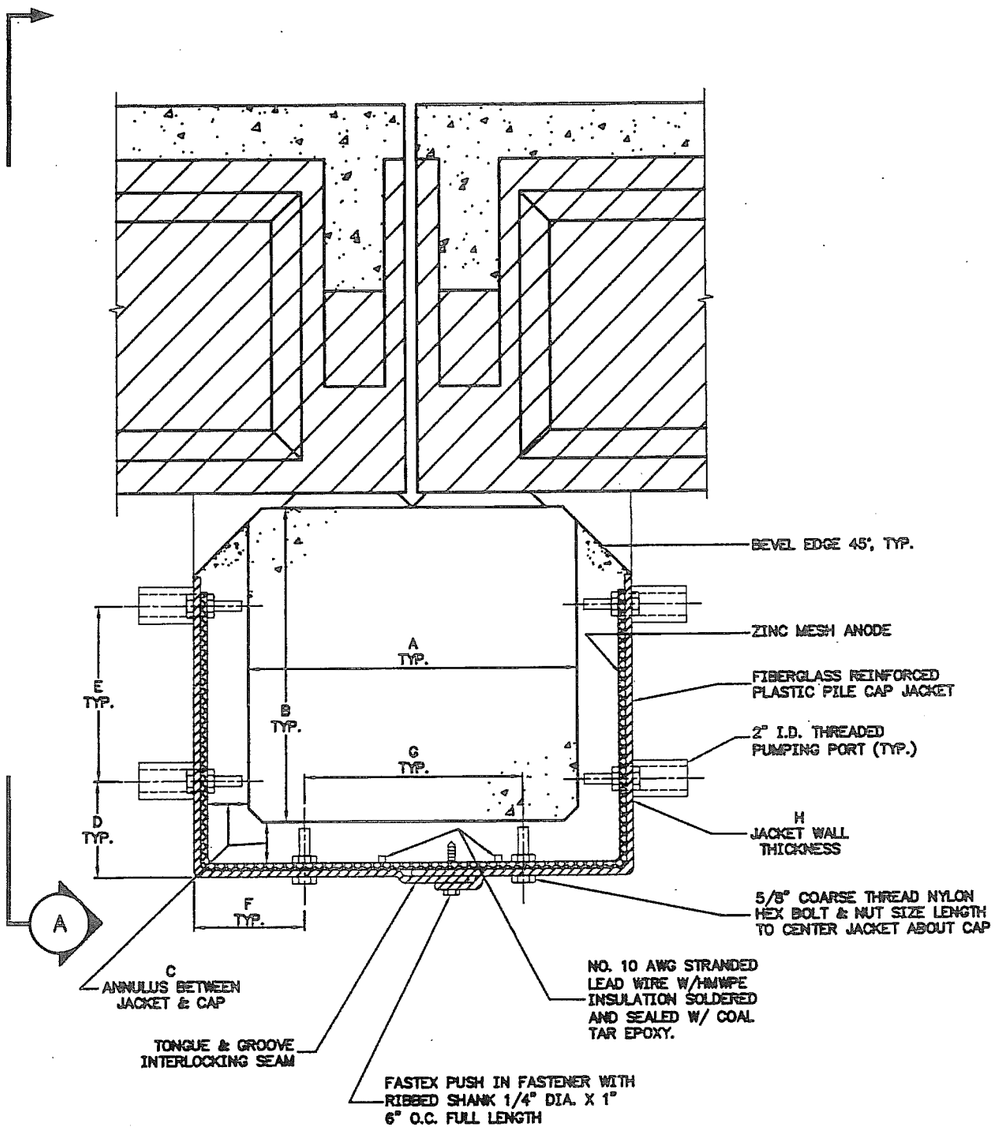

CAP JACKET SECTION @ GIRDER BEARING LOCATION (1)

N.T.S.

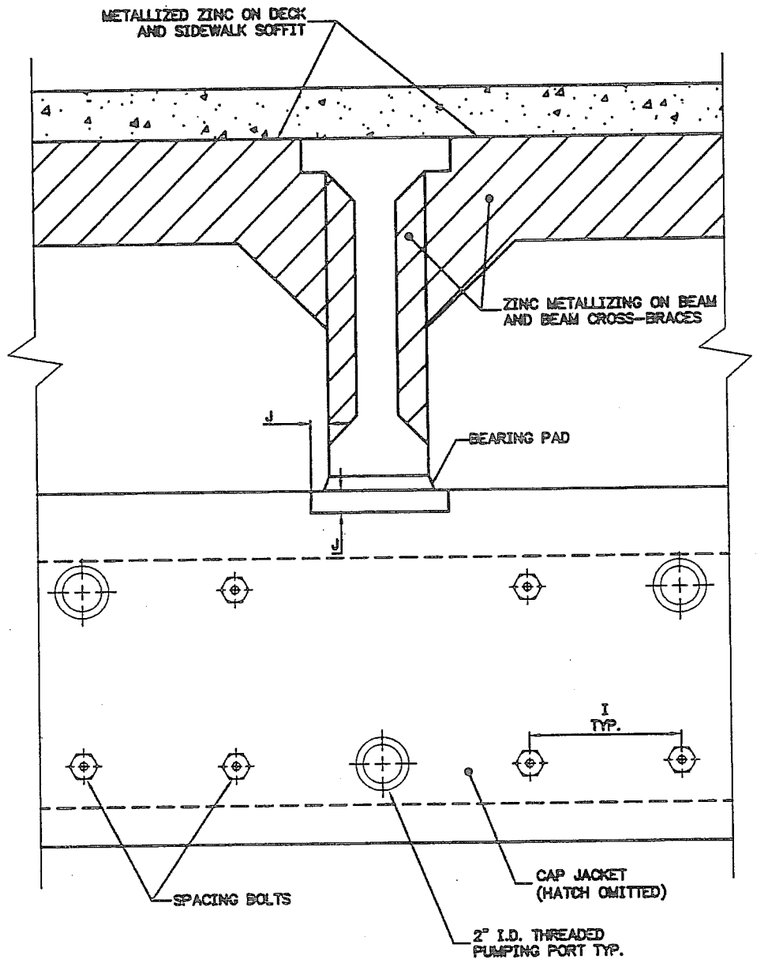

INTERMEDIATE GIRDER CAP ELEVATION DETAIL (A)

N.T.S.

NOTES:

1. INSIDE JACKET SURFACE MUST BE ROUGHENED ACCORDING TO SPECIAL PROVISIONS.
2. COMPLETELY FILL THE ENTIRE ANNULUS BETWEEN THE FIBERGLASS JACKET AND STRUCTURE WITH GROUT.
3. THE PUMPING PORT LOCATIONS ARE OPTIONAL. ALTERNATE METHODS/PROCEDURE MAY BE SUBMITTED FOR APPROVAL, INCLUDING PORTS OR AIR VENTS LOCATIONS IF USED.
4. WETTING HOLES REQ'D. SEE DETAIL ON CP-4.5.

ELEVATIONS, BENCHMARKS AND DIMENSIONS ARE BASED ON "AS-BUILT" PLANS. VERIFY ALL CONTROLLING FIELD DIMENSIONS BEFORE ORDERING OR FABRICATING ANY MATERIAL.

DESIGNED BY: M. FIGLEY

CHECKED BY: G. IMBSEN

DRAWN/REVISED BY: R.S., R.G.

STATE OF ALASKA
DEPARTMENT OF TRANSPORTATION & PUBLIC FACILITIES
STATEWIDE DESIGN & ENGINEERING SERVICES DIVISION

KTN-VIADUCTS REHABILITATION
PROJECT NO. 68571

INTERMEDIATE GIRDER SECTION & BEAM

PATH:
PLOT: PSPACE 1=1(F) OR MSPACE 1=1(F)

CP-4.6

REVISIONS			PROJECT DESIGNATION	YEAR	SHEET NO.	TOTAL SHEETS
NO.	DATE	DESCRIPTION	NH-0902(34)	2009	55	70

DIMENSIONS																
A	B	C	D	E	F	G	H	I	J	K	L	M	N	O	CAP	VIADUCT
28"	24"	12"	2"	2"	6"	16"	14"	0"	10"	2"	4"	1/4"	10"	12"	TRANSITION	TONGASS AVE.

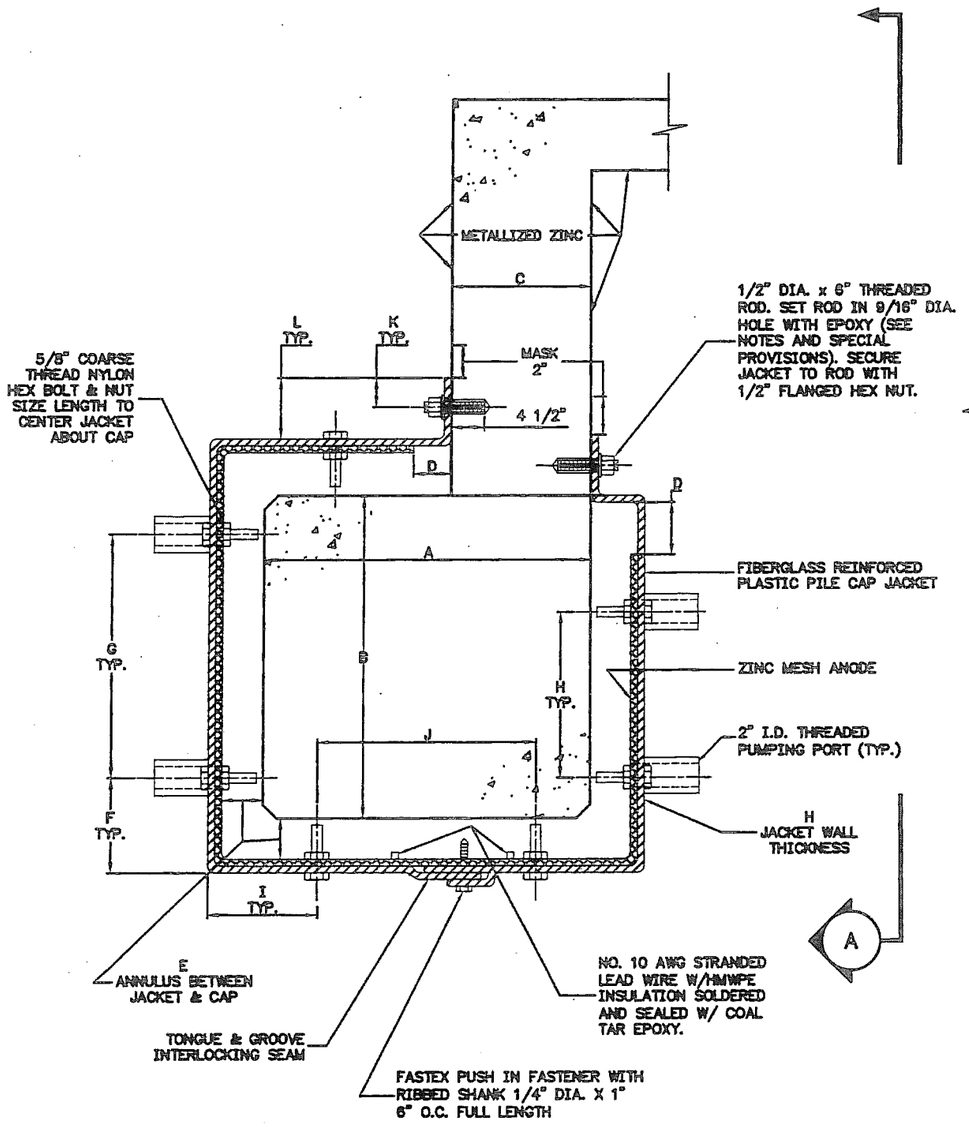

CAP JACKET SECTION @ SOLID DIAPHRAGM BENTS (Transition Bents)

1

N.T.S.

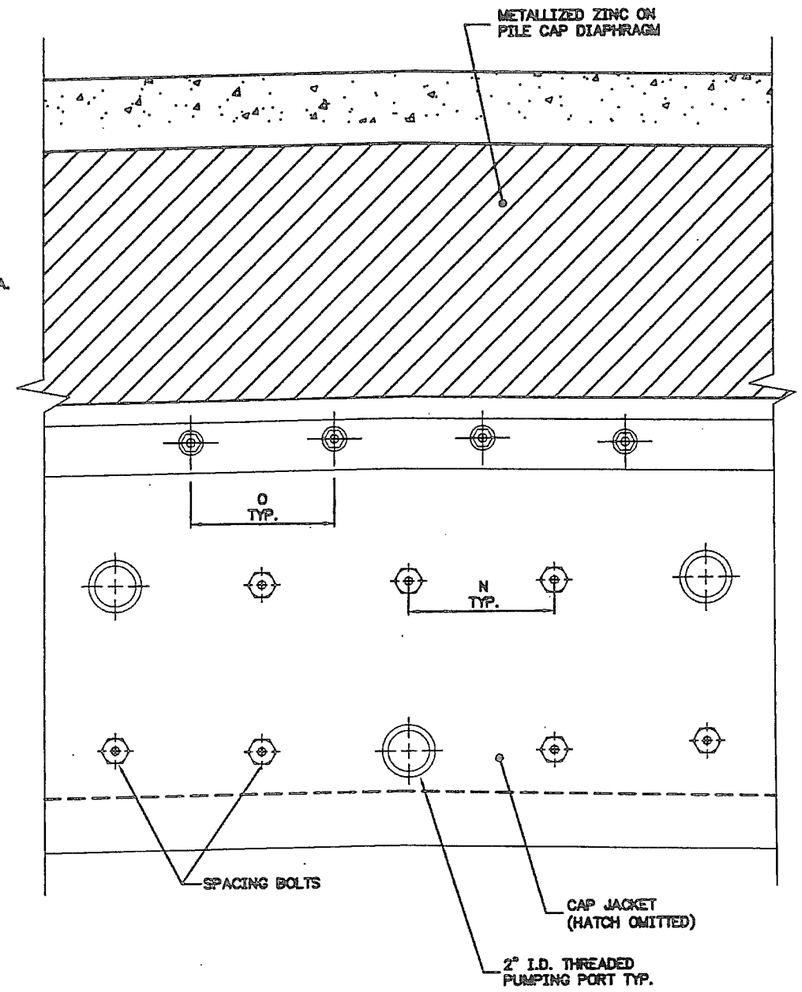

INTERMEDIATE GIRDER CAP ELEVATION DETAIL

A

N.T.S.

NOTES:

1. INSIDE JACKET SURFACE MUST BE ROUGHENED ACCORDING TO SPECIFICATIONS.

2. COMPLETELY FILL THE ENTIRE ANNULUS BETWEEN THE FIBERGLASS JACKET AND STRUCTURE WITH GROUT.

3. THE PUMPING PORT LOCATIONS ARE OPTIONAL. ALTERNATE METHODS/PROCEDURE MAY BE SUBMITTED FOR APPROVAL, INCLUDING PORTS OR AIR VENTS LOCATIONS IF USED.

4. THREADED ROD MUST BE INSTALLED AND EPOXY FULLY CURED BEFORE PLACING AND SECURING JACKET.

5. FOLLOW SPECIFICATIONS THE EPOXY RESIN MANUFACTURER'S DIRECTIONS DURING SURFACE PREPARATION, STORAGE, SAFE AND PROPER USE, MIXING AND APPLICATION OF THE EPOXY RESIN. STRICTLY FOLLOW ANY TEMPERATURE OR MOISTURE RESTRICTIONS, REQUIREMENTS OR LIMITATIONS.

6. THREADED ROD MUST BE INSTALLED IN A CLEAN AND DRY HOLE.

7. TO INSTALL THREADED ROD:
   a) DRILL HOLE;
   b) CLEAN HOLE W/NYLON BRUSH---DO NOT USE METAL BRUSH;
   c) BLOWOUT HOLE WITH DRY COMPRESSED AIR;
   d) STARTING AT THE DEEPEST END, FILL HOLE TO APPROXIMATELY 1/2 DEPTH W/EPOXY;
   e) INSERT ROD TO DEPTH WITH TWISTING MOTION; CAREFULLY REMOVE EXCESS AND KEEP NON-EMBEDDED THREADS CLEAN.

8. INSTALL THE THREADED ROD IMMEDIATELY AFTER HOLE SURFACE PREPARATION, OR THE HOLE MUST BE RE-CLEANED (DRIED IF NECESSARY).

9. WETTING HOLES REQ'D. SEE DETAIL ON CP-4.5.

ELEVATIONS, BENCHMARKS AND DIMENSIONS ARE BASED ON "AS-BUILT" PLANS. VERIFY ALL CONTROLLING FIELD DIMENSIONS BEFORE ORDERING OR FABRICATING ANY MATERIAL.

DESIGNED BY: M. FIGLEY

CHECKED BY: G. IMBSEN

DRAWN/REVISED BY: R.S., R.G.

STATE OF ALASKA
DEPARTMENT OF TRANSPORTATION & PUBLIC FACILITIES
STATEWIDE DESIGN & ENGINEERING SERVICES DIVISION

KTN-VIADUCTS REHABILITATION
PROJECT NO. 68571

TRANSITION CAP SECTION

PATH:
PLOT: PSPACE 1=1(F) OR MSPACE 1=1(F)

CP-4.7

REVISIONS			PROJECT DESIGNATION	YEAR	SHEET NO.	TOTAL SHEETS
NO.	DATE	DESCRIPTION	NH-0902(34)	2009	56	70

DIMENSIONS															
A	B	C	D	E	F	G	H	I	J	K	L	M	N	O	CAP	VIADUCT
28"	24"	12"	2"	2"	7 3/16"	14 3/8"	12"	8 3/16"	16 5/16"	2"	3 13/16"	1/4"	18"	12"	TRANSITION	TONGASS AVE.

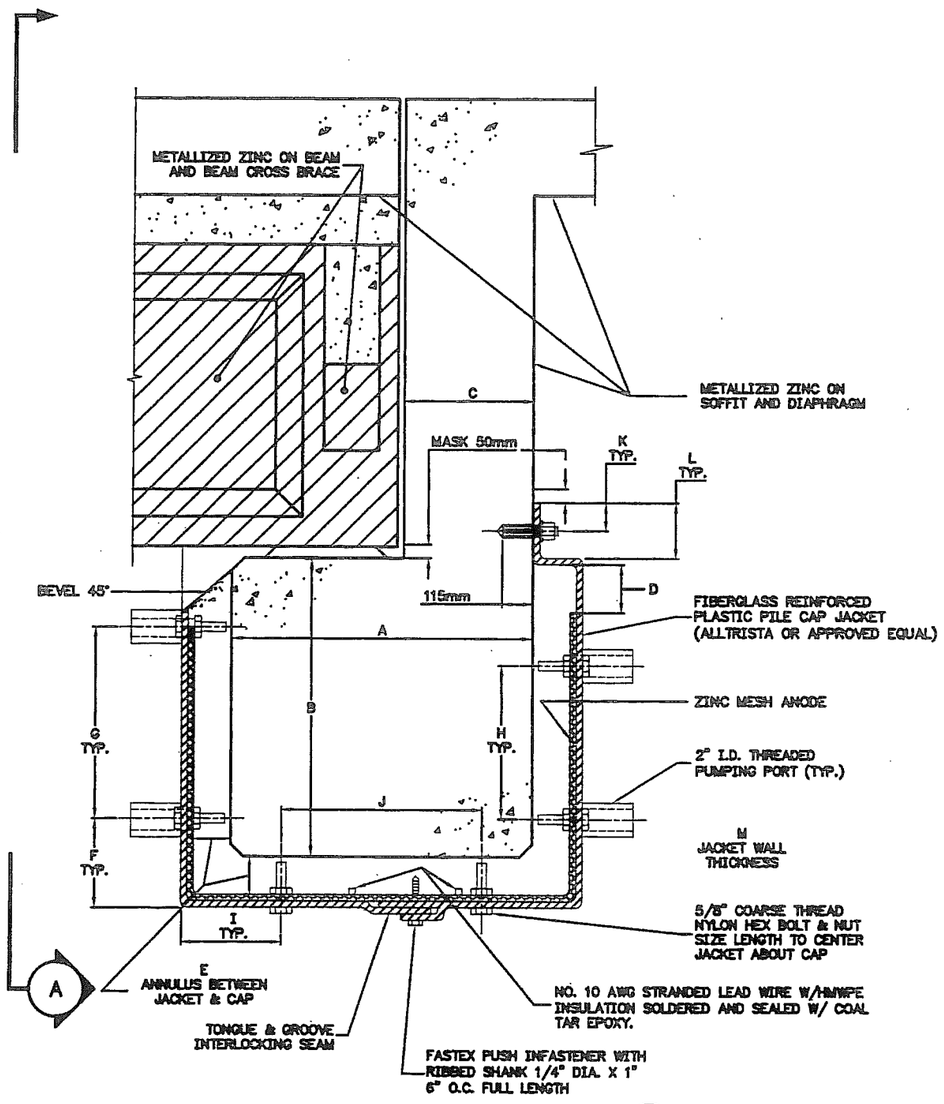

TRANSITION CAP JACKET SECTION @ GIRDER BEARING LOCATION (1)

N.T.S.

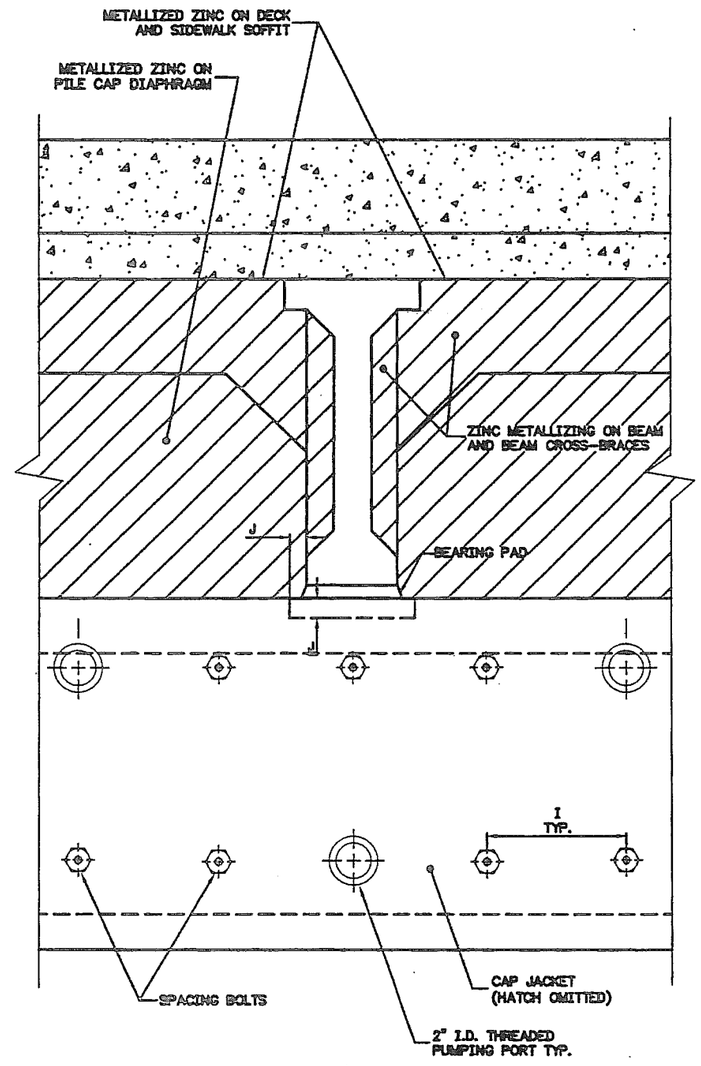

CAP JACKET ELEVATION DETAIL (A)

N.T.S.

NOTES:

1. INSIDE JACKET SURFACE MUST BE ROUGHENED ACCORDING TO SPECIAL PROVISIONS.

2. COMPLETELY FILL THE ENTIRE ANNULUS BETWEEN THE FIBERGLASS JACKET AND STRUCTURE WITH GROUT.

3. THE PUMPING PORT LOCATIONS ARE OPTIONAL. ALTERNATE METHODS/PROCEDURE MAY BE SUBMITTED FOR APPROVAL, INCLUDING PORTS OR AIR VENTS LOCATIONS IF USED.

4. THREADED ROD MUST BE INSTALLED AND EPOXY FULLY CURED BEFORE PLACING AND SECURING JACKET.

5. FOLLOW SPECIFICATIONS THE EPOXY RESIN MANUFACTURER'S DIRECTIONS DURING SURFACE PREPARATION, STORAGE, SAFE AND PROPER USE, MIXING AND APPLICATION OF THE EPOXY RESIN. STRICTLY FOLLOW ANY TEMPERATURE OR MOISTURE RESTRICTIONS, REQUIREMENTS OR LIMITATIONS.

6. THREADED ROD MUST BE INSTALLED IN A CLEAN AND DRY HOLE.

7. TO INSTALL THREADED ROD:
   a) DRILL HOLE;
   b) CLEAN HOLE W/NYLON BRUSH---DO NOT USE METAL BRUSH;
   c) BLOWOUT HOLE WITH DRY COMPRESSED AIR;
   d) STARTING AT THE DEEPEST END, FILL HOLE TO APPROXIMATELY 1/2 DEPTH W/EPOXY;
   e) INSERT ROD TO DEPTH WITH TWISTING MOTION; CAREFULLY REMOVE EXCESS AND KEEP NON-EMBEDDED THREADS CLEAN.

8. INSTALL THE THREADED ROD IMMEDIATELY AFTER HOLE SURFACE PREPARATION, OR THE HOLE MUST BE RE-CLEANED (DRIED IF NECESSARY).

9. WETTING HOLES REQ'D. SEE DETAIL ON CP-4.5.

ELEVATIONS, BENCHMARKS AND DIMENSIONS ARE BASED ON "AS-BUILT" PLANS. VERIFY ALL CONTROLLING FIELD DIMENSIONS BEFORE ORDERING OR FABRICATING ANY MATERIAL.

DESIGNED BY: M. FIGLEY
CHECKED BY: G. IMBSEN
DRAWN/REVISED BY: R.S., R.G.

STATE OF ALASKA
DEPARTMENT OF TRANSPORTATION & PUBLIC FACILITIES
STATEWIDE DESIGN & ENGINEERING SERVICES DIVISION

KTN-VIADUCTS REHABILITATION PROJECT NO. 68571

TRANSITION CAP SECTION & BEAM

PATH:
PLOT: PSPACE 1=1(F) OR MSPACE 1=1(F)

CP-4.8

REVISIONS			PROJECT DESIGNATION	YEAR	SHEET NO.	TOTAL SHEETS
NO.	DATE	DESCRIPTION	NH-0902(34)	2009	57	70

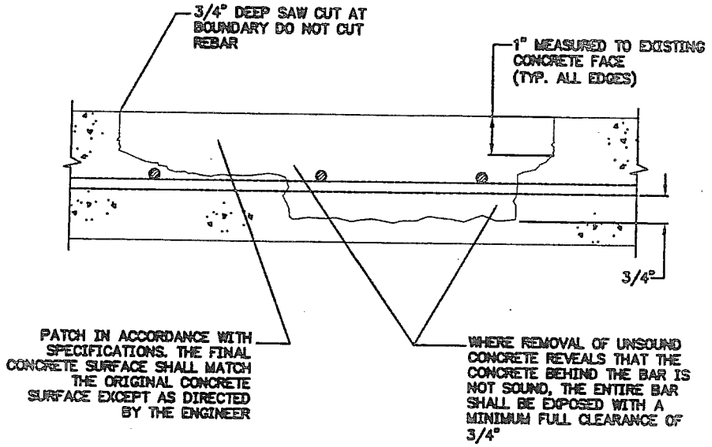

HORIZONTAL PATCH (1)

N.T.S.

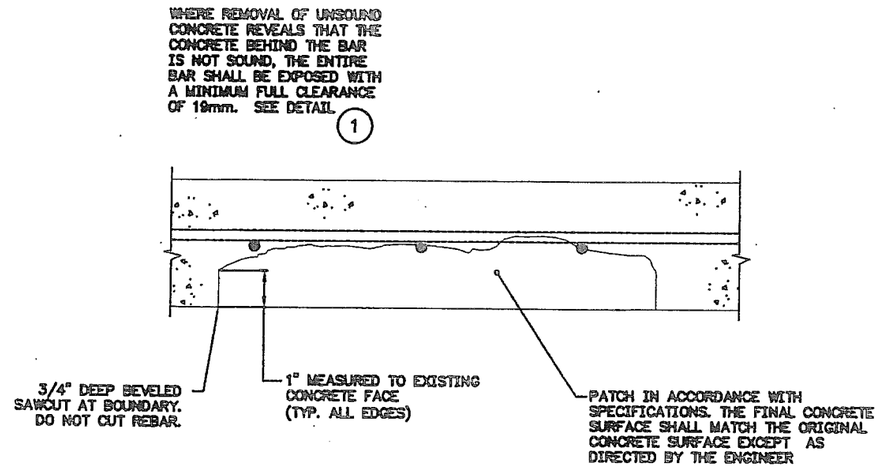

OVERHEAD PATCH (2)

N.T.S.

NOTES:

1. REMOVE ALL UNSOUND CONCRETE IN ACCORDANCE WITH THE SPECIFICATIONS.

2. PRIOR TO RESTORING CONCRETE COVER, CLEAN EXCAVATED CONCRETE SURFACE AND EXPOSED REINFORCEMENT IN ACCORDANCE WITH THE SPECIFICATIONS. IN ADDITION TO BEING CLEAN, ALL SURFACES IN CONTACT WITH THE PATCH MUST BE SSD PRIOR TO PLACING PATCH MATERIAL. THIS WILL REQUIRE PRE-WETTING THE CONCRETE FOR A MINIMUM OF 24-HOURS.

3. WHERE THE REBAR HAS SECTION LOSS FROM CORROSION, THE EXCAVATION SHALL BE ENLARGED AS DIRECTED TO PROVIDE ADEQUATE DEVELOPMENT LENGTH FOR A NEW SPLICED REINFORCING BAR. THE BAR SHALL BE GRADE 40 AND WILL BE WIRED IN PLACE. THE ADDITIONAL EXCAVATION SHALL BE DONE ONLY AS DIRECTED. THE REBAR FOR THIS REPAIR IS CONSIDERED PART OF SUBSIDIARY TO OTHER ITEMS OF WORK.

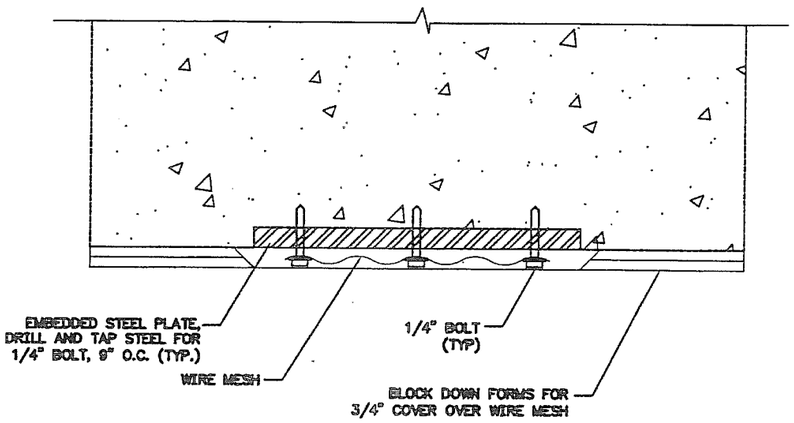

CONCRETE REPAIR AT EMBEDDED STEEL PLATE (5)

N.T.S.

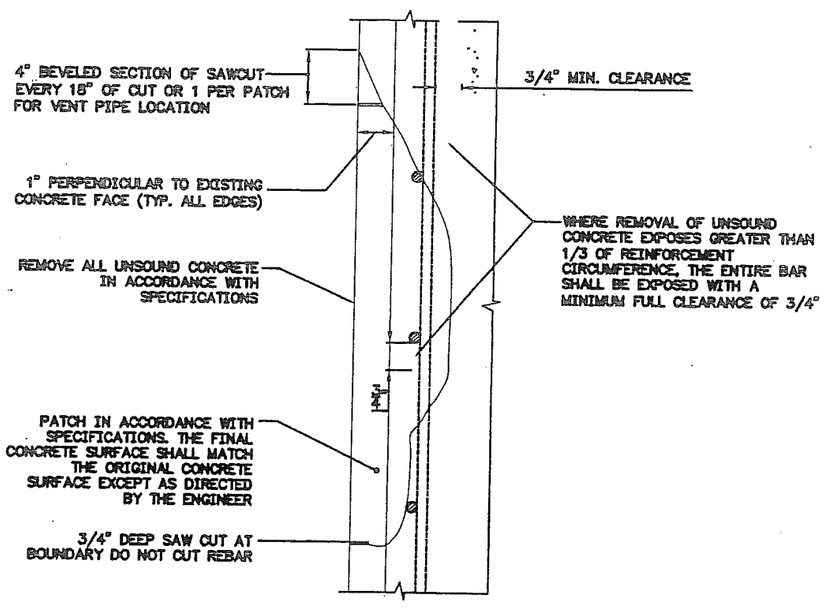

VERTICAL PATCH (3)

N.T.S.

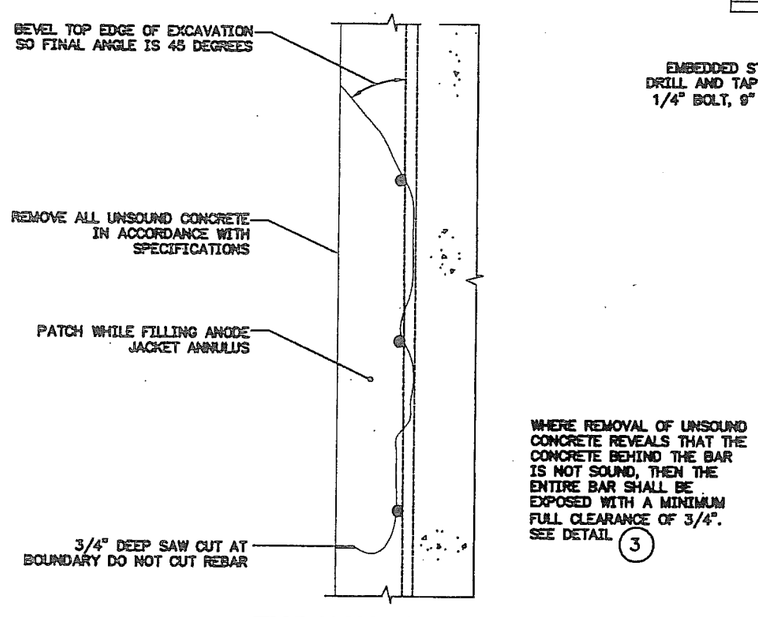

EXCAVATION WITHIN ANODE JACKET (4)

N.T.S.

ELEVATIONS, BENCHMARKS AND DIMENSIONS ARE BASED ON "AS-BUILT" PLANS. VERIFY ALL CONTROLLING FIELD DIMENSIONS BEFORE ORDERING OR FABRICATING ANY MATERIAL.

DESIGNED BY: M. FIGLEY

CHECKED BY: G. IMBSEN
DRAWN/REVISED BY: R.S., R.G.

STATE OF ALASKA
DEPARTMENT OF TRANSPORTATION & PUBLIC FACILITIES
STATEWIDE DESIGN & ENGINEERING SERVICES DIVISION

KTN-VIADUCTS REHABILITATION
PROJECT NO. 68571

HORIZONTAL & VERTICAL CONCRETE REPAIR

PATH:
PLOT: PSPACE 1=1(F) OR MSPACE 1=1(F)

CP-5.0

REVISIONS			PROJECT DESIGNATION	YEAR	SHEET NO.	TOTAL SHEETS
NO.	DATE	DESCRIPTION				
			NH-0902(34)	2009	58	70

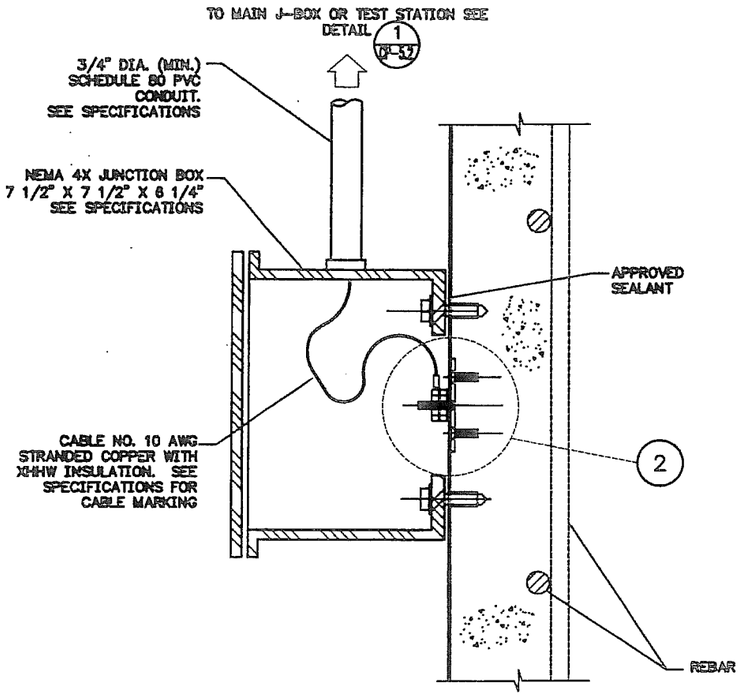

SPRAYED ZINC ANODE CONNECTION (1)

N.T.S.

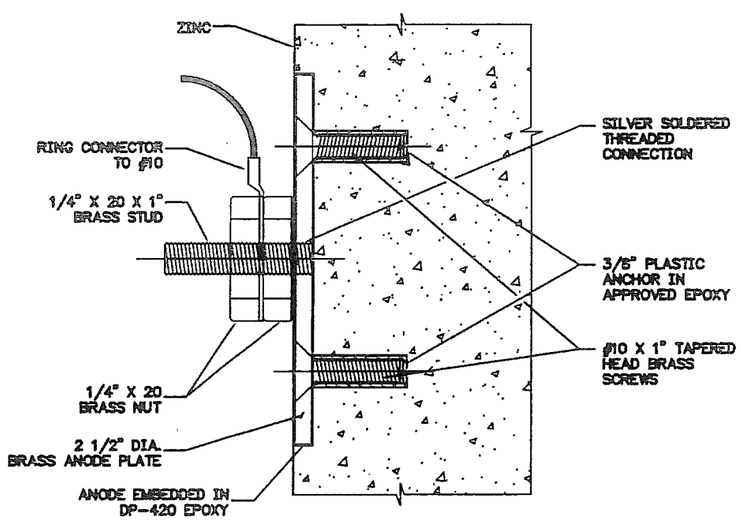

PRIMARY ANODE TERMINAL PLATE (2)

N.T.S.

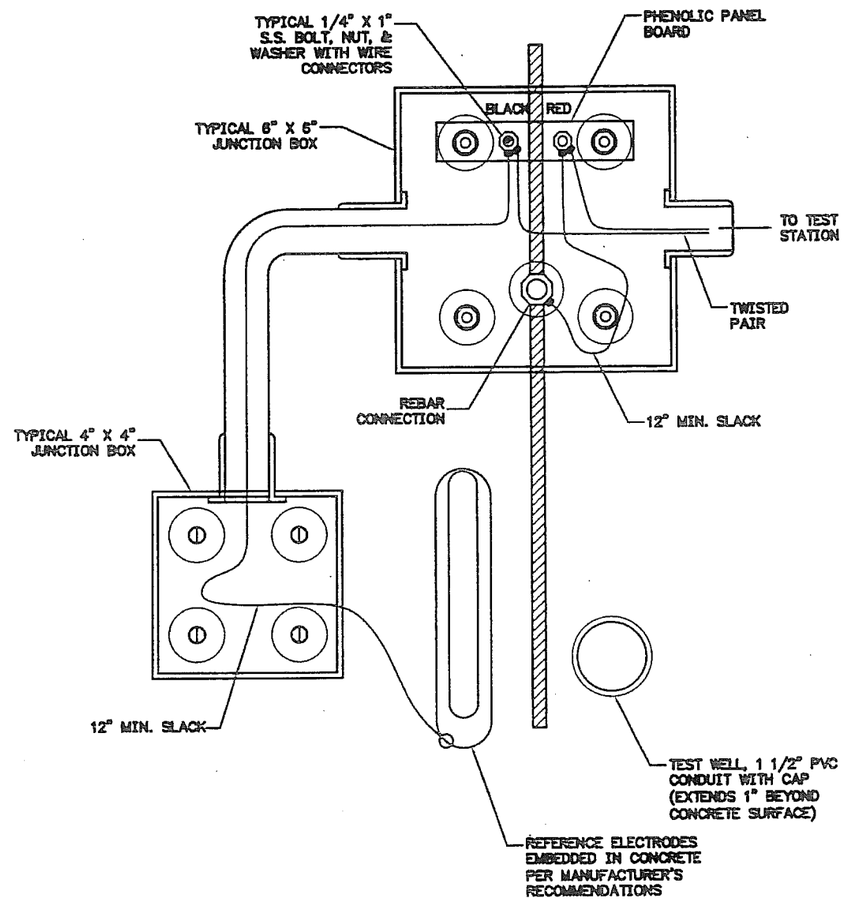

EMBEDDED ELECTRODE CONNECTION DETAIL (3)

N.T.S.

NOTES:

1. PROTECT EXISTING UTILITIES AND PROPERTY FROM ANY CONSTRUCTION RELATED DAMAGE.
2. SECURE PERMISSION OF UTILITY OWNER, OR OWNER OF OTHER PROPERTY, PRIOR TO MOVING OR TEMPORARILY RELOCATING ANY PROPERTY FOR THE CONVENIENCE OF CONSTRUCTION ACTIVITIES.
3. CONDUIT SHALL BE UL 651 SCHEDULE 80 RIGID PVC. SIZE AND SUPPORT CONDUIT PER NEC FOR NONMETALLIC CONDUIT. MINIMUM DIAMETER IS 3/4".
4. USE APPROVED NONMETALLIC CONDUIT CLAMPS AND/OR STRUTS. ATTACH WITH STAINLESS STEEL ANCHOR BOLT/NON-METALLIC ANCHOR SLEEVE FASTENERS.
5. SIZE JUNCTION BOXES AND ENCLOSURES BASED ON NUMBER AND SIZE OF CONDUCTORS AND CONDUIT.
6. CONDUIT RUNS SHALL BE INSTALLED NEAT, STRAIGHT AND LEVEL. USE 1/2" PVC CONDUIT STAND OFFS OR NONMETALLIC STRUTS AS REQUIRED TO MAINTAIN LEVEL RUNS.
7. ENCLOSURES AND JUNCTION BOXES SHALL BE NEMA 4X RATED PVC WITH FLAT TOPS SECURED BY STAINLESS STEEL SCREWS.
8. DO NOT MAKE ATTACHMENTS TO PRESTRESSED CONCRETE USING DRILLED ANCHORS WITHOUT PRIOR APPROVAL.
9. SEE SPECIFICATIONS FOR MARKING AND CABLE INSULATION COLORS.
10. LEAVE FREE CABLE IN ALL BOXES TO ALLOW FOR RECONNECTION, SEE SPECIFICATIONS.
11. WIRE CONNECTIONS TO PANEL BOARD & PRIMARY ANODE SHALL BE COATED WITH APPROVED ANTI-CORROSIVE COMPOUND, 1/4" THICK LAYER.

ELEVATIONS, BENCHMARKS AND DIMENSIONS ARE BASED ON "AS-BUILT" PLANS. VERIFY ALL CONTROLLING FIELD DIMENSIONS BEFORE ORDERING OR FABRICATING ANY MATERIAL.

DESIGNED BY: M. FIGLEY

STATE OF ALASKA
DEPARTMENT OF TRANSPORTATION & PUBLIC FACILITIES
STATEWIDE DESIGN & ENGINEERING SERVICES DIVISION

KTN-VIADUCTS REHABILITATION
PROJECT NO. 68571

CHECKED BY: G. IMBSEN
DRAWN/REVISED BY: R.S., R.G.

THERMAL SPRAY ANODE CONNECTION

PATH:
PLOT: PSPACE 1=1(F) OR MSPACE 1=1(F)

CP-5.1

REVISIONS			PROJECT DESIGNATION	YEAR	SHEET NO.	TOTAL SHEETS
NO.	DATE	DESCRIPTION	NH-0902(34)	2009	59	70

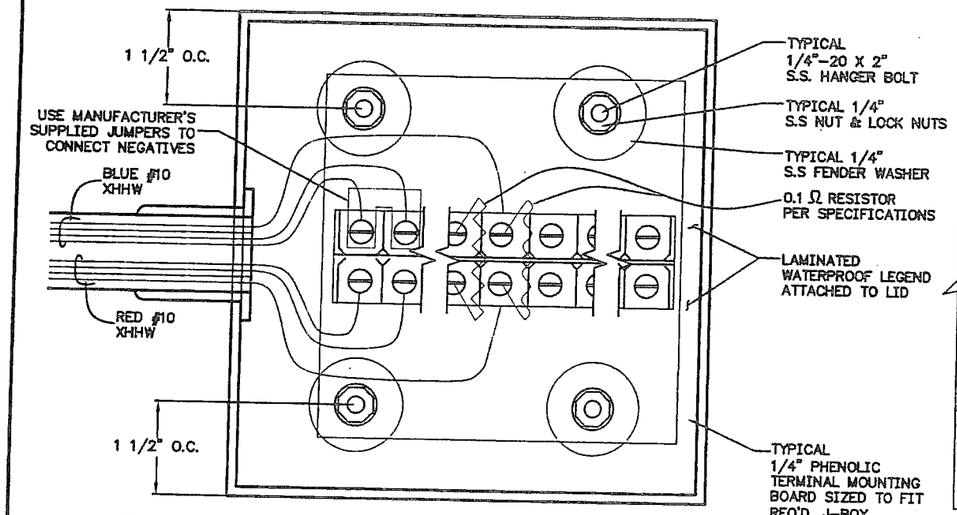

NOTE:
SUPPLY 0.1 Ω RESISTORS FOR ALL ANODE-NEGATIVE CONNECTIONS IN MAIN JUNCTION BOX.

FRONT VIEW

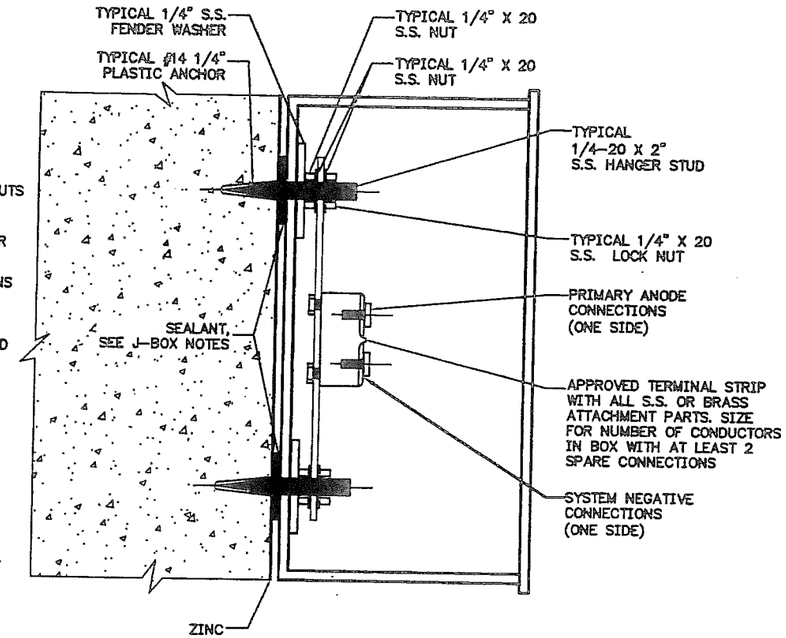

SIDE VIEW

MAIN JUNCTION BOX (JB)
N.T.S.
1

GENERAL NOTES:

1. PROTECT EXISTING UTILITIES AND PROPERTY FROM ANY CONSTRUCTION RELATED DAMAGE.

2. SECURE PERMISSION OF UTILITY OWNER, OR OWNER OF OTHER PROPERTY, PRIOR TO MOVING OR TEMPORARILY RELOCATING ANY PROPERTY FOR THE CONVENIENCE OF CONSTRUCTION ACTIVITIES.

3. CONDUIT SHALL BE UL 651 SCHEDULE 80 RIGID PVC. SIZE CONDUIT PER NEC FOR NONMETALLIC CONDUIT. MINIMUM DIAMETER IS $\frac{3}{4}$".

4. ALL CONDUIT SHALL BE SECURED BY 2 HOLE PVC STRAPS 18" O.C.

5. USE APPROVED NONMETALLIC CONDUIT CLAMPS AND/OR STRUTS. ATTACH WITH APPROVED STAINLESS STEEL ANCHOR BOLT/NONMETALLIC ANCHOR SLEEVE FASTENERS.

6. CONDUIT RUNS SHALL BE INSTALLED NEAT, STRAIGHT AND LEVEL.

7. ENCLOSURES AND JUNCTION BOXES SHALL BE NEMA 4X RATED PVC WITH FLAT TOPS SECURED BY STAINLESS STEEL SCREWS, EXCEPT MAIN JB IS AS DESCRIBED BELOW.

8. SIZE OF JUNCTION BOXES AND ENCLOSURES BASED ON NUMBER AND SIZE OF CONDUCTORS AND CONDUIT.

9. DO NOT MAKE ATTACHMENTS TO PRESTRESSED CONCRETE USING DRILLED ANCHORS WITHOUT PRIOR APPROVAL.

10. SEE SPECIFICATIONS FOR MARKING AND CABLE INSTALLATION COLORS.

11. SEAL OR ENCAPSULATE BOLT AND WIRE CONNECTIONS PER THE ENGINEER'S RECOMMENDATIONS.

12. SEALANT TO BE SIKA-FLEX URETHANE SEALANT OR ACE 10204 BUTYL RUBBER HEAVY-DUTY SEALANT OR APPROVED EQUAL.

13. DRILL $\frac{1}{8}$" DRAIN HOLE IN THE LOWEST CORNER OF THE J-BOX OR CONDUIT RUN.

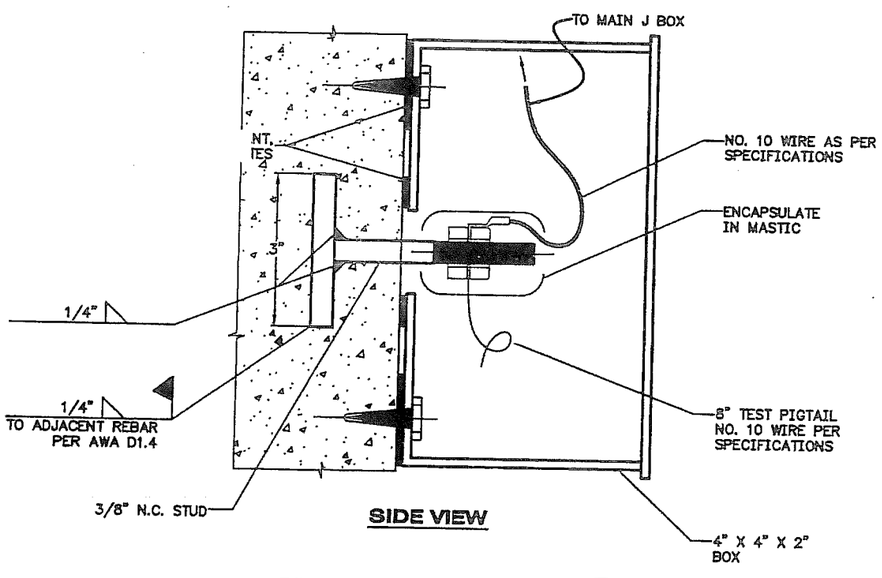

SIDE VIEW

SYSTEM NEGATIVE
N.T.S.
3

MAIN JUNCTION BOX (JB) NOTES:

1. ALL WIRE ENDS TO BE CRIMP RING STYLE, SIZED TO FIT, AND SEALED WITH MASTIC-FILLED HEAT SHRINK.

2. EACH WIRE TO BE IDENTIFIED WITH LETTERS OR NUMBERS 1/16" IN SIZE, INCORPORATED ON A WRAP-AROUND LABEL. EACH LABEL SHALL BE ENCASED BY CLEAR HEAT SHRINK THAT SHALL OFFER HIGH RESISTANCE TO WATER, OIL, SOLVENTS, AND MILD ACIDS.

3. ALL WIRE CONNECTIONS TO THE TERMINAL STRIP TO BE COATED WITH APPROVED ANTI-CORROSIVE COMPOUND-1/4" THICK LAYER.

4. CHECK CONTINUITY BETWEEN SYSTEM NEGATIVE AND S.S. MOUNTING SCREWS AND/OR ALL TERMINAL COMPONENTS TO ENSURE ISOLATION.

5. ALL CONDUCTORS TO BE SIZED AND COLORED PER THE PLANS AND SPECIFICATIONS.

6. THE NUMBER OF CONDUCTORS DEPENDS ON THE NUMBER OF PILE JACKETS, CAP JACKETS, METALLIZED AREAS & REFERENCE ELECTRODES PER LOCATION.

7. THE MAIN J-BOX SHALL BE A POLYESTER MODULAR ENCLOSURE, NEMA 4X. (SEE SPECIFICATIONS).

ELEVATIONS, BENCHMARKS AND DIMENSIONS ARE BASED ON "AS-BUILT" PLANS. VERIFY ALL CONTROLLING FIELD DIMENSIONS BEFORE ORDERING OR FABRICATING ANY MATERIAL.

DESIGNED BY: M. FIGLEY

STATE OF ALASKA 49th Mark W. Figley CE-8050

CHECKED BY: G. IMBSEN
DRAWN/REVISED BY: R.S., R.G.

STATE OF ALASKA
DEPARTMENT OF TRANSPORTATION & PUBLIC FACILITIES
STATEWIDE DESIGN & ENGINEERING SERVICES DIVISION

KTN-VIADUCTS REHABILITATION
PROJECT NO. 68571

JUNCTION BOX

PATH:
PLOT: PSPACE 1=1(F) OR MSPACE 1=1(F)

CP-5.2

REVISIONS			PROJECT DESIGNATION	YEAR	SHEET NO.	TOTAL SHEETS
NO.	DATE	DESCRIPTION				
			NH-0902(34)	2009	60	70

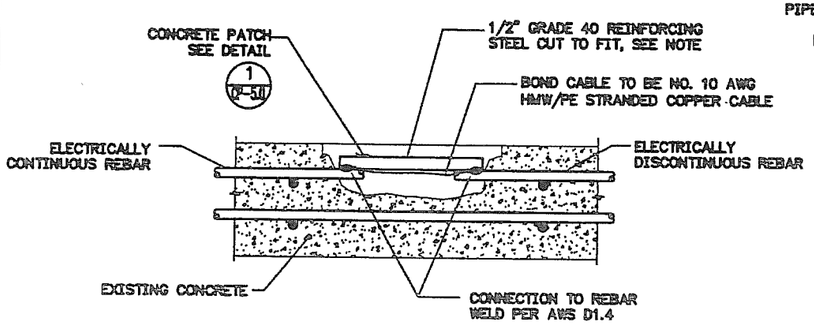

USE EITHER BOND CABLE OR 1/2" REINFORCING STEEL
CHECK WITH ENGINEER FOR STRUCTURAL REQUIREMENTS.

DISCONTINUOUS REBAR BOND (1)
N.T.S.

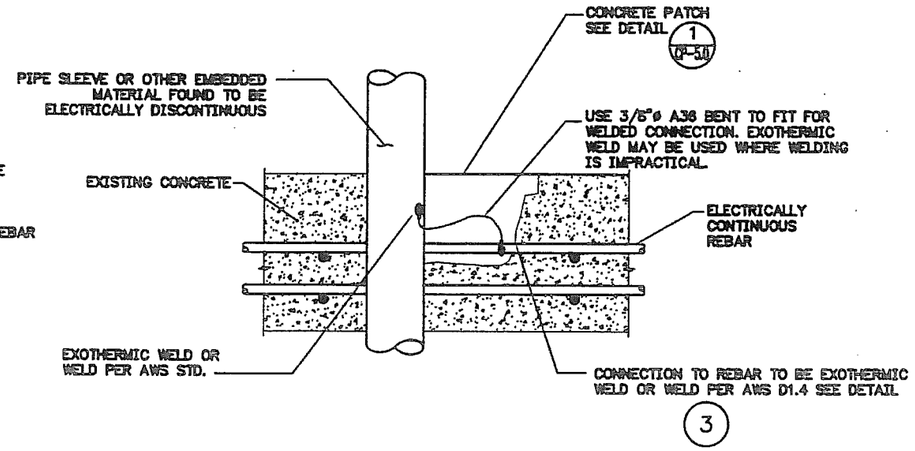

DISCONTINUOUS REBAR BOND (2)
N.T.S.

NOTES:

1. BONDS TO PRESTRESSING STEEL MUST BE MECHANICAL. DO NOT USE WELDING OR EXOTHERMIC WELDING TO MAKE ELECTRICAL CONNECTIONS TO PRESTRESSING STEEL.

2. AFTER REVIEWING AS-BUILT RECORDS OF PRESTRESSED GIRDERS AND BEAMS PROVIDE SHOP DRAWINGS AND PROCEDURES THAT CLEARLY STATE HOW THE TENDONS WILL BE EXPOSED, ELECTRICAL CONNECTIONS MADE AND THE EXCAVATIONS PATCHED.

3. WHEN WELDING TO REINFORCEMENT, AWS D1.4 MUST BE FOLLOWED, SEE SPECIFICATIONS.

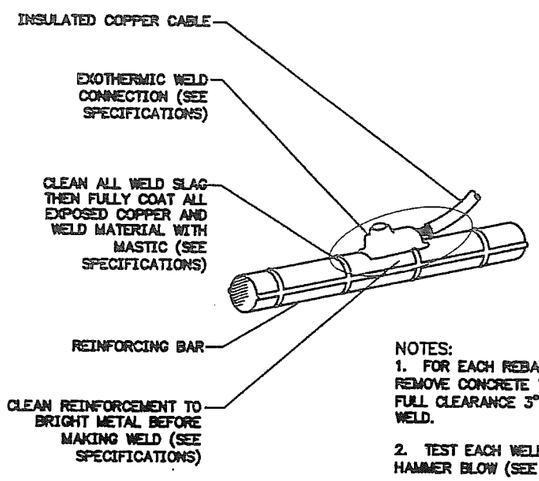

NOTES:
1. FOR EACH REBAR TO BE BONDED, REMOVE CONCRETE TO PROVIDE 5/8" FULL CLEARANCE 3" EITHER SIDE OF WELD.

2. TEST EACH WELD WITH OBLIQUE HAMMER BLOW (SEE SPECIFICATIONS).

DISCONTINUOUS REBAR BOND (3)
N.T.S.

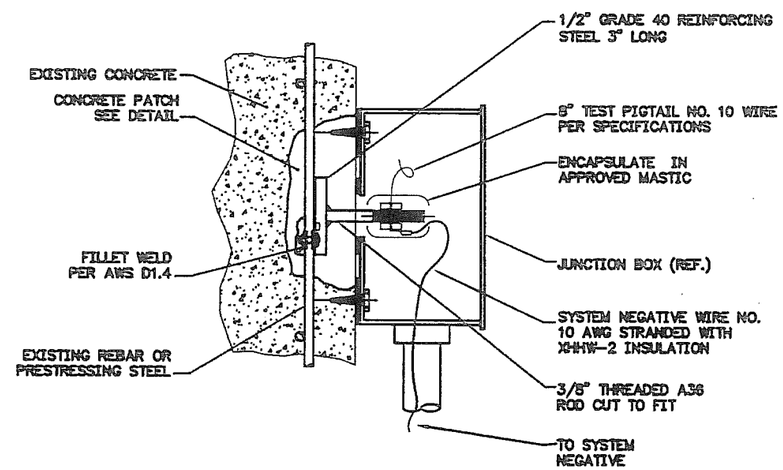

DISCONTINUOUS REBAR BOND (4)
N.T.S.

ELEVATIONS, BENCHMARKS AND DIMENSIONS ARE BASED ON "AS-BUILT" PLANS. VERIFY ALL CONTROLLING FIELD DIMENSIONS BEFORE ORDERING OR FABRICATING ANY MATERIAL.

DESIGNED BY: M. FIGLEY
CHECKED BY: G. IMBSEN
DRAWN/REVISED BY: R.S., R.G.

STATE OF ALASKA
DEPARTMENT OF TRANSPORTATION
& PUBLIC FACILITIES
STATEWIDE DESIGN & ENGINEERING SERVICES DIVISION

KTN-VIADUCTS
REHABILITATION
PROJECT NO. 68571

REBAR BONDING
DETAILS

PATH:
PLOT: PSPACE 1=1(F) OR MSPACE 1=1(F)

CP-5.3

REVISIONS			PROJECT DESIGNATION	YEAR	SHEET NO.	TOTAL SHEETS
NO.	DATE	DESCRIPTION	NH-0902(34)	2009	61	70

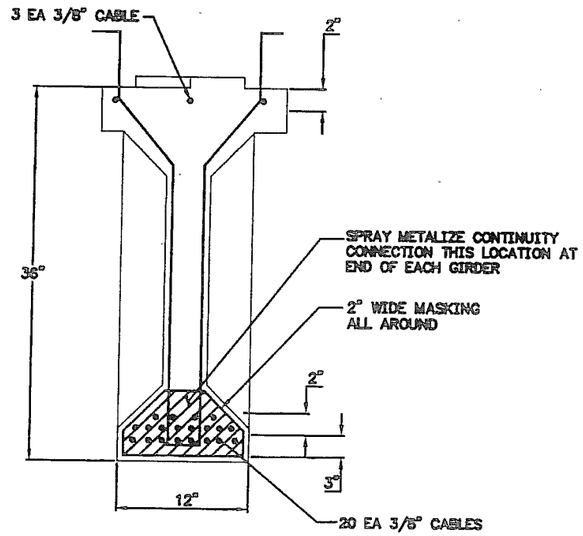

GIRDER PRESTRESS WIRE (1)
N.T.S.

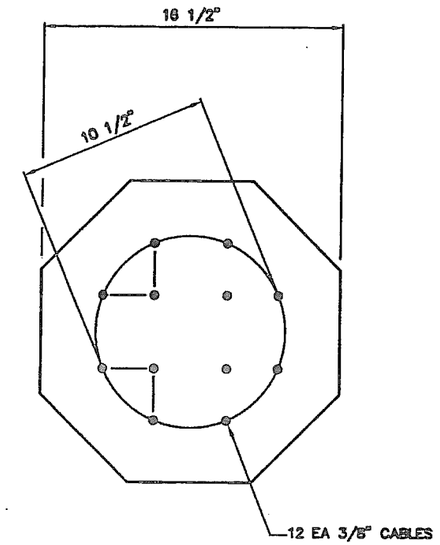

PILE PRESTRESS WIRE (2)
N.T.S.

NOTES:

1. BONDS TO PRESTRESSING STEEL MUST BE MECHANICAL. DO NOT USE WELDING OR EXOTHERMIC WELDING TO MAKE ELECTRICAL CONNECTIONS TO PRESTRESSING STEEL.
2. THESE WIRE LAYOUTS ARE DEVELOPED FROM AS-BUILT DRAWINGS. CONFIRM LAYOUT IN THE FIELD BEFORE EXCAVATING AND MAKING ELECTRICAL CONNECTIONS.
3. NO DAMAGE TO THE PRESTRESS WIRES WILL BE TOLERATED.

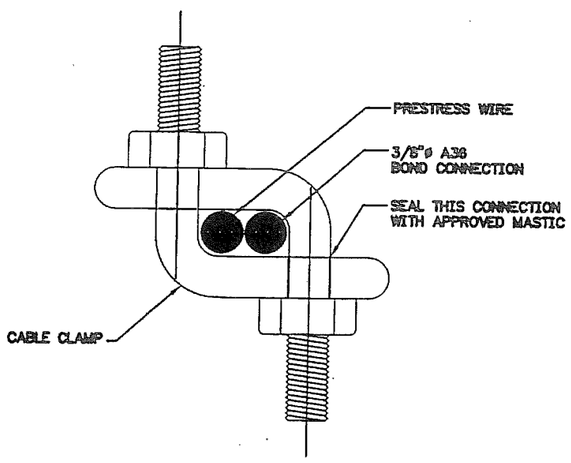

MECHANICAL CLAMP (3)
N.T.S.

ELEVATIONS, BENCHMARKS AND DIMENSIONS ARE BASED ON "AS-BUILT" PLANS. VERIFY ALL CONTROLLING FIELD DIMENSIONS BEFORE ORDERING OR FABRICATING ANY MATERIAL.

DESIGNED BY: M. FIGLEY

CHECKED BY: G. IMBSEN

DRAWN/REVISED BY: R.S., R.G.

STATE OF ALASKA
DEPARTMENT OF TRANSPORTATION & PUBLIC FACILITIES
STATEWIDE DESIGN & ENGINEERING SERVICES DIVISION

KTN-VIADUCTS REHABILITATION
PROJECT NO. 68571

PRE-STRESSED WIRE

PATH:
PLOT: PSPACE 1=1(F) OR MSPACE 1=1(F)

CP-5.4

REVISIONS			PROJECT DESIGNATION	YEAR	SHEET NO.	TOTAL SHEETS
NO.	DATE	DESCRIPTION	NH-0902(34)	2009	62	70

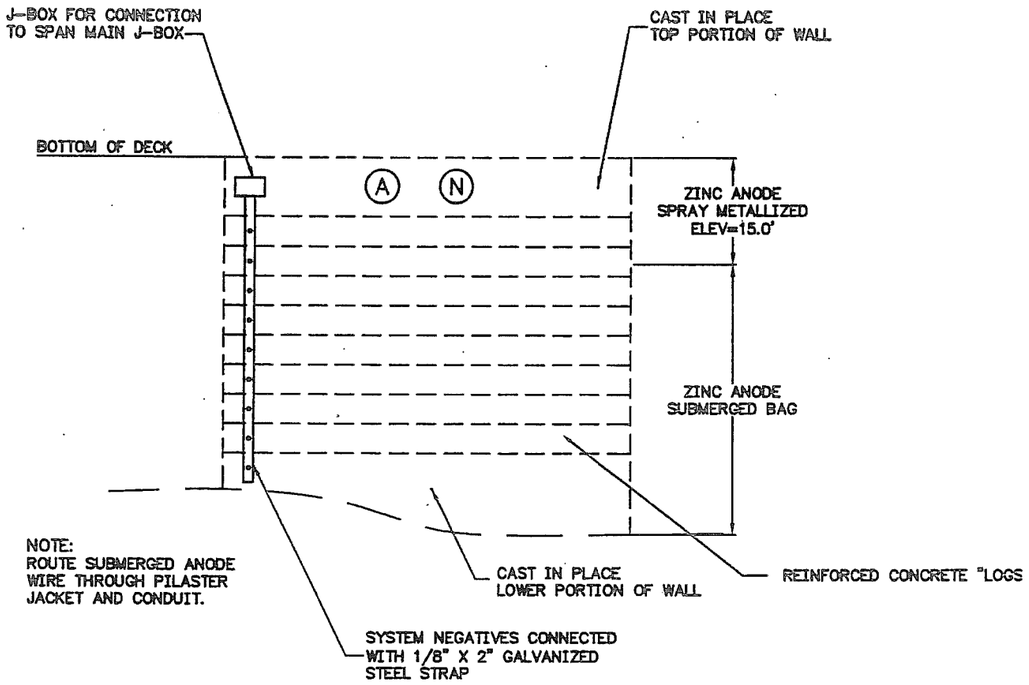

RETAINING WALL PANEL CATHODIC PROTECTION

N.T.S.

2

NOTES

1. RETAINING WALL SHOWN INCLUDES REINFORCED CONCRETE "LOGS". NOT ALL RETAINING WALLS INCLUDE REINFORCED CONCRETE "LOGS".
2. RETAINING WALLS DO NOT REQUIRE REMOVAL OF NEAR SURFACE METAL.
3. WALLS WITHOUT REINFORCED CONCRETE "LOGS" WILL NOT REQUIRE 1/8"X2" GALVANIZED STEEL STRAP.
4. EACH REINFORCED CONCRETE "LOG" REQUIRES A SYSTEM NEGATIVE.
5. EACH SEPARATE PORTION OF CAST IN PLACE WALL REQUIRES A SYSTEM NEGATIVE AND PORTIONS WHICH ARE SPRAY METALLIZED REQUIRE AND ANODE CONNECTION.
6. SUBMERGED ANODES WILL BE CONNECTED THROUGH THE MAIN JUNCTION BOX.
7. ANODE AND SYSTEM NEGATIVE ON CAST IN PLACE PORTION ABOVE 15.0' ELEVATION WILL BE CONNECTED DIRECTLY TOGETHER; THEY WILL NOT BE CONNECTED THROUGH THE MAIN JUNCTION BOX.

ELEVATIONS, BENCHMARKS AND DIMENSIONS ARE BASED ON "AS-BUILT" PLANS. VERIFY ALL CONTROLLING FIELD DIMENSIONS BEFORE ORDERING OR FABRICATING ANY MATERIAL.

DESIGNED BY: M. FIGLEY

CHECKED BY: G. IMBSEN

DRAWN/REVISED BY: R.S., R.G.

STATE OF ALASKA
DEPARTMENT OF TRANSPORTATION
& PUBLIC FACILITIES
STATEWIDE DESIGN & ENGINEERING SERVICES DIVISION

KTN-VIADUCTS
REHABILITATION
PROJECT NO. 68571

RETANING WALL
DETAILS

PATH:
PLOT: PSPACE 1=1(F) OR MSPACE 1=1(F)

CP-5.5

REVISIONS			PROJECT DESIGNATION	YEAR	SHEET NO.	TOTAL SHEETS
NO.	DATE	DESCRIPTION				
			NH-0902(34)	2009	63	70

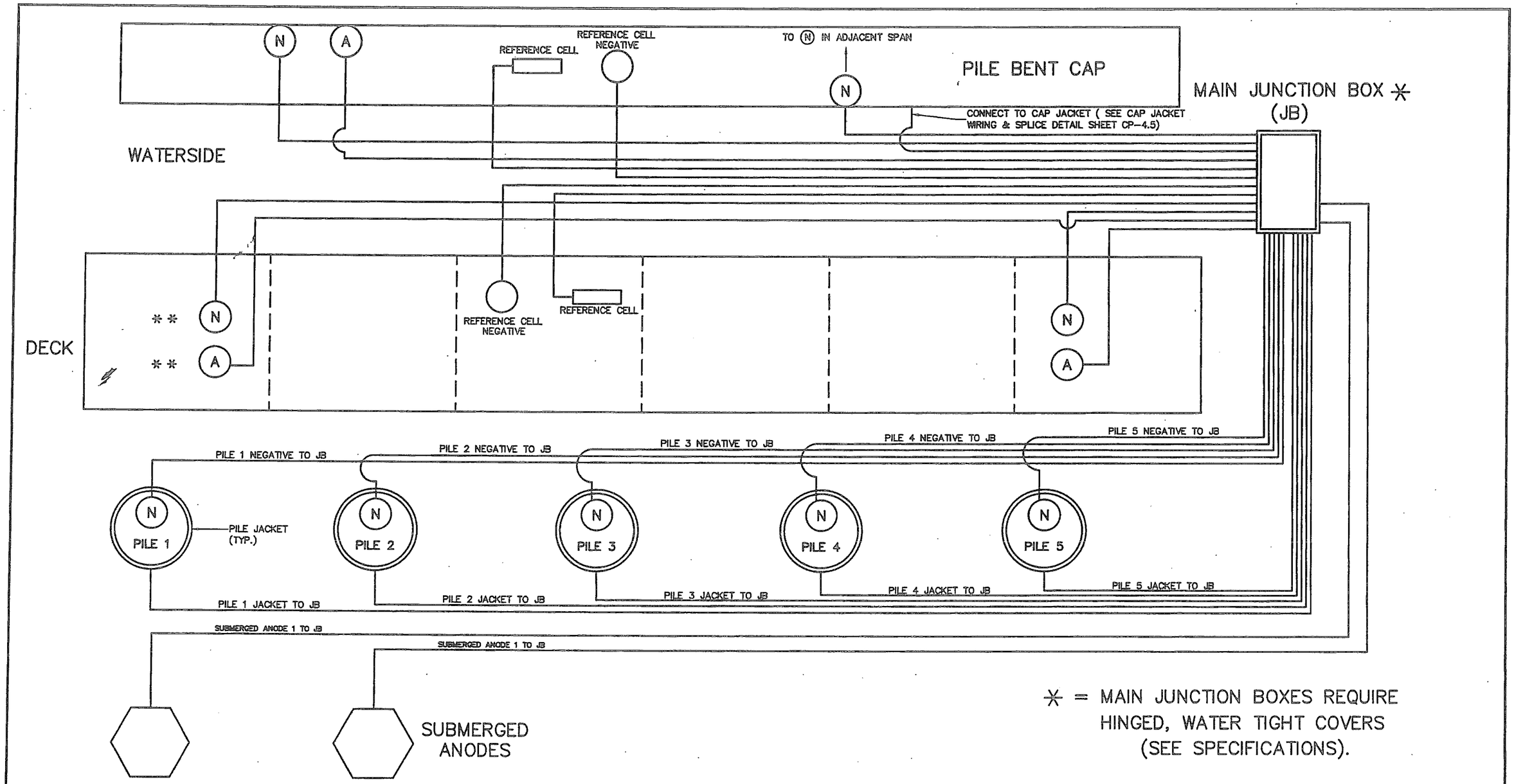

✳ = MAIN JUNCTION BOXES REQUIRE HINGED, WATER TIGHT COVERS (SEE SPECIFICATIONS).

NOTE:

1. TONGASS AVENUE COULD HAVE BETWEEN 1 AND 5 PILES. THE WIRING IS SIMILAR WITH LESS ELEMENTS. SEE PLAN LAYOUT OF (N) & (A).
2. SOME SPANS WILL NOT HAVE REFERENCE CELLS.
3. JB LOCATION MUST BE APPROVED BY THE ENGINEER.

LEGEND

(N) = SYSTEM NEGATIVE

(A) = ANODE TERMINAL

✳✳ MAY BE UP TO 5 PER SPAN, OTHERS NOT SHOWN FOR CLARITY.

TONGASS AVENUE
VIADUCT WIRING FOR PRESTESSED GIRDER SPANS

DESIGNED BY: M. FIGLEY

STATE OF ALASKA
DEPARTMENT OF TRANSPORTATION & PUBLIC FACILITIES
STATEWIDE DESIGN & ENGINEERING SERVICES DIVISION

KTN-VIADUCTS REHABILITATION
PROJECT NO. 68571

Tongass Avenue
Viaduct Wiring for Spans

CHECKED BY: G. IMBSEN
DRAWN/REVISED BY: R.S., R.G.

PATH:
PLOT: PSPACE 1=1(F) OR MSPACE 1=1(F)

CP-6.0

REVISIONS			PROJECT DESIGNATION	YEAR	SHEET NO.	TOTAL SHEETS
NO.	DATE	DESCRIPTION	NH-0902(34)	2009	64	70

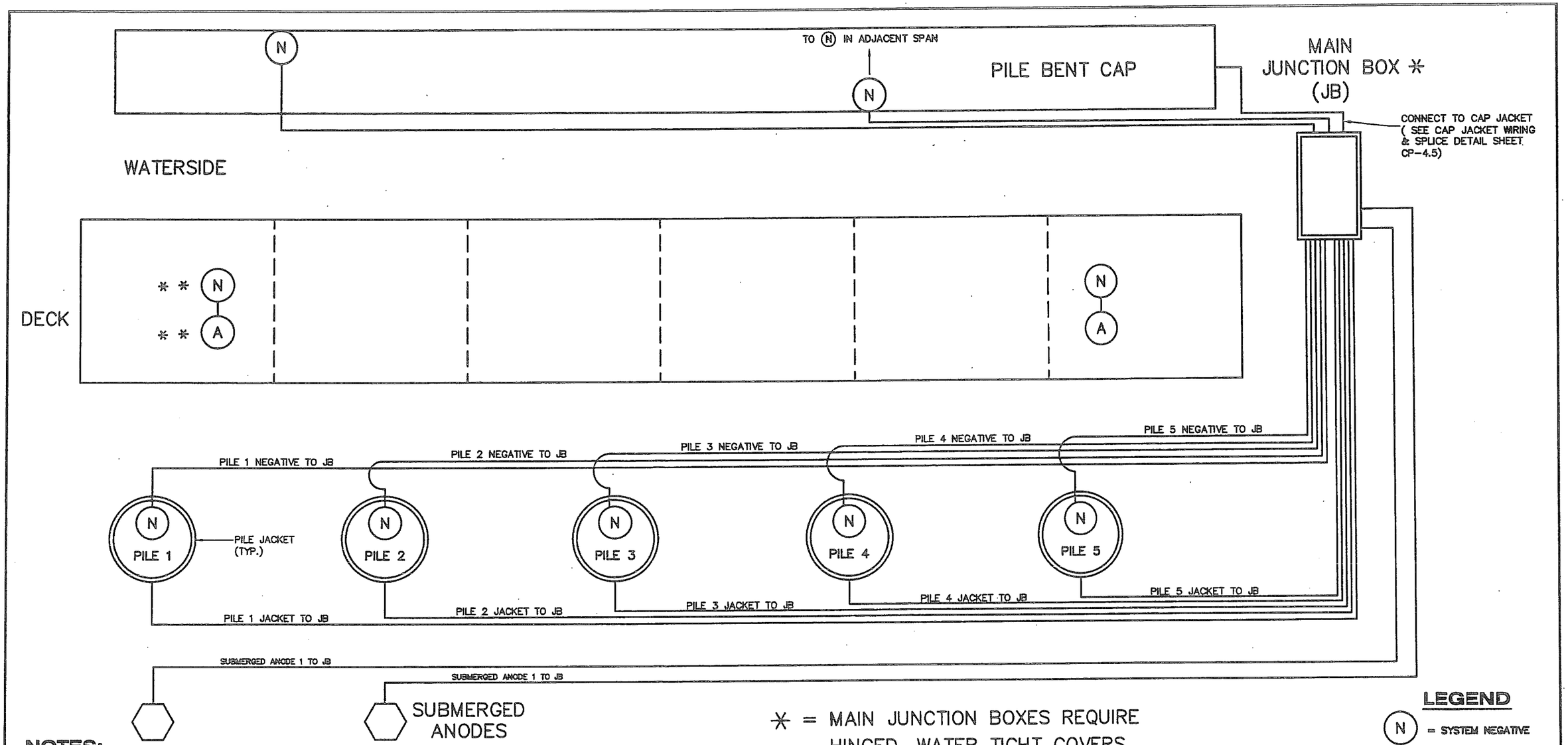

✳ = MAIN JUNCTION BOXES REQUIRE HINGED, WATER TIGHT COVERS (SEE SPECIFICATIONS).

LEGEND

(N) = SYSTEM NEGATIVE

(A) = ANODE TERMINAL

✳✳ MAY BE UP TO 5 PER SPAN, OTHERS NOT SHOWN FOR CLARITY.

NOTES:

1. TONGASS AVENUE COULD HAVE BETWEEN 1 AND 5 PILES. THE WIRING IS SIMILAR WITH LESS ELEMENTS. SEE PLAN LAYOUT OF (N) & (A).
2. NEGATIVE ON NORTH SIDE OF CAP WILL BE BONDED TO NEAREST DECK NEGATIVE OF THE ADJACENT ZONE.
3. THIS SHEET DEPICTS THE EXISTING WIRING ON BENT/SPANS 18, 20 (BENT ONLY), 27 (BENT ONLY), AND 37 (BENT ONLY).
4. BENT/SPANS 19, 25, 26 ARE WIRED AS SHOWN ON SHEET CP 6.0.
5. PILE JACKETS AND SUBMERGED ANODES ARE NOT WIRED TO MAIN JUNCTION BOX ON BENT/SPANS 14,15 AND 16. THE ANODE/NEGATIVE CONNECTION IS MADE IN A JUNCTION BOX AT THE TOP OF EACH PILE. THESE CONNECTIONS WILL BE REWIRED TO A MAIN JUNCTION BOX AS SHOWN ON CP 6.2 UNDER ITEM 684(8) REWIRE EXISTING SPANS.
6. WIRING AND CONDUIT TO REFERENCE ELECTRODES WILL BE PRESERVED AND INCLUDED IN THE NEW JUNCTION BOXES INSTALLED IN CONJUNCTION WITH ITEM 684(8) REWIRE EXISTING SPANS.
7. SEE SHEET S-1 FOR BENT/SPAN LOCATIONS.

TONGASS AVENUE
VIADUCT WIRING FOR PRESTESSED EXISTING GIRDER SPANS WITHOUT REFERENCE CELLS

DESIGNED BY: M. FIGLEY

STATE OF ALASKA
DEPARTMENT OF TRANSPORTATION & PUBLIC FACILITIES
STATEWIDE DESIGN & ENGINEERING SERVICES DIVISION

KTN-VIADUCTS REHABILITATION
PROJECT NO. 68571

CHECKED BY: G. IMBSEN
DRAWN/REVISED BY: R.S., R.G.

Tongass Avenue Viaduct Wiring for Spans

PATH:
PLOT: PSPACE 1=1(F) OR MSPACE 1=1(F)

CP-6.1

REVISIONS			PROJECT DESIGNATION	YEAR	SHEET NO.	TOTAL SHEETS
NO.	DATE	DESCRIPTION				
			NH-0902(34)	2009	65	70

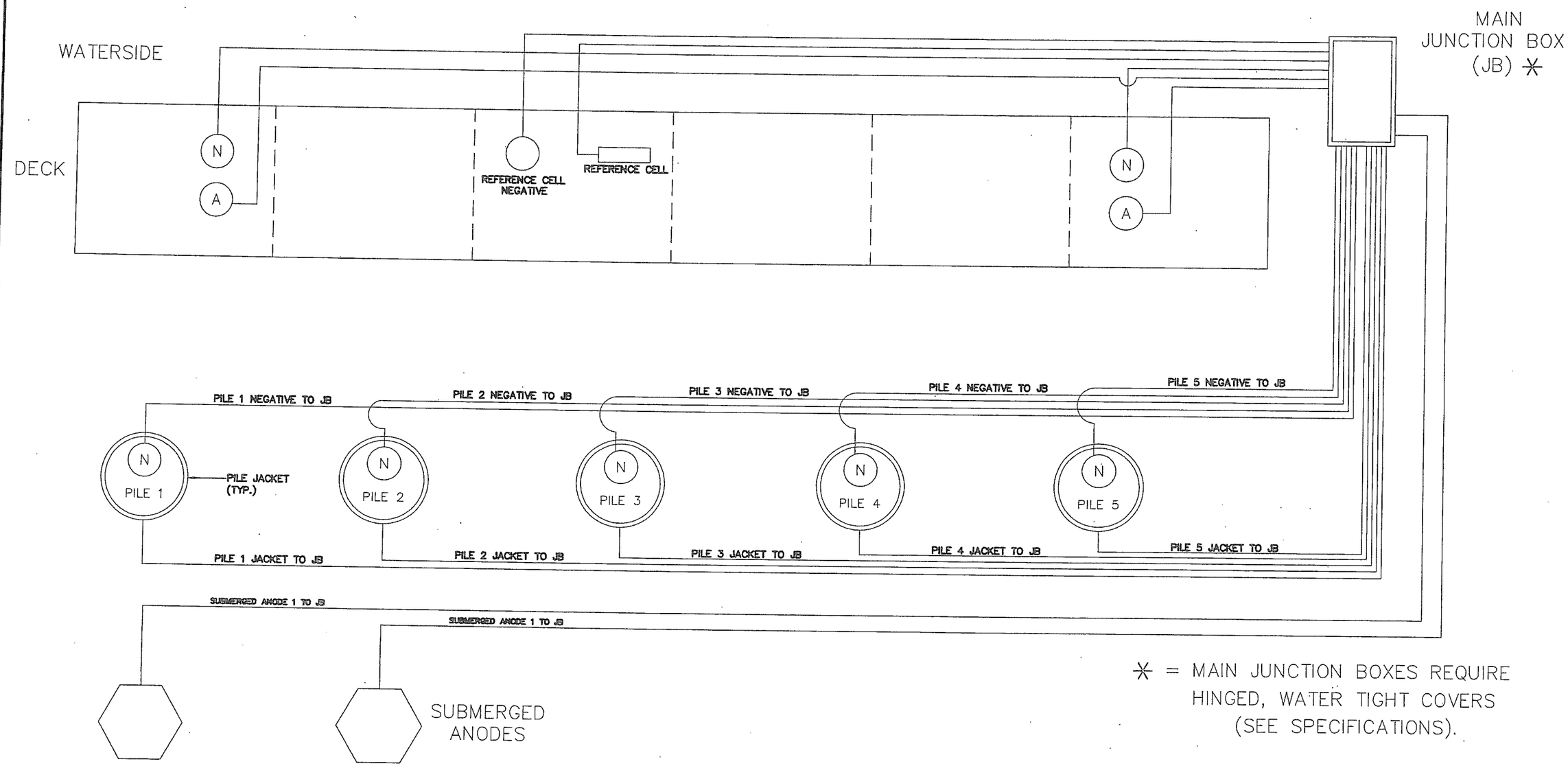

✳ = MAIN JUNCTION BOXES REQUIRE HINGED, WATER TIGHT COVERS (SEE SPECIFICATIONS).

NOTE:

1. TONGASS AVENUE COULD HAVE BETWEEN 1 AND 5 PILES. THE WIRING IS SIMILAR WITH LESS ELEMENTS. SEE PLAN LAYOUT OF (N) & (A).
2. SOME SPANS WILL NOT HAVE REFERENCE CELLS.
3. JB LOCATION MUST BE APPROVED BY THE ENGINEER.

LEGEND

(N) = SYSTEM NEGATIVE

(A) = ANODE TERMINAL

TONGASS AVENUE VIADUCT WIRING FOR FLAT SPANS

DESIGNED BY: M. FIGLEY

STATE OF ALASKA
DEPARTMENT OF TRANSPORTATION & PUBLIC FACILITIES
STATEWIDE DESIGN & ENGINEERING SERVICES DIVISION

KTN-VIADUCTS REHABILITATION
PROJECT NO. 68571

CHECKED BY: G. IMBSEN
DRAWN/REVISED BY: R.S., R.G.

Tongass Avenue Viaduct Wiring for Spans

PATH:
PLOT: PSPACE 1=1(F) OR MSPACE 1=1(F)

CP-6.2

REVISIONS			PROJECT DESIGNATION	YEAR	SHEET NO.	TOTAL SHEETS
NO.	DATE	DESCRIPTION	NH-0902(34)	2009	66	70

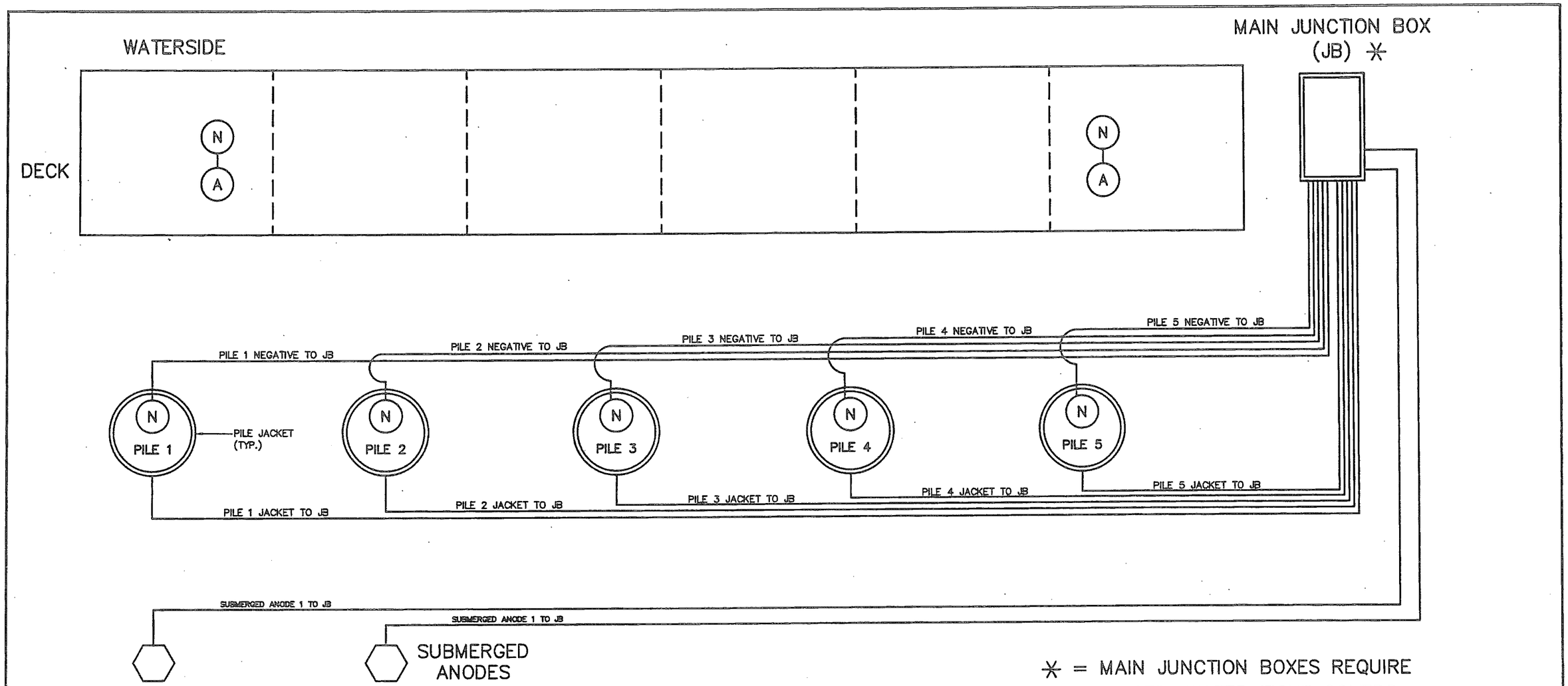

✳ = MAIN JUNCTION BOXES REQUIRE HINGED, WATER TIGHT COVERS (SEE SPECIFICATIONS).

LEGEND

(N) = SYSTEM NEGATIVE

(A) = ANODE TERMINAL

1. **NOTES:**

   TONGASS AVENUE COULD HAVE BETWEEN 1 AND 5 PILES. THE WIRING IS SIMILAR WITH LESS ELEMENTS. SEE PLAN LAYOUT OF (N) & (A).
2. NEGATIVE ON NORTH SIDE OF CAP WILL BE BONDED TO NEAREST DECK NEGATIVE OF THE ADJACENT ZONE.
3. THIS SHEET DEPICTS THE EXISTING WIRING ON BENT/SPANS 20, 21, 23, 24, 27, 28, 31, 32, 33, 34, 35, AND 36.
4. BENT/SPANS 22, 29, 30 ARE WIRED AS SHOWN ON SHEET CP 6.2.
5. PILE JACKETS AND SUBMERGED ANODES ARE NOT WIRED TO A MAIN JUNCTION BOX ON BENT/SPANS 14, 15 AND 16. THE ANODE/NEGATIVE CONNECTION IS MADE IN A JUNCTION BOX AT THE TOP OF EACH PILE. THESE CONNECTIONS WILL BE REWIRED TO A MAIN JUNCTION BOX AS SHOWN ON CP 6.2 UNDER ITEM 684(8) REWIRE EXISTING SPANS.
6. WIRING AND CONDUIT TO REFERENCE ELECTRODES WILL BE PRESERVED AND INCLUDED IN THE NEW JUNCTION BOXES INSTALLED IN CONJUNCTION WITH ITEM 684(8) REWIRE EXISTING SPANS.
7. SEE SHEET S-1.1 FOR BENT/SPAN LOCATIONS.

TONGASS AVE. EXISTING REFERENCE CELL LOCATIONS

J-BOX LOCATION BENT	NUMBER OF ELECTRODES IN TEST STATION	REFERENCE ELECTRODES LOCATED
13	1	SPAN 12, DECK CELL 1B
15	1	SPAN 14, DECK
19	3	SPAN 19 DECK CELL 5B, GIRDER 5 EAST FACE, CAP 19 SOUTH FACE
22	1	SPAN 22, DECK WEST SIDE
26	2	SPAN 25, DECK CELL 1A, SPAN 26 DECK CELL 8C.
29	1	SPAN 29, DECK
30	2	CAP 30 NORTH FACE, CAP 31 SOUTH FACE.
34	1	SPAN 34, DECK

TONGASS AVENUE
VIADUCT WIRING FOR FLAT EXISTING SPANS
WITHOUT REFERENCE CELLS

DESIGNED BY: M. FIGLEY
CHECKED BY: G. MISSEN
DRAWN/REVISED BY: R.S., R.G.

STATE OF ALASKA
DEPARTMENT OF TRANSPORTATION
& PUBLIC FACILITIES
STATEWIDE DESIGN & ENGINEERING SERVICES DIVISION

KTN-VIADUCTS
REHABILITATION
PROJECT NO. 68571
Tongass Avenue
Viaduct Existing Wiring for
Spans

PATH:
PLOT: PSPACE 1=1(F) OR MSPACE 1=5(F)

CP-6.3

REVISIONS			PROJECT DESIGNATION	YEAR	SHEET NO.	TOTAL SHEETS
NO.	DATE	DESCRIPTION	NH-0902(34)	2009	67	70

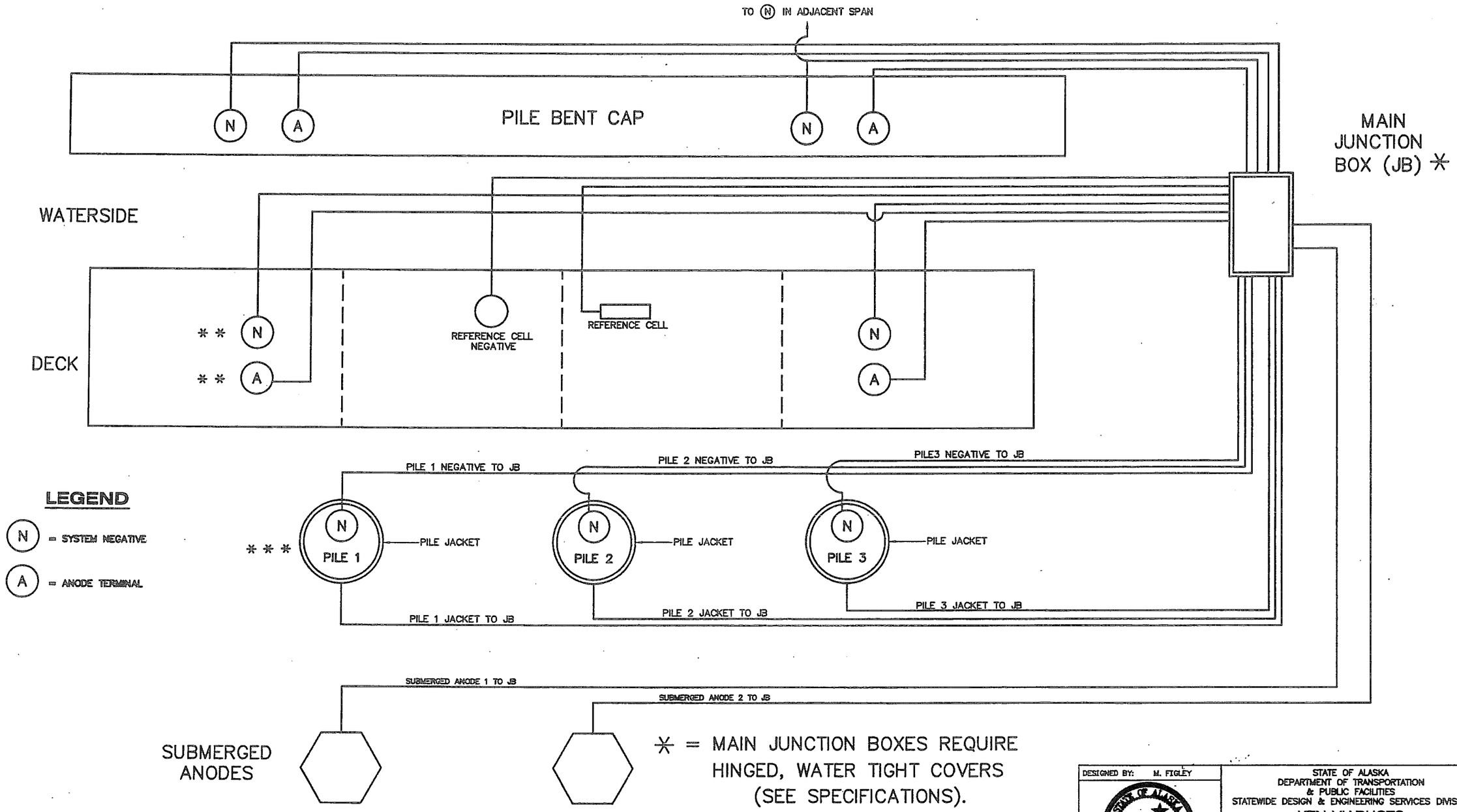

LEGEND

(N) = SYSTEM NEGATIVE

(A) = ANODE TERMINAL

✳ = MAIN JUNCTION BOXES REQUIRE HINGED, WATER TIGHT COVERS (SEE SPECIFICATIONS).

** MAY BE UP TO 4 PER SPAN, OTHERS NOT SHOWN FOR CLARITY.

*** MAY BE UP TO 5 PER SPAN, OTHERS NOT SHOWN FOR CLARITY.

NOTES:

1. WIRING IS THE SAME ON NARROWER SPANS, THERE IS JUST ONE LESS PILE AND ONE LESS SET OF (N) & (A) IN THE SPAN. SEE PLAN LAYOUT OF (N) & (A).
2. REFERENCE CELL MAY BE LOCATED IN PILES OR CAPS. WIRING WILL BE SIMILAR.
3. SOME SPANS WILL NOT HAVE CORNER CELLS.
4. JB LOCATION MUST BE APPROVED BY THE ENGINEER.

WATER STREET
VIADUCT WIRING FOR SPANS

DESIGNED BY: M. FIGLEY

STATE OF ALASKA
DEPARTMENT OF TRANSPORTATION
& PUBLIC FACILITIES
STATEWIDE DESIGN & ENGINEERING SERVICES DIVISION

KTN-VIADUCTS
REHABILITATION
PROJECT NO. 68571

Water Street
Viaduct Wiring for Spans

CHECKED BY: G. IMBSEN
DRAWN/REVISED BY: R.S., R.G.

PATH:
PLOT: PSPACE 1=1(F) OR MSPACE 1=1(F)

CP-6.4

REVISIONS			PROJECT DESIGNATION	YEAR	SHEET NO.	TOTAL SHEETS
NO.	DATE	DESCRIPTION	NH-0902(34)	2009	68	70

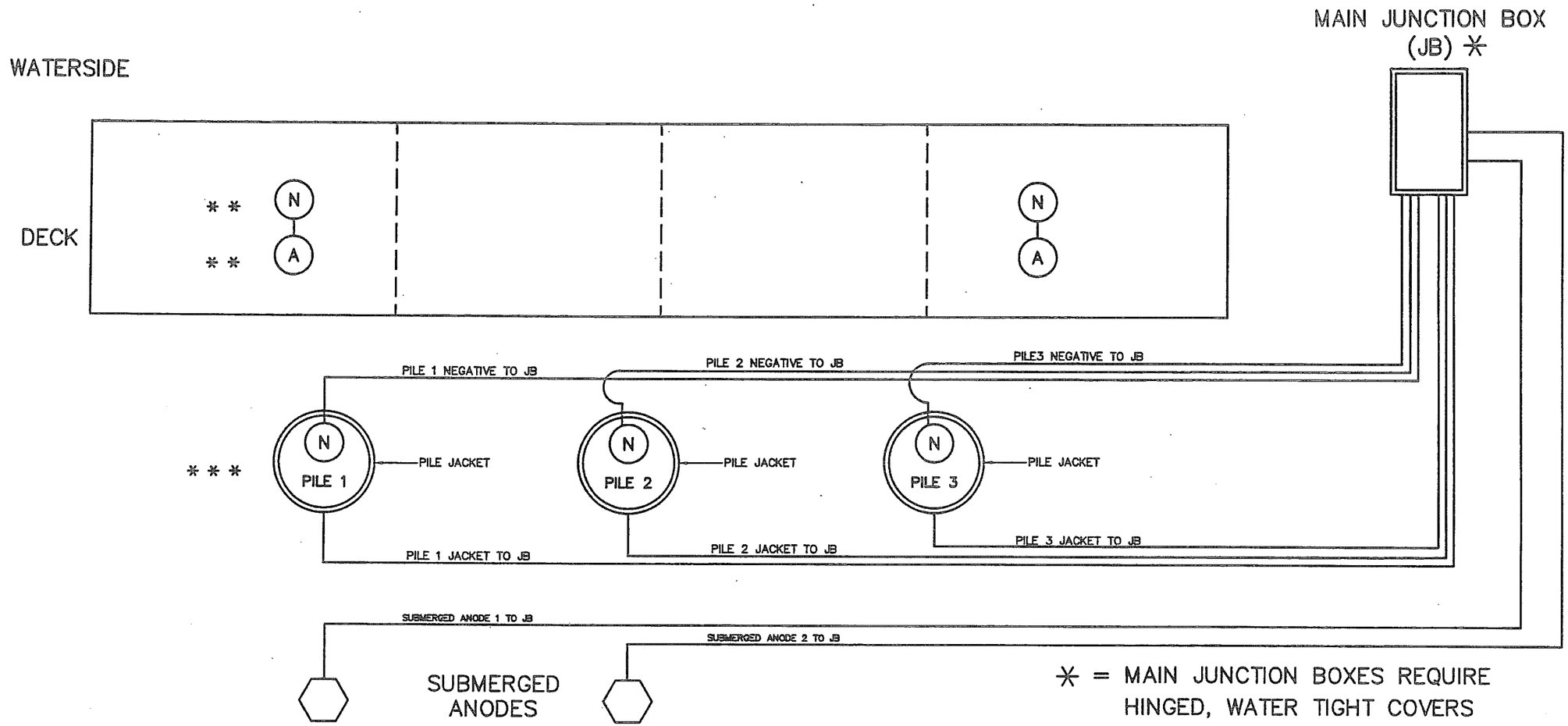

** MAY BE UP TO 4 PER SPAN, OTHERS NOT SHOWN FOR CLARITY.

*** MAY BE UP TO 5 PER SPAN, OTHERS NOT SHOWN FOR CLARITY.

✳ = MAIN JUNCTION BOXES REQUIRE HINGED, WATER TIGHT COVERS (SEE SPECIFICATIONS).

NOTES:

1. WIRING IS THE SAME ON NARROWER SPANS, THERE IS JUST ONE LESS PILE AND ONE LESS SET OF Ⓝ & Ⓐ IN THE SPAN. SEE PLAN LAYOUT OF Ⓝ & Ⓐ.
2. EXISTING WIRING ON WATER STREET WITH REFERENCE CELLS ARE WIRED AS SHOWN ON SHEET CP 6.4
3. THIS SHEET DEPICTS THE EXISTING WIRING ON BENT/SPANS 24–27, 30, 31, 32, 34, 35, 37–41, 43–53, 55–60, 62, 64 (BENT ONLY).
4. THE WIRING ON BENT/SPANS 28, 32, 36, 42, 54 AND 61 IS AS SHOWN ON SHEET CP 6.4.
5. PILE JACKETS AND SUBMERGED ANODES ARE NOT WIRED TO A MAIN JUNCTION BOX ON BENT/SPANS 14, 15 AND 16. THE ANODE/NEGATIVE CONNECTION IS MADE IN A JUNCTION BOX AT THE TOP OF EACH PILE. THESE CONNECTIONS WILL BE REWIRED TO A MAIN JUNCTION BOX AS SHOWN ON CP 6.2 UNDER ITEM 684(8) REWIRE EXISTING SPANS.
6. WIRING AND CONDUIT TO REFERENCE ELECTRODES WILL BE PRESERVED AND INCLUDED IN THE NEW JUNCTION BOXES INSTALLED UNDER ITEM 684(8) REWIRE EXISTING SPANS.
7. SEE SHEET S–1.1 FOR BENT/SPAN LOCATIONS.

WATER STREET VIADUCT EXISTING REFERENCE CELL LOCATIONS

J–BOX LOCATION BENT	NUMBER OF ELECTRODES IN TEST STATION	REFERENCE ELECTRODES LOCATED
27	2	BENT 27, PILE NO. 1 AND PILE STRUT
29	2	SPAN 28, DECK, CAP 29 WEST
33	2	SPAN 32, BEAM 3 EAST FACE, SPAN 32 EAST SIDEWALK
36	1	SPAN 36, DECK BAY 6
42	1	SPAN 42, BEAM 3 EAST FACE
54	1	SPAN 54, BEAM 3 EAST FACE
61	2	SPAN 61, DECK AND WALL ADJACENT TO SPAN 61

WATER STREET VIADUCT WIRING ON EXISTING SPANS WITHOUT REFERENCE CELLS

LEGEND

(N) = SYSTEM NEGATIVE

(A) = ANODE TERMINAL

DESIGNED BY: M. FIGLEY

STATE OF ALASKA 49th Mark W. Figley CE-8050

CHECKED BY: G. IMBSEN

DRAWN/REVISED BY: R.S., R.G.

STATE OF ALASKA
DEPARTMENT OF TRANSPORTATION
& PUBLIC FACILITIES
STATEWIDE DESIGN & ENGINEERING SERVICES DIVISION

KTN-VIADUCTS
REHABILITATION
PROJECT NO. 68571

Water Street Existing Wiring for Spans

PATH:
PLOT: PSPACE 1=1(F) OR MSPACE 1=1(F)

CP-6.5

REVISIONS			PROJECT DESIGNATION	YEAR	SHEET NO.	TOTAL SHEETS
NO.	DATE	DESCRIPTION	NH-0902(34)	2009	69	70

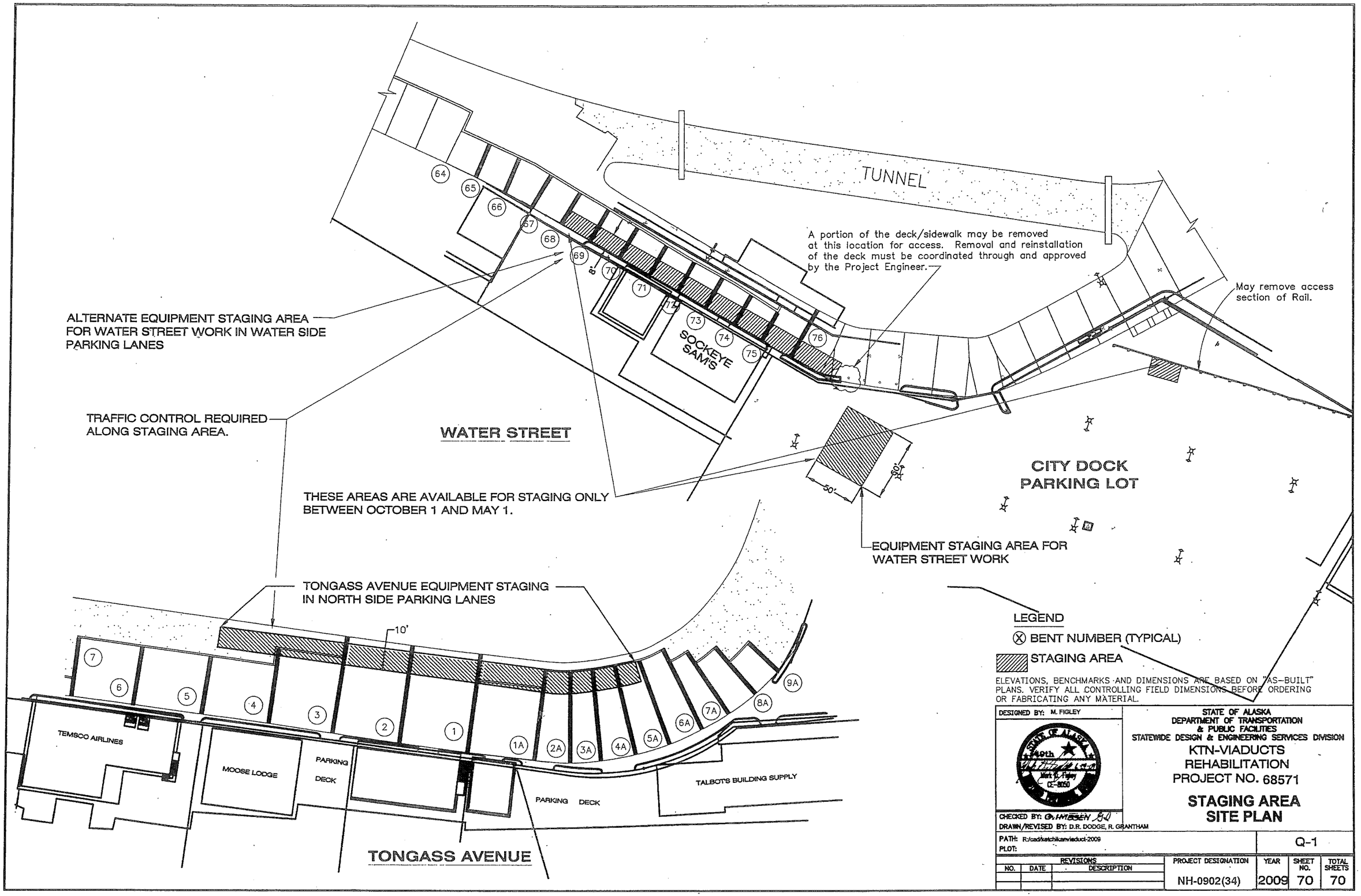

ELEVATIONS, BENCHMARKS AND DIMENSIONS ARE BASED ON "AS-BUILT" PLANS. VERIFY ALL CONTROLLING FIELD DIMENSIONS BEFORE ORDERING OR FABRICATING ANY MATERIAL.

DESIGNED BY: M. FIGLEY

STATE OF ALASKA
DEPARTMENT OF TRANSPORTATION & PUBLIC FACILITIES
STATEWIDE DESIGN & ENGINEERING SERVICES DIVISION

KTN-VIADUCTS REHABILITATION
PROJECT NO. 68571

STAGING AREA SITE PLAN

CHECKED BY: G. HMBSEN
DRAWN/REVISED BY: D.R. DODGE, R. GRANTHAM

PATH: R:/cad/ketchikanviaduct-2009
PLOT:

Q-1

REVISIONS			PROJECT DESIGNATION	YEAR	SHEET NO.	TOTAL SHEETS
NO.	DATE	DESCRIPTION	NH-0902(34)	2009	70	70

SPAN 9A - VIEW THROUGH DECK

BENT 8A

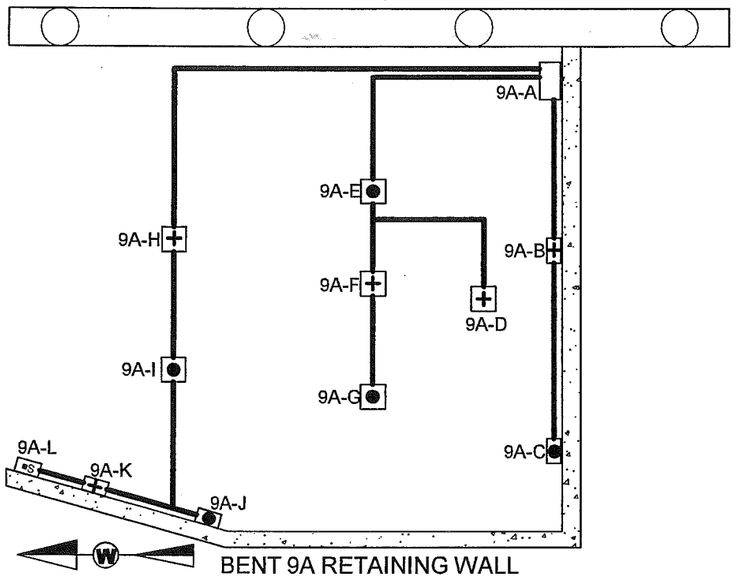

BENT 9A RETAINING WALL

BENT 8A NORTH ELEVATION

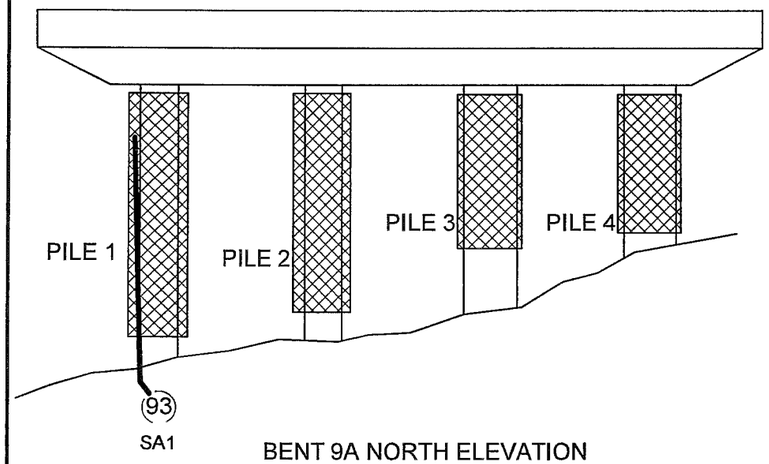

BENT 9A NORTH ELEVATION

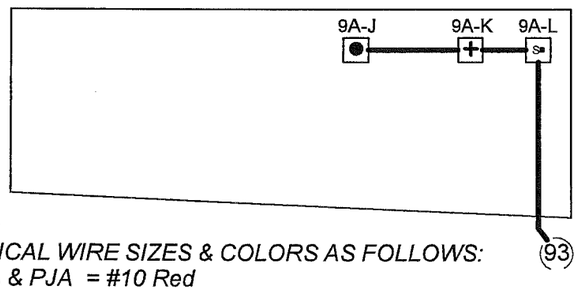

SCHEMATIC

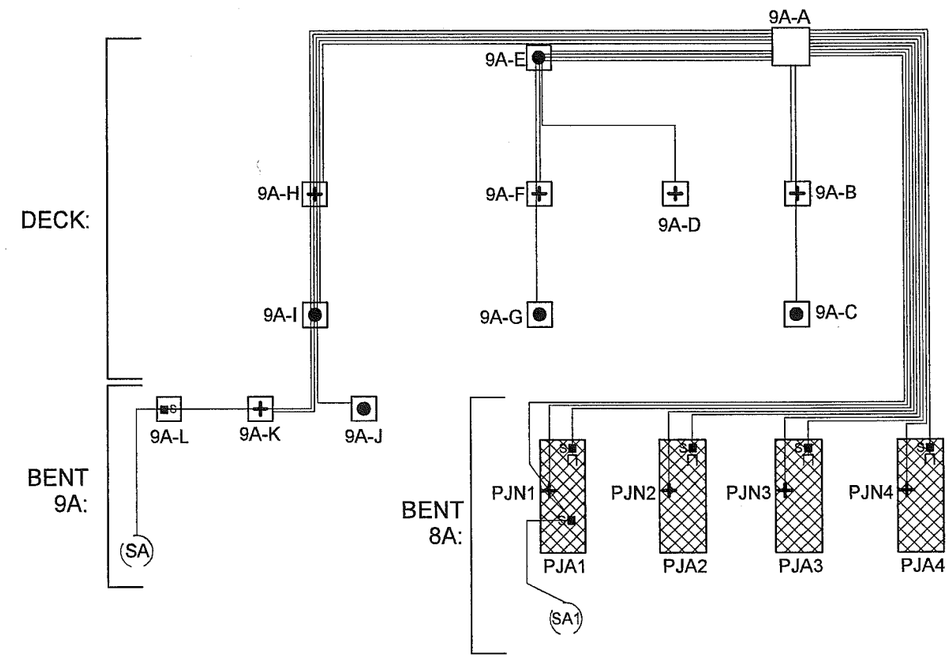

J-BOX DETAILS:

	J-Box Size	Wires or Structure	
9A-A	14" x 12" x 8"	MAIN J-BOX: (5) MZA; (5) MZN; (4) PJA; (4) PJN; (2) SA; SAN jumpered from PJN	
9A-B	4" x 4" x 2"	Structure Negative (MZN); (1) MZA	
9A-C	4" x 4" x 2"	Primary Anode Terminal Plate (MZA)	
9A-D	4" x 4" x 2"	Structure Negative (MZN)	
9A-E	4" x 4" x 2"	Primary Anode Terminal Plate (MZA); (2) MZN; (1) MZA	
9A-F	4" x 4" x 2"	Structure Negative (MZN); (1) MZA	Wired as separate passive system in Main J-Box
9A-G	4" x 4" x 2"	Primary Anode Terminal Plate (MZA)	
9A-H	4" x 4" x 2"	Structure Negative (MZN); (2) MZA; (1) MZN; (1) SA	
9A-I	4" x 4" x 2"	Primary Anode Terminal Plate (MZA); (1) MZA; (1) MZN; (1) SA	
9A-J	4" x 4" x 2"	Primary Anode Terminal Plate (MZA)	Wired as separate passive system in Main J-Box
9A-K	4" x 4" x 2"	Structure Negative (MZN)	
9A-L	6" x 6" x 4"	Submerged Anode Encapsulated Splice (SA)	

ABBREVIATIONS:

MZN = Metallized Zinc Negative
PJN = Pile Jacket Negative
CJN = Cap Jacket Negative
SAN = Submerged Anode Negative
MZA = Metallized Zinc Anode
PJA = Pile Jacket Anode
CJA = Cap Jacket Anode
SA = Submerged Anode
RE = Reference Electrode
REN = Reference Electrode Negative

LEGEND

(x) Submerged Anode x = Weight in LBS
Pile Jacket
Cap Jacket
● Primary Anode Terminal
+ Negative Connection
S Encapsulated Splice

TYPICAL WIRE SIZES & COLORS AS FOLLOWS:
MZA & PJA = #10 Red
MZN; PJN = #10 Blue
SA = #8 Black
RE/REN: #16 Twisted Pair Red/Black

Tongass Span 9A

SCALE: NONE	Field Sketch Electrical As-Built	DRAWN BY KRH
DATE: 10-19-10		REVISED 09-08-11

GREAT WESTERN CORPORATION

Ketchikan Viaduct II Repair & C.P.

DRAWING NUMBER T9A

Sheet # 71

SPAN 8A - VIEW THROUGH DECK

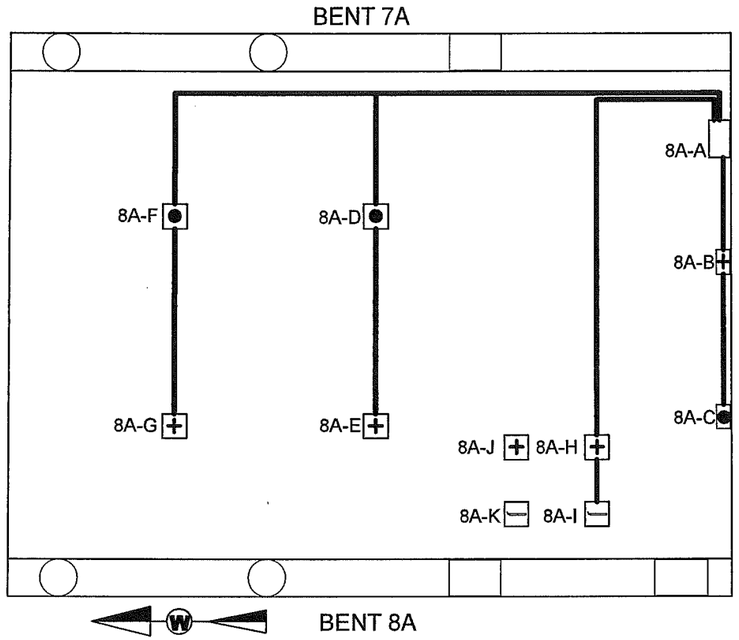

SCHEMATIC

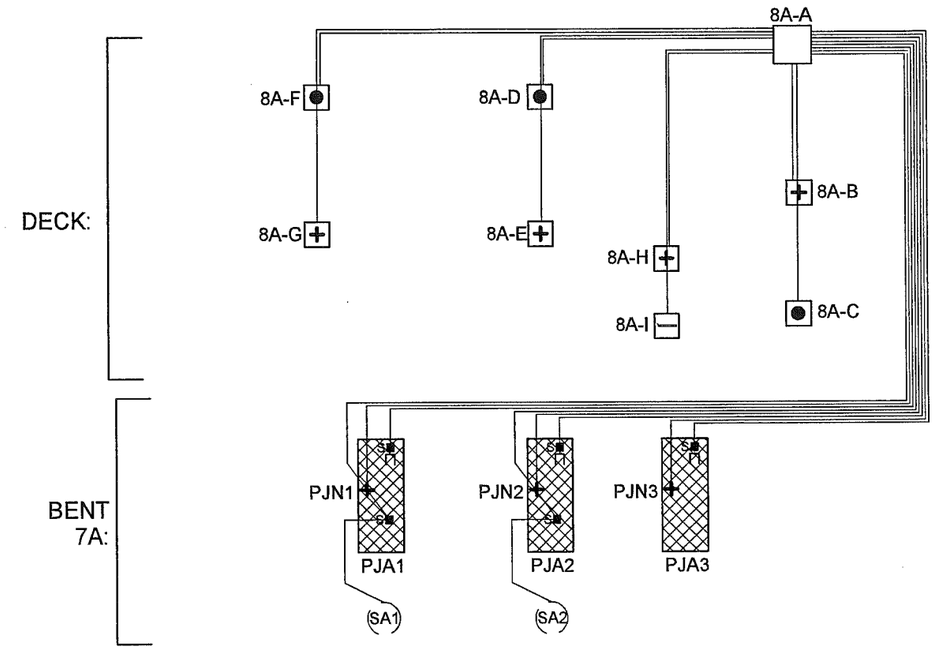

BENT 7A SOUTH ELEVATION

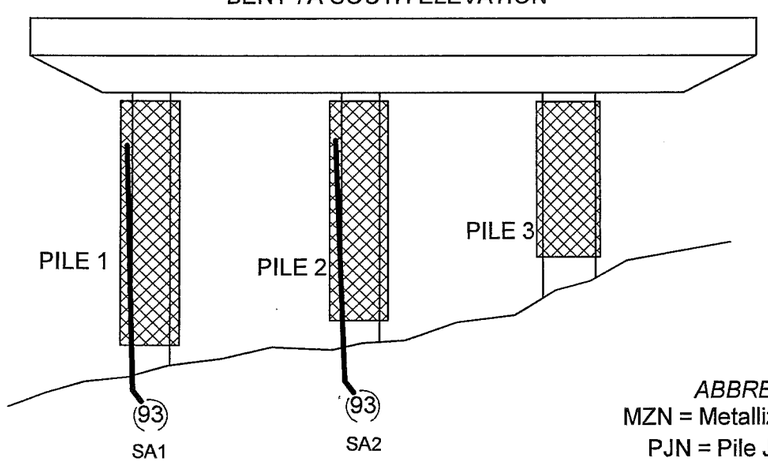

J-BOX DETAILS:

	J-Box Size	Wires or Structure
8A-A	14"x12"x8"	MAIN J-BOX: (3) MZA; (3) MZN; (3) PJA; (3) PJN; (2) SA; SAN jumpered from PJN; (1) RE; (1) REN
8A-B	4"x4"x2"	Structure Negative (MZN); (1) MZA
8A-C	4"x4"x2"	Primary Anode Terminal Plate (MZA)
8A-D	4"x4"x2"	Primary Anode Terminal Plate (MZA); Structure Negative (MZN)
8A-E	4"x4"x2"	Structure Negative (MZN)
8A-F	4"x4"x2"	Primary Anode Terminal Plate (MZA); Structure Negative (MZN)
8A-G	4"x4"x2"	Structure Negative (MZN)
8A-H	4"x4"x2"	Reference Electrode Negative (REN); (1) RE
8A-I	4"x4"x2"	Reference Electrode (RE) S/N410205
8A-J	4"x4"x2"	REN - Abandoned Location
8A-K	4"x4"x2"	RE - Abandoned Location

ABBREVIATIONS:

MZN = Metallized Zinc Negative
PJN = Pile Jacket Negative
CJN = Cap Jacket Negative
SAN = Submerged Anode Negative
MZA = Metallized Zinc Anode
PJA = Pile Jacket Anode
CJA = Cap Jacket Anode
SA = Submerged Anode
RE = Reference Electrode
REN = Reference Electrode Negative

TYPICAL WIRE SIZES & COLORS AS FOLLOWS:
MZA & PJA = #10 Red
MZN; PJN = #10 Blue
SA = #8 Black
RE/REN: #16 Twisted Pair Red/Black

LEGEND

(x) Submerged Anode x = Weight in LBS
Pile Jacket
Cap Jacket
● Primary Anode Terminal
+ Negative Connection
s Encapsulated Splice
— Reference Electrode

Tongass Span 8A

SCALE: NONE	Field Sketch Electrical As-Built	DRAWN BY KRH
DATE: 10-21-10		REVISED 09-08-11

GREAT WESTERN CORPORATION

Ketchikan Viaduct II Repair & C.P.	DRAWING NUMBER T8A

SPAN 7A - VIEW THROUGH DECK

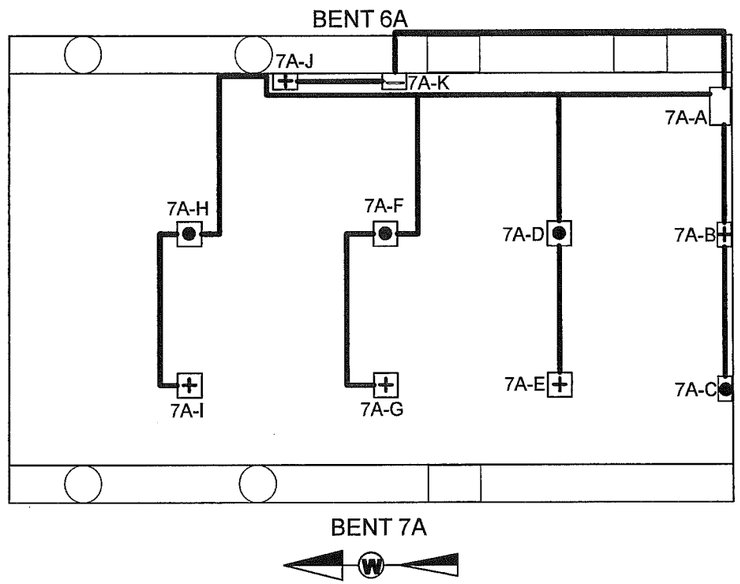

SCHEMATIC

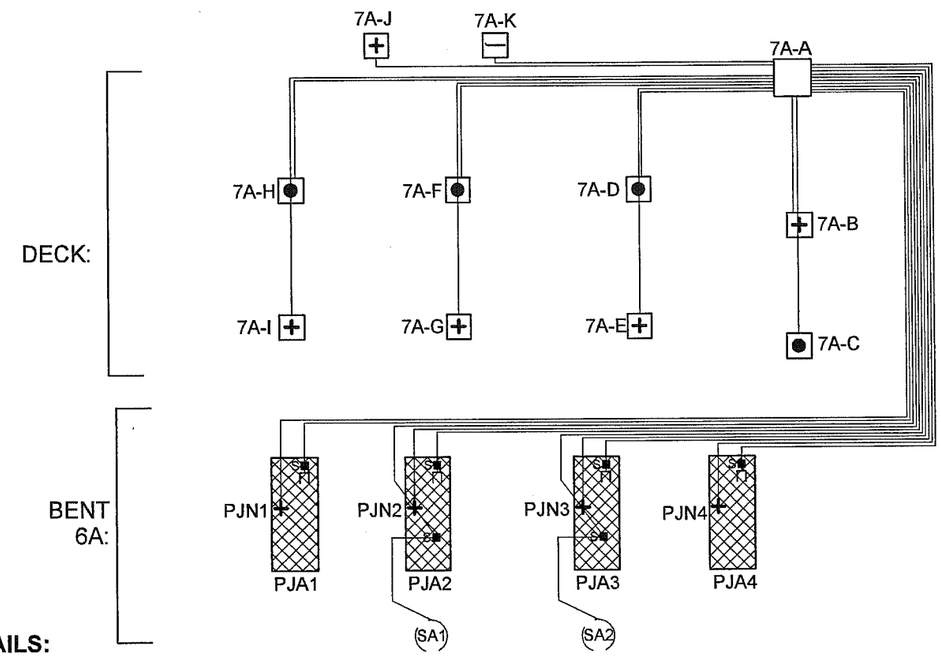

BENT 6A SOUTH ELEVATION

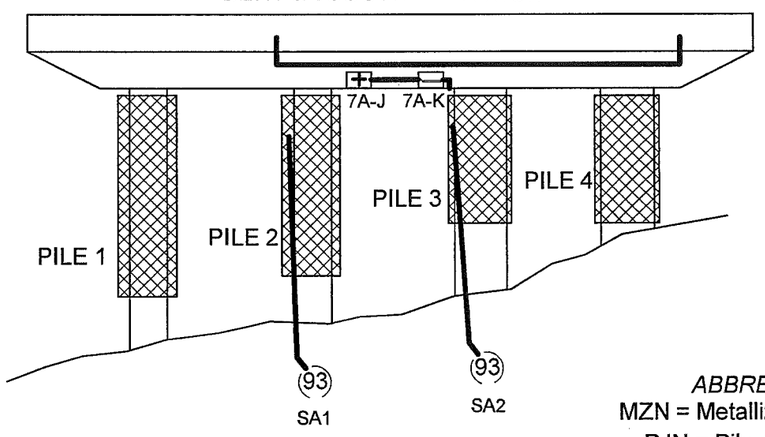

J-BOX DETAILS:

	J-Box Size	Wires or Structure
7A-A	14" x 12" x 8"	MAIN J-BOX: (4) MZA; (4) MZN; (4) PJA; (4) PJN; (2) SA; SAN jumpered from PJN; (1) RE; (1) REN
7A-B	4" x 4" x 2"	Structure Negative (MZN); (1) MZA
7A-C	4" x 4" x 2"	Primary Anode Terminal Plate (MZA)
7A-D	4" x 4" x 2"	Primary Anode Terminal Plate (MZA); Structure Negative (MZN)
7A-E	4" x 4" x 2"	Structure Negative (MZN)
7A-F	4" x 4" x 2"	Primary Anode Terminal Plate (MZA); Structure Negative (MZN)
7A-G	4" x 4" x 2"	Structure Negative (MZN)
7A-H	4" x 4" x 2"	Primary Anode Terminal Plate (MZA); Structure Negative (MZN)
7A-I	4" x 4" x 2"	Structure Negative (MZN)
7A-J	4" x 4" x 2"	Reference Electrode (RE) S/N 410209; (1) REN
7A-K	4" x 4" x 2"	Reference Electrode NEGATIVE (REN)

ABBREVIATIONS:

MZN = Metallized Zinc Negative
PJN = Pile Jacket Negative
CJN = Cap Jacket Negative
SAN = Submerged Anode Negative
MZA = Metallized Zinc Anode
PJA = Pile Jacket Anode
CJA = Cap Jacket Anode
SA = Submerged Anode
RE = Reference Electrode
REN = Reference Electrode Negative

LEGEND

(x) Submerged Anode x = Weight in LBS
Pile Jacket
Cap Jacket
● Primary Anode Terminal
+ Negative Connection
Encapsulated Splice
— Reference Electrode

TYPICAL WIRE SIZES & COLORS AS FOLLOWS:
MZA & PJA = #10 Red
MZN; PJN = #10 Blue
SA = #8 Black
RE/REN: #16 Twisted Pair Red/Black

Tongass Span 7A

SCALE: NONE	Field Sketch Electrical As-Built	DRAWN BY KRH
DATE: 10-21-10		REVISED 09-08-11

GREAT WESTERN CORPORATION

Ketchikan Viaduct II Repair & C.P.	DRAWING NUMBER T7A

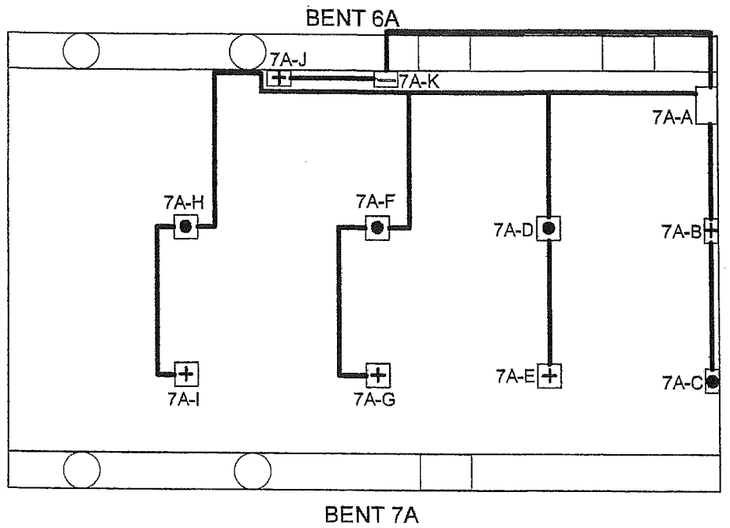

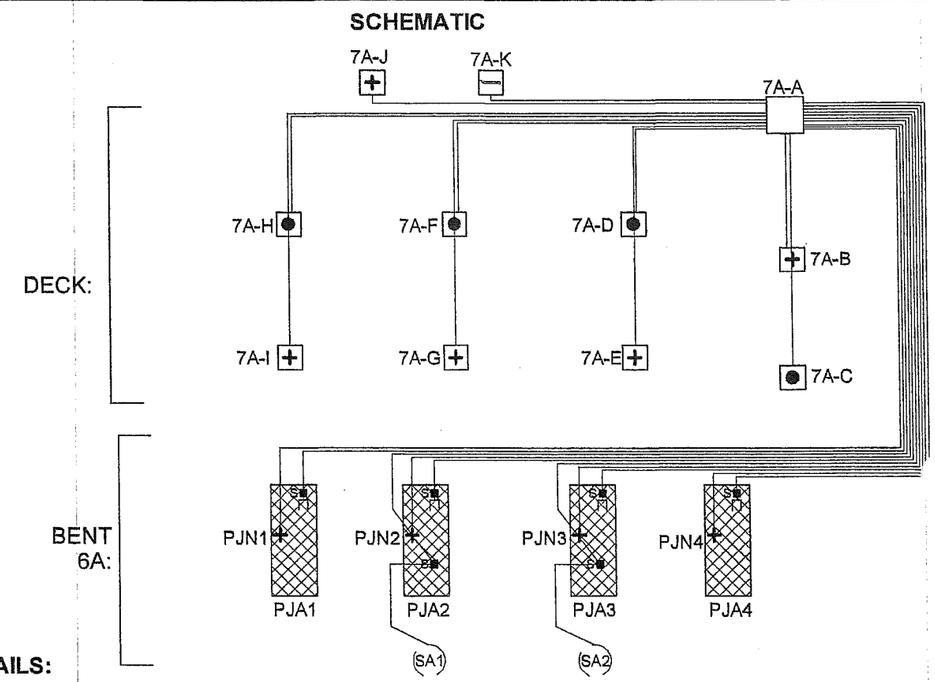

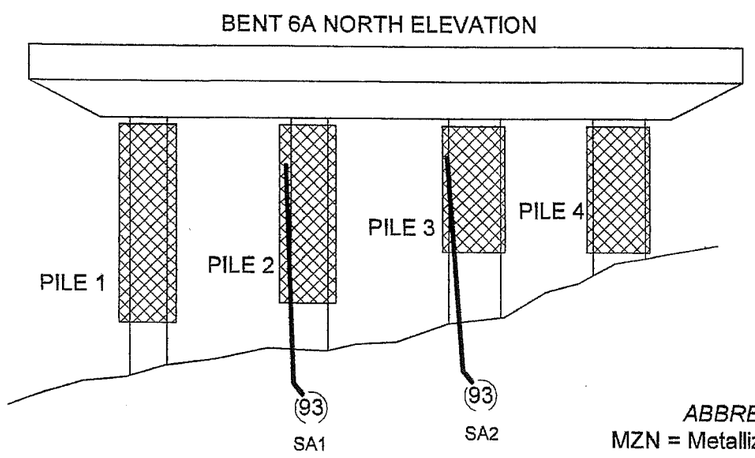

J-BOX DETAILS:

	J-Box Size	Wires or Structure
7A-A	14"x12"x8"	MAIN J-BOX: (4) MZA; (4) MZN; (4) PJA; (4) PJN; (2) SA; SAN jumpered from PJN; (1) RE; (1) REN
7A-B	4"x4"x2"	Structure Negative (MZN); (1) MZA
7A-C	4"x4"x2"	Primary Anode Terminal Plate (MZA)
7A-D	4"x4"x2"	Primary Anode Terminal Plate (MZA); Structure Negative (MZN)
7A-E	4"x4"x2"	Structure Negative (MZN)
7A-F	4"x4"x2"	Primary Anode Terminal Plate (MZA); Structure Negative (MZN)
7A-G	4"x4"x2"	Structure Negative (MZN)
7A-H	4"x4"x2"	Primary Anode Terminal Plate (MZA); Structure Negative (MZN)
7A-I	4"x4"x2"	Structure Negative (MZN)
7A-J	4"x4"x2"	Reference Electrode (RE) S/N 410209; (1) REN
7A-K	4"x4"x2"	Reference Electrode NEGATIVE (REN)

ABBREVIATIONS:

MZN = Metallized Zinc Negative
PJN = Pile Jacket Negative
CJN = Cap Jacket Negative
SAN = Submerged Anode Negative
MZA = Metallized Zinc Anode
PJA = Pile Jacket Anode
CJA = Cap Jacket Anode
SA = Submerged Anode
RE = Reference Electrode
REN = Reference Electrode Negative

LEGEND

(x) Submerged Anode x = Weight in LBS
Pile Jacket
Cap Jacket
Primary Anode Terminal
+ Negative Connection
Encapsulated Splice
Reference Electrode

TYPICAL WIRE SIZES & COLORS AS FOLLOWS:
MZA & PJA = #10 Red
MZN; PJN = #10 Blue
SA = #8 Black
RE/REN: #16 Twisted Pair Red/Black

Tongass Span 7A

SCALE: NONE	Field Sketch	DRAWN BY KRH
DATE: 10-21-10	Electrical As-Built	REVISED 10-27-10

GREAT WESTERN CORPORATION

Ketchikan Viaduct II Repair & C.P.	DRAWING NUMBER T7A

SPAN 6A - VIEW THROUGH DECK

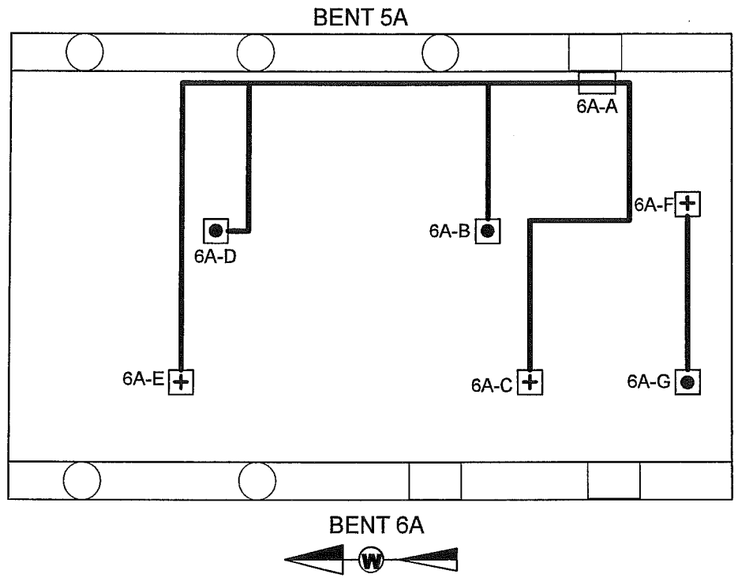

SCHEMATIC

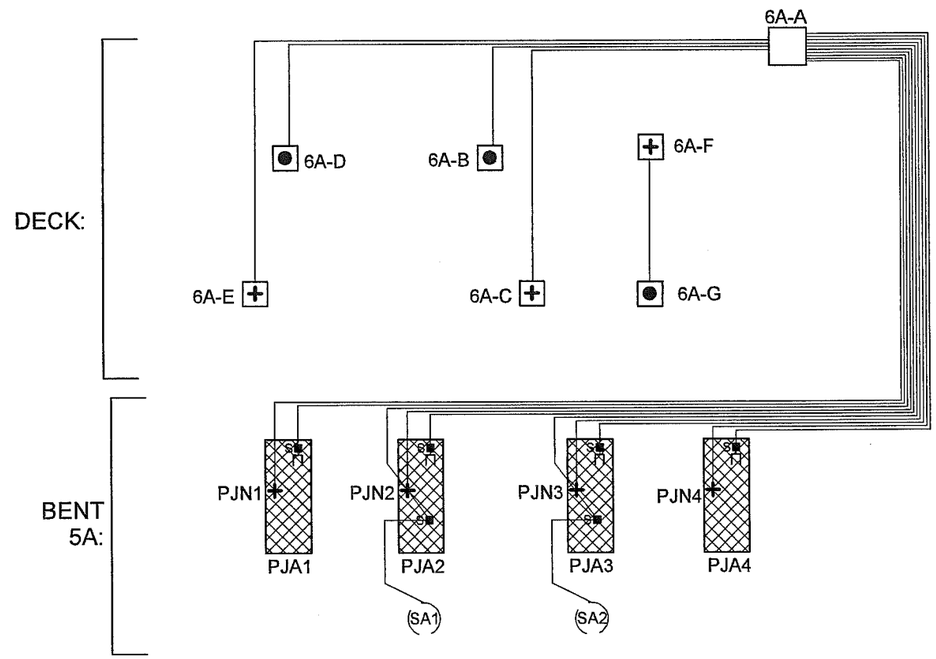

BENT 5A SOUTH ELEVATION

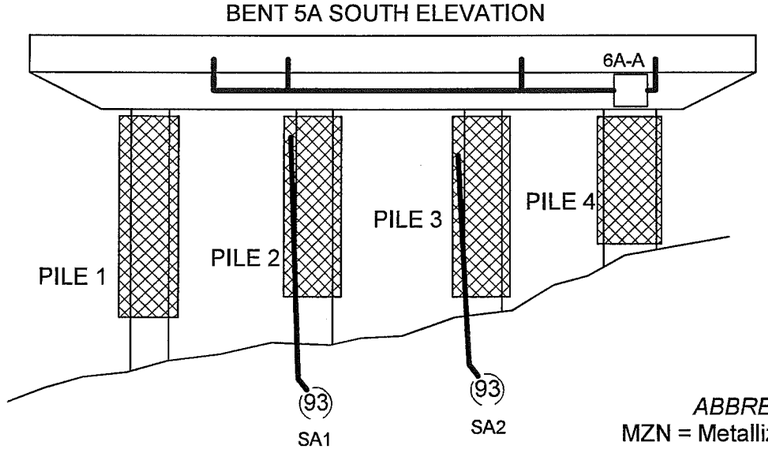

J-BOX DETAILS:

	J-Box Size	Wires or Structure
6A-A	14" x 12" x 8"	MAIN J-BOX: (2) MZA; (2) MZN; (4) PJA; (4) PJN; (2) SA; SAN jumpered from PJN
6A-B	4" x 4" x 2"	Primary Anode Terminal Plate (MZA)
6A-C	4" x 4" x 2"	Structure Negative (MZN)
6A-D	4" x 4" x 2"	Primary Anode Terminal Plate (MZA)
6A-E	4" x 4" x 2"	Structure Negative (MZN)
6A-F	4" x 4" x 2"	Structure Negative (MZN)
6A-G	4" x 4" x 2"	Primary Anode Terminal Plate (MZA)

ABBREVIATIONS:

MZN = Metallized Zinc Negative
PJN = Pile Jacket Negative
CJN = Cap Jacket Negative
SAN = Submerged Anode Negative
MZA = Metallized Zinc Anode
PJA = Pile Jacket Anode
CJA = Cap Jacket Anode
SA = Submerged Anode
RE = Reference Electrode
REN = Reference Electrode Negative

LEGEND

(x) Submerged Anode x = Weight in LBS
Pile Jacket
Cap Jacket
● Primary Anode Terminal
+ Negative Connection
Encapsulated Splice
Reference Electrode

TYPICAL WIRE SIZES & COLORS AS FOLLOWS:
MZA & PJA = #10 Red
MZN; PJN = #10 Blue
SA = #8 Black
RE/REN: #16 Twisted Pair Red/Black

Tongass Span 6A		
SCALE: NONE	Field Sketch Electrical As-Built	DRAWN BY KRH
DATE: 10-21-10		REVISED 09-08-11
GREAT WESTERN CORPORATION		
Ketchikan Viaduct II Repair & C.P.		DRAWING NUMBER T6A

SPAN 5A - VIEW THROUGH DECK

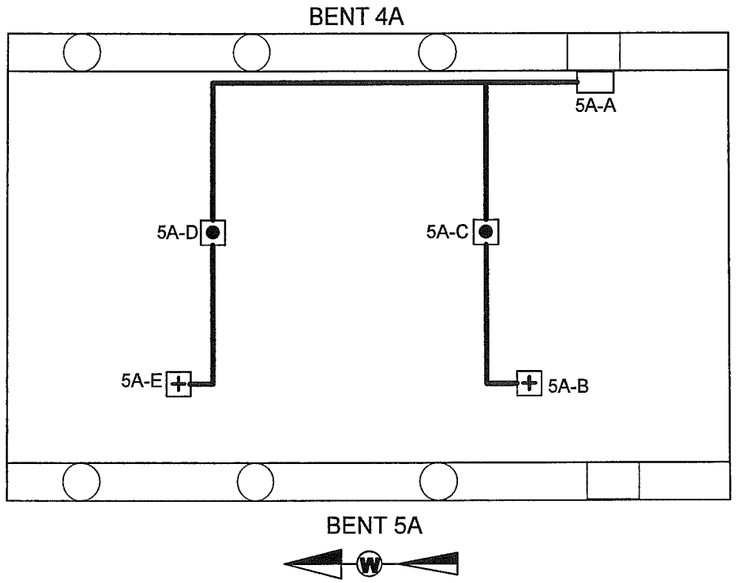

SCHEMATIC

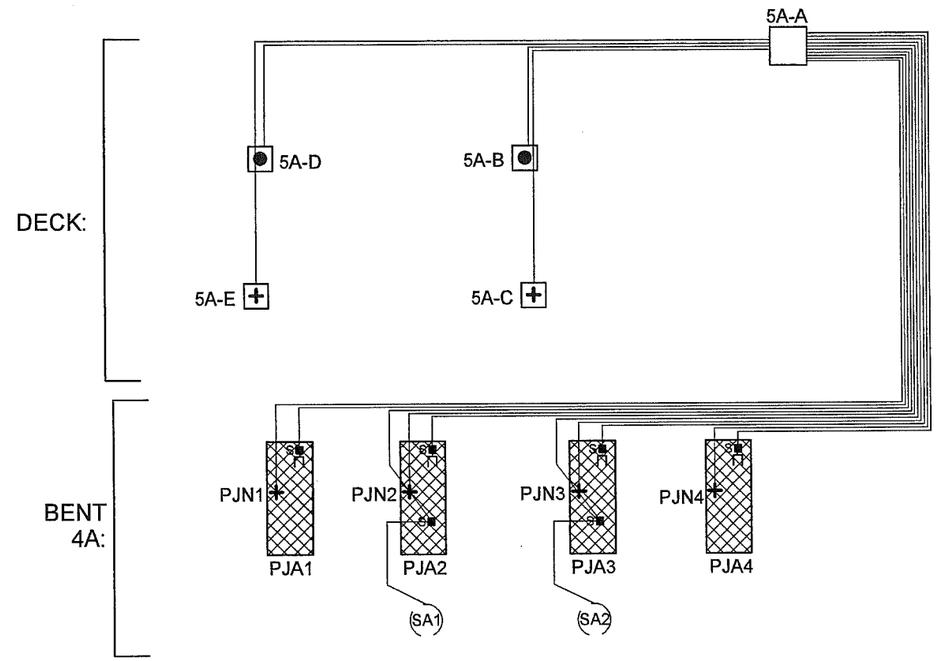

BENT 4A SOUTH ELEVATION

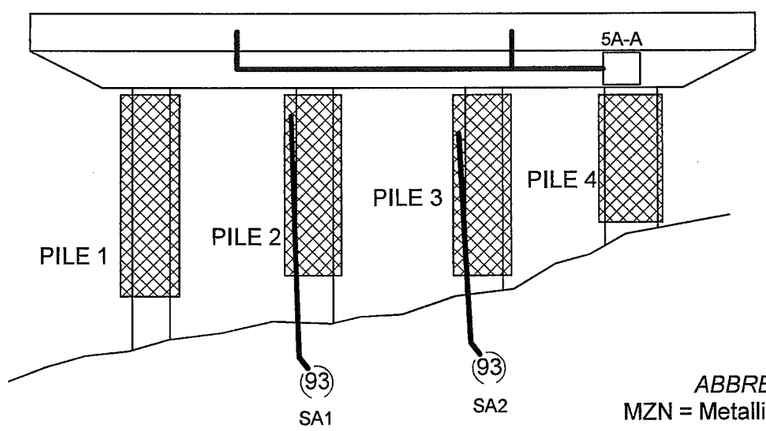

J-BOX DETAILS:

	J-Box Size	Wires or Structure
5A-A	14" x 12" x 8"	MAIN J-BOX: (2) MZA; (2) MZN; (4) PJA; (4) PJN; (2) SA; SAN jumpered from PJN
5A-B	4" x 4" x 2"	Structure Negative (MZN)
5A-C	4" x 4" x 2"	Primary Anode Terminal Plate (MZA); (1) (MZN)
5A-D	4" x 4" x 2"	Structure Negative (MZN)
5A-E	4" x 4" x 2"	Primary Anode Terminal Plate (MZA); (1) (MZN)

ABBREVIATIONS:

MZN = Metallized Zinc Negative
PJN = Pile Jacket Negative
CJN = Cap Jacket Negative
SAN = Submerged Anode Negative
MZA = Metallized Zinc Anode
PJA = Pile Jacket Anode
CJA = Cap Jacket Anode
SA = Submerged Anode
RE = Reference Electrode
REN = Reference Electrode Negative

LEGEND

(x) Submerged Anode x = Weight in LBS
Pile Jacket
Cap Jacket
● Primary Anode Terminal
+ Negative Connection
S Encapsulated Splice
— Reference Electrode

TYPICAL WIRE SIZES & COLORS AS FOLLOWS:
MZA & PJA = #10 Red
MZN; PJN = #10 Blue
SA = #8 Black
RE/REN: #16 Twisted Pair Red/Black

Tongass Span 5A

SCALE: NONE	Field Sketch Electrical As-Built	DRAWN BY KRH
DATE: 04-27-11		REVISED 09-08-11

GREAT WESTERN CORPORATION

Ketchikan Viaduct II Repair & C.P.

DRAWING NUMBER T5A

SPAN 4A - VIEW THROUGH DECK

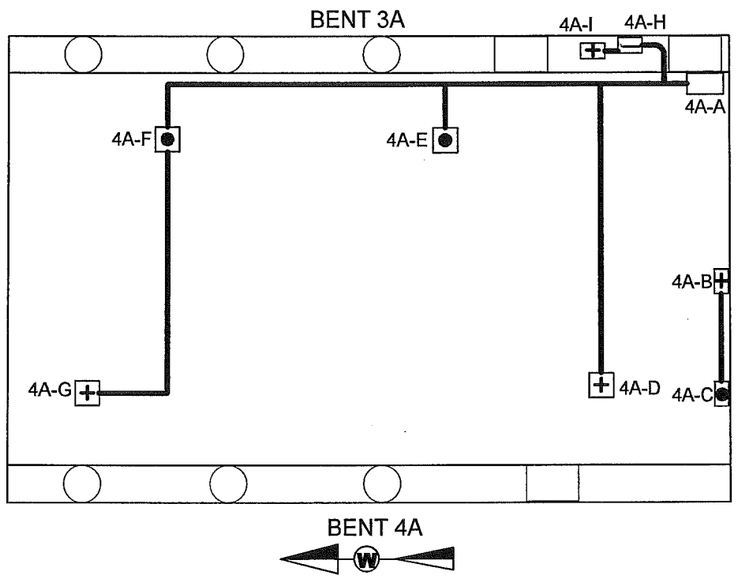

SCHEMATIC

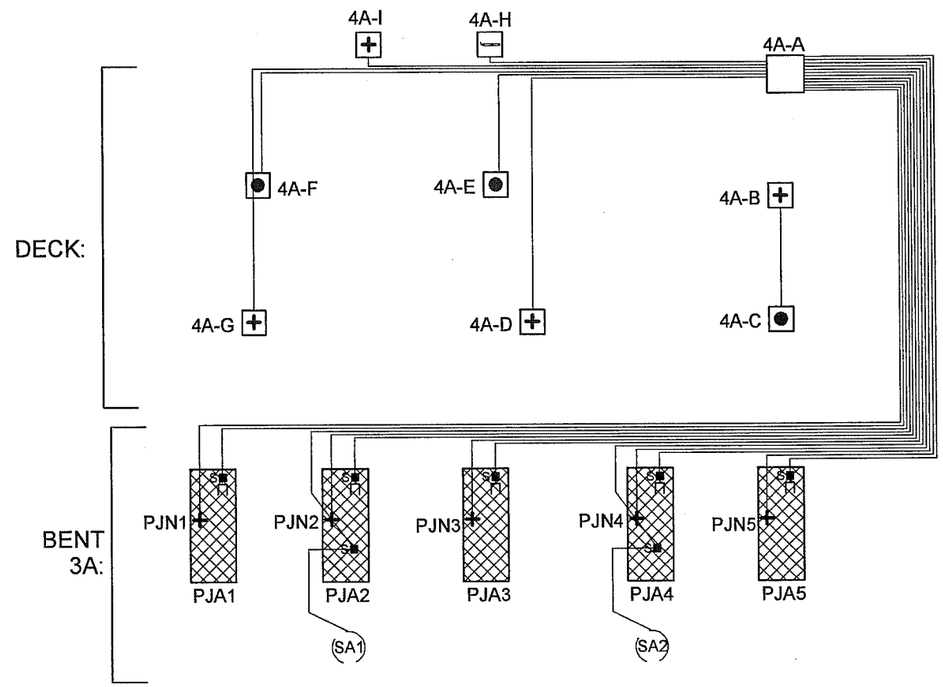

BENT 3A SOUTH ELEVATION

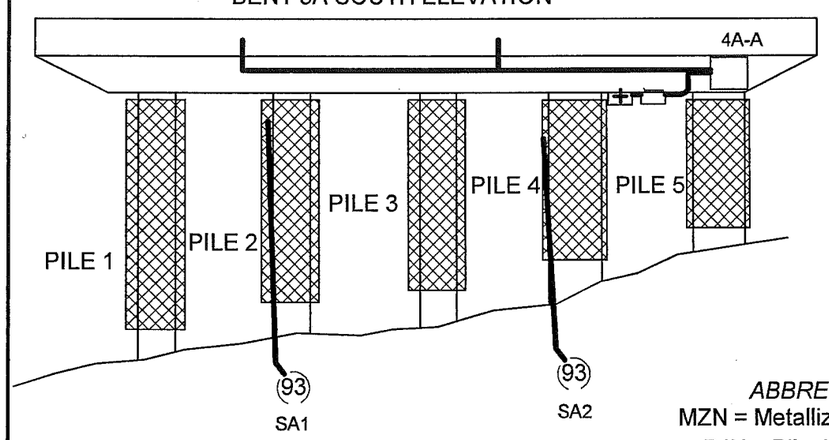

J-BOX DETAILS:

	J-Box Size	Wires or Structure
4A-A	14"x12"x8"	MAIN J-BOX: (2) MZA; (2) MZN; (5) PJA; (5) PJN; (2) SA; SAN jumpered from PJN; (1) RE; (1) REN
4A-B	4"x4"x2"	Structure Negative (MZN)
4A-C	4"x4"x2"	Primary Anode Terminal Plate (MZA)
4A-D	4"x4"x2"	Structure Negative (MZN)
4A-E	4"x4"x2"	Primary Anode Terminal Plate (MZA)
4A-F	4"x4"x2"	Primary Anode Terminal Plate (MZA); (1) MZN
4A-G	4"x4"x2"	Structure Negative (MZN)
4A-H	4"x4"x2"	Reference Electrode (RE) S/N 410197; (1) REN
4A-I	4"x4"x2"	Reference Electrode NEGATIVE (REN)

ABBREVIATIONS:

MZN = Metallized Zinc Negative
PJN = Pile Jacket Negative
CJN = Cap Jacket Negative
SAN = Submerged Anode Negative
MZA = Metallized Zinc Anode
PJA = Pile Jacket Anode
CJA = Cap Jacket Anode
SA = Submerged Anode
RE = Reference Electrode
REN = Reference Electrode Negative

LEGEND

(x) Submerged Anode x = Weight in LBS
Pile Jacket
Cap Jacket
● Primary Anode Terminal
+ Negative Connection
Encapsulated Splice
— Reference Electrode

TYPICAL WIRE SIZES & COLORS AS FOLLOWS:
MZA & PJA = #10 Red
MZN; PJN = #10 Blue
SA = #8 Black
RE/REN: #16 Twisted Pair Red/Black

Tongass Span 4A

SCALE: NONE	Field Sketch	DRAWN BY KRH
DATE: 5-9-11	Electrical As-Built	REVISED 09-08-11

GREAT WESTERN CORPORATION

Ketchikan Viaduct II Repair & C.P.	DRAWING NUMBER T4A

SPAN 3A - VIEW THROUGH DECK

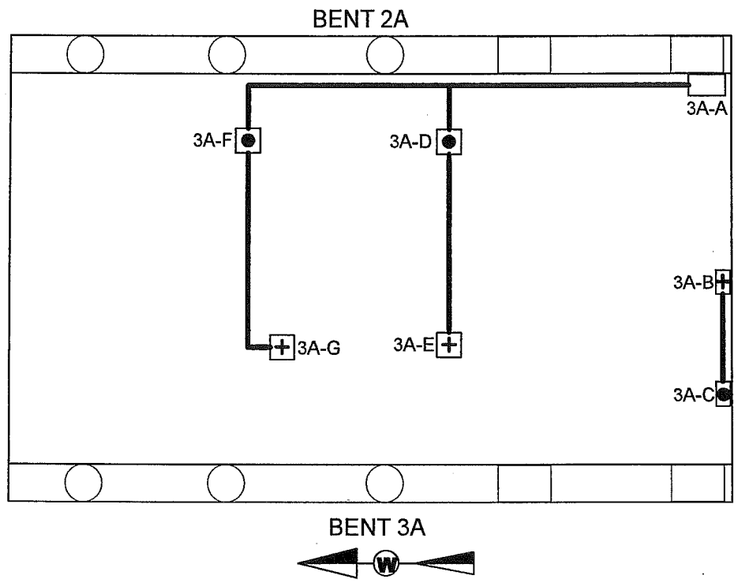

SCHEMATIC

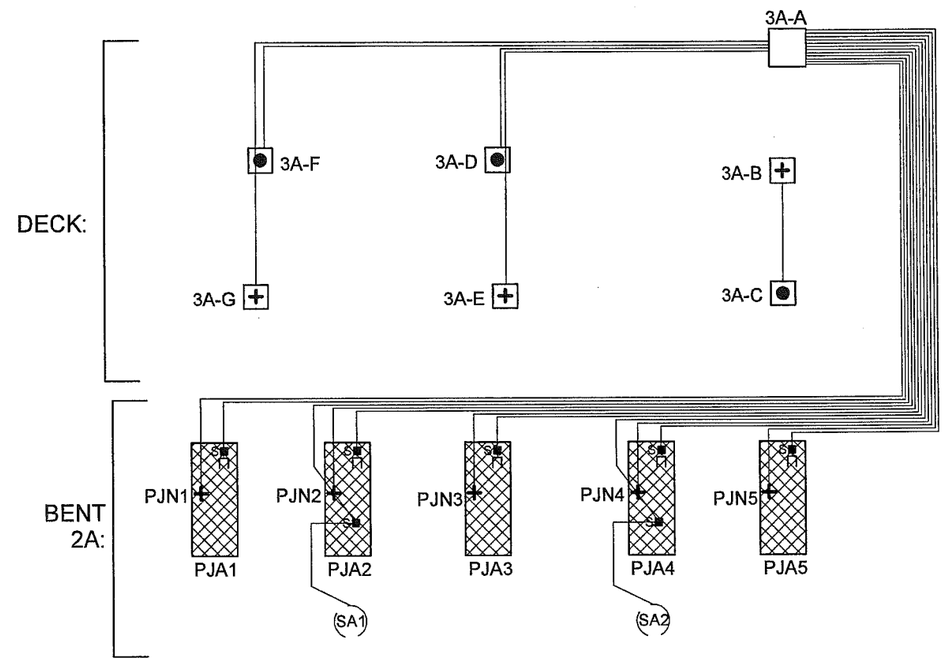

BENT 2A SOUTH ELEVATION

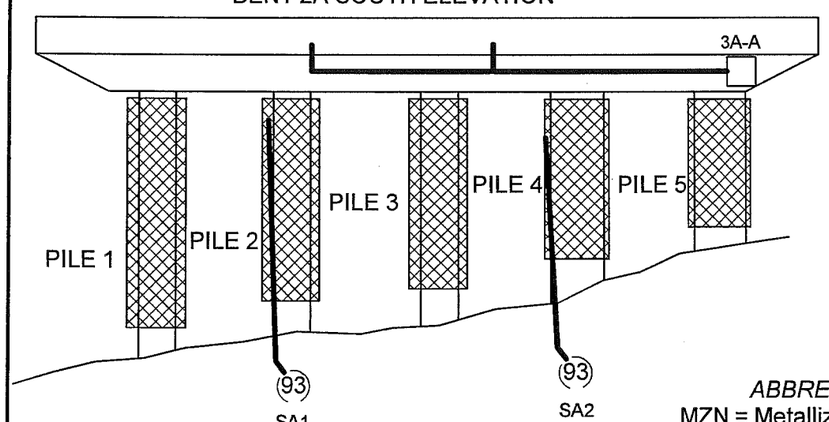

J-BOX DETAILS:

	J-Box Size	Wires or Structure
3A-A	14" x 12" x 8"	MAIN J-BOX: (2) MZA; (2) MZN; (5) PJA; (5) PJN; (2) SA; SAN jumpered from PJN
3A-B	4" x 4" x 2"	Structure Negative (MZN)
3A-C	4" x 4" x 2"	Primary Anode Terminal Plate (MZA)
3A-D	4" x 4" x 2"	Primary Anode Terminal Plate (MZA); (1) MZN
3A-E	4" x 4" x 2"	Structure Negative (MZN)
3A-F	4" x 4" x 2"	Primary Anode Terminal Plate (MZA); (1) MZN
3A-G	4" x 4" x 2"	Structure Negative (MZN)

ABBREVIATIONS:

MZN = Metallized Zinc Negative
PJN = Pile Jacket Negative
CJN = Cap Jacket Negative
SAN = Submerged Anode Negative
MZA = Metallized Zinc Anode
PJA = Pile Jacket Anode
CJA = Cap Jacket Anode
SA = Submerged Anode
RE = Reference Electrode
REN = Reference Electrode Negative

LEGEND

(x) Submerged Anode x = Weight in LBS
Pile Jacket
Cap Jacket
● Primary Anode Terminal
+ Negative Connection
S Encapsulated Splice
— Reference Electrode

TYPICAL WIRE SIZES & COLORS AS FOLLOWS:
MZA & PJA = #10 Red
MZN; PJN = #10 Blue
SA = #8 Black
RE/REN: #16 Twisted Pair Red/Black

Tongass Span 3A

SCALE: NONE	Field Sketch	DRAWN BY KRH
DATE: 5-9-11	Electrical As-Built	REVISED 9-8-11

GREAT WESTERN CORPORATION

Ketchikan Viaduct II
Repair & C.P.

DRAWING NUMBER
T3A

SPAN 2A - VIEW THROUGH DECK

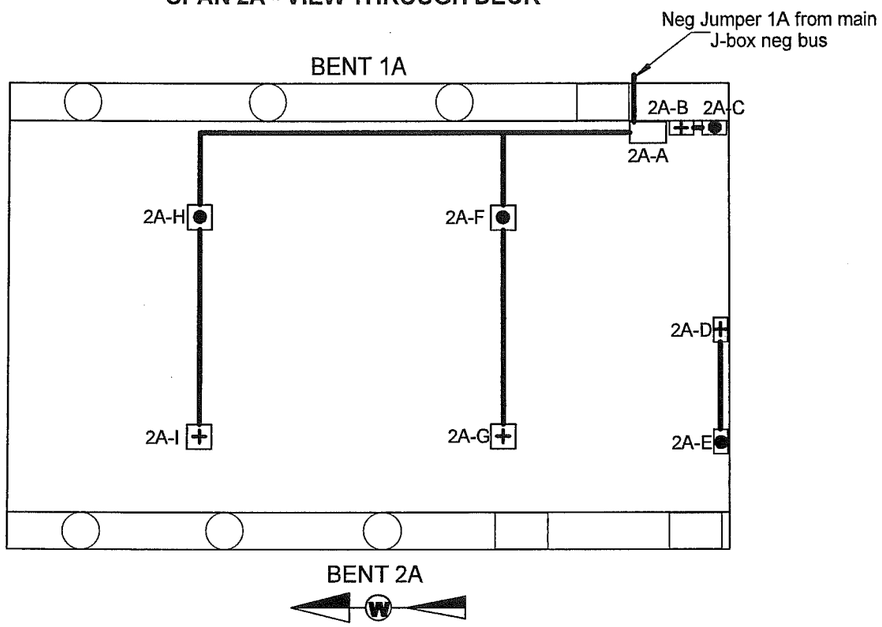

SCHEMATIC

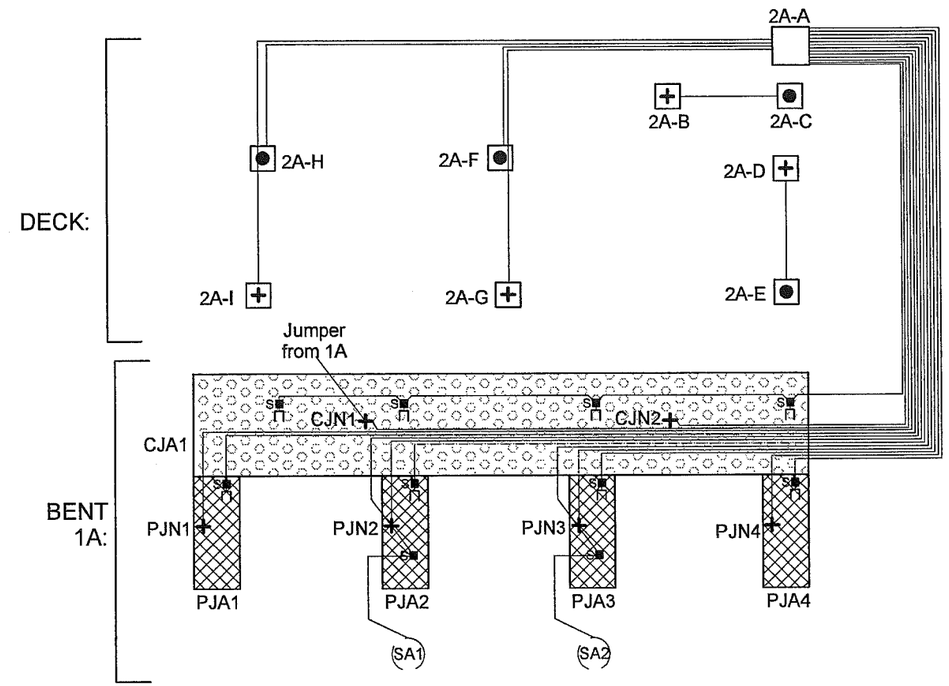

BENT 1A SOUTH ELEVATION

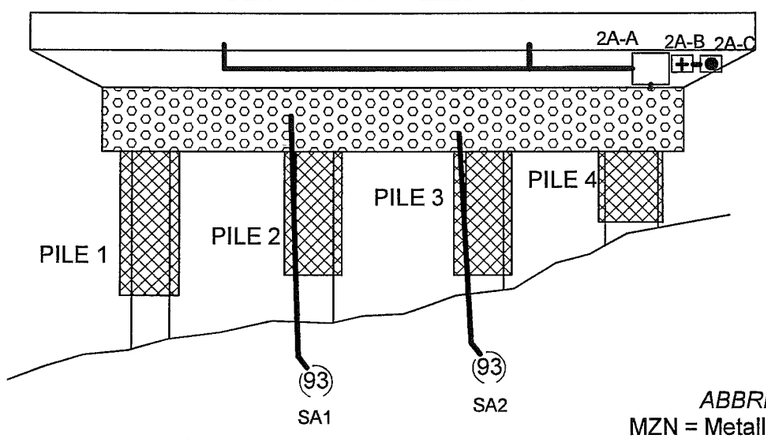

J-BOX DETAILS:

	J-Box Size	Wires or Structure
2A-A	14" x 12" x 8"	MAIN J-BOX: (2) MZA; (2) MZN; (4) PJA; (4) PJN; (1) CJA; (2) CJN; (2) SA; SAN jumpered from PJN; CJN1 jumpered from Span 1A
2A-B	4" x 4" x 2"	Structure Negative (MZN)
2A-C	4" x 4" x 2"	Primary Anode Terminal Plate (MZA)
2A-D	4" x 4" x 2"	Structure Negative (MZN)
2A-E	4" x 4" x 2"	Primary Anode Terminal Plate (MZA)
2A-F	4" x 4" x 2"	Primary Anode Terminal Plate (MZA); (1) MZN
2A-G	4" x 4" x 2"	Structure Negative (MZN)
2A-H	4" x 4" x 2"	Primary Anode Terminal Plate (MZA); (1) MZN
2A-I	4" x 4" x 2"	Structure Negative (MZN)

ABBREVIATIONS:

MZN = Metallized Zinc Negative
PJN = Pile Jacket Negative
CJN = Cap Jacket Negative
SAN = Submerged Anode Negative
MZA = Metallized Zinc Anode
PJA = Pile Jacket Anode
CJA = Cap Jacket Anode
SA = Submerged Anode
RE = Reference Electrode
REN = Reference Electrode Negative

LEGEND

(x) Submerged Anode x = Weight in LBS
Pile Jacket
Cap Jacket
● Primary Anode Terminal
+ Negative Connection
s Encapsulated Splice
— Reference Electrode

TYPICAL WIRE SIZES & COLORS AS FOLLOWS:
MZA & PJA = #10 Red
MZN; PJN = #10 Blue
SA = #8 Black
RE/REN: #16 Twisted Pair Red/Black

Tongass Span 2A		
SCALE: NONE	Field Sketch Electrical As-Built	DRAWN BY KRH
DATE: 5-9-11		REVISED 09-08-11
GREAT WESTERN CORPORATION		
Ketchikan Viaduct II Repair & C.P.		DRAWING NUMBER T2A

SPAN 1A - VIEW THROUGH DECK

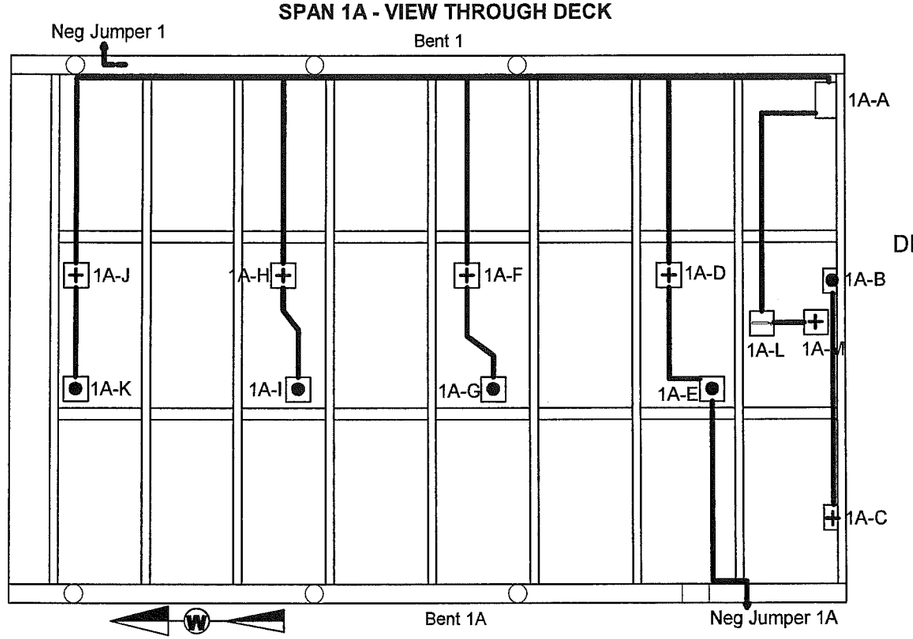

SCHEMATIC

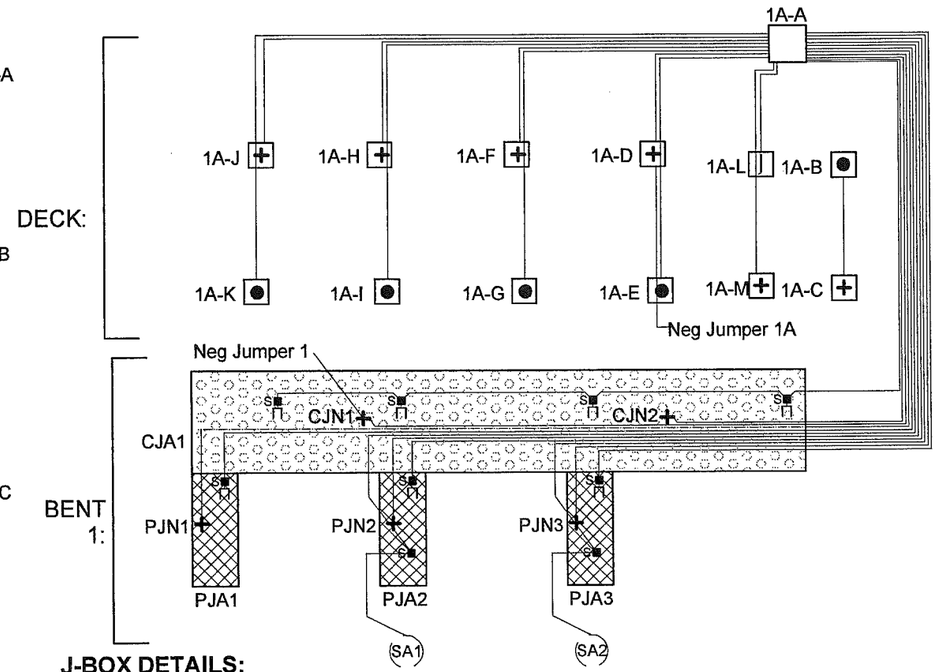

BENT 1 SOUTH ELEVATION

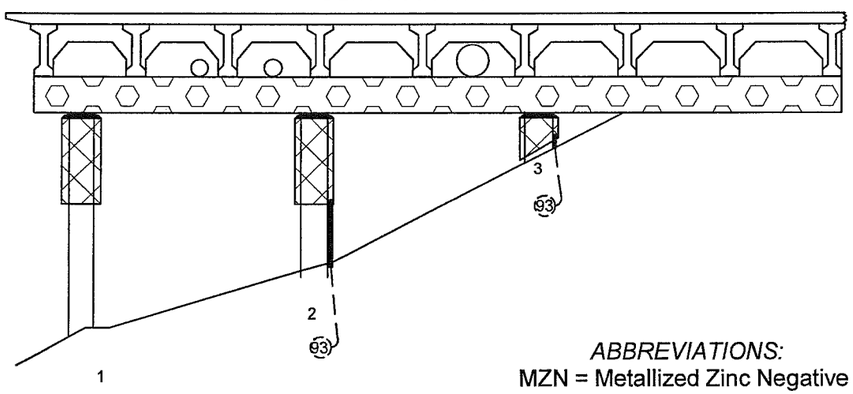

J-BOX DETAILS:

	J-Box Size	Wires or Structure
1A-A	14" x 12" x 8"	MAIN J-BOX: (4) MZA; (4) MZN; (3) PJA; (3) PJN; (1) CJA; (2) CJN; (2) SA; SAN jumpered from PJN; CJN1 jumpered from Span 1
1A-B	4" x 4" x 2"	Primary Anode Terminal Plate (MZA)
1A-C	4" x 4" x 2"	Structure Negative (MZN)
1A-D	4" x 4" x 2"	Structure Negative (MZN); (1) MZA
1A-E	4" x 4" x 2"	Primary Anode Terminal Plate (MZA); (1) MZN JUMPER TO SPAN 2A
1A-F	4" x 4" x 2"	Structure Negative (MZN); (1) MZA
1A-G	4" x 4" x 2"	Primary Anode Terminal Plate (MZA)
1A-H	4" x 4" x 2"	Structure Negative (MZN); (1) MZA
1A-I	4" x 4" x 2"	Primary Anode Terminal Plate (MZA)
1A-J	4" x 4" x 2"	Structure Negative (MZN); (1) MZA
1A-K	4" x 4" x 2"	Primary Anode Terminal Plate (MZA)
1A-L	4" x 4" x 2"	Reference Electrode (RE) S/N 410197; (1) REN
1A-M	4" x 4" x 2"	Reference Electrode Negative (REN)

ABBREVIATIONS:

MZN = Metallized Zinc Negative
PJN = Pile Jacket Negative
CJN = Cap Jacket Negative
SAN = Submerged Anode Negative
MZA = Metallized Zinc Anode
PJA = Pile Jacket Anode
CJA = Cap Jacket Anode
SA = Submerged Anode
RE = Reference Electrode
REN = Reference Electrode Negative

TYPICAL WIRE SIZES & COLORS AS FOLLOWS:
MZA & PJA = #10 Red
MZN; PJN = #10 Blue
SA = #8 Black
RE/REN: #16 Twisted Pair Red/Black

LEGEND

(x) Submerged Anode x = Weight in LBS
Pile Jacket
Cap Jacket
● Primary Anode Terminal
+ Negative Connection
Encapsulated Splice
Reference Electrode

Tongass Span 1A		
SCALE: NONE	Field Sketch Electrical As-Built	DRAWN BY KRH
DATE: 9-8-11		REVISED 9-12-11
GREAT WESTERN CORPORATION		
Ketchikan Viaduct II Repair & C.P.		DRAWING NUMBER T1A

SPAN 1 - VIEW THROUGH DECK

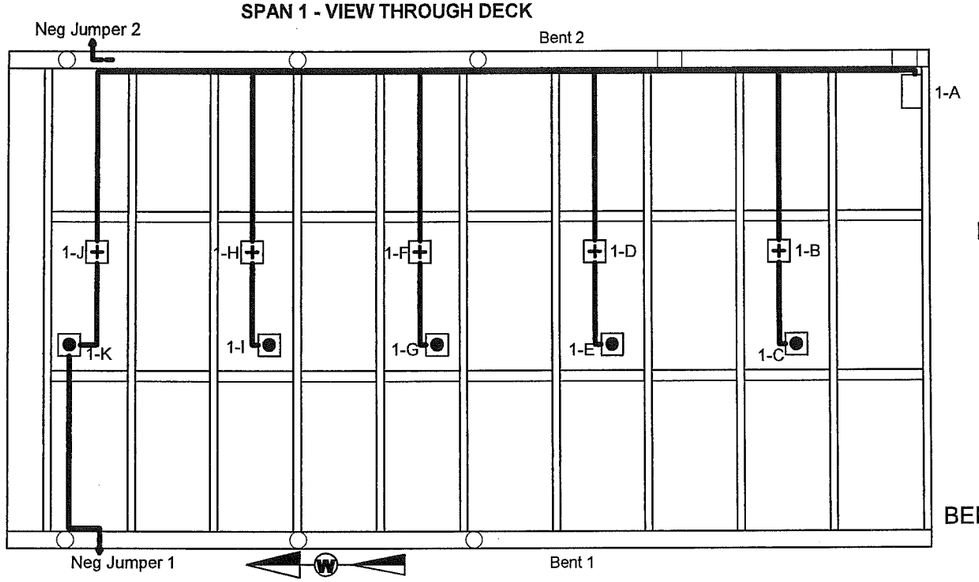

SCHEMATIC

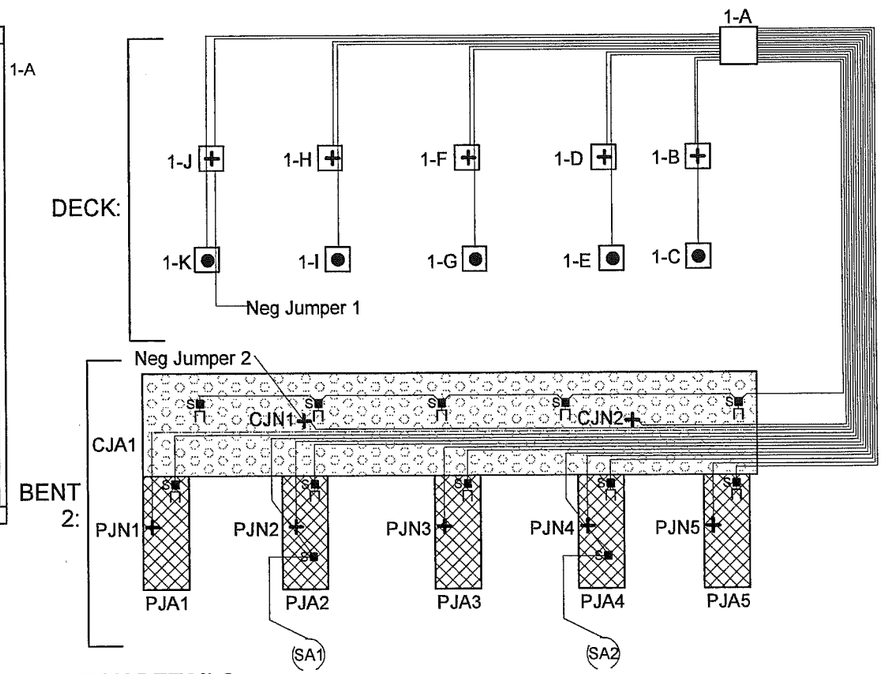

BENT 2 SOUTH ELEVATION

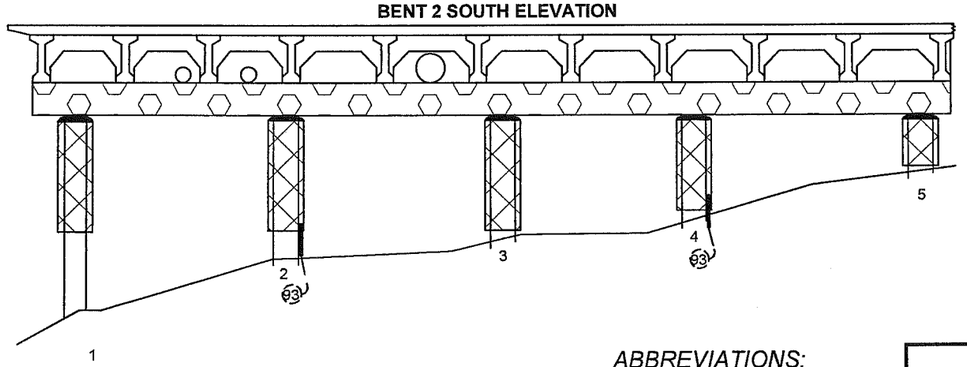

J-BOX DETAILS:

	J-Box Size	Wires or Structure
1-A	14"x12"x8"	MAIN J-BOX: (5) MZA; (5) MZN; (5) PJA; (5) PJN; (1) CJA; (2) CJN; (2) SA; SAN jumpered from PJN
1-B	4"x4"x2"	Structure Negative (MZN); (1) MZA
1-C	4"x4"x2"	Primary Anode Terminal Plate (MZA)
1-D	4"x4"x2"	Structure Negative (MZN); (1) MZA
1-E	4"x4"x2"	Primary Anode Terminal Plate (MZA)
1-F	4"x4"x2"	Structure Negative (MZN); (1) MZA
1-G	4"x4"x2"	Primary Anode Terminal Plate (MZA)
1-H	4"x4"x2"	Structure Negative (MZN); (1) MZA
1-I	4"x4"x2"	Primary Anode Terminal Plate (MZA)
1-J	4"x4"x2"	Structure Negative (MZN); (1) MZA
1-K	4"x4"x2"	Primary Anode Terminal Plate (MZA); (1) MZN JUMPER 1

ABBREVIATIONS:

MZN = Metallized Zinc Negative
PJN = Pile Jacket Negative
CJN = Cap Jacket Negative
SAN = Submerged Anode Negative
MZA = Metallized Zinc Anode
PJA = Pile Jacket Anode
CJA = Cap Jacket Anode
SA = Submerged Anode
RE = Reference Electrode
REN = Reference Electrode Negative

TYPICAL WIRE SIZES & COLORS AS FOLLOWS:
MZA & PJA = #10 Red
MZN; PJN = #10 Blue
SA = #8 Black
RE/REN: #16 Twisted Pair Red/Black

LEGEND

(x) Submerged Anode x = Weight in LBS
Pile Jacket
Cap Jacket
● Primary Anode Terminal
+ Negative Connection
S Encapsulated Splice
— Reference Electrode

Tongass Span 1

SCALE: NONE	Field Sketch Electrical As-Built	DRAWN BY KRH
DATE: 9-12-11		REVISED

GREAT WESTERN CORPORATION

Ketchikan Viaduct II Repair & C.P.	DRAWING NUMBER T1

SPAN 2 - VIEW THROUGH DECK

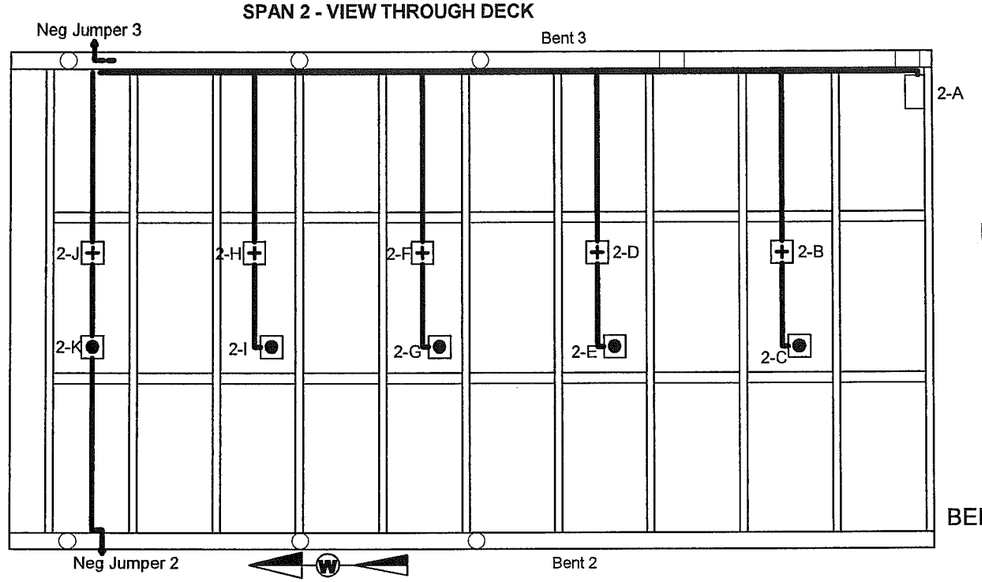

SCHEMATIC

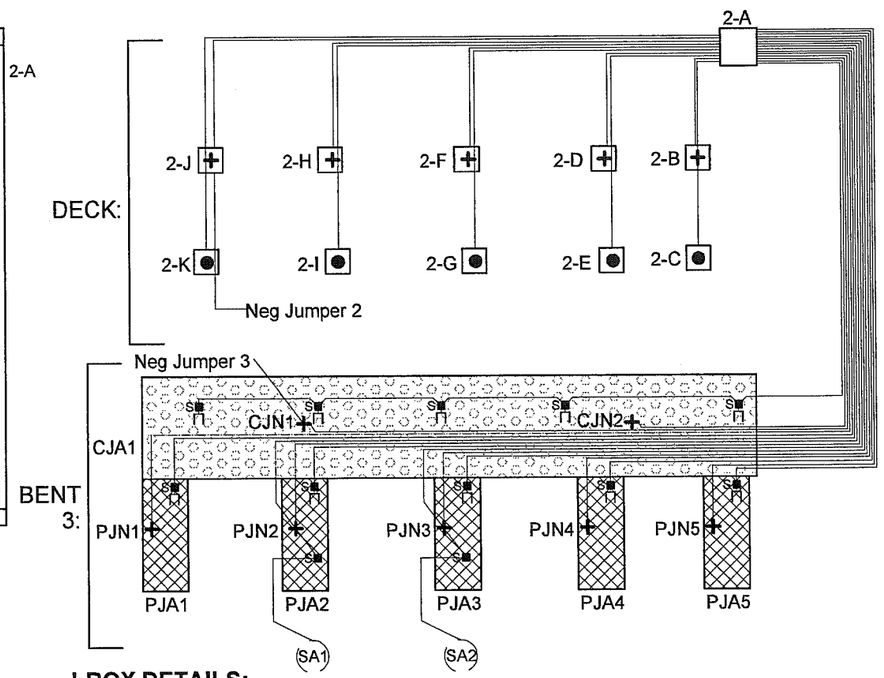

BENT 3 SOUTH ELEVATION

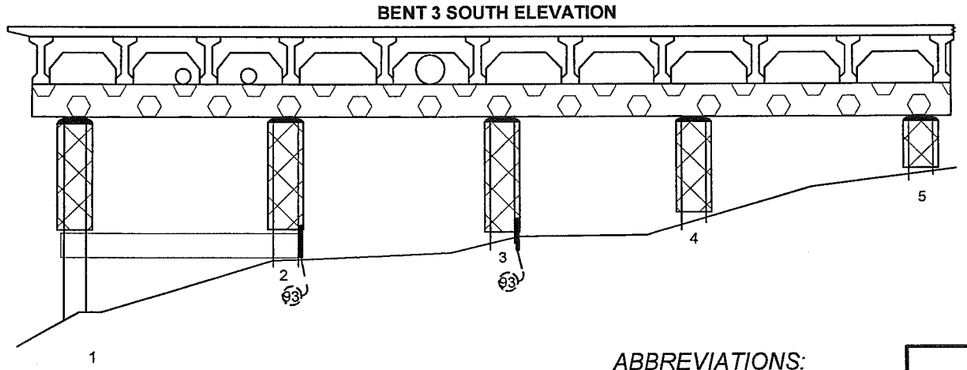

J-BOX DETAILS:

	J-Box Size	Wires or Structure
2-A	14"x12"x8"	MAIN J-BOX: (5) MZA; (5) MZN; (5) PJA; (5) PJN; (1) CJA; (2) CJN; (2) SA; SAN jumpered from PJN
2-B	4"x4"x2"	Structure Negative (MZN); (1) MZA
2-C	4"x4"x2"	Primary Anode Terminal Plate (MZA)
2-D	4"x4"x2"	Structure Negative (MZN); (1) MZA
2-E	4"x4"x2"	Primary Anode Terminal Plate (MZA)
2-F	4"x4"x2"	Structure Negative (MZN); (1) MZA
2-G	4"x4"x2"	Primary Anode Terminal Plate (MZA)
2-H	4"x4"x2"	Structure Negative (MZN); (1) MZA
2-I	4"x4"x2"	Primary Anode Terminal Plate (MZA)
2-J	4"x4"x2"	Structure Negative (MZN); (1) MZA
2-K	4"x4"x2"	Primary Anode Terminal Plate (MZA); (1) MZN JUMPER 1

ABBREVIATIONS:

MZN = Metallized Zinc Negative
PJN = Pile Jacket Negative
CJN = Cap Jacket Negative
SAN = Submerged Anode Negative
MZA = Metallized Zinc Anode
PJA = Pile Jacket Anode
CJA = Cap Jacket Anode
SA = Submerged Anode
RE = Reference Electrode
REN = Reference Electrode Negative

TYPICAL WIRE SIZES & COLORS AS FOLLOWS:
MZA & PJA = #10 Red
MZN; PJN = #10 Blue
SA = #8 Black
RE/REN: #16 Twisted Pair Red/Black

LEGEND

(x) Submerged Anode x = Weight in LBS
Pile Jacket
Cap Jacket
● Primary Anode Terminal
+ Negative Connection
S Encapsulated Splice
— Reference Electrode

Tongass Span 2

SCALE: NONE	Field Sketch Electrical As-Built	DRAWN BY KRH
DATE: 9-12-11		REVISED

GREAT WESTERN CORPORATION

Ketchikan Viaduct II Repair & C.P.	DRAWING NUMBER T2

SPAN 3 - VIEW THROUGH DECK

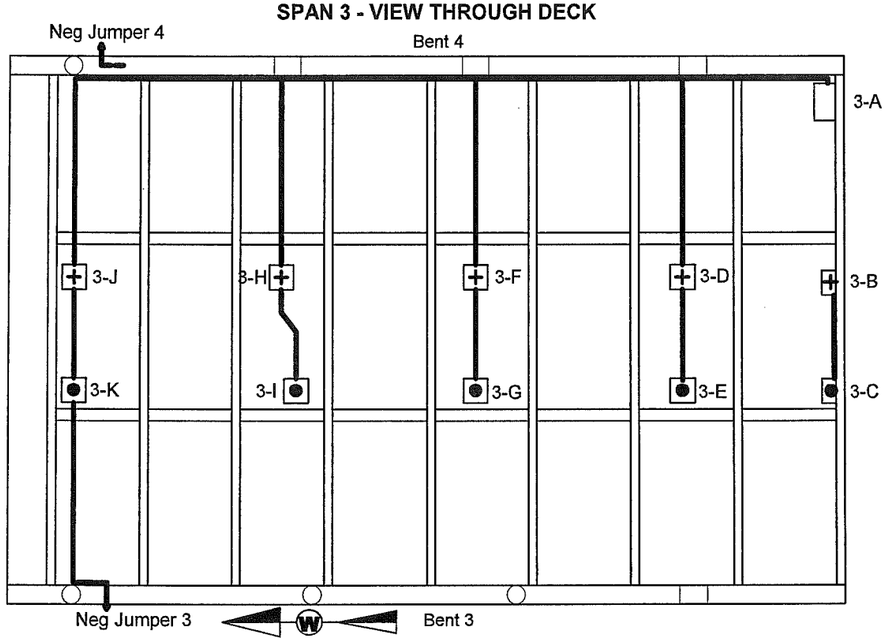

SCHEMATIC

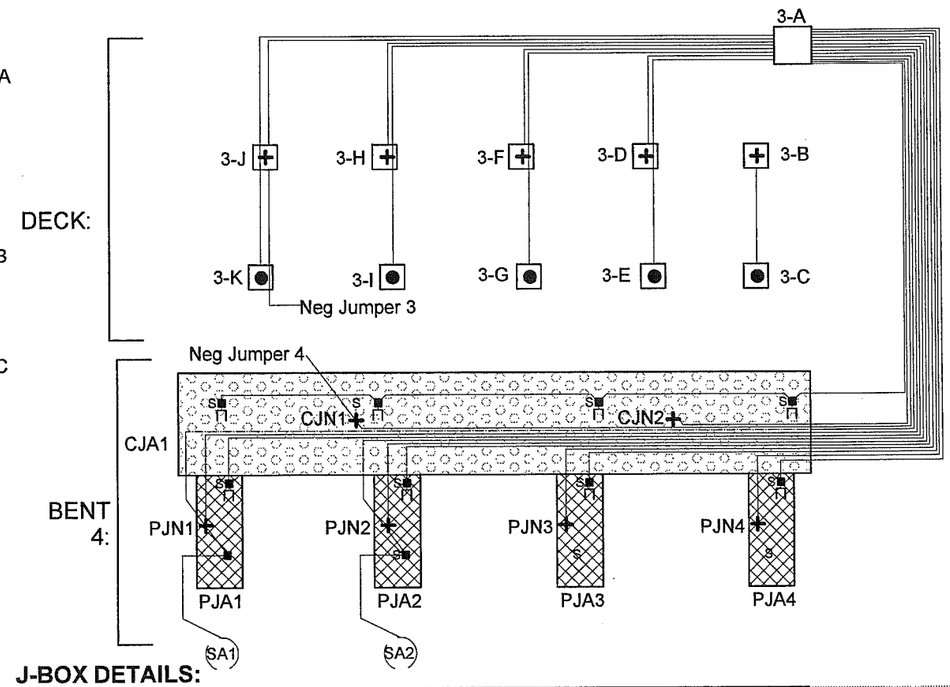

BENT 4 SOUTH ELEVATION

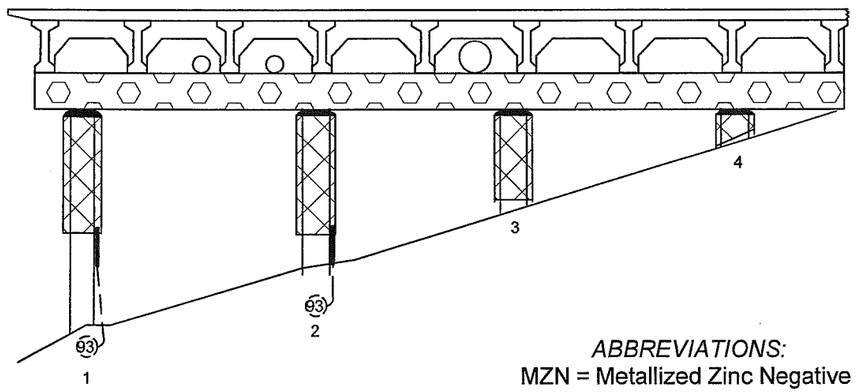

J-BOX DETAILS:

	J-Box Size	Wires or Structure
3-A	14"x12"x8"	MAIN J-BOX: (4) MZA; (4) MZN; (3) PJA; (3) PJN; (1) CJA; (2) CJN; (2) SA; SAN jumpered from PJN
3-B	4"x4"x2"	Structure Negative (MZN)
3-C	4"x4"x2"	Primary Anode Terminal Plate (MZA)
3-D	4"x4"x2"	Structure Negative (MZN); (1) MZA
3-E	4"x4"x2"	Primary Anode Terminal Plate (MZA)
3-F	4"x4"x2"	Structure Negative (MZN); (1) MZA
3-G	4"x4"x2"	Primary Anode Terminal Plate (MZA)
3-H	4"x4"x2"	Structure Negative (MZN); (1) MZA
3-I	4"x4"x2"	Primary Anode Terminal Plate (MZA)
3-J	4"x4"x2"	Structure Negative (MZN); (1) MZA
3-K	4"x4"x2"	Primary Anode Terminal Plate (MZA); (1) MZN JUMPER 3

ABBREVIATIONS:

MZN = Metallized Zinc Negative
PJN = Pile Jacket Negative
CJN = Cap Jacket Negative
SAN = Submerged Anode Negative
MZA = Metallized Zinc Anode
PJA = Pile Jacket Anode
CJA = Cap Jacket Anode
SA = Submerged Anode
RE = Reference Electrode
REN = Reference Electrode Negative

TYPICAL WIRE SIZES & COLORS AS FOLLOWS:
MZA & PJA = #10 Red
MZN; PJN = #10 Blue
SA = #8 Black
RE/REN: #16 Twisted Pair Red/Black

LEGEND

(x) Submerged Anode x = Weight in LBS
Pile Jacket
Cap Jacket
● Primary Anode Terminal
+ Negative Connection
S Encapsulated Splice
— Reference Electrode

Tongass Span 3

SCALE: NONE	Field Sketch Electrical As-Built	DRAWN BY KRH
DATE: 9-12-11		REVISED

GREAT WESTERN CORPORATION

Ketchikan Viaduct II Repair & C.P.	DRAWING NUMBER T3

SPAN 4 - VIEW THROUGH DECK

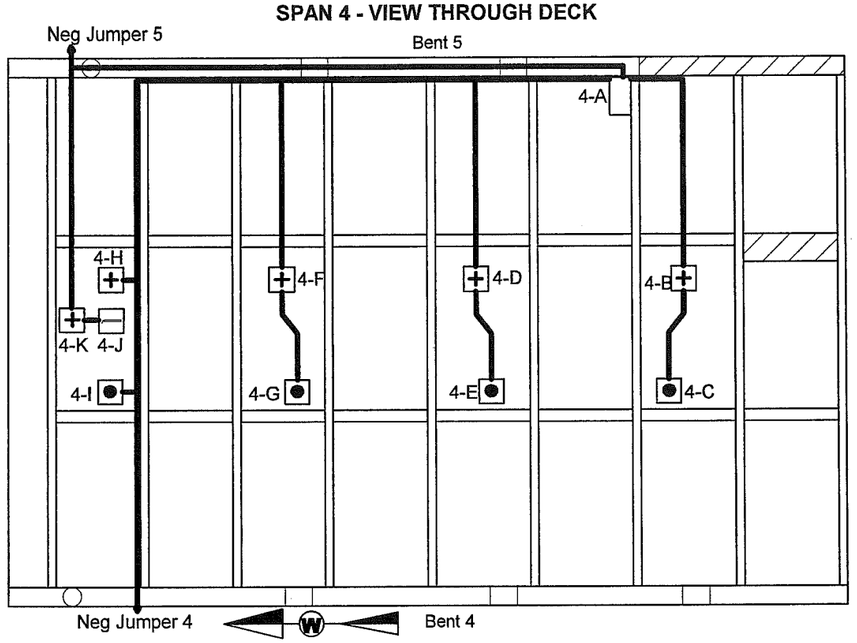

SCHEMATIC

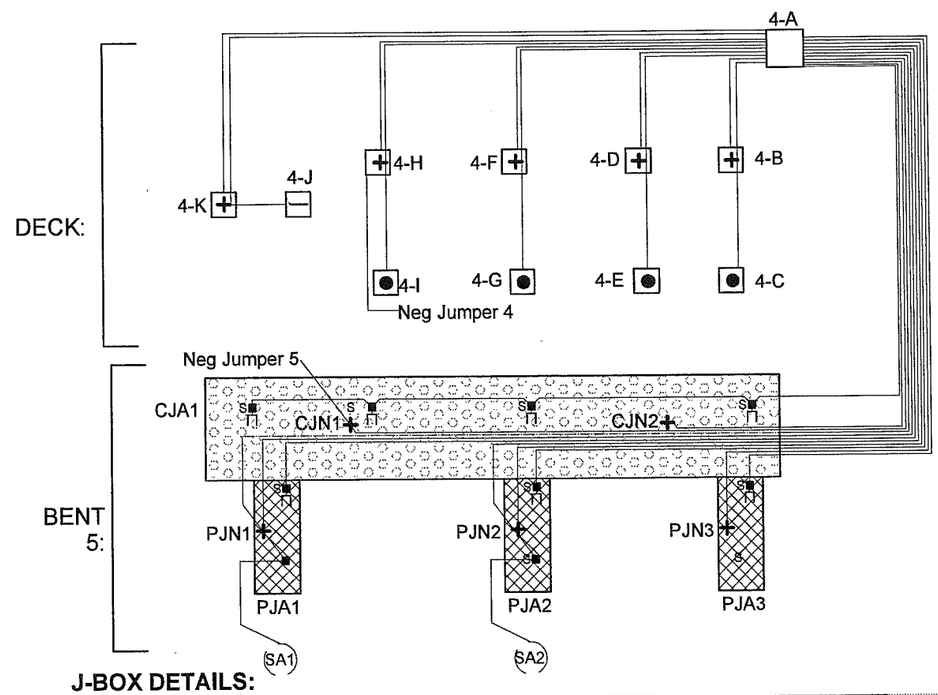

BENT 5 SOUTH ELEVATION

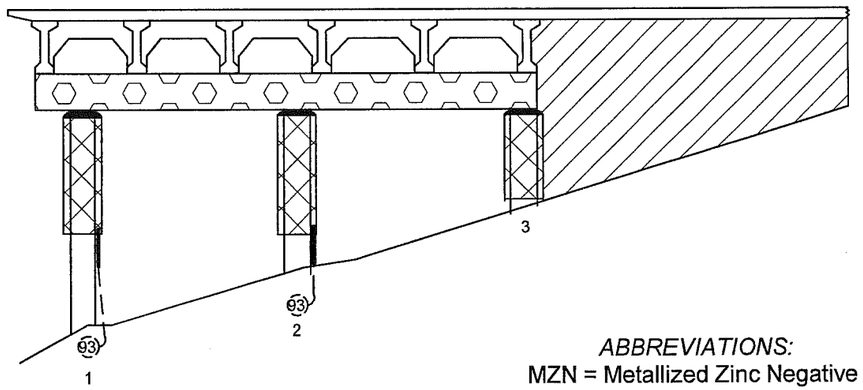

J-BOX DETAILS:

	J-Box Size	Wires or Structure
4-A	15" x 12" x 8"	MAIN J-BOX: (4) MZA; (4) MZN; (3) PJA; (3) PJN; (1) CJA; (2) CJN; (2) SA; SAN jumpered from PJN
4-B	5" x 5" x 2"	Structure Negative (MZN); (1) MZA
4-C	5" x 5" x 2"	Primary Anode Terminal Plate (MZA)
4-D	5" x 5" x 2"	Structure Negative (MZN); (1) MZA
4-E	5" x 5" x 2"	Primary Anode Terminal Plate (MZA)
4-F	5" x 5" x 2"	Structure Negative (MZN); (1) MZA
4-G	5" x 5" x 2"	Primary Anode Terminal Plate (MZA)
4-H	5" x 5" x 2"	Structure Negative (MZN)
4-I	5" x 5" x 2"	Primary Anode Terminal Plate (MZA)
4-J	5" x 5" x 2"	Reference Electrode (RE) S/N 410203
4-K	5" x 5" x 2"	Reference Electrode Negative (REN); (1) RE

ABBREVIATIONS:

MZN = Metallized Zinc Negative
PJN = Pile Jacket Negative
CJN = Cap Jacket Negative
SAN = Submerged Anode Negative
MZA = Metallized Zinc Anode
PJA = Pile Jacket Anode
CJA = Cap Jacket Anode
SA = Submerged Anode
RE = Reference Electrode
REN = Reference Electrode Negative

TYPICAL WIRE SIZES & COLORS AS FOLLOWS:
MZA & PJA = #10 Red
MZN; PJN = #10 Blue
SA = #8 Black
RE/REN: #16 Twisted Pair Red/Black

LEGEND

(x) Submerged Anode x = Weight in LBS
Pile Jacket
Cap Jacket
● Primary Anode Terminal
+ Negative Connection
S Encapsulated Splice
Reference Electrode

Tongass Span 4		
SCALE: NONE	Field Sketch Electrical As-Built	DRAWN BY KRH
DATE: 9-12-11		REVISED
GREAT WESTERN CORPORATION		
Ketchikan Viaduct II Repair & C.P.		DRAWING NUMBER T4

SPAN 5 - VIEW THROUGH DECK

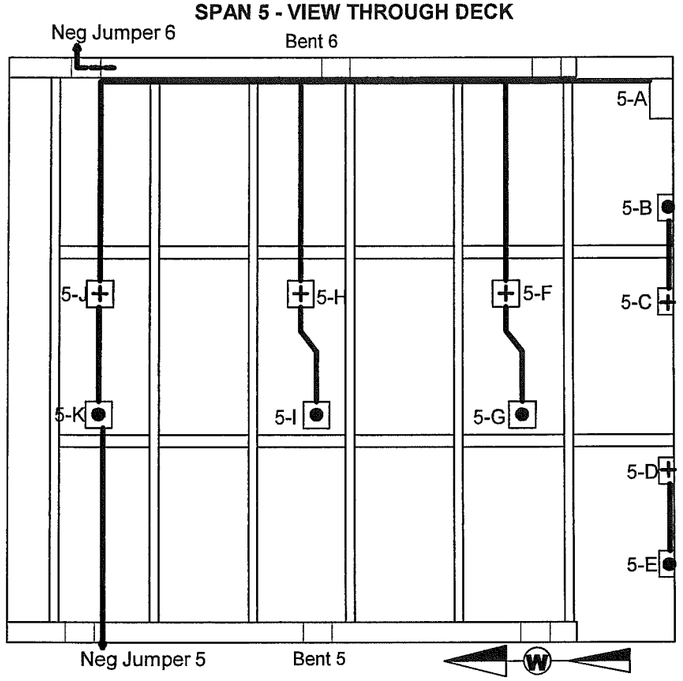

SCHEMATIC

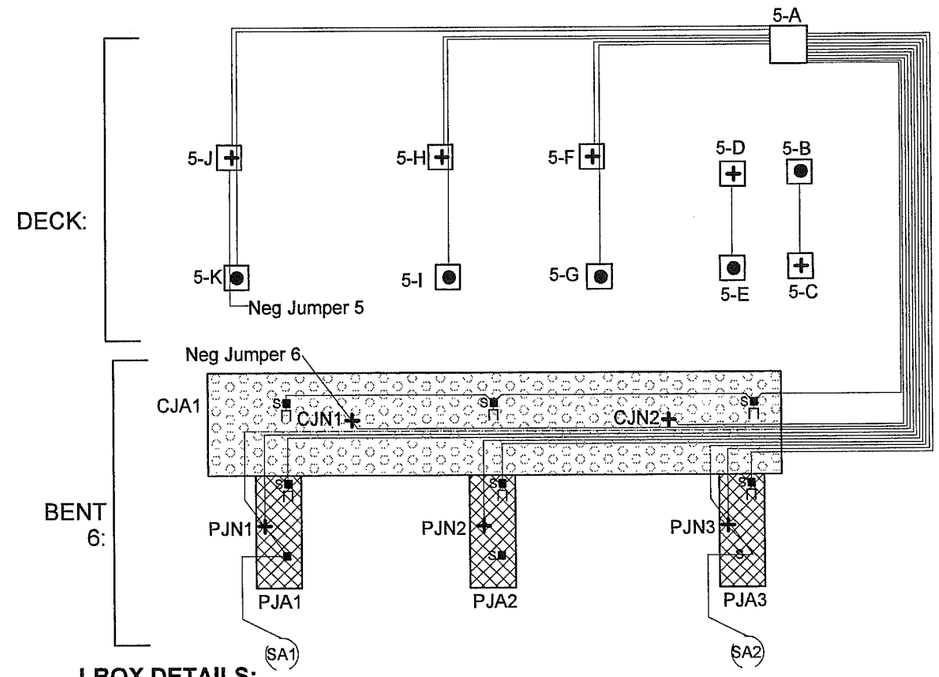

BENT 6 SOUTH ELEVATION

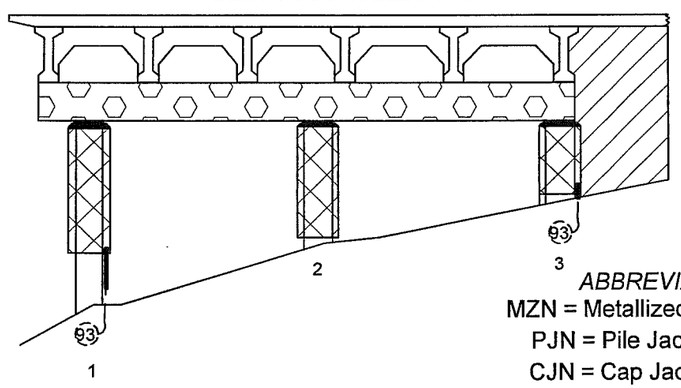

J-BOX DETAILS:

	J-Box Size	Wires or Structure
5-A	14" x 12" x 8"	MAIN J-BOX: (3) MZA; (3) MZN; (3) PJA; (3) PJN; (1) CJA; (2) CJN; (2) SA; SAN jumpered from PJN
5-B	5" x 5" x 2"	Primary Anode Terminal Plate (MZA)
5-C	5" x 5" x 2"	Structure Negative (MZN)
5-D	5" x 5" x 2"	Structure Negative (MZN)
5-E	5" x 5" x 2"	Primary Anode Terminal Plate (MZA)
5-F	5" x 5" x 2"	Structure Negative (MZN); (1) MZA
5-G	5" x 5" x 2"	Primary Anode Terminal Plate (MZA)
5-H	5" x 5" x 2"	Structure Negative (MZN); (1) MZA
5-I	5" x 5" x 2"	Primary Anode Terminal Plate (MZA)
5-J	5" x 5" x 2"	Structure Negative (MZN); (1) MZA
5-K	5" x 5" x 2"	Primary Anode Terminal Plate (MZA); (1) MZN JUMPER 5

ABBREVIATIONS:

MZN = Metallized Zinc Negative
PJN = Pile Jacket Negative
CJN = Cap Jacket Negative
SAN = Submerged Anode Negative
MZA = Metallized Zinc Anode
PJA = Pile Jacket Anode
CJA = Cap Jacket Anode
SA = Submerged Anode
RE = Reference Electrode
REN = Reference Electrode Negative

TYPICAL WIRE SIZES & COLORS AS FOLLOWS:
MZA & PJA = #10 Red
MZN; PJN = #10 Blue
SA = #8 Black
RE/REN: #16 Twisted Pair Red/Black

LEGEND

(x) Submerged Anode x = Weight in LBS
Pile Jacket
Cap Jacket
● Primary Anode Terminal
+ Negative Connection
S Encapsulated Splice
— Reference Electrode

Tongass Span 5		
SCALE: NONE	Field Sketch Electrical As-Built	DRAWN BY KRH
DATE: 9-12-11		REVISED
GREAT WESTERN CORPORATION		
Ketchikan Viaduct II Repair & C.P.		DRAWING NUMBER T5

SPAN 6 - VIEW THROUGH DECK

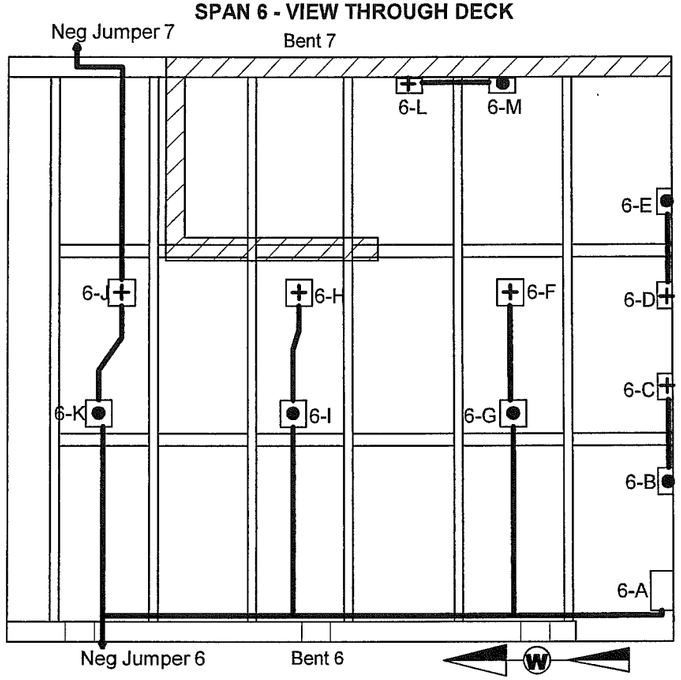

BENT 7 SOUTH ELEVATION

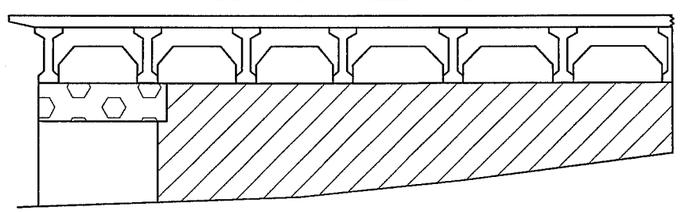

SCHEMATIC

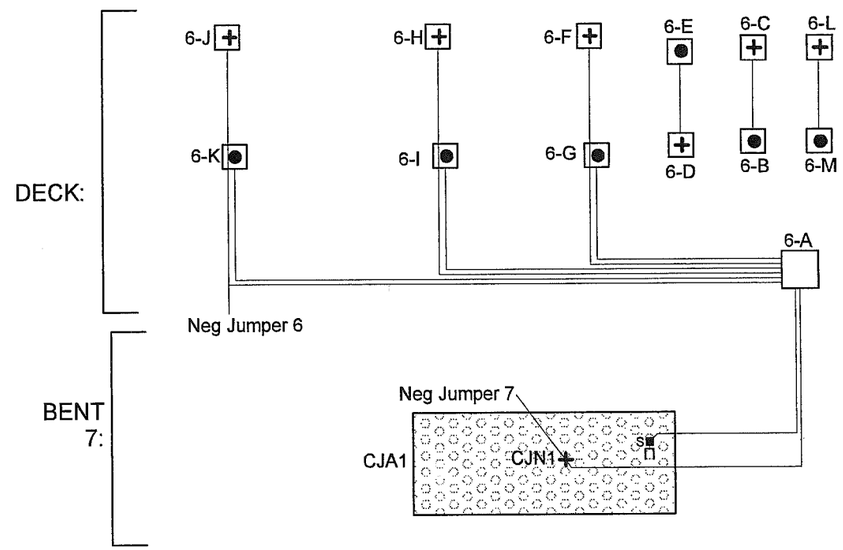

J-BOX DETAILS:

	J-Box Size	Wires or Structure
6-A	14" x 12" x 8"	MAIN J-BOX: (3) MZA; (3) MZN; (1) CJA; (1) CJN
6-B	5" x 5" x 2"	Primary Anode Terminal Plate (MZA)
6-C	5" x 5" x 2"	Structure Negative (MZN)
6-D	5" x 5" x 2"	Structure Negative (MZN)
6-E	5" x 5" x 2"	Primary Anode Terminal Plate (MZA)
6-F	5" x 5" x 2"	Structure Negative (MZN)
6-G	5" x 5" x 2"	Primary Anode Terminal Plate (MZA); (1) MZN
6-H	5" x 5" x 2"	Structure Negative (MZN)
6-I	5" x 5" x 2"	Primary Anode Terminal Plate (MZA); (1) MZN
6-J	5" x 5" x 2"	Structure Negative (MZN) - NEG JUMPER 6
6-K	5" x 5" x 2"	Primary Anode Terminal Plate (MZA); (1) MZN
6-L	5" x 5" x 2"	Structure Negative (MZN)
6-M	5" x 5" x 2"	Primary Anode Terminal Plate (MZA)

ABBREVIATIONS:

MZN = Metallized Zinc Negative
PJN = Pile Jacket Negative
CJN = Cap Jacket Negative
SAN = Submerged Anode Negative
MZA = Metallized Zinc Anode
PJA = Pile Jacket Anode
CJA = Cap Jacket Anode
SA = Submerged Anode
RE = Reference Electrode
REN = Reference Electrode Negative

TYPICAL WIRE SIZES & COLORS AS FOLLOWS:
MZA & PJA = #10 Red
MZN; PJN = #10 Blue
SA = #8 Black
RE/REN: #16 Twisted Pair Red/Black

LEGEND

(x) Submerged Anode x = Weight in LBS
Pile Jacket
Cap Jacket
● Primary Anode Terminal
+ Negative Connection
S Encapsulated Splice
Reference Electrode

Tongass Span 6

SCALE: NONE	Field Sketch	DRAWN BY KRH
DATE: 9-12-11	Electrical As-Built	REVISED

GREAT WESTERN CORPORATION

Ketchikan Viaduct II Repair & C.P.	DRAWING NUMBER T6

86

SPAN 7 - VIEW THROUGH DECK

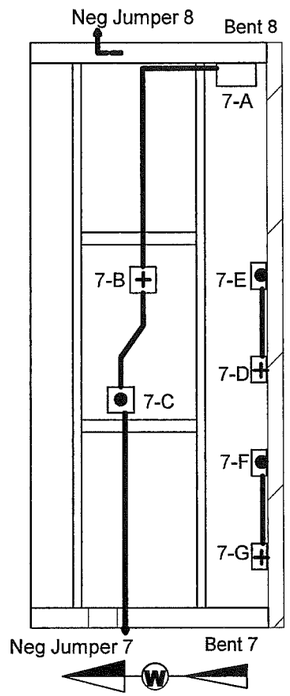

BENT 8 SOUTH ELEVATION

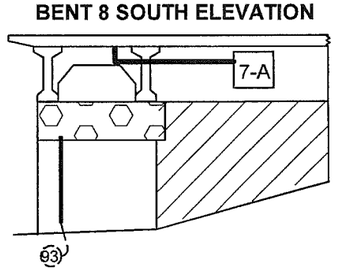

SCHEMATIC

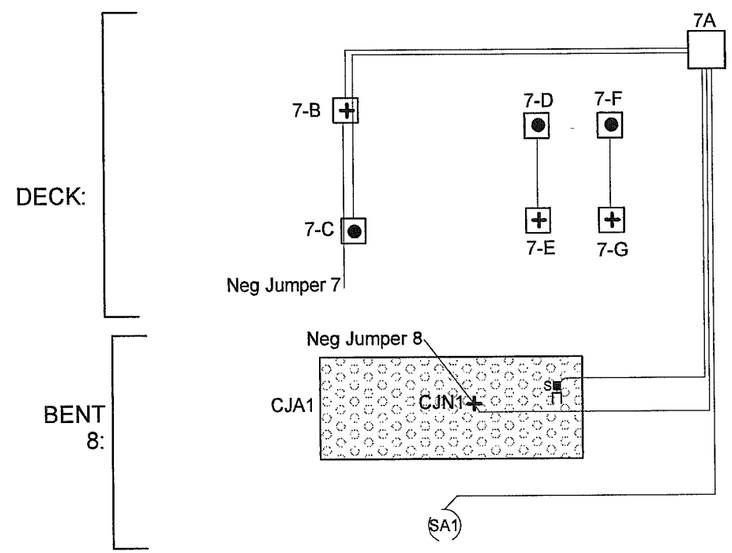

J-BOX DETAILS:

	J-Box Size	Wires or Structure
7-A	14" x 12" x 8"	MAIN J-BOX: (1) MZA; (1) MZN; (1) CJA; (1) CJN; (1) SA
7-B	5" x 5" x 2"	Structure Negative (MZN) - NEG JUMPER 7; (1) MZA
7-C	5" x 5" x 2"	Primary Anode Terminal Plate (MZA); (1) NEG JMPR 7
7-D	5" x 5" x 2"	Primary Anode Terminal Plate (MZA)
7-E	5" x 5" x 2"	Structure Negative (MZN)
7-F	5" x 5" x 2"	Primary Anode Terminal Plate (MZA)
7-G	5" x 5" x 2"	Structure Negative (MZN)

ABBREVIATIONS:

MZN = Metallized Zinc Negative
PJN = Pile Jacket Negative
CJN = Cap Jacket Negative
SAN = Submerged Anode Negative
MZA = Metallized Zinc Anode
PJA = Pile Jacket Anode
CJA = Cap Jacket Anode
SA = Submerged Anode
RE = Reference Electrode
REN = Reference Electrode Negative

LEGEND

(x) Submerged Anode x = Weight in LBS
Pile Jacket
Cap Jacket
● Primary Anode Terminal
+ Negative Connection
Encapsulated Splice
Reference Electrode

TYPICAL WIRE SIZES & COLORS AS FOLLOWS:
MZA & PJA = #10 Red
MZN; PJN = #10 Blue
SA = #8 Black
RE/REN: #16 Twisted Pair Red/Black

Tongass Span 7		
SCALE: NONE	Field Sketch Electrical As-Built	DRAWN BY KRH
DATE: 9-12-11		REVISED
GREAT WESTERN CORPORATION		
Ketchikan Viaduct II Repair & C.P.		DRAWING NUMBER T7

SPAN 8 - VIEW THROUGH DECK

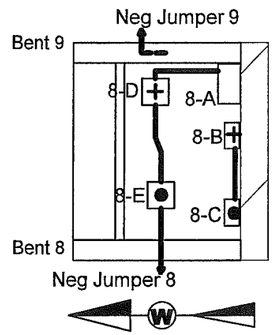

SCHEMATIC

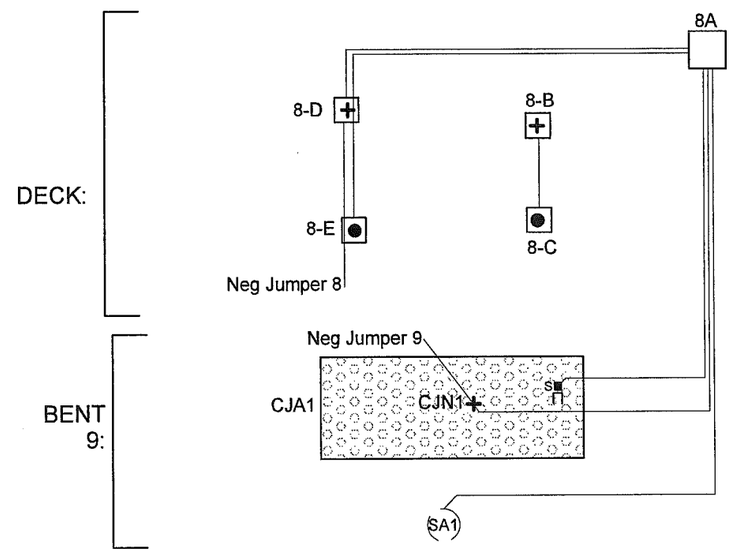

BENT 9 SOUTH ELEVATION

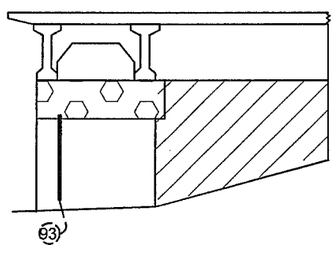

J-BOX DETAILS:

	J-Box Size	Wires or Structure
8-A	14"x12"x8"	MAIN J-BOX: (1) MZA; (1) MZN; (1) CJA; (1) CJN; (1) SA
8-B	5"x5"x2"	Structure Negative (MZN)
8-C	5"x5"x2"	Primary Anode Terminal Plate (MZA)
8-D	5"x5"x2"	Structure Negative (MZN) - NEG JUMPER 8; (1) MZA
8-E	5"x5"x2"	Primary Anode Terminal Plate (MZA); (1) NEG JMPR 8

ABBREVIATIONS:

MZN = Metallized Zinc Negative
PJN = Pile Jacket Negative
CJN = Cap Jacket Negative
SAN = Submerged Anode Negative
MZA = Metallized Zinc Anode
PJA = Pile Jacket Anode
CJA = Cap Jacket Anode
SA = Submerged Anode
RE = Reference Electrode
REN = Reference Electrode Negative

TYPICAL WIRE SIZES & COLORS AS FOLLOWS:
MZA & PJA = #10 Red
MZN; PJN = #10 Blue
SA = #8 Black
RE/REN: #16 Twisted Pair Red/Black

LEGEND

- (x) Submerged Anode x = Weight in LBS
- Pile Jacket
- Cap Jacket
- ● Primary Anode Terminal
- + Negative Connection
- S Encapsulated Splice
- — Reference Electrode

Tongass Span 8

SCALE: NONE	Field Sketch Electrical As-Built	DRAWN BY KRH
DATE: 9-12-11		REVISED
GREAT WESTERN CORPORATION		
Ketchikan Viaduct II Repair & C.P.		DRAWING NUMBER T8

SPAN 9 - VIEW THROUGH DECK

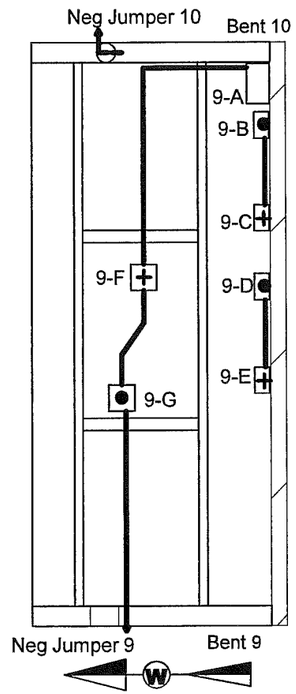

BENT 10 SOUTH ELEVATION

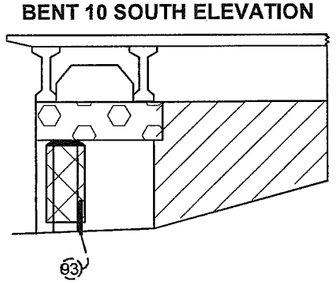

SCHEMATIC

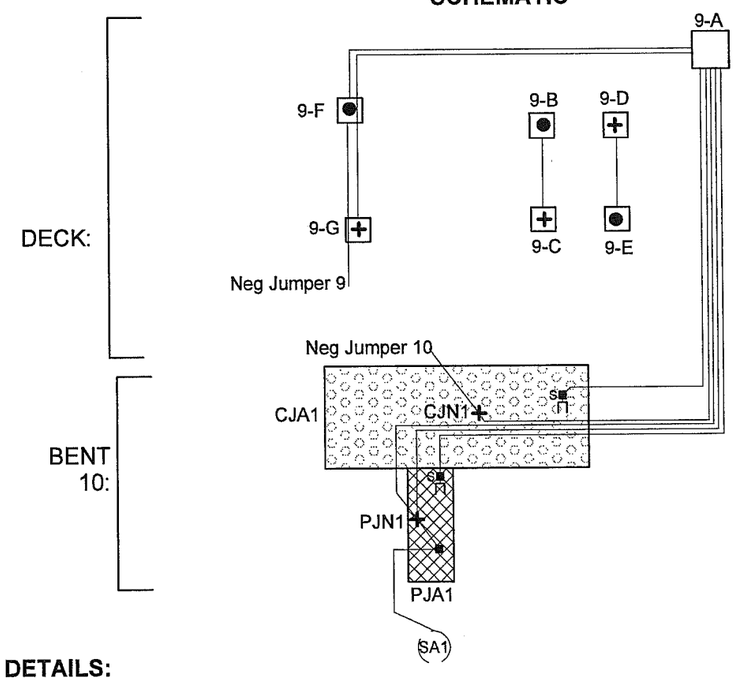

J-BOX DETAILS:

	J-Box Size	Wires or Structure
9-A	14" x 12" x 8"	MAIN J-BOX: (1) MZA; (1) MZN; (1) CJA; (1) CJN; (1) PJA; (1) PJN; (1) SA; SAN jumpered from PJN
9-B	5" x 5" x 2"	Primary Anode Terminal Plate (MZA)
9-C	5" x 5" x 2"	Structure Negative (MZN)
9-D	5" x 5" x 2"	Structure Negative (MZN)
9-E	5" x 5" x 2"	Primary Anode Terminal Plate (MZA)
9-F	5" x 5" x 2"	Primary Anode Terminal Plate (MZA); (1) MZN
9-G	5" x 5" x 2"	Structure Negative (MZN) - NEG JUMPER 9

ABBREVIATIONS:

MZN = Metallized Zinc Negative
PJN = Pile Jacket Negative
CJN = Cap Jacket Negative
SAN = Submerged Anode Negative
MZA = Metallized Zinc Anode
PJA = Pile Jacket Anode
CJA = Cap Jacket Anode
SA = Submerged Anode
RE = Reference Electrode
REN = Reference Electrode Negative

TYPICAL WIRE SIZES & COLORS AS FOLLOWS:
MZA & PJA = #10 Red
MZN; PJN = #10 Blue
SA = #8 Black
RE/REN: #16 Twisted Pair Red/Black

LEGEND

- (X) Submerged Anode x = Weight in LBS
- Pile Jacket
- Cap Jacket
- ● Primary Anode Terminal
- + Negative Connection
- Encapsulated Splice
- Reference Electrode

Tongass Span 9		
SCALE: NONE	Field Sketch Electrical As-Built	DRAWN BY KRH
DATE: 9-12-11		REVISED
GREAT WESTERN CORPORATION		
Ketchikan Viaduct II Repair & C.P.		DRAWING NUMBER T9

SPAN 10 - VIEW THROUGH DECK

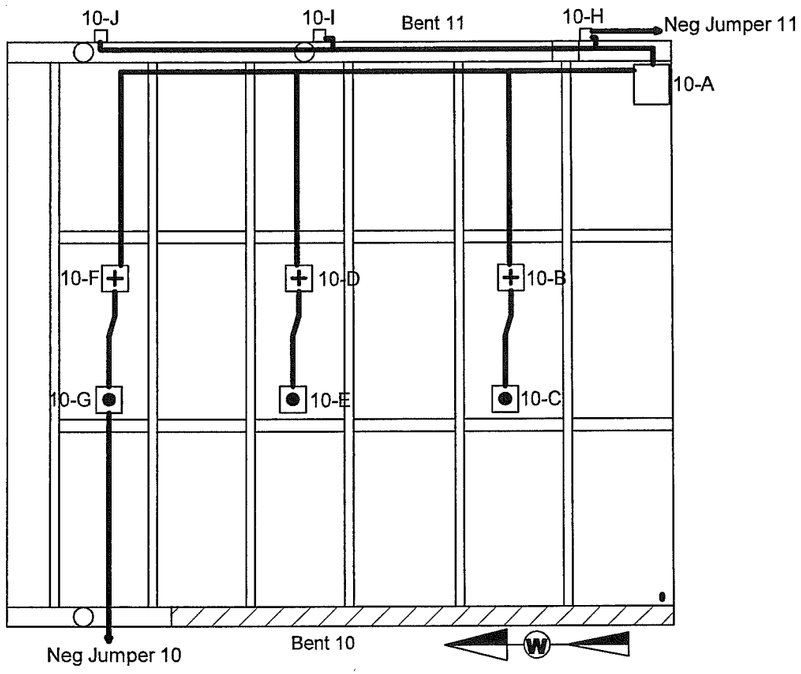

BENT 11 SOUTH ELEVATION

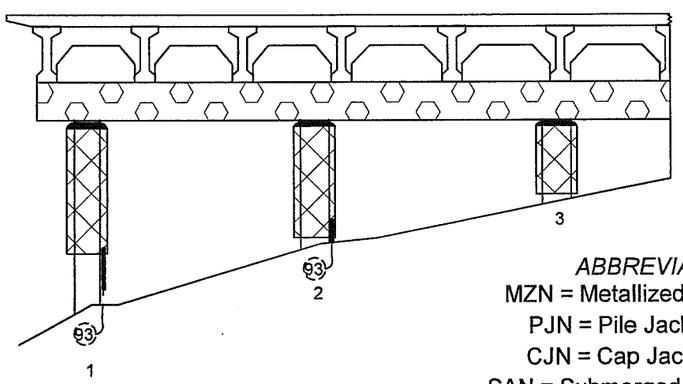

SCHEMATIC

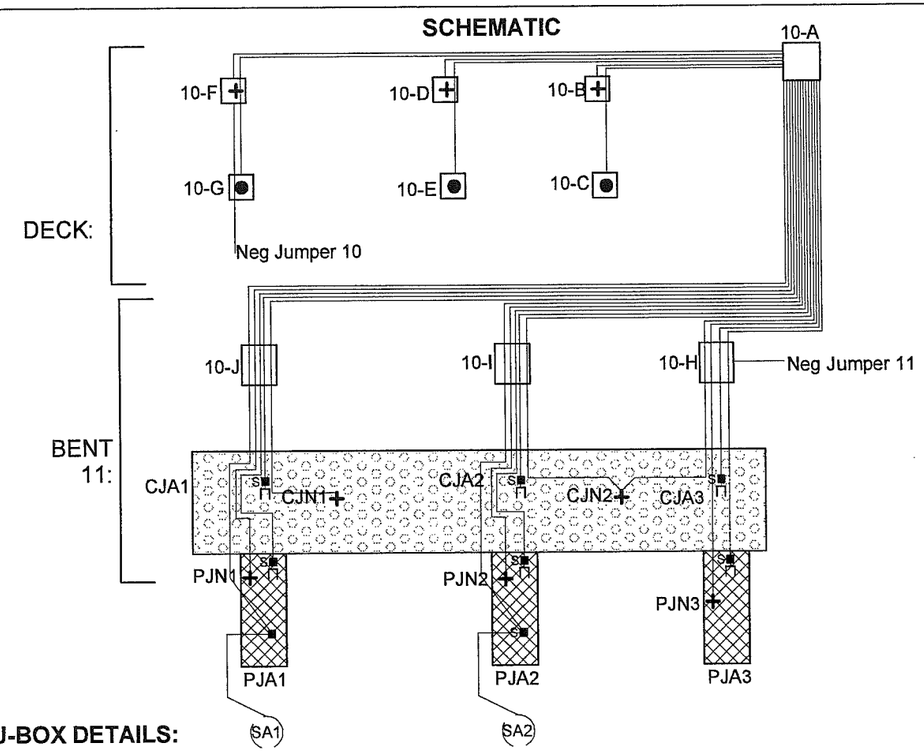

J-BOX DETAILS:

	J-Box Size	Wires or Structure
10-A	14"x12"x8"	MAIN J-BOX: (1) MZA; (1) MZN; (1) CJA; (1) CJN; (1) PJA; (1) PJN; (1) SA; SAN jumpered from PJN
10-B	5"x5"x2"	Structure Negative (MZN); (1) MZA
10-C	5"x5"x2"	Primary Anode Terminal Plate (MZA)
10-D	5"x5"x2"	Structure Negative (MZN); (1) MZA
10-E	5"x5"x2"	Primary Anode Terminal Plate (MZA)
10-F	5"x5"x2"	Structure Negative (MZN) - NEG JUMPER 10; (1) MZA
10-G	5"x5"x2"	Primary Anode Terminal Plate (MZA); (1) NEG JMPR 10
10-H	8"x8"x4"	CJA3; CJN3; PJA3; PJN3; NEG JMPR 11
10-I	8"x8"x4"	CJA2; CJN2; PJA2; PJN2; SA2
10-J	8"x8"x4"	CJA1; CJN1; PJA1; PJN1; SA1

ABBREVIATIONS:

MZN = Metallized Zinc Negative
PJN = Pile Jacket Negative
CJN = Cap Jacket Negative
SAN = Submerged Anode Negative
MZA = Metallized Zinc Anode
PJA = Pile Jacket Anode
CJA = Cap Jacket Anode
SA = Submerged Anode
RE = Reference Electrode
REN = Reference Electrode Negative

TYPICAL WIRE SIZES & COLORS AS FOLLOWS:
MZA & PJA = #10 Red
MZN; PJN = #10 Blue
SA = #8 Black
RE/REN: #16 Twisted Pair Red/Black

LEGEND

(x) Submerged Anode x = Weight in LBS
Pile Jacket
Cap Jacket
● Primary Anode Terminal
+ Negative Connection
Encapsulated Splice
Reference Electrode

Tongass Span 10

SCALE: NONE	Field Sketch Electrical As-Built	DRAWN BY KRH
DATE: 9-12-11		REVISED 9-13-11

GREAT WESTERN CORPORATION

Ketchikan Viaduct II Repair & C.P.

DRAWING NUMBER T10

SPAN 11 - VIEW THROUGH DECK

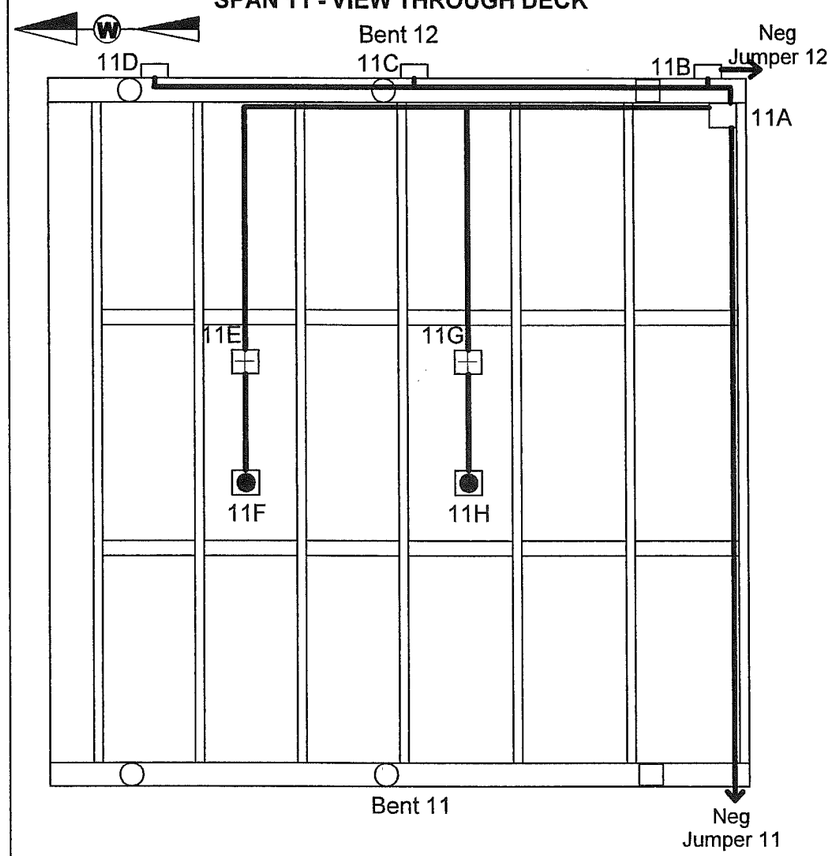

SCHEMATIC

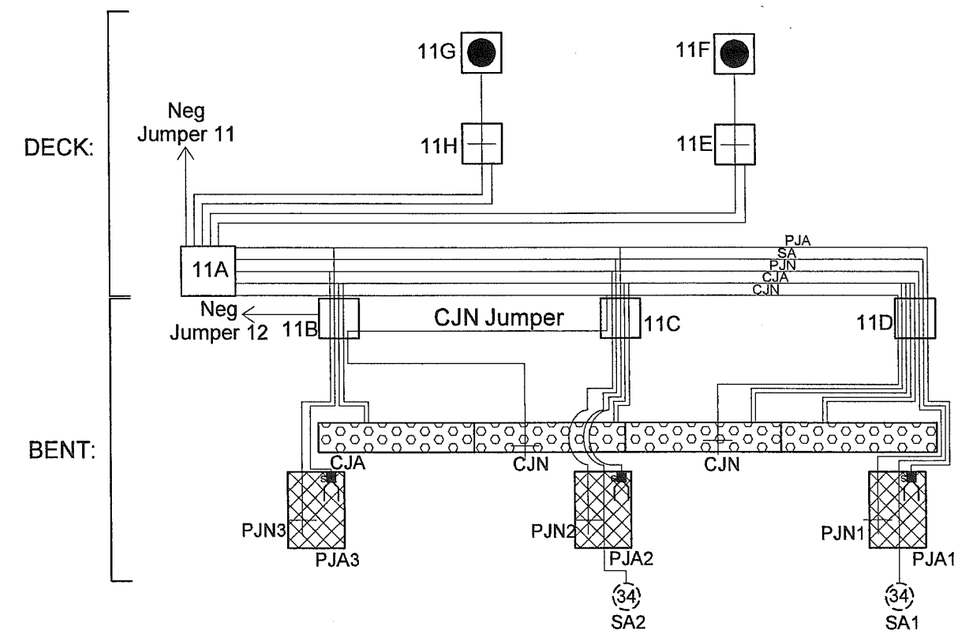

BENT 12 NORTH ELEVATION

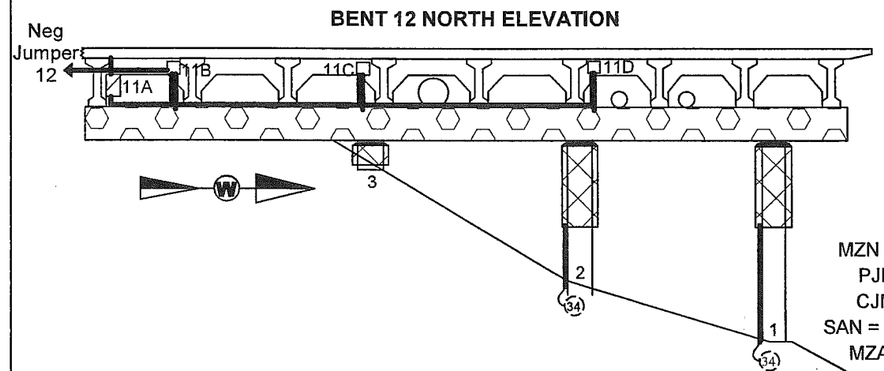

J-BOX DETAILS:

	J-Box Size	Wires or Structure
11-A	14"x12"x8"	MAIN J-BOX: (2) MZA; (2) MZN; (1) PJA; (1) PJN; (1) SA; SAN jumpered from PJN; NEG. JUMPER 11
11-B	8"x8"x4"	PJA3; PJN3; CJA3; CJN3; NEG JUMPER 12
11-C	8"x8"x4"	PJA2; PJN2; CJA2; CJN2; SA2
11-D	8"x8"x4"	PJA1; PJN1; CJA1; CJN1; SA1
11-E	5"x5"x2"	Structure Negative (MZN); (1) MZA
11-F	5"x5"x2"	Primary Anode Terminal Plate (MZA)
11-G	5"x5"x2"	Structure Negative (MZN); (1) MZA
11-H	5"x5"x2"	Primary Anode Terminal Plate (MZA)

ABBREVIATIONS:
MZN = Metallized Zinc Negative
PJN = Pile Jacket Negative
CJN = Cap Jacket Negative
SAN = Submerged Anode Negative
MZA = Metallized Zinc Anode
PJA = Pile Jacket Anode
CJA = Cap Jacket Anode
SA = Submerged Anode
RE = Reference Electrode
REN = Reference Electrode Negative

LEGEND
- (x) Submerged Anode x = Weight in LBS
- Pile Jacket
- Cap Jacket
- Primary Anode Terminal
- Negative Connection
- Encapsulated Splice
- Reference Electrode

TYPICAL WIRE SIZES & COLORS AS FOLLOWS:
MZA & PJA = #10 Red
MZN; PJN = #10 Blue
SA = #8 Black
RE/REN: #16 Twisted Pair Red/Black

Tongass Ave Bent 12 North Elevation & Span 11			
SCALE: NONE	Field Sketch As-Built	DRAWN BY KRH	
DATE: 10-26-11		REVISED 10-27-11	
GREAT WESTERN CORPORATION			
Ketchikan Viaduct II Repair & C.P.		DRAWING NUMBER T-11	

SPAN 14 - VIEW THROUGH DECK

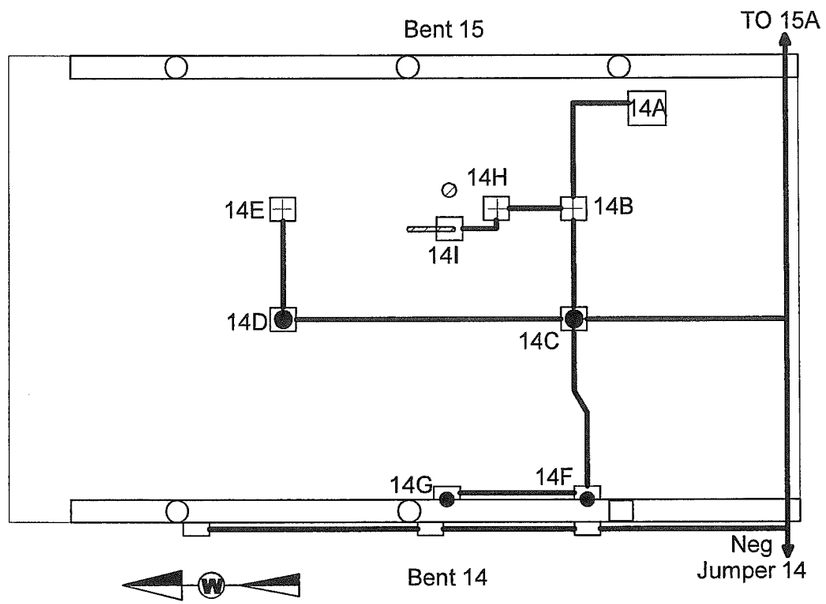

SCHEMATIC

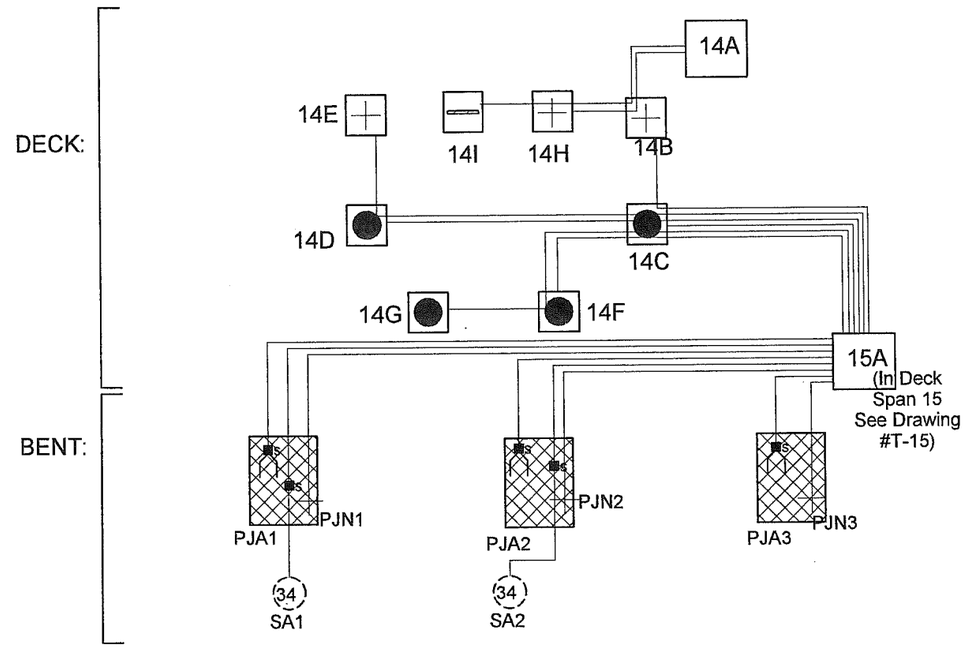

BENT 15 SOUTH ELEVATION

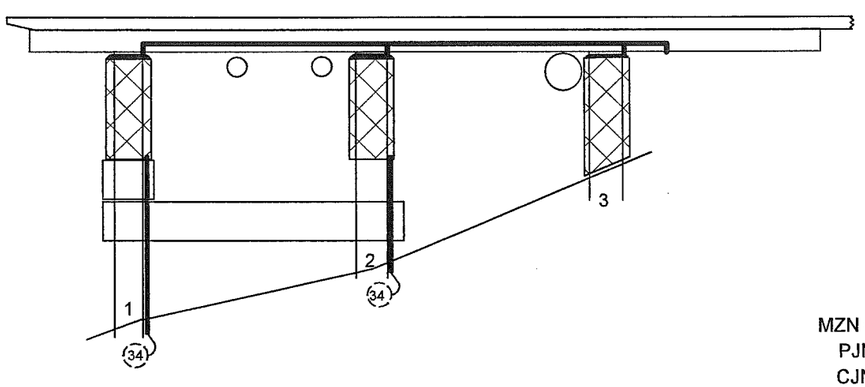

J-BOX DETAILS:

	J-Box Size	Wires or Structure	
14-A	14" x 12" x 8"	MAIN J-BOX: (1) RE; (1) REN	
14-B	5" x 5" x 2"	Structure Negative (MZN) - TO 15A; (1) RE; (1) REN	Run to Span 15 Main J-Box (15A)
14-C	5" x 5" x 2"	Primary Anode Terminal Plate (MZA); (2) MZN; (3) MZA	
14-D	5" x 5" x 2"	Primary Anode Terminal Plate (MZA); (1) MZN	
14-E	5" x 5" x 2"	Structure Negative (MZN)	
14-F	5" x 5" x 2"	Primary Anode Terminal Plate (MZA); (1) MZA	
14-G	5" x 5" x 2"	Primary Anode Terminal Plate (MZA)	
14-H	5" x 5" x 2"	Reference Electrode Negative (REN)	
14-I	5" x 5" x 2"	Reference Electrode (RE)	

TYPICAL WIRE SIZES & COLORS AS FOLLOWS:
MZA & PJA = #10 Red
MZN; PJN = #10 Blue
SA = #8 Black
RE/REN: #16 Twisted Pair Red/Black

ABBREVIATIONS:
MZN = Metallized Zinc Negative
PJN = Pile Jacket Negative
CJN = Cap Jacket Negative
SAN = Submerged Anode Negative
MZA = Metallized Zinc Anode
PJA = Pile Jacket Anode
CJA = Cap Jacket Anode
SA = Submerged Anode
RE = Reference Electrode
REN = Reference Electrode Negative

LEGEND
- (x) Submerged Anode x = Weight in LBS
- Pile Jacket
- Cap Jacket
- Primary Anode Terminal
- Negative Connection
- Encapsulated Splice
- Reference Electrode

Tongass Ave Bent 15 South Elevation & Span 14			
SCALE: NONE	Field Sketch As-Built	DRAWN BY KRH	
DATE: 10-27-11		REVISED	
GREAT WESTERN CORPORATION			
Ketchikan Viaduct II Repair & C.P.		DRAWING NUMBER T-14	

SPAN 12 - VIEW THROUGH DECK

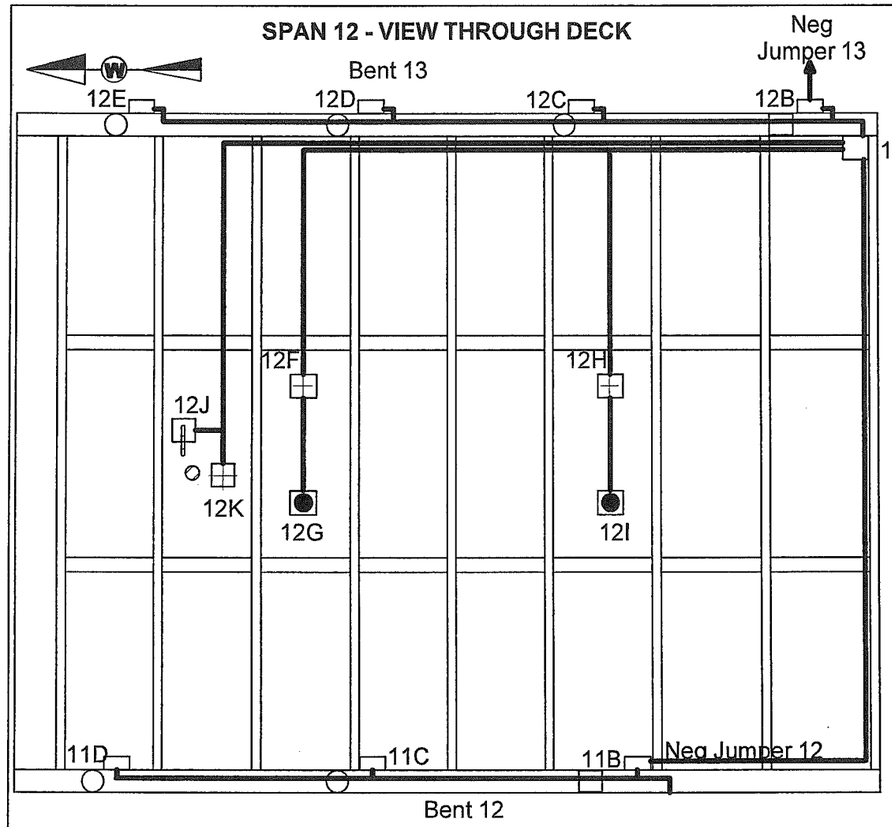

BENT 13 NORTH ELEVATION

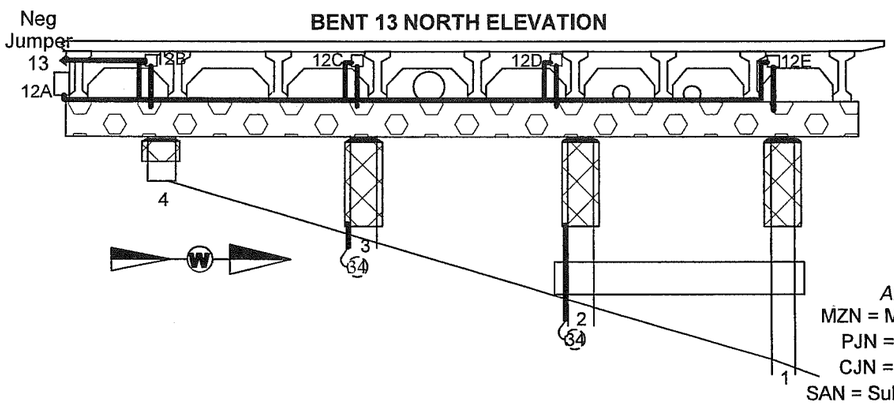

SCHEMATIC

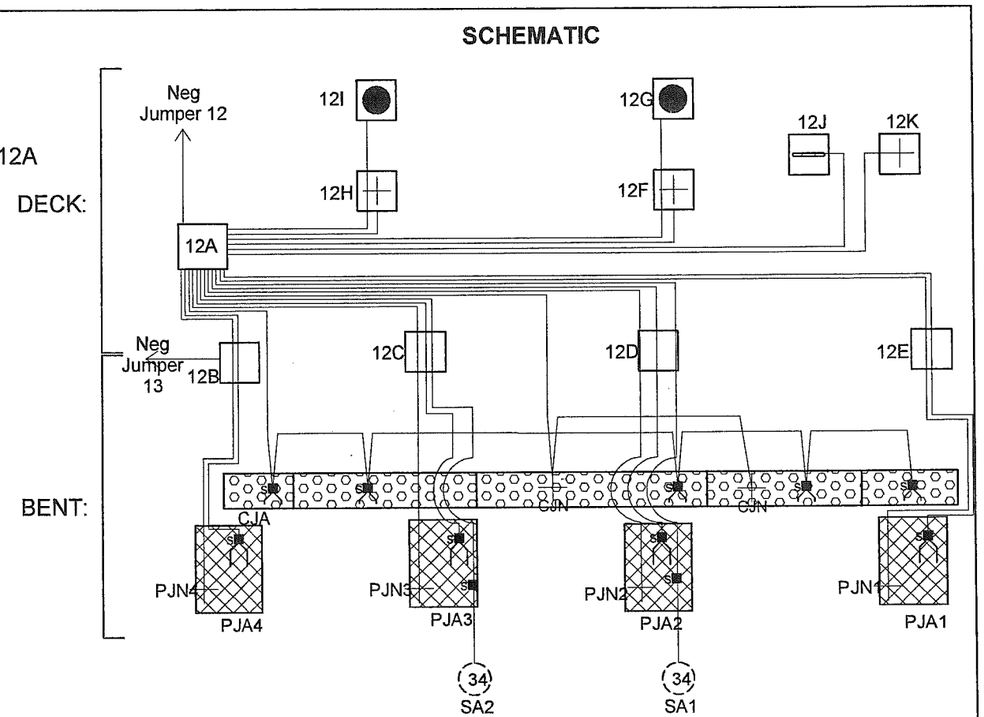

J-BOX DETAILS:

	J-Box Size	Wires or Structure
12-A	14" x 12" x 8"	MAIN J-BOX: (2) MZA; (2) MZN; (4) PJA; (4) PJN; (1) CJA; (1) CJN; (2) SA; SAN jumpered from PJN; NEG. JUMPER 12; (1) RE; (1) REN
12-B	8" x 8" x 4"	PJA4; PJN4; NEG JUMPER 13
12-C	8" x 8" x 4"	PJA3; PJN3; SA2
12-D	8" x 8" x 4"	PJA2; PJN2; SA1
12-E	8" x 8" x 4"	PJA1; PJN1
12-F	5" x 5" x 2"	Structure Negative (MZN); (1) MZA
12-G	5" x 5" x 2"	Primary Anode Terminal Plate (MZA)
12-H	5" x 5" x 2"	Structure Negative (MZN); (1) MZA
12-I	5" x 5" x 2"	Primary Anode Terminal Plate (MZA)

ABBREVIATIONS:
MZN = Metallized Zinc Negative
PJN = Pile Jacket Negative
CJN = Cap Jacket Negative
SAN = Submerged Anode Negative
MZA = Metallized Zinc Anode
PJA = Pile Jacket Anode
CJA = Cap Jacket Anode
SA = Submerged Anode
RE = Reference Electrode
REN = Reference Electrode Negative

LEGEND
- Submerged Anode x = Weight in LBS
- Pile Jacket
- Cap Jacket
- Primary Anode Terminal
- Negative Connection
- Encapsulated Splice
- Reference Electrode

TYPICAL WIRE SIZES & COLORS AS FOLLOWS:
MZA & PJA = #10 Red
MZN; PJN = #10 Blue
SA = #8 Black
RE/REN: #16 Twisted Pair Red/Black

Tongass Ave Bent 13 North Elevation & Span 12			
SCALE: NONE	Field Sketch As-Built	DRAWN BY KRH	
DATE: 10-26-11		REVISED 10-27-11	
GREAT WESTERN CORPORATION			
Ketchikan Viaduct II Repair & C.P.		DRAWING NUMBER T-12	

SPAN 13 - VIEW THROUGH DECK

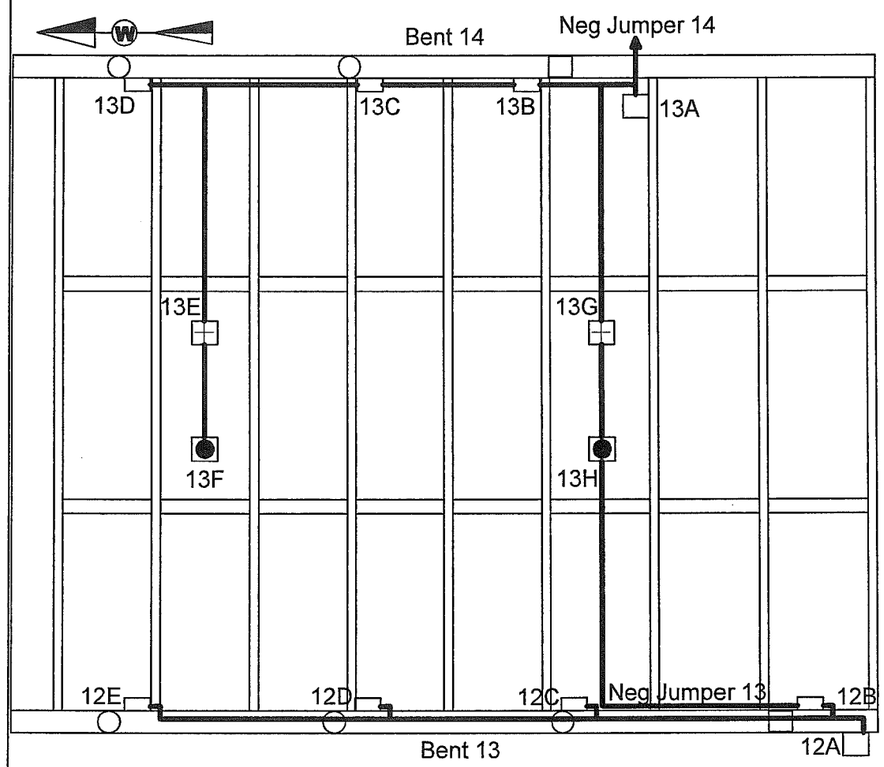

BENT 14 SOUTH ELEVATION

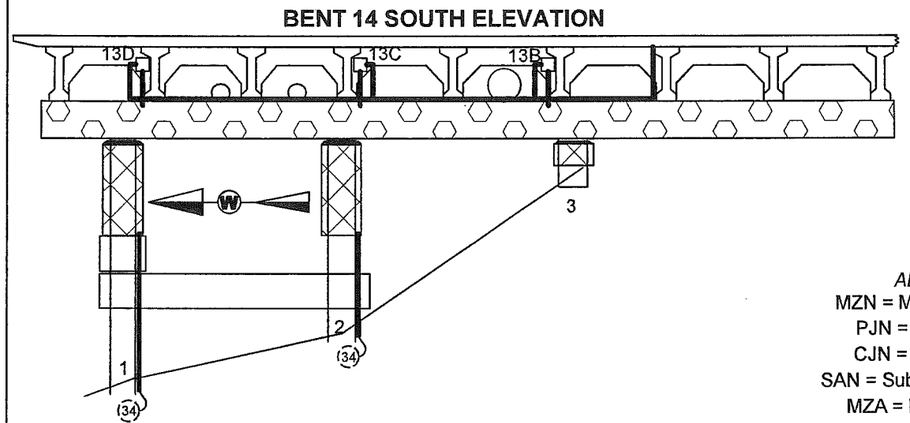

TYPICAL WIRE SIZES & COLORS AS FOLLOWS:
MZA & PJA = #10 Red
MZN; PJN = #10 Blue
SA = #8 Black
RE/REN: #16 Twisted Pair Red/Black

SCHEMATIC

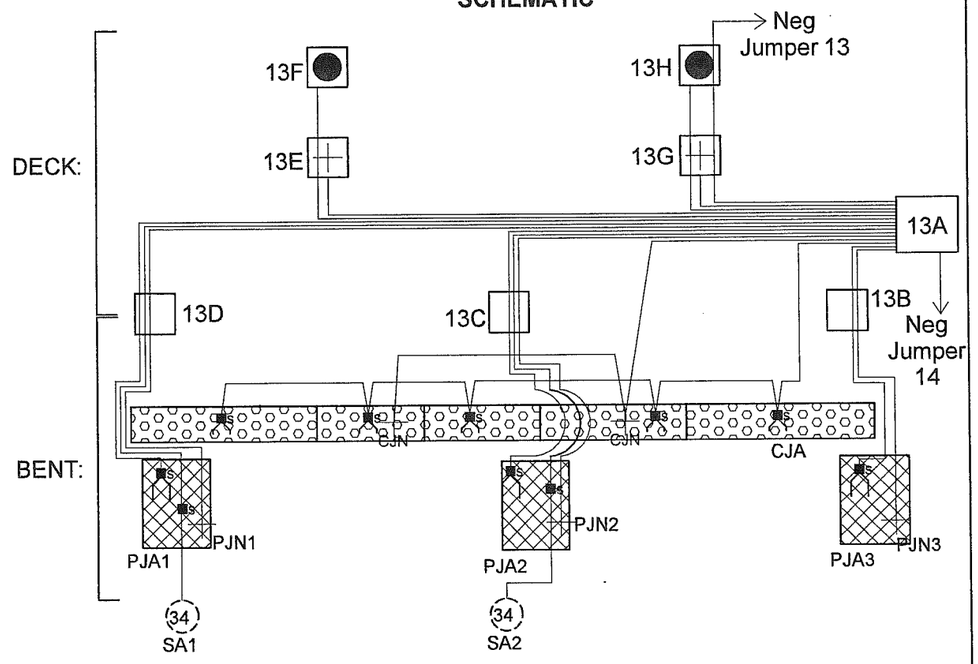

J-BOX DETAILS:

	J-Box Size	Wires or Structure
13-A	14" x 12" x 8"	MAIN J-BOX: (2) MZA; (2) MZN; (3) PJA; (3) PJN; (1) CJA; (1) CJN; (2) SA; SAN jumpered from PJN; NEG. JUMPER 14
13-B	8" x 8" x 4"	PJA3; PJN3
13-C	8" x 8" x 4"	PJA2; PJN2; SA2
13-D	8" x 8" x 4"	PJA1; PJN1; SA1
13-E	5" x 5" x 2"	Structure Negative (MZN); (1) MZA
13-F	5" x 5" x 2"	Primary Anode Terminal Plate (MZA)
13-G	5" x 5" x 2"	Structure Negative (MZN); (1) MZA; NEG JUMPER 13
13-H	5" x 5" x 2"	Primary Anode Terminal Plate (MZA); (1) NEG JUMPER

ABBREVIATIONS:
MZN = Metallized Zinc Negative
PJN = Pile Jacket Negative
CJN = Cap Jacket Negative
SAN = Submerged Anode Negative
MZA = Metallized Zinc Anode
PJA = Pile Jacket Anode
CJA = Cap Jacket Anode
SA = Submerged Anode
RE = Reference Electrode
REN = Reference Electrode Negative

LEGEND
- (X) Submerged Anode x = Weight in LBS
- Pile Jacket
- Cap Jacket
- Primary Anode Terminal
- Negative Connection
- Encapsulated Splice
- Reference Electrode

Tongass Ave Bent 14 South Elevation & Span 13			
SCALE: NONE	Field Sketch As-Built	DRAWN BY KRH	
DATE: 10-27-11		REVISED	
GREAT WESTERN CORPORATION			
Ketchikan Viaduct II Repair & C.P.		DRAWING NUMBER T-13	

SPAN 15 - VIEW THROUGH DECK

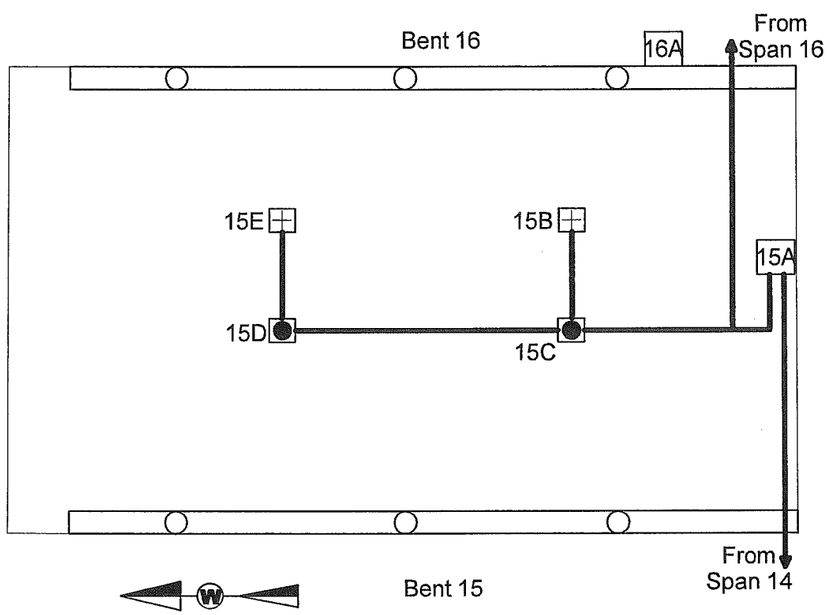

SCHEMATIC

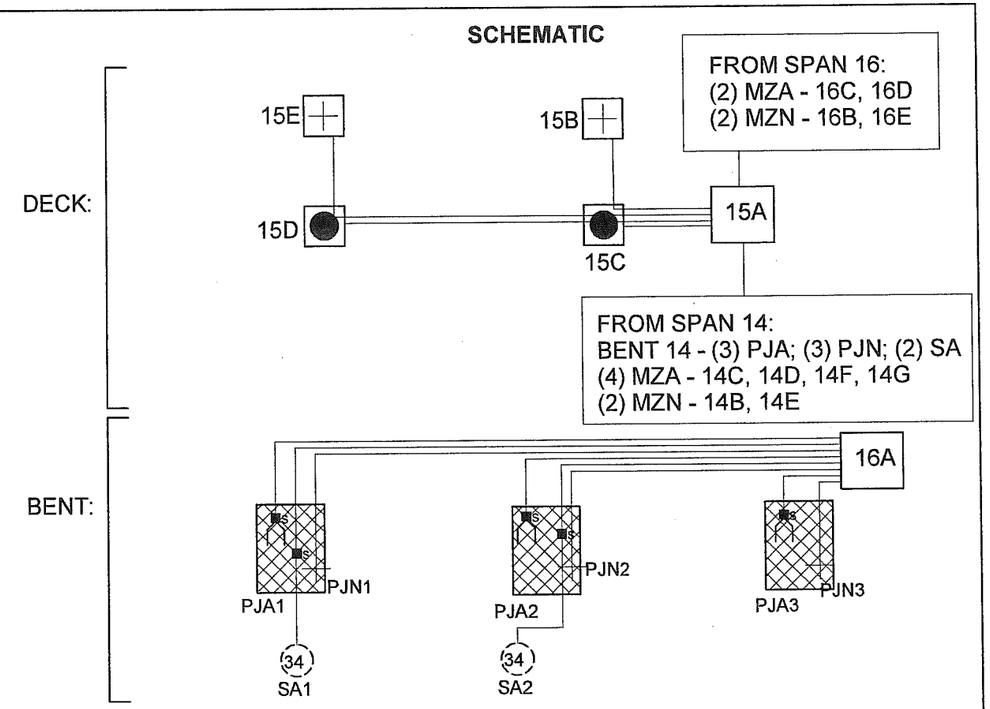

BENT 16 SOUTH ELEVATION

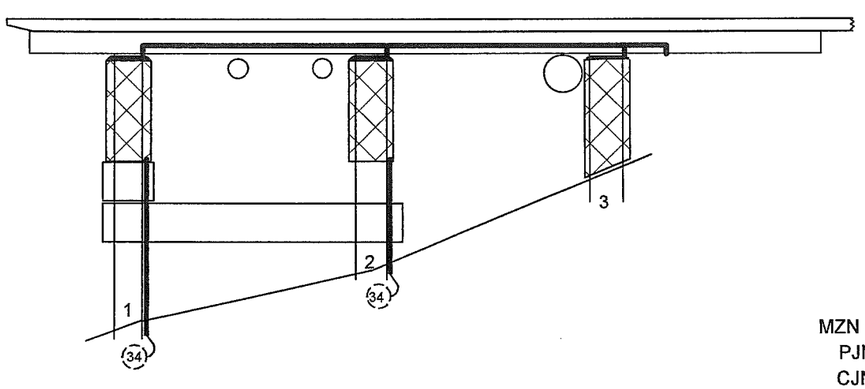

J-BOX DETAILS:

	J-Box Size	Wires or Structure
16-A	14" x 12" x 8"	BENT 16 MAIN J-BOX: (3) PJA; (3) PJN; (2) SA; SAN jumpered from PJN
15-A	14" x 12" x 8"	MAIN J-BOX: (2) MZA; (2) MZN
15-B	5" x 5" x 2"	Structure Negative (MZN)
15-C	5" x 5" x 2"	Primary Anode Terminal Plate (MZA); (1) MZN
15-D	5" x 5" x 2"	Primary Anode Terminal Plate (MZA); (1) MZN
15-E	5" x 5" x 2"	Structure Negative (MZN)

TYPICAL WIRE SIZES & COLORS AS FOLLOWS:
MZA & PJA = #10 Red
MZN; PJN = #10 Blue
SA = #8 Black
RE/REN: #16 Twisted Pair Red/Black

ABBREVIATIONS:
MZN = Metallized Zinc Negative
PJN = Pile Jacket Negative
CJN = Cap Jacket Negative
SAN = Submerged Anode Negative
MZA = Metallized Zinc Anode
PJA = Pile Jacket Anode
CJA = Cap Jacket Anode
SA = Submerged Anode
RE = Reference Electrode
REN = Reference Electrode Negative

LEGEND
- Submerged Anode x = Weight in LBS
- Pile Jacket
- Cap Jacket
- Primary Anode Terminal
- Negative Connection
- Encapsulated Splice
- Reference Electrode

Tongass Ave Bent 16 South Elevation & Span 15			
SCALE: NONE	Field Sketch As-Built	DRAWN BY KRH	
DATE: 10-27-11		REVISED	
GREAT WESTERN CORPORATION			
Ketchikan Viaduct II Repair & C.P.		DRAWING NUMBER T-15	

SPAN 16 - VIEW THROUGH DECK

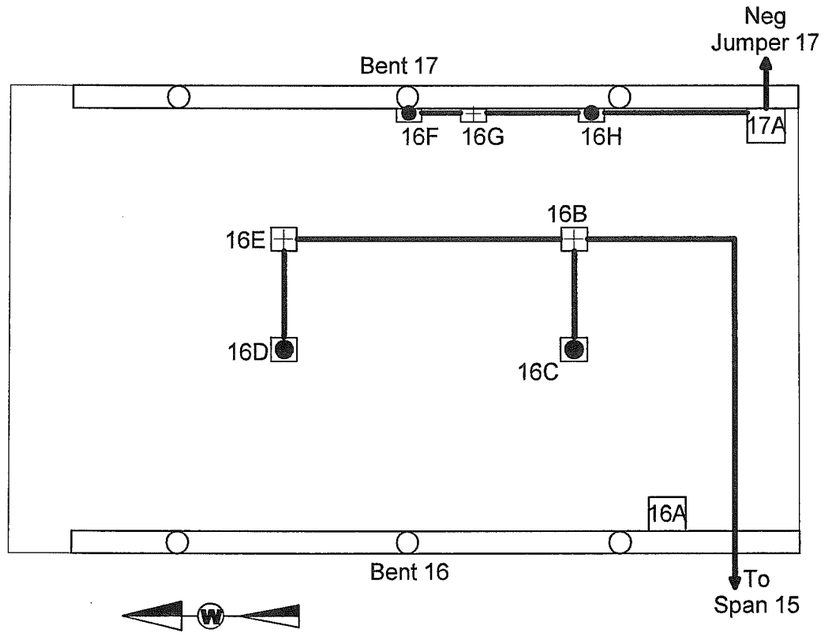

SCHEMATIC

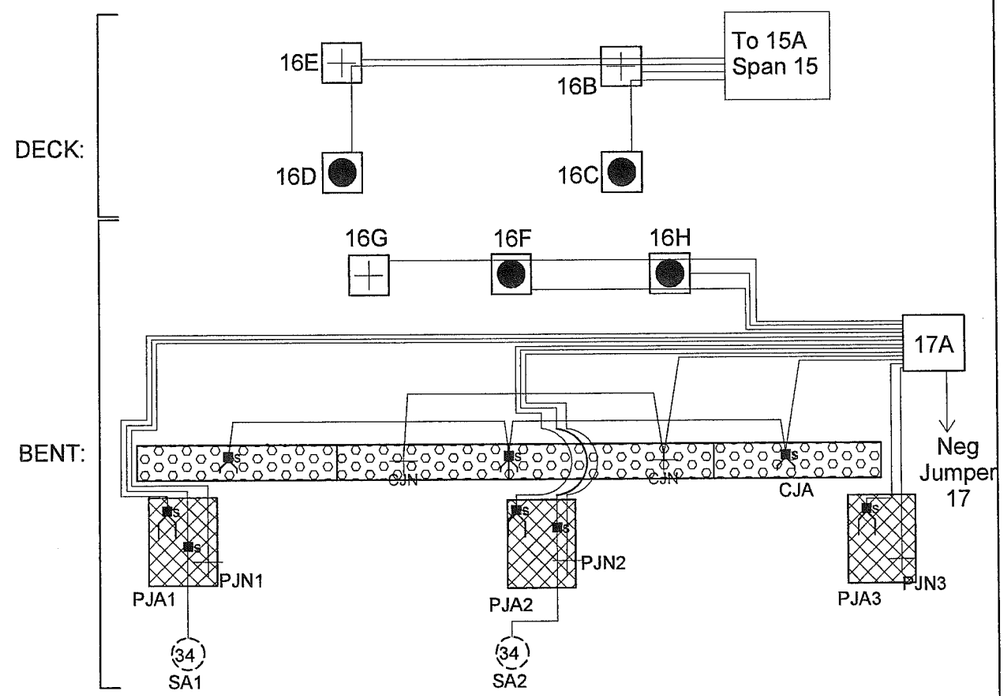

BENT 17 SOUTH ELEVATION

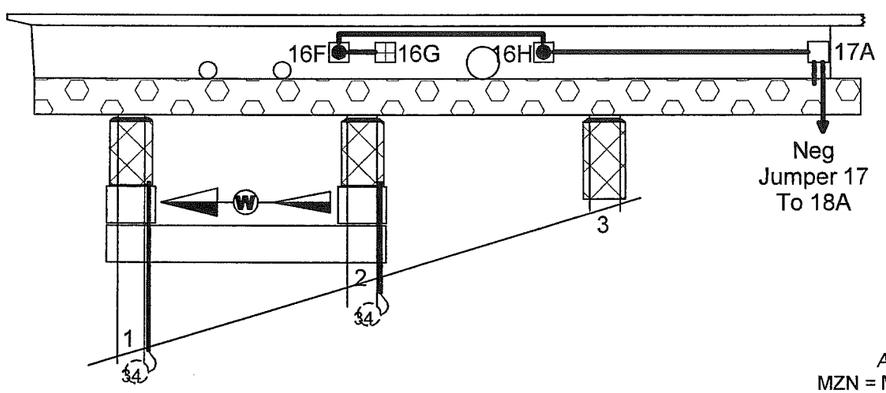

J-BOX DETAILS:

	J-Box Size	Wires or Structure	
17-A	14" x 12" x 8"	BENT 17 MAIN J-BOX: (2) MZA; (1) MZN; (3) PJA; (3) PJN; (2) SA; SAN jumpered from PJN; Neg Jumper to Span 17	
16-A	14" x 12" x 8"	BENT 16 MAIN J-BOX: (3) PJA; (3) PJN; (2) SA; SAN jumpered from PJN	
16-B	5" x 5" x 2"	Structure Negative (MZN); (2) MZA; (1) MZN	Run to Span 15 Main J-Box (15A)
16-C	5" x 5" x 2"	Primary Anode Terminal Plate (MZA)	
16-D	5" x 5" x 2"	Primary Anode Terminal Plate (MZA)	
16-E	5" x 5" x 2"	Primary Anode Terminal Plate (MZA); (1) MZN	
16-F	5" x 5" x 2"	Primary Anode Terminal Plate (MZA); (1) MZN	
16-G	5" x 5" x 2"	Structure Negative (MZN)	
16-H	5" x 5" x 2"	Primary Anode Terminal Plate (MZA); (1) MZN; (1) MZA	

ABBREVIATIONS:
MZN = Metallized Zinc Negative
PJN = Pile Jacket Negative
CJN = Cap Jacket Negative
SAN = Submerged Anode Negative
MZA = Metallized Zinc Anode
PJA = Pile Jacket Anode
CJA = Cap Jacket Anode
SA = Submerged Anode
RE = Reference Electrode
REN = Reference Electrode Negative

LEGEND
- Submerged Anode x = Weight in LBS
- Pile Jacket
- Cap Jacket
- Primary Anode Terminal
- Negative Connection
- Encapsulated Splice
- Reference Electrode

TYPICAL WIRE SIZES & COLORS AS FOLLOWS:
MZA & PJA = #10 Red
MZN; PJN = #10 Blue
SA = #8 Black
RE/REN: #16 Twisted Pair Red/Black

Tongass Ave Bent 17 South Elevation & Span 16			
SCALE: NONE	Field Sketch As-Built	DRAWN BY KRH	
DATE: 10-27-11		REVISED	
GREAT WESTERN CORPORATION			
Ketchikan Viaduct II Repair & C.P.		DRAWING NUMBER T-16	

SPAN 17 - VIEW THROUGH DECK

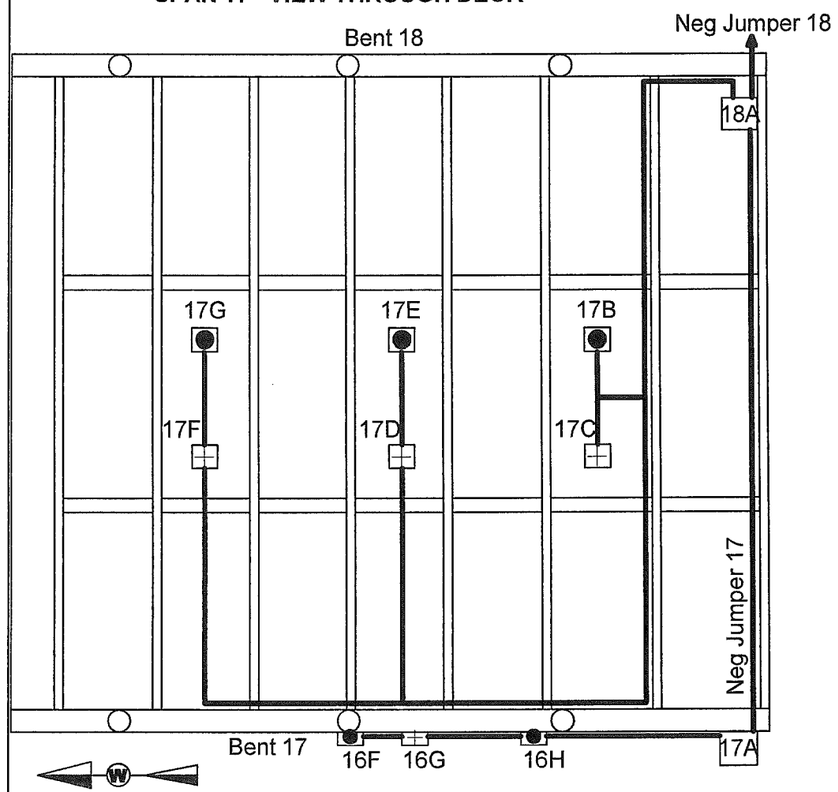

BENT 18 SOUTH ELEVATION

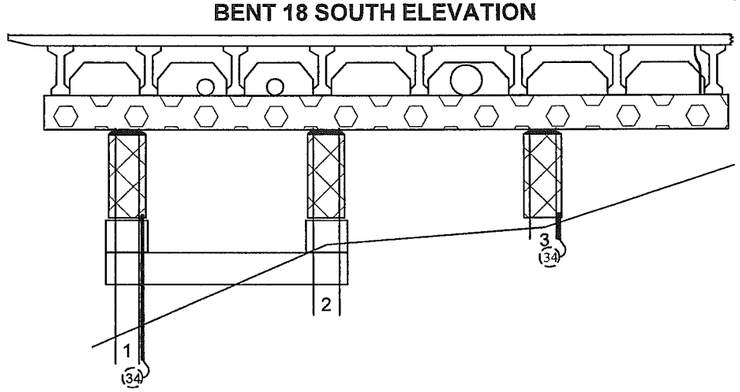

TYPICAL WIRE SIZES & COLORS AS FOLLOWS:
MZA & PJA = #10 Red
MZN; PJN = #10 Blue
SA = #8 Black
RE/REN: #16 Twisted Pair Red/Black

SCHEMATIC

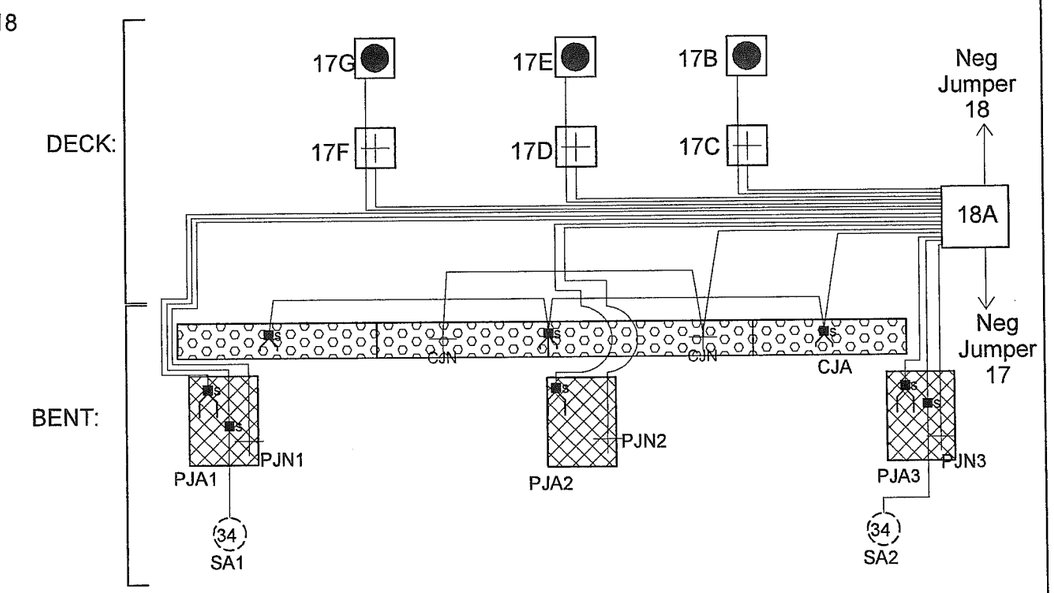

J-BOX DETAILS:

	J-Box Size	Wires or Structure
17-A	14" x 12" x 8"	MAIN J-BOX: (3) PJA; (3) PJN; (1) CJA; (1) CJA; (2) SA; SAN Jumpered from PJN; (3) MZA; (3) MZN; (2) MZN Jumpers
17-B	5" x 5" x 2"	Primary Anode Terminal Plate (MZA)
17-C	5" x 5" x 2"	Structure Negative (MZN)
17-D	5" x 5" x 2"	Structure Negative (MZN); (1) MZA
17-E	5" x 5" x 2"	Primary Anode Terminal Plate (MZA)
17-F	5" x 5" x 2"	Structure Negative (MZN); (1) MZA
17-G	5" x 5" x 2"	Primary Anode Terminal Plate (MZA)

ABBREVIATIONS:
MZN = Metallized Zinc Negative
PJN = Pile Jacket Negative
CJN = Cap Jacket Negative
SAN = Submerged Anode Negative
MZA = Metallized Zinc Anode
PJA = Pile Jacket Anode
CJA = Cap Jacket Anode
SA = Submerged Anode
RE = Reference Electrode
REN = Reference Electrode Negative

LEGEND
- (x) Submerged Anode x = Weight in LBS
- Pile Jacket
- Cap Jacket
- Primary Anode Terminal
- Negative Connection
- Encapsulated Splice
- Reference Electrode

Tongass Ave Bent 18 South Elevation & Span 17			
SCALE: NONE	Field Sketch As-Built	DRAWN BY KRH	
DATE: 10-27-11		REVISED	
GREAT WESTERN CORPORATION			
Ketchikan Viaduct II Repair & C.P.		DRAWING NUMBER T-17	

SPAN 18 - VIEW THROUGH DECK

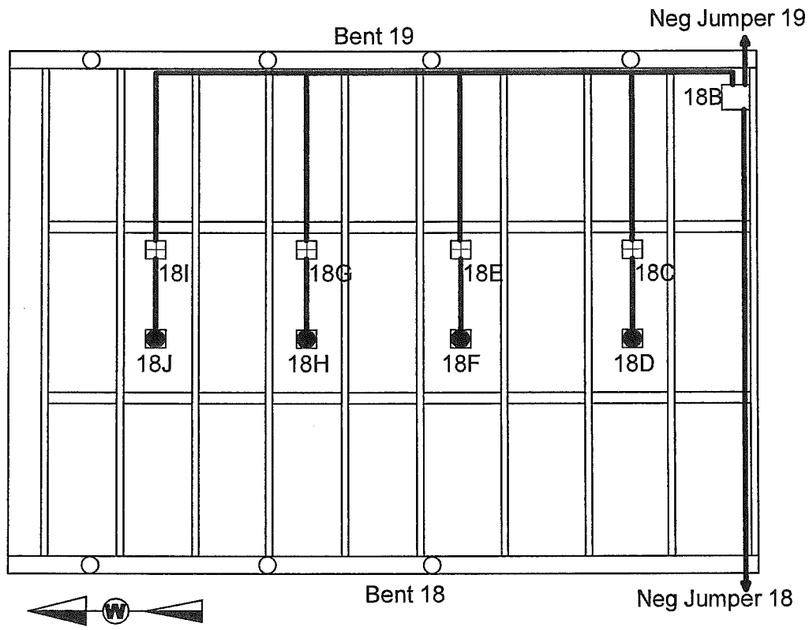

SCHEMATIC

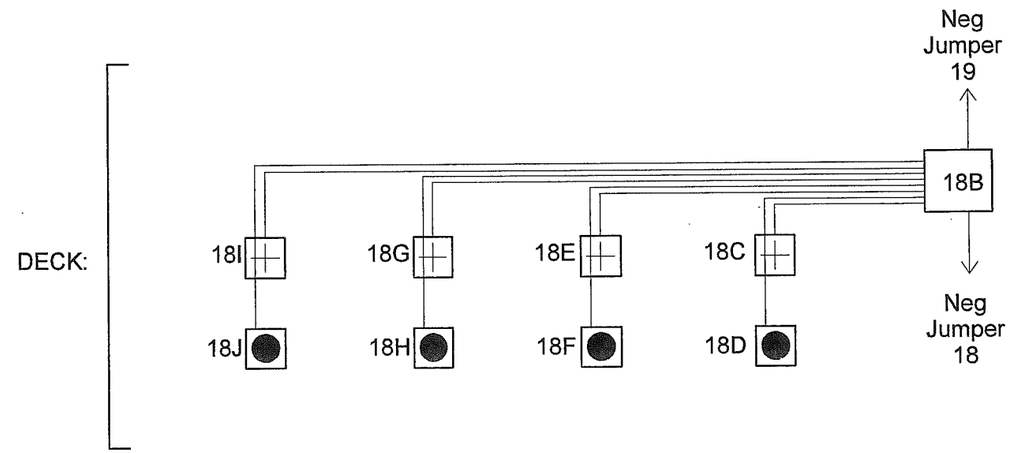

J-BOX DETAILS:

	J-Box Size	Wires or Structure
18-B	14" x 12" x 8"	MAIN J-BOX: (4) MZA; (4) MZN
18-C	5" x 5" x 2"	Structure Negative (MZN); (1) MZA
18-D	5" x 5" x 2"	Primary Anode Terminal Plate (MZA)
18-E	5" x 5" x 2"	Structure Negative (MZN); (1) MZA
18-F	5" x 5" x 2"	Primary Anode Terminal Plate (MZA)
18-G	5" x 5" x 2"	Structure Negative (MZN); (1) MZA
18-H	5" x 5" x 2"	Primary Anode Terminal Plate (MZA)
18-I	5" x 5" x 2"	Structure Negative (MZN); (1) MZA
18-J	5" x 5" x 2"	Primary Anode Terminal Plate (MZA)

TYPICAL WIRE SIZES & COLORS AS FOLLOWS:
MZA & PJA = #10 Red
MZN; PJN = #10 Blue
SA = #8 Black
RE/REN: #16 Twisted Pair Red/Black

ABBREVIATIONS:
MZN = Metallized Zinc Negative
PJN = Pile Jacket Negative
CJN = Cap Jacket Negative
SAN = Submerged Anode Negative
MZA = Metallized Zinc Anode
PJA = Pile Jacket Anode
CJA = Cap Jacket Anode
SA = Submerged Anode
RE = Reference Electrode
REN = Reference Electrode Negative

LEGEND
- Submerged Anode x = Weight in LBS
- Pile Jacket
- Cap Jacket
- Primary Anode Terminal
- Negative Connection
- Encapsulated Splice
- Reference Electrode

Tongass Ave Span 18			
SCALE: NONE	Field Sketch As-Built	DRAWN BY KRH	
DATE: 10-27-11		REVISED	
GREAT WESTERN CORPORATION			
Ketchikan Viaduct II Repair & C.P.		DRAWING NUMBER T-18	

SPAN 19 - VIEW THROUGH DECK

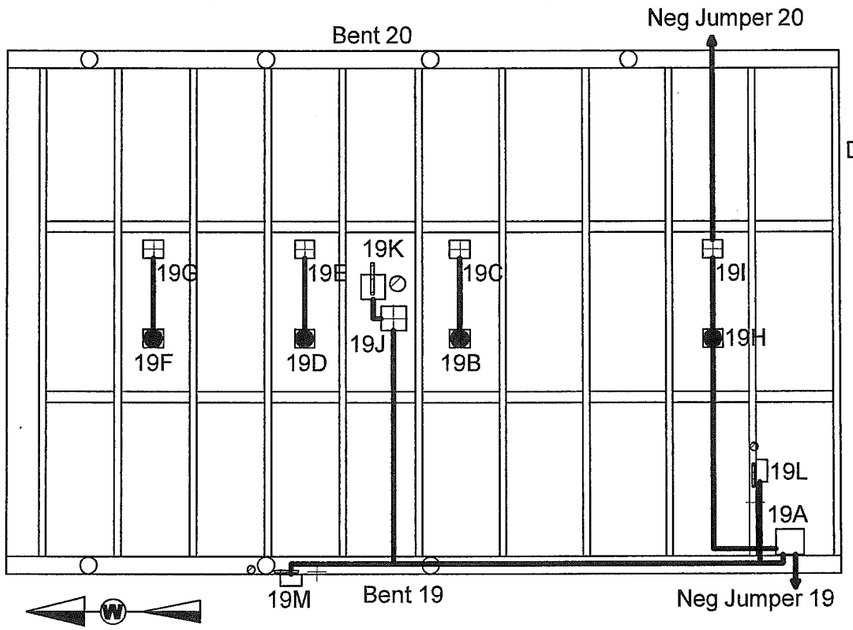

SCHEMATIC

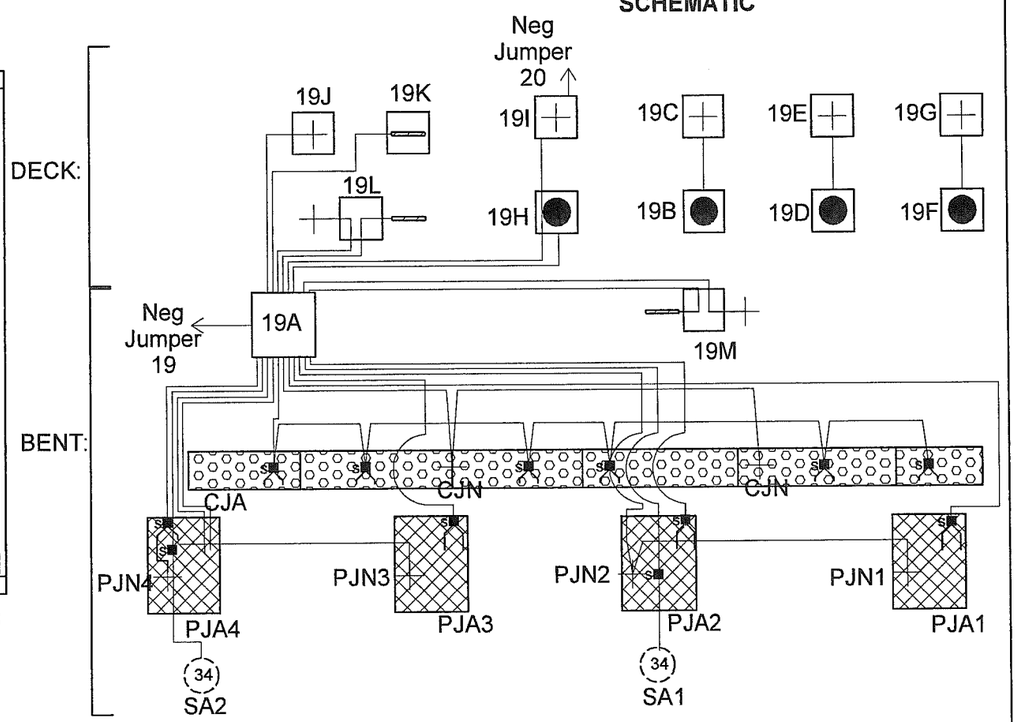

BENT 19 NORTH ELEVATION

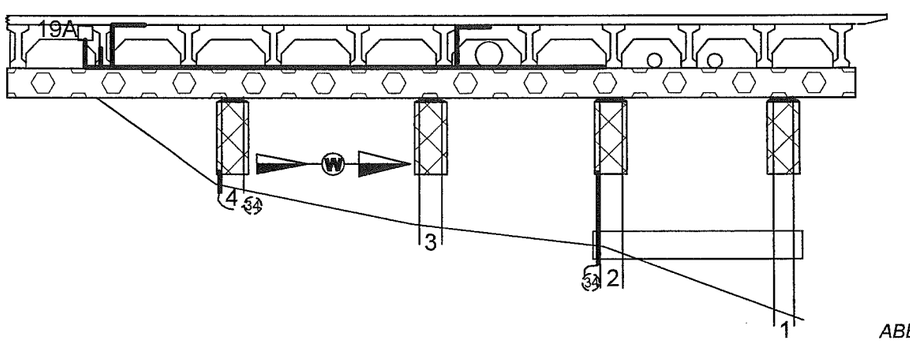

J-BOX DETAILS:

	J-Box Size	Wires or Structure
19-A	14" x 12" x 8"	MAIN J-BOX: (4) PJA; (2) PJN; (1) CJA; (1) CJN; (2) SA; SAN Jumpered from PJN; (1) MZA; (1) MZN; (3) RE; (3) REN; Neg Jumper 19
19-B	5" x 5" x 2"	Primary Anode Terminal Plate (MZA)
19-C	5" x 5" x 2"	Structure Negative (MZN)
19-D	5" x 5" x 2"	Primary Anode Terminal Plate (MZA)
19-E	5" x 5" x 2"	Structure Negative (MZN)
19-F	5" x 5" x 2"	Primary Anode Terminal Plate (MZA)
19-G	5" x 5" x 2"	Structure Negative (MZN)
19-H	5" x 5" x 2"	Primary Anode Terminal Plate (MZA); (1) MZN
19-I	5" x 5" x 2"	Structure Negative (MZN) - NEG Jumper 20
19-J	5" x 5" x 2"	Reference Electrode Negative (REN)
19-K	5" x 5" x 2"	Reference Electrode (RE)
19-L	5" x 5" x 2"	Reference Electrode (RE); (1) REN
19-M	5" x 5" x 2"	Reference Electrode (RE); (1) REN

ABBREVIATIONS:

MZN = Metallized Zinc Negative
PJN = Pile Jacket Negative
CJN = Cap Jacket Negative
SAN = Submerged Anode Negative
MZA = Metallized Zinc Anode
PJA = Pile Jacket Anode
CJA = Cap Jacket Anode
SA = Submerged Anode
RE = Reference Electrode
REN = Reference Electrode Negative

LEGEND

- (x) Submerged Anode x = Weight in LBS
- Pile Jacket
- Cap Jacket
- Primary Anode Terminal
- Negative Connection
- Encapsulated Splice
- Reference Electrode

TYPICAL WIRE SIZES & COLORS AS FOLLOWS:
MZA & PJA = #10 Red
MZN; PJN = #10 Blue
SA = #8 Black
RE/REN: #16 Twisted Pair Red/Black

Tongass Ave Bent 19 North Elevation & Span 19			
SCALE: NONE	Field Sketch As-Built	DRAWN BY KRH	
DATE: 10-27-11		REVISED 10-31-11	
GREAT WESTERN CORPORATION			
Ketchikan Viaduct II Repair & C.P.		DRAWING NUMBER T-19	

98

SPAN 20 - VIEW THROUGH DECK

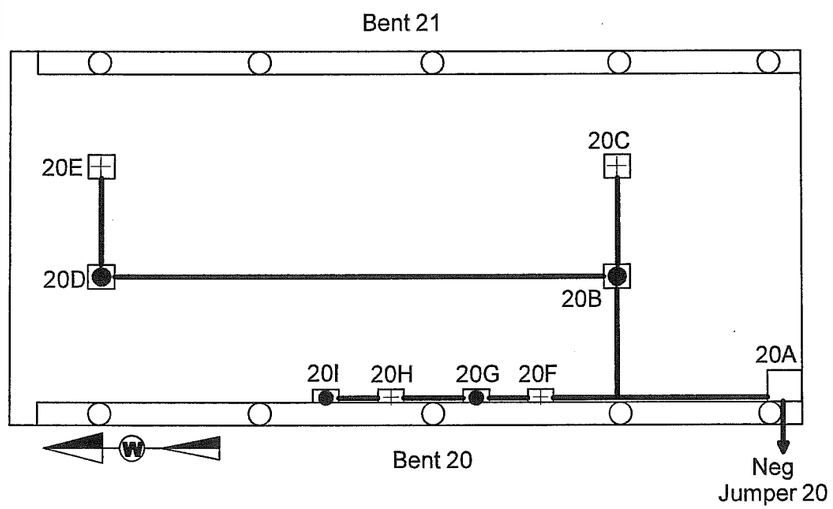

SCHEMATIC

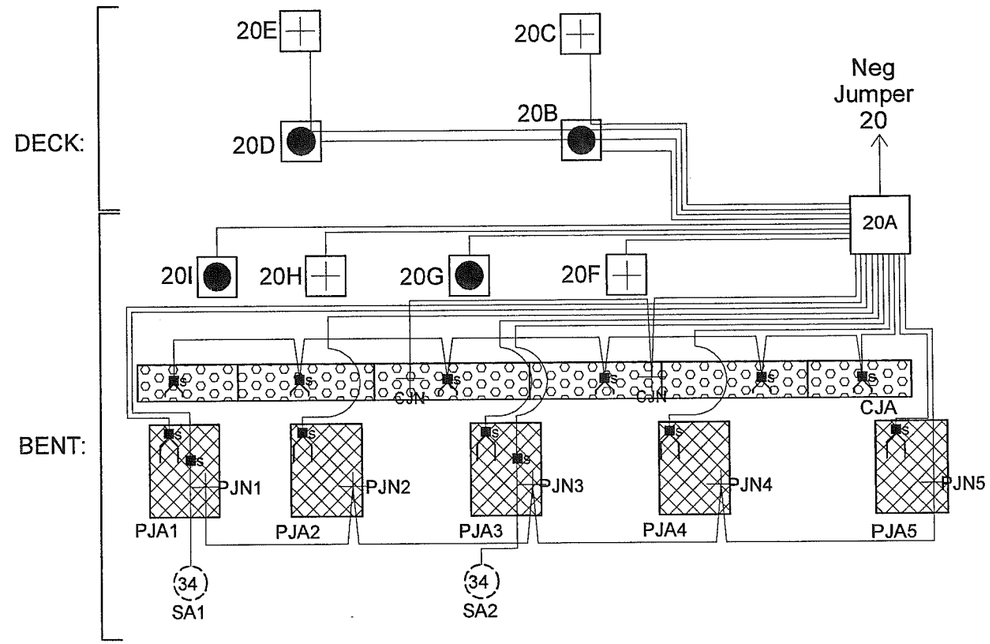

BENT 20 NORTH ELEVATION

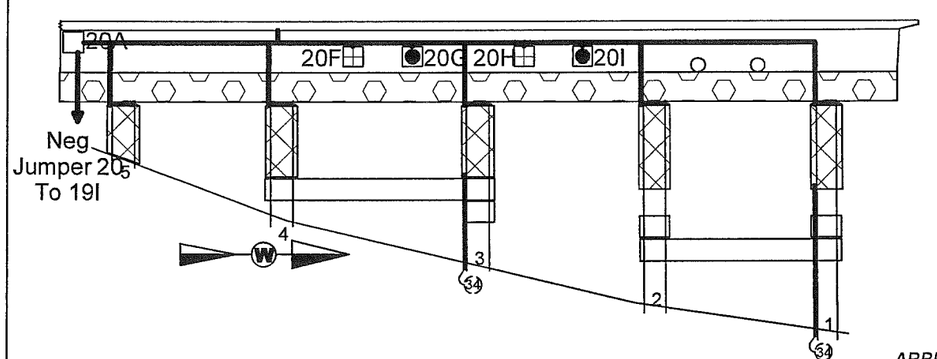

J-BOX DETAILS:

	J-Box Size	Wires or Structure
20-A	14"x12"x8"	MAIN J-BOX: (5) PJA; (1) PJN; (1) CJA; (1) CJN; (2) SA; SAN Jumpered from PJN; (4) MZA; (4) MZN; (1) MZN Jumpers
20-B	5"x5"x2"	Primary Anode Terminal Plate (MZA); (1) MZA; (2) MZN
20-C	5"x5"x2"	Structure Negative (MZN)
20-D	5"x5"x2"	Primary Anode Terminal Plate (MZA); (1) MZN
20-E	5"x5"x2"	Structure Negative (MZN)
20-F	5"x5"x2"	Structure Negative (MZN)
20-G	5"x5"x2"	Primary Anode Terminal Plate (MZA)
20-H	5"x5"x2"	Structure Negative (MZN)
20-I	5"x5"x2"	Primary Anode Terminal Plate (MZA)

ABBREVIATIONS:
MZN = Metallized Zinc Negative
PJN = Pile Jacket Negative
CJN = Cap Jacket Negative
SAN = Submerged Anode Negative
MZA = Metallized Zinc Anode
PJA = Pile Jacket Anode
CJA = Cap Jacket Anode
SA = Submerged Anode
RE = Reference Electrode
REN = Reference Electrode Negative

LEGEND
- (x) Submerged Anode x = Weight in LBS
- Pile Jacket
- Cap Jacket
- Primary Anode Terminal
- Negative Connection
- Encapsulated Splice
- Reference Electrode

TYPICAL WIRE SIZES & COLORS AS FOLLOWS:
MZA & PJA = #10 Red
MZN; PJN = #10 Blue
SA = #8 Black
RE/REN: #16 Twisted Pair Red/Black

Tongass Ave Bent 20 North Elevation & Span 20			
SCALE: NONE	Field Sketch As-Built	DRAWN BY KRH	
DATE: 10-31-11		REVISED	
GREAT WESTERN CORPORATION			
Ketchikan Viaduct II Repair & C.P.		DRAWING NUMBER T-20	

SPAN 21 - VIEW THROUGH DECK

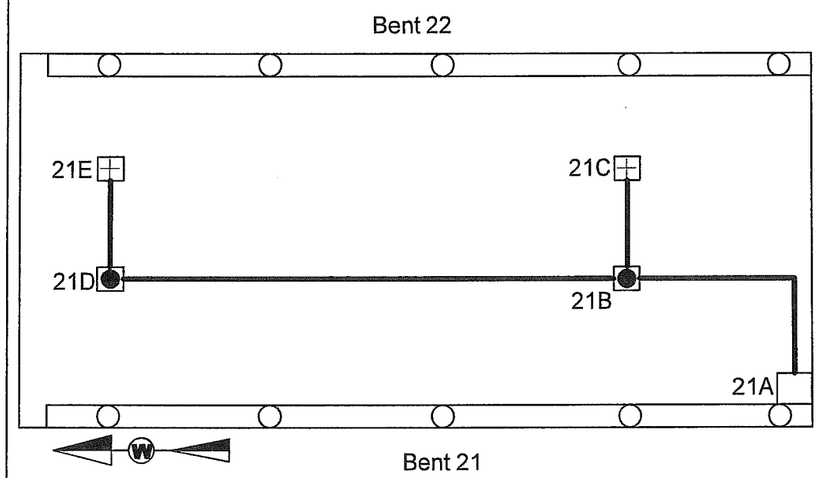

SCHEMATIC

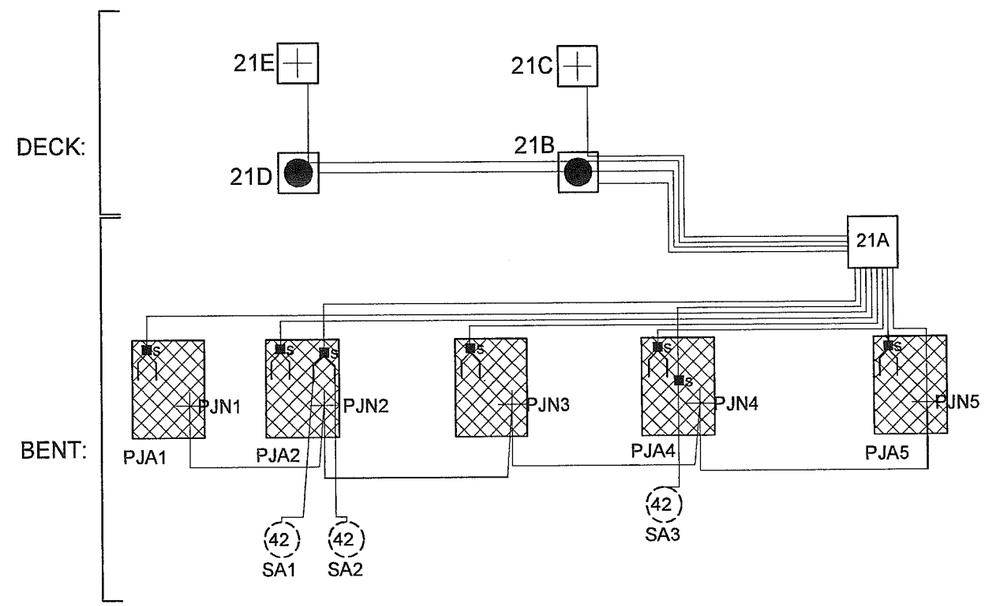

BENT 21 NORTH ELEVATION

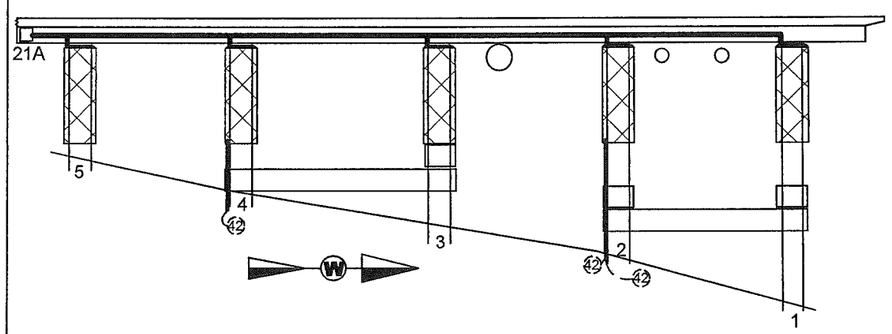

J-BOX DETAILS:

	J-Box Size	Wires or Structure
21-A	14" x 12" x 8"	MAIN J-BOX: (5) PJA; (1) PJN; (2) SA; SAN Jumpered from PJN; (2) MZA; (2) MZN
21-B	5" x 5" x 2"	Primary Anode Terminal Plate (MZA); (1) MZA; (2) MZN
21-C	5" x 5" x 2"	Structure Negative (MZN)
21-D	5" x 5" x 2"	Primary Anode Terminal Plate (MZA); (1) MZN
21-E	5" x 5" x 2"	Structure Negative (MZN)

TYPICAL WIRE SIZES & COLORS AS FOLLOWS:
MZA & PJA = #10 Red
MZN; PJN = #10 Blue
SA = #8 Black
RE/REN: #16 Twisted Pair Red/Black

ABBREVIATIONS:
MZN = Metallized Zinc Negative
PJN = Pile Jacket Negative
CJN = Cap Jacket Negative
SAN = Submerged Anode Negative
MZA = Metallized Zinc Anode
PJA = Pile Jacket Anode
CJA = Cap Jacket Anode
SA = Submerged Anode
RE = Reference Electrode
REN = Reference Electrode Negative

LEGEND
- Submerged Anode x = Weight in LBS
- Pile Jacket
- Cap Jacket
- Primary Anode Terminal
- Negative Connection
- Encapsulated Splice
- Reference Electrode

Tongass Ave Bent 21 North Elevation & Span 21			
SCALE: NONE	Field Sketch As-Built	DRAWN BY KRH	
DATE: 10-31-11		REVISED	
GREAT WESTERN CORPORATION			
Ketchikan Viaduct II Repair & C.P.		DRAWING NUMBER T-21	

SPAN 22 - VIEW THROUGH DECK

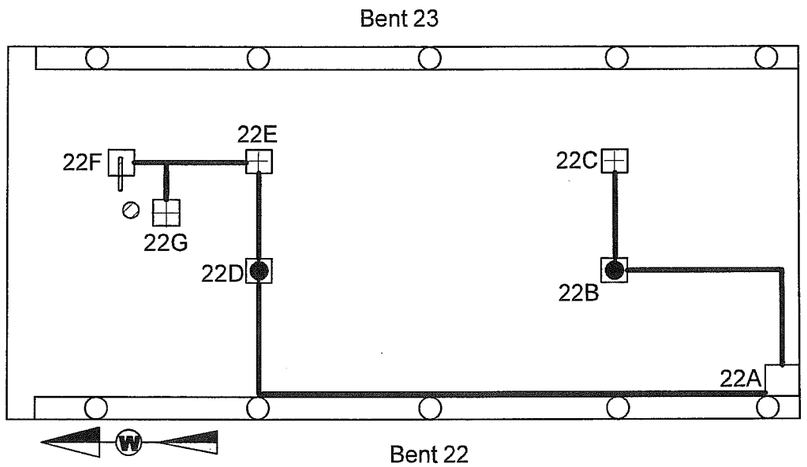

SCHEMATIC

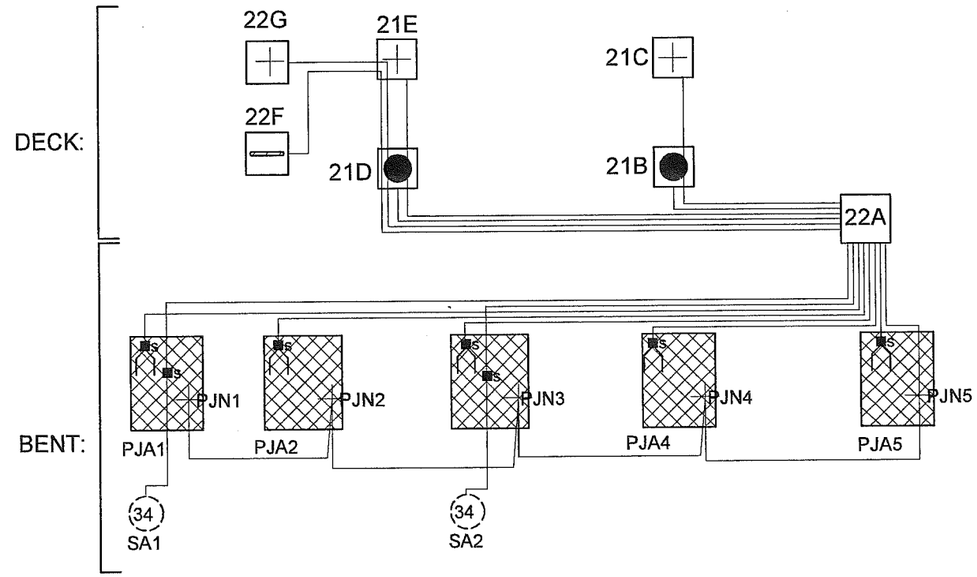

BENT 22 NORTH ELEVATION

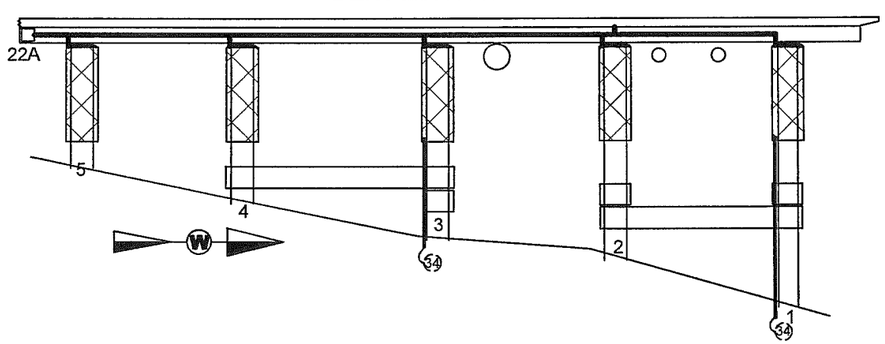

J-BOX DETAILS:

	J-Box Size	Wires or Structure
22-A	14" x 12" x 8"	MAIN J-BOX: (5) PJA; (1) PJN; (2) SA; SAN Jumpered from PJN; (2) MZA; (2) MZN; (1) RE; (1) REN
22-B	5" x 5" x 2"	Primary Anode Terminal Plate (MZA); (1) MZN
22-C	5" x 5" x 2"	Structure Negative (MZN)
22-D	5" x 5" x 2"	Primary Anode Terminal Plate (MZA); (1) MZN; (1) RE; (1) REN
22-E	5" x 5" x 2"	Structure Negative (MZN); (1) RE; (1) REN
22-F	5" x 5" x 2"	Reference Electrode (RE)
22-G	5" x 5" x 2"	Reference Electrode Negative (REN)

TYPICAL WIRE SIZES & COLORS AS FOLLOWS:
MZA & PJA = #10 Red
MZN; PJN = #10 Blue
SA = #8 Black
RE/REN: #16 Twisted Pair Red/Black

ABBREVIATIONS:
MZN = Metallized Zinc Negative
PJN = Pile Jacket Negative
CJN = Cap Jacket Negative
SAN = Submerged Anode Negative
MZA = Metallized Zinc Anode
PJA = Pile Jacket Anode
CJA = Cap Jacket Anode
SA = Submerged Anode
RE = Reference Electrode
REN = Reference Electrode Negative

LEGEND
- Submerged Anode x = Weight in LBS
- Pile Jacket
- Cap Jacket
- Primary Anode Terminal
- Negative Connection
- Encapsulated Splice
- Reference Electrode

Tongass Ave Bent 22 North Elevation & Span 22			
SCALE: NONE	Field Sketch As-Built	DRAWN BY KRH	
DATE: 10-31-11		REVISED	
GREAT WESTERN CORPORATION			
Ketchikan Viaduct II Repair & C.P.		DRAWING NUMBER T-22	

SPAN 23 - VIEW THROUGH DECK

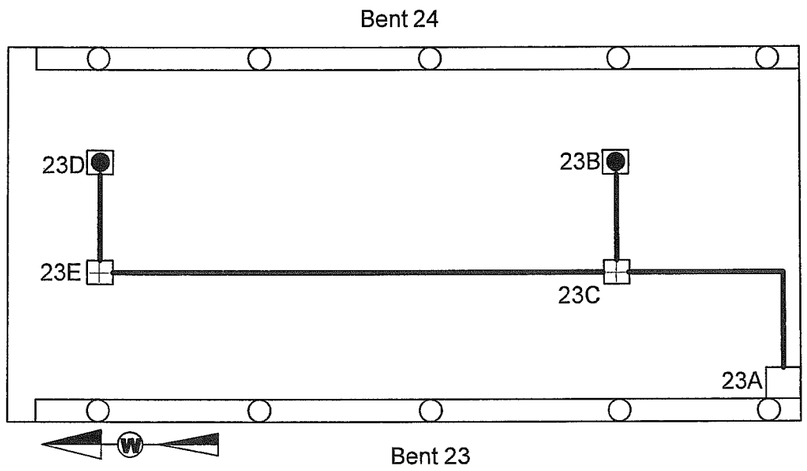

SCHEMATIC

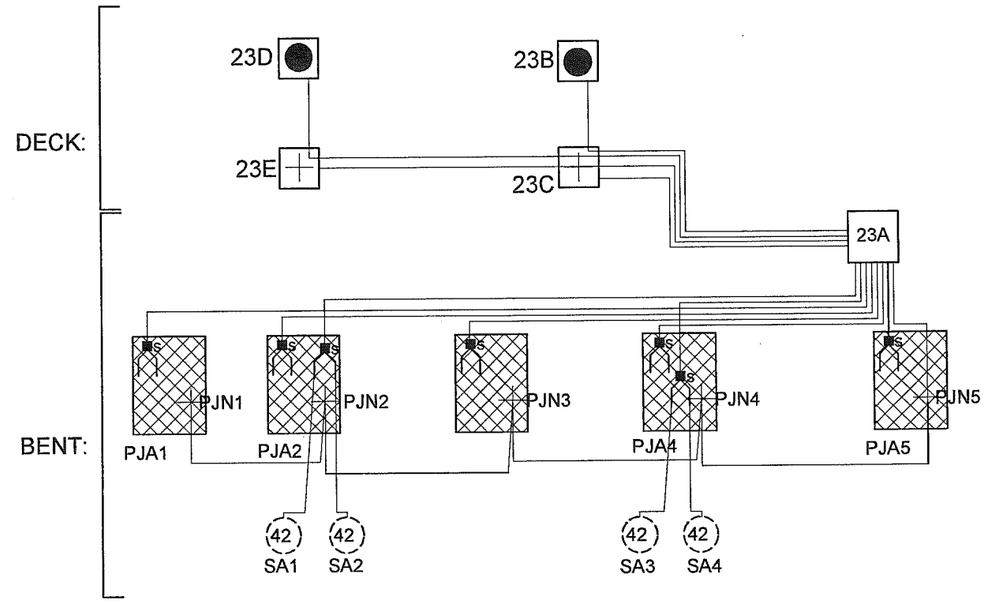

BENT 23 NORTH ELEVATION

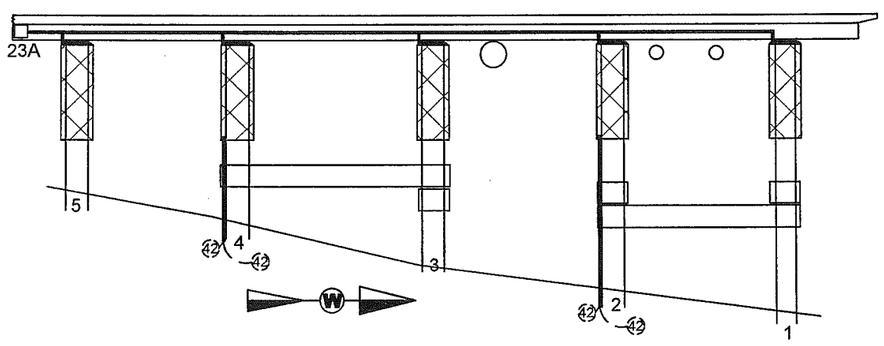

J-BOX DETAILS:

	J-Box Size	Wires or Structure
23-A	14" x 12" x 8"	MAIN J-BOX: (5) PJA; (1) PJN; (2) SA; SAN Jumpered from PJN; (2) MZA; (2) MZN
23-B	5" x 5" x 2"	Primary Anode Terminal Plate (MZA)
23-C	5" x 5" x 2"	Structure Negative (MZN); (2) MZA; (1) MZN
23-D	5" x 5" x 2"	Primary Anode Terminal Plate (MZA)
23-E	5" x 5" x 2"	Structure Negative (MZN); (1) MZA

ABBREVIATIONS:
MZN = Metallized Zinc Negative
PJN = Pile Jacket Negative
CJN = Cap Jacket Negative
SAN = Submerged Anode Negative
MZA = Metallized Zinc Anode
PJA = Pile Jacket Anode
CJA = Cap Jacket Anode
SA = Submerged Anode
RE = Reference Electrode
REN = Reference Electrode Negative

LEGEND
- Submerged Anode x = Weight in LBS
- Pile Jacket
- Cap Jacket
- Primary Anode Terminal
- Negative Connection
- Encapsulated Splice
- Reference Electrode

TYPICAL WIRE SIZES & COLORS AS FOLLOWS:
MZA & PJA = #10 Red
MZN; PJN = #10 Blue
SA = #8 Black
RE/REN: #16 Twisted Pair Red/Black

Tongass Ave Bent 23 North Elevation & Span 23			
SCALE: NONE	Field Sketch As-Built	DRAWN BY KRH	
DATE: 10-31-11		REVISED	
GREAT WESTERN CORPORATION			
Ketchikan Viaduct II Repair & C.P.		DRAWING NUMBER T-23	

SPAN 24 - VIEW THROUGH DECK

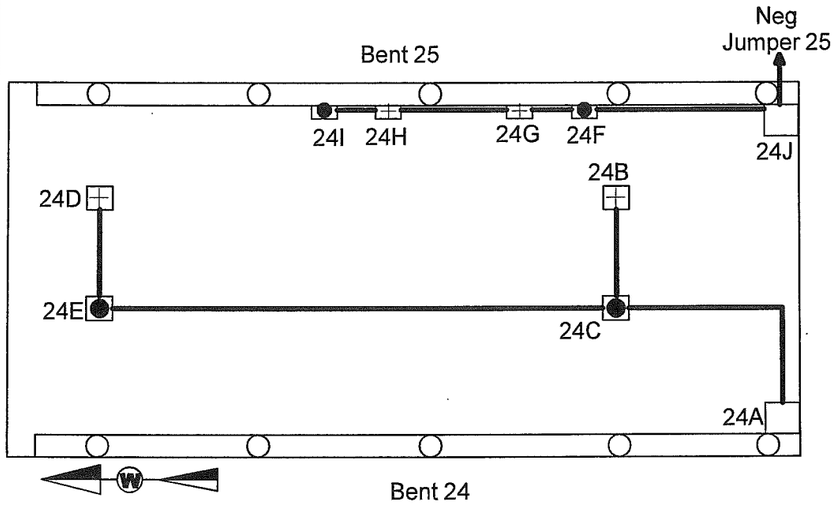

SCHEMATIC

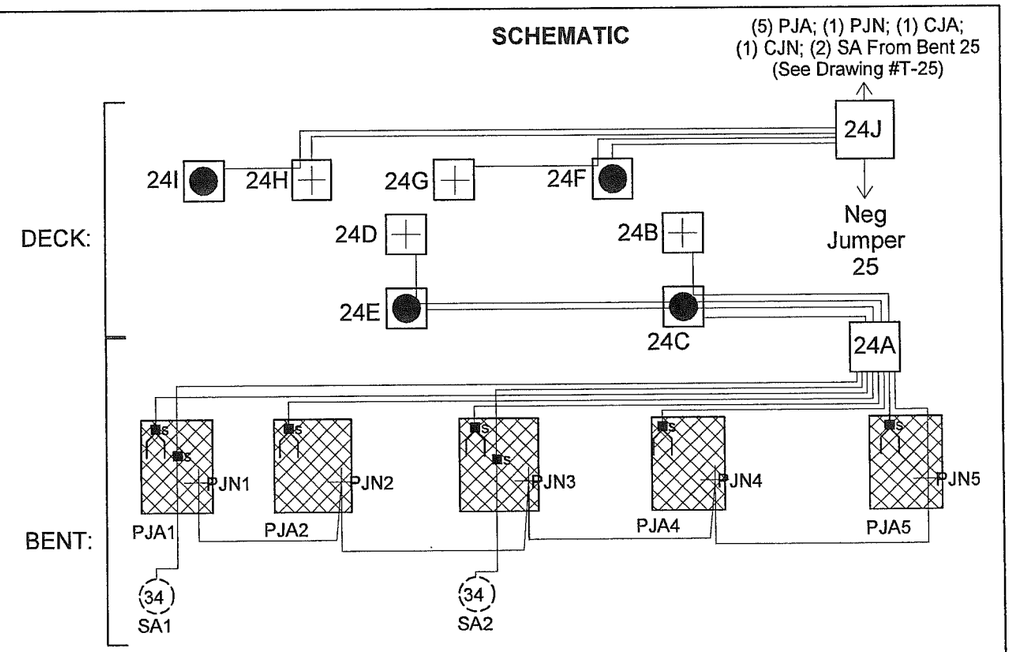

BENT 24 NORTH ELEVATION

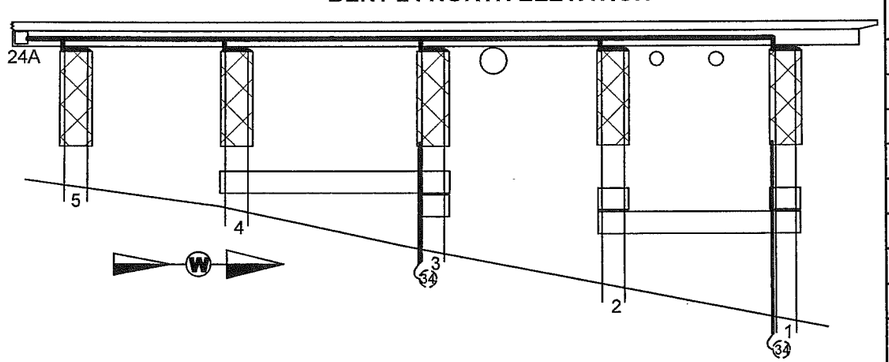

J-BOX DETAILS:

	J-Box Size	Wires or Structure
24-A	14"x12"x8"	MAIN J-BOX: (5) PJA; (1) PJN; (2) SA; SAN Jumpered from PJN; (2) MZA; (2) MZN
24-B	5"x5"x2"	Structure Negative (MZN)
24-C	5"x5"x2"	Primary Anode Terminal Plate (MZA); (2) MZN; (1) MZA
24-D	5"x5"x2"	Structure Negative (MZN)
24-E	5"x5"x2"	Primary Anode Terminal Plate (MZA); (1) MZN
24-F	5"x5"x2"	Primary Anode Terminal Plate (MZA); (1) MZN
24-G	5"x5"x2"	Structure Negative (MZN)
24-H	5"x5"x2"	Structure Negative (MZN); (1) MZA
24-I	5"x5"x2"	Primary Anode Terminal Plate (MZA)
24-J	14"x12"x8"	MAIN J-BOX BENT 25: (See Drawing #T-25) (5) PJA; (1) PJN; (1) CJA; (1) CJN; (2) SA; SAN Jumpered from PJN; (2) MZA; (2) MZN

ABBREVIATIONS:
MZN = Metallized Zinc Negative
PJN = Pile Jacket Negative
CJN = Cap Jacket Negative
SAN = Submerged Anode Negative
MZA = Metallized Zinc Anode
PJA = Pile Jacket Anode
CJA = Cap Jacket Anode
SA = Submerged Anode
RE = Reference Electrode
REN = Reference Electrode Negative

LEGEND
- (x) Submerged Anode x = Weight in LBS
- Pile Jacket
- Cap Jacket
- Primary Anode Terminal
- Negative Connection
- Encapsulated Splice
- Reference Electrode

TYPICAL WIRE SIZES & COLORS AS FOLLOWS:
MZA & PJA = #10 Red
MZN; PJN = #10 Blue
SA = #8 Black
RE/REN: #16 Twisted Pair Red/Black

Tongass Ave Bent 24 North Elevation & Span 24			
SCALE: NONE	Field Sketch As-Built	DRAWN BY KRH	
DATE: 10-31-11		REVISED 11-1-11	
GREAT WESTERN CORPORATION			
Ketchikan Viaduct II Repair & C.P.		DRAWING NUMBER T-24	

SPAN 25 - VIEW THROUGH DECK

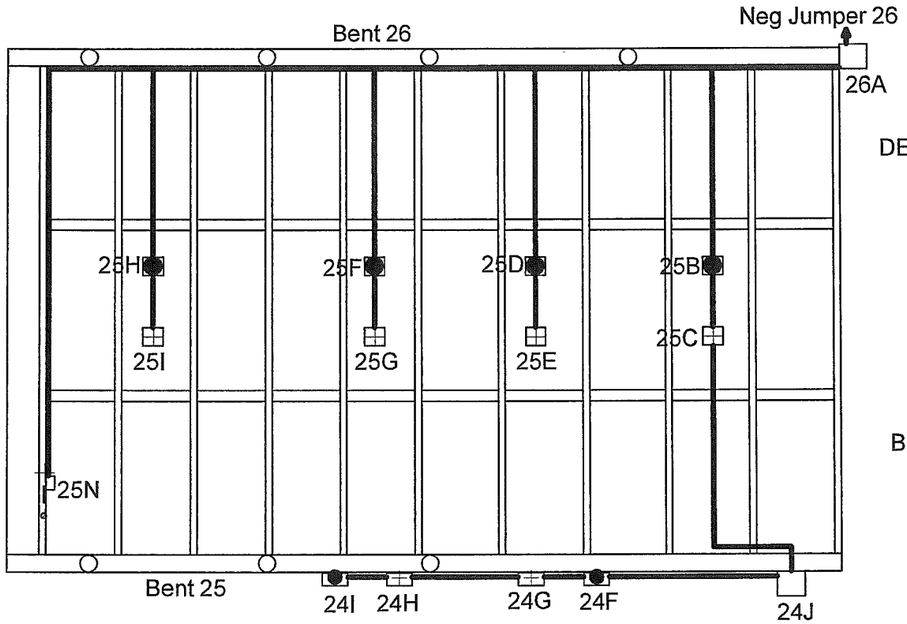

SCHEMATIC

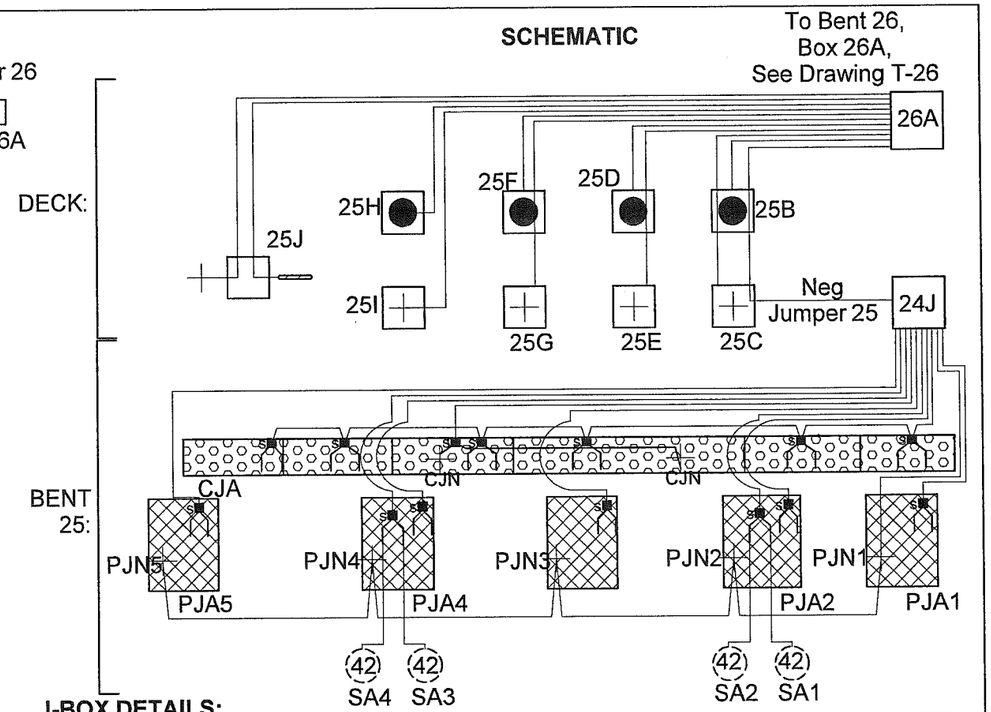

J-BOX DETAILS:

	J-Box Size	Wires or Structure
26-A	14"x12"x8"	MAIN J-BOX Bent 26 (See Drawing #T-26): (5) PJA; (1) PJN; (1) CJA; (1) CJN; (2) SA; SAN Jumpered from PJN; (8) MZA; (8) MZN; (2) RE; (2) REN
25-B	5"x5"x2"	Primary Anode Terminal Plate (MZA); (1) MZN; (1) NEG JUMPER 25
25-C	5"x5"x2"	Structure Negative (MZN); (1) NEG JUMPER 25
25-D	5"x5"x2"	Primary Anode Terminal Plate (MZA); (1) MZN
25-E	5"x5"x2"	Structure Negative (MZN)
25-F	5"x5"x2"	Primary Anode Terminal Plate (MZA); (1) MZN
25-G	5"x5"x2"	Structure Negative (MZN)
25-H	5"x5"x2"	Primary Anode Terminal Plate (MZA); (1) MZN
25-I	5"x5"x2"	Structure Negative (MZN)
25-J	8"x8"x4"	Reference Electrode (RE); Reference Electrode Negative (REN)
24-F	5"x5"x2"	Primary Anode Terminal Plate (MZA); (1) MZN
24-G	5"x5"x2"	Structure Negative (MZN)
24-H	5"x5"x2"	Structure Negative (MZN); (1) MZA
24-I	5"x5"x2"	Primary Anode Terminal Plate (MZA)
24-J	14"x12"x8"	MAIN J-BOX BENT 25: (5) PJA; (1) PJN; (1) CJA; (1) CJN; (2) SA; SAN Jumpered from PJN; (2) MZA; (2) MZN

BENT 25 SOUTH ELEVATION

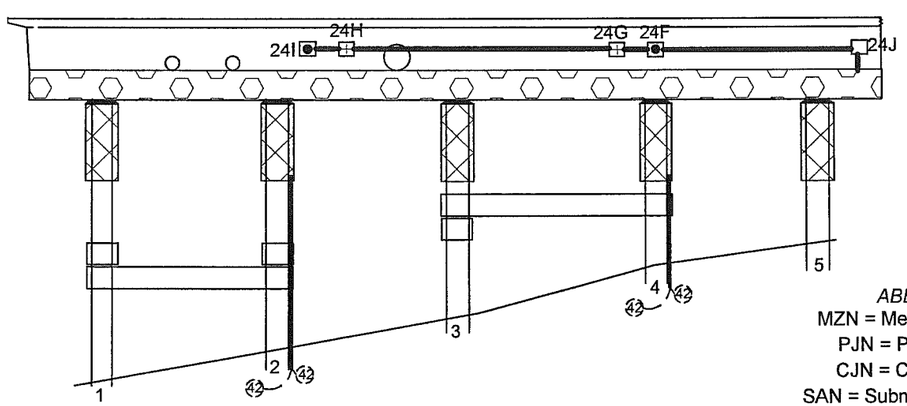

TYPICAL WIRE SIZES & COLORS AS FOLLOWS:
MZA & PJA = #10 Red
MZN; PJN = #10 Blue
SA = #8 Black
RE/REN: #16 Twisted Pair Red/Black

ABBREVIATIONS:
MZN = Metallized Zinc Negative
PJN = Pile Jacket Negative
CJN = Cap Jacket Negative
SAN = Submerged Anode Negative
MZA = Metallized Zinc Anode
PJA = Pile Jacket Anode
CJA = Cap Jacket Anode
SA = Submerged Anode
RE = Reference Electrode
REN = Reference Electrode Negative

LEGEND
- Submerged Anode x = Weight in LBS
- Pile Jacket
- Cap Jacket
- Primary Anode Terminal
- Negative Connection
- Encapsulated Splice
- Reference Electrode

Tongass Ave Bent 25 South Elevation & Span 25			
SCALE: NONE	Field Sketch As-Built	DRAWN BY KRH	
DATE: 10-31-11		REVISED 11-1-11	
GREAT WESTERN CORPORATION			
Ketchikan Viaduct II Repair & C.P.		DRAWING NUMBER T-25	

SPAN 26 - VIEW THROUGH DECK

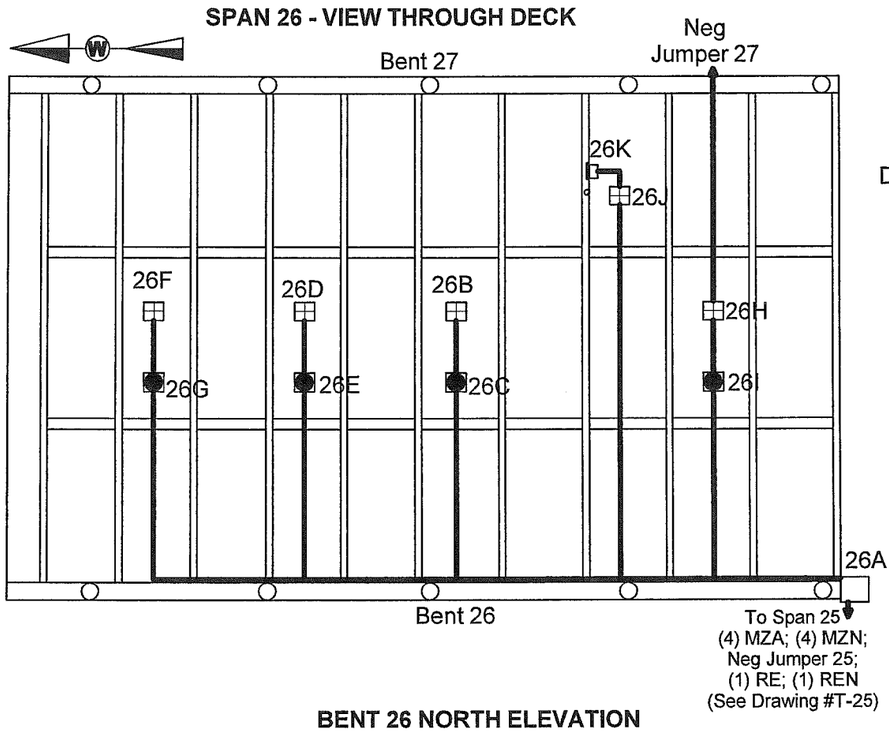

BENT 26 NORTH ELEVATION

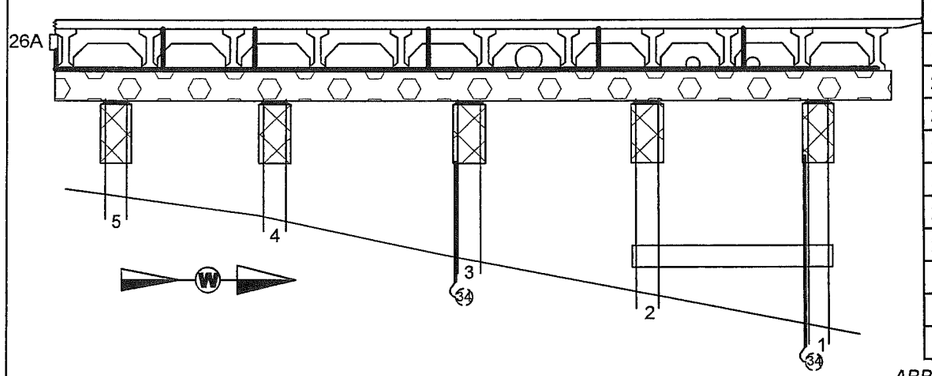

SCHEMATIC

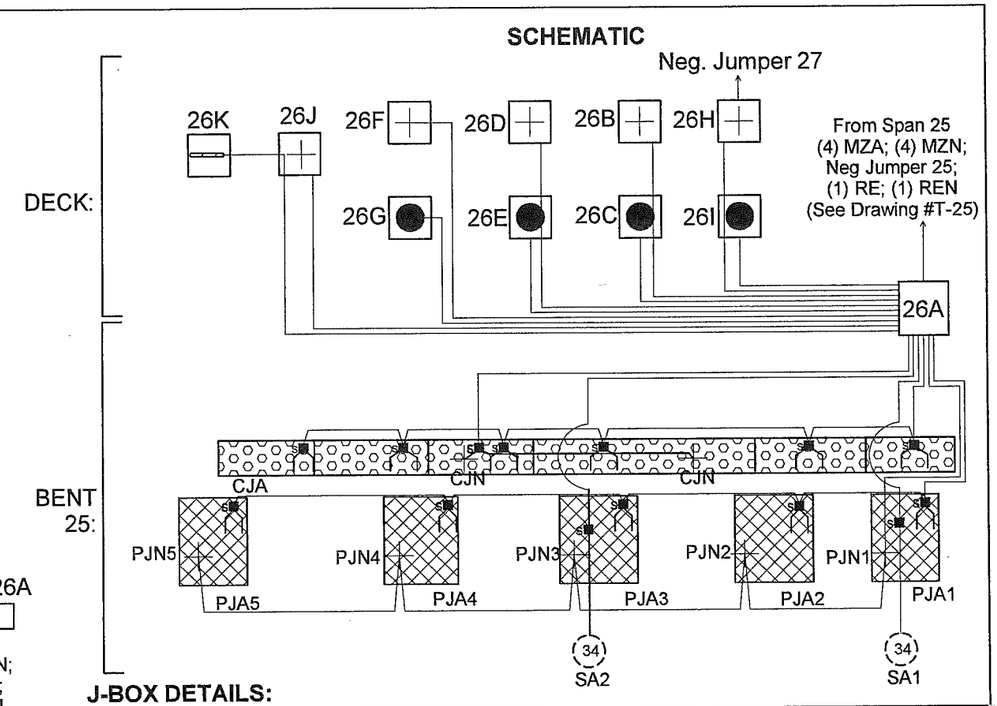

J-BOX DETAILS:

	J-Box Size	Wires or Structure
26-A	14" x 12" x 8"	MAIN J-BOX: (5) PJA; (1) PJN; (1) CJA; (1) CJN; (2) SA; SAN Jumpered from PJN; (8) MZA; (8) MZN; (2) RE; (2) REN
26-B	5" x 5" x 2"	Structure Negative (MZN)
26-C	5" x 5" x 2"	Primary Anode Terminal Plate (MZA); (1) MZN
26-D	5" x 5" x 2"	Structure Negative (MZN)
26-E	5" x 5" x 2"	Primary Anode Terminal Plate (MZA); (1) MZN
26-F	5" x 5" x 2"	Structure Negative (MZN)
26-G	5" x 5" x 2"	Primary Anode Terminal Plate (MZA); (1) MZN
26-H	5" x 5" x 2"	Structure Negative (MZN); NEG JUMPER 27
26-I	5" x 5" x 2"	Primary Anode Terminal Plate (MZA); (1) MZN
26-J	8" x 8" x 4"	Reference Electrode Negative (REN); (1) RE
26-K	5" x 5" x 2"	Reference Electrode (RE)

ABBREVIATIONS:
MZN = Metallized Zinc Negative
PJN = Pile Jacket Negative
CJN = Cap Jacket Negative
SAN = Submerged Anode Negative
MZA = Metallized Zinc Anode
PJA = Pile Jacket Anode
CJA = Cap Jacket Anode
SA = Submerged Anode
RE = Reference Electrode
REN = Reference Electrode Negative

LEGEND
- (x) Submerged Anode x = Weight in LBS
- Pile Jacket
- Cap Jacket
- Primary Anode Terminal
- Negative Connection
- Encapsulated Splice
- Reference Electrode

TYPICAL WIRE SIZES & COLORS AS FOLLOWS:
MZA & PJA = #10 Red
MZN; PJN = #10 Blue
SA = #8 Black
RE/REN: #16 Twisted Pair Red/Black

Tongass Ave Bent 26 North Elevation & Span 26			
SCALE: NONE	Field Sketch As-Built	DRAWN BY KRH	
DATE: 11-1-11		REVISED	
GREAT WESTERN CORPORATION			
Ketchikan Viaduct II Repair & C.P.		DRAWING NUMBER T-26	

SPAN 27 - VIEW THROUGH DECK

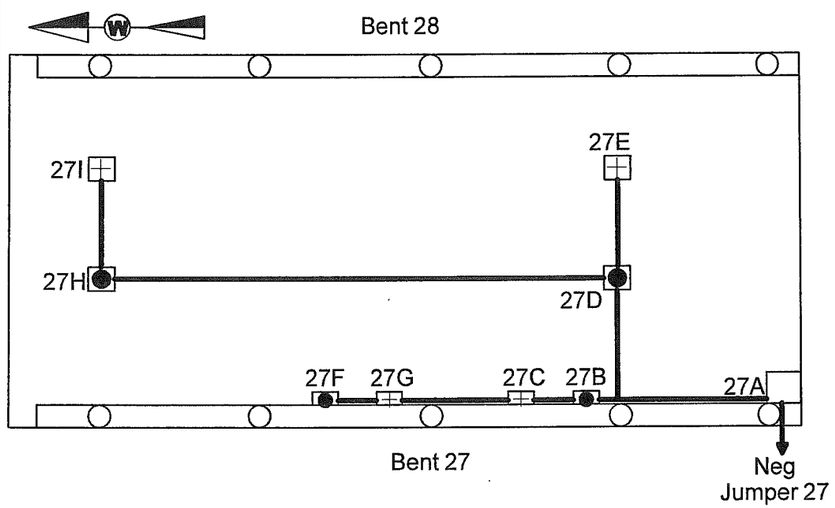

SCHEMATIC

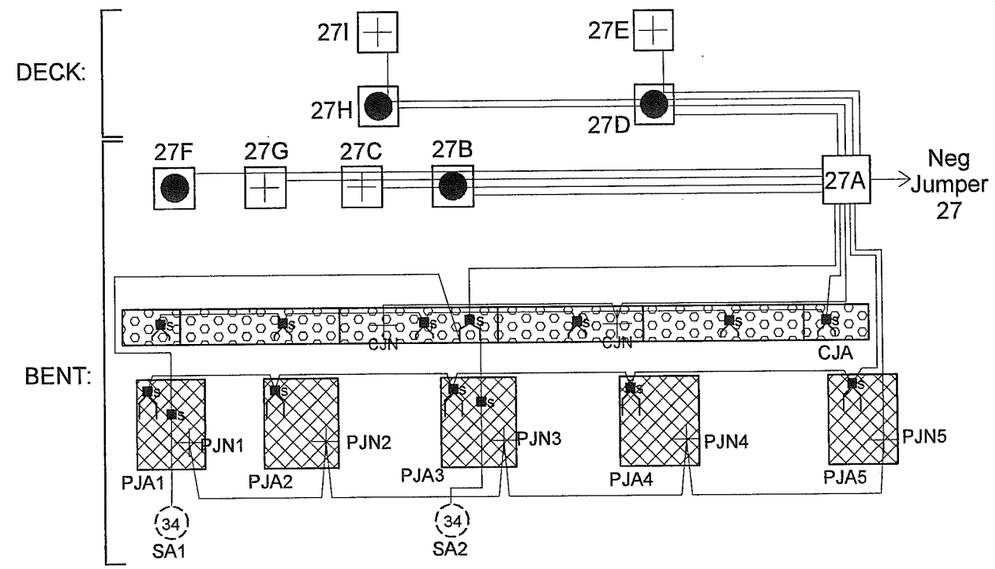

BENT 27 NORTH ELEVATION

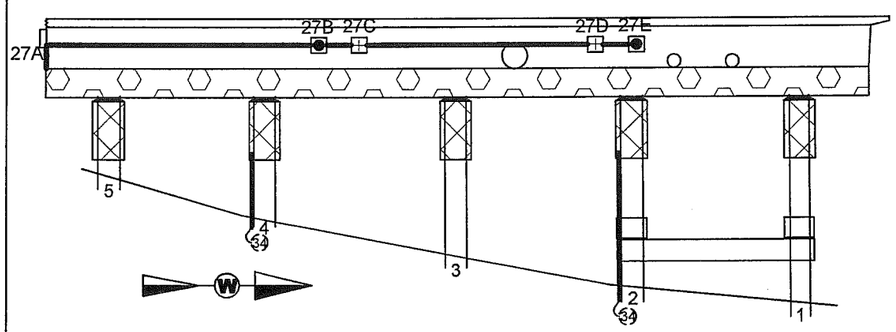

J-BOX DETAILS:

	J-Box Size	Wires or Structure
27-A	14" x 12" x 8"	MAIN J-BOX: (5) PJA; (1) PJN; (1) CJA; (1) CJN; (2) SA; SAN Jumpered from PJN; (4) MZA; (4) MZN
27-B	5" x 5" x 2"	Primary Anode Terminal Plate (MZA); (2) MZN; (1) MZA
27-C	5" x 5" x 2"	Structure Negative (MZN); (1) MZA; (1) MZN
27-D	5" x 5" x 2"	Primary Anode Terminal Plate (MZA); (2) MZN; (1) MZA
27-E	5" x 5" x 2"	Structure Negative (MZN)
27-F	5" x 5" x 2"	Primary Anode Terminal Plate (MZA)
27-G	5" x 5" x 2"	Structure Negative (MZN); (1) MZA
27-H	5" x 5" x 2"	Primary Anode Terminal Plate (MZA); (1) MZN
27-I	5" x 5" x 2"	Structure Negative (MZN)

TYPICAL WIRE SIZES & COLORS AS FOLLOWS:
MZA & PJA = #10 Red
MZN; PJN = #10 Blue
SA = #8 Black
RE/REN: #16 Twisted Pair Red/Black

ABBREVIATIONS:
MZN = Metallized Zinc Negative
PJN = Pile Jacket Negative
CJN = Cap Jacket Negative
SAN = Submerged Anode Negative
MZA = Metallized Zinc Anode
PJA = Pile Jacket Anode
CJA = Cap Jacket Anode
SA = Submerged Anode
RE = Reference Electrode
REN = Reference Electrode Negative

LEGEND
- (X) Submerged Anode x = Weight in LBS
- Pile Jacket
- Cap Jacket
- Primary Anode Terminal
- Negative Connection
- Encapsulated Splice
- Reference Electrode

Tongass Ave Bent 27 North Elevation & Span 27			
SCALE: NONE	Field Sketch As-Built	DRAWN BY KRH	
DATE: 11-1-11		REVISED	
GREAT WESTERN CORPORATION			
Ketchikan Viaduct II Repair & C.P.		DRAWING NUMBER T-27	

SPAN 28 - VIEW THROUGH DECK

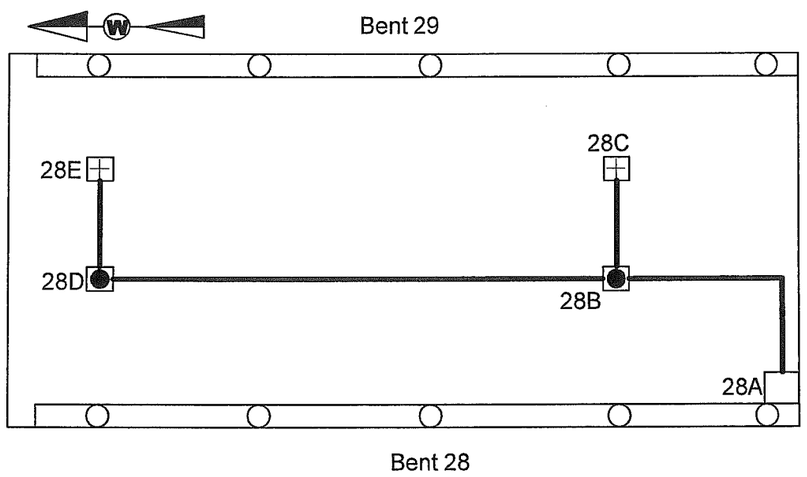

SCHEMATIC

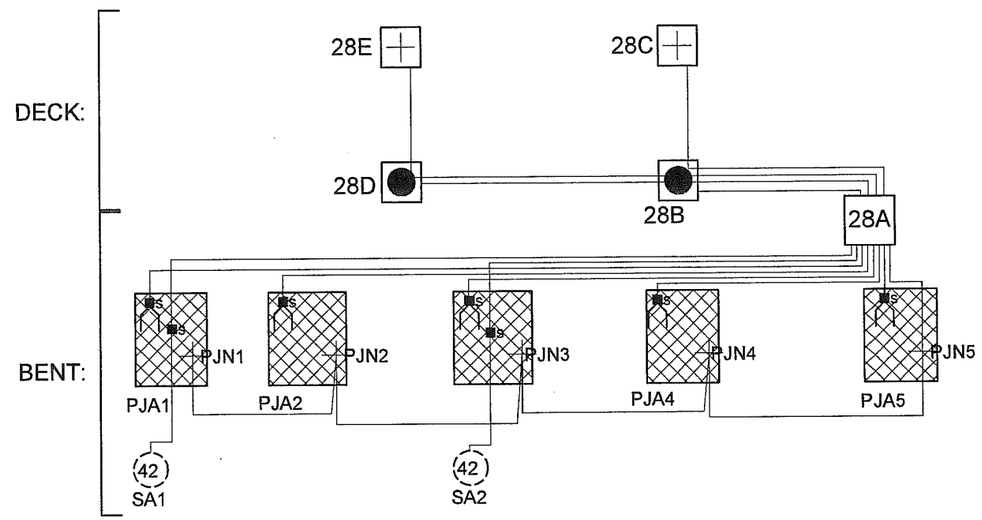

BENT 28 NORTH ELEVATION

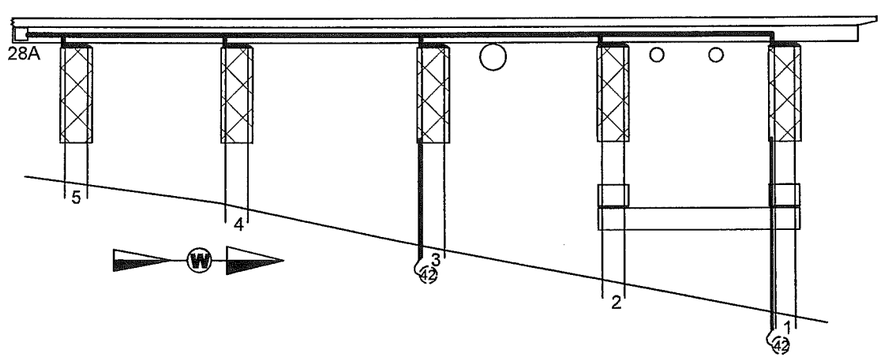

J-BOX DETAILS:

	J-Box Size	Wires or Structure
28-A	14" x 12" x 8"	MAIN J-BOX: (5) PJA; (1) PJN; (2) SA; SAN Jumpered from PJN; (2) MZA; (2) MZN
28-B	5" x 5" x 2"	Primary Anode Terminal Plate (MZA); (2) MZN; (1) MZA
28-C	5" x 5" x 2"	Structure Negative (MZN)
28-D	5" x 5" x 2"	Primary Anode Terminal Plate (MZA); (1) MZN
28-E	5" x 5" x 2"	Structure Negative (MZN)

ABBREVIATIONS:
MZN = Metallized Zinc Negative
PJN = Pile Jacket Negative
CJN = Cap Jacket Negative
SAN = Submerged Anode Negative
MZA = Metallized Zinc Anode
PJA = Pile Jacket Anode
CJA = Cap Jacket Anode
SA = Submerged Anode
RE = Reference Electrode
REN = Reference Electrode Negative

LEGEND
- (x) Submerged Anode x = Weight in LBS
- Pile Jacket
- Cap Jacket
- Primary Anode Terminal
- Negative Connection
- Encapsulated Splice
- Reference Electrode

TYPICAL WIRE SIZES & COLORS AS FOLLOWS:
MZA & PJA = #10 Red
MZN; PJN = #10 Blue
SA = #8 Black
RE/REN: #16 Twisted Pair Red/Black

Tongass Ave Bent 28 North Elevation & Span 28			
SCALE: NONE	Field Sketch As-Built	DRAWN BY KRH	
DATE: 11-1-11		REVISED	
GREAT WESTERN CORPORATION			
Ketchikan Viaduct II Repair & C.P.		DRAWING NUMBER T-28	

SPAN 29 - VIEW THROUGH DECK

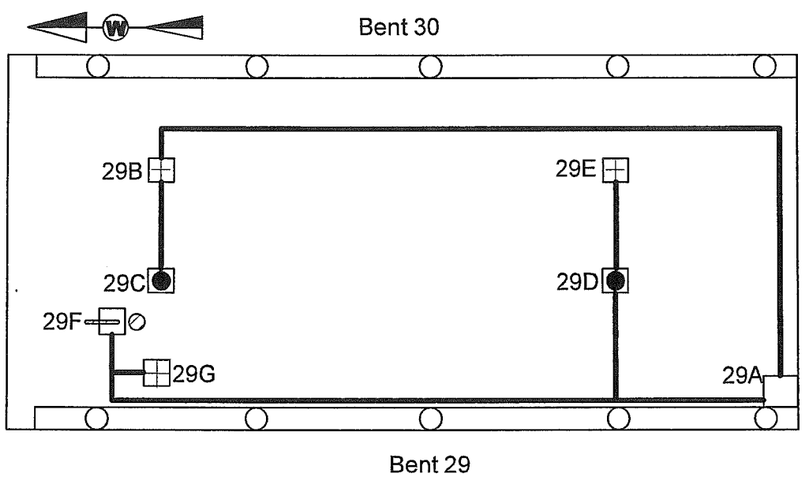

SCHEMATIC

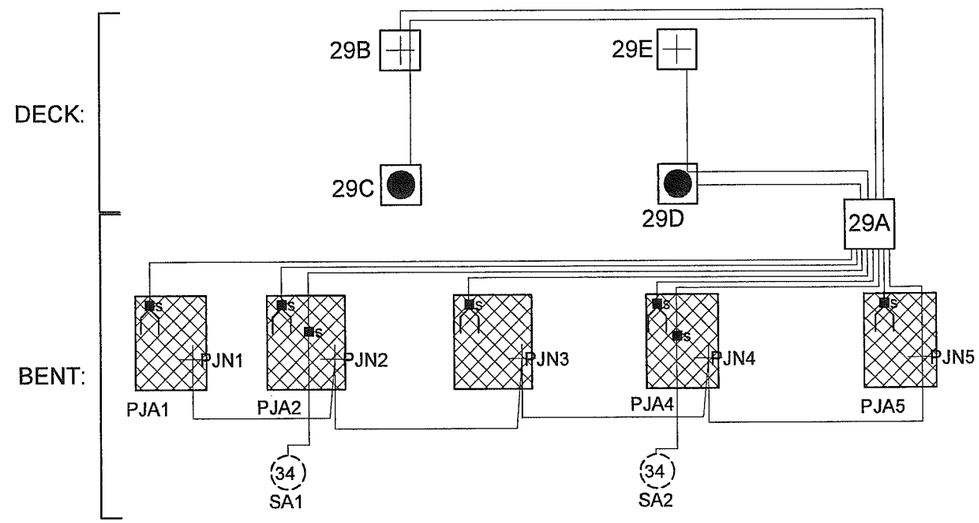

BENT 29 NORTH ELEVATION

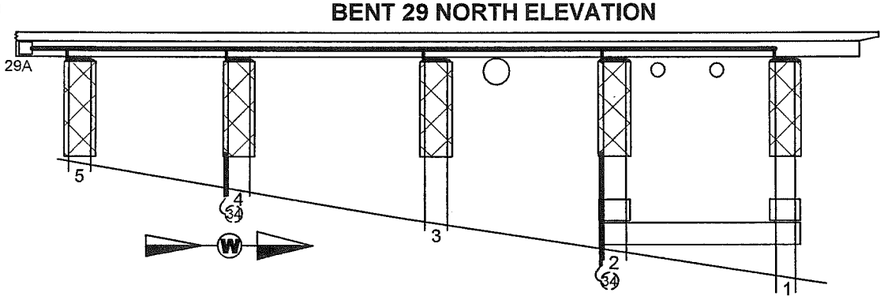

J-BOX DETAILS:

	J-Box Size	Wires or Structure
29-A	14" x 12" x 8"	MAIN J-BOX: (5) PJA; (1) PJN; (2) SA; SAN Jumpered from PJN; (2) MZA; (2) MZN
29-B	5" x 5" x 2"	Structure Negative (MZN); (1) MZA
29-C	5" x 5" x 2"	Primary Anode Terminal Plate (MZA)
29-D	5" x 5" x 2"	Primary Anode Terminal Plate (MZA); (1) MZN
29-E	5" x 5" x 2"	Structure Negative (MZN)

ABBREVIATIONS:
MZN = Metallized Zinc Negative
PJN = Pile Jacket Negative
CJN = Cap Jacket Negative
SAN = Submerged Anode Negative
MZA = Metallized Zinc Anode
PJA = Pile Jacket Anode
CJA = Cap Jacket Anode
SA = Submerged Anode
RE = Reference Electrode
REN = Reference Electrode Negative

LEGEND
- Submerged Anode x = Weight in LBS
- Pile Jacket
- Cap Jacket
- Primary Anode Terminal
- Negative Connection
- Encapsulated Splice
- Reference Electrode

TYPICAL WIRE SIZES & COLORS AS FOLLOWS:
MZA & PJA = #10 Red
MZN; PJN = #10 Blue
SA = #8 Black
RE/REN: #16 Twisted Pair Red/Black

Tongass Ave Bent 29 North Elevation & Span 29			
SCALE: NONE	Field Sketch As-Built	DRAWN BY KRH	
DATE: 11-1-11		REVISED	
GREAT WESTERN CORPORATION			
Ketchikan Viaduct II Repair & C.P.		DRAWING NUMBER T-29	

SPAN 30 - VIEW THROUGH DECK

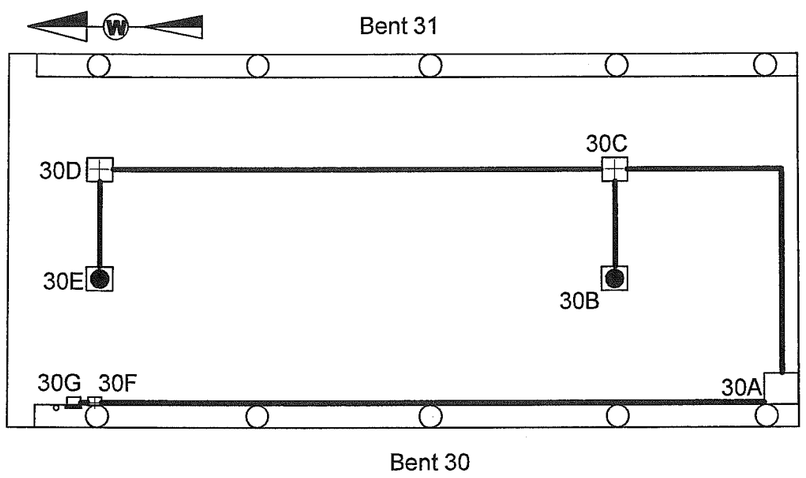

SCHEMATIC

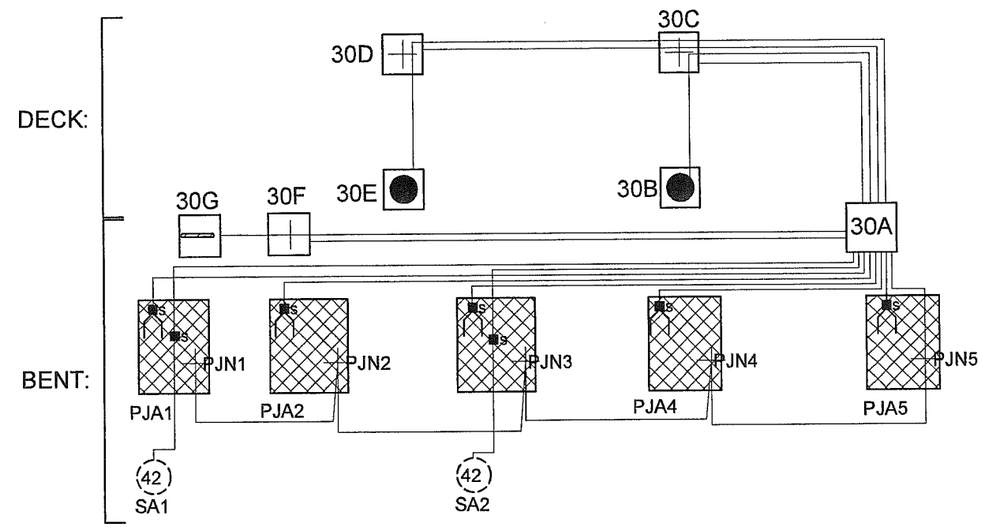

BENT 30 NORTH ELEVATION

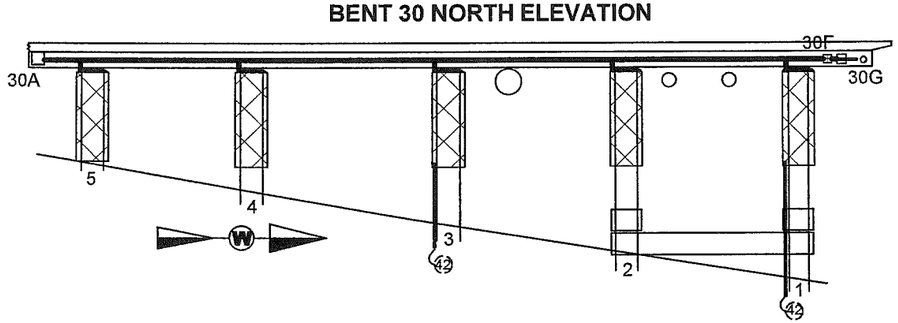

J-BOX DETAILS:

	J-Box Size	Wires or Structure
30-A	14" x 12" x 8"	MAIN J-BOX: (5) PJA; (1) PJN; (2) SA; SAN Jumpered from PJN; (2) MZA; (2) MZN; (1) RE; (1) REN
30-B	5" x 5" x 2"	Primary Anode Terminal Plate (MZA); (2) MZN; (1) MZA
30-C	5" x 5" x 2"	Structure Negative (MZN); (1) MZA; (1) MZN
30-D	5" x 5" x 2"	Structure Negative (MZN); (1) MZA
30-E	5" x 5" x 2"	Primary Anode Terminal Plate (MZA)
30-F	5" x 5" x 2"	Reference Electrode Negative (REN); (1) RE
30-G	5" x 5" x 2"	Reference Electrode (RE)

ABBREVIATIONS:
MZN = Metallized Zinc Negative
PJN = Pile Jacket Negative
CJN = Cap Jacket Negative
SAN = Submerged Anode Negative
MZA = Metallized Zinc Anode
PJA = Pile Jacket Anode
CJA = Cap Jacket Anode
SA = Submerged Anode
RE = Reference Electrode
REN = Reference Electrode Negative

LEGEND
- (x) Submerged Anode x = Weight in LBS
- Pile Jacket
- Cap Jacket
- Primary Anode Terminal
- Negative Connection
- Encapsulated Splice
- Reference Electrode

TYPICAL WIRE SIZES & COLORS AS FOLLOWS:
MZA & PJA = #10 Red
MZN; PJN = #10 Blue
SA = #8 Black
RE/REN: #16 Twisted Pair Red/Black

Tongass Ave Bent 30 North Elevation & Span 30			
SCALE: NONE	Field Sketch As-Built	DRAWN BY KRH	
DATE: 11-1-11		REVISED	
GREAT WESTERN CORPORATION			
Ketchikan Viaduct II Repair & C.P.		DRAWING NUMBER T-30	

SPAN 31 - VIEW THROUGH DECK

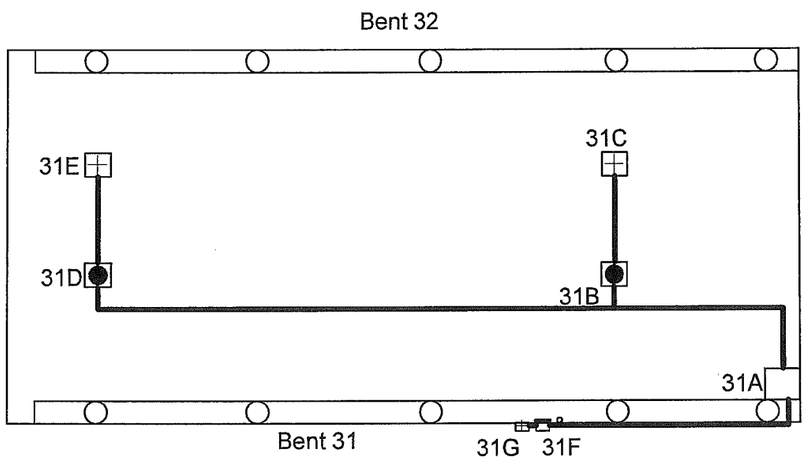

SCHEMATIC

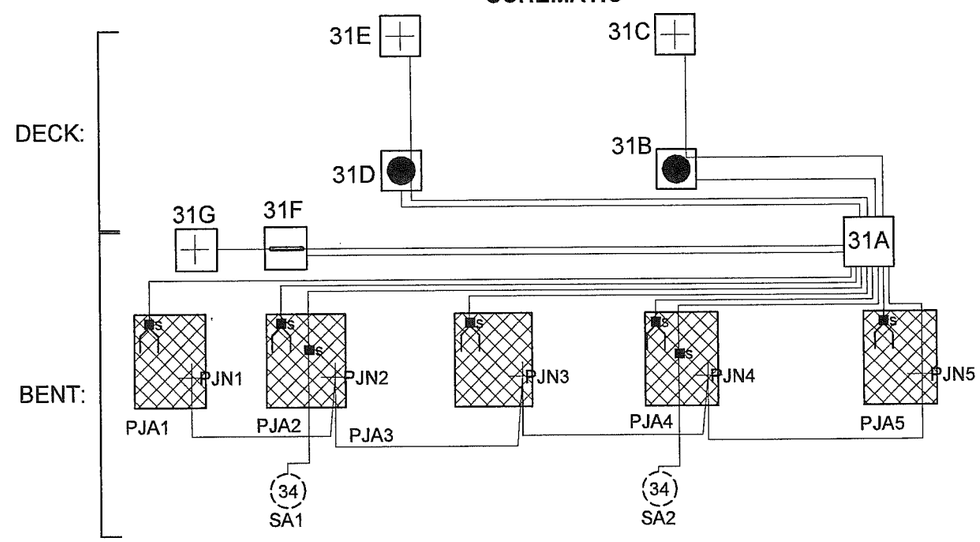

BENT 31 SOUTH ELEVATION

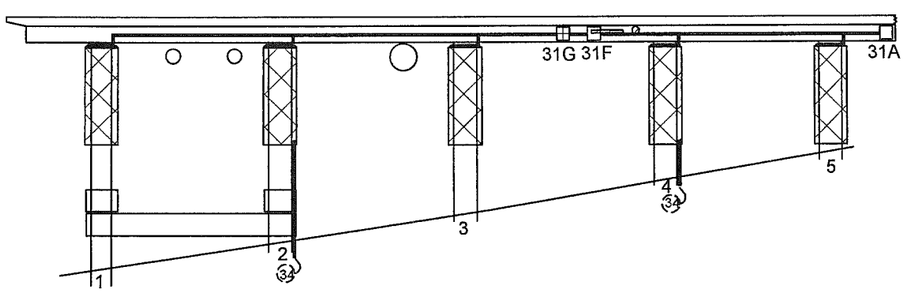

J-BOX DETAILS:

	J-Box Size	Wires or Structure
31-A	14" x 12" x 8"	MAIN J-BOX: (5) PJA; (1) PJN; (2) SA; SAN Jumpered from PJN; (2) MZA; (2) MZN;(1) RE; (1) REN
31-B	5" x 5" x 2"	Primary Anode Terminal Plate (MZA); (1) MZN
31-C	5" x 5" x 2"	Structure Negative (MZN)
31-D	5" x 5" x 2"	Primary Anode Terminal Plate (MZA); (1) MZN
31-E	5" x 5" x 2"	Structure Negative (MZN)
31-F	8" x 8" x 4"	Reference Electrode (RE); (1) REN
31-G	5" x 5" x 2"	Reference Electrode Negative (REN)

TYPICAL WIRE SIZES & COLORS AS FOLLOWS:
MZA & PJA = #10 Red
MZN; PJN = #10 Blue
SA = #8 Black
RE/REN: #16 Twisted Pair Red/Black

ABBREVIATIONS:
MZN = Metallized Zinc Negative
PJN = Pile Jacket Negative
CJN = Cap Jacket Negative
SAN = Submerged Anode Negative
MZA = Metallized Zinc Anode
PJA = Pile Jacket Anode
CJA = Cap Jacket Anode
SA = Submerged Anode
RE = Reference Electrode
REN = Reference Electrode Negative

LEGEND
- (x) Submerged Anode x = Weight in LBS
- Pile Jacket
- Cap Jacket
- Primary Anode Terminal
- Negative Connection
- Encapsulated Splice
- Reference Electrode

Tongass Ave Bent 31 North Elevation & Span 31			
SCALE: NONE	Field Sketch As-Built	DRAWN BY KRH	
DATE: 11-1-11		REVISED	
GREAT WESTERN CORPORATION			
Ketchikan Viaduct II Repair & C.P.		DRAWING NUMBER T-31	

SPAN 32 - VIEW THROUGH DECK

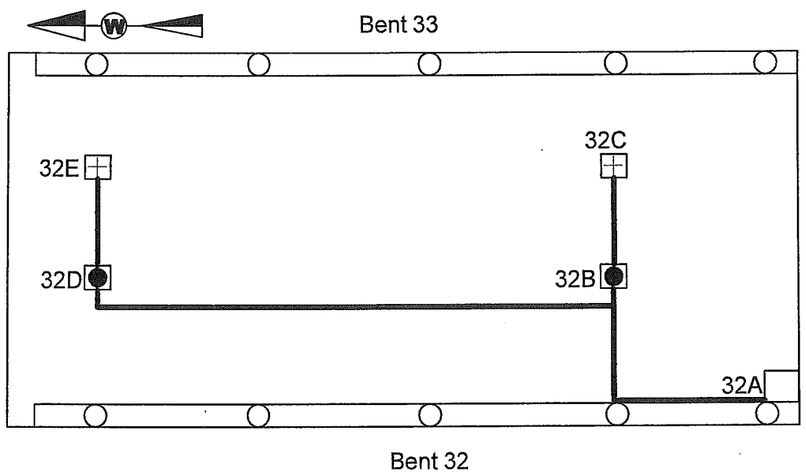

SCHEMATIC

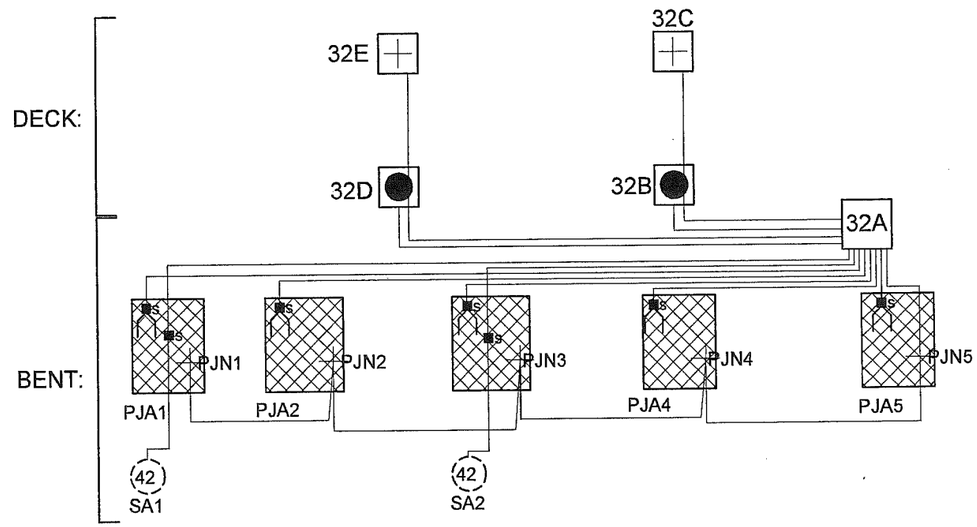

BENT 32 NORTH ELEVATION

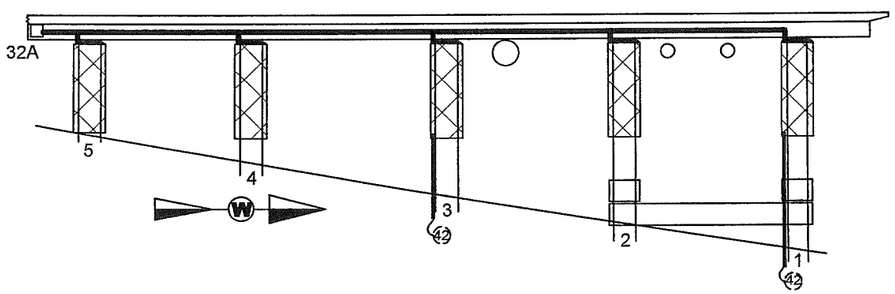

J-BOX DETAILS:

	J-Box Size	Wires or Structure
32-A	14" x 12" x 8"	MAIN J-BOX: (5) PJA; (1) PJN; (2) SA; SAN Jumpered from PJN; (2) MZA; (2) MZN
32-B	5" x 5" x 2"	Primary Anode Terminal Plate (MZA); (1) MZN
32-C	5" x 5" x 2"	Structure Negative (MZN)
32-D	5" x 5" x 2"	Primary Anode Terminal Plate (MZA); (1) MZN
32-E	5" x 5" x 2"	Structure Negative (MZN)

ABBREVIATIONS:
MZN = Metallized Zinc Negative
PJN = Pile Jacket Negative
CJN = Cap Jacket Negative
SAN = Submerged Anode Negative
MZA = Metallized Zinc Anode
PJA = Pile Jacket Anode
CJA = Cap Jacket Anode
SA = Submerged Anode
RE = Reference Electrode
REN = Reference Electrode Negative

LEGEND
- Submerged Anode x = Weight in LBS
- Pile Jacket
- Cap Jacket
- Primary Anode Terminal
- Negative Connection
- Encapsulated Splice
- Reference Electrode

TYPICAL WIRE SIZES & COLORS AS FOLLOWS:
MZA & PJA = #10 Red
MZN; PJN = #10 Blue
SA = #8 Black
RE/REN: #16 Twisted Pair Red/Black

Tongass Ave Bent 32 North Elevation & Span 32			
SCALE: NONE	Field Sketch As-Built	DRAWN BY KRH	
DATE: 11-1-11		REVISED	
GREAT WESTERN CORPORATION			
Ketchikan Viaduct II Repair & C.P.		DRAWING NUMBER T-32	

SPAN 33 - VIEW THROUGH DECK

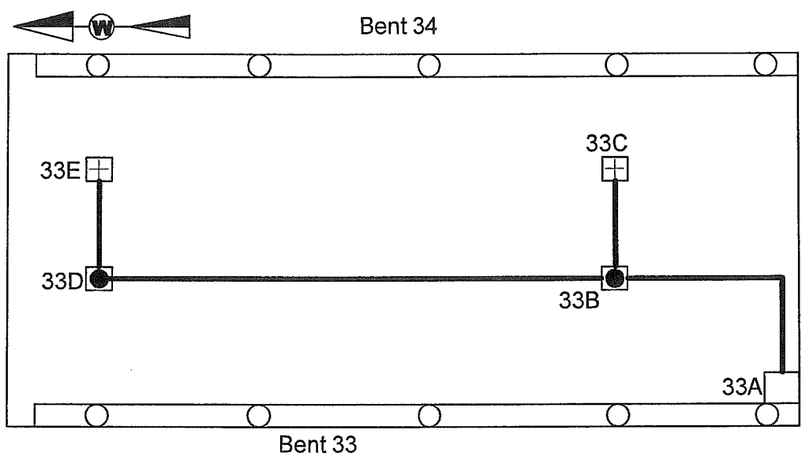

SCHEMATIC

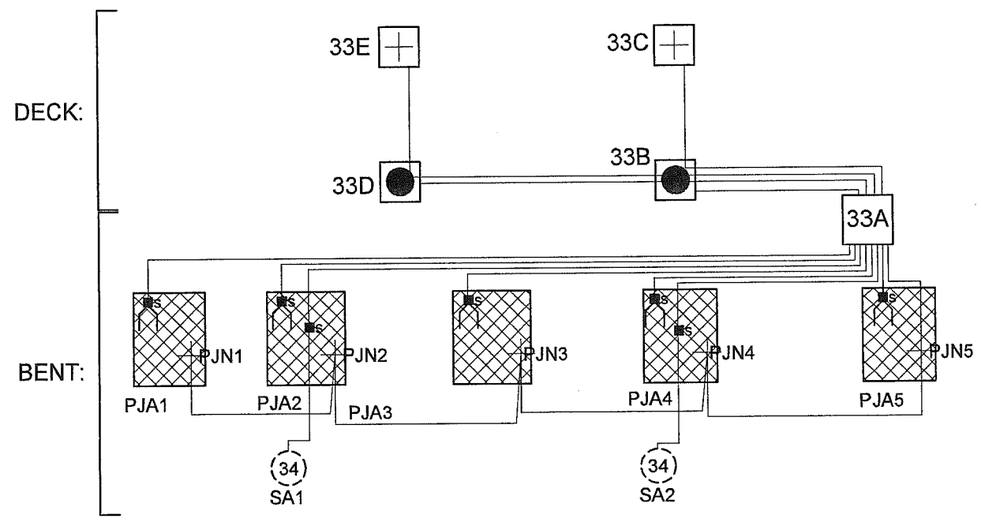

BENT 33 NORTH ELEVATION

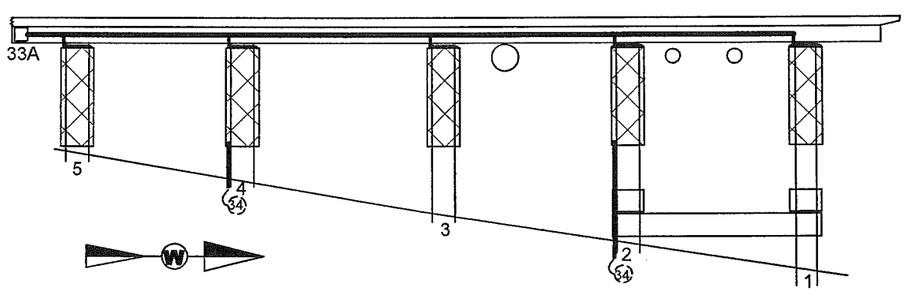

J-BOX DETAILS:

	J-Box Size	Wires or Structure
33-A	14" x 12" x 8"	MAIN J-BOX: (5) PJA; (1) PJN; (2) SA; SAN Jumpered from PJN; (2) MZA; (2) MZN
33-B	5" x 5" x 2"	Primary Anode Terminal Plate (MZA); (2) MZN; (1) MZA
33-C	5" x 5" x 2"	Structure Negative (MZN)
33-D	5" x 5" x 2"	Primary Anode Terminal Plate (MZA); (1) MZN
33-E	5" x 5" x 2"	Structure Negative (MZN)

ABBREVIATIONS:
MZN = Metallized Zinc Negative
PJN = Pile Jacket Negative
CJN = Cap Jacket Negative
SAN = Submerged Anode Negative
MZA = Metallized Zinc Anode
PJA = Pile Jacket Anode
CJA = Cap Jacket Anode
SA = Submerged Anode
RE = Reference Electrode
REN = Reference Electrode Negative

LEGEND
- Submerged Anode x = Weight in LBS
- Pile Jacket
- Cap Jacket
- Primary Anode Terminal
- Negative Connection
- Encapsulated Splice
- Reference Electrode

TYPICAL WIRE SIZES & COLORS AS FOLLOWS:
MZA & PJA = #10 Red
MZN; PJN = #10 Blue
SA = #8 Black
RE/REN: #16 Twisted Pair Red/Black

Tongass Ave Bent 33 North Elevation & Span 33			
SCALE: NONE	Field Sketch As-Built	DRAWN BY KRH	
DATE: 11-1-11		REVISED	
GREAT WESTERN CORPORATION			
Ketchikan Viaduct II Repair & C.P.		DRAWING NUMBER T-33	

SPAN 34 - VIEW THROUGH DECK

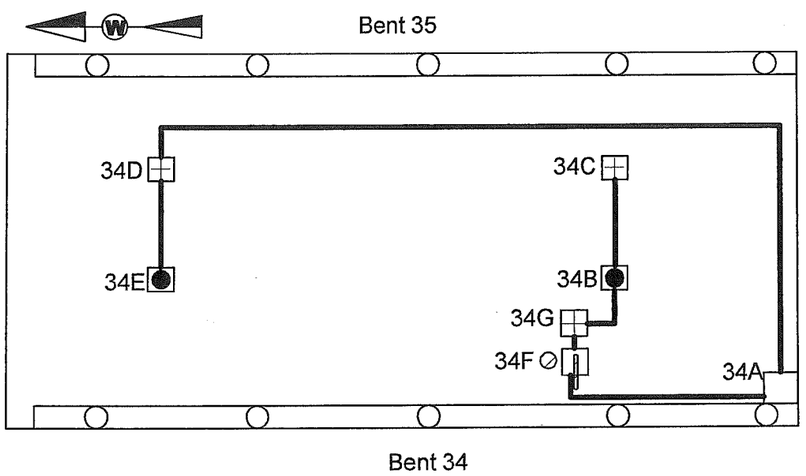

SCHEMATIC

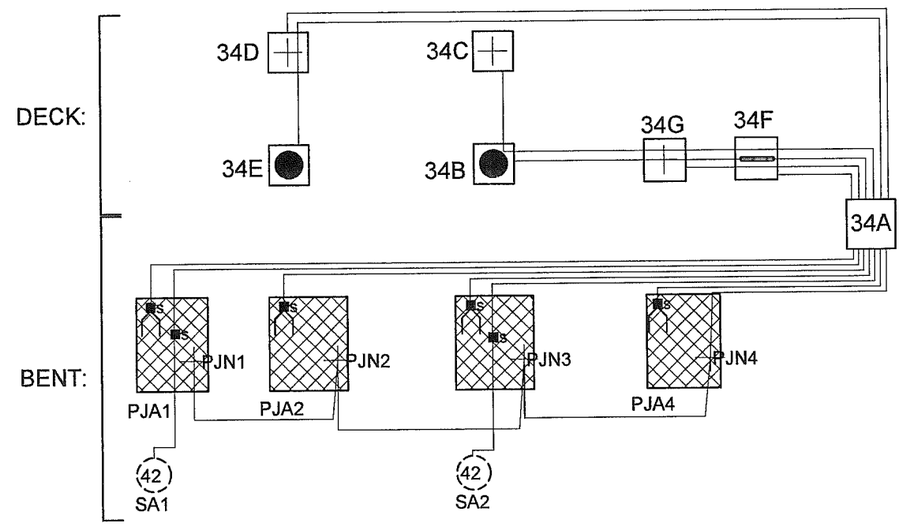

BENT 34 NORTH ELEVATION

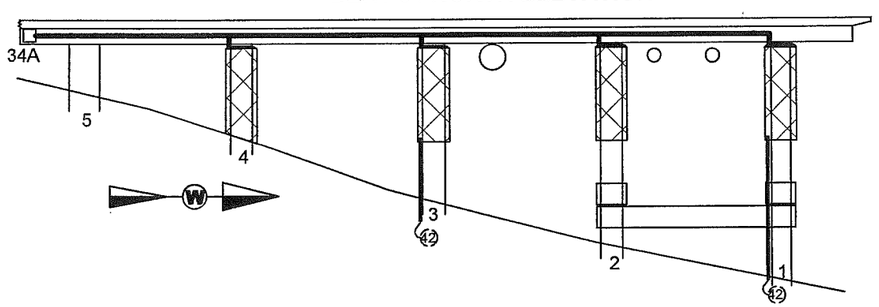

J-BOX DETAILS:

	J-Box Size	Wires or Structure
34-A	14" x 12" x 8"	MAIN J-BOX: (4) PJA; (1) PJN; (2) SA; SAN Jumpered from PJN; (2) MZA; (2) MZN; (1) RE; (1) REN
34-B	5" x 5" x 2"	Primary Anode Terminal Plate (MZA); (1) MZN
34-C	5" x 5" x 2"	Structure Negative (MZN)
34-D	5" x 5" x 2"	Structure Negative (MZN); (1) MZA
34-E	5" x 5" x 2"	Primary Anode Terminal Plate (MZA)
34-F	5" x 5" x 2"	Reference Electrode (RE); (1) REN; (1) MZA; (1) MZN
34-G	8" x 8" x 2"	Reference Electrode Negative (REN); (1) MZA; (1) MZN

TYPICAL WIRE SIZES & COLORS AS FOLLOWS:
MZA & PJA = #10 Red
MZN; PJN = #10 Blue
SA = #8 Black
RE/REN: #16 Twisted Pair Red/Black

ABBREVIATIONS:
MZN = Metallized Zinc Negative
PJN = Pile Jacket Negative
CJN = Cap Jacket Negative
SAN = Submerged Anode Negative
MZA = Metallized Zinc Anode
PJA = Pile Jacket Anode
CJA = Cap Jacket Anode
SA = Submerged Anode
RE = Reference Electrode
REN = Reference Electrode Negative

LEGEND
- Submerged Anode x = Weight in LBS
- Pile Jacket
- Cap Jacket
- Primary Anode Terminal
- Negative Connection
- Encapsulated Splice
- Reference Electrode

Tongass Ave Bent 34 North Elevation & Span 34			
SCALE: NONE	Field Sketch As-Built	DRAWN BY KRH	
DATE: 11-1-11		REVISED	
GREAT WESTERN CORPORATION			
Ketchikan Viaduct II Repair & C.P.		DRAWING NUMBER T-34	

SPAN 35 - VIEW THROUGH DECK

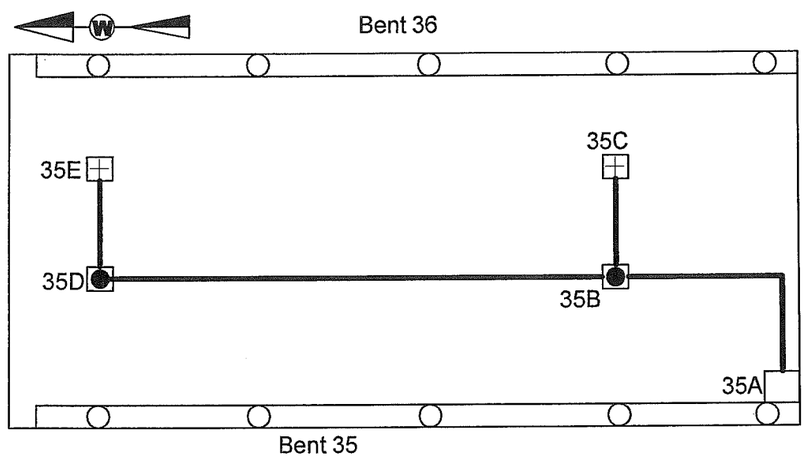

SCHEMATIC

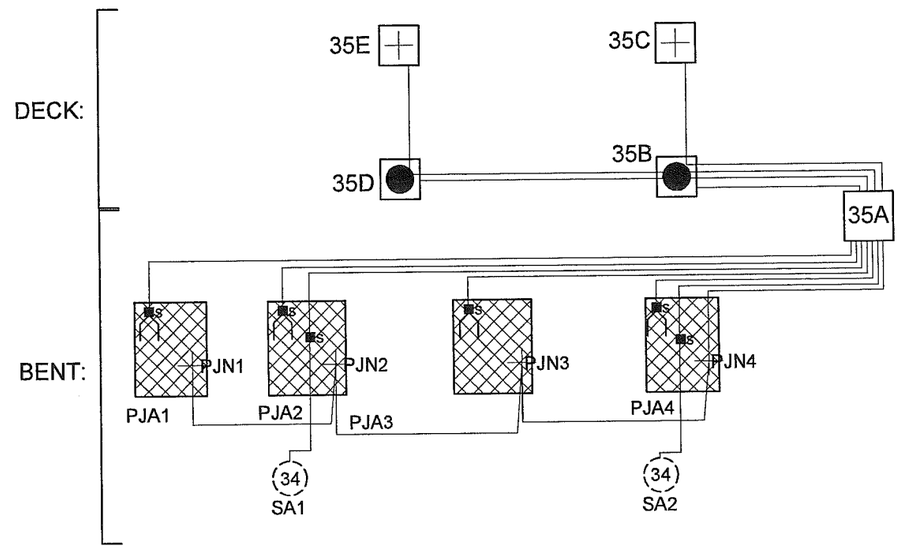

BENT 35 NORTH ELEVATION

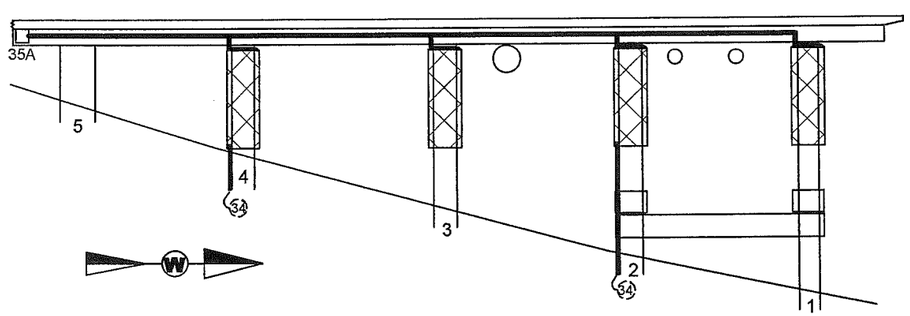

J-BOX DETAILS:

	J-Box Size	Wires or Structure
35-A	14" x 12" x 8"	MAIN J-BOX: (4) PJA; (1) PJN; (2) SA; SAN Jumpered from PJN; (2) MZA; (2) MZN
35-B	5" x 5" x 2"	Primary Anode Terminal Plate (MZA); (2) MZN; (1) MZA
35-C	5" x 5" x 2"	Structure Negative (MZN)
35-D	5" x 5" x 2"	Primary Anode Terminal Plate (MZA); (1) MZN
35-E	5" x 5" x 2"	Structure Negative (MZN)

ABBREVIATIONS:
MZN = Metallized Zinc Negative
PJN = Pile Jacket Negative
CJN = Cap Jacket Negative
SAN = Submerged Anode Negative
MZA = Metallized Zinc Anode
PJA = Pile Jacket Anode
CJA = Cap Jacket Anode
SA = Submerged Anode
RE = Reference Electrode
REN = Reference Electrode Negative

LEGEND
- (x) Submerged Anode x = Weight in LBS
- Pile Jacket
- Cap Jacket
- Primary Anode Terminal
- Negative Connection
- Encapsulated Splice
- Reference Electrode

TYPICAL WIRE SIZES & COLORS AS FOLLOWS:
MZA & PJA = #10 Red
MZN; PJN = #10 Blue
SA = #8 Black
RE/REN: #16 Twisted Pair Red/Black

Tongass Ave Bent 35 North Elevation & Span 35			
SCALE: NONE	Field Sketch As-Built	DRAWN BY KRH	
DATE: 11-1-11		REVISED	
GREAT WESTERN CORPORATION			
Ketchikan Viaduct II Repair & C.P.		DRAWING NUMBER T-35	

SPAN 36 - VIEW THROUGH DECK

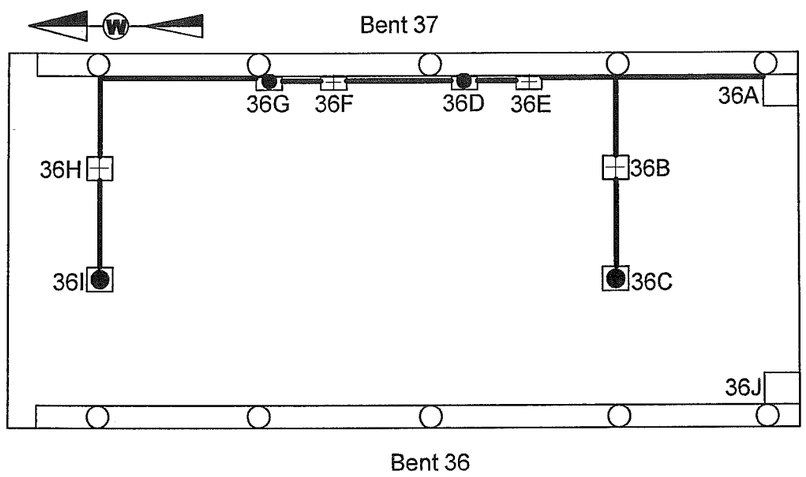

SCHEMATIC

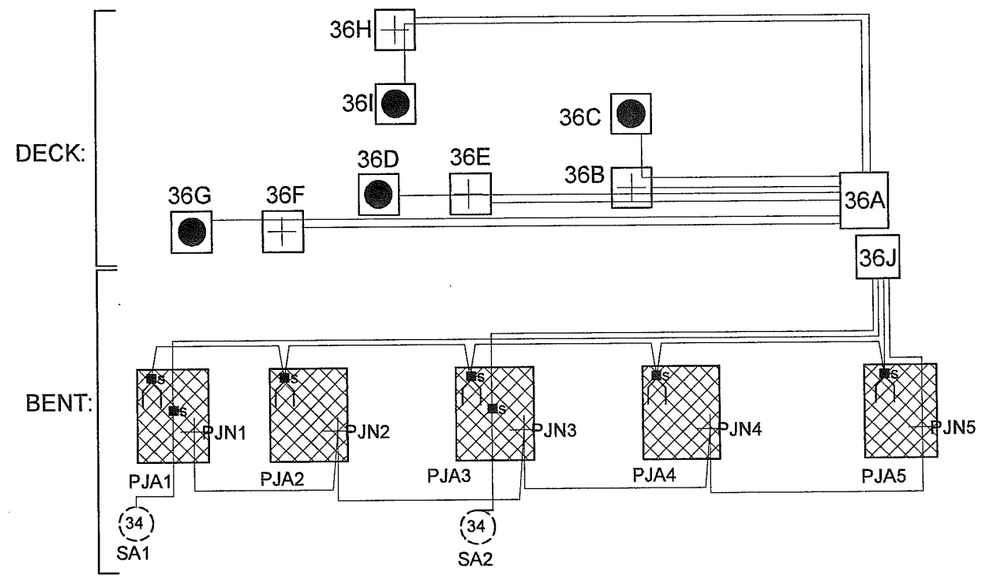

BENT 36 NORTH ELEVATION

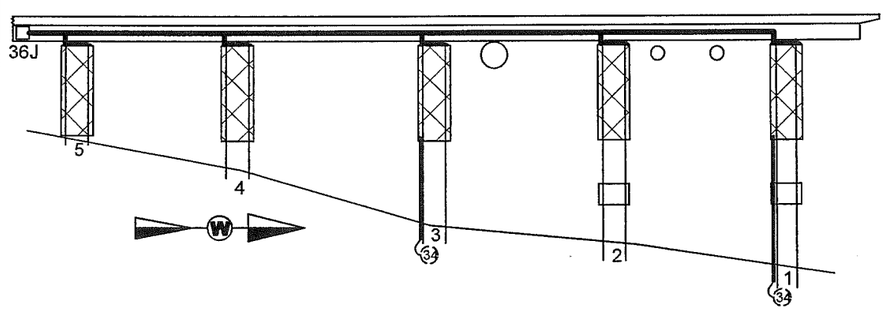

J-BOX DETAILS:

	J-Box Size	Wires or Structure
36-A	14" x 12" x 8"	MAIN J-BOX Bent 37: (5) PJA; (1) PJN; (1) CJA; (1) CJN; (2) SA; SAN Jumpered from PJN; (4) MZA; (4) MZN
36-J	14" x 12" x 8"	MAIN J-BOX Bent 36: (1) PJA; (1) PJN; (2) SA; SAN Jumpered from PJN
36-B	5" x 5" x 2"	Structure Negative (MZN); (2) MZA; (1) MZN
36-C	5" x 5" x 2"	Primary Anode Terminal Plate (MZA)
36-D	5" x 5" x 2"	Primary Anode Terminal Plate (MZA)
36-E	5" x 5" x 2"	Structure Negative (MZN); (1) MZA
36-F	5" x 5" x 2"	Structure Negative (MZN); (1) MZA
36-G	5" x 5" x 2"	Primary Anode Terminal Plate (MZA)
36-H	5" x 5" x 2"	Structure Negative (MZN); (1) MZA
36-I	5" x 5" x 2"	Primary Anode Terminal Plate (MZA)

TYPICAL WIRE SIZES & COLORS AS FOLLOWS:
MZA & PJA = #10 Red
MZN; PJN = #10 Blue
SA = #8 Black
RE/REN: #16 Twisted Pair Red/Black

ABBREVIATIONS:
MZN = Metallized Zinc Negative
PJN = Pile Jacket Negative
CJN = Cap Jacket Negative
SAN = Submerged Anode Negative
MZA = Metallized Zinc Anode
PJA = Pile Jacket Anode
CJA = Cap Jacket Anode
SA = Submerged Anode
RE = Reference Electrode
REN = Reference Electrode Negative

LEGEND
- (x) Submerged Anode x = Weight in LBS
- Pile Jacket
- Cap Jacket
- Primary Anode Terminal
- Negative Connection
- Encapsulated Splice
- Reference Electrode

Tongass Ave Bent 36 North Elevation & Span 36			
SCALE: NONE	Field Sketch As-Built	DRAWN BY KRH	
DATE: 11-1-11		REVISED	
GREAT WESTERN CORPORATION			
Ketchikan Viaduct II Repair & C.P.		DRAWING NUMBER T-36	

SCHEMATIC

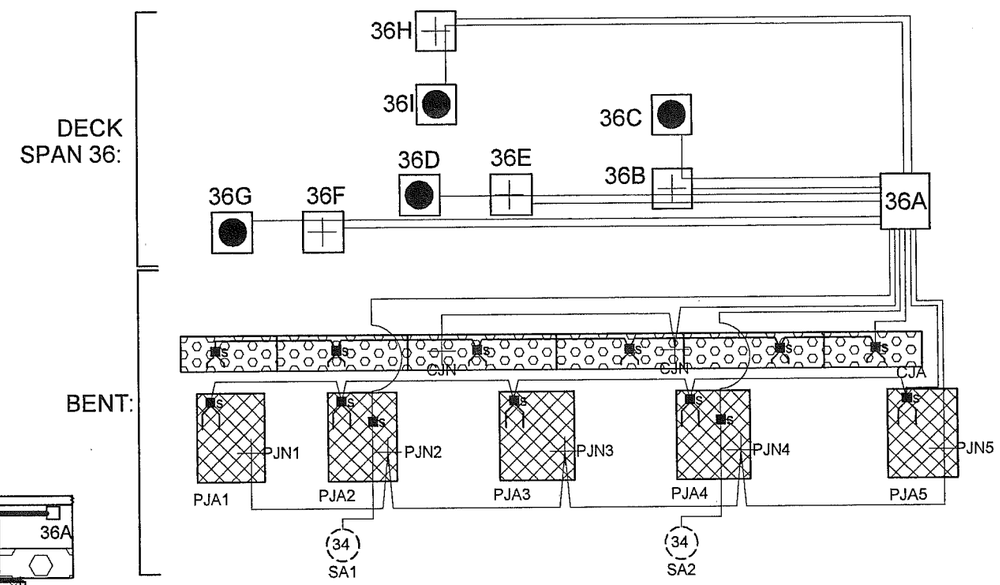

BENT 37 SOUTH ELEVATION

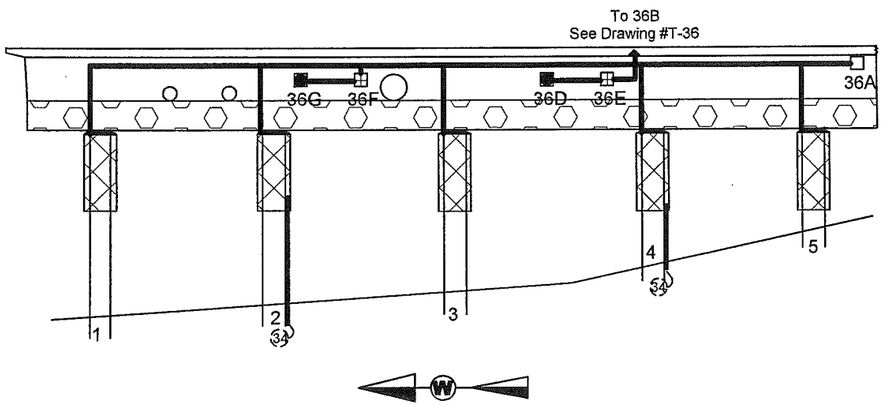

J-BOX DETAILS:

	J-Box Size	Wires or Structure
36-A	14" x 12" x 8"	MAIN J-BOX Bent 37: (5) PJA; (1) PJN; (1) CJA; (1) CJN; (2) SA; SAN Jumpered from PJN; (4) MZA; (4) MZN
36-B	5" x 5" x 2"	Structure Negative (MZN); (2) MZA; (1) MZN
36-C	5" x 5" x 2"	Primary Anode Terminal Plate (MZA)
36-D	5" x 5" x 2"	Primary Anode Terminal Plate (MZA)
36-E	5" x 5" x 2"	Structure Negative (MZN); (1) MZA
36-F	5" x 5" x 2"	Structure Negative (MZN); (1) MZA
36-G	5" x 5" x 2"	Primary Anode Terminal Plate (MZA)
36-H	5" x 5" x 2"	Structure Negative (MZN); (1) MZA
36-I	5" x 5" x 2"	Primary Anode Terminal Plate (MZA)

ABBREVIATIONS:
MZN = Metallized Zinc Negative
PJN = Pile Jacket Negative
CJN = Cap Jacket Negative
SAN = Submerged Anode Negative
MZA = Metallized Zinc Anode
PJA = Pile Jacket Anode
CJA = Cap Jacket Anode
SA = Submerged Anode
RE = Reference Electrode
REN = Reference Electrode Negative

LEGEND
- (x) Submerged Anode x = Weight in LBS
- Pile Jacket
- Cap Jacket
- Primary Anode Terminal
- Negative Connection
- Encapsulated Splice
- Reference Electrode

TYPICAL WIRE SIZES & COLORS AS FOLLOWS:
MZA & PJA = #10 Red
MZN; PJN = #10 Blue
SA = #8 Black
RE/REN: #16 Twisted Pair Red/Black

Tongass Ave Bent 37 South Elevation			
SCALE: NONE	Field Sketch As-Built	DRAWN BY KRH	
DATE: 11-1-11		REVISED	
GREAT WESTERN CORPORATION			
Ketchikan Viaduct II Repair & C.P.		DRAWING NUMBER T-37	

SPAN 24 - VIEW THROUGH DECK

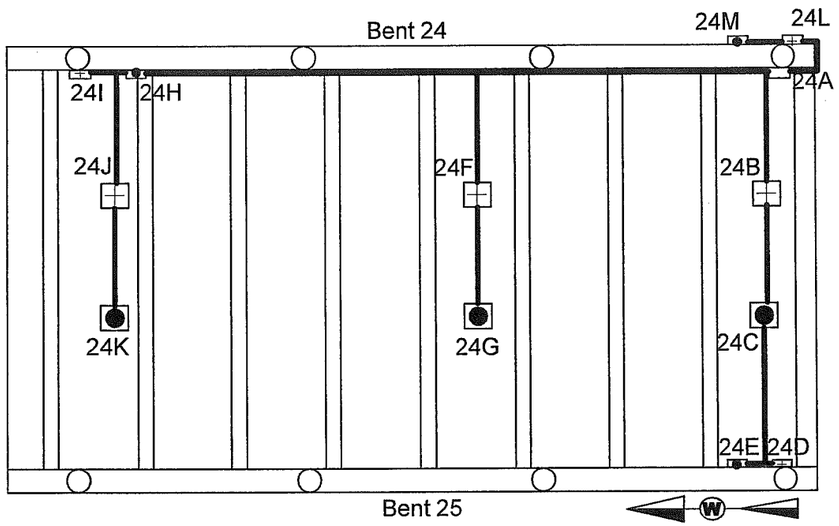

SCHEMATIC

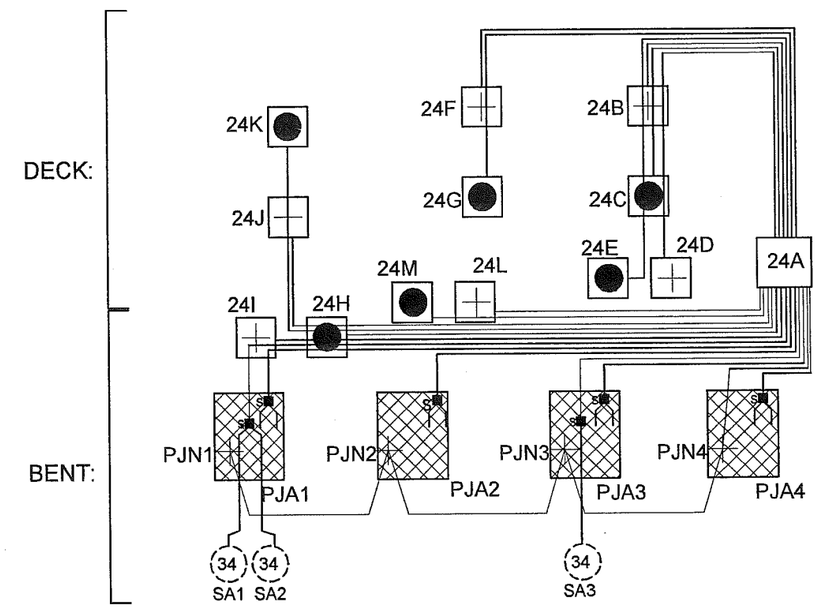

WATER BENT 24 SOUTH ELEVATION

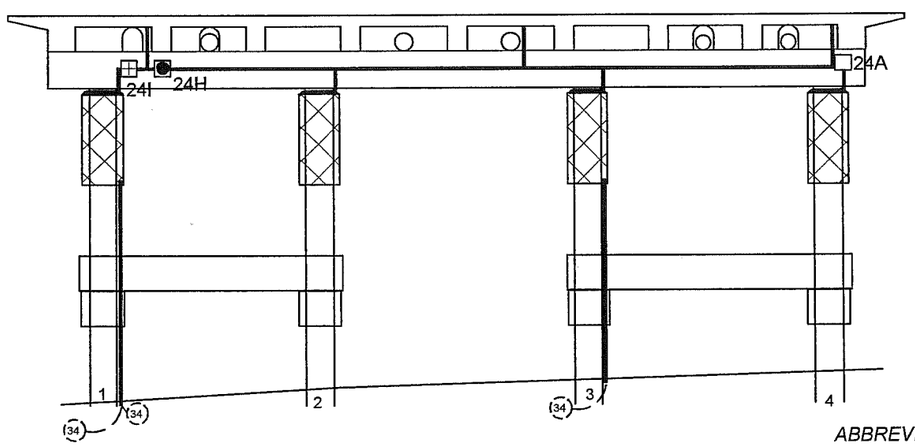

J-BOX DETAILS:

	J-Box Size	Wires or Structure
24-A	14" x 12" x 8"	MAIN J-BOX: (6) MZA; (6) MZN; (4) PJA; (1) PJN; (2) SA; SAN jumpered from PJN
24-B	5" x 5" x 2"	Structure Negative (MZN); (2) MZA; (1) MZN
24-C	5" x 5" x 2"	Primary Anode Terminal Plate (MZA); (1) MZN; (1) MZA
24-D	5" x 5" x 2"	Structure Negative (MZN)
24-E	5" x 5" x 2"	Primary Anode Terminal Plate (MZA)
24-F	5" x 5" x 2"	Structure Negative (MZN); (1) MZA
24-G	5" x 5" x 2"	Primary Anode Terminal Plate (MZA)
24-H	5" x 5" x 2"	Primary Anode Terminal Plate (MZA); (2) MZN; (1) MZA; (1) PJA; (1) SA
24-I	5" x 5" x 2"	Structure Negative (MZN); (1) PJA; (1) SA
24-J	5" x 5" x 2"	Structure Negative (MZN); (1) MZA
24-K	5" x 5" x 2"	Primary Anode Terminal Plate (MZA)
24-L	5" x 5" x 2"	Structure Negative (MZN); (1) MZA
24-M	5" x 5" x 2"	Primary Anode Terminal Plate (MZA)

ABBREVIATIONS:
MZN = Metallized Zinc Negative
PJN = Pile Jacket Negative
CJN = Cap Jacket Negative
SAN = Submerged Anode Negative
MZA = Metallized Zinc Anode
PJA = Pile Jacket Anode
CJA = Cap Jacket Anode
SA = Submerged Anode
RE = Reference Electrode
REN = Reference Electrode Negative

TYPICAL WIRE SIZES & COLORS AS FOLLOWS:
MZA & PJA = #10 Red
MZN; PJN = #10 Blue
SA = #8 Black
RE/REN: #16 Twisted Pair Red/Black

LEGEND
- (x) Submerged Anode x = Weight in LBS
- Pile Jacket
- Cap Jacket
- Primary Anode Terminal
- Negative Connection
- Encapsulated Splice
- Reference Electrode

Water Street Bent 24 South Elevation & Span 24

SCALE:	NONE	Field Sketch As-Built	DRAWN BY	KRH
DATE:	10-21-11		REVISED	

GREAT WESTERN CORPORATION

Ketchikan Viaduct II Repair & C.P.

DRAWING NUMBER W-24

SPAN 25 - VIEW THROUGH DECK

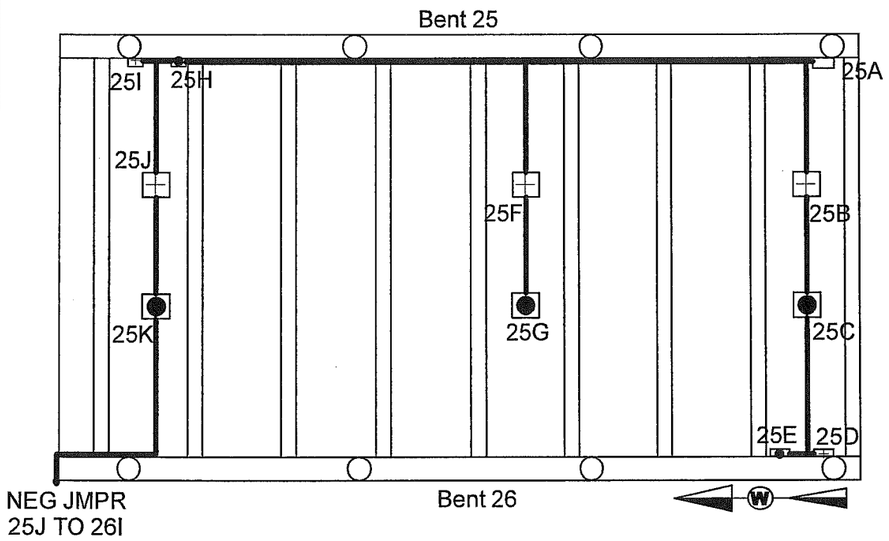

SCHEMATIC

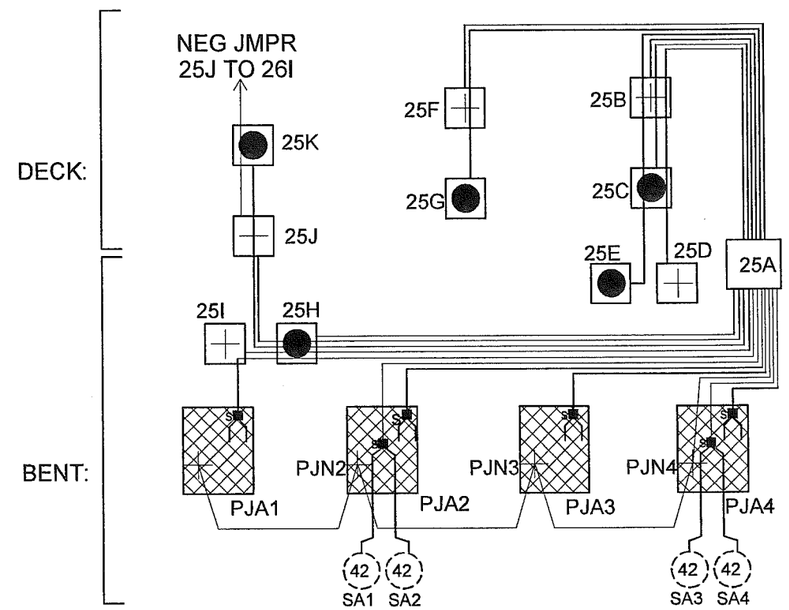

WATER BENT 25 SOUTH ELEVATION

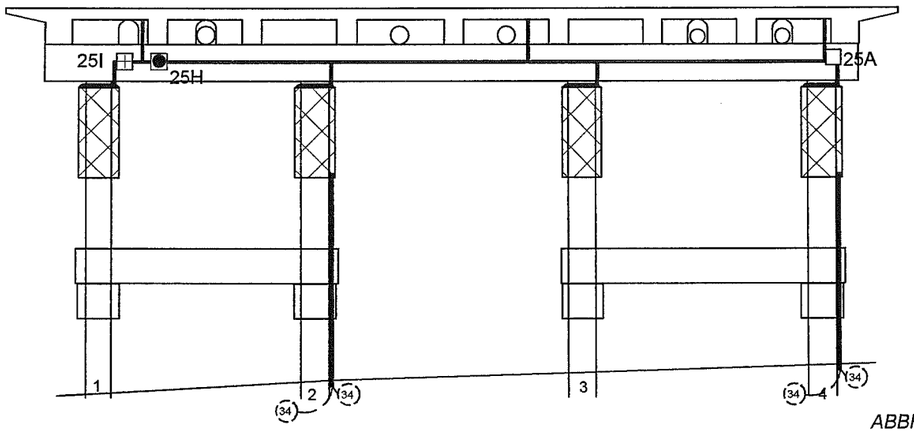

J-BOX DETAILS:

	J-Box Size	Wires or Structure
25-A	14"x12"x8"	MAIN J-BOX: (5) MZA; (5) MZN; (4) PJA; (1) PJN; (2) SA; SAN jumpered from PJN
25-B	5"x5"x2"	Structure Negative (MZN); (2) MZA; (1) MZN
25-C	5"x5"x2"	Primary Anode Terminal Plate (MZA); (1) MZN; (1) MZA
25-D	5"x5"x2"	Structure Negative (MZN)
25-E	5"x5"x2"	Primary Anode Terminal Plate (MZA)
25-F	5"x5"x2"	Structure Negative (MZN); (1) MZA
25-G	5"x5"x2"	Primary Anode Terminal Plate (MZA)
25-H	5"x5"x2"	Primary Anode Terminal Plate (MZA); (2) MZN; (1) MZA; (1) PJA
25-I	5"x5"x2"	Structure Negative (MZN); (1) PJA
25-J	5"x5"x2"	Structure Negative (MZN); (1) MZA
25-K	5"x5"x2"	Primary Anode Terminal Plate (MZA); MZN Jumper to 26I

ABBREVIATIONS:
MZN = Metallized Zinc Negative
PJN = Pile Jacket Negative
CJN = Cap Jacket Negative
SAN = Submerged Anode Negative
MZA = Metallized Zinc Anode
PJA = Pile Jacket Anode
CJA = Cap Jacket Anode
SA = Submerged Anode
RE = Reference Electrode
REN = Reference Electrode Negative

LEGEND
- Submerged Anode x = Weight in LBS
- Pile Jacket
- Cap Jacket
- Primary Anode Terminal
- Negative Connection
- Encapsulated Splice
- Reference Electrode

TYPICAL WIRE SIZES & COLORS AS FOLLOWS:
MZA & PJA = #10 Red
MZN; PJN = #10 Blue
SA = #8 Black
RE/REN: #16 Twisted Pair Red/Black

Water Street Bent 25 South Elevation & Span 25			
SCALE: NONE	Field Sketch As-Built	DRAWN BY KRH	
DATE: 10-21-11		REVISED	
GREAT WESTERN CORPORATION			
Ketchikan Viaduct II Repair & C.P.		DRAWING NUMBER W-25	

SPAN 26 - VIEW THROUGH DECK

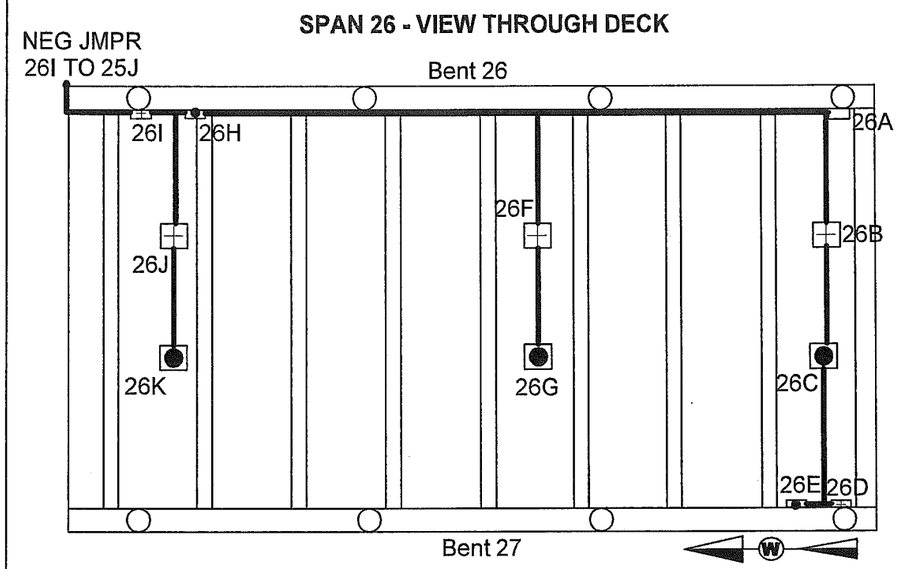

SCHEMATIC

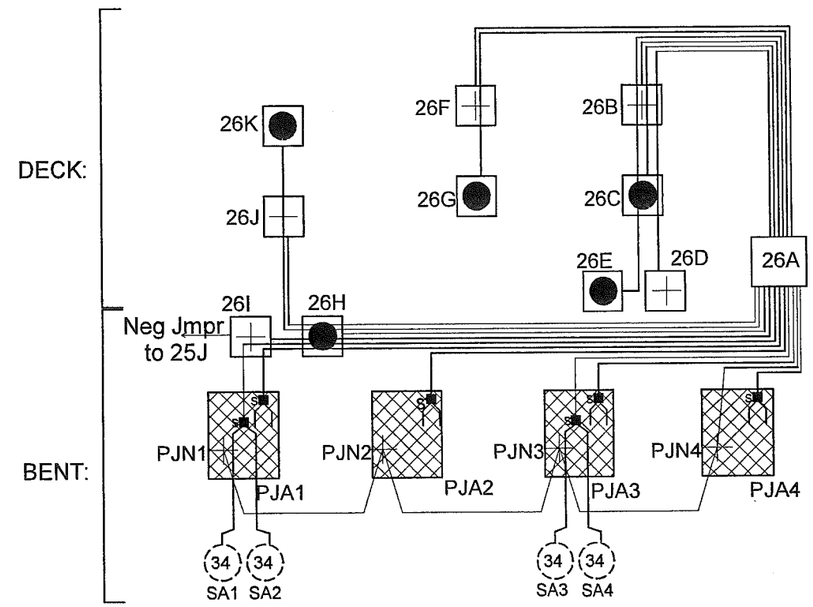

WATER BENT 26 SOUTH ELEVATION

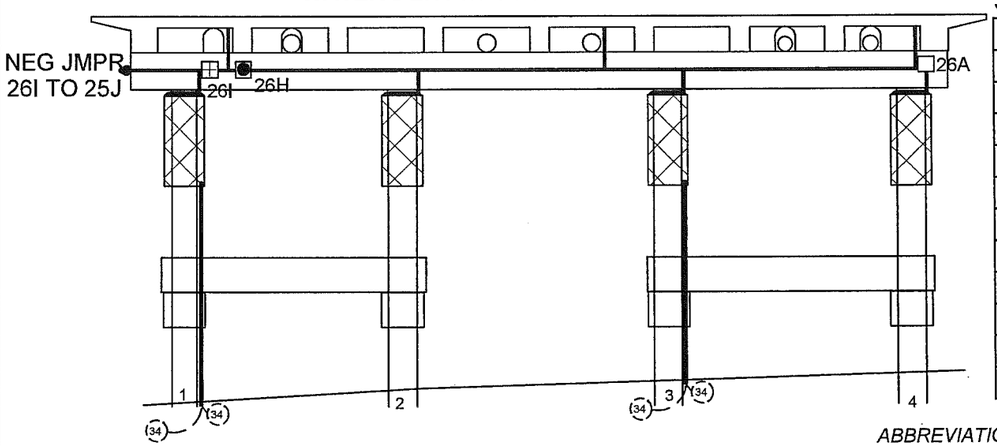

J-BOX DETAILS:

	J-Box Size	Wires or Structure
26-A	14"x12"x8"	MAIN J-BOX: (5) MZA; (5) MZN; (4) PJA; (1) PJN; (2) SA; SAN jumpered from PJN
26-B	5"x5"x2"	Structure Negative (MZN); (2) MZA; (1) MZN
26-C	5"x5"x2"	Primary Anode Terminal Plate (MZA); (1) MZN; (1) MZA
26-D	5"x5"x2"	Structure Negative (MZN)
26-E	5"x5"x2"	Primary Anode Terminal Plate (MZA)
26-F	5"x5"x2"	Structure Negative (MZN); (1) MZA
26-G	5"x5"x2"	Primary Anode Terminal Plate (MZA)
26-H	5"x5"x2"	Primary Anode Terminal Plate (MZA); (2) MZN; (1) MZA; (1) PJA; (1) SA
26-I	5"x5"x2"	Structure Negative (MZN); MZN Jumper to 25J; (1) PJA; (1) SA
26-J	5"x5"x2"	Structure Negative (MZN); (1) MZA
26-K	5"x5"x2"	Primary Anode Terminal Plate (MZA)

ABBREVIATIONS:

MZN = Metallized Zinc Negative
PJN = Pile Jacket Negative
CJN = Cap Jacket Negative
SAN = Submerged Anode Negative
MZA = Metallized Zinc Anode
PJA = Pile Jacket Anode
CJA = Cap Jacket Anode
SA = Submerged Anode
RE = Reference Electrode
REN = Reference Electrode Negative

TYPICAL WIRE SIZES & COLORS AS FOLLOWS:
MZA & PJA = #10 Red
MZN; PJN = #10 Blue
SA = #8 Black
RE/REN: #16 Twisted Pair Red/Black

LEGEND

- (x) Submerged Anode x = Weight in LBS
- Pile Jacket
- Cap Jacket
- Primary Anode Terminal
- Negative Connection
- Encapsulated Splice
- Reference Electrode

Water Street Bent 26 South Elevation & Span 26

SCALE: NONE	Field Sketch As-Built	DRAWN BY	KRH
DATE: 10-21-11		REVISED	

GREAT WESTERN CORPORATION

Ketchikan Viaduct II Repair & C.P.

DRAWING NUMBER W-26

SPAN 27 - VIEW THROUGH DECK

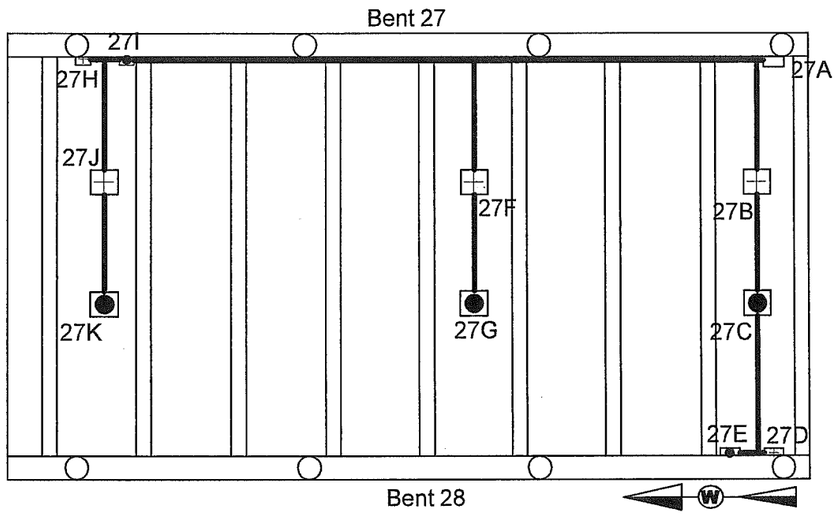

SCHEMATIC

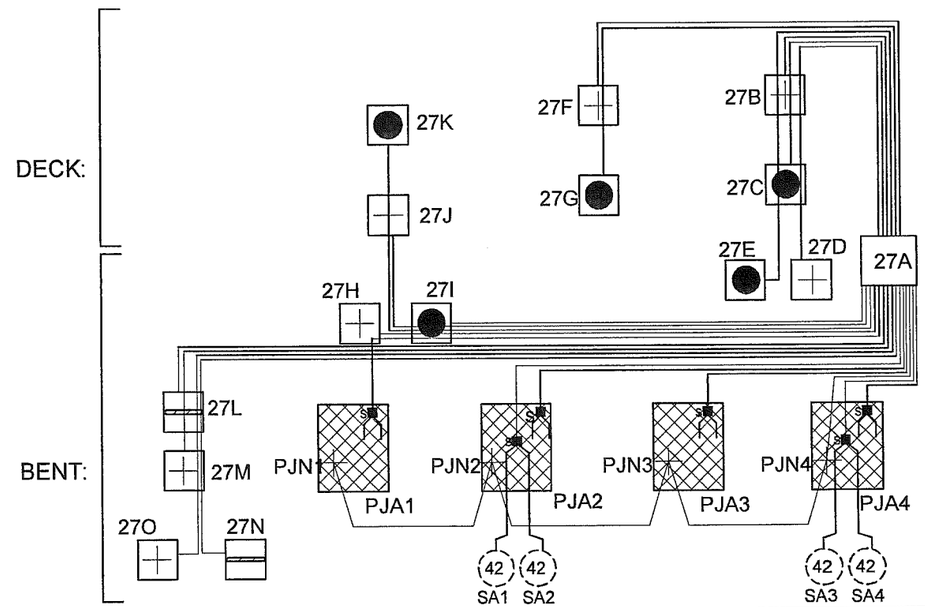

WATER BENT 27 SOUTH ELEVATION

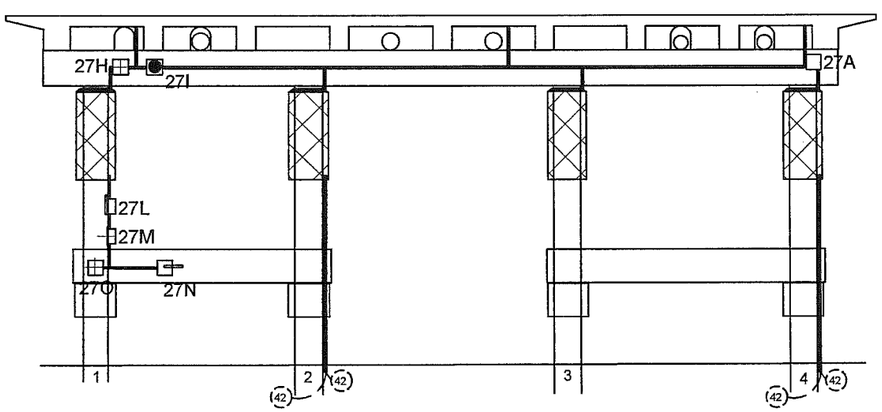

J-BOX DETAILS:

	J-Box Size	Wires or Structure
27-A	14"x12"x8"	MAIN J-BOX: (5) MZA; (5) MZN; (4) PJA; (1) PJN; (2) SA; SAN jumpered from PJN; (2) RE; (2) REN
27-B	5"x5"x2"	Structure Negative (MZN); (2) MZA; (1) MZN
27-C	5"x5"x2"	Primary Anode Terminal Plate (MZA); (1) MZN; (1) MZA
27-D	5"x5"x2"	Structure Negative (MZN)
27-E	5"x5"x2"	Primary Anode Terminal Plate (MZA)
27-F	5"x5"x2"	Structure Negative (MZN); (1) MZA
27-G	5"x5"x2"	Primary Anode Terminal Plate (MZA)
27-H	5"x5"x2"	Structure Negative (MZN); (1) PJA
27-I	5"x5"x2"	Primary Anode Terminal Plate (MZA); (2) MZN; (1) MZA; (1) PJA
27-J	5"x5"x2"	Structure Negative (MZN); (1) MZA
27-K	5"x5"x2"	Primary Anode Terminal Plate (MZA)
27-L	5"x5"x2"	Reference Electrode (RE); (2) REN; (1) RE
27-M	5"x5"x2"	Reference Electrode Negative (REN); (1) RE; (1) REN
27-N	5"x5"x2"	Reference Electrode (RE)
27-O	5"x5"x2"	Reference Electrode Negative (REN)

ABBREVIATIONS:

MZN = Metallized Zinc Negative
PJN = Pile Jacket Negative
CJN = Cap Jacket Negative
SAN = Submerged Anode Negative
MZA = Metallized Zinc Anode
PJA = Pile Jacket Anode
CJA = Cap Jacket Anode
SA = Submerged Anode
RE = Reference Electrode
REN = Reference Electrode Negative

LEGEND

- (x) Submerged Anode x = Weight in LBS
- Pile Jacket
- Cap Jacket
- Primary Anode Terminal
- Negative Connection
- Encapsulated Splice
- Reference Electrode

TYPICAL WIRE SIZES & COLORS AS FOLLOWS:
MZA & PJA = #10 Red
MZN; PJN = #10 Blue
SA = #8 Black
RE/REN: #16 Twisted Pair Red/Black

Water Street Bent 27 South Elevation & Span 27

SCALE: NONE	Field Sketch As-Built	DRAWN BY	KRH
DATE: 10-21-11		REVISED	

GREAT WESTERN CORPORATION

Ketchikan Viaduct II Repair & C.P.

DRAWING NUMBER W-27

SPAN 28 - VIEW THROUGH DECK

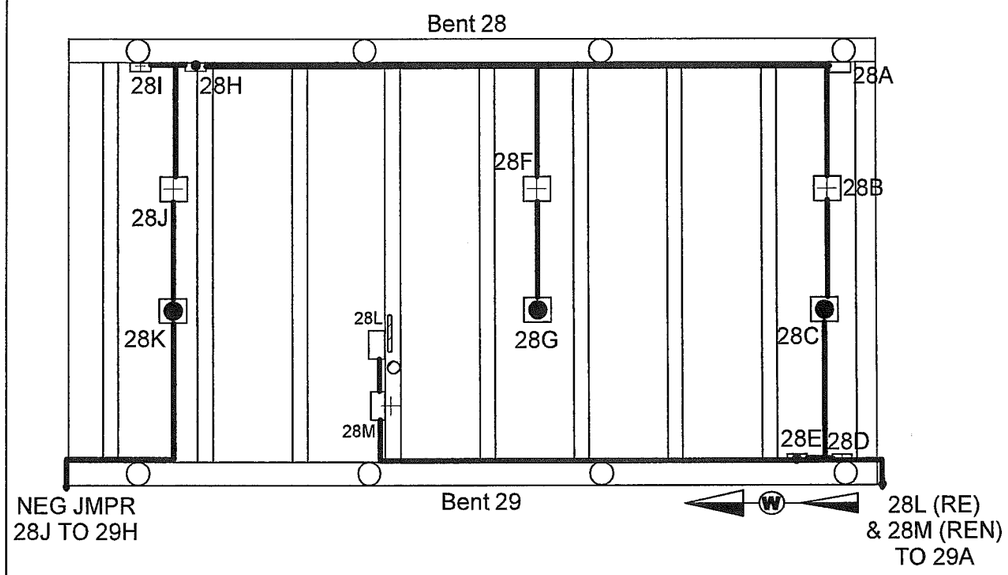

SCHEMATIC

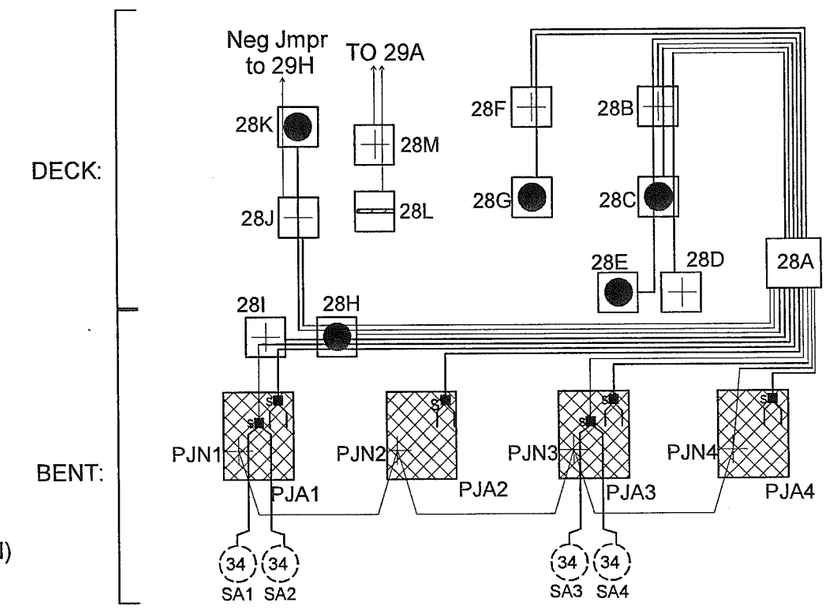

WATER BENT 28 SOUTH ELEVATION

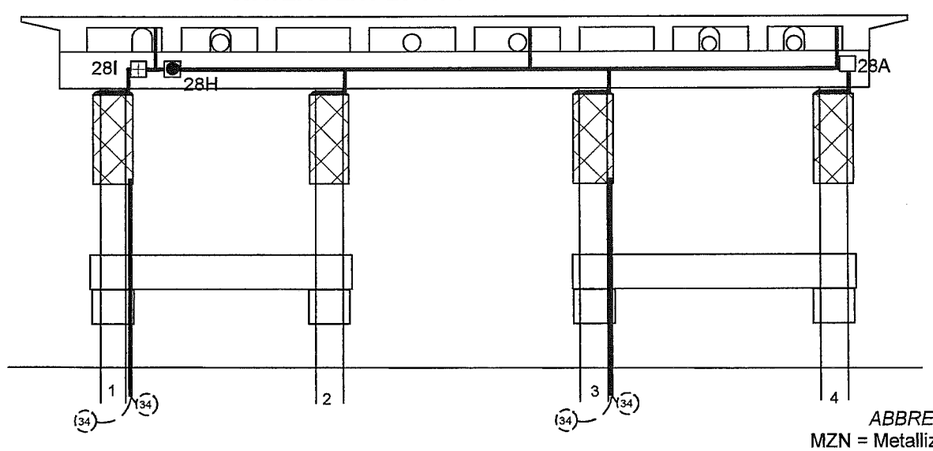

J-BOX DETAILS:

	J-Box Size	Wires or Structure
28-A	14" x 12" x 8"	MAIN J-BOX: (5) MZA; (5) MZN; (4) PJA; (1) PJN; (2) SA; SAN jumpered from PJN
28-B	5" x 5" x 2"	Structure Negative (MZN); (2) MZA; (1) MZN
28-C	5" x 5" x 2"	Primary Anode Terminal Plate (MZA); (1) MZN; (1) MZA
28-D	5" x 5" x 2"	Structure Negative (MZN)
28-E	5" x 5" x 2"	Primary Anode Terminal Plate (MZA)
28-F	5" x 5" x 2"	Structure Negative (MZN); (1) MZA
28-G	5" x 5" x 2"	Primary Anode Terminal Plate (MZA)
28-H	5" x 5" x 2"	Primary Anode Terminal Plate (MZA); (2) MZN; (1) MZA; (1) PJA; (1) SA
28-I	5" x 5" x 2"	Structure Negative (MZN); (1) PJA; (1) SA
28-J	5" x 5" x 2"	Structure Negative (MZN); MZN Jumper to 29H; (1) MZA
28-K	5" x 5" x 2"	Primary Anode Terminal Plate (MZA)
28-L	5" x 5" x 2"	Reference Electrode (RE)
28-M	5" x 5" x 2"	Reference Electrode Negative (REN); (1) RE

ABBREVIATIONS:
MZN = Metallized Zinc Negative
PJN = Pile Jacket Negative
CJN = Cap Jacket Negative
SAN = Submerged Anode Negative
MZA = Metallized Zinc Anode
PJA = Pile Jacket Anode
CJA = Cap Jacket Anode
SA = Submerged Anode
RE = Reference Electrode
REN = Reference Electrode Negative

TYPICAL WIRE SIZES & COLORS AS FOLLOWS:
MZA & PJA = #10 Red
MZN; PJN = #10 Blue
SA = #8 Black
RE/REN: #16 Twisted Pair Red/Black

LEGEND
- (x) Submerged Anode x = Weight in LBS
- Pile Jacket
- Cap Jacket
- Primary Anode Terminal
- Negative Connection
- Encapsulated Splice
- Reference Electrode

Water Street Bent 28 South Elevation & Span 28			
SCALE: NONE	Field Sketch As-Built	DRAWN BY KRH	
DATE: 10-21-11		REVISED	
GREAT WESTERN CORPORATION			
Ketchikan Viaduct II Repair & C.P.		DRAWING NUMBER W-28	

SPAN 29 - VIEW THROUGH DECK

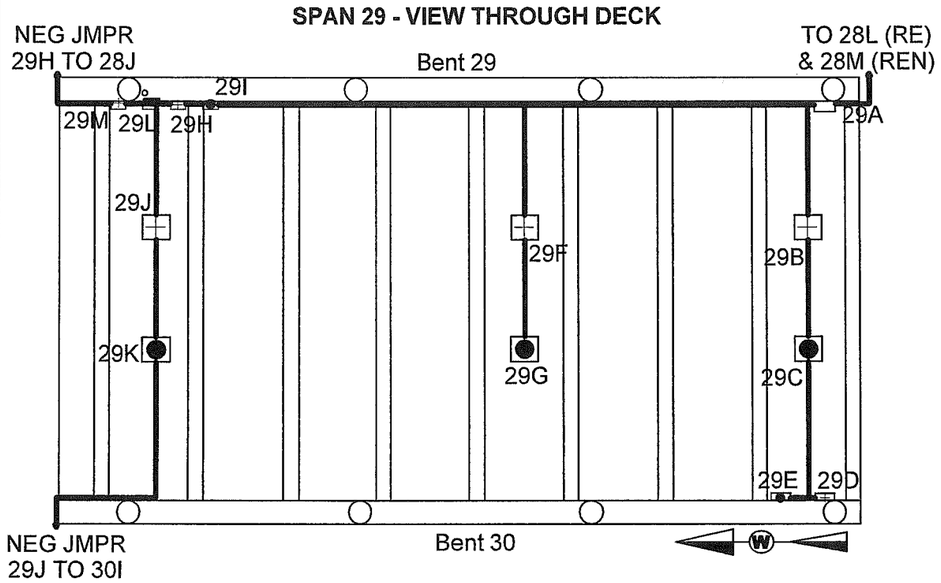

SCHEMATIC

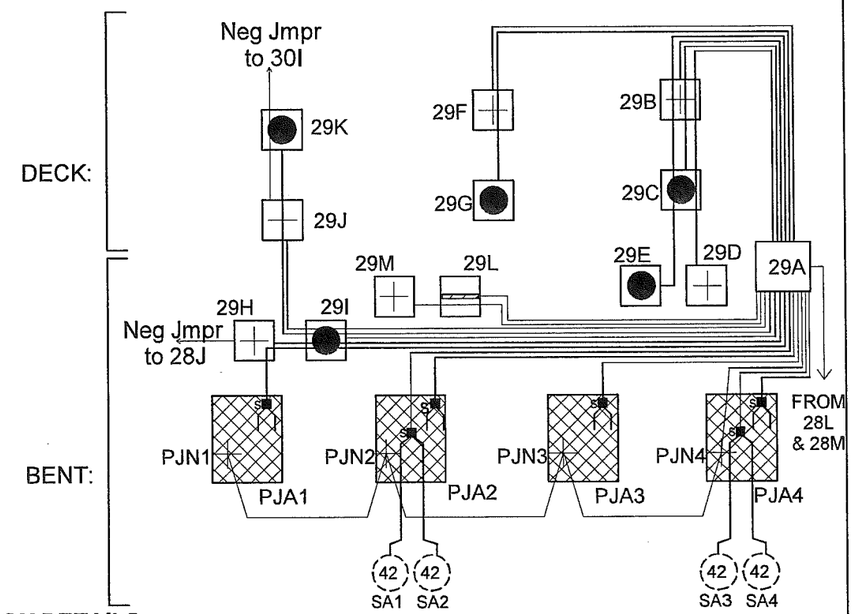

WATER BENT 29 SOUTH ELEVATION

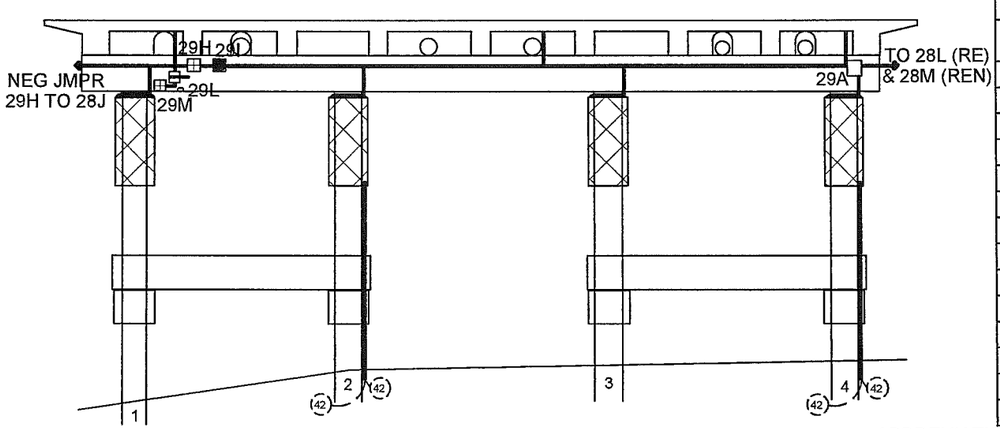

J-BOX DETAILS:

	J-Box Size	Wires or Structure
29-A	14" x 12" x 8"	MAIN J-BOX: (5) MZA; (5) MZN; (4) PJA; (1) PJN; (2) SA; SAN jumpered from PJN; (2) RE; (2) REN
29-B	5" x 5" x 2"	Structure Negative (MZN); (2) MZA; (1) MZN
29-C	5" x 5" x 2"	Primary Anode Terminal Plate (MZA); (1) MZN; (1) MZA
29-D	5" x 5" x 2"	Structure Negative (MZN)
29-E	5" x 5" x 2"	Primary Anode Terminal Plate (MZA)
29-F	5" x 5" x 2"	Structure Negative (MZN); (1) MZA
29-G	5" x 5" x 2"	Primary Anode Terminal Plate (MZA)
29-H	5" x 5" x 2"	Structure Negative (MZN); MZN Jumper to 28J; (1) PJA
29-I	5" x 5" x 2"	Primary Anode Terminal Plate (MZA); (2) MZN; (1) MZA; (1) PJA
29-J	5" x 5" x 2"	Structure Negative (MZN); MZN Jumper to 30I); (1) MZA
29-K	5" x 5" x 2"	Primary Anode Terminal Plate (MZA)
29-L	5" x 5" x 2"	Reference Electrode (RE) S/N:100099; (1) REN
29-M	5" x 5" x 2"	Reference Electrode Negative (REN)
28-L	5" x 5" x 2"	Reference Electrode (RE) (Span 28)
28-M	5" x 5" x 2"	Reference Electrode Negative (REN) (Span 28)

ABBREVIATIONS:

MZN = Metallized Zinc Negative
PJN = Pile Jacket Negative
CJN = Cap Jacket Negative
SAN = Submerged Anode Negative
MZA = Metallized Zinc Anode
PJA = Pile Jacket Anode
CJA = Cap Jacket Anode
SA = Submerged Anode
RE = Reference Electrode
REN = Reference Electrode Negative

LEGEND

- (x) Submerged Anode x = Weight in LBS
- Pile Jacket
- Cap Jacket
- Primary Anode Terminal
- Negative Connection
- Encapsulated Splice
- Reference Electrode

TYPICAL WIRE SIZES & COLORS AS FOLLOWS:
MZA & PJA = #10 Red
MZN; PJN = #10 Blue
SA = #8 Black
RE/REN: #16 Twisted Pair Red/Black

Water Street Bent 29 South Elevation & Span 29			
SCALE: NONE	Field Sketch As-Built	DRAWN BY KRH	
DATE: 10-14-11		REVISED	
GREAT WESTERN CORPORATION			
Ketchikan Viaduct II Repair & C.P.		DRAWING NUMBER W-29	

SPAN 30 - VIEW THROUGH DECK

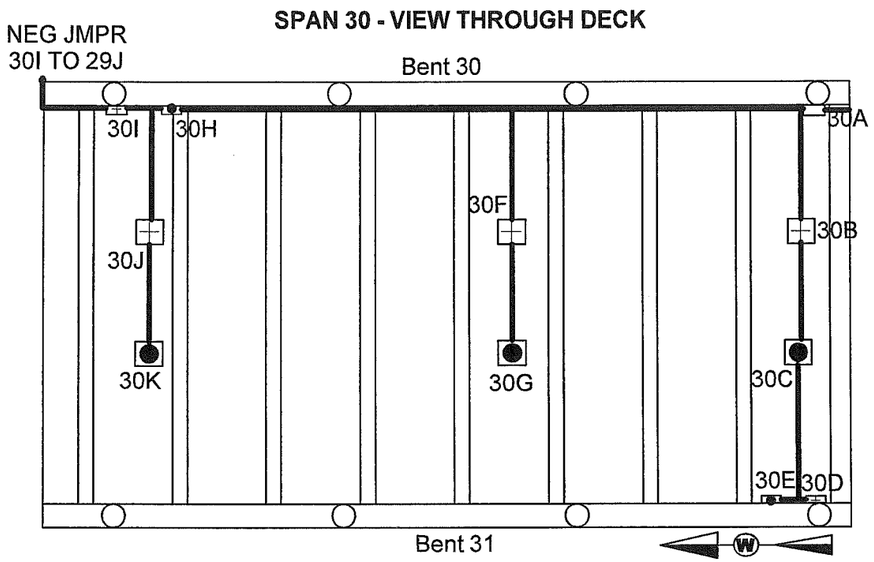

SCHEMATIC

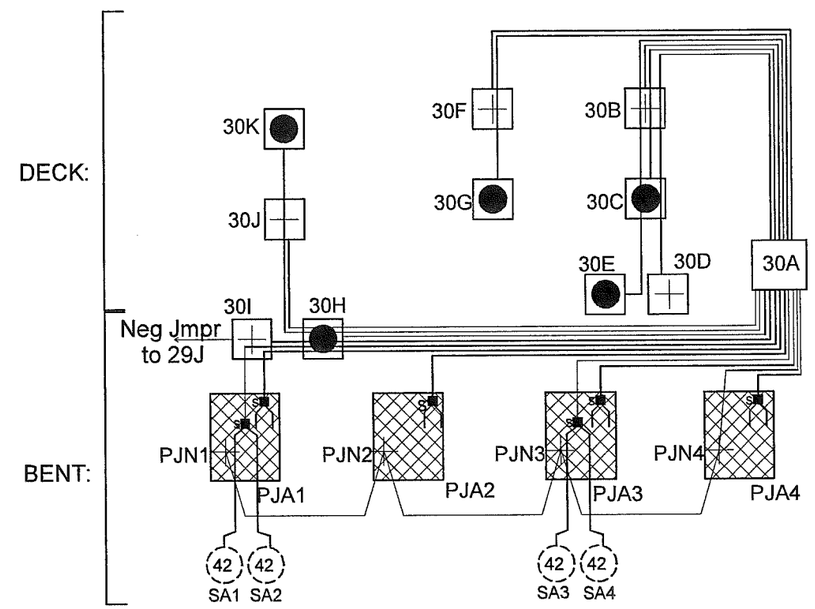

WATER BENT 30 SOUTH ELEVATION

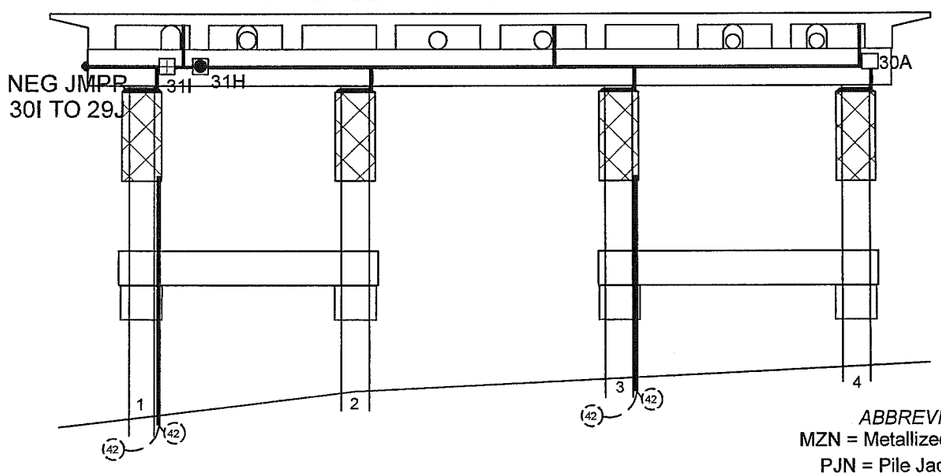

J-BOX DETAILS:

	J-Box Size	Wires or Structure
30-A	14" x 12" x 8"	MAIN J-BOX: (5) MZA; (5) MZN; (4) PJA; (1) PJN; (2) SA; SAN jumpered from PJN
30-B	5" x 5" x 2"	Structure Negative (MZN); (2) MZA; (1) MZN
30-C	5" x 5" x 2"	Primary Anode Terminal Plate (MZA); (1) MZN; (1) MZA
30-D	5" x 5" x 2"	Structure Negative (MZN)
30-E	5" x 5" x 2"	Primary Anode Terminal Plate (MZA)
30-F	5" x 5" x 2"	Structure Negative (MZN); (1) MZA
30-G	5" x 5" x 2"	Primary Anode Terminal Plate (MZA)
30-H	5" x 5" x 2"	Primary Anode Terminal Plate (MZA); (2) MZN; (1) MZA; (1) PJA; (1) SA
30-I	5" x 5" x 2"	Structure Negative (MZN); (1) PJA; (1) SA; MZN Jumper to 29J
30-J	5" x 5" x 2"	Structure Negative (MZN); (1) MZA
30-K	5" x 5" x 2"	Primary Anode Terminal Plate (MZA)

ABBREVIATIONS:
MZN = Metallized Zinc Negative
PJN = Pile Jacket Negative
CJN = Cap Jacket Negative
SAN = Submerged Anode Negative
MZA = Metallized Zinc Anode
PJA = Pile Jacket Anode
CJA = Cap Jacket Anode
SA = Submerged Anode
RE = Reference Electrode
REN = Reference Electrode Negative

LEGEND
- (x) Submerged Anode x = Weight in LBS
- Pile Jacket
- Cap Jacket
- Primary Anode Terminal
- Negative Connection
- Encapsulated Splice
- Reference Electrode

TYPICAL WIRE SIZES & COLORS AS FOLLOWS:
MZA & PJA = #10 Red
MZN; PJN = #10 Blue
SA = #8 Black
RE/REN: #16 Twisted Pair Red/Black

Water Street Bent 30 South Elevation & Span 30			
SCALE: NONE	Field Sketch As-Built	DRAWN BY KRH	
DATE: 10-14-11		REVISED	
GREAT WESTERN CORPORATION			
Ketchikan Viaduct II Repair & C.P.		DRAWING NUMBER W-30	

SPAN 31 - VIEW THROUGH DECK

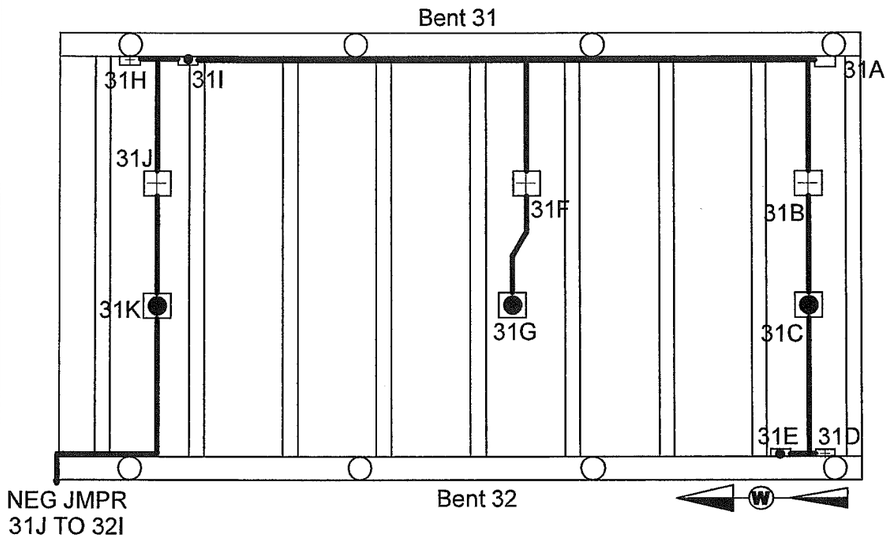

SCHEMATIC

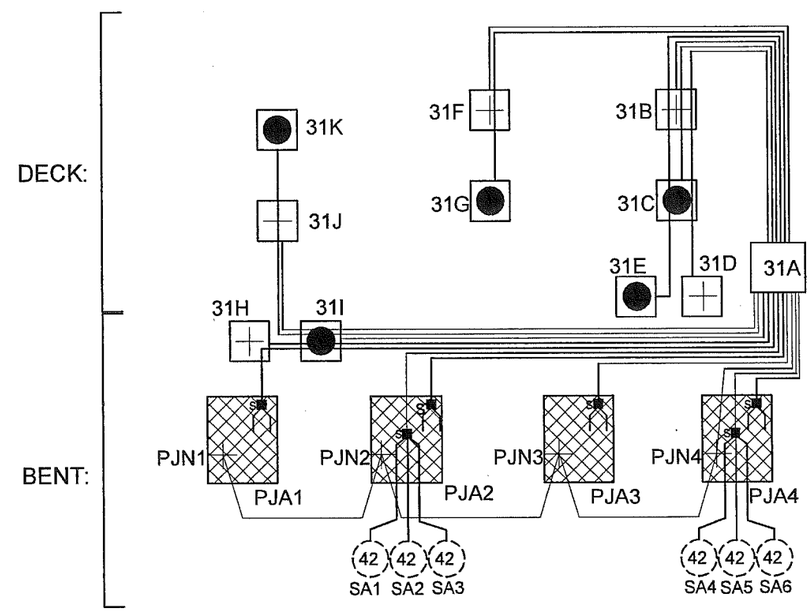

WATER BENT 31 SOUTH ELEVATION

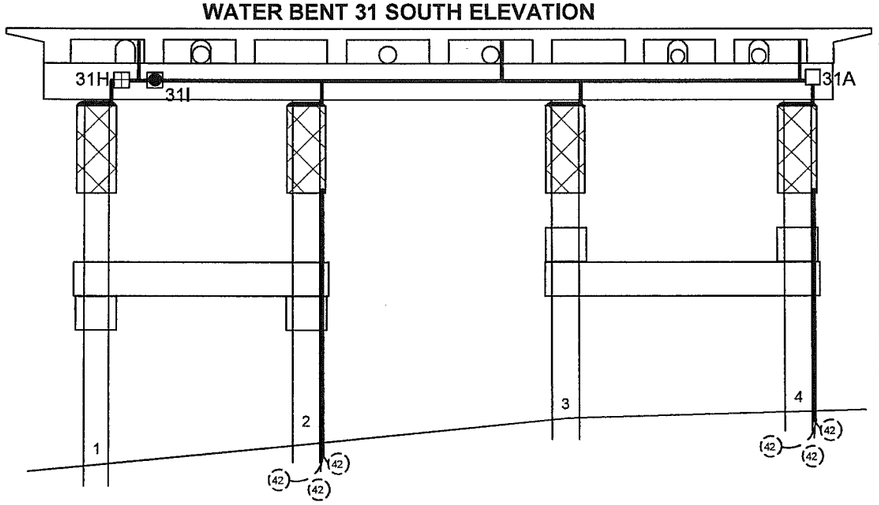

J-BOX DETAILS:

	J-Box Size	Wires or Structure
31-A	14"x12"x8"	MAIN J-BOX: (5) MZA; (5) MZN; (4) PJA; (1) PJN; (2) SA; SAN jumpered from PJN
31-B	5"x5"x2"	Structure Negative (MZN); (2) MZA; (1) MZN
31-C	5"x5"x2"	Primary Anode Terminal Plate (MZA); (1) MZN; (1) MZA
31-D	5"x5"x2"	Structure Negative (MZN)
31-E	5"x5"x2"	Primary Anode Terminal Plate (MZA)
31-F	5"x5"x2"	Structure Negative (MZN); (1) MZA
31-G	5"x5"x2"	Primary Anode Terminal Plate (MZA)
31-H	5"x5"x2"	Structure Negative (MZN); (1) PJA
31-I	5"x5"x2"	Primary Anode Terminal Plate (MZA); (2) MZN; (1) MZA; (1) PJA
31-J	5"x5"x2"	Structure Negative (MZN); (1) MZA
31-K	5"x5"x2"	Primary Anode Terminal Plate (MZA)

TYPICAL WIRE SIZES & COLORS AS FOLLOWS:
MZA & PJA = #10 Red
MZN; PJN = #10 Blue
SA = #8 Black
RE/REN: #16 Twisted Pair Red/Black

ABBREVIATIONS:
MZN = Metallized Zinc Negative
PJN = Pile Jacket Negative
CJN = Cap Jacket Negative
SAN = Submerged Anode Negative
MZA = Metallized Zinc Anode
PJA = Pile Jacket Anode
CJA = Cap Jacket Anode
SA = Submerged Anode
RE = Reference Electrode
REN = Reference Electrode Negative

LEGEND
- (X) Submerged Anode X = Weight in KG
- Pile Jacket
- Cap Jacket
- Primary Anode Terminal
- Negative Connection
- s Encapsulated Splice

Water Street Bent 31 South Elevation & Span 31			
SCALE: NONE	Field Sketch As-Built	DRAWN BY KRH	
DATE: 10-14-11		REVISED	
GREAT WESTERN CORPORATION			
Ketchikan Viaduct II Repair & C.P.		DRAWING NUMBER W-31	

SPAN 32 - VIEW THROUGH DECK

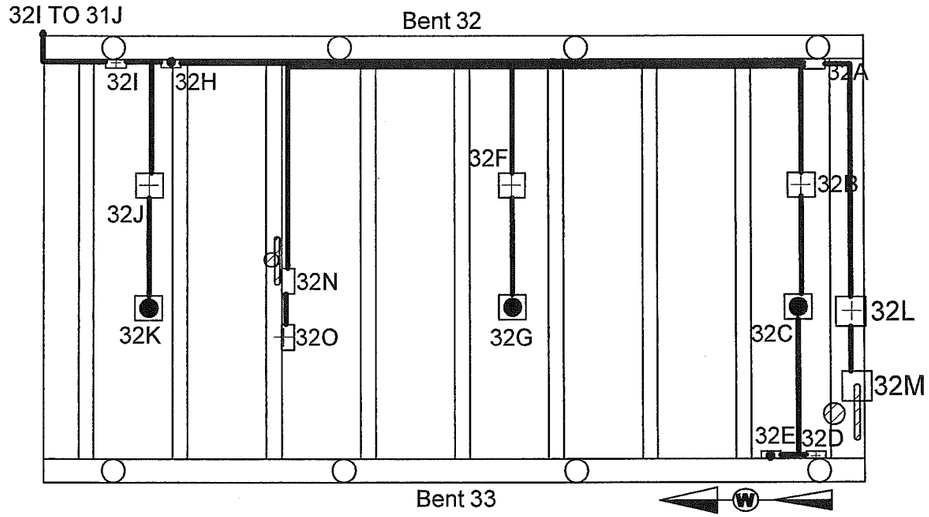

SCHEMATIC

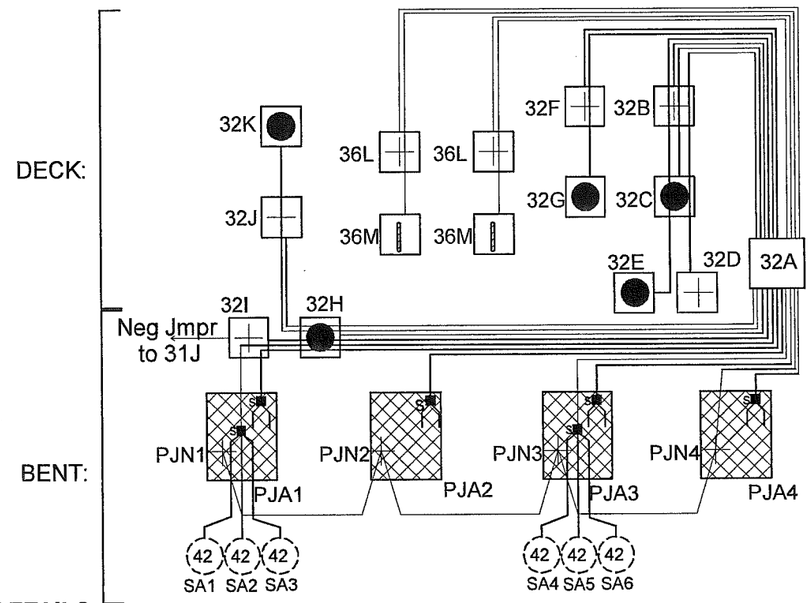

WATER BENT 32 SOUTH ELEVATION

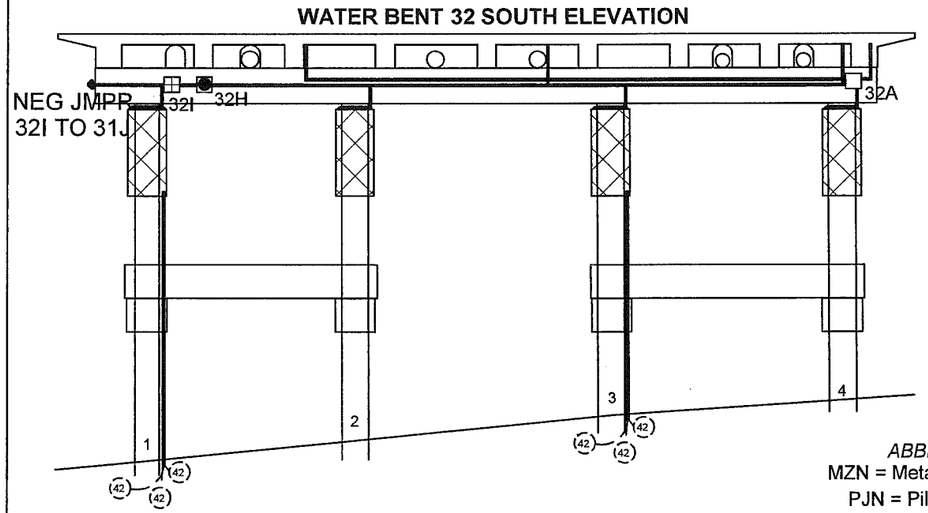

J-BOX DETAILS:

	J-Box Size	Wires or Structure
32-A	14" x 12" x 8"	MAIN J-BOX: (5) MZA; (5) MZN; (4) PJA; (1) PJN; (2) SA; SAN jumpered from PJN; (2) RE; (2) REN
32-B	5" x 5" x 2"	Structure Negative (MZN); (2) MZA; (1) MZN
32-C	5" x 5" x 2"	Primary Anode Terminal Plate (MZA); (1) MZN; (1) MZA
32-D	5" x 5" x 2"	Structure Negative (MZN)
32-E	5" x 5" x 2"	Primary Anode Terminal Plate (MZA)
32-F	5" x 5" x 2"	Structure Negative (MZN); (1) MZA
32-G	5" x 5" x 2"	Primary Anode Terminal Plate (MZA)
32-H	5" x 5" x 2"	Primary Anode Terminal Plate (MZA); (2) MZN; (1) MZA; (1) PJA; (1) SA
32-I	5" x 5" x 2"	Structure Negative (MZN); (1) PJA; (1) SA; MZN Jumper to 31J
32-J	5" x 5" x 2"	Structure Negative (MZN); (1) MZA
32-K	5" x 5" x 2"	Primary Anode Terminal Plate (MZA)
32-L	5" x 5" x 2"	Reference Electrode Negative (REN) (1) RE
32-M	5" x 5" x 2"	Reference Electrode (RE)
32-N	5" x 5" x 2"	Reference Electrode (RE); (1) REN
32-O	5" x 5" x 2"	Reference Electrode Negative (REN)

ABBREVIATIONS:

MZN = Metallized Zinc Negative
PJN = Pile Jacket Negative
CJN = Cap Jacket Negative
SAN = Submerged Anode Negative
MZA = Metallized Zinc Anode
PJA = Pile Jacket Anode
CJA = Cap Jacket Anode
SA = Submerged Anode
RE = Reference Electrode
REN = Reference Electrode Negative

LEGEND

- (x) Submerged Anode x = Weight in LBS
- Pile Jacket
- Cap Jacket
- Primary Anode Terminal
- Negative Connection
- Encapsulated Splice
- Reference Electrode

TYPICAL WIRE SIZES & COLORS AS FOLLOWS:
MZA & PJA = #10 Red
MZN; PJN = #10 Blue
SA = #8 Black
RE/REN: #16 Twisted Pair Red/Black

Water Street Bent 32 South Elevation & Span 32			
SCALE: NONE	Field Sketch As-Built	DRAWN BY KRH	
DATE: 10-14-11		REVISED	
GREAT WESTERN CORPORATION			
Ketchikan Viaduct II Repair & C.P.		DRAWING NUMBER W-32	

SPAN 33 - VIEW THROUGH DECK

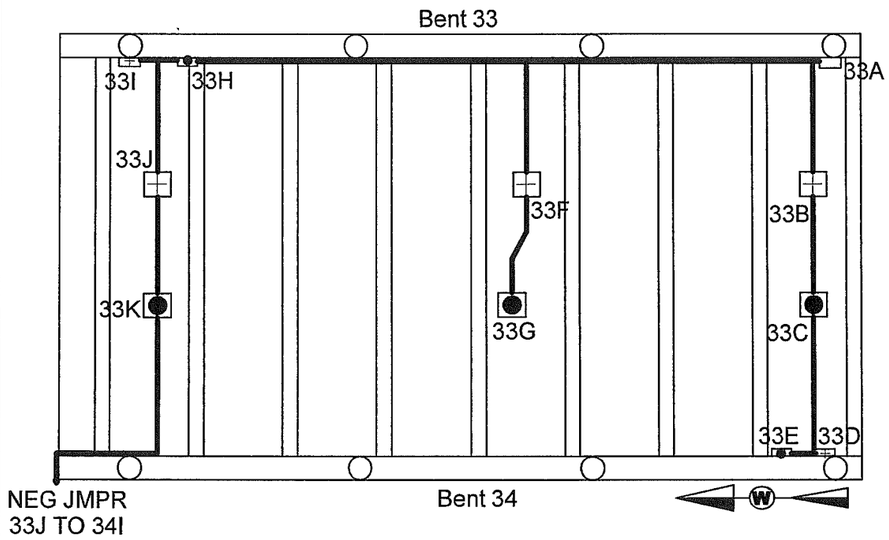

SCHEMATIC

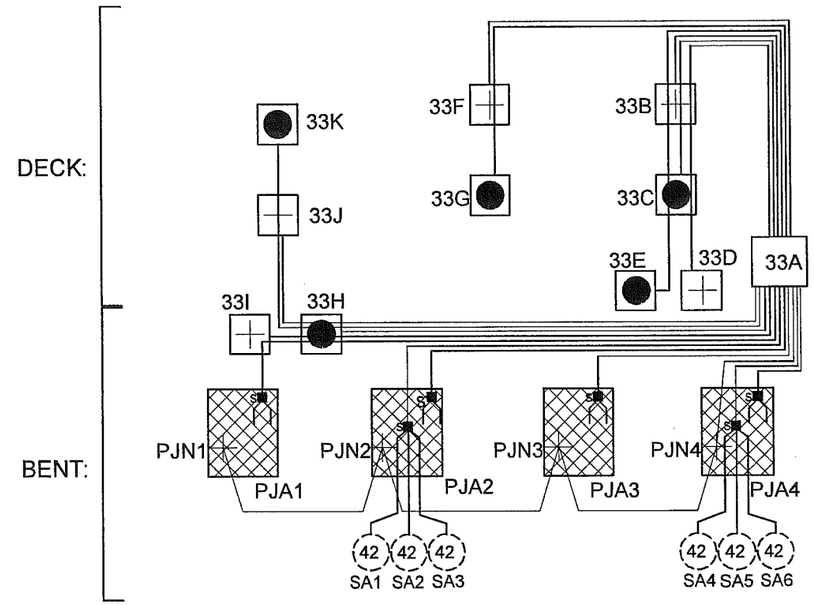

WATER BENT 33 SOUTH ELEVATION

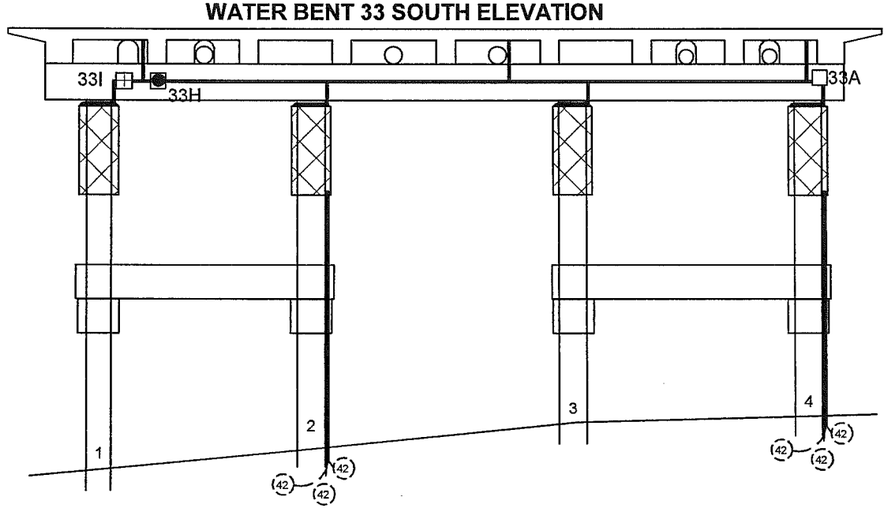

J-BOX DETAILS:

	J-Box Size	Wires or Structure
33-A	14"x12"x8"	MAIN J-BOX: (5) MZA; (5) MZN; (4) PJA; (1) PJN; (2) SA; SAN jumpered from PJN
33-B	5"x5"x2"	Structure Negative (MZN); (2) MZA; (1) MZN
33-C	5"x5"x2"	Primary Anode Terminal Plate (MZA); (1) MZN; (1) MZA
33-D	5"x5"x2"	Structure Negative (MZN)
33-E	5"x5"x2"	Primary Anode Terminal Plate (MZA)
33-F	5"x5"x2"	Structure Negative (MZN); (1) MZA
33-G	5"x5"x2"	Primary Anode Terminal Plate (MZA)
33-H	5"x5"x2"	Primary Anode Terminal Plate (MZA); (2) MZN; (1) MZA; (1) PJA
33-I	5"x5"x2"	Structure Negative (MZN); (1) PJA
33-J	5"x5"x2"	Structure Negative (MZN); (1) MZA
33-K	5"x5"x2"	Primary Anode Terminal Plate (MZA)

TYPICAL WIRE SIZES & COLORS AS FOLLOWS:
MZA & PJA = #10 Red
MZN; PJN = #10 Blue
SA = #8 Black
RE/REN: #16 Twisted Pair Red/Black

ABBREVIATIONS:
MZN = Metallized Zinc Negative
PJN = Pile Jacket Negative
CJN = Cap Jacket Negative
SAN = Submerged Anode Negative
MZA = Metallized Zinc Anode
PJA = Pile Jacket Anode
CJA = Cap Jacket Anode
SA = Submerged Anode
RE = Reference Electrode
REN = Reference Electrode Negative

LEGEND
- (X) Submerged Anode X = Weight in KG
- Pile Jacket
- Cap Jacket
- Primary Anode Terminal
- Negative Connection
- s Encapsulated Splice

Water Street Bent 33 South Elevation & Span 33			
SCALE: NONE	Field Sketch As-Built	DRAWN BY KRH	
DATE: 10-14-11		REVISED	
GREAT WESTERN CORPORATION			
Ketchikan Viaduct II Repair & C.P.		DRAWING NUMBER W-33	

SPAN 34 - VIEW THROUGH DECK

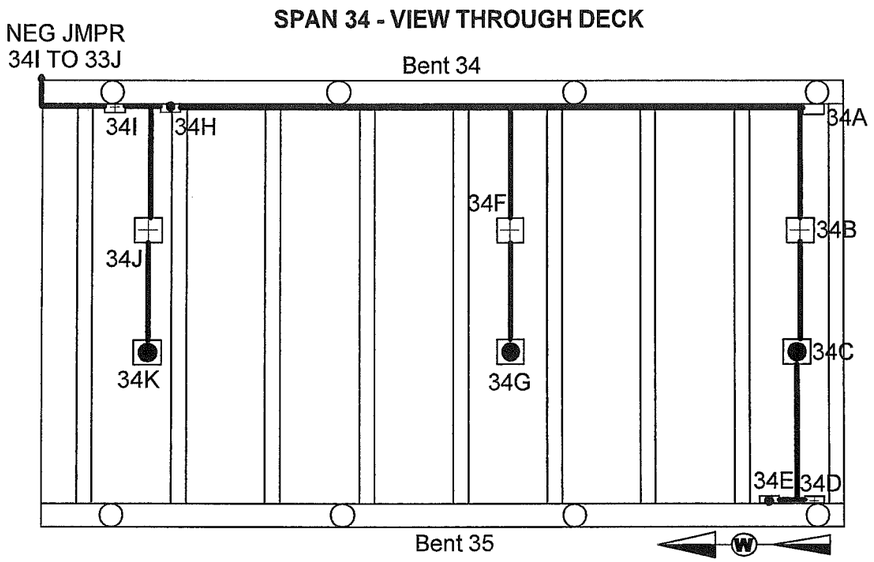

SCHEMATIC

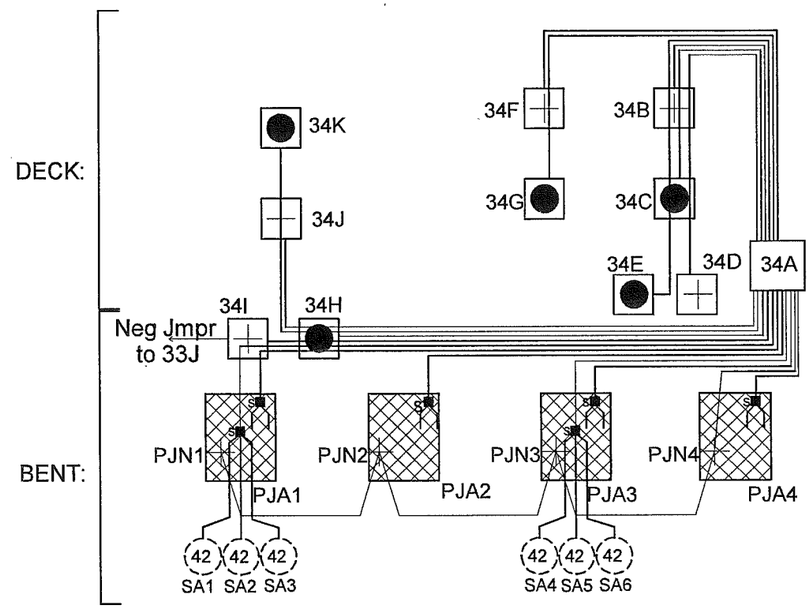

WATER BENT 34 SOUTH ELEVATION

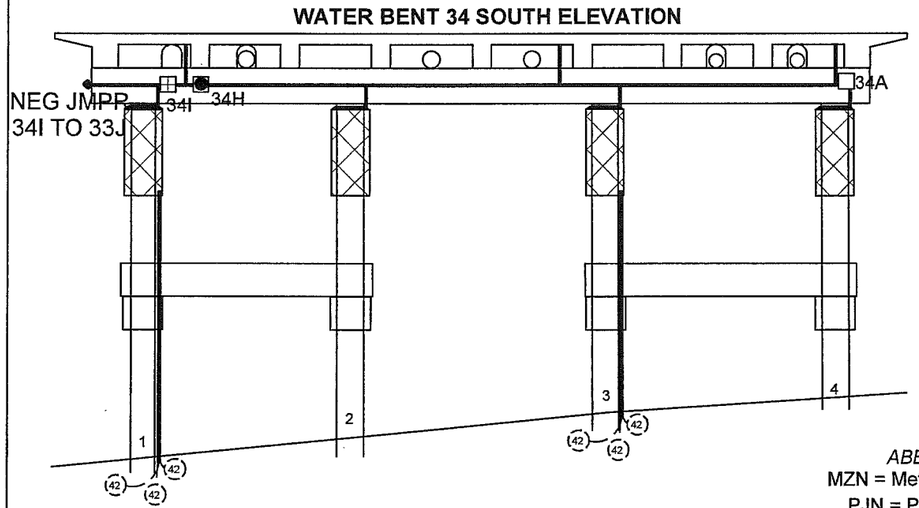

J-BOX DETAILS:

	J-Box Size	Wires or Structure
34-A	14" x 12" x 8"	MAIN J-BOX: (5) MZA; (5) MZN; (4) PJA; (1) PJN; (2) SA; SAN jumpered from PJN
34-B	5" x 5" x 2"	Structure Negative (MZN); (2) MZA; (1) MZN
34-C	5" x 5" x 2"	Primary Anode Terminal Plate (MZA); (1) MZN; (1) MZA
34-D	5" x 5" x 2"	Structure Negative (MZN)
34-E	5" x 5" x 2"	Primary Anode Terminal Plate (MZA)
34-F	5" x 5" x 2"	Structure Negative (MZN); (1) MZA
34-G	5" x 5" x 2"	Primary Anode Terminal Plate (MZA)
34-H	5" x 5" x 2"	Primary Anode Terminal Plate (MZA); (2) MZN; (1) MZA; (1) PJA; (1) SA
34-I	5" x 5" x 2"	Structure Negative (MZN); (1) PJA; (1) SA; MZN Jumper to 33J
34-J	5" x 5" x 2"	Structure Negative (MZN); (1) MZA
34-K	5" x 5" x 2"	Primary Anode Terminal Plate (MZA)

ABBREVIATIONS:
MZN = Metallized Zinc Negative
PJN = Pile Jacket Negative
CJN = Cap Jacket Negative
SAN = Submerged Anode Negative
MZA = Metallized Zinc Anode
PJA = Pile Jacket Anode
CJA = Cap Jacket Anode
SA = Submerged Anode
RE = Reference Electrode
REN = Reference Electrode Negative

TYPICAL WIRE SIZES & COLORS AS FOLLOWS:
MZA & PJA = #10 Red
MZN; PJN = #10 Blue
SA = #8 Black
RE/REN: #16 Twisted Pair Red/Black

LEGEND
- Submerged Anode x = Weight in LBS
- Pile Jacket
- Cap Jacket
- Primary Anode Terminal
- Negative Connection
- Encapsulated Splice
- Reference Electrode

Water Street Bent 34 South Elevation & Span 34			
SCALE: NONE	Field Sketch As-Built	DRAWN BY KRH	
DATE: 10-14-11		REVISED	
GREAT WESTERN CORPORATION			
Ketchikan Viaduct II Repair & C.P.		DRAWING NUMBER W-34	

SPAN 35 - VIEW THROUGH DECK

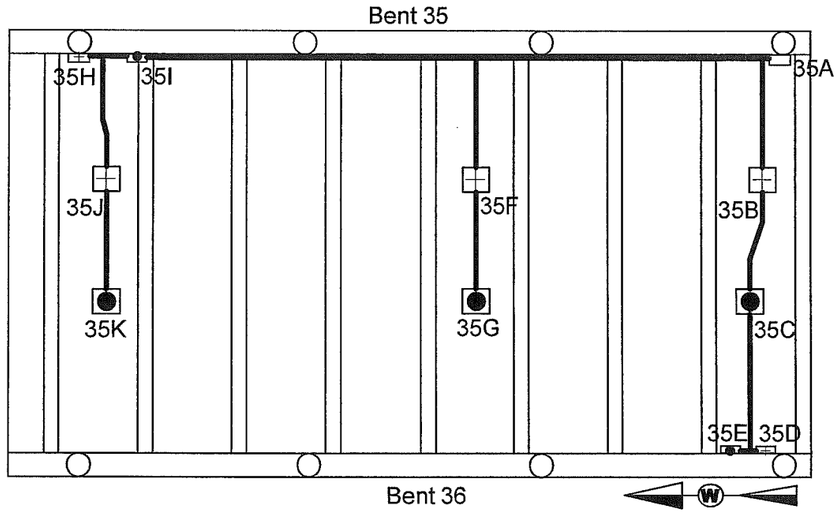

SCHEMATIC

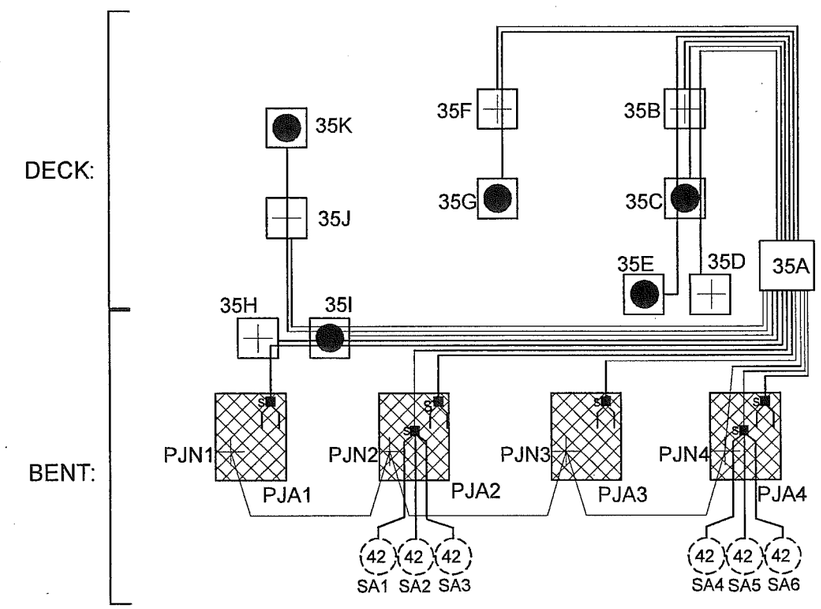

WATER BENT 35 SOUTH ELEVATION

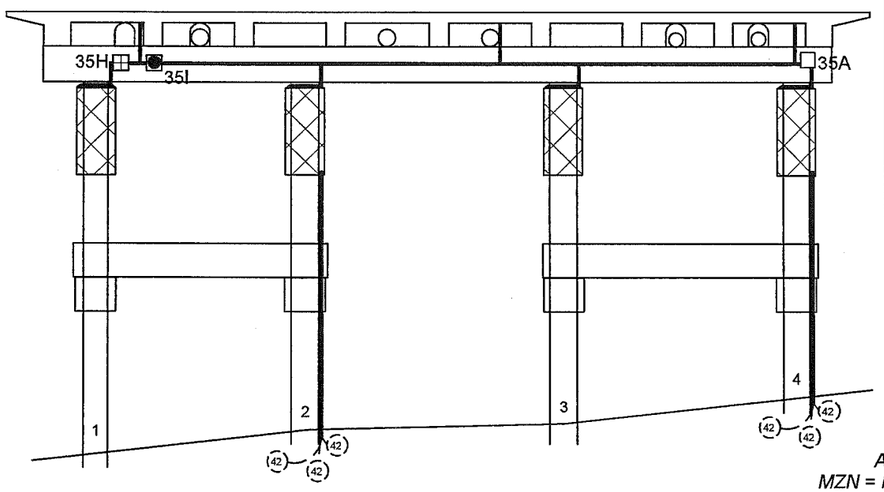

J-BOX DETAILS:

	J-Box Size	Wires or Structure
35-A	14"x12"x8"	MAIN J-BOX: (5) MZA; (5) MZN; (4) PJA; (1) PJN; (2) SA; SAN jumpered from PJN
35-B	5"x5"x2"	Structure Negative (MZN); (2) MZA; (1) MZN
35-C	5"x5"x2"	Primary Anode Terminal Plate (MZA); (1) MZN; (1) MZA
35-D	5"x5"x2"	Structure Negative (MZN)
35-E	5"x5"x2"	Primary Anode Terminal Plate (MZA)
35-F	5"x5"x2"	Structure Negative (MZN); (1) MZA
35-G	5"x5"x2"	Primary Anode Terminal Plate (MZA)
35-H	5"x5"x2"	Structure Negative (MZN); (1) PJA
35-I	5"x5"x2"	Primary Anode Terminal Plate (MZA); (2) MZN; (1) MZA; (1) PJA
35-J	5"x5"x2"	Structure Negative (MZN); (1) MZA
35-K	5"x5"x2"	Primary Anode Terminal Plate (MZA)

TYPICAL WIRE SIZES & COLORS AS FOLLOWS:
MZA & PJA = #10 Red
MZN; PJN = #10 Blue
SA = #8 Black
RE/REN: #16 Twisted Pair Red/Black

ABBREVIATIONS:
MZN = Metallized Zinc Negative
PJN = Pile Jacket Negative
CJN = Cap Jacket Negative
SAN = Submerged Anode Negative
MZA = Metallized Zinc Anode
PJA = Pile Jacket Anode
CJA = Cap Jacket Anode
SA = Submerged Anode
RE = Reference Electrode
REN = Reference Electrode Negative

LEGEND
- (X) Submerged Anode X = Weight in KG
- Pile Jacket
- Cap Jacket
- Primary Anode Terminal
- Negative Connection
- s Encapsulated Splice

Water Street Bent 35 South Elevation & Span 35			
SCALE: NONE	Field Sketch As-Built	DRAWN BY KRH	
DATE: 10-14-11		REVISED	
GREAT WESTERN CORPORATION			
Ketchikan Viaduct II Repair & C.P.		DRAWING NUMBER W-35	

SPAN 36 - VIEW THROUGH DECK

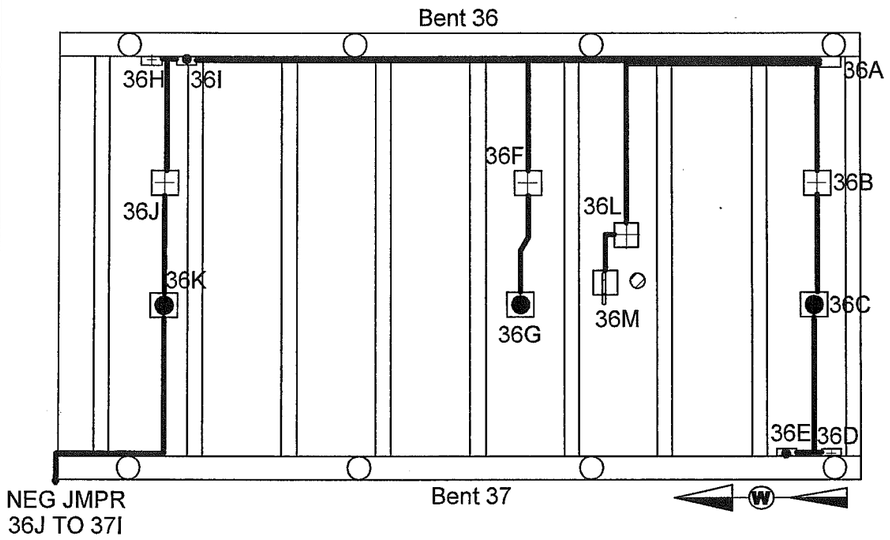

SCHEMATIC

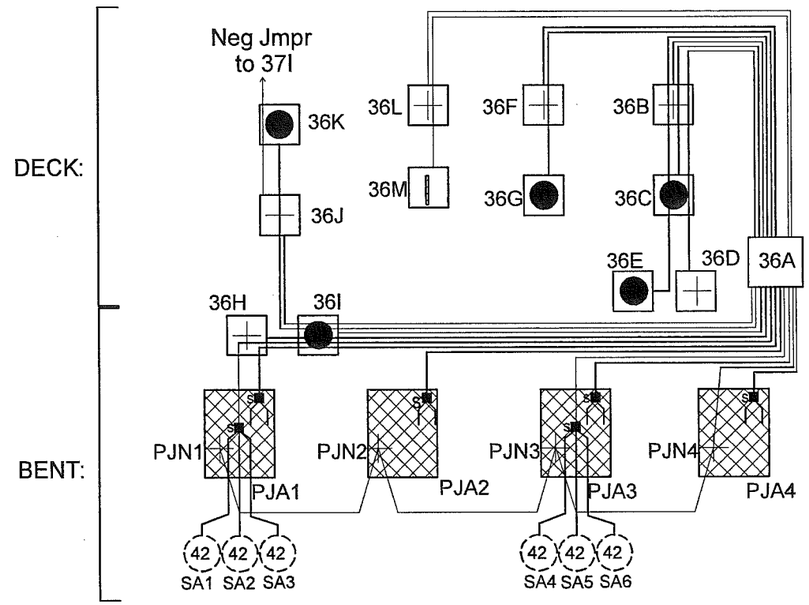

WATER BENT 36 SOUTH ELEVATION

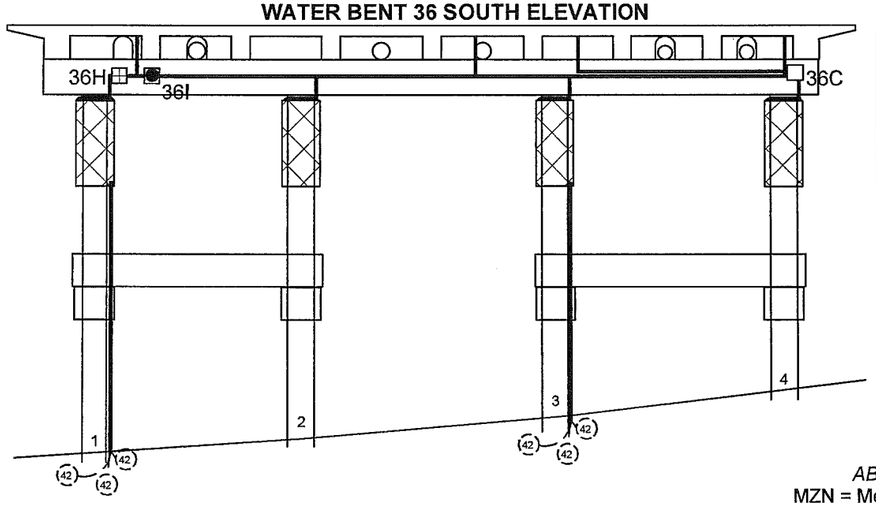

J-BOX DETAILS:

	J-Box Size	Wires or Structure
36-A	14" x 12" x 8"	MAIN J-BOX: (5) MZA; (5) MZN; (4) PJA; (1) PJN; (2) SA; SAN jumpered from PJN; (1) RE; (1) REN
36-B	5" x 5" x 2"	Structure Negative (MZN); (2) MZA; (1) MZN
36-C	5" x 5" x 2"	Primary Anode Terminal Plate (MZA); (1) MZN; (1) MZA
36-D	5" x 5" x 2"	Structure Negative (MZN)
36-E	5" x 5" x 2"	Primary Anode Terminal Plate (MZA)
36-F	5" x 5" x 2"	Structure Negative (MZN); (1) MZA
36-G	5" x 5" x 2"	Primary Anode Terminal Plate (MZA)
36-H	5" x 5" x 2"	Structure Negative (MZN); (1) PJA; (1) SA
36-I	5" x 5" x 2"	Primary Anode Terminal Plate (MZA); (2) MZN; (1) MZA; (1) PJA; (1) SA
36-J	5" x 5" x 2"	Structure Negative (MZN); (1) MZA; MZN Jumper to 37I
36-K	5" x 5" x 2"	Primary Anode Terminal Plate (MZA); (1) MZN Jumper
36-L	5" x 5" x 2"	Reference Electrode Negative (REN) (1) RE
36-M	5" x 5" x 2"	Reference Electrode (RE)

ABBREVIATIONS:
MZN = Metallized Zinc Negative
PJN = Pile Jacket Negative
CJN = Cap Jacket Negative
SAN = Submerged Anode Negative
MZA = Metallized Zinc Anode
PJA = Pile Jacket Anode
CJA = Cap Jacket Anode
SA = Submerged Anode
RE = Reference Electrode
REN = Reference Electrode Negative

LEGEND
- (X) Submerged Anode x = Weight in LBS
- Pile Jacket
- Cap Jacket
- Primary Anode Terminal
- Negative Connection
- Encapsulated Splice
- Reference Electrode

TYPICAL WIRE SIZES & COLORS AS FOLLOWS:
MZA & PJA = #10 Red
MZN; PJN = #10 Blue
SA = #8 Black
RE/REN: #16 Twisted Pair Red/Black

Water Street Bent 36 South Elevation & Span 36			
SCALE: NONE	Field Sketch As-Built	DRAWN BY KRH	
DATE: 10-14-11		REVISED	
GREAT WESTERN CORPORATION			
Ketchikan Viaduct II Repair & C.P.		DRAWING NUMBER W-36	

SPAN 37 - VIEW THROUGH DECK

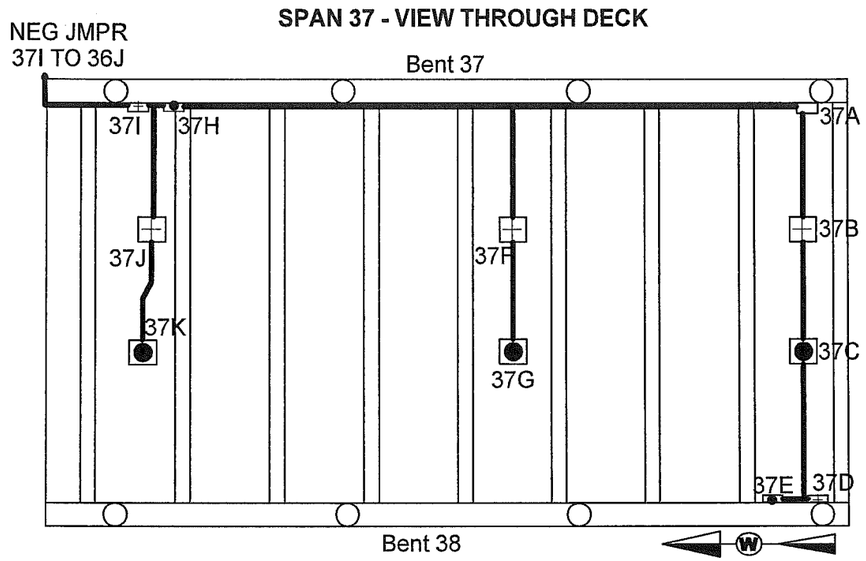

SCHEMATIC

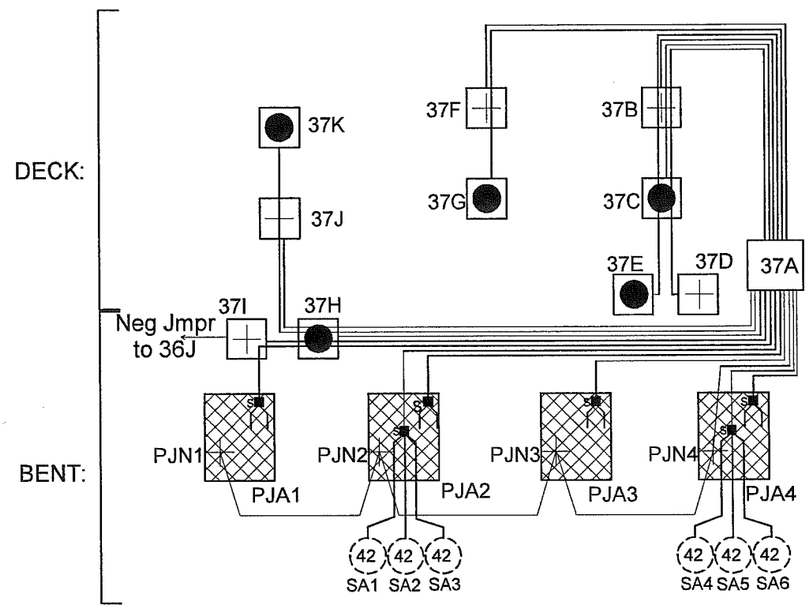

WATER BENT 37 SOUTH ELEVATION

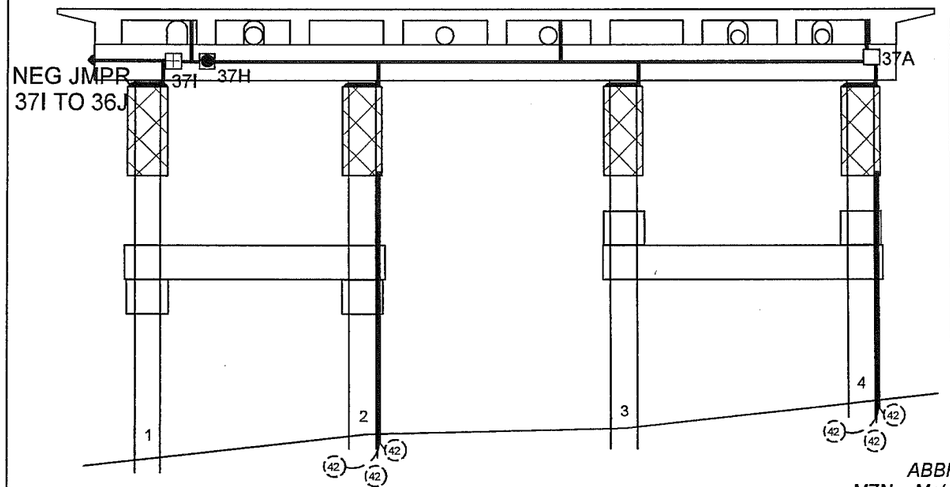

J-BOX DETAILS:

	J-Box Size	Wires or Structure
37-A	14"x12"x8"	MAIN J-BOX: (5) MZA; (5) MZN; (4) PJA; (1) PJN; (2) SA; SAN jumpered from PJN
37-B	5"x5"x2"	Structure Negative (MZN); (2) MZA; (1) MZN
37-C	5"x5"x2"	Primary Anode Terminal Plate (MZA); (1) MZN; (1) MZA
37-D	5"x5"x2"	Structure Negative (MZN)
37-E	5"x5"x2"	Primary Anode Terminal Plate (MZA)
37-F	5"x5"x2"	Structure Negative (MZN); (1) MZA
37-G	5"x5"x2"	Primary Anode Terminal Plate (MZA)
37-H	5"x5"x2"	Primary Anode Terminal Plate (MZA); (2) MZN; (1) MZA; (1) PJA
37-I	5"x5"x2"	Structure Negative (MZN); MZN Jumper to 36J; (1) PJA
37-J	5"x5"x2"	Structure Negative (MZN); (1) MZA
37-K	5"x5"x2"	Primary Anode Terminal Plate (MZA)

ABBREVIATIONS:
MZN = Metallized Zinc Negative
PJN = Pile Jacket Negative
CJN = Cap Jacket Negative
SAN = Submerged Anode Negative
MZA = Metallized Zinc Anode
PJA = Pile Jacket Anode
CJA = Cap Jacket Anode
SA = Submerged Anode
RE = Reference Electrode
REN = Reference Electrode Negative

TYPICAL WIRE SIZES & COLORS AS FOLLOWS:
MZA & PJA = #10 Red
MZN; PJN = #10 Blue
SA = #8 Black
RE/REN: #16 Twisted Pair Red/Black

LEGEND
- (X) Submerged Anode X = Weight in KG
- Pile Jacket
- Cap Jacket
- Primary Anode Terminal
- Negative Connection
- s Encapsulated Splice

Water Street Bent 37 South Elevation & Span 37			
SCALE: NONE	Field Sketch As-Built	DRAWN BY KRH	
DATE: 10-14-11		REVISED	
GREAT WESTERN CORPORATION			
Ketchikan Viaduct II Repair & C.P.		DRAWING NUMBER W-37	

SPAN 40 - VIEW THROUGH DECK

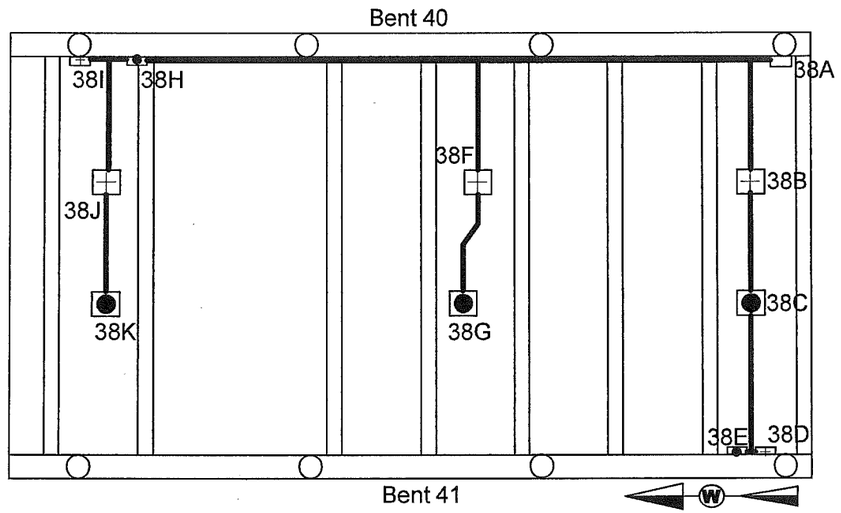

SCHEMATIC

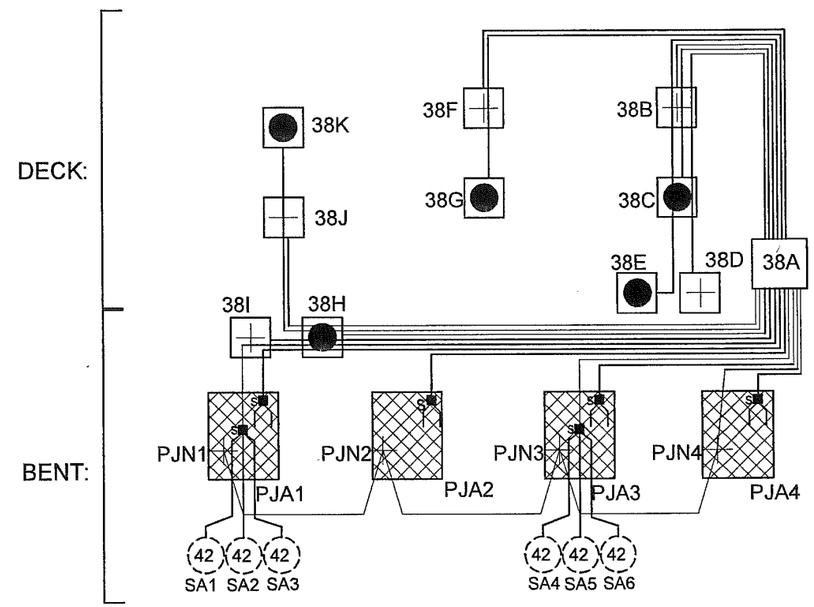

WATER BENT 38 SOUTH ELEVATION

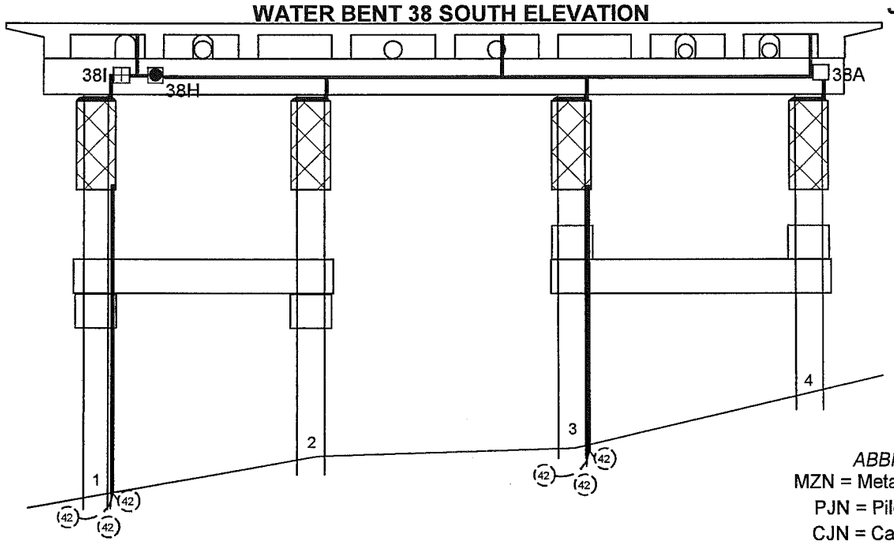

J-BOX DETAILS:

	J-Box Size	Wires or Structure
38-A	14" x 12" x 8"	MAIN J-BOX: (5) MZA; (5) MZN; (4) PJA; (1) PJN; (2) SA; SAN jumpered from PJN
38-B	5" x 5" x 2"	Structure Negative (MZN); (2) MZA; (1) MZN
38-C	5" x 5" x 2"	Primary Anode Terminal Plate (MZA); (1) MZN; (1) MZA
38-D	5" x 5" x 2"	Structure Negative (MZN)
38-E	5" x 5" x 2"	Primary Anode Terminal Plate (MZA)
38-F	5" x 5" x 2"	Structure Negative (MZN); (1) MZA
38-G	5" x 5" x 2"	Primary Anode Terminal Plate (MZA)
38-H	5" x 5" x 2"	Primary Anode Terminal Plate (MZA); (2) MZN; (1) MZA; (1) PJA; (1) SA
38-I	5" x 5" x 2"	Structure Negative (MZN); (1) PJA; (1) SA
38-J	5" x 5" x 2"	Structure Negative (MZN); (1) MZA
38-K	5" x 5" x 2"	Primary Anode Terminal Plate (MZA)

ABBREVIATIONS:

MZN = Metallized Zinc Negative
PJN = Pile Jacket Negative
CJN = Cap Jacket Negative
SAN = Submerged Anode Negative
MZA = Metallized Zinc Anode
PJA = Pile Jacket Anode
CJA = Cap Jacket Anode
SA = Submerged Anode
RE = Reference Electrode
REN = Reference Electrode Negative

LEGEND

- (x) Submerged Anode x = Weight in LBS
- Pile Jacket
- Cap Jacket
- Primary Anode Terminal
- Negative Connection
- Encapsulated Splice
- Reference Electrode

TYPICAL WIRE SIZES & COLORS AS FOLLOWS:
MZA & PJA = #10 Red
MZN; PJN = #10 Blue
SA = #8 Black
RE/REN: #16 Twisted Pair Red/Black

Water Street Bent 38 South Elevation & Span 38			
SCALE: NONE	Field Sketch As-Built	DRAWN BY KRH	
DATE: 10-14-11		REVISED	
GREAT WESTERN CORPORATION			
Ketchikan Viaduct II Repair & C.P.		DRAWING NUMBER W-38	

SPAN 39 - VIEW THROUGH DECK

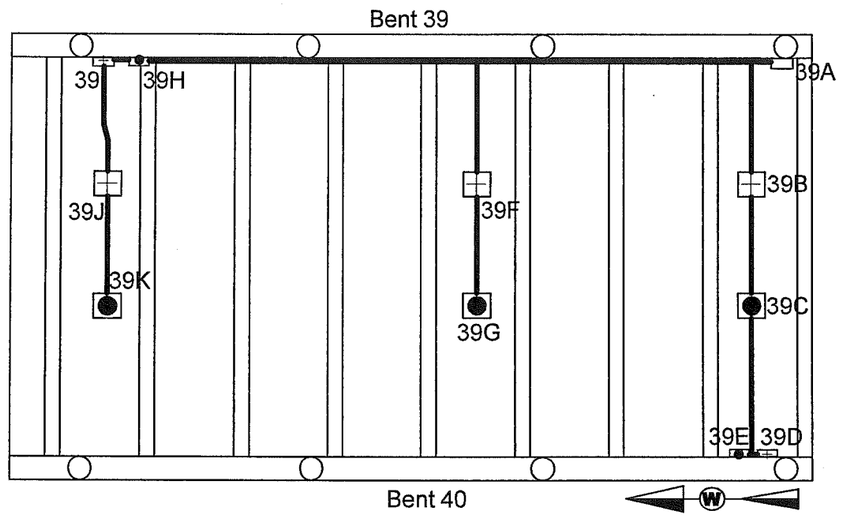

SCHEMATIC

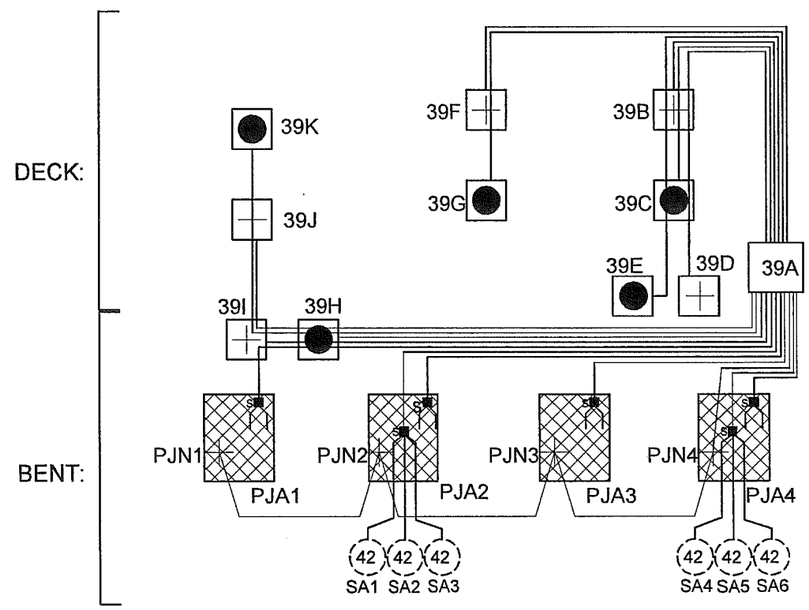

WATER BENT 39 SOUTH ELEVATION

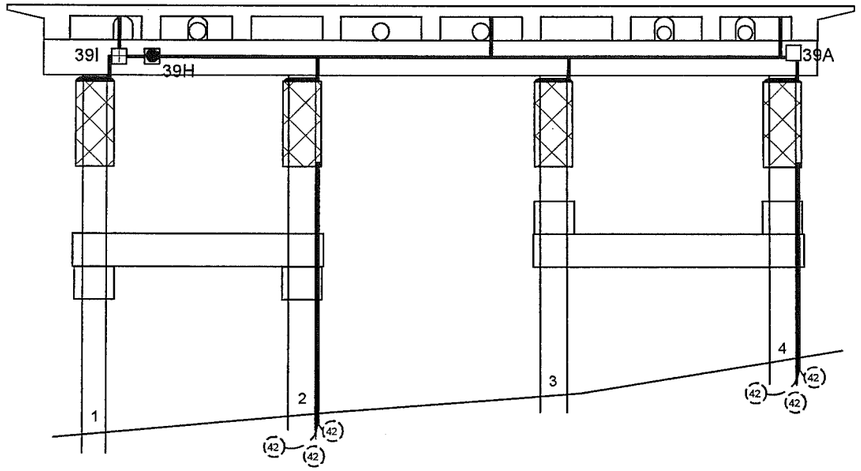

J-BOX DETAILS:

	J-Box Size	Wires or Structure
39-A	14"x12"x8"	MAIN J-BOX: (5) MZA; (5) MZN; (4) PJA; (1) PJN; (2) SA; SAN jumpered from PJN
39-B	5"x5"x2"	Structure Negative (MZN); (2) MZA; (1) MZN
39-C	5"x5"x2"	Primary Anode Terminal Plate (MZA); (1) MZN; (1) MZA
39-D	5"x5"x2"	Structure Negative (MZN)
39-E	5"x5"x2"	Primary Anode Terminal Plate (MZA)
39-F	5"x5"x2"	Structure Negative (MZN); (1) MZA
39-G	5"x5"x2"	Primary Anode Terminal Plate (MZA)
39-H	5"x5"x2"	Primary Anode Terminal Plate (MZA); (2) MZN; (1) MZA; (1) PJA
39-I	5"x5"x2"	Structure Negative (MZN); (1) MZA; (1) MZN; (1) PJA
39-J	5"x5"x2"	Structure Negative (MZN); (1) MZA
39-K	5"x5"x2"	Primary Anode Terminal Plate (MZA)

ABBREVIATIONS:
MZN = Metallized Zinc Negative
PJN = Pile Jacket Negative
CJN = Cap Jacket Negative
SAN = Submerged Anode Negative
MZA = Metallized Zinc Anode
PJA = Pile Jacket Anode
CJA = Cap Jacket Anode
SA = Submerged Anode
RE = Reference Electrode
REN = Reference Electrode Negative

TYPICAL WIRE SIZES & COLORS AS FOLLOWS:
MZA & PJA = #10 Red
MZN; PJN = #10 Blue
SA = #8 Black
RE/REN: #16 Twisted Pair Red/Black

LEGEND
- (X) Submerged Anode X = Weight in KG
- Pile Jacket
- Cap Jacket
- Primary Anode Terminal
- Negative Connection
- s Encapsulated Splice

Water Street Bent 39 South Elevation & Span 39			
SCALE: NONE	Field Sketch As-Built	DRAWN BY KRH	
DATE: 10-14-11		REVISED	
GREAT WESTERN CORPORATION			
Ketchikan Viaduct II Repair & C.P.		DRAWING NUMBER W-39	

SPAN 40 - VIEW THROUGH DECK

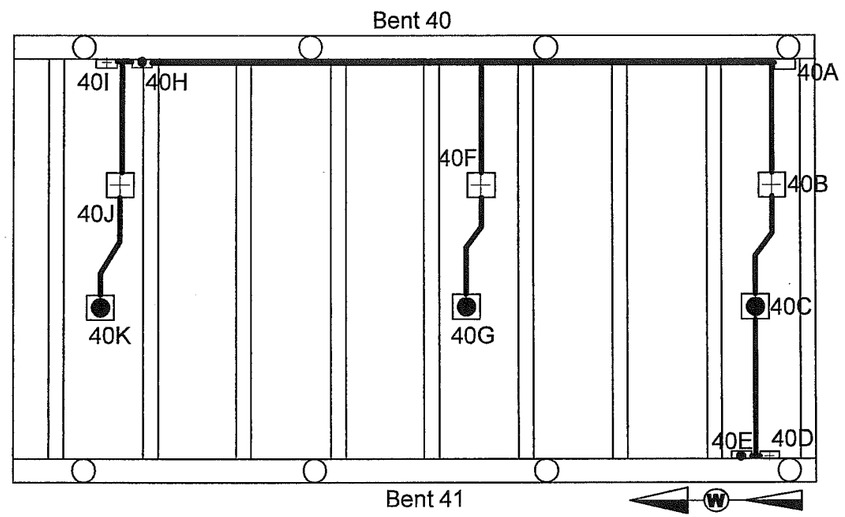

SCHEMATIC

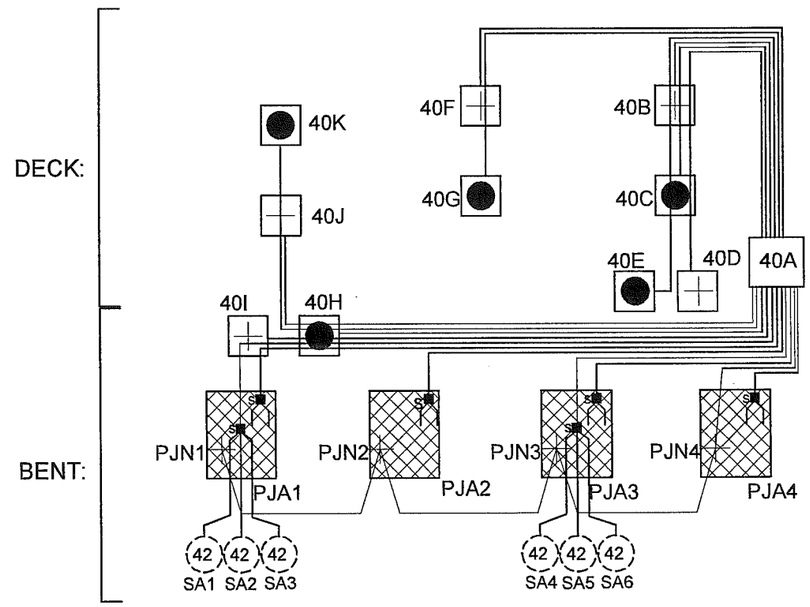

WATER BENT 40 SOUTH ELEVATION

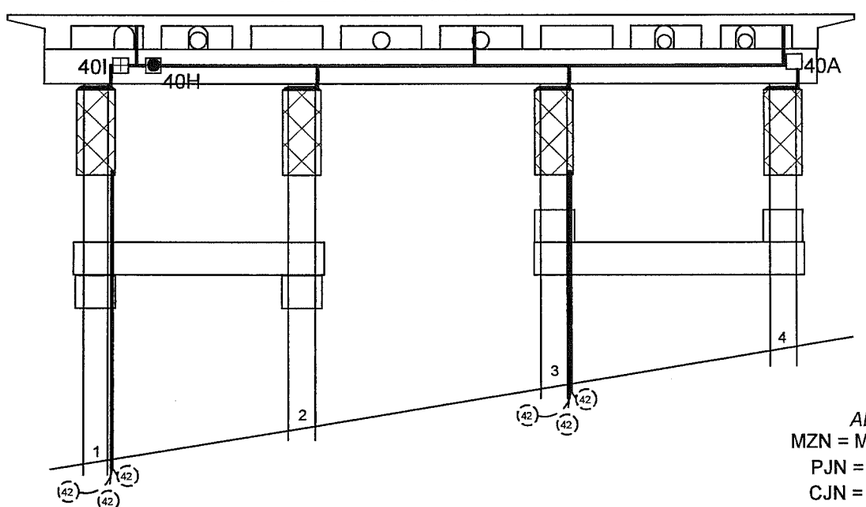

J-BOX DETAILS:

	J-Box Size	Wires or Structure
40-A	14"x12"x8"	MAIN J-BOX: (5) MZA; (5) MZN; (4) PJA; (1) PJN; (2) SA; SAN jumpered from PJN
40-B	5"x5"x2"	Structure Negative (MZN); (2) MZA; (1) MZN
40-C	5"x5"x2"	Primary Anode Terminal Plate (MZA); (1) MZN; (1) MZA
40-D	5"x5"x2"	Structure Negative (MZN)
40-E	5"x5"x2"	Primary Anode Terminal Plate (MZA)
40-F	5"x5"x2"	Structure Negative (MZN); (1) MZA
40-G	5"x5"x2"	Primary Anode Terminal Plate (MZA)
40-H	5"x5"x2"	Primary Anode Terminal Plate (MZA); (2) MZN; (1) MZA; (1) PJA; (1) SA
40-I	5"x5"x2"	Structure Negative (MZN); (1) PJA; (1) SA
40-J	5"x5"x2"	Structure Negative (MZN); (1) MZA
40-K	5"x5"x2"	Primary Anode Terminal Plate (MZA)

ABBREVIATIONS:
MZN = Metallized Zinc Negative
PJN = Pile Jacket Negative
CJN = Cap Jacket Negative
SAN = Submerged Anode Negative
MZA = Metallized Zinc Anode
PJA = Pile Jacket Anode
CJA = Cap Jacket Anode
SA = Submerged Anode
RE = Reference Electrode
REN = Reference Electrode Negative

LEGEND
- Submerged Anode x = Weight in LBS
- Pile Jacket
- Cap Jacket
- Primary Anode Terminal
- Negative Connection
- Encapsulated Splice
- Reference Electrode

TYPICAL WIRE SIZES & COLORS AS FOLLOWS:
MZA & PJA = #10 Red
MZN; PJN = #10 Blue
SA = #8 Black
RE/REN: #16 Twisted Pair Red/Black

Water Street Bent 40 South Elevation & Span 40			
SCALE: NONE	Field Sketch As-Built	DRAWN BY KRH	
DATE: 10-13-11		REVISED 10-14-11	
GREAT WESTERN CORPORATION			
Ketchikan Viaduct II Repair & C.P.		DRAWING NUMBER W-40	

SPAN 41 - VIEW THROUGH DECK

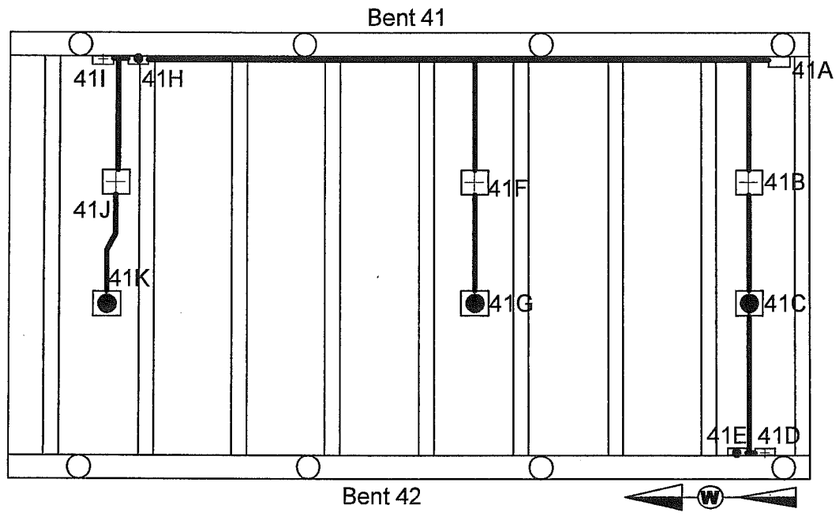

SCHEMATIC

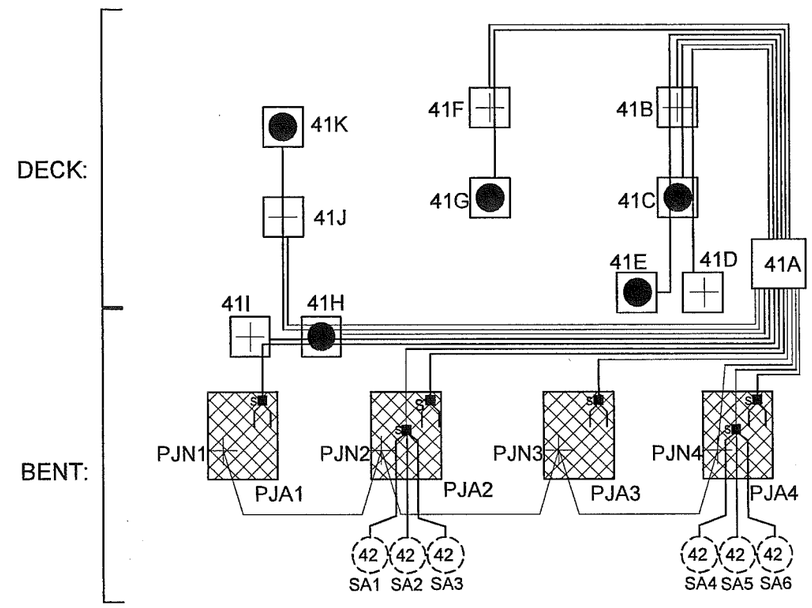

WATER BENT 41 SOUTH ELEVATION

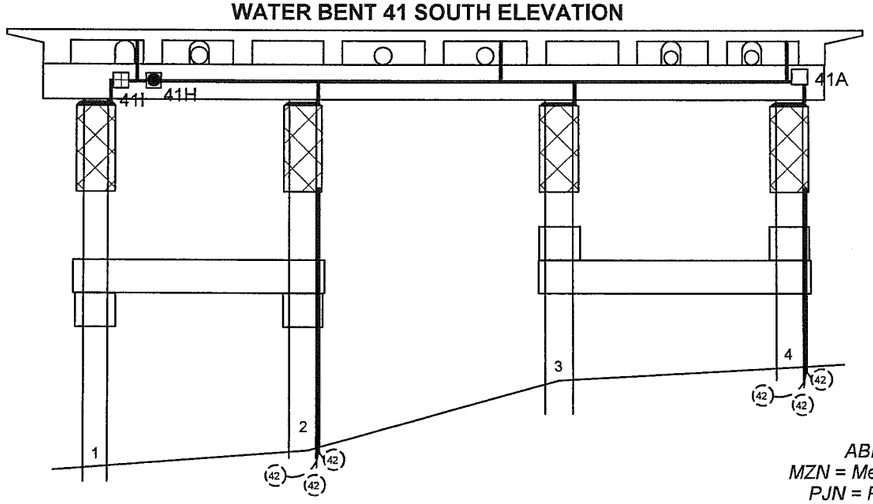

J-BOX DETAILS:

	J-Box Size	Wires or Structure
41-A	14" x 12" x 8"	MAIN J-BOX: (5) MZA; (5) MZN; (4) PJA; (1) PJN; (2) SA; SAN jumpered from PJN
41-B	5" x 5" x 2"	Structure Negative (MZN); (2) MZA; (1) MZN
41-C	5" x 5" x 2"	Primary Anode Terminal Plate (MZA); (1) MZN; (1) MZA
41-D	5" x 5" x 2"	Structure Negative (MZN)
41-E	5" x 5" x 2"	Primary Anode Terminal Plate (MZA)
41-F	5" x 5" x 2"	Structure Negative (MZN); (1) MZA
41-G	5" x 5" x 2"	Primary Anode Terminal Plate (MZA)
41-H	5" x 5" x 2"	Primary Anode Terminal Plate (MZA); (2) MZN; (1) MZA; (1) PJA
41-I	5" x 5" x 2"	Structure Negative (MZN); (1) PJA
41-J	5" x 5" x 2"	Structure Negative (MZN); (1) MZA
41-K	5" x 5" x 2"	Primary Anode Terminal Plate (MZA)

TYPICAL WIRE SIZES & COLORS AS FOLLOWS:
MZA & PJA = #10 Red
MZN; PJN = #10 Blue
SA = #8 Black
RE/REN: #16 Twisted Pair Red/Black

ABBREVIATIONS:
MZN = Metallized Zinc Negative
PJN = Pile Jacket Negative
CJN = Cap Jacket Negative
SAN = Submerged Anode Negative
MZA = Metallized Zinc Anode
PJA = Pile Jacket Anode
CJA = Cap Jacket Anode
SA = Submerged Anode
RE = Reference Electrode
REN = Reference Electrode Negative

LEGEND
- (X) Submerged Anode X = Weight in KG
- Pile Jacket
- Cap Jacket
- Primary Anode Terminal
- Negative Connection
- s Encapsulated Splice

Water Street Bent 41 South Elevation & Span 41			
SCALE: NONE	Field Sketch As-Built	DRAWN BY KRH	
DATE: 10-13-11		REVISED 10-14-11	
GREAT WESTERN CORPORATION			
Ketchikan Viaduct II Repair & C.P.		DRAWING NUMBER W-41	

SPAN 42 - VIEW THROUGH DECK

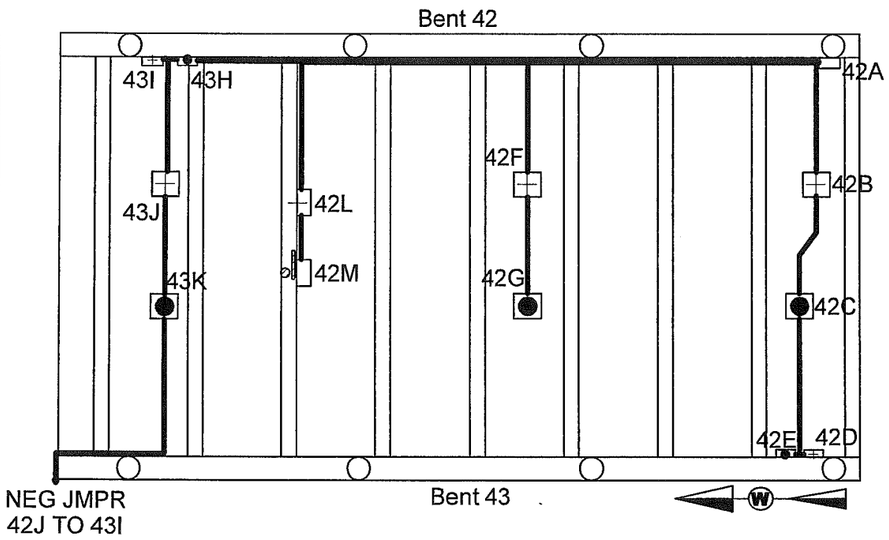

SCHEMATIC

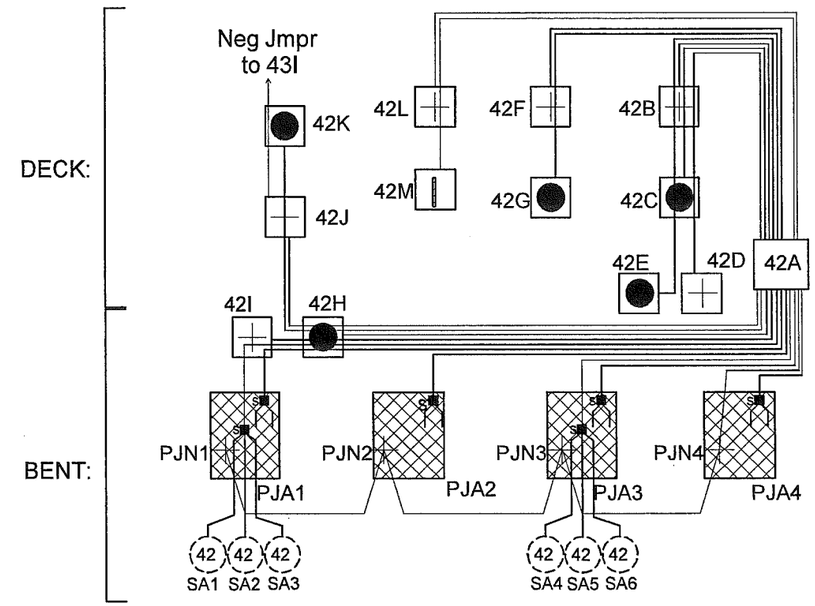

WATER BENT 42 SOUTH ELEVATION

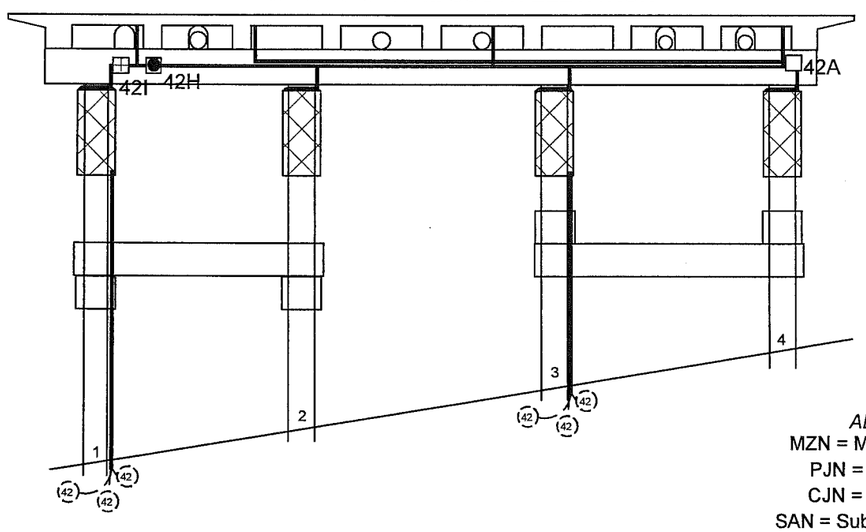

J-BOX DETAILS:

	J-Box Size	Wires or Structure
42-A	14" x 12" x 8"	MAIN J-BOX: (5) MZA; (5) MZN; (4) PJA; (1) PJN; (2) SA; SAN jumpered from PJN; (1) RE; (1) REN
42-B	5" x 5" x 2"	Structure Negative (MZN); (2) MZA; (1) MZN
42-C	5" x 5" x 2"	Primary Anode Terminal Plate (MZA); (1) MZN; (1) MZA
42-D	5" x 5" x 2"	Structure Negative (MZN)
42-E	5" x 5" x 2"	Primary Anode Terminal Plate (MZA)
42-F	5" x 5" x 2"	Structure Negative (MZN); (1) MZA
42-G	5" x 5" x 2"	Primary Anode Terminal Plate (MZA)
42-H	5" x 5" x 2"	Primary Anode Terminal Plate (MZA); (2) MZN; (1) MZA; (1) PJA; (1) SA
42-I	5" x 5" x 2"	Structure Negative (MZN); MZN Jumper to 42J; (1) PJA; (1) SA
42-J	5" x 5" x 2"	Structure Negative (MZN); (1) MZA; MZN Jumper to 43I
42-K	5" x 5" x 2"	Primary Anode Terminal Plate (MZA); (1) MZN Jumper
42-L	5" x 5" x 2"	Reference Electrode Negative (REN) (1) RE
42-M	5" x 5" x 2"	Reference Electrode (RE)

ABBREVIATIONS:
MZN = Metallized Zinc Negative
PJN = Pile Jacket Negative
CJN = Cap Jacket Negative
SAN = Submerged Anode Negative
MZA = Metallized Zinc Anode
PJA = Pile Jacket Anode
CJA = Cap Jacket Anode
SA = Submerged Anode
RE = Reference Electrode
REN = Reference Electrode Negative

TYPICAL WIRE SIZES & COLORS AS FOLLOWS:
MZA & PJA = #10 Red
MZN; PJN = #10 Blue
SA = #8 Black
RE/REN: #16 Twisted Pair Red/Black

LEGEND
- (x) Submerged Anode x = Weight in LBS
- Pile Jacket
- Cap Jacket
- Primary Anode Terminal
- Negative Connection
- Encapsulated Splice
- Reference Electrode

Water Street Bent 42 South Elevation & Span 42			
SCALE: NONE	Field Sketch As-Built	DRAWN BY KRH	
DATE: 10-13-11		REVISED 10-14-11	
GREAT WESTERN CORPORATION			
Ketchikan Viaduct II Repair & C.P.		DRAWING NUMBER W-42	

SPAN 43 - VIEW THROUGH DECK

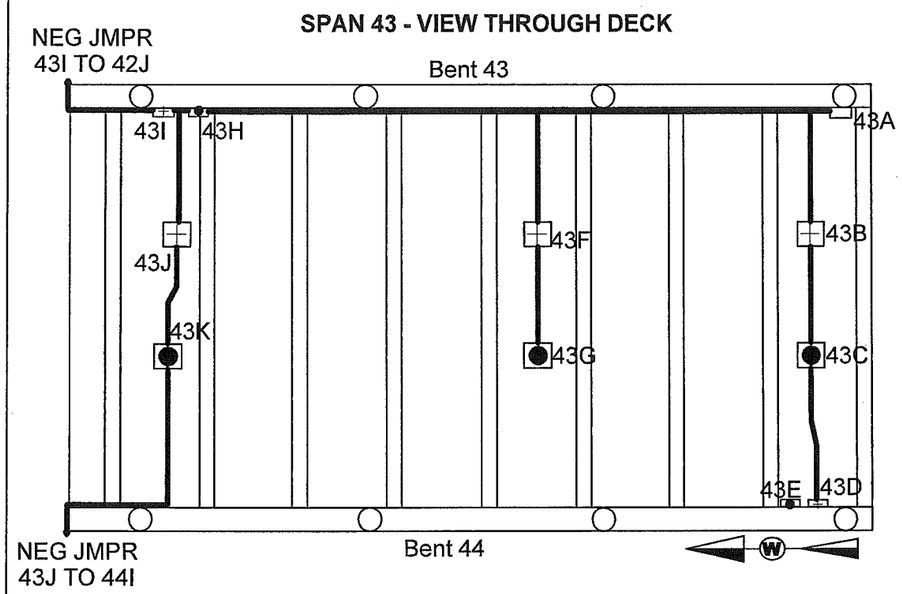

SCHEMATIC

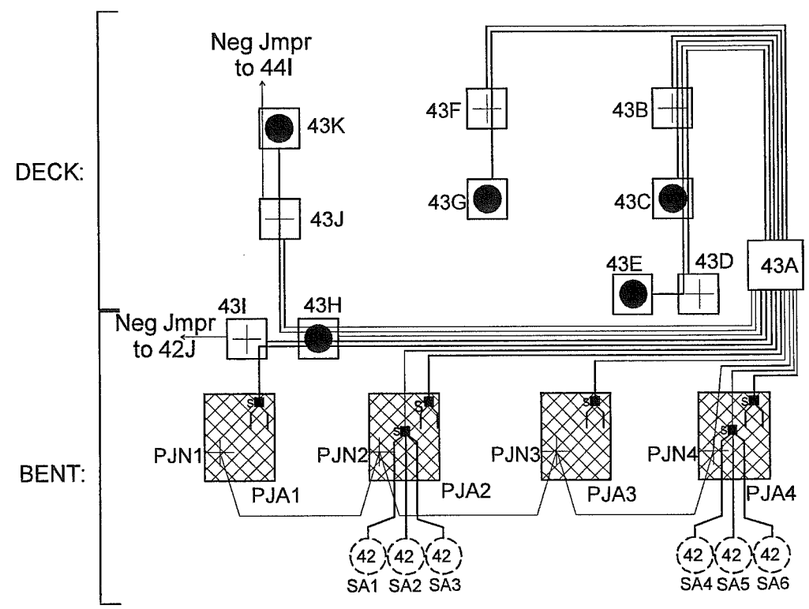

WATER BENT 43 SOUTH ELEVATION

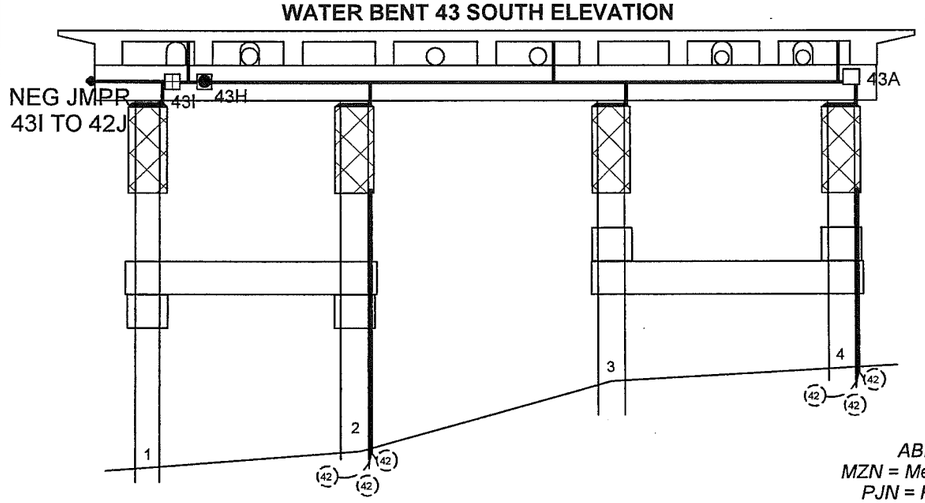

J-BOX DETAILS:

	J-Box Size	Wires or Structure
43-A	14"x12"x8"	MAIN J-BOX: (5) MZA; (5) MZN; (4) PJA; (1) PJN; (2) SA; SAN jumpered from PJN
43-B	5"x5"x2"	Structure Negative (MZN); (2) MZA; (1) MZN
43-C	5"x5"x2"	Primary Anode Terminal Plate (MZA); (1) MZN; (1) MZA
43-D	5"x5"x2"	Structure Negative (MZN); (1) MZA
43-E	5"x5"x2"	Primary Anode Terminal Plate (MZA)
43-F	5"x5"x2"	Structure Negative (MZN); (1) MZA
43-G	5"x5"x2"	Primary Anode Terminal Plate (MZA)
43-H	5"x5"x2"	Primary Anode Terminal Plate (MZA); (2) MZN; (1) MZA; (1) PJA
43-I	5"x5"x2"	Structure Negative (MZN); MZN Jumper to 42J; (1) PJA
43-J	5"x5"x2"	Structure Negative (MZN); (1) MZA; MZN Jumper to 44I
43-K	5"x5"x2"	Primary Anode Terminal Plate (MZA); (1) MZN Jumper

TYPICAL WIRE SIZES & COLORS AS FOLLOWS:
MZA & PJA = #10 Red
MZN; PJN = #10 Blue
SA = #8 Black
RE/REN: #16 Twisted Pair Red/Black

ABBREVIATIONS:
MZN = Metallized Zinc Negative
PJN = Pile Jacket Negative
CJN = Cap Jacket Negative
SAN = Submerged Anode Negative
MZA = Metallized Zinc Anode
PJA = Pile Jacket Anode
CJA = Cap Jacket Anode
SA = Submerged Anode
RE = Reference Electrode
REN = Reference Electrode Negative

LEGEND
- (X) Submerged Anode X = Weight in KG
- Pile Jacket
- Cap Jacket
- Primary Anode Terminal
- Negative Connection
- s Encapsulated Splice

Water Street Bent 43 South Elevation & Span 43			
SCALE: NONE	Field Sketch As-Built	DRAWN BY KRH	
DATE: 10-13-11		REVISED 10-14-11	
GREAT WESTERN CORPORATION			
Ketchikan Viaduct II Repair & C.P.		DRAWING NUMBER W-43	

SPAN 44 - VIEW THROUGH DECK

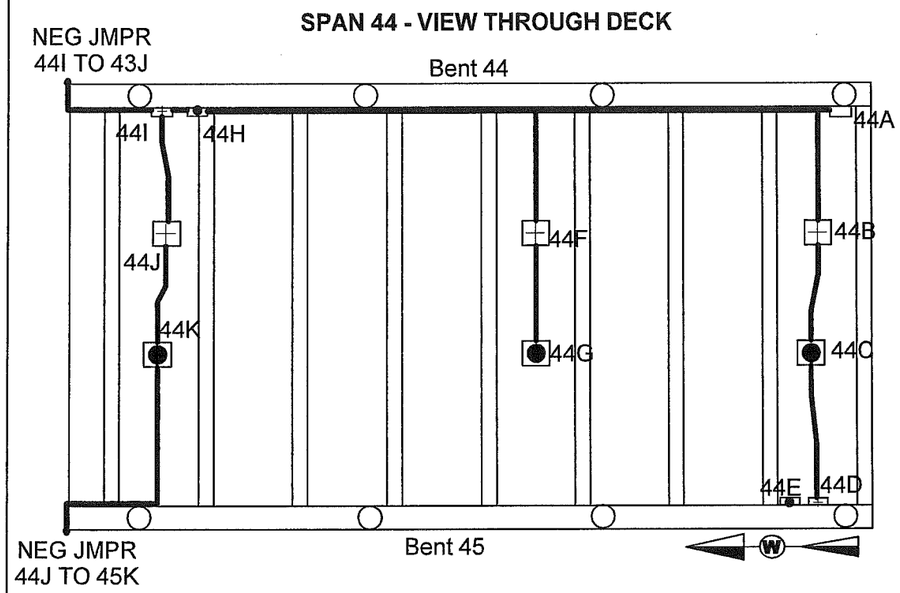

SCHEMATIC

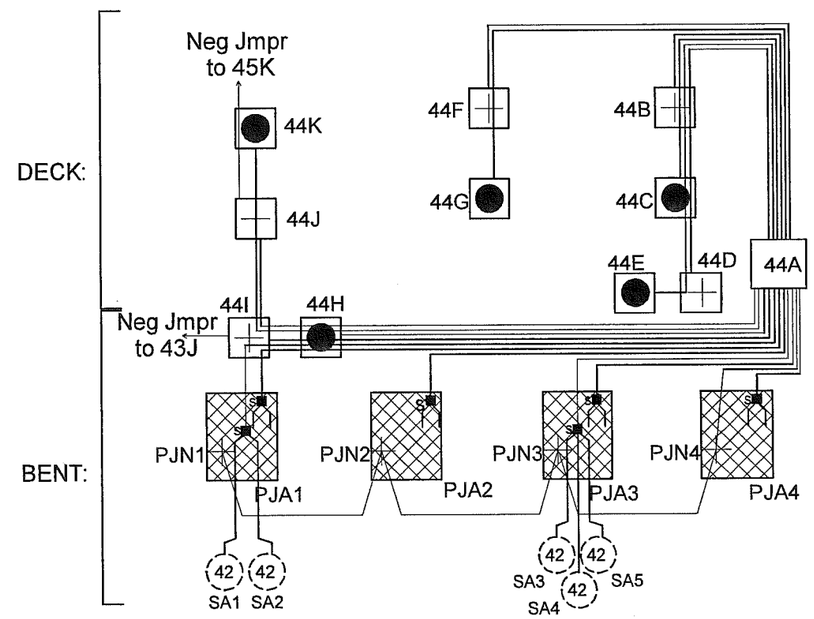

WATER BENT 44 SOUTH ELEVATION

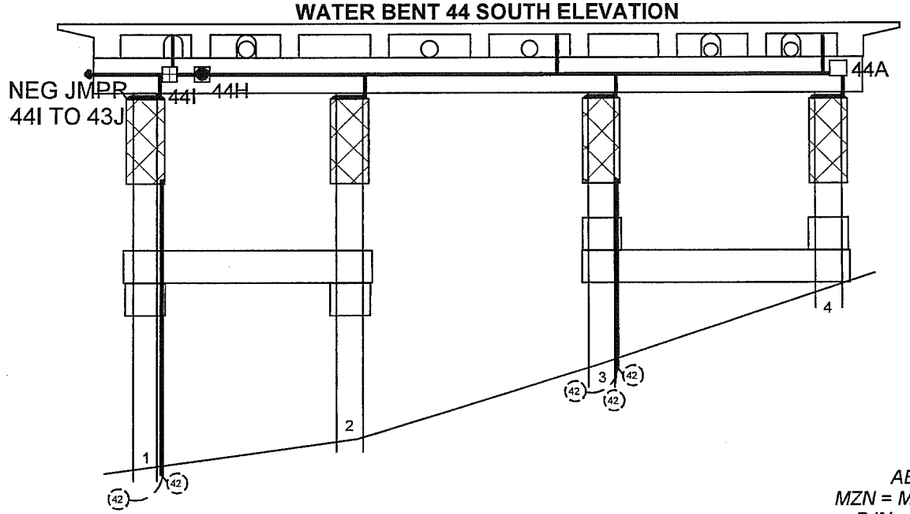

J-BOX DETAILS:

	J-Box Size	Wires or Structure
44-A	14"x12"x8"	MAIN J-BOX: (5) MZA; (5) MZN; (4) PJA; (1) PJN; (2) SA; SAN jumpered from PJN
44-B	5"x5"x2"	Structure Negative (MZN); (2) MZA; (1) MZN
44-C	5"x5"x2"	Primary Anode Terminal Plate (MZA); (1) MZN; (1) MZA
44-D	5"x5"x2"	Structure Negative (MZN); (1) MZA
44-E	5"x5"x2"	Primary Anode Terminal Plate (MZA)
44-F	5"x5"x2"	Structure Negative (MZN); (1) MZA
44-G	5"x5"x2"	Primary Anode Terminal Plate (MZA)
44-H	5"x5"x2"	Primary Anode Terminal Plate (MZA); (2) MZN; (1) MZA; (1) PJA; (1) SA
44-I	5"x5"x2"	Structure Negative (MZN); (1) MZA; (1) MZN; MZN Jumper to 43J; (1) PJA; (1) SA
44-J	5"x5"x2"	Structure Negative (MZN); (1) MZA; MZN Jumper to 45K
44-K	5"x5"x2"	Primary Anode Terminal Plate (MZA); (1) MZN Jumper

TYPICAL WIRE SIZES & COLORS AS FOLLOWS:
MZA & PJA = #10 Red
MZN; PJN = #10 Blue
SA = #8 Black
RE/REN: #16 Twisted Pair Red/Black

ABBREVIATIONS:
MZN = Metallized Zinc Negative
PJN = Pile Jacket Negative
CJN = Cap Jacket Negative
SAN = Submerged Anode Negative
MZA = Metallized Zinc Anode
PJA = Pile Jacket Anode
CJA = Cap Jacket Anode
SA = Submerged Anode
RE = Reference Electrode
REN = Reference Electrode Negative

LEGEND
- (X) Submerged Anode X = Weight in KG
- Pile Jacket
- Cap Jacket
- Primary Anode Terminal
- Negative Connection
- s Encapsulated Splice

Water Street Bent 44 South Elevation & Span 44			
SCALE: NONE	Field Sketch As-Built	DRAWN BY KRH	
DATE: 10-13-11		REVISED 10-14-11	
GREAT WESTERN CORPORATION			
Ketchikan Viaduct II Repair & C.P.		DRAWING NUMBER W-44	

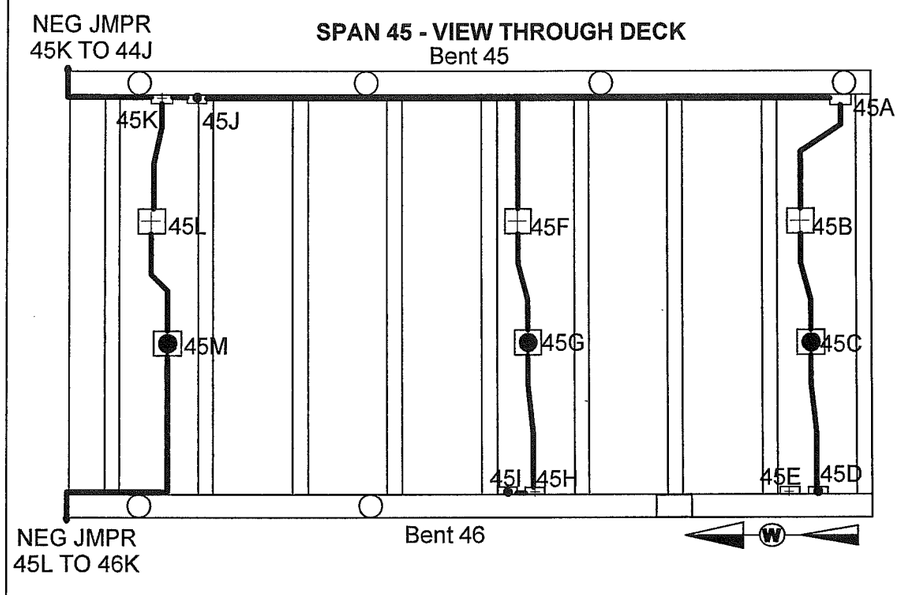

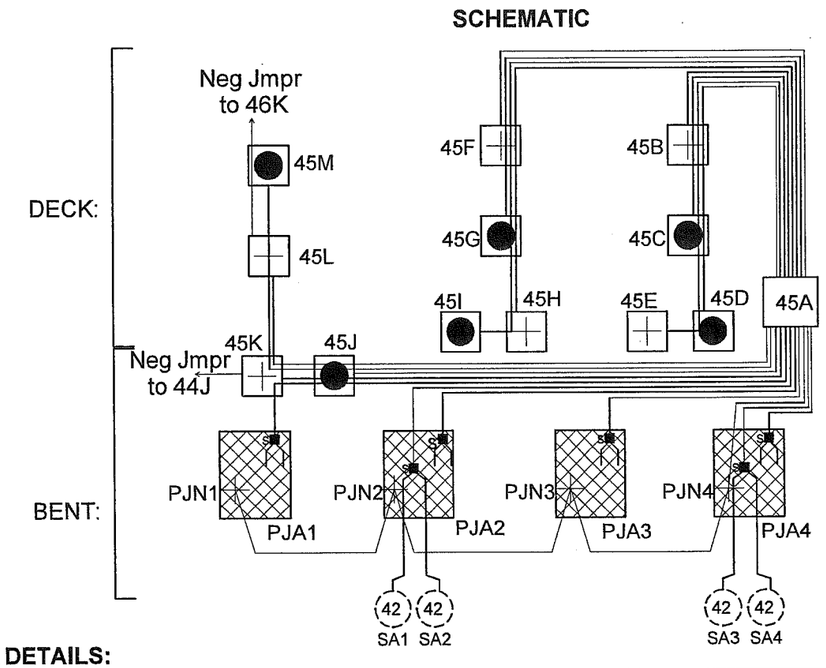

J-BOX DETAILS:

	J-Box Size	Wires or Structure
45-A	14"x12"x8"	MAIN J-BOX: (6) MZA; (6) MZN; (4) PJA; (1) PJN; (2) SA; SAN jumpered from PJN
45-B	5"x5"x2"	Structure Negative (MZN); (2) MZA; (1) MZN
45-C	5"x5"x2"	Primary Anode Terminal Plate (MZA); (1) MZN; (1) MZA
45-D	5"x5"x2"	Primary Anode Terminal Plate (MZA); (1) MZN
45-E	5"x5"x2"	Structure Negative (MZN)
45-F	5"x5"x2"	Structure Negative (MZN); (2) MZA; (1) MZN
45-G	5"x5"x2"	Primary Anode Terminal Plate (MZA); (1) MZN; (1) MZA
45-H	5"x5"x2"	Structure Negative (MZN); (1) MZA
45-I	5"x5"x2"	Primary Anode Terminal Plate (MZA)
45-J	5"x5"x2"	Primary Anode Terminal Plate (MZA); (2) MZN; (1) MZA; (1) PJA
45-K	5"x5"x2"	Structure Negative (MZN); (1) MZA; (1) MZN; MZN Jumper to 44J; (1) PJA
45-L	5"x5"x2"	Structure Negative (MZN); (1) MZA; MZN Jumper to 46K
45-M	5"x5"x2"	Primary Anode Terminal Plate (MZA); (1) MZN Jumper

WATER BENT 45 SOUTH ELEVATION

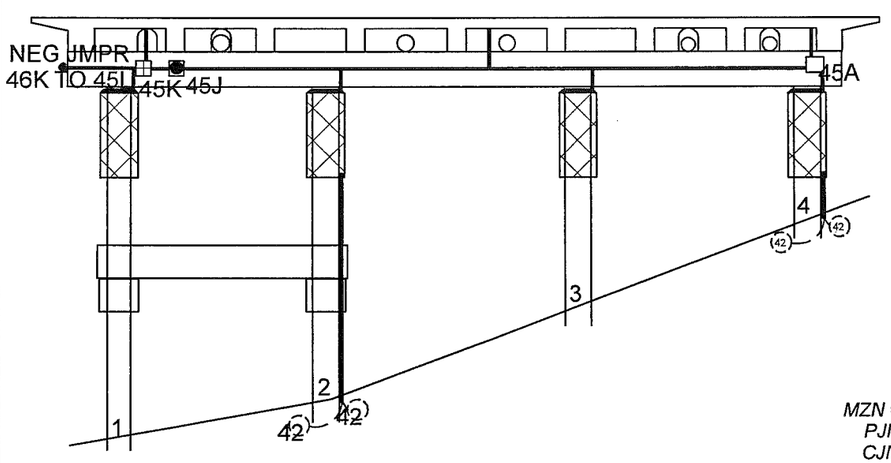

TYPICAL WIRE SIZES & COLORS AS FOLLOWS:
MZA & PJA = #10 Red
MZN; PJN = #10 Blue
SA = #8 Black
RE/REN: #16 Twisted Pair Red/Black

ABBREVIATIONS:
MZN = Metallized Zinc Negative
PJN = Pile Jacket Negative
CJN = Cap Jacket Negative
SAN = Submerged Anode Negative
MZA = Metallized Zinc Anode
PJA = Pile Jacket Anode
CJA = Cap Jacket Anode
SA = Submerged Anode
RE = Reference Electrode
REN = Reference Electrode Negative

LEGEND
- (X) Submerged Anode X = Weight in KG
- Pile Jacket
- Cap Jacket
- Primary Anode Terminal
- Negative Connection
- s Encapsulated Splice

Water Street Bent 45 South Elevation & Span 45			
SCALE: NONE	Field Sketch As-Built	DRAWN BY KRH	
DATE: 10-13-11		REVISED	
GREAT WESTERN CORPORATION			
Ketchikan Viaduct II Repair & C.P.		DRAWING NUMBER W-45	

SPAN 46 - VIEW THROUGH DECK

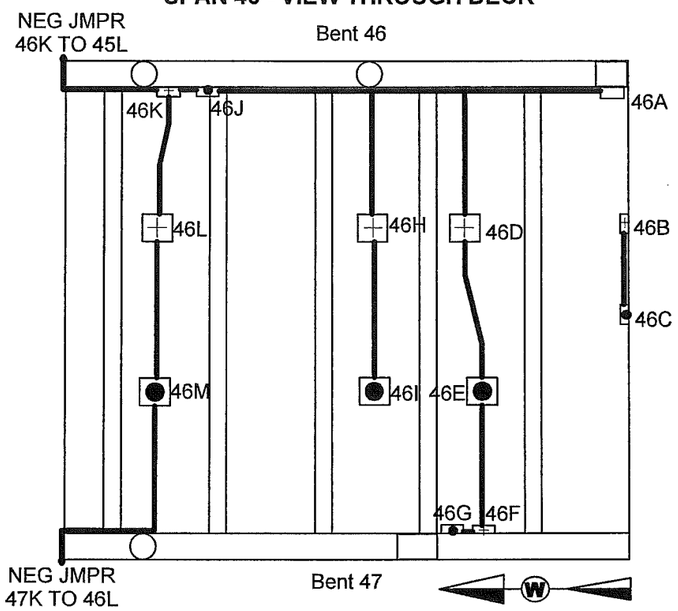

WATER BENT 46 SOUTH ELEVATION

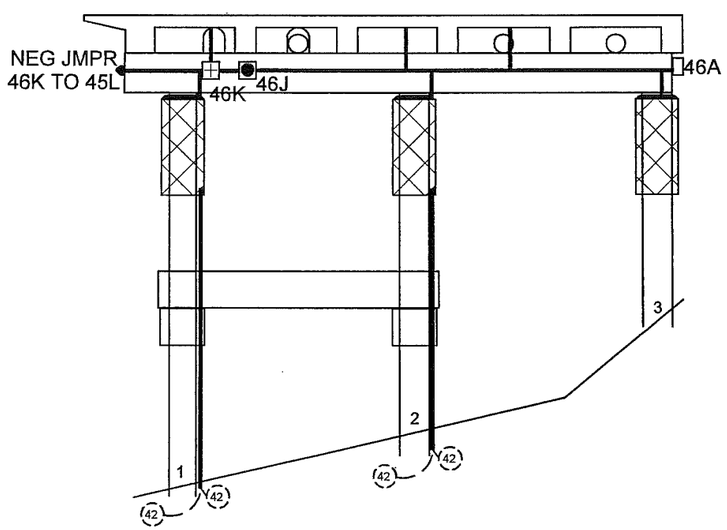

SCHEMATIC

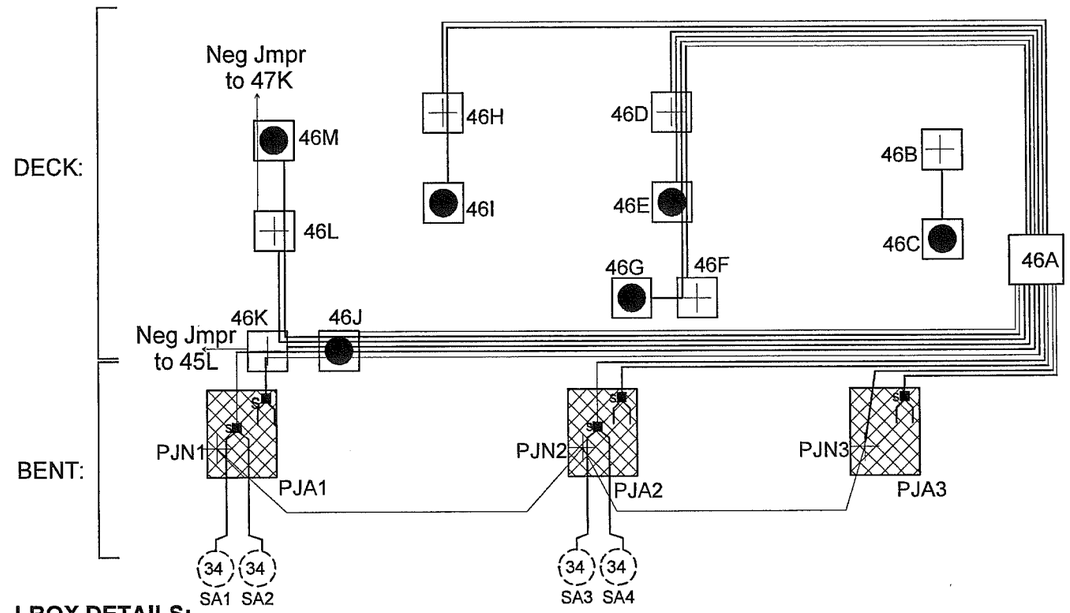

J-BOX DETAILS:

	J-Box Size	Wires or Structure
46-A	14" x 12" x 8"	MAIN J-BOX: (5) MZA; (5) MZN; (3) PJA; (1) PJN; (2) SA; SAN jumpered from PJN
46-B	5" x 5" x 2"	Structure Negative (MZN)
46-C	5" x 5" x 2"	Primary Anode Terminal Plate (MZA)
46-D	5" x 5" x 2"	Structure Negative (MZN); (2) MZA; (1) MZN
46-E	5" x 5" x 2"	Primary Anode Terminal Plate (MZA); (1) MZN; (1) MZA
46-F	5" x 5" x 2"	Structure Negative (MZN); (1) MZA
46-G	5" x 5" x 2"	Primary Anode Terminal Plate (MZA)
46-H	5" x 5" x 2"	Structure Negative (MZN); (1) MZA
46-I	5" x 5" x 2"	Primary Anode Terminal Plate (MZA)
46-J	5" x 5" x 2"	Primary Anode Terminal Plate (MZA); (2) MZN; (1) MZA; (1) PJA; (1) SA
46-K	5" x 5" x 2"	Structure Negative (MZN); (1) MZA; (1) MZN; MZN Jumper to 45L; (1) PJA; (1) SA
46-L	5" x 5" x 2"	Structure Negative (MZN); (1) MZA; MZN Jumper to 47K
46-M	5" x 5" x 2"	Primary Anode Terminal Plate (MZA); (1) MZN Jumper

TYPICAL WIRE SIZES & COLORS AS FOLLOWS:
MZA & PJA = #10 Red
MZN; PJN = #10 Blue
SA = #8 Black
RE/REN: #16 Twisted Pair Red/Black

ABBREVIATIONS:
MZN = Metallized Zinc Negative
PJN = Pile Jacket Negative
CJN = Cap Jacket Negative
SAN = Submerged Anode Negative
MZA = Metallized Zinc Anode
PJA = Pile Jacket Anode
CJA = Cap Jacket Anode
SA = Submerged Anode
RE = Reference Electrode
REN = Reference Electrode Negative

LEGEND
- (X) Submerged Anode X = Weight in KG
- Pile Jacket
- Cap Jacket
- Primary Anode Terminal
- Negative Connection
- s Encapsulated Splice

Water Street Bent 46 South Elevation & Span 46			
SCALE: NONE	Field Sketch As-Built	DRAWN BY KRH	
DATE: 10-4-11		REVISED	
GREAT WESTERN CORPORATION			
Ketchikan Viaduct II Repair & C.P.		DRAWING NUMBER W-46	

SPAN 47 - VIEW THROUGH DECK

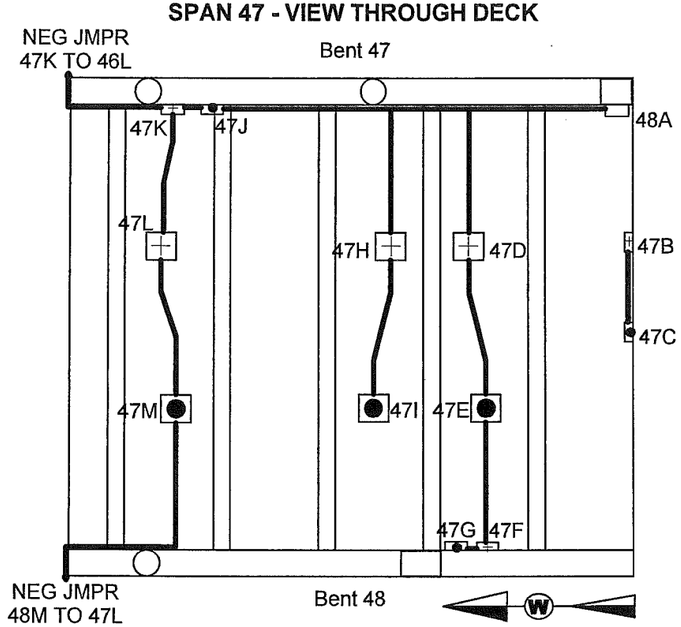

SCHEMATIC

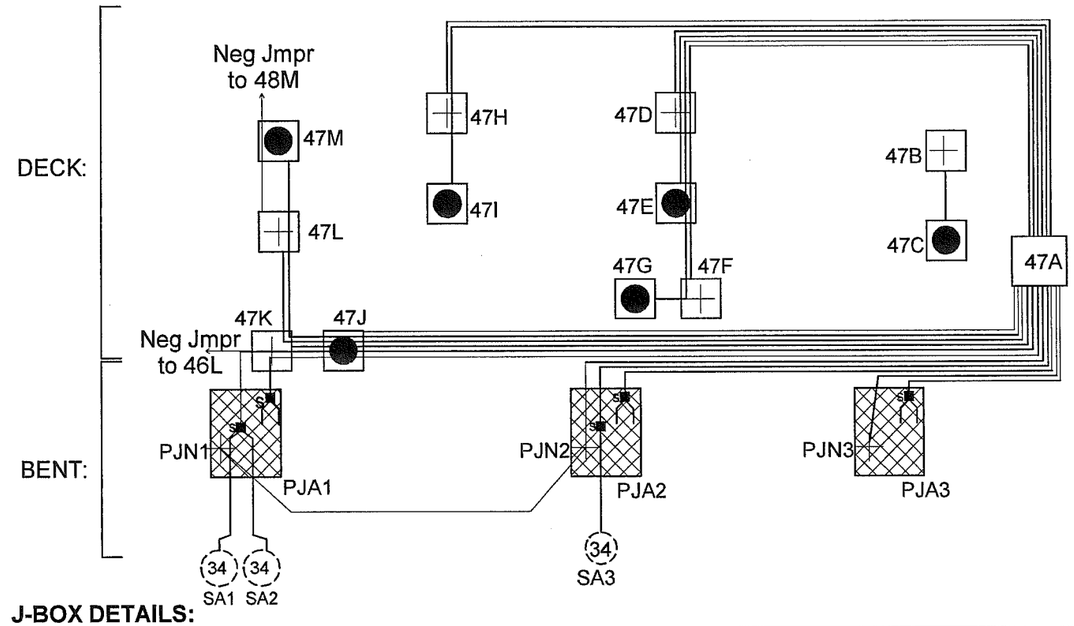

WATER BENT 47 SOUTH ELEVATION

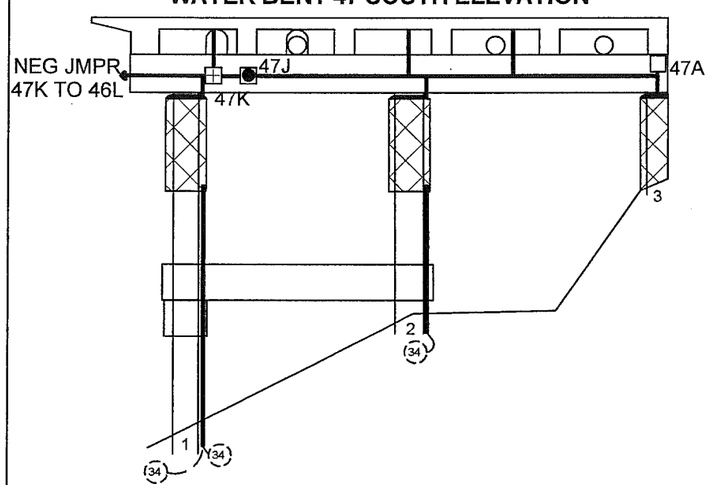

J-BOX DETAILS:

	J-Box Size	Wires or Structure
47-A	14" x 12" x 8"	MAIN J-BOX: (5) MZA; (5) MZN; (3) PJA; (2) PJN; (2) SA; SAN jumpered from PJN
47-B	5" x 5" x 2"	Structure Negative (MZN)
47-C	5" x 5" x 2"	Primary Anode Terminal Plate (MZA)
47-D	5" x 5" x 2"	Structure Negative (MZN); (2) MZA; (1) MZN
47-E	5" x 5" x 2"	Primary Anode Terminal Plate (MZA); (1) MZN; (1) MZA
47-F	5" x 5" x 2"	Structure Negative (MZN); (1) MZA
47-G	5" x 5" x 2"	Primary Anode Terminal Plate (MZA)
47-H	5" x 5" x 2"	Structure Negative (MZN); (1) MZA
47-I	5" x 5" x 2"	Primary Anode Terminal Plate (MZA)
47-J	5" x 5" x 2"	Primary Anode Terminal Plate (MZA); (2) MZN; (1) MZA; (1) PJA; (1) SA
47-K	5" x 5" x 2"	Structure Negative (MZN); (1) MZA; (1) MZN; MZN Jumper to 46L; (1) PJA; (1) SA
47-L	5" x 5" x 2"	Structure Negative (MZN); (1) MZA; MZN Jumper to 48M
47-M	5" x 5" x 2"	Primary Anode Terminal Plate (MZA); (1) MZN Jumper

TYPICAL WIRE SIZES & COLORS AS FOLLOWS:
MZA & PJA = #10 Red
MZN; PJN = #10 Blue
SA = #8 Black
RE/REN: #16 Twisted Pair Red/Black

ABBREVIATIONS:
MZN = Metallized Zinc Negative
PJN = Pile Jacket Negative
CJN = Cap Jacket Negative
SAN = Submerged Anode Negative
MZA = Metallized Zinc Anode
PJA = Pile Jacket Anode
CJA = Cap Jacket Anode
SA = Submerged Anode
RE = Reference Electrode
REN = Reference Electrode Negative

LEGEND
- (X) Submerged Anode X = Weight in KG
- Pile Jacket
- Cap Jacket
- Primary Anode Terminal
- Negative Connection
- s Encapsulated Splice

Water Street Bent 47 South Elevation & Span 47			
SCALE: NONE	Field Sketch As-Built	DRAWN BY KRH	
DATE: 10-4-11		REVISED	
GREAT WESTERN CORPORATION			
Ketchikan Viaduct II Repair & C.P.		DRAWING NUMBER W-47	

SPAN 48 - VIEW THROUGH DECK

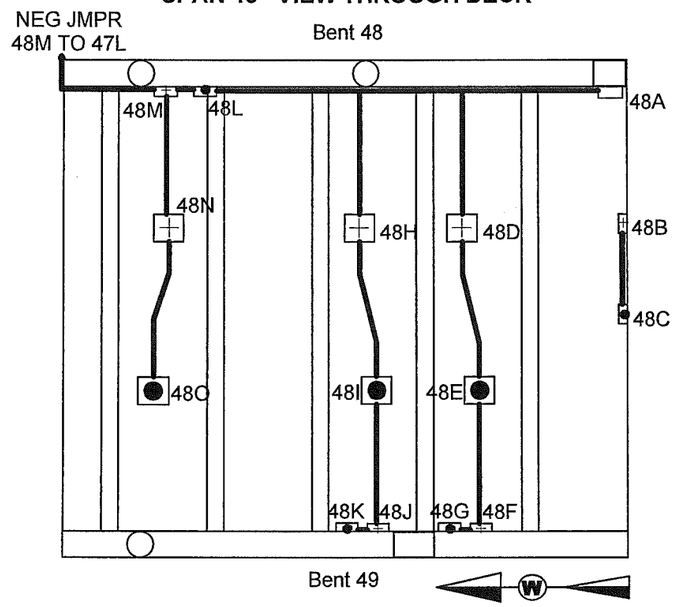

WATER BENT 48 SOUTH ELEVATION

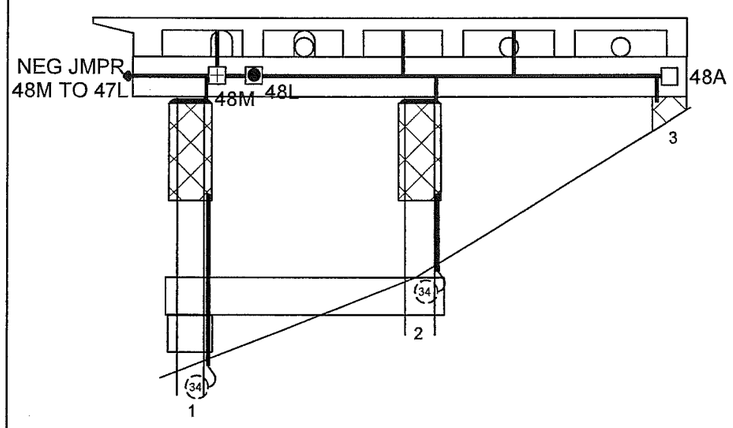

SCHEMATIC

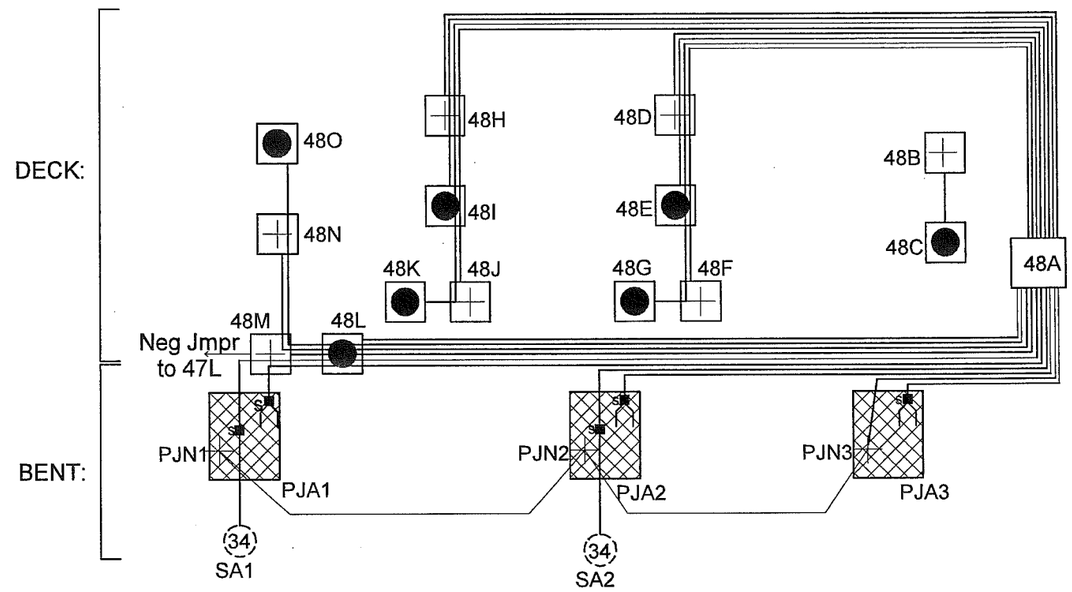

J-BOX DETAILS:

	J-Box Size	Wires or Structure
48-A	14" x 12" x 8"	MAIN J-BOX: (6) MZA; (6) MZN; (3) PJA; (1) PJN; (2) SA; SAN jumpered from PJN
48-B	5" x 5" x 2"	Structure Negative (MZN)
48-C	5" x 5" x 2"	Primary Anode Terminal Plate (MZA)
48-D	5" x 5" x 2"	Structure Negative (MZN); (2) MZA; (1) MZN
48-E	5" x 5" x 2"	Primary Anode Terminal Plate (MZA); (1) MZN; (1) MZA
48-F	5" x 5" x 2"	Structure Negative (MZN); (1) MZA
48-G	5" x 5" x 2"	Primary Anode Terminal Plate (MZA)
48-H	5" x 5" x 2"	Structure Negative (MZN); (2) MZA; (1) MZN
48-I	5" x 5" x 2"	Primary Anode Terminal Plate (MZA); (1) MZN; (1) MZA
48-J	5" x 5" x 2"	Structure Negative (MZN); (1) MZA
48-K	5" x 5" x 2"	Primary Anode Terminal Plate (MZA)
48-L	5" x 5" x 2"	Primary Anode Terminal Plate (MZA); (2) MZN; (1) MZA; (1) PJA; (1) SA
48-M	5" x 5" x 2"	Structure Negative (MZN); (1) MZA; (1) MZN; MZN Jumper to 47L; (1) PJA; (1) SA
48-N	5" x 5" x 2"	Structure Negative (MZN); (1) MZA
48-O	5" x 5" x 2"	Primary Anode Terminal Plate (MZA)

TYPICAL WIRE SIZES & COLORS AS FOLLOWS:
MZA & PJA = #10 Red
MZN; PJN = #10 Blue
SA = #8 Black
RE/REN: #16 Twisted Pair Red/Black

ABBREVIATIONS:
MZN = Metallized Zinc Negative
PJN = Pile Jacket Negative
CJN = Cap Jacket Negative
SAN = Submerged Anode Negative
MZA = Metallized Zinc Anode
PJA = Pile Jacket Anode
CJA = Cap Jacket Anode
SA = Submerged Anode
RE = Reference Electrode
REN = Reference Electrode Negative

LEGEND
- (X) Submerged Anode X = Weight in KG
- Pile Jacket
- Cap Jacket
- Primary Anode Terminal
- Negative Connection
- s Encapsulated Splice

Water Street Bent 48 South Elevation & Span 48			
SCALE: NONE	Field Sketch As-Built	DRAWN BY KRH	
DATE: 10-4-11		REVISED	
GREAT WESTERN CORPORATION			
Ketchikan Viaduct II Repair & C.P.		DRAWING NUMBER W-48	

SPAN 49 - VIEW THROUGH DECK

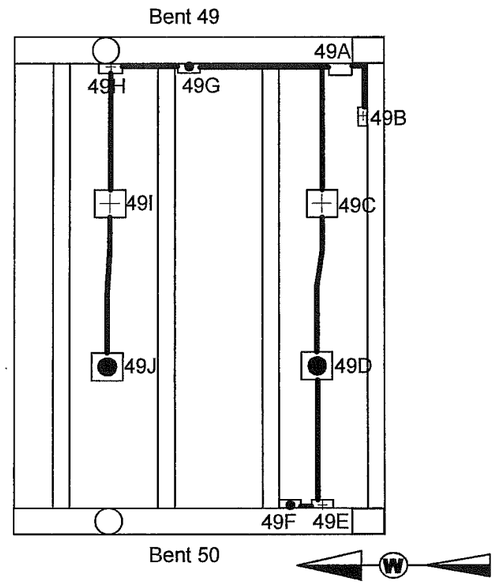

SCHEMATIC

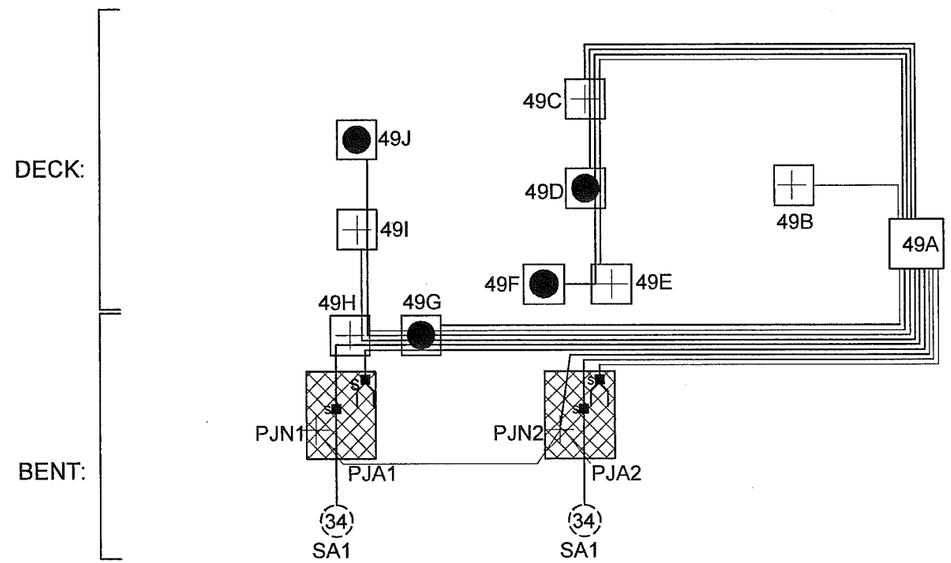

WATER BENT 49 SOUTH ELEVATION

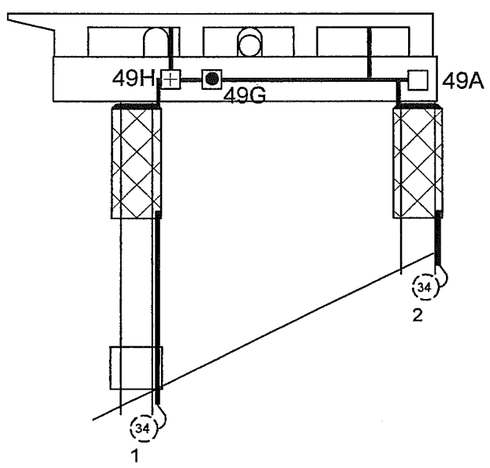

J-BOX DETAILS:

	J-Box Size	Wires or Structure
49-A	14"x12"x8"	MAIN J-BOX: (4) MZA; (5) MZN; (2) PJA; (1) PJN; (2) SA; SAN jumpered from PJN
49-B	5"x5"x2"	Structure Negative (MZN)
49-C	5"x5"x2"	Structure Negative (MZN); (2) MZA; (1) MZN
49-D	5"x5"x2"	Primary Anode Terminal Plate (MZA); (1) MZN; (1) MZA
49-E	5"x5"x2"	Structure Negative (MZN); (1) MZA
49-F	5"x5"x2"	Primary Anode Terminal Plate (MZA)
49-G	5"x5"x2"	Primary Anode Terminal Plate (MZA); (2) MZN; (1) MZA; (1) PJA; (1) SA
49-H	5"x5"x2"	Structure Negative (MZN); (1) MZA; (1) MZN; (1) PJA (1) SA
49-I	5"x5"x2"	Structure Negative (MZN); (1) MZA
49-J	5"x5"x2"	Primary Anode Terminal Plate (MZA)

TYPICAL WIRE SIZES & COLORS AS FOLLOWS:
MZA & PJA = #10 Red
MZN; PJN = #10 Blue
SA = #8 Black
RE/REN: #16 Twisted Pair Red/Black

ABBREVIATIONS:
MZN = Metallized Zinc Negative
PJN = Pile Jacket Negative
CJN = Cap Jacket Negative
SAN = Submerged Anode Negative
MZA = Metallized Zinc Anode
PJA = Pile Jacket Anode
CJA = Cap Jacket Anode
SA = Submerged Anode
RE = Reference Electrode
REN = Reference Electrode Negative

LEGEND
- (X) Submerged Anode, X = Weight in KG
- Pile Jacket
- Cap Jacket
- Primary Anode Terminal
- Negative Connection
- s Encapsulated Splice

Water Street Bent 49 South Elevation & Span 49			
SCALE: NONE	Field Sketch As-Built	DRAWN BY KRH	
DATE: 10-4-11		REVISED	
GREAT WESTERN CORPORATION			
Ketchikan Viaduct II Repair & C.P.		DRAWING NUMBER W-49	

SPAN 50 - VIEW THROUGH DECK

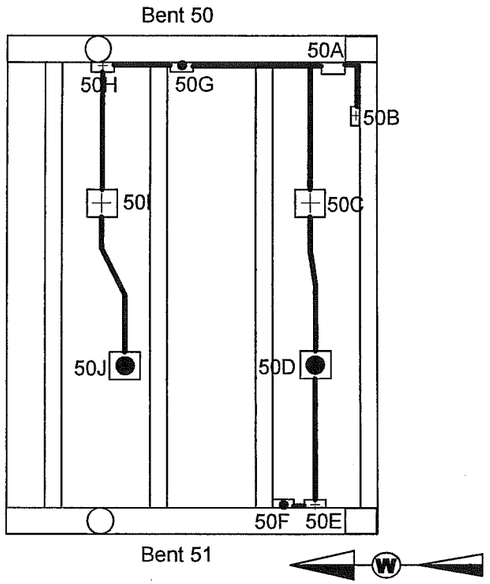

SCHEMATIC

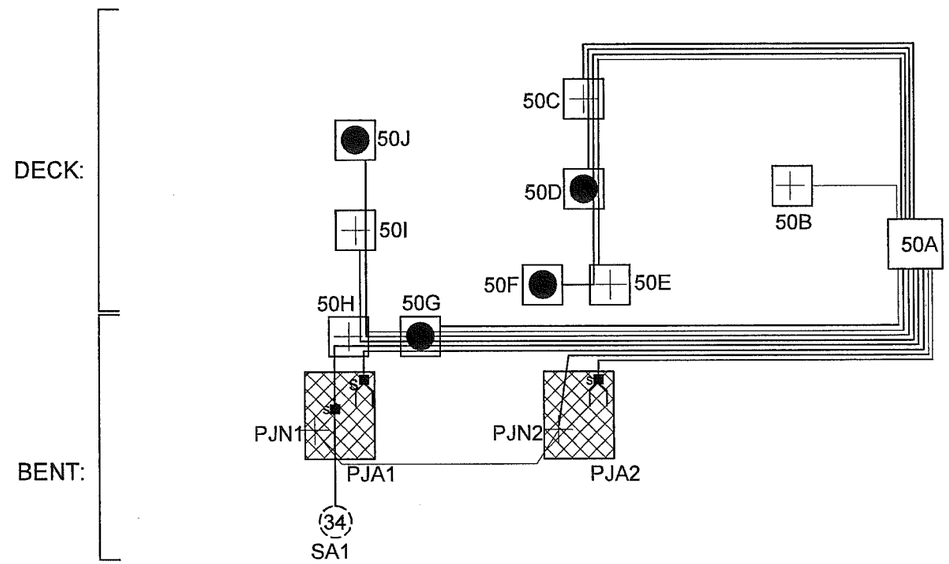

WATER BENT 50 SOUTH ELEVATION

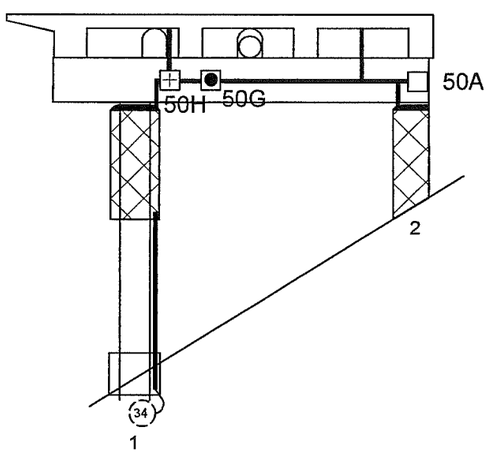

J-BOX DETAILS:

	J-Box Size	Wires or Structure
50-A	14" x 12" x 8"	MAIN J-BOX: (4) MZA; (5) MZN; (2) PJA; (1) PJN; (1) SA; SAN jumpered from PJN
50-B	5" x 5" x 2"	Structure Negative (MZN)
50-C	5" x 5" x 2"	Structure Negative (MZN); (2) MZA; (1) MZN
50-D	5" x 5" x 2"	Primary Anode Terminal Plate (MZA); (1) MZN; (1) MZA
50-E	5" x 5" x 2"	Structure Negative (MZN); (1) MZA
50-F	5" x 5" x 2"	Primary Anode Terminal Plate (MZA)
50-G	5" x 5" x 2"	Primary Anode Terminal Plate (MZA); (2) MZN; (1) MZA; (1) PJA; (1) SA
50-H	5" x 5" x 2"	Structure Negative (MZN); (1) MZA; (1) MZN; (1) PJA (1) SA
50-I	5" x 5" x 2"	Structure Negative (MZN); (1) MZA
50-J	5" x 5" x 2"	Primary Anode Terminal Plate (MZA)

TYPICAL WIRE SIZES & COLORS AS FOLLOWS:
MZA & PJA = #10 Red
MZN; PJN = #10 Blue
SA = #8 Black
RE/REN: #16 Twisted Pair Red/Black

ABBREVIATIONS:
MZN = Metallized Zinc Negative
PJN = Pile Jacket Negative
CJN = Cap Jacket Negative
SAN = Submerged Anode Negative
MZA = Metallized Zinc Anode
PJA = Pile Jacket Anode
CJA = Cap Jacket Anode
SA = Submerged Anode
RE = Reference Electrode
REN = Reference Electrode Negative

LEGEND
- (X) Submerged Anode X = Weight in KG
- Pile Jacket
- Cap Jacket
- Primary Anode Terminal
- Negative Connection
- Encapsulated Splice

Water Street Bent 50 South Elevation & Span 50			
SCALE: NONE	Field Sketch As-Built	DRAWN BY KRH	
DATE: 09-30-11		REVISED 10-4-11	
GREAT WESTERN CORPORATION			
Ketchikan Viaduct II Repair & C.P.		DRAWING NUMBER W-50	

SPAN 51 - VIEW THROUGH DECK

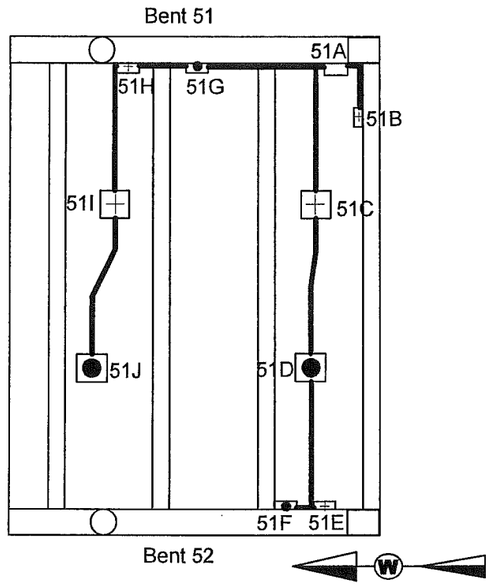

SCHEMATIC

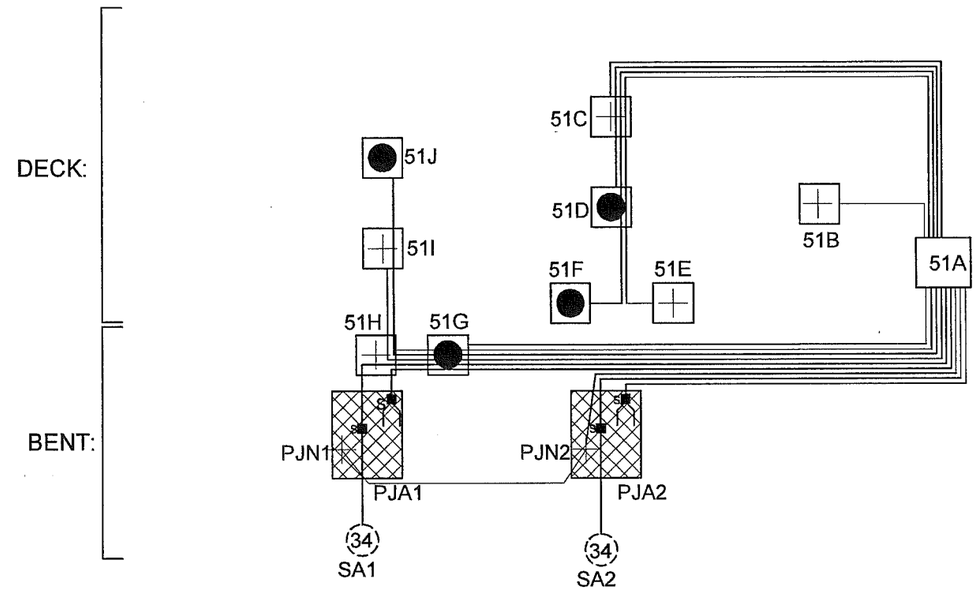

WATER BENT 51 SOUTH ELEVATION

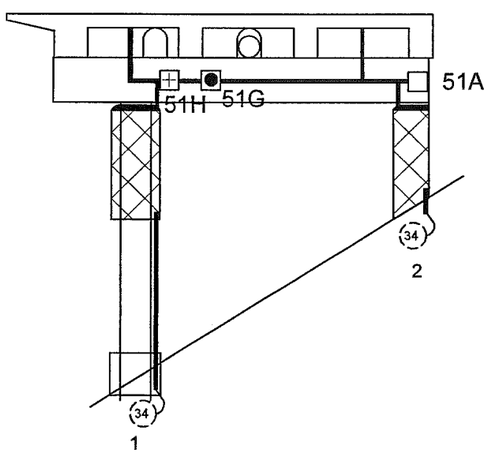

J-BOX DETAILS:

	J-Box Size	Wires or Structure
51-A	14"x12"x8"	MAIN J-BOX: (4) MZA; (5) MZN; (2) PJA; (1) PJN; (2) SA; SAN jumpered from PJN
51-B	5"x5"x2"	Structure Negative (MZN)
51-C	5"x5"x2"	Structure Negative (MZN); (2) MZA; (1) MZN
51-D	5"x5"x2"	Primary Anode Terminal Plate (MZA); (1) MZN; (1) MZA
51-E	5"x5"x2"	Structure Negative (MZN)
51-F	5"x5"x2"	Primary Anode Terminal Plate (MZA)
51-G	5"x5"x2"	Primary Anode Terminal Plate (MZA); (2) MZN; (1) MZA; (1) PJA; (1) SA
51-H	5"x5"x2"	Structure Negative (MZN); (1) MZA; (1) MZN; (1) PJA (1) SA
51-I	5"x5"x2"	Structure Negative (MZN); (1) MZA
51-J	5"x5"x2"	Primary Anode Terminal Plate (MZA)

TYPICAL WIRE SIZES & COLORS AS FOLLOWS:
MZA & PJA = #10 Red
MZN; PJN = #10 Blue
SA = #8 Black
RE/REN: #16 Twisted Pair Red/Black

ABBREVIATIONS:
MZN = Metallized Zinc Negative
PJN = Pile Jacket Negative
CJN = Cap Jacket Negative
SAN = Submerged Anode Negative
MZA = Metallized Zinc Anode
PJA = Pile Jacket Anode
CJA = Cap Jacket Anode
SA = Submerged Anode
RE = Reference Electrode
REN = Reference Electrode Negative

LEGEND
- (X) Submerged Anode X = Weight in KG
- Pile Jacket
- Cap Jacket
- Primary Anode Terminal
- Negative Connection
- s Encapsulated Splice

Water Street Bent 51 South Elevation & Span 51			
SCALE: NONE	Field Sketch As-Built	DRAWN BY KRH	
DATE: 05-12-11		REVISED 10-4-11	
GREAT WESTERN CORPORATION			
Ketchikan Viaduct II Repair & C.P.		DRAWING NUMBER W-51	

SPAN 52 - VIEW THROUGH DECK

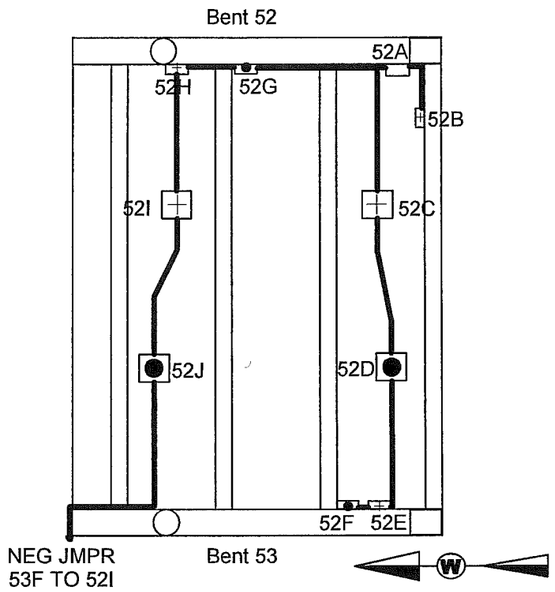

WATER BENT 52 SOUTH ELEVATION

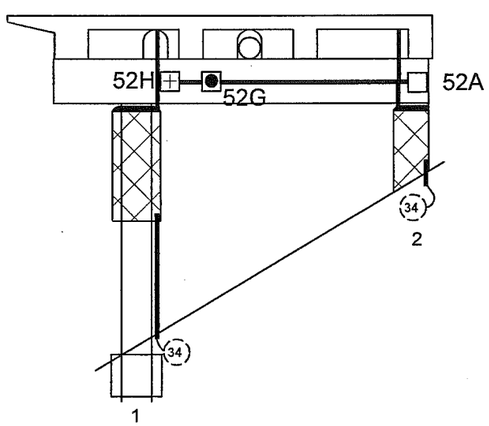

SCHEMATIC

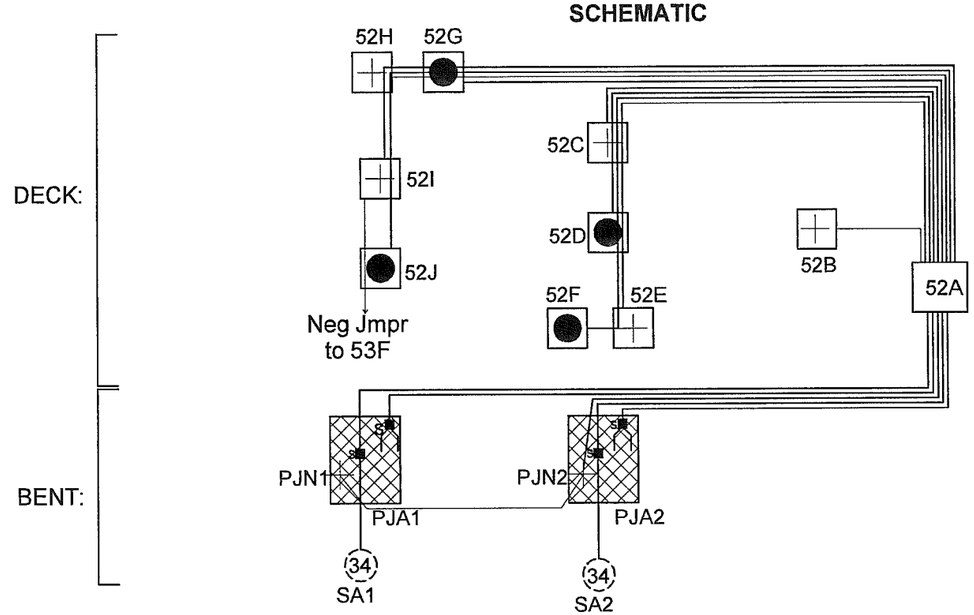

J-BOX DETAILS:

	J-Box Size	Wires or Structure
52-A	14" x 12" x 8"	MAIN J-BOX: (4) MZA; (5) MZN; (2) PJA; (1) PJN; (2) SA; SAN jumpered from PJN
52-B	5" x 5" x 2"	Structure Negative (MZN)
52-C	5" x 5" x 2"	Structure Negative (MZN); (2) MZA; (1) MZN
52-D	5" x 5" x 2"	Primary Anode Terminal Plate (MZA); (1) MZN; (1) MZA
52-E	5" x 5" x 2"	Structure Negative (MZN); (1) MZA
52-F	5" x 5" x 2"	Primary Anode Terminal Plate (MZA)
52-G	5" x 5" x 2"	Primary Anode Terminal Plate (MZA); (2) MZN; (1) MZA
52-H	5" x 5" x 2"	Structure Negative (MZN); (1) MZA; (1) MZN
52-I	5" x 5" x 2"	Structure Negative (MZN); (1) MZA; MZN Jumper to 53F
52-J	5" x 5" x 2"	Primary Anode Terminal Plate (MZA); (1) MZN Jumper to 53F

TYPICAL WIRE SIZES & COLORS AS FOLLOWS:
MZA & PJA = #10 Red
MZN; PJN = #10 Blue
SA = #8 Black
RE/REN: #16 Twisted Pair Red/Black

ABBREVIATIONS:
MZN = Metallized Zinc Negative
PJN = Pile Jacket Negative
CJN = Cap Jacket Negative
SAN = Submerged Anode Negative
MZA = Metallized Zinc Anode
PJA = Pile Jacket Anode
CJA = Cap Jacket Anode
SA = Submerged Anode
RE = Reference Electrode
REN = Reference Electrode Negative

LEGEND
- (X) Submerged Anode X = Weight in KG
- Pile Jacket
- Cap Jacket
- Primary Anode Terminal
- Negative Connection
- Encapsulated Splice

Water Street Bent 52 South Elevation & Span 52			
SCALE: NONE	Field Sketch As-Built	DRAWN BY KRH	
DATE: 05-12-11		REVISED 09-29-11	
GREAT WESTERN CORPORATION			
Ketchikan Viaduct II Repair & C.P.		DRAWING NUMBER W-52	

SPAN 53 - VIEW THROUGH DECK

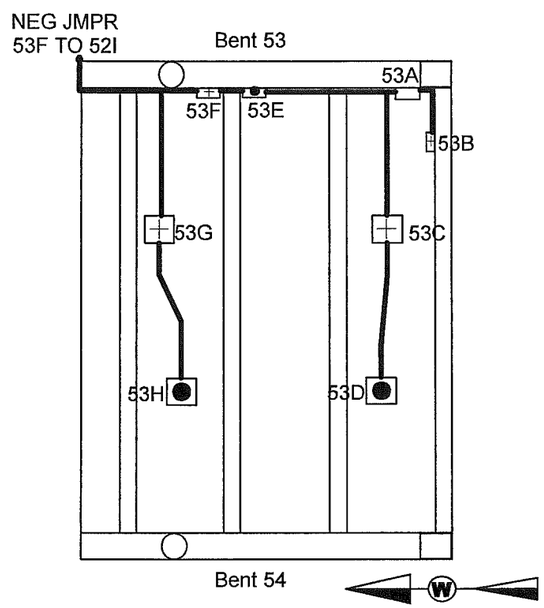

SCHEMATIC

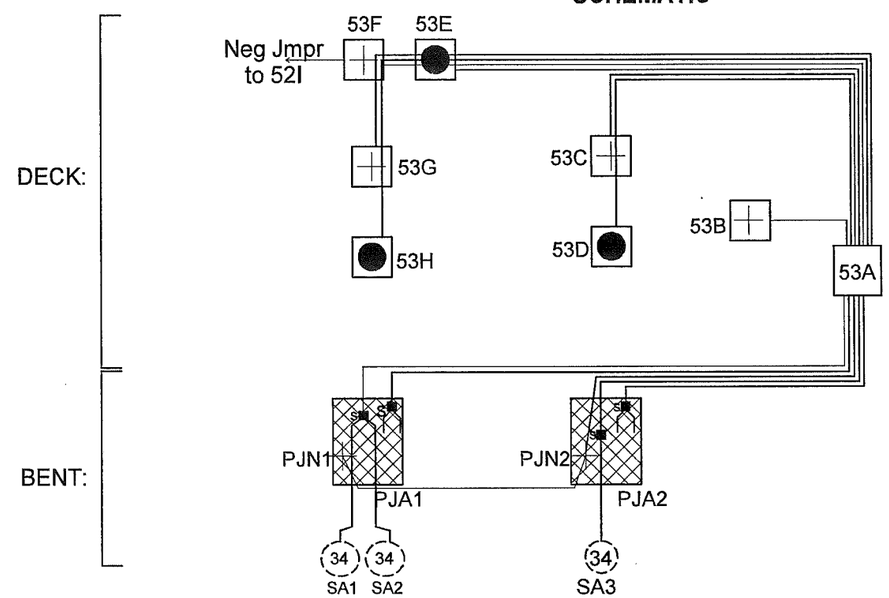

WATER BENT 53 SOUTH ELEVATION

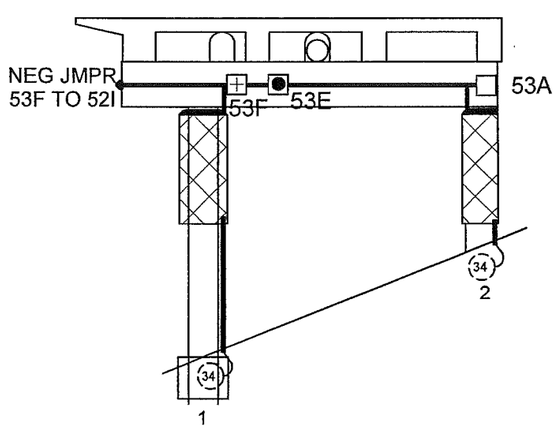

J-BOX DETAILS:

	J-Box Size	Wires or Structure
53-A	14"x12"x8"	MAIN J-BOX: (3) MZA; (4) MZN; (2) PJA; (1) PJN; (2) SA; SAN jumpered from PJN
53-B	5"x5"x2"	Structure Negative (MZN)
53-C	5"x5"x2"	Structure Negative (MZN); (1) MZA
53-D	5"x5"x2"	Primary Anode Terminal Plate (MZA)
53-E	5"x5"x2"	Primary Anode Terminal Plate (MZA); (2) MZN; (1) MZA
53-F	5"x5"x2"	Structure Negative (MZN); (1) MZA; (1) MZN; MZN Jumper to 52I
53-G	5"x5"x2"	Structure Negative (MZN); (1) MZA
53-H	5"x5"x2"	Primary Anode Terminal Plate (MZA)

TYPICAL WIRE SIZES & COLORS AS FOLLOWS:
MZA & PJA = #10 Red
MZN; PJN = #10 Blue
SA = #8 Black
RE/REN: #16 Twisted Pair Red/Black

ABBREVIATIONS:
MZN = Metallized Zinc Negative
PJN = Pile Jacket Negative
CJN = Cap Jacket Negative
SAN = Submerged Anode Negative
MZA = Metallized Zinc Anode
PJA = Pile Jacket Anode
CJA = Cap Jacket Anode
SA = Submerged Anode
RE = Reference Electrode
REN = Reference Electrode Negative

LEGEND
- (X) Submerged Anode X = Weight in KG
- Pile Jacket
- Cap Jacket
- Primary Anode Terminal
- Negative Connection
- S Encapsulated Splice

Water Street Bent 53 South Elevation & Span 53			
SCALE: NONE	Field Sketch As-Built	DRAWN BY KRH	
DATE: 05-12-11		REVISED 09-29-11	
GREAT WESTERN CORPORATION			
Ketchikan Viaduct II Repair & C.P.		DRAWING NUMBER W-53	

SPAN 54 - VIEW THROUGH DECK

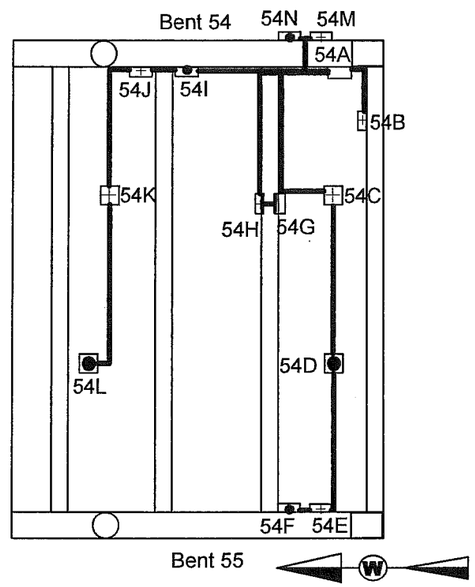

SCHEMATIC

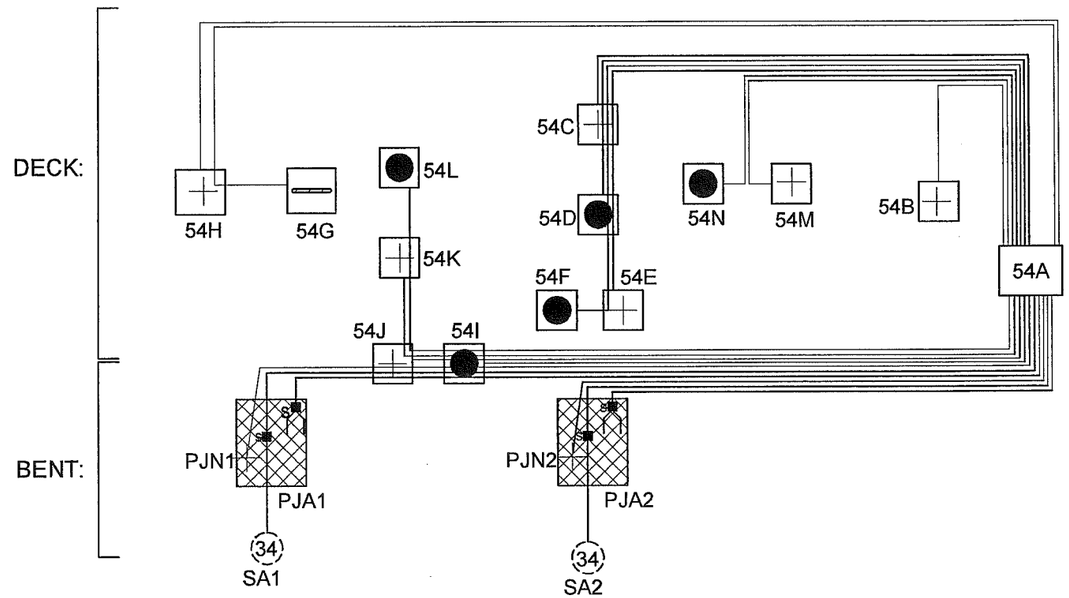

WATER BENT 54 SOUTH ELEVATION

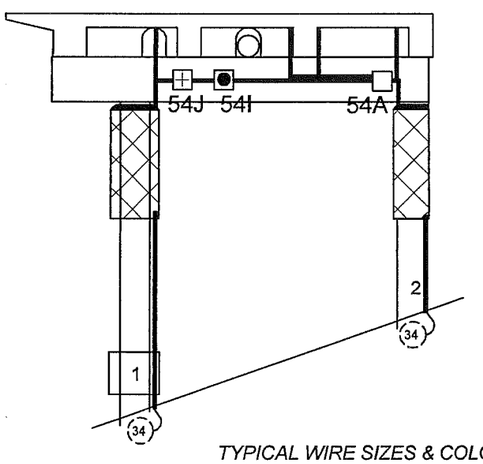

TYPICAL WIRE SIZES & COLORS AS FOLLOWS:
MZA & PJA = #10 Red
MZN; PJN = #10 Blue
SA = #8 Black
RE/REN: #16 Twisted Pair Red/Black

J-BOX DETAILS:

	J-Box Size	Wires or Structure
54-A	14" x 12" x 8"	MAIN J-BOX: (5) MZA; (6) MZN; (2) PJA; (2) PJN; (2) SA; SAN jumpered from PJN; (1) RE; (1) REN
54-B	5" x 5" x 2"	Structure Negative (MZN)
54-C	5" x 5" x 2"	Structure Negative (MZN); (2) MZA; (1) MZN
54-D	5" x 5" x 2"	Primary Anode Terminal Plate (MZA); (1) MZN; (1) MZA
54-E	5" x 5" x 2"	Structure Negative (MZN); (1) MZA
54-F	5" x 5" x 2"	Primary Anode Terminal Plate (MZA)
54-G	5" x 5" x 2"	Reference Electrode (RE) S/N 1000096
54-H	5" x 5" x 2"	Reference Electrode Negative (REN) (1) RE
54-I	5" x 5" x 2"	Primary Anode Terminal Plate (MZA); (2) MZN; (1) MZA; (1) PJA; (1) PJN; (1) SA
54-J	5" x 5" x 2"	Structure Negative (MZN); (1) MZA; (1) MZN; (1) PJA; (1) PJN; (1) SA
54-K	5" x 5" x 2"	Structure Negative (MZN); (1) MZA
54-L	5" x 5" x 2"	Primary Anode Terminal Plate (MZA)

ABBREVIATIONS:
MZN = Metallized Zinc Negative
PJN = Pile Jacket Negative
CJN = Cap Jacket Negative
SAN = Submerged Anode Negative
MZA = Metallized Zinc Anode
PJA = Pile Jacket Anode
CJA = Cap Jacket Anode
SA = Submerged Anode
RE = Reference Electrode
REN = Reference Electrode Negative

LEGEND
- (x) Submerged Anode x = Weight in LBS
- Pile Jacket
- Cap Jacket
- Primary Anode Terminal
- Negative Connection
- Encapsulated Splice
- Reference Electrode

Water Street Bent 54 South Elevation & Span 54			
SCALE: NONE	Field Sketch As-Built	DRAWN BY KRH	
DATE: 05-12-11		REVISED 10-4-11	
GREAT WESTERN CORPORATION			
Ketchikan Viaduct II Repair & C.P.		DRAWING NUMBER W-54	

SPAN 55 - VIEW THROUGH DECK

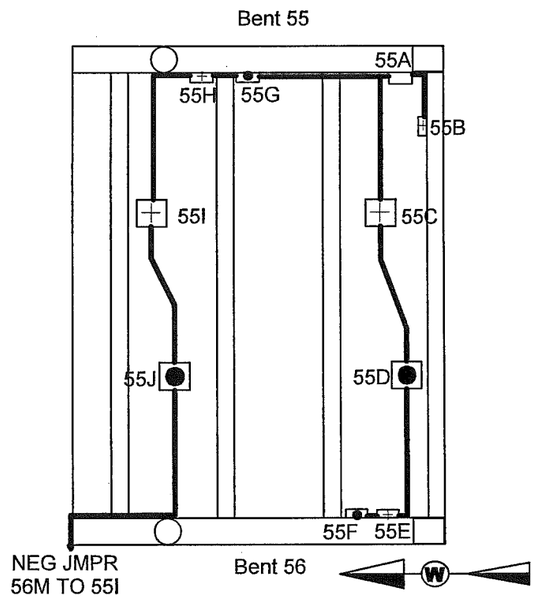

SCHEMATIC

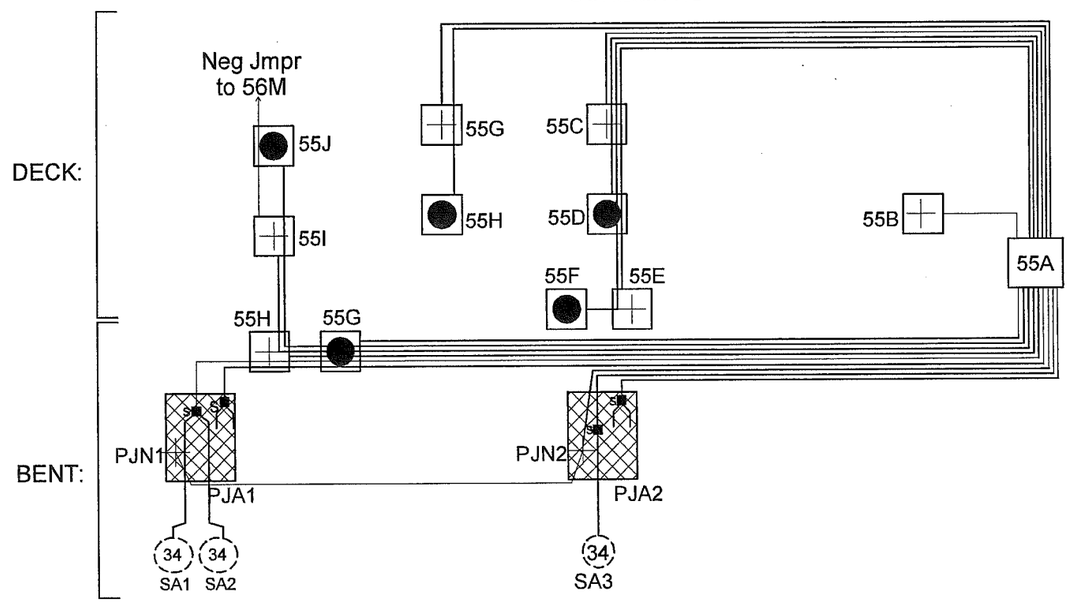

WATER BENT 55 SOUTH ELEVATION

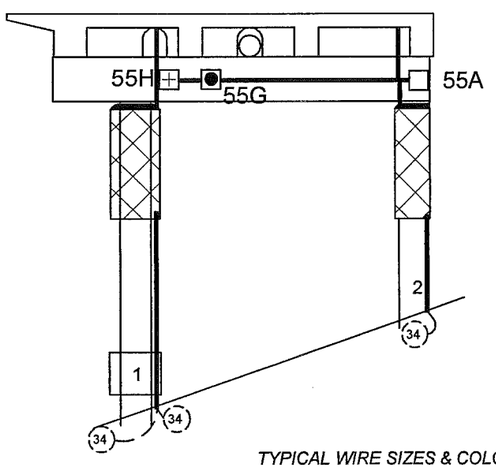

TYPICAL WIRE SIZES & COLORS AS FOLLOWS:
MZA & PJA = #10 Red
MZN; PJN = #10 Blue
SA = #8 Black
RE/REN: #16 Twisted Pair Red/Black

J-BOX DETAILS:

	J-Box Size	Wires or Structure
55-A	14" x 12" x 8"	MAIN J-BOX: (4) MZA; (5) MZN; (2) PJA; (1) PJN; (2) SA; SAN jumpered from PJN
55-B	5" x 5" x 2"	Structure Negative (MZN)
55-C	5" x 5" x 2"	Structure Negative (MZN); (2) MZA; (1) MZN
55-D	5" x 5" x 2"	Primary Anode Terminal Plate (MZA); (1) MZN; (1) MZA
55-E	5" x 5" x 2"	Structure Negative (MZN); (1) MZA
55-F	5" x 5" x 2"	Primary Anode Terminal Plate (MZA)
55-G	5" x 5" x 2"	Primary Anode Terminal Plate (MZA); (2) MZN; (1) MZA; (1) PJA; (1) SA
55-H	5" x 5" x 2"	Structure Negative (MZN); (1) MZA; (1) MZN; (1) PJA; (1) SA
55-I	5" x 5" x 2"	Structure Negative (MZN); (1) MZA; MZN Jumper to 56M
55-J	5" x 5" x 2"	Primary Anode Terminal Plate (MZA); (1) MZN Jumper

ABBREVIATIONS:
MZN = Metallized Zinc Negative
PJN = Pile Jacket Negative
CJN = Cap Jacket Negative
SAN = Submerged Anode Negative
MZA = Metallized Zinc Anode
PJA = Pile Jacket Anode
CJA = Cap Jacket Anode
SA = Submerged Anode
RE = Reference Electrode
REN = Reference Electrode Negative

LEGEND
- (X) Submerged Anode X = Weight in KG
- Pile Jacket
- Cap Jacket
- Primary Anode Terminal
- Negative Connection
- s Encapsulated Splice

Water Street Bent 55 South Elevation & Span 55			
SCALE: NONE	Field Sketch As-Built	DRAWN BY KRH	
DATE: 05-12-11		REVISED 10-4-11	
GREAT WESTERN CORPORATION			
Ketchikan Viaduct II Repair & C.P.		DRAWING NUMBER W-55	

48

SPAN 56 - VIEW THROUGH DECK

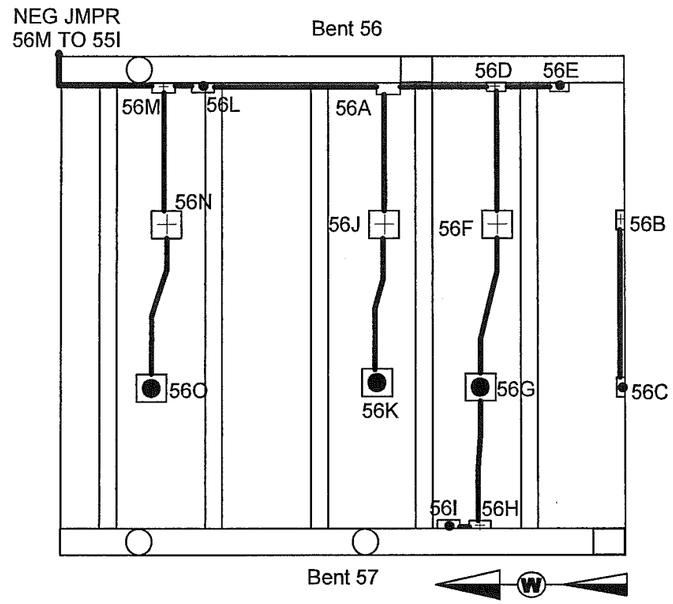

SCHEMATIC

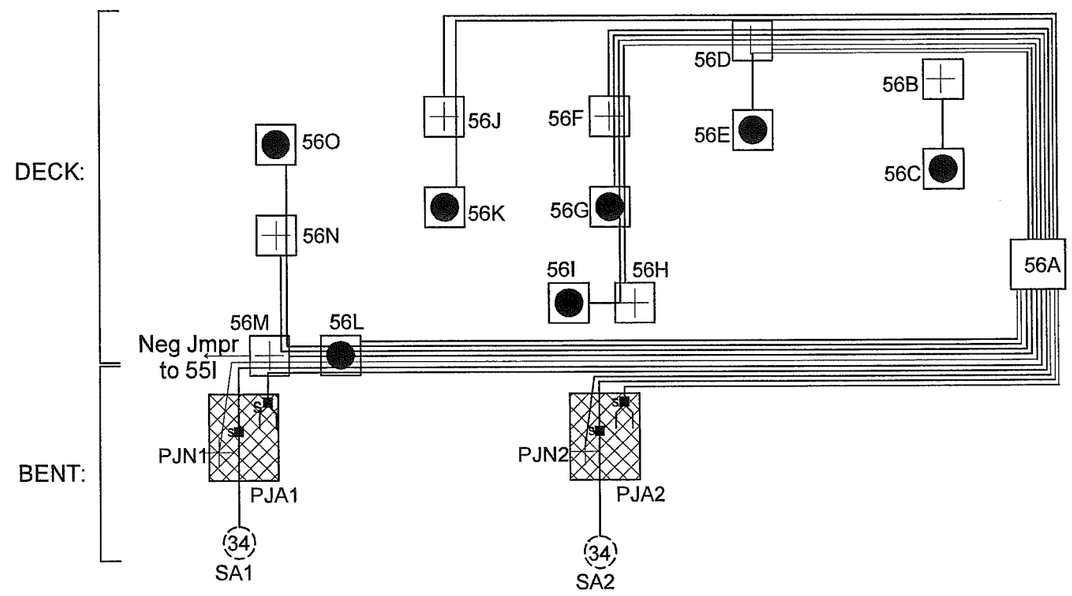

WATER BENT 56 SOUTH ELEVATION

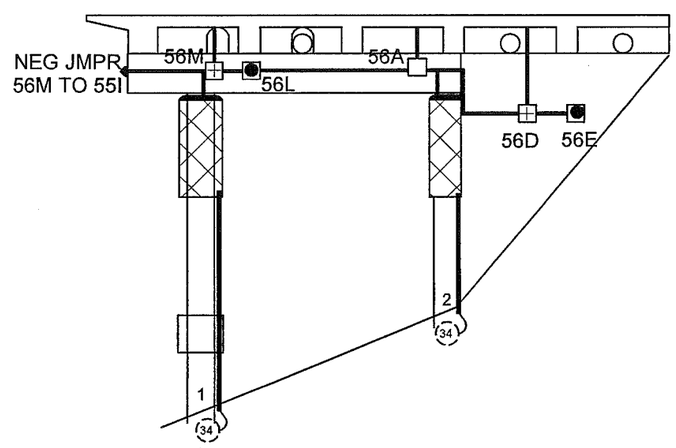

J-BOX DETAILS:

	J-Box Size	Wires or Structure
56-A	14" x 12" x 8"	MAIN J-BOX: (6) MZA; (6) MZN; (2) PJA; (2) PJN; (2) SA; SAN jumpered from PJN
56-B	5" x 5" x 2"	Structure Negative (MZN)
56-C	5" x 5" x 2"	Primary Anode Terminal Plate (MZA)
56-D	5" x 5" x 2"	Structure Negative (MZN); (3) MZA; (2) MZN
56-E	5" x 5" x 2"	Primary Anode Terminal Plate (MZA)
56-F	5" x 5" x 2"	Structure Negative (MZN); (2) MZA; (1) MZN
56-G	5" x 5" x 2"	Primary Anode Terminal Plate (MZA); (1) MZN; (1) MZA
56-H	5" x 5" x 2"	Structure Negative (MZN); (1) MZA
56-I	5" x 5" x 2"	Primary Anode Terminal Plate (MZA)
56-J	5" x 5" x 2"	Structure Negative (MZN); (1) MZA
56-K	5" x 5" x 2"	Primary Anode Terminal Plate (MZA)
56-L	5" x 5" x 2"	Primary Anode Terminal Plate (MZA); (2) MZN; (1) MZA; (1) PJA; (1) PJN; (1) SA
56-M	5" x 5" x 2"	Structure Negative (MZN); (1) MZA; (1) MZN; MZN Jumper to 55I; (1) PJA; (1) PJN; (1) SA
56-N	5" x 5" x 2"	Structure Negative (MZN); (1) MZA
56-O	5" x 5" x 2"	Primary Anode Terminal Plate (MZA)

TYPICAL WIRE SIZES & COLORS AS FOLLOWS:
MZA & PJA = #10 Red
MZN; PJN = #10 Blue
SA = #8 Black
RE/REN: #16 Twisted Pair Red/Black

ABBREVIATIONS:
MZN = Metallized Zinc Negative
PJN = Pile Jacket Negative
CJN = Cap Jacket Negative
SAN = Submerged Anode Negative
MZA = Metallized Zinc Anode
PJA = Pile Jacket Anode
CJA = Cap Jacket Anode
SA = Submerged Anode
RE = Reference Electrode
REN = Reference Electrode Negative

LEGEND
- Submerged Anode X = Weight in KG
- Pile Jacket
- Cap Jacket
- Primary Anode Terminal
- Negative Connection
- Encapsulated Splice

Water Street Bent 56 South Elevation & Span 56			
SCALE: NONE	Field Sketch As-Built	DRAWN BY KRH	
DATE: 05-12-11		REVISED 10-4-11	
GREAT WESTERN CORPORATION			
Ketchikan Viaduct II Repair & C.P.		DRAWING NUMBER W-56	

SPAN 57 - VIEW THROUGH DECK

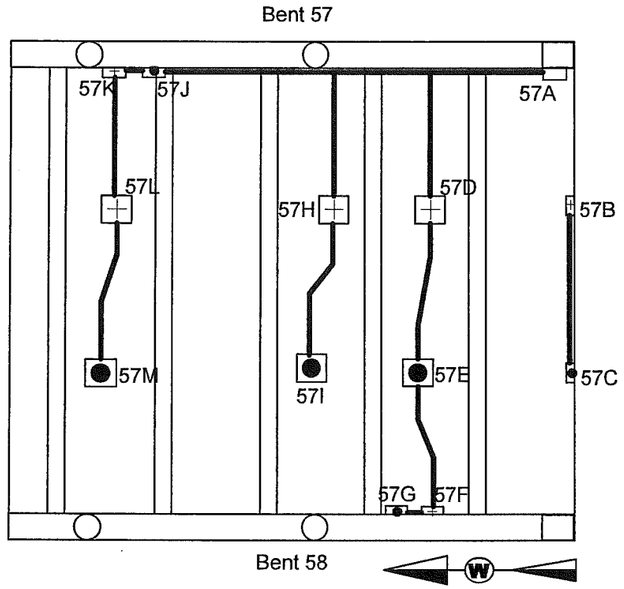

SCHEMATIC

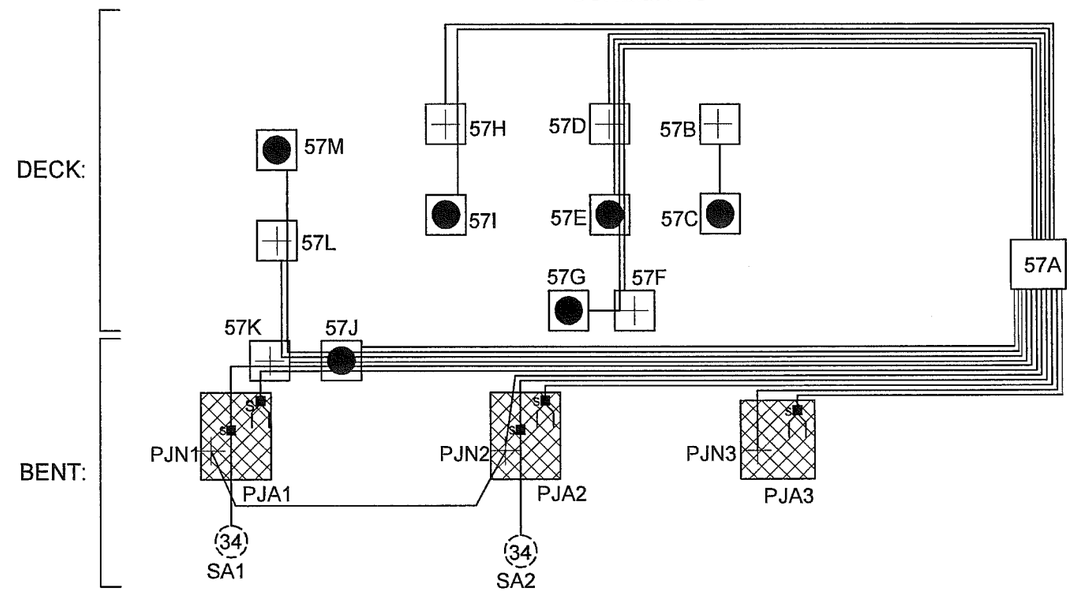

WATER BENT 57 SOUTH ELEVATION

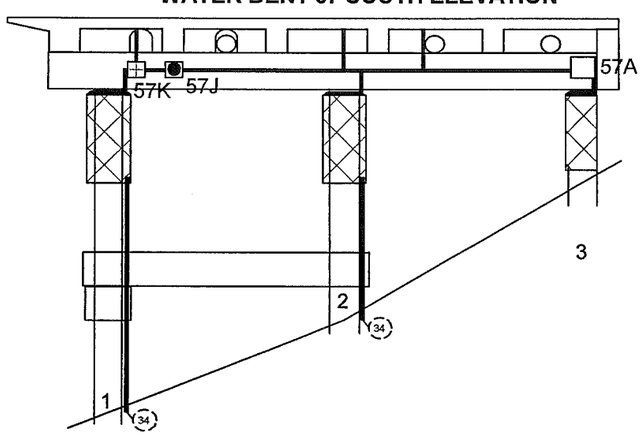

TYPICAL WIRE SIZES & COLORS AS FOLLOWS:
MZA & PJA = #10 Red
MZN; PJN = #10 Blue
SA = #8 Black
RE/REN: #16 Twisted Pair Red/Black

J-BOX DETAILS:

	J-Box Size	Wires or Structure
57-A	14" x 12" x 8"	MAIN J-BOX: (5) MZA; (5) MZN; (3) PJA; (2) PJN; (2) SA; SAN jumpered from PJN
57-B	5" x 5" x 2"	Structure Negative (MZN)
57-C	5" x 5" x 2"	Primary Anode Terminal Plate (MZA)
57-D	5" x 5" x 2"	Structure Negative (MZN); (2) MZA; (1) MZN
57-E	5" x 5" x 2"	Primary Anode Terminal Plate (MZA); (1) MZN; (1) MZA
57-F	5" x 5" x 2"	Structure Negative (MZN); (1) MZA
57-G	5" x 5" x 2"	Primary Anode Terminal Plate (MZA)
57-H	5" x 5" x 2"	Structure Negative (MZN); (1) MZA
57-I	5" x 5" x 2"	Primary Anode Terminal Plate (MZA)
57-J	5" x 5" x 2"	Primary Anode Terminal Plate (MZA); (2) MZN; (1) MZA; (1) PJA; (1) SA
57-K	5" x 5" x 2"	Structure Negative (MZN); (1) MZA; (1) MZN; (1) PJA; (1) SA
57-L	5" x 5" x 2"	Structure Negative (MZN); (1) MZA
57-M	5" x 5" x 2"	Primary Anode Terminal Plate (MZA)

ABBREVIATIONS:
MZN = Metallized Zinc Negative
PJN = Pile Jacket Negative
CJN = Cap Jacket Negative
SAN = Submerged Anode Negative
MZA = Metallized Zinc Anode
PJA = Pile Jacket Anode
CJA = Cap Jacket Anode
SA = Submerged Anode
RE = Reference Electrode
REN = Reference Electrode Negative

LEGEND
- (X) Submerged Anode X = Weight in KG
- Pile Jacket
- Cap Jacket
- Primary Anode Terminal
- Negative Connection
- s Encapsulated Splice

Water Street Bent 57 South Elevation & Span 57			
SCALE: NONE	Field Sketch As-Built	DRAWN BY KRH	
DATE: 05-12-11		REVISED 10-4-11	
GREAT WESTERN CORPORATION			
Ketchikan Viaduct II Repair & C.P.		DRAWING NUMBER W-57	

SPAN 58 - VIEW THROUGH DECK

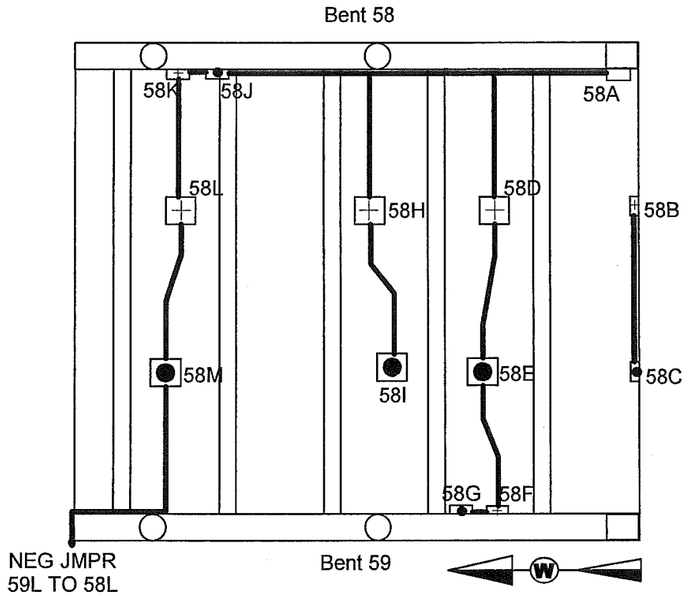

SCHEMATIC

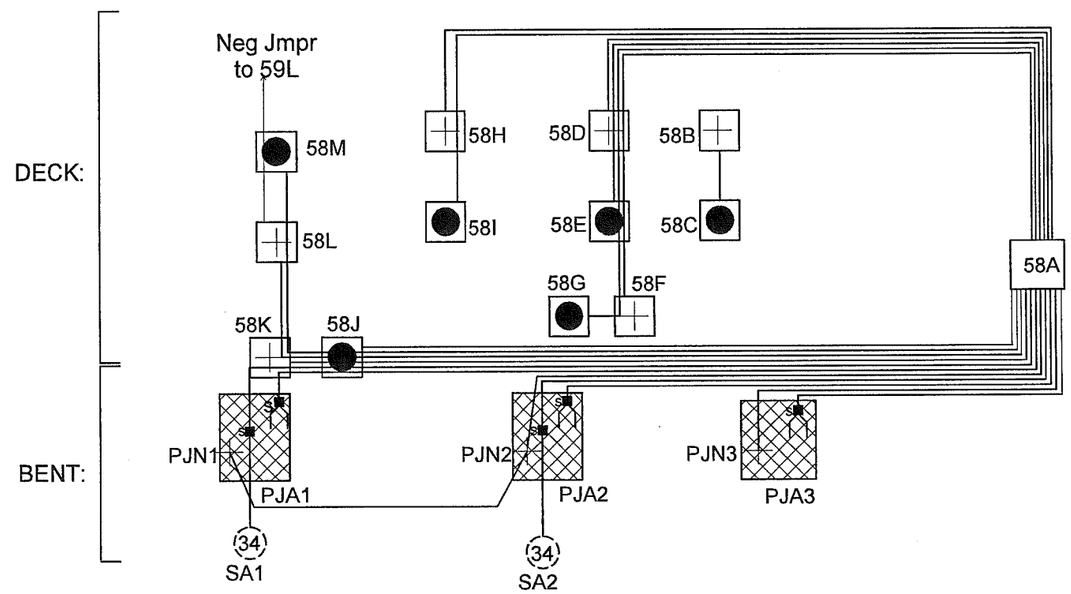

WATER BENT 58 SOUTH ELEVATION

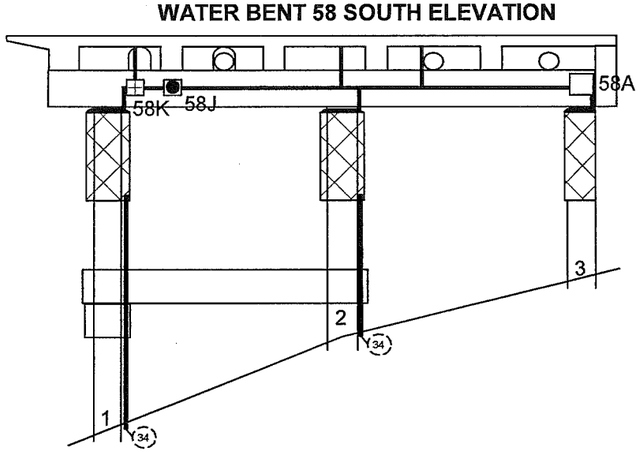

TYPICAL WIRE SIZES & COLORS AS FOLLOWS:
MZA & PJA = #10 Red
MZN; PJN = #10 Blue
SA = #8 Black
RE/REN: #16 Twisted Pair Red/Black

J-BOX DETAILS:

	J-Box Size	Wires or Structure
58-A	14" x 12" x 8"	MAIN J-BOX: (5) MZA; (5) MZN; (3) PJA; (2) PJN; (2) SA; SAN jumpered from PJN
58-B	5" x 5" x 2"	Structure Negative (MZN)
58-C	5" x 5" x 2"	Primary Anode Terminal Plate (MZA)
58-D	5" x 5" x 2"	Structure Negative (MZN); (2) MZA; (1) MZN
58-E	5" x 5" x 2"	Primary Anode Terminal Plate (MZA); (1) MZN; (1) MZA
58-F	5" x 5" x 2"	Structure Negative (MZN); (1) MZA
58-G	5" x 5" x 2"	Primary Anode Terminal Plate (MZA)
58-H	5" x 5" x 2"	Structure Negative (MZN); (1) MZA
58-I	5" x 5" x 2"	Primary Anode Terminal Plate (MZA)
58-J	5" x 5" x 2"	Primary Anode Terminal Plate (MZA); (2) MZN; (1) MZA; (1) PJA; (1) SA
58-K	5" x 5" x 2"	Structure Negative (MZN); (1) MZA; (1) MZN; (1) PJA; (1) SA
58-L	5" x 5" x 2"	Structure Negative (MZN); (1) MZA; MZN Jumper to 59L
58-M	5" x 5" x 2"	Primary Anode Terminal Plate (MZA); (1) MZN jumper

ABBREVIATIONS:
MZN = Metallized Zinc Negative
PJN = Pile Jacket Negative
CJN = Cap Jacket Negative
SAN = Submerged Anode Negative
MZA = Metallized Zinc Anode
PJA = Pile Jacket Anode
CJA = Cap Jacket Anode
SA = Submerged Anode
RE = Reference Electrode
REN = Reference Electrode Negative

LEGEND
- (X) Submerged Anode X = Weight in KG
- Pile Jacket
- Cap Jacket
- Primary Anode Terminal
- Negative Connection
- s Encapsulated Splice

Water Street Bent 58 South Elevation & Span 58			
SCALE: NONE	Field Sketch As-Built	DRAWN BY KRH	
DATE: 05-12-11		REVISED 10-4-11	
GREAT WESTERN CORPORATION			
Ketchikan Viaduct II Repair & C.P.		DRAWING NUMBER W-58	

SPAN 59 - VIEW THROUGH DECK

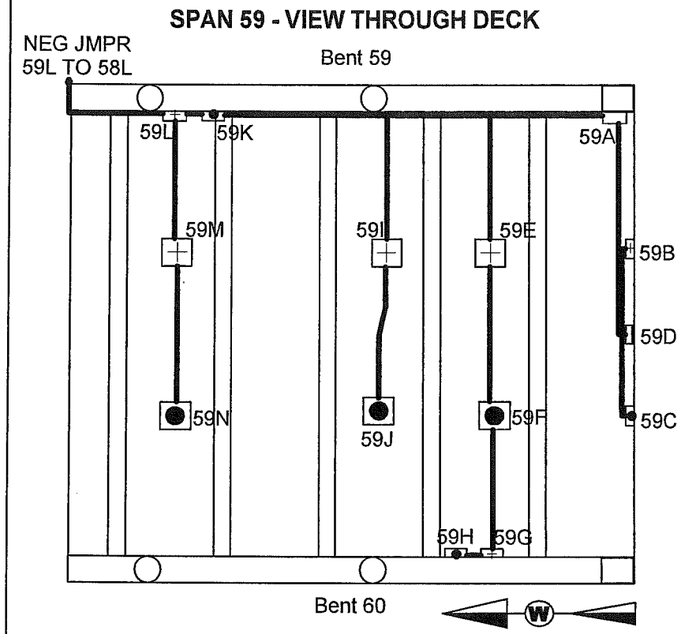

SCHEMATIC

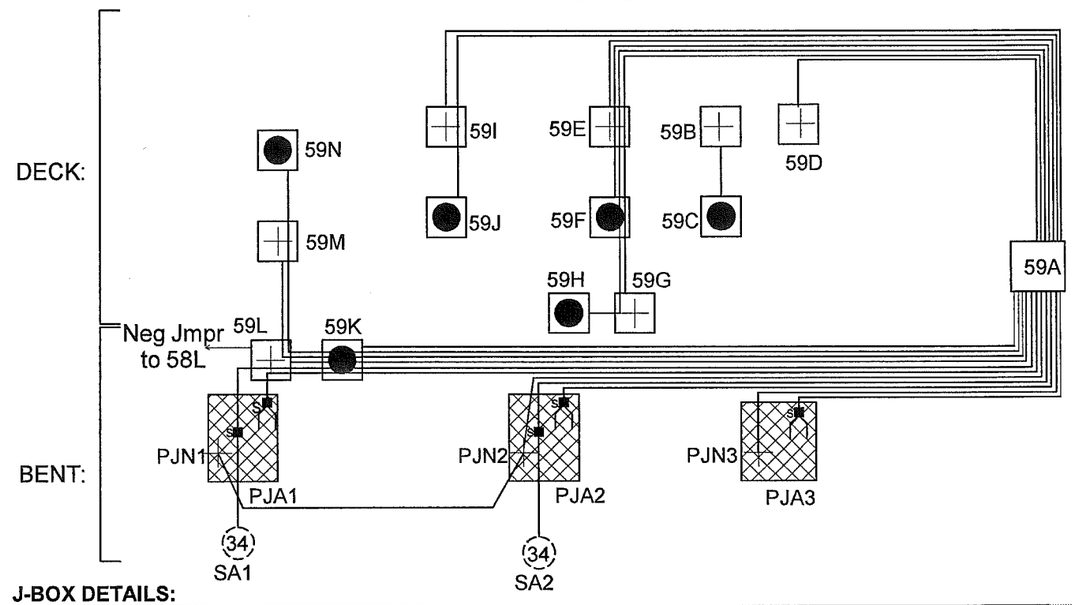

WATER BENT 59 SOUTH ELEVATION

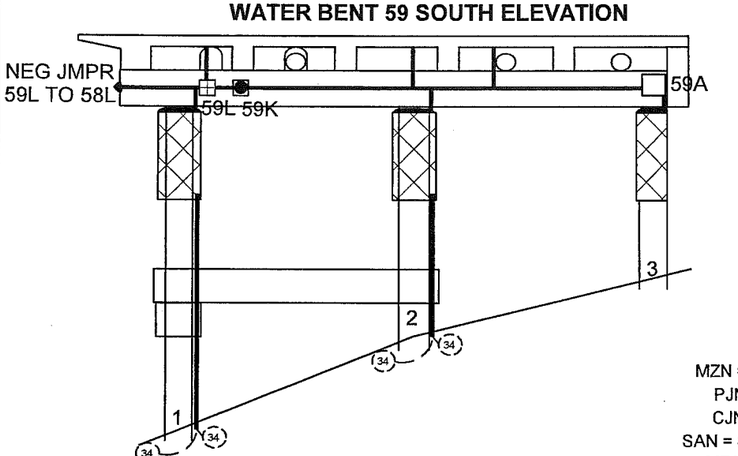

J-BOX DETAILS:

	J-Box Size	Wires or Structure
59-A	14" x 12" x 8"	MAIN J-BOX: (5) MZA; (5) MZN; (3) PJA; (2) PJN; (2) SA; SAN jumpered from PJN
59-B	5" x 5" x 2"	Structure Negative (MZN)
59-C	5" x 5" x 2"	Primary Anode Terminal Plate (MZA)
59-D	5" x 5" x 2"	Structure Negative (MZN)
59-E	5" x 5" x 2"	Structure Negative (MZN); (2) MZA; (1) MZN
59-F	5" x 5" x 2"	Primary Anode Terminal Plate (MZA); (1) MZN; (1) MZA
59-G	5" x 5" x 2"	Structure Negative (MZN); (1) MZA
59-H	5" x 5" x 2"	Primary Anode Terminal Plate (MZA)
59-I	5" x 5" x 2"	Structure Negative (MZN); (1) MZA
59-J	5" x 5" x 2"	Primary Anode Terminal Plate (MZA)
59-K	5" x 5" x 2"	Primary Anode Terminal Plate (MZA); (2) MZN; (1) MZA; (1) PJA; (1) SA
59-L	5" x 5" x 2"	Structure Negative (MZN); (1) MZA; (1) MZN; MZN Jumper to 58L; (1) PJA; (1) SA
59-M	5" x 5" x 2"	Structure Negative (MZN); (1) MZA
59-N	5" x 5" x 2"	Primary Anode Terminal Plate (MZA)

TYPICAL WIRE SIZES & COLORS AS FOLLOWS:
MZA & PJA = #10 Red
MZN; PJN = #10 Blue
SA = #8 Black
RE/REN: #16 Twisted Pair Red/Black

ABBREVIATIONS:
MZN = Metallized Zinc Negative
PJN = Pile Jacket Negative
CJN = Cap Jacket Negative
SAN = Submerged Anode Negative
MZA = Metallized Zinc Anode
PJA = Pile Jacket Anode
CJA = Cap Jacket Anode
SA = Submerged Anode
RE = Reference Electrode
REN = Reference Electrode Negative

LEGEND
- (X) Submerged Anode x = Weight in LBS
- Pile Jacket
- Cap Jacket
- Primary Anode Terminal
- Negative Connection
- Encapsulated Splice
- Reference Electrode

Water Street Bent 61 South Elevation & Span 59

SCALE: NONE	Field Sketch As-Built	DRAWN BY KRH	
DATE: 05-11-11		REVISED 10-4-11	

GREAT WESTERN CORPORATION

Ketchikan Viaduct II Repair & C.P.

DRAWING NUMBER W-59

152

SPAN 60 - VIEW THROUGH DECK

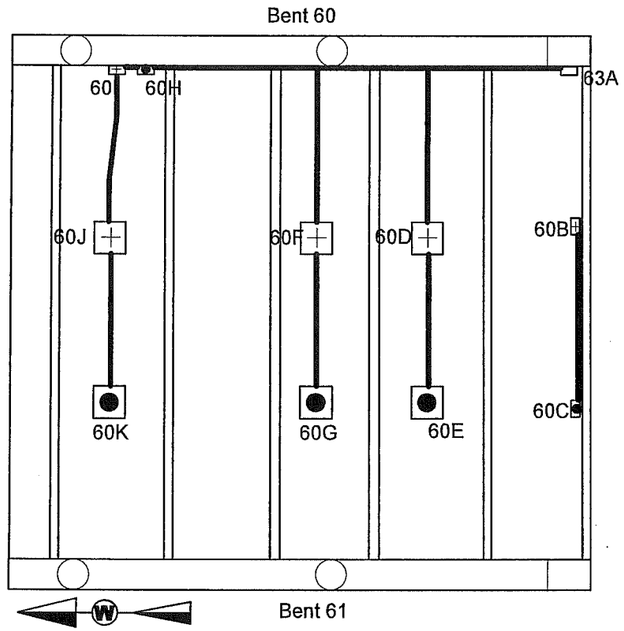

SCHEMATIC

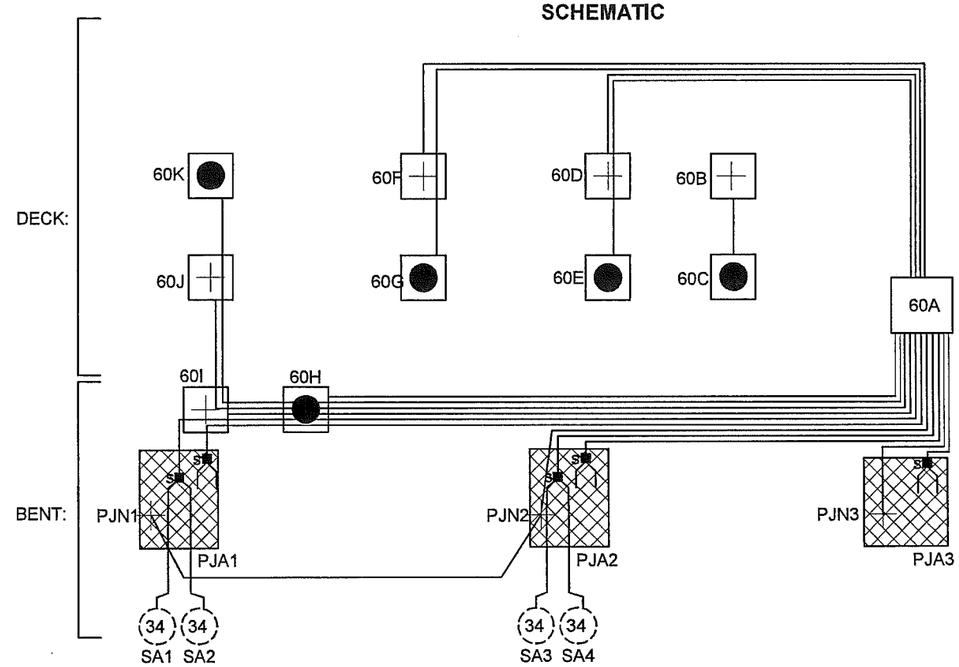

WATER BENT 60 SOUTH ELEVATION

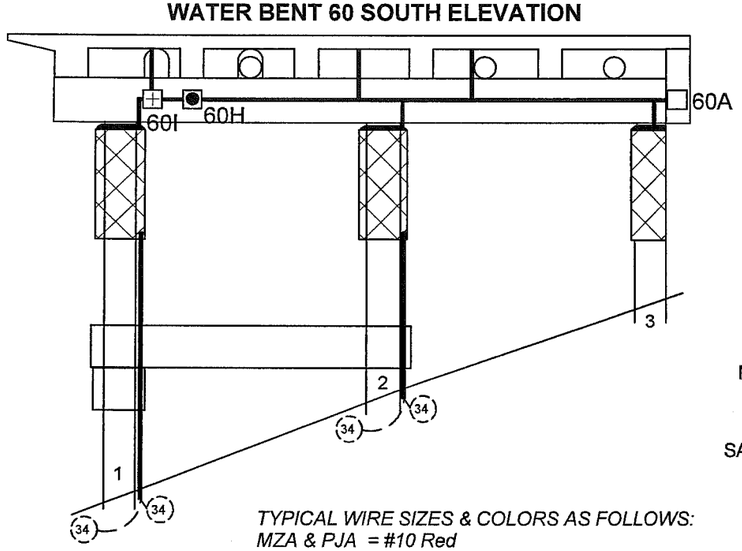

TYPICAL WIRE SIZES & COLORS AS FOLLOWS:
MZA & PJA = #10 Red
MZN; PJN = #10 Blue
SA = #8 Black
RE/REN: #16 Twisted Pair Red/Black

J-BOX DETAILS:

	J-Box Size	Wires or Structure
60-A	14" x 12" x 8"	MAIN J-BOX: (4) MZA; (4) MZN; (3) PJA; (2) PJN; (2) SA; SAN jumpered from PJN
60-B	5" x 5" x 2"	Structure Negative (MZN)
60-C	5" x 5" x 2"	Primary Anode Terminal Plate (MZA)
60-D	5" x 5" x 2"	Structure Negative (MZN); (1) MZA
60-E	5" x 5" x 2"	Primary Anode Terminal Plate (MZA)
60-F	5" x 5" x 2"	Structure Negative (MZN); (1) MZA
60-G	5" x 5" x 2"	Primary Anode Terminal Plate (MZA)
60-H	5" x 5" x 2"	Primary Anode Terminal Plate (MZA); (2) MZN; (1) MZA; (1) PJA; (1) SA
60-I	5" x 5" x 2"	Structure Negative (MZN); (1) MZA; (1) MZN; (1) PJA; (1) SA
60-J	5" x 5" x 2"	Structure Negative (MZN); (1) MZA
60-K	5" x 5" x 2"	Primary Anode Terminal Plate (MZA)

ABBREVIATIONS:
MZN = Metallized Zinc Negative
PJN = Pile Jacket Negative
CJN = Cap Jacket Negative
SAN = Submerged Anode Negative
MZA = Metallized Zinc Anode
PJA = Pile Jacket Anode
CJA = Cap Jacket Anode
SA = Submerged Anode
RE = Reference Electrode
REN = Reference Electrode Negative

LEGEND
- Submerged Anode x = Weight in LBS
- Pile Jacket
- Cap Jacket
- Primary Anode Terminal
- Negative Connection
- Encapsulated Splice
- Reference Electrode

Water Street Bent 60 South Elevation & Span 60			
SCALE: NONE	Field Sketch As-Built	DRAWN BY KRH	
DATE: 05-11-11		REVISED 10-4-11	
GREAT WESTERN CORPORATION			
Ketchikan Viaduct II Repair & C.P.		DRAWING NUMBER W-60	

SPAN 61 - VIEW THROUGH DECK

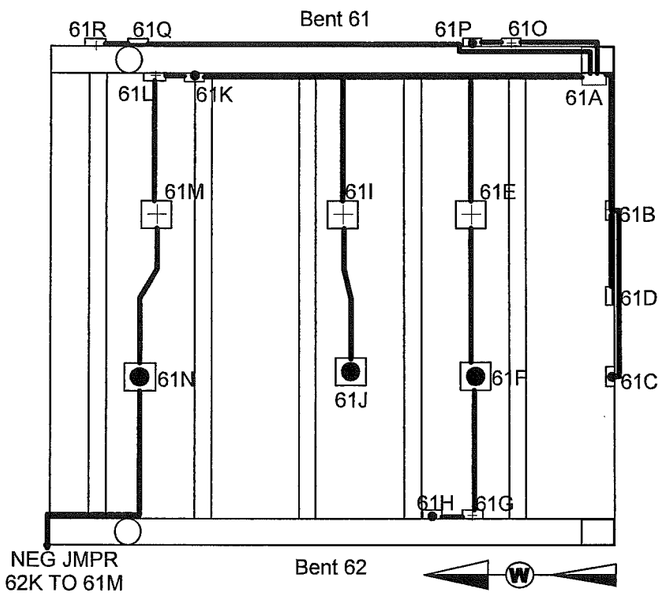

SCHEMATIC

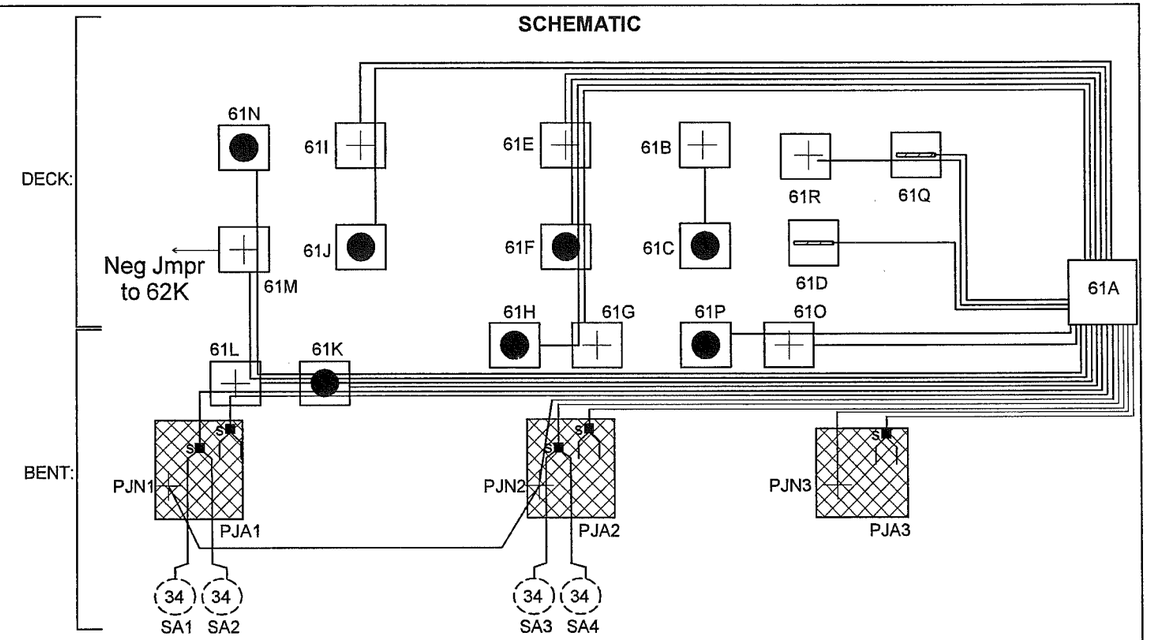

WATER BENT 61 SOUTH ELEVATION

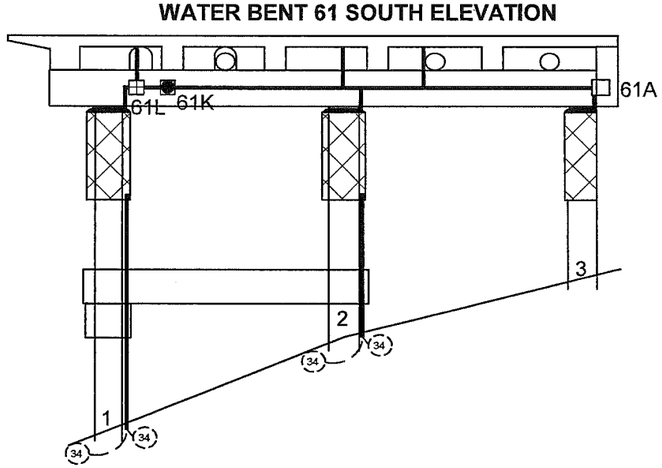

TYPICAL WIRE SIZES & COLORS AS FOLLOWS:
MZA & PJA = #10 Red
MZN; PJN = #10 Blue
SA = #8 Black
RE/REN: #16 Twisted Pair Red/Black

J-BOX DETAILS:

	J-Box Size	Wires or Structure
61-A	14" x 12" x 8"	MAIN J-BOX: (6) MZA; (7) MZN; (3) PJA; (2) PJN; (2) SA; SAN jumpered from PJN
61-B	5" x 5" x 2"	Structure Negative (MZN); (1) MZA
61-C	5" x 5" x 2"	Primary Anode Terminal Plate (MZA)
61-D	5" x 5" x 2"	Reference Electrode (RE) S/N 1000101
61-E	5" x 5" x 2"	Structure Negative (MZN); (2) MZA; (1) MZN
61-F	5" x 5" x 2"	Primary Anode Terminal Plate (MZA); (1) MZN; (1) MZA
61-G	5" x 5" x 2"	Structure Negative (MZN); (1) MZA
61-H	5" x 5" x 2"	Primary Anode Terminal Plate (MZA)
61-I	5" x 5" x 2"	Structure Negative (MZN); (1) MZA
61-J	5" x 5" x 2"	Primary Anode Terminal Plate (MZA)
61-K	5" x 5" x 2"	Primary Anode Terminal Plate (MZA); (2) MZN; (1) MZA; (1) PJA; (1) SA
61-L	5" x 5" x 2"	Structure Negative (MZN); (1) MZA; (1) MZN; (1) PJA; (1) SA
61-M	5" x 5" x 2"	Structure Negative (MZN); (1) MZA; (1) MZN JMPR 62
61-N	5" x 5" x 2"	Primary Anode Terminal Plate (MZA); (1) MZN JMPR 62
61-O	5" x 5" x 2"	Structure Negative (MZN); (1) MZA
61-P	5" x 5" x 2"	Primary Anode Terminal Plate (MZA)
61-Q	5" x 5" x 2"	Reference Electrode (RE) S/N 1000100
61-R	5" x 5" x 2"	Reference Electrode Negative (REN)

ABBREVIATIONS:
MZN = Metallized Zinc Negative
PJN = Pile Jacket Negative
CJN = Cap Jacket Negative
SAN = Submerged Anode Negative
MZA = Metallized Zinc Anode
PJA = Pile Jacket Anode
CJA = Cap Jacket Anode
SA = Submerged Anode
RE = Reference Electrode
REN = Reference Electrode Negative

LEGEND
- (x) Submerged Anode x = Weight in LBS
- Pile Jacket
- Cap Jacket
- Primary Anode Terminal
- Negative Connection
- Encapsulated Splice
- Reference Electrode

Water Street Bent 61 South Elevation & Span 61			
SCALE: NONE	Field Sketch As-Built	DRAWN BY KRH	
DATE: 05-11-11		REVISED 10-4-11	
GREAT WESTERN CORPORATION			
Ketchikan Viaduct II Repair & C.P.		DRAWING NUMBER W-61	

SPAN 62 - VIEW THROUGH DECK

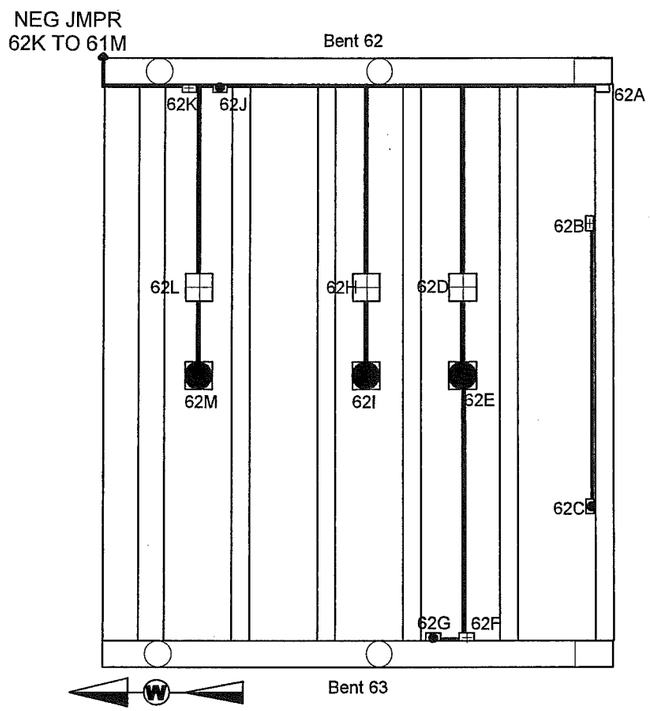

WATER BENT 62 SOUTH ELEVATION

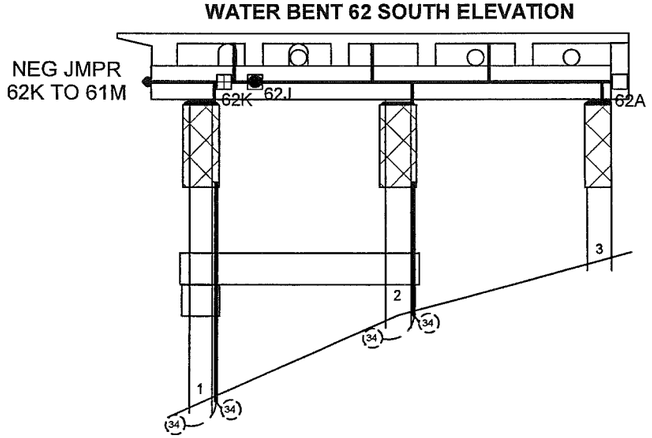

TYPICAL WIRE SIZES & COLORS AS FOLLOWS:
MZA & PJA = #10 Red
MZN; PJN = #10 Blue
SA = #8 Black
RE/REN: #16 Twisted Pair Red/Black

SCHEMATIC

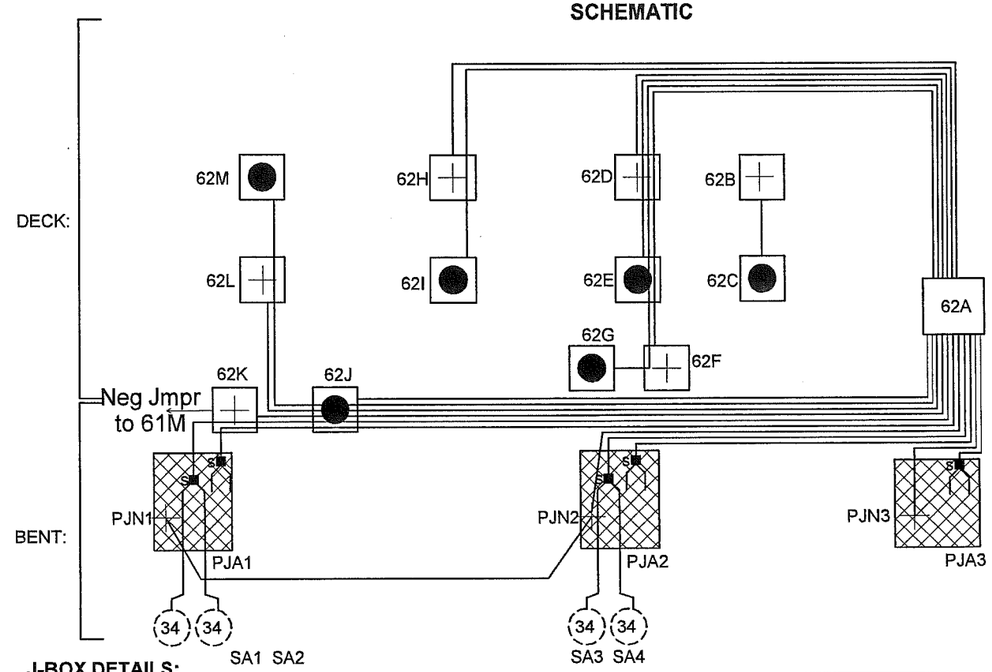

J-BOX DETAILS:

	J-Box Size	Wires or Structure
62-A	14" x 12" x 8"	MAIN J-BOX: (5) MZA; (5) MZN; (3) PJA; (2) PJN; (2) SA; SAN jumpered from PJN
62-B	5" x 5" x 2"	Structure Negative (MZN)
62-C	5" x 5" x 2"	Primary Anode Terminal Plate (MZA)
62-D	5" x 5" x 2"	Structure Negative (MZN); (2) MZA; (1) MZN
62-E	5" x 5" x 2"	Primary Anode Terminal Plate (MZA); (1) MZN; (1) MZA
62-F	5" x 5" x 2"	Structure Negative (MZN); (1) MZA
62-G	5" x 5" x 2"	Primary Anode Terminal Plate (MZA)
62-H	5" x 5" x 2"	Structure Negative (MZN); (1) MZA
62-I	5" x 5" x 2"	Primary Anode Terminal Plate (MZA)
62-J	5" x 5" x 2"	Primary Anode Terminal Plate (MZA); (2) MZN; (1) MZA; (1) PJA; (1) SA
62-K	5" x 5" x 2"	Structure Negative (MZN); MZN Jumper to 61M; (1) PJA; (1) SA
62-L	5" x 5" x 2"	Structure Negative (MZN); (1) MZA
62-M	5" x 5" x 2"	Primary Anode Terminal Plate (MZA)

ABBREVIATIONS:
MZN = Metallized Zinc Negative
PJN = Pile Jacket Negative
CJN = Cap Jacket Negative
SAN = Submerged Anode Negative
MZA = Metallized Zinc Anode
PJA = Pile Jacket Anode
CJA = Cap Jacket Anode
SA = Submerged Anode
RE = Reference Electrode
REN = Reference Electrode Negative

LEGEND
- (X) Submerged Anode x = Weight in LBS
- Pile Jacket
- Cap Jacket
- Primary Anode Terminal
- Negative Connection
- Encapsulated Splice
- Reference Electrode

Water Street Bent 62 South Elevation & Span 62			
SCALE: NONE	Field Sketch As-Built	DRAWN BY KRH	
DATE: 05-11-11		REVISED 10-4-11	
GREAT WESTERN CORPORATION			
Ketchikan Viaduct II Repair & C.P.		DRAWING NUMBER W-62	

SPAN 63 - VIEW THROUGH DECK

Bent 63

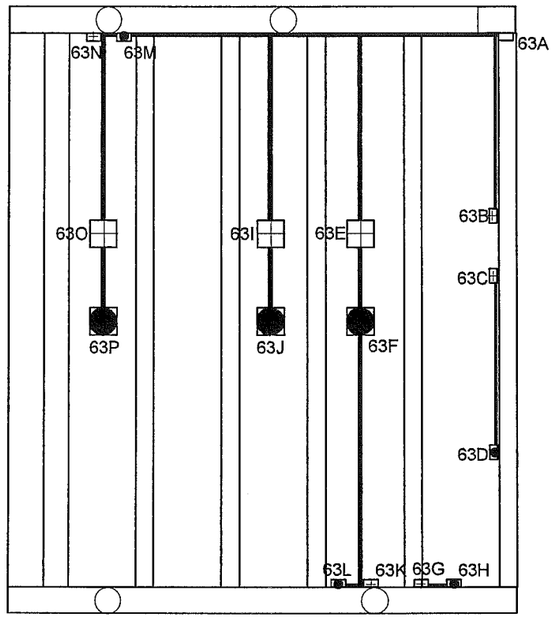

Bent 64

W

WATER BENT 63 SOUTH ELEVATION

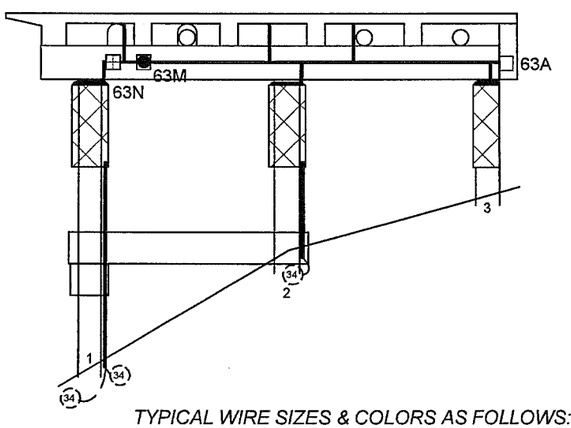

TYPICAL WIRE SIZES & COLORS AS FOLLOWS:
MZA & PJA = #10 Red
MZN; PJN = #10 Blue
SA = #8 Black
RE/REN: #16 Twisted Pair Red/Black

SCHEMATIC

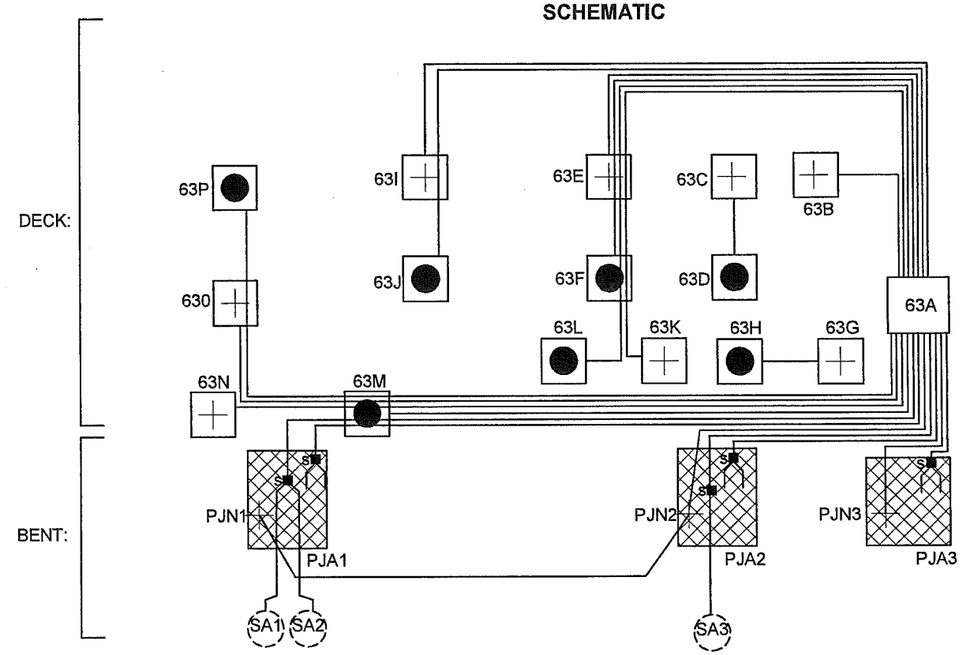

J-BOX DETAILS:

	J-Box Size	Wires or Structure
63-A	14" x 12" x 8"	MAIN J-BOX: (6) MZA; (7) MZN; (3) PJA; (2) PJN; (2) SA; SAN jumpered from PJN
63-B	5" x 5" x 2"	Structure Negative (MZN)
63-C	5" x 5" x 2"	Structure Negative (MZN)
63-D	5" x 5" x 2"	Primary Anode Terminal Plate (MZA)
63-E	5" x 5" x 2"	Structure Negative (MZN); (2) MZA; (1) MZN
63-F	5" x 5" x 2"	Primary Anode Terminal Plate (MZA); (1) MZN; (1) MZA
63-G	5" x 5" x 2"	Structure Negative (MZN)
63-H	5" x 5" x 2"	Primary Anode Terminal Plate (MZA)
63-I	5" x 5" x 2"	Structure Negative (MZN); (1) MZA
63-J	5" x 5" x 2"	Primary Anode Terminal Plate (MZA)
63-K	5" x 5" x 2"	Structure Negative (MZN)
63-L	5" x 5" x 2"	Primary Anode Terminal Plate (MZA)
63-M	5" x 5" x 2"	Primary Anode Terminal Plate (MZA); (2) MZN; (1) MZA; (1) PJA; (1) SA
63-N	5" x 5" x 2"	Structure Negative (MZN)
63-O	5" x 5" x 2"	Structure Negative (MZN); (1) MZA
63-P	5" x 5" x 2"	Primary Anode Terminal Plate (MZA)

ABBREVIATIONS:
MZN = Metallized Zinc Negative
PJN = Pile Jacket Negative
CJN = Cap Jacket Negative
SAN = Submerged Anode Negative
MZA = Metallized Zinc Anode
PJA = Pile Jacket Anode
CJA = Cap Jacket Anode
SA = Submerged Anode
RE = Reference Electrode
REN = Reference Electrode Negative

LEGEND
- (x) Submerged Anode x = Weight in LBS
- Pile Jacket
- Cap Jacket
- Primary Anode Terminal
- Negative Connection
- Encapsulated Splice
- Reference Electrode

Water Street Bent 63 South Elevation & Span 63

SCALE: NONE	Field Sketch As-Built	DRAWN BY KRH	
DATE: 05-11-11		REVISED 10-4-11	

GREAT WESTERN CORPORATION

Ketchikan Viaduct II Repair & C.P.

DRAWING NUMBER W-63

156

SPAN 64 - VIEW THROUGH DECK

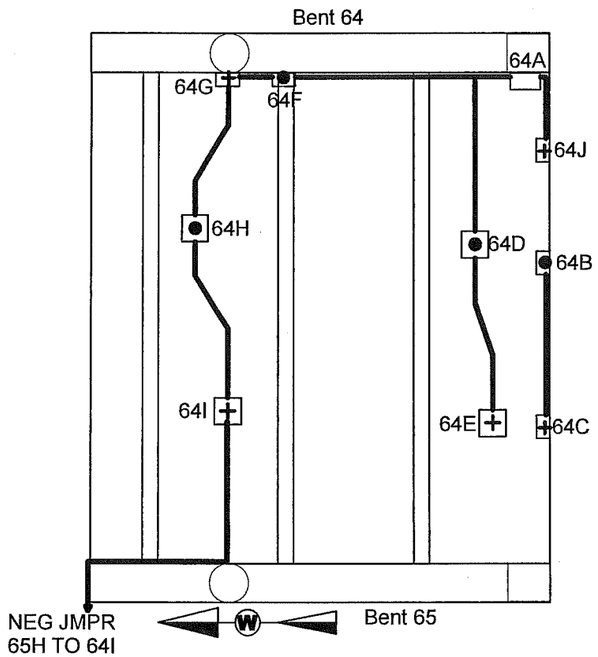

WATER BENT 64 SOUTH ELEVATION

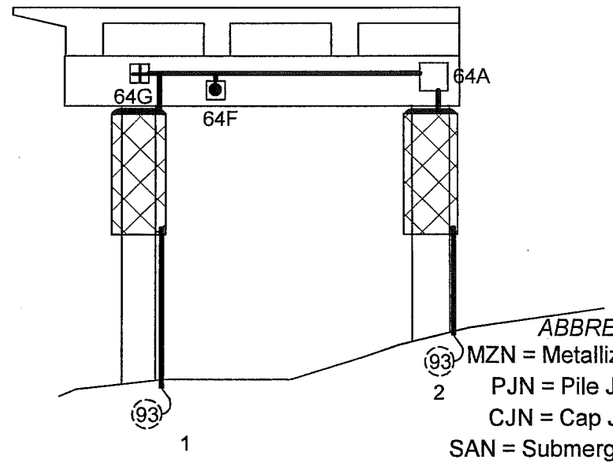

SCHEMATIC

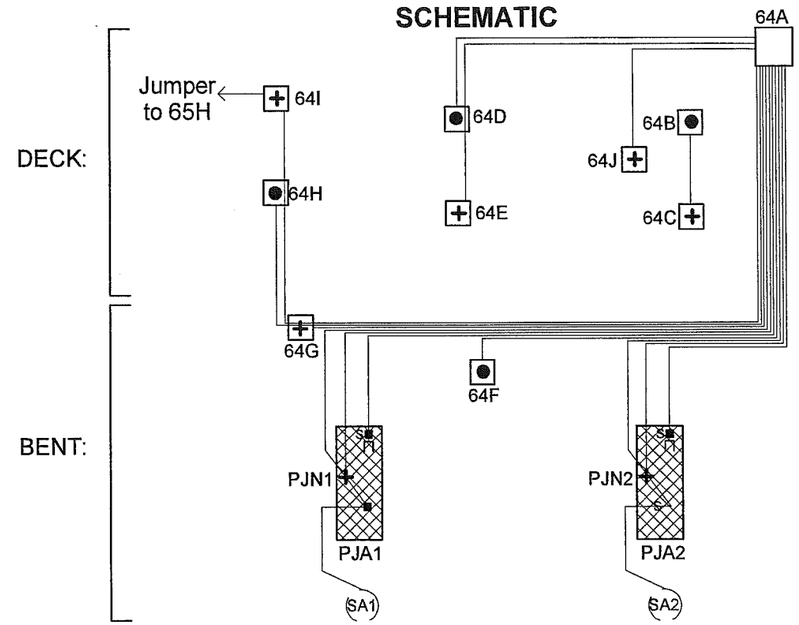

J-BOX DETAILS:

	J-Box Size	Wires or Structure
64-A	14" x 12" x 8"	MAIN J-BOX: (3) MZA; (4) MZN; (2) PJA; (2) PJN; (2) SA; SAN jumpered from PJN
64-B	5" x 5" x 2"	Primary Anode Terminal Plate (MZA)
64-C	5" x 5" x 2"	Structure Negative (MZN)
64-D	5" x 5" x 2"	Primary Anode Terminal Plate (MZA); (1) MZN
64-E	5" x 5" x 2"	Structure Negative (MZN)
64-F	5" x 5" x 2"	Primary Anode Terminal Plate (MZA)
64-G	5" x 5" x 2"	Structure Negative (MZN); (1) MZA; (1) MZN
64-H	5" x 5" x 2"	Primary Anode Terminal Plate (MZA); (1) MZN
64-I	5" x 5" x 2"	Structure Negative (MZN) - NEG JMPR 64
64-J	5" x 5" x 2"	Structure Negative (MZN)

ABBREVIATIONS:

MZN = Metallized Zinc Negative
PJN = Pile Jacket Negative
CJN = Cap Jacket Negative
SAN = Submerged Anode Negative
MZA = Metallized Zinc Anode
PJA = Pile Jacket Anode
CJA = Cap Jacket Anode
SA = Submerged Anode
RE = Reference Electrode
REN = Reference Electrode Negative

TYPICAL WIRE SIZES & COLORS AS FOLLOWS:
MZA & PJA = #10 Red
MZN; PJN = #10 Blue
SA = #8 Black
RE/REN: #16 Twisted Pair Red/Black

LEGEND

(x) Submerged Anode x = Weight in LBS
Pile Jacket
Cap Jacket
● Primary Anode Terminal
+ Negative Connection
S Encapsulated Splice
— Reference Electrode

Water Street Bent 64 South Elevation & Span 64		
SCALE: NONE	Field Sketch As-Built	DRAWN BY KRH
DATE: 9-14-11		REVISED
GREAT WESTERN CORPORATION		
Ketchikan Viaduct II Repair & C.P.		DRAWING NUMBER W64

SPAN 65 - VIEW THROUGH DECK

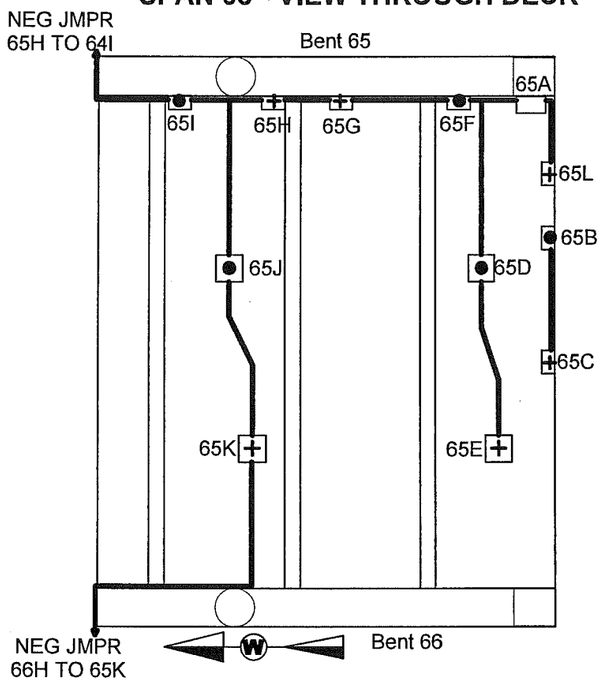

WATER BENT 65 SOUTH ELEVATION

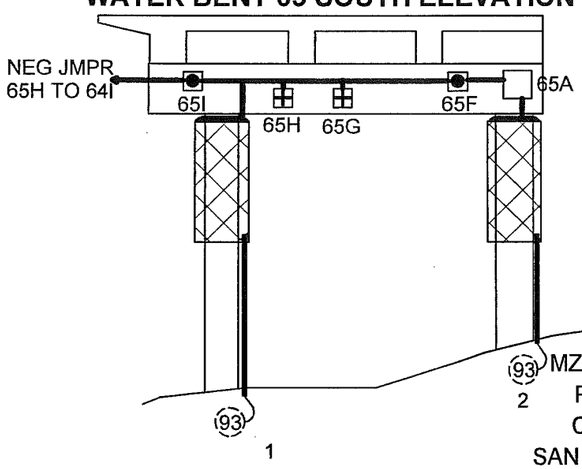

SCHEMATIC

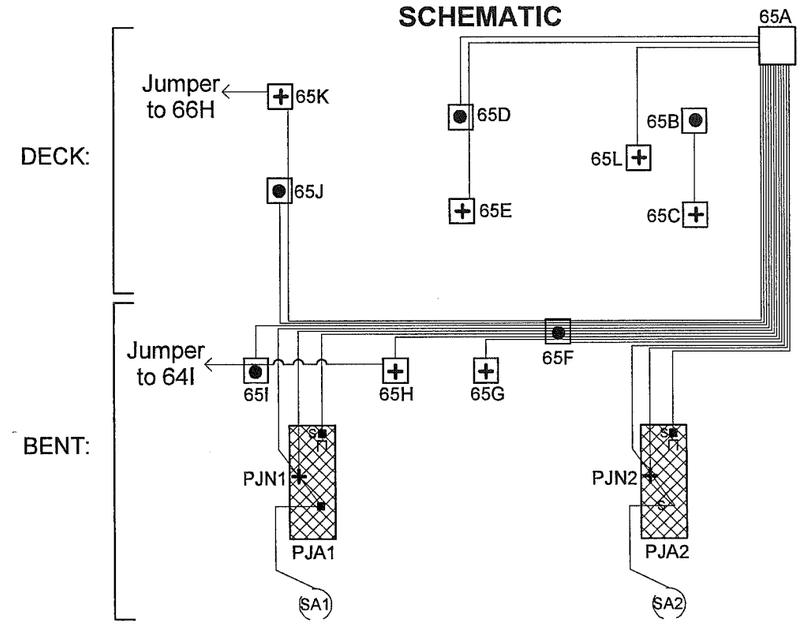

J-BOX DETAILS:

	J-Box Size	Wires or Structure
65-A	14" x 12" x 8"	MAIN J-BOX: (4) MZA; (5) MZN; (2) PJA; (2) PJN; (2) SA; SAN jumpered from PJN
65-B	5" x 5" x 2"	Primary Anode Terminal Plate (MZA)
65-C	5" x 5" x 2"	Structure Negative (MZN)
65-D	5" x 5" x 2"	Primary Anode Terminal Plate (MZA); (1) MZN
65-E	5" x 5" x 2"	Structure Negative (MZN)
65-F	5" x 5" x 2"	Primary Anode Terminal Plate (MZA); (2) MZA; (3) MZN; (1) PJA; (1) PJN; (1) SA
65-G	5" x 5" x 2"	Structure Negative (MZN)
65-H	5" x 5" x 2"	Structure Negative (MZN) - NEG JMPR 65
65-I	5" x 5" x 2"	Primary Anode Terminal Plate (MZA); (1) MZN JMPR 65
65-J	5" x 5" x 2"	Primary Anode Terminal Plate (MZA); (1) MZN
65-K	5" x 5" x 2"	Structure Negative (MZN); (1) MZN JMPR 66
65-L	5" x 5" x 2"	Structure Negative (MZN)

ABBREVIATIONS:

MZN = Metallized Zinc Negative
PJN = Pile Jacket Negative
CJN = Cap Jacket Negative
SAN = Submerged Anode Negative
MZA = Metallized Zinc Anode
PJA = Pile Jacket Anode
CJA = Cap Jacket Anode
SA = Submerged Anode
RE = Reference Electrode
REN = Reference Electrode Negative

TYPICAL WIRE SIZES & COLORS AS FOLLOWS:
MZA & PJA = #10 Red
MZN; PJN = #10 Blue
SA = #8 Black
RE/REN: #16 Twisted Pair Red/Black

LEGEND

- (x) Submerged Anode x = Weight in LBS
- Pile Jacket
- Cap Jacket
- Primary Anode Terminal
- + Negative Connection
- Encapsulated Splice
- Reference Electrode

Water Street Bent 65 South Elevation & Span 65		
SCALE: NONE	Field Sketch As-Built	DRAWN BY KRH
DATE: 9-14-11		REVISED
GREAT WESTERN CORPORATION		
Ketchikan Viaduct II Repair & C.P.		DRAWING NUMBER W65

158

SPAN 66 - VIEW THROUGH DECK

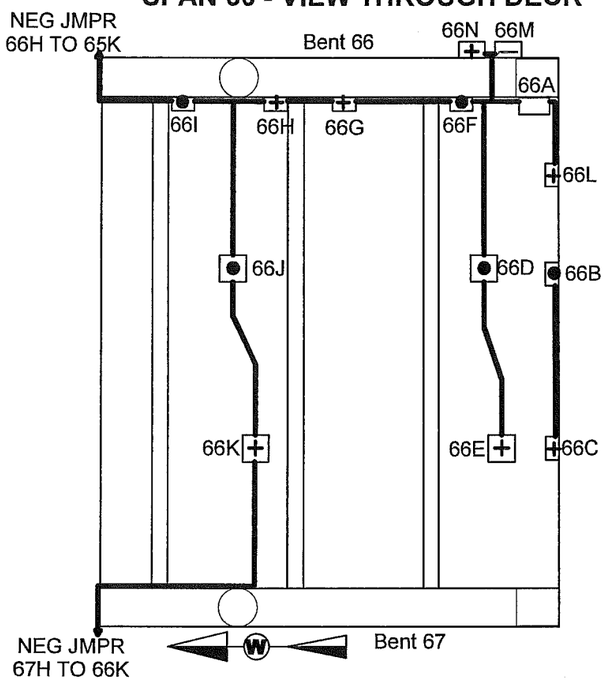

WATER BENT 66 SOUTH ELEVATION

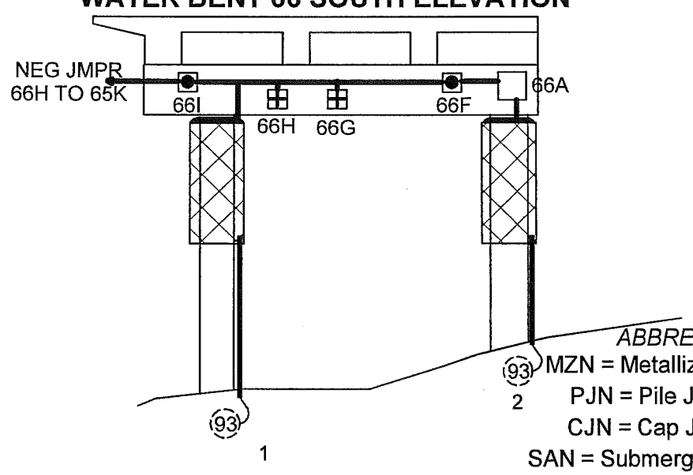

SCHEMATIC

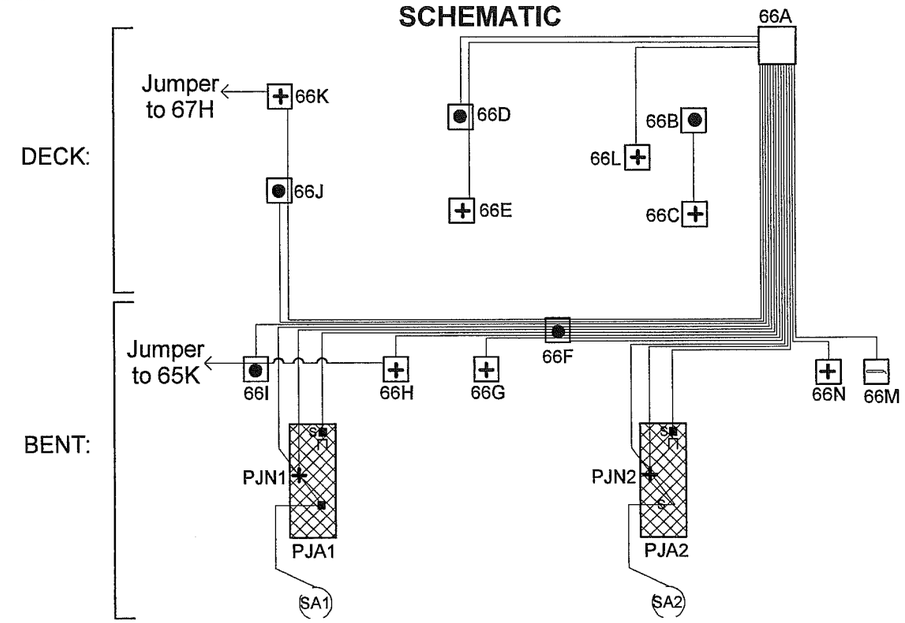

J-BOX DETAILS:

	J-Box Size	Wires or Structure
66-A	14" x 12" x 8"	MAIN J-BOX: (4) MZA; (5) MZN; (2) PJA; (2) PJN; (2) SA; SAN jumpered from PJN; (1) RE; (1) REN
66-B	5" x 5" x 2"	Primary Anode Terminal Plate (MZA)
66-C	5" x 5" x 2"	Structure Negative (MZN)
66-D	5" x 5" x 2"	Primary Anode Terminal Plate (MZA); (1) MZN
66-E	5" x 5" x 2"	Structure Negative (MZN)
66-F	5" x 5" x 2"	Primary Anode Terminal Plate (MZA); (2) MZA; (3) MZN; (1) PJA; (1) PJN; (1) SA
66-G	5" x 5" x 2"	Structure Negative (MZN)
66-H	5" x 5" x 2"	Structure Negative (MZN) - NEG JMPR 66
66-I	5" x 5" x 2"	Primary Anode Terminal Plate (MZA); (1) MZN JMPR 66
66-J	5" x 5" x 2"	Primary Anode Terminal Plate (MZA); (1) MZN
66-K	5" x 5" x 2"	Structure Negative (MZN); (1) MZN JMPR 67
66-L	5" x 5" x 2"	Structure Negative (MZN)
66-M	5" x 5" x 2"	Reference Electrode (RE) S/N 509044
66-N	5" x 5" x 2"	Reference Electrode Negative (REN)

ABBREVIATIONS:

MZN = Metallized Zinc Negative
PJN = Pile Jacket Negative
CJN = Cap Jacket Negative
SAN = Submerged Anode Negative
MZA = Metallized Zinc Anode
PJA = Pile Jacket Anode
CJA = Cap Jacket Anode
SA = Submerged Anode
RE = Reference Electrode
REN = Reference Electrode Negative

TYPICAL WIRE SIZES & COLORS AS FOLLOWS:
MZA & PJA = #10 Red
MZN; PJN = #10 Blue
SA = #8 Black
RE/REN: #16 Twisted Pair Red/Black

LEGEND

- (x) Submerged Anode x = Weight in LBS
- Pile Jacket
- Cap Jacket
- Primary Anode Terminal
- + Negative Connection
- Encapsulated Splice
- Reference Electrode

Water Street Bent 66 South Elevation & Span 66		
SCALE: NONE	Field Sketch As-Built	DRAWN BY KRH
DATE: 9-14-11		REVISED
GREAT WESTERN CORPORATION		
Ketchikan Viaduct II Repair & C.P.		DRAWING NUMBER W66

SPAN 67 - VIEW THROUGH DECK

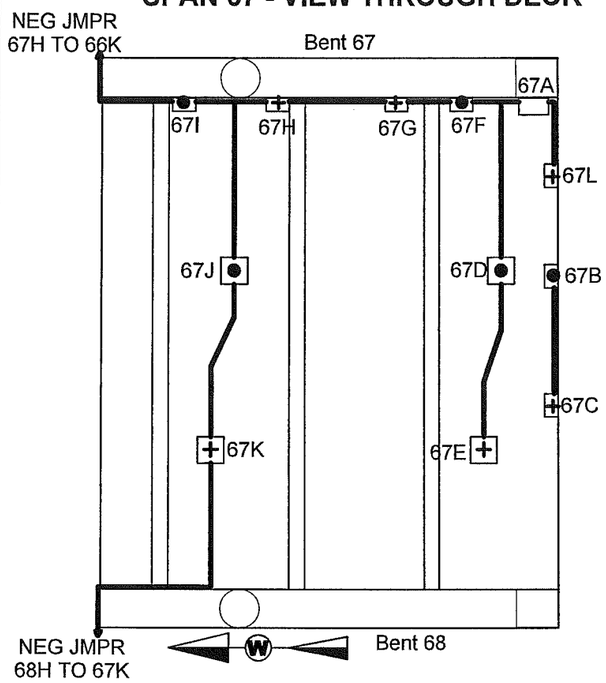

WATER BENT 67 SOUTH ELEVATION

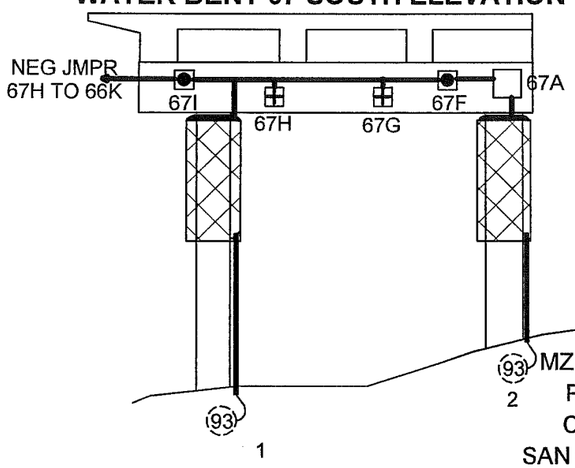

SCHEMATIC

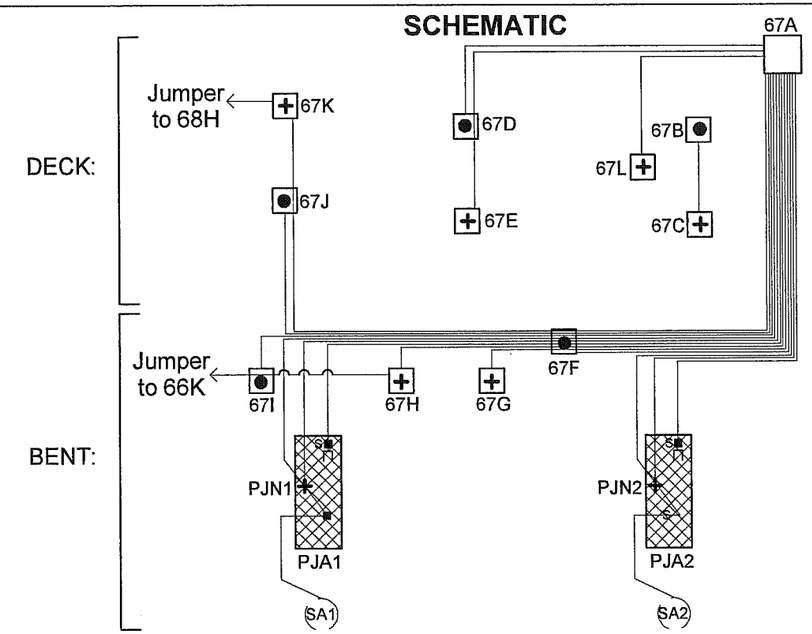

J-BOX DETAILS:

	J-Box Size	Wires or Structure
67-A	14" x 12" x 8"	MAIN J-BOX: (4) MZA; (5) MZN; (2) PJA; (2) PJN; (2) SA; SAN jumpered from PJN
67-B	5" x 5" x 2"	Primary Anode Terminal Plate (MZA)
67-C	5" x 5" x 2"	Structure Negative (MZN)
67-D	5" x 5" x 2"	Primary Anode Terminal Plate (MZA); (1) MZN
67-E	5" x 5" x 2"	Structure Negative (MZN)
67-F	5" x 5" x 2"	Primary Anode Terminal Plate (MZA); (2) MZA; (3) MZN; (1) PJA; (1) PJN; (1) SA
67-G	5" x 5" x 2"	Structure Negative (MZN)
67-H	5" x 5" x 2"	Structure Negative (MZN) - NEG JMPR 67
67-I	5" x 5" x 2"	Primary Anode Terminal Plate (MZA); (1) MZN JMPR 67
67-J	5" x 5" x 2"	Primary Anode Terminal Plate (MZA); (1) MZN
67-K	5" x 5" x 2"	Structure Negative (MZN); (1) MZN JMPR 68
67-L	5" x 5" x 2"	Structure Negative (MZN)

ABBREVIATIONS:

MZN = Metallized Zinc Negative
PJN = Pile Jacket Negative
CJN = Cap Jacket Negative
SAN = Submerged Anode Negative
MZA = Metallized Zinc Anode
PJA = Pile Jacket Anode
CJA = Cap Jacket Anode
SA = Submerged Anode
RE = Reference Electrode
REN = Reference Electrode Negative

TYPICAL WIRE SIZES & COLORS AS FOLLOWS:
MZA & PJA = #10 Red
MZN; PJN = #10 Blue
SA = #8 Black
RE/REN: #16 Twisted Pair Red/Black

LEGEND

- (x) Submerged Anode x = Weight in LBS
- Pile Jacket
- Cap Jacket
- Primary Anode Terminal
- + Negative Connection
- Encapsulated Splice
- Reference Electrode

Water Street Bent 67 South Elevation & Span 67		
SCALE: NONE	Field Sketch As-Built	DRAWN BY KRH
DATE: 9-14-11		REVISED
GREAT WESTERN CORPORATION		
Ketchikan Viaduct II Repair & C.P.		DRAWING NUMBER W67

SPAN 68 - VIEW THROUGH DECK

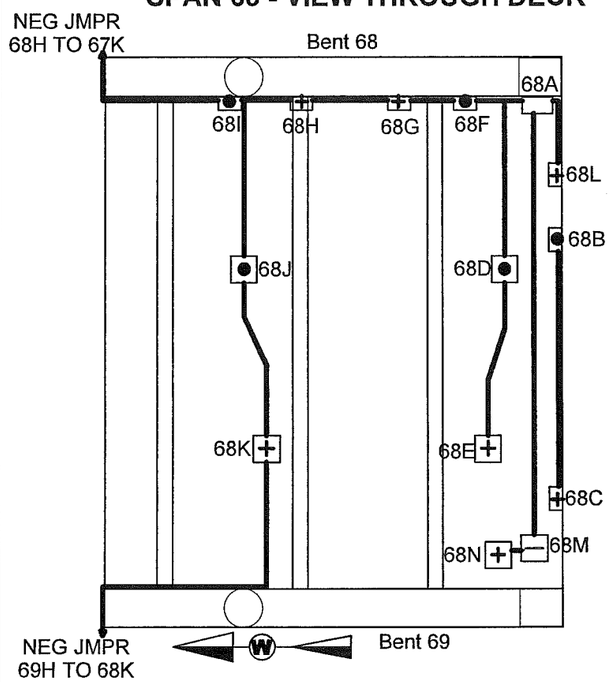

WATER BENT 68 SOUTH ELEVATION

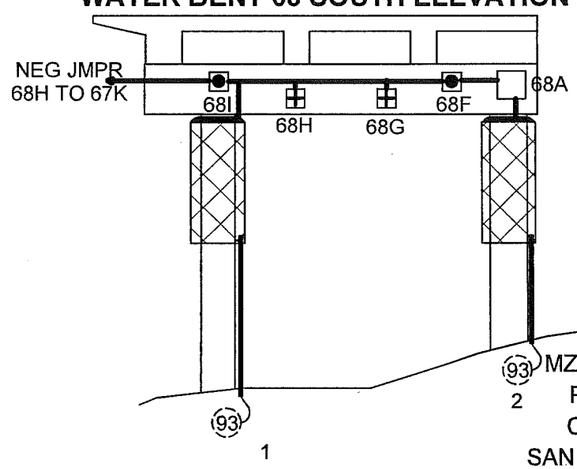

SCHEMATIC

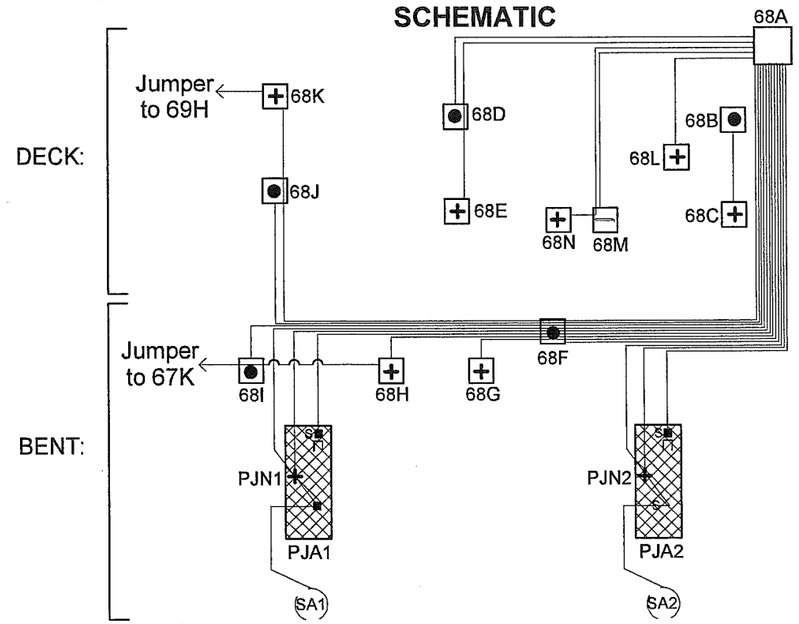

J-BOX DETAILS:

	J-Box Size	Wires or Structure
68-A	14" x 12" x 8"	MAIN J-BOX: (4) MZA; (5) MZN; (2) PJA; (2) PJN; (2) SA; SAN jumpered from PJN; (1) RE; (1) REN
68-B	5" x 5" x 2"	Primary Anode Terminal Plate (MZA)
68-C	5" x 5" x 2"	Structure Negative (MZN)
68-D	5" x 5" x 2"	Primary Anode Terminal Plate (MZA); (1) MZN
68-E	5" x 5" x 2"	Structure Negative (MZN)
68-F	5" x 5" x 2"	Primary Anode Terminal Plate (MZA); (3) MZA; (2) MZN; (1) PJA; (1) PJN; (1) SA
68-G	5" x 5" x 2"	Structure Negative (MZN)
68-H	5" x 5" x 2"	Structure Negative (MZN) - NEG JMPR 68
68-I	5" x 5" x 2"	Primary Anode Terminal Plate (MZA); (1) MZN JMPR 68
68-J	5" x 5" x 2"	Primary Anode Terminal Plate (MZA); (1) MZN
68-K	5" x 5" x 2"	Structure Negative (MZN); (1) MZN JMPR 69
68-L	5" x 5" x 2"	Structure Negative (MZN)
68-M	5" x 5" x 2"	Reference Electrode (RE) S/N 509037
68-N	5" x 5" x 2"	Reference Electrode Negative (REN)

ABBREVIATIONS:

MZN = Metallized Zinc Negative
PJN = Pile Jacket Negative
CJN = Cap Jacket Negative
SAN = Submerged Anode Negative
MZA = Metallized Zinc Anode
PJA = Pile Jacket Anode
CJA = Cap Jacket Anode
SA = Submerged Anode
RE = Reference Electrode
REN = Reference Electrode Negative

TYPICAL WIRE SIZES & COLORS AS FOLLOWS:
MZA & PJA = #10 Red
MZN; PJN = #10 Blue
SA = #8 Black
RE/REN: #16 Twisted Pair Red/Black

LEGEND

- (x) Submerged Anode x = Weight in LBS
- Pile Jacket
- Cap Jacket
- Primary Anode Terminal
- + Negative Connection
- Encapsulated Splice
- Reference Electrode

Water Street Bent 68 South Elevation & Span 68		
SCALE: NONE	Field Sketch As-Built	DRAWN BY KRH
DATE: 9-14-11		REVISED
GREAT WESTERN CORPORATION		
Ketchikan Viaduct II Repair & C.P.		DRAWING NUMBER W68

SPAN 69 - VIEW THROUGH DECK

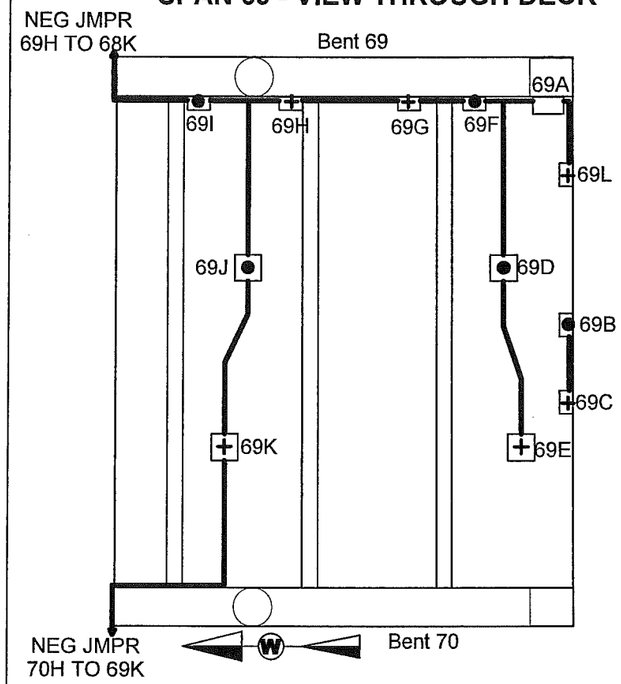

WATER BENT 69 SOUTH ELEVATION

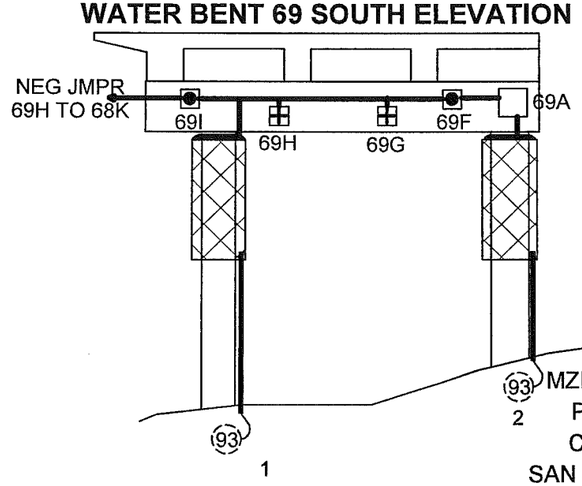

SCHEMATIC

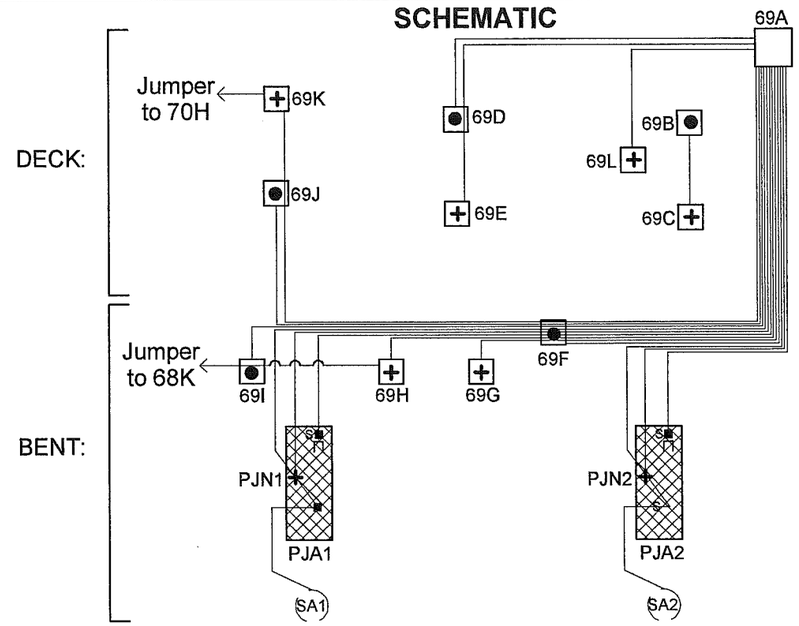

J-BOX DETAILS:

	J-Box Size	Wires or Structure
69-A	14" x 12" x 8"	MAIN J-BOX: (4) MZA; (5) MZN; (2) PJA; (2) PJN; (2) SA; SAN jumpered from PJN
69-B	5" x 5" x 2"	Primary Anode Terminal Plate (MZA)
69-C	5" x 5" x 2"	Structure Negative (MZN)
69-D	5" x 5" x 2"	Primary Anode Terminal Plate (MZA); (1) MZN
69-E	5" x 5" x 2"	Structure Negative (MZN)
69-F	5" x 5" x 2"	Primary Anode Terminal Plate (MZA); (2) MZA; (3) MZN; (1) PJA; (1) PJN; (1) SA
69-G	5" x 5" x 2"	Structure Negative (MZN)
69-H	5" x 5" x 2"	Structure Negative (MZN) - NEG JMPR 69
69-I	5" x 5" x 2"	Primary Anode Terminal Plate (MZA); (1) MZN JMPR 69
69-J	5" x 5" x 2"	Primary Anode Terminal Plate (MZA); (1) MZN
69-K	5" x 5" x 2"	Structure Negative (MZN); (1) MZN JMPR 70
69-L	5" x 5" x 2"	Structure Negative (MZN)

ABBREVIATIONS:

MZN = Metallized Zinc Negative
PJN = Pile Jacket Negative
CJN = Cap Jacket Negative
SAN = Submerged Anode Negative
MZA = Metallized Zinc Anode
PJA = Pile Jacket Anode
CJA = Cap Jacket Anode
SA = Submerged Anode
RE = Reference Electrode
REN = Reference Electrode Negative

TYPICAL WIRE SIZES & COLORS AS FOLLOWS:
MZA & PJA = #10 Red
MZN; PJN = #10 Blue
SA = #8 Black
RE/REN: #16 Twisted Pair Red/Black

LEGEND

- (x) Submerged Anode x = Weight in LBS
- Pile Jacket
- Cap Jacket
- Primary Anode Terminal
- + Negative Connection
- Encapsulated Splice
- Reference Electrode

Water Street Bent 69 South Elevation & Span 69		
SCALE: NONE	Field Sketch As-Built	DRAWN BY KRH
DATE: 9-14-11		REVISED
GREAT WESTERN CORPORATION		
Ketchikan Viaduct II Repair & C.P.		DRAWING NUMBER W69

SPAN 70 - VIEW THROUGH DECK

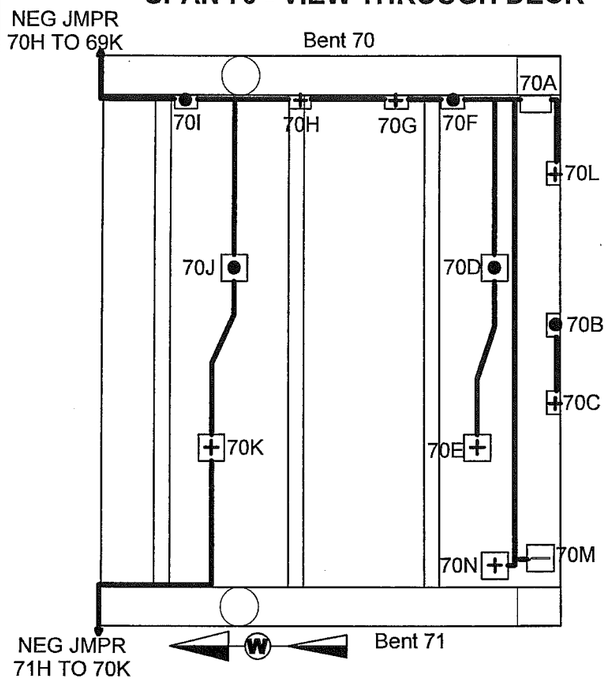

WATER BENT 70 SOUTH ELEVATION

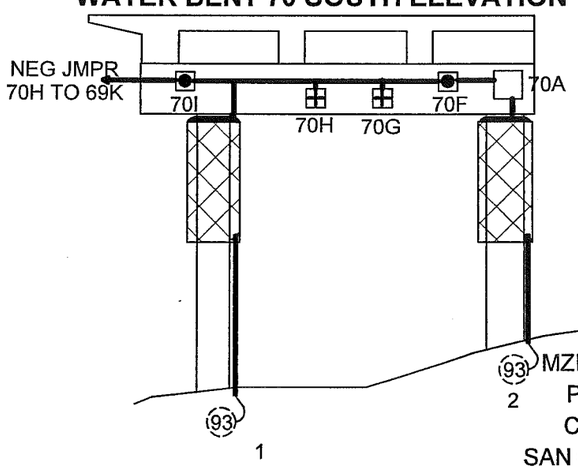

SCHEMATIC

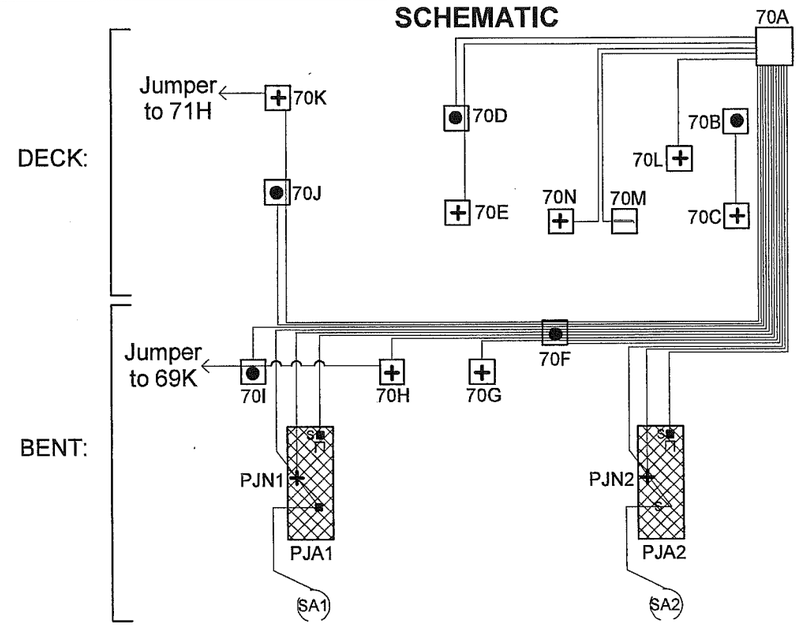

J-BOX DETAILS:

	J-Box Size	Wires or Structure
70-A	14"x12"x8"	MAIN J-BOX: (4) MZA; (5) MZN; (2) PJA; (2) PJN; (2) SA; SAN jumpered from PJN; (1) RE; (1) REN
70-B	5"x5"x2"	Primary Anode Terminal Plate (MZA)
70-C	5"x5"x2"	Structure Negative (MZN)
70-D	5"x5"x2"	Primary Anode Terminal Plate (MZA); (1) MZN
70-E	5"x5"x2"	Structure Negative (MZN)
70-F	5"x5"x2"	Primary Anode Terminal Plate (MZA); (2) MZA; (3) MZN; (1) PJA; (1) PJN; (1) SA
70-G	5"x5"x2"	Structure Negative (MZN)
70-H	5"x5"x2"	Structure Negative (MZN) - NEG JMPR 70
70-I	5"x5"x2"	Primary Anode Terminal Plate (MZA); (1) MZN JMPR 70
70-J	5"x5"x2"	Primary Anode Terminal Plate (MZA); (1) MZN
70-K	5"x5"x2"	Structure Negative (MZN); (1) MZN JMPR 71
70-L	5"x5"x2"	Structure Negative (MZN)
70-M	5"x5"x2"	Reference Electrode (RE) S/N 509033
70-N	5"x5"x2"	Reference Electrode Negative (REN)

ABBREVIATIONS:

MZN = Metallized Zinc Negative
PJN = Pile Jacket Negative
CJN = Cap Jacket Negative
SAN = Submerged Anode Negative
MZA = Metallized Zinc Anode
PJA = Pile Jacket Anode
CJA = Cap Jacket Anode
SA = Submerged Anode
RE = Reference Electrode
REN = Reference Electrode Negative

TYPICAL WIRE SIZES & COLORS AS FOLLOWS:
MZA & PJA = #10 Red
MZN; PJN = #10 Blue
SA = #8 Black
RE/REN: #16 Twisted Pair Red/Black

LEGEND

- (x) Submerged Anode x = Weight in LBS
- Pile Jacket
- Cap Jacket
- Primary Anode Terminal
- + Negative Connection
- Encapsulated Splice
- Reference Electrode

Water Street Bent 70 South Elevation & Span 70		
SCALE: NONE	Field Sketch As-Built	DRAWN BY KRH
DATE: 9-14-11		REVISED
GREAT WESTERN CORPORATION		
Ketchikan Viaduct II Repair & C.P.		DRAWING NUMBER W70

SPAN 71 - VIEW THROUGH DECK

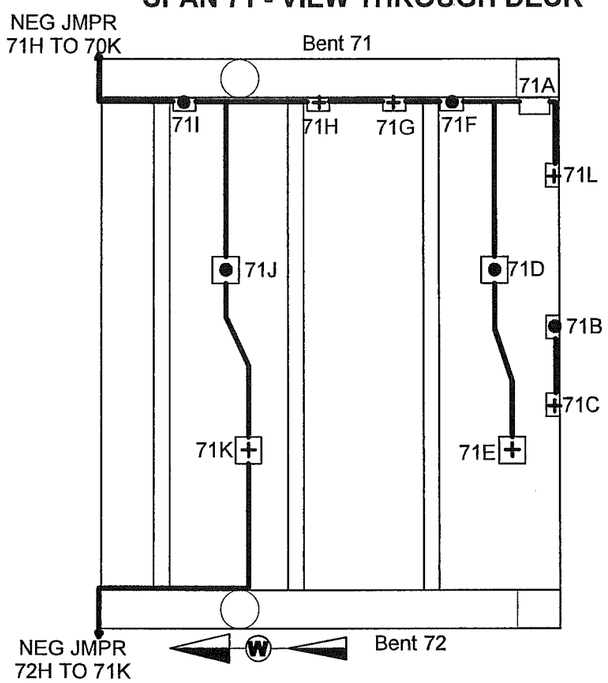

WATER BENT 71 SOUTH ELEVATION

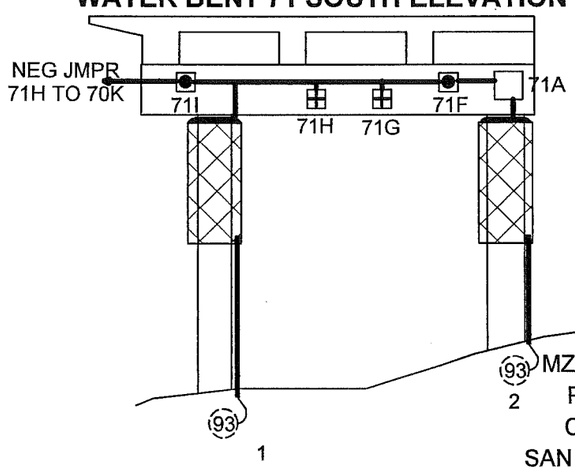

SCHEMATIC

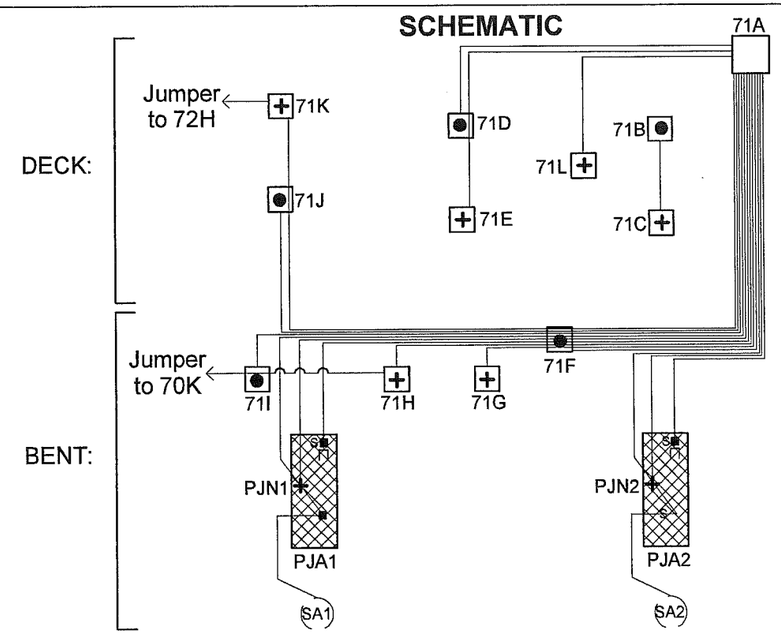

J-BOX DETAILS:

	J-Box Size	Wires or Structure
71-A	14" x 12" x 8"	MAIN J-BOX: (4) MZA; (5) MZN; (2) PJA; (2) PJN; (2) SA; SAN jumpered from PJN
71-B	5" x 5" x 2"	Primary Anode Terminal Plate (MZA)
71-C	5" x 5" x 2"	Structure Negative (MZN)
71-D	5" x 5" x 2"	Primary Anode Terminal Plate (MZA); (1) MZN
71-E	5" x 5" x 2"	Structure Negative (MZN)
71-F	5" x 5" x 2"	Primary Anode Terminal Plate (MZA); (2) MZA; (3) MZN; (1) PJA; (1) PJN; (1) SA
71-G	5" x 5" x 2"	Structure Negative (MZN)
71-H	5" x 5" x 2"	Structure Negative (MZN) - NEG JMPR 71
71-I	5" x 5" x 2"	Primary Anode Terminal Plate (MZA); (1) MZN JMPR 71
71-J	5" x 5" x 2"	Primary Anode Terminal Plate (MZA); (1) MZN
71-K	5" x 5" x 2"	Structure Negative (MZN); (1) MZN JMPR 72
71-L	5" x 5" x 2"	Structure Negative (MZN)

ABBREVIATIONS:

MZN = Metallized Zinc Negative
PJN = Pile Jacket Negative
CJN = Cap Jacket Negative
SAN = Submerged Anode Negative
MZA = Metallized Zinc Anode
PJA = Pile Jacket Anode
CJA = Cap Jacket Anode
SA = Submerged Anode
RE = Reference Electrode
REN = Reference Electrode Negative

TYPICAL WIRE SIZES & COLORS AS FOLLOWS:
MZA & PJA = #10 Red
MZN; PJN = #10 Blue
SA = #8 Black
RE/REN: #16 Twisted Pair Red/Black

LEGEND

- (x) Submerged Anode x = Weight in LBS
- Pile Jacket
- Cap Jacket
- Primary Anode Terminal
- + Negative Connection
- Encapsulated Splice
- Reference Electrode

Water Street Bent 71 South Elevation & Span 71		
SCALE: NONE	Field Sketch As-Built	DRAWN BY KRH
DATE: 9-14-11		REVISED
GREAT WESTERN CORPORATION		
Ketchikan Viaduct II Repair & C.P.		DRAWING NUMBER W71

164

SPAN 72 - VIEW THROUGH DECK

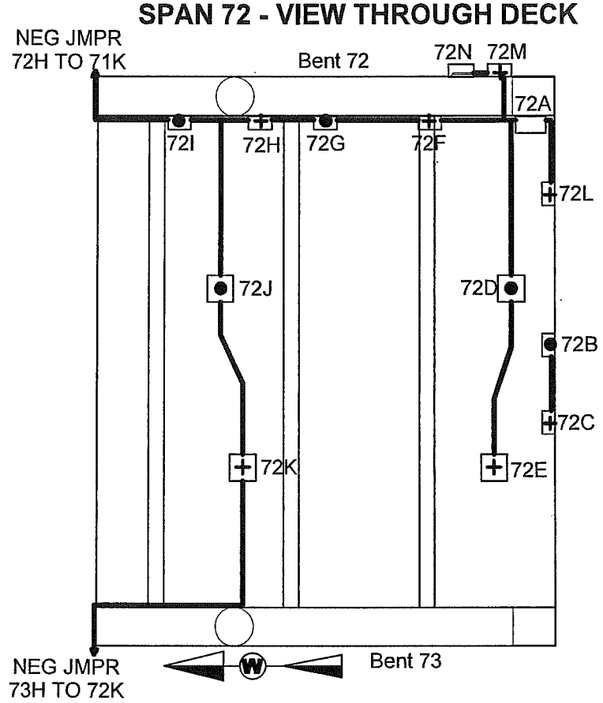

WATER BENT 72 SOUTH ELEVATION

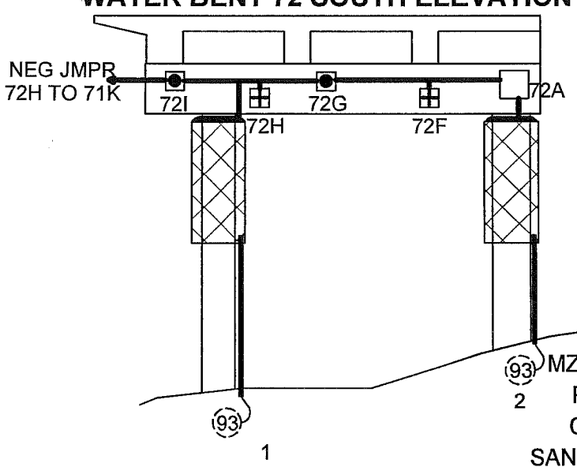

SCHEMATIC

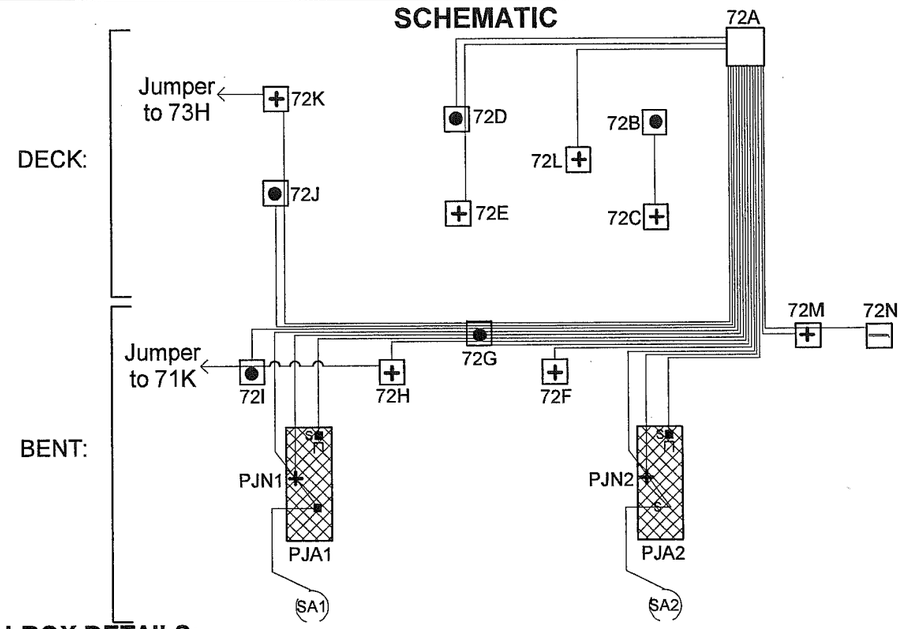

J-BOX DETAILS:

	J-Box Size	Wires or Structure
72-A	14" x 12" x 8"	MAIN J-BOX: (4) MZA; (5) MZN; (2) PJA; (2) PJN; (2) SA; SAN jumpered from PJN; (1) RE; (1) REN
72-B	5" x 5" x 2"	Primary Anode Terminal Plate (MZA)
72-C	5" x 5" x 2"	Structure Negative (MZN)
72-D	5" x 5" x 2"	Primary Anode Terminal Plate (MZA); (1) MZN
72-E	5" x 5" x 2"	Structure Negative (MZN)
72-F	5" x 5" x 2"	Structure Negative (MZN)
72-G	5" x 5" x 2"	Primary Anode Terminal Plate (MZA); (2) MZA; (2) MZN; (1) PJA; (1) PJN; (1) SA
72-H	5" x 5" x 2"	Structure Negative (MZN) - NEG JMPR 72
72-I	5" x 5" x 2"	Primary Anode Terminal Plate (MZA); (1) MZN JMPR 72
72-J	5" x 5" x 2"	Primary Anode Terminal Plate (MZA); (1) MZN
72-K	5" x 5" x 2"	Structure Negative (MZN); (1) MZN JMPR 73
72-L	5" x 5" x 2"	Structure Negative (MZN)
72-M	5" x 5" x 2"	Reference Electrode Negative (REN)
72-N	5" x 5" x 2"	Reference Electrode (RE) S/N 509046

ABBREVIATIONS:

MZN = Metallized Zinc Negative
PJN = Pile Jacket Negative
CJN = Cap Jacket Negative
SAN = Submerged Anode Negative
MZA = Metallized Zinc Anode
PJA = Pile Jacket Anode
CJA = Cap Jacket Anode
SA = Submerged Anode
RE = Reference Electrode
REN = Reference Electrode Negative

TYPICAL WIRE SIZES & COLORS AS FOLLOWS:
MZA & PJA = #10 Red
MZN; PJN = #10 Blue
SA = #8 Black
RE/REN: #16 Twisted Pair Red/Black

LEGEND

- (x) Submerged Anode x = Weight in LBS
- Pile Jacket
- Cap Jacket
- Primary Anode Terminal
- + Negative Connection
- Encapsulated Splice
- Reference Electrode

Water Street Bent 72 South Elevation & Span 72		
SCALE: NONE	Field Sketch As-Built	DRAWN BY KRH
DATE: 9-14-11		REVISED
GREAT WESTERN CORPORATION		
Ketchikan Viaduct II Repair & C.P.		DRAWING NUMBER W72

SPAN 73 - VIEW THROUGH DECK

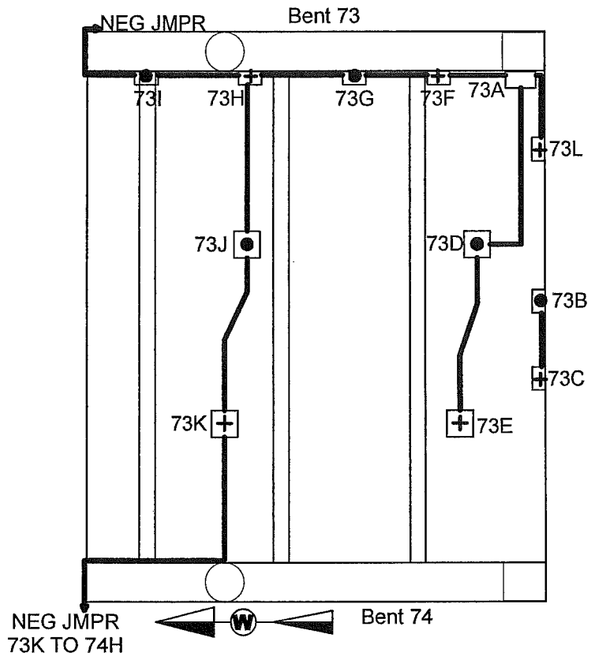

WATER BENT 73 SOUTH ELEVATION

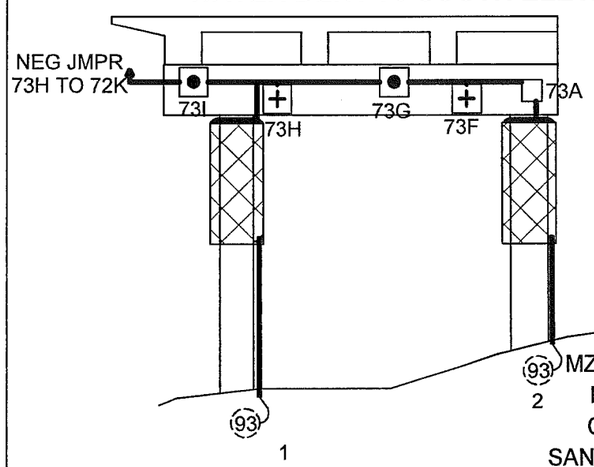

SCHEMATIC

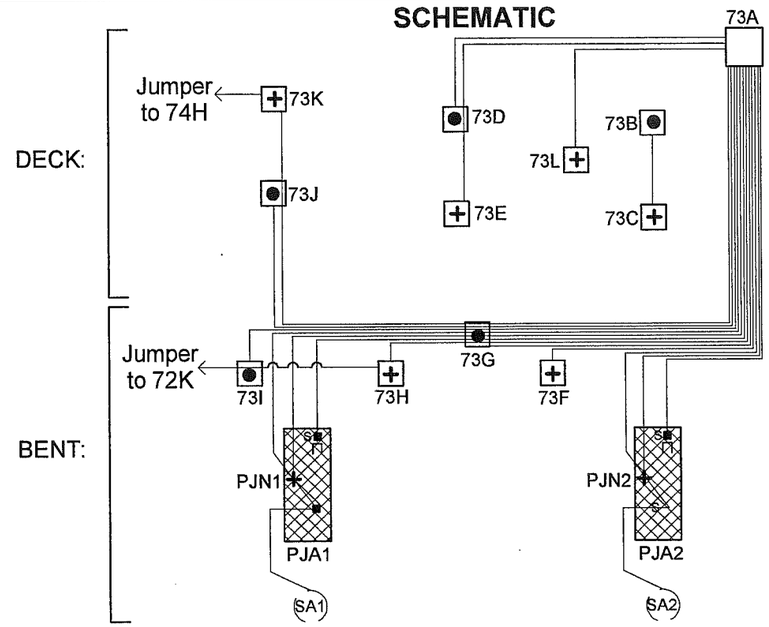

J-BOX DETAILS:

	J-Box Size	Wires or Structure
73-A	14" x 12" x 8"	MAIN J-BOX: (4) MZA; (5) MZN; (2) PJA; (2) PJN; (2) SA; SAN jumpered from PJN
73-B	5" x 5" x 2"	Primary Anode Terminal Plate (MZA)
73-C	5" x 5" x 2"	Structure Negative (MZN)
73-D	5" x 5" x 2"	Primary Anode Terminal Plate (MZA); (1) MZN
73-E	5" x 5" x 2"	Structure Negative (MZN)
73-F	5" x 5" x 2"	Structure Negative (MZN)
73-G	5" x 5" x 2"	Primary Anode Terminal Plate (MZA); (2) MZA; (2) MZN; (1) PJA; (1) PJN; (1) SA
73-H	5" x 5" x 2"	Structure Negative (MZN) - NEG JMPR 73
73-I	5" x 5" x 2"	Primary Anode Terminal Plate (MZA); (1) MZN JMPR 73
73-J	5" x 5" x 2"	Primary Anode Terminal Plate (MZA); (1) MZN
73-K	5" x 5" x 2"	Structure Negative (MZN); (1) MZN JMPR 74
73-L	5" x 5" x 2"	Structure Negative (MZN)

ABBREVIATIONS:

MZN = Metallized Zinc Negative
PJN = Pile Jacket Negative
CJN = Cap Jacket Negative
SAN = Submerged Anode Negative
MZA = Metallized Zinc Anode
PJA = Pile Jacket Anode
CJA = Cap Jacket Anode
SA = Submerged Anode
RE = Reference Electrode
REN = Reference Electrode Negative

TYPICAL WIRE SIZES & COLORS AS FOLLOWS:
MZA & PJA = #10 Red
MZN; PJN = #10 Blue
SA = #8 Black
RE/REN: #16 Twisted Pair Red/Black

LEGEND

- (x) Submerged Anode x = Weight in LBS
- Pile Jacket
- Cap Jacket
- Primary Anode Terminal
- + Negative Connection
- Encapsulated Splice
- Reference Electrode

Water Street Bent 73 South Elevation & Span 73		
SCALE: NONE	Field Sketch As-Built	DRAWN BY KRH
DATE: 9-13-11		REVISED
GREAT WESTERN CORPORATION		
Ketchikan Viaduct II Repair & C.P.		DRAWING NUMBER W73

SPAN 74 - VIEW THROUGH DECK

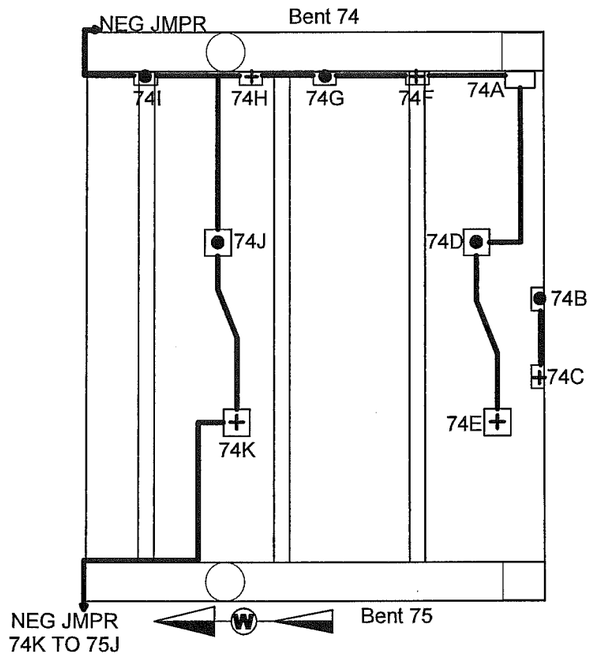

WATER BENT 74 SOUTH ELEVATION

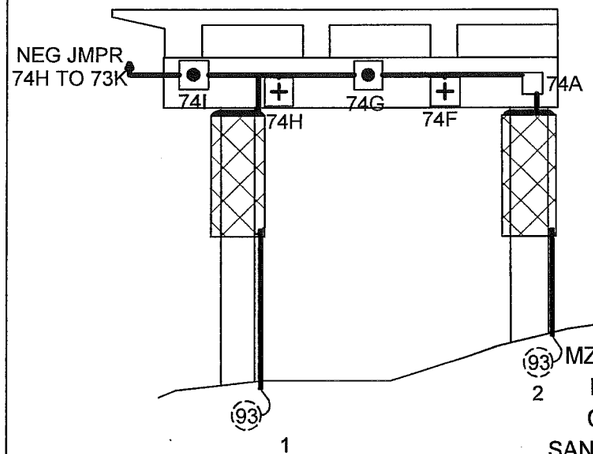

SCHEMATIC

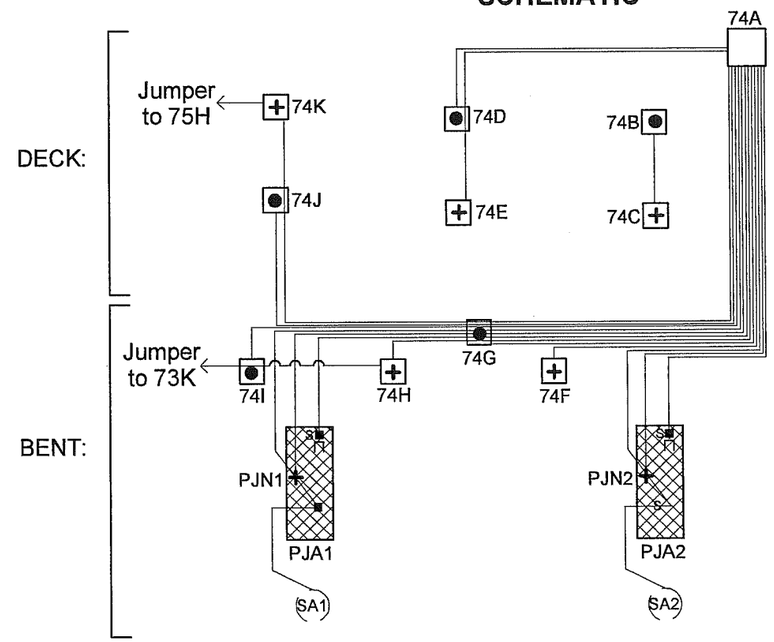

J-BOX DETAILS:

	J-Box Size	Wires or Structure
74-A	14" x 12" x 8"	MAIN J-BOX: (4) MZA; (4) MZN; (2) PJA; (2) PJN; (2) SA; SAN jumpered from PJN
74-B	5" x 5" x 2"	Primary Anode Terminal Plate (MZA)
74-C	5" x 5" x 2"	Structure Negative (MZN)
74-D	5" x 5" x 2"	Primary Anode Terminal Plate (MZA); (1) MZN
74-E	5" x 5" x 2"	Structure Negative (MZN)
74-F	5" x 5" x 2"	Structure Negative (MZN)
74-G	5" x 5" x 2"	Primary Anode Terminal Plate (MZA); (2) MZA; (2) MZN; (1) PJA; (1) PJN; (1) SA
74-H	5" x 5" x 2"	Structure Negative (MZN) - NEG JMPR 74
74-I	5" x 5" x 2"	Primary Anode Terminal Plate (MZA); (1) MZN JMPR 74
74-J	5" x 5" x 2"	Primary Anode Terminal Plate (MZA); (1) MZN
74-K	5" x 5" x 2"	Structure Negative (MZN); (1) MZN JMPR 75

ABBREVIATIONS:

MZN = Metallized Zinc Negative
PJN = Pile Jacket Negative
CJN = Cap Jacket Negative
SAN = Submerged Anode Negative
MZA = Metallized Zinc Anode
PJA = Pile Jacket Anode
CJA = Cap Jacket Anode
SA = Submerged Anode
RE = Reference Electrode
REN = Reference Electrode Negative

TYPICAL WIRE SIZES & COLORS AS FOLLOWS:
MZA & PJA = #10 Red
MZN; PJN = #10 Blue
SA = #8 Black
RE/REN: #16 Twisted Pair Red/Black

LEGEND

(x) Submerged Anode x = Weight in LBS
Pile Jacket
Cap Jacket
● Primary Anode Terminal
+ Negative Connection
Encapsulated Splice
Reference Electrode

Water Street Bent 74 South Elevation & Span 74		
SCALE: NONE	Field Sketch As-Built	DRAWN BY KRH
DATE: 9-13-11		REVISED
GREAT WESTERN CORPORATION		
Ketchikan Viaduct II Repair & C.P.		DRAWING NUMBER W74

SPAN 75 - VIEW THROUGH DECK

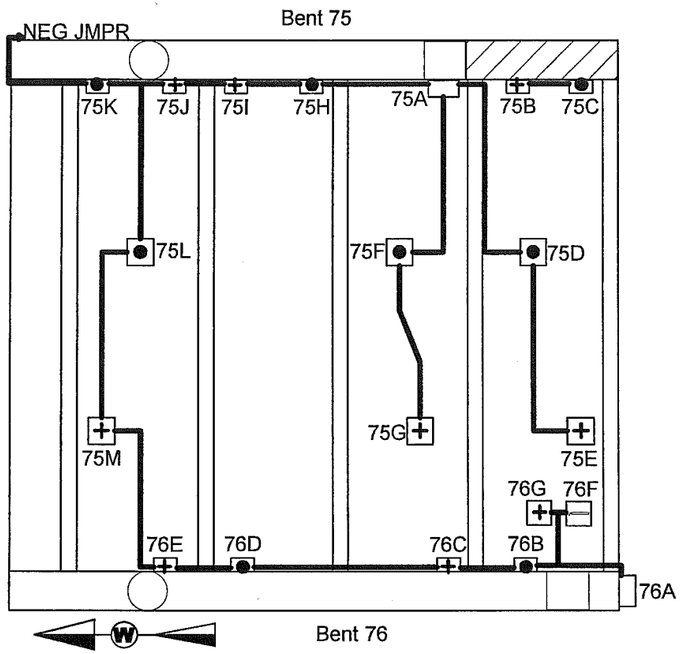

WATER BENT 75 SOUTH ELEVATION

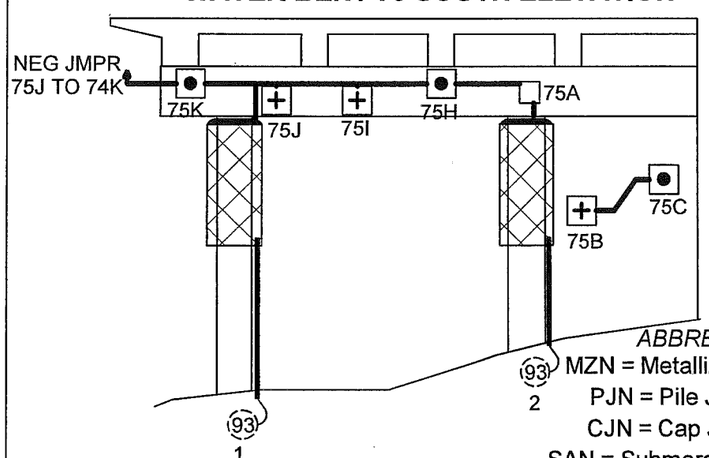

SCHEMATIC

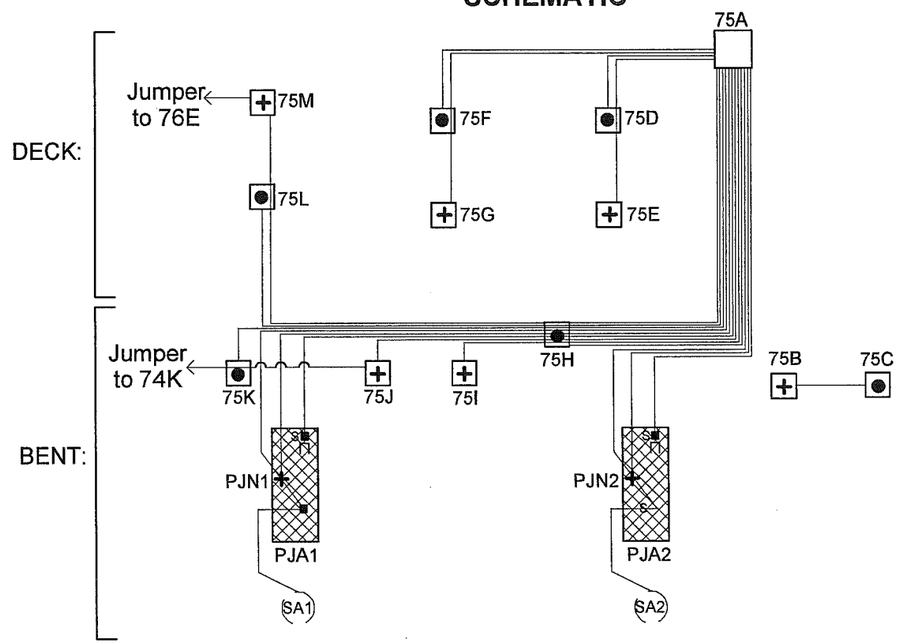

J-BOX DETAILS:

	J-Box Size	Wires or Structure
75-A	14"x12"x8"	MAIN J-BOX: (5) MZA; (5) MZN; (2) PJA; (2) PJN; (2) SA; SAN jumpered from PJN
75-B	5"x5"x2"	Structure Negative (MZN)
75-C	5"x5"x2"	Primary Anode Terminal Plate (MZA)
75-D	5"x5"x2"	Primary Anode Terminal Plate (MZA); (1) MZN
75-E	5"x5"x2"	Structure Negative (MZN)
75-F	5"x5"x2"	Primary Anode Terminal Plate (MZA); (1) MZN
75-G	5"x5"x2"	Structure Negative (MZN)
75-H	5"x5"x2"	Primary Anode Terminal Plate (MZA); (2) MZA; (3) MZN; (1) PJA; (1) PJN; (1) SA
75-I	5"x5"x2"	Structure Negative (MZN)
75-J	5"x5"x2"	Structure Negative (MZN) - NEG JMPR 75
75-K	5"x5"x2"	Primary Anode Terminal Plate (MZA); (1) MZN JMPR 75
75-L	5"x5"x2"	Primary Anode Terminal Plate (MZA)
75-M	5"x5"x2"	Structure Negative (MZN); (1) MZN JMPR 76

ABBREVIATIONS:

MZN = Metallized Zinc Negative
PJN = Pile Jacket Negative
CJN = Cap Jacket Negative
SAN = Submerged Anode Negative
MZA = Metallized Zinc Anode
PJA = Pile Jacket Anode
CJA = Cap Jacket Anode
SA = Submerged Anode
RE = Reference Electrode
REN = Reference Electrode Negative

TYPICAL WIRE SIZES & COLORS AS FOLLOWS:
MZA & PJA = #10 Red
MZN; PJN = #10 Blue
SA = #8 Black
RE/REN: #16 Twisted Pair Red/Black

LEGEND

- (x) Submerged Anode x = Weight in LBS
- Pile Jacket
- Cap Jacket
- ● Primary Anode Terminal
- + Negative Connection
- Encapsulated Splice
- — Reference Electrode

Water Street Bent 75 South Elevation & Span 75		
SCALE: NONE	Field Sketch As-Built	DRAWN BY KRH
DATE: 9-13-11		REVISED
GREAT WESTERN CORPORATION		
Ketchikan Viaduct II Repair & C.P.		DRAWING NUMBER W75

BENT 76 - VIEW THROUGH DECK

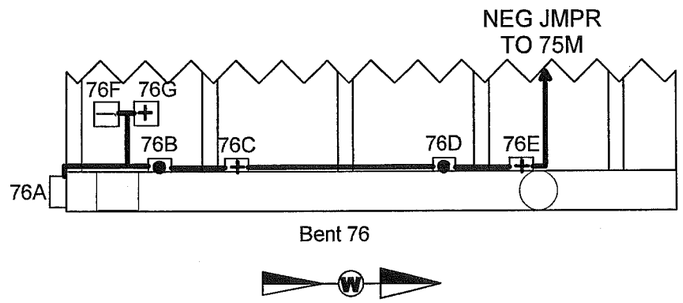

SCHEMATIC

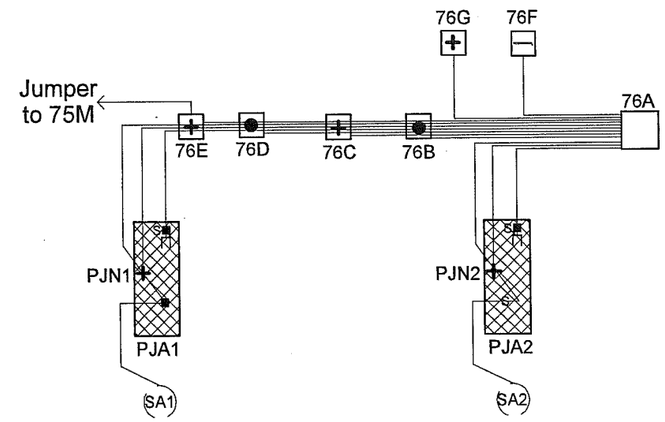

WATER BENT 76 NORTH ELEVATION

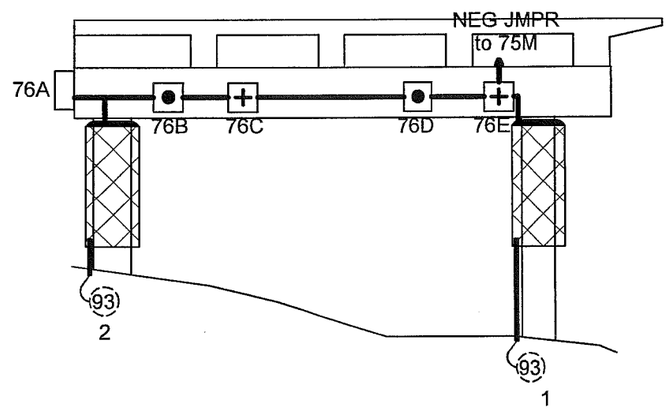

J-BOX DETAILS:

	J-Box Size	Wires or Structure
76-A	14" x 12" x 8"	MAIN J-BOX: (2) MZA; (2) MZN; (2) PJA; (2) PJN; (2) SA; SAN jumpered from PJN; (1) RE; (1) REN
76-B	5" x 5" x 2"	Primary Anode Terminal Plate (MZA); (1) MZA; (2) MZN; (1) PJA; (1) PJN; (1) SA
76-C	5" x 5" x 2"	Structure Negative (MZN); (1) MZA; (1) MZN; (1) PJA; (1) PJN; (1) SA
76-D	5" x 5" x 2"	Primary Anode Terminal Plate (MZA); (1) MZN; (1) PJA; (1) PJN; (1) SA
76-E	5" x 5" x 2"	Structure Negative (MZN) - MZN JUMPER 76; (1) PJA; (1) PJN; (1) SA
76-F	5" x 5" x 2"	Reference Electrode (RE)
76-G	5" x 5" x 2"	Reference Electrode Negative (REN)

ABBREVIATIONS:
MZN = Metallized Zinc Negative
PJN = Pile Jacket Negative
CJN = Cap Jacket Negative
SAN = Submerged Anode Negative
MZA = Metallized Zinc Anode
PJA = Pile Jacket Anode
CJA = Cap Jacket Anode
SA = Submerged Anode
RE = Reference Electrode
REN = Reference Electrode Negative

TYPICAL WIRE SIZES & COLORS AS FOLLOWS:
MZA & PJA = #10 Red
MZN; PJN = #10 Blue
SA = #8 Black
RE/REN: #16 Twisted Pair Red/Black

LEGEND
(x) Submerged Anode x = Weight in LBS
Pile Jacket
Cap Jacket
● Primary Anode Terminal
+ Negative Connection
S Encapsulated Splice
— Reference Electrode

Water Street Bent 76 North Elevation		
SCALE: NONE	Field Sketch As-Built	DRAWN BY KRH
DATE: 9-13-11		REVISED
GREAT WESTERN CORPORATION		
Ketchikan Viaduct II Repair & C.P.		DRAWING NUMBER W76