State of Alaska
Department of Transportation and Public Facilities
Design and Engineering Services Division

As builts
Project Engineer:
Mark Pigley
Start Date: 2/7/2007
End Date: 8/1/2009

KETCHIKAN AIRPORT

RUNWAY SAFETY AREA EXPANSION & RUNWAY OVERLAY
PROJECT No. 68306
AIP NO. 3-02-0144-1606

LEWIS REEF ROAD TUNNEL

PROJECT NO. 68456
HPRL - 0003 (122)

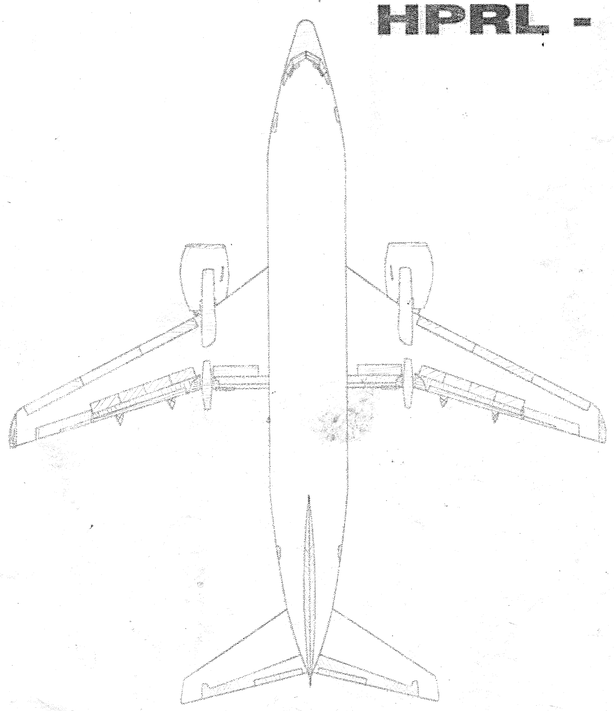

DESIGN DATA

AIRPORT TYPE	COMMERCIAL SERVICE
RUNWAY CATEGORY	TRANSPORT
RUNWAY INSTRUMENTATION	PRECISION
RUNWAY/TAXIWAY SURFACE	ASPHALT CONCRETE
RUNWAY LIGHTING	HIGH INTENSITY RUNWAY LIGHTING (HIRL)
AIRPORT REFERENCE CODE	C-III
AIRPORT ELEVATION	88' (MSL) / 96' (MLLW)
AIRPORT REFERENCE POINT (ARP COORDINATES -- NAD '83)	Latitude N 55° 21' 19.95" Longitude W 131° 42' 49.46"
RUNWAY SAFETY AREA WIDTH	500'
RUNWAY OBJECT FREE AREA WIDTH	800'
DESIGN AIRCRAFT	BOEING 737-900

INDEX

SHEET NO.	DESCRIPTION
A1	TITLE SHEET
A2	KEY MAP, LEGEND & ABBREVIATIONS
A3	SURVEY CONTROL PLAN
A4	GENERAL LAYOUT PLAN
A5-A11	SAFETY PLAN
B1-B5	TYPICAL SECTIONS
C1-C2	ESTIMATE OF QUANTITIES
D1	SUMMARY TABLES
E1-E4	RUNWAY PLAN & PROFILE
E5	MALSR ACCESS ROAD PLAN & PROFILE
E6-E7	GOVERNMENT CREEK PLAN & PROFILE
E8	NORTH TRIBUTARY PLAN & PROFILE
E9	BORROW SITE PLAN
E10-E15	GRADING PLANS
E16	GOVERNMENT CREEK ACCESS ROAD PLAN & PROFILE
E17	PERMIT BOUNDARY LIMITS
F1-F3	MISCELLANEOUS DETAILS
F4-F6	CREEK REROUTE CONSTRUCTION DE
F7	CREEK SLOPE STABILIZATION DETAILS
F8-F9	FENCING PLAN & DETAILS
F10-F11	RUNWAY & TAXIWAY MARKING PLAN
F12-F13	RUNWAY & TAXIWAY MARKING DETAILS
F14-F19	STRUCTURAL DETAILS
G1-G5	ELECTRICAL DEMOLITION
G6-G10	ELECTRICAL LAYOUT
G11-G49	ELECTRICAL DETAILS & SCHEDULES
K1-K4	EROSION & SEDIMENT CONTROL PLAN
K5-K8	EROSION & SEDIMENT CONTROL DETAILS
L1-L19	LEWIS REEF ROAD TUNNEL

STATE OF ALASKA
DEPARTMENT OF TRANSPORTATION
& PUBLIC FACILITIES
STATEWIDE DESIGN & ENGINEERING SERVICES DIVISION

STATE OF ALASKA 49TH
D. Lance Mearig
CE-7435
EXPIRES PROFESSIONAL ENGINEER

RECOMMENDED FOR APPROVAL:
Jack D. Beedle 11/15/06
JACK D. BEEDLE, P.E. DATE
REGIONAL PRE-CONSTRUCTION ENGINEER

APPROVED:
M. Menzies 11/17/06
MALCOLM A. MENZIES, P.E., L.S. DATE
REGIONAL DIRECTOR, SOUTHEAST REGION

CERTIFIED TRUE & CORRECT AS-BUILT OF ACTUAL FIELD CONDITION:
CONSTRUCTION PROJECT MANAGER 2/1/11
DATE

PATH: I:\823400\Dwgs\C\Sheets\A01.dwg
Thu. 09/Nov/06 02:41PM

STATE	PROJECT DESIGNATION	YEAR	SHEET NO.	TOTAL SHEETS
ALASKA	AIP NO. 3-02-0144-1606	2006	A1	131

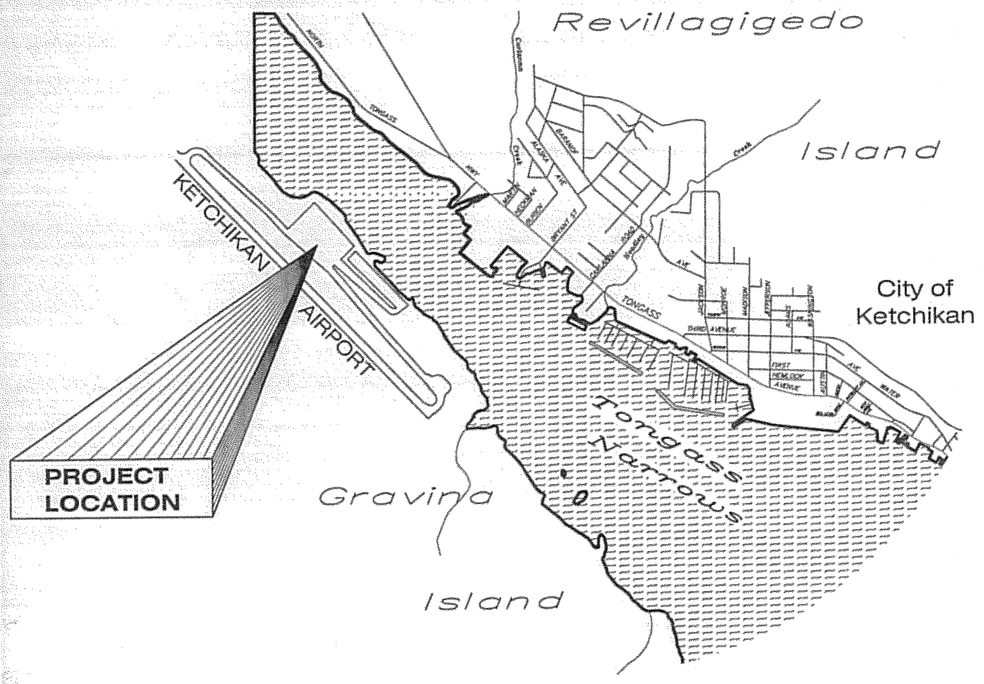

VICINITY MAP

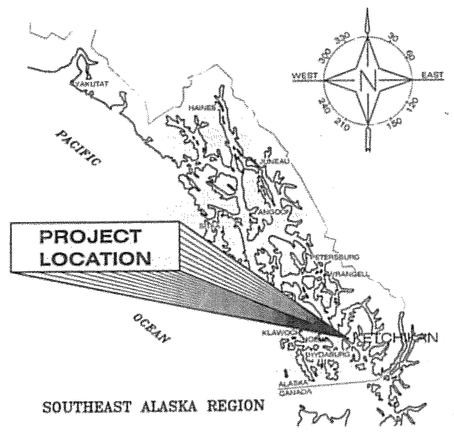

LOCATION MAP

LEGEND

EXISTING	NEW	
		RUNWAY/TAXIWAY CENTERLINE
		EDGE OF PAVEMENT
		EDGE OF GRAVEL
		HAUL ROUTE
70	70	CONTOUR
UGE	UGE	UNDERGROUND ELECTRIC LINE
SD		DRAINAGE CONDUITS
X X	X X	SECURITY FENCE
		CULVERT
	P-7	NEW CULVERT NUMBER (SEE SUMMARY ON SHEET D1)
		SHORELINE
		STREAM/DITCH/SWALE
		FISH IN STREAM/DITCH/SWALE
		CUT SLOPE LIMITS
		FILL SLOPE LIMITS
	PB	PERMIT BOUNDARY
		ROCK FILL TOE
		RIPRAP
		NEW PAVEMENT
		REMOVE EXISTING PAVEMENT OR ROAD
		BRIDGE
		STRUCTURE
		DRAINAGE STRUCTURE
		RUNWAY EDGE LIGHTING
T		TELEPHONE BOX
TMH		TELEPHONE MANHOLE
		ELECTRICAL VAULT
EMH		ELECTRICAL MANHOLE
TH-10		TEST HOLE LOCATION
		NGS MONUMENT
		GPS_CHK
		2" ALCAP W/REBAR
		CENTERLINE CASE MONUMENT
		PRIMARY MONUMENT
		P.K. NAIL

NOTE:
SEE SHEET G1 FOR ELECTRICAL LEGEND.

ABBREVIATIONS

AC	ASPHALT CONCRETE	GC	GOVERNMENT CREEK	O.D.	OUTSIDE DIAMETER
A.C.	ADVISORY CIRCULAR	GS	GLIDE SLOPE	OFA	OBJECT FREE AREA
A.F.F.	ABOVE FINISH FLOOR	HMA	HOT MIX ASPHALT	OFZ	OBSTACLE FREE ZONE
A.I.P.	AIRPORT IMPROVEMENT PROGRAM	HDPE	HIGH DENSITY POLYETHYLENE	OSAR	OVERSIZED ACCESS ROAD
AOA	AIRPORT OPERATIONS AREA	HR.	HOUR	PAPI	PRECISION APPROACH PATH INDICATOR
APPROX.	APPROXIMATE	HTL	HIGH TIDE LINE	PB	PERMIT BOUNDARY
ASOS	AUTOMATED SURFACE OBSERVING SYSTEM	ILS	INSTRUMENT LANDING SYSTEM	PE	POLYETHYLENE
ATB	ASPHALT TREATED BASE	IN.	INCHES	PST	POST
℄	CENTERLINE	LB	POUND	PVMT.	PAVEMENT
CA	CREEK ACCESS	L.F.	LINEAR FEET	R	RADIUS
C.F.	CUBIC FOOT	LOC	LOCALIZER	RCO	REMOTE COMMUNICATION OUTLET
CFR	CODE OF FEDERAL REGULATIONS	LRR	LEWIS REEF ROAD	RPZ	RUNWAY PROTECTION ZONE
CMP	CORRUGATED METAL PIPE	L.S.	LUMP SUM	RSA	RUNWAY SAFETY AREA
CPP	CORRUGATED POLYETHYLENE PIPE	LT.	LEFT	RT.	RIGHT
C.S.	CONTINGENT SUM	M	MALSR ACCESS ROAD	RVR	RUNWAY VISUAL RANGE
C.Y.	CUBIC YARD	MALSF	MEDIUM INTENSITY APPROACH LIGHTING SYSTEM SEQUENCED FLASHER	R/W	RUNWAY
DBH	DIAMETER AT BREAST HEIGHT			S.F.	SQUARE FEET
DIA.	DIAMETER	MALSR	MEDIUM INTENSITY APPROACH LIGHTING SYSTEM WITH RUNWAY ALIGNMENT INDICATOR LIGHTS	SIDA	SECURITY IDENTIFICATION DISPLAY AREA
DME	DISTANCE MEASURING EQUIPMENT			SPP	STRUCTURAL PLATE PIPE
(E)	EXISTING	MAX.	MAXIMUM	SREB	SNOW REMOVAL EQUIPMENT BUILDING
EHW	EXTREME HIGH WATER	MHW	MEAN HIGH WATER	STA.	STATION
ELEV.	ELEVATION	MIN.	MINIMUM	SWPPP	STORM WATER POLLUTION PREVENTION PLANS
ESCP	EROSION AND SEDIMENT CONTROL PLAN	MLLW	MEAN LOWER LOW WATER	S.Y.	SQUARE YARD
FAA	FEDERAL AVIATION ADMINISTRATION	NDB	NON DIRECTIONAL BEACON	TSA	TAXIWAY SAFETY AREA
FOD	FOREIGN OBJECTS AND DEBRIS	NO.S	NUMBERS	TYP.	TYPICAL
FT.	FEET	NT	NORTH TRIBUTARY	T/W	TAXIWAY
GA.	GAUGE	N.T.S.	NOT TO SCALE	VASI	VISUAL APPROACH SLOPE INDICATOR

THE FOLLOWING STANDARD DRAWINGS APPLY TO THIS PROJECT:

D-04.21 S-00.10 E-00.00 E-13.00 M-13.01 M-16.01

DO NOT SCALE FROM THESE DRAWINGS USE DIMENSIONS

PATH: I:\823400\Dwgs\C\Sheets\A02.dwg
Wed, 04/Oct/06 08:37AM bpaddock
TAB: A02

ADDENDUM NUMBER
ATTACHMENT NUMBER

RECORD OF REVISIONS

No.	DATE	DESCRIPTION

KETCHIKAN AIRPORT
RUNWAY SAFETY AREA EXPANSION
& RUNWAY OVERLAY
PROJECT NO. 68306

KEY MAP, LEGEND & ABBREVIATIONS

PREPARED BY: USKH INC.
CHECKED BY: DLM

STATE OF ALASKA 49TH
D. Lance Mearig
CE-7435
DAOCLOC
REGISTERED PROFESSIONAL ENGINEER

DESIGNED BY: NCL
DRAWN BY: WJP

STATE OF ALASKA
DEPARTMENT OF TRANSPORTATION
& PUBLIC FACILITIES
DESIGN & ENGINEERING SERVICES
DIVISION-SOUTHEAST REGION

KEY MAP, LEGEND & ABBREVIATIONS

PROJECT DESIGNATION	
AIP NO. 3-02-0144-1606	
STATE	YEAR
ALASKA	2006
SHEET NUMBER	TOTAL SHEETS
A2	131

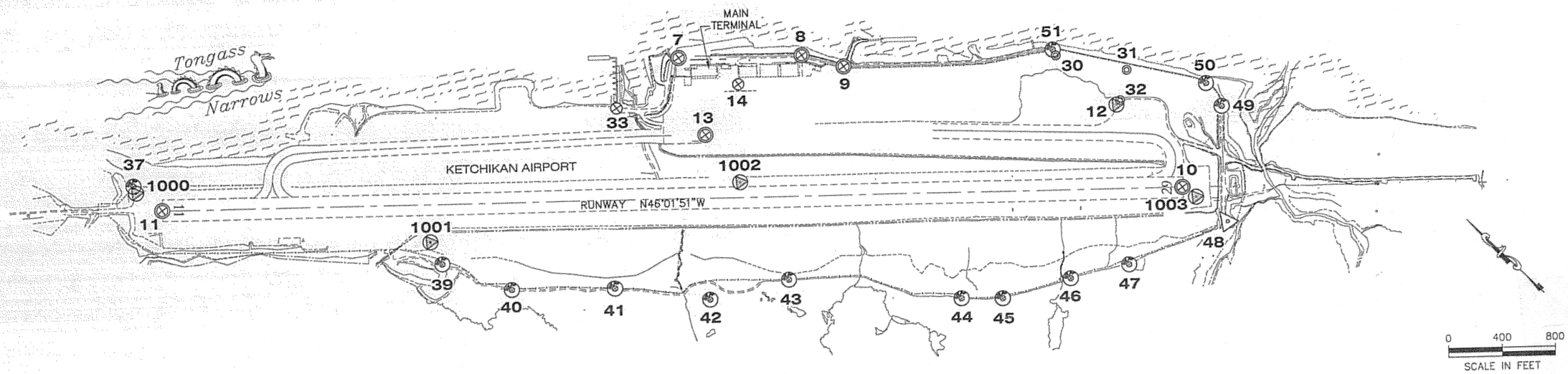

EXISTING CONTROL MONUMENTS

POINT	LOCAL NORTH	LOCAL EAST	ORTHO ELEV (MLLW)	DESC	LAT	LON	AKSPC NORTH	AKSPC EAST
					*LAT/LON values are DMS packed format			
7	93146.1529	93130.7817	43.44	CL_MON_PT_234+94.89	55.21267017	-131.42357656	1292614.6738	3093071.2126
8	92516.3127	93783.5225	45.60	CL_MON_PI_244+01.44	55.21203130	-131.42247882	1291984.8392	3093723.8335
9	92236.4095	93942.4766	33.77	CL_MON_PI-9	55.21175107	-131.42221776	1291704.9499	3093882.7475
10	89835.7293	95058.2039	92.88	CL_MON_RUNWAY_BC_195+00	55.20535447	-131.42040721	1289304.4108	3094998.1545
11	95042.7981	89660.3110	85.62	CL_MON_RUNWAY_BC_120+00	55.21463580	-131.43348564	1294511.4334	3089601.2519
12	90611.9051	95149.8731	80.76	NGS_DMA_3"_BC	55.21011658	-131.42021029	1290080.5015	3095089.8823
13	92604.2219	92865.4780	45.64	CL_MON_BC2.5"_60+00_TAXI/APRON	55.21214369	-131.42406206	1292072.8197	3092805.8879
14	92696.8360	93302.2976	45.29	BC2"_L3/L4_BLK400	55.21222268	-131.42330210	1292165.3865	3093242.6722
30	91186.8171	95094.8670	31.67	ALCAP1.5"_C4	55.21068454	-131.42027695	1290655.3611	3095034.9318
31	90740.0371	95385.1642	25.75	ALCAP1.5"_C1	55.21023618	-131.41579712	1290208.6002	3095325.1612
32	90615.1019	95192.7987	80.43	ALCAP1.5"_C2	55.21011852	-131.42013592	1290083.6942	3095132.8039
33	93204.7564	92547.0924	27.29	BC2"/CONC_KIA-33	55.21274428	-131.42458309	1292673.3224	3092487.5863
37	95320.1162	89639.8800	70.73	ALCAP2"/REBAR_KIA-37	55.21490958	-131.43350742	1294788.7258	3089580.8472
39	93297.4615	90826.4243	134.27	ALCAP2"/REBAR_KIA-39	55.21288375	-131.43155425	1292766.1684	3090767.0972
40	92799.9047	91050.2255	157.17	ALCAP2"/REBAR_KIA-40	55.21238730	-131.43119161	1292268.6415	3090990.8327
41	92266.6981	91590.8250	182.35	ALCAP2"/REBAR_KIA-41	55.21184687	-131.43028290	1291735.4407	3091531.3320
42	91713.5427	92022.1544	177.69	ALCAP2"/REBAR_KIA-42	55.21128982	-131.42556420	1291182.3026	3091962.5703
43	91406.2432	92535.7144	175.30	ALCAP2"/REBAR_KIA-43	55.21097268	-131.42469126	1290874.9888	3092476.0525
44	90401.4201	93332.4562	198.81	ALCAP2"/REBAR_KIA-44	55.20596036	-131.42336309	1289870.1959	3093272.6275
45	90190.6665	93542.7404	191.80	ALCAP2"/REBAR_KIA-45	55.20574682	-131.42300990	1289659.4449	3093482.8724
46	89941.3762	93998.9398	168.20	ALCAP2"/REBAR_KIA-46	55.20548839	-131.42223343	1289410.1396	3093939.0048
47	89707.9641	94374.7442	149.40	ALCAP2"/REBAR_KIA-47	55.20524785	-131.42159520	1289176.7178	3094314.7515
48	89419.2365	95112.9901	88.42	PK_KIA-48	55.20494259	-131.42033310	1288887.9545	3095052.8988
49	90054.8246	95688.2042	36.01	ALCAP2"/REBAR_KIA-49	55.20555255	-131.41530710	1289523.4293	3095628.1113
50	90255.9322	95727.1681	30.29	ALCAP2"/REBAR_KIA-50	55.20574958	-131.41522977	1289724.5135	3095667.0889
51	91234.0965	95111.0172	28.12	ALCAP2"/REBAR_KIA-51	55.21073066	-131.42024668	1290702.6344	3095051.0845
1000	95270.0082	89616.5671	82.95	NGS_BC_KTN-A_RTK	55.21486087	-131.43355019	1294738.6248	3089557.5322
1001	93476.7387	90881.0051	99.37	NGS_BC_KTN-C_RTK	55.21305885	-131.43145107	1292945.4230	3090821.6882
1002	92174.2870	92796.9966	93.12	NGS_BC_KTN-ARP2_RTK	55.21172204	-131.42420165	1291642.9335	3092737.3758
1003	89713.5227	95077.7166	92.18	NGS_BC_KTN-B_RTK	55.20523352	-131.42037952	1289182.2145	3095017.6546

HORIZONTAL CONTROL

This project was initially based on the Ketchikan Air 2000 Grid. See project #68035 for legacy details. To avoid negative Northing values as far south as the Gravina project, it was decided to transform all existing airport project information to the Tongass Avenue / Third Avenue coordinate system.

The basis of bearing for the Tongass Avenue / Third Avenue coordinate system is the record grid bearing of S 88°29'20" W between a Dept. of Highways monument in a case in front of 2324 Tongass Ave. known as monument "J" and a 3" brass P.I. monument in a case in front of 2106 Tongass ave. known as monument "I". All bearings are NAD 27 grid bearings based on the Ketchikan Gateway Borough control network of 1984. Control monument "J" and control monument "I" are from the Ketchikan tidelands subdivision plat of 1964.

Subsequently, this project has been controlled by GPS, and transformation parameters developed to relate the project to NAD83(92) Alaska State Plane zone 1. Currently, the basis of bearing accepted for Ketchikan Airport is the bearing of N46°01'51"W from the threshold runway centerline monument #10 at sta 195+00 to the threshold runway centerline monument #11 at sta 120+00.

The Ketchikan Tongass Avenue / Third Avenue Grid is a local ground coordinate system based DOT Brass Cap TBM-66 located in bedrock near PC 62+23.46 of Third Avenue Extension. TBM-66 was established with two OPUS sessions on March of 2002. The Grid system relates to AKSPC zone 1 NAD83(92) through the following parameters:
Zone = NAD83 AKSPC ZONE 1
Grid Scale = 0.9999007
Convergence = -0°00'18"
Translation about TBM-66 as follows:
AKSPC Northing = 1289213.0350 FT US
AKSPC Easting = 3104427.6100 FT US
Local Northing = 89745.1675 FT US
Local Easting = 104488.6038 FT US

*please note that the convergence angle listed is 18 seconds of arc. That is not a true convergence angle, but it is the angle that relates NAD83 State Plane values to Local Grid values. This angle is quite small because the original local system was developed on NAD27 grid bearings.

Coordinates for this project established with SKI PRO static GPS processing and Starnet least squares adjustment.

Project Specific Horizontal Control

10 : 3" brass cap in well located at threshold of runway 29.
Tongass-Grid N 89835.7293 FT US, E 95058.2039 FT US
AKSPC N 1289304.4108 FT US , E 3094998.1545 FT US

11 : 3" brass cap in well located at threshold of runway 11.
Tongass-Grid N 95042.7981 FT US, E 89660.3110 FT US
AKSPC N 1294511.4334 FT US, E 3089601.2519 FT US

VERTICAL CONTROL

The basis of vertical control is the point number 7, PT mon at sta 234+94.89 of the airport road. The monument has an accepted elevation of 43.43' above MLLW. This elevation was established from a series of tidal observations on 10/29/86 and 10/30/86. The vertical control was checked with real time kinematic gps on 5/18/00. The basis of the vertical datum check was Ketchikan tidal benchmarks "BM No-34 1944" and "BM No-37 1956". The results of the vertical control check were height observations of 49.32' (published 49.32') at "BM No-34" and 34.94' (published 35.09') at "BM No-37". The published elevations to the tidal benchmarks are based on 1960 - 1978 tidal observations. www.co-ops.nos.noaa.gov/benchmarks/benchmarks_old/9450460.html

The Project Specific Basis of Vertical Control is threshold runway centerline monument #10 at sta 195+00 having an accepted elevation of 92.88 feet above MLLW.

DO NOT SCALE FROM THESE DRAWINGS USE DIMENSIONS

CHECKED BY: R. MURPHY
DESIGNED BY: T. REED
DRAWN BY: T.R. /R.S.

STATE OF ALASKA
Timothy Reed
No. 10613
REGISTERED PROFESSIONAL LAND SURVEYOR
10/4/06

STATE OF ALASKA
DEPARTMENT OF TRANSPORTATION & PUBLIC FACILITIES
S.E. REGION DESIGN & ENGINEERING SERVICES DIVISION

KETCHIKAN AIRPORT RUNWAY SAFETY AREA PROJECT #68306

SURVEY CONTROL PLAN

PATH: I:\823400\Dwgs\C\Sheets\A03.dwg
TAB: A3
Wed, 04/Oct/06 11:09AM bpaddock

REVISIONS NO.	DATE	DESCRIPTION

PROJECT DESIGNATION	YEAR	SHEET NO.	TOTAL SHEETS
AIP No. 3-02-0144-1606	2006	A3	131

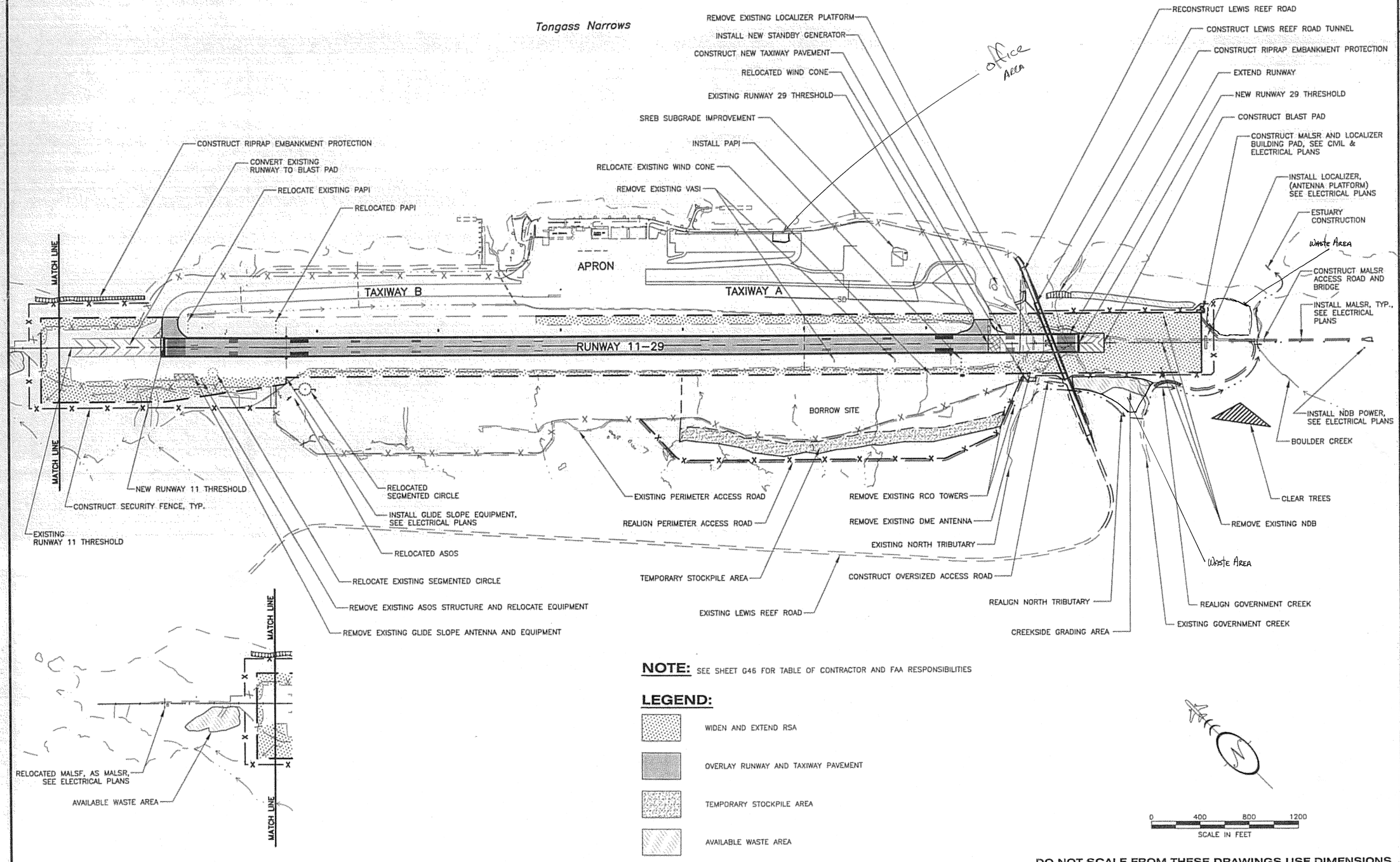

NOTE: SEE SHEET G46 FOR TABLE OF CONTRACTOR AND FAA RESPONSIBILITIES

LEGEND:

- WIDEN AND EXTEND RSA
- OVERLAY RUNWAY AND TAXIWAY PAVEMENT
- TEMPORARY STOCKPILE AREA
- AVAILABLE WASTE AREA

DO NOT SCALE FROM THESE DRAWINGS USE DIMENSIONS

PATH: I:\823400\Dwgs\C\Sheets\A04.dwg
Wed, 04/Oct/06 08:37AM bpaddock
TAB: A4

ADDENDUM NUMBER

ATTACHMENT NUMBER

RECORD OF REVISIONS

No.	DATE	DESCRIPTION

KETCHIKAN AIRPORT
RUNWAY SAFETY AREA EXPANSION
& RUNWAY OVERLAY
PROJECT NO. 68306

GENERAL LAYOUT PLAN

PREPARED BY: USKH INC.

CHECKED BY: DLM

STATE OF ALASKA 49TH
D. Lance Mearig
CE-7435
04Oct06
REGISTERED PROFESSIONAL ENGINEER

DESIGNED BY: EJG

DRAWN BY: WJP

STATE OF ALASKA
DEPARTMENT OF TRANSPORTATION
& PUBLIC FACILITIES
DESIGN & ENGINEERING SERVICES
DIVISION–SOUTHEAST REGION

GENERAL LAYOUT PLAN

PROJECT DESIGNATION	
AIP NO. 3-02-0144-1606	
STATE	YEAR
ALASKA	2006
SHEET NUMBER	TOTAL SHEETS
A4	131

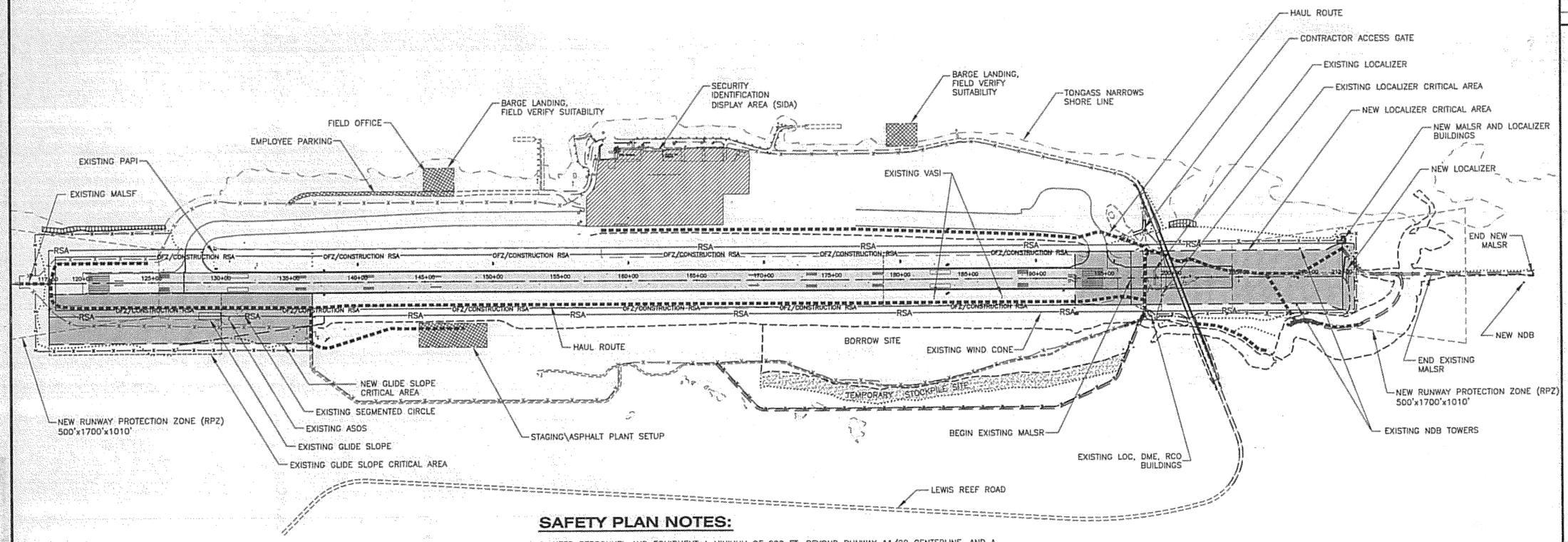

SAFETY PLAN NOTES:

1. KEEP PERSONNEL AND EQUIPMENT A MINIMUM OF 200 FT. BEYOND RUNWAY 11/29 CENTERLINE, AND A MINIMUM OF 200 FT. BEYOND RUNWAY THRESHOLDS, DURING OPERATIONS OF AIRCRAFT CLASSIFIED AS DESIGN GROUP II (49 FT. WING SPAN) OR LARGER. AN AIRCRAFT OPERATION INCLUDES 15 MINUTES BEFORE ARRIVAL AND 15 MINUTES AFTER DEPARTURE, IN ADDITION TO TIME ON RUNWAY AND TAXI WAY SURFACES, AS PART OF THE TIME RESTRICTION FOR AIRCRAFT OPERATIONS.
2. KEEP PERSONNEL AND EQUIPMENT OUTSIDE FUNCTIONAL INSTRUMENT LANDING SYSTEM (ILS) CRITICAL AREAS (GLIDE SLOPE AND LOCALIZER) DURING INSTRUMENT AIRCRAFT OPERATIONS.
3. WORK CAN BE PERFORMED OUTSIDE 200 FT. OF RUNWAY CENTERLINE, AND BEYOND 200 FT. OF RUNWAY THRESHOLDS, AT ANY TIME DURING THE CONTRACT, SUBJECT TO APPROVED SAFETY PLAN CONDITIONS, LIMITATIONS DESCRIBED IN SECTION 80 OF THE SPECIFICATIONS, AND PERMIT STIPULATIONS.
4. DO NOT STORE MATERIALS OR PARK EQUIPMENT WITHIN 250 FT. OF RUNWAY CENTERLINE. USE THOSE AREAS SHOWN FOR STAGING TO STORE MATERIALS OR PARK EQUIPMENT. EQUIPMENT MAY BE PARKED IN ACTIVE WORK AREAS IF NOT IN CONFLICT WITH OTHER LIMITATIONS AND AS APPROVED BY THE ENGINEER. ENSURE ADEQUATE DISTANCE FOR BLAST PROTECTION.
5. SET UP ASPHALT PLANT SO THAT TALLEST EQUIPMENT IS FURTHEST FROM RUNWAY.
6. MARK OPEN TRENCHES AND EXCAVATIONS WITH RED OR ORANGE FLAGS, AS APPROVED BY THE ENGINEER. LIGHT WITH RED LIGHTS DURING HOURS OF RESTRICTED VISIBILITY OR DARKNESS. OPEN TRENCHES OR EXCAVATIONS ARE NOT PERMITTED WITHIN 200 FT. OF THE RUNWAY CENTERLINE AND 200 FT. BEYOND THE RUNWAY THRESHOLD WHILE THE RUNWAY IS OPEN. IF THE RUNWAY MUST BE OPENED BEFORE EXCAVATIONS ARE BACKFILLED, COVER THE EXCAVATIONS APPROPRIATELY. COVERINGS FOR OPEN TRENCHES OR EXCAVATIONS MUST BE OF SUFFICIENT STRENGTH TO SUPPORT THE WEIGHT OF THE HEAVIEST AIRCRAFT OPERATING ON THE RUNWAY.
7. SUBMIT A SAFETY PLAN TO THE ENGINEER FOR REVIEW. DO NOT BEGIN CONSTRUCTION ACTIVITIES UNTIL THE ENGINEER APPROVES THE PLAN IN WRITING. INCLUDE CONSTRUCTION SEQUENCING AND HALF-WIDTH RUNWAY OPERATIONS IN THE SAFETY PLAN. IF THE PLAN DIFFERS FROM WHAT IS SHOWN IN THE DRAWINGS, OR IF SUBSEQUENT CHANGES ARE MADE, SUBMIT A CORRESPONDING REVISION TO THE ENGINEER FOR REVIEW AND APPROVAL.
8. COMPLETE CLOSURE OF RUNWAY 11-29 IS NOT PERMITTED. HALF-WIDTH RUNWAY CLOSURES ARE ALLOWED WITH AN APPROVED SAFETY PLAN. REFER TO GUIDELINES IN THE DRAWINGS FOR IMPLEMENTING HALF-WIDTH RUNWAY CLOSURES.
9. DURING HALF-WIDTH OPERATIONS, MONITOR TEMPORARY MARKINGS AND LIGHTING FREQUENTLY AND TAKE ACTION TO CORRECT DEFICIENCIES IMMEDIATELY.
10. AREAS IDENTIFIED IN THE AIRPORT SECURITY PROGRAM AS SECURITY IDENTIFICATION DISPLAY AREAS (SIDA) REQUIRE EACH PERSON TO CONTINUOUSLY DISPLAY ON THEIR OUTERMOST CLOTHING AN AIRPORT-APPROVED IDENTIFICATION MEDIUM UNLESS UNDER AIRPORT APPROVED ESCORT. WORK IS NOT REQUIRED IN THE SIDA UNDER THIS CONTRACT. KEEP PERSONNEL AND EQUIPMENT OUT OF THE SIDA UNLESS AUTHORIZED BY THE ENGINEER.

0 400 800 1200
SCALE IN FEET

DO NOT SCALE FROM THESE DRAWINGS USE DIMENSIONS

PATH: I:\B23400\Dwgs\C\Sheets\A05.dwg
Wed, 04/Oct/06 08:38AM bpaddock
TAB: A05

ADDENDUM NUMBER

ATTACHMENT NUMBER

RECORD OF REVISIONS

No.	DATE	DESCRIPTION

KETCHIKAN AIRPORT
RUNWAY SAFETY AREA EXPANSION
& RUNWAY OVERLAY
PROJECT NO. 68306

SAFETY PLAN

PREPARED BY: USKH INC.

CHECKED BY: DLM

STATE OF ALASKA 49 TH
D. Lance Mearig CE-7435 REGISTERED PROFESSIONAL ENGINEER
04 Oct 06

DESIGNED BY: NCL

DRAWN BY: WJP

STATE OF ALASKA
DEPARTMENT OF TRANSPORTATION & PUBLIC FACILITIES
DESIGN & ENGINEERING SERVICES
DIVISION-SOUTHEAST REGION

SAFETY PLAN

PROJECT DESIGNATION	
AIP NO. 3-02-0144-1606	
STATE	YEAR
ALASKA	2006
SHEET NUMBER	TOTAL SHEETS
A5	131

SEQUENCING NOTES:

1. STAGES 1 – 7 SHOW A SUGGESTED CONSTRUCTION SEQUENCE FOR WORK UNDER THIS CONTRACT. THE SAFETY PLANS AND SPECIFICATIONS PROVIDE ADDITIONAL GUIDANCE ON OPERATIONAL LIMITATIONS. STAGE CONSTRUCTION TO COMPLY WITH ALL CONDITIONS OF THE SAFETY PLAN, SUBSECTION 80-04 LIMITATION OF OPERATIONS, AND PROJECT PERMIT STIPULATIONS.

2. USE THESE STAGES, OR ALTERNATE STAGING APPROVED BY THE ENGINEER, AS A BASIS FOR PREPARING STORM WATER POLLUTION PREVENTION PLAN (SWPPP) MEASURES FOR EACH STAGE. THE PROJECT EROSION AND SEDIMENT CONTROL PLAN (ESCP) MEASURES APPLY TO ALL STAGES REGARDLESS OF ALLOWED, LIMITED OR RESTRICTED CONDITIONS. SUBMIT ALTERNATE SEQUENCING PLANS FOR APPROVAL FIVE DAYS BEFORE SWPPP SUBMITTAL. PROVIDE SWPPP UPDATES AS EACH STAGE PROGRESSES. SUBMIT SWPPP UPDATES FOR SUBSEQUENT STAGES AT LEAST 30 DAYS BEFORE PROCEEDING TO THE NEXT STAGE.

3. DEVELOP A CONSTRUCTION SCHEDULE BASED ON SEQUENCING SHOWN, OR AN APPROVED ALTERNATE. PROVIDE SUFFICIENT DETAIL TO ADDRESS REQUIRED SUBMITTALS, REVIEW PERIODS, PROCUREMENT OF MATERIALS, CONSTRUCTION WORK, AND COORDINATION REQUIREMENTS ASSOCIATION WITH ITEMS OF WORK.

4. THE GENERAL SCOPE OF WORK FOR EACH STAGE IS DESCRIBED BELOW. PARTICULAR RESTRICTIONS ARE NOTED IN THE PLAN VIEW FOR EACH STAGE. COMPLETE WORK IN NUMERICAL SEQUENCE SHOWN. DEVIATIONS FROM SEQUENCE SHOWN AND COMBINING OF STAGES SUBJECT TO APPROVAL BY THE ENGINEER.

STAGE 1 OPEN MATERIAL SITE. EXCAVATE AND CONSTRUCT NEW STREAM CHANNELS AND ESTUARY EXPANSION, EXCEPT DO NOT DISTURB EXISTING GROUND BELOW ORDINARY HIGH WATER IN EXISTING BOULDER CREEK CHANNEL. CONSTRUCT RSA EMBANKMENT. CONSTRUCT LEWIS REEF ROAD AND TUNNEL. CONSTRUCT MALSR ACCESS ROAD AND BRIDGE. CONSTRUCT NEW LOCALIZER (LOC) PLATFORM. PLACE NEW LOCALIZER EQUIPMENT BUILDING AND DME FOUNDATION.

STAGE 2 EXCAVATE NEW STREAM CHANNEL IN LOWER BOULDER CREEK. CONSTRUCT NEW STREAM CHANNELS AND ESTUARY EXPANSION. DIVERT STREAMS. CONSTRUCT RSA EMBANKMENT. CONSTRUCT LEWIS REEF ROAD AND TUNNEL. CONSTRUCT MALSR ACCESS ROAD AND BRIDGE. CONSTRUCT NEW LOCALIZER (LOC) PLATFORM. PLACE NEW LOCALIZER EQUIPMENT BUILDING AND DME FOUNDATION. INSTALL R/W 29 MALSR AND PAPI SYSTEMS.

STAGE 3 REMOVE EXISTING LOC PLATFORM. RELOCATE EXISTING LOCALIZER RF DISTRIBUTION/COMBINING UNIT. COMPLETE RSA GRADING IN NEW LOC CRITICAL AREA TO WITHIN ONE FOOT OF FINISHED GRADE. CONSTRUCT RSA EMBANKMENT. CONSTRUCT LEWIS REEF ROAD. INSTALL R/W 29 MALSR AND PAPI SYSTEMS. INSTALL CONDUIT AND LIGHT BASES FOR NEW EDGE AND THRESHOLD LIGHTS.

STAGE 4 OVERLAY NORTH HALF OF RUNWAY. REMOVE R/W 29 THRESHOLD AND MALSR THRESHOLD LIGHTS. PAVE R/W 29 EXTENSION. PROVIDE TEMPORARY THRESHOLD LIGHTS. CONSTRUCT RSA EMBANKMENT. COMPLETE FINAL RSA GRADING IN NEW LOC CRITICAL AREA. CONSTRUCT LEWIS REEF ROAD. CONSTRUCT MALSR ACCESS ROAD AND BRIDGE. CONSTRUCT NEW R/W 11 PAPI INFRASTRUCTURE.

STAGE 5 OVERLAY SOUTH HALF OF RUNWAY. GRADE RSA EMBANKMENT. CONSTRUCT LEWIS REEF ROAD. CONSTRUCT MALSR ACCESS ROAD AND BRIDGE. CONSTRUCT NEW GLIDE SLOPE ANTENNA FOUNDATION AND SET NEW GLIDESLOPE BUILDING. RELOCATE ASOS.

STAGE 6 REMOVE EXISTING GLIDE SLOPE ANTENNA. RELOCATE EXISTING GLIDE SLOPE BUILDING. COMPLETE FINAL GRADING IN NEW GLIDE SLOPE CRITICAL AREA. COMPLETE LIGHTING AND MARKING FOR THRESHOLD SHIFT. REMOVE EXISTING DME/LOC BUILDING. GRADE RSA EMBANKMENT. RELOCATE RUNWAY EDGE AND THRESHOLD LIGHTS. RELOCATE R/W 11 PAPI SYSTEM. REMOVE R/W 29 VASI SYSTEM. INSTALL R/W 29 MALSR SYSTEM. RELOCATE R/W 11 MALSR SYSTEM. ENGINEER WILL NOT AUTHORIZE SHIFTING THRESHOLDS UNTIL NEW ILS IS FULLY OPERATIONAL.

STAGE 7 COMPLETE FINAL RSA GRADING. GROOVE RUNWAY PAVEMENT. COMPLETE ELECTRICAL WORK. RECLAIM MATERIAL SITE. COMPLETE ANY NECESSARY REPAIRS OR MODIFICATIONS IN NEW STREAM CHANNELS, SUBJECT TO PERMIT CONDITIONS.

KEY TO CONSTRUCTION SEQUENCING COLORS:

ALLOWED: PROCEED AT CONTRACTOR DISCRETION, SUBJECT TO CONDITIONS OF THE SAFETY PLAN, SUBSECTION 80-04 LIMITATION OF OPERATIONS, AND PROJECT PERMIT STIPULATIONS.

LIMITED: PROCEED AS APPROVED BY THE ENGINEER, SUBJECT TO CONDITIONS OF THE SAFETY PLAN, SUBSECTION 80-04 LIMITATION OF OPERATIONS, AND PROJECT PERMIT STIPULATIONS. THE ENGINEER MAY ORDER WORK STOPPED AT ANY TIME OR REQUIRE REMOVAL OF COMPLETED WORK TO RESTORE SAFE AIRFIELD OPERATIONS.

RESTRICTED: PROCEED AS DIRECTED BY THE ENGINEER. MOVE PERSONNEL, MATERIALS AND EQUIPMENT ON APPROVED HAUL ROUTES SUBJECT TO CONDITIONS OF THE SAFETY PLAN, SUBSECTION 80-04 LIMITATION OF OPERATIONS, AND PROJECT PERMIT STIPULATIONS

NOTE:

SHEETS A6 – A9 ARE INTENDED TO BE VIEWED IN COLOR. CONTACT THE ENGINEER FOR INSTRUCTION ON ACQUIRING COLOR COPIES.

KEY
ALLOWED
LIMITED
RESTRICTED
COLOR PLAN SHEET

STAGE 1

RESTRICTIONS:

1. DO NOT EXCAVATE OR PLACE FILL IN THE EXISTING GLIDE SLOPE CRITICAL AREA.
2. PLACE FILL IN THE EXISTING LOC CRITICAL AREA BETWEEN STATION 179+00 AND 197+00 ONLY AS DIRECTED BY THE ENGINEER. DO NOT PLACE FILL IN THE EXISTING LOC CRITICAL AREA BETWEEN STATION 198+00 AND 199+00. DO NOT PLACE FILL IN REMAINING LOC CRITICAL AREA THAT INTERFERES WITH ILS OPERATIONS.
3. WORK BELOW ORDINARY HIGH WATER IN EXISTING ANADROMOUS STREAMS IS SUBJECT TO PERMIT STIPULATIONS AND TIMING WINDOWS.
4. WORK BELOW HIGH TIDE LINE IN TONGASS NARROWS IS SUBJECT TO PERMIT STIPULATIONS AND ENVIRONMENTAL COMMITMENTS.
5. DO NOT DAMAGE OR INTERRUPT POWER TO DME AND NDB.
6. MAINTAIN LOC/DME BUILDING IN ITS EXISTING CONDITION.

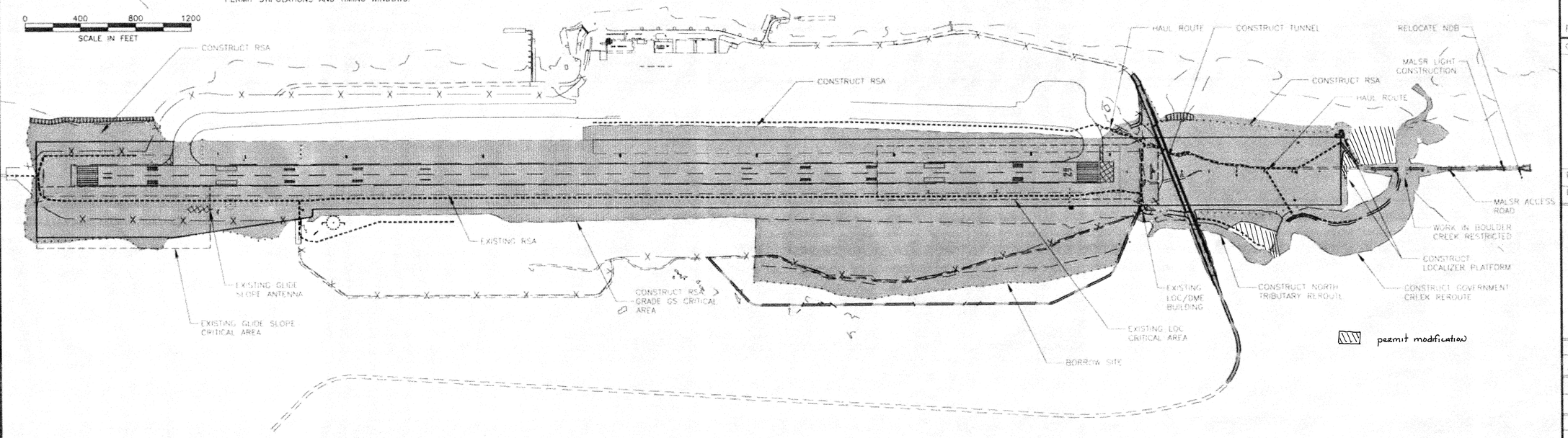

DO NOT SCALE FROM THESE DRAWINGS USE DIMENSIONS

PATH: I:\823400\Dwgs\C\Sheets\A06.dwg
Wed, 08/Nov/06 01:37PM bpoddock
TAB: A06

ADDENDUM NUMBER

ATTACHMENT NUMBER

RECORD OF REVISIONS

No.	DATE	DESCRIPTION

KETCHIKAN AIRPORT
RUNWAY SAFETY AREA EXPANSION
& RUNWAY OVERLAY
PROJECT NO. 68306

SAFETY PLAN CONSTRUCTION SEQUENCING NOTE & STAGE 1

PREPARED BY: USKH INC.
CHECKED BY: DLM

STATE OF ALASKA 49 TH
D. Lance Meimg
CE 7435
ON Nov 06
REGISTERED PROFESSIONAL ENGINEER

DESIGNED BY: NCL
DRAWN BY: WJP

STATE OF ALASKA
DEPARTMENT OF TRANSPORTATION & PUBLIC FACILITIES
DESIGN & ENGINEERING SERVICES
DIVISION-SOUTHEAST REGION

SAFETY PLAN CONSTRUCTION SEQUENCING NOTES & STAGE 1

PROJECT DESIGNATION	
AIP NO. 3-02-0144-1606	
STATE	YEAR
ALASKA	2006
SHEET NUMBER	TOTAL SHEETS
A6	131

STAGE 2

RESTRICTIONS:

1. WORK UNDER THIS STAGE WILL COINCIDE WITH THE GOVERNMENT CREEK PERMIT WINDOW. AFTER DIVERTING STREAMS, WORK UNDER THIS STAGE MAY CONTINUE SUBJECT TO NOTE 4 BELOW.
2. DO NOT EXCAVATE OR PLACE FILL IN THE EXISTING GLIDE SLOPE CRITICAL AREA.
3. PLACE FILL IN THE EXISTING LOCALIZER (LOC) CRITICAL AREA BETWEEN STATION 179+00 AND 197+00 ONLY AS DIRECTED BY THE ENGINEER. DO NOT PLACE FILL IN THE EXISTING LOC CRITICAL AREA BETWEEN STATION 198+00 AND 199+00. DO NOT PLACE FILL IN REMAINING LOC CRITICAL AREA THAT INTERFERES WITH ILS OPERATIONS.
4. WORK BELOW ORDINARY HIGH WATER IN EXISTING OR NEW ANADROMOUS STREAMS IS SUBJECT TO ENVIRONMENTAL COMMITMENTS, PERMIT STIPULATIONS AND TIMING WINDOWS.
5. WORK BELOW HIGH TIDE LINE IN TONGASS NARROWS IS SUBJECT TO PERMIT STIPULATIONS.
6. DO NOT DAMAGE OR INTERRUPT POWER TO DME AND NDB.
7. MAINTAIN LOC/DME BUILDING IN ITS EXISTING CONDITION.

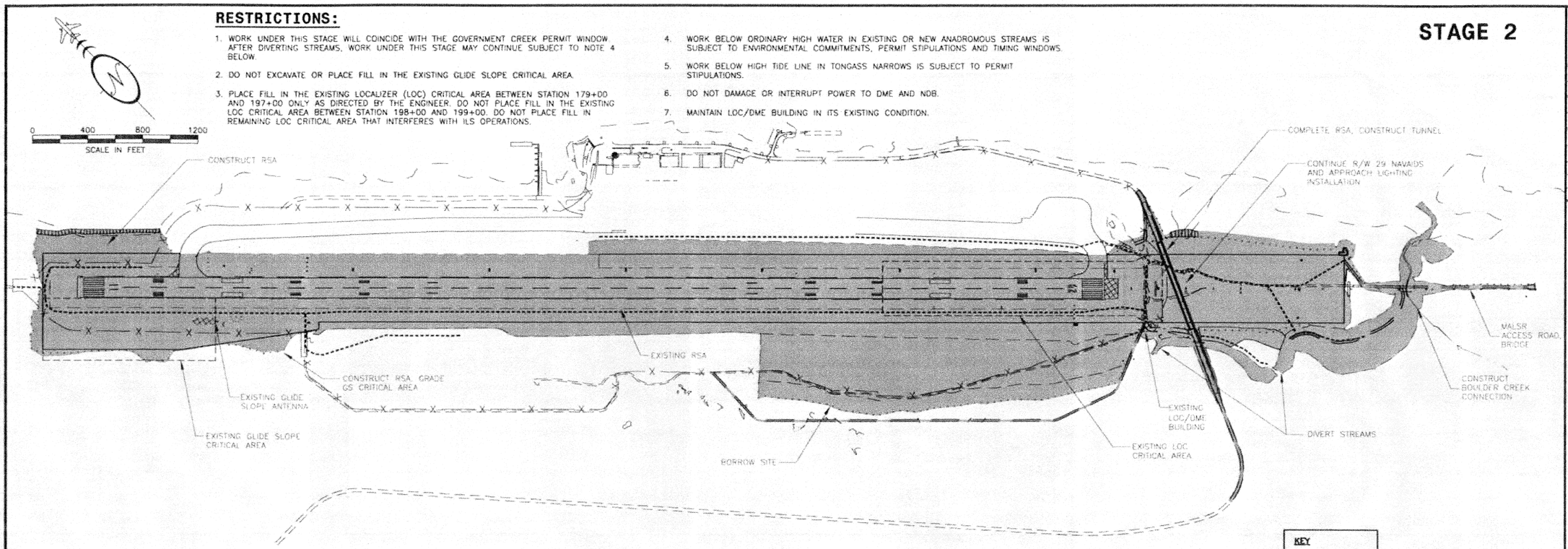

KEY
- ALLOWED
- LIMITED
- RESTRICTED

COLOR PLAN SHEET

STAGE 3

RESTRICTIONS:

1. WORK UNDER THIS STAGE WILL COINCIDE WITH THE LOC OUTAGE, WHICH MAY NOT OCCUR FROM THE MONDAY PRECEDING THE THANKSGIVING HOLIDAY UNTIL THE FRIDAY FOLLOWING THE CHRISTMAS HOLIDAY. THE LOC OUTAGE WILL BE LIMITED TO 10 CALENDAR DAYS AND TIMING WILL BE APPROVED BY FAA THROUGH THE ENGINEER.
2. WORK BELOW ORDINARY HIGH WATER IN ANADROMOUS STREAMS IS SUBJECT TO PERMIT STIPULATIONS AND TIMING WINDOWS
3. WORK BELOW HIGH TIDE LINE IN TONGASS NARROWS IS SUBJECT TO PERMIT STIPULATIONS AND ENVIRONMENTAL COMMITMENTS.
4. DO NOT DAMAGE OR INTERRUPT POWER TO DME AND NDB.
5. MAINTAIN LOC/DME BUILDING IN ITS EXISTING CONDITION

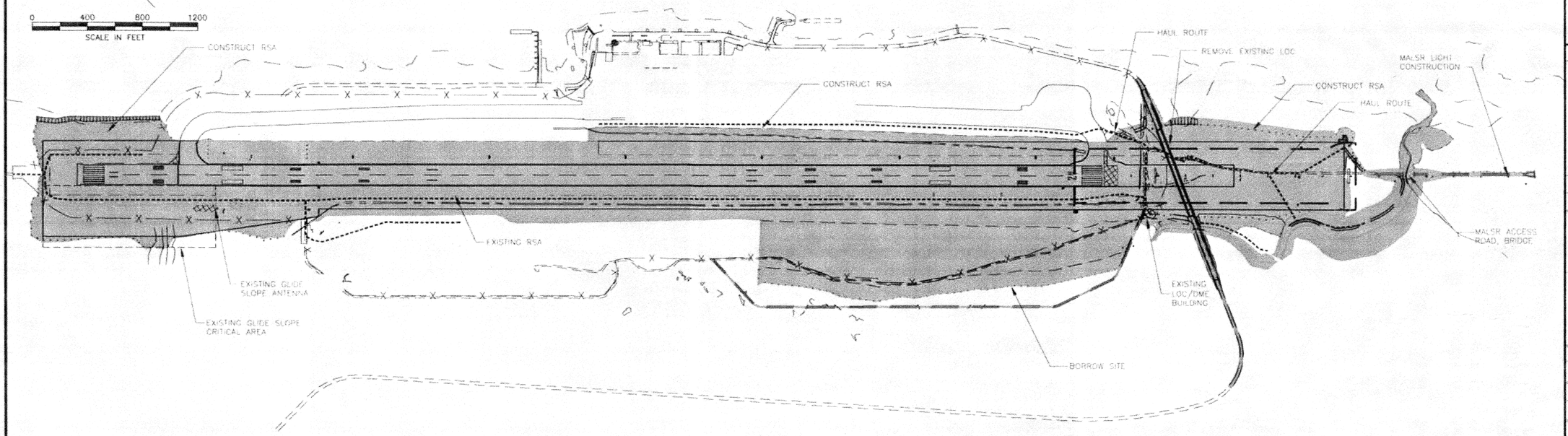

DO NOT SCALE FROM THESE DRAWINGS USE DIMENSIONS

PATH: I:\B23400\Dwgs\C\Sheets\A07.dwg
Wed, 08/Nov/06 01:38PM bpaddock
TAB: A07

ADDENDUM NUMBER

ATTACHMENT NUMBER

RECORD OF REVISIONS

No.	DATE	DESCRIPTION

KETCHIKAN AIRPORT
RUNWAY SAFETY AREA EXPANSION
& RUNWAY OVERLAY
PROJECT NO. 68306

SAFETY PLAN CONSTRUCTION SEQUENCING STAGES 2 & 3

PREPARED BY: USKH INC

CHECKED BY: DLM

STATE OF ALASKA 49 TH — D. Lance Mearig CE-7435 — 08Nov06 — REGISTERED PROFESSIONAL ENGINEER

DESIGNED BY: NCL

DRAWN BY: WJP

STATE OF ALASKA
DEPARTMENT OF TRANSPORTATION
& PUBLIC FACILITIES
DESIGN & ENGINEERING SERVICES
DIVISION—SOUTHEAST REGION

SAFETY PLAN CONSTRUCTION SEQUENCING STAGES 2 & 3

PROJECT DESIGNATION	
AIP NO. 3-02-0144-1606	
STATE	YEAR
ALASKA	2006
SHEET NUMBER	TOTAL SHEETS
A7	131

STAGE 4

RESTRICTIONS:

1. WORK UNDER THIS STAGE WILL COINCIDE WITH HALF-WIDTH OPERATIONS ON THE SOUTH SIDE OF THE RUNWAY. COMPLY WITH SAFETY PLAN REQUIREMENTS.
2. DO NOT EXCAVATE OR PLACE FILL IN THE EXISTING GLIDE SLOPE CRITICAL AREA.
3. WORK BELOW ORDINARY HIGH WATER IN ANADROMOUS STREAMS IS SUBJECT TO PERMIT STIPULATIONS AND TIMING WINDOWS.
4. WORK BELOW HIGH TIDE LINE IN TONGASS NARROWS IS SUBJECT TO PERMIT STIPULATIONS AND ENVIRONMENTAL COMMITMENTS.
5. DO NOT DAMAGE OR INTERRUPT POWER TO DME AND NDB.
6. MAINTAIN LOC/DME BUILDING IN ITS EXISTING CONDITION.

0 400 800 1200
SCALE IN FEET

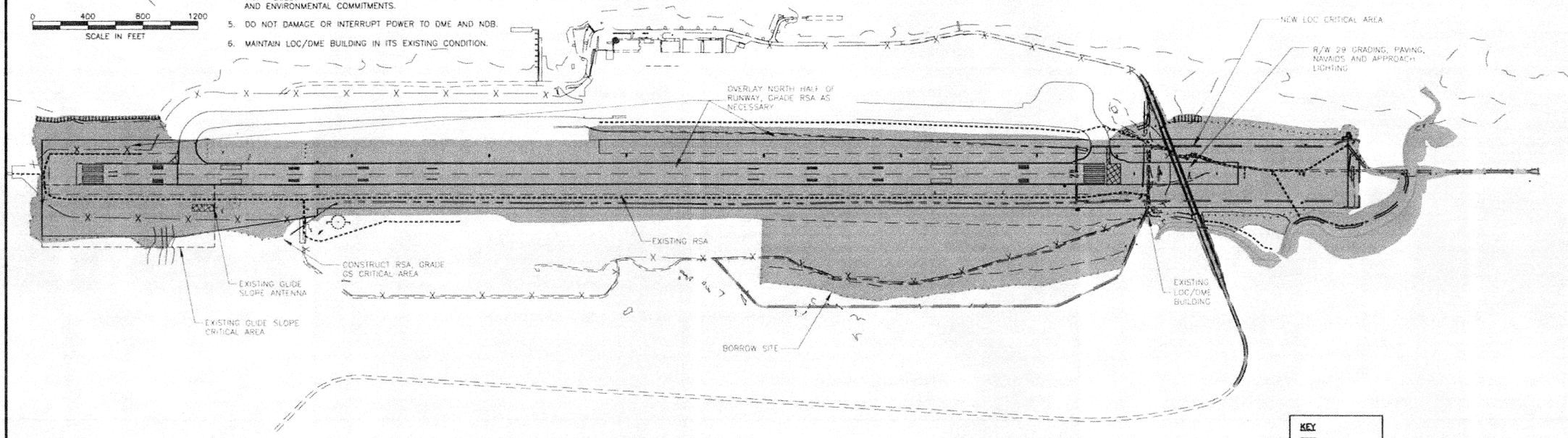

KEY
- ALLOWED
- LIMITED
- RESTRICTED

COLOR PLAN SHEET

STAGE 5

RESTRICTIONS:

1. WORK UNDER THIS STAGE WILL COINCIDE WITH HALF-WIDTH OPERATIONS ON THE NORTH SIDE OF THE RUNWAY. COMPLY WITH SAFETY PLAN REQUIREMENTS.
2. DO NOT EXCAVATE OR PLACE FILL IN THE EXISTING GLIDE SLOPE CRITICAL AREA.
3. WORK BELOW ORDINARY HIGH WATER IN ANADROMOUS STREAMS IS SUBJECT TO PERMIT STIPULATIONS AND TIMING WINDOWS.
4. WORK BELOW HIGH TIDE LINE IN TONGASS NARROWS IS SUBJECT TO PERMIT STIPULATIONS AND ENVIRONMENTAL COMMITMENTS.
5. DO NOT DAMAGE OR INTERRUPT POWER TO DME AND NDB.
6. MAINTAIN LOC/DME BUILDING IN ITS EXISTING CONDITION.

0 400 800 1200
SCALE IN FEET

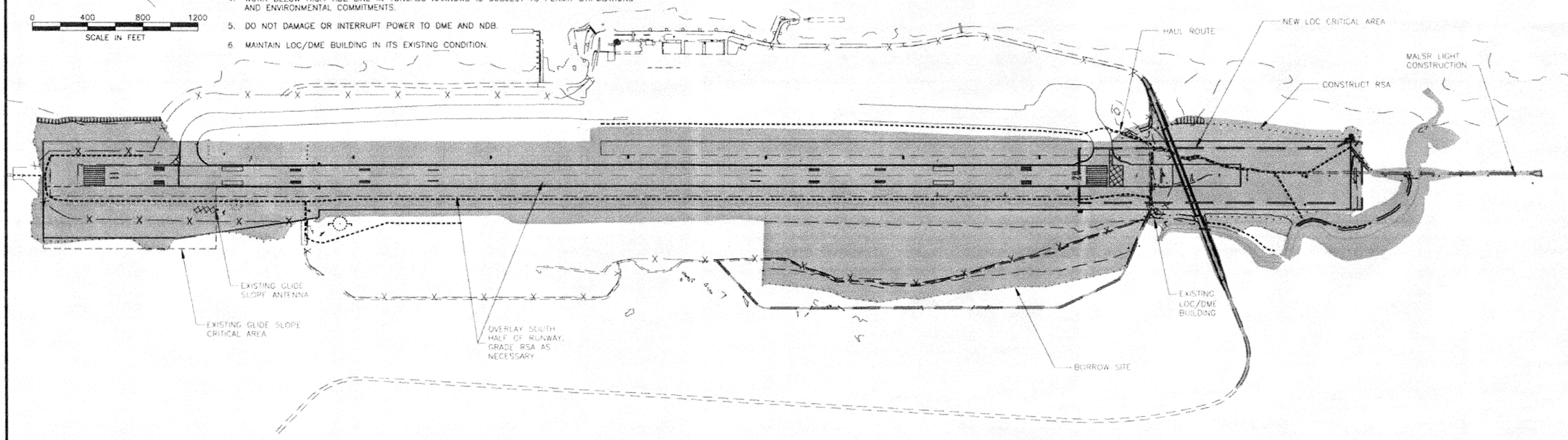

DO NOT SCALE FROM THESE DRAWINGS USE DIMENSIONS

PATH: I:\823400\Dwgs\C\Sheets\A08.dwg
Wed, 08/Nov/06 01:39PM bpaddock
TAB: A08

ADDENDUM NUMBER

ATTACHMENT NUMBER

RECORD OF REVISIONS

No.	DATE	DESCRIPTION

KETCHIKAN AIRPORT
RUNWAY SAFETY AREA EXPANSION
& RUNWAY OVERLAY
PROJECT NO. 68306

SAFETY PLAN CONSTRUCTION SEQUENCING STAGE 4 & 5

PREPARED BY: USKH INC.

CHECKED BY: DLM

STATE OF ALASKA 49TH D. Lance Mearig CE-7435 REGISTERED PROFESSIONAL ENGINEER

DESIGNED BY: NCL

DRAWN BY: WJP

STATE OF ALASKA
DEPARTMENT OF TRANSPORTATION & PUBLIC FACILITIES
DESIGN & ENGINEERING SERVICES
DIVISION - SOUTHEAST REGION

SAFETY PLAN CONSTRUCTION SEQUENCING STAGES 4 & 5

PROJECT DESIGNATION	
AIP NO. 3-02-0144-1606	
STATE	YEAR
ALASKA	2006
SHEET NUMBER	TOTAL SHEETS
A8	131

STAGE 6

RESTRICTIONS:

1. WORK UNDER THIS STAGE WILL COINCIDE WITH THE GLIDE SLOPE OUTAGE, WHICH MAY NOT OCCUR FROM THE MONDAY PRECEDING THE THANKSGIVING HOLIDAY UNTIL THE FRIDAY FOLLOWING THE CHRISTMAS HOLIDAY. THE GLIDE SLOPE OUTAGE WILL BE LIMITED TO THREE (3) CALENDAR DAYS AND TIMING WILL BE APPROVED BY FAA THROUGH THE ENGINEER.
2. THE R/W 11 PAPI MUST REMAIN IN SERVICE DURING THE GLIDE SLOPE OUTAGE.
3. WORK BELOW ORDINARY HIGH WATER IN ANADROMOUS STREAMS IS SUBJECT TO PERMIT STIPULATIONS AND TIMING WINDOWS.
4. WORK BELOW HIGH TIDE LINE IN TONGASS NARROWS IS SUBJECT TO PERMIT STIPULATIONS AND ENVIRONMENTAL COMMITMENTS.
5. DO NOT DAMAGE OR INTERRUPT POWER TO NDB.

0 400 800 1200
SCALE IN FEET

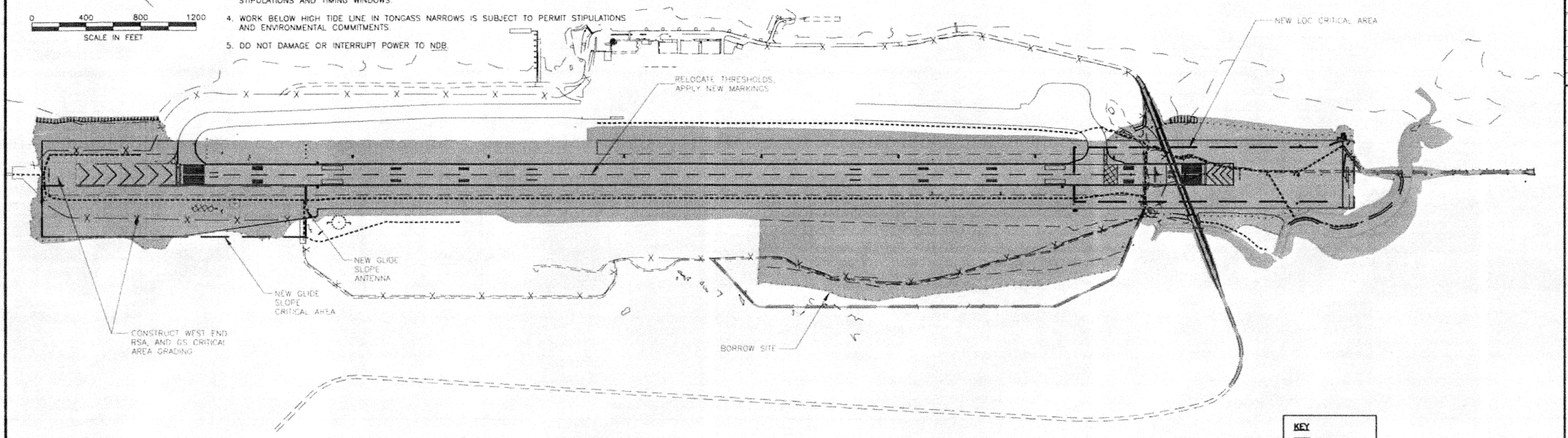

KEY
- ALLOWED
- LIMITED
- RESTRICTED

COLOR PLAN SHEET

STAGE 7

RESTRICTIONS:

1. DO NOT EXCAVATE OR PLACE FILL IN THE GLIDE SLOPE OR LOC CRITICAL AREAS.
2. DO NOT INTERFERE WITH ILS OPERATIONS.
3. WORK BELOW ORDINARY HIGH WATER IN ANADROMOUS STREAMS IS SUBJECT TO PERMIT STIPULATIONS AND TIMING WINDOWS.
4. WORK BELOW HIGH TIDE LINE IN TONGASS NARROWS IS SUBJECT TO PERMIT STIPULATIONS AND ENVIRONMENTAL COMMITMENTS.
5. DO NOT DAMAGE OR INTERRUPT POWER TO NDB.

0 400 800 1200
SCALE IN FEET

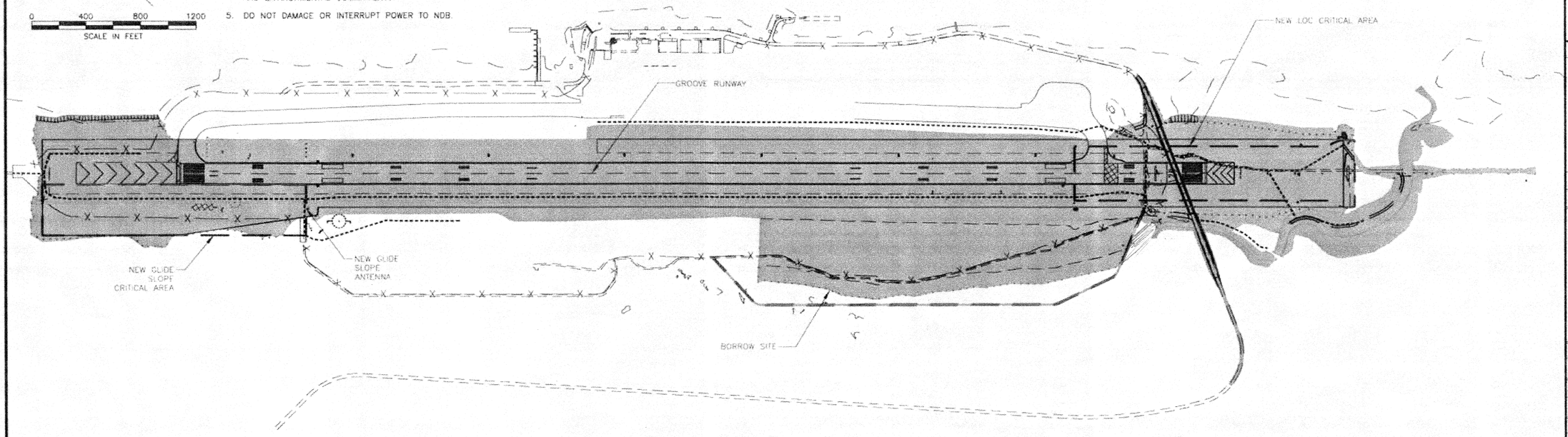

DO NOT SCALE FROM THESE DRAWINGS USE DIMENSIONS

PATH: I:\823400\Dwgs\C\Sheets\A09.dwg
Wed, 06/Nov/06 01:40PM bpaddock
TAB: A09

ADDENDUM NUMBER

ATTACHMENT NUMBER

RECORD OF REVISIONS

No.	DATE	DESCRIPTION

KETCHIKAN AIRPORT
RUNWAY SAFETY AREA EXPANSION
& RUNWAY OVERLAY
PROJECT NO. 68306

SAFETY PLAN CONSTRUCTION SEQUENCING STAGES 6 & 7

PREPARED BY: USKH INC.

CHECKED BY: DLM

STATE OF ALASKA 49TH
D Lance Mealig
CE 7435
06Nov06
REGISTERED PROFESSIONAL ENGINEER

DESIGNED BY: NCL

DRAWN BY: WJP

STATE OF ALASKA
DEPARTMENT OF TRANSPORTATION
& PUBLIC FACILITIES
DESIGN & ENGINEERING SERVICES
DIVISION–SOUTHEAST REGION

SAFETY PLAN CONSTRUCTION SEQUENCING STAGES 6 & 7

PROJECT DESIGNATION
AIP NO. 3-02-0144-1606

STATE	YEAR
ALASKA	2006
SHEET NUMBER	TOTAL SHEETS
A9	131

NOTES:

1. WHEN THE ACTIVE RUNWAY IS REDUCED TO HALF-WIDTH (75 FT.) THE CORRESPONDING RSA IS REDUCED TO 400 FT. WIDE CENTERED ON THE 75 FT. ACTIVE RUNWAY.
2. KEEP ALL PERSONNEL, EQUIPMENT AND MATERIALS OUTSIDE THE RUNWAY SAFETY AREA WHEN THE ACTIVE RUNWAY IS OPEN TO AIR OPERATIONS.
3. EQUIPMENT WILL ONLY BE PERMITTED INSIDE OF AOA AS APPROVED BY THE ENGINEER.
4. MAINTAIN AIRCRAFT ACCESS TO ONE TAXIWAY AT ALL TIMES.
5. SEE SPECIFICATIONS FOR LIMITATIONS, OPERATIONAL SAFETY REQUIREMENTS, AND TEMPORARY LIGHTING REQUIREMENTS.
6. PROVIDE SUFFICIENT BALLAST OR ANCHORING P.K. NAIL ON TEMPORARY LIGHTING CONES TO WITHSTAND JET BLAST.
7. A TRANSITION WEDGE WILL BE REQUIRED FOR AIRCRAFT MOVEMENT ACROSS VERTICAL DROPS OF TWO (2) INCHES OR MORE. SEE DETAIL

NORTH HALF RUNWAY CLOSURE

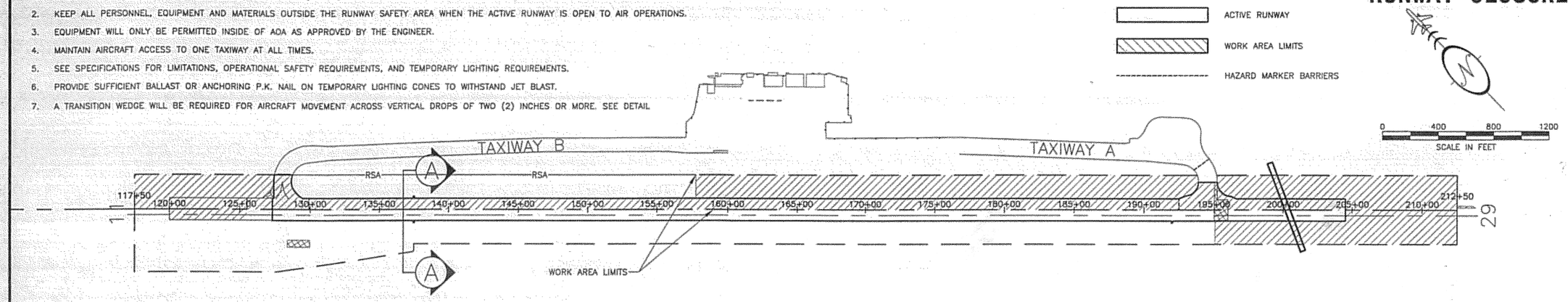

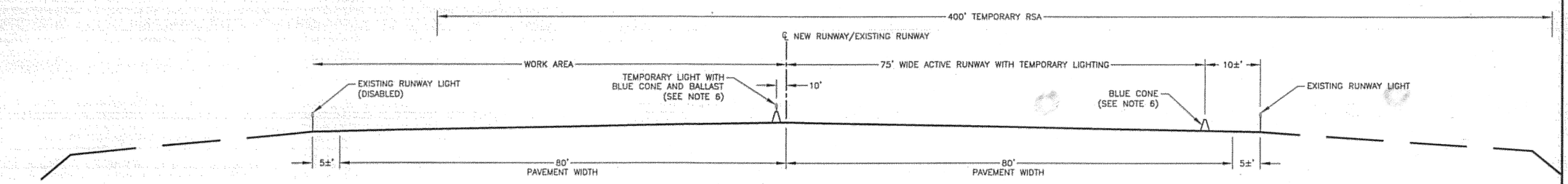

TYPICAL SECTION A-A

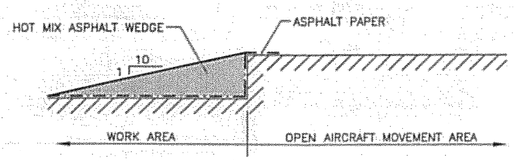

TRANSITION WEDGE DETAIL
SEE NOTE 7

SOUTH HALF RUNWAY CLOSURE

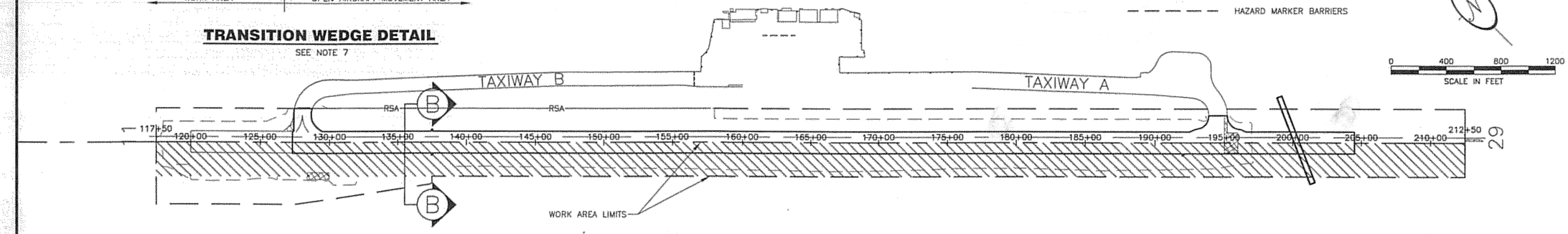

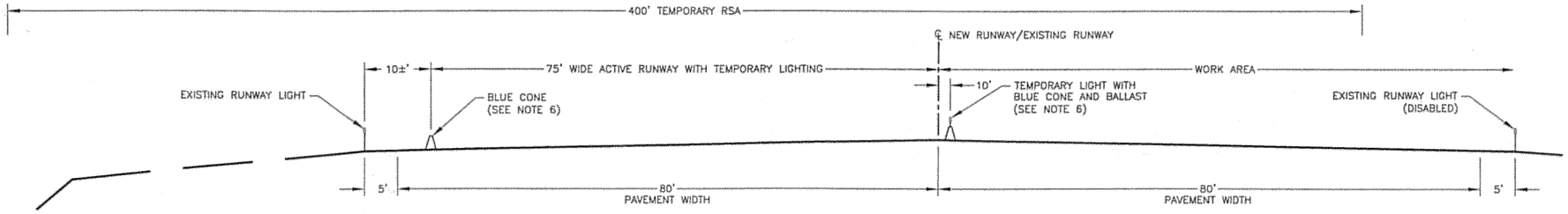

TYPICAL SECTION B-B

DO NOT SCALE FROM THESE DRAWINGS USE DIMENSIONS

PATH: I:\823400\Dwgs\C\Sheets\A10.dwg
Wed, 04/Oct/06 08:38AM bpaddock
TAB: A10

ADDENDUM NUMBER

ATTACHMENT NUMBER

RECORD OF REVISIONS

No.	DATE	DESCRIPTION

KETCHIKAN AIRPORT
RUNWAY SAFETY AREA EXPANSION
& RUNWAY OVERLAY
PROJECT NO. 68306

SAFETY PLAN HALF-WIDTH RUNWAY OPERATIONS

PREPARED BY: USKH INC.
CHECKED BY: DLM

STATE OF ALASKA 49TH
D. Lance Mearig CE-7435 REGISTERED PROFESSIONAL ENGINEER
04 Oct 06

DESIGNED BY: NCL
DRAWN BY: WJP

STATE OF ALASKA
DEPARTMENT OF TRANSPORTATION & PUBLIC FACILITIES
DESIGN & ENGINEERING SERVICES
DIVISION-SOUTHEAST REGION

SAFETY PLAN HALF-WIDTH RUNWAY OPERATIONS

PROJECT DESIGNATION	
AIP NO. 3-02-0144-1606	
STATE	YEAR
ALASKA	2006
SHEET NUMBER	TOTAL SHEETS
A10	131

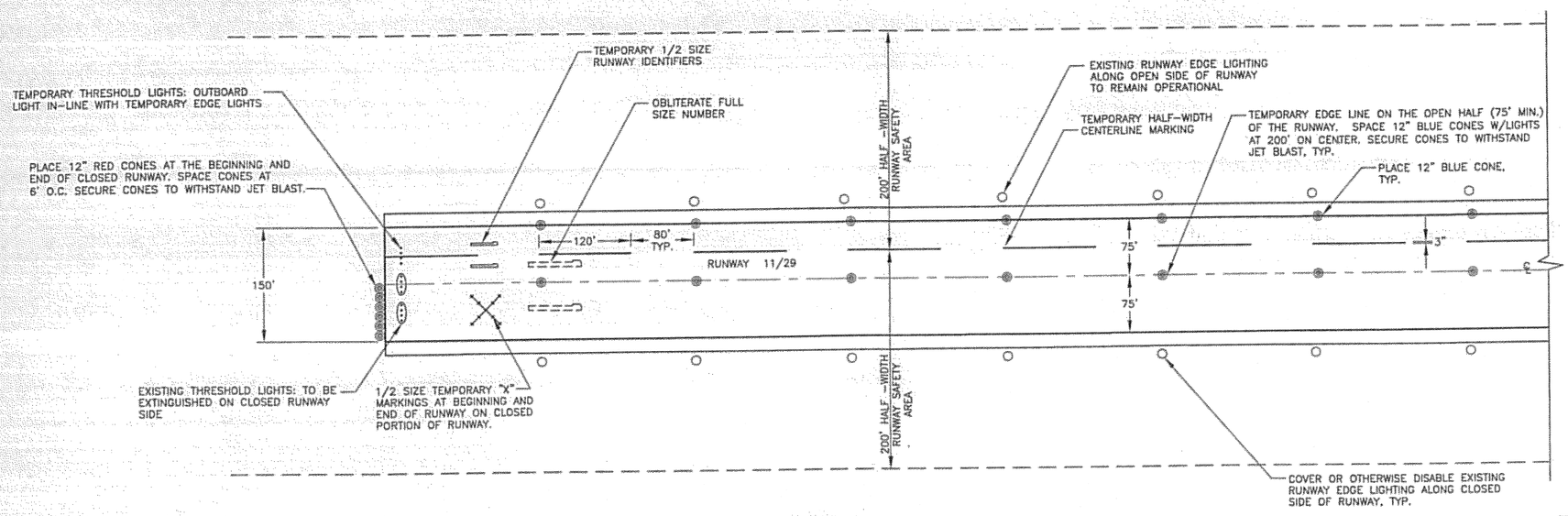

RUNWAY 11/29 - PARTIAL WIDTH CLOSURE

N.T.S.

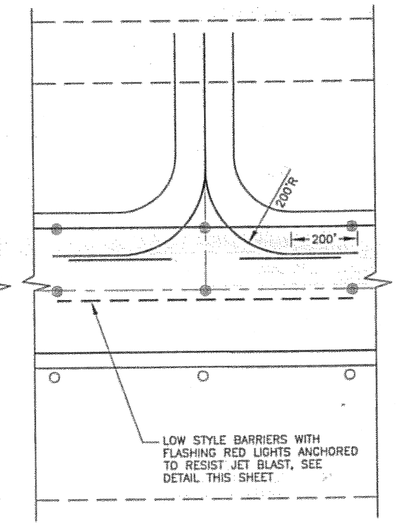

RUNWAY - TAXIWAY INTERSECTION

NOTES:

1. LIMIT HALF-WIDTH RUNWAY CLOSURE TO THOSE STAGES SHOWN IN THE SAFETY PLAN.
2. PLACE BARRIERS TO LIMIT ACCESS TO THE CLOSED PORTION OF THE RUNWAY. USE LOW STYLE BARRIERS (LESS THAN 12 INCHES HIGH) WHEN ADJACENT TO AN ACTIVE MOVEMENT AREA.
3. PHYSICALLY REMOVE ALL CONFLICTING RUNWAY MARKINGS BY SAND BLASTING, CHEMICAL REMOVER OR BY OTHER APPROVED MEANS. PAINTING OVER OR OTHERWISE MASKING TEMPORARY MARKINGS IS STRICTLY FORBIDDEN.
4. DISABLE AND PREVENT THE OPERATION OF RUNWAY EDGE LIGHTS AND RUNWAY THRESHOLD LIGHTS IN A CLOSED PORTION OF THE RUNWAY.
5. USE PAINTED AIRPORT MARKINGS THAT ARE CONCISE AND CLEARLY VISIBLE TO PILOTS AND ARE NOT MISLEADING, CONFUSING, OR DECEPTIVE.
6. USE TEMPORARY LIGHTING TO OUTLINE THE ACTIVE RUNWAY FOR HALF-WIDTH OPERATIONS.
7. THE RSA FOR HALF-WIDTH OPERATIONS IS 200 FT. EACH SIDE OF THE HALF-WIDTH CENTERLINE.

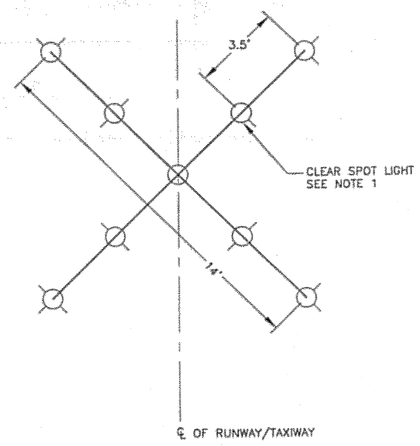

NOTES:

1. REFER TO FAA CIRCULAR 150/5345-55 FOR DETAILS.
2. PLACE CROSSES AT EACH END OF THE CLOSED PORTION OF THE RUNWAY/TAXIWAY.

TEMPORARY CLOSURE MARKINGS

N.T.S.

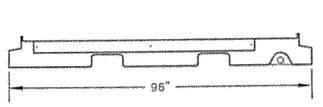

ELEVATION VIEW

SIDE VIEW

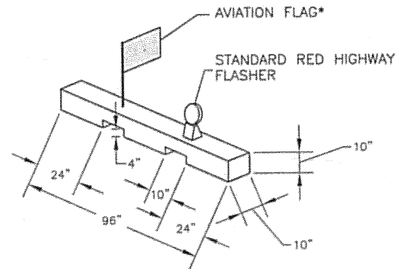

PREPARATION OF
FLAG & FLASHER MOUNT DETAIL

HAZARDOUS AREA BARRIERS

*FLAGS SHALL ALTERNATE COLOR (ORANGE/WHITE) ON EACH BARRIER AS THEY ARE PLACED IN THE AIRPORT OPERATIONS AREA, IN SEQUENCE.

DO NOT SCALE FROM THESE DRAWINGS USE DIMENSIONS

PATH: I:\823400\Dwgs\C\Sheets\A11.dwg
Wed, 04/Oct/06 08:38AM bpaddock
TAB: A11

ADDENDUM NUMBER
ATTACHMENT NUMBER

RECORD OF REVISIONS

No.	DATE	DESCRIPTION

KETCHIKAN AIRPORT
RUNWAY SAFETY AREA EXPANSION
& RUNWAY OVERLAY
PROJECT NO. 68306

SAFETY PLAN DETAILS

PREPARED BY: USKH INC.

CHECKED BY: DLM

STATE OF ALASKA 49TH D. Lance Mearig CE-7435 04 Oct 06 REGISTERED PROFESSIONAL ENGINEER

DESIGNED BY: NCL

DRAWN BY: WJP

STATE OF ALASKA
DEPARTMENT OF TRANSPORTATION & PUBLIC FACILITIES
DESIGN & ENGINEERING SERVICES
DIVISION-SOUTHEAST REGION

SAFETY PLAN DETAILS

PROJECT DESIGNATION	
AIP NO. 3-02-0144-1606	
STATE	YEAR
ALASKA	2006
SHEET NUMBER	TOTAL SHEETS
A11	131

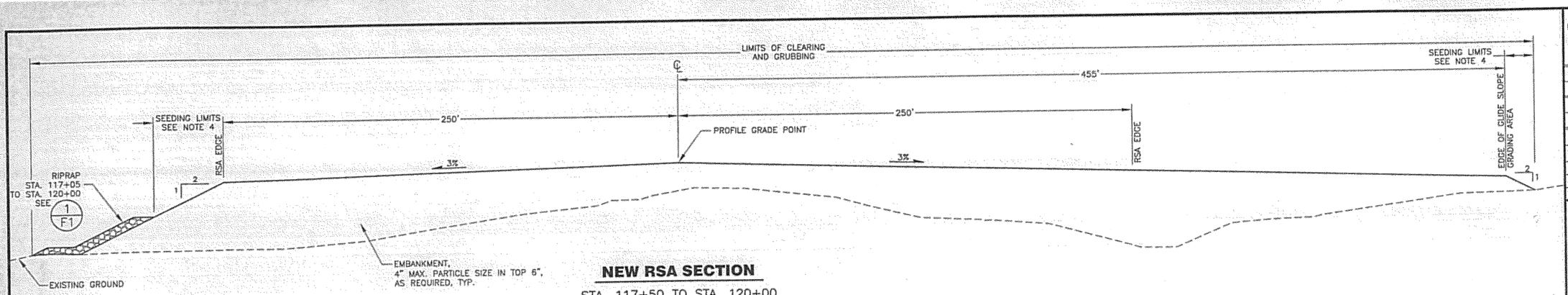

NEW RSA SECTION

STA. 117+50 TO STA. 120+00

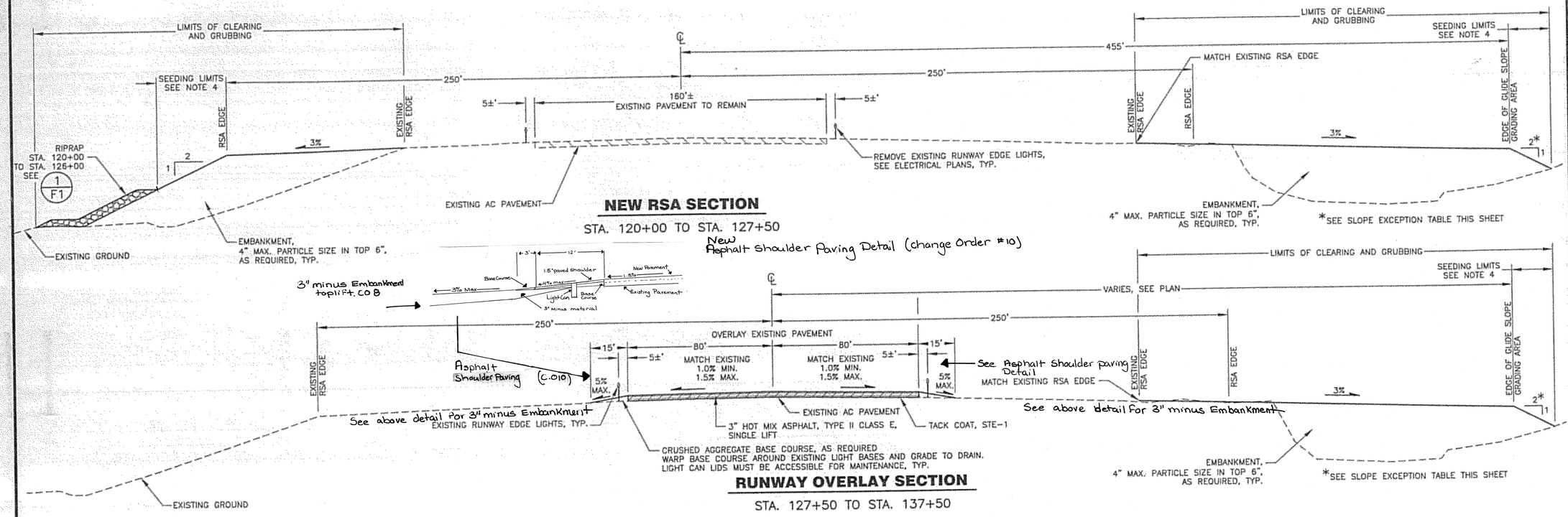

NEW RSA SECTION

STA. 120+00 TO STA. 127+50

New Asphalt Shoulder Paving Detail (Change Order #10)

RUNWAY OVERLAY SECTION

STA. 127+50 TO STA. 137+50

TYPICAL SECTION NOTES:

1. COLD PLANE EXISTING PAVEMENT 2–INCHES BELOW EXISTING GRADE IN CRACKED AND DISTRESSED AREAS, AS DIRECTED BY THE ENGINEER. THE ENGINEER WILL FIELD DETERMINE THE PAVEMENT MILLING WIDTH AND LENGTH.
2. SEAL EXISTING CRACKS PRIOR TO PAVEMENT OVERLAY AS DIRECTED BY THE ENGINEER.
3. PROVIDE TACK COAT BETWEEN ALL LIFTS AND LAYERS OF HOT MIX ASPHALT PAVEMENT.
4. SEED SOIL EMBANKMENT SIDE SLOPES. DO NOT SEED ROCK SIDE SLOPES. THE ENGINEER WILL DIRECT THE LIMITS REQUIRED FOR THIS WORK.
5. REGRADE AND SEED ALL AREAS DISTURBED BY CONSTRUCTION
6. PLACE ORGANIC MATTER (PEAT, ORGANIC SILT, SOD) ON CUT AND FILL SLOPES, MAXIMUM THICKNESS OF 1 FT OR AS DIRECTED BY THE ENGINEER. DO NOT PLACE ORGANIC MATTER ON EMBANKMENT SLOPES BELOW THE HTL ELEVATION (19.40 FT) OR WITHIN 4 VERTICAL FT OF PROPOSED FINISHED GRADE.

SIDE SLOPE EXCEPTION TABLE

STATION	FORESLOPE	DISTANCE TO LOW POINT (FT)	BACKSLOPE	DEPTH (FT)
124+00	5:1	17	–	–
124+50	15:1	49	–	–
125+00	33:1	93	–	–
125+50	33:1	78	–	–
126+00	50:1	75	2:1	–
126+50	54:1	90	–	–
127+00	1.5:1	2.3	1.5:1	5
127+50	1.5:1	2.3	1.5:1	1.2
128+00	1.5:1	2.3	1.5:1	1.6
128+50	1.5:1	2	2.3:1	0.8
131+00	4:1	14.8	–	–
131+50	6:1	25	–	–

SIDE SLOPE EXCEPTION TABLE

STATION	FORESLOPE	DISTANCE TO LOW POINT (FT)	BACKSLOPE	DEPTH (FT)
132+00	11:1	43.7	–	–
132+50	20:1	69	–	–
133+00	26:1	86	–	–
133+50	36:1	117	–	–
134+00	33:1	115	–	–
134+50	55:1	116	–	–
135+00	55:1	110	–	–
135+50	38:1	33	–	–
136+00	–	–	2:1	1.7
136+50	–	–	2:1	2.1
137+00	–	–	2:1	1.3
137+50	–	–	15:1	–

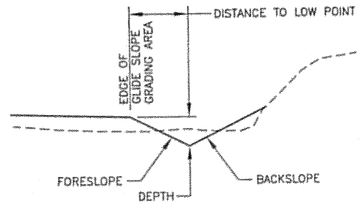

SIDE SLOPE EXCEPTION GRADING DETAIL

TABLE NOTES:

1. PROVIDE SMOOTH GRADE TRANSITIONS BETWEEN STATIONS.
2. GRADE TO DRAIN AS INDICATED IN PLAN VIEW ON SHEET E1.

DO NOT SCALE FROM THESE DRAWINGS USE DIMENSIONS

PATH: I:\823400\Dwgs\C\Sheets\B01.dwg
Wed, 04/Oct/06 08:38AM bpaddock
TAB: B01

ADDENDUM NUMBER
ATTACHMENT NUMBER

RECORD OF REVISIONS

No.	DATE	DESCRIPTION

KETCHIKAN AIRPORT
RUNWAY SAFETY AREA EXPANSION & RUNWAY OVERLAY
PROJECT NO. 68306

TYPICAL SECTIONS

PREPARED BY: USKH INC.

CHECKED BY: DLM

STATE OF ALASKA 49TH
D. Lance Mearig
CE-7435
04Oct06
REGISTERED PROFESSIONAL ENGINEER

DESIGNED BY: EJG

DRAWN BY: WJP

STATE OF ALASKA
DEPARTMENT OF TRANSPORTATION & PUBLIC FACILITIES
DESIGN & ENGINEERING SERVICES
DIVISION–SOUTHEAST REGION

TYPICAL SECTIONS

PROJECT DESIGNATION
AIP NO. 3-02-0144-1606

STATE	YEAR
ALASKA	2006
SHEET NUMBER	TOTAL SHEETS
B1	131

NOTES:

1. COLD PLANE EXISTING PAVEMENT 2-INCHES BELOW EXISTING GRADE IN CRACKED AND DISTRESSED AREAS, AS DIRECTED BY THE ENGINEER. THE ENGINEER WILL FIELD DETERMINE THE PAVEMENT MILLING WIDTH AND LENGTH.
2. SEAL EXISTING CRACKS PRIOR TO PAVEMENT OVERLAY AS DIRECTED BY THE ENGINEER.
3. PROVIDE TACK COAT BETWEEN ALL LIFTS AND LAYERS OF HOT MIX ASPHALT PAVEMENT.
4. SEED SOIL EMBANKMENT SIDE SLOPES. DO NOT SEED ROCK SIDE SLOPES. THE ENGINEER WILL DIRECT THE LIMITS REQUIRED FOR THIS WORK.
5. REGRADE AND SEED ALL AREAS DISTURBED BY CONSTRUCTION
6. PLACE ORGANIC MATTER (PEAT, ORGANIC SILT, SOD) ON CUT AND FILL SLOPES, MAXIMUM THICKNESS OF 1 FT OR AS DIRECTED BY THE ENGINEER. DO NOT PLACE ORGANIC MATTER ON EMBANKMENT SLOPES BELOW THE HTL ELEVATION (19.40 FT) OR WITHIN 4 VERTICAL FT OF PROPOSED FINISHED GRADE.

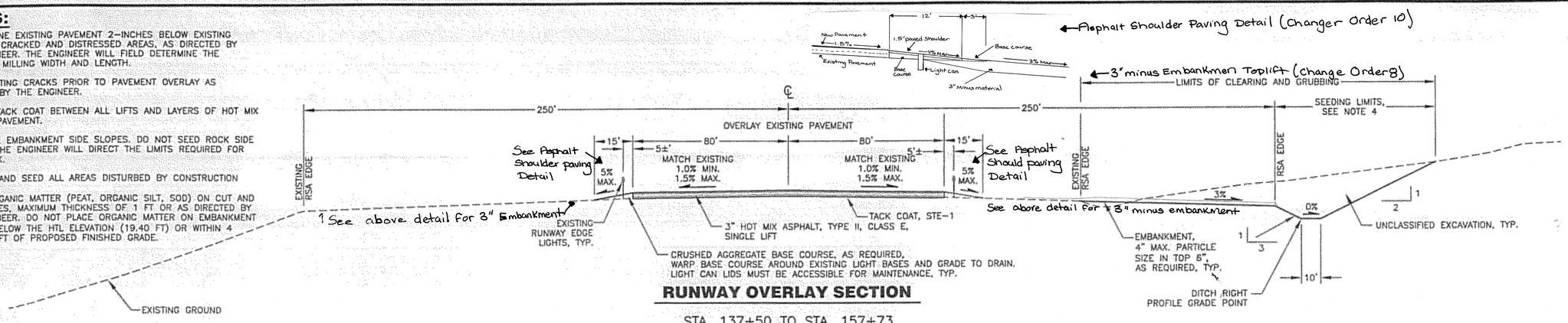

RUNWAY OVERLAY SECTION
STA. 137+50 TO STA. 157+73

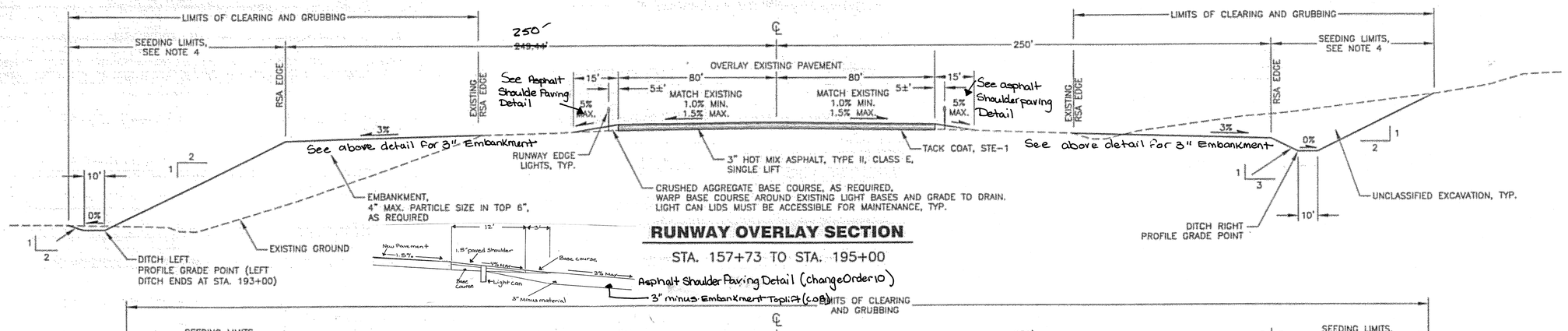

RUNWAY OVERLAY SECTION
STA. 157+73 TO STA. 195+00

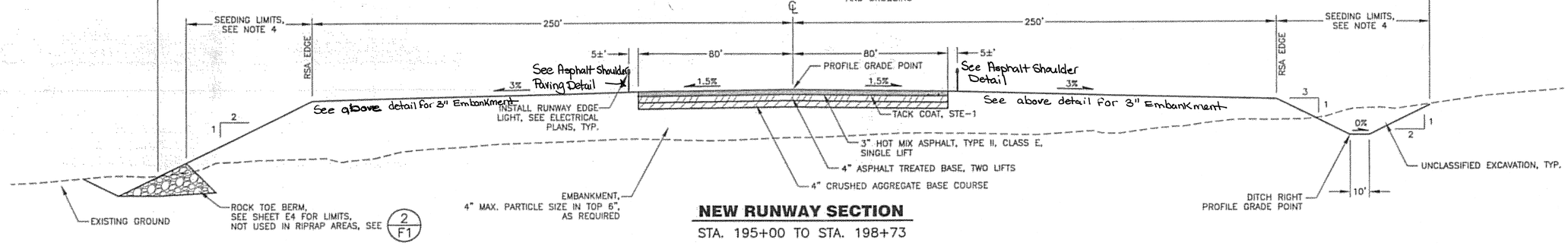

NEW RUNWAY SECTION
STA. 195+00 TO STA. 198+73

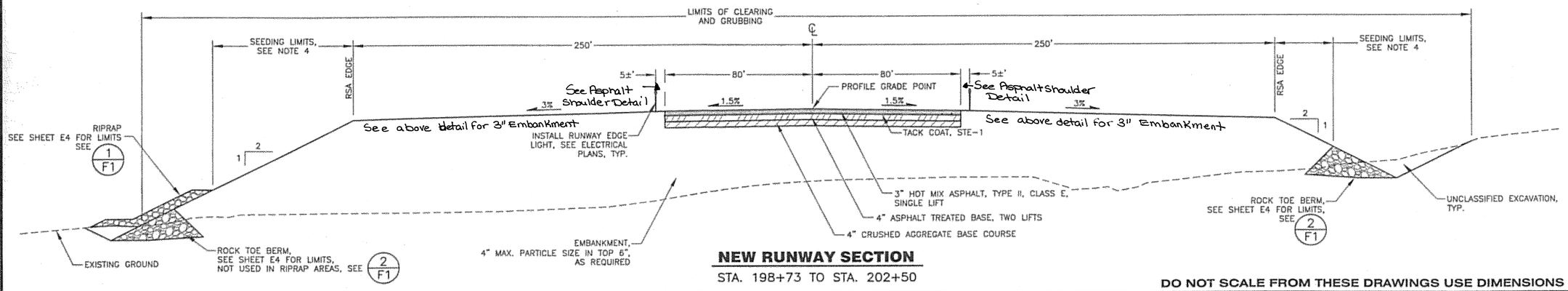

NEW RUNWAY SECTION
STA. 198+73 TO STA. 202+50

DO NOT SCALE FROM THESE DRAWINGS USE DIMENSIONS

PATH: I:\B23400\Dwgs\C\Sheets\B02.dwg
Wed, 04/Oct/06 08:38AM bpaddock
TAB: B02

ADDENDUM NUMBER
ATTACHMENT NUMBER

RECORD OF REVISIONS

No.	DATE	DESCRIPTION

KETCHIKAN AIRPORT
RUNWAY SAFETY AREA EXPANSION
& RUNWAY OVERLAY
PROJECT NO. 68306

TYPICAL SECTIONS

PREPARED BY: USKH INC.
CHECKED BY: DLM

STATE OF ALASKA 49 TH
D. Lance Mearig
CE-7435
04Oct06
REGISTERED PROFESSIONAL ENGINEER

DESIGNED BY: EJG
DRAWN BY: WJP

STATE OF ALASKA
DEPARTMENT OF TRANSPORTATION & PUBLIC FACILITIES
DESIGN & ENGINEERING SERVICES
DIVISION-SOUTHEAST REGION

TYPICAL SECTIONS

PROJECT DESIGNATION	
AIP NO. 3-02-0144-1606	
STATE	YEAR
ALASKA	2006
SHEET NUMBER	TOTAL SHEETS
B2	131

NOTES:

1. SEED SOIL EMBANKMENT SIDE SLOPES. DO NOT SEED ROCK SIDE SLOPES. THE ENGINEER WILL DETERMINE THE LIMITS OF THIS WORK.
2. REGRADE AND SEED ALL AREAS DISTURBED BY CONSTRUCTION.
3. PLACE ORGANIC MATTER (PEAT, ORGANIC SILT, SOD) ON CUT AND FILL SLOPES, MAXIMUM THICKNESS OF 1 FT OR AS DIRECTED BY THE ENGINEER. DO NOT PLACE ORGANIC MATTER ON EMBANKMENT SLOPES BELOW THE HTL ELEVATION (19.40 FT) OR WITHIN 4 VERTICAL FT OF PROPOSED FINISHED GRADE.

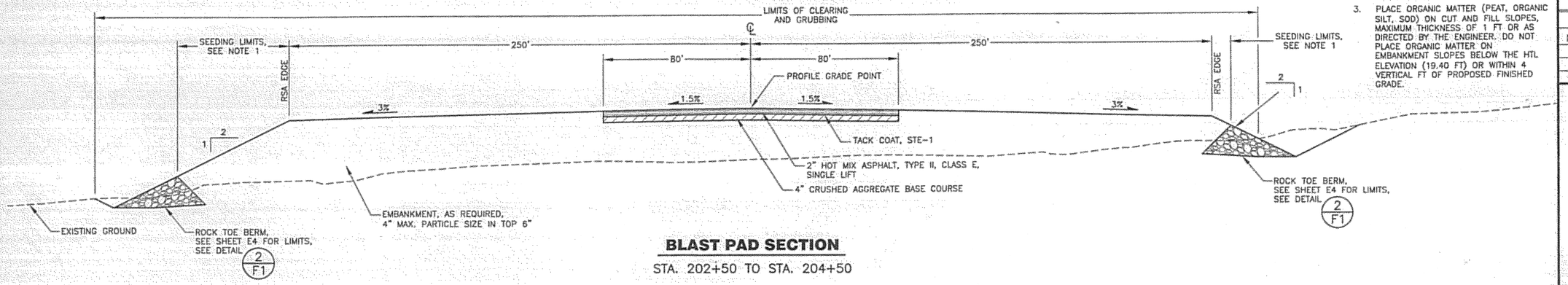

BLAST PAD SECTION

STA. 202+50 TO STA. 204+50

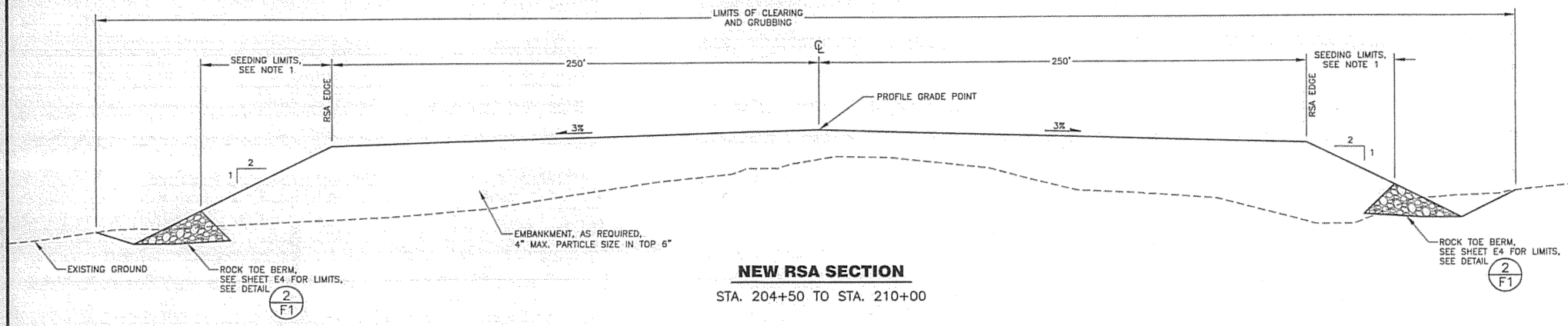

NEW RSA SECTION

STA. 204+50 TO STA. 210+00

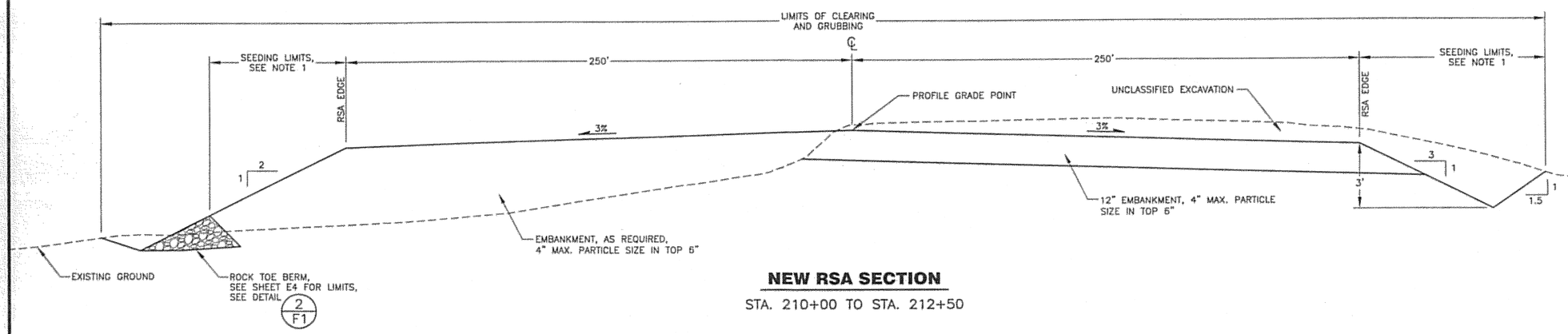

NEW RSA SECTION

STA. 210+00 TO STA. 212+50

DO NOT SCALE FROM THESE DRAWINGS USE DIMENSIONS

PATH: I:\B23400\Dwgs\C\Sheets\B03.dwg

Wed, 04/Oct/06 08:38AM bpaddock

TAB: B03

ADDENDUM NUMBER

ATTACHMENT NUMBER

RECORD OF REVISIONS

No.	DATE	DESCRIPTION

KETCHIKAN AIRPORT
RUNWAY SAFETY AREA EXPANSION
& RUNWAY OVERLAY
PROJECT NO. 68306

TYPICAL SECTIONS

PREPARED BY: USKH INC.

CHECKED BY: DLM

STATE OF ALASKA 49TH — D. Lance Mearig CE-7435 — 10 Oct 06 — REGISTERED PROFESSIONAL ENGINEER

DESIGNED BY: EJG

DRAWN BY: WJP

STATE OF ALASKA
DEPARTMENT OF TRANSPORTATION & PUBLIC FACILITIES
DESIGN & ENGINEERING SERVICES DIVISION–SOUTHEAST REGION

TYPICAL SECTIONS

PROJECT DESIGNATION:

AIP NO. 3-02-0144-1606

STATE	YEAR
ALASKA	2006
SHEET NUMBER	TOTAL SHEETS
B3	131

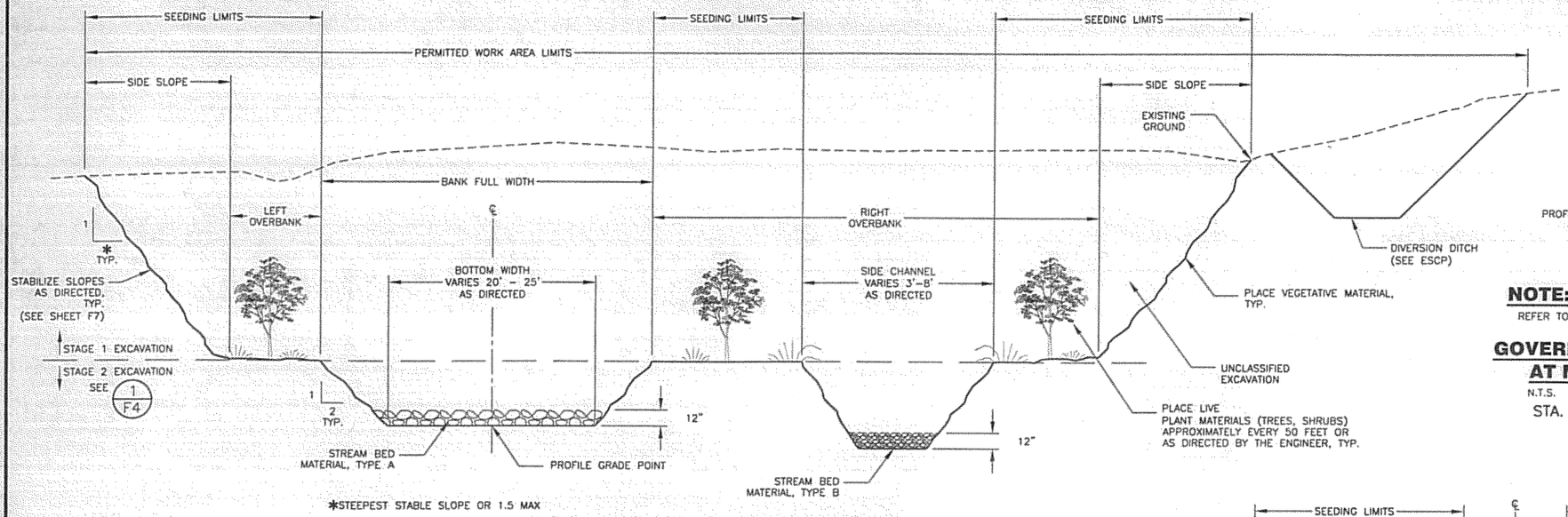

GOVERNMENT CREEK TYPICAL SECTION

N.T.S.

STA. GC 1+00 TO STA. GC 14+74.86
STA. GC 14+87.86 TO STA. GC 15+50

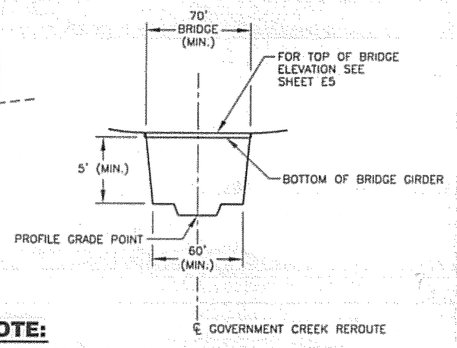

NOTE:

REFER TO GOVERNMENT CREEK TYPICAL SECTION FOR DETAILS

GOVERNMENT CREEK TYPICAL SECTION AT MALSR ACCESS ROAD BRIDGE

N.T.S.

STA. GC 14+74.86 TO STA. GC 14+87.86

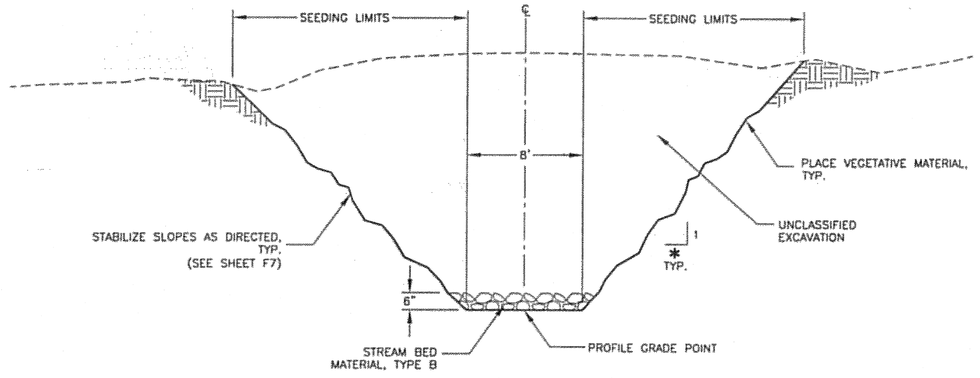

NORTH TRIBUTARY TYPICAL SECTION

N.T.S. STA. NT 1+00 TO STA. NT 11+29.19

NOTES:

1. TYPICAL SECTIONS FOR GOVERNMENT CREEK AND NORTH TRIBUTARY ARE APPROXIMATE AND SUBJECT TO FIELD REVISION BY THE ENGINEER.
2. SEE SHEETS E6-E8 AND F4-F6 FOR DETAILS.
3. FOR ESTUARY, SEE SHEET E14.
3. PLACE ORGANIC MATTER (PEAT, ORGANIC SILT, SOD) ON CUT AND FILL SLOPES, MAXIMUM THICKNESS OF 1 FT OR AS DIRECTED BY THE ENGINEER.
4. DO NOT PLACE ORGANIC MATTER ON EMBANKMENT SLOPES BELOW THE HTL ELEVATION (19.40 FT) OR WITHIN 4 VERTICAL FT OF PROPOSED FINISHED GRADE.

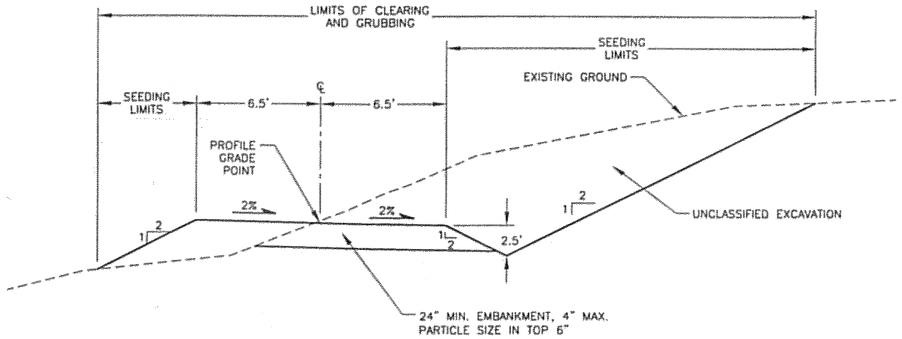

MALSR ACCESS ROAD TYPICAL SECTION

N.T.S. STA. M 1+00 TO STA. M 15+80.64

NOTES:

1. SEED SOIL EMBANKMENT SIDE SLOPES. DO NOT SEED ROCK SIDE SLOPES. THE ENGINEER WILL DETERMINE THE LIMITS OF THIS WORK.
2. REGRADE AND SEED ALL AREAS DISTURBED BY CONSTRUCTION.

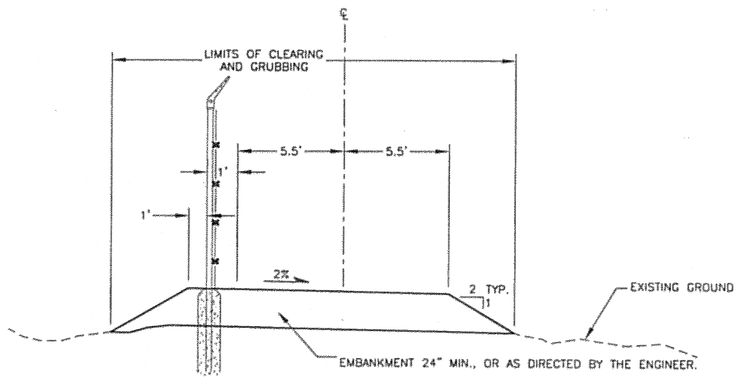

PERIMETER ACCESS ROAD TYPICAL SECTION

N.T.S.

DO NOT SCALE FROM THESE DRAWINGS USE DIMENSIONS

PATH: I:\823400\Dwgs\C\Sheets\B04.dwg
Wed, 04/Oct/06 09:27AM schoudhury
TAB: B04

ADDENDUM NUMBER
ATTACHMENT NUMBER

RECORD OF REVISIONS

No.	DATE	DESCRIPTION

KETCHIKAN AIRPORT
RUNWAY SAFETY AREA EXPANSION
& RUNWAY OVERLAY
PROJECT NO. 68306

TYPICAL SECTIONS

PREPARED BY: USKH INC.
CHECKED BY: DLM

STATE OF ALASKA 49TH
D. Lance Mearig
CE-7435
REGISTERED PROFESSIONAL ENGINEER
04Oct06

DESIGNED BY: EJG
DRAWN BY: WJP

STATE OF ALASKA
DEPARTMENT OF TRANSPORTATION & PUBLIC FACILITIES
DESIGN & ENGINEERING SERVICES
DIVISION-SOUTHEAST REGION

TYPICAL SECTIONS

PROJECT DESIGNATION	
AIP NO. 3-02-0144-1606	
STATE	YEAR
ALASKA	2006
SHEET NUMBER	TOTAL SHEETS
B4	131

SECTION NOTES:

1. SEE GRADING PLANS ON SHEETS E12 AND E13 FOR OVERLAY WIDTHS.
2. COLD PLANE EXISTING PAVEMENT AS NECESSARY TO PLACE A MINIMUM OF 3" HMA AT THE FINISH GRADE ELEVATIONS IN GRADING PLANS.
3. PLACE TACK COAT ON EXISTING PAVEMENT BEFORE OVERLAYING.

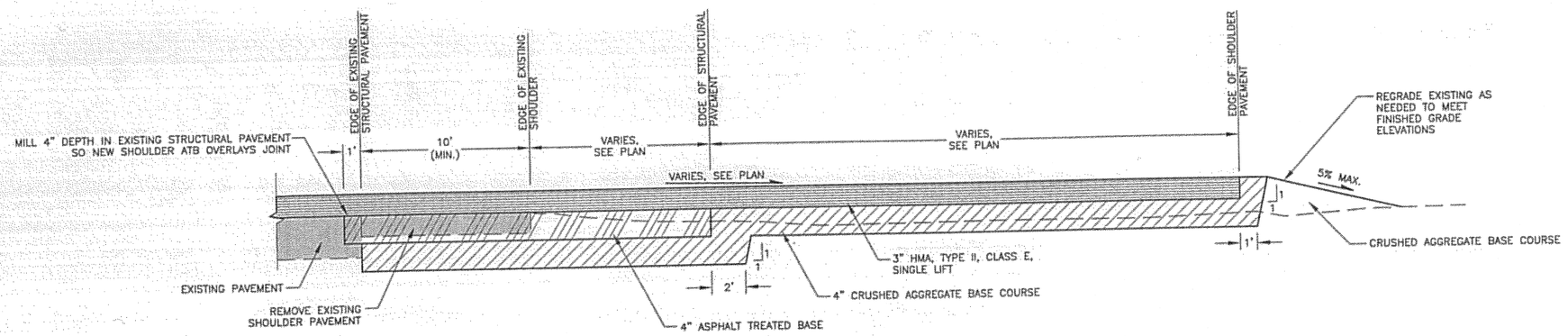

1/B5 **T/W A NEW PAVEMENT SECTION**
N.T.S.

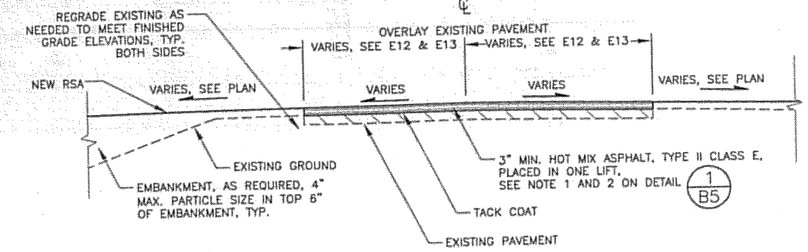

2/B5 **T/W TYPICAL SECTION**
N.T.S.

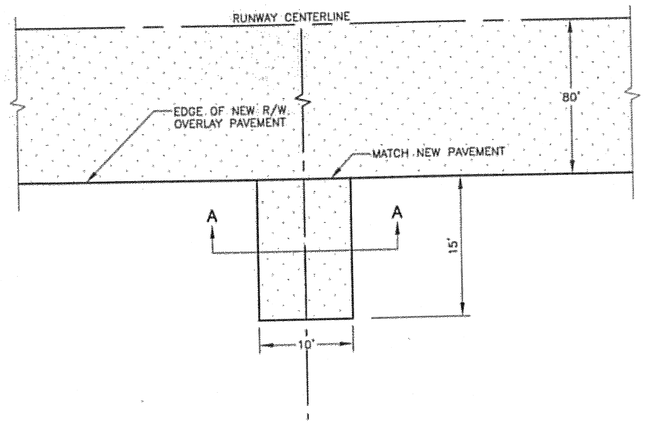

PLAN

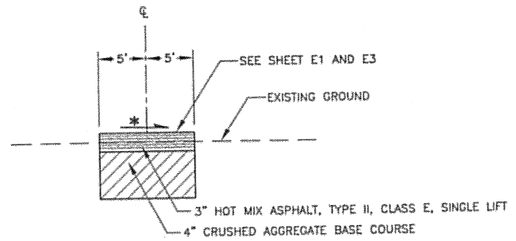

SECTION A-A

* SEE PLAN AND PROFILE SHEETS FOR SLOPE DIRECTION

3/B5 **FOD REMOVAL PAD**
N.T.S.

NOTE:

1. SEE SHEETS E1 AND E3 FOR LOCATION AND FINISHED GRADE PAVEMENT ELEVATIONS.

DO NOT SCALE FROM THESE DRAWINGS USE DIMENSIONS

PATH: I:\823400\Dwgs\C\Sheets\B05.dwg
Wed, 04/Oct/06 08:38AM bpaddock
TAB: B05

ADDENDUM NUMBER

ATTACHMENT NUMBER

RECORD OF REVISIONS

No.	DATE	DESCRIPTION

KETCHIKAN AIRPORT
RUNWAY SAFETY AREA EXPANSION
& RUNWAY OVERLAY
PROJECT NO. 68306

TYPICAL SECTIONS

PREPARED BY: USKH INC.

CHECKED BY: DLM

STATE OF ALASKA 49 TH
D. Lance Mearig
CE-7435
04Oct06
REGISTERED PROFESSIONAL ENGINEER

DESIGNED BY: EJG

DRAWN BY: WJP

STATE OF ALASKA
DEPARTMENT OF TRANSPORTATION & PUBLIC FACILITIES
DESIGN & ENGINEERING SERVICES DIVISION–SOUTHEAST REGION

TYPICAL SECTIONS

PROJECT DESIGNATION	
AIP NO. 3-02-0144-1606	
STATE	YEAR
ALASKA	2006
SHEET NUMBER	TOTAL SHEETS
B5	131

ESTIMATE OF QUANTITIES

ITEM NO.	PAY ITEM	PAY UNIT	QUANTITY				
			PROJECT NO.: 68306	PROJECT NO.: 68456	PROJECT NO.: 68290	PROJECT NO.: 67874, 67875	TOTAL
D-701a	CORRUGATED POLYETHYLENE PIPE, 18 INCH	LINEAR FOOT	198 ~~118~~				198 ~~118~~
D-701d	CORRUGATED POLYETHYLENE PIPE, 24 INCH	LINEAR FOOT	248.9 ~~280~~				248.9 ~~280~~
F-162a	8-FOOT CHAIN-LINK FENCE	LINEAR FOOT	10,917.95~~10,873~~				10,917.95~~10,873~~
F-162c	24-FOOT DOUBLE SWING GATE	EACH	4				4
G-100a	MOBILIZATION AND DEMOBILIZATION	LUMP SUM	ALL REQUIRED	ALL REQUIRED	ALL REQUIRED	ALL REQUIRED	ALL REQUIRED
G-115a	WORKER MEALS AND LODGING, OR PER DIEM	LUMP SUM	ALL REQUIRED	ALL REQUIRED	ALL REQUIRED	ALL REQUIRED	ALL REQUIRED
G-130a	FIELD OFFICE	LUMP SUM	ALL REQUIRED	ALL REQUIRED	ALL REQUIRED	ALL REQUIRED	ALL REQUIRED
G-130b	FIELD LABORATORY	LUMP SUM	ALL REQUIRED	ALL REQUIRED	ALL REQUIRED	ALL REQUIRED	ALL REQUIRED
G-130g	NUCLEAR TESTING EQUIPMENT STORAGE SHED	EACH	1				1
G-130h	FAA EQUIPMENT STORAGE	LUMP SUM	ALL REQUIRED				ALL REQUIRED
G-131a	ENGINEERING TRANSPORTATION (TRUCK)	EACH	3	1			4
G-135a	CONSTRUCTION SURVEYING BY THE CONTRACTOR	LUMP SUM	ALL REQUIRED	ALL REQUIRED	ALL REQUIRED	ALL REQUIRED	ALL REQUIRED
G-135b	CONDITIONAL SURVEY PARTY	HOUR	334.305 ~~250~~				334.305 ~~250~~
G-135c	MONUMENTS BY THE CONTRACTOR	LUMP SUM	ALL REQUIRED				ALL REQUIRED
G-200a	CONTRACTOR QUALITY CONTROL PROGRAM	LUMP SUM	ALL REQUIRED	ALL REQUIRED	ALL REQUIRED	ALL REQUIRED	ALL REQUIRED
G-300a	CPM SCHEDULING	LUMP SUM	ALL REQUIRED	ALL REQUIRED	ALL REQUIRED	ALL REQUIRED	ALL REQUIRED
G-700a	AIRPORT FLAGGER	CONTINGENT SUM	ALL REQUIRED				ALL REQUIRED
G-700c	AIRPORT TRAFFIC MAINTENANCE	LUMP SUM	ALL REQUIRED				ALL REQUIRED
L-100c	HIGH INTENSITY RUNWAY EDGE AND THRESHOLD LIGHT, L-862 AND L-862E	EACH	1				1
L-100e	TAXIWAY EDGE LIGHT, L-861T	EACH	3				3
L-100f	WIND CONE HANDHOLE, L-867, SIZE D	EACH	~~3~~ 2 ~~2~~				2
L-100l	RELOCATE EXISTING AIRPORT SIGN, TYPE L-858	EACH	7				7
L-100q	JUNCTION BOX, TYPE II	EACH	15 ~~14~~				15 ~~14~~
L-100r	TEMPORARY RUNWAY LIGHTING SYSTEM	LUMP SUM	ALL REQUIRED				ALL REQUIRED
L-100ai	RELOCATE EXISTING HIGH INTENSITY RUNWAY EDGE AND THRESHOLD LIGHT, L-862 AND L-862E	EACH	15 ~~23~~				15 ~~23~~
L-100aj	RELOCATE EXISTING TAXIWAY EDGE LIGHT, L-861T	EACH	7				7
L-107e	RELOCATE EXISTING LIGHTED WIND CONE	EACH	2				2
L-108a	UNDERGROUND CABLE #8 AWG, COPPER, 5 KV FAA TYPE "C", L-824	LINEAR FOOT	4287.15 ~~4500~~				4287.15 ~~4500~~
L-108c	#6 BARE COPPER GROUND CONDUCTOR	LINEAR FOOT	3420.47 ~~3600~~				3420.47 ~~3600~~
L-108e	UNDERGROUND CABLE #1/0 AWG COPPER, 600V, TYPE "C", L-824	LINEAR FOOT	1958 ~~2800~~				1958 ~~2800~~
L-108g	GROUND ROD	EACH	43 ~~45~~				43 ~~45~~
L-110a	2-INCH RIGID STEEL CONDUIT	LINEAR FOOT	203 ~~30~~				203 ~~30~~
L-110g	2-INCH PE CONDUIT	LINEAR FOOT	21,490.95 ~~21,800~~				21,490.95 ~~21,800~~
L-110n	ELECTRICAL MANHOLE	EACH	7			1 ~~2~~	8 ~~9~~
L-110t	4-INCH PE CONDUIT Deleted by C.O 1	~~LINEAR FOOT~~	~~5800~~			~~5500~~	~~11,300~~
L-110u	6-INCH PE CONDUIT Deleted by C.O 1	~~LINEAR FOOT~~				~~2500~~	~~2500~~
L-132a	INSTALL APPROACH LIGHTING AIDS, MALSR, RW 29	LUMP SUM	ALL REQUIRED				ALL REQUIRED
L-132b	INSTALL APPROACH LIGHTING AIDS, PAPI, RW 29	LUMP SUM	ALL REQUIRED				ALL REQUIRED
L-132c	REMOVE APPROACH LIGHTING AIDS, MALSR, RW 29	LUMP SUM	ALL REQUIRED				ALL REQUIRED
L-132d	REMOVE APPROACH LIGHTING AIDS, VASI, RW 29	LUMP SUM	ALL REQUIRED				ALL REQUIRED
L-132e	RELOCATE APPROACH LIGHTING AIDS, MALSF, RW 11, CONVERT TO MALSR	LUMP SUM	ALL REQUIRED				ALL REQUIRED
L-132f	RELOCATE APPROACH LIGHTING AIDS, PAPI, RW 11	LUMP SUM	ALL REQUIRED				ALL REQUIRED
L-135a	INSTALL FAA EQUIPMENT, GLIDE SLOPE	LUMP SUM	ALL REQUIRED				ALL REQUIRED
L-135b	INSTALL FAA EQUIPMANT, WIND SENSOR	LUMP SUM	ALL REQUIRED				ALL REQUIRED
L-135c	INSTALL FAA EQUIPMANT, LOCALIZER	LUMP SUM	ALL REQUIRED				ALL REQUIRED
L-135d	INSTALL FAA EQUIPMANT, DME	LUMP SUM	ALL REQUIRED				ALL REQUIRED
L-135e	INSTALL FAA EQUIPMANT, RVR	LUMP SUM	ALL REQUIRED				ALL REQUIRED
L-135f	INSTALL FAA EQUIPMANT, NDB	LUMP SUM	ALL REQUIRED				ALL REQUIRED
L-135g	REMOVE FAA EQUIPMENT, GLIDE SOPE	LUMP SUM	ALL REQUIRED				ALL REQUIRED
L-135h	REMOVE FAA EQUIPMENT, LOCALIZER	LUMP SUM	ALL REQUIRED				ALL REQUIRED
L-135i	REMOVE FAA EQUIPMENT, DME	LUMP SUM	ALL REQUIRED				ALL REQUIRED
L-135j	REMOVE FAA EQUIPMENT, RCO TOWERS	LUMP SUM	ALL REQUIRED				ALL REQUIRED
L-135k	REMOVE FAA EQUIPMENT, NDB	LUMP SUM	ALL REQUIRED				ALL REQUIRED
L-135m	RELOCATE FAA EQUIPMENT, ASOS	LUMP SUM	ALL REQUIRED				ALL REQUIRED
L-143a	SERVICE TRANSFORMER, NEW	EACH	5 ~~4~~				5 ~~4~~
L-143b	SERVICE TRANSFORMER, REMOVE	EACH	3				3
L-143c	PRIMARY SECTIONALIZER CABINET, NEW Did Not Install / Deleted by C04	EACH	~~1~~				~~1~~
L-143d	PRIMARY CABLE, #1/0 AWG, 15 KV, CONCENTRIC NEUTRAL	LINEAR FOOT	2183.5 ~~1800~~				1800

See change Order Items

DO NOT SCALE FROM THESE DRAWINGS USE DIMENSIONS

PATH: I:\823400\Dwgs\C\Sheets\C01_C2.dwg
Thu, 09/Nov/06 11:26AM bpaddock
TAB: C01

ADDENDUM NUMBER

ATTACHMENT NUMBER

RECORD OF REVISIONS

No.	DATE	DESCRIPTION

KETCHIKAN AIRPORT
RUNWAY SAFETY AREA EXPANSION
& RUNWAY OVERLAY
PROJECT NO. 68306

ESTIMATE OF QUANTITIES

PREPARED BY: USKH INC.

CHECKED BY: DLM

STATE OF ALASKA 49TH D. Lance Mearig CE-7435 09Nov06 REGISTERED PROFESSIONAL ENGINEER

DESIGNED BY: SC

DRAWN BY: WJP

STATE OF ALASKA
DEPARTMENT OF TRANSPORTATION
& PUBLIC FACILITIES
DESIGN & ENGINEERING SERVICES
DIVISION-SOUTHEAST REGION

ESTIMATE OF QUANTITIES

PROJECT DESIGNATION
AIP NO. 3-02-0144-1606

STATE	YEAR
ALASKA	2006
SHEET NUMBER	TOTAL SHEETS
C1	131

Estimate of Quantity from Change Order Item

Lewis Reef Road Underpass 68456

Item Number	Pay Item	Pay Unit	Quantity	Change Order
S-146b	Tunnel Liner	Lump Sum	All Required	13
S-146c	Additional Fireproofing	Lump Sum	All Required	14
S-146d	Tunnel Heating	Lump Sum	All Required	14
S-146e	Tunnel Waterline	Lump Sum	All Required	16
S-146f	Tunnel Fireproofing Repair	Lump Sum	All Required	15
S-146g	Temporary Tunnel Power	Per Month	6	17
S-146h	Tunnel Lighting Condultet T's	Lump Sum	All Required	17
S-146I	Tunnel Water Intrusion Cost	Lump Sum	All Required	14
S-146j	Lewis Reef Rd Tree Removal	Lump Sum	All Required	22
S-146k	Tunnel SWPPP Item Changes	Lump Sum	All Required	24

Airport Overlay & Saftey Area Upgrade 68306

Item Number	Pay Item	Pay Unit	Quantity	Change Order
P-157f-1	Silt Boom	Per 100 Section	31	2
L-110t-b	4-Inch Conduit	Linear Foot	6844	1
D-701f	End Section with 24" Grates	Each	7	11
D-701e	Corrugated Polyethylene Pipe 36"	Linear Foot	520	11
P-157f-a	Temporary Seeding	Pound	827.7	6
T-901b	Seeding	Pound	1716	6
P-157i-a	North Trib Diversion Pipe	Lump Sum	All Required	7
L-135c-1	Localizer Kick Boards	Lump Sum	All Required	9
P-152g	3" Minus Embankment Toplift	Cubic Yards	59845.6	8
L-135n	Electrical Transfer Switches	Lump Sum	All Required	4
L-135c-2	Localizer Platform Counterpoise	Lump Sum	All Required	9
D-701h	53" Galvanized Steel Pipe Arch	Lump Sum	All Required	11
L-100ai-2	Adjust Light Can Elevation	Lump Sum	All Required	23
P-401a-1	Asphalt Concrete for shoulders	Ton	2050.44	10
P-401c-2	Asphalt Cement for shoulder paving	Ton	106.62	10
L-100ai-1	Relocate Existing High Intensity Runway Edge and Threshold Lights L-868 (Light Can Upgrade)	Lump Sum	All Required	3
L-132e-1	Relocate Approach Lighting Aids Malsf RW11 Covert to MALSR L-868 (Light Can Upgrade)	Lump Sum	All Required	3
L-132a-a	MALSR Approach Light Breakaway Couplings	Lump Sum	All Required	5
L-135a-1	Install FAA Equipment RVR	Lump Sum	All Required	4
L-110n-1	Adjust Existing Electrical MH	Each	6	23
L-132a-2	Install ELB 14 and EF 16 Modified Towers	Lump Sum	All Required	5
D-701g	36" Security Grate	Each	2	11
L-108i	Guard Wire	Linear Foot	8199	4
G-130i	Partnering Meeting	Lump Sum	All Required	12
L-100l-1	Raise Taxiway Signs	Lump Sum	All Required	23
L-144c-1	Additional Communication Cable 25 Pair	Lump Sum	All Required	4
L-100aj-1	Raise Taxiway Lights	Lump Sum	All Required	23
L-107e-1	New Wind Cones	Lump Sum	All Required	4
P-151g	Additional Tree Removal	Per Day	6	18
P-620c-1	Additional Runway Painting and Striping	Lump Sum	All Required	19
L-132a-4	16" Base Plates for 29 MALSR	Lump Sum	All Required	5
P-620c-2	Re-paint Runway and Taxiway Markings	Lump Sum	All Required	19
L-110t-c	Conduit Concrete Protection Taxiway A	Lump Sum	All Required	4
L-132a-3	Flasher Cabinet Tees	Lump Sum	All Required	5
50-17a	Electrical Impact Settlement	Lump Sum	All Required	25
P-152h	Embankment fill ILS Area	Lump Sum	All Required	21
L-132a-5	Install Approach Lighting Aids, MALSR 29	Lump Sum	All Required	26

KPU Eletrical

Item Number	Pay Item	Pay Unit	Quantity	Change Order
L-110t-a	4 Inch PE Conduit	Linear Foot	3970	1

Final quantity pending for 3 " Embankment on Change Order 8

ESTIMATING FACTORS

ITEM NO.	ITEM	FACTOR/QUANTITY
P-151d	CLEARING & GRUBBING	66 ACRES
P-209b	CRUSHED AGGREGATE BASE COURSE	150 LB/CF
P-320b	ASPHALT TREATED BASE	152 LB/CF
P-401a	HOT MIX ASPHALT TYPE II, CLASS E	152 LB/CF
P-401c	ASPHALT CEMENT [PG 64-28]	5.5% OF P-401a
P-603a	TACK COAT, STE-1	0.06 GAL./SQ YD

NOTE:

QUANTITIES PROVIDED IN THE BASIS OF ESTIMATE ARE APPROXIMATE, AND BASED ON NEAT LINE MEASUREMENTS. QUANTITIES ARE PROVIDED FOR INFORMATION ONLY AND ACT AS A BASIS FOR THE ENGINEER'S ESTIMATE. ALL QUANTITIES WERE CALCULATED BASED ON THE BEST AVAILABLE INFORMATION AND REFLECT THE DESIGNER'S JUDGMENT AND ASSUMPTIONS.

ESTIMATE OF QUANTITIES

ITEM NO.	PAY ITEM	PAY UNIT	QUANTITY				
			PROJECT NO.: 68306	PROJECT NO.: 68456	PROJECT NO.: 68290	PROJECT NO.: 67874, 67875	TOTAL
L-143e	PRIMARY CABLE, #1/0 AWG, 15 KV, TAPE SHIELD	LINEAR FOOT	1958 ~~2000~~				2000
L-144a	COMMUNICATIONS PEDESTAL, NEW	EACH	1				1
L-144b	COMMUNICATIONS PEDESTAL, REMOVE	EACH	2				1
L-144c	COMMUNICATIONS CABLE, 25 PAIR, NO. 22 AWG	LINEAR FOOT	8321.0 9100				9100
L-144d	COMMUNICATIONS CABLE, 100 PAIR, NO. 22 AWG	LINEAR FOOT	1000 ~~1100~~				1100
L-145a	STANDY GENERATOR AND ENCLOSURE	LUMP SUM	ALL REQUIRED				ALL REQUIRED
P-151d	CLEARING & GRUBBING	LUMP SUM	ALL REQUIRED				ALL REQUIRED
P-151f	TREE REMOVAL	ACRE	1				1
P-152a	UNCLASSIFIED EXCAVATION	CUBIC YARD	736,062 ~~750,000~~		2630 ~~4000~~		737,682 ~~760,000~~
P-152f	EMBANKMENT	CUBIC YARD	1,522,869.08 ~~375,500~~		2630 ~~4000~~		1525,499.8 ~~379,500~~
P-152j(1)	STREAMBED MATERIAL, TYPE A	CUBIC YARD	800.7 ~~1200~~				1200
P-152j(2)	STREAMBED MATERIAL, TYPE B	CUBIC YARD	800.7 ~~850~~				850
P-152j(3)	STREAMBED MATERIAL, TYPE C	CUBIC YARD	741.8 ~~1500~~				1500
P-157a	EROSION AND POLLUTION CONTROL ADMINISTRATION	LUMP SUM	ALL REQUIRED	ALL REQUIRED	ALL REQUIRED	ALL REQUIRED	ALL REQUIRED
P-157b	TEMPORARY EROSION AND POLLUTION CONTROL	CONTINGENT SUM	ALL REQUIRED	ALL REQUIRED	ALL REQUIRED	ALL REQUIRED	ALL REQUIRED
P-157e	TEMPORARY CHECK DAMS	EACH	181 ~~40~~				40
P-157f	SILT BOOM Deleted by C.O 2	LUMP SUM	ALL REQUIRED				ALL REQUIRED
P-157g	TEMPORARY SETTLING POND, TYPE I	EACH	1				7
P-157h	TEMPORARY SETTLING POND, TYPE II	EACH	18				3
P-157i	INTERCEPTION/DIVERSION DITCH	LINEAR FOOT	6745.5 ~~5500~~				5500
P-157j	SILT FENCE	LINEAR FOOT	28,457 ~~21,000~~				21,000
P-157k	TEMPORARY SEEDING	ACRE	10.11 ~~8~~				9
P-160a	EXCAVATION AND DISPOSAL OF PAVEMENT (AC)	SQUARE YARD	3502.6 ~~2000~~				2000
P-162a	PAVEMENT COLD PLANING	SQUARE FOOT	29,294.21 ~~5000~~				5000
P-165a	REMOVAL AND DISPOSAL OF EXISTING STRUCTURES	LUMP SUM	ALL REQUIRED				ALL REQUIRED
P-180a(2)	RIPRAP, CLASS II	CUBIC YARD	872.02 ~~1800~~				1800
P-180a(4)	RIPRAP, CLASS IV	CUBIC YARD	9086.23 ~~14,000~~				14,000
P-209b	CRUSHED AGGREGATE BASE COURSE	TON	10993.41 ~~7000~~				7000
P-320b	ASPHALT TREATED BASE	TON	3221.83 ~~3200~~				3200
P-401a	HOT MIX ASPHALT TYPE II, CLASS E	TON	26,420.88 ~~26,500~~				26,500
P-401b	HOT MIX ASPHALT PRICE ADJUSTMENT	CONTINGENT SUM	ALL REQUIRED				ALL REQUIRED
P-401c	ASPHALT CEMENT, PG 64-28	TON	1540.67 ~~1500~~				1500
P-603a	TACK COAT, STE-1	TON	50.8 ~~40~~				40
P-605a	JOINT SEALING FILLER	LINEAR FOOT	30,000 ~~15,000~~				15,000
P-620c	RUNWAY AND TAXIWAY PAINTING	LUMP SUM	ALL REQUIRED				ALL REQUIRED
P-630a	PAVEMENT GROOVING	SQUARE YARD	141,932 ~~133,500~~				133,500
P-640c	RELOCATE SEGMENTED CIRCLE	LUMP SUM	ALL REQUIRED				ALL REQUIRED
P-661a	STANDARD SIGN	SQUARE FOOT	504 ~~112~~				112
P-670a	HAZARD MARKER BARRIER	EACH	85 ~~40~~				40
P-690a(1)	LOG STEPS	EACH	11				11
P-690a(2)	BOULDER STEPS	EACH	34.5 ~~15~~				15
P-690a(3)	BEDROCK STEPS	EACH	14				14
P-690b	UNANCHORED LOG, TYPE I	EACH	31 ~~15~~				15
P-690c	UNANCHORED LOG, TYPE II	EACH	25 ~~15~~				15
P-690d	ANCHORED LOG-BOULDER INSTALLATION	EACH	9				9
P-690e	CONSTRUCTED STREAM CONNECTION	LUMP SUM	ALL REQUIRED				ALL REQUIRED
P-690f	FISH BARRIER	LUMP SUM	ALL REQUIRED				ALL REQUIRED
P-690g	RELOCATE BOULDERS	LUMP SUM	ALL REQUIRED				ALL REQUIRED
S-145a	BRIDGE	LUMP SUM	ALL REQUIRED				ALL REQUIRED
S-146a	TUNNEL	LUMP SUM		ALL REQUIRED			ALL REQUIRED
T-901a	SEEDING	ACRE	1.6031 ~~83~~				83
T-902a	LIVE PLANTS	EACH	185				185
T-908c	MULCHING	ACRE	11.741 ~~83~~				83
T-908d	TACKIFIER	ACRE	7.411 ~~83~~				83
T-908e	QUARRY FLOOR STABILIZATION	LUMP SUM	ALL REQUIRED				ALL REQUIRED
T-911a	SLOPE RECLAMATION	LUMP SUM	ALL REQUIRED				ALL REQUIRED
T-911b	COIR LOGS	LINEAR FOOT	2480.0 ~~5100~~				5100
T-911c	ROLLED MATTING	SQUARE YARD	7045.13 ~~7500~~				7500

DO NOT SCALE FROM THESE DRAWINGS USE DIMENSIONS

PATH: I:\B23400\Dwgs\C\Sheets\C01_C2.dwg

Thu, 09/Nov/06 11:26AM bpoddock

TAB: C02

ADDENDUM NUMBER

ATTACHMENT NUMBER

RECORD OF REVISIONS

No.	DATE	DESCRIPTION

KETCHIKAN AIRPORT
RUNWAY SAFETY AREA EXPANSION
& RUNWAY OVERLAY
PROJECT NO. 68306

ESTIMATE OF QUANTITIES

PREPARED BY: USKH INC.

CHECKED BY: DLM

STATE OF ALASKA 49 TH
D. Lance Mearig
CE-7435
09Nov06
REGISTERED PROFESSIONAL ENGINEER

DESIGNED BY: SC

DRAWN BY: WJP

STATE OF ALASKA
DEPARTMENT OF TRANSPORTATION
& PUBLIC FACILITIES
DESIGN & ENGINEERING SERVICES
DIVISION-SOUTHEAST REGION

ESTIMATE OF QUANTITIES

PROJECT DESIGNATION

AIP NO. 3-02-0144-1606

STATE	YEAR
ALASKA	2006
SHEET NUMBER	TOTAL SHEETS
C2	131

CULVERT INSTALLATION SUMMARY

PIPE	INLET STATION	INLET OFFSET	INLET APPROX. INVERT	OUTLET STATION	OUTLET OFFSET	OUTLET APPROX. INVERT	18" CPP	24" CPP	GRADE	REMARKS
P-1	168+43	860 RT.	165.6	168+81	861 RT.	165.0		40	1.6%	PERIMETER ROAD
P-2	173+21	984 RT.	176.4	173+34	953 RT.	174.7		35	4.8%	PERIMETER ROAD
P-3	175+76	991 RT.	174.4	175+27	953 RT.	174.0		40	0.1%	PERIMETER ROAD
P-4	181+45	985 RT.	200.1	181+33	954 RT.	199.7		35	1.4%	PERIMETER ROAD
P-5	184+99	981 RT.	183.5	185+23	953 RT.	179.9		40	9.7%	PERIMETER ROAD
P-6	186+01	982 RT.	178.1	186+29	951 RT.	176.3		45	4.4%	PERIMETER ROAD
P-7	197+50	300 RT.	73.1	197+90	316 RT.	72.7		~~45~~	1.7%	PERIMETER ROAD 36" CPP 80'
P-8	M 1+85	~~150~~ 423 RT.	59.6	M 1+85	350 ~~23 LT.~~	56.2	~~88~~200'		7.6%	36" CPP STA: 213~ or M 1+40
P-9	CA 1+75	31 RT.	28.2	CA 1+75	13 LT.	24.9	48		7.3%	
P-10a	M15+20			M15+20			38'			Did Not Install P-10 @ Plan Location
P-10	M15+80			M15+80						18" CPP w/ OME Pad and building installation
P-8a	212+62	80 RT		212+62	80 LT		160'			36" CPP
P-12	142+~~80~~	262.7 RT		141+80	262.7 RT		40'			36" CPP
P-13	142+20	267.3 RT		141+80	267.3 RT		40'			36" CPP
P-1a	136+65			136+47			33'			24" CPP

CULVERT INSTALLATION NOTES:

1. PLACE ADDITIONAL CULVERTS UNDER PERIMETER ROAD AS DIRECTED BY THE ENGINEER.
2. TEMPORARY CULVERT INSTALLATIONS ARE REQUIRED AS PART OF THIS PROJECT'S EROSION AND SEDIMENT CONTROL PLAN (SEE ESCP SHEETS). THE CONTRACTOR SHALL REMOVE TEMPORARY CULVERTS AS DIRECTED BY THE ENGINEER.
3. THE INLET AND OUTLET SHALL BE ADJUSTED AT SITE TO MEET THE MINIMUM COVER REQUIREMENTS.

		24" CPP		
P-6a	187+90	21'		Perimeter Rd.
P-6b	188+00	24.5'		Perimeter Rd.

REMOVAL AND DISPOSAL OF EXISTING STRUCTURES

ITEM REMARKS	FROM STATION	FROM OFFSET	TO STATION	TO OFFSET	LENGTH/ QUANTITY	REMARKS
WOOD RETAINING WALL	198+30	67 RT.	198+21	107 RT.	42 FT.	REMOVE FROM THE AIRPORT PROPERTY
VEHICULAR BRIDGE	200+53	102 RT.	200+72	153 RT.	1 EACH	REMOVE FROM THE AIRPORT PROPERTY
VEHICULAR BRIDGE	200+84	112 LT.	201+22	123 LT.	1 EACH	REMOVE AND RETURN TO USFS THORN BAY STATION
PEDESTRIAN BRIDGE	201+56	27 RT.	201+91	8 RT.	1 EACH	REMOVE FROM THE AIRPORT PROPERTY
PEDESTRIAN BRIDGE	M 6+14	32 RT.	M 6+72	33 RT.	1 EACH	REMOVE FROM THE AIRPORT PROPERTY

NOTES:

CONTRACTOR TO FIELD VERIFY ALL LOCATIONS AND DIMENSIONS.

SIGN SUMMARY

PERIMETER SIGN STATION	PERIMETER SIGN OFFSET	GATE SIGN STATION	GATE SIGN OFFSET
~~4~~20+00	505 RT.	213+50	93 LT.
125+00	505 RT.	198+91	289 RT.
130+00	505 RT.	197+75	280 RT.
135+00	505 RT.	198+12	432 LT.
170+00	941 RT.		
175+00	941 RT.		
180+00	941 RT.		
185+00	941 RT.		
190+00	941 RT.		
195+00	785 RT.		

FENCE REMOVAL SUMMARY

FROM STATION	FROM OFFSET	TO STATION	TO OFFSET	LENGTH (FT.)
116+50	70 RT.	136+68	504 RT.	2287
136+68	326 RT.	136+68	504 RT.	178
166+51	613 RT.	197+89	433 LT.	4158
116+50	63 LT.	126+32	370 LT.	1155
			TOTAL	7778

NEW FENCE SUMMARY

FROM STATION	FROM OFFSET	TO STATION	TO OFFSET	LENGTH (FT.)
116+50	70 RT.	116+50	505 RT.	435
116+50	505 RT.	136+68	505 RT.	2018
166+51	613 RT.	169+71	952 RT.	466
169+71	952 RT.	191+48	954 RT.	2177
191+48	954 RT.	195+73	744 RT.	474
195+73	744 RT.	197+75	280 RT.	506
197+99	280 RT.	198+91	316 RT.	106
198+91	316 RT.	198+91	313 RT.	3
198+91	289 RT.	198+91	270 RT.	19
198+91	270 RT.	213+29	270 RT.	1131
213+29	270 RT.	213+50	249 RT.	30
213+50	249 RT.	213+50	69 LT.	318
213+50	93 LT.	213+50	321 LT.	228
213+50	321 LT.	212+45	321 LT.	105
212+45	321 LT.	211+85	270 LT.	79
211+85	270 LT.	198+90	270 LT.	1295
198+90	270 LT.	198+12	353 LT.	114
198+12	353 LT.	198+12	432 LT.	80
116+50	63 LT.	116+50	370 LT.	307
116+50	370 LT.	126+32	370 LT.	982
			TOTAL	10873

LIVE PLANTS

LOCATION	APPROXIMATE NUMBER OF PLANTS
NEW GOVERNMENT CREEK OVERBANK	75
NEW GOVERNMENT CREEK SIDESLOPES	50
NEW ESTUARY	60
TOTAL	185

DO NOT SCALE FROM THESE DRAWINGS USE DIMENSIONS

PATH: I:\823400\Dwgs\C\Sheets\D01.dwg
Wed, 04/Oct/06 10:56AM bpaddock
TAB: D01

ADDENDUM NUMBER

ATTACHMENT NUMBER

RECORD OF REVISIONS

No.	DATE	DESCRIPTION

KETCHIKAN AIRPORT
RUNWAY SAFETY AREA EXPANSION
& RUNWAY OVERLAY
PROJECT NO. 68306

SUMMARY TABLES

PREPARED BY: USKH INC.

CHECKED BY: DLM

STATE OF ALASKA 49TH
D. Lance Mearig CE-7435
04 October
REGISTERED PROFESSIONAL ENGINEER

DESIGNED BY: SC

DRAWN BY: WJP

STATE OF ALASKA
DEPARTMENT OF TRANSPORTATION
& PUBLIC FACILITIES
DESIGN & ENGINEERING SERVICES
DIVISION–SOUTHEAST REGION

SUMMARY TABLES

PROJECT DESIGNATION
AIP NO. 3-02-0144-1606

STATE	YEAR
ALASKA	2006
SHEET NUMBER	TOTAL SHEETS
D1	131

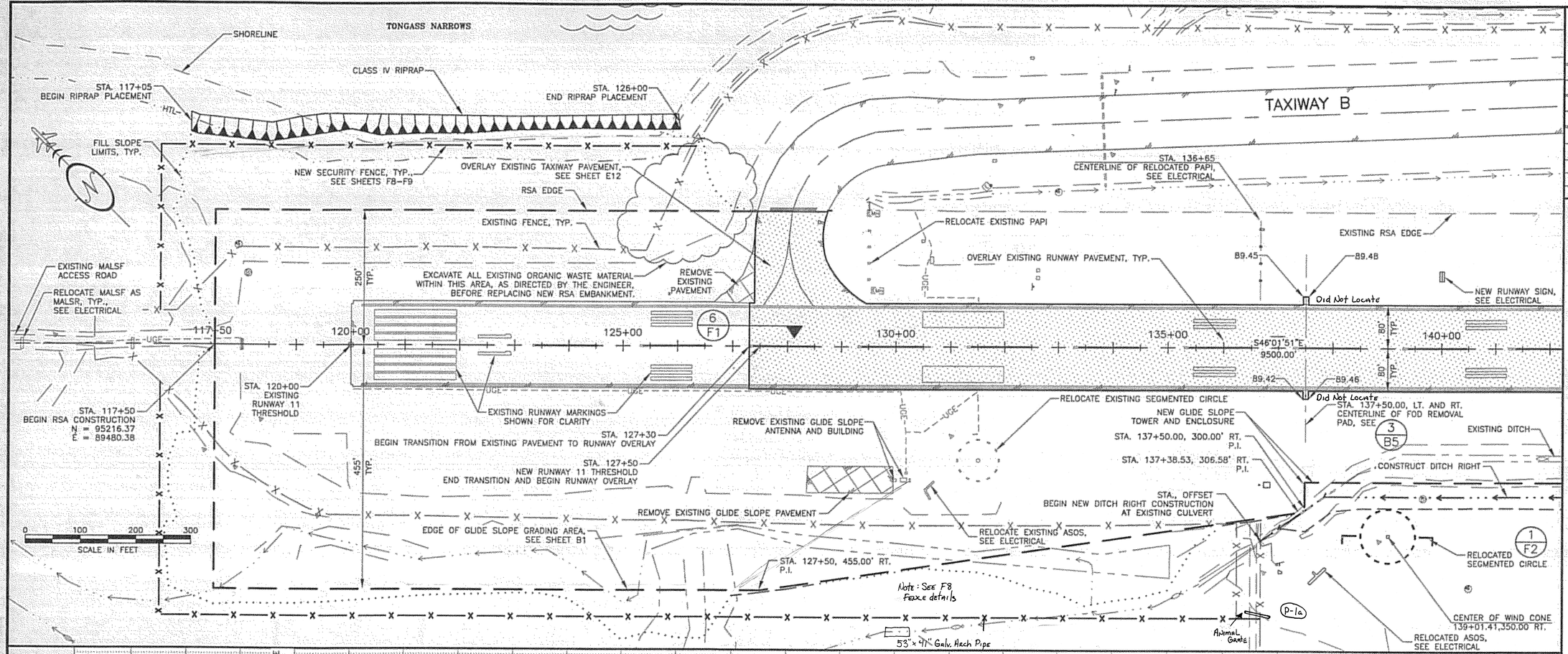

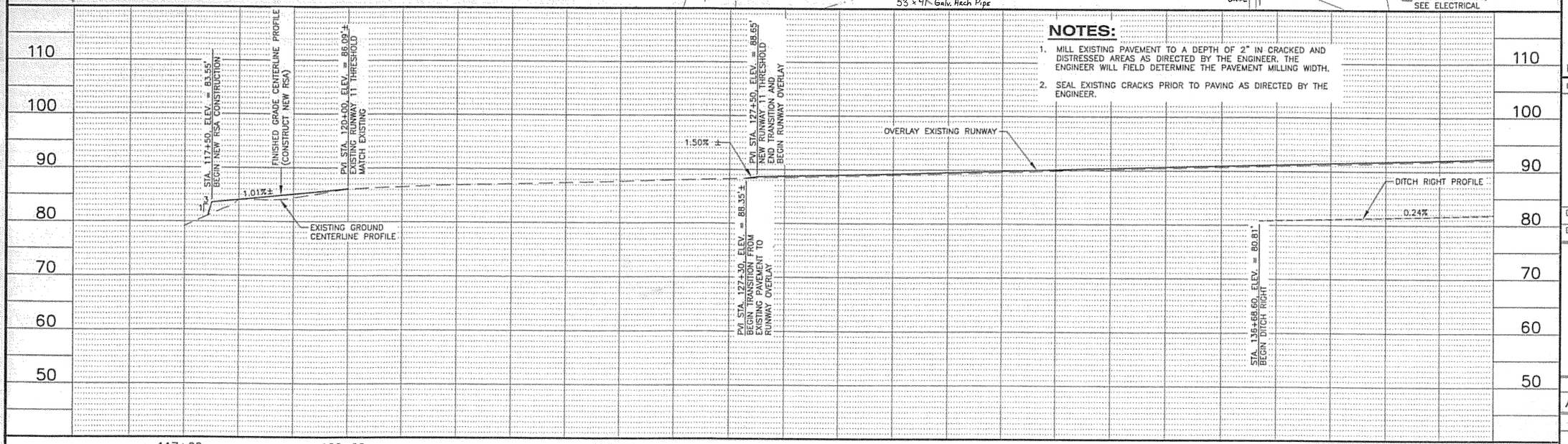

NOTES:

1. MILL EXISTING PAVEMENT TO A DEPTH OF 2" IN CRACKED AND DISTRESSED AREAS AS DIRECTED BY THE ENGINEER. THE ENGINEER WILL FIELD DETERMINE THE PAVEMENT MILLING WIDTH.
2. SEAL EXISTING CRACKS PRIOR TO PAVING AS DIRECTED BY THE ENGINEER.

DO NOT SCALE FROM THESE DRAWINGS USE DIMENSIONS

PATH: I:\823400\Dwgs\C\Sheets\E01.dwg
Wed, 04/Oct/08 08:39AM bpaddock
TAB: E01

ADDENDUM NUMBER

ATTACHMENT NUMBER

RECORD OF REVISIONS

No.	DATE	DESCRIPTION

KETCHIKAN AIRPORT
RUNWAY SAFETY AREA EXPANSION
& RUNWAY OVERLAY
PROJECT NO. 68306

RUNWAY PLAN & PROFILE

PREPARED BY: USKH INC.

CHECKED BY: DLM

STATE OF ALASKA
49 TH
D. Lance Mearig
CE-7435
REGISTERED PROFESSIONAL ENGINEER

DESIGNED BY: EJG

DRAWN BY: WJP

STATE OF ALASKA
DEPARTMENT OF TRANSPORTATION & PUBLIC FACILITIES
DESIGN & ENGINEERING SERVICES
DIVISION-SOUTHEAST REGION

RUNWAY PLAN & PROFILE

PROJECT DESIGNATION
AIP NO. 3-02-0144-1606

STATE	YEAR
ALASKA	2006
SHEET NUMBER	TOTAL SHEETS
E1	131

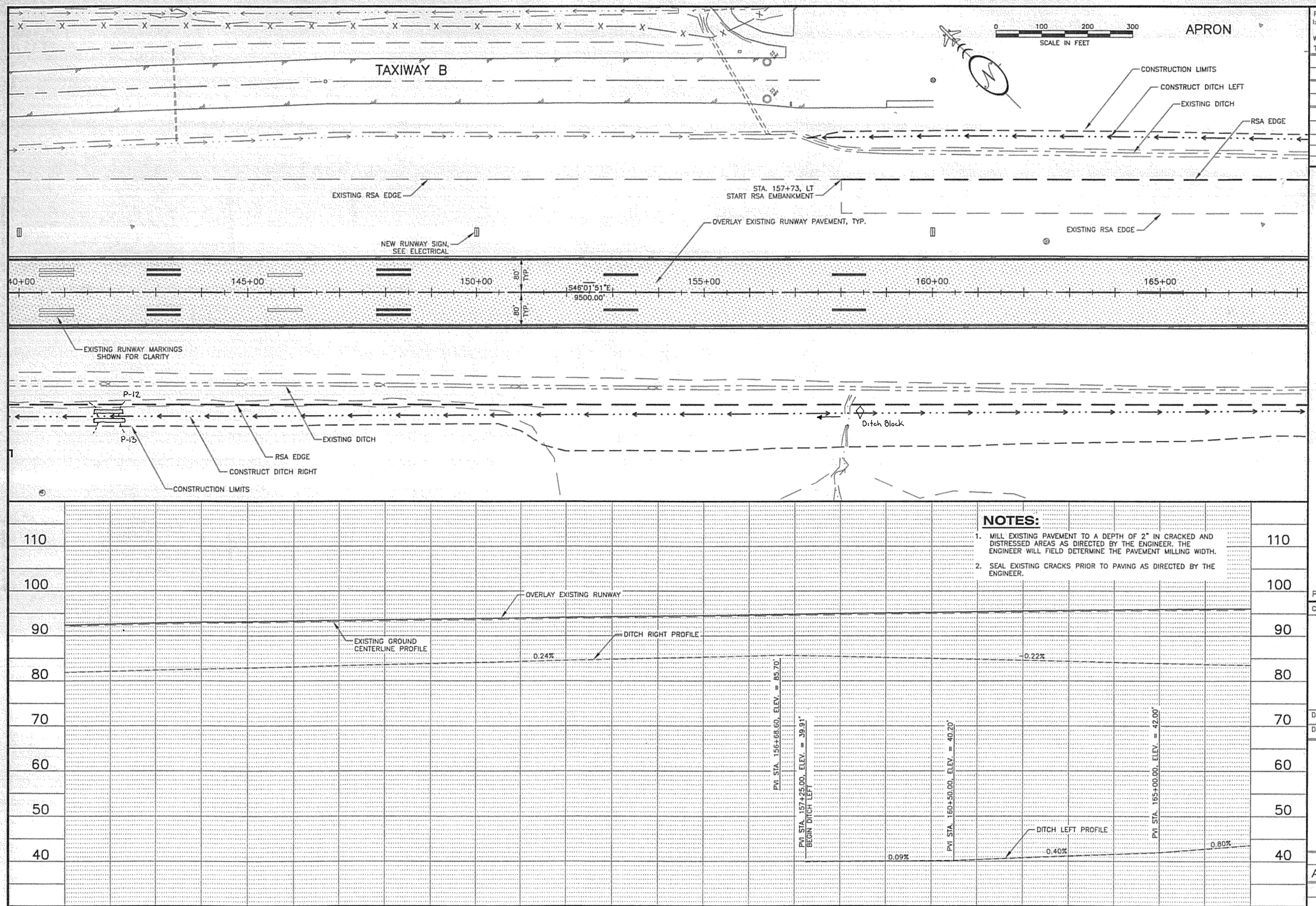

DO NOT SCALE FROM THESE DRAWINGS USE DIMENSIONS

PATH:
I:\B23400\Dwgs\C\Sheets\E02.dwg

Wed, 04/Oct/06 08:39AM bpaddock

TAB: E02

ADDENDUM NUMBER

ATTACHMENT NUMBER

RECORD OF REVISIONS

No.	DATE	DESCRIPTION

KETCHIKAN AIRPORT
RUNWAY SAFETY AREA EXPANSION
& RUNWAY OVERLAY
PROJECT NO. 68306

RUNWAY PLAN & PROFILE

PREPARED BY: USKH INC.

CHECKED BY: DLM

STATE OF ALASKA
49TH
D. Lance Mearig
CE-7435
04 Oct 06
REGISTERED PROFESSIONAL ENGINEER

DESIGNED BY: EJG

DRAWN BY: WJP

STATE OF ALASKA
DEPARTMENT OF TRANSPORTATION
& PUBLIC FACILITIES
DESIGN & ENGINEERING SERVICES
DIVISION–SOUTHEAST REGION

RUNWAY PLAN & PROFILE

PROJECT DESIGNATION:
AIP NO. 3-02-0144-1606

STATE	YEAR
ALASKA	2006
SHEET NUMBER	**TOTAL SHEETS**
E2	131

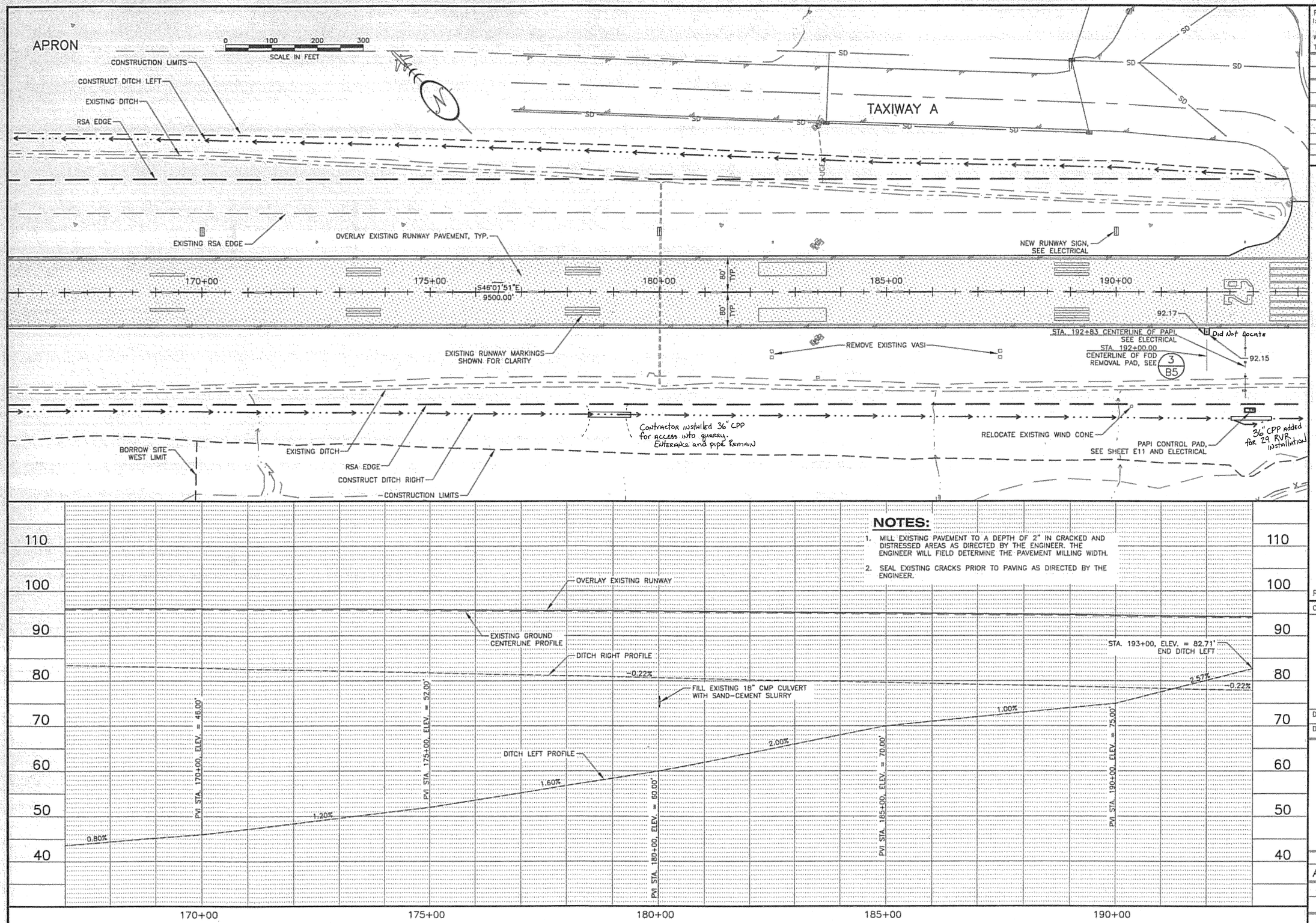

NOTES:

1. MILL EXISTING PAVEMENT TO A DEPTH OF 2" IN CRACKED AND DISTRESSED AREAS AS DIRECTED BY THE ENGINEER. THE ENGINEER WILL FIELD DETERMINE THE PAVEMENT MILLING WIDTH.
2. SEAL EXISTING CRACKS PRIOR TO PAVING AS DIRECTED BY THE ENGINEER.

DO NOT SCALE FROM THESE DRAWINGS USE DIMENSIONS

PATH: I:\823400\Dwgs\C\Sheets\E03.dwg
Wed, 04/Oct/06 08:39AM bpaddock
TAB: E03

ADDENDUM NUMBER

ATTACHMENT NUMBER

RECORD OF REVISIONS

No.	DATE	DESCRIPTION

KETCHIKAN AIRPORT
RUNWAY SAFETY AREA EXPANSION
& RUNWAY OVERLAY
PROJECT NO. 68306

RUNWAY PLAN & PROFILE

PREPARED BY: USKH INC.

CHECKED BY: DLM

STATE OF ALASKA 49TH
D. Lance Mearig CE-7435
REGISTERED PROFESSIONAL ENGINEER

DESIGNED BY: EJG

DRAWN BY: WJP

STATE OF ALASKA
DEPARTMENT OF TRANSPORTATION & PUBLIC FACILITIES
DESIGN & ENGINEERING SERVICES
DIVISION-SOUTHEAST REGION

RUNWAY PLAN & PROFILE

PROJECT DESIGNATION	
AIP NO. 3-02-0144-1606	
STATE	YEAR
ALASKA	2006
SHEET NUMBER	TOTAL SHEETS
E3	131

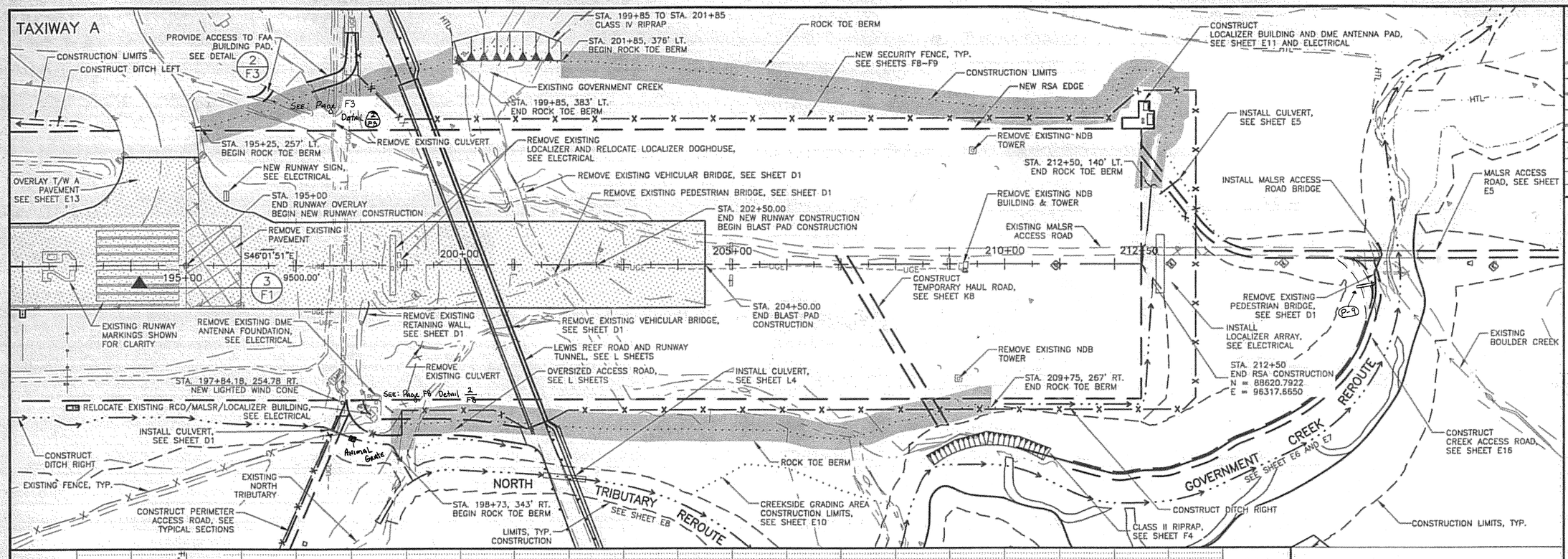

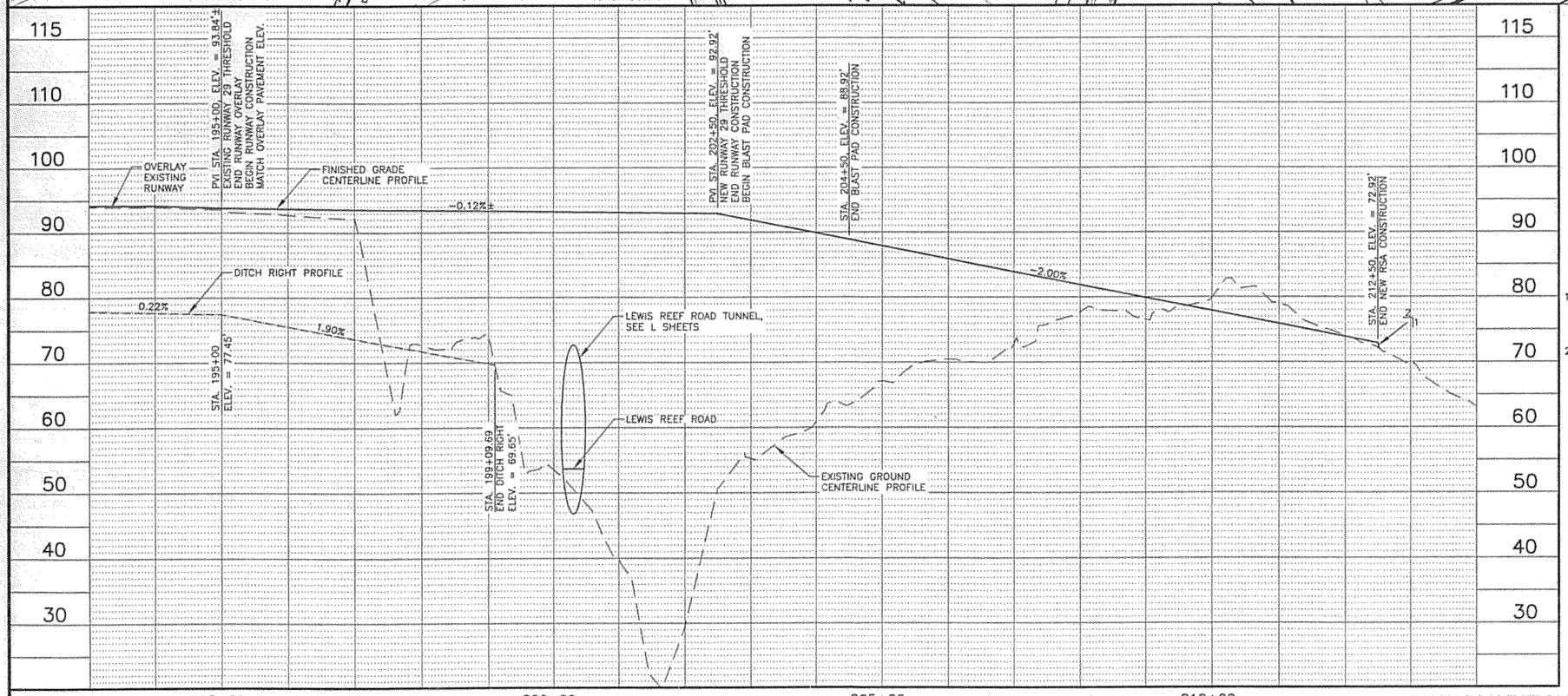

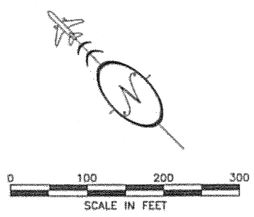

NOTES:

1. MILL EXISTING PAVEMENT TO A DEPTH OF 2" IN CRACKED AND DISTRESSED AREAS AS DIRECTED BY THE ENGINEER. THE ENGINEER WILL FIELD DETERMINE THE PAVEMENT MILLING WIDTH.
2. SEAL EXISTING CRACKS PRIOR TO PAVING AS DIRECTED BY THE ENGINEER.

DO NOT SCALE FROM THESE DRAWINGS USE DIMENSIONS

PATH: I:\823400\Dwgs\C\Sheets\E04.dwg
Wed, 04/Oct/06 08:39AM bpaddock
TAB: E04

ADDENDUM NUMBER

ATTACHMENT NUMBER

RECORD OF REVISIONS

No.	DATE	DESCRIPTION

KETCHIKAN AIRPORT
RUNWAY SAFETY AREA EXPANSION & RUNWAY OVERLAY
PROJECT NO. 68306

RUNWAY PLAN & PROFILE

PREPARED BY: USKH INC.

CHECKED BY: DLM

STATE OF ALASKA 49TH D. Lance Mearig CE-7435 REGISTERED PROFESSIONAL ENGINEER

DESIGNED BY: EJG

DRAWN BY: WJP

STATE OF ALASKA
DEPARTMENT OF TRANSPORTATION & PUBLIC FACILITIES
DESIGN & ENGINEERING SERVICES
DIVISION-SOUTHEAST REGION

RUNWAY PLAN & PROFILE

PROJECT DESIGNATION	
AIP NO. 3-02-0144-1606	
STATE	YEAR
ALASKA	2006
SHEET NUMBER	TOTAL SHEETS
E4	131

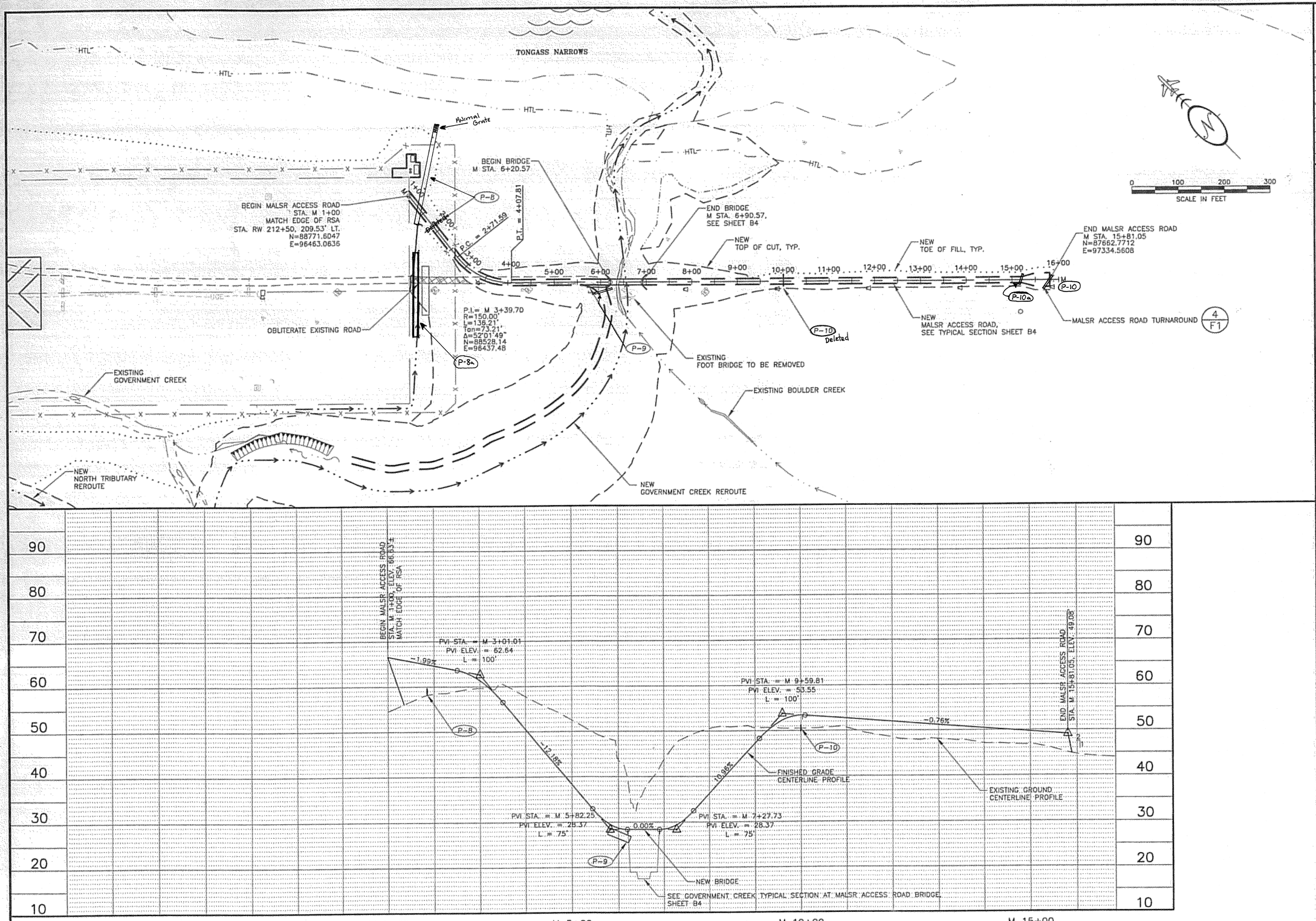

DO NOT SCALE FROM THESE DRAWINGS USE DIMENSIONS

PATH:
I:\823400\Dwgs\C\Sheets\E05.dwg

Wed, 04/Oct/06 08:40AM bpaddock
TAB: E05

ADDENDUM NUMBER

ATTACHMENT NUMBER

RECORD OF REVISIONS

No.	DATE	DESCRIPTION

KETCHIKAN AIRPORT
RUNWAY SAFETY AREA EXPANSION
& RUNWAY OVERLAY
PROJECT NO. 68306

MALSR ACCESS ROAD PLAN & PROFILE

PREPARED BY: USKH INC.

CHECKED BY: DLM

STATE OF ALASKA
49TH
D. Lance Mearig
CE-7435
04 Oct 06
REGISTERED PROFESSIONAL ENGINEER

DESIGNED BY: EJG

DRAWN BY: WJP

STATE OF ALASKA
DEPARTMENT OF TRANSPORTATION
& PUBLIC FACILITIES
DESIGN & ENGINEERING SERVICES
DIVISION–SOUTHEAST REGION

MALSR ACCESS ROAD PLAN & PROFILE

PROJECT DESIGNATION	
AIP NO. 3-02-0144-1606	
STATE	YEAR
ALASKA	2006
SHEET NUMBER	TOTAL SHEETS
E5	131

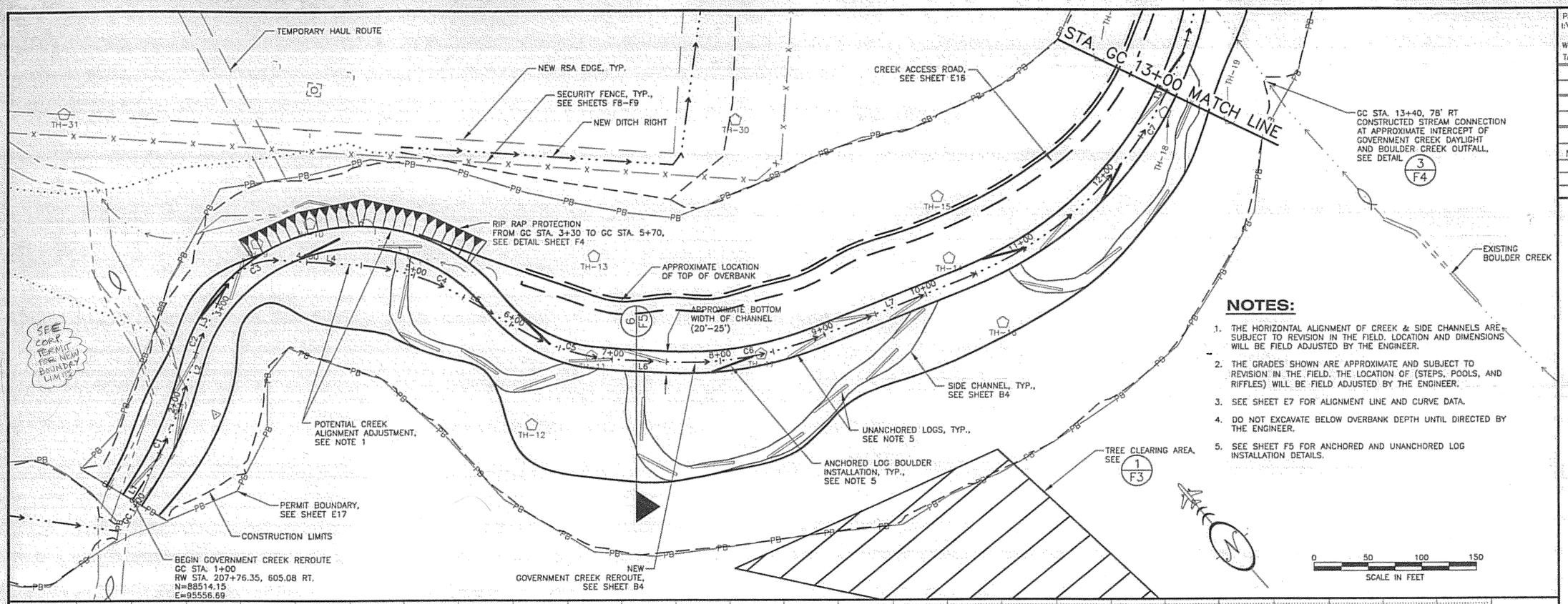

NOTES:

1. THE HORIZONTAL ALIGNMENT OF CREEK & SIDE CHANNELS ARE SUBJECT TO REVISION IN THE FIELD. LOCATION AND DIMENSIONS WILL BE FIELD ADJUSTED BY THE ENGINEER.
2. THE GRADES SHOWN ARE APPROXIMATE AND SUBJECT TO REVISION IN THE FIELD. THE LOCATION OF (STEPS, POOLS, AND RIFFLES) WILL BE FIELD ADJUSTED BY THE ENGINEER.
3. SEE SHEET E7 FOR ALIGNMENT LINE AND CURVE DATA.
4. DO NOT EXCAVATE BELOW OVERBANK DEPTH UNTIL DIRECTED BY THE ENGINEER.
5. SEE SHEET F5 FOR ANCHORED AND UNANCHORED LOG INSTALLATION DETAILS.

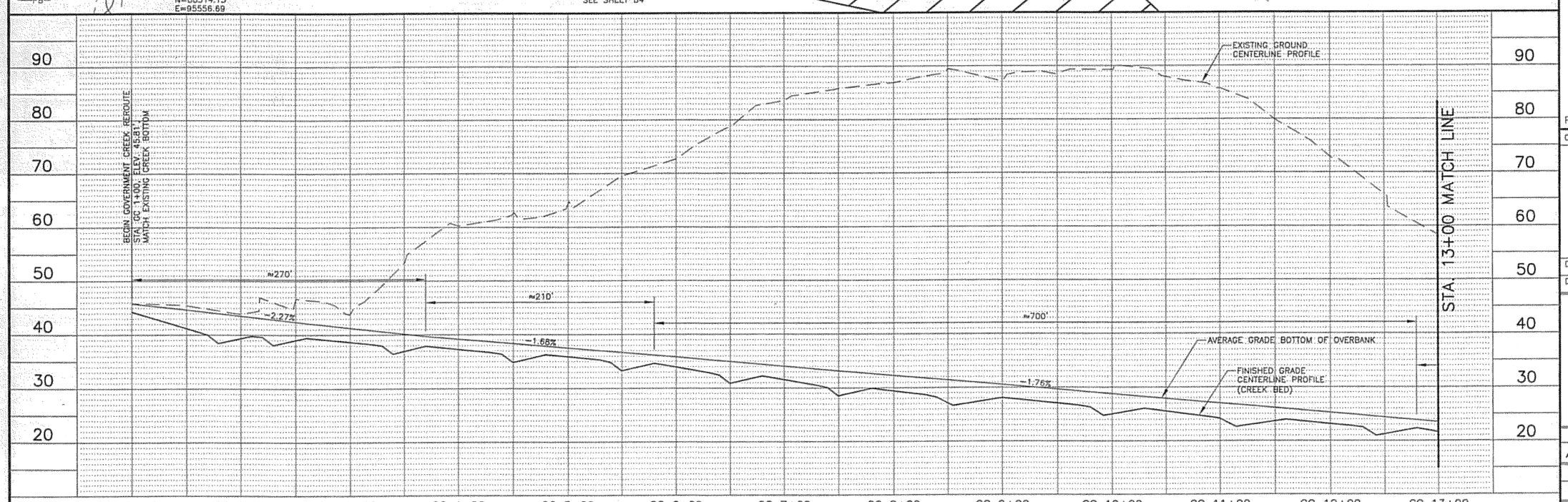

DO NOT SCALE FROM THESE DRAWINGS USE DIMENSIONS

PATH: I:\823400\Dwgs\C\Sheets\E06.dwg
Wed, 04/Oct/06 08:40AM bpaddock
TAB: E06

ADDENDUM NUMBER

ATTACHMENT NUMBER

RECORD OF REVISIONS

No.	DATE	DESCRIPTION

KETCHIKAN AIRPORT
RUNWAY SAFETY AREA EXPANSION
& RUNWAY OVERLAY
PROJECT NO. 68306

GOVERNMENT CREEK PLAN & PROFILE

PREPARED BY: USKH INC.
CHECKED BY: DLM

STATE OF ALASKA 49TH D. Lance Mearig CE-7435 04Oct06 REGISTERED PROFESSIONAL ENGINEER

DESIGNED BY: EJG
DRAWN BY: WJP

STATE OF ALASKA
DEPARTMENT OF TRANSPORTATION & PUBLIC FACILITIES
DESIGN & ENGINEERING SERVICES
DIVISION–SOUTHEAST REGION

GOVERNMENT CREEK PLAN & PROFILE

PROJECT DESIGNATION
AIP NO. 3-02-0144-1606

STATE	YEAR
ALASKA	2006
SHEET NUMBER	TOTAL SHEETS
E6	131

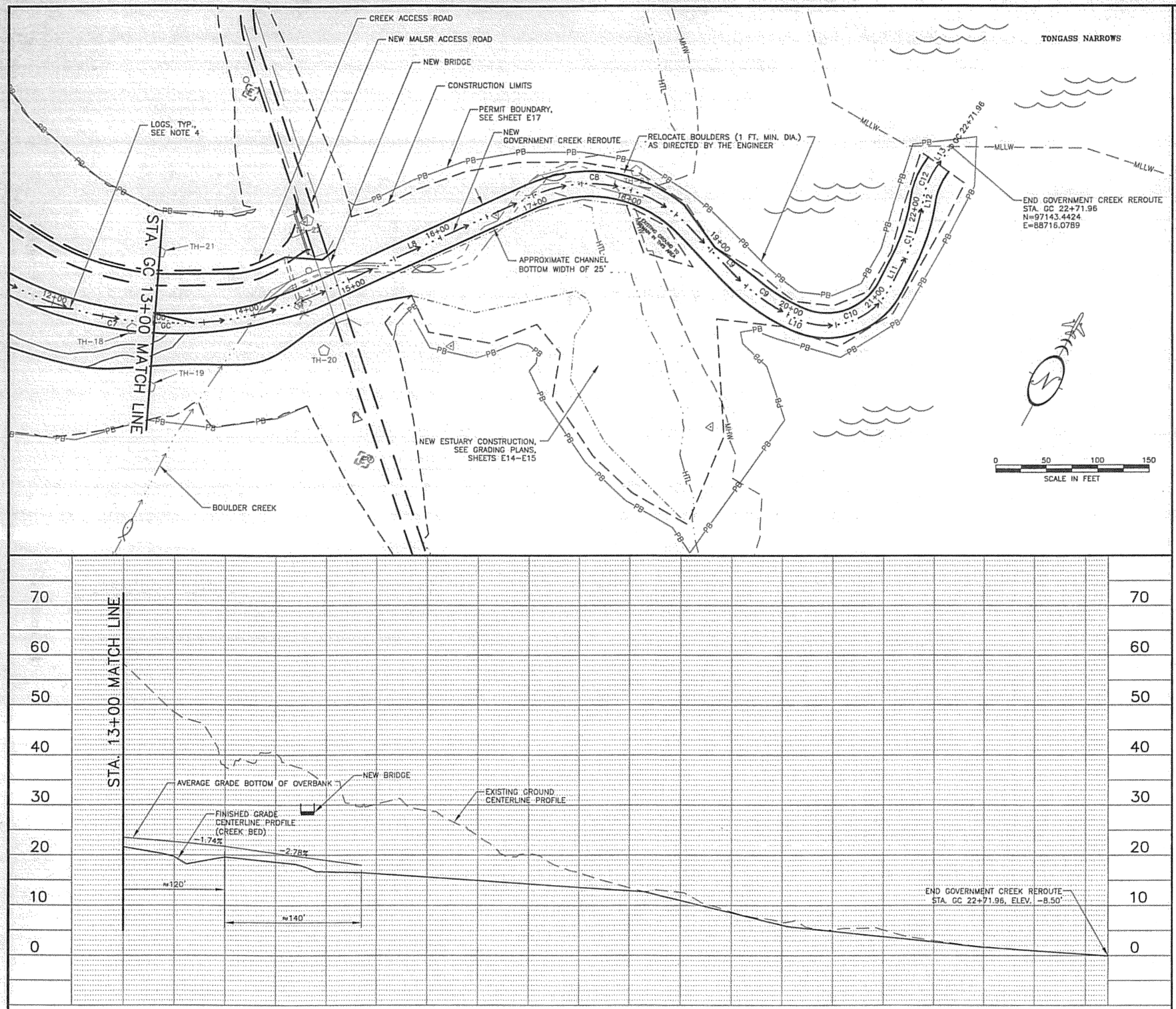

NOTES:

1. THE HORIZONTAL ALIGNMENT OF THE CREEK IS SUBJECT TO CHANGE, DEPENDING ON SITE CONDITIONS.
2. THE GRADES SHOWN ARE APPROXIMATE AND SUBJECT TO REVISION IN THE FIELD. THE LOCATION OF (STEPS, POOLS, AND RIFFLES) WILL BE FIELD ADJUSTED BY THE ENGINEER.
3. DO NOT EXCAVATE BELOW OVERBANK DEPTH UNTIL DIRECTED BY THE ENGINEER.
4. SEE SHEET F5 FOR ANCHORED AND UNANCHORED LOG INSTALLATION DETAILS.

LINE TABLE

LINE	LENGTH (FT.)	BEARING
L1	16.68	N71°53'27"E
L2	31.59	N55°50'20"E
L3	40.06	N65°52'47"E
L4	71.23	S46°14'43"E
L5	60.87	S19°23'53"E
L6	43.63	S46°56'47"E
L7	147.21	S71°47'51"E
L8	225.62	N37°16'12"E
L9	63.64	S70°58'45"E
L10	1.31	N86°41'04"E
L11	28.30	N00°58'40"W
L12	0.65	N19°25'00"W
L13	25.42	N07°40'06"E

CURVE TABLE

CURVE	P.I.	RADIUS (FT.)	TANGENT (FT.)	DELTA	LENGTH (FT.)
C1	1+65.71	350.00	49.35	16°03'07"	98.06
C2	2+59.47	150.00	13.18	10°02'27"	26.29
C3	3+43.48	52.00	34.99	67°52'30"	61.60
C4	4+98.23	225.00	53.70	26°50'51"	105.43
C5	6+59.89	200.00	49.03	27°32'54"	96.16
C6	8+22.09	325.00	71.61	24°51'05"	140.96
C7	12+56.42	350.00	249.34	70°55'57"	433.30
C8	17+83.23	135.00	97.64	71°45'03"	169.06
C9	19+70.38	200.00	39.49	22°20'11"	77.97
C10	20+64.23	70.00	67.20	87°39'44"	107.10
C11	21+78.26	200.00	32.46	16°26'20"	64.36
C12	22+28.81	75.00	18.06	27°05'06"	35.45

DO NOT SCALE FROM THESE DRAWINGS USE DIMENSIONS

PATH: I:\823400\Dwgs\C\Sheets\E07.dwg
Wed, 04/Oct/06 08:40AM bpaddock
TAB: E07

ADDENDUM NUMBER

ATTACHMENT NUMBER

RECORD OF REVISIONS

No.	DATE	DESCRIPTION

KETCHIKAN AIRPORT
RUNWAY SAFETY AREA EXPANSION
& RUNWAY OVERLAY
PROJECT NO. 68306

GOVERNMENT CREEK PLAN & PROFILE

PREPARED BY: USKH INC.

CHECKED BY: DLM

STATE OF ALASKA 49TH D. Lance Mearig CE-7435 REGISTERED PROFESSIONAL ENGINEER 04Oct06

DESIGNED BY: EJG

DRAWN BY: WJP

STATE OF ALASKA
DEPARTMENT OF TRANSPORTATION & PUBLIC FACILITIES
DESIGN & ENGINEERING SERVICES DIVISION–SOUTHEAST REGION

GOVERNMENT CREEK PLAN & PROFILE

PROJECT DESIGNATION	
AIP NO. 3-02-0144-1606	
STATE	YEAR
ALASKA	2006
SHEET NUMBER	TOTAL SHEETS
E7	131

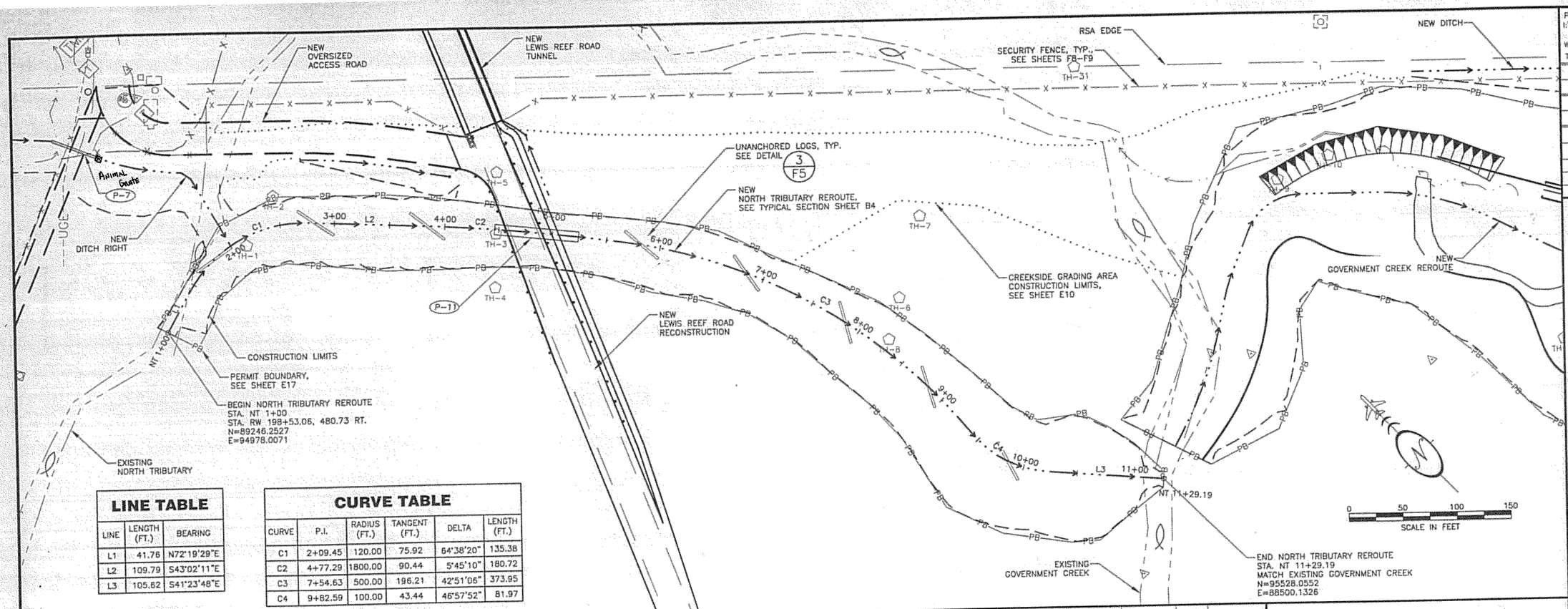

LINE TABLE

LINE	LENGTH (FT.)	BEARING
L1	41.76	N72°19'29"E
L2	109.79	S43°02'11"E
L3	105.62	S41°23'48"E

CURVE TABLE

CURVE	P.I.	RADIUS (FT.)	TANGENT (FT.)	DELTA	LENGTH (FT.)
C1	2+09.45	120.00	75.92	64°38'20"	135.38
C2	4+77.29	1800.00	90.44	5°45'10"	180.72
C3	7+54.63	500.00	196.21	42°51'06"	373.95
C4	9+82.59	100.00	43.44	46°57'52"	81.97

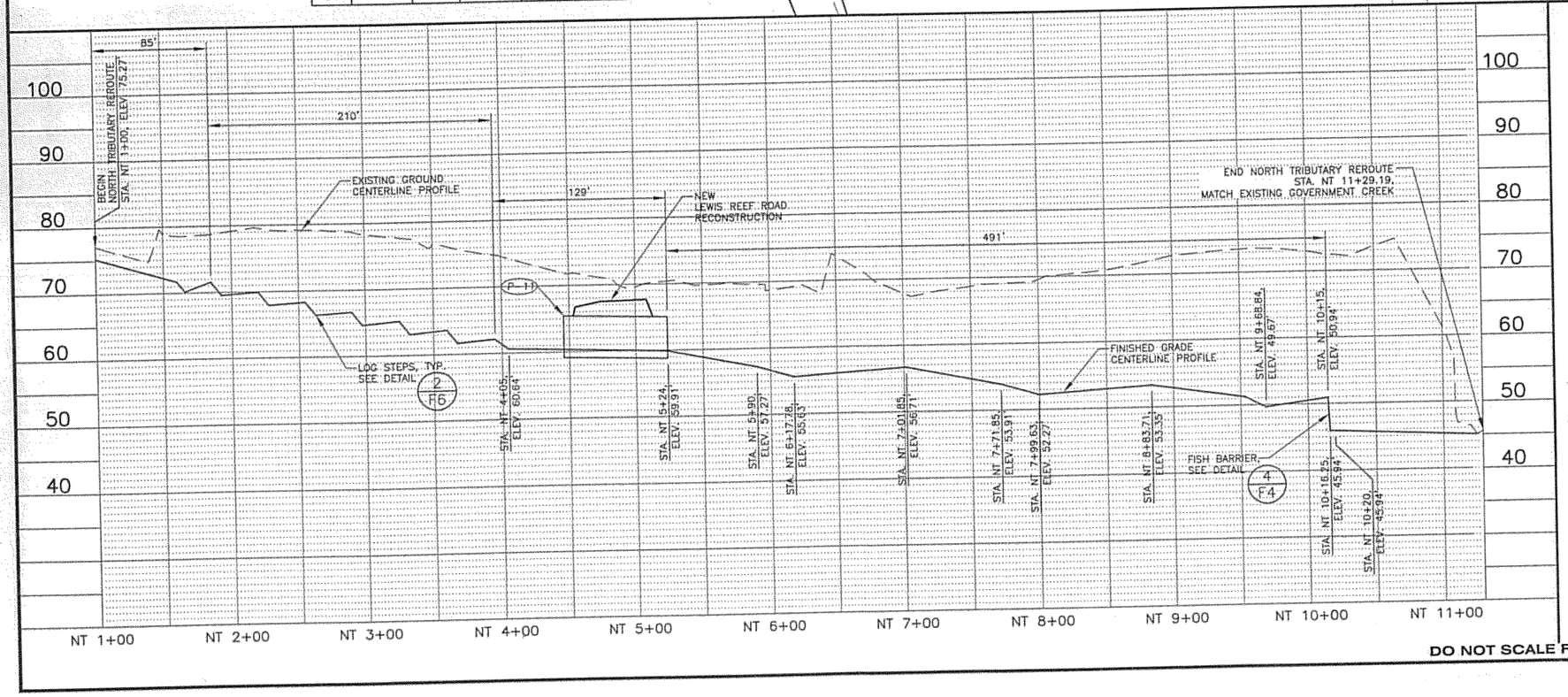

TEST HOLE LOCATIONS

TEST HOLE NO.	NORTH TRIBUTARY	
	STATION	OFFSET
TH–1	NT 2+13	8 RT.
TH–2	NT 2+49	27 LT.
TH–3	NT 4+47	4 RT.
TH–4	NT 4+50	54 RT.
TH–5	NT 4+44	53 LT.
TH–6	NT 8+12	47 LT.
TH–7	NT 7+88	120 LT.
TH–8	NT 8+27	10 LT.

NOTES:

1. THE HORIZONTAL ALIGNMENT OF THE CREEK IS SUBJECT TO CHANGE, DEPENDING ON SITE CONDITIONS.
2. THE GRADES SHOWN ARE APPROXIMATE AND SUBJECT TO REVISION IN THE FIELD. THE LOCATION OF (STEPS, POOLS, AND RIFFLES) WILL BE FIELD ADJUSTED BY THE ENGINEER.

DO NOT SCALE FROM THESE DRAWINGS USE DIMENSIONS

PATH: I:\823400\Dwgs\C\Sheets\E08.dwg
Wed, 04/Oct/06 08:40AM bpaddock
TAB: E08

ADDENDUM NUMBER

ATTACHMENT NUMBER

RECORD OF REVISIONS

No.	DATE	DESCRIPTION

KETCHIKAN AIRPORT
RUNWAY SAFETY AREA EXPANSION
& RUNWAY OVERLAY
PROJECT NO. 68306

NORTH TRIBUTARY PLAN & PROFILE

PREPARED BY: USKH INC.

CHECKED BY: DLM

STATE OF ALASKA 49TH D. Lance Mearig CE-7435 04Oct06 REGISTERED PROFESSIONAL ENGINEER

DESIGNED BY: EJG

DRAWN BY: WJP

STATE OF ALASKA
DEPARTMENT OF TRANSPORTATION
& PUBLIC FACILITIES
DESIGN & ENGINEERING SERVICES
DIVISION–SOUTHEAST REGION

NORTH TRIBUTARY PLAN & PROFILE

PROJECT DESIGNATION
AIP NO. 3-02-0144-1606

STATE	YEAR
ALASKA	2006
SHEET NUMBER	TOTAL SHEETS
E8	131

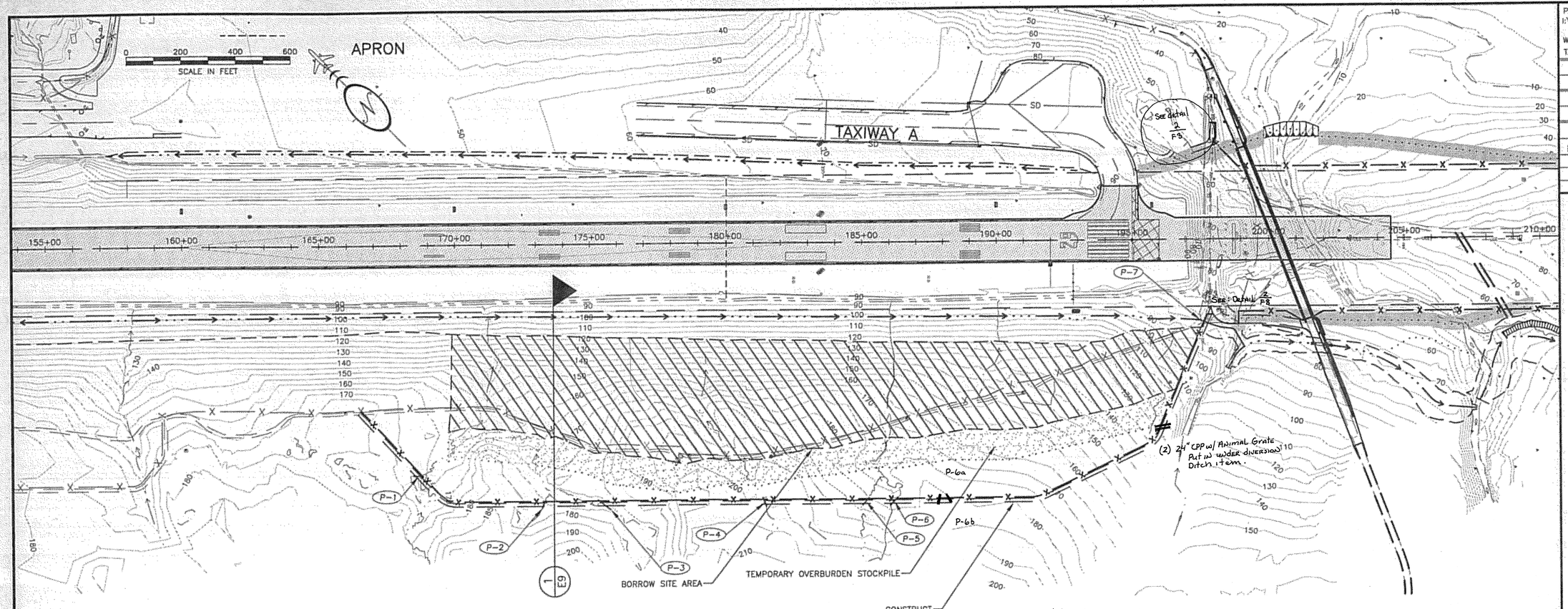

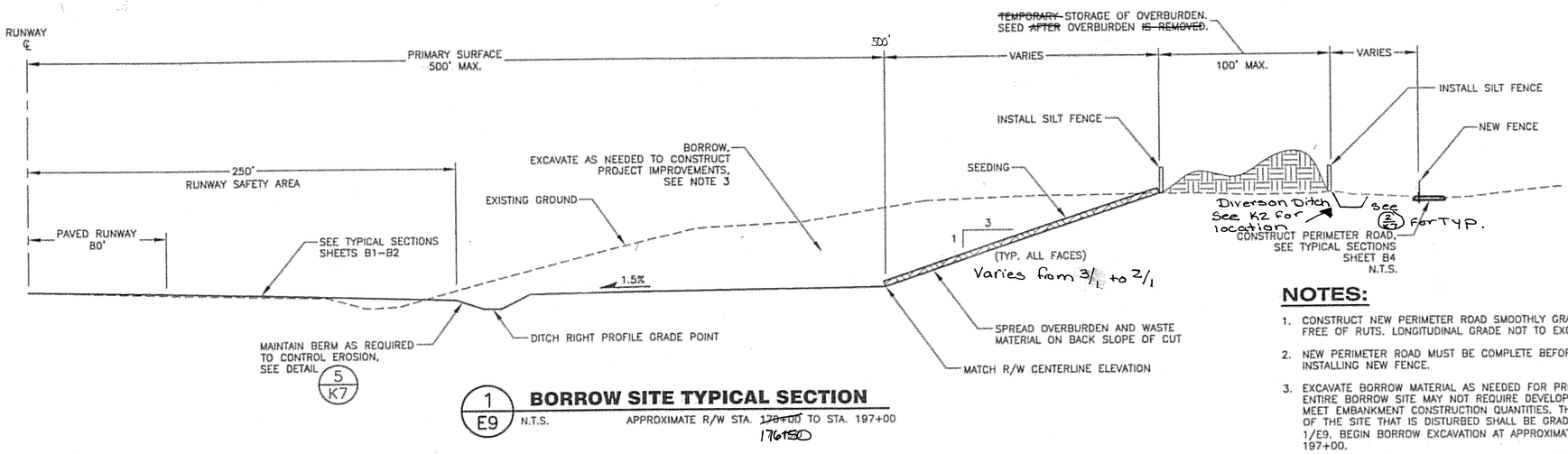

1 E9 BORROW SITE TYPICAL SECTION

N.T.S. APPROXIMATE R/W STA. ~~128+00~~ 176+50 TO STA. 197+00

NOTES:

1. CONSTRUCT NEW PERIMETER ROAD SMOOTHLY GRADED AND FREE OF RUTS. LONGITUDINAL GRADE NOT TO EXCEED 25%.
2. NEW PERIMETER ROAD MUST BE COMPLETE BEFORE INSTALLING NEW FENCE.
3. EXCAVATE BORROW MATERIAL AS NEEDED FOR PROJECT. THE ENTIRE BORROW SITE MAY NOT REQUIRE DEVELOPMENT TO MEET EMBANKMENT CONSTRUCTION QUANTITIES. THE EXTENT OF THE SITE THAT IS DISTURBED SHALL BE GRADED PER 1/E9, BEGIN BORROW EXCAVATION AT APPROXIMATE R/W STA. 197+00.

DO NOT SCALE FROM THESE DRAWINGS USE DIMENSIONS

PATH: I:\823400\Dwgs\C\Sheets\E09.dwg

Wed, 04/Oct/06 08:40AM bpoddock

TAB: E09

ADDENDUM NUMBER
ATTACHMENT NUMBER

RECORD OF REVISIONS

No.	DATE	DESCRIPTION

KETCHIKAN AIRPORT
RUNWAY SAFETY AREA EXPANSION
& RUNWAY OVERLAY
PROJECT NO. 68306

BORROW SITE PLAN

PREPARED BY: USKH INC.

CHECKED BY: DLM

STATE OF ALASKA 49TH D. Lance Mearig CE-7435 04Oct06 REGISTERED PROFESSIONAL ENGINEER

DESIGNED BY: NCL

DRAWN BY: WJP

STATE OF ALASKA
DEPARTMENT OF TRANSPORTATION & PUBLIC FACILITIES
DESIGN & ENGINEERING SERVICES DIVISION-SOUTHEAST REGION

BORROW SITE PLAN

PROJECT DESIGNATION	
AIP NO. 3-02-0144-1606	
STATE	YEAR
ALASKA	2006
SHEET NUMBER	TOTAL SHEETS
E9	131

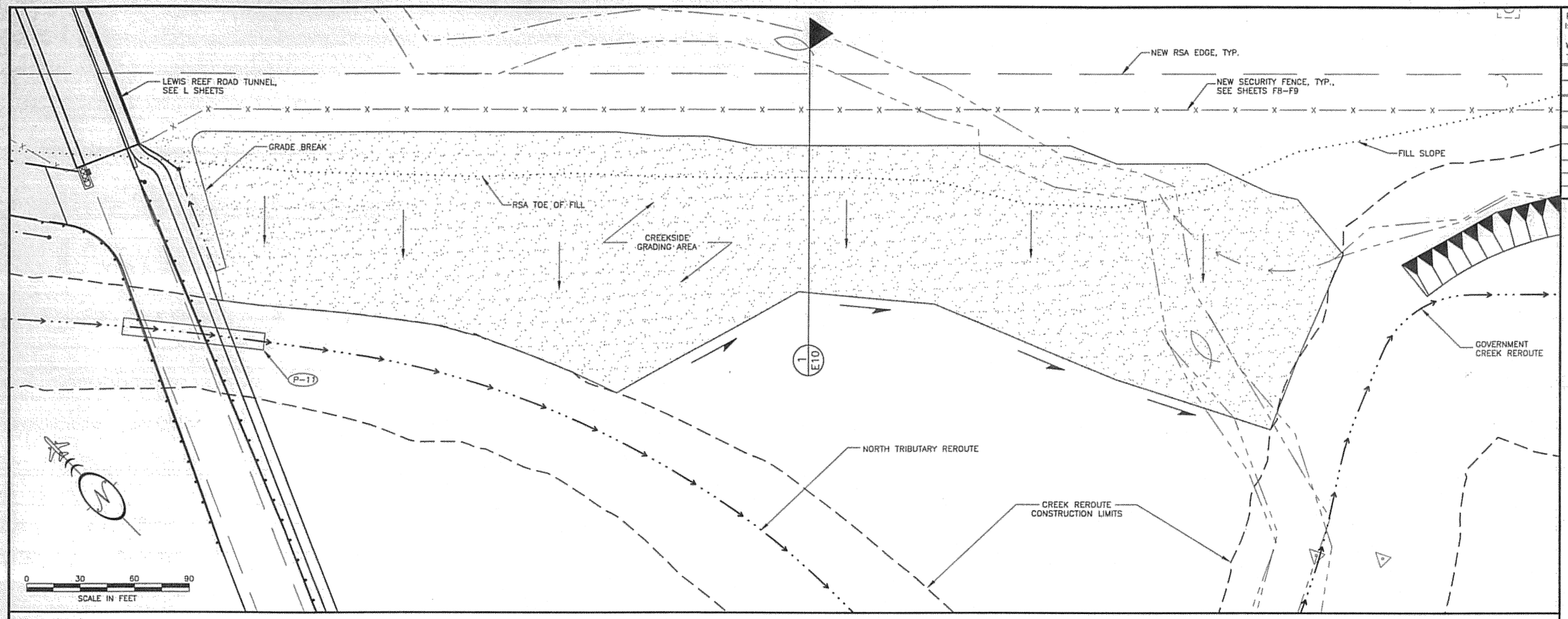

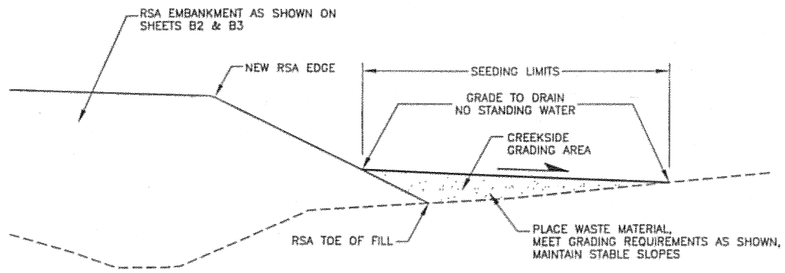

1/E10 **FILL SECTION**
N.T.S.

DO NOT SCALE FROM THESE DRAWINGS USE DIMENSIONS

PATH: I:\823400\Dwgs\C\Sheets\E10.dwg
Wed, 04/Oct/06 08:40AM bpaddock
TAB: E10

ADDENDUM NUMBER
ATTACHMENT NUMBER

RECORD OF REVISIONS

No.	DATE	DESCRIPTION

KETCHIKAN AIRPORT
RUNWAY SAFETY AREA EXPANSION
& RUNWAY OVERLAY
PROJECT NO. 68306

CREEKSIDE GRADING PLAN

PREPARED BY: USKH INC.

CHECKED BY: DLM

STATE OF ALASKA 49 TH
D. Lance Mearig CE-7435 REGISTERED PROFESSIONAL ENGINEER 04Oct06

DESIGNED BY: EJG

DRAWN BY: WJP

STATE OF ALASKA
DEPARTMENT OF TRANSPORTATION & PUBLIC FACILITIES
DESIGN & ENGINEERING SERVICES
DIVISION–SOUTHEAST REGION

CREEKSIDE GRADING PLAN

PROJECT DESIGNATION	
AIP NO. 3-02-0144-1606	
STATE	YEAR
ALASKA	2006
SHEET NUMBER	TOTAL SHEETS
E10	131

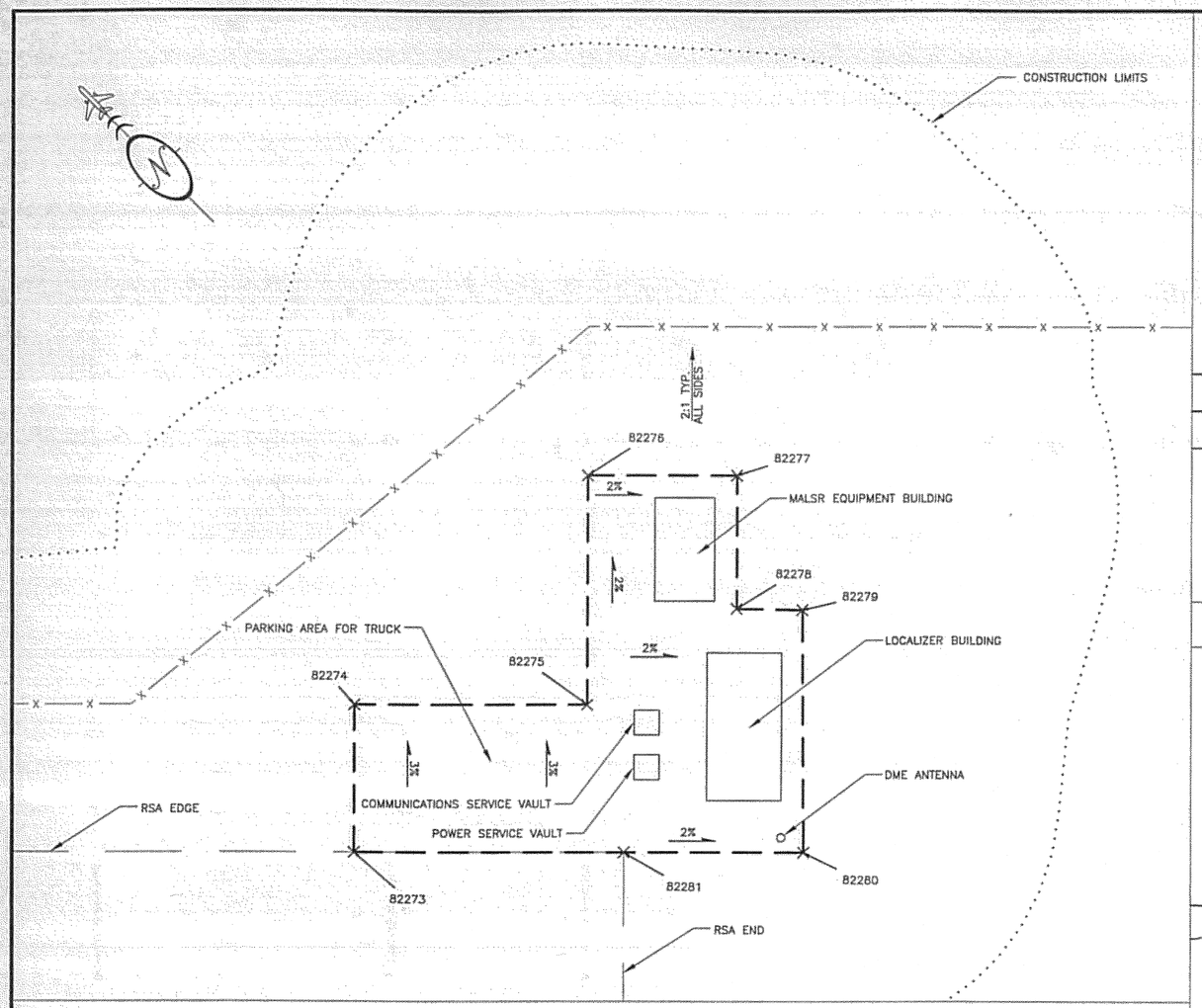

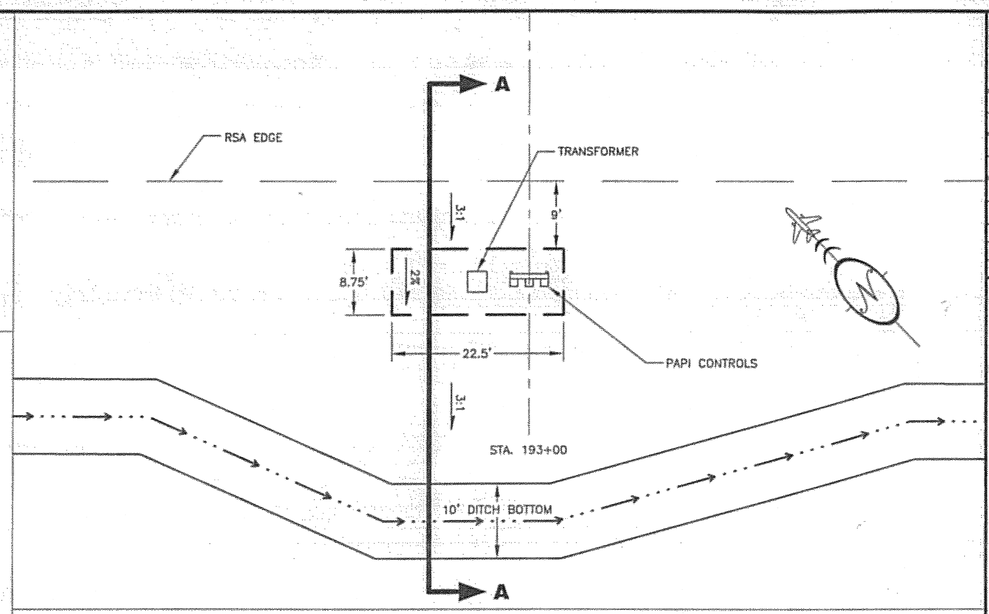

PLAN

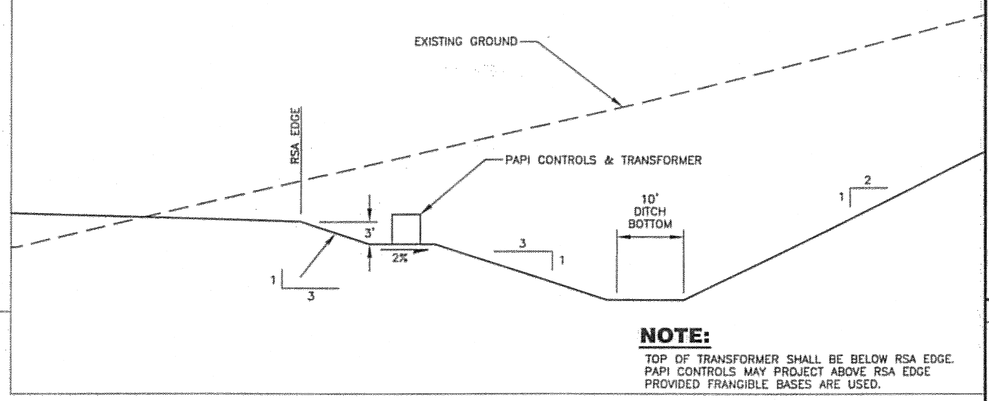

NOTE:
TOP OF TRANSFORMER SHALL BE BELOW RSA EDGE. PAPI CONTROLS MAY PROJECT ABOVE RSA EDGE PROVIDED FRANGIBLE BASES ARE USED.

SECTION A-A

(2 / E11) **PAPI CONTROL PAD**
N.T.S.

SITE GRADING DATA

POINT NUMBER	STATION	OFFSET	ELEVATION
82273	212+14	250.00' LT.	66.14
82274	212+14	270.00' LT.	65.54
82275	212+45	270.00' LT.	64.82
82276	212+45	301.00' LT.	64.20
82277	212+65	301.00' LT.	63.80
82278	212+65	282.99' LT.	64.16
82279	212+74	282.84' LT.	63.98
82280	212+74	250.00' LT.	65.07
82281	212+50	250.00' LT.	65.42

0 10 20 30
SCALE IN FEET

(1 / E11) **PAPI CONTROL PAD**
N.T.S.

DO NOT SCALE FROM THESE DRAWINGS USE DIMENSIONS

PATH: I:\B23400\Dwgs\C\Sheets\E11.dwg
Wed, 04/Oct/06 08:41AM bpaddock
TAB: E11

ADDENDUM NUMBER

ATTACHMENT NUMBER

RECORD OF REVISIONS

No.	DATE	DESCRIPTION

KETCHIKAN AIRPORT
RUNWAY SAFETY AREA EXPANSION
& RUNWAY OVERLAY
PROJECT NO. 68306

GRADING PLANS

PREPARED BY: USKH INC.
CHECKED BY: DLM

STATE OF ALASKA 49TH
D. Lance Mearig CE-7435
REGISTERED PROFESSIONAL ENGINEER
04Oct06

DESIGNED BY: EJG
DRAWN BY: WJP

STATE OF ALASKA
DEPARTMENT OF TRANSPORTATION
& PUBLIC FACILITIES
DESIGN & ENGINEERING SERVICES
DIVISION–SOUTHEAST REGION

GRADING PLANS

PROJECT DESIGNATION	
AIP NO. 3-02-0144-1606	
STATE	YEAR
ALASKA	2006
SHEET NUMBER	TOTAL SHEETS
E11	131

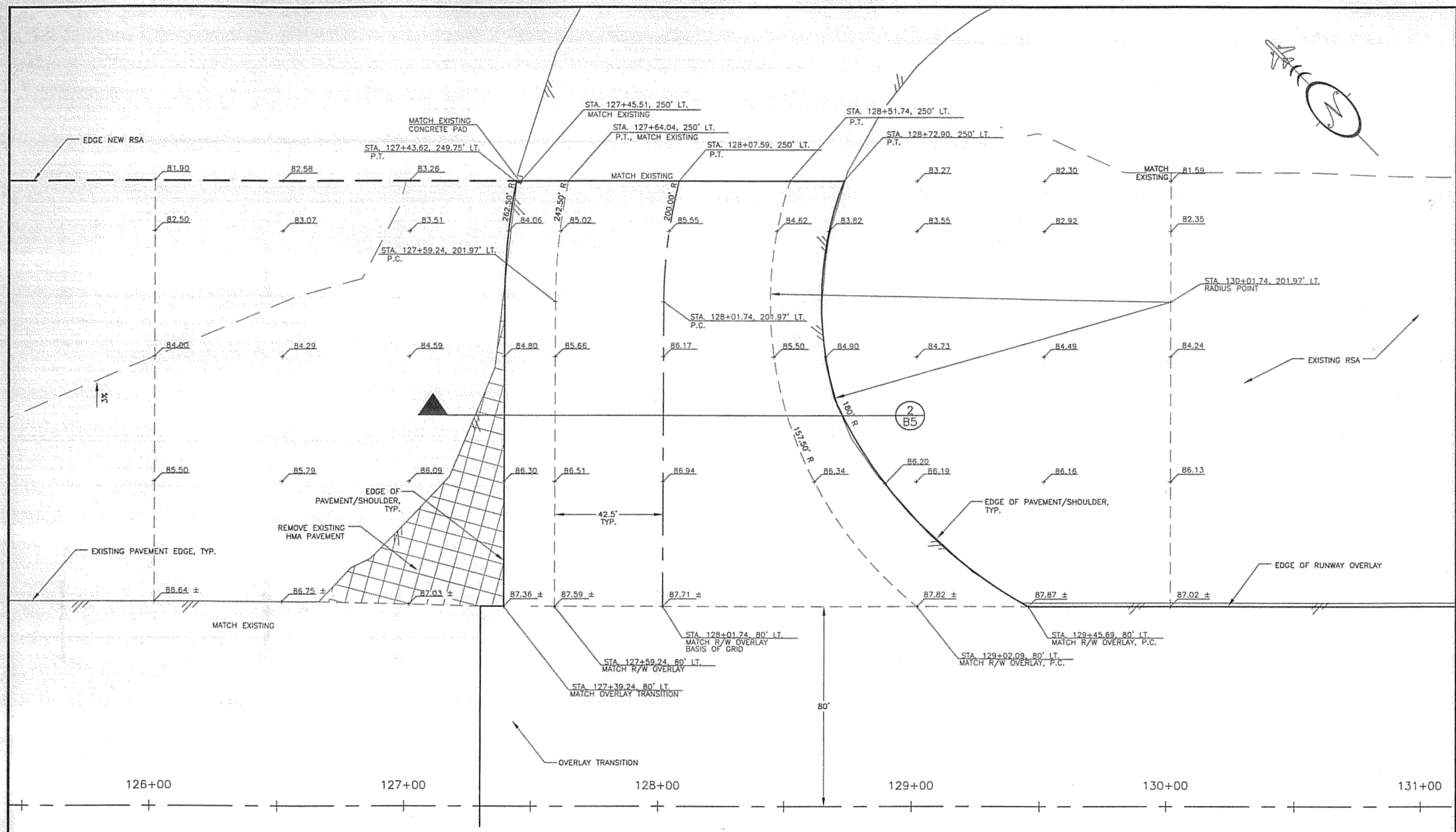

NOTES:

1. THE BASIS FOR GRID IS THE INTERSECTION OF THE T/W B CENTERLINE WITH THE PROPOSED EDGE OF RUNWAY OVERLAY PAVEMENT (AN 80' OFFSET OF THE R/W CENTERLINE) AT 50' INCREMENTS, EXCEPT AT GRADE BREAKS. THE GRID IS 50'X50' UNLESS OTHERWISE NOTED ON PLAN.
2. PROVIDE SMOOTH TRANSITIONS BETWEEN ALL FINISHED GRADE SPOT ELEVATIONS.

LEGEND

— — — — — — — — GRADE BREAK

0 20 30 60
SCALE IN FEET

DO NOT SCALE FROM THESE DRAWINGS USE DIMENSIONS

PATH: I:\823400\Dwgs\C\Sheets\E12.dwg
Wed, 04/Oct/06 08:41AM bpoddock
TAB: E12

ADDENDUM NUMBER
ATTACHMENT NUMBER

RECORD OF REVISIONS		
No.	DATE	DESCRIPTION

KETCHIKAN AIRPORT
RUNWAY SAFETY AREA EXPANSION & RUNWAY OVERLAY
PROJECT NO. 68306

TAXIWAY B GRADING PLAN

PREPARED BY: USKH INC.
CHECKED BY: DLM

STATE OF ALASKA 49TH D. Lance Mearig CE-7435 04Oct06 REGISTERED PROFESSIONAL ENGINEER

DESIGNED BY: EJC
DRAWN BY: WJP

STATE OF ALASKA
DEPARTMENT OF TRANSPORTATION & PUBLIC FACILITIES
DESIGN & ENGINEERING SERVICES
DIVISION–SOUTHEAST REGION

TAXIWAY B GRADING PLAN

PROJECT DESIGNATION	
AIP NO. 3-02-0144-1606	
STATE	YEAR
ALASKA	2006
SHEET NUMBER	TOTAL SHEETS
E12	131

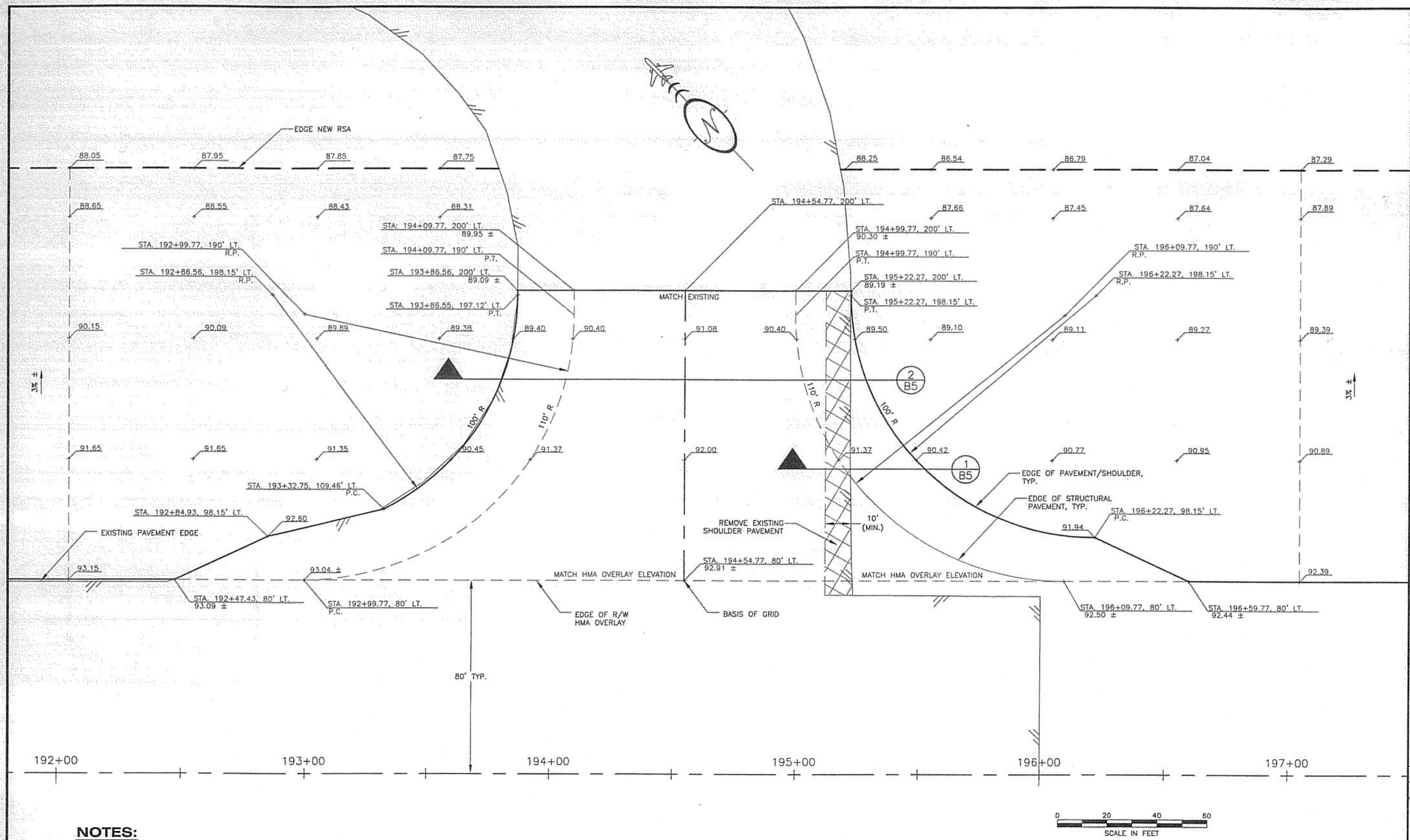

NOTES:

1. THE BASIS OF GRID IS THE INTERSECTION OF THE T/W A CENTERLINE WITH THE PROPOSED EDGE OF RUNWAY OVERLAY PAVEMENT (AN 80' OFFSET OF THE R/W CENTERLINE) AT 50' INCREMENTS, EXCEPT AT GRADE BREAKS. THE GRID IS 50'X50' UNLESS OTHERWISE NOTED ON THE PLAN.
2. PROVIDE SMOOTH TRANSITIONS BETWEEN ALL FINISHED GRADE SPOT ELEVATIONS.

LEGEND

– – – – – – – – – GRADE BREAK

DO NOT SCALE FROM THESE DRAWINGS USE DIMENSIONS

PATH: I:\823400\Dwgs\C\Sheets\E13.dwg
Wed, 04/Oct/06 08:41AM bpaddock
TAB: E13

ADDENDUM NUMBER
ATTACHMENT NUMBER

RECORD OF REVISIONS

No.	DATE	DESCRIPTION

KETCHIKAN AIRPORT
RUNWAY SAFETY AREA EXPANSION
& RUNWAY OVERLAY
PROJECT NO. 68306

TAXIWAY A GRADING PLAN

PREPARED BY: USKH INC.

CHECKED BY: DLM

STATE OF ALASKA 49TH
D. Lance Mearig
CE-7435
REGISTERED PROFESSIONAL ENGINEER

DESIGNED BY: EJG

DRAWN BY: WJP

STATE OF ALASKA
DEPARTMENT OF TRANSPORTATION
& PUBLIC FACILITIES
DESIGN & ENGINEERING SERVICES
DIVISION–SOUTHEAST REGION

TAXIWAY A GRADING PLAN

PROJECT DESIGNATION	
AIP NO. 3-02-0144-1606	
STATE	YEAR
ALASKA	2006
SHEET NUMBER	TOTAL SHEETS
E13	131

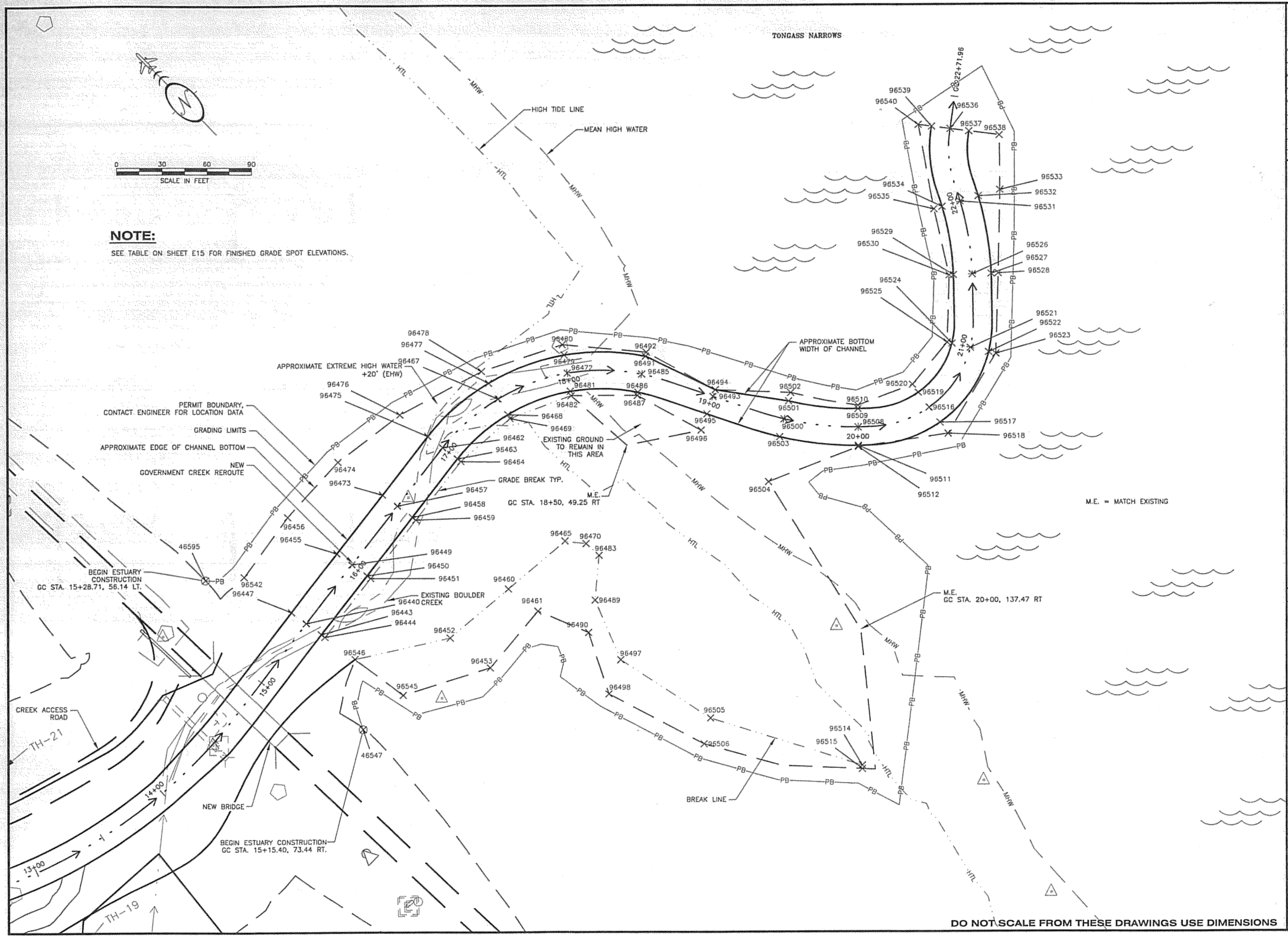

PATH:
I:\B23400\Dwgs\C\Sheets\E14.dwg

Wed, 04/Oct/06 10:11AM bpaddock
TAB: E14

ADDENDUM NUMBER

ATTACHMENT NUMBER

RECORD OF REVISIONS

No.	DATE	DESCRIPTION

KETCHIKAN AIRPORT
RUNWAY SAFETY AREA EXPANSION
& RUNWAY OVERLAY
PROJECT NO. 68306

GOVERNMENT CREEK ESTUARY GRADING PLANS

PREPARED BY: USKH INC.

CHECKED BY: DLM

STATE OF ALASKA
49 TH
D. Lance Mearig
CE-7435
04Oct06
REGISTERED PROFESSIONAL ENGINEER

DESIGNED BY: EJG

DRAWN BY: JRH

STATE OF ALASKA
DEPARTMENT OF TRANSPORTATION
& PUBLIC FACILITIES
DESIGN & ENGINEERING SERVICES
DIVISION–SOUTHEAST REGION

GOVERNMENT CREEK ESTUARY GRADING PLANS

PROJECT DESIGNATION	
AIP NO. 3-02-0144-1606	
STATE	YEAR
ALASKA	2006
SHEET NUMBER	TOTAL SHEETS
E14	131

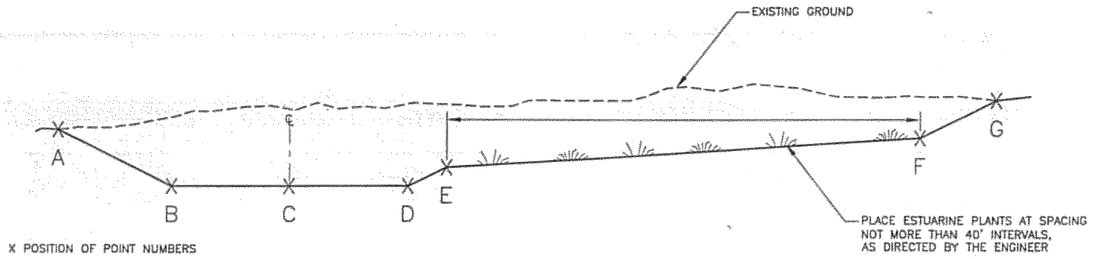

POINT LAYOUT FOR ESTUARY

ESTUARY GRADING POINT TABLE

STATION	A			B			C			D			E			F			G		
	PT #	OFFSET	ELEV	PT #	OFFSET	ELEV	PT #	OFFSET	ELEV	PT #	OFFSET	ELEV	PT #	OFFSET	ELEV	PT #	OFFSET	ELEV	PT #	OFFSET	ELEV
15+50	96542	52.1	39.7	96447	12.5	16.3	96440	0	16.3	96443	12.5	16.3	96444	15.5	17.8	96546	40.4	20.0	96545	80.8	40.2
16+00	96456	53.5	36.2	96455	12.5	15.6	96449	0	15.6	96450	12.5	15.6	96451	15.5	17.1	96452	82.4	20.0	96453	115.9	36.7
16+50	96474	49.5	33.5	96473	12.5	15.0	96457	0	15.0	96458	12.5	15.0	96459	15.5	16.5	96460	93.3	20.0	96461	118.3	36.5
17+00	96476	36.2	26.1	96475	12.5	14.3	96462	0	14.3	96463	12.5	14.3	96464	15.5	15.8	96465	104.1	20.0	–	–	–
17+50	96478	21.8	18.3	96477	12.5	13.6	96467	0	13.6	96468	12.5	13.6	96469	15.5	15.1	96470	114.9	20.0	–	–	–
18+00	96480	19.5	16.4	96479	12.5	12.9	96472	0	12.9	96481	12.5	12.9	96482	15.5	14.4	96483	125.8	20.0	–	–	–
18+50	96492	15.3	12.4	96491	12.5	11.0	96485	0	11.0	96486	12.5	11.0	96487	14.7	M.E.	96489	156.7	20.0	96490	179.1	31.2
19+00	–	–	–	96494	4.79	8.5	96493	0	8.5	96495	12.5	8.5	96496	24.2	10.0	96497	189.2	20.0	96498	213.7	32.2
19+50	96502	18.4	7.6	96501	12.5	6.1	96500	0	6.1	96503	12.5	6.1	96504	43.8	10.0	96505	208.8	20.0	96506	226.8	29.0
20+00	96510	14.8	5.4	96509	12.5	4.9	96508	0	4.9	96511	12.5	4.9	96512	13.3	M.E.	96514	229.4	20.0	96515	231.8	21.2
20+50	96520	19.2	5.4	96519	12.5	3.8	96516	0	3.8	96517	12.5	3.8	96518	21.8	4.9	–	–	–	–	–	–
21+00	96525	15.7	3.5	96524	12.5	2.7	96521	0	2.7	96522	12.5	2.7	96523	17.3	3.3	–	–	–	–	–	–
21+50	96530	15.3	2.4	96529	12.5	1.7	96526	0	1.7	96527	12.5	1.7	96528	17.0	2.2	–	–	–	–	–	–
22+00	96535	18.2	2.4	96534	12.5	1.0	96531	0	1.0	96532	12.5	1.0	96533	27.3	2.8	–	–	–	–	–	–
22+50	96540	21.5	2.5	96539	12.5	0.3	96536	0	0.3	96537	12.5	0.3	96538	32.6	2.8	–	–	–	–	–	–

PT# = POINT NUMBER

M.E. = MATCH EXISTING

NOTES:

1. SHEET E14 FOR POINT LOCATIONS.
2. POINT INFORMATION IS PROVIDED AT THE CENTERLINE AND AT THE GRADE BREAKS.

GENERAL LAYOUT OF POINT INFORMATION FOR ESTUARY

DO NOT SCALE FROM THESE DRAWINGS USE DIMENSIONS

PATH: I:\823400\Dwgs\C\Sheets\E15.dwg

Wed, 04/Oct/06 10:54AM bpaddock

TAB: E15

ADDENDUM NUMBER

ATTACHMENT NUMBER

RECORD OF REVISIONS

No.	DATE	DESCRIPTION

KETCHIKAN AIRPORT
RUNWAY SAFETY AREA EXPANSION
& RUNWAY OVERLAY
PROJECT NO. 68306

ESTUARY GRADING PLANS

PREPARED BY: USKH INC.

CHECKED BY: DLM

STATE OF ALASKA 49TH
D. Lance Mearig
CE-7435
04 Oct 06
REGISTERED PROFESSIONAL ENGINEER

DESIGNED BY: EJG

DRAWN BY: JRH

STATE OF ALASKA
DEPARTMENT OF TRANSPORTATION
& PUBLIC FACILITIES
DESIGN & ENGINEERING SERVICES
DIVISION–SOUTHEAST REGION

ESTUARY GRADING PLANS

PROJECT DESIGNATION

AIP NO. 3-02-0144-1606

STATE	YEAR
ALASKA	2006
SHEET NUMBER	TOTAL SHEETS
E15	131

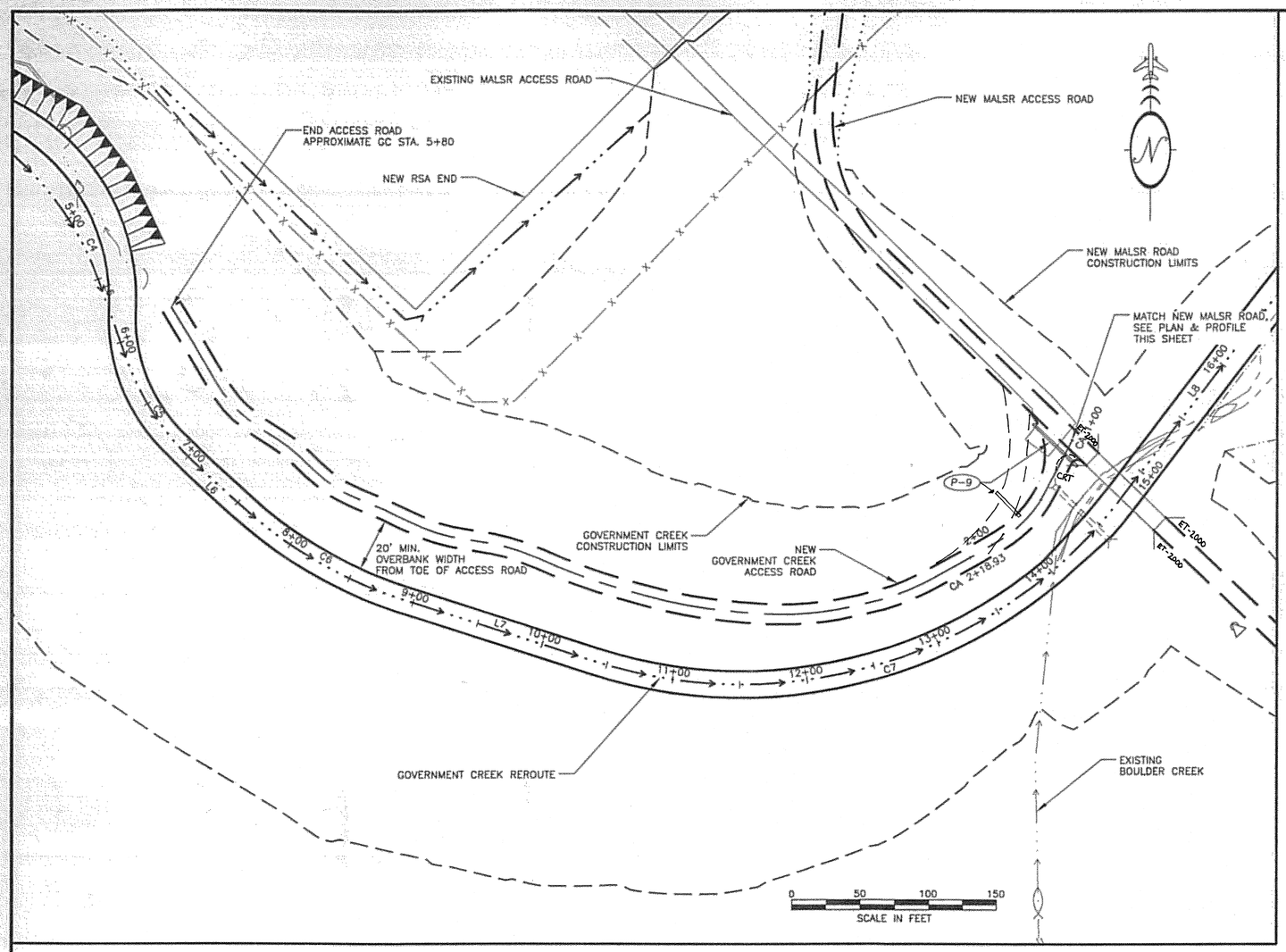

PLAN

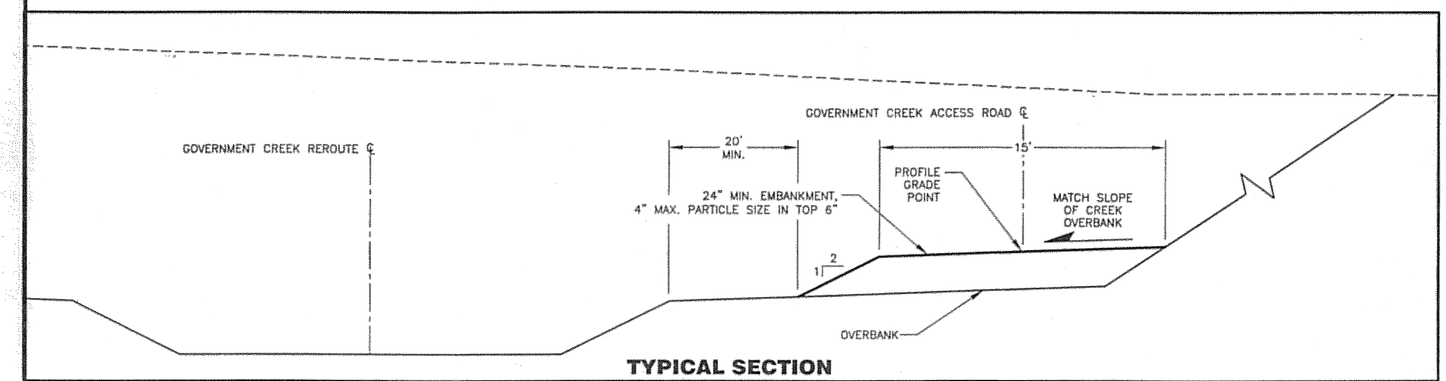

TYPICAL SECTION

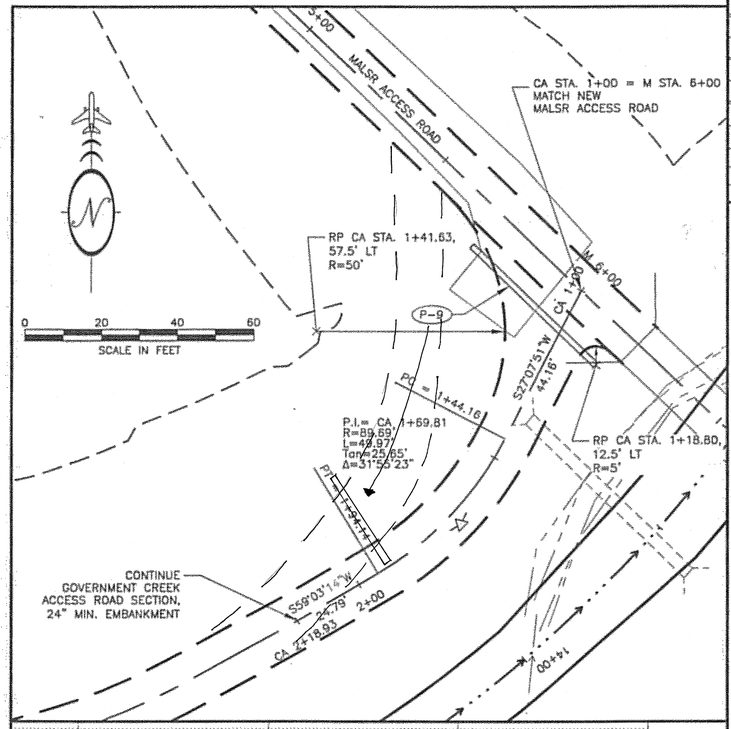

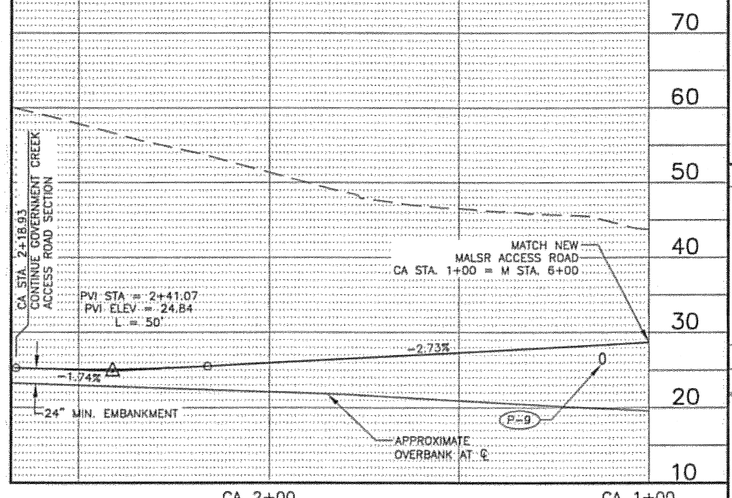

PLAN & PROFILE

PATH:
I:\823400\Dwgs\C\Sheets\E16.dwg

Wed, 04/Oct/06 08:41AM bpaddock
TAB: E16

ADDENDUM NUMBER

ATTACHMENT NUMBER

RECORD OF REVISIONS

No.	DATE	DESCRIPTION

KETCHIKAN AIRPORT
RUNWAY SAFETY AREA EXPANSION
& RUNWAY OVERLAY
PROJECT NO. 68306

GOVERNMENT CREEK
ACCESS ROAD PLAN & PROFILE

PREPARED BY: USKH INC.

CHECKED BY: DLM

STATE OF ALASKA
49 TH
D. Lance Mearig
CE-7435
ACEC
REGISTERED PROFESSIONAL ENGINEER

DESIGNED BY: EJG

DRAWN BY: WJP

STATE OF ALASKA
DEPARTMENT OF TRANSPORTATION
& PUBLIC FACILITIES
DESIGN & ENGINEERING SERVICES
DIVISION–SOUTHEAST REGION

GOVERNMENT CREEK ACCESS ROAD PLAN & PROFILE

PROJECT DESIGNATION	
AIP NO. 3-02-0144-1606	
STATE	YEAR
ALASKA	2006
SHEET NUMBER	TOTAL SHEETS
E16	131

DO NOT SCALE FROM THESE DRAWINGS USE DIMENSIONS

GOVERNMENT CREEK
PERMIT BOUNDARY LIMITS

STATION	OFFSET (FT.)		NORTHING	EASTING
1+00	LEFT	55.43	88566.8346	95539.4594
	RIGHT	37.01	88478.9745	95568.1921
1+50	LEFT	42.78	88570.3969	95586.5690
	RIGHT	73.95	88463.4009	95633.2332
2+00	LEFT	46.64	88594.0347	95623.3781
	RIGHT	78.33	88487.7656	95689.1358
2+50	LEFT	42.96	88618.2797	95666.2424
	RIGHT	68.95	88524.1681	95726.7994
3+00	LEFT	44.55	88644.7664	95716.1433
	RIGHT	147.59	88469.3989	95794.6636
3+50	LEFT	76.46	88684.6660	95804.7353
	RIGHT	84.26	88530.9689	95757.7367
4+00	LEFT	80.74	88639.9118	95877.5468
	RIGHT	84.85	88478.1187	95789.1757
4+50	LEFT	102.39	88619.5165	95930.0694
	RIGHT	97.22	88478.1187	95789.1757
5+00	LEFT	104.02	88563.7510	95976.8709
	RIGHT	100.80	88454.0978	95803.8843
5+50	LEFT	112.41	88500.9943	96016.7686
	RIGHT	109.24	88426.5033	95808.0043
6+00	LEFT	129.13	88458.9423	96049.2997
	RIGHT	118.94	88376.5522	95815.3137
6+50	LEFT	136.71	88439.3776	96065.4527
	RIGHT	150.60	88294.2479	95817.4852
7+00	LEFT	136.95	88427.0251	96075.2279
	RIGHT	179.55	88204.5400	95850.1133
7+50	LEFT	134.52	88394.8050	96106.0833
	RIGHT	181.94	88163.5657	95890.0360
8+00	LEFT	145.02	88384.6068	96135.2927
	RIGHT	173.33	88122.3140	95954.8781
8+50	LEFT	151.35	88376.4342	96161.9682
	RIGHT	175.70	88081.7553	96020.1051
9+00	LEFT	153.29	88367.4526	96190.7122
	RIGHT	192.41	88039.0512	96082.7240
9+50	LEFT	156.92	88355.2819	96239.3440
	RIGHT	181.39	88033.9032	96133.6650
10+00	LEFT	157.52	88340.2408	96287.0319
	RIGHT	180.01	88019.6018	96181.5961
10+50	LEFT	147.56	88316.5902	96327.3491
	RIGHT	172.34	88009.9047	96236.3397
11+00	LEFT	147.86	88310.6618	96355.6091
	RIGHT	163.61	88002.4822	96310.4130
11+50	LEFT	141.41	88302.0745	96384.3643
	RIGHT	156.55	88004.1170	96383.5420
12+00	LEFT	131.96	88294.7534	96415.3874
	RIGHT	136.60	88028.8310	96452.8881
12+50	LEFT	123.62	88293.2865	96448.1427
	RIGHT	126.19	88053.4040	96517.8900
13+00	LEFT	112.27	88294.1560	96483.1381
	RIGHT	97.58	88103.0512	96569.8159
13+50	LEFT	110.67	88308.9946	96513.8232
	RIGHT	105.23	88127.0753	96630.0863
14+00	LEFT	102.97	88323.5694	96546.2474
	RIGHT	105.2	88165.9094	96682.1796

NORTH TRIBUTARY
PERMIT BOUNDARY LIMITS

STATION	OFFSET (FT.)		NORTHING	EASTING
1+00	LEFT	10.76	89254.9096	94975.2483
	RIGHT	7.28	89237.7225	94980.7252
1+25	LEFT	8.64	89260.4762	94999.7131
	RIGHT	27.06	89226.4653	95010.5512
1+50	LEFT	6.77	89260.4762	94999.7131
	RIGHT	25.48	89226.4653	95010.5512
2+00	LEFT	20.99	89281.7915	95079.5421
	RIGHT	31.50	89230.1237	95070.3071
2+50	LEFT	27.17	89265.0025	95137.0481
	RIGHT	37.31	89211.5506	95100.9845
3+00	LEFT	26.18	89226.0529	95177.1859
	RIGHT	41.54	89179.8323	95127.6836
3+50	LEFT	27.86	89190.6508	95212.5341
	RIGHT	44.01	89141.6058	95160.0069
4+00	LEFT	28.26	89154.1940	95247.0534
	RIGHT	40.81	89107.4259	95196.2297
4+50	LEFT	22.28	89112.4284	95276.4106
	RIGHT	34.53	89075.1334	95233.5512
5+00	LEFT	19.83	89072.2319	95307.2148
	RIGHT	31.29	89039.7552	95267.7294
5+50	LEFT	21.41	89033.7183	95340.0271
	RIGHT	33.75	88999.8710	95296.4632
6+00	LEFT	24.90	88994.0060	95373.3736
	RIGHT	38.49	88958.9505	95320.5648
6+50.08	LEFT	28.77	88953.1794	95402.2776
	RIGHT	34.27	88918.1335	95349.4832
7+00	LEFT	23.95	88900.9804	95421.4501
	RIGHT	33.32	88879.4166	95368.3923
7+50	LEFT	26.18	88852.1652	95440.8578
	RIGHT	37.59	88834.1742	95379.6834
8+00	LEFT	32.22	88802.1452	95459.0958
	RIGHT	46.52	88787.5818	95381.7156
8+50	LEFT	38.99	88750.0178	95473.0489
	RIGHT	47.93	88742.5494	95386.4509
9+00	LEFT	38.20	88696.1876	95474.2075
	RIGHT	50.92	88697.4327	95385.0909
9+50	LEFT	43.53	88646.2376	95476.7654
	RIGHT	58.66	88647.5878	95374.5816
9+75.27	LEFT	46.59	88621.1174	95485.7001
	RIGHT	67.69	88622.6846	95367.0895
10+00	LEFT	46.48	88620.4571	95485.9259
	RIGHT	61.13	88570.0292	95390.8544
10+50	LEFT	56.09	88596.6292	95517.7617
	RIGHT	64.88	88516.6340	95427.0140
10+75	LEFT	45.79	88571.0646	95526.5670
	RIGHT	59.99	88501.1163	95447.2167
11+00	LEFT	30.29	88542.0653	95531.4760
	RIGHT	35.44	88498.5978	95482.1659

DO NOT SCALE FROM THESE DRAWINGS USE DIMENSIONS

PATH: I:\823400\Dwgs\C\Sheets\E17.dwg

Wed, 04/Oct/06 12:16PM bpaddock

TAB: E17

ADDENDUM NUMBER

ATTACHMENT NUMBER

RECORD OF REVISIONS

No.	DATE	DESCRIPTION

KETCHIKAN AIRPORT
RUNWAY SAFETY AREA EXPANSION
& RUNWAY OVERLAY
PROJECT NO. 68306

PERMIT BOUNDARY LIM ITS

PREPARED BY: USKH INC.

CHECKED BY: DLM

STATE OF ALASKA 49TH D. Lance Mearig CE-7435 REGISTERED PROFESSIONAL ENGINEER 04 Oct 06

DESIGNED BY: SC

DRAWN BY: JRH

STATE OF ALASKA
DEPARTMENT OF TRANSPORTATION
& PUBLIC FACILITIES
DESIGN & ENGINEERING SERVICES
DIVISION—SOUTHEAST REGION

PERMIT BOUNDARY LIMITS

PROJECT DESIGNATION

AIP NO. 3-02-0144-1606

STATE	YEAR
ALASKA	2006
SHEET NUMBER	TOTAL SHEETS
E17	131

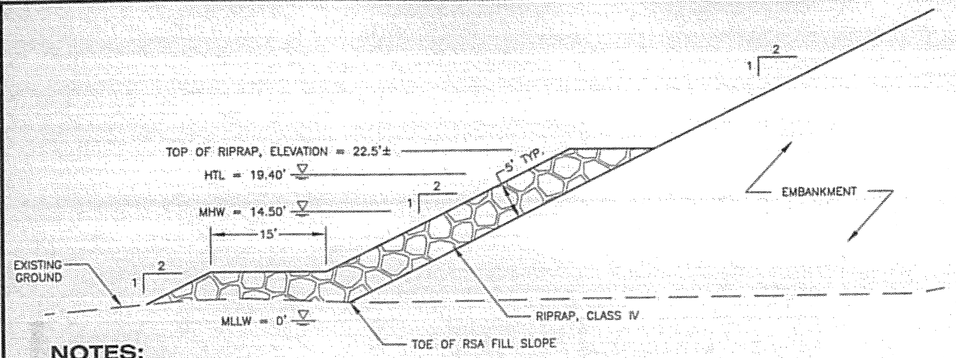

NOTES:

1. PLACE RIPRAP AT THE TOE OF SLOPE AS SHOWN. FOR LOCATIONS SEE SHEET E1 AND E4.
2. SALVAGE OF EXISTING RIPRAP WITHIN THE CONSTRUCTION LIMITS IS PERMITTED.
3. ALL WORK IN THE INTERTIDAL ZONE IS SUBJECT TO ENVIRONMENTAL COMMITMENTS. SEE APPENDIX F.

1/F1 **RIPRAP DETAIL**
N.T.S.

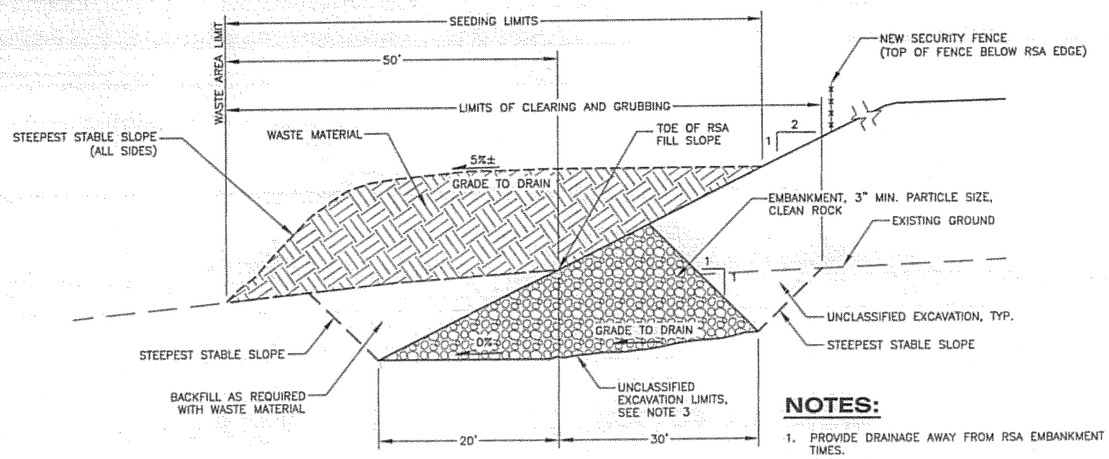

NOTES:

1. PROVIDE DRAINAGE AWAY FROM RSA EMBANKMENT AT ALL TIMES.
2. THE SLOPES OF MATERIAL STOCKPILED IN WASTE AREA SHALL BE STABLE AT ALL TIMES.
3. REMOVE SOFT SOIL DOWN TO DENSE DRY SOIL OR BEDROCK AS DIRECTED BY ENGINEER.
4. DO NOT PLACE WASTE INSIDE (RUNWAY SIDE) OF FENCE.

2/F1 **ROCK TOE BERM DETAIL**
N.T.S.

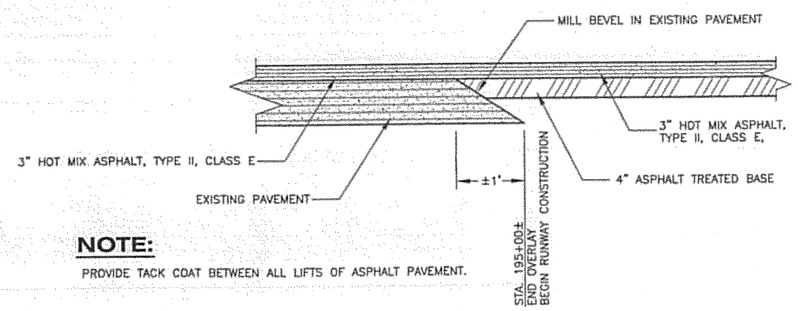

NOTE:
PROVIDE TACK COAT BETWEEN ALL LIFTS OF ASPHALT PAVEMENT.

3/F1 **RUNWAY 29 PAVEMENT TRANSITION DETAIL**
N.T.S.

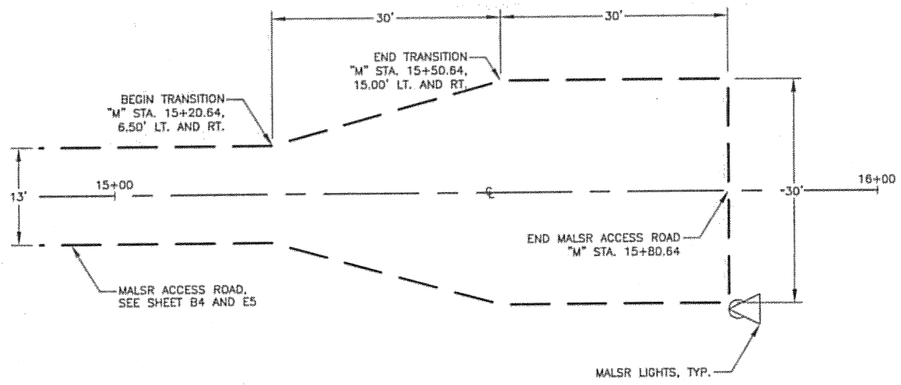

4/F1 **MALSR ACCESS ROAD TURNAROUND**
N.T.S.

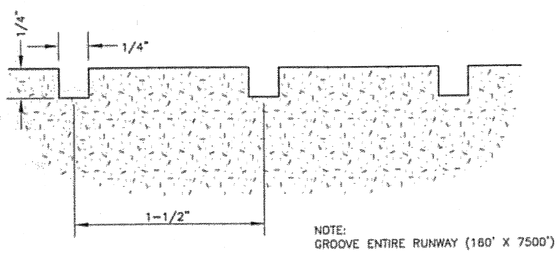

NOTE:
GROOVE ENTIRE RUNWAY (180' X 7500')

5/F1 **PAVEMENT GROOVING DETAIL**
N.T.S.

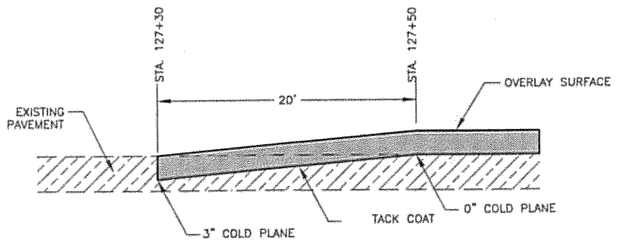

6/F1 **RUNWAY 11 PAVEMENT TRANSITION DETAIL**
N.T.S.

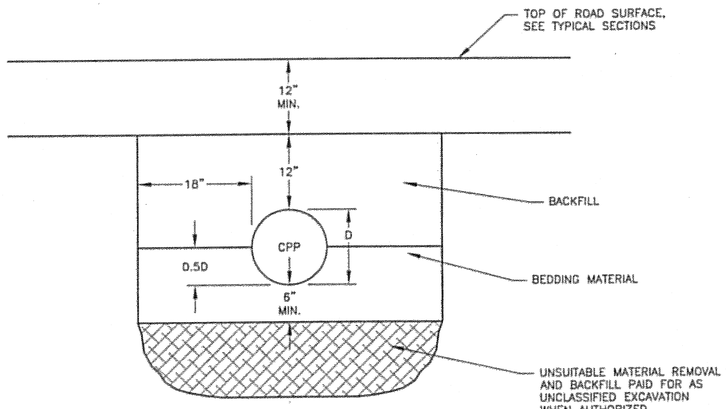

7/F1 **PIPE TRENCHING & BEDDING DETAIL**
N.T.S.

DO NOT SCALE FROM THESE DRAWINGS USE DIMENSIONS

PATH:
I:\B23400\Dwgs\C\Sheets\F01.dwg

Wed, 04/Oct/06 08:41AM bpaddock
TAB: F01

ADDENDUM NUMBER

ATTACHMENT NUMBER

RECORD OF REVISIONS

No.	DATE	DESCRIPTION

KETCHIKAN AIRPORT
RUNWAY SAFETY AREA EXPANSION
& RUNWAY OVERLAY
PROJECT NO. 68306

MISCELLANEOUS DETAILS

PREPARED BY: USKH INC.

CHECKED BY: DLM

STATE OF ALASKA
49 TH
D. Lance Mearig
CE-7435
04Oct06
REGISTERED PROFESSIONAL ENGINEER

DESIGNED BY: EJG

DRAWN BY: WJP

STATE OF ALASKA
DEPARTMENT OF TRANSPORTATION
& PUBLIC FACILITIES
DESIGN & ENGINEERING SERVICES
DIVISION–SOUTHEAST REGION

MISCELLANEOUS DETAILS

PROJECT DESIGNATION
AIP NO. 3-02-0144-1606

STATE	YEAR
ALASKA	2006
SHEET NUMBER	TOTAL SHEETS
F1	131

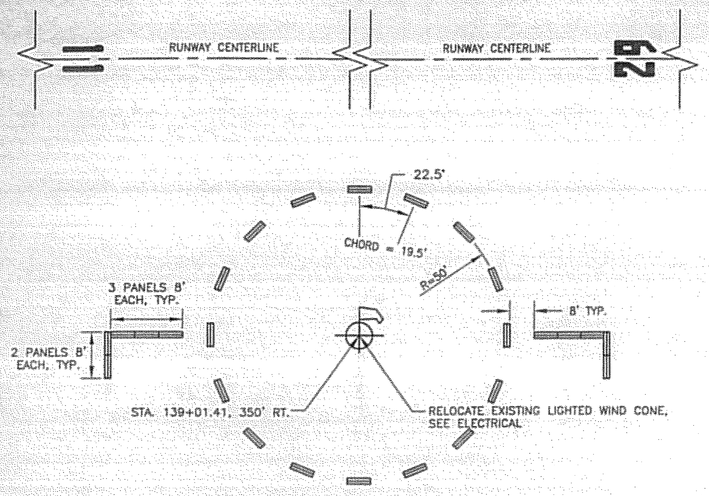

LAYOUT VIEW

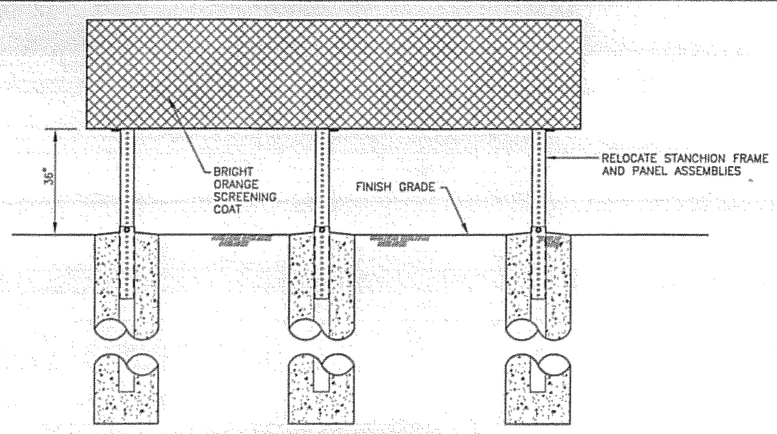

PANEL FRONT VIEW

NOTE: 1. MINIMUM NEAT LINE CONCRETE VOLUME OF 3.5 CUBIC FEET EACH FOOTING

1/F2 **SEGMENTED CIRCLE DETAILS**
N.T.S.

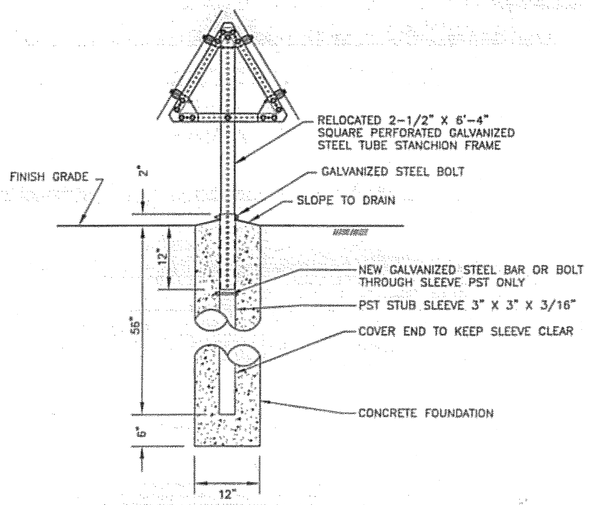

PANEL SIDE VIEW
REMOVE EXISTING PANEL ASSEMBLIES & INSTALL IN NEW FOUNDATIONS

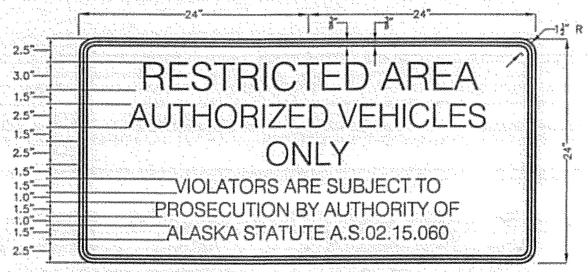

2/F2 **GATE SIGN**
N.T.S.

SIGNING NOTES:

1. FABRICATE ALL SIGNS WITH TYPE III-A (HIGH-INTENSITY) REFLECTIVE SHEETING ON ALUMINUM PANELS, MIN. THICKNESS OF 0.125 INCHES.
2. SIGN LOCATIONS ARE APPROXIMATE AND SUBJECT TO ADJUSTMENT BY THE ENGINEER.
3. ALL FENCE AND GATE SIGNING SHALL BE RED REFLECTIVE SHEETING WITH WHITE LETTERING. THEY SHALL BE INSTALLED 4' ABOVE GROUND.
4. SIGNS MAY BE ATTACHED TO THE FENCE WITH 9 GAUGE WIRE.

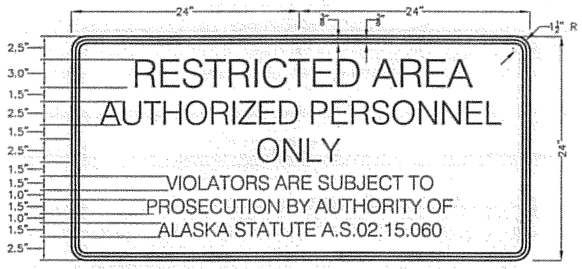

3/F2 **PERIMETER SIGN**
N.T.S.

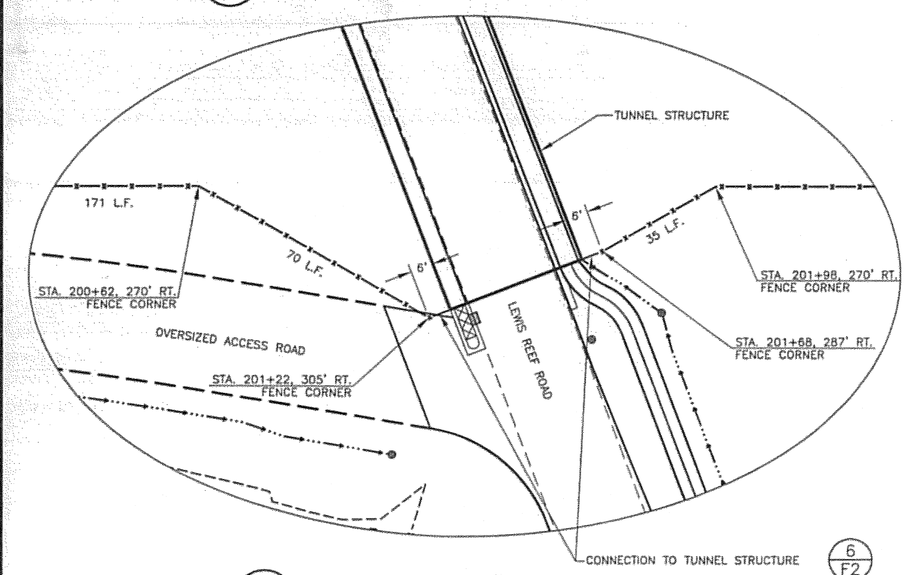

4/F2 **TUNNEL CONNECTION PLAN**
SCALE = 1:20

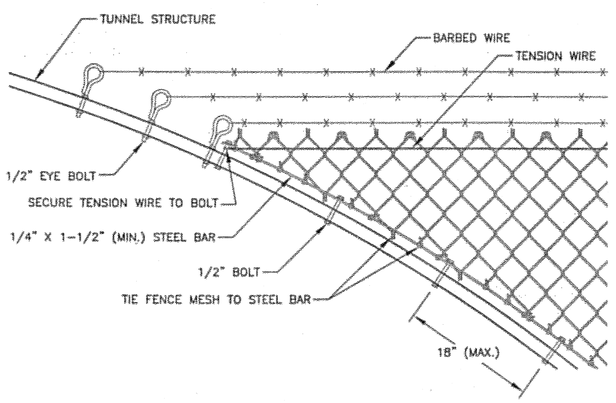

5/F2 **TUNNEL CONNECTION DETAIL**
N.T.S.

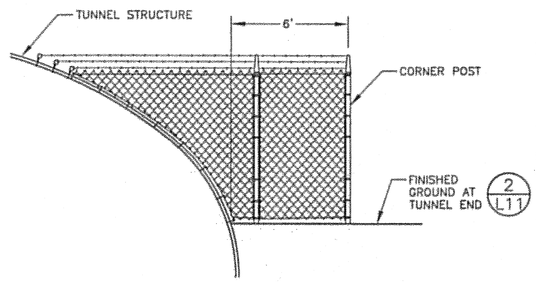

6/F2 **TUNNEL CONNECTION ELEVATION**
N.T.S.

DO NOT SCALE FROM THESE DRAWINGS USE DIMENSIONS

PATH: I:\823400\Dwgs\C\Sheets\F02.dwg
Wed, 04/Oct/06 08:42AM bpaddock
TAB: F02

ADDENDUM NUMBER
ATTACHMENT NUMBER

RECORD OF REVISIONS

No.	DATE	DESCRIPTION

KETCHIKAN AIRPORT
RUNWAY SAFETY AREA EXPANSION
& RUNWAY OVERLAY
PROJECT NO. 68306

MISCELLANEOUS DETAILS

PREPARED BY: USKH INC.
CHECKED BY: DLM

STATE OF ALASKA 49 TH
D. Lance Mearig
CE-7435
04Oct06
REGISTERED PROFESSIONAL ENGINEER

DESIGNED BY: EJG
DRAWN BY: WJP

STATE OF ALASKA
DEPARTMENT OF TRANSPORTATION & PUBLIC FACILITIES
DESIGN & ENGINEERING SERVICES
DIVISION-SOUTHEAST REGION

MISCELLANEOUS DETAILS

PROJECT DESIGNATION	
AIP NO. 3-02-0144-1606	
STATE	YEAR
ALASKA	2006
SHEET NUMBER	TOTAL SHEETS
F2	131

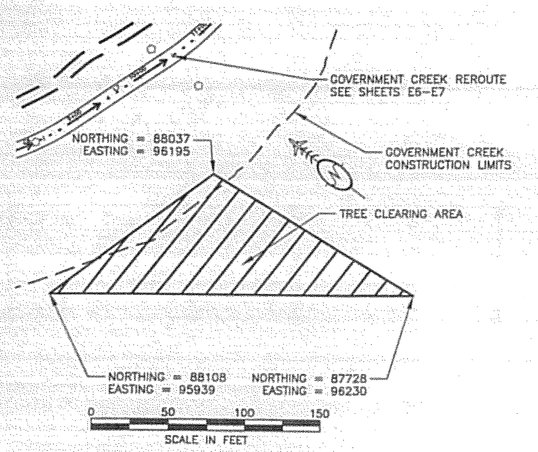

1/F3 **TREE CLEARING AREA**
N.T.S.

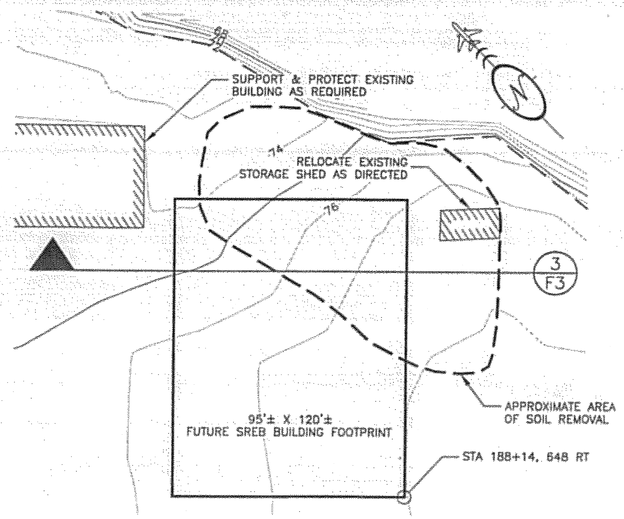

2/F3 **SREB SUBGRADE IMPROVEMENT - PLAN**
N.T.S.

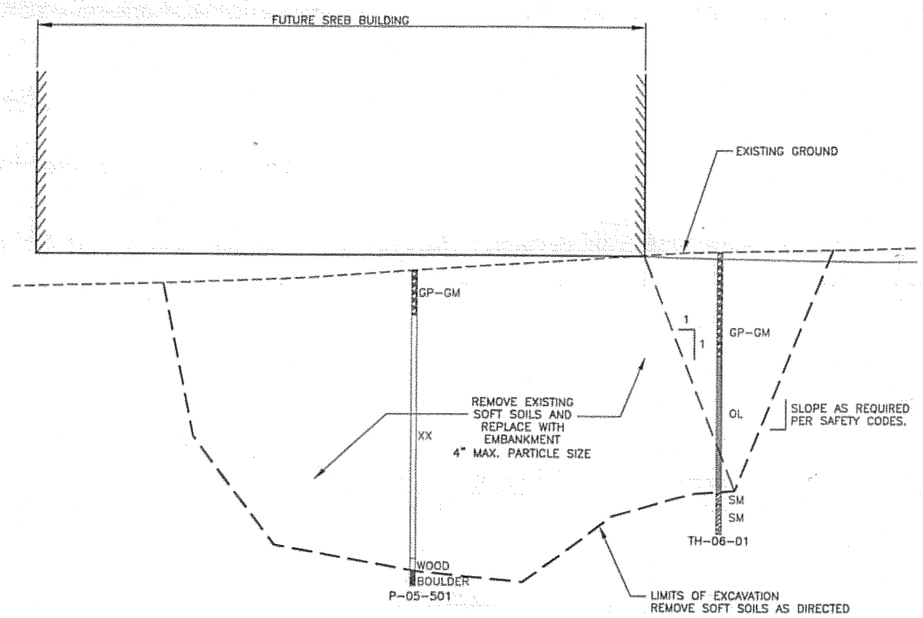

3/F3 **SREB SUBGRADE IMPROVEMENT - SECTION**
VERTICAL = X2

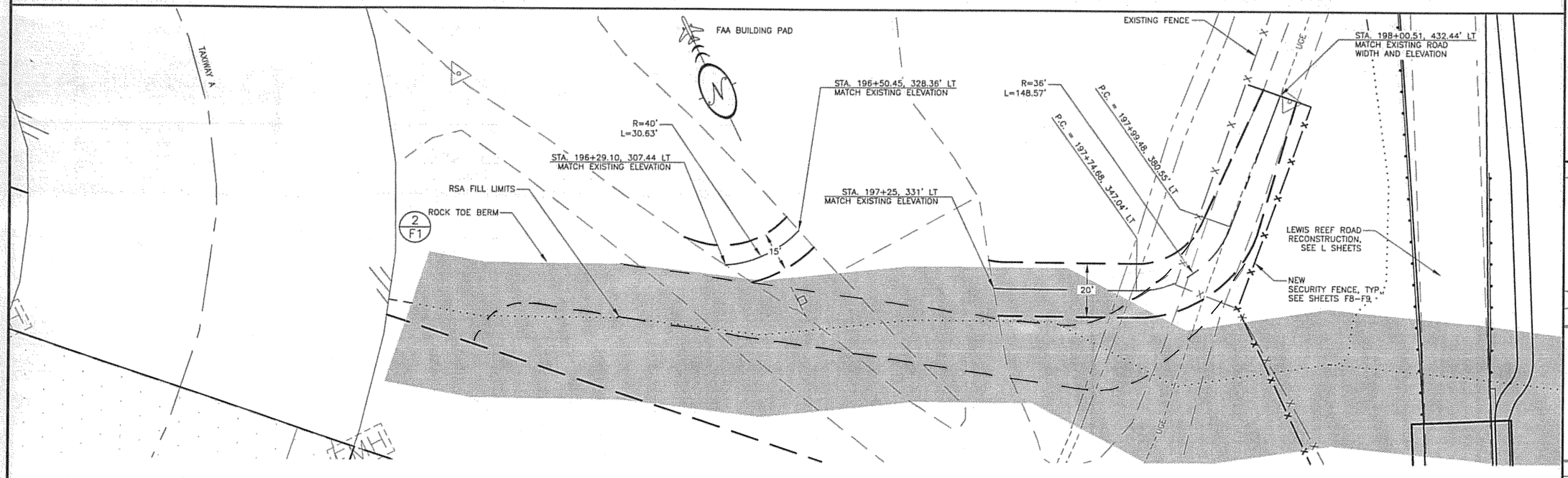

2/F3 **ACCESS CONNECTIONS FOR FAA BUILDING PAD**
N.T.S.

DO NOT SCALE FROM THESE DRAWINGS USE DIMENSIONS

PATH:
I:\823400\Dwgs\C\Sheets\F03.dwg
Wed, 04/Oct/06 08:42AM bpaddock
TAB: F03

ADDENDUM NUMBER

ATTACHMENT NUMBER

RECORD OF REVISIONS

No.	DATE	DESCRIPTION

KETCHIKAN AIRPORT
RUNWAY SAFETY AREA EXPANSION
& RUNWAY OVERLAY
PROJECT NO. 68306

MISCELLANEOUS DETAILS

PREPARED BY: USKH INC.

CHECKED BY: DLM

STATE OF ALASKA 49TH
D. Lance Mearig
CE-7435
10-06-06
REGISTERED PROFESSIONAL ENGINEER

DESIGNED BY: SC

DRAWN BY: WJP

STATE OF ALASKA
DEPARTMENT OF TRANSPORTATION
& PUBLIC FACILITIES
DESIGN & ENGINEERING SERVICES
DIVISION-SOUTHEAST REGION

MISCELLANEOUS DETAILS

PROJECT DESIGNATION	
AIP NO. 3-02-0144-1606	
STATE	YEAR
ALASKA	2006
SHEET NUMBER	TOTAL SHEETS
F3	131

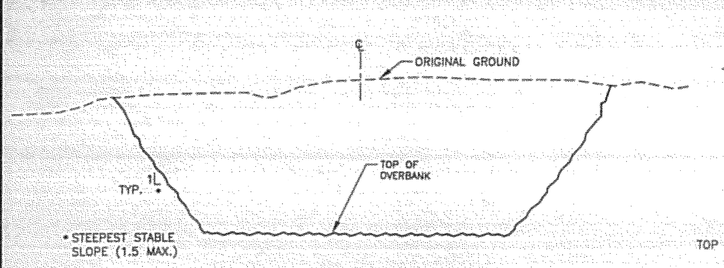

STAGE 1 OF EXCAVATION

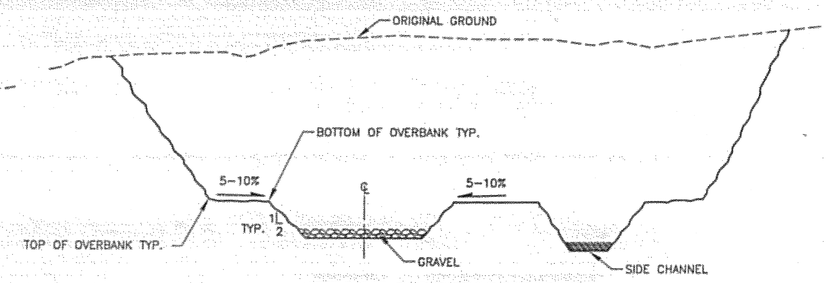

STAGE 2 OF EXCAVATION

1/F4 GOVERNMENT CREEK CONSTRUCTION

N.T.S.

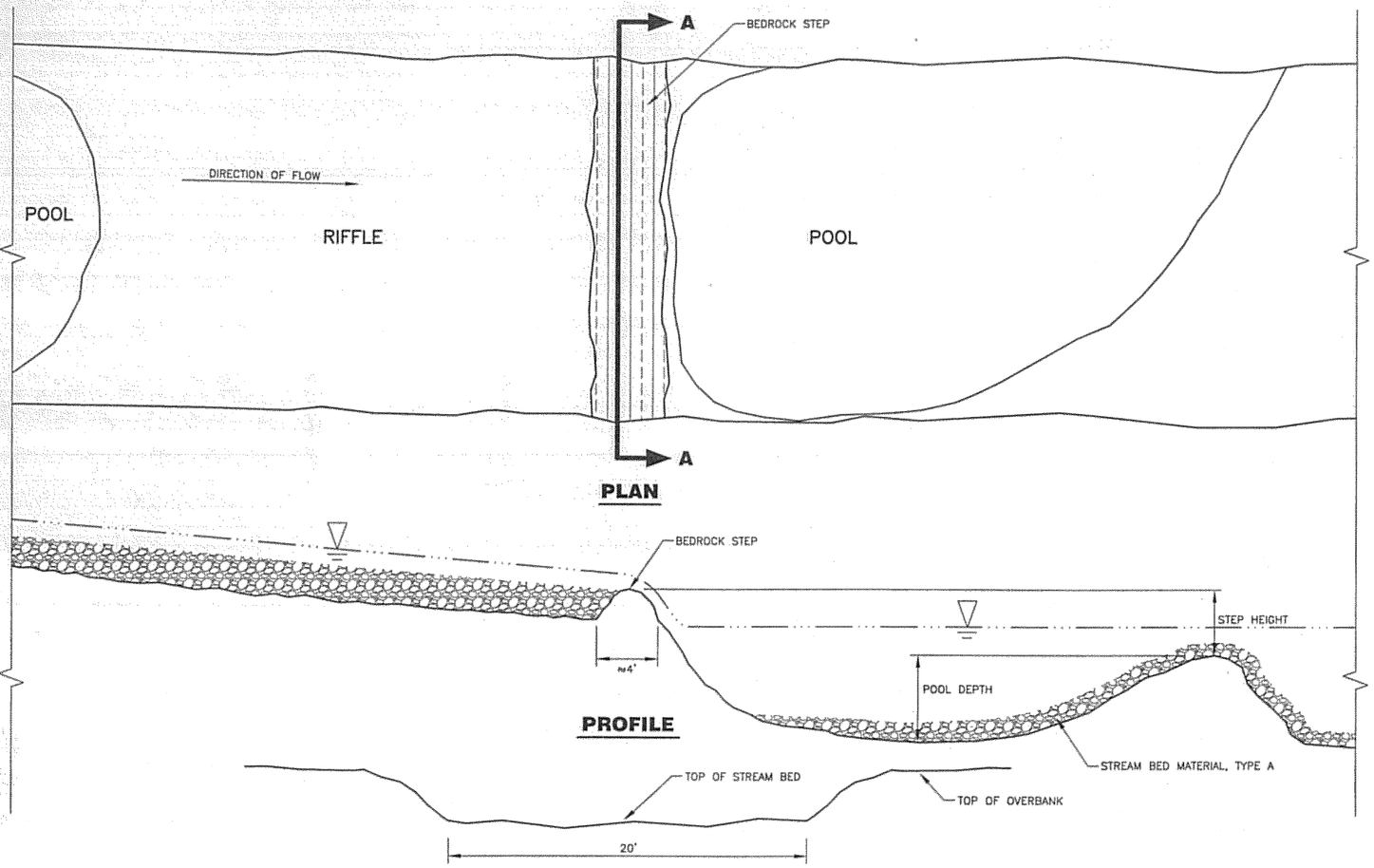

PLAN

PROFILE

SECTION A-A

2/F4 BEDROCK STEP DETAILS

N.T.S.

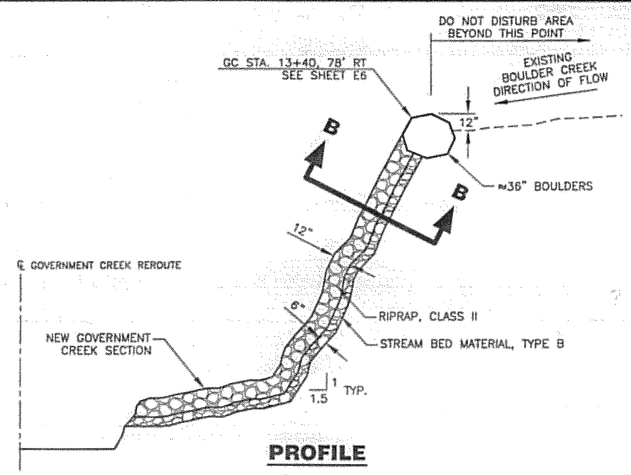

PROFILE

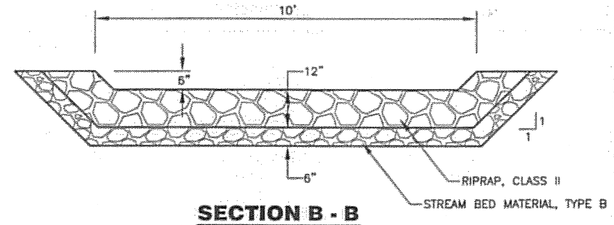

SECTION B - B

3/F4 CONSTRUCTED STREAM CONNECTION

N.T.S.

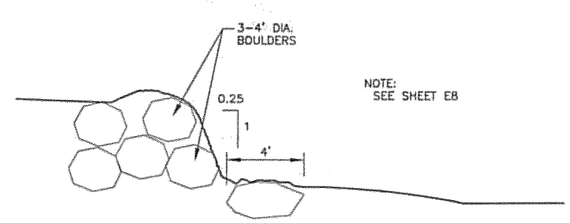

4/F4 FISH BARRIER

N.T.S.

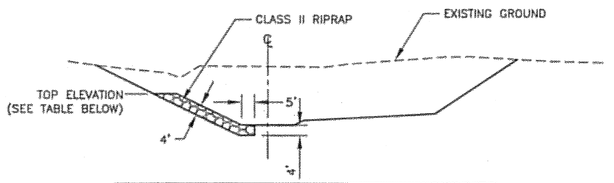

STATION	ELEVATION (FT.)
GC 3+50	47.0
GC 4+00	46.5
GC 4+50	46.0
GC 5+00	45.0
GC 5+50	44.0

5/F4 RIPRAP PROTECTION IN GOVERNMENT CREEK

N.T.S.

DO NOT SCALE FROM THESE DRAWINGS USE DIMENSIONS

PATH: I:\823400\Dwgs\C\Sheets\F04.dwg
Wed, 04/Oct/06 08:43AM bpaddock
TAB: F04

ADDENDUM NUMBER

ATTACHMENT NUMBER

RECORD OF REVISIONS

No.	DATE	DESCRIPTION

KETCHIKAN AIRPORT
RUNWAY SAFETY AREA EXPANSION
& RUNWAY OVERLAY
PROJECT NO. 68306

CREEK REROUTE CONSTRUCTION DETAILS

PREPARED BY: USKH INC.

CHECKED BY: DLM

STATE OF ALASKA 49TH — D. Lance Mearig CE-7435 — REGISTERED PROFESSIONAL ENGINEER — 04Oct06

DESIGNED BY: SC

DRAWN BY: GS, WJP

STATE OF ALASKA
DEPARTMENT OF TRANSPORTATION
& PUBLIC FACILITIES
DESIGN & ENGINEERING SERVICES
DIVISION–SOUTHEAST REGION

CREEK REROUTE CONSTRUCTION DETAILS

PROJECT DESIGNATION
AIP NO. 3-02-0144-1606

STATE	YEAR
ALASKA	2006
SHEET NUMBER	TOTAL SHEETS
F4	131

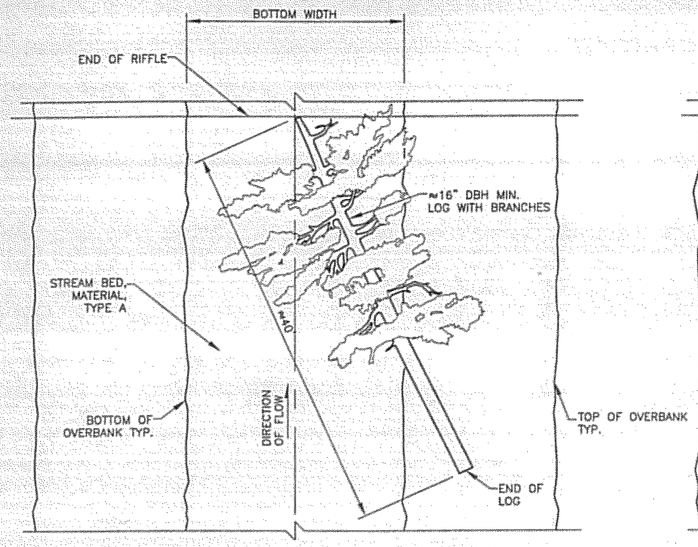

1 F5 **UNANCHORED LOG, TYPE I, INSTALLATION**
N.T.S.

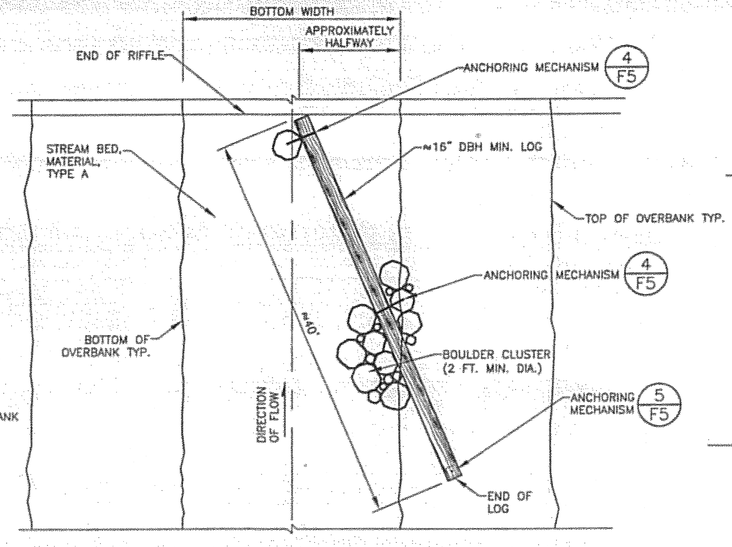

2 F5 **ANCHORED LOG - BOULDER INSTALLATION**
N.T.S.

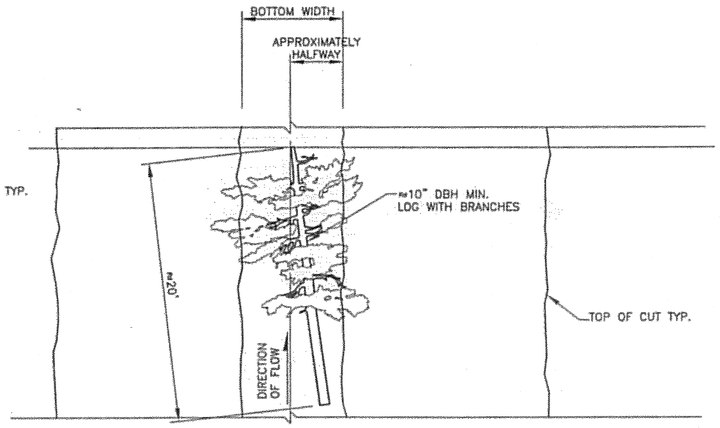

3 F5 **UNANCHORED LOG, TYPE II, INSTALLATION**
N.T.S.

NOTES:

1. FOR ANCHORING MECHANISM IN GOVERNMENT CREEK, BOLT THE LOGS AS SHOWN. WHEREVER THERE IS BEDROCK, IN PLACE OF CONCRETE BLOCK, EXTEND THE REBAR INTO THE ROCK TO A MINIMUM OF 2' AND GROUT.
2. FINAL LOG PLACEMENT LOCATION WILL BE DETERMINED BY THE ENGINEER IN THE FIELD.

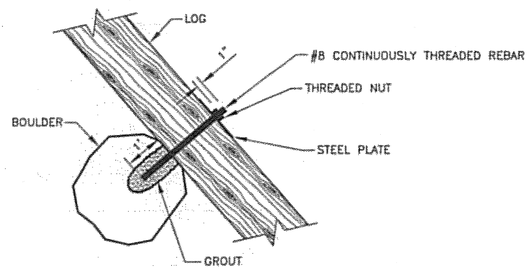

4 F5 **BOULDER ANCHOR**
N.T.S.

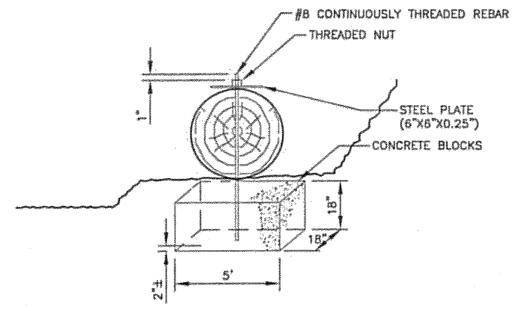

5 F5 **CONCRETE ANCHOR**
N.T.S.

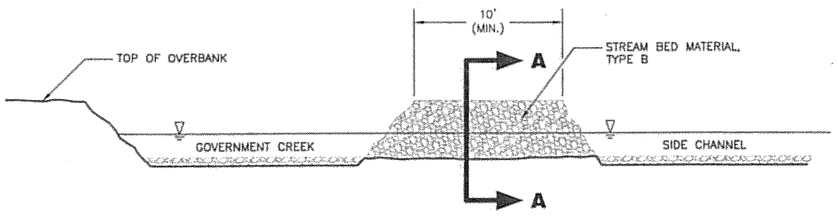

6 F5 **UPSTREAM SIDE CHANNEL CONNECTION**
N.T.S.

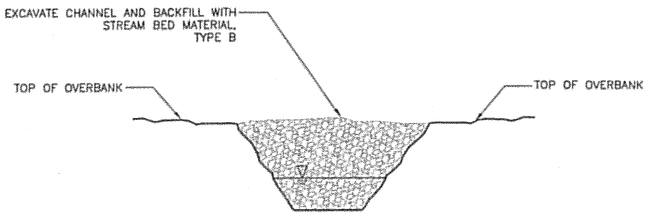

SECTION A-A

DO NOT SCALE FROM THESE DRAWINGS USE DIMENSIONS

PATH: I:\823400\Dwgs\C\Sheets\F05.dwg
Wed, 04/Oct/06 08:43AM bpaddock
TAB: F05

ADDENDUM NUMBER

ATTACHMENT NUMBER

RECORD OF REVISIONS

No.	DATE	DESCRIPTION

KETCHIKAN AIRPORT
RUNWAY SAFETY AREA EXPANSION & RUNWAY OVERLAY
PROJECT NO. 68306

CREEK REROUTE CONSTRUCTION DETAILS

PREPARED BY: USKH INC.
CHECKED BY: DLM

STATE OF ALASKA 49TH D. Lance Mearig CE-7435 04Oct06 REGISTERED PROFESSIONAL ENGINEER

DESIGNED BY: SC
DRAWN BY: GS, WJP

STATE OF ALASKA
DEPARTMENT OF TRANSPORTATION & PUBLIC FACILITIES
DESIGN & ENGINEERING SERVICES DIVISION–SOUTHEAST REGION

CREEK REROUTE CONSTRUCTION DETAILS

PROJECT DESIGNATION	
AIP NO. 3-02-0144-1606	
STATE	YEAR
ALASKA	2006
SHEET NUMBER	TOTAL SHEETS
F5	131

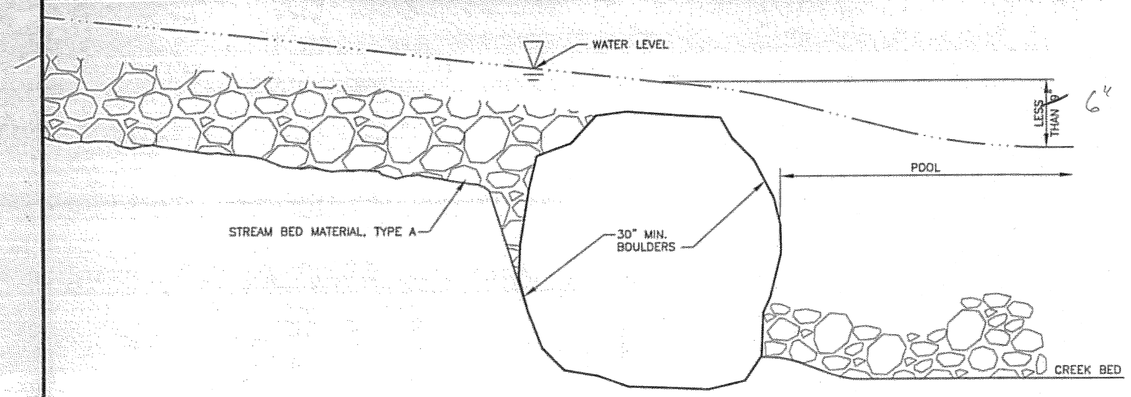

ELEVATION

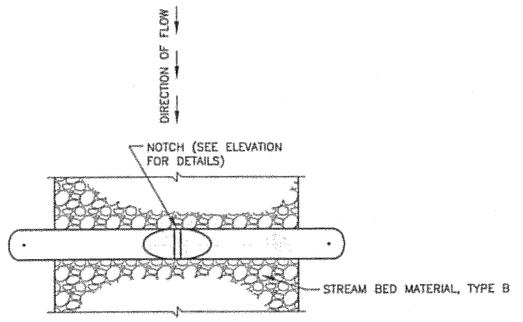

PLAN

NOTE:

NOTCH FOR LOG STEPS SHOULD BE CONSTRUCTED AFTER FLOW IS ESTABLISHED.

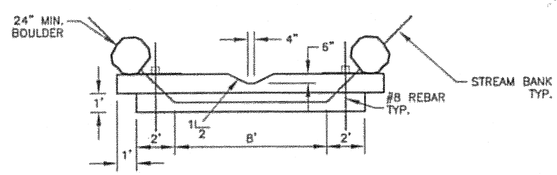

ELEVATION

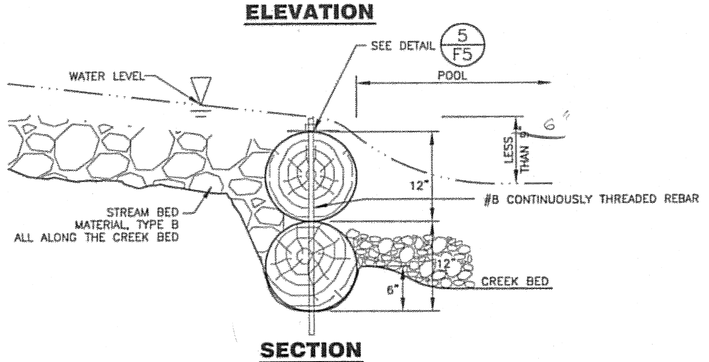

SECTION

NOTE:

1. FINAL LOCATIONS OF STEPS WILL BE DETERMINED IN THE FIELD DURING CONSTRUCTION BY THE ENGINEER.
2. WHEN ROCK IS ENCOUNTERED AT STEP LOCATIONS, STEPS MAY BE FORMED BY EXCAVATING ROCK TO THE APPROXIMATE DIMENSIONS SHOWN FOR BOULDER STEPS. ALTERNATIVELY, SHAPE THE CHANNEL BOTTOM AS SHOWN, KEYING THE BOULDERS INTO THE CHANNEL BOTTOM TO MAINTAIN STABILITY AND RESTRICT FLOW UNDER THE BOULDERS.

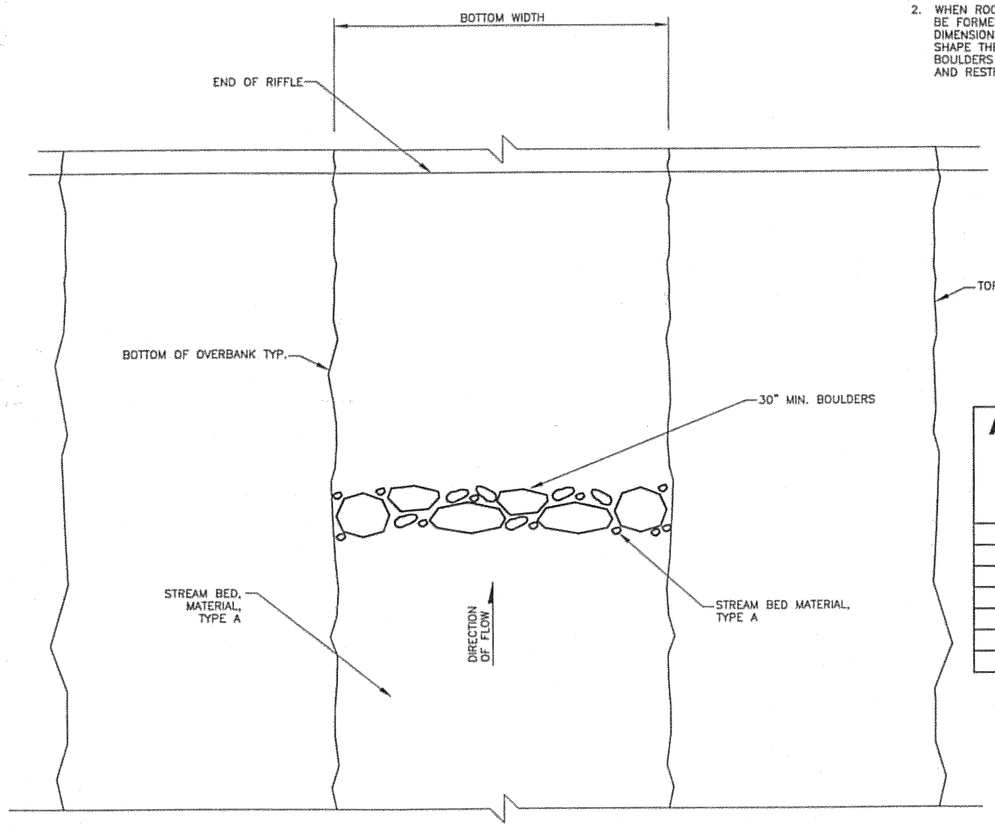

PLAN

APPROXIMATE LOCATIONS FOR PLACEMENT OF BOULDER STEPS IN GOVERNMENT CREEK

STATION	STATION
GC 2+10	GC 8+30
GC 3+20	GC 9+70
GC 4+30	GC 10+90
GC 5+30	GC 12+20
GC 6+30	GC 13+40
GC 7+30	

LOG STEP SCHEDULE

STATION	ELEVATION
NT 1+60	71.7'
NT 1+85	71.6'
NT 2+20	69.9'
NT 2+55	68.3'
NT 2+90	66.7'
NT 3+25	65.6'
NT 3+60	63.7'
NT 3+95	62.1'

NOTE:
STATION IS AT CENTER OF TOP LOG, ELEVATION IS AT TOP LOG BELOW ANCHOR PLATE

1/F6 **BOULDER STEP DETAILS** N.T.S.

2/F6 **LOG STEP DETAILS** N.T.S.

DO NOT SCALE FROM THESE DRAWINGS USE DIMENSIONS

PATH: I:\823400\Dwgs\C\Sheets\F06.dwg
Wed, 04/Oct/06 08:43AM bpoddock
TAB: F06

ADDENDUM NUMBER

ATTACHMENT NUMBER

RECORD OF REVISIONS

No.	DATE	DESCRIPTION

KETCHIKAN AIRPORT
RUNWAY SAFETY AREA EXPANSION & RUNWAY OVERLAY
PROJECT NO. 68306

CREEK REROUTE CONSTRUCTION DETAILS

PREPARED BY: USKH INC.

CHECKED BY: DLM

STATE OF ALASKA 49TH D. Lance Mearig CE-7435 10 Oct 06 REGISTERED PROFESSIONAL ENGINEER

DESIGNED BY: SC

DRAWN BY: GS, WJP

STATE OF ALASKA
DEPARTMENT OF TRANSPORTATION & PUBLIC FACILITIES
DESIGN & ENGINEERING SERVICES
DIVISION-SOUTHEAST REGION

CREEK REROUTE CONSTRUCTION DETAILS

PROJECT DESIGNATION
AIP NO. 3-02-0144-1606

STATE	YEAR
ALASKA	2006
SHEET NUMBER	TOTAL SHEETS
F6	131

SLOPE STABILIZATION NOTES:

1. STABILIZE EXCAVATIONS AS REQUIRED TO COMPLY WITH THE SPECIFICATIONS, ESCP, SWPPP AND PERMIT REQUIREMENTS. PROVIDE FOR LONG TERM STABILIZATION OF CUT SLOPES IN THE GOVERNMENT CREEK AND NORTH TRIBUTARY CHANNEL EXCAVATIONS. DUE TO THE HIGH CUT SLOPES IN THE CREEK CHANNELS, ADDITIONAL MEASURES BEYOND THOSE DESCRIBED IN ITEM P-157 MAY BE REQUIRED. SUPPLEMENT ITEM P-157 STABILIZATION METHODS WITH APPLICATION OF COIR LOGS OR ROLLED MATTING, OR AS DIRECTED BY THE ENGINEER.
2. DETAILS AND NOTES ON THIS SHEET PROVIDE GUIDELINES FOR INSTALLATION OF ADDITIONAL SLOPE STABILIZATION METHODS. THE INFORMATION PROVIDED DOES NOT CHANGE THE INTENT TO RECREATE A STREAM ENVIRONMENT THAT APPROXIMATES NATURAL CONDITIONS AS DESCRIBED UNDER ITEM P-152, DRAINAGE EXCAVATION. ADJUST THE SUGGESTED APPLICATION METHODS AS NECESSARY TO COMPLY WITH THESE REQUIREMENTS.
3. REFER TO STANDARD DRAWING E-00.00 FOR INSTALLATION OF ROLLED MATTING.

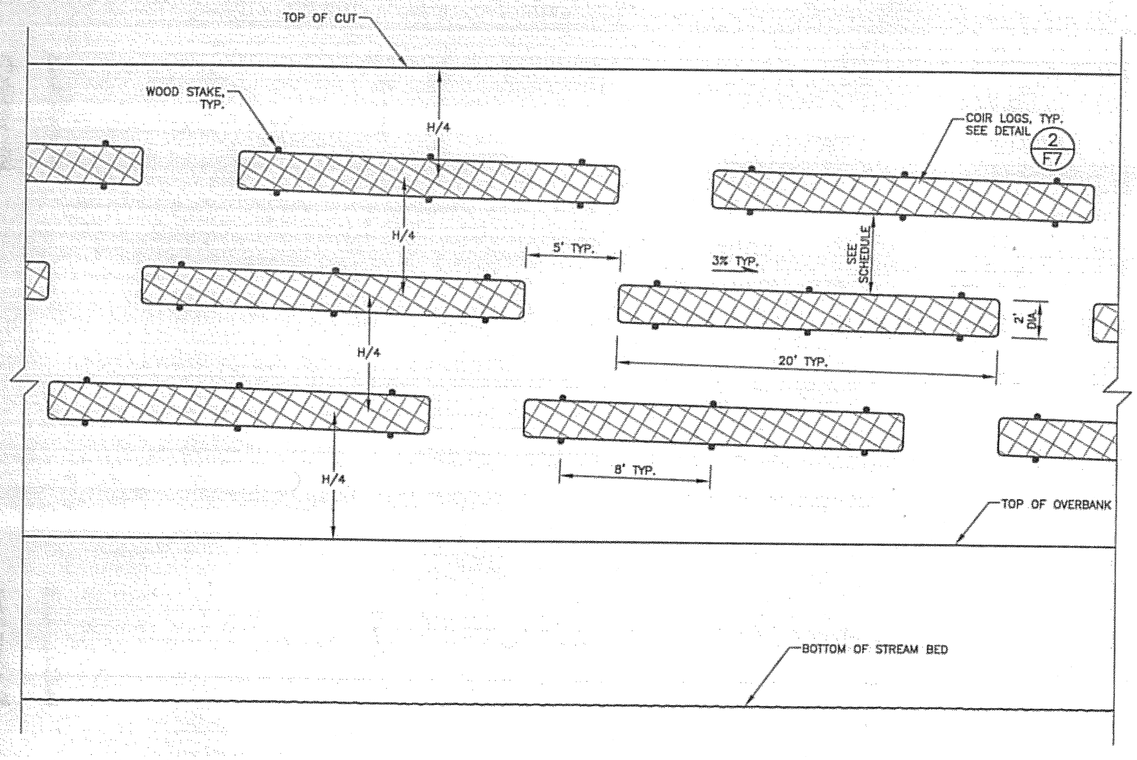

ELEVATION

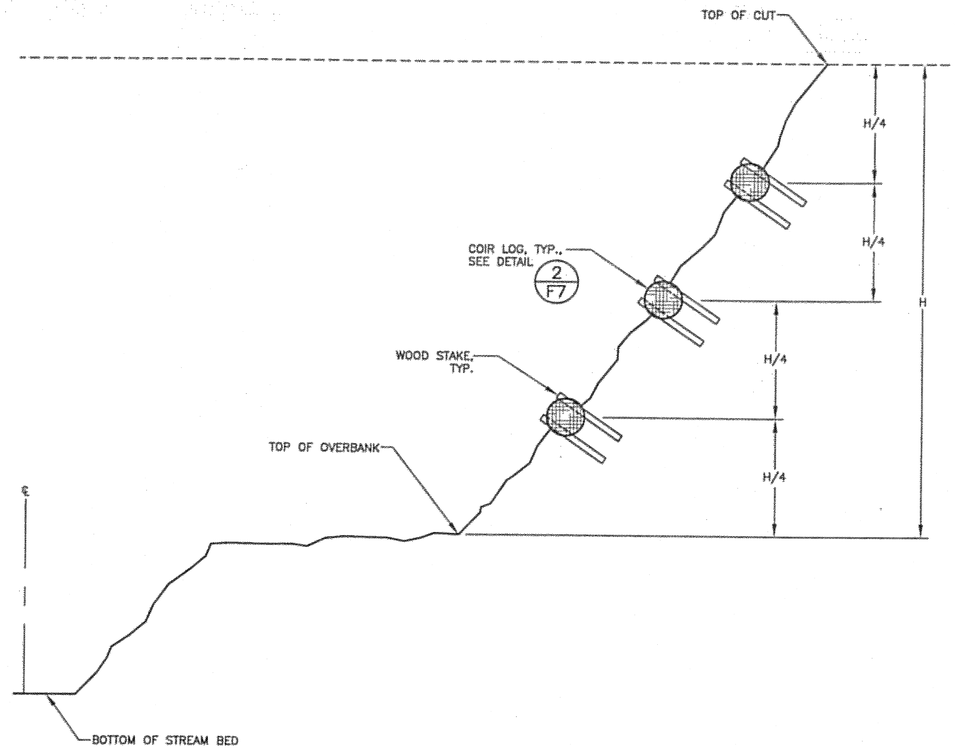

SECTION

NOTES:

1. THIS IS A SUGGESTED LAYOUT FOR THE PLACEMENT OF COIR LOGS FOR SLOPE STABILIZATION.
2. THE NUMBER OF ROWS WILL DEPEND ON THE HEIGHT FROM TOP OF OVERBANK TO TOP OF CUT, SEE SCHEDULE.

1/F7 COIR LOG PLACEMENT DETAILS
N.T.S.

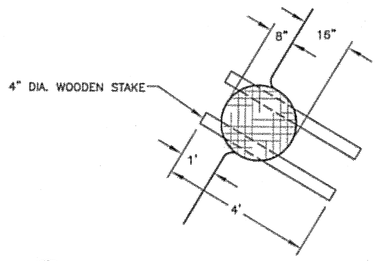

2/F7 COIR LOG INSTALLATION DETAIL
N.T.S.

COIR LOGS INSTALLATION SCHEDULE

HEIGHT	NUMBER OF ROWS	SPACING OF LOGS
0-5	0	-
5-20	1	H/2
20-30	2	H/3
30-40	3	H/4
40-50	4	H/5
50-60	5	H/6
60-70	6	H/7

SEE DETAILS BELOW FOR TYPICAL INSTALLATION

DO NOT SCALE FROM THESE DRAWINGS USE DIMENSIONS

PATH: I:\823400\Dwgs\C\Sheets\F07.dwg
Wed, 08/Nov/06 01:40PM bpoddock
TAB: F07

ADDENDUM NUMBER
ATTACHMENT NUMBER

RECORD OF REVISIONS

No.	DATE	DESCRIPTION

KETCHIKAN AIRPORT
RUNWAY SAFETY AREA EXPANSION
& RUNWAY OVERLAY
PROJECT NO. 68306

CREEK SLOPE STABILIZATION DETAILS

PREPARED BY: USKH INC.
CHECKED BY: DLM

STATE OF ALASKA 49TH D. Lance Mearig CE-7435 09NOV06 REGISTERED PROFESSIONAL ENGINEER

DESIGNED BY: SC
DRAWN BY: WJP

STATE OF ALASKA
DEPARTMENT OF TRANSPORTATION
& PUBLIC FACILITIES
DESIGN & ENGINEERING SERVICES
DIVISION-SOUTHEAST REGION

CREEK SLOPE STABILIZATION DETAILS

PROJECT DESIGNATION	
AIP NO. 3-02-0144-1606	
STATE	YEAR
ALASKA	2006
SHEET NUMBER	TOTAL SHEETS
F7	131

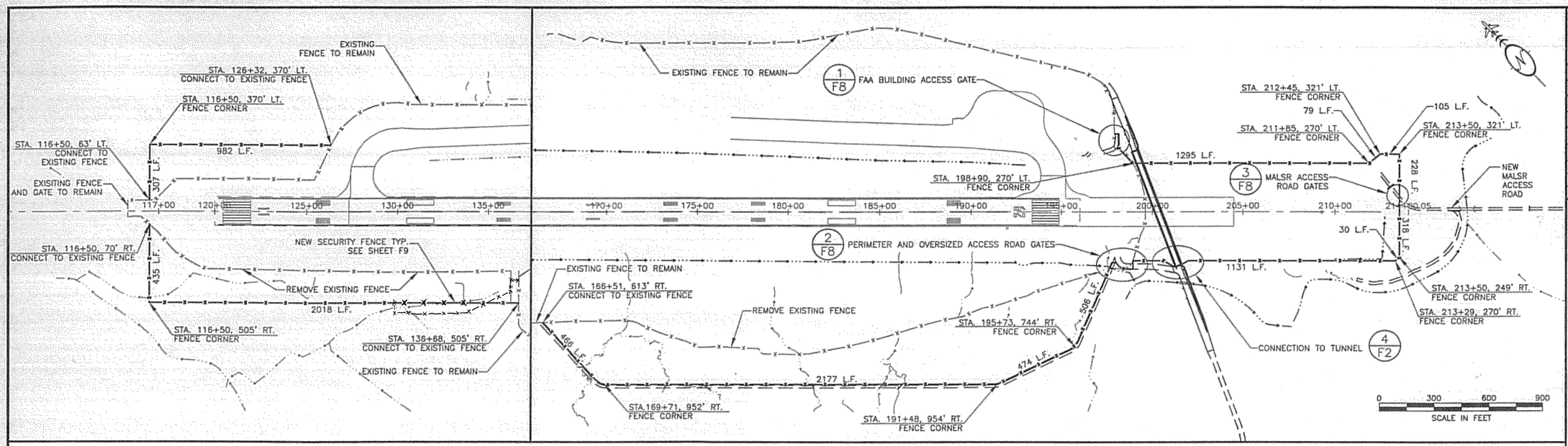

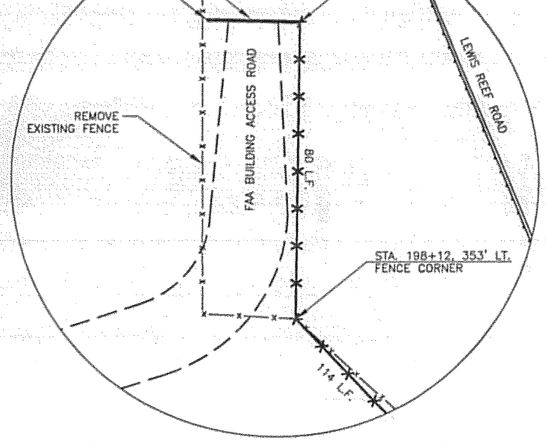

1 F8 FAA BUILDING ACCESS GATE

SCALE = 1:20

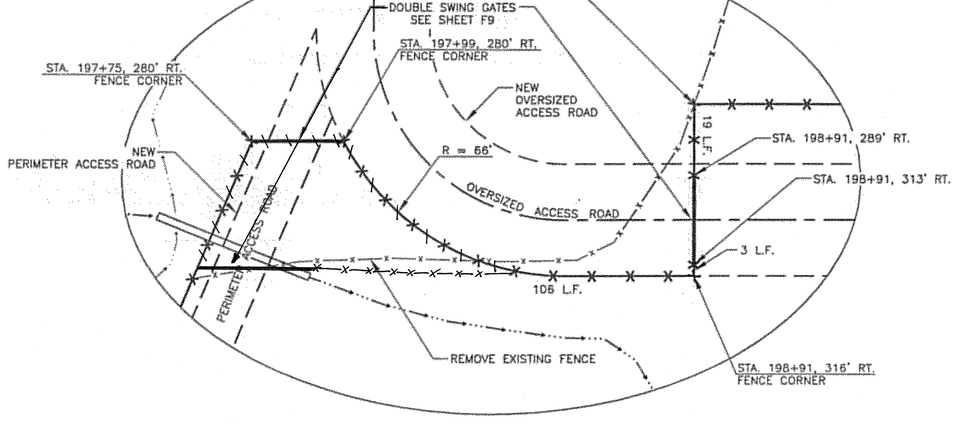

2 F8 PERIMETER AND OVERSIZED ACCESS ROAD GATES

SCALE = 1:20

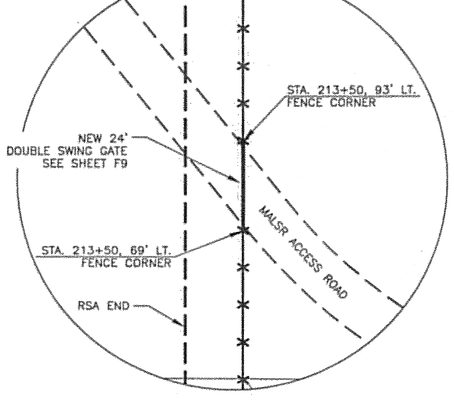

3 F8 MALSR ACCESS ROAD GATE

SCALE = 1:20

NOTES:

1. INSTALL NEW CHAIN LINK FENCE AS SHOWN (SEE SHEET F9 FENCE DETAILS)
2. INSTALL TEMPORARY CHAIN LINK FENCE TO MAINTAIN AIRPORT SECURITY DURING CONSTRUCTION. MEET THE PERMANENT FENCE DIMENSIONAL STANDARDS AND SPECIFICATIONS, EXCEPT CONCRETE FOOTINGS AND BARBED WIRE TOP EXTENSION WILL NOT BE REQUIRED
3. TEMPORARY FENCING MAY NOT BE LOCATED ANY CLOSER THAN 200' TO THE RUNWAY CENTERLINE, AND MUST NOT PENETRATE ANY OFA, OFZ, APPROACH SURFACE, OR ANY OTHER IMAGINARY SURFACE. (REFER 14 CFR PART 77)
4. TEMPORARY FENCE LOCATIONS MUST BE APPROVED BY THE ENGINEER PRIOR TO PLACEMENT.
5. ALL TEMPORARY FENCE INSTALLATIONS SHALL PROVIDE A CONTINUOUS BARRIER TO INTRUSIONS BY HUMANS AND ANIMALS AND SHALL BY INSTALLED IN SUCH AWAY THAT THE BARRIER CANNOT BE EASILY CIRCUMVENTED.
6. PERMANENT CHAIN LINK FENCE MAY BE INSTALLED ON THE QUARRY SIDE OF THE RUNWAY BEFORE EXCAVATION BEGINS. NEW PERIMETER ROAD MUST BE COMPLETED BEFORE INSTALLATION OF NEW FENCE.
7. INSTALL GATE SIGN ALL NEW GATES.
8. SEE SHEET D1 FOR PERIMETER SIGN PLATE LOCATIONS AND SHEET F2 FOR DETAILS.

LEGEND

NEW FENCE

EXISTING FENCE

DO NOT SCALE FROM THESE DRAWINGS USE DIMENSIONS

PATH: I:\B23400\Dwgs\C\Sheets\F08.dwg
Wed, 04/Oct/06 08:43AM bpaddock
TAB: F08

ADDENDUM NUMBER

ATTACHMENT NUMBER

RECORD OF REVISIONS

No.	DATE	DESCRIPTION

KETCHIKAN AIRPORT
RUNWAY SAFETY AREA EXPANSION & RUNWAY OVERLAY
PROJECT NO. 68306

FENCING PLAN & DETAILS

PREPARED BY: USKH INC.

CHECKED BY: DLM

STATE OF ALASKA 49 TH
D. Lance Mearig CE-7435 04OctO6 REGISTERED PROFESSIONAL ENGINEER

DESIGNED BY: SC

DRAWN BY: WJP

STATE OF ALASKA
DEPARTMENT OF TRANSPORTATION & PUBLIC FACILITIES
DESIGN & ENGINEERING SERVICES
DIVISION-SOUTHEAST REGION

FENCING PLAN & DETAILS

PROJECT DESIGNATION
AIP NO. 3-02-0144-1606

STATE	YEAR
ALASKA	2006
SHEET NUMBER	TOTAL SHEETS
F8	131

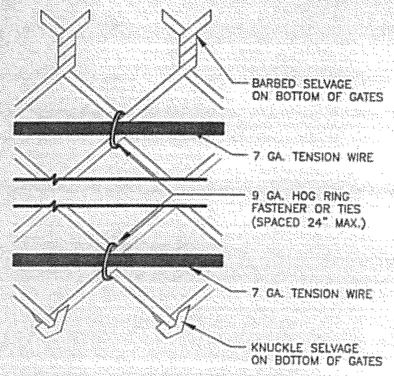

TYPICAL METHOD OF TYING FABRIC TO TENSION WIRE

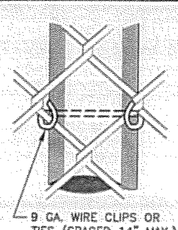

ELEVATION

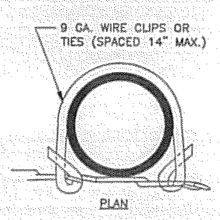

PLAN

TYPICAL CONNECTION FABRIC TO LINE POSTS

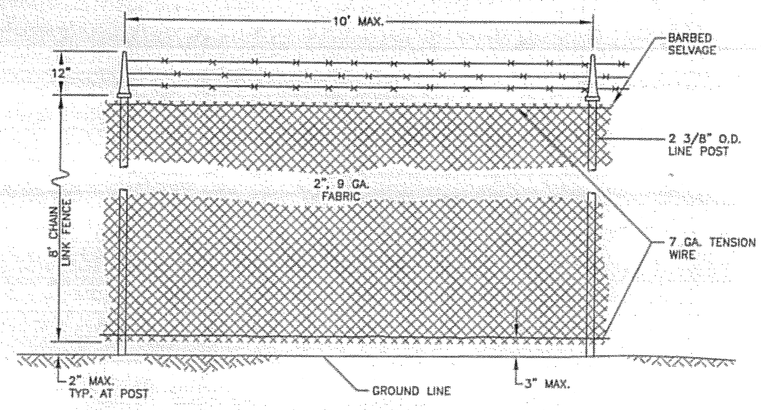

TYPICAL FENCE ELEVATION

FENCE NOTES:

1. ALL CONCRETE USED FOR FENCE FOOTINGS SHALL BE 3000 PSI MINIMUM.
2. FINISHED CONCRETE TO BE RECESSED BELOW THE GROUND LINE. BACKFILL AND COMPACT AROUND RECESSED CONCRETE WITH EXCAVATED MATERIAL (TYPICAL FOR ALL CONCRETE POSTS IN GROUND).
3. FINISHED CONCRETE TO BE FLUSH WITH PAVEMENT (TYPICAL FOR ALL CONCRETE POSTS IN PAVEMENT).
4. FOR SIGNAGE DETAILS REFER TO SHEET F2.

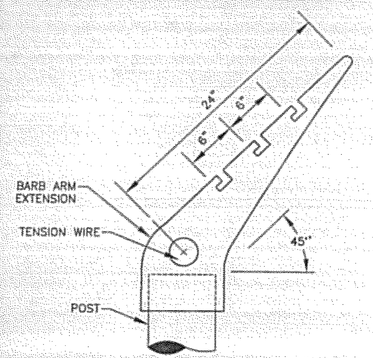

NOTE:
TYPICAL TOP FOR ALL LINE AND PULL POSTS.

TYPICAL EYE-TOP BARB-TOP EXTENSION



ACORN OR DOME CAP FOR GATE/TERMINAL POST

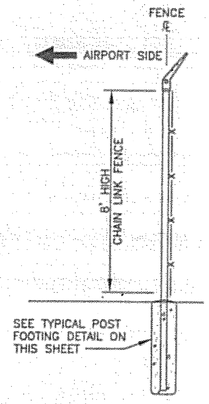

TYPICAL FENCE SECTION

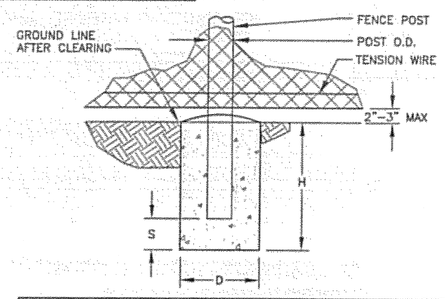

FOOTING DIMENSIONS

	POST OUTSIDE DIAMETER	D	H	S
LINE POST	2 3/8"	12"	38"	2"
PULL POST, CORNER POST	2 7/8"	20"	38"	2"
GATE POST	6 5/8"	20"	60"	6"

TYPICAL FENCE FOUNDATION

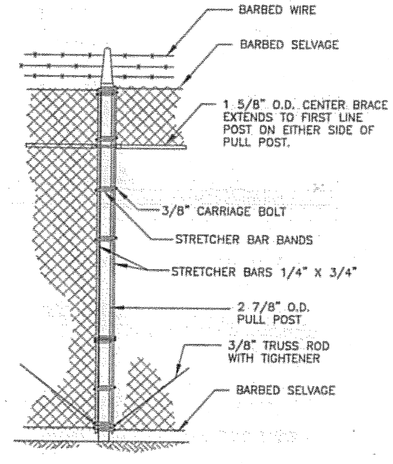

NOTE:
PULL POSTS SHALL BE SPACED AT 250' INTERVALS.

TYPICAL PULL POST DETAIL

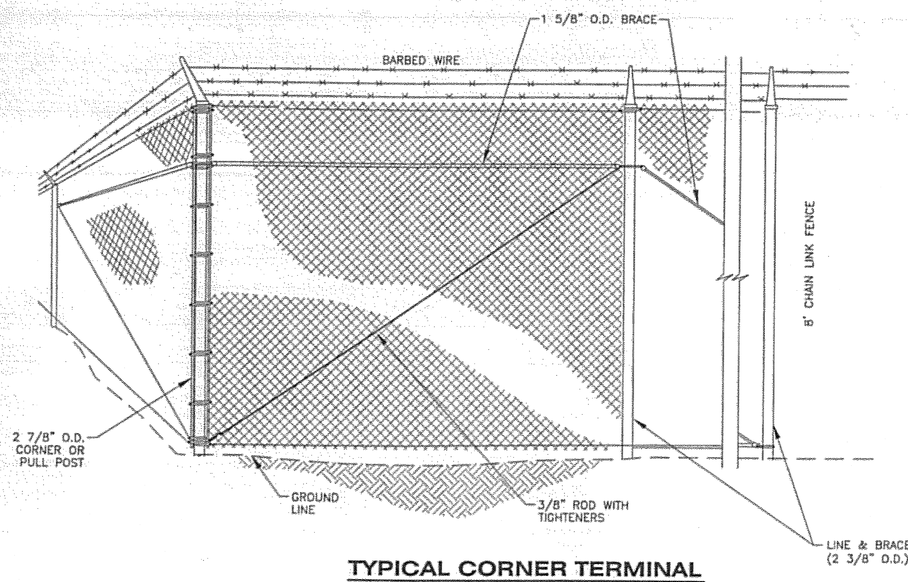

TYPICAL CORNER TERMINAL

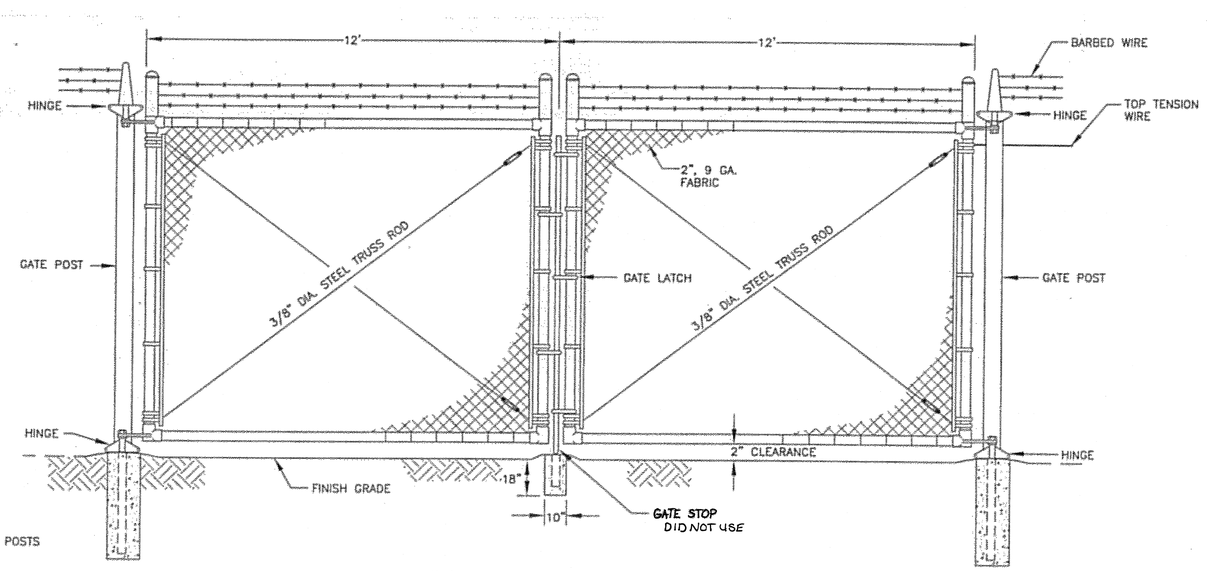

DOUBLE SWING GATE

DO NOT SCALE FROM THESE DRAWINGS USE DIMENSIONS

PATH: I:\823400\Dwgs\C\Sheets\F09.dwg
Wed, 08/Nov/06 01:41PM bpaddock
TAB: F09

ADDENDUM NUMBER

ATTACHMENT NUMBER

RECORD OF REVISIONS

No.	DATE	DESCRIPTION

KETCHIKAN AIRPORT
RUNWAY SAFETY AREA EXPANSION
& RUNWAY OVERLAY
PROJECT NO. 68306

FENCING DETAILS

PREPARED BY: USKH INC.

CHECKED BY: DLM

STATE OF ALASKA 49 TH
D. Lance Mearig
CE-7435
06Nov06
REGISTERED PROFESSIONAL ENGINEER

DESIGNED BY: SC

DRAWN BY: WJP

STATE OF ALASKA
DEPARTMENT OF TRANSPORTATION & PUBLIC FACILITIES
DESIGN & ENGINEERING SERVICES DIVISION–SOUTHEAST REGION

FENCING DETAILS

PROJECT DESIGNATION	
AIP NO. 3-02-0144-1606	
STATE	YEAR
ALASKA	2006
SHEET NUMBER	TOTAL SHEETS
F9	131

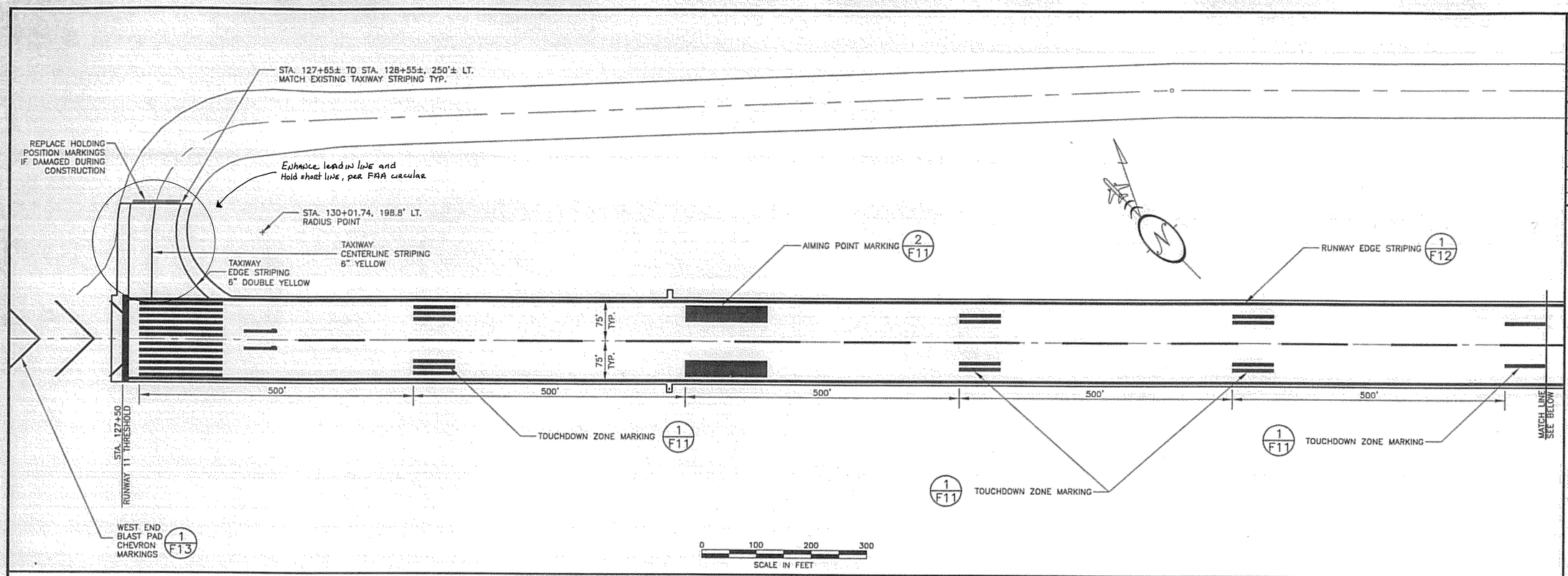

NOTES:

1. ALL RUNWAY MARKINGS SHALL BE WHITE PAINT.
2. ALL TAXIWAY MARKINGS SHALL BE "AVIATION" YELLOW PAINT.
3. LAYOUT RUNWAY CENTERLINE SPACING FROM BOTH ENDS TOWARD CENTER OF RUNWAY. MAINTAIN 120' CENTERLINE STRIPES AND 80' SPACES AND ADJUST AT CENTER STRIPE/SPACE.
4. REFLECTIVE GLASS BEADS SHALL BE USED ON ALL AIRFIELD MARKINGS.
5. RUNWAY AND TAXIWAY EDGE MARKINGS ARE DIMENSIONED FROM CENTERLINE TO THE OUTSIDE EDGE OF THE OUTERMOST STRIPE.

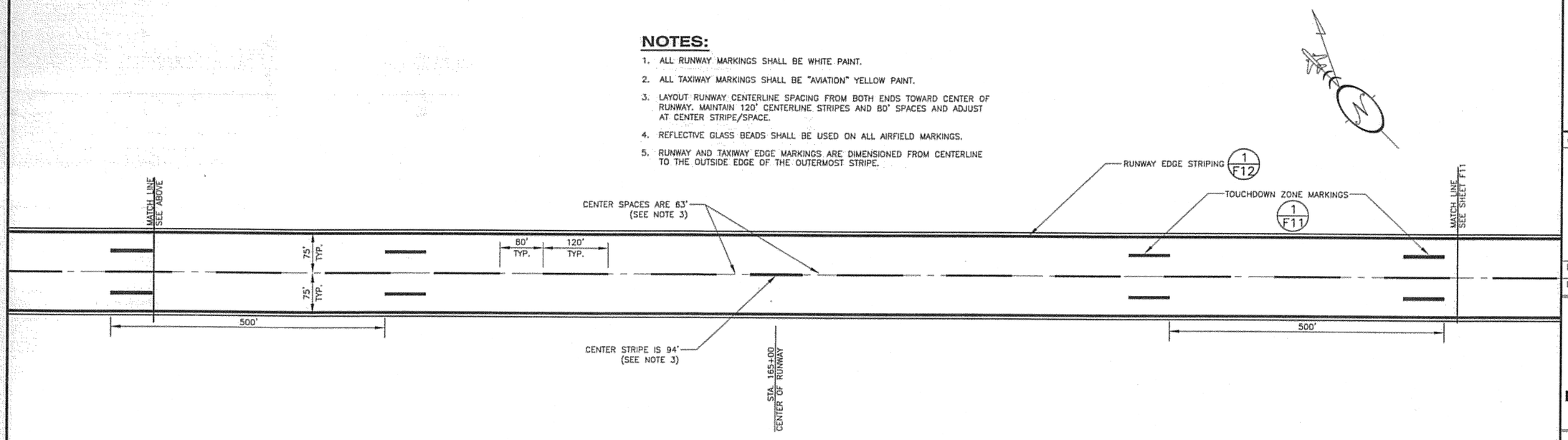

DO NOT SCALE FROM THESE DRAWINGS USE DIMENSIONS

PATH: I:\823400\Dwgs\C\Sheets\F10.dwg
Wed, 04/Oct/06 08:43AM bpaddock
TAB: F10

ADDENDUM NUMBER

ATTACHMENT NUMBER

RECORD OF REVISIONS

No.	DATE	DESCRIPTION

KETCHIKAN AIRPORT
RUNWAY SAFETY AREA EXPANSION & RUNWAY OVERLAY
PROJECT NO. 68306

RUNWAY & TAXIWAY MARKING PLAN

PREPARED BY: USKH INC.

CHECKED BY: DLM

STATE OF ALASKA 49TH
D. Lance Mearig CE-7435 04 Oct 06 REGISTERED PROFESSIONAL ENGINEER

DESIGNED BY: EJG

DRAWN BY: WJP

STATE OF ALASKA
DEPARTMENT OF TRANSPORTATION & PUBLIC FACILITIES
DESIGN & ENGINEERING SERVICES
DIVISION–SOUTHEAST REGION

RUNWAY & TAXIWAY MARKING PLAN

PROJECT DESIGNATION	
AIP NO. 3-02-0144-1606	
STATE	YEAR
ALASKA	2006
SHEET NUMBER	TOTAL SHEETS
F10	131

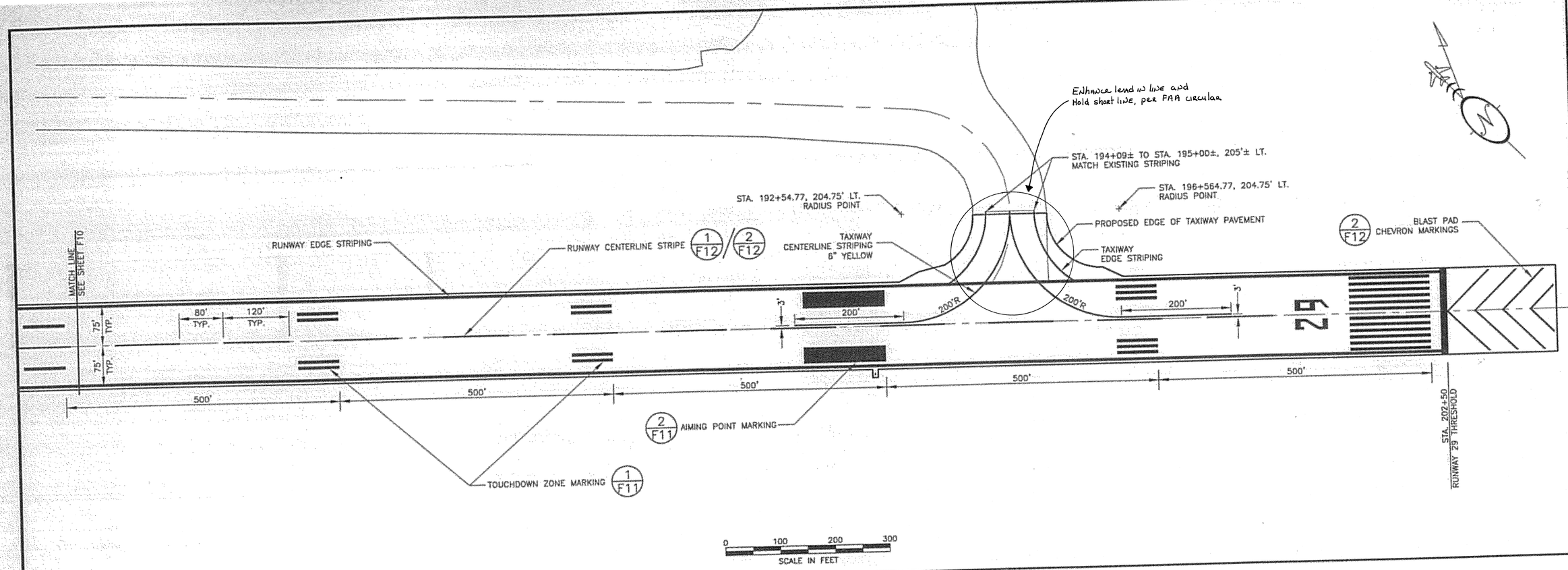

1/F11 **TOUCHDOWN ZONE MARKING DETAIL**
N.T.S.

2/F11 **AIMING POINT MARKING DETAIL**
N.T.S.

DO NOT SCALE FROM THESE DRAWINGS USE DIMENSIONS

PATH: I:\823400\Dwgs\C\Sheets
Wed, 04/Oct/06 08:43AM
TAB: F11

ADDENDUM N

ATTACHMENT

RECORD OF

No.	DATE

KETCHIKAN AIRPORT
RUNWAY SAFETY AREA EXPANSION
& RUNWAY OVERLAY
PROJECT NO. 68306

PREPARED BY:
CHECKED BY: DLM
DESIGNED BY: EJ
DRAWN BY: W.

STATE
DEPARTMENT
& PUBL
DESIGN & EN
DIVISION-SC

RUNWAY
MARK
& D

PROJECT
AIP NO. 3-

STATE
ALASKA

SHEET NUMBE
F11

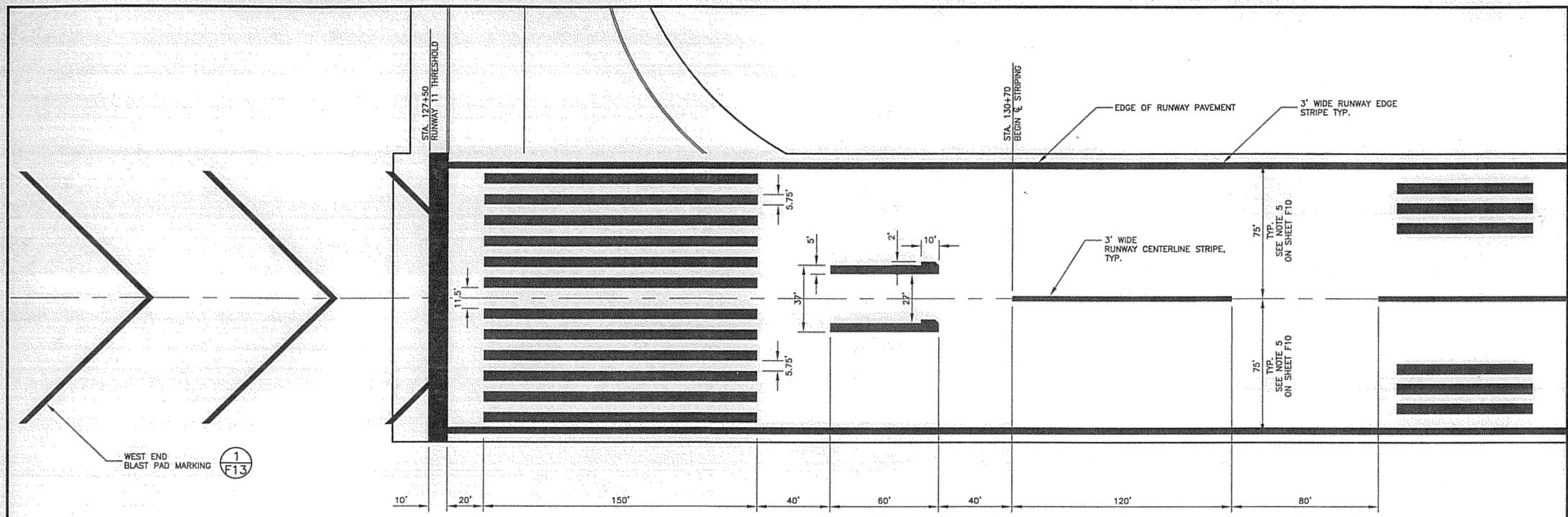

1/F12 **RUNWAY 11 APPROACH END MARKINGS** N.T.S.

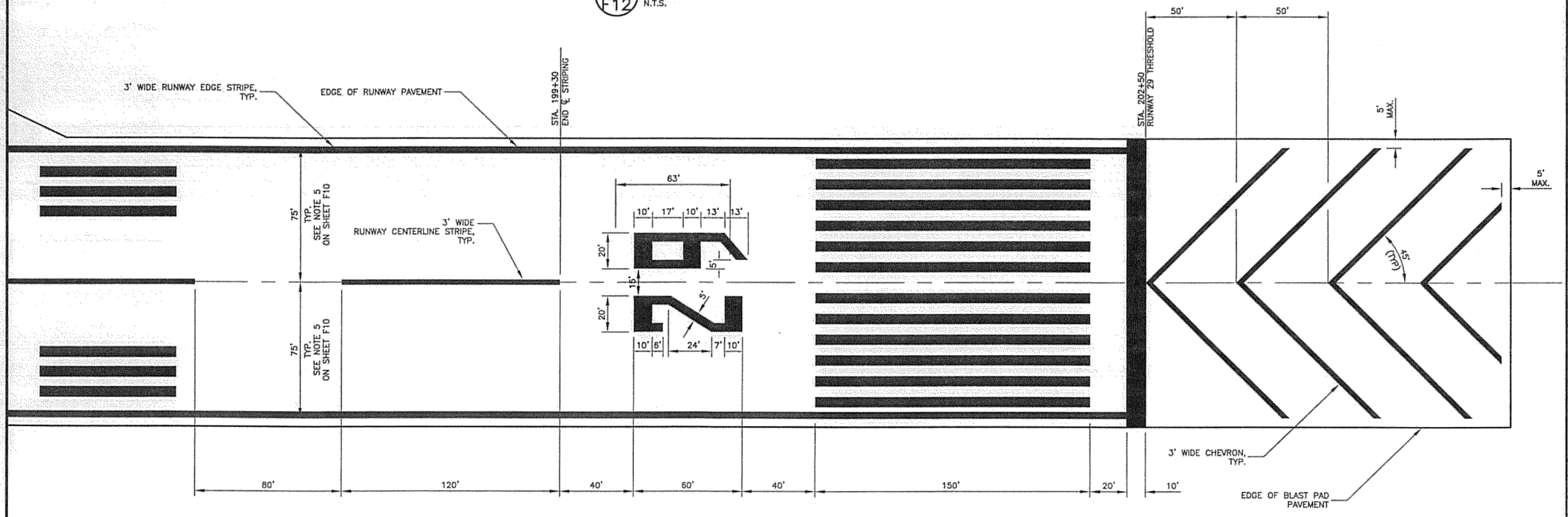

2/F12 **RUNWAY 29 APPROACH END MARKINGS** N.T.S.

DO NOT SCALE FROM THESE DRAWINGS USE DIMENSIONS

PATH: I:\B23400\Dwgs\C\Sheets\F12.dwg

Wed, 04/Oct/06 12:42PM bpaddock

TAB: F12

ADDENDUM NUMBER

ATTACHMENT NUMBER

RECORD OF REVISIONS

No.	DATE	DESCRIPTION

KETCHIKAN AIRPORT
RUNWAY SAFETY AREA EXPANSION
& RUNWAY OVERLAY
PROJECT NO. 68306

RUNWAY & TAXIWAY MARKING DETAILS

PREPARED BY: USKH INC.

CHECKED BY: DLM

STATE OF ALASKA 49 TH D. Lance Mearig CE-7435 04Oct06 REGISTERED PROFESSIONAL ENGINEER

DESIGNED BY: EJG

DRAWN BY: WJP

STATE OF ALASKA
DEPARTMENT OF TRANSPORTATION
& PUBLIC FACILITIES
DESIGN & ENGINEERING SERVICES
DIVISION–SOUTHEAST REGION

RUNWAY & TAXIWAY MARKING DETAILS

PROJECT DESIGNATION	
AIP NO. 3-02-0144-1606	
STATE	YEAR
ALASKA	2006
SHEET NUMBER	TOTAL SHEETS
F12	131

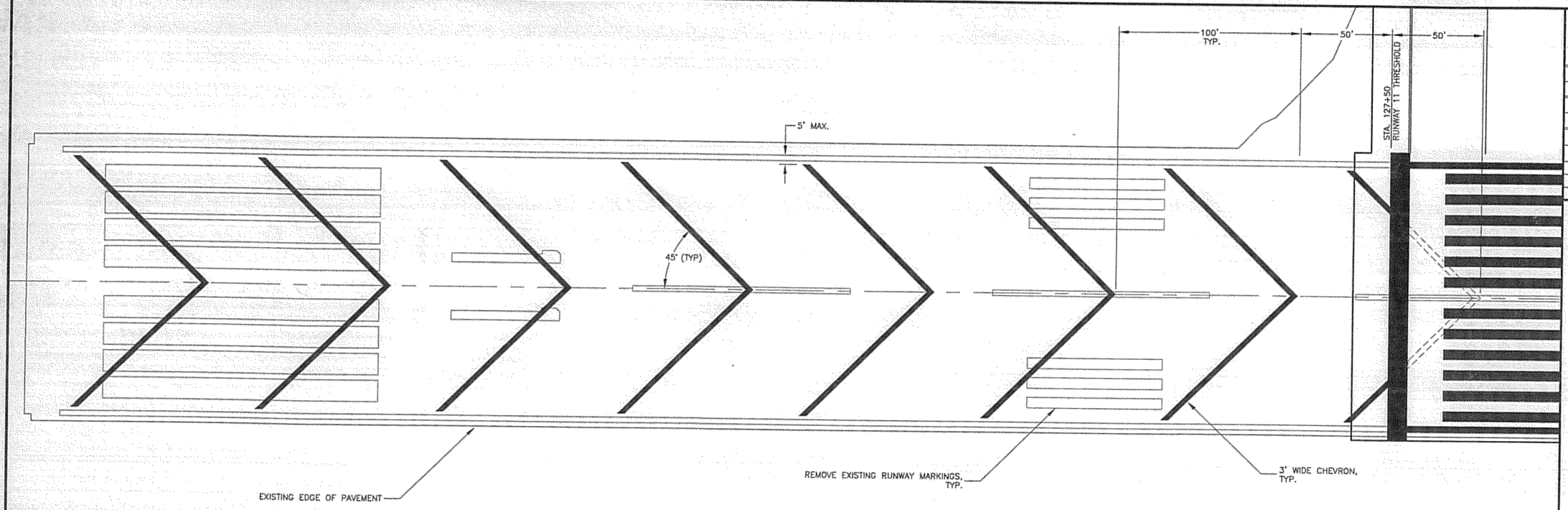

1 F13 N.T.S.

WEST END BLAST PAD MARKING DETAIL

NOTE:

ALL TAXIWAY STRIPING SHALL BE AVIATION YELLOW

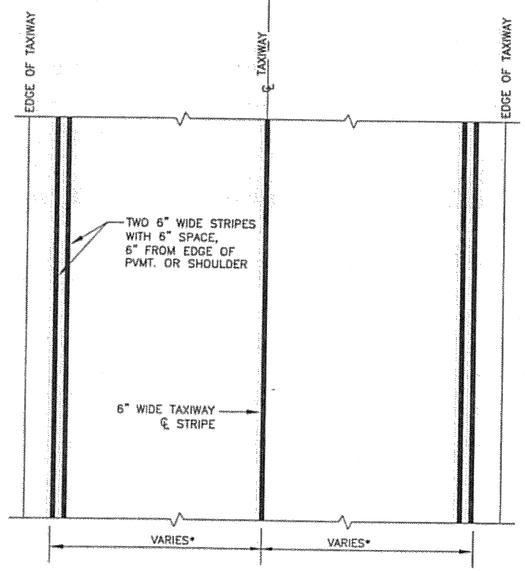

* DIMENSIONS TO OUTSIDE EDGE OF OUTERMOST STRIPE.

2 F13 N.T.S.

TAXIWAY MARKING DETAIL

DO NOT SCALE FROM THESE DRAWINGS USE DIMENSIONS

PATH: I:\B23400\Dwgs\C\Sheets\F13.dwg
Wed, 04/Oct/06 08:44AM bpaddock
TAB: F13

ADDENDUM NUMBER
ATTACHMENT NUMBER

RECORD OF REVISIONS

No.	DATE	DESCRIPTION

KETCHIKAN AIRPORT
RUNWAY SAFETY AREA EXPANSION
& RUNWAY OVERLAY
PROJECT NO. 68306

RUNWAY & TAXIWAY MARKING DETAILS

PREPARED BY: USKH INC.

CHECKED BY: DLM

STATE OF ALASKA 49 TH
D. Lance Mearig CE-7435 REGISTERED PROFESSIONAL ENGINEER
04 Oct 06

DESIGNED BY: EJG

DRAWN BY: WJP

STATE OF ALASKA
DEPARTMENT OF TRANSPORTATION & PUBLIC FACILITIES
DESIGN & ENGINEERING SERVICES
DIVISION–SOUTHEAST REGION

RUNWAY & TAXIWAY MARKING DETAILS

PROJECT DESIGNATION	
AIP NO. 3-02-0144-1606	
STATE	YEAR
ALASKA	2006
SHEET NUMBER	TOTAL SHEETS
F13	131

GENERAL STRUCTURAL NOTES

(APPLIES UNLESS NOTED OTHERWISE)

CODE:

2003 EDITION OF THE INTERNATIONAL BUILDING CODE (IBC) WITH STATE OF ALASKA AMENDMENTS.

DESIGN LOADS:

DECK LIVE LOAD ——— 20 PSF

WIND LOADS:
- BASIC WIND SPEED ——— 120 MPH
- EXPOSURE ——— B
- IMPORTANCE FACTOR ——— 1.0

SEISMIC LOADS:
- SEISMIC DESIGN CATEGORY ——— 1.0
- BUILDING CATEGORY ——— I
- IMPORTANCE FACTOR ——— 1.0
- SITE CLASSIFICATION ——— D

STRUCTURAL SYSTEM:
CANTILEVERED
- R: 2.5
- Ω_0: 2.0
- C_p: 2.5
- S_S: 0.26
- S_1: 0.18
- BASE SHEAR COEFFICIENT ——— $v = 0.11W$

CONCRETE:

TYPICAL CONCRETE COMPRESSIVE STRENGTHS		
CONCRETE	MINIMUM 28 DAY COMPRESSIVE STRENGTH	SLUMP AT PLACEMENT
UNLESS NOTED OTHERWISE, ALL CONCRETE SHALL BE	2,500 PSI	4 1/2" MAXIMUM

CONCRETE WORK SHALL CONFORM TO ALL REQUIREMENTS OF ACI 301, " SPECIFICATIONS FOR STRUCTURAL CONCRETE FOR BUILDINGS" AND ACI 318, "BUILDING CODE REQUIREMENTS FOR REINFORCED CONCRETE". MECHANICALLY VIBRATE ALL CONCRETE WHEN PLACED.

MISCELLANEOUS STEEL:

TYPICAL STEEL STRENGTHS
PLATES, BARS, ANGLE CHANNELS ——— ASTM A36 (Fy = 36 KSI)

LATEST AISC AND AWS CODES APPLY. ALL CONSTRUCTION PER LATEST AISC HANDBOOK. ALL BOLTS SHALL BE INSTALLED WITH STEEL WASHERS.

WOOD (LRFD):

TYPICAL MINIMUM WOOD PROPERTIES					
MEMBER	Fb (PSI)	Fv (PSI)	E (PSI)	Fc (PSI)	SPECIES AND GRADE
JOISTS,/BEAMS 2" – 4" THICK	2,160	220	1,300,000	3,000	TREATED HEM FIR #2
POSTS & TIMBERS 5"X5" & LARGER	1,330	200	1,100,000	900	TREATED HEM FIR #2

FRAMING LUMBER SHALL COMPLY WITH THE LATEST EDITION OF THE GRADING RULES OF THE WESTERN WOOD PRODUCTS ASSOCIATION. ALL WOOD PRODUCTS SHALL BE TREATED (ALL WEATHER WOOD) FOR GROUND CONTACT PER AWPA SPECIFICATIONS AND SHALL BE STAMPED WITH THE GRADE MARK OF AN APPROVED GRADING AGENCY. ALL FASTENERS AND HANGERS MUST BE STAINLESS STEEL OR G185, (1.85 OZ. OF ZINC PER SQUARE FOOT OF SURFACE AREA) WHEN STAINLESS STEEL IS NOT AVAILABLE.

GRATING:

MOLDED SQUARE MESH 1 1/2" SQ. GRID X 1 1/2" DEEP FIBERGLASS GRATING, GRITTED SURFACE, MEDIUM GRAY COLOR. SEAL EXPOSED ENDS AFTER FIELD CUTTING. LOAD CAPACITY 150 PSF.

TIMBER PILES:

TIMBER PILES SHALL BE WEST COAST DOUGLAS FIR IN CONFORMANCE WITH ASTM D-25, CLEAN PEELED OR ROUGH PEELED. ALL PILES TO BE PRESERVATIVE TREATED FOR CONTACT WITH SOIL. ALL FIELD CUTS IN TIMBER PILES TO BE PAINTED WITH A WOOD PRESERVATIVE.

SHOP DRAWINGS:

THE CONTRACTOR SHALL REVIEW, STAMP WITH HIS APPROVAL, DATE AND SIGN ALL SHOP DRAWINGS REQUIRED BY THE CONTRACT DOCUMENTS PRIOR TO SUBMITTING TO THE ENGINEER. AT THE TIME OF SUBMISSION, THE CONTRACTOR SHALL INFORM THE ENGINEER IN WRITING OF ANY DEVIATION IN THE SHOP DRAWINGS FROM THE REQUIREMENTS OF THE CONTRACT DOCUMENTS.

SPECIAL INSPECTIONS:

THE CONTRACTOR SHALL PERMIT THE OWNER TO ACCESS THE SITE TO PERFORM INSPECTIONS OF THE WORK AS THE WORK IS IN PROGRESS. THE OWNER WILL, AS A MINIMUM (NOT INCLUDING OTHER TRADES) INSPECT THE FOLLOWING OPERATIONS PER UBC SECTION 1701.5:

CONCRETE: DURING TAKING OF SPECIMENS AND PLACEMENT OF ALL CONCRETE. SEE PROJECT SPECIFICATIONS FOR FREQUENCY OF TESTING AND STRENGTH REQUIREMENTS.

BOLTS INSTALLED IN WOOD: PRIOR TO AND DURING THE PLACEMENT OF LAGS OR THROUGH BOLTS.

DO NOT SCALE FROM THESE DRAWINGS USE DIMENSIONS

PATH:
I:\823400\Dwgs\S\sheets\823400_F14.dwg

Tue, 03/Oct/06 10:47AM bhopper
TAB: Layout1

ADDENDUM NUMBER

ATTACHMENT NUMBER

RECORD OF REVISIONS

No.	DATE	DESCRIPTION

KETCHIKAN AIRPORT
RUNWAY SAFETY AREA EXPANSION
& RUNWAY OVERLAY
PROJECT NO. 68306

GENERAL STRUCTURAL NOTES

PREPARED BY: USKH INC.

CHECKED BY: BEH

STATE OF ALASKA
49TH
Bruce E. Hepper
CE-7745
REGISTERED PROFESSIONAL ENGINEER

DESIGNED BY: BEH

DRAWN BY: DJR

STATE OF ALASKA
DEPARTMENT OF TRANSPORTATION
& PUBLIC FACILITIES
DESIGN & ENGINEERING SERVICES
DIVISION–SOUTHEAST REGION

GENERAL STRUCTURAL NOTES

PROJECT DESIGNATION
AIP NO. 3-02-0144-6106

STATE	YEAR
ALASKA	2006
SHEET NUMBER	TOTAL SHEETS
F14	131

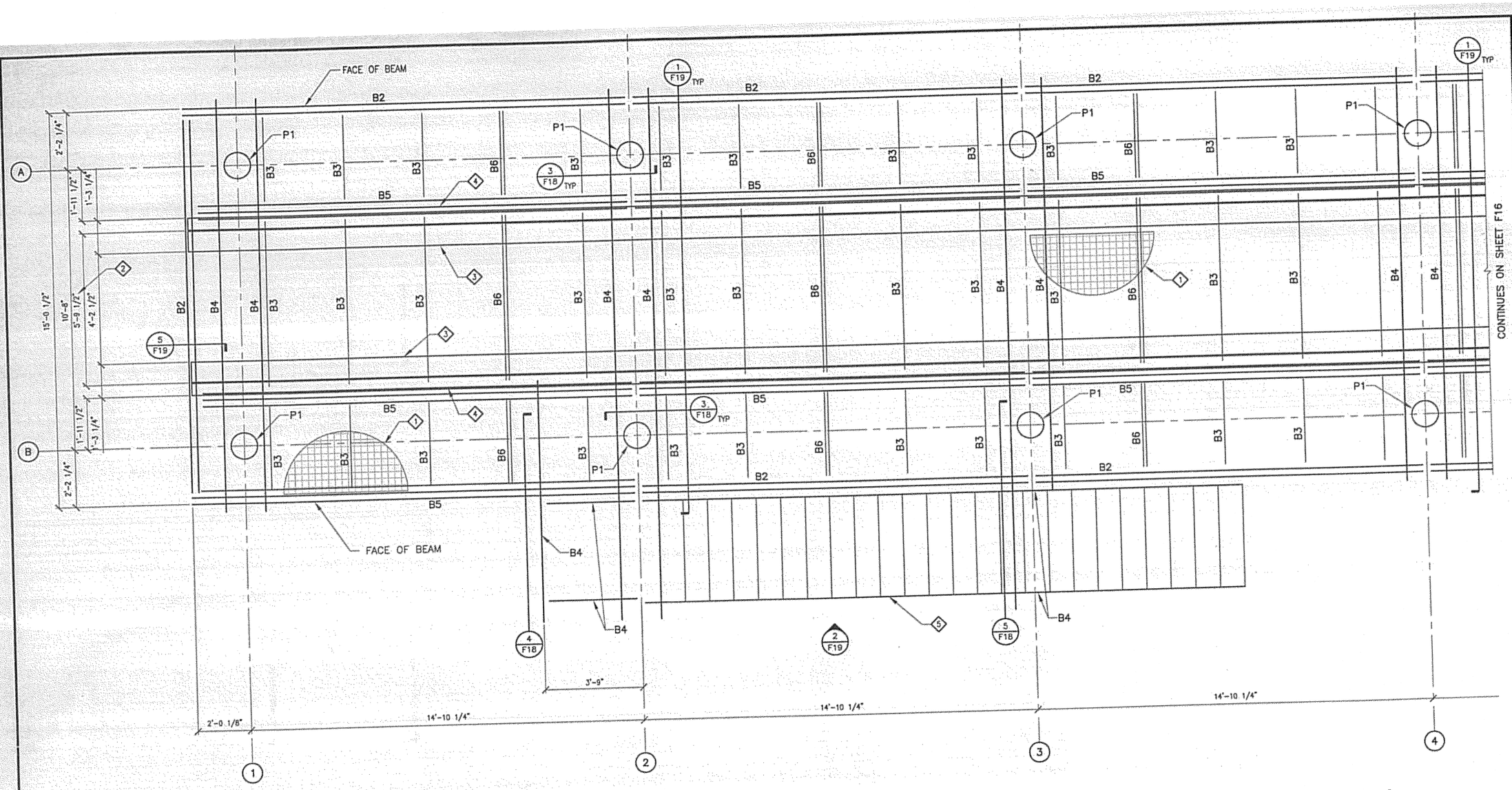

1 / F15 PARTIAL ANTENNA PLATFORM FRAMING PLAN

SCALE: 1/2" = 1'-0"

SCALE 1/2":1'-0" 0 1 2 3

PILE (P) SCHEDULE			
MARK	SIZE	BASE CONNECTION	REMARKS
P1	36" MINIMUM TIP CIRCUMFERENCE, TREATED ROUND TIMBER	SEE DETAILS	INSTALL BUTT END DOWN. LENGTHS VARY.

BEAM (B) SCHEDULE			
MARK	BEAM SIZE	END CONNECTION	REMARKS
B1	2 X 12 ALL WEATHER WOOD	SEE DETAILS	———
B2	(2) 2 X 12 ALL WEATHER WOOD	SEE DETAILS	———
B3	2 X 8 ALL WEATHER WOOD	SEE DETAILS	AT 36" O.C.
B4	4 X 12 ALL WEATHER WOOD	SEE DETAILS	———
B5	(3) 2 x 12 ALL WEATHER WOOD	SEE DETAILS	———
B6	(2) 2 x 8 ALL WEATHER WOOD	SEE DETAILS	———

KEY NOTES

1. FIBERGLASS GRATING. SEE DETAIL 6/F18 FOR ATTACHMENT.
2. CRITICAL DIMENSION FOR LOCALIZER ANTENNA INSTALLATION. DO NOT ALTER.
3. 2 X 10 TREATED WOOD LAID FLAT AT GRATING ELEVATION.
4. 2 X 6 TREATED WOOD LAID FLAT AT GRATING ELEVATION.
5. STAIRS, THE NUMBER OF RISERS WILL VARY DEPENDING ON FINAL GRADING. ADJUST IN FIELD AS NECESSARY.

DO NOT SCALE FROM THESE DRAWINGS USE DIMENSIONS

PATH: I:\823400\Dwgs\S\sheets\823400_F15.dwg
Mon, 02/Oct/06 10:32AM bhopper
TAB: Layout1

ADDENDUM NUMBER
ATTACHMENT NUMBER

RECORD OF REVISIONS

No.	DATE	DESCRIPTION

KETCHIKAN AIRPORT
RUNWAY SAFETY AREA EXPANSION
& RUNWAY OVERLAY
PROJECT NO. 68306

ANTENNA PLATFORM PARTIAL FRANUNG PLAN

PREPARED BY: USKH INC.

CHECKED BY: BEH

STATE OF ALASKA 49TH Bruce E. Hopper CE-7745 REGISTERED PROFESSIONAL ENGINEER

DESIGNED BY: BEH

DRAWN BY: DJR

STATE OF ALASKA
DEPARTMENT OF TRANSPORTATION & PUBLIC FACILITIES
DESIGN & ENGINEERING SERVICES
DIVISION–SOUTHEAST REGION

ANTENNA PLATFORM PARTIAL FRAMING PLAN

PROJECT DESIGNATION
AIP NO. 3-02-0144-610

STATE	YEAR
ALASKA	2006
SHEET NUMBER	TOTAL SHEE
F15	131

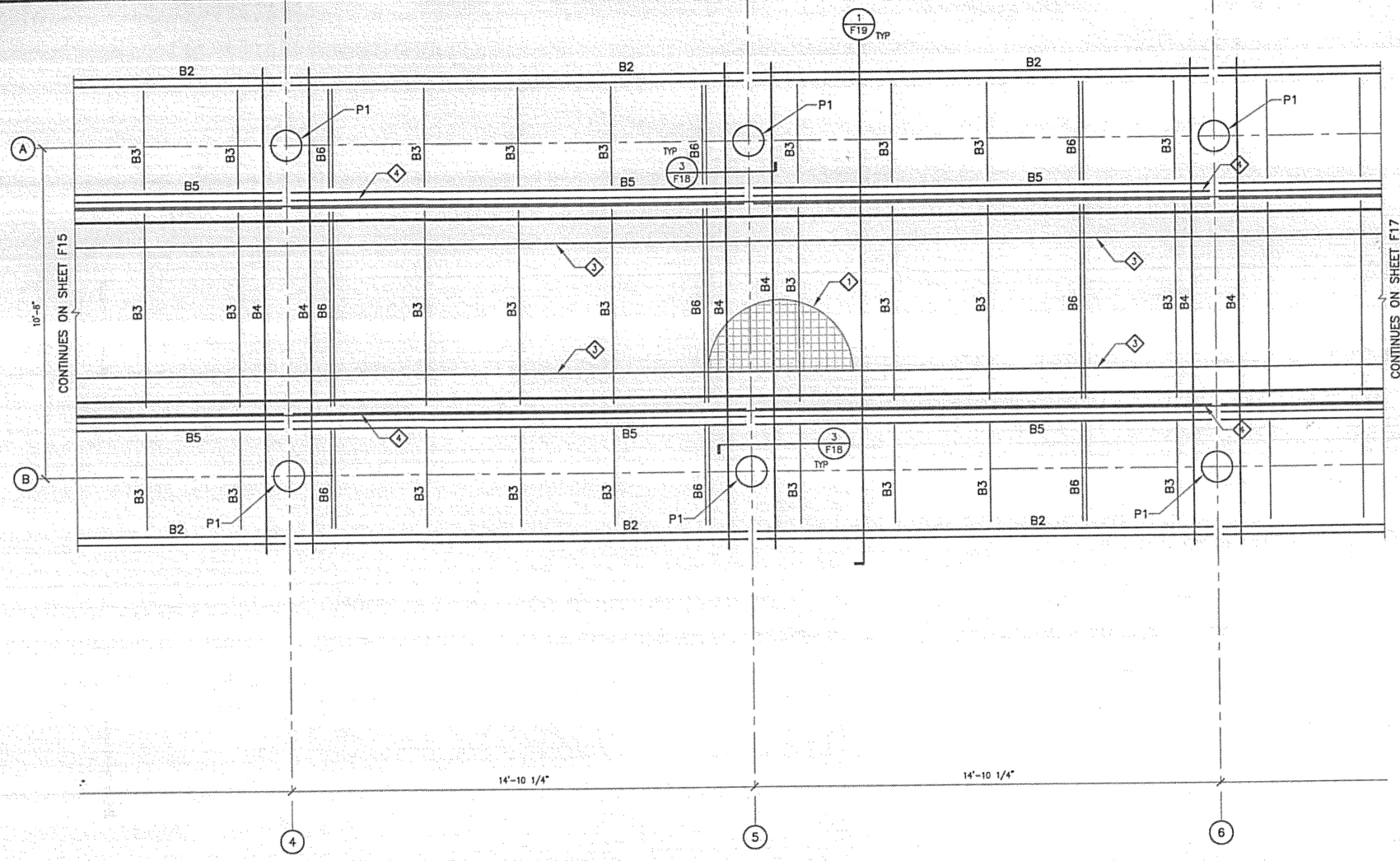

1 / F16 PARTIAL ANTENNA PLATFORM FRAMING PLAN

SCALE: 1/2" = 1'-0"

SCALE 1/2":1'-0" 0 1 2 3

PILE (P) SCHEDULE			
MARK	SIZE	BASE CONNECTION	REMARKS
P1	38" MINIMUM TIP CIRCUMFERENCE, TREATED ROUND TIMBER	SEE DETAILS	INSTALL BUTT END DOWN. LENGTHS VARY.

BEAM (B) SCHEDULE			
MARK	BEAM SIZE	END CONNECTION	REMARKS
B1	2 X 12 ALL WEATHER WOOD	SEE DETAILS	———
B2	(2) 2 X 12 ALL WEATHER WOOD	SEE DETAILS	———
B3	2 X 8 ALL WEATHER WOOD	SEE DETAILS	AT 36" O.C.
B4	4 X 12 ALL WEATHER WOOD	SEE DETAILS	———
B5	(3) 2 x 12 ALL WEATHER WOOD	SEE DETAILS	———
B6	(2) 2 x 8 ALL WEATHER WOOD	SEE DETAILS	———

KEY NOTES

1. FIBERGLASS GRATING. SEE DETAIL 6/F18 FOR ATTACHMENT.
2. CRITICAL DIMENSION FOR LOCALIZER ANTENNA INSTALLATION. DO NOT ALTER.
3. 2 X 10 TREATED WOOD LAID FLAT AT GRATING ELEVATION.
4. 2 X 6 TREATED WOOD LAID FLAT AT GRATING ELEVATION.
5. STAIRS, THE NUMBER OF RISERS WILL VARY DEPENDING ON FINAL GRADING. ADJUST IN FIELD AS NECESSARY.

DO NOT SCALE FROM THESE DRAWINGS USE DIMENSIONS

PATH: I:\B23400\Dwgs\S\sheets\B23400_F16.dwg
Mon, 02/Oct/06 10:32AM bhopper
TAB: Layout1

ADDENDUM NUMBER
ATTACHMENT NUMBER

RECORD OF REVISIONS

No.	DATE	DESCRIPTION

KETCHIKAN AIRPORT
RUNWAY SAFETY AREA EXPANSION
& RUNWAY OVERLAY
PROJECT NO. 68306

ANTENNA PLATFORM PARTIAL FRAMING PLAN

PREPARED BY: USKH INC.

CHECKED BY: BEH

STATE OF ALASKA — 49TH — REGISTERED PROFESSIONAL ENGINEER
Bruce E. Hepper
CE-7745
10/02/06

DESIGNED BY: BEH

DRAWN BY: DJR

STATE OF ALASKA
DEPARTMENT OF TRANSPORTATION
& PUBLIC FACILITIES
DESIGN & ENGINEERING SERVICES
DIVISION–SOUTHEAST REGION

ANTENNA PLATFORM PARTIAL FRAMING PLAN

PROJECT DESIGNATION	
AIP NO. 3-02-0144-6106	
STATE	YEAR
ALASKA	2006
SHEET NUMBER	TOTAL SHEETS
F16	131

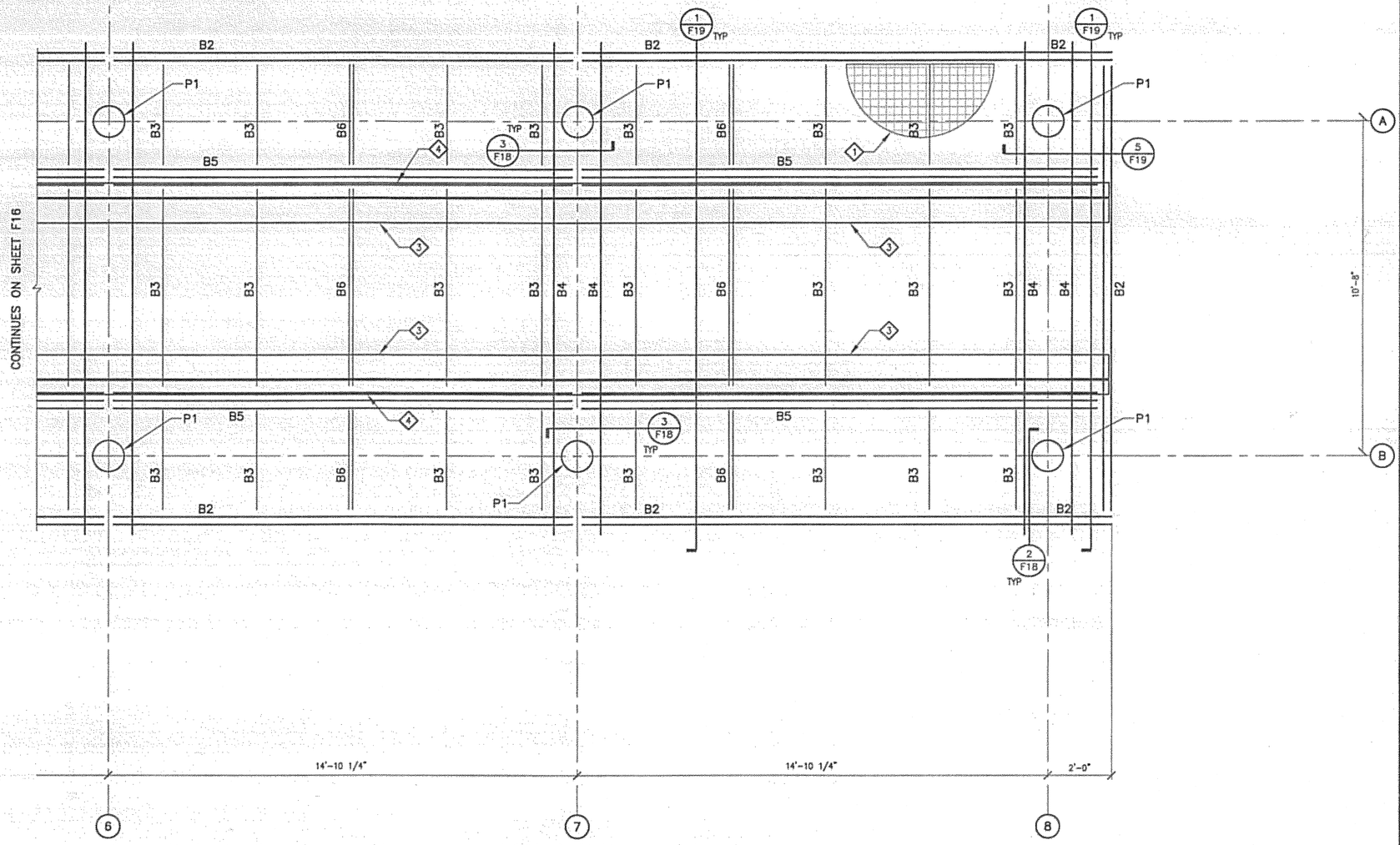

1 / F17 PARTIAL ANTENNA PLATFORM FRAMING PLAN
SCALE: 1/2" = 1'-0"

SCALE 1/2":1'-0" 0 1 2 3

PILE (P) SCHEDULE			
MARK	SIZE	BASE CONNECTION	REMARKS
P1	38" MINIMUM TIP CIRCUMFERENCE, TREATED ROUND TIMBER	SEE DETAILS	INSTALL BUTT END DOWN. LENGTHS VARY.

BEAM (B) SCHEDULE			
MARK	BEAM SIZE	END CONNECTION	REMARKS
B1	2 X 12 ALL WEATHER WOOD	SEE DETAILS	———
B2	(2) 2 X 12 ALL WEATHER WOOD	SEE DETAILS	———
B3	2 X 8 ALL WEATHER WOOD	SEE DETAILS	AT 36" O.C.
B4	4 X 12 ALL WEATHER WOOD	SEE DETAILS	———
B5	(3) 2 x 12 ALL WEATHER WOOD	SEE DETAILS	———
B6	(2) 2 x 8 ALL WEATHER WOOD	SEE DETAILS	———

KEY NOTES

1. FIBERGLASS GRATING. SEE DETAIL 6/F18 FOR ATTACHMENT.
2. CRITICAL DIMENSION FOR LOCALIZER ANTENNA INSTALLATION. DO NOT ALTER.
3. 2 X 10 TREATED WOOD LAID FLAT AT GRATING ELEVATION.
4. 2 X 6 TREATED WOOD LAID FLAT AT GRATING ELEVATION.
5. STAIRS, THE NUMBER OF RISERS WILL VARY DEPENDING ON FINAL GRADING. ADJUST IN FIELD AS NECESSARY.

DO NOT SCALE FROM THESE DRAWINGS USE DIMENSIONS

PATH: I:\823400\Dwgs\S\sheets\823400_F17.dwg
Mon, 02/Oct/06 10:31AM bhopper
TAB: Layout1

ADDENDUM NUMBER

ATTACHMENT NUMBER

RECORD OF REVISIONS

No.	DATE	DESCRIPTION

KETCHIKAN AIRPORT
RUNWAY SAFETY AREA EXPANSION
& RUNWAY OVERLAY
PROJECT NO. 68306

ANTENNA PLATFORM PARTIAL FRAMING PLAN

PREPARED BY: USKH INC.

CHECKED BY: BEH

STATE OF ALASKA 49TH REGISTERED PROFESSIONAL ENGINEER Bruce E. Hopper CE-7745 10/31/06

DESIGNED BY: BEH

DRAWN BY: DJR

STATE OF ALASKA
DEPARTMENT OF TRANSPORTATION
& PUBLIC FACILITIES
DESIGN & ENGINEERING SERVICES
DIVISION-SOUTHEAST REGION

ANTENNA PLATFORM PARTIAL FRAMING PLAN

PROJECT DESIGNATION	
AIP NO. 3-02-0144-6106	
STATE	YEAR
ALASKA	2006
SHEET NUMBER	TOTAL SHEETS
F17	131

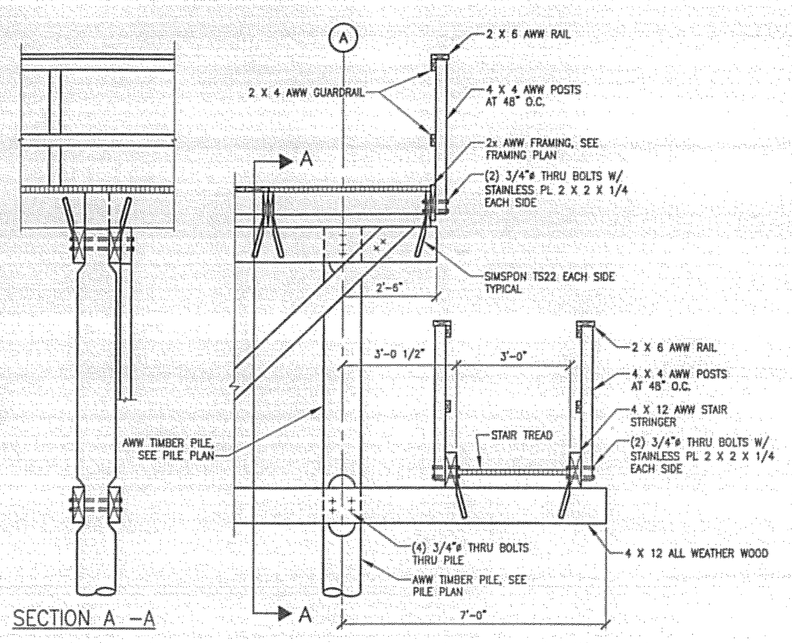

5 F18 INTERMEDIATE STAIR SUPPORT
SCALE: 1/2"=1'-0"

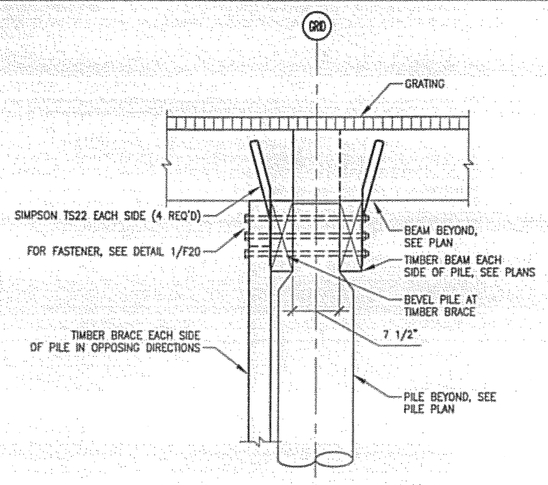

3 F18 TYPICAL BRACE AT PILE
SCALE: 1"=1'-0"

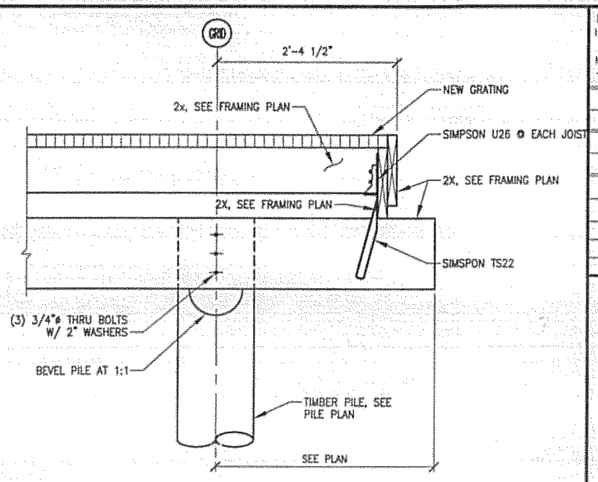

1 F18 FRAMING AT TOP OF PILE
SCALE: 1"=1'-0"

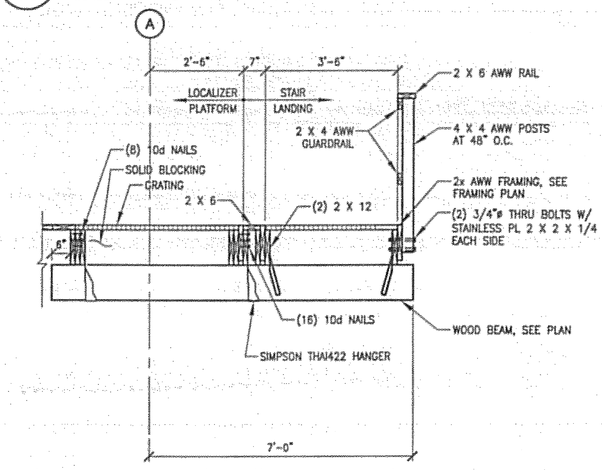

4 F18 FRAMING AT STAIR LANDING
SCALE: 1/2"=1'-0"

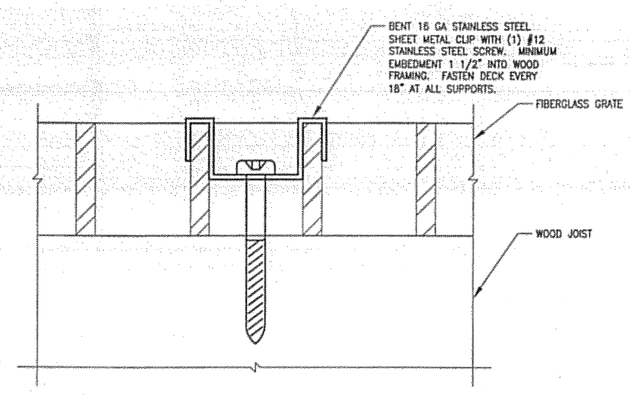

6 F18 GRATE ATTACHMENT
SCALE: 1'-0"=1'-0"

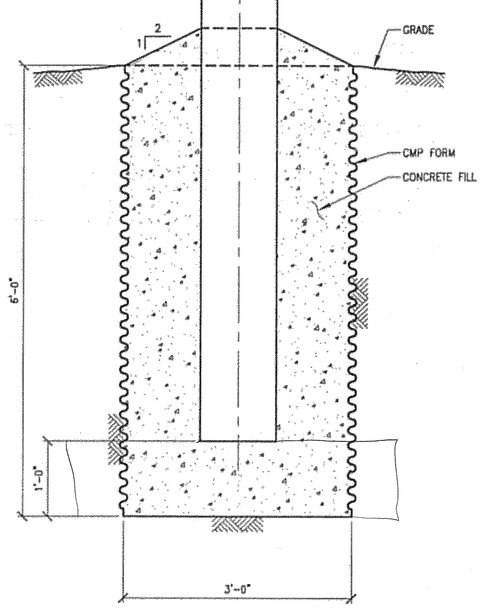

2 F18 TYPICAL PILE INSTALLATION
SCALE: 1"=1'-0"

DO NOT SCALE FROM THESE DRAWINGS USE DIMENSIONS

PATH: I:\823400\Dwgs\S\sheets\823400_F18.dwg
Mon, 02/Oct/06 10:30AM bhopper
TAB: Layout1

ADDENDUM NUMBER

ATTACHMENT NUMBER

RECORD OF REVISIONS

No.	DATE	DESCRIPTION

KETCHIKAN AIRPORT
RUNWAY SAFETY AREA EXPANSION
& RUNWAY OVERLAY
PROJECT NO. 68306

STRUCTURAL DETAILS

PREPARED BY: USKH INC.

CHECKED BY: BEH

STATE OF ALASKA
Bruce E. Hopper
CE-7745
10/01/06
REGISTERED PROFESSIONAL ENGINEER

DESIGNED BY: BEH

DRAWN BY: DJR

STATE OF ALASKA
DEPARTMENT OF TRANSPORTATION
& PUBLIC FACILITIES
DESIGN & ENGINEERING SERVICES
DIVISION-SOUTHEAST REGION

STRUCTURAL DETAILS

PROJECT DESIGNATION	
AIP NO. 3-02-0144-6106	
STATE	YEAR
ALASKA	2006
SHEET NUMBER	TOTAL SHEETS
F18	131

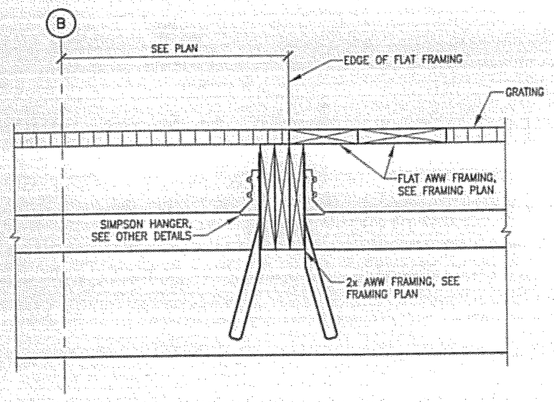

4 / F19 DOUBLE JOISTS AT FLAT FRAMING
SCALE: 1 1/2"=1'-0"

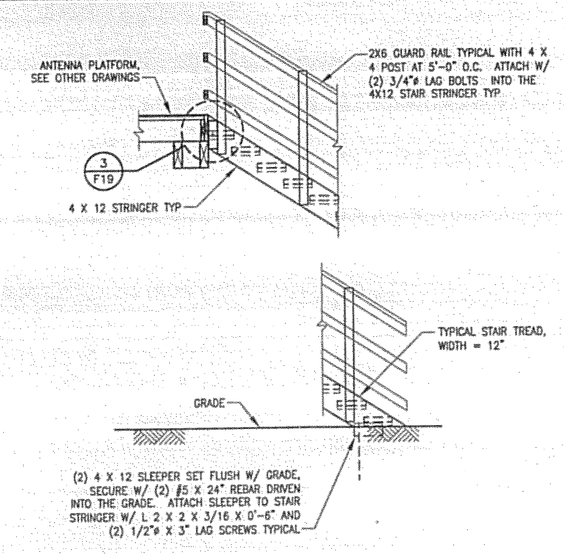

2 / F19 STAIR ELEVATOIN
SCALE: 1"=1'-0"

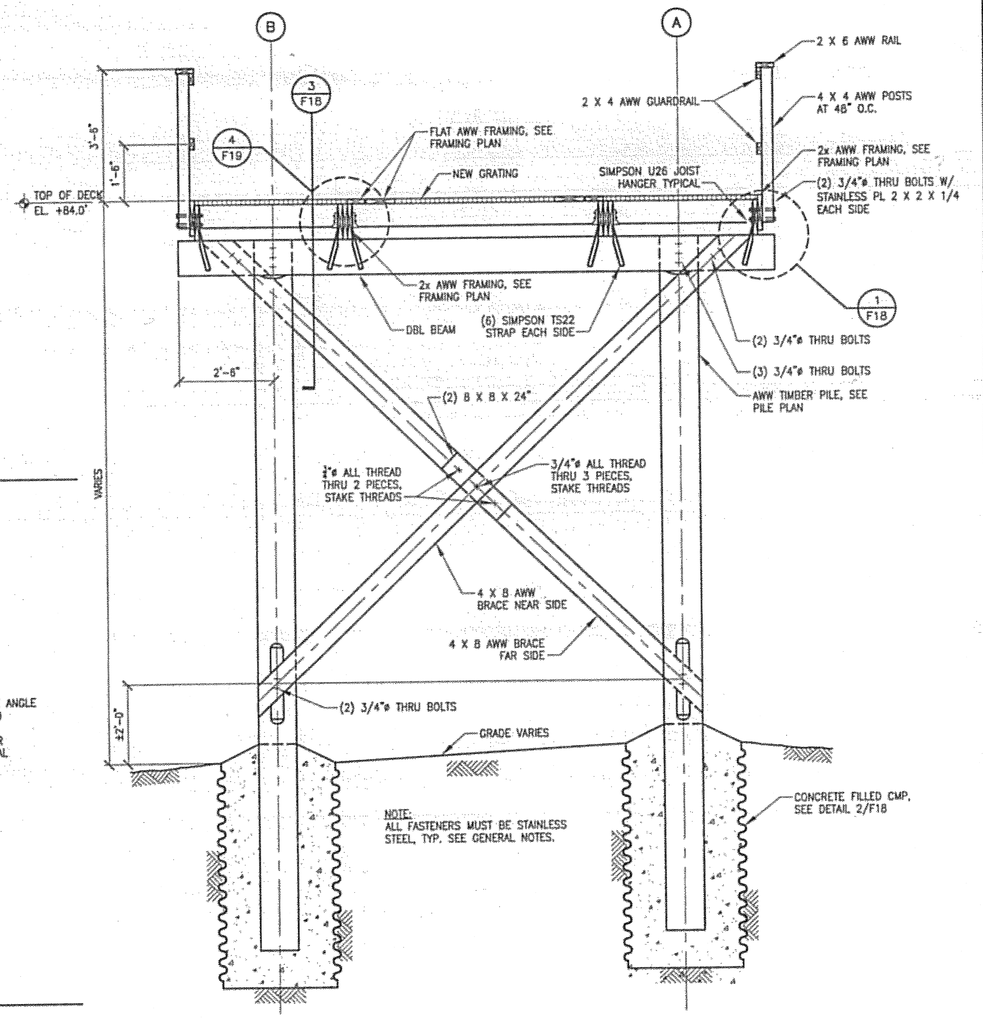

1 / F19 TYPICAL PLATFORM SECTION
SCALE: 1/2"=1'-0"

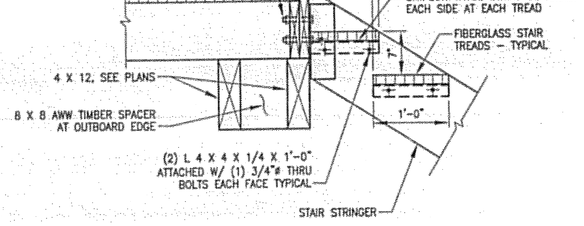

3 / F19 STAIR STRINGER ATTACHMENT
SCALE: 1"=1'-0"

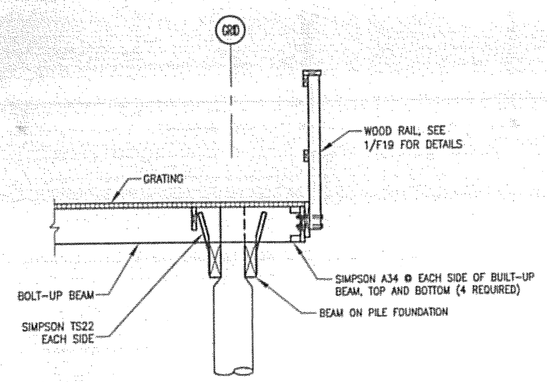

5 / F19 DECK CLOSURE
SCALE: 1/2"=1'-0"

DO NOT SCALE FROM THESE DRAWINGS USE DIMENSIONS

PATH: I:\823400\Dwgs\S\sheets\823400_F19.dwg
Mon, 02/Oct/06 10:46AM bhopper
TAB: Layout1

ADDENDUM NUMBER

ATTACHMENT NUMBER

RECORD OF REVISIONS

No.	DATE	DESCRIPTION

KETCHIKAN AIRPORT
RUNWAY SAFETY AREA EXPANSION
& RUNWAY OVERLAY
PROJECT NO. 68306

STRUCTURAL DETAILS

PREPARED BY: USKH INC.

CHECKED BY: BEH

STATE OF ALASKA 49TH Bruce E. Hopper CE-7745 10/01/06 REGISTERED PROFESSIONAL ENGINEER

DESIGNED BY: BEH

DRAWN BY: DJR

STATE OF ALASKA
DEPARTMENT OF TRANSPORTATION & PUBLIC FACILITIES
DESIGN & ENGINEERING SERVICES
DIVISION–SOUTHEAST REGION

STRUCTURAL DETAILS

PROJECT DESIGNATION	
AIP NO. 3-02-0144-6106	
STATE	YEAR
ALASKA	2006
SHEET NUMBER	TOTAL SHEETS
F19	131

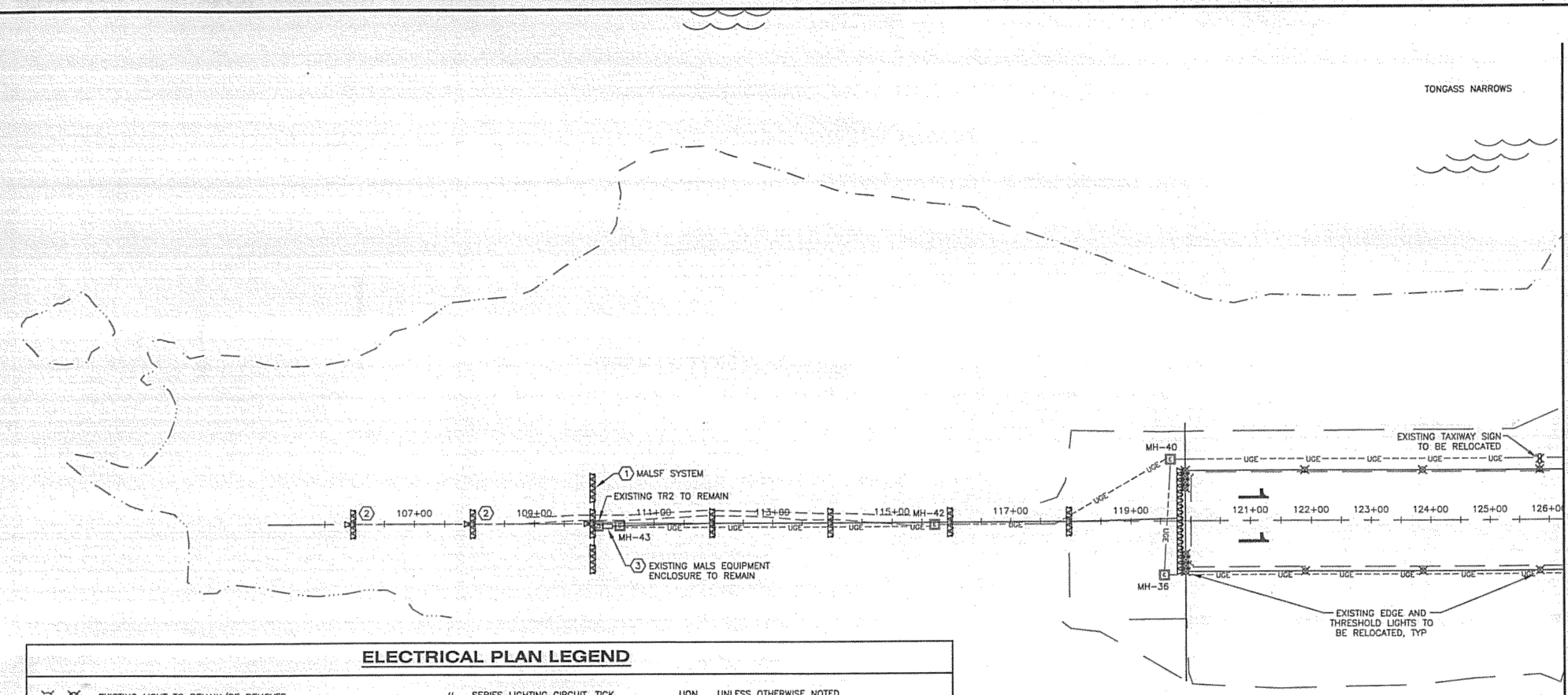

ELECTRICAL PLAN LEGEND

- EXISTING LIGHT TO REMAIN/BE REMOVED
- RUNWAY EDGE LIGHT, 360° WHITE
- RUNWAY EDGE LIGHT, 180° WHITE AND 180° YELLOW
- THRESHOLD LIGHT, 180° RED AND 180° GREEN
- TAXIWAY EDGE LIGHT, 360° BLUE
- EXISTING LIGHTED AIRPORT SIGN TO REMAIN/BE REMOVED
- NEW LIGHTED AIRPORT SIGN
- GROUND ROD, 3/4"x10' TYPICAL
- NEW HANDHOLE (HH), TYPE I (LIGHT BASE WITH BLANK COVER)
- EXISTING ELECTRICAL MANHOLE TO REMAIN/BE REMOVED
- EXISTING COMMUNICATIONS PEDESTAL TO REMAIN/BE REMOVED
- NEW ELECTRICAL MANHOLE
- NEW COMMUNICATIONS PEDESTAL, JUNCTION BOX (TYPE II), OR MANHOLE AS INDICATED
- EXISTING TRANSFORMER TO REMAIN/BE REMOVED
- NEW TRANSFORMER OR EXISTING TRANSFORMER TO BE RELOCATED
- NEW SECTIONALIZER CABINET
- JUNCTION BOX, TYPE II, SEE DOT STANDARD DETAIL L-23.01
- BRANCH CIRCUIT HOMERUN WITH GROUND, NEUTRAL AND NUMBER OF HOT WIRES
- T-2 INDICATES PANEL AND CIRCUIT NUMBER
- EXISTING PRIMARY UNDERGROUND ELECTRICAL LINE TO REMAIN/BE REMOVED
- EXISTING UNDERGROUND COMMUNICATIONS LINE TO REMAIN/BE REMOVED
- NEW PRIMARY UNDERGROUND ELECTRICAL LINE
- NEW UNDERGROUND COMMUNICATIONS LINE
- MALS SYSTEM LIGHT BAR
- MALS SYSTEM FLASHER OR THRESHOLD LIGHT
- SERIES LIGHTING CIRCUIT, TICK MARKS INDICATE NUMBER OF #8 5KV SERIES CONDUCTORS IN 2" HDPE CONDUIT (2 SHOWN), INCLUDE #6 GROUND CONDUCTOR (NOT SHOWN), TICK MARKS NOT SHOWN ON SHORT SEGMENTS FOR CLARITY
- SERIES LIGHTING CIRCUIT, TICK MARKS INDICATE NUMBER OF #8 5KV SERIES CONDUCTORS IN 2" RIGID STEEL CONDUIT (2 SHOWN), INCLUDE #6 GROUND CONDUCTOR (NOT SHOWN), TICK MARKS NOT SHOWN ON SHORT SEGMENTS FOR CLARITY

EQUIPMENT NUMBER
- EX TAXIWAY/RUNWAY EDGE LIGHT
- SX LIGHTED SIGN
- MH-X MANHOLE
- S-X SECTIONALIZER CABINET
- JB-X JUNCTION BOX
- P-X PEDESTAL
- P-X PEDESTAL

(X) REFERENCE TO SHEET NOTE

LIGHT COLORS AND DISTRIBUTIONS
- B BLUE
- Y YELLOW
- R RED
- G GREEN
- W WHITE
- BI BI-DIRECTIONAL
- UNI UNI-DIRECTIONAL
- OMNI OMNI-DIRECTIONAL

- UON UNLESS OTHERWISE NOTED
- EMT ELECTRICAL METALLIC TUBING
- RMC RIGID METALLIC CONDUIT (GALVANIZED STEEL)
- HDPE HIGH DENSITY POLYETHYLENE
- PVC POLYVINYL CHLORIDE
- LFMC LIQUIDTIGHT FLEXIBLE METALLIC CONDUIT
- LFNC LIQUIDTIGHT FLEXIBLE NONMETALLIC CONDUIT
- C CONDUIT
- BC BARE COPPER
- TYP TYPICAL
- GRD GROUND
- CB CIRCUIT BREAKER
- NF NON-FUSED
- NDB NON-DIRECTIONAL BEACON
- PAPI PRECISION APPROACH PATH INDICATOR
- LHA LIGHT HOUSING ASSEMBLY
- MALSR MEDIUM INTENSITY APPROACH LIGHTING SYSTEM WITH RUNWAY ALIGNMENT INDICATOR LIGHTS
- MALSF MEDIUM INTENSITY APPROACH LIGHTING WITH SEQUENCED FLASHERS
- ASOS AUTOMATED SURFACE OBERVING SYSTEM
- RVR RUNWAY VISUAL RANGE
- VASI VISUAL APPROACH SLOPE INDICATOR
- RCO RADIO COMMUNICATIONS OUTLET
- DME DISTANCE MEASURING EQUIPMENT

DEMOLITION NOTES:

1. REMOVE EQUIPMENT INDICATED ON DEMOLITION PLANS UNLESS OTHERWISE NOTED. REMOVAL INCLUDES ALL ASSOCIATED CONDUIT, JUNCTION BOXES, CONDUCTORS, LIGHT BASES, TRANSFORMERS, CONTROLLERS, DRAIN CONDUITS, SUPPORT STRUCTURES, FOUNDATIONS, AND CONCRETE.
2. REMOVE ALL UNUSED AND DECOMMISIONED CONDUCTORS UNLESS OTHERWISE INDICATED. UNDERGROUND CONDUITS MAY BE ABANDONED IN PLACE UNLESS DISTURBED BY EXCAVATION ASSOCIATED WITH THIS PROJECT.
3. WHEN REMOVING CONDUCTORS FROM EXISTING CONDUIT TO REMAIN, INSTALL A PULL ROPE FOR FUTURE USE.

SHEET NOTES: ⬡

1. REMOVE EXISTING MALSF SYSTEM, EXCEPT PORTIONS INDICATED OTHERWISE. EXISTING TOWERS, LIGHT BARS, FLASHERS, JUNCTION BOXES, AND BASE ASSEMBLIES TO BE REUSED. PROTECT AND STORE EQUIPMENT UNTIL REINSTALLED.
2. EXISTING TOWER PLATFORM, TOWER, CONDUIT, JUNCTION BOXES, AND FLASHERS TO REMAIN. REMOVE ALL ASSOCIATED CONDUCTORS. REMOVE LIGHT BAR FROM TOWER.
3. EXISTING MALSF CONTROLS TO REMAIN. REMOVE ALL MALSF CONDUCTORS LEAVING BUILDING. EXISTING CONDUITS PENETRATING BUILDING TO BE REUSED.

0 100 200 300
SCALE IN FEET

DO NOT SCALE FROM THESE DRAWINGS USE DIMENSIONS

PATH: I:\823400\Dwgs\E\Sheets\G01.dwg
Tue, 03/Oct/06 02:19PM lschneller
TAB: G01

ADDENDUM NUMBER

ATTACHMENT NUMBER

RECORD OF REVISIONS

No.	DATE	DESCRIPTION

KETCHIKAN AIRPORT
RUNWAY SAFETY AREA EXPANSION
& RUNWAY OVERLAY
PROJECT NO. 68306

ELECTRICAL DEMOLITION

PREPARED BY: USKH INC.

CHECKED BY: GRH

STATE OF ALASKA 49TH GARY R. HABLE EE-10243 REGISTERED PROFESSIONAL ENGINEER 10/4/06

DESIGNED BY: LPS

DRAWN BY: LPS

STATE OF ALASKA
DEPARTMENT OF TRANSPORTATION & PUBLIC FACILITIES
DESIGN & ENGINEERING SERVICES DIVISION-SOUTHEAST REGION

ELECTRICAL DEMOLITION

PROJECT DESIGNATION	
AIP NO. 3-02-0144-1606	
STATE	YEAR
ALASKA	2006
SHEET NUMBER	TOTAL SHEETS
G1	131

See attached Electrical Asbuilts

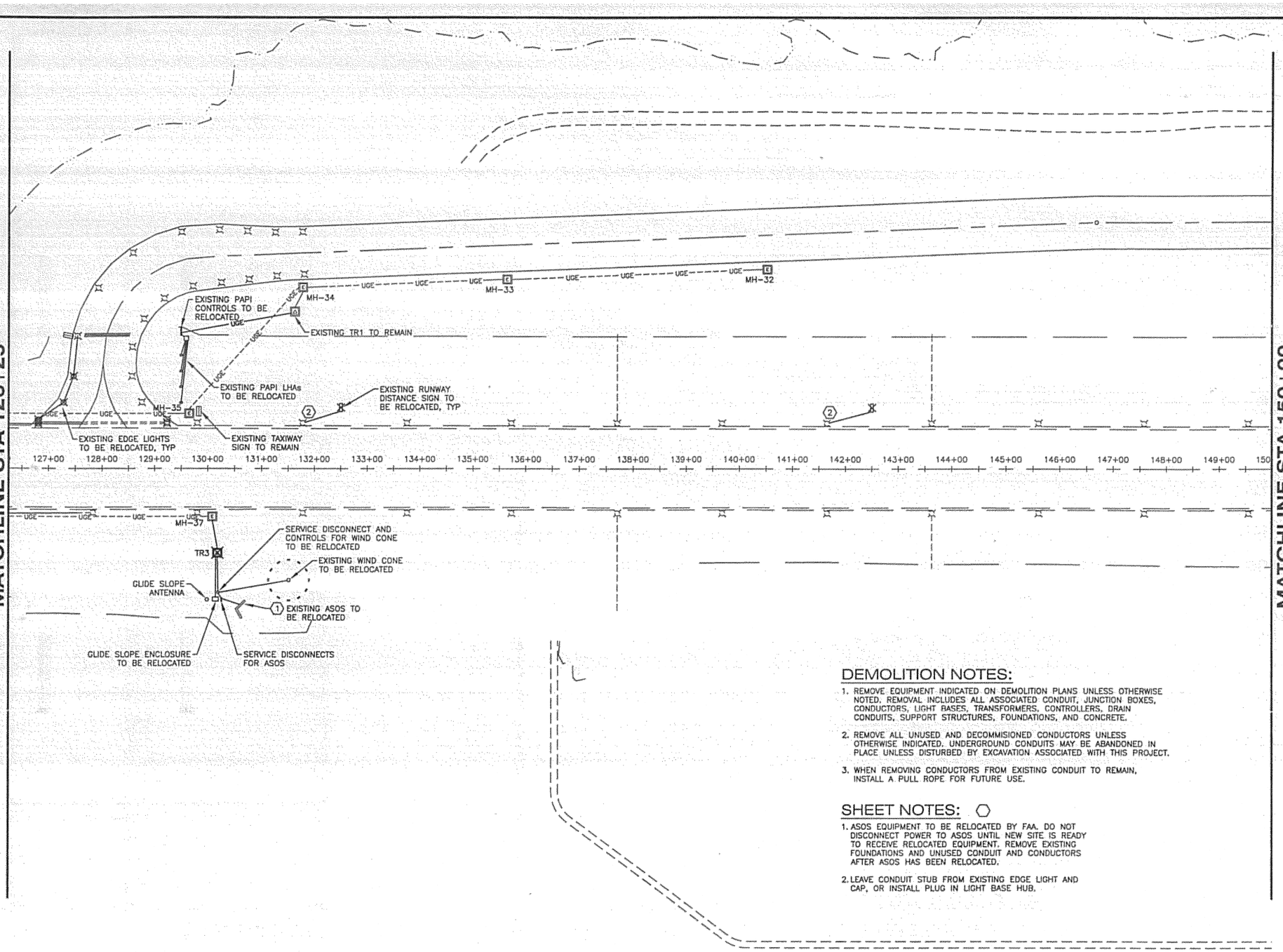

DEMOLITION NOTES:

1. REMOVE EQUIPMENT INDICATED ON DEMOLITION PLANS UNLESS OTHERWISE NOTED. REMOVAL INCLUDES ALL ASSOCIATED CONDUIT, JUNCTION BOXES, CONDUCTORS, LIGHT BASES, TRANSFORMERS, CONTROLLERS, DRAIN CONDUITS, SUPPORT STRUCTURES, FOUNDATIONS, AND CONCRETE.
2. REMOVE ALL UNUSED AND DECOMMISIONED CONDUCTORS UNLESS OTHERWISE INDICATED. UNDERGROUND CONDUITS MAY BE ABANDONED IN PLACE UNLESS DISTURBED BY EXCAVATION ASSOCIATED WITH THIS PROJECT.
3. WHEN REMOVING CONDUCTORS FROM EXISTING CONDUIT TO REMAIN, INSTALL A PULL ROPE FOR FUTURE USE.

SHEET NOTES: ⬡

1. ASOS EQUIPMENT TO BE RELOCATED BY FAA. DO NOT DISCONNECT POWER TO ASOS UNTIL NEW SITE IS READY TO RECEIVE RELOCATED EQUIPMENT. REMOVE EXISTING FOUNDATIONS AND UNUSED CONDUIT AND CONDUCTORS AFTER ASOS HAS BEEN RELOCATED.
2. LEAVE CONDUIT STUB FROM EXISTING EDGE LIGHT AND CAP, OR INSTALL PLUG IN LIGHT BASE HUB.

0 100 200 300
SCALE IN FEET

DO NOT SCALE FROM THESE DRAWINGS USE DIMENSIONS

PATH: I:\823400\Dwgs\E\Sheets\G02.dwg
Tue, 03/Oct/06 02:19PM lschneller
TAB: G02

ADDENDUM NUMBER

ATTACHMENT NUMBER

RECORD OF REVISIONS

No.	DATE	DESCRIPTION

KETCHIKAN AIRPORT
RUNWAY SAFETY AREA EXPANSION
& RUNWAY OVERLAY
PROJECT NO. 68306

ELECTRICAL DEMOLITION

PREPARED BY: USKH INC.

CHECKED BY: GRH

STATE OF ALASKA 49TH
GARY R. HABLE
EE-10243
REGISTERED PROFESSIONAL ENGINEER
10/4/06

DESIGNED BY: LPS

DRAWN BY: LPS

STATE OF ALASKA
DEPARTMENT OF TRANSPORTATION
& PUBLIC FACILITIES
DESIGN & ENGINEERING SERVICES
DIVISION-SOUTHEAST REGION

ELECTRICAL DEMOLITION

PROJECT DESIGNATION	
AIP NO. 3-02-0144-1606	
STATE	YEAR
ALASKA	2006
SHEET NUMBER	TOTAL SHEETS
G2	131

See attached Electrical Asbuilts

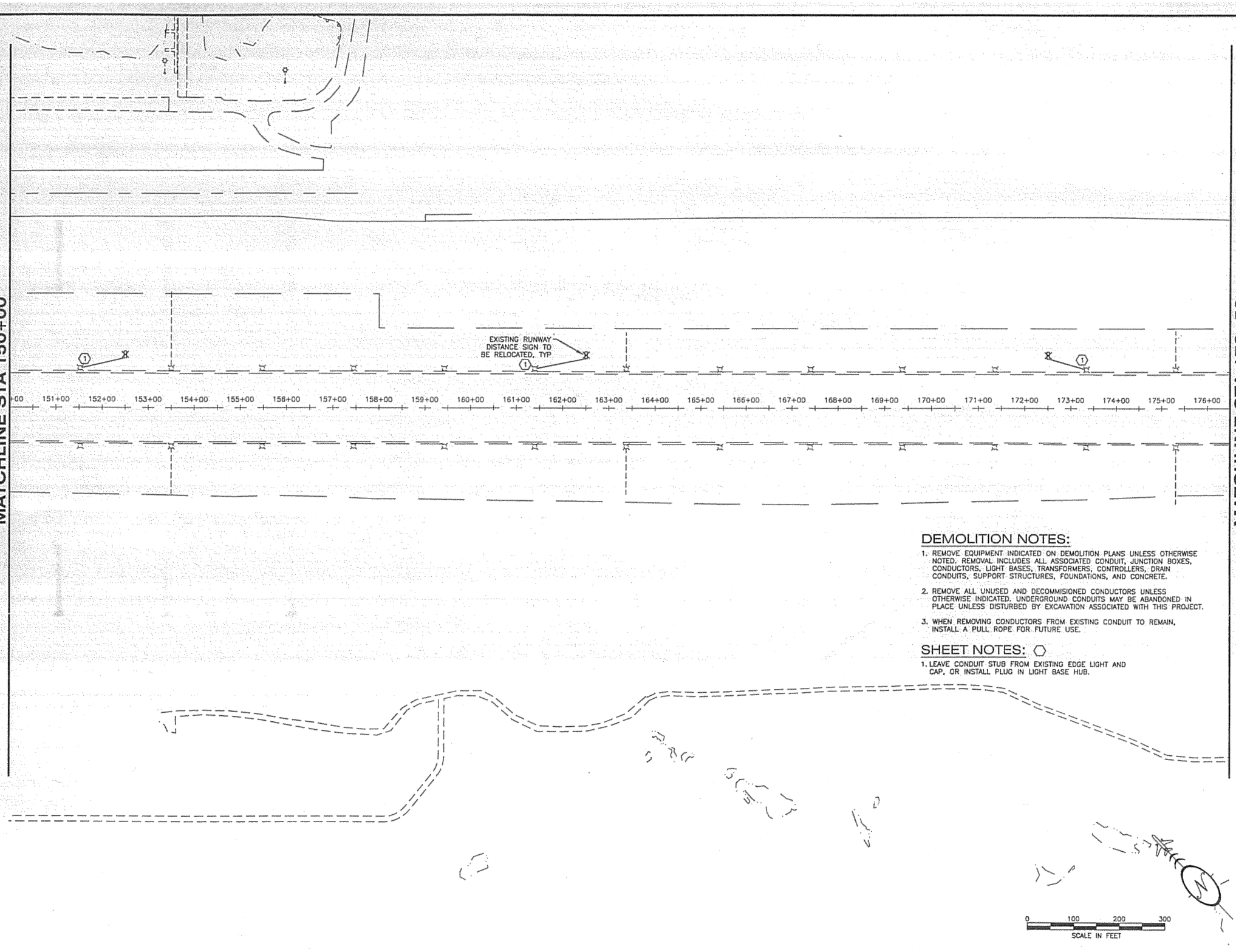

DEMOLITION NOTES:

1. REMOVE EQUIPMENT INDICATED ON DEMOLITION PLANS UNLESS OTHERWISE NOTED. REMOVAL INCLUDES ALL ASSOCIATED CONDUIT, JUNCTION BOXES, CONDUCTORS, LIGHT BASES, TRANSFORMERS, CONTROLLERS, DRAIN CONDUITS, SUPPORT STRUCTURES, FOUNDATIONS, AND CONCRETE.
2. REMOVE ALL UNUSED AND DECOMMISIONED CONDUCTORS UNLESS OTHERWISE INDICATED. UNDERGROUND CONDUITS MAY BE ABANDONED IN PLACE UNLESS DISTURBED BY EXCAVATION ASSOCIATED WITH THIS PROJECT.
3. WHEN REMOVING CONDUCTORS FROM EXISTING CONDUIT TO REMAIN, INSTALL A PULL ROPE FOR FUTURE USE.

SHEET NOTES: ⬡

1. LEAVE CONDUIT STUB FROM EXISTING EDGE LIGHT AND CAP, OR INSTALL PLUG IN LIGHT BASE HUB.

DO NOT SCALE FROM THESE DRAWINGS USE DIMENSIONS

PATH:
I:\823400\Dwgs\E\Sheets\G03.dwg

Tue, 03/Oct/06 02:19PM Ischneller
TAB: G03

ADDENDUM NUMBER

ATTACHMENT NUMBER

RECORD OF REVISIONS

No.	DATE	DESCRIPTION

KETCHIKAN AIRPORT
RUNWAY SAFETY AREA EXPANSION
& RUNWAY OVERLAY
PROJECT NO. 68306

ELECTRICAL DEMOLITION

PREPARED BY: USKH INC.

CHECKED BY: GRH

STATE OF ALASKA
49TH
GARY R. HABLE
EE-10243
REGISTERED PROFESSIONAL ENGINEER
10/4/06

DESIGNED BY: LPS

DRAWN BY: LPS

STATE OF ALASKA
DEPARTMENT OF TRANSPORTATION
& PUBLIC FACILITIES
DESIGN & ENGINEERING SERVICES
DIVISION--SOUTHEAST REGION

ELECTRICAL DEMOLITION

PROJECT DESIGNATION
AIP NO. 3-02-0144-1606

STATE	YEAR
ALASKA	2006
SHEET NUMBER	TOTAL SHEETS
G3	131

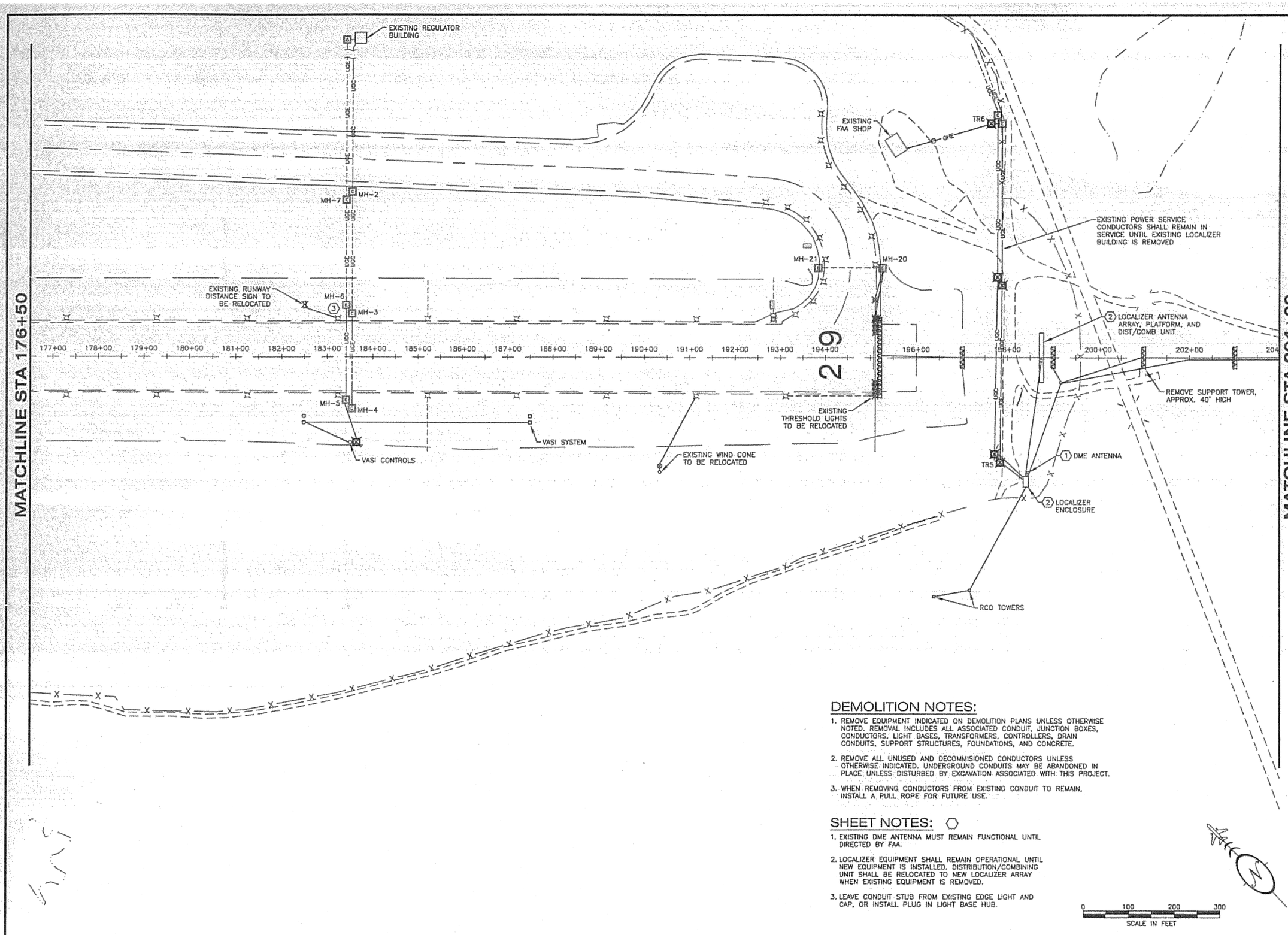

DEMOLITION NOTES:

1. REMOVE EQUIPMENT INDICATED ON DEMOLITION PLANS UNLESS OTHERWISE NOTED. REMOVAL INCLUDES ALL ASSOCIATED CONDUIT, JUNCTION BOXES, CONDUCTORS, LIGHT BASES, TRANSFORMERS, CONTROLLERS, DRAIN CONDUITS, SUPPORT STRUCTURES, FOUNDATIONS, AND CONCRETE.
2. REMOVE ALL UNUSED AND DECOMMISIONED CONDUCTORS UNLESS OTHERWISE INDICATED. UNDERGROUND CONDUITS MAY BE ABANDONED IN PLACE UNLESS DISTURBED BY EXCAVATION ASSOCIATED WITH THIS PROJECT.
3. WHEN REMOVING CONDUCTORS FROM EXISTING CONDUIT TO REMAIN, INSTALL A PULL ROPE FOR FUTURE USE.

SHEET NOTES: ⬡

1. EXISTING DME ANTENNA MUST REMAIN FUNCTIONAL UNTIL DIRECTED BY FAA.
2. LOCALIZER EQUIPMENT SHALL REMAIN OPERATIONAL UNTIL NEW EQUIPMENT IS INSTALLED. DISTRIBUTION/COMBINING UNIT SHALL BE RELOCATED TO NEW LOCALIZER ARRAY WHEN EXISTING EQUIPMENT IS REMOVED.
3. LEAVE CONDUIT STUB FROM EXISTING EDGE LIGHT AND CAP, OR INSTALL PLUG IN LIGHT BASE HUB.

DO NOT SCALE FROM THESE DRAWINGS USE DIMENSIONS

PATH: I:\823400\Dwgs\E\Sheets\G04.dwg
Tue, 03/Oct/06 02:19PM lschneller
TAB: G04

ADDENDUM NUMBER

ATTACHMENT NUMBER

RECORD OF REVISIONS

No.	DATE	DESCRIPTION

KETCHIKAN AIRPORT
RUNWAY SAFETY AREA EXPANSION
& RUNWAY OVERLAY
PROJECT NO. 68306

ELECTRICAL DEMOLITION

PREPARED BY: USKH INC.

CHECKED BY: GRH

STATE OF ALASKA 49TH GARY R. HABLE EE-10243 REGISTERED PROFESSIONAL ENGINEER
10/4/06

DESIGNED BY: LPS

DRAWN BY: LPS

STATE OF ALASKA
DEPARTMENT OF TRANSPORTATION & PUBLIC FACILITIES
DESIGN & ENGINEERING SERVICES
DIVISION-SOUTHEAST REGION

ELECTRICAL DEMOLITION

PROJECT DESIGNATION	
AIP NO. 3-02-0144-1606	
STATE	YEAR
ALASKA	2006
SHEET NUMBER	TOTAL SHEETS
G4	131

See attached Electrical Asbuilts

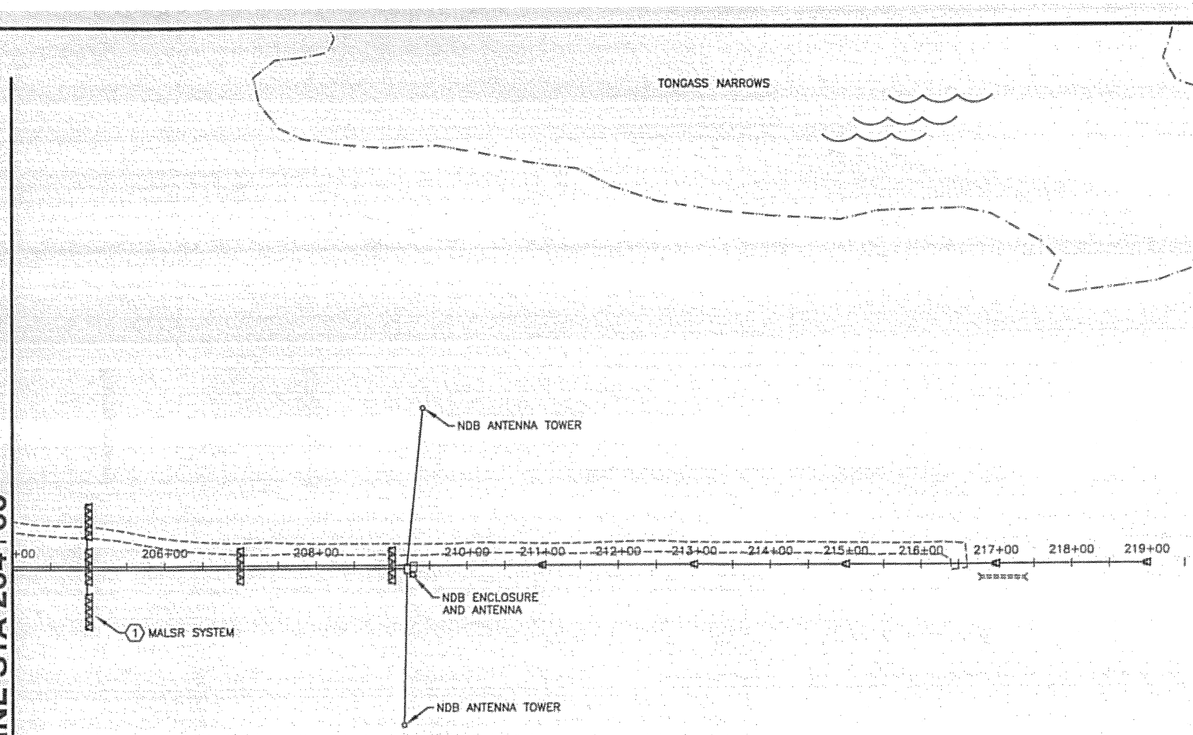

DEMOLITION NOTES:

1. REMOVE EQUIPMENT INDICATED ON DEMOLITION PLANS UNLESS OTHERWISE NOTED. REMOVAL INCLUDES ALL ASSOCIATED CONDUIT, JUNCTION BOXES, CONDUCTORS, LIGHT BASES, TRANSFORMERS, CONTROLLERS, DRAIN CONDUITS, SUPPORT STRUCTURES, FOUNDATIONS, AND CONCRETE.
2. REMOVE ALL UNUSED AND DECOMMISIONED CONDUCTORS UNLESS OTHERWISE INDICATED. UNDERGROUND CONDUITS MAY BE ABANDONED IN PLACE UNLESS DISTURBED BY EXCAVATION ASSOCIATED WITH THIS PROJECT.
3. WHEN REMOVING CONDUCTORS FROM EXISTING CONDUIT TO REMAIN, INSTALL A PULL ROPE FOR FUTURE USE.

SHEET NOTES:

1. REMOVE EXISTING MALSR SYSTEM. EXISTING TOWER BASE ASSEMBLIES TO BE REUSED. PROTECT AND STORE EQUIPMENT UNTIL REINSTALLED.

0 100 200 300
SCALE IN FEET

DO NOT SCALE FROM THESE DRAWINGS USE DIMENSIONS

PATH: I:\823400\Dwgs\E\Sheets\G05.dwg
Tue, 03/Oct/06 02:19PM lschneller
TAB: G05

ADDENDUM NUMBER

ATTACHMENT NUMBER

RECORD OF REVISIONS

No.	DATE	DESCRIPTION

KETCHIKAN AIRPORT
RUNWAY SAFETY AREA EXPANSION & RUNWAY OVERLAY
PROJECT NO. 68306

ELECTRICAL DEMOLITION

PREPARED BY: USKH INC.

CHECKED BY: GRH

STATE OF ALASKA 49TH
GARY R. HABLE
EE-10243
REGISTERED PROFESSIONAL ENGINEER
10/4/06

DESIGNED BY: LPS

DRAWN BY: LPS

STATE OF ALASKA
DEPARTMENT OF TRANSPORTATION & PUBLIC FACILITIES
DESIGN & ENGINEERING SERVICES
DIVISION-SOUTHEAST REGION

ELECTRICAL DEMOLITION

PROJECT DESIGNATION	
AIP NO. 3-02-0144-1606	
STATE	YEAR
ALASKA	2006
SHEET NUMBER	TOTAL SHEETS
G5	131

See attached Electrical Asbuilts

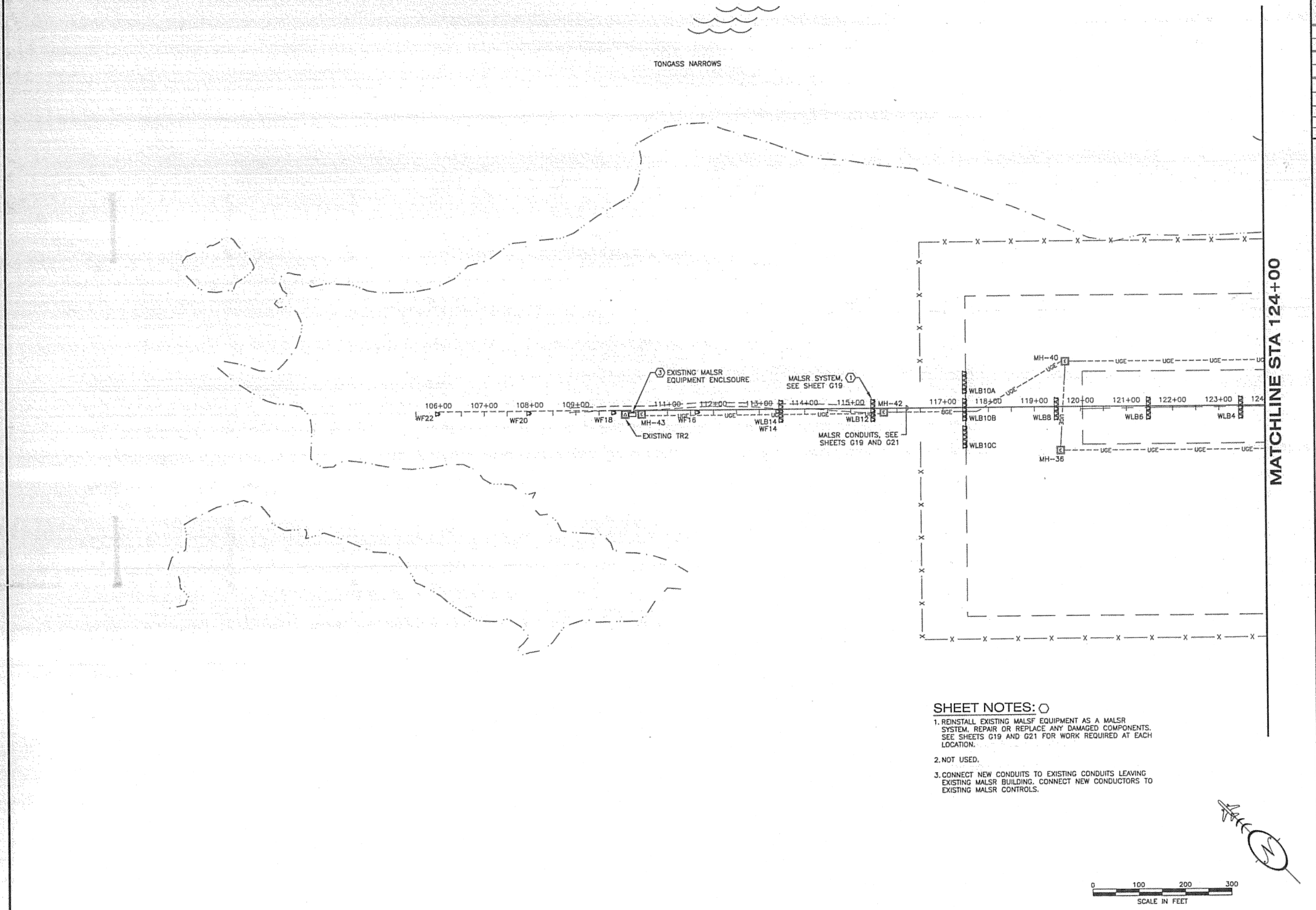

SHEET NOTES:

1. REINSTALL EXISTING MALSF EQUIPMENT AS A MALSR SYSTEM. REPAIR OR REPLACE ANY DAMAGED COMPONENTS. SEE SHEETS G19 AND G21 FOR WORK REQUIRED AT EACH LOCATION.
2. NOT USED.
3. CONNECT NEW CONDUITS TO EXISTING CONDUITS LEAVING EXISTING MALSR BUILDING. CONNECT NEW CONDUCTORS TO EXISTING MALSR CONTROLS.

DO NOT SCALE FROM THESE DRAWINGS USE DIMENSIONS

PATH: i:\823400\Dwgs\E\Sheets\G06.dwg
Tue, 03/Oct/06 02:20PM lschneller
TAB: G06

ADDENDUM NUMBER

ATTACHMENT NUMBER

RECORD OF REVISIONS

No.	DATE	DESCRIPTION

KETCHIKAN AIRPORT
RUNWAY SAFETY AREA EXPANSION
& RUNWAY OVERLAY
PROJECT NO. 68306

ELECTRICAL LAYOUT

PREPARED BY: USKH INC.

CHECKED BY: GRH

STATE OF ALASKA
49TH
GARY R. HABLE
EE-10243
REGISTERED PROFESSIONAL ENGINEER
10/4/06

DESIGNED BY: LPS

DRAWN BY: LPS

STATE OF ALASKA
DEPARTMENT OF TRANSPORTATION
& PUBLIC FACILITIES
DESIGN & ENGINEERING SERVICES
DIVISION-SOUTHEAST REGION

ELECTRICAL LAYOUT

PROJECT DESIGNATION	
AIP NO. 3-02-0144-1606	
STATE	YEAR
ALASKA	2006
SHEET NUMBER	TOTAL SHEETS
G6	131

See attached Electrical Asbuilts

MATCHLINE STA 124+00

MATCHLINE STA 150+50

TO EXISTING WIND SENSOR

MH-34

MH-33

MH-32

RELOCATED PAPI CONTROLS, SEE SHEET G38

EXISTING TR1

STA 136+65
RELOCATED PAPI, SEE SHEET G37

RELOCATED RUNWAY DISTANCE SIGN, TYP, SEE SHEET G11

S1

S2

RELOCATED EDGE LIGHTS

E1

55.4'

55.4'

MH-35

EXISTING TAXIWAY SIGN

(2) EXISTING 2" RMC UNDER TAXIWAY

E8

E4

125+00 126+00 128+00 129+00 130+00 131+00 132+00 133+00 134+00 135+00 136+00 137+00 138+00 139+00 140+00 141+00 142+00 143+00 144+00 145+00 146+00 147+00 148+00 149+00 150+00

WLB2

197.5' TYP

E9

C12

39.1'

MH-37

MH-38

STA 127+44.0
RELOCATED RUNWAY AND MALSR THRESHOLD LIGHTS, SEE SHEET G11 AND G27

PRIMARY SERVICE CONDUCTORS, SEE 2/G14

NEW GLIDE SLOPE ENCLOSURE AND ANTENNA

JB-18

JB-17

JB-16

COMMUNICATIONS SERVICE CONDUCTORS, SEE 1/G15

TR4

RELOCATED WIND CONE

1 RELOCATED ASOS

SEE ENLARGED PLAN ON SHEET G31

RVR SYSTEM

SHEET NOTES:

1. INSTALL NEW FOUNDATIONS AND POWER SUPPLY FOR ASOS. ASOS RAILS AND EQUIPMENT TO BE RELOCATED BY FAA.
2. EXTEND DRAIN CONDUIT TO DAYLIGHT. FIELD VERIFY EXACT LENGTH. SEE DETAIL 4/G12.
3. EXTEND EXISTING DRAIN CONDUIT TO DAYLIGHT AS REQUIRED. FIELD VERIFY EXACT LENGTH. SEE DETAIL 4/G12.
4. DRILL SIDE OF EXISTING LIGHT BASE AND INSTALL RUBBER GROMMET FOR NEW CONDUIT ENTRY.

0 100 200 300
SCALE IN FEET

DO NOT SCALE FROM THESE DRAWINGS USE DIMENSIONS

PATH: I:\823400\Dwgs\E\Sheets\G07.dwg
Tue, 03/Oct/06 02:20PM lschneller
TAB: G07

ADDENDUM NUMBER

ATTACHMENT NUMBER

RECORD OF REVISIONS

No.	DATE	DESCRIPTION

KETCHIKAN AIRPORT
RUNWAY SAFETY AREA EXPANSION
& RUNWAY OVERLAY
PROJECT NO. 68306

ELECTRICAL LAYOUT

PREPARED BY: USKH INC.

CHECKED BY: GRH

STATE OF ALASKA
49TH
GARY R. HABLE
EE-10243
REGISTERED PROFESSIONAL ENGINEER
10/4/06

DESIGNED BY: LPS

DRAWN BY: LPS

STATE OF ALASKA
DEPARTMENT OF TRANSPORTATION & PUBLIC FACILITIES
DESIGN & ENGINEERING SERVICES DIVISION-SOUTHEAST REGION

ELECTRICAL LAYOUT

PROJECT DESIGNATION	
AIP NO. 3-02-0144-1606	
STATE	YEAR
ALASKA	2006
SHEET NUMBER	TOTAL SHEETS
G7	131

See attached Electrical Asbuilts

MATCHLINE STA 150+50

MATCHLINE STA 177+50

MH-22

RELOCATED RUNWAY DISTANCE SIGN, TYP. SEE SHEET G11

S3

S4

151+00 152+00 153+00 154+00 155+00 156+00 157+00 158+00 159+00 160+00 161+00 162+00 163+00 164+00 165+00 166+00 167+00 168+00 169+00 170+00 171+00 172+00 173+00 174+00 175+00 176+00 177+00

JB-15 JB-14 JB-13 JB-12 JB-11 JB-10

UGC

COMMUNICATIONS SERVICE CONDUCTORS, SEE SHEET G15

SHEET NOTES:

1. REMOVE, EXTEND, OR REROUTE EXISTING 6" D.I.P. MANHOLE DRAIN AS REQUIRED FOR CHANGES IN DRAINAGE DITCH. WORK SHALL BE SUBSIDIARY TO ITEM L-110t.
2. NOT USED.
3. EXTEND EXISTING DRAIN CONDUIT TO DAYLIGHT AS REQUIRED. FIELD VERIFY EXACT LENGTH. SEE DETAIL 4/G12.
4. DRILL SIDE OF EXISTING LIGHT BASE AND INSTALL RUBBER GROMMET FOR NEW CONDUIT ENTRY.

0 100 200 300
SCALE IN FEET

DO NOT SCALE FROM THESE DRAWINGS USE DIMENSIONS

PATH: I:\823400\Dwgs\E\Sheets\G08.dwg
Tue, 03/Oct/06 02:20PM lschneller
TAB: G08

ADDENDUM NUMBER

ATTACHMENT NUMBER

RECORD OF REVISIONS

No.	DATE	DESCRIPTION

KETCHIKAN AIRPORT
RUNWAY SAFETY AREA EXPANSION
& RUNWAY OVERLAY
PROJECT NO. 68306

ELECTRICAL LAYOUT

PREPARED BY: USKH INC.

CHECKED BY: GRH

STATE OF ALASKA 49TH
GARY R. HABLE
EE-10243
REGISTERED PROFESSIONAL ENGINEER
10/4/06

DESIGNED BY: LPS

DRAWN BY: LPS

STATE OF ALASKA
DEPARTMENT OF TRANSPORTATION & PUBLIC FACILITIES
DESIGN & ENGINEERING SERVICES
DIVISION-SOUTHEAST REGION

ELECTRICAL LAYOUT

PROJECT DESIGNATION	
AIP NO. 3-02-0144-1606	
STATE	YEAR
ALASKA	2006
SHEET NUMBER	TOTAL SHEETS
G8	131

See attached Electrical Asbuilts

MATCHLINE STA 177+50

EXISTING REGULATOR BUILDING
MH-7
MH-2
MH-6
MH-3
MH-5
MH-4
S5
RELOCATED RUNWAY DISTANCE SIGN, TYP SEE SHEET G11.
S6
MH-21
MH-20
E13
E15
S7
E17
E19
RELOCATED TAXIWAY SIGN
EXISTING FAA SHOP
FAA GENERATOR MODULE, SEE SHEET G17
S-50
TR7
TR9
MH-58
MH-51
1 TEMPORARY LOCALIZER POWER AND COMMUNICATIONS IF REQUIRED, SEE 1/G14 AND 1/G15
PANEL SERVING TUNNEL LIGHTING, SEE SHEET L14
JB-2
MH-52
PERMANENT LOCALIZER POWER AND COMMUNICATIONS, SEE 1/G14 AND 1/G15
TUNNEL LIGHTING, SEE SHEET L14
RELOCATED EDGE LIGHTS, TYP
E20
E22
STA 202+56.0
RELOCATED RUNWAY AND NEW MALSR THRESHOLD LIGHTS, SEE SHEETS G11 AND G27
E26
E27
E30
ELB2
178+00 179+00 180+00 181+00 182+00 183+00 184+00 185+00 186+00 187+00 188+00 189+00 190+00 191+00 192+00 193+00 194+00 195+00 196+00 197+00 198+00 199+00 201+00 202+00 204+00 205
197.5' TYP
197.5'
188.7'
188.7' TYP
POWER TO REMAIN IN SERVICE UNTIL LOCALIZER BUILDING IS DISCONNECTED FOR REMOVAL
E34
STA 192+75, 255' RT NEW F420 WIND SENSOR, SEE SHEET G46
STA 192+83 NEW PAPI SYSTEM, SEE SHEET G37
POWER AND COMMUNICATIONS SERVICE CONDUCTORS, SEE 3/G14 AND 1/G15
ROUTE CONDUITS IN TUNNEL UNDER ROADWAY
JB-8
JB-9
MH-57
MH-7
TR13
JB-6
STA 197+25.0, 255' RT RELOCATED WIND CONE, SEE SHEET G12
PAPI CONTROLS, WIND SENSOR DISCONNECT AND TEL DEMARC, SEE DETAIL 3/G38
MH-56
MH-59
CAP CONDUITS OUTSIDE ROADWAY AND MARK WITH STAKE FOR FUTURE EXTENSION
UGC

MATCHLINE STA 205+00

SHEET NOTES:

1. INSTALL IN HDPE LAID ON SURFACE, REMOVE AFTER CONNECTION OF PERMANENT CONDUCTORS.
2. EXTEND DRAIN CONDUIT TO DAYLIGHT. FIELD VERIFY EXACT LENGTH. SEE DETAIL 4/G12.
3. EXTEND EXISTING DRAIN CONDUIT TO DAYLIGHT AS REQUIRED. FIELD VERIFY EXACT LENGTH. SEE DETAIL 4/G12.
4. DRILL SIDE OF EXISTING LIGHT BASE AND INSTALL RUBBER GROMMET FOR NEW CONDUIT ENTRY.

0 100 200 300
SCALE IN FEET

DO NOT SCALE FROM THESE DRAWINGS USE DIMENSIONS

PATH: I:\823400\Dwgs\E\Sheets\G09.dwg
Tue, 03/Oct/06 02:20PM lschneller
TAB: G09

ADDENDUM NUMBER

ATTACHMENT NUMBER

RECORD OF REVISIONS

No.	DATE	DESCRIPTION

KETCHIKAN AIRPORT
RUNWAY SAFETY AREA EXPANSION
& RUNWAY OVERLAY
PROJECT NO. 68306

ELECTRICAL LAYOUT

PREPARED BY: USKH INC.

CHECKED BY: GRH

STATE OF ALASKA 49TH
GARY R. HABLE
EE-10243
REGISTERED PROFESSIONAL ENGINEER
10/4/06

DESIGNED BY: LPS

DRAWN BY: LPS

STATE OF ALASKA
DEPARTMENT OF TRANSPORTATION & PUBLIC FACILITIES
DESIGN & ENGINEERING SERVICES
DIVISION-SOUTHEAST REGION

ELECTRICAL LAYOUT

PROJECT DESIGNATION
AIP NO. 3-02-0144-1606

STATE	YEAR
ALASKA	2006
SHEET NUMBER	TOTAL SHEETS
G9	131

See attached Electrical Asbuilts

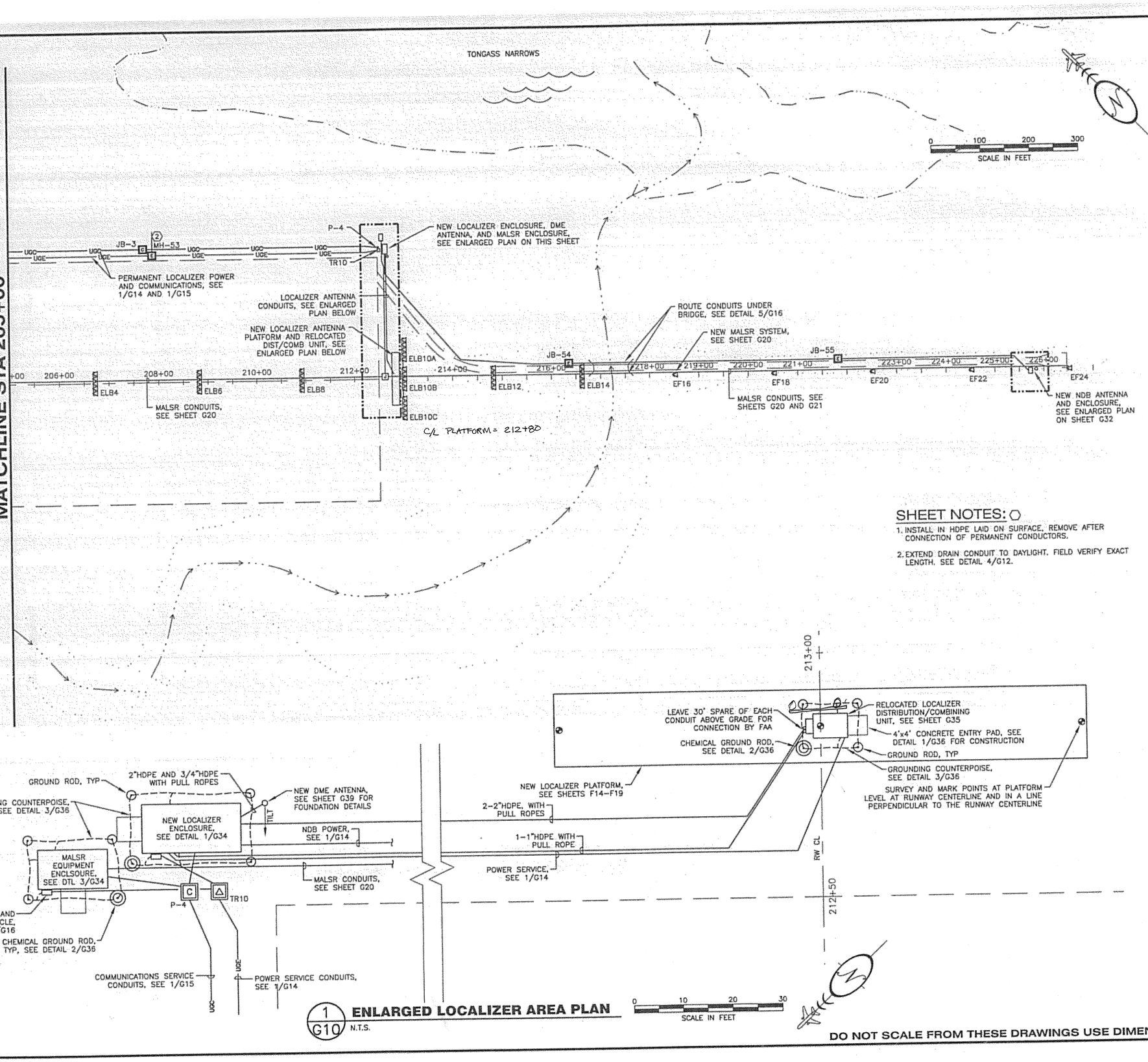

1/G10 **ENLARGED LOCALIZER AREA PLAN** N.T.S.

DO NOT SCALE FROM THESE DRAWINGS USE DIMENSIONS

PATH: I:\823400\Dwgs\E\Sheets\G10.dwg
Tue, 03/Oct/06 02:21PM lschneller
TAB: G10

ADDENDUM NUMBER

ATTACHMENT NUMBER

RECORD OF REVISIONS

No.	DATE	DESCRIPTION

KETCHIKAN AIRPORT
RUNWAY SAFETY AREA EXPANSION
& RUNWAY OVERLAY
PROJECT NO. 68306

ELECTRICAL LAYOUT

PREPARED BY: USKH INC.

CHECKED BY: GRH

STATE OF ALASKA 49TH GARY R. HABLE EE-10243 REGISTERED PROFESSIONAL ENGINEER
10/4/06

DESIGNED BY: LPS

DRAWN BY: LPS

STATE OF ALASKA
DEPARTMENT OF TRANSPORTATION & PUBLIC FACILITIES
DESIGN & ENGINEERING SERVICES
DIVISION-SOUTHEAST REGION

ELECTRICAL LAYOUT

PROJECT DESIGNATION	
AIP NO. 3-02-0144-1606	
STATE	YEAR
ALASKA	2006
SHEET NUMBER	TOTAL SHEETS
G10	131

See attached Electrical Asbuilts

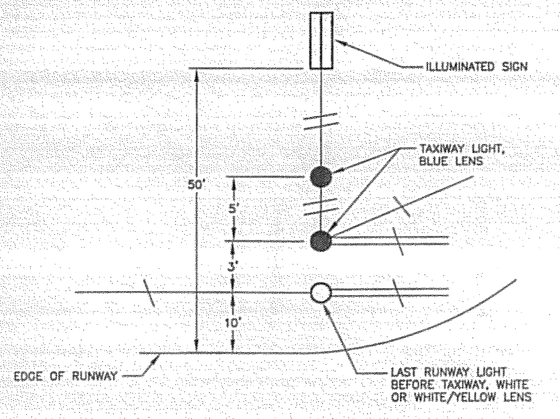

3 G11 **TAXIWAY INTERSECTION DETAIL**
N.T.S.

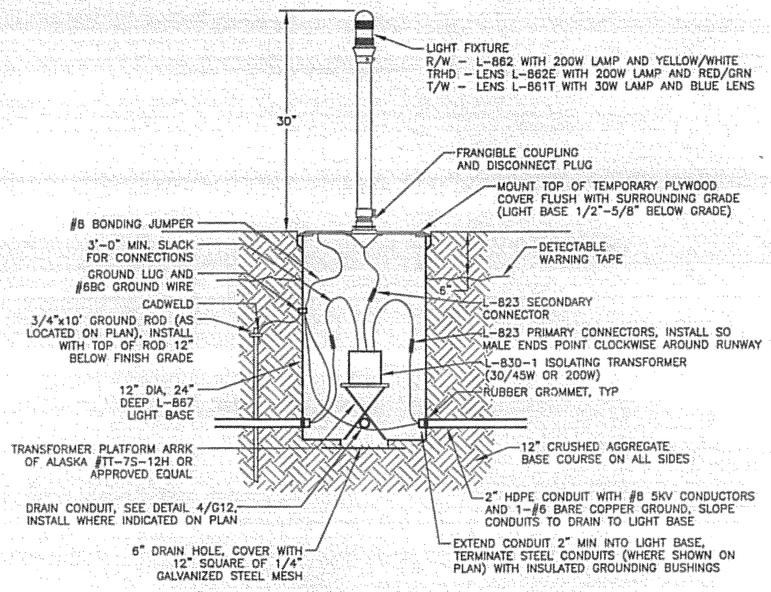

2 G11 **BASE MOUNTED LIGHT DETAIL**
N.T.S.

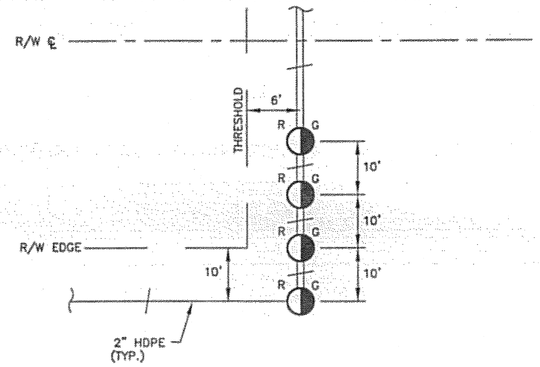

1 G11 **THRESHOLD LIGHTING DETAIL**
N.T.S.

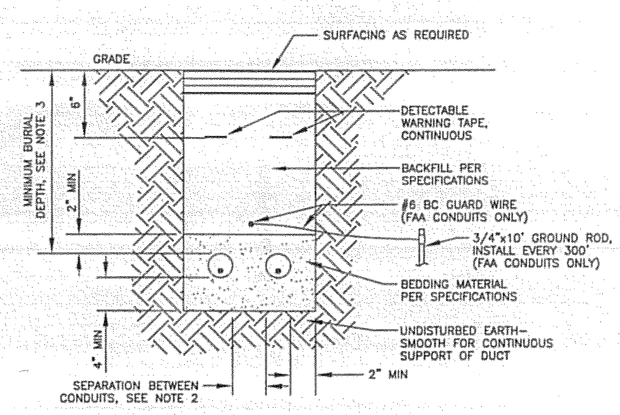

NOTES:

1. WIDTH OF TRENCH AND NUMBER OF CONDUITS PER TRENCH DETERMINED IN FIELD (2 SHOWN)
2. SEPARATION BETWEEN CONDUITS SHALL BE AS FOLLOWS:
   -CONDUITS OF SAME SYSTEM – 2"
   -AIRPORT LIGHTING AND FAA CONDUITS – 12" MIN
   -PRIMARY POWER AND ANY OTHER CONDUIT – 18" MIN
   -TELECOM SERVICE AND ANY OTHER CONDUIT – 18" MIN
3. MINIMUM BURIAL DEPTH SHALL BE AS FOLLOWS:
   -AIRPORT LIGHTING CONDUITS – 18"
   -FAA CONDUITS – 24"
   -PRIMARY POWER – 36"
   -TELECOM SERVICE – 36"

5 G11 **TYPICAL TRENCH DETAIL**
N.T.S.

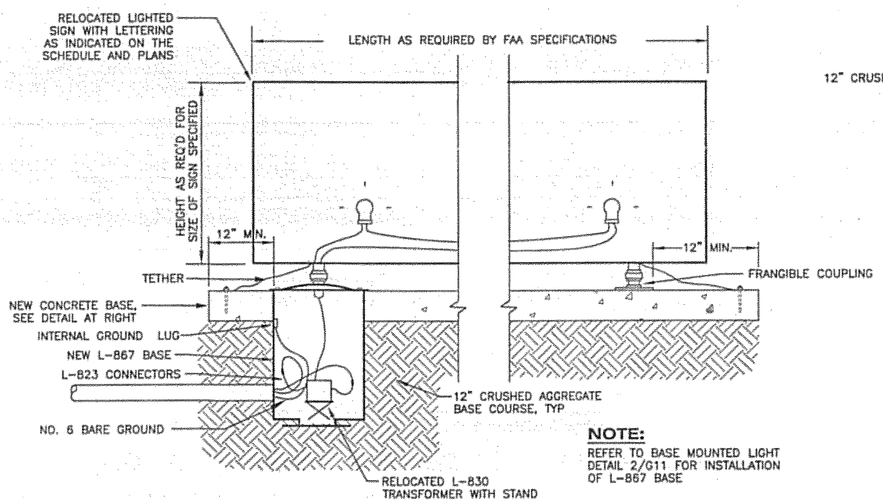

NOTE:
REFER TO BASE MOUNTED LIGHT DETAIL 2/G11 FOR INSTALLATION OF L-867 BASE

SIDE VIEW

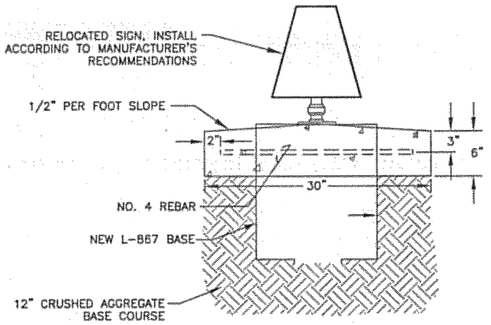

END VIEW

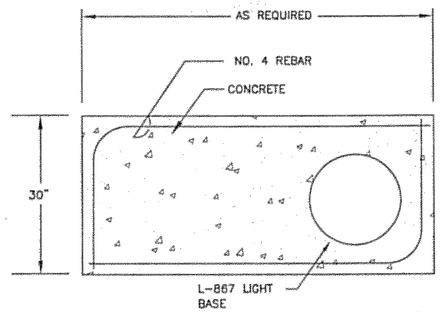

TOP VIEW

4 G11 **ILLUMINATED SIGN DETAILS**
N.T.S.

DO NOT SCALE FROM THESE DRAWINGS USE DIMENSIONS

PATH: I:\823400\Dwgs\E\Sheets\G11.dwg
Tue, 03/Oct/06 02:18PM lschneller
TAB: G11

ADDENDUM NUMBER

ATTACHMENT NUMBER

RECORD OF REVISIONS

No.	DATE	DESCRIPTION

KETCHIKAN AIRPORT
RUNWAY SAFETY AREA EXPANSION & RUNWAY OVERLAY
PROJECT NO. 68306

ELECTRICAL & LIGHTING DETAILS

PREPARED BY: USKH INC.
CHECKED BY: GRH

STATE OF ALASKA 49TH GARY R. HABLE EE-10243 REGISTERED PROFESSIONAL ENGINEER 10/4/06

DESIGNED BY: LPS
DRAWN BY: LPS

STATE OF ALASKA
DEPARTMENT OF TRANSPORTATION & PUBLIC FACILITIES
DESIGN & ENGINEERING SERVICES DIVISION-SOUTHEAST REGION

ELECTRICAL & LIGHTING DETAILS

PROJECT DESIGNATION	
AIP NO. 3-02-0144-1606	
STATE	YEAR
ALASKA	2006
SHEET NUMBER	TOTAL SHEETS
G11	131

See attached Electrical Asbuilts

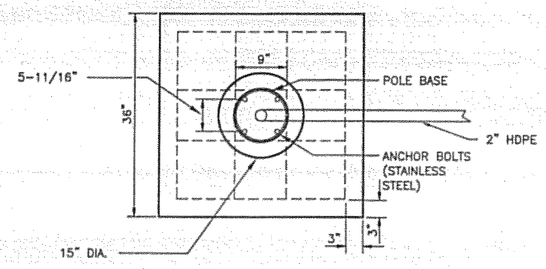

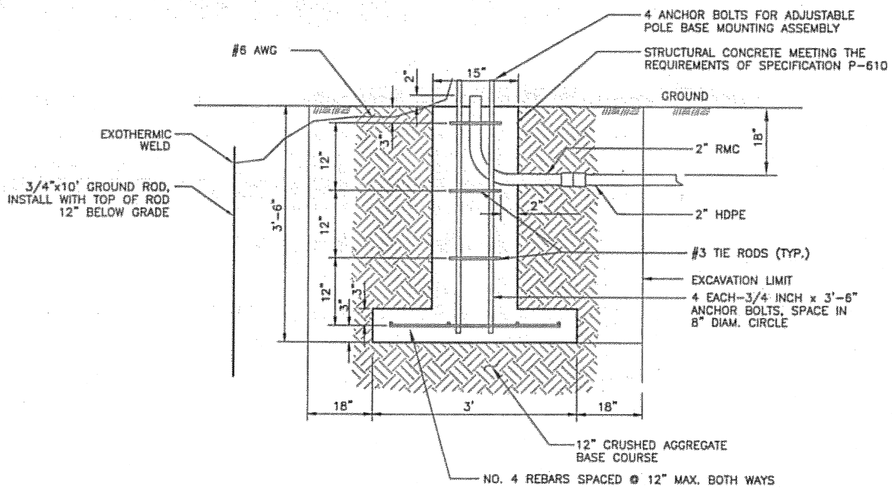

2 G12 **WIND CONE FOUNDATION DETAILS**
N.T.S.

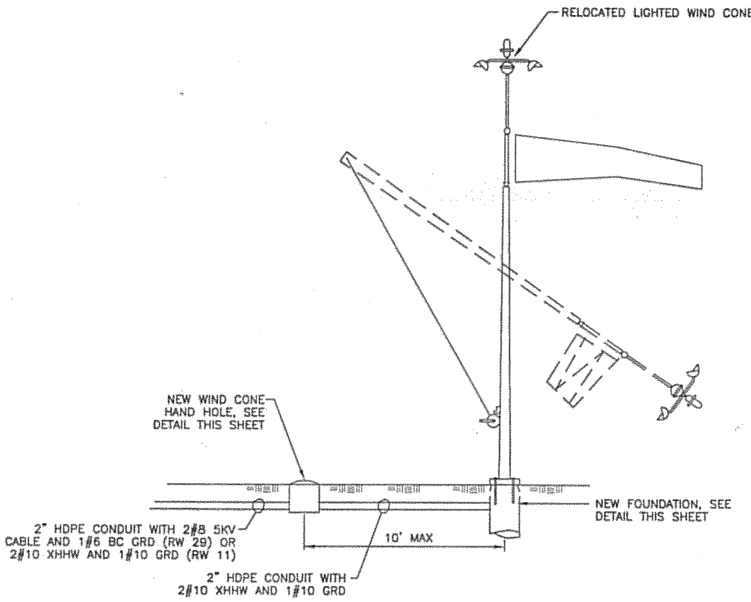

FAA TYPE L-807, STYLE-I, SIZE-1

1 G12 **LIGHTED WIND CONE ASSEMBLY**
N.T.S.

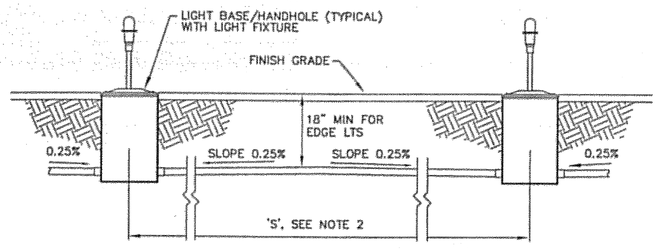

NOTES:

1. CONDUIT SHALL BE INSTALLED WITH CROWN TO DRAIN TO LIGHT BASES AS SHOWN.
2. IF 'S' IS LESS THAN 20', OR IF 0.25% SLOPE CAN BE MAINTAINED IN ONE DIRECTION DUE TO SLOPE OF GRADE, LAY CONDUIT STRAIGHT WITHOUT CROWN BETWEEN BASES/HANDHOLES.
3. A THIRD HUB FOR A CONDUIT DRAIN SHALL BE PROVIDED WHERE SHOWN ON PLANS.

5 G12 **TYPICAL INTERCONNECTION DETAIL**
N.T.S.

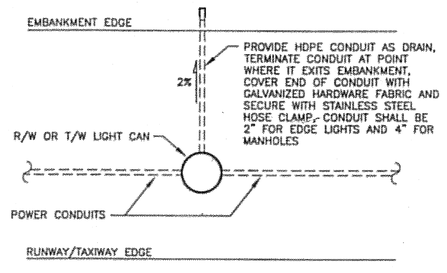

4 G12 **DRAIN CONDUIT DETAIL**
N.T.S.

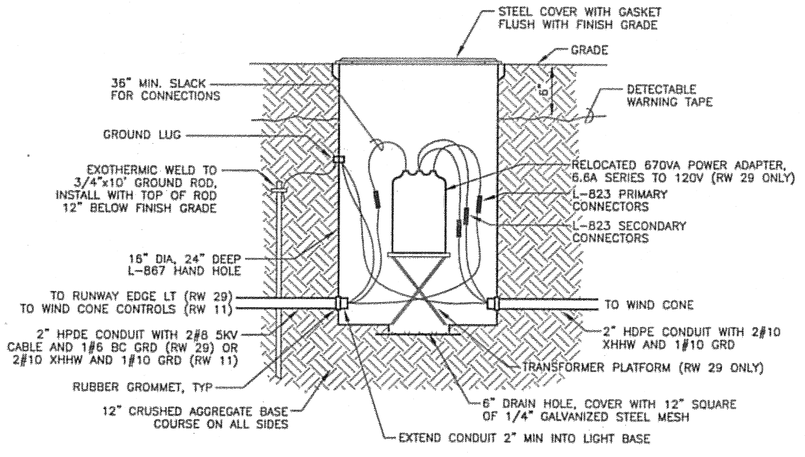

NOTES:

1. AT RW 11, ROUTE #10 CONDUCTORS STRAIGHT THROUGH HANDHOLE WITH NO SPLICES. LEAVE 36" SLACK CONDUCTOR COILED IN HANDHOLE.
2. AT RW 11, RELOCATE EXISTING WIND CONE DISCONNECT AND CONTROLLER (WITH PHOTOCELL) TO NEW SUPPORT STRUCTURE AS SHOWN ON G31. RECONNECT EXISTING CONTROLLER TO MATCH EXISTING CONFIGURATION.

3 G12 **WIND CONE HAND HOLE**
N.T.S.

DO NOT SCALE FROM THESE DRAWINGS USE DIMENSIONS

PATH: I:\823400\Dwgs\E\Sheets\G12.dwg
Tue. 03/Oct/06 02:21PM lschneller
TAB: G12

ADDENDUM NUMBER
ATTACHMENT NUMBER

RECORD OF REVISIONS

No.	DATE	DESCRIPTION

KETCHIKAN AIRPORT
RUNWAY SAFETY AREA EXPANSION
& RUNWAY OVERLAY
PROJECT NO. 68306

ELECTRICAL & LIGHTING DETAILS

PREPARED BY: USKH INC.

CHECKED BY: GRH

STATE OF ALASKA 49TH GARY R. HABLE EE-10243 REGISTERED PROFESSIONAL ENGINEER 10/4/06

DESIGNED BY: LPS

DRAWN BY: LPS

STATE OF ALASKA
DEPARTMENT OF TRANSPORTATION & PUBLIC FACILITIES
DESIGN & ENGINEERING SERVICES DIVISION-SOUTHEAST REGION

ELECTRICAL & LIGHTING DETAILS

PROJECT DESIGNATION	
AIP NO. 3-02-0144-1606	
STATE	YEAR
ALASKA	2006
SHEET NUMBER	TOTAL SHEETS
G12	131

See attached Electrical Asbuilts

SIGN SCHEDULE

NUM	SIDE	PANEL	LEGEND	TYPE	LEGEND COLOR	FACE COLOR	STATION	OFFSET	SIZE	STYLE	CLASS	MODE	REMARKS
S1	1	1	6	L-858B	WHITE	BLACK	140+00.0	134.1 LT	–	–	–	–	REINSTALL EXISTING SIGN
	2	1	1	L-858B	WHITE	BLACK							
S2	1	1	5	L-858B	WHITE	BLACK	150+00.0	134.1 LT	–	–	–	–	REINSTALL EXISTING SIGN
	2	1	2	L-858B	WHITE	BLACK							
S3	1	1	4	L-858B	WHITE	BLACK	160+00.0	134.1 LT	–	–	–	–	REINSTALL EXISTING SIGN
	2	1	3	L-858B	WHITE	BLACK							
S4	1	1	3	L-858B	WHITE	BLACK	170+00.0	134.1 LT	–	–	–	–	REINSTALL EXISTING SIGN
	2	1	4	L-858B	WHITE	BLACK							
S5	1	1	2	L-858B	WHITE	BLACK	180+00.0	134.1 LT	–	–	–	–	REINSTALL EXISTING SIGN
	2	1	5	L-858B	WHITE	BLACK							
S6	1	1	1	L-858B	WHITE	BLACK	190+00.0	134.1 LT	–	–	–	–	REINSTALL EXISTING SIGN
	2	1	6	L-858B	WHITE	BLACK							
S7	1	–	–	–	–	–	196+09.8	119.2 LT	5	–	–	–	REINSTALL EXISTING SIGN WITH NEW PANELS, FIELD VERIFY SIZE PRIOR TO ORDERING PANELS
	2	1	A →	L-858Y	BLACK	YELLOW							

STATION AND OFFSET INDICATED IS AT CENTER OF SIGN DEPTH ON END NEAREST TO EDGE OF TAXIWAY UNLESS OTHERWISE INDICATED.

NOTE: TRANSFORMERS SHALL BE SIZED AS RECOMMENDED BY THE SIGN MANUFACTURER.

TAXIWAY EDGE LIGHT SCHEDULE

NUM	LENS COLOR	TYPE	WATTAGE LAMP	WATTAGE XFMR	STATION	OFFSET	REMARKS
E1	B	L-861T	30	30/45	127+49.2	203.8 LT	RELOCATED
E2	B	L-861T	30	30/45	127+49.2	148.4 LT	RELOCATED
E3	B	L-861T	30	30/45	127+49.2	93.0 LT	RELOCATED
E4	B	L-861T	30	30/45	127+49.24	88.0 LT	RELOCATED
E5	G/R	L-862E	200	200	127+44.0	85.0 LT	RELOCATED
E6	G/R	L-862E	200	200	127+44.0	75.0 LT	RELOCATED
E7	G/R	L-862E	200	200	127+44 .0	65.0 LT	RELOCATED
E8	G/R	L-862E	200	200	127+44.0	55.0 LT	RELOCATED
E9	G/R	L-862E	200	200	127+44.0	55.0 RT	RELOCATED
E10	G/R	L-862E	200	200	127+44.0	65.0 RT	RELOCATED
E11	G/R	L-862E	200	200	127+44.0	75.0 RT	RELOCATED
E12	G/R	L-862E	200	200	127+44.0	85.0 RT	RELOCATED
E13	B	L-861T	30	30/45	195+09.8	185.0 LT	RELOCATED
E14	B	L-861T	30	30/45	195+17.4	146.7 LT	RELOCATED
E15	B	L-861T	30	30/45	195+39.1	114.3 LT	RELOCATED
E16	B	L-861T	30	30/45	195+71.5	92.6 LT	NEW
E17	B	L-861T	30	30/45	196+09.8	93.0 LT	NEW
E18	B	L-861T	30	30/45	196+09.8	88.0 LT	NEW
E19	Y/W	L-862	200	200	196+09.8	85.0 LT	RELOCATED
E20	Y/W	L-862	200	200	196+89.9	85.0 LT	RELOCATED
E21	Y/W	L-862	200	200	198+78.6	85.0 LT	RELOCATED
E22	Y/W	L-862	200	200	200+67.3	85.0 LT	RELOCATED
E23	R/G	L-862E	200	200	202+56.0	85.0 LT	RELOCATED
E24	R/G	L-862E	200	200	202+56.0	75.0 LT	RELOCATED
E25	R/G	L-862E	200	200	202+56.0	65.0 LT	RELOCATED
E26	R/G	L-862E	200	200	202+56.0	55.0 LT	RELOCATED
E27	R/G	L-862E	200	200	202+56.0	55.0 RT	RELOCATED
E28	R/G	L-862E	200	200	202+56.0	65.0 RT	RELOCATED
E29	R/G	L-862E	200	200	202+56.0	75.0 RT	RELOCATED
E30	R/G	L-862E	200	200	202+56.0	85.0 RT	RELOCATED
E31	Y/W	L-862	200	200	200+67.3	85.0 RT	RELOCATED
E32	Y/W	L-862	200	200	198+78.6	85.0 RT	RELOCATED
E33	Y/W	L-862	200	200	196+89.9	85.0 RT	RELOCATED
E34	Y/W	L-862	200	200	195+01.2	85.0 RT	NEW

NOTE: REUSE EXISTING FIXTURE, SUPPORT COLUMN, BASEPLATE, AND TRANSFORMER FOR FIXTURES INDICATED AS RELOCATED

PATH: I:\823400\Dwgs\E\Sheets\G13.dwg

Tue, 03/Oct/06 02:21PM lschneller

TAB: G09

ADDENDUM NUMBER

ATTACHMENT NUMBER

RECORD OF REVISIONS

No.	DATE	DESCRIPTION

KETCHIKAN AIRPORT
RUNWAY SAFETY AREA EXPANSION
& RUNWAY OVERLAY
PROJECT NO. 68306

LIGHTING SCHEDULES

PREPARED BY: USKH INC.

CHECKED BY: GRH

STATE OF ALASKA 49TH GARY R. HABLE EE-10243 REGISTERED PROFESSIONAL ENGINEER 10/4/06

DESIGNED BY: LPS

DRAWN BY: LPS

STATE OF ALASKA
DEPARTMENT OF TRANSPORTATION
& PUBLIC FACILITIES
DESIGN & ENGINEERING SERVICES
DIVISION-SOUTHEAST REGION

LIGHTING SCHEDULES

PROJECT DESIGNATION

AIP NO. 3-02-0144-1606

STATE	YEAR
ALASKA	2006
SHEET NUMBER	TOTAL SHEETS
G13	131

See attached Electrical Asbuilts

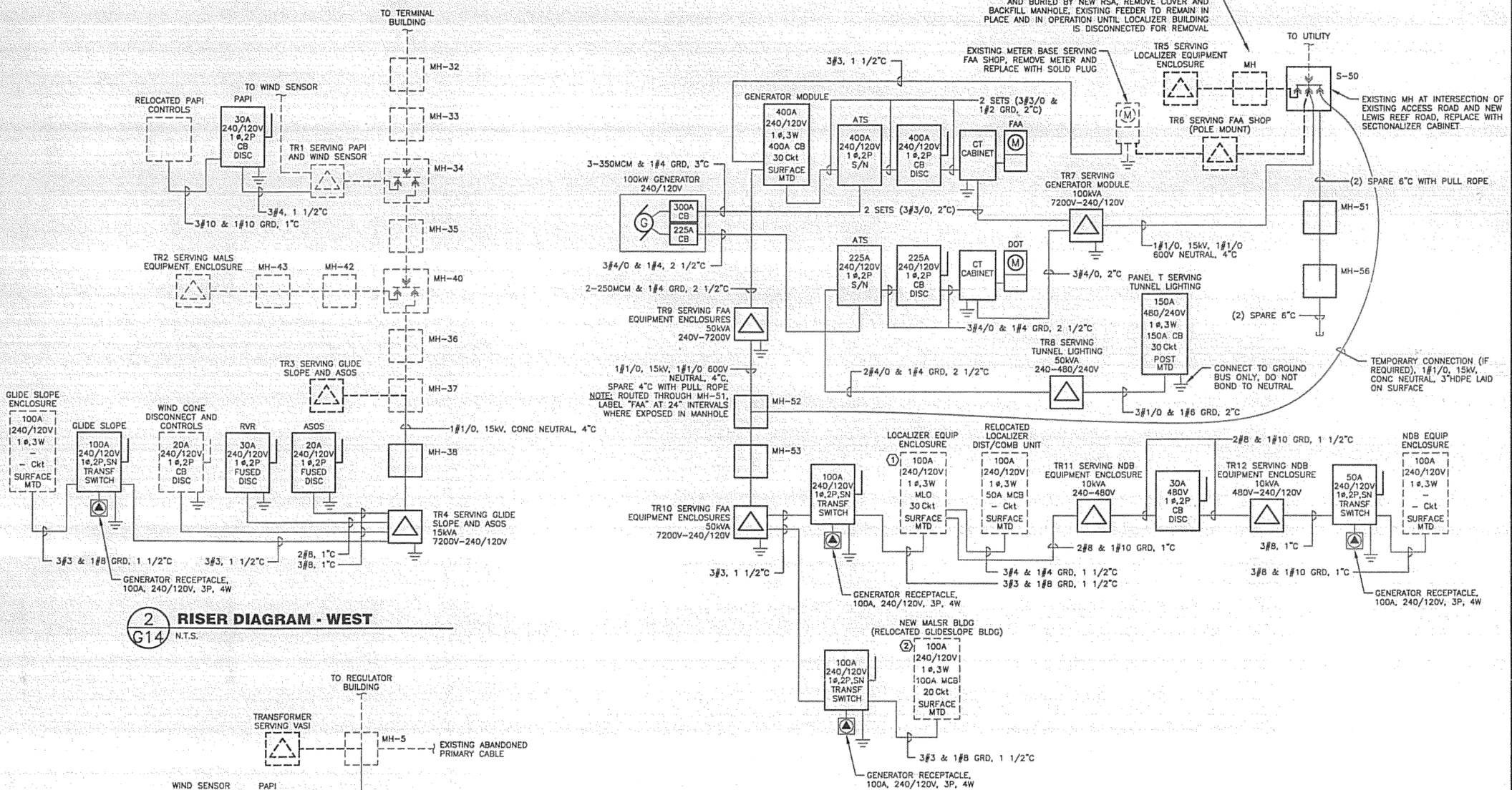

2 G14 RISER DIAGRAM - WEST

N.T.S.

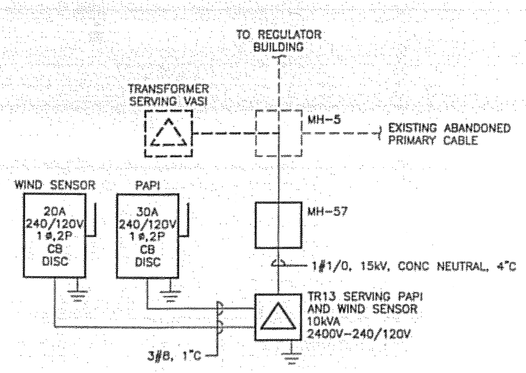

3 G14 RISER DIAGRAM - SOUTH

N.T.S.

1 G14 RISER DIAGRAM - EAST

N.T.S.

NOTES:

1. UNDERGROUND CONDUITS SHALL BE HDPE UNLESS OTHERWISE INDICATED ON THE PLANS. TRANSITION TO PVC COATED RMC PRIOR TO THE ELBOW OR 2' OUTSIDE STRUCTURE FOOTPRINT, WHICHEVER COMES FIRST, FOR STUB-UPS TO EQUIPMENT OR STRUCTURES.
2. COORDINATE ALL CONNECTIONS, DISCONNECTIONS, AND OTHER WORK ASSOCIATED WITH THE EXISTING PRIMARY ELECTRIC LINES ON THE EAST END OF THE RUNWAY WITH KETCHIKAN PUBLIC UTILITIES.

PANEL NOTES: ⬡

1. PROVIDE (2) 50A/2P CIRCUIT BREAKERS TO SERVE THE DIST/COMB UNIT AND TR11.
2. PROVIDE 80A/2P CIRCUIT BREAKER TO SERVE MALSR SYSTEM.

RISER DIAGRAM LEGEND

- EXISTING TO REMAIN OR NEW PROVIDED BY OTHERS
- EXISTING TO BE REMOVED
- NEW WORK
- ⏚ INDICATES CONNECTION TO GROUND RING (WHERE PRESENT) OR (2) 3/4"x10' GROUND RODS CONNECTED BY #6BC (WHERE GROUND RING IS NOT PRESENT)

PATH: I:\823400\Dwgs\E\Sheets\G14-R1.dwg
Tue, 03/Oct/06 02:21PM lschneller
TAB: G12

ADDENDUM NUMBER

ATTACHMENT NUMBER

RECORD OF REVISIONS

No.	DATE	DESCRIPTION

KETCHIKAN AIRPORT
RUNWAY SAFETY AREA EXPANSION & RUNWAY OVERLAY
PROJECT NO. 68306

ELECTRICAL RISER DIAGRAMS

PREPARED BY: USKH INC.

CHECKED BY: GRH

STATE OF ALASKA 49TH GARY R. HABLE EE-10243 REGISTERED PROFESSIONAL ENGINEER 10/4/06

DESIGNED BY: LPS

DRAWN BY: LPS

STATE OF ALASKA
DEPARTMENT OF TRANSPORTATION & PUBLIC FACILITIES
DESIGN & ENGINEERING SERVICES DIVISION-SOUTHEAST REGION

ELECTRICAL RISER DIAGRAMS

PROJECT DESIGNATION
AIP NO. 3-02-0144-1606

STATE	YEAR
ALASKA	2006
SHEET NUMBER	TOTAL SHEETS
G14	131

See attached Electrical Asbuilts

TRANSFORMER SCHEDULE

DES.	ACTION	TYPE	KVA	TEMP RISE	PRIMARY VOLTAGE	PRIMARY PHASE	PRIMARY WIRE	SECONDARY VOLTAGE	SECONDARY PHASE	SECONDARY WIRE	NOTES
TR1	REMAIN	LF	15	–	7200	1	2	240/120	1	3	
TR2	REMAIN	LF	25	–	7200	1	2	240/120	1	3	
TR3	REMOVE	LF	15	–	7200	1	2	240/120	1	3	3
TR4	NEW	LF	15	150	7200	1	2	240/120	1	3	
TR5	REMOVE	LF	–	–	7200	1	2	240/120	1	3	4,5
TR6	REMOVE	LF	–	–	7200	1	2	240/120	1	3	6
TR7	NEW	LF	100	150	7200	1	2	240/120	1	3	
TR8	NEW	DT	50	150	240	1	2	480/240	1	3	2,7
TR9	NEW	LF	50	150	240	1	2	7200	1	2	
TR10	NEW	LF	50	150	7200	1	2	240/120	1	3	
TR11	NEW	DT	10	150	240	1	2	480	1	2	1
TR12	NEW	DT	10	150	480	1	2	240/120	1	3	7
TR13	NEW	LF	10	150	2400	1	2	240/120	1	3	8

ABBREVIATIONS:
CR = CAST RESIN
DT = DRY TYPE
EC = ENCAPSULATED CORE
LF = LIQUID FILLED

TRANSFORMER SCHEDULE NOTES:
1. PROVIDE WITH MANUFACTURER'S WALL MOUNTING BRACKET.
2. FLOOR MOUNT ON VIBRATION ISOLATORS.
3. REMOVE TRANSFORMER AND PAD. TURN TRANSFORMER OVER TO FAA.
4. REMOVE TRANSFORMER AND PAD. TURN TRANSFORMER OVER TO KPU.
5. TRANSFORMER MUST REMAIN IN SERVICE UNTIL EXISTING DME IS REMOVED.
6. POLE MOUNT TRANSFORMER. REMOVE TRANSFORMER AND PRIMARY RISER. TURN TRANSFORMER OVER TO KPU.
7. PROVIDE TRANSFORMER WITH MULTIPLE TAPS AND CONNECT APPROPRIATE TAP TO PROVIDE RATED VOLTAGE ON SECONDARY SIDE OF TRANSFORMER.
8. EXTEND TRANSFORMER PAD 6" ABOVE GRADE INSTEAD OF THE 12" SHOWN IN DETAIL 3/G16. 30" MAXIMUM HEIGHT TO TOP OF TRANSFORMER.

SECTIONALIZER CABINET SCHEDULE

NUM	VOLTAGE kV	VOLTAGE PHASE	RATING (A)	STATION	OFFSET	REMARKS
S–50	15	3	200	197+88.3	519.1 LT	

NOTE: LOCATIONS ARE APPROXIMATE, FIELD LOCATE SECTIONALIZER CABINETS

HANDHOLE AND JUNCTION BOX SCHEDULE

NUM	TYPE	STATION	OFFSET	REMARKS
JB–2	II	203+15.7	273.4 LT	
JB–3	II	207+71.0	273.4 LT	
JB–6	II	196+84.5	259.9 RT	
JB–8	II	187+12.8	259.9 RT	
JB–9	II	182+12.8	259.9 RT	
JB–10	II	177+12.8	259.9 RT	
JB–11	II	172+12.8	259.9 RT	
JB–12	II	167+12.8	259.9 RT	
JB–13	II	162+12.8	259.9 RT	
JB–14	II	157+12.8	259.9 RT	
JB–15	II	152+12.8	259.9 RT	
JB–16	II	147+12.8	259.9 RT	
JB–17	II	142+12.8	259.9 RT	
JB–18	II	137+12.8	259.9 RT	
JB–54	II	216+36.0	27.2 LT	PAID UNDER L–135
JB–55	II	221+82.4	27.2 LT	PAID UNDER L–135

NOTE: LOCATIONS ARE APPROXIMATE, FIELD LOCATE HANDHOLES AND JUNCTION BOXES
JUNCTION BOXES REQUIRED FOR FAA APPROACH LIGHTING SYSTEMS ARE NOT SCHEDULED, SEE DOT STANDARD DETAIL L–23.01 FOR JUNCTION BOX INSTALLATION

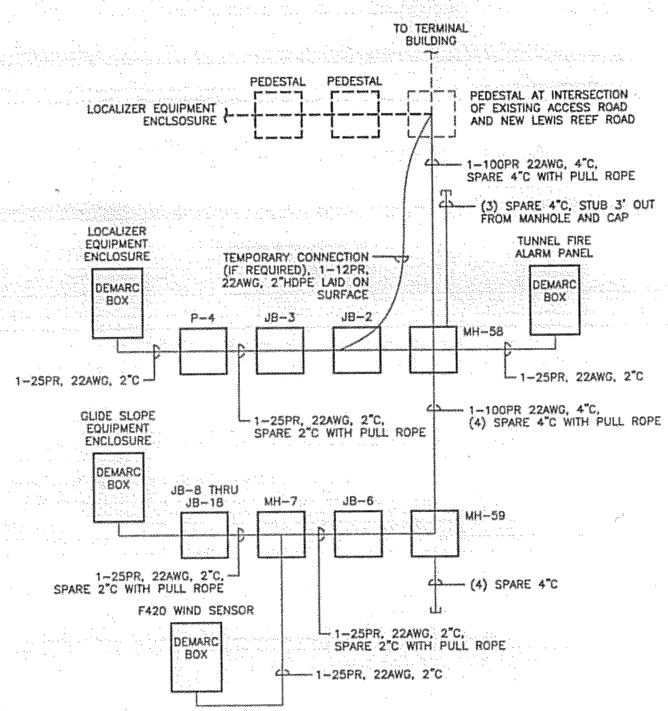

1 G15 **COMMUNICATIONS RISER DIAGRAM** N.T.S.

RISER DIAGRAM LEGEND
– – – – – EXISTING TO REMAIN
– – – – – EXISTING TO BE REMOVED
——— NEW WORK

NOTE:
UNDERGROUND CONDUITS SHALL BE HDPE UNLESS OTHERWISE INDICATED ON THE PLANS. TRANSITION TO PVC COATED RMC PRIOR TO THE ELBOW OR 2' OUTSIDE STRUCTURE FOOTPRINT, WHICHEVER COMES FIRST, FOR STUB–UPS TO EQUIPMENT OR STRUCTURES.

COMMUNICATIONS PEDESTAL SCHEDULE

NUM	SIZE (IN)	STATION	OFFSET	REMARKS
P–4	8	212+53.0	267.6 LT	

NOTE: LOCATIONS ARE APPROXIMATE, FIELD LOCATE PEDESTALS

ELECTRICAL MANHOLE SCHEDULE

NUM	LOAD RATING	INT DIM (MIN) LxWxH (FT)	STATION	OFFSET	REMARKS
MH–7	AIRCRAFT	4x6x4	192+12.8	259.9 RT	
MH–38	AIRCRAFT	3x4x3	136+98.2	91.0 RT	
MH–51	H–20	4x6.5x6	198+67.1	351.4 LT	
MH–52	AIRCRAFT	3x4x3	203+34.3	260.7 LT	
MH–53	AIRCRAFT	3x4x3	207+89.6	260.7 LT	
MH–56	H–20	4x6.5x6	201+33.9	348.9 RT	
MH–57	AIRCRAFT	3x4x3	186+86.5	270.0 RT	
MH–58	H–20	4.5x8.5x6.5	198+69.6	360.4 LT	42"DIA ACCESS COVER
MH–59	H–20	4.5x8.5x6.5	201+36.6	355.9 RT	42"DIA ACCESS COVER

NOTE: LOCATIONS ARE APPROXIMATE, FIELD LOCATE MANHOLES

PATH: I:\823400\Dwgs\E\Sheets\G15–R2.dwg
Tue, 03/Oct/06 02:21PM lschneller
TAB: G12

ADDENDUM NUMBER

ATTACHMENT NUMBER

RECORD OF REVISIONS

No.	DATE	DESCRIPTION

KETCHIKAN AIRPORT
RUNWAY SAFETY AREA EXPANSION
& RUNWAY OVERLAY
PROJECT NO. 68306

ELECTRICAL DIAGRAMS & SCHEDULES

PREPARED BY: USKH INC.

CHECKED BY: GRH

STATE OF ALASKA 49TH REGISTERED PROFESSIONAL ENGINEER
GARY R. HABLE
EE–10243
10/4/06

DESIGNED BY: LPS

DRAWN BY: LPS

STATE OF ALASKA
DEPARTMENT OF TRANSPORTATION & PUBLIC FACILITIES
DESIGN & ENGINEERING SERVICES
DIVISION–SOUTHEAST REGION

ELECTRICAL DIAGRAMS & SCHEDULES

PROJECT DESIGNATION
AIP NO. 3-02-0144-1606

STATE	YEAR
ALASKA	2006
SHEET NUMBER	TOTAL SHEETS
G15	131

See attached Electrical Asbuilts

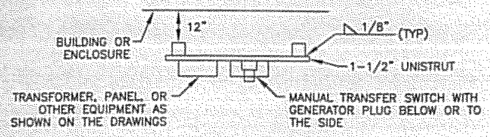

PLAN VIEW

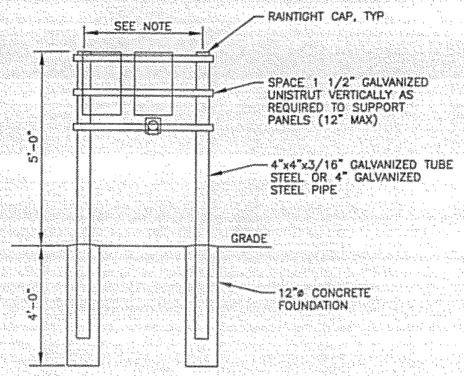

NOTE:
ADJUST WIDTH AS REQUIRED FOR EQUIPMENT INSTALLED AT EACH LOCATION, 24" MINIMUM, 48" MAXIMUM, IF LONGER SUPPORTS ARE NEEDED, PROVIDE ADDITIONAL POSTS

6/G16 BUILDING SERVICE MOUNTING DETAIL
N.T.S.

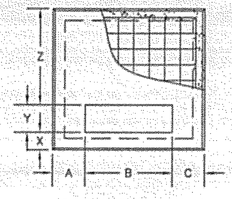

TOP VIEW

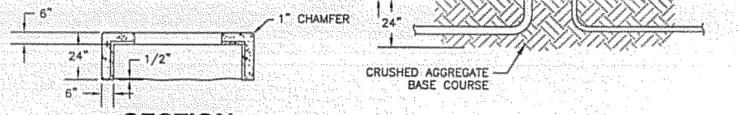

SECTION

NOTES:
1. THIS UNIT INCLUDES THE PAD, SITE PREPARATION, EXCAVATION, AND BACKFILL.
2. LEVEL TOP OF PAD AND GRAVEL. THE BASE COURSE INSIDE THE PAD SHALL BE LEVEL WITH THE BASE OF THE PAD.
3. PAD SHALL BE SQUARE WITH RUNWAY OR ADJACENT STRUCTURES UNLESS SPECIFIED OTHERWISE. ORIENT THE PAD AWAY FROM POTENTIAL CONFLICTS TO PROVIDE ACCESS TO THE FRONT OF THE EQUIPMENT.
4. VERIFY PAD DIMENSIONS AND CONDUIT LOCATIONS WITH TRANSFORMER PRIOR TO CONSTRUCTING PAD.

3/G16 TRANSFORMER PAD DETAIL
N.T.S.

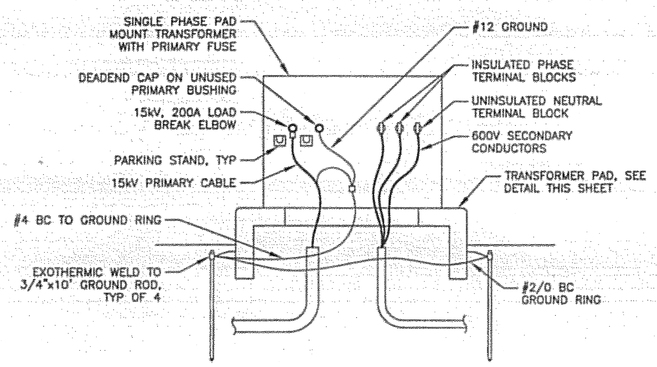

1/G16 TRANSFORMER DETAIL
N.T.S.

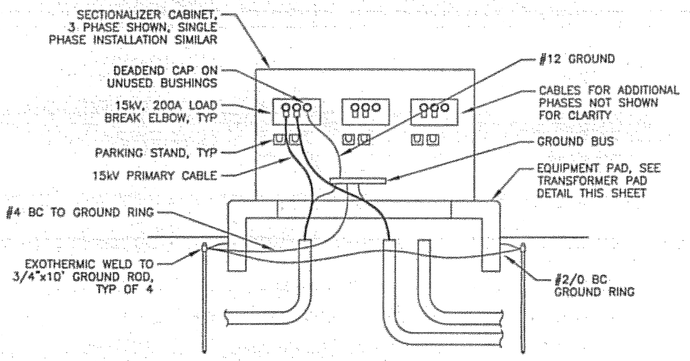

2/G16 SECTIONALIZER DETAIL
N.T.S.

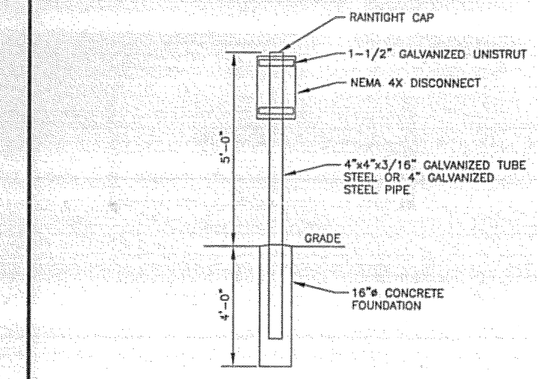

7/G16 DISCONNECT MOUNTING DETAIL
N.T.S.

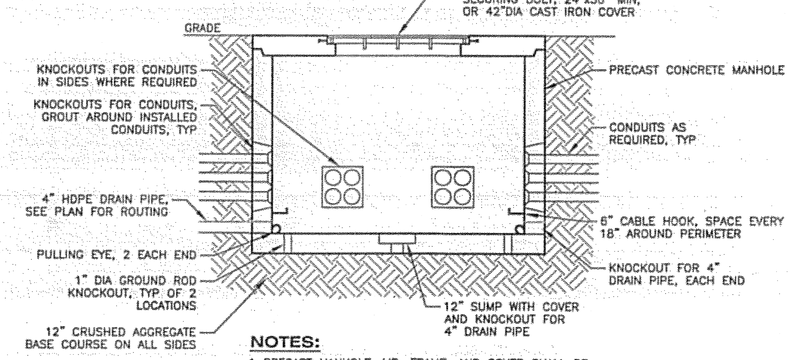

NOTES:
1. PRECAST MANHOLE, LID, FRAME, AND COVER SHALL BE RATED FOR WHEEL LOADING BASED ON LOCATION:
   AIRCRAFT AREA – 100,000 LB. LOAD
   NON-AIRCRAFT AREA – H-20 WHEEL LOADING
2. SEE MANHOLE SCHEDULE ON SHEET G15 FOR LOAD RATINGS AND SIZES OF INDIVIDUAL MANHOLES.
3. CAST IRON HINGED COVERS SHALL BE PROVIDED WITH SPRING ASSIST MECHANISM.

4/G16 ELECTRICAL MANHOLE DETAIL
N.T.S.

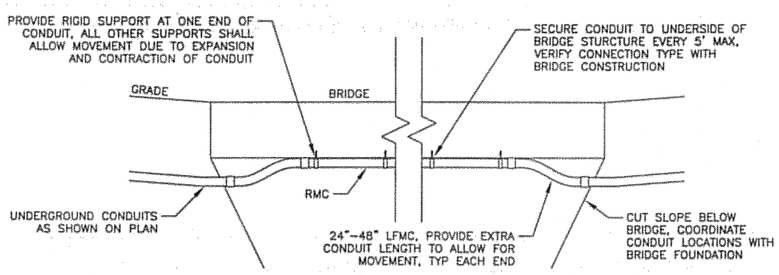

5/G16 BRIDGE MOUNTED CONDUIT DETAIL
N.T.S.

DO NOT SCALE FROM THESE DRAWINGS USE DIMENSIONS

PATH: I:\823400\Dwgs\E\Sheets\G16-R3.dwg
Tue, 03/Oct/06 02:21PM lschneller
TAB: G12

ADDENDUM NUMBER
ATTACHMENT NUMBER

RECORD OF REVISIONS

No.	DATE	DESCRIPTION

KETCHIKAN AIRPORT
RUNWAY SAFETY AREA EXPANSION & RUNWAY OVERLAY
PROJECT NO. 68306

ELECTRICAL DETAILS

PREPARED BY: USKH INC.

CHECKED BY: GRH

STATE OF ALASKA 49TH GARY R. HABLE EE-10243 REGISTERED PROFESSIONAL ENGINEER 10/4/06

DESIGNED BY: LPS

DRAWN BY: LPS

STATE OF ALASKA
DEPARTMENT OF TRANSPORTATION & PUBLIC FACILITIES
DESIGN & ENGINEERING SERVICES
DIVISION-SOUTHEAST REGION

ELECTRICAL DETAILS

PROJECT DESIGNATION	
AIP NO. 3-02-0144-1606	
STATE	YEAR
ALASKA	2006
SHEET NUMBER	TOTAL SHEETS
G16	131

See attached Electrical Asbuilts

GENERATOR MODULE PANEL

CKT	LOAD	BRANCH BKR	BRANCH VA	CONN KVA A	CONN KVA B	BRANCH VA	BRANCH BKR	LOAD	CKT
1	FAA SHOP	100/2	9000	26.0		17000	250/2	RW 29 FAA EQUIPMENT	2
3			9000		26.0	17000		ENCLOSURES	4
5	LIGHTS	20/1	307	2.8		2500	30/2	UNIT HEATER	6
7	RECEPTS	20/1	720		3.2	2500			8
9	EXHAUST FAN	20/1	696	1.4		750	20/2	COOLANT HEATER	10
11	BATTERY CHARGER	20/1	1000		1.8	750			12
13	DAMPER CONTROLS	20/1	600	0.7		50	20/2	ANTI-CONDENSATION HEATER	14
15					0.1	50			16
17				0.0					18
19					0.0				20
21				0.0					22
23					0.0				24
25				0.0					26
27					0.0				28
29				0.0					30
	CONNECTED LOAD	61.9 KVA		30.9	31.0				
		258 AMPS		258	259				
	NEC DEMAND	62.0 KVA							
		258 AMPS							

PANEL NOTES

PANEL SPECIFICATIONS
MAINS RATING AMPS – 400
MAIN CIRCUIT BREAKER AMPERES – 400
CAPACITY ONE-POLE CIRCUITS – 30
SYSTEM VOLTAGE – 240/120
PHASE, NO. OF WIRES – 1 PH, 3 W
AIC RATING – 22,000
MOUNTING – SURFACE

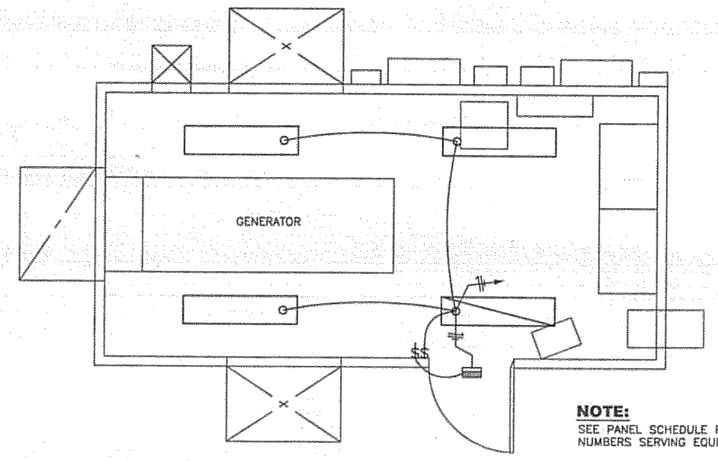

NOTE:
SEE PANEL SCHEDULE FOR CIRCUIT NUMBERS SERVING EQUIPMENT

1/G17 **GENERATOR MODULE - LIGHTING PLAN**
N.T.S.

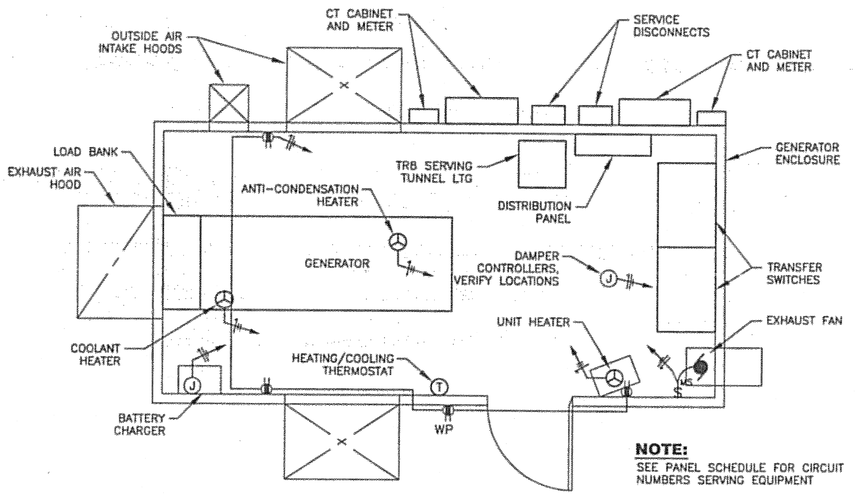

NOTE:
SEE PANEL SCHEDULE FOR CIRCUIT NUMBERS SERVING EQUIPMENT

2/G17 **GENERATOR MODULE - POWER PLAN**
N.T.S.

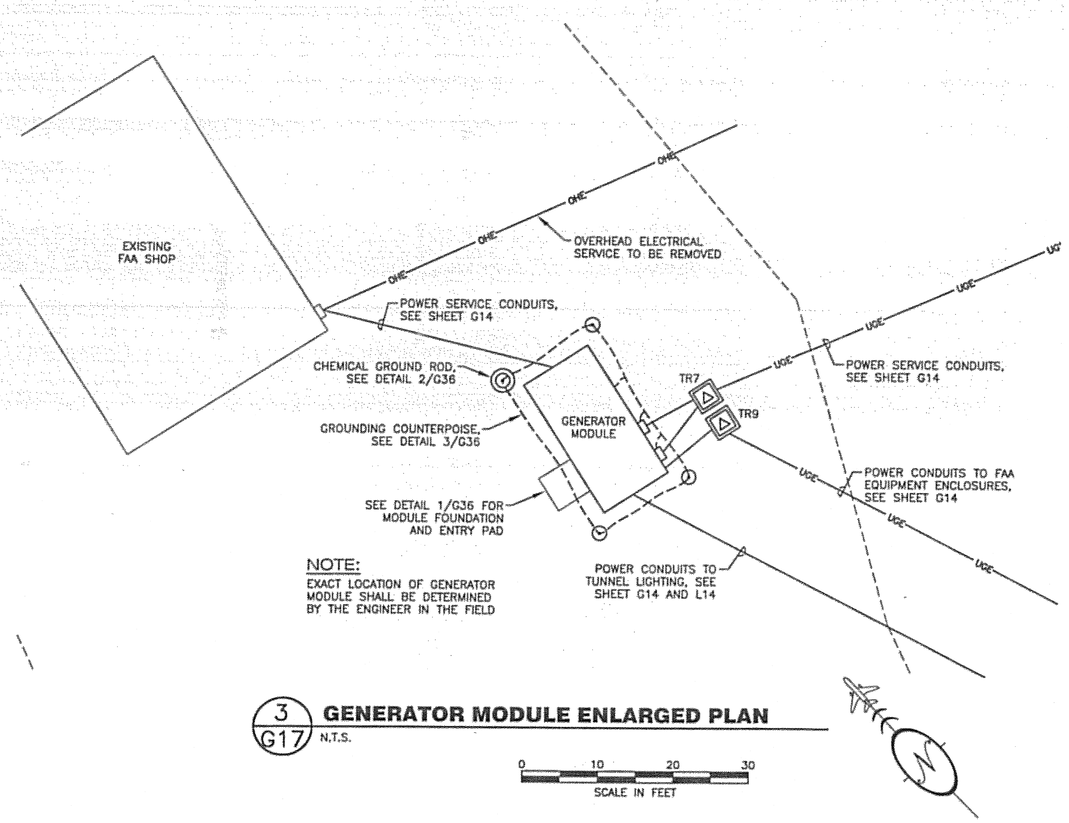

NOTE:
EXACT LOCATION OF GENERATOR MODULE SHALL BE DETERMINED BY THE ENGINEER IN THE FIELD

3/G17 **GENERATOR MODULE ENLARGED PLAN**
N.T.S.

DO NOT SCALE FROM THESE DRAWINGS USE DIMENSIONS

PATH:
I:\823400\Dwgs\E\Sheets\G17-E1.dwg
Tue, 03/Oct/06 02:21PM lschneller
TAB: G11

ADDENDUM NUMBER

ATTACHMENT NUMBER

RECORD OF REVISIONS

No.	DATE	DESCRIPTION

KETCHIKAN AIRPORT
RUNWAY SAFETY AREA EXPANSION
& RUNWAY OVERLAY
PROJECT NO. 68306

GENERATOR MODULE DETAILS

PREPARED BY: USKH INC.

CHECKED BY: GRH

STATE OF ALASKA
49TH
GARY R. HABLE
EE-10243
REGISTERED PROFESSIONAL ENGINEER
10/4/06

DESIGNED BY: LPS

DRAWN BY: LPS

STATE OF ALASKA
DEPARTMENT OF TRANSPORTATION & PUBLIC FACILITIES
DESIGN & ENGINEERING SERVICES
DIVISION-SOUTHEAST REGION

GENERATOR MODULE DETAILS

PROJECT DESIGNATION	
AIP NO. 3-02-0144-1606	
STATE	YEAR
ALASKA	2006
SHEET NUMBER	TOTAL SHEETS
G17	131

See attached Electrical Asbuilts

NAVAID CONSTRUCTION RESPONSIBILITIES

SYSTEM PAY ITEM	FAA	CONTRACTOR	PLAN SHEETS	DETAIL SHEETS
Glide Slope L-135a(1) L-135b(1)	– Provide building with lights, heat, and power distribution – Install glide slope equipment in new building – Install glide slope antenna, including tower, obstruction lights, and connection to building – Remove glide slope equipment from existing building – Remove glide slope antenna from tower	– Prepare building site/foundation – Set and anchor building – Install/fabricate cover entry – Connect power service to new building – Connect communications service to new building – Install grounding counterpoise and test – Install glide slope tower foundation – Disconnect existing building from power service – Relocate existing building (see MALSR RW 29 for reconnection) – Remove and dispose of existing glide slope antenna tower	G2–Demo G7–New G31–Enlarged G34–GS Bldg	G36–GS Bldg Fdn G36–GS Bldg Grd G33–Tower Fdn G14–Power Service G15–Comm Service
Localizer Equip Bldg L-135a(3) L-135b(2)	– Provide building with lights, heat, and power distribution – Install localizer equipment in new building – Remove localizer equipment from existing building	– Prepare building site/foundation – Set and anchor building – Install/fabricate cover entry – Connect power service to new building – Connect communications service to new building – Install grounding counterpoise and test – Disconnect existing building from power and communications services – Relocate existing building to maintenance area as directed by the engineer	G4–Demo G10–New, Enlarged G34–LOC Bldg	G36–LOC Bldg Fdn G36–LOC Bldg Grd G14–Power Service G15–Comm Service
Localizer Antenna Array L-135a(3) L-135b(2)	– Install and connect new antenna array – Remove existing antenna array – Disconnect existing communications conductors at dist/comb unit – Install new communications conductors from localizer building to antenna platform – Reconfigure communications conduit and conductors to route through dist/comb unit	– Construct antenna platform – Prepare dist/comb unit site/foundation – Install conduit from localizer building to antenna platform through junction box – Install obstruction lights on platform – Disconnect existing dist/comb unit from power service – Relocate dist/comb unit to new location – Connect power service to dist/comb unit – Remove existing antenna platform	G4–Demo G10–New G35–Dist/Comb	F14–F19–Platform G36–Dist/Comb Fdn G36–Dist/Comb Grd G14–Dist/Comb Pwr
DME L-135a(4) L-135b(3)	– Install new antenna tower and antenna – Install DME equipment in localizer building – Install communications conductors from localizer building to antenna – Disconnect and remove existing antenna	– Install antenna tower foundation – Install conduits from localizer building to antenna	G4–Demo G10–New, Enlarged	G39–Foundation
NDB L-135a(6) L-135b(5)	– Disconnect existing antenna – Install antenna foundation – Install new antenna – Install building foundation – Set and anchor building – Install gounding counterpoise radials and ground rods – Perform ground testing – Relocate transmitter equipment	– Remove and dispose of existing antenna and support towers as directed, new NDB must be operational prior to removal of existing (FAA flight check required) – Disconnect existing building from power service – Connect power service to new building – Relocate existing building to maintenance area as directed by the engineer – Provide temporary power as required – Protect grounding counterpoise during installation of permanent power and MALSR conduits	G5–Demo G10–New G32–Enlarged	G14–Power Service
ASOS L-135c(1)	– Relocate existing ASOS rails and equipment	– Prepare new site and foundations – Disconnect existing equipment from power service – Connect power service to relocated equipment	G2–Demo G7–New G31–Enlarged	G14–Power Service G40–G42–ASOS Dtls
F420 Wind Sensor L-135a(2)	– Provide and install tower and sensor equipment	– Install new tower foundation – Install conduit from tower to power disconnect and telecom demarc	G10–New	G15–Power Service G15–Comm Service G46–Foundation
RCO Towers L-135b(4)	– Remove antennas deemed salvageable – Disconnect existing communications conductors at localizer building	– Remove and dispose of existing RCO towers – Remove above ground portions of conductors and abandoned direct buried conductors in place	G4–Demo	

NAVAID CONSTRUCTION RESPONSIBILITIES

SYSTEM PAY ITEM	FAA	CONTRACTOR	PLAN SHEETS	DETAIL SHEETS
RVR L-135a(5)	– Install new tower and equipment near glide slope building – Install and connect new equipment (CDs, ALS, and DPU) in terminal building (in FSS and FAA comm room) – Install and connect new equipment (RLIM) in regulator vault	– Install equipment foundations – Install conduit between equipment and glide slope building – Install CTs on lighting circuits in regulator vault for connection to RLIM by FAA – Install support structure, power service, service disconnect, and underground conduit and grounding as shown	G7–New	G14–Power Service G43–G45 RVR Dtls
PAPI RW 11 L-132c(2)	– Replace tilt switches in LHAs during service outage	– Prepare new site and foundations – Relocate PAPI system to new site – Return remote monitoring subsystem cabinet to FAA – Remove existing conductors, foundations, and support structures	G2–Demo G7–New	G14–Power Service G37–G38–PAPI Dtls
VASI RW 29 L-132b(2)		– Remove existing VASI system including radio control cabinets	G4–Demo	G15–Power Service
PAPI RW 29 L-132a(2)	– Provide new PAPI system	– Prepare site and foundations – Install PAPI system	G9–New	G15–Power Service G37–G38–PAPI Dtls
MALSR RW 11 L-132c(1)	– Provide (2) new flashers and ICCs	– Relocate MALSR towers and lights – Install new foundations, conduit, and conductors – Provide new parts as required to reinstall system at new locations – Provide replacement parts and make repairs as required	G1–Demo G6–New G19–Enlarged	G21–Equipment and Conduit Schedules G22–G27–MALSR Dtls G28–Wiring Diag G14–Power Service
MALSR RW 29 L-132a(1) L-132b(1)	– Provide new MALSR system and air-to-ground radio controller	– Install new MALSR system, including new foundations, conduit, and conductors – Relocate existing support towers and provide new towers as required and indicated to install new system – Set and anchor relocated glide slope building (MALSR building) – Connect MALSR building to power service – Install controls in MALSR building – Relocate existing ground-to-ground receiver from existing localizer building to new MALSR building and connect to control new MALSR system	G4–5–Demo G10–New G20–Enlarged G36–MALSR Bldg	G20–Equipment and Conduit Schedules G22–27–MALSR Dtls G29–30–Wiring Diag G14–Power Service G36–MALSR Bldg Fdn G36–MALSR Bldg Grd

NOTE: This list is intended to portray the general responsibilities of the parties involved and may not include all specific aspects of the work required.

PATH: I:\823400\Dwgs\E\Sheets\G18-F2.dwg
Fri, 27/Oct/06 11:33AM lschneller
TAB: G09

ADDENDUM NUMBER

ATTACHMENT NUMBER

RECORD OF REVISIONS

No.	DATE	DESCRIPTION

KETCHIKAN AIRPORT
RUNWAY SAFETY AREA EXPANSION
& RUNWAY OVERLAY
PROJECT NO. 68306

NAVAID CONSTRUCTION RESPONSIBILITIES

PREPARED BY: USKH INC.

CHECKED BY: GRH

STATE OF ALASKA 49TH Gary R. Hable GARY R. HABLE EE-10243 REGISTERED PROFESSIONAL ENGINEER 10/4/06

DESIGNED BY: LPS

DRAWN BY: LPS

STATE OF ALASKA
DEPARTMENT OF TRANSPORTATION
& PUBLIC FACILITIES
DESIGN & ENGINEERING SERVICES
DIVISION–SOUTHEAST REGION

NAVAID CONSTRUCTION RESPONSIBILITIES

PROJECT DESIGNATION
AIP NO. 3-02-0144-1606

STATE	YEAR
ALASKA	2006
SHEET NUMBER	TOTAL SHEETS
G18	131

See attached Electrical Asbuilts

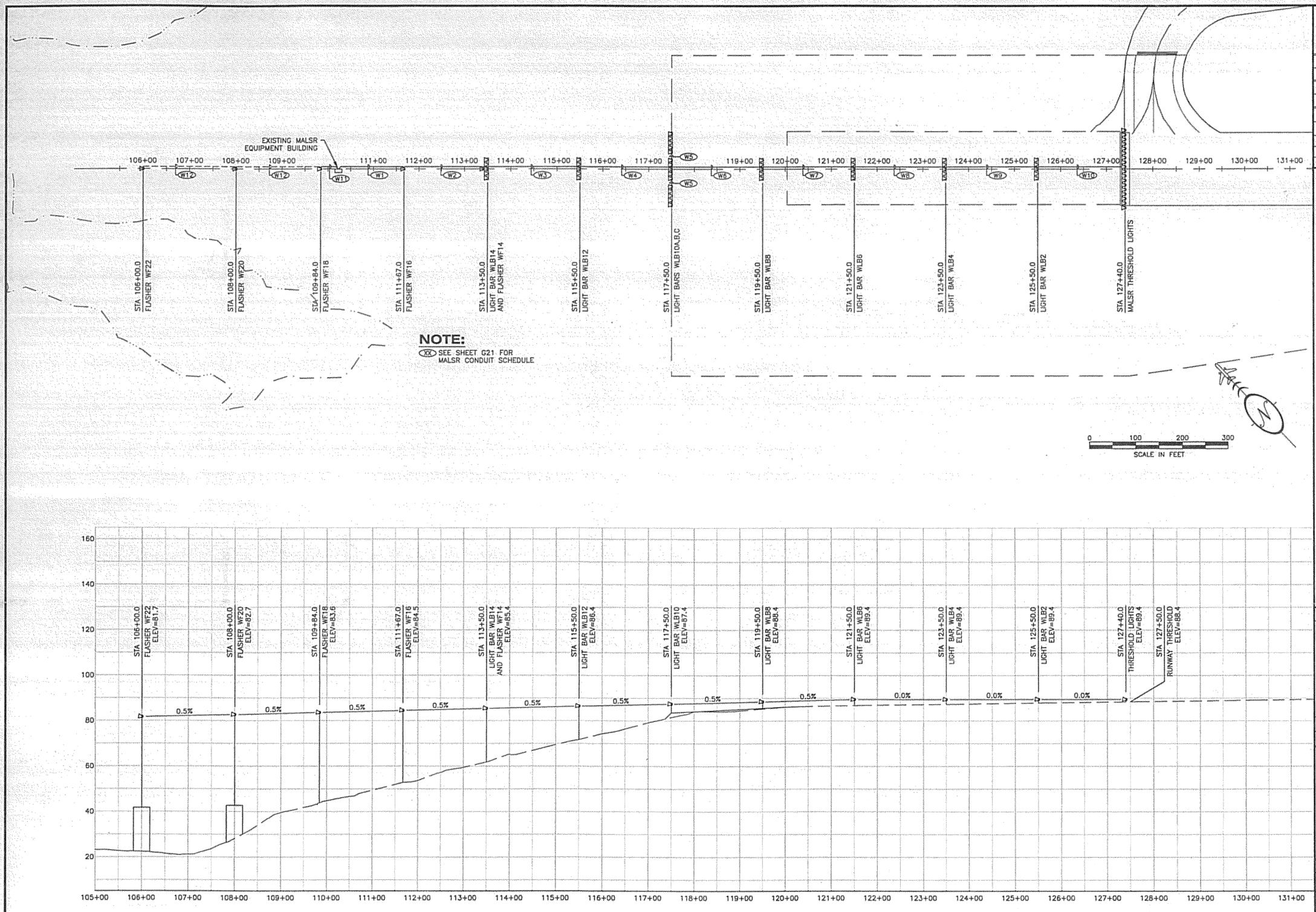

PATH: I:\823400\Dwgs\E\Sheets\G19-M1.dwg
Tue, 03/Oct/06 02:22PM Ischneller
TAB: G10

ADDENDUM NUMBER

ATTACHMENT NUMBER

RECORD OF REVISIONS

No.	DATE	DESCRIPTION

KETCHIKAN AIRPORT
RUNWAY SAFETY AREA EXPANSION
& RUNWAY OVERLAY
PROJECT NO. 68306

MALSR PLAN & PROFILE - WEST

PREPARED BY: USKH INC.

CHECKED BY: GRH

STATE OF ALASKA
49TH
GARY R. HABLE
EE-10243
REGISTERED PROFESSIONAL ENGINEER
10/4/06

DESIGNED BY: LPS

DRAWN BY: LPS

STATE OF ALASKA
DEPARTMENT OF TRANSPORTATION
& PUBLIC FACILITIES
DESIGN & ENGINEERING SERVICES
DIVISION–SOUTHEAST REGION

MALSR PLAN & PROFILE - WEST

PROJECT DESIGNATION
AIP NO. 3-02-0144-1606

STATE	YEAR
ALASKA	2006
SHEET NUMBER	TOTAL SHEETS
G19	131

DO NOT SCALE FROM THESE DRAWINGS USE DIMENSIONS

See attached Electrical Asbuilts

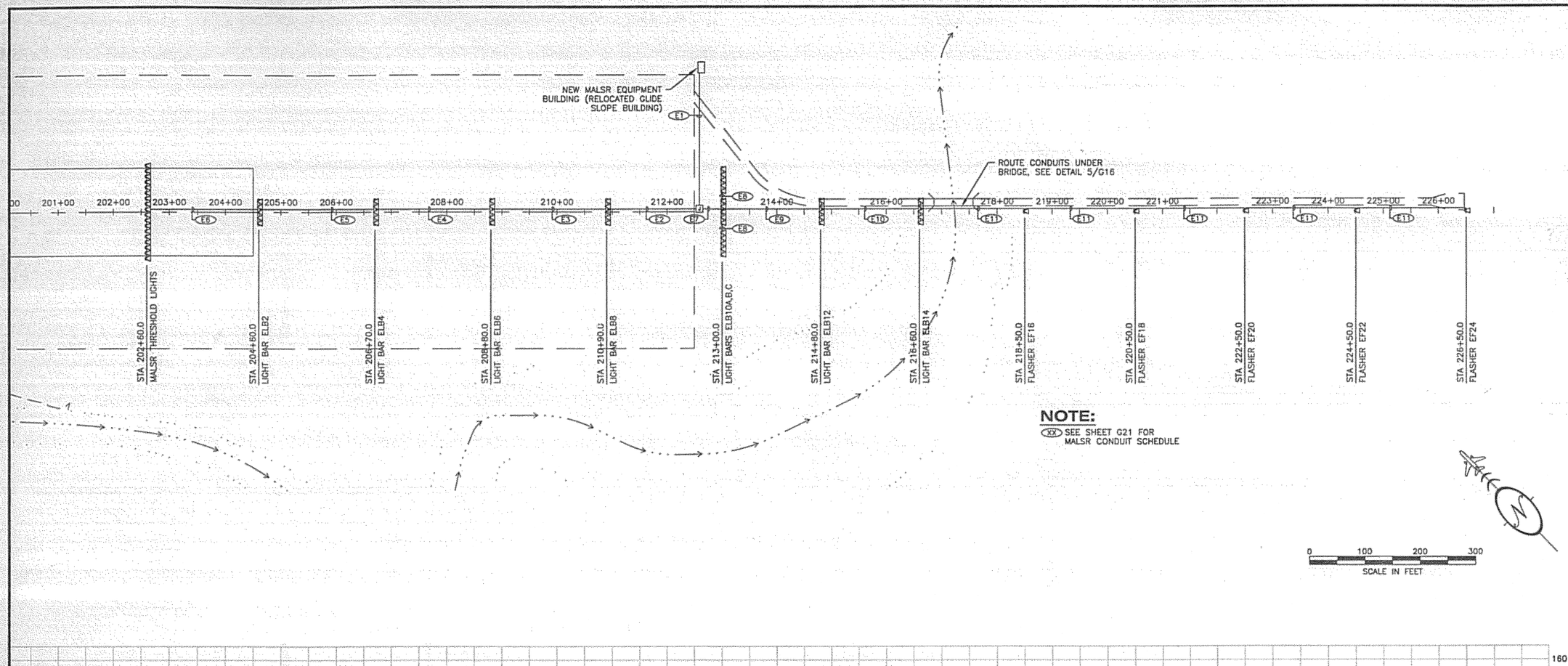

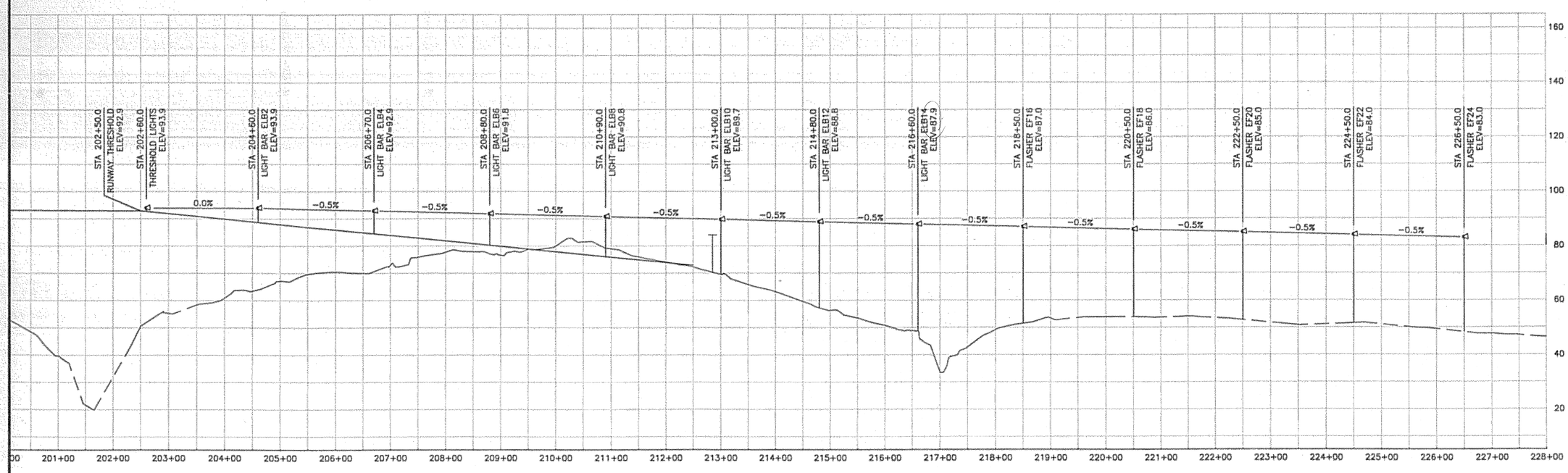

DO NOT SCALE FROM THESE DRAWINGS USE DIMENSIONS

PATH: I:\823400\Dwgs\E\Sheets\G20-M2.dwg

Tue, 03/Oct/06 02:22PM lschneller

TAB: G09

ADDENDUM NUMBER

ATTACHMENT NUMBER

RECORD OF REVISIONS

No.	DATE	DESCRIPTION

KETCHIKAN AIRPORT
RUNWAY SAFETY AREA EXPANSION
& RUNWAY OVERLAY
PROJECT NO. 68306

MALSR PLAN & PROFILE - EAST

PREPARED BY: USKH INC.

CHECKED BY: GRH

STATE OF ALASKA 49TH GARY R. HABLE EE-10243 REGISTERED PROFESSIONAL ENGINEER
10/4/06

DESIGNED BY: LPS

DRAWN BY: LPS

STATE OF ALASKA
DEPARTMENT OF TRANSPORTATION & PUBLIC FACILITIES
DESIGN & ENGINEERING SERVICES
DIVISION-SOUTHEAST REGION

MALSR PLAN & PROFILE - EAST

PROJECT DESIGNATION	
AIP NO. 3-02-0144-1606	
STATE	YEAR
ALASKA	2006
SHEET NUMBER	TOTAL SHEETS
G20	131

See attached Electrical Asbuilts

MALSR LIGHTBARS AND FLASHERS - RW 11

DES.	STA.	OFFSET	APPROX HGT	EXISTING TO REMAIN	EXISTING REUSED	NEW	INSTALL. DETAIL	FNDTN DTL SHEET	REMARKS
TRSHLD LTS	127+40.0	–	1.0	–	LAMPHOLDERS, COLUMNS, BASEPLATES	LIGHT BASES, LAMPS	1/G27	–	
WLB2	125+50.0	0.0	1.5	–	LAMPHOLDERS, BASEPLATES	LIGHT BASES, LAMPS, COLUMNS	3/G23	–	
WLB4	123+50.0	0.0	2.1	–	LAMPHOLDERS	LIGHT BASES, LAMPS, COLUMNS, BASEPLATES	3/G23	–	
WLB6	121+50.0	0.0	2.6	–	LAMPHOLDERS	LIGHT BASES, LAMPS, COLUMNS, BASEPLATES	3/G23	–	
WLB8	119+50.0	0.0	2.8	–	LAMPHOLDERS	LIGHT BASES, LAMPS, COLUMNS, BASEPLATES	3/G23	–	
WLB10A	117+50.0	28.0 LT	3.9	–	LAMPHOLDERS	LIGHT BASES, LAMPS, COLUMNS, BASEPLATES	3/G23	–	
WLB10B	117+50.0	0.0	3.9	–	LAMPHOLDERS	LIGHT BASES, LAMPS, COLUMNS, BASEPLATES	3/G23	–	
WLB10C	117+50.0	28.0 RT	3.9	–	LAMPHOLDERS	LIGHT BASES, LAMPS, COLUMNS, BASEPLATES	3/G23	–	
WLB12	115+50.0	0.0	14.7	–	LAMPHOLDERS, JB, LIGHT BAR, TOWER, BASE ASMBLY	LAMPS	1/G23	G25	
WLB14	113+50.0	0.0	23.6	–	LAMPHOLDERS, JB, LIGHT BAR, TOWER, BASE ASMBLY	LAMPS	1/G22	G26	
WF14	113+50.0	0.0	–	–	FLASHER, ICC, JB		1/G24	–	LOCATE FLASHER ON WLB14 TOWER
WF16	111+67.0	0.0	31.7	–	TOWER, BASE ASSEMBLY	FLASHER, ICC, JB	1/G24	G26	
WF18	109+84.0	0.0	39.7	–	TOWER, BASE ASSEMBLY	FLASHER, ICC, JB	1/G24	G26	
WF20	108+00.0	0.0	54.5	FLASHER, ICC, JB, TOWER, FNDTN	–	–	–	–	REMOVE LIGHT BAR FROM TOWER
WF22	106+00.0	0.0	59.2	FLASHER, ICC, JB, TOWER, FNDTN	–	–	–	–	REMOVE LIGHT BAR FROM TOWER

NOTE: ALL CONDUIT, CONDUCTORS, AND FOUNDATIONS SHALL BE NEW UNLESS OTHERWISE INDICATED.
TOWERS AND LIGHTBARS INDICATED TO BE REUSED MAY BE FROM RW 11 OR RW 29 SYSTEM.

MALSR LIGHTBARS AND FLASHERS - RW 29

DES.	STA.	OFFSET	APPROX HGT	EXISTING TO REMAIN	EXISTING REUSED	NEW	INSTALL. DETAIL	FNDTN DTL SHEET	REMARKS
TRSHLD LTS	202+60.0	–	1.2	–	BASEPLATES	ALL OTHER COMPONENTS	1/G27	–	
ELB2	204+60.0	0.0	5.2	–	LIGHTBAR, BASE ASSEMBLY	LAMPHOLDERS, LAMPS, JB, TOWER	1/G23	G25	
ELB4	206+70.0	0.0	8.4	–	LIGHTBAR, BASE ASSEMBLY	LAMPHOLDERS, LAMPS, JB, TOWER	1/G23	G25	
ELB6	208+80.0	0.0	11.5	–	LIGHTBAR, BASE ASSEMBLY	LAMPHOLDERS, LAMPS, JB, TOWER	1/G23	G25	
ELB8	210+90.0	0.0	14.7	–	LIGHTBAR, BASE ASSEMBLY	LAMPHOLDERS, LAMPS, JB, TOWER	1/G23	G25	
ELB10A	213+00.0	28.0 LT	20.2	–	LIGHTBAR, BASE ASSEMBLY	LAMPHOLDERS, LAMPS, JB, TOWER	1/G22	G26	
ELB10B	213+00.0	0.0	20.2	–	LIGHTBAR, BASE ASSEMBLY	LAMPHOLDERS, LAMPS, JB, TOWER	1/G22	G26	
ELB10C	213+00.0	28.0 RT	20.2	–	LIGHTBAR, BASE ASSEMBLY	LAMPHOLDERS, LAMPS, JB, TOWER	1/G22	G26	
ELB12	214+80.0	0.0	31.6	–	LIGHTBAR, BASE ASSEMBLY	LAMPHOLDERS, LAMPS, JB, TOWER	1/G22	G26	
ELB14	216+60.0	0.0	39.3	–	LIGHTBAR, BASE ASSEMBLY	LAMPHOLDERS, LAMPS, JB, TOWER	1/G22	G26	
EF16	218+50.0	0.0	35.5	–	BASE ASSEMBLY	FLASHER, ICC, JB, TOWER	1/G24	G26	
EF18	220+50.0	0.0	32.1	–	BASE ASSEMBLY	FLASHER, ICC, JB, TOWER	1/G24	G26	
EF20	222+50.0	0.0	32.2	–	BASE ASSEMBLY	FLASHER, ICC, JB, TOWER	1/G24	G26	
EF22	224+50.0	0.0	32.4	–	BASE ASSEMBLY	FLASHER, ICC, JB, TOWER	1/G24	G26	
EF24	226+50.0	0.0	34.7	–	BASE ASSEMBLY	FLASHER, ICC, JB, TOWER	1/G24	G26	

NOTES: ALL CONDUIT, CONDUCTORS, AND FOUNDATIONS SHALL BE NEW UNLESS OTHERWISE INDICATED.
TOWERS AND LIGHTBARS INDICATED TO BE REUSED MAY BE FROM RW 11 OR RW 29 SYSTEM.

MALSR CONDUIT SCHEDULE

ID	DESCRIPTION	SERVICE
E1	2"C	
	– 3#2/0	THRESHOLD LTS
	– 3#8	ELB10A,B,C
	– 1#2/0	GROUND
	2"C	
	– 3#2	EF16–24
	– 3#8	ELB12,14
	– 1#2	GROUND
	2"C	
	– 3#8	ELB2,4
	– 3#8	ELB6,8
	– 1#8	GROUND
	2"C	
	– 2–6PR#19 SHLD	EF16–24
	2"C	
	– PULL ROPE	SPARE
E2	2"C	
	– 3#2/0	THRESHOLD LTS
	– 1#2/0	GROUND
	2"C	
	– 3#8	ELB2,4
	– 3#8	ELB6,8
	– 1#8	GROUND
E3	2"C	
	– 3#2/0	THRESHOLD LTS
	– 1#2/0	GROUND
	2"C	
	– 3#8	ELB2,4
	– 2#8	ELB6
	– 1#8	GROUND
E4	2"C	
	– 3#2/0	THRESHOLD LTS
	– 1#2/0	GROUND
	2"C	
	– 3#8	ELB2,4
	– 1#8	GROUND
E5	2"C	
	– 3#2/0	THRESHOLD LTS
	– 1#2/0	GROUND
	2"C	
	– 2#8	ELB2
	– 1#8	GROUND
E6	2"C	
	– 3#2/0	THRESHOLD LTS
	– 1#2/0	GROUND

ID	DESCRIPTION	SERVICE
E7	2"C	
	– 3#8	ELB10A,B,C
	– 1#8	GROUND
	2"C	
	– 3#2	EF16–24
	– 3#8	ELB12,14
	– 1#2	GROUND
	2"C	
	– 2–6PR#19 SHLD	EF16–24
E8	2"C	
	– 2#8	ELB10A,C
	– 1#8	GROUND
E9	2"C	
	– 3#2	EF16–24
	– 3#8	ELB12,14
	– 1#2	GROUND
	2"C	
	– 2–6PR#19 SHLD	EF16–24
E10	2"C	
	– 3#4	EF16–24
	– 2#8	ELB14
	– 1#4	GROUND
	2"C	
	– 2–6PR#19 SHLD	EF16–24
E11	2"C	
	– 3#4	EF16–24
	– 1#4	GROUND
	2"C	
	– 2–6PR#19 SHLD	EF16–24

ID	DESCRIPTION	SERVICE
W1	2"C	
	– 3#2/0	THRESHOLD LTS
	– 3#8	WF14,16
	– 1#2/0	GROUND
	2"C	
	– 3#6	WLB2,4
	– 3#8	WLB6,8
	– 1#6	GROUND
	2"C	
	– 3#6	WLB10A,B,C
	– 3#8	WLB12,14
	– 1#6	GROUND
	2"C	
	– 2–6PR#19 SHLD	WF14,16
W2	2"C	
	– 3#2/0	THRESHOLD LTS
	– 3#8	WF14
	– 1#2/0	GROUND
	2"C	
	– 3#6	WLB2,4
	– 3#8	WLB6,8
	– 1#6	GROUND
	2"C	
	– 3#6	WLB10A,B,C
	– 3#8	WLB12,14
	– 1#6	GROUND
	2"C	
	– 2–6PR#19 SHLD	WF14
W3	2"C	
	– 3#2/0	THRESHOLD LTS
	– 1#2/0	GROUND
	2"C	
	– 3#6	WLB2,4
	– 3#8	WLB6,8
	– 1#6	GROUND
	2"C	
	– 3#6	WLB10A,B,C
	– 3#8	WLB12
	– 1#6	GROUND
W4	2"C	
	– 3#2/0	THRESHOLD LTS
	– 1#2/0	GROUND
	2"C	
	– 3#6	WLB2,4
	– 3#8	WLB6,8
	– 1#6	GROUND
	2"C	
	– 3#6	WLB10A,B,C
	– 1#6	GROUND

ID	DESCRIPTION	SERVICE
W5	2"C	
	– 3#8	WLB10A,C
	– 1#8	GROUND
W6	2"C	
	– 3#2/0	THRESHOLD LTS
	– 1#2/0	GROUND
	2"C	
	– 3#6	WLB2,4
	– 3#8	WLB6,8
	– 1#6	GROUND
W7	2"C	
	– 3#2/0	THRESHOLD LTS
	– 1#2/0	GROUND
	2"C	
	– 3#6	WLB2,4
	– 2#8	WLB6
	– 1#6	GROUND
W8	2"C	
	– 3#2/0	THRESHOLD LTS
	– 1#2/0	GROUND
	2"C	
	– 3#6	WLB2,4
	– 1#6	GROUND
W9	2"C	
	– 3#2/0	THRESHOLD LTS
	– 1#2/0	GROUND
	2"C	
	– 2#6	WLB2
	– 1#6	GROUND
W10	2"C	
	– 3#2/0	THRESHOLD LTS
	– 1#2/0	GROUND
W11	2"C	
	– 3#8	WF18–22
	– 1#8	GROUND
	2"C	
	– 2–6PR#19 SHLD	WF18–22
W12	EXISTING 2"C	
	– 3#8	WF20,22
	– 1#8	GROUND
	2"C	
	– 2–6PR#19 SHLD	WF20,22

PATH: I:\823400\Dwgs\E\Sheets\G21–M3.dwg
Tue, 03/Oct/06 02:22PM lschneller
TAB: G09

ADDENDUM NUMBER

ATTACHMENT NUMBER

RECORD OF REVISIONS

No.	DATE	DESCRIPTION

KETCHIKAN AIRPORT
RUNWAY SAFETY AREA EXPANSION
& RUNWAY OVERLAY
PROJECT NO. 68306

MALSR SCHEDULES

PREPARED BY: USKH INC.

CHECKED BY: GRH

STATE OF ALASKA
49TH
GARY R. HABLE
EE–10243
REGISTERED PROFESSIONAL ENGINEER
10/4/06

DESIGNED BY: LPS

DRAWN BY: LPS

STATE OF ALASKA
DEPARTMENT OF TRANSPORTATION & PUBLIC FACILITIES
DESIGN & ENGINEERING SERVICES
DIVISION–SOUTHEAST REGION

MALSR SCHEDULES

PROJECT DESIGNATION
AIP NO. 3-02-0144-1606

STATE	YEAR
ALASKA	2006
SHEET NUMBER	TOTAL SHEETS
G21	131

See attached Electrical Asbuilts

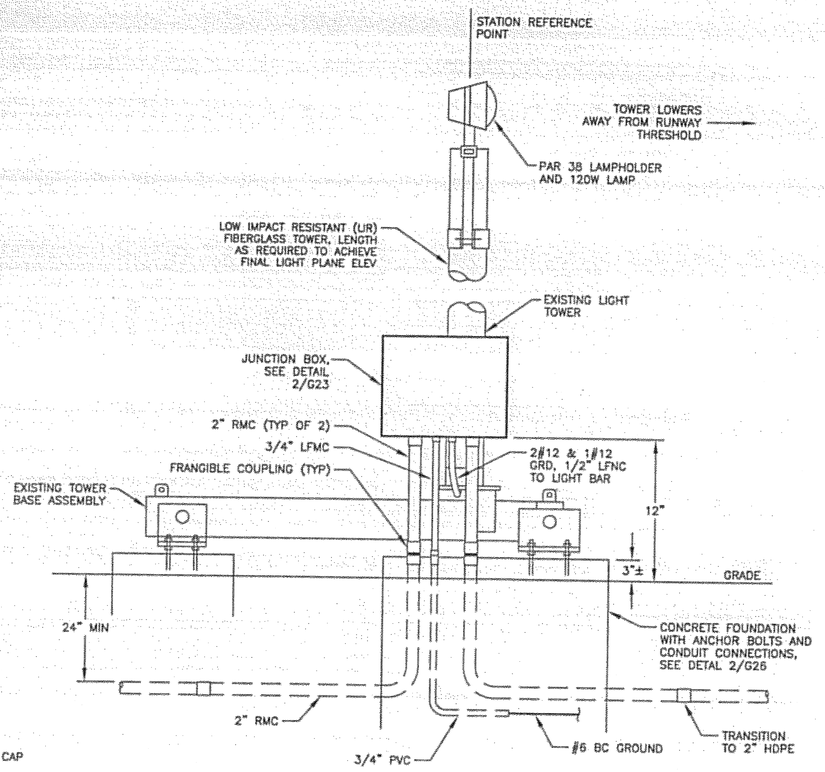

1/G22 LIGHT BAR TOWER DETAILS - WITH GUY WIRES

N.T.S.

NOTE:
GUY WIRES NOT SHOWN FOR CLARITY

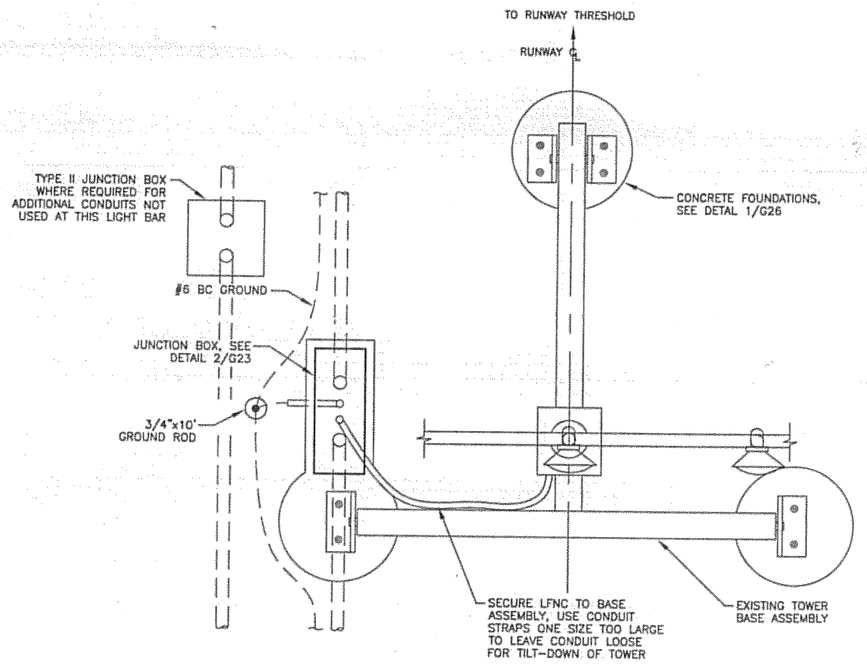

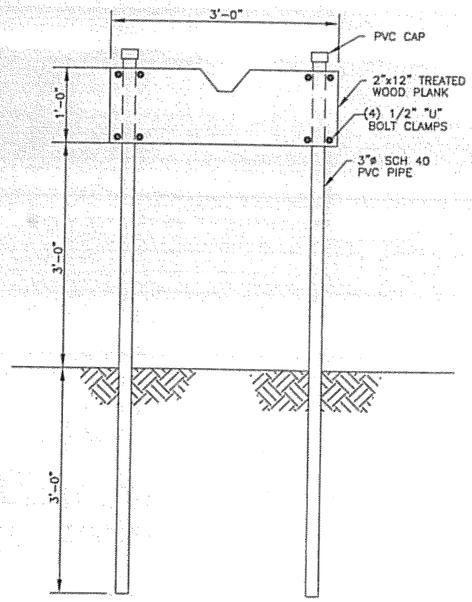

NOTE:
PROVIDE ONE MAST SUPPORT FOR EACH MALSR MAST AND ONE FOR THE RVR MAST. COORDINATE LOCATION WITH MAST HEIGHT.

4/G22 MAST SUPPORT

N.T.S.

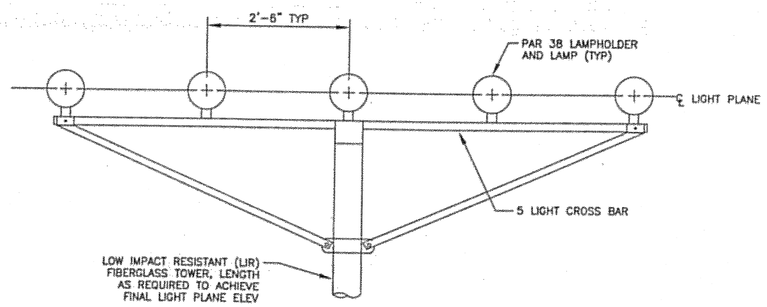

3/G22 LIGHT BAR DETAIL

N.T.S.

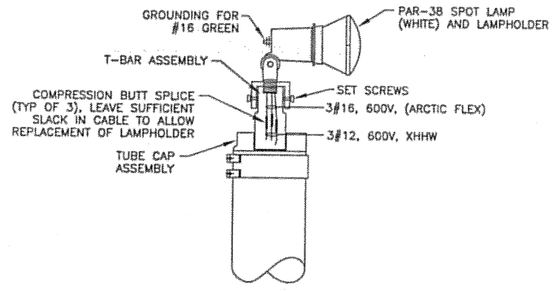

2/G22 LIGHT BAR ASSEMBLY/ LAMPHOLDER DETAIL

N.T.S.

DO NOT SCALE FROM THESE DRAWINGS USE DIMENSIONS

PATH: I:\823400\Dwgs\E\Sheets\G22-M4.dwg
Tue, 03/Oct/06 02:22PM lschneller
TAB: G12

ADDENDUM NUMBER

ATTACHMENT NUMBER

RECORD OF REVISIONS

No.	DATE	DESCRIPTION

KETCHIKAN AIRPORT
RUNWAY SAFETY AREA EXPANSION & RUNWAY OVERLAY
PROJECT NO. 68306

MALSR DETAILS

PREPARED BY: USKH INC.

CHECKED BY: GRH

STATE OF ALASKA 49TH REGISTERED PROFESSIONAL ENGINEER
GARY R. HABLE
EE-10243
10/4/06

DESIGNED BY: LPS

DRAWN BY: LPS

STATE OF ALASKA
DEPARTMENT OF TRANSPORTATION & PUBLIC FACILITIES
DESIGN & ENGINEERING SERVICES DIVISION-SOUTHEAST REGION

MALSR DETAILS

PROJECT DESIGNATION	
AIP NO. 3-02-0144-1606	
STATE	YEAR
ALASKA	2006
SHEET NUMBER	TOTAL SHEETS
G22	131

See attached Electrical Asbuilts

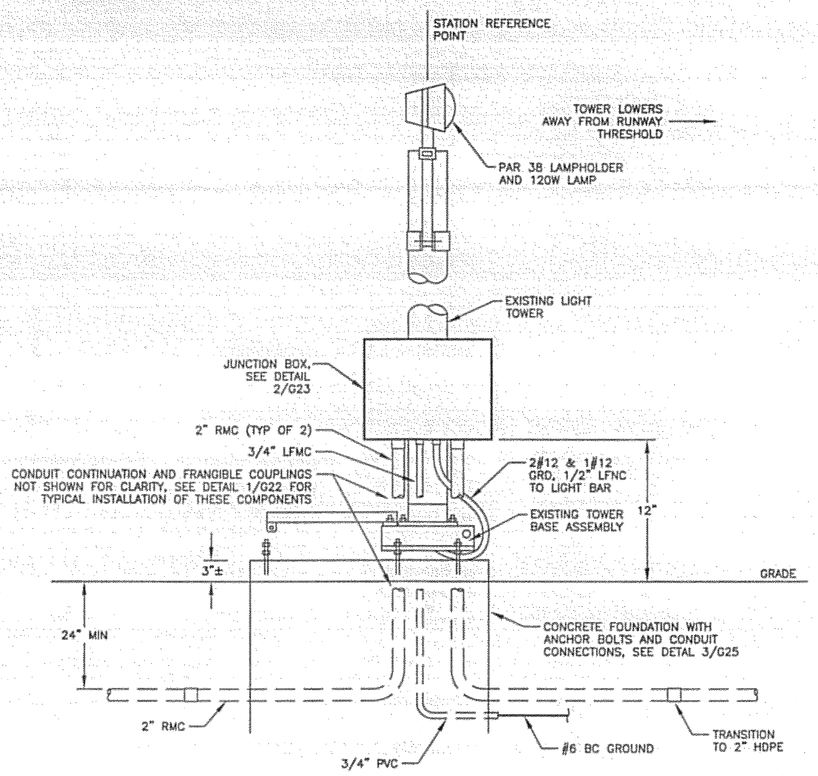

1/G23 **LIGHT BAR TOWER DETAILS - WITHOUT GUY WIRES**
N.T.S.

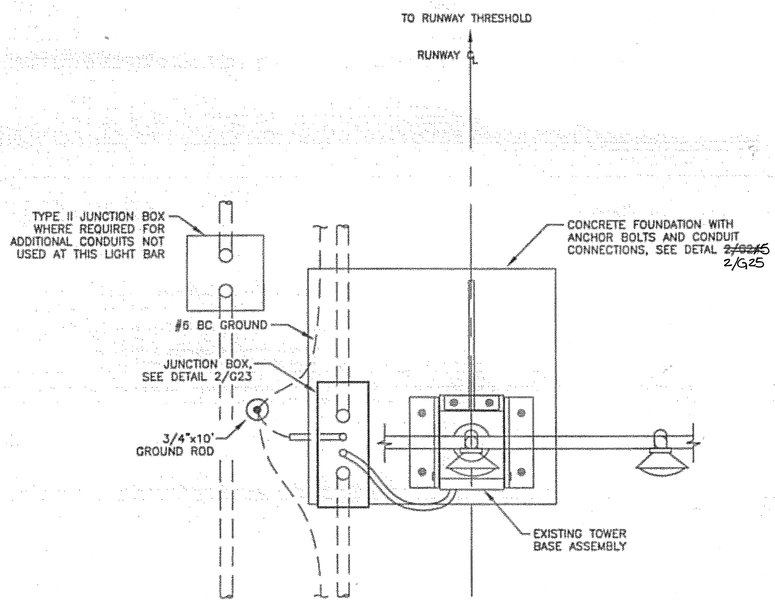

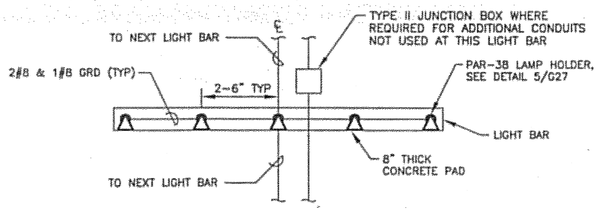

3/G23 **BASE MOUNTED LIGHT BAR PLAN**
N.T.S.

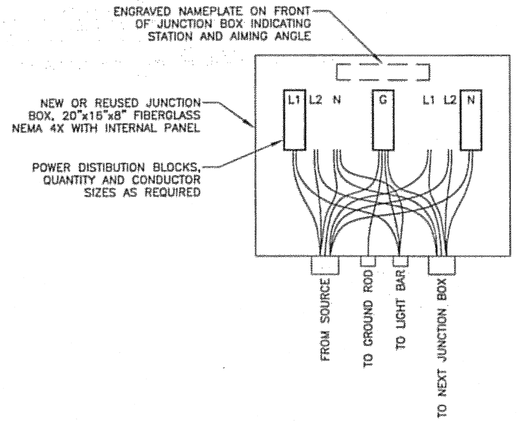

2/G23 **LIGHT BAR JUNCTION BOX**
N.T.S.

DO NOT SCALE FROM THESE DRAWINGS USE DIMENSIONS

PATH: I:\823400\Dwgs\E\Sheets\G23-M5.dwg
Tue, 03/Oct/06 02:22PM lschneller
TAB: G12

ADDENDUM NUMBER

ATTACHMENT NUMBER

RECORD OF REVISIONS

No.	DATE	DESCRIPTION

KETCHIKAN AIRPORT
RUNWAY SAFETY AREA EXPANSION & RUNWAY OVERLAY
PROJECT NO. 68306

MALSR DETAILS

PREPARED BY: USKH INC.

CHECKED BY: GRH

STATE OF ALASKA 49TH REGISTERED PROFESSIONAL ENGINEER
Gary R. Hable
GARY R. HABLE
EE-10243
10/4/06

DESIGNED BY: LPS

DRAWN BY: LPS

STATE OF ALASKA
DEPARTMENT OF TRANSPORTATION & PUBLIC FACILITIES
DESIGN & ENGINEERING SERVICES
DIVISION-SOUTHEAST REGION

MALSR DETAILS

PROJECT DESIGNATION	
AIP NO. 3-02-0144-1606	
STATE	YEAR
ALASKA	2006
SHEET NUMBER	TOTAL SHEETS
G23	131

See attached Electrical Asbuilts

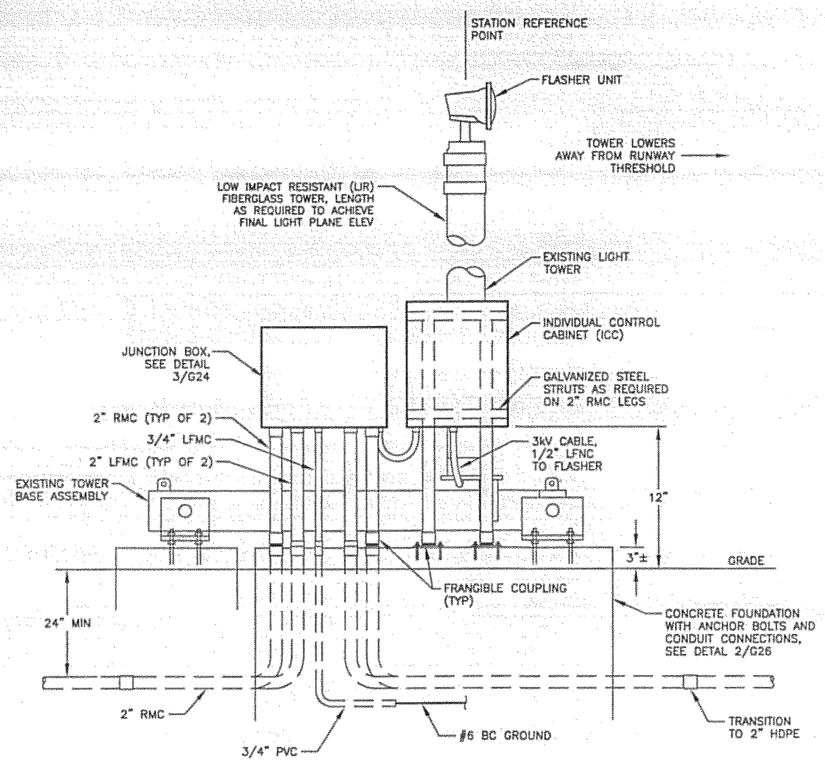

1 G24 **FLASHER TOWER DETAILS - WITH GUY WIRES**
N.T.S.

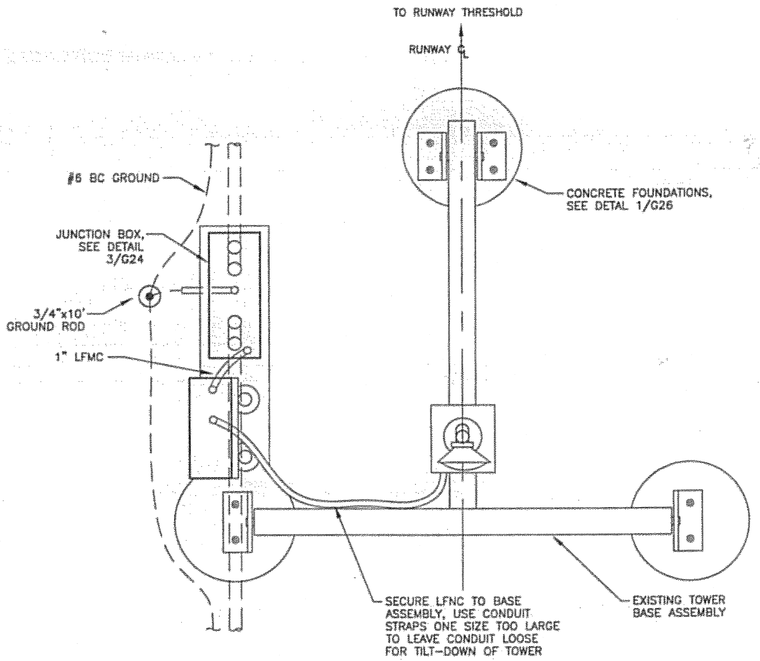

NOTE:
GUY WIRES NOT SHOWN FOR CLARITY

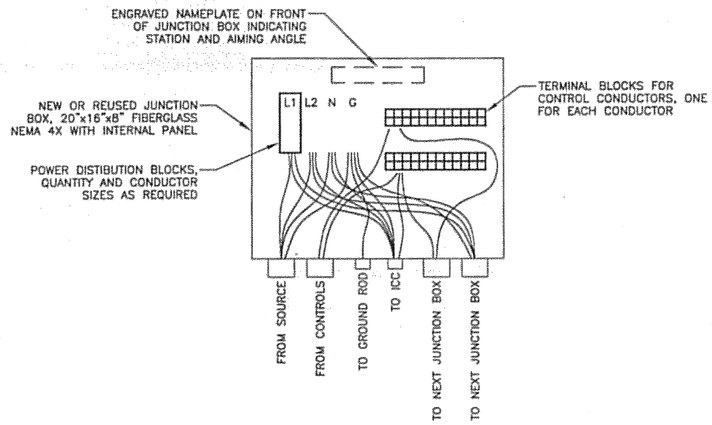

3 G24 **FLASHER JUNCTION BOX**
N.T.S.

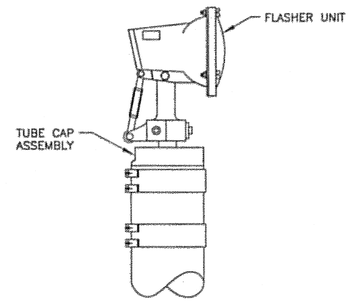

2 G24 **FLASHER UNIT DETAIL**
N.T.S.

DO NOT SCALE FROM THESE DRAWINGS USE DIMENSIONS

PATH: I:\823400\Dwgs\E\Sheets\G24-M6.dwg
Tue, 03/Oct/06 02:23PM lschneller
TAB: G12

ADDENDUM NUMBER

ATTACHMENT NUMBER

RECORD OF REVISIONS

No.	DATE	DESCRIPTION

KETCHIKAN AIRPORT
RUNWAY SAFETY AREA EXPANSION
& RUNWAY OVERLAY
PROJECT NO. 68306

MALSR DETAILS

PREPARED BY: USKH INC.

CHECKED BY: GRH

STATE OF ALASKA 49TH GARY R. HABLE EE-10243 REGISTERED PROFESSIONAL ENGINEER
10/4/06

DESIGNED BY: LPS

DRAWN BY: LPS

STATE OF ALASKA
DEPARTMENT OF TRANSPORTATION & PUBLIC FACILITIES
DESIGN & ENGINEERING SERVICES
DIVISION-SOUTHEAST REGION

MALSR DETAILS

PROJECT DESIGNATION	
AIP NO. 3-02-0144-1606	
STATE	YEAR
ALASKA	2006
SHEET NUMBER	TOTAL SHEETS
G24	131

See attached Electrical Asbuilts

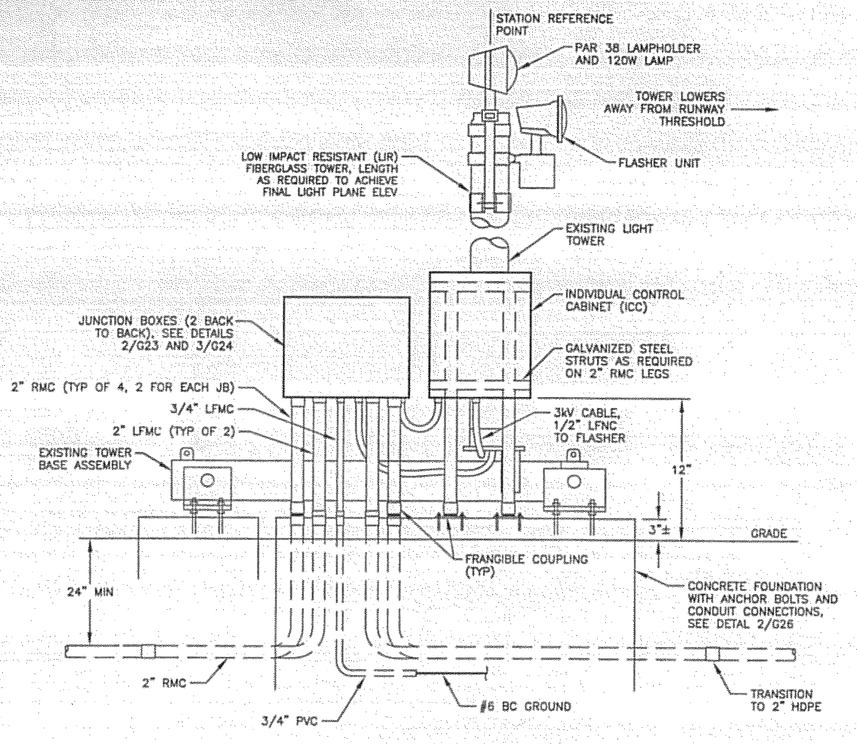

1/G24 **LIGHT BAR/FLASHER TOWER DETAILS - WITH GUY WIRES**
N.T.S.

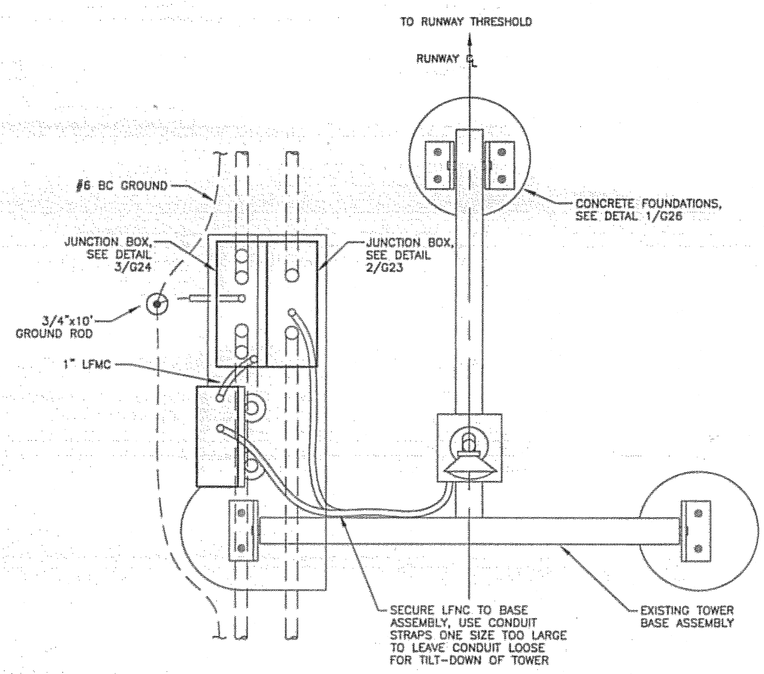

NOTE:
GUY WIRES NOT SHOWN FOR CLARITY

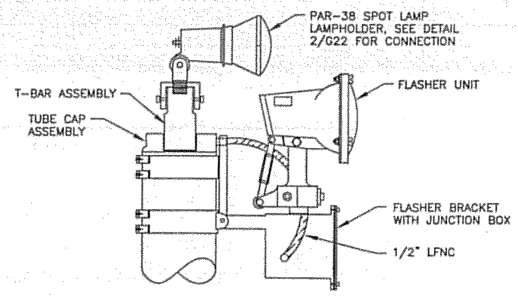

4/G25 **LIGHT BAR/FLASHER UNIT DETAIL**
N.T.S.

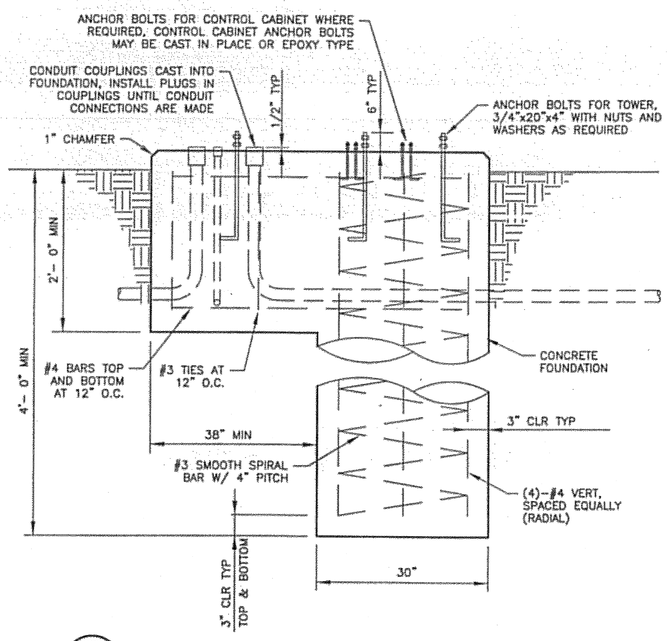

3/G25 **TOWER FOUNDATION DETAIL**
N.T.S.

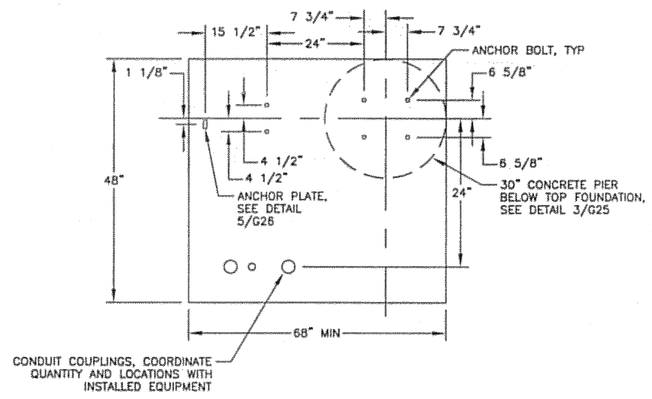

2/G25 **TOWER FOUNDATION LAYOUT**
N.T.S.

NOTE:
CONCRETE ANCHOR BOLT LOCATIONS SHOWN FOR NEW JAQUITH MG-20 BASE ASSEMBLY, ADJUST DIMENSIONS AS REQUIRED WHEN REUSING EXISTING EQUIPMENT

DO NOT SCALE FROM THESE DRAWINGS USE DIMENSIONS

PATH: I:\823400\Dwgs\E\Sheets\G25-M7.dwg
Tue, 03/Oct/06 02:23PM lschneller
TAB: G12

ADDENDUM NUMBER

ATTACHMENT NUMBER

RECORD OF REVISIONS

No.	DATE	DESCRIPTION

KETCHIKAN AIRPORT
RUNWAY SAFETY AREA EXPANSION
& RUNWAY OVERLAY
PROJECT NO. 68306

MALSR DETAILS

PREPARED BY: USKH INC.

CHECKED BY: GRH

STATE OF ALASKA 49TH REGISTERED PROFESSIONAL ENGINEER
GARY R. HABLE
EE-10243
10/4/06

DESIGNED BY: LPS

DRAWN BY: LPS

STATE OF ALASKA
DEPARTMENT OF TRANSPORTATION & PUBLIC FACILITIES
DESIGN & ENGINEERING SERVICES
DIVISION-SOUTHEAST REGION

MALSR DETAILS

PROJECT DESIGNATION	
AIP NO. 3-02-0144-1606	
STATE	YEAR
ALASKA	2006
SHEET NUMBER	TOTAL SHEETS
G25	131

See attached Electrical Asbuilts

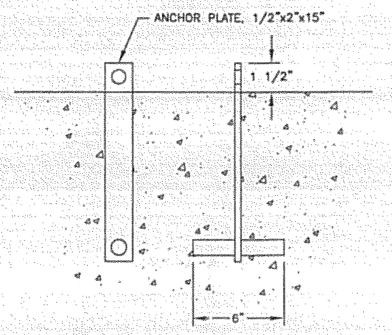

5 G26 **ANCHOR PLATE DETAIL**
N.T.S.

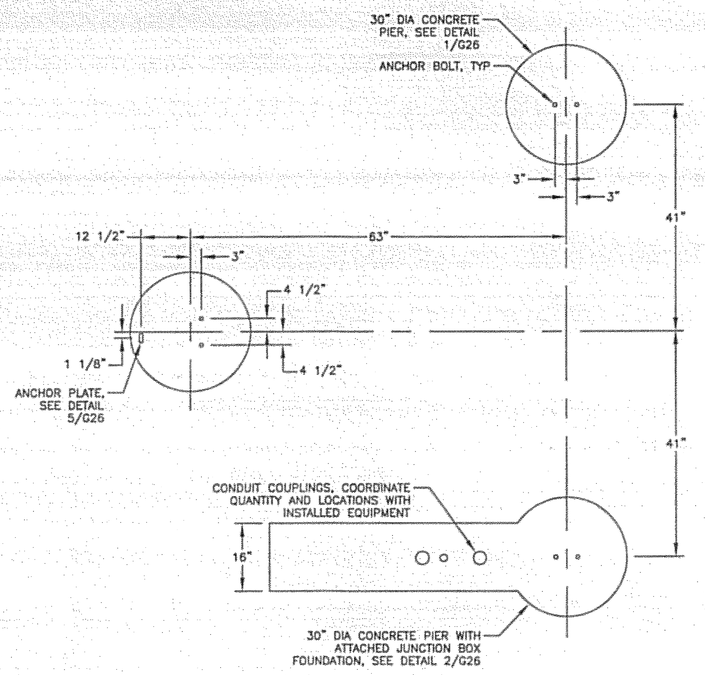

3 G26 **TOWER FOUNDATION LAYOUT**
N.T.S.

NOTE:
CONCRETE PIER AND ANCHOR BOLT LOCATIONS SHOWN FOR NEW JAQUITH MG-30/40 BASE ASSEMBLY. ADJUST DIMENSIONS AS REQUIRED WHEN REUSING EXISTING EQUIPMENT

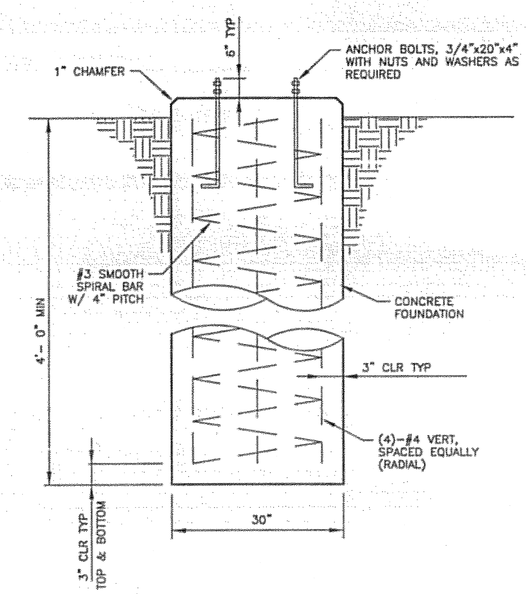

1 G26 **CONCRETE PIER DETAIL**
N.T.S.

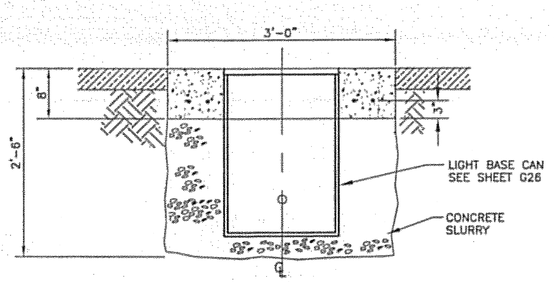

SECTION

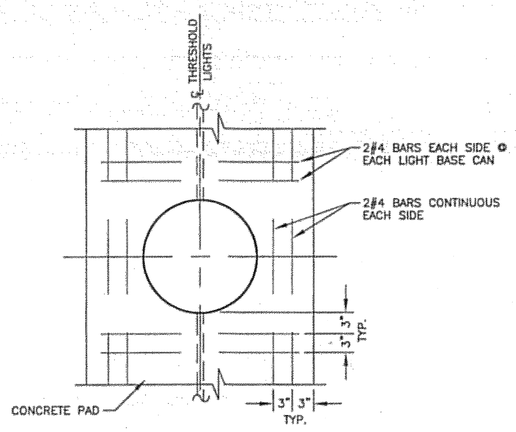

PLAN VIEW

4 G26 **BASE MOUNTED LIGHT FOUNDATION DETAILS**
N.T.S.

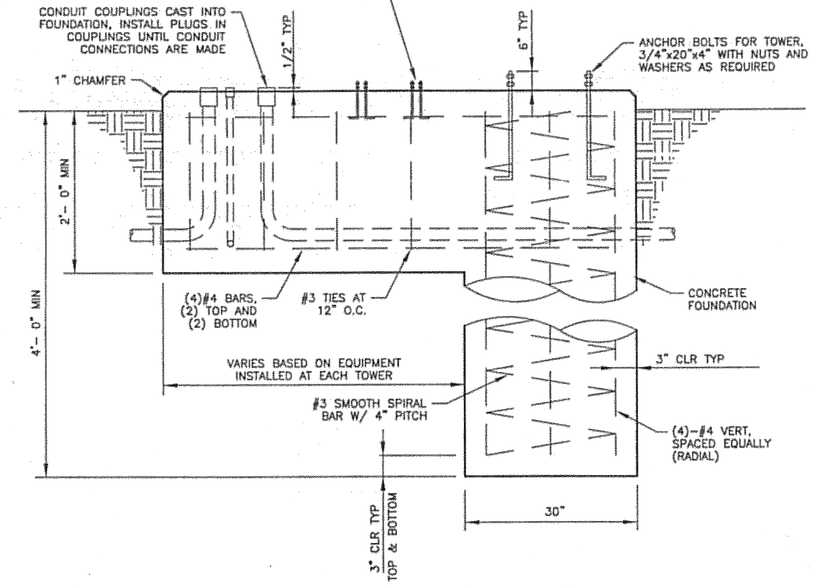

2 G26 **CONCRETE PIER WITH JUNCTION BOX FOUNDATION DETAIL**
N.T.S.

DO NOT SCALE FROM THESE DRAWINGS USE DIMENSIONS

PATH: I:\823400\Dwgs\E\Sheets\G26-M8.dwg
Tue, 03/Oct/06 02:23PM lschneller
TAB: G12

ADDENDUM NUMBER
ATTACHMENT NUMBER

RECORD OF REVISIONS

No.	DATE	DESCRIPTION

KETCHIKAN AIRPORT
RUNWAY SAFETY AREA EXPANSION & RUNWAY OVERLAY
PROJECT NO. 68306

MALSR DETAILS

PREPARED BY: USKH INC.
CHECKED BY: GRH

STATE OF ALASKA 49TH GARY R. HABLE EE-10243 REGISTERED PROFESSIONAL ENGINEER
10/4/06

DESIGNED BY: LPS
DRAWN BY: LPS

STATE OF ALASKA
DEPARTMENT OF TRANSPORTATION & PUBLIC FACILITIES
DESIGN & ENGINEERING SERVICES
DIVISION-SOUTHEAST REGION

MALSR DETAILS

PROJECT DESIGNATION	
AIP NO. 3-02-0144-1606	
STATE	YEAR
ALASKA	2006
SHEET NUMBER	TOTAL SHEETS
G26	131

See attached Electrical Asbuilts

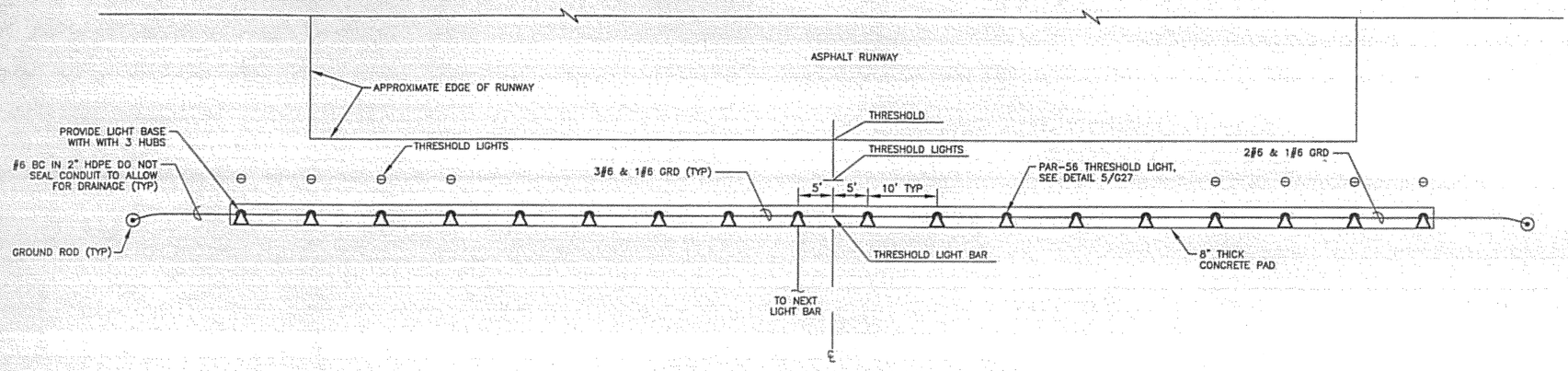

1 G27 **THRESHOLD LIGHTS - PLAN**
N.T.S.

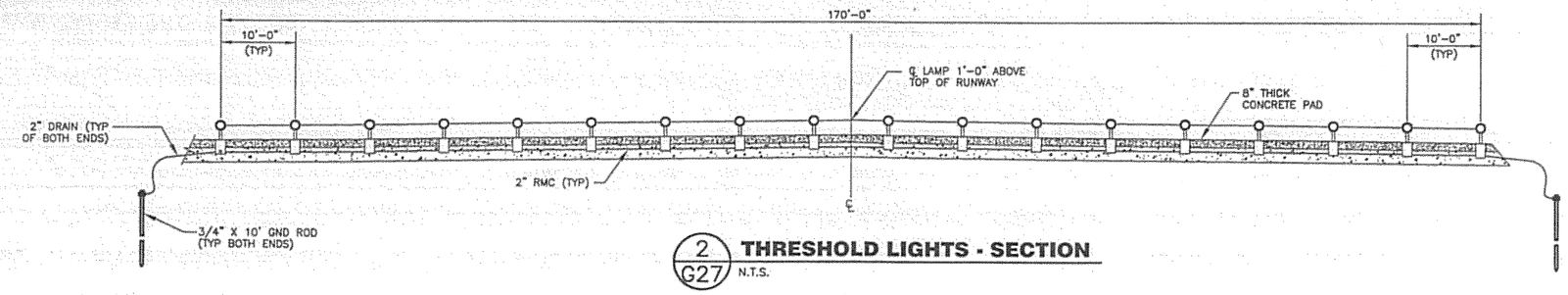

2 G27 **THRESHOLD LIGHTS - SECTION**
N.T.S.

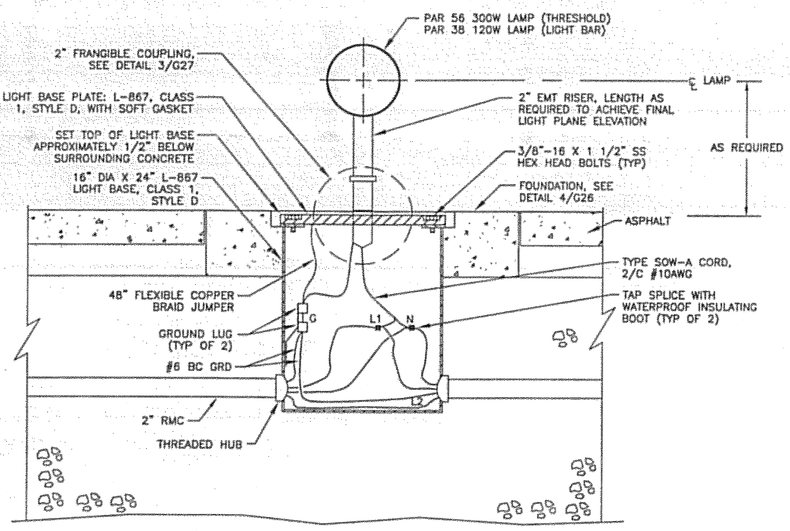

5 G27 **BASE MOUNTED LIGHT - SECTION**
N.T.S.

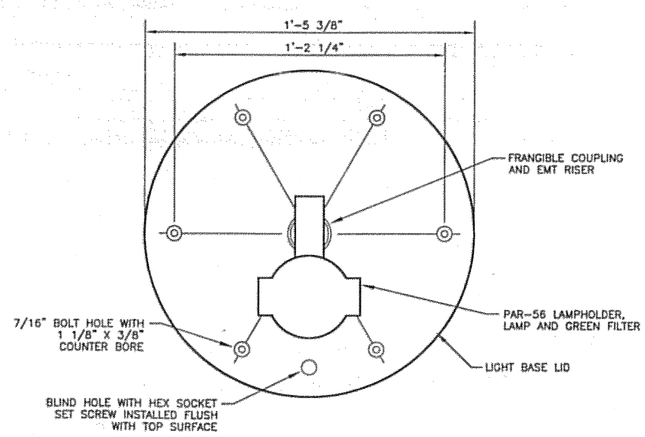

4 G27 **BASE MOUNTED LIGHT - PLAN**
N.T.S.

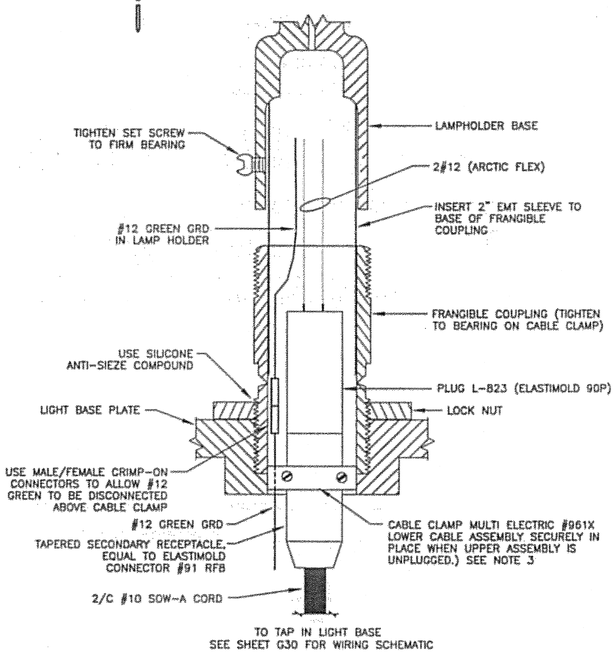

3 G27 **FRANGIBLE COUPLING DETAIL**
N.T.S.

NOTES:

1. RELOCATE THE EXISTING THRESHOLD LIGHTS (RW 11) TO THE NEW RUNWAY THRESHOLD OR INSTALL NEW THRESHOLD LIGHTS (RW 29). PROVIDE NEW THRESHOLD LIGHT BASES AND CIRCUITING AS SHOWN.
2. CONDUITS BELOW GRADE SHALL BE HDPE, EXCEPT INSTALL RIGID GALVANIZED STEEL (RMC) UNDER PADS AND ROADWAYS.
3. DRILL HOLE IN CABLE CLAMP AND INSTALL GREEN INSULATED GROUND CONDUCTOR FROM GROUND LUG IN LIGHT BASE TO LAMP HOLDER. CARE SHOULD BE TAKEN NOT TO INSTALL CABLE CLAMP UPSIDE DOWN SO THAT WHEN THE FRANGIBLE COUPLING IS SCREWED IN, IT WILL NOT TWIST THE CLAMP AND RECEPTACLE SO AS NOT TO SHORT THE WIRING.

DO NOT SCALE FROM THESE DRAWINGS USE DIMENSIONS

PATH: I:\823400\Dwgs\E\Sheets\G27-M9.dwg
Tue, 03/Oct/06 02:23PM lschneller
TAB: G12

ADDENDUM NUMBER
ATTACHMENT NUMBER

RECORD OF REVISIONS

No.	DATE	DESCRIPTION

KETCHIKAN AIRPORT
RUNWAY SAFETY AREA EXPANSION
& RUNWAY OVERLAY
PROJECT NO. 68306

MALSR DETAILS

PREPARED BY: USKH INC.

CHECKED BY: GRH

STATE OF ALASKA 49TH GARY R. HABLE EE-10243 REGISTERED PROFESSIONAL ENGINEER
10/4/06

DESIGNED BY: LPS

DRAWN BY: LPS

STATE OF ALASKA
DEPARTMENT OF TRANSPORTATION & PUBLIC FACILITIES
DESIGN & ENGINEERING SERVICES
DIVISION-SOUTHEAST REGION

MALSR DETAILS

PROJECT DESIGNATION	
AIP NO. 3-02-0144-1606	
STATE	YEAR
ALASKA	2006
SHEET NUMBER	TOTAL SHEETS
G27	131

See attached Electrical Asbuilts

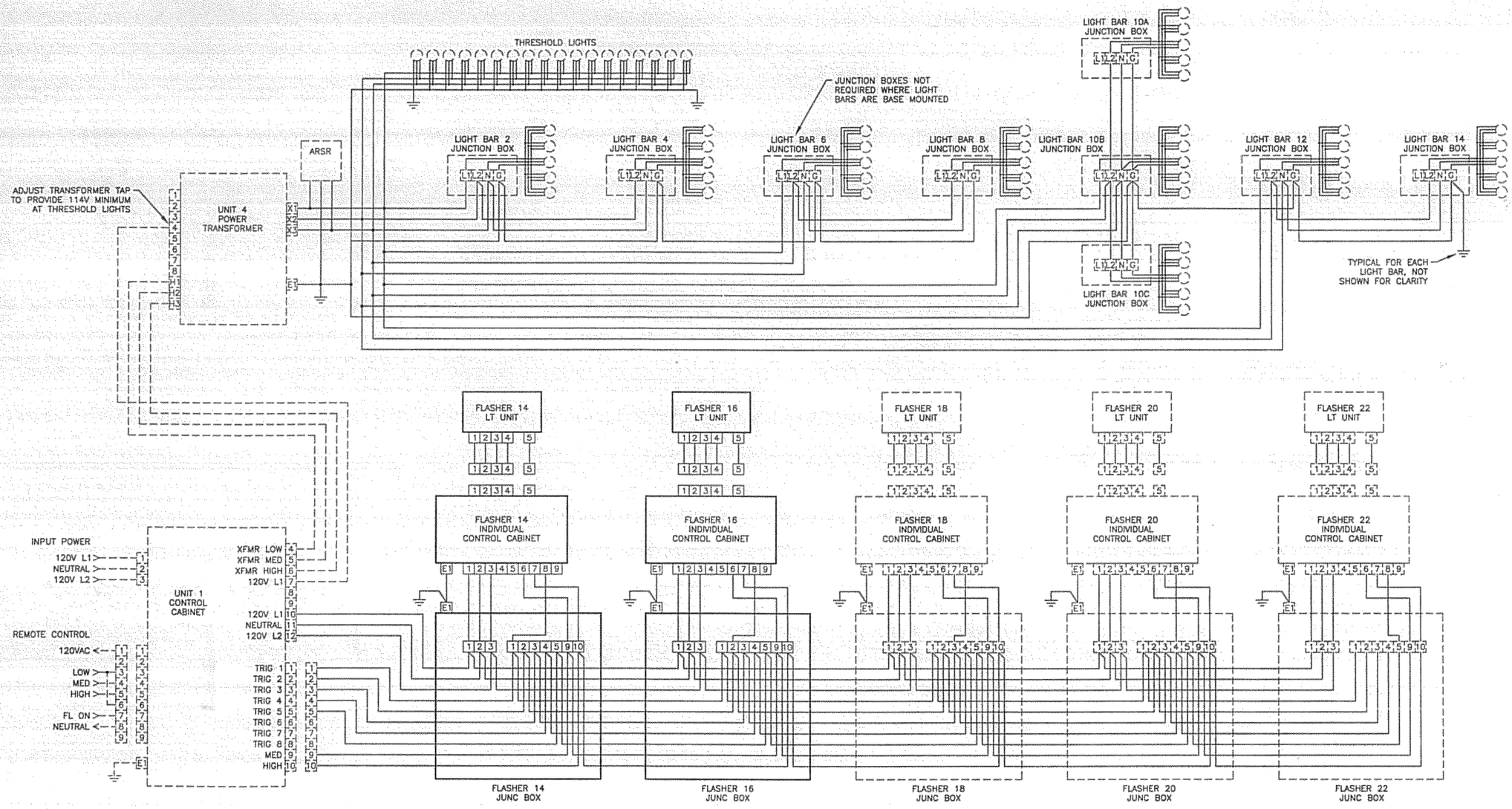

1/G28 **MALSR WIRING DIAGRAM - RW 11**
N.T.S.

NOTE:
ARRANGEMENT AND CONNECTION OF EQUIPMENT IS SCHEMATIC, SEE SHEET G19 FOR ACTUAL ARRANGEMENT AND CONDUCTORS

WIRING DIAGRAM LEGEND
- - - - EXISTING EQUIPMENT TO REMAIN OR TO BE REINSTALLED
——— NEW WORK

DO NOT SCALE FROM THESE DRAWINGS USE DIMENSIONS

PATH: I:\823400\Dwgs\E\Sheets\G28-M10.dwg
Tue, 03/Oct/06 02:23PM lschneller
TAB: G12

ADDENDUM NUMBER

ATTACHMENT NUMBER

RECORD OF REVISIONS

No.	DATE	DESCRIPTION

KETCHIKAN AIRPORT
RUNWAY SAFETY AREA EXPANSION
& RUNWAY OVERLAY
PROJECT NO. 68306

MALSR WIRING DIAGRAM - RW 11

PREPARED BY: USKH INC.

CHECKED BY: GRH

STATE OF ALASKA 49TH
GARY R. HABLE
EE-10243
REGISTERED PROFESSIONAL ENGINEER
10/4/06

DESIGNED BY: LPS

DRAWN BY: LPS

STATE OF ALASKA
DEPARTMENT OF TRANSPORTATION & PUBLIC FACILITIES
DESIGN & ENGINEERING SERVICES
DIVISION-SOUTHEAST REGION

MALSR WIRING DIAGRAM - RW 11

PROJECT DESIGNATION	
AIP NO. 3-02-0144-1606	
STATE	YEAR
ALASKA	2006
SHEET NUMBER	TOTAL SHEETS
G28	131

See attached Electrical Asbuilts

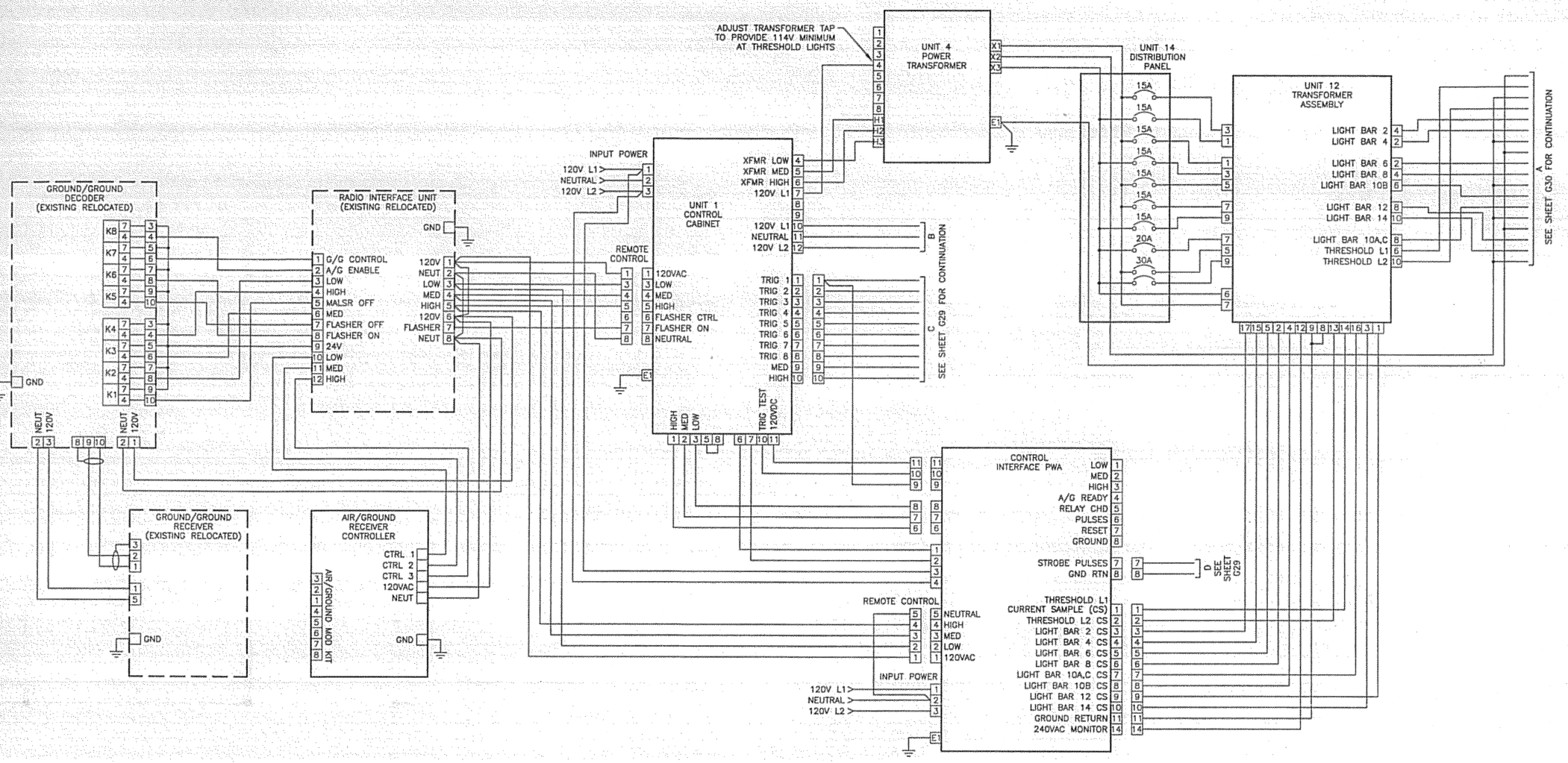

1 G29 **MALSR WIRING DIAGRAM - RW 29**
N.T.S.

DO NOT SCALE FROM THESE DRAWINGS USE DIMENSIONS

PATH: I:\823400\Dwgs\E\Sheets\G29-M11.dwg
Tue, 03/Oct/06 02:23PM lschneller
TAB: G12

ADDENDUM NUMBER

ATTACHMENT NUMBER

RECORD OF REVISIONS

No.	DATE	DESCRIPTION

KETCHIKAN AIRPORT
RUNWAY SAFETY AREA EXPANSION
& RUNWAY OVERLAY
PROJECT NO. 68306

MALSR WIRING DIAGRAM - RW 29

PREPARED BY: USKH INC.

CHECKED BY: GRH

STATE OF ALASKA 49TH GARY R. HABLE EE-10243 REGISTERED PROFESSIONAL ENGINEER
Gary R. Hable
10/4/06

DESIGNED BY: LPS

DRAWN BY: LPS

STATE OF ALASKA
DEPARTMENT OF TRANSPORTATION & PUBLIC FACILITIES
DESIGN & ENGINEERING SERVICES
DIVISION-SOUTHEAST REGION

MALSR WIRING DIAGRAM - RW 29

PROJECT DESIGNATION	
AIP NO. 3-02-0144-1606	
STATE	YEAR
ALASKA	2006
SHEET NUMBER	TOTAL SHEETS
G29	131

See attached Electrical Asbuilts

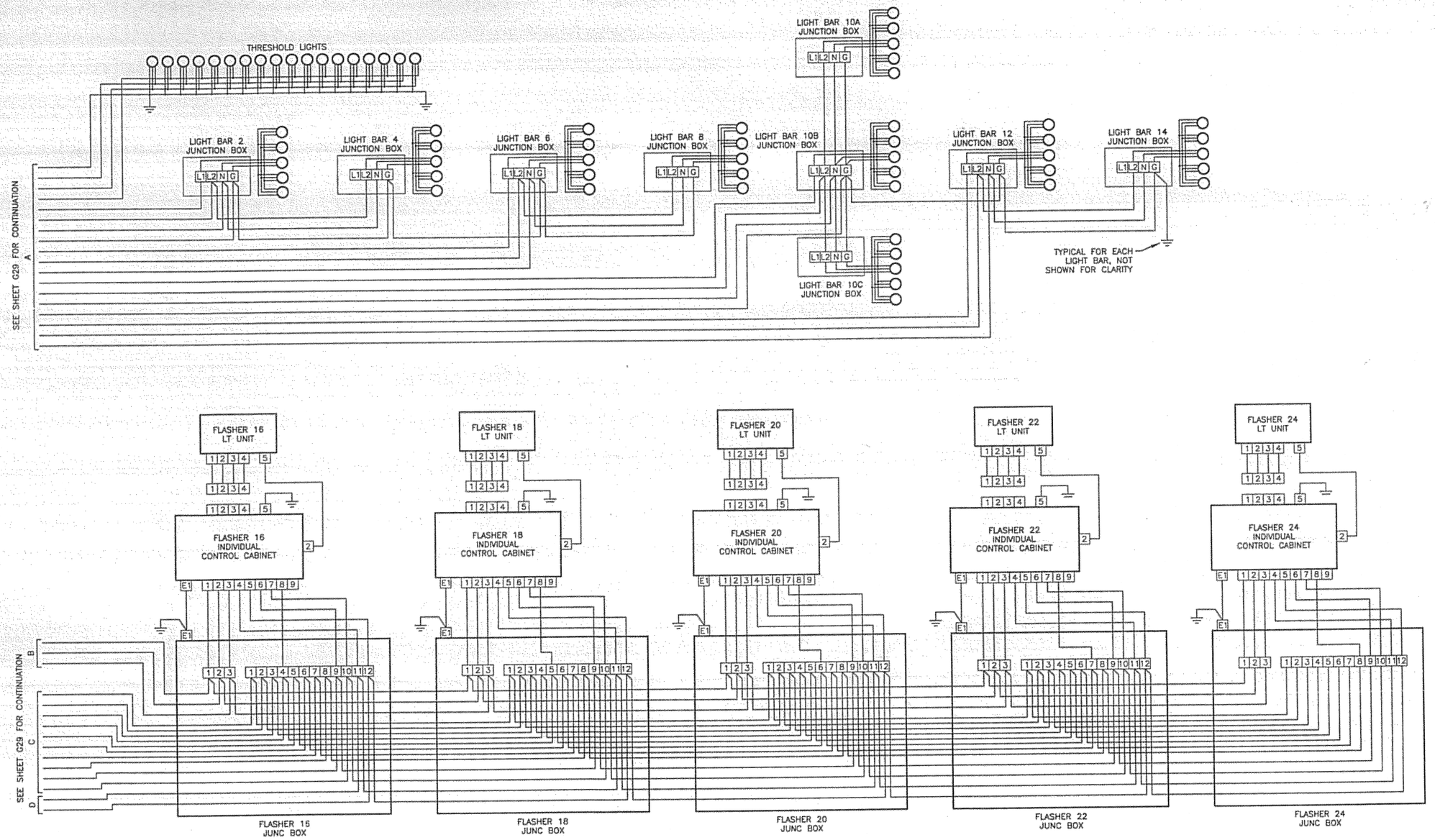

1 G30 **MALSR WIRING DIAGRAM - RW 29**
N.T.S.

NOTE:
ARRANGEMENT AND CONNECTION OF EQUIPMENT IS SCHEMATIC, SEE SHEET G19 FOR ACTUAL ARRANGEMENT AND CONDUCTORS

DO NOT SCALE FROM THESE DRAWINGS USE DIMENSIONS

PATH: I:\823400\Dwgs\E\Sheets\G30-M12.dwg
Tue, 03/Oct/06 02:24PM lschneller
TAB: G12

ADDENDUM NUMBER
ATTACHMENT NUMBER

RECORD OF REVISIONS

No.	DATE	DESCRIPTION

KETCHIKAN AIRPORT
RUNWAY SAFETY AREA EXPANSION
& RUNWAY OVERLAY
PROJECT NO. 68306

MALSR WIRING DIAGRAM - RW 29

PREPARED BY: USKH INC.

CHECKED BY: GRH

STATE OF ALASKA 49TH
GARY R. HABLE
EE-10243
REGISTERED PROFESSIONAL ENGINEER
10/4/06

DESIGNED BY: LPS

DRAWN BY: LPS

STATE OF ALASKA
DEPARTMENT OF TRANSPORTATION & PUBLIC FACILITIES
DESIGN & ENGINEERING SERVICES
DIVISION–SOUTHEAST REGION

MALSR WIRING DIAGRAM -RW 29

PROJECT DESIGNATION	
AIP NO. 3-02-0144-1606	
STATE	YEAR
ALASKA	2006
SHEET NUMBER	TOTAL SHEETS
G30	131

See attached Electrical Asbuilts

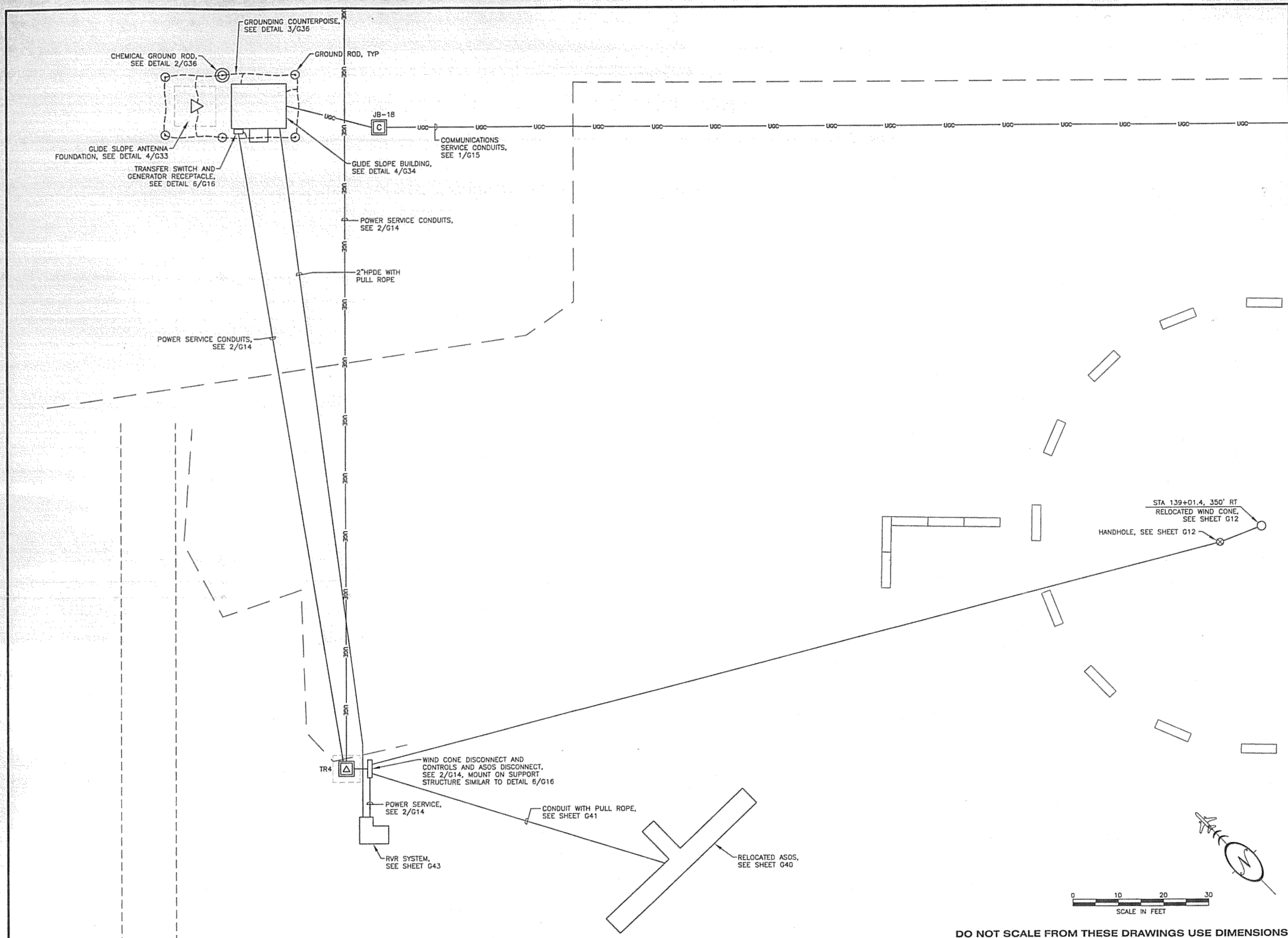

DO NOT SCALE FROM THESE DRAWINGS USE DIMENSIONS

PATH: I:\823400\Dwgs\E\Sheets\G31-G1.dwg
Tue, 03/Oct/06 02:24PM lschneller
TAB: G06

ADDENDUM NUMBER

ATTACHMENT NUMBER

RECORD OF REVISIONS

No.	DATE	DESCRIPTION

KETCHIKAN AIRPORT
RUNWAY SAFETY AREA EXPANSION & RUNWAY OVERLAY
PROJECT NO. 68306

GLIDE SLOPE AREA ENLARGED PLAN

PREPARED BY: USKH INC.

CHECKED BY: GRH

STATE OF ALASKA
49TH
GARY R. HABLE
EE-10243
REGISTERED PROFESSIONAL ENGINEER
10/4/06

DESIGNED BY: LPS

DRAWN BY: LPS

STATE OF ALASKA
DEPARTMENT OF TRANSPORTATION & PUBLIC FACILITIES
DESIGN & ENGINEERING SERVICES
DIVISION-SOUTHEAST REGION

GLIDE SLOPE AREA ENLARGED PLAN

PROJECT DESIGNATION	
AIP NO. 3-02-0144-1606	
STATE	YEAR
ALASKA	2006
SHEET NUMBER	TOTAL SHEETS
G31	131

See attached Electrical Asbuilts

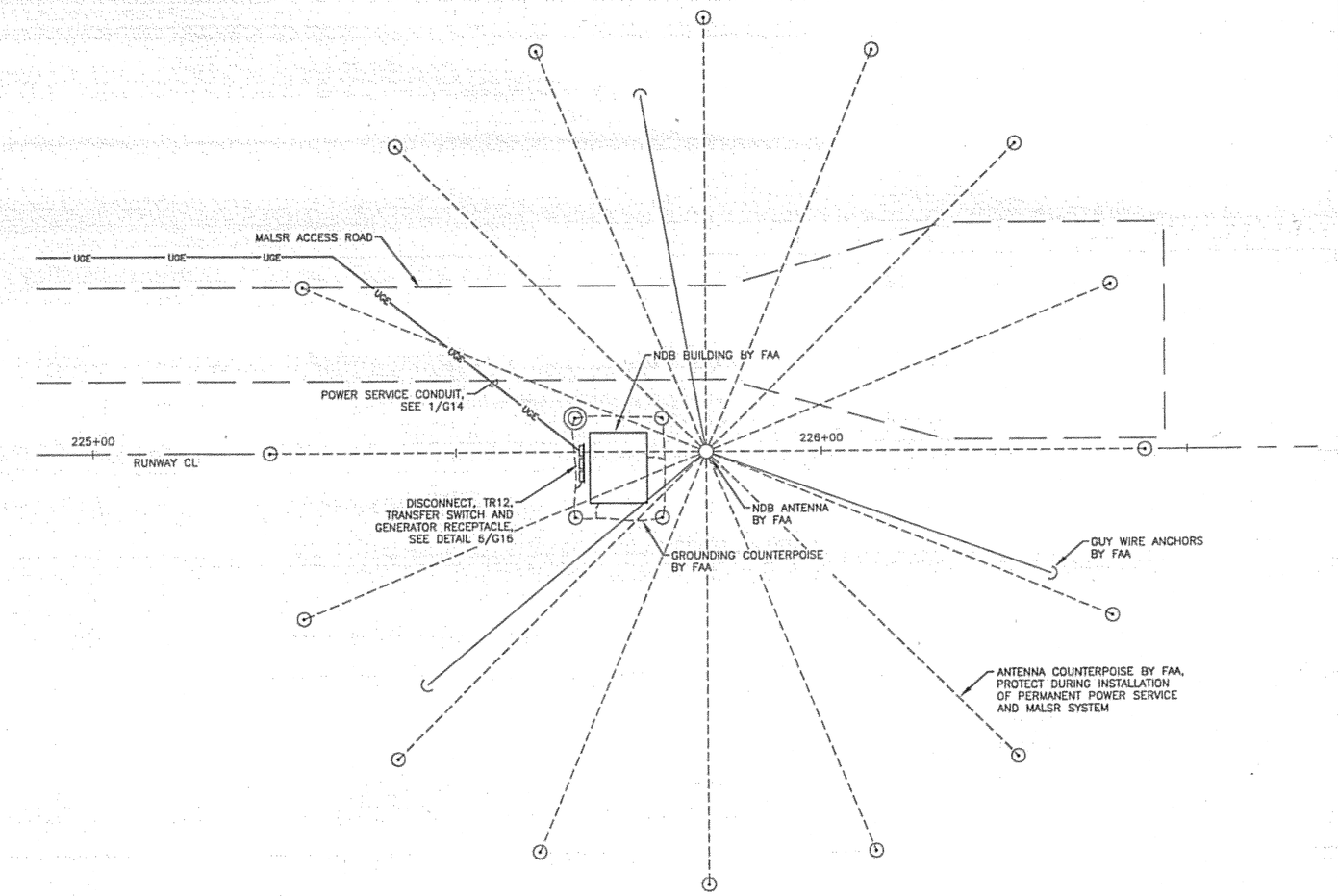

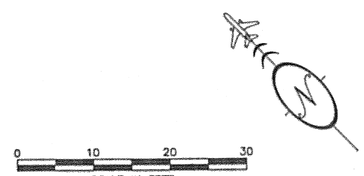

0 10 20 30
SCALE IN FEET

DO NOT SCALE FROM THESE DRAWINGS USE DIMENSIONS

PATH: I:\823400\Dwgs\E\Sheets\G32-N1.dwg
Tue, 03/Oct/06 02:24PM Ischneller
TAB: G06

ADDENDUM NUMBER

ATTACHMENT NUMBER

RECORD OF REVISIONS

No.	DATE	DESCRIPTION

KETCHIKAN AIRPORT
RUNWAY SAFETY AREA EXPANSION
& RUNWAY OVERLAY
PROJECT NO. 68306

NDB AREA ENLARGED PLAN

PREPARED BY: USKH INC.

CHECKED BY: GRH

STATE OF ALASKA
49TH
GARY R. HABLE
EE-10243
REGISTERED PROFESSIONAL ENGINEER
10/4/06

DESIGNED BY: LPS

DRAWN BY: LPS

STATE OF ALASKA
DEPARTMENT OF TRANSPORTATION
& PUBLIC FACILITIES
DESIGN & ENGINEERING SERVICES
DIVISION–SOUTHEAST REGION

NDB AREA ENLARGED PLAN

PROJECT DESIGNATION
AIP NO. 3-02-0144-1606

STATE	YEAR
ALASKA	2006
SHEET NUMBER	TOTAL SHEETS
G32	131

See attached Electrical Asbuilts

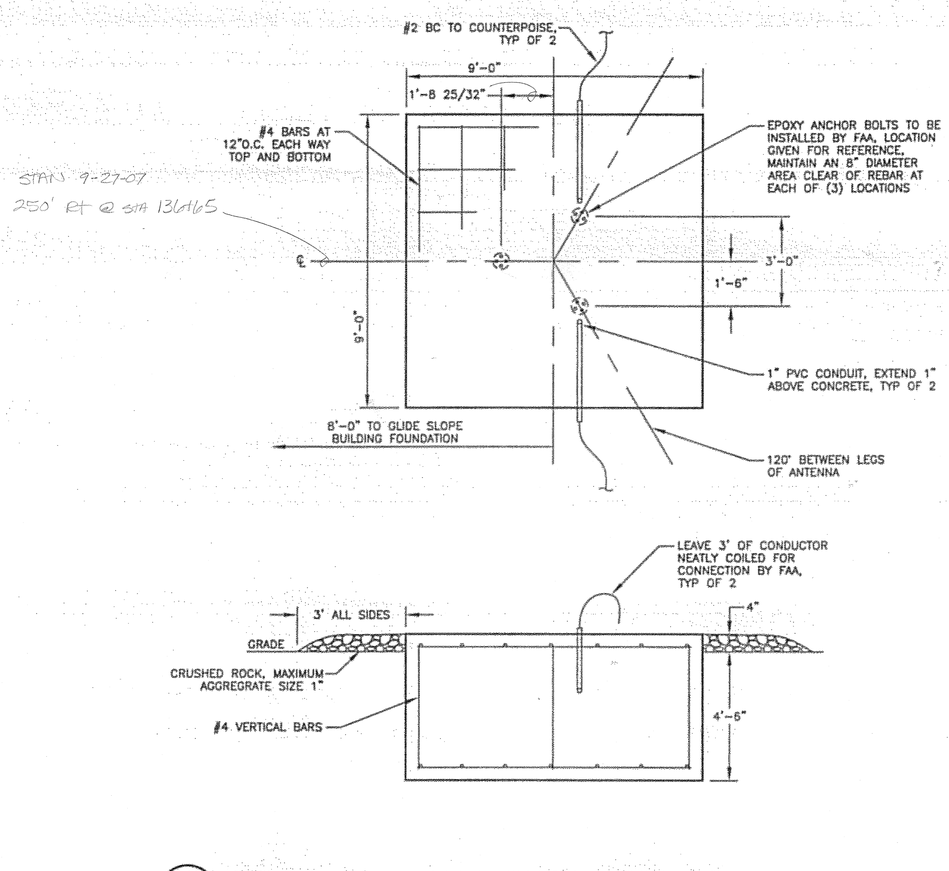

1 G33 GLIDE SLOPE ANTENNA TOWER FOUNDATION DETAIL

N.T.S.

FOUNDATION NOTES:

1. CONCRETE SHALL DEVELOP 3000PSI IN 28 DAYS WITH A MAXIMUM SLUMP OF 3". MAXIMUM AGGREGATE SIZE SHALL BE 3/4".
2. IF FILL OR GRADING IS REQUIRED, IT SHALL BE BUILT UP IN LAYERS NOT EXCEEDING 6". EACH LAYER SHALL BE THOROUGHLY TAMPED AND COMPACTED TO 95% OF MAXIMUM DENSITY AT OPTIMUM WATER CONTENT. GRADING OF SOIL AND ROCK SHOULD BE SUCH THAT ALL DRAINAGE IS AWAY FROM FOUNDATION.
3. MAINTAIN A MINIMUM OF 3" OF CONCRETE COVER OVER ALL REINFORCING STEEL.
4. FOUNDATION SURFACE SHALL BE LEVEL ±1/8" AND HAVE A BROOMED FINISH.
5. REINFORCING STEEL SHALL BE ASTM A615 GRADE 40 DEFORMED BARS.
6. ALL FORMS MUST BE REMOVED BEFORE PLACING COMPACTED BACKFILL.

DO NOT SCALE FROM THESE DRAWINGS USE DIMENSIONS

PATH: I:\823400\Dwgs\E\Sheets\G33-F2.dwg
Tue, 03/Oct/06 02:24PM lschneller
TAB: G12

ADDENDUM NUMBER

ATTACHMENT NUMBER

RECORD OF REVISIONS

No.	DATE	DESCRIPTION

KETCHIKAN AIRPORT
RUNWAY SAFETY AREA EXPANSION
& RUNWAY OVERLAY
PROJECT NO. 68306

NAVAID FOUNDATION DETAILS

PREPARED BY: USKH INC.

CHECKED BY: GRH

STATE OF ALASKA 49TH
GARY R. HABLE
EE-10243
REGISTERED PROFESSIONAL ENGINEER
10/4/06

DESIGNED BY: LPS

DRAWN BY: LPS

STATE OF ALASKA
DEPARTMENT OF TRANSPORTATION & PUBLIC FACILITIES
DESIGN & ENGINEERING SERVICES
DIVISION-SOUTHEAST REGION

NAVAID FOUNDATION DETAILS

PROJECT DESIGNATION
AIP NO. 3-02-0144-1606

STATE	YEAR
ALASKA	2006
SHEET NUMBER	TOTAL SHEETS
G33	131

See attached Electrical Asbuilts

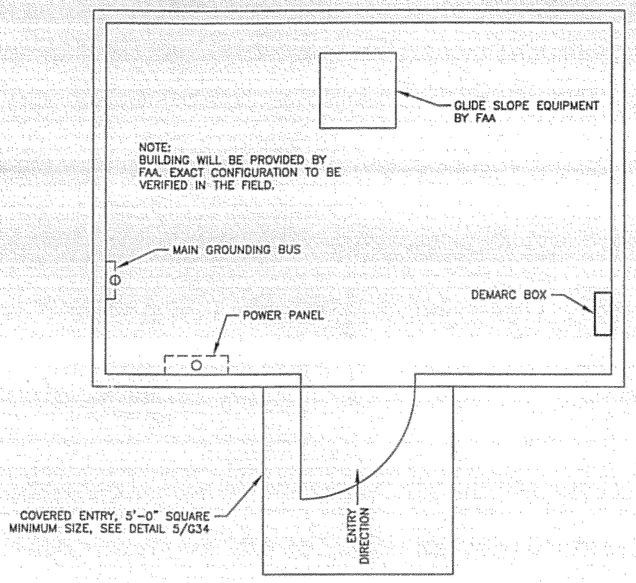

4/G34 **GLIDE SLOPE EQUIPMENT ENCLOSURE**
N.T.S.

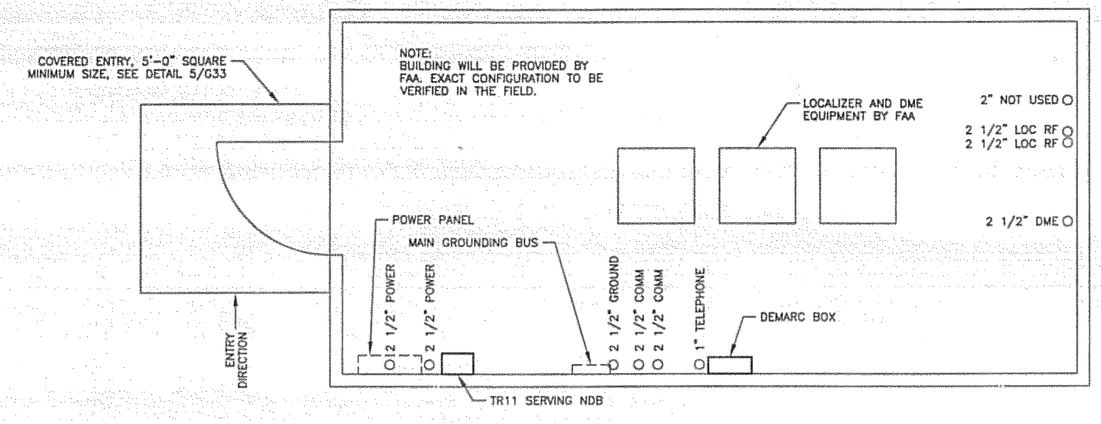

1/G34 **LOCALIZER EQUIPMENT ENCLOSURE**
N.T.S.

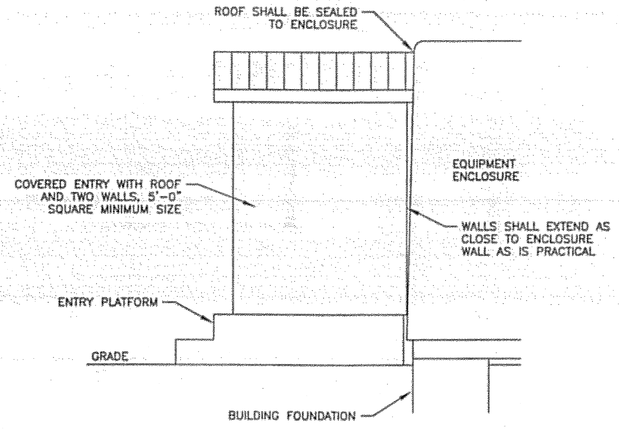

5/G34 **COVERED ENTRY DETAIL**
N.T.S.

COVERED ENTRY NOTES:

1. COVERED ENTRIES MAY BE PREFABRICATED FIBERGLASS UNITS OR CONSTRUCTED ON SITE.
2. FIELD CONSTRUCTED ENTRIES SHALL BE CONSTRUCTED OF ALL-WEATHER TREATED WOOD STRUCTURE, METAL OR FIBERGLASS ROOF AND WALL PANELS, AND FIBERGLASS FLOOR GRATING. OTHER MATERIALS MAY BE USED UPON APPROVAL OF THE ENGINEER.
3. THE ENTRY PLATFORM MAY BE CONSTRUCTED AS DESCRIBED ABOVE OR MAY BE POURED OR PRECAST CONCRETE. MAXIMUM STEP HEIGHT SHALL BE 8".
4. ONE PREFABRICATED FIBERGLASS ENTRY IS AVAILABLE FOR SALVAGE FROM THE EXISTING LOCALIZER BUILDING.
5. COORDINATE ENTRY CONSTRUCTION AND CONNECTION TO ENCLOSURE WITH EXISTING ENCLOSURE PENETRATIONS, VENTILATION HOODS, ENTRY DOOR, ETC.

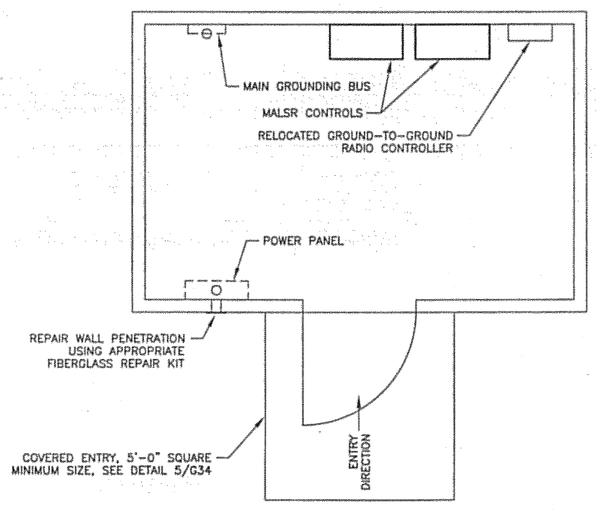

3/G34 **MALSR EQUIPMENT ENCLOSURE**
N.T.S.

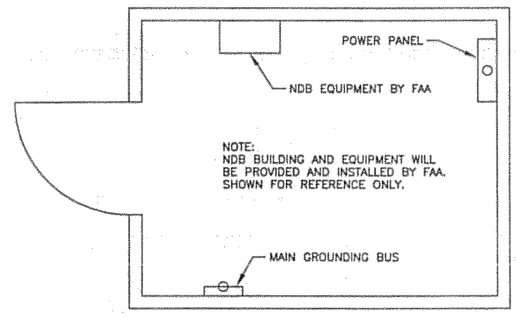

2/G34 **NDB EQUIPMENT ENCLOSURE**
N.T.S.

BUILDING NOTES:

1. LAYOUTS SHOWN ARE TAKEN FROM AS-BUILT INFORMATION AND SITE INVESTIGATIONS. DIMENSIONS, LOCATIONS, AND LAYOUT SHOULD BE VERIFIED IN THE FIELD PRIOR TO STARTING CONSTRUCTION.
2. BUILDING PENETRATIONS SHALL BE MADE THROUGH THE FLOOR ONLY. EXISTING BUILDING PENETRATIONS SHALL BE REUSED WHENEVER POSSIBLE. ADDITIONAL PENETRATIONS SHALL NOT BE MADE WITHOUT PRIOR APPROVAL OF THE ENGINEER.
3. EXACT LAYOUT OF EQUIPMENT AND CONDUIT ENTRY POINTS SHALL BE COORDINATED IN THE FIELD BASED ON EXISTING AND FIELD CONDITIONS.

DO NOT SCALE FROM THESE DRAWINGS USE DIMENSIONS

PATH: I:\823400\Dwgs\E\Sheets\G34-F3.dwg
Tue, 03/Oct/06 02:24PM lschneller
TAB: G11

ADDENDUM NUMBER
ATTACHMENT NUMBER

RECORD OF REVISIONS

No.	DATE	DESCRIPTION

KETCHIKAN AIRPORT
RUNWAY SAFETY AREA EXPANSION & RUNWAY OVERLAY
PROJECT NO. 68306

EQUIPMENT ENCLOSURE PLANS

PREPARED BY: USKH INC.

CHECKED BY: GRH

STATE OF ALASKA 49TH — GARY R. HABLE EE-10243 REGISTERED PROFESSIONAL ENGINEER — 10/4/06

DESIGNED BY: LPS

DRAWN BY: LPS

STATE OF ALASKA
DEPARTMENT OF TRANSPORTATION & PUBLIC FACILITIES
DESIGN & ENGINEERING SERVICES
DIVISION-SOUTHEAST REGION

EQUIPMENT ENCLOSURE PLANS

PROJECT DESIGNATION	
AIP NO. 3-02-0144-1606	
STATE	YEAR
ALASKA	2006
SHEET NUMBER	TOTAL SHEETS
G34	131

See attached Electrical Asbuilts

NOTES:

1. 3 1/4" SOLID WALL FIBERGLASS CONSTRUCTION.
2. 3/4" PLYWOOD BACKING ————
3. PANELBOARD P-1A SCHEDULE.

120/240V		1PH			
1. SERVICE DC	DP60A	2.	BASEBOARD HTR		DP20A
3. SERVICE DC	DP60A	4.	BASEBOARD HTR		DP20A
5. LIGHTS	20A	6.	ANT. HTRS		DP20A
7. OUTLETS	20A	8.	ANT. HTRS		DP20A
9. OUTLETS	20A	10.	THERMOSTAT		20A
11. EQUIP. OUTLET AND GFCI	20A	12.	OBSTRUCTION LTS.		20A

4. THE EXISTING LOCALIZER RF DISTRIBUTION/COMBININB BUILDING IS TO BE REUSED. THESE DRAWINGS OF THE EXISTING BUILDING ARE FOR REFERENCE ONLY. EXISTING BUILDING PENETRATIONS SHALL BE REUSED – NO NEW BUILDING PENETRATIONS SHALL BE MADE.

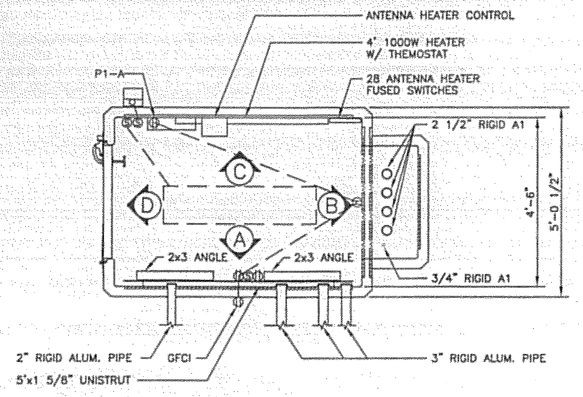

PLAN
SCALE: 1/2" = 1'-0"

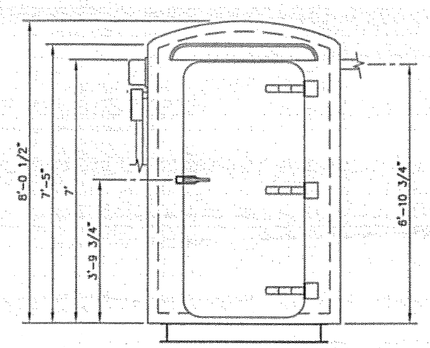

FRONT ELEVATION
SCALE: 1/2" = 1'-0"

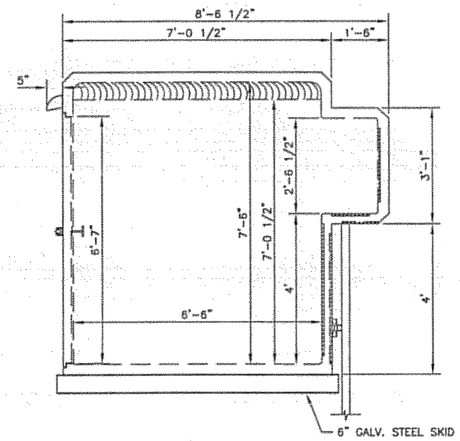

SIDE ELEVATION
SCALE: 1/2" = 1'-0"

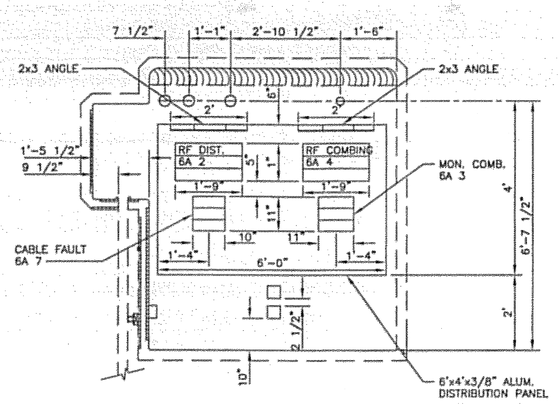

ELEVATION "A"
SCALE: 1/2" = 1'-0"

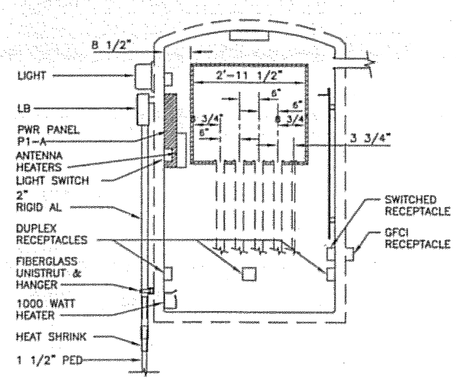

ELEVATION "B"
SCALE: 1/2" = 1'-0"

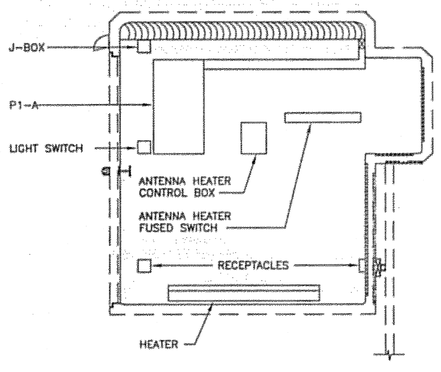

ELEVATION "C"
SCALE: 1/2" = 1'-0"

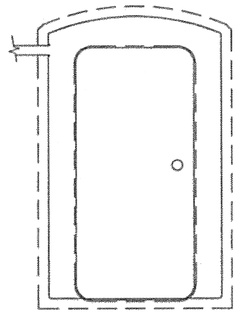

ELEVATION "D"
SCALE: 1/2" = 1'-0"

DO NOT SCALE FROM THESE DRAWINGS USE DIMENSIONS

PATH:
I:\823400\Dwgs\E\Sheets\G35-C1.dwg

Tue, 03/Oct/06 02:24PM lschneller
TAB: G12

ADDENDUM NUMBER

ATTACHMENT NUMBER

RECORD OF REVISIONS

No.	DATE	DESCRIPTION

KETCHIKAN AIRPORT
RUNWAY SAFETY AREA EXPANSION
& RUNWAY OVERLAY
PROJECT NO. 68306

LOCALIZER RF DISTRIBUTION/COMBING UNIT

PREPARED BY: USKH INC.

CHECKED BY: GRH

STATE OF ALASKA
49TH
GARY R. HABLE
EE-10243
REGISTERED PROFESSIONAL ENGINEER
10/4/06

DESIGNED BY: LPS

DRAWN BY: LPS

STATE OF ALASKA
DEPARTMENT OF TRANSPORTATION
& PUBLIC FACILITIES
DESIGN & ENGINEERING SERVICES
DIVISION-SOUTHEAST REGION

LOCALIZER DISTRIBUTION/ COMBINING UNIT

PROJECT DESIGNATION
AIP NO. 3-02-0144-1606

STATE	YEAR
ALASKA	2006
SHEET NUMBER	TOTAL SHEETS
G35	131

See attached Electrical Asbuilts

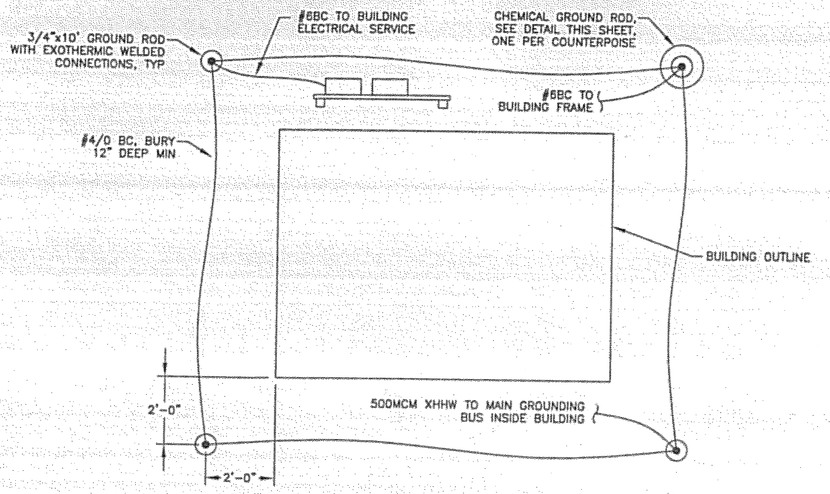

NOTE:
DETAIL IS TYPICAL, SEE PLANS FOR EXACT CONFIGURATION AND CONNECTION POINTS

3 G36 **GROUNDING COUNTERPOISE DETAIL**
N.T.S.

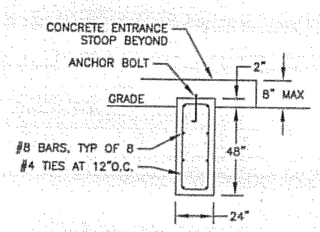

CONCRETE GRADE BEAM

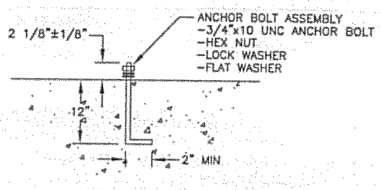

ANCHOR BOLT DETAIL

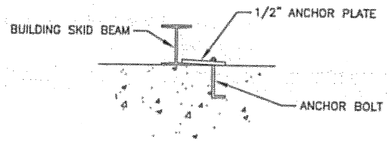

SHELTER ANCHOR DETAIL

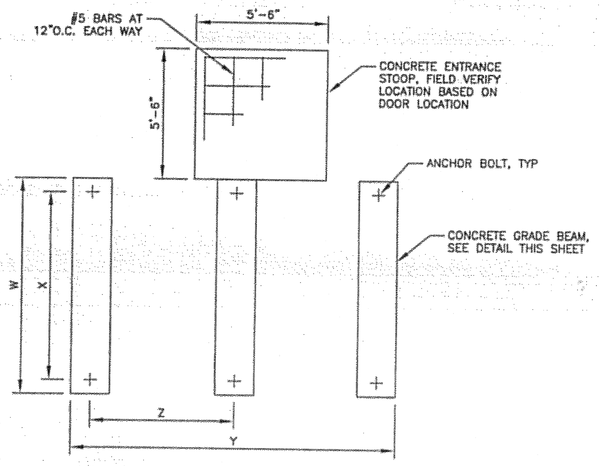

BUILDING FOUNDATION NOTES:

1. FIELD VERIFY ALL DIMENSIONS WITH BUILDINGS BEING INSTALLED

BUILDING	W	X	Y	Z	NO OF BEAMS
LOCALIZER	10'-0"	9'-3"	20'-0"	4'-6"	5
MALSR	8'-0"	7'-3"	12'-0"	5'-0"	3
GLIDE SLOPE	10'-0"	9'-3"	14'-0"	4'-0"	4
DIST/COMB	5'-0"	4'-3"	7'-0"	5'-0"	2
GENERATOR	FIELD VERIFY MODULE SIZE			4'-0" MAX	

2. CONCRETE SHALL DEVELOP 3000PSI IN 28 DAYS WITH A MAXIMUM SLUMP OF 3". MAXIMUM AGGREGATE SIZE SHALL BE 3/4".
3. IF FILL OR GRADING IS REQUIRED, IT SHALL BE BUILT UP IN LAYERS NOT EXCEEDING 6". EACH LAYER SHALL BE THOROUGHLY TAMPED AND COMPACTED TO 95% OF MAXIMUM DENSITY AT OPTIMUM WATER CONTENT. GRADING OF SOIL AND ROCK SHOULD BE SUCH THAT ALL DRAINAGE IS AWAY FROM FOUNDATIONS.
4. ANCHOR BOLTS, NUTS, AND WASHERS SHALL BE HOT DIP GALVANIZED STEEL PER ASTM A153 AND A325.
5. MAINTAIN A MINIMUM OF 3" OF CONCRETE COVER OVER ALL REINFORCING STEEL.
6. GRADE BEAM FOUNDATION ELEVATIONS SHALL BE HORIZONTALLY LEVEL WITH EACH OTHER ±1/4". INDIVIDUAL GRADE BEAM SURFACES MUST BE LEVEL ±1/8".
7. ANCHOR BOLTS MAY BE REPLACED WITH EPOXY ANCHORED THREADED ROD AT THE CONTRACTOR'S OPTION. EPOXY SHALL HAVE A MINIMUM TENSION SHEAR OF 4500PSI WHEN SET. THREADED ROD SHALL BE 3/4"-10 UNC STAINLESS STEEL. INSTALL ROD PER MANUFACTURER'S RECOMMENDATIONS LEAVING 2 1/8" ABOVE CONCRETE.
8. FOUNDATION ELEVATION SHALL BE FIELD VERIFIED AND RECORDED ON THE AS-BUILT DRAWINGS.

1 G36 **TYPICAL BUILDING FOUNDATION DETAILS**
N.T.S.

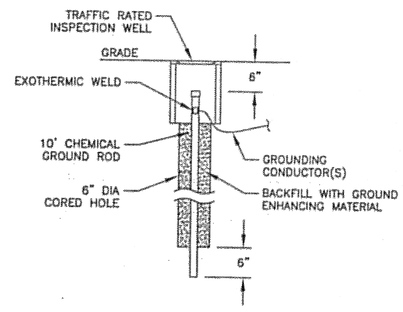

2 G36 **CHEMICAL GROUND ROD DETAIL**
N.T.S.

DO NOT SCALE FROM THESE DRAWINGS USE DIMENSIONS

PATH: I:\823400\Dwgs\E\Sheets\G36-F1.dwg
Tue, 03/Oct/06 02:25PM lschneller
TAB: G12

ADDENDUM NUMBER

ATTACHMENT NUMBER

RECORD OF REVISIONS

No.	DATE	DESCRIPTION

KETCHIKAN AIRPORT
RUNWAY SAFETY AREA EXPANSION & RUNWAY OVERLAY
PROJECT NO. 68306

EQUIPMENT ENCLOSURE DETAILS

PREPARED BY: USKH INC.

CHECKED BY: GRH

STATE OF ALASKA 49TH REGISTERED PROFESSIONAL ENGINEER
GARY R. HABLE
EE-10243
10/4/06

DESIGNED BY: LPS

DRAWN BY: LPS

STATE OF ALASKA
DEPARTMENT OF TRANSPORTATION & PUBLIC FACILITIES
DESIGN & ENGINEERING SERVICES
DIVISION-SOUTHEAST REGION

EQUIPMENT ENCLOSURE DETAILS

PROJECT DESIGNATION
AIP NO. 3-02-0144-1606

STATE	YEAR
ALASKA	2006
SHEET NUMBER	TOTAL SHEETS
G36	131

See attached Electrical Asbuilts

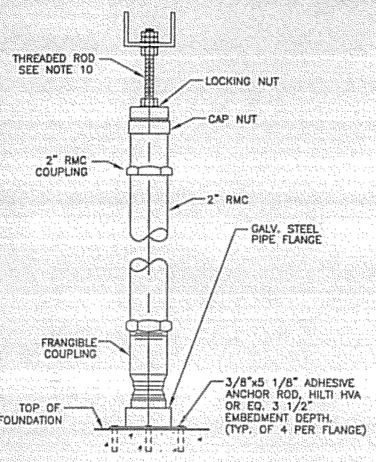

3 G37 **STRUCTURAL LEG DETAIL**
N.T.S.

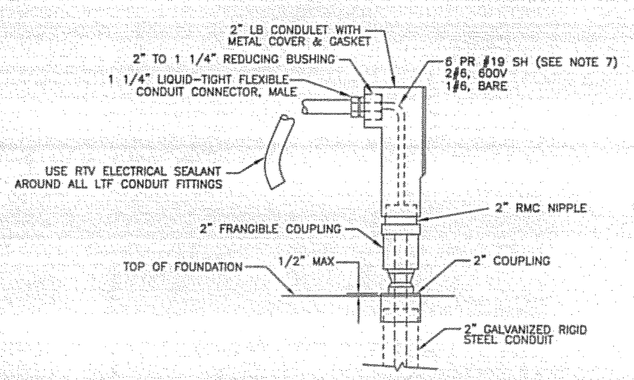

2 G37 **POWER AND CONTROL WIRE LEG**
N.T.S.

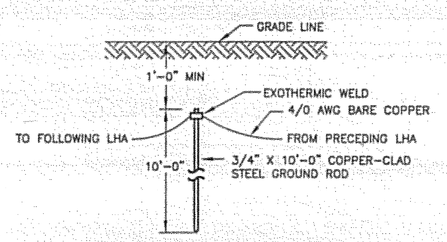

1 G37 **DETAIL A - GROUND ROD INSTALLATION DETAIL**
N.T.S.

NOTES:

1. INSTALL PAPI FURNISHED BY FAA (RW 29) AND REINSTALL EXISTING PAPI SYSTEM (RW 11). FAA WILL AIM AND CERTIFY PAPI SYSTEMS AFTER INSTALLATION IS COMPLETE.
2. SEE CONCRETE SPECIFICATIONS FOR CONCRETE REQUIREMENTS.
3. PRIOR TO PLACING FORMS, ENSURE ONLY NFS MATERIAL COMPACTED TO 95% IS BELOW ALL FOUNDATIONS. IF NFS MATERIAL IS NOT PRESENT, EXCAVATE AS REQUIRED TO PROVIDE A MINIMUM OF 4 FEET OF NFS MATERIAL BENEATH PAPI FOUNDATIONS. PLACE FILL IN 8" LIFTS AND COMPACT TO 95% OF MAXIMUM DENSITY AS DETERMINED BY WAQTC FOP FOR AASHTO T 99/T 180.
4. REINFORCING STEEL SHALL BE ASTM A615, GRADE 60, DEFORMED STEEL BARS.
5. DRILL HOLES AND INSTALL ADHESIVE ANCHOR RODS WHEN PAPI UNITS HAVE BEEN ACCURATELY LOCATED.
6. COORDINATE PLACEMENT OF CONDUIT STUB-UPS WITH FAA.
7. FOLD BACK UNUSED SHIELDED PAIRS AND TAPE IN THE LHA.
8. ALL MOUNTINGS TO BE 2 INCH FRANGIBLE COUPLINGS.
9. 2" RMC LENGTH IS REQUIRED SO THAT THE BEAM CENTERS OF ALL LIGHT UNITS SHALL BE WITHIN 1 INCH OF A HORIZONTAL PLANE. THIS HORIZONTAL PLANE SHALL BE WITHIN 1 FOOT OF THE ELEVATION OF THE RUNWAY CROWN ADJACENT TO THE PAPI UNITS.
10. PROVIDE ANTI-SEIZE COMPOUND ON THE ADJUSTABLE LEG THREADS, NSN# 8030-00-251-3980 MANUFACTURED BY JET-LUBE, INC., HOUSTON, TX OR EQUAL.
11. ENSURE 18" MIN OF FREE DRAINING MATERIAL IS UNDER PULL BOX. SEE SPECIFICATIONS FOR PULL BOX REQUIREMENTS.
12. ALL UNITS IN A BAR SHALL BE LOCATED ON A LINE PERPENDICULAR TO THE RUNWAY CENTERLINE. THE FRONT FACES OF EACH LIGHT UNIT MUST BE WITHIN ±6" OF THIS LINE. TO OUTSIDE FACE OF BEAM

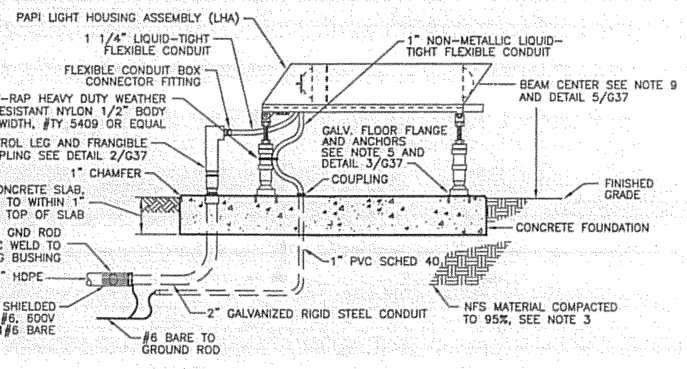

SECTION

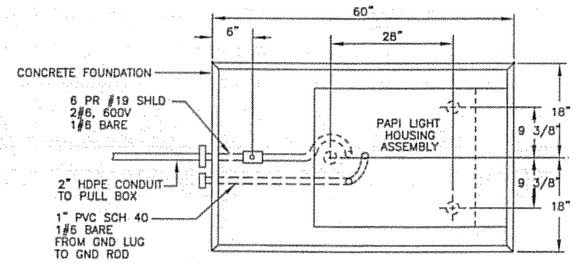

PLAN VIEW

7 G37 **LIGHT HOUSING ASSEMBLY (LHA)**
N.T.S.

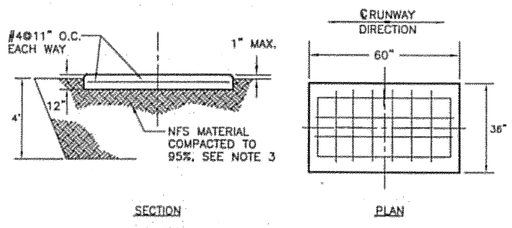

6 G37 **PAPI FOUNDATION**
N.T.S.

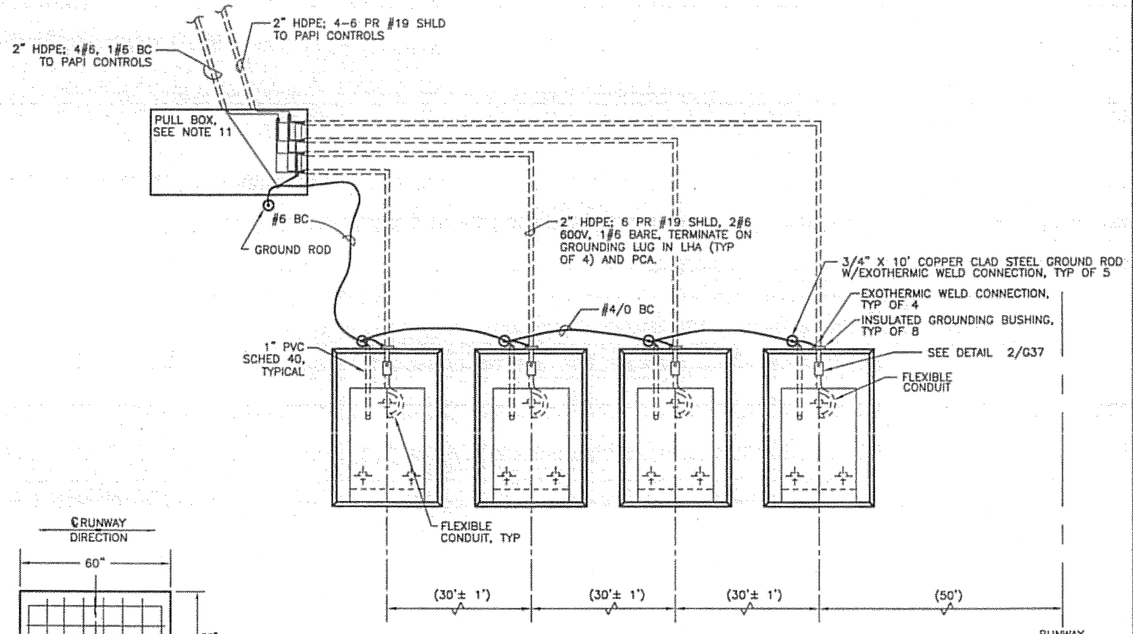

4 G37 **FOUNDATION LAYOUT**
N.T.S.

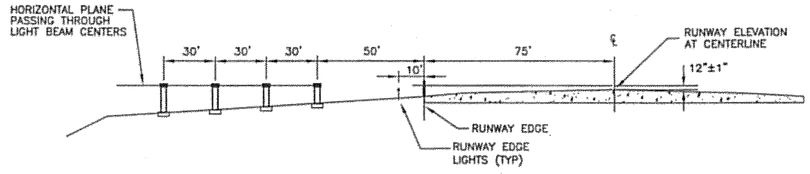

5 G37 **PAPI ELEVATION**
N.T.S.

DO NOT SCALE FROM THESE DRAWINGS USE DIMENSIONS

PATH: I:\823400\Dwgs\E\Sheets\G37-P1.dwg
Tue, 03/Oct/06 02:25PM lschneller
TAB: G12

ADDENDUM NUMBER

ATTACHMENT NUMBER

RECORD OF REVISIONS

No.	DATE	DESCRIPTION

KETCHIKAN AIRPORT
RUNWAY SAFETY AREA EXPANSION
& RUNWAY OVERLAY
PROJECT NO. 68306

PAPI PLANS AND DETAILS

PREPARED BY: USKH INC.

CHECKED BY: GRH

STATE OF ALASKA 49TH GARY R. HABLE EE-10243 REGISTERED PROFESSIONAL ENGINEER 10/4/06

DESIGNED BY: LPS

DRAWN BY: LPS

STATE OF ALASKA
DEPARTMENT OF TRANSPORTATION & PUBLIC FACILITIES
DESIGN & ENGINEERING SERVICES
DIVISION-SOUTHEAST REGION

PAPI PLANS AND DETAILS

PROJECT DESIGNATION
AIP NO. 3-02-0144-1606

STATE	YEAR
ALASKA	2006
SHEET NUMBER	TOTAL SHEETS
G37	131

See attached Electrical Asbuilts

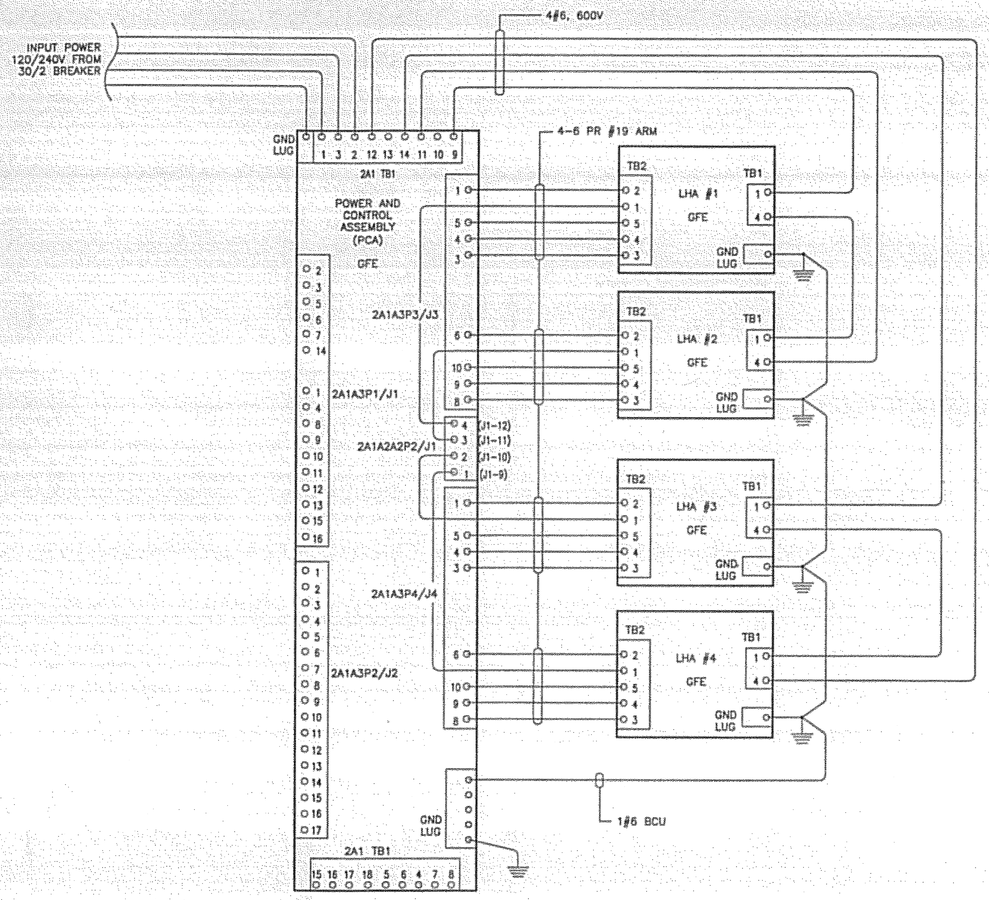

2 G38 **PAPI SCHEMATIC WIRING DIAGRAM**
N.T.S.

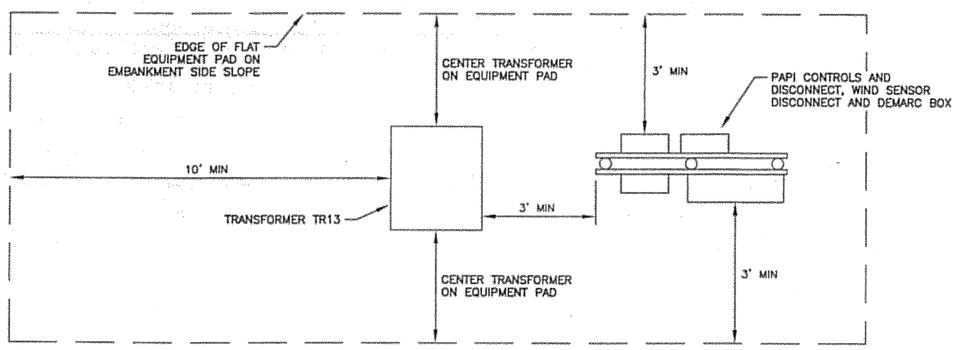

3 G38 **PAPI EQUIPMENT PAD LAYOUT - RW 29**
N.T.S.

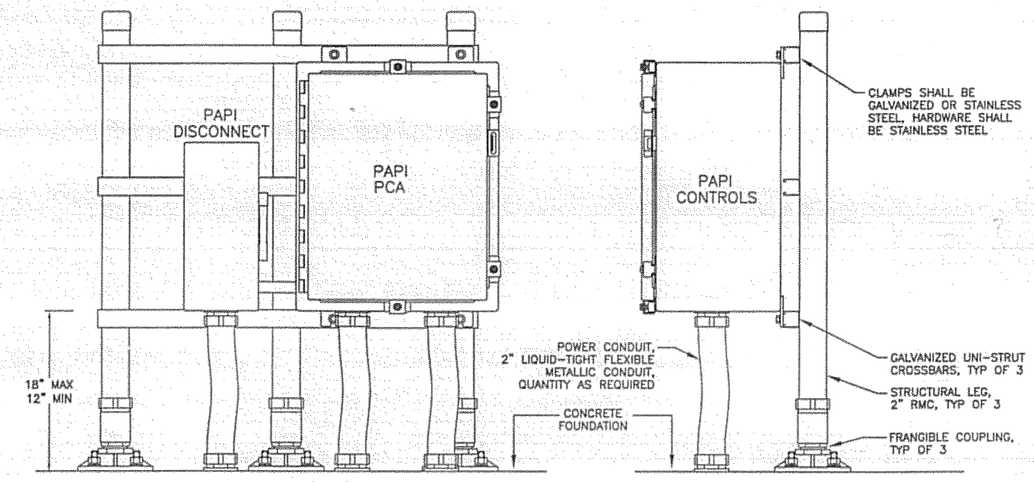

FRONT VIEW **SIDE VIEW**

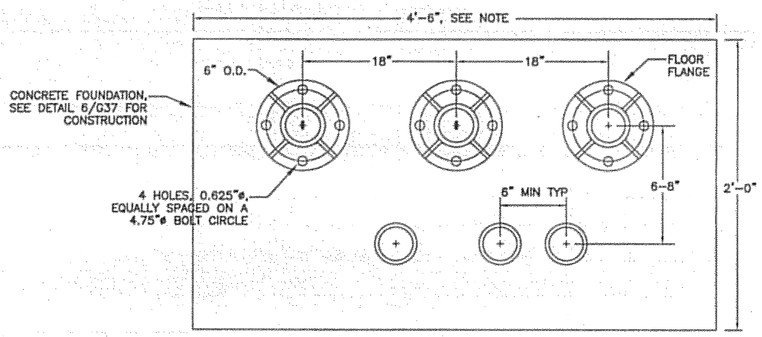

FOOTING PLAN

1 G38 **PAPI CONTROLS MOUNTING DETAILS**
N.T.S.

NOTE:
AT RW 29 LOCATION, INCREASE LENGTH OF SUPPORT STRUCTURE AND FOUNDATION TO ALLOW MOUNTING OF F420 WIND SENSOR POWER DISCONNECT AND TELECOM DEMARC BOX. ALTERNATELY, WIND SENSOR DISCONNECT AND DEMARC BOX MAY BE MOUNTED ON ADDITIONAL CROSSBARS ON THE OPPOSITE SIDE OF THE STRUCTURE

DO NOT SCALE FROM THESE DRAWINGS USE DIMENSIONS

PATH: I:\823400\Dwgs\E\Sheets\G38-P2.dwg
Tue, 03/Oct/06 02:25PM lschneller
TAB: G12

ADDENDUM NUMBER

ATTACHMENT NUMBER

RECORD OF REVISIONS

No.	DATE	DESCRIPTION

KETCHIKAN AIRPORT
RUNWAY SAFETY AREA EXPANSION
& RUNWAY OVERLAY
PROJECT NO. 68306

PAPI DETAILS

PREPARED BY: USKH INC.

CHECKED BY: GRH

STATE OF ALASKA 49TH GARY R. HABLE EE-10243 REGISTERED PROFESSIONAL ENGINEER
10/4/06

DESIGNED BY: LPS

DRAWN BY: LPS

STATE OF ALASKA
DEPARTMENT OF TRANSPORTATION & PUBLIC FACILITIES
DESIGN & ENGINEERING SERVICES
DIVISION-SOUTHEAST REGION

PAPI DETAILS

PROJECT DESIGNATION
AIP NO. 3-02-0144-1606

STATE	YEAR
ALASKA	2006
SHEET NUMBER	TOTAL SHEETS
G38	131

See attached Electrical Asbuilts

NOTES:

1. #6 VERTICAL COLUMN REINFORCEMENT WITH 6" ø BENDS TO FORM 90–"L" HOOKS.
2. PROVIDE A MINIMUM OF 2" CLEAR COVER OVER ALL REINFORCING STEEL AND CONDUITS.
3. MINIMUM DEVELOPMENT LENGTH ASSUMES GRADE 40 REINFORCING STEEL.
4. CLEAR SPACING BETWEEN SPIRALS SHALL NOT EXCEED THREE INCHES NOR BE LESS THAN 1 INCH. ANCHORAGE OF OF SPIRAL REINFORCEMENT SHALL BE PROVIDED BY 1–1/2 EXTRA TURNS OF SPIRAL BAR OR WIRE AT THE EACH END OF A SPIRAL UNIT.
5. CONDUIT PENETRATIONS THROUGH CONCRETE SLAB CAP ARE USED AS FOLLOWS:
   A) TWO INCH CONDUIT SWEEP – TWO RUNS OF 1/2–INCH HELIAX (ANDREW LDF4–50A OR EQUIV) FOR DME RF COMM.
   B) 3/4–INCH CONDUIT SWEEP – ONE GROUND WIRE (#6 BARE, STRANDED CU) BONDED TO LOC/DME BUILDING GROUND CONUTERPOISE.
   C) 3/4–INCH CONDUIT SWEEP – ONE CIRCUIT (120VAC) FOR DME TOWER OBSTRUCTION LIGHT.
6. EIGHTEEN INCH DME TOWER BASE PLATE TO BE FABRICATED BY OTHERS AND INSTALLED BY FAA. ANCHOR BOLT PATTERN IS 13–INCH SPACING – SQUARE PATTERN OF 4–3/4 INCH ANCHOR BOLTS AS SHOWN. A PLYWOOD TEMPLATE IS SUGGESTED IN ORDER TO PROPERLY PLACE ANCHOR BOLTS. VERTICALLY STUB UP ANCHOR BOLTS APPROXIMATELY 6 INCHES OUT OF CONCRETE SURFACE.
7. CONDUIT STUBS SHALL PENETRATE THE WEST SIDE OR LEFT SIDE (AS ONE FACES NORTH) OF THE SLAB CAP. POUR SLAB CAP SUCH THAT ITS LONG AXIS IS PARALLEL TO THE LONG AXIS OF THE LOC/DME BUILDING ON SITE.
8. FOR THE REPRESENTATIVE CONCRETE FOUNDATION SHOWN:
   A. CONCRETE STRENGTH = 3000 PSI @ 28 DAYS, (MIN.)
   B. SECURELY PLACE ANCHOR BOLTS PRIOR TO PLACING CONCRETE. TIE TO REINFORCEMENT.
   C. PLACE ALL CONCRETE ON UNDISTURBED SOIL OR COMPACTED BACKFILL. BACKFILL TO BE COMPACTED TO 92%
   D. DEPTH OF CONCRETE PIER = 4 FT IN SAND/GRAVEL OR BELOW FROST LEVEL.
   E. REININFORCEMENT STEEL PER ASTM A615, GR. 60, TIE WIRE TO BE 16 GAUGE OR LARGER ANNEALED IRON.
   F. ALL ANCHORAGE BOLTS AND PLATES TO BE HOT–DIPPED GALV. AFTER FABRICATION. COLD–GALV SPRAY TO BE APPLIED AFTER INSTALLATION TO ALL FASTENING HARDWARE AFTER INSTALLATION COMPLETED.
9. FOUNDATION EXCAVATION SHALL BE DUG AND BACKFILLED WITH NON–FROST SUSCEPTIBLE MATERIAL OR AUGERED AT INDICATED DIAMETER.
10. REBAR IS BENT AT THE TOP AND WIRE–TIED WITH THE HORIZONTAL CROSS–SUPPORT REBAR.

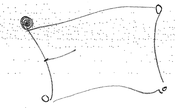

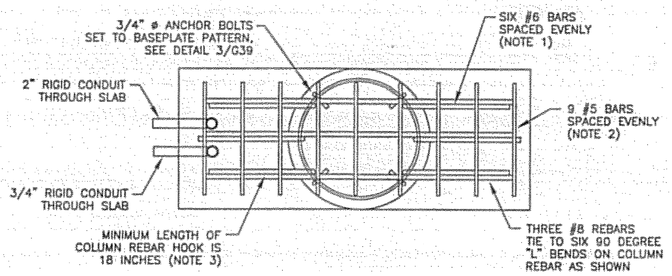

2 G39 **REINFORCING PLAN** N.T.S.

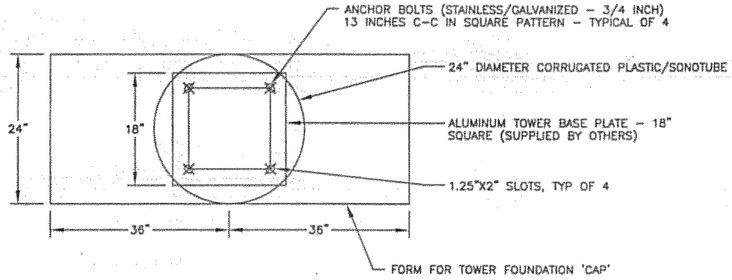

1 G39 **FOUNDATION PLAN** N.T.S.

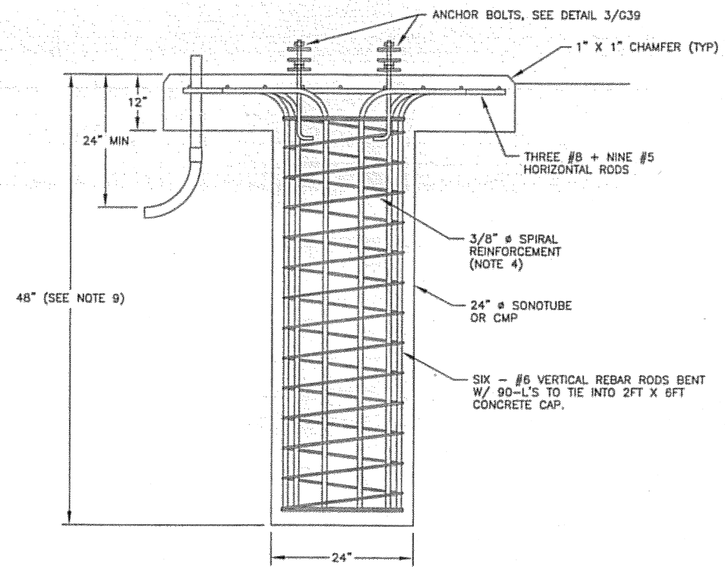

4 G39 **FOUNDATION SECTION** N.T.S.

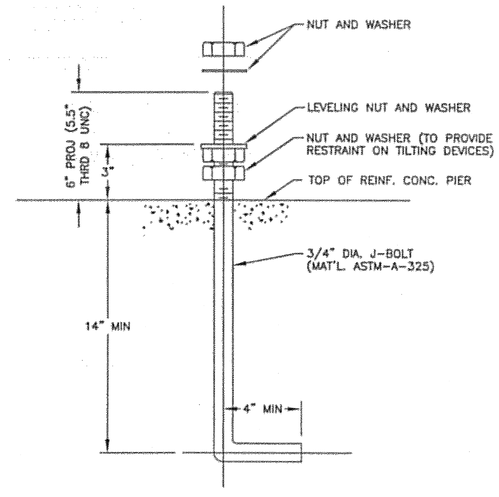

3 G39 **ANCHOR BOLT DETAIL** N.T.S.

DO NOT SCALE FROM THESE DRAWINGS USE DIMENSIONS

PATH: I:\823400\Dwgs\E\Sheets\G39–01.dwg
Tue, 03/Oct/06 02:25PM lschneller
TAB: G12

ADDENDUM NUMBER

ATTACHMENT NUMBER

RECORD OF REVISIONS

No.	DATE	DESCRIPTION

KETCHIKAN AIRPORT
RUNWAY SAFETY AREA EXPANSION
& RUNWAY OVERLAY
PROJECT NO. 68306

DME FOUNDATION DETAILS

PREPARED BY: USKH INC.

CHECKED BY: GRH

STATE OF ALASKA 49TH GARY R. HABLE EE–10243 REGISTERED PROFESSIONAL ENGINEER 10/4/06

DESIGNED BY: LPS

DRAWN BY: LPS

STATE OF ALASKA
DEPARTMENT OF TRANSPORTATION & PUBLIC FACILITIES
DESIGN & ENGINEERING SERVICES
DIVISION–SOUTHEAST REGION

DME FOUNDATION DETAILS

PROJECT DESIGNATION
AIP NO. 3-02-0144-1606

STATE	YEAR
ALASKA	2006
SHEET NUMBER	TOTAL SHEETS
G39	131

See attached Electrical Asbuilts

NOTES:

3. PROTECT FLANGE ASSEMBLIES AGAINST WATER INCURSION.
4. POUR CONCRETE FOUNDATION AGAINST UNDISTURBED EARTH OR USE FORM.
5. POUR TOWER AND PEDESTAL FOUNDATION ON UNDISTURBED SOIL.
7. THIS AREA (ϕ=2.0 FT) TO BE FREE OF GRAVEL AND VEGETATION BARRIER.

ASOS ALIGNMENT TRUE NORTH - per E. Helms 2-13-08

N

ALIGN THE ASOS TO TRUE NORTH PER E. HELMS 2-13-08

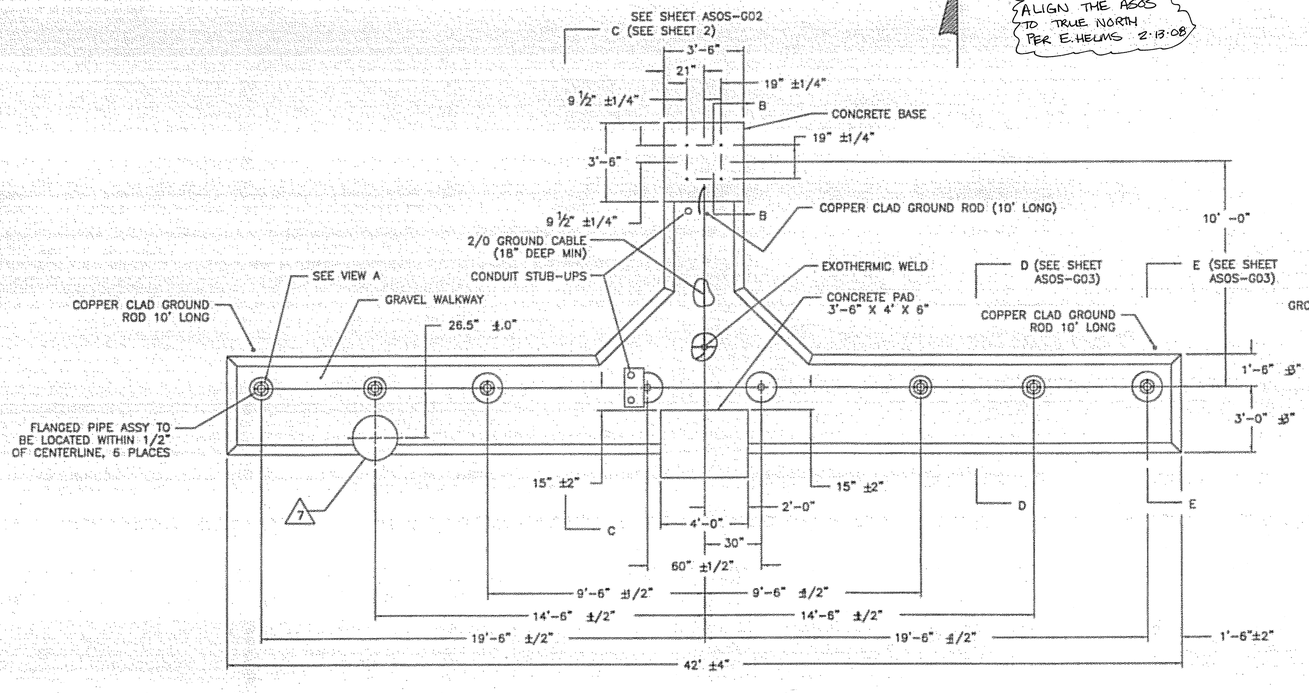

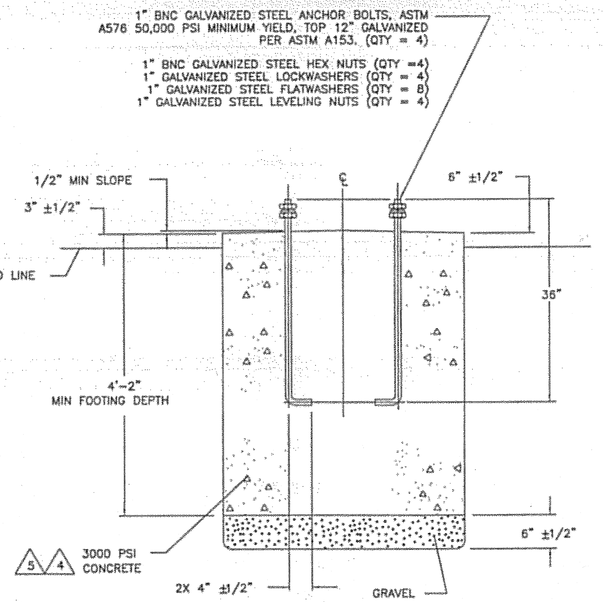

SECTION B-B

SCALE: 1/8

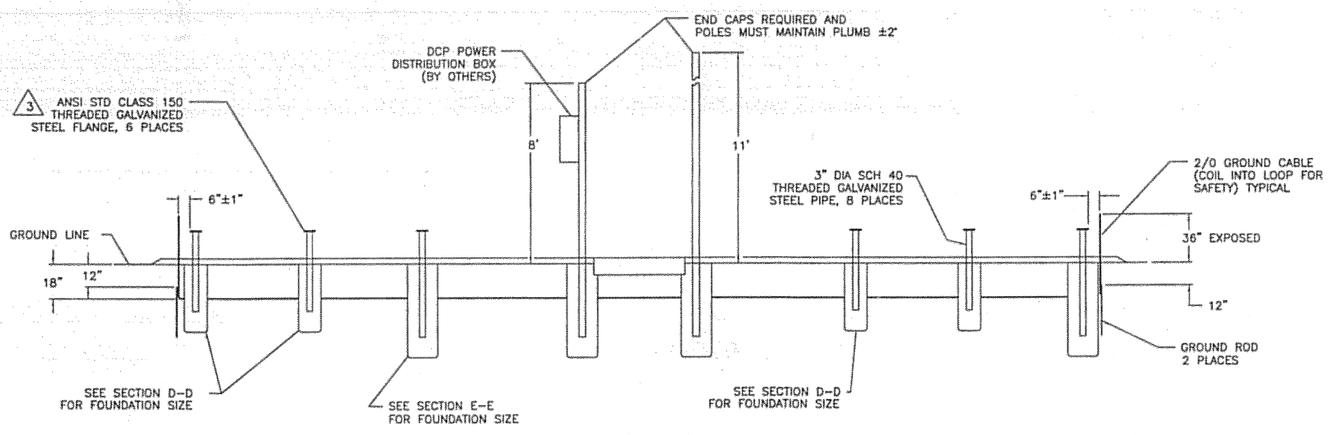

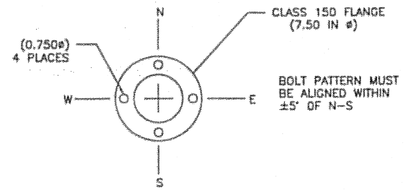

VIEW A

SCALE: 1/4

1 G40 ASOS PLOT PLAN

N.T.S.

DO NOT SCALE FROM THESE DRAWINGS USE DIMENSIONS

PATH: I:\823400\Dwgs\E\Sheets\G40-A1.dwg
Tue, 03/Oct/06 02:25PM lschneller
TAB: G12

ADDENDUM NUMBER

ATTACHMENT NUMBER

RECORD OF REVISIONS

No.	DATE	DESCRIPTION

KETCHIKAN AIRPORT
RUNWAY SAFETY AREA EXPANSION
& RUNWAY OVERLAY
PROJECT NO. 68306

ASOS PLOT PLAN

PREPARED BY: USKH INC.

CHECKED BY: GRH

STATE OF ALASKA 49TH GARY R. HABLE EE-10243 REGISTERED PROFESSIONAL ENGINEER 10/4/06

DESIGNED BY: LPS

DRAWN BY: LPS

STATE OF ALASKA
DEPARTMENT OF TRANSPORTATION
& PUBLIC FACILITIES
DESIGN & ENGINEERING SERVICES
DIVISION-SOUTHEAST REGION

ASOS PLOT PLAN

PROJECT DESIGNATION	
AIP NO. 3-02-0144-1606	
STATE	YEAR
ALASKA	2006
SHEET NUMBER	TOTAL SHEETS
G40	131

See attached Electrical Asbuilts

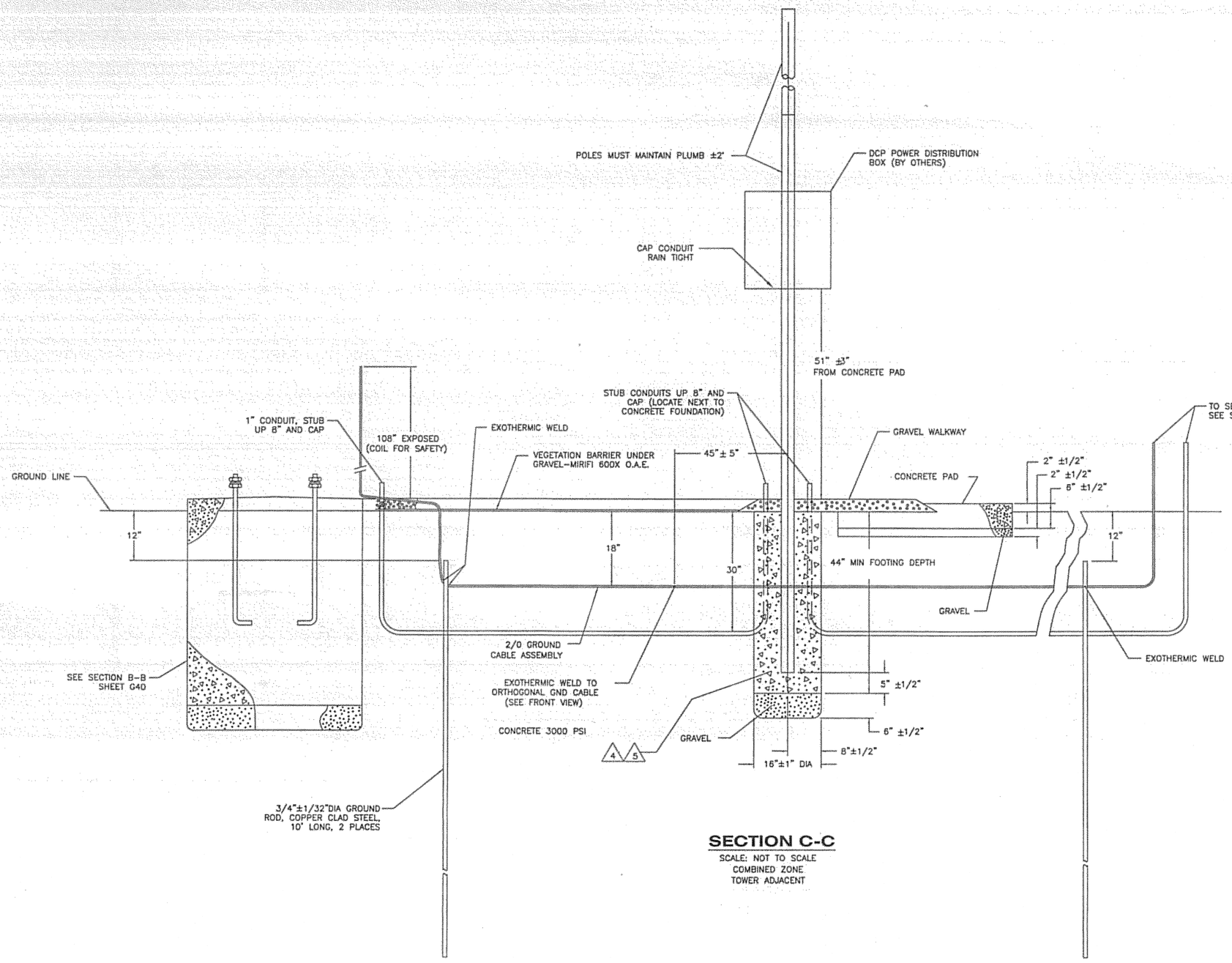

SECTION C-C

SCALE: NOT TO SCALE
COMBINED ZONE
TOWER ADJACENT

1 / G41 **ASOS SECTION VIEW** N.T.S.

DO NOT SCALE FROM THESE DRAWINGS USE DIMENSIONS

PATH: I:\823400\Dwgs\E\Sheets\G41-A2.dwg
Tue, 03/Oct/06 02:25PM lschneller
TAB: G12

ADDENDUM NUMBER

ATTACHMENT NUMBER

RECORD OF REVISIONS

No.	DATE	DESCRIPTION

KETCHIKAN AIRPORT
RUNWAY SAFETY AREA EXPANSION & RUNWAY OVERLAY
PROJECT NO. 68306

ASOS SECTION

PREPARED BY: USKH INC.

CHECKED BY: GRH

STATE OF ALASKA 49TH REGISTERED PROFESSIONAL ENGINEER
GARY R. HABLE
EE-10243
10/4/06

DESIGNED BY: LPS

DRAWN BY: LPS

STATE OF ALASKA
DEPARTMENT OF TRANSPORTATION & PUBLIC FACILITIES
DESIGN & ENGINEERING SERVICES
DIVISION-SOUTHEAST REGION

ASOS SECTION

PROJECT DESIGNATION	
AIP NO. 3-02-0144-1606	
STATE	YEAR
ALASKA	2006
SHEET NUMBER	TOTAL SHEETS
G41	131

See attached Electrical Asbuilts

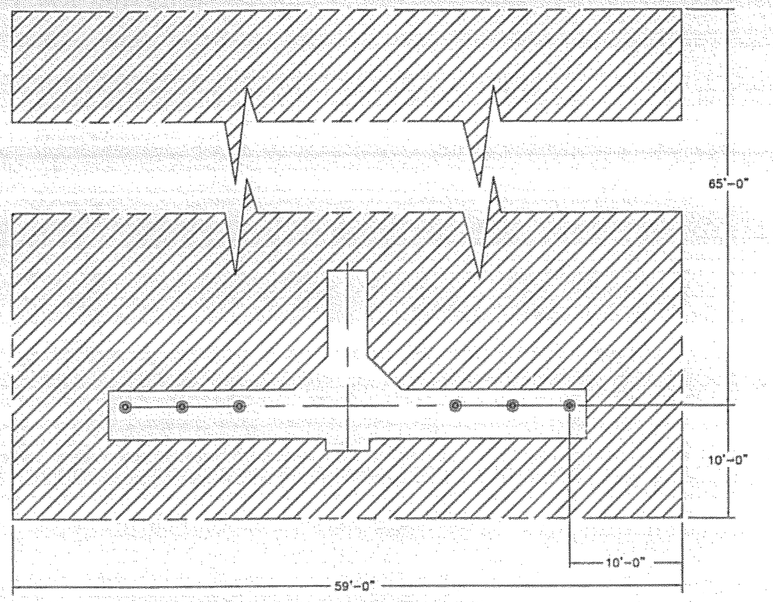

THE CROSS-HATCHED AREA SHOWN SHOULD BE CLEAR OF ABOVE GROUND OBSTRUCTIONS, REFLECTIVE SURFACES AND LIGHT SOURCES.

1 / G42 ASOS CLEARING AREA

N.T.S.

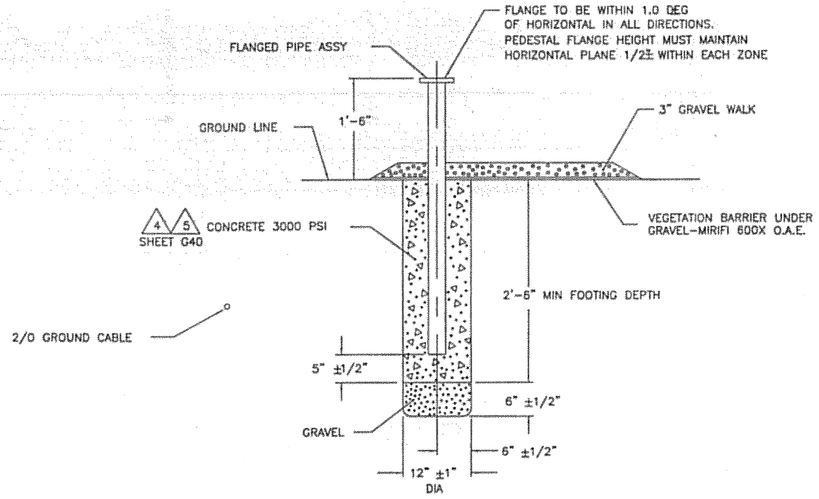

SECTION D-D

SCALE: NOT TO SCALE

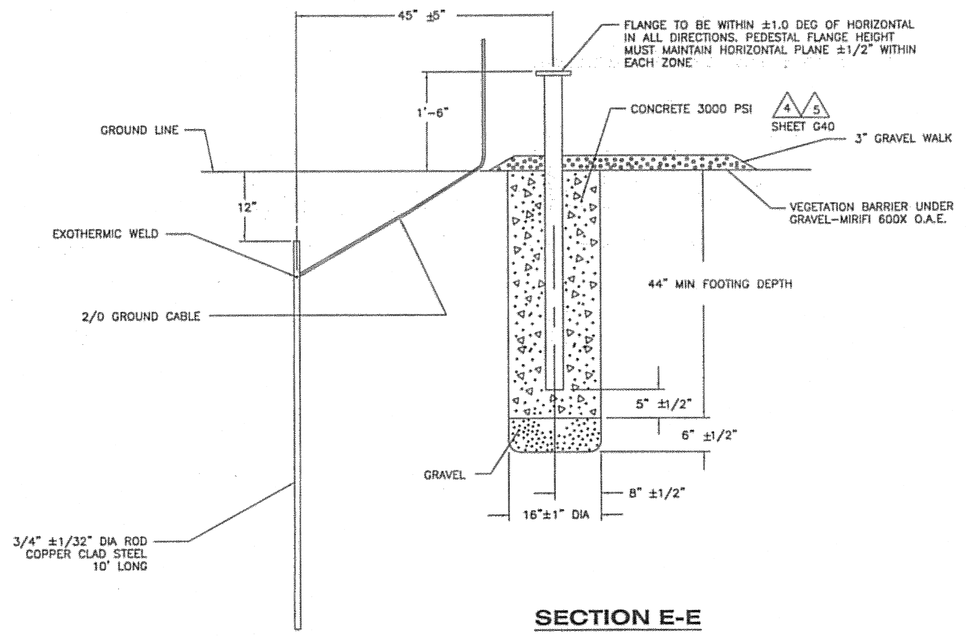

SECTION E-E

SCALE: NOT TO SCALE
ROTATED 90° CCW

2 / G42 ASOS FOUNDATION DETAILS

N.T.S.

DO NOT SCALE FROM THESE DRAWINGS USE DIMENSIONS

PATH: I:\823400\Dwgs\E\Sheets\G42-A3.dwg
Tue, 03/Oct/06 02:25PM lschneller
TAB: G12

ADDENDUM NUMBER

ATTACHMENT NUMBER

RECORD OF REVISIONS

No.	DATE	DESCRIPTION

KETCHIKAN AIRPORT
RUNWAY SAFETY AREA EXPANSION
& RUNWAY OVERLAY
PROJECT NO. 68306

ASOS DETAILS

PREPARED BY: USKH INC.

CHECKED BY: GRH

STATE OF ALASKA 49TH REGISTERED PROFESSIONAL ENGINEER
GARY R. HABLE
EE-10243
10/4/06

DESIGNED BY: LPS

DRAWN BY: LPS

STATE OF ALASKA
DEPARTMENT OF TRANSPORTATION & PUBLIC FACILITIES
DESIGN & ENGINEERING SERVICES
DIVISION-SOUTHEAST REGION

ASOS DETAILS

PROJECT DESIGNATION	
AIP NO. 3-02-0144-1606	
STATE	YEAR
ALASKA	2006
SHEET NUMBER	TOTAL SHEETS
G42	131

See attached Electrical Asbuilts

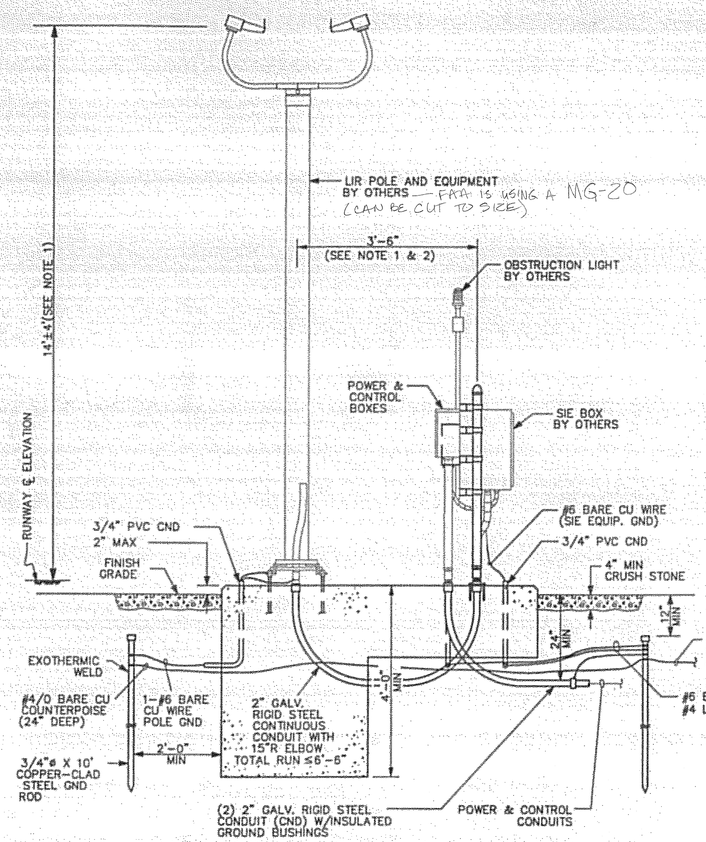

ELEVATION VIEW (PROFILE)

LIR POLE AND SIE BOX SUPPORT

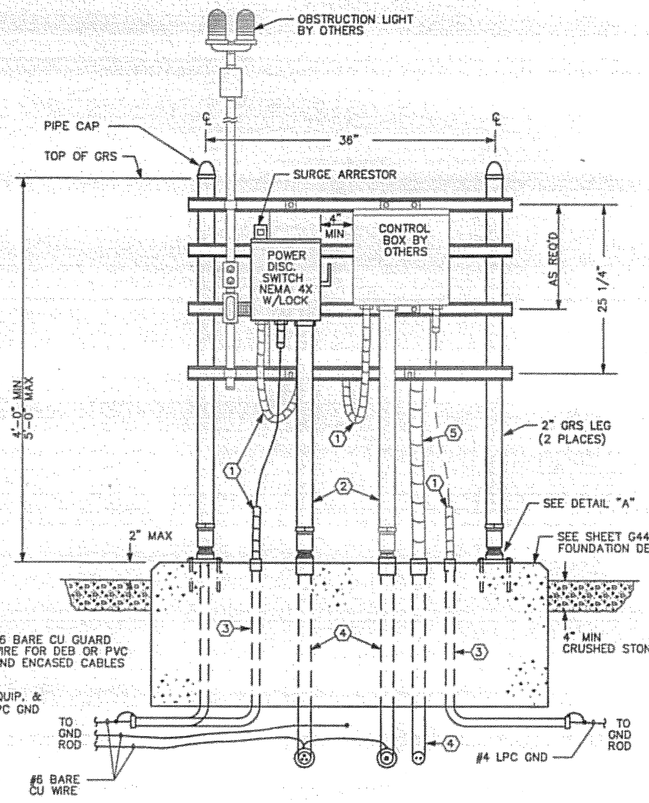

REAR ELEVATION VIEW

SIE BOX SUPPORT

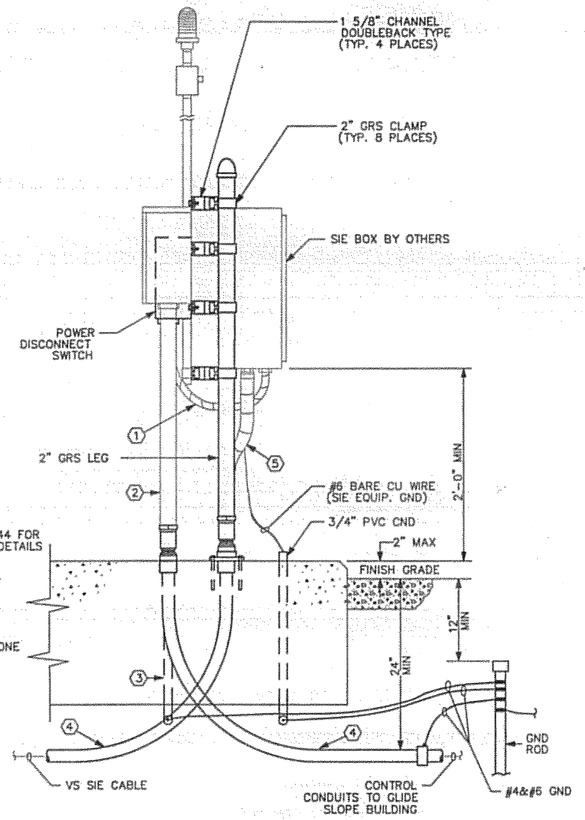

PARTIAL SIDE ELEVATION VIEW

SIE BOX SUPPORT

1 G43 RVR INSTALLATION DETAILS

N.T.S.

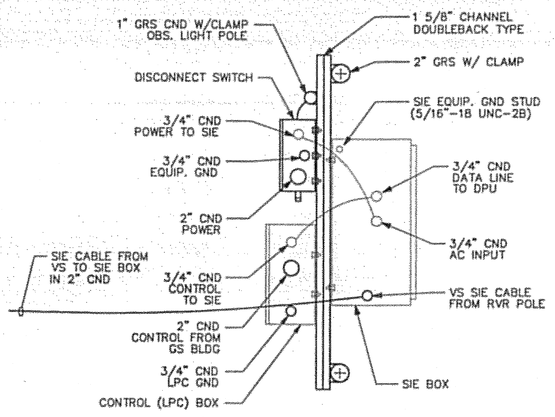

PARTIAL PLAN VIEW

FOUNDATION NOT SHOWN

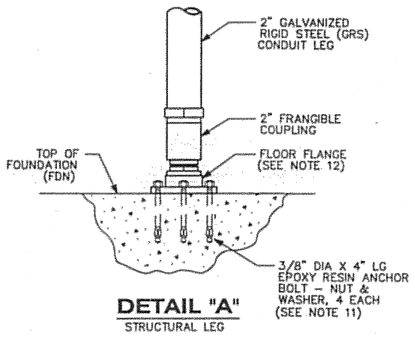

DETAIL "A"

STRUCTURAL LEG

LEGEND:

1. 3/4" DIA FLEXIBLE LIQUID TIGHT CONDUIT WITH COUPLINGS
2. 2" DIA GALVANIZED RIGID STEEL CONDUIT (GRS) WITH FRANGIBLE COUPLINGS
3. 3/4" DIA GRS CONDUIT WITH COUPLINGS
4. 2" DIA GRS CONDUIT WITH COUPLINGS
5. 2" DIA FLEXIBLE LIQUID TIGHT CONDUIT WITH COUPLINGS

NOTES:

1. BASIC REQUIREMENTS FOR TOUCHDOWN, MIDPOINT AND ROLLOUT RVR INSTALLATIONS ARE AS FOLLOWS:
   A. HEIGHT FROM CENTERLINE OF TRANSMITTER/RECEIVER IS 14 FEET ±4 FEET ABOVE ELEVATION OF RUNWAY CENTERLINE PERPENDICULAR TO STRUCTURE.
2. DISTANCE FROM CENTER OF LIR POLE TO SIE BOX GRS LEG IS DETERMINED BY HEIGHT OF VS AND SIE BOX ABOVE GRADE, VERTICAL CABLE RUN BELOW GRADE, AND A 1 FOOT MINIMUM CABLE SLACK. APPROXIMATELY 2.6 FEET OF THE 37 FOOT VS CABLE WILL RUN THRU THE VS FORK ASSEMBLY.
3. SEE SITE DRAWINGS FOR LOCATION AND ORIENTATION RESTRICTIONS.
4. VISIBILITY SENSOR RECEIVER MUST FACE IN A NORTHERLY DIRECTION. ROTATE VS FORK ASSEMBLY TO TRUE NORTH OR TO WITHIN ±10 DEGREES OF TRUE NORTH.
5. NOT USED.
6. SIE UNIT SUPPORT FRAME SHOWN MAY BE LOCATED ON OPPOSITE SIDE OF RVR POLE TO FACILITATE EASY ACCESS TO POWER AND CONTROL LINES. MUST BE LOCATED CLEAR OF RVR POLE TILT DIRECTION.
7. NOT USED.
8. ALL METAL PARTS, CONDUITS, EQUIPMENT AND JUNCTION BOXES SHALL BE GROUNDED IN ACCORDANCE WITH FAA-STD-019.
9. ALL EXTERIOR ENCLOSURES, CHANNELS, CLAMPS AND MOUNTING HARDWARE SHALL BE STAINLESS STEEL.
10. DRILL HOLES AND INSTALL EPOXY TYPE ANCHOR BOLTS WHEN SIE BOX SUPPORTS HAVE BEEN ACCURATELY LOCATED.
11. COAT FLOOR FLANGE SURFACE RESTING ON CONCRETE WITH AN ASPHALT COMPOUND FOR METAL PROTECTION.
12. ALL FAA STANDARDS AND ORDERS REFERENCED IN THESE DRAWINGS SHALL BE THE LATEST VERSION.
13. PRORTIONS OF THE SYSTEM NOT INSTALLED UNDER THIS CONTRACT AND NON-APPLICABLE NOTES ARE SHOWN FOR REFERENCE ONLY.

DO NOT SCALE FROM THESE DRAWINGS USE DIMENSIONS

PATH: i:\823400\Dwgs\E\Sheets\G43-V1.dwg
Tue, 03/Oct/06 02:25PM lschneller
TAB: G12

ADDENDUM NUMBER

ATTACHMENT NUMBER

RECORD OF REVISIONS

No.	DATE	DESCRIPTION

KETCHIKAN AIRPORT
RUNWAY SAFETY AREA EXPANSION
& RUNWAY OVERLAY
PROJECT NO. 68306

RVR INSTALLATION DETAILS

PREPARED BY: USKH INC.

CHECKED BY: GRH

STATE OF ALASKA 49TH — GARY R. HABLE EE-10243 REGISTERED PROFESSIONAL ENGINEER — 10/4/06

DESIGNED BY: LPS

DRAWN BY: LPS

STATE OF ALASKA
DEPARTMENT OF TRANSPORTATION
& PUBLIC FACILITIES
DESIGN & ENGINEERING SERVICES
DIVISION-SOUTHEAST REGION

RVR INSTALLATION DETAILS

PROJECT DESIGNATION
AIP NO. 3-02-0144-1606

STATE	YEAR
ALASKA	2006
SHEET NUMBER	TOTAL SHEETS
G43	131

See attached Electrical Asbuilts

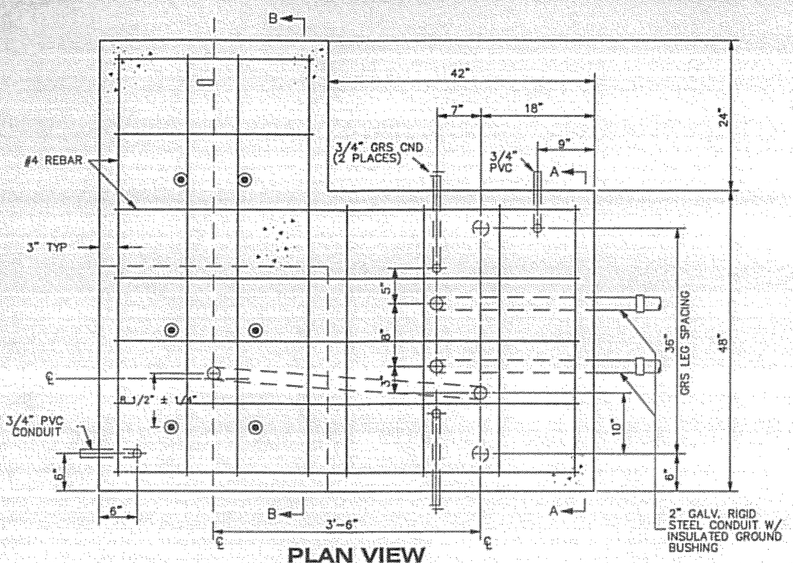

PLAN VIEW

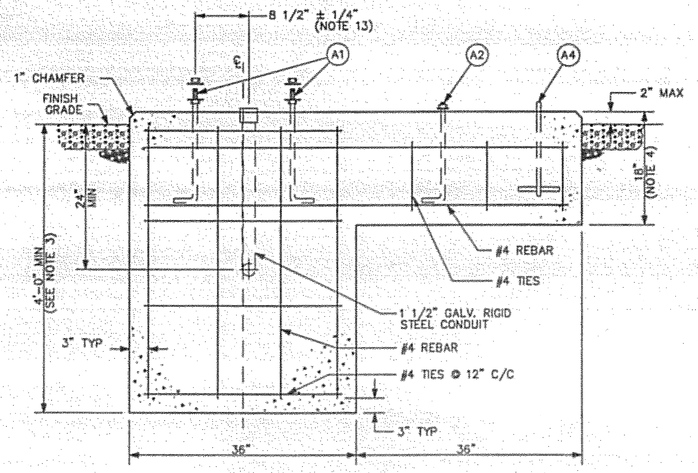

ELEVATION "B-B"

NOTES:

1. CONCRETE SHALL DEVELOP A MINIMUM STRENGTH OF 3000 PSI IN 28 DAYS WITH MAXIMUM SLUMP OF 3 INCHES. MAXIMUM AGGREGATE SIZE SHALL BE 3/4 INCH.
2. SOIL BEARING CAPACITY SHALL BE A MINIMUM OF 3000 POUNDS PER SQUARE FOOT OR AS LOCAL SOIL CONDITIONS DICTATE. SOIL INVESTIGATION SHALL BE CONDUCTED AT SITE PRIOR TO CONSTRUCTION. ALL CONCRETE SHALL BE PLACED ON UNDISTURBED SOIL.
3. MINIMUM DEPTH OF CONCRETE FOUNDATION SHALL BE 4 FEET OR MINIMUM 1 FOOT BELOW LOCAL FROST LEVEL, WHICHEVER IS GREATER. EXCEPT IN LOCATIONS WHERE THERE IS A FIRM BEDROCK LESS THAN THIS DEPTH. THE BOTTOM OF ALL EXCAVATIONS SHALL BE FREE OF WATER AND LOOSE EARTH.
4. OPTIONAL, EXTEND 18" CONCRETE DEPTH TO 48" BELOW FINISHED GRADE OR MINIMUM 12" BELOW FROST LEVEL.
5. FOUNDATIONS SHALL BE FORMED TO FULL DEPTH BELOW FINISHED GRADE.
6. WELDED STEEL WIRE FABRIC (WWF) SHALL BE FABRICATED IN ACCORDANCE WITH ASTM-A185 AND SHALL BE HOT-DIPPED GALVANIZED PER ASTM-A153.
7. ALL PLATES, ANCHOR BOLTS, NUTS, AND WASHERS SHALL BE HOT DIPPED GALVANIZED OR STAINLESS STEEL.
8. FOUNDATION MAY BE MODIFIED AS DICTATED BY LOCAL SOIL AND CLIMATIC CONDITIONS. IF REGIONALLY REQUIRED, AN OPTIONAL APPROVED SCREW ANCHOR FOUNDATION DESIGN (NOT SHOWN) MAY BE USED.
9. FOUNDATION AREA MAY REQUIRE CUT OPERATION TO MEET RVR POLE HEIGHT REQUIREMENTS. FILL SHALL BE PLACED IN LAYERS NOT EXCEEDING 6 INCHES AND EACH LAYER SHALL BE THOROUGHLY COMPACTED TO 95% OF MAXIMUM DENSITY OF OPTIMUM MOISTURE CONTENT IN ACCORDANCE WITH AASHTO-T99. IF FILL MATERIAL IS REQUIRED WITHIN R/W SAFETY AREA, WORK MUST COMPLY WITH FAA AC 150/5300-13.
10. ALL REINFORCING STEEL SHALL BE DEFORMED BILLET STEEL BARS CONFORMING TO ASTM A615 GRADE 60.
11. TOP OF 3/4" PVC CONDUIT SHOULD NOT EXTEND MORE THAN ONE INCH ABOVE CONCRETE SURFACE. EXTEND UNDERGROUND END OF CONDUIT A MINIMUM OF 3" BEYOND CONCRETE FOUNDATION.
12. 1 1/2" RIGID CONDUIT MUST BE LOCATED AS SHOWN TO ALIGN WITH 2" HOLE IN THE BASE PLATE ASSEMBLY.
13. TOTAL UNDERGROUND VS CABLE RUN SHALL NOT EXCEED 6'-6".
14. CONCRETE REINFORCEMENT MAY BE SHIFTED TO ALLOW FOR PLACEMENT OF ANCHOR BOLTS, INSERTS AND CONDUITS.
15. GRADING OF SOIL AND ROCK SHOULD BE THAT ALL DRAINAGE IS AWAY FROM FOUNDATION.
16. ALL FAA STANDARDS AND ORDERS REFERENCED IN THESE DRAWINGS SHALL BE THE LATEST VERSION.

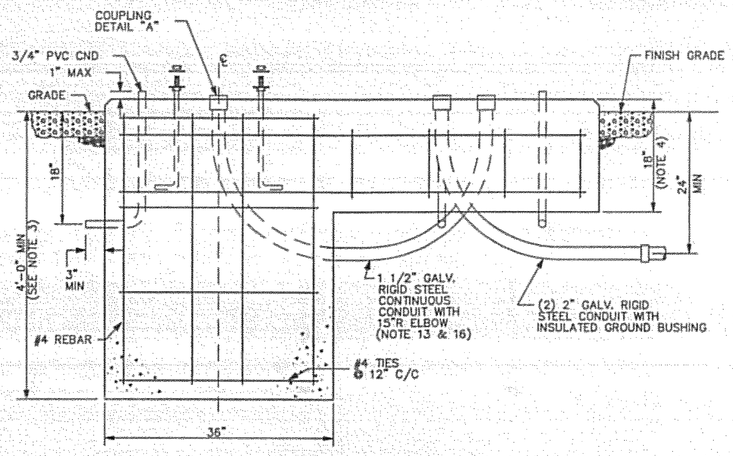

ELEVATION VIEW

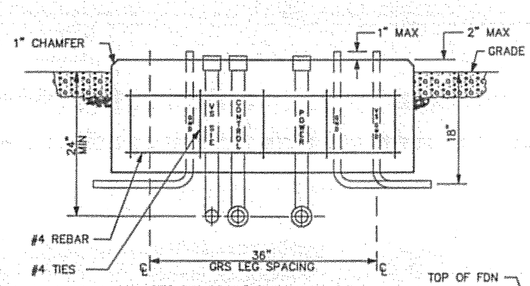

ELEVATION "A-A"

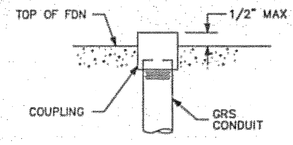

DETAIL "A"

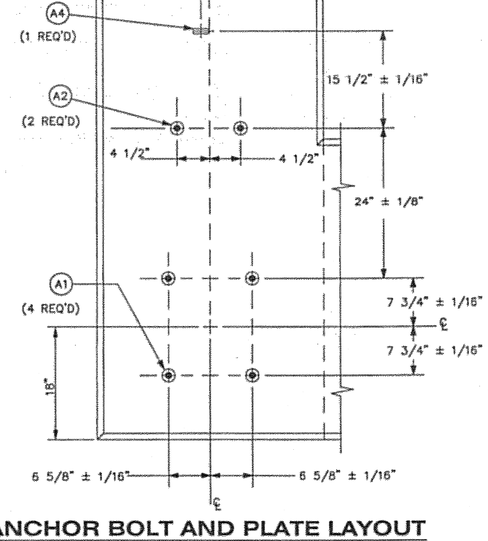

ANCHOR BOLT AND PLATE LAYOUT

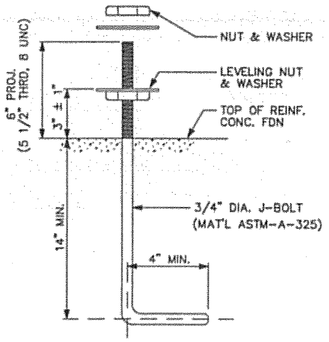

ANCHOR BOLT (A1)

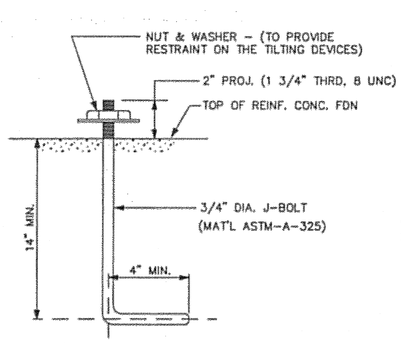

ANCHOR BOLT (A2)

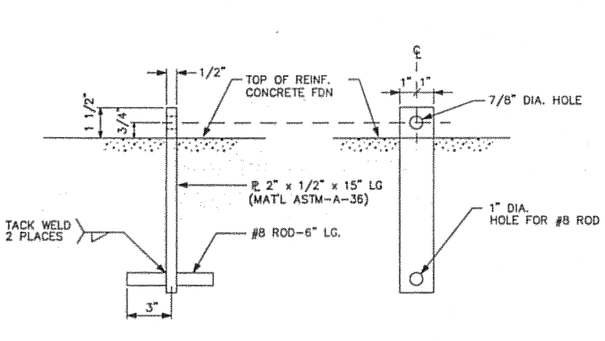

ANCHOR PLATE (A4)

1 / G44 **RVR FOUNDATION DETAILS**
N.T.S.

DO NOT SCALE FROM THESE DRAWINGS USE DIMENSIONS

PATH: I:\823400\Dwgs\E\Sheets\G44-V2.dwg
Tue, 03/Oct/06 02:26PM lschneller
TAB: C12

ADDENDUM NUMBER

ATTACHMENT NUMBER

RECORD OF REVISIONS

No.	DATE	DESCRIPTION

KETCHIKAN AIRPORT
RUNWAY SAFETY AREA EXPANSION
& RUNWAY OVERLAY
PROJECT NO. 68306

RVR FOUNDATION DETAILS

PREPARED BY: USKH INC.

CHECKED BY: GRH

STATE OF ALASKA 49TH
GARY R. HABLE
EE-10243
REGISTERED PROFESSIONAL ENGINEER
10/4/06

DESIGNED BY: LPS

DRAWN BY: LPS

STATE OF ALASKA
DEPARTMENT OF TRANSPORTATION & PUBLIC FACILITIES
DESIGN & ENGINEERING SERVICES
DIVISION-SOUTHEAST REGION

RVR FOUNDATION DETAILS

PROJECT DESIGNATION
AIP NO. 3-02-0144-1606

STATE	YEAR
ALASKA	2006
SHEET NUMBER	TOTAL SHEETS
G44	131

See attached Electrical Asbuilts

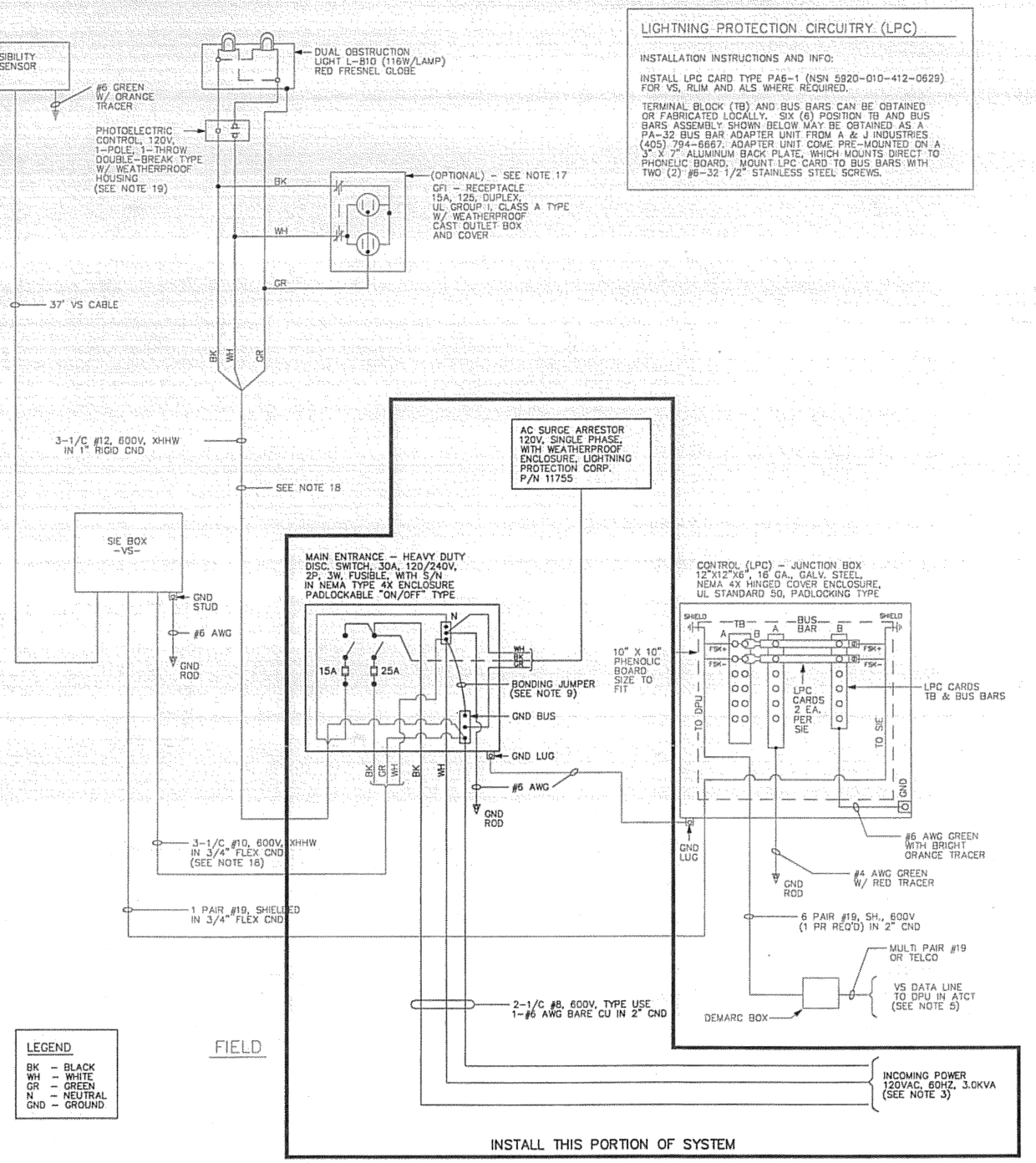

LIGHTNING PROTECTION CIRCUITRY (LPC)

INSTALLATION INSTRUCTIONS AND INFO:

INSTALL LPC CARD TYPE PA6-1 (NSN 5920-010-412-0629) FOR VS, RLIM AND ALS WHERE REQUIRED.

TERMINAL BLOCK (TB) AND BUS BARS CAN BE OBTAINED OR FABRICATED LOCALLY. SIX (6) POSITION TB AND BUS BARS ASSEMBLY SHOWN BELOW MAY BE OBTAINED AS A PA-32 BUS BAR ADAPTER UNIT FROM A & J INDUSTRIES (405) 794-6667. ADAPTER UNIT COME PRE-MOUNTED ON A 3" X 7" ALUMINUM BACK PLATE, WHICH MOUNTS DIRECT TO PHENOLIC BOARD. MOUNT LPC CARD TO BUS BARS WITH TWO (2) #6-32 1/2" STAINLESS STEEL SCREWS.

NOTES:

1. ~~CONTRACTOR SHALL TERMINATE POWER AND CONTROL CABLES BY LOOPING BACK AND WEATHERPROOFING ENDS WHEN HOOKUP IS TO BE PERFORMED BY FAA.~~
2. POWER AND CONTROL SOURCE(S) SHALL BE REGIONALLY DETERMINED POWER REQUIREMENT FOR SIE(VS, ALS, RLIM) IS 120VAC, 60HZ, 3KVA, SINGLE PHASE.
3. IF VOLTAGE DROP EXCEEDS 5%, INCREASE THE VOLTAGE SOURCE VIA TRANSFORMER OR CABLE SIZE TO REDUCE VOLTAGE DROP.
4. ~~EACH VS, RLIM, AND ALS SHALL REQUIRE A MINIMUM 1-PAIR SHIELDED #19, 600V, REGIONALLY DETERMINED NUMBER OF SPARES WITH AT LEAST 1 PAIR FOR BACKUP. IF ALS IS COLLOCATED WITH VS A MINIMUM 2 PAIR #19 SHALL BE REQUIRED.~~
5. INSTALL REQUIRED SIZE PULL WIRE IN EACH CONDUIT RUN IN ACCORDANCE WITH SPECIFICATION FAA-C-1391.
6. ALL WORK SHALL BE DONE IN ACCORDANCE WITH FAA-STD-019, FAA-C-1217, LATEST NATIONAL ELECTRICAL CODES, AND OTHER APPLICABLE LOCAL CODES AND REGULATIONS.
7. NEUTRAL BUS IS TO BE INSULATED FROM ENCLOSURE AND IS GROUNDED ONLY AT THE MAIN ENTRANCE DISCONNECT SWITCH AND POWER COMPANY TRANSFORMER.
8. EQUIPMENT GROUND AND NEUTRAL BUS IS TO BE BONDED TOGETHER AT THE MAIN SERVICE ENTRANCE SWITCH ONLY. BONDING JUMPER SHALL BE SIZED IN ACCORDANCE WITH THE LATEST NEC.
9. ALL ENCLOSURES, FITTINGS, AND OTHER NONCURRENT CARRYING METAL PARTS SHALL BE EFFECTIVELY GROUNDED WHERE NECESSARY TO ASSURE ELECTRICAL CONTINUITY AND CAPACITY TO HANDLE ANY FAULT CURRENT THAT MAY BE ANTICIPATED. USE SPLIT BOLT CONNECTIONS OR GROUNDING LUGS.
10. PRIOR TO GROUNDING, REMOVE ANY NONCONDUCTIVE PAINT, ENAMEL, OR FOREIGN MATERIAL FROM CONTACT SURFACES.
11. ALL CONDUITS TERMINATING IN BOXES, PANELS, AND ENCLOSURES SHALL HAVE DOUBLE LOCKNUTS AND INSULATED BUSHINGS.
12. ALL CONDUITS SHALL BE RIGID HOT DIPPED GALVANIZED STEEL, UNLESS OTHERWISE INDICATED.
13. GROUND ROD SHALL BE 3/4" X 10' LONG COPPER CLAD STEEL. CONNECTIONS TO GROUND RODS SHALL BE EXOTHERMICALLY WELDED.
14. ALL EXTERIOR ENCLOSURES, NUTS, BOLTS, AND MISCELLANEOUS MOUNTING HARDWARE SHALL BE STAINLESS STEEL, UNLESS NOTED OTHERWISE.
15. #6 AWG BARE COPPER GROUND WIRE MAY BE SOLID OR STRANDED UNLESS OTHERWISE INDICATED.
16. ~~EACH SIE CONTAINS ONE 120V/15A GFI DUPLEX RECEPTACLE.~~
17. ~~DUAL OBSTRUCTIONS LIGHT MAY BE OPTIONALLY POWERED DIRECTLY FROM A TERMINAL BLOCK IN THE SIE.~~
18. ~~CONTROL DEVICES MUST ENERGIZE AT 35 FOOT CANDLES AND DE-ENERGIZE AT 60 FOOT CANDLES PER AC 70/7460-1.~~
19. ~~AIR TERMINALS ARE NOT REQUIRED FOR RVR VISIBILITY SENSORS WHEN MOUNTED ON LIR MASTS.~~
20. ALL FAA STANDARDS AND ORDERS REFERENCED IN THESE DRAWINGS SHALL BE THE LATEST VERSION.
21. PRORTIONS OF THE SYSTEM NOT INSTALLED UNDER THIS CONTRACT AND NON-APPLICABLE NOTES ARE SHOWN FOR REFERENCE ONLY.

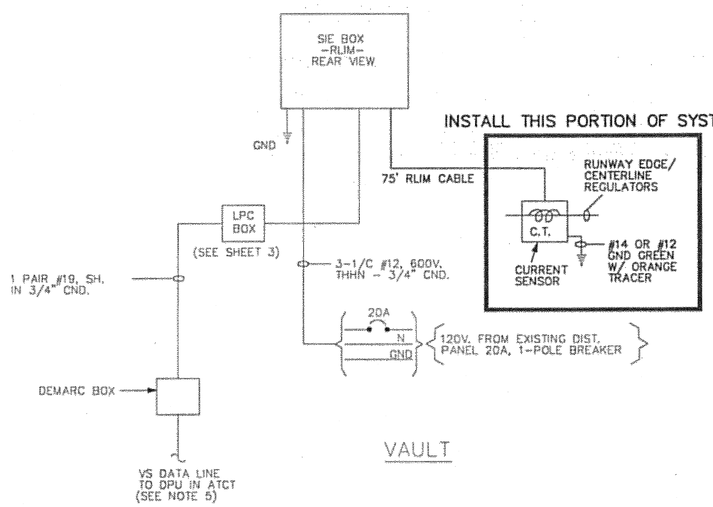

DO NOT SCALE FROM THESE DRAWINGS USE DIMENSIONS

PATH: I:\823400\Dwgs\E\Sheets\G45-V3.dwg
Tue, 03/Oct/06 02:26PM lschneller
TAB: G12

ADDENDUM NUMBER

ATTACHMENT NUMBER

RECORD OF REVISIONS

No.	DATE	DESCRIPTION

KETCHIKAN AIRPORT
RUNWAY SAFETY AREA EXPANSION & RUNWAY OVERLAY
PROJECT NO. 68306

RVR DETAILS

PREPARED BY: USKH INC.

CHECKED BY: GRH

STATE OF ALASKA 49TH GARY R. HABLE EE-10243 REGISTERED PROFESSIONAL ENGINEER 10/4/06

DESIGNED BY: LPS

DRAWN BY: LPS

STATE OF ALASKA
DEPARTMENT OF TRANSPORTATION & PUBLIC FACILITIES
DESIGN & ENGINEERING SERVICES
DIVISION-SOUTHEAST REGION

RVR DETAILS

PROJECT DESIGNATION	
AIP NO. 3-02-0144-1606	
STATE	YEAR
ALASKA	2006
SHEET NUMBER	TOTAL SHEETS
G45	131

NOTES:

1. #6 VERTICAL COLUMN REINFORCEMENT WITH 6" ø BENDS TO FORM 90–"L" HOOKS.
2. PROVIDE A MINIMUM OF 2" CLEAR COVER OVER ALL REINFORCING STEEL AND CONDUITS.
3. MINIMUM DEVELOPMENT LENGTH ASSUMES GRADE 40 REINFORCING STEEL.
4. CLEAR SPACING BETWEEN SPIRALS SHALL NOT EXCEED THREE INCHES NOR BE LESS THAN 1 INCH. ANCHORAGE OF OF SPIRAL REINFORCEMENT SHALL BE PROVIDED BY 1–1/2 EXTRA TURNS OF SPIRAL BAR OR WIRE AT THE EACH END OF A SPIRAL UNIT.
5. CONDUIT PENETRATIONS THROUGH CONCRETE FOUNDATION ARE USED AS FOLLOWS:
   A) ONE INCH CONDUIT SWEEP – POWER.
   B) ONE INCH CONDUIT SWEEP – COMMUNICATIONS.
6. WIND SENSOR TOWER IS EXISTING AND IS TO BE INSTALLED BY FAA. ANCHOR BOLT PATTERN IS 20–INCH SPACING – SQUARE PATTERN OF 4 3/4 INCH ANCHOR BOLTS AS SHOWN. VERIFY SPACING OF WITH EXISTING EQUIPMENT. A PLYWOOD TEMPLATE IS SUGGESTED IN ORDER TO PROPERLY PLACE ANCHOR BOLTS. VERTICALLY STUB UP ANCHOR BOLTS APPROXIMATELY 4–INCHES OUT OF CONCRETE SURFACE.
7. POUR SLAB CAP SUCH THAT ITS LONG AXIS IS PARALLEL TO THE RUNWAY.
8. FOR THE REPRESENTATIVE CONCRETE FOUNDATION SHOWN:
   A. CONCRETE STRENGTH = 3000 PSI @ 28 DAYS, (MIN.)
   B. SECURELY PLACE ANCHOR BOLTS PRIOR TO PLACING CONCRETE. TIE TO REINFORCEMENT.
   C. PLACE ALL CONCRETE ON UNDISTURBED SOIL OR COMPACTED BACKFILL. BACKFILL TO BE COMPACTED TO 92%
   D. DEPTH OF CONCRETE PIER = 4 FT IN SAND/GRAVEL OR BELOW FROST LEVEL.
   E. REININFORCEMENT STEEL PER ASTM A615, GR. 60, TIE WIRE TO BE 16 GAUGE OR LARGER ANNEALED IRON.
   F. ALL ANCHORAGE BOLTS AND PLATES TO BE HOT– DIPPED GALV. AFTER FABRICATION. COLD–GALV SPRAY TO BE APPLIED AFTER INSTALLATION TO ALL FASTENING HARDWARE AFTER INSTALLATION COMPLETED.
9. FOUNDATION EXCAVATION SHALL BE DUG AND BACKFILLED WITH NON–FROST SUSCEPTIBLE MATERIAL OR AUGERED AT INDICATED DIAMETER.
10. REBAR IS BENT AT THE TOP AND WIRE–TIED WITH THE HORIZONTAL CROSS–SUPPORT REBAR.

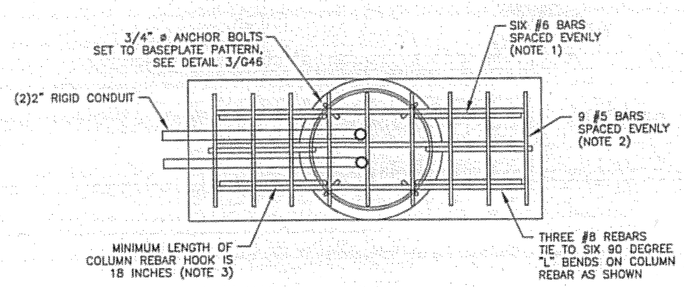

2/G46 **REINFORCING PLAN** N.T.S.

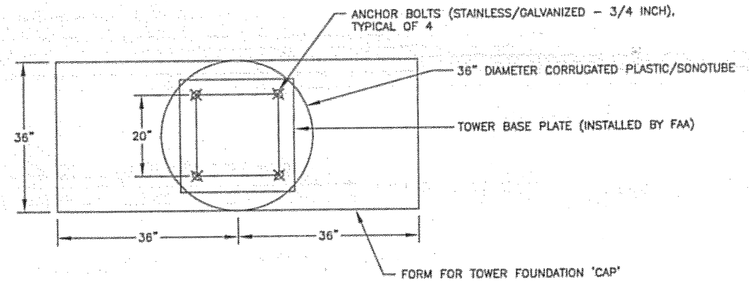

1/G46 **FOUNDATION PLAN** N.T.S.

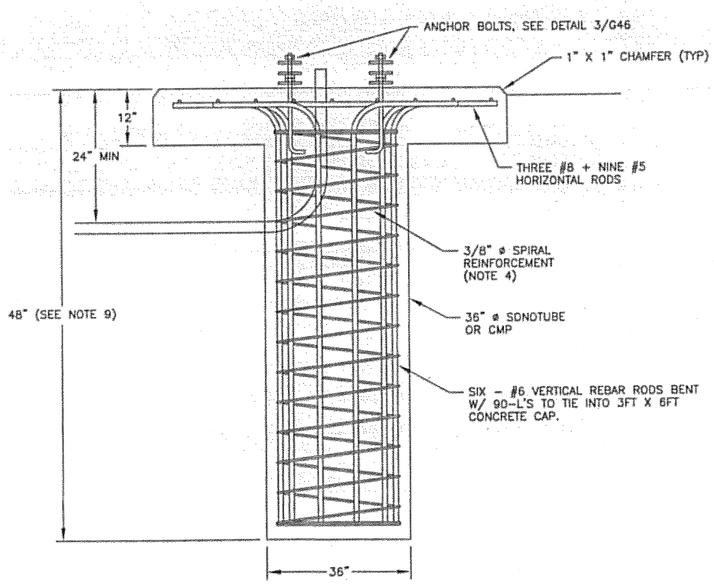

4/G46 **FOUNDATION SECTION** N.T.S.

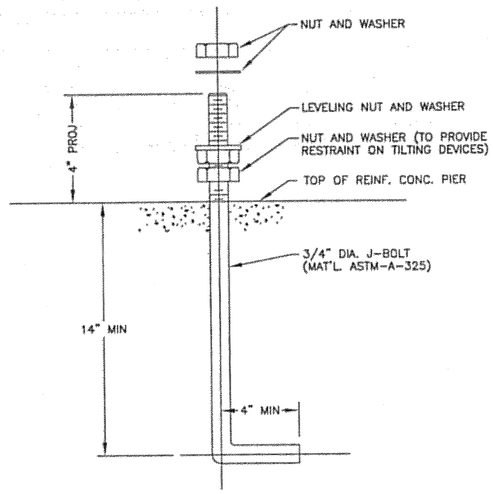

3/G46 **ANCHOR BOLT DETAIL** N.T.S.

DO NOT SCALE FROM THESE DRAWINGS USE DIMENSIONS

PATH: I:\823400\Dwgs\E\Sheets\G46–W1.dwg
Tue, 03/Oct/06 02:26PM lschneller
TAB: G12

ADDENDUM NUMBER
ATTACHMENT NUMBER

RECORD OF REVISIONS

No.	DATE	DESCRIPTION

KETCHIKAN AIRPORT
RUNWAY SAFETY AREA EXPANSION
& RUNWAY OVERLAY
PROJECT NO. 68306

F420 WIND SENSOR FOUNDATION DETAILS

PREPARED BY: USKH INC.

CHECKED BY: GRH

STATE OF ALASKA 49TH REGISTERED PROFESSIONAL ENGINEER
GARY R. HABLE
EE–10243
10/4/06

DESIGNED BY: LPS

DRAWN BY: LPS

STATE OF ALASKA
DEPARTMENT OF TRANSPORTATION & PUBLIC FACILITIES
DESIGN & ENGINEERING SERVICES
DIVISION–SOUTHEAST REGION

F420 WIND SENSOR FOUNDATION DETAILS

PROJECT DESIGNATION	
AIP NO. 3-02-0144-1606	
STATE	YEAR
ALASKA	2006
SHEET NUMBER	TOTAL SHEETS
G46	131

See attached Electrical Asbuilts

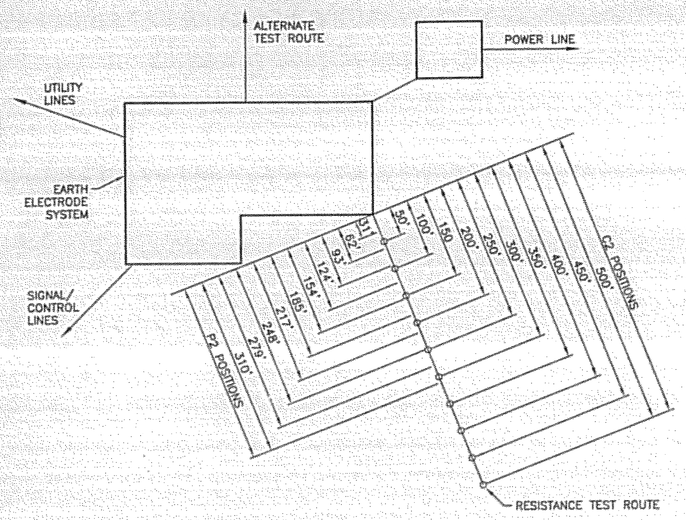

1 G47 **TYPICAL FACILITY TEST ROUTE**
N.T.S.

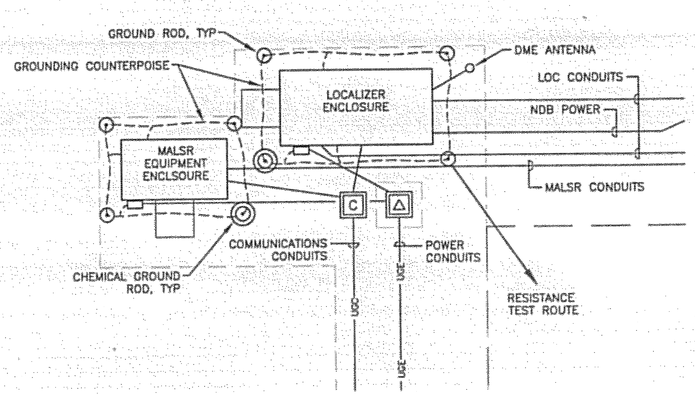

3 G47 **FACILITY TEST ROUTE**
N.T.S.

NOTES:

1. AN FAA REPRESENTATIVE SHALL BE PRESENT TO MONITOR AND/OR VERIFY THE EARTH ELECTRODE RESISTANCE TEST.
2. THE CIVIL CONTRACTOR, WITH THE ASSISTANCE OF A QUALIFIED ELECTRICIAN, SHALL PREPARE A NEAT SKETCH OF THE NEW FACILITY GROUND SYSTEM SIMILAR TO THAT SHOWN IN DETAIL 3. THIS SKETCH TOGETHER WITH THE RESISTANCE MEASUREMENT WORKSHEET (DETAIL 4) WILL BECOME PART OF THE PERMANENT FACILITY FILE. THREE COPIES WILL BE PROVIDED TO THE RESIDENT ENGINEER.
3. MEASURE THE RESISTANCE OF THE ELECTRODE SYSTEM WITH AN INSTRUMENT DESIGNED FOR THE PURPOSE USING THE FALL OF POTENTIAL METHOD (SUCH AS THE BIDDLE NULL BALANCE EARTH TESTER). PROCEED AS FOLLOWS:
   A. CONNECT THE TERMINALS MARKED C1 AND P1 TOGETHER AND CONNECT THEM TO THE ELECTRODE UNDER TEST.
   B. POSITION THE C2 PROBE ALONG A LINE WITH MAXIMIZES THE DISTANCE FROM THE ELECTRODE UNDER TEST AND FROM THE OTHER BURIED MATERIALS SUCH AS UTILITY PIPES, POWER AND SIGNAL CABLES, FUEL TANKS, ETC. IN CHOOSING THE DIRECTION FOR PLACEMENT OF THE C2 PROBE, EXAMINE THE CONFIGURATION OF THE ELECTRODE SYSTEM FOR THE FACILITY AND DETERMINE THE LOCATION OF ALL SUCH BURIED METALS. THEN LOCATE THE PROBE AS FAR AS POSSIBLE FROM THESE MATERIALS AS ILLUSTRATED IN DETAIL 1 (FOR LONG SYSTEM SUCH AS ALS, THE C2 PROBE LINE SHOULD BE RUN 90° TO ALS). KEEP C2 AND P2 LEADS SEPARATED AS FAR AS POSSIBLE.
   C. POSITION THE C2 PROBE AT DISTANCES AS SHOWN IN DETAIL 4. RECORD THE METER READINGS FOR EACH C2 AND P2 PROBE POSITION (NOTE THAT THE P2 POSITIONS ARE 62% OF THE C2 POSITIONS). IT MAY NOT BE NECESSARY TO PLOT THE FULL 500'. PLOT ENOUGH POINTS TO ACCURATELY DETERMINE WHERE RESISTANCE CURVE LEVELS OFF.
   D. NEXT PLOT ON THE GRAPH AS MANY RECORDED RESISTANCE READINGS VERSUS THE CORRESPONDING C2 PROBE POSITIONS AS NECESSARY TO DETERMINE WHERE CURVE LEVELS OFF (DETAIL 4).
   E. THE TRUE VALUE OF RESISTANCE CAN BE ESTIMATED BY EXTRAPOLATING THE CURVE TO ITS ASYMPTOTIC VALUE.

C2 PROBE DISTANCE	P2 PROBE DISTANCE (0.62xC2)	RESISTANCE METER READING (OHMS)
50'	31'	7.5
100'	62'	5.2
150'	93'	5.9
200'	124'	5.2
250'	154'	4.2
300'	185'	3.4
350'	217'	3.8
400'	248'	3.4
450'	279'	3.4
500'	310'	3.1

DEPTH OF REFERENCE RODS
RESISTANCE = 2.8 OHMS

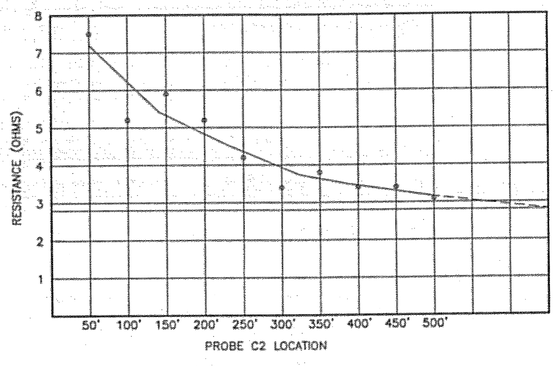

2 G47 **SAMPLE MEASUREMENT WORKSHEET**
N.T.S.

C2 PROBE DISTANCE	P2 PROBE DISTANCE (0.62xC2)	RESISTANCE METER READING (OHMS)
50'	31'	
100'	62'	
150'	93'	
200'	124'	
250'	154'	
300'	185'	
350'	217'	
400'	248'	
450'	279'	
500'	310'	

DEPTH OF REFERENCE RODS
RESISTANCE =

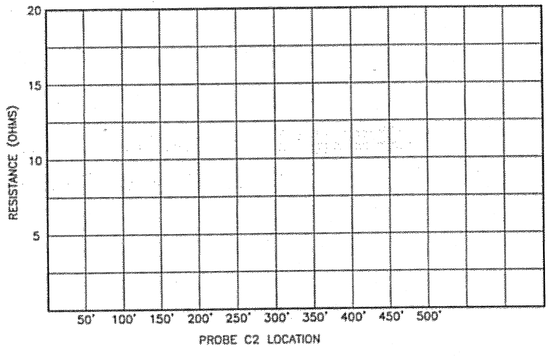

4 G47 **MEASUREMENT WORKSHEET**
N.T.S.

DO NOT SCALE FROM THESE DRAWINGS USE DIMENSIONS

PATH: I:\823400\Dwgs\E\Sheets\G47-GRD1.dwg
Tue, 03/Oct/06 02:26PM lschneller
TAB: G12

ADDENDUM NUMBER

ATTACHMENT NUMBER

RECORD OF REVISIONS

No.	DATE	DESCRIPTION

KETCHIKAN AIRPORT
RUNWAY SAFETY AREA EXPANSION
& RUNWAY OVERLAY
PROJECT NO. 68306

LOCALIZER GROUND TESTING

PREPARED BY: USKH INC.

CHECKED BY: GRH

STATE OF ALASKA
49TH
GARY R. HABLE
EE-10243
REGISTERED PROFESSIONAL ENGINEER
10/4/06

DESIGNED BY: LPS

DRAWN BY: LPS

STATE OF ALASKA
DEPARTMENT OF TRANSPORTATION
& PUBLIC FACILITIES
DESIGN & ENGINEERING SERVICES
DIVISION-SOUTHEAST REGION

LOCALIZER GROUND TESTING

PROJECT DESIGNATION
AIP NO. 3-02-0144-1606

STATE	YEAR
ALASKA	2006
SHEET NUMBER	TOTAL SHEETS
G47	131

See attached Electrical Asbuilts

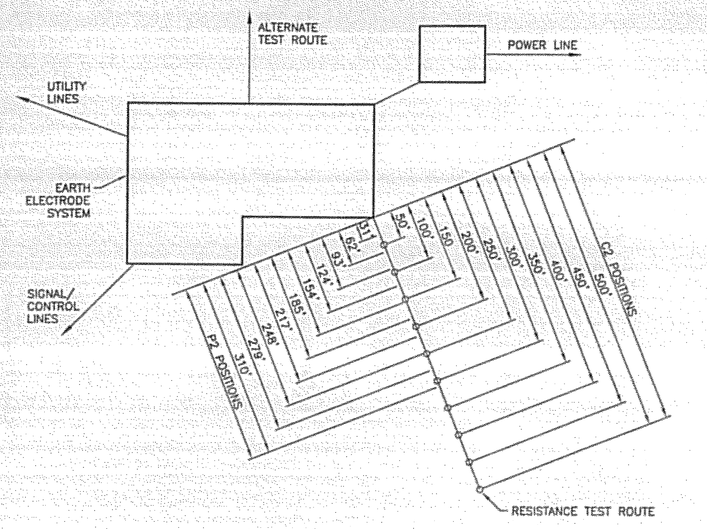

1 G48 **TYPICAL FACILITY TEST ROUTE**
N.T.S.

C2 PROBE DISTANCE	P2 PROBE DISTANCE (0.62xC2)	RESISTANCE METER READING (OHMS)
50'	31'	7.5
100'	62'	5.2
150'	93'	5.9
200'	124'	5.2
250'	154'	4.2
300'	185'	3.4
350'	217'	3.8
400'	248'	3.4
450'	279'	3.4
500'	310'	3.1

DEPTH OF REFERENCE RODS
RESISTANCE = 2.8 OHMS

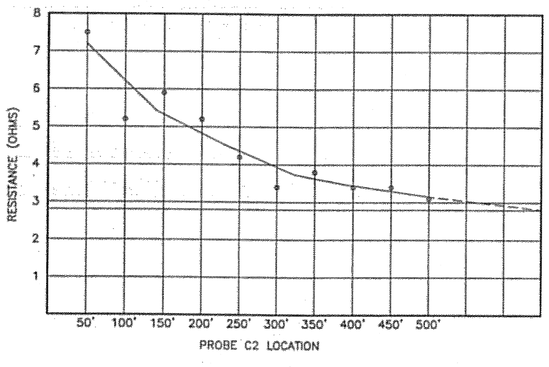

2 G48 **SAMPLE MEASUREMENT WORKSHEET**
N.T.S.

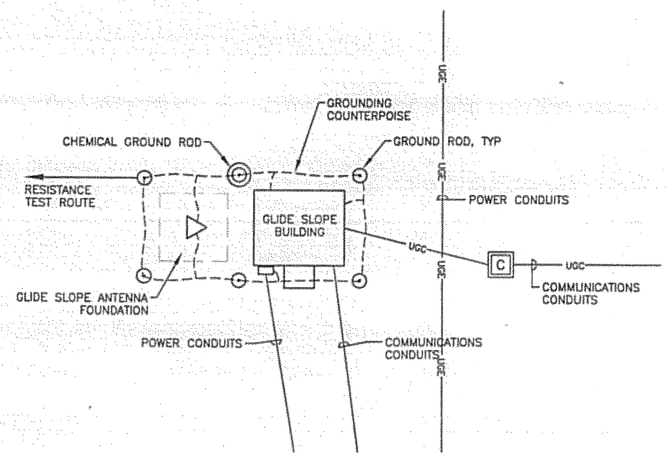

3 G48 **FACILITY TEST ROUTE**
N.T.S.

C2 PROBE DISTANCE	P2 PROBE DISTANCE (0.62xC2)	RESISTANCE METER READING (OHMS)
50'	31'	
100'	62'	
150'	93'	
200'	124'	
250'	154'	
300'	185'	
350'	217'	
400'	248'	
450'	279'	
500'	310'	

DEPTH OF REFERENCE RODS
RESISTANCE =

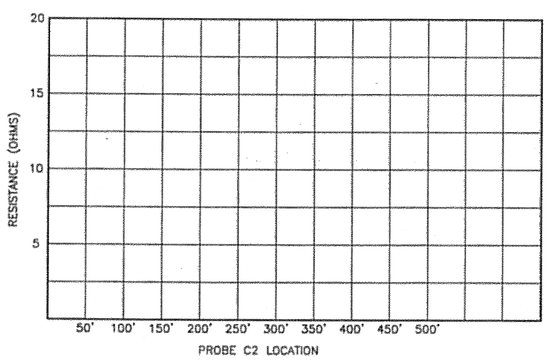

4 G48 **MEASUREMENT WORKSHEET**
N.T.S.

NOTES:

1. AN FAA REPRESENTATIVE SHALL BE PRESENT TO MONITOR AND/OR VERIFY THE EARTH ELECTRODE RESISTANCE TEST.
2. THE CIVIL CONTRACTOR, WITH THE ASSISTANCE OF A QUALIFIED ELECTRICIAN, SHALL PREPARE A NEAT SKETCH OF THE NEW FACILITY GROUND SYSTEM SIMILAR TO THAT SHOWN IN DETAIL 3. THIS SKETCH TOGETHER WITH THE RESISTANCE MEASUREMENT WORKSHEET (DETAIL 4) WILL BECOME PART OF THE PERMANENT FACILITY FILE. THREE COPIES WILL BE PROVIDED TO THE RESIDENT ENGINEER.
3. MEASURE THE RESISTANCE OF THE ELECTRODE SYSTEM WITH AN INSTRUMENT DESIGNED FOR THE PURPOSE USING THE FALL OF POTENTIAL METHOD (SUCH AS THE BIDDLE NULL BALANCE EARTH TESTER). PROCEED AS FOLLOWS:
   A. CONNECT THE TERMINALS MARKED C1 AND P1 TOGETHER AND CONNECT THEM TO THE ELECTRODE UNDER TEST.
   B. POSITION THE C2 PROBE ALONG A LINE WITH MAXIMIZES THE DISTANCE FROM THE ELECTRODE UNDER TEST AND FROM THE OTHER BURIED MATERIALS SUCH AS UTILITY PIPES, POWER AND SIGNAL CABLES, FUEL TANKS, ETC. IN CHOOSING THE DIRECTION FOR PLACEMENT OF THE C2 PROBE, EXAMINE THE CONFIGURATION OF THE ELECTRODE SYSTEM FOR THE FACILITY AND DETERMINE THE LOCATION OF ALL SUCH BURIED METALS. THEN LOCATE THE PROBE AS FAR AS POSSIBLE FROM THESE MATERIALS AS ILLUSTRATED IN DETAIL 1 (FOR LONG SYSTEM SUCH AS ALS, THE C2 PROBE LINE SHOULD BE RUN 90° TO ALS). KEEP C2 AND P2 LEADS SEPARATED AS FAR AS POSSIBLE.
   C. POSITION THE C2 PROBE AT DISTANCES AS SHOWN IN DETAIL 4. RECORD THE METER READINGS FOR EACH C2 AND P2 PROBE POSITION (NOTE THAT THE P2 POSITIONS ARE 62% OF THE C2 POSITIONS). IT MAY NOT BE NECESSARY TO PLOT THE FULL 500'. PLOT ENOUGH POINTS TO ACCURATELY DETERMINE WHERE RESISTANCE CURVE LEVELS OFF.
   D. NEXT PLOT ON THE GRAPH AS MANY RECORDED RESISTANCE READINGS VERSUS THE CORRESPONDING C2 PROBE POSITIONS AS NECESSARY TO DETERMINE WHERE CURVE LEVELS OFF (DETAIL 4).
   E. THE TRUE VALUE OF RESISTANCE CAN BE ESTIMATED BY EXTRAPOLATING THE CURVE TO ITS ASYMPTOTIC VALUE.

DO NOT SCALE FROM THESE DRAWINGS USE DIMENSIONS

PATH: I:\823400\Dwgs\E\Sheets\G48-GRD2.dwg
Tue, 03/Oct/06 02:27PM lschneller
TAB: G12

ADDENDUM NUMBER

ATTACHMENT NUMBER

RECORD OF REVISIONS

No.	DATE	DESCRIPTION

KETCHIKAN AIRPORT
RUNWAY SAFETY AREA EXPANSION
& RUNWAY OVERLAY
PROJECT NO. 68306

GLIDE SLOPE GROUND TESTING

PREPARED BY: USKH INC.

CHECKED BY: GRH

STATE OF ALASKA 49TH GARY R. HABLE EE-10243 REGISTERED PROFESSIONAL ENGINEER 10/4/06

DESIGNED BY: LPS

DRAWN BY: LPS

STATE OF ALASKA
DEPARTMENT OF TRANSPORTATION
& PUBLIC FACILITIES
DESIGN & ENGINEERING SERVICES
DIVISION-SOUTHEAST REGION

GLIDE SLOPE GROUND TESTING

PROJECT DESIGNATION
AIP NO. 3-02-0144-1606

STATE	YEAR
ALASKA	2006
SHEET NUMBER	TOTAL SHEETS
G48	131

See attached Electrical Asbuilts

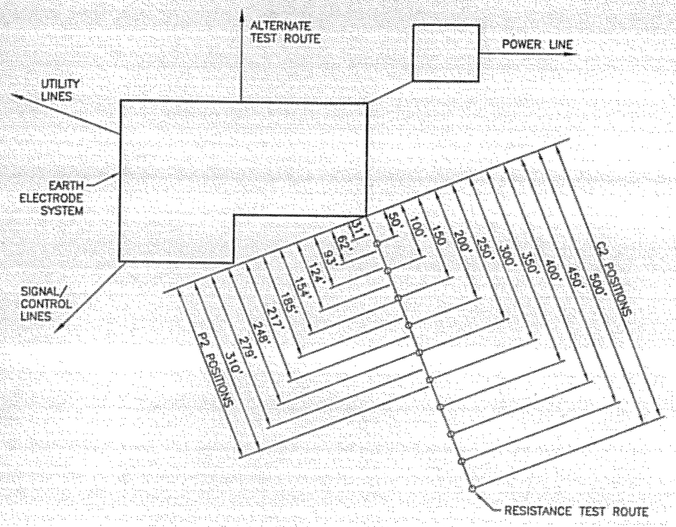

1 G49 **TYPICAL FACILITY TEST ROUTE**
N.T.S.

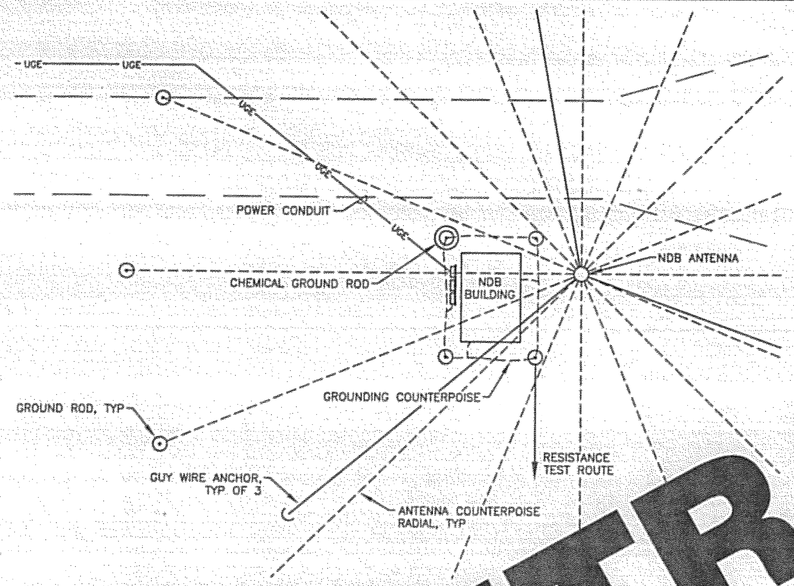

3 G49 **FACILITY TEST ROUTE**
N.T.S.

NOTES:

1. AN FAA REPRESENTATIVE SHALL BE PRESENT TO MONITOR AND/OR VERIFY THE EARTH ELECTRODE RESISTANCE TEST.
2. THE CIVIL CONTRACTOR, WITH THE ASSISTANCE OF A QUALIFIED ELECTRICIAN, SHALL PREPARE A NEAT SKETCH OF THE NEW FACILITY GROUND SYSTEM SIMILAR TO THAT SHOWN IN DETAIL 3. THIS SKETCH TOGETHER WITH THE RESISTANCE MEASUREMENT WORKSHEET (DETAIL 4) WILL BECOME PART OF THE PERMANENT FACILITY FILE. THREE COPIES WILL BE PROVIDED TO THE RESIDENT ENGINEER.
3. MEASURE THE RESISTANCE OF THE ELECTRODE SYSTEM WITH AN INSTRUMENT DESIGNED FOR THE PURPOSE USING THE FALL OF POTENTIAL METHOD (SUCH AS THE BIDDLE NULL BALANCE EARTH TESTER). PROCEED AS FOLLOWS:
   A. CONNECT THE TERMINALS MARKED C1 AND P1 TOGETHER AND CONNECT THEM T
   THE FACILITY AND DETERMINE ...TEM FOR ...F ALL SUCH BURIED METALS. THEN ... PROBE AS ... POSSIBLE FROM THESE MATERIALS A... DETAIL 1 ...NG SYSTEM SUCH AS ALS. THE ... SHOULD BE R... D ALS). KEEP C2 AND P2 LEADS ...ATED AS FAR AS POSSIBL...
   C. POSITION ...2 PROBE AT DISTANCES AS ... IN DETAIL 4. RECORD THE MET... DINGS FOR E... C2 AND P... ROBE POSITION (NOTE THAT THA... SITIONS A... OF THE C2 POSITIONS). IT MAY NOT BE NECES... PLOT T... 500'. PLOT ENOUGH POINTS TO ...CCURATEL... INE ... RESISTANCE CURVE LEVELS OFF. ... PLOT ... MANY RECORDED RESISTANCE READINGS ... THE ... C2 PROBE POSITIONS AS NECESSARY TO ... WHER... LEVELS OFF. (DETAIL 4).
   T... VALUE OF RESISTANCE CAN BE ESTIMATED BY EXTRAPOLATING ... ITS ASYMPTOTIC VALUE.

C2 PROBE DISTANCE	P2 PROBE DISTANCE (0.62xC2)	RESISTANCE METER READING (OHMS)
50'	31'	7.5
100'	62'	5.2
150'	93'	5.9
200'	124'	5.2
250'	154'	4.2
300'	185'	3.4
350'	217'	3.8
400'	248'	3.4
450'	279'	3.4
500'	310'	3.1

DEPTH OF REFERENCE ROD
RESISTANCE = 2.8 OHMS

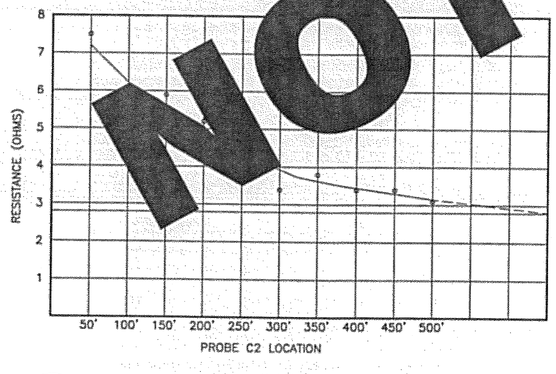

2 G49 **SAMPLE MEASUREMENT WORKSHEET**
N.T.S.

C2 PROBE DISTANCE	P2 PROBE DISTANCE (0.62xC2)	RESISTANCE METER READING (OHMS)
50'	31'	
100'	62'	
150'	93'	
200'	124'	
250'	154'	
300'	185'	
350'	217'	
400'	248'	
450'	279'	
500'	310'	

DEPTH OF REFERENCE RODS
RESISTANCE =

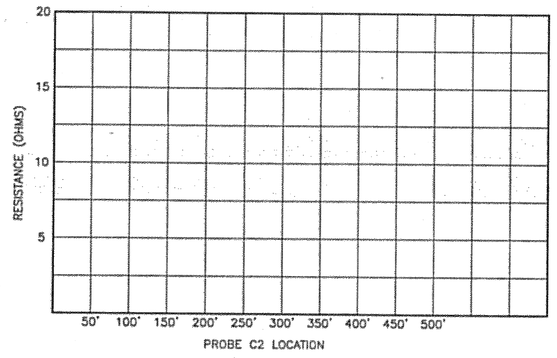

4 G49 **MEASUREMENT WORKSHEET**
N.T.S.

NOT IN CONTRACT

DO NOT SCALE FROM THESE DRAWINGS USE DIMENSIONS

PATH: I:\B23400\Dwgs\E\Sheets\G49-GRD3.dwg
Tue, 03/Oct/06 02:27PM lschneller
TAB: G12

ADDENDUM NUMBER
ATTACHMENT NUMBER

RECORD OF REVISIONS

No.	DATE	DESCRIPTION

KETCHIKAN AIRPORT
RUNWAY SAFETY AREA EXPANSION
& RUNWAY OVERLAY
PROJECT NO. 68306

NDB GROUND TESTING

PREPARED BY: USKH INC.
CHECKED BY: GRH

STATE OF ALASKA
49TH
GARY R. HABLE
EE-10243
REGISTERED PROFESSIONAL ENGINEER
10/4/06

DESIGNED BY: LPS
DRAWN BY: LPS

STATE OF ALASKA
DEPARTMENT OF TRANSPORTATION
& PUBLIC FACILITIES
DESIGN & ENGINEERING SERVICES
DIVISION-SOUTHEAST REGION

NDB GROUND TESTING

PROJECT DESIGNATION
AIP NO. 3-02-0144-1606

STATE	YEAR
ALASKA	2006
SHEET NUMBER	TOTAL SHEETS
G49	131

See attached Electrical Asbuilts

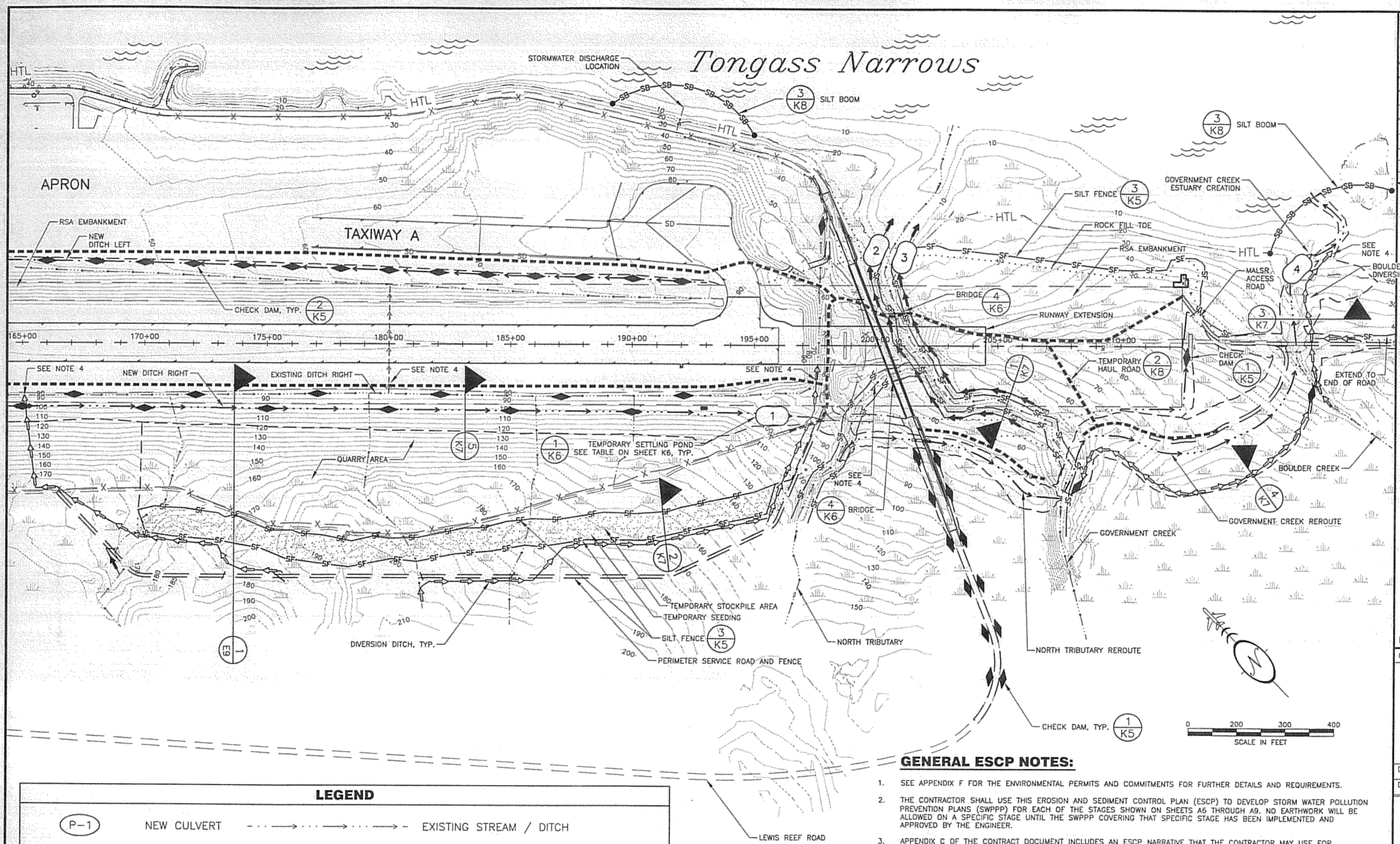

LEGEND

P-1	NEW CULVERT		EXISTING STREAM / DITCH
	CHECK DAM		NEW STREAM / DITCH / CREEK REROUTE
SF SF	SILT FENCE		INTERCEPTION DITCH
SB SB	SILT BOOM		DIVERSION DITCH
HTL	HIGH TIDE LINE		FISH STREAM
1	TEMPORARY SETTLING POND		WETLANDS
	HAUL ROUTE		

GENERAL ESCP NOTES:

1. SEE APPENDIX F FOR THE ENVIRONMENTAL PERMITS AND COMMITMENTS FOR FURTHER DETAILS AND REQUIREMENTS.
2. THE CONTRACTOR SHALL USE THIS EROSION AND SEDIMENT CONTROL PLAN (ESCP) TO DEVELOP STORM WATER POLLUTION PREVENTION PLANS (SWPPP) FOR EACH OF THE STAGES SHOWN ON SHEETS A5 THROUGH A9. NO EARTHWORK WILL BE ALLOWED ON A SPECIFIC STAGE UNTIL THE SWPPP COVERING THAT SPECIFIC STAGE HAS BEEN IMPLEMENTED AND APPROVED BY THE ENGINEER.
3. APPENDIX C OF THE CONTRACT DOCUMENT INCLUDES AN ESCP NARRATIVE THAT THE CONTRACTOR MAY USE FOR DEVELOPING A SWPPP.
4. SETTLING PONDS ARE INTENDED TO TREAT ONLY STORM WATER RUNOFF COMING FROM DISTURBED AREAS. STORM WATER COMING FROM OUTSIDE THE PROJECT LIMITS, UNDISTURBED AREAS AND BASE FLOWS ARE TO BE ROUTED THROUGH EXISTING DRAINAGE CHANNELS AND AROUND SETTLING PONDS. USE TEMPORARY DITCHING AND PIPING AS NECESSARY TO MEET THIS INTENT.
5. THE ENGINEER MAY DIRECT THE CONTRACTOR TO PROVIDE ADDITIONAL EROSION AND SEDIMENT CONTROL MEASURES AS REQUIRED TO PREVENT SEDIMENT FROM ENTERING WATERS OF THE US. THESE ADDITIONAL CONTROL MEASURES MAY INCLUDE, BUT ARE NOT LIMITED TO:
   - TEMPORARY SEEDING OF EXPOSED SLOPES
   - ADDING OF FLOCCULANTS IN SEDIMENTATION PONDS
   - APPLICATION OF SOIL STABILIZATION POLYMER TO ROADS OR EXPOSED SLOPES.
   - BENTONITE CLAY AND OTHER SOIL SEALERS
   - ADDITION OF AGGREGATE BASE COURSE MATERIALS TO HAUL ROADS
   - VEHICLE TRACKING ENTRANCE/EXIT
   - DEWATERING SILT BAG
   - CONSTRUCTION TIMING AND SEQUENCING TO MINIMIZE EXPOSURE OF EXPOSED SLOPES

DO NOT SCALE FROM THESE DRAWINGS USE DIMENSIONS

PATH: I:\823400\Dwgs\C\Sheets\K01.dwg
Wed, 04/Oct/06 08:44AM bpaddock
TAB: K01

ADDENDUM NUMBER
ATTACHMENT NUMBER

RECORD OF REVISIONS

No.	DATE	DESCRIPTION

KETCHIKAN AIRPORT
RUNWAY SAFETY AREA EXPANSION
& RUNWAY OVERLAY
PROJECT NO. 68306

EROSION & SEDIMENT CONTROL PLAN STAGE 1

PREPARED BY: USKH INC.
CHECKED BY: DLM

STATE OF ALASKA 49 TH
D. Lance Mearig
CE-7435
04Oct06
REGISTERED PROFESSIONAL ENGINEER

DESIGNED BY: NCL
DRAWN BY: WJP

STATE OF ALASKA
DEPARTMENT OF TRANSPORTATION & PUBLIC FACILITIES
DESIGN & ENGINEERING SERVICES
DIVISION–SOUTHEAST REGION

EROSION & SEDIMENT CONTROL PLAN STAGE 1

PROJECT DESIGNATION	
AIP NO. 3-02-0144-1606	
STATE	YEAR
ALASKA	2006
SHEET NUMBER	TOTAL SHEETS
K1	131

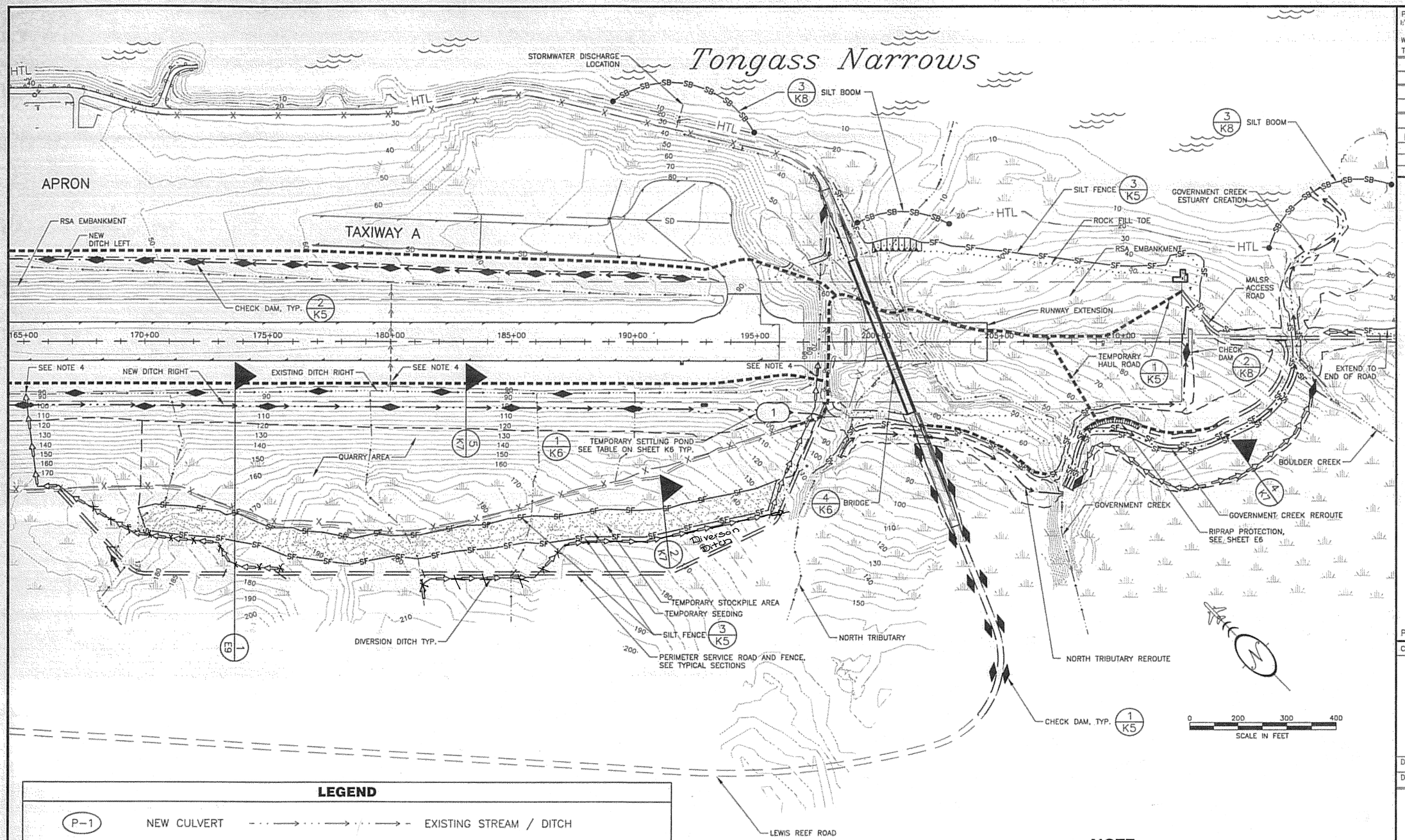

LEGEND

P-1	NEW CULVERT		EXISTING STREAM / DITCH
	CHECK DAM		NEW STREAM / DITCH / CREEK REROUTE
SF SF	SILT FENCE		INTERCEPTION DITCH
SB SB	SILT BOOM		DIVERSION DITCH
HTL	HIGH TIDE LINE		FISH STREAM
1	TEMPORARY SETTLING POND		WETLANDS
	HAUL ROUTE		

NOTE:
SEE SHEET K1 FOR GENERAL NOTES.

DO NOT SCALE FROM THESE DRAWINGS USE DIMENSIONS

PATH: I:\B23400\Dwgs\C\Sheets\K02.dwg
Wed, 04/Oct/06 08:44AM bpaddock
TAB: K02

ADDENDUM NUMBER

ATTACHMENT NUMBER

RECORD OF REVISIONS

No.	DATE	DESCRIPTION

KETCHIKAN AIRPORT
RUNWAY SAFETY AREA EXPANSION
& RUNWAY OVERLAY
PROJECT NO. 68306

EROSION & SEDIMENT CONTROL PLAN STAGE 2

PREPARED BY: USKH INC.
CHECKED BY: DLM

STATE OF ALASKA 49TH D. Lance Mearig CE-7435 REGISTERED PROFESSIONAL ENGINEER

DESIGNED BY: NCL
DRAWN BY: WJP

STATE OF ALASKA
DEPARTMENT OF TRANSPORTATION & PUBLIC FACILITIES
DESIGN & ENGINEERING SERVICES
DIVISION–SOUTHEAST REGION

EROSION & SEDIMENT CONTROL PLAN STAGE 2

PROJECT DESIGNATION
AIP NO. 3-02-0144-1606

STATE	YEAR
ALASKA	2006
SHEET NUMBER	TOTAL SHEETS
K2	131

1168
310
1478

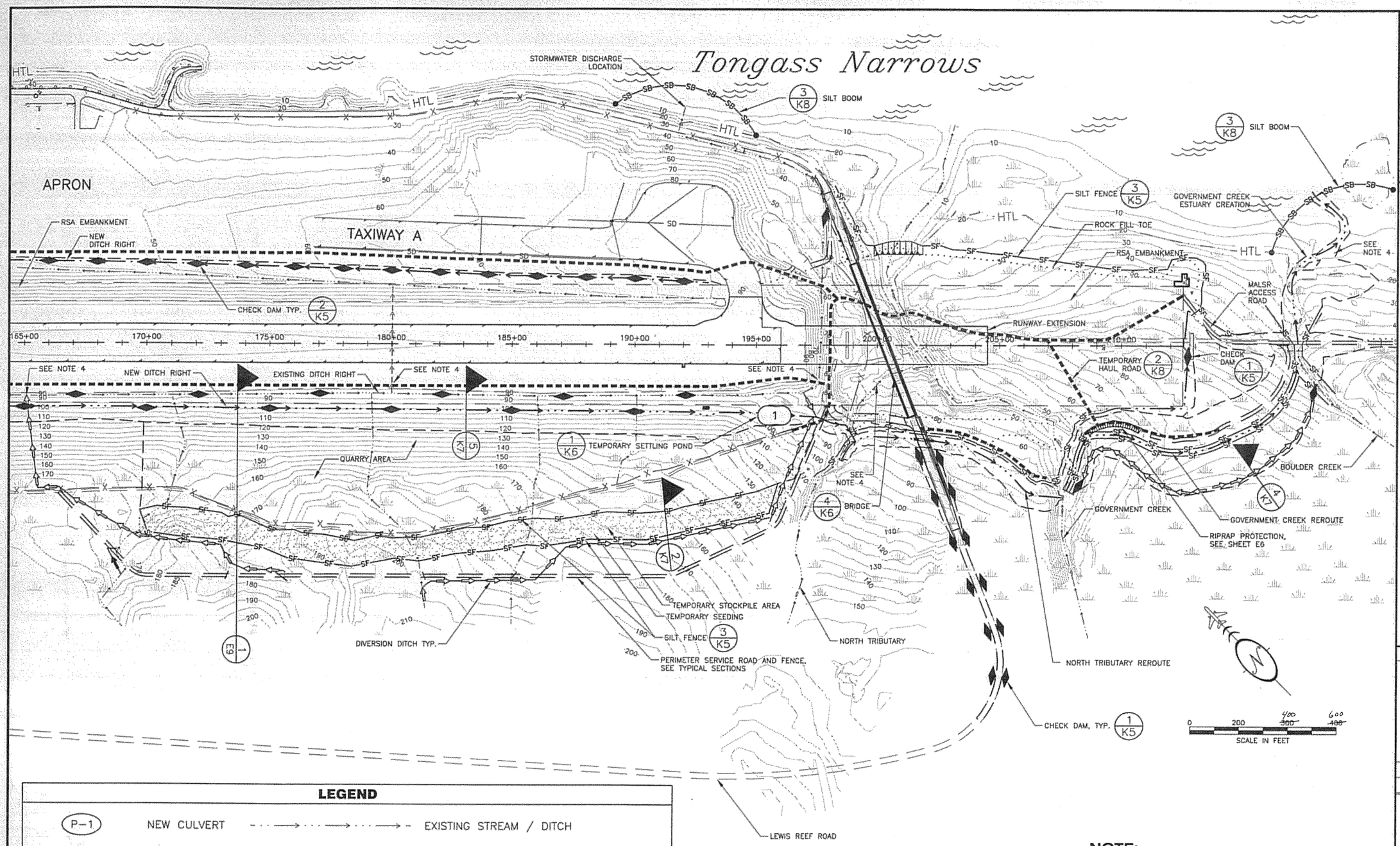

LEGEND

P–1	NEW CULVERT		EXISTING STREAM / DITCH
	CHECK DAM		NEW STREAM / DITCH / CREEK REROUTE
SF SF	SILT FENCE		INTERCEPTION DITCH
SB SB	SILT BOOM		DIVERSION DITCH
HTL	HIGH TIDE LINE		FISH STREAM
1	TEMPORARY SETTLING POND		WETLANDS
	HAUL ROUTE		

NOTE:
SEE SHEET K1 FOR GENERAL NOTES.

DO NOT SCALE FROM THESE DRAWINGS USE DIMENSIONS

PATH: I:\823400\Dwgs\C\Sheets\K03.dwg
Wed, 04/Oct/06 08:44AM bpaddock
TAB: K03

ADDENDUM NUMBER

ATTACHMENT NUMBER

RECORD OF REVISIONS

No.	DATE	DESCRIPTION

KETCHIKAN AIRPORT
RUNWAY SAFETY AREA EXPANSION
& RUNWAY OVERLAY
PROJECT NO. 68306

EROSION & SEDIMENT CONTROL PLAN STAGE 3-7

PREPARED BY: USKH INC.
CHECKED BY: DLM

STATE OF ALASKA 49 TH
D. Lance Mearig
CE-7435
04 Oct 06
REGISTERED PROFESSIONAL ENGINEER

DESIGNED BY: NCL
DRAWN BY: WJP

STATE OF ALASKA
DEPARTMENT OF TRANSPORTATION & PUBLIC FACILITIES
DESIGN & ENGINEERING SERVICES
DIVISION–SOUTHEAST REGION

EROSION & SEDIMENT CONTROL PLAN STAGE 3-7

PROJECT DESIGNATION
AIP NO. 3-02-0144-1606

STATE	YEAR
ALASKA	2006
SHEET NUMBER	TOTAL SHEETS
K3	131

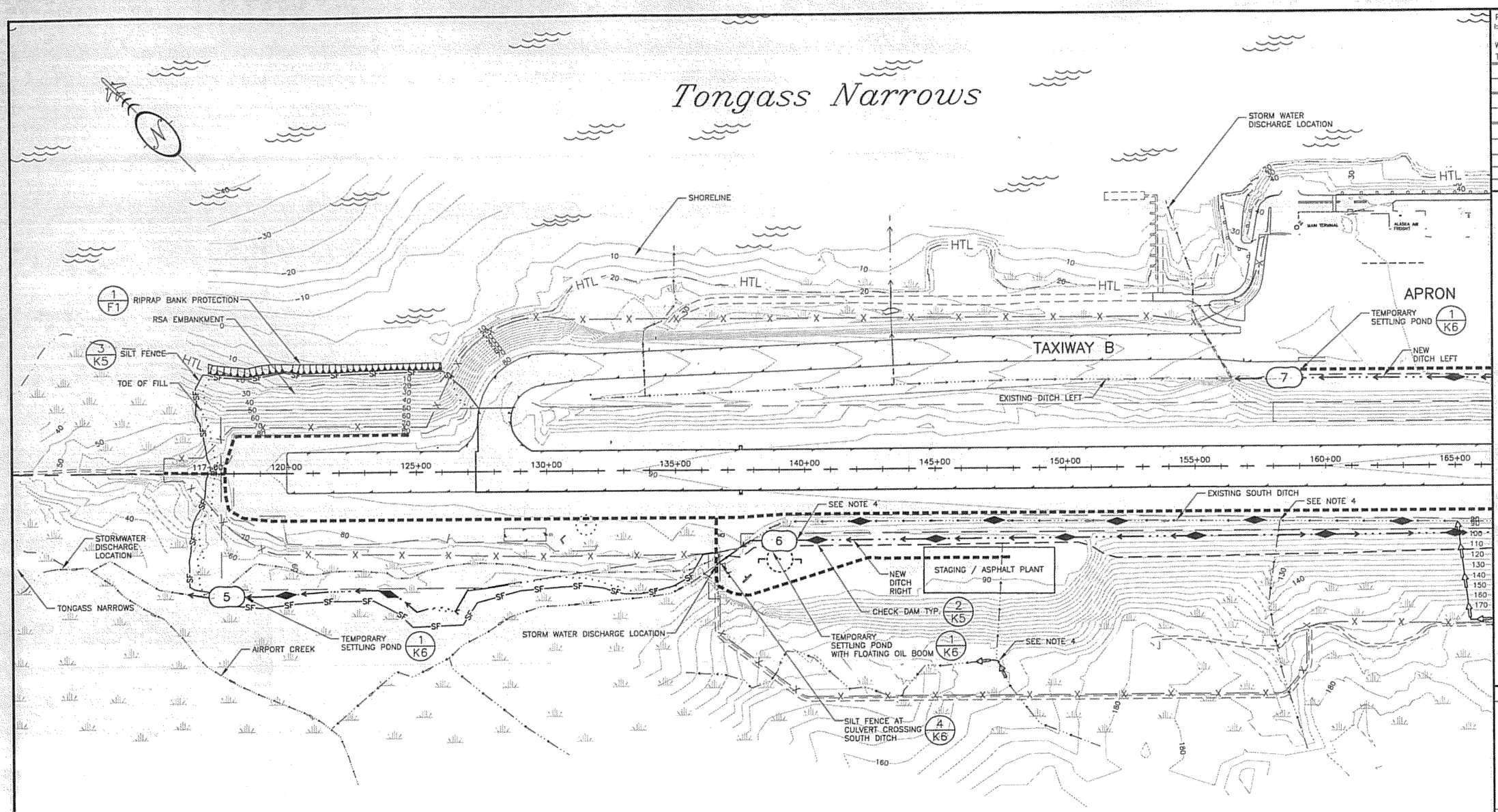

LEGEND

P–1	NEW CULVERT		EXISTING STREAM / DITCH
	CHECK DAM		NEW STREAM / DITCH / CREEK REROUTE
SF SF	SILT FENCE		INTERCEPTION DITCH
SB SB	SILT BOOM		DIVERSION DITCH
HTL	HIGH TIDE LINE		FISH STREAM
1	TEMPORARY SETTLING POND		WETLANDS
	HAUL ROUTE		

DO NOT SCALE FROM THESE DRAWINGS USE DIMENSIONS

PATH: I:\823400\Dwgs\C\Sheets\K04.dwg
Wed, 04/Oct/06 08:45AM bpaddock
TAB: K04

ADDENDUM NUMBER

ATTACHMENT NUMBER

RECORD OF REVISIONS

No.	DATE	DESCRIPTION

KETCHIKAN AIRPORT
RUNWAY SAFETY AREA EXPANSION
& RUNWAY OVERLAY
PROJECT NO. 68306

EROSION & SEDIMENT CONTROL PLAN STAGES 1-7

PREPARED BY: USKH INC.
CHECKED BY: DLM

STATE OF ALASKA 49 TH
D. Lance Mearig
CE-7435
10 Oct 06
REGISTERED PROFESSIONAL ENGINEER

DESIGNED BY: NCL
DRAWN BY: WJP

STATE OF ALASKA
DEPARTMENT OF TRANSPORTATION & PUBLIC FACILITIES
DESIGN & ENGINEERING SERVICES
DIVISION–SOUTHEAST REGION

EROSION & SEDIMENT CONTROL PLAN STAGES 1-7

PROJECT DESIGNATION	
AIP NO. 3-02-0144-1606	
STATE	YEAR
ALASKA	2006
SHEET NUMBER	TOTAL SHEETS
K4	131

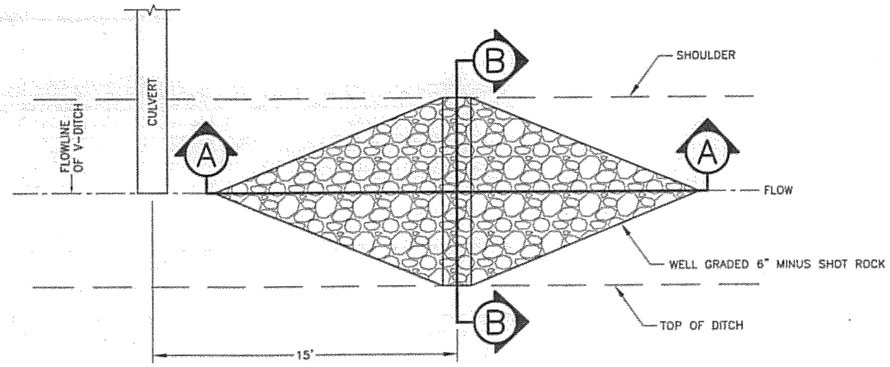

PLAN VIEW

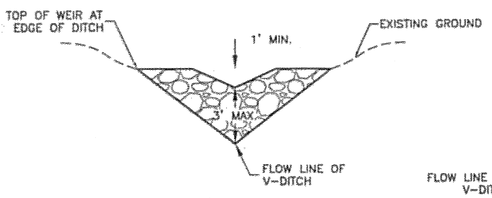

SECTION B-B

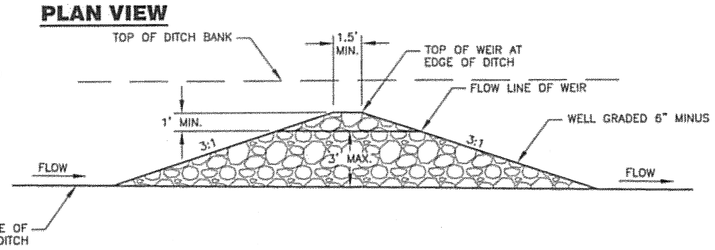

SECTION A-A

1 / K5 **V-DITCH CHECK DAM DETAILS**
N.T.S.

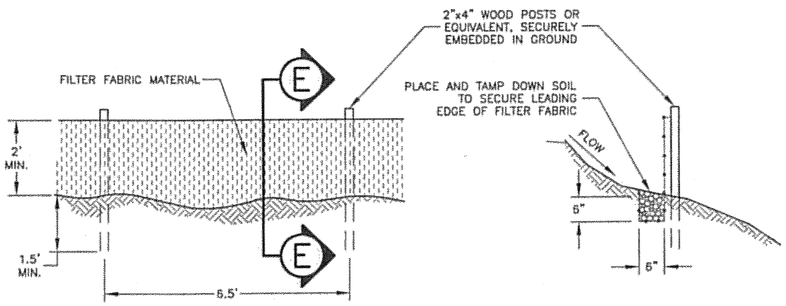

ELEVATION **SECTION E-E**

3 / K5 **SILT FENCE DETAILS**
N.T.S.

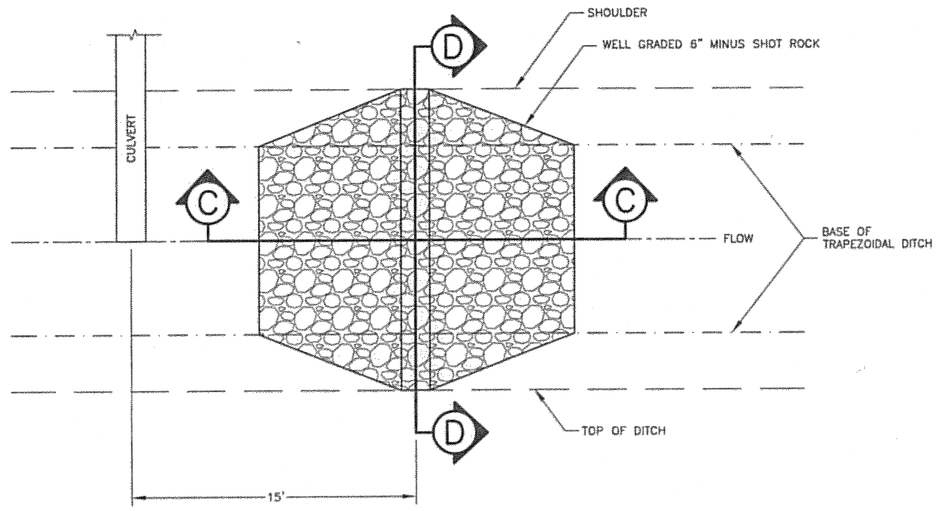

PLAN VIEW

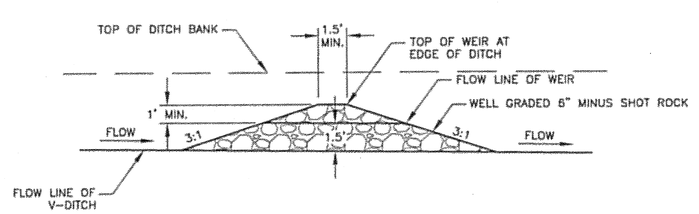

SECTION C-C

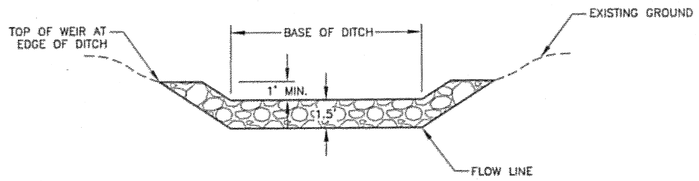

SECTION D-D

2 / K5 **TRAPEZOIDAL DITCH CHECK DAM DETAILS**
N.T.S.

DO NOT SCALE FROM THESE DRAWINGS USE DIMENSIONS

PATH: I:\823400\Dwgs\C\Sheets\K05.dwg
Wed, 04/Oct/06 08:45AM bpaddock
TAB: K05

ADDENDUM NUMBER

ATTACHMENT NUMBER

RECORD OF REVISIONS

No.	DATE	DESCRIPTION

KETCHIKAN AIRPORT
RUNWAY SAFETY AREA EXPANSION
& RUNWAY OVERLAY
PROJECT NO. 68306

EROSION & SEDIMENT CONTROL DETAILS

PREPARED BY: USKH INC.
CHECKED BY: DLM

STATE OF ALASKA 49 TH
D. Lance Mearig
CE-7435
04Oct06
REGISTERED PROFESSIONAL ENGINEER

DESIGNED BY: NCL
DRAWN BY: WJP

STATE OF ALASKA
DEPARTMENT OF TRANSPORTATION & PUBLIC FACILITIES
DESIGN & ENGINEERING SERVICES
DIVISION–SOUTHEAST REGION

EROSION & SEDIMENT CONTROL DETAILS

PROJECT DESIGNATION	
AIP NO. 3-02-0144-1606	
STATE	YEAR
ALASKA	2006
SHEET NUMBER	TOTAL SHEETS
K5	131

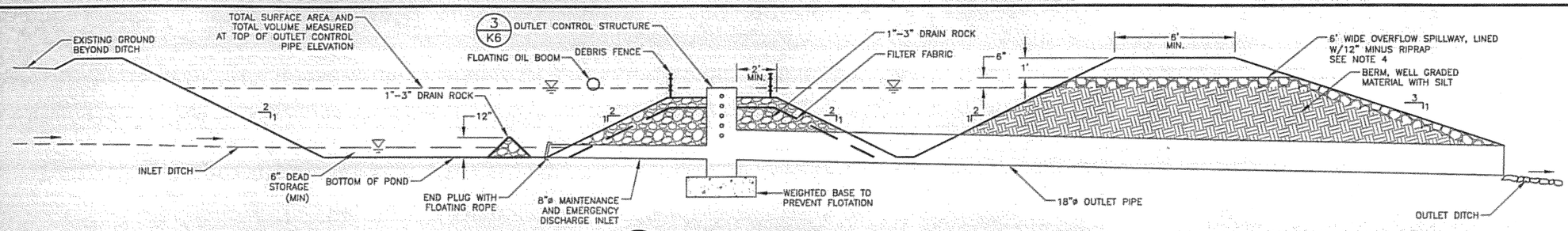

1/K6 **TYPE-I TEMPORARY SETTLING POND - SECTION**
N.T.S.

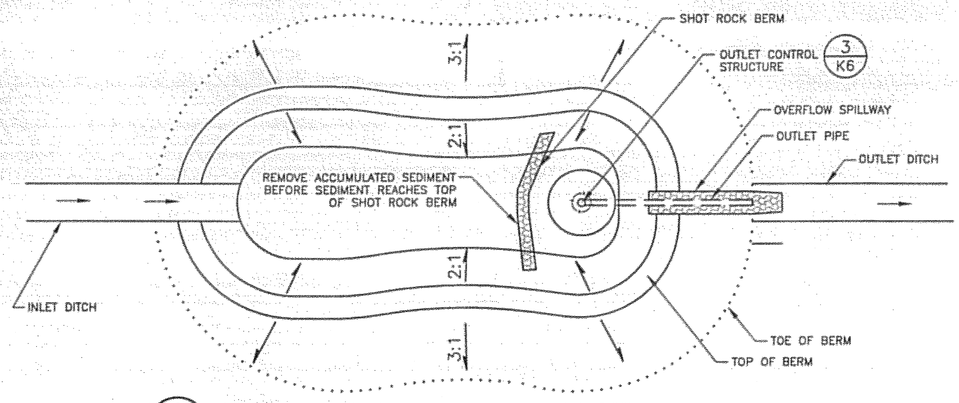

2/K6 **TYPE-I TEMPORARY SETTLING POND - PLAN**
N.T.S.

TYPE-I SETTLING POND TABLE

POND #	DRAINAGE BASIN AREA (ACRES)	DESIGN FLOW (CFS) SEE NOTE 1	SETTLING POND SIZE, SEE NOTE 2				OUTLET HOLE PATTERN, SEE NOTE 3			
			MIN. SURFACE AREA (S.F.)	VOLUME (C.F.)	WIDTH ±	LENGTH ±	DIAMETER ø (INCH)	N (EACH)	Y (INCHES)	TOTAL SURFACE AREA OF OUTLET HOLES (S.F.)
1	26.1	33	52,700	145,100	160	320	2	15	6	0.33
2	6.9	8	13,400	34,200	80	160	1	15	7.5	0.08
3	10.5	17	27,100	76,600	120	230	1.5	15	7.0	0.18
4	16.5	19	29,500	80,000	120	240	1.5	15	7.0	0.18
5	16.9	20	32,000	90,800	130	250	1.5	18	5.0	0.22
6	30.5	35	55,300	159,400	170	330	2	18	4.5	0.39
7	39.3	50	80,200	229,300	200	400	2	24	2.5	0.52

TYPE-I SETTLING POND NOTES:

1. DESIGN FLOW BASED ON 2 YEAR, 24 HOUR STORM
2. SETTLING POND SURFACE AREA BASED ON SETTLING OUT A 20 MICRON PARTICLE
3. OUTLET HOLE PATTERN BASED ON 40 HOUR DRAWDOWN TIME
4. DESIGN CALCULATIONS INDICATE THAT APPROXIMATELY ONE-HALF OF THE FLOW FROM THE DESIGN STORM WILL FLOW OVER THE SPILLWAY

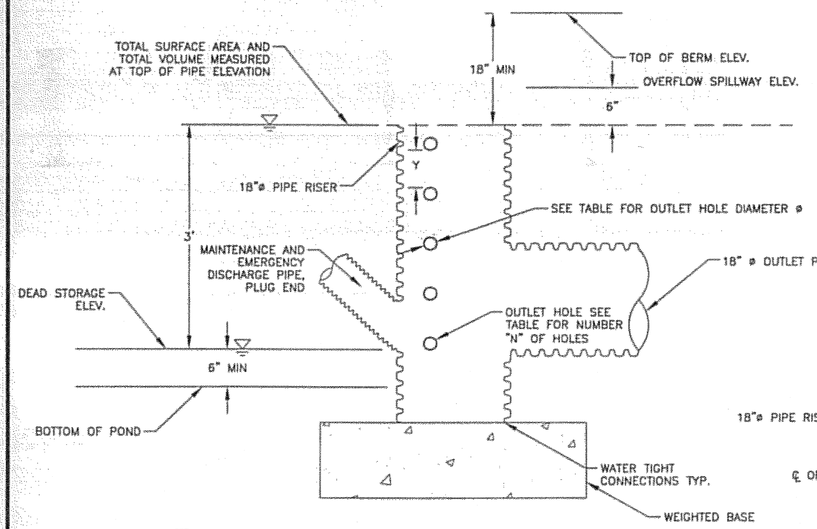

3/K6 **OUTLET CONTROL STRUCTURE**
N.T.S.

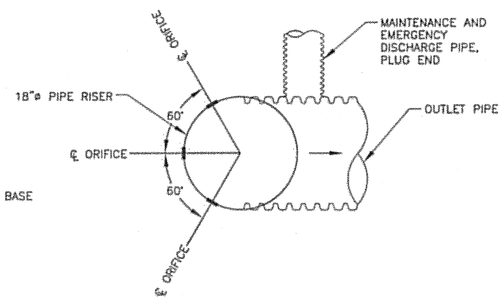

4/K6 **PLAN VIEW OF OUTLET CONTROL**
N.T.S.

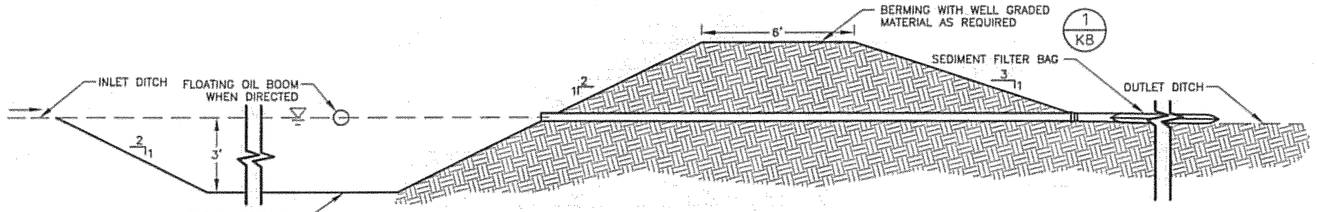

5/K6 **TYPE-II TEMPORARY SETTLING POND - SECTION**
N.T.S.

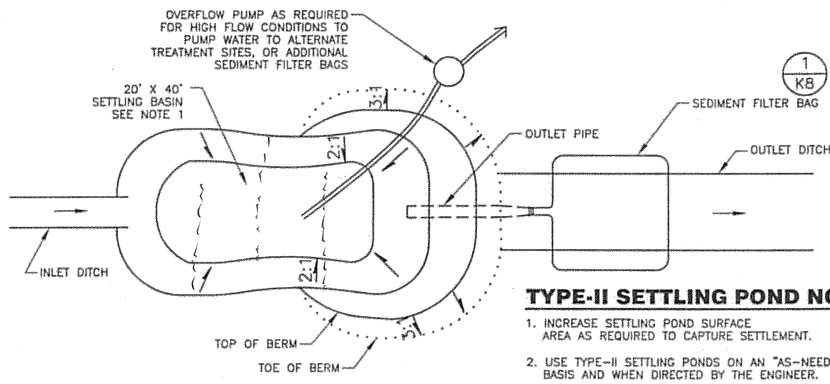

TYPE-II SETTLING POND NOTES:

1. INCREASE SETTLING POND SURFACE AREA AS REQUIRED TO CAPTURE SETTLEMENT.
2. USE TYPE-II SETTLING PONDS ON AN "AS-NEEDED" BASIS AND WHEN DIRECTED BY THE ENGINEER.

6/K6 **TYPE-II TEMPORARY SETTLING POND - PLAN**
N.T.S.

DO NOT SCALE FROM THESE DRAWINGS USE DIMENSIONS

PATH: I:\B23400\Dwgs\C\Sheets\K06.dwg
Wed, 04/Oct/06 08:45AM bpaddock
TAB: K06

ADDENDUM NUMBER

ATTACHMENT NUMBER

RECORD OF REVISIONS

No.	DATE	DESCRIPTION

KETCHIKAN AIRPORT
RUNWAY SAFETY AREA EXPANSION & RUNWAY OVERLAY
PROJECT NO. 68306

EROSION & SEDIMENT CONTROL DETAILS

PREPARED BY: USKH INC.

CHECKED BY: DLM

STATE OF ALASKA 49TH D. Lance Mearig CE-7435 04Oct06 REGISTERED PROFESSIONAL ENGINEER

DESIGNED BY: NCL

DRAWN BY: JRH, WJP

STATE OF ALASKA
DEPARTMENT OF TRANSPORTATION & PUBLIC FACILITIES
DESIGN & ENGINEERING SERVICES
DIVISION-SOUTHEAST REGION

EROSION & SEDIMENT CONTROL DETAILS

PROJECT DESIGNATION	
AIP NO. 3-02-0144-1606	
STATE	YEAR
ALASKA	2006
SHEET NUMBER	TOTAL SHEETS
K6	131

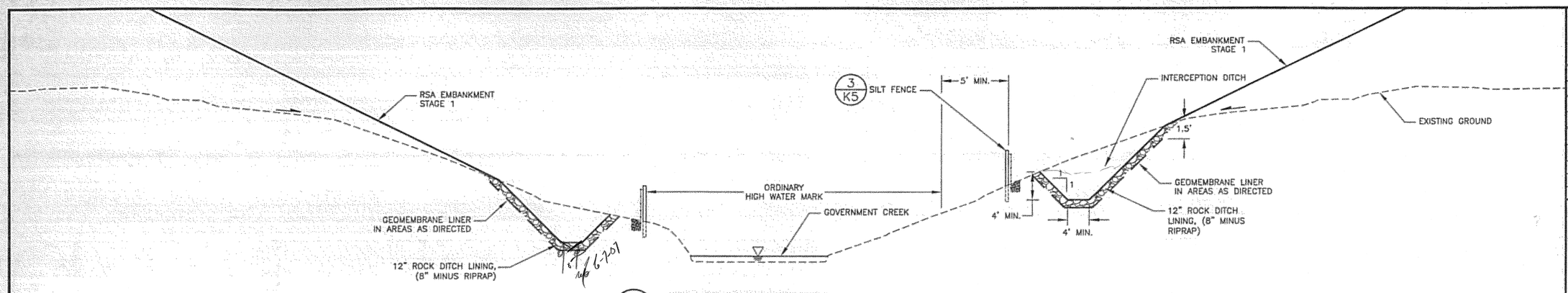

1/K7 INTERCEPTION DITCH N.T.S.

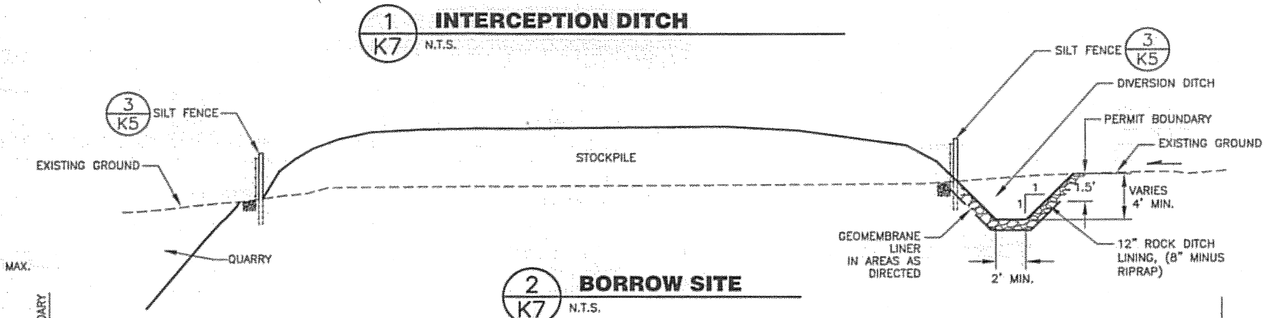

2/K7 BORROW SITE N.T.S.

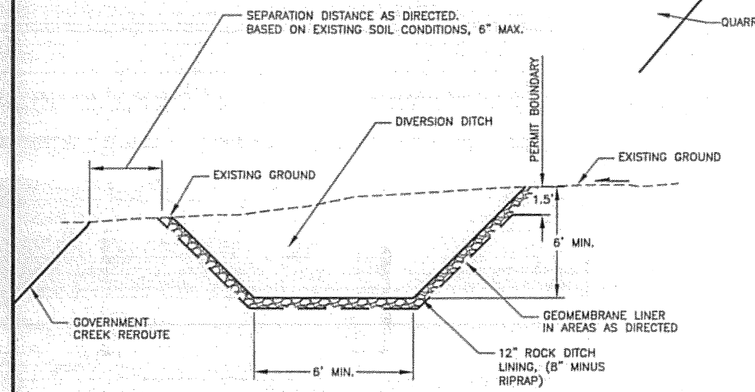

3/K7 BOULDER CREEK DIVERSION DITCH N.T.S.

NOTE:
THE CONTRACTOR MAY USE A HDPE PIPE STORM DRAIN SYSTEM IN LIEU OF A DIVERSION DITCH.

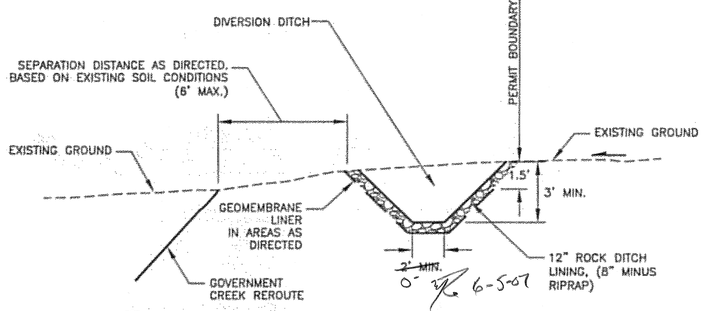

4/K7 GOVERNMENT CREEK DIVERSION DITCH N.T.S.

NOTE:
GOVERNMENT CREEK DIVERSION DITCH TO BE A PERMANENT FIXTURE AND NOT REMOVED AFTER CONSTRUCTION.

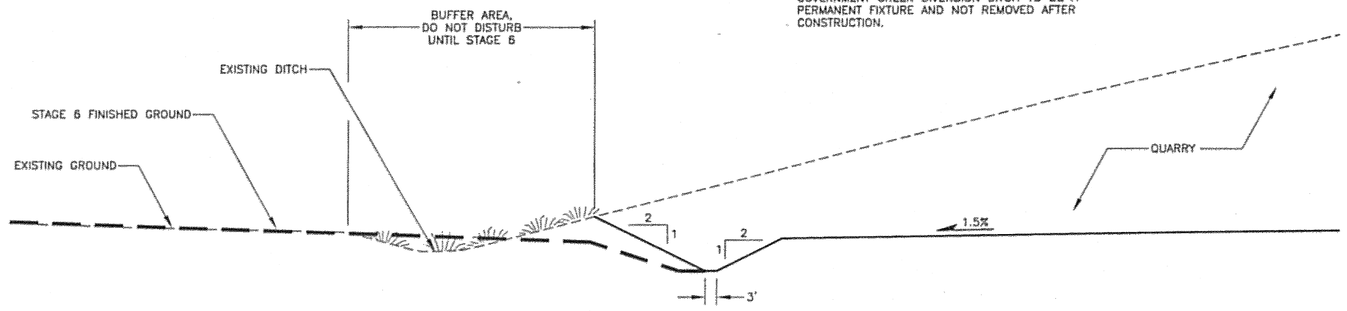

5/K7 QUARRY AREA INTERCEPTION DITCH N.T.S.

DO NOT SCALE FROM THESE DRAWINGS USE DIMENSIONS

PATH: I:\823400\Dwgs\C\Sheets\K07.dwg
Wed, 04/Oct/06 08:45AM bpaddock
TAB: K07

ADDENDUM NUMBER

ATTACHMENT NUMBER

RECORD OF REVISIONS

No.	DATE	DESCRIPTION

KETCHIKAN AIRPORT
RUNWAY SAFETY AREA EXPANSION & RUNWAY OVERLAY
PROJECT NO. 68306

EROSION & SEDIMENT CONTROL DETAILS

PREPARED BY: USKH INC.

CHECKED BY: DLM

STATE OF ALASKA 49TH D. Lance Mearig CE-7435 04Oct06 REGISTERED PROFESSIONAL ENGINEER

DESIGNED BY: NCL

DRAWN BY: WJP

STATE OF ALASKA
DEPARTMENT OF TRANSPORTATION & PUBLIC FACILITIES
DESIGN & ENGINEERING SERVICES DIVISION–SOUTHEAST REGION

EROSION & SEDIMENT CONTROL DETAILS

PROJECT DESIGNATION	
AIP NO. 3-02-0144-1606	
STATE	YEAR
ALASKA	2006
SHEET NUMBER	TOTAL SHEETS
K7	131

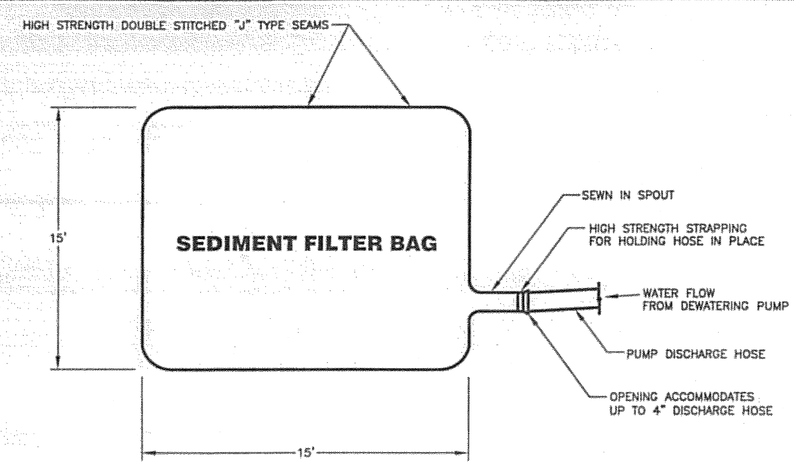

TOP VIEW

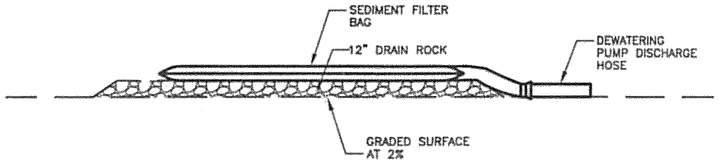

SIDE VIEW

SEDIMENT FILTER BAG NOTES:

1. SEDIMENT FILTER BAG TO BE USED IN EXCAVATION AREAS WHERE DEWATERING IS REQUIRED AND AS DIRECTED.
2. REPLACE BAG WHEN 50% FULL OR BECOMES CLOGGED.

1/K8 SEDIMENT FILTER BAG

N.T.S.

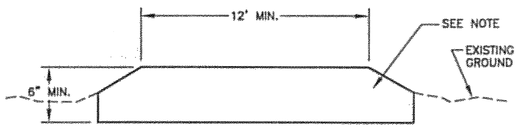

NOTE:

CRUSHED AGGREGATE BASE COURSE OR SIMILAR APPROVED MATERIAL THAT WILL NOT DEGRADE UNDER CONSTRUCTION TRAFFIC.

2/K8 TEMPORARY HAUL ROUTE DETAIL

N.T.S.

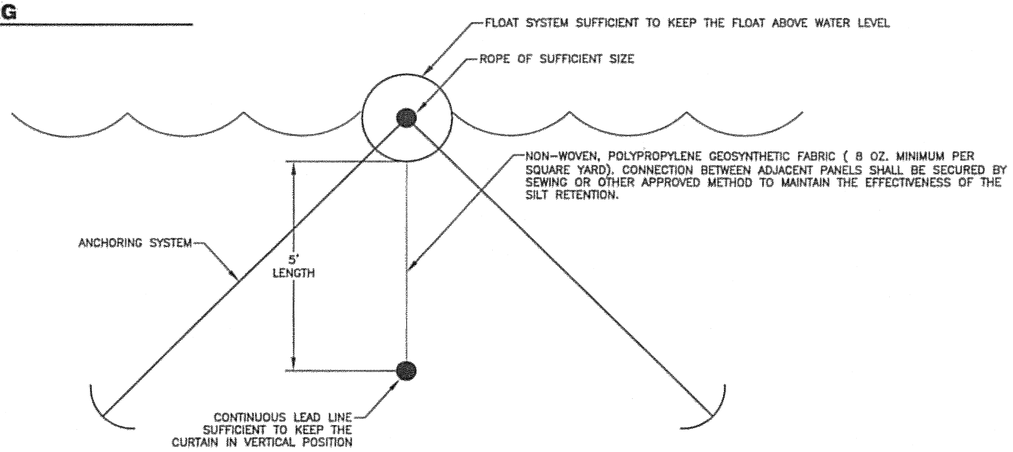

SILT BOOM NOTES:

1. BEFORE GROUND DISTURBING ACTIVITIES, INCLUDING EXCAVATION OR EMBANKMENT OCCURS AT THE PROJECT SITE, THE CONTRACTOR SHALL INSTALL A SILT CONTAINMENT BOOM TO ISOLATE THE WORK SITE FROM TONGASS NARROWS. THE BOOM SHALL EXTEND FROM BANK TO BANK AND SHALL RISE & FALL WITH THE TIDES.
2. THE BOOM SHALL BE MAINTAINED 24 HOURS PER DAY BY THE CONTRACTOR AND UPON REMOVAL, SHALL BE THE PROPERTY OF THE CONTRACTOR.
3. THE CONTRACTOR SHALL SUBMIT AN ANCHORING PLAN FOR DEPARTMENT REVIEW. THE ANCHORING SYSTEM MUST BE STAMPED BY AN ENGINEER REGISTERED IN THE STATE OF ALASKA. THE BOOM SHALL BE SECURED SUFFICIENTLY TO WITHSTAND WIND, SEAS, PROPELLER WASH, AND TIDAL FORCES REASONABLY EXPECTED AT THE SITE.
4. THE BOOM SHALL REMAIN IN PLACE UNTIL EMBANKMENT CONSTRUCTION AND DRAINAGE CONDUITS IS COMPLETE, AND WATER QUALITY IS DEEMED ACCEPTABLE BY THE ENGINEER.

3/K8 SILT BOOM

N.T.S.

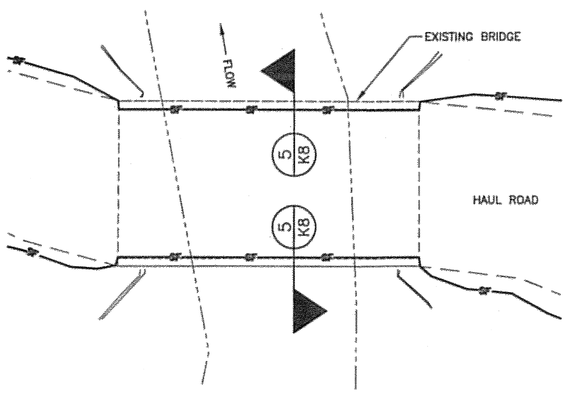

4/K8 PLAN VIEW OF SILT FENCE CROSSING BRIDGE

N.T.S.

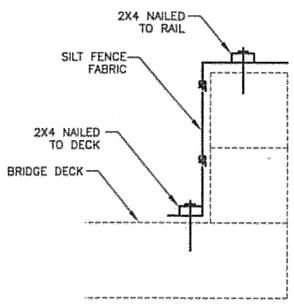

5/K8 DETAIL OF SILT FENCE ATTACHMENT TO BRIDGE

N.T.S.

NOTE:

SIMILAR FUNCTIONING SILT FENCE TO BE USED ON NORTH TRIBUTARY BRIDGE AND CULVERT CROSSING SOUTH DITCH

DO NOT SCALE FROM THESE DRAWINGS USE DIMENSIONS

PATH: I:\823400\Dwgs\C\Sheets\K08.dwg

Wed, 04/Oct/06 04:39PM bpaddock

TAB: K08

ADDENDUM NUMBER

ATTACHMENT NUMBER

RECORD OF REVISIONS

No.	DATE	DESCRIPTION

KETCHIKAN AIRPORT
RUNWAY SAFETY AREA EXPANSION
& RUNWAY OVERLAY
PROJECT NO. 68306

EROSION AND SEDIMENT CONTROL DETAILS

PREPARED BY: USKH INC.

CHECKED BY: DLM

STATE OF ALASKA 49TH D. Lance Mearig CE-7435 REGISTERED PROFESSIONAL ENGINEER

DESIGNED BY: NCL

DRAWN BY: JRH

STATE OF ALASKA
DEPARTMENT OF TRANSPORTATION & PUBLIC FACILITIES
DESIGN & ENGINEERING SERVICES
DIVISION-SOUTHEAST REGION

EROSION AND SEDIMENT CONTROL DETAILS

PROJECT DESIGNATION	
AIP NO. 3-02-0144-1606	
STATE	YEAR
ALASKA	2006
SHEET NUMBER	TOTAL SHEETS
K8	131

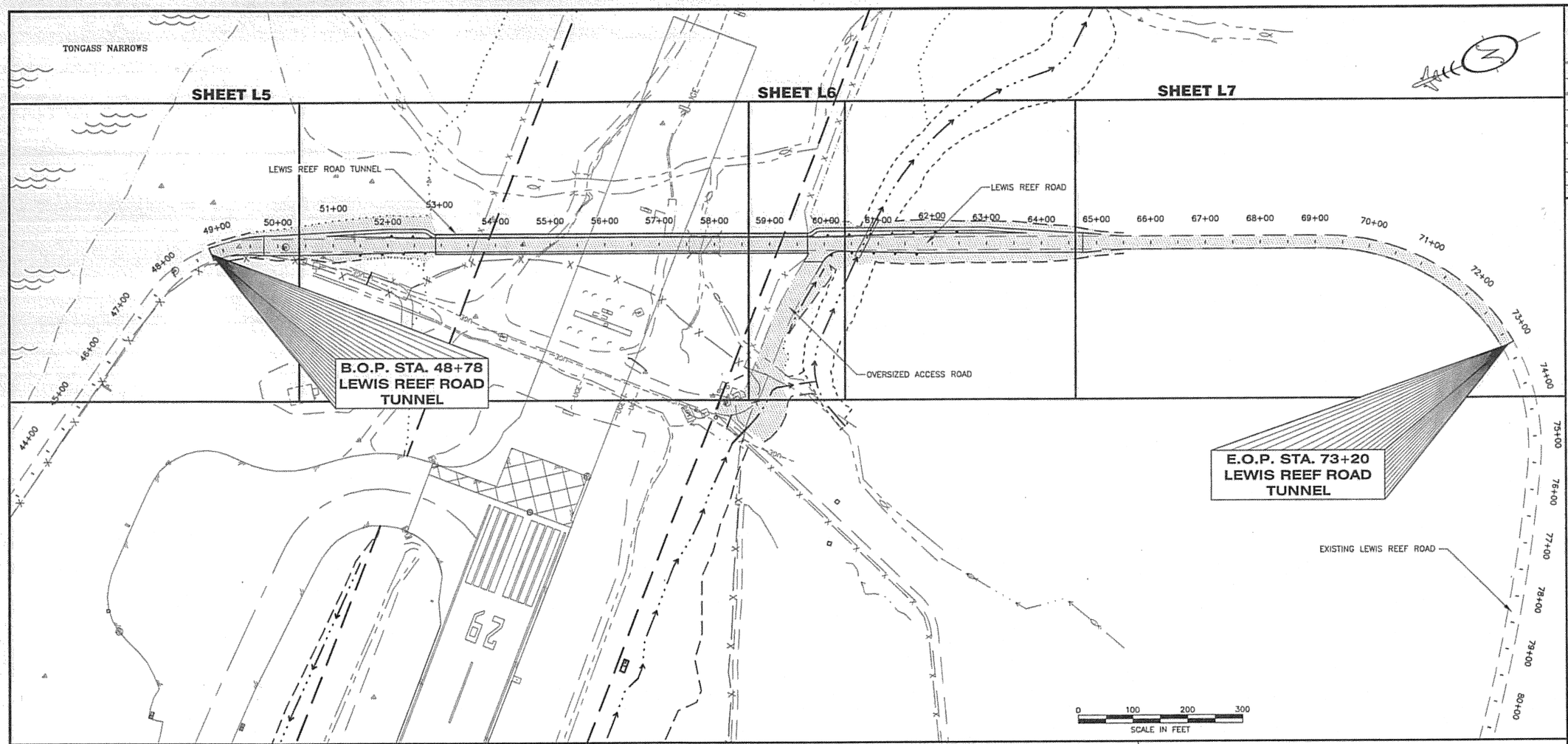

GENERAL NOTES:

1. ITEMS SHOWN ON SHEETS L1 – L19 ARE PAID FOR UNDER (ITEM S-146a TUNNEL – PER Lump Sum) UNLESS, LABELED (RSA ITEM).
2. TOPOGRAPHIC SURVEY INFORMATION IS NOT AVAILABLE FROM LRR STA 8+00 TO LRR STA 28+00. FIELD VERIFY EXISTING CONDITIONS INCLUDING UNDERGROUND UTILITIES.

ABBREVIATIONS

CRT	CONTROLLED RELEASE TERMINAL
NOM.	NOMINAL
OSAR	OVERSIZED ACCESS ROAD
SCH	SCHEDULE
SSP	STRUCTURAL STEEL PLATE

LEWIS REEF ROAD INDEX

SHEET NO.	DESCRIPTION
L1	SHEET LAYOUT & SHEET INDEX
L2-L3	TYPICAL SECTIONS
L4	SUMMARY TABLES
L5-L7	TUNNEL PLAN & PROFILE
L8	OVERSIZED ACCESS ROAD PLAN & PROFILE
L9	GRADING & UTILITY PLAN
L10-12	DETAILS
L13	SIGNING & STRIPING PLAN
L14	TUNNEL LIGHTING PLAN
L15	TUNNEL LIGHTING DETAILS
L16	FIRE PROTECTION STAND PIPE
L17-L19	WATERLINE PLAN & PROFILE

THE FOLLOWING STANDARD DRAWINGS APPLY TO THIS PROJECT:

A-1	D-01.02	D-04.21	D-22.01	D-24.00	D-35.00
G-00.01	G-04.06S	G-04.07W	G-10.01	G-20.10	G-25.20W
I-81.00	S-00.10	S-05.01	S-20.10	S-30.03	

DO NOT SCALE FROM THESE DRAWINGS USE DIMENSIONS

PATH: I:\823400\Dwgs\C\Sheets\L01.dwg
Thu, 09/Nov/06 11:39AM bpaddock
TAB: L01

ADDENDUM NUMBER

ATTACHMENT NUMBER

RECORD OF REVISIONS

No.	DATE	DESCRIPTION

LEWIS REEF ROAD TUNNEL
PROJECT NO. 67858

SHEET LAYOUT & SHEET INDEX

PREPARED BY: USKH INC.

CHECKED BY: DLM

STATE OF ALASKA 49TH
D. Lance Mearig
CE-7435
11/10/06
REGISTERED PROFESSIONAL ENGINEER

DESIGNED BY: NCL

DRAWN BY: WJP

STATE OF ALASKA
DEPARTMENT OF TRANSPORTATION
& PUBLIC FACILITIES
DESIGN & ENGINEERING SERVICES
DIVISION-SOUTHEAST REGION

SHEET LAYOUT & SHEET INDEX

PROJECT DESIGNATION
68456

STATE	YEAR
ALASKA	2006

SHEET NUMBER	TOTAL SHEETS
L1	131

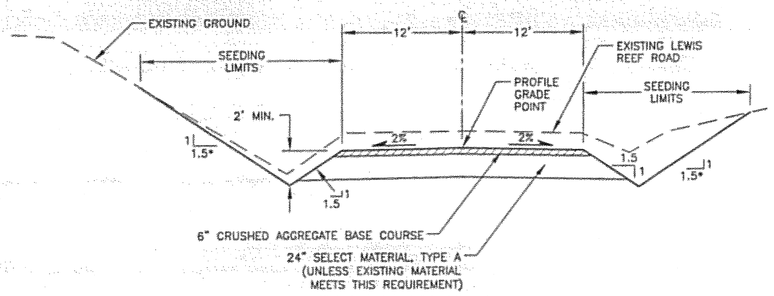

LEWIS REEF ROAD REGRADING TYPICAL SECTION

N.T.S.

LRR STA. 48+77 TO LRR STA. 49+00
LRR STA. 65+50 TO LRR STA. 73+50

NOTE:

TRANSITION SMOOTHLY BETWEEN TYPICAL SECTIONS.

***SLOPE TABLE**

MATERIAL	CUT	FILL
GRANULAR SOILS	1.5:1	1.5:1
SOFT GROUND	0.5:1	N/A
ROCK	1.25:1	1.5:1
SILT	1.5:1	N/A

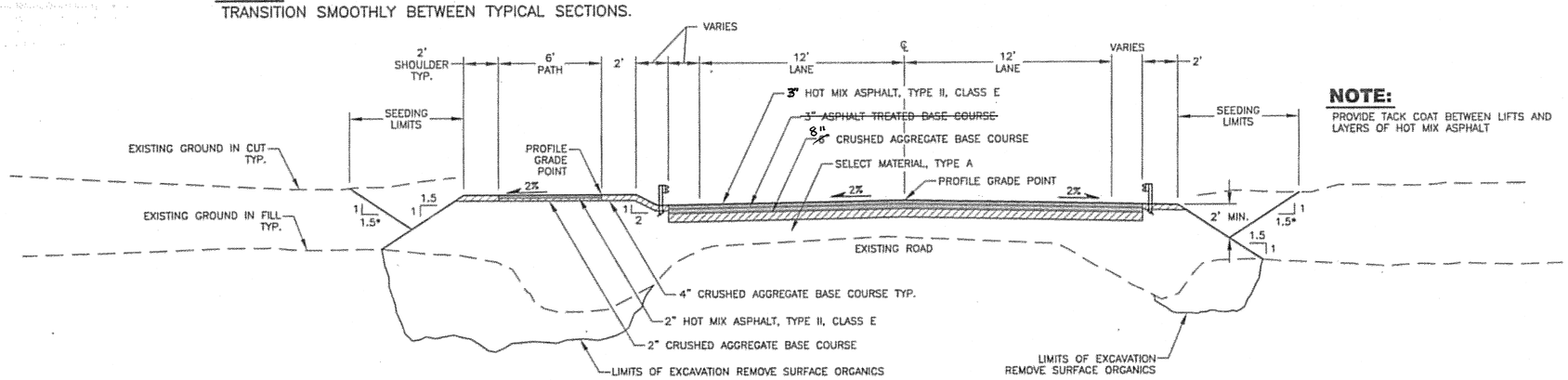

NOTE:

PROVIDE TACK COAT BETWEEN LIFTS AND LAYERS OF HOT MIX ASPHALT

LEWIS REEF ROAD TYPICAL SECTION

N.T.S.

LRR STA. 49+75 TO LRR STA. 52+89
LRR STA. 59+69 TO LRR STA. 64+75

NOTE:

TRANSITION SMOOTHLY BETWEEN TYPICAL SECTIONS.

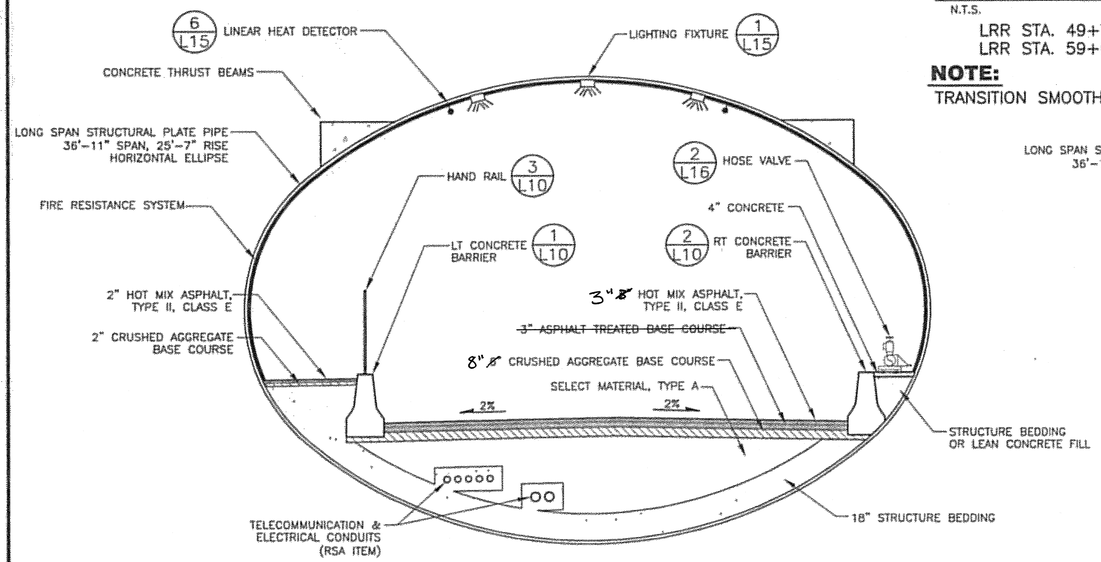

TUNNEL ROAD STRUCTURAL SECTION

N.T.S.

LRR STA. 52+89 TO LRR STA. 59+69

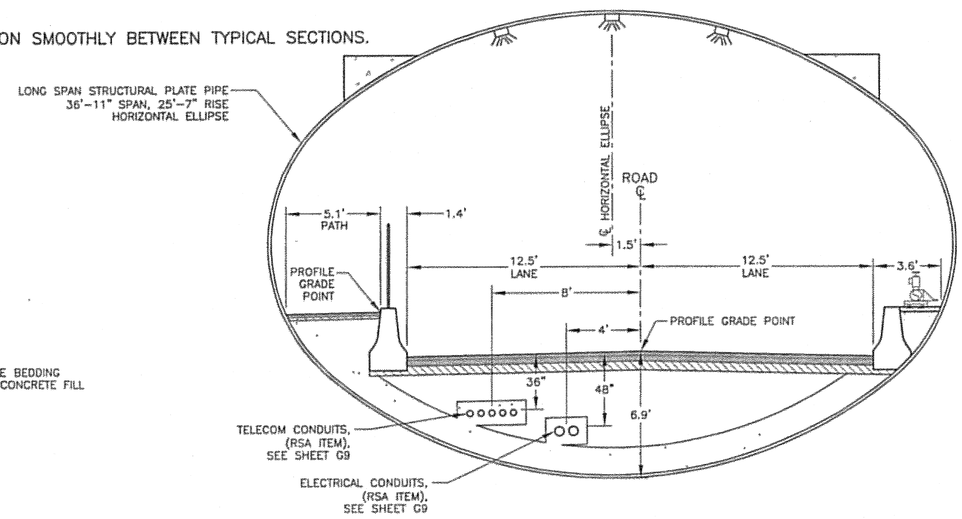

TUNNEL ROAD TYPICAL SECTION

N.T.S.

LRR STA. 52+89 TO LRR STA. 59+69

DO NOT SCALE FROM THESE DRAWINGS USE DIMENSIONS

PATH: I:\823400\Dwgs\C\Sheets\L02.dwg
Thu, 09/Nov/06 11:41AM bpaddock
TAB: L02

ADDENDUM NUMBER

ATTACHMENT NUMBER

RECORD OF REVISIONS

No.	DATE	DESCRIPTION

LEWIS REEF ROAD TUNNEL
PROJECT NO. 67858

LEWIS REEF ROAD TUNNEL
TYPICAL SECTIONS

PREPARED BY: USKH INC.

CHECKED BY: DLM

STATE OF ALASKA 49TH D. Lance Mearig CE-7435 09Nov06 REGISTERED PROFESSIONAL ENGINEER

DESIGNED BY: NCL

DRAWN BY: WJP

STATE OF ALASKA
DEPARTMENT OF TRANSPORTATION & PUBLIC FACILITIES
DESIGN & ENGINEERING SERVICES
DIVISION-SOUTHEAST REGION

LEWIS REEF ROAD TUNNEL TYPICAL SECTIONS

PROJECT DESIGNATION	
68456	
STATE	YEAR
ALASKA	2006
SHEET NUMBER	TOTAL SHEETS
L2	131

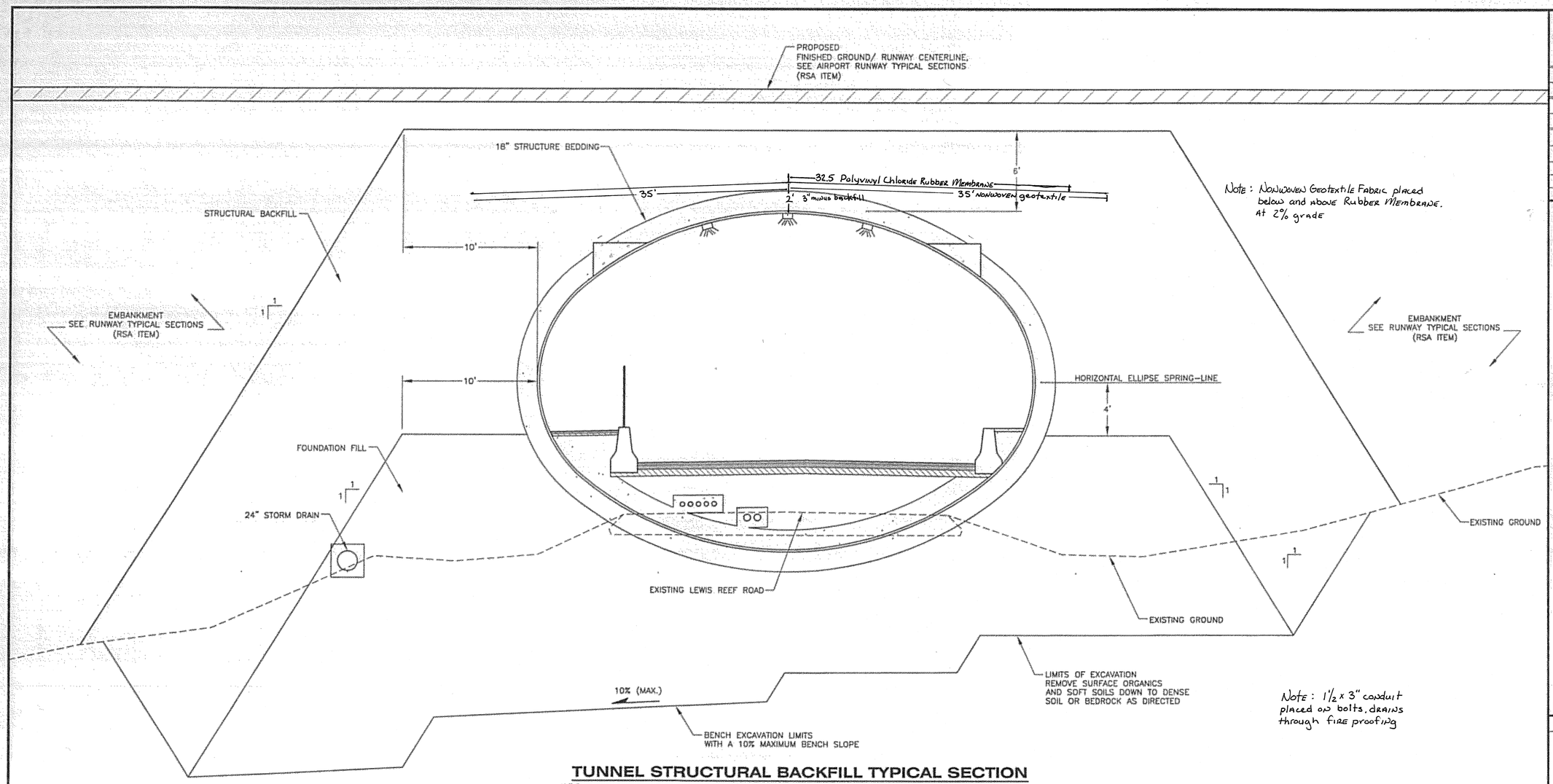

TUNNEL STRUCTURAL BACKFILL TYPICAL SECTION

N.T.S.

LRR STA. 52+89 TO LRR STA. 59+69

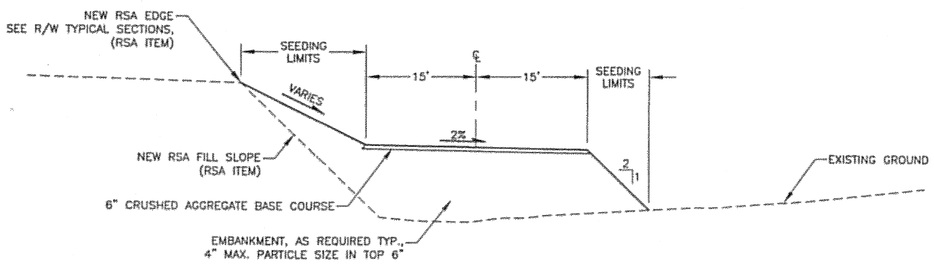

OVERSIZED ACCESS ROAD TYPICAL FILL SECTION

N.T.S.

STA. OSAR 3+50 TO STA. OSAR 5+50

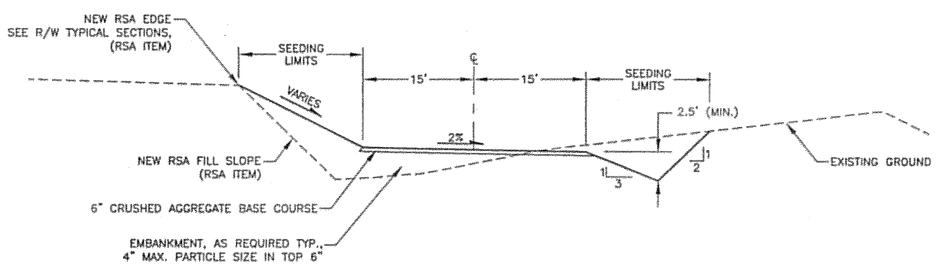

OVERSIZED ACCESS ROAD TYPICAL CUT SECTION

N.T.S.

STA. OSAR 5+50 TO STA. OSAR 7+00

NOTE:

FOR OSAR STA. 7+00 TO OSAR STA. 7+13 SEE GRADING PLAN SHEET L9

DO NOT SCALE FROM THESE DRAWINGS USE DIMENSIONS

PATH: i:\823400\Dwgs\C\Sheets\L03.dwg

Thu, 09/Nov/06 11:42AM bpaddock

TAB: L03

ADDENDUM NUMBER

ATTACHMENT NUMBER

RECORD OF REVISIONS

No.	DATE	DESCRIPTION

LEWIS REEF ROAD TUNNEL
PROJECT NO. 67858

LEWIS REEF ROAD TUNNEL
TYPICAL SECTIONS

PREPARED BY: USKH INC.

CHECKED BY: DLM

STATE OF ALASKA 49 TH D. Lance Mearig CE-7435 09Nov06 REGISTERED PROFESSIONAL ENGINEER

DESIGNED BY: NCL

DRAWN BY: WJP

STATE OF ALASKA
DEPARTMENT OF TRANSPORTATION & PUBLIC FACILITIES
DESIGN & ENGINEERING SERVICES
DIVISION-SOUTHEAST REGION

LEWIS REEF ROAD TUNNEL TYPICAL SECTIONS

PROJECT DESIGNATION	
68456	
STATE	YEAR
ALASKA	2006
SHEET NUMBER	TOTAL SHEETS
L3	131

BASIS OF ESTIMATES

ITEM NO.	ITEM	UNIT	QUANTITY
201(3A)	CLEARING AND GRUBBING	ACRE	2
203(3)	UNCLASSIFIED EXCAVATION	C.Y.	34000
203(5)	SELECTED MATERIAL, TYPE A	C.Y.	7500
301(1)	AGGREGATE BASE COURSE, GRADING D-1	TON	2500
514(1)	LONG SPAN STRUCTURAL PLATE PIPE	LINEAR FOOT	680
514(2)	FOUNDATION FILL	C.Y.	26000
514(3)	STRUCTURAL BACKFILL	C.Y.	44000
514(4)	STRUCTURE BEDDING	C.Y.	5100
514(5)	FIRE RESISTANCE SYSTEM	LUMP SUM	ALL REQUIRED
603(2)	112" X 75" CSP ARCH	LINEAR FOOT	78
603(9A)	18" CORRUGATED ALUMINUM PIPE	LINEAR FOOT	113
603(9B)	24" CORRUGATED ALUMINUM PIPE	LINEAR FOOT	742
604(1)	STORM SEWER MANHOLE	EACH	6
606(1)	W-BEAM GUARD RAIL	LINEAR FOOT	538
606(9)	CONTROLLED RELEASE TERMINAL (CRT)	EACH	1
606(11)	EXTRUDER TERMINAL (ET-2000)	EACH	4
606(13)	GUARDRAIL/CONCRETE BARRIER CONNECTION	EACH	3
606(14)	CRASH CUSHION	EACH	1
614(1)	CONCRETE BARRIER	LINEAR FOOT	1384
615(1)	STANDARD SIGN	SQUARE FOOT	223
618(1)	SEEDING	ACRE	2
625(1)	PIPE HAND RAIL	LINEAR FOOT	702
627(1)	8 INCH DUCTILE IRON WATER CONDUIT,CLASS 350	LINEAR FOOT	2225
627(3)	INSTALL VALVE BOX	EACH	1
627(5)	FIRE HYDRANT INSTALLATION	EACH	3
627(9)	INSTALL 8 INCH GATE VALVE	EACH	1
643(2)	TRAFFIC MAINTENANCE	LUMP SUM	ALL REQUIRED
660(2)	FLASHING BEACON SYSTEM COMPLETE	LUMP SUM	ALL REQUIRED
660(14)	TUNNEL LIGHTING SYSTEM COMPLETE	LUMP SUM	ALL REQUIRED
670(1)	PAINTED TRAFFIC MARKINGS	LUMP SUM	ALL REQUIRED
690(1)	FIRE STANDPIPE SYSTEM	LUMP SUM	ALL REQUIRED
691(1)	FIRE ALARM SYSTEM	LUMP SUM	ALL REQUIRED
P-152f	EMBANKMENT	C.Y.	2000
P-320b	ASPHALT TREATED BASE	TON	800
P-401a	HOT MIX ASPHALT, TYPE II, CLASS E	TON	650
P-401c	ASPHALT CEMENT PG 64-28	TON	33

NOTE: ALL ABOVE ITEMS ARE SUBSIDIARY TO PAY ITEM S-146A

602(3) LONG SPAN STRUCTURAL PLATE PIPE - LINEAR FOOT

BEGIN			END			LENGTH	GRADE	REMARKS
STATION	OFFSET (FT)	BOTTOM OF STRUCTURE	STATION	OFFSET (FT)	BOTTOM OF STRUCTURE			
LRR 52+89	1.5 LT	35.78	LRR 59+69	1.5 LT	56.18	680	3%	

603(2) 112" X 75" CORRUGATED STEEL PIPE ARCH - LINEAR FOOT

PIPE	INLET			OUTLET			LENGTH	GRADE	REMARKS
	STATION	OFFSET	INVERT	STATION	OFFSET	INVERT			
P-11	NT 4+46	–	59.19	NT 5+24	–	58.80	78	0.5%	FISH STREAM

603(9A) 18" CORRUGATED ALUMINUM PIPE - LINEAR FOOT

PIPE NUMBER	LENGTH	INV. IN ELEVATION	INV. OUT ELEVATION	GRADE	REMARKS
SD-1	42	56.93	56.55	1%	
SD-2	31.2	56.45	56.17	2%	
SD-3	20	56.07	54.81	7.87%	
SD-6	20	37.65	33.71	24.63%	
TOTAL =	113				

NOTE:

LENGTH OF PIPE IS MEASURED FROM CENTER OF STRUCTURE TO CENTER OF STRUCTURE.
GRADES AND INVERT ELEVATIONS ARE CALCULATED FROM EDGE OF STRUCTURE TO EDGE OF STRUCTURE

603(9B) 24" CORRUGATED ALUMINUM PIPE - LINEAR FOOT

PIPE NUMBER	LENGTH	INV. IN ELEVATION	INV. OUT ELEVATION	GRADE	REMARKS
SD-4	724	54.81	33.21	3.00%	8 GAUGE (0.164"), 2-2/3" X 1/2" CORRUGATIONS
SD-5	18	33.11	29	25.69%	8 GAUGE (0.164"), 2-2/3" X 1/2" CORRUGATIONS
TOTAL =	742				

24"CPP @ Stn. 51+00 Lewis Reef Rd.

NOTE:

LENGTH OF PIPE IS MEASURED FROM CENTER OF STRUCTURE TO CENTER OF STRUCTURE.
GRADES AND INVERT ELEVATIONS ARE CALCULATED FROM EDGE OF STRUCTURE TO EDGE OF STRUCTURE

604(1) STORM SEWER MANHOLE, TYPE 1 - EACH

STRUCTURE NUMBER	STATION	OFFSET	TOP OF CASTING ELEVATION	TYPE OF CASTING	REMARKS
S-1	OSAR 6+90	23.6 RT.	60.93	FIFG	
S-2	LRR 59+73.5	12.5 RT.	63.06	GIFG	
S-3	LRR 59+90	15.0 LT.	63.21	FIFG	
S-4	LRR 59+90	35.0 LT.	63.00	FIFG	
S-5	LRR 52+66	35.0 LT.	43.00	FIFG	
S-6	LRR 52+66	15.0 LT.	41.65	FIFG	
TOTAL =	6				

FIFG = FIELD INLET FRAME & GRATE
GIFG = GUTTER INLET FRAME & GRATE

NOTE:

LOCATION IS TO CENTER OF FIELD INLET AND CENTER OF CASTING OF GUTTER INLET

625(1) PIPE HAND RAIL - LINEAR FOOT

BEGIN	END	OFFSET	QUANTITY	REMARKS
LRR 52+77	LRR 59+79	LT.	702	

606(1) W-BEAM GUARDRAIL - LINEAR FOOT

BEGIN	END	OFFSET	QUANTITY	REMARKS
LRR 51+10	LRR 52+89	RT.	129	ET-2000 TERMINAL
LRR 51+97	LRR 52+77	LT.	30	ET-2000 TERMINAL
LRR 59+83	LRR 62+00	RT.	120	CRT & ET-2000 TERMINALS
LRR 59+81	LRR 62+90	LT.	259	ET-2000 TERMINAL
		TOTAL =	538	

615(1) STANDARD SIGNING SUMMARY

SIGN NO.	STATION	OFFSET LT.	OFFSET RT.	TYPE	FACING TRAFFIC	LEGEND	SIZE (IN.) WD.	SIZE (IN.) HT.	AREA S.F.	POST SIZE	REMARKS
1	LRR 32+50		X	R14-3	SB	NO HAZARDOUS MATERIAL	36	36	9	2.5	
2	LRR 32+50		X	SPECIAL	SB	SPECIAL	120	36	30		MOUNT BELOW 1, BLACK 4D LETTERING ON WHITE BACKGROUND
3	LRR 33+00		X	W12-2	SB	13' 3"	36	36	9	2.5	
4	LRR 33+00		X	W16-2P	SB	2000 FT.	36	20	5		MOUNT BELOW 3
5	LRR 45+64		X	R2-1	SB	20 M.P.H.	30	36	7.5	2.5	REMOVE EXISTING SIGNS
6	LRR 50+00	X		W1-1L	NB	CURVE LEFT	36	36	9	2.5	
7	LRR 50+00	X		W13-1	NB	25 MPH	24	24	4		MOUNT BELOW 6
8	LRR 52+89	SEE DETAIL 3/L11 FOR PLACEMENT OF SIGNS 8 - 11		W12-2P	SB	14 FT. 0 IN	78	24	13	2.5	
9	LRR 52+89			W12-2P	SB	15 FT. 11 IN	78	24	13	2.5	
10	LRR 59+69			W12-2P	NB	15 FT. 11 IN	78	24	13	2.5	
11	LRR 59+69			W12-2P	NB	14 FT. 0 IN	78	24	13	2.5	
12	LRR 59+20	X		R5-1	WB	DO NOT ENTER	36	36	9	2.5	
13	LRR 67+00	X		R14-3	NB	NO HAZARDOUS MATERIAL	36	36	9	2.5	
14	LRR 67+00	X		SPECIAL	NB	SPECIAL	120	36	30		MOUNT BELOW 13, BLACK 4D LETTERING ON WHITE BACKGROUND
15	LRR 60+75	X		R2-1	NB	20 M.P.H.	30	36	7.5	2.5	
16	LRR 52+74		17'	R8-10	SB	STOP HERE WHEN FLASHING	24	36	6		MOUNT ON FLASHER
17	LRR 59+95	17'		R8-10	NB	STOP HERE WHEN FLASHING	24	36	6		MOUNT ON FLASHER
18	LRR 51+00		X	W11-1	SB	BICYCLE	36	36	9	2.5	
19	LRR 51+00		X	W16-1	SB	SHARE THE ROAD	24	30	6		MOUNT BELOW 18
20	LRR 63+50	X		W11-1	NB	BICYCLE	36	36	9	2.5	
21	LRR 63+50	X		W16-1	NB	SHARE THE ROAD	24	30	6		MOUNT BELOW 20
								TOTAL	223		

DO NOT SCALE FROM THESE DRAWINGS USE DIMENSIONS

PATH: I:\823400\Dwgs\C\Sheets\L04.dwg
Thu, 09/Nov/06 11:43AM bpaddock
TAB: L04

ADDENDUM NUMBER

ATTACHMENT NUMBER

RECORD OF REVISIONS

No.	DATE	DESCRIPTION

LEWIS REEF ROAD TUNNEL
PROJECT NO. 67858

LEWIS REEF ROAD TUNNEL
SUMMARY TABLES

PREPARED BY: USKH INC.

CHECKED BY: DLM

STATE OF ALASKA 49TH
D. Lance Mearig
CE-7435
ODNovOB
REGISTERED PROFESSIONAL ENGINEER

DESIGNED BY: NCL

DRAWN BY: WJP

STATE OF ALASKA
DEPARTMENT OF TRANSPORTATION
& PUBLIC FACILITIES
DESIGN & ENGINEERING SERVICES
DIVISION-SOUTHEAST REGION

LEWIS REEF ROAD TUNNEL SUMMARY TABLES

PROJECT DESIGNATION
68456

STATE	YEAR
ALASKA	2006

SHEET NUMBER	TOTAL SHEETS
L4	131

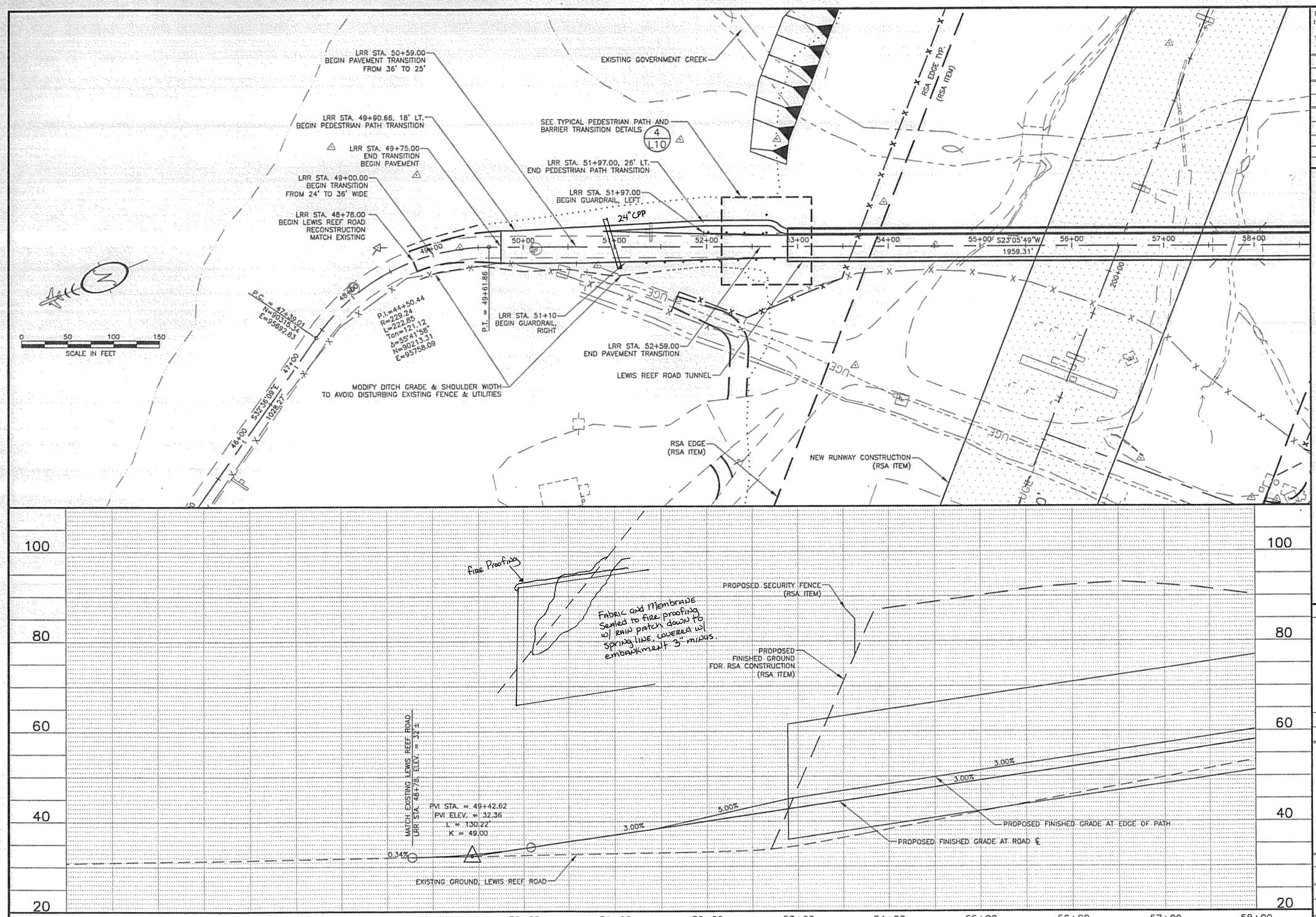

DO NOT SCALE FROM THESE DRAWINGS USE DIMENSIONS

PATH:
I:\823400\Dwgs\C\Sheets\L05.dwg

Thu, 09/Nov/06 11:44AM bpaddock
TAB: L05

ADDENDUM NUMBER

ATTACHMENT NUMBER

RECORD OF REVISIONS

No.	DATE	DESCRIPTION

LEWIS REEF ROAD TUNNEL
PROJECT NO. 67858

LEWIS REEF ROAD TUNNEL
PLAN & PROFILE

PREPARED BY: USKH INC.

CHECKED BY: DLM

STATE OF ALASKA
49TH
D. Lance Mearig
CE-7435
09NOV06
REGISTERED PROFESSIONAL ENGINEER

DESIGNED BY: NCL

DRAWN BY: WJP

STATE OF ALASKA
DEPARTMENT OF TRANSPORTATION
& PUBLIC FACILITIES
DESIGN & ENGINEERING SERVICES
DIVISION–SOUTHEAST REGION

LEWIS REEF ROAD TUNNEL
PLAN & PROFILE

PROJECT DESIGNATION	
68456	
STATE	YEAR
ALASKA	2006
SHEET NUMBER	TOTAL SHEETS
L5	131

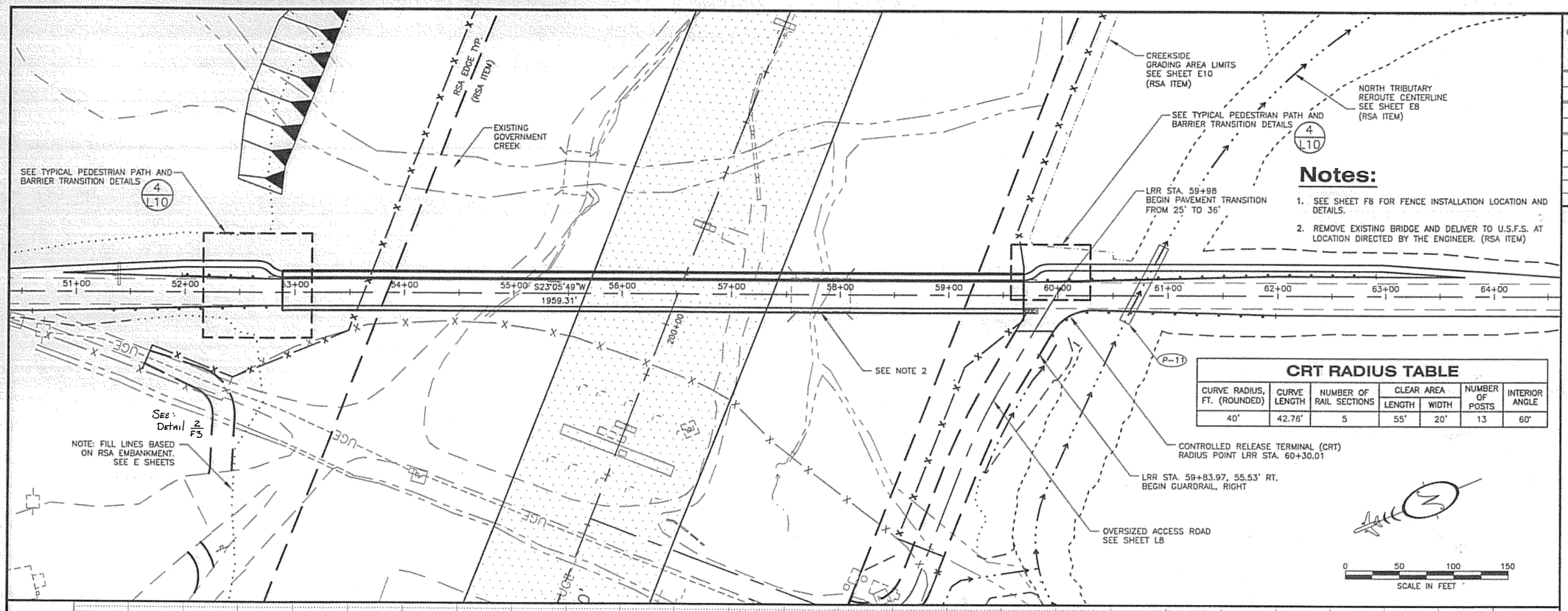

Notes:

1. SEE SHEET F8 FOR FENCE INSTALLATION LOCATION AND DETAILS.
2. REMOVE EXISTING BRIDGE AND DELIVER TO U.S.F.S. AT LOCATION DIRECTED BY THE ENGINEER. (RSA ITEM)

CRT RADIUS TABLE

CURVE RADIUS, FT. (ROUNDED)	CURVE LENGTH	NUMBER OF RAIL SECTIONS	CLEAR AREA		NUMBER OF POSTS	INTERIOR ANGLE
			LENGTH	WIDTH		
40'	42.76'	5	55'	20'	13	60°

DO NOT SCALE FROM THESE DRAWINGS USE DIMENSIONS

PATH: I:\823400\Dwgs\C\Sheets\L06.dwg
Thu, 09/Nov/06 11:45AM bpaddock
TAB: L06

ADDENDUM NUMBER
ATTACHMENT NUMBER

RECORD OF REVISIONS

No.	DATE	DESCRIPTION

LEWIS REEF ROAD TUNNEL
PROJECT NO. 67858

LEWIS REEF ROAD TUNNEL
PLAN & PROFILE

PREPARED BY: USKH INC.

CHECKED BY: DLM

STATE OF ALASKA 49TH D. Lance Mearig CE-7435 09Nov06 REGISTERED PROFESSIONAL ENGINEER

DESIGNED BY: NCL

DRAWN BY: WJP

STATE OF ALASKA
DEPARTMENT OF TRANSPORTATION & PUBLIC FACILITIES
DESIGN & ENGINEERING SERVICES
DIVISION–SOUTHEAST REGION

LEWIS REEF ROAD TUNNEL PLAN & PROFILE

PROJECT DESIGNATION	
68456	
STATE	YEAR
ALASKA	2006
SHEET NUMBER	TOTAL SHEETS
L6	131

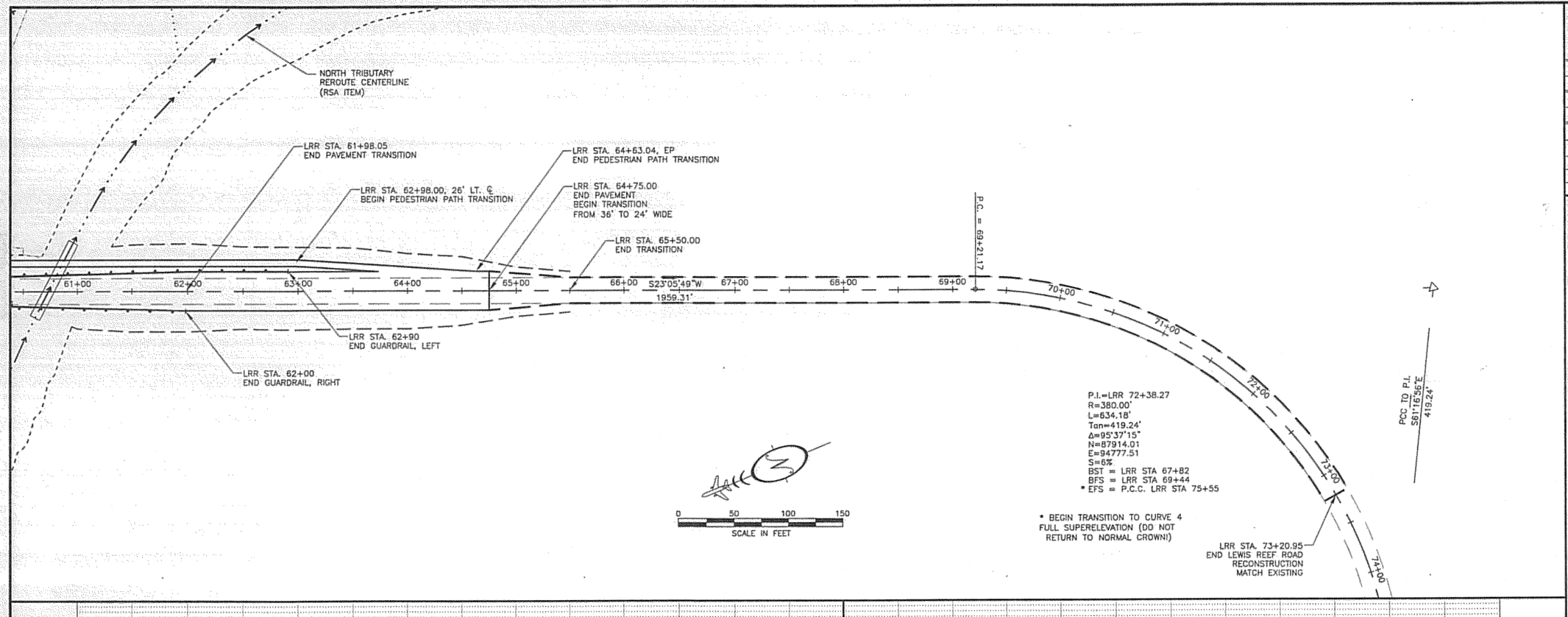

PATH:
t:\823400\Dwgs\C\Sheets\L07.dwg

Thu, 09/Nov/06 11:45AM bpaddock
TAB: L07

ADDENDUM NUMBER

ATTACHMENT NUMBER

RECORD OF REVISIONS

No.	DATE	DESCRIPTION

LEWIS REEF ROAD TUNNEL
PROJECT NO. 67858

LEWIS REEF ROAD TUNNEL
PLAN & PROFILE

PREPARED BY: USKH INC.

CHECKED BY: DLM

STATE OF ALASKA
49 TH
D. Lance Mearig
CE-7435
09NOV06
REGISTERED PROFESSIONAL ENGINEER

DESIGNED BY: NCL

DRAWN BY: WJP

STATE OF ALASKA
DEPARTMENT OF TRANSPORTATION
& PUBLIC FACILITIES
DESIGN & ENGINEERING SERVICES
DIVISION–SOUTHEAST REGION

LEWIS REEF ROAD TUNNEL
PLAN & PROFILE

PROJECT DESIGNATION	
68456	
STATE	YEAR
ALASKA	2006
SHEET NUMBER	TOTAL SHEETS
L7	131

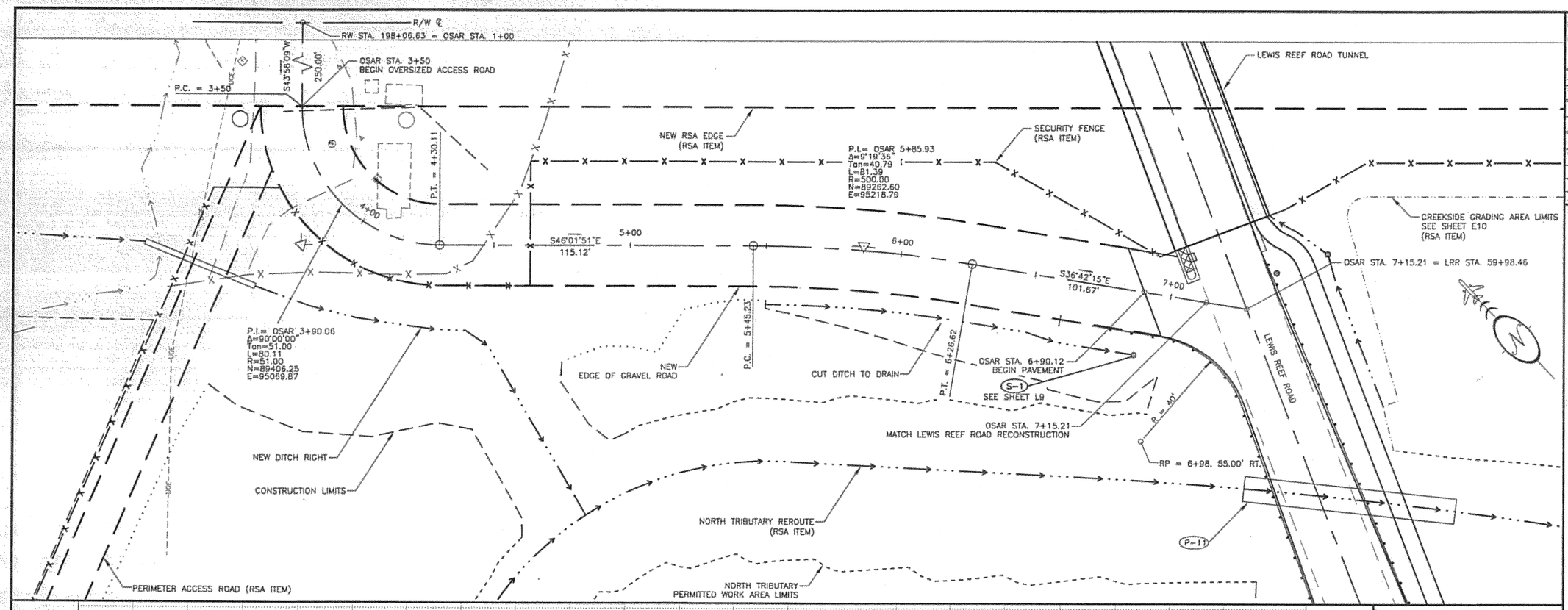

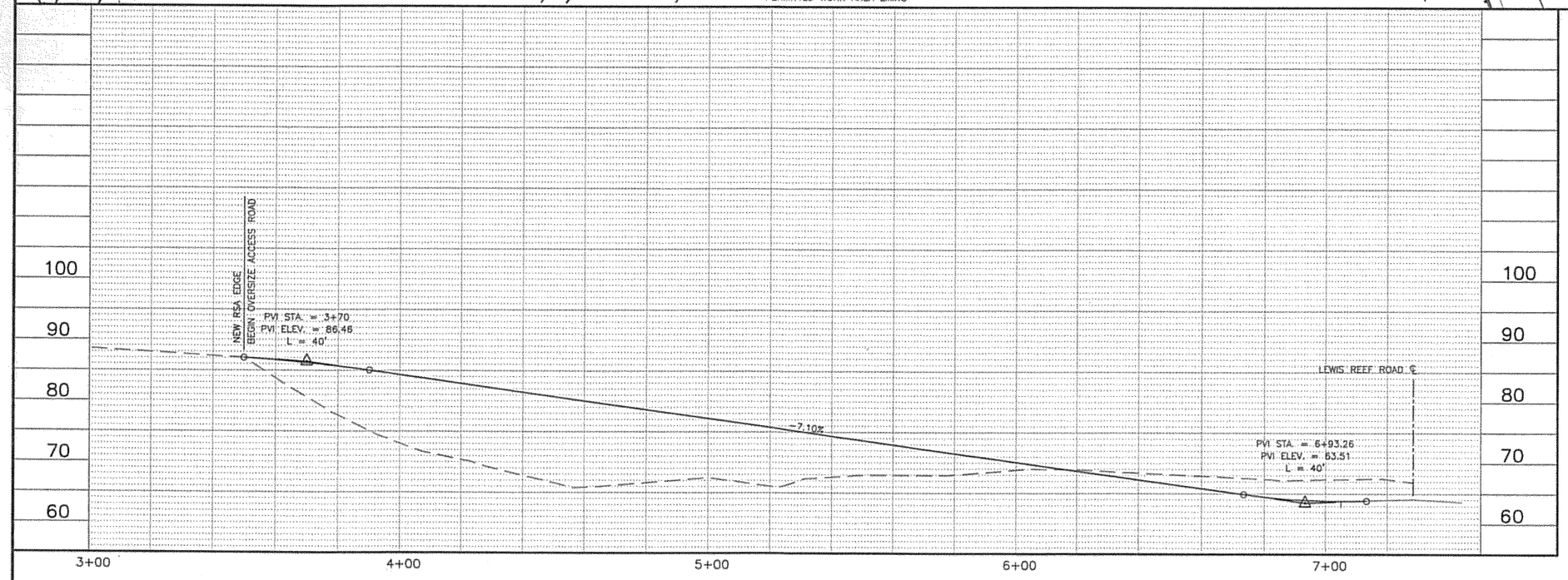

DO NOT SCALE FROM THESE DRAWINGS USE DIMENSIONS

PATH:
t:\823400\Dwgs\C\Sheets\L08.dwg

Thu, 09/Nov/06 11:46AM bpaddock
TAB: L08

ADDENDUM NUMBER

ATTACHMENT NUMBER

RECORD OF REVISIONS

No.	DATE	DESCRIPTION

LEWIS REEF ROAD TUNNEL
PROJECT NO. 67858

OVERSIZED ACCESS ROAD PLAN & PROFILE

PREPARED BY: USKH INC.

CHECKED BY: DLM

STATE OF ALASKA
49 TH
D. Lance Mearig
CE-7435
09Nov06
REGISTERED PROFESSIONAL ENGINEER

DESIGNED BY: NCL

DRAWN BY: WJP

STATE OF ALASKA
DEPARTMENT OF TRANSPORTATION
& PUBLIC FACILITIES
DESIGN & ENGINEERING SERVICES
DIVISION–SOUTHEAST REGION

OVERSIZED ACCESS ROAD PLAN & PROFILE

PROJECT DESIGNATION	
68456	
STATE	YEAR
ALASKA	2006
SHEET NUMBER	TOTAL SHEETS
L8	131

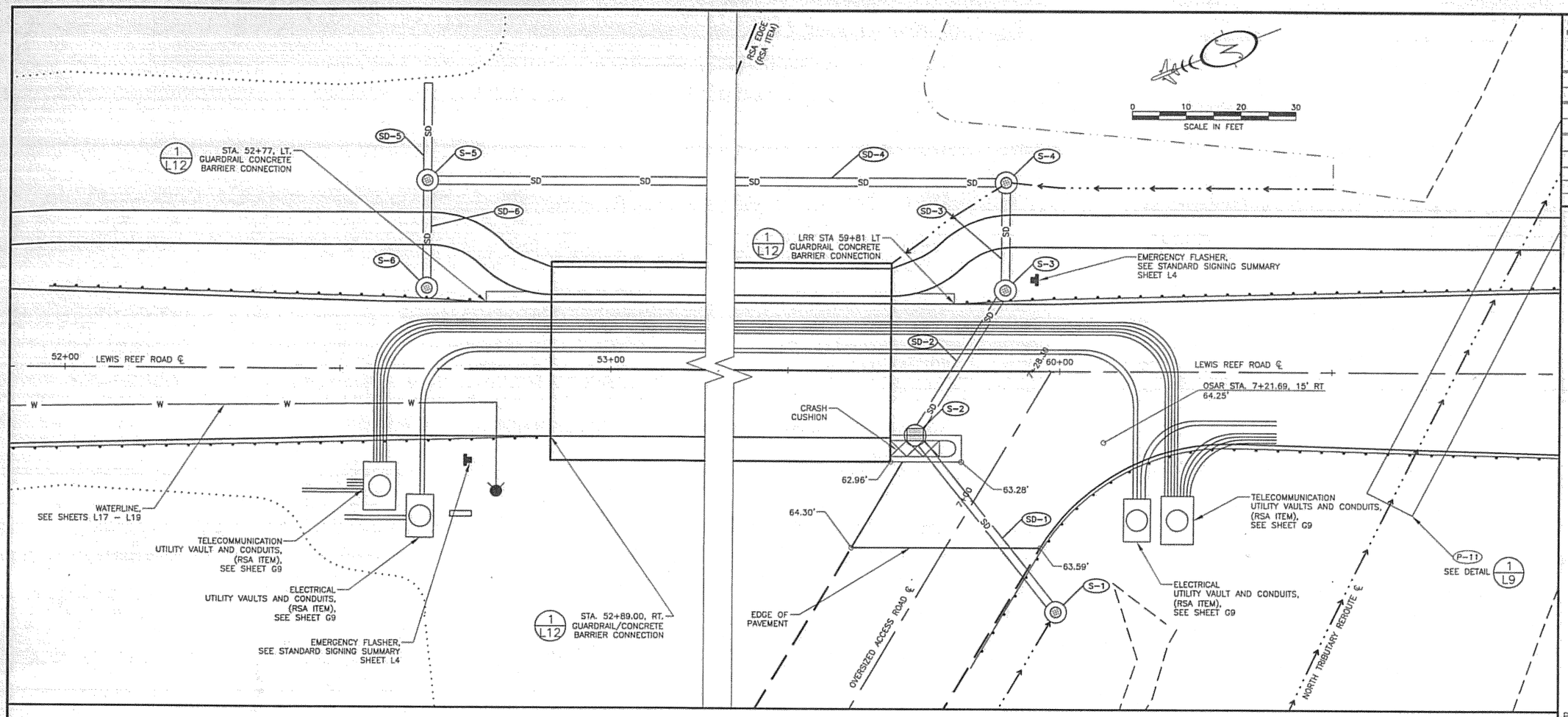

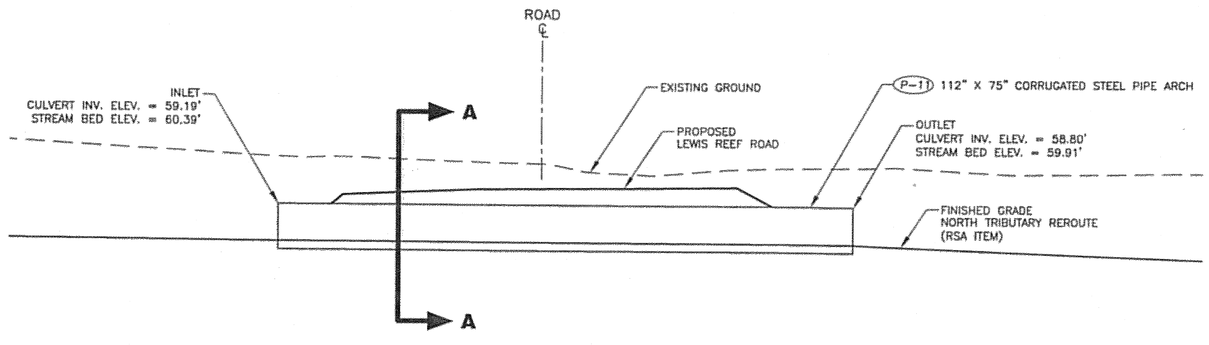

CULVERT PROFILE

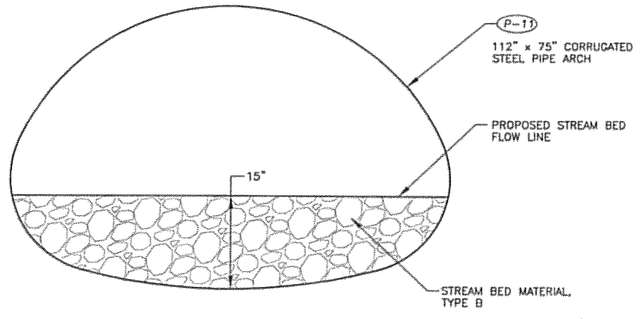

SECTION A-A

1/L9 P11 NORTH TRIBUTARY CULVERT DETAILS

N.T.S.

DO NOT SCALE FROM THESE DRAWINGS USE DIMENSIONS

PATH: I:\823400\Dwgs\C\Sheets\L09.dwg
Thu, 09/Nov/06 11:47AM bpaddock
TAB: L09

ADDENDUM NUMBER

ATTACHMENT NUMBER

RECORD OF REVISIONS

No.	DATE	DESCRIPTION

LEWIS REEF ROAD TUNNEL
PROJECT NO. 67858

GRADING & UTILITY PLAN

PREPARED BY: USKH INC.

CHECKED BY: DLM

STATE OF ALASKA 49TH D. Lance Mearig CE-7435 09Nov06 REGISTERED PROFESSIONAL ENGINEER

DESIGNED BY: NCL

DRAWN BY: WJP

STATE OF ALASKA
DEPARTMENT OF TRANSPORTATION & PUBLIC FACILITIES
DESIGN & ENGINEERING SERVICES
DIVISION–SOUTHEAST REGION

GRADING & UTILITY PLAN

PROJECT DESIGNATION	
68456	
STATE	YEAR
ALASKA	2006
SHEET NUMBER	TOTAL SHEETS
L9	131

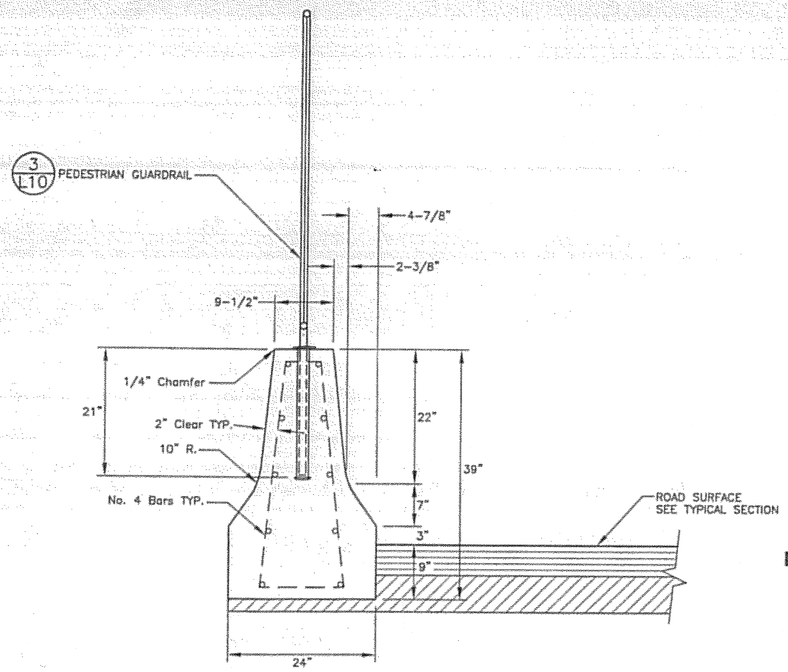

1 L10 **LT CONCRETE BARRIER** N.T.S.

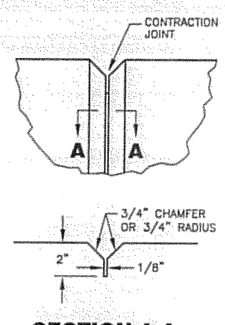

SECTION A-A

SECTION A-A
CONTRACTION JOINT

CONTRACTION JOINT SPACING SHALL BE 20'

NOTES:

1. CONCRETE BARRIER MAY BE CAST-IN-PLACE OR PRECAST.
2. PRECAST SECTIONS SHALL INCLUDE THE INTERCONNECTION OF INDIVIDUAL SECTIONS PROVIDING LATERAL RESISTANCE EQUIVALENT TO THAT OF THE BARRIER SECTION IT SELF.

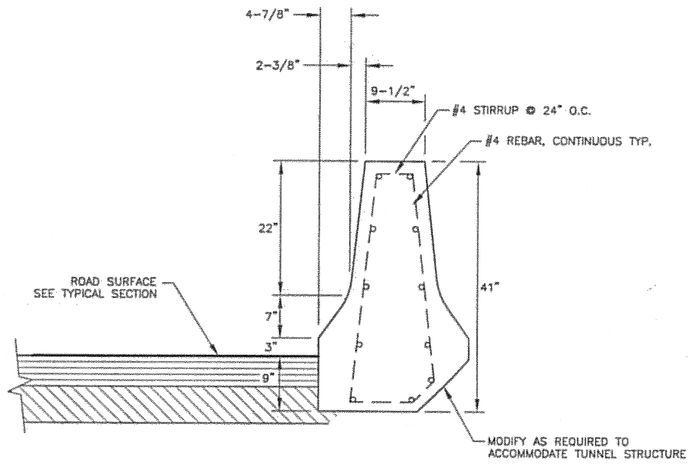

2 L10 **RT CONCRETE BARRIER** N.T.S.

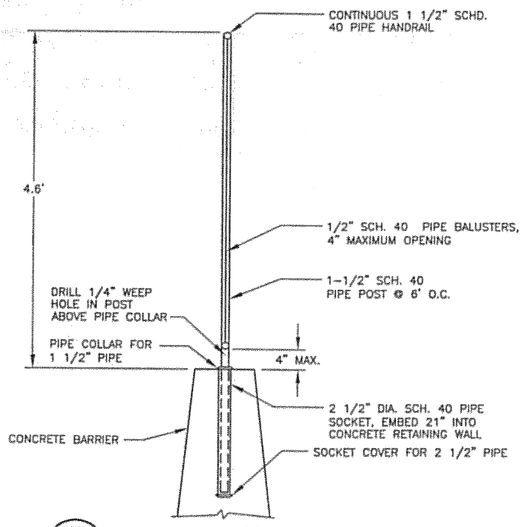

3 L10 **PEDESTRIAN HANDRAIL DETAIL** N.T.S.

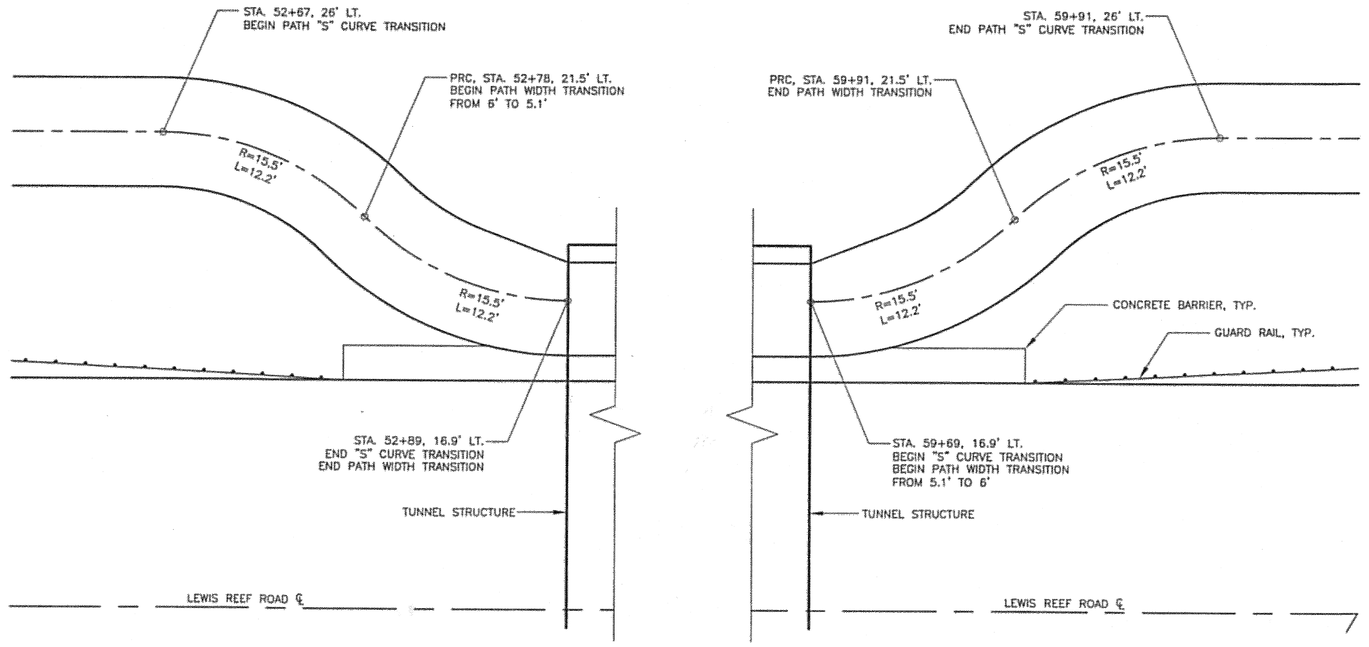

4 L10 **PATH TRANSITION DETAILS** N.T.S.

DO NOT SCALE FROM THESE DRAWINGS USE DIMENSIONS

PATH: I:\823400\Dwgs\C\Sheets\L10.dwg
Thu, 09/Nov/06 11:48AM bpaddock
TAB: L10

ADDENDUM NUMBER
ATTACHMENT NUMBER

RECORD OF REVISIONS

No.	DATE	DESCRIPTION

LEWIS REEF ROAD TUNNEL
PROJECT NO. 67858

LEWIS REEF ROAD TUNNEL DETAILS

PREPARED BY: USKH INC.

CHECKED BY: DLM

STATE OF ALASKA 49TH D. Lance Mearig CE-7435 09Nov06 REGISTERED PROFESSIONAL ENGINEER

DESIGNED BY: NCL

DRAWN BY: WJP

STATE OF ALASKA
DEPARTMENT OF TRANSPORTATION & PUBLIC FACILITIES
DESIGN & ENGINEERING SERVICES
DIVISION-SOUTHEAST REGION

LEWIS REEF ROAD TUNNEL DETAILS

PROJECT DESIGNATION	
68456	
STATE	YEAR
ALASKA	2006
SHEET NUMBER	TOTAL SHEETS
L10	131

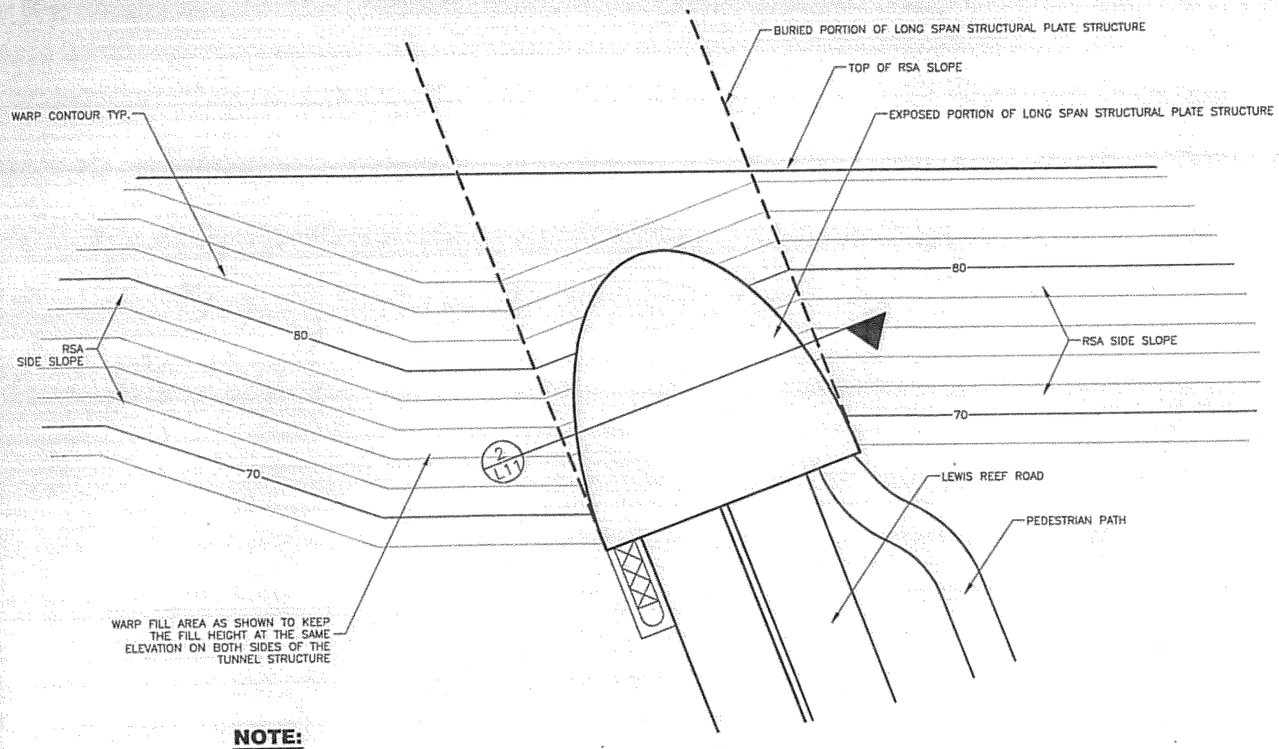

NOTE:

DETAIL DRAWN FOR SOUTH ENTRANCE, SIMILAR DETAIL APPLIES TO NORTH ENTRANCE.

1 L11 **SURFACE GRADING AT TUNNEL STRUCTURE ENDS - PLAN**
N.T.S.

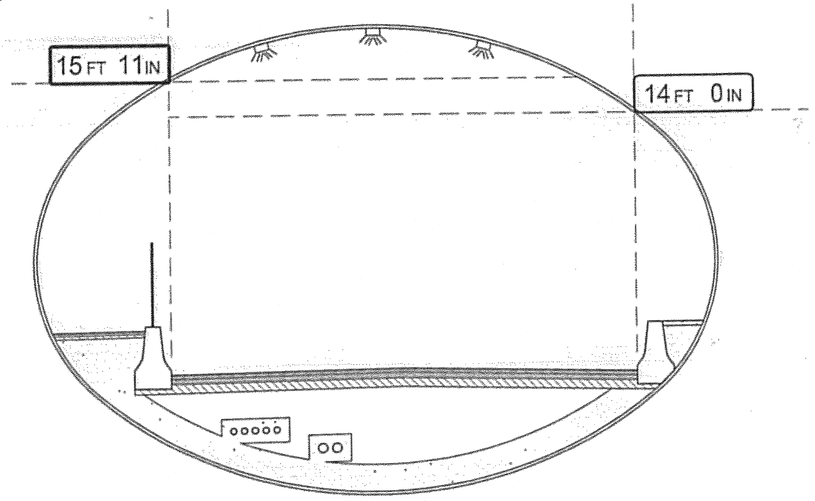

3 L11 **SIGN PLACEMENT ON TUNNEL ENDS**
N.T.S.

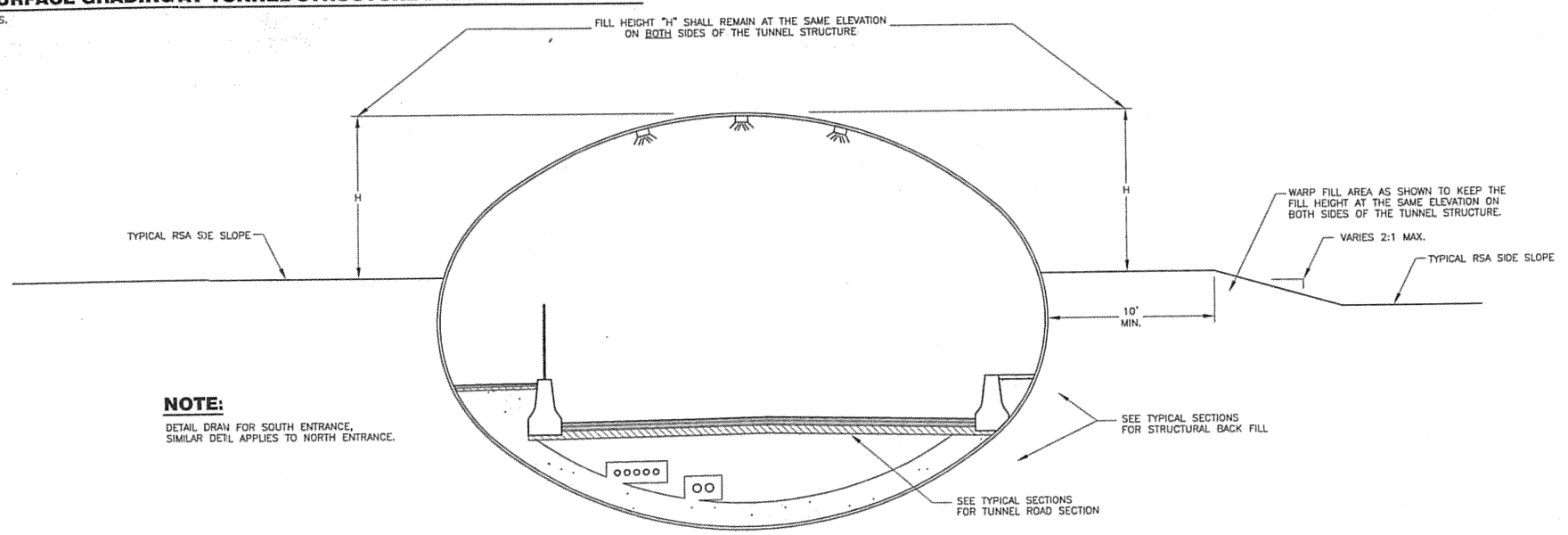

NOTE:

DETAIL DRAN FOR SOUTH ENTRANCE, SIMILAR DETIL APPLIES TO NORTH ENTRANCE.

2 L11 **SURFACE GRADING AT TUNNEL STRUCTURE ENDS - PLAN**
N.T.S.

DO NOT SCALE FROM THESE DRAWINGS USE DIMENSIONS

PATH: I:\823400\Dwgs\C\Sheets\L11.dwg
Thu, 09/Nov/06 11:48AM bpaddock
TAB: L11

ADDENDUM NUMBER
ATTACHMENT NUMBER

RECORD OF REVISIONS

No.	DATE	DESCRIPTION

LEWIS REEF ROAD TUNNEL
PROJECT NO. 67858

LEWIS REEF ROAD TUNNEL DETAILS

PREPARED BY: USKH INC.

CHECKED BY: DLM

STATE OF ALASKA 49TH
D. Lance Mearig
CE-7435
09Nov06
REGISTERED PROFESSIONAL ENGINEER

DESIGNED BY: NCL

DRAWN BY: WJP

STATE OF ALASKA
DEPARTMENT OF TRANSPORTATION & PUBLIC FACILITIES
DESIGN & ENGINEERING SERVICES DIVISION–SOUTHEAST REGION

LEWIS REEF ROAD TUNNEL DETAILS

PROJECT DESIGNATION	
68456	
STATE	YEAR
ALASKA	2006
SHEET NUMBER	TOTAL SHEETS
L11	131

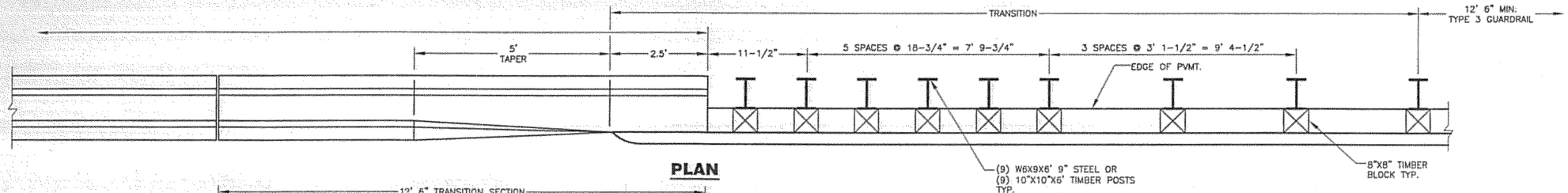

PLAN

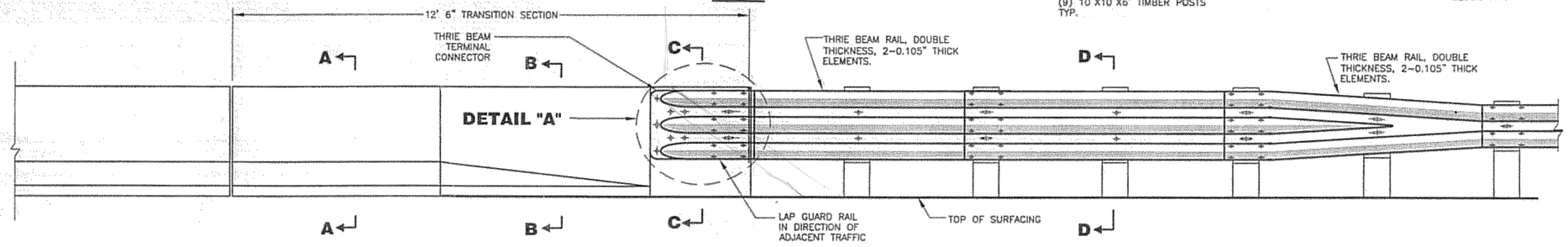

PROFILE

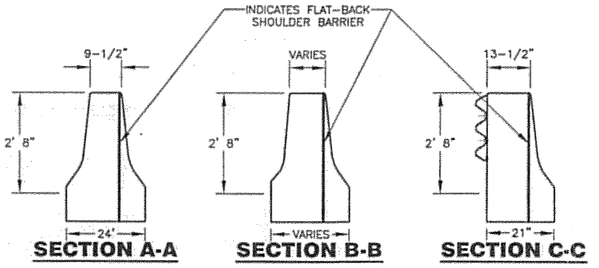

SECTION A-A **SECTION B-B** **SECTION C-C**

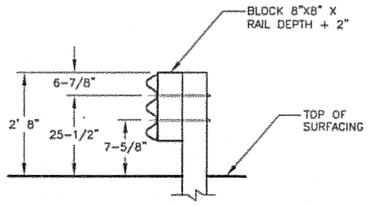

SECTION D-D

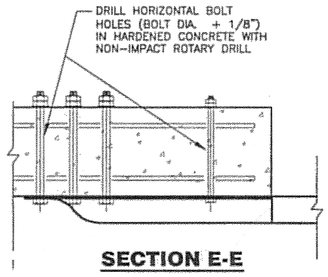

SECTION E-E

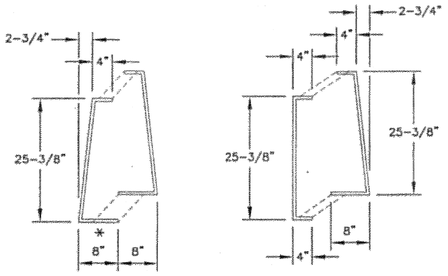

MODIFIED STIRRUP PAIR SECTION A-A #4 Rebar

MODIFIED STIRRUP PAIR SECTION B-B #4 Rebar

* DIMENSION VARIABLE THROUGH TRANSITION SECTION.

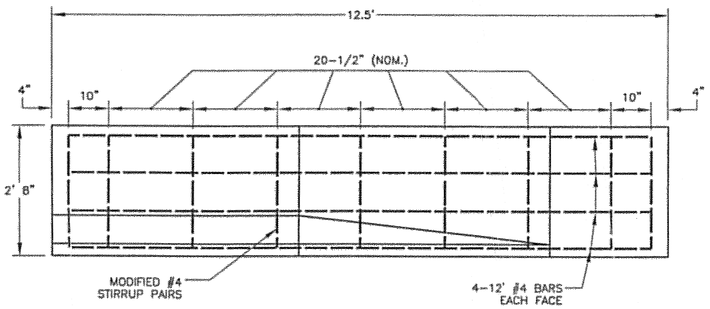

TRANSITION SECTION REBAR PLACEMENT

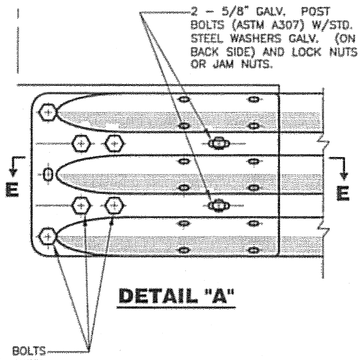

DETAIL "A"

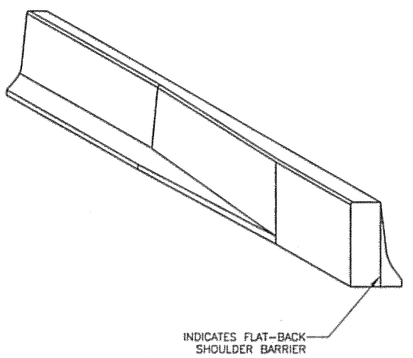

TRANSITION SECTION

GENERAL NOTES:

ALL REINFORCING STEEL SHALL CONFORM TO ASTM A706 OR AASHTO M31 (ASTM A615) GRADE 420. ALL BARS SHALL BE FULL LENGTH AS SHOWN AND SHALL BE PLACED 2" CLEAR OF THE NEAREST FACE OF CONCRETE UNLESS SHOWN OTHERWISE.

DRAWING TAKEN FROM OREGON DOT STANDARD DETAIL RD530.

1/L12 **GUARD RAIL CONNECTION TO CONCRETE BARRIER** N.T.S.

DO NOT SCALE FROM THESE DRAWINGS USE DIMENSIONS

PATH:
I:\823400\Dwgs\C\Sheets\L12.dwg
Thu, 09/Nov/06 11:49AM bpaddock
TAB: L12

ADDENDUM NUMBER

ATTACHMENT NUMBER

RECORD OF REVISIONS

No.	DATE	DESCRIPTION

LEWIS REEF ROAD TUNNEL
PROJECT NO. 67858

PREPARED BY: USKH INC.

CHECKED BY: DLM

STATE OF ALASKA 49TH
D. Lance Mearig
CE-7435
09Nov06
REGISTERED PROFESSIONAL ENGINEER

DESIGNED BY: NCL

DRAWN BY: JRH

STATE OF ALASKA
DEPARTMENT OF TRANSPORTATION
& PUBLIC FACILITIES
DESIGN & ENGINEERING SERVICES
DIVISION-SOUTHEAST REGION

LEWIS REEF ROAD TUNNEL DETAILS

PROJECT DESIGNATION	
68456	
STATE	YEAR
ALASKA	2006
SHEET NUMBER	TOTAL SHEETS
L12	131

GENERAL NOTES:

1. SEE SHEET L4 FOR SIGNING SUMMARY TABLE.
2. USE STANDARD 4" DOUBLE YELLOW CENTERLINE AND 4" WHITE EDGE LINE FOR STRIPING NEW PAVEMENT FROM LRR STA. 49+75 TO LRR STA. 64+75.
3. SEE LEWIS REEF ROAD TYPICAL SECTION ON SHEET L2 FOR LANE WIDTHS.

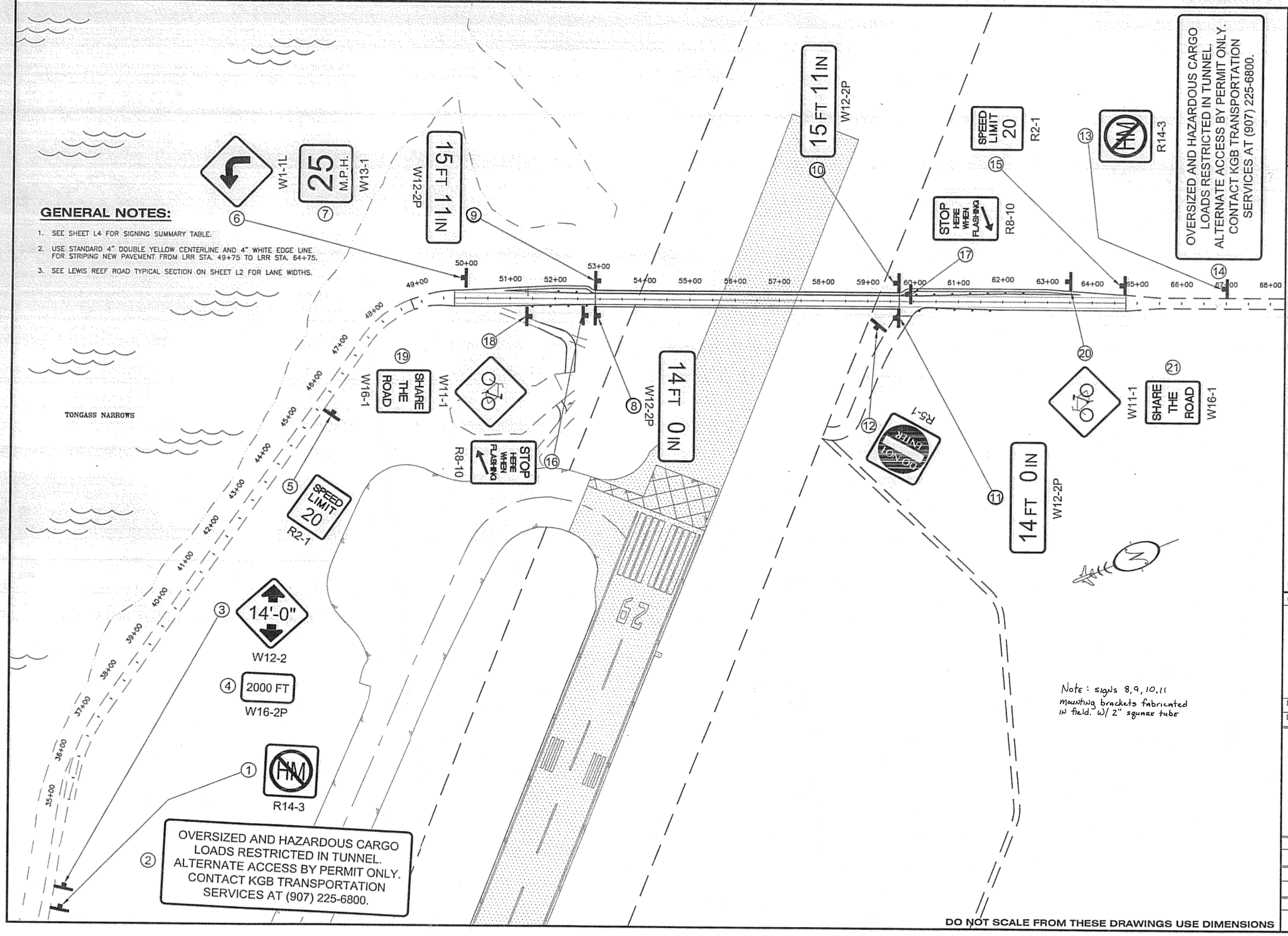

Note: signs 8, 9, 10, 11 mounting brackets fabricated in field. w/ 2" square tube

DO NOT SCALE FROM THESE DRAWINGS USE DIMENSIONS

PATH: I:\823400\Dwgs\C\Sheets\L13.dwg
Thu, 09/Nov/06 11:50AM bpaddock
TAB: L13

ADDENDUM NUMBER

ATTACHMENT NUMBER

RECORD OF REVISIONS

No.	DATE	DESCRIPTION

LEWIS REEF ROAD TUNNEL
PROJECT NO. 67858

LEWIS REEF ROAD TUNNEL
SIGNING & STRIPING PLAN

PREPARED BY: USKH INC.
CHECKED BY: DLM

STATE OF ALASKA 49TH — D. Lance Mearig CE-7435 — DNovOB — REGISTERED PROFESSIONAL ENGINEER

DESIGNED BY: NCL
DRAWN BY: WJP

STATE OF ALASKA
DEPARTMENT OF TRANSPORTATION & PUBLIC FACILITIES
DESIGN & ENGINEERING SERVICES
DIVISION–SOUTHEAST REGION

LEWIS REEF ROAD TUNNEL SIGNING & STRIPING PLAN

PROJECT DESIGNATION	
68456	
STATE	YEAR
ALASKA	2006
SHEET NUMBER	TOTAL SHEETS
L13	131

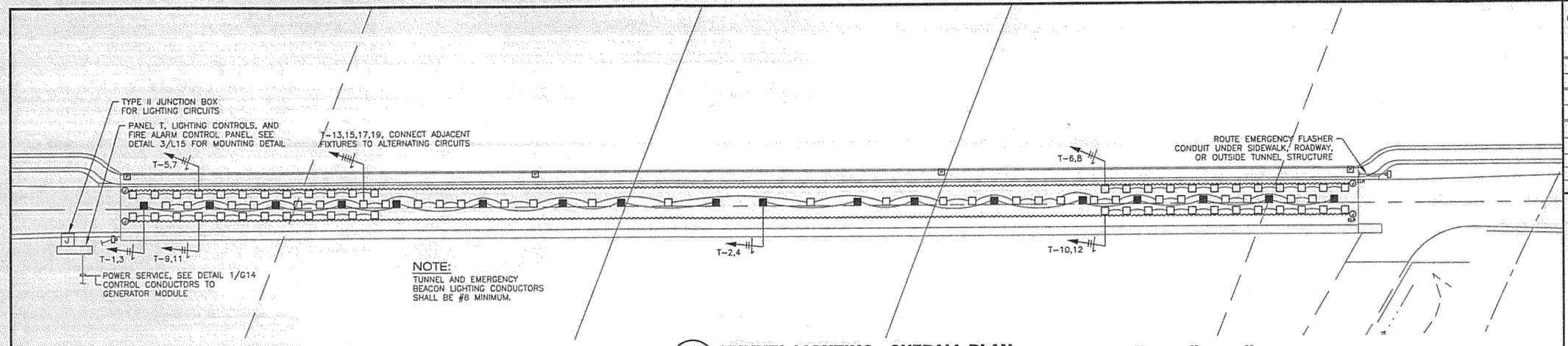

1/L14 **TUNNEL LIGHTING - OVERALL PLAN**
1" = 30'-0"

0 30 60 90
SCALE IN FEET

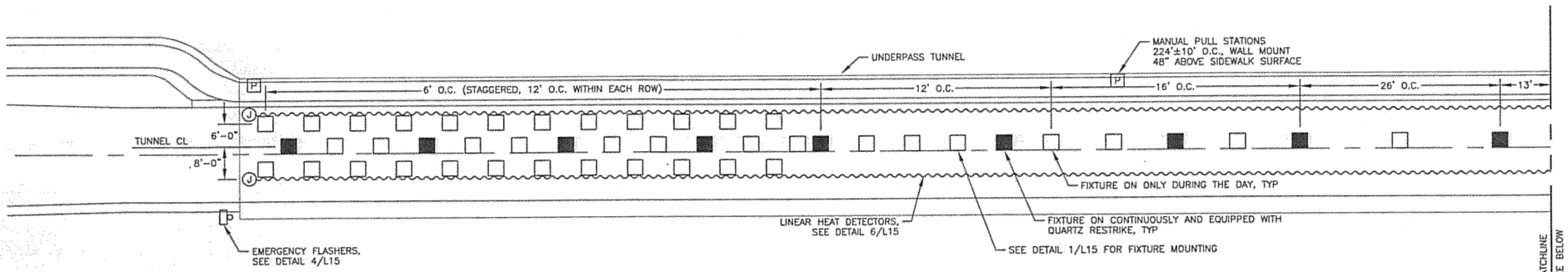

2/L14 **TUNNEL LIGHTING - NORTH**
1/16" = 1'-0"

0 16 32 48
SCALE IN FEET

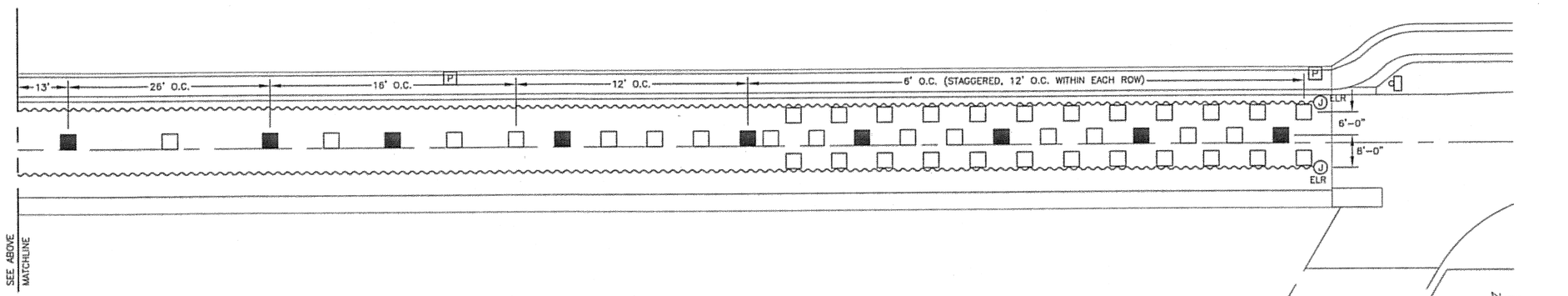

3/L14 **TUNNEL LIGHTING - SOUTH**
1/16" = 1'-0"

0 16 32 48
SCALE IN FEET

DO NOT SCALE FROM THESE DRAWINGS USE DIMENSIONS

PATH: I:\823400\Dwgs\E\BOUND_11_06\L14-T1.dwg
Thu, 09/Nov/06 02:33PM bpaddock
TAB: G09

ADDENDUM NUMBER
ATTACHMENT NUMBER

RECORD OF REVISIONS

No.	DATE	DESCRIPTION

LEWIS REEF ROAD TUNNEL
PROJECT NO. 67858

TUNNEL LIGHTING PLAN

PREPARED BY: USKH INC.
CHECKED BY: GRH

STATE OF ALASKA 49TH
GARY R. HABLE EE-10243 REGISTERED PROFESSIONAL ENGINEER

DESIGNED BY: LPS
DRAWN BY: LPS

STATE OF ALASKA
DEPARTMENT OF TRANSPORTATION & PUBLIC FACILITIES
DESIGN & ENGINEERING SERVICES
DIVISION-SOUTHEAST REGION

TUNNEL LIGHTING PLAN

PROJECT DESIGNATION	
68456	
STATE	YEAR
ALASKA	2006
SHEET NUMBER	TOTAL SHEETS
L14	131

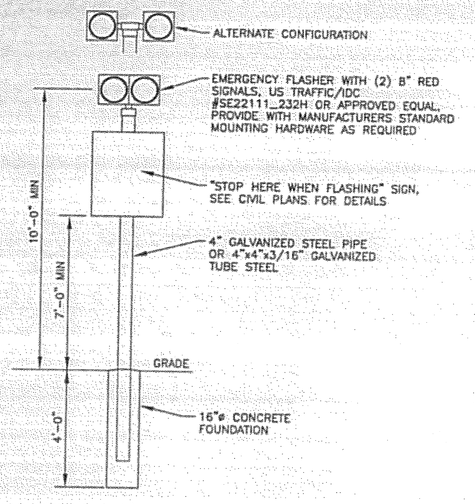

4/L15 **EMERGENCY FLASHER DETAIL** N.T.S.

PANEL 'T'

CKT	LOAD	BRANCH BKR	BRANCH VA	CONN. KVA A	CONN. KVA B	BRANCH VA	BRANCH BKR	LOAD	CKT
1	TUNNEL LIGHTING – NORTH (NIGHT)	20/2	2106	4.2		2106	20/2	TUNNEL LIGHTING – SOUTH (NIGHT)	2
3	SEE NOTE 1		2106		4.2	2106		SEE NOTE 1	4
5	TUNNEL LIGHTING – NORTH	20/2	2208	4.4		2208	20/2	TUNNEL LIGHTING – SOUTH	6
7	SEE NOTE 2		2208		4.4	2208		SEE NOTE 2	8
9	TUNNEL LIGHTING – NORTH	20/2	2208	4.4		2208	20/2	TUNNEL LIGHTING – SOUTH	10
11	SEE NOTE 2		2208		4.4	2208		SEE NOTE 2	12
13	TUNNEL LIGHTING – CENTER	20/2	2760	2.8					14
15	SEE NOTE 2		2760		2.8				16
17	TUNNEL LIGHTING – CENTER	20/2	2760	2.8					18
19	SEE NOTE 2		2760		2.8				20
21	LIGHTING CONTROLS	15/1	500	0.5					22
23	EMERGENCY FLASHERS	15/1	160		0.2				24
25	FIRE ALARM CONTROL PANEL	15/1	300	0.3					26
27					0.0				28
29				0.0					30
	CONNECTED LOAD	38.1 KVA / 79 AMPS		19.4	18.7				
				81	78				
	NEC DEMAND	47.5 KVA / 99 AMPS							

PANEL NOTES
1. SERVE LIGHTING DIRECTLY FROM CIRCUIT BREAKER.
2. SERVE LIGHTING THROUGH NORMALLY–CLOSED CONTACTOR SO LIGHTING IS ENERGIZED DURING THE DAY.

PANEL SPECIFICATIONS
MAINS RATING AMPS – 150
MAIN CIRCUIT BREAKER AMPERES – 150
CAPACITY ONE–POLE CIRCUITS – 30
SYSTEM VOLTAGE – 480/240
PHASE, NO. OF WIRES – 1 PH, 3 W
AIC RATING – 10,000
ENCLOSURE – NEMA 4X

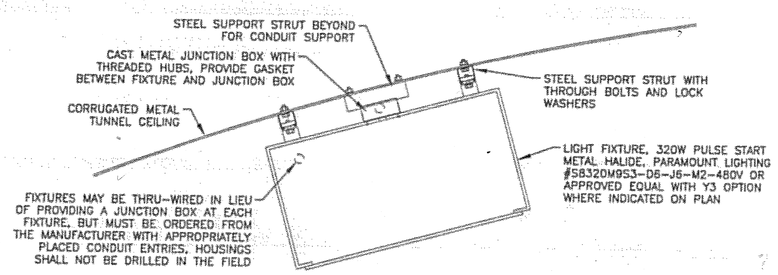

NOTES:
1. STEEL SUPPORT STRUT SHALL BE HOT DIP GALVANIZED OR STAINLESS STEEL
2. HARDWARE SHALL BE STAINLESS STEEL
3. STEEL SUPPORT STRUT FOR FIXTURE SUPPORT MAY BE CONTINOUS, SEGMENTS AT EACH FIXTURE, OR A COMBINATION. WHERE STRUT IS CONTINOUS, LOCATE THROUGH BOLTS WITHIN 12" OF EACH SIDE OF EACH FIXTURE AND EVERY 4' MAXIMUM BETWEEN FIXTURES
4. MOUNTING SHOWN IS SUGGESTED MOUNTING METHOD. CONTRACTOR MAY PROPOSE ALTERNATE INSTALLATION FOR REVIEW BY THE ENGINEER

1/L15 **FIXTURE MOUNTING DETAIL** N.T.S.

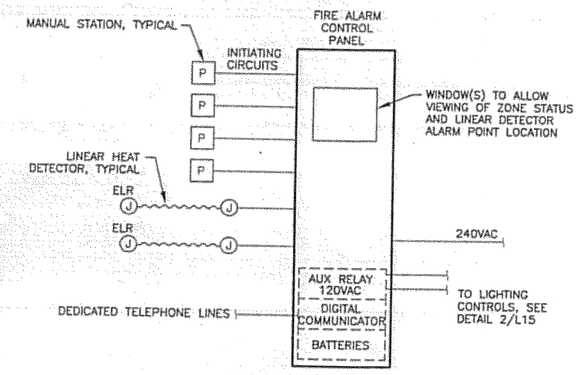

SYSTEM OPERATION:
ACTIVATION OF HEAT DETECTOR OR PULL STATION SHALL ACTIVATE EMERGENCY FLASHERS, TRANSMIT ALARM SIGNAL TO A CENTRAL STATION, AND DISPLAY THE LOCATION OF THE ALARMING DEVICE

5/L15 **FIRE ALARM RISER DIAGRAM** N.T.S.

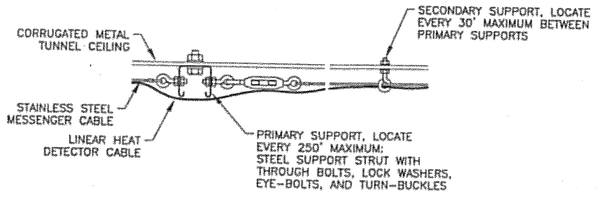

6/L15 **HEAT DETECTOR MOUNTING DETAIL** N.T.S.

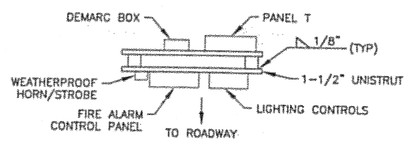

PLAN VIEW

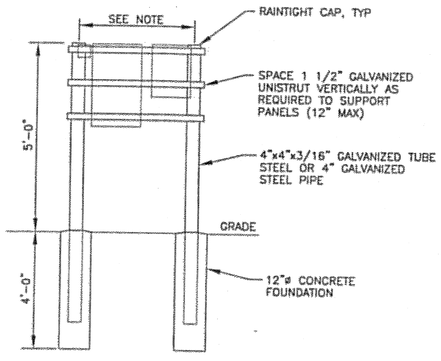

NOTE:
ADJUST WIDTH AS REQUIRED FOR EQUIPMENT INSTALLED, 24" MINIMUM, 48" MAXIMUM, IF LONGER SUPPORTS ARE NEEDED, PROVIDE ADDITIONAL POSTS

3/L15 **PANEL MOUNTING DETAIL** N.T.S.

LIGHTING CONTROL NOTES:
1. MOUNT LIGHTING CONTROLS IN A NEMA 4X ENCLOSURE WITH INTERNAL DEAD–FRONT PANEL UNLESS OTHERWISE NOTED.
2. ON–OFF–AUTO SWITCH, SQUARE D #K543B OR APPROVED EQUAL, MOUNT IN DEAD–FRONT PANEL AND LABEL "DAYTIME TUNNEL LIGHTING"
3. 30A/12–POLE CONTACTOR. CONTACTOR SHALL BE ELECTRICALLY HELD WITH 120V COIL, SQUARE D TYPE LO OR APPROVED EQUAL
4. 120V ADJUSTABLE PHOTOCELL LOCATED AT LOADCENTER
5. 24VDC CONTROL RELAY
6. ROUTE TO N.O. OVERLOAD ALARM CONTACTS IN GENERATOR CONTROLLER, SET TO CLOSE AT 95% OF RATED LOAD
7. 24VDC POWER SUPPLY OR 24V PROVIDED BY GENERATOR CONTROLS
8. MOUNT RELAY (AND POWER SUPPLY IF PROVIDED) IN NEMA 1 ENCLOSURE IN GENERATOR MODULE
9. CONTACTS IN FIRE ALARM CONTROL PANEL, SEE DETAIL 5/L15
10. ALTERNATING FLASHER MODULE, 120VAC
11. ON–AUTO SWITCH, SQUARE D #K511B OR APPROVED EQUAL, MOUNT IN DEAD–FRONT PANEL AND LABEL "EMERGENCY FLASHERS"
12. 15A, 120VAC POWER RELAY
13. 1.5kW, 240–120V TRANSFORMER, MOUNT IN CONTROL ENCLOSURE

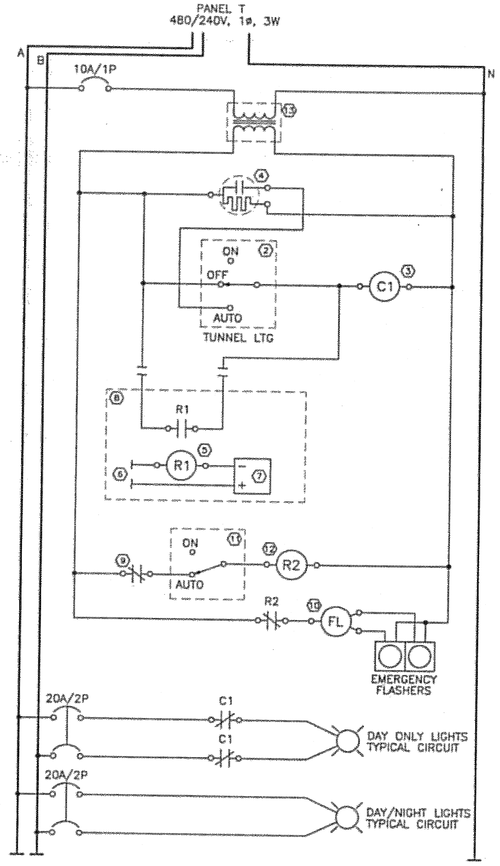

2/L15 **TUNNEL LIGHTING CONTROL DETAIL** N.T.S.

DO NOT SCALE FROM THESE DRAWINGS USE DIMENSIONS

PATH: I:\823400\Dwgs\E\BOUND_11_06\L15-T2.dwg
Thu, 09/Nov/06 02:31PM bpaddock
TAB: G11

ADDENDUM NUMBER

ATTACHMENT NUMBER

RECORD OF REVISIONS

No.	DATE	DESCRIPTION

LEWIS REEF ROAD TUNNEL
PROJECT NO. 67858

TUNNEL LIGHTING DETAILS

PREPARED BY: USKH INC.
CHECKED BY: GRH

STATE OF ALASKA 49TH GARY R. HABLE EE–10243 REGISTERED PROFESSIONAL ENGINEER

DESIGNED BY: LPS
DRAWN BY: LPS

STATE OF ALASKA
DEPARTMENT OF TRANSPORTATION & PUBLIC FACILITIES
DESIGN & ENGINEERING SERVICES
DIVISION–SOUTHEAST REGION

TUNNEL LIGHTING DETAILS

PROJECT DESIGNATION	
68456	
STATE	YEAR
ALASKA	2006
SHEET NUMBER	TOTAL SHEETS
L15	131

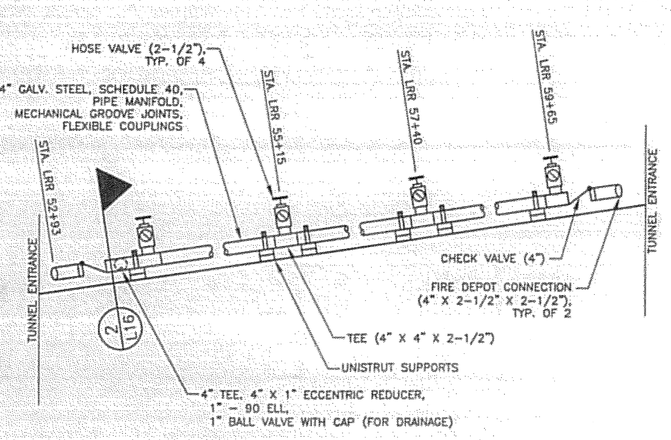

1 L16 SCHEMATIC - TUNNEL STANDPIPE SYSTEM

N.T.S.

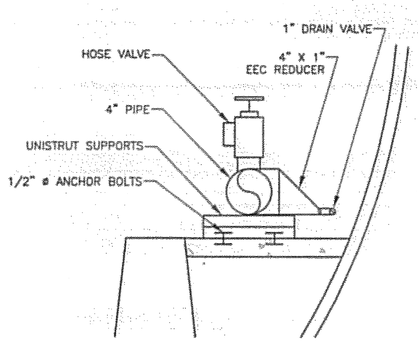

2 L16 TUNNEL STAND PIPE SECTION

N.T.S.

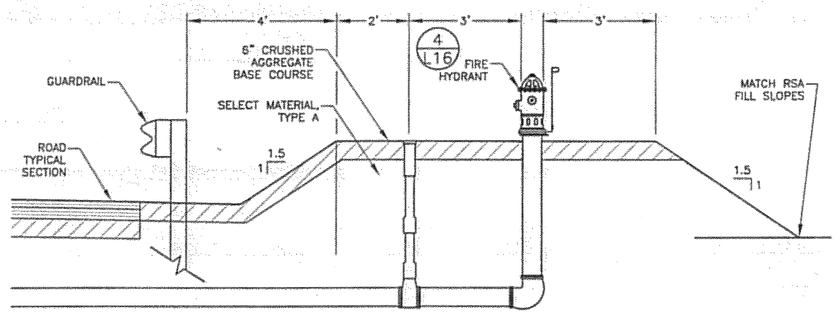

3 L16 FIRE HYDRANT ACCESS PAD

N.T.S.

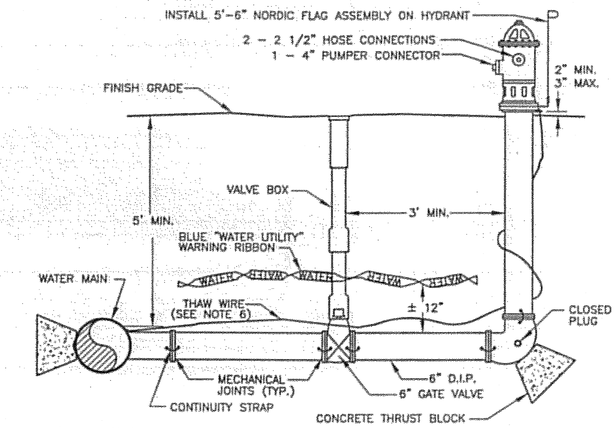

NOTES:

1. HYDRANT BARREL SHALL BE PLUMB.
2. WATER PIPE SHALL BE 6" D.I.P. CONNECTIONS SHALL BE RESTRAINED MECHANICAL JOINTS OR MEGALUGS.
3. GROUND COVER SHALL BE 5' MINIMUM.
4. BENDS BETWEEN THE HYDRANT AND THE MAIN SHALL NOT EXCEED 11 1/4'.
5. ALL HYDRANTS SHALL BE PAINTED "CATERPILLAR YELLOW". ALL HYDRANTS WITH PLUGGED DRAINS SHALL HAVE THE TOP BONNET PAINTED OSHA SAFETY BLUE. NUMBER OF FEET TO VALVE SHALL BE PRINTED IN BLACK 1/2" BLOCK LETTERS JUST BELOW TOP BONNET.
6. THAW WIRE AND CONTINUITY STRAPS SHALL BE #2 COPPER WITH TYPE THHW INSULATION. THAW WIRE SHALL BE CAD WELDED TO THE MAIN. EACH JOINT SHALL HAVE TWO CAD WELDED CONTINUITY STRAPS ACROSS OPPOSITE SIDES OF THE PIPE.

4 L16 FIRE HYDRANT

N.T.S.

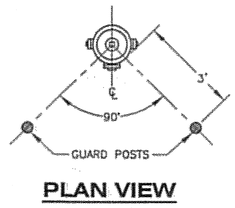

PLAN VIEW

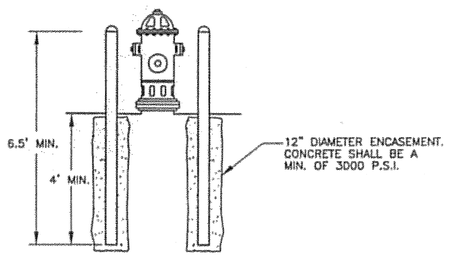

ELEVATION VIEW

NOTES:

1. GUARD POSTS SHALL BE 8" DIAMETER, SCHEDULE 40 STEEL PIPE.
2. POSTS SHALL BE FILLED FLUSH WITH CONCRETE AND PAINTED WITH OSHA YELLOW ENAMEL AFTER INSTALLATION.
3. POSTS SHALL NOT BLOCK OPERATION OF VALVE.
4. GUARD POSTS NOT TO BE USED WHEN FIRE HYDRANT GUARD POST IS INSIDE THE ROAD CLEAR ZONE. CLEAR ZONE IS 22' FROM ROAD CENTERLINE.

5 L16 FIRE HYDRANT GUARD POSTS

N.T.S.

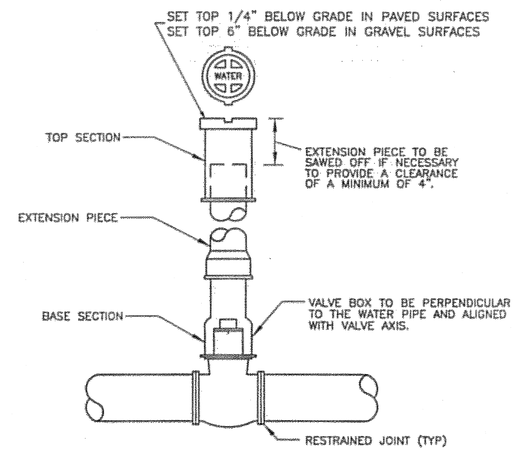

6 L16 VALVE BOX

N.T.S.

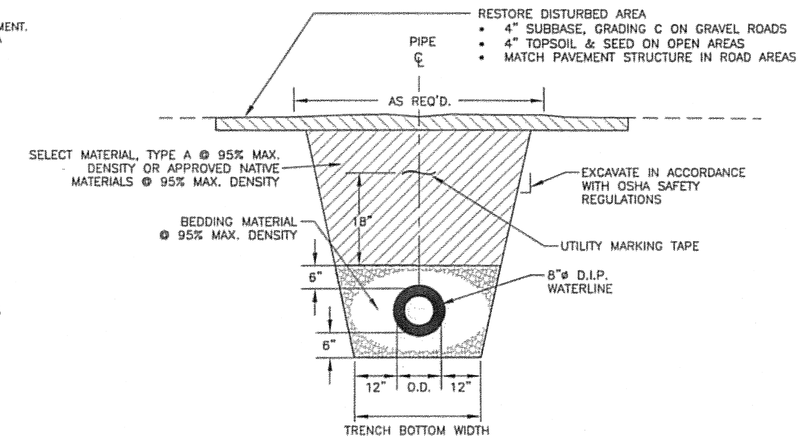

7 L16 TYPICAL TRENCH DETAIL

N.T.S.

DO NOT SCALE FROM THESE DRAWINGS USE DIMENSIONS

PATH: I:\823400\Dwgs\C\Sheets\L16.dwg
Thu, 09/Nov/06 11:51AM bpaddock
TAB: L16

ADDENDUM NUMBER

ATTACHMENT NUMBER

RECORD OF REVISIONS

No.	DATE	DESCRIPTION

LEWIS REEF ROAD TUNNEL
PROJECT NO. 67858

FIRE PROTECTION STAND PIPE

PREPARED BY: USKH INC.

CHECKED BY: DLM

STATE OF ALASKA 49 TH D. Lance Mearig CE-7435 09Nov06 REGISTERED PROFESSIONAL ENGINEER

DESIGNED BY: NCL

DRAWN BY: WJP

STATE OF ALASKA
DEPARTMENT OF TRANSPORTATION & PUBLIC FACILITIES
DESIGN & ENGINEERING SERVICES
DIVISION-SOUTHEAST REGION

FIRE PROTECTION STAND PIPE

PROJECT DESIGNATION	
68456	
STATE	YEAR
ALASKA	2006
SHEET NUMBER	TOTAL SHEETS
L16	131

WATERLINE GENERAL NOTES:

1. CAUTION! TOPOGRAPHIC INFORMATION ALONG THE AIRPORT ACCESS ROAD WAS OBTAINED BEFORE RECENT ROAD AND UTILITY IMPROVEMENTS. VERIFY EXACT LOCATIONS OF ROAD AND UTILITY FACILITIES BY TOPOGRAPHIC SURVEYING AND OBTAINING UTILITY LOCATES. SUBMIT THIS TO THE ENGINEER AND ADJUST LOCATIONS OF WATERLINE IMPROVEMENTS TO AVOID CONFLICTS AS DIRECTED.
2. RESTORE ALL DISTURBED PROPERTY TO MATCH EXISTING CONDITIONS, EXCEPT AS SHOWN OTHERWISE.
3. VERIFY HORIZONTAL AND VERTICAL LOCATIONS OF ALL UTILITIES ENCOUNTERED DURING CONSTRUCTION. RECORD LOCATIONS AND CHANGES TO UTILITIES IN SURVEY NOTES AND ON AS-BUILT PLANS.
4. WATER PIPE SHALL BE 8" D.I.P., PRESSURE CLASS 350.
5. PROVIDE THRUST BLOCKS ON ALL WATERLINE TEES, BENDS, AND STUBOUTS.
6. FIELD ADJUST WATERLINE ALIGNMENT AS DIRECTED TO AVOID CONSTRUCTION OUTSIDE PERMIT AREAS. SEE APPENDIX F.

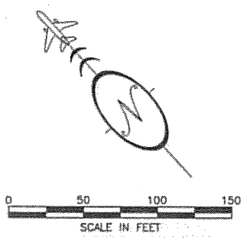

DO NOT SCALE FROM THESE DRAWINGS USE DIMENSIONS

PATH: I:\823400\Dwgs\C\Sheets\L17.dwg
Thu, 09/Nov/06 11:52AM bpaddock
TAB: L17

ADDENDUM NUMBER
ATTACHMENT NUMBER

RECORD OF REVISIONS

No.	DATE	DESCRIPTION

LEWIS REEF ROAD TUNNEL
PROJECT NO. 67858

WATERLINE PLAN & PROFILE

PREPARED BY: USKH INC.

CHECKED BY: DLM

STATE OF ALASKA
49 TH
D. Lance Mearig
CE-7435
09Nov06
REGISTERED PROFESSIONAL ENGINEER

DESIGNED BY: NCL

DRAWN BY: WJP

STATE OF ALASKA
DEPARTMENT OF TRANSPORTATION & PUBLIC FACILITIES
DESIGN & ENGINEERING SERVICES
DIVISION-SOUTHEAST REGION

WATERLINE PLAN & PROFILE

PROJECT DESIGNATION	
68456	
STATE	YEAR
ALASKA	2006
SHEET NUMBER	TOTAL SHEETS
L17	131

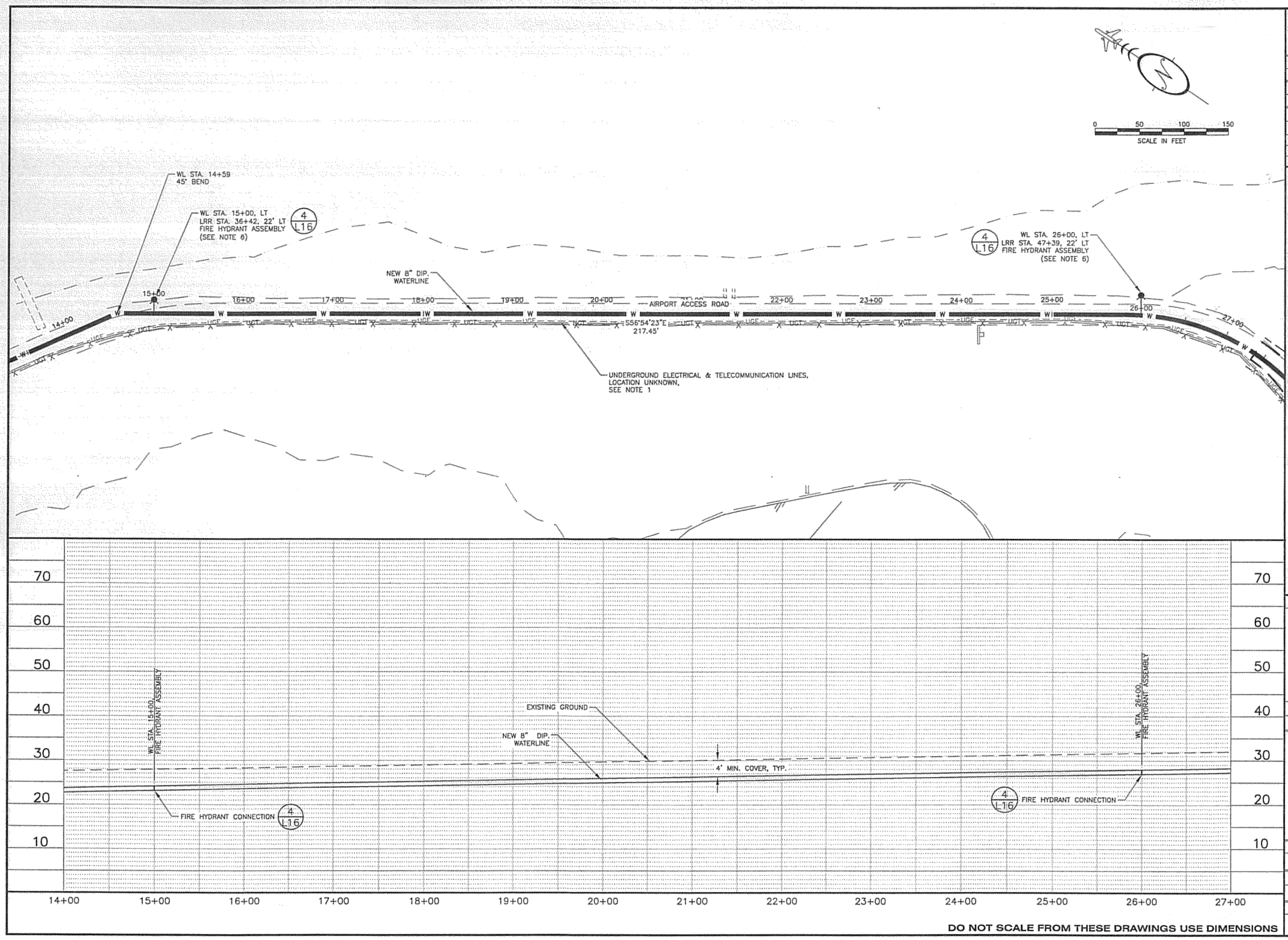

DO NOT SCALE FROM THESE DRAWINGS USE DIMENSIONS

PATH:
I:\823400\Dwgs\C\Sheets\L18.dwg

Thu, 09/Nov/06 11:52AM bpaddock
TAB: L18

ADDENDUM NUMBER

ATTACHMENT NUMBER

RECORD OF REVISIONS

No.	DATE	DESCRIPTION

LEWIS REEF ROAD TUNNEL
PROJECT NO. 67858

WATERLINE PLAN & PROFILE

PREPARED BY: USKH INC.

CHECKED BY: DLM

STATE OF ALASKA
49TH
D. Lance Mearig
CE-7435
09Nov06
REGISTERED PROFESSIONAL ENGINEER

DESIGNED BY: NCL

DRAWN BY: WJP

STATE OF ALASKA
DEPARTMENT OF TRANSPORTATION
& PUBLIC FACILITIES
DESIGN & ENGINEERING SERVICES
DIVISION-SOUTHEAST REGION

WATERLINE PLAN & PROFILE

PROJECT DESIGNATION
68456

STATE	YEAR
ALASKA	2006
SHEET NUMBER	TOTAL SHEETS
L18	131

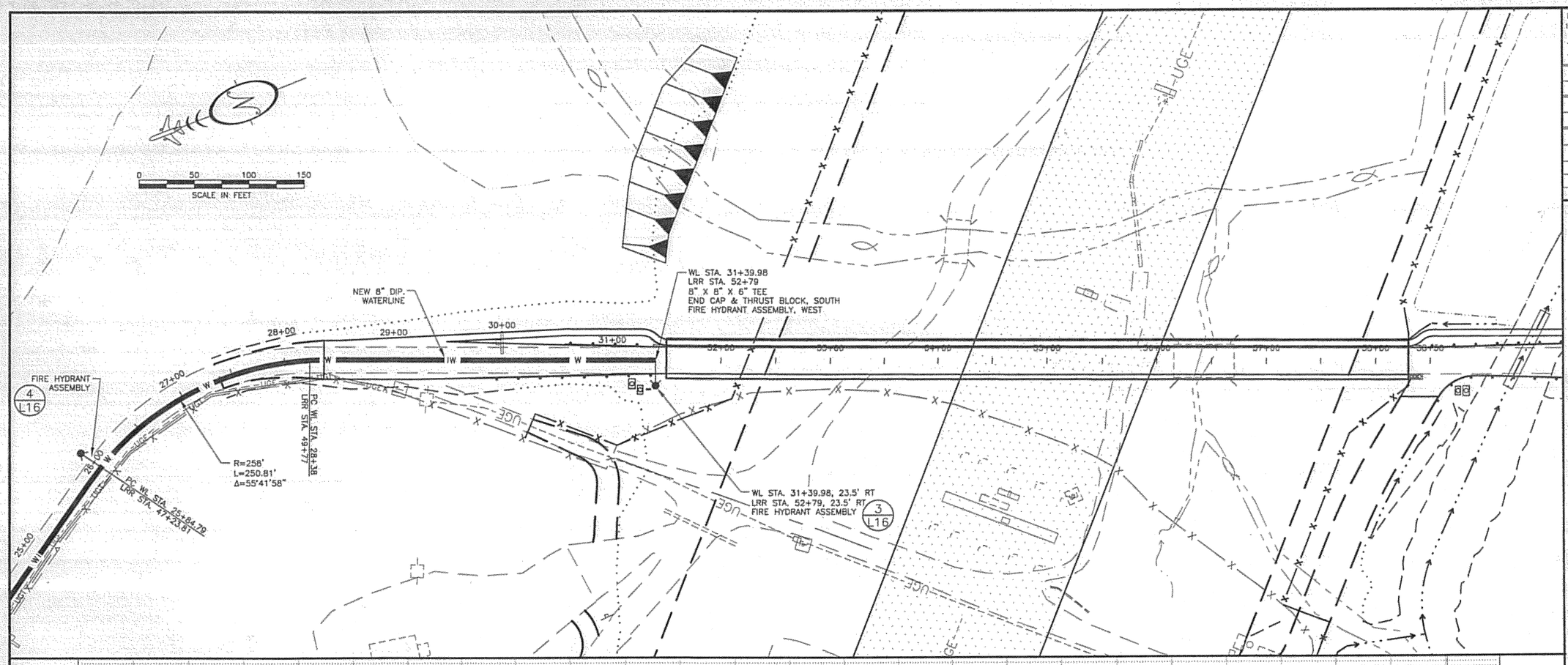

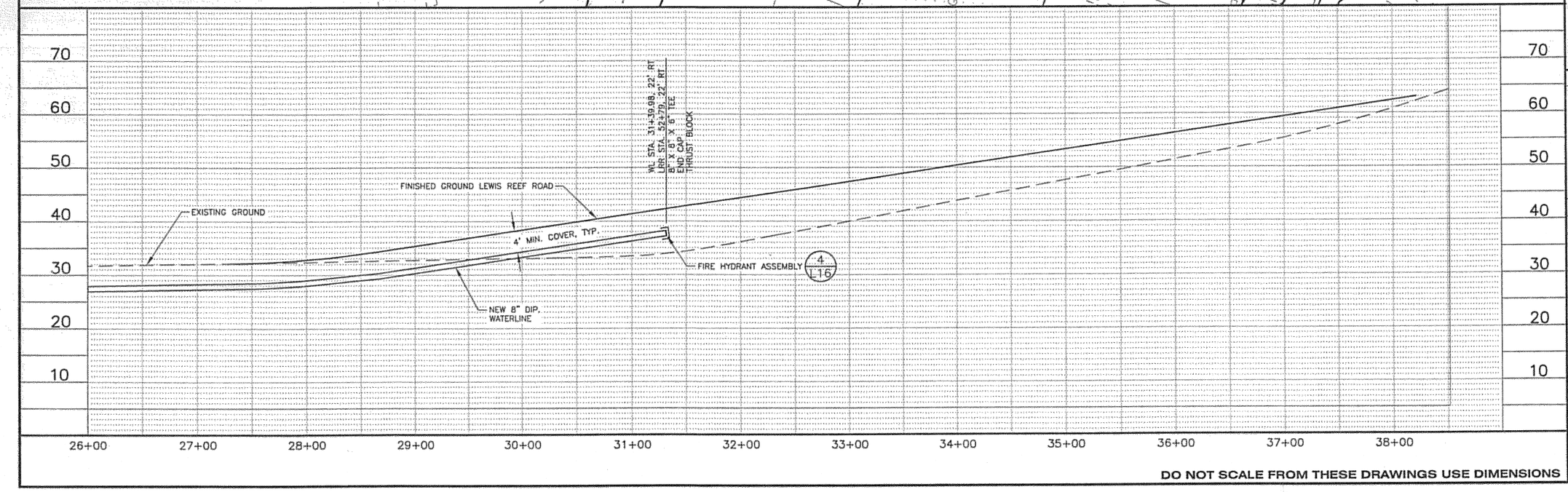

DO NOT SCALE FROM THESE DRAWINGS USE DIMENSIONS

PATH: I:\823400\Dwgs\C\Sheets\L19.dwg
Thu, 09/Nov/06 11:53AM bpaddock
TAB: L19

ADDENDUM NUMBER

ATTACHMENT NUMBER

RECORD OF REVISIONS

No.	DATE	DESCRIPTION

LEWIS REEF ROAD TUNNEL
PROJECT NO. 67858

WATERLINE PLAN & PROFILE

PREPARED BY: USKH INC.

CHECKED BY: DLM

STATE OF ALASKA 49TH
D. Lance Mearig
CE-7435
09Nov06
REGISTERED PROFESSIONAL ENGINEER

DESIGNED BY: NCL

DRAWN BY: WJP

STATE OF ALASKA
DEPARTMENT OF TRANSPORTATION
& PUBLIC FACILITIES
DESIGN & ENGINEERING SERVICES
DIVISION-SOUTHEAST REGION

WATERLINE PLAN & PROFILE

PROJECT DESIGNATION
68456

STATE	YEAR
ALASKA	2006
SHEET NUMBER	TOTAL SHEETS
L19	131

As Built Certification

To the best of my knowledge and belief
the data submitted is correct and complete.

8/16/10

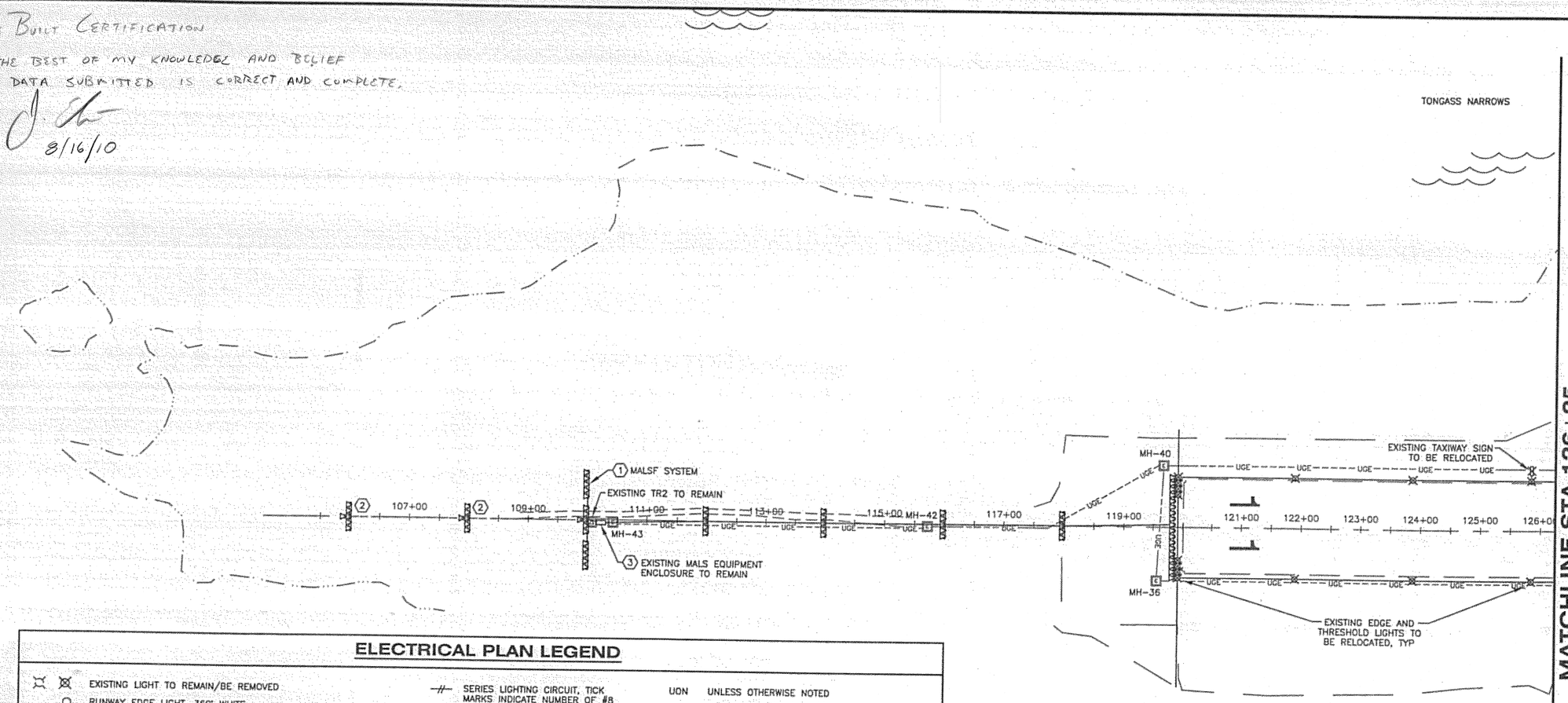

ELECTRICAL PLAN LEGEND

- EXISTING LIGHT TO REMAIN/BE REMOVED
- RUNWAY EDGE LIGHT, 360° WHITE
- RUNWAY EDGE LIGHT, 180° WHITE AND 180° YELLOW
- THRESHOLD LIGHT, 180° RED AND 180° GREEN
- TAXIWAY EDGE LIGHT, 360° BLUE
- EXISTING LIGHTED AIRPORT SIGN TO REMAIN/BE REMOVED
- NEW LIGHTED AIRPORT SIGN
- GROUND ROD, 3/4"x10' TYPICAL
- NEW HANDHOLE (HH), TYPE I (LIGHT BASE WITH BLANK COVER)
- EXISTING ELECTRICAL MANHOLE TO REMAIN/BE REMOVED
- EXISTING COMMUNICATIONS PEDESTAL TO REMAIN/BE REMOVED
- NEW ELECTRICAL MANHOLE
- NEW COMMUNICATIONS PEDESTAL, JUNCTION BOX (TYPE II), OR MANHOLE AS INDICATED
- EXISTING TRANSFORMER TO REMAIN/BE REMOVED
- NEW TRANSFORMER OR EXISTING TRANSFORMER TO BE RELOCATED
- NEW SECTIONALIZER CABINET
- JUNCTION BOX, TYPE II, SEE DOT STANDARD DETAIL L-23.01
- BRANCH CIRCUIT HOMERUN WITH GROUND, NEUTRAL AND NUMBER OF HOT WIRES
- T-2 INDICATES PANEL AND CIRCUIT NUMBER
- --UGE-=-UGE- EXISTING PRIMARY UNDERGROUND ELECTRICAL LINE TO REMAIN/BE REMOVED
- --UGC-=-UGC- EXISTING UNDERGROUND COMMUNICATIONS LINE TO REMAIN/BE REMOVED
- -UGE- NEW PRIMARY UNDERGROUND ELECTRICAL LINE
- -UGC- NEW UNDERGROUND COMMUNICATIONS LINE
- MALS SYSTEM LIGHT BAR
- MALS SYSTEM FLASHER OR THRESHOLD LIGHT
- -#- SERIES LIGHTING CIRCUIT, TICK MARKS INDICATE NUMBER OF #8 5KV SERIES CONDUCTORS IN 2" HDPE CONDUIT (2 SHOWN), INCLUDE #6 GROUND CONDUCTOR (NOT SHOWN), TICK MARKS NOT SHOWN ON SHORT SEGMENTS FOR CLARITY
- =#= SERIES LIGHTING CIRCUIT, TICK MARKS INDICATE NUMBER OF #8 5KV SERIES CONDUCTORS IN 2" RIGID STEEL CONDUIT (2 SHOWN), INCLUDE #6 GROUND CONDUCTOR (NOT SHOWN), TICK MARKS NOT SHOWN ON SHORT SEGMENTS FOR CLARITY

EQUIPMENT NUMBER
- EX TAXIWAY/RUNWAY EDGE LIGHT
- SX LIGHTED SIGN
- MH-X MANHOLE
- S-X SECTIONALIZER CABINET
- JB-X JUNCTION BOX
- P-X PEDESTAL
- P-X PEDESTAL

(X) REFERENCE TO SHEET NOTE

LIGHT COLORS AND DISTRIBUTIONS
- B BLUE
- Y YELLOW
- R RED
- G GREEN
- W WHITE
- BI BI-DIRECTIONAL
- UNI UNI-DIRECTIONAL
- OMNI OMNI-DIRECTIONAL

UON	UNLESS OTHERWISE NOTED
EMT	ELECTRICAL METALLIC TUBING
RMC	RIGID METALLIC CONDUIT (GALVANIZED STEEL)
HDPE	HIGH DENSITY POLYETHYLENE
PVC	POLYVINYL CHLORIDE
LFMC	LIQUIDTIGHT FLEXIBLE METALLIC CONDUIT
LFNC	LIQUIDTIGHT FLEXIBLE NONMETALLIC CONDUIT
C	CONDUIT
BC	BARE COPPER
TYP	TYPICAL
GRD	GROUND
CB	CIRCUIT BREAKER
NF	NON-FUSED
NDB	NON-DIRECTIONAL BEACON
PAPI	PRECISION APPROACH PATH INDICATOR
LHA	LIGHT HOUSING ASSEMBLY
MALSR	MEDIUM INTENSITY APPROACH LIGHTING SYSTEM WITH RUNWAY ALIGNMENT INDICATOR LIGHTS
MALSF	MEDIUM INTENSITY APPROACH LIGHTING WITH SEQUENCED FLASHERS
ASOS	AUTOMATED SURFACE OBERVING SYSTEM
RVR	RUNWAY VISUAL RANGE
VASI	VISUAL APPROACH SLOPE INDICATOR
RCO	RADIO COMMUNICATIONS OUTLET
DME	DISTANCE MEASURING EQUIPMENT

DEMOLITION NOTES:

1. REMOVE EQUIPMENT INDICATED ON DEMOLITION PLANS UNLESS OTHERWISE NOTED. REMOVAL INCLUDES ALL ASSOCIATED CONDUIT, JUNCTION BOXES, CONDUCTORS, LIGHT BASES, TRANSFORMERS, CONTROLLERS, DRAIN CONDUITS, SUPPORT STRUCTURES, FOUNDATIONS, AND CONCRETE.
2. REMOVE ALL UNUSED AND DECOMMISIONED CONDUCTORS UNLESS OTHERWISE INDICATED. UNDERGROUND CONDUITS MAY BE ABANDONED IN PLACE UNLESS DISTURBED BY EXCAVATION ASSOCIATED WITH THIS PROJECT.
3. WHEN REMOVING CONDUCTORS FROM EXISTING CONDUIT TO REMAIN, INSTALL A PULL ROPE FOR FUTURE USE.

SHEET NOTES: ⬡

1. REMOVE EXISTING MALSF SYSTEM, EXCEPT PORTIONS INDICATED OTHERWISE. EXISTING TOWERS, LIGHT BARS, FLASHERS, JUNCTION BOXES, AND BASE ASSEMBLIES TO BE REUSED. PROTECT AND STORE EQUIPMENT UNTIL REINSTALLED.
2. EXISTING TOWER PLATFORM, TOWER, CONDUIT, JUNCTION BOXES, AND FLASHERS TO REMAIN. REMOVE ALL ASSOCIATED CONDUCTORS. REMOVE LIGHT BAR FROM TOWER.
3. EXISTING MALSF CONTROLS TO REMAIN. REMOVE ALL MALSF CONDUCTORS LEAVING BUILDING. EXISTING CONDUITS PENETRATING BUILDING TO BE REUSED.

0 100 200 300
SCALE IN FEET

DO NOT SCALE FROM THESE DRAWINGS USE DIMENSIONS

MATCHLINE STA 126+25

PATH: I:\823400\Dwgs\E\Sheets\G01.dwg
Tue, 03/Oct/06 02:19PM Ischneller
TAB: G01

ADDENDUM NUMBER
ATTACHMENT NUMBER

RECORD OF REVISIONS

No.	DATE	DESCRIPTION

KETCHIKAN AIRPORT
RUNWAY SAFETY AREA EXPANSION
& RUNWAY OVERLAY
PROJECT NO. 68306

ELECTRICAL DEMOLITION

PREPARED BY: USKH INC.

CHECKED BY: GRH

STATE OF ALASKA 49TH
GARY R. HABLE
REGISTERED PROFESSIONAL ENGINEER
GARY R. HABLE
EE-10243
10/4/06

DESIGNED BY: LPS

DRAWN BY: LPS

STATE OF ALASKA
DEPARTMENT OF TRANSPORTATION & PUBLIC FACILITIES
DESIGN & ENGINEERING SERVICES
DIVISION-SOUTHEAST REGION

ELECTRICAL DEMOLITION

PROJECT DESIGNATION
AIP NO. 3-02-0144-1606

STATE	YEAR
ALASKA	2006
SHEET NUMBER	TOTAL SHEETS
G1	131

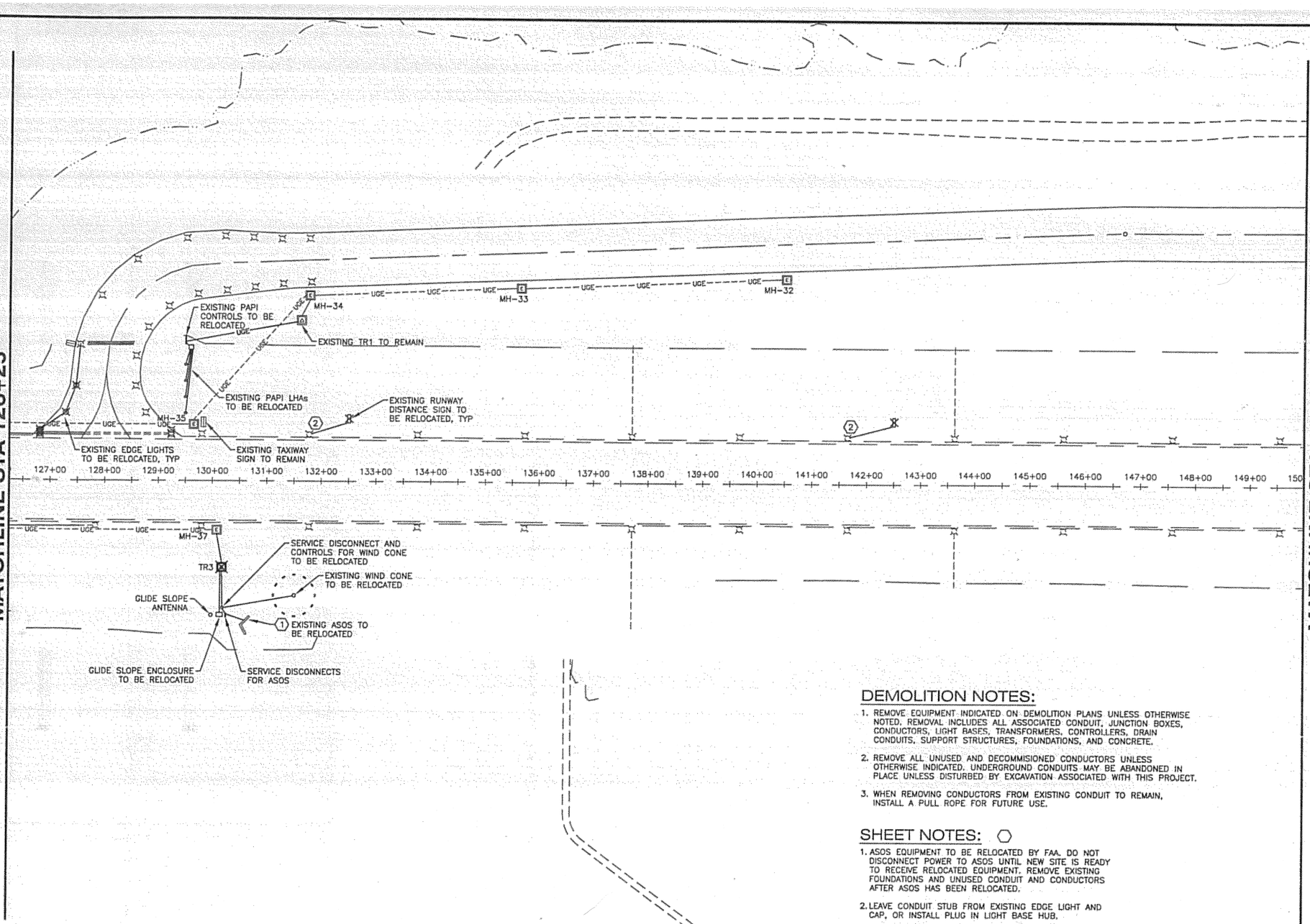

DEMOLITION NOTES:

1. REMOVE EQUIPMENT INDICATED ON DEMOLITION PLANS UNLESS OTHERWISE NOTED. REMOVAL INCLUDES ALL ASSOCIATED CONDUIT, JUNCTION BOXES, CONDUCTORS, LIGHT BASES, TRANSFORMERS, CONTROLLERS, DRAIN CONDUITS, SUPPORT STRUCTURES, FOUNDATIONS, AND CONCRETE.
2. REMOVE ALL UNUSED AND DECOMMISIONED CONDUCTORS UNLESS OTHERWISE INDICATED. UNDERGROUND CONDUITS MAY BE ABANDONED IN PLACE UNLESS DISTURBED BY EXCAVATION ASSOCIATED WITH THIS PROJECT.
3. WHEN REMOVING CONDUCTORS FROM EXISTING CONDUIT TO REMAIN, INSTALL A PULL ROPE FOR FUTURE USE.

SHEET NOTES: ⬡

1. ASOS EQUIPMENT TO BE RELOCATED BY FAA. DO NOT DISCONNECT POWER TO ASOS UNTIL NEW SITE IS READY TO RECEIVE RELOCATED EQUIPMENT. REMOVE EXISTING FOUNDATIONS AND UNUSED CONDUIT AND CONDUCTORS AFTER ASOS HAS BEEN RELOCATED.
2. LEAVE CONDUIT STUB FROM EXISTING EDGE LIGHT AND CAP, OR INSTALL PLUG IN LIGHT BASE HUB.

DO NOT SCALE FROM THESE DRAWINGS USE DIMENSIONS

PATH: I:\B23400\Dwgs\E\Sheets\G02.dwg
Tue, 03/Oct/06 02:19PM lschneller
TAB: G02

ADDENDUM NUMBER

ATTACHMENT NUMBER

RECORD OF REVISIONS

No.	DATE	DESCRIPTION

KETCHIKAN AIRPORT
RUNWAY SAFETY AREA EXPANSION
& RUNWAY OVERLAY
PROJECT NO. 68306

ELECTRICAL DEMOLITION

PREPARED BY: USKH INC.

CHECKED BY: GRH

STATE OF ALASKA
49TH
GARY R. HABLE
EE-10243
REGISTERED PROFESSIONAL ENGINEER
10/4/06

DESIGNED BY: LPS

DRAWN BY: LPS

STATE OF ALASKA
DEPARTMENT OF TRANSPORTATION
& PUBLIC FACILITIES
DESIGN & ENGINEERING SERVICES
DIVISION-SOUTHEAST REGION

ELECTRICAL DEMOLITION

PROJECT DESIGNATION	
AIP NO. 3-02-0144-1606	
STATE	YEAR
ALASKA	2006
SHEET NUMBER	TOTAL SHEETS
G2	131

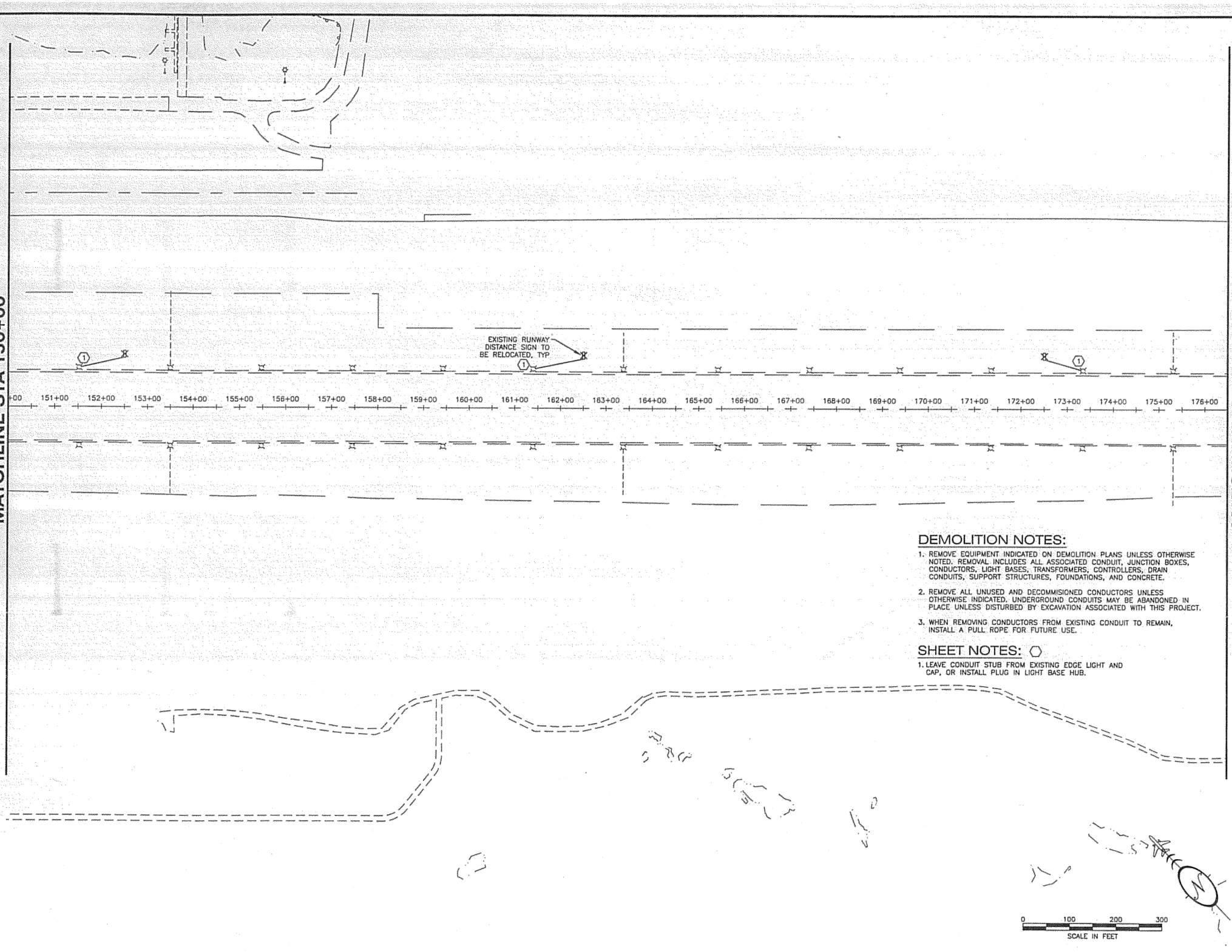

DEMOLITION NOTES:

1. REMOVE EQUIPMENT INDICATED ON DEMOLITION PLANS UNLESS OTHERWISE NOTED. REMOVAL INCLUDES ALL ASSOCIATED CONDUIT, JUNCTION BOXES, CONDUCTORS, LIGHT BASES, TRANSFORMERS, CONTROLLERS, DRAIN CONDUITS, SUPPORT STRUCTURES, FOUNDATIONS, AND CONCRETE.
2. REMOVE ALL UNUSED AND DECOMMISIONED CONDUCTORS UNLESS OTHERWISE INDICATED. UNDERGROUND CONDUITS MAY BE ABANDONED IN PLACE UNLESS DISTURBED BY EXCAVATION ASSOCIATED WITH THIS PROJECT.
3. WHEN REMOVING CONDUCTORS FROM EXISTING CONDUIT TO REMAIN, INSTALL A PULL ROPE FOR FUTURE USE.

SHEET NOTES: ⬡

1. LEAVE CONDUIT STUB FROM EXISTING EDGE LIGHT AND CAP, OR INSTALL PLUG IN LIGHT BASE HUB.

DO NOT SCALE FROM THESE DRAWINGS USE DIMENSIONS

PATH: I:\823400\Dwgs\E\Sheets\G03.dwg

Tue, 03/Oct/06 02:19PM lschneller

TAB: G03

ADDENDUM NUMBER

ATTACHMENT NUMBER

RECORD OF REVISIONS

No.	DATE	DESCRIPTION

KETCHIKAN AIRPORT
RUNWAY SAFETY AREA EXPANSION
& RUNWAY OVERLAY
PROJECT NO. 68306

ELECTRICAL DEMOLITION

PREPARED BY: USKH INC.

CHECKED BY: GRH

STATE OF ALASKA
49TH
GARY R. HABLE
EE-10243
REGISTERED PROFESSIONAL ENGINEER
10/4/06

DESIGNED BY: LPS

DRAWN BY: LPS

STATE OF ALASKA
DEPARTMENT OF TRANSPORTATION
& PUBLIC FACILITIES
DESIGN & ENGINEERING SERVICES
DIVISION–SOUTHEAST REGION

ELECTRICAL DEMOLITION

PROJECT DESIGNATION	
AIP NO. 3-02-0144-1606	
STATE	YEAR
ALASKA	2006
SHEET NUMBER	TOTAL SHEETS
G3	131

MATCHLINE STA 176+50

EXISTING REGULATOR BUILDING

MH-7 MH-2

MH-6 MH-3

EXISTING RUNWAY DISTANCE SIGN TO BE RELOCATED

MH-5 MH-4

VASI SYSTEM

VASI CONTROLS

EXISTING WIND CONE TO BE RELOCATED

MH-21 MH-20

EXISTING THRESHOLD LIGHTS TO BE RELOCATED

EXISTING FAA SHOP

TR6

TR5

EXISTING POWER SERVICE CONDUCTORS SHALL REMAIN IN SERVICE UNTIL EXISTING LOCALIZER BUILDING IS REMOVED

2 LOCALIZER ANTENNA ARRAY, PLATFORM, AND DIST/COMB UNIT

REMOVE SUPPORT TOWER, APPROX. 40' HIGH

1 DME ANTENNA

2 LOCALIZER ENCLOSURE

RCO TOWERS

177+00 178+00 179+00 180+00 181+00 182+00 183+00 184+00 185+00 186+00 187+00 188+00 189+00 190+00 191+00 192+00 193+00 194+00 196+00 198+00 200+00 202+00 204

MATCHLINE STA 204+00

DEMOLITION NOTES:

1. REMOVE EQUIPMENT INDICATED ON DEMOLITION PLANS UNLESS OTHERWISE NOTED. REMOVAL INCLUDES ALL ASSOCIATED CONDUIT, JUNCTION BOXES, CONDUCTORS, LIGHT BASES, TRANSFORMERS, CONTROLLERS, DRAIN CONDUITS, SUPPORT STRUCTURES, FOUNDATIONS, AND CONCRETE.
2. REMOVE ALL UNUSED AND DECOMMISIONED CONDUCTORS UNLESS OTHERWISE INDICATED. UNDERGROUND CONDUITS MAY BE ABANDONED IN PLACE UNLESS DISTURBED BY EXCAVATION ASSOCIATED WITH THIS PROJECT.
3. WHEN REMOVING CONDUCTORS FROM EXISTING CONDUIT TO REMAIN, INSTALL A PULL ROPE FOR FUTURE USE.

SHEET NOTES: ⬡

1. EXISTING DME ANTENNA MUST REMAIN FUNCTIONAL UNTIL DIRECTED BY FAA.
2. LOCALIZER EQUIPMENT SHALL REMAIN OPERATIONAL UNTIL NEW EQUIPMENT IS INSTALLED. DISTRIBUTION/COMBINING UNIT SHALL BE RELOCATED TO NEW LOCALIZER ARRAY WHEN EXISTING EQUIPMENT IS REMOVED.
3. LEAVE CONDUIT STUB FROM EXISTING EDGE LIGHT AND CAP, OR INSTALL PLUG IN LIGHT BASE HUB.

0 100 200 300
SCALE IN FEET

DO NOT SCALE FROM THESE DRAWINGS USE DIMENSIONS

PATH: I:\B23400\Dwgs\E\Sheets\G04.dwg
Tue, 03/Oct/06 02:19PM lschneller
TAB: G04

ADDENDUM NUMBER

ATTACHMENT NUMBER

RECORD OF REVISIONS

No.	DATE	DESCRIPTION

MATCHLINE STA 204+00

KETCHIKAN AIRPORT
RUNWAY SAFETY AREA EXPANSION
& RUNWAY OVERLAY
PROJECT NO. 68306

ELECTRICAL DEMOLITION

PREPARED BY: USKH INC.

CHECKED BY: GRH

STATE OF ALASKA 49TH
GARY R. HABLE
EE-10243
REGISTERED PROFESSIONAL ENGINEER
10/4/06

DESIGNED BY: LPS

DRAWN BY: LPS

STATE OF ALASKA
DEPARTMENT OF TRANSPORTATION
& PUBLIC FACILITIES
DESIGN & ENGINEERING SERVICES
DIVISION-SOUTHEAST REGION

ELECTRICAL DEMOLITION

PROJECT DESIGNATION	
AIP NO. 3-02-0144-1606	
STATE	YEAR
ALASKA	2006
SHEET NUMBER	TOTAL SHEETS
G4	131

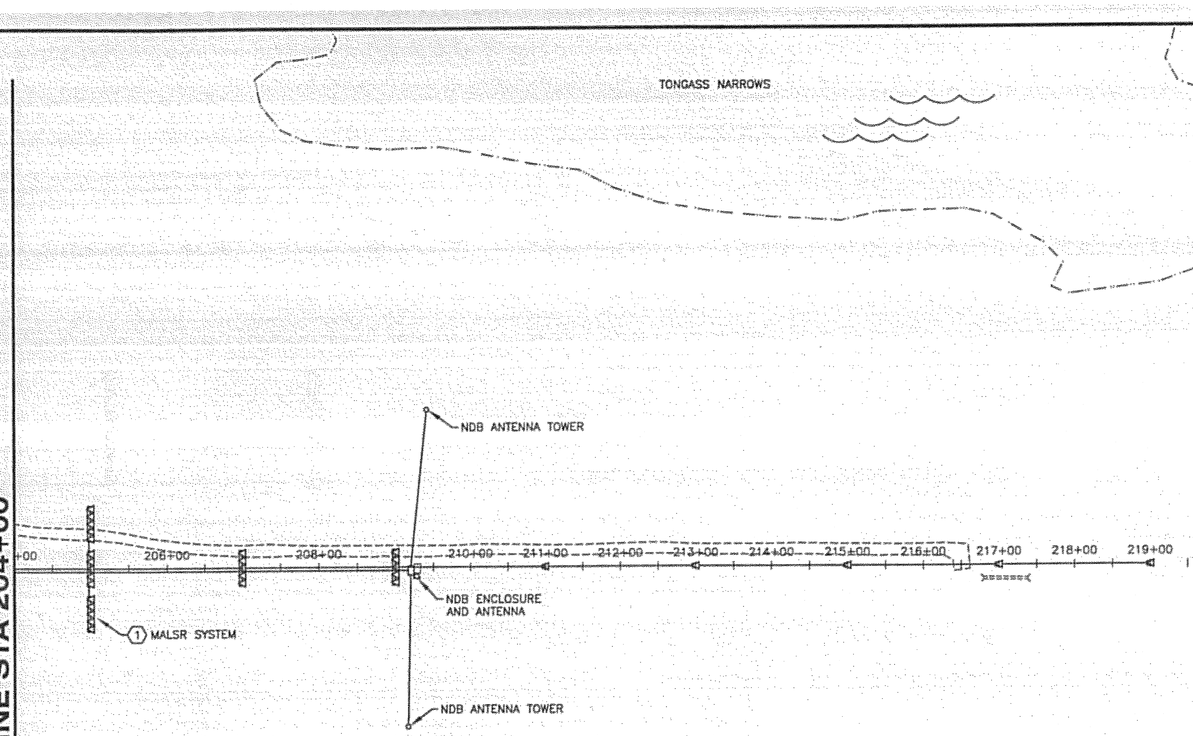

DEMOLITION NOTES:

1. REMOVE EQUIPMENT INDICATED ON DEMOLITION PLANS UNLESS OTHERWISE NOTED. REMOVAL INCLUDES ALL ASSOCIATED CONDUIT, JUNCTION BOXES, CONDUCTORS, LIGHT BASES, TRANSFORMERS, CONTROLLERS, DRAIN CONDUITS, SUPPORT STRUCTURES, FOUNDATIONS, AND CONCRETE.
2. REMOVE ALL UNUSED AND DECOMMISIONED CONDUCTORS UNLESS OTHERWISE INDICATED. UNDERGROUND CONDUITS MAY BE ABANDONED IN PLACE UNLESS DISTURBED BY EXCAVATION ASSOCIATED WITH THIS PROJECT.
3. WHEN REMOVING CONDUCTORS FROM EXISTING CONDUIT TO REMAIN, INSTALL A PULL ROPE FOR FUTURE USE.

SHEET NOTES: ⬡

1. REMOVE EXISTING MALSR SYSTEM. EXISTING TOWER BASE ASSEMBLIES TO BE REUSED. PROTECT AND STORE EQUIPMENT UNTIL REINSTALLED.

0 100 200 300
SCALE IN FEET

DO NOT SCALE FROM THESE DRAWINGS USE DIMENSIONS

PATH: I:\823400\Dwgs\E\Sheets\G05.dwg
Tue, 03/Oct/06 02:19PM tschneller
TAB: G05

ADDENDUM NUMBER

ATTACHMENT NUMBER

RECORD OF REVISIONS

No.	DATE	DESCRIPTION

KETCHIKAN AIRPORT
RUNWAY SAFETY AREA EXPANSION
& RUNWAY OVERLAY
PROJECT NO. 68306

ELECTRICAL DEMOLITION

PREPARED BY: USKH INC.

CHECKED BY: GRH

STATE OF ALASKA 49TH
GARY R. HABLE
EE-10243
REGISTERED PROFESSIONAL ENGINEER
10/4/06

DESIGNED BY: LPS

DRAWN BY: LPS

STATE OF ALASKA
DEPARTMENT OF TRANSPORTATION & PUBLIC FACILITIES
DESIGN & ENGINEERING SERVICES
DIVISION–SOUTHEAST REGION

ELECTRICAL DEMOLITION

PROJECT DESIGNATION	
AIP NO. 3-02-0144-1606	
STATE	YEAR
ALASKA	2006
SHEET NUMBER	TOTAL SHEETS
G5	131

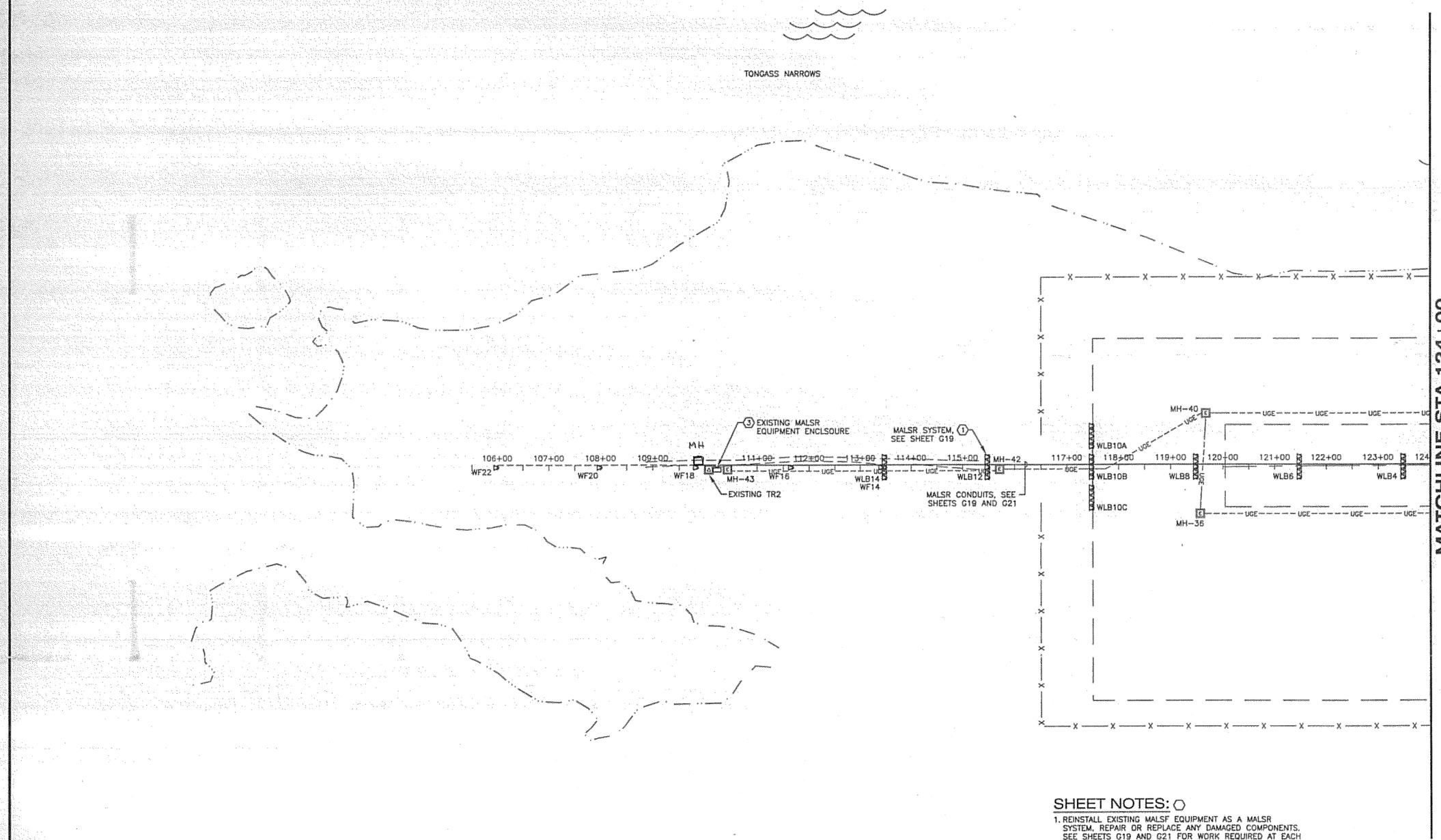

SHEET NOTES:

1. REINSTALL EXISTING MALSF EQUIPMENT AS A MALSR SYSTEM. REPAIR OR REPLACE ANY DAMAGED COMPONENTS. SEE SHEETS G19 AND G21 FOR WORK REQUIRED AT EACH LOCATION.
2. NOT USED.
3. CONNECT NEW CONDUITS TO EXISTING CONDUITS LEAVING EXISTING MALSR BUILDING. CONNECT NEW CONDUCTORS TO EXISTING MALSR CONTROLS.

DO NOT SCALE FROM THESE DRAWINGS USE DIMENSIONS

PATH: I:\823400\Dwgs\E\Sheets\G06.dwg
Tue, 03/Oct/06 02:20PM lschneller
TAB: G06

ADDENDUM NUMBER

ATTACHMENT NUMBER

RECORD OF REVISIONS

No.	DATE	DESCRIPTION

KETCHIKAN AIRPORT
RUNWAY SAFETY AREA EXPANSION
& RUNWAY OVERLAY
PROJECT NO. 68306

ELECTRICAL LAYOUT

PREPARED BY: USKH INC.

CHECKED BY: GRH

STATE OF ALASKA
49TH
GARY R. HABLE
EE-10243
REGISTERED PROFESSIONAL ENGINEER
10/4/06

DESIGNED BY: LPS

DRAWN BY: LPS

STATE OF ALASKA
DEPARTMENT OF TRANSPORTATION
& PUBLIC FACILITIES
DESIGN & ENGINEERING SERVICES
DIVISION-SOUTHEAST REGION

ELECTRICAL LAYOUT

PROJECT DESIGNATION	
AIP NO. 3-02-0144-1606	
STATE	YEAR
ALASKA	2006
SHEET NUMBER	TOTAL SHEETS
G6	131

MATCHLINE STA 124+00

MATCHLINE STA 150+50

TO EXISTING WIND SENSOR

MH-34

MH-33

MH-32

RELOCATED PAPI CONTROLS, SEE SHEET G38

EXISTING TR1

STA 136+65
RELOCATED PAPI, SEE SHEET G37

RELOCATED EDGE LIGHTS

E1

55.4'

55.4'

MH-35

EXISTING TAXIWAY SIGN

E8

E4

(2) EXISTING 2" RMC UNDER TAXIWAY

RELOCATED RUNWAY DISTANCE SIGN, TYP. SEE SHEET G11

S1

S2

125+00 126+00 128+00 129+00 130+00 131+00 132+00 133+00 134+00 135+00 136+00 137+00 138+00 139+00 140+00 141+00 142+00 143+00 144+00 145+00 146+00 147+00 148+00 149+00 150+00

WLB2

E9

197.5' TYP

E12

39.1'

MH-37

MH-38

STA 127+44.0
RELOCATED RUNWAY AND MALSR THRESHOLD LIGHTS, SEE SHEET G11 AND G27

PRIMARY SERVICE CONDUCTORS, SEE 2/G14

NEW GLIDE SLOPE ENCLOSURE AND ANTENNA

JB-18

JB-17

JB-16

COMMUNICATIONS SERVICE CONDUCTORS, SEE 1/G15

TR4

NEW RELOCATED WIND CONE

1 RELOCATED ASOS

SEE ENLARGED PLAN ON SHEET G31

RVR SYSTEM

SHEET NOTES:

1. INSTALL NEW FOUNDATIONS AND POWER SUPPLY FOR ASOS. ASOS RAILS AND EQUIPMENT TO BE RELOCATED BY FAA.
2. EXTEND DRAIN CONDUIT TO DAYLIGHT. FIELD VERIFY EXACT LENGTH. SEE DETAIL 4/G12.
3. EXTEND EXISTING DRAIN CONDUIT TO DAYLIGHT AS REQUIRED. FIELD VERIFY EXACT LENGTH. SEE DETAIL 4/G12.
4. DRILL SIDE OF EXISTING LIGHT BASE AND INSTALL RUBBER GROMMET FOR NEW CONDUIT ENTRY.

0 100 200 300
SCALE IN FEET

DO NOT SCALE FROM THESE DRAWINGS USE DIMENSIONS

PATH: I:\823400\Dwgs\E\Sheets\G07.dwg
Tue, 03/Oct/06 02:20PM lschneller
TAB: G07

ADDENDUM NUMBER

ATTACHMENT NUMBER

RECORD OF REVISIONS

No.	DATE	DESCRIPTION

KETCHIKAN AIRPORT
RUNWAY SAFETY AREA EXPANSION
& RUNWAY OVERLAY
PROJECT NO. 68306

ELECTRICAL LAYOUT

PREPARED BY: USKH INC.

CHECKED BY: GRH

STATE OF ALASKA
49TH
Gary R. Hable
GARY R. HABLE
EE-10243
REGISTERED PROFESSIONAL ENGINEER
10/4/06

DESIGNED BY: LPS

DRAWN BY: LPS

STATE OF ALASKA
DEPARTMENT OF TRANSPORTATION & PUBLIC FACILITIES
DESIGN & ENGINEERING SERVICES
DIVISION-SOUTHEAST REGION

ELECTRICAL LAYOUT

PROJECT DESIGNATION	
AIP NO. 3-02-0144-1606	
STATE	YEAR
ALASKA	2006
SHEET NUMBER	TOTAL SHEETS
G7	131

MATCHLINE STA 150+50

MATCHLINE STA 177+50

MH-22

RELOCATED RUNWAY DISTANCE SIGN, TYP. SEE SHEET G11

S3

S4

151+00 152+00 153+00 154+00 155+00 156+00 157+00 158+00 159+00 160+00 161+00 162+00 163+00 164+00 165+00 166+00 167+00 168+00 169+00 170+00 171+00 172+00 173+00 174+00 175+00 176+00 177+00

JB-15 JB-14 JB-13 JB-12 JB-11 JB-10

UGC

COMMUNICATIONS SERVICE CONDUCTORS, SEE SHEET G15

SHEET NOTES:

1. REMOVE, EXTEND, OR REROUTE EXISTING 6" D.I.P. MANHOLE DRAIN AS REQUIRED FOR CHANGES IN DRAINAGE DITCH. WORK SHALL BE SUBSIDIARY TO ITEM L-110t.
2. NOT USED.
3. EXTEND EXISTING DRAIN CONDUIT TO DAYLIGHT AS REQUIRED. FIELD VERIFY EXACT LENGTH. SEE DETAIL 4/G12.
4. DRILL SIDE OF EXISTING LIGHT BASE AND INSTALL RUBBER GROMMET FOR NEW CONDUIT ENTRY.

0 100 200 300
SCALE IN FEET

DO NOT SCALE FROM THESE DRAWINGS USE DIMENSIONS

PATH: I:\823400\Dwgs\E\Sheets\G08.dwg
Tue. 03/Oct/06 02:20PM lschneller
TAB: G08

ADDENDUM NUMBER

ATTACHMENT NUMBER

RECORD OF REVISIONS

No.	DATE	DESCRIPTION

KETCHIKAN AIRPORT
RUNWAY SAFETY AREA EXPANSION
& RUNWAY OVERLAY
PROJECT NO. 68306

ELECTRICAL LAYOUT

PREPARED BY: USKH INC.

CHECKED BY: GRH

STATE OF ALASKA 49TH GARY R. HABLE REGISTERED PROFESSIONAL ENGINEER
GARY R. HABLE
EE-10243
10/4/06

DESIGNED BY: LPS

DRAWN BY: LPS

STATE OF ALASKA
DEPARTMENT OF TRANSPORTATION & PUBLIC FACILITIES
DESIGN & ENGINEERING SERVICES
DIVISION-SOUTHEAST REGION

ELECTRICAL LAYOUT

PROJECT DESIGNATION	
AIP NO. 3-02-0144-1606	
STATE	YEAR
ALASKA	2006
SHEET NUMBER	TOTAL SHEETS
G8	131

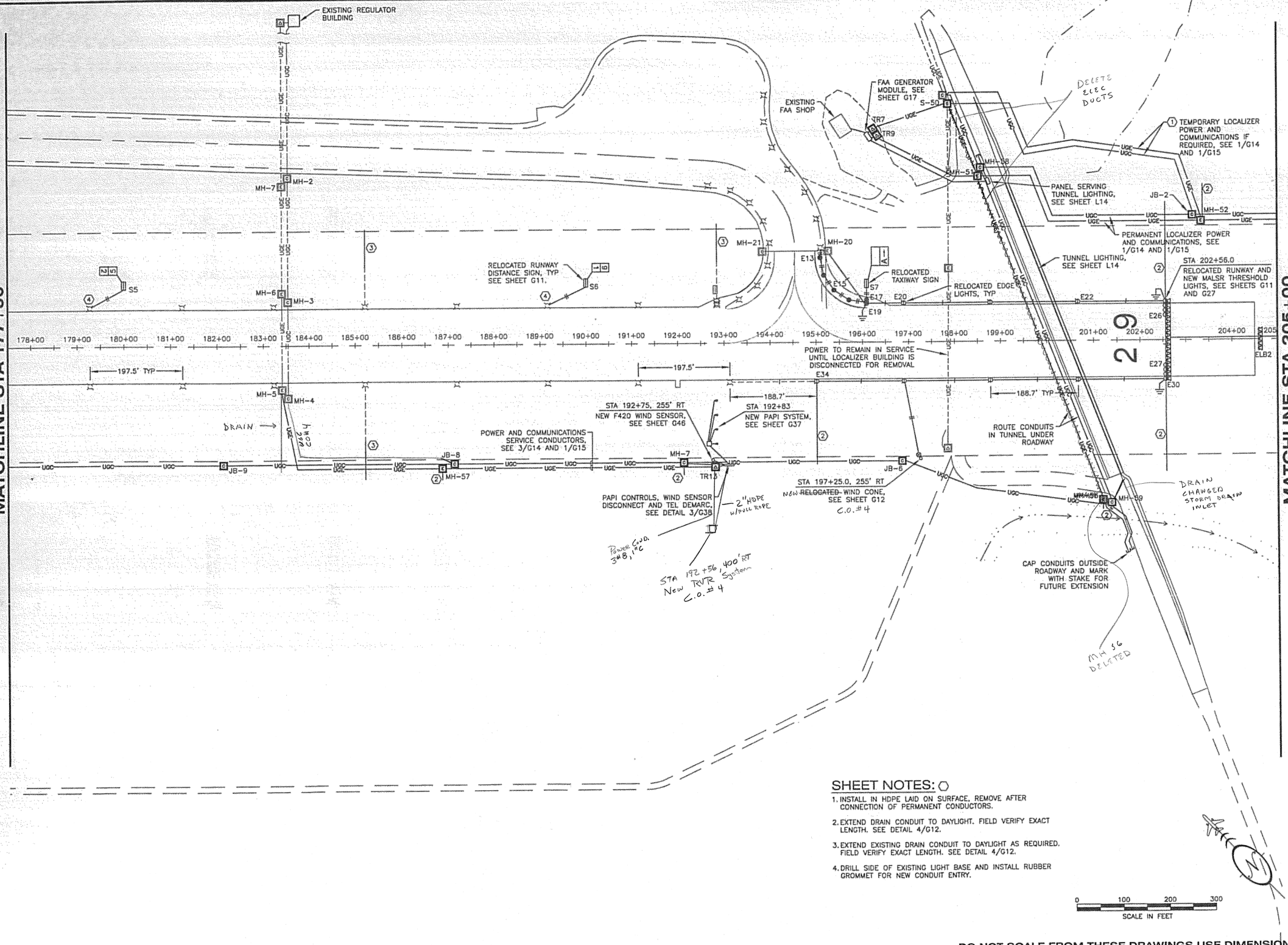

SHEET NOTES:

1. INSTALL IN HDPE LAID ON SURFACE. REMOVE AFTER CONNECTION OF PERMANENT CONDUCTORS.
2. EXTEND DRAIN CONDUIT TO DAYLIGHT. FIELD VERIFY EXACT LENGTH. SEE DETAIL 4/G12.
3. EXTEND EXISTING DRAIN CONDUIT TO DAYLIGHT AS REQUIRED. FIELD VERIFY EXACT LENGTH. SEE DETAIL 4/G12.
4. DRILL SIDE OF EXISTING LIGHT BASE AND INSTALL RUBBER GROMMET FOR NEW CONDUIT ENTRY.

DO NOT SCALE FROM THESE DRAWINGS USE DIMENSIONS

PATH: I:\823400\Dwgs\E\Sheets\G09.dwg

Tue, 03/Oct/06 02:20PM Ischneller

TAB: G09

ADDENDUM NUMBER

ATTACHMENT NUMBER

RECORD OF REVISIONS

No.	DATE	DESCRIPTION

KETCHIKAN AIRPORT
RUNWAY SAFETY AREA EXPANSION
& RUNWAY OVERLAY
PROJECT NO. 68306

ELECTRICAL LAYOUT

PREPARED BY: USKH INC.

CHECKED BY: GRH

STATE OF ALASKA 49TH GARY R. HABLE EE-10243 REGISTERED PROFESSIONAL ENGINEER

10/4/06

DESIGNED BY: LPS

DRAWN BY: LPS

STATE OF ALASKA
DEPARTMENT OF TRANSPORTATION & PUBLIC FACILITIES
DESIGN & ENGINEERING SERVICES DIVISION–SOUTHEAST REGION

ELECTRICAL LAYOUT

PROJECT DESIGNATION	
AIP NO. 3-02-0144-1606	
STATE	YEAR
ALASKA	2006
SHEET NUMBER	TOTAL SHEETS
G9	131

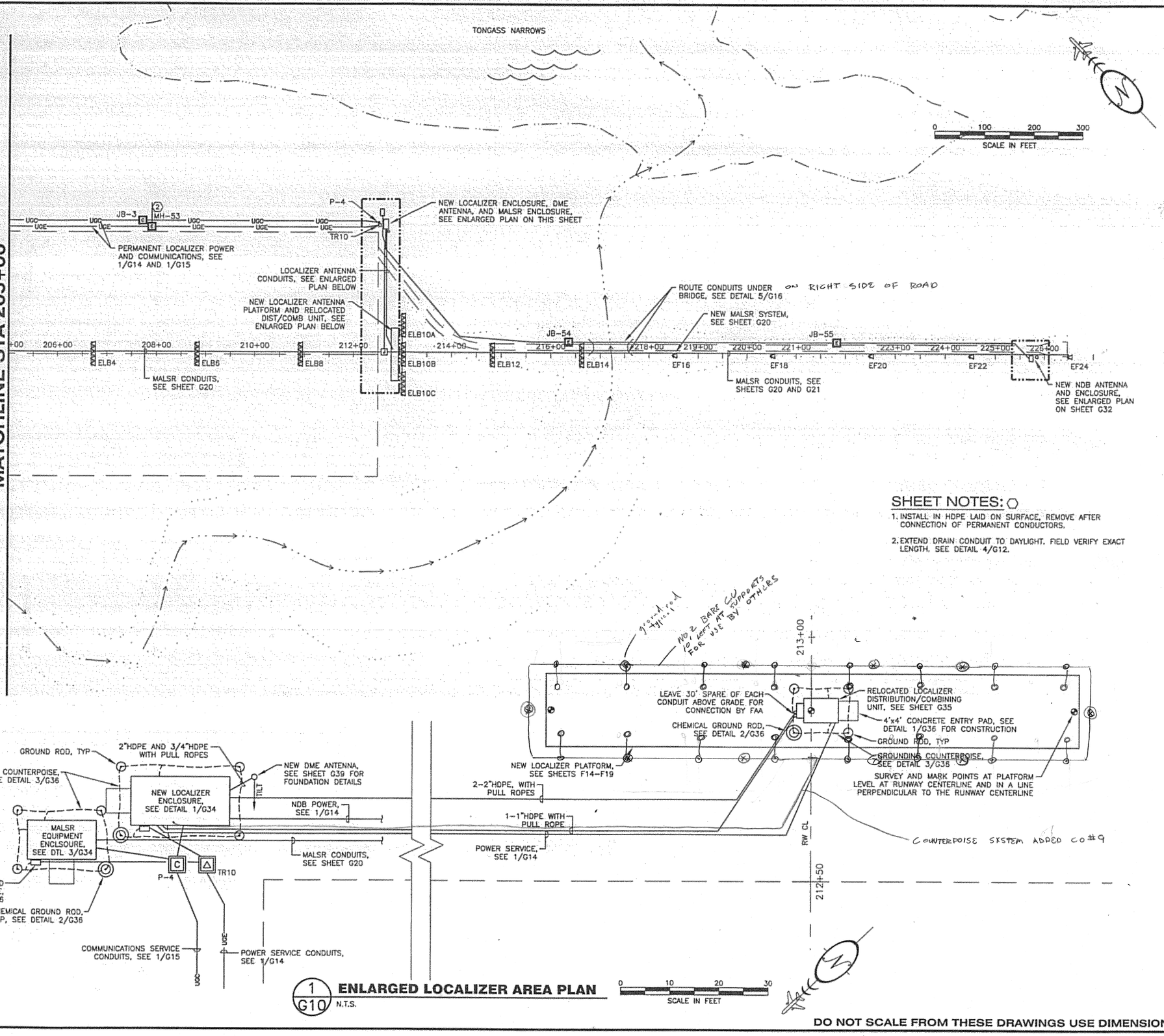

SHEET NOTES:

1. INSTALL IN HDPE LAID ON SURFACE, REMOVE AFTER CONNECTION OF PERMANENT CONDUCTORS.
2. EXTEND DRAIN CONDUIT TO DAYLIGHT. FIELD VERIFY EXACT LENGTH. SEE DETAIL 4/G12.

1/G10 **ENLARGED LOCALIZER AREA PLAN** N.T.S.

0 10 20 30
SCALE IN FEET

DO NOT SCALE FROM THESE DRAWINGS USE DIMENSIONS

PATH: I:\823400\Dwgs\E\Sheets\G10.dwg
Tue, 03/Oct/06 02:21PM lschneller
TAB: G10

ADDENDUM NUMBER
ATTACHMENT NUMBER

RECORD OF REVISIONS

No.	DATE	DESCRIPTION

KETCHIKAN AIRPORT
RUNWAY SAFETY AREA EXPANSION & RUNWAY OVERLAY
PROJECT NO. 68306

ELECTRICAL LAYOUT

PREPARED BY: USKH INC.

CHECKED BY: GRH

STATE OF ALASKA 49TH GARY R. HABLE EE-10243 REGISTERED PROFESSIONAL ENGINEER 10/4/06

DESIGNED BY: LPS

DRAWN BY: LPS

STATE OF ALASKA
DEPARTMENT OF TRANSPORTATION & PUBLIC FACILITIES
DESIGN & ENGINEERING SERVICES DIVISION-SOUTHEAST REGION

ELECTRICAL LAYOUT

PROJECT DESIGNATION
AIP NO. 3-02-0144-1606

STATE	YEAR
ALASKA	2006
SHEET NUMBER	TOTAL SHEETS
G10	131

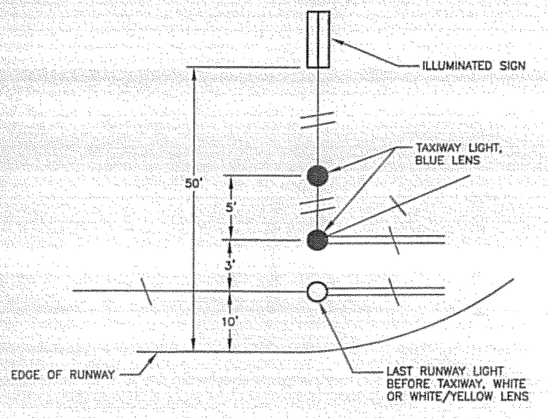

3 G11 **TAXIWAY INTERSECTION DETAIL**
N.T.S.

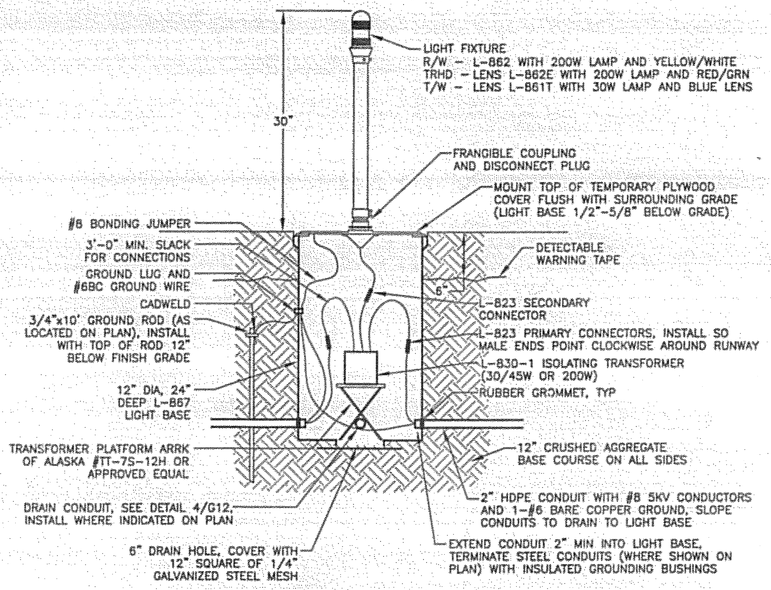

2 G11 **BASE MOUNTED LIGHT DETAIL**
N.T.S.

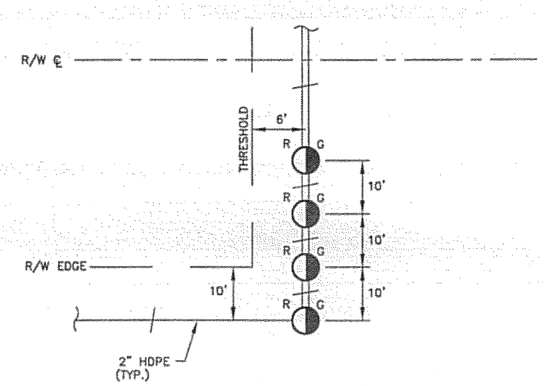

1 G11 **THRESHOLD LIGHTING DETAIL**
N.T.S.

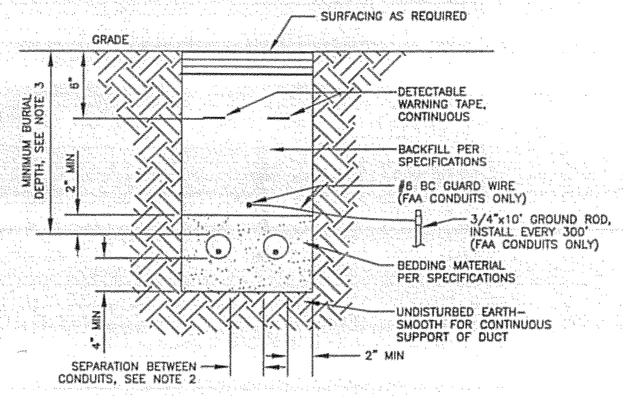

NOTES:

1. WIDTH OF TRENCH AND NUMBER OF CONDUITS PER TRENCH DETERMINED IN FIELD (2 SHOWN)
2. SEPARATION BETWEEN CONDUITS SHALL BE AS FOLLOWS:
   - -CONDUITS OF SAME SYSTEM - 2"
   - -AIRPORT LIGHTING AND FAA CONDUITS - 12" MIN
   - -PRIMARY POWER AND ANY OTHER CONDUIT - 18" MIN
   - -TELECOM SERVICE AND ANY OTHER CONDUIT - 18" MIN
3. MINIMUM BURIAL DEPTH SHALL BE AS FOLLOWS:
   - -AIRPORT LIGHTING CONDUITS - 18"
   - -FAA CONDUITS - 24"
   - -PRIMARY POWER - 36"
   - -TELECOM SERVICE - 36"

5 G11 **TYPICAL TRENCH DETAIL**
N.T.S.

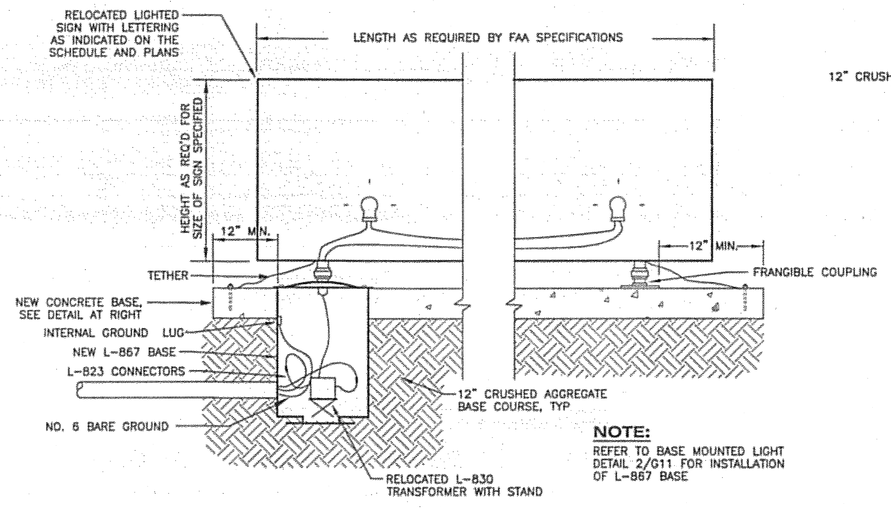

NOTE:
REFER TO BASE MOUNTED LIGHT DETAIL 2/G11 FOR INSTALLATION OF L-867 BASE

SIDE VIEW

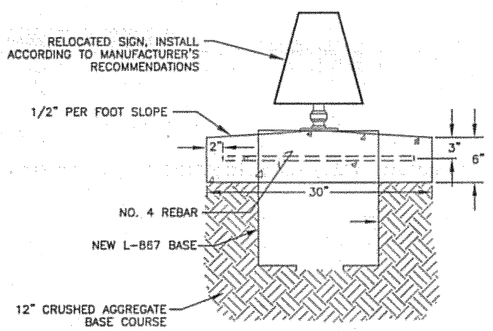

END VIEW

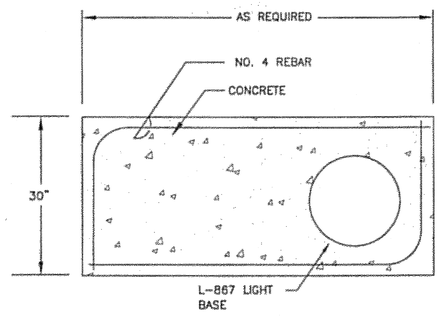

TOP VIEW

4 G11 **ILLUMINATED SIGN DETAILS**
N.T.S.

DO NOT SCALE FROM THESE DRAWINGS USE DIMENSIONS

PATH: I:\823400\Dwgs\E\Sheets\G11.dwg
Tue, 03/Oct/06 02:18PM lschneller
TAB: G11

ADDENDUM NUMBER
ATTACHMENT NUMBER

RECORD OF REVISIONS

No.	DATE	DESCRIPTION

KETCHIKAN AIRPORT
RUNWAY SAFETY AREA EXPANSION & RUNWAY OVERLAY
PROJECT NO. 68306

ELECTRICAL & LIGHTING DETAILS

PREPARED BY: USKH INC.
CHECKED BY: GRH

STATE OF ALASKA 49TH GARY R. HABLE EE-10243 REGISTERED PROFESSIONAL ENGINEER 10/4/06

DESIGNED BY: LPS
DRAWN BY: LPS

STATE OF ALASKA
DEPARTMENT OF TRANSPORTATION & PUBLIC FACILITIES
DESIGN & ENGINEERING SERVICES DIVISION-SOUTHEAST REGION

ELECTRICAL & LIGHTING DETAILS

PROJECT DESIGNATION	
AIP NO. 3-02-0144-1606	
STATE	YEAR
ALASKA	2006
SHEET NUMBER	TOTAL SHEETS
G11	131

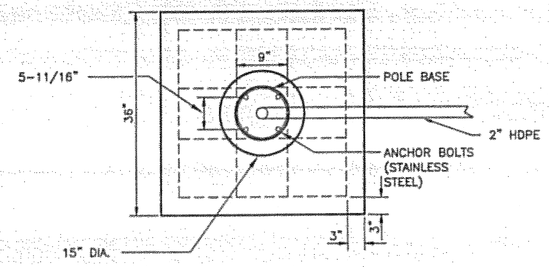

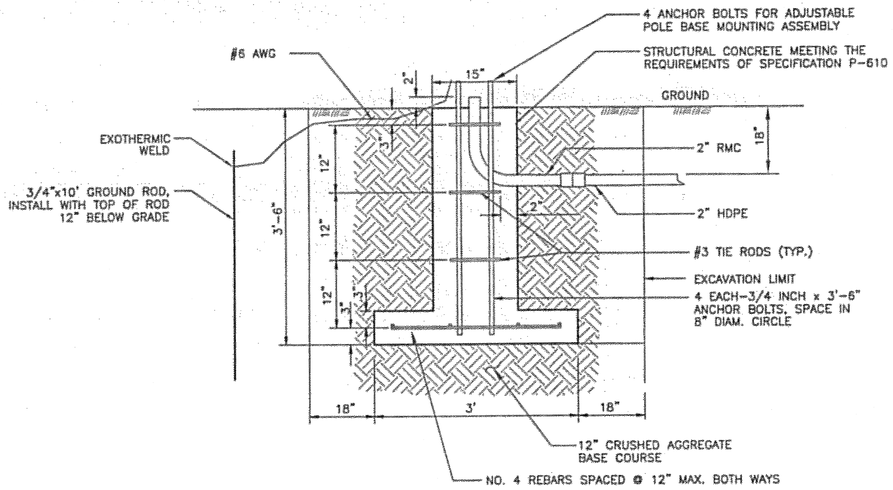

2 G12 WIND CONE FOUNDATION DETAILS
N.T.S.

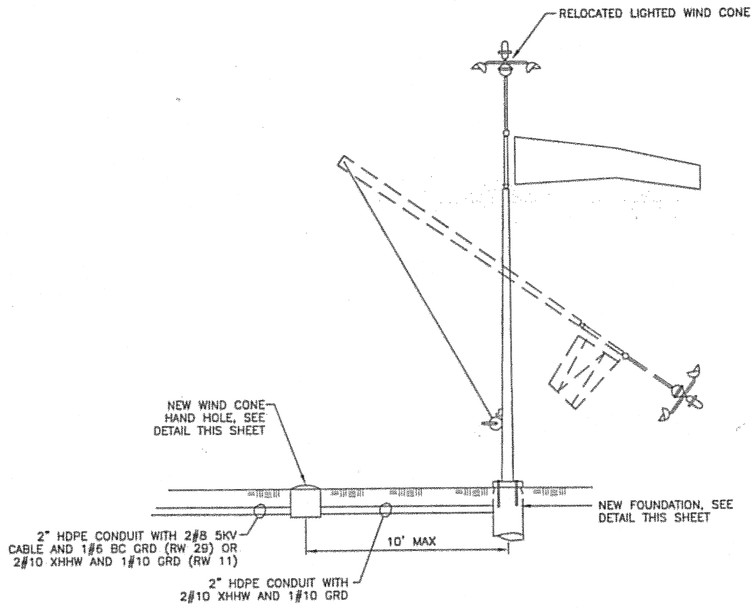

FAA TYPE L-807, STYLE-I, SIZE-1

1 G12 LIGHTED WIND CONE ASSEMBLY
N.T.S.

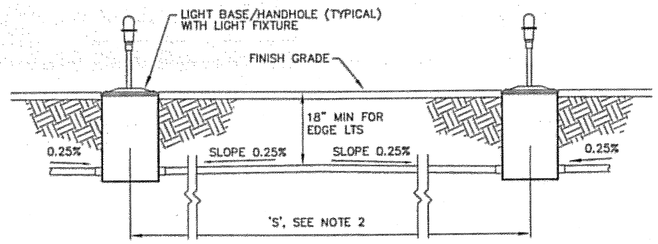

NOTES:

1. CONDUIT SHALL BE INSTALLED WITH CROWN TO DRAIN TO LIGHT BASES AS SHOWN.
2. IF 'S' IS LESS THAN 20', OR IF 0.25% SLOPE CAN BE MAINTAINED IN ONE DIRECTION DUE TO SLOPE OF GRADE, LAY CONDUIT STRAIGHT WITHOUT CROWN BETWEEN BASES/HANDHOLES.
3. A THIRD HUB FOR A CONDUIT DRAIN SHALL BE PROVIDED WHERE SHOWN ON PLANS.

5 G12 TYPICAL INTERCONNECTION DETAIL
N.T.S.

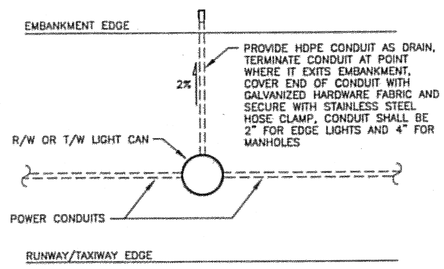

4 G12 DRAIN CONDUIT DETAIL
N.T.S.

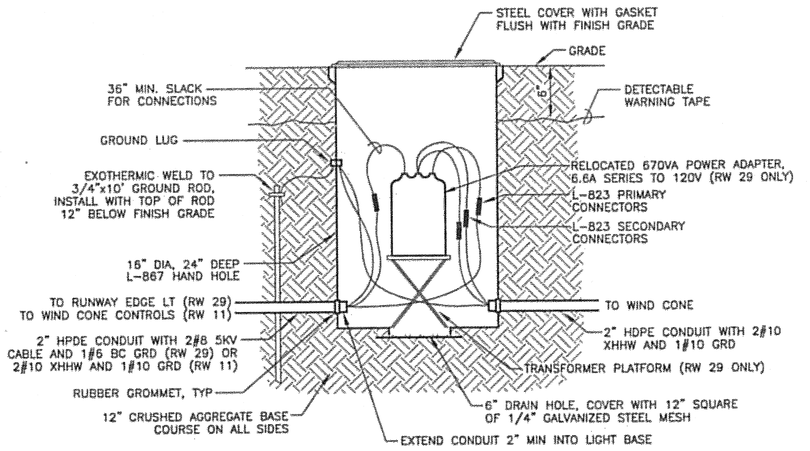

NOTES:

1. AT RW 11, ROUTE #10 CONDUCTORS STRAIGHT THROUGH HANDHOLE WITH NO SPLICES. LEAVE 36" SLACK CONDUCTOR COILED IN HANDHOLE.
2. AT RW 11, RELOCATE EXISTING WIND CONE DISCONNECT AND CONTROLLER (WITH PHOTOCELL) TO NEW SUPPORT STRUCTURE AS SHOWN ON G31. RECONNECT EXISTING CONTROLLER TO MATCH EXISTING CONFIGURATION.

3 G12 WIND CONE HAND HOLE
N.T.S.

DO NOT SCALE FROM THESE DRAWINGS USE DIMENSIONS

PATH: I:\823400\Dwgs\E\Sheets\G12.dwg
Tue, 03/Oct/06 02:21PM lschneller
TAB: G12

ADDENDUM NUMBER
ATTACHMENT NUMBER

RECORD OF REVISIONS

No.	DATE	DESCRIPTION

KETCHIKAN AIRPORT
RUNWAY SAFETY AREA EXPANSION
& RUNWAY OVERLAY
PROJECT NO. 68306

ELECTRICAL & LIGHTING DETAILS

PREPARED BY: USKH INC.

CHECKED BY: GRH

STATE OF ALASKA 49TH GARY R. HABLE EE-10243 REGISTERED PROFESSIONAL ENGINEER
10/4/06

DESIGNED BY: LPS

DRAWN BY: LPS

STATE OF ALASKA
DEPARTMENT OF TRANSPORTATION & PUBLIC FACILITIES
DESIGN & ENGINEERING SERVICES DIVISION-SOUTHEAST REGION

ELECTRICAL & LIGHTING DETAILS

PROJECT DESIGNATION	
AIP NO. 3-02-0144-1606	
STATE	YEAR
ALASKA	2006
SHEET NUMBER	TOTAL SHEETS
G12	131

SIGN SCHEDULE

NUM	SIDE	PANEL	LEGEND	TYPE	LEGEND COLOR	FACE COLOR	STATION	OFFSET	SIZE	STYLE	CLASS	MODE	REMARKS
S1	1	1	6	L-858B	WHITE	BLACK	140+00.0	134.1 LT	–	–	–	–	REINSTALL
	2	1	1	L-858B	WHITE	BLACK							EXISTING SIGN
S2	1	1	5	L-858B	WHITE	BLACK	150+00.0	134.1 LT	–	–	–	–	REINSTALL
	2	1	2	L-858B	WHITE	BLACK							EXISTING SIGN
S3	1	1	4	L-858B	WHITE	BLACK	160+00.0	134.1 LT	–	–	–	–	REINSTALL
	2	1	3	L-858B	WHITE	BLACK							EXISTING SIGN
S4	1	1	3	L-858B	WHITE	BLACK	170+00.0	134.1 LT	–	–	–	–	REINSTALL
	2	1	4	L-858B	WHITE	BLACK							EXISTING SIGN
S5	1	1	2	L-858B	WHITE	BLACK	180+00.0	134.1 LT	–	–	–	–	REINSTALL
	2	1	5	L-858B	WHITE	BLACK							EXISTING SIGN
S6	1	1	1	L-858B	WHITE	BLACK	190+00.0	134.1 LT	–	–	–	–	REINSTALL
	2	1	6	L-858B	WHITE	BLACK							EXISTING SIGN
S7	1	–	–	–	–	–	196+09.8	119.2 LT	5	–	–	–	REINSTALL EXISTING SIGN WITH NEW PANELS, FIELD VERIFY SIZE PRIOR TO ORDERING PANELS
	2	1	A	L-858Y	BLACK	YELLOW							

STATION AND OFFSET INDICATED IS AT CENTER OF SIGN DEPTH ON END NEAREST TO EDGE OF TAXIWAY UNLESS OTHERWISE INDICATED.

NOTE: TRANSFORMERS SHALL BE SIZED AS RECOMMENDED BY THE SIGN MANUFACTURER.

TAXIWAY EDGE LIGHT SCHEDULE

NUM	LENS COLOR	TYPE	WATTAGE LAMP	WATTAGE XFMR	STATION	OFFSET	REMARKS
E1	B	L-861T	30	30/45	127+49.2	203.8 LT	RELOCATED
E2	B	L-861T	30	30/45	127+49.2	148.4 LT	RELOCATED
E3	B	L-861T	30	30/45	127+49.2	93.0 LT	RELOCATED
E4	B	L-861T	30	30/45	127+49.24	88.0 LT	RELOCATED
E5	G/R	L-862E	200	200	127+44.0	85.0 LT	RELOCATED
E6	G/R	L-862E	200	200	127+44.0	75.0 LT	RELOCATED
E7	G/R	L-862E	200	200	127+44 .0	65.0 LT	RELOCATED
E8	G/R	L-862E	200	200	127+44.0	55.0 LT	RELOCATED
E9	G/R	L-862E	200	200	127+44.0	55.0 RT	RELOCATED
E10	G/R	L-862E	200	200	127+44.0	65.0 RT	RELOCATED
E11	G/R	L-862E	200	200	127+44.0	75.0 RT	RELOCATED
E12	G/R	L-862E	200	200	127+44.0	85.0 RT	RELOCATED
E13	B	L-861T	30	30/45	195+09.8	185.0 LT	RELOCATED
E14	B	L-861T	30	30/45	195+17.4	146.7 LT	RELOCATED
E15	B	L-861T	30	30/45	195+39.1	114.3 LT	RELOCATED
E16	B	L-861T	30	30/45	195+71.5	92.6 LT	NEW
E17	B	L-861T	30	30/45	196+09.8	93.0 LT	NEW
E18	B	L-861T	30	30/45	196+09.8	88.0 LT	NEW
E19	Y/W	L-862	200	200	196+09.8	85.0 LT	RELOCATED
E20	Y/W	L-862	200	200	196+89.9	85.0 LT	RELOCATED
E21	Y/W	L-862	200	200	198+78.6	85.0 LT	RELOCATED
E22	Y/W	L-862	200	200	200+67.3	85.0 LT	RELOCATED
E23	R/G	L-862E	200	200	202+56.0	85.0 LT	RELOCATED
E24	R/G	L-862E	200	200	202+56.0	75.0 LT	RELOCATED
E25	R/G	L-862E	200	200	202+56.0	65.0 LT	RELOCATED
E26	R/G	L-862E	200	200	202+56.0	55.0 LT	RELOCATED
E27	R/G	L-862E	200	200	202+56.0	55.0 RT	RELOCATED
E28	R/G	L-862E	200	200	202+56.0	65.0 RT	RELOCATED
E29	R/G	L-862E	200	200	202+56.0	75.0 RT	RELOCATED
E30	R/G	L-862E	200	200	202+56.0	85.0 RT	RELOCATED
E31	Y/W	L-862	200	200	200+67.3	85.0 RT	RELOCATED
E32	Y/W	L-862	200	200	198+78.6	85.0 RT	RELOCATED
E33	Y/W	L-862	200	200	196+89.9	85.0 RT	RELOCATED
E34	Y/W	L-862	200	200	195+01.2	85.0 RT	NEW

NOTE: REUSE EXISTING FIXTURE, SUPPORT COLUMN, BASEPLATE, AND TRANSFORMER FOR FIXTURES INDICATED AS RELOCATED

PATH: I:\823400\Dwgs\E\Sheets\G13.dwg

Tue, 03/Oct/06 02:21PM lschneller

TAB: G09

ADDENDUM NUMBER

ATTACHMENT NUMBER

RECORD OF REVISIONS

No.	DATE	DESCRIPTION

KETCHIKAN AIRPORT
RUNWAY SAFETY AREA EXPANSION
& RUNWAY OVERLAY
PROJECT NO. 68306

LIGHTING SCHEDULES

PREPARED BY: USKH INC.

CHECKED BY: GRH

STATE OF ALASKA
49TH
GARY R. HABLE
EE-10243
REGISTERED PROFESSIONAL ENGINEER
10/4/06

DESIGNED BY: LPS

DRAWN BY: LPS

STATE OF ALASKA
DEPARTMENT OF TRANSPORTATION
& PUBLIC FACILITIES
DESIGN & ENGINEERING SERVICES
DIVISION-SOUTHEAST REGION

LIGHTING SCHEDULES

PROJECT DESIGNATION

AIP NO. 3-02-0144-1606

STATE	YEAR
ALASKA	2006
SHEET NUMBER	TOTAL SHEETS
G13	131

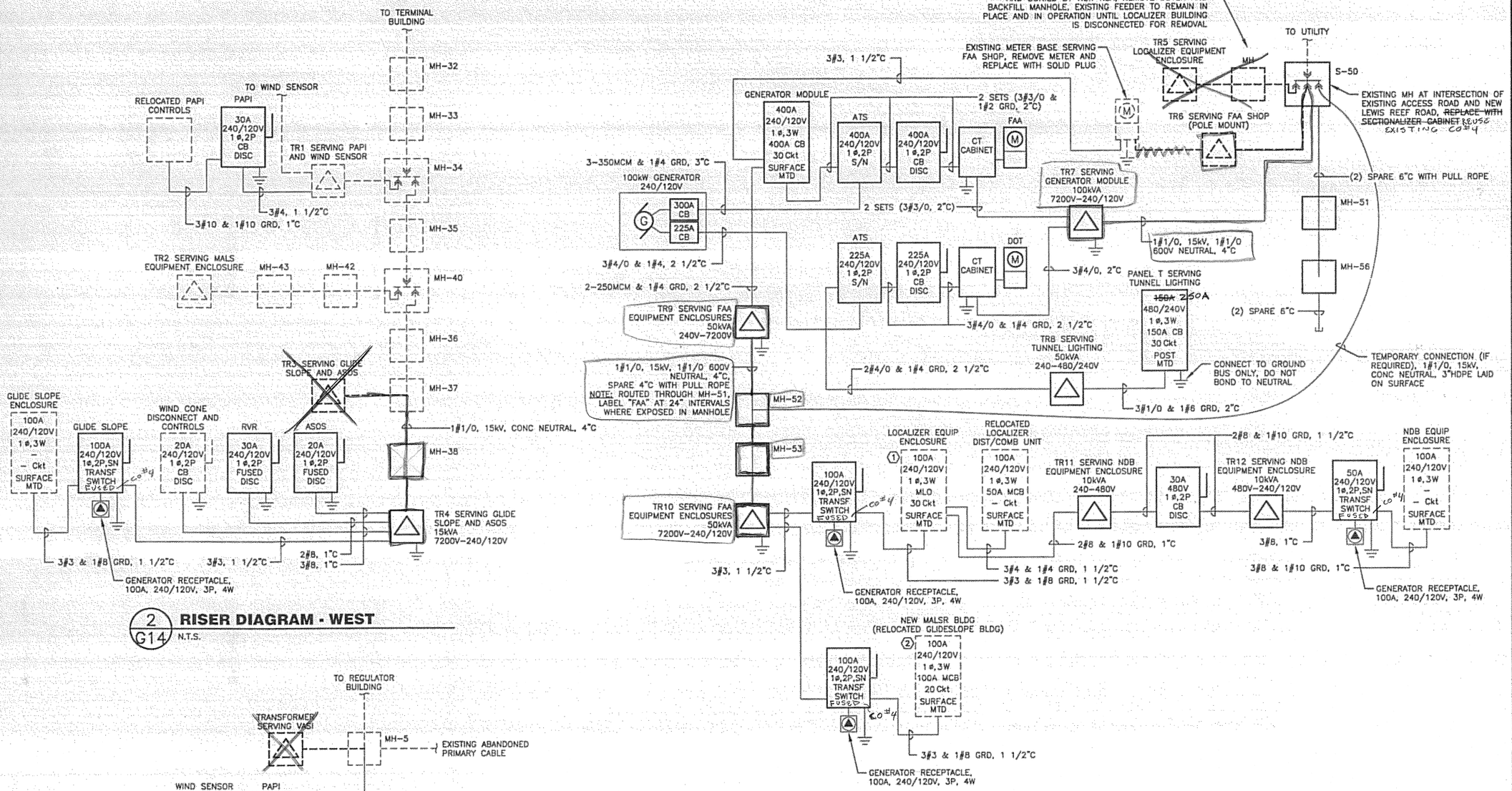

2 G14 RISER DIAGRAM - WEST

N.T.S.

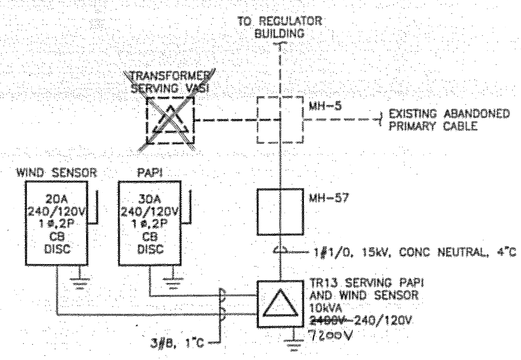

3 G14 RISER DIAGRAM - SOUTH

N.T.S.

1 G14 RISER DIAGRAM - EAST

N.T.S.

NOTES:

1. UNDERGROUND CONDUITS SHALL BE HDPE UNLESS OTHERWISE INDICATED ON THE PLANS. TRANSITION TO PVC COATED RMC PRIOR TO THE ELBOW OR 2' OUTSIDE STRUCTURE FOOTPRINT, WHICHEVER COMES FIRST, FOR STUB-UPS TO EQUIPMENT OR STRUCTURES.
2. COORDINATE ALL CONNECTIONS, DISCONNECTIONS, AND OTHER WORK ASSOCIATED WITH THE EXISTING PRIMARY ELECTRIC LINES ON THE EAST END OF THE RUNWAY WITH KETCHIKAN PUBLIC UTILITIES.

PANEL NOTES: ⬡

1. PROVIDE (2) 50A/2P CIRCUIT BREAKERS TO SERVE THE DIST/COMB UNIT AND TR11.
2. PROVIDE 80A/2P CIRCUIT BREAKER TO SERVE MALSR SYSTEM.

RISER DIAGRAM LEGEND

- EXISTING TO REMAIN OR NEW PROVIDED BY OTHERS
- EXISTING TO BE REMOVED
- NEW WORK
- ⏚ INDICATES CONNECTION TO GROUND RING (WHERE PRESENT) OR (2) 3/4"x10' GROUND RODS CONNECTED BY #6BC (WHERE GROUND RING IS NOT PRESENT)

PATH: I:\823400\Dwgs\E\Sheets\G14-R1.dwg
Tue, 03/Oct/06 02:21PM lschneller
TAB: G12

ADDENDUM NUMBER

ATTACHMENT NUMBER

RECORD OF REVISIONS

No.	DATE	DESCRIPTION

KETCHIKAN AIRPORT
RUNWAY SAFETY AREA EXPANSION
& RUNWAY OVERLAY
PROJECT NO. 68306

ELECTRICAL RISER DIAGRAMS

PREPARED BY: USKH INC.

CHECKED BY: GRH

STATE OF ALASKA 49TH GARY R. HABLE EE-10243 REGISTERED PROFESSIONAL ENGINEER 10/4/06

DESIGNED BY: LPS

DRAWN BY: LPS

STATE OF ALASKA
DEPARTMENT OF TRANSPORTATION & PUBLIC FACILITIES
DESIGN & ENGINEERING SERVICES DIVISION–SOUTHEAST REGION

ELECTRICAL RISER DIAGRAMS

PROJECT DESIGNATION
AIP NO. 3-02-0144-1606

STATE	YEAR
ALASKA	2006
SHEET NUMBER	TOTAL SHEETS
G14	131

TRANSFORMER SCHEDULE

DES.	ACTION	TYPE	KVA	TEMP RISE	PRIMARY VOLTAGE	PRIMARY PHASE	PRIMARY WIRE	SECONDARY VOLTAGE	SECONDARY PHASE	SECONDARY WIRE	NOTES
TR1	REMAIN	LF	15	–	7200	1	2	240/120	1	3	
TR2	REMAIN	LF	25	–	7200	1	2	240/120	1	3	
TR3	REMOVE	LF	15	–	7200	1	2	240/120	1	3	3
TR4	NEW	LF	15	150	7200	1	2	240/120	1	3	
TR5	REMOVE	LF	–	–	7200	1	2	240/120	1	3	4,5
TR6	REMOVE	LF	–	–	7200	1	2	240/120	1	3	6
TR7	NEW	LF	100	150	7200	1	2	240/120	1	3	
TR8	NEW	DT	50	150	240	1	2	480/240	1	3	2,7
TR9	NEW	LF	50	150	240	1	2	7200	1	2	
TR10	NEW	LF	50	150	7200	1	2	240/120	1	3	
TR11	NEW	DT	10	150	240	1	2	480	1	2	1
TR12	NEW	DT	10	150	480	1	2	240/120	1	3	7
TR13	NEW	LF	10	150	~~2400~~ 7200	1	2	240/120	1	3	8

ABBREVIATIONS:
CR = CAST RESIN
DT = DRY TYPE
EC = ENCAPSULATED CORE
LF = LIQUID FILLED

TRANSFORMER SCHEDULE NOTES:
1. PROVIDE WITH MANUFACTURER'S WALL MOUNTING BRACKET.
2. FLOOR MOUNT ON VIBRATION ISOLATORS.
3. REMOVE TRANSFORMER AND PAD. TURN TRANSFORMER OVER TO FAA.
4. REMOVE TRANSFORMER AND PAD. TURN TRANSFORMER OVER TO KPU.
5. TRANSFORMER MUST REMAIN IN SERVICE UNTIL EXISTING DME IS REMOVED.
6. POLE MOUNT TRANSFORMER. REMOVE TRANSFORMER AND PRIMARY RISER. TURN TRANSFORMER OVER TO KPU.
7. PROVIDE TRANSFORMER WITH MULTIPLE TAPS AND CONNECT APPROPRIATE TAP TO PROVIDE RATED VOLTAGE ON SECONDARY SIDE OF TRANSFORMER.
8. EXTEND TRANSFORMER PAD 6" ABOVE GRADE INSTEAD OF THE 12" SHOWN IN DETAIL 3/G16. 30" MAXIMUM HEIGHT TO TOP OF TRANSFORMER.

SECTIONALIZER CABINET SCHEDULE

NUM	VOLTAGE kV	VOLTAGE PHASE	RATING (A)	STATION	OFFSET	REMARKS
S-50	15	3	200	197+88.3	519.1 LT	

NOTE: LOCATIONS ARE APPROXIMATE, FIELD LOCATE SECTIONALIZER CABINETS

HANDHOLE AND JUNCTION BOX SCHEDULE

NUM	TYPE	STATION	OFFSET	REMARKS
JB-2	II	203+15.7	273.4 LT	
JB-3	II	207+71.0	273.4 LT	
JB-6	II	196+84.5	259.9 RT	
JB-8	II	187+12.8	259.9 RT	
JB-9	II	182+12.8	259.9 RT	
JB-10	II	177+12.8	259.9 RT	
JB-11	II	172+12.8	259.9 RT	
JB-12	II	167+12.8	259.9 RT	
JB-13	II	162+12.8	259.9 RT	
JB-14	II	157+12.8	259.9 RT	
JB-15	II	152+12.8	259.9 RT	
JB-16	II	147+12.8	259.9 RT	
JB-17	II	142+12.8	259.9 RT	
JB-18	II	137+12.8	259.9 RT	
JB-54	II	216+36.0	27.2 LT	PAID UNDER L-135
JB-55	II	221+82.4	27.2 LT	PAID UNDER L-135

NOTE: LOCATIONS ARE APPROXIMATE, FIELD LOCATE HANDHOLES AND JUNCTION BOXES JUNCTION BOXES REQUIRED FOR FAA APPROACH LIGHTING SYSTEMS ARE NOT SCHEDULED, SEE DOT STANDARD DETAIL L-23.01 FOR JUNCTION BOX INSTALLATION

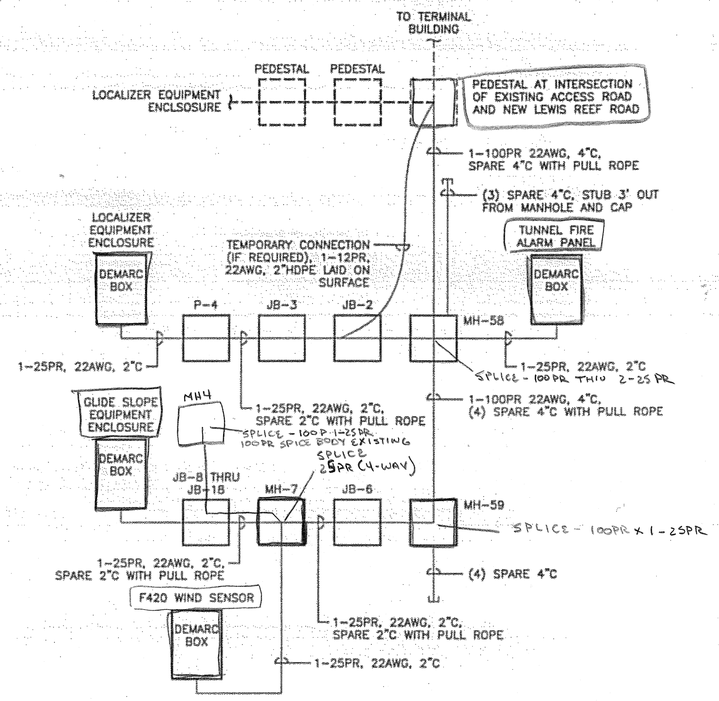

1/G15 **COMMUNICATIONS RISER DIAGRAM** N.T.S.

RISER DIAGRAM LEGEND
- – – – – – EXISTING TO REMAIN
- – – – – – EXISTING TO BE REMOVED
- ——— NEW WORK

NOTE:
UNDERGROUND CONDUITS SHALL BE HDPE UNLESS OTHERWISE INDICATED ON THE PLANS. TRANSITION TO PVC COATED RMC PRIOR TO THE ELBOW OR 2' OUTSIDE STRUCTURE FOOTPRINT, WHICHEVER COMES FIRST, FOR STUB-UPS TO EQUIPMENT OR STRUCTURES.

COMMUNICATIONS PEDESTAL SCHEDULE

NUM	SIZE (IN)	STATION	OFFSET	REMARKS
P-4	8	212+53.0	267.6 LT	

NOTE: LOCATIONS ARE APPROXIMATE, FIELD LOCATE PEDESTALS

ELECTRICAL MANHOLE SCHEDULE

NUM	LOAD RATING	INT DIM (MIN) LxWxH (FT)	STATION	OFFSET	REMARKS
MH-7	AIRCRAFT	4x6x4	192+12.8	259.9 RT	
MH-38	AIRCRAFT	3x4x3	136+98.2	91.0 RT	
MH-51	H-20	4x6.5x6	198+67.1	351.4 LT	
MH-52	AIRCRAFT	3x4x3	203+34.3	260.7 LT	
MH-53	AIRCRAFT	3x4x3	207+89.6	260.7 LT	
MH-56	H-20	4x6.5x6	201+33.9	348.9 RT	
MH-57	AIRCRAFT	3x4x3	186+86.5	270.0 RT	
MH-58	H-20	4.5x8.5x6.5	198+69.6	360.4 LT	42"DIA ACCESS COVER
MH-59	H-20	4.5x8.5x6.5	201+36.6	355.9 RT	42"DIA ACCESS COVER

NOTE: LOCATIONS ARE APPROXIMATE, FIELD LOCATE MANHOLES

PATH: I:\823400\Dwgs\E\Sheets\G15-R2.dwg
Tue, 03/Oct/06 02:21PM lschneller
TAB: G12

ADDENDUM NUMBER

ATTACHMENT NUMBER

RECORD OF REVISIONS

No.	DATE	DESCRIPTION

KETCHIKAN AIRPORT
RUNWAY SAFETY AREA EXPANSION
& RUNWAY OVERLAY
PROJECT NO. 68306

ELECTRICAL DIAGRAMS & SCHEDULES

PREPARED BY: USKH INC.

CHECKED BY: GRH

STATE OF ALASKA 49TH GARY R. HABLE EE-10243 REGISTERED PROFESSIONAL ENGINEER 10/4/06

DESIGNED BY: LPS

DRAWN BY: LPS

STATE OF ALASKA
DEPARTMENT OF TRANSPORTATION & PUBLIC FACILITIES
DESIGN & ENGINEERING SERVICES
DIVISION-SOUTHEAST REGION

ELECTRICAL DIAGRAMS & SCHEDULES

PROJECT DESIGNATION
AIP NO. 3-02-0144-1606

STATE	YEAR
ALASKA	2006
SHEET NUMBER	TOTAL SHEETS
G15	131

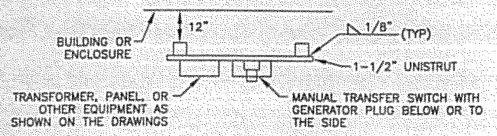

PLAN VIEW

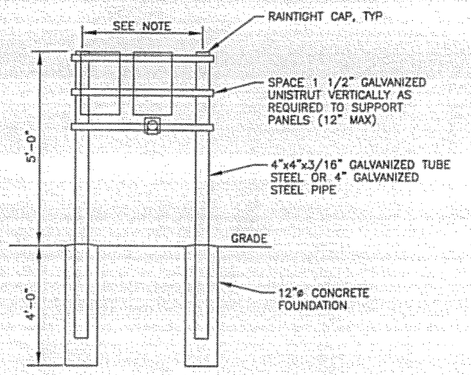

NOTE:
ADJUST WIDTH AS REQUIRED FOR EQUIPMENT INSTALLED AT EACH LOCATION, 24" MINIMUM, 48" MAXIMUM, IF LONGER SUPPORTS ARE NEEDED, PROVIDE ADDITIONAL POSTS

6 G16 BUILDING SERVICE MOUNTING DETAIL
N.T.S.

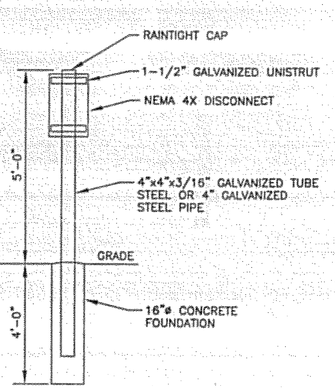

7 G16 DISCONNECT MOUNTING DETAIL
N.T.S.

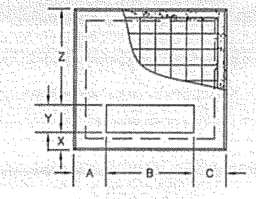

TOP VIEW

SECTION

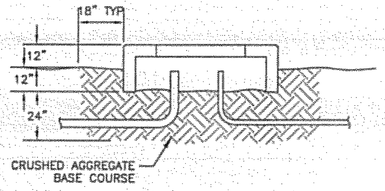

NOTES:
1. THIS UNIT INCLUDES THE PAD, SITE PREPARATION, EXCAVATION, AND BACKFILL.
2. LEVEL TOP OF PAD AND GRAVEL THE BASE COURSE INSIDE THE PAD SHALL BE LEVEL WITH THE BASE OF THE PAD.
3. PAD SHALL BE SQUARE WITH RUNWAY OR ADJACENT STRUCTURES UNLESS SPECIFIED OTHERWISE. ORIENT THE PAD AWAY FROM POTENTIAL CONFLICTS TO PROVIDE ACCESS TO THE FRONT OF THE EQUIPMENT.
4. VERIFY PAD DIMENSIONS AND CONDUIT LOCATIONS WITH TRANSFORMER PRIOR TO CONSTRUCTING PAD.

3 G16 TRANSFORMER PAD DETAIL
N.T.S.

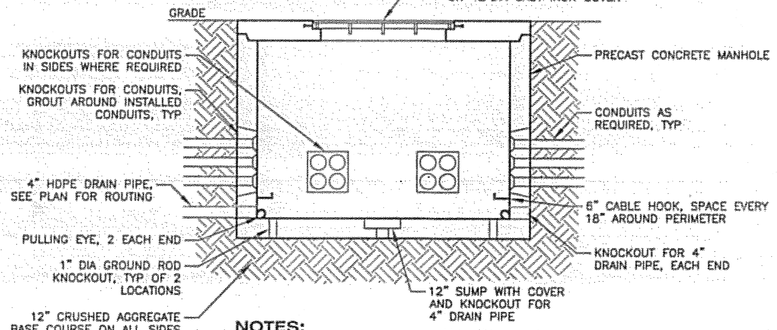

NOTES:
1. PRECAST MANHOLE, LID, FRAME, AND COVER SHALL BE RATED FOR WHEEL LOADING BASED ON LOCATION:
   AIRCRAFT AREA – 100,000 LB. LOAD
   NON-AIRCRAFT AREA – H-20 WHEEL LOADING
2. SEE MANHOLE SCHEDULE ON SHEET G15 FOR LOAD RATINGS AND SIZES OF INDIVIDUAL MANHOLES.
3. CAST IRON HINGED COVERS SHALL BE PROVIDED WITH SPRING ASSIST MECHANISM.

4 G16 ELECTRICAL MANHOLE DETAIL
N.T.S.

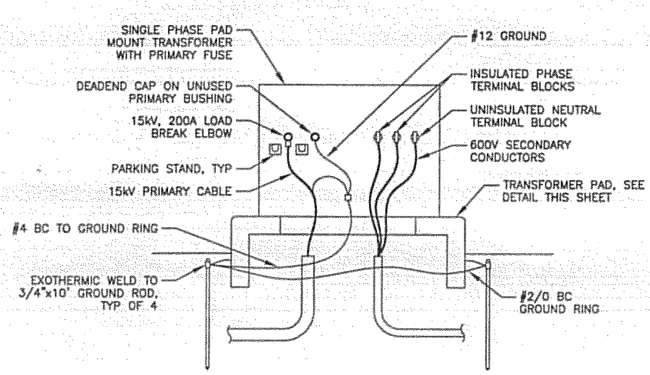

1 G16 TRANSFORMER DETAIL
N.T.S.

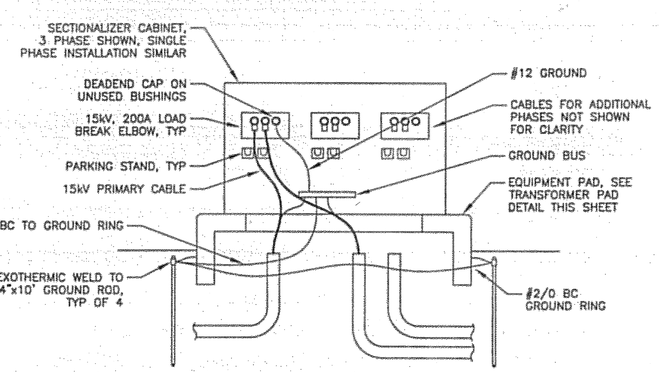

2 G16 SECTIONALIZER DETAIL
N.T.S.

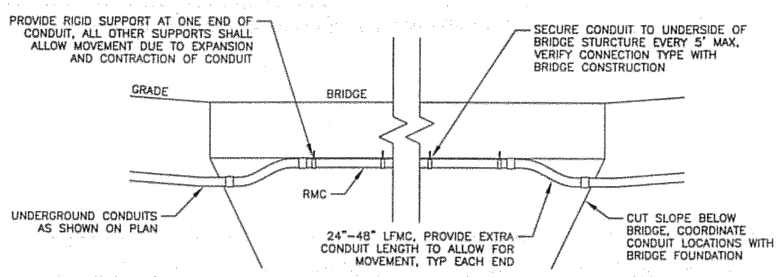

5 G16 BRIDGE MOUNTED CONDUIT DETAIL
N.T.S.

DO NOT SCALE FROM THESE DRAWINGS USE DIMENSIONS

PATH: I:\823400\Dwgs\E\Sheets\G16-R3.dwg
Tue, 03/Oct/06 02:21PM lschneller
TAB: G12

ADDENDUM NUMBER
ATTACHMENT NUMBER

RECORD OF REVISIONS

No.	DATE	DESCRIPTION

KETCHIKAN AIRPORT
RUNWAY SAFETY AREA EXPANSION & RUNWAY OVERLAY
PROJECT NO. 68306

ELECTRICAL DETAILS

PREPARED BY: USKH INC.

CHECKED BY: GRH

STATE OF ALASKA 49TH GARY R. HABLE EE-10243 REGISTERED PROFESSIONAL ENGINEER
10/4/06

DESIGNED BY: LPS

DRAWN BY: LPS

STATE OF ALASKA
DEPARTMENT OF TRANSPORTATION & PUBLIC FACILITIES
DESIGN & ENGINEERING SERVICES
DIVISION-SOUTHEAST REGION

ELECTRICAL DETAILS

PROJECT DESIGNATION	
AIP NO. 3-02-0144-1606	
STATE	YEAR
ALASKA	2006
SHEET NUMBER	TOTAL SHEETS
G16	131

GENERATOR MODULE PANEL

CKT	LOAD	BRANCH BKR	BRANCH VA	CONN KVA A	CONN KVA B	BRANCH VA	BRANCH BKR	LOAD	CKT
1	FAA SHOP	100/2	9000	26.0		17000	250/2	RW 29 FAA EQUIPMENT	2
3			9000		26.0	17000		ENCLOSURES	4
5	LIGHTS	20/1	307	2.8		2500	30/2	UNIT HEATER	6
7	RECEPTS	20/1	720		3.2	2500			8
9	EXHAUST FAN	20/1	696	1.4		750	20/2	COOLANT HEATER	10
11	BATTERY CHARGER	20/1	1000		1.8	750			12
13	DAMPER CONTROLS	20/1	600	0.7		50	~~20/2~~	~~ANTI-CONDENSATION HEATER~~	14
15					0.1	50			16
17				0.0					18
19					0.0				20
21				0.0					22
23					0.0				24
25				0.0					26
27					0.0				28
29				0.0					30
	CONNECTED LOAD	61.9 KVA		30.9	31.0				
		258 AMPS		258	259				
	NEC DEMAND	62.0 KVA							
		258 AMPS							

PANEL NOTES

PANEL SPECIFICATIONS
MAINS RATING AMPS – 400
MAIN CIRCUIT BREAKER AMPERES – 400
CAPACITY ONE-POLE CIRCUITS – 30
SYSTEM VOLTAGE – 240/120
PHASE, NO. OF WIRES – 1 PH, 3 W
AIC RATING – 22,000
MOUNTING – SURFACE

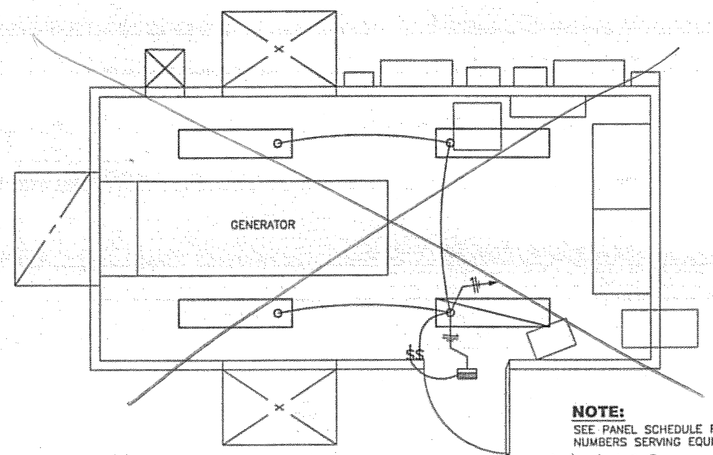

1/G17 **GENERATOR MODULE - LIGHTING PLAN** N.T.S.

SEE ATTACHED G17A & G17B

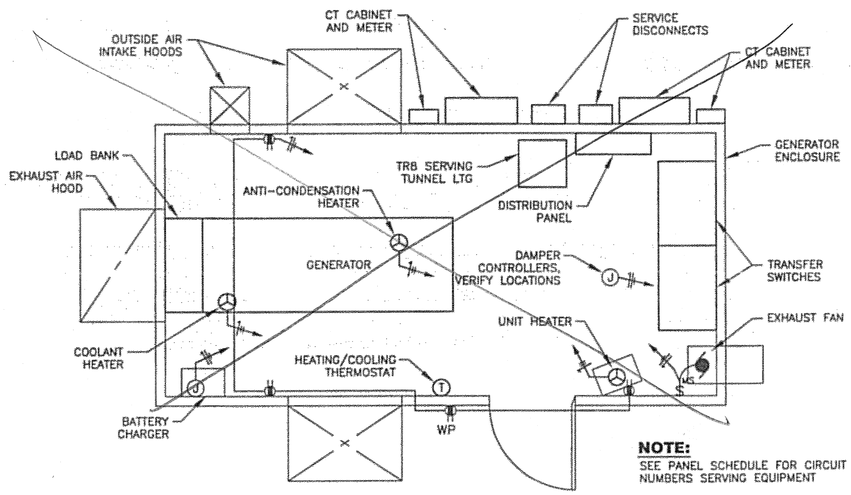

2/G17 **GENERATOR MODULE - POWER PLAN** N.T.S.

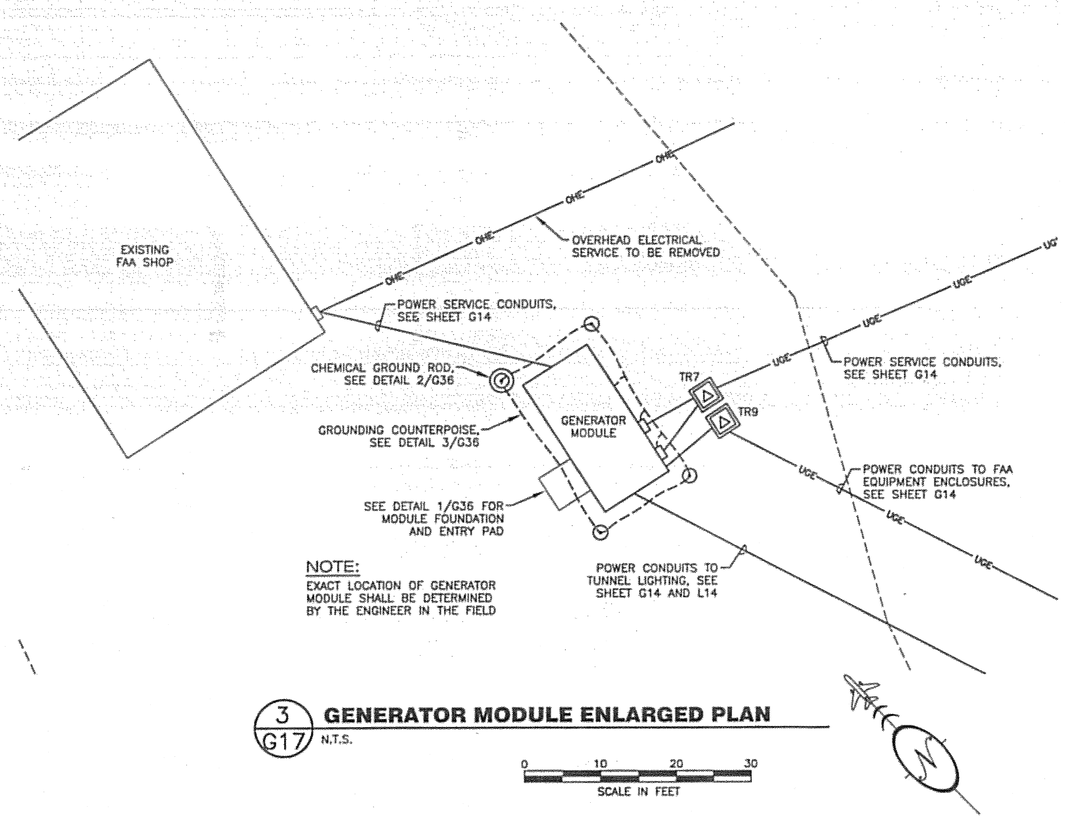

3/G17 **GENERATOR MODULE ENLARGED PLAN** N.T.S.

DO NOT SCALE FROM THESE DRAWINGS USE DIMENSIONS

PATH: I:\823400\Dwgs\E\Sheets\G17-E1.dwg
Tue, 03/Oct/06 02:21PM Ischneller
TAB: G11

ADDENDUM NUMBER

ATTACHMENT NUMBER

RECORD OF REVISIONS

No.	DATE	DESCRIPTION

KETCHIKAN AIRPORT
RUNWAY SAFETY AREA EXPANSION
& RUNWAY OVERLAY
PROJECT NO. 68306

GENERATOR MODULE DETAILS

PREPARED BY: USKH INC.

CHECKED BY: GRH

STATE OF ALASKA 49TH GARY R. HABLE EE-10243 REGISTERED PROFESSIONAL ENGINEER
10/4/06

DESIGNED BY: LPS

DRAWN BY: LPS

STATE OF ALASKA
DEPARTMENT OF TRANSPORTATION & PUBLIC FACILITIES
DESIGN & ENGINEERING SERVICES
DIVISION-SOUTHEAST REGION

GENERATOR MODULE DETAILS

PROJECT DESIGNATION
AIP NO. 3-02-0144-1606

STATE	YEAR
ALASKA	2006
SHEET NUMBER	TOTAL SHEETS
G17	131

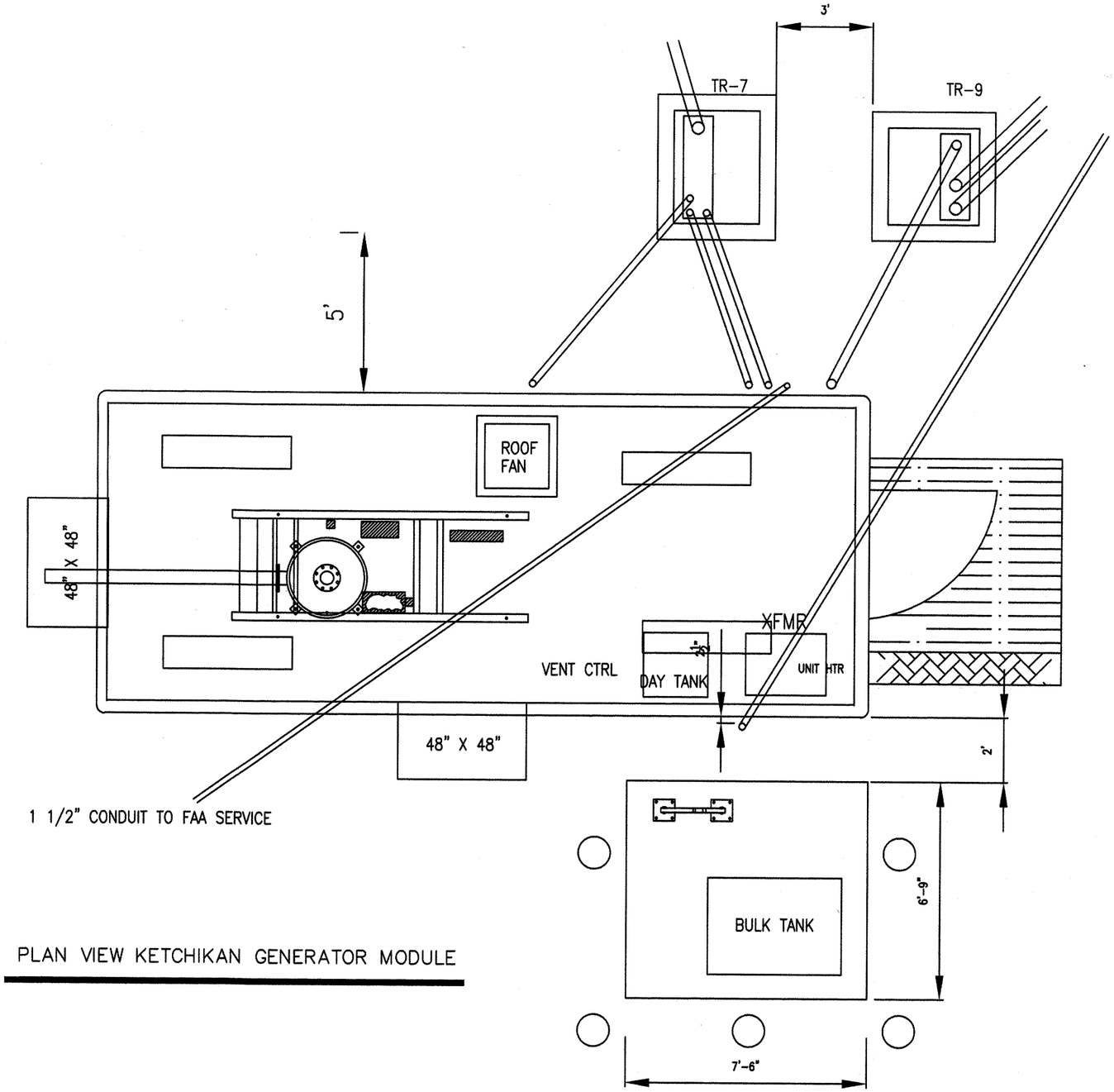

PLAN VIEW KETCHIKAN GENERATOR MODULE

G17A

SWANSON GENERAL CONTRACTORS, INC

GENERATOR BLD PAD

KETCHIKAN AIRPORT – PROPOSED FAA GENERATOR SHELTER

designed
drawn
checked
job no.
date
dwg. title
revisions:
9/6/07–Tank mod

sheet no. 1 of 1

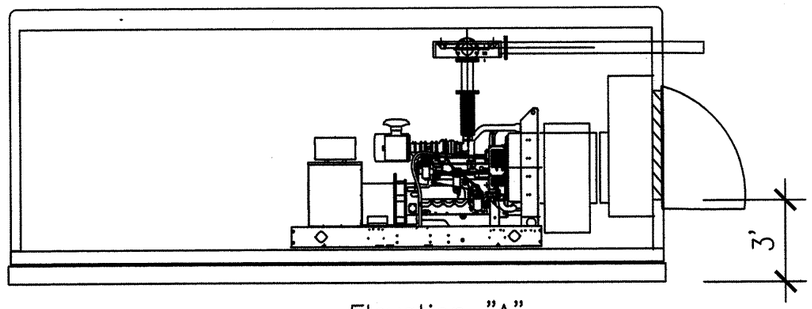

Elevation "A"

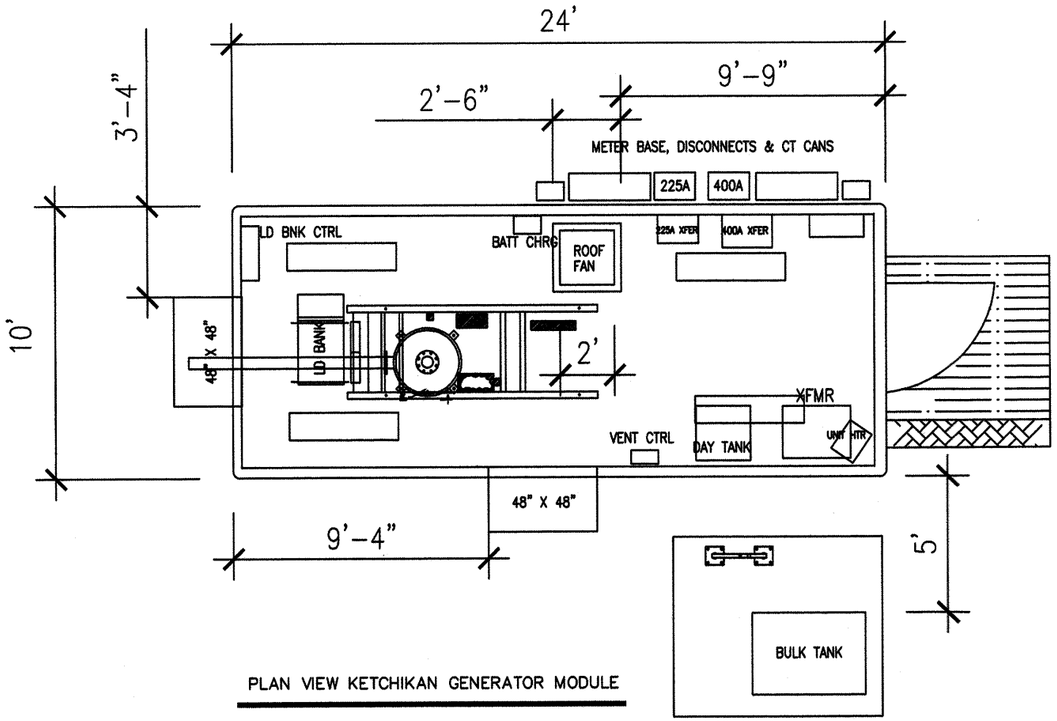

PLAN VIEW KETCHIKAN GENERATOR MODULE

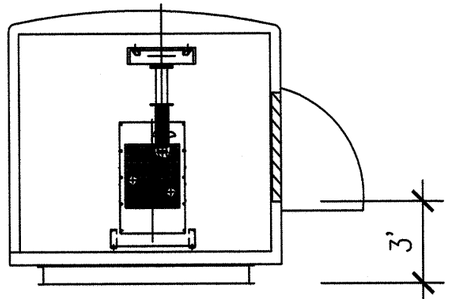

Elevation "B"

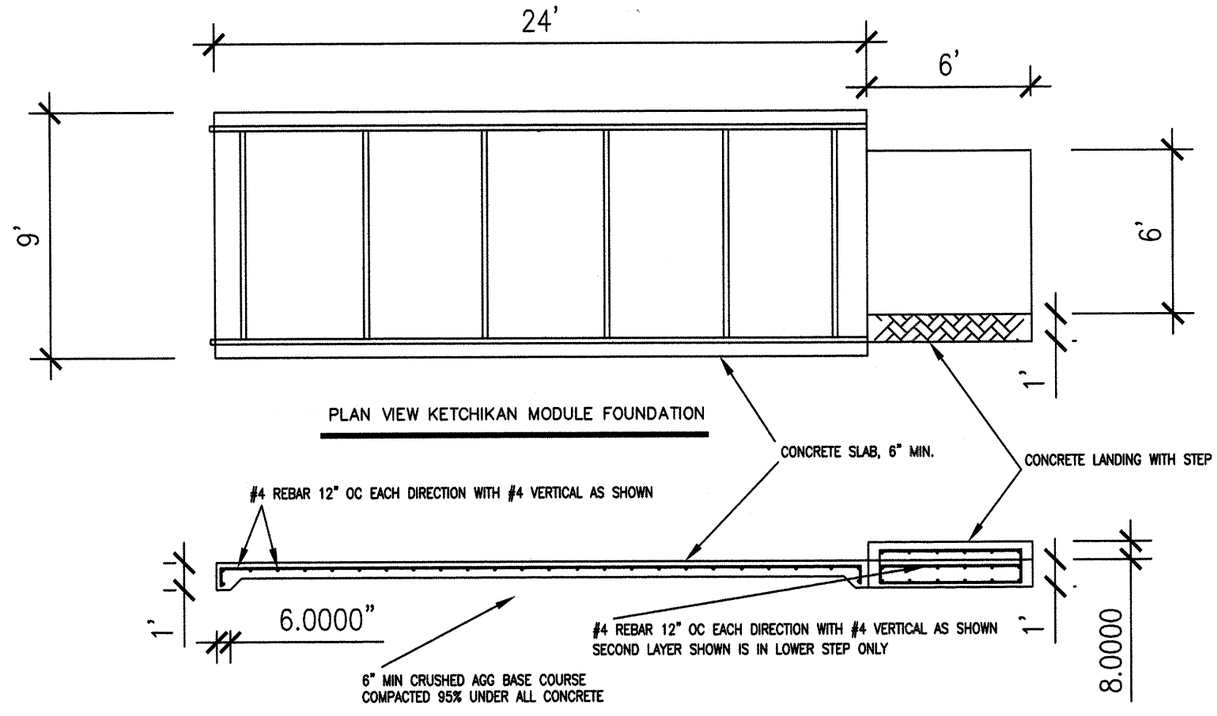

PLAN VIEW KETCHIKAN MODULE FOUNDATION

ELEVATION VIEW KETCHIKAN MODULE FOUNDATION

G17B

SWANSON GENERAL CONTRACTORS, INC

PROPOSED MODULE

KETCHIKAN AIRPORT – PROPOSED FAA GENERATOR SHELTER

designed
drawn
checked
job no.
date
dwg. title
revisions:
9/6/07–Tank mod

sheet no. 1 of 1

NAVAID CONSTRUCTION RESPONSIBILITIES

SYSTEM PAY ITEM	FAA	CONTRACTOR	PLAN SHEETS	DETAIL SHEETS
Glide Slope L-135a(1) L-135b(1)	– Provide building with lights, heat, and power distribution – Install glide slope equipment in new building – Install glide slope antenna, including tower, obstruction lights, and connection to building – Remove glide slope equipment from existing building – Remove glide slope antenna from tower	– Prepare building site/foundation – Set and anchor building – Install/fabricate cover entry – Connect power service to new building – Connect communications service to new building – Install grounding counterpoise and test – Install glide slope tower foundation – Disconnect existing building from power service – Relocate existing building (see MALSR RW 29 for reconnection) – Remove and dispose of existing glide slope antenna tower	G2–Demo G7–New G31–Enlarged G34–GS Bldg	G36–GS Bldg Fdn G36–GS Bldg Grd G33–Tower Fdn G14–Power Service G15–Comm Service
Localizer Equip Bldg L-135a(3) L-135b(2)	– Provide building with lights, heat, and power distribution – Install localizer equipment in new building – Remove localizer equipment from existing building	– Prepare building site/foundation – Set and anchor building – Install/fabricate cover entry – Connect power service to new building – Connect communications service to new building – Install grounding counterpoise and test – Disconnect existing building from power and communications services – Relocate existing building to maintenance area as directed by the engineer	G4–Demo G10–New, Enlarged G34–LOC Bldg	G36–LOC Bldg Fdn G36–LOC Bldg Grd G14–Power Service G15–Comm Service
Localizer Antenna Array L-135a(3) L-135b(2)	– Install and connect new antenna array – Remove existing antenna array – Disconnect existing communications conductors at dist/comb unit – Install new communications conductors from localizer building to antenna platform – Reconfigure communications conduit and conductors to route through dist/comb unit	– Construct antenna platform – Prepare dist/comb unit site/foundation – Install conduit from localizer building to antenna platform through junction box – Install obstruction lights on platform – Disconnect existing dist/comb unit from power service – Relocate dist/comb unit to new location – Connect power service to dist/comb unit – Remove existing antenna platform	G4–Demo G10–New G35–Dist/Comb	F14–F19–Platform G36–Dist/Comb Fdn G36–Dist/Comb Grd G14–Dist/Comb Pwr
DME L-135a(4) L-135b(3)	– Install new antenna tower and antenna – Install DME equipment in localizer building – Install communications conductors from localizer building to antenna – Disconnect and remove existing antenna	– Install antenna tower foundation – Install conduits from localizer building to antenna	G4–Demo G10–New, Enlarged	G39–Foundation
NDB L-135a(6) L-135b(5)	– Disconnect existing antenna – Install antenna foundation – Install new antenna – Install building foundation – Set and anchor building – Install gounding counterpoise radials and ground rods – Perform ground testing – Relocate transmitter equipment	– Remove and dispose of existing antenna and support towers as directed, new NDB must be operational prior to removal of existing (FAA flight check required) – Disconnect existing building from power service – Connect power service to new building – Relocate existing building to maintenance area as directed by the engineer – Provide temporary power as required – Protect grounding counterpoise during installation of permanent power and MALSR conduits	G5–Demo G10–New G32–Enlarged	G14–Power Service
ASOS L-135c(1)	– Relocate existing ASOS rails and equipment	– Prepare new site and foundations – Disconnect existing equipment from power service – Connect power service to relocated equipment	G2–Demo G7–New G31–Enlarged	G14–Power Service G40–G42–ASOS Dtls
F420 Wind Sensor L-135a(2)	– Provide and install tower and sensor equipment	– Install new tower foundation – Install conduit from tower to power disconnect and telecom demarc	G10–New	G15–Power Service G15–Comm Service G45–Foundation
RCO Towers L-135b(4)	– Remove antennas deemed salvageable – Disconnect existing communications conductors at localizer building	– Remove and dispose of existing RCO towers – Remove above ground portions of conductors and abandoned direct buried conductors in place	G4–Demo	

NAVAID CONSTRUCTION RESPONSIBILITIES

SYSTEM PAY ITEM	FAA	CONTRACTOR	PLAN SHEETS	DETAIL SHEETS
RVR L-135a(5)	– Install new tower and equipment near glide slope building – Install and connect new equipment (CDs, ALS, and DPU) in terminal building (in FSS and FAA comm room) – Install and connect new equipment (RLIM) in regulator vault	– Install equipment foundations – Install conduit between equipment and glide slope building – Install CTs on lighting circuits in regulator vault for connection to RLIM by FAA – Install support structure, power service, service disconnect, and underground conduit and grounding as shown	G7–New	G14–Power Service G43–G45 RVR Dtls
PAPI RW 11 L-132c(2)	– Replace tilt switches in LHAs during service outage	– Prepare new site and foundations – Relocate PAPI system to new site – Return remote monitoring subsystem cabinet to FAA – Remove existing conductors, foundations, and support structures	G2–Demo G7–New	G14–Power Service G37–G38–PAPI Dtls
VASI RW 29 L-132b(2)		– Remove existing VASI system including radio control cabinets	G4–Demo	G15–Power Service
PAPI RW 29 L-132a(2)	– Provide new PAPI system	– Prepare site and foundations – Install PAPI system	G9–New	G15–Power Service G37–G38–PAPI Dtls
MALSR RW 11 L-132c(1)	– Provide (2) new flashers and ICCs	– Relocate MALSR towers and lights – Install new foundations, conduit, and conductors – Provide new parts as required to reinstall system at new locations – Provide replacement parts and make repairs as required	G1–Demo G6–New G19–Enlarged	G21–Equipment and Conduit Schedules G22–G27–MALSR Dtls G28–Wiring Diag G14–Power Service
MALSR RW 29 L-132a(1) L-132b(1)	– Provide new MALSR system and air-to-ground radio controller	– Install new MALSR system, including new foundations, conduit, and conductors – Relocate existing support towers and provide new towers as required and indicated to install new system – Set and anchor relocated glide slope building (MALSR building) – Connect MALSR building to power service – Install controls in MALSR building – Relocate existing ground-to-ground receiver from existing localizer building to new MALSR building and connect to control new MALSR system	G4–5–Demo G10–New G20–Enlarged G36–MALSR Bldg	G20–Equipment and Conduit Schedules G22–27–MALSR Dtls G29–30–Wiring Diag G14–Power Service G36–MALSR Bldg Fdn G36–MALSR Bldg Grd

NOTE: This list is intended to portray the general responsibilities of the parties involved and may not include all specific aspects of the work required.

PATH: I:\B23400\Dwgs\E\Sheets\G18-F2.dwg
Fri, 27/Oct/06 11:33AM lschneller
TAB: G09

ADDENDUM NUMBER

ATTACHMENT NUMBER

RECORD OF REVISIONS

No.	DATE	DESCRIPTION

KETCHIKAN AIRPORT
RUNWAY SAFETY AREA EXPANSION
& RUNWAY OVERLAY
PROJECT NO. 68306

NAVAID CONSTRUCTION RESPONSIBILITIES

PREPARED BY: USKH INC.

CHECKED BY: GRH

STATE OF ALASKA 49TH
GARY R. HABLE
EE-10243
REGISTERED PROFESSIONAL ENGINEER
10/4/06

DESIGNED BY: LPS

DRAWN BY: LPS

STATE OF ALASKA
DEPARTMENT OF TRANSPORTATION
& PUBLIC FACILITIES
DESIGN & ENGINEERING SERVICES
DIVISION-SOUTHEAST REGION

NAVAID CONSTRUCTION RESPONSIBILITIES

PROJECT DESIGNATION
AIP NO. 3-02-0144-1606

STATE	YEAR
ALASKA	2006
SHEET NUMBER	TOTAL SHEETS
G18	131

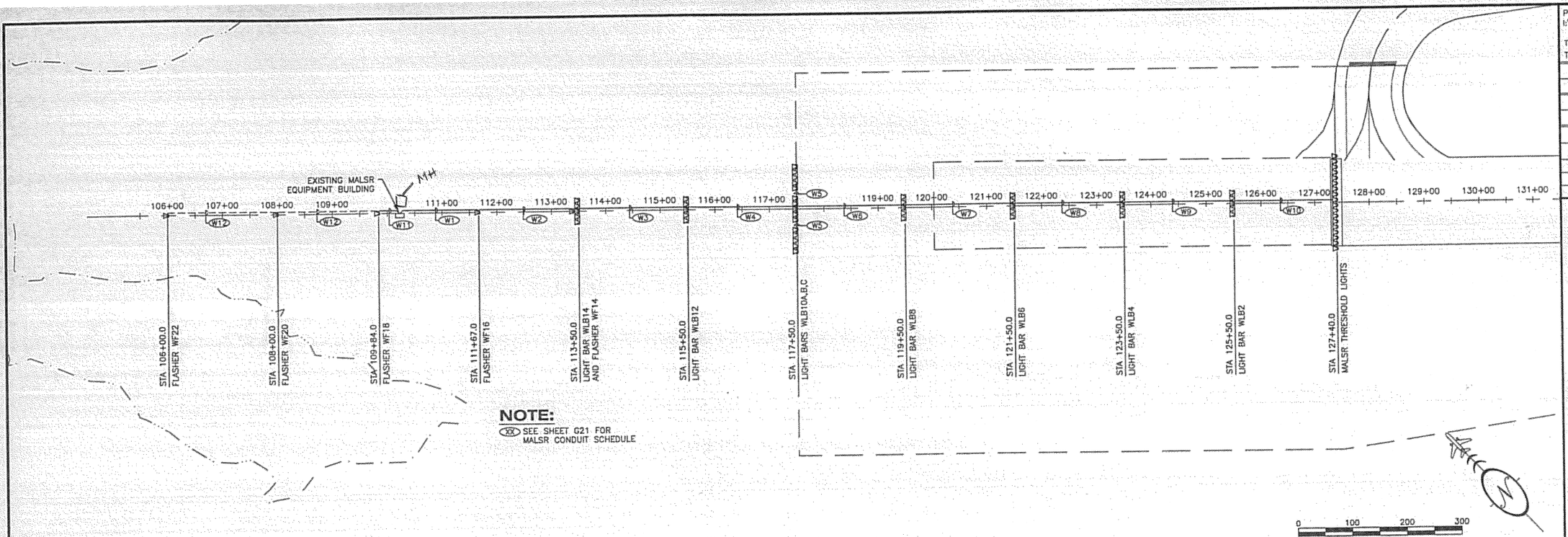

NOTE:
(XX) SEE SHEET G21 FOR MALSR CONDUIT SCHEDULE

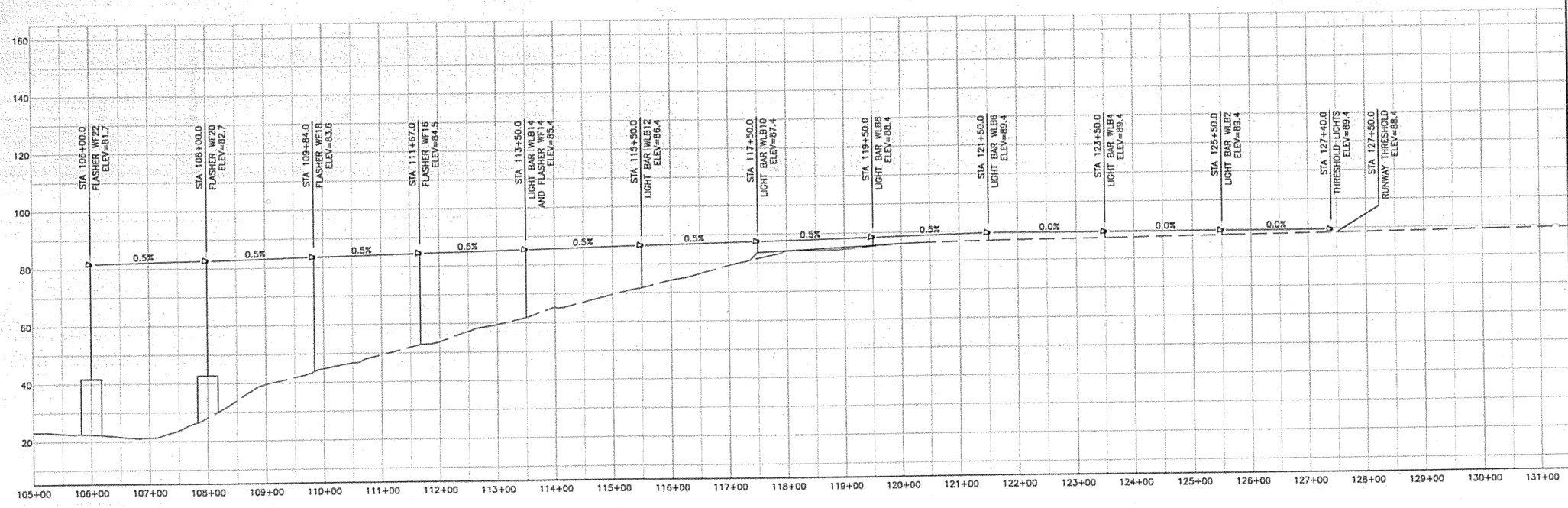

DO NOT SCALE FROM THESE DRAWINGS USE DIMENSIONS

PATH: I:\623400\Dwgs\E\Sheets\G19-M1.dwg
Tue, 03/Oct/06 02:22PM lschneller
TAB: G10

ADDENDUM NUMBER
ATTACHMENT NUMBER

RECORD OF REVISIONS

No.	DATE	DESCRIPTION

KETCHIKAN AIRPORT
RUNWAY SAFETY AREA EXPANSION
& RUNWAY OVERLAY
PROJECT NO. 68306

MALSR PLAN & PROFILE - WEST

PREPARED BY: USKH INC.

CHECKED BY: GRH

STATE OF ALASKA
49TH
GARY R. HABLE
EE-10243
REGISTERED PROFESSIONAL ENGINEER
10/4/06

DESIGNED BY: LPS

DRAWN BY: LPS

STATE OF ALASKA
DEPARTMENT OF TRANSPORTATION & PUBLIC FACILITIES
DESIGN & ENGINEERING SERVICES
DIVISION-SOUTHEAST REGION

MALSR PLAN & PROFILE - WEST

PROJECT DESIGNATION	
AIP NO. 3-02-0144-1606	
STATE	YEAR
ALASKA	2006
SHEET NUMBER	TOTAL SHEETS
G19	131

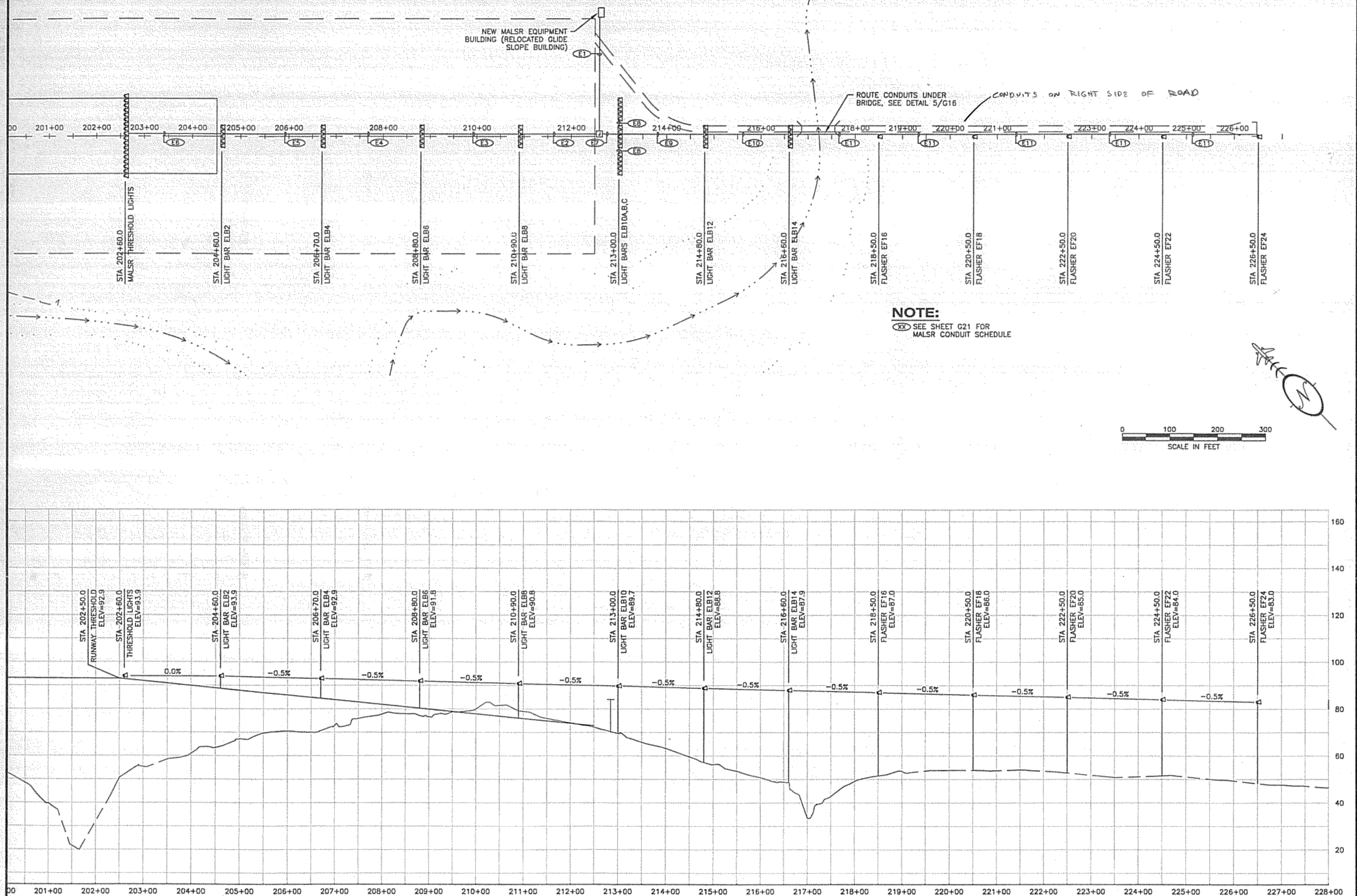

DO NOT SCALE FROM THESE DRAWINGS USE DIMENSIONS

PATH: I:\823400\Dwgs\E\Sheets\G20-M2.dwg

Tue, 03/Oct/06 02:22PM lschneller

TAB: G09

ADDENDUM NUMBER

ATTACHMENT NUMBER

RECORD OF REVISIONS

No.	DATE	DESCRIPTION

KETCHIKAN AIRPORT
RUNWAY SAFETY AREA EXPANSION
& RUNWAY OVERLAY
PROJECT NO. 68306

MALSR PLAN & PROFILE - EAST

PREPARED BY: USKH INC.

CHECKED BY: GRH

STATE OF ALASKA
49TH
GARY R. HABLE
EE-10243
REGISTERED PROFESSIONAL ENGINEER
10/4/06

DESIGNED BY: LPS

DRAWN BY: LPS

STATE OF ALASKA
DEPARTMENT OF TRANSPORTATION
& PUBLIC FACILITIES
DESIGN & ENGINEERING SERVICES
DIVISION–SOUTHEAST REGION

MALSR PLAN & PROFILE - EAST

PROJECT DESIGNATION

AIP NO. 3-02-0144-1606

STATE	YEAR
ALASKA	2006
SHEET NUMBER	TOTAL SHEETS
G20	131

MALSR LIGHTBARS AND FLASHERS - RW 11

DES.	STA.	OFFSET	APPROX HGT	EXISTING TO REMAIN	EXISTING REUSED	NEW	INSTALL. DETAIL	FNDTN DTL SHEET	REMARKS
TRSHLD LTS	127+40.0	–	1.0	–	LAMPHOLDERS, COLUMNS, BASEPLATES	LIGHT BASES, LAMPS	1/G27	–	
WLB2	125+50.0	0.0	1.5	–	LAMPHOLDERS, BASEPLATES	LIGHT BASES, LAMPS, COLUMNS	3/G23	–	
WLB4	123+50.0	0.0	2.1	–	LAMPHOLDERS	LIGHT BASES, LAMPS, COLUMNS, BASEPLATES	3/G23	–	
WLB6	121+50.0	0.0	2.6	–	LAMPHOLDERS	LIGHT BASES, LAMPS, COLUMNS, BASEPLATES	3/G23	–	
WLB8	119+50.0	0.0	2.8	–	LAMPHOLDERS	LIGHT BASES, LAMPS, COLUMNS, BASEPLATES	3/G23	–	
WLB10A	117+50.0	28.0 LT	3.9	–	LAMPHOLDERS	LIGHT BASES, LAMPS, COLUMNS, BASEPLATES	3/G23	–	
WLB10B	117+50.0	0.0	3.9	–	LAMPHOLDERS	LIGHT BASES, LAMPS, COLUMNS, BASEPLATES	3/G23	–	
WLB10C	117+50.0	28.0 RT	3.9	–	LAMPHOLDERS	LIGHT BASES, LAMPS, COLUMNS, BASEPLATES	3/G23	–	
WLB12	115+50.0	0.0	14.7	–	LAMPHOLDERS, JB, LIGHT BAR, TOWER, BASE ASMBLY	LAMPS	1/G23	G25	
WLB14	113+50.0	0.0	23.6	–	LAMPHOLDERS, JB, LIGHT BAR, TOWER, BASE ASMBLY	LAMPS	1/G22	G26	
WF14	113+50.0	0.0	–	–	FLASHER, ICC, JB		1/G24	–	LOCATE FLASHER ON WLB14 TOWER
WF16	111+67.0	0.0	31.7	–	TOWER, BASE ASSEMBLY	FLASHER, ICC, JB	1/G24	G26	
WF18	109+84.0	0.0	39.7	–	TOWER, BASE ASSEMBLY	FLASHER, ICC, JB	1/G24	G26	
WF20	108+00.0	0.0	54.5	FLASHER, ICC, JB, TOWER, FNDTN	–	–	–	–	REMOVE LIGHT BAR FROM TOWER
WF22	106+00.0	0.0	59.2	FLASHER, ICC, JB, TOWER, FNDTN	–	–	–	–	REMOVE LIGHT BAR FROM TOWER

NOTE: ALL CONDUIT, CONDUCTORS, AND FOUNDATIONS SHALL BE NEW UNLESS OTHERWISE INDICATED. TOWERS AND LIGHTBARS INDICATED TO BE REUSED MAY BE FROM RW 11 OR RW 29 SYSTEM.

MALSR LIGHTBARS AND FLASHERS - RW 29

DES.	STA.	OFFSET	APPROX HGT	EXISTING TO REMAIN	EXISTING REUSED	NEW	INSTALL. DETAIL	FNDTN DTL SHEET	REMARKS
TRSHLD LTS	202+60.0	–	1.2	–	BASEPLATES	ALL OTHER COMPONENTS	1/G27	–	
ELB2	204+60.0	0.0	5.2	–	LIGHTBAR, BASE ASSEMBLY	LAMPHOLDERS, LAMPS, JB, TOWER	1/G23	G25	
ELB4	206+70.0	0.0	8.4	–	LIGHTBAR, BASE ASSEMBLY	LAMPHOLDERS, LAMPS, JB, TOWER	1/G23	G25	
ELB6	208+80.0	0.0	11.5	–	LIGHTBAR, BASE ASSEMBLY	LAMPHOLDERS, LAMPS, JB, TOWER	1/G23	G25	
ELB8	210+90.0	0.0	14.7	–	LIGHTBAR, BASE ASSEMBLY	LAMPHOLDERS, LAMPS, JB, TOWER	1/G23	G25	
ELB10A	213+00.0	28.0 LT	20.2	–	LIGHTBAR, BASE ASSEMBLY	LAMPHOLDERS, LAMPS, JB, TOWER	1/G22	G26	
ELB10B	213+00.0	0.0	20.2	–	LIGHTBAR, BASE ASSEMBLY	LAMPHOLDERS, LAMPS, JB, TOWER	1/G22	G26	
ELB10C	213+00.0	28.0 RT	20.2	–	LIGHTBAR, BASE ASSEMBLY	LAMPHOLDERS, LAMPS, JB, TOWER	1/G22	G26	
ELB12	214+80.0	0.0	31.6	–	LIGHTBAR, BASE ASSEMBLY	LAMPHOLDERS, LAMPS, JB, TOWER	1/G22	G26	
ELB14	216+60.0	0.0	39.3	–	LIGHTBAR, BASE ASSEMBLY	LAMPHOLDERS, LAMPS, JB, TOWER	1/G22	G26	
EF16	218+50.0	0.0	35.5	–	BASE ASSEMBLY	FLASHER, ICC, JB, TOWER	1/G24	G26	
EF18	220+50.0	0.0	32.1	–	BASE ASSEMBLY	FLASHER, ICC, JB, TOWER	1/G24	G26	
EF20	222+50.0	0.0	32.2	–	BASE ASSEMBLY	FLASHER, ICC, JB, TOWER	1/G24	G26	
EF22	224+50.0	0.0	32.4	–	BASE ASSEMBLY	FLASHER, ICC, JB, TOWER	1/G24	G26	
EF24	226+50.0	0.0	34.7	–	BASE ASSEMBLY	FLASHER, ICC, JB, TOWER	1/G24	G26	

NOTES: ALL CONDUIT, CONDUCTORS, AND FOUNDATIONS SHALL BE NEW UNLESS OTHERWISE INDICATED. TOWERS AND LIGHTBARS INDICATED TO BE REUSED MAY BE FROM RW 11 OR RW 29 SYSTEM.

MALSR CONDUIT SCHEDULE

ID	DESCRIPTION	SERVICE
E1	2"C	
	– 3#2/0	THRESHOLD LTS
	– 3#8	ELB10A,B,C
	– 1#2/0	GROUND
	2"C	
	– 3#2	EF16–24
	– 3#8	ELB12,14
	– 1#2	GROUND
	2"C	
	– 3#8	ELB2,4
	– 3#8	ELB6,8
	– 1#8	GROUND
	2"C	
	– 2–6PR#19 SHLD	EF16–24
	2"C	
	– PULL ROPE	SPARE
E2	2"C	
	– 3#2/0	THRESHOLD LTS
	– 1#2/0	GROUND
	2"C	
	– 3#8	ELB2,4
	– 3#8	ELB6,8
	– 1#8	GROUND
E3	2"C	
	– 3#2/0	THRESHOLD LTS
	– 1#2/0	GROUND
	2"C	
	– 3#8	ELB2,4
	– 2#8	ELB6
	– 1#8	GROUND
E4	2"C	
	– 3#2/0	THRESHOLD LTS
	– 1#2/0	GROUND
	2"C	
	– 3#8	ELB2,4
	– 1#8	GROUND
E5	2"C	
	– 3#2/0	THRESHOLD LTS
	– 1#2/0	GROUND
	2"C	
	– 2#8	ELB2
	– 1#8	GROUND
E6	2"C	
	– 3#2/0	THRESHOLD LTS
	– 1#2/0	GROUND

ID	DESCRIPTION	SERVICE
E7	2"C	
	– 3#8	ELB10A,B,C
	– 1#8	GROUND
	2"C	
	– 3#2	EF16–24
	– 3#8	ELB12,14
	– 1#2	GROUND
	2"C	
	– 2–6PR#19 SHLD	EF16–24
E8	2"C	
	– 2#8	ELB10A,C
	– 1#8	GROUND
E9	2"C	
	– 3#2	EF16–24
	– 3#8	ELB12,14
	– 1#2	GROUND
	2"C	
	– 2–6PR#19 SHLD	EF16–24
E10	2"C	
	– 3#4	EF16–24
	– 2#8	ELB14
	– 1#4	GROUND
	2"C	
	– 2–6PR#19 SHLD	EF16–24
E11	2"C	
	– 3#4	EF16–24
	– 1#4	GROUND
	2"C	
	– 2–6PR#19 SHLD	EF16–24

ID	DESCRIPTION	SERVICE
W1	2"C	
	– 3#2/0	THRESHOLD LTS
	– 3#8	WF14,16
	– 1#2/0	GROUND
	2"C	
	– 3#6	WLB2,4
	– 3#8	WLB6,8
	– 1#6	GROUND
	2"C	
	– 3#6	WLB10A,B,C
	– 3#8	WLB12,14
	– 1#6	GROUND
	2"C	
	– 2–6PR#19 SHLD	WF14,16
W2	2"C	
	– 3#2/0	THRESHOLD LTS
	– 3#8	WF14
	– 1#2/0	GROUND
	2"C	
	– 3#6	WLB2,4
	– 3#8	WLB6,8
	– 1#6	GROUND
	2"C	
	– 3#6	WLB10A,B,C
	– 3#8	WLB12,14
	– 1#6	GROUND
	2"C	
	– 2–6PR#19 SHLD	WF14
W3	2"C	
	– 3#2/0	THRESHOLD LTS
	– 1#2/0	GROUND
	2"C	
	– 3#6	WLB2,4
	– 3#8	WLB6,8
	– 1#6	GROUND
	2"C	
	– 3#6	WLB10A,B,C
	– 3#8	WLB12
	– 1#6	GROUND
W4	2"C	
	– 3#2/0	THRESHOLD LTS
	– 1#2/0	GROUND
	2"C	
	– 3#6	WLB2,4
	– 3#8	WLB6,8
	– 1#6	GROUND
	2"C	
	– 3#6	WLB10A,B,C
	– 1#6	GROUND

ID	DESCRIPTION	SERVICE
W5	2"C	
	– 3#8	WLB10A,C
	– 1#8	GROUND
W6	2"C	
	– 3#2/0	THRESHOLD LTS
	– 1#2/0	GROUND
	2"C	
	– 3#6	WLB2,4
	– 3#8	WLB6,8
	– 1#6	GROUND
W7	2"C	
	– 3#2/0	THRESHOLD LTS
	– 1#2/0	GROUND
	2"C	
	– 3#6	WLB2,4
	– 2#8	WLB6
	– 1#6	GROUND
W8	2"C	
	– 3#2/0	THRESHOLD LTS
	– 1#2/0	GROUND
	2"C	
	– 3#6	WLB2,4
	– 1#6	GROUND
W9	2"C	
	– 3#2/0	THRESHOLD LTS
	– 1#2/0	GROUND
	2"C	
	– 2#6	WLB2
	– 1#6	GROUND
W10	2"C	
	– 3#2/0	THRESHOLD LTS
	– 1#2/0	GROUND
W11	2"C	
	– 3#8	WF18–22
	– 1#8	GROUND
	2"C	
	– 2–6PR#19 SHLD	WF18–22
W12	EXISTING 2"C	
	– 3#8	WF20,22
	– 1#8	GROUND
	2"C	
	– 2–6PR#19 SHLD	WF20,22

PATH: I:\623400\Dwgs\E\Sheets\G21–M3.dwg

Tue, 03/Oct/06 02:22PM ischneller

TAB: G09

ADDENDUM NUMBER

ATTACHMENT NUMBER

RECORD OF REVISIONS

No.	DATE	DESCRIPTION

KETCHIKAN AIRPORT
RUNWAY SAFETY AREA EXPANSION
& RUNWAY OVERLAY
PROJECT NO. 68306

MALSR SCHEDULES

PREPARED BY: USKH INC.

CHECKED BY: GRH

STATE OF ALASKA 49TH
GARY R. HABLE
EE–10243
REGISTERED PROFESSIONAL ENGINEER
10/4/06

DESIGNED BY: LPS

DRAWN BY: LPS

STATE OF ALASKA
DEPARTMENT OF TRANSPORTATION & PUBLIC FACILITIES
DESIGN & ENGINEERING SERVICES
DIVISION–SOUTHEAST REGION

MALSR SCHEDULES

PROJECT DESIGNATION

AIP NO. 3-02-0144-1606

STATE	YEAR
ALASKA	2006
SHEET NUMBER	TOTAL SHEETS
G21	131

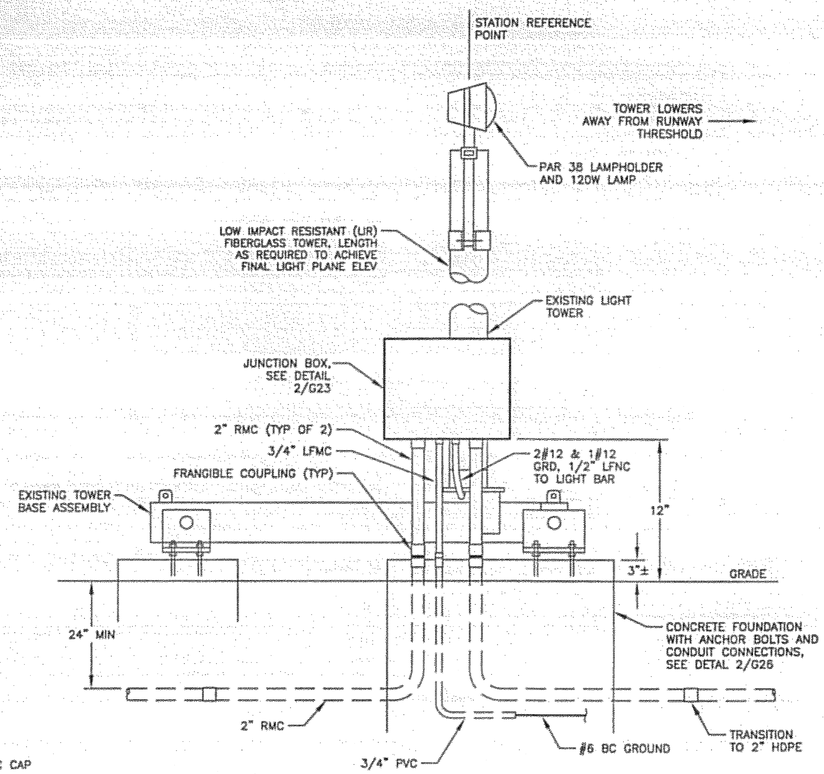

1/G22 LIGHT BAR TOWER DETAILS - WITH GUY WIRES

N.T.S.

NOTE:
GUY WIRES NOT SHOWN FOR CLARITY

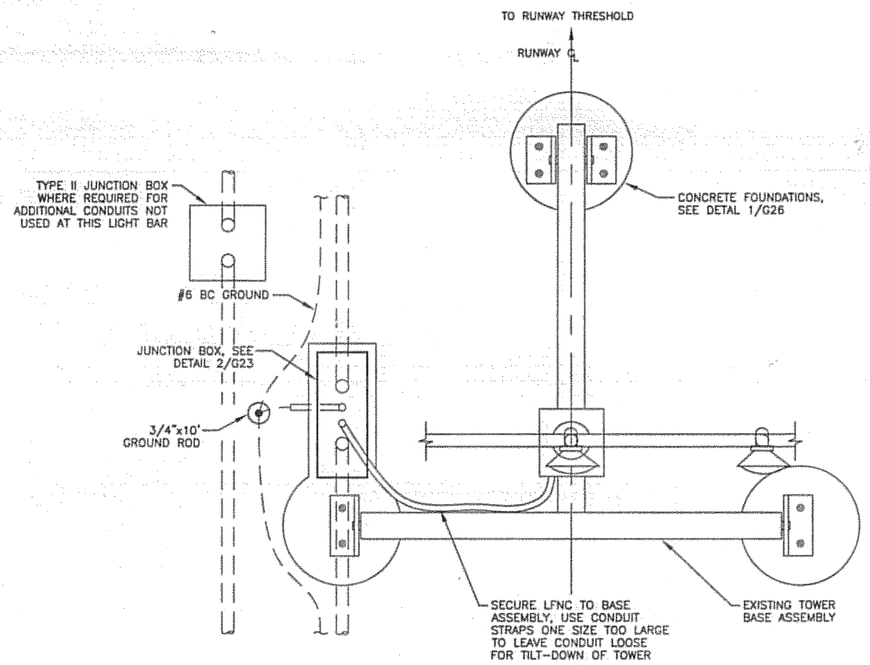

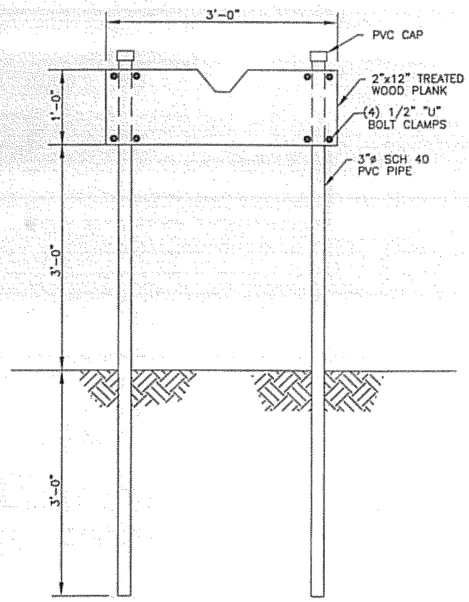

NOTE:
PROVIDE ONE MAST SUPPORT FOR EACH MALSR MAST AND ONE FOR THE RVR MAST. COORDINATE LOCATION WITH MAST HEIGHT.

4/G22 MAST SUPPORT

N.T.S.

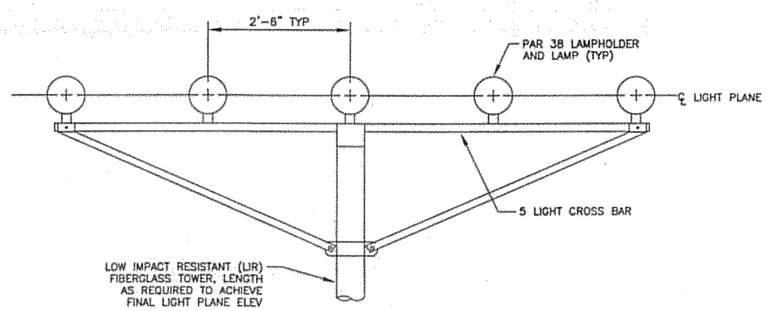

3/G22 LIGHT BAR DETAIL

N.T.S.

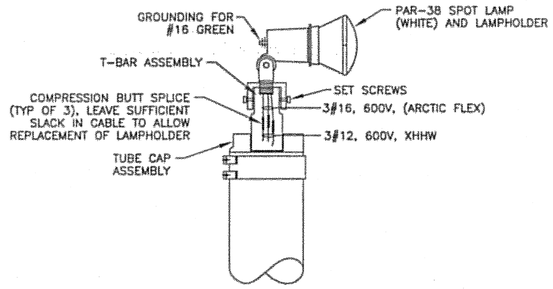

2/G22 LIGHT BAR ASSEMBLY/ LAMPHOLDER DETAIL

N.T.S.

DO NOT SCALE FROM THESE DRAWINGS USE DIMENSIONS

PATH: I:\823400\Dwgs\E\Sheets\G22-M4.dwg
Tue, 03/Oct/06 02:22PM lschneller
TAB: G12

ADDENDUM NUMBER

ATTACHMENT NUMBER

RECORD OF REVISIONS

No.	DATE	DESCRIPTION

KETCHIKAN AIRPORT
RUNWAY SAFETY AREA EXPANSION & RUNWAY OVERLAY
PROJECT NO. 68306

MALSR DETAILS

PREPARED BY: USKH INC.

CHECKED BY: GRH

STATE OF ALASKA 49TH GARY R. HABLE EE-10243 REGISTERED PROFESSIONAL ENGINEER 10/4/06

DESIGNED BY: LPS

DRAWN BY: LPS

STATE OF ALASKA
DEPARTMENT OF TRANSPORTATION & PUBLIC FACILITIES
DESIGN & ENGINEERING SERVICES
DIVISION-SOUTHEAST REGION

MALSR DETAILS

PROJECT DESIGNATION	
AIP NO. 3-02-0144-1606	
STATE	YEAR
ALASKA	2006
SHEET NUMBER	TOTAL SHEETS
G22	131

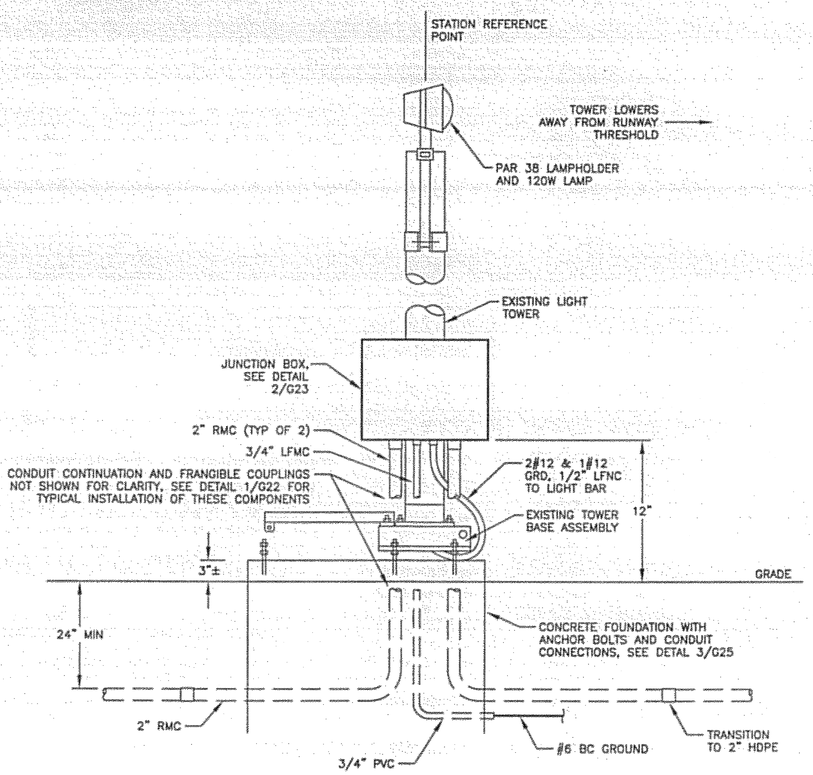

1/G23 **LIGHT BAR TOWER DETAILS - WITHOUT GUY WIRES**
N.T.S.

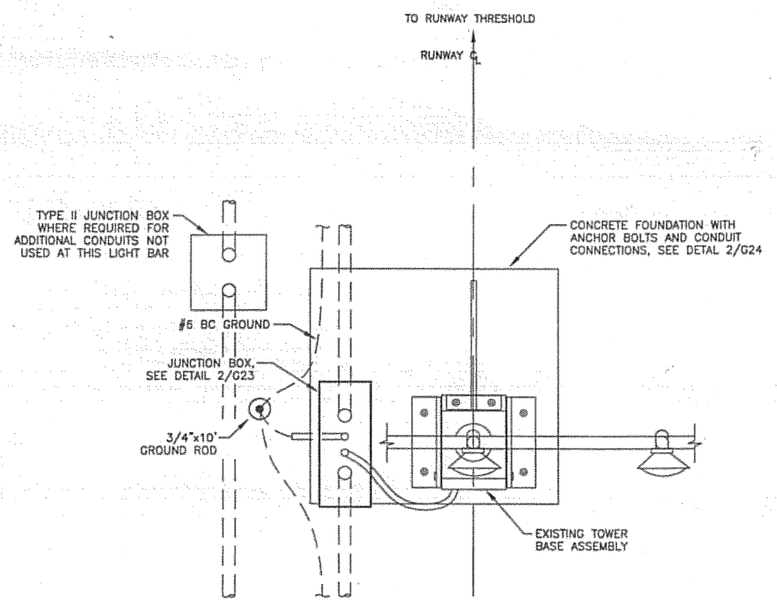

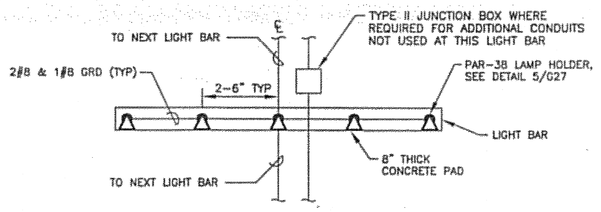

3/G23 **BASE MOUNTED LIGHT BAR PLAN**
N.T.S.

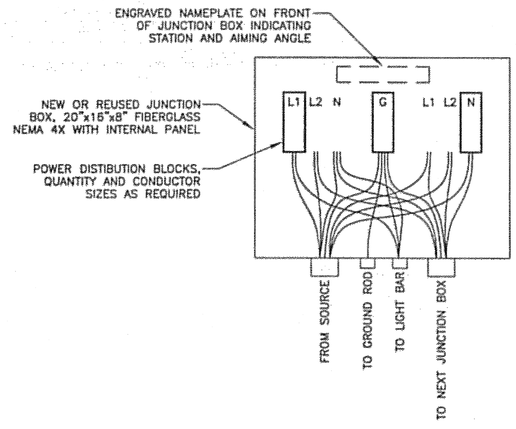

2/G23 **LIGHT BAR JUNCTION BOX**
N.T.S.

DO NOT SCALE FROM THESE DRAWINGS USE DIMENSIONS

PATH: I:\823400\Dwgs\E\Sheets\G23-M5.dwg
Tue, 03/Oct/06 02:22PM lschneller
TAB: G12

ADDENDUM NUMBER

ATTACHMENT NUMBER

RECORD OF REVISIONS

No.	DATE	DESCRIPTION

KETCHIKAN AIRPORT
RUNWAY SAFETY AREA EXPANSION & RUNWAY OVERLAY
PROJECT NO. 68306

MALSR DETAILS

PREPARED BY: USKH INC.

CHECKED BY: GRH

STATE OF ALASKA 49TH GARY R. HABLE EE-10243 REGISTERED PROFESSIONAL ENGINEER
Gary R. Hable
10/4/06

DESIGNED BY: LPS

DRAWN BY: LPS

STATE OF ALASKA
DEPARTMENT OF TRANSPORTATION & PUBLIC FACILITIES
DESIGN & ENGINEERING SERVICES
DIVISION-SOUTHEAST REGION

MALSR DETAILS

PROJECT DESIGNATION	
AIP NO. 3-02-0144-1606	
STATE	YEAR
ALASKA	2006
SHEET NUMBER	TOTAL SHEETS
G23	131

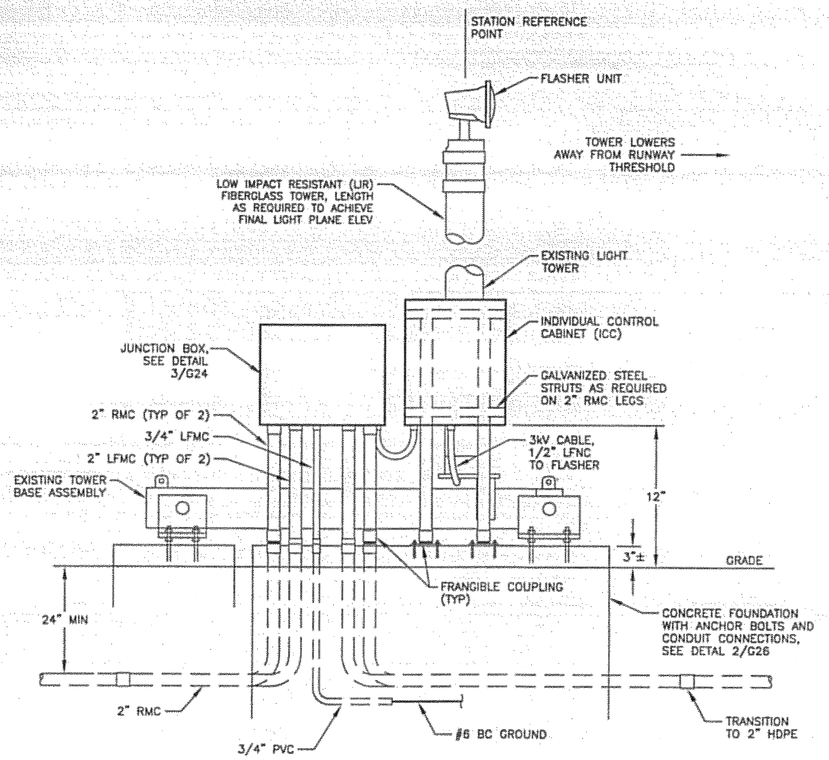

1/G24 FLASHER TOWER DETAILS - WITH GUY WIRES

N.T.S.

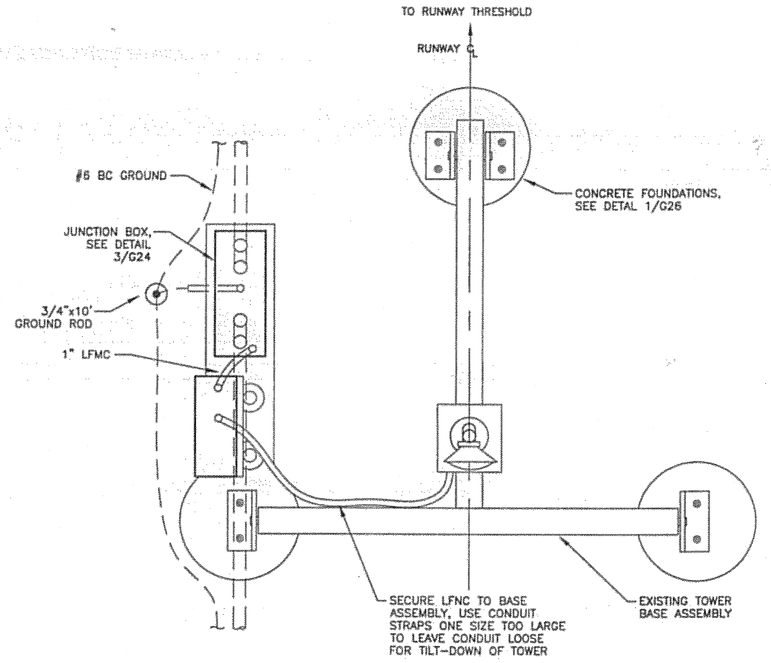

NOTE:
GUY WIRES NOT SHOWN FOR CLARITY

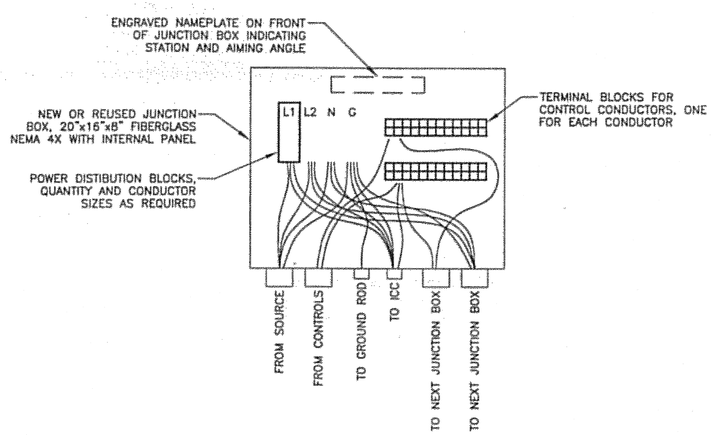

3/G24 FLASHER JUNCTION BOX

N.T.S.

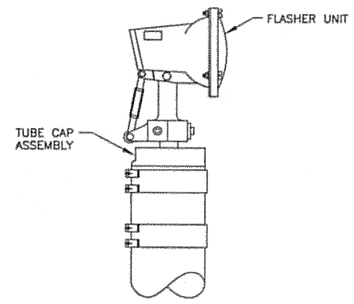

2/G24 FLASHER UNIT DETAIL

N.T.S.

DO NOT SCALE FROM THESE DRAWINGS USE DIMENSIONS

PATH: I:\823400\Dwgs\E\Sheets\G24-M6.dwg
Tue, 03/Oct/06 02:23PM lschneller
TAB: G12

ADDENDUM NUMBER

ATTACHMENT NUMBER

RECORD OF REVISIONS

No.	DATE	DESCRIPTION

KETCHIKAN AIRPORT
RUNWAY SAFETY AREA EXPANSION
& RUNWAY OVERLAY
PROJECT NO. 68306

MALSR DETAILS

PREPARED BY: USKH INC.

CHECKED BY: GRH

STATE OF ALASKA 49TH
GARY R. HABLE
EE-10243
REGISTERED PROFESSIONAL ENGINEER
10/4/06

DESIGNED BY: LPS

DRAWN BY: LPS

STATE OF ALASKA
DEPARTMENT OF TRANSPORTATION & PUBLIC FACILITIES
DESIGN & ENGINEERING SERVICES
DIVISION-SOUTHEAST REGION

MALSR DETAILS

PROJECT DESIGNATION
AIP NO. 3-02-0144-1606

STATE	YEAR
ALASKA	2006
SHEET NUMBER	TOTAL SHEETS
G24	131

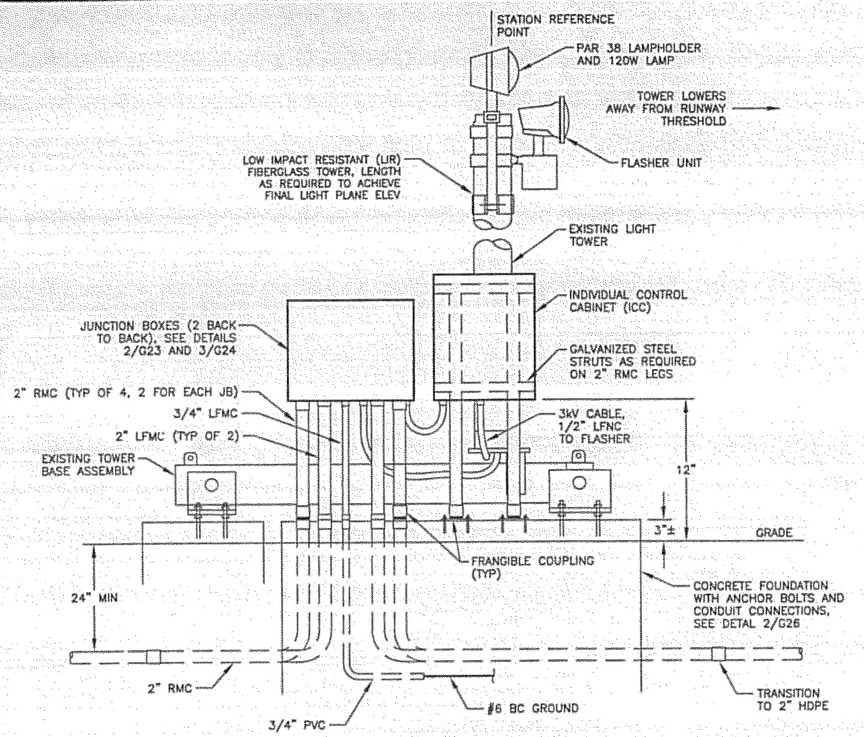

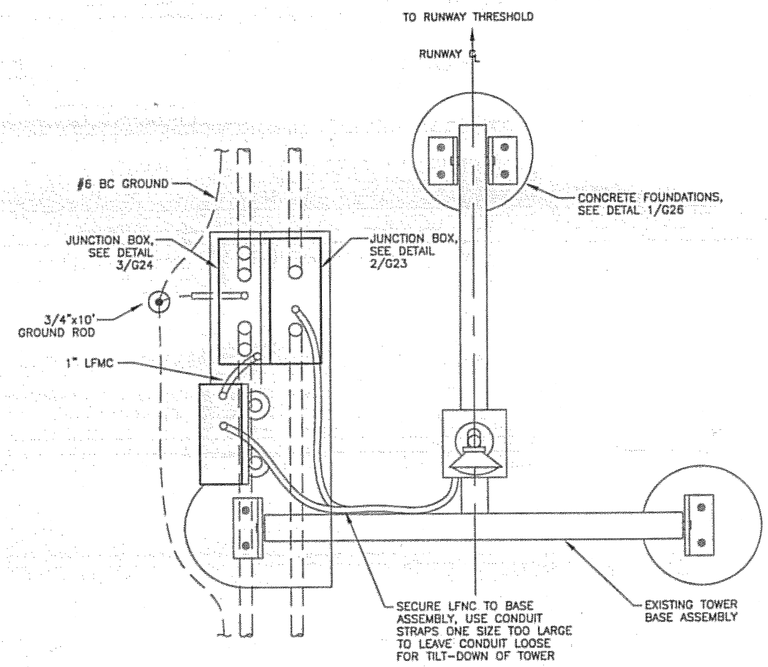

1 / G24 LIGHT BAR/FLASHER TOWER DETAILS - WITH GUY WIRES
N.T.S.

NOTE:
GUY WIRES NOT SHOWN FOR CLARITY

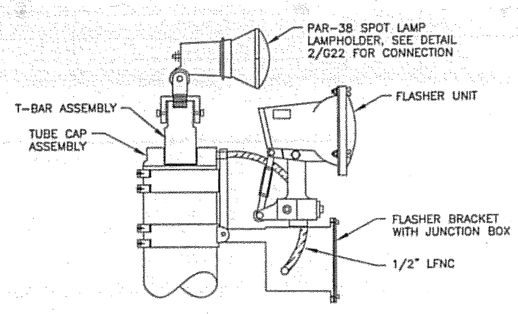

4 / G25 LIGHT BAR/FLASHER UNIT DETAIL
N.T.S.

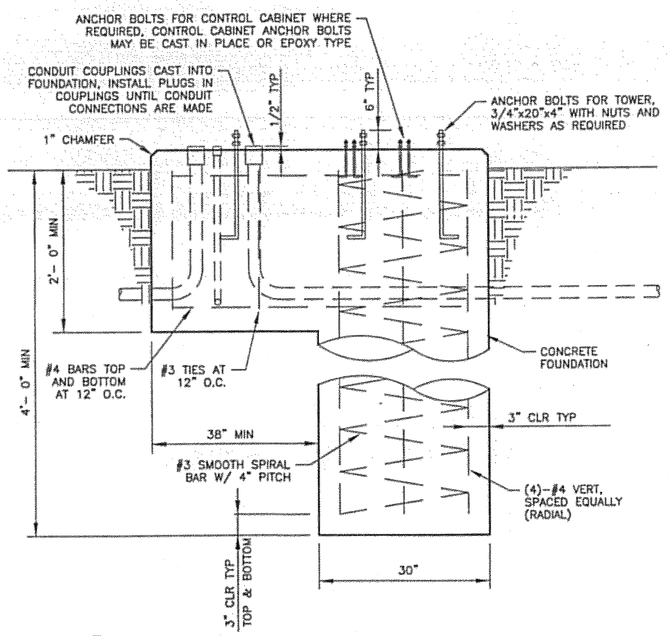

3 / G25 TOWER FOUNDATION DETAIL
N.T.S.

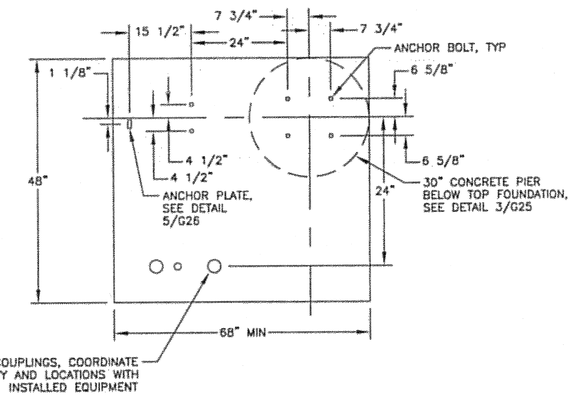

2 / G25 TOWER FOUNDATION LAYOUT
N.T.S.

NOTE:
CONCRETE ANCHOR BOLT LOCATIONS SHOWN FOR NEW JAQUITH MG-20 BASE ASSEMBLY, ADJUST DIMENSIONS AS REQUIRED WHEN REUSING EXISTING EQUIPMENT

DO NOT SCALE FROM THESE DRAWINGS USE DIMENSIONS

PATH: I:\823400\Dwgs\E\Sheets\G25-M7.dwg
Tue, 03/Oct/06 02:23PM lschneller
TAB: G12

ADDENDUM NUMBER

ATTACHMENT NUMBER

RECORD OF REVISIONS

No.	DATE	DESCRIPTION

KETCHIKAN AIRPORT
RUNWAY SAFETY AREA EXPANSION
& RUNWAY OVERLAY
PROJECT NO. 68306

MALSR DETAILS

PREPARED BY: USKH INC.

CHECKED BY: GRH

STATE OF ALASKA 49TH GARY R. HABLE REGISTERED PROFESSIONAL ENGINEER
GARY R. HABLE
EE-10243
10/4/06

DESIGNED BY: LPS

DRAWN BY: LPS

STATE OF ALASKA
DEPARTMENT OF TRANSPORTATION & PUBLIC FACILITIES
DESIGN & ENGINEERING SERVICES
DIVISION-SOUTHEAST REGION

MALSR DETAILS

PROJECT DESIGNATION	
AIP NO. 3-02-0144-1606	
STATE	YEAR
ALASKA	2006
SHEET NUMBER	TOTAL SHEETS
G25	131

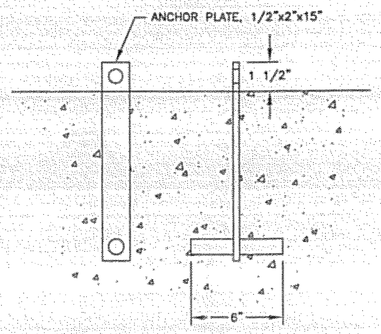

5 G26 **ANCHOR PLATE DETAIL** N.T.S.

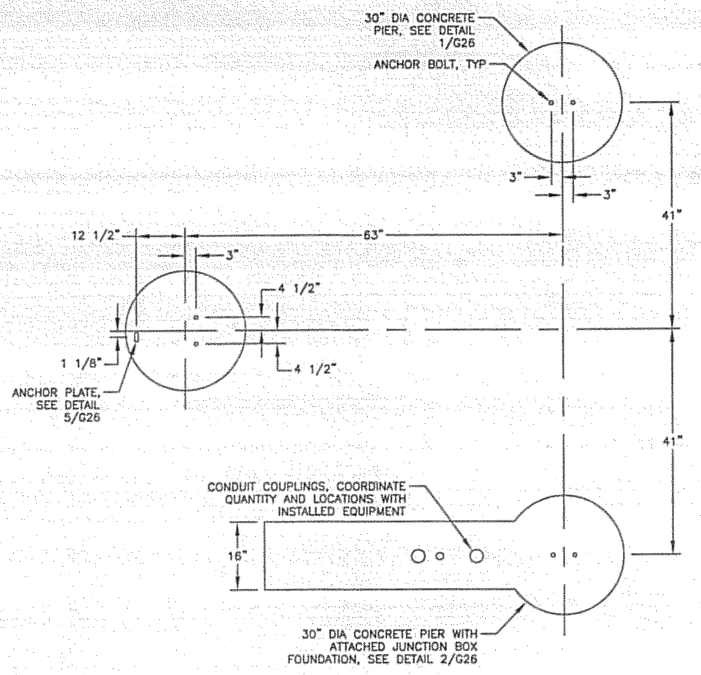

3 G26 **TOWER FOUNDATION LAYOUT** N.T.S.

NOTE:
CONCRETE PIER AND ANCHOR BOLT LOCATIONS SHOWN FOR NEW JAQUITH MG-30/40 BASE ASSEMBLY, ADJUST DIMENSIONS AS REQUIRED WHEN REUSING EXISTING EQUIPMENT

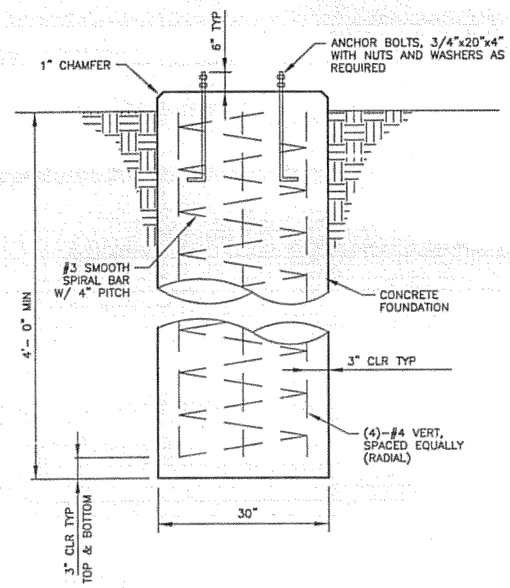

1 G26 **CONCRETE PIER DETAIL** N.T.S.

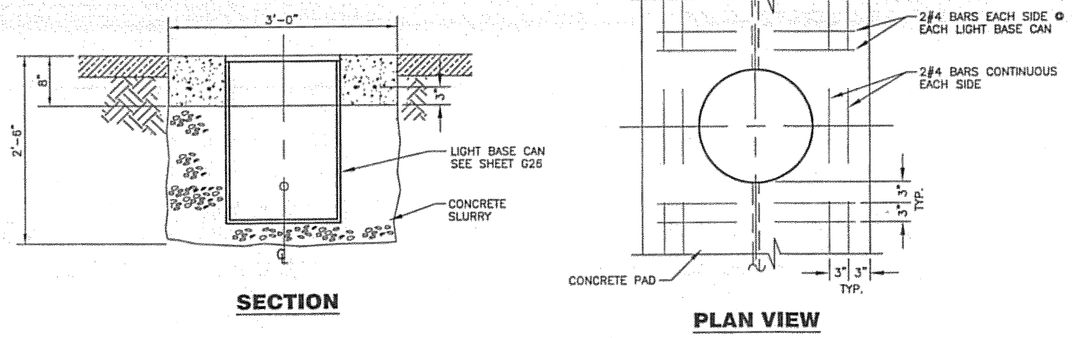

4 G26 **BASE MOUNTED LIGHT FOUNDATION DETAILS** N.T.S.

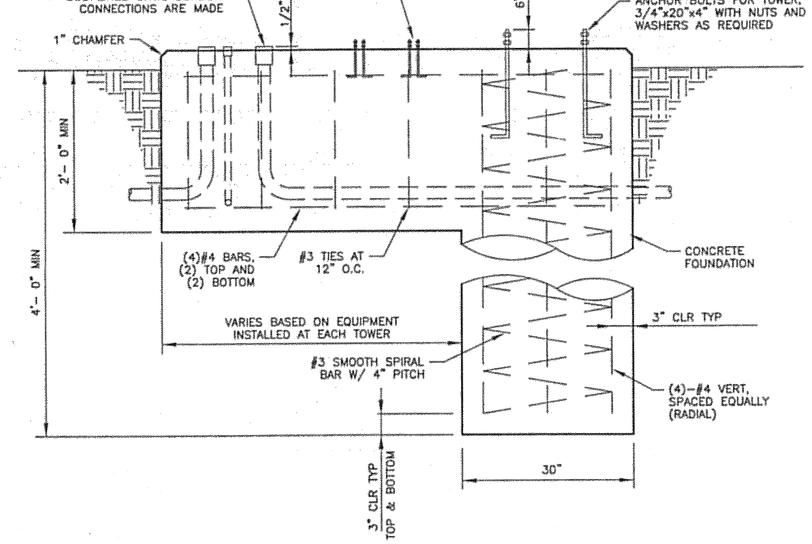

2 G26 **CONCRETE PIER WITH JUNCTION BOX FOUNDATION DETAIL** N.T.S.

DO NOT SCALE FROM THESE DRAWINGS USE DIMENSIONS

PATH: I:\823400\Dwgs\E\Sheets\G26-M8.dwg
Tue, 03/Oct/06 02:23PM lschneller
TAB: G12

ADDENDUM NUMBER

ATTACHMENT NUMBER

RECORD OF REVISIONS

No.	DATE	DESCRIPTION

KETCHIKAN AIRPORT
RUNWAY SAFETY AREA EXPANSION & RUNWAY OVERLAY
PROJECT NO. 68306

MALSR DETAILS

PREPARED BY: USKH INC.

CHECKED BY: GRH

STATE OF ALASKA 49TH GARY R. HABLE EE-10243 REGISTERED PROFESSIONAL ENGINEER 10/4/06

DESIGNED BY: LPS

DRAWN BY: LPS

STATE OF ALASKA
DEPARTMENT OF TRANSPORTATION & PUBLIC FACILITIES
DESIGN & ENGINEERING SERVICES
DIVISION-SOUTHEAST REGION

MALSR DETAILS

PROJECT DESIGNATION	
AIP NO. 3-02-0144-1606	
STATE	YEAR
ALASKA	2006
SHEET NUMBER	TOTAL SHEETS
G26	131

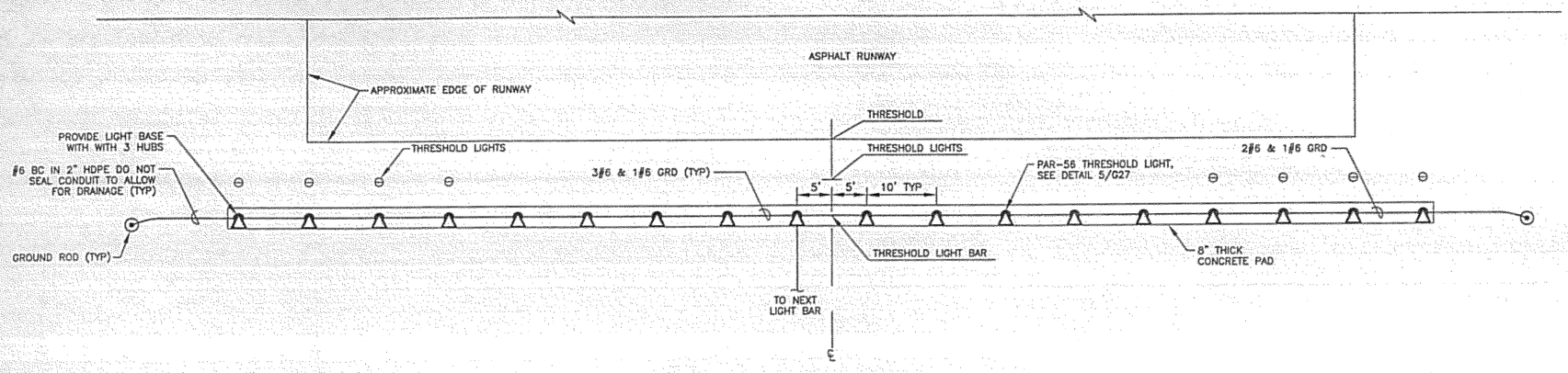

1 G27 **THRESHOLD LIGHTS - PLAN**
N.T.S.

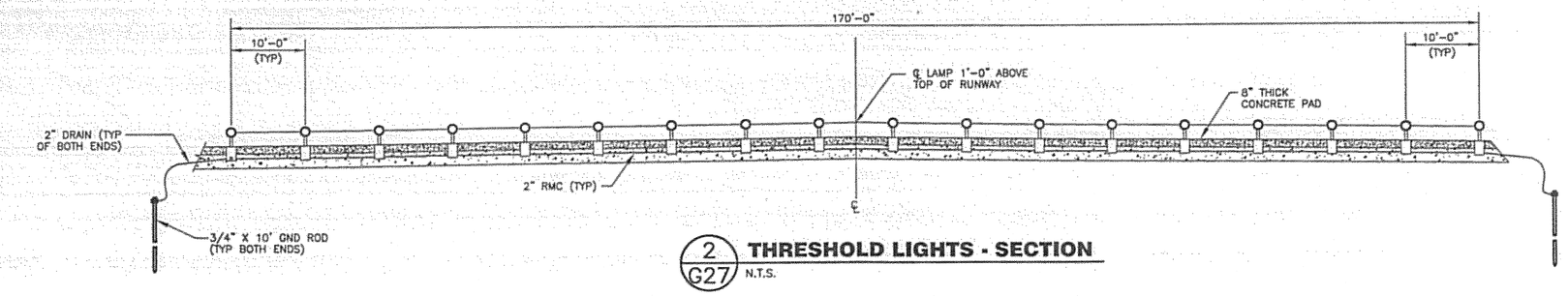

2 G27 **THRESHOLD LIGHTS - SECTION**
N.T.S.

NOTES:

1. RELOCATE THE EXISTING THRESHOLD LIGHTS (RW 11) TO THE NEW RUNWAY THRESHOLD OR INSTALL NEW THRESHOLD LIGHTS (RW 29). PROVIDE NEW THRESHOLD LIGHT BASES AND CIRCUITING AS SHOWN.
2. CONDUITS BELOW GRADE SHALL BE HDPE, EXCEPT INSTALL RIGID GALVANIZED STEEL (RMC) UNDER PADS AND ROADWAYS.
3. DRILL HOLE IN CABLE CLAMP AND INSTALL GREEN INSULATED GROUND CONDUCTOR FROM GROUND LUG IN LIGHT BASE TO LAMP HOLDER. CARE SHOULD BE TAKEN NOT TO INSTALL CABLE CLAMP UPSIDE DOWN SO THAT WHEN THE FRANGIBLE COUPLING IS SCREWED IN, IT WILL NOT TWIST THE CLAMP AND RECEPTACLE SO AS NOT TO SHORT THE WIRING.

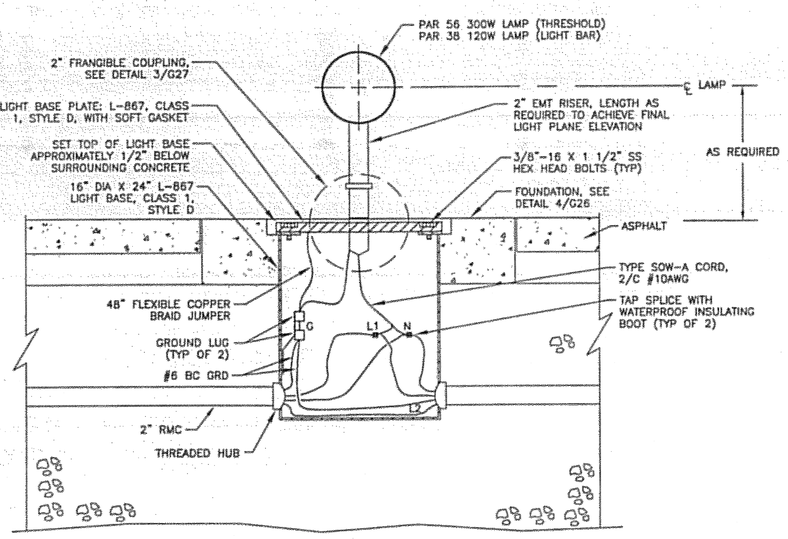

5 G27 **BASE MOUNTED LIGHT - SECTION**
N.T.S.

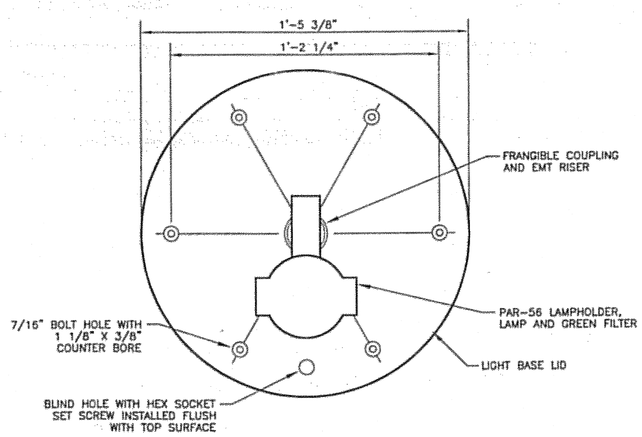

4 G27 **BASE MOUNTED LIGHT - PLAN**
N.T.S.

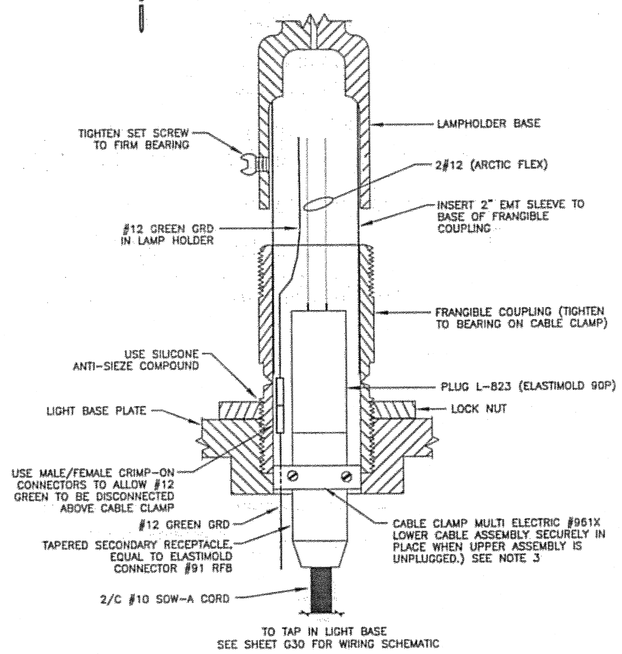

3 G27 **FRANGIBLE COUPLING DETAIL**
N.T.S.

DO NOT SCALE FROM THESE DRAWINGS USE DIMENSIONS

PATH: I:\823400\Dwgs\E\Sheets\G27-M9.dwg
Tue, 03/Oct/06 02:23PM lschneller
TAB: G12

ADDENDUM NUMBER
ATTACHMENT NUMBER

RECORD OF REVISIONS

No.	DATE	DESCRIPTION

KETCHIKAN AIRPORT
RUNWAY SAFETY AREA EXPANSION
& RUNWAY OVERLAY
PROJECT NO. 68306

MALSR DETAILS

PREPARED BY: USKH INC.

CHECKED BY: GRH

STATE OF ALASKA 49TH
GARY R. HABLE
EE-10243
REGISTERED PROFESSIONAL ENGINEER
10/4/06

DESIGNED BY: LPS

DRAWN BY: LPS

STATE OF ALASKA
DEPARTMENT OF TRANSPORTATION & PUBLIC FACILITIES
DESIGN & ENGINEERING SERVICES
DIVISION-SOUTHEAST REGION

MALSR DETAILS

PROJECT DESIGNATION	
AIP NO. 3-02-0144-1606	
STATE	YEAR
ALASKA	2006
SHEET NUMBER	TOTAL SHEETS
G27	131

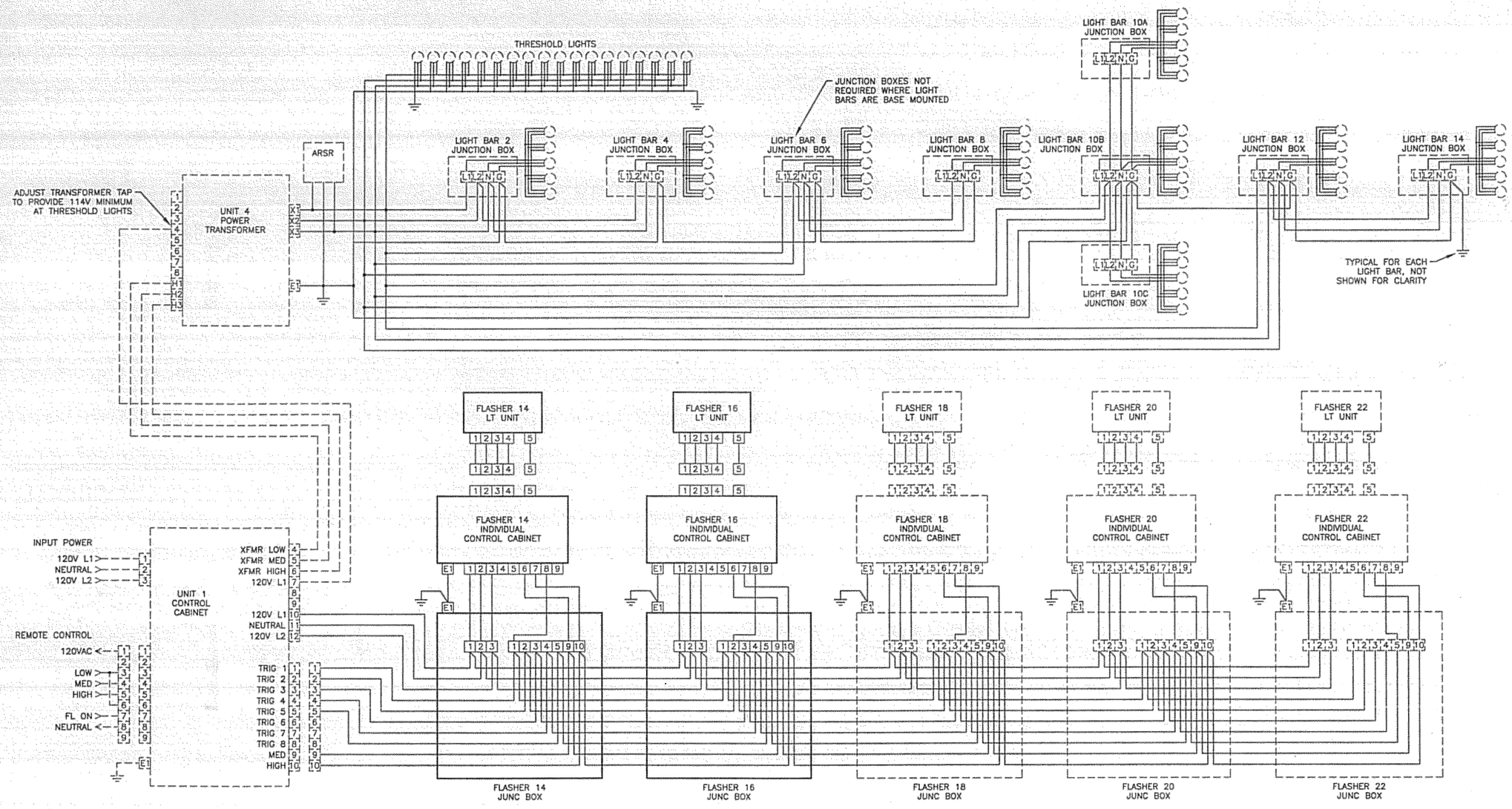

1 / G28 **MALSR WIRING DIAGRAM - RW 11**
N.T.S.

NOTE:
ARRANGEMENT AND CONNECTION OF EQUIPMENT IS SCHEMATIC, SEE SHEET G19 FOR ACTUAL ARRANGEMENT AND CONDUCTORS

WIRING DIAGRAM LEGEND
- - - - EXISTING EQUIPMENT TO REMAIN OR TO BE REINSTALLED
——— NEW WORK

DO NOT SCALE FROM THESE DRAWINGS USE DIMENSIONS

PATH: I:\823400\Dwgs\E\Sheets\G28-M10.dwg
Tue, 03/Oct/06 02:23PM lschneller
TAB: G12

ADDENDUM NUMBER

ATTACHMENT NUMBER

RECORD OF REVISIONS

No.	DATE	DESCRIPTION

KETCHIKAN AIRPORT
RUNWAY SAFETY AREA EXPANSION & RUNWAY OVERLAY
PROJECT NO. 68306

MALSR WIRING DIAGRAM - RW 11

PREPARED BY: USKH INC.
CHECKED BY: GRH

STATE OF ALASKA 49TH GARY R. HABLE EE-10243 REGISTERED PROFESSIONAL ENGINEER 10/4/06

DESIGNED BY: LPS
DRAWN BY: LPS

STATE OF ALASKA
DEPARTMENT OF TRANSPORTATION & PUBLIC FACILITIES
DESIGN & ENGINEERING SERVICES DIVISION–SOUTHEAST REGION

MALSR WIRING DIAGRAM - RW 11

PROJECT DESIGNATION	
AIP NO. 3-02-0144-1606	
STATE	YEAR
ALASKA	2006
SHEET NUMBER	TOTAL SHEETS
G28	131

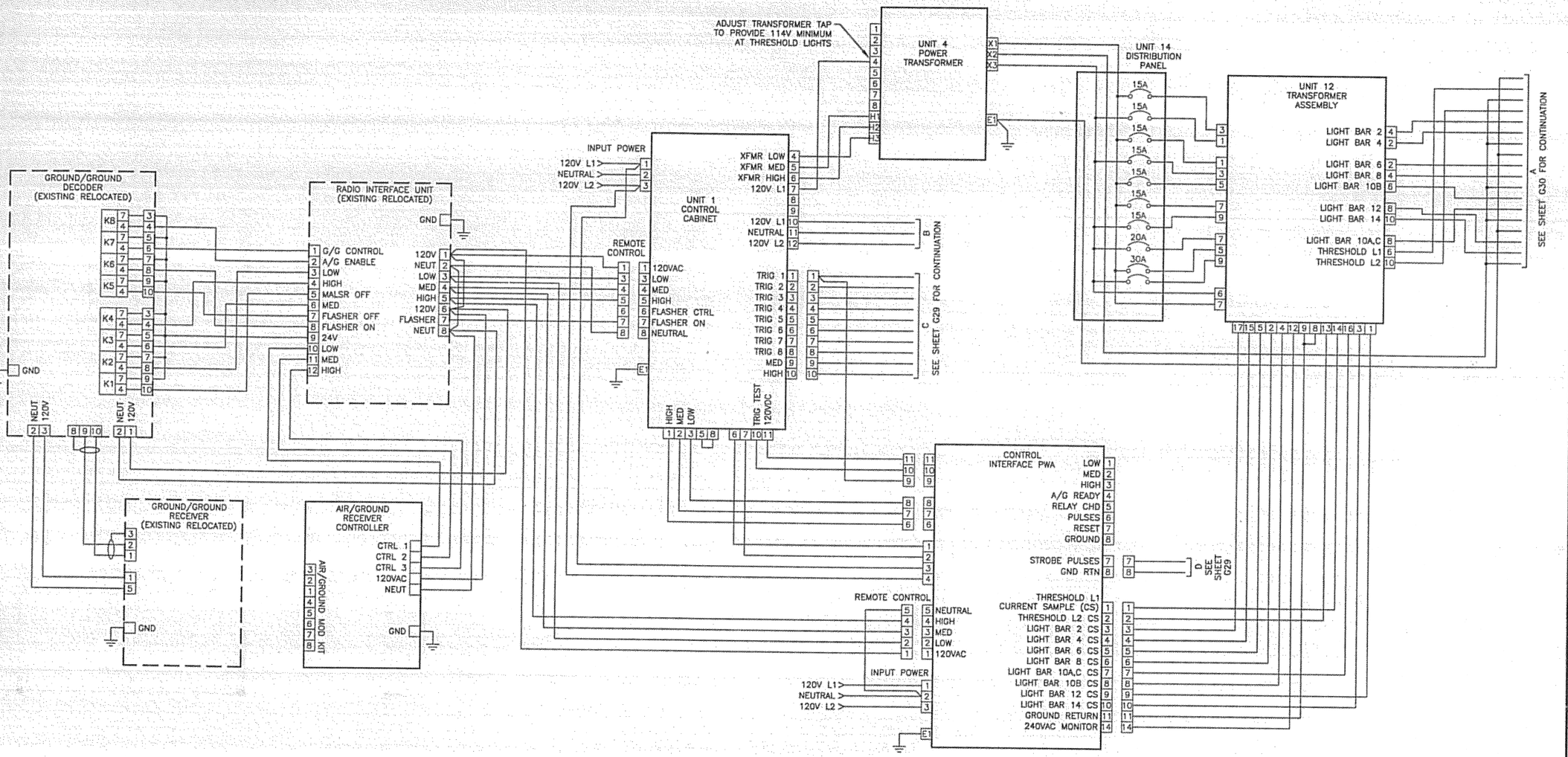

1/G29 MALSR WIRING DIAGRAM - RW 29
N.T.S.

DO NOT SCALE FROM THESE DRAWINGS USE DIMENSIONS

PATH: I:\823400\Dwgs\E\Sheets\G29-M11.dwg
Tue, 03/Oct/06 02:23PM lschneller
TAB: G12

ADDENDUM NUMBER
ATTACHMENT NUMBER

RECORD OF REVISIONS

No.	DATE	DESCRIPTION

KETCHIKAN AIRPORT
RUNWAY SAFETY AREA EXPANSION
& RUNWAY OVERLAY
PROJECT NO. 68306

MALSR WIRING DIAGRAM - RW 29

PREPARED BY: USKH INC.

CHECKED BY: GRH

STATE OF ALASKA
49TH
GARY R. HABLE
EE-10243
REGISTERED PROFESSIONAL ENGINEER
10/4/06

DESIGNED BY: LPS

DRAWN BY: LPS

STATE OF ALASKA
DEPARTMENT OF TRANSPORTATION
& PUBLIC FACILITIES
DESIGN & ENGINEERING SERVICES
DIVISION–SOUTHEAST REGION

MALSR WIRING DIAGRAM - RW 29

PROJECT DESIGNATION	
AIP NO. 3-02-0144-1606	
STATE	YEAR
ALASKA	2006
SHEET NUMBER	TOTAL SHEETS
G29	131

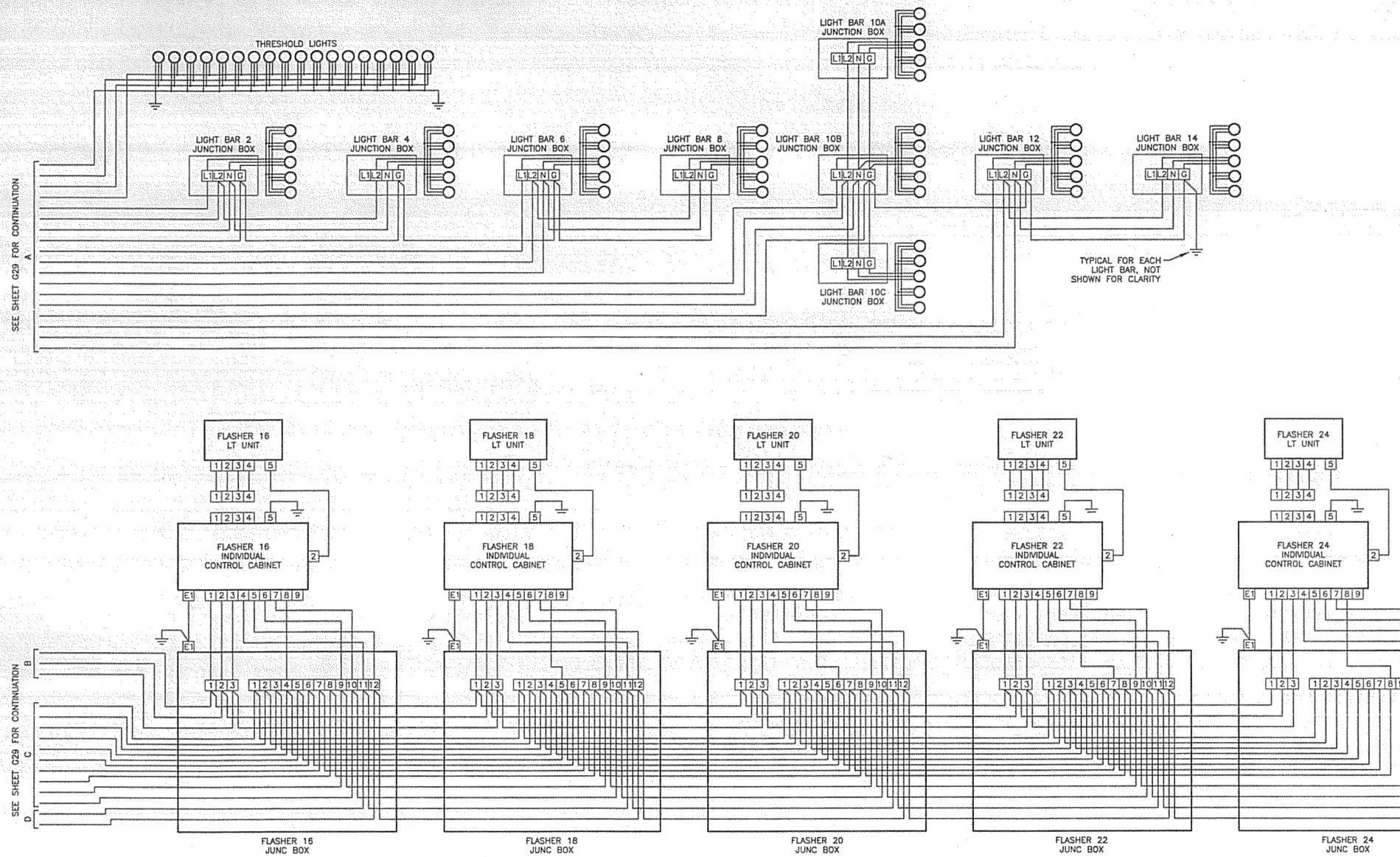

1 G30 MALSR WIRING DIAGRAM - RW 29

N.T.S.

NOTE:
ARRANGEMENT AND CONNECTION OF EQUIPMENT IS SCHEMATIC, SEE SHEET G19 FOR ACTUAL ARRANGEMENT AND CONDUCTORS

DO NOT SCALE FROM THESE DRAWINGS USE DIMENSIONS

PATH: I:\823400\Dwgs\E\Sheets\G30-M12.dwg
Tue, 03/Oct/06 02:24PM lschneller
TAB: G12

ADDENDUM NUMBER

ATTACHMENT NUMBER

RECORD OF REVISIONS

No.	DATE	DESCRIPTION

KETCHIKAN AIRPORT
RUNWAY SAFETY AREA EXPANSION
& RUNWAY OVERLAY
PROJECT NO. 68306

MALSR WIRING DIAGRAM - RW 29

PREPARED BY: USKH INC.

CHECKED BY: GRH

STATE OF ALASKA
49TH
GARY R. HABLE
EE-10243
REGISTERED PROFESSIONAL ENGINEER
10/4/06

DESIGNED BY: LPS

DRAWN BY: LPS

STATE OF ALASKA
DEPARTMENT OF TRANSPORTATION
& PUBLIC FACILITIES
DESIGN & ENGINEERING SERVICES
DIVISION-SOUTHEAST REGION

MALSR WIRING DIAGRAM -RW 29

PROJECT DESIGNATION	
AIP NO. 3-02-0144-1606	
STATE	YEAR
ALASKA	2006
SHEET NUMBER	TOTAL SHEETS
G30	131

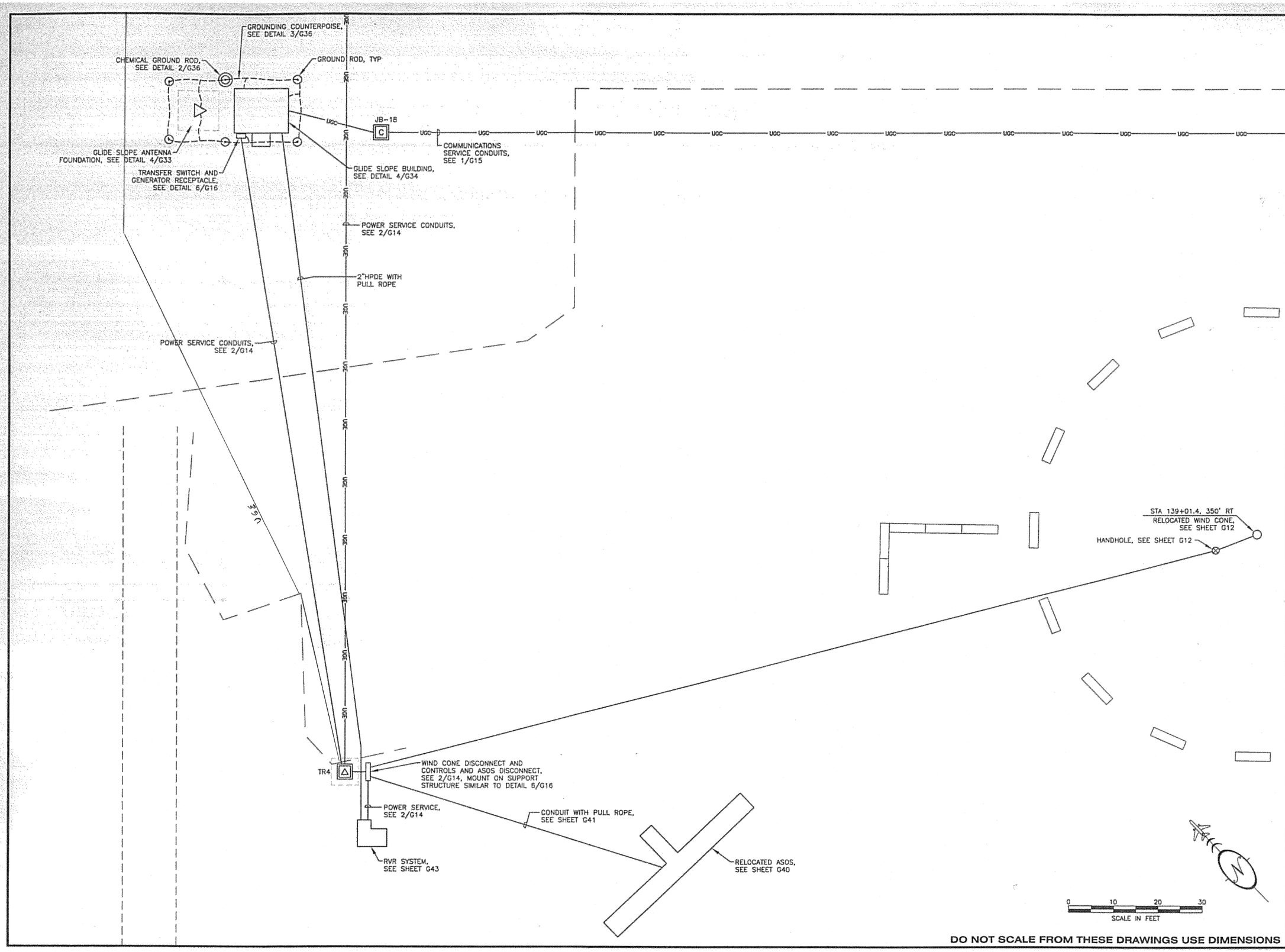

DO NOT SCALE FROM THESE DRAWINGS USE DIMENSIONS

PATH: I:\823400\Dwgs\E\Sheets\G31-G1.dwg
Tue, 03/Oct/06 02:24PM lschneller
TAB: G06

ADDENDUM NUMBER

ATTACHMENT NUMBER

RECORD OF REVISIONS

No.	DATE	DESCRIPTION

KETCHIKAN AIRPORT
RUNWAY SAFETY AREA EXPANSION & RUNWAY OVERLAY
PROJECT NO. 68306

PREPARED BY: USKH INC.

CHECKED BY: GRH

STATE OF ALASKA
49TH
GARY R. HABLE
EE-10243
REGISTERED PROFESSIONAL ENGINEER
10/4/06

DESIGNED BY: LPS

DRAWN BY: LPS

STATE OF ALASKA
DEPARTMENT OF TRANSPORTATION & PUBLIC FACILITIES
DESIGN & ENGINEERING SERVICES
DIVISION-SOUTHEAST REGION

GLIDE SLOPE AREA ENLARGED PLAN

PROJECT DESIGNATION	
AIP NO. 3-02-0144-1606	
STATE	YEAR
ALASKA	2006
SHEET NUMBER	TOTAL SHEETS
G31	131

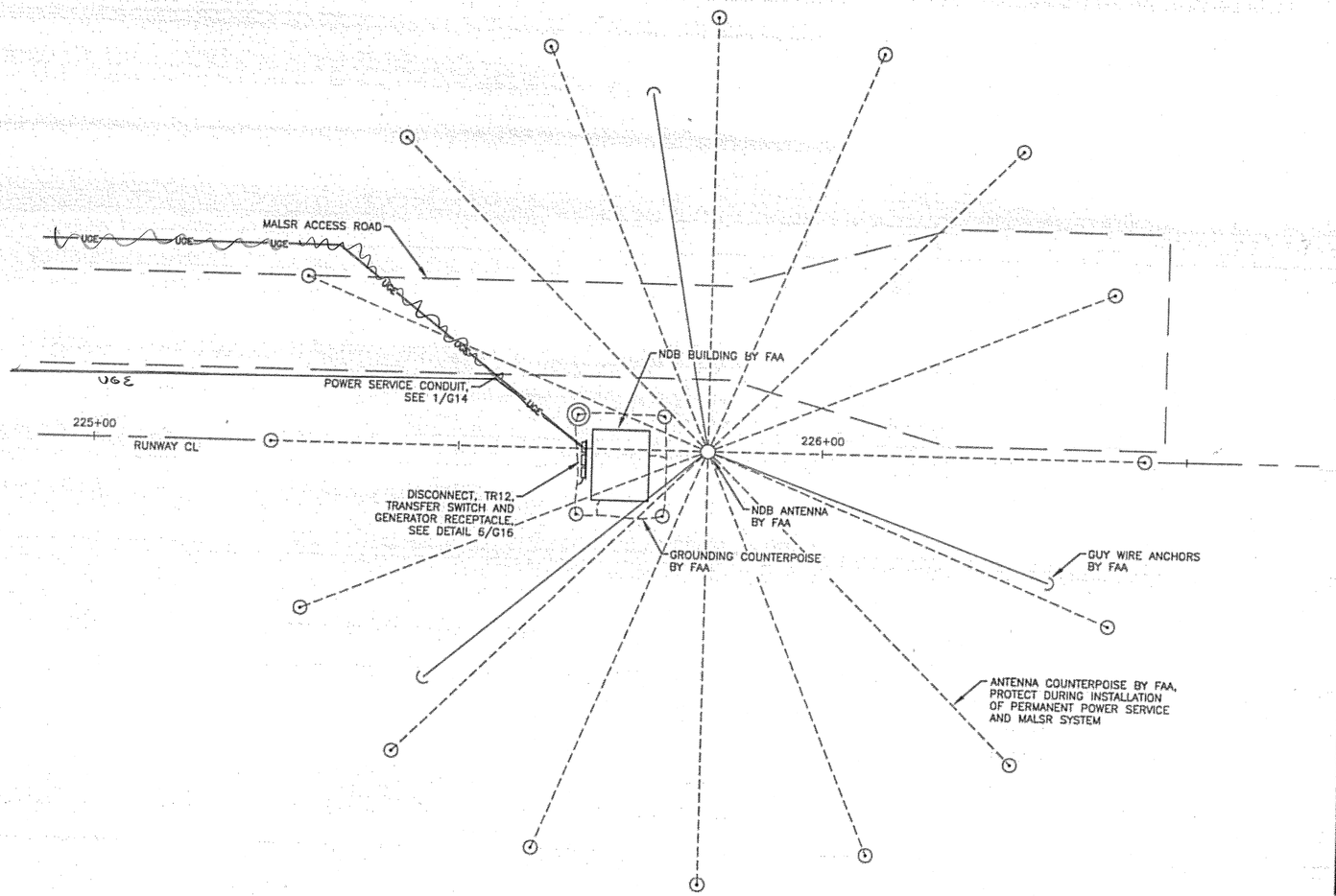

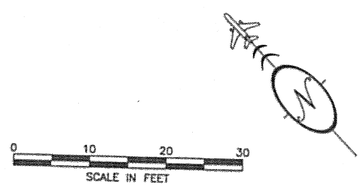

DO NOT SCALE FROM THESE DRAWINGS USE DIMENSIONS

PATH: I:\823400\Dwgs\E\Sheets\G32-N1.dwg
Tue, 03/Oct/06 02:24PM lschneller
TAB: G06

ADDENDUM NUMBER

ATTACHMENT NUMBER

RECORD OF REVISIONS

No.	DATE	DESCRIPTION

KETCHIKAN AIRPORT
RUNWAY SAFETY AREA EXPANSION
& RUNWAY OVERLAY
PROJECT NO. 68306

NDB AREA ENLARGED PLAN

PREPARED BY: USKH INC.

CHECKED BY: GRH

STATE OF ALASKA
49TH
GARY R. HABLE
EE-10243
REGISTERED PROFESSIONAL ENGINEER
10/4/06

DESIGNED BY: LPS

DRAWN BY: LPS

STATE OF ALASKA
DEPARTMENT OF TRANSPORTATION
& PUBLIC FACILITIES
DESIGN & ENGINEERING SERVICES
DIVISION–SOUTHEAST REGION

NDB AREA ENLARGED PLAN

PROJECT DESIGNATION	
AIP NO. 3-02-0144-1606	
STATE	YEAR
ALASKA	2006
SHEET NUMBER	TOTAL SHEETS
G32	131

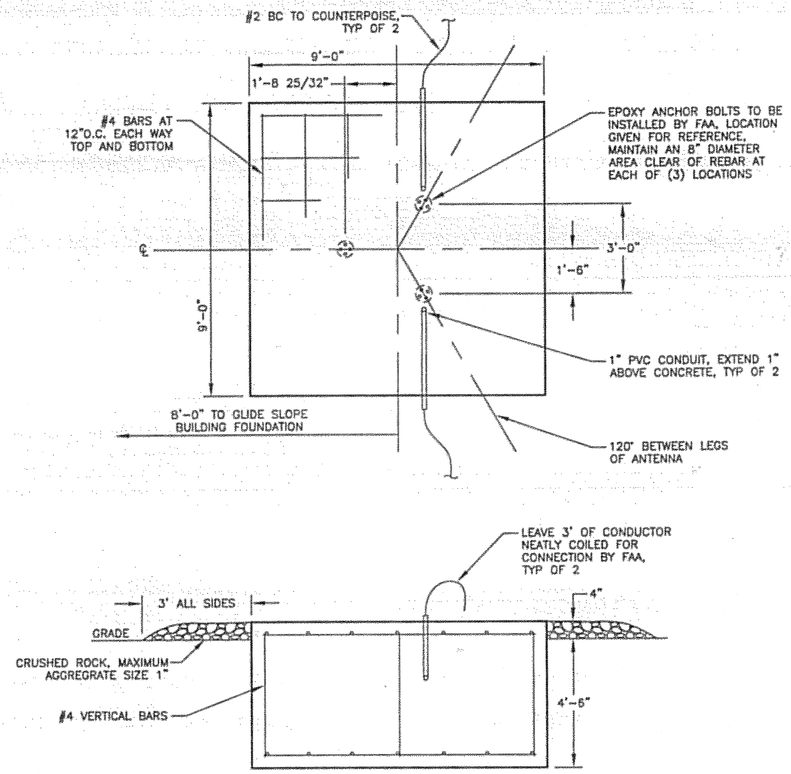

1 G33 GLIDE SLOPE ANTENNA TOWER FOUNDATION DETAIL

N.T.S.

FOUNDATION NOTES:

1. CONCRETE SHALL DEVELOP 3000PSI IN 28 DAYS WITH A MAXIMUM SLUMP OF 3". MAXIMUM AGGREGATE SIZE SHALL BE 3/4".
2. IF FILL OR GRADING IS REQUIRED, IT SHALL BE BUILT UP IN LAYERS NOT EXCEEDING 6". EACH LAYER SHALL BE THOROUGHLY TAMPED AND COMPACTED TO 95% OF MAXIMUM DENSITY AT OPTIMUM WATER CONTENT. GRADING OF SOIL AND ROCK SHOULD BE SUCH THAT ALL DRAINAGE IS AWAY FROM FOUNDATION.
3. MAINTAIN A MINIMUM OF 3" OF CONCRETE COVER OVER ALL REINFORCING STEEL.
4. FOUNDATION SURFACE SHALL BE LEVEL ±1/8" AND HAVE A BROOMED FINISH.
5. REINFORCING STEEL SHALL BE ASTM A615 GRADE 40 DEFORMED BARS.
6. ALL FORMS MUST BE REMOVED BEFORE PLACING COMPACTED BACKFILL.

DO NOT SCALE FROM THESE DRAWINGS USE DIMENSIONS

PATH: I:\823400\Dwgs\E\Sheets\G33-F2.dwg
Tue, 03/Oct/06 02:24PM lschneller
TAB: G12

ADDENDUM NUMBER

ATTACHMENT NUMBER

RECORD OF REVISIONS

No.	DATE	DESCRIPTION

KETCHIKAN AIRPORT
RUNWAY SAFETY AREA EXPANSION
& RUNWAY OVERLAY
PROJECT NO. 68306

NAVAID FOUNDATION DETAILS

PREPARED BY: USKH INC.

CHECKED BY: GRH

STATE OF ALASKA 49TH
GARY R. HABLE
EE-10243
REGISTERED PROFESSIONAL ENGINEER
10/4/06

DESIGNED BY: LPS

DRAWN BY: LPS

STATE OF ALASKA
DEPARTMENT OF TRANSPORTATION
& PUBLIC FACILITIES
DESIGN & ENGINEERING SERVICES
DIVISION-SOUTHEAST REGION

NAVAID FOUNDATION DETAILS

PROJECT DESIGNATION

AIP NO. 3-02-0144-1606

STATE	YEAR
ALASKA	2006
SHEET NUMBER	TOTAL SHEETS
G33	131

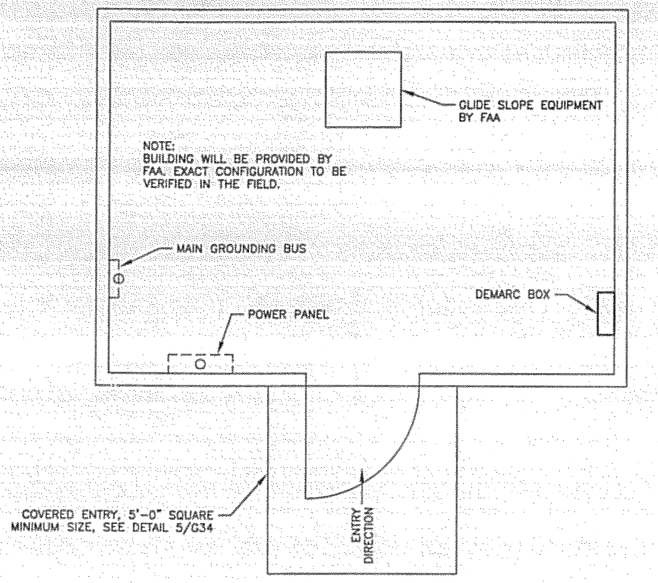

4/G34 **GLIDE SLOPE EQUIPMENT ENCLOSURE**
N.T.S.

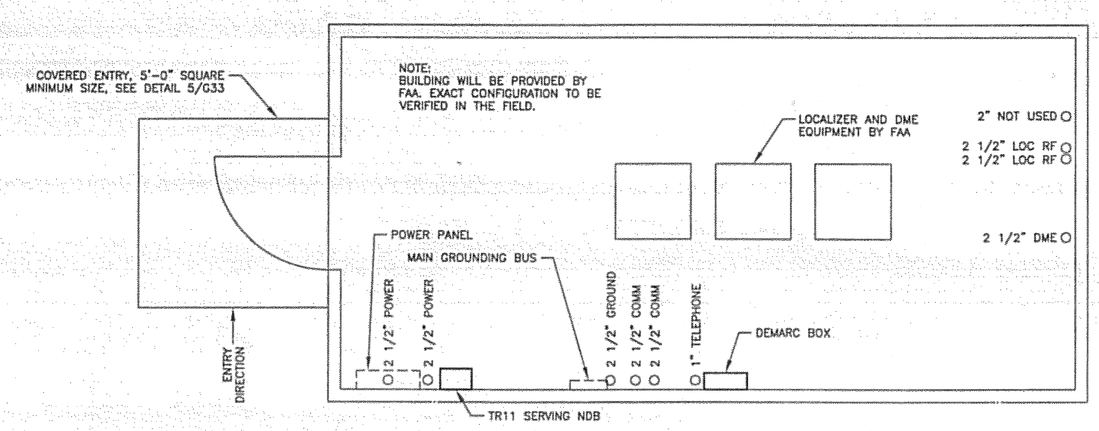

1/G34 **LOCALIZER EQUIPMENT ENCLOSURE**
N.T.S.

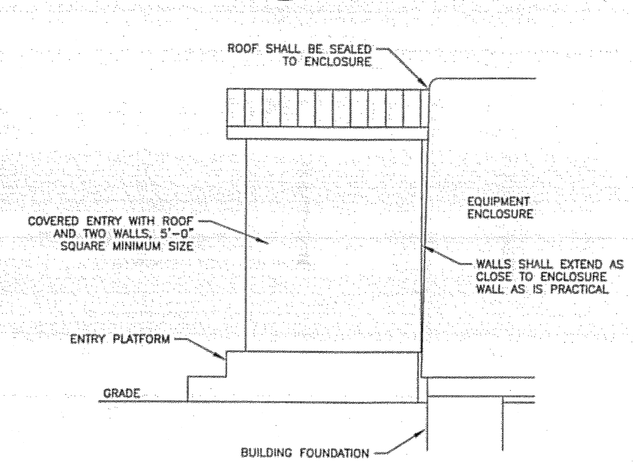

5/G34 **COVERED ENTRY DETAIL**
N.T.S.

COVERED ENTRY NOTES:

1. COVERED ENTRIES MAY BE PREFABRICATED FIBERGLASS UNITS OR CONSTRUCTED ON SITE.
2. FIELD CONSTRUCTED ENTRIES SHALL BE CONSTRUCTED OF ALL-WEATHER TREATED WOOD STRUCTURE, METAL OR FIBERGLASS ROOF AND WALL PANELS, AND FIBERGLASS FLOOR GRATING. OTHER MATERIALS MAY BE USED UPON APPROVAL OF THE ENGINEER.
3. THE ENTRY PLATFORM MAY BE CONSTRUCTED AS DESCRIBED ABOVE OR MAY BE POURED OR PRECAST CONCRETE. MAXIMUM STEP HEIGHT SHALL BE 8".
4. ONE PREFABRICATED FIBERGLASS ENTRY IS AVAILABLE FOR SALVAGE FROM THE EXISTING LOCALIZER BUILDING.
5. COORDINATE ENTRY CONSTRUCTION AND CONNECTION TO ENCLOSURE WITH EXISTING ENCLOSURE PENETRATIONS, VENTILATION HOODS, ENTRY DOOR, ETC.

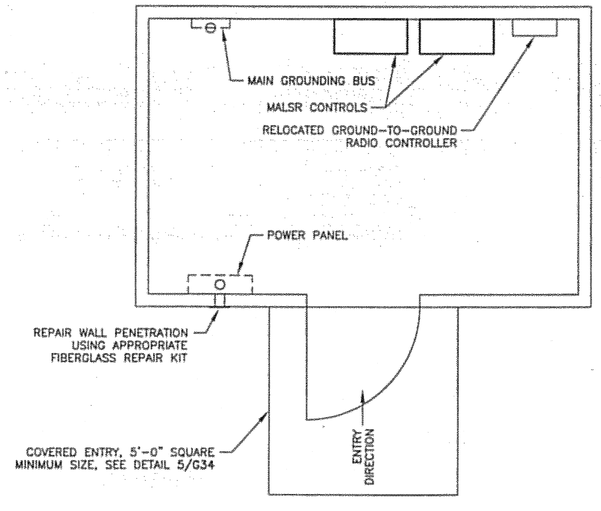

3/G34 **MALSR EQUIPMENT ENCLOSURE**
N.T.S.

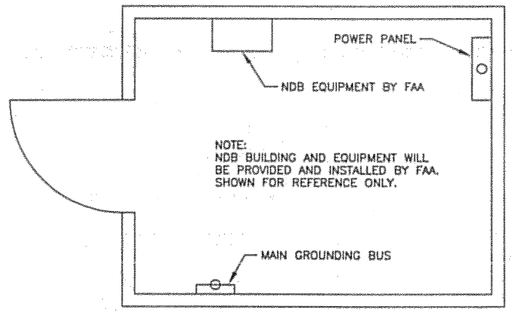

2/G34 **NDB EQUIPMENT ENCLOSURE**
N.T.S.

BUILDING NOTES:

1. LAYOUTS SHOWN ARE TAKEN FROM AS-BUILT INFORMATION AND SITE INVESTIGATIONS. DIMENSIONS, LOCATIONS, AND LAYOUT SHOULD BE VERIFIED IN THE FIELD PRIOR TO STARTING CONSTRUCTION.
2. BUILDING PENETRATIONS SHALL BE MADE THROUGH THE FLOOR ONLY. EXISTING BUILDING PENETRATIONS SHALL BE REUSED WHENEVER POSSIBLE. ADDITIONAL PENETRATIONS SHALL NOT BE MADE WITHOUT PRIOR APPROVAL OF THE ENGINEER.
3. EXACT LAYOUT OF EQUIPMENT AND CONDUIT ENTRY POINTS SHALL BE COORDINATED IN THE FIELD BASED ON EXISTING AND FIELD CONDITIONS.

DO NOT SCALE FROM THESE DRAWINGS USE DIMENSIONS

PATH: I:\823400\Dwgs\E\Sheets\G34-F3.dwg
Tue, 03/Oct/06 02:24PM lschneller
TAB: G11

ADDENDUM NUMBER
ATTACHMENT NUMBER

RECORD OF REVISIONS

No.	DATE	DESCRIPTION

KETCHIKAN AIRPORT
RUNWAY SAFETY AREA EXPANSION & RUNWAY OVERLAY
PROJECT NO. 68306

EQUIPMENT ENCLOSURE PLANS

PREPARED BY: USKH INC.

CHECKED BY: GRH

STATE OF ALASKA
49TH
GARY R. HABLE
EE-10243
REGISTERED PROFESSIONAL ENGINEER
10/4/06

DESIGNED BY: LPS

DRAWN BY: LPS

STATE OF ALASKA
DEPARTMENT OF TRANSPORTATION & PUBLIC FACILITIES
DESIGN & ENGINEERING SERVICES
DIVISION-SOUTHEAST REGION

EQUIPMENT ENCLOSURE PLANS

PROJECT DESIGNATION	
AIP NO. 3-02-0144-1606	
STATE	YEAR
ALASKA	2006
SHEET NUMBER	TOTAL SHEETS
G34	131

NOTES:

1. 3 1/4" SOLID WALL FIBERGLASS CONSTRUCTION.
2. 3/4" PLYWOOD BACKING
3. PANELBOARD P-1A SCHEDULE.

	120/240V	1PH			
1.	SERVICE DC	DP60A	2.	BASEBOARD HTR	DP20A
3.	SERVICE DC	DP60A	4.	BASEBOARD HTR	DP20A
5.	LIGHTS	20A	6.	ANT. HTRS	DP20A
7.	OUTLETS	20A	8.	ANT. HTRS	DP20A
9.	OUTLETS	20A	10.	THERMOSTAT	20A
11.	EQUIP. OUTLET AND GFCI	20A	12.	OBSTRUCTION LTS.	20A

4. THE EXISTING LOCALIZER RF DISTRIBUTION/COMBININB BUILDING IS TO BE REUSED. THESE DRAWINGS OF THE EXISTING BUILDING ARE FOR REFERENCE ONLY. EXISTING BUILDING PENETRATIONS SHALL BE REUSED – NO NEW BUILDING PENETRATIONS SHALL BE MADE.

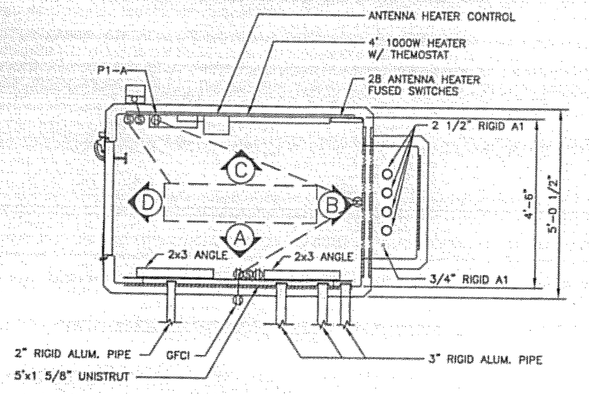

PLAN
SCALE: 1/2" = 1'-0"

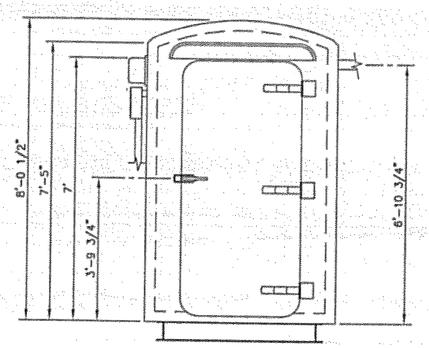

FRONT ELEVATION
SCALE: 1/2" = 1'-0"

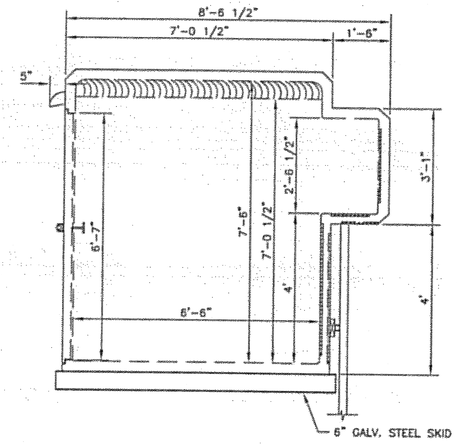

SIDE ELEVATION
SCALE: 1/2" = 1'-0"

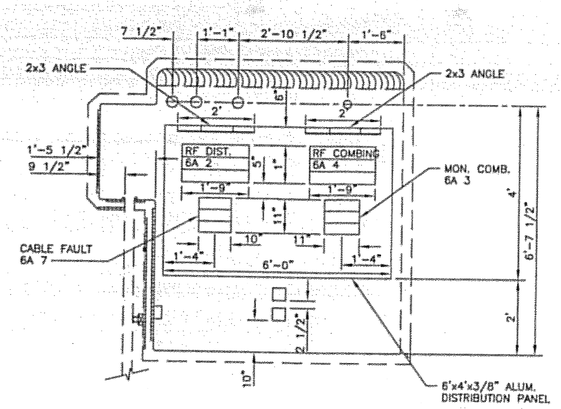

ELEVATION "A"
SCALE: 1/2" = 1'-0"

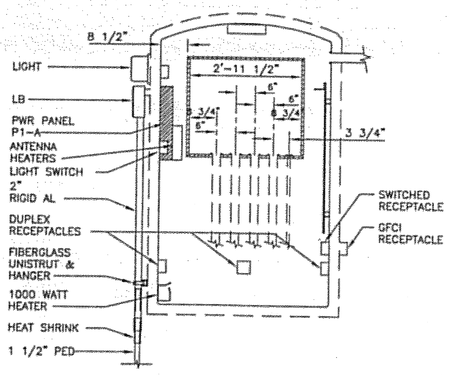

ELEVATION "B"
SCALE: 1/2" = 1'-0"

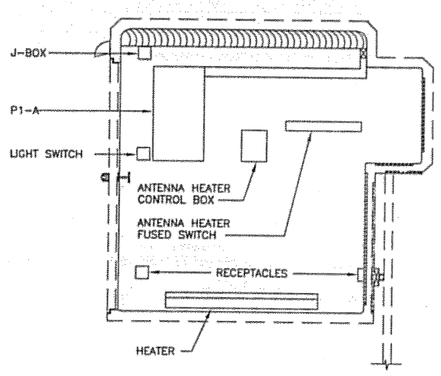

ELEVATION "C"
SCALE: 1/2" = 1'-0"

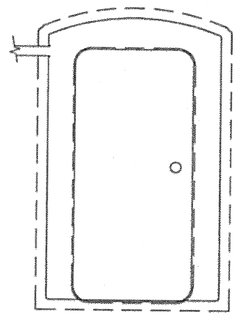

ELEVATION "D"
SCALE: 1/2" = 1'-0"

DO NOT SCALE FROM THESE DRAWINGS USE DIMENSIONS

PATH: I:\823400\Dwgs\E\Sheets\G35-C1.dwg
Tue, 03/Oct/06 02:24PM lschneller
TAB: G12

ADDENDUM NUMBER
ATTACHMENT NUMBER

RECORD OF REVISIONS

No.	DATE	DESCRIPTION

KETCHIKAN AIRPORT
RUNWAY SAFETY AREA EXPANSION
& RUNWAY OVERLAY
PROJECT NO. 68306

LOCALIZER RF DISTRIBUTION/COMBING UNIT

PREPARED BY: USKH INC.

CHECKED BY: GRH

STATE OF ALASKA 49TH
GARY R. HABLE
EE-10243
REGISTERED PROFESSIONAL ENGINEER
10/4/06

DESIGNED BY: LPS

DRAWN BY: LPS

STATE OF ALASKA
DEPARTMENT OF TRANSPORTATION
& PUBLIC FACILITIES
DESIGN & ENGINEERING SERVICES
DIVISION-SOUTHEAST REGION

LOCALIZER DISTRIBUTION/ COMBINING UNIT

PROJECT DESIGNATION	
AIP NO. 3-02-0144-1606	
STATE	YEAR
ALASKA	2006
SHEET NUMBER	TOTAL SHEETS
G35	131

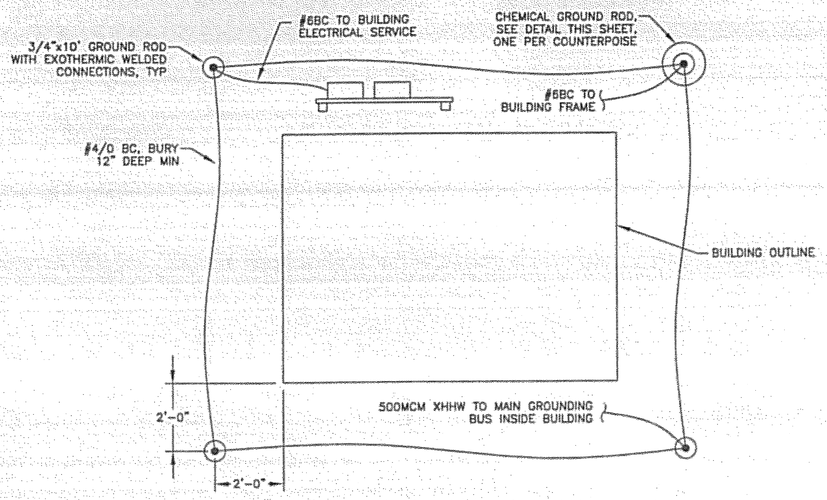

NOTE:
DETAIL IS TYPICAL, SEE PLANS FOR EXACT CONFIGURATION AND CONNECTION POINTS

3/G36 **GROUNDING COUNTERPOISE DETAIL**
N.T.S.

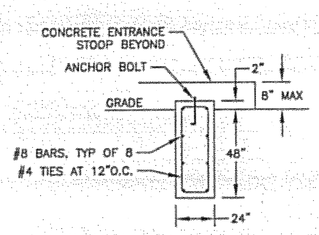

CONCRETE GRADE BEAM

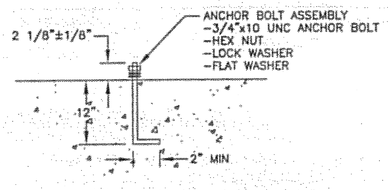

ANCHOR BOLT DETAIL

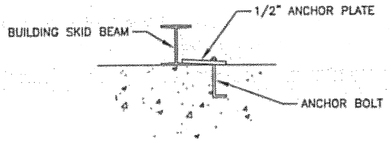

SHELTER ANCHOR DETAIL

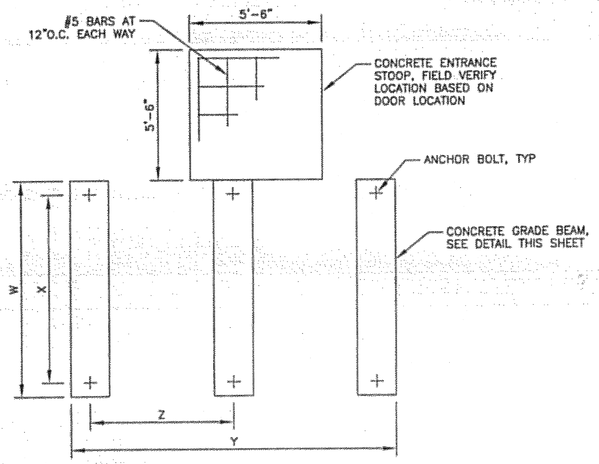

BUILDING FOUNDATION NOTES:

1. FIELD VERIFY ALL DIMENSIONS WITH BUILDINGS BEING INSTALLED

BUILDING	W	X	Y	Z	NO OF BEAMS
LOCALIZER	10'-0"	9'-3"	20'-0"	4'-6"	5
MALSR	8'-0"	7'-3"	12'-0"	5'-0"	3
GLIDE SLOPE	10'-0"	9'-3"	14'-0"	4'-0"	4
DIST/COMB	5'-0"	4'-3"	7'-0"	5'-0"	2
GENERATOR	FIELD VERIFY MODULE SIZE			4'-0" MAX	

2. CONCRETE SHALL DEVELOP 3000PSI IN 28 DAYS WITH A MAXIMUM SLUMP OF 3". MAXIMUM AGGREGATE SIZE SHALL BE 3/4".
3. IF FILL OR GRADING IS REQUIRED, IT SHALL BE BUILT UP IN LAYERS NOT EXCEEDING 6". EACH LAYER SHALL BE THOROUGHLY TAMPED AND COMPACTED TO 95% OF MAXIMUM DENSITY AT OPTIMUM WATER CONTENT. GRADING OF SOIL AND ROCK SHOULD BE SUCH THAT ALL DRAINAGE IS AWAY FROM FOUNDATIONS.
4. ANCHOR BOLTS, NUTS, AND WASHERS SHALL BE HOT DIP GALVANIZED STEEL PER ASTM A153 AND A325.
5. MAINTAIN A MINIMUM OF 3" OF CONCRETE COVER OVER ALL REINFORCING STEEL.
6. GRADE BEAM FOUNDATION ELEVATIONS SHALL BE HORIZONTALLY LEVEL WITH EACH OTHER ±1/4". INDIVIDUAL GRADE BEAM SURFACES MUST BE LEVEL ±1/8".
7. ANCHOR BOLTS MAY BE REPLACED WITH EPOXY ANCHORED THREADED ROD AT THE CONTRACTOR'S OPTION. EPOXY SHALL HAVE A MINIMUM TENSION SHEAR OF 4500PSI WHEN SET. THREADED ROD SHALL BE 3/4"-10 UNC STAINLESS STEEL. INSTALL ROD PER MANUFACTURER'S RECOMMENDATIONS LEAVING 2 1/8" ABOVE CONCRETE.
8. FOUNDATION ELEVATION SHALL BE FIELD VERIFIED AND RECORDED ON THE AS-BUILT DRAWINGS.

1/G36 **TYPICAL BUILDING FOUNDATION DETAILS**
N.T.S.

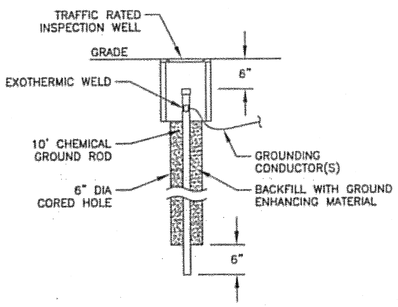

2/G36 **CHEMICAL GROUND ROD DETAIL**
N.T.S.

DO NOT SCALE FROM THESE DRAWINGS USE DIMENSIONS

PATH: I:\823400\Dwgs\E\Sheets\G36-F1.dwg
Tue, 03/Oct/06 02:25PM lschneller
TAB: G12

ADDENDUM NUMBER

ATTACHMENT NUMBER

RECORD OF REVISIONS

No.	DATE	DESCRIPTION

KETCHIKAN AIRPORT
RUNWAY SAFETY AREA EXPANSION
& RUNWAY OVERLAY
PROJECT NO. 68306

EQUIPMENT ENCLOSURE DETAILS

PREPARED BY: USKH INC.

CHECKED BY: GRH

STATE OF ALASKA
49TH
GARY R. HABLE
EE-10243
REGISTERED PROFESSIONAL ENGINEER
10/4/06

DESIGNED BY: LPS

DRAWN BY: LPS

STATE OF ALASKA
DEPARTMENT OF TRANSPORTATION & PUBLIC FACILITIES
DESIGN & ENGINEERING SERVICES
DIVISION-SOUTHEAST REGION

EQUIPMENT ENCLOSURE DETAILS

PROJECT DESIGNATION
AIP NO. 3-02-0144-1606

STATE	YEAR
ALASKA	2006
SHEET NUMBER	TOTAL SHEETS
G36	131

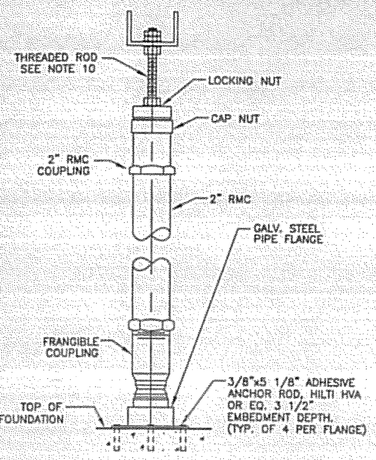

3 G37 STRUCTURAL LEG DETAIL

N.T.S.

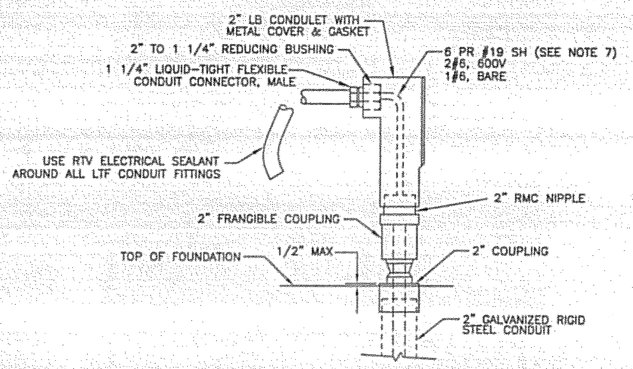

2 G37 POWER AND CONTROL WIRE LEG

N.T.S.

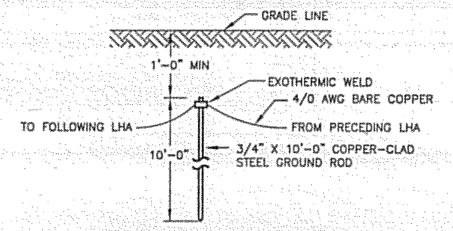

1 G37 DETAIL A - GROUND ROD INSTALLATION DETAIL

N.T.S.

NOTES:

1. INSTALL PAPI FURNISHED BY FAA (RW 29) AND REINSTALL EXISTING PAPI SYSTEM (RW 11). FAA WILL AIM AND CERTIFY PAPI SYSTEMS AFTER INSTALLATION IS COMPLETE.
2. SEE CONCRETE SPECIFICATIONS FOR CONCRETE REQUIREMENTS.
3. PRIOR TO PLACING FORMS, ENSURE ONLY NFS MATERIAL COMPACTED TO 95% IS BELOW ALL FOUNDATIONS. IF NFS MATERIAL IS NOT PRESENT, EXCAVATE AS REQUIRED TO PROVIDE A MINIMUM OF 4 FEET OF NFS MATERIAL BENEATH PAPI FOUNDATIONS. PLACE FILL IN 8" LIFTS AND COMPACT TO 95% OF MAXIMUM DENSITY AS DETERMINED BY WAQTC FOP FOR AASHTO T 99/T 180.
4. REINFORCING STEEL SHALL BE ASTM A615, GRADE 60, DEFORMED STEEL BARS.
5. DRILL HOLES AND INSTALL ADHESIVE ANCHOR RODS WHEN PAPI UNITS HAVE BEEN ACCURATELY LOCATED.
6. COORDINATE PLACEMENT OF CONDUIT STUB-UPS WITH FAA.
7. FOLD BACK UNUSED SHIELDED PAIRS AND TAPE IN THE LHA.
8. ALL MOUNTINGS TO BE 2 INCH FRANGIBLE COUPLINGS.
9. 2" RMC LENGTH IS REQUIRED SO THAT THE BEAM CENTERS OF ALL LIGHT UNITS SHALL BE WITHIN 1 INCH OF A HORIZONTAL PLANE. THIS HORIZONTAL PLANE SHALL BE WITHIN 1 FOOT OF THE ELEVATION OF THE RUNWAY CROWN ADJACENT TO THE PAPI UNITS.
10. PROVIDE ANTI-SEIZE COMPOUND ON THE ADJUSTABLE LEG THREADS. NSN# 8030-00-251-3980 MANUFACTURED BY JET-LUBE, INC., HOUSTON, TX OR EQUAL.
11. ENSURE 18" MIN OF FREE DRAINING MATERIAL IS UNDER PULL BOX. SEE SPECIFICATIONS FOR PULL BOX REQUIREMENTS.
12. ALL UNITS IN A BAR SHALL BE LOCATED ON A LINE PERPENDICULAR TO THE RUNWAY CENTERLINE. THE FRONT FACES OF EACH LIGHT UNIT MUST BE WITHIN ±6" OF THIS LINE.

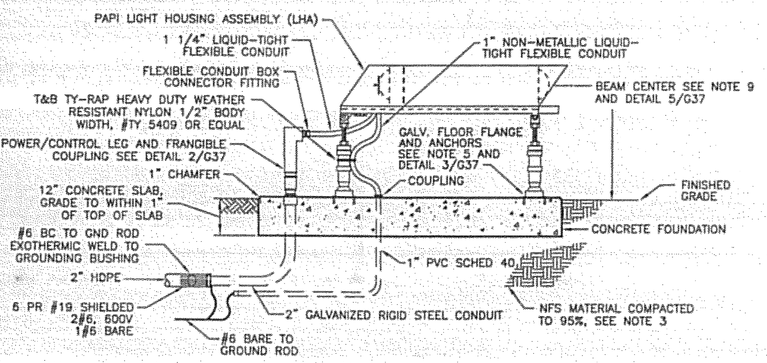

SECTION

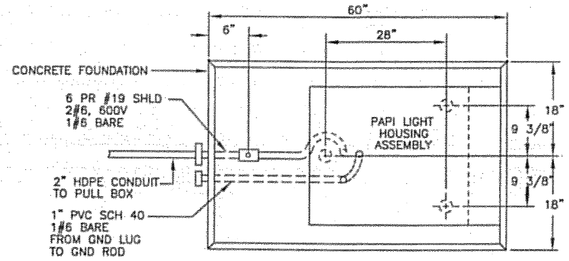

PLAN VIEW

7 G37 LIGHT HOUSING ASSEMBLY (LHA)

N.T.S.

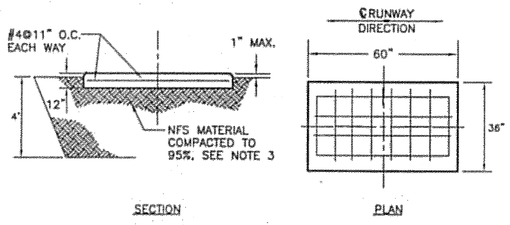

SECTION PLAN

6 G37 PAPI FOUNDATION

N.T.S.

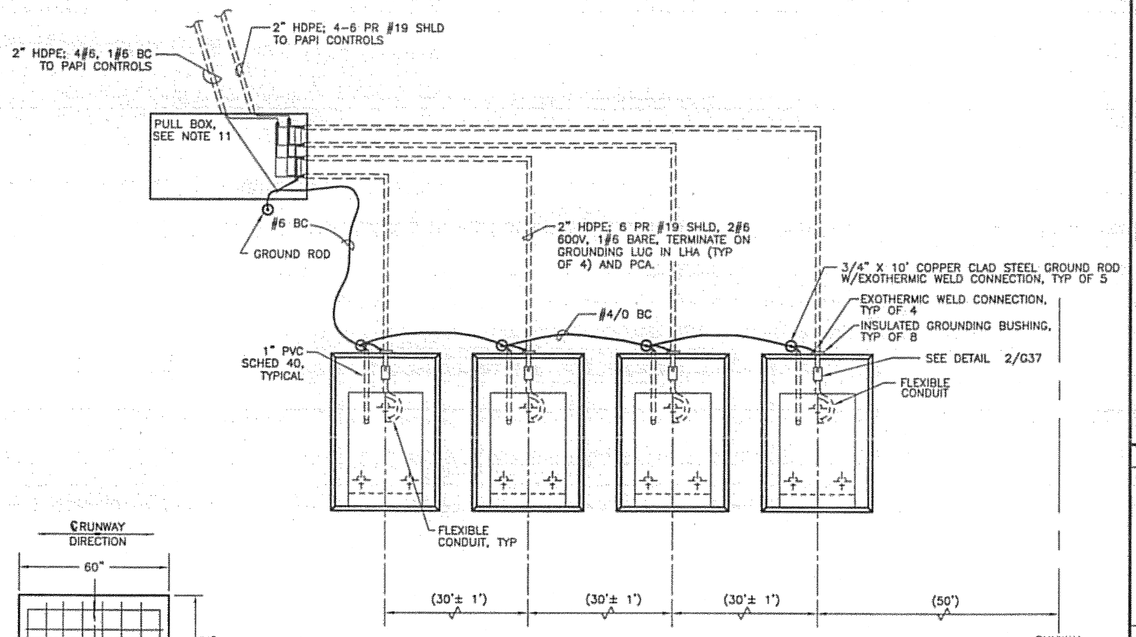

4 G37 FOUNDATION LAYOUT

N.T.S.

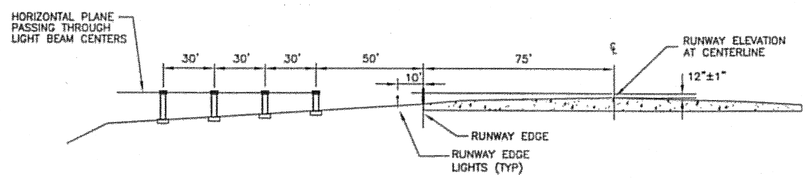

5 G37 PAPI ELEVATION

N.T.S.

DO NOT SCALE FROM THESE DRAWINGS USE DIMENSIONS

PATH: I:\823400\Dwgs\E\Sheets\G37-P1.dwg
Tue, 03/Oct/06 02:25PM lschneller
TAB: G12

ADDENDUM NUMBER

ATTACHMENT NUMBER

RECORD OF REVISIONS

No.	DATE	DESCRIPTION

KETCHIKAN AIRPORT
RUNWAY SAFETY AREA EXPANSION & RUNWAY OVERLAY
PROJECT NO. 68306

PAPI PLANS AND DETAILS

PREPARED BY: USKH INC.

CHECKED BY: GRH

STATE OF ALASKA 49TH GARY R. HABLE EE-10243 REGISTERED PROFESSIONAL ENGINEER 10/4/06

DESIGNED BY: LPS

DRAWN BY: LPS

STATE OF ALASKA
DEPARTMENT OF TRANSPORTATION & PUBLIC FACILITIES
DESIGN & ENGINEERING SERVICES
DIVISION-SOUTHEAST REGION

PAPI PLANS AND DETAILS

PROJECT DESIGNATION
AIP NO. 3-02-0144-1606

STATE	YEAR
ALASKA	2006
SHEET NUMBER	TOTAL SHEETS
G37	131

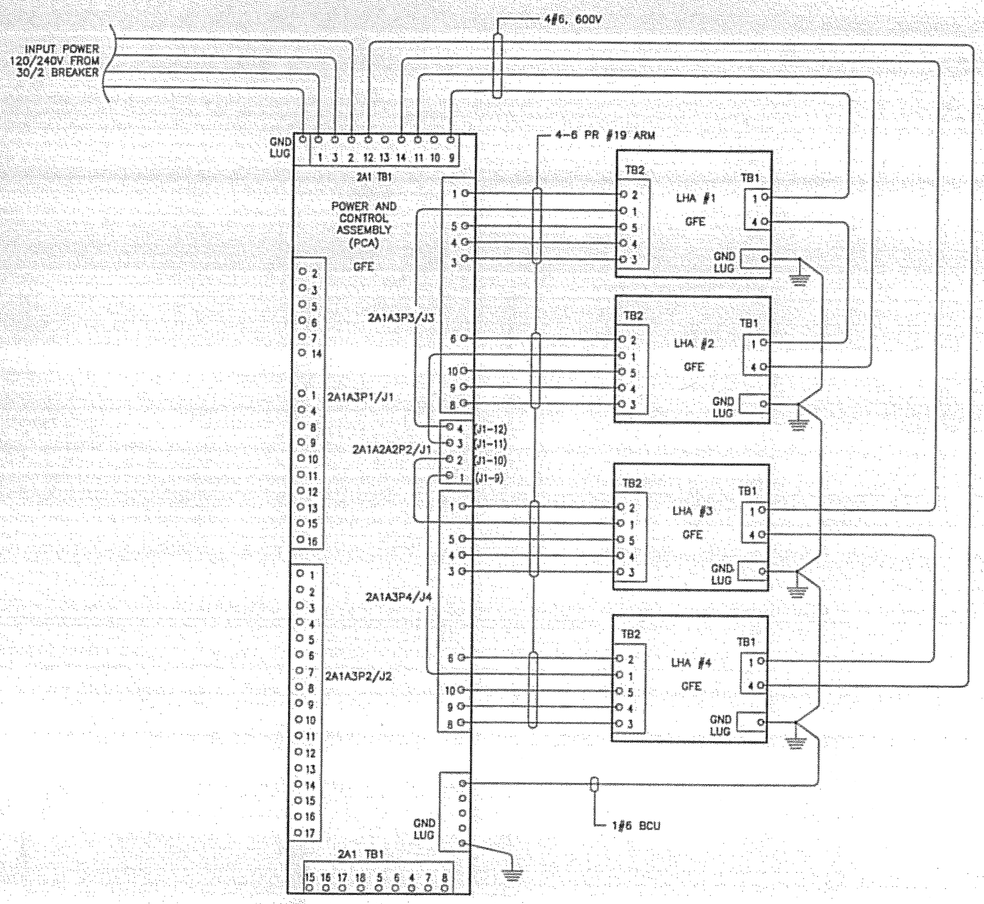

2 G38 **PAPI SCHEMATIC WIRING DIAGRAM**
N.T.S.

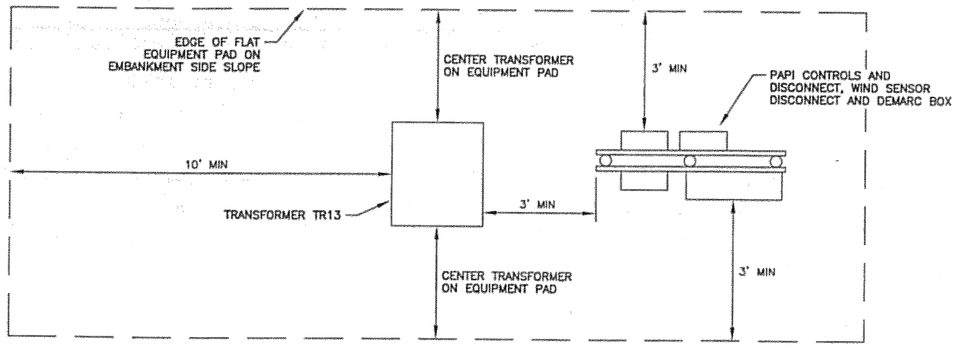

3 G38 **PAPI EQUIPMENT PAD LAYOUT - RW 29**
N.T.S.

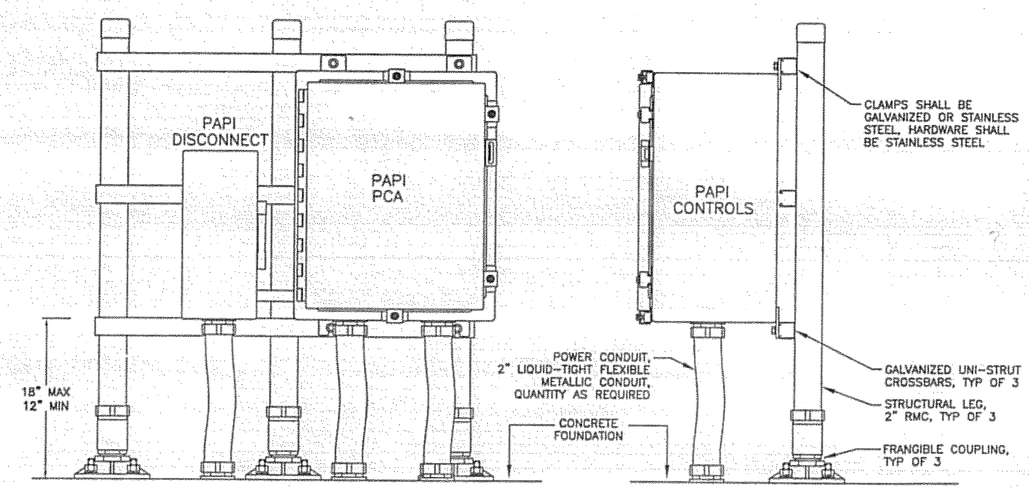

FRONT VIEW **SIDE VIEW**

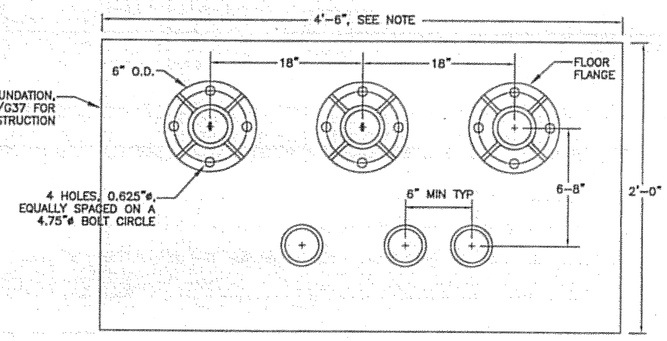

FOOTING PLAN

1 G38 **PAPI CONTROLS MOUNTING DETAILS**
N.T.S.

NOTE:
AT RW 29 LOCATION, INCREASE LENGTH OF SUPPORT STRUCTURE AND FOUNDATION TO ALLOW MOUNTING OF F420 WIND SENSOR POWER DISCONNECT AND TELECOM DEMARC BOX. ALTERNATELY, WIND SENSOR DISCONNECT AND DEMARC BOX MAY BE MOUNTED ON ADDITIONAL CROSSBARS ON THE OPPOSITE SIDE OF THE STRUCTURE.

DO NOT SCALE FROM THESE DRAWINGS USE DIMENSIONS

PATH: I:\823400\Dwgs\E\Sheets\G38-P2.dwg
Tue, 03/Oct/06 02:25PM Ischneller
TAB: G12

ADDENDUM NUMBER
ATTACHMENT NUMBER

RECORD OF REVISIONS

No.	DATE	DESCRIPTION

KETCHIKAN AIRPORT
RUNWAY SAFETY AREA EXPANSION
& RUNWAY OVERLAY
PROJECT NO. 68306

PAPI DETAILS

PREPARED BY: USKH INC.
CHECKED BY: GRH

STATE OF ALASKA 49TH GARY R. HABLE EE-10243 REGISTERED PROFESSIONAL ENGINEER
10/4/06

DESIGNED BY: LPS
DRAWN BY: LPS

STATE OF ALASKA
DEPARTMENT OF TRANSPORTATION & PUBLIC FACILITIES
DESIGN & ENGINEERING SERVICES
DIVISION-SOUTHEAST REGION

PAPI DETAILS

PROJECT DESIGNATION	
AIP NO. 3-02-0144-1606	
STATE	YEAR
ALASKA	2006
SHEET NUMBER	TOTAL SHEETS
G38	131

NOTES:

1. #6 VERTICAL COLUMN REINFORCEMENT WITH 6" ø BENDS TO FORM 90–"L" HOOKS.
2. PROVIDE A MINIMUM OF 2" CLEAR COVER OVER ALL REINFORCING STEEL AND CONDUITS.
3. MINIMUM DEVELOPMENT LENGTH ASSUMES GRADE 40 REINFORCING STEEL.
4. CLEAR SPACING BETWEEN SPIRALS SHALL NOT EXCEED THREE INCHES NOR BE LESS THAN 1 INCH. ANCHORAGE OF OF SPIRAL REINFORCEMENT SHALL BE PROVIDED BY 1–1/2 EXTRA TURNS OF SPIRAL BAR OR WIRE AT THE EACH END OF A SPIRAL UNIT.
5. CONDUIT PENETRATIONS THROUGH CONCRETE SLAB CAP ARE USED AS FOLLOWS:
   A) TWO INCH CONDUIT SWEEP – TWO RUNS OF 1/2–INCH HELIAX (ANDREW LDF4–50A OR EQUIV) FOR DME RF COMM.
   B) 3/4–INCH CONDUIT SWEEP – ONE GROUND WIRE (#6 BARE, STRANDED CU) BONDED TO LOC/DME BUILDING GROUND CONUTERPOISE.
   C) 3/4–INCH CONDUIT SWEEP – ONE CIRCUIT (120VAC) FOR DME TOWER OBSTRUCTION LIGHT.
6. EIGHTEEN INCH DME TOWER BASE PLATE TO BE FABRICATED BY OTHERS AND INSTALLED BY FAA. ANCHOR BOLT PATTERN IS 13–INCH SPACING – SQUARE PATTERN OF 4–3/4 INCH ANCHOR BOLTS AS SHOWN. A PLYWOOD TEMPLATE IS SUGGESTED IN ORDER TO PROPERLY PLACE ANCHOR BOLTS. VERTICALLY STUB UP ANCHOR BOLTS APPROXIMATELY 6 INCHES OUT OF CONCRETE SURFACE.
7. CONDUIT STUBS SHALL PENETRATE THE WEST SIDE OR LEFT SIDE (AS ONE FACES NORTH) OF THE SLAB CAP. POUR SLAB CAP SUCH THAT ITS LONG AXIS IS PARALLEL TO THE LONG AXIS OF THE LOC/DME BUILDING ON SITE.
8. FOR THE REPRESENTATIVE CONCRETE FOUNDATION SHOWN:
   A. CONCRETE STRENGTH = 3000 PSI @ 28 DAYS, (MIN.)
   B. SECURELY PLACE ANCHOR BOLTS PRIOR TO PLACING CONCRETE. TIE TO REINFORCEMENT.
   C. PLACE ALL CONCRETE ON UNDISTURBED SOIL OR COMPACTED BACKFILL. BACKFILL TO BE COMPACTED TO 92%
   D. DEPTH OF CONCRETE PIER = 4 FT IN SAND/GRAVEL OR BELOW FROST LEVEL.
   E. REININFORCEMENT STEEL PER ASTM A615, GR. 60, TIE WIRE TO BE 16 GAUGE OR LARGER ANNEALED IRON.
   F. ALL ANCHORAGE BOLTS AND PLATES TO BE HOT–DIPPED GALV. AFTER FABRICATION. COLD–GALV SPRAY TO BE APPLIED AFTER INSTALLATION TO ALL FASTENING HARDWARE AFTER INSTALLATION COMPLETED.
9. FOUNDATION EXCAVATION SHALL BE DUG AND BACKFILLED WITH NON–FROST SUSCEPTIBLE MATERIAL OR AUGERED AT INDICATED DIAMETER.
10. REBAR IS BENT AT THE TOP AND WIRE–TIED WITH THE HORIZONTAL CROSS–SUPPORT REBAR.

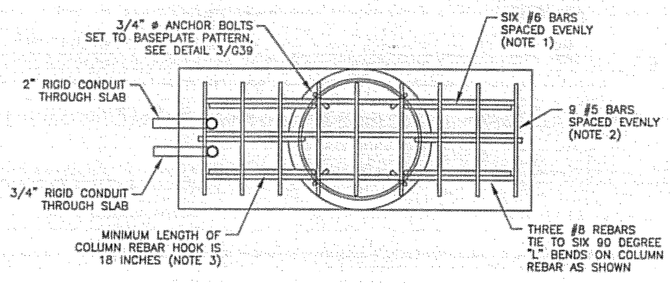

2 G39 **REINFORCING PLAN** N.T.S.

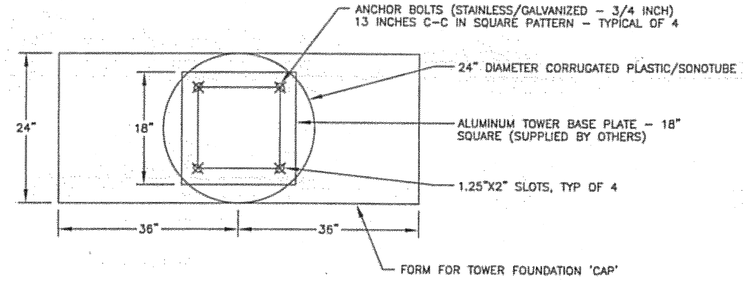

1 G39 **FOUNDATION PLAN** N.T.S.

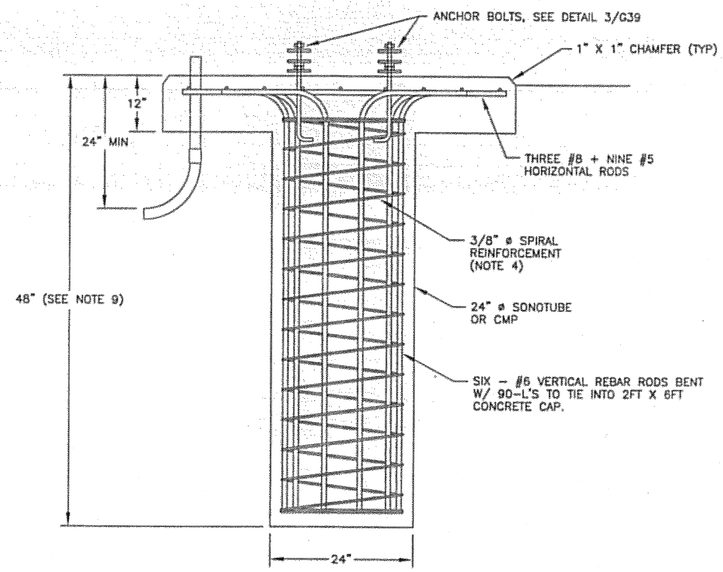

4 G39 **FOUNDATION SECTION** N.T.S.

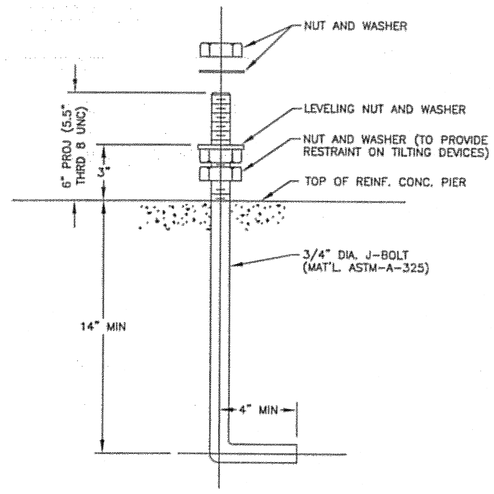

3 G39 **ANCHOR BOLT DETAIL** N.T.S.

DO NOT SCALE FROM THESE DRAWINGS USE DIMENSIONS

PATH: I:\B23400\Dwgs\E\Sheets\G39–D1.dwg
Tue, 03/Oct/06 02:25PM lschneller
TAB: G12

ADDENDUM NUMBER
ATTACHMENT NUMBER

RECORD OF REVISIONS

No.	DATE	DESCRIPTION

KETCHIKAN AIRPORT
RUNWAY SAFETY AREA EXPANSION
& RUNWAY OVERLAY
PROJECT NO. 68306

DME FOUNDATION DETAILS

PREPARED BY: USKH INC.

CHECKED BY: GRH

STATE OF ALASKA 49TH GARY R. HABLE REGISTERED PROFESSIONAL ENGINEER
GARY R. HABLE
EE–10243
10/4/06

DESIGNED BY: LPS

DRAWN BY: LPS

STATE OF ALASKA
DEPARTMENT OF TRANSPORTATION & PUBLIC FACILITIES
DESIGN & ENGINEERING SERVICES
DIVISION–SOUTHEAST REGION

DME FOUNDATION DETAILS

PROJECT DESIGNATION	
AIP NO. 3-02-0144-1606	
STATE	YEAR
ALASKA	2006
SHEET NUMBER	TOTAL SHEETS
G39	131

NOTES:

3. PROTECT FLANGE ASSEMBLIES AGAINST WATER INCURSION.
4. POUR CONCRETE FOUNDATION AGAINST UNDISTURBED EARTH OR USE FORM.
5. POUR TOWER AND PEDESTAL FOUNDATION ON UNDISTURBED SOIL.
7. THIS AREA (ø=2.0 FT) TO BE FREE OF GRAVEL AND VEGETATION BARRIER.

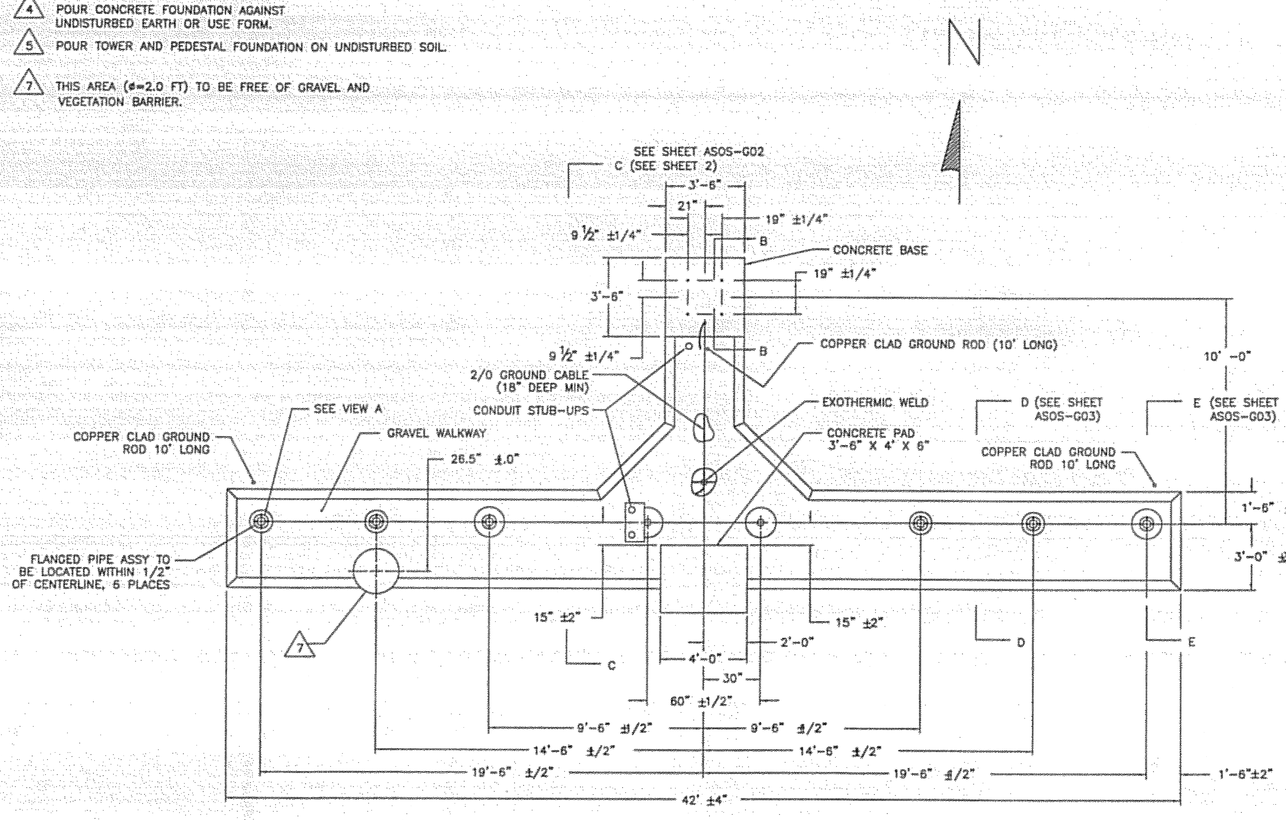

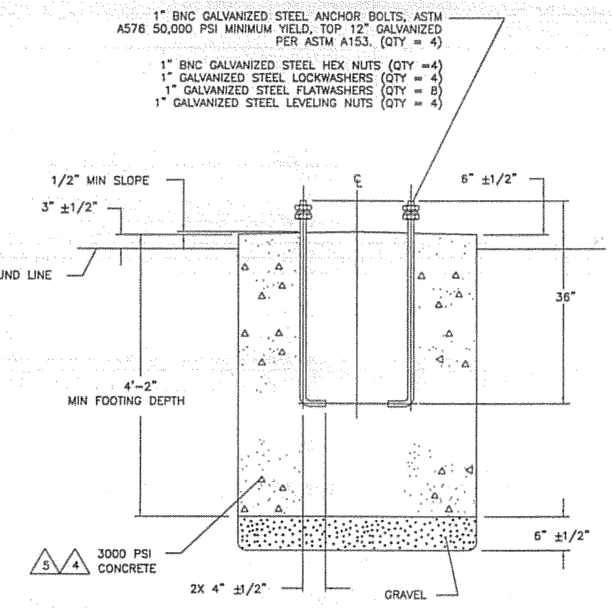

SECTION B-B

SCALE: 1/8

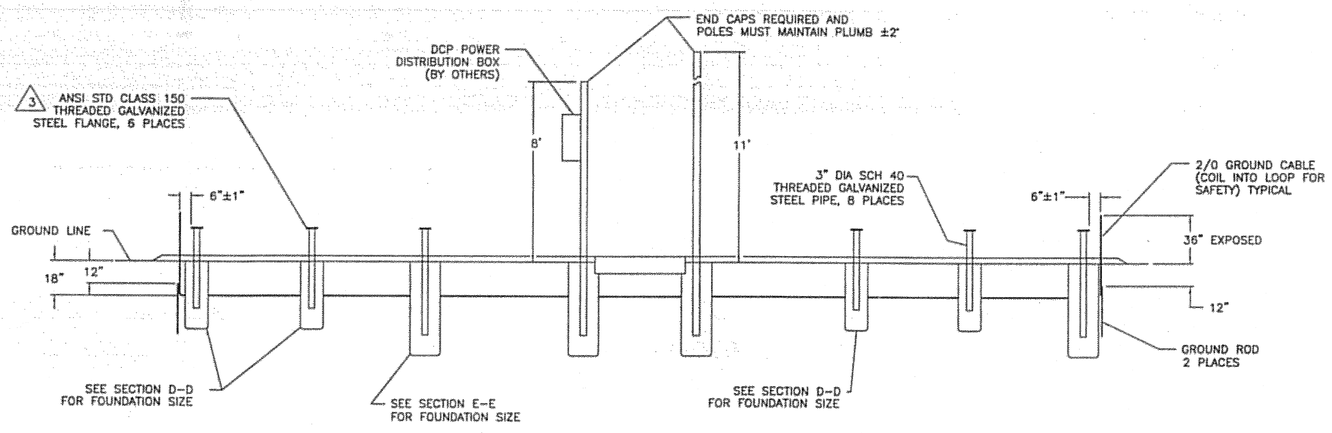

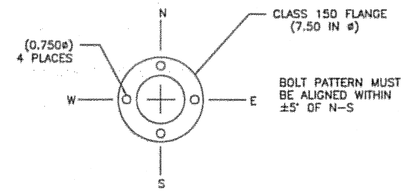

VIEW A

SCALE: 1/4

1 G40 ASOS PLOT PLAN

N.T.S.

DO NOT SCALE FROM THESE DRAWINGS USE DIMENSIONS

PATH: I:\823400\Dwgs\E\Sheets\G40-A1.dwg
Tue. 03/Oct/06 02:25PM lschneller
TAB: G12

ADDENDUM NUMBER
ATTACHMENT NUMBER

RECORD OF REVISIONS

No.	DATE	DESCRIPTION

KETCHIKAN AIRPORT
RUNWAY SAFETY AREA EXPANSION
& RUNWAY OVERLAY
PROJECT NO. 68306

ASOS PLOT PLAN

PREPARED BY: USKH INC.

CHECKED BY: GRH

STATE OF ALASKA 49TH
GARY R. HABLE
EE-10243
REGISTERED PROFESSIONAL ENGINEER
10/4/06

DESIGNED BY: LPS

DRAWN BY: LPS

STATE OF ALASKA
DEPARTMENT OF TRANSPORTATION & PUBLIC FACILITIES
DESIGN & ENGINEERING SERVICES
DIVISION-SOUTHEAST REGION

ASOS PLOT PLAN

PROJECT DESIGNATION	
AIP NO. 3-02-0144-1606	
STATE	YEAR
ALASKA	2006
SHEET NUMBER	TOTAL SHEETS
G40	131

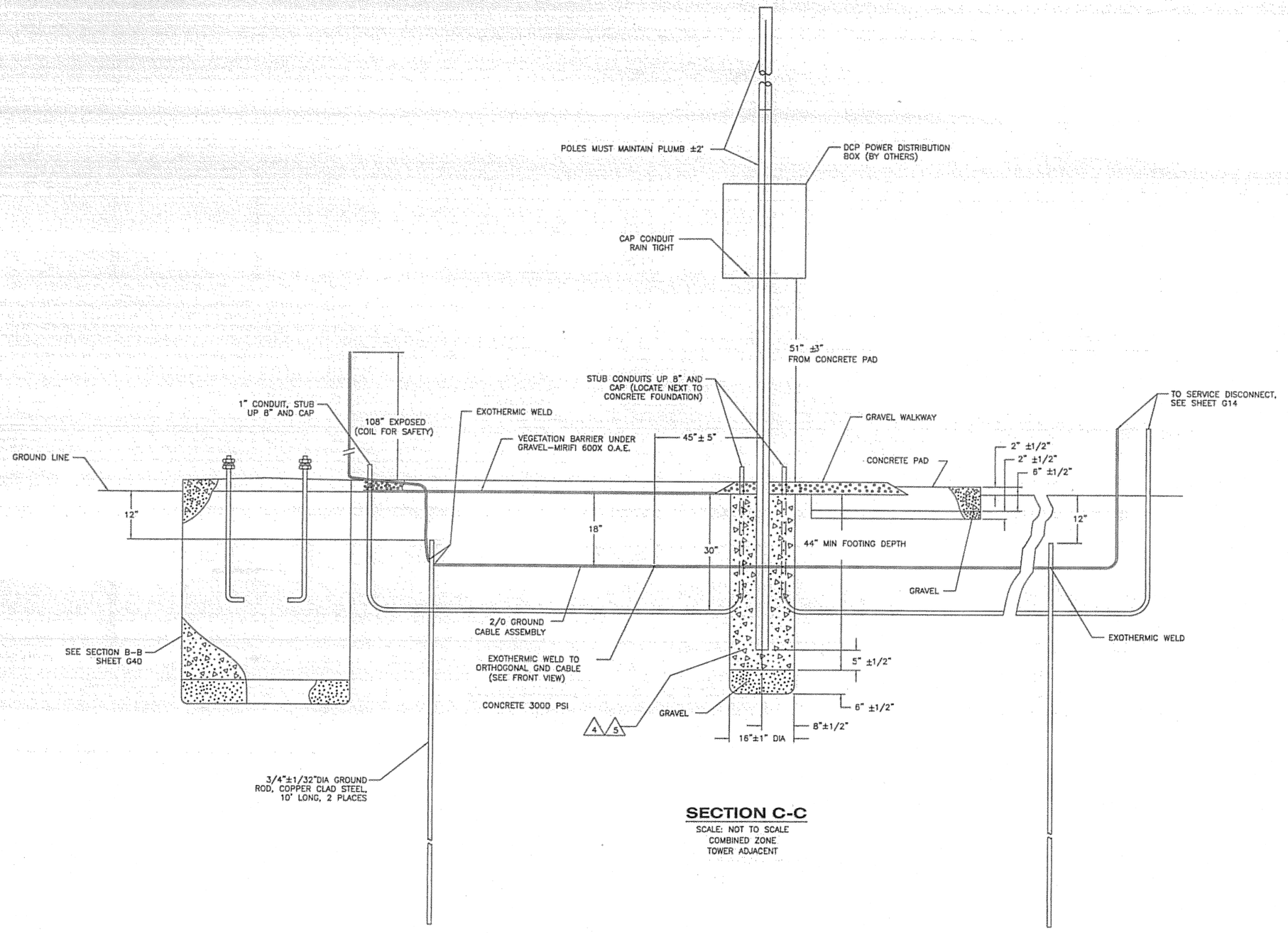

SECTION C-C

SCALE: NOT TO SCALE
COMBINED ZONE
TOWER ADJACENT

1/G41 **ASOS SECTION VIEW** N.T.S.

DO NOT SCALE FROM THESE DRAWINGS USE DIMENSIONS

PATH:
I:\823400\Dwgs\E\Sheets\G41-A2.dwg
Tue, 03/Oct/06 02:25PM Ischneller
TAB: C12

ADDENDUM NUMBER

ATTACHMENT NUMBER

RECORD OF REVISIONS

No.	DATE	DESCRIPTION

KETCHIKAN AIRPORT
RUNWAY SAFETY AREA EXPANSION
& RUNWAY OVERLAY
PROJECT NO. 68306

ASOS SECTION

PREPARED BY: USKH INC.

CHECKED BY: GRH

STATE OF ALASKA 49TH REGISTERED PROFESSIONAL ENGINEER
GARY R. HABLE
EE-10243
10/4/06

DESIGNED BY: LPS

DRAWN BY: LPS

STATE OF ALASKA
DEPARTMENT OF TRANSPORTATION
& PUBLIC FACILITIES
DESIGN & ENGINEERING SERVICES
DIVISION-SOUTHEAST REGION

ASOS SECTION

PROJECT DESIGNATION
AIP NO. 3-02-0144-1606

STATE	YEAR
ALASKA	2006
SHEET NUMBER	TOTAL SHEETS
G41	131

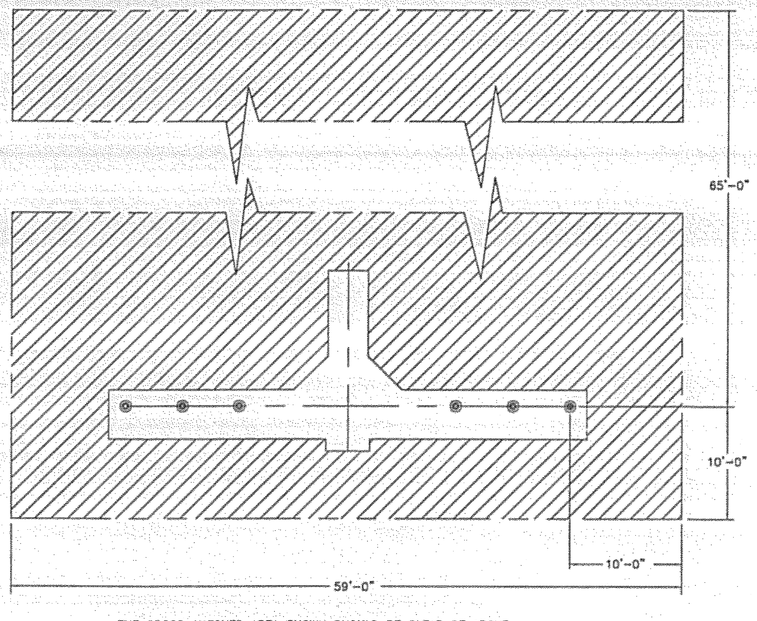

THE CROSS-HATCHED AREA SHOWN SHOULD BE CLEAR OF ABOVE GROUND OBSTRUCTIONS, REFLECTIVE SURFACES AND LIGHT SOURCES.

1 / G42 ASOS CLEARING AREA

N.T.S.

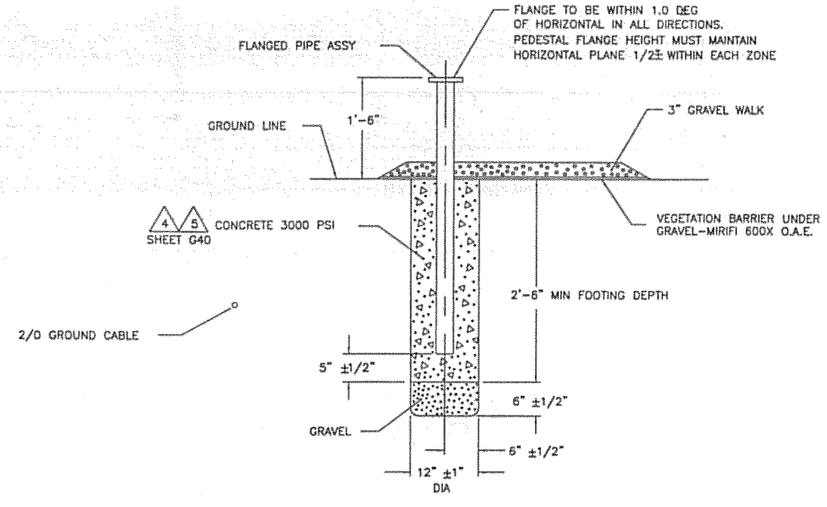

SECTION D-D

SCALE: NOT TO SCALE

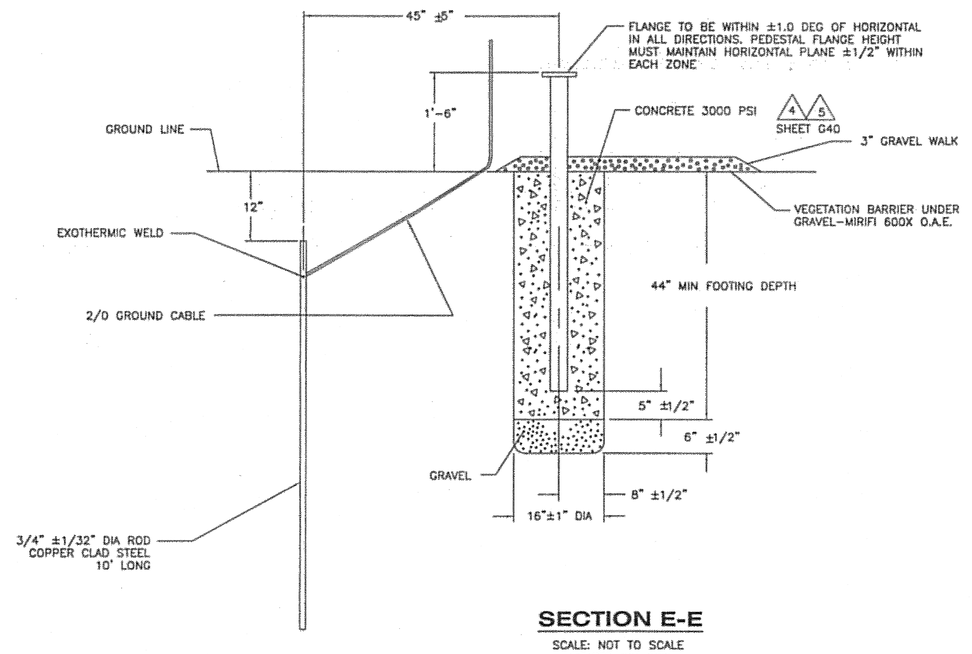

SECTION E-E

SCALE: NOT TO SCALE
ROTATED 90° CCW

2 / G42 ASOS FOUNDATION DETAILS

N.T.S.

DO NOT SCALE FROM THESE DRAWINGS USE DIMENSIONS

PATH: I:\823400\Dwgs\E\Sheets\G42-A3.dwg

Tue, 03/Oct/06 02:25PM lschneller

TAB: G12

ADDENDUM NUMBER

ATTACHMENT NUMBER

RECORD OF REVISIONS

No.	DATE	DESCRIPTION

KETCHIKAN AIRPORT
RUNWAY SAFETY AREA EXPANSION
& RUNWAY OVERLAY
PROJECT NO. 68306

ASOS DETAILS

PREPARED BY: USKH INC.

CHECKED BY: GRH

STATE OF ALASKA
49TH
GARY R. HABLE
EE-10243
REGISTERED PROFESSIONAL ENGINEER
10/4/06

DESIGNED BY: LPS

DRAWN BY: LPS

STATE OF ALASKA
DEPARTMENT OF TRANSPORTATION
& PUBLIC FACILITIES
DESIGN & ENGINEERING SERVICES
DIVISION-SOUTHEAST REGION

ASOS DETAILS

PROJECT DESIGNATION	
AIP NO. 3-02-0144-1606	
STATE	YEAR
ALASKA	2006
SHEET NUMBER	TOTAL SHEETS
G42	131

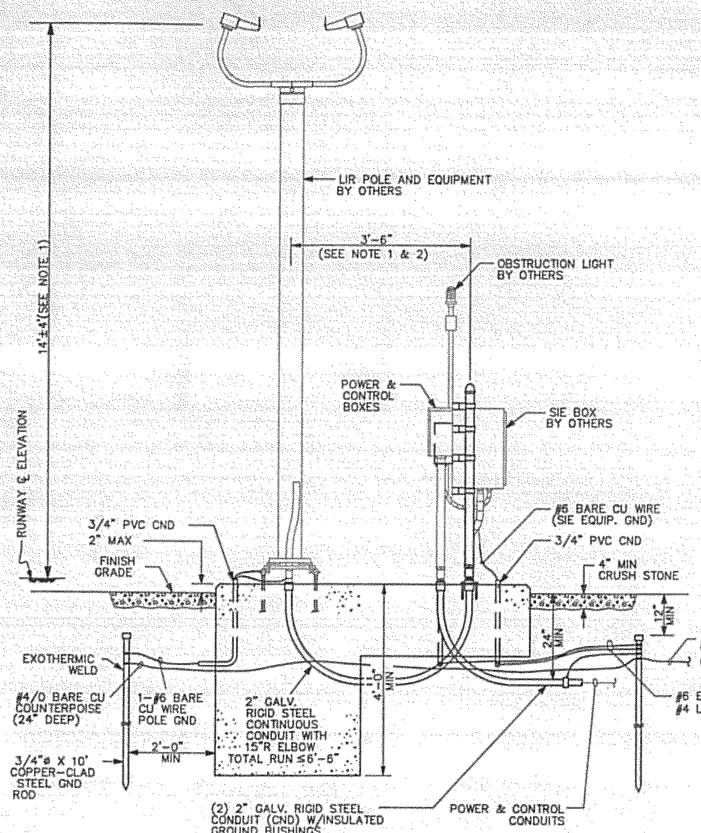

ELEVATION VIEW (PROFILE)

LIR POLE AND SIE BOX SUPPORT

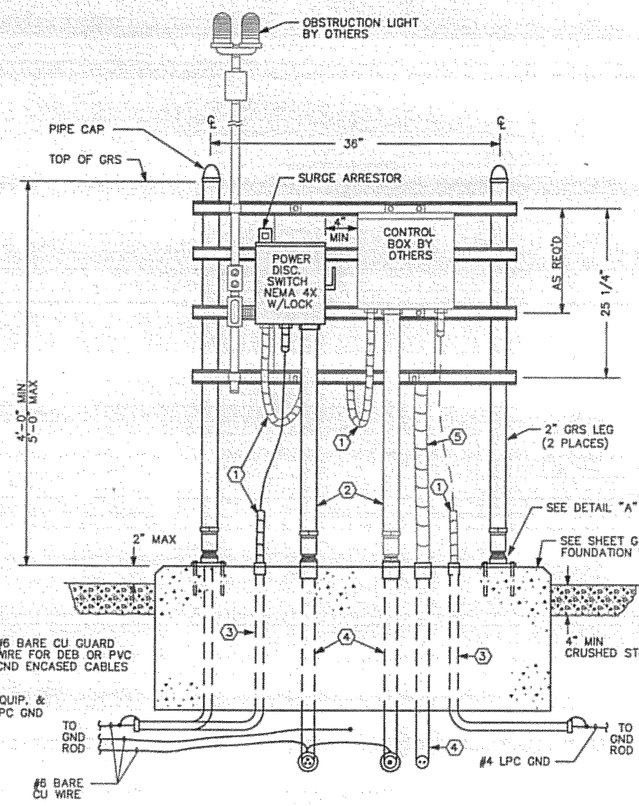

REAR ELEVATION VIEW

SIE BOX SUPPORT

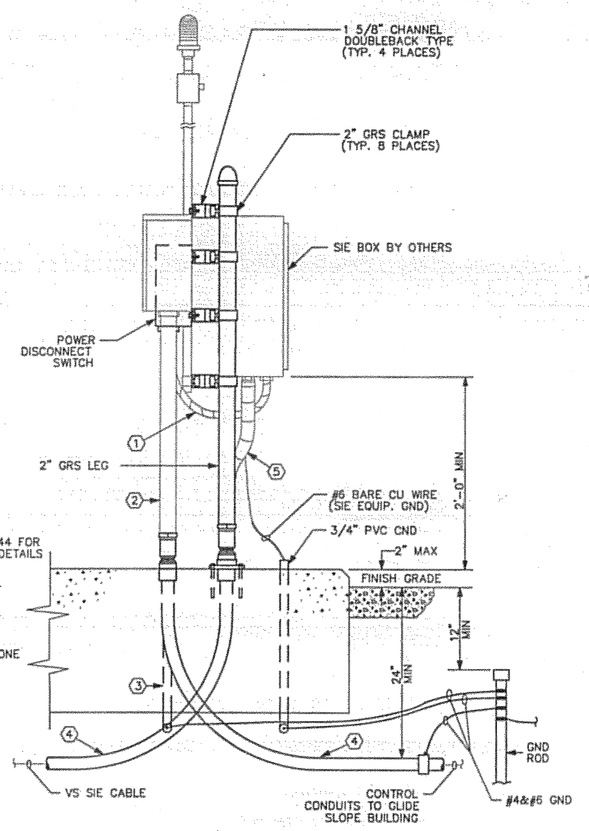

PARTIAL SIDE ELEVATION VIEW

SIE BOX SUPPORT

1 G43 RVR INSTALLATION DETAILS

N.T.S.

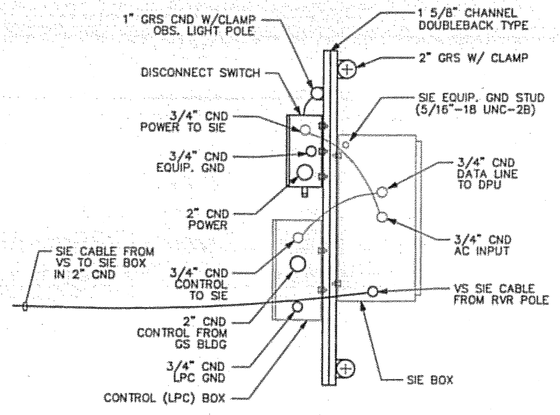

PARTIAL PLAN VIEW

FOUNDATION NOT SHOWN

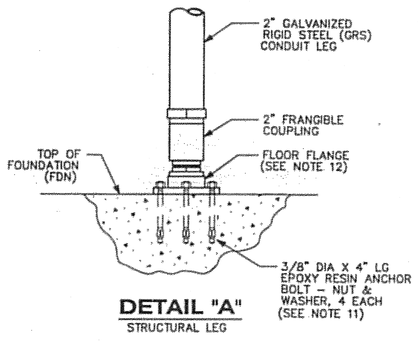

DETAIL "A"

STRUCTURAL LEG

LEGEND:

1. 3/4" DIA FLEXIBLE LIQUID TIGHT CONDUIT WITH COUPLINGS
2. 2" DIA GALVANIZED RIGID STEEL CONDUIT (GRS) WITH FRANGIBLE COUPLINGS
3. 3/4" DIA GRS CONDUIT WITH COUPLINGS
4. 2" DIA GRS CONDUIT WITH COUPLINGS
5. 2" DIA FLEXIBLE LIQUID TIGHT CONDUIT WITH COUPLINGS

NOTES:

1. BASIC REQUIREMENTS FOR TOUCHDOWN, MIDPOINT AND ROLLOUT RVR INSTALLATIONS ARE AS FOLLOWS:
   A. HEIGHT FROM CENTERLINE OF TRANSMITTER/RECEIVER IS 14 FEET ±4 FEET ABOVE ELEVATION OF RUNWAY CENTERLINE PERPENDICULAR TO STRUCTURE.
2. DISTANCE FROM CENTER OF LIR POLE TO SIE BOX GRS LEG IS DETERMINED BY HEIGHT OF VS AND SIE BOX ABOVE GRADE, VERTICAL CABLE RUN BELOW GRADE, AND A 1 FOOT MINIMUM CABLE SLACK. APPROXIMATELY 2.6 FEET OF THE 37 FOOT VS CABLE WILL RUN THRU THE VS FORK ASSEMBLY.
3. SEE SITE DRAWINGS FOR LOCATION AND ORIENTATION RESTRICTIONS.
4. VISIBILITY SENSOR RECEIVER MUST FACE IN A NORTHERLY DIRECTION. ROTATE VS FORK ASSEMBLY TO TRUE NORTH OR TO WITHIN ±10 DEGREES OF TRUE NORTH.
5. NOT USED.
6. SIE UNIT SUPPORT FRAME SHOWN MAY BE LOCATED ON OPPOSITE SIDE OF RVR POLE TO FACILITATE EASY ACCESS TO POWER AND CONTROL LINES. MUST BE LOCATED CLEAR OF RVR POLE TILT DIRECTION.
7. NOT USED.
8. ALL METAL PARTS, CONDUITS, EQUIPMENT AND JUNCTION BOXES SHALL BE GROUNDED IN ACCORDANCE WITH FAA-STD-019.
9. ALL EXTERIOR ENCLOSURES, CHANNELS, CLAMPS AND MOUNTING HARDWARE SHALL BE STAINLESS STEEL.
10. DRILL HOLES AND INSTALL EPOXY TYPE ANCHOR BOLTS WHEN SIE BOX SUPPORTS HAVE BEEN ACCURATELY LOCATED.
11. COAT FLOOR FLANGE SURFACE RESTING ON CONCRETE WITH AN ASPHALT COMPOUND FOR METAL PROTECTION.
12. ALL FAA STANDARDS AND ORDERS REFERENCED IN THESE DRAWINGS SHALL BE THE LATEST VERSION.
13. PRORTIONS OF THE SYSTEM NOT INSTALLED UNDER THIS CONTRACT AND NON-APPLICABLE NOTES ARE SHOWN FOR REFERENCE ONLY.

DO NOT SCALE FROM THESE DRAWINGS USE DIMENSIONS

PATH: I:\823400\Dwgs\E\Sheets\G43-V1.dwg
Tue, 03/Oct/06 02:25PM lschneller
TAB: G12

ADDENDUM NUMBER
ATTACHMENT NUMBER

RECORD OF REVISIONS

No.	DATE	DESCRIPTION

KETCHIKAN AIRPORT
RUNWAY SAFETY AREA EXPANSION
& RUNWAY OVERLAY
PROJECT NO. 68306

RVR INSTALLATION DETAILS

PREPARED BY: USKH INC.

CHECKED BY: GRH

STATE OF ALASKA 49TH — GARY R. HABLE EE-10243 REGISTERED PROFESSIONAL ENGINEER — 10/4/06

DESIGNED BY: LPS

DRAWN BY: LPS

STATE OF ALASKA
DEPARTMENT OF TRANSPORTATION & PUBLIC FACILITIES
DESIGN & ENGINEERING SERVICES DIVISION-SOUTHEAST REGION

RVR INSTALLATION DETAILS

PROJECT DESIGNATION	
AIP NO. 3-02-0144-1606	
STATE	YEAR
ALASKA	2006
SHEET NUMBER	TOTAL SHEETS
G43	131

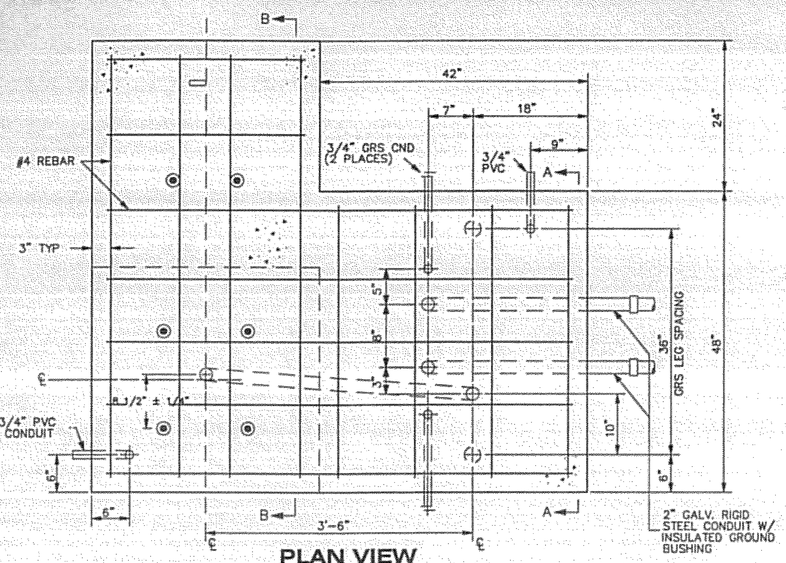

PLAN VIEW

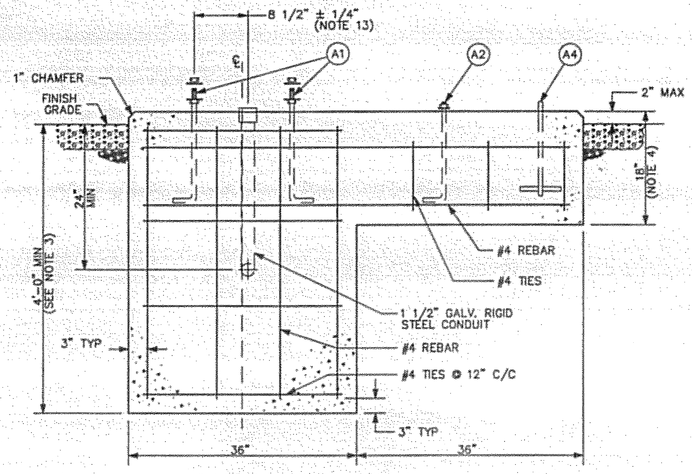

ELEVATION "B-B"

NOTES:

1. CONCRETE SHALL DEVELOP A MINIMUM STRENGTH OF 3000 PSI IN 28 DAYS WITH MAXIMUM SLUMP OF 3 INCHES. MAXIMUM AGGREGATE SIZE SHALL BE 3/4 INCH.
2. SOIL BEARING CAPACITY SHALL BE A MINIMUM OF 3000 POUNDS PER SQUARE FOOT OR AS LOCAL SOIL CONDITIONS DICTATE. SOIL INVESTIGATION SHALL BE CONDUCTED AT SITE PRIOR TO CONSTRUCTION. ALL CONCRETE SHALL BE PLACED ON UNDISTURBED SOIL.
3. MINIMUM DEPTH OF CONCRETE FOUNDATION SHALL BE 4 FEET OR MINIMUM 1 FOOT BELOW LOCAL FROST LEVEL, WHICHEVER IS GREATER, EXCEPT IN LOCATIONS WHERE THERE IS A FIRM BEDROCK LESS THAN THIS DEPTH. THE BOTTOM OF ALL EXCAVATIONS SHALL BE FREE OF WATER AND LOOSE EARTH.
4. OPTIONAL, EXTEND 18" CONCRETE DEPTH TO 48" BELOW FINISHED GRADE OR MINIMUM 12" BELOW FROST LEVEL.
5. FOUNDATIONS SHALL BE FORMED TO FULL DEPTH BELOW FINISHED GRADE.
6. WELDED STEEL WIRE FABRIC (WWF) SHALL BE FABRICATED IN ACCORDANCE WITH ASTM-A185 AND SHALL BE HOT-DIPPED GALVANIZED PER ASTM-A153.
7. ALL PLATES, ANCHOR BOLTS, NUTS, AND WASHERS SHALL BE HOT DIPPED GALVANIZED OR STAINLESS STEEL.
8. FOUNDATION MAY BE MODIFIED AS DICTATED BY LOCAL SOIL AND CLIMATIC CONDITIONS. IF REGIONALLY REQUIRED, AN OPTIONAL APPROVED SCREW ANCHOR FOUNDATION DESIGN (NOT SHOWN) MAY BE USED.
9. FOUNDATION AREA MAY REQUIRE CUT OPERATION TO MEET RVR POLE HEIGHT REQUIREMENTS. FILL SHALL BE PLACED IN LAYERS NOT EXCEEDING 6 INCHES AND EACH LAYER SHALL BE THOROUGHLY COMPACTED TO 95% OF MAXIMUM DENSITY OF OPTIMUM MOISTURE CONTENT IN ACCORDANCE WITH AASHTO-T99. IF FILL MATERIAL IS REQUIRED WITHIN R/W SAFETY AREA, WORK MUST COMPLY WITH FAA AC 150/5300-13.
10. ALL REINFORCING STEEL SHALL BE DEFORMED BILLET STEEL BARS CONFORMING TO ASTM A615 GRADE 60.
11. TOP OF 3/4" PVC CONDUIT SHOULD NOT EXTEND MORE THAN ONE INCH ABOVE CONCRETE SURFACE. EXTEND UNDERGROUND END OF CONDUIT A MINIMUM OF 3" BEYOND CONCRETE FOUNDATION.
12. 1 1/2" RIGID CONDUIT MUST BE LOCATED AS SHOWN TO ALIGN WITH 2" HOLE IN THE BASE PLATE ASSEMBLY.
13. TOTAL UNDERGROUND VS CABLE RUN SHALL NOT EXCEED 6'-6".
14. CONCRETE REINFORCEMENT MAY BE SHIFTED TO ALLOW FOR PLACEMENT OF ANCHOR BOLTS, INSERTS AND CONDUITS.
15. GRADING OF SOIL AND ROCK SHOULD BE THAT ALL DRAINAGE IS AWAY FROM FOUNDATION.
16. ALL FAA STANDARDS AND ORDERS REFERENCED IN THESE DRAWINGS SHALL BE THE LATEST VERSION.

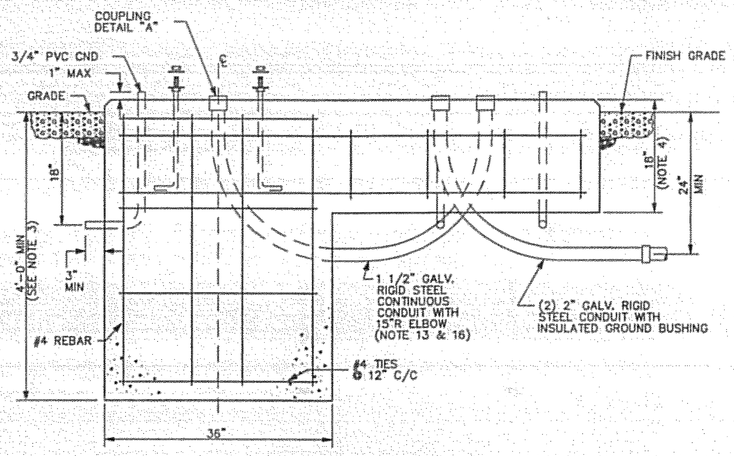

ELEVATION VIEW

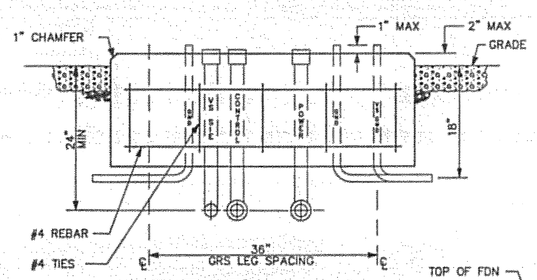

ELEVATION "A-A"

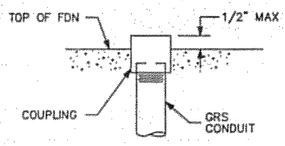

DETAIL "A"

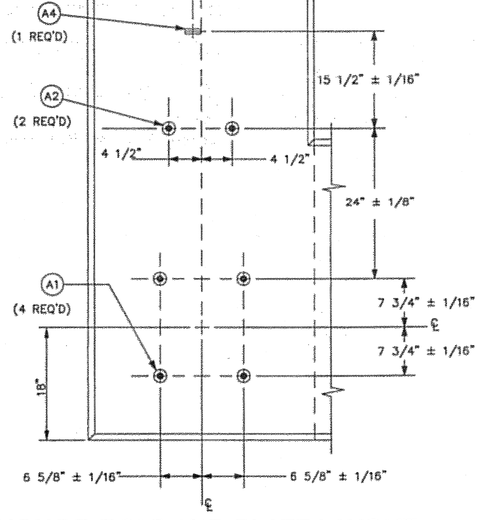

ANCHOR BOLT AND PLATE LAYOUT

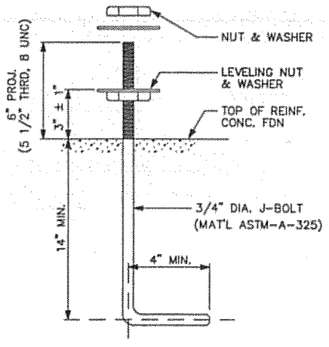

ANCHOR BOLT (A1)

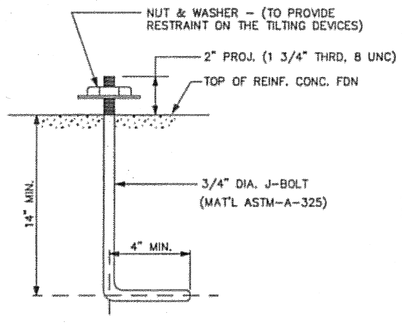

ANCHOR BOLT (A2)

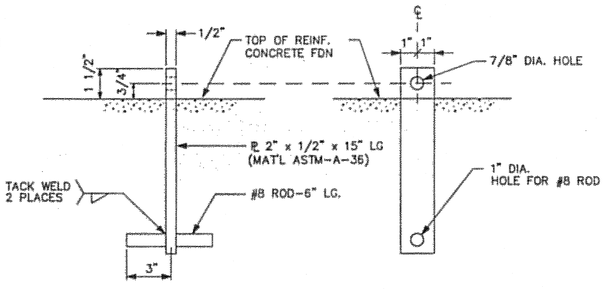

ANCHOR PLATE (A4)

1 G44 RVR FOUNDATION DETAILS

N.T.S.

DO NOT SCALE FROM THESE DRAWINGS USE DIMENSIONS

PATH: I:\823400\Dwgs\E\Sheets\G44-V2.dwg

Tue, 03/Oct/06 02:26PM lschneller

TAB: G12

ADDENDUM NUMBER

ATTACHMENT NUMBER

RECORD OF REVISIONS

No.	DATE	DESCRIPTION

KETCHIKAN AIRPORT
RUNWAY SAFETY AREA EXPANSION
& RUNWAY OVERLAY
PROJECT NO. 68306

RVR FOUNDATION DETAILS

PREPARED BY: USKH INC.

CHECKED BY: GRH

STATE OF ALASKA 49TH
GARY R. HABLE
EE-10243
REGISTERED PROFESSIONAL ENGINEER
10/4/06

DESIGNED BY: LPS

DRAWN BY: LPS

STATE OF ALASKA
DEPARTMENT OF TRANSPORTATION & PUBLIC FACILITIES
DESIGN & ENGINEERING SERVICES
DIVISION-SOUTHEAST REGION

RVR FOUNDATION DETAILS

PROJECT DESIGNATION
AIP NO. 3-02-0144-1606

STATE	YEAR
ALASKA	2006
SHEET NUMBER	TOTAL SHEETS
G44	131

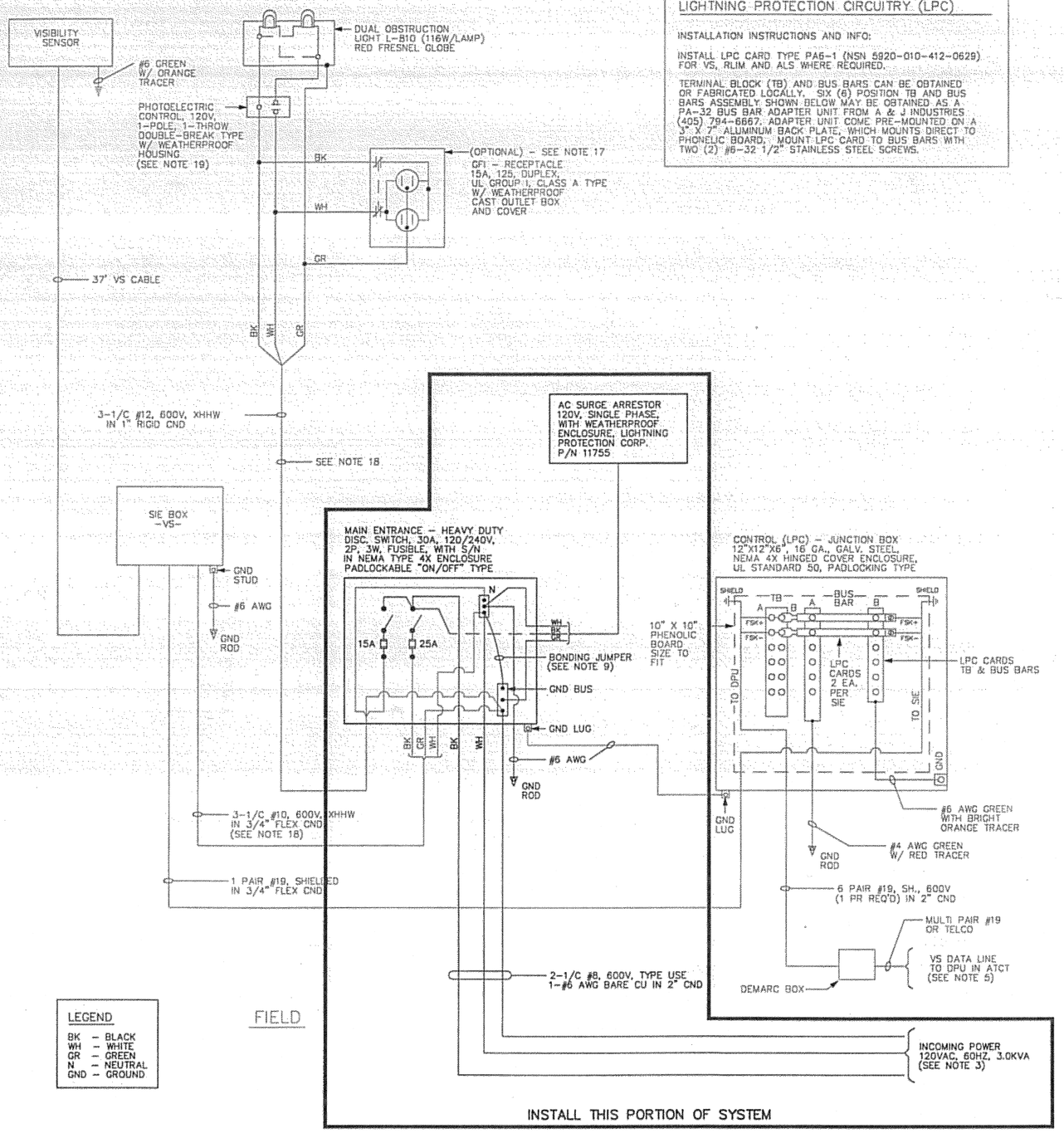

LIGHTNING PROTECTION CIRCUITRY (LPC)

INSTALLATION INSTRUCTIONS AND INFO:

INSTALL LPC CARD TYPE PA6-1 (NSN 5920-010-412-0629) FOR VS, RLIM AND ALS WHERE REQUIRED.

TERMINAL BLOCK (TB) AND BUS BARS CAN BE OBTAINED OR FABRICATED LOCALLY. SIX (6) POSITION TB AND BUS BARS ASSEMBLY SHOWN BELOW MAY BE OBTAINED AS A PA-32 BUS BAR ADAPTER UNIT FROM A & J INDUSTRIES (405) 794-6667. ADAPTER UNIT COME PRE-MOUNTED ON A 3" X 7" ALUMINUM BACK PLATE, WHICH MOUNTS DIRECT TO PHENOLIC BOARD. MOUNT LPC CARD TO BUS BARS WITH TWO (2) #6-32 1/2" STAINLESS STEEL SCREWS.

NOTES:

1. ~~CONTRACTOR SHALL TERMINATE POWER AND CONTROL CABLES BY LOOPING BACK AND WEATHERPROOFING ENDS WHEN HOOKUP IS TO BE PERFORMED BY FAA.~~
2. POWER AND CONTROL SOURCE(S) SHALL BE REGIONALLY DETERMINED POWER REQUIREMENT FOR SIE(VS, ALS, RLIM) IS 120VAC, 60HZ, 3KVA, SINGLE PHASE.
3. IF VOLTAGE DROP EXCEEDS 5% INCREASE THE VOLTAGE SOURCE VIA TRANSFORMER OR CABLE SIZE TO REDUCE VOLTAGE DROP.
4. ~~EACH VS, RLIM, AND ALS SHALL REQUIRE A MINIMUM 1 PAIR SHIELDED #19, 600V, REGIONALLY DETERMINED NUMBER OF SPARES WITH AT LEAST 1 PAIR FOR BACKUP. IF ALS IS COLLOCATED WITH VS A MINIMUM 2 PAIR #19 SHALL BE REQUIRED.~~
5. INSTALL REQUIRED SIZE PULL WIRE IN EACH CONDUIT RUN IN ACCORDANCE WITH SPECIFICATION FAA-C-1391.
6. ALL WORK SHALL BE DONE IN ACCORDANCE WITH FAA-STD-019, FAA-C-1217, LATEST NATIONAL ELECTRICAL CODES, AND OTHER APPLICABLE LOCAL CODES AND REGULATIONS.
7. NEUTRAL BUS IS TO BE INSULATED FROM ENCLOSURE AND IS GROUNDED ONLY AT THE MAIN ENTRANCE DISCONNECT SWITCH AND POWER COMPANY TRANSFORMER.
8. EQUIPMENT GROUND AND NEUTRAL BUS IS TO BE BONDED TOGETHER AT THE MAIN SERVICE ENTRANCE SWITCH ONLY. BONDING JUMPER SHALL BE SIZED IN ACCORDANCE WITH THE LATEST NEC.
9. ALL ENCLOSURES, FITTINGS, AND OTHER NONCURRENT CARRYING METAL PARTS SHALL BE EFFECTIVELY GROUNDED WHERE NECESSARY TO ASSURE ELECTRICAL CONTINUITY AND CAPACITY TO HANDLE ANY FAULT CURRENT THAT MAY BE ANTICIPATED. USE SPLIT BOLT CONNECTIONS OR GROUNDING LUGS.
10. PRIOR TO GROUNDING, REMOVE ANY NONCONDUCTIVE PAINT, ENAMEL, OR FOREIGN MATERIAL FROM CONTACT SURFACES.
11. ALL CONDUITS TERMINATING IN BOXES, PANELS, AND ENCLOSURES SHALL HAVE DOUBLE LOCKNUTS AND INSULATED BUSHINGS.
12. ALL CONDUITS SHALL BE RIGID HOT DIPPED GALVANIZED STEEL, UNLESS OTHERWISE INDICATED.
13. GROUND ROD SHALL BE 3/4" X 10' LONG COPPER CLAD STEEL. CONNECTIONS TO GROUND RODS SHALL BE EXOTHERMICALLY WELDED.
14. ALL EXTERIOR ENCLOSURES, NUTS, BOLTS, AND MISCELLANEOUS MOUNTING HARDWARE SHALL BE STAINLESS STEEL, UNLESS NOTED OTHERWISE.
15. #6 AWG BARE COPPER GROUND WIRE MAY BE SOLID OR STRANDED UNLESS OTHERWISE INDICATED.
16. ~~EACH SIE CONTAINS ONE 120V/15A GFI DUPLEX RECEPTACLE.~~
17. ~~DUAL OBSTRUCTIONS LIGHT MAY BE OPTIONALLY POWERED DIRECTLY FROM A TERMINAL BLOCK IN THE SIE.~~
18. ~~CONTROL DEVICES MUST ENERGIZE AT 35 FOOT CANDLES AND DE-ENERGIZE AT 60 FOOT CANDLES PER AC 70/7460-1.~~
19. ~~AIR TERMINALS ARE NOT REQUIRED FOR RVR VISIBILITY SENSORS WHEN MOUNTED ON LIR MASTS.~~
20. ALL FAA STANDARDS AND ORDERS REFERENCED IN THESE DRAWINGS SHALL BE THE LATEST VERSION.
21. PRORTIONS OF THE SYSTEM NOT INSTALLED UNDER THIS CONTRACT AND NON-APPLICABLE NOTES ARE SHOWN FOR REFERENCE ONLY.

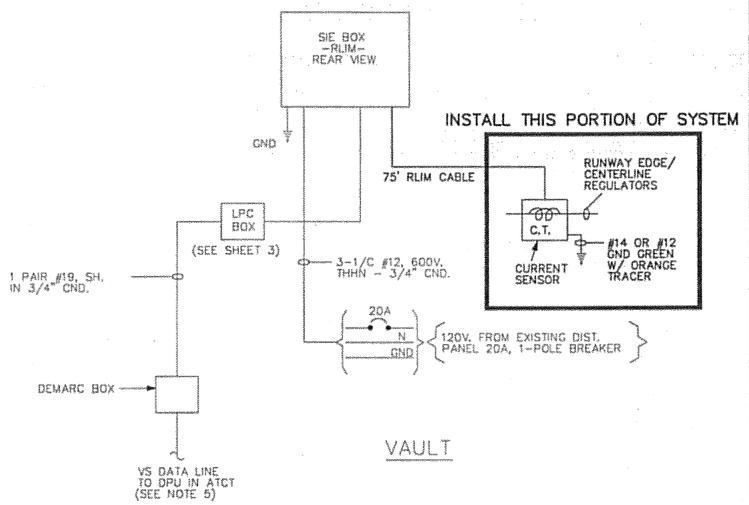

DO NOT SCALE FROM THESE DRAWINGS USE DIMENSIONS

PATH: I:\823400\Dwgs\E\Sheets\G45-V3.dwg

Tue, 03/Oct/06 02:26PM lschneller

TAB: G12

ADDENDUM NUMBER

ATTACHMENT NUMBER

RECORD OF REVISIONS

No.	DATE	DESCRIPTION

KETCHIKAN AIRPORT
RUNWAY SAFETY AREA EXPANSION & RUNWAY OVERLAY
PROJECT NO. 68306

RVR DETAILS

PREPARED BY: USKH INC.

CHECKED BY: GRH

STATE OF ALASKA 49TH GARY R. HABLE EE-10243 REGISTERED PROFESSIONAL ENGINEER 10/4/06

DESIGNED BY: LPS

DRAWN BY: LPS

STATE OF ALASKA
DEPARTMENT OF TRANSPORTATION & PUBLIC FACILITIES
DESIGN & ENGINEERING SERVICES
DIVISION-SOUTHEAST REGION

RVR DETAILS

PROJECT DESIGNATION

AIP NO. 3-02-0144-1606

STATE	YEAR
ALASKA	2006
SHEET NUMBER	TOTAL SHEETS
G45	131

NOTES:

1. #6 VERTICAL COLUMN REINFORCEMENT WITH 6" ø BENDS TO FORM 90–"L" HOOKS.
2. PROVIDE A MINIMUM OF 2" CLEAR COVER OVER ALL REINFORCING STEEL AND CONDUITS.
3. MINIMUM DEVELOPMENT LENGTH ASSUMES GRADE 40 REINFORCING STEEL.
4. CLEAR SPACING BETWEEN SPIRALS SHALL NOT EXCEED THREE INCHES NOR BE LESS THAN 1 INCH. ANCHORAGE OF OF SPIRAL REINFORCEMENT SHALL BE PROVIDED BY 1–1/2 EXTRA TURNS OF SPIRAL BAR OR WIRE AT THE EACH END OF A SPIRAL UNIT.
5. CONDUIT PENETRATIONS THROUGH CONCRETE FOUNDATION ARE USED AS FOLLOWS:
   A) ONE INCH CONDUIT SWEEP – POWER.
   B) ONE INCH CONDUIT SWEEP – COMMUNICATIONS.
6. WIND SENSOR TOWER IS EXISTING AND IS TO BE INSTALLED BY FAA. ANCHOR BOLT PATTERN IS 20–INCH SPACING – SQUARE PATTERN OF 4 3/4 INCH ANCHOR BOLTS AS SHOWN. VERIFY SPACING OF WITH EXISTING EQUIPMENT. A PLYWOOD TEMPLATE IS SUGGESTED IN ORDER TO PROPERLY PLACE ANCHOR BOLTS. VERTICALLY STUB UP ANCHOR BOLTS APPROXIMATELY 4–INCHES OUT OF CONCRETE SURFACE.
7. POUR SLAB CAP SUCH THAT ITS LONG AXIS IS PARALLEL TO THE RUNWAY.
8. FOR THE REPRESENTATIVE CONCRETE FOUNDATION SHOWN:
   A. CONCRETE STRENGTH = 3000 PSI @ 28 DAYS, (MIN.)
   B. SECURELY PLACE ANCHOR BOLTS PRIOR TO PLACING CONCRETE. TIE TO REINFORCEMENT.
   C. PLACE ALL CONCRETE ON UNDISTURBED SOIL OR COMPACTED BACKFILL. BACKFILL TO BE COMPACTED TO 92%
   D. DEPTH OF CONCRETE PIER = 4 FT IN SAND/GRAVEL OR BELOW FROST LEVEL.
   E. REININFORCEMENT STEEL PER ASTM A615, GR. 60, TIE WIRE TO BE 16 GAUGE OR LARGER ANNEALED IRON.
   F. ALL ANCHORAGE BOLTS AND PLATES TO BE HOT– DIPPED GALV. AFTER FABRICATION. COLD–GALV SPRAY TO BE APPLIED AFTER INSTALLATION TO ALL FASTENING HARDWARE AFTER INSTALLATION COMPLETED.
9. FOUNDATION EXCAVATION SHALL BE DUG AND BACKFILLED WITH NON–FROST SUSCEPTIBLE MATERIAL OR AUGERED AT INDICATED DIAMETER.
10. REBAR IS BENT AT THE TOP AND WIRE–TIED WITH THE HORIZONTAL CROSS–SUPPORT REBAR.

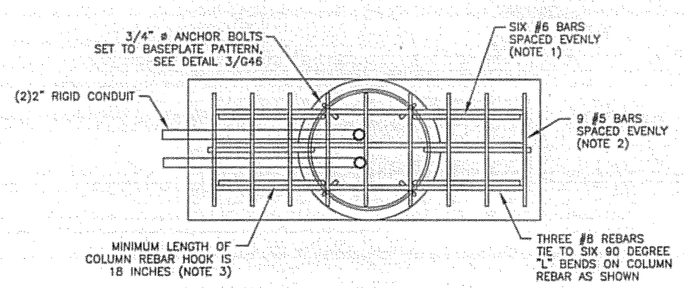

2/G46 **REINFORCING PLAN** N.T.S.

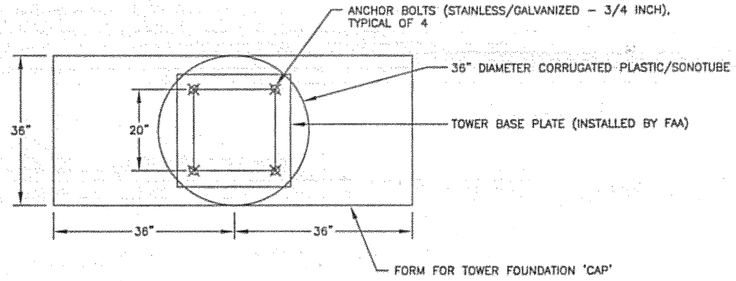

1/G46 **FOUNDATION PLAN** N.T.S.

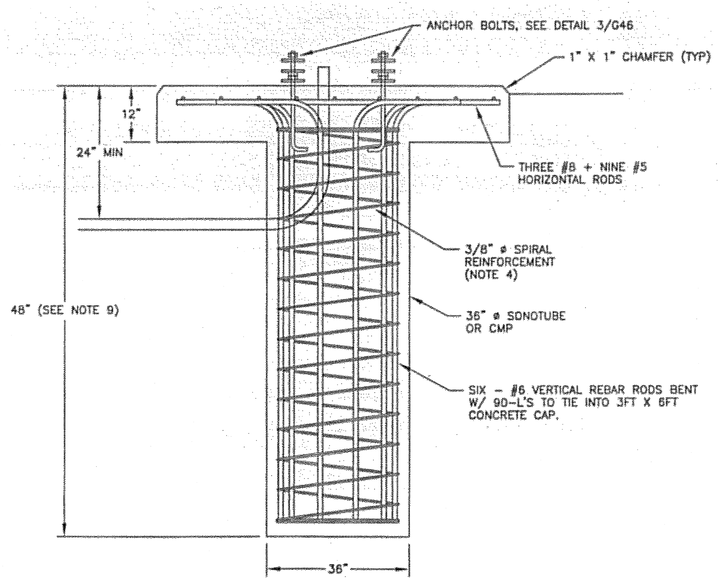

4/G46 **FOUNDATION SECTION** N.T.S.

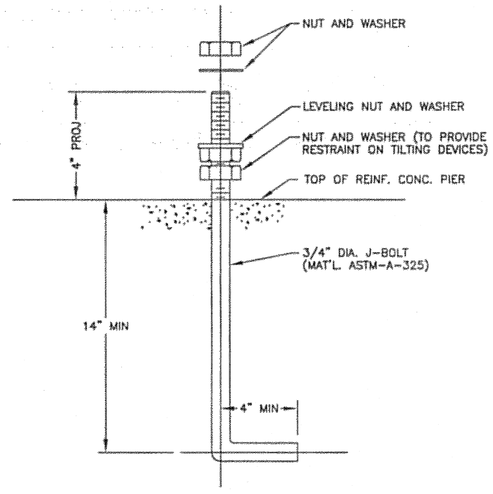

3/G46 **ANCHOR BOLT DETAIL** N.T.S.

DO NOT SCALE FROM THESE DRAWINGS USE DIMENSIONS

PATH: I:\823400\Dwgs\E\Sheets\G46–W1.dwg
Tue, 03/Oct/06 02:26PM lschneller
TAB: G12

ADDENDUM NUMBER

ATTACHMENT NUMBER

RECORD OF REVISIONS

No.	DATE	DESCRIPTION

KETCHIKAN AIRPORT
RUNWAY SAFETY AREA EXPANSION
& RUNWAY OVERLAY
PROJECT NO. 68306

F420 WIND SENSOR FOUNDATION DETAILS

PREPARED BY: USKH INC.

CHECKED BY: GRH

STATE OF ALASKA 49TH
GARY R. HABLE
EE–10243
REGISTERED PROFESSIONAL ENGINEER
10/4/06

DESIGNED BY: LPS

DRAWN BY: LPS

STATE OF ALASKA
DEPARTMENT OF TRANSPORTATION & PUBLIC FACILITIES
DESIGN & ENGINEERING SERVICES
DIVISION–SOUTHEAST REGION

F420 WIND SENSOR FOUNDATION DETAILS

PROJECT DESIGNATION	
AIP NO. 3-02-0144-1606	
STATE	YEAR
ALASKA	2006
SHEET NUMBER	TOTAL SHEETS
G46	131

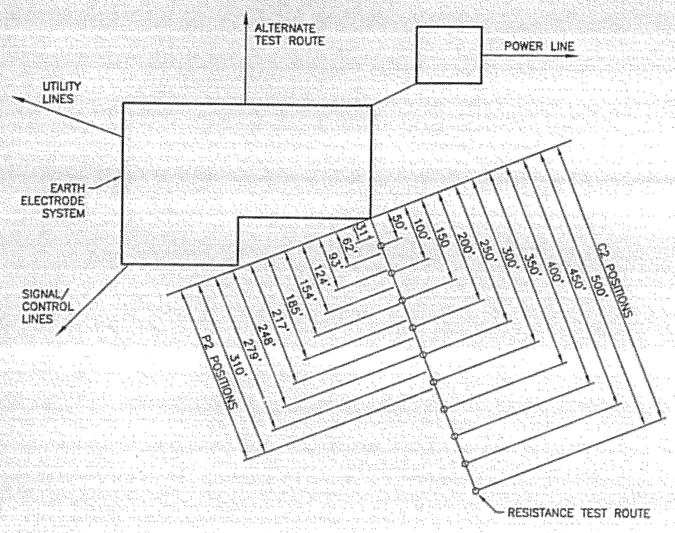

1 G47 **TYPICAL FACILITY TEST ROUTE**
N.T.S.

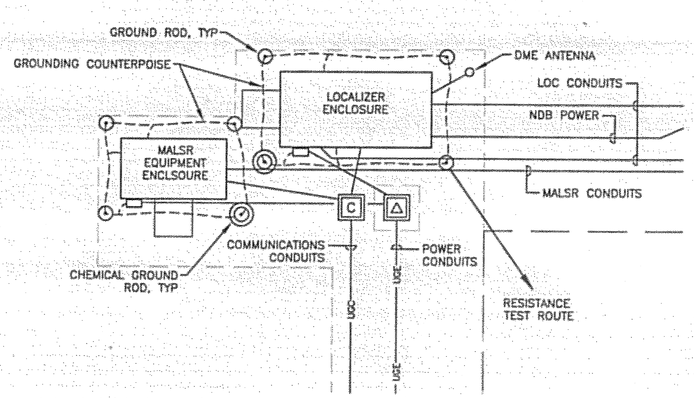

3 G47 **FACILITY TEST ROUTE**
N.T.S.

NOTES:

1. AN FAA REPRESENTATIVE SHALL BE PRESENT TO MONITOR AND/OR VERIFY THE EARTH ELECTRODE RESISTANCE TEST.
2. THE CIVIL CONTRACTOR, WITH THE ASSISTANCE OF A QUALIFIED ELECTRICIAN, SHALL PREPARE A NEAT SKETCH OF THE NEW FACILITY GROUND SYSTEM SIMILAR TO THAT SHOWN IN DETAIL 3. THIS SKETCH TOGETHER WITH THE RESISTANCE MEASUREMENT WORKSHEET (DETAIL 4) WILL BECOME PART OF THE PERMANENT FACILITY FILE. THREE COPIES WILL BE PROVIDED TO THE RESIDENT ENGINEER.
3. MEASURE THE RESISTANCE OF THE ELECTRODE SYSTEM WITH AN INSTRUMENT DESIGNED FOR THE PURPOSE USING THE FALL OF POTENTIAL METHOD (SUCH AS THE BIDDLE NULL BALANCE EARTH TESTER). PROCEED AS FOLLOWS:
   A. CONNECT THE TERMINALS MARKED C1 AND P1 TOGETHER AND CONNECT THEM TO THE ELECTRODE UNDER TEST.
   B. POSITION THE C2 PROBE ALONG A LINE WITH MAXIMIZES THE DISTANCE FROM THE ELECTRODE UNDER TEST AND FROM THE OTHER BURIED MATERIALS SUCH AS UTILITY PIPES, POWER AND SIGNAL CABLES, FUEL TANKS, ETC. IN CHOOSING THE DIRECTION FOR PLACEMENT OF THE C2 PROBE, EXAMINE THE CONFIGURATION OF THE ELECTRODE SYSTEM FOR THE FACILITY AND DETERMINE THE LOCATION OF ALL SUCH BURIED METALS. THEN LOCATE THE PROBE AS FAR AS POSSIBLE FROM THESE MATERIALS AS ILLUSTRATED IN DETAIL 1 (FOR LONG SYSTEM SUCH AS ALS, THE C2 PROBE LINE SHOULD BE RUN 90° TO ALS). KEEP C2 AND P2 LEADS SEPARATED AS FAR AS POSSIBLE.
   C. POSITION THE C2 PROBE AT DISTANCES AS SHOWN IN DETAIL 4. RECORD THE METER READINGS FOR EACH C2 AND P2 PROBE POSITION (NOTE THAT THE P2 POSITIONS ARE 62% OF THE C2 POSITIONS). IT MAY NOT BE NECESSARY TO PLOT THE FULL 500'. PLOT ENOUGH POINTS TO ACCURATELY DETERMINE WHERE RESISTANCE CURVE LEVELS OFF.
   D. NEXT PLOT ON THE GRAPH AS MANY RECORDED RESISTANCE READINGS VERSUS THE CORRESPONDING C2 PROBE POSITIONS AS NECESSARY TO DETERMINE WHERE CURVE LEVELS OFF (DETAIL 4).
   E. THE TRUE VALUE OF RESISTANCE CAN BE ESTIMATED BY EXTRAPOLATING THE CURVE TO ITS ASYMPTOTIC VALUE.

C2 PROBE DISTANCE	P2 PROBE DISTANCE (0.62xC2)	RESISTANCE METER READING (OHMS)
50'	31'	7.5
100'	62'	5.2
150'	93'	5.9
200'	124'	5.2
250'	154'	4.2
300'	185'	3.4
350'	217'	3.8
400'	248'	3.4
450'	279'	3.4
500'	310'	3.1

DEPTH OF REFERENCE RODS
RESISTANCE = 2.8 OHMS

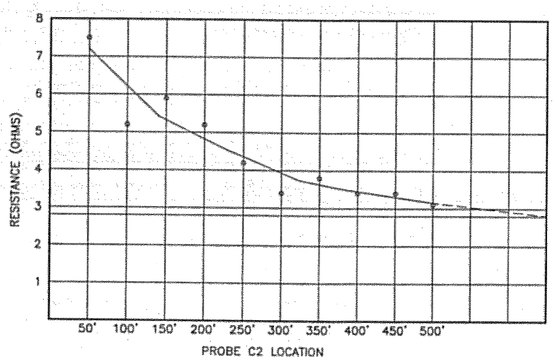

2 G47 **SAMPLE MEASUREMENT WORKSHEET**
N.T.S.

C2 PROBE DISTANCE	P2 PROBE DISTANCE (0.62xC2)	RESISTANCE METER READING (OHMS)
50'	31'	
100'	62'	
150'	93'	
200'	124'	
250'	154'	
300'	185'	
350'	217'	
400'	248'	
450'	279'	
500'	310'	

DEPTH OF REFERENCE RODS
RESISTANCE =

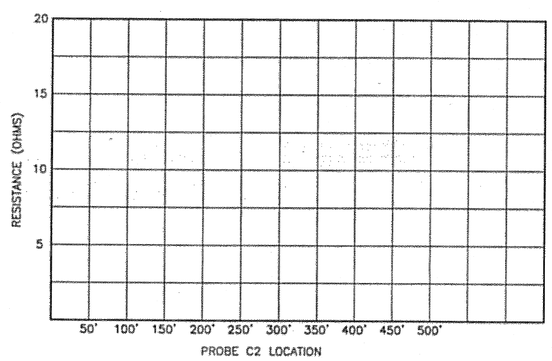

4 G47 **MEASUREMENT WORKSHEET**
N.T.S.

DO NOT SCALE FROM THESE DRAWINGS USE DIMENSIONS

PATH: I:\823400\Dwgs\E\Sheets\G47-GR01.dwg
Tue, 03/Oct/06 02:26PM lschneller
TAB: G12

ADDENDUM NUMBER

ATTACHMENT NUMBER

RECORD OF REVISIONS

No.	DATE	DESCRIPTION

KETCHIKAN AIRPORT
RUNWAY SAFETY AREA EXPANSION
& RUNWAY OVERLAY
PROJECT NO. 68306

LOCALIZER GROUND TESTING

PREPARED BY: USKH INC.

CHECKED BY: GRH

STATE OF ALASKA 49TH
GARY R. HABLE
EE-10243
REGISTERED PROFESSIONAL ENGINEER
10/4/06

DESIGNED BY: LPS

DRAWN BY: LPS

STATE OF ALASKA
DEPARTMENT OF TRANSPORTATION
& PUBLIC FACILITIES
DESIGN & ENGINEERING SERVICES
DIVISION–SOUTHEAST REGION

LOCALIZER GROUND TESTING

PROJECT DESIGNATION
AIP NO. 3-02-0144-1606

STATE	YEAR
ALASKA	2006
SHEET NUMBER	TOTAL SHEETS
G47	131

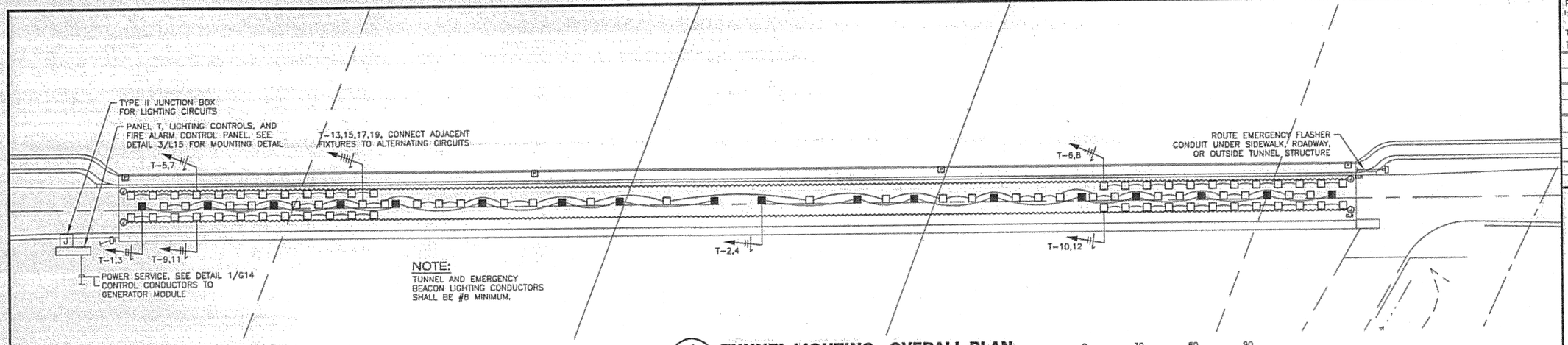

1 / L14 **TUNNEL LIGHTING - OVERALL PLAN**
1" = 30'-0"

0 30 60 90
SCALE IN FEET

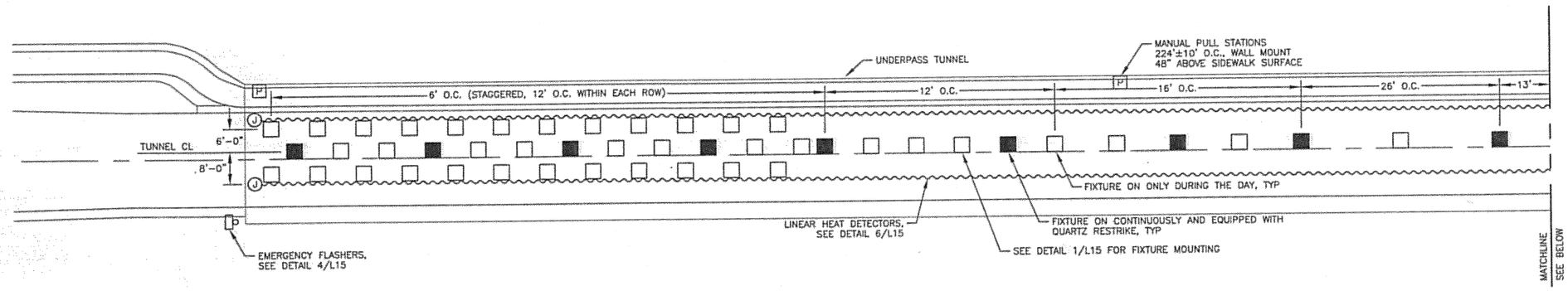

2 / L14 **TUNNEL LIGHTING - NORTH**
1/16" = 1'-0"

0 16 32 48
SCALE IN FEET

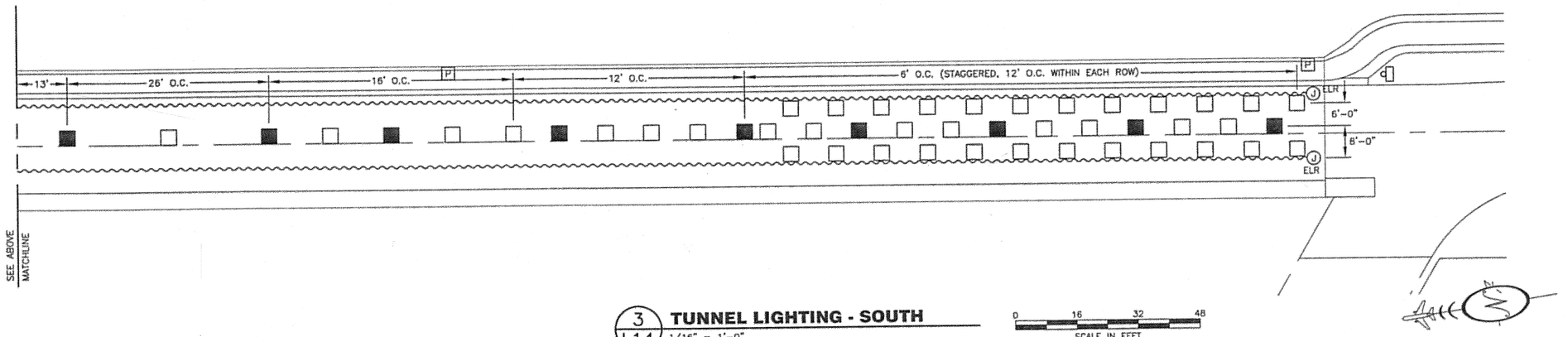

3 / L14 **TUNNEL LIGHTING - SOUTH**
1/16" = 1'-0"

0 16 32 48
SCALE IN FEET

DO NOT SCALE FROM THESE DRAWINGS USE DIMENSIONS

PATH: I:\823400\Dwgs\E\BOUND_11_06\L14-T1.dwg
Thu, 09/Nov/06 02:33PM bpaddock
TAB: G09

ADDENDUM NUMBER
ATTACHMENT NUMBER

RECORD OF REVISIONS

No.	DATE	DESCRIPTION

LEWIS REEF ROAD TUNNEL
PROJECT NO. 67858

TUNNEL LIGHTING PLAN

PREPARED BY: USKH INC.
CHECKED BY: GRH

STATE OF ALASKA
49TH
GARY R. HABLE
EE-10243
CERTIFIED PROFESSIONAL ENGINEER

DESIGNED BY: LPS
DRAWN BY: LPS

STATE OF ALASKA
DEPARTMENT OF TRANSPORTATION & PUBLIC FACILITIES
DESIGN & ENGINEERING SERVICES
DIVISION-SOUTHEAST REGION

TUNNEL LIGHTING PLAN

PROJECT DESIGNATION	
68456	
STATE	YEAR
ALASKA	2006
SHEET NUMBER	TOTAL SHEETS
L14	131

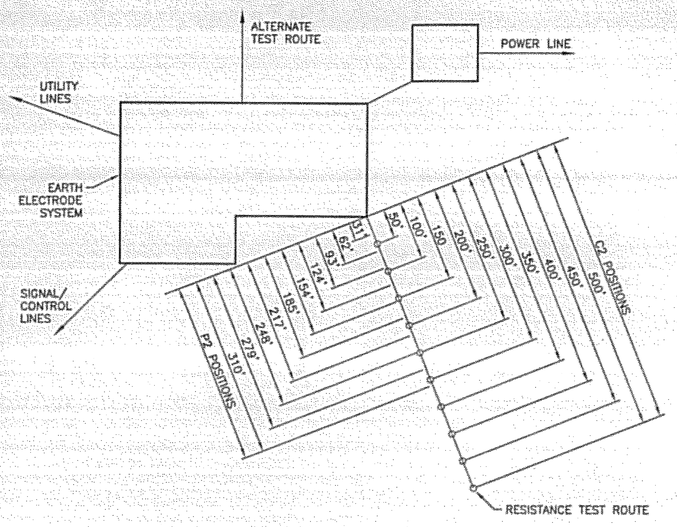

1 G48 **TYPICAL FACILITY TEST ROUTE**
N.T.S.

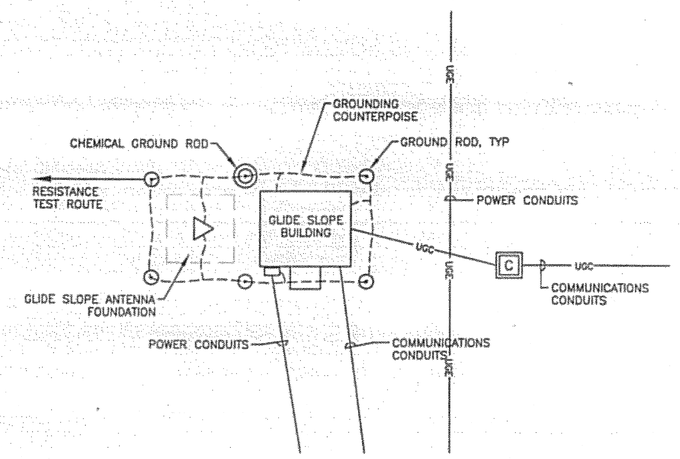

3 G48 **FACILITY TEST ROUTE**
N.T.S.

NOTES:

1. AN FAA REPRESENTATIVE SHALL BE PRESENT TO MONITOR AND/OR VERIFY THE EARTH ELECTRODE RESISTANCE TEST.
2. THE CIVIL CONTRACTOR, WITH THE ASSISTANCE OF A QUALIFIED ELECTRICIAN, SHALL PREPARE A NEAT SKETCH OF THE NEW FACILITY GROUND SYSTEM SIMILAR TO THAT SHOWN IN DETAIL 3. THIS SKETCH TOGETHER WITH THE RESISTANCE MEASUREMENT WORKSHEET (DETAIL 4) WILL BECOME PART OF THE PERMANENT FACILITY FILE. THREE COPIES WILL BE PROVIDED TO THE RESIDENT ENGINEER.
3. MEASURE THE RESISTANCE OF THE ELECTRODE SYSTEM WITH AN INSTRUMENT DESIGNED FOR THE PURPOSE USING THE FALL OF POTENTIAL METHOD (SUCH AS THE BIDDLE NULL BALANCE EARTH TESTER). PROCEED AS FOLLOWS:
   A. CONNECT THE TERMINALS MARKED C1 AND P1 TOGETHER AND CONNECT THEM TO THE ELECTRODE UNDER TEST.
   B. POSITION THE C2 PROBE ALONG A LINE WITH MAXIMIZES THE DISTANCE FROM THE ELECTRODE UNDER TEST AND FROM THE OTHER BURIED MATERIALS SUCH AS UTILITY PIPES, POWER AND SIGNAL CABLES, FUEL TANKS, ETC. IN CHOOSING THE DIRECTION FOR PLACEMENT OF THE C2 PROBE, EXAMINE THE CONFIGURATION OF THE ELECTRODE SYSTEM FOR THE FACILITY AND DETERMINE THE LOCATION OF ALL SUCH BURIED METALS. THEN LOCATE THE PROBE AS FAR AS POSSIBLE FROM THESE MATERIALS AS ILLUSTRATED IN DETAIL 1 (FOR LONG SYSTEM SUCH AS ALS, THE C2 PROBE LINE SHOULD BE RUN 90° TO ALS). KEEP C2 AND P2 LEADS SEPARATED AS FAR AS POSSIBLE.
   C. POSITION THE C2 PROBE AT DISTANCES AS SHOWN IN DETAIL 4. RECORD THE METER READINGS FOR EACH C2 AND P2 PROBE POSITION (NOTE THAT THE P2 POSITIONS ARE 62% OF THE C2 POSITIONS). IT MAY NOT BE NECESSARY TO PLOT THE FULL 500', PLOT ENOUGH POINTS TO ACCURATELY DETERMINE WHERE RESISTANCE CURVE LEVELS OFF.
   D. NEXT PLOT ON THE GRAPH AS MANY RECORDED RESISTANCE READINGS VERSUS THE CORRESPONDING C2 PROBE POSITIONS AS NECESSARY TO DETERMINE WHERE CURVE LEVELS OFF (DETAIL 4).
   E. THE TRUE VALUE OF RESISTANCE CAN BE ESTIMATED BY EXTRAPOLATING THE CURVE TO ITS ASYMPTOTIC VALUE.

C2 PROBE DISTANCE	P2 PROBE DISTANCE (0.62xC2)	RESISTANCE METER READING (OHMS)
50'	31'	7.5
100'	62'	5.2
150'	93'	5.9
200'	124'	5.2
250'	154'	4.2
300'	185'	3.4
350'	217'	3.8
400'	248'	3.4
450'	279'	3.4
500'	310'	3.1

DEPTH OF REFERENCE RODS
RESISTANCE = 2.8 OHMS

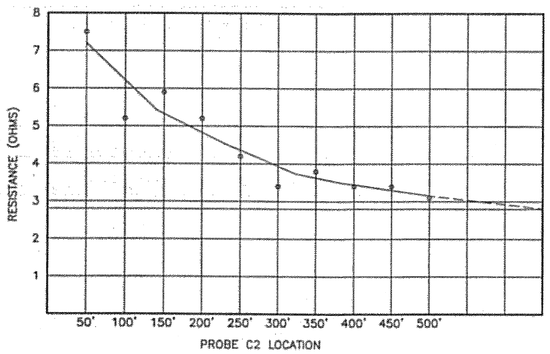

2 G48 **SAMPLE MEASUREMENT WORKSHEET**
N.T.S.

C2 PROBE DISTANCE	P2 PROBE DISTANCE (0.62xC2)	RESISTANCE METER READING (OHMS)
50'	31'	
100'	62'	
150'	93'	
200'	124'	
250'	154'	
300'	185'	
350'	217'	
400'	248'	
450'	279'	
500'	310'	

DEPTH OF REFERENCE RODS
RESISTANCE =

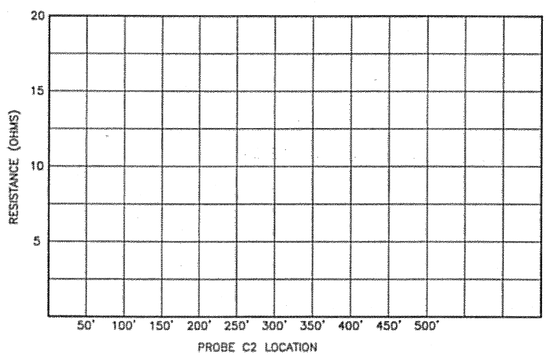

4 G48 **MEASUREMENT WORKSHEET**
N.T.S.

DO NOT SCALE FROM THESE DRAWINGS USE DIMENSIONS

PATH: I:\823400\Dwgs\E\Sheets\G48-GRD2.dwg
Tue, 03/Oct/06 02:27PM lschneller
TAB: G12

ADDENDUM NUMBER

ATTACHMENT NUMBER

RECORD OF REVISIONS

No.	DATE	DESCRIPTION

KETCHIKAN AIRPORT
RUNWAY SAFETY AREA EXPANSION
& RUNWAY OVERLAY
PROJECT NO. 68306

GLIDE SLOPE GROUND TESTING

PREPARED BY: USKH INC.

CHECKED BY: GRH

STATE OF ALASKA 49TH
GARY R. HABLE
EE-10243
REGISTERED PROFESSIONAL ENGINEER
10/4/06

DESIGNED BY: LPS

DRAWN BY: LPS

STATE OF ALASKA
DEPARTMENT OF TRANSPORTATION
& PUBLIC FACILITIES
DESIGN & ENGINEERING SERVICES
DIVISION-SOUTHEAST REGION

GLIDE SLOPE GROUND TESTING

PROJECT DESIGNATION
AIP NO. 3-02-0144-1606

STATE	YEAR
ALASKA	2006
SHEET NUMBER	TOTAL SHEETS
G48	131

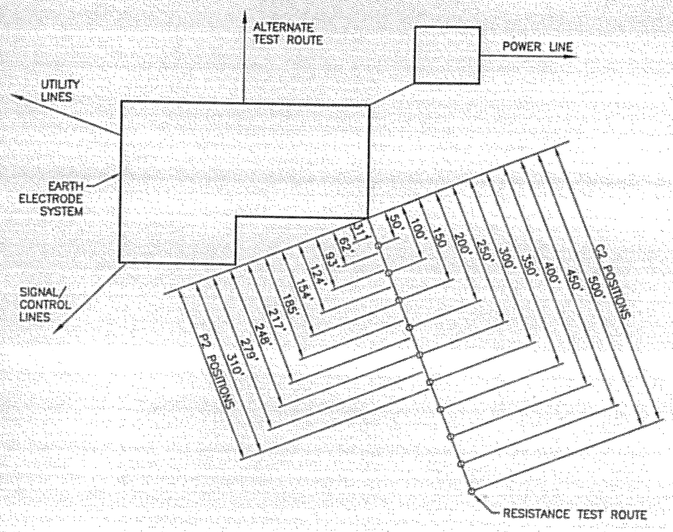

1 G49 **TYPICAL FACILITY TEST ROUTE**
N.T.S.

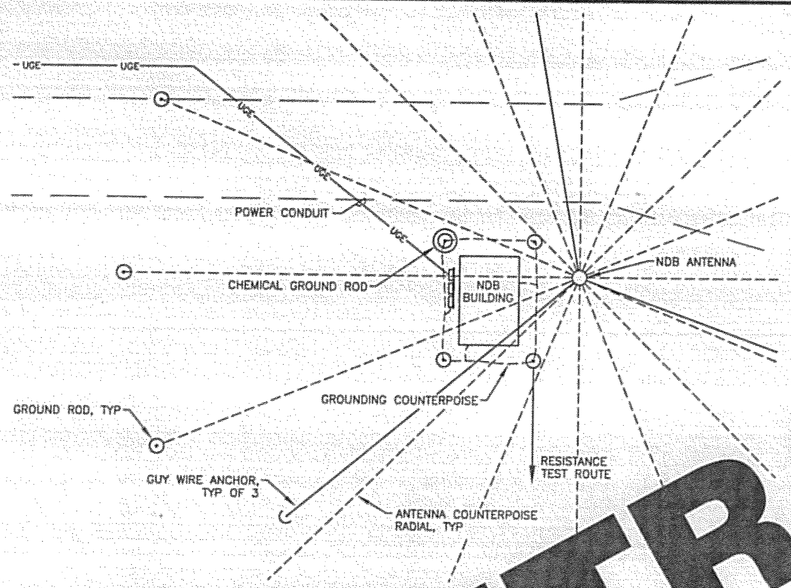

3 G49 **FACILITY TEST ROUTE**
N.T.S.

NOTES:

1. AN FAA REPRESENTATIVE SHALL BE PRESENT TO MONITOR AND/OR VERIFY THE EARTH ELECTRODE RESISTANCE TEST.
2. THE CIVIL CONTRACTOR, WITH THE ASSISTANCE OF A QUALIFIED ELECTRICIAN, SHALL PREPARE A NEAT SKETCH OF THE NEW FACILITY GROUND SYSTEM SIMILAR TO THAT SHOWN IN DETAIL 3. THIS SKETCH TOGETHER WITH THE RESISTANCE MEASUREMENT WORKSHEET (DETAIL 4) WILL BECOME PART OF THE PERMANENT FACILITY FILE. THREE COPIES WILL BE PROVIDED TO THE RESIDENT ENGINEER.
3. MEASURE THE RESISTANCE OF THE ELECTRODE SYSTEM WITH AN INSTRUMENT DESIGNED FOR THE PURPOSE USING THE FALL OF POTENTIAL METHOD (SUCH AS THE BIDDLE NULL BALANCE EARTH TESTER). PROCEED AS FOLLOWS:
   A. CONNECT THE TERMINALS MARKED C1 AND P1 TOGETHER AND CONNECT THEM T
   THE FACILITY AND DETERMINE ...TEM FOR ... OF ALL SUCH BURIED METALS. THEN ... PROBE AS ... POSSIBLE FROM THESE MATERIALS A... DETAIL 1 ...NG SYSTEM SUCH AS ALS, THE ... SHOULD BE R... TO ALS). KEEP C2 AND P2 LEADS ...ATED AS FAR AS POSSIBL...
   C. POSITION ... 2 PROBE AT DISTANCES AS ... IN DETAIL 4. RECORD THE MET... DINGS FOR ... C2 AND P... ROBE POSITION (NOTE THAT TH... SITIONS A... OF THE C2 POSITIONS). IT MAY NOT BE NECE... PLOT T... 500', PLOT ENOUGH POINTS TO ACCURATEL... RESISTANCE CURVE LEVELS OFF. PLOT ... MANY RECORDED RESISTANCE READINGS ... THE ... C2 PROBE POSITIONS AS NECESSARY TO ... WHER... LEVELS OFF (DETAIL 4).
   ...VALUE OF RESISTANCE CAN BE ESTIMATED BY EXTRAPOLATING ... ITS ASYMPTOTIC VALUE.

C2 PROBE DISTANCE	P2 PROBE DISTANCE (0.62xC2)	RESISTANCE METER READING (OHMS)
50'	31'	7.5
100'	62'	5.2
150'	93'	5.9
200'	124'	5.2
250'	154'	4.2
300'	185'	3.4
350'	217'	3.8
400'	248'	3.4
450'	279'	3.4
500'	310'	3.1

DEPTH OF REFERENCE ROD
RESISTANCE = 2.8 OHMS

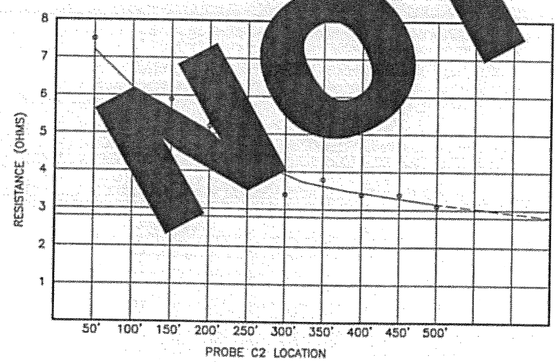

2 G49 **SAMPLE MEASUREMENT WORKSHEET**
N.T.S.

C2 PROBE DISTANCE	P2 PROBE DISTANCE (0.62xC2)	RESISTANCE METER READING (OHMS)
50'	31'	
100'	62'	
150'	93'	
200'	124'	
250'	154'	
300'	185'	
350'	217'	
400'	248'	
450'	279'	
500'	310'	

DEPTH OF REFERENCE RODS
RESISTANCE =

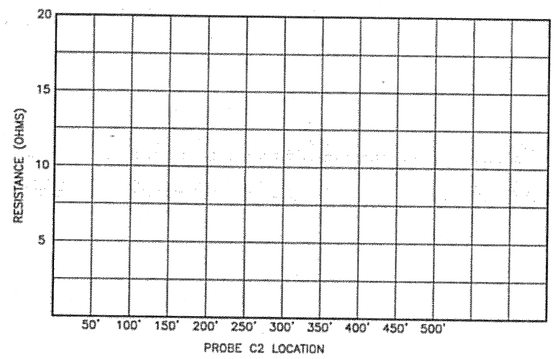

4 G49 **MEASUREMENT WORKSHEET**
N.T.S.

NOT IN CONTRACT

DO NOT SCALE FROM THESE DRAWINGS USE DIMENSIONS

PATH: I:\B23400\Dwgs\E\Sheets\G49-GRD3.dwg
Tue, 03/Oct/06 02:27PM lschneller
TAB: G12

ADDENDUM NUMBER

ATTACHMENT NUMBER

RECORD OF REVISIONS

No.	DATE	DESCRIPTION

KETCHIKAN AIRPORT
RUNWAY SAFETY AREA EXPANSION
& RUNWAY OVERLAY
PROJECT NO. 68306

NDB GROUND TESTING

PREPARED BY: USKH INC.

CHECKED BY: GRH

STATE OF ALASKA
49TH
GARY R. HABLE
EE-10243
REGISTERED PROFESSIONAL ENGINEER
10/4/06

DESIGNED BY: LPS

DRAWN BY: LPS

STATE OF ALASKA
DEPARTMENT OF TRANSPORTATION & PUBLIC FACILITIES
DESIGN & ENGINEERING SERVICES
DIVISION-SOUTHEAST REGION

NDB GROUND TESTING

PROJECT DESIGNATION
AIP NO. 3-02-0144-1606

STATE	YEAR
ALASKA	2006
SHEET NUMBER	TOTAL SHEETS
G49	131

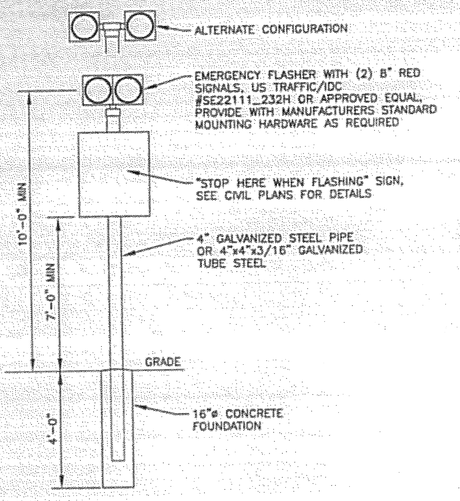

4 L15 EMERGENCY FLASHER DETAIL

N.T.S.

PANEL 'T'

CKT	LOAD	BRANCH BKR	BRANCH VA	CONN. KVA A	CONN. KVA B	BRANCH VA	BRANCH BKR	LOAD	CKT
1	TUNNEL LIGHTING – NORTH (NIGHT)	20/2	2106	4.2		2106	20/2	TUNNEL LIGHTING – SOUTH (NIGHT)	2
3	SEE NOTE 1		2106		4.2	2106		SEE NOTE 1	4
5	TUNNEL LIGHTING – NORTH	20/2	2208	4.4		2208	20/2	TUNNEL LIGHTING – SOUTH	6
7	SEE NOTE 2		2208		4.4	2208		SEE NOTE 2	8
9	TUNNEL LIGHTING – NORTH	20/2	2208	4.4		2208	20/2	TUNNEL LIGHTING – SOUTH	10
11	SEE NOTE 2		2208		4.4	2208		SEE NOTE 2	12
13	TUNNEL LIGHTING – CENTER	20/2	2760	2.8					14
15	SEE NOTE 2		2760		2.8				16
17	TUNNEL LIGHTING – CENTER	20/2	2760	2.8					18
19	SEE NOTE 2		2760		2.8				20
21	LIGHTING CONTROLS	15/1	500	0.5					22
23	EMERGENCY FLASHERS	15/1	160		0.2				24
25	FIRE ALARM CONTROL PANEL	15/1	300	0.3					26
27					0.0				28
29				0.0					30
	CONNECTED LOAD		38.1 KVA 79 AMPS	19.4 81	18.7 78				
	NEC DEMAND		47.5 KVA 99 AMPS						

PANEL NOTES
1. SERVE LIGHTING DIRECTLY FROM CIRCUIT BREAKER.
2. SERVE LIGHTING THROUGH NORMALLY–CLOSED CONTACTOR SO LIGHTING IS ENERGIZED DURING THE DAY.

PANEL SPECIFICATIONS
MAINS RATING AMPS – 150
MAIN CIRCUIT BREAKER AMPERES – 150
CAPACITY ONE–POLE CIRCUITS – 30
SYSTEM VOLTAGE – 480/240
PHASE, NO. OF WIRES – 1 PH, 3 W
AIC RATING – 10,000
ENCLOSURE – NEMA 4X

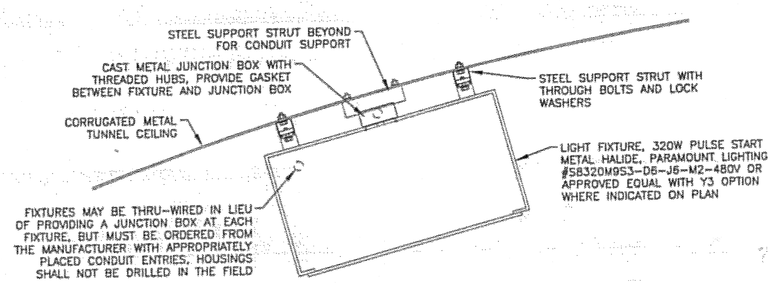

NOTES:
1. STEEL SUPPORT STRUT SHALL BE HOT DIP GALVANIZED OR STAINLESS STEEL
2. HARDWARE SHALL BE STAINLESS STEEL
3. STEEL SUPPORT STRUT FOR FIXTURE SUPPORT MAY BE CONTINOUS, SEGMENTS AT EACH FIXTURE, OR A COMBINATION. WHERE STRUT IS CONTINOUS, LOCATE THROUGH BOLTS WITHIN 12" OF EACH SIDE OF EACH FIXTURE AND EVERY 4' MAXIMUM BETWEEN FIXTURES
4. MOUNTING SHOWN IS SUGGESTED MOUNTING METHOD. CONTRACTOR MAY PROPOSE ALTERNATE INSTALLATION FOR REVIEW BY THE ENGINEER

1 L15 FIXTURE MOUNTING DETAIL

N.T.S.

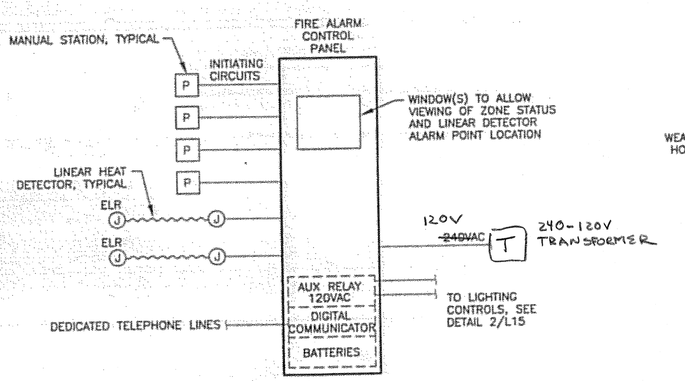

SYSTEM OPERATION:
ACTIVATION OF HEAT DETECTOR OR PULL STATION SHALL ACTIVATE EMERGENCY FLASHERS, TRANSMIT ALARM SIGNAL TO A CENTRAL STATION, AND DISPLAY THE LOCATION OF THE ALARMING DEVICE

5 L15 FIRE ALARM RISER DIAGRAM

N.T.S.

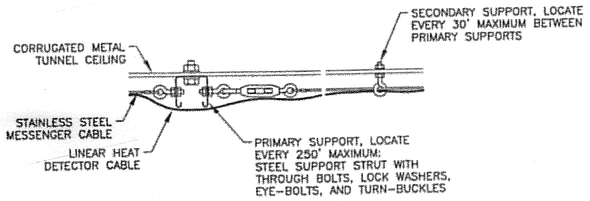

6 L15 HEAT DETECTOR MOUNTING DETAIL

N.T.S.

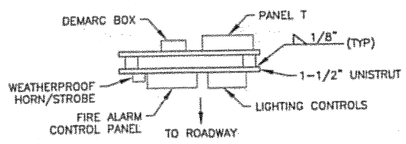

PLAN VIEW

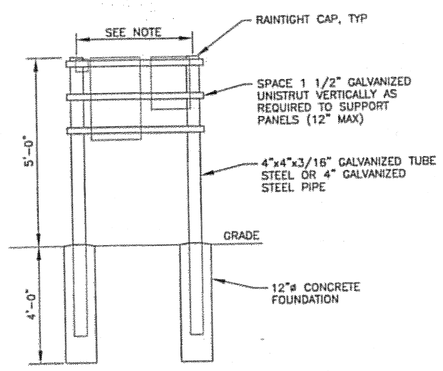

NOTE:
ADJUST WIDTH AS REQUIRED FOR EQUIPMENT INSTALLED. 24" MINIMUM, 48" MAXIMUM. IF LONGER SUPPORTS ARE NEEDED, PROVIDE ADDITIONAL POSTS

3 L15 PANEL MOUNTING DETAIL

N.T.S.

LIGHTING CONTROL NOTES:
1. MOUNT LIGHTING CONTROLS IN A NEMA 4X ENCLOSURE WITH INTERNAL DEAD–FRONT PANEL UNLESS OTHERWISE NOTED.
2. ON–OFF–AUTO SWITCH, SQUARE D #K543B OR APPROVED EQUAL, MOUNT IN DEAD–FRONT PANEL AND LABEL "DAYTIME TUNNEL LIGHTING"
3. 30A/12–POLE CONTACTOR. CONTACTOR SHALL BE ELECTRICALLY HELD WITH 120V COIL, SQUARE D TYPE LO OR APPROVED EQUAL
4. 120V ADJUSTABLE PHOTOCELL LOCATED AT LOADCENTER
5. 24VDC CONTROL RELAY
6. ROUTE TO N.O. OVERLOAD ALARM CONTACTS IN GENERATOR CONTROLLER, SET TO CLOSE AT 95% OF RATED LOAD
7. 24VDC POWER SUPPLY OR 24V PROVIDED BY GENERATOR CONTROLS
8. MOUNT RELAY (AND POWER SUPPLY IF PROVIDED) IN NEMA 1 ENCLOSURE IN GENERATOR MODULE
9. CONTACTS IN FIRE ALARM CONTROL PANEL. SEE DETAIL 5/L15
10. ALTERNATING FLASHER MODULE, 120VAC
11. ON–AUTO SWITCH, SQUARE D #KS11B OR APPROVED EQUAL, MOUNT IN DEAD–FRONT PANEL AND LABEL "EMERGENCY FLASHERS"
12. 15A, 120VAC POWER RELAY
13. 1.5kW, 240–120V TRANSFORMER, MOUNT IN CONTROL ENCLOSURE

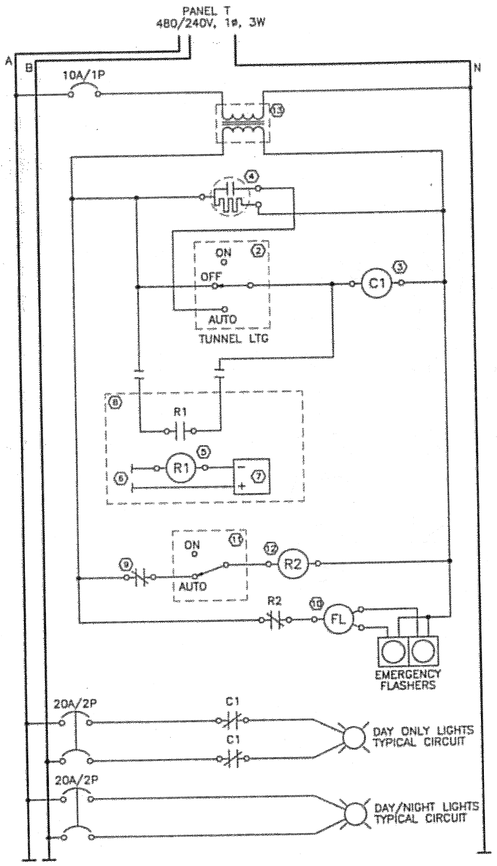

2 L15 TUNNEL LIGHTING CONTROL DETAIL

N.T.S.

DO NOT SCALE FROM THESE DRAWINGS USE DIMENSIONS

PATH: I:\823400\Dwgs\E\BOUND_11_06\L15-T2.dwg
Thu, 09/Nov/06 02:31PM bpaddock
TAB: G11

ADDENDUM NUMBER
ATTACHMENT NUMBER

RECORD OF REVISIONS

No.	DATE	DESCRIPTION

LEWIS REEF ROAD TUNNEL
PROJECT NO. 67858

TUNNEL LIGHTING DETAILS

PREPARED BY: USKH INC.

CHECKED BY: GRH

STATE OF ALASKA 49TH REGISTERED PROFESSIONAL ENGINEER
GARY R. HABLE EE–10243

DESIGNED BY: LPS

DRAWN BY: LPS

STATE OF ALASKA
DEPARTMENT OF TRANSPORTATION & PUBLIC FACILITIES
DESIGN & ENGINEERING SERVICES
DIVISION–SOUTHEAST REGION

TUNNEL LIGHTING DETAILS

PROJECT DESIGNATION	
68456	
STATE	YEAR
ALASKA	2006
SHEET NUMBER	TOTAL SHEETS
L15	131