State of Alaska

Department of Transportation and Public Facilities

Design and Engineering Services Division

KETCHIKAN AIRPORT

SNOW REMOVAL EQUIPMENT, SAND, AND CHEMICAL STORAGE BUILDING

As-Built Plans

CONSTRUCTION: 10-2007 THRU 9-2009
CONTRACTOR: McGRAW CUSTOM CONST.
PROJ. ENGINEER: A.K. SHEPARD

PROJECT No. 68290

AIP NO. 3-02-0144-019-2007

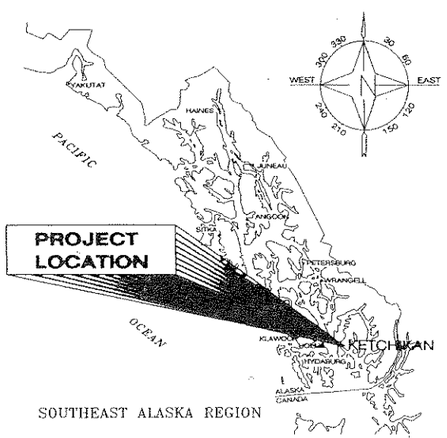

LOCATION MAP

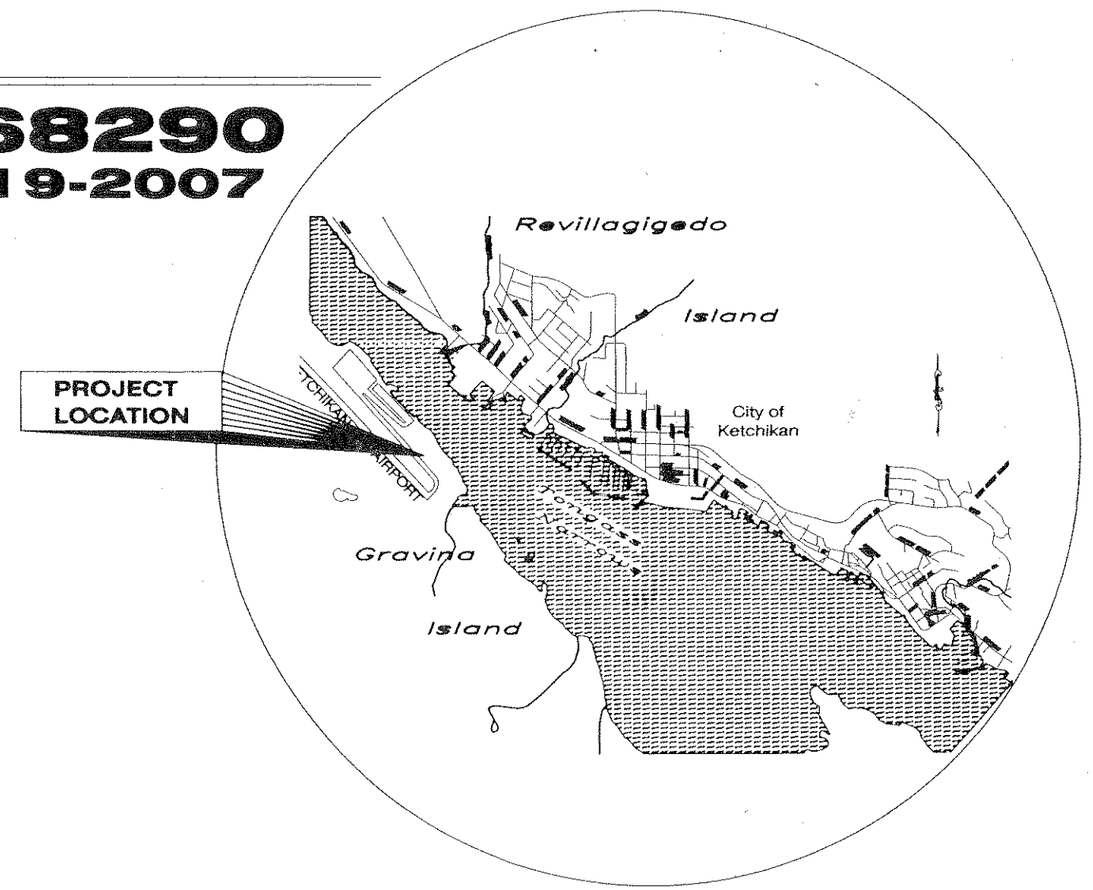

VICINITY MAP

STATE OF ALASKA
DEPARTMENT OF TRANSPORTATION
& PUBLIC FACILITIES
STATEWIDE DESIGN & ENGINEERING SERVICES DIVISION

STATE OF ALASKA 49th GARY H. POHL #A-4645 REGISTERED PROFESSIONAL ARCHITECT 5/30/07

RECOMMENDED FOR APPROVAL:

Jack D. Beedle 6/4/07
JACK D. BEEDLE, P.E. — DATE
REGIONAL PRE-CONSTRUCTION ENGINEER

APPROVED:

6/5/07
MALCOLM A. MENZIES, P.E., L.S. — DATE
REGIONAL DIRECTOR, SOUTHEAST REGION

CERTIFIED TRUE & CORRECT AS-BUILT OF ACTUAL FIELD CONDITION:

CONSTRUCTION PROJECT MANAGER — DATE

PATH: I:\906400\Dwgs\A\sheets\T01 MOD.dwg
Tue, 22/May/07 05:07PM

STATE	PROJECT DESIGNATION	YEAR	SHEET NO.	TOTAL SHEETS
ALASKA	68290	2006	T1	56

DRAWING INDEX :

SHEET NO.	DESCRIPTION
T1	TITLE SHEET
T2	DRAWING INDEX
T3	CODE DATA AND ABBREVIATIONS
C1	LEGEND & SURVEY CONTROL
C2	SITE PHASING PLAN
C3	SITE DEMOLITION PLAN
C4	PROPOSED SITE PLAN
C5	SITE GRADING PLAN
C6	SITE DETAILS
C7	SITE DETAILS
C8	SITE DETAILS
C9	PROPOSED UTILITY PLAN
C10	UTILITY DETAILS
C11	UTILITY DETAILS
C12	EROSION AND SEDIMENT CONTROL PLAN (ESCP)
A1.0	FLOOR PLAN – PHASE I
A1.1 *	FLOOR PLAN – PHASE III
A1.2	DOOR AND ROOM FINISH SCHEDULES
A2.0	BUILDING ELEVATIONS
A2.1	BUILDING ELEVATIONS
A2.2	BUILDING SECTIONS
A2.3	BUILDING SECTIONS
A2.4	WALL SECTIONS
A2.5	WALL SECTIONS
A3.0	ENLARGED PLANS INTERIOR ELEVATIONS
A6.0	ROOF PLAN AND DETAILS
A9.0	DOOR DETAILS
A9.1	MISC. DETAILS
S0.0	GENERAL STRUCTURAL NOTES
S1.0	PHASE I FOUNDATION/ SLAB PLAN
S1.1	PHASE III FOUNDATION/ SLAB PLAN
S1.2	FOUNDATION DETAILS
S2.0	MEZZANINE PLAN AND DETAILS
S2.1	MEZZANINE DETAILS
S3.0	PHASE I ROOF FRAMING PLAN
S3.1	PHASE III ROOF FRAMING PLAN

DRAWING INDEX :

SHEET NO.	DESCRIPTION
M1.1	MECHANICAL LEGEND AND SCHEDULES
M1.2	MECHANICAL SCHEDULES
M2.1	PLUMBING PLAN AND DETAILS
M3.1	SLAB HEATING PLAN
M3.2	FIRST FLOOR HVAC PLAN
M4.1	ENLARGED MECHANICAL PLANS AND SECTIONS
M4.2	ENLARGED MECHANICAL PLANS AND SECTIONS
M5.1	PLUMBING RISER DIAGRAMS AND DETAILS
M5.2	SCHEMATICS AND DETAILS
M5.3	DETAILS
M5.4	DETAILS
E1.1	SITE PLAN, LEGEND, TRENCH & HANDHOLE
E2.1	FLOOR PLAN – PHASE I POWER
E2.2	FLOOR PLAN – PHASE III POWER
E2.3	SINGLE LINE DIAGRAM & FLOOR PLAN REGULATOR BLDG PHASE I
E2.4	SCHEDULES
E2.5	RISER DIAGRAMS & MOUNTING BOARDS
E3.1	FLOOR PLAN – PHASE I LIGHTING
E3.2	FLOOR PLAN – PHASE III LIGHTING
E3.3	LUMINAIRE SCHEDULE DETAILS

PATH:
I:\906400\Dwgs\A\Sheets\T02 MOD BP 7_16_07.

PLOTTED DATE:
Mon, 16/Jul/07 02:36PM bpoddock

ADDENDUM NUMBER

RECORD OF REVISIONS

No.	DATE	DESCRIPTION

KETCHIKAN AIRPORT
SNOW REMOVAL EQUIPMENT,
SAND, AND CHEMICAL
STORAGE BUILDING

PREPARED BY: USKH INC.

STATE OF ALASKA
49TH
GARY H. POHL
A-4645
REGISTERED PROFESSIONAL ARCHITECT

PROJECT MGR.: BS
DRAWN BY: WJP
CHECKED BY: NCL
DATE: JULY 9, 2007

STATE OF ALASKA
DEPARTMENT OF TRANSPORTATION
& PUBLIC FACILITIES
DESIGN & ENGINEERING SERVICES
DIVISION–SOUTHEAST REGION

DRAWING INDEX

AKSAS PROJECT NUMBER
68290

STATE	YEAR
ALASKA	2006
SHEET NUMBER	TOTAL SHEETS
T2	56

ABBREVIATIONS :

&	AND
∠	ANGLE
@	AT
℄	CENTERLINE
Ø	DIAMETER OR ROUND
#	NUMBER OR POUND
(E)	EXISTING
ACOUS.	ACCOUSTICAL
A.D.	AREA DRAIN
ADJ.	ADJUSTABLE
AGGR.	AGGREGATE
AL.	ALUMINUM
APPROX.	APPROXIMATE
ARCH.	ARCHITECTURAL
ASB.	ASBESTOS
ASPH.	ASPHALT
BD.	BOARD
BITUM.	BITUMINOUS
BLDG.	BUILDING
BLK.	BLOCK
BLKG.	BLOCKING
BM.	BEAM
BOT.	BOTTOM
CAB.	CABINET
C.B.	CATCH BASIN
CEM.	CEMENT
CER.	CERAMIC
C.I.	CAST IRON
C.G.	CORNER GUARD
CLG.	CEILING
CLKG.	CALKING
CLO.	CLOSET
CLR.	CLEAR
C.O.	CASED OPENING
COL.	COLUMN
CONC.	CONCRETE
CONN.	CONNECTION
CONSTR.	CONSTRUCTION
CONT.	CONTINUOUS
CORR.	CORRIDOR
CTSK.	COUNTERSUNK
CNTR.	COUNTER
CTR.	CENTER
DBL.	DOUBLE
DEPT.	DEPARTMENT
D.F.	DRINKING FOUNTAIN
DET.	DETAIL
DIA.	DIAMETER
DIM.	DIMENSION
DISP.	DISPENSER
DN.	DOWN
D.O.	DOOR OPENING
DR.	DOOR
DWR.	DRAWER
DS.	DOWNSPOUT
D.S.P.	DRY STANDPIPE
DWG.	DRAWING
E.	EAST
EA.	EACH
E.J.	EXPANSION JOINT
EL.	ELEVATION
ELEC.	ELEVATOR
ELEV.	EMERGENCY
EMER.	ENCLOSURE
ENCL.	ELECTRICAL PANELBOARD
E.P.	EQUAL
EQ.	EQUIPMENT
EQPT.	ELECTRIC WATER COOLER
E.W.C.	EXISTING
EXPO.	EXPOSED
EXP.	EXPANSION
EXT.	EXTERIOR
F.A.	FIRE ALARM
F.B.	FLAT BAR
F.D.	FLOOR DRAIN
FDN.	FOUNDATION
F.E.	FIRE EXTINGUISHER
F.E.C.	FIRE EXTINGUISHER CAB.
F.H.C.	FIRE HOSE CABINET
FIN.	FINISH
FL.	FLOOR
FLASH.	FLASHING
FLUOR.	FLUORESCENT
F.O.C.	FACE OF CONCRETE
F.O.F.	FACE OF FINISH
F.O.S.	FACE OF STUDS
FPRF.	FIREPROOF
F.S.	FULL SIZE
FT.	FOOT OR FEET
FTG.	FOOTING
FURR.	FURRING
FUT.	FUTURE
GA.	GAUGE
GALV.	GALVANIZED
G.B.	GRAB BAR
GL.	GLASS
GND.	GROUND
GR.	GRADE
GYP.	GYPSUM
H.B.	HOSE BIBB
H.C.	HOLLOW CORE
HDWD.	HARDWOOD
HDWE.	HARDWARE
H.M.	HOLLOW METAL
HORIZ.	HORIZONTAL
HR.	HOUR
HGT.	HEIGHT
I.D.	INSIDE DIAMETER (DIM.)
INSUL.	INSULATION
INT.	INTERIOR
JAN.	JANITOR
JT.	JOINT
KIT.	KITCHEN
LAB.	LABORATORY
LAM.	LAMINATE
LAV.	LAVATORY
LKR.	LOCKER
LT.	LIGHT
MAX.	MAXIMUM
M.C.	MEDICINE CABINET
MECH.	MECHANICAL
MEMB.	MEMBRANE
MET.	METAL
MFR.	MANUFACTURER
MH.	MANHOLE
MIN.	MINIMUM
MIR.	MIRROR
MISC.	MISCELLANEOUS
M.O.	MASONRY OPENING
MTD.	MOUNTED
MUL.	MULLION
N.	NORTH
N.I.C.	NOT IN CONTRACT
NO. OR #	NUMBER
NOM.	NOMINAL
N.T.S.	NOT TO SCALE
O.A.	OVERALL
OBS.	OBSCURE
O.C.	ON CENTER
O.D.	OUTSIDE DIAMETER (DIM.)
OFF.	OFFICE
OPNG.	OPENING
OPP.	OPPOSITE
PRCST.	PRE-CAST
PL.	PLATE
P.LAM.	PLASTIC LAMINATE
PLAS.	PLASTER
PLYWD.	PLYWOOD
PR.	PAIR
PT.	POINT
P.T.D.	PAPER TOWEL DISPENSER
P.T.D/R	COMBINATION PAPER TOWEL DISPENSER & RECEPTACLE
PTN.	PARTITION
P.T.R.	PAPER TOWEL RECEPTACLE
Q.T.	QUARRY TILE
R.	RISER
RAD.	RADIUS
R.D.	ROOF DRAIN
REF.	REFERENCE
REFR.	REFRIGERATOR
RGTR.	REGISTER
REINF.	REINFORCED
REQ.	REQUIRED
RESIL.	RESILIENT
RM.	ROOM
R.O.	ROUGH OPENING
RWD.	REDWOOD
R.W.L.	RAIN WATER LEADER
S.	SOUTH
S.C.	SOLID CORE
S.C.D.	SEAT COVER DISPENSER
SCHED.	SCHEDULE
S.D.	SOAP DISPENSER
SECT.	SECTION
SH.	SHELF
SHR.	SHOWER
SHT.	SHEET
SIM.	SIMILAR
S.N.D.	SANITARY NAPKIN DISPENSER
S.N.R.	SANITARY NAPKIN RECEPTACLE
SPEC.	SPECIFICATION
SQ.	SQUARE
S.ST.	STAINLESS STEEL
S.SK.	SERVICE SINK
STA.	STATION
STD.	STANDARD
STL.	STEEL
STOR.	STORAGE
STRL.	STRUCTURAL
SUSP.	SUSPENDED
SYM.	SYMMETRICAL
TRD.	TREAD
T.B.	TOWEL BAR
T.C.	TOP OF CURB
TEL.	TELEPHONE
TER.	TERRAZZO
T.&G.	TONGUE AND GROOVE
THK.	THICK
T.P.	TOP OF PAVEMENT
T.P.D.	TOILET PAPER DISPENSER
T.V.	TELEVISION
T.W.	TOP OF WALL
TYP.	TYPICAL
UNF.	UNFINISHED
U.O.N.	UNLESS OTHERWISE NOTED
UR.	URINAL
VERT.	VERTICAL
VEST.	VESTIBULE
W.	WEST
W/	WITH
W.C.	WATER CLOSET
WD.	WOOD
W/O	WITHOUT
WP.	WATERPROOF
WSCT.	WAINSCOT
WT.	WEIGHT

CODE ANALYSIS :

CODE ANALYSIS	RESULTS	2003 IBC REF
Project Name	Ketchikan Snow Removal Airport Equipment, Sand and Chemical Storage Building	
Jurisdiction	**State of Alaska Fire Marshal**	
Applicable Codes	2003 International Building Code (IBC) 2003 International Mechanical Code (IMC) 2003 Uniform Plumbing Code (UPC) 2002 National Electrical Code (NEC) Americans with Disabilities Act (ADA)	
Occupancy	**S-1**	IBC 311
Fire Separation -	Boiler Room - 1 hour or automatic sprinkler	IBC 302.1.1
Incidental Use Areas	Vehicle Bays (automotive parking) - 2 hours or 1 hour w/ automatic sprinkler Storage Rooms > 100 SF - 1 hour or automatic sprinkler	
Construction Type	**Type II-B, Non-rated, non-combustible** Note: Exterior plastic foam core/metal faced wall and roof panels shall conform with requirements of IBC Section 2603.7 for large scale tests such as FM 4880, UL 1040 or UL 1715, exempting the panels from the requirements of IBC Section 2603.4 through 2603.6.	IBC Table 601
Automatic Sprinkler System	**Yes, unless the building is separated into individual fire areas.** Sprinklering is required when individual S-1 fire areas exceed 12,000 SF. S-1 fire areas are located more than 3 stories above grade, or the combined S-1 fire areas including mezzanines exceeds 24,000 SF. Sprinklering is required in buildings 2 or more stories in height, with a fire area containing a repair garage exceeding 10,000 SF or one story repair garages with a fire area exceeding 12,000 SF	IBC 903.2.8 IBC [F]903.2.8.1
Automatic Manual Fire Alarm	**Not required**	IBC 907
Fire Resistance of Exterior Walls	**Zero because building fire separation distance greater than 30 feet.**	IBC Table 602
Area Actual	**16,344 SF**	
Area Allowable A_t Per IBC Table	17,500 SF	IBC Table 503
Height Actual	**2 stories**	
Height Allowable Per IBC Table	3 stories	IBC Table 503
Frontage Increase I_f	I_f = 100[720/720-0.25]30/30 = **75**	IBC Equation 5-2
Sprinkler Increase I_s	Not Sprinklered I_s = **0**	IBC Section 506.3
Total Allowable Area A_a	$A_a = A_t+[A_tI_f/100]+[A_tI_s/100]$ = 17,500+[(17,5000)(75)/100]+[(17,500)(0)/100] = **30,625 SF**	IBC Equation 5-1
Minimum Plumbing Facilities	**1 unisex toilet, lavatory and drinking fountain required and provided**	IPC App. Chapter 29 Table A-29-A

t:\906400\Dwgs\A\sheets\T03.dwg

PLOTTED DATE:
Thu, 05/Oct/06 11:34AM clease

ADDENDUM NUMBER

RECORD OF REVISIONS		
No.	DATE	DESCRIPTION

KETCHIKAN AIRPORT
SNOW REMOVAL EQUIPMENT,
SAND, AND CHEMICAL
STORAGE BUILDING

PREPARED BY: USKH INC.

STATE OF ALASKA
GARY K. FOX
#A-4645
REGISTERED PROFESSIONAL ARCHITECT
10-5-2006

PROJECT MGR.: BS
DRAWN BY: WJP
CHECKED BY: NCL
DATE: OCTOBER 6, 2006

STATE OF ALASKA
DEPARTMENT OF TRANSPORTATION
& PUBLIC FACILITIES
DESIGN & ENGINEERING SERVICES
DIVISION-SOUTHEAST REGION

CODE DATA AND ABBREVIATIONS

AKSAS PROJECT NUMBER	
68290	
STATE	YEAR
ALASKA	2006
SHEET NUMBER	TOTAL SHEETS
T3	56

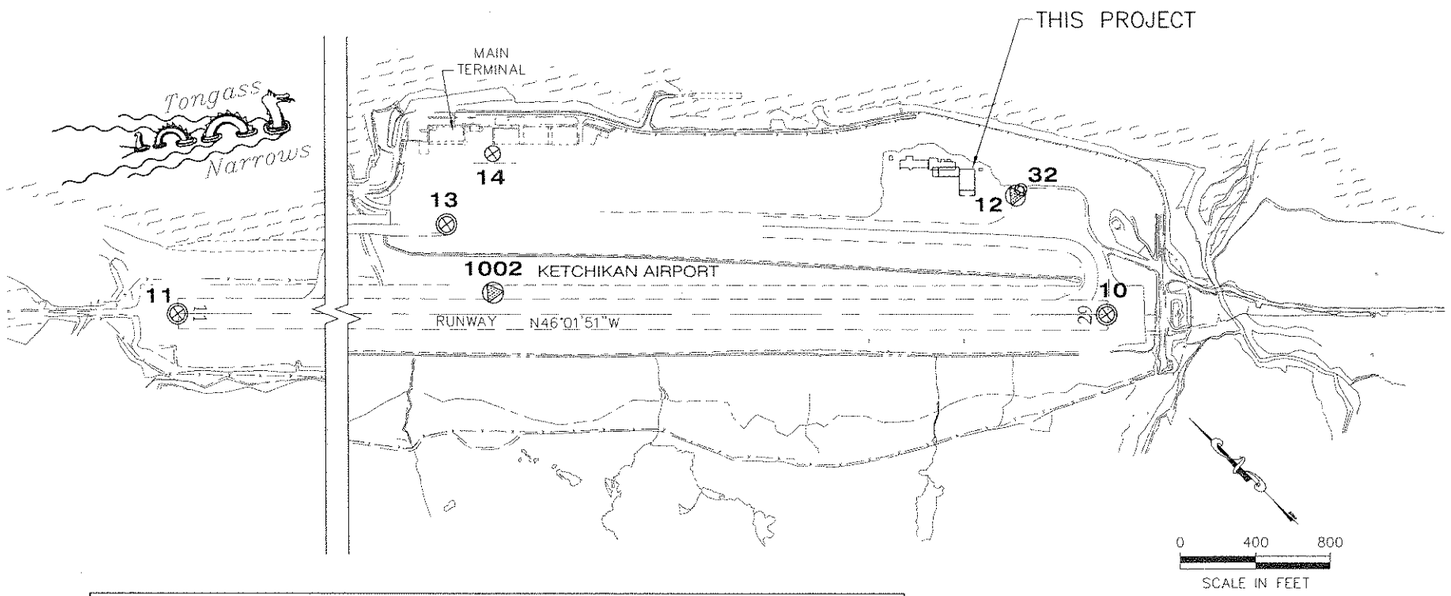

EXISTING CONTROL MONUMENTS

POINT	STATION	OFFSET	LOCAL NORTH	LOCAL EAST	ORTHO ELEV (MLLW)	DESC
10	195+00.00	0.00	89835.7293	95058.2039	92.88	CL_MON_RUNWAY_BC_195+00
11	120+00.00	0.00	95042.7981	89660.3110	85.62	CL_MON_RUNWAY_BC_120+00
12	190+27.15	622.27 LT	90611.9051	95149.8731	80.76	NGS_DMA_3"_BC
13	159+99.83	470.18 LT	92604.2219	92865.4780	45.64	CL_MON_BC2.5"_60+00_TAXI/APRON
14	162+49.92	840.10 LT	92696.8360	93302.2976	45.29	BC2"_L3/L4_BLK400
32	190+55.83	654.37 LT	90615.1019	95192.7987	80.43	ALCAP1.5"_C2
1002	162+49.04	113.20 LT	92174.2870	92796.9966	93.12	NGS_BC_KTN-ARP2_RTK

HORIZONTAL CONTROL

The Ketchikan Tongass Avenue / Third Avenue Grid is a local ground coordinate system based DOT Brass Cap TBM-66 located in bedrock near PC 62+23.46 of Third Avenue Extension. TBM-66 was established with two OPUS sessions on March of 2002. The Grid system relates to AKSPC zone 1 NAD83(92) through the following parameters:

Zone = NAD83 AKSPC ZONE 1
Grid Scale = 0.9999007
Convergence = -0°00'18"

Translation about TBM-66 as follows:
AKSPC Northing = 1289213.0360 FT US
AKSPC Easting = 3104427.6100 FT US
Local Northing = 89745.1675 FT US
Local Easting = 104488.6038 FT US

Project Specific Horizontal Control

10 : 3" brass cap in well located at threshold of runway 29.
Tongass-Grid N 89835.7293 FT US, E 95058.2039 FT US
AKSPC N 1289304.4108 FT US, E 3094998.1545 FT US

11 : 3" brass cap in well located at threshold of runway 11.
Tongass-Grid N 95042.7981 FT US, E 89660.3110 FT US
AKSPC N 1294511.4334 FT US, E 3089601.2519 FT US

VERTICAL CONTROL

The basis of vertical control is the point number 7, PT mon at sta 234+94.89 of the airport road. The monument has an accepted elevation of 43.43' above MLLW.

The Project Specific Basis of Vertical Control
is threshold runway centerline monument #10 at sta 195+00 having an accepted elevation of 92.88 feet above MLLW.

GENERAL CIVIL NOTES

1. TOPOGRAPHIC INFORMATION IS BASED ON SURVEY PRE-FORMED BY USKH DECEMBER 2005 AND A LIMITED NUMBER OF RECORD DRAWINGS.
2. CAUTION! LOCATIONS OF EXISTING UTILITIES ARE APPROXIMATE ONLY. THE CONTRACTOR SHALL VERIFY EXACT LOCATION BY OBTAINING UTILITY LOCATES PRIOR TO START OF CONSTRUCTION AND EXERCISE CAUTION DURING EXCAVATION.
3. THIS PROJECT LIES WITHIN THE AIRPORT BOUNDARY. THE EXISTING BUILDING RESTRICTION LINE (BRL) SHOWN COMES FROM THE NOVEMBER 2002 AIRPORT LAYOUT PLAN. THE PROPOSED BRL SHOWN WILL BE ESTABLISHED BY THE DEPARTMENT.
4. SOILS INFORMATION IS TAKEN FROM A SOILS INVESTIGATION AND GEOTECHNICAL REPORT PERFORMED BY THE DEPARTMENT DATED MAY 10, 2006. COPY OF THIS REPORT HAVE BEEN ATTACHED TO THE PROJECT SPECIFICATIONS.
5. RESTORE ALL DISTURBED PROPERTY TO MATCH EXISTING CONDITIONS, EXCEPT AS SHOWN OTHERWISE.
6. THE CONTRACTOR SHALL VERIFY THAT REQUIRED PERMITS HAVE BEEN OBTAINED, INCLUDING BUT NOT LIMITED TO: ADEC/EPA OIL WATER SEPARATOR OUTFALL, ACOE 404 PERMIT, KETCHIKAN BOROUGH ZONING.
7. THE DEPARTMENT MAY HAVE INCLUDED THE REMOVAL AND EXCAVATION OF SOFT SOILS IN A PREVIOUS PROJECT. THE CONTRACTOR SHALL VERIFY IF THIS WORK HAS BEEN COMPLETED BEFORE SUBMITTING A BID.

LEGEND

EXISTING	NEW	
BRL	BRL	BUILDING RESTRICTION LINE
		LEASE LOT BOUNDARY
		PRIMARY MONUMENTS
		EDGE OF PAVEMENT
		EDGE OF GRAVEL
		GRADING LIMIT
UGE	UGE	UNDERGROUND ELECTRIC
UGT	UGT	UNDERGROUND TELEPHONE
W	W	WATER LINE
FD	FD	FOOTING DRAIN
	RD	ROOF DRAIN
SD	SD	STORM DRAIN LINE
		CATCH BASIN
		FIRE HYDRANT
		GATE VALVE
		THRUST BLOCK
		TELEPHONE PEDESTAL
J		JUNCTION BOX
		TRANSFORMER
EMH		ELECTRICAL MANHOLE
	105	GRADING POINT
		SURFACE GRADE
5		MAJOR CONTOUR LINES
2		MINOR CONTOUR LINES
		BOLLARD
		ANTENNA
		TAXIWAY EDGE LIGHTS
		BEACON TOWER
		BUILDING
		STRUCTURE TO BE DEMOLISHED
		CONCRETE APRON
		CONCRETE SIDEWALK
		VALLEY GUTTER
		TRENCH DRAIN
		SOIL TEST HOLE
		SOIL TEST PROBE

PATH:
I:\906400\Dwgs\C\Sheets\906400C01.dwg

PLOTTED DATE:
Thu, 12/Jul/07 08:01AM bpoddock

ADDENDUM NUMBER

RECORD OF REVISIONS

No.	DATE	DESCRIPTION

KETCHIKAN AIRPORT
SNOW REMOVAL EQUIPMENT, SAND, AND CHEMICAL STORAGE BUILDING

PREPARED BY: USKH INC.

STATE OF ALASKA 49TH Nathan C. Leigh CE-8386 REGISTERED PROFESSIONAL ENGINEER
7-10-07

PROJECT MGR.: BS
DRAWN BY: WJP
CHECKED BY: NCL
DATE: JULY 9, 2007

STATE OF ALASKA
DEPARTMENT OF TRANSPORTATION & PUBLIC FACILITIES
DESIGN & ENGINEERING SERVICES
DIVISION-SOUTHEAST REGION

LEGEND & SURVEY CONTROL

AKSAS PROJECT NUMBER
68290

STATE	YEAR
ALASKA	2006
SHEET NUMBER	TOTAL SHEETS
C1	56

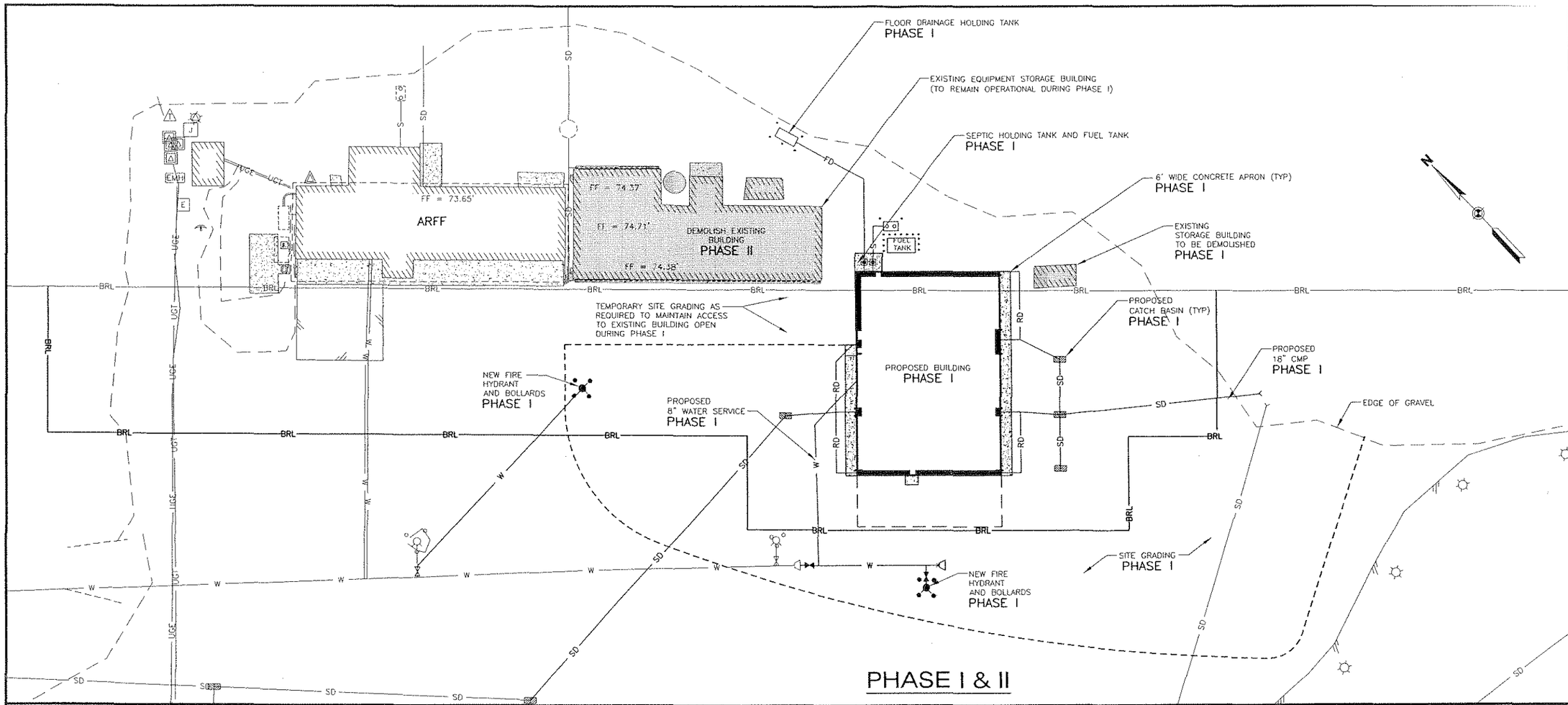

PHASE I & II

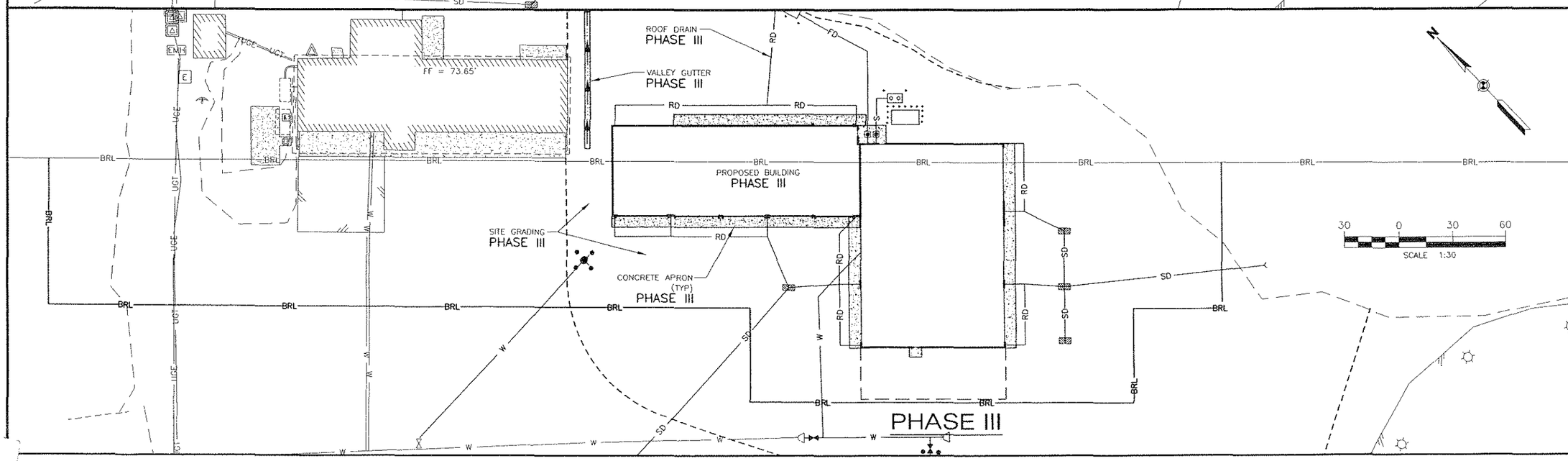

PHASE III

PATH:
I:\906400\Dwgs\C\Sheets\906400C02.dwg

PLOTTED DATE:
Thu, 12/Jul/07 08:02AM bpaddock

ADDENDUM NUMBER

RECORD OF REVISIONS

No.	DATE	DESCRIPTION

KETCHIKAN AIRPORT
SNOW REMOVAL EQUIPMENT,
SAND, AND CHEMICAL
STORAGE BUILDING

PREPARED BY: USKH INC.

STATE OF ALASKA
49TH
Nathan C. Leigh
CE-8386
REGISTERED PROFESSIONAL ENGINEER
7-10-07

PROJECT MGR.: BS
DRAWN BY: WJP
CHECKED BY: NCL
DATE: JULY 9, 2007

STATE OF ALASKA
DEPARTMENT OF TRANSPORTATION
& PUBLIC FACILITIES
DESIGN & ENGINEERING SERVICES
DIVISION-SOUTHEAST REGION

SITE PHASING PLAN

AKSAS PROJECT NUMBER	
68290	
STATE	YEAR
ALASKA	2006
SHEET NUMBER	TOTAL SHEETS
C2	56

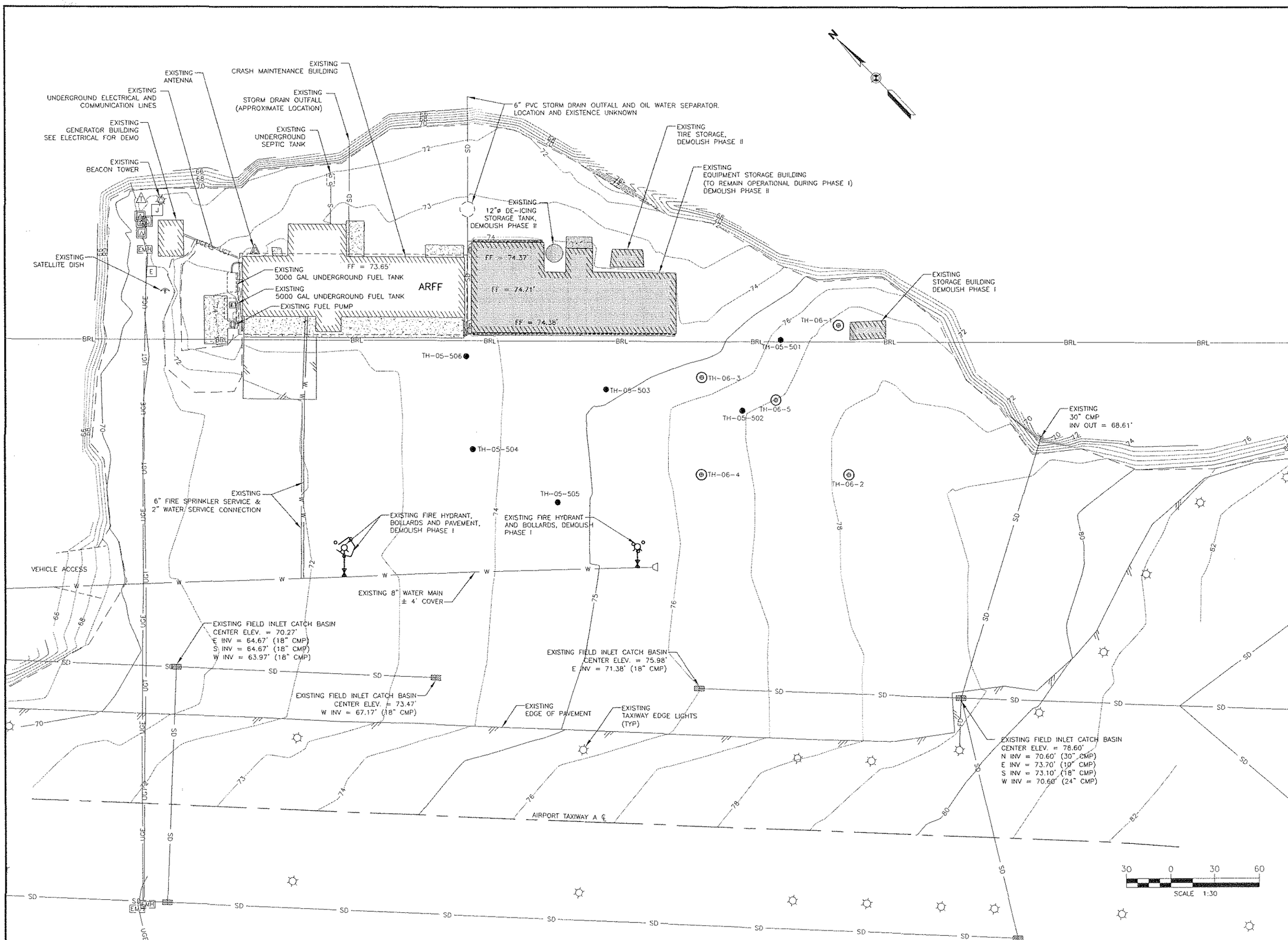

PATH: f:\906400\Dwgs\C\Sheets\906400C03.dwg

PLOTTED DATE: Thu, 12/Jul/07 08:03AM bpaddock

ADDENDUM NUMBER

RECORD OF REVISIONS

No.	DATE	DESCRIPTION

KETCHIKAN AIRPORT
SNOW REMOVAL EQUIPMENT, SAND, AND CHEMICAL STORAGE BUILDING

PREPARED BY: USKH INC.

STATE OF ALASKA 49TH Nathan C. Leigh CE-8386 REGISTERED PROFESSIONAL ENGINEER

7-10-07

PROJECT MGR.: BS
DRAWN BY: WJP
CHECKED BY: NCL
DATE: JULY 9, 2007

STATE OF ALASKA
DEPARTMENT OF TRANSPORTATION & PUBLIC FACILITIES
DESIGN & ENGINEERING SERVICES DIVISION–SOUTHEAST REGION

SITE DEMOLITION PLAN

AKSAS PROJECT NUMBER	
68290	
STATE	YEAR
ALASKA	2006
SHEET NUMBER	TOTAL SHEETS
C3	56

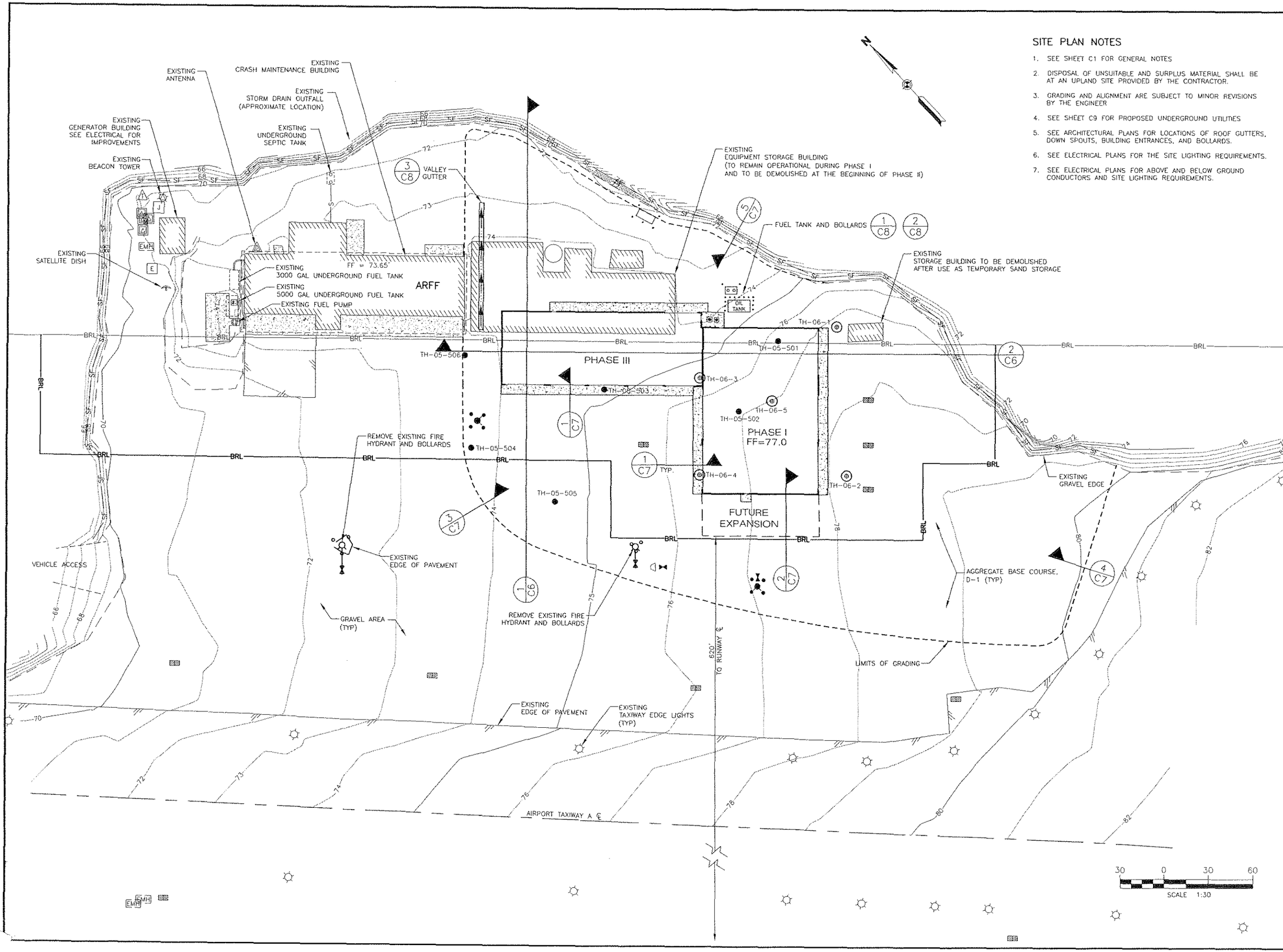

SITE PLAN NOTES

1. SEE SHEET C1 FOR GENERAL NOTES
2. DISPOSAL OF UNSUITABLE AND SURPLUS MATERIAL SHALL BE AT AN UPLAND SITE PROVIDED BY THE CONTRACTOR.
3. GRADING AND ALIGNMENT ARE SUBJECT TO MINOR REVISIONS BY THE ENGINEER
4. SEE SHEET C9 FOR PROPOSED UNDERGROUND UTILITIES
5. SEE ARCHITECTURAL PLANS FOR LOCATIONS OF ROOF GUTTERS, DOWN SPOUTS, BUILDING ENTRANCES, AND BOLLARDS.
6. SEE ELECTRICAL PLANS FOR THE SITE LIGHTING REQUIREMENTS.
7. SEE ELECTRICAL PLANS FOR ABOVE AND BELOW GROUND CONDUCTORS AND SITE LIGHTING REQUIREMENTS.

PATH: I:\906400\Dwgs\C\Sheets\906400C04.dwg

PLOTTED DATE: Thu, 12/Jul/07 08:07AM bpaddock

ADDENDUM NUMBER

RECORD OF REVISIONS		
No.	DATE	DESCRIPTION

KETCHIKAN AIRPORT
SNOW REMOVAL EQUIPMENT, SAND, AND CHEMICAL STORAGE BUILDING

PREPARED BY: USKH INC.

STATE OF ALASKA 49TH Nathan Leigh CE-8396 REGISTERED PROFESSIONAL ENGINEER
7-10-07

PROJECT MGR.: BS
DRAWN BY: WJP
CHECKED BY: NCL
DATE: JULY 9, 2007

STATE OF ALASKA
DEPARTMENT OF TRANSPORTATION & PUBLIC FACILITIES
DESIGN & ENGINEERING SERVICES DIVISION–SOUTHEAST REGION

PROPOSED SITE PLAN

AKSAS PROJECT NUMBER 68290

STATE	YEAR
ALASKA	2006
SHEET NUMBER	TOTAL SHEETS
C4	56

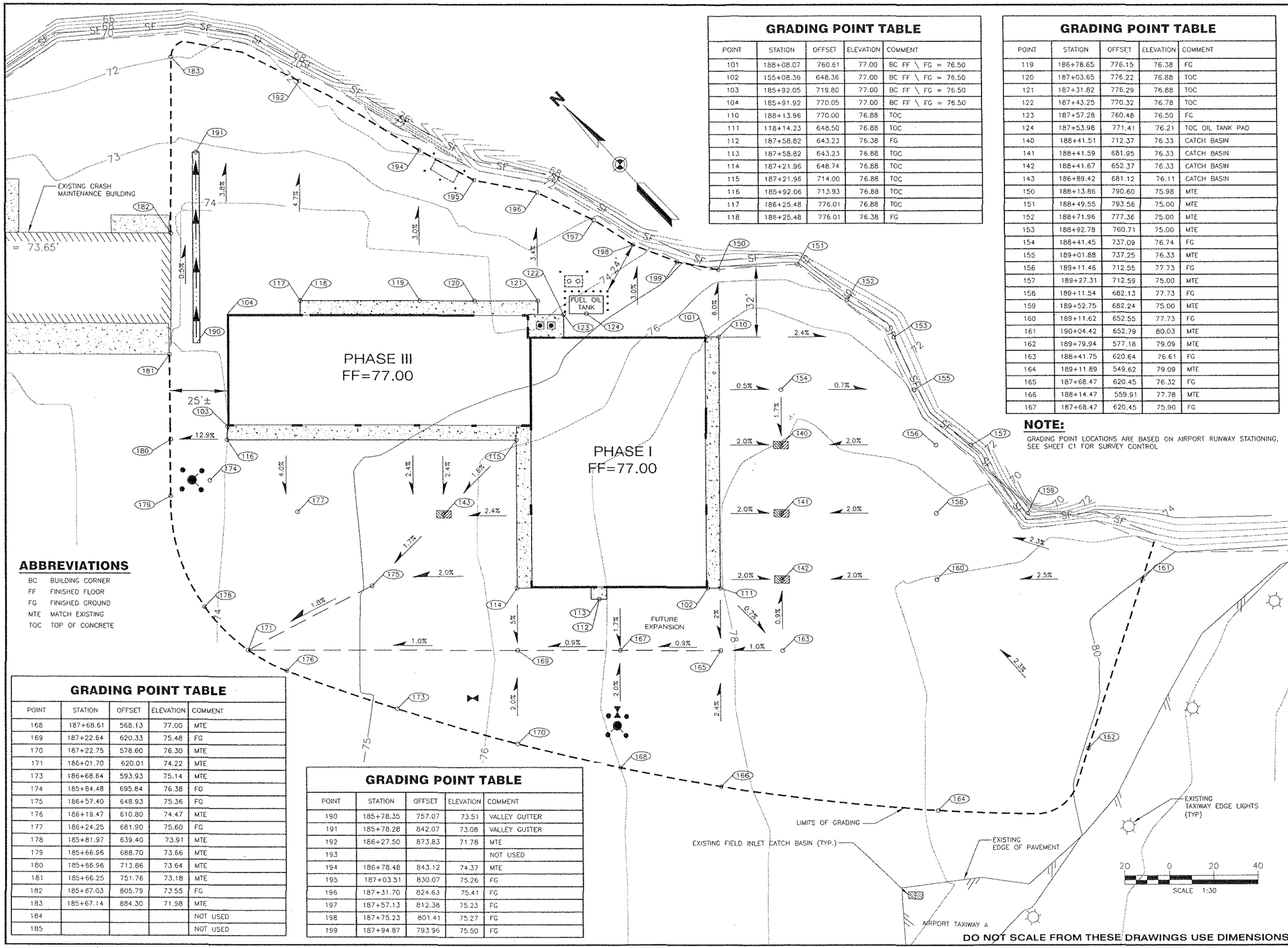

GRADING POINT TABLE

POINT	STATION	OFFSET	ELEVATION	COMMENT
101	188+08.07	760.61	77.00	BC FF \ FG = 76.50
102	155+08.36	648.36	77.00	BC FF \ FG = 76.50
103	185+92.05	719.80	77.00	BC FF \ FG = 76.50
104	185+91.92	770.05	77.00	BC FF \ FG = 76.50
110	188+13.96	770.00	76.88	TOC
111	118+14.23	648.50	76.88	TOC
112	187+58.82	643.23	76.38	FG
113	187+58.82	643.23	76.88	TOC
114	187+21.96	648.74	76.88	TOC
115	187+21.96	714.00	76.88	TOC
116	185+92.06	713.93	76.88	TOC
117	186+25.48	776.01	76.88	TOC
118	186+25.48	776.01	76.38	FG

GRADING POINT TABLE

POINT	STATION	OFFSET	ELEVATION	COMMENT
119	186+78.65	776.15	76.38	FG
120	187+03.65	776.22	76.88	TOC
121	187+31.82	776.29	76.88	TOC
122	187+43.25	770.32	76.78	TOC
123	187+57.28	760.48	76.50	FG
124	187+53.98	771.41	76.21	TOC OIL TANK PAD
140	188+41.51	712.37	76.33	CATCH BASIN
141	188+41.59	681.95	76.33	CATCH BASIN
142	188+41.67	652.37	76.33	CATCH BASIN
143	186+89.42	681.12	76.11	CATCH BASIN
150	188+13.86	790.60	75.98	MTE
151	188+49.55	793.56	75.00	MTE
152	188+71.96	777.36	75.00	MTE
153	188+92.78	760.71	75.00	MTE
154	188+41.45	737.09	76.74	FG
155	189+01.88	737.25	76.33	MTE
156	189+11.46	712.55	77.73	FG
157	189+27.31	712.59	75.00	MTE
158	189+11.54	682.13	77.73	FG
159	189+52.75	682.24	75.00	MTE
160	189+11.62	652.55	77.73	FG
161	190+04.42	652.79	80.03	MTE
162	189+79.94	577.18	79.09	MTE
163	188+41.75	620.64	76.61	FG
164	189+11.89	549.62	79.09	MTE
165	187+68.47	620.45	76.32	FG
166	188+14.47	559.91	77.78	MTE
167	187+68.47	620.45	75.90	FG

NOTE:

GRADING POINT LOCATIONS ARE BASED ON AIRPORT RUNWAY STATIONING, SEE SHEET C1 FOR SURVEY CONTROL

ABBREVIATIONS

BC	BUILDING CORNER
FF	FINISHED FLOOR
FG	FINISHED GROUND
MTE	MATCH EXISTING
TOC	TOP OF CONCRETE

GRADING POINT TABLE

POINT	STATION	OFFSET	ELEVATION	COMMENT
168	187+68.61	568.13	77.00	MTE
169	187+22.64	620.33	75.48	FG
170	187+22.75	578.60	76.30	MTE
171	186+01.70	620.01	74.22	MTE
173	186+68.64	593.93	75.14	MTE
174	185+84.48	695.84	76.38	FG
175	186+57.40	648.93	75.36	FG
176	186+19.47	610.80	74.47	MTE
177	186+24.25	681.90	75.60	FG
178	185+81.97	639.40	73.91	MTE
179	185+66.96	688.70	73.66	MTE
180	185+66.96	713.86	73.64	MTE
181	185+66.25	751.76	73.18	MTE
182	185+67.03	805.79	73.55	FG
183	185+67.14	884.30	71.98	MTE
184				NOT USED
185				NOT USED

GRADING POINT TABLE

POINT	STATION	OFFSET	ELEVATION	COMMENT
190	185+78.35	757.07	73.51	VALLEY GUTTER
191	185+78.28	842.07	73.08	VALLEY GUTTER
192	186+27.50	873.83	71.78	MTE
193				NOT USED
194	186+78.48	843.12	74.37	MTE
195	187+03.51	830.07	75.26	FG
196	187+31.70	824.63	75.41	FG
197	187+57.13	812.38	75.23	FG
198	187+75.23	801.41	75.27	FG
199	187+94.87	793.96	75.50	FG

PATH:
I:\906400\Dwgs\C\Sheets\906400C05.dwg

PLOTTED DATE:
Thu, 12/Jul/07 08:07AM bpaddock

ADDENDUM NUMBER

RECORD OF REVISIONS

No.	DATE	DESCRIPTION

KETCHIKAN AIRPORT
SNOW REMOVAL EQUIPMENT, SAND, AND CHEMICAL STORAGE BUILDING

PREPARED BY: USKH INC.

STATE OF ALASKA 49TH Nathan Leigh CE-8386 REGISTERED PROFESSIONAL ENGINEER

7-10-07

PROJECT MGR.: BS
DRAWN BY: WJP
CHECKED BY: NCL
DATE: JULY 9, 2007

STATE OF ALASKA
DEPARTMENT OF TRANSPORTATION & PUBLIC FACILITIES
DESIGN & ENGINEERING SERVICES DIVISION--SOUTHEAST REGION

SITE GRADING PLAN

AKSAS PROJECT NUMBER
68290

STATE	YEAR
ALASKA	2006

SHEET NUMBER	TOTAL SHEETS
C5	56

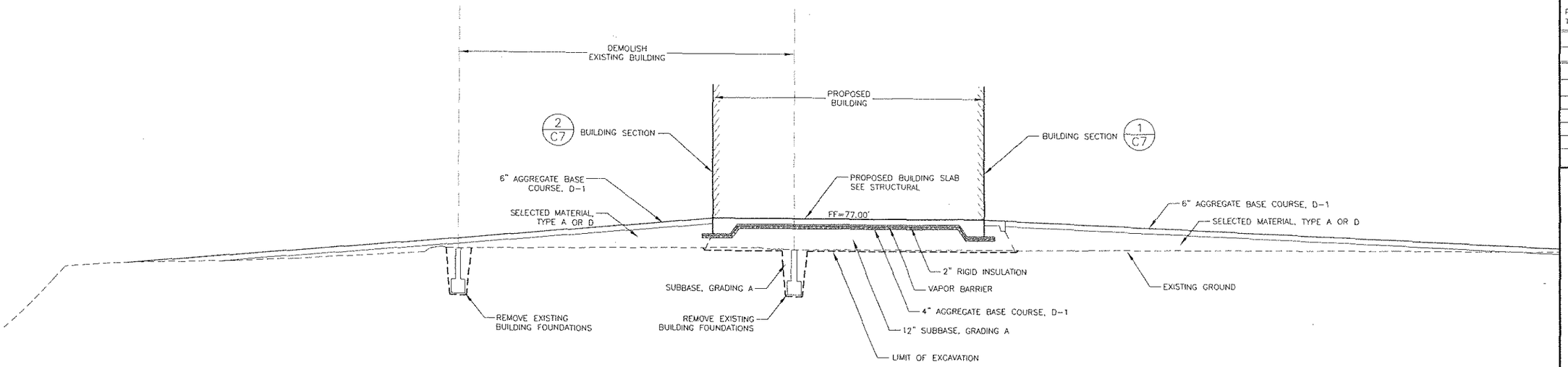

1 / C6 SITE SECTION

HORIZONTAL=2X VERTICAL

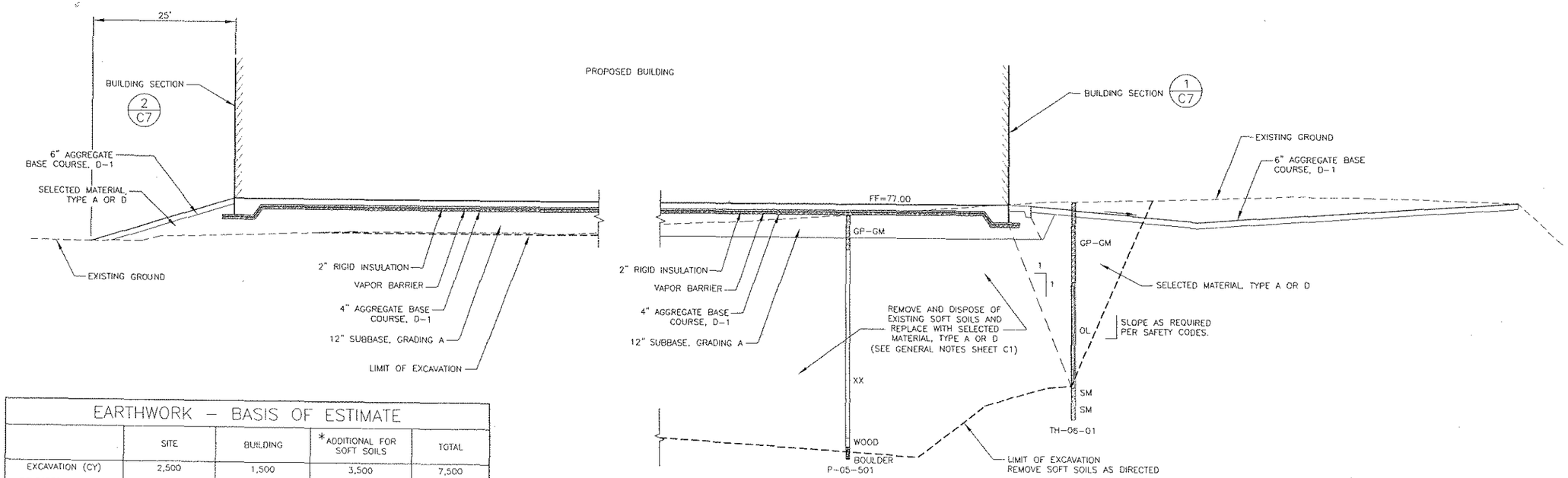

2 / C6 SITE SECTION

HORIZONTAL=2X VERTICAL

EARTHWORK – BASIS OF ESTIMATE

	SITE	BUILDING	*ADDITIONAL FOR SOFT SOILS	TOTAL
EXCAVATION (CY)	2,500	1,500	3,500	7,500
SELECTED MATERIAL, TYPE A OR D (CY)	2,000	N/A	3,500	5,500
SUBBASE, GRADING A	N/A	2,000 CY	N/A	2,000
AGGREGATE BASE COURSE , D1	1,500 CY	200 CY	N/A	1,700

*SEE GENERAL NOTES SHEET C1

PATH: I:\906400\Dwgs\C\Sheets\906400C06.dwg

PLOTTED DATE: Thu, 12/Jul/07 08:03AM bpoddock

ADDENDUM NUMBER

RECORD OF REVISIONS

No.	DATE	DESCRIPTION

KETCHIKAN AIRPORT
SNOW REMOVAL EQUIPMENT, SAND, AND CHEMICAL STORAGE BUILDING

PREPARED BY: USKH INC.

STATE OF ALASKA 49TH Nathan C. Leigh CE-8386 REGISTERED PROFESSIONAL ENGINEER

7-10-07

PROJECT MGR.: BS

DRAWN BY: JRH

CHECKED BY: NCL

DATE: JULY 9, 2007

STATE OF ALASKA
DEPARTMENT OF TRANSPORTATION & PUBLIC FACILITIES
DESIGN & ENGINEERING SERVICES DIVISION–SOUTHEAST REGION

SITE DETAILS

AKSAS PROJECT NUMBER 68290

STATE	YEAR
ALASKA	2006
SHEET NUMBER	TOTAL SHEETS
C6	56

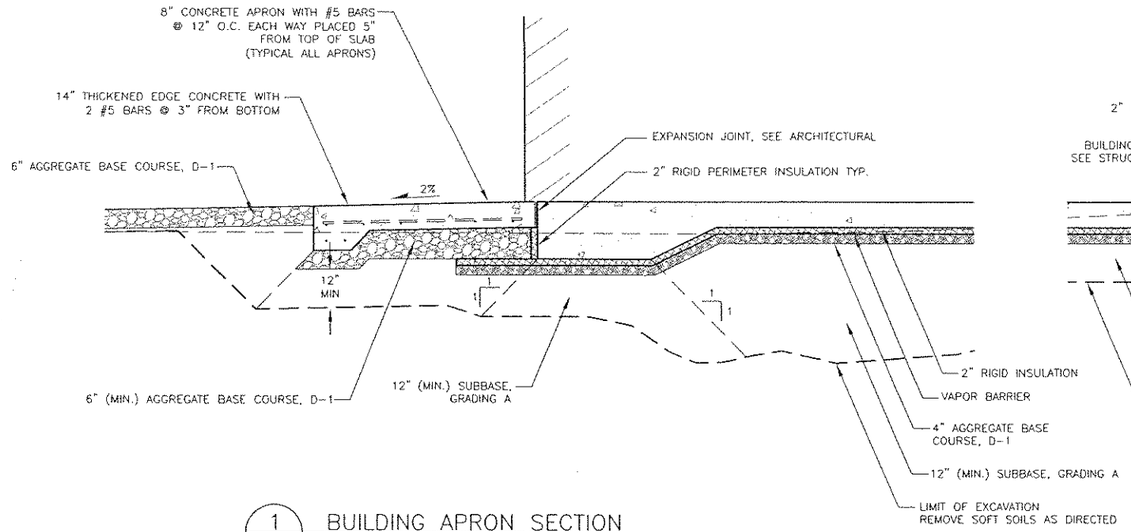

1 C7 BUILDING APRON SECTION
NTS

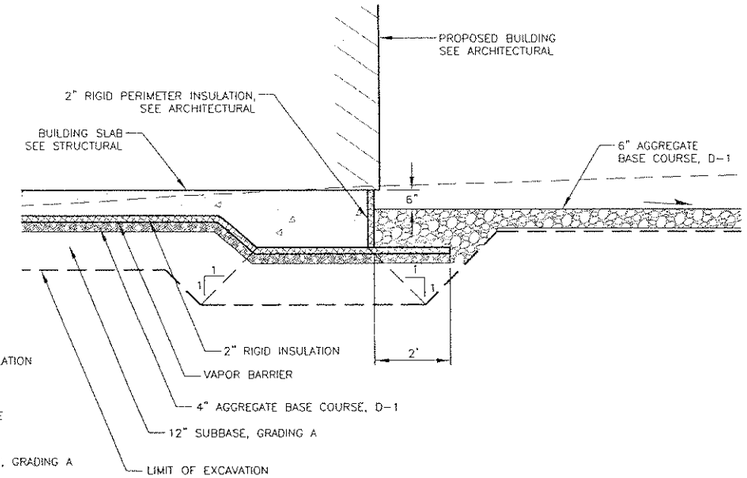

2 C7 BUILDING SECTION
NTS

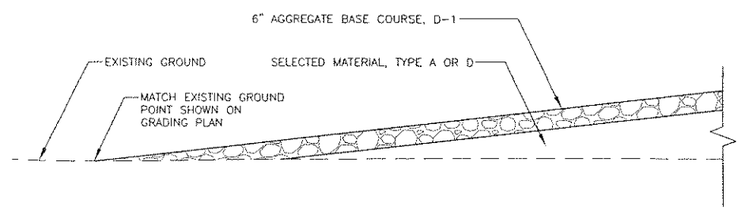

3 C7 TYPICAL SITE SECTION IN FILL
NTS

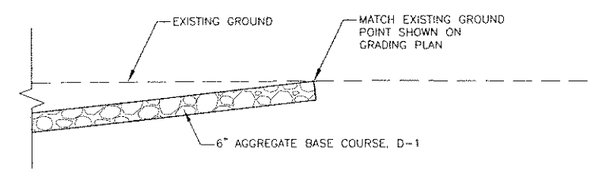

4 C7 TYPICAL SITE SECTION IN CUT
NTS

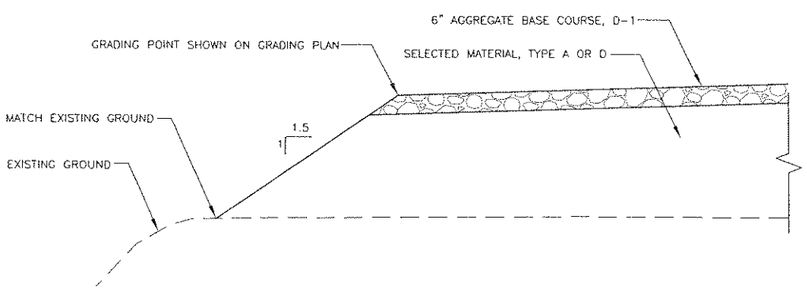

5 C7 TYPICAL SITE SECTION NORTH SLOPE
NTS

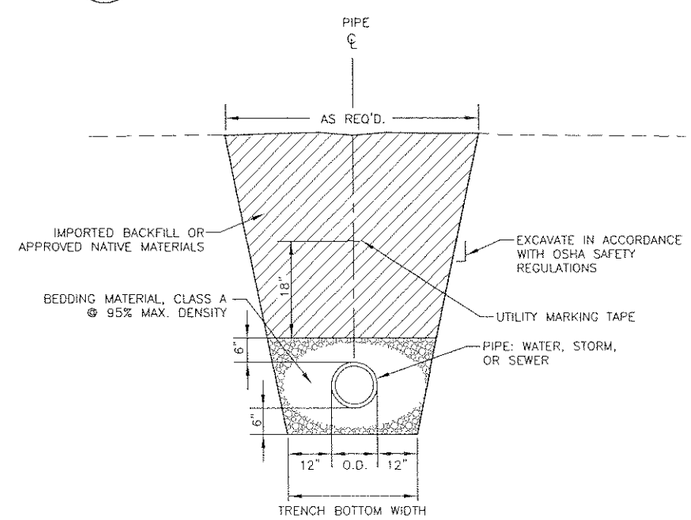

6 C7 TYPICAL TRENCH DETAIL
NTS

PATH:
i:\906400\Dwgs\C\Sheets\906400C07.dwg

PLOTTED DATE:
Thu, 12/Jul/07 08:14AM bpaddock

ADDENDUM NUMBER

RECORD OF REVISIONS

No.	DATE	DESCRIPTION

KETCHIKAN AIRPORT
SNOW REMOVAL EQUIPMENT, SAND, AND CHEMICAL STORAGE BUILDING

PREPARED BY: USKH INC.

STATE OF ALASKA 49TH Nathan C. Leigh CE-8386 REGISTERED PROFESSIONAL ENGINEER
7-10-07

PROJECT MGR.: BS
DRAWN BY: WJP/JRH
CHECKED BY: NCL
DATE: JULY 9, 2007

STATE OF ALASKA
DEPARTMENT OF TRANSPORTATION & PUBLIC FACILITIES
DESIGN & ENGINEERING SERVICES
DIVISION-SOUTHEAST REGION

SITE DETAILS

AKSAS PROJECT NUMBER
68290

STATE	YEAR
ALASKA	2006
SHEET NUMBER	TOTAL SHEETS
C7	56

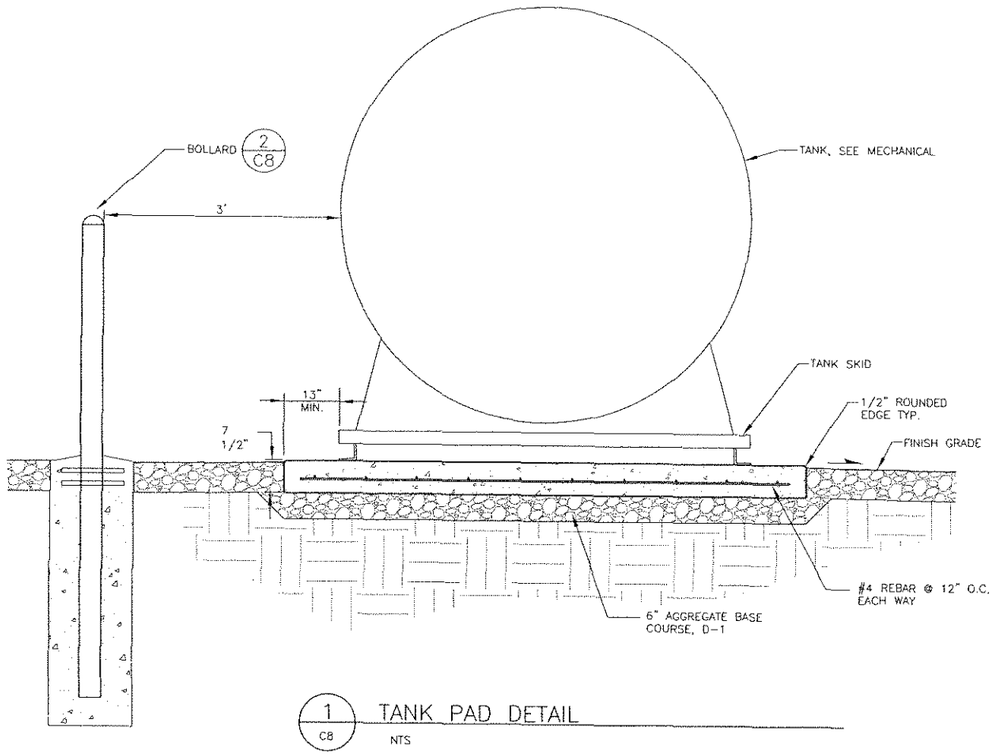

1 / C8 TANK PAD DETAIL

NTS

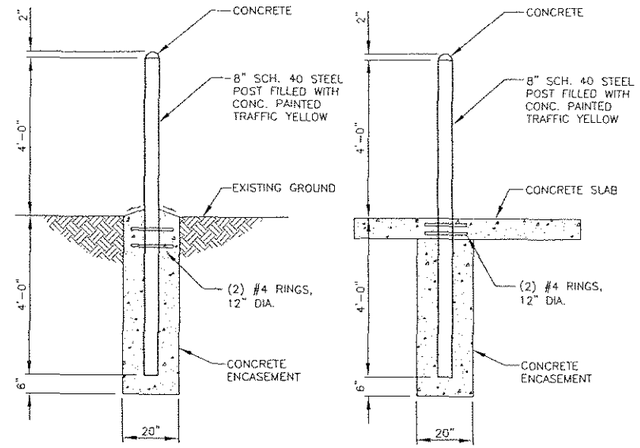

2 / C8 BUILDING BOLLARDS

NTS

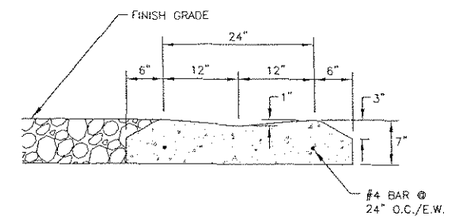

3 / C8 VALLEY GUTTER

NTS

SILT FENCE NOTES:

1. SILT FENCE SHALL BE PLACED ON SLOPE CONTOURS TO MAXIMIZE PONDING EFFICIENCY.
2. INSPECT AND REPAIR FENCE AFTER EACH STORM EVENT AND REMOVE SEDIMENT WHEN NECESSARY. 9" MAXIMUM RECOMMENDED STORAGE HEIGHT.
3. REMOVED SEDIMENT SHALL BE DEPOSITED TO AN AREA THAT WILL NOT CONTRIBUTE SEDIMENT OFF-SITE AND CAN BE PERMANENTLY STABILIZED.

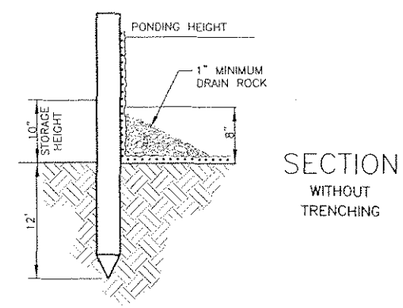

SECTION WITHOUT TRENCHING

CATCH BASIN SEDIMENT CONTROL INSTALLATION AND MAINTENANCE GUIDELINES

1. INSTALLATION: REMOVE THE GRATE FROM CATCH BASIN. IF USING OPTIONAL OIL ABSORBENTS; PLACE ABSORBENT PILLOW IN UNIT. STAND THE GRATE ON END. MOVE THE TOP LIFTING STRAPS OUT OF THE WAY AND PLACE THE GRATE INTO THE SEDIMENT BAG SO THAT THE GRATE IS BELOW THE TOP STRAPS AND ABOVE THE LOWER STRAPS. HOLDING THE LIFTING DEVICES, INSERT THE GRATE INTO THE INLET.
2. MAINTENANCE: REMOVE ALL ACCUMULATED SEDIMENT AND DEBRIS FROM VICINITY OF UNIT AFTER EACH STORM EVENT. AFTER EACH STORM EVENT AND AT REGULAR INTERVALS, LOOK INTO THE SEDIMENT BAG. IF THE CONTAINMENT AREA IS MORE THAN 1/3 FULL OF SEDIMENT, THE UNIT MUST BE EMPTIED. TO EMPTY UNIT, LIFT THE UNIT OUT OF THE INLET USING THE LIFTING STRAPS AND REMOVE THE GRATE. IF USING OPTIONAL OIL ABSORBENTS; REPLACE ABSORBENT WHEN NEAR SATURATION.

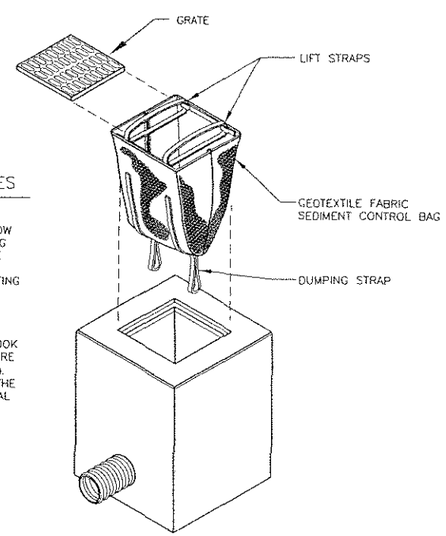

4 / C8 CATCH BASIN SEDIMENT BAG

NTS

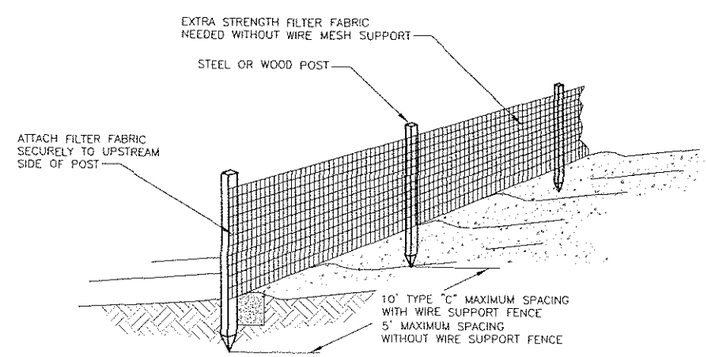

5 / C8 SILT FENCE DETAILS

NTS

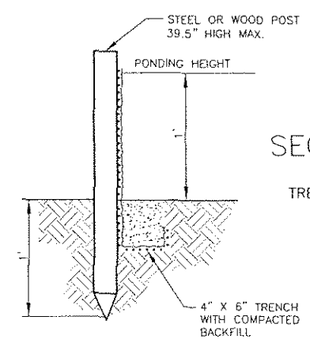

SECTION WITH TRENCHING

PATH: I:\906400\Dwgs\C\Sheets\906400C08.dwg

PLOTTED DATE: Thu, 12/Jul/07 08:14AM bpaddock

ADDENDUM NUMBER

RECORD OF REVISIONS

No.	DATE	DESCRIPTION

KETCHIKAN AIRPORT
SNOW REMOVAL EQUIPMENT, SAND, AND CHEMICAL STORAGE BUILDING

PREPARED BY: USKH INC.

STATE OF ALASKA 49TH Nathan Leigh Nathan C. Leigh CE-8386 REGISTERED PROFESSIONAL ENGINEER

7-10-07

PROJECT MGR.: BS

DRAWN BY: WJP

CHECKED BY: NCL

DATE: JULY 9, 2007

STATE OF ALASKA
DEPARTMENT OF TRANSPORTATION & PUBLIC FACILITIES
DESIGN & ENGINEERING SERVICES
DIVISION-SOUTHEAST REGION

SITE DETAILS

AKSAS PROJECT NUMBER 68290

STATE	YEAR
ALASKA	2006
SHEET NUMBER	TOTAL SHEETS
C8	56

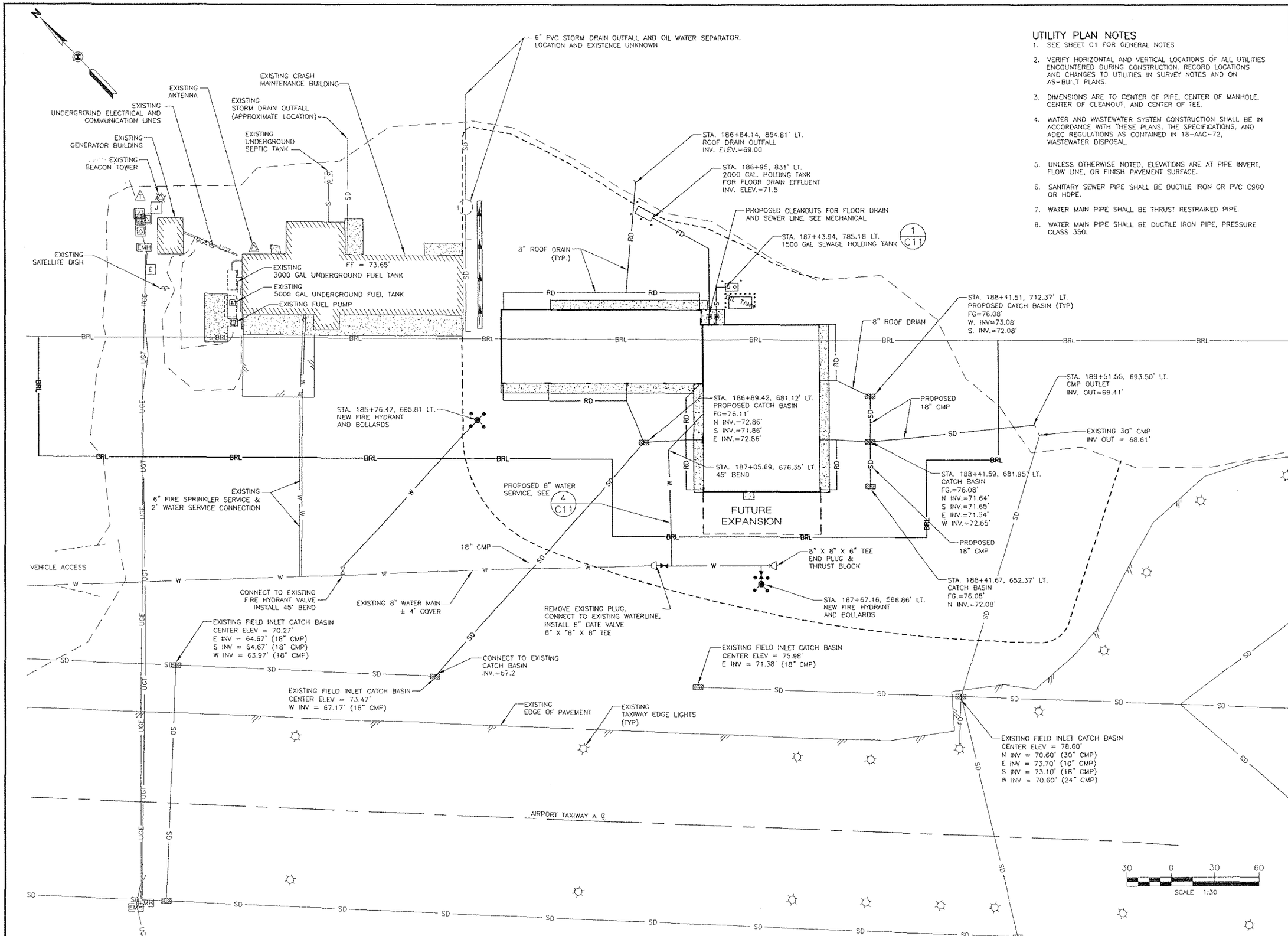

UTILITY PLAN NOTES

1. SEE SHEET C1 FOR GENERAL NOTES
2. VERIFY HORIZONTAL AND VERTICAL LOCATIONS OF ALL UTILITIES ENCOUNTERED DURING CONSTRUCTION. RECORD LOCATIONS AND CHANGES TO UTILITIES IN SURVEY NOTES AND ON AS-BUILT PLANS.
3. DIMENSIONS ARE TO CENTER OF PIPE, CENTER OF MANHOLE, CENTER OF CLEANOUT, AND CENTER OF TEE.
4. WATER AND WASTEWATER SYSTEM CONSTRUCTION SHALL BE IN ACCORDANCE WITH THESE PLANS, THE SPECIFICATIONS, AND ADEC REGULATIONS AS CONTAINED IN 18-AAC-72, WASTEWATER DISPOSAL.
5. UNLESS OTHERWISE NOTED, ELEVATIONS ARE AT PIPE INVERT, FLOW LINE, OR FINISH PAVEMENT SURFACE.
6. SANITARY SEWER PIPE SHALL BE DUCTILE IRON OR PVC C900 OR HDPE.
7. WATER MAIN PIPE SHALL BE THRUST RESTRAINED PIPE.
8. WATER MAIN PIPE SHALL BE DUCTILE IRON PIPE, PRESSURE CLASS 350.

PATH: I:\906400\Dwgs\C\Sheets\906400C09.dwg

PLOTTED DATE: Thu, 12/Jul/07 08:13AM bpaddock

ADDENDUM NUMBER

RECORD OF REVISIONS

No.	DATE	DESCRIPTION

KETCHIKAN AIRPORT
SNOW REMOVAL EQUIPMENT, SAND, AND CHEMICAL STORAGE BUILDING

PREPARED BY: USKH INC.

STATE OF ALASKA 49TH Nathan C. Leigh CE-8386 REGISTERED PROFESSIONAL ENGINEER
7-10-07

PROJECT MGR.: BS
DRAWN BY: WJP
CHECKED BY: NCL
DATE: JULY 9, 2007

STATE OF ALASKA
DEPARTMENT OF TRANSPORTATION & PUBLIC FACILITIES
DESIGN & ENGINEERING SERVICES DIVISION-SOUTHEAST REGION

PROPOSED UTILITY PLAN

AKSAS PROJECT NUMBER 68290

STATE	YEAR
ALASKA	2006
SHEET NUMBER	TOTAL SHEETS
C9	56

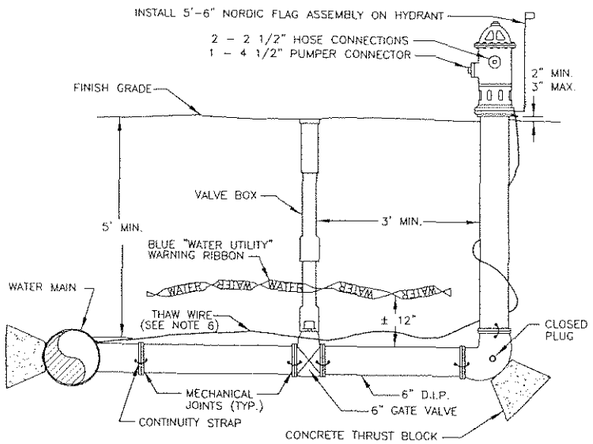

NOTES

1. HYDRANT BARREL SHALL BE PLUMB.
2. WATER PIPE SHALL BE 6" D.I.P. CONNECTIONS SHALL BE RESTRAINED MECHANICAL JOINTS OR MEGALUGS.
3. GROUND COVER SHALL BE 5' MINIMUM.
4. BENDS BETWEEN THE HYDRANT AND THE MAIN SHALL NOT EXCEED 11 1/4°.
5. ALL HYDRANTS SHALL BE PAINTED "CATERPILLAR YELLOW". ALL HYDRANTS WITH PLUGGED DRAINS SHALL HAVE THE TOP BONNET PAINTED OSHA SAFETY BLUE. NUMBER OF FEET TO VALVE SHALL BE PRINTED IN BLACK 1/2" BLOCK LETTERS JUST BELOW TOP BONNET.
6. THAW WIRE AND CONTINUITY STRAPS SHALL BE #2 COPPER WITH TYPE THHW INSULATION. THAW WIRE SHALL BE CAD WELDED TO THE MAIN. EACH JOINT SHALL HAVE TWO CAD WELDED CONTINUITY STRAPS ACROSS OPPOSITE SIDES OF THE PIPE.

1 / C10 FIRE HYDRANT

NTS

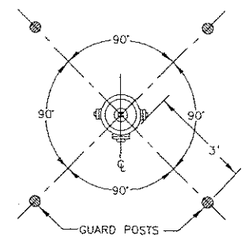

PLAN VIEW

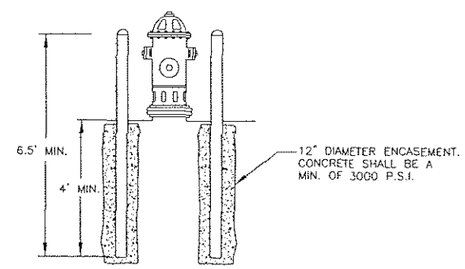

ELEVATION VIEW

NOTES:

1. GUARD POSTS SHALL BE 8" DIAMETER, SCHEDULE 40 STEEL PIPE.
2. POSTS SHALL BE FILLED FLUSH WITH CONCRETE AND PAINTED WITH OSHA YELLOW ENAMEL AFTER INSTALLATION.
3. POSTS SHALL NOT BLOCK OPERATION OF VALVE.

2 / C10 FIRE HYDRANT GUARD POSTS

NTS

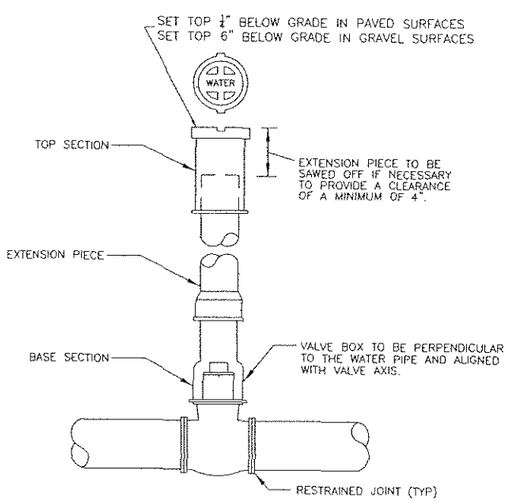

3 / C10 VALVE BOX

NTS

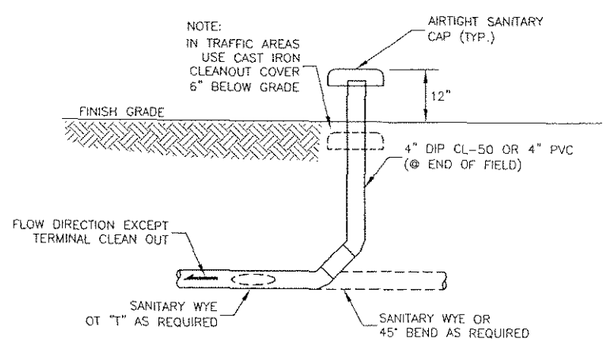

4 / C10 CLEANOUT

NTS

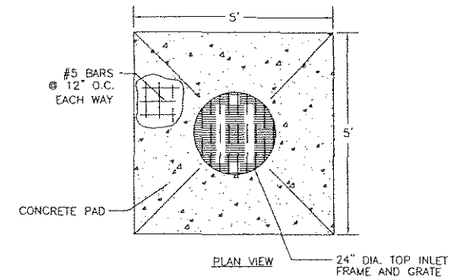

PLAN VIEW

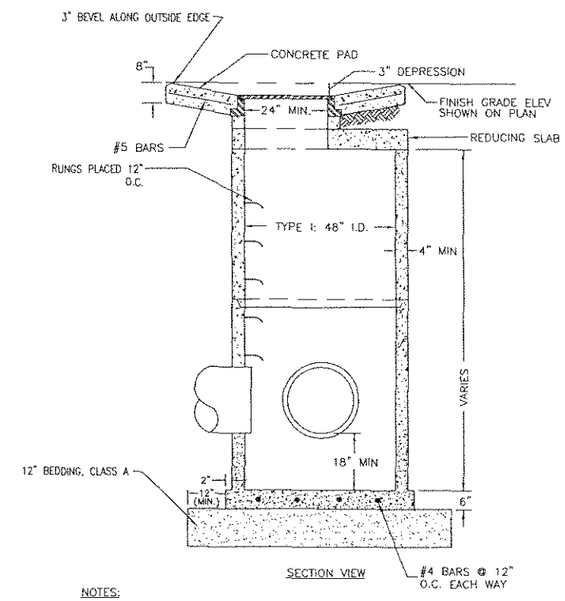

SECTION VIEW

NOTES:

1. ENTIRE KNOCKOUT IS TO BE REMOVED AND SEALED SHUT AROUND PIPE. ALL PIPES ARE TO EXTEND MIN 1" AND MAX 2" INTO MANHOLE. GROUT INTERIOR AND EXTERIOR BETWEEN FRAME, SECTIONS, AND MANHOLE.
2. FRAME AND GRATE SHALL BE DUCTILE IRON. FRAME MAY BE CAST INTO THE TOP UNIT OR PLACED OVER THE OPENING AS APPROVED BY THE ENGINEER.
3. TOP INLET FRAME & GRATE SHALL MEET HIGHWAY STANDARD-20 LOAD REQUIREMENTS.
4. MANHOLE CONSTRUCTION SHALL CONFORM TO AASHTO M199.
5. MINIMUM SUMP DEPTH SHALL BE 18".
6. ALL JOINTS BETWEEN SECTIONS SHALL BE SEALED BY "RAM-NEK", "RUB-R-NEK", OR OTHER 6. APPROVED GASKETING MATERIAL.

5 / C10 STORM DRAIN MANHOLE / CATCH BASIN

NTS

PATH:
t:\906400\Dwgs\C\Sheets\906400C10.dwg

PLOTTED DATE:
Thu, 12/Jul/07 08:13AM bpoddock

ADDENDUM NUMBER

RECORD OF REVISIONS

No.	DATE	DESCRIPTION

KETCHIKAN AIRPORT
SNOW REMOVAL EQUIPMENT, SAND, AND CHEMICAL STORAGE BUILDING

PREPARED BY: USKH INC.

STATE OF ALASKA 49TH Nathan C. Leigh CE-8386 REGISTERED PROFESSIONAL ENGINEER

7-10-07

PROJECT MGR.: BS
DRAWN BY: WJP
CHECKED BY: NCL
DATE: JULY 9, 2007

STATE OF ALASKA
DEPARTMENT OF TRANSPORTATION & PUBLIC FACILITIES
DESIGN & ENGINEERING SERVICES DIVISION-SOUTHEAST REGION

UTILITY DETAILS

AKSAS PROJECT NUMBER
68290

STATE	YEAR
ALASKA	2006
SHEET NUMBER	TOTAL SHEETS
C10	56

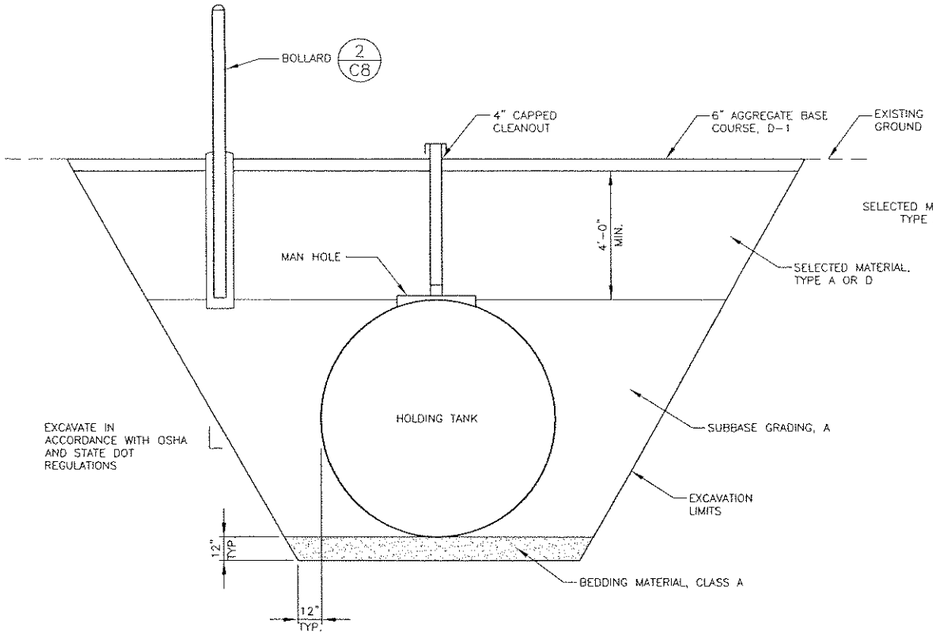

1/C11 HOLDING TANK DETAIL–SEWAGE AND FLOOR DRAINAGE

NTS

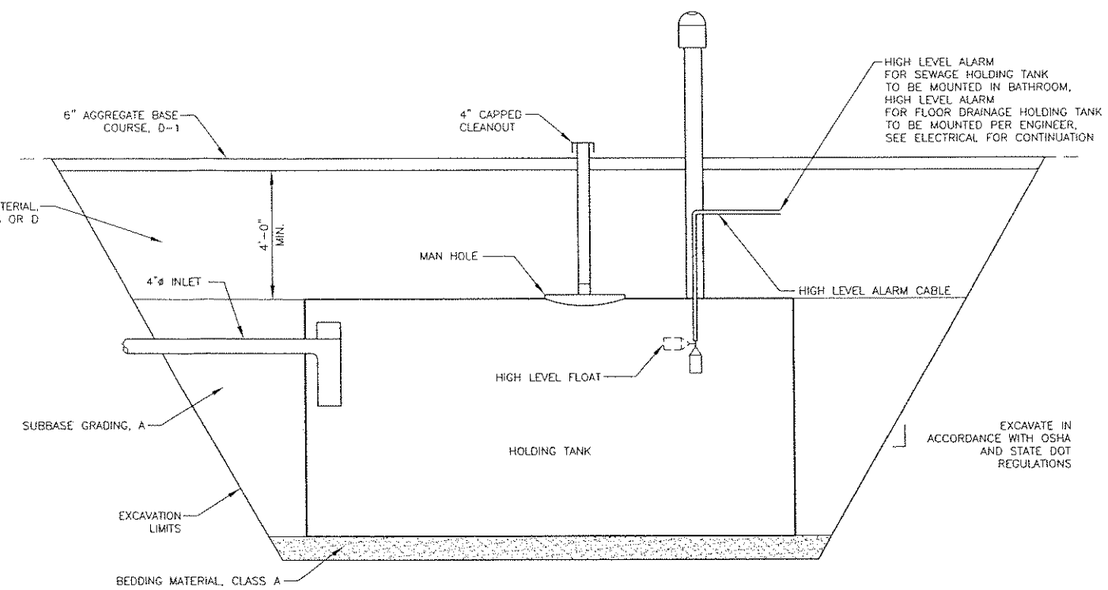

2/C11 HOLDING TANK DETAIL–SEWAGE AND FLOOR DRAINAGE

NTS

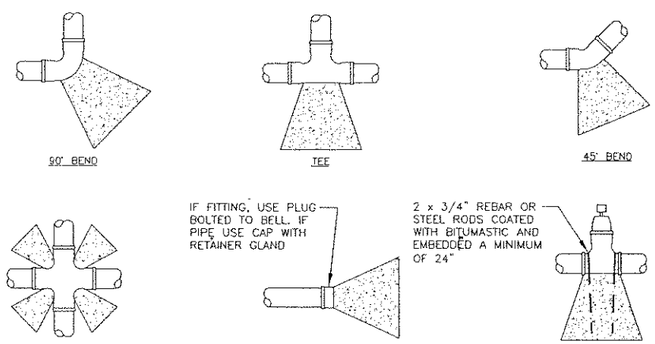

PIPE SIZE	90° BEND, TEE OR PLUG		0° – 45° BEND OR CROSS		VALVES
	MIN. CONCRETE VOLUME (YD^3)	MIN. BEARING AREA (FT^2)	MIN. CONCRETE VOLUME (YD^3)	MIN. BEARING AREA (FT^2)	MIN. CONCRETE VOLUME (YD^3)
6"	0.3	3.0	0.25	1.6	0.25
8"	0.5	5.3	0.3	3.0	0.5
12"	1.0	12.0	0.75	6.5	0.5

NOTES:

1. CENTER OF MASS OF THRUST BLOCK MUST LAY OPPOSITE TO AND ALIGNED AGAINST THE DIRECTION OF THRUST.
2. THRUST BLOCKS SHALL BE POURED SO THAT JOINTS OF FITTINGS REMAIN ACCESSIBLE.
3. CONCRETE THRUST BLOCKS SHALL BE POURED AGAINST UNDISTURBED EARTH. UNSTABLE OR UNSUITABLE MATERIALS SHALL BE REMOVED, REPLACED AND/OR COMPACTED AS DETERMINED BY THE ENGINEER.
4. VOLUME AND BEARING SURFACE OF 2500 P.S.I. CONCRETE THRUST BLOCKS ARE BASED ON 150 P.S.I. WATER PRESSURE AND SOIL BEARING CAPACITY OF 2000 P.S.F. ALL OTHER PRESSURE AND/OR SOIL CONDITIONS ARE SUBJECT TO THE ENGINEER'S REVIEW AND APPROVAL.

3/C11 HORIZONTAL THRUST BLOCKS

NTS

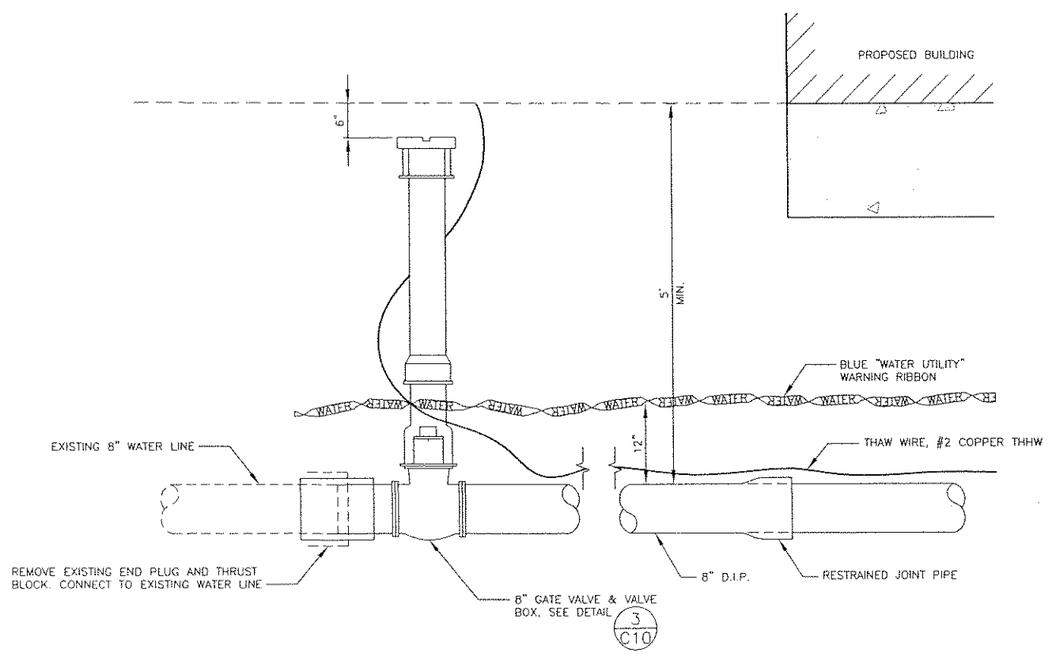

4/C11 WATER SERVICE CONNECTION

NTS

PATH: I:\906400\Dwgs\C\Sheets\906400C11.dwg

PLOTTED DATE: Thu, 12/Jul/07 08:12AM bpoddock

ADDENDUM NUMBER

RECORD OF REVISIONS

No.	DATE	DESCRIPTION

KETCHIKAN AIRPORT
SNOW REMOVAL EQUIPMENT, SAND, AND CHEMICAL STORAGE BUILDING

PREPARED BY: USKH INC.

STATE OF ALASKA 49TH Nathan C. Leigh CE-8386 REGISTERED PROFESSIONAL ENGINEER

7-10-07

PROJECT MGR.: BS
DRAWN BY: WJP
CHECKED BY: NCL
DATE: JULY 9, 2007

STATE OF ALASKA
DEPARTMENT OF TRANSPORTATION & PUBLIC FACILITIES
DESIGN & ENGINEERING SERVICES DIVISION–SOUTHEAST REGION

UTILITY DETAILS

AKSAS PROJECT NUMBER 68290

STATE	YEAR
ALASKA	2006
SHEET NUMBER	TOTAL SHEETS
C11	56

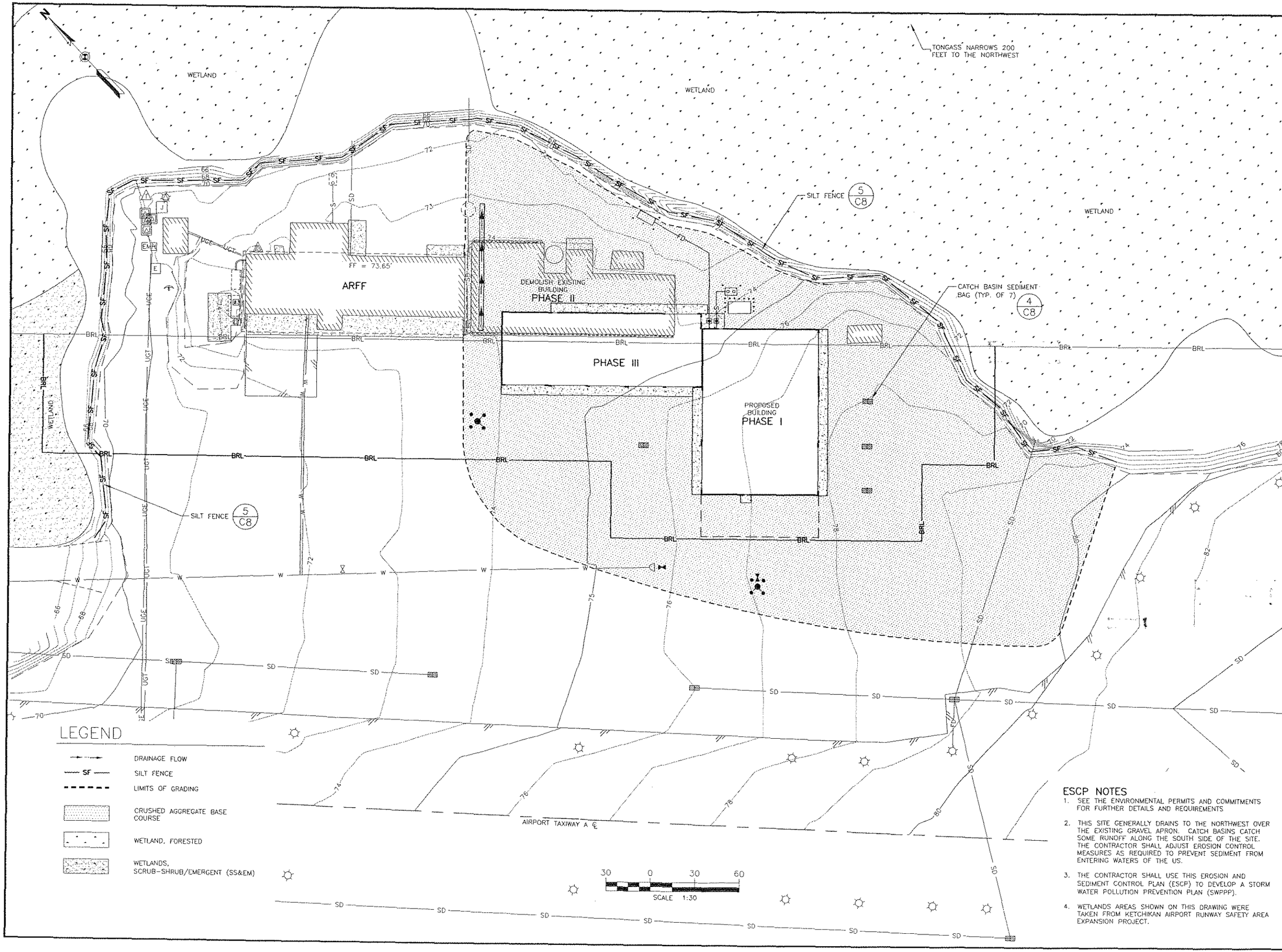

LEGEND

- DRAINAGE FLOW
- SF — SILT FENCE
- LIMITS OF GRADING
- CRUSHED AGGREGATE BASE COURSE
- WETLAND, FORESTED
- WETLANDS, SCRUB-SHRUB/EMERGENT (SS&EM)

ESCP NOTES

1. SEE THE ENVIRONMENTAL PERMITS AND COMMITMENTS FOR FURTHER DETAILS AND REQUIREMENTS
2. THIS SITE GENERALLY DRAINS TO THE NORTHWEST OVER THE EXISTING GRAVEL APRON. CATCH BASINS CATCH SOME RUNOFF ALONG THE SOUTH SIDE OF THE SITE. THE CONTRACTOR SHALL ADJUST EROSION CONTROL MEASURES AS REQUIRED TO PREVENT SEDIMENT FROM ENTERING WATERS OF THE US.
3. THE CONTRACTOR SHALL USE THIS EROSION AND SEDIMENT CONTROL PLAN (ESCP) TO DEVELOP A STORM WATER POLLUTION PREVENTION PLAN (SWPPP).
4. WETLANDS AREAS SHOWN ON THIS DRAWING WERE TAKEN FROM KETCHIKAN AIRPORT RUNWAY SAFETY AREA EXPANSION PROJECT.

PATH: K:\906400\Dwgs\C\Sheets\906400C12.dwg

PLOTTED DATE: Thu, 12/Jul/07 08:13AM bpaddock

ADDENDUM NUMBER

RECORD OF REVISIONS

No.	DATE	DESCRIPTION

KETCHIKAN AIRPORT
SNOW REMOVAL EQUIPMENT, SAND, AND CHEMICAL STORAGE BUILDING

PREPARED BY: USKH INC.

STATE OF ALASKA 49TH Nathan C. Leigh CE-8386 REGISTERED PROFESSIONAL ENGINEER

7-10-07

PROJECT MGR.: BS
DRAWN BY: WJP
CHECKED BY: NCL
DATE: JULY 9, 2007

STATE OF ALASKA
DEPARTMENT OF TRANSPORTATION & PUBLIC FACILITIES
DESIGN & ENGINEERING SERVICES
DIVISION–SOUTHEAST REGION

EROSION AND SEDIMENT CONTROL PLAN (ESCP)

AKSAS PROJECT NUMBER
68290

STATE	YEAR
ALASKA	2006
SHEET NUMBER	TOTAL SHEETS
C12	56

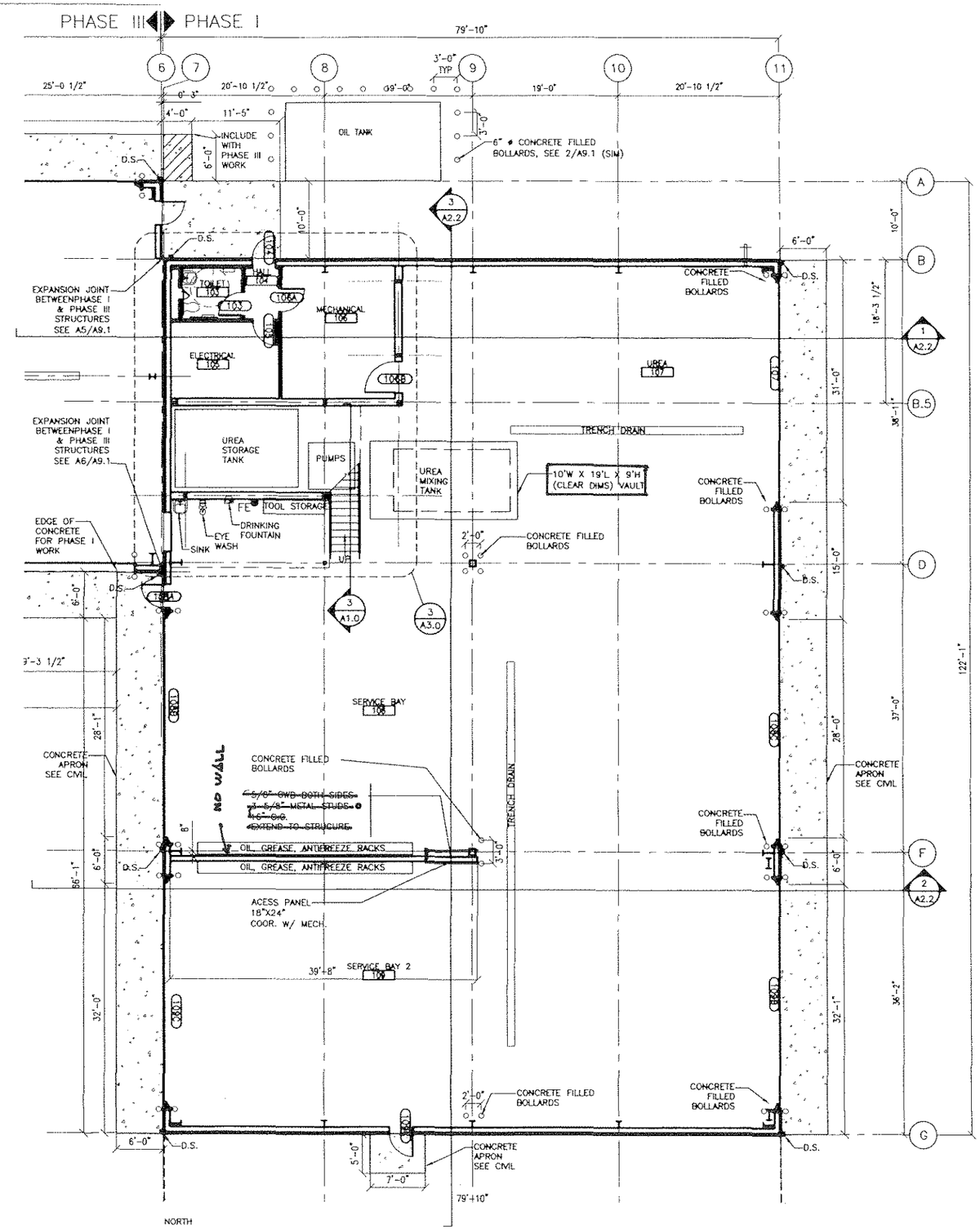

1 A1.0 FIRST FLOOR PLAN – PHASE I

SCALE: 1/8" = 1'-0" CIVIL = F.F.EL. 77.00
ARCH = F.F.EL. 0''-0"

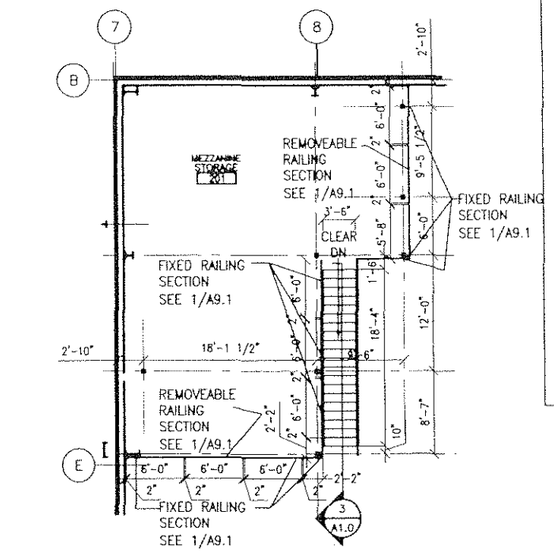

NORTH

2 A1.0 MEZZANINE PLAN – PHASE I

SCALE: 1/8" = 1'-0" CIVIL = F.F.EL. 89.00
ARCH = F.F.EL. 12'-0"

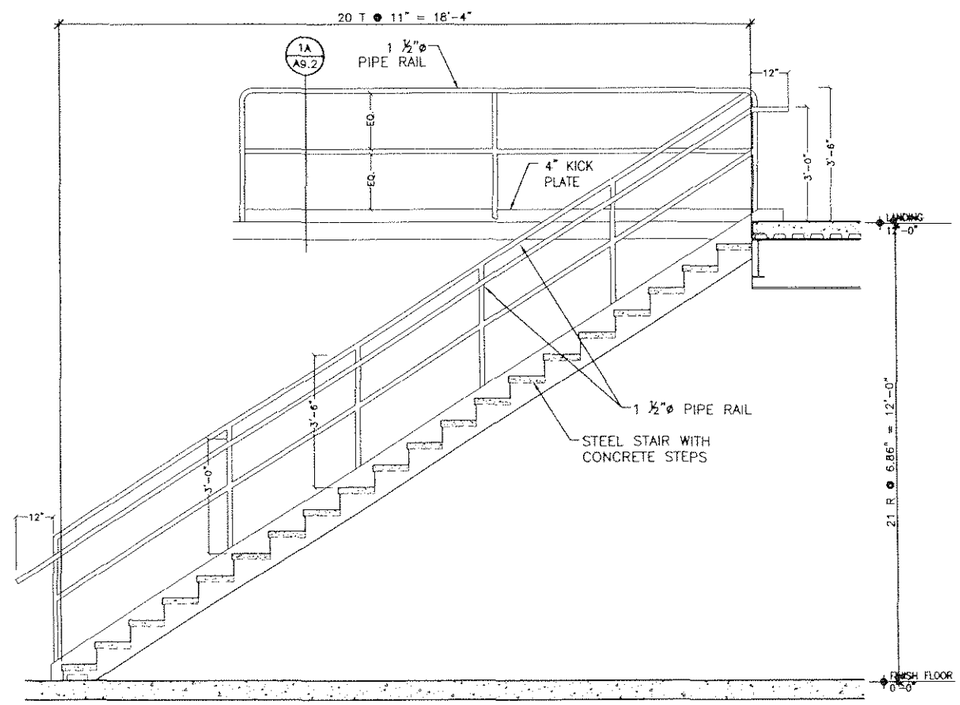

3 A1.0 STAIR SECTION

SCALE: 1/2" = 1'-0"

PLAN REFERENCE LEGEND

- SECTION NUMBER / SHEET WHERE SECTION IS DRAWN
- DETAIL NUMBER / SHEET WHERE DETAIL IS DRAWN
- ROOM NAME AND NUMBER, REFER TO SCHEDULE SHEET A2.2
- DOOR NUMBER, REFER TO SCHEDULE SHEET A2.3
- WINDOW TYPE, REFER TO SCHEDULE SHEET A2.3
- FE FIRE EXTINGUISHER

KEYED NOTES

MECHANICAL ROOM 106 SHALL BE ENCLOSED IN ONE-HOUR RATED WALL AND FLOOR/CEILING CONSTRUCTION. FIRESTOP PENETRATIONS AT FLOOR/CEILING AND WALLS.

PATH: C:\temp\AcPublish_2508\906400 A10.dwg

PLOTTED DATE: Thu, 05/Oct/06 11:34AM clease

ADDENDUM NUMBER

RECORD OF REVISIONS

No.	DATE	DESCRIPTION

KETCHIKAN AIRPORT
SNOW REMOVAL EQUIPMENT, SAND, AND CHEMICAL STORAGE BUILDING

PREPARED BY: USKH INC.

STATE OF ALASKA 49th GARY H. POHL #A-4645 REGISTERED PROFESSIONAL ARCHITECT
10.6.2006

PROJECT MGR.: BS
DRAWN BY: CAL
CHECKED BY: KDR
DATE: OCTOBER 6, 2006

STATE OF ALASKA
DEPARTMENT OF TRANSPORTATION & PUBLIC FACILITIES
DESIGN & ENGINEERING SERVICES
DIVISION-SOUTHEAST REGION

FLOOR PLAN - PHASE I

AKSAS PROJECT NUMBER 68290

STATE	YEAR
ALASKA	2006
SHEET NUMBER	TOTAL SHEETS
A1.0	56

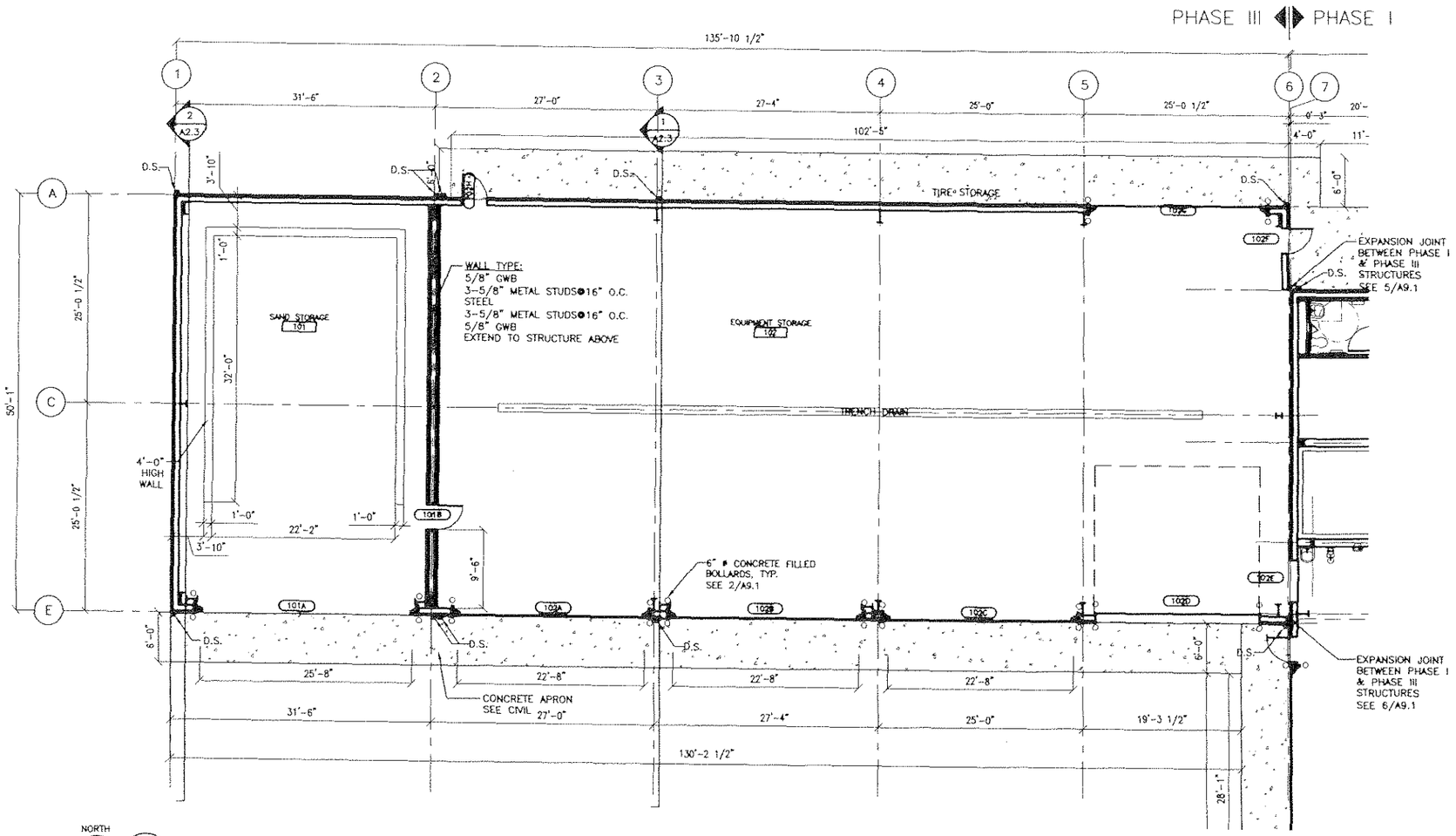

1 / A1.0 FIRST FLOOR PLAN – PHASE III

SCALE: 1/8" = 1'-0"

PATH:
I:\906400\Dwgs\A\sheets\906400 A11.dwg

PLOTTED DATE:
Thu, 05/Oct/06 11:34AM cleose

ADDENDUM NUMBER

RECORD OF REVISIONS

No.	DATE	DESCRIPTION

KETCHIKAN AIRPORT
SNOW REMOVAL EQUIPMENT,
SAND, AND CHEMICAL
STORAGE BUILDING

PREPARED BY: USKH INC.

STATE OF ALASKA
49th
GARY H. FOHL
#A-4645
REGISTERED PROFESSIONAL ARCHITECT

10-5-2006

PROJECT MGR.: BS
DRAWN BY: CAL
CHECKED BY: KDR
DATE: OCTOBER 6, 2006

STATE OF ALASKA
DEPARTMENT OF TRANSPORTATION
& PUBLIC FACILITIES
DESIGN & ENGINEERING SERVICES
DIVISION–SOUTHEAST REGION

FLOOR PLAN - PHASE III

AKSAS PROJECT NUMBER
68290

STATE	YEAR
ALASKA	2006
SHEET NUMBER	TOTAL SHEETS
A1.1	56

PLAN REFERENCE LEGEND

- 1 / A1.0 — SECTION NUMBER; SHEET WHERE SECTION IS DRAWN
- 1 / A1.0 — DETAIL NUMBER; SHEET WHERE DETAIL IS DRAWN
- ROOM 100 — ROOM NAME AND NUMBER, REFER TO SCHEDULE SHEET A2.2
- 1020 — DOOR NUMBER, REFER TO SCHEDULE SHEET A2.3
- A — WINDOW TYPE, REFER TO SCHEDULE SHEET A2.3
- FE — FIRE EXTINGUISHER

DOOR SCHEDULE

DOOR NUMBER	DESCRIPTION	DOOR SIZE WIDTH	DOOR SIZE HEIGHT	DOOR DETAILS TYPE	DOOR CONSTRUCTION	DOOR FINISH	DOOR GLAZING	DOOR RATING	FRAME DETAILS JAMB	FRAME DETAILS HEAD	FRAME DETAILS THRESHOLD	FRAME DETAILS TYPE	FRAME CONSTRUCTION	HARDWARE GROUP	REMARKS	DOOR NUMBER
101A	SAND STORAGE	25'-0" C.O.	18'-0" C.O.	H	IMP	PT	–		12/A9.0	13/A9.0	11/A9.0	B		1		101A
101B	SAND STORAGE	3'-0"	7'-0"	F	HM	PT	–		9/A9.0	10/A9.0	N/A	A	HM	2		101B
102A	EQUIPMENT STORAGE	22'-0" C.O.	16'-0" C.O.	H	IMP	FF	–		12/A9.0	13/A9.0	11/A9.0	B		1		102A
102B	EQUIPMENT STORAGE	22'-0" C.O.	16'-0" C.O.	H	IMP	FF	–		12/A9.0	13/A9.0	11/A9.0	B		1		102B
102C	EQUIPMENT STORAGE	22'-0" C.O.	16'-0" C.O.	H	IMP	FF	–		12/A9.0	13/A9.0	11/A9.0	B		1		102C
102D	EQUIPMENT STORAGE	20'-0" C.O.	16'-0" C.O.	OHS-V	IMP	FF	IN-SF		5/A9.0	6/A9.0	4/A9.0	B		1		102D
102E	SERVICE BAY 1	5'-0"	8'-0"	OHC	IMP	FF	–		7/A9.0	8/A9.0	4/A9.0	B		1		102E
102F	EQUIPMENT STORAGE	3'-0"	7'-0"	F	IHM	PT	–		2/A9.0	3/A9.0	1/A9.0	A	IHM	3		102F
102G	EQUIPMENT STORAGE	20'-0" C.O.	16'-0" C.O.	H-V	IMP	FF	IN-SF		12/A9.0	13/A9.0	11/A9.0	B		1		102G
102H	EQUIPMENT STORAGE	3'-0"	7'-0"	F	IHM	PT	–		2/A9.0	3/A9.0	1/A9.0	A	IHM	3		102H
103	TOILET	3'-0"	7'-0"	F	HM	PT	–		2/A9.0	3/A9.0	1/A9.0	A	HM	4		103
104	HALL	3'-0"	7'-0"	N	IHM	PT	IN-SF		2/A9.0	3/A9.0	1/A9.0	A	IHM	3		104
105	ELECTRICAL	3'-0"	7'-0"	F	HM	PT	–		9/A9.0	10/A9.0	N/A	A	HM	5		105A
106A	MECHANICAL	3'-0"	7'-0"	F	HM	PT	–	60 MIN	9/A9.0	10/A9.0	N/A	A	HM	6		106A
106B	MECHANICAL	4'-0"	7'-0"	F	HM	PT	–	60 MIN	9/A9.0	10/A9.0	N/A	A	HM	6		106B
107	UREA	28'-0" C.O.	16'-0" C.O.	H-V	IMP	FF	IN-SF		12/A9.0	13/A9.0	11/A9.0	B		1		107
108A	SERVICE BAY 1	3'-0"	7'-0"	N	IHM	PT	IN-SF		2/A9.0	3/A9.0	1/A9.0	A	IHM	3		108A
108B	SERVICE BAY 1	28'-0" C.O.	16'-0" C.O.	H-V	IMP	FF	IN-SF		12/A9.0	13/A9.0	11/A9.0	B		1		108B
108C	SERVICE BAY 1	28'-0" C.O.	16'-0" C.O.	H-V	IMP	FF	IN-SF		12/A9.0	13/A9.0	11/A9.0	B		1		108C
109A	SERVICE BAY 2	28'-0" C.O.	16'-0" C.O.	H-V	IMP	FF	IN-SF		12/A9.0	13/A9.0	11/A9.0	B		1		109A
109B	SERVICE BAY 2	28'-0" C.O.	16'-0" C.O.	H-V	IMP	FF	IN-SF		12/A9.0	13/A9.0	11/A9.0	B		1		109B
109C	SERVICE BAY 2	3'-0"	7'-0"	F	IHM	PT	–		2/A9.0	3/A9.0	1/A9.0	A	IHM	3		109C

ROOM FINISH SCHEDULE

ROOM NO	ROOM NAME	FLOOR	BASE	WALLS NORTH MAT'L	WALLS NORTH FINISH	WALLS SOUTH MAT'L	WALLS SOUTH FINISH	WALLS EAST MAT'L	WALLS EAST FINISH	WALLS WEST MAT'L	WALLS WEST FINISH	CEILING MATL	CEILING HEIGHT	REMARKS	ROOM NO
101	SAND STORAGE	CONC	–	CONC	–	CONC	–	CONC	–	CONC	–	IMP	MIN. 22'-0"	PAINT EXPOSED STEEL STRUCTURE	101
102	EQUIPMENT STORAGE	SCONC	–	IMP	FF	IMP	FF	IMP	FF	IMP	FF	IMP	VARIES	PAINT EXPOSED STEEL STRUCTURE	102
103	TOILET	SV	6" SC	GWB	PT	GWB	PT	GWB	PT	GWB	PT	GWB	8'-0"	4' FRP WAINSCOAT	103
104	HALL	SCONC	4" RB	GWB	PT	GWB	PT	GWB	PT	GWB	PT	PT	10'-6"	PAINT EXPOSED STEEL STRUCTURE	104
105	ELECTRICAL	SCONC	4" RB	GWB	PT	GWB	PT	GWB	PT	–	PT	PT	10'-6"	PAINT EXPOSED STEEL STRUCTURE	105
106	MECHANICAL	SCONC	4" RB	GWB	PT	GWB	PT	GWB	PT	GWB	PT	GWB	10'-6"	PAINT CEILING	106
107	UREA	SCONC	–	IMP	FF	–	–	IMP	FF	GWB	PT	IMP	VARIES	PAINT EXPOSED STEEL STRUCTURE	107
108	SERVICE BAY 1	SCONC	–	IMP	FF	GWB	PT	GWB	PT	GWB	PT	IMP	VARIES	PAINT EXPOSED STEEL STRUCTURE	108
109	SERVICE BAY 2	SCONC	–	–	–	IMP	FF	IMP	FF	IMP	FF	IMP	VARIES	PAINT EXPOSED STEEL STRUCTURE	109
201	MEZZANINE STORAGE	SCONC	4" RB	IMP	FF	–	–	–	–	IMP	FF	IMP	VARIES	PAINT EXPOSED STEEL STRUCTURE	201

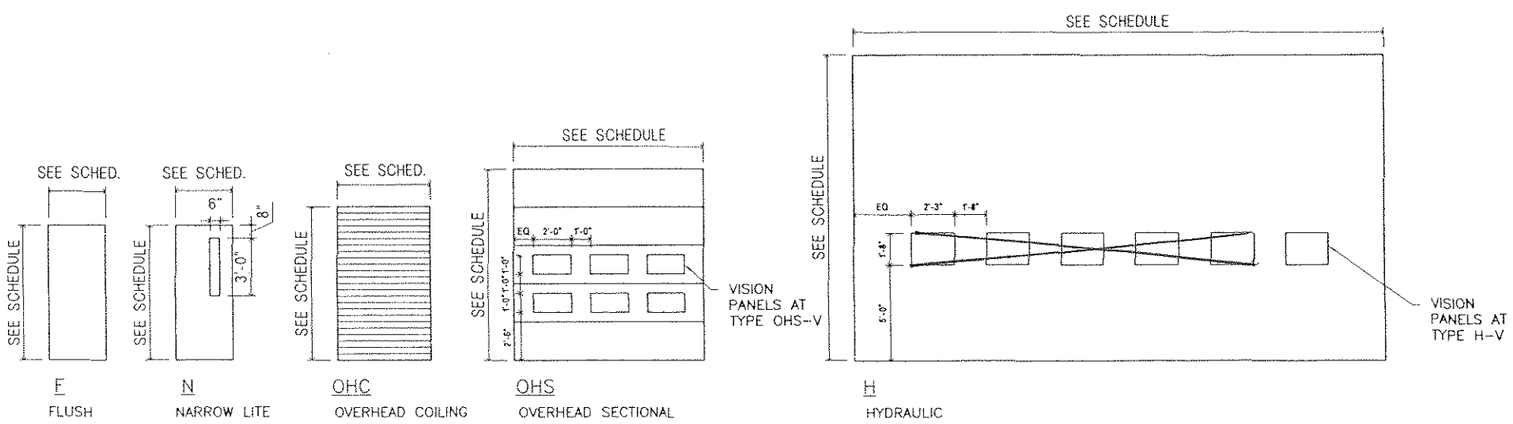

1 A1.1 DOOR ELEVATIONS
SCALE: 1/4" = 1'-0"

DOOR SCHEDULE KEY

CO	CLEAR OPENING
FF	FACTORY FINISH
HM	HOLLOW METAL
IMP	INSULATED METAL PANELS
IHM	INSULATED HOLLOW METAL
IN-SF	INSULATED SAFETY GLASS
SF	SAFETY GLASS
PT	PAINT
UON	UNLESS OTHERWISE NOTED

DOOR SCHEDULE NOTES

1 PAINT DOORS AND FRAMES AS SCHEDULED ON FINISH SCHEDULE.

2 DOOR FRAMES ARE 16 GA., LABEL AS INDICATED

3 ALL HM DOORS ARE 1-3/4 INCH THICK UON.

ROOM FINISH KEY

ACT	ACOUSTICAL CEILING TILE
CONC	CONCRETE
FF	FACTORY FINISH
GWB	GYPSUM WALL BOARD
IMP	INSULATED METAL PANEL
PT	PAINT
RB	RUBBER BASE
RT	RUBBER TILE
SCONC	SEALED CONCRETE
SV	SHEET VINYL
SC	SELF COVE

ROOM FINISH SCHEDULE NOTES

1 PAINT EXPOSED STRUCTURAL STEEL FRAMING, INCLUDING RIGID FRAMES, COLUMNS, GIRTS, PURLINS AND BRACING WHITE TO MATCH INTERIOR FINISH OF METAL WALL AND CEILING PANELS.

2 PAINT EXTERIOR ITEMS TO MATCH EXTERIOR WALL PANEL COLORS AS NOTED ON COLOR SCHEDULE – EXTERIOR.

3 PROVIDE FLOOR TRANSITIONS AT INTERFACE OF DIFFERING FLOOR MATERIALS.

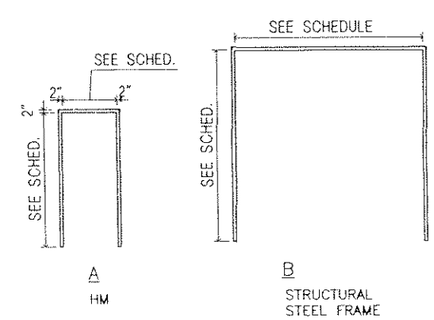

2 A1.1 DOOR ELEVATIONS
SCALE: 1/4" = 1'-0"

PATH:
I:\906400\Dwgs\A\sheets\906400 A12.dwg

PLOTTED DATE:
Thu, 05/Oct/06 11:34AM cleose

ADDENDUM NUMBER

RECORD OF REVISIONS

No.	DATE	DESCRIPTION

KETCHIKAN AIRPORT
SNOW REMOVAL EQUIPMENT,
SAND, AND CHEMICAL
STORAGE BUILDING

PREPARED BY: USKH INC.

STATE OF ALASKA 49th GARY H. FOH #A-4645 REGISTERED PROFESSIONAL ARCHITECT
10.5.2006

PROJECT MGR.: BS
DRAWN BY: CAL
CHECKED BY: KDR
DATE: OCTOBER 6, 2006

STATE OF ALASKA
DEPARTMENT OF TRANSPORTATION
& PUBLIC FACILITIES
DESIGN & ENGINEERING SERVICES
DIVISION-SOUTHEAST REGION

DOOR AND ROOM FINISH SCHEDULES

AKSAS PROJECT NUMBER
68290

STATE	YEAR
ALASKA	2006

SHEET NUMBER	TOTAL SHEETS
A1.2	56

SYMBOL	MATERIAL	MANUFACTURER	NUMBER	COLOR	LOCATIONS
IMP-1	INSULATED METAL PANEL	METL-SPAN	C:436S512	AEGEAN BLUE	EXTERIOR WALL PANELS & FLASHINGS
IMP-2	INSULATED METAL PANEL	METL-SPAN	C:433X517	SANDSTONE	EXTERIOR ROOF PANELS & FLASHINGS
PT-3	PAINT	FULLER O'BRIEN	3WS4-3	PEBBLESTONE BEIGE, NOTE 1	EXTERIOR HM DOOR & FRAMES, EXTERIOR MECHANICAL HOODS
PT-4	PAINT	FULLER O'BRIEN	5W18-6	MIAMI YELLOW	STEEL BOLLARDS

EXTERIOR FINISH KEY

IMP INSULATED METAL PANEL
PT PAINT

FINISH NOTES

1. PAINT EXTERIOR HM DOORS & FRAMES AND MECHANICAL HOODS TO MATCH IMP-1 EXTERIOR WALL PANEL COLOR.
2. EXTERIOR WINDOW FRAMES AND OVERHEAD DOOR PANELS TO BE WHITE.

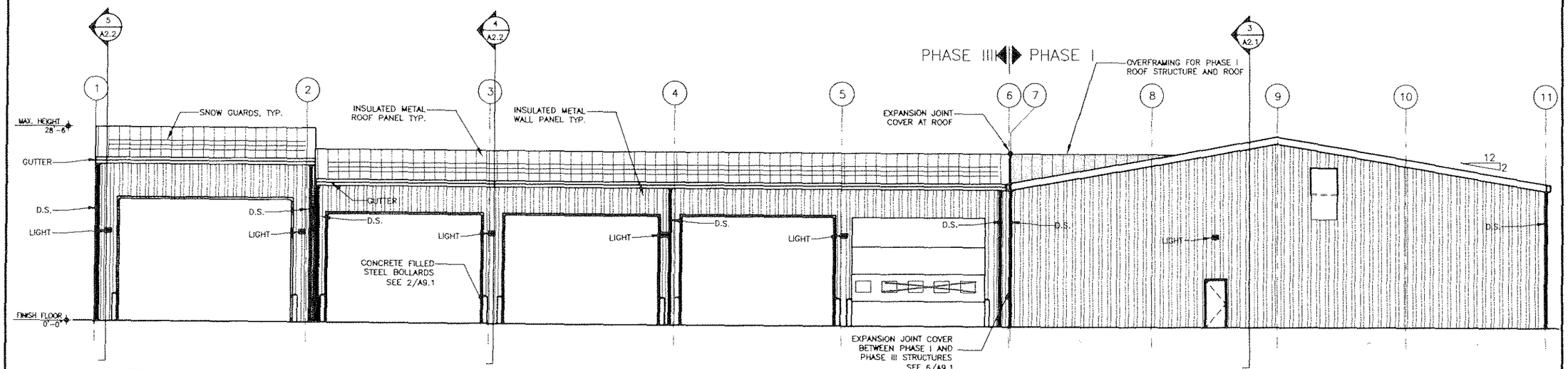

1 A2.0 SOUTH ELEVATION
SCALE: 1/8" = 1'-0"

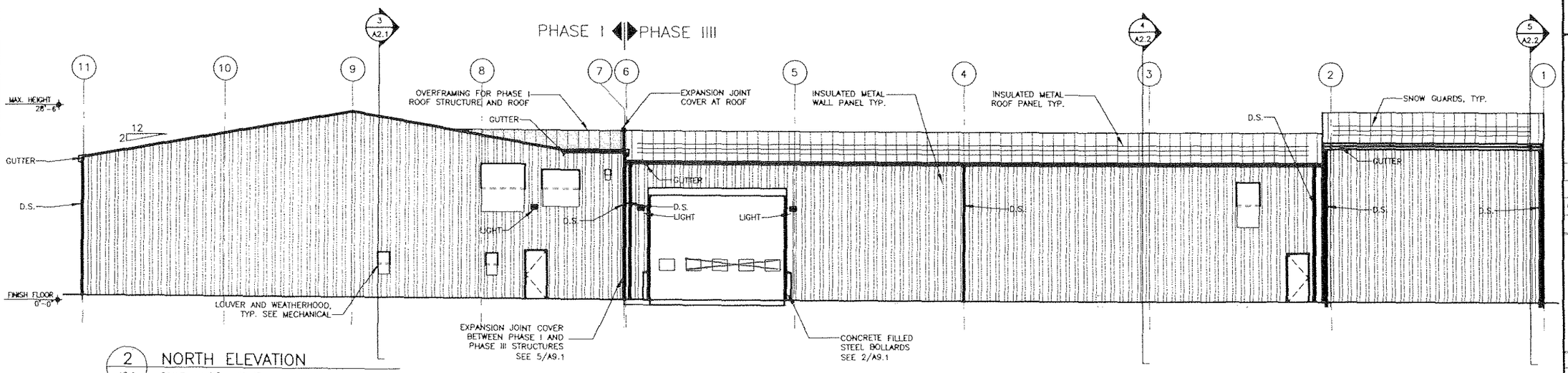

2 A2.0 NORTH ELEVATION
SCALE: 1/8" = 1'-0"

PATH: I:\906400\Dwgs\A\sheets\906400 A20.dwg
PLOTTED DATE: Thu, 05/Oct/06 11:35AM clease

ADDENDUM NUMBER

RECORD OF REVISIONS

No.	DATE	DESCRIPTION

KETCHIKAN AIRPORT
SNOW REMOVAL EQUIPMENT, SAND, AND CHEMICAL STORAGE BUILDING

PREPARED BY: USKH INC.

STATE OF ALASKA 8th GARY H. POHL #A-4645 REGISTERED PROFESSIONAL ARCHITECT
10-5-2006

PROJECT MGR.: BS
DRAWN BY: CAL
CHECKED BY: KDR
DATE: OCTOBER 6, 2006

STATE OF ALASKA
DEPARTMENT OF TRANSPORTATION & PUBLIC FACILITIES
DESIGN & ENGINEERING SERVICES DIVISION-SOUTHEAST REGION

BUILDING ELEVATIONS

AKSAS PROJECT NUMBER
68290

STATE	YEAR
ALASKA	2006
SHEET NUMBER	TOTAL SHEETS
A2.0	56

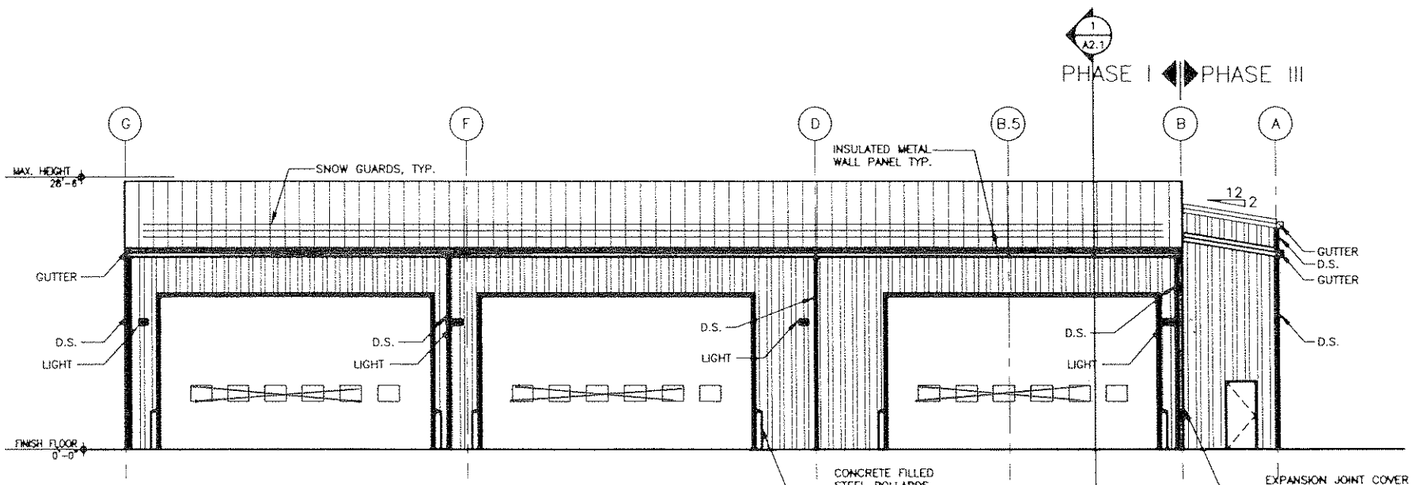

1 A2.1 EAST ELEVATION
SCALE: 1/8" = 1'-0"

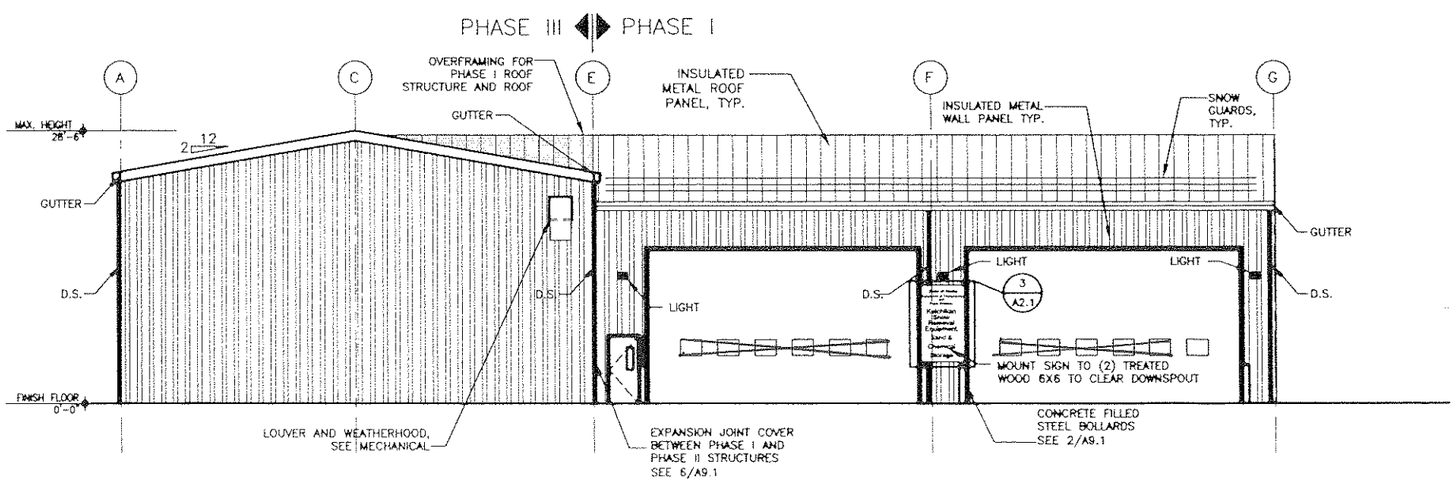

2 A2.1 WEST ELEVATION
SCALE: 1/8" = 1'-0"

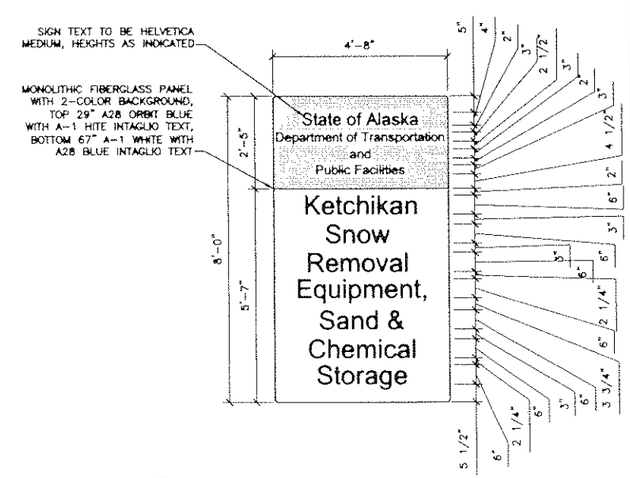

3 A2.1 ENLARGED SIGN DETAIL
SCALE: 1/2" = 1'-0"

PATH:
I:\906400\Dwgs\A\sheets\906400 A21.dwg

PLOTTED DATE:
Thu, 05/Oct/06 01:49PM clease

ADDENDUM NUMBER

RECORD OF REVISIONS

No.	DATE	DESCRIPTION

KETCHIKAN AIRPORT
SNOW REMOVAL EQUIPMENT, SAND, AND CHEMICAL STORAGE BUILDING

PREPARED BY: USKH INC.

STATE OF ALASKA 49th GARY H. PONG #A-4645 REGISTERED PROFESSIONAL ARCHITECT
10.5.2006

PROJECT MGR.: BS
DRAWN BY: CAL
CHECKED BY: KDR
DATE: OCTOBER 6, 2006

STATE OF ALASKA
DEPARTMENT OF TRANSPORTATION & PUBLIC FACILITIES
DESIGN & ENGINEERING SERVICES
DIVISION-SOUTHEAST REGION

BUILDING ELEVATIONS

AKSAS PROJECT NUMBER
68290

STATE	YEAR
ALASKA	2006
SHEET NUMBER	TOTAL SHEETS
A2.1	56

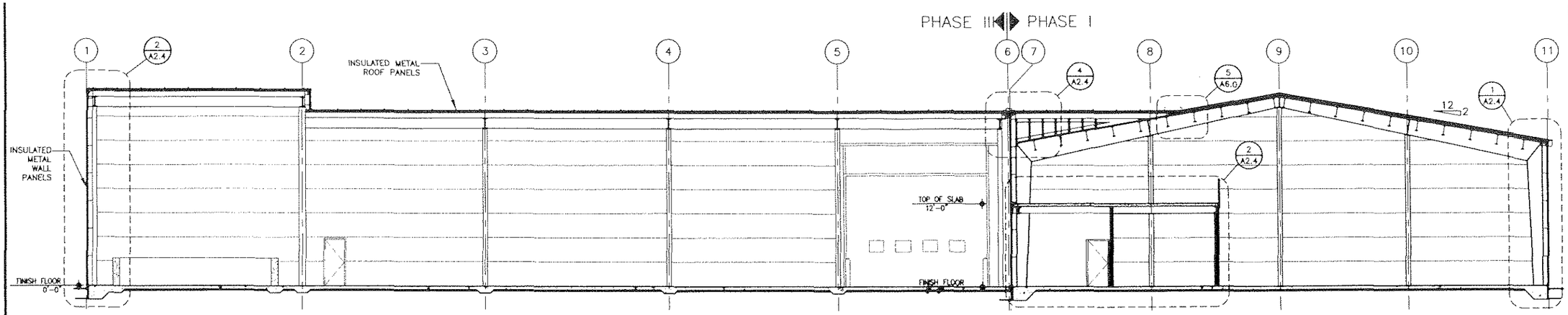

1 A2.2 BUILDING SECTION
SCALE: 1/8" = 1'-0"

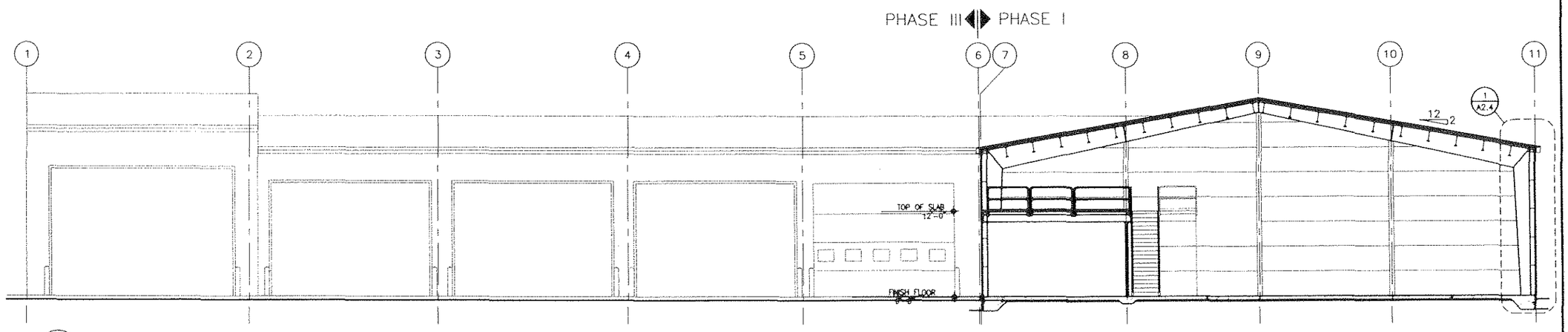

2 A2.2 BUILDING SECTION
SCALE: 1/8" = 1'-0"

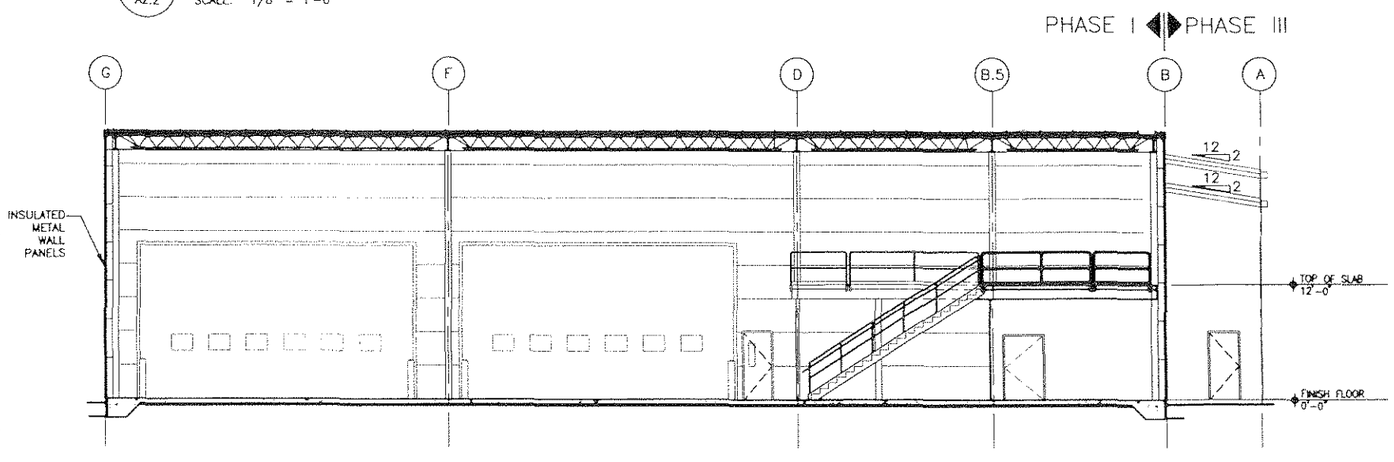

3 A2.2 BUILDING SECTION
SCALE: 1/8" = 1'-0"

PATH:
I:\906400\Dwgs\A\sheets\906400 A22.dwg

PLOTTED DATE:
Thu, 05/Oct/06 11:35AM clease

ADDENDUM NUMBER

RECORD OF REVISIONS

No.	DATE	DESCRIPTION

KETCHIKAN AIRPORT
SNOW REMOVAL EQUIPMENT,
SAND, AND CHEMICAL
STORAGE BUILDING

PREPARED BY: USKH INC.

STATE OF ALASKA
49th
GARY H. POHL
#A-4645
REGISTERED PROFESSIONAL ARCHITECT

10-5-2006

PROJECT MGR.: BS
DRAWN BY: CNL
CHECKED BY: KDR
DATE: OCTOBER 6, 2006

STATE OF ALASKA
DEPARTMENT OF TRANSPORTATION
& PUBLIC FACILITIES
DESIGN & ENGINEERING SERVICES
DIVISION-SOUTHEAST REGION

BUILDING SECTIONS

AKSAS PROJECT NUMBER
68290

STATE	YEAR
ALASKA	2006
SHEET NUMBER	TOTAL SHEETS
A2.2	56

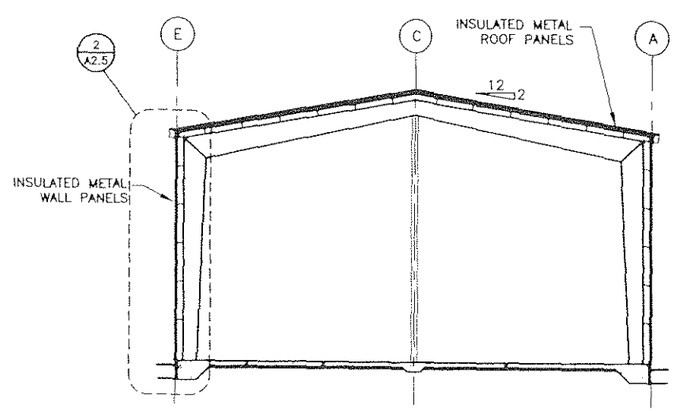

1 / A2.3 BUILDING SECTION – PHASE III
SCALE: 1/8" = 1'-0"

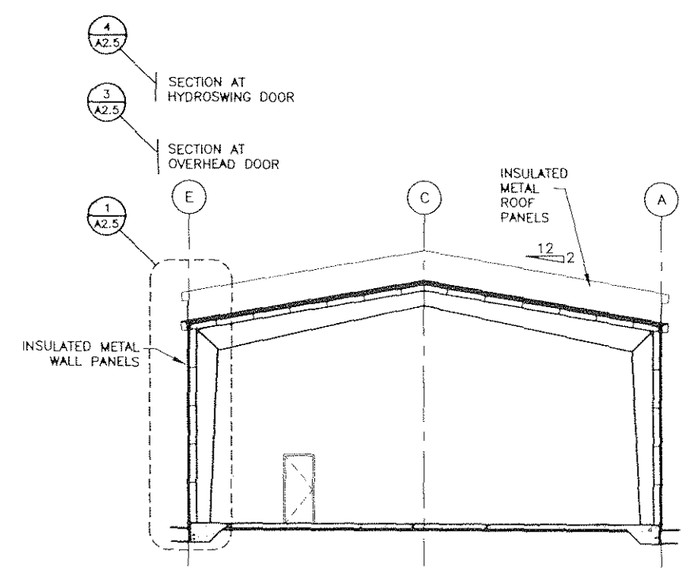

2 / A2.3 BUILDING SECTION – PHASE III
SCALE: 1/8" = 1'-0"

PATH:
I:\906400\Dwgs\A\sheets\906400 A23.dwg

PLOTTED DATE:
Thu. 05/Oct/06 11:35AM cleose

ADDENDUM NUMBER

RECORD OF REVISIONS

No.	DATE	DESCRIPTION

KETCHIKAN AIRPORT
SNOW REMOVAL EQUIPMENT,
SAND, AND CHEMICAL
STORAGE BUILDING

PREPARED BY: USKH INC.

STATE OF ALASKA
49th
CARY H. POHL
#A-4645
REGISTERED PROFESSIONAL ARCHITECT

10-5-2006

PROJECT MGR.: BS
DRAWN BY: CAL
CHECKED BY: KDR
DATE: OCTOBER 6, 2006

STATE OF ALASKA
DEPARTMENT OF TRANSPORTATION
& PUBLIC FACILITIES
DESIGN & ENGINEERING SERVICES
DIVISION–SOUTHEAST REGION

BUILDING SECTIONS

AKSAS PROJECT NUMBER
68290

STATE	YEAR
ALASKA	2006
SHEET NUMBER	TOTAL SHEETS
A2.3	56

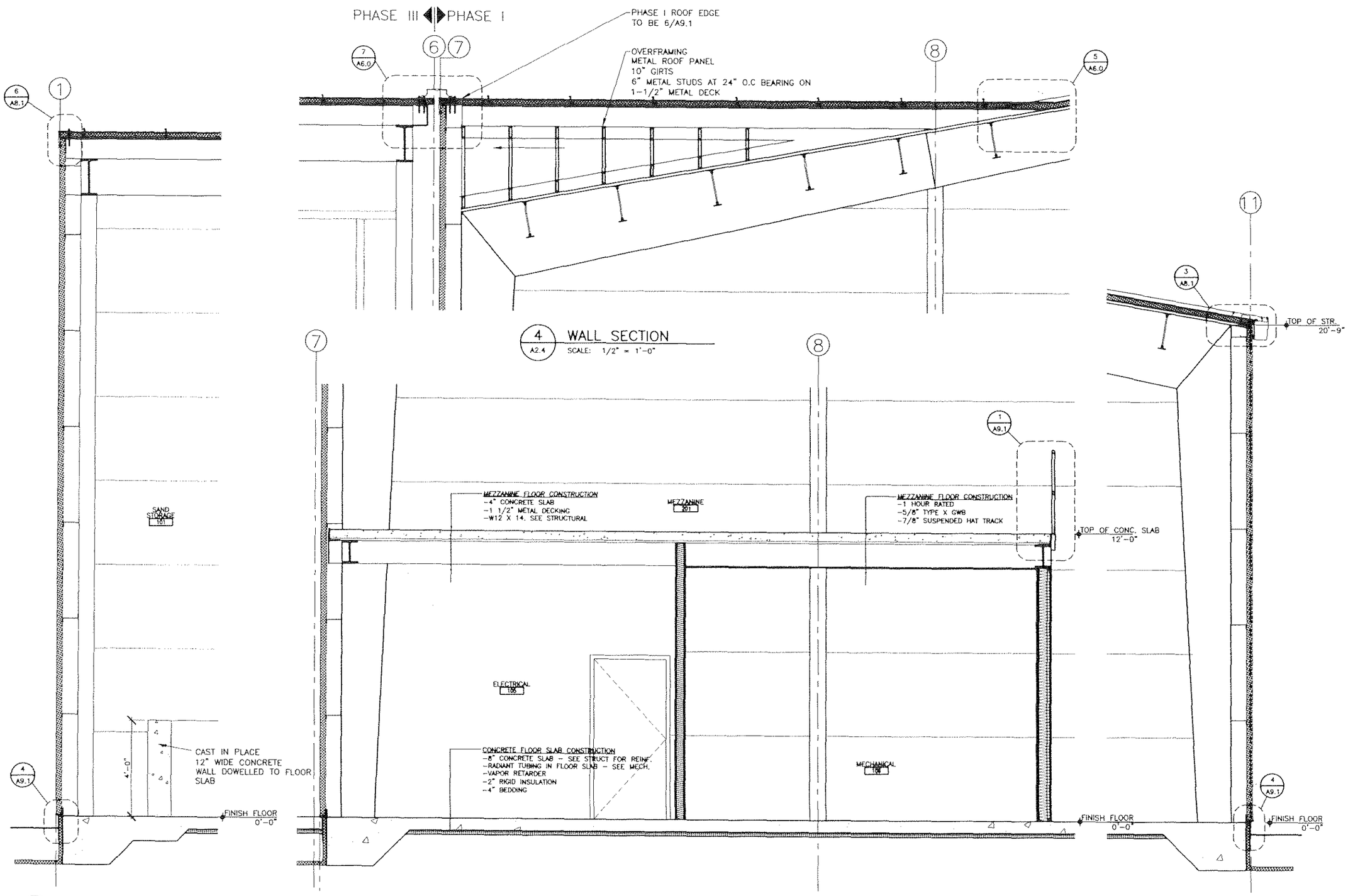

4/A2.4 WALL SECTION
SCALE: 1/2" = 1'-0"

3/A2.4 WALL SECTION
SCALE: 1/2" = 1'-0"

2/A2.4 WALL SECTION
SCALE: 1/2" = 1'-0"

1/A2.4 WALL SECTION
SCALE: 1/2" = 1'-0"

FILE:
I:\906400\Dwgs\A\sheets\906400 A24.dwg

PLOTTED DATE:
Thu, 05/Oct/06 11:35AM clease

ADDENDUM NUMBER

RECORD OF REVISIONS

No.	DATE	DESCRIPTION

KETCHIKAN AIRPORT
SNOW REMOVAL EQUIPMENT,
SAND, AND CHEMICAL
STORAGE BUILDING

PREPARED BY: USKH INC.

STATE OF ALASKA
49th
GARY H. POHL
#A-4645
REGISTERED PROFESSIONAL ARCHITECT
10.5.2006

PROJECT MGR.: BS
DRAWN BY: CAL
CHECKED BY: KDR
DATE: OCTOBER 6, 2006

STATE OF ALASKA
DEPARTMENT OF TRANSPORTATION
& PUBLIC FACILITIES
DESIGN & ENGINEERING SERVICES
DIVISION-SOUTHEAST REGION

WALL SECTIONS

AKSAS PROJECT NUMBER
68290

STATE	YEAR
ALASKA	2006
SHEET NUMBER	TOTAL SHEETS
A2.4	56

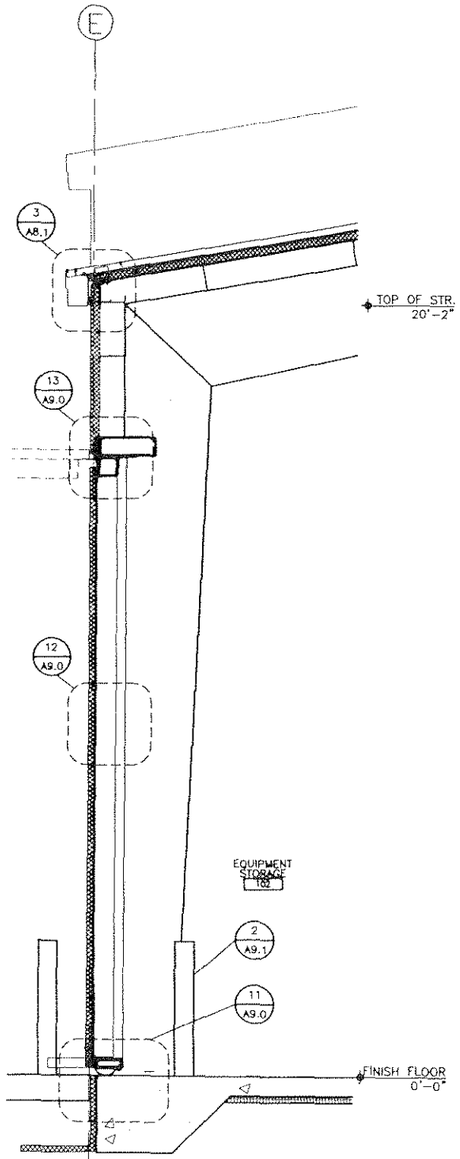

4 A2.5 WALL SECTION
1/2" = 1'-0"

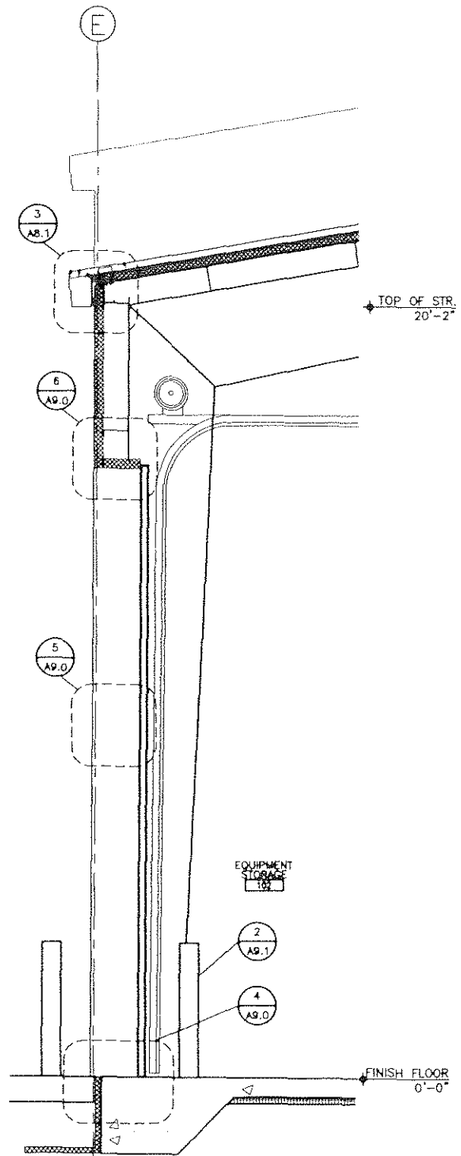

3 A2.5 WALL SECTION
1/2" = 1'-0"

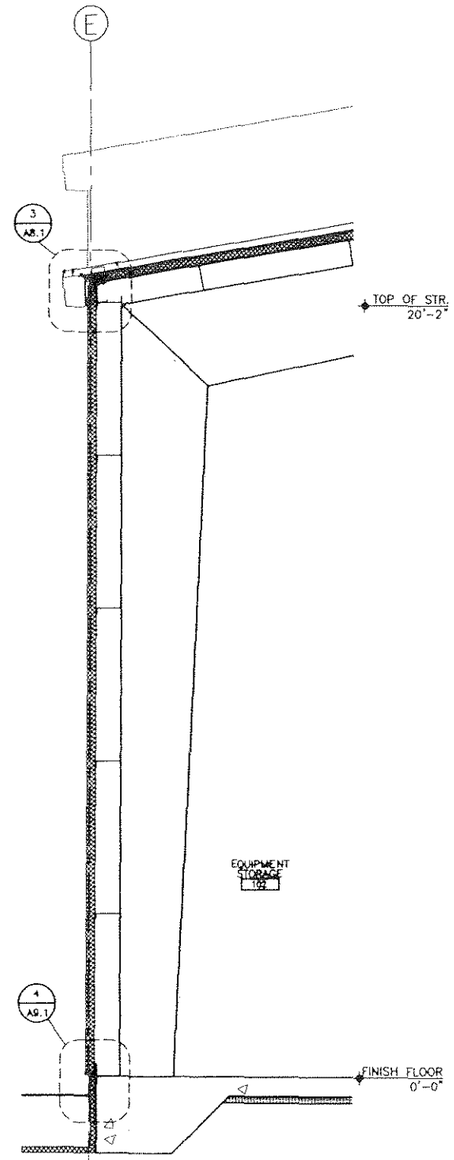

2 A2.5 WALL SECTION
1/2" = 1'-0"

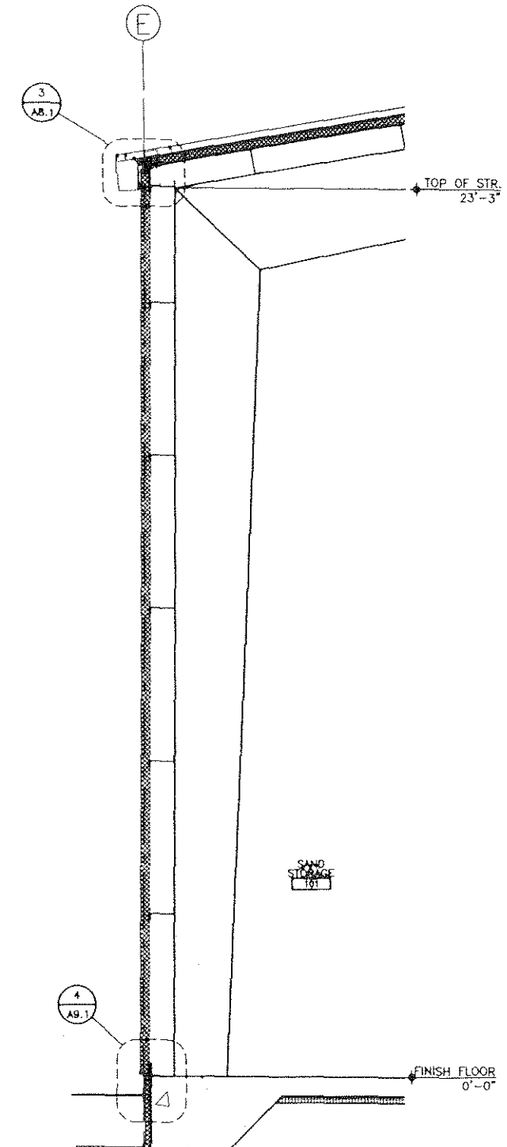

1 A2.5 WALL SECTION
1/2" = 1'-0"

PATH:
I:\906400\Dwgs\A\sheets\906400 A25.dwg

PLOTTED DATE:
Thu, 05/Oct/06 11:35AM cleose

ADDENDUM NUMBER

RECORD OF REVISIONS

No.	DATE	DESCRIPTION

KETCHIKAN AIRPORT
SNOW REMOVAL EQUIPMENT,
SAND, AND CHEMICAL
STORAGE BUILDING

PREPARED BY: USKH INC.

STATE OF ALASKA
9th
GARY H. POKE
#A-4645
REGISTERED PROFESSIONAL ARCHITECT

10-5-2006

PROJECT MGR.: BS
DRAWN BY: CAL
CHECKED BY: KDR
DATE: OCTOBER 6, 2006

STATE OF ALASKA
DEPARTMENT OF TRANSPORTATION
& PUBLIC FACILITIES
DESIGN & ENGINEERING SERVICES
DIVISION–SOUTHEAST REGION

WALL SECTIONS

AKSAS PROJECT NUMBER
68290

STATE	YEAR
ALASKA	2006
SHEET NUMBER	TOTAL SHEETS
A2.5	56

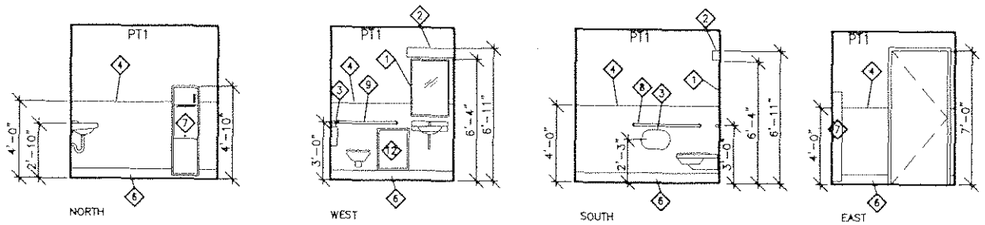

1 A3.0 INTERIOR BATHROOM ELEVATION
SCALE: 1/4" = 1'-0"

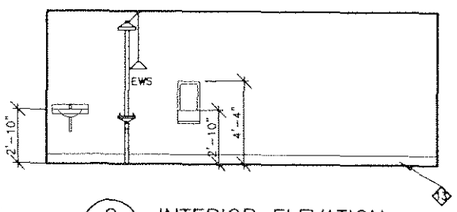

2 A3.0 INTERIOR ELEVATION
SCALE: 1/4" = 1'-0"

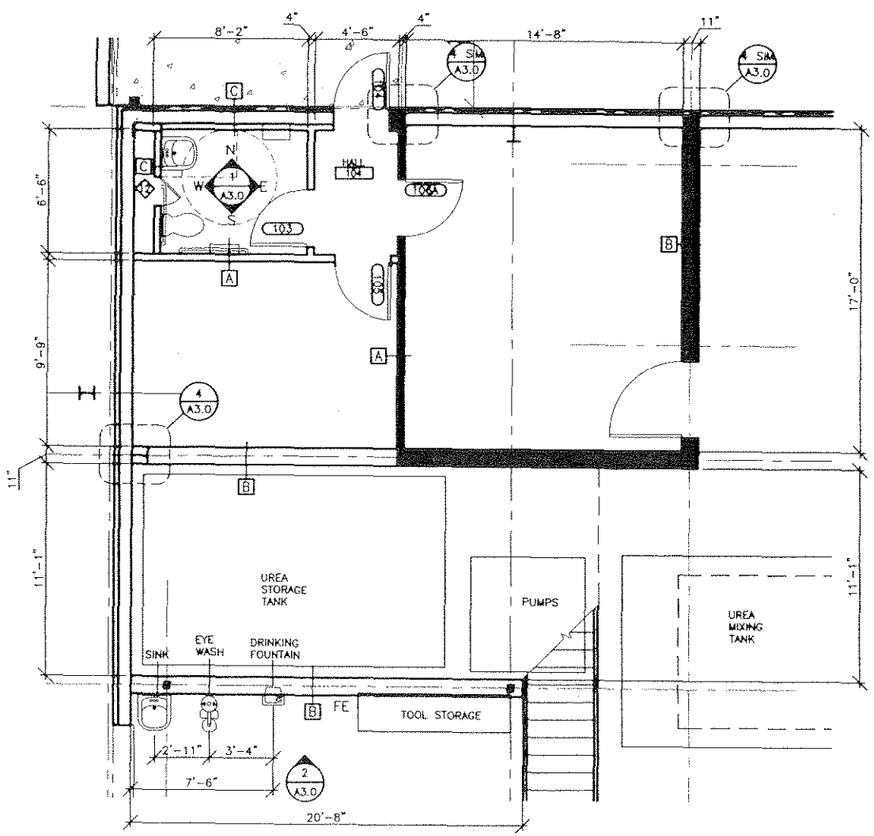

3 A3.0 ENLARGED FLOOR PLAN
SCALE: 1/4" = 1'-0"

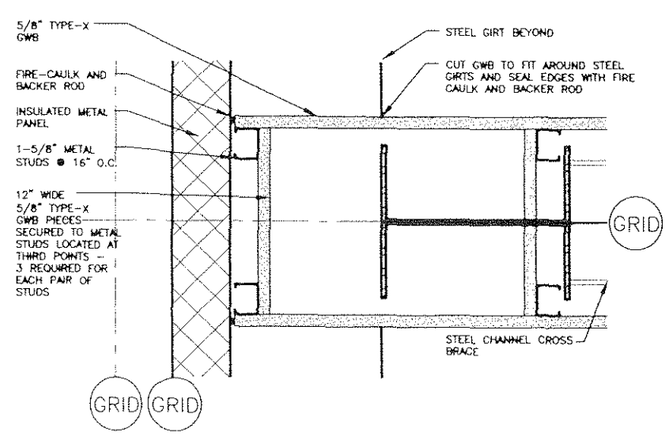

4 A3.0 FIRE WALL CONNECTION
SCALE: 3" = 1'-0"

NOTES:

1 ALL WORK TO COMPLY WITH ADA AND LOCAL CODES.
2
3

KEY NOTES

1. MIRROR
2. LIGHT, SEE ELECTRICAL
3. TOILET PAPER DISPENSER
4. FRP WAINSCOT
5. TUBE STEEL WORK BENCH WITH PLYWOOD COUNTER
6. SELF COVE
7. COMBINATION TRASH/PAPER TOWEL DISPENSER
8. 36" GRAB BAR
9. 42" GRAB BAR
10. SANITARY NAPKIN DISPOSAL
11. COAT HOOK
12. ACCESS PANEL - 18"W X 24"H
13. 4" RUBBER BASE

WALL TYPES

A — 3-5/8" METAL STUDS WITH ONE LAYER 5/8" TYPE X GWB EACH SIDE EXTEND TO BOTTOM SIDE OF MEZZANINE

B — DOUBLE WALL
11" TOTAL WIDTH OF WALL
- 5/8" TYPE X GWB
- 1-5/8" METAL STUDS @ 16" O.C.
- 6-3/4" CLEAR/STEEL CHANNELS
- 5/8" GWB PIECES 12" WIDE X 9-1/2" LONG LOCATED AT 1/3 POINTS USED AS CROSS BRACES FASTENED TO STUD PAIRS WITH (3) 1" TYPE X DRYWALL SCREWS AT END OF EACH BRACE
- 5/8" TYPE X GWB
- EXTEND TO BOTTOM SIDE OF MEZZANINE

C — CHASE WALL - 3-5/8" METAL STUDS WITH ONE LAYER 5/8" TYPE X GWB ON INTERIOR SIDE OF ROOM EXTEND TO BOTTOM SIDE OF MEZZANINE

ONE HOUR RATED WALL

PATH:
I:\906400\Dwgs\A\sheets\906400 A30.dwg

PLOTTED DATE:
Thu, 05/Oct/06 11:35AM clease

ADDENDUM NUMBER

RECORD OF REVISIONS

No.	DATE	DESCRIPTION

KETCHIKAN AIRPORT
SNOW REMOVAL EQUIPMENT, SAND, AND CHEMICAL STORAGE BUILDING

PREPARED BY: USKH INC.

STATE OF ALASKA
GARY H. FORE
#A-4645
REGISTERED PROFESSIONAL ARCHITECT
10-5-2006

PROJECT MGR.: BS
DRAWN BY: CAL
CHECKED BY: KDR
DATE: OCTOBER 6, 2006

STATE OF ALASKA
DEPARTMENT OF TRANSPORTATION & PUBLIC FACILITIES
DESIGN & ENGINEERING SERVICES DIVISION-SOUTHEAST REGION

ENLARGED PLANS INTERIOR ELEVATIONS

AKSAS PROJECT NUMBER
68290

STATE	YEAR
ALASKA	2006
SHEET NUMBER	TOTAL SHEETS
A3.0	56

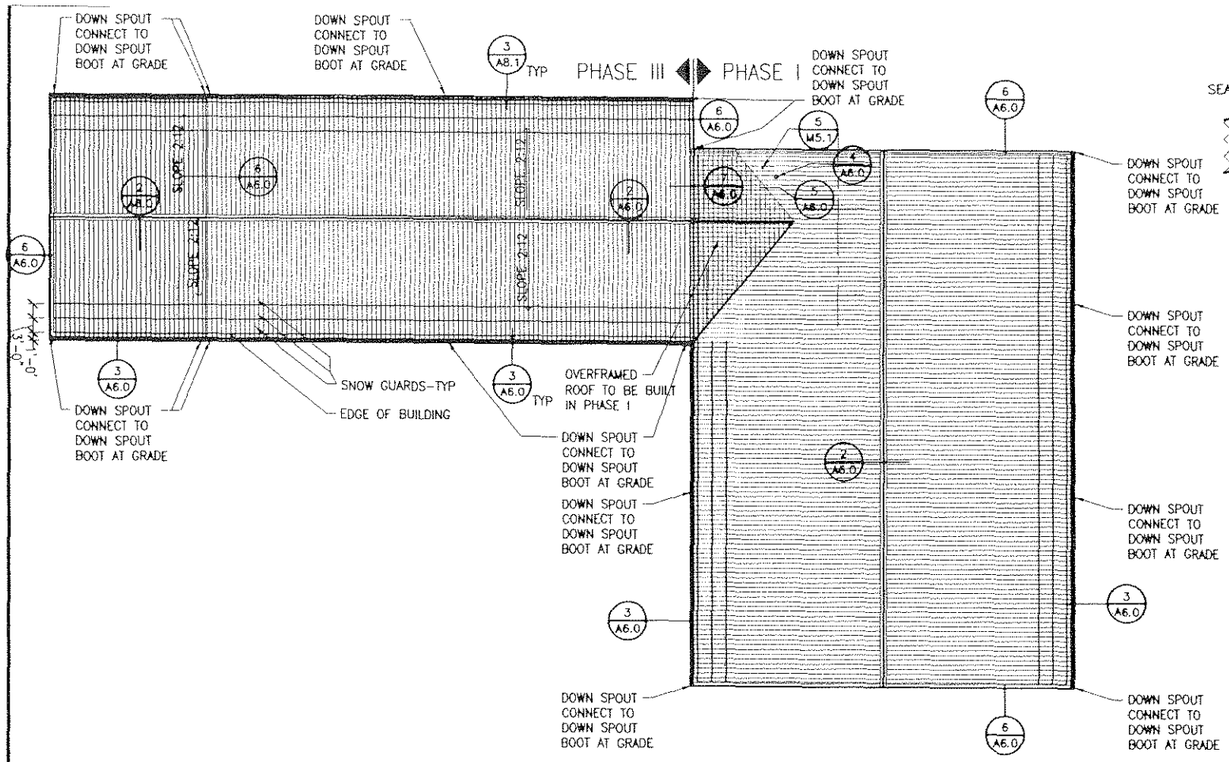

1/A6.0 ROOF PLAN
SCALE: 1/16" = 1'-0"

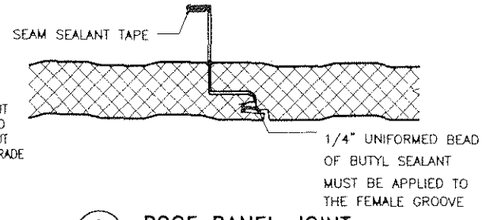

8/A6.0 ROOF PANEL JOINT
SCALE: 3" = 1'-0"

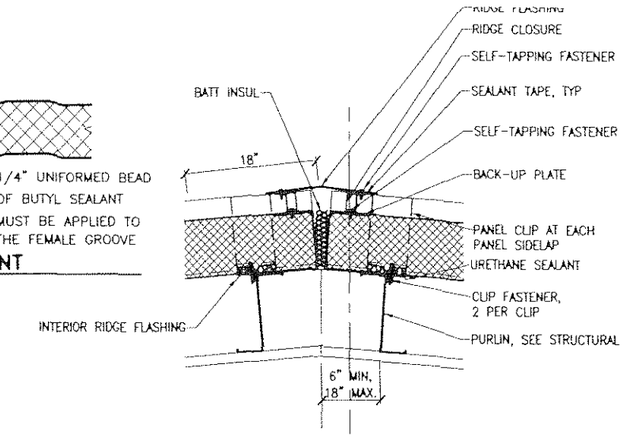

2/A6.0 RIDGE DETAIL
SCALE: 1-1/2" = 1'-0"

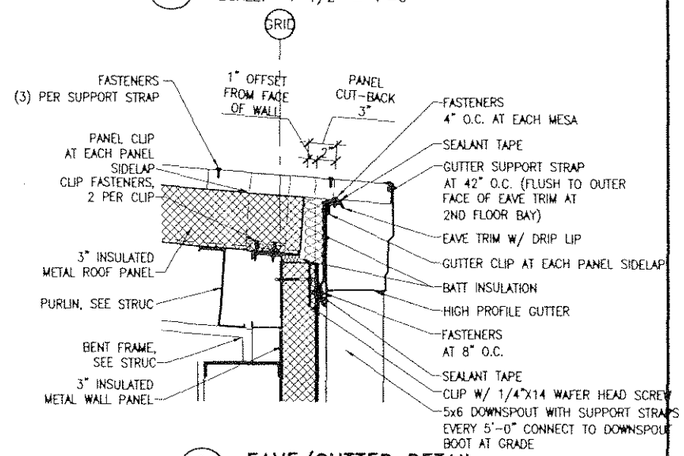

3/A6.0 EAVE/GUTTER DETAIL
SCALE: 1-1/2" = 1'-0"

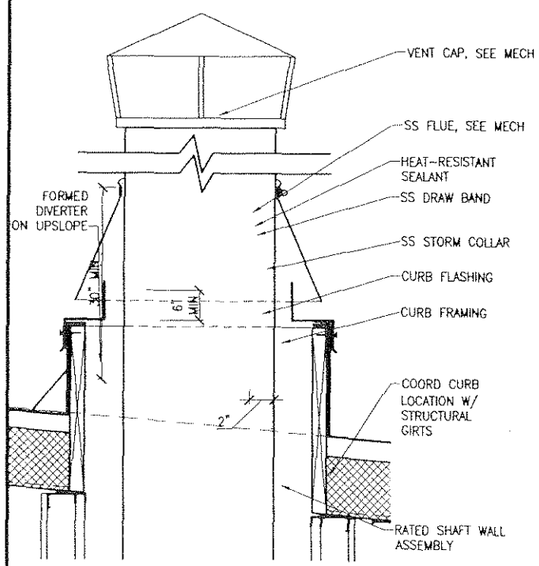

4/A6.0 FLUE SHAFT CURB DETAIL
SCALE: 1"=1'-0"

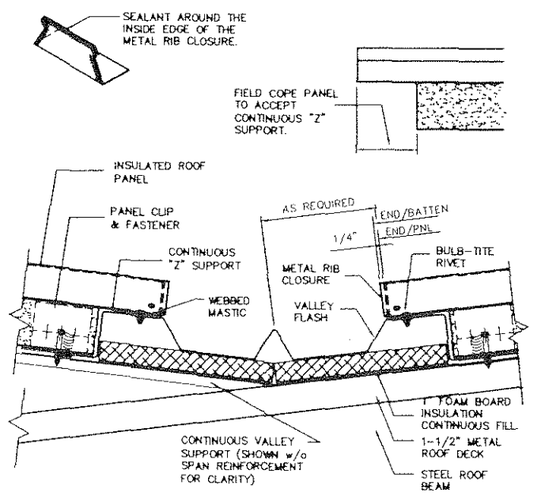

5/A6.0 VALLEY DETAIL
SCALE: 3" = 1'-0"

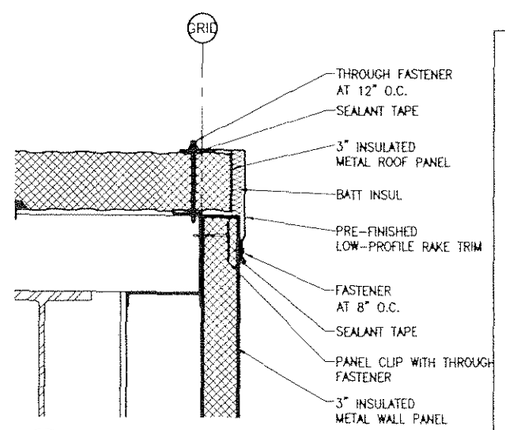

6/A6.0 RAKE DETAIL
SCALE: 1-1/2" = 1'-0"

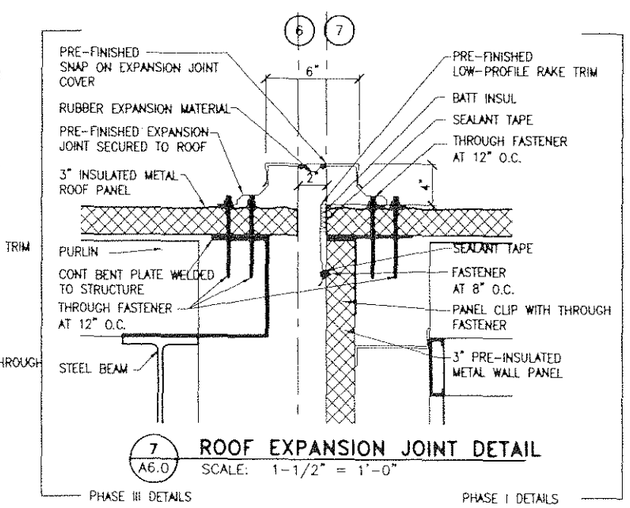

7/A6.0 ROOF EXPANSION JOINT DETAIL
SCALE: 1-1/2" = 1'-0"

DO NOT SCALE FROM THESE DRAWINGS USE DIMENSIONS

PATH:
I:\906400\Dwgs\A\sheets\906400 A60.dwg

PLOTTED DATE:
Thu, 05/Oct/06 11:36AM clease

ADDENDUM NUMBER

RECORD OF REVISIONS

No.	DATE	DESCRIPTION

KETCHIKAN AIRPORT
SNOW REMOVAL EQUIPMENT, SAND, AND CHEMICAL STORAGE BUILDING

PREPARED BY: USKH INC.

STATE OF ALASKA 9th GARY H. POHL #A-4645 REGISTERED PROFESSIONAL ARCHITECT
10.5.2006

PROJECT MGR.: BS
DRAWN BY: CAL
CHECKED BY: KDR
DATE: OCTOBER 6, 2006

STATE OF ALASKA
DEPARTMENT OF TRANSPORTATION & PUBLIC FACILITIES
DESIGN & ENGINEERING SERVICES DIVISION-SOUTHEAST REGION

ROOF PLAN AND DETAILS

AKSAS PROJECT NUMBER
68290

STATE	YEAR
ALASKA	2006
SHEET NUMBER	TOTAL SHEETS
A6.0	56

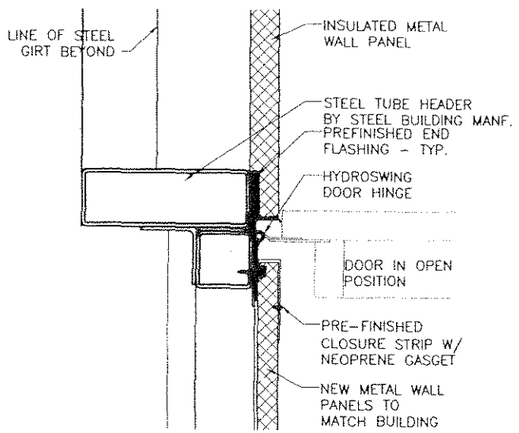

13 A9.0 HYDROSWING DOOR HEAD
SCALE: 1-1/2" = 1'-0"

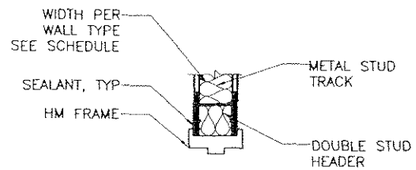

10 A9.0 INTERIOR DOOR HEAD
SCALE: 1-1/2" = 1'-0"

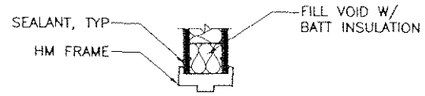

9 A9.0 INTERIOR DOOR JAMB
SCALE: 1-1/2" = 1'-0"

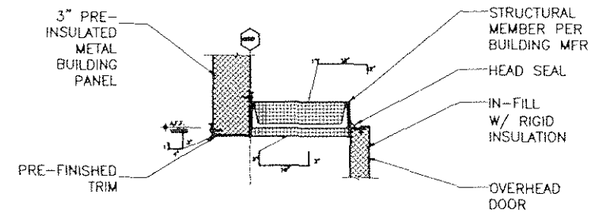

6 A9.0 OVERHEAD DOOR HEAD
SCALE: 1-1/2" = 1'-0"

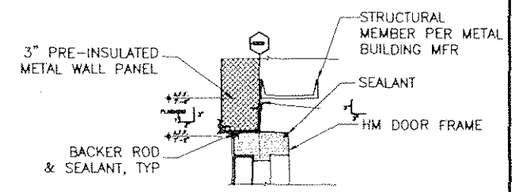

3 A9.0 EXTERIOR DOOR HEAD
SCALE: 1-1/2" = 1'-0"

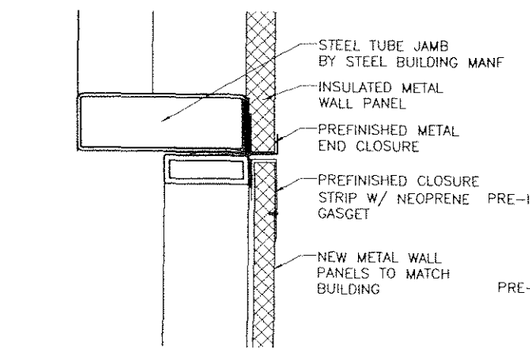

12 A9.0 HYDROSWING DOOR JAMB
SCALE: 1-1/2" = 1'-0"

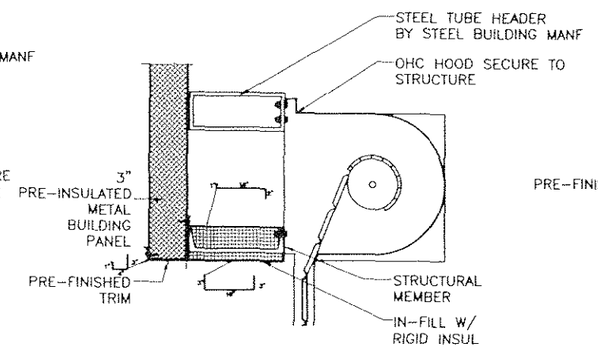

8 A9.0 OVERHEAD COILING DOOR HEAD
SCALE: 1-1/2" = 1'-0"

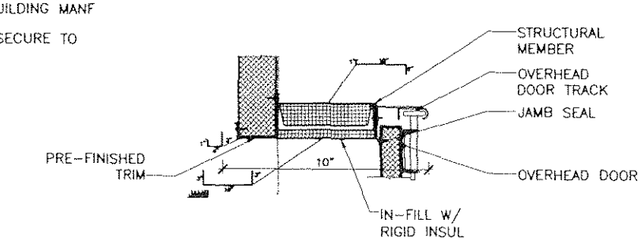

5 A9.0 OVERHEAD DOOR JAMB
SCALE: 1-1/2" = 1'-0"

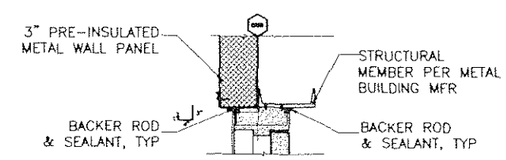

2 A9.0 EXTERIOR DOOR JAMB
SCALE: 1-1/2" = 1'-0"

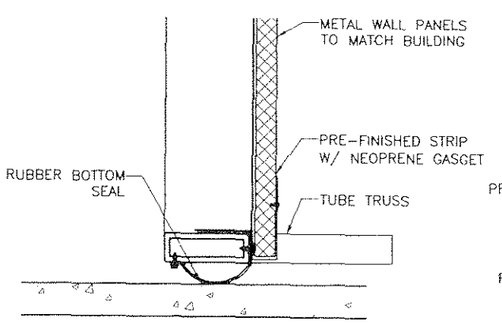

11 A9.0 HYDROSWING DOOR SILL
SCALE: 1-1/2" = 1'-0"

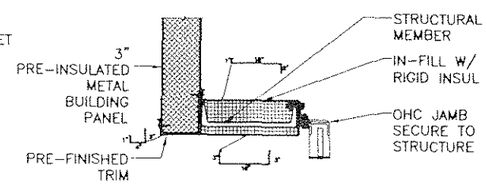

7 A9.0 OVERHEAD COILING DOOR JAMB
SCALE: 1-1/2" = 1'-0"

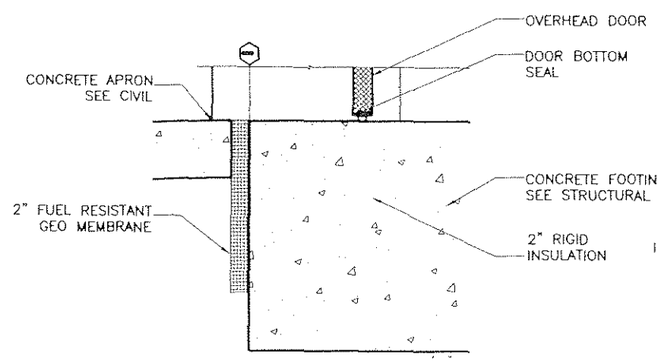

4 A9.0 OVERHEAD DOOR THRESHOLD
SCALE: 1-1/2" = 1'-0"

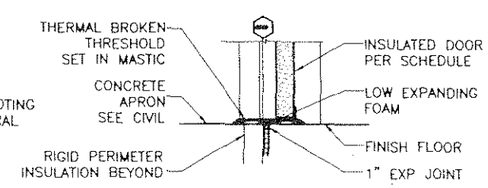

1 A9.0 EXTERIOR DOOR THRESHOLD
SCALE: 1-1/2" = 1'-0"

PATH:
I:\906400\Dwgs\A\sheets\906400 A90.dwg

PLOTTED DATE:
Thu, 05/Oct/06 11:36AM clease

ADDENDUM NUMBER

RECORD OF REVISIONS

No.	DATE	DESCRIPTION

KETCHIKAN AIRPORT
SNOW REMOVAL EQUIPMENT, SAND, AND CHEMICAL STORAGE BUILDING

PREPARED BY: USKH INC.

STATE OF ALASKA 9th GARY H. POPE #A-4645 REGISTERED PROFESSIONAL ARCHITECT
10-5-2006

PROJECT MGR.: BS
DRAWN BY: CAL
CHECKED BY: KDR
DATE: OCTOBER 6, 2006

STATE OF ALASKA
DEPARTMENT OF TRANSPORTATION & PUBLIC FACILITIES
DESIGN & ENGINEERING SERVICES
DIVISION-SOUTHEAST REGION

DOOR DETAILS

AKSAS PROJECT NUMBER
68290

STATE	YEAR
ALASKA	2006
SHEET NUMBER	TOTAL SHEETS
A9.0	56

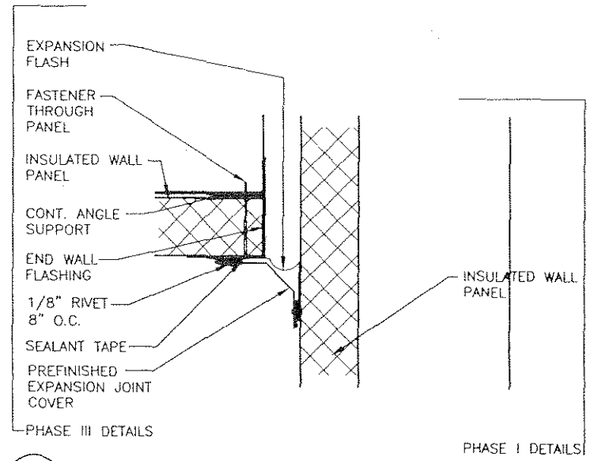

6 A9.1 EXPANSION JOINT DETAILL
SCALE: 3"=1'-0"

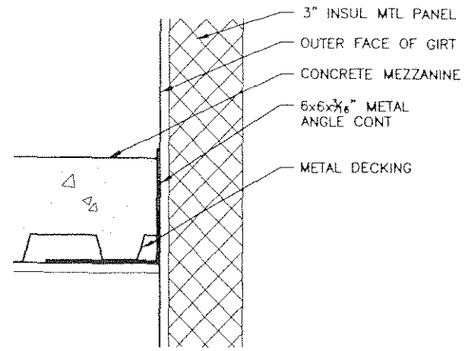

3 A9.1 MEZZANINE DETAIL
SCALE: 1 1/2"=1'-0"

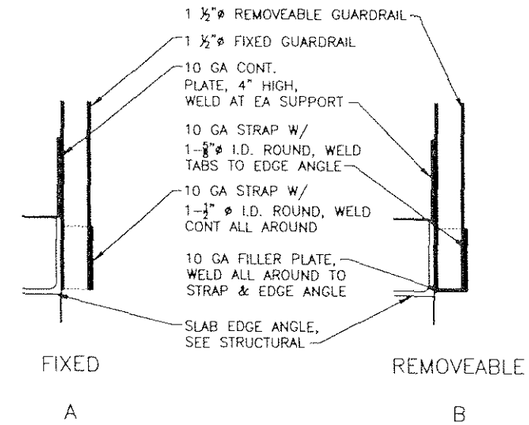

1 A9.1 GUARDRAIL MOUNTING DETAILS
SCALE: 3"=1'-0"

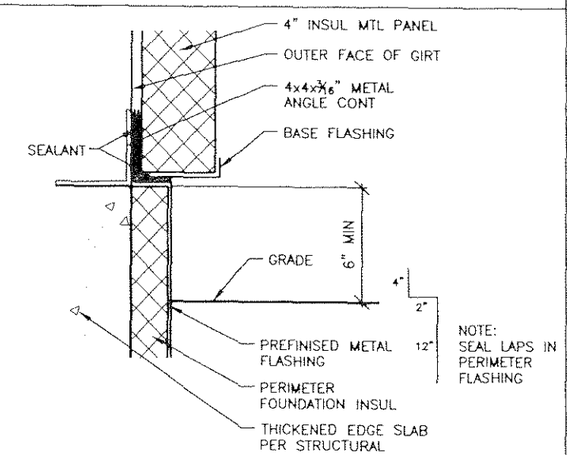

4 A9.1 TYPICAL SILL DETAIL
SCALE: 1 1/2"=1'-0"

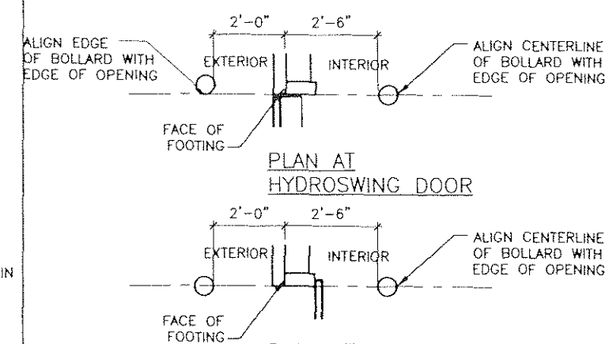

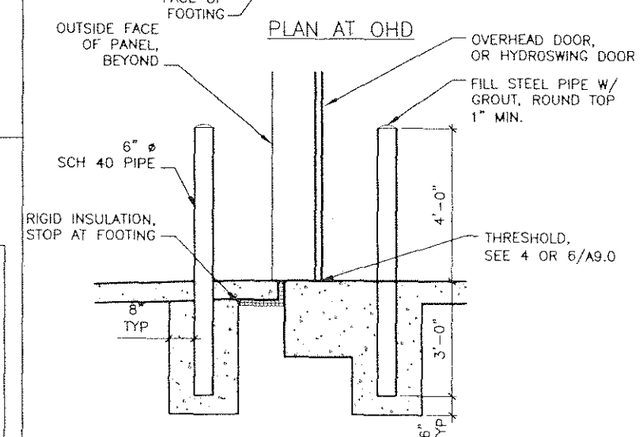

SECTION

2 A9.1 BOLLARD DETAIL
SCALE: 1/2"=1'-0"

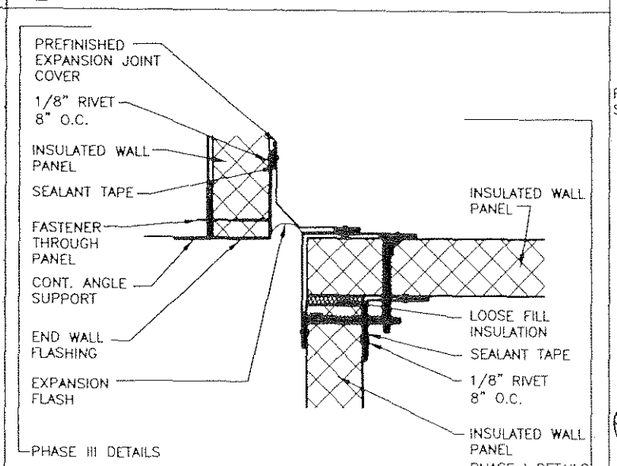

5 A9.1 EXPANSION JOINT DETAILL
SCALE: 3"=1'-0"

PATH:
I:\906400\Dwgs\A\sheets\906400 A91.dwg

PLOTTED DATE:
Thu, 05/Oct/06 11:36AM cleose

ADDENDUM NUMBER

RECORD OF REVISIONS

No.	DATE	DESCRIPTION

KETCHIKAN AIRPORT
SNOW REMOVAL EQUIPMENT, SAND, AND CHEMICAL STORAGE BUILDING

PREPARED BY: USKH INC.

STATE OF ALASKA
49th
GARY H. FOIS
#A-4645
REGISTERED PROFESSIONAL ARCHITECT
10-5-2006

PROJECT MGR.: BS
DRAWN BY: CAL
CHECKED BY: KDR
DATE: OCTOBER 6, 2006

STATE OF ALASKA
DEPARTMENT OF TRANSPORTATION & PUBLIC FACILITIES
DESIGN & ENGINEERING SERVICES DIVISION-SOUTHEAST REGION

MISC. DETAILS

AKSAS PROJECT NUMBER
68290

STATE	YEAR
ALASKA	2006
SHEET NUMBER	TOTAL SHEETS
A9.1	56

GENERAL STRUCTURAL NOTES

A. DESIGN CRITERIA

1. BUILDING CODE ..... 2003 IBC (INTERNATIONAL BUILDING CODE)
2. LIVE LOADS:
   - FLOOR LIVE LOAD (STAIRS) ..... 100 PSF
   - FLOOR LIVE LOAD (MEZZANINE) ..... 125 PSF
3. SNOW LOADS:
   - GROUND SNOW LOAD P_g ..... 55 PSF
   - FLAT ROOF SNOW LOAD P_f ..... 37 PSF
   - SNOW EXPOSURE FACTOR C_e 0.8
   - SNOW LOAD IMPORTANCE FACTOR I 1.2
   - THERMAL FACTOR C_t 1.0
4. WIND LOADS:
   - BASIC WIND SPEED ..... 120 MPH (3 SECOND GUST)
   - IMPORTANCE FACTOR 1.15
   - EXPOSURE ..... D
   - COMPONENTS AND CLADDING DESIGN PRESSURE ..... PER REQUIREMENTS OF THE 2003 IBC FOR 120 MPH EXPOSURE D
5. SEISMIC LOADS:
   - SEISMIC USE GROUP III
   - S_{DS} 0.18
   - S_{D1} 0.16
   - SITE CLASS ..... D
   - BASIC SEISMIC FORCE RESISTING SYSTEM ..... PER BUILDING MANIFACTURER
   - DESIGN BASE SHEAR ..... PER BUILDING MANUFACTURER
   - ANALYSIS PROCEDURE ..... PER BUILDING MANUFACTURER

B. FOUNDATION

1. FOUNDATION DESIGN IS BASED ON A GEOTECHNICAL INVESTIGATION PREPARED BY AKDOT DATED MAY 10, 2006.
2. ALLOWABLE SOIL BEARING PRESSURE: 3500 PSF
3. ALL ORGANIC AND/ OR OTHER UNSUITABLE MATERIAL SHALL BE REMOVED FROM SUB-GRADE AND BACK FILL AREAS AND THE EXCAVATION SHALL BE BACK FILLED WITH STRUCTURAL FILL.
4. THE CONTRACTOR SHALL PROVIDE ALL NECESSARY MEASURES TO PREVENT ANY FROST OR ICE FROM PENETRATING ANY FOOTING OR SLAB SUB-GRADE BEFORE AND AFTER PLACING CONCRETE UNTIL SUCH SUB-GRADES ARE PERMANENTLY PROTECTED BY THE BUILDING STRUCTURE.

C. CONCRETE

1. ALL CAST-IN-PLACE CONCRETE SHALL HAVE A MINIMUM 28-DAY COMPRESSIVE STRENGTH (f'c) OF 4000 PSI.
2. REINFORCING BARS SHALL CONFORM TO ASTM A615 GRADE 60.
3. DETAIL REINFORCING BARS IN ACCORDANCE WITH THE ACI DETAILING MANUAL AND THE ACI BUILDING CODE REQUIREMENTS FOR REINFORCED CONCRETE, LATEST EDITION.
4. CONCRETE SHALL MEET ALL REQUIREMENTS OF ACI 301 SPECIFICATION FOR STRUCTURAL CONCRETE BUILDINGS.
5. HORIZONTAL FOUNDATION AND WALL REINFORCING SHALL BE CONTINUOUS AROUND CORNERS AND INTERSECTIONS; PROVIDE CORNER BARS.
6. LAP ALL REINFORCING THE LARGER OF 24 INCHES OR 36 BAR DIAMETERS.
7. PROVIDE ALL ACCESSORIES NECESSARY TO SUPPORT REINFORCING AT POSITIONS SHOWN ON THE DRAWINGS. PROVIDE SUFFICIENT TIE BARS TO SUPPORT ALL REINFORCING.
8. PROVIDE REINFORCEMENT COVER AS FOLLOWS, UNLESS NOTED OTHERWISE ON DRAWINGS:
   - CONCRETE POURED AGAINST EARTH ..... 3"
   - CONCRETE POURED IN FORMS ..... 1 1/2" TYPICAL EXCEPT AS NOTED BELOW
   - CONCRETE POURED IN FORMS ..... 2" IF FACE OF CONCRETE IS IN CONTACT WITH EARTH
   - CONCRETE SLABS ON GRADE ..... PLACE REINFORCING AT SLAB MID-DEPTH

D. STRUCTURAL STEEL

1. ALL STRUCTURAL STEEL WIDE FLANGE MEMBERS SHALL BE ASTM A992 GRADE 50 (Fy = 50 KSI).
2. SQUARE/ RECTANGULAR HOLLOW STRUCTURAL SECTIONS (HSS) SHALL CONFORM TO ASTM A500 GRADE B (Fy = 46 KSI).
3. ANGLES, CHANNELS, AND PLATES SHALL BE ASTM A36 (Fy = 36 KSI).
4. ALL STRUCTURAL STEEL SHALL BE DETAILED AND FABRICATED IN ACCORDANCE WITH THE LATEST EDITION OF THE AISC MANUAL OF STEEL CONSTRUCTION.
5. WELDING SHALL BE PERFORMED WITH E70XX ELECTRODES. WELDING SHALL BE DONE BY CERTIFIED WELDERS AND SHALL CONFORM TO THE AWS D1.1 LATEST EDITION. ALL WELDS ARE INTENDED TO BE CONTINUOUS UNLESS OTHERWISE NOTED.
6. FIELD WELDS NOTED THROUGHOUT THE CONTRACT DOCUMENTS ARE ACCEPTABLE LOCATIONS FOR FIELD WELDING. AT THE CONTRACTOR'S OPTION, FIELD WELDS MAY BE PERFORMED IN THE SHOP.
7. BOLTED CONNECTIONS SHALL BE ACCOMPLISHED WITH ASTM A325 (TYPE N) HIGH STRENGTH BOLTS IN STANDARD HOLES (NOMINAL BOLT DIAMETER PLUS 1/16") UNLESS NOTED OTHERWISE. ANCHOR BOLTS GRADE PER BUILDING MANUFACTURER. ANCHOR BOLTS ARE TO BE ACCURATELY PLACED WITH SETTING TEMPLATES.
8. THE CONTRACTOR SHALL BE RESPONSIBLE FOR THE CONTROL OF ALL ERECTION PROCEDURES AND SEQUENCES WITH REGARDS TO TEMPERATURE DIFFERENTIALS.

E. STEEL DECK

1. STEEL DECK INSTALLATION SHALL COMPLY WITH ALL MANUFACTURER'S REQUIREMENTS AND THE STEEL DECK INSTITUTE'S SPECIFICATIONS FOR FABRICATION AND ERECTION.
2. WELDING OF STEEL DECK IS TO BE DONE BY CERTIFIED WELDERS IN ACCORDANCE WITH AWS D1.3.

F. PRE-ENGINEERED METAL BUILDING REQUIREMENTS

1. METAL BUILDING IS TO BE DESIGNED AND SEALED BY A PROFESSIONAL CIVIL ENGINEER LICENSED IN THE STATE OF ALASKA
2. METAL BUILDING IS TO BE DESIGNED TO LOAD AND CODE CRITERIA SHOWN ABOVE AND TO THE REQUIREMENTS OF THE METAL BUILDING MANUFACTURERS ASSOCIATION (MBMA)
3. DESIGN OF RIGID AND PORTAL FRAMES IS TO CONSIDER THE MASS CONTRIBUTION AND RIGID DIAPHRAGM BEHAVIOR OF THE STORAGE MEZZANINE. A MINIMUM UNIT MASS OF 85 PSF SHALL BE ASSUMED FOR THE STORAGE MEZZANINE.
4. DESIGN FOR WIND FORCES SHALL CONSIDER THE BUILDING AS AN ENCLOSED STRUCTURE AND CONSIDER THE EFFECTS OF ALL OVERHEAD DOORS OPEN SIMULTANEOUSLY (PARTIALLY OPEN STRUCTURE). THE WORST CASE FORCES SHALL GOVERN THE DESIGN OF EACH COMPONENT.
5. DESIGN SHALL CONSIDER COLUMN BASES AS PINNED CONNECTIONS.
6. ROOF FRAMING SHALL BE DESIGNED FOR ACTUAL DEAD LOAD PLUS A COLLATERAL LOAD OF 5 PSF.

SPECIAL INSPECTIONS

THE FOLLOWING STRUCTURAL ITEMS REQUIRE SPECIAL INSPECTION PER IBC SECTION 1704. THESE INSPECTIONS SHALL BE PERFORMED BY A SPECIAL INSPECTOR APPROVED BY THE OWNER AND QUALIFIED TO PERFORM THE TYPES OF INSPECTIONS SPECIFIED. SEE PROJECT SPECIFICATIONS FOR ADDITIONAL REQUIREMENTS FOR INSPECTION AND TESTING THAT ARE NOT PART OF SPECIAL INSPECTIONS. CONTRACTOR TO PROVIDE CW1/ VISUAL INSPECTION.

ITEM	INSPECTION DESCRIPTION	FREQUENCY
CONCRETE	VISUAL INSPECTION OF PLACEMENT OF CONCRETE FOR FOOTINGS, GRADE BEAMS, WALLS, AND SLABS (FIRST 20% CONTINUOUS, BALANCE PERIODIC)	ONE HOUR MINIMUM INSPECTION OF FIRST CONCRETE PLACEMENT
GROUT	VISUAL INSPECTION OF PLACEMENT OF GROUT FOR COLUMN BASE PLATES	INSPECTION OF ALL BASE PLATES AFTER PLACEMENT OF GROUT
BOLTS INSTALLED IN CONCRETE	VISUAL INSPECTION OF ANCHOR BOLTS PRIOR TO CONCRETE PLACEMENT (FIRST 20% CONTINUOUS, BALANCE PERIODIC)	INSPECTION OF ANCHOR BOLTS PRIOR TO EACH CONCRETE PLACEMENT
REINFORCING STEEL	VISUAL INSPECTION OF PLACEMENT OF REINFORCING STEEL (FIRST 20% CONTINUOUS, BALANCE PERIODIC)	INSPECTION OF REINFORCING PRIOR TO EACH CONCRETE PLACEMENT
WELDING	CONTINUOUS VISUAL INSPECTION OF FIELD WELDS PER REQUIREMENTS OF AWS D1.1 TABLE 6.1. VISUAL INSPECTION OF FIELD WELDING OF STEEL DECK AND WELDING OF HEADED ANCHOR STUDS (FIRST 10% CONTINUOUS, BALANCE PERIODIC)	ONE SITE VISIT DURING WELDING PROCESS. VISUAL INSPECTION OF ALL FIELD WELDS AFTER COMPLETION
HIGH STRENGTH BOLTING	PERIODIC VISUAL INSPECTION OF FIELD BOLTED CONNECTIONS USING HIGH STRENGTH BOLTS TO ENSURE PLACEMENT OF ALL SPECIFIED BOLTS AND COMPLIANCE WITH SLIP CRITICAL REQUIREMENTS WHERE SPECIFIED.	INSPECTION OF ALL BOLTS AFTER INSTALLATION
SPECIAL GRADING, EXCAVATION, AND FILLING	PERIODIC VISUAL INSPECTION OF STRUCTURAL EXCAVATION, BACK FILL, AND COMPACTION	ONE SITE VISIT PRIOR TO ANY BACKFILLING OR PLACEMENT OF CONCRETE FORMS.

PATH:
I:\906400\Dwgs\S\sheets\906400S00.dwg

PLOTTED DATE:
Wed, 04/Oct/06 05:01PM clease

ADDENDUM NUMBER

RECORD OF REVISIONS

No.	DATE	DESCRIPTION

KETCHIKAN AIRPORT
SNOW REMOVAL EQUIPMENT, SAND, AND CHEMICAL STORAGE BUILDING

PREPARED BY: USKH INC.

STATE OF ALASKA
49TH
PETER A. JACOBSEN
No. CE 9961
REGISTERED PROFESSIONAL ENGINEER
10/5/06

PROJECT MGR.: BS
DRAWN BY: KB
CHECKED BY:
DATE: OCTOBER 6, 2006

STATE OF ALASKA
DEPARTMENT OF TRANSPORTATION
& PUBLIC FACILITIES
DESIGN & ENGINEERING SERVICES
DIVISION-SOUTHEAST REGION

GENERAL STRUCTURAL NOTES

AKSAS PROJECT NUMBER
68290

STATE	YEAR
ALASKA	2006

SHEET NUMBER	TOTAL SHEETS
S0.0	56

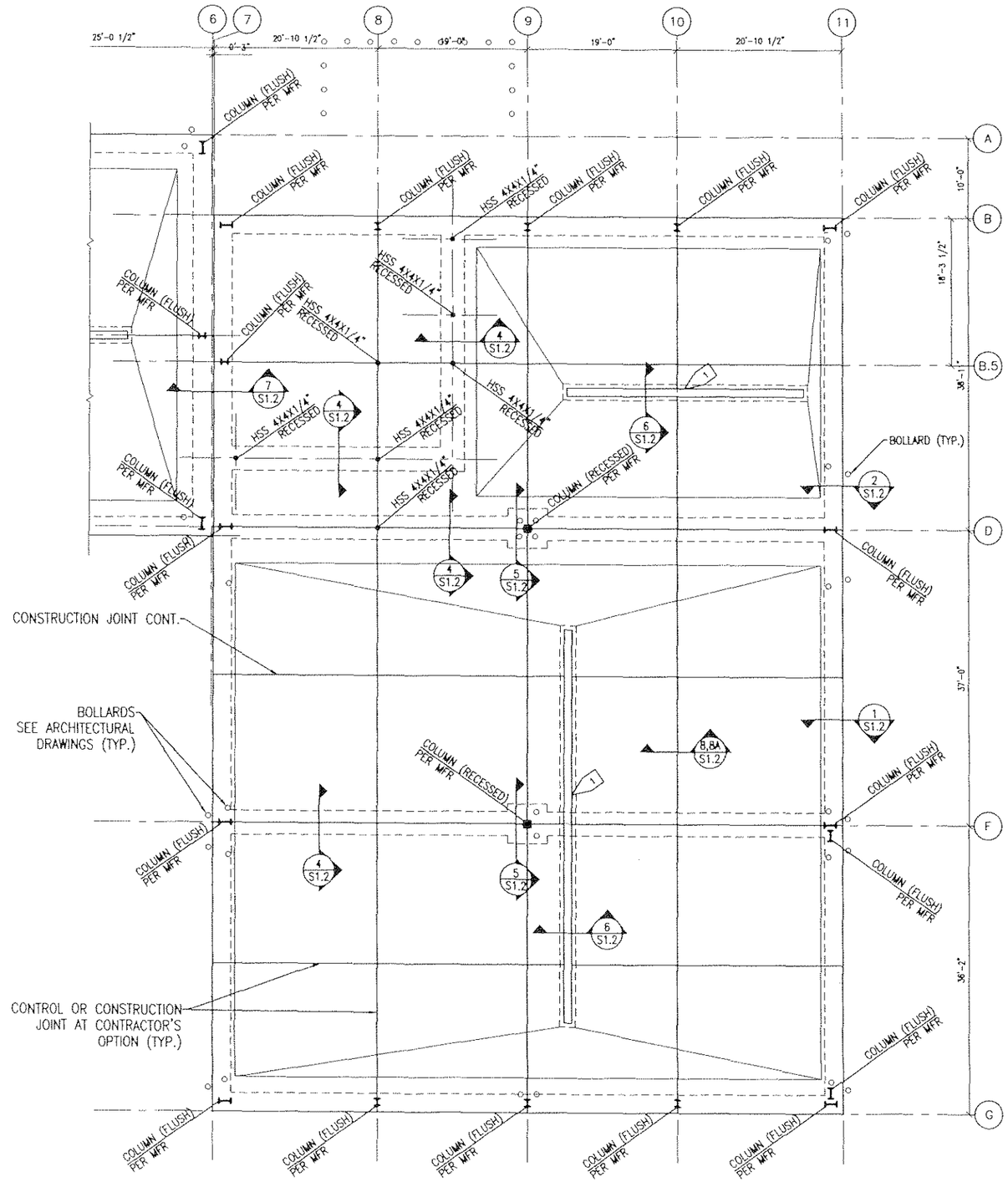

1 S1.0 PHASE I FOUNDATION/ SLAB PLAN

SCALE: 1/8" = 1'-0"

KEY NOTES

1 TRENCH DRAIN. SLOPE SLAB TO DRAIN 1/8" PER FOOT.

PLAN NOTES

PROVIDE CONTROL AND CONSTRUCTION JOINTS AS SHOWN ON PLAN. CONTROL JOINTS OR CONSTRUCTION JOINTS MAY BE PROVIDED AT CONTRACOR'S OPTION, EXCEPT AT LOCATIONS SECIFICALLY REQUIRING CONSTRUCTION JOINTS.

PATH:
I:\906400\Dwgs\S\sheets\906400S10.dwg

PLOTTED DATE:
Wed, 04/Oct/06 05:01PM clease

ADDENDUM NUMBER

RECORD OF REVISIONS

No.	DATE	DESCRIPTION

KETCHIKAN AIRPORT
SNOW REMOVAL EQUIPMENT, SAND, AND CHEMICAL STORAGE BUILDING

PREPARED BY: USKH INC.

STATE OF ALASKA 49TH PETER A. JACOBSEN No. CE 9961 REGISTERED PROFESSIONAL ENGINEER
10/5/06

PROJECT MGR.: BS
DRAWN BY: PAJ/KJB
CHECKED BY:
DATE: OCTOBER 6, 2006

STATE OF ALASKA
DEPARTMENT OF TRANSPORTATION & PUBLIC FACILITIES
DESIGN & ENGINEERING SERVICES DIVISION-SOUTHEAST REGION

PHASE I FOUNDATION/ SLAB PLAN

AKSAS PROJECT NUMBER
68290

STATE	YEAR
ALASKA	2006
SHEET NUMBER	TOTAL SHEETS
S1.0	56

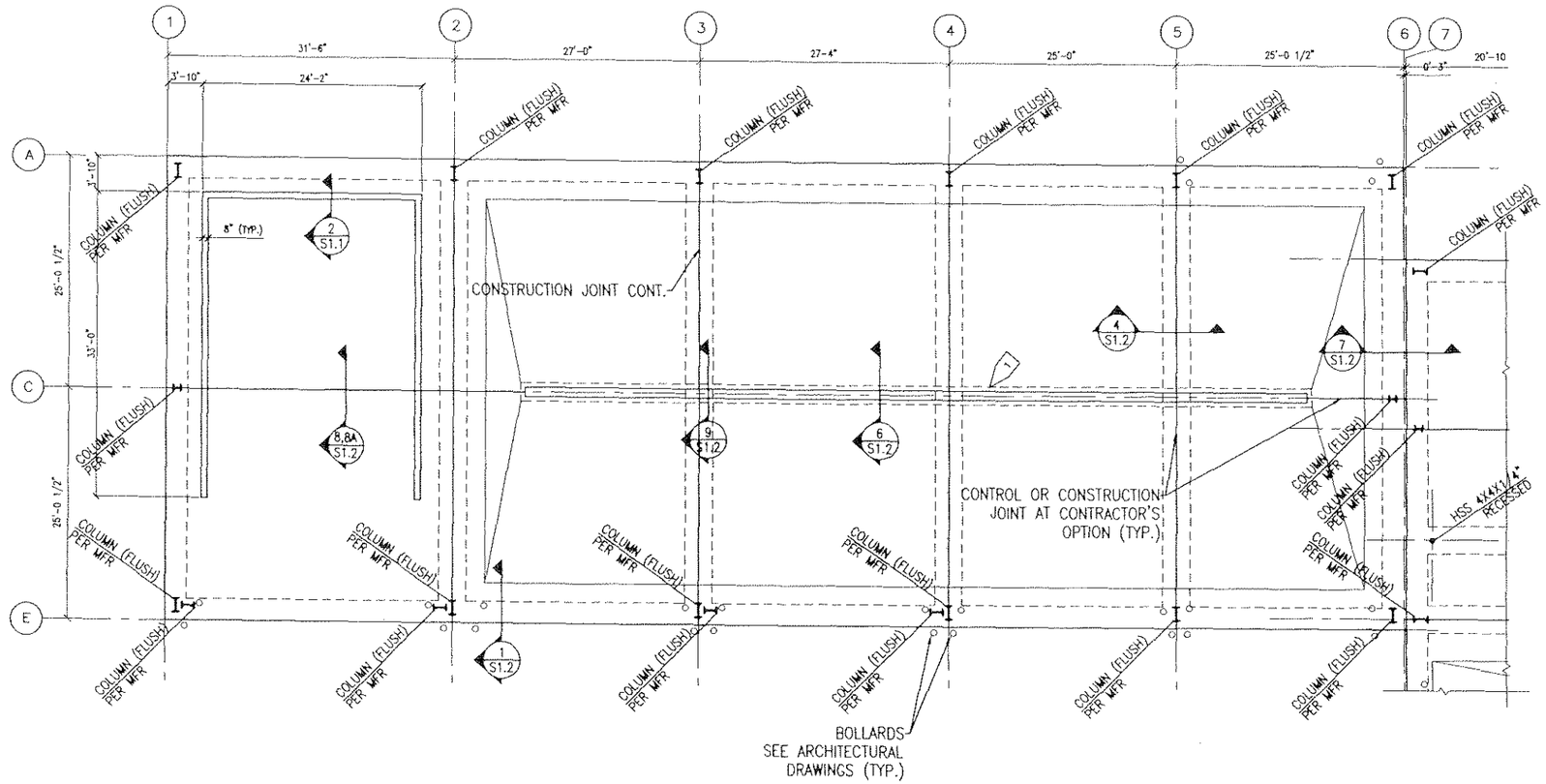

KEY NOTES

1 TRENCH DRAIN. SLOPE SLAB TO DRAIN 1/8" PER FOOT.

PLAN NOTES

PROVIDE CONTROL AND CONSTRUCTION JOINTS AS SHOWN ON PLAN. CONTROL JOINTS OR CONSTRUCTION JOINTS MAY BE PROVIDED AT CONTRACOR'S OPTION, EXCEPT AT LOCATIONS SECIFICALLY REQUIRING CONSTRUCTION JOINTS.

1 / S1.1 PHASE III FOUNDATION/ SLAB PLAN

SCALE: 1/8" = 1'-0"

NOTE: SEE ARCHITECTURAL AND MECHANICAL DRAWINGS FOR EXACT LOCATIONS AND EXTENTS OF HOUSEKEEPING PADS

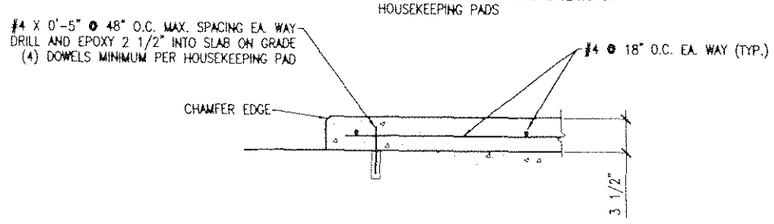

3 / S1.1 TYPICAL HOUSEKEEPING PAD DETAIL

SCALE: 1 1/2" = 1'-0"

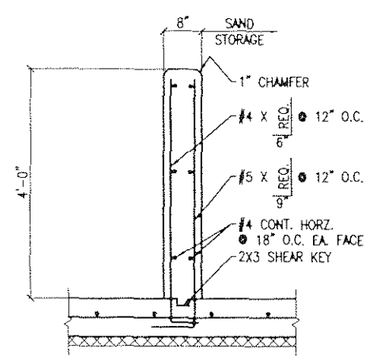

2 / S1.1 SAND STORAGE WALL DETAIL

SCALE: 3/4" = 1'-0"

PATH: I:\906400\Dwgs\S\sheets\906400S11.dwg

PLOTTED DATE: Wed. 04/Oct/06 05:01PM cleose

ADDENDUM NUMBER

RECORD OF REVISIONS		
No.	DATE	DESCRIPTION

KETCHIKAN AIRPORT
SNOW REMOVAL EQUIPMENT, SAND, AND CHEMICAL STORAGE BUILDING

PREPARED BY: USKH INC.

STATE OF ALASKA 49TH PETER A. JACOBSEN No. CE 9961 REGISTERED PROFESSIONAL ENGINEER 10/5/06

PROJECT MGR.: BS
DRAWN BY: PAJ/KJB
CHECKED BY:
DATE: OCTOBER 5, 2006

STATE OF ALASKA
DEPARTMENT OF TRANSPORTATION & PUBLIC FACILITIES
DESIGN & ENGINEERING SERVICES DIVISION-SOUTHEAST REGION

PHASE III FOUNDATION/ SLAB PLAN

AKSAS PROJECT NUMBER
68290

STATE	YEAR
ALASKA	2006
SHEET NUMBER	TOTAL SHEETS
S1.1	56

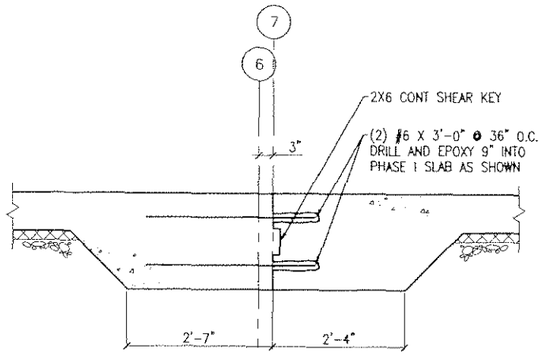

NOTE: TYPICAL SLAB REINFORCING
NOT SHOWN FOR CLARITY

7 / S1.2 FOUNDATION DETAIL
SCALE: 3/4" = 1'-0"

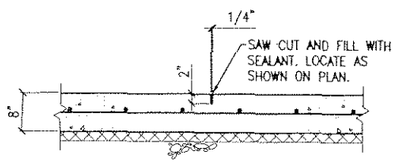

8 / S1.2 CONTROL JOINT (TYP.)
SCALE: 3/4" = 1'-0"

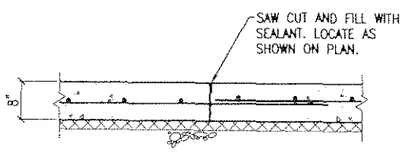

8A / S1.2 CONSTRUCTION JOINT (TYP.)
SCALE: 3/4" = 1'-0"

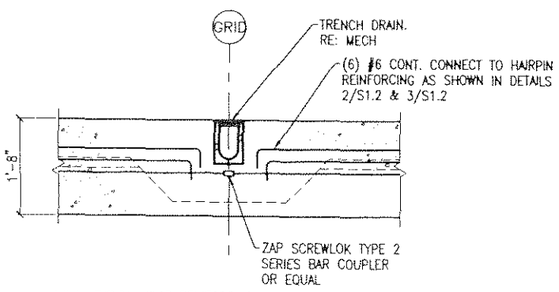

NOTE: TYPICAL SLAB REINFORCING
NOT SHOWN FOR CLARITY

9 / S1.2 FOUNDATION DETAIL
SCALE: 3/4" = 1'-0"

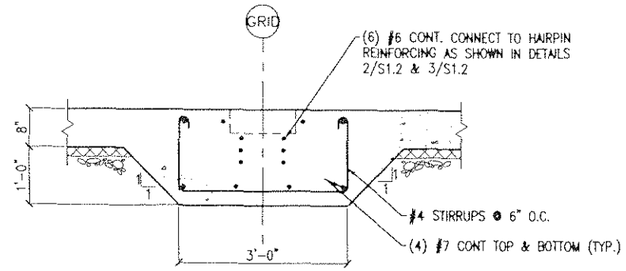

NOTE: TYPICAL SLAB REINFORCING
NOT SHOWN FOR CLARITY

4 / S1.2 FOUNDATION DETAIL
SCALE: 3/4" = 1'-0"

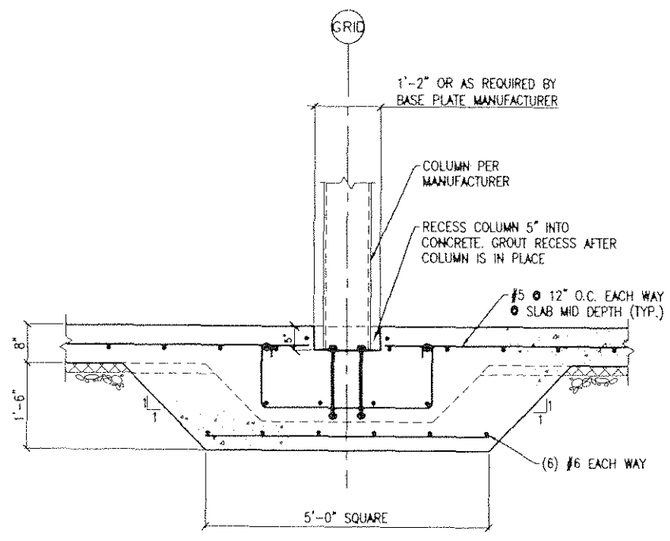

5 / S1.2 FOUNDATION DETAIL
SCALE: 3/4" = 1'-0"

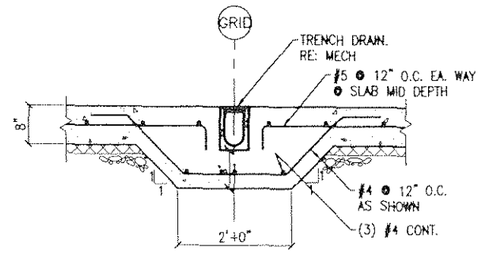

6 / S1.2 FOUNDATION DETAIL
SCALE: 3/4" = 1'-0"

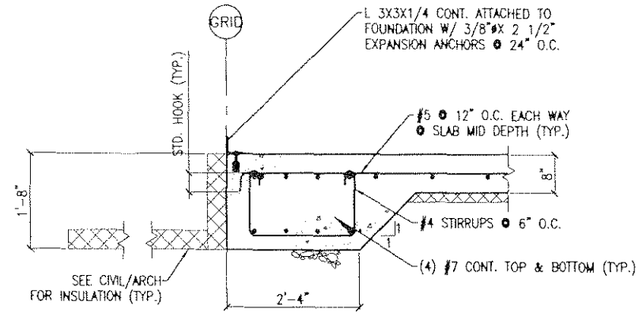

1 / S1.2 FOUNDATION DETAIL
SCALE: 3/4" = 1'-0"

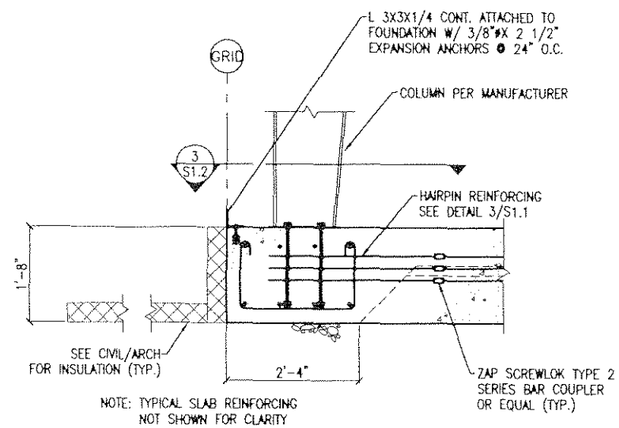

NOTE: TYPICAL SLAB REINFORCING
NOT SHOWN FOR CLARITY

2 / S1.2 FOUNDATION DETAIL
SCALE: 3/4" = 1'-0"

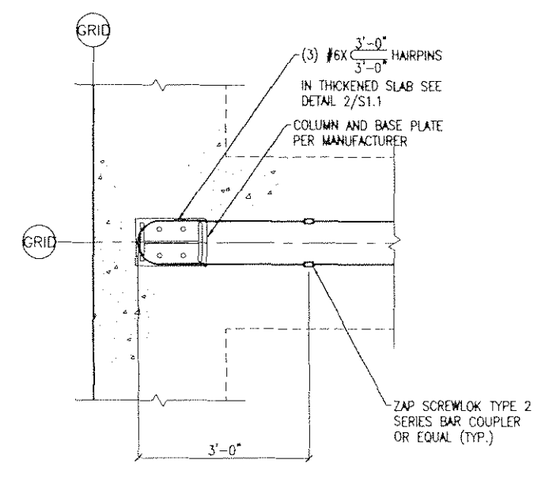

3 / S1.2 FOUNDATION DETAIL
SCALE: 3/4" = 1'-0"

PATH:
I:\906400\Dwgs\S\sheets\906400S12.dwg

PLOTTED DATE:
Wed. 04/Oct/06 05:01PM clease

ADDENDUM NUMBER

RECORD OF REVISIONS

No.	DATE	DESCRIPTION

KETCHIKAN AIRPORT
SNOW REMOVAL EQUIPMENT,
SAND, AND CHEMICAL
STORAGE BUILDING

PREPARED BY: USKH INC.

STATE OF ALASKA
49TH
PETER A. JACOBSEN
No. CE 9961
REGISTERED PROFESSIONAL ENGINEER
10/5/06

PROJECT MGR.: BS
DRAWN BY: KB
CHECKED BY:
DATE: OCTOBER 6, 2006

STATE OF ALASKA
DEPARTMENT OF TRANSPORTATION
& PUBLIC FACILITIES
DESIGN & ENGINEERING SERVICES
DIVISION–SOUTHEAST REGION

FOUNDATION DETAILS

AKSAS PROJECT NUMBER
68290

STATE	YEAR
ALASKA	2006
SHEET NUMBER	TOTAL SHEETS
S1.2	56

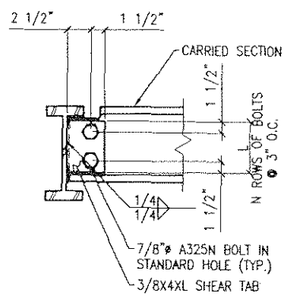

SHEAR TAB (BEAM TO GIRDER WEB)

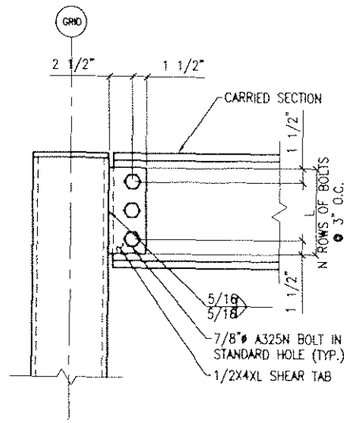

SHEAR TAB (BEAM TO TUBE FACE)

CARRIED SECTION	N	L
W8	2	6
W10	2	6
W12	3	9

2 / S2.0 TYPICAL CONNECTIONS

SCALE: NTS

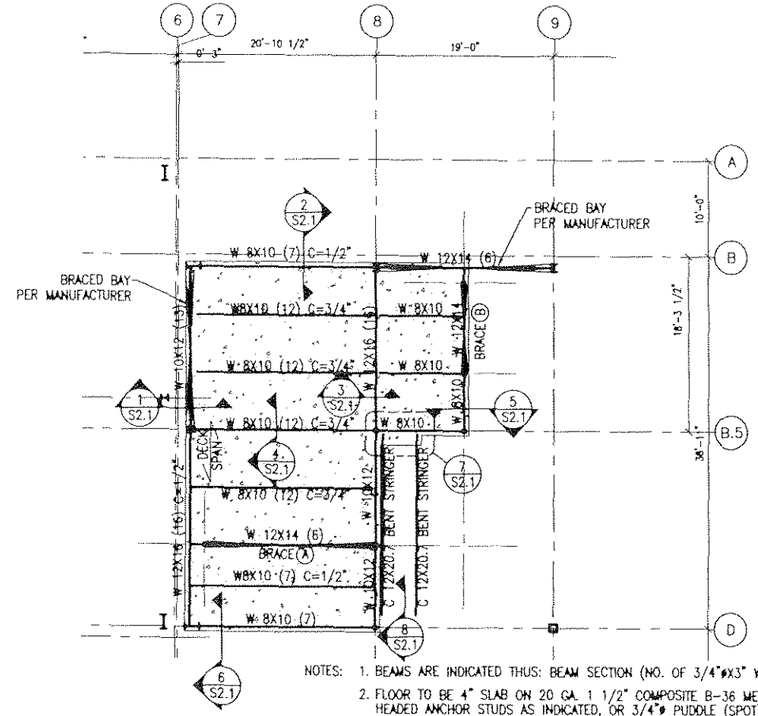

NOTES:

1. BEAMS ARE INDICATED THUS: BEAM SECTION (NO. OF 3/4"øX3" WELDED HEADED ANCHOR STUDS) C. = CAMBER.
2. FLOOR TO BE 4" SLAB ON 20 GA. 1 1/2" COMPOSITE B-36 METAL DECK. FASTEN TO DECK W/ WELDED HEADED ANCHOR STUDS AS INDICATED, OR 3/4"ø PUDDLE (SPOT) WELDS @ 24" O.C. MAXIMUM SPACING PUTTON PUNCH SIDE SEAMS @ 24" O.C. REINFORCE SLAB W/ #4 @ 18" O.C. EA. WAY.
3. TOP OF STEEL ELEVATION = 11'-8"
4. ALL MEZZANINE FRAMING TO BE PROVIDED AND FABRICATED BY THE METAL BUILDING MANUFACTURER. MANUFACTURER MAY SUBSTITUTE FABRICATED SECTIONS WITH STRUCTURAL PROPERTIES MATCHING OR EXCEEDING SPECIFIED ROLLED SECTIONS AND NOT EXCEEDING 12" IN DEPTH.
5. HEADED ANCHOR STUDS (HAS) ARE TO BE WELDED TO BEAM FLANGES WITH A STUD GUN.

1 / S2.0 PHASE I MEZZANINE FRAMING PLAN

SCALE: 1/8" = 1'-0"

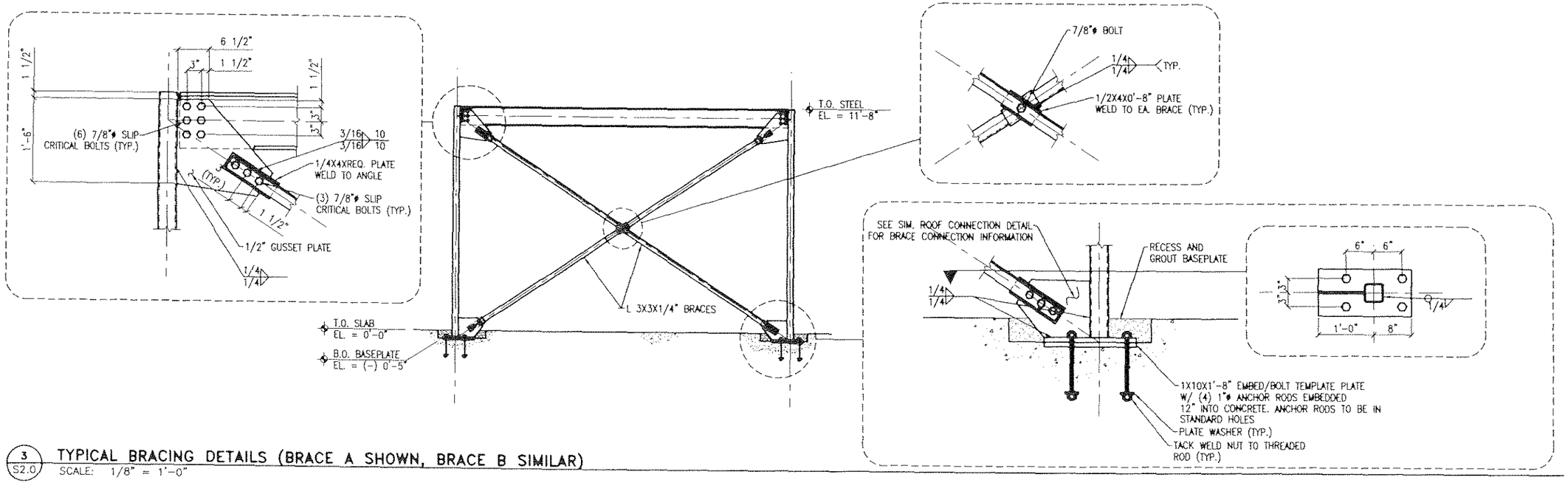

3 / S2.0 TYPICAL BRACING DETAILS (BRACE A SHOWN, BRACE B SIMILAR)

SCALE: 1/8" = 1'-0"

PATH: I:\906400\Dwgs\S\sheets\906400S20.dwg

PLOTTED DATE: Wed, 04/Oct/06 05:00PM clease

ADDENDUM NUMBER

RECORD OF REVISIONS

No.	DATE	DESCRIPTION

KETCHIKAN AIRPORT
SNOW REMOVAL EQUIPMENT, SAND, AND CHEMICAL STORAGE BUILDING

PREPARED BY: USKH INC.

STATE OF ALASKA 49TH PETER A. JACOBSEN No. CE 9961 REGISTERED PROFESSIONAL ENGINEER 10/5/06

PROJECT MGR.: BS

DRAWN BY:

CHECKED BY:

DATE: OCTOBER 6, 2006

STATE OF ALASKA
DEPARTMENT OF TRANSPORTATION & PUBLIC FACILITIES
DESIGN & ENGINEERING SERVICES DIVISION-SOUTHEAST REGION

MEZZANINE PLAN AND DETAILS

AKSAS PROJECT NUMBER: 68290

STATE	YEAR
ALASKA	2006
SHEET NUMBER	TOTAL SHEETS
S2.0	56

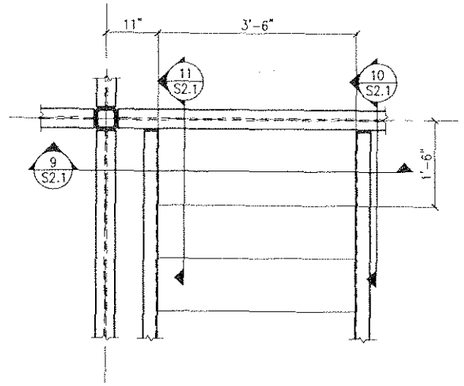

7 S2.1 **ENLARGED LANDING PLAN**
SCALE: 3/4" = 1'-0"

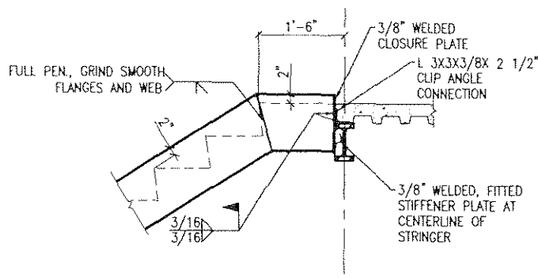

10 S2.1 **STAIR FRAMING DETAIL**
SCALE: 3/4" = 1'-0"

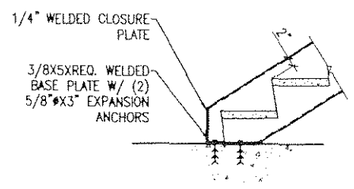

8 S2.1 **STAIR FRAMING DETAIL**
SCALE: 3/4" = 1'-0"

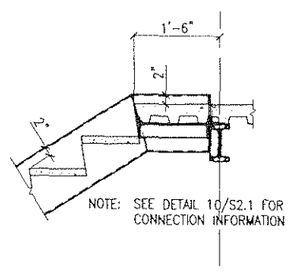

11 S2.1 **STAIR FRAMING DETAIL**
SCALE: 3/4" = 1'-0"

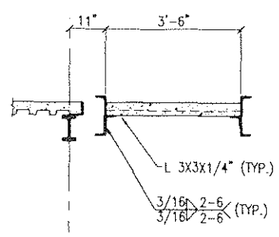

9 S2.1 **STAIR FRAMING DETAIL**
SCALE: 3/4" = 1'-0"

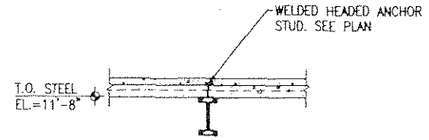

4 S2.1 **MEZZANINE FRAMING DETAIL**
SCALE: 3/4" = 1'-0"

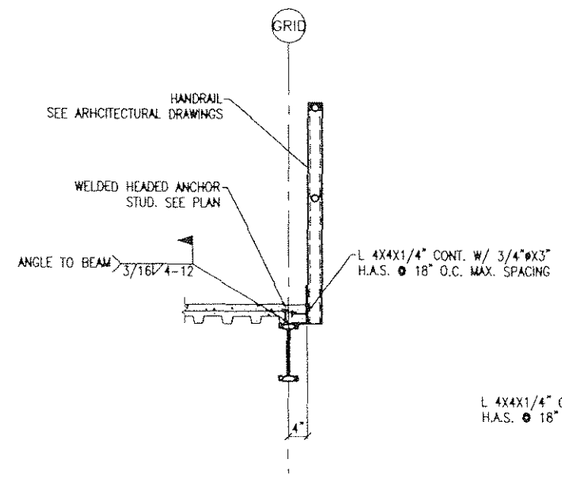

5 S2.1 **MEZZANINE FRAMING DETAIL**
SCALE: 3/4" = 1'-0"

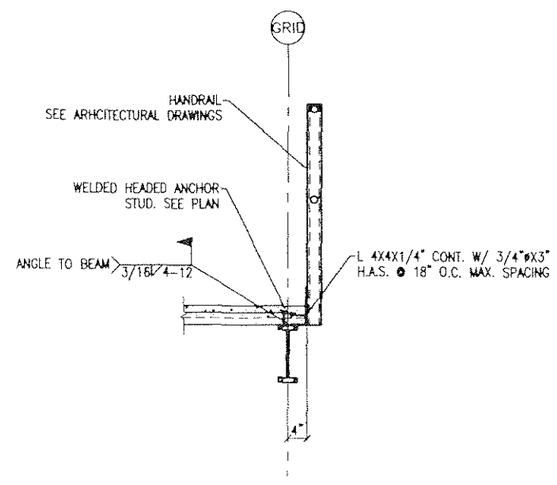

6 S2.1 **MEZZANINE FRAMING DETAIL**
SCALE: 3/4" = 1'-0"

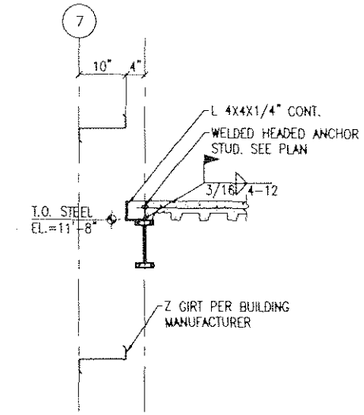

1 S2.1 **MEZZANINE FRAMING DETAIL**
SCALE: 3/4" = 1'-0"

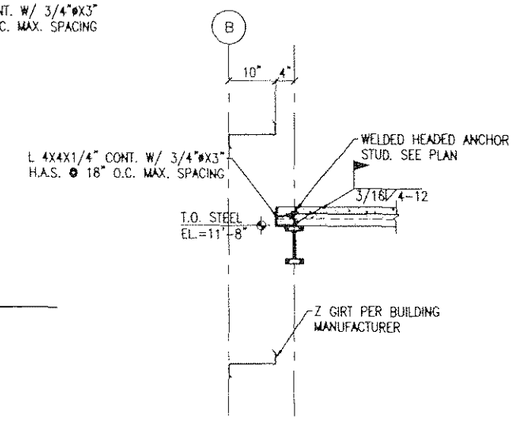

2 S2.1 **MEZZANINE FRAMING DETAIL**
SCALE: 3/4" = 1'-0"

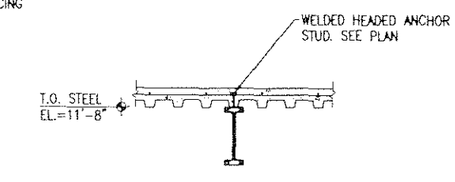

3 S2.1 **MEZZANINE FRAMING DETAIL**
SCALE: 3/4" = 1'-0"

FILE:
I:\906400\Dwgs\S\sheets\906400S21.dwg

PLOTTED DATE:
Wed. 04/Oct/06 05:00PM clease

ADDENDUM NUMBER

RECORD OF REVISIONS

No.	DATE	DESCRIPTION

KETCHIKAN AIRPORT
SNOW REMOVAL EQUIPMENT, SAND, AND CHEMICAL STORAGE BUILDING

PREPARED BY: USKH INC.

STATE OF ALASKA 49TH PETER A. JACOBSEN No. CE 9961 REGISTERED PROFESSIONAL ENGINEER
10/5/06

PROJECT MGR.: BS
DRAWN BY:
CHECKED BY:
DATE: OCTOBER 6, 2006

STATE OF ALASKA
DEPARTMENT OF TRANSPORTATION & PUBLIC FACILITIES
DESIGN & ENGINEERING SERVICES
DIVISION--SOUTHEAST REGION

MEZZANINE DETAILS

AKSAS PROJECT NUMBER
68290

STATE	YEAR
ALASKA	2006
SHEET NUMBER	TOTAL SHEETS
S2.1	56

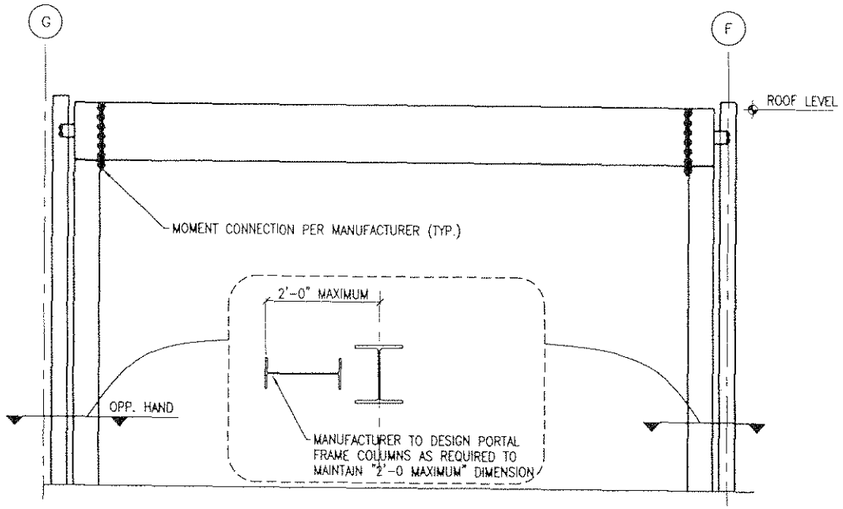

2 / S3.0 SCHEMATIC PORTAL FRAME ELEVATION

SCALE: 1/4" = 1'-0"

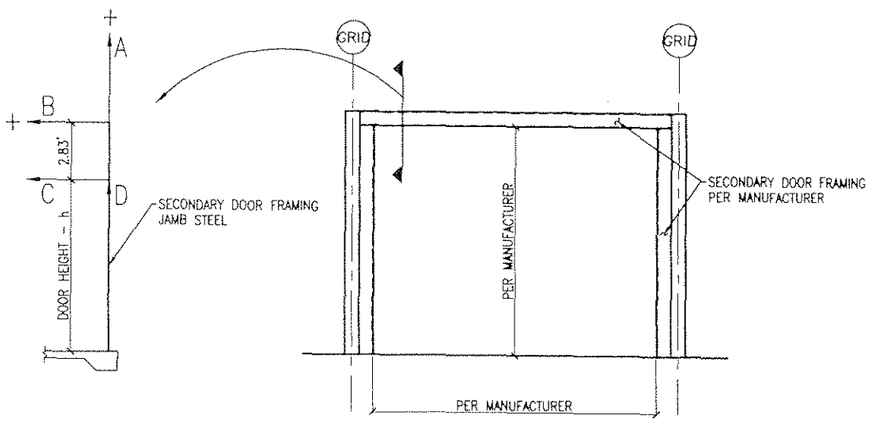

OVERHEAD DOOR REACTIONS				
DOOR SIZE (WIDTH X HEIGHT)	REACTION A (KIPS)	REACTION B (KIPS)	REACTION C (KIPS)	REACTION D (KIPS)
28'X16'	1.84, −0.27	3.68	−3.68	0.96, −1.19
25'X18'	2.19, −0.28	4.38	−4.38	0.97, −1.54
22'X16'	1.45, −0.22	2.89	−2.89	0.76, −0.94
20'X16'	1.31, −0.20	2.63	−2.63	0.69, −0.85

NOTE: REACTIONS SHOWN FOR INFORMATION ONLY. CONTRACTOR TO COORDINATE ACTUAL REACTIONS WITH DOOR MANUFACTURER AND BUILDING MANUFACTURER.

3 / S3.0 HYDROSWING DOOR SCHEMATIC FRAMING AND REACTIONS

SCALE: NTS

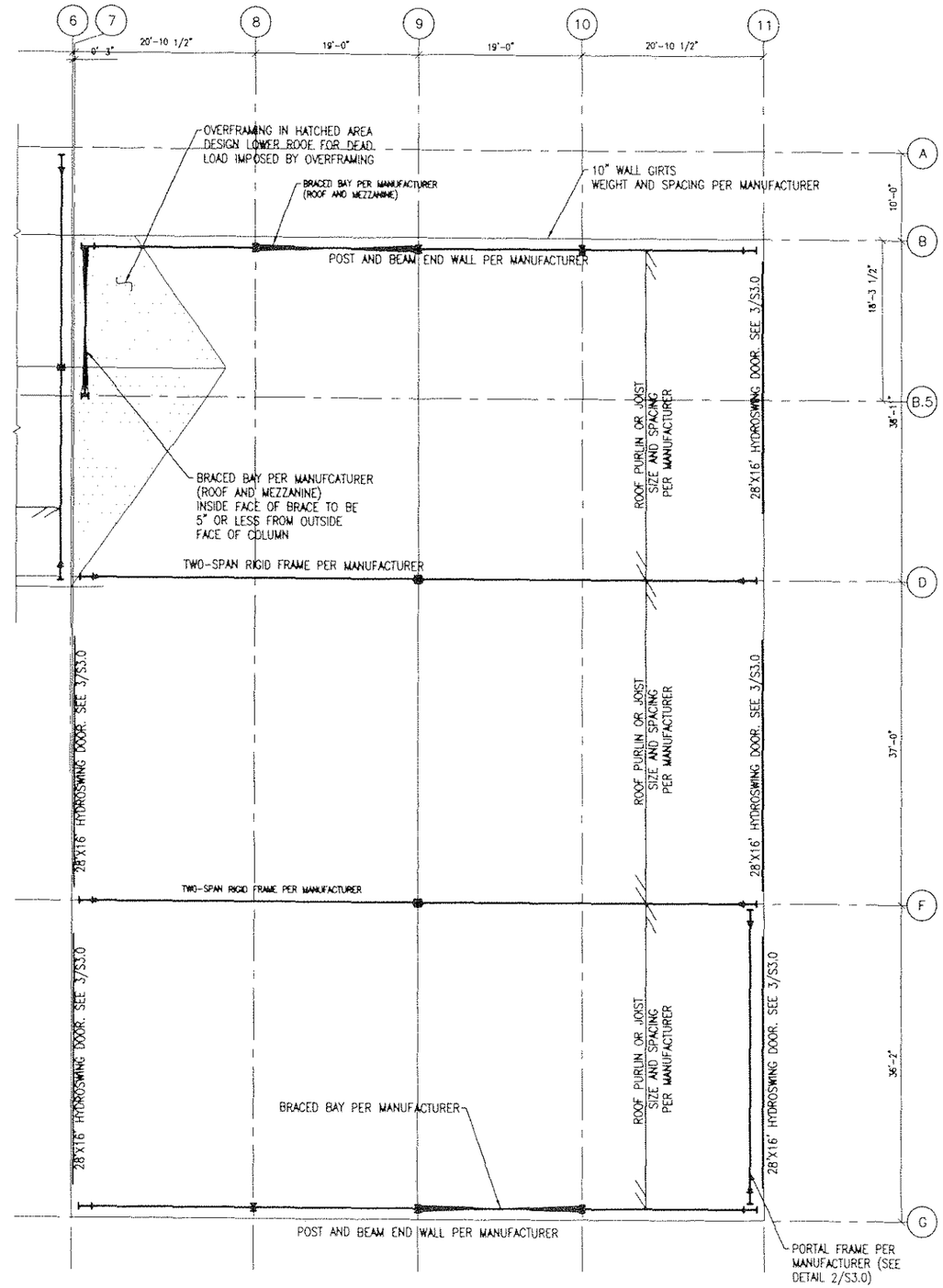

1 / S3.0 PHASE I ROOF FRAMING PLAN

SCALE: 1/8" = 1'-0"

PATH: t:\906400\Dwgs\S\sheets\906400S10.dwg

PLOTTED DATE: Wed, 04/Oct/06 04:53PM cleose

ADDENDUM NUMBER

RECORD OF REVISIONS

No.	DATE	DESCRIPTION

KETCHIKAN AIRPORT
SNOW REMOVAL EQUIPMENT, SAND, AND CHEMICAL STORAGE BUILDING

PREPARED BY: USKH INC.

STATE OF ALASKA — PETER A. JACOBSEN No. CE 9961 — REGISTERED PROFESSIONAL ENGINEER

PROJECT MGR.: BS

DRAWN BY: PAJ/KJB

CHECKED BY:

DATE: OCTOBER 6, 2006

STATE OF ALASKA
DEPARTMENT OF TRANSPORTATION & PUBLIC FACILITIES
DESIGN & ENGINEERING SERVICES DIVISION–SOUTHEAST REGION

PHASE I
ROOF FRAMING PLAN

AKSAS PROJECT NUMBER
68290

STATE	YEAR
ALASKA	2006
SHEET NUMBER	TOTAL SHEETS
S3.0	56

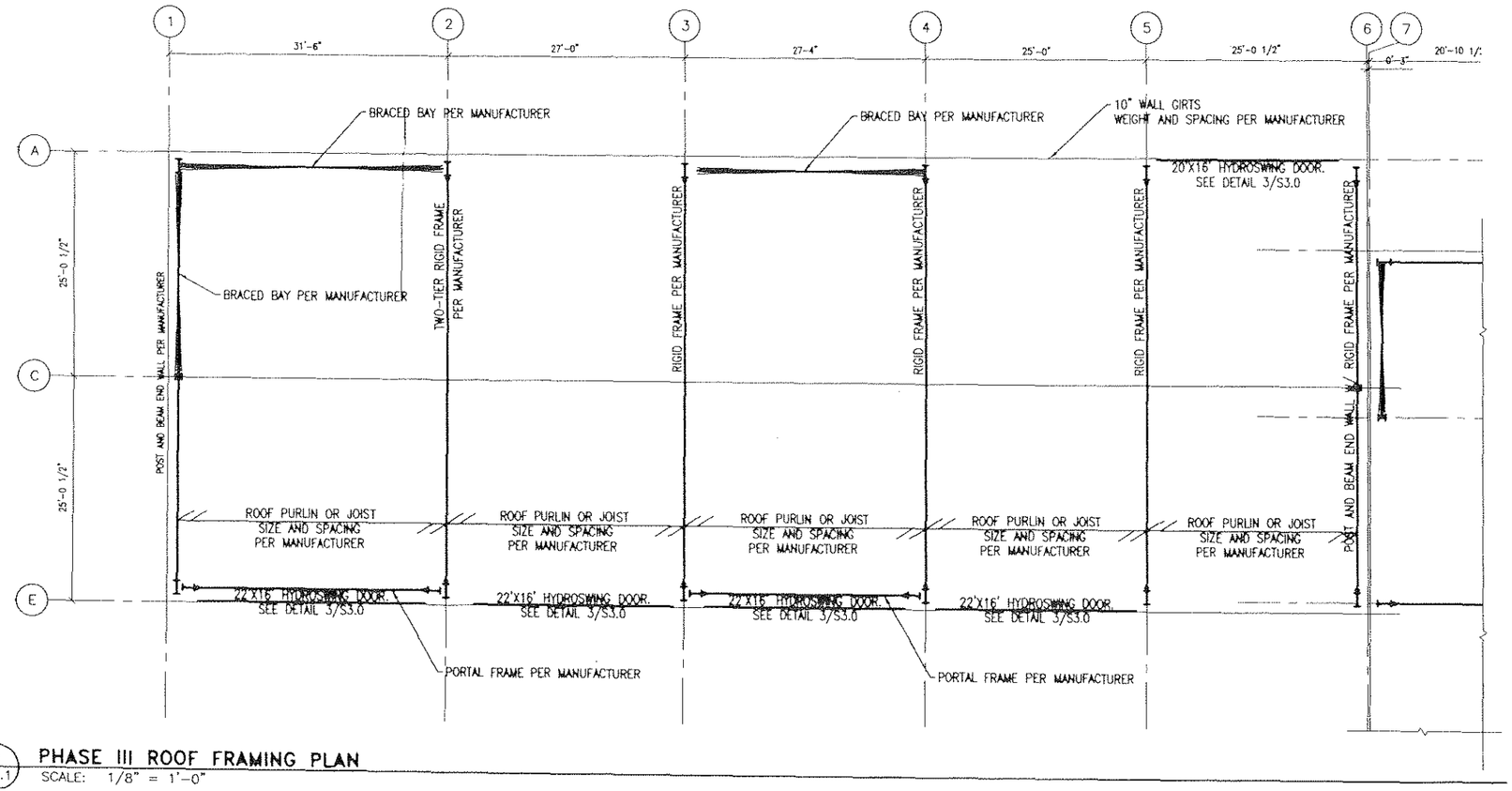

1 / S3.1 **PHASE III ROOF FRAMING PLAN**
SCALE: 1/8" = 1'-0"

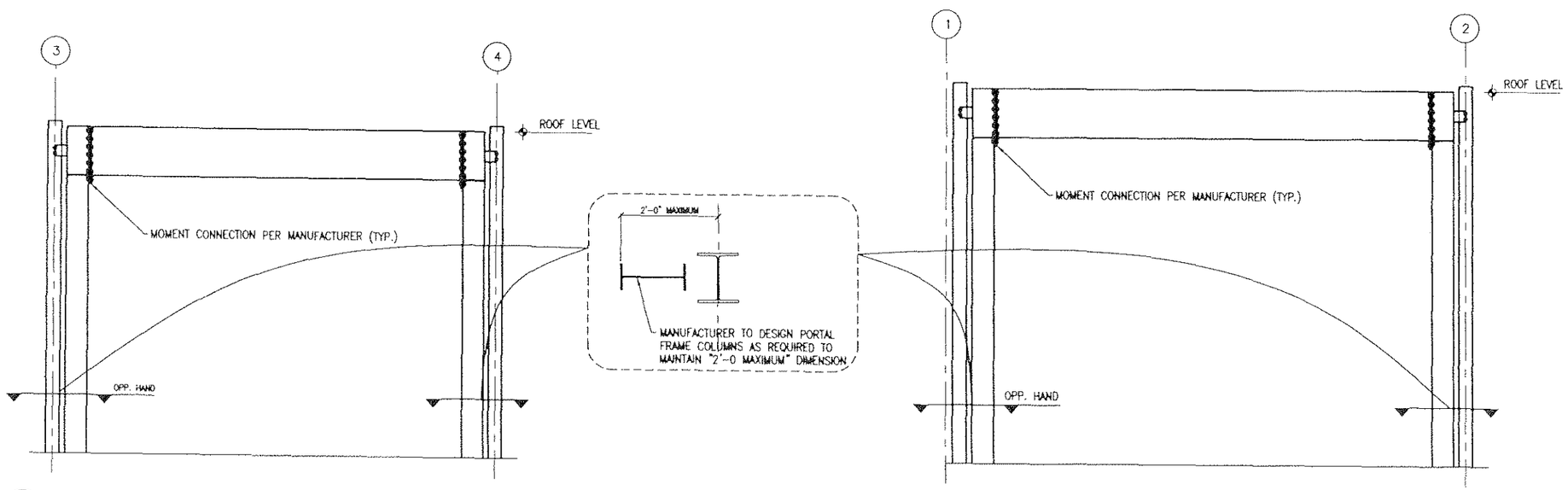

2 / S3.1 **SCHEMATIC PORTAL FRAME ELEVATIONS**
SCALE: 1/4" = 1'-0"

I:\906400\Dwgs\S\sheets\906400S31.dwg

PLOTTED DATE:
Wed. 04/Oct/06 05:00PM clease

ADDENDUM NUMBER

RECORD OF REVISIONS

No.	DATE	DESCRIPTION

KETCHIKAN AIRPORT
SNOW REMOVAL EQUIPMENT,
SAND, AND CHEMICAL
STORAGE BUILDING

PREPARED BY: USKH INC.

STATE OF ALASKA 49TH PETER A. JACOBSEN No. CE 9961 REGISTERED PROFESSIONAL ENGINEER 10/5/06

PROJECT MGR.: BS
DRAWN BY: PAJ/KJB
CHECKED BY:
DATE: OCTOBER 6, 2006

STATE OF ALASKA
DEPARTMENT OF TRANSPORTATION
& PUBLIC FACILITIES
DESIGN & ENGINEERING SERVICES
DIVISION-SOUTHEAST REGION

PHASE III
ROOF FRAMING PLAN

AKSAS PROJECT NUMBER
68290

STATE	YEAR
ALASKA	2006
SHEET NUMBER	TOTAL SHEETS
S3.1	56

MISCELLANEOUS EQUIPMENT SCHEDULE

DESIGNATION	EQUIPMENT	LOCATION	CAPACITY	ELECTRICAL HP	ELECTRICAL VOLTS	ELECTRICAL PHASE	BASIS OF DESIGN MFR	BASIS OF DESIGN MODEL	NOTES
AS-1	AIR SEP	MECH	60 GPM@1.5' WG DP	-	-	-	AMTROL	3-AS	-
ET-1	EXP TANK	MECH	68 TOT/34 GAL ACC.	-	-	-	AMTROL	AX-120-V	
ET-2	EXP TANK	MECH	6.4 TOT/0.5 GAL ACC.	-	-	-	AMTROL	ST-12-C	
T-1	FUEL OIL TANK	OUTSIDE	2000 GAL	-	-	-	ANCH TANK		
T-2	UREA MIX TANK	UREA 107	5000 GAL	-	-	-	ANCH TANK		
T-3	UREA STOR TANK	MECH	8000 GAL	-	-	-	ANCH TANK		
TM-1	TANK MIXER	T-2		3	208	3	GROVAC	770-3000	
GMT-1	GLYCOL MAKEUP	MECH	6 GAL	50W	120	1	AXIOM	MF-200	
C-1	COMPRESSOR	STAIRS	-	15	208	3	INGERSOL RAND	7100E10/1	

NOTES
1.
2.

PUMP SCHEDULE

DESIGNATION	SERVICE	GPM	HEAD (FT)	FLUID	BODY	(°F)	SUCTION SIZE (IN)	DISCHARGE SIZE (IN)	ELECTRICAL HP	ELECTRICAL VOLTS	ELECTRICAL PHASE	BASIS OF DESIGN MFR	BASIS OF DESIGN MODEL	NOTES
CP-1	BOILER CIRC	17	10	30%PG	CI	200	1.25	1.25	1/3	120	1	GRUNDFOS	UPS32-40/4	2
CP-2	BOILER CIRC	48	10	30%PG	CI	200	1.25	1.25	1/2	120	1	GRUNDFOS	UPS32-80/2	2
CP-3,-4	MAIN CIRC	60	17	30%PG	CI	200	1.5	1.5	1/2	120	1	GRUNDFOS	UPS40-80/4	1
CP-5,6	RAD SLAB	20	22	30%PG	CI	120	1.25	1.25	1/2	120	1	GRUNDFOS	UPS32-80/2	
CP-7,-8	UREA CIRC	300	30	UREA	SS	100	4	4	5	208	3	GOULDS	TRASH HOG 4x4-9	
CP-9	DHW CIRC	2	10	WATER	BR	120	1.25	1.25	1/25	120	1	GRUNDFOS	UPS15-42	

NOTES
1. PROVIDE VFD. CONTRACTOR SHALL ENSURE COMPATIBILITY BETWEEN VFD AND PUMP MOTOR.
2. PROVIDED BY BOILER MANUFACTURER, SEE BOILER SCHEDULE.

BOILER SCHEDULE

DESIGNATION	HEATING FLUID	FUEL TYPE	GROSS OUTPUT (MBH)	NET IBR (MBH)	GPM	EWT (°F)	LWT (°F)	ELECTRICAL HP	ELECTRICAL VOLTS	ELECTRICAL PHASE	CONNECTIONS SUPPLY	CONNECTIONS RETURN	BASIS OF DESIGN MFR	BASIS OF DESIGN MODEL	NOTES
B-1	30%PG	OIL	346	301	17	140	180	-	120	1	1.5	1.5	BURNHAM	V903A	1
B-2	30%PG	OIL	959	834	48	140	180	-	120	1	2.0	2.0	BURNHAM	V907A	2

NOTES
1. PROVIDE 4-WAY VALVE PART NO 80199016, 1" NPT AND CIRC PUMP PER PUMP SCHEDULE.
2. PROVIDE 4-WAY VALVE PART NO 80149025, 2" NPT AND CIRC PUMP PER PUMP SCHEDULE.

UNIT HEATER SCHEDULE

DESIGNATION	LOCATION	MBH	CFM	GPM	EWT (°F)	LWT (°F)	WPD (FT)	ELECTRICAL HP	ELECTRICAL VOLTS	ELECTRICAL PHASE	BASIS OF DESIGN MFR	BASIS OF DESIGN MODEL	NOTES
UH-1	MECH	10	400	1.5	180	150	1	1/20	120	1	RITTLING	RH-18	1

NOTES
1. HORIZONTAL THROW. REDUCED MOTOR SPEED. PROVIDE VALVES AND COMPONENTS SIMILAR TO RITTLING VALVE PACKAGE V-D3.

FAN SCHEDULE

DESIGNATION	LOCATION	SERVICE	CFM	RPM	SP (IN WC)	DAMPER	ELECTRICAL HP	ELECTRICAL VOLTS	ELECTRICAL PHASE	BASIS OF DESIGN MFR	BASIS OF DESIGN MODEL	NOTES
EF-1	EQP STOR 102	EXHAUST	7,550	1160	0.5	MOTORIZED	1	208	3	GREENHECK	SE2-30-610-B10	-
EF-2	SERVICE BAY 109	EXHAUST	11,700	1160	0.5	MOTORIZED	2	208	3	GREENHECK	SE2-36-609-B20	
EF-3	SAND STOR 101	EXHAUST	2,300	1750	0.5	MOTORIZED	1/3	120	1	GREENHECK	SE2-20-407-A3	
EF-4	TOILET	EXHAUST	75	1000	0.7	BACKDRAFT	83W	120	1	GREENHECK	SP-A250	1
VF-1	MECH	COOLING/COMB	948	1750	0.5	MOTORIZED	1/4	120	1	GREENHECK	SS1-12-432-A4	

NOTES
1. PROVIDE SPEED CONTROLLER IN CEILING SPACE TO SET CORRECT AIR FLOW.
2. PROVIDE OA & RA DAMPERS & MIXING BOX CONTROL.

MAKE-UP AIR UNIT SCHEDULE

DESIGNATION	SUPPLY (CFM)	O/A (°F)	EXT SP	ELECTRICAL HP	ELECTRICAL PHASE	ELECTRICAL VOLTAGE	FILTERS	BASIS OF DESIGN MFR	BASIS OF DESIGN MODEL	NOTES
MAU-1	7,550	13	0.8	5	3	208	FLAT, 30%	MCQUAY	-	1
MAU-2	11,700	13	0.8	7.5	3	208	FLAT, 30%	MCQUAY		1

NOTES
1. PROVIDE HEATING COIL, SEE COIL SCHEDULE.
2.

COIL SCHEDULE

DESIGNATION	DESCRIPTION	SYSTEM	AIR SIDE HEAT TRANSFER (MBH)	AIR SIDE CFM	AIR SIDE EAT (°F)	AIR SIDE LAT (°F)	AIR SIDE APD (IN WG)	AIR SIDE FACE VELOCITY (FPM)	WATER SIDE FLUID	WATER SIDE GPM	WATER SIDE EWT (°F)	WATER SIDE LWT (°F)	WATER SIDE WPD (FT)	WATER SIDE ROWS /FINS/ IN	NOTES
HC-1	HEATING	MAU-1	220	7,550	13	40	0.25	568	30% PG	15.5	180	150	5	1/9	1
HC-2	HEATING	MAU-2	341	11,700	13	40	0.25		30% PG	24.0	180	150	5	1/9	1

NOTES
1. TO BE PROVIDED BY MAU-1, MAU-2 MANUFACTURER AS PART OF PACKAGED UNIT.
2.

PIPING ELEMENTS/VALVING

- EXISTING EQUIPMENT OR PIPING TO BE REMOVED.
- GATE VALVE
- GLOBE VALVE
- PLUG VALVE
- BUTTERFLY VALVE
- BALL VALVE
- SWING CHECK VALVE
- LIFT CHECK VALVE
- GATE VALVE, ANGLE
- GLOBE VALVE, ANGLE
- DIAPHRAM VALVE
- AUTOMATIC FLOW CONTROL VALVE
- CBV — CIRCUIT SETTING BALANCING VALVE
- THREE WAY CONTROL VALVE
- TWO WAY CONTROL VALVE
- S — SOLENOID VALVE
- PRESSURE REDUCING VALVE (PRV)
- TPV — TEMPERATURE/PRESSURE RELIEF VALVE
- RELIEF/SAFETY VALVE
- BACKFLOW PREVENTOR (REDUCED ZONE)
- BACKFLOW PREVENTOR (DOUBLE CHECK VALVE ASSEMBLY)
- FUSIBLE LINK VALVE–QUICK CLOSING
- FUSIBLE LINK VALVE–QUICK OPENING
- GAS COCK
- GAS PRESSURE REGULATOR
- VALVE IN RISE OR DROP
- HOSE BIBB
- AUTOMATIC FILL VALVE
- STRAINER
- STRAINER WITH BLOW OFF VALVE
- BASKET STRAINER
- STEAM TRAP
- FLOAT OPERATED CONTROL VALVE
- AUTOMATIC AIR VENT (EXTEND DISCHARGE TO DRAIN)
- MV — MANUAL AIR VENT
- FLOW METER–VENTURI
- FLOW METER–ORIFICE
- DIRECTION OF FLOW
- R D — DIRECTION OF PITCH–RISE OR DROP
- PIPE RISING UP
- PIPE DROPPING DOWN
- UNION – SCREWED OR FLANGED
- CONCENTRIC REDUCER
- ECCENTRIC REDUCER
- ELECTRICALLY TRACED PIPING
- VB — VACUUM BREAKER
- WATER HAMMER ARRESTER
- RD — ROOF DRAIN
- FD — FLOOR DRAIN
- CO — CLEANOUT
- PUMP
- H W — EXPANSION LOOP (WxH)
- FLEXIBLE–CONNECTION
- A — ANCHOR
- G — GUIDE
- EJ — EXPANSION JOINT
- FS — FLOW SWITCH
- TEMPERATURE TRANSMITTER
- PT/PS — PRESSURE TRANSMITTER OR PRESSURE SWITCH
- THERMOMETER
- GAUGE WITH GAUGE COCK & SYPHON (STEAM)
- GAUGE WITH GAUGE COCK/ PRESSURE INDICATOR
- AQUASTAT
- STEAM LEAK DETECTOR
- CO — WALL CLEAN OUT
- SPRINKLER

DUCTWORK SYMBOLS

DOUBLE LINE / SINGLE LINE

- EXISTING EQUIPMENT OR DUCTWORK TO BE REMOVED.
- EXISTING DUCTWORK TO REMAIN
- NEW DUCTWORK
- VD — MANUAL VOLUME DAMPER (MVD) MOTOR OPERATED DAMPER (MOD)
- AD — ACCESS DOOR
- RADIUS ELBOW (R=1.5)
- VANED ELBOW
- BRANCH DUCT TAKE–OFF
- D R — RISE OR DROP DIRECTION OF AIR FLOW
- FLEXIBLE CONNECTION (FXC)
- DIFFUSER — SIZE CFM/BLOW
- CEILING RETURN/EXHAUST REGISTER (R) OR GRILLE (G) — SIZE CFM
- SUPPLY AIR GRILLE (G) OR SUPPLY AIR REGISTER (R) — NUMBER CFM SIZE
- RETURN AND/OR EXHAUST AIR GRILLE (G) OR REGISTER (R) — NUMBER CFM SIZE
- CONTROL DAMPER–OPPOSED BLADE
- CONTROL DAMPER–PARALLEL BLADE
- BACKDRAFT DAMPER
- UC — UNDERCUT DOOR
- DL — DOOR LOWER (FREE AREA REQUIRED INDICATED IN SQUARE FEET)
- AIR DEVICE TO BE REMOVED
- SUPPLY AIR
- RETURN OR EXHAUST AIR
- OUTSIDE AIR
- F — FIRE DAMPER
- S — SMOKE DETECTOR

HVAC REFERENCE SYMBOLS

- BB–1 / X' X — EQUIPMENT IDENTITY (SEE EQUIPMENT ABBREVIATION LIST AND SCHEDULES); EQUIPMENT NUMBER; GPM; LENGTH
- B / 1
- X / X — INDICATES DETAIL, PLAN, SECTION, AND/OR DIAGRAM(APPLIES ONLY WHERE INDICATED ON DRAWINGS); INDICATES DRAWING ON WHICH DETAIL APPEARS
- TYP / X — INDICATES TYPICAL DETAIL (APPLIES TO ALL CONTRACT DRAWINGS); INDICATES DRAWING ON WHICH DETAIL APPEARS
- X / X — INDICATES SECTION NUMBER; INDICATES ON WHICH DRAWING SECTION APPEARS
- X — INDICATES REVISION & NUMBER
- X — LOCATION POINT FOR COORDINATION BETWEEN FLOOR PLANS & PIPING DIAGRAMS (NUMBER)
- CONNECT NEW TO EXISTING
- TERMINATION POINT OF DEMOLITION
- CONNECT TO MANUFACTURER'S PREPIPED CONNECTION
- POINT OF BEAM PENETRATION
- PREPURCHASED EQUIPMENT
- # — SHEET NOTE NUMBER
- D# — DEMOLITION NOTE NUMBER

PIPE LINETYPES

- GLYCOL HEATING SUPPLY (GHS)
- GLYCOL HEATING RETURN (GHR)
- DOMESTIC COLD WATER (DCW)
- DOMESTIC HOT WATER (DHW)
- DOMESTIC HOT WATER CIRC (DHWC)
- PLUMBING VENT
- PLUMBING WASTE
- A — AIR

PATH:
JOBS\0512 USKH DETCHIKAN SREB\DWG\M

PLOTTED DATE:
OCTOBER 4, 2006

ADDENDUM NUMBER

RECORD OF REVISIONS

No.	DATE	DESCRIPTION

KETCHIKAN AIRPORT
SNOW REMOVAL EQUIPMENT,
SAND, AND CHEMICAL
STORAGE BUILDING

PREPARED BY: USKH INC.

STATE OF ALASKA 49TH — HELEN CRETAS RUTTER — ME-10190 — REGISTERED PROFESSIONAL ENGINEER — 10/5/06

PROJECT MGR.: BS
DRAWN BY: LDS
CHECKED BY: HBR
DATE: OCTOBER 6, 2006

STATE OF ALASKA
DEPARTMENT OF TRANSPORTATION
& PUBLIC FACILITIES
DESIGN & ENGINEERING SERVICES
DIVISION–SOUTHEAST REGION

MECHANICAL LEGEND AND SCHEDULES

AKSAS PROJECT NUMBER
68290

STATE	YEAR
ALASKA	2006
SHEET NUMBER	TOTAL SHEETS
M1.1	56

PLUMBING FIXTURE CONNECTION SCHEDULE

DESIGNATION	FIXTURE	TRAP	WASTE	VENT	CW	HW	BASIS OF DESIGN MFR	BASIS OF DESIGN MODEL	NOTES
P-1	WATER CLOSET-ADA	-	3"	2"	1"	-	AMERICAN STANDARD	2305.100	1
P-2	LAVATORY-ADA	1-1/2"	1-1/2"	1-1/4"	1/2"	1/2"	AMERICAN STANDARD	0356.4321	2
P-3	SERVICE SINK	3"	3"	2"	1/2"	1/2"	AMERICAN STANDARD	7695.008	3
P-4	EMERGENCY SHOWER & EYEWASH	1-1/2"	1-1/2"	1-1/4"	1-1/4"	1-1/4"	HAWS	8200WC	4
DF-1	DRINKING FOUNTAIN	1-1/4"	1-1/4"	1-1/4"	3/8"	-	HALSEY TAYLOR	HRFSEBP	11
TD-1	TRENCH DRAIN	4"	4"	2"	-	-	J.R. SMITH	SERIES 9931	5
OWS-1	OIL WATER SEPARATOR	-	3"	2"	-	-	ANCHORAGE TANK	ATLLS-25-GRIT	6
FD-1	FLOOR DRAIN	2"	2"	1-1/2"	-	-	J.R. SMITH	2005Y-A	
HB-1	HOSE BIBB	-	-	-	1"	-	JOSAM	71020-81	7
HB-2	HOSE BIBB	-	-	-	1"	1"	JOSAM	71650	8
TP-1	TRAP PRIMER	-	-	-	1/2"	-	PPP	-	9
TP-2	TRAP PRIMER	-	-	-	1/2"	-	PPP	-	10

NOTES

1. PROVIDE CHURCH 9500C OPEN FRONT SEAT AND SLOAN ROYAL 111 FLUSH VALVE.
2. PROVIDE AMERICAN STANDARD 1480.115 FAUCET, GRID STRAINER AND PIPING SHIELD. REINFORCE WALL AS REQUIRED FOR WALL HANGER.
3. PROVIDE AMERICAN STANDARD 6379.026 RIM GUARD, 8340.243 FAUCET, AND 7798.030 CAST IRON P TRAP.
4. PROVIDE TWBS-SH TEMPERED WATER BLENDING SYSTEM
5. PROVIDE CLASS E EXTRA HEAVY DUTY GRATE AND CATCH BASIN.
6. PROVIDE GRIT TRAP BY MANUFACTURER AND EXTENSIONS TO GRADE AS REQUIRED.
7. PROVIDE TAMPA RUBBER & GASKET TYPE 54 1" HOSE (100LF) AND DF47-1-100 SERIES 2640 HOSE REEL.
8. PROVIDE NON-FREEZE HOT/COLD MIXING FAUCET.
9. PROVIDE RECESSED COMPARTMENT AND ACCESS DOOR.
10. PROVIDE SURFACE MOUNTED COMPARTMENT AND ACCESS DOOR.
11. PROVIDE HIGH/ LOW ADA WALL MOUNTED FIXTURE WITH MOUNTING PLATE. REINFORCE WALL AS REQUIRED.

WALL VENT SCHEDULE

DESIGNATION	SERVICE	SIZE (WXH, IN)	CFM	FREE AREA, SF	FACE VEL, FPM	NOTES
WV-1	EF-1	39X39	7550	10.6	714.8	-
WV-2	EF-2	45X45	11700	14.1	832.0	-
WV-3	EF-3	27X27	2300	5.1	454.3	-
WV-4	EF-4	9X9	75	0.6	133.3	-
WV-5	VF-1	19X19	948	2.5	378.1	-
WV-6	VF-1	19X19	948	2.5	378.1	1
WV-7	MAU-1	64X32	7550	14.2	530.9	-
WV-8	MAU-2	76X42	11700	22.2	527.6	-
WV-9	EF-3	27X27	2300	5.1	454.3	1

NOTES

1. RELIEF AIR.
2.

WATER TO WATER HEAT EXCHANGER SCHEDULE

DESIGNATION	DESCRIPTION	PRIMARY SIDE HEAT TRANSFER (MBH)	PRIMARY SIDE FLUID	PRIMARY SIDE GPM	PRIMARY SIDE EWT (°F)	PRIMARY SIDE LWT (°F)	PRIMARY SIDE MAX PD (FT)	PRIMARY SIDE CONN SIZE (IN)	SECONDARY SIDE FLUID	SECONDARY SIDE GPM	SECONDARY SIDE EWT (°F)	SECONDARY SIDE LWT (°F)	SECONDARY SIDE MAX PD (FT)	SECONDARY SIDE CONN SIZE (IN)	BASIS OF DESIGN MFR	BASIS OF DESIGN MODEL	NOTES
HX-1	T-2 FILL	1,135	30% PG	60	180	140	11	2	WATER	61	58	95	11	2	FLATPLATE	FP10X20-60	-

NOTES

1.
2.

WATER HEATER SCHEDULE

DESIGNATION	LOCATION	GROSS INPUT (MBH)	RECOVERY (GPH)	TEMP RISE (°F)	STORAGE (GALLONS)	PRIMARY SIDE GPM	PRIMARY SIDE DP (FT)	BASIS OF DESIGN MFR	BASIS OF DESIGN MODEL	NOTES
WH-1	MECH	74-100	115	70	30	6	11.5	BOCK	30CT	-

NOTES

1.
2.

RADIANT FLOOR CIRCUIT SCHEDULE

ROOM	DESCRIPTION	MANIFOLD-CIRCUIT	TUBE DIAMETER (IN)	TUBE LENGTH (FT)	HEAD LOSS (FT WATER)	FLOW (°F) (GPM)	SPACING (IN)	NOTES
107	UREA	A1-1	1/2"	305	5	0.5	18	1
		A2-1	1/2"	278	5	0.5	18	1
		A3-1	1/2"	322	5	0.5	18	1
		A4-1	1/2"	358	5	0.5	18	1
109	SERVICE BAY 2	B1-2	1/2"	306	5	0.5	18	1
		B2-2	1/2"	332	5	0.5	18	1
		B3-2	1/2"	288	5	0.5	18	1
		B4-2	1/2"	292	5	0.5	18	1
		B5-2	1/2"	275	5	0.5	18	1
		B6-2	1/2"	239	5	0.5	18	1
		B7-2	1/2"	254	5	0.5	18	1
108	SERVICE BAY 1	C1-3	1/2"	295	5	0.5	18	1
		C2-3	1/2"	285	5	0.5	18	1
		C3-3	1/2"	306	5	0.5	18	1
		C4-3	1/2"	335	5	0.5	18	1
		C5-3	1/2"	309	5	0.5	18	1
		C6-3	1/2"	303	5	0.5	18	1
		C7-3	1/2"	335	5	0.5	18	1
103, 104	TOILET & HALL	D1-4	1/2"	143	5	0.5	6	1
102	EQP. STORAGE	E1-5	1/2"	271	5	0.5	18	1
		E2-5	1/2"	267	5	0.5	18	1
		E3-5	1/2"	262	5	0.5	18	1
		E4-5	1/2"	257	5	0.5	18	1
		E5-5	1/2"	252	5	0.5	18	1
		E6-5	1/2"	247	5	0.5	18	1
		E7-5	1/2"	242	5	0.5	18	1
		E8-5	1/2"	237	5	0.5	18	1
		E9-5	1/2"	230	5	0.5	18	1
		E10-5	1/2"	225	5	0.5	18	1
		E11-5	1/2"	220	5	0.5	18	1
		E12-5	1/2"	220	5	0.5	18	1
		E13-5	1/2"	224	5	0.5	18	1
		E14-5	1/2"	230	5	0.5	18	1
		E15-5	1/2"	234	5	0.5	18	1
		E16-5	1/2"	247	5	0.5	18	1
101	SAND. STORAGE	F1-6	1/2"	344	5	0.5	18	1
		F2-6	1/2"	310	5	0.5	18	1
		F3-6	1/2"	359	5	0.5	18	1

NOTES

1. TUBE LENGTHS INCLUDE 10" TAILS (5' SUPPLY, 5' RETURN).
2.

AIR OUTLET SCHEDULE

DESIGNATION	USE	UNIT SIZE (IN)	THROW (FT)	PATTERN	SP (IN WG)	NC	FINISH	BASIS OF DESIGN MFR	BASIS OF DESIGN MODEL	NOTES
SD-1	SUPPLY	50X15	64-78-110	STRAIGHT	0.2	45	WHITE	TITUS	DL	-
SD-2	SUPPLY	70X15	75-92-130	STRAIGHT	0.2	45	WHITE	TITUS	DL	-

NOTES

1.
2.

PATH:
JOBS\0512 USKH DETCHIKAN SREB\DWG\M

PLOTTED DATE:
OCTOBER 4, 2006

ADDENDUM NUMBER

RECORD OF REVISIONS

No.	DATE	DESCRIPTION

KETCHIKAN AIRPORT
SNOW REMOVAL EQUIPMENT,
SAND, AND CHEMICAL
STORAGE BUILDING

PREPARED BY: USKH INC.

STATE OF ALASKA 49TH HELENE BRETAS RUETER ME-10190 REGISTERED PROFESSIONAL ENGINEER

10/5/06

PROJECT MGR.: BS
DRAWN BY: LDS
CHECKED BY: HBR
DATE: OCTOBER 6, 2006

STATE OF ALASKA
DEPARTMENT OF TRANSPORTATION
& PUBLIC FACILITIES
DESIGN & ENGINEERING SERVICES
DIVISION-SOUTHEAST REGION

MECHANICAL SCHEDULES

AKSAS PROJECT NUMBER
68290

STATE	YEAR
ALASKA	2006
SHEET NUMBER	TOTAL SHEETS
M1.2	56

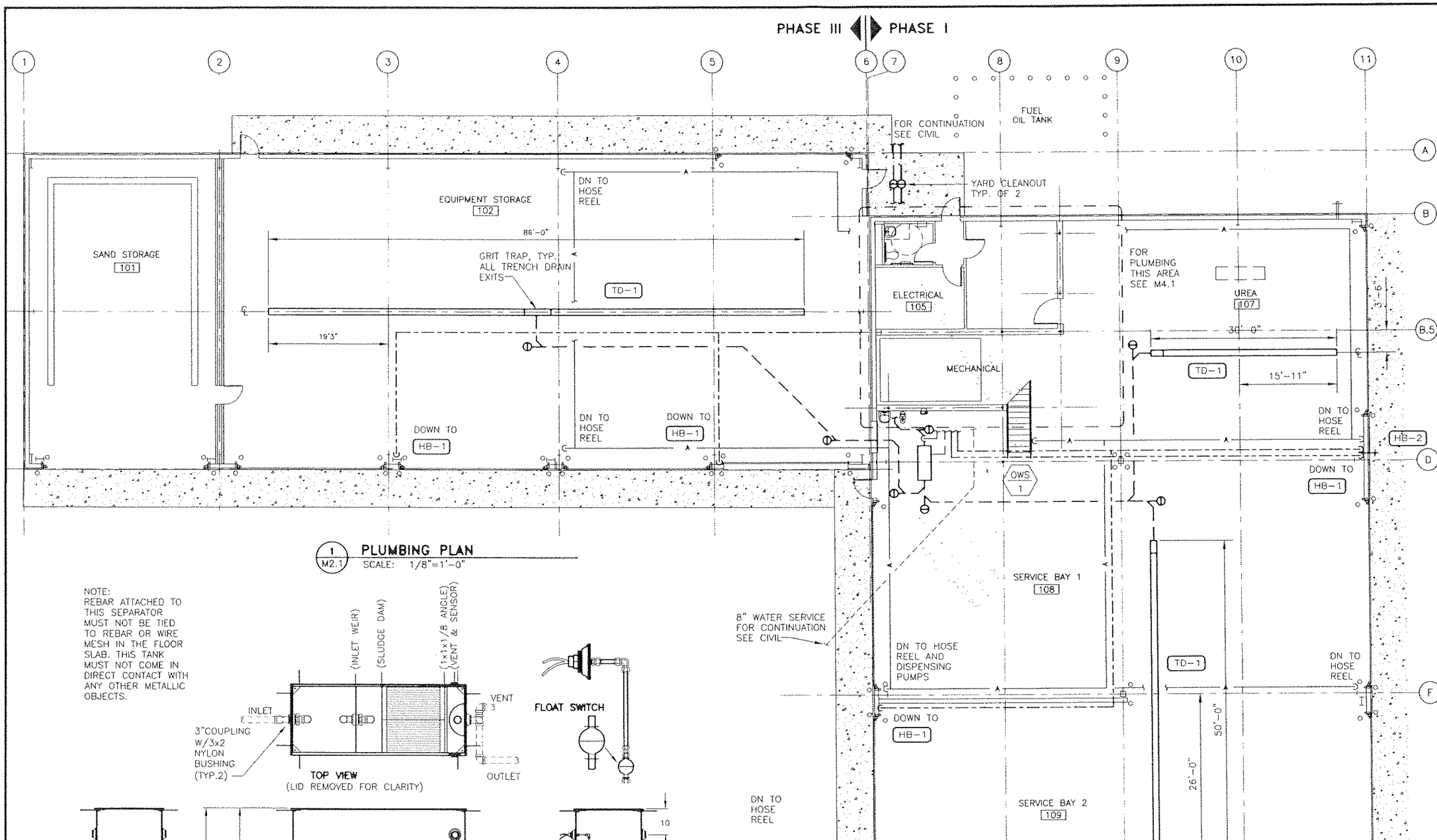

1 M2.1 PLUMBING PLAN
SCALE: 1/8"=1'-0"

NOTE:
REBAR ATTACHED TO THIS SEPARATOR MUST NOT BE TIED TO REBAR OR WIRE MESH IN THE FLOOR SLAB. THIS TANK MUST NOT COME IN DIRECT CONTACT WITH ANY OTHER METALLIC OBJECTS.

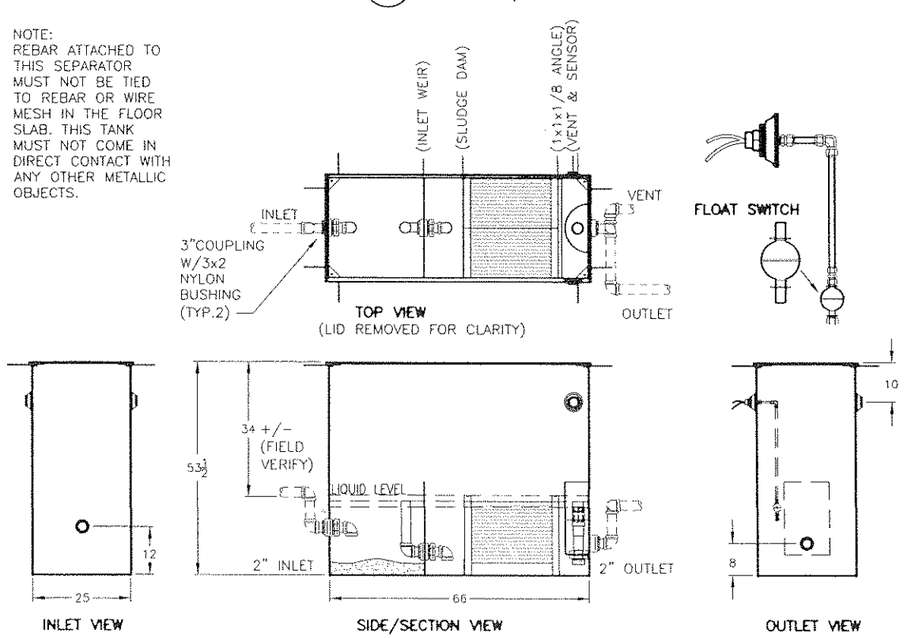

2 M2.1 OWS DETAIL
SCALE: NONE

GENERAL NOTES

1. PIPE SIZES ARE SHOWN ON THE RISERS AND SCHEMATICS.

PATH: JOBS\0512 USKH DETCHIKAN SREB\DWG\M
PLOTTED DATE: OCTOBER 4, 2006

ADDENDUM NUMBER

RECORD OF REVISIONS

No.	DATE	DESCRIPTION

KETCHIKAN AIRPORT
SNOW REMOVAL EQUIPMENT, SAND, AND CHEMICAL STORAGE BUILDING

PREPARED BY: USKH INC.

STATE OF ALASKA 49TH HELENA BRETAS ROETER ME-10190 REGISTERED PROFESSIONAL ENGINEER
10/5/06

PROJECT MGR.: BS
DRAWN BY: LDS
CHECKED BY: HBR
DATE: OCTOBER 6, 2006

STATE OF ALASKA
DEPARTMENT OF TRANSPORTATION & PUBLIC FACILITIES
DESIGN & ENGINEERING SERVICES
DIVISION-SOUTHEAST REGION

PLUMBING PLAN AND DETAILS

AKSAS PROJECT NUMBER
68290

STATE	YEAR
ALASKA	2006
SHEET NUMBER	TOTAL SHEETS
M2.1	56

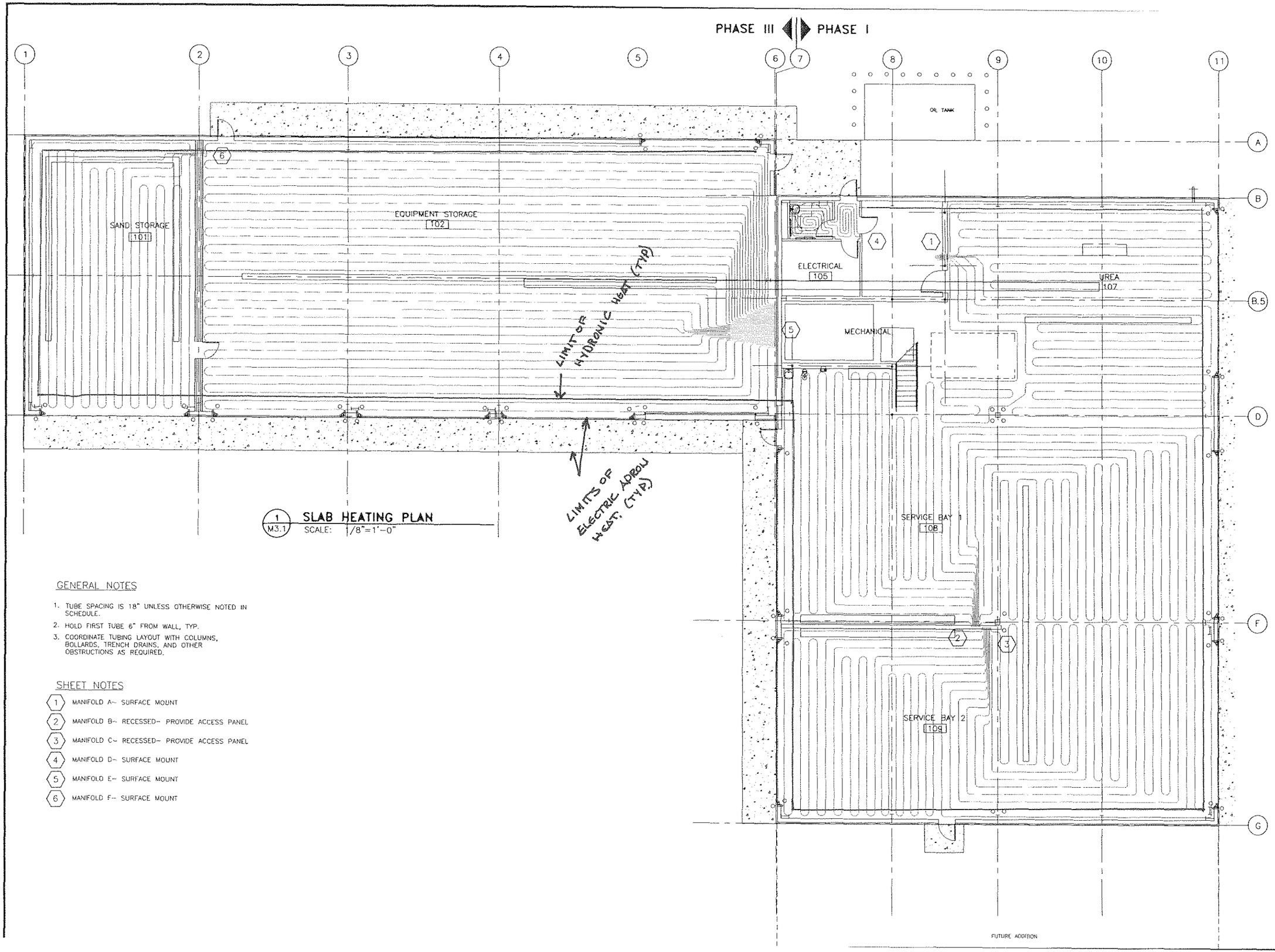

1 / M3.1 SLAB HEATING PLAN
SCALE: 1/8"=1'-0"

GENERAL NOTES

1. TUBE SPACING IS 18" UNLESS OTHERWISE NOTED IN SCHEDULE.
2. HOLD FIRST TUBE 6" FROM WALL, TYP.
3. COORDINATE TUBING LAYOUT WITH COLUMNS, BOLLARDS, TRENCH DRAINS, AND OTHER OBSTRUCTIONS AS REQUIRED.

SHEET NOTES

1. MANIFOLD A– SURFACE MOUNT
2. MANIFOLD B– RECESSED– PROVIDE ACCESS PANEL
3. MANIFOLD C– RECESSED– PROVIDE ACCESS PANEL
4. MANIFOLD D– SURFACE MOUNT
5. MANIFOLD E– SURFACE MOUNT
6. MANIFOLD F– SURFACE MOUNT

PATH:
JOBS\0512 USKH DETCHIKAN SREB\DWG\M

PLOTTED DATE:
OCTOBER 4, 2006

ADDENDUM NUMBER

RECORD OF REVISIONS

No.	DATE	DESCRIPTION

KETCHIKAN AIRPORT
SNOW REMOVAL EQUIPMENT,
SAND, AND CHEMICAL
STORAGE BUILDING

PREPARED BY: USKH INC.

STATE OF ALASKA 49TH
HELENA BRITAS RUTTER
ME-10190
REGISTERED PROFESSIONAL ENGINEER
10/5/06

PROJECT MGR.: BS
DRAWN BY: HBR
CHECKED BY: HBR
DATE: OCTOBER 6, 2006

STATE OF ALASKA
DEPARTMENT OF TRANSPORTATION
& PUBLIC FACILITIES
DESIGN & ENGINEERING SERVICES
DIVISION–SOUTHEAST REGION

SLAB HEATING PLAN

AKSAS PROJECT NUMBER
68290

STATE	YEAR
ALASKA	2006
SHEET NUMBER	TOTAL SHEETS
M3.1	56

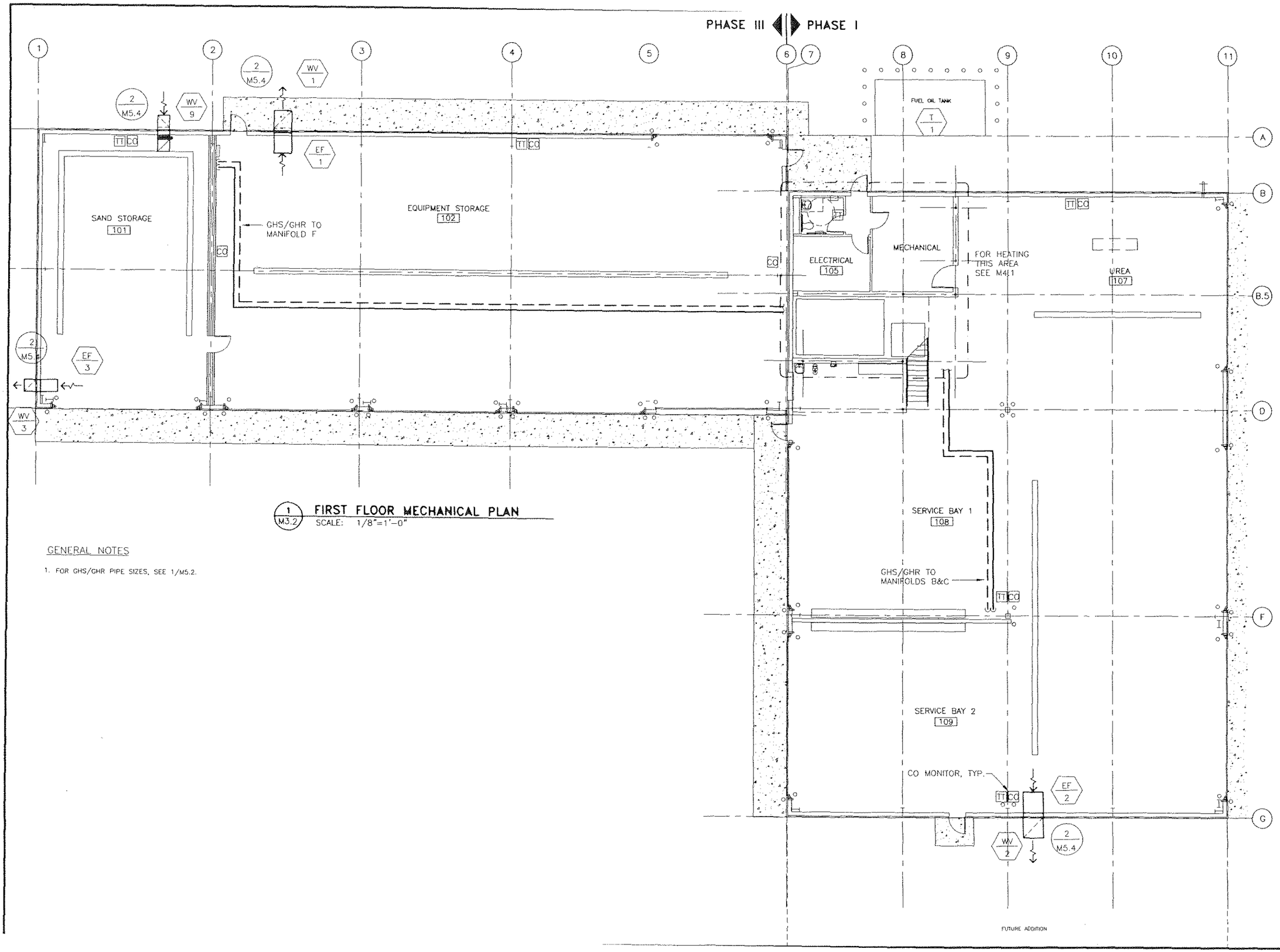

1 / M3.2 FIRST FLOOR MECHANICAL PLAN
SCALE: 1/8"=1'-0"

GENERAL NOTES

1. FOR GHS/GHR PIPE SIZES, SEE 1/M5.2.

PATH:
JOBS\0512 USKH DETCHIKAN SREB\DWG\M

PLOTTED DATE:
OCTOBER 4, 2006

ADDENDUM NUMBER

RECORD OF REVISIONS

No.	DATE	DESCRIPTION

KETCHIKAN AIRPORT
SNOW REMOVAL EQUIPMENT,
SAND, AND CHEMICAL
STORAGE BUILDING

PREPARED BY: USKH INC.

STATE OF ALASKA
49TH
HELENA BRETAS RUETER
ME-10190
REGISTERED PROFESSIONAL ENGINEER
10/5/06

PROJECT MGR.: BS
DRAWN BY: LDS
CHECKED BY: HBR
DATE: OCTOBER 6, 2006

STATE OF ALASKA
DEPARTMENT OF TRANSPORTATION
& PUBLIC FACILITIES
DESIGN & ENGINEERING SERVICES
DIVISION-SOUTHEAST REGION

FIRST FLOOR HVAC PLAN

AKSAS PROJECT NUMBER
68290

STATE	YEAR
ALASKA	2006
SHEET NUMBER	TOTAL SHEETS
M3.2	56

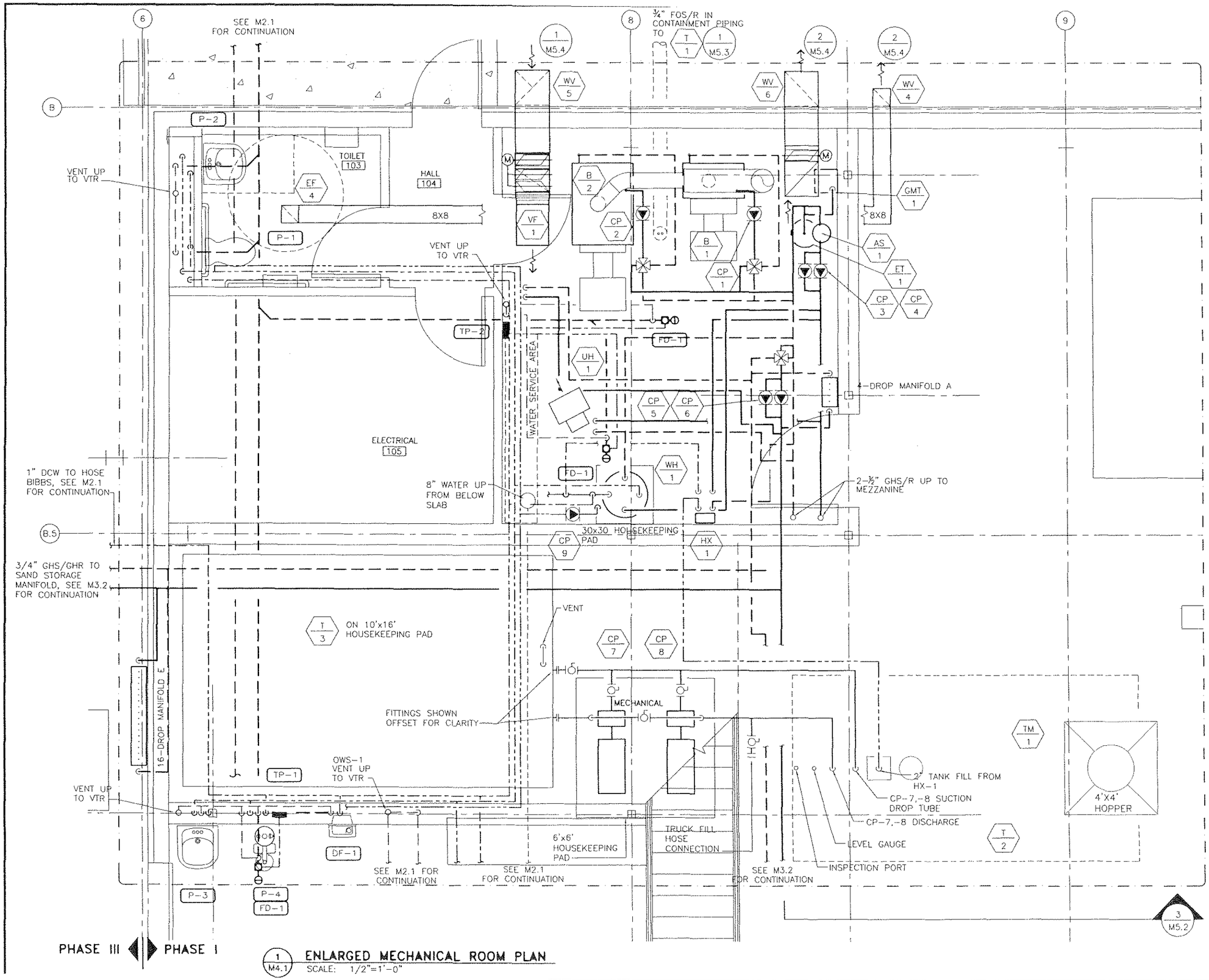

1 / M4.1 ENLARGED MECHANICAL ROOM PLAN
SCALE: 1/2"=1'-0"

FILE: JOBS\0512 USKH DETCHIKAN SREB\DWG\M
PLOTTED DATE: OCTOBER 4, 2006

ADDENDUM NUMBER		
RECORD OF REVISIONS		
No.	DATE	DESCRIPTION

KETCHIKAN AIRPORT
SNOW REMOVAL EQUIPMENT, SAND, AND CHEMICAL STORAGE BUILDING

PREPARED BY: USKH INC.

STATE OF ALASKA 40TH HELENA BRETAS RUETER ME-10190 REGISTERED PROFESSIONAL ENGINEER
10/5/06

PROJECT MGR.: BS
DRAWN BY: LDS
CHECKED BY: HBR
DATE: OCTOBER 6, 2006

STATE OF ALASKA
DEPARTMENT OF TRANSPORTATION & PUBLIC FACILITIES
DESIGN & ENGINEERING SERVICES DIVISION-SOUTHEAST REGION

ENLARGED MECHANICAL PLANS AND SECTIONS

AKSAS PROJECT NUMBER
68290

STATE	YEAR
ALASKA	2006
SHEET NUMBER	TOTAL SHEETS
M4.1	56

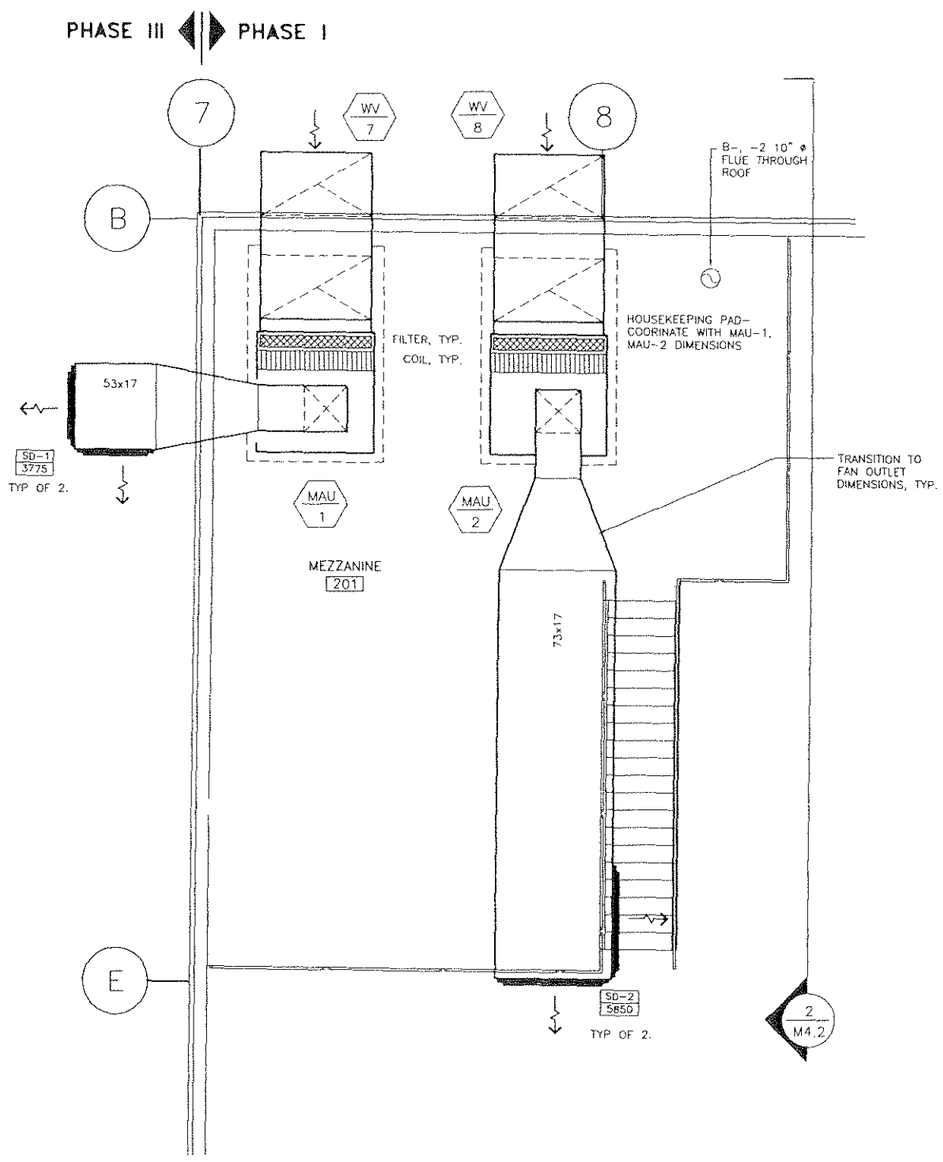

1 M4.2 ENLARGED MEZZANINE PLAN
SCALE: 1/4"=1'-0"

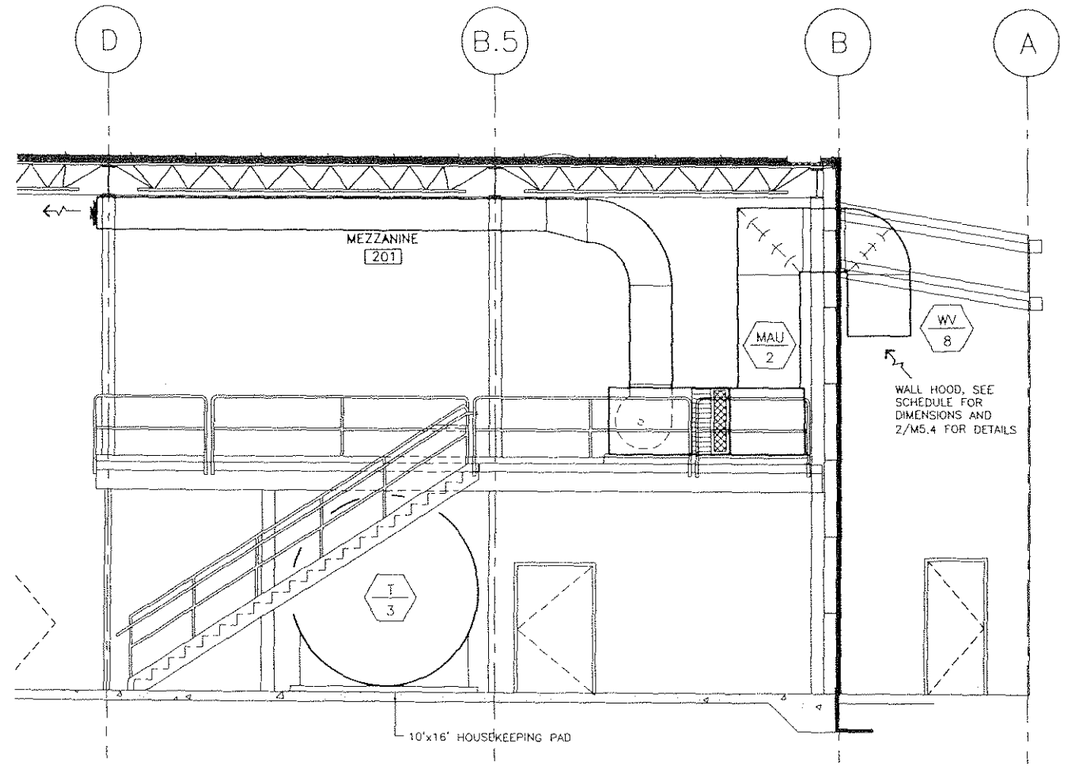

2 M4.2 SECTION AT MAU-2
SCALE: 1/4"=1'-0"

JOBS\0512 USKH DETCHIKAN SREB\DWG\M

PLOTTED DATE:
OCTOBER 4, 2006

ADDENDUM NUMBER

RECORD OF REVISIONS

No.	DATE	DESCRIPTION

KETCHIKAN AIRPORT
SNOW REMOVAL EQUIPMENT,
SAND, AND CHEMICAL
STORAGE BUILDING

PREPARED BY: USKH INC.

STATE OF ALASKA 49TH HELENA BRETAS RUETER ME-10190 REGISTERED PROFESSIONAL ENGINEER
10/5/06

PROJECT MGR.: BS
DRAWN BY: LDS
CHECKED BY: HBR
DATE: OCTOBER 6, 2006

STATE OF ALASKA
DEPARTMENT OF TRANSPORTATION
& PUBLIC FACILITIES
DESIGN & ENGINEERING SERVICES
DIVISION-SOUTHEAST REGION

ENLARGED MECHANICAL PLANS AND SECTIONS

AKSAS PROJECT NUMBER
68290

STATE	YEAR
ALASKA	2006
SHEET NUMBER	TOTAL SHEETS
M4.2	56

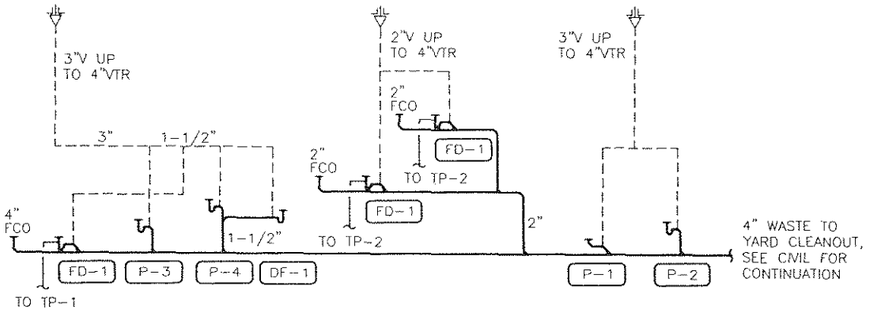

DOMESTIC WASTE AND VENT RISER

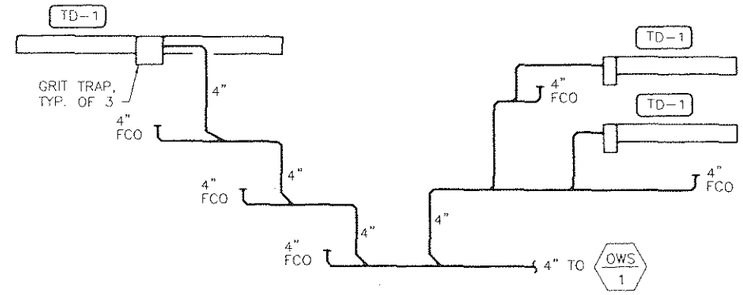

TRENCH DRAIN SYSTEM RISER

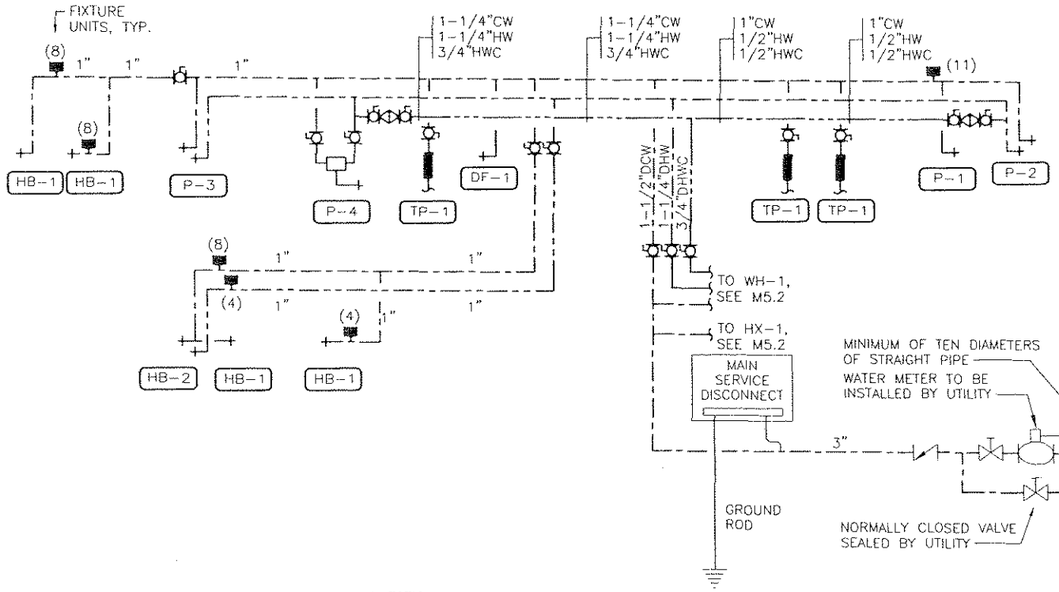

DOMESTIC HOT AND COLD WATER RISER

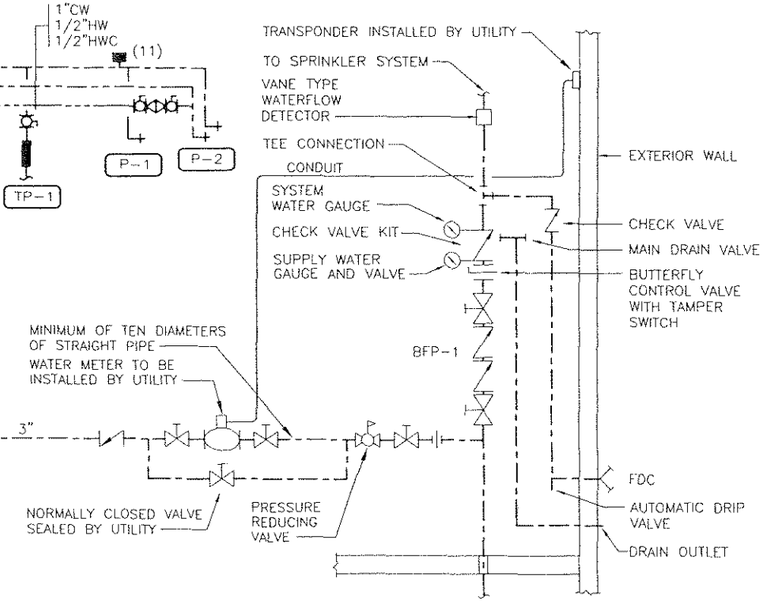

1 M5.1 PLUMBING RISER DIAGRAMS
SCALE: NONE

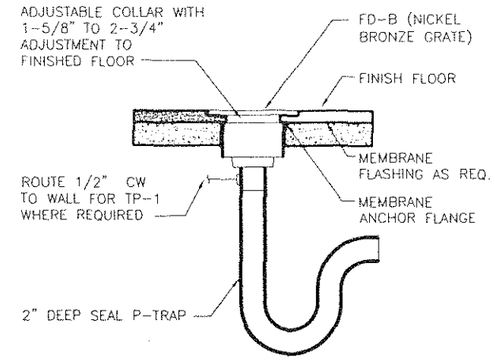

3 M5.1 FLOOR DRAIN DETAIL
SCALE: NONE

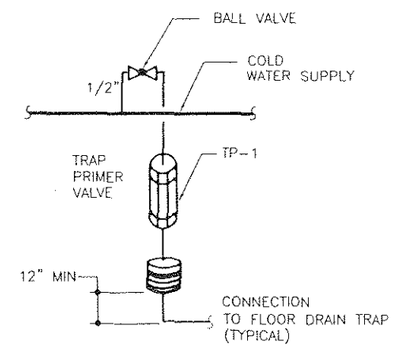

NOTE:

PROVIDE 12"X12" ACCESS BOX FOR TRAP PRIMER (RECESSED FOR FRAME WALL OR SURFACE MOUNTED FOR MASONRY WALL).

4 M5.1 TRAP PRIMER DETAIL
SCALE: NONE

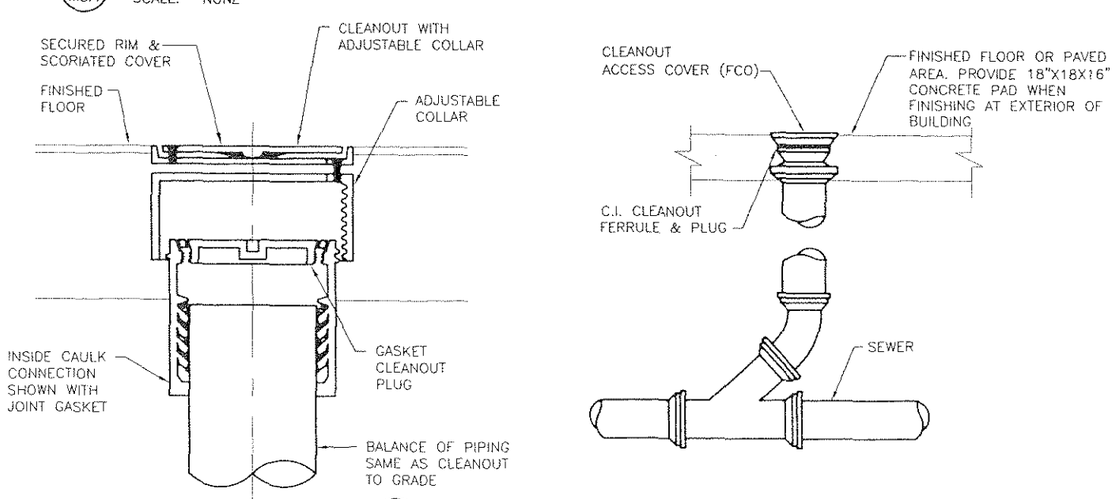

2 M5.1 CLEANOUT DETAILS
SCALE: NONE

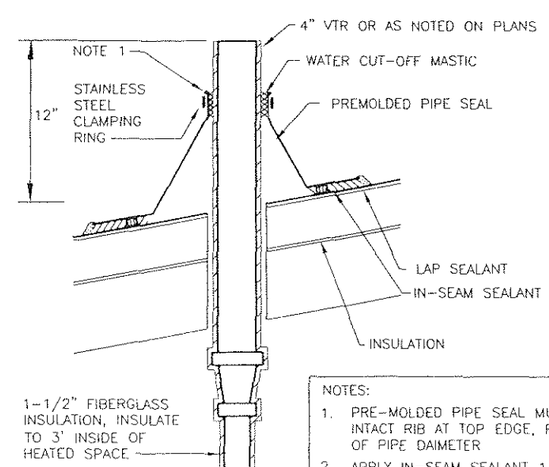

NOTES:
1. PRE-MOLDED PIPE SEAL MUST HAVE INTACT RIB AT TOP EDGE, REGARDLESS OF PIPE DAIMETER
2. APPLY IN-SEAM SEALANT 1/2 INCH FROM INSIDE EDGE OF PIPE SEAL FLANGE
3. DECK FLANGES OF THE PRE-MOLDED PIPE FLASHING SHALL NOT BE OVERLAPPED

5 M5.1 VTR DETAIL
SCALE: NONE

JOBS\0512 USKH DETCHIKAN SREB\DWG\M

PLOTTED DATE: OCTOBER 4, 2006

ADDENDUM NUMBER

RECORD OF REVISIONS

No.	DATE	DESCRIPTION

KETCHIKAN AIRPORT
SNOW REMOVAL EQUIPMENT, SAND, AND CHEMICAL STORAGE BUILDING

PREPARED BY: USKH INC.

STATE OF ALASKA 49TH HELENA BRETAS RUETER ME-10190 REGISTERED PROFESSIONAL ENGINEER
10/5/06

PROJECT MGR.: BS
DRAWN BY: LDS
CHECKED BY: HBR
DATE: OCTOBER 6, 2006

STATE OF ALASKA
DEPARTMENT OF TRANSPORTATION & PUBLIC FACILITIES
DESIGN & ENGINEERING SERVICES DIVISION-SOUTHEAST REGION

PLUMBING RISER DIAGRAMS AND DETAILS

AKSAS PROJECT NUMBER: 68290

STATE	YEAR
ALASKA	2006
SHEET NUMBER	TOTAL SHEETS
M5.1	56

264 NOTES: 1. 264 CONNECTIONS NOT SHOWN FOR CLARITY. INSTALL IN ACCORDANCE WITH BOILER IOM APPENDIX A10.
2. PROVIDE LINE VOLTAGE AND 24 V POWER AS NEEDED TO COMPLETE THE INSTALLATION; COORDINATE WITH ELECTRICAL.
3. PROVIDE OUTDOOR RESET FEATURE, SENSORS, RELAYS, BOILER SEQUENCER AND PUMP CP-3 AND CP-4 SEQUENCER.

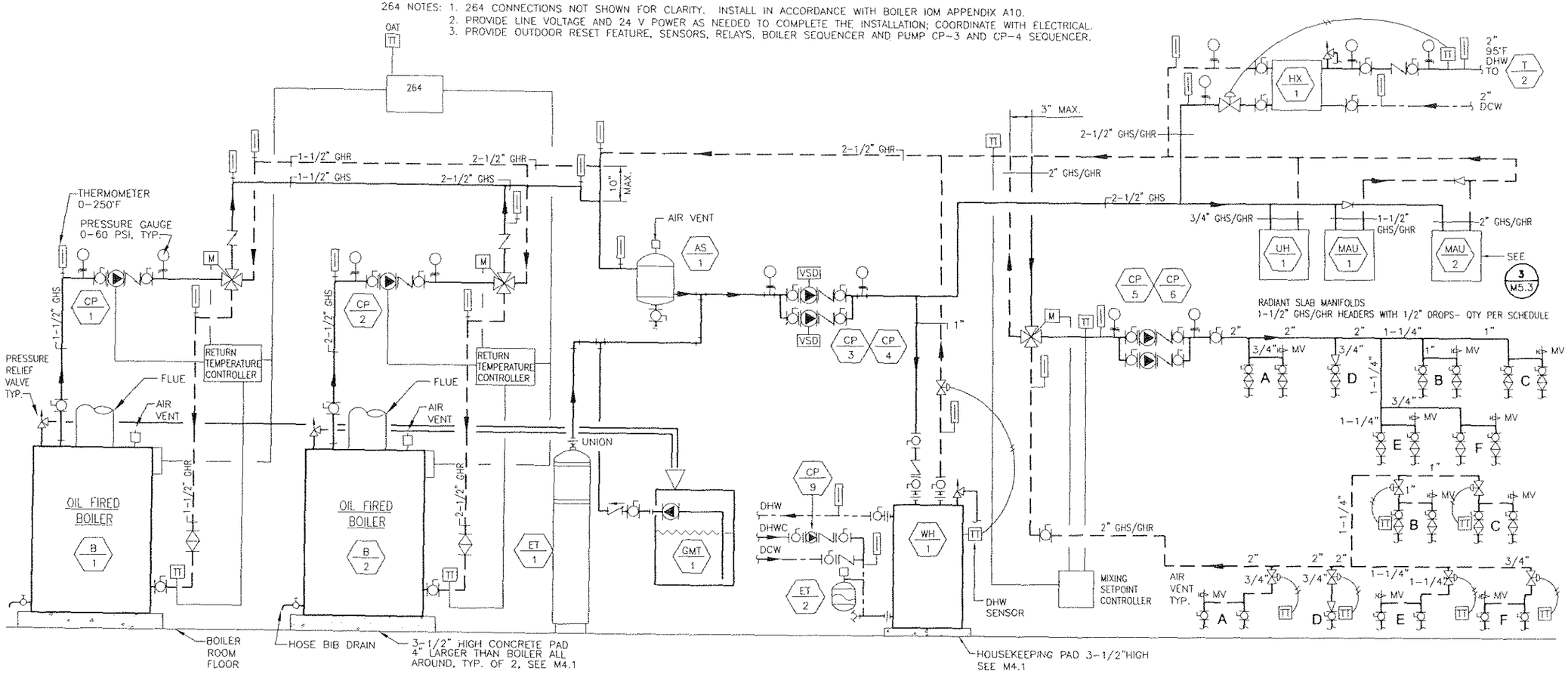

1 / M5.2 HEATING SYSTEM SCHEMATIC DIAGRAM

SCALE: NONE

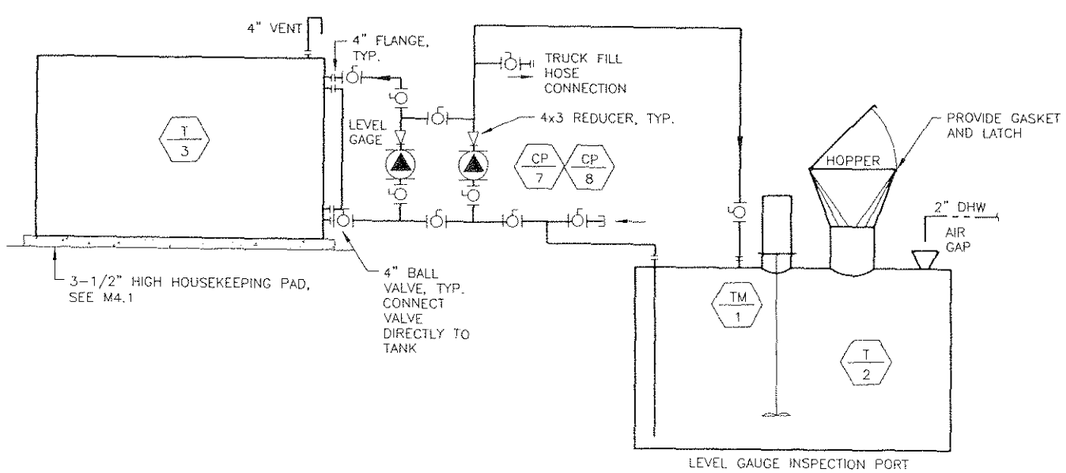

2 / M5.2 UREA AND STORAGE SYSTEM SCHEMATIC DIAGRAM

SCALE: NONE

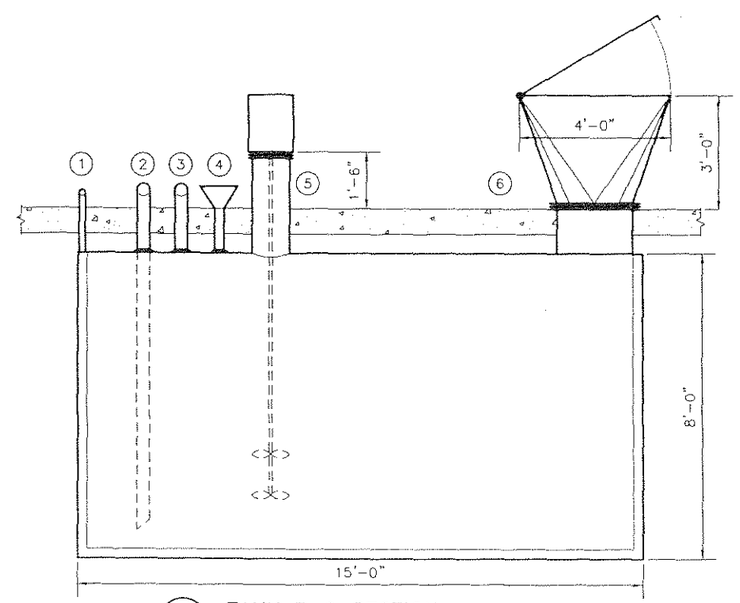

1. 2" INSPECTION PORT (NPT)
2. 4" DROP TUBE, PUMP SUCTION
3. 4" FOR PUMP DISCHARGE
4. 3" FOR WATER FILL
5. 12" FLANGE FOR TANK MIXER 18" TALL
6. 24"ø FLANGE FOR HOPPER

3 / M5.2 TANK T-2 SECTION

SCALE: 1/2"=1'-0"

PATH: JOBS\0512 USKH DETCHIKAN SREB\DWG\M

PLOTTED DATE: OCTOBER 4, 2006

ADDENDUM NUMBER

RECORD OF REVISIONS

No.	DATE	DESCRIPTION

KETCHIKAN AIRPORT
SNOW REMOVAL EQUIPMENT, SAND, AND CHEMICAL STORAGE BUILDING

PREPARED BY: USKH INC.

STATE OF ALASKA 49TH HELENA BRETAS BOETER ME-10190 REGISTERED PROFESSIONAL ENGINEER

10/5/06

PROJECT MGR.: BS
DRAWN BY: LDS
CHECKED BY: HBR
DATE: OCTOBER 6, 2006

STATE OF ALASKA
DEPARTMENT OF TRANSPORTATION & PUBLIC FACILITIES
DESIGN & ENGINEERING SERVICES DIVISION-SOUTHEAST REGION

SCHEMATICS AND DETAILS

AKSAS PROJECT NUMBER: 68290

STATE	YEAR
ALASKA	2006
SHEET NUMBER	TOTAL SHEETS
M5.2	56

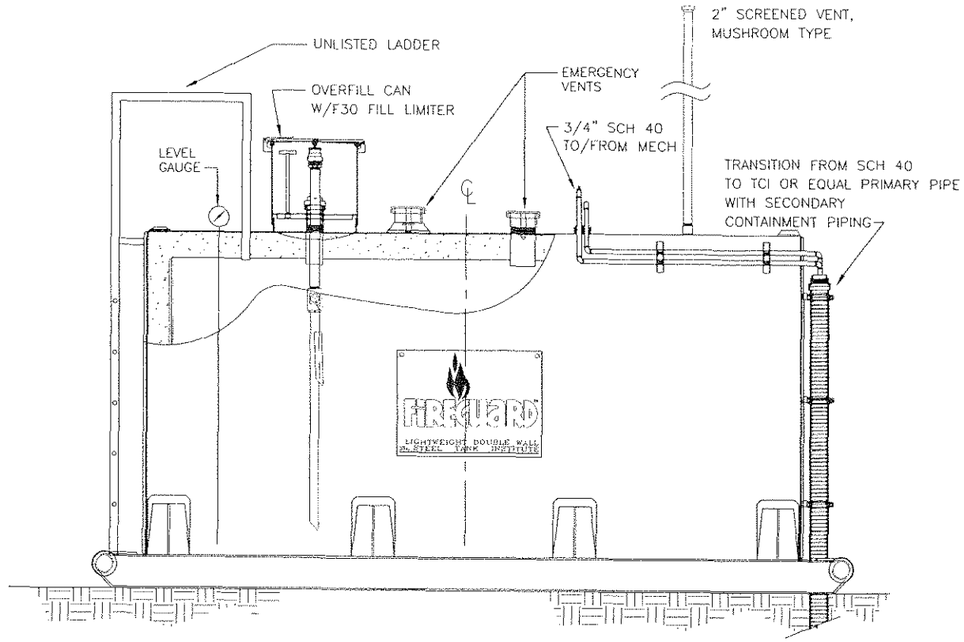

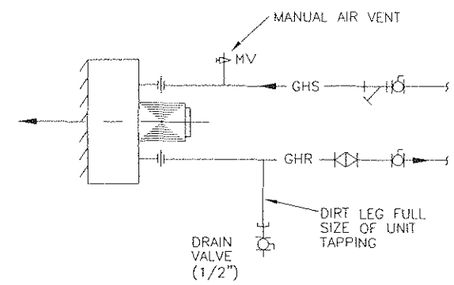

2 M5.3 **UNIT HEATER PIPING DETAIL**
SCALE: NONE

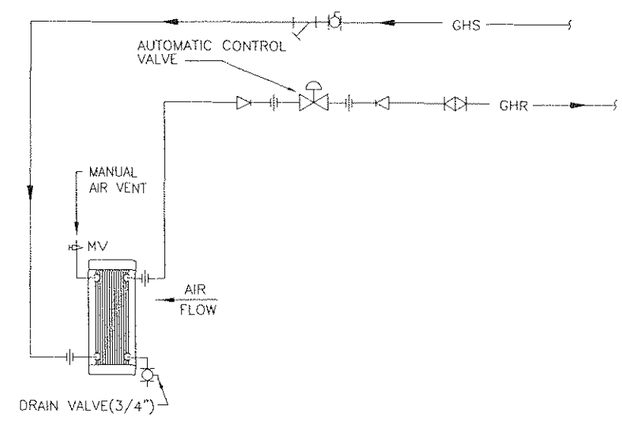

3 M5.3 **HEATING COIL PIPING DETAIL**
SCALE: NONE

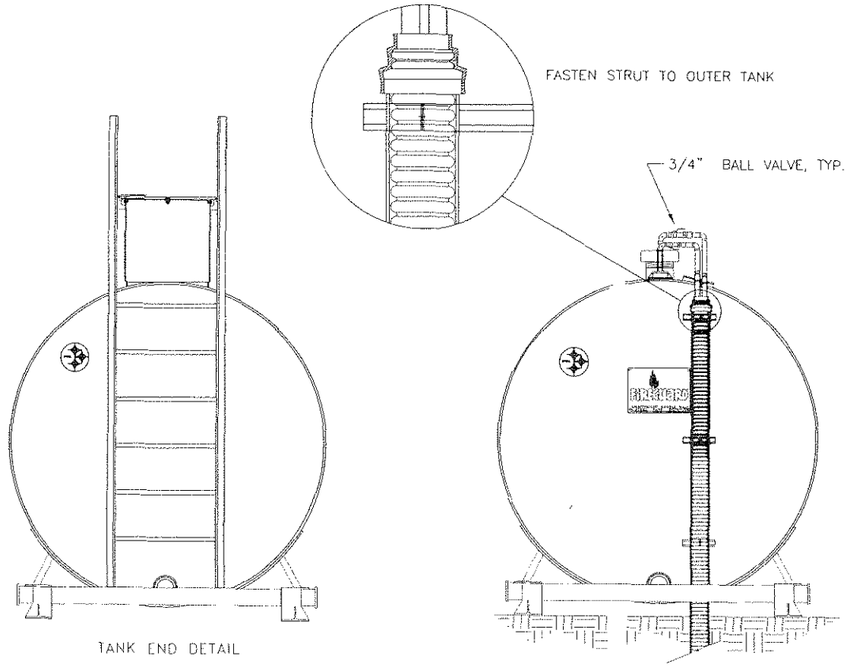

NOMINAL TANK SIZE	2,000
BASIS OF DESIGN:	ANCHORAGE TANK
DIMENSIONS	
DIAMETER OUTER TANK	6'-4"
LENGTH OUTER TANK	13'-1"
LENGTH OVERALL	–
SADDLE SPACING	72"
CAPACITIES	
INNER TANK (GALLONS)	2,019
OUTER TANK (GALLONS)	–
% CONTAINMENT	110%
MATERIALS	
INNER TANK	3/16"
OUTER TANK	3/16"
OUTER TANK HEAD	3/16"
SKID BEAMS	W X 24#
SADDLES	PL 3/16" X 12"
MISC SKID PARTS	PL 3/16"
TOWBAR	4" SCHED. 40
HEAD BRACE	N/A
OTHER DATA	
VENT SIZE	2"
Cu Ft/Hr INNER TANK	–
Cu Ft/Hr OUTER TANK	–
E. VENT INNER TANK	6"
E. VENT OUTER TANK	6"
WEIGHT	11,000 LBS.

1 M5.3 **TANK T-1 DETAIL**
SCALE: NONE

PATH:
JOBS\0512 USKH DETCHIKAN SREB\DWG\M

PLOTTED DATE:
OCTOBER 4, 2006

ADDENDUM NUMBER

RECORD OF REVISIONS

No.	DATE	DESCRIPTION

KETCHIKAN AIRPORT
SNOW REMOVAL EQUIPMENT,
SAND, AND CHEMICAL
STORAGE BUILDING

PREPARED BY: USKH INC.

STATE OF ALASKA
49TH
HELENA BRETAS RUETER
ME-10190
REGISTERED PROFESSIONAL ENGINEER
10/5/06

PROJECT MGR.: BS
DRAWN BY: LDS
CHECKED BY: HBR
DATE: OCTOBER 6, 2006

STATE OF ALASKA
DEPARTMENT OF TRANSPORTATION
& PUBLIC FACILITIES
DESIGN & ENGINEERING SERVICES
DIVISION-SOUTHEAST REGION

DETAILS

AKSAS PROJECT NUMBER
68290

STATE	YEAR
ALASKA	2006
SHEET NUMBER	TOTAL SHEETS
M5.3	56

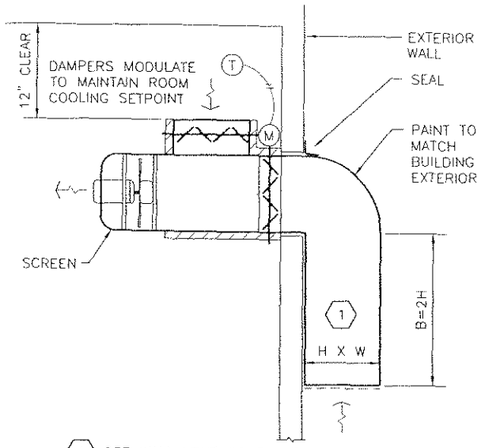

1 SEE WALL VENT SCHEDULE FOR H X W.

1/M5.4 VF-1 DETAIL
SCALE: NONE

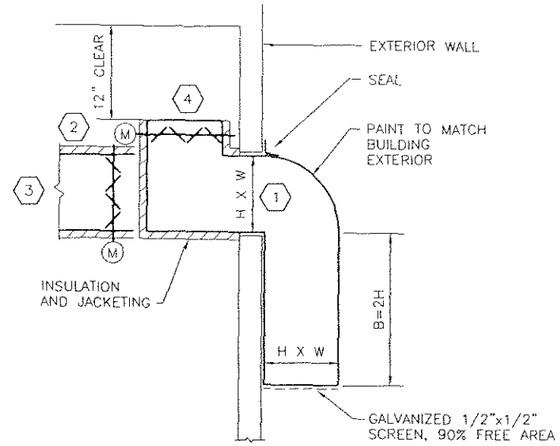

1. SEE WALL VENT SCHEDULE FOR H X W.
2. MOTORIZED DAMPER TO BE INTERLOCKED WITH ASSOCIATED EQUIPMENT.
3. ROUTE DUCT HORIZONTALLY TO MAU-1,-2, EF-1,-2,-3
4. ROUTE DUCT VERTICALLY FOR RELIEF AIR VENTING.

2/M5.4 WEATHER HOOD DETAIL
SCALE: NONE

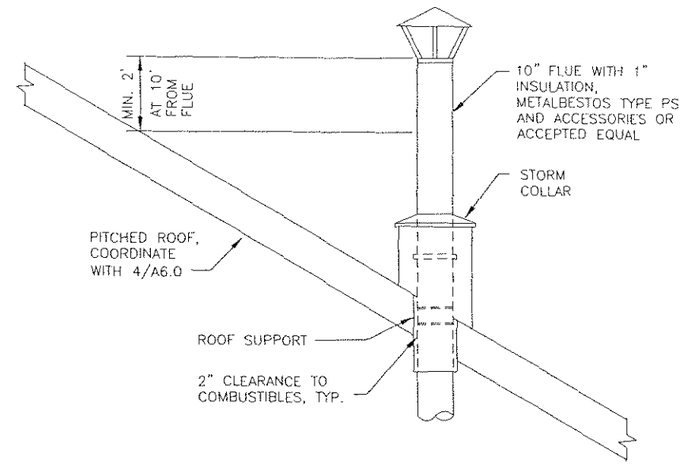

3/M5.4 FLUE PENETRATION DETAIL
SCALE: NONE

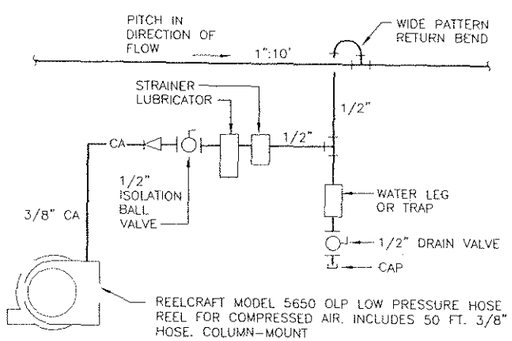

4/M5.4 COMPRESSED AIR HOSE REEL SCHEMATIC
SCALE: NONE

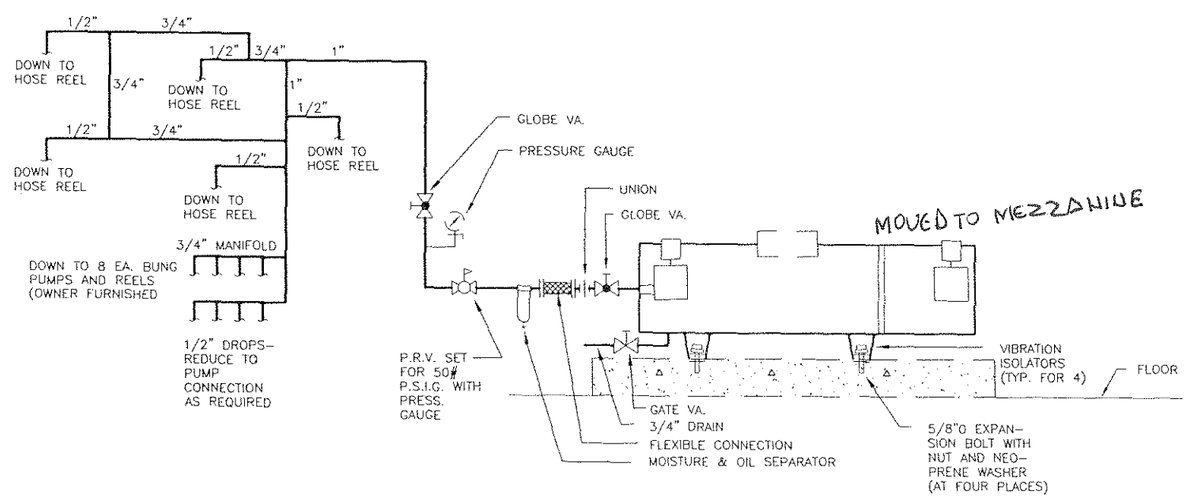

5/M5.4 COMPRESSED AIR SCHEMATIC
SCALE: NONE

PATH:
JOBS\0512 USKH DETCHIKAN SREB\DWG\M

PLOTTED DATE:
OCTOBER 4, 2006

ADDENDUM NUMBER

RECORD OF REVISIONS

No.	DATE	DESCRIPTION

KETCHIKAN AIRPORT
SNOW REMOVAL EQUIPMENT, SAND, AND CHEMICAL STORAGE BUILDING

PREPARED BY: USKH INC.

STATE OF ALASKA 49TH HELENA BRETAS RUETER ME-10190 REGISTERED PROFESSIONAL ENGINEER
10/5/06

PROJECT MGR.: BS
DRAWN BY: LDS
CHECKED BY: HBR
DATE: OCTOBER 6, 2006

STATE OF ALASKA
DEPARTMENT OF TRANSPORTATION & PUBLIC FACILITIES
DESIGN & ENGINEERING SERVICES DIVISION-SOUTHEAST REGION

DETAILS

AKSAS PROJECT NUMBER
68290

STATE	YEAR
ALASKA	2006

SHEET NUMBER	TOTAL SHEETS
M5.4	56

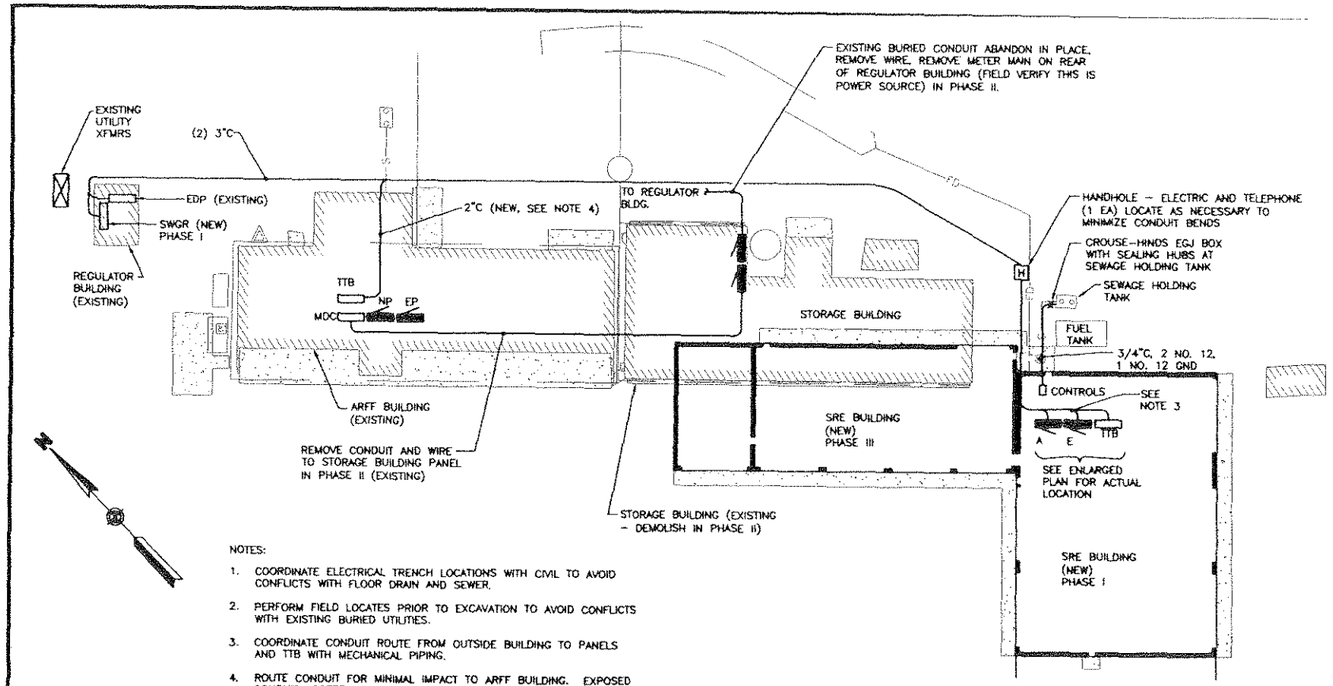

NOTES:

1. COORDINATE ELECTRICAL TRENCH LOCATIONS WITH CIVIL TO AVOID CONFLICTS WITH FLOOR DRAIN AND SEWER.
2. PERFORM FIELD LOCATES PRIOR TO EXCAVATION TO AVOID CONFLICTS WITH EXISTING BURIED UTILITIES.
3. COORDINATE CONDUIT ROUTE FROM OUTSIDE BUILDING TO PANELS AND TTB WITH MECHANICAL PIPING.
4. ROUTE CONDUIT FOR MINIMAL IMPACT TO ARFF BUILDING. EXPOSED CONDUIT ACCEPTABLE IN MECHANICAL ROOMS AND ON OUTSIDE WALL OF BUILDING. UPON EXITING BUILDING, ROUTE CONDUIT INTO POWER CONDUIT TRECH FROM REGULATOR BUILDING TO SRE BUILDING.

SITE PLAN

30 0 30 60
SCALE 1:30

LEGEND

ABBREVIATIONS:

AFF	ABOVE FINISHED FLOOR
AFG	ABOVE FINISHED GRADE
GFI	GROUND FAULT INTERRUPTED
MB	MOUNTING BOARD
PE	PHOTOELECTRIC
TTB	TELEPHONE TERMINAL BOARD
UON	UNLESS OTHERWISE NOTED
WP	WEATHERPROOF
XFMR	TRANSFORMER

SWITCHING:

S	SINGLE POLE SWITCH, 48" AFF
S_3	THREE WAY SWITCH, 48" AFF
S_4	FOUR WAY SWITCH, 48" AFF
S_{MS}	MASTER SWITCH FOR LOW VOLTAGE SYSTEM, 48" AFF
S_F	FAN SWITCH
LC	LIGHTING CONTACTOR
PE	PHOTOELECTRIC CELL
W	OCCUPANCY SENSOR: W–WALL, U–ULTRASONIC, D–DUAL TECH

LIGHTING:

	SURFACE OR SUSPENDED FLUORESCENT LUMINAIRE
	SURFACE OR PENDANT MOUNTED LUMINAIRE
	WALL MOUNTED LUMINAIRE
	WALL MOUNTED EXIT LUMINAIRE
	EXTERIOR WALL MOUNTED LUMINAIRE

POWER:

	SINGLE RECEPTACLE, 48" AFF UON.
	DUPLEX RECEPTACLE, 48" AFF UON.
	DOUBLE DUPLEX RECEPTACLE, 48" AFF
	PUSHBUTTON
	JUNCTION BOX
	HANDHOLE
	PANELBOARD
	MOTOR CONNECTION
	COMBINATION STARTER/DISCONNECT
	STARTER
	DISCONNECT

SIGNAL:

	SPRINKLER TAMPER SWITCH
	SPRINKLER PRESSURE SWITCH
	SPRINKLER FLOW SWITCH
	TELEPHONE, 18" AFF UON.
	WALL SPEAKER, 15' AFF UON.

GENERAL:

	HOME RUN
	CONDUIT: 1/2" UON.
	UNGROUNDED CONDUCTORS
	NEUTRAL: #10 WITH DOT, #12 OTHERWISE
	GROUND CONDUCTOR
	CONDUCTORS NOT SHOWN WHERE ONLY #12 NEUTRAL AND UNGROUNDED CONDUCTOR ARE REQUIRED
	FLEXIBLE CONDUIT

NOTE: ALL DEVICE HEIGHTS TO CENTER, UON.

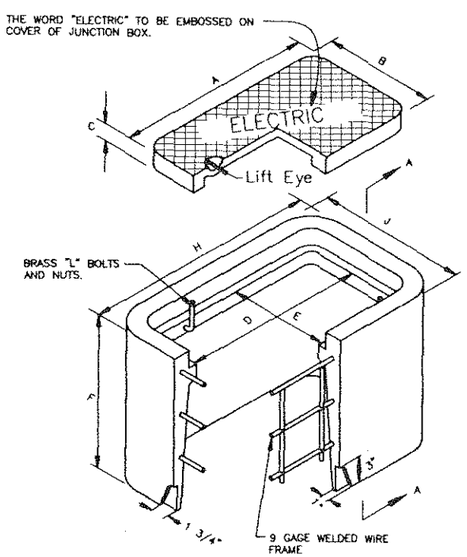

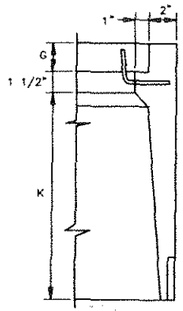

SECTION A–A

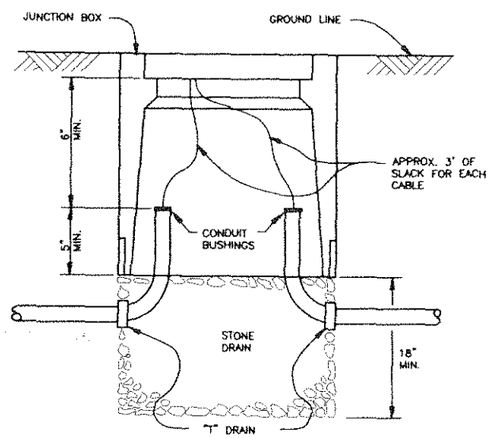

	DIMENSIONS (IN.)	
	TYPE I	TYPE I–A
A	15	22 3/4
B	10	13 1/4
C	1 3/4	2
D	13 1/2	21 1/4
E	8 1/2	11 3/4
F	12	18
G	1 3/4	2
H	19 1/2	27 1/4
J	14 1/2	17 3/4
K	8 3/4	14 1/2

NOTES:

1. COVERS SHALL BE EITHER ALUMINUM OR CAST IRON.
2. COVERS SHALL BE BONDED TO GROUND WITH COPPER BRAID OF #8 AWG CROSS SECTION. LENGTH SHALL BE 3 FT.
3. JUNCTION BOXES SHALL BE SET FLUSH WITH THE SURROUNDING SURFACE.
4. ALL CONDUITS SHALL BE BONDED TO FORM A CONTINUOUS ELECTRICALLY SECURE SYSTEM WITH THE GROUND AT THE SERVICE ENTRANCE.
5. ALL JUNCTION BOXES SHALL BE TRAFFIC RATED.
6. HANDHOLES FOR TELEPHONE ONLY SHALL HAVE COVER EMBOSSED "TELEPHONE".

DETAIL – HANDHOLE

NO SCALE

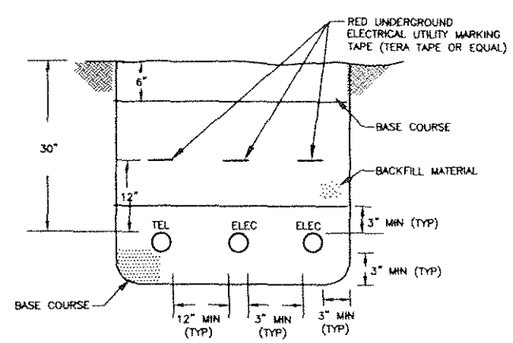

NOTE:

1. PROVIDE AND COMPACT BASE COURSE & BACKFILL PER SPECIFICATIONS.

DETAIL – TRENCH

NO SCALE

PATH: F:\projects\167 USKH\29 Ketchikan SRE\Drawings

PLOTTED DATE: Fri, 22/Sep/06 07:19PM Alex

ADDENDUM NUMBER

RECORD OF REVISIONS

No.	DATE	DESCRIPTION

KETCHIKAN AIRPORT
SNOW REMOVAL EQUIPMENT, SAND, AND CHEMICAL STORAGE BUILDING

PREPARED BY: USKH INC.

STATE OF ALASKA
B.C. HAIGHT
EE 4840

5 October 2006

PROJECT MGR.:	MAH
DRAWN BY:	RJB/PEL
CHECKED BY:	BCH
DATE: OCTOBER 6, 2006	

STATE OF ALASKA
DEPARTMENT OF TRANSPORTATION & PUBLIC FACILITIES
DESIGN & ENGINEERING SERVICES DIVISION–SOUTHEAST REGION

SITE PLAN, LEGEND, TRENCH & HANDHOLE

AKSAS PROJECT NUMBER
68290

STATE	YEAR
ALASKA	2006
SHEET NUMBER	TOTAL SHEETS
E1.1	56

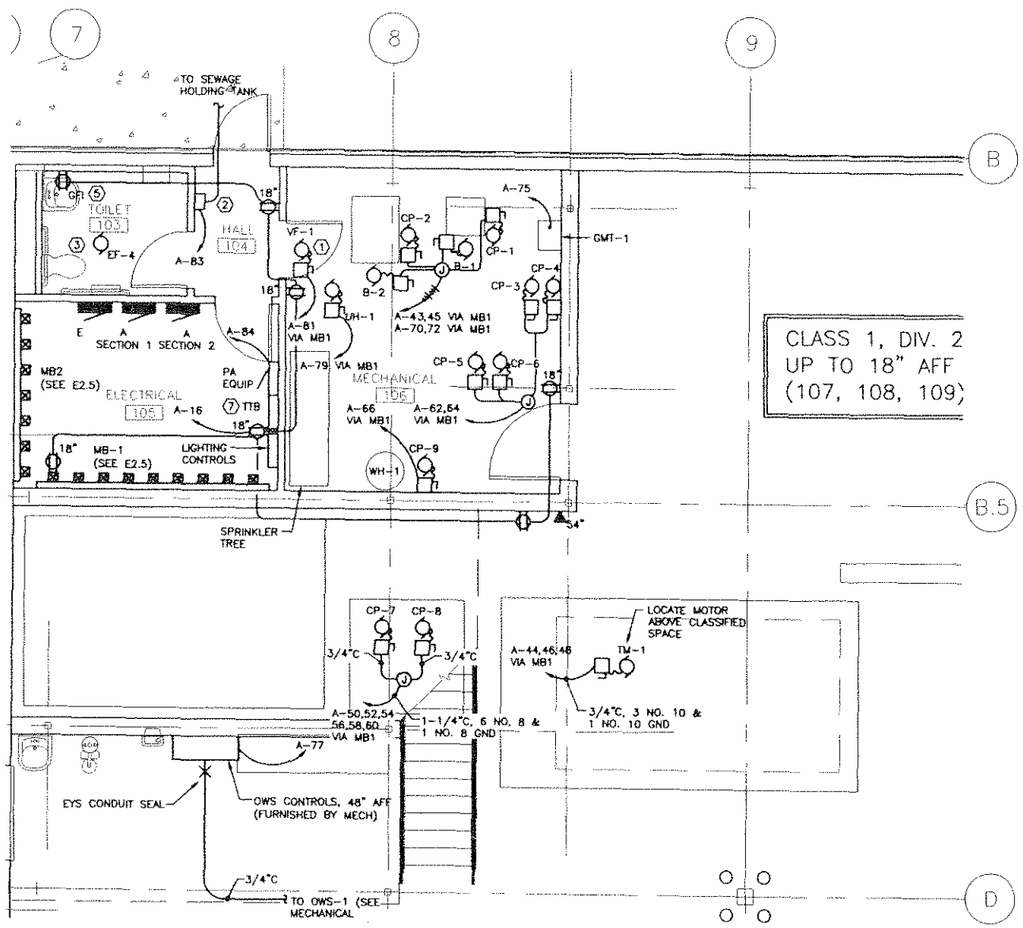

ENLARGED FLOOR PLAN

SCALE 1/4"=1'-0"

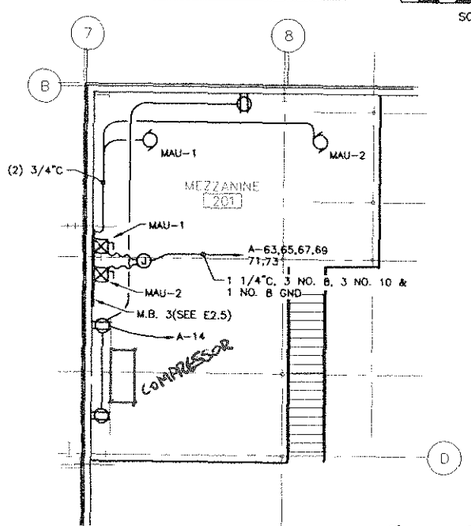

MEZZANINE FLOOR PLAN

SCALE 1/8"=1'-0"

NOTES:

1. PROVIDE POWER CONNECTION TO MOTOR AND MOTORIZED DAMPERS. SWITCHING AND CONTROL WIRING SHALL BE BY CONTROLS CONTRACTOR.
2. ALARM ENCLOSURE FOR SEWAGE HOLDING TANK (FURNISHED WITH CIVIL) MOUNT AT 48" AFF.
3. EF-4 SHALL BE POWERED FROM LIGHTING CIRCUIT E-31 AND CONTROLLED VIA ROOM OCCUPANCY SENSOR.
4. EXPOSED CONDUIT IS ACCEPTABLE IN ALL ROOMS EXCEPT TOILET 103 AND HALL 104.
5. COORDINATE DEVICE INSTALLATION WITH WAINSCOAT.
6. COORDINATE WITH ARCHITECTURAL FOR DOOR MOTOR AND CONTROLS LOCATIONS.
7. PROVIDE GROUND BUS ON TTB PER SPECIFICATIONS.
8. PROVIDE CONDUIT SEALS PER NEC FOR CONDUITS PASSING THROUGH CLASSIFIED AREA BOUNDARY INTO UNCLASSIFIED AREAS.

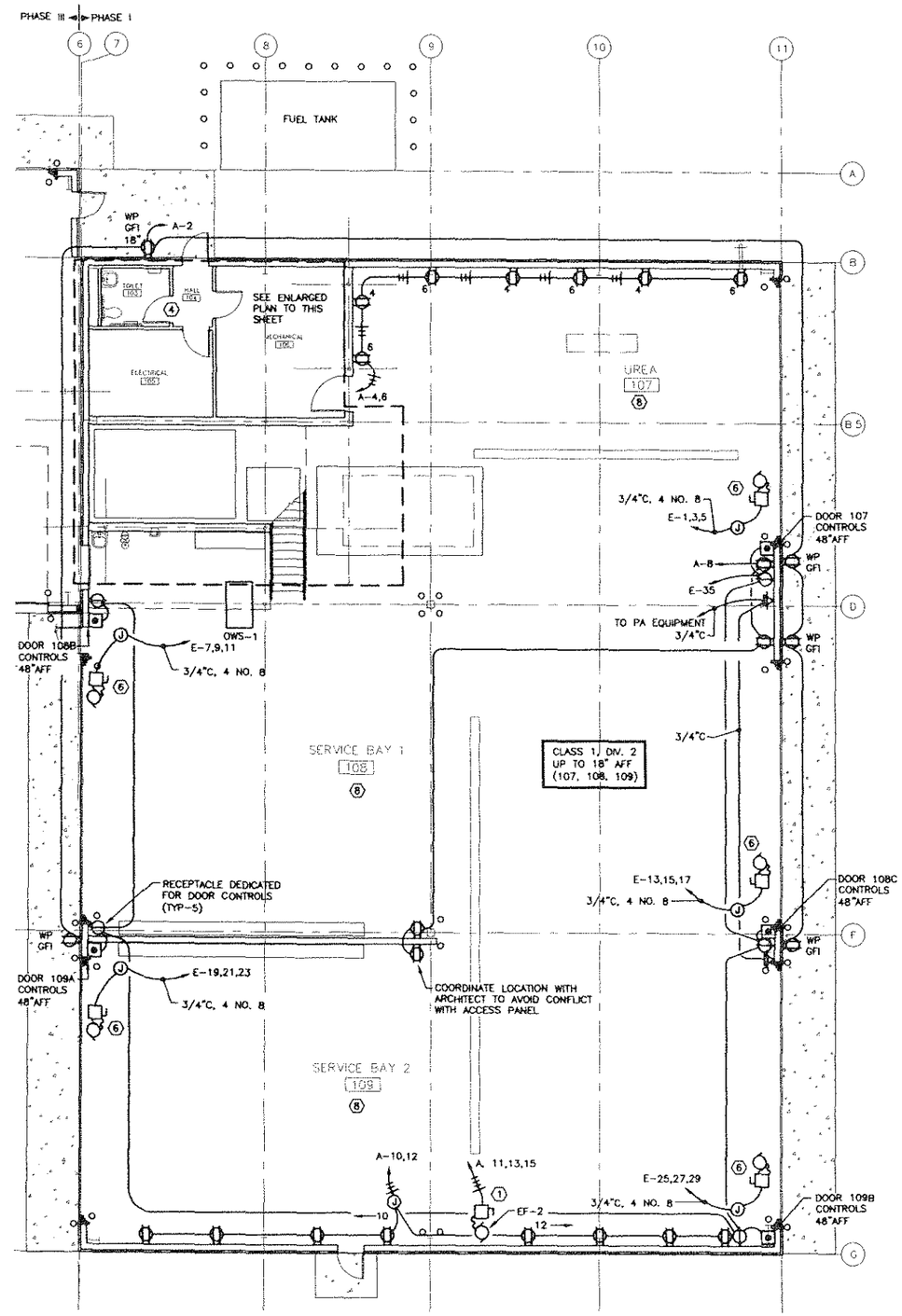

FLOOR PLAN

SCALE 1/8"=1'-0"

PATH: F:\projects\167 USKH\29 Ketchikan SRE\Drawings

PLOTTED DATE: Fri, 22/Sep/06 07:27PM Alex

ADDENDUM NUMBER

RECORD OF REVISIONS

No.	DATE	DESCRIPTION

KETCHIKAN AIRPORT SNOW REMOVAL EQUIPMENT, SAND, AND CHEMICAL STORAGE BUILDING

PREPARED BY: USKH INC.

STATE OF ALASKA 20th B.C. HAUGH CE 4800

5 OCTOBER 2006

PROJECT MGR.:	MAH
DRAWN BY:	RJB/PEL
CHECKED BY:	BCH
DATE: OCTOBER 6, 2006	

STATE OF ALASKA
DEPARTMENT OF TRANSPORTATION & PUBLIC FACILITIES
DESIGN & ENGINEERING SERVICES DIVISION-SOUTHEAST REGION

FLOOR PLAN - PHASE I POWER

AKSAS PROJECT NUMBER	
68290	
STATE	YEAR
ALASKA	2006
SHEET NUMBER	TOTAL SHEETS
E2.1	56

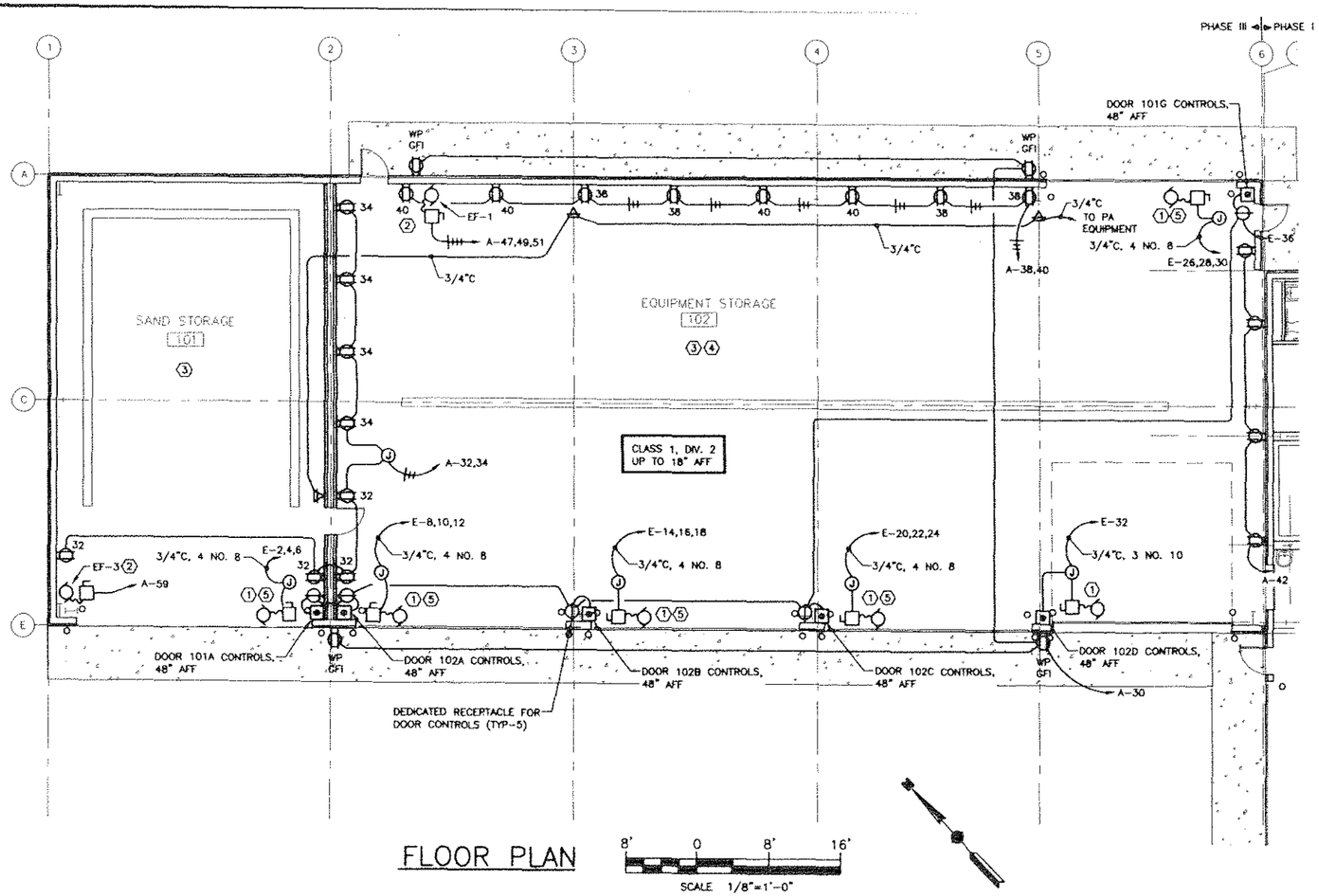

FLOOR PLAN

8' 0 8' 16'
SCALE 1/8"=1'-0"

NOTES:

1. COORDINATE WITH ARCHITECTURAL FOR DOOR MOTOR AND CONTROLS LOCATIONS.
2. PROVIDE POWER CONNECTION TO MOTOR AND MOTORIZED DAMPERS. SWITCHING AND CONTROL WIRING SHALL BE BY CONTROLS CONTRACTOR.
3. EXPOSED CONDUIT IS ACCEPTABLE IN THIS SPACE.
4. PROVIDE CONDUIT SEALS PER NEC FOR CONDUITS PASSING THROUGH CLASSIFIED AREA BOUNDARY INTO UNCLASSIFIED AREAS.
5. COORDINATE WITH ARCHITECTURAL FOR CONTROLS CONNECTION BETWEEN HYDRAULIC OPERATOR AND STARTER IN ELECTRIC 105.

PATH:
F:\projects\167 USKH\29 Ketchikan SRE\Drawings

PLOTTED DATE:
Fri, 22/Sep/06 07:28PM Alex

ADDENDUM NUMBER

RECORD OF REVISIONS

No.	DATE	DESCRIPTION

KETCHIKAN AIRPORT
SNOW REMOVAL EQUIPMENT,
SAND, AND CHEMICAL
STORAGE BUILDING

PREPARED BY: USKH INC.

STATE OF ALASKA
B.C. HAIGHT
EE 4680
5 OCTOBER 2006

PROJECT MGR.: MAH
DRAWN BY: RJB/PEL
CHECKED BY: BCH
DATE: OCTOBER 6, 2006

STATE OF ALASKA
DEPARTMENT OF TRANSPORTATION
& PUBLIC FACILITIES
DESIGN & ENGINEERING SERVICES
DIVISION - SOUTHEAST REGION

FLOOR PLAN - PHASE III POWER

AKSAS PROJECT NUMBER
68290

STATE	YEAR
ALASKA	2006
SHEET NUMBER	TOTAL SHEETS
E2.2	56

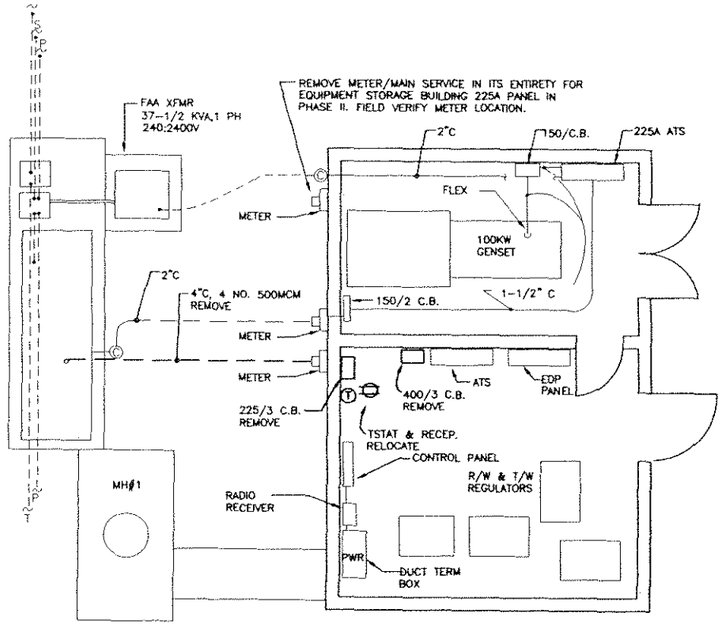

REGULATOR BUILDING – DEMO

1/4" = 1'-0"

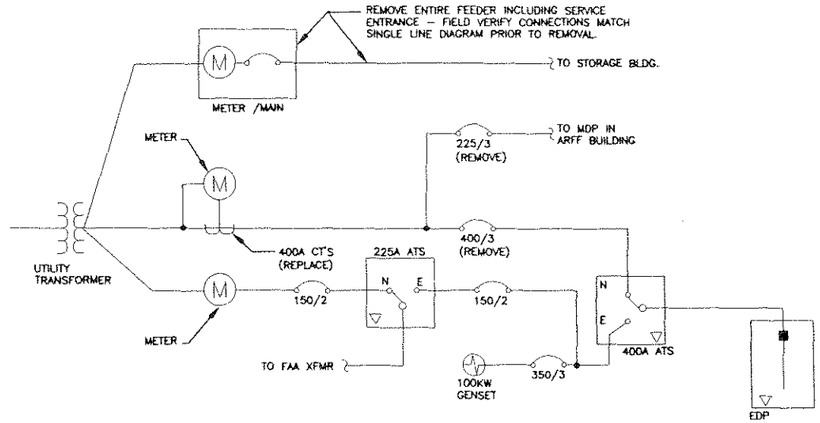

NOTE: ALL EQUIPMENT IS EXISTING TO REMAIN AND IS LOCATED AT THE REGULATOR BUILDING, UON.

EXISTING SINGLE LINE DIAGRAM

NO SCALE

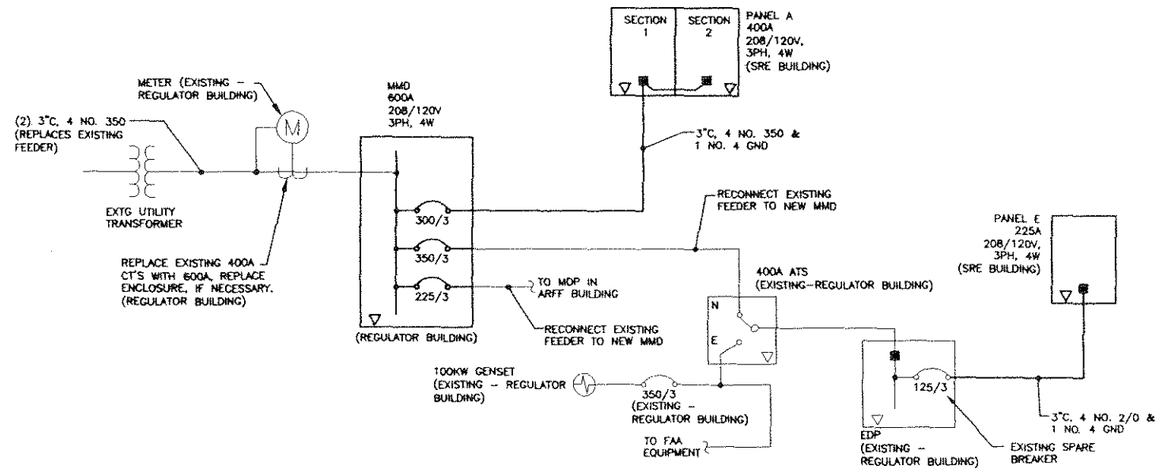

NEW SINGLE LINE DIAGRAM

NO SCALE

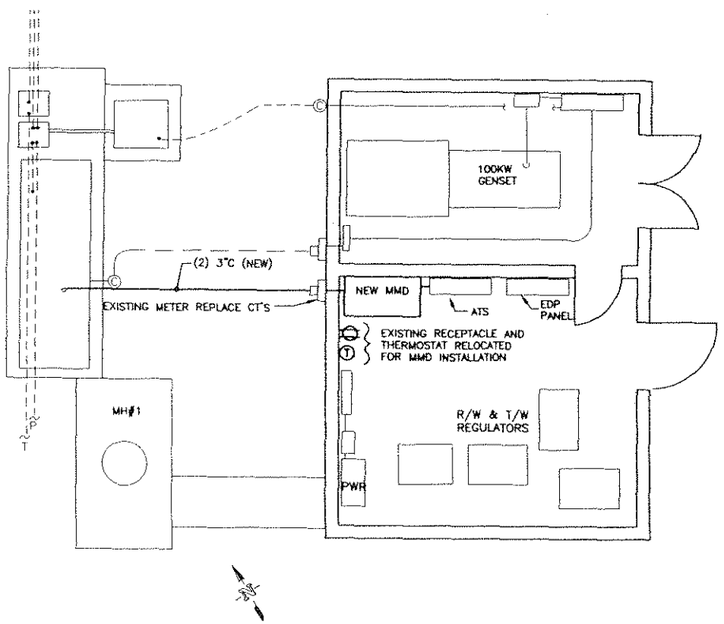

REGULATOR BUILDING – NEW

1/4" = 1'-0"

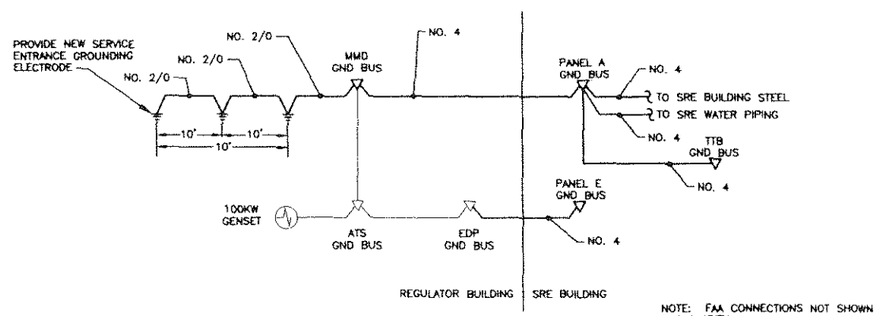

NOTE: FAA CONNECTIONS NOT SHOWN FOR CLARITY.

PARTIAL GROUNDING SCHEMATIC

NO SCALE

DO NOT SCALE FROM THESE DRAWINGS USE DIMENSIONS

F:\projects\167 USKH\29 Ketchikan SRE\Drawings

PLOTTED DATE:
Fri, 22/Sep/06 07:26PM Alex

ADDENDUM NUMBER

RECORD OF REVISIONS

No.	DATE	DESCRIPTION

KETCHIKAN AIRPORT
SNOW REMOVAL EQUIPMENT, SAND, AND CHEMICAL STORAGE BUILDING

PREPARED BY: USKH INC.

5 OCTOBER 2006

PROJECT MGR.:	MAH
DRAWN BY:	RJB/PEL
CHECKED BY:	BCH
DATE: OCTOBER 6, 2006	

STATE OF ALASKA
DEPARTMENT OF TRANSPORTATION & PUBLIC FACILITIES
DESIGN & ENGINEERING SERVICES DIVISION–SOUTHEAST REGION

SINGLE LINE DIAGRAM & FLOOR PLAN REGULATOR BLDG PHASE I

AKSAS PROJECT NUMBER
68290

STATE	YEAR
ALASKA	2006
SHEET NUMBER	TOTAL SHEETS
E2.3	56

EQUIPMENT SCHEDULE

DESIGNATION			LOAD					CIRCUITING					CONTROL		
ITEM	DESCRIPTION	LOCATION	HP	KW	AMPS	VOLTS	PHASE	NO.	RATING	CONDUCTORS	DISCONNECT SWITCH	DISCONNECT FUSE	STARTER SIZE	CONTROL	REMARKS
TM-1	TANK MIXER	UREA 107	3	.	.	208	3 PH	.	25/3	3 NO. 10 & 1 NO. 10GND	HD	.	0	ON-OFF	.
CP-1	BOILER CIRC	MECH 106	1/3	.	.	120	1 PH	.	20/1	2 NO. 12 & 1 NO. 12GND	GD	.	00	ON-OFF	.
CP-2	BOILER CIRC	MECH 106	1/2	.	.	120	1 PH	.	20/1	2 NO. 12 & 1 NO. 12GND	GD	.	00	ON-OFF	.
CP-3	MAIN CIRC	MECH 106	1/2	.	.	120	1 PH	.	20/1	2 NO. 12 & 1 NO. 12GND	GD	.	00	VFD	VFD FURN. BY MECH
CP-4	MAIN CIRC	MECH 106	1/2	.	.	120	1 PH	.	20/1	2 NO. 12 & 1 NO. 12GND	GD	.	00	VFD	VFD FURN. BY MECH
CP-5	RADIANT SLAB	MECH 106	1/2	.	.	120	1 PH	.	20/1	2 NO. 12 & 1 NO. 12GND	GD	.	00	ON-OFF	.
CP-6	RADIANT SLAB	MECH 106	1/2	.	.	120	1 PH	.	20/1	2 NO. 12 & 1 NO. 12GND	GD	.	00	ON-OFF	.
CP-7	UREA CIRC	UREA 107	5	.	.	208	3 PH	.	35/3	3 NO. 8 & 1 NO. 8GND	HD	.	1	ON-OFF	.
CP-8	UREA CIRC	UREA 107	5	.	.	208	3 PH	.	35/3	3 NO. 8 & 1 NO. 8GND	HD	.	1	ON-OFF	.
CP-9	DHW CIRC	MECH 106	1/25	.	.	120	1 PH	.	15/1	2 NO. 12 & 1 NO. 12GND	GD	.	00	ON-OFF	.
GMT-1	GLYCOL MAKEUP	MECH 106	.	0.05	.	120	1 PH	.	.	.	.	.	.	.	.
B-1	BOILER	MECH 106	.	.	.	120	1 PH	.	20/1	2 NO. 12 & 1 NO. 12GND	SW	.	.	.	.
B-2	BOILER	MECH 106	.	.	.	120	1 PH	.	20/1	2 NO. 12 & 1 NO. 12GND	SW	.	.	.	.
UH-1	UNIT HEATER	MECH 106	1/20	.	.	120	1 PH	.	20/1	2 NO. 12 & 1 NO. 12GND	GD	.	00	ON-OFF	.
EF-1	EXHAUST FAN	EQUIP STOR 102	1	.	.	208	3 PH	.	15/3	3 NO. 12 & 1 NO. 12GND	GD		00	H-O-A	MOTORIZED DAMPER
EF-2	EXHAUST FAN	SERVICE BAY 109	2	.	.	208	3 PH	.	20/3	3 NO. 12 & 1 NO. 12GND	HD	.	0	H-O-A	MOTORIZED DAMPER
EF-3	EXHAUST FAN	SAND STOR 101	1/3	.	.	120	1 PH	.	20/1	2 NO. 12 & 1 NO. 12GND	GD	.	00	H-O-A	MOTORIZED DAMPER
EF-4	EXHAUST FAN	TOILET 103	.	0.83	.	120	1 PH	.	.	.	.	.	.	.	PWR/SW FROM LT CKT
VF-1	COOLING/COMB	MECH 106	1/4	.	.	120	1 PH	.	15/1	2 NO. 12 & 1 NO. 12GND	GD	.	00	ON-OFF	MOTORIZED DAMPER
MAU-1	MAKE-UP AIR UNIT	MEZZ 201	5	.	.	208	3 PH	.	35/3	3 NO.8 & 1 NO. 8GND	HD	.	1	H-O-A	MOTORIZED DAMPER
MAU-2	MAKE-UP AIR UNIT	MEZZ 201	7.5	.	.	208	3 PH	.	50/3	3 NO. 6 & 1 NO. 6GND	HD	.	1	H-O-A	MOTORIZED DAMPER
OWS-1	OIL WATER SEP	SERVICE BAY 108	.	.	.	120	1 PH	.	.	.	.	.	.	.	CONTROLS BY MECH
.	SEWAGE HOLDING TANK	HALL 104	.	.	.	120	1 PH	.	20/1	2 NO. 12 & 1 NO. 12GND	.	.	.	.	CONTROLS FURN. BY CIVIL
.	DOOR 101A	SAND STOR 101	5	.	.	208	3 PH	.	35/3	3 NO. 8 & 1 NO. 8GND	.	.	1	ON-OFF	DISC. FURN. BY MFR.
.	DOOR 102A	EQUIP STOR 102	5	.	.	208	3 PH	.	35/3	3 NO. 8 & 1 NO. 8GND	.	.	1	ON-OFF	DISC. FURN. BY MFR.
.	DOOR 102B	EQUIP STOR 102	5	.	.	208	3 PH	.	35/3	3 NO. 8 & 1 NO. 8GND	.	.	1	ON-OFF	DISC. FURN. BY MFR.
.	DOOR 102C	EQUIP STOR 102	5	.	.	208	3 PH	.	35/3	3 NO. 8 & 1 NO. 8GND	.	.	1	ON-OFF	DISC. FURN. BY MFR.
.	DOOR 102D	EQUIP STOR 102	3/4	.	.	120	1 PH	.	30/1	2 NO. 10 & 1 NO. 10GND	GD	.	00	ON-OFF	
.	DOOR 102G	EQUIP STOR 102	5	.	.	208	3 PH	.	35/3	3 NO. 8 & 1 NO. 8GND	.	.	1	ON-OFF	DISC. FURN. BY MFR.
.	DOOR 107	UREA 107	5	.	.	208	3 PH	.	35/3	3 NO. 8 & 1 NO. 8GND	.	.	1	ON-OFF	DISC. FURN. BY MFR.
.	DOOR 108B	SERVICE BAY 108	5	.	.	208	3 PH	.	35/3	3 NO. 8 & 1 NO. 8GND	.	.	1	ON-OFF	DISC. FURN. BY MFR.
.	DOOR 108C	SERVICE BAY 108	5	.	.	208	3 PH	.	35/3	3 NO. 8 & 1 NO. 8GND	.	.	1	ON-OFF	DISC. FURN. BY MFR.
.	DOOR 109A	SERVICE BAY 109	5	.	.	208	3 PH	.	35/3	3 NO. 8 & 1 NO. 8GND	.	.	1	ON-OFF	DISC. FURN. BY MFR.
.	DOOR 109B	SERVICE BAY 109	5	.	.	208	3 PH	.	35/3	3 NO. 8 & 1 NO. 8GND	.	.	1	ON-OFF	DISC. FURN. BY MFR.

PANEL A (SECTION 1)

SIZE	VOLTS/PHASE	MAIN	LOCATION	MOUNT
400 AMPS	120/208V, 3 PH	LUGS ONLY	ELECTRICAL 105	SURFACE

CKT NO	DESCRIPTION	BREAKER AMP/POLE	KVA CKT	KVA AØ	KVA BØ	KVA CØ	KVA CKT	BREAKER AMP/POLE	DESCRIPTION	CKT NO
1	EXTERIOR BUILDING LTG	20/1	0.4	1.3			0.9	20/1	EXTERIOR	2
3	UREA 107 WALLPACKS	20/1	1.2		1.7		0.5	20/1	UREA 107	4
5	UREA 107 HIGH BAYS	20/1	0.8			1.5	0.7	20/1	UREA 107	6
7	SERVICE BAY 1 108 HIGH BAYS	20/1	1.2	1.9			0.7	20/1	SERVICE BAY 2 109	8
9	SERVICE BAY 1 108 HIGH BAYS	20/1	1.2		1.9		0.7	20/1	SERVICE BAY 2 109	10
11	SERVICE BAY 2 109 HIGH BAYS	20/1	0.8			1.5	0.7	20/1	SERVICE BAY 2 109	12
13	SERVICE BAY 2 109 HIGH BAYS	20/1	1.2	1.7			0.5	20/1	MEZZANINE 201	14
15	EXTERIOR BUILDING	20/1	0.4		1.7		1.3	20/1	ROOMS 103-106	16
17	EQUIPMENT STORAGE 102 WALLPACKS	20/1	1.2			1.2	0.0	20/1	SPARE	18
19	EQUIPMENT STORAGE 102 HIGH BAYS	20/1	1.2	1.2			0.0	20/1	SPARE	20
21	EQUIPMENT STORAGE 102 HIGH BAYS	20/1	1.2		1.2		0.0	20/1	SPARE	22
23	EQUIPMENT STORAGE 102 WALLPACKS	20/1	1.2			1.2	0.0	20/1	SPARE	24
25	SAND STORAGE 101	20/1	1.2	1.2			0.0	20/1	SPARE	26
27	INTERIOR LTG CONTROLS	20/1	0.2		0.2		0.0	20/1	SPARE	28
29	SPARE	20/1	0.0			0.0	0.0	20/1	SPARE	30
31	SPARE	20/1	0.0	0.7			0.7	20/1	EXTERIOR	32
33	SPARE	20/1	0.0		0.7		0.7	20/1	SAND STOR 101, EQUIPMENT STOR 102	34
35	SPARE	20/1	0.0			0.7	0.7	20/1	EQUIPMENT STOR 102	36
37	SPARE	20/1	0.0	0.7			0.7	20/1	EQUIPMENT STOR 102	38
39	SPARE	20/1	0.0		0.7		0.7	20/1	EQUIPMENT STOR 102	40
41	SPARE	20/1	0.0			0.7	0.7	20/1	EQUIPMENT STOR 102	42
BALANCED CONNECTED LOAD = 72.8 KVA / 202 AMPS				8.7	8.1	6.8				
MAXIMUM CONNECTED LOAD = 72.8 KVA / 218 AMPS										

PANEL A (SECTION 2)

SIZE	VOLTS/PHASE	MAIN	LOCATION	MOUNT
400 AMPS	120/208V, 3 PH	LUGS ONLY	ELECTRICAL 105	SURFACE

CKT NO	DESCRIPTION	BREAKER AMP/POLE	KVA CKT	KVA AØ	KVA BØ	KVA CØ	KVA CKT	BREAKER AMP/POLE	DESCRIPTION	CKT NO
43	BOILER B-1	20/1	1.5	2.8			1.3	25/3	TANK MIXER TM-1	44
45	CIRC PUMP CP-1	20/1	1.5		2.8		1.3	--	----	46
47	EXHAUST FAN EF-1	15/3	0.6			1.9	1.3	--	----	48
49	----	--	0.6	2.6			2.0	25/3	CIRC PUMP CP-7	50
51	----	--	0.6		2.6		2.0	--	----	52
53	EXHAUST FAN EF-2	20/3	0.9			2.9	2.0	--	----	54
55	----	--	0.9	2.9			2.0	25/3	CIRC PUMP CP-8	56
57	----	--	0.9		2.9		2.0	--	----	58
59	EXHAUST FAN EF-3	20/1	0.9			2.9	2.0	--	----	60
61	COOLING/COMB VF-1	20/1	0.7	3.1			2.4	20/1	CIRC PUMPS CP-3, CP-4	62
63	MAKE-UP AIR UNIT MAU-1	25/3	2.0		4.4		2.4	20/1	CIRC PUMPS CP-5, CP-6	64
65	----	--	2.0			2.1	0.1	15/1	CIRC PUMPS CP-9	66
67	----	--	2.0	2.2			0.2	20/1	SPRINKLER DIALER	68
69	MAKE-UP AIR UNIT MAU-2	45/3	2.9		4.4		1.5	20/1	BOILER B-2	70
71	----	--	2.9			4.4	1.5	20/1	CIRC PUMP CP-2	72
73	----	--	2.9	2.9			0.0	20/1	SPARE	74
75	GLYCOL MAKE-UP GMT-1	20/1	0.2		0.2		0.0	20/1	SPARE	76
77	OWS-1 CONTROLS	20/1	0.2			0.2	0.0	20/1	SPARE	78
79	UNIT HEATER UH-1	20/1	0.1	0.1			0.0	20/1	SPARE	80
81	COOLING/COMB VF-1	15/1	0.7		0.7		0.0	20/1	SPARE	82
83	SEPTIC TANK CONTROLS	20/1	0.2			0.4	0.2	20/1	PA EQUIPMENT	84
				16.6	18.0	14.8				

PANEL E

SIZE	VOLTS/PHASE	MAIN	LOCATION	MOUNT
225 AMPS	120/208V, 3 PH	LUGS ONLY	ELECTRICAL 105	SURFACE

CKT NO	DESCRIPTION	BREAKER AMP/POLE	KVA CKT	KVA AØ	KVA BØ	KVA CØ	KVA CKT	BREAKER AMP/POLE	DESCRIPTION	CKT NO
1	DOOR 107	35/3	2.0	4.0			2.0	35/3	DOOR 101A	2
3	----	--	2.0		4.0		2.0	--	----	4
5	----	--	2.0			4.0	2.0	--	----	6
7	DOOR 108B	35/3	2.0	4.0			2.0	35/3	DOOR 102A	8
9	----	--	2.0		4.0		2.0	--	----	10
11	----	--	2.0			4.0	2.0	--	----	12
13	DOOR 108C	35/3	2.0	4.0			2.0	35/3	DOOR 102B	14
15	----	--	2.0		4.0		2.0	--	----	16
17	----	--	2.0			4.0	2.0	--	----	18
19	DOOR 109A	35/3	2.0	4.0			2.0	35/3	DOOR 102C	20
21	----	--	2.0		4.0		2.0	--	----	22
23	----	--	2.0			4.0	2.0	--	----	24
25	DOOR 109B	35/3	2.0	4.0			2.0	35/3	DOOR 102G	26
27	----	--	2.0		4.0		2.0	--	----	28
29	----	--	2.0			4.0	2.0	--	----	30
31	T103, ELEC 105, MECH 106, MEZZ 201 LTG	20/1	1.6	3.3			1.7	30/1	DOOR 102D	32
33	UREA 107, SERV BAYS 108, & 109 PERIMETER	20/1	1.5		3.0		1.5	20/1	SAND STOR 101,EQUIP STOR 102 PERIMETER LTG	34
35	HYDRO DOOR CONTROL POWER	20/1	0.5			1.0	0.5	20/1	HYDRO DOOR CONTROL POWER	36
37	SPARE	20/1	0.0	0.0			0.0	20/1	SPARE	38
39	SPARE	20/1	0.0		0.0		0.0	20/1	SPARE	40
41	SPARE	20/1	0.0			0.0	0.0	20/1	SPARE	42
BALANCED CONNECTED LOAD = 66.3 KVA / 184 AMPS				23.3	23.0	20.0			BALANCED DEMAND LOAD = 31.3 KVA / 87 AMPS	
MAXIMUM CONNECTED LOAD = 66.3 KVA / 194 AMPS									MAXIMUM DEMAND LOAD = 31.3 KVA / 94 AMPS	

PATH:
F:\projects\167 USKH\29 Ketchikan SRE\Drawings

PLOTTED DATE:
Fri, 22/Sep/06 07:25PM Alex

ADDENDUM NUMBER

RECORD OF REVISIONS

No.	DATE	DESCRIPTION

KETCHIKAN AIRPORT
SNOW REMOVAL EQUIPMENT,
SAND, AND CHEMICAL
STORAGE BUILDING

PREPARED BY: USKH INC.

STATE OF ALASKA
10th
B.C. HAIGH
EE 4800

5 OCTOBER 2006

PROJECT MGR.: MAH
DRAWN BY: RJB/PEL
CHECKED BY: BCH
DATE: OCTOBER 6, 2006

STATE OF ALASKA
DEPARTMENT OF TRANSPORTATION
& PUBLIC FACILITIES
DESIGN & ENGINEERING SERVICES
DIVISION-SOUTHEAST REGION

SCHEDULES

AKSAS PROJECT NUMBER
68290

STATE	YEAR
ALASKA	2006
SHEET NUMBER	TOTAL SHEETS
E2.4	56

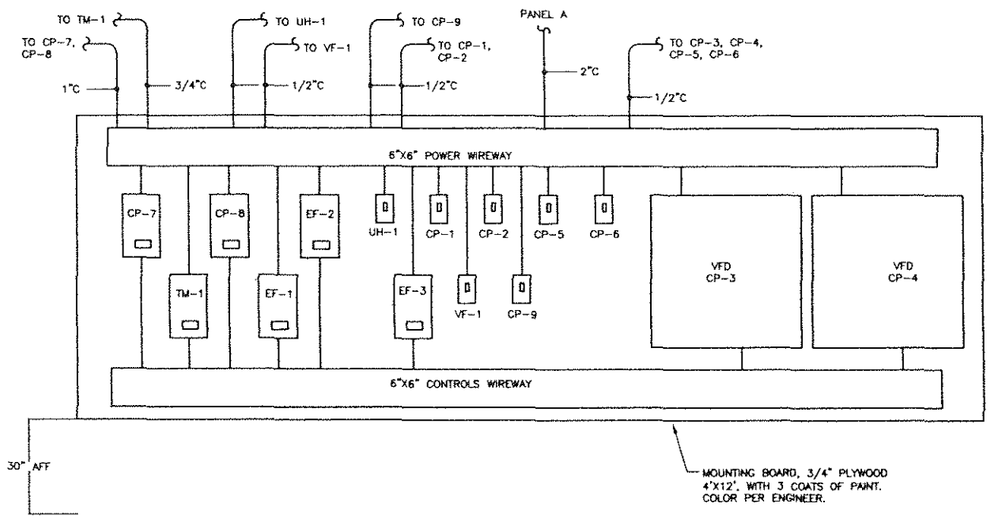

ELEVATION – MOUNTING BOARD 1

NO SCALE

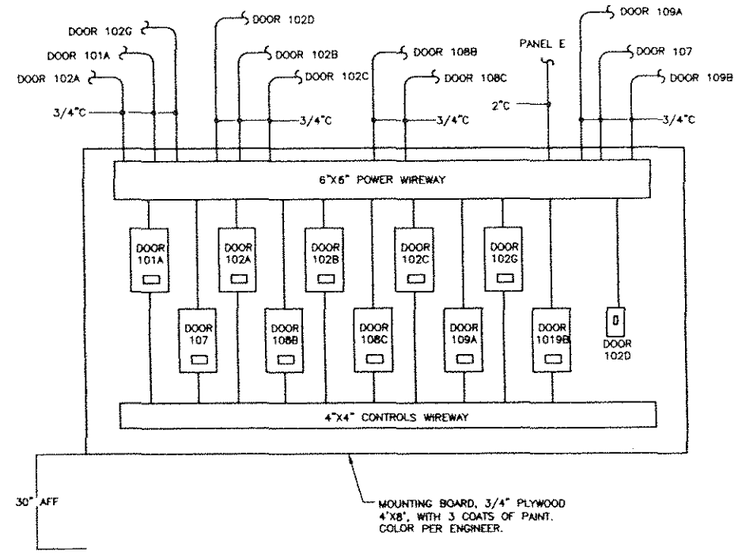

ELEVATION – MOUNTING BOARD 2

NO SCALE

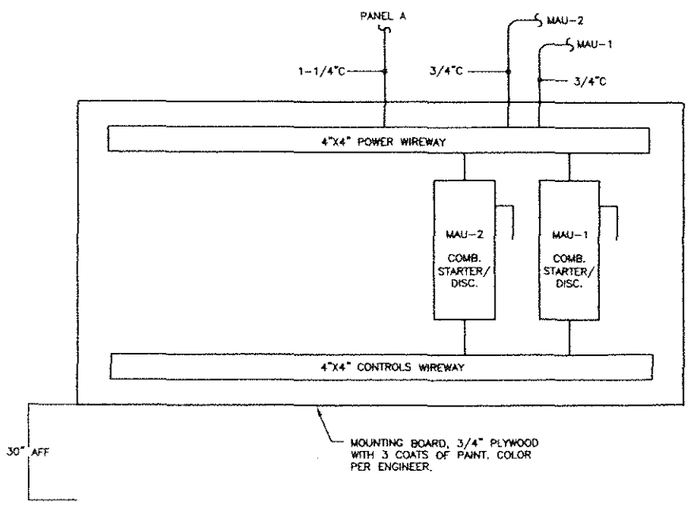

ELEVATION – MOUNTING BOARD MB3

NO SCALE

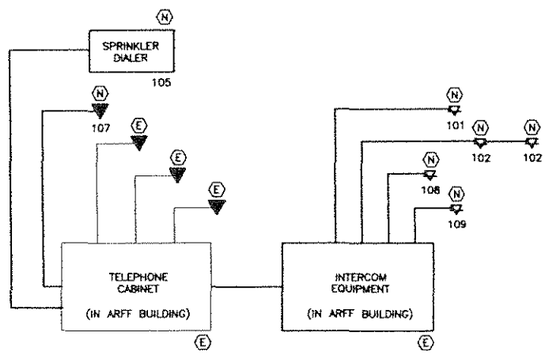

NOTES:

1. CONNECT PAGING SPEAKERS AND TELEPHONE TO EXISTING HEADEND EQUIPMENT LOCATED IN THE ARFF BUILDING.
2. INSTALL NEW TELEPHONE IN UREA 107.
3. INSTALL PAGING SPEAKERS IN SERVICE BAYS 1 AND 2 (1 EACH).
4. INSTALL PAGING SPEAKERS IN STORAGE 101, (1 EACH) AND IN STORAGE 102 (2 EACH).
5. INSTALL DEDICATED TELEPHONE LINES (2) TO SPRINKLER DIALER.

TELEPHONE RISER

NO SCALE

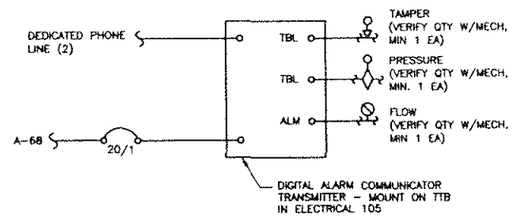

SPRINKLER DIALER

NO SCALE

DO NOT SCALE FROM THESE DRAWINGS USE DIMENSIONS

F:\projects\167 USKH\29 Ketchikan SRE\Drawings

PLOTTED DATE:
Fri, 22/Sep/06 07:23PM Alex

ADDENDUM NUMBER

RECORD OF REVISIONS

No.	DATE	DESCRIPTION

KETCHIKAN AIRPORT
SNOW REMOVAL EQUIPMENT, SAND, AND CHEMICAL STORAGE BUILDING

PREPARED BY: USKH INC.

STATE OF ALASKA 29th B.C. HAIGHT EE 4806

5 OCTOBER 2006

PROJECT MGR.:	MAH
DRAWN BY:	RJB/PEL
CHECKED BY:	BCH
DATE: OCTOBER 6, 2006	

STATE OF ALASKA
DEPARTMENT OF TRANSPORTATION & PUBLIC FACILITIES
DESIGN & ENGINEERING SERVICES DIVISION – SOUTHEAST REGION

RISER DIAGRAMS & MOUNTING BOARDS

AKSAS PROJECT NUMBER	
68290	
STATE	YEAR
ALASKA	2006
SHEET NUMBER	TOTAL SHEETS
E2.5	56

NOTES:

1. EXPOSED CONDUIT IS ACCEPTABLE IN ALL ROOMS EXCEPT TOILET 103 AND HALL 104.

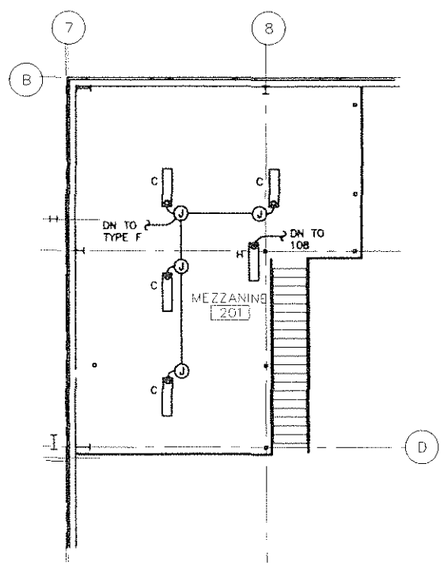

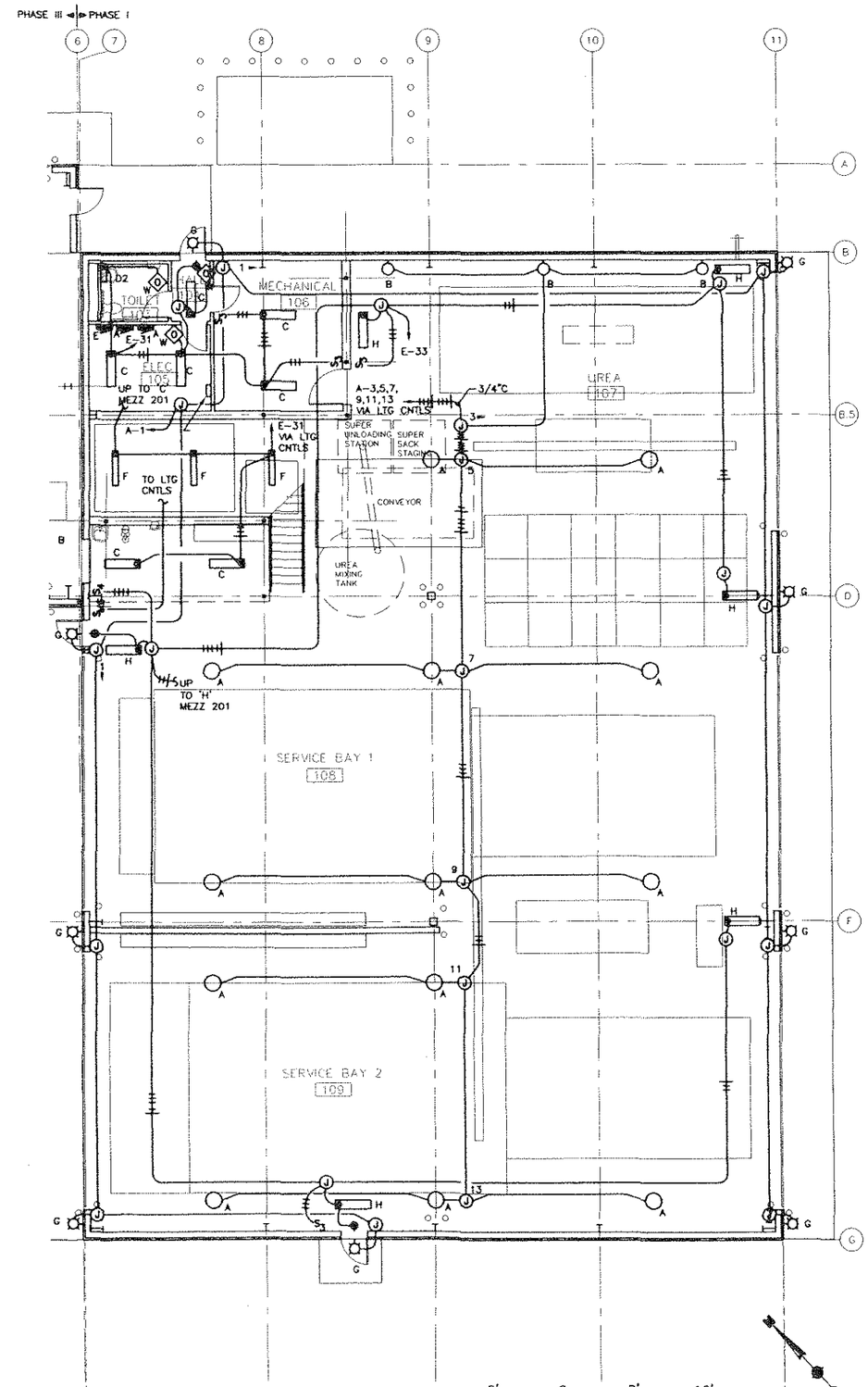

FLOOR PLAN

SCALE 1/8"=1'-0"

PATH:
F:\projects\167 USKH\29 Ketchikan SRE\Drawing

PLOTTED DATE:
Fri, 22/Sep/08 07:22PM Alex

ADDENDUM NUMBER

RECORD OF REVISIONS

No.	DATE	DESCRIPTION

KETCHIKAN AIRPORT
SNOW REMOVAL EQUIPMENT,
SAND, AND CHEMICAL
STORAGE BUILDING

PREPARED BY: USKH INC.

STATE OF ALASKA
B.C. HAIRT
EE 4806

5 OCTOBER 2006

PROJECT MGR.:	MAH
DRAWN BY:	RJB/PEL
CHECKED BY:	BCH
DATE: OCTOBER 6, 2006	

STATE OF ALASKA
DEPARTMENT OF TRANSPORTATION
& PUBLIC FACILITIES
DESIGN & ENGINEERING SERVICES
DIVISION-SOUTHEAST REGION

FLOOR PLAN - PHASE I LIGHTING

AKSAS PROJECT NUMBER	
68290	
STATE	YEAR
ALASKA	2006
SHEET NUMBER	TOTAL SHEETS
E3.1	56

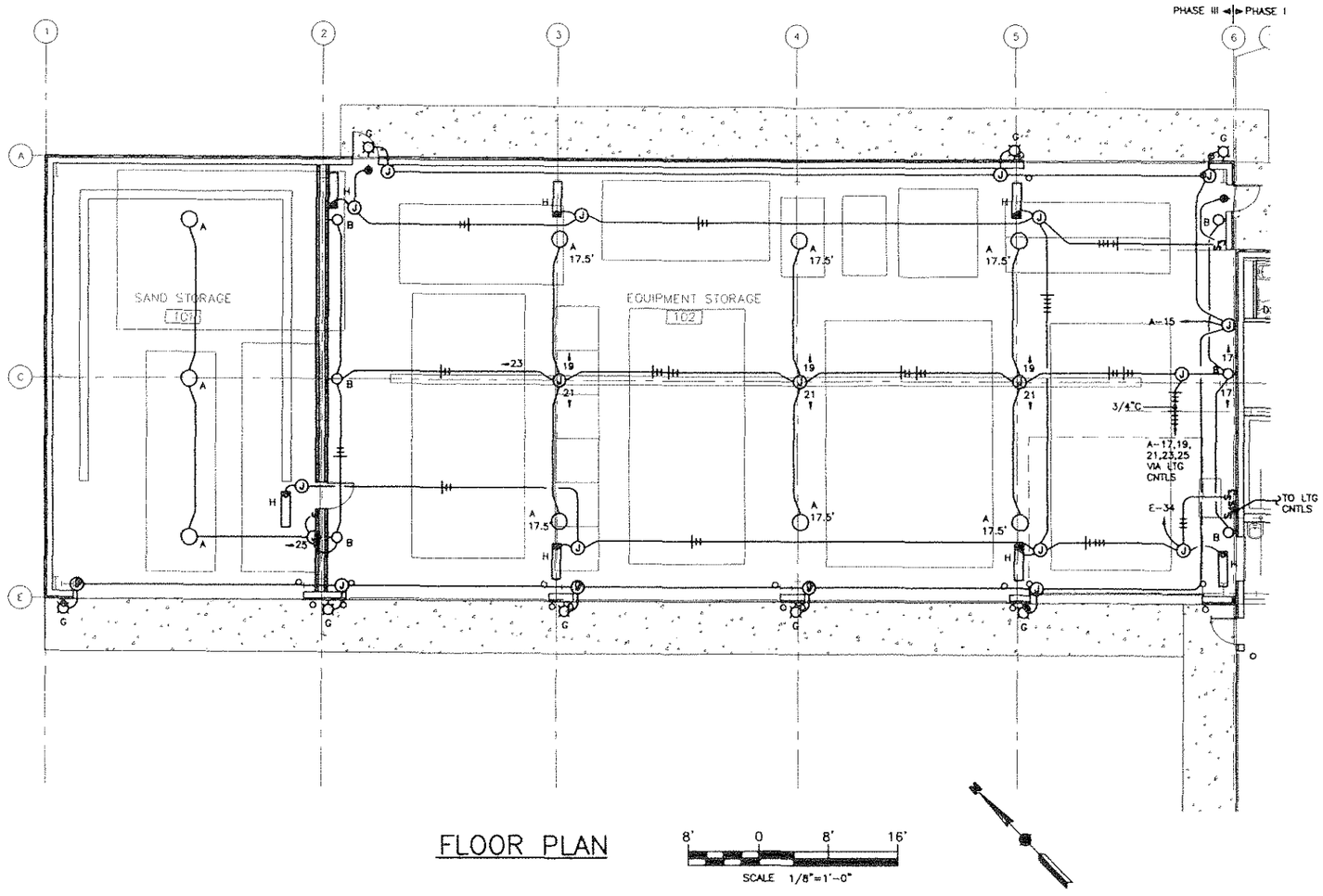

FLOOR PLAN

PATH:
F:\projects\167 USKH\29 Ketchikan SRE\Drawings

PLOTTED DATE:
Fri, 22/Sep/06 07:20PM Alex

ADDENDUM NUMBER

RECORD OF REVISIONS		
No.	DATE	DESCRIPTION

KETCHIKAN AIRPORT
SNOW REMOVAL EQUIPMENT,
SAND, AND CHEMICAL
STORAGE BUILDING

PREPARED BY: USKH INC.

STATE OF ALASKA
49th
B.C. HAIGH
EE 4800

5 OCTOBER 2006

PROJECT MGR.:	MAH
DRAWN BY:	RJB/PEL
CHECKED BY:	BCH
DATE: OCTOBER 6, 2006	

STATE OF ALASKA
DEPARTMENT OF TRANSPORTATION
& PUBLIC FACILITIES
DESIGN & ENGINEERING SERVICES
DIVISION–SOUTHEAST REGION

FLOOR PLAN - PHASE III LIGHTING

AKSAS PROJECT NUMBER	
68290	
STATE	YEAR
ALASKA	2006
SHEET NUMBER	TOTAL SHEETS
E3.2	56

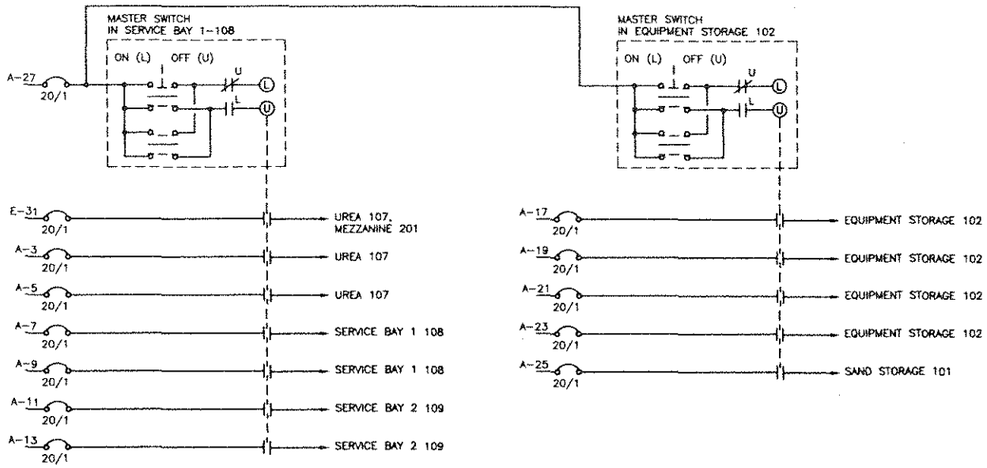

SCHEMATIC – INTERIOR LIGHTING CONTROLS

NO SCALE

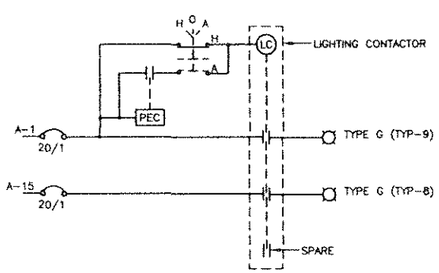

SCHEMATIC – EXTERIOR LIGHTING CONTROLS

NO SCALE

LUMINAIRE SCHEDULE

TYPE	DESCRIPTION	MANUFACTURER	LAMPS	REMARKS
A	PENDANT MOUNTED HID HIGH BAY INDUSTRIAL WITH PRISMATIC GLASS REFLECTOR, 1 LAMP	HOLOPHANE PE-40LMH-12-P-N-PE40	(1) 400W MH 3800K, CRI 65	MOUNT @ 20'-0" AFF TO BOTTOM OF LUMINAIRE, UON.
B	HID WALLPACK, NON-CUTOFF, DIE-CAST ALUMINUM HOUSING, BOROSILICATE PRISMATIC GLASS REFRACTOR, 1 LAMP	HOLOPHANE WL3K-400MH-12-WH	(1) 400W MH 3800K, CRI 65	MOUNT @ 18'-0" AFF TO BOTTOM OF LUMINAIRE, UON.
C	4' CEILING MOUNTED LINEAR FLUORESCENT PARABOLIC INDUSTRIAL, END PLATES AND WIREGUARD, 2 LAMP	LITHONIA PV 2 54T5HO 120 GEB10 PCEP WGAFPV	(2) 54W T5HO 3500K, CRI 85	-
D	2' WALL MOUNTED LINEAR FLUORESCENT WRAPAROUND, EXTRUDED ALUMINUM HOUSING, CLEAR POLYCARBONATE LENS, 2 LAMP	DESIGNPLAN 885-8-F1-0-01-1-C-P-0	(2) 24W T5HO 3500K, CRI 85	WALL MOUNT ABOVE MIRROR.
F	4' CEILING MOUNTED LINEAR FLUORESCENT WRAPAROUND, EXTRUDED ALUMINUM HOUSING, CLEAR POLYCARBONATE LENS, 2 LAMP	DESIGNPLAN 885-8-80-0-01-1-C-P-0	(2) 54W T5HO 3500K, CRI 85	-
G	EXTERIOR COMPACT FLUORESCENT WALL SCONCE, DIE-CAST ALUMINUM HOUSING, TEMPERED GLASS LENS, MEDIUM THROW DISTRIBUTION, BRONZE PAINT FINISH, 1 LAMP	GARDCO LIGHTING 111-MT-32TRF-UNIV-BRP	(1) 32W TRF 3500K, CRI 85	MOUNT @ 13'-0" AFF TO BOTTOM OF LUMINAIRE, UON.
H	4' SUSPENDED OR WALL MOUNTED ENCLOSED FLUORESCENT INDUSTRIAL, POLYCARBONATE HOUSING AND CLEAR POLYCARBONATE LENS, 2 LAMP, 1 LAMP EMERGENCY	HOLOPHANE CTL 4 SA 1 254 12	(2) 54W T5HO 3500K, CRI 85	MOUNT @ 18'-0" AFF TO BOTTOM OF LUMINAIRE, UON.
⊗	EMERGENCY EXIT LIGHT, NICKEL-CADMIUM BATTERY, SELF DIAGNOSTICS AND POLYCARBONATE SHIELD SINGLE	LITHONIA LE S 1 G 120/277 EL N SD VR	LED	MOUNT @ 8'-0" AFF
◇O	OCCUPANCY SENSOR, AUTOMATIC WALL SWITCH	THE WATT STOPPER WA-200	LED	MOUNT @ 48" AFF TO CENTER

PATH:
F:\projects\187 USKH\29 Ketchikan SP[illegible]

PLOTTED DATE:
Fri, [illegible]

ADDENDUM NUMBER

RECORD OF REVISIONS

No.	DATE	DESCRIPTION

KETCHIKAN AIRPORT
SNOW REMOVAL EQUIPMENT,
SAND, AND CHEMICAL
STORAGE BUILDING

PREPARED BY: USKH INC.

STATE OF ALASKA
B.C. HAIGHT
EE 4980

5 OCTOBER 2006

PROJECT MGR.: MAH
DRAWN BY: RJB/PEL
CHECKED BY: BCH
DATE: OCTOBER 6, 2006

STATE OF ALASKA
DEPARTMENT OF TRANSPORTATION
& PUBLIC FACILITIES
DESIGN & ENGINEERING SERVICES
DIVISION-SOUTHEAST REGION

LUMINAIRE SCHEDULE DETAILS

AKSAS PROJECT NUMBER
68290

STATE	YEAR
ALASKA	2006
SHEET NUMBER	TOTAL SHEETS
E3.3	56