AS ADVERTISED

STATE	PROJECT	SHEET NO.	TOTAL
ALASKA	F-093-2(2)	1	4

STATE OF ALASKA
DEPARTMENT OF TRANSPORTATION
&
PUBLIC FACILITIES

PLAN AND PROFILE
PROPOSED HIGHWAY PROJECT
F-093-2 (2)
AUKE BAY FERRY TERMINAL
MODIFICATIONS
JUNEAU, ALASKA

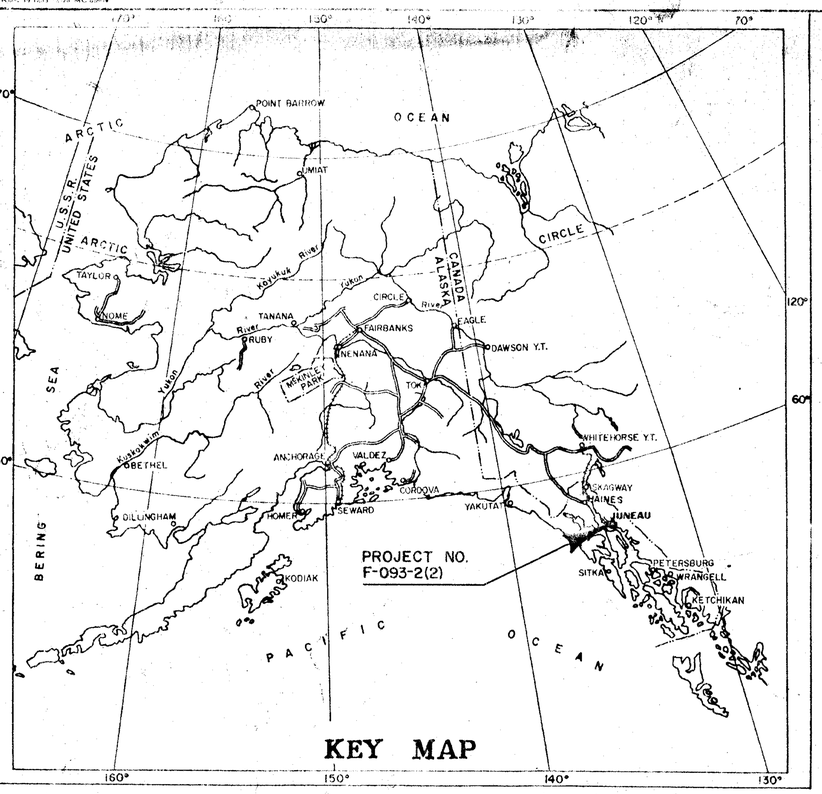

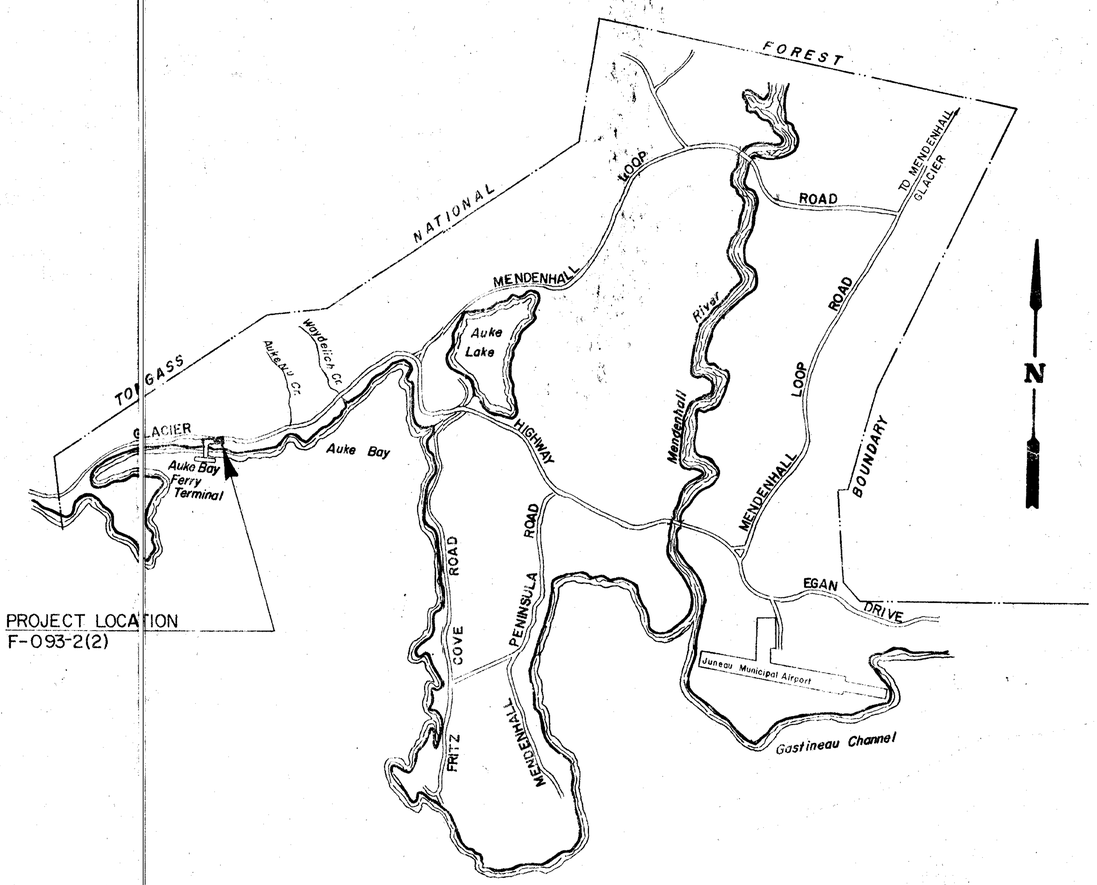

INDEX OF SHEETS

SHEET NO.	DESCRIPTION
1	Title Sheet
2	Estimate of Quantities & T.C.P
3	Site Preparation Plan
4	General Layout
5	Grading Details
6	Typical Section
7-9	Miscellaneous
10	Storm Drain Details
11&12	State Designated and State Furnished Material Sites
13	Striping, Signing & Illumination Details
14-17	Water System Details
18-33	Abutment, Transfer Ramp & Apron
34-44	Barge, Dolphin & Catwalk Details
45-48	Electrical Details

The following Standard Drawings apply to this project:
A-1, C-00.04, C-10.03, C-11.03, D-01.00, D-04.00, D-05.00, D-20.10, D-23.01, D-24.13, D-26.03, G-04.15, G-04.34, G-13.14, G-14.06, G-18.12, G-34.0 G-34.11, I-20.01, I-80.00, L-03.12, L-20.03, L-30 M-16.03, R-26.00, S-00.11, S-05.00, S-20.10, S-30.12, T-20.03, T-21.03, T-22.00, U-03.00 L-10.13, L-23.03, G-35.01

"AS BUILT PLANS"

RED SAMM CONSTRUCTION

PROJECT ENGINEER
VINCENT J. RHEA 1-12-81 thru 5-19-81
GARY HOGINS 5-20-81 thru 11-82

BEGIN CONSTRUCTION: JANUARY 26 1981

END CONSTRUCTION: JUNE 20, 1982

NO CHANGE IN LENGTH

STATE OF ALASKA
DEPARTMENT OF TRANSPORTATION
&
PUBLIC FACILITIES

APPROVED
James R. Nelson Date 5/20/80
For SOUTHEASTERN REGION
DESIGN / CONSTRUCTION ENGINEER

STATE OF ALASKA
DEPARTMENT OF TRANSPORTATION
&
PUBLIC FACILITIES

APPROVED
Charles S. Stallock Date 10-3-80
DIRECTOR HIGHWAY DESIGN & CONSTRUCTION

Revised 4-21-81

AS ADVERTISED

STATE	PROJECT DESIGNATION	YEAR	SHEET NO.
ALASKA	F-093-2(2)	1980	2

ESTIMATE OF QUANTITIES

ITEM NO.	ITEM	PAY UNIT			EST. QUANT RDWY	UNIT		EST QUANT PAD	UNIT	TOTAL
1	Furnish and Maintain Engineering Facilities	L.S.								All Req'd
109(1)	Petroleum Escalation	C.S.								All Req'd
110(1)	Mobilization	L.S.								All Req'd
111(1)	Temporary Erosion and Pollution Control	C.S.								All Req'd
114(1)	Construction Engineering by the Contractor	L.S.								All Req'd
115(1)	Traffic Maintenance	L.S.								All Req'd
202(1A)	Removal of Structures and Obstructions (Upland)	L.S.								All Req'd
202(1B)	Removal of Structures and Obstructions (Marine)	L.S.								All Req'd
203(2E)	Rock Borrow	L.S.						23,240 22,867	C.Y.	All Req'd
203(3A)	Unclassified Excavation	L.S.			1,518	C.Y.		565	C.Y.	All Req'd
203(5D)	Borrow	L.S.			325	C.Y.	20,024	~~13,245~~	C.Y.	All Req'd
203(12)	Filter Blanket	L.S.						91	C.Y.	All Req'd
301(1A)	Crushed Aggregate Base Course	L.S.			625	C.Y.		1,625	C.Y.	All Req'd
304(3)	Subbase, Grading A	L.S.			759	C.Y.	1745	~~5,975~~	C.Y.	All Req'd
401(1A)	Hot Asphalt Pavement, Class I	L.S.			3,539	S.Y.	10,204	~~2,315~~	S.Y.	All Req'd
401(2A)	AC-5 Asphalt Cement	L.S.			42	Tons		70.5	Tons	All Req'd
401(3)	Asphalt Curb	L.F.			345**	L.F.				~~425~~ 345
403(1A)	MC-30 Liquid Asphalt for Prime Coat	L.S.			3.5 ‡	Tons		9.8	Tons	All Req'd
501(1)	Class A Concrete	L.S.								All Req'd
503(1)	Reinforcing Steel	L.S.								All Req'd
504(1A)	Structural Steel Transfer Bridge, Furn., Fab., and Erected	L.S.								All Req'd
504(2A)	Structural Steel Catwalks, Furnished, and Fabricated, and Erected	L.S.								All Req'd
505(11A)	Pipe Piles (18"x0.50" Wall Thickness) Furnished	L.F.						2,700	L.F.	2,700
505(11B)	Pipe Pile, Driven	Ea.						18	Ea.	18
505(11C)	Additional Lengths of pipe piles, furnished and driven	L.F.						1,000	L.F.	1,000
505(11D)	Pile Anchor	Ea.						6	Ea.	6
505(11E)	Field splices on additional lengths of pipe piles	Ea.								
508(1)	Dolphin Caps and Fenders	L.S.								All Req'd
508(2)	Barge Guide Pile Caps	L.S.								All Req'd
511(1)	Transfer Barge	L.S.								All Req'd
603(22C)	24" Pipe Conduit	L.F.			52	L.F.		192	L.F.	244
604(2)	Sanitary Sewer Manhole	Ea.						1	Ea.	1
604(5)	Inlets	Ea.						3	Ea.	3
606(1)	Beam Type Guardrail, Type I Posts	L.F.						375	L.F.	375
606(5)	Single Post Median Guard Rail	L.F.			512.5	L.F.		425	L.F.	937.5
608(1)	Concrete Sidewalk, 4" Depth	S.Y.							S.Y.	237
609(2)	Curb and Gutter, Standard Type	L.F.							L.F.	517
611(3)	Riprap, Class II A	L.S.						5,537	C.Y.	All Req'd
614(4)	Survey Monuments and Cases	Ea.			3	Ea.				3
615(1)	Standard Signs	S.F.			94.34	S.F.		9.0	S.F.	103.34
618(3)	Seeding (Includes 74 C.Y. of Topsoil, 20 MSF of seeding & 1M. Gal. of water.)	L.S.								All Req'd
622(4)	Litter Can With Rack, Type I	Ea.						3	Ea.	3
622(15)	Park Bench	Ea.						4	Ea.	4
622(16)	Basketball Hoop, Complete	Ea.								1
625(1)	Pipe Handrail	L.F.						588	L.F.	
626(1)	8" Ductile Iron Sewer Conduit, AWWA Class 151	L.F.						222	L.F.	222
628(13)	Water System, Complete	L.S.								All Req'd
630(3)	Highway Lighting System, Complete	L.S.								All Req'd
670(2)	Painted Traffic Markings (See sht. 13 for details)	L.S.								All Req'd
681(1)	Power Conduit System	L.S.								All Req'd
681(2)	Telephone Conduit System	L.S.								All Req'd
682(1)	Power System	L.S.								All Req'd

* Includes approximately 3.3 C.Y. Hot Mix Asphalt & 567 B.F. Timber

‡@ 0.1 Gal/S.Y.

TRAFFIC CONTROL PLAN

1. The Contractor shall designate one of his employees the responsibility of installing and maintaining all required traffic control elements. All traffic control elements shall be maintained 24 hours a day.

2. Should the Contractor fail to complete any of the work required on TCP, he shall be penalized under Subsection 115-5.01.

3. All construction signing shall remain in place until the unsafe condition they delineate no longer exists.

4. Project identification signing shall be as shown on Standard Drawing C-11.03.

5. Once the Contractor begins improvements to the existing roadway and/or staging area the following traffic controls will remain in force until the project is completed.

   A. The Contractor shall conduct his operations so as not to interfere with normal scheduled ferry access or vehicular traffic to and from the existing ferry facilities.

   B. Ferry traffic shall have priority over construction activities and it shall be the contractor's responsibility to coordinate his activities with ferry arrivals and departures.

6. The Contractor shall not stockpile any materials in the existing ferry terminal staging area.

7. During construction of the proposed containment dyke between "O" 234+50 and "O" 239+76 the contractor shall remove only those structures and obstructions required to facilitate placement of the containment dyke and Class II A Riprap See Sheets 4 & 6.

8. Once the contractor begins reconstruction of the roadway between "O" 234+23 and "L" 243+00 and the staging area between "O" 239+76 and "L" 243+00 he shall have 20 calendar days to complete the work listed below.

   A. Complete the roadway and staging area to the finished grade indicated on Sheet 5.

   B. Install the proposed guardrail between the following stations.
   "O" 235+95; 20' Lt. to "O" 240+20; 20' Lt.
   "O" 240+64; 20' Lt. to "O" 241+51.50; 20' Lt.
   "O" 235+32.5; 20' Lt. to "O" 242+08; 115' Lt.

   C. Install Type 3 Barricades from "O" 239+76; 20' Lt. to 195' Lt.

   D. Install the proposed roadway striping shown on Sheet 13.

9. During reconstruction of the roadway between "O" 234+23 and "L" 243+00 the contractor may maintain one-way traffic with a flagging operation during his normal working hours, however, during non-working hours the roadway shall be reopened to two-way traffic. No more work shall be performed than that which can be completed by the end of the shift so as to leave no shoulder drop-off during non-working hours.

10. All one-lane closures shall be as shown in Standard Drawing C-11.03 without the pilot car.

11. All detours required on this project shall be constructed and maintained to the following minimum widths at all times:

    One-way traffic — 12'
    Two-way traffic — 20'

GENERAL NOTES

1. Grade and alignment shown on these plans are subject to minor revisions.

2. Storm Inlet locations and elevations shown on these pl are subject to minor revisions.

3. Culvert lengths and locations shown on these plans a subject to minor revisions.

4. The location of all utilities shown on these plans are appro only and should be field verified by the Contractor.

5. Both the existing and proposed utility pole locations a shown and are to be considered informational only.

6. Relocation of existing utilities shall be coordinated between the u co's, the contractor and the Project Engineer at a Utility Conference whi held after the Preconstruction Conference, but prior to commencement of an uction activity.

7. Between April 25 and June 30 the contractor shall r place any embankment material below elev. +23.0 unless containment dyke is completed as specified. Completion of the containment dyke specified will negate any further ment restriction on the remainder of the embankm material except as noted in the T.C.P. No time restrictions o placed on Removal and Disposal of obstructions or pile dri activities.

8. When the contractor completes that portion of t rock containment dyke that the transfer bridge abutment is to be constructed on, he shall not any more construction in the area under the abutme two months unless otherwise directed. This time restri is to allow the engineer time to install and monitor consolidation platforms.

9. The existing cable anchoring system shown on S 3 and 4 shall remain connected at all times. Du construction of the containment dyke it shall be contractor's responsibility to see that the existing deadman, cable spring line, and dolphin are not damaged. Any damage to the existing dolphin o anchoring system shall be repaired as directed at the contractor's expense.

10. The contractor shall not allow any of the water required in testing and disinfecting the wate system to be disposed of in such a manner t it will seek it's way into salt water environ This waste water may be disposed of at th City and Borough of Juneau Mendenhall Sewa Treatment Plant, located at the West end of the Juneau Airport. Other methods of disposal may be acceptable. See section 628 of the Special Provi

11. The contractor shall not allow any concrete wash to enter salt water environment.

STATE	PROJECT DESIGNATION	YEAR	SHEET NO.	TOTAL SHEETS
ALASKA	F-093-2(2)	1980	3	48

SITE PREPARATION PLAN

AS ADVERTISED

HORIZONTAL CONTROL

Horizontal Control is based on the Mendenhall Valley control traverse beginning at P.O.T. 393+81.12 (Intersection of Egan Drive and Loop Road) and terminating at Highway's "KEET" (East end of Airport Runway). Scale Factor = .9999271.

VERTICAL CONTROL

Vertical Control was derived from U.S.C. & G.S. Bench Mark 2 (1917), a standard disk stamped "B.M. 2" set in the top of a large granite boulder on the north side of a small bay leading to the outlet of Auke Lake, with an elev. of 19.27 feet MLLW (Tidal Datum 1960). See Sht. 5 for Project Bench Mark.

NOTES

1. The installation adjustment or removal of utility poles and appurtenances shall be performed by others and are not considered items of work under this contract.
2. The removal of existing roadway pavement shall be paid for as unclassified excavation. All cuts made in the existing pavement shall be made in a neat workmanship manner.
3. The Contractor, except as noted in note no. 4, shall remove and dismantle all existing signs. All dismantled signs shall be returned to the D.O.T. & P.F. Maintenance Station at 7.5 mile Glacier Highway. This work shall be considered incidental to Item 615(1) "Standard Signs."
4. Removal and relocation of the existing Auke Bay Ferry Terminal signs shall be considered incidental to Item 615(1) "Standard Signs." See sheet 13 for relocated position.
5. All existing luminaires, poles, and appurtenances shown on the plans for removal shall be returned to the D.O.T. Maintenance Station at 7.5 mile Glacier Highway.

Removal and Disposal of Upland Structures and Obstructions

Item	Estimated Quantity	
Exist. Asphalt	3,431 S.Y.	(A)
CMP	337 F.T.	(A)
Curb & Gutter	641 L.F.	(A)
Handrail	378 L.F.	(A)
Inlets	5 each	(A)
Sidewalk	319 S.Y.	(A)
Luminaires	5 each	
Guardrails	140 L.F.	(A)
Signs	33 S.F.	

Removal and Disposal of Marine Structures and Obstructions

Item	Estimated Quantity
Ferry Ramp	90 S.Y.
3-7 Pile Dolphins	21 Piles-Total

(A) Indicate items except for wood guard-rail post that may be disposed of in the borrow portion of the embankment. The above material shall be buried a minimun of 7' below finished grade.

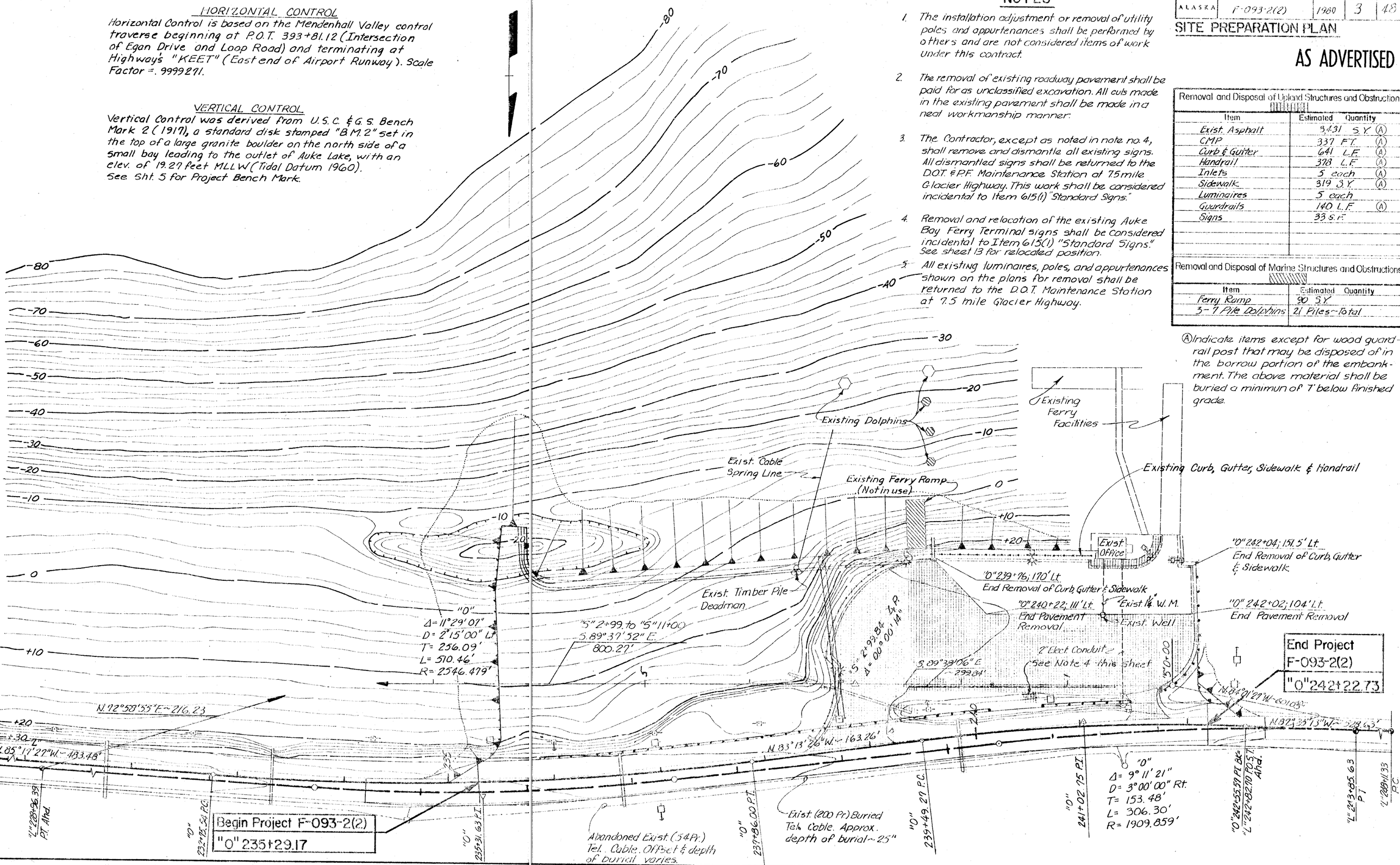

STATE	PROJECT DESIGNATION	YEAR	SHEET NO.	TOTAL SHEETS
ALASKA	F-093-2(2)	1980	4	48

GENERAL LAYOUT

AS ADVERTISE

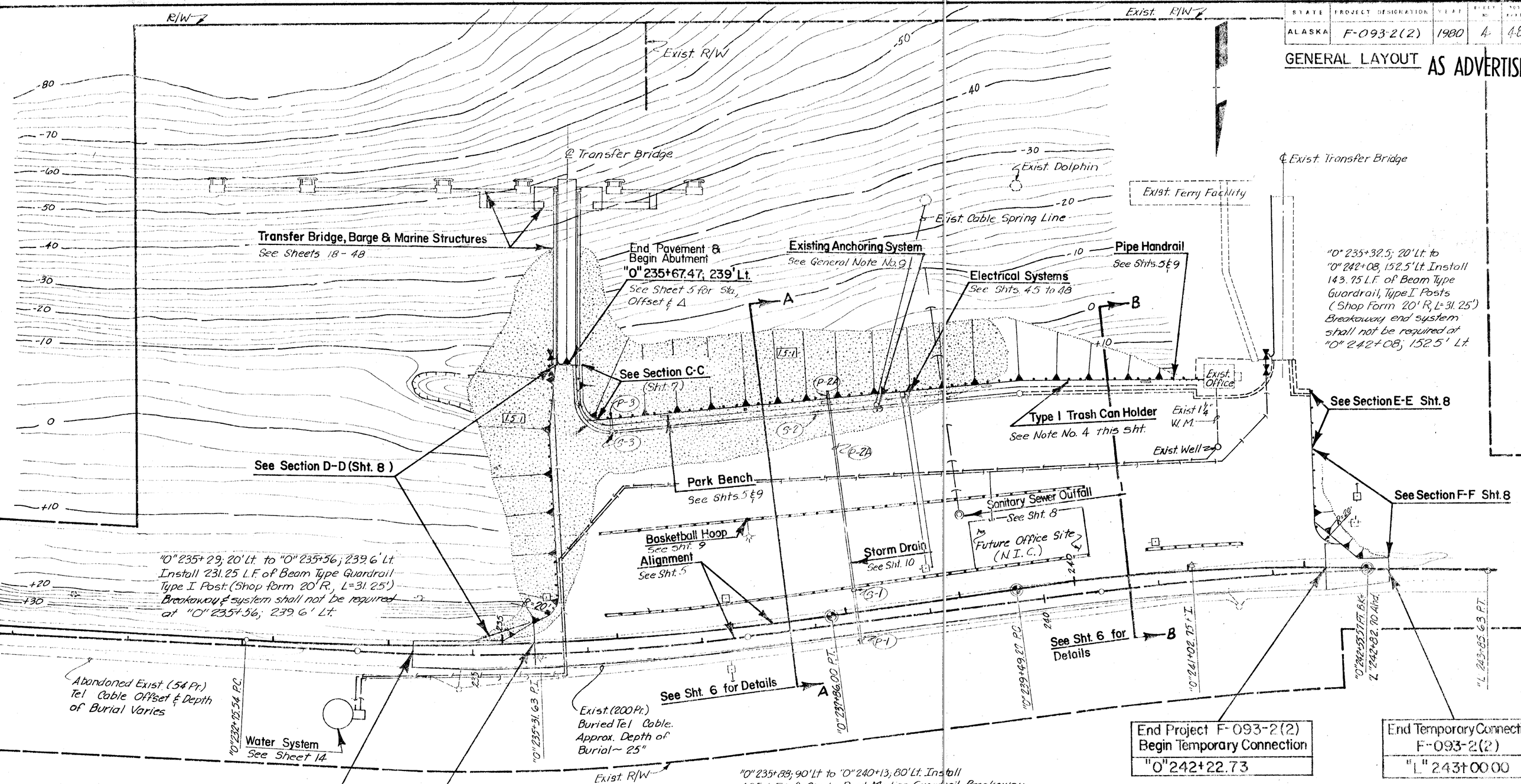

NOTES

1. N. I. C. ~ Indicates Not Included in this Contract
2. Indicates approximate limits of rock containment dyke, See Sht. 6
3. See Sht. 7 for curb & gutter, and sidewalk joint details.
4. Type I trash can holder shall be construct in accordance with Standard Drawing R-26 00 except that the concrete base shall be constructed with Class A Conc versus the Class shown on the Standard Drawing

STATE	PROJECT DESIGNATION	YEAR	SHEET NO	TOTAL SHEETS
ALASKA	F-093-2(2)	1980	5	48

GRADING DETAIL

NOTES

1. All elevations shown are to finished grade @ edge of pavement unless otherwise noted.
2. Ⓐ Indicates installation of Type I Trash Can & Holder, See Standard Drawing R-26.00
3. Ⓑ Indicates installation of Park Bench, See Sheet 9 for Details.
4. Ⓒ Indicates existing pavement elevation.
5. Indicates existing asphalt pavement to remain in place.
6. Existing monuments are brass pins.
7. Ⓓ Grade shown is between "O" 236+07 & "O" 239+71.97, Dist = 3.56'

PROJECT BENCH MARK:

A Standard Highway Disk Stamped "BM Auke 1977." Set in large boulder, 55' Lt. of "L" 243+84 Elev. 18.98 M.L.L.W. (1960 Tidal Datum)

AS ADVERTISED

Face of Dolphins, Layout Line
See Sht 34 for Dolphin Spacing

℄ Bridge to ℄ of Exist. Bridge
S. 88°22'16" E. ~ 620.00'

℄ of Proposed Transfer Bridge
N. 1°37'44" E. ~ 161.00'

"MC" 10+31.57 P.I.
Δ = 90°00'00"

Begin Curb & Gutter ~ Face of Curb
"O" 235+76 ~ 238.50' Lt. - El. @ Top of Curb = 25.40

Begin Handrail - "O" 235+77.9 ~ 238.4' Lt.

"DC" 2+27.45 P.I. ~ Δ = 86°30'43" Rt.
El. 22.75

N. 1°51'32" W. ~ 32.80'

"DC" 2+58.30 - Begin 20' R; El. 22.75'

Curb Return - Face of Curb - "O" 235+76.16 ~ 2[illegible]7.3' Lt.
El. @ Top of Curb = 25.40'

Begin Sidewalk - "O" 235+88.84, 188.90' Lt.

Face of Curb ~ "L"
Δ = 92°20'10"
T = 31.25'
L = 48.35'
R = 30.00'

"DC"
Δ = 92°49'31"
T = 21.01
L = 30.40'
R = 20.00'

Begin Abutment - El. 25.00
"O" 235+67.47 ~ 239' Lt. =
"MC" 11+92.57 P.I.,
Δ = 3°29'17" Lt.
Bearing to P.O.C. = N. 1°51'33" W.

N. 88°22'16" W. ~ 19.19'

"DC" 2+08.26 P.I.
Δ = 85°57'23" Rt; El. 22.75

Edge of Pavement; El. 25.00'
"O" 235+56.46 ~ 239.59' Lt.

S. 5°40'21" W. ~ 61.09'

"DC" 1+47.17 P.I.
Δ = 4°15'38" Rt.; El. 22.5'

Edge of Pavement; El. 24.96'
"O" 235+48.11; 179.0' Lt.

"O" N. 85°17'27" W. ~ 483.48'

S. 01°24'43" W. ~ 147.17

BEGIN DYKE CONTROL LINE
"O" 235+41.54; 31.94' Lt. = "DC" 0+00; El. 23°

Match Edge of Exist. Pavement
Elev. 32.63 Ⓒ

Edge of Embankment
Edge of Pavement
El. 32.42
4' Lt.

R = 20'

Edge of Pavement; El. 30.54
"O" 235+49.19, 40' Lt.

"O" 237+92.01 P.T.

"O" 232+75.54 P.C.

"L" N. 85°47'50" W ~ 503.73'

"L" 234+00.12 P.C.

Match Edge of Exist. Pavement - Elev. 33.23 Ⓒ

33.22
20' Rt.

33.21
20' Rt.

"O" 235+31.63 P.T.

"L" 235+70.39 P.T.

Edge of 3" Pavement

"L" 237+39.76 P.T.

"O" 237+86.00 P.T.

"O" 239+49.27 P.C.

"L" 240+49.64 P.C.

"O" 241+02.75 P.T.

"L" 242+17.94 P.T.

"O" 242+55.57 P.T. Bk = 82.70' Post Ahd

"L" 243+85.63 P.T. = "O" 0+00.00 P.T.
Δ = 46°59'54" Rt.

"L" 248+11.33 P.C.

"L"
Δ = 10°11'22"
D = 3° Lt.
T = 170.27'
L = 339.65'
R = 1909.859'

"O"
Δ = 11°29'07"
D = 2°15' Lt.
T = 256.09'
L = 510.46'
R = 2546.479'
S = 4%

"O" S. 83°13'26" W. ~ 163.26'

"L" S. 84°00'48" W. ~ 309.89'

"L" N. 85°47'50" W ~ 503.73'

"L" N. 87°35'13" W. ~ 425.70'

"O" N. 87°35'13" W. ~ 528.64'

Beginning of Temporary Connection
F-093-2(2)
"L" 234+50.00 = "O" 234+23.29

End Temporary Connection & Begin Project F-093-2(2)
"O" 235+29.17

Earthwork Equation:
Embankment = (Unclassified Excavation - Waste) x Grading Factor + Borrow
Embankment = 44,915 C.Y. (Includes 22,865 C.Y. of Rock Borrow & 22,050 C.Y. of Borrow)
Unclassified Excavation = 2,083 C.Y. (No Waste)
Rock Borrow = 22,865 C.Y.
Borrow = 19,967 C.Y.

End Project F-093-2(2) & Begin Temporary Connection
"O" 242+22.73

End Temporary Connection
F-093-2(2)
"L" 243+00.00

Face of Exist. Dock & Face of Dolphins
"MC" 4+11.57 - Δ = 90°00'00"

℄ Exist. Bridge
S. 1°37'44" W. ~ 160.00'

End Curb, Gutter & Sidewalk
"O" 239+76 ~ 170' Lt.; See Detail E this sht.

End Handrail @ Exist. Office

"MC" 2+51.57 P.I.
Δ = 46°11'45" Rt.

Exist. Office

"O" 239+93.32; 169.38
Δ = 4°48'21"

Edge of embankment

"O" 239+76; 170' Lt.

N. 85°48'17" E.

S. 89°23'22" E.

Face of Curb

27.71
27.13

Exist. Curb, Gutter & Sidewalk

DETAIL E

Edge of Pavement ~ El. 25.30
"O" 242+08.06 ~ 151.70' Lt.

Edge of Pavement ~ El. 26.34
"O" 242+08.06 ~ 103.0' Lt.

Edge of Pavement ~ El. 29.19
"O" 242+08.06 ~ 40' Lt.

MARINE CONTROL LINE
S. 44°01'12" E. ~ 251.57'

Edge of Pavement ~ El. 29.03
"O" 242+32.5 ~ 20' Lt.

Edge of Pavement
El.

Match Edge of Exist. Pavement
"L" 243+00 ~ El. 28.34 Ⓒ

See Note No. 6

Match Edge of Exist. Pavement
"L" 243+00 ~ El. 27.82 Ⓒ

"L"
Δ = 8°23'59"
D = 2°30' Rt.
T = 168.29'
L = 335.99'
R = 2291.831'

"O"
Δ = 9°11'21"
D = 3° Rt.
T = 153.48'
L = 306.30'
R = 1909.859'
S = 4.5%

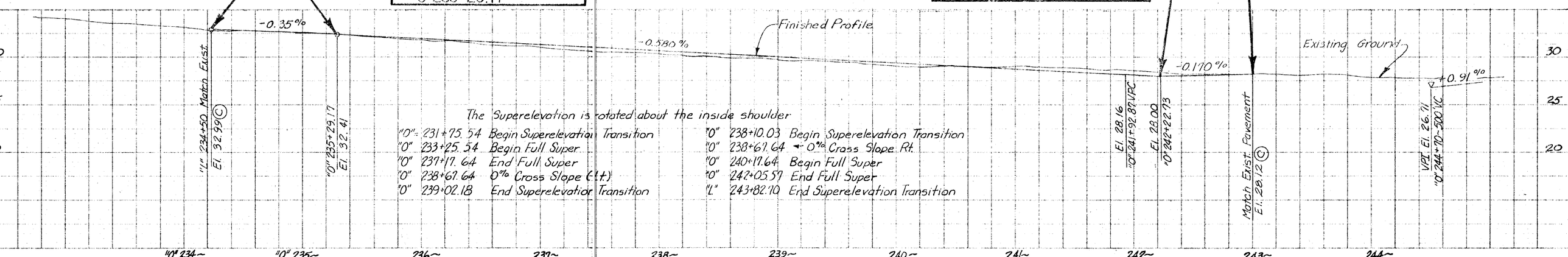

The Superelevation is rotated about the inside shoulder

"O"	231+75.54	Begin Superelevation Transition	"O"	238+10.03	Begin Superelevation Transition
"O"	233+25.54	Begin Full Super	"O"	238+67.64	← 0% Cross Slope Rt.
"O"	237+17.64	End Full Super	"O"	240+17.64	Begin Full Super
"O"	238+67.64	0% Cross Slope (Lt.)	"O"	242+05.57	End Full Super
"O"	239+02.18	End Superelevation Transition	"L"	243+82.10	End Superelevation Transition

TYPICAL SECTIONS OF IMPROVEMENTS

AS ADVERTISED

STATE	PROJECT DESIGNATION	YEAR	SHEET NO	TOTAL SHEETS
ALASKA	F-093-2-(2)	1980	6	48

TYPICAL SECTION SHEETS

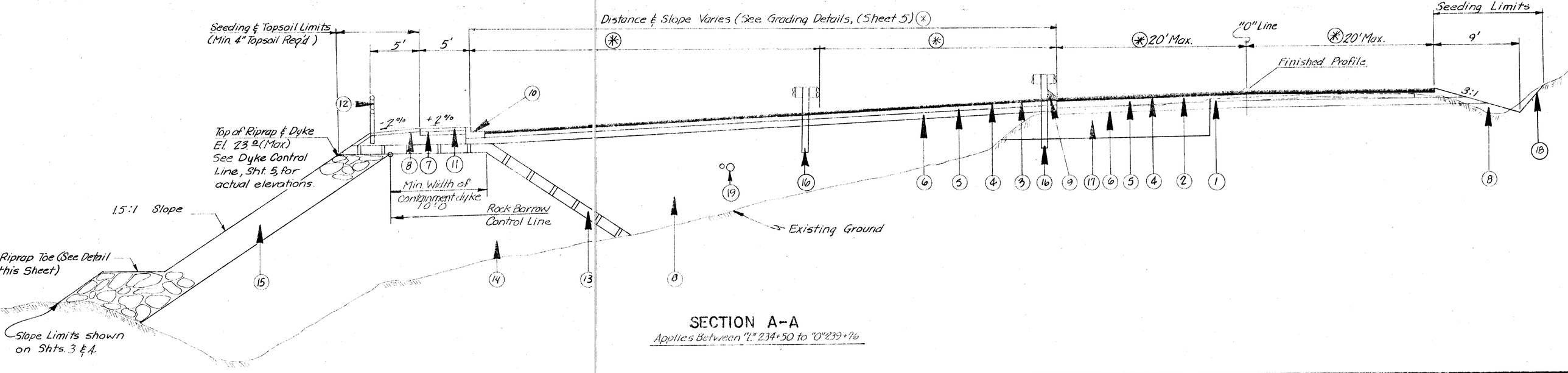

SECTION A-A

Applies Between "L" 234+50 to "0" 239+76

LABELING INDEX

1. Existing Pavement 22' Wide
2. 3½" Hot Asphalt Pavement, (Class I)
3. 2" Hot Asphalt Pavement, (Class I)
4. MC-30 Liquid Asphalt for Prime Coat
5. 6" Crushed Aggregate
6. 7" Subbase, Grading A
7. 4" Subbase, Grading A
8. Unclassified Excavation and/or Borrow
9. Asphalt Curb ~ See Sheet 7 for Details
10. Curb & Gutter Standard Type
11. 4" Concrete Sidewalk
12. Pipe Handrail ~ See Sheet 9 for Details
13. 1' Filter Blanket ~ Typ. for length & width of dyke
14. Rock Borrow ~ See Section 203 of the Special Provisions.
15. 3' Riprap, Class II A
16. Single Post Median Guardrail, See Standard Drawing G-35.01
17. "0" 236+15 to "0" 238+50 Lt. the existing embankment material shall be excavated to 4' below finished grade or as directed. The excavated material shall be used in the lower portions of the embankment. Payment for this work shall be considered incidental to unclassified excavation.
18. Backslope shall be 1:1 unless otherwise directed.
19. Water Mains, See sheets 14 & 15 for details

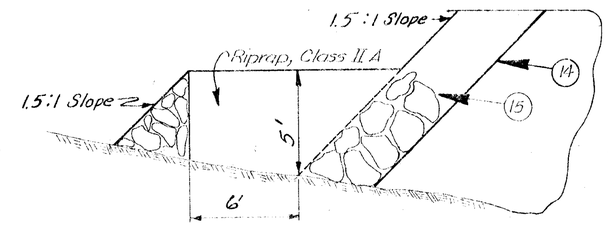

RIPRAP TOE DETAIL

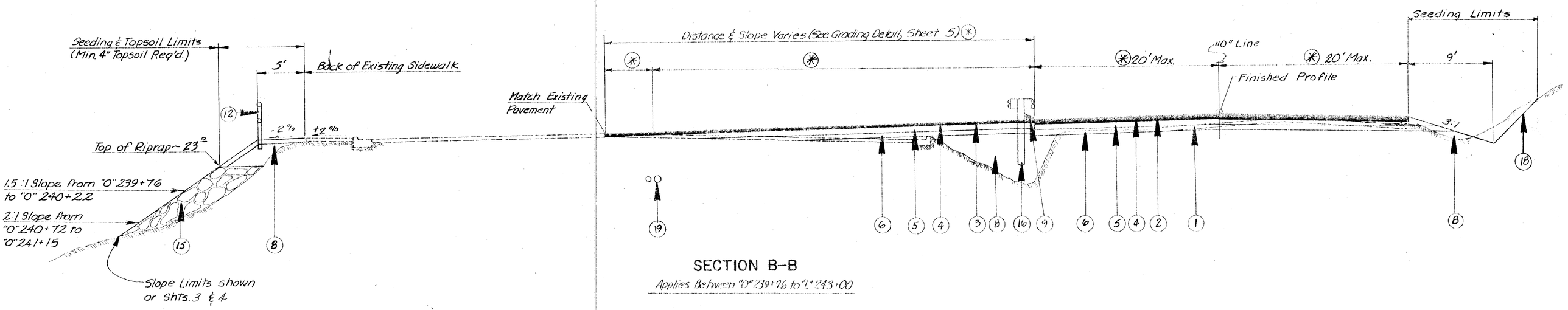

SECTION B-B

Applies Between "0" 239+76 to "L" 243+00

AS ADVERTISED

STATE	PROJECT DESIGNATION	YEAR	SHEET NO.	TOTAL SHTS.
ALASKA	F-093-2(2)	1980	7	48

MISCELLANEOUS DETAILS

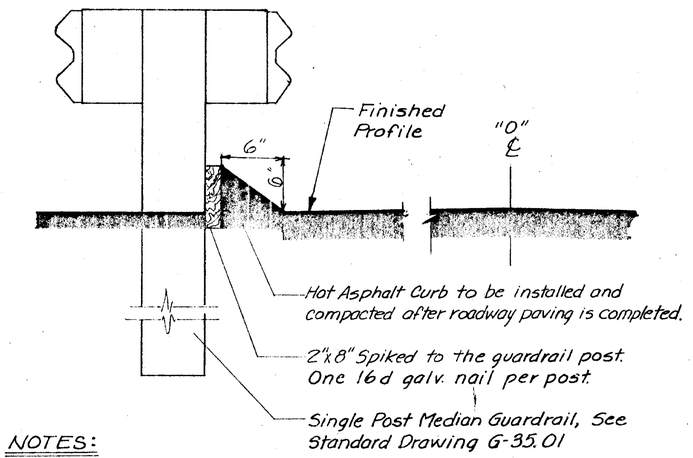

NOTES:

1. The 2"x 8" backing timber shall be rough sawn Douglas Fir and treated in accordance with applicable standards of the American Wood Preservers Association
2. Install from "0" 235+95 to "0" 240+20; 20' Lt.

ASPHALT CURB DETAIL

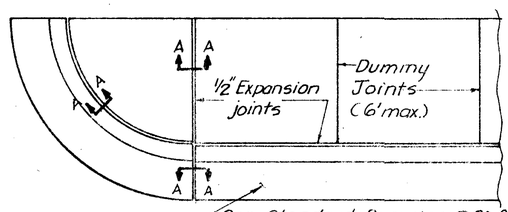

See Standard Drawing I 20.01 for curb & gutter details

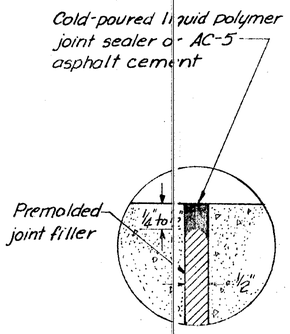

SECTION A-A

NOTES:

1. Premolded expansion joint filler and liquid polymer joint sealer (See Specifications) or AC-5 asphalt cement, shall be considered incidental to pay Item 608(1) "Concrete Sidewalk."
2. Curb & gutter expansion joints shall be placed at each end of the curb return. Thereafter they shall be placed at intervals of 30' except where shorter sections are needed for closure.
3. Sidewalk expansion joints shall be opposite expansion joints in adjoining curb & gutter. Dummy joints shall be equally spaced between expansion joints and the spacing shall not exceed 6'.

TYPICAL CURB & SIDEWALK JOINT DETAIL

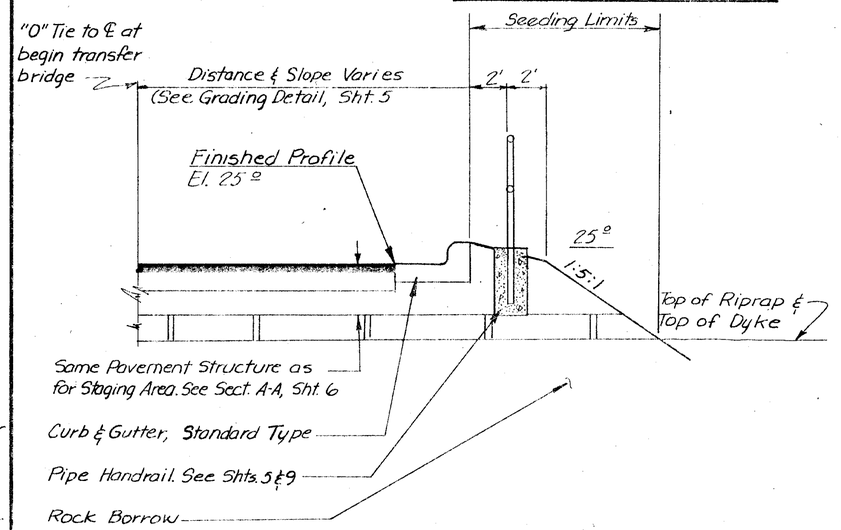

SECTION C-C

AS ADVERTISED

STATE	PROJECT DESIGNATION	YEAR	SHEET NO	TOTAL SHEETS
ALASKA	F-093-2(2)	1980	8	48

MISCELLANEOUS DETAILS

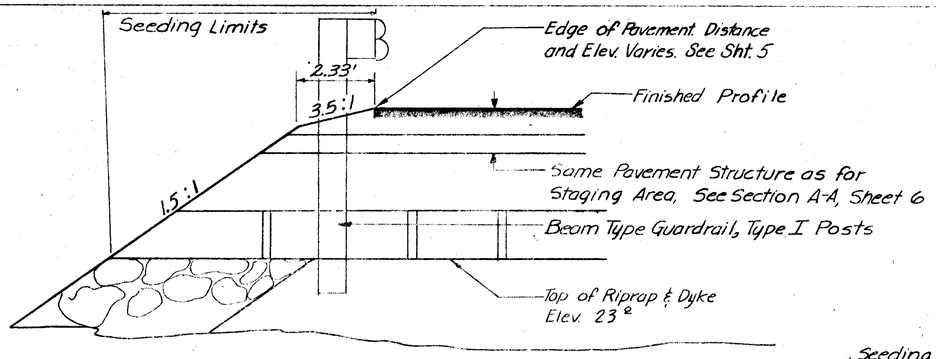

SECTION D-D

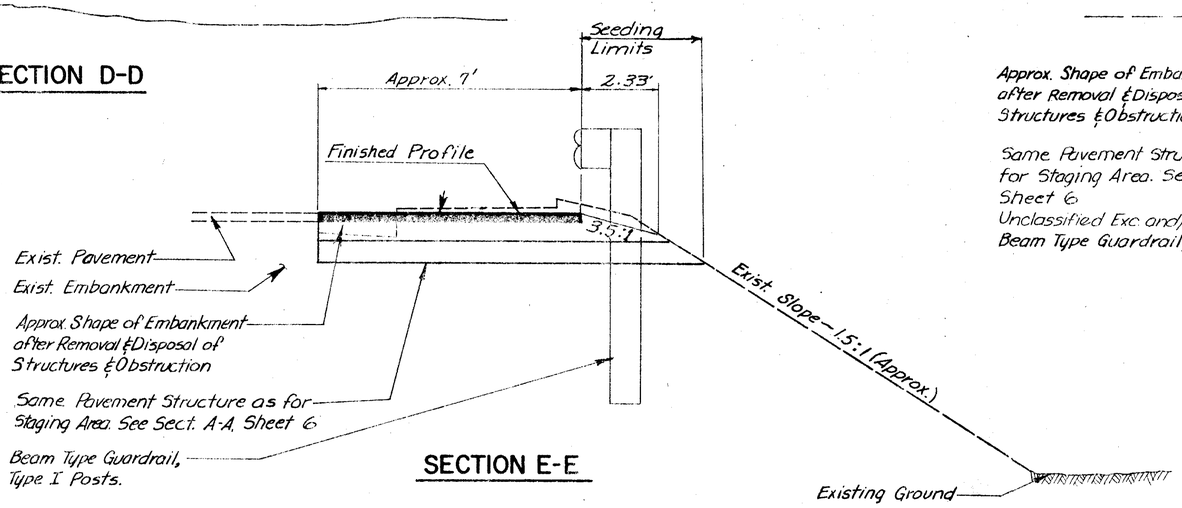

SECTION E-E

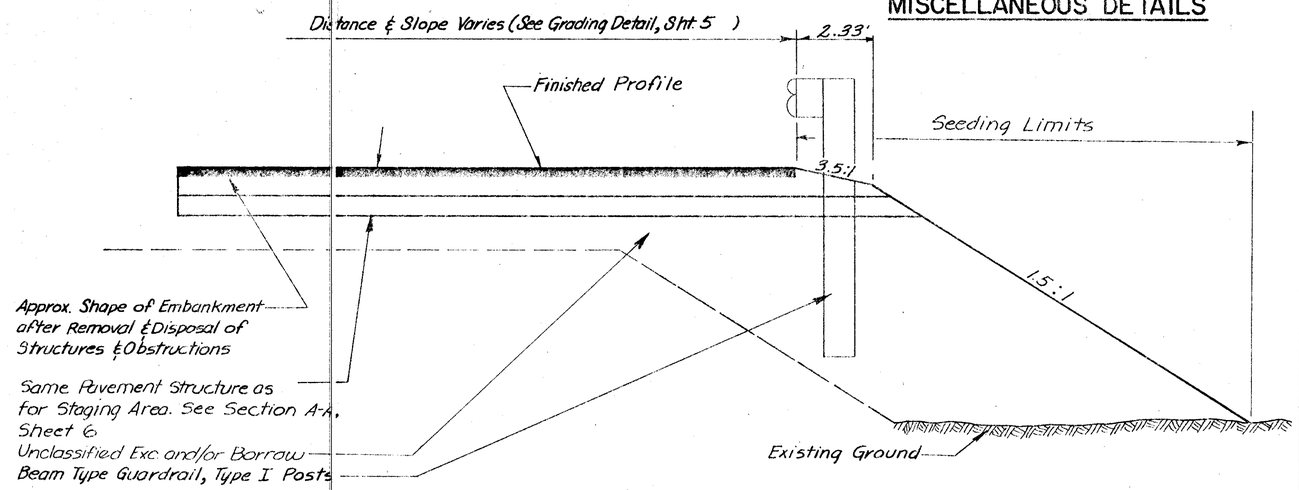

SECTION F-F

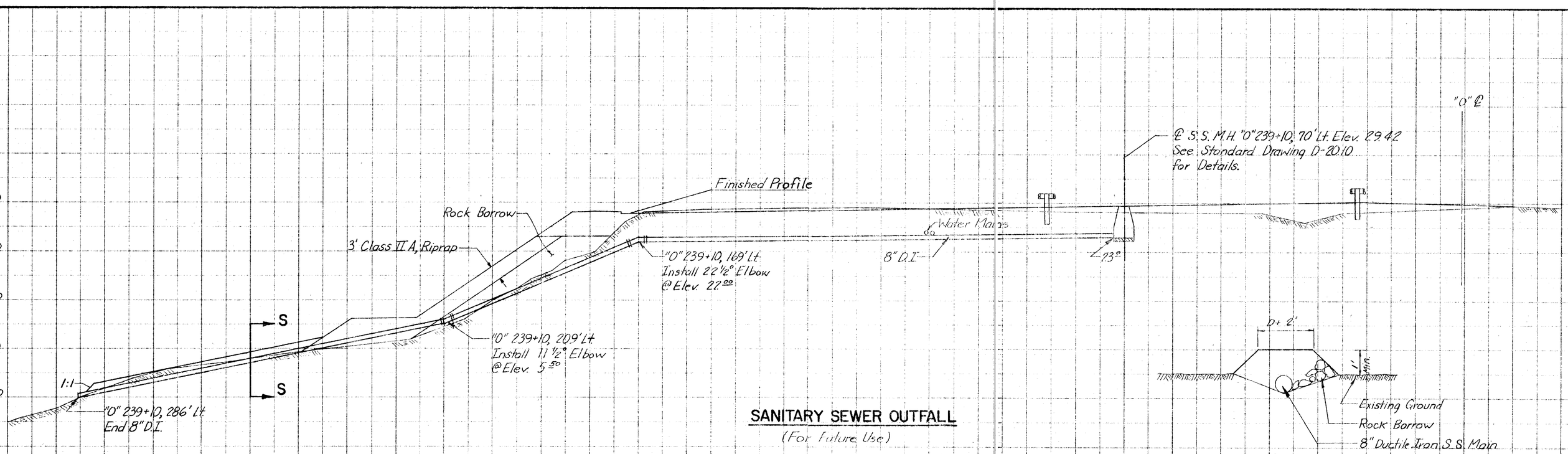

SANITARY SEWER OUTFALL

(For Future Use)

SECTION S-S

Applies Between 250' & 274' Lt.

AS ADVERTISED

STATE	PROJECT DESIGNATION	YEAR	SHEET NO.	TOTAL SHEETS
ALASKA	F-093-2(2)	1980	9	48

MISCELLANEOUS DETAILS

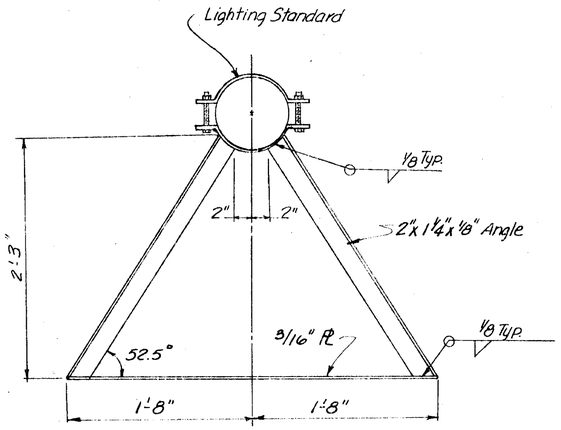

SECTION A-A

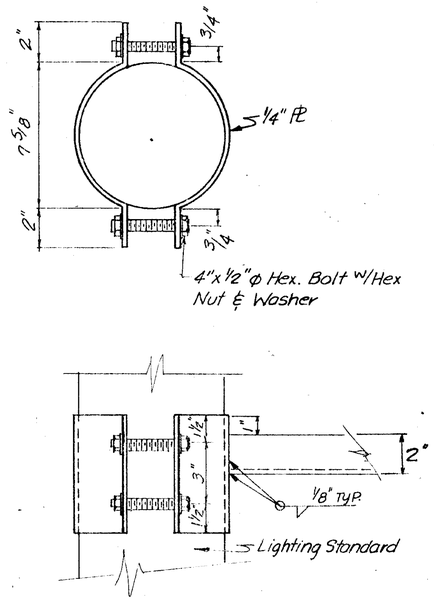

CLAMP DETAIL

ESTIMATE OF QUANTITIES	
ITEM	EST. QUANT.
Timber	128 B.M.
Class A Conc.	0.5 C.Y.
Rebar	39 lbs.

NOTES

1. Use most economical durable species available, preferably heartwood cuts. Lumber shall be equivalent to West Coast Lumberman's Assoc. "Construction Grade for Douglas Fir." Lumber shall have a moisture content, prior to treatment, of not to exceed 20% in the outer half inch.
2. After all cutting and boring is completed, the plank seat shall be given one brush coat of natural stain finish, tinted light brown after assembly.
3. The plank seat shall be installed with the heartside down.
4. Dimensions are nominal.
5. Payment shall be made under Section 622(15)

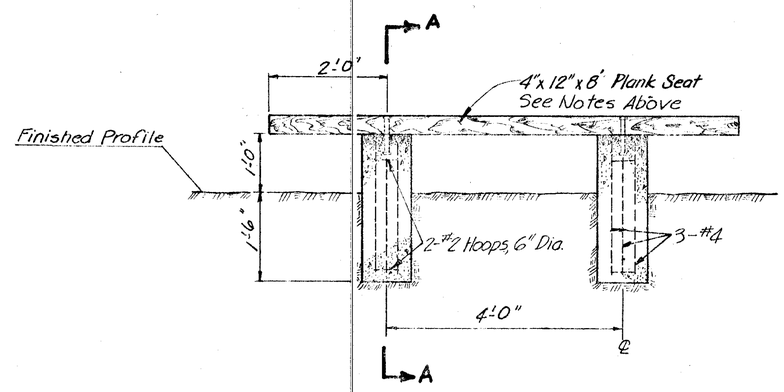

PARK BENCH DETAIL

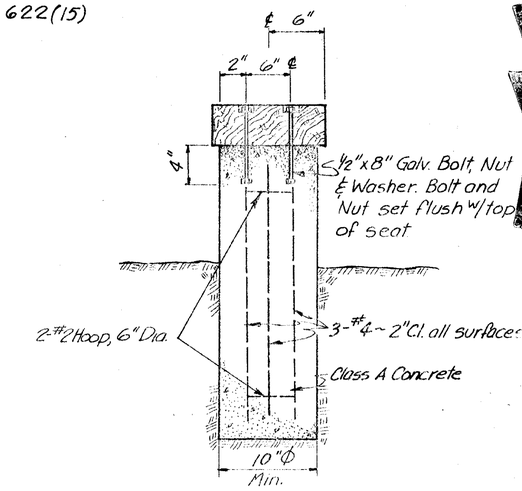

SECTION A-A

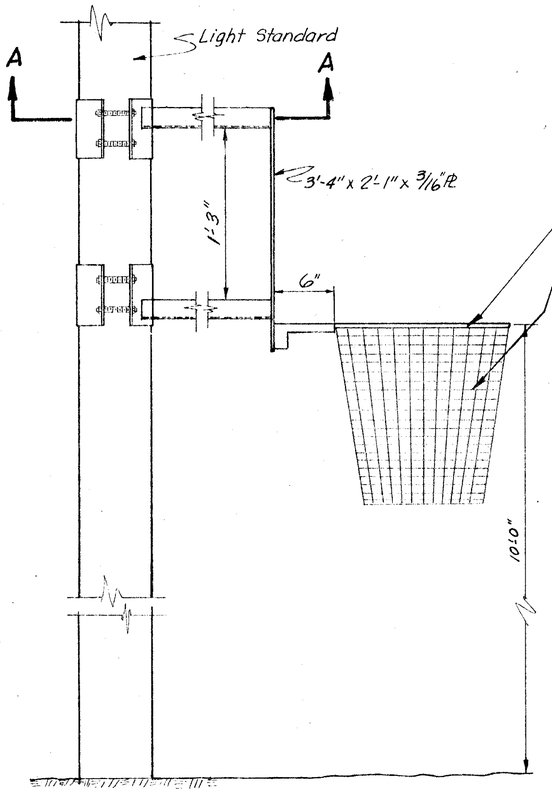

Premanufactured Hoop & Net, Hoop Dia. = 1'-6"
Steel Chain Net Length = 1'-3"
Bolt Hoop to Back Board with 1/4" bolts as directed

NOTES:

All Burrs, Cuts and Welds shall be ground smooth prior to being galvanized.

All fabricated parts, bolts, nuts and washers shall be galvanized prior to erection.

Payment shall be made under Section 622 (16).

BASKETBALL HOOP DETAILS

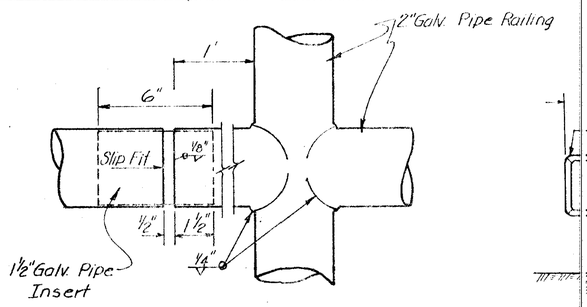

1. All fabricated parts shall be hot dip galvanized prior to erection.
2. All burrs, cuts & welds shall be ground smooth prior to galvanizing.
3. Finished gap between rail elements shall be 1/2".
4. Joints as detailed shall be provided at every fifth post.

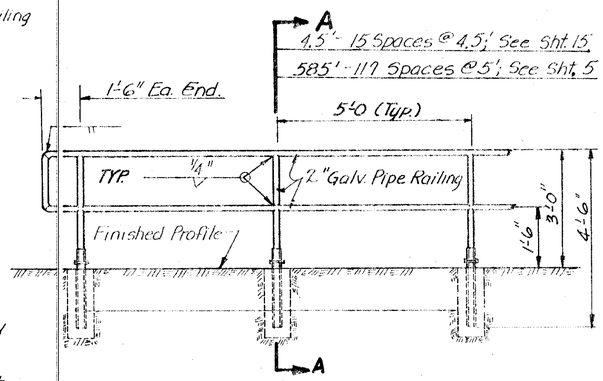

Estimate of Quantities	
Item	Est. of Quant.
Class A Conc.	2 C.Y.

PIPE HANDRAIL DETAIL

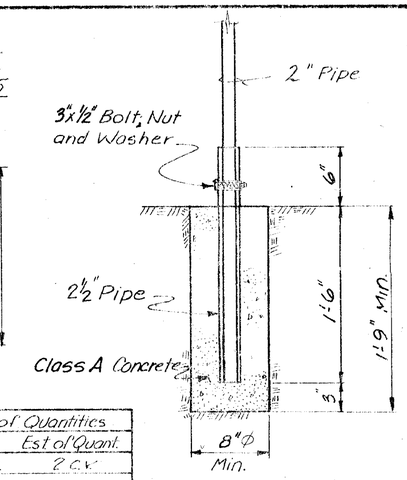

SECTION A-A

STATE	PROJECT DESIGNATION	YEAR	SHEET NO.	TOTAL SHEETS
ALASKA	F-093-2(2)	1980	10	48

STORM DRAIN DETAILS

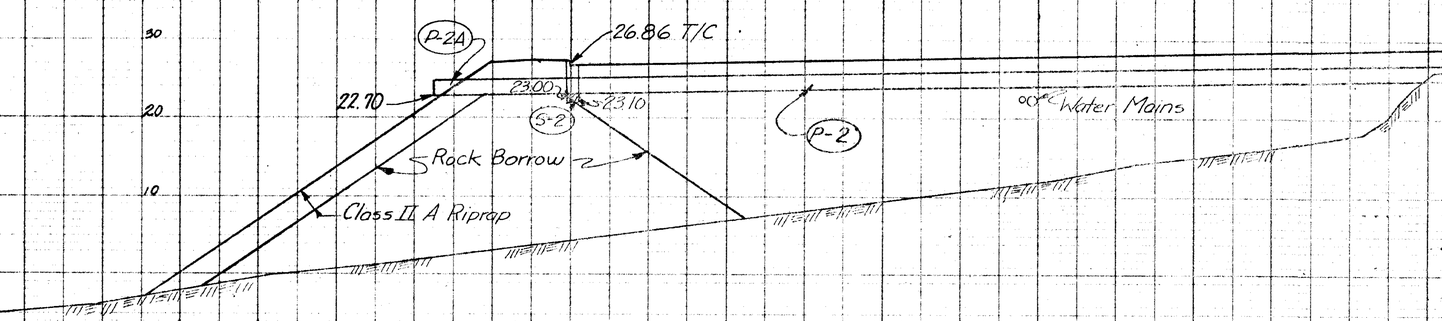

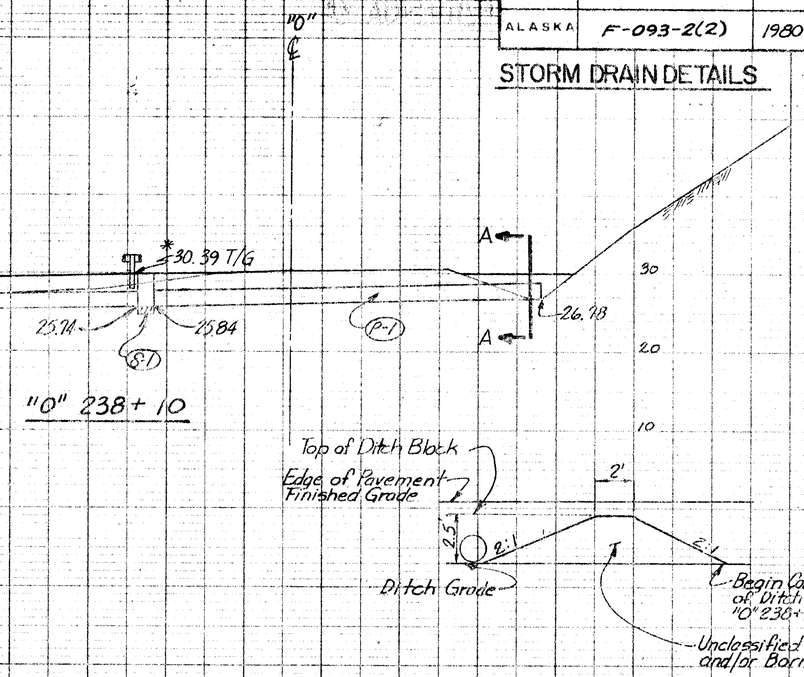

SECTION A-A

INLET SUMMARY

Inlet No.	Type	Station	Offset Lt.	Offset Rt.	El. Top of Curb	Inlet Elev.	Outlet Elev.
S-1	A	"0" 238+10	19.5‡		*30.39	25.85	25.74
S-2	A	"0" 238+10	176.0		26.86	23.11	23.03
S-3	A	"0" 236+09.65	179.46		25.41	---	22.75

‡ Indicates Installation of a Gutter Inlet and Frame. See Standard Drawing D-24.13.

PIPE SUMMARY

Pipe No.	Pipe Dia.	Pipe Lgth	From Structure	From Inv. Elev.	To Structure	To Inv. Elev.
P-1	24"	52'	Ditch	26.78	S-1	25.84
P-2	24"	156'	S-1	25.74	S-2	23.11
P-2A	24"	18'	S-2	23.03	Outfall	22.70
P-3	24"	18'	S-3	22.75	Outfall	22.60

NOTES

1. 00.00 T/C Indicates Elevations Given to Top of Curb.
2. * 00.00 Indicates Elevations Given to Top of Grate.
3. All Inlets Shall be Installed With Type G3-R Grates. See Standard Drawing D-23.01.

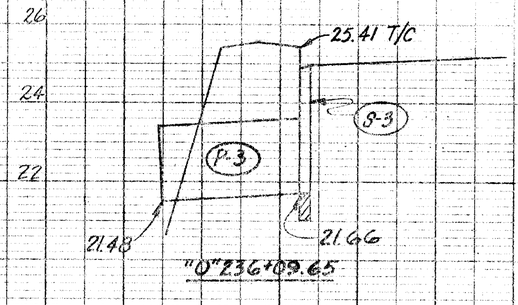

AS ADVERTISED

AS ADVERTISED

STATE	PROJECT DESIGNATION	YEAR	SHEET NO	TOTAL SHEETS
ALASKA	F-093-2(2)	1980	11	48

STATE FURNISHED MATERIALS SITE

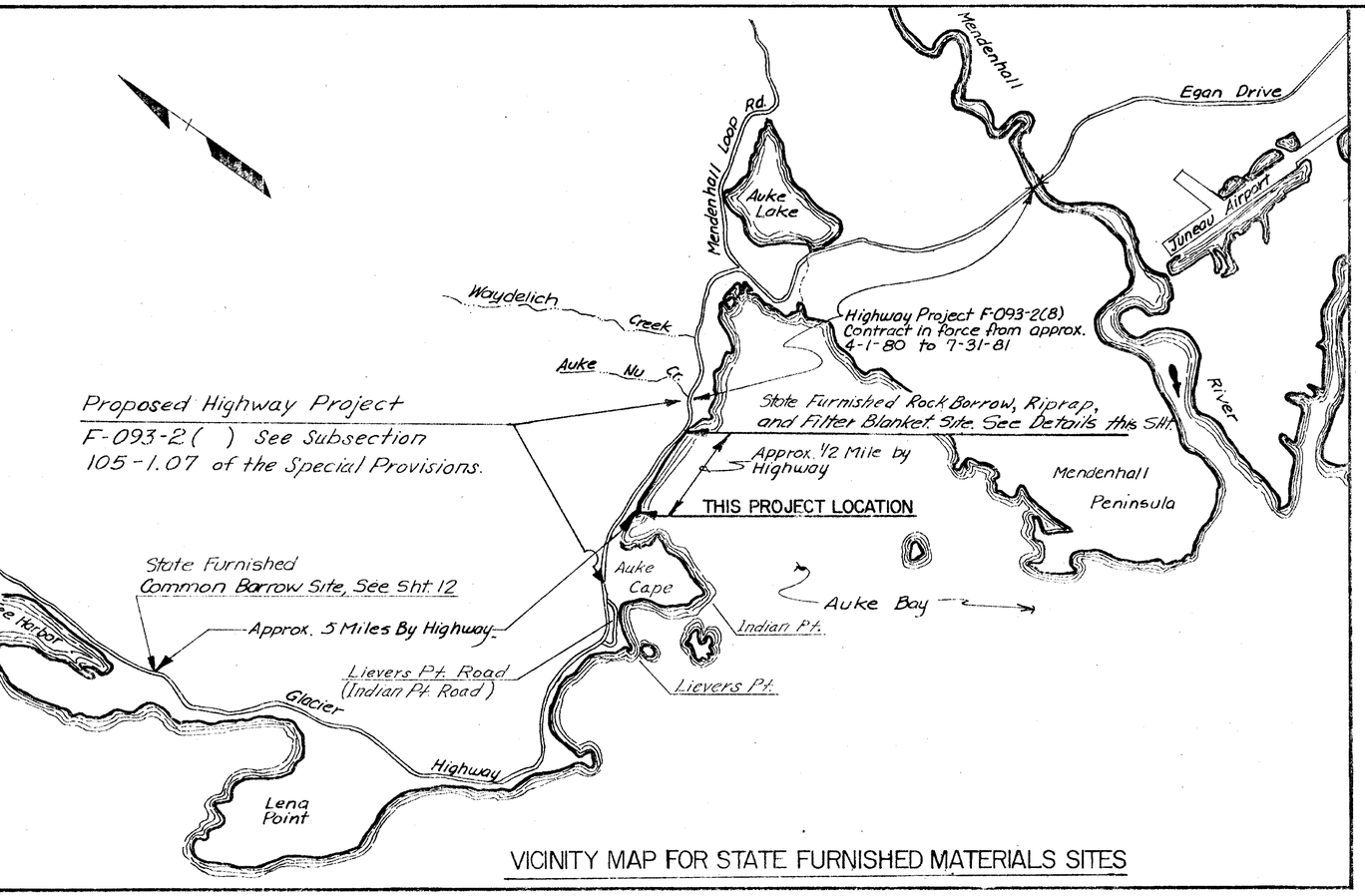

VICINITY MAP FOR STATE FURNISHED MATERIALS SITES

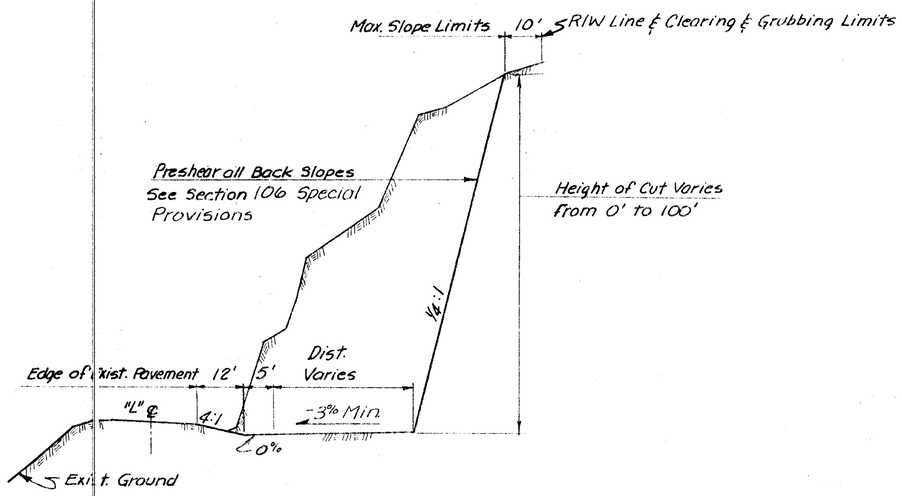

TYPICAL SECTION

ROCK BORROW, RIPRAP AND FILTER BLANKET MATERIALS SITE

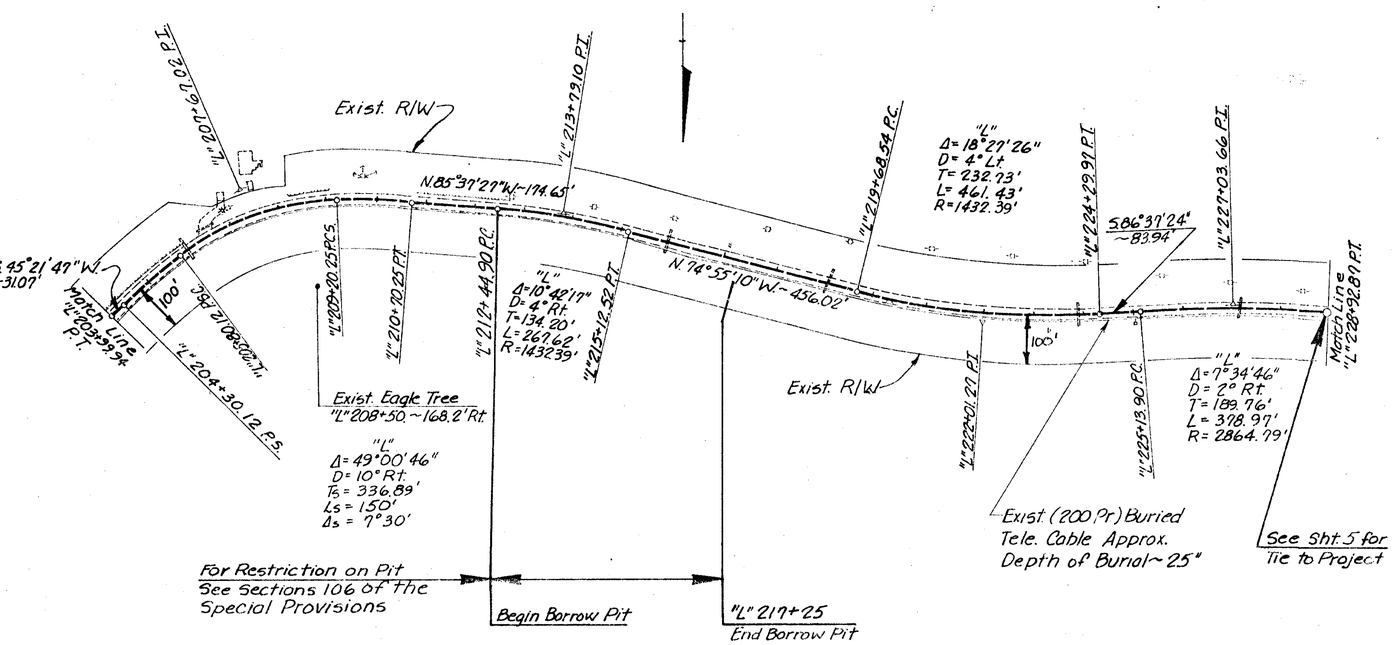

NOTES

1. The Rock Borrow Quarry has approx. 32,000 bank cubic yards of material. Material shall be used only as Rock Borrow, Class II A, Riprap, and Filter Blanket.
2. See Section 106-1.02 of the Special Provisions for Stipulations that apply to the development of this material site.
3. TBM BH #13 Point on Rock Outcropping 24' Right of ℄ Sta. 208+21; Elevation 62.07.

AS ADVERTISED

STATE	PROJECT DESIGNATION	YEAR	SHEET NO.	TOTAL SHEETS
ALASKA	F-093-2(2)	1980	12	48

STATE FURNISHED MATERIAL SITE

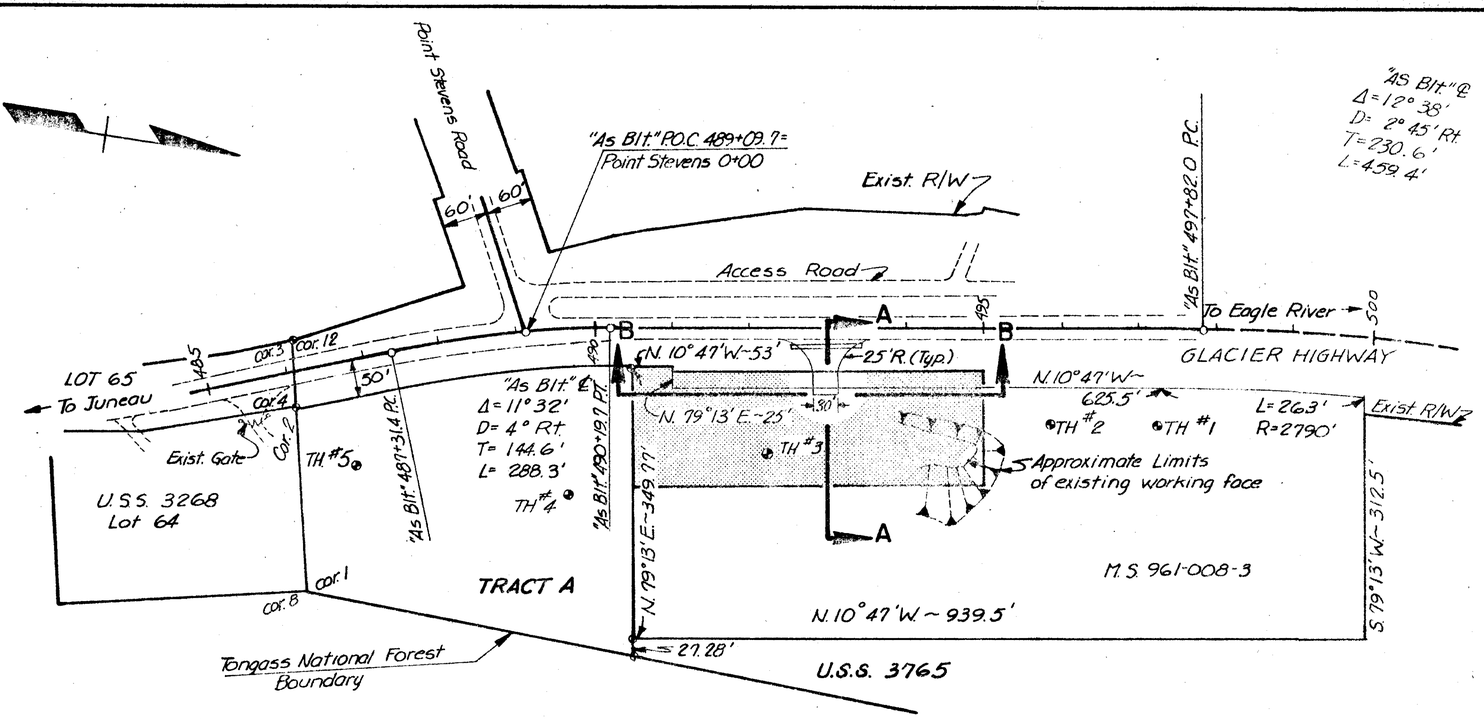

NOTES

1. Indicates the area of the Borrow Site that is available for use on this project unless otherwise directed. See details this sheet.
2. The shaded area contains approximately 40,000 Bank Cubic Yards of material
3. T.B.M. #F-H2 spike set in 36" Spruce Tree 36.5' Lt. of "As Blt." 499+58.
4. "As Blt." 493+00 Rt. Install new approach (Detail this sheet), 18" x 80' pipe conduit, and relocate existing gate from 485+50 Rt. to 493+00; 30' Rt. All labor and materials required to accomplish the above work shall be considered incidental to other items of work.
5. See Section 106-1.02 of the Special Provisions for stipulations that apply to the development of this materials site

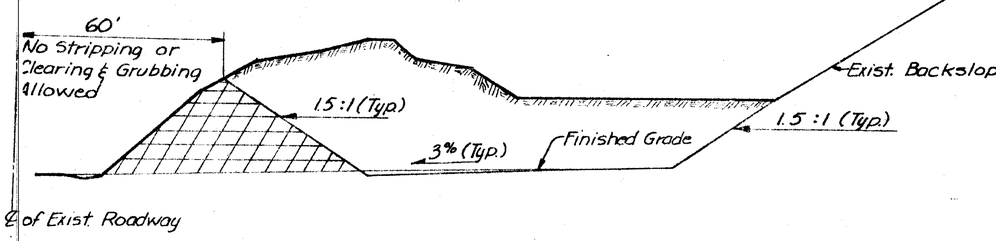

1. Indicates existing material that's to remain in place except through new approach area.

SECTION A-A

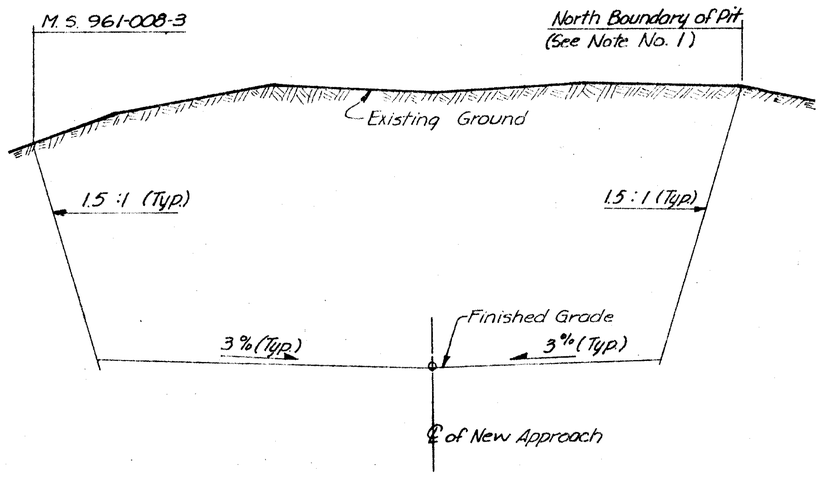

SECTION B-B

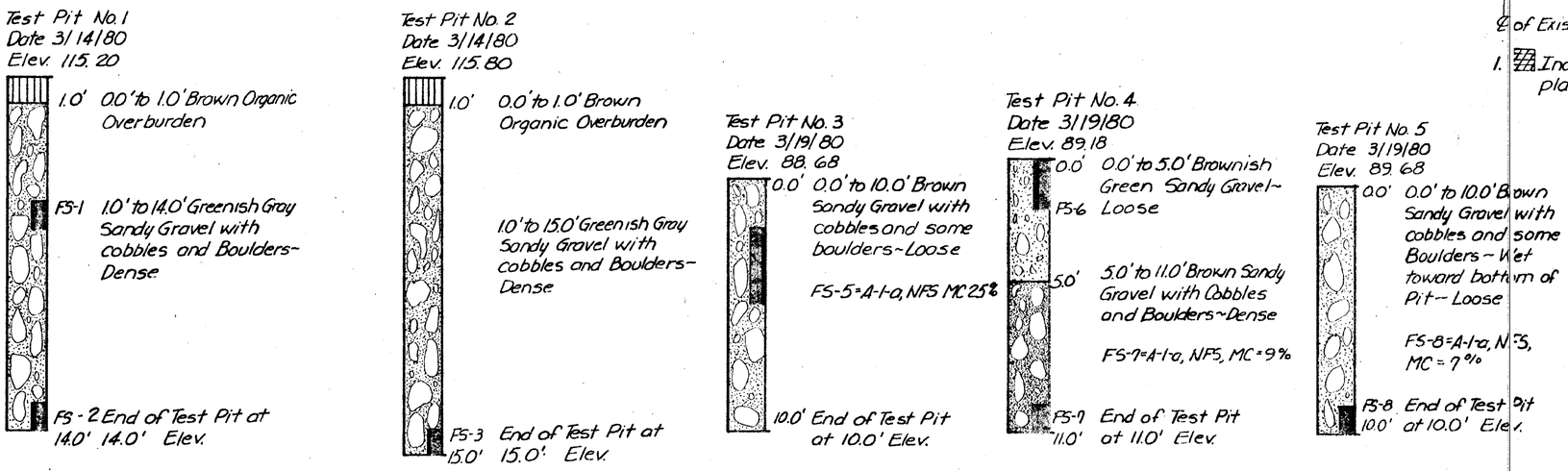

SYMBOLS

- Organic Material
- Gravel
- Test Pit Location
- Field Sample Location
- Water Table
- 5.0' – Depth in Feet

LOG OF TEST BORINGS

STATE	PROJECT DESIGNATION	YEAR	SHEET NO.	TOTAL SHEETS
ALASKA	F-093-2(2)	1980	13	48

STRIPING, SIGNING AND ILLUMINATION DETAILS

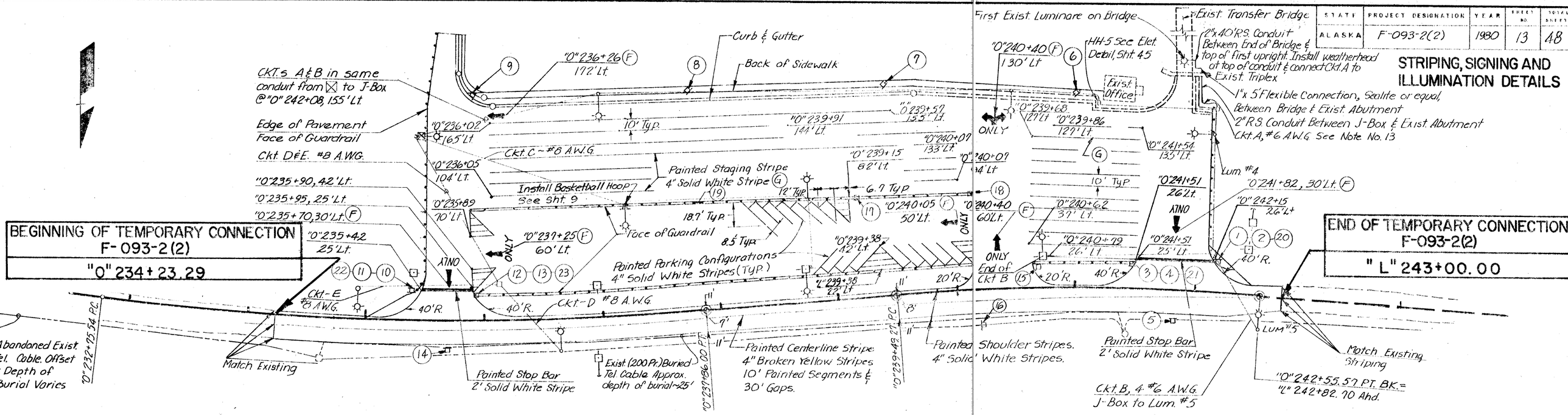

GENERAL ILLUMINATION NOTES

1. Locations of luminaires and J-boxes are approximate only and are subject to minor field adjustment by the Engineer.
2. All luminaire fittings shall be Type II or Type III. (See Standard Drawing L-30.01 for details.)
3. All lighting standards shall have short bases. (See Standard Drawing L-10.13 for details.)
4. All luminaires shall be mounted 35' above the Staging Area. (See Standard Drawing L-03.12.)
5. Mast arms shall be 15' unless otherwise noted on the plans. (See Standard Drawing L-03.12 & note 12 this sheet.)
6. All luminaires shall be 240 V, 250 Watts medium distribution, semi cut-off Type III High Pressure Sodium.
7. All junction boxes shall be Type II unless otherwise noted on the Plans. (See Standard Drawing L-23.10.)
8. All conduits shall be 2" PVC schedule 40, except where otherwise specified.
9. ☒ Indicates approximate location of illumination distribution center. See Sheet 46 for electrical connection between illumination distribution center and power distribution center.
10. Distribution center location and breaker ratings are shown on the plans. (See Standard Drawing L-20.05 for wiring schedule and other details.)
11. Cuts in the existing pavement, drilling of the existing abutment, grouting of hole in abutment, and reinstallation of pavement structure to install Ckts. A & B shall be considered incidental to Section 665.
12. Circuit A shall not be switched by the contractor so that it supplies continuous power to existing illuminaires on the bridge. See Standard Drawing L-20.3.

ILLUMINATION SUMMARY

STATION	OFFSET LT.	OFFSET RT.	ITEM	MAST ARM LENGTH	REMARKS
"0" 234+94	215		Pole	15'	
"0" 235+42	155		Pole	15'	
"0" 236+14	30		J-Box		
"0" 236+64		27	Pole	15'	
"0" 237+08	188		Pole	15'	
"0" 237+21	93		Pole	15'	
"0" 238+73	87		Pole	15'	
"0" 238+95	29		Pole	10'	See Utility Pole Detail
"0" 240+49	167		Pole	15'	See Utility Pole Detail
"0" 240+74	27		Pole	15'	
"0" 242+08	155		J-Box	15'	
"0" 242+17	32		J-Box		
"0" 242+55		27	Pole	15'	

Breaker Rating For CKT. A & B = 20 Amp/240 V, CKT. C-E 15 Amp/240 V.

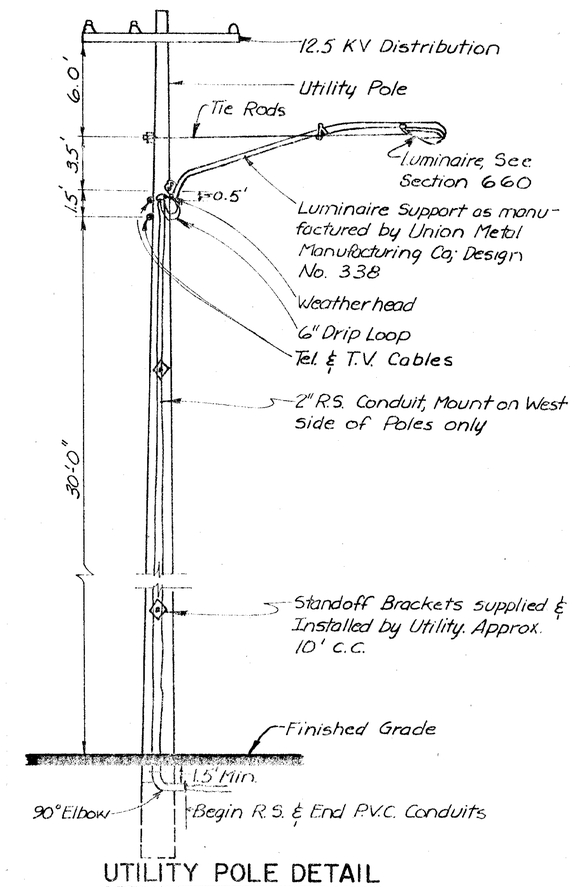

UTILITY POLE DETAIL

SIGNING SCHEDULE

STATION	DIST. FROM ℄ Lt.	DIST. FROM ℄ Rt.	CODE NO.	LEGEND	SIGN PANEL THICKNESS SIZE	UNFRAMED	FRAMED	AREA S.F.	POST No. of POSTS	TYPE	SIZE	LENGTH	EMBEDMENT	FACING TRAFFIC	REMARKS
"0" 242+19	26		R1-1	Stop	30"x30"	.063		6.25	1	Tube	2"	—	3'	N.B.	
"0" 242+19	26		R5-1	Do Not Enter	36"x36"	.063		9.00	1	Tube	2"	13'	3'	S.B.	Mount Opposite #1
"0" 242+49	21		R1-1	Stop	30"x30"			6.25				—		N.B.	
"0" 242+49	21		R5-1	Do Not Enter	36"x36"			9.00				12'		S.B.	Mount Opposite #3
"0" 241+60		21	D1-1	Juneau	12"x36.1"			4.67				10'		N.B.	
"0" 241+03	142		R1-1	No Parking	12"x18"			1.50				10'		W.B.	
"0" 239+52	176		R7-1	No Parking	12"x18"			1.50				10'		E.B.	
"0" 237+87	184		R7-1	No Parking	12"x18"			1.50				10'		E.B.	
"0" 235+90	190		R7-1	No Parking	12"x18"			1.50				10'		E.B.	
"0" 235+39	24		R1-1	Stop	30"x30"			6.25				—		N.B.	
"0" 235+39	24		R5-1	Do Not Enter	36"x36"			9.00				11'		S.B.	Mount Opposite #11
"0" 235+94	21		R1-1	Stop	30"x30"			6.25				—		N.B.	
"0" 235+94	21		R5-1	Do Not Enter	36"x36"			9.00				11'		S.B.	Mount Opposite #13
"0" 235+67		21	D1-1	Juneau	12"x36.1"			4.67				10'		N.B.	
"0" 240+20		31	I4-4R	Ferry →	24"x36"			6.00				12'		W.B.	
"0" 240+70	21		I4-4L	← Ferry	24"x36"	.063		6.00	1	Tube	2"	10'	3'	E.B.	
"0" 239+21	84		R7-1R	No Parking Any Time	12"x18"	.063		1.50	1	Tube	2"	10'	3'	E.B.	
"0" 240+15	80		R7-1L	No Parking Any Time	12"x18"	.063		1.50	1	Tube	2"	10'	3'	S.B.	
"0" 237+86	90		Existing	Auke Bay Ferry Terminal					2	Wood	6x6"	12'	3'	S.B.	Relocate Existing Sign as Directed
"0" 242+19	26		R6-1	ONE WAY	36"x12"			3.0						W.B.	Mount Above #2
"0" 242+49	21		R6-1	ONE WAY	36"x12"			3.0						E.B.	" " #4
"0" 235+39	24		R6-1	ONE WAY	36"x12"			3.0						E.B.	" " #11
"0" 235+94	21		R6-1	ONE WAY	36"x12"			3.0						W.B.	" " #13

GENERAL SIGNING AND STRIPING NOTES

1. Sign locations and post lengths are approximate only, and are subject to minor revisions.
2. All sign posts shall be square telescoping perforated galvanized steel posts, the 2" size shall be used above ground and the 2¾" size shall be used below ground for the sleeve.
3. All posts shall be installed with the sleeve type embedment in accordance with Standard Drawing S-30.12, except that the 2¾" size shall be used for the entire embedment depth.
4. Post lengths are from the cut off in the sleeve to the top of the post. See Standard Drawings S-05.00 & S-30.12.
5. Painted pavement markings shall be applied in accordance with the Alaska Traffic Manual, Standard Drawings T-21.03 and T-22.00, Sect. 670 of the Special Provisions.
   - A. Approximate length of 24" White Painted pavement markings for Stop Lines = 120 L.F.
   - B. Approximate length of 4" Yellow Painted Pavement Markings for Centerline Striping = 200 L.F.
   - C. Approximate length of 4" White Painted Pavement Markings for Edge, Staging & Parking Lines 7,200 L.F.

(F) Indicates that details of signs are shown on Standard Drawing T-27.01.

AS ADVERTISED

AS ADVERTISED

STATE	PROJECT DESIGNATION	YEAR	SHEET NO.	TOTAL SHEETS
ALASKA	F-093-2(2)	1980	14	48

WATER SYSTEM DETAILS

ESTIMATE OF QUANTITIES

ITEM	ESTIMATED QUANTITY	
Pad Exc.	180	C.Y.
Structure Exc.	104	C.Y.
Class A Conc. (Sht. 16)	28.8	C.Y.
Reinforcing Steel (Sht. 16)	3,580	Lbs.
1½" Galv. Steel W.M.	940	L.F.
3" Galv. Steel W.M.	125	L.F.
3" D.I. W.M.	1,160	L.F.
6" D.I. W.M.	30	L.F.
Fire Hydrant	1	Ea.
Valve Boxes	7	Ea.
Floor Stands	1	Ea.
Seeding	2	M.S.F.

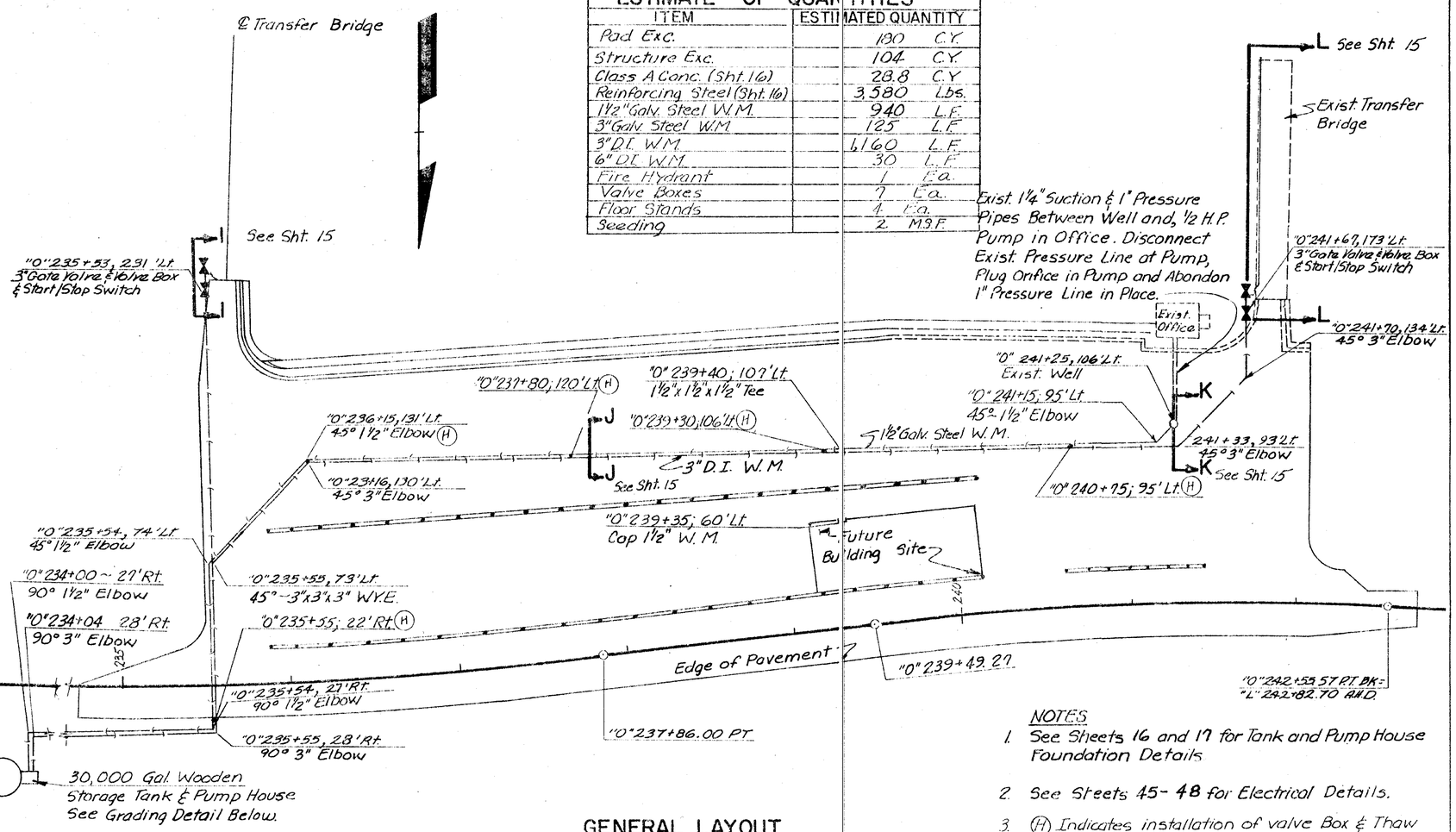

GENERAL LAYOUT

NOTES

1. See Sheets 16 and 17 for Tank and Pump House Foundation Details
2. See Sheets 45 - 48 for Electrical Details.
3. (H) Indicates installation of valve Box & Thaw Wires. See Sheet 15 for details.

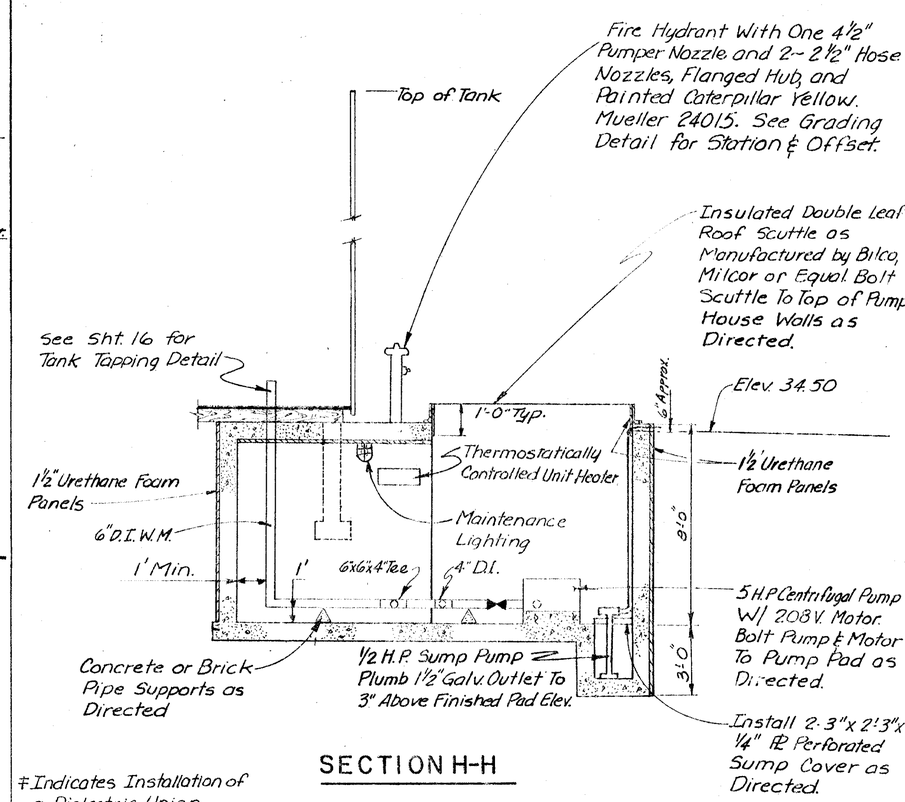

SECTION H-H

‡ Indicates Installation of a Dielectric Union

‡‡ Indicate Installation of Flanged Nylon Expansion Joint.

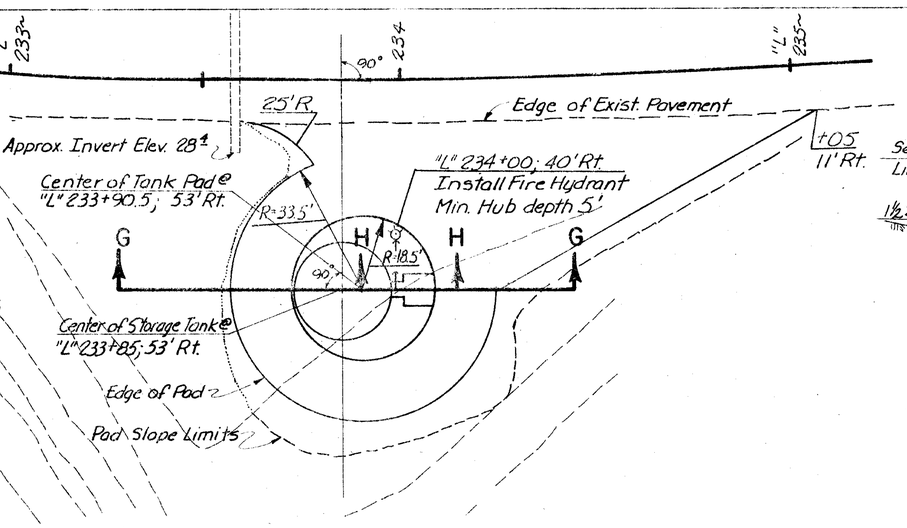

PLAN

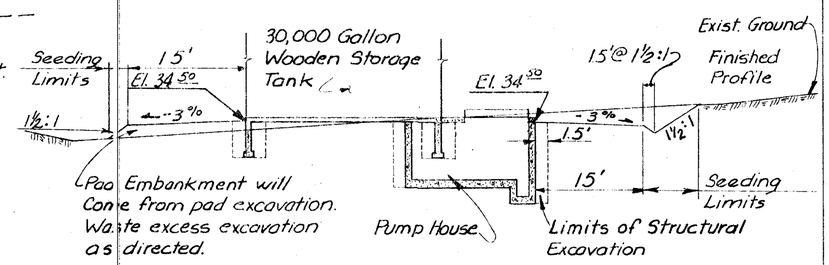

SECTION G-G

PUMP HOUSE AND TANK PAD GRADING DETAILS

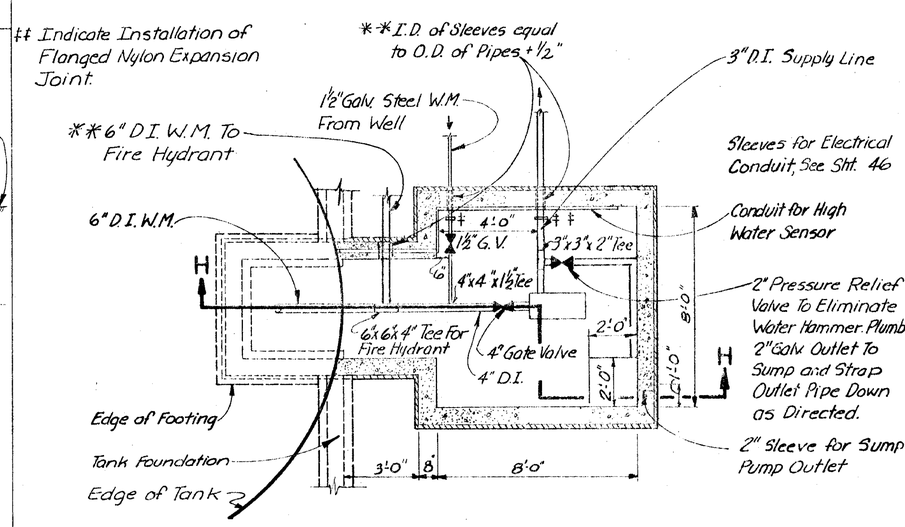

PLAN

PUMP HOUSE DETAIL

STATE	PROJECT DESIGNATION	YEAR	SHEET NO	TOTAL SHEETS
ALASKA	F-093-2(2)	1980	15	48

SECTION K-K

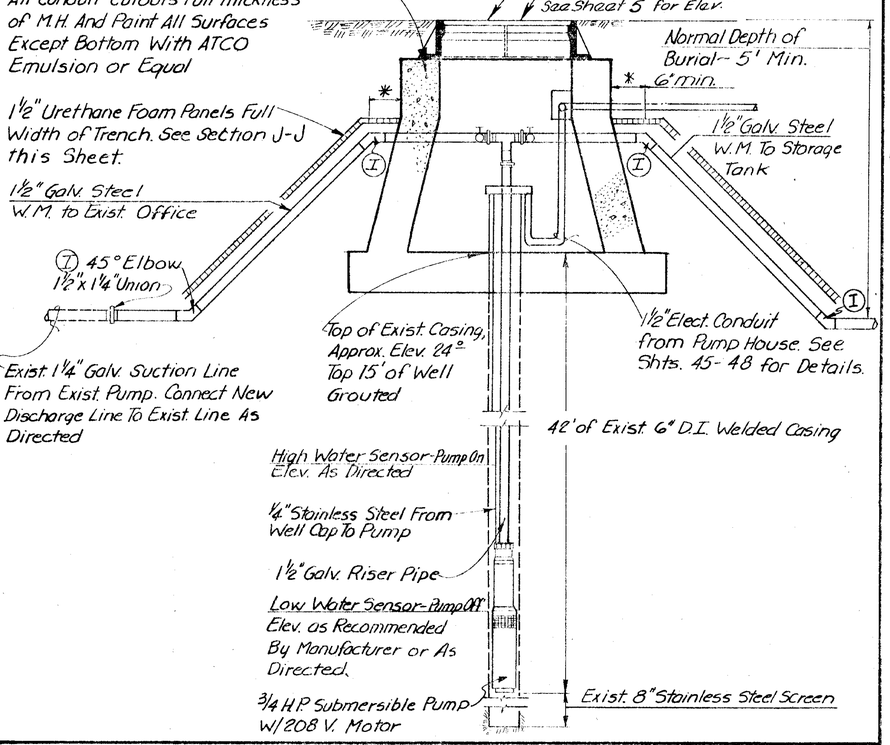

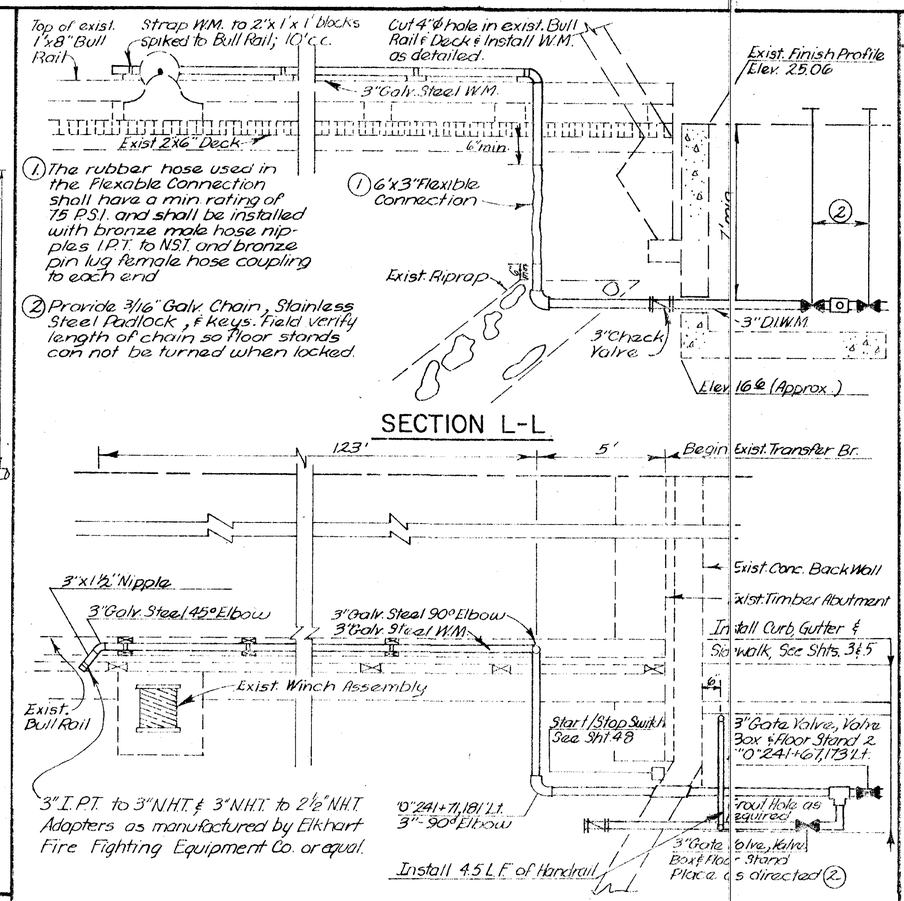

WATER SYSTEM DETAILS

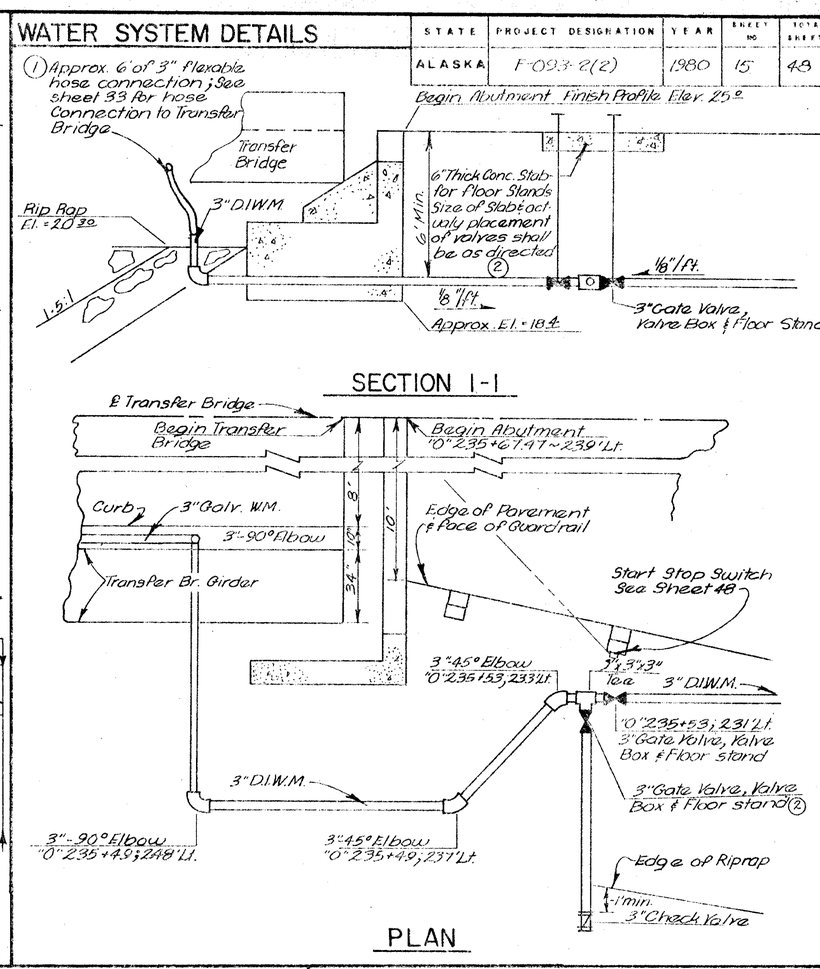

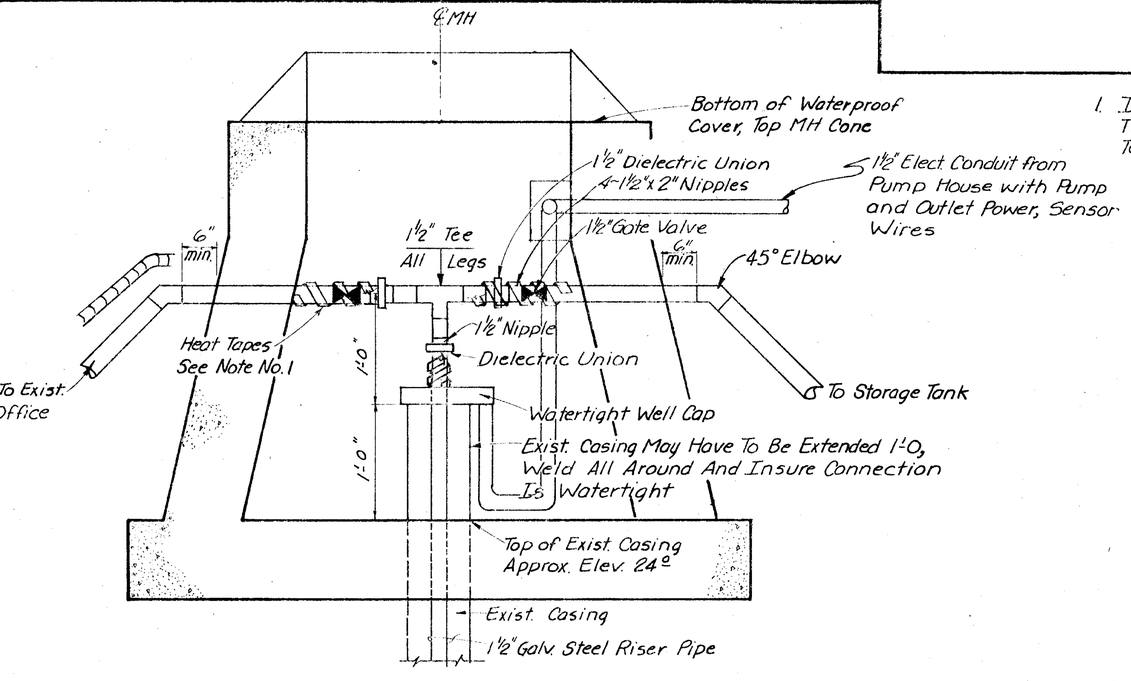

1. Install 16' of Automatic Heat Tape. Thermostat Shall Activate When Air Temperature drops to 38°F.

TEE DETAIL

AS ADVERTISED

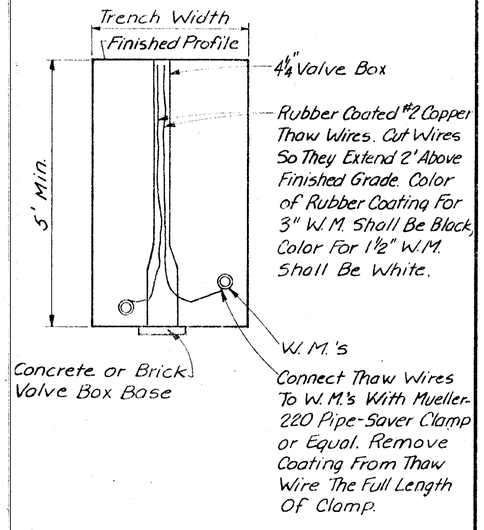

WATER MAIN THAW WIRE DETAIL

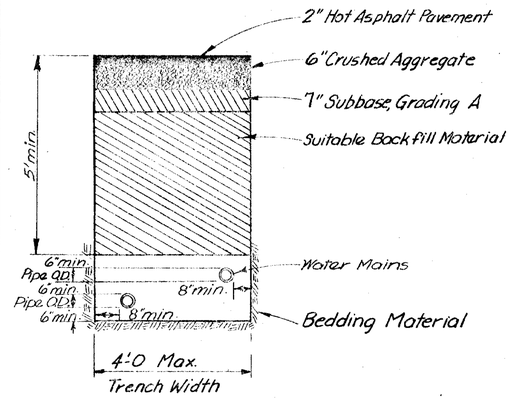

Separation Shown Above Shall Only Be Required Where Mains Cross

SECTION J-J

19 1153 5-79 MC 9423*

AS ADVERTISED

STATE	PROJECT DESIGNATION	YEAR	SHEET NO.	TOTAL SHEETS
ALASKA	F-093-2(2)	1980	16	48

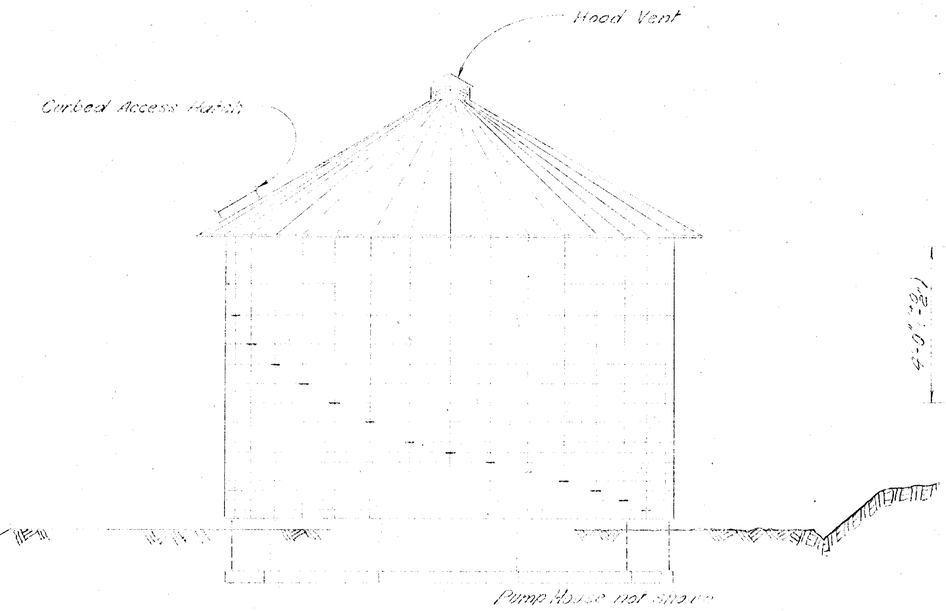

ELEVATION

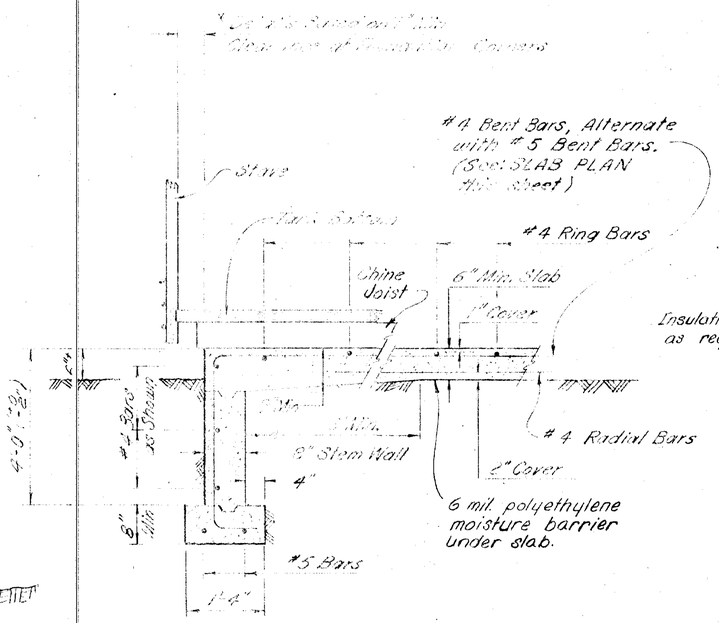

TYPICAL SECTION

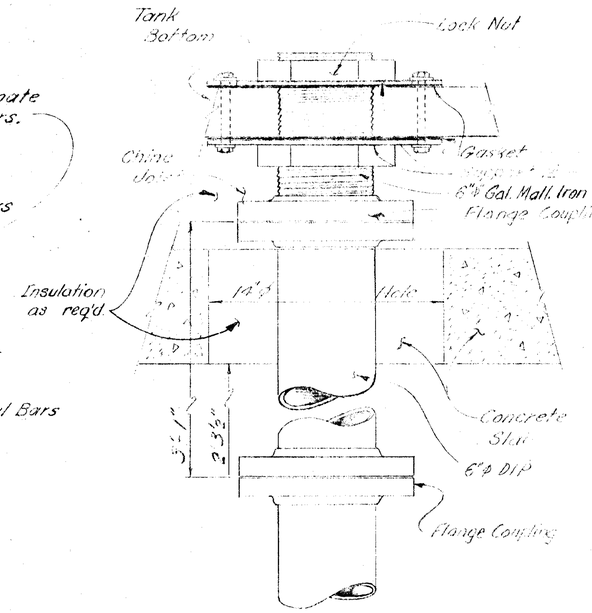

Note: All Tank Tappings and Fittings are subject to verification by Tank Supplier.

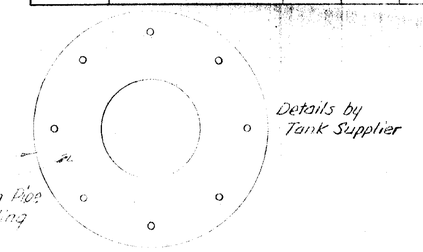

GENERAL NOTES

Details shown are schematic only and are based on a standard tank having a nominal 23' outside diameter.

* All dimensions so noted are subject to verification by tank supplier.

Area around tank shall be graded as directed by the Engineer.

The area within the limits of the concrete stem wall shall be backfilled with foundation fill. See Special Provisions.

Slab design is based on 25% D.L. + L.L. moment for a perimeter supported circular slab, 100% D.L. + L.L. shear at perimeter. Design stresses: f'_c= 3000 psi. f_s= 24,000 psi.

All tank fittings shall be nominal 6" diameter standard galvanized iron. Gate valves shall be nominal 4" diameter bronze.

ELEVATION

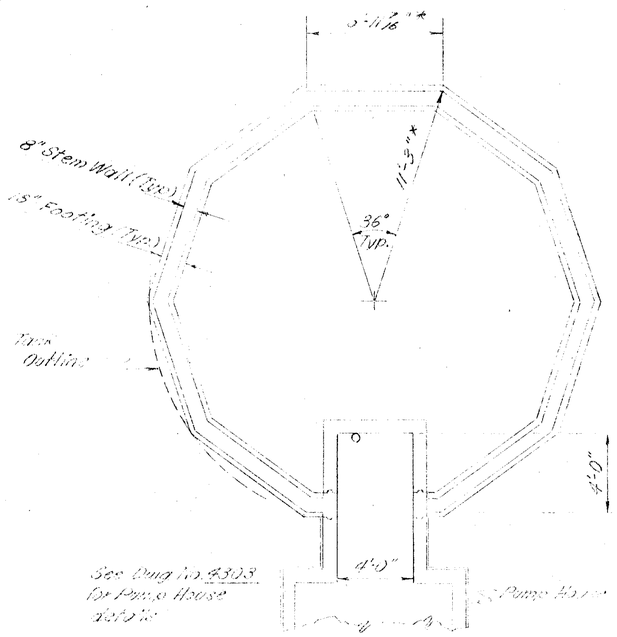

FOUNDATION PLAN

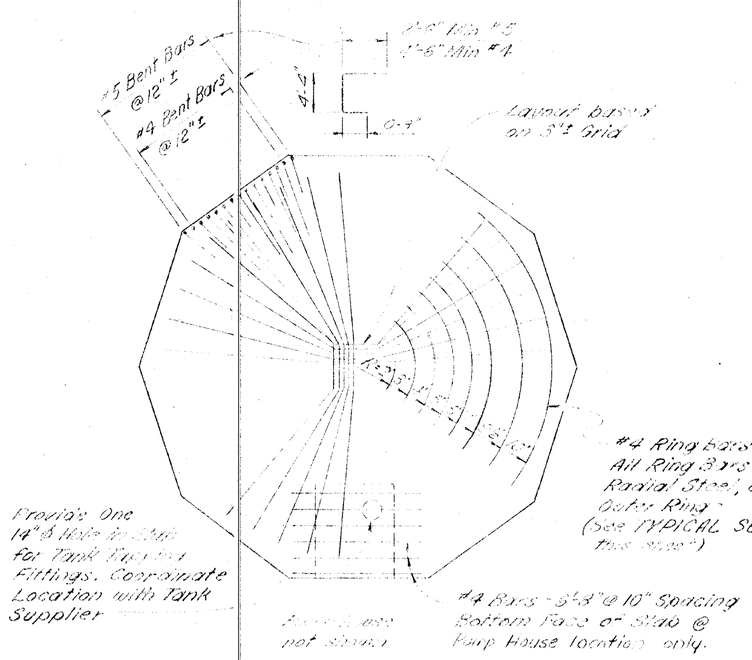

SLAB PLAN

(PARTIAL REINFORCING STEEL SHOWN)

TANK TAPPING DETAIL

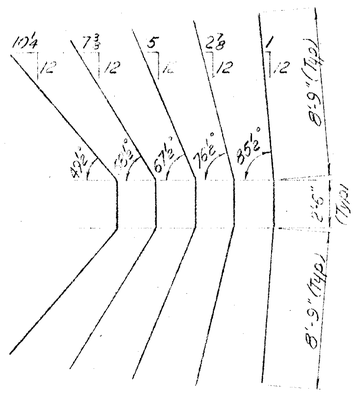

#4 RADIAL BARS

QUANTITIES

	UNIT	QUANTITY
*Reinforcing Steel	Pounds	3580
*Class A Concrete	Cu. Yards	28.8
Tank & Cover	Lump Sum	All Required

* Includes "Pump House" Quantities

No Scale

AUKE BAY TRANSFER BRIDGE

ROUTE F-93

WATER TANK

State of Alaska
DEPARTMENT OF TRANSPORTATION and PUBLIC FACILITIES
Juneau, Alaska

Date

Approved

BRIDGE NO. 1474

DWNG. NO. 4302

AS ADVERTISED

	PROJECT DESIGNATION	YEAR	SHEET NO.	TOTAL SHEETS
ALASKA	F-093-2(2)	1980	17	48

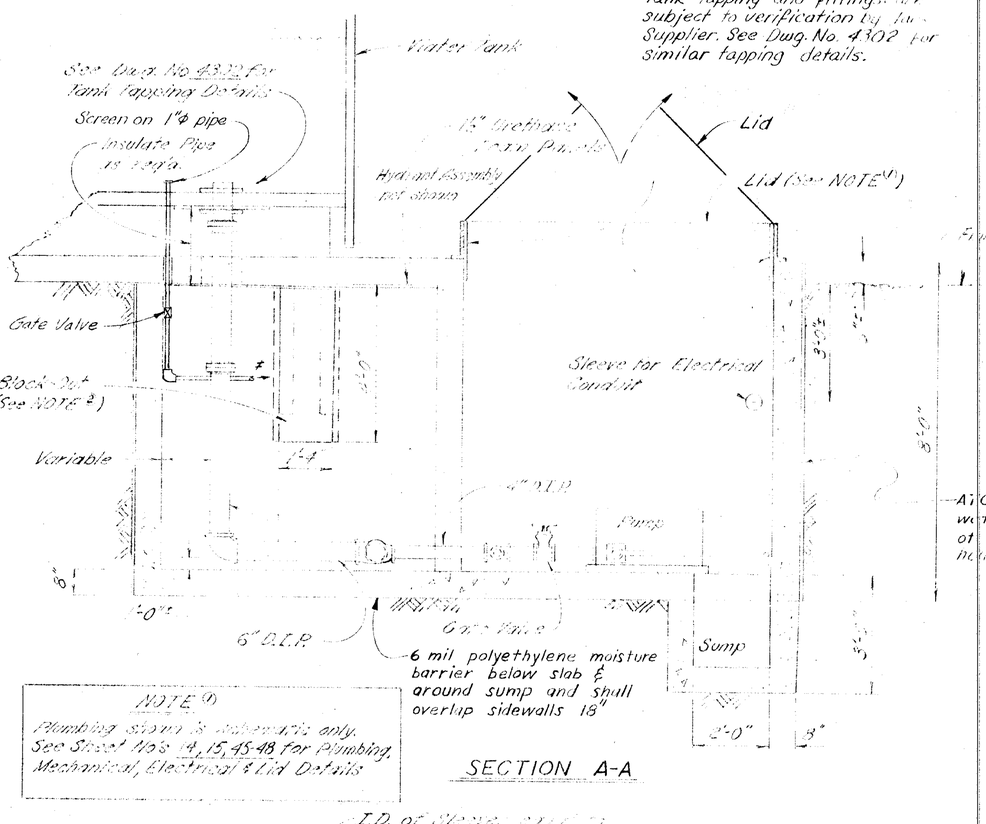

SECTION A-A

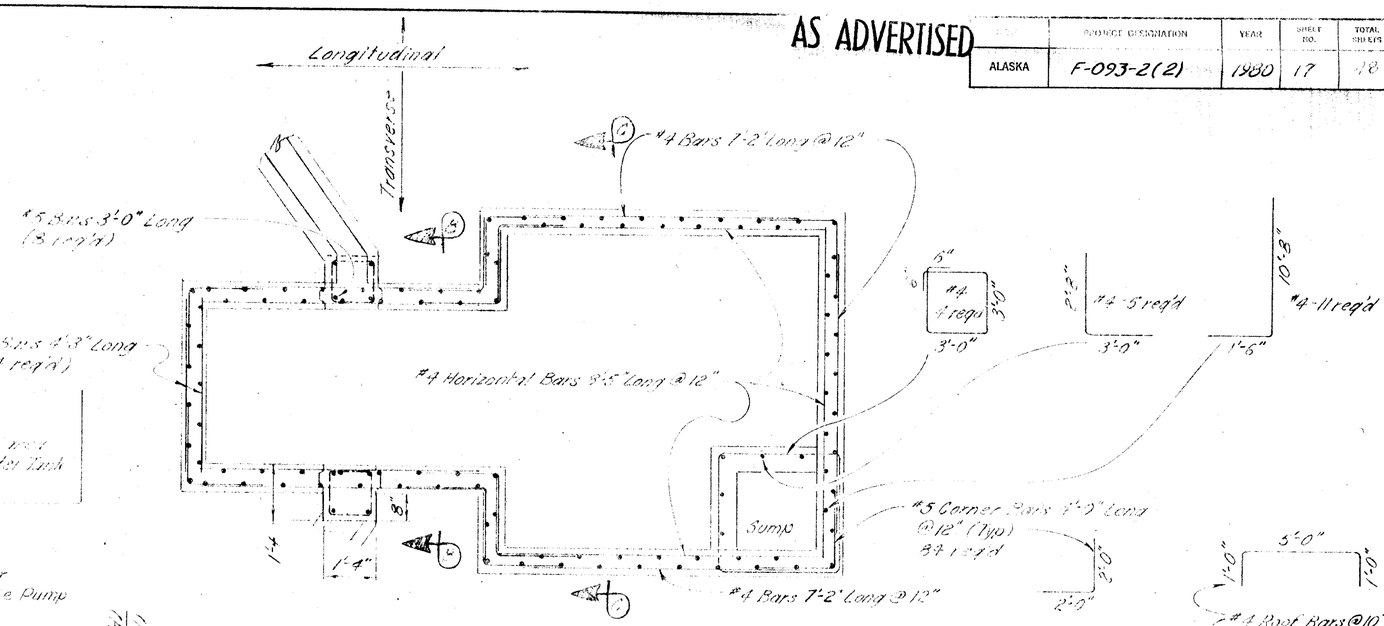

REINFORCEMENT PLAN

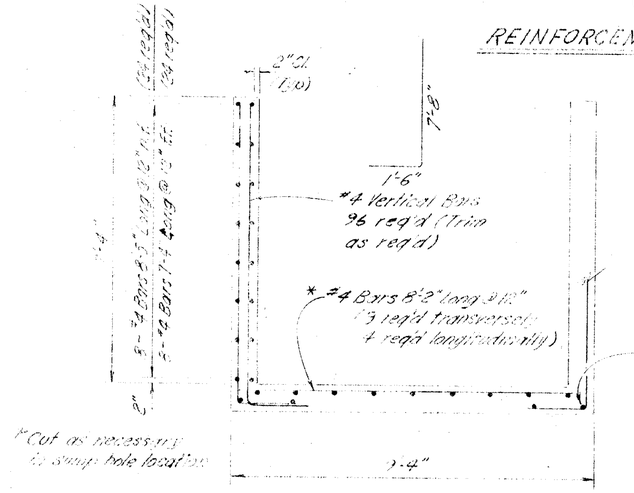

SECTION C-C

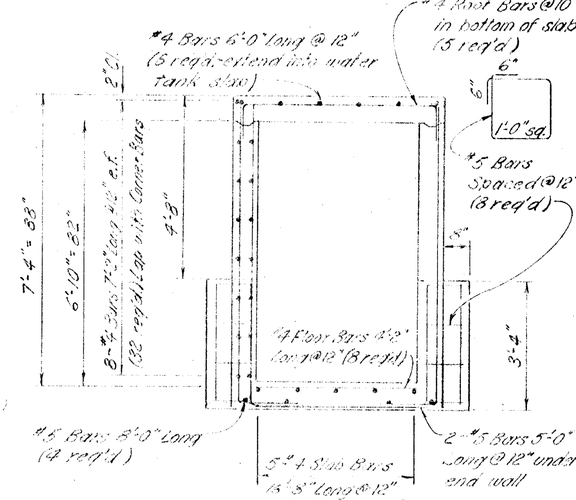

SECTION B-B

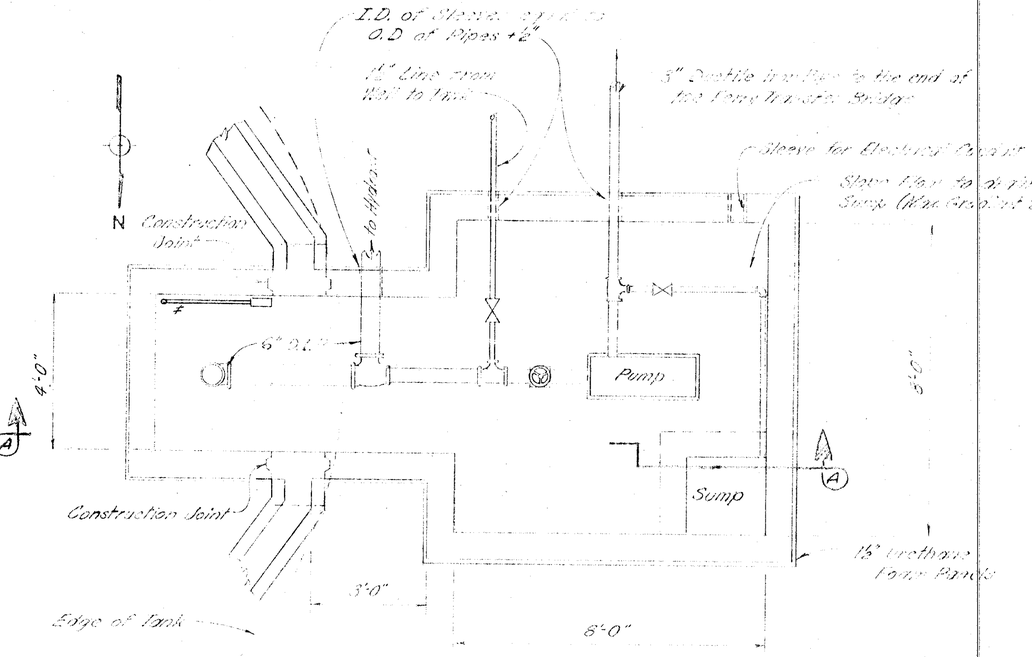

PLAN

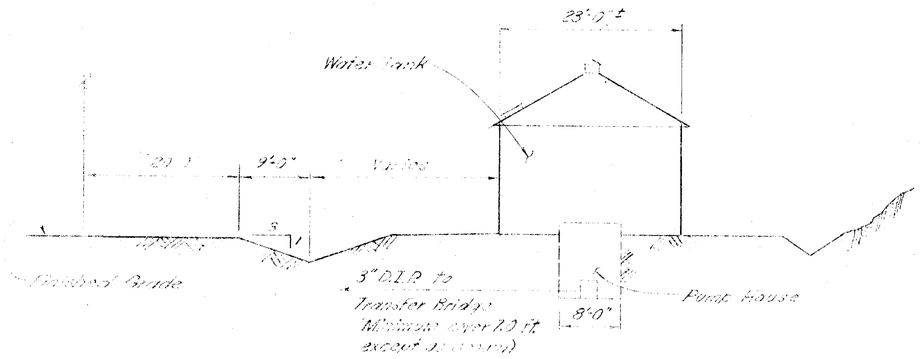

ELEVATION

No Scale

AUKE BAY TRANSFER BRIDGE

ROUTE F-93

PUMP HOUSE

State of Alaska
DEPARTMENT OF TRANSPORTATION and PUBLIC FACILITIES
Juneau, Alaska

Date 10-6-80
Approved

BRIDGE NO. 1474
DWNG. NO. 4303

AS ADVERTISED

STATE	PROJECT DESIGNATION	YEAR	SHEET NO.	TOTAL SHEETS
ALASKA	F-093-2(2)	1980	18	48

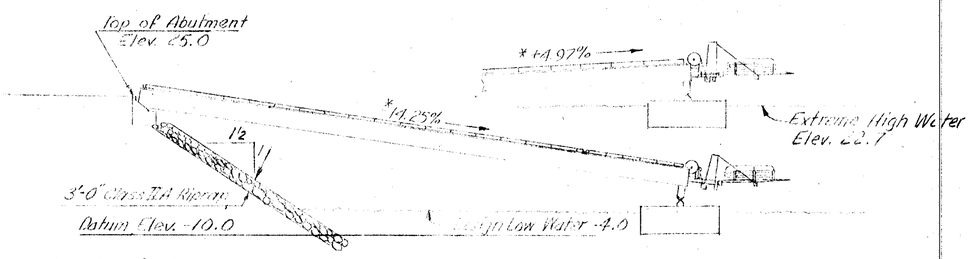

*Note: Transfer Bridge is level when tide is at El. 15.75

ELEVATION

10 0 20 40
Feet

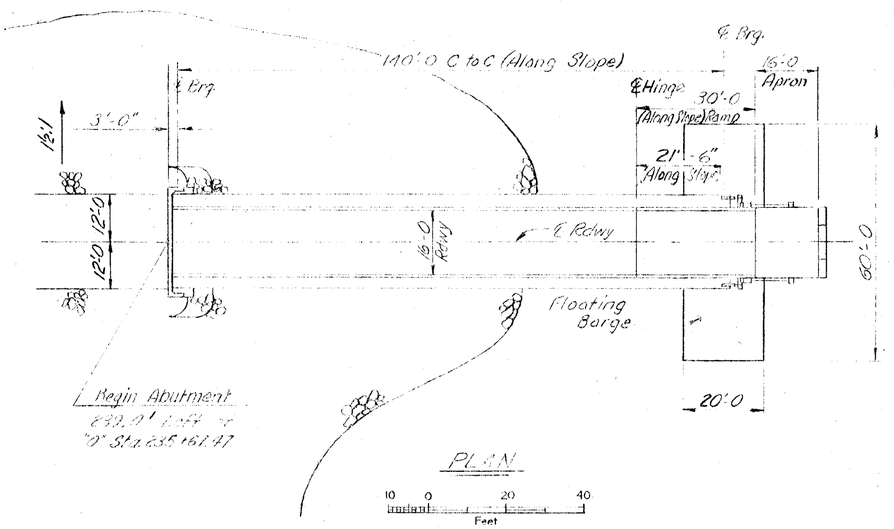

PLAN

10 0 20 40
Feet

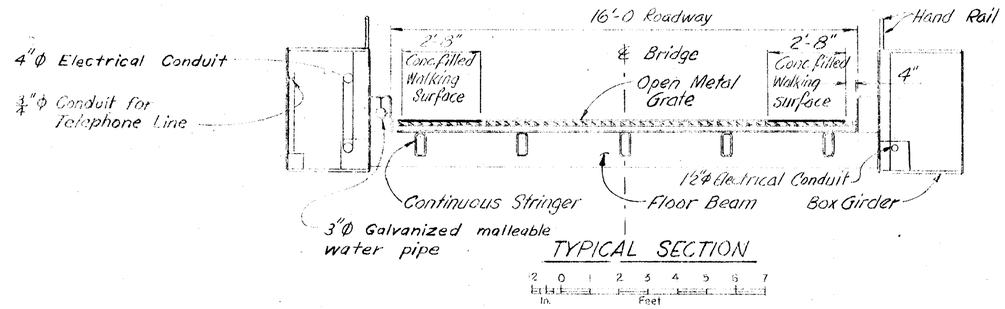

TYPICAL SECTION

2 0 1 2 3 4 5 6 7
In. Feet

TOTAL ESTIMATED QUANTITIES

ITEM	UNIT	SUBSTR	SUPER	TOTAL	DWG. NO.'s
Class "A" Concrete	CY	24.8	——	24.8	4291
Reinforcing Steel	Lb	2240	——	2240	4291
*Structural Steel Furnished, Fabricated and Erected	Lb	6,480	240,460	246,940	4291 Thru 4301, 4304

* Does not include weight of sheaves, cables, hydraulic units and appurtenances used to raise and lower the ramps. The weight includes approximately 77,920 lbs. A572, 115,610 lbs. A36 and 53,410 lbs A500 Grade B.

GENERAL NOTES

Specifications:

Design: AASHTO Standard Specifications for Highway Bridges, 1977 Edition, with latest Interim Specifications.

Construction: State of Alaska Standard Specifications for Highway Construction, 1972; with Supplemental Specifications, 1975; Standard Modifications, and the Special Provisions.

Live Load: HS 20-44

Dead Load: No allowance for future wearing surface

Design Unit Stresses:

Structural Steel:

A36	F_s = 20,000
A500 Grade B	F_s = 25,000
A572	F_s = 27,000
A108	F_s = 29,000
A608 Grade D	F_s = 30,000

Reinforced Concrete: f'_c = 3,000 psi
F_y = 60,000 psi

Structural Materials:

Structural Steel: All structural steel tube sections shall be A500 Grade B. All other structural steel shall be A36 except as noted. All structural steel not designated for painting shall be galvanized. Group 2 Charpy impact requirements shall apply. Anchor bolts shall be galvanized A325 high strength bolts. All other bolts shall be galvanized A307 machine bolts.

Concrete: All cast-in-place concrete shall be Class "A".

Reinforcing Steel: All reinforcing steel shall conform to ASTM 615 Grade 60.

Soil Pressure: Abutment spread footing 2 tons/sq.ft.

INDEX

TITLE	DWG. NO.
GENERAL LAYOUT	4290
ABUTMENT	4291
ABUTMENT BEARINGS	4292
TYPICAL SECTION	4293
HATCH & DECK PANELS	4294
INTERMEDIATE RAMP	4295
INTERMEDIATE RAMP DETAILS	4296
BARGE BEARINGS & END GIRDER	4297
MISCELLANEOUS DETAILS	4298
APRON	4299
RAILING	4300
UTILITIES	4301
WATER TANK	4302
PUMP HOUSE	4303
FRONT BUMPER RESTRAINT	4304

AUKE BAY TRANSFER BRIDGE

ROUTE F-093

GENERAL LAYOUT

State of Alaska
DEPARTMENT OF TRANSPORTATION
and PUBLIC FACILITIES
Juneau, Alaska

Date 10-6-80
Approved

BRIDGE NO. 1474
DWNG. NO. 4290

AS ADVERTISED

STATE	PROJECT DESIGNATION	YEAR	SHEET NO.	TOTAL SHEETS
ALASKA	F-093-2(2)	1980	19	48

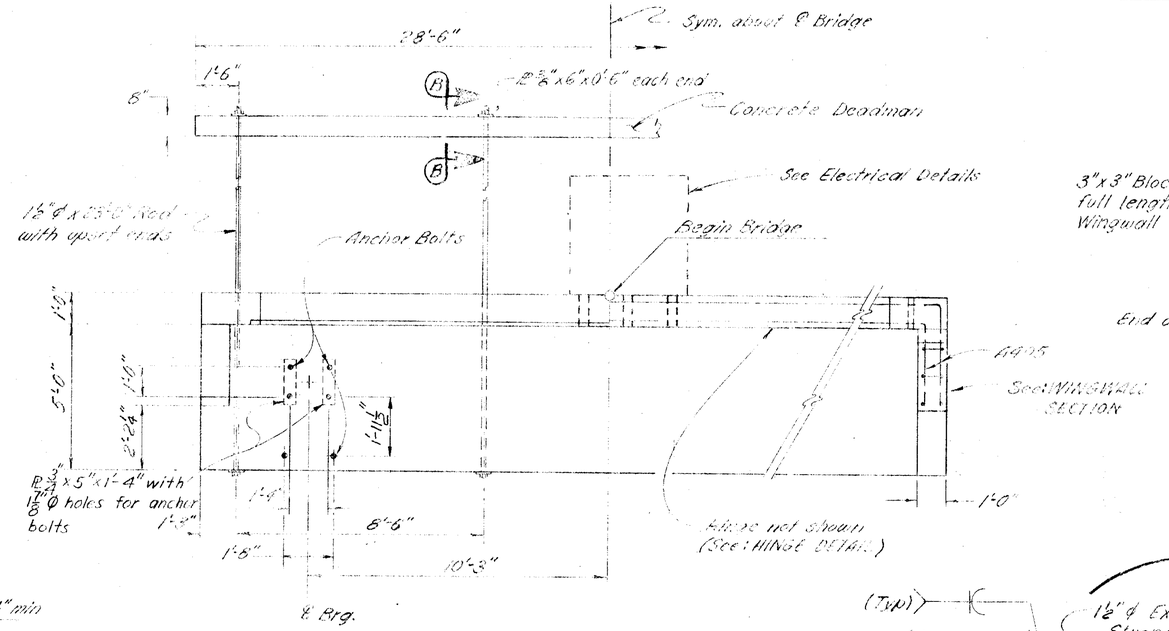

PLAN

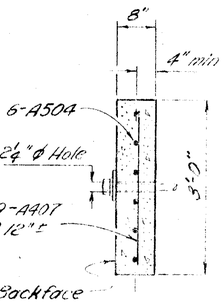

SECTION B-B
CONCRETE DEPTH

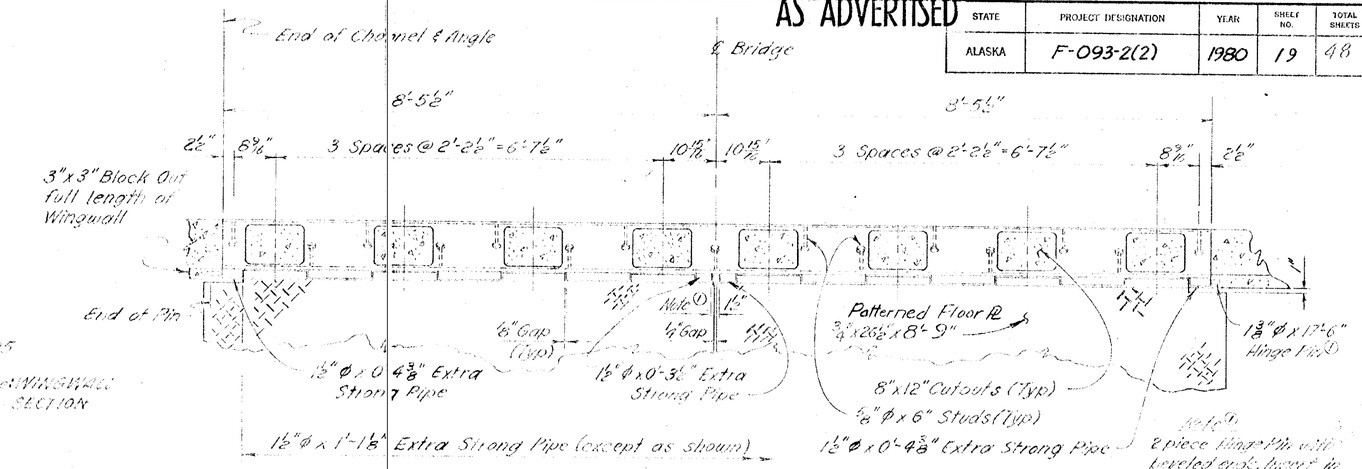

HINGE DETAIL

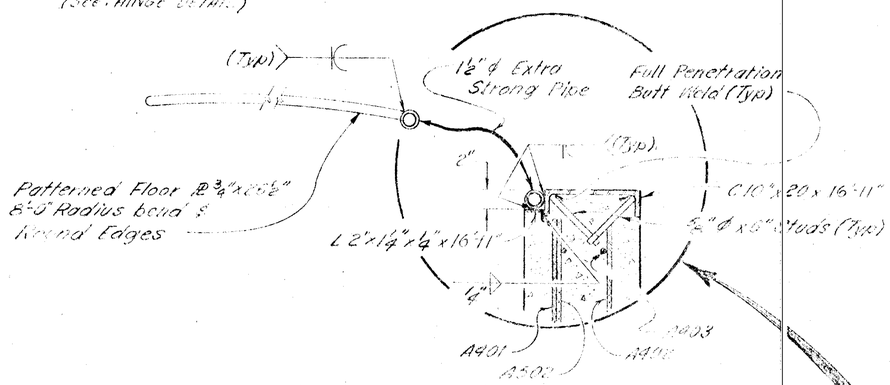

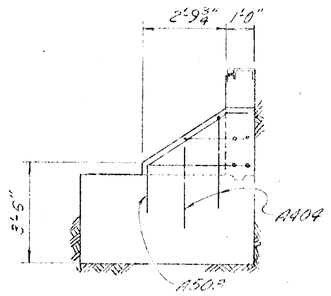

WINGWALL SECTION

ABUTMENT REINFORCING STEEL				
MARK	SIZE	NO.	LENGTH	TYPE
*A401	4	29	5'-0"	
*A402	4	29	20'-3"	Bent
*A403	4	8	27'-6"	
A404	4	4	6'-6"	Bent
*A405	4	8	4'-10"	Bent
A407	4	29	2'-6"	
A501	5	10	6'-6"	Bent
A502	5	8	8'-2"	Bent
A503	5	4	5'-6"	Bent
A504	5	6	28'-0"	
A801	8	16	27'-6"	

BENDING DIAGRAM

* Trim to fit

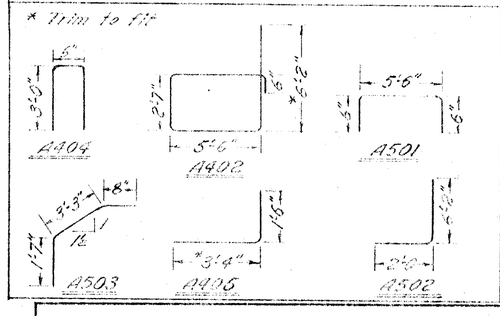

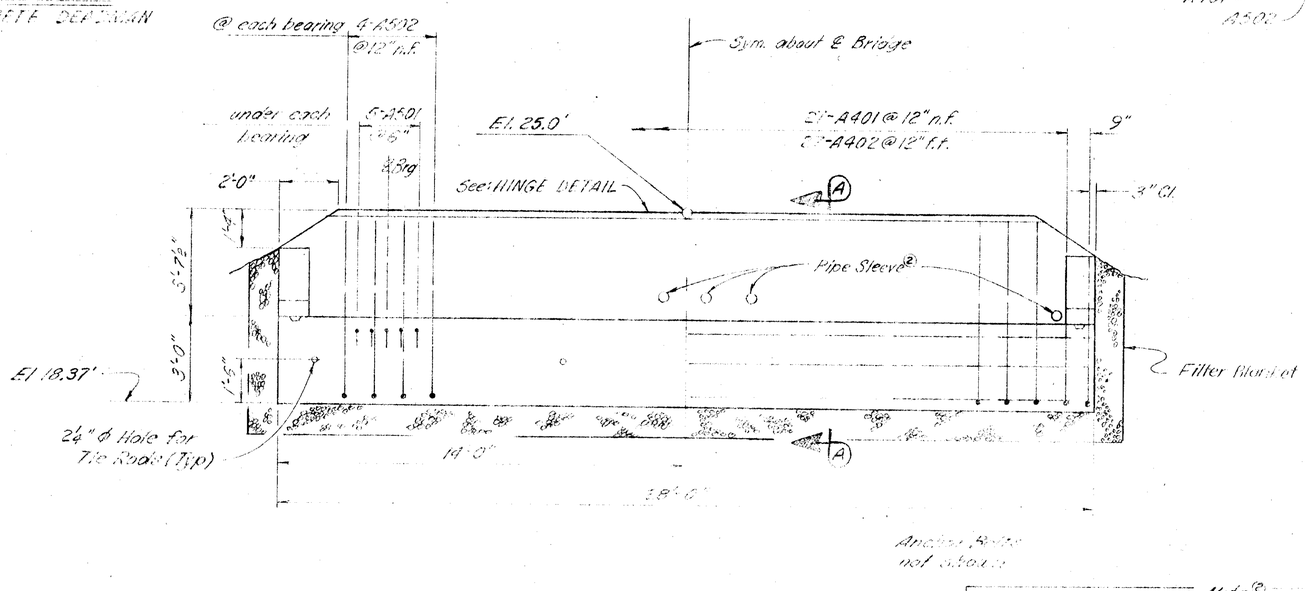

ELEVATION

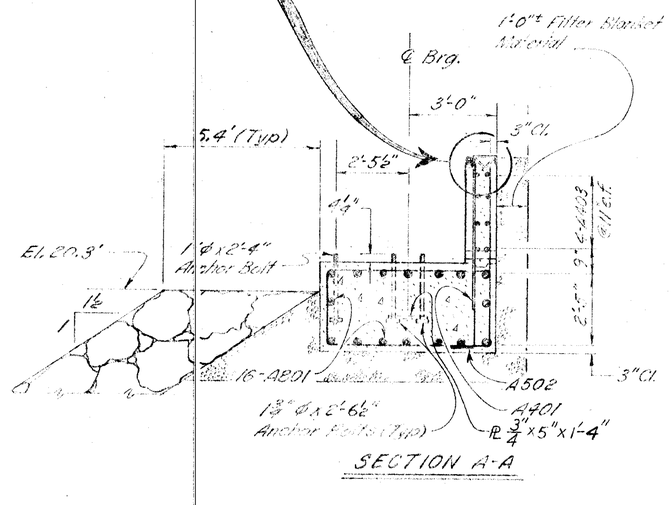

SECTION A-A

Note ②

Shown in rigid conduit. Fill annular space with sand. Locate in field to fit.

Pipe Sleeve Size	Conduit Size
2"ϕ	3¼"ϕ
5"ϕ	6½"ϕ
6"ϕ	7"ϕ

No scale except as shown.

AUKE BAY TRANSFER BRIDGE

ROUTE F-93

ABUTMENT

State of Alaska
DEPARTMENT OF TRANSPORTATION and PUBLIC FACILITIES
Juneau, Alaska

Date 10-6-80
Approved [signature]

BRIDGE NO. 1474
DWNG. NO. 4291

AS ADVERTISED

STATE	PROJECT DESIGNATION	YEAR	SHEET NO.	TOTAL SHEETS
ALASKA	F-093-2(2)	1980	20	48

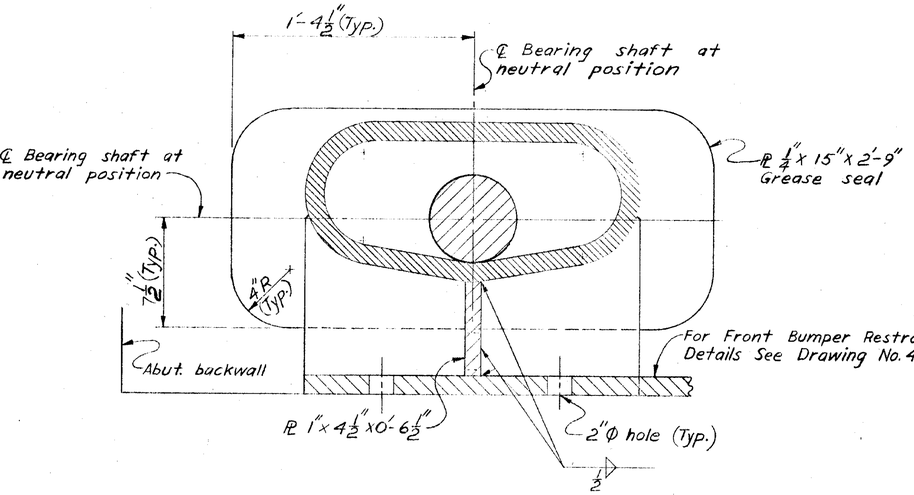

SECTION A-A

1 0 6 12
Inches

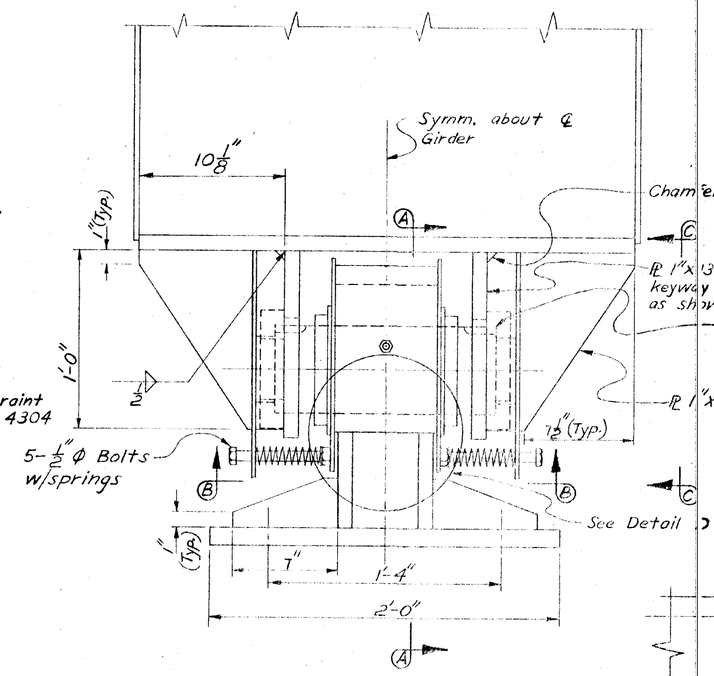

ELEVATION-BEARING

1 0 6 12
Inches

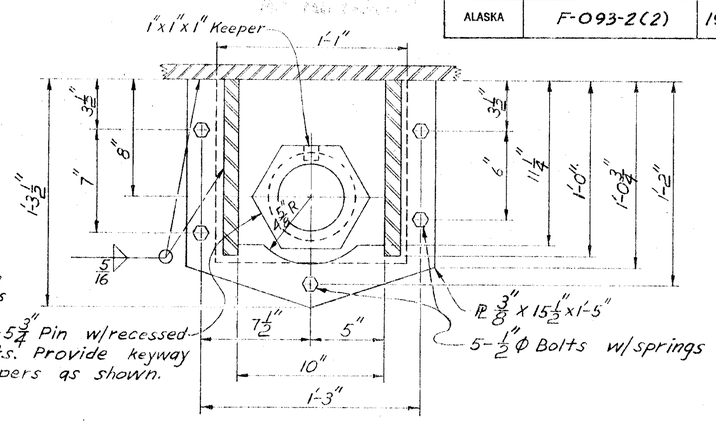

VIEW C-C

1 0 6 12
Inches

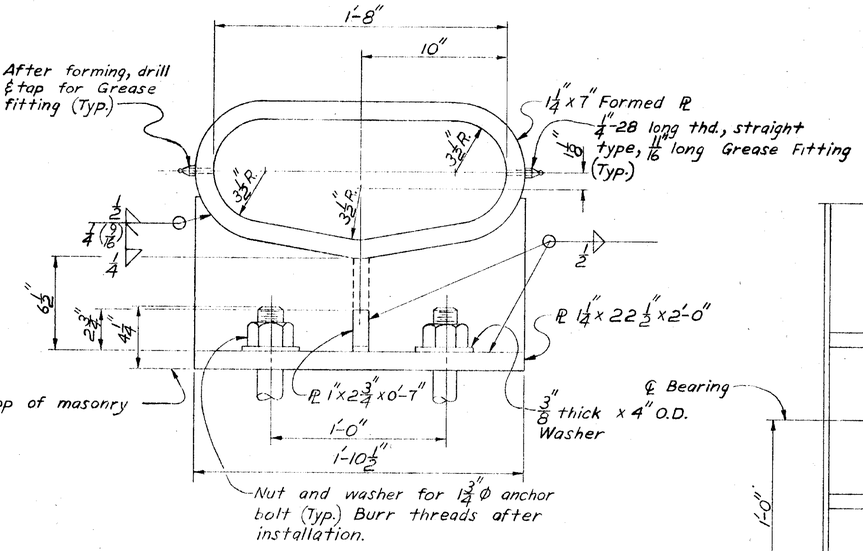

BEARING HOUSING DETAIL

1 0 6 12
Inches

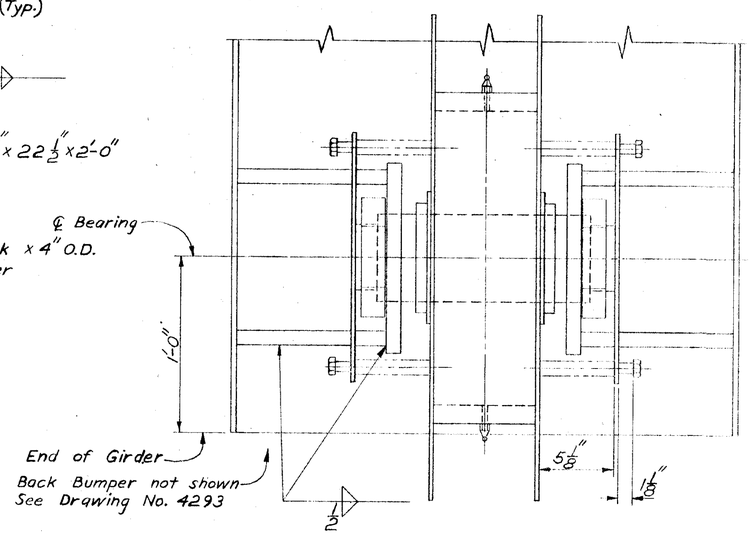

SECTION B-B

1 0 6 12
Inches

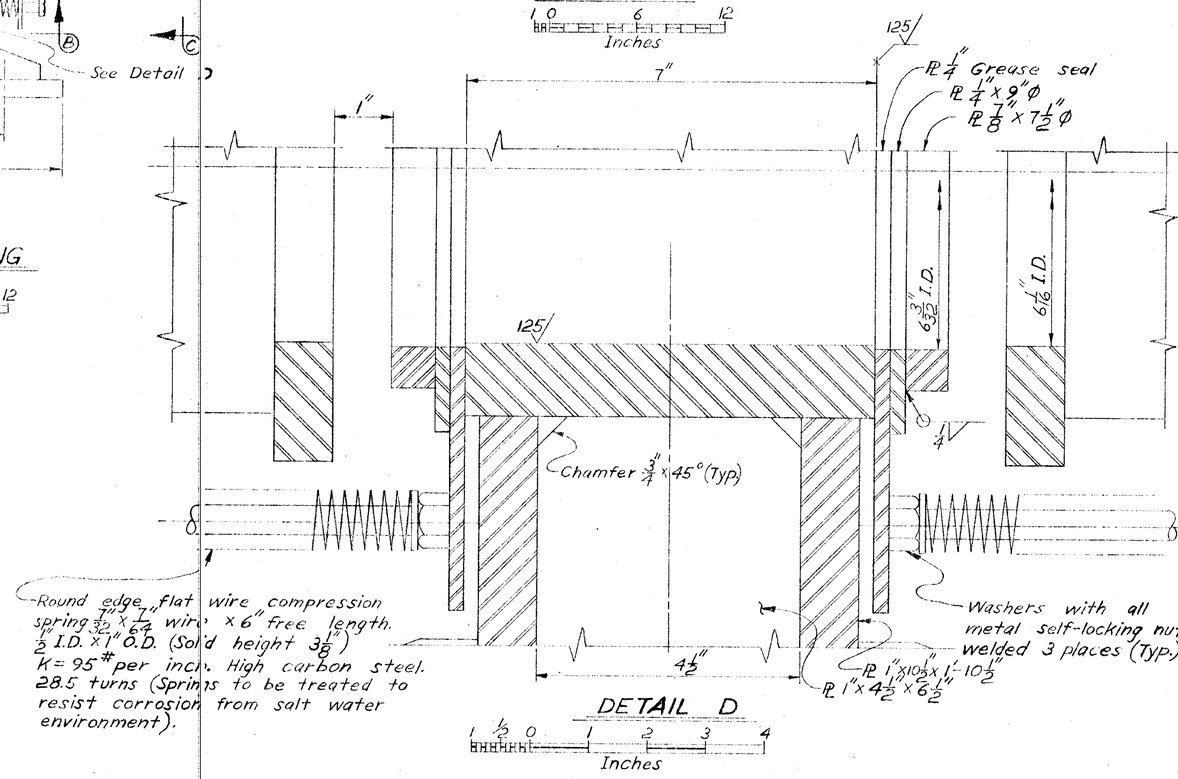

DETAIL D

1/2 0 1 2 3 4
Inches

AUKE BAY TRANSFER BRIDGE

ROUTE NO. F-093

ABUTMENT BEARINGS

State of Alaska
DEPARTMENT OF TRANSPORTATION and PUBLIC FACILITIES
Juneau, Alaska

Date 10-6-80
Approved [illegible]

BRIDGE NO. 1474
DWNG. NO. 4292

9 1153 5-79 MC 9423*

AS ADVERTISED

STATE	PROJECT DESIGNATION	YEAR	SHEET NO.	TOTAL SHEETS
ALASKA	F-093-2(2)	1980	21	48

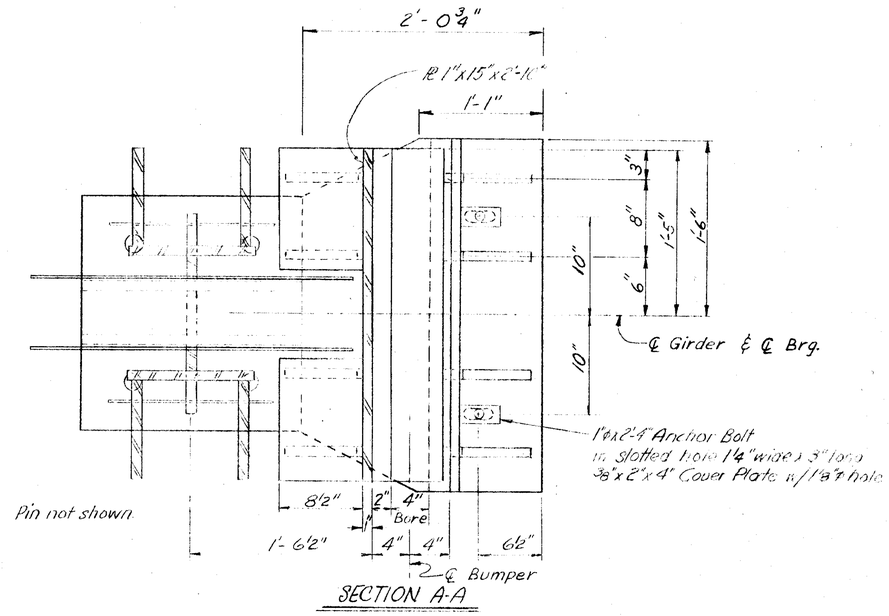

SECTION A-A

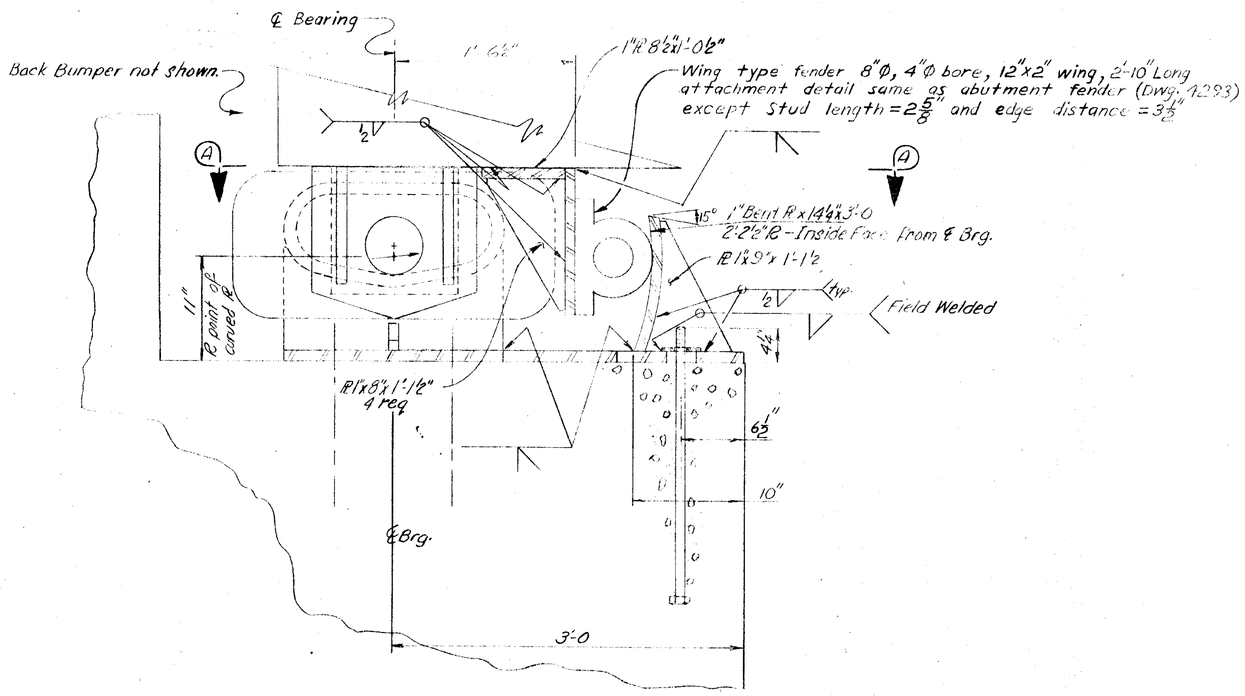

ELEVATION

AUKE BAY TRANSFER BRIDGE

ROUTE F-093

FRONT BUMPER RESTRAINT

State of Alaska
DEPARTMENT OF TRANSPORTATION
and PUBLIC FACILITIES
Juneau, Alaska

Date 10-6-80
Approved

BRIDGE NO. 1474
DWNG. NO. 4304

19 1183 8-79 MC 94234

AS ADVERTISED

STATE	PROJECT DESIGNATION	YEAR	SHEET NO.	TOTAL SHEETS
ALASKA	F-093-2(2)	1980	22	48

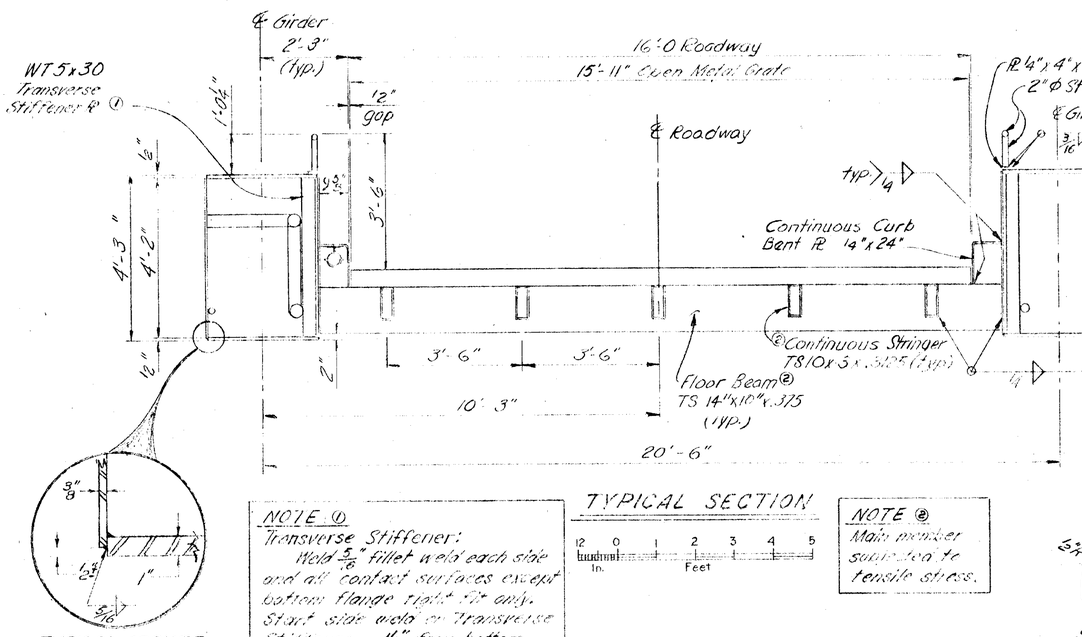

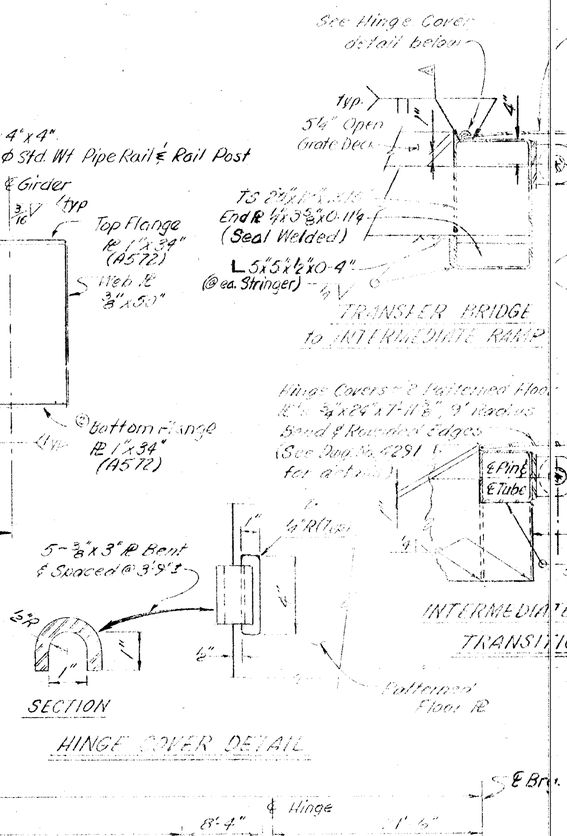

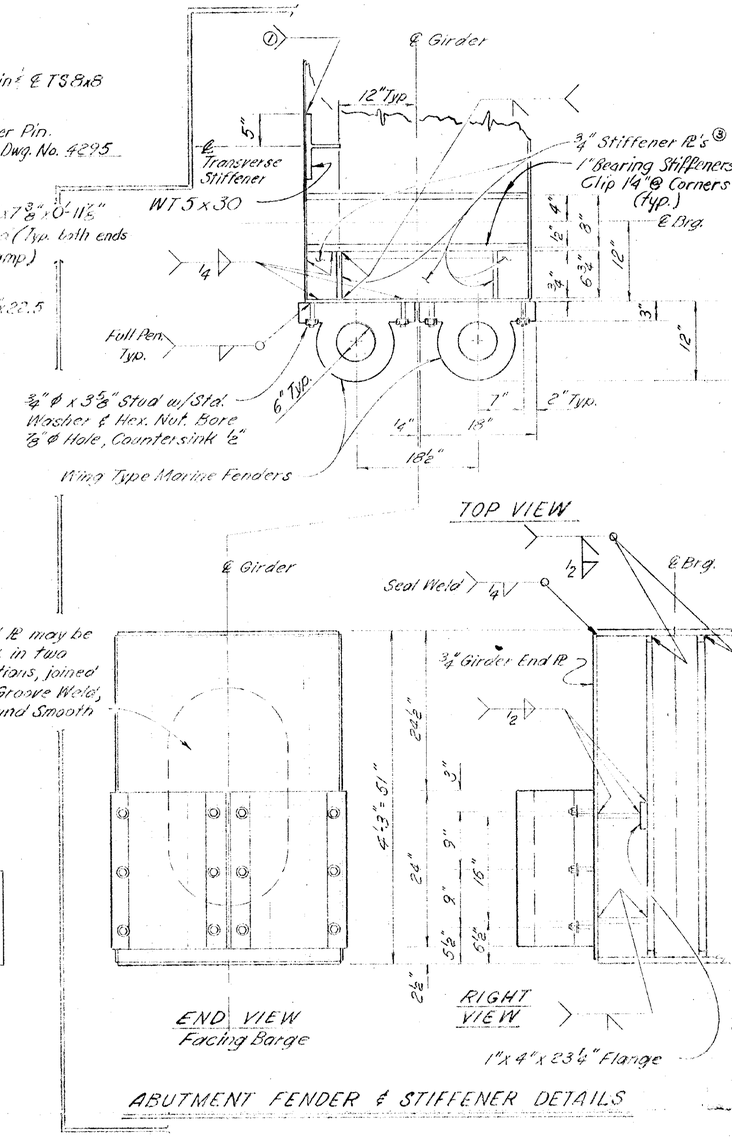

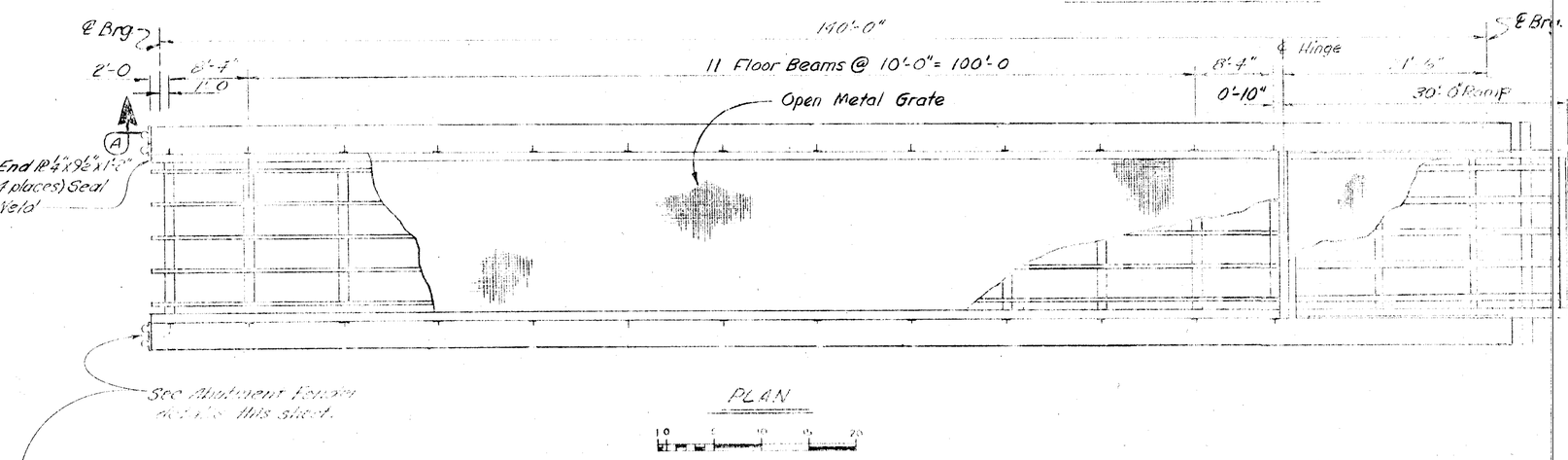

NOTE ③
Clip ¾" @ stiffener PL corners unless otherwise noted.

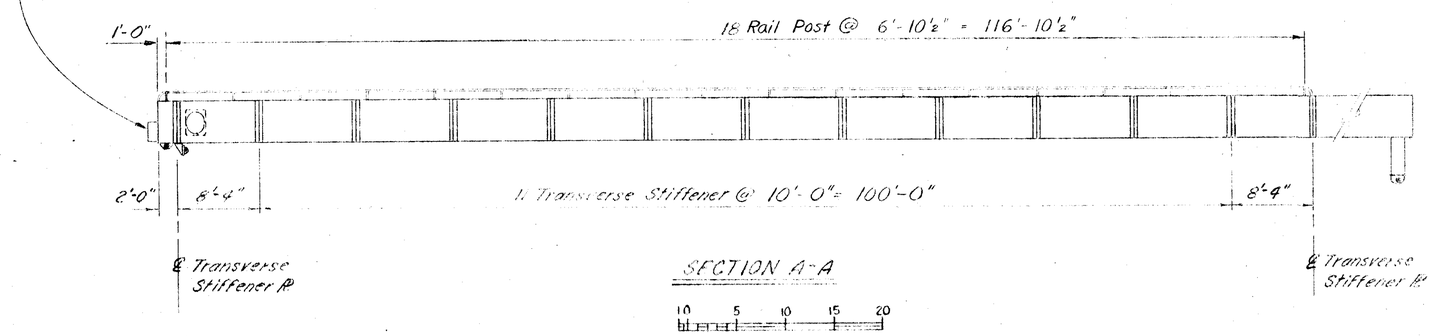

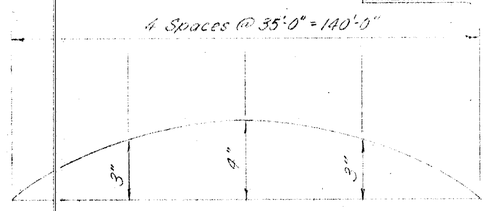

DEAD LOAD CAMBER DIAGRAM

No Scale Except As Shown

AUKE BAY TRANSFER BRIDGE

ROUTE F-93

TYPICAL SECTION

State of Alaska
DEPARTMENT OF TRANSPORTATION and PUBLIC FACILITIES
Juneau, Alaska

Date 10-6-80
Approved [signature]

BRIDGE NO. 1474
DWNG. NO. 4293

AS ADVERTISED

STATE	PROJECT DESIGNATION	YEAR	SHEET NO.	TOTAL SHEETS
ALASKA	F-093-2(2)	1980	23	48

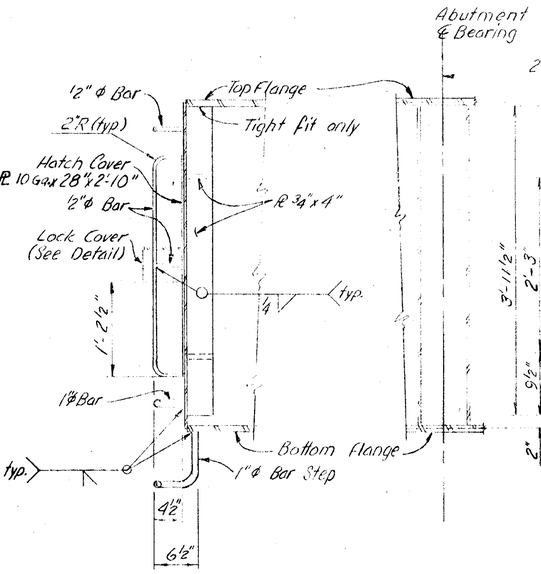

SECTION A-A

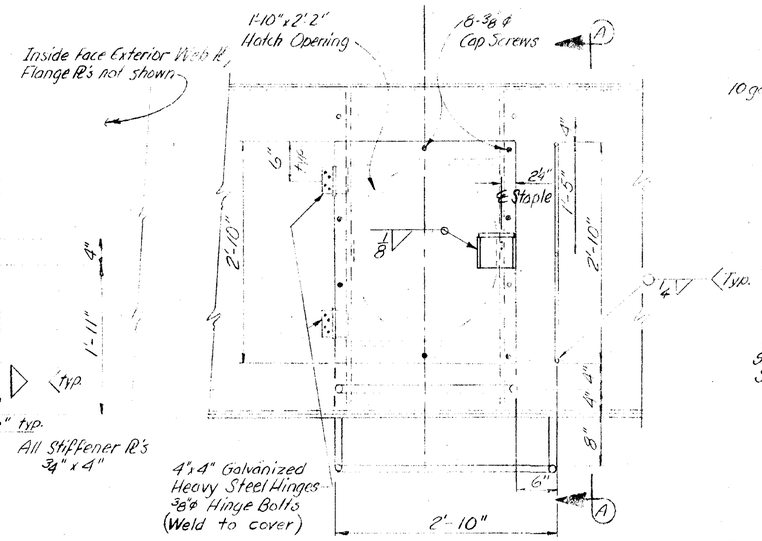

HATCH COVER*

* Hatches are on the outside Girder Web 2-required. Hatches are to be bolted in place before hinges are bolted down & welded.

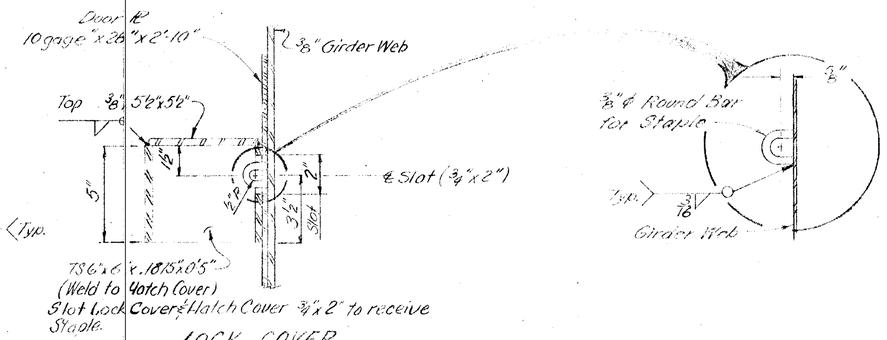

LOCK COVER

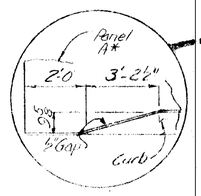

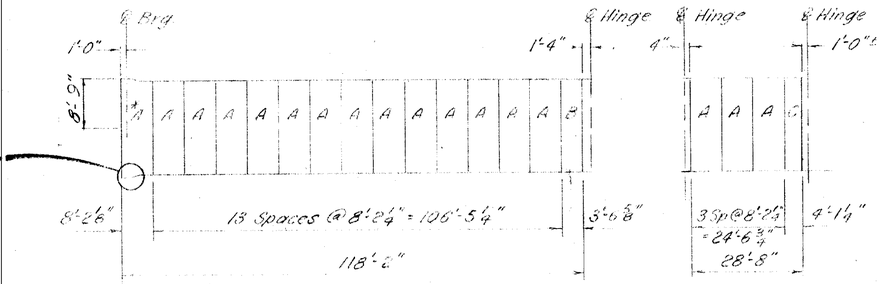

TRANSFER BRIDGE

INTERMEDIATE RAMP

DECK PANEL LAYOUT

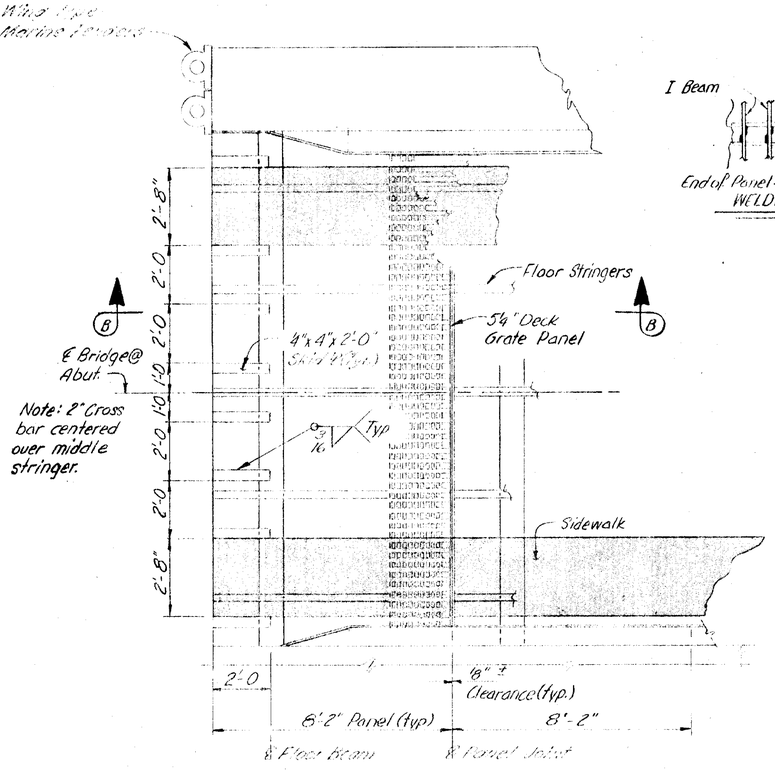

PLAN

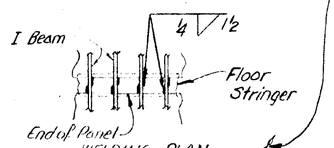

WELDING PLAN

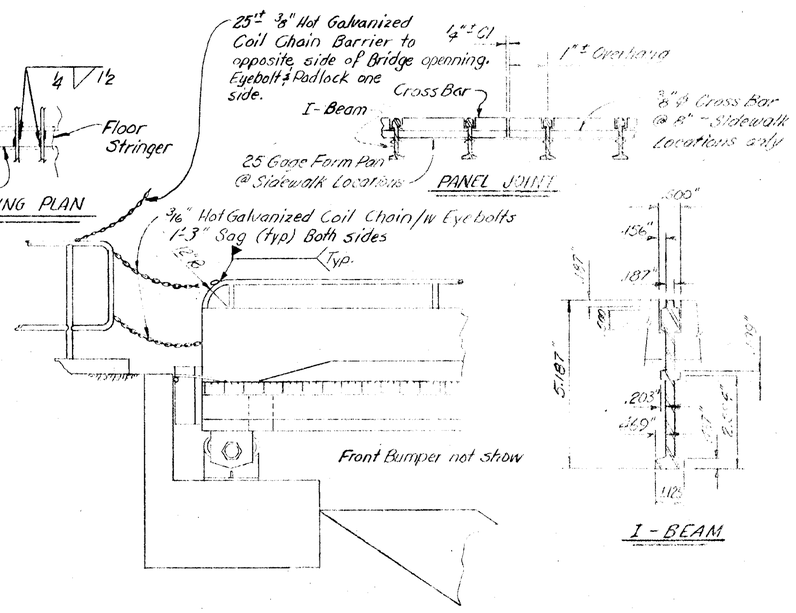

PANEL JOINT

SECTION B-B

I-BEAM

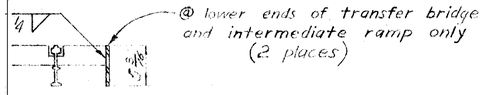

TRIM PL's

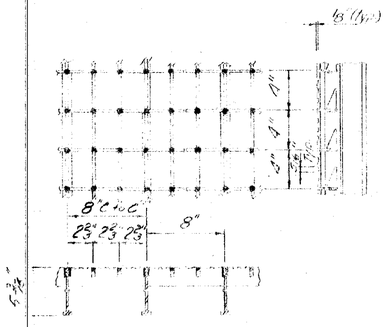

PANEL DETAILS

PANEL	WIDTH
A	8'-2"
B	3'-6 1/2"
C	4'-1 1/8"

No Scale

AUKE BAY TRANSFER BRIDGE

ROUTE F-93

HATCH and DECK PANELS

State of Alaska
DEPARTMENT OF TRANSPORTATION
and PUBLIC FACILITIES
Juneau, Alaska

Date 15-6-80
Approved

BRIDGE NO. 1474
DWNG. NO. 4294

19 1153 8-79 MC 9423a

AS ADVERTISED

STATE	PROJECT DESIGNATION	YEAR	SHEET NO.	TOTAL SHEETS
ALASKA	F-093-2(2)	1980	24	48

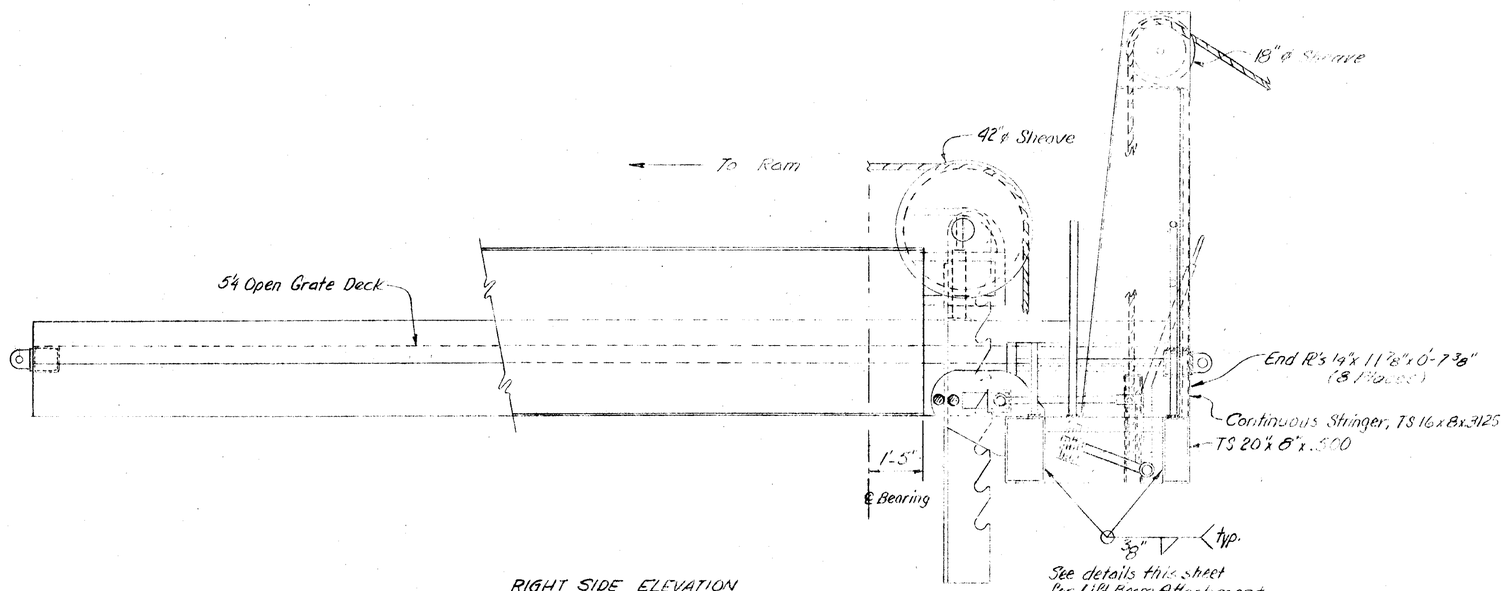

RIGHT SIDE ELEVATION

12 0 1 2 3 4 5
In. Feet

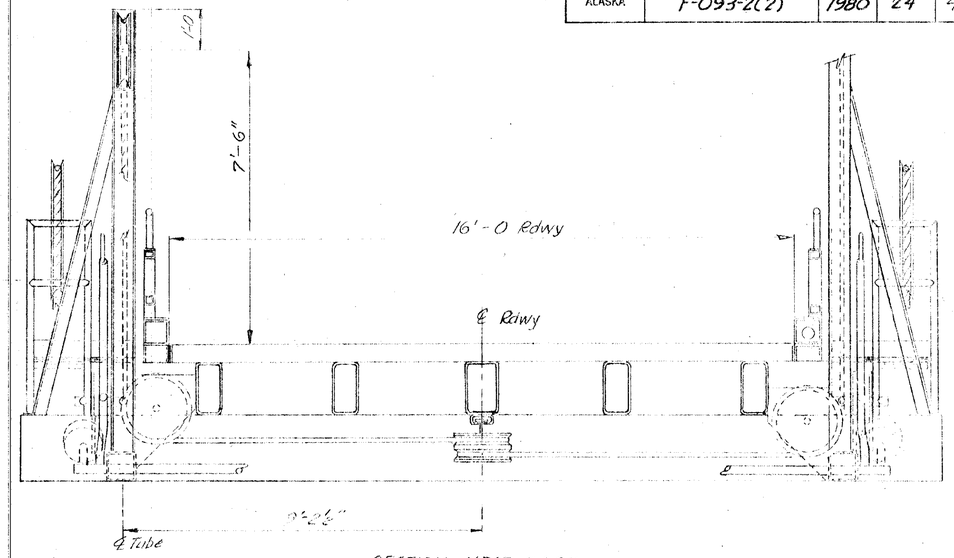

SECTION NEAR DOCK
(View Looking Toward Abutment)

12 0 1 2 3 4 5
In. Feet

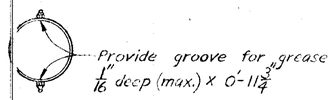

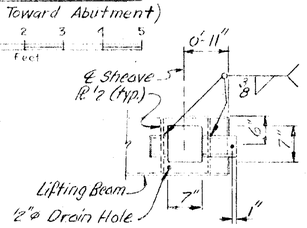

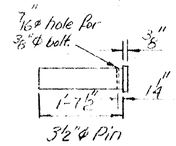

* Main Members subject to tensile stress

SECTION A-A
(No Scale)

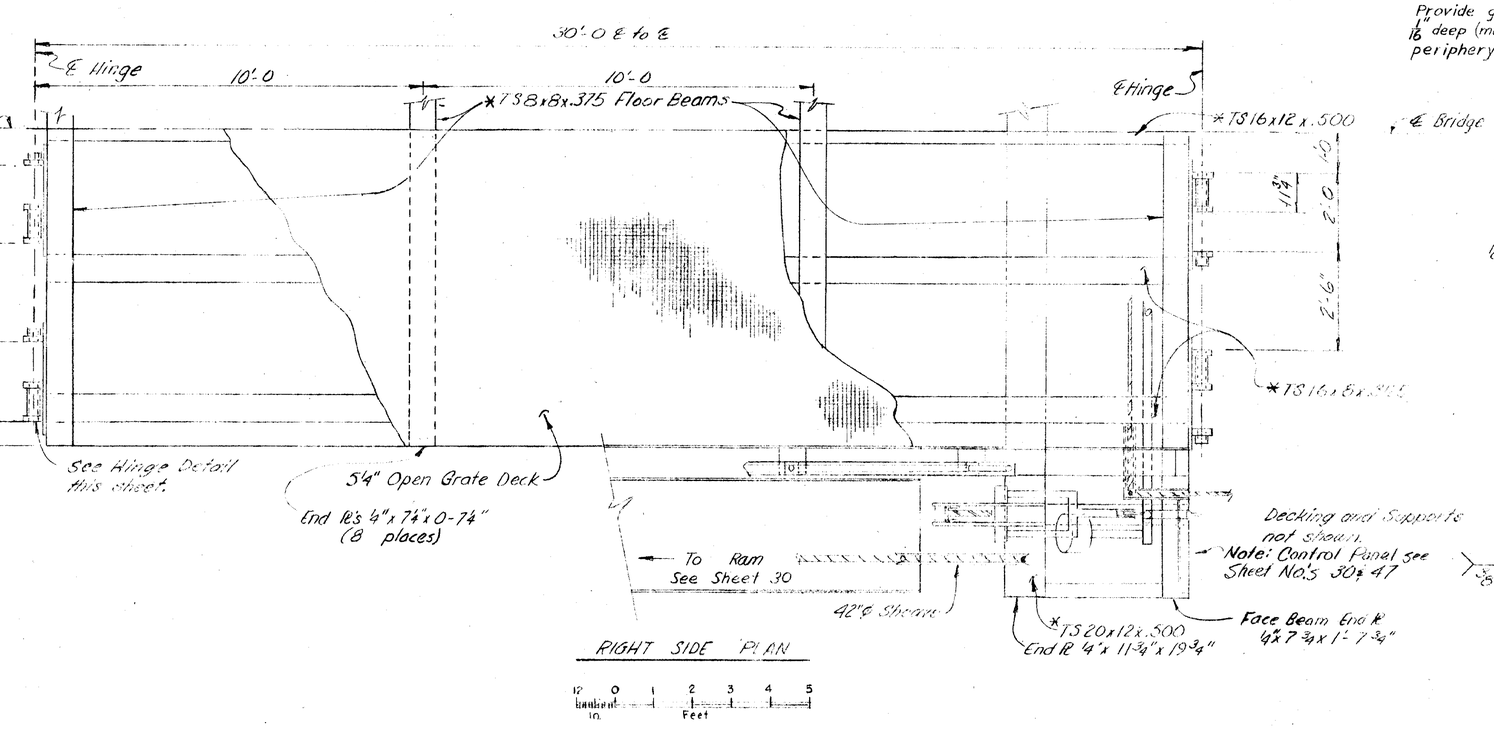

RIGHT SIDE PLAN

12 0 1 2 3 4 5
In. Feet

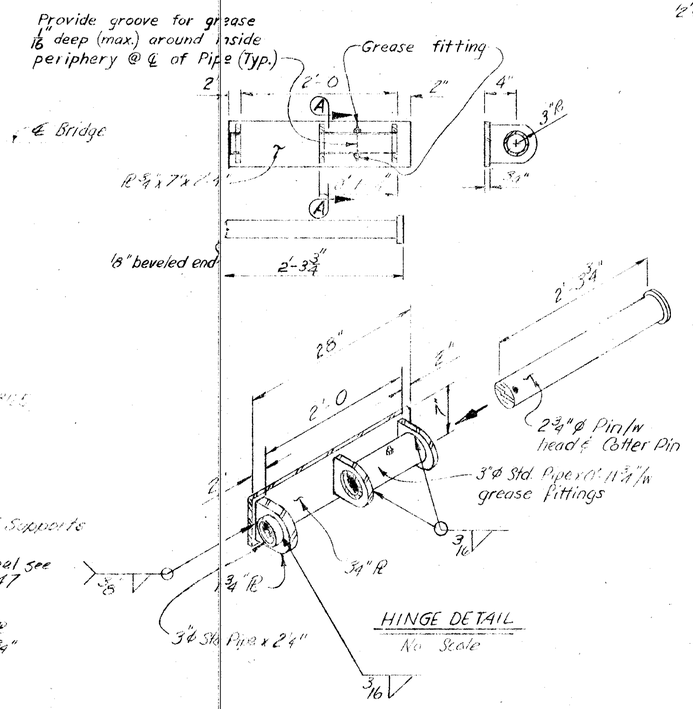

HINGE DETAIL
No Scale

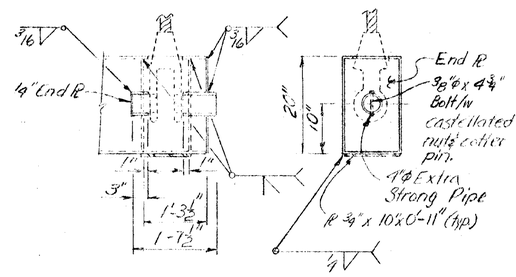

LIFT BEAM
ATTACHMENT
No Scale

AUKE BAY TRANSFER BRIDGE

ROUTE F-093

INTERMEDIATE RAMP

State of Alaska
DEPARTMENT OF TRANSPORTATION
and PUBLIC FACILITIES
Juneau, Alaska

Date 10-6-82
Approved

BRIDGE NO. 1474
DWNG. NO. 4295

AS ADVERTISED

STATE	PROJECT DESIGNATION	YEAR	SHEET NO.	TOTAL SHEETS
ALASKA	F-093-2(2)	1980	25	48

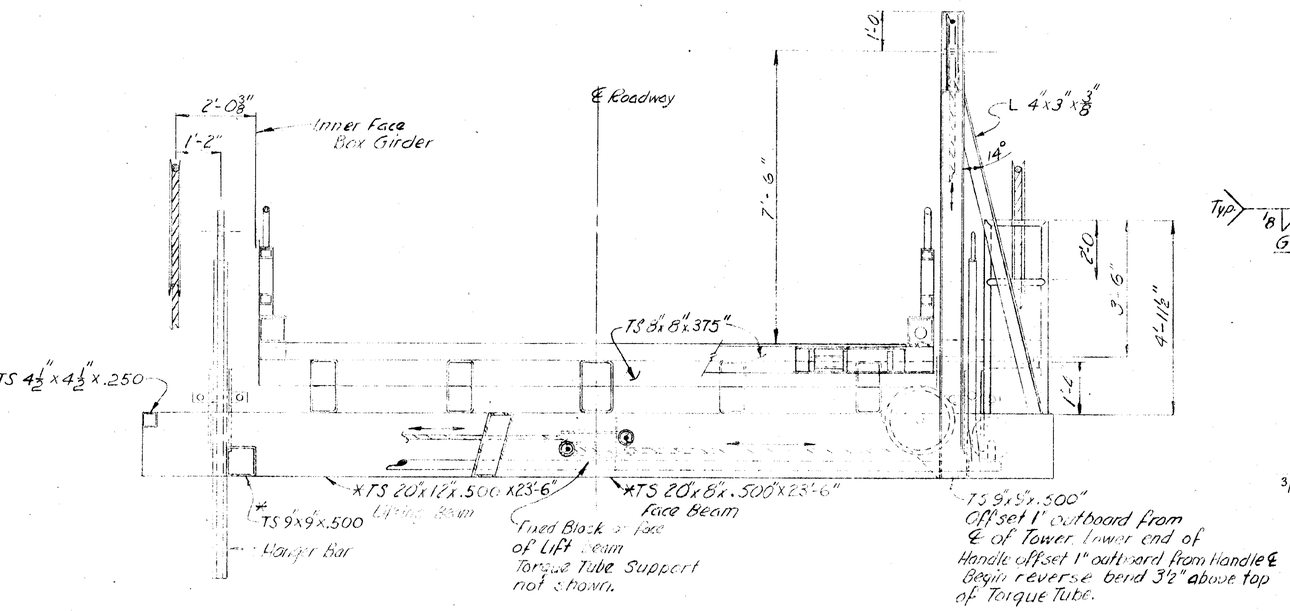

SECTION NEAR DOCK END
(View Looking Toward Abutment)

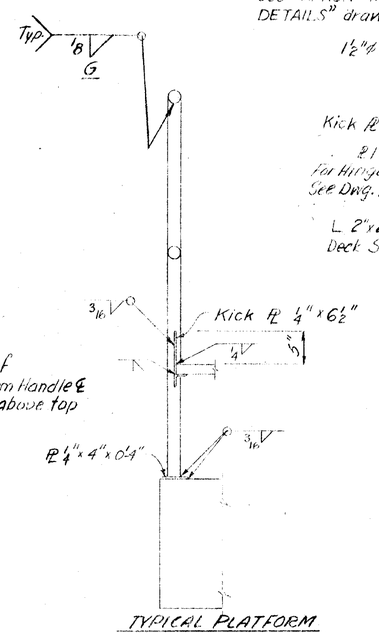

TYPICAL PLATFORM RAIL POST SECTION
No Scale

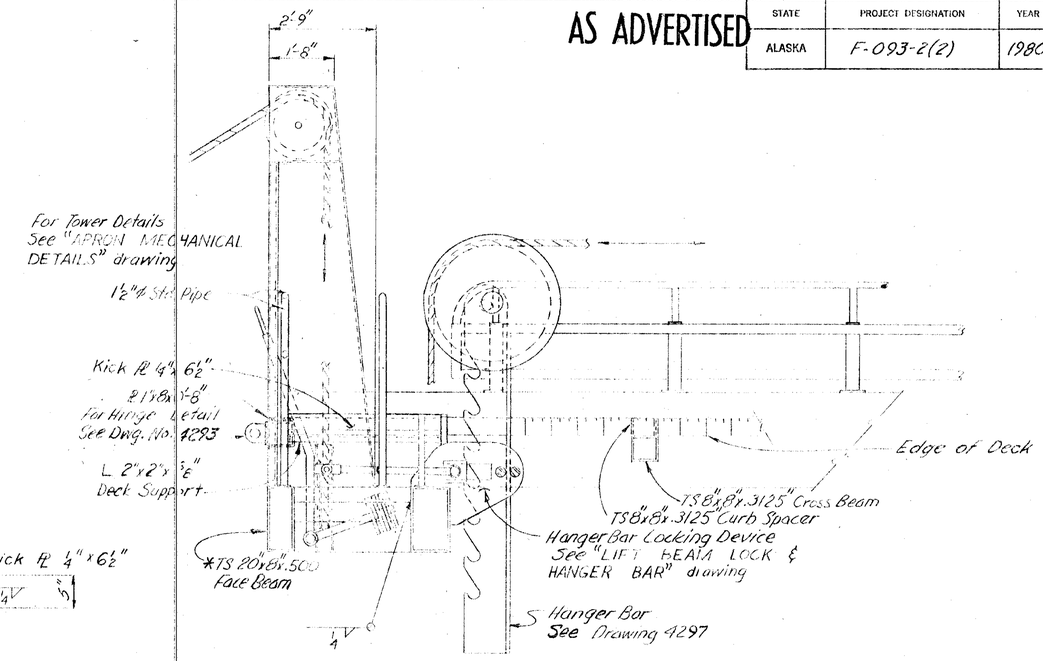

LEFT ELEVATION
BOX GIRDER NOT SHOWN

Note: All structural tube to structural tube welds shall be ¼" all around unless otherwise noted.

* Main Members subject to tensile stress

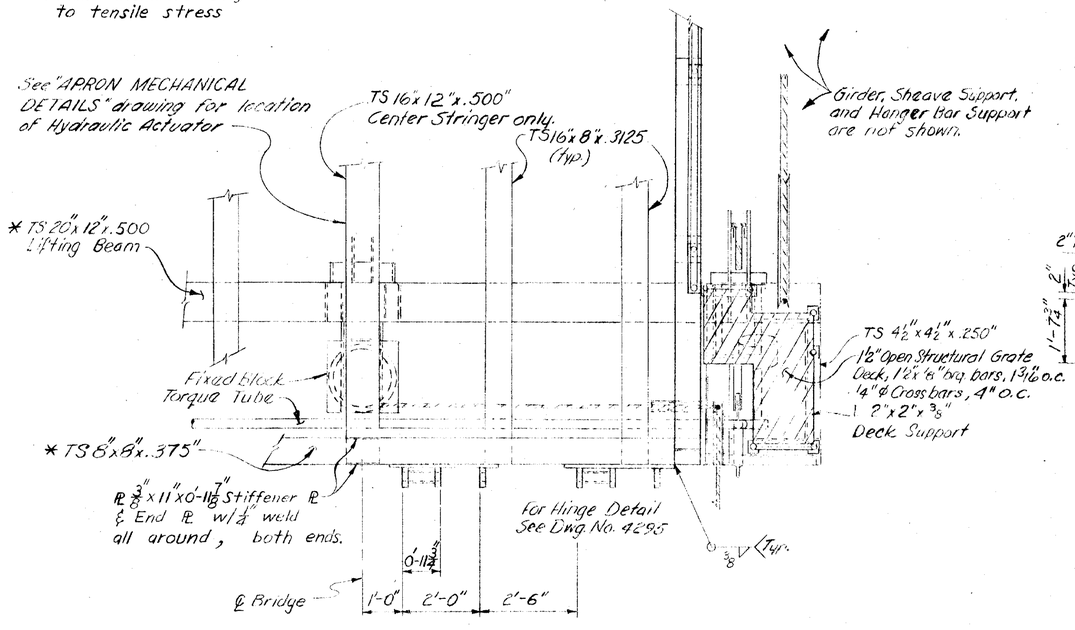

PARTIAL PLAN

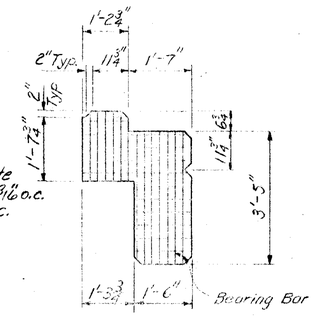

PLATFORM

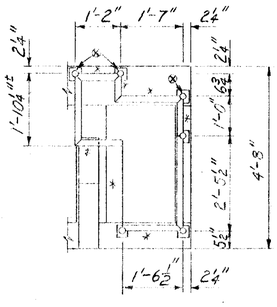

DECK SUPPORT ANGLES

‡ Weld support angle to tower with ¼" Fillet weld top & bot.

*Kick PL Locations

⊗ 1'-10½" deck support post. Cap all posts.

Inches 12 0 1 2 3 4 5 Feet
Unless Noted

AUKE BAY TRANSFER BRIDGE

ROUTE NO. F-093

INTERMEDIATE RAMP DETAILS

State of Alaska
DEPARTMENT OF TRANSPORTATION and PUBLIC FACILITIES
Juneau, Alaska

Date 10-6-80
Approved

BRIDGE NO. 1474
DWNG. NO. 4296

AS ADVERTISED

STATE	PROJECT DESIGNATION	YEAR	SHEET NO.	TOTAL SHEETS
ALASKA	F-093-2(2)	1980	26	48

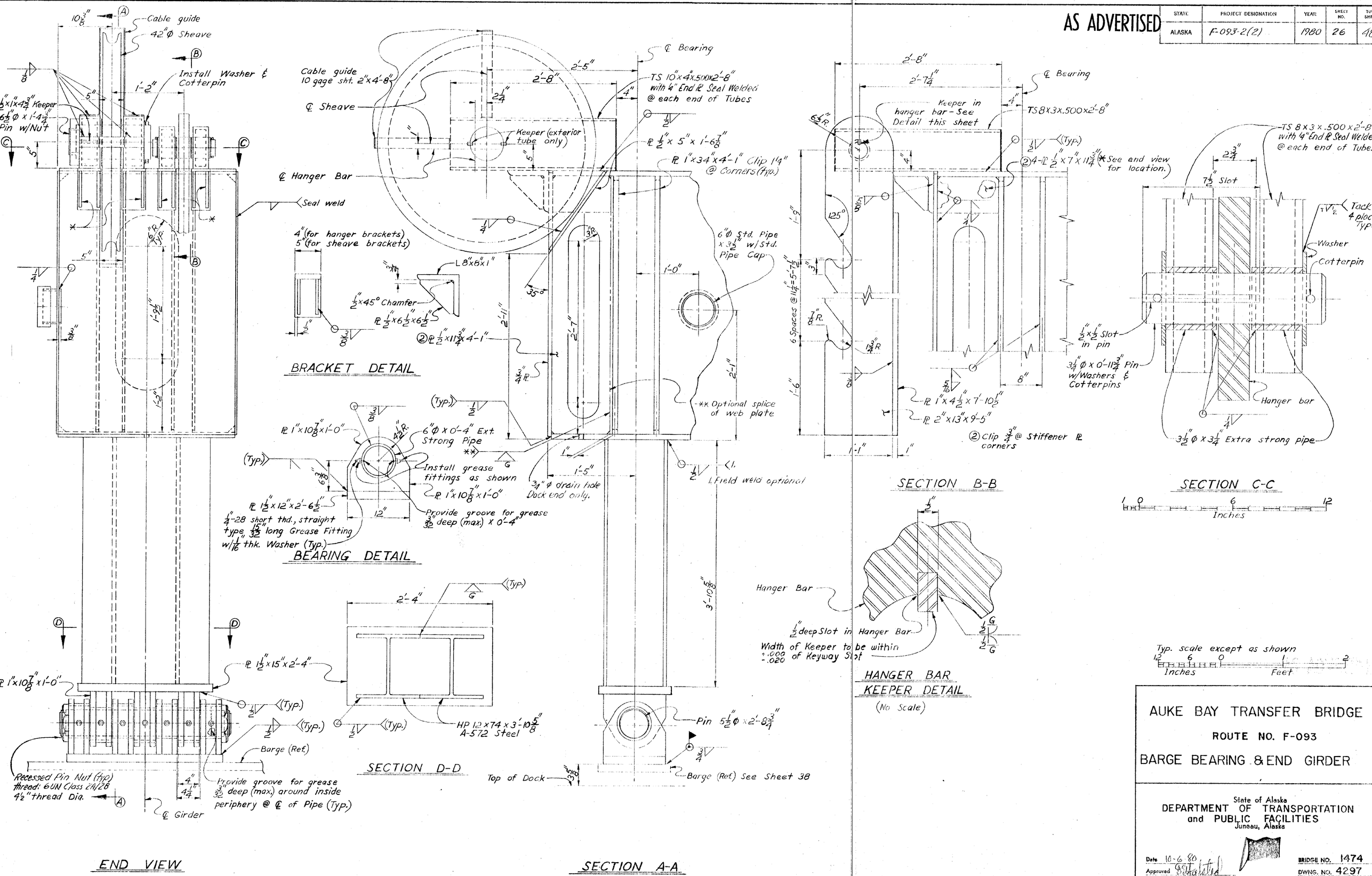

AUKE BAY TRANSFER BRIDGE

ROUTE NO. F-093

BARGE BEARING & END GIRDER

State of Alaska
DEPARTMENT OF TRANSPORTATION and PUBLIC FACILITIES
Juneau, Alaska

Date 10-6-80
Approved [illegible]

BRIDGE NO. 1474
DWNG. NO. 4297

STATE	PROJECT DESIGNATION	YEAR	SHEET NO.	TOTAL SHEETS
ALASKA	F-093-2(2)	1980	27	48

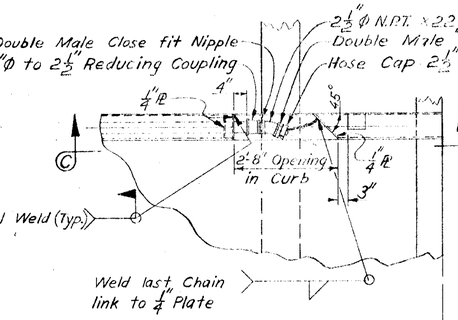

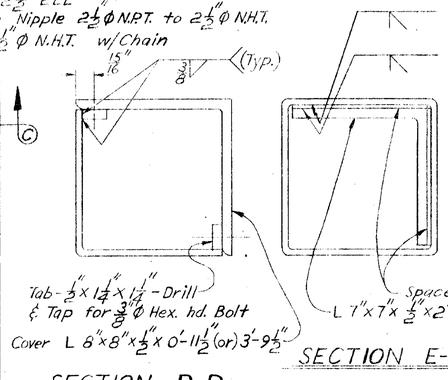

SECTION D-D

SECTION E-E

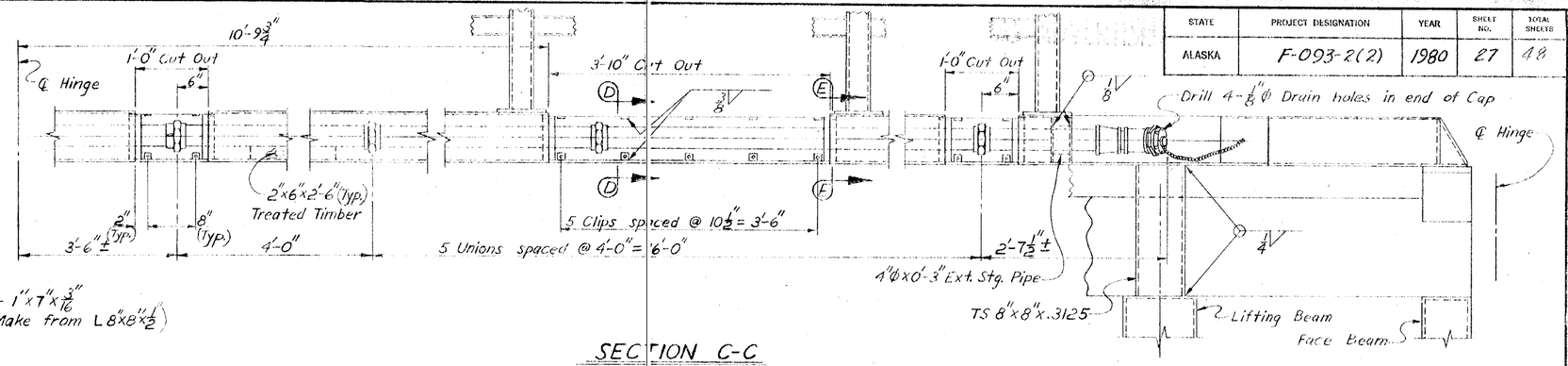

SECTION C-C

(Cover Angles omitted for clarity)

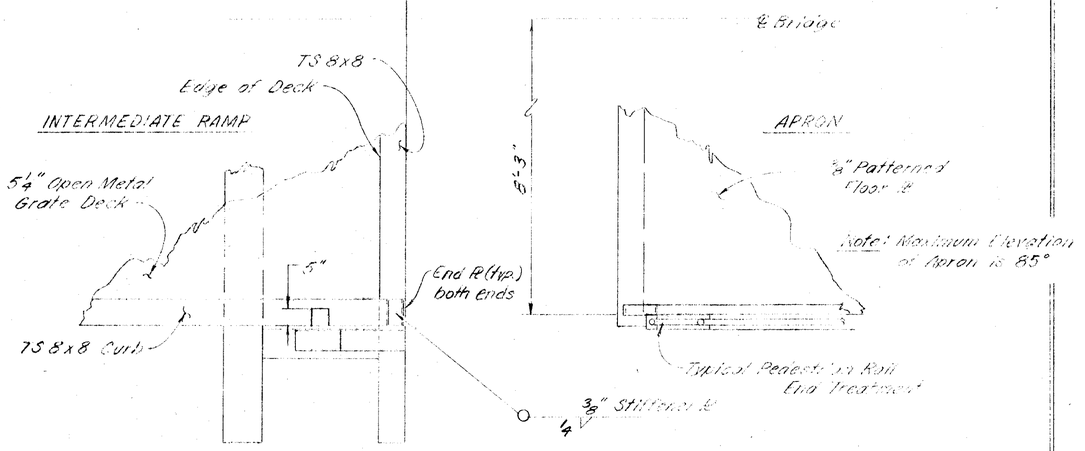

PLAN

(TYPICAL EACH SIDE)

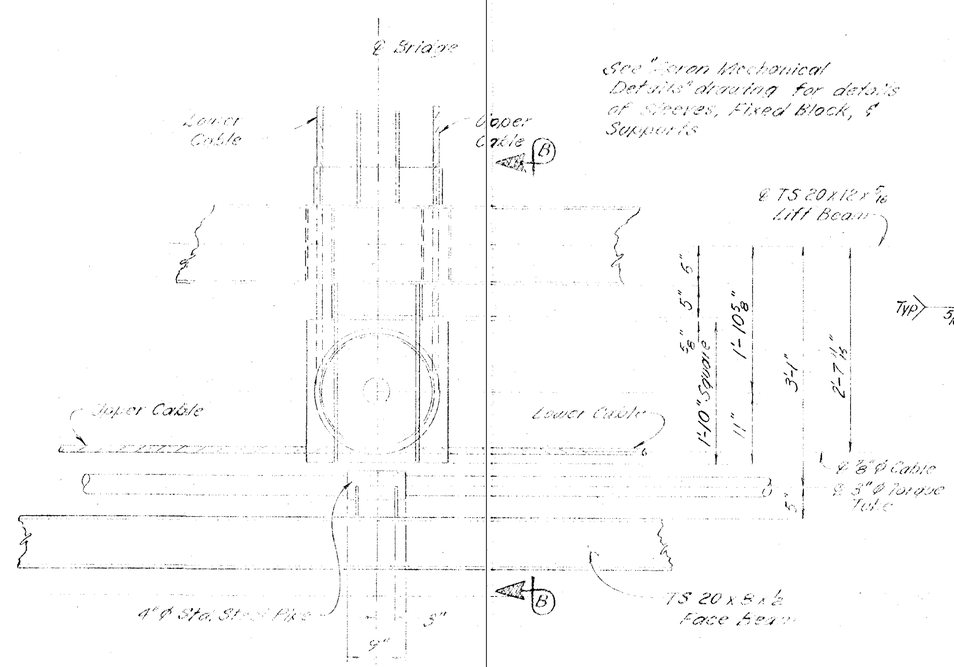

PLAN

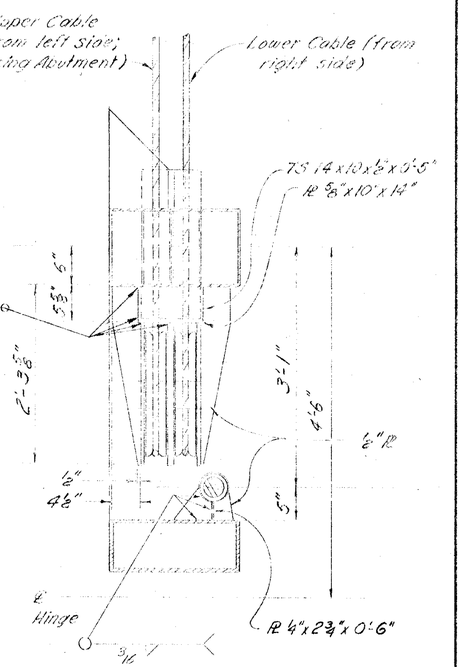

SECTION B-B

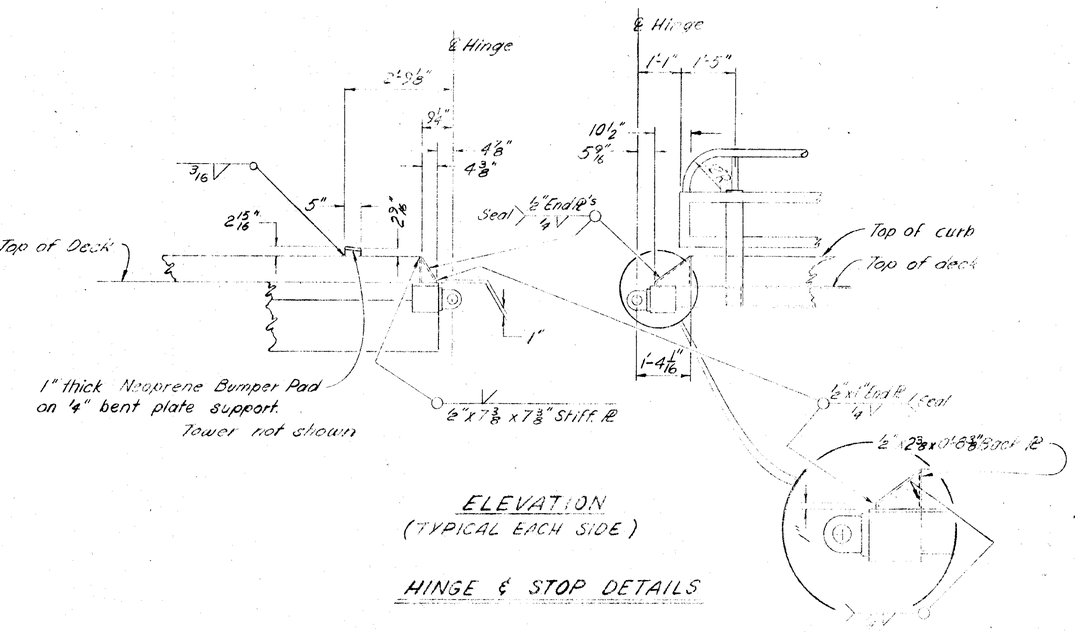

ELEVATION

(TYPICAL EACH SIDE)

HINGE & STOP DETAILS

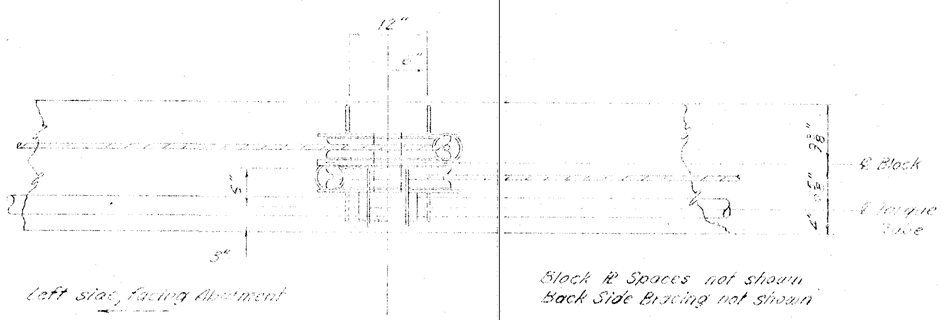

ELEVATION

INTERMEDIATE RAMP

(FIXED BLOCK & TORQUE TUBE SUPPORTS)

AS ADVERTISED

AUKE BAY TRANSFER BRIDGE

ROUTE F-93

MISCELLANEOUS DETAILS

State of Alaska
DEPARTMENT OF TRANSPORTATION and PUBLIC FACILITIES
Juneau, Alaska

Date 10-6-80
Approved

BRIDGE NO. 1474
DWNG. NO. 4298

AS ADVERTISED

STATE	PROJECT DESIGNATION	YEAR	SHEET NO.	TOTAL SHEETS
ALASKA	F-093-2(2)	1980	28	48

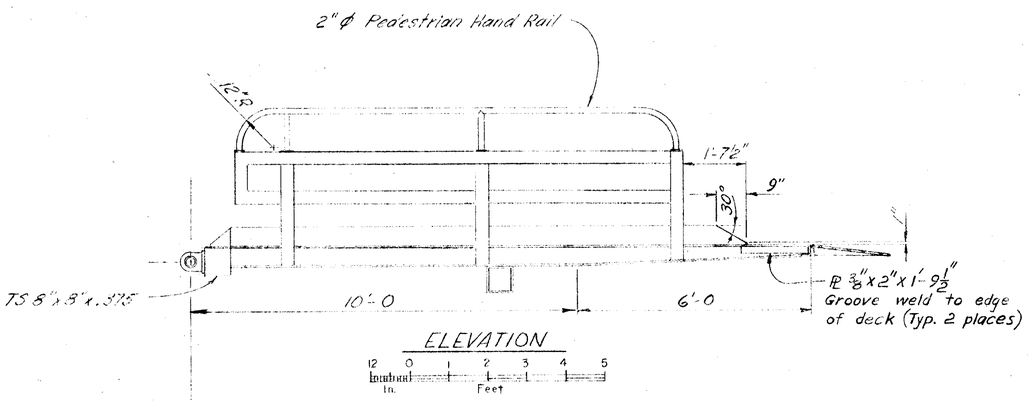

ELEVATION

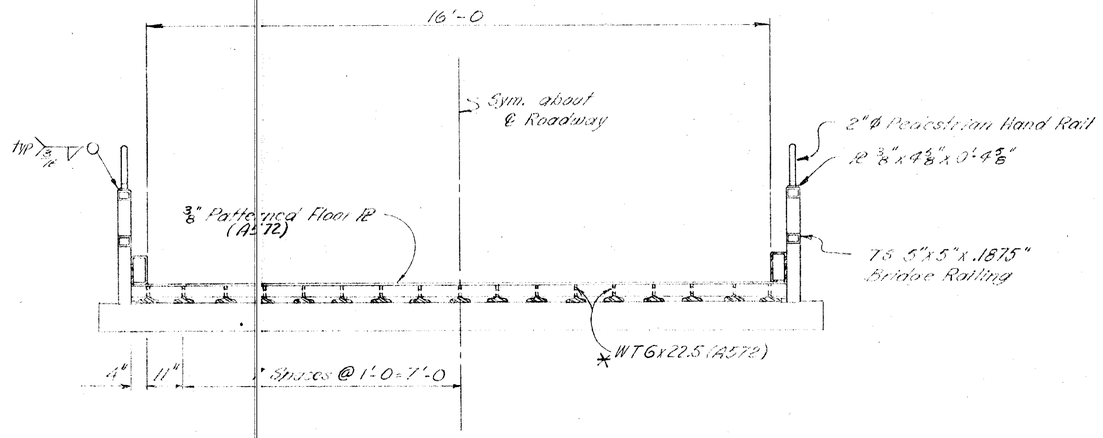

TYPICAL SECTION

* Main Members subject to tensile stress

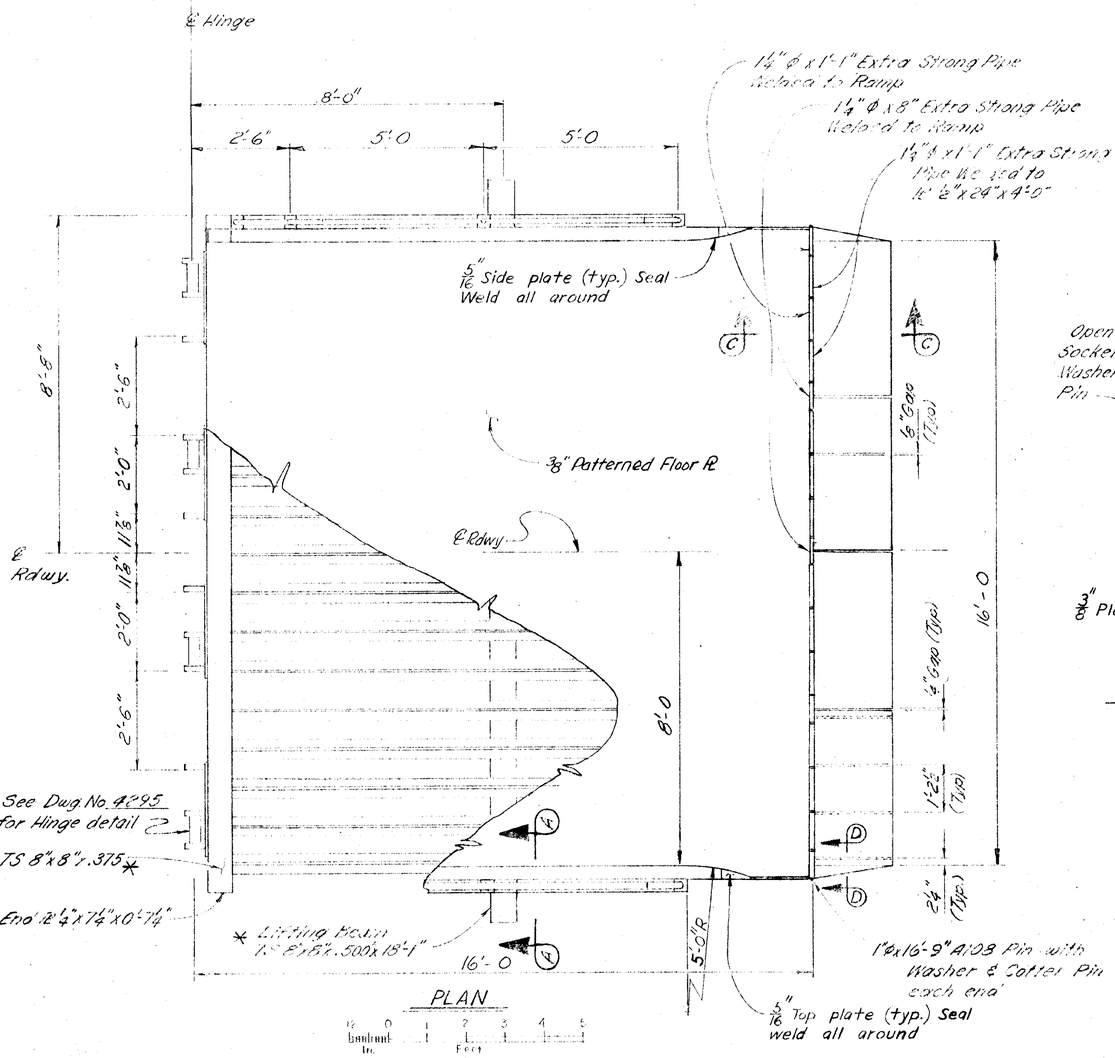

PLAN

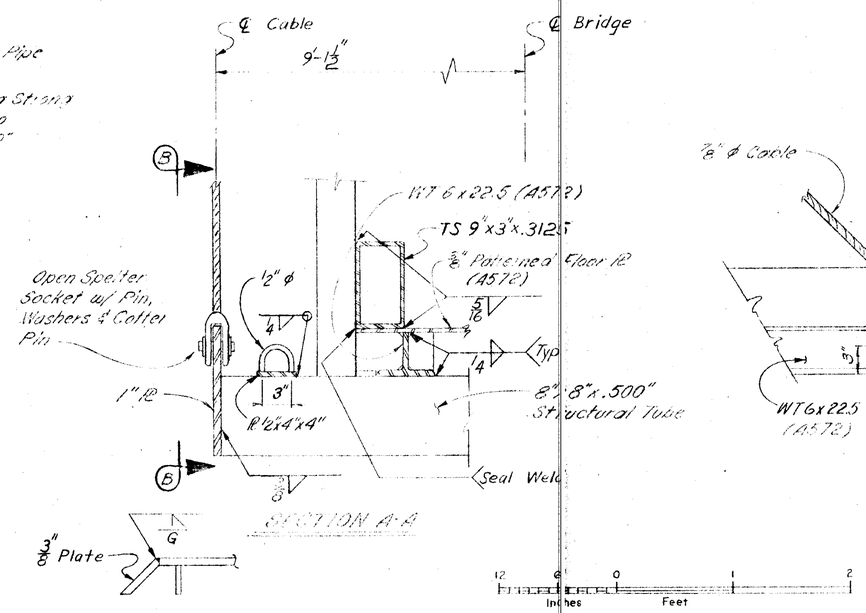

SECTION A-A

SECTION D-D
(No Scale)

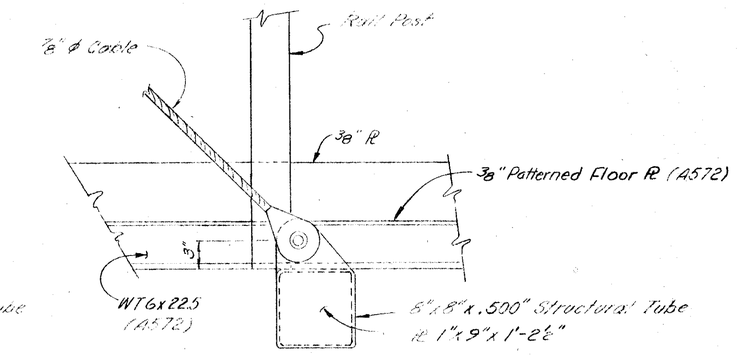

VIEW B-B

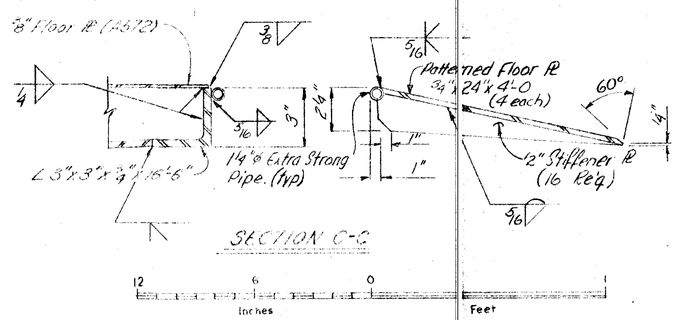

SECTION C-C

AUKE BAY TRANSFER BRIDGE

ROUTE NO. F-93

APRON

State of Alaska
DEPARTMENT OF TRANSPORTATION and PUBLIC FACILITIES
Juneau, Alaska

Date 10-6-80
Approved [signature]

BRIDGE NO. 1474
DWNG. NO. 4299

AS ADVERTISED

STATE	PROJECT DESIGNATION	YEAR	SHEET NO.	TOTAL SHEETS
ALASKA	F-093-2(2)	1980	29	48

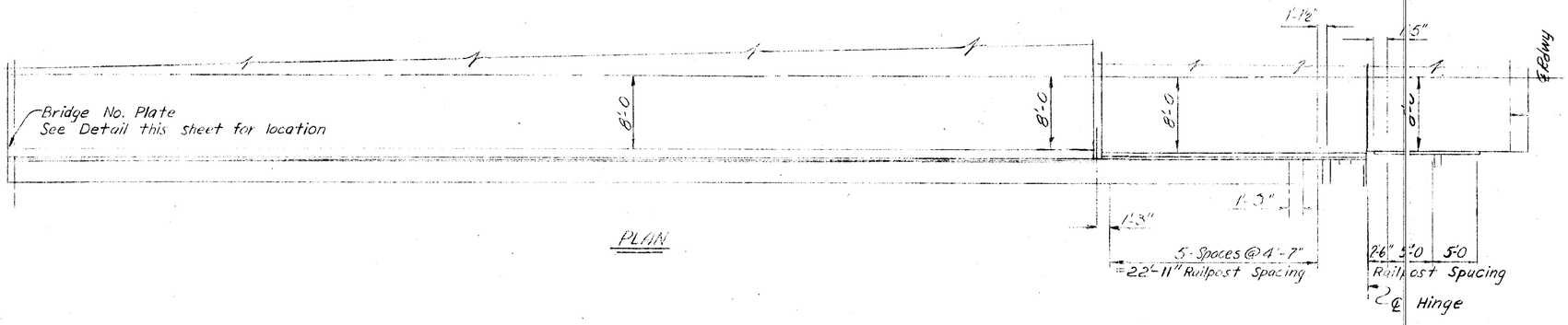

PLAN

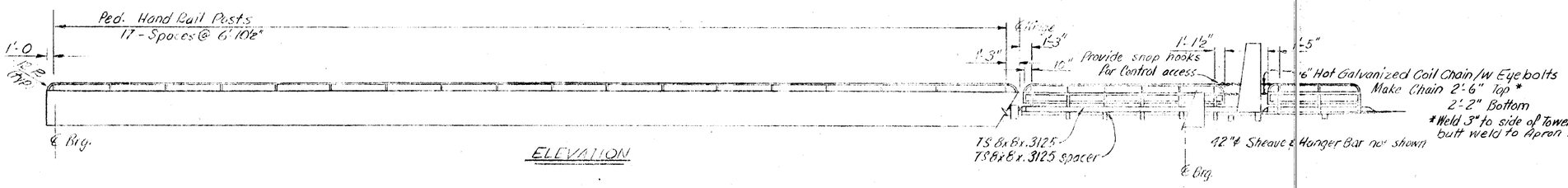

ELEVATION

RAILING LAYOUT, TRANSFER INTERMEDIATE & APRON

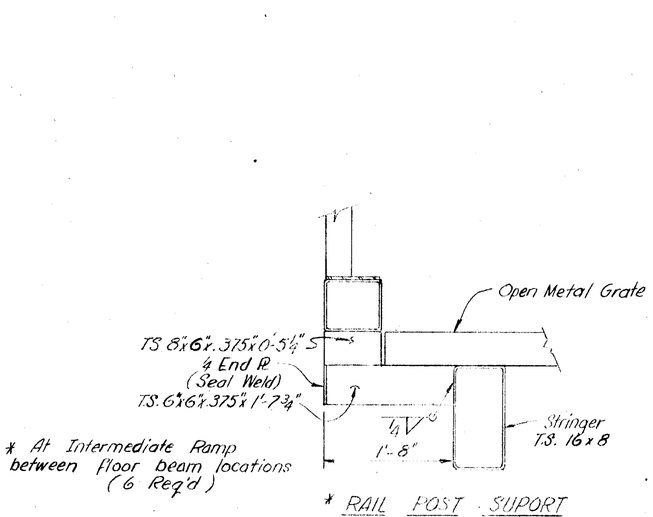

* RAIL POST SUPORT

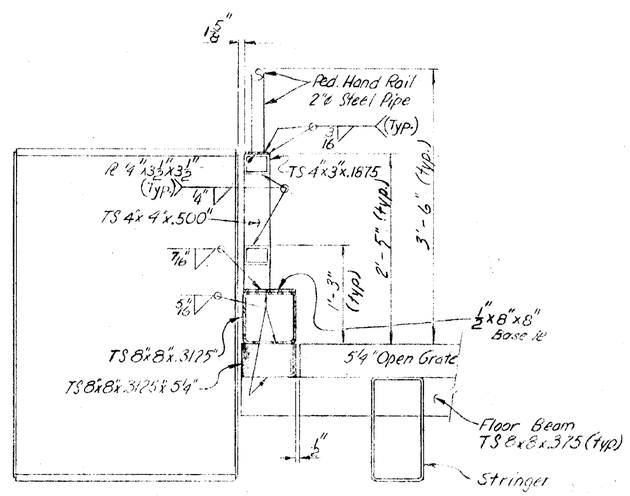

INTERMEDIATE RAMP @
FLOOR BEAM LOCATION

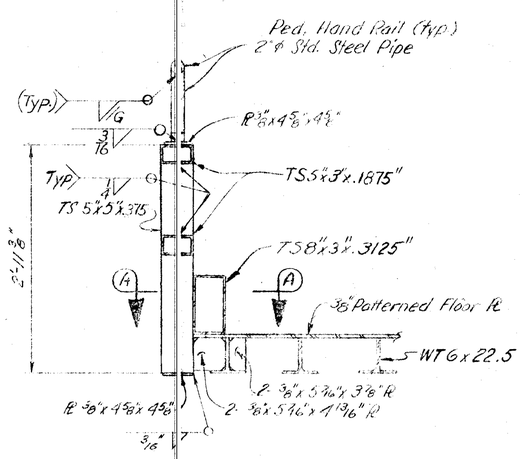

APRON

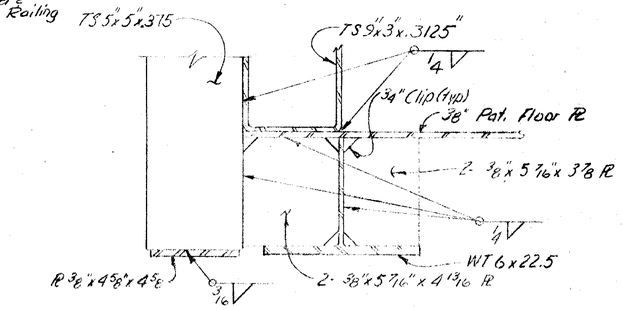

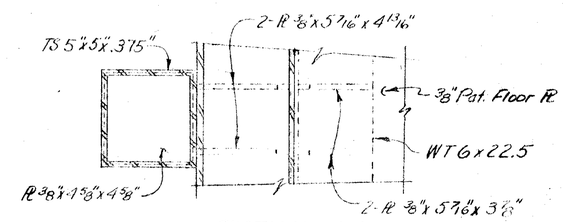

SECTION A-A
No Scale

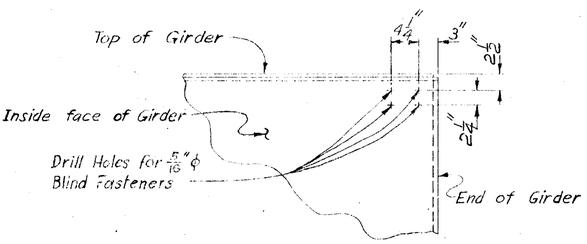

DETAIL - BRIDGE NO. PL LOCATION
(Typ. 2 Places)

NOTES

1. All railing, posts, anchor assemblies and other steel components shall be galvanized after fabrication.
2. Locate bridge number plate on right side of approaching traffic at each end of the bridge as shown. Attach to web with 5/16" diameter low profile head blind fasteners, HUCK OSL-10 or approved equal.
3. Bridge number plates to be furnished by the State.

AUKE BAY TRANSFER BRIDGE

ROUTE F-093

RAILING

State of Alaska
DEPARTMENT OF TRANSPORTATION
and PUBLIC FACILITIES
Juneau, Alaska

Date 10-6-80
Approved

BRIDGE NO. 1474
DWNG. NO. 4300

Note: (1) Hydraulic cylinder, foot mount, 10"ø Bore x 75" stroke. Geometry based on Tomkins - Johnson Hydraulic Cylinders. Contractor shall provide all drawings & details and make adjustments necessary to accommodate cylinder model selected. Fully retracted, the cylinder rod shall extend 6". 1/2" of thread shall be exposed enabling future adjustment.
(2) Cable shall be 1 1/8"ø 6x27 Type H flattened strand, lang lay with a fibre core. (Breaking strength ≈ 169 tons)
(3) The sheave shall have a 37.5 min. tread ø & be fitted w/roller bearings & grease fittings.

AS ADVERTISED

STATE	PROJECT DESIGNATION	YEAR	NO	SHEET
ALASKA	F-093-2(2)	1980	30	4

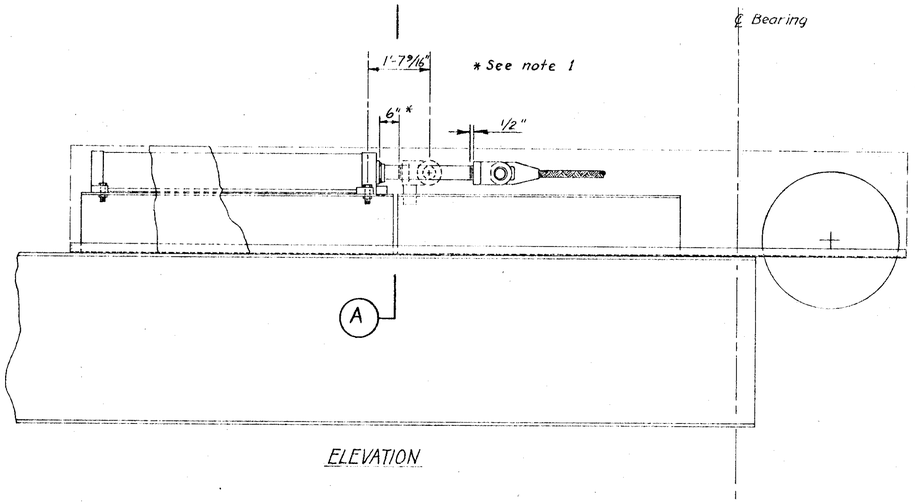

ELEVATION

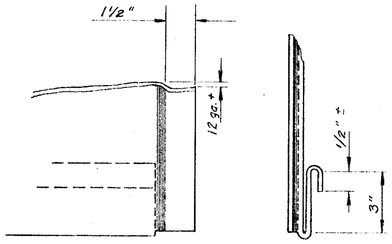

HOUSING JOINT DETAILS (FEMALE END)
3" = 1'-0"

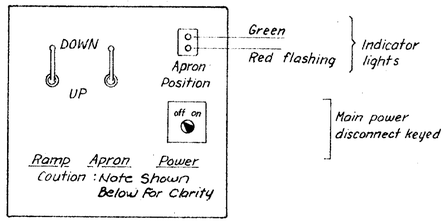

CONTROL PANEL, Provide Galv. sht. metal or fiberglass enclosure, see specs. Sect. 504 - 2.01 (m)

(1) Lock Ramp Before Loading or Unloading. Lock Ramp in Center Notch When is Not in Use.

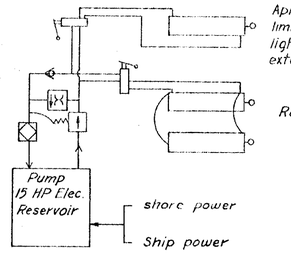

All hydraulic lines to be rigid except long flexible loop, platform to ramp and ramp to main girder.

LEGEND
Flow Control
Pressure Relief
Filter
3 spool valve

SCHEMATIC

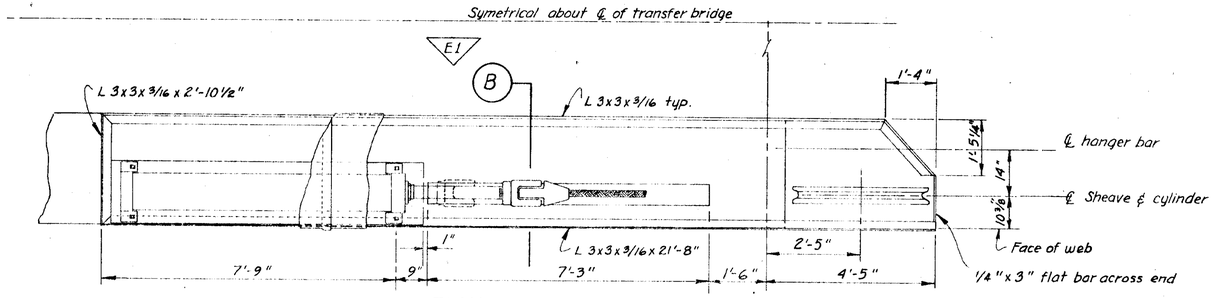

PLAN
RAMP HYDRAULICS
1/2" = 1'-0"

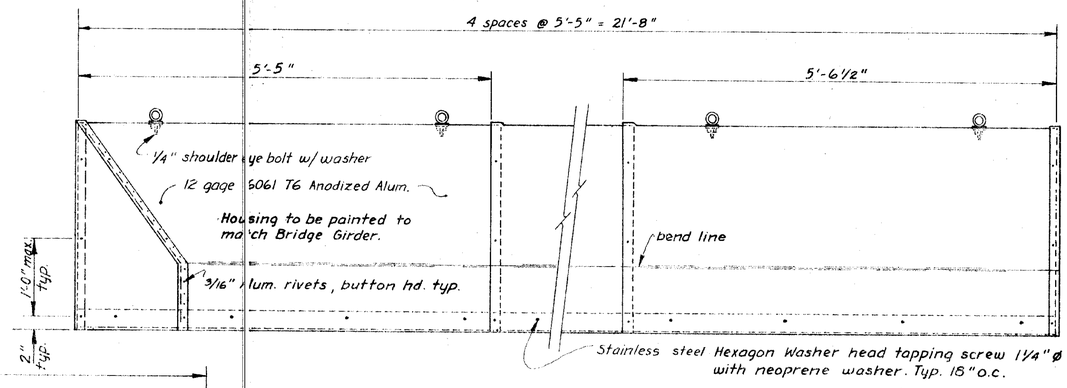

E1 ELEVATION
(Other side opposite hand)

HOUSING DETAILS
1" = 1'-0"

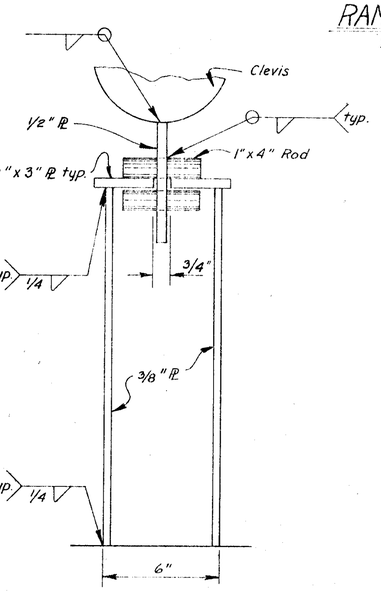

SECTION (B)

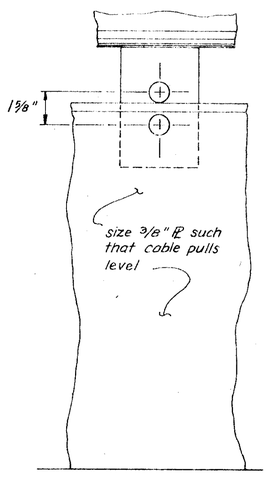

CYLINDER SUPPORT DETAILS
3" = 1'-0"

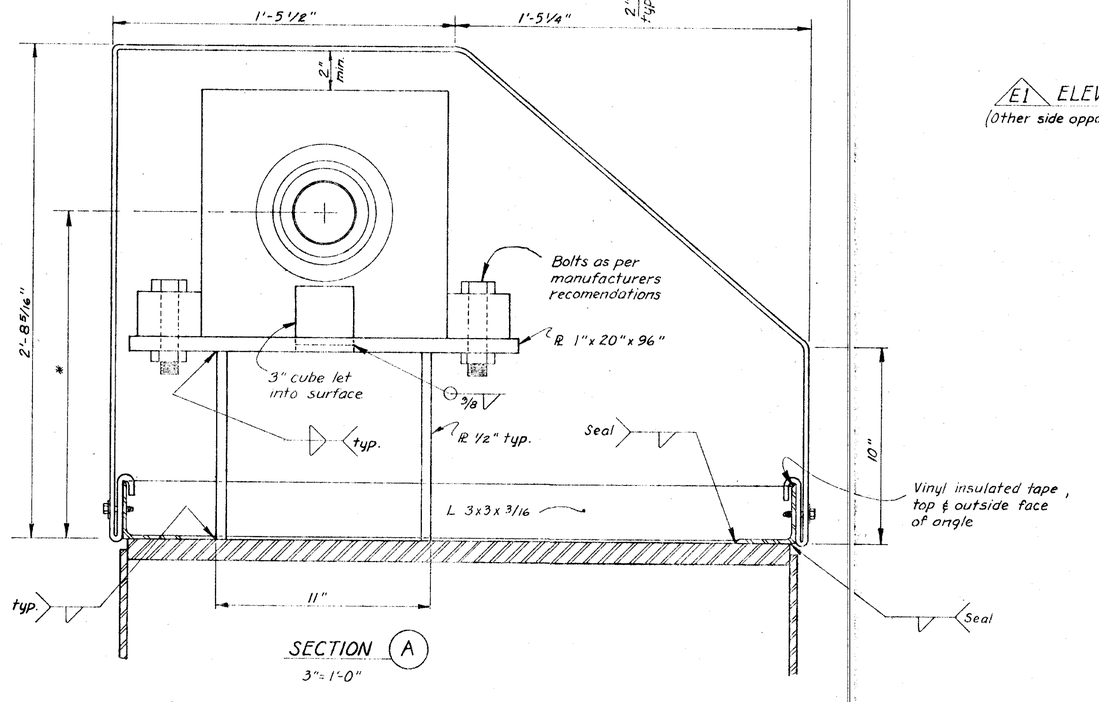

SECTION (A)
3" = 1'-0"

* The cable will pull level between cylinder & sheave. Dimension dependent on sheave select

STAMP	DO NOT SCALE THIS DRAWING - USE DIMENSIONS
STATE OF ALASKA 49th Harold R. Mueser No. 4373-E REGISTERED PROFESSIONAL ENGINEER	STATE OF ALASKA DEPARTMENT OF TRANSPORTATION AND PUBLIC FACILITIES DIVISION OF HARBOR DESIGN AND CONSTRUCTION
	RAMP HYDRAULICS & HOUSING
SCALE As Noted DESIGNED GH CHECKED	SURVEYED DRAWN T.S. DATE Jan-80
APPROVED Robert P. Beck CHIEF OF DESIGN	
PROJECT NUMBER F-093-2(2)	SHEET OF

AS ADVERTISED

STATE	PROJECT DESIGNATION	YEAR	SHEET NO.	TOTAL SHEETS
ALASKA	F-093-2(2)	1980	31	4

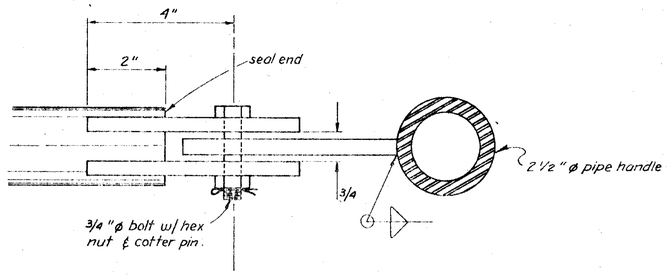

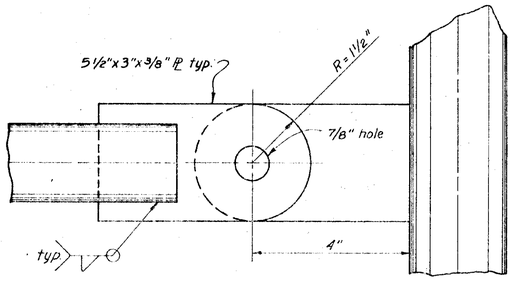

LINKAGE DETAIL
1/2" = 1"

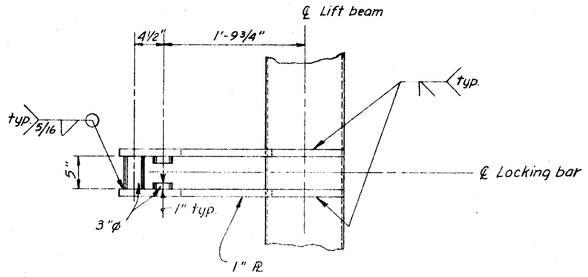

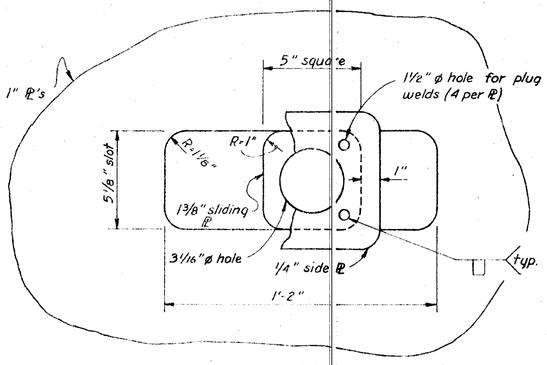

SLOT DETAIL
1/4" = 1"

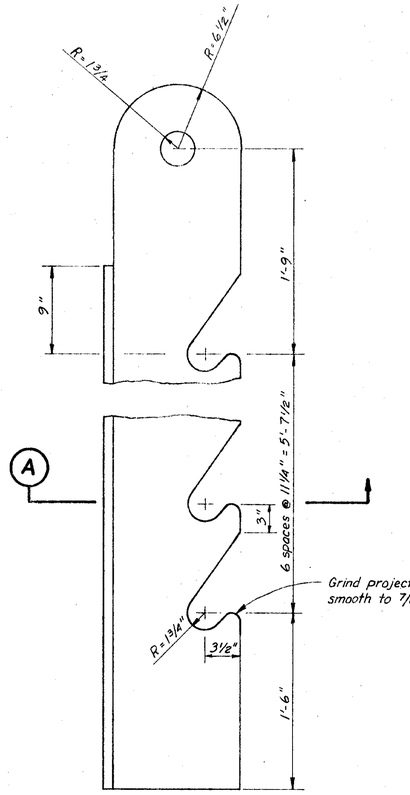

HANGER BAR
1 1/2" = 1'-0"

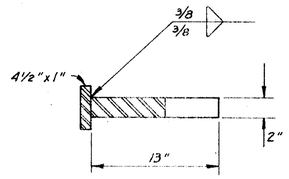

SECTION A
1 1/2" = 1'-0"

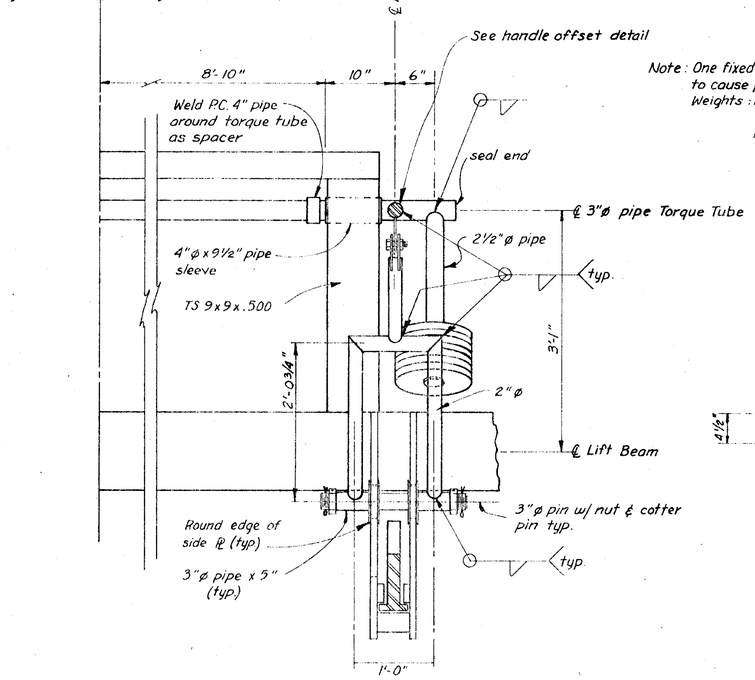

PLAN

Note: One fixed weight and enough loose weights to cause pin to lock automatically.
Weights: 12"ø x 1/2" w/ 3"ø hole in center, ea. side & 7/8" hole for 3/4" bolt.
Handle one side only.

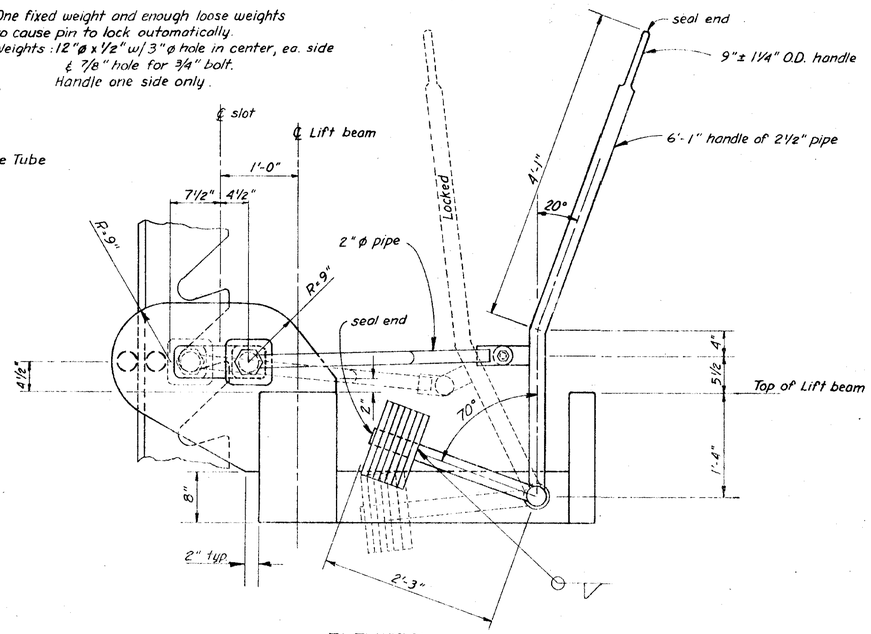

ELEVATION

LIFT BEAM HANGER LOCK ASSEMBLY
1" = 1'-0"

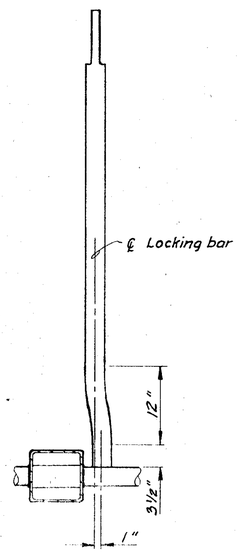

HANDLE OFFSET DETAILS
1" = 1'-0"

STAMP	DO NOT SCALE THIS DRAWING - USE DIMENSIONS
STATE OF ALASKA 49th Harold R. Morse No. 4373-E REGISTERED PROFESSIONAL ENGINEER	STATE OF ALASKA DEPARTMENT OF TRANSPORTATION AND PUBLIC FACILITIES DIVISION OF HARBOR DESIGN AND CONSTRUCTION
	LIFT BEAM LOCK & HANGER BAR
SCALE As Noted DESIGNED GH CHECKED	SURVEYED DRAWN TS DATE Dec. 79
	APPROVED Robert P. Beck CHIEF OF DESIGN
PROJECT NUMBER F-093-2(2)	SHEET OF

AS ADVERTISED

STATE	PROJECT DESIGNATION	YEAR	SHEET NO	TOTAL SHEETS
ALASKA	F-093-2(2)	1980	32	48

Fixed & moving block construction similar.

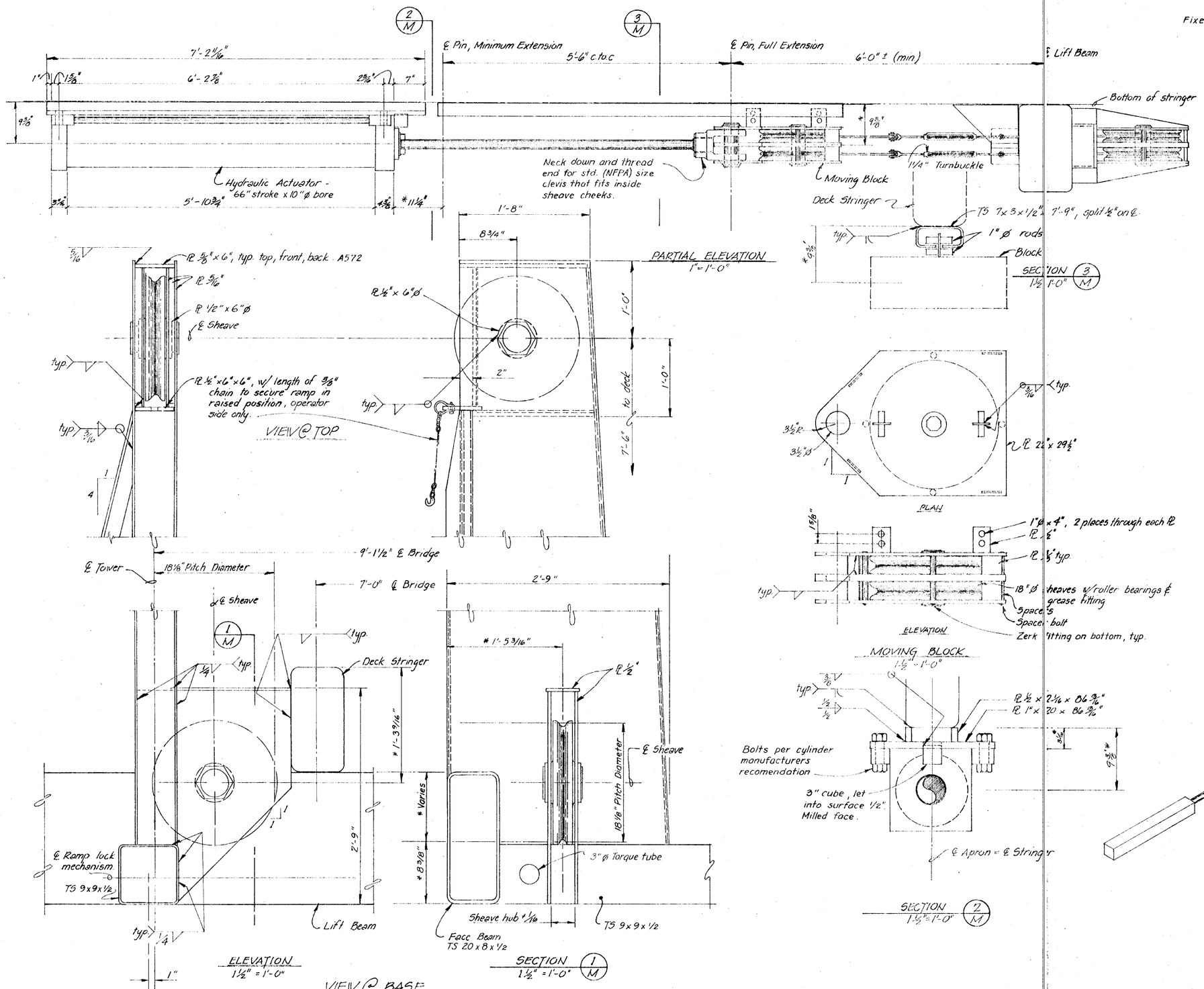

Notes: 1. * Dimensions based on actual sheave and actuator details. Sheave ℄ = Hydraulic actuator ℄.

2. Cable shall be 7/8" ø ~ 6 x 30 flattened strand, lang lay, fibre-core. (Breaking strength = 35.4 tons)

3. All sheaves this sht: 17 1/4 Tread
18 1/8 Pitch
19 O.D.
3 1/2 Hub thk.
4 1/4 Shaft ø

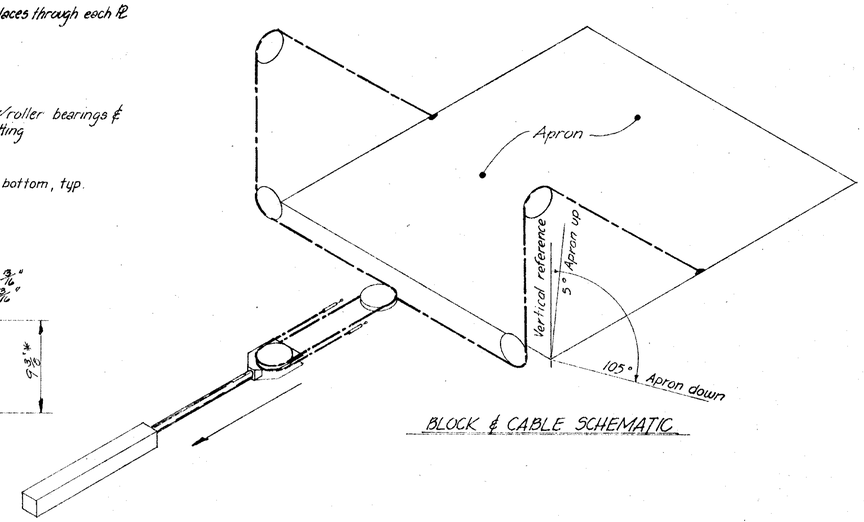

BLOCK & CABLE SCHEMATIC

STAMP	DO NOT SCALE THIS DRAWING – USE DIMENSIONS
STATE OF ALASKA 49th Harold R. Moeser No. 4373-E REGISTERED PROFESSIONAL ENGINEER	STATE OF ALASKA DEPARTMENT OF TRANSPORTATION AND PUBLIC FACILITIES DIVISION OF HARBOR DESIGN AND CONSTRUCTION
	APRON MECHANICAL DETAILS
SCALE As Noted DESIGNED HRM CHECKED	SURVEYED DRAWN JTM DATE Jan. 80
APPROVED Robert P. Beck CHIEF OF DESIGN	
PROJECT NUMBER F-093-2(2)	SHEET OF

E 19 1153 5-79 MC 9423a

AS ADVERTISED

STATE	PROJECT DESIGNATION	YEAR	SHEET NO.	TOTAL SHEETS
ALASKA	F093-2(2)	1980	33	48

NOTES

① 3" Ø 75 psi flexible hose, rubber or neoprene outer cover wire wound rubber or polyester line with swivel hose coupling each end. Cut longer for flexibility.

② Deleted

③ 4 Ø rigid galvanized Electrical Conduit supported at 10'-0" max.- Junction Box to be weatherproof. See Electrical Details, Sheet 45-48.

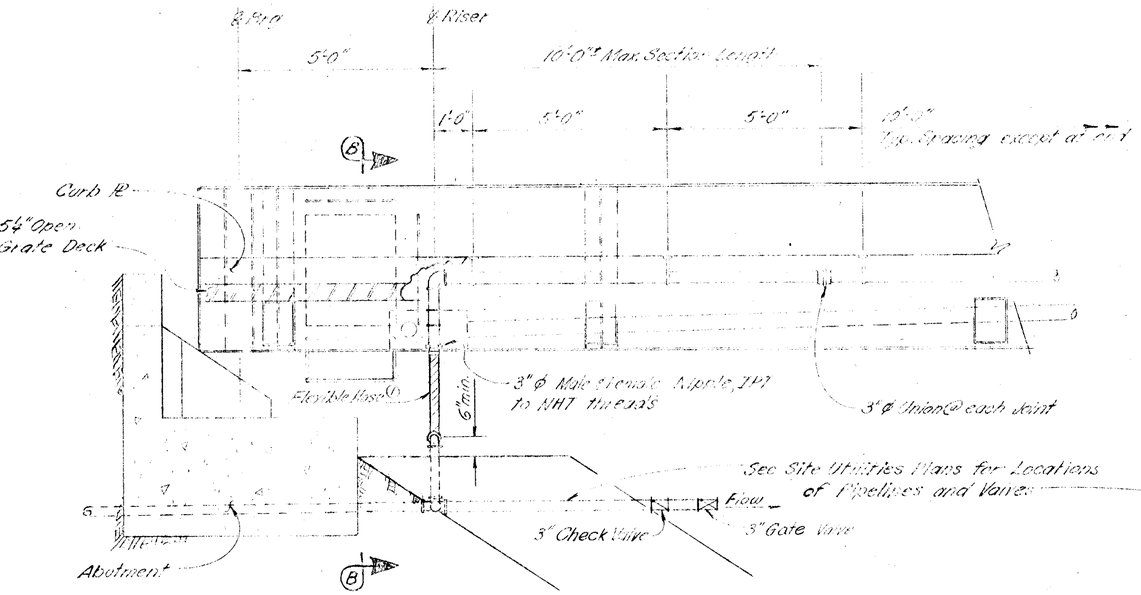

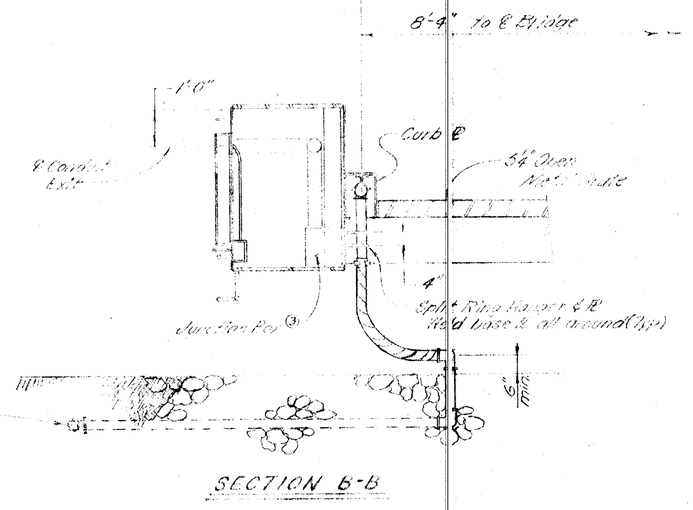

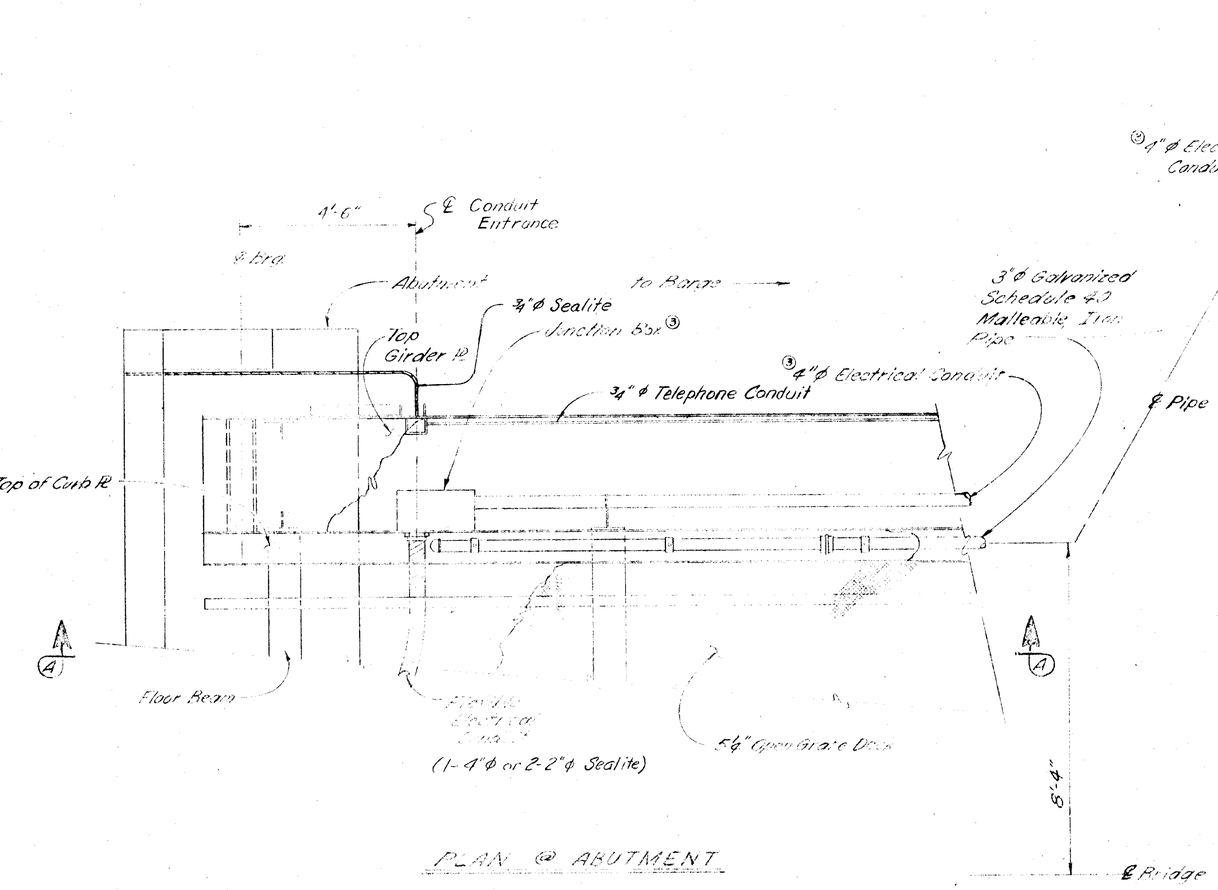

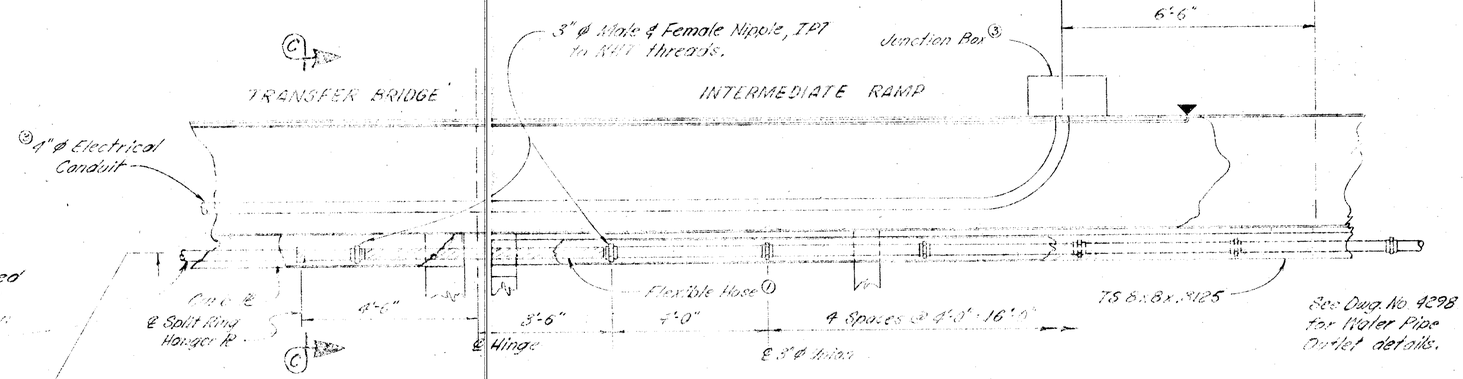

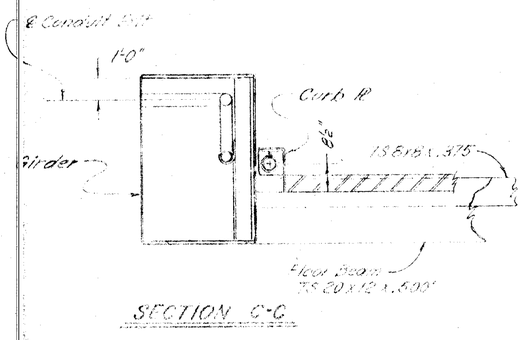

AUKE BAY TRANSFER BRIDGE

ROUTE F-093

UTILITIES

No Scale

State of Alaska
DEPARTMENT OF TRANSPORTATION and PUBLIC FACILITIES
Juneau, Alaska

Date 10-6-80
Approved

BRIDGE NO. 1474
DWNG. NO. 4301

AS ADVERTISED

STATE	PROJECT DESIGNATION	YEAR	SHEET NO.	TOTAL SHEETS
ALASKA	F-093-2(2)	1980	34	48

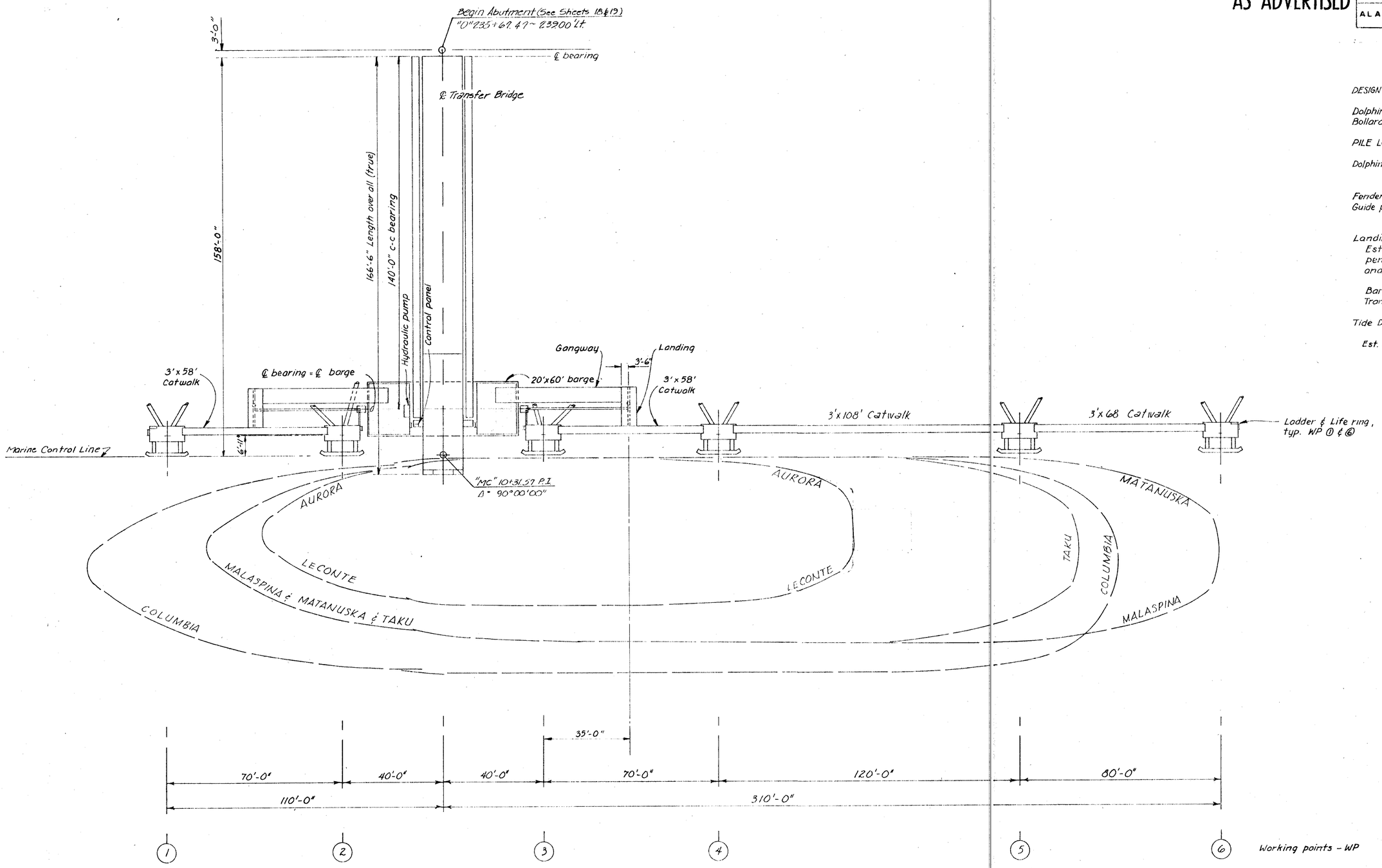

Working points - WP

DESIGN CRITERIA

Dolphin Energy : 30,000 ft. lbs.
Bollard load : 30,000 lbs.

PILE LOADS (DESIGN BEARING REQ'D.)

Dolphin support
- Vertical 100 ton
- Batter 100 ton

Fender pile 25' Penetration
Guide piles
- Vertical 100 ton
- Batter 100 ton

Landing support 20 ton
Estimated quantity based on 60' penetration for dolpin support piles and 25' penetration for fender pile.

Barge immersion constant 3.2 tons/in.
Transverse stability factor (Trim) 3.46 ft. tons/in.

Tide Data :

Est. Extreme High Water	22.7'
MHHW	15.9'
MLLW	0.0'
Extreme Low Water	-6.0'

STAMP

STATE OF ALASKA 49th
Harold R. Morter No. 4373-E
REGISTERED PROFESSIONAL ENGINEER

DO NOT SCALE THIS DRAWING - USE DIMENSIONS

STATE OF ALASKA
DEPARTMENT OF TRANSPORTATION AND PUBLIC FACILITIES
DIVISION OF HARBOR DESIGN AND CONSTRUCTION

Juneau Alaska

MARINE LAYOUT

SCALE 1" = 20'
DESIGNED
CHECKED
SURVEYED
DRAWN GRF
DATE Jan. 80
APPROVED Robert P. Beck
CHIEF OF DESIGN

PROJECT NUMBER F-093-2(2)
SHEET OF

AS ADVERTISED

STATE	PROJECT DESIGNATION	YEAR	SHEET NO.
ALASKA	F-093-2(2)	1980	35

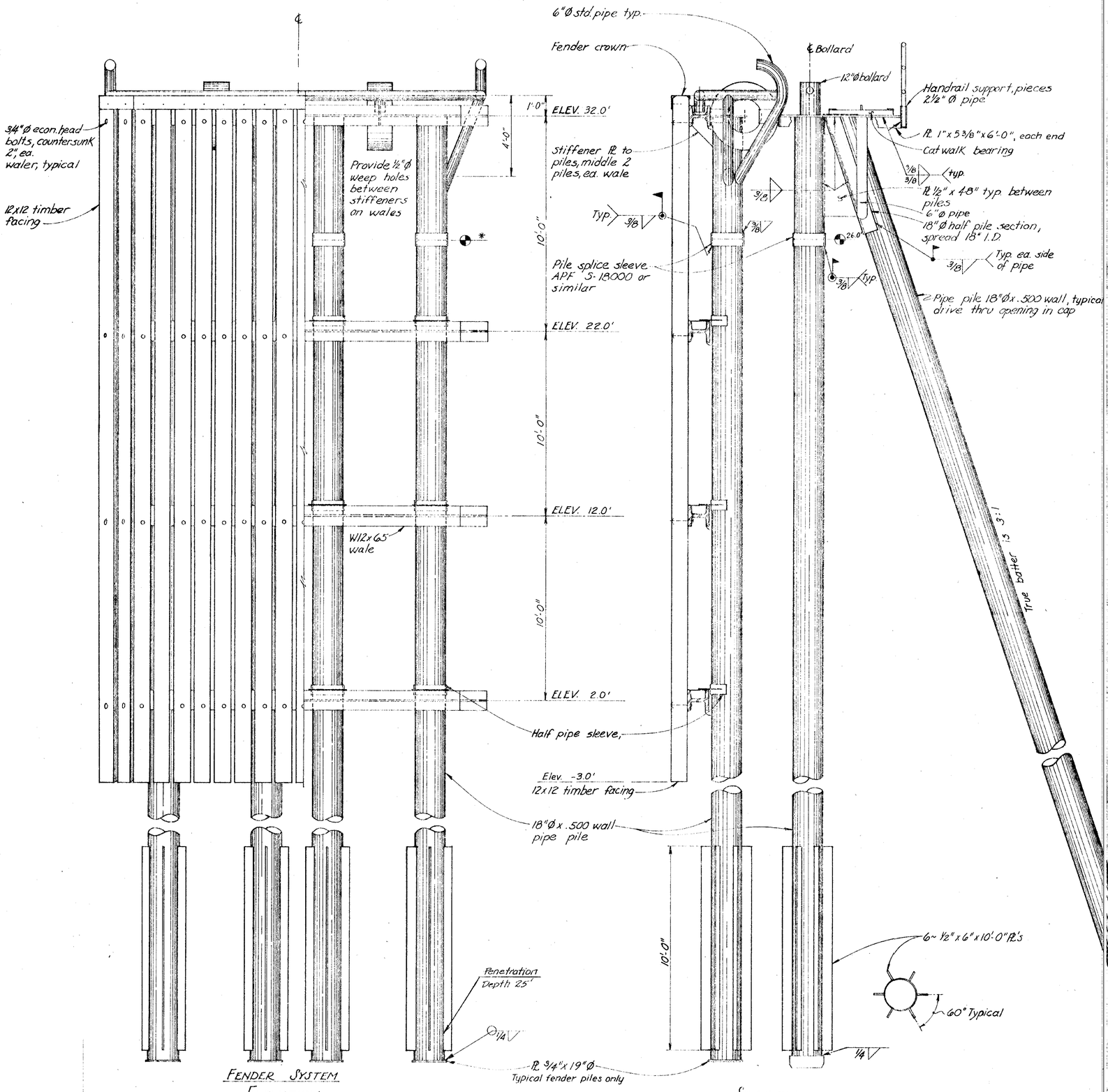

FENDER SYSTEM
ELEVATION
3/8"=1'-0"

SECTION
3/8"=1'-0"

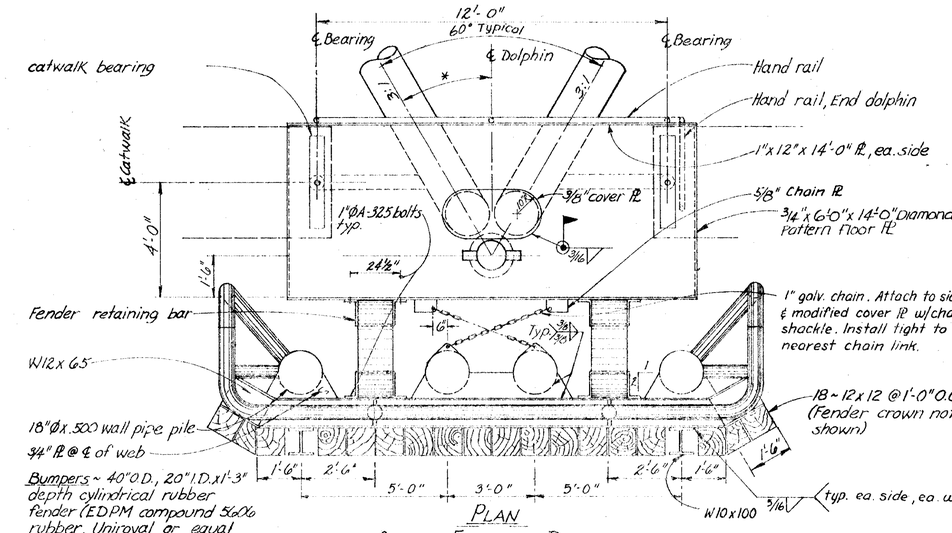

PLAN
STEEL FENDER DOLPHIN
3/8" = 1'-0"

WP ① ② ③ ④ ⑤ ⑥
Note * 30° WP 1, 4, 5, 6
* 45° WP 2
* 15° WP 3

* Recommend contractor stagger cut off for installation ease.

STAMP

STATE OF ALASKA 49th
Harold R. Mosier No. 4373-L
REGISTERED PROFESSIONAL ENGINEER

DO NOT SCALE THIS DRAWING — USE DIMENSIONS

STATE OF ALASKA
DEPARTMENT OF TRANSPORTATION AND PUBLIC FACILITIES
DIVISION OF HARBOR DESIGN AND CONSTRUCTION

DOLPHIN PLAN & DETAILS

SCALE AS NOTED	SURVEYED	APPROVED
DESIGNED	DRAWN JJS	Robert P. Beck
CHECKED	DATE Jan. 80	CHIEF OF DESIGN
PROJECT NUMBER F-093-2(2)	SHEET	OF

AS ADVERTISED

STATE	PROJECT DESIGNATION	YEAR	SHEET NO
ALASKA	F-093-2(2)	1980	36

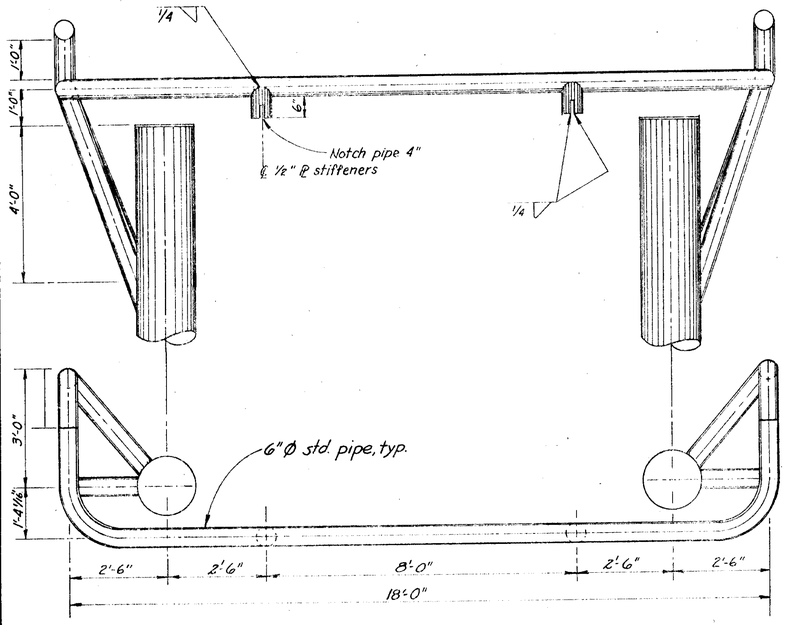

UPPER RAIL
1/2" = 1'-0"

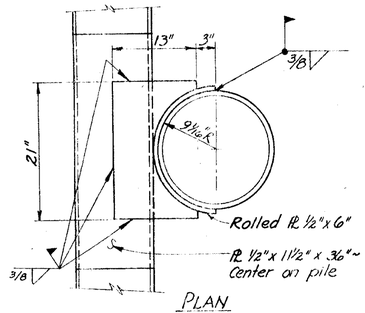

PLAN

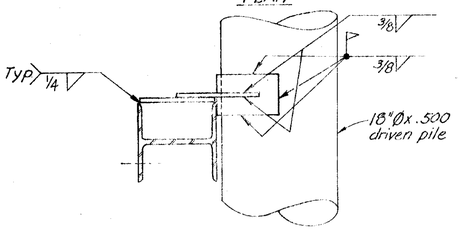

ELEVATION

PIPE SLEEVE DETAIL
1" = 1'-0"

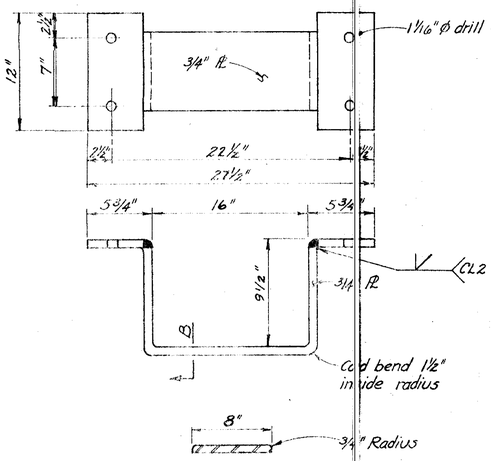

SECTION B

FENDER RETAINING BAR
1 1/2" = 1'-0"

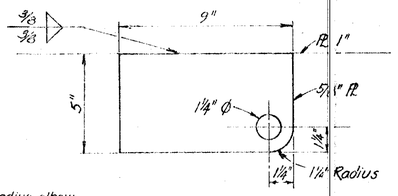

PLATE DETAIL
3" = 1'-0"

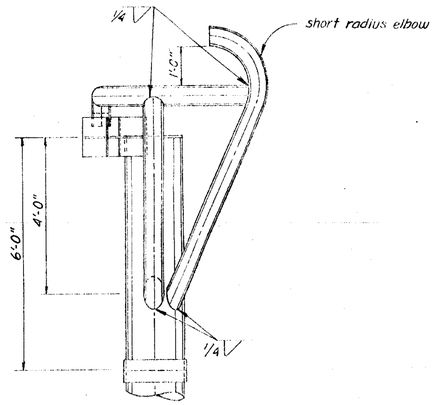

UPPER RAIL
1/2" = 1'-0"

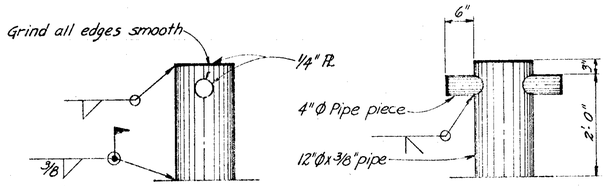

BOLLARD DETAIL
3/4" = 1'-0"

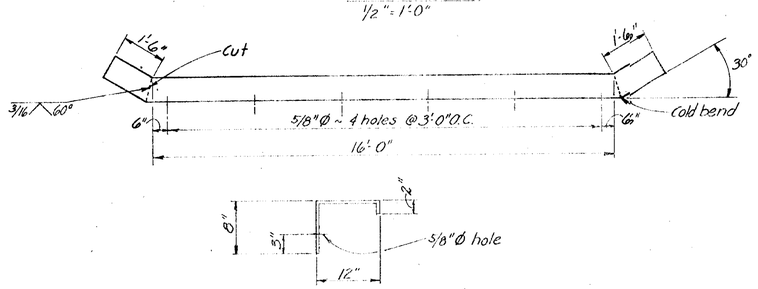

Cut from TS 12x10 x 3/8" x 19'-11"

FENDER CROWN
N.T.S.

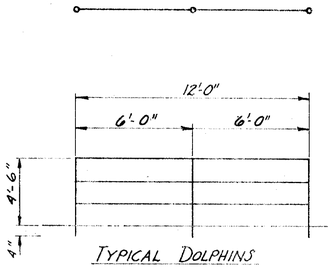

TYPICAL DOLPHINS

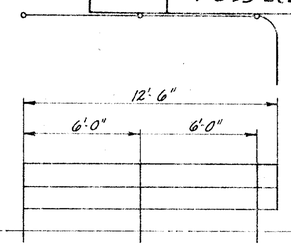

END DOLPHIN
(WP 1 & 3 opposit horrid)

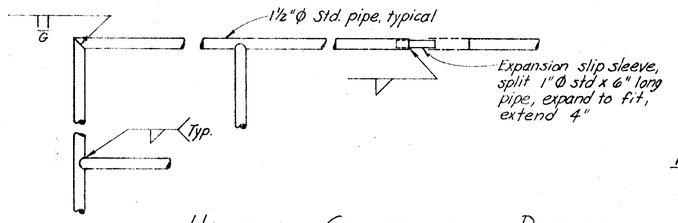

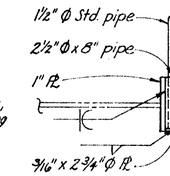

HANDRAIL SUPPORT DETAIL

HANDRAIL CONSTRUCTION DETAILS
1" = 1'-0"

Plwd. 1/2" AC-Ext., paint white, 2 coats oil base paint. Provide Coast Guard approved life ring. Mount to hand rail w/ hot dip galvanized pipe clamp and bronze bolts, washer and nut.

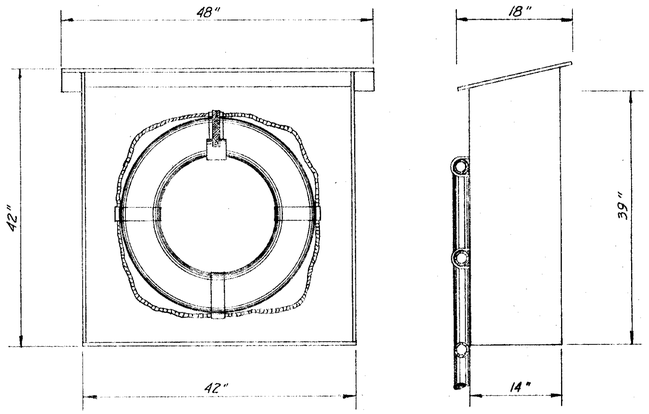

LIFE RING BOX, 2 REQ'D. WP ① & ⑥
1" = 1'-0"

STAMP

STATE OF ALASKA 49th
Harold R. Nosser No. 4373-E
REGISTERED PROFESSIONAL ENGINEER

DO NOT SCALE THIS DRAWING — USE DIMENSIONS

STATE OF ALASKA
DEPARTMENT OF TRANSPORTATION AND PUBLIC FACILITIES
DIVISION OF HARBOR DESIGN AND CONSTRUCTION

FENDER SYSTEM DETAILS

SCALE As Noted	SURVEYED	APPROVED Robert P. Beck, CHIEF OF DESIGN
DESIGNED	DRAWN S.J.S.	
CHECKED	DATE Jan. 80	
PROJECT NUMBER F-093-2(2)		SHEET OF

AS ADVERTISED

STATE	PROJECT DESIGNATION	YEAR	SHEET NO.	TOTAL SHEETS
ALASKA	F-093-2(2)	1980	37	48

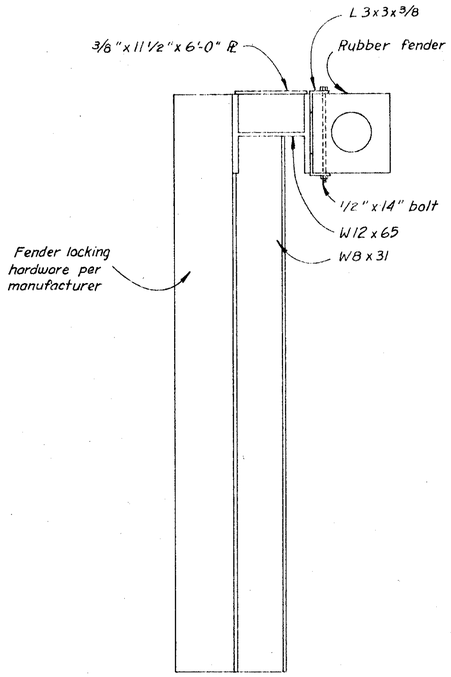

PROFILE
1"=1'-0"

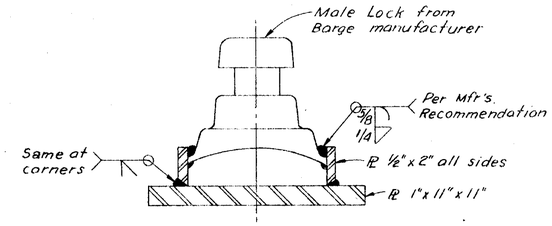

LOCKING LUG DETAIL
3"=1'-0"

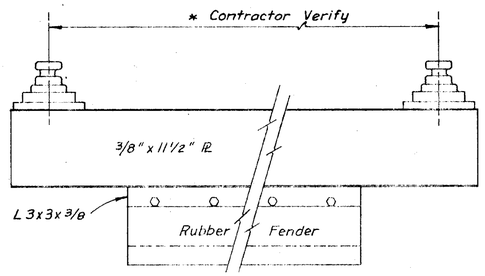

PLAN
1"=1'-0"

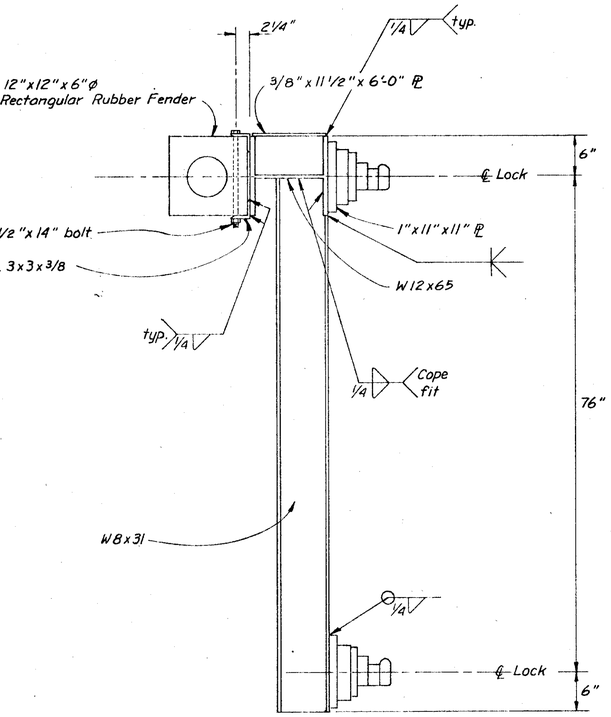

FENDER WELDMENT DETAILS
1"=1'-0"

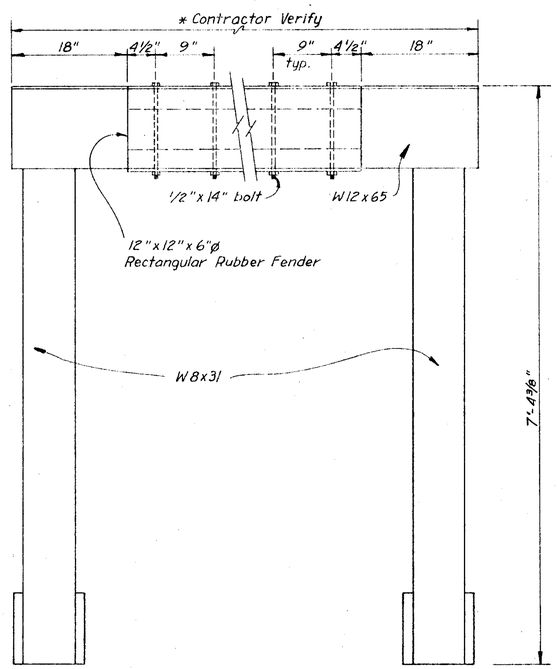

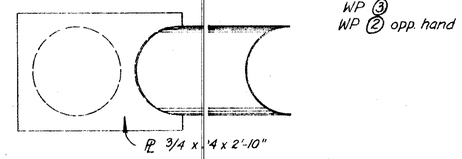

PLAN

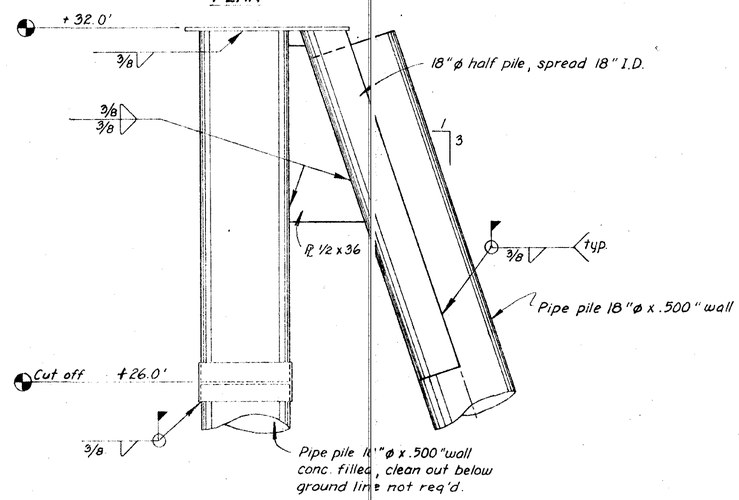

ELEVATION
PONTOON GUIDE PILE
3/4"=1'-0"

PILE LOAD RESISTANCE REQUIREMENTS

Front Piles - Front Piles are designed for a working load of 100 Tons uplift.

Estimated tip elevation varies
Estimated penetration 60'

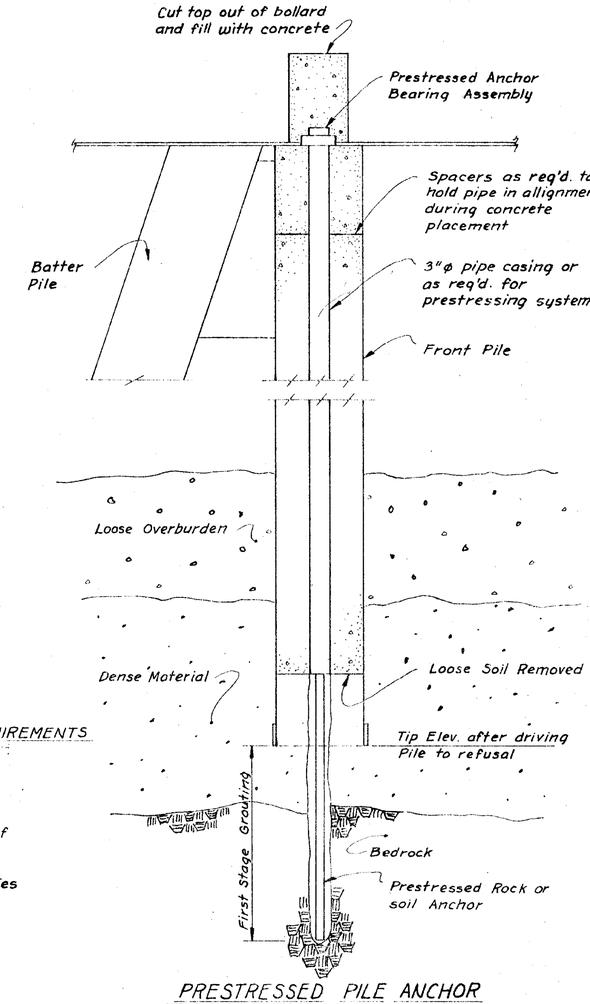

PRESTRESSED PILE ANCHOR
3/4"=1'-0"

Note: 1. Prestressed Anchor shall be used only when directed by the engineer. 8 may be req'd. in accordance with section 505.
2. Guide Piles to be driven after locating barge. Fill vertical guide pile with class A concrete.

STAMP

STATE OF ALASKA 4911 Harold R. Mueser No. 4373-E REGISTERED PROFESSIONAL ENGINEER

DO NOT SCALE THIS DRAWING - USE DIMENSIONS

STATE OF ALASKA
DEPARTMENT OF TRANSPORTATION AND PUBLIC FACILITIES
DIVISION OF HARBOR DESIGN AND CONSTRUCTION

GUIDE PILE DETAILS

SCALE	SURVEYED	APPROVED Robert P. Beck, CHIEF OF DESIGN
DESIGNED HM	DRAWN TS	
CHECKED	DATE Jan. 80	
PROJECT NUMBER F-093-2(2)		SHEET OF

AS ADVERTISED

STATE	PROJECT DESIGNATION	YEAR	SHEET NO.	TOTAL SHEETS
ALASKA	F-093-2(2)	1980	38	48

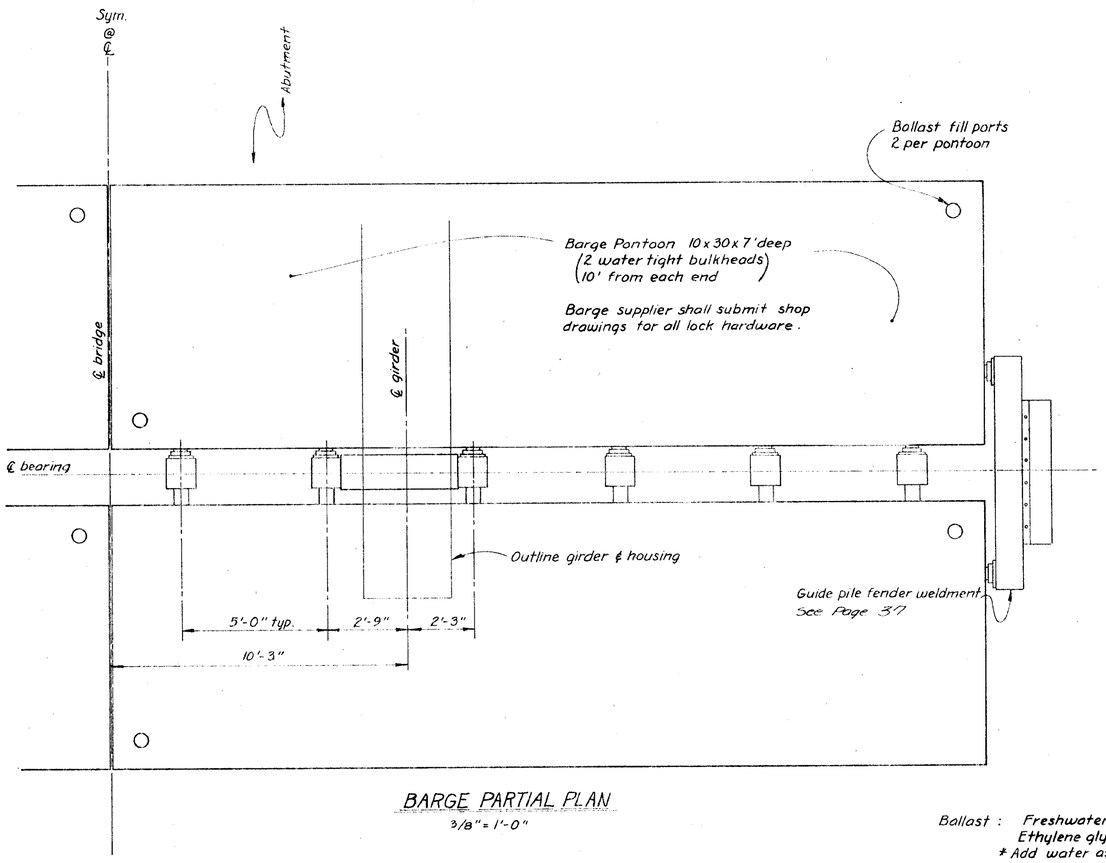

BARGE PARTIAL PLAN
3/8" = 1'-0"

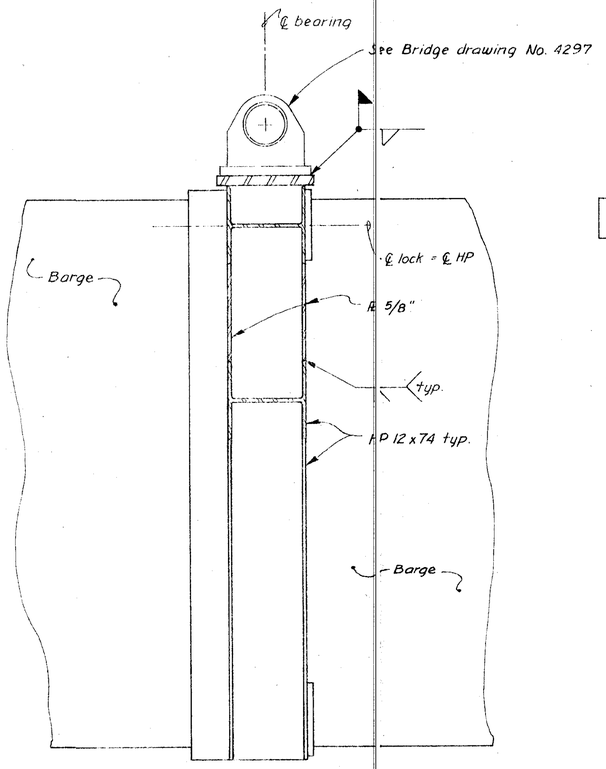

1 SECTION
1" = 1'-0"

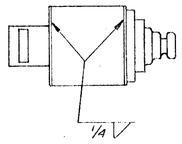

PLAN

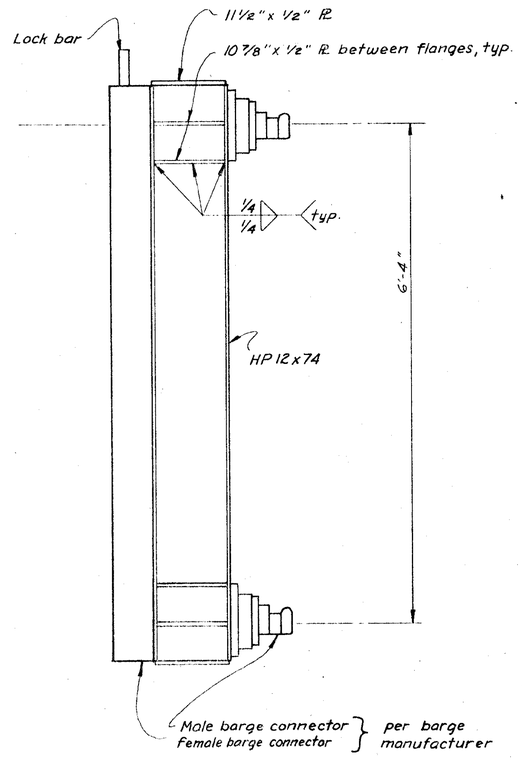

PROFILE

BARGE LOCK WELDMENT
1" = 1'-0"

Ballast :

	Tank	Total
Freshwater	4255	17,020 *
Ethylene glycol	825 gal.	3300 gal.

* Add water as req'd. to obtain 2'-0" ± freeboard

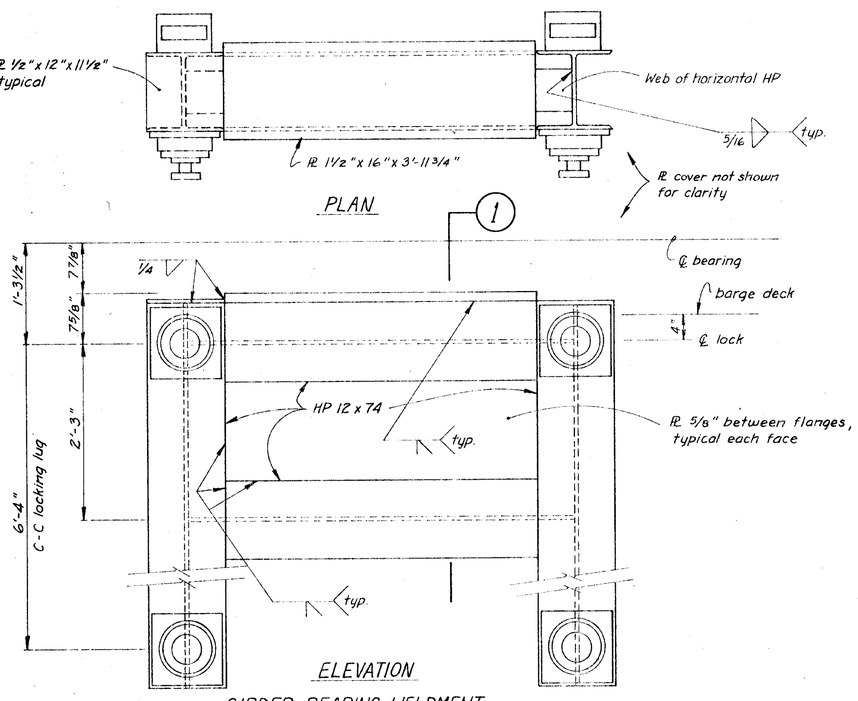

PLAN

ELEVATION

GIRDER BEARING WELDMENT
1" = 1'-0"

STAMP

DO NOT SCALE THIS DRAWING - USE DIMENSIONS

STATE OF ALASKA
DEPARTMENT OF TRANSPORTATION AND PUBLIC FACILITIES
DIVISION OF HARBOR DESIGN AND CONSTRUCTION

BARGE, BRIDGE WELDMENTS

SCALE As Noted	SURVEYED	APPROVED Robert P. Beck
DESIGNED HM	DRAWN TS	CHIEF OF DESIGN
CHECKED	DATE 3/80	
PROJECT NUMBER F-093-2(2)		SHEET OF

AS ADVERTISED

STATE	PROJECT DESIGNATION	YEAR	SHEET NO.	TO SHEETS
ALASKA	F-093-2(2)	1980	39	40

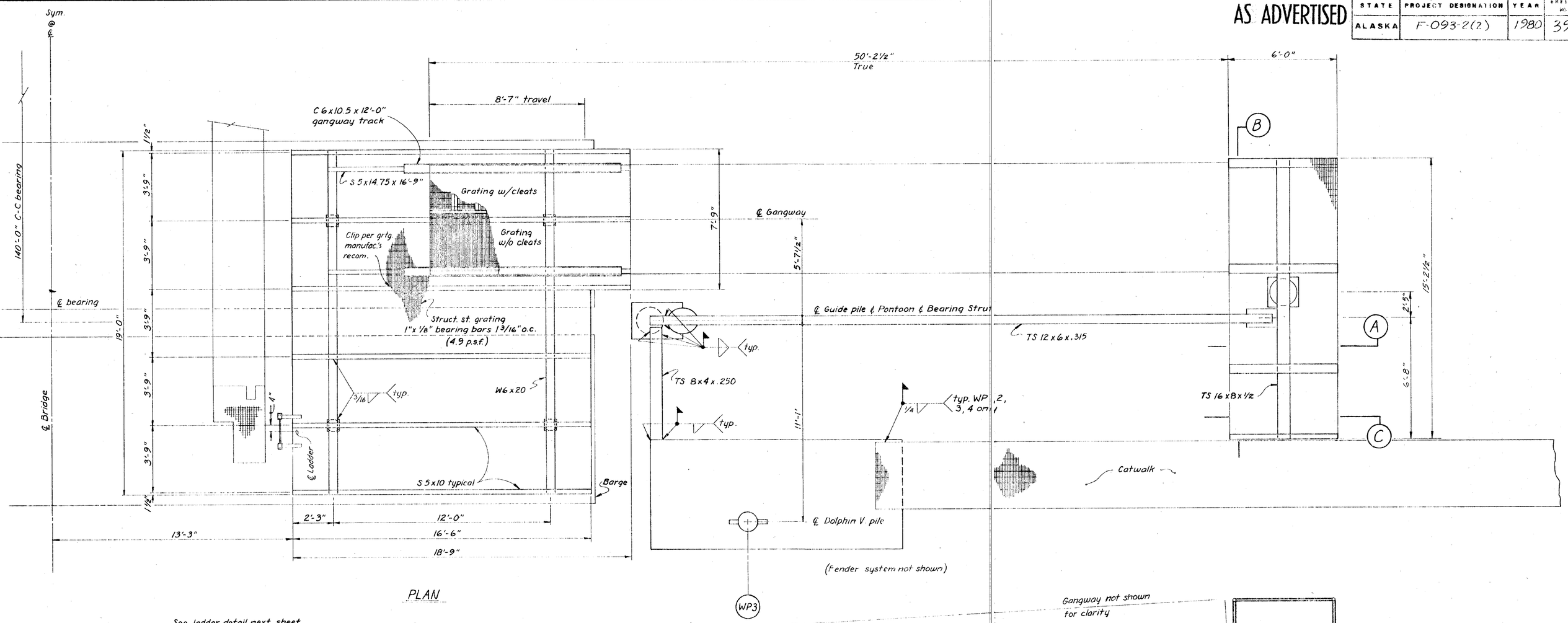

Note : Other side opposite hand

STAMP	DO NOT SCALE THIS DRAWING - USE DIMENSIONS
STATE OF ALASKA 49th REGISTERED PROFESSIONAL ENGINEER Harold R. Moeser No. 4373-E	STATE OF ALASKA DEPARTMENT OF TRANSPORTATION AND PUBLIC FACILITIES DIVISION OF HARBOR DESIGN AND CONSTRUCTION
	BARGE PLATFORM & GANGWAY LANDINGS
SCALE 3/8" = 1'-0" DESIGNED HM CHECKED	SURVEYED DRAWN TS DATE 3/80
	APPROVED Robert P. Beck CHIEF OF DESIGN
PROJECT NUMBER F-093-2(2)	SHEET OF

AS ADVERTISED

STATE	PROJECT DESIGNATION	YEAR	SHEET NO.	TO ENG
ALASKA	F-093-2(2)	1980	40	4

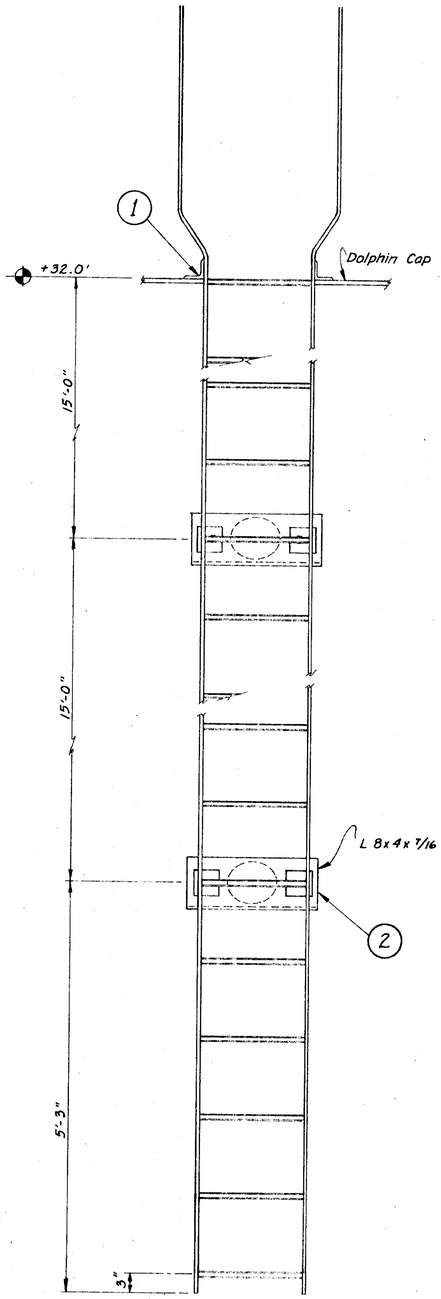

DOLPHIN LADDER DETAIL WP 1 & 6

1" = 1'-0"

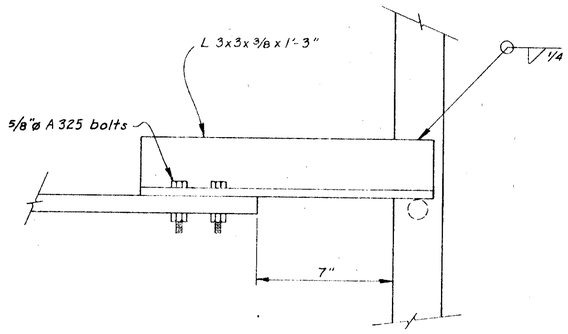

1 DOLPHIN CAP CONN. DETAIL

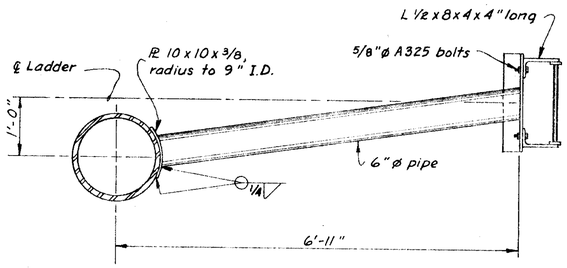

2 LADDER SUPPORT DETAIL

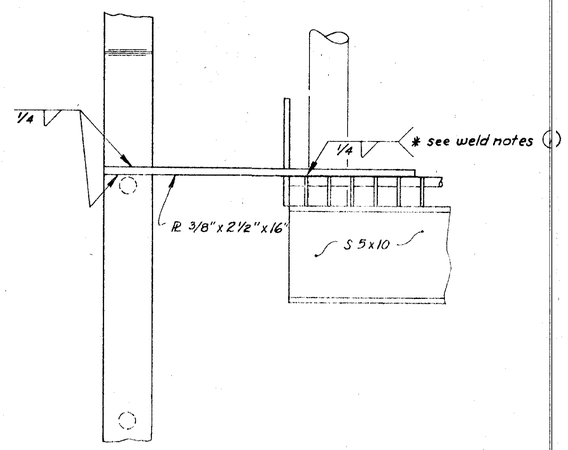

SECTION A-A

3" = 1'-0"

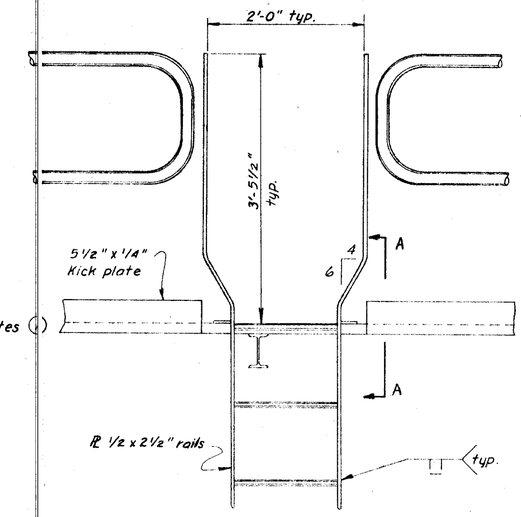

7/8"ø x 16" rungs on 12" centers. Top rung even with grate.

BARGE LADDER DETAIL

1" = 1'-0"

Note : All ladder construction details similar unless noted.

STAMP

STATE OF ALASKA 49th Harold R. Mueller No. 4373-E REGISTERED PROFESSIONAL ENGINEER

DO NOT SCALE THIS DRAWING — USE DIMENSIONS

STATE OF ALASKA
DEPARTMENT OF TRANSPORTATION AND PUBLIC FACILITIES
DIVISION OF HARBOR DESIGN AND CONSTRUCTION

LADDER DETAILS

SCALE As Noted	SURVEYED	APPROVED Robert P. Beck, CHIEF OF DESIGN
DESIGNED HM	DRAWN T.S.	
CHECKED	DATE 3/80	
PROJECT NUMBER F-093-2(2)		SHEET OF

AS ADVERTISED

STATE	PROJECT DESIGNATION	YEAR	SHEET NO	TOTAL SHEETS
ALASKA	F-093-2(2)	1980	41	4

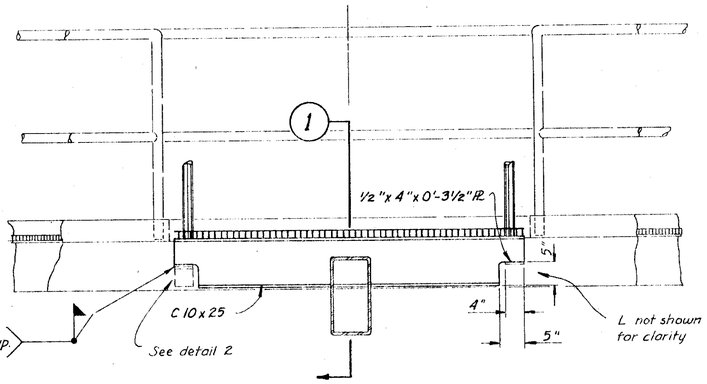

C SECTION

3/4" = 1'-0"

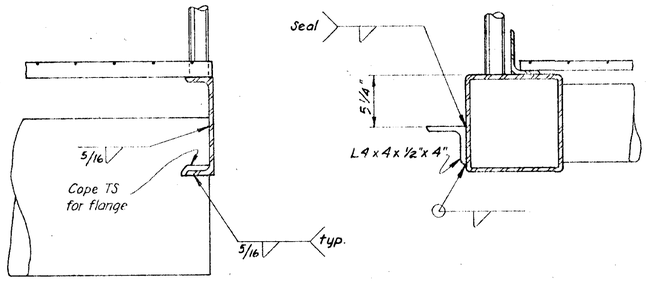

1 DETAIL

1 1/2" = 1'-0"

2 DETAIL

1 1/2" = 1'-0"

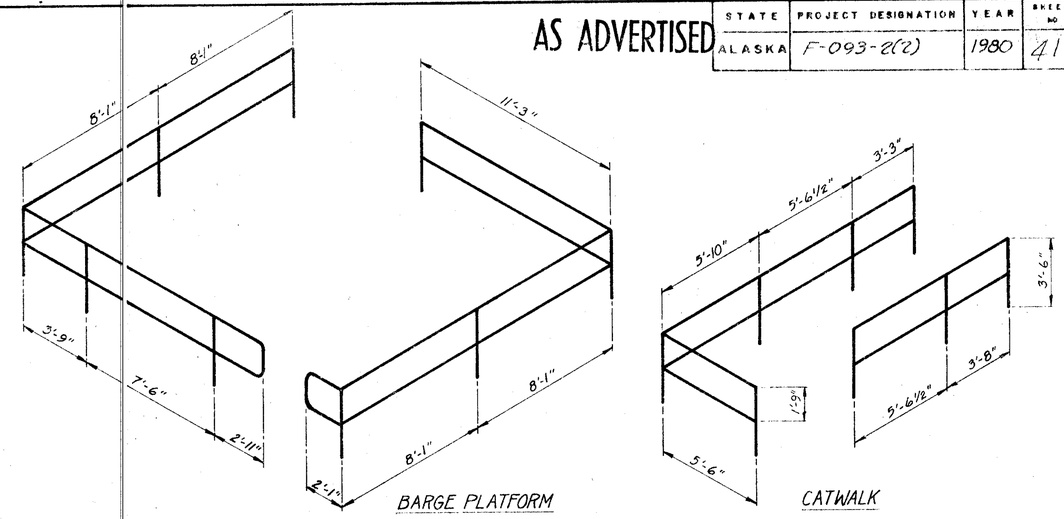

HANDRAIL & POST LAYOUTS

1/4" = 1'-0"

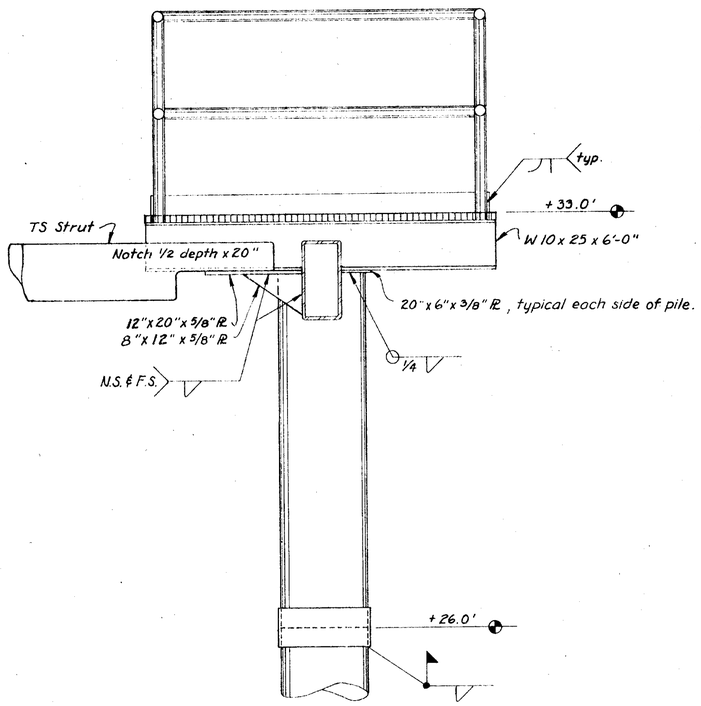

A SECTION

3/4" = 1'-0"

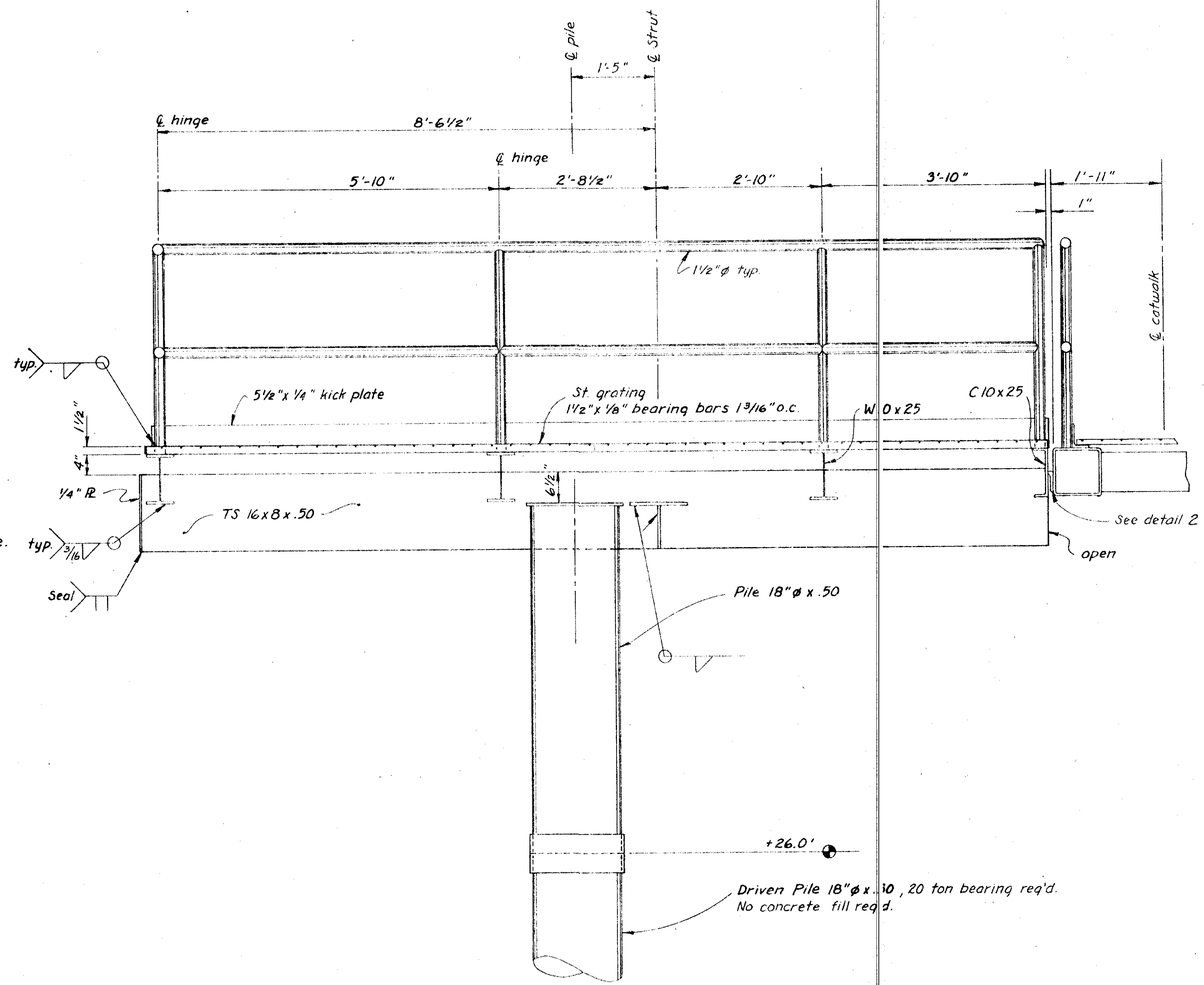

B SECTION

3/4" = 1'-0"

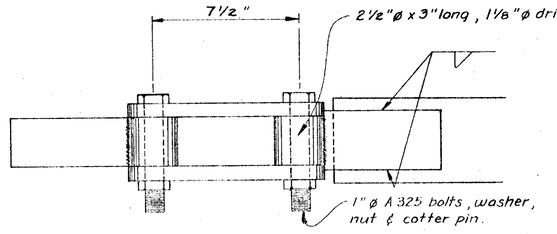

PLAN

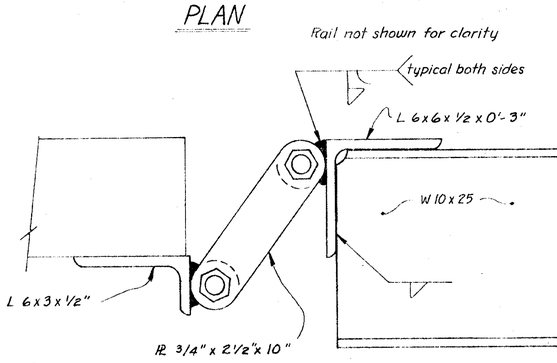

GANGWAY HANGER

STAMP	DO NOT SCALE THIS DRAWING – USE DIMENSIONS
STATE OF ALASKA 49th Harold R. Moeser No. 4373-E REGISTERED PROFESSIONAL ENGINEER	STATE OF ALASKA DEPARTMENT OF TRANSPORTATION AND PUBLIC FACILITIES DIVISION OF HARBOR DESIGN AND CONSTRUCTION
	GANGWAY LANDING DETAILS
SCALE As Noted DESIGNED HM CHECKED	SURVEYED DRAWN TS DATE 3/80
APPROVED Robert P. Beck CHIEF OF DESIGN	
PROJECT NUMBER F-093-2(2)	SHEET OF

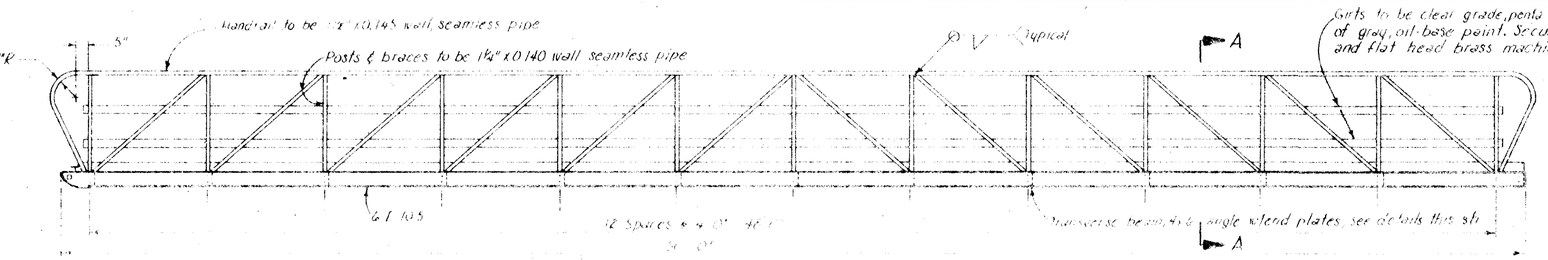

ELEVATION
3/8" = 1'-0"

Girts to be clear grade, penta treated, Douglas fir, S4S, 1x4. Paint with 2-coats of gray, oil-base paint. Secure to posts & braces w/ 1¼" pipe clamps and flat head brass machine bolts.

Welded steel grating w/ ¾" x ⅛" bearing bars spaced at 1 3/16" centers and ¼" cross bars spaced at 4" centers. Wearing surface of bearing and cross bars shall be serrated. The grating shall be hot dip galvanized. Every 4th bearing bar to be welded with ¾" long fillet to L 3½ x 2½

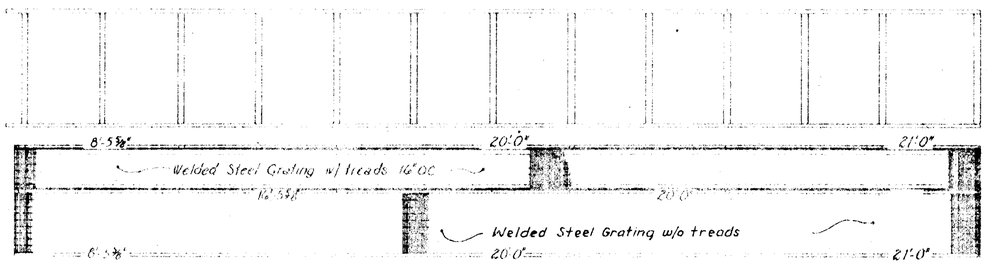

STRINGER & DECKING LAYOUT
¼" = 1'-0"

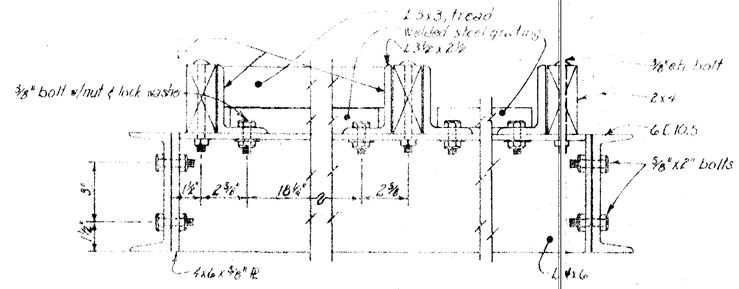

SECTION
DETAIL ~ L 3½ x 2½ Bolted to L 4 x 6
3" = 1'-0"

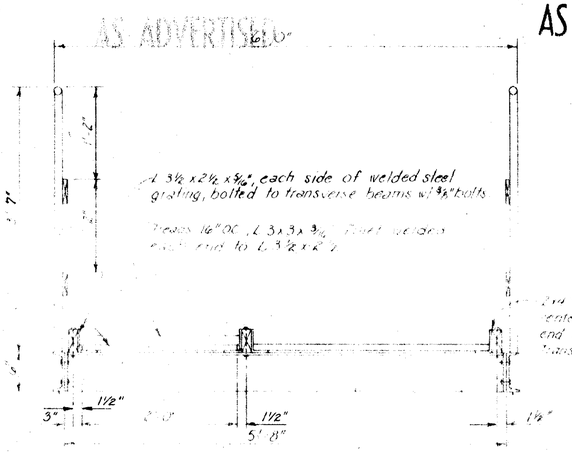

AS ADVERTISED

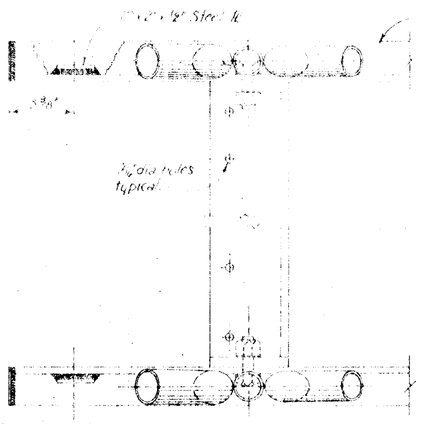

GANGWAY DETAILS
3" = 1'-0"

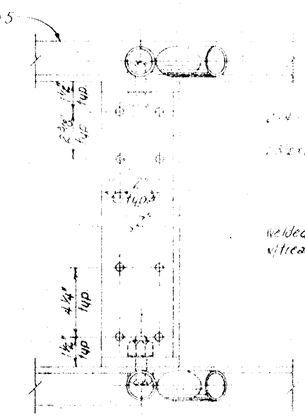

TYPICAL DECKING DETAIL

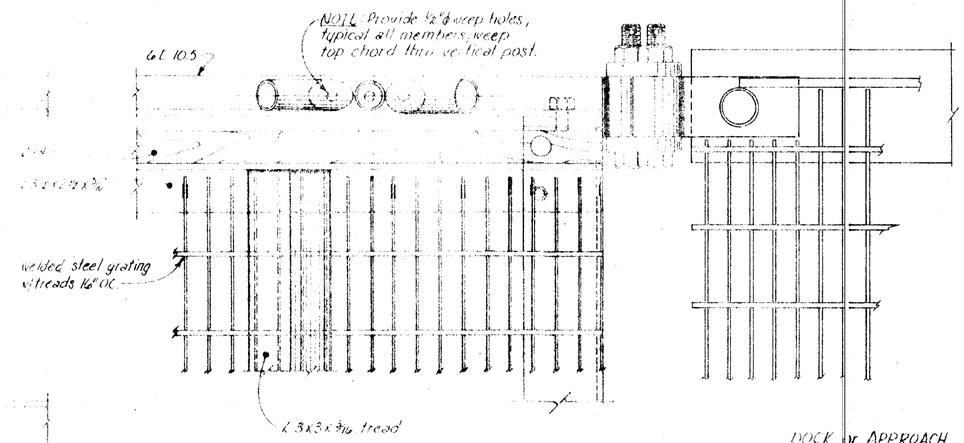

GANGWAY HEAD DETAILS

DOCK & APPROACH

GENERAL NOTES

1. Design load: 55 psf on gangway or 85 p.s.f. on treaded walkway only.
2. All seamless pipe shall conform to ASTM A-53 Grade B or ASTM A-500.
3. All shapes & plates shall conform to ASTM A-36.
4. Trusses shall be shop fabricated & assembled including hangers.
5. Splices shall be held to a minimum and where necessary shall be made in a manner that will not reduce the strength of the truss.
6. No tubing or channel splices will be permitted within 10' of the center of the truss structure.
7. Trusses & transverse beams shall be hot dipped galvanized after fabrication and in accordance with ASTM A-123, A-384, A-385 & A-386.
8. All steel hardware & fasteners shall be hot dipped galvanized in accordance with ASTM A-153.
9. Decking & deck spacers shall be No.1 grade HEM FIR penta pressure treated [illegible] in accordance with AWPA standards. Attention and shall be field drilled to match shop drilled holes in transverse members.
10. [illegible] shop drawing shall be submitted for approval.

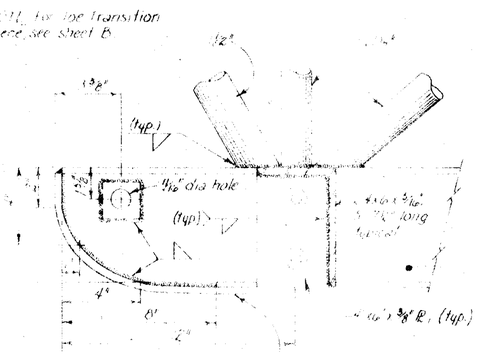

¼" x 2" Flat bar cut to necessary length, bend and weld to toe of stringer

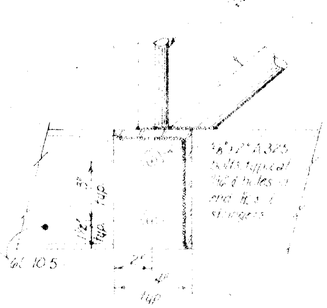

SECTIONAL ELEVATIONS

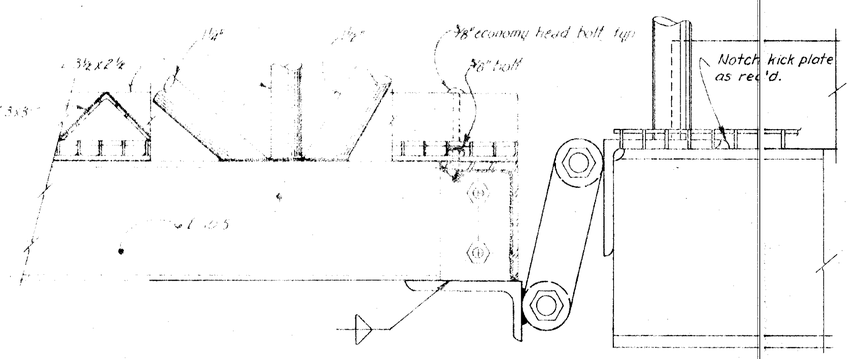

STATE	PROJECT DESIGNATION	YEAR	SHEET NO.	TOTAL SHEETS
ALASKA	F-093-2(2)	1980	42	48

STATE OF ALASKA 49th
Harold R. Musser No. 6373-E
REGISTERED PROFESSIONAL ENGINEER

GANGWAY

SCALE: As noted
DESIGNED:
DRAWN: GFF
DATE: Dec. 1979
APPROVED: Robert P. Beck, CHIEF OF DESIGN

F-093-2(2)

AS ADVERTISED

STATE	PROJECT DESIGNATION	YEAR	SHEET NO.	TOTAL SHEETS
ALASKA	F-093-2(2)	1980	43	48

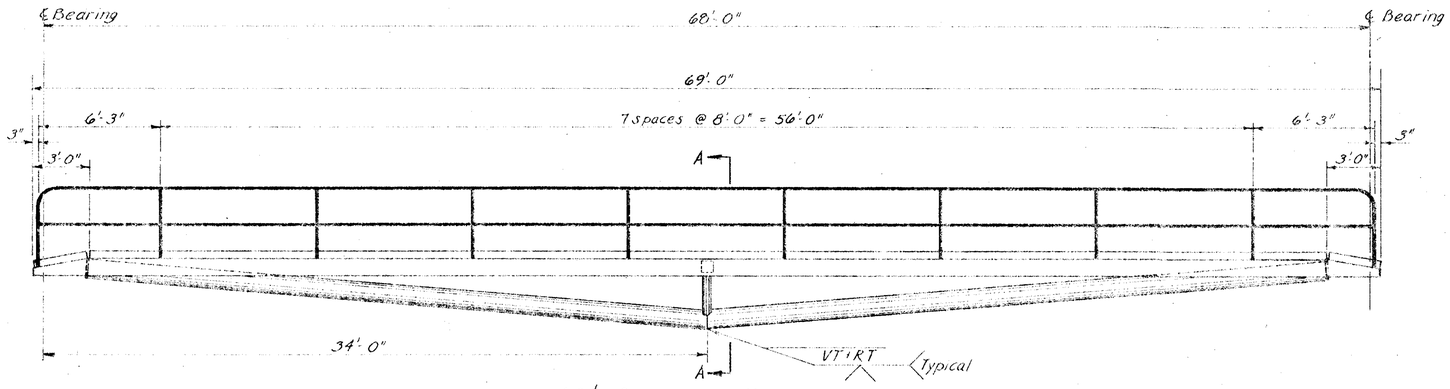

68' CATWALK ELEVATION
1/4" = 1'-0"

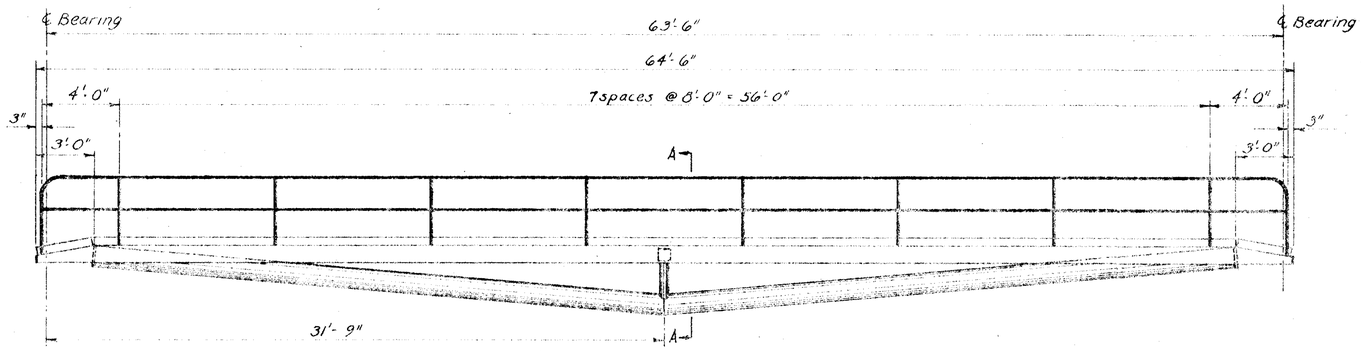

63'-6" CATWALK ELEVATION *NIC
1/4" = 1'-0"

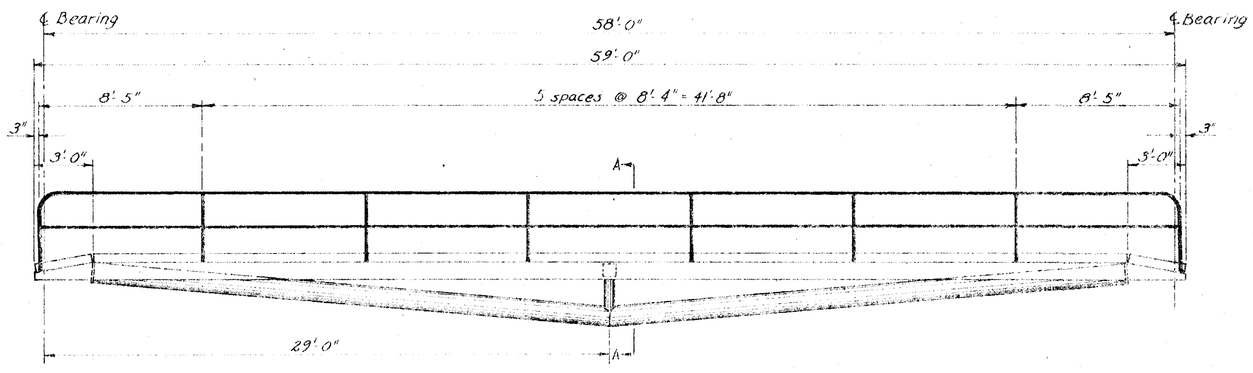

58' CATWALK ELEVATION
1/4" = 1'-0"

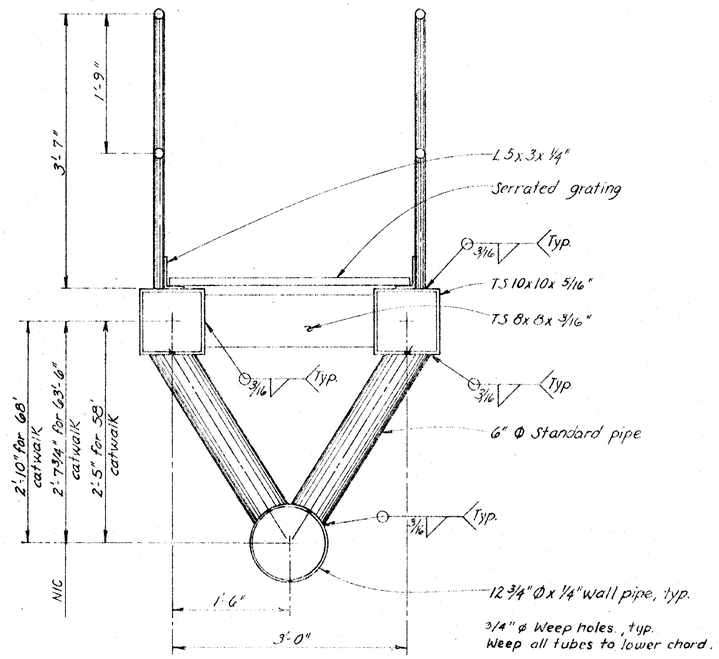

SECTION A-A
1" = 1'-0"

* NIC = Not in Contract

NOTE:
All splices in tension or compression components of structure to be double bevel complete penetration.
The fully erected catwalk structure shall only be supported or lifted @ end bearing points.

STAMP

STATE OF ALASKA 49th Harold R. Meeser No. 4373-E REGISTERED PROFESSIONAL ENGINEER

DO NOT SCALE THIS DRAWING – USE DIMENSIONS

STATE OF ALASKA
DEPARTMENT OF TRANSPORTATION AND PUBLIC FACILITIES
DIVISION OF HARBOR DESIGN AND CONSTRUCTION

68', 63'-6", & 58' CATWALK ELEVATIONS

SCALE As Noted	SURVEYED	APPROVED
DESIGNED JAL	DRAWN SJS	Robert P Beck
CHECKED	DATE Jan 80	CHIEF OF DESIGN
PROJECT NUMBER F-093-2(2)		SHEET OF

AS ADVERTISED

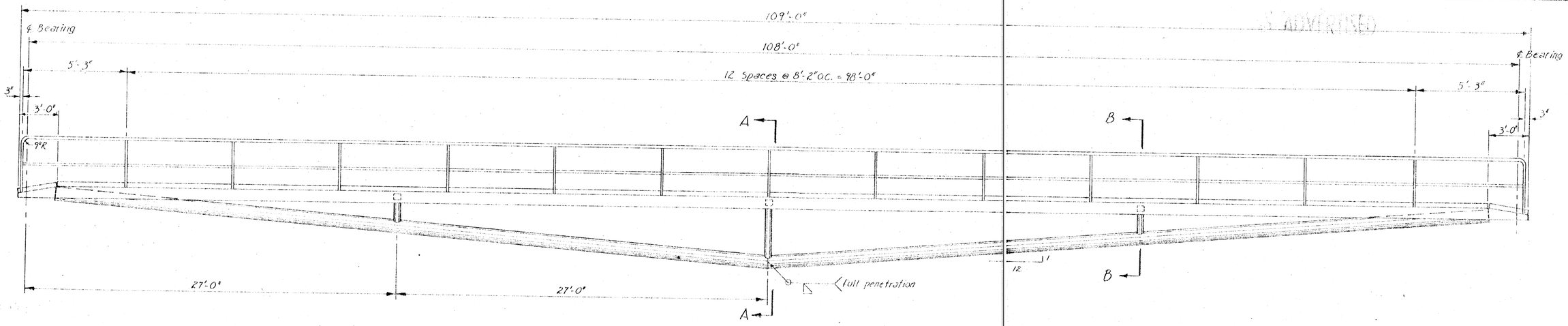

ELEVATION
1/4" = 1'-0"

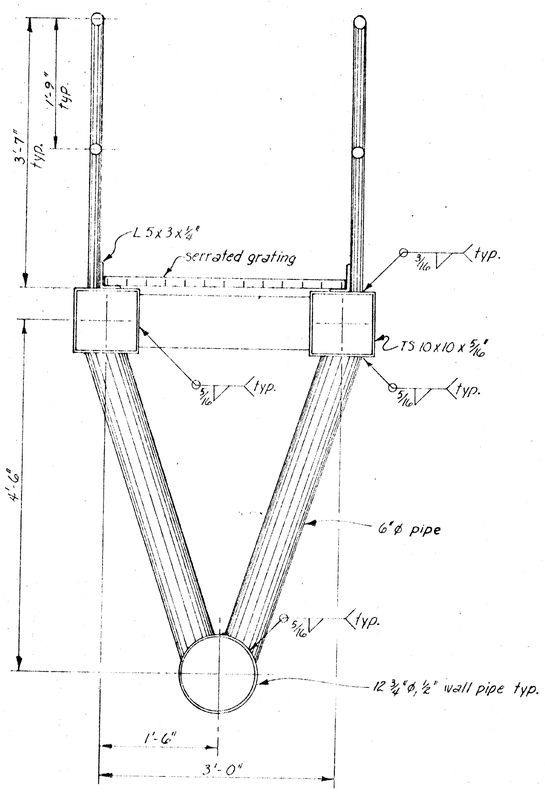

SECTION A-A
1" = 1'-0"

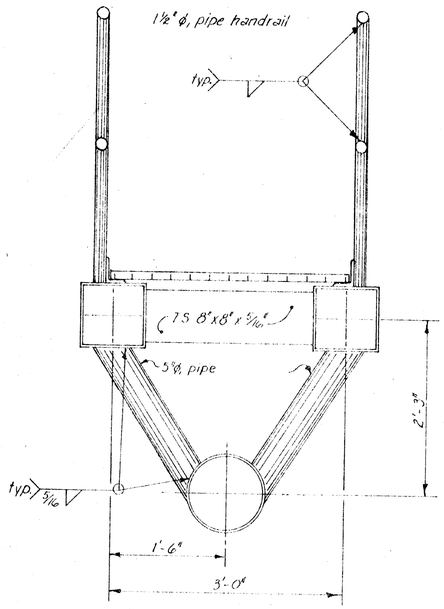

SECTION B-B
1" = 1'-0"

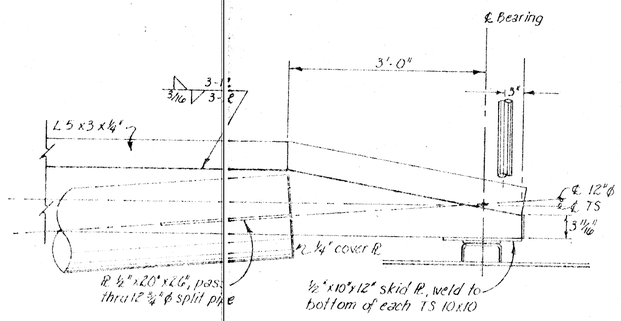

TYPICAL SECTIONAL ELEVATION
1" = 1'-0"

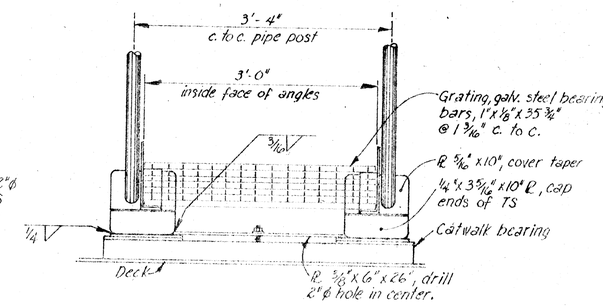

TYPICAL END ELEVATION
1" = 1'-0"

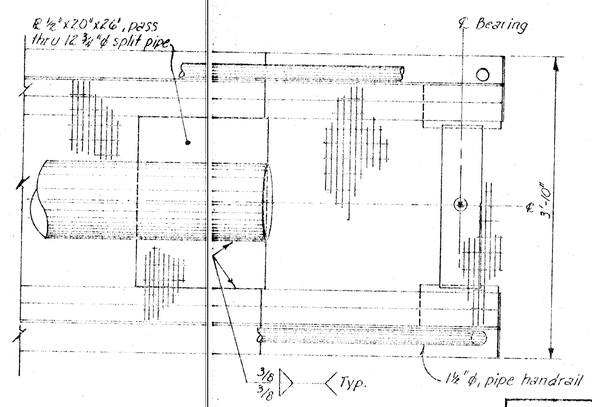

TYPICAL SECTIONAL PLAN
1" = 1'-0"

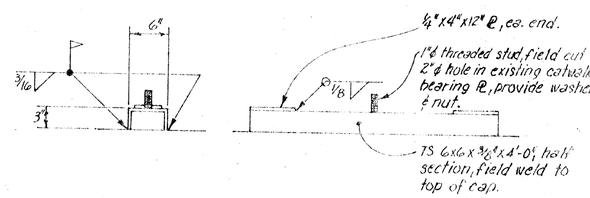

TYPICAL CATWALK BEARING DETAIL
1" = 1'-0"

Notes:
Grating shall be galv. steel serrated edge. 1" x 1/8" bearing bars, 1 3/16" O.C., 1" x 1/8" cross bars, 4" O.C. Weld grating to angle.

All splices in tension or compression components of structure to be double bevel full penetration.

The fully erected catwalk structure shall only be lifted @ the quarter points.

Weep all tubes to lower chord

STATE	PROJECT DESIGNATION	YEAR	SHEET NO.	TOTAL SHEETS
ALASKA	F-093-2(2)	1980	44	48

STAMP

STATE OF ALASKA 49th Harold B. Messer No. 4373-E REGISTERED PROFESSIONAL ENGINEER

DO NOT SCALE THIS DRAWING USE DIMENSIONS

STATE OF ALASKA
DEPARTMENT OF TRANSPORTATION AND PUBLIC FACILITIES
DIVISION OF HARBOR DESIGN AND CONSTRUCTION

108'-0" CATWALK & DETAILS

SCALE As Noted	SURVEYED	APPROVED
DESIGNED JAL / HM	DRAWN GRT	Robert P. Beck
CHECKED	DATE June 1979	CHIEF OF DESIGN
PROJECT NUMBER F-093-2(2)		SHEET OF

AS ADVERTISED

STATE	PROJECT DESIGNATION	YEAR	SHEET NO	TOTAL SHEETS
ALASKA	F-093-2(2)	1990	45	4

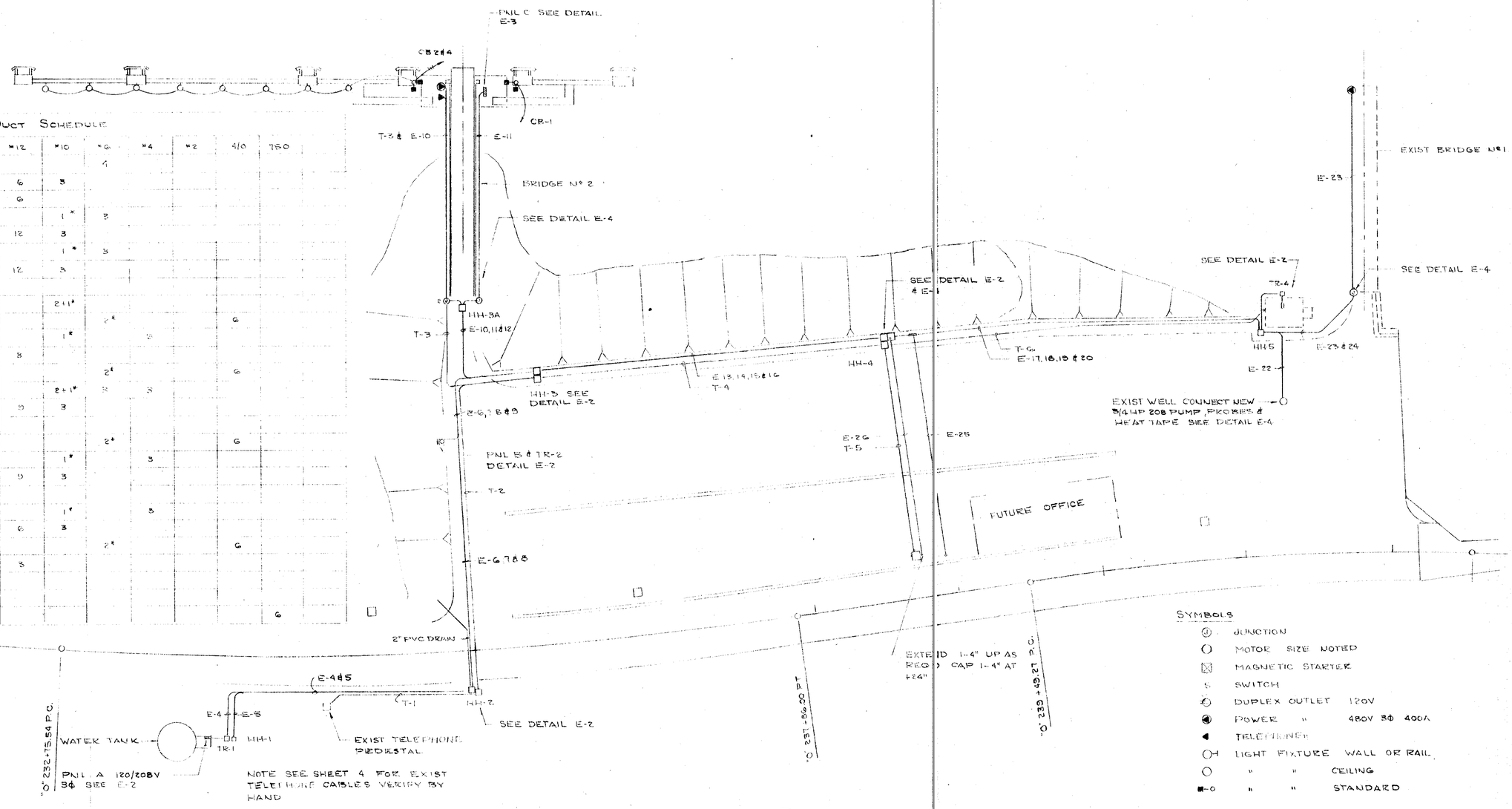

PLAN
1" = 40'

Electrical Duct Schedule

Nº	FROM	TO	SIZE	D	#12	#10	#6	#4	#2	4/0	750
E-1	TR-1	PNL A	1 1/2"				4				
E-2	MS-1	HH-1	1		6	3					
E-3	MS-2	HH-1	1		6						
E-4	TR-1	HH-2	1 1/2"			1*	3				
E-5	HH-1	HH-2	1 1/2"		12	3					
E-6	HH-2	HH-3	2			1*	3				
E-7	HH-2	HH-3	2		12	3					
E-8	HH-2	HH-3	2#								
E-9	HH-3	TR-2	1			2+1*					
E-10	HH-3	POWER	4				2*			6	
E-11	HH-3	PNL C	1 1/2			1*		3			
E-12	HH-3	S/S	3/4		3						
E-13	HH-3	HH-4 & P	4				2*			6	
E-14	HH-3	HH4 & P	2			2+1*	3	3			
E-15	HH-3	HH4	2		9	3					
E-16	HH-3	HH-4	4#								
E-17	P	HH-5	4				2*			6	
E-18	P	HH-5	2			1*		3			
E-19	HH-4	HH-5	2		9	3					
E-20	HH-4	HH-5	4#								
E-21	HH-5	TR-4	2			1*		3			
E-22	HH-5	WELL	1/2		6	3					
E-23	HH-5	POWER	4				2*			6	
E-24	HH-5	S/S	3/4		3						
E-25	PNL P	FUTURE	3#								
E-26	500KVA	POLE	2-4								
E-27	500KVA	P	2-4*							6	

* GROUND
\# SPARE

CONDUIT, CONDUCTORS, HANDHOLES TRANSFORMERS ETC ASSOCIATED WITH ITEM 626

Symbols

- JUNCTION
- MOTOR SIZE NOTED
- MAGNETIC STARTER
- SWITCH
- DUPLEX OUTLET 120V
- POWER " 480V 3Φ 400A
- TELEPHONE
- LIGHT FIXTURE WALL OR RAIL
- " " CEILING
- " " STANDARD

Telephone Schedule

Nº	FROM	TO	SIZE	D	REMARKS
T-1	PEDESTAL	HH-2	2		
T-2	HH-2	HH-3	2		
T-3	HH-3	OUTLET	3/4		
T-4	HH-3	HH-4	2		
T-5	HH-4	FUTURE	2		CAP AT +12"
T-6	HH-4	BLDG	2		

STAMP

STATE OF ALASKA 49TH Leonard P. Linvill No. 5551 REGISTERED PROFESSIONAL ENGINEER

DO NOT SCALE THIS DRAWING - USE DIMENSIONS

STATE OF ALASKA
DEPARTMENT OF TRANSPORTATION AND PUBLIC FACILITIES
DIVISION OF HARBOR DESIGN AND CONSTRUCTION

ELECTRICAL DETAIL

SCALE 1" = 40'	SURVEYED	APPROVED
DESIGNED LPL	DRAWN	DIRECTOR
CHECKED	DATE	
PROJECT NUMBER F-093-2(2)	SHEET	OF

19 1183 3-78 MC 7738

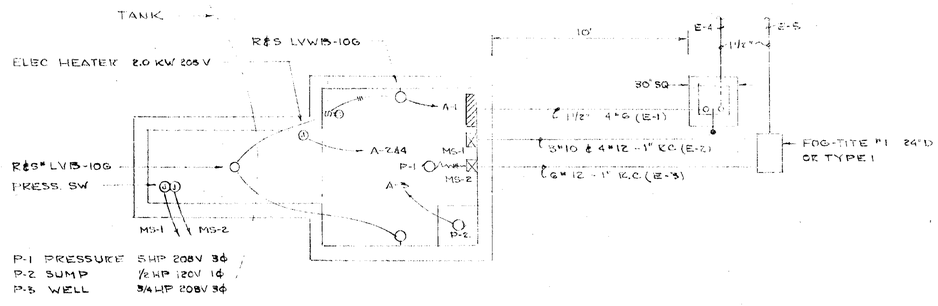

DETAIL PLAN I
1/4" = 1'-0"

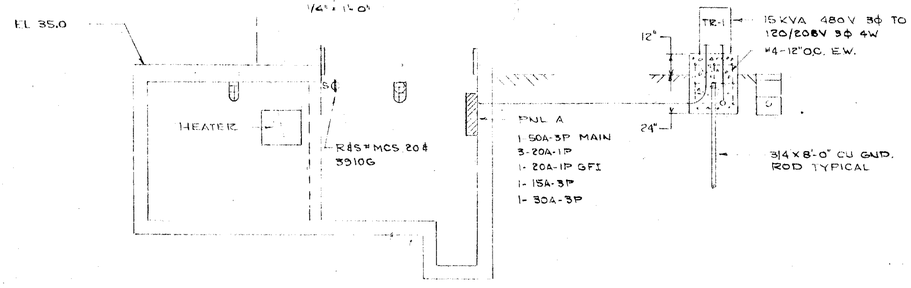

ELEVATION
1/4" = 1'-0"

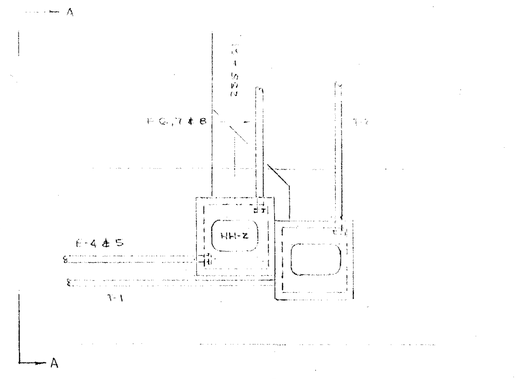

HH-2 PLAN
1/4" = 1'-0"

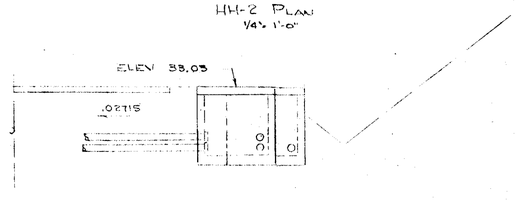

SECTION A-A
1/4" = 1'-0"

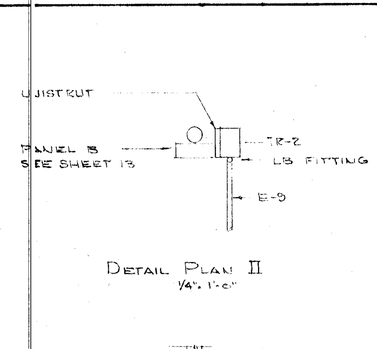

DETAIL PLAN II
1/4" = 1'-0"

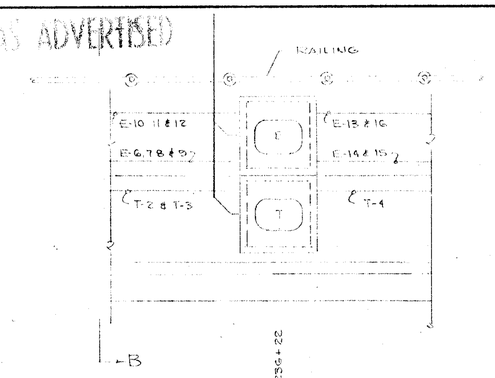

HAND HOLE 3 PLAN
1/4" = 1'-0"

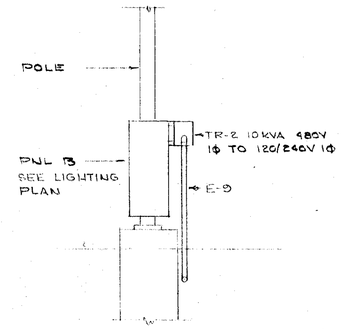

ELEVATION
1/4" = 1'-0"

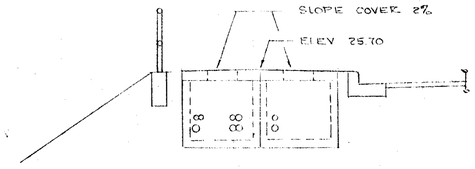

SECTION B-B
1/4" = 1'-0"

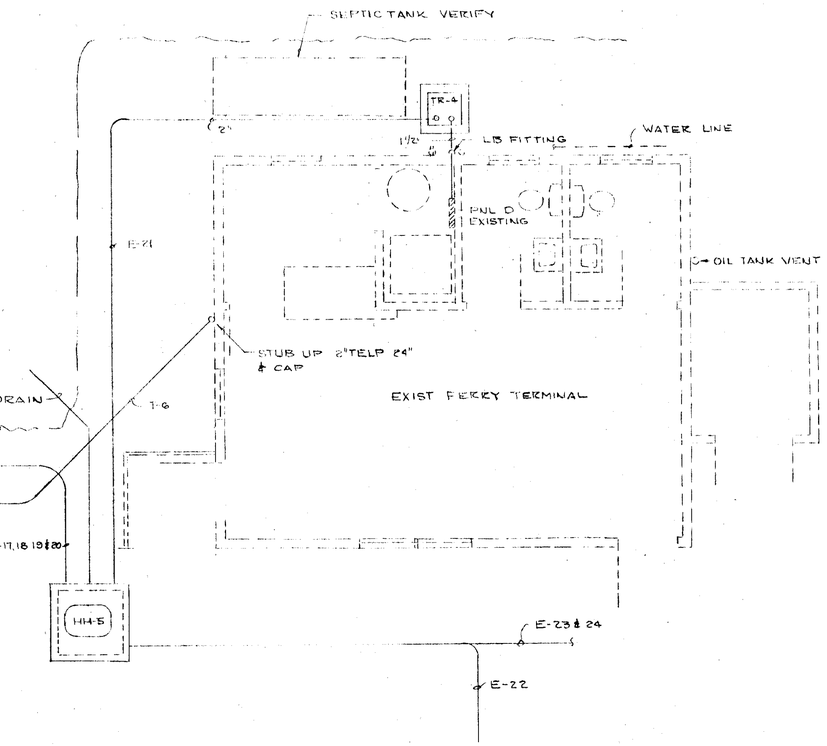

DETAIL PLAN III
1/4" = 1'-0"

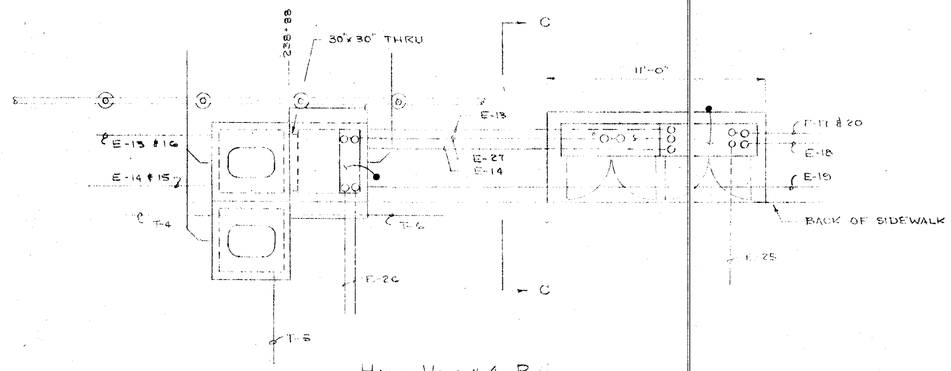

HAND HOLE # 4 PLAN
1/4" = 1'-0"

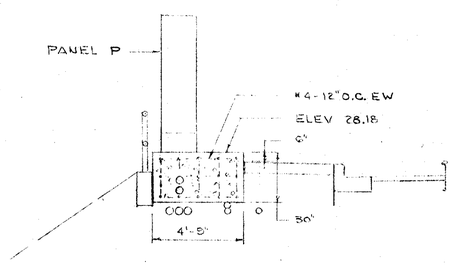

SECTION C-C
1/4" = 1'-0"

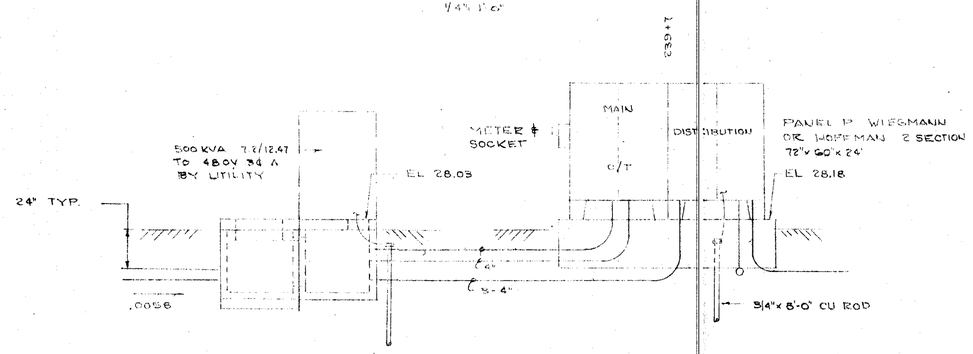

ELEVATION
1/4" = 1'-0"

AS ADVERTISED

ALASKA | F-093-2(2) | 1980 | 46 | 48

AS ADVERTISED

E-2

STAMP	DO NOT SCALE THIS DRAWING – USE DIMENSIONS
STATE OF ALASKA 49TH REGISTERED PROFESSIONAL ENGINEER Leonard P. Lowell No. 553-E	STATE OF ALASKA DEPARTMENT OF TRANSPORTATION AND PUBLIC FACILITIES DIVISION OF HARBOR DESIGN AND CONSTRUCTION
	ELECTRICAL DETAIL
SCALE NOTED DESIGNED LPL CHECKED	SURVEYED DRAWN DATE
	APPROVED DIRECTOR
PROJECT NUMBER F-093-2(2)	SHEET OF

AS ADVERTISED

STATE	PROJECT DESIGNATION	YEAR	SHEET NO	TOT SHEE
ALASKA	F-093-2(2)	1980	47	48

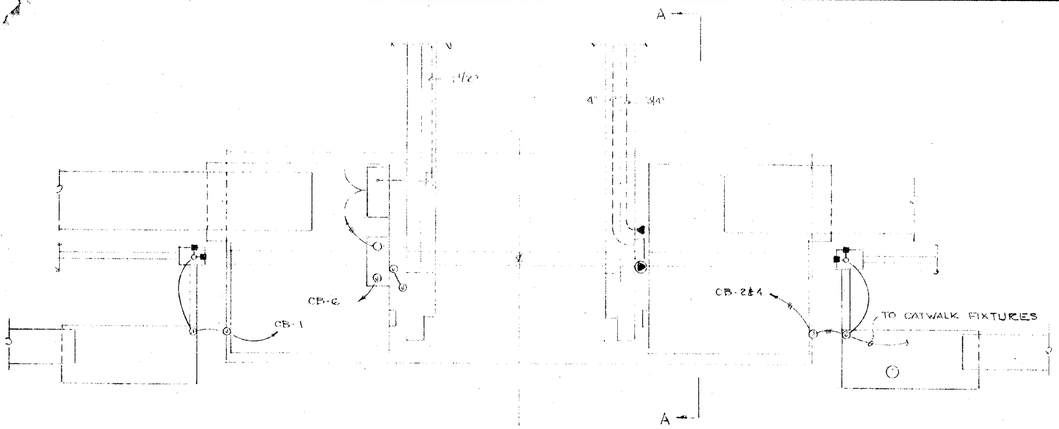

DETAIL PLAN
1/8" = 1'-0"

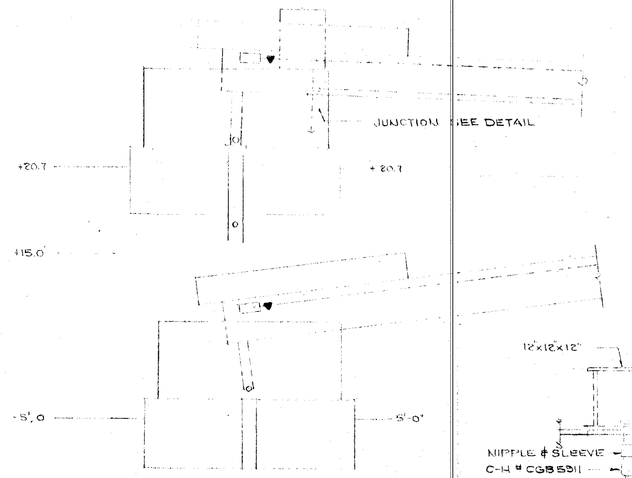

SECTION A-A
1/8" = 1'-0"

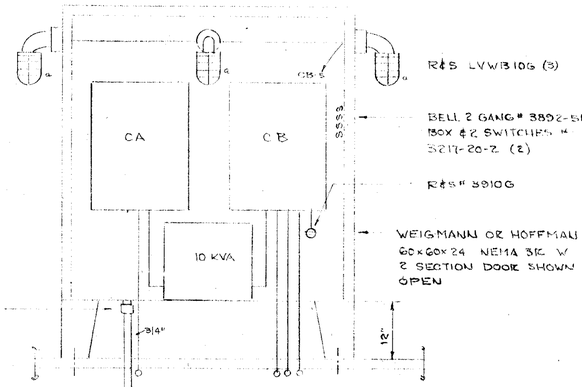

PANEL DETAIL
3/4" = 1'-0"

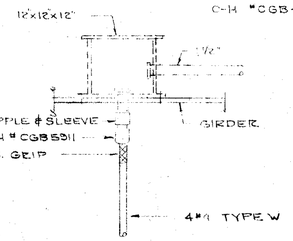

JUNCTION DETAIL
3/4" = 1'-0"

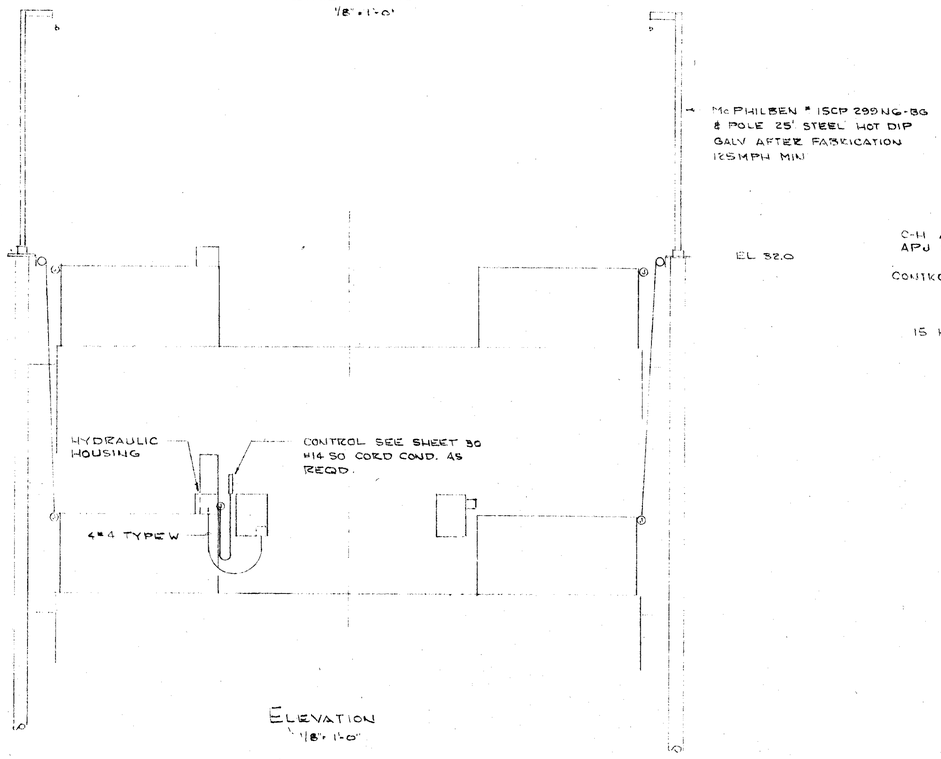

ELEVATION
1/8" = 1'-0"

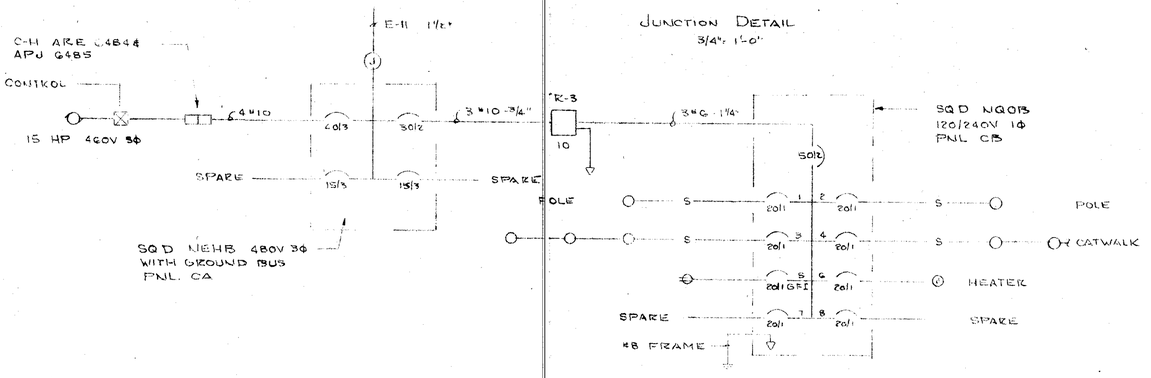

ONE LINE DIAGRAMS
NO SCALE

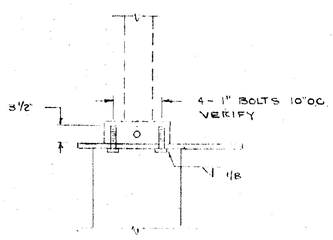

FIXTURE DETAIL
3/4" = 1'-0"

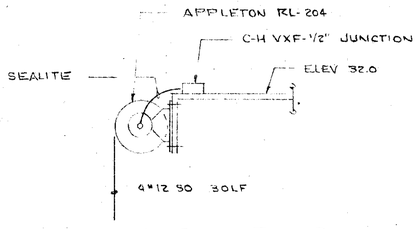

CABLE REEL DETAIL
3/4" = 1'-0"

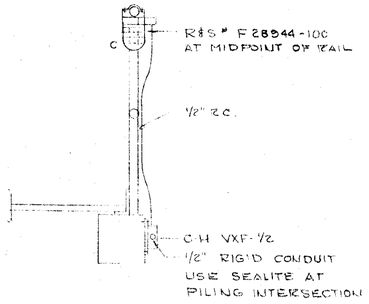

CATWALK FIXTURE
3/4" = 1'-0"

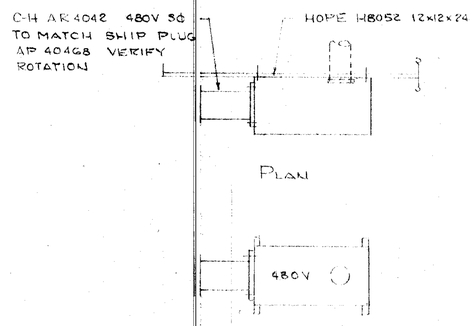

PLAN

ELEVATION

400A OUTLET
3/4" = 1'-0"

E-3

STAMP

STATE OF ALASKA 49TH
Leonard P. Lowell
No. 553-E
REGISTERED PROFESSIONAL ENGINEER

DO NOT SCALE THIS DRAWING — USE DIMENSIONS

STATE OF ALASKA
DEPARTMENT OF TRANSPORTATION AND PUBLIC FACILITIES
DIVISION OF HARBOR DESIGN AND CONSTRUCTION

ELECTRICAL DETAIL

SCALE NONE	SURVEYED	APPROVED
DESIGNED	DRAWN	
CHECKED	DATE	DIRECTOR
PROJECT NUMBER F-093-2(2)	SHEET	OF

AS ADVERTISED

STATE	PROJECT DESIGNATION	YEAR	SHEET NO	TOTAL SHEETS
ALASKA	F-093-2(2)	1980	48	48

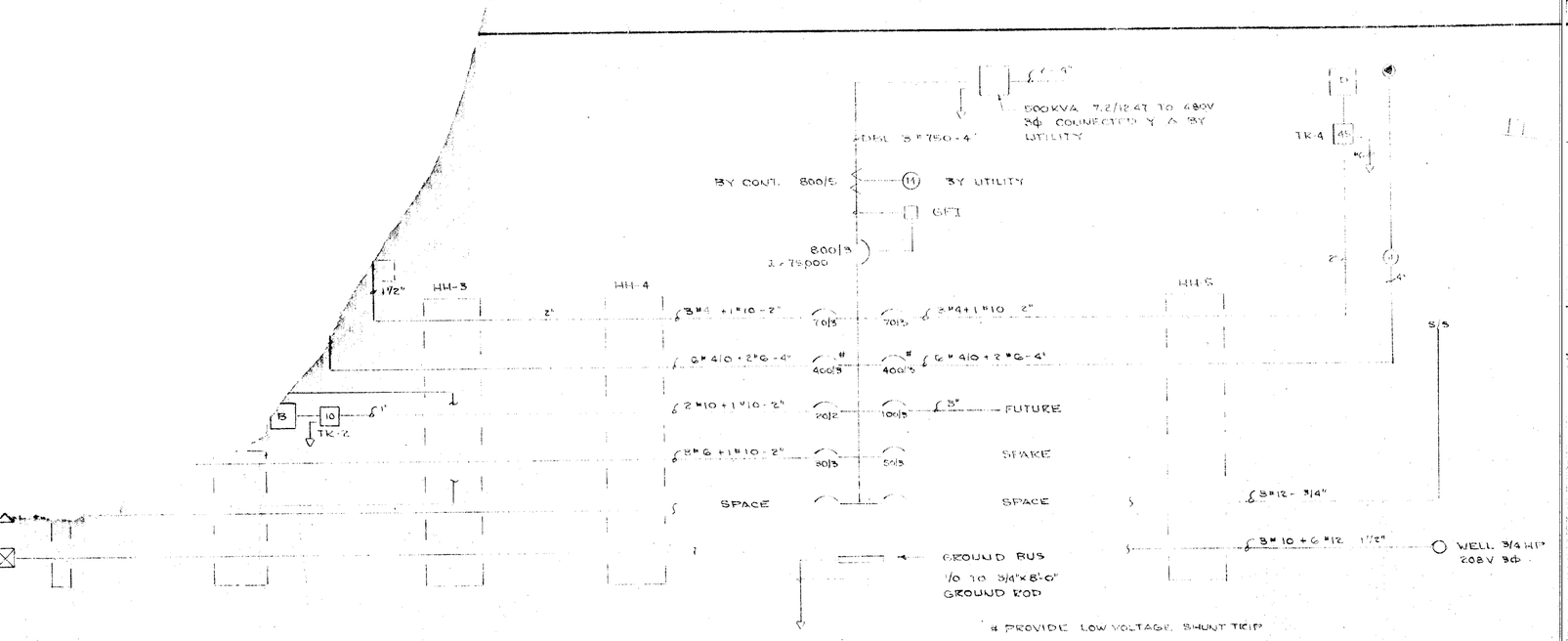

ONE LINE DIAGRAM
NO SCALE

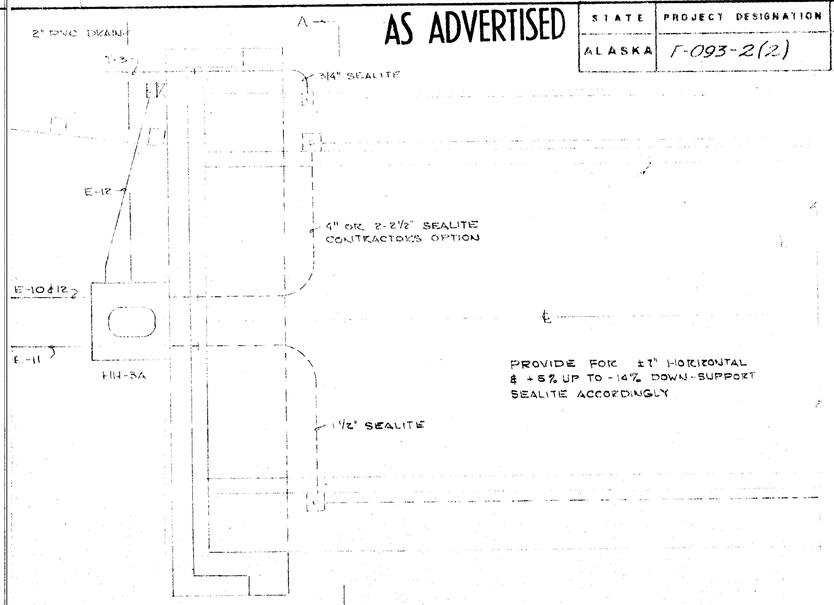

TRANSFER BRIDGE Nº 2 PLAN
1/4"= 1'-0"

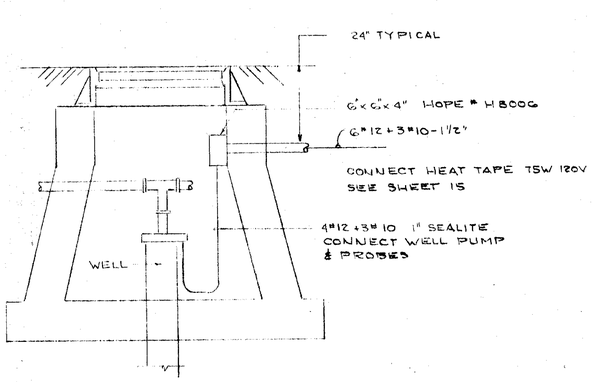

WELL DETAIL
3/4"= 1'-0"

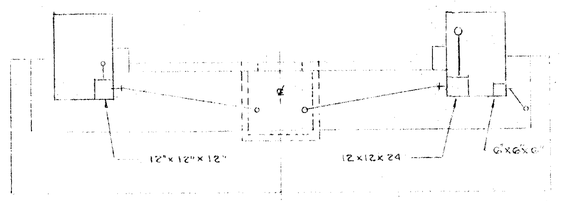

SECTION A-A
1/4"= 1'-0"

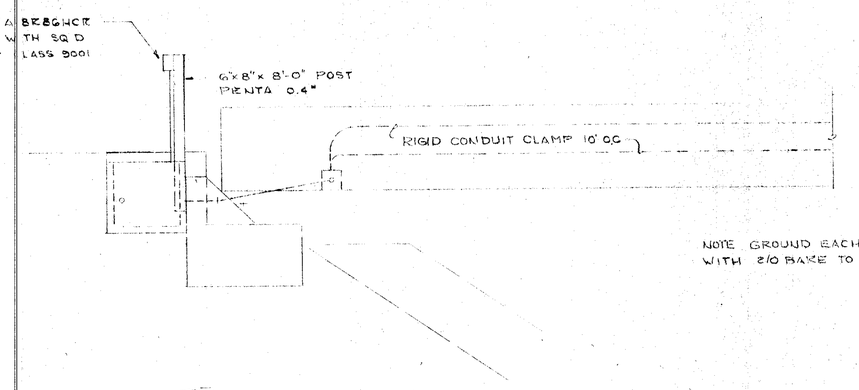

ELEVATION
1/4"= 1'-0"

TRANSFORMER SCHEDULE

Nº	KVA	Φ	V	V	REMARKS
TR-1	15.	3	480	120/208	SEE DETAIL E-2
TR-2	10	1	480	120/240	" " E-2
TR-3	10	1	480	120/240	" " E-3
TR-4	45	3	480	120/208	" E-2

ALL TRANSFORMERS TIERNEY OR EQUAL WITH TAPS - CLASS H EPOXY COATED FOR OUTDOOR SALT AIR ATMOSPHERE

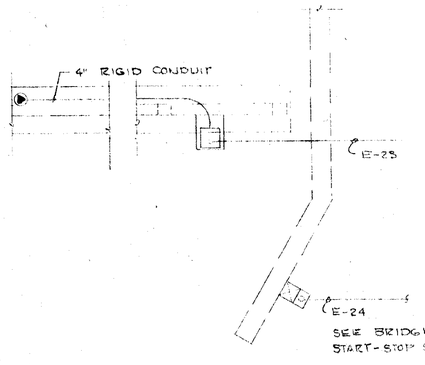

PLAN BRIDGE Nº 1
1/4"= 1'-0"

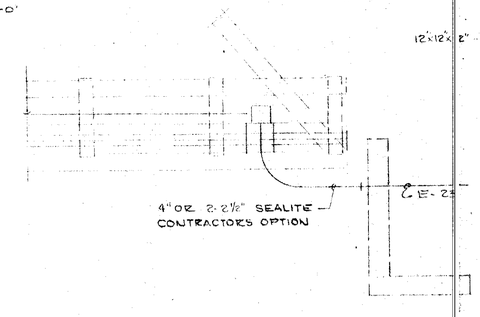

ELEVATION
1/4"= 1'-0"

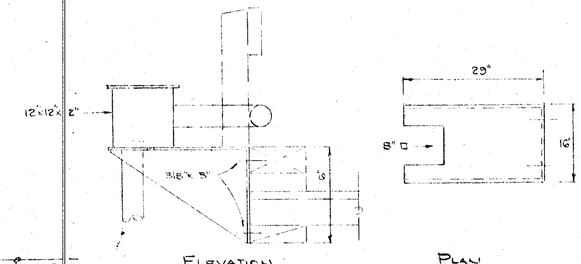

ELEVATION PLAN

SUPPORT BRACKET
3/4"= 1'-0"

E-4

STAMP

STATE OF ALASKA 49TH
Leonard F. Lowell No. 553-E
REGISTERED PROFESSIONAL ENGINEER

DO NOT SCALE THIS DRAWING - USE DIMENSIONS

STATE OF ALASKA
DEPARTMENT OF TRANSPORTATION AND PUBLIC FACILITIES
DIVISION OF HARBOR DESIGN AND CONSTRUCTION

ELECTRICAL DETAIL

SCALE NOTED	SURVEYED	APPROVED
DESIGNED LPL	DRAWN	DIRECTOR
CHECKED	DATE	
PROJECT NUMBER F-093-2(2)	SHEET OF	