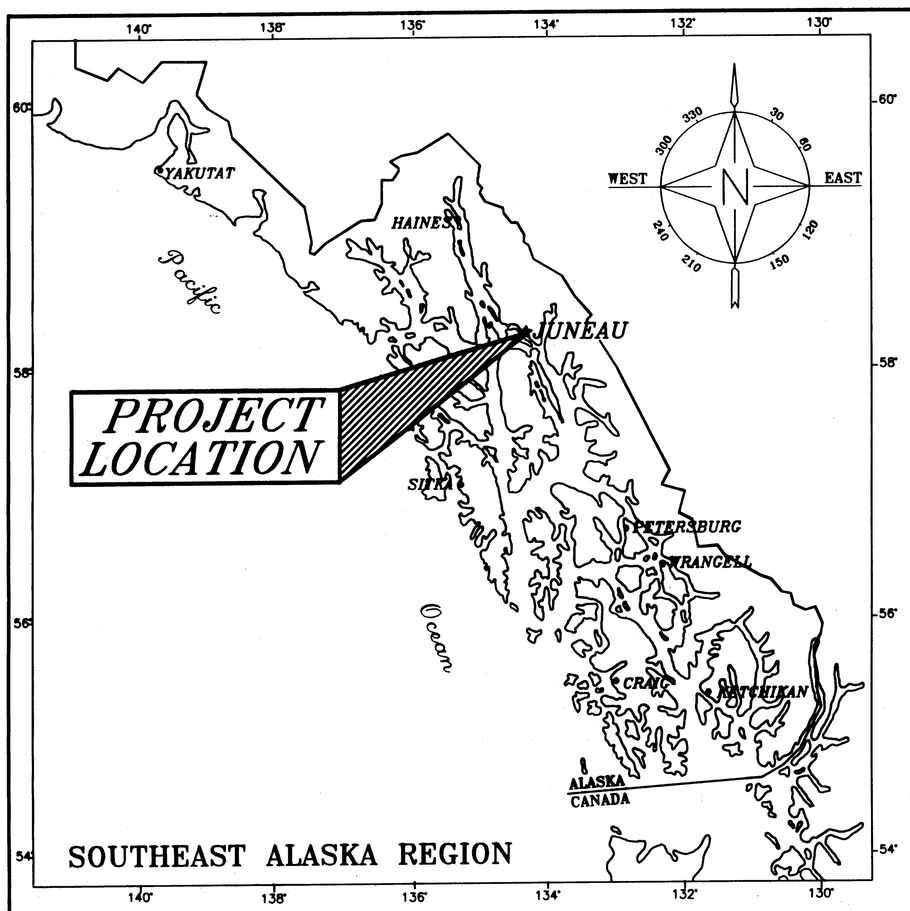

STATE OF ALASKA
DEPARTMENT OF TRANSPORTATION AND PUBLIC FACILITIES

STATEWIDE DESIGN AND ENGINEERING SERVICES DIVISION

JUNEAU, ALASKA

MENDENHALL RIVER PEDESTRIAN CROSSING

GRADING, DRAINAGE, PAVING & BRIDGE STRUCTURE

PROJECT NO. TEA-0967(6)/72120

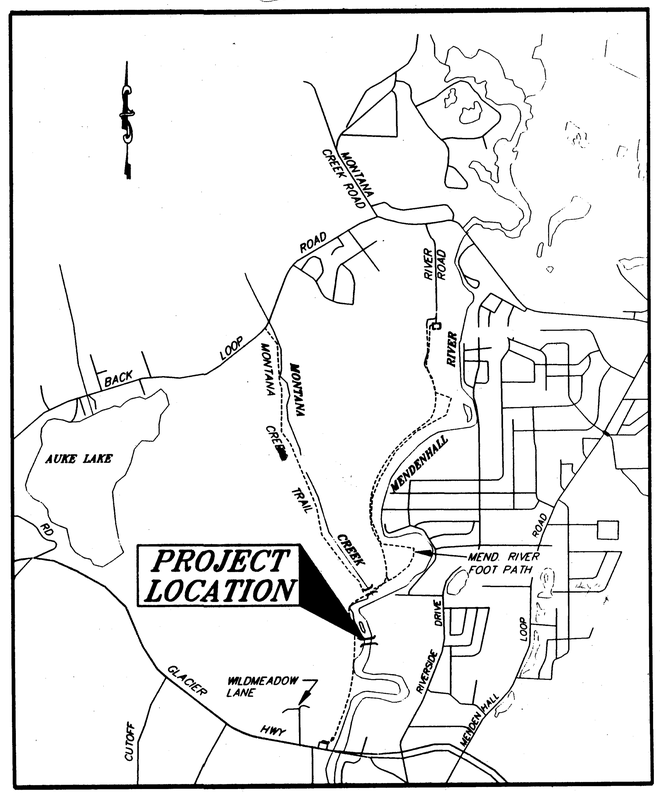

VICINITY MAP

NO SCALE

INDEX OF SHEETS

SHEET NO.	DESCRIPTION
1	TITLE SHEET
2	ESTIMATE OF QUANTITIES AND TYPICAL SECTIONS
3	PLAN AND PROFILE
4–15	BRIDGE PLANS
16	PARKING LOT DETAILS
17	SIGNING AND MISCELLANEOUS DETAILS
18	EROSION AND SEDIMENT CONTROL

The following Standard Drawings apply to this project :

A-1, C-01.03, D-01.02, D-04.10, D-05.10, E-13.00, S-00.00, S-05.00, S-20.00, S-30.01

As - Built Plans

CONTRACTOR : SWALLING CONSTRUCTION COMPANY INCORPORATED
PROJECT ENGINEER : MIKE LAVERING
BEGIN DATE : APRIL 21, 2000
END DATE : JANUARY 29, 2001
TOTAL CONTRACT AMT : $1,683,340.22

STATE OF ALASKA
DEPARTMENT OF TRANSPORTATION AND PUBLIC FACILITIES
STATEWIDE DESIGN AND ENGINEERING SERVICES DIVISION

APPROVED _____ Date 11/5/99
Regional Preconstruction Engineer

APPROVED _____ Date 5/11/99
Director, S.E. Region

PROJECT NUMBER: 72120

DATE: NOV. 4, 1999

SHEET 1 OF 18

ENGINEER'S SEAL

STATE OF ALASKA 11/5/99 49th DUANE F. DOERFLINGER CE-7567 PROFESSIONAL ENGINEER

Q:\JNU\72120\DR\-TSHT 1=1

ESTIMATE OF QUANTITIES

ITEM NO.	PAY ITEM	UNIT	QUANTITY
120(1)	DBE ADJUSTMENT	CONTINGENT SUM	ALL REQUIRED
201(4B)	HAND CLEARING	LUMP SUM	ALL REQUIRED
203(6)	BORROW, TYPE "D"	TON	~~6,600~~ 5,534.90
203(11)	BORROW, TYPE "E"	SQUARE YARD	~~1,500~~ 1,901.60
205(1)	EXCAVATION FOR STRUCTURES	CUBIC YARD	~~953~~ 1,011.00
301(1)	CRUSHED AGGREGATE BASE COURSE	TON	~~325~~ 555.86
401(1)	ASPHALT CONCRETE PAVEMENT, TYPE II, CLASS B	TON	80.41
401(2)	PG 58-28 ASPHALT CEMENT	TON	~~4.8~~ 4.74
501(1)	CLASS A CONCRETE	LUMP SUM	ALL REQUIRED
501(2)	CLASS A-A CONCRETE	LUMP SUM	ALL REQUIRED
503(1)	REINFORCING STEEL	LUMP SUM	ALL REQUIRED
503(2)	EPOXY COATED REINFORCING STEEL	LUMP SUM	ALL REQUIRED
504(2)	STRUCTURAL STEEL FURNISHED, FABRICATED AND ERECTED	POUND	~~183,082~~ 181,827.10
505(5a)	STRUCTURAL STEEL PILES, FURNISHED (12" DIA. PIPE PILES)	LINEAR FOOT	~~249~~ 260.40
505(5b)	STRUCTURAL STEEL PILES, FURNISHED (30" DIA. PIPE PILES)	LINEAR FOOT	~~393~~ 399.26
505(5c)	STRUCTURAL STEEL PILES, FURNISHED (48" DIA. PIPE PILES)	LINEAR FOOT	~~254~~ 269.29
505(6a)	STRUCTURAL STEEL PILES, DRIVEN (12" DIA. PIPE PILES)	EACH	4
505(6b)	STRUCTURAL STEEL PILES, DRIVEN (30" DIA. PIPE PILES)	EACH	4
505(6c)	STRUCTURAL STEEL PILES, DRIVEN (48" DIA. PIPE PILES)	EACH	2
506(5)	TIMBER BOLLARD	EACH	2
506(6)	PARK BENCH	EACH	1
507(2)	PEDESTRIAN RAILING	LINEAR FOOT	950
603(17-48)	48 INCH PIPE	LINEAR FOOT	~~60~~ 40
611(1)	RIPRAP, CLASS II	CUBIC YARD	~~853~~ 891.66
614(1)	SURVEY MONUMENTS	EACH	6
614(2)	MONUMENT CASES	EACH	6
615(1)	STANDARD SIGNS	SQUARE FOOT	~~47.17~~ 46.67
618(1)	SEEDING	ACRE	~~0.4~~ 0.393
619(2)	MATTING	SQUARE YARD	~~1,500~~ 1,479
631(2)	GEOTEXTILE, EROSION CONTROL, CLASS A	SQUARE YARD	~~811~~ 769
640(1)	MOBILIZATION AND DEMOBILIZATION	LUMP SUM	ALL REQUIRED
641(1)	EROSION AND POLLUTION CONTROL ADMINISTRATION	LUMP SUM	ALL REQUIRED
641(2)	EROSION AND POLLUTION CONTROL	CONTINGENT SUM	~~ALL REQUIRED~~ 0
641(3)	SILT FENCE	LINEAR FOOT	~~800~~ 881
642(1)	CONSTRUCTION SURVEYING	LUMP SUM	ALL REQUIRED
642(2)	THREE PERSON SURVEY PARTY	HOUR	~~10~~ 0
643(2)	TRAFFIC MAINTENANCE	LUMP SUM	ALL REQUIRED
643(4)	CONSTRUCTION SIGN	EACH PER DAY	~~60~~ 90
643(6)	TYPE III BARRICADE	EACH PER DAY	~~190~~ 0
643(15)	FLAGGING	MAN HOUR	~~100~~ 0
670(1)	PAINTED TRAFFIC MARKINGS	LUMP SUM	ALL REQUIRED
109(1)	Delay & Impact Compensation CO 2	LUMP SUM	ALL REQUIRED
690(1)	Access Road SA 1	LUMP SUM	ALL REQUIRED

BASIS OF ESTIMATE

ITEM NO.	ESTIMATING FACTOR
203(6)	1.80 TON/CUBIC YARD
301(1)	1.96 TON/CUBIC YARD
401(1)	115 LBS/SQ. YD/INCH DEPTH
401(2)	6% OF ITEM 401(1) TYPE II, CLASS "B"

GENERAL NOTES:

1. GRADES AND ALIGNMENT SHOWN ON THESE PLANS ARE SUBJECT TO REVISIONS.
2. CULVERT LENGTHS AND LOCATIONS ARE APPROXIMATE AND ARE SUBJECT TO FIELD REVISIONS.
3. CLEARING WORK SHALL CONSIST OF REMOVING VEGETATION AND DEBRIS ABOVE THE ORIGINAL GROUND SURFACE.
4. ALL TREE STUMPS SHALL BE CUT LEVEL TO THE ORIGINAL GROUND SURFACE.
5. DISPOSAL OF TREES SELECTED FOR REMOVAL SHALL BE THE RESPONSIBILITY OF THE CONTRACTOR.
6. ALL UNCLASSIFIED EXCAVATION SHALL BE CONSIDERED WASTE AND HAULED TO AN APPROVED WASTE SITE.
7. ALL CURVES SHALL BE SUPERELEVATED AT 2% TO THE INSIDE OF THE CURVE. SUPERELEVATION TRANSITIONS SHALL START 50' BEFORE THE P.C., BE AT FULL SUPERELEVATION FROM P.C. TO P.T. AND TRANSITION FROM FULL SUPER AT THE P.T. TO NORMAL CROSS SLOPE AT 50' PAST THE P.T..

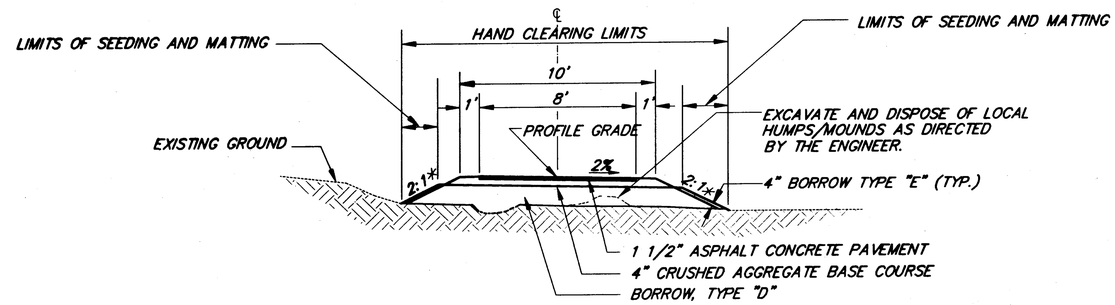

TYPICAL SECTION

*SIDE SLOPE NOTE:

WHEN EMBANKMENT DEPTH EXCEEDS 12", THE SIDE SLOPE SHALL BE 1.5:1 (50' TRANSITION TYP.)

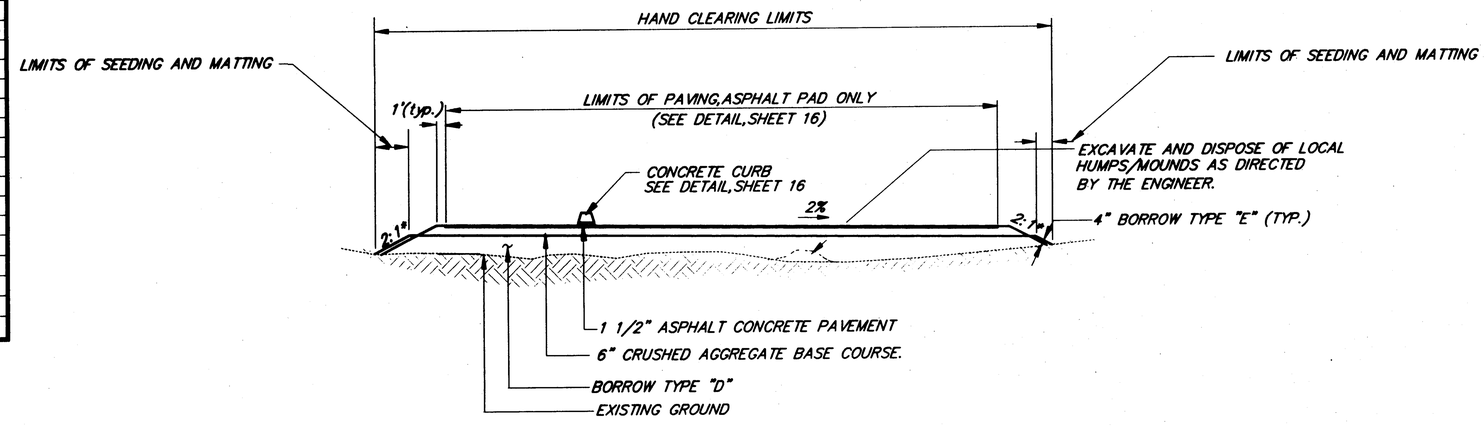

PARKING LOT TYPICAL SECTION

NOTE: DO NOT SCALE FROM THESE PLANS-USE DIMENSIONS

PATH: P:\JNU\72120\DR\-EST 1=4
P:\LIB\PLOT\PLOTF.PCP(4) OR PLOTH.PCP(8)

BY:	DATE:	DESCRIPTION OF CHANGE:

RECORD OF REVISIONS

STATE OF ALASKA
DEPARTMENT OF TRANSPORTATION AND PUBLIC FACILITIES
SOUTHEAST REGION

JUNEAU — JNU-MENDENHALL RIVER PEDESTRIAN CROSSING — ALASKA
PROJECT NO. TEA-0967 (6) ~ 72120

ESTIMATE OF QUANTITIES

DESIGNED BY: P. JONES	PROJECT NO. 72120
DRAWN BY: K. KLEMMETSON	DATE: NOV. 4, 1999
CHECKED BY: C. MORROW	SHEET 2 OF 18

STATE OF ALASKA 49th DUANE F. DOERFLINGER LICENSED PROFESSIONAL ENGINEER

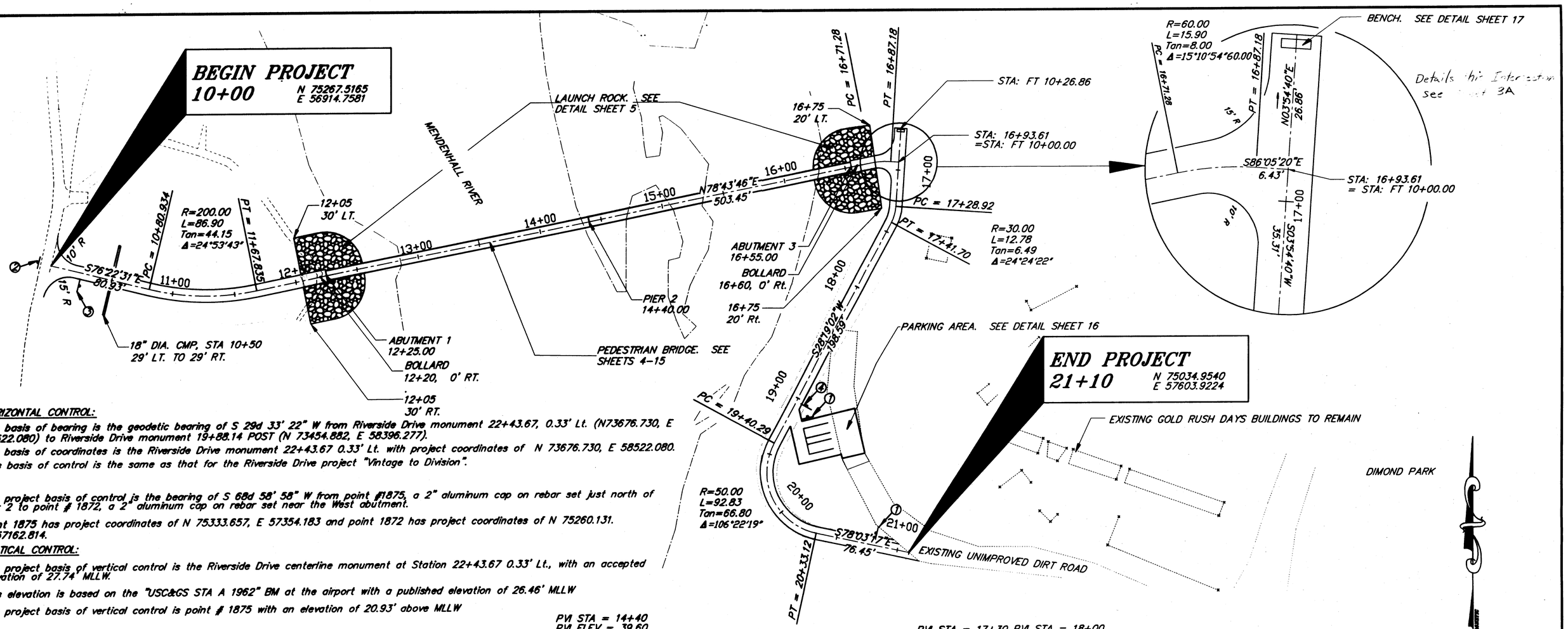

HORIZONTAL CONTROL:

The basis of bearing is the geodetic bearing of S 29d 33' 22" W from Riverside Drive monument 22+43.67, 0.33' Lt. (N73676.730, E 58522.080) to Riverside Drive monument 19+88.14 POST (N 73454.882, E 58396.277).

The basis of coordinates is the Riverside Drive monument 22+43.67 0.33' Lt. with project coordinates of N 73676.730, E 58522.080.

This basis of control is the same as that for the Riverside Drive project "Vintage to Division".

The project basis of control is the bearing of S 68d 58' 58" W from point #1875, a 2" aluminum cap on rebar set just north of pier 2 to point # 1872, a 2" aluminum cap on rebar set near the West abutment.

Point 1875 has project coordinates of N 75333.657, E 57354.183 and point 1872 has project coordinates of N 75260.131, E 57162.814.

VERTICAL CONTROL:

The project basis of vertical control is the Riverside Drive centerline monument at Station 22+43.67 0.33' Lt., with an accepted elevation of 27.74' MLLW.

This elevation is based on the "USC&GS STA A 1962" BM at the airport with a published elevation of 26.46' MLLW

The project basis of vertical control is point # 1875 with an elevation of 20.93' above MLLW

DO NOT SCALE FROM THESE PLANS-USE DIMENSIONS

ENGINEER'S SEAL

STATE OF ALASKA 49th DUANE F. DOERFLINGER 11/5/1999 REGISTERED PROFESSIONAL ENGINEER

PATH: P:\JNU\72120\DR\-pp111499 PLOTF.PCP(40) OR PLOTH.PCP(80)		
BY:	DATE:	DESCRIPTION OF CHANGE:
RECORD OF REVISIONS		

STATE OF ALASKA
DEPARTMENT OF TRANSPORTATION AND PUBLIC FACILITIES
SOUTHEAST REGION

JUNEAU — **JNU-MENDENHALL RIVER PEDESTRIAN CROSSING** — ALASKA
PROJECT NO. TEA-0967 (6) ~ 72120

PLAN & PROFILE

DESIGNED BY: D. DOERFLINGER	PROJECT NO. 72120
DRAWN BY: D. DOERFLINGER	DATE: NOV. 4, 1999
CHECKED BY: C. MORROW	SHEET 3 OF 14

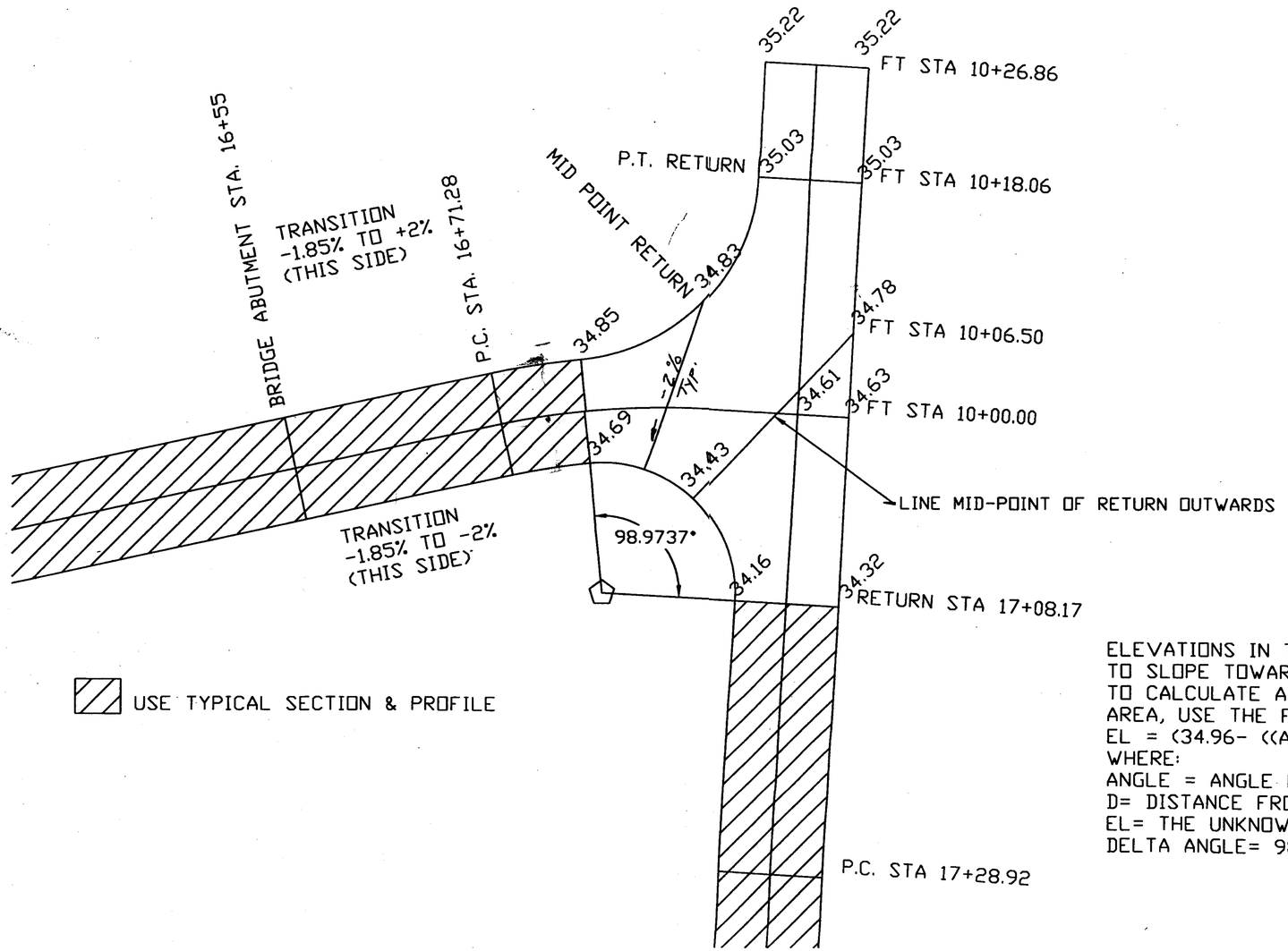

ELEVATIONS IN THE INTERSECTION ARE CALCULATED
TO SLOPE TOWARDS THE RADIUS POINT (✿)
TO CALCULATE ADDITIONAL POINTS IN THE INTERSECTION
AREA, USE THE FOLLOWING FORMULA:
EL = (34.96- ((ANGLE / DELTA ANGLE) * 0.53))+ D*0.02.
WHERE:
ANGLE = ANGLE P.C. OF RETURN TO (EL) POINT.
D= DISTANCE FROM INSIDE EDGE OF RETURN TO (EL) POINT
EL= THE UNKNOWN POINT ELEVATION.
DELTA ANGLE= 98.9737 DECIMAL DEGREES.

C:\WINNT\Profiles\Lavering\Mendenhall Bridge\east abutment.dwg Tue Mar 28 10:51:05 2000 Plot By: MGL

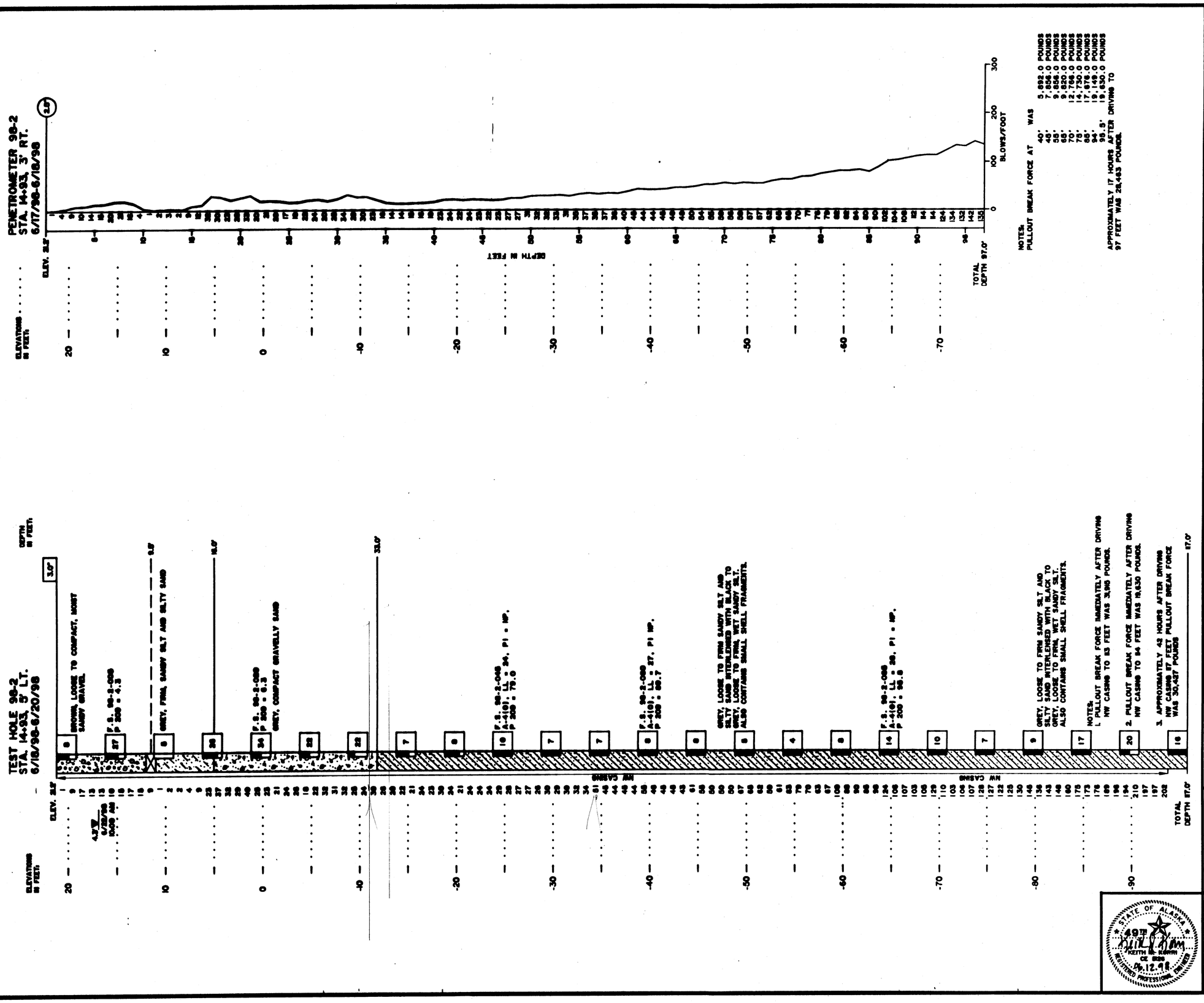

STATE	PROJECT DESIGNATION	YEAR	SHEET NO.	TOTAL SHEETS
ALASKA	TEA-0967(6)	1998		

BASIC MATERIALS SYMBOLS

Organic
Silt
Cobbles/Boulders
Clay
Gravel
Bedrock
Sand
Coal

NOTE: SIGNIFICANT SOIL MIXTURES ARE SHOWN BY COMBINING SOIL SYMBOLS.

TYPICAL TEST HOLE SYMBOLS

Plan View
Textbate/ Penetrometer

Section View
Rotary
Auger
Diamond Core

RELATIVE DENSITY AND CONSISTENCY CLASSIFICATION

Based on Standard Penetration Test

GRANULAR		COHESIVE	
Blows/ft.	Rel. Density	Blows/ft.	Consistency
0-5	Very Loose	2	Very Soft
6-10	Loose	2-4	Soft
11-20	Firm	5-8	Medium
21-35	Compact	9-15	Stiff
36-50	Dense	16-30	Very Stiff
51-70	Very Dense	31-60	Hard
71+	V. Very Dense	61+	Very Hard

TYPICAL TEST HOLE LOG

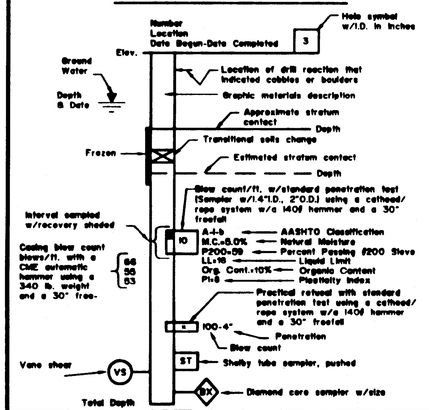

TYPICAL PENETROMETER TEST LOG

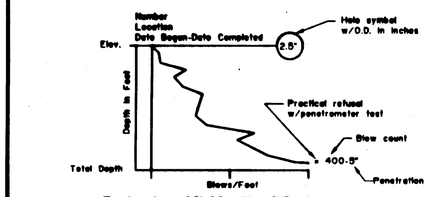

TEST HOLE LOGS & LOCATIONS

MENDENHALL RIVER PEDESTRIAN CROSSING

STATE OF ALASKA
49TH
KEITH M. KOHN
CE 8529
9.12.98
REGISTERED PROFESSIONAL ENGINEER

State of Alaska
DEPARTMENT of TRANSPORTATION
and
PUBLIC FACILITIES

Bridge No: 1904
Drawing No: 13 OF 18

STATE	PROJECT DESIGNATION	YEAR	SHEET NO.	TOTAL SHEETS
ALASKA	TEA-0967(6)	1998		

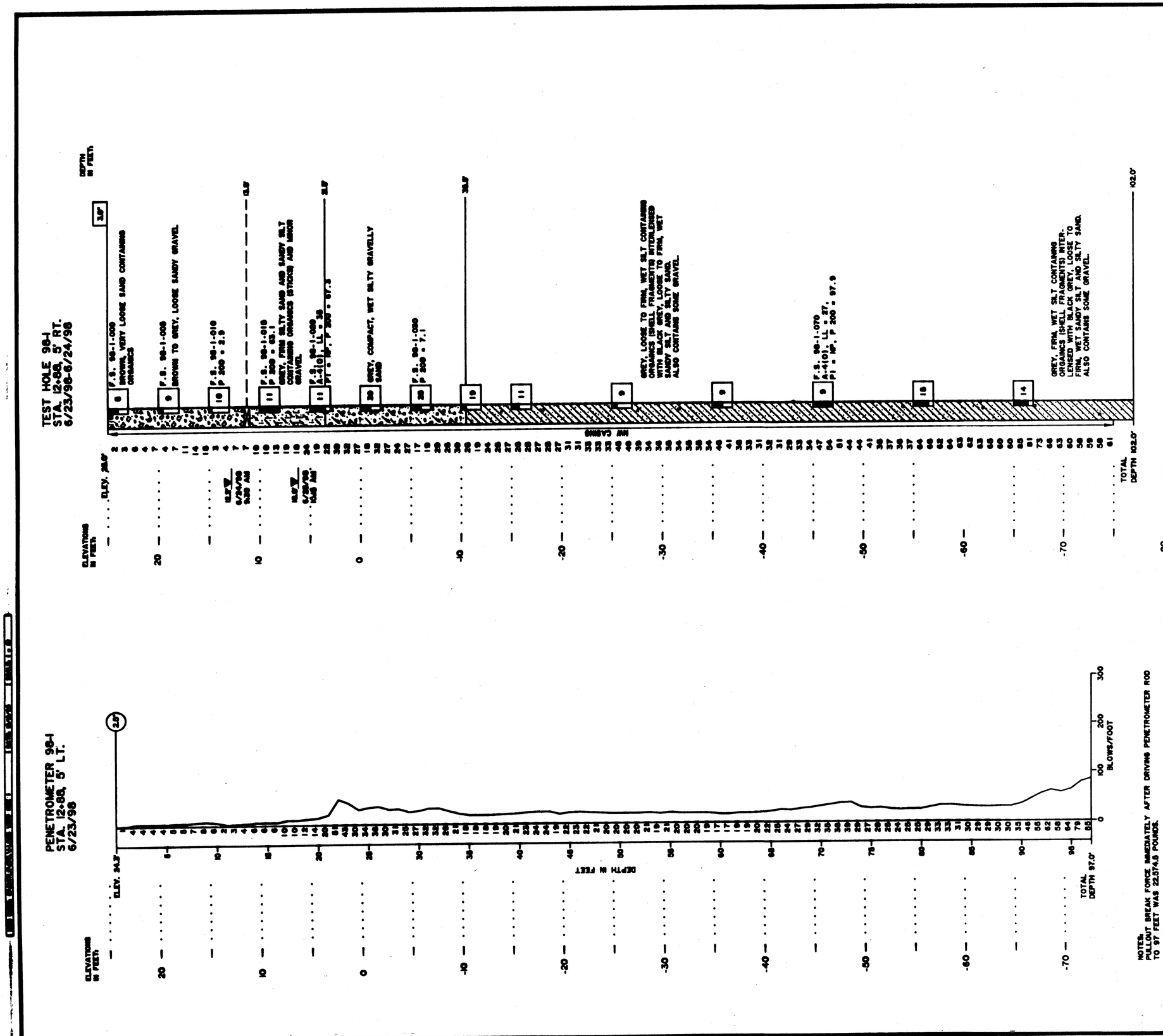

NOTE:
PULLOUT BREAK FORCE APPROXIMATELY 18 HOURS AFTER DRIVING NW CASING WAS 18,449 POUNDS.

NOTE:
PULLOUT BREAK FORCE IMMEDIATELY AFTER DRIVING PENETROMETER ROD TO 97 FEET WAS 22,574.8 POUNDS.

BASIC MATERIALS SYMBOLS

Organic
Cobbles/Boulders
Gravel
Sand
Silt
Clay
Bedrock
Coal

NOTE: SIGNIFICANT SOIL MIXTURES ARE SHOWN BY COMBINING SOIL SYMBOLS.

TYPICAL TEST HOLE SYMBOLS

Plan View
Testhole/Penetrometer

Section View
Rotary
Auger
Diamond Core

RELATIVE DENSITY AND CONSISTENCY CLASSIFICATION

Based on Standard Penetration Test

GRANULAR		COHESIVE	
Blows/ft.	Rel. Density	Blows/ft.	Consistency
0-5	Very Loose	2	Very Soft
6-10	Loose	2-4	Soft
11-20	Firm	5-8	Medium
21-35	Compact	9-15	Stiff
36-50	Dense	16-30	Very Stiff
51-70	Very Dense	31-60	Hard
71+	V. Very Dense	61+	Very Hard

TYPICAL TEST HOLE LOG

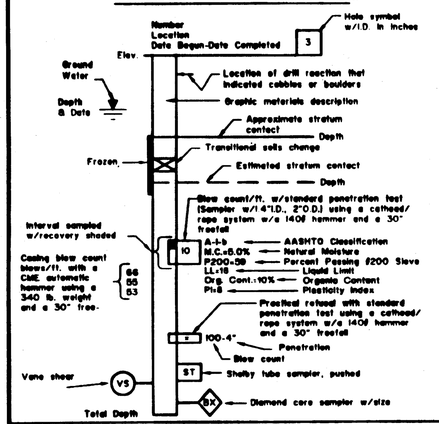

TYPICAL PENETROMETER TEST LOG

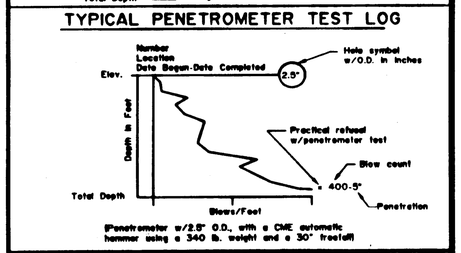

TEST HOLE LOGS & LOCATIONS

MENDENHALL RIVER PEDESTRIAN CROSSING

STATE OF ALASKA
49TH
KEITH A. KOMPI
CE 8266
REGISTERED PROFESSIONAL ENGINEER
06.12.98

State of Alaska
DEPARTMENT of TRANSPORTATION and PUBLIC FACILITIES

Bridge No: 1904
Drawing No: 14 OF 18

STATE	PROJECT DESIGNATION	YEAR	SHEET NO.	TOTAL SHEETS
ALASKA	TEA-0967(6)	1998		

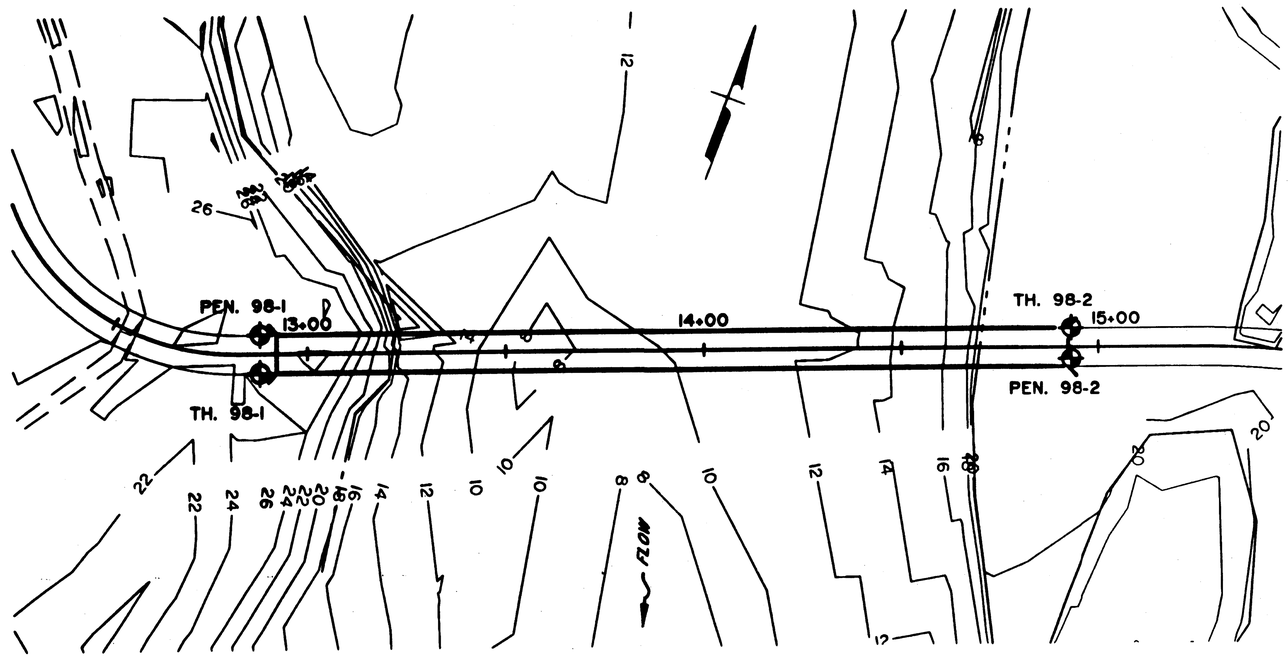

PLAN VIEW

0 25 50 75 100
FEET

TEST HOLE LOGS AND LOCATIONS

MENDENHALL RIVER PEDESTRIAN CROSSING GENERAL LAYOUT

GENERAL NOTES:

1. HORIZONTAL AND VERTICAL GEOMETRY WITH TOPOGRAPHIC DATA FURNISHED BY THE SOUTHEAST REGION HIGHWAY DESIGN SECTION ON JUNE 1996.
2. THE TEST HOLE(S) DEPICTED ARE A COMBINATION OF THE ORIGINAL FIELD LOG(S), AND AN OFFICE EXAMINATION OF THE FIELD LOG(S), SOIL SAMPLE(S) AND/OR ROCK CORE(S).
3. THE STRATIFICATION LINES REPRESENT THE APPROXIMATE BOUNDARY BETWEEN SOIL TYPES OR RELATIVE DENSITIES. THE TRANSITION MAY BE GRADUAL.
4. WHERE CASING OR HOLLOW STEM IS INDICATED, THE NEED WAS PREDICATED BY THE POSITION OF THE GROUNDWATER TABLE OR BY CAVING GROUND CONDITIONS. THE CASING OR HOLLOW STEM WAS USED TO PROVIDE TEMPORARY SOIL SUPPORT AND/OR PROVIDE FOR DRILL FLUID CIRCULATION.
5. FIELD MOISTURE DESCRIPTIONS (DRY, MOIST, AND WET) ARE BASED ON THE FOLLOWING FIELD OBSERVATIONS:
   - A. DRY-A SOIL WITH NO VISIBLE MOISTURE, FEELS DRY WHEN HELD IN THE HAND. WILL NOT FORM A CAST.
   - B. MOIST-A SOIL WITH VISIBLE MOISTURE, FEELS MOIST IN THE HAND, WILL FORM A CAST.
   - C. WET-A SOIL WITH VISIBLE WATER, WETS THE HAND WHEN HELD, HAS FREE WATER WHEN SHAKEN.
   - D. A COMBINATION OF THESE TERMS MAY BE USED TO DESCRIBE THE SOIL MOISTURE CONDITION.

SOIL GRAIN SIZE DEFINITIONS

BOULDER	>12" DIAMETER
COBBLE	3"-12" DIAMETER
BROKEN ROCK (ANGULAR)	>3" DIAMETER
GRAVEL (ROUNDED); STONE (ANGULAR)	#10 SIEVE-3" DIA.
SAND	#200 SIEVE-#10
SILT/CLAY	<#200 SIEVE

NOTE: SOIL CLASSIFICATIONS ARE VISUAL ONLY UNLESS AASHTO SOIL CLASS IS SHOWN ON THE LOG.

STATE OF ALASKA
49TH
KEITH J. KORRI
CE 525
REGISTERED PROFESSIONAL ENGINEER
04.17.98

State of Alaska
DEPARTMENT of TRANSPORTATION
and
PUBLIC FACILITIES

Bridge No: 1904
Drawing No: 15 OF 18

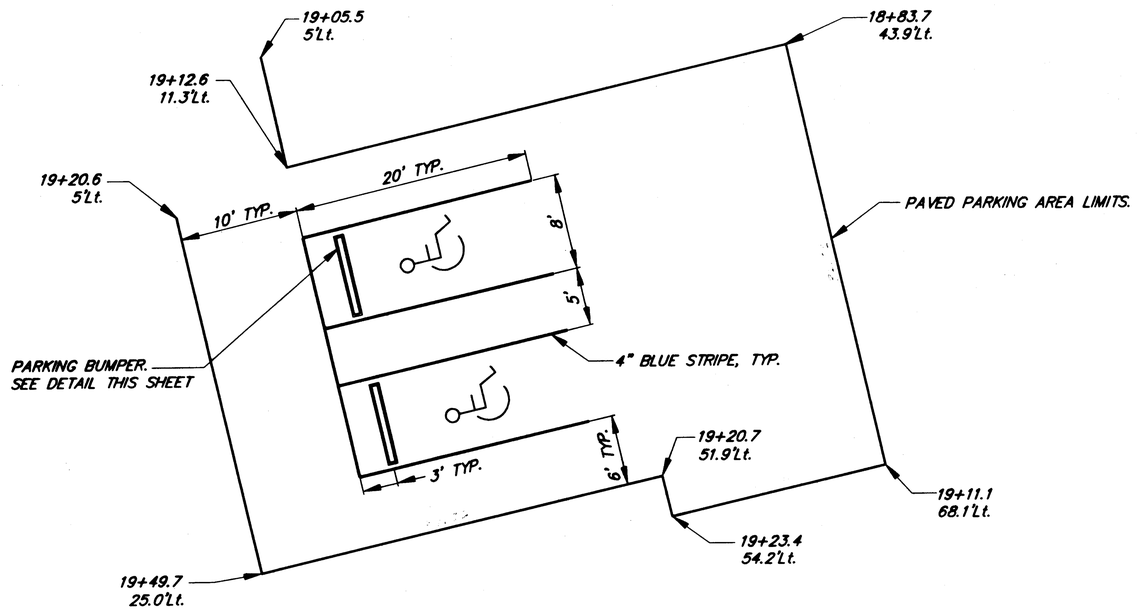

PARKING AREA DETAIL

SEE TYPICAL PARKING LOT SECTION, SHEET 2

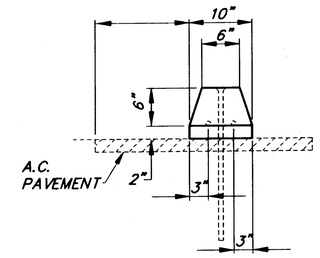

END VIEW

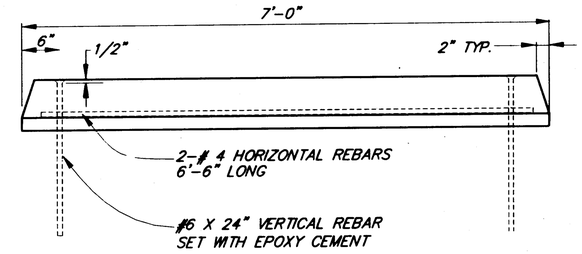

SIDE VIEW

BUMPER CURB DETAIL

BUMPER CURB NOTES:

1. BUMPER CURB SHALL BE PLACED TO PREVENT PARKED VEHICLES FROM EXTENDING INTO THE PEDESTRIAN PATH AS SHOWN ON THE PLANS OR AS DIRECTED BY THE ENGINEER.
2. BUMPER CURBS SHALL BE PRECAST.
3. EPOXY CEMENT SHALL NOT BE SUBSTITUTED FOR #6 VERTICAL REBAR PIN.
4. CENTER CURB SECTIONS LATERALLY IN PARKING SPACES.
5. HOLES FOR REBAR DOWELS SHALL BE 1-INCH DIAMETER. GROUT, CEMENT, OR EPOXY HOLE SHUT AFTER BAR IS IN PLACE.

DO NOT SCALE FROM THESE PLANS-USE DIMENSIONS

ENGINEER'S SEAL

STATE OF ALASKA 49th DUANE T. DOERFLINGER REGISTERED PROFESSIONAL ENGINEER

PATH: O:\JNU\72120\DR\-DET PLOTF.PCP OR PLOTH.PCP		
BY:	DATE:	DESCRIPTION OF CHANGE:

RECORD OF REVISIONS

STATE OF ALASKA
DEPARTMENT OF TRANSPORTATION AND PUBLIC FACILITIES
SOUTHEAST REGION

JUNEAU — JNU-MENDENHALL RIVER PEDESTRIAN CROSSING — ALASKA
PROJECT NO. TEA-0967 (6) ~ 72120

PARKING LOT DETAILS

DESIGNED BY: D. DOERFLINGER	PROJECT NO. 72120
DRAWN BY: D. DOERFLINGER	DATE: NOV. 4, 1999
CHECKED BY: C. MORROW	SHEET 16 OF 18

SIGN SUMMARY

SIGN NO.	STATION	LT.	RT.	NO. POST	LEGEND	CODE	SIGN SIZE	AREA SQ. FT.	REMARKS
1	19+08	13'		1	SEE SPECIAL SIGN DETAIL "C"	SPECIAL	18"X36"	4.50	DETAIL ON THIS SHEET
							4"X18"	0.50	
					NO MOTOR VEHICLES	R5-3	18"X24"	3.00	
	20+78	X		1	SEE SPECIAL SIGN DETAIL "C"	SPECIAL	18"X36"	4.50	
							4"X18"	0.50	
					NO MOTOR VEHICLES	R5-3	18"X24"	3.00	
2	9+89		℄	2	SEE SPECIAL SIGN DETAIL "B"	SPECIAL	28"X42"	8.17	DETAIL ON THIS SHEET
					SEE SPECIAL SIGN DETAIL "C"	SPECIAL	18"X36"	4.50	DETAIL ON THIS SHEET
							4"X18"	0.50	
3	10+25		X	2	SEE SPECIAL SIGN DETAIL "D"	SPECIAL	14"X42"	4.08	
4	19+00	X		2	SEE SPECIAL SIGN DETAIL "A"	SPECIAL	22"X42"	6.42	DETAIL ON THIS SHEET
					SEE SPECIAL SIGN DETAIL "C"	SPECIAL	18"X36"	4.50	SEE SIGNING NOTE 7
5	19+21.4	16.5		1	RESERVED PARKING (HANDICAP)	R7-8	12"X18"	1.50	
6	19+31.1	25.1		1	RESERVED PARKING (HANDICAP)	R7-8	12"X18"	1.50	
							TOTAL = 47.17 SQ. FT.		

SIGNING NOTES:

1. SIGN LOCATIONS ARE APPROXIMATE ONLY AND SUBJECT TO MINOR REVISIONS.
2. SEE STD. DWG. S-30.01 FOR POST SLEEVE TYPE SOIL EMBEDMENT.
3. ALL SIGN POSTS SHALL BE TELESCOPING PERFORATED GALVANIZED SQUARE STEEL POSTS.
4. ALL SIGNS SHALL BE .080" THICK EXCEPT AS NOTED IN THE STANDARD SIGN SCHEDULE.
5. SIGNS SHALL BE INSTALLED SO THAT THE BOTTOM OF THE SIGN PANEL IS 6 FEET ABOVE THE ROADWAY SURFACE AND THE INSIDE EDGE IS 4 FEET FROM EDGE OF PAVEMENT.
6. ALL SPECIAL SIGNS ARE 2" WHITE UPPER CASE ON BROWN BACKGROUND.
7. MOUNT PEDESTRIAN/BICYCLE SIGN BELOW MENDENHALL RIVER TRAIL SIGN. DELETE "TRAIL" SIGN.

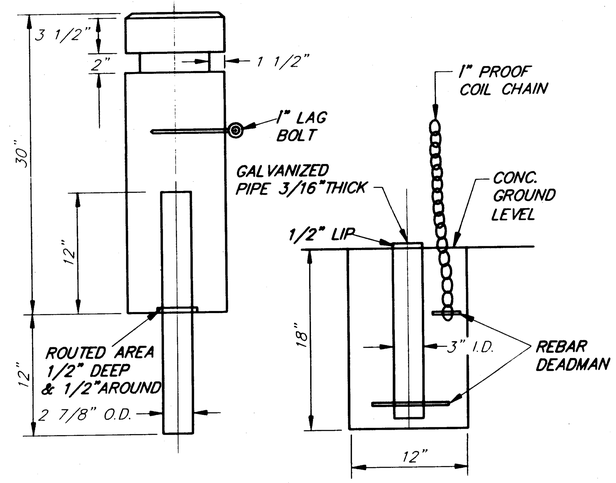

BOLLARD DETAIL

LUMBER-PRESSURE TREATED 8"x8" #2 OR BETTER

BOLLARD PIPE 3/16" THICK-O.D. 2 7/8" SECURED INTO PRE-DRILLED 2 7/8" <12" HOLE WITH POLYURETHANE MARINE ADHESIVE 3M=6501.

BOLLARD SLEEVE PIPE 3/16" THICK I.D. 3"-BOTTOM SHOULD BE SEALED WITH PLASTIC TO PROHIBIT CONC. FROM SEEPING INSIDE.

PROOF COIL CHAIN- SHOULD REACH TO LEVEL OF 1" LAG BOLT SECURED BY LOCK.

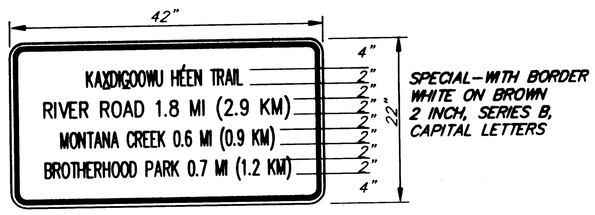

SPECIAL SIGN DETAIL "A"

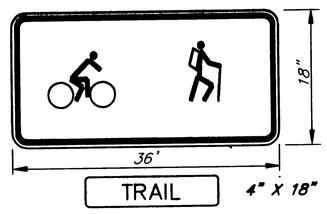

SPECIAL SIGN DETAIL "C"

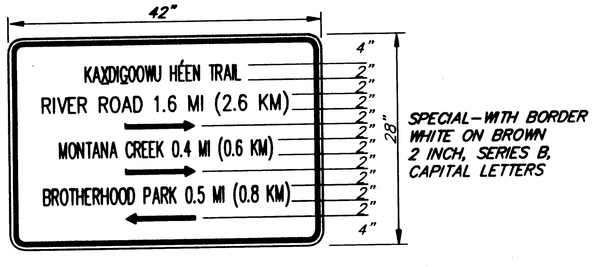

SPECIAL SIGN DETAIL "B"

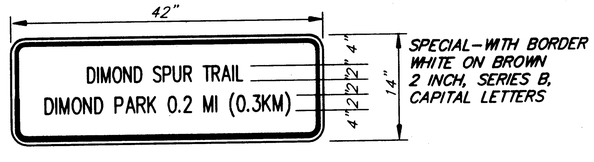

SPECIAL SIGN DETAIL "D"

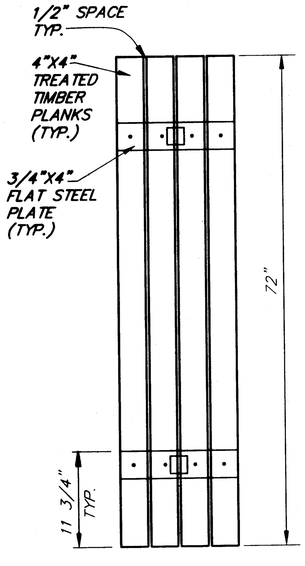

PARK BENCH PLAN VIEW

ALL METAL & HARDWARE SHALL BE GALVANIZED, AFTER FABRICATION.

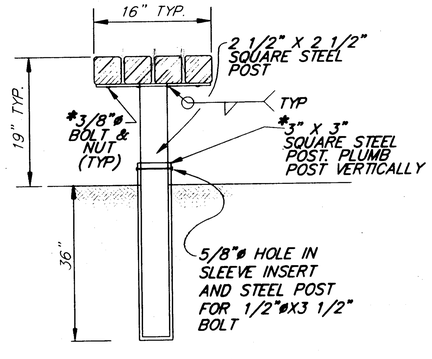

PARK BENCH DETAIL

NOTE: DO NOT SCALE FROM THESE PLANS-USE DIMENSIONS

ENGINEER'S SEAL

STATE OF ALASKA 49th DUANE J. DOERFLINGER 11/5/99 REGISTERED PROFESSIONAL ENGINEER

PATH: P:\JNU\72120\DR\-SIGNS PLOTF.OR PLOTH.		
BY:	DATE:	DESCRIPTION OF CHANGE:
RECORD OF REVISIONS		

STATE OF ALASKA
DEPARTMENT OF TRANSPORTATION AND PUBLIC FACILITIES
SOUTHEAST REGION

JUNEAU — JNU-MENDENHALL RIVER PEDESTRIAN CROSSING — ALASKA
PROJECT NO. TEA-0967(6) ~ 72120

SIGNING & MISCELLANEOUS DETAILS

DESIGNED BY: D. DOERFLINGER	PROJECT NO. 72120
DRAWN BY: D. DOERFLINGER	DATE: NOV. 4, 1999
CHECKED BY: C. MORROW	SHEET 17 OF 18

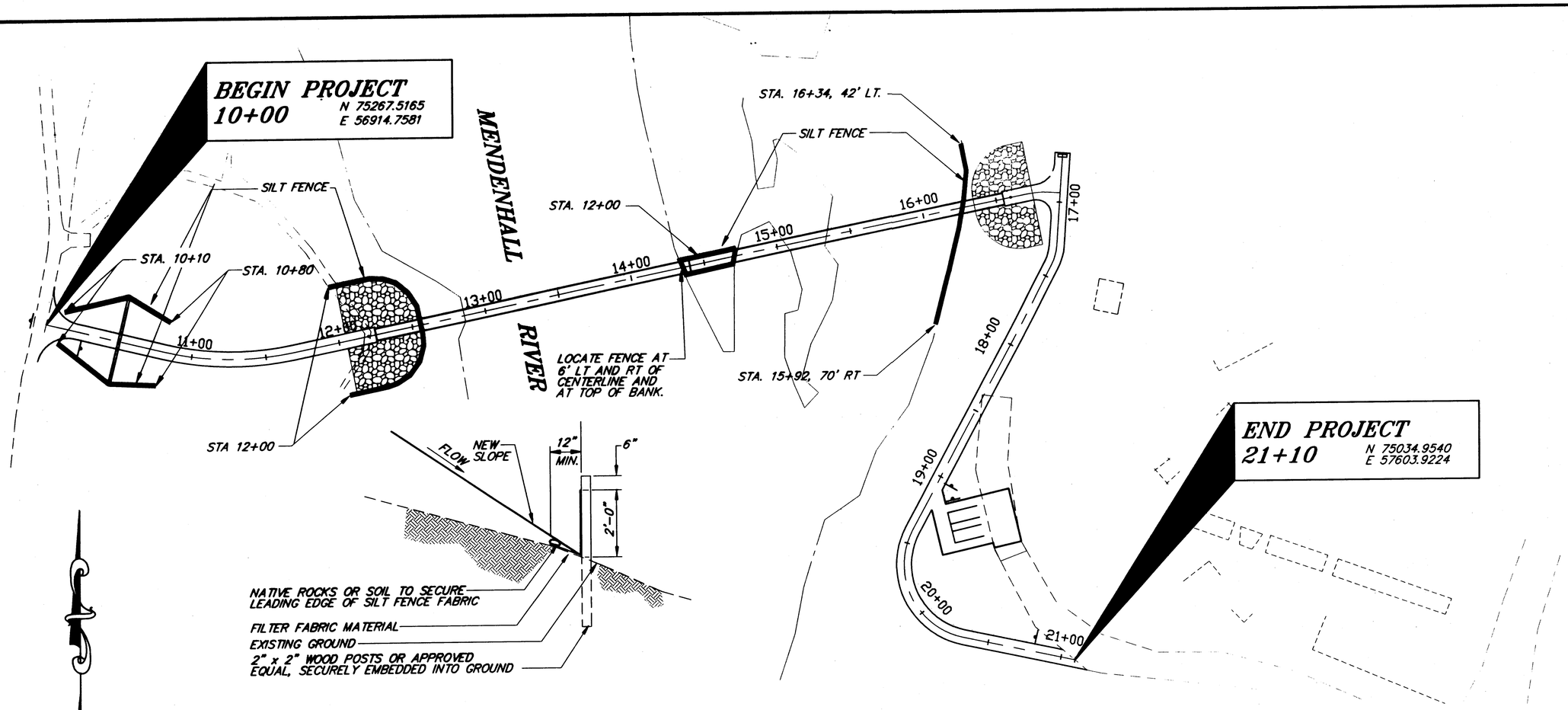

SECTION FOR USE BETWEEN STATION. 10+10 AND 10+80 LT AND RT.

SEE STANDARD DRAWING E-13 FOR OTHER LOCATIONS

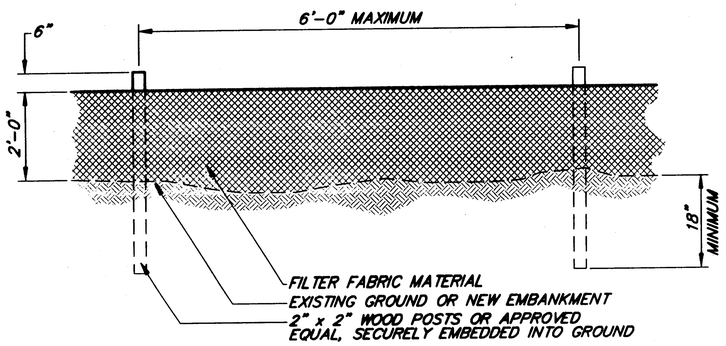

ELEVATION

TYPICAL AT ALL LOCATIONS

SILT FENCE DETAILS

TEMPORARY EROSION AND SEDIMENT CONTROL NOTES

1. IN ADDITION TO THE SPECIFIED QUANTITIES OF MATTING, SILT FENCE, AND OTHER EROSION AND SEDIMENT CONTROL MEASURES, THE CONTRACTOR SHALL HAVE ON HAND SUFFICIENT QUANTITIES OF MATTING, SILT FENCE, STRAW BALES AND SORBENT PADS AS NECESSARY TO CONTROL EROSION OR POLLUTION RESULTING FROM UNFORESEEN CIRCUMSTANCES. STRAW BALES MAY BE USED AS TEMPORARY EMERGENCY CONTROL DEVICES ONLY. SORBENT PADS SHALL BE KEPT ON SITE FOR ABSORBING SUCH FUEL OR OIL AS MAY BE LOST DURING FUELING OF EQUIPMENT OR FAILURE OF HYDRAULIC LINES, ETC.
2. PRIOR TO COMMENCEMENT OF ANY GRUBBING OR EXCAVATION ACTIVITIES IN OR NEAR STREAMS OR DRAINAGES THE CONTRACTOR SHALL INSTALL SILT FENCES AS NECESSARY TO PREVENT SEDIMENT INFILTRATION INTO WATERWAYS.
3. SILT FENCES, WHEN NO LONGER NECESSARY, SHALL BE REMOVED SUCH THAT SEDIMENT IS NOT DEPOSITED INTO ANY DRAINAGE. USED SILT FENCE FABRIC SHALL BE REMOVED FROM WITHIN THE PROJECT LIMITS. SILT FENCES WHICH ARE NOT WITHIN THE EMBANKMENT LIMITS SHALL REMAIN IN PLACE AND BE MAINTAINED UNTIL SUCH TIME AS MATTING AND/OR SEEDING HAS BEEN PERFORMED AND A UNIFORM VEGETATIVE COVER, AS DETERMINED BY THE ENGINEER, HAS BEEN ESTABLISHED ON THE AREA WHICH THE SILT FENCE WAS INTENDED TO CONTAIN. IF ANY CUT OR FILL SLOPE BEGINS TO SHOW EVIDENCE OF EROSION, SILT FENCES SHALL BE INSTALLED AND MAINTAINED AS DIRECTED TO PREVENT SEDIMENT INFILTRATION INTO WATERWAYS. SILT FENCE MATERIAL EMBEDED UNDER NEWLY CONSTRUCTED EMBANKMENTS SHALL BE NEATLY CUT AT THE EMBANKMENT AND THE EMBEDDED PORTION LEFT IN PLACE (SEE DETAIL THIS SHEET).
4. ALL SLOPES COMPLETED BETWEEN APRIL 30 AND SEPTEMBER 10 SHALL BE MATTED AND/OR SEEDED WITHIN 14 DAYS OF COMPLETION. SLOPES COMPLETED BETWEEN SEPTEMBER 10 AND APRIL 30 SHALL BE COVERED WITH MATTING MATERIAL AND SEEDED BETWEEN APRIL 30 AND SEPTEMBER 10. SEEDING DATES MAY BE ADJUSTED, BY THE ENGINEER, DEPENDANT UPON ACTUAL WEATHER CONDITIONS ENCOUNTERED DURING CONSTRUCTION. SLOPES NOT SHOWING ADEQUATE GROWTH WITHIN 30 DAYS OF THE INITIAL SEEDING, AS DETERMINED BY THE ENGINEER, SHALL BE RE-SEEDED. PRIOR TO FINAL INSPECTION ALL SEEDED AREAS NOT SHOWING ADEQUATE GROWTH, AS DETERMINED BY THE ENGINEER, SHALL BE RE-SEEDED.

DO NOT SCALE FROM THESE PLANS-USE DIMENSIONS

ENGINEER'S SEAL

STATE OF ALASKA 49th DUANE J. DOERFLINGER 11/5/99 REGISTERED PROFESSIONAL ENGINEER

PATH: P:\JNU\72120\DR\-ESCP PLOTF.PCP(40) OR PLOTH.PCP(80)		
BY:	DATE:	DESCRIPTION OF CHANGE:

RECORD OF REVISIONS

STATE OF ALASKA
DEPARTMENT OF TRANSPORTATION AND PUBLIC FACILITIES
SOUTHEAST REGION

JUNEAU — JNU-MENDENHALL RIVER PEDESTRIAN CROSSING — ALASKA
PROJECT NO. TEA-0967 (6) ~ 72120

EROSION AND SEDIMENT CONTROL PLAN

DESIGNED BY: D. DOERFLINGER	PROJECT NO. 72120
DRAWN BY: D. DOERFLINGER	DATE: NOV. 4, 1999
CHECKED BY: C. MORROW	SHEET 18 OF 18

STATE	PROJECT DESIGNATION	YEAR	SHEET NO.	TOTAL SHEETS
ALASKA	TEA-0967(6)/72120	1999	4	18

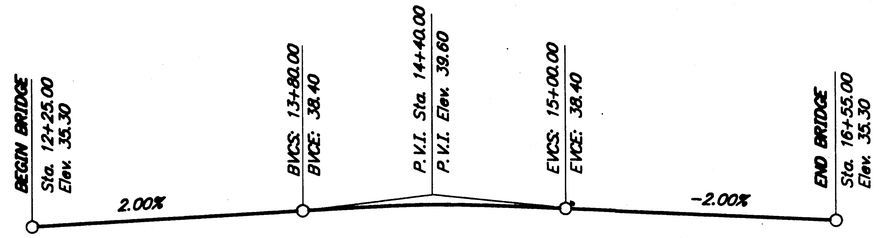

GRADE DATA

No Scale

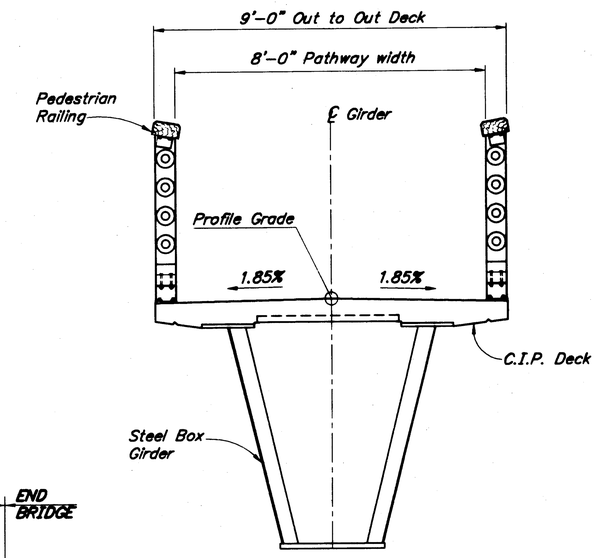

TYPICAL SECTION

12 6 0 1 2 3 4
In. Feet

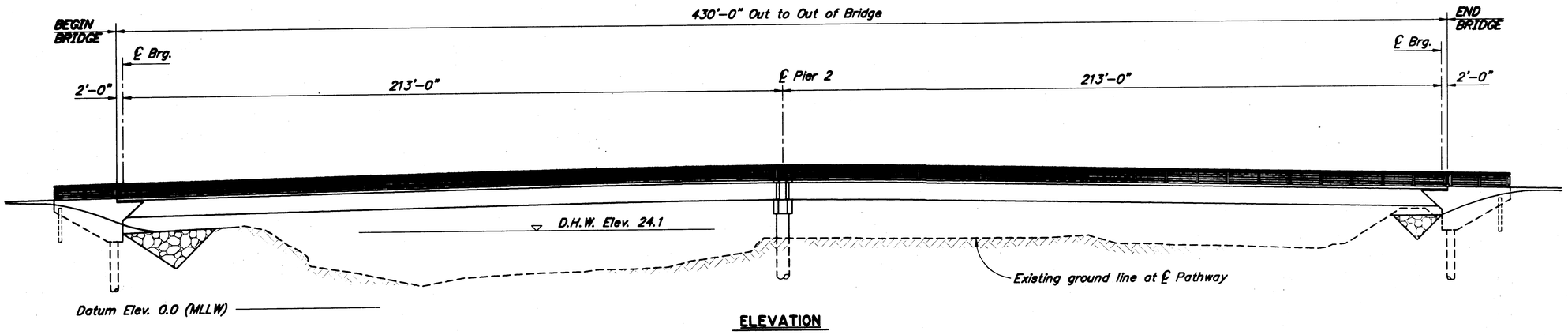

ELEVATION

10 0 20 40
Feet

DRAWING INDEX

TITLE	DWG. NO.
GENERAL LAYOUT	1
SITE PLAN	2
ABUTMENTS	3
PIER	4
TYPICAL SECTION	5
GIRDER	6
GIRDER DETAILS	7
GIRDER CAMBER	8
PEDESTRIAN RAILING	9
TEST HOLE LOGS & LOCATIONS	10-12

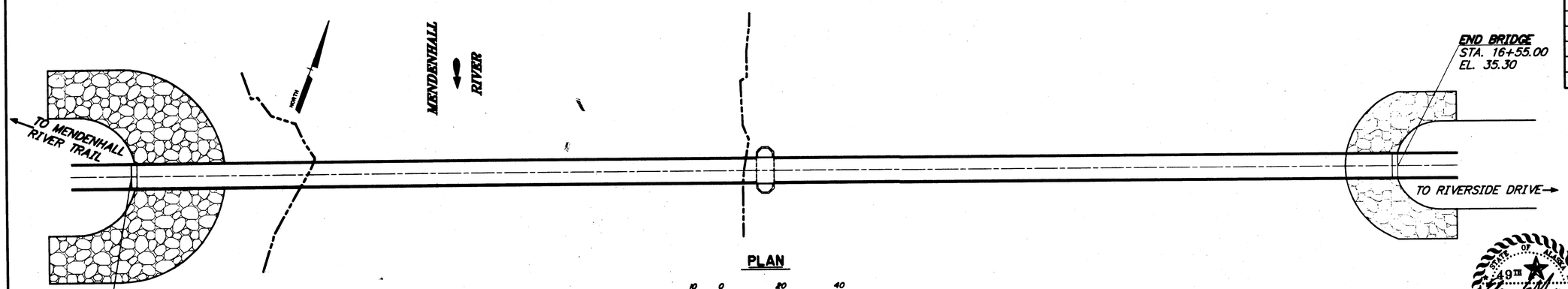

PLAN

10 0 20 40
Feet

STATE OF ALASKA
49TH
Elmer E. Marx III
No. CE 9480
11-22-99
PROFESSIONAL ENGINEER

Designed By: CEM
Detail Check By: DJS
Design Check By: DJS

P:\1904\1904-1.dgn
9/22/1999 12:26
Plot Scale = 20.00
Drawn or Revised By: CEM

MENDENHALL RIVER PEDESTRIAN BRIDGE

GENERAL LAYOUT

STATE of ALASKA
DEPARTMENT of TRANSPORTATION and PUBLIC FACILITIES
JUNEAU, ALASKA

BRIDGE NO. 1904
DWG. NO. 1

STATE	PROJECT DESIGNATION	YEAR	SHEET NO.	TOTAL SHEETS
ALASKA	TEA-0967(6)/72120	1999	5	18

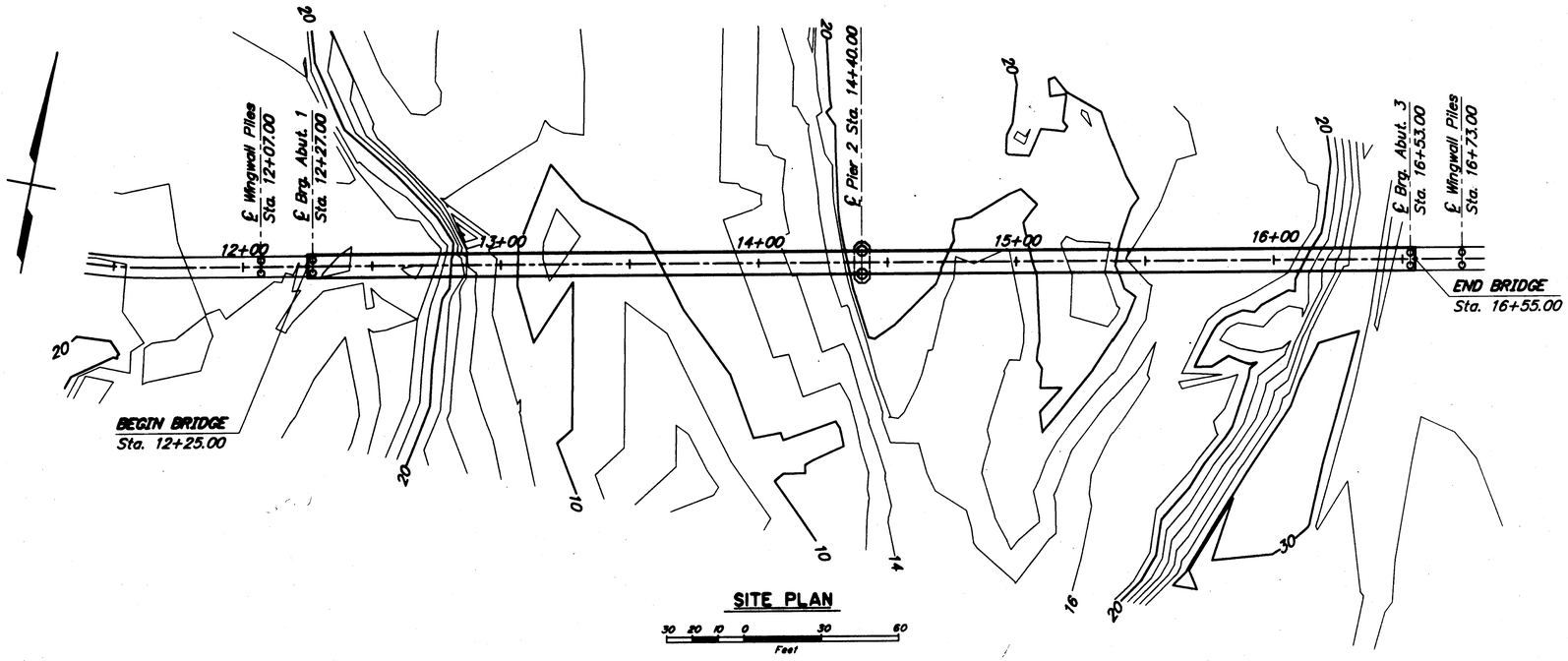

SITE PLAN

30 20 10 0 30 60
Feet

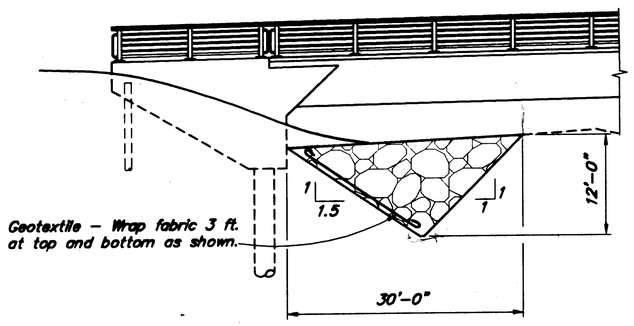

LAUNCH ROCK DETAIL-ABUTMENT 1

10 5 0 10 20
Feet

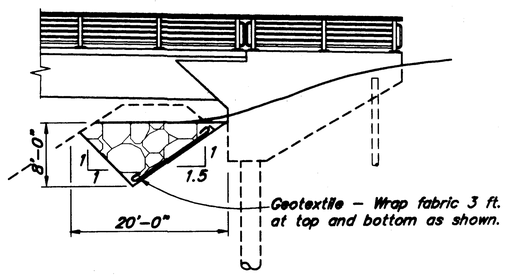

LAUNCH ROCK DETAIL-ABUTMENT 3

10 5 0 10 20
Feet

GENERAL NOTES

SPECIFICATION:

Design:..... AASHTO LRFD Bridge Design Specifications, 1998 Edition, with the latest Interim Specifications.

Construction:..... State of Alaska Standard Specifications for Highway Construction with Special Provisions.

Live Load:..... 85 psf or 10 k service vehicle whichever produces maximum effect.

MATERIAL PROPERTIES:

Structural Steel:..... Fy = 50 ksi

Cast-in-Place Concrete:.... f'c = 4 ksi

Reinforcing Steel:..... Fy = 60 ksi

STRUCTURAL MATERIALS:

Concrete:..... Use Class "AA" for all cast-in-place deck concrete. Use Class "A" for all other cast-in-place concrete.

Reinforcing Steel:..... Use ASTM A615 Grade 60 reinforcing steel.

Use ASTM A572, Grade 50 structural steel for girder flanges, webs and splice plates. Consider all girder flanges, webs and splice plates as fracture critical, group 3 for Charpy V-Notch impact requirements. Use ASTM A36 for all other structural steel unless otherwise noted.

Use ASTM A36, Grade 50 for all piles. Galvanize the top 30 feet of the steel pipe piles at the pier.

Use ASTM A325 high strength bolts.

Structural Steel:..... Use EKKI wood timber for railing.

PILE SPECIFICATIONS:

Piling:..... Design pile load 48"ø Pipe Piles = 340 k
Ultimate bearing capacity 48"ø Pipe Piles = 750 k
Design Pile Load, 12"ø Pipe Pile = 15 k
Ultimate Bearing Capacity, 12"ø Pipe Pile = Install to specified pile tip elevation.

Design Pile Load 30"ø Pipe Piles = 135 k
Ultimate Bearing Capacity, 30"ø Pipe Piles = 300 k

PILE TIP ELEVATIONS

PILE	LOCATION	MIN. TIP ELEV.	EST. TIP ELEV.
12"ø Pipe Pile	Abutment Wingwalls	-30.0	-30.0
30"ø Pipe Pile	Abutments	-70.0	-75.0
48"ø Pipe Pile	Pier	-95.0	-100.0

HYDRAULIC & HYDROLOGIC SUMMARY

FLOOD FREQUENCY (YR)	50 YR.	100 YR.	500 YR.
Exceedance Probability (%)	2	1	0.2
Design Discharge (cfs)	N/A	21400	25500
Design High Water (ft)	N/A	23.9	24.9
Anticipated Add'l Backwater (ft)	N/A	0.0	
Contraction Scour (ft)		0.0	0.0
Abutment Scour (ft)		N/A	N/A
Pier Scour (ft)		N/A	N/A

Drainage Area for this crossing: 102.5 square miles

Hydraulic Capacity: 32,700 cfs at Elevation 27.75 ft. (roadway over topping) which has an exceedance probability of equal to or less than 0.2 percent.

ESTIMATE OF QUANTITIES

ITEM NO.	ITEM	UNIT	SUBST.	SUPERST.	TOTAL
205(1)	Excavation for Structures	CY	953	–	953
501(1)	Class "A" Concrete	LS-CY	157	–	157
501(2)	Class "AA" Concrete	LS-CY	–	90	90
503(3)	Reinforcing Steel	LBS	26 170	–	26 170
503(4)	Epoxy Coated Reinforcing Steel	LBS	–	22 780	22 780
504(2)	Structural Steel, Furnished, Fabricated & Erected	LBS	–	183 082	183 082
505(5A)	Structural Steel Piles, Furnished (12"ø Pipe Piles)	LF	249	–	249
505(5B)	Structural Steel Piles, Furnished (30"ø Pipe Piles)	LF	393	–	393
505(5C)	Structural Steel Piles, Furnished (48"ø Pipe Piles)	LF	254	–	254
505(6A)	Structural Steel Piles, Driven (12"ø Pipe Piles)	Each	4	–	4
505(6B)	Structural Steel Piles Driven (30"ø Pipe Piles)	Each	4	–	4
505(6C)	Structural Steel Piles, Driven (48"ø Pipe Piles)	Each	2	–	2
507(2)	Pedestrian Railing	LF	–	950	950
611(1)	Riprap, Class II	CY	953	–	953
631(2)	Geotextile, Erosion Control, Class 2	SY	611	–	611

Item numbers are for reference only. Quantities shown are not necessarily the pay quantities nor the total quantity of the particular item.

STATE OF ALASKA 49TH Mark D. Miles No. CE-7558 REGISTERED PROFESSIONAL ENGINEER

STATE OF ALASKA 49TH Elmer E. Marx III No. CE 9490 REGISTERED PROFESSIONAL ENGINEER

Designed By: EEM
Detail Check By: DJS
Design Check By: DJS

P:\1904\1904-2.dgn
9/22/1999 12:31
Plot Scale = 20.00
Drawn or Revised By: CSA

MENDENHALL RIVER PEDESTRIAN BRIDGE

SITE PLAN

STATE of ALASKA
DEPARTMENT of TRANSPORTATION and PUBLIC FACILITIES
JUNEAU, ALASKA

BRIDGE NO. 1904
DWG. NO. 2

STATE	PROJECT DESIGNATION	YEAR	SHEET NO.	TOTAL SHEETS
ALASKA	TEA-0967(6)/72120	1999	6	18

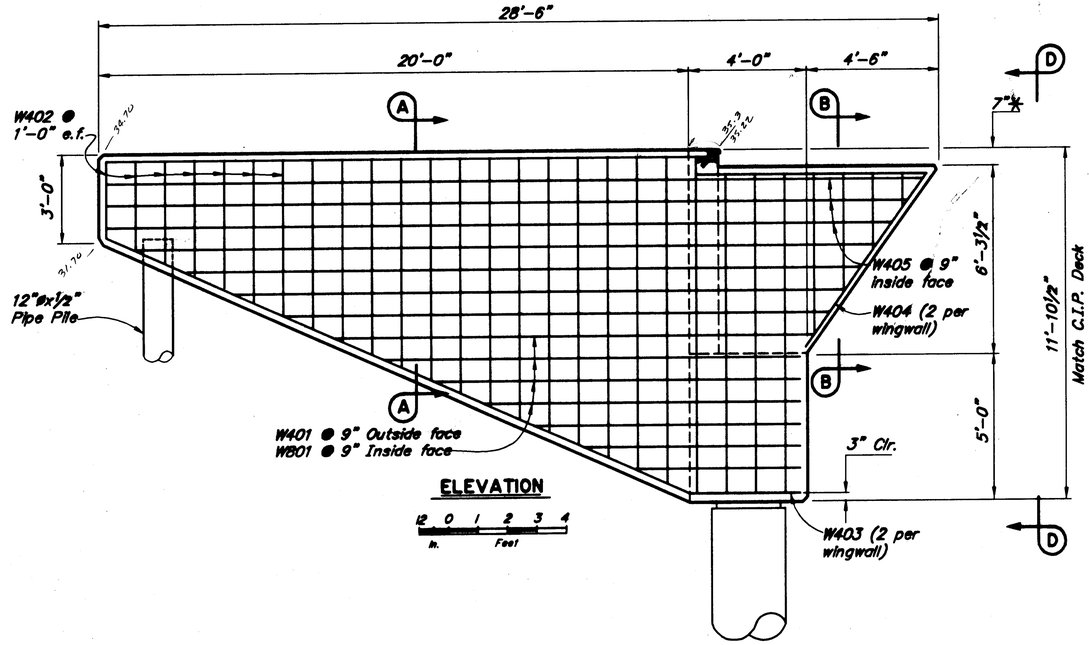

ELEVATION

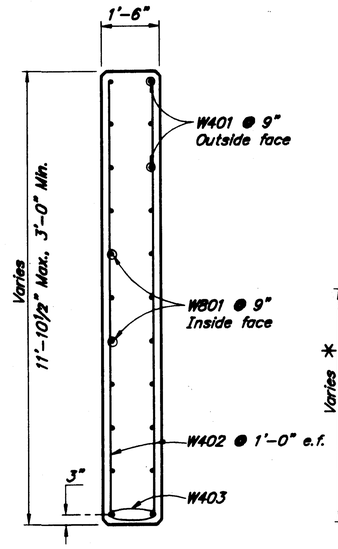

SECTION A-A

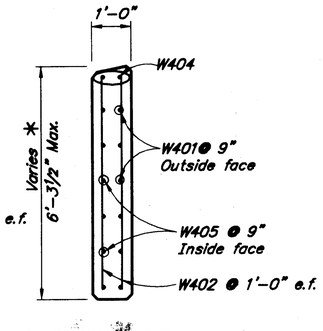

SECTION B-B

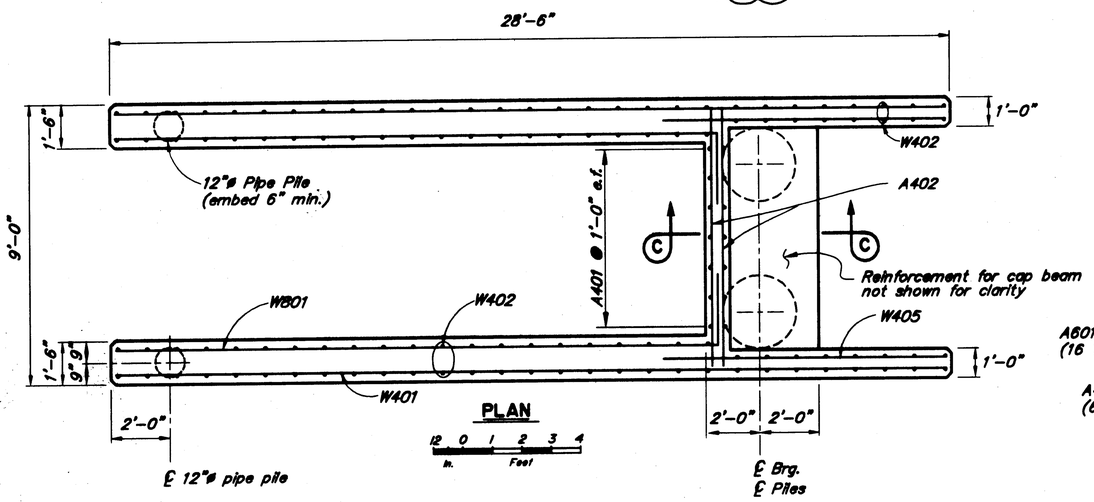

PLAN

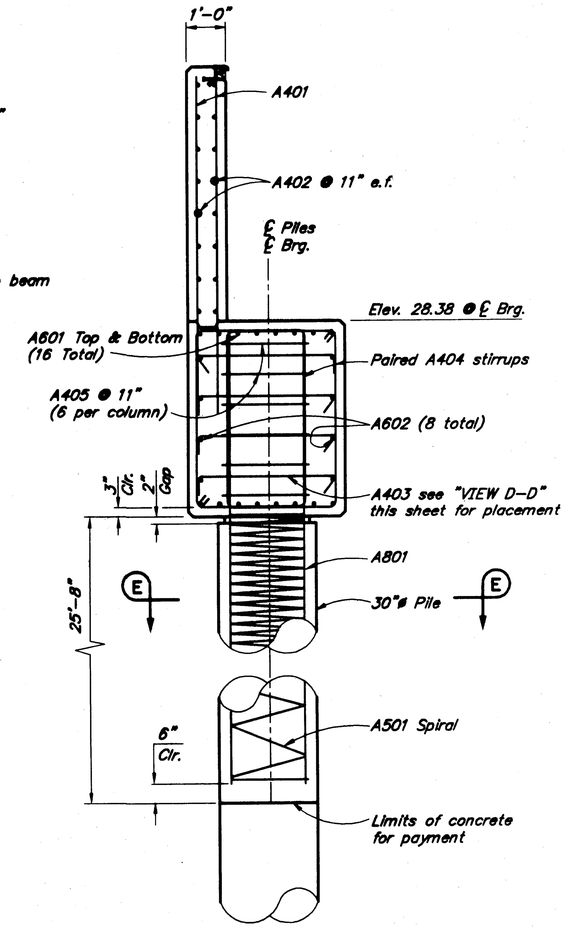

SECTION C-C

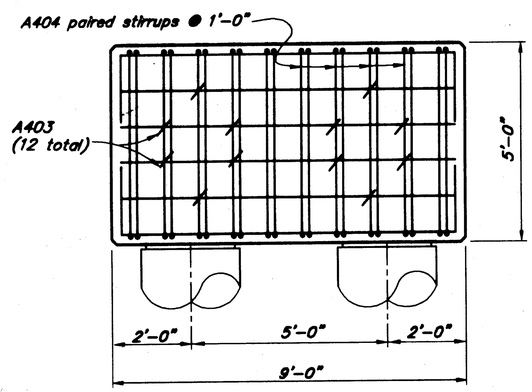

VIEW D-D

(WINGWALLS AND BACKWALL NOT SHOWN)

REINFORCING STEEL-ONE ABUTMENT

MARK	SIZE	NO.	LENGTH	TYPE
A401	4	14	7'-9"	–
A402	4	16	8'-8"	–
A403	4	12	4'-9"	Bent
A404	4	20	15'-2"	Bent
A405	4	12	7'-3 1/2"	Bent
b A501	5	2	224'-0"	Bent
A601	6	16	10'-8"	Bent
A602	6	8	8'-8"	–
A801	8	16	30'-0"	–
a W401	4	30	28'-0"	–
a W402	4	112	11'-5 1/2"	–
W403	4	4	25'-6"	Bent
W404	4	4	15'-10"	Bent
a W405	4	18	9'-2"	–
a W801	8	30	22'-2"	Bent

BENDING DIAGRAM

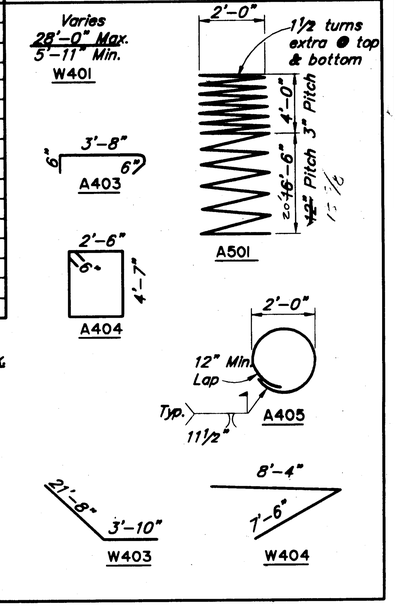

a – Length varies, maximum length shown.
b – Splice length not included.

NOTE:

* Match bridge grade and underside of deck cross slope. Provide 1" gap filled with expanded polyetheylene between underside of deck and top of wall.

See Dwg. No. 5 for Anchor Bolt Details

Finish bearing areas parallel to the pathway grade.

Railing on Wingwall not shown for clarity.

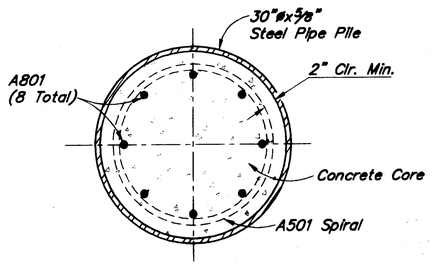

SECTION E-E

STATE OF ALASKA 49TH Elmer E. Marx III No. CE 9490 9-22-98 PROFESSIONAL ENGINEER

Designed By: EEM
Detail Checked By: DJS
Design Checked By: DJS

P:\1904\1904-3.dgn
9/22/1998 15:37
Plot Scale = 1.00
Drawn or Revised By: CSA

MENDENHALL RIVER PEDESTRIAN BRIDGE

ABUTMENTS

STATE of ALASKA
DEPARTMENT of TRANSPORTATION and PUBLIC FACILITIES
JUNEAU, ALASKA

BRIDGE NO. 1904
DWG. NO. 3

STATE	PROJECT DESIGNATION	YEAR	SHEET NO.	TOTAL SHEETS
ALASKA	TEA-0967(6)/72120	1999	7	18

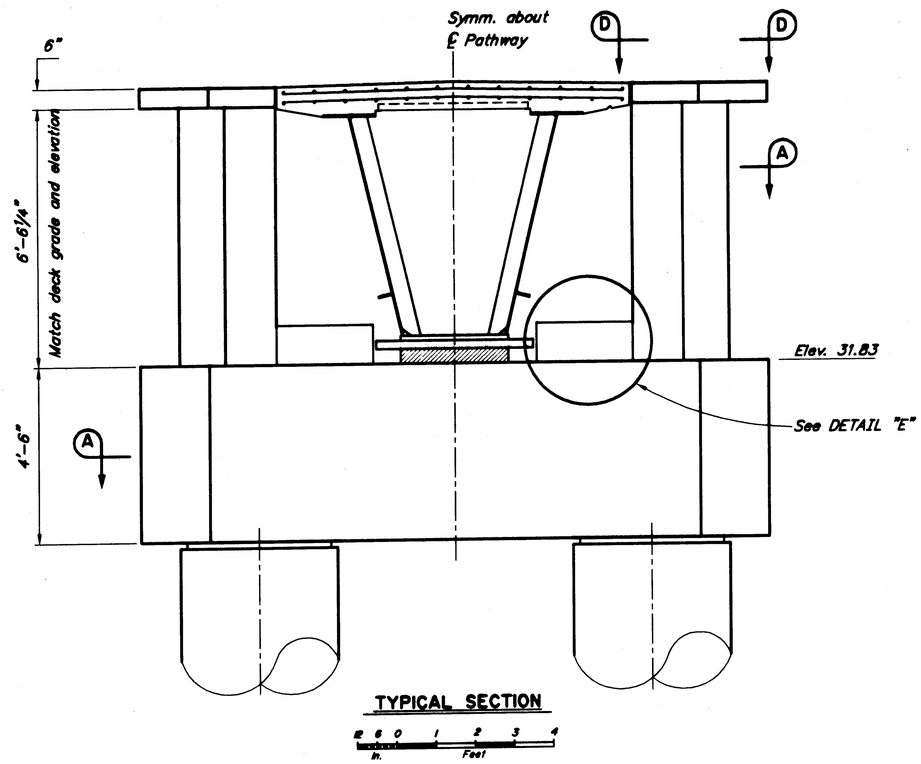

TYPICAL SECTION

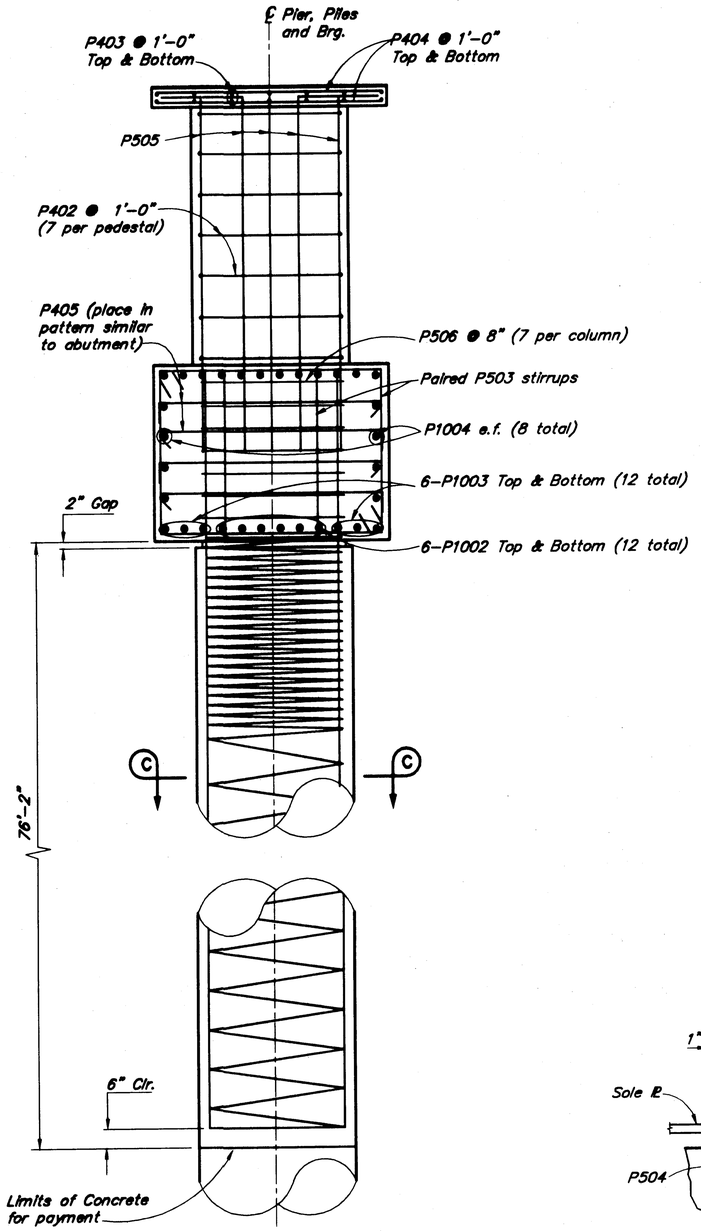

SECTION B-B

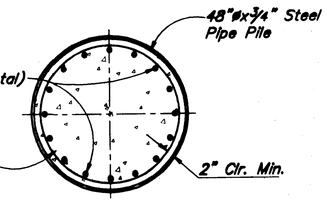

SECTION C-C

REINFORCING STEEL-ONE PIER

	MARK	SIZE	NO.	LENGTH	TYPE
	P401	4	6	3'-8"	–
	P402	4	14	11'-2"	Bent
a	P403	4	28	3'-1½"	–
a	P404	4	16	5'-8"	–
	P405	4	12	6'-9"	Bent
b	P501	5	2	1035'-0"	Spiral
	P502	5	6	14'-4"	Bent
	P503	5	40	17'-4"	Bent
	P504	5	10	6'-3"	Bent
	P505	5	24	10'-0"	Bent
	P506	5	14	12'-0"	Bent
b	P1001	10	32	80'-0"	–
	P1002	10	12	19'-4"	Bent
a	P1003	10	12	14'-6"	–
	P1004	10	8	12'-6"	–

BENDING DIAGRAM

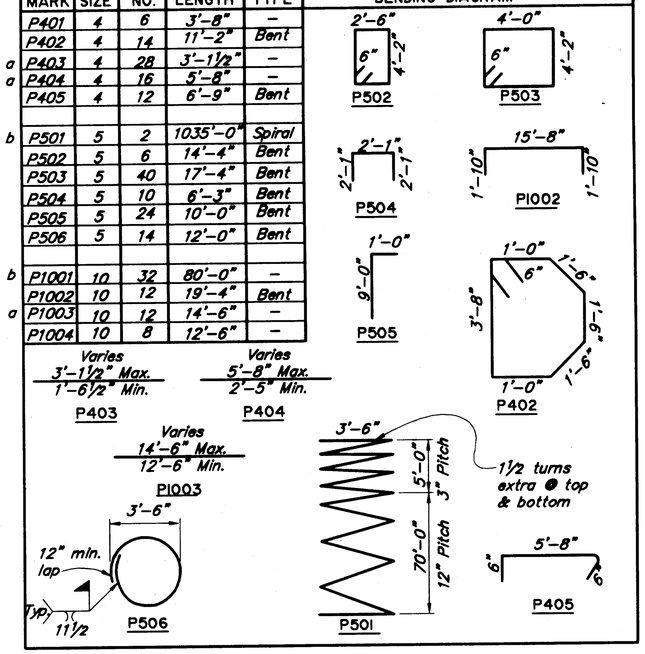

a – Length varies, maximum length shown.

b – Splice length not included.

NOTE:

Railing not shown for clarity.

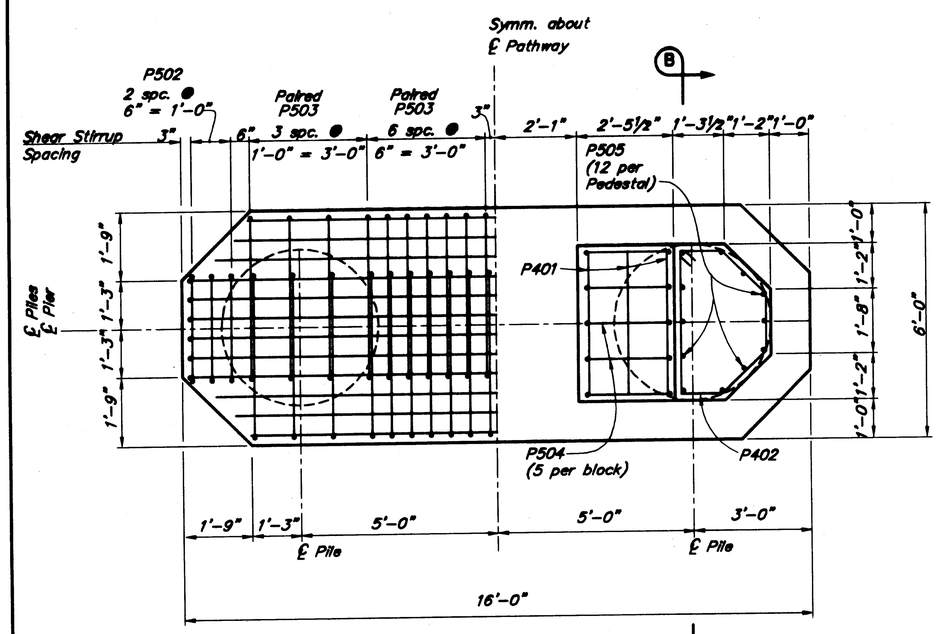

SECTION A-A

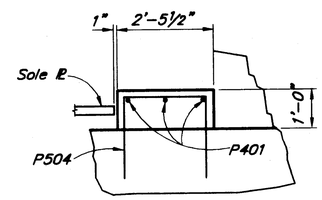

DETAIL "E"

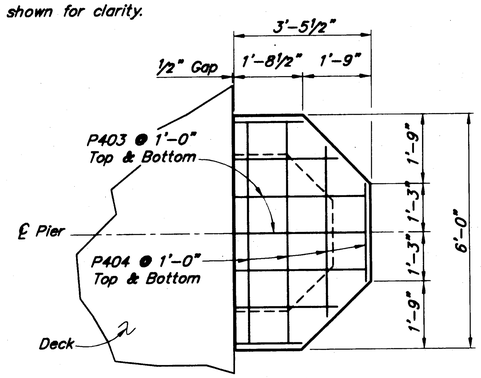

VIEW D-D

MENDENHALL RIVER PEDESTRIAN BRIDGE

PIER

STATE of ALASKA
DEPARTMENT of TRANSPORTATION and PUBLIC FACILITIES
JUNEAU, ALASKA

BRIDGE NO. 1904

DWG. NO. 4

STATE OF ALASKA 4906 Elmer E. Marx III No. CE 9490 9-14-99 PROFESSIONAL ENGINEER

Designed By: EEM
Detail Check By: DJS
Design Check By: DJS

P:\1904\1904-4.dgn
9/22/1999 12:35
Plot Scale = 2.00
Drawn or Revised By: CSH

STATE	PROJECT DESIGNATION	YEAR	SHEET NO.	TOTAL SHEETS
ALASKA	TEA-0967(6)/72120	1999	8	18

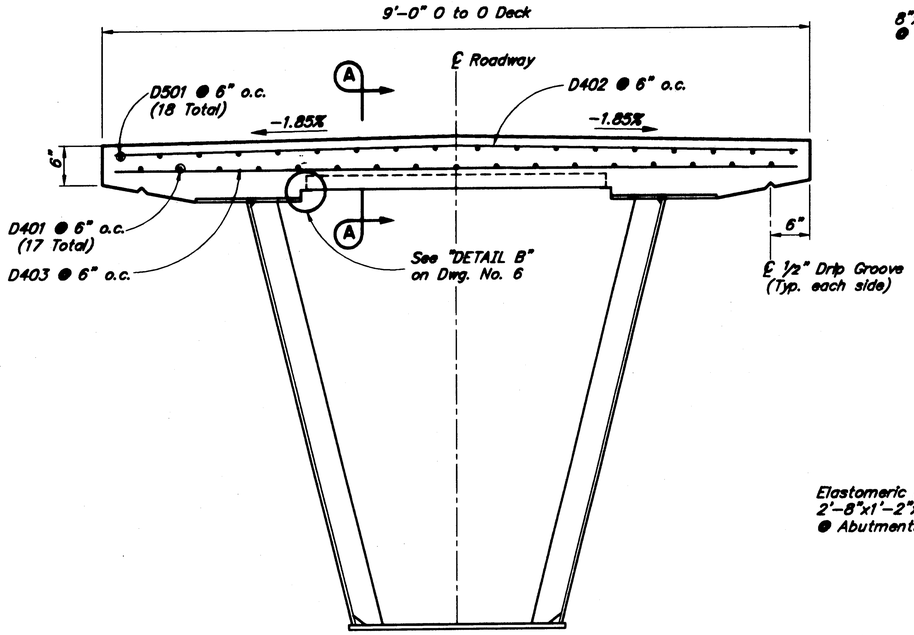

BRIDGE SECTION NEAR MIDSPAN

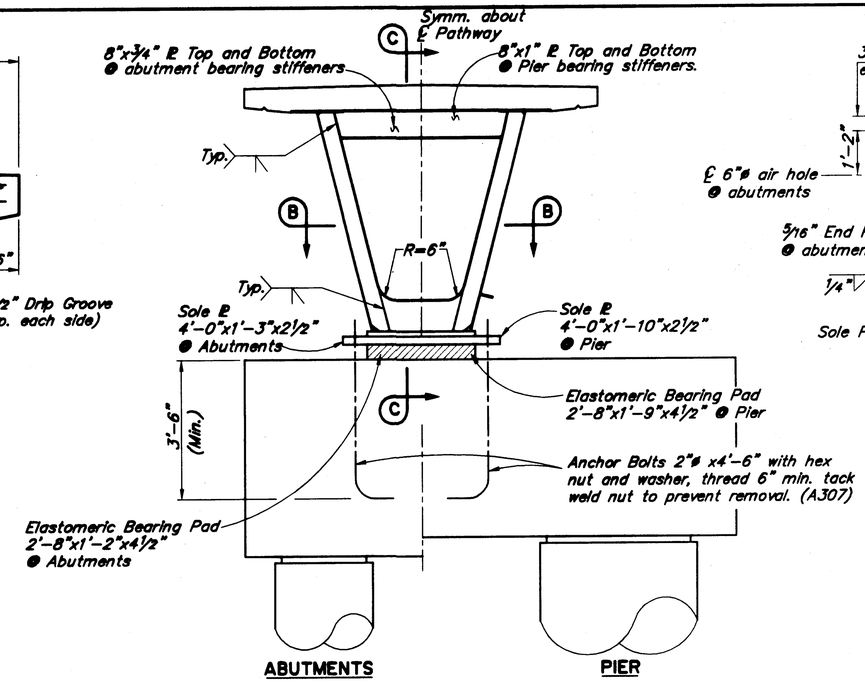

TYPICAL SECTION

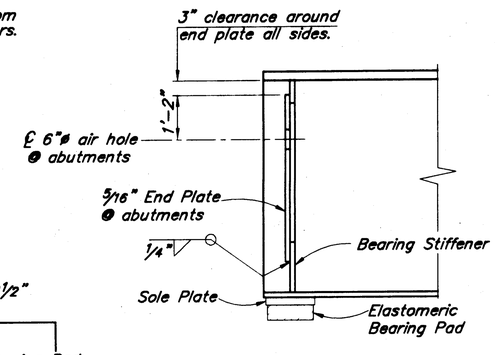

SECTION C-C

No Scale

REINFORCING STEEL-DECK †

	MARK	SIZE	NO.	LENGTH	TYPE	BENDING DIAGRAM
a	D401	4	17	427'-0"	–	
	D402	4	855	8'-8"	Bent	
	D403	4	855	8'-8"	–	
a	D501	5	18	427'-0"	–	

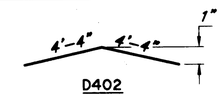

† –Epoxy coat all rebar in deck.
a – Does not include lap splices.

NOTE:

✳ Gap at 60° F. Adjust by 1/8" for each 10° F.

Provide deck with light broom finish.

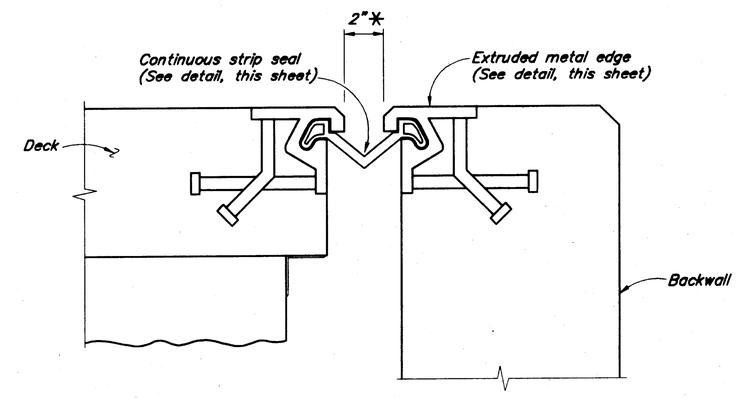

EXPANSION JOINT SECTION AT ABUTMENT

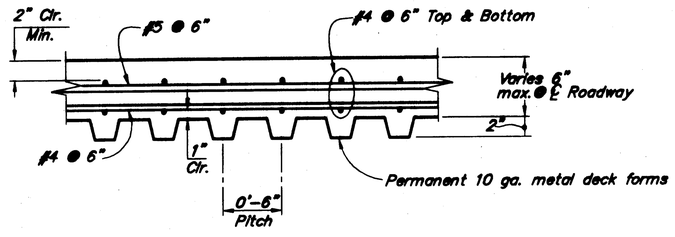

SECTION A-A

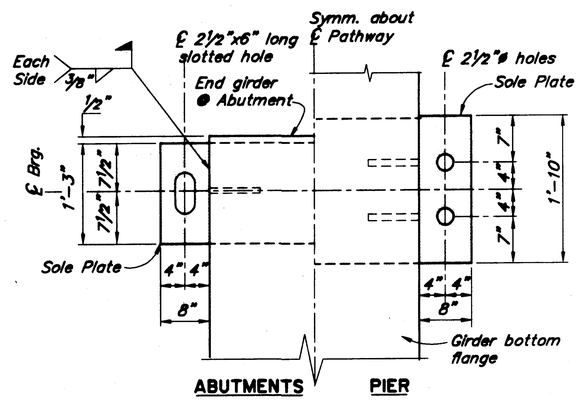

SECTION B-B

BEARING-PLAN VIEW

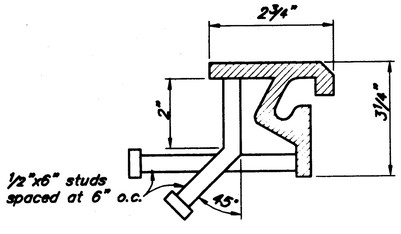

EXTRUDED METAL EDGE

No Scale

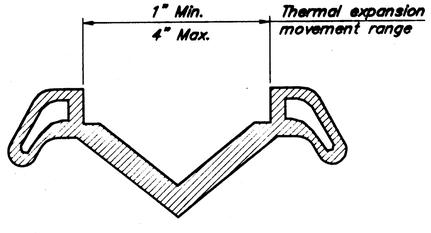

STRIP SEAL DETAIL

No Scale

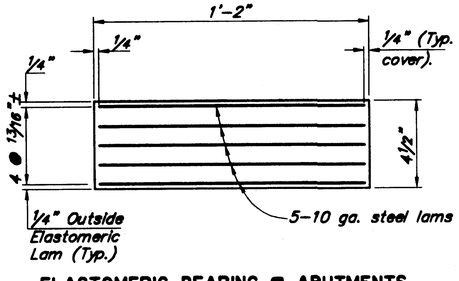

ELASTOMERIC BEARING ● ABUTMENTS

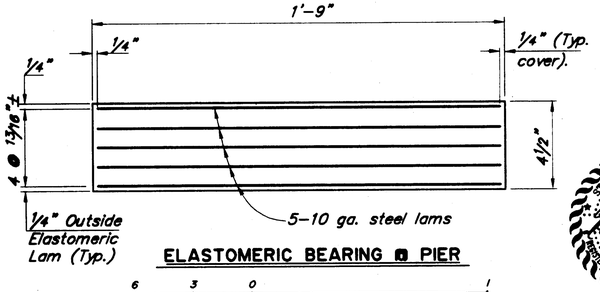

ELASTOMERIC BEARING ● PIER

Designed By: EEM
Detail Check By: DJS
Design Check By: DJS

F:\1904\1904-5.dwg
9/22/1999 12:38
Plot Scale = 1.00
Drawn or Revised By: CSA

MENDENHALL RIVER PEDESTRIAN BRIDGE

TYPICAL SECTION

STATE of ALASKA
DEPARTMENT of TRANSPORTATION and PUBLIC FACILITIES
JUNEAU, ALASKA

BRIDGE NO. 1904

DWG. NO. 5

STATE	PROJECT DESIGNATION	YEAR	SHEET NO.	TOTAL SHEETS
ALASKA	TEA-0967(6)/72120	1999	9	18

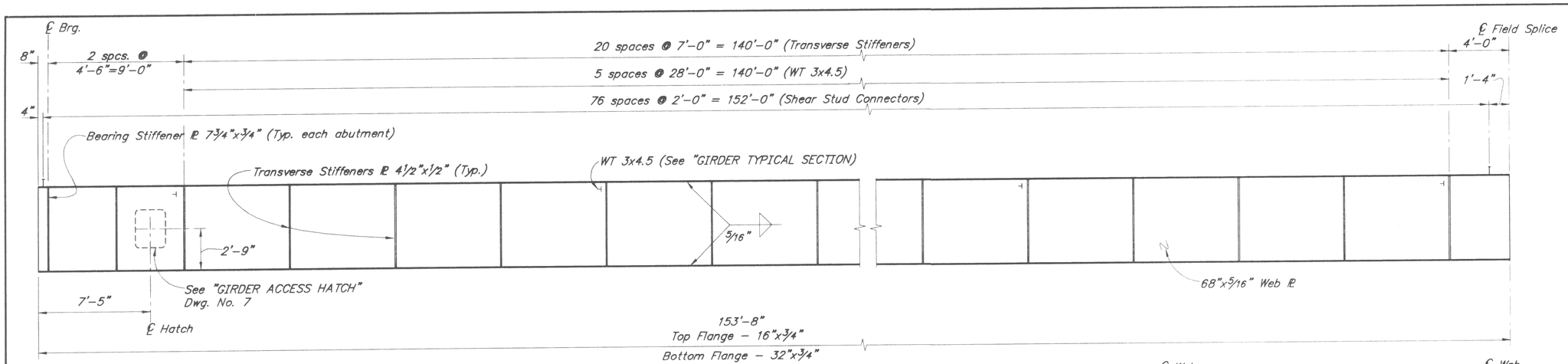

GIRDER SEGMENT A

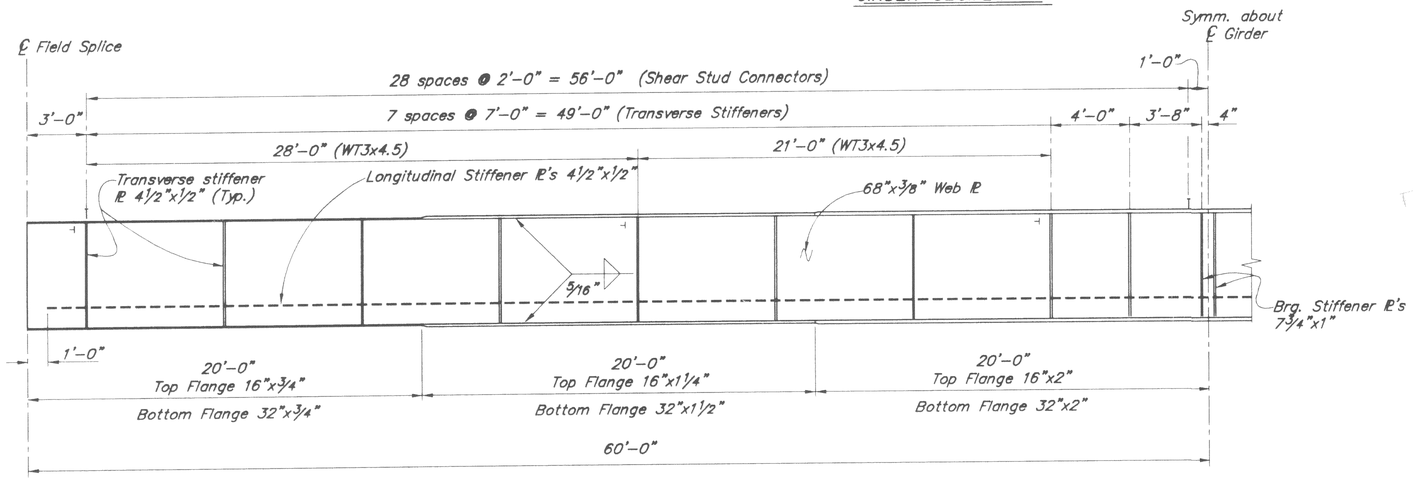

GIRDER SEGMENT B

(Camber not shown)

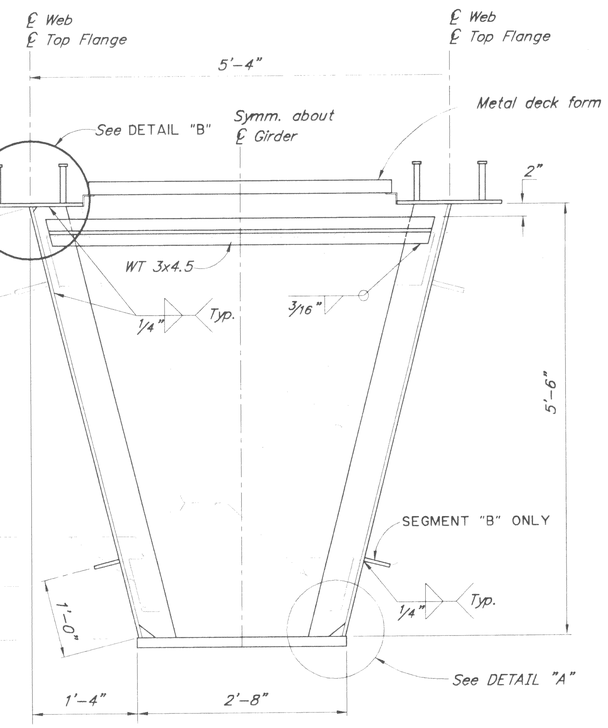

GIRDER TYPICAL SECTION

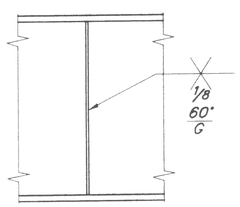

ELEVATION

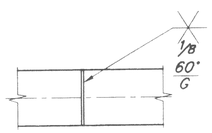

PLAN

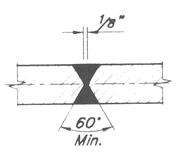

SECTION THRU WEBS

WEB SPLICE

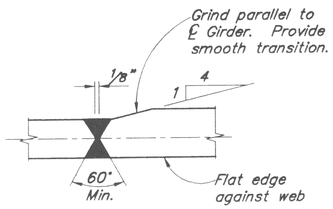

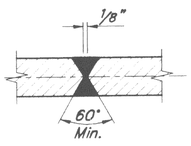

SECTION THRU FLANGE

FLANGE SPLICE

GIRDER WELD DETAILS

No Scale

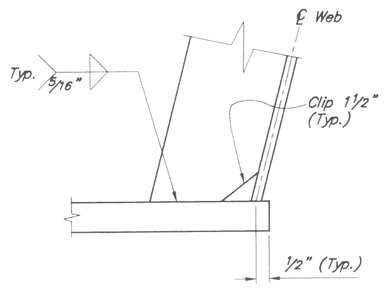

DETAIL "A"

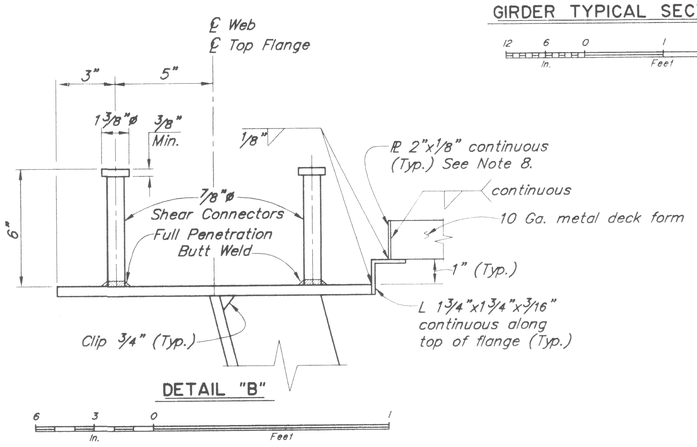

DETAIL "B"

NOTES

1. Field weld all Shear Connectors after deck reinforcement is in place.
2. Use ASTM A572 for flanges, webs, and splice plates
3. Use ASTM A36 for stiffeners and bracing members.
4. Galvanize all steel after fabrication in accordance with SSPC Coating System Guide No. 23.00.
5. Seal permanent metal deck forms against infiltration of water.
6. Temporary internal cross bracing may be used to facilitate fabrication.
7. Use extension bars on all Flange and Web butt welds. Place extension bar tack welds to be incorporated in the final weld area.
8. With the approval of Engineer, use metal deck forms with factory closed ends.
9. Install metal deck forms prior to shipping girder segments.

STATE OF ALASKA 49TH — Elmer E. Marx III — No. CE 9490 — 7-22-99 — REGISTERED PROFESSIONAL ENGINEER

Designed By: EEM
Detail Check By: DJS
Design Check By: DJS

P:\1904\1904-6.dwg
9/22/1999 12:39
Plot Scale = 1.00
Drawn or Revised By: CSA

MENDENHALL RIVER PEDESTRIAN BRIDGE

GIRDER

STATE of ALASKA
DEPARTMENT of TRANSPORTATION and PUBLIC FACILITIES
JUNEAU, ALASKA

BRIDGE NO. 1904

DWG. NO. 6

STATE	PROJECT DESIGNATION	YEAR	SHEET NO.	TOTAL SHEETS
ALASKA	TEA-0967(6)/72120	1999	10	18

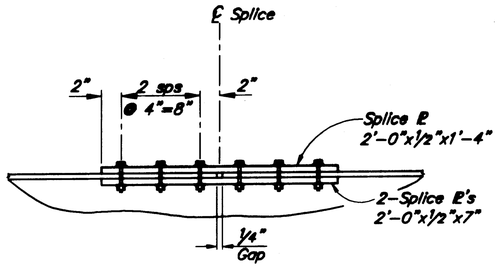

SECTION A-A

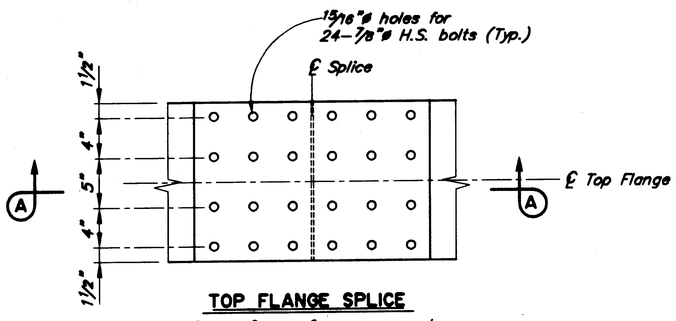

TOP FLANGE SPLICE

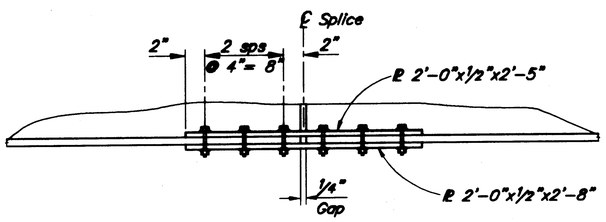

SECTION B-B

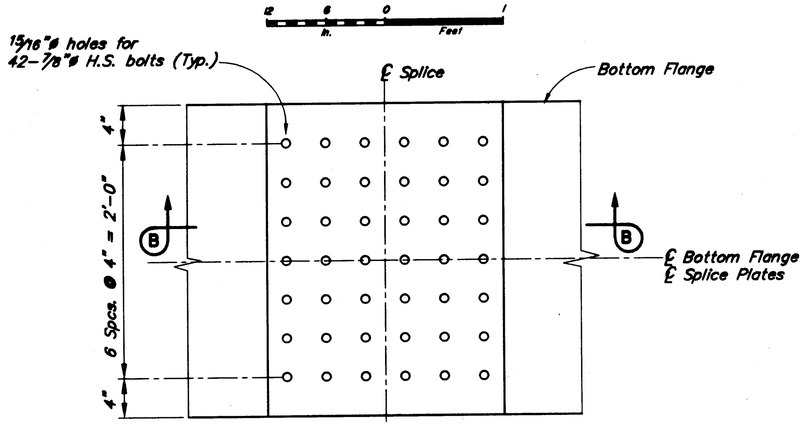

BOTTOM FLANGE SPLICE

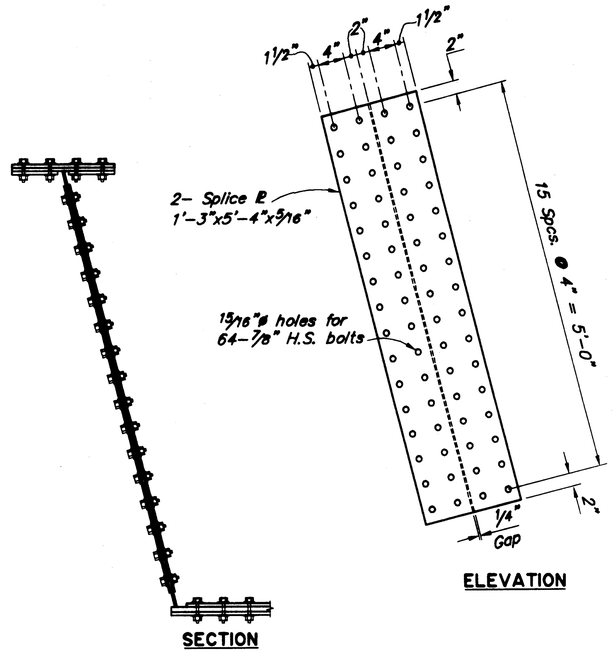

SECTION

ELEVATION

WEB SPLICE

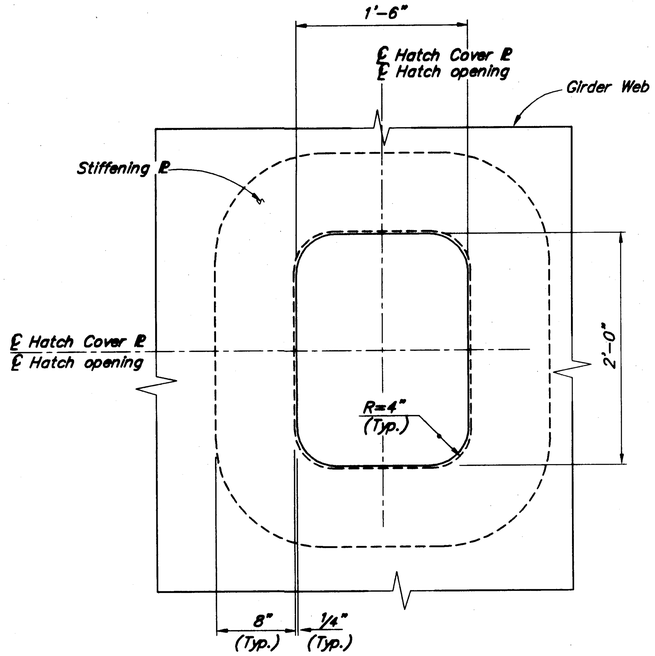

HATCH OPENING

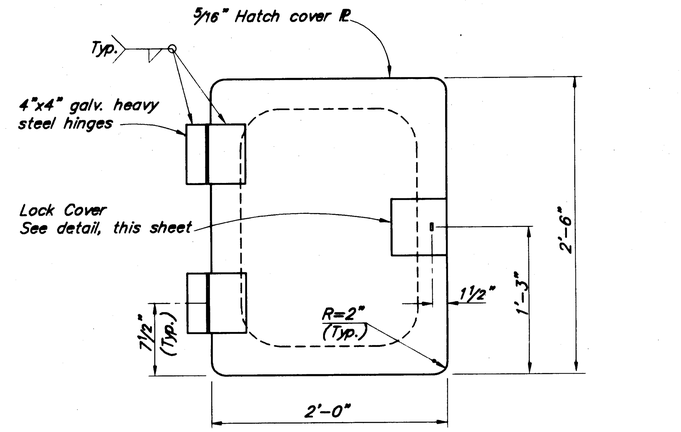

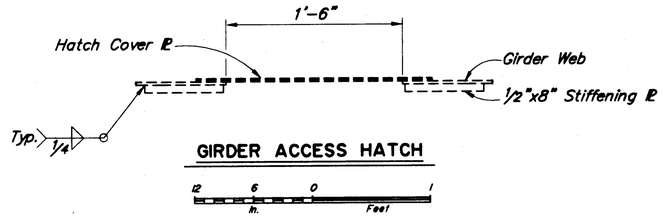

GIRDER ACCESS HATCH

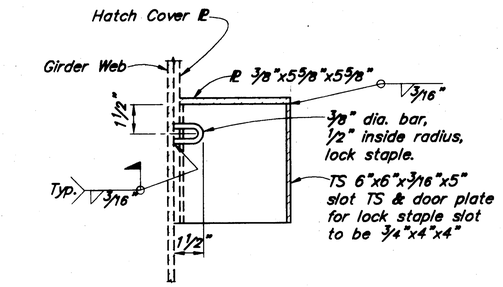

LOCK COVER DETAIL

MENDENHALL RIVER PEDESTRIAN BRIDGE

GIRDER DETAILS

STATE of ALASKA
DEPARTMENT of TRANSPORTATION and PUBLIC FACILITIES
JUNEAU, ALASKA

BRIDGE NO. 1904
DWG. NO. 7

STATE OF ALASKA 49TH Elmer E. Marx III No. CE 9480 9-22-99 REGISTERED PROFESSIONAL ENGINEER

Designed By: EEM
Detail Check By: DJS
Design Check By: DJS

F:\1904\1904-7.dwg
9/22/1999 12:40
Plot Scale = 0.67
Drawn or Revised By: CSA

STATE	PROJECT DESIGNATION	YEAR	SHEET NO.	TOTAL SHEETS
ALASKA	TEA-0967(6)/72120	1999	11	18

10 spaces @ 15'-3 5/8"± = 153'-0" | 10 spaces @ 12'-0" = 120'-0" | 10 spaces @ 15'-3 5/8"± = 153'-0"

Final Shop Camber "X" Ordinate (inch)	0	2.66	4.98	6.75	7.84	8.14	7.67	6.47	4.66	2.42	0.00	1.11	1.87	2.35	2.60	2.67	2.60	2.35	1.87	1.11	0.00	2.42	4.66	6.47	7.67	8.14	7.84	6.75	4.98	2.66	0
"Y" Ordinate (inch)	0	4.13	8.25	12.38	16.50	20.63	24.75	28.88	33.00	37.13	41.25	41.25	41.25	41.25	41.25	41.25	41.25	41.25	41.25	41.25	41.25	37.13	33.00	28.88	24.75	20.63	16.50	12.38	8.25	4.13	0
TOTAL Deflection (inch)	0	6.79	13.23	19.13	24.34	28.77	32.42	35.35	37.66	39.55	41.25	42.36	43.12	43.60	43.85	43.92	43.85	43.60	43.12	42.36	41.25	39.55	37.66	35.35	32.42	28.77	24.34	19.13	13.23	6.79	0

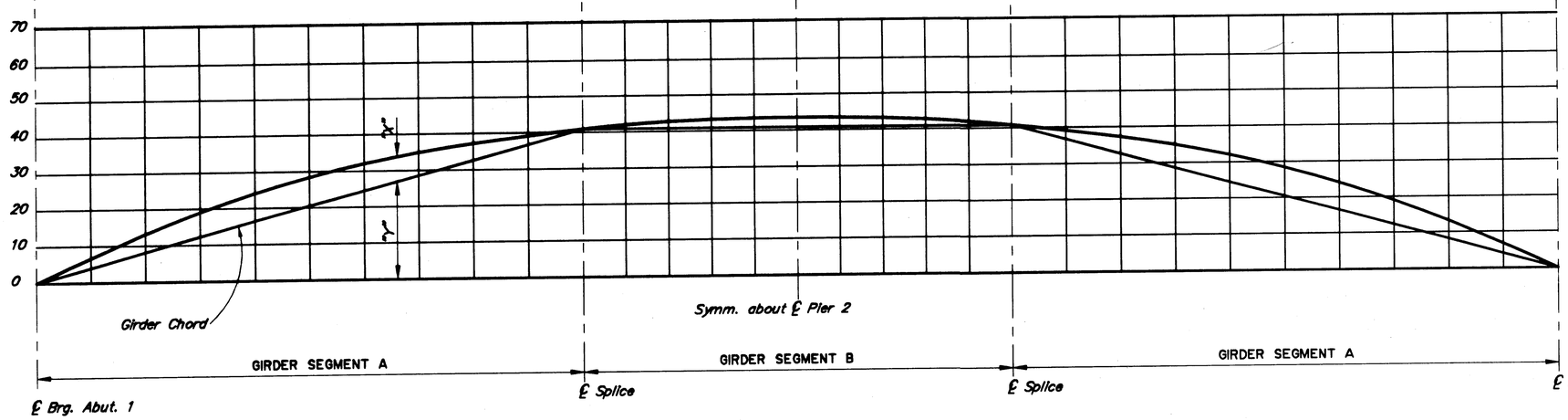

CAMBER DIAGRAM

No Scale

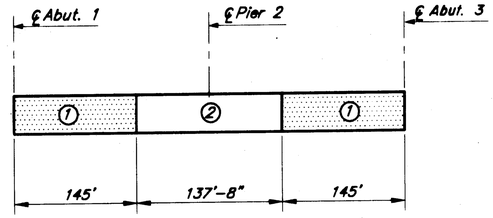

CONCRETE PLACEMENT DIAGRAM

No Scale

CONCRETE PLACING NOTES:

The numbers represent the sequence in which the slab concrete is to be placed. Sections of like numbers need not be placed simultaneously. However, all like numbered sections must be placed prior to placing any sections of the succeeding number. All forms and rebar shall be properly placed in a section prior to placing any of the concrete.

Each section must cure 48 hours prior to placing the next section.

STATE OF ALASKA
19TH
Elmer E. Marx III
No. CE 9490
9-22-99
PROFESSIONAL ENGINEER

Designed By: EEM
Detail Check By: DJS
Design Check By: DJS

F:\1904\1904-G.dgn
9/22/1999 12:42
Plot Scale = 20.00
Drawn By: SHS/bmm

MENDENHALL RIVER
PEDESTRIAN BRIDGE

GIRDER CAMBER

STATE of ALASKA
DEPARTMENT of TRANSPORTATION
and PUBLIC FACILITIES
JUNEAU, ALASKA

BRIDGE NO. 1904
DWG. NO. 8