# Department of Transportation and Public Facilities
## Statewide Design and Engineering Services Division

# JUNEAU, ALASKA

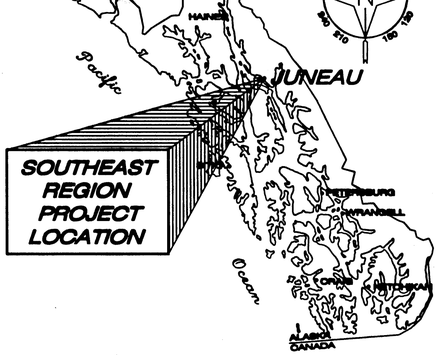


# FISH CREEK ROAD SAFETY IMPROVEMENTS

# ACHRO-0953(4) - 68269

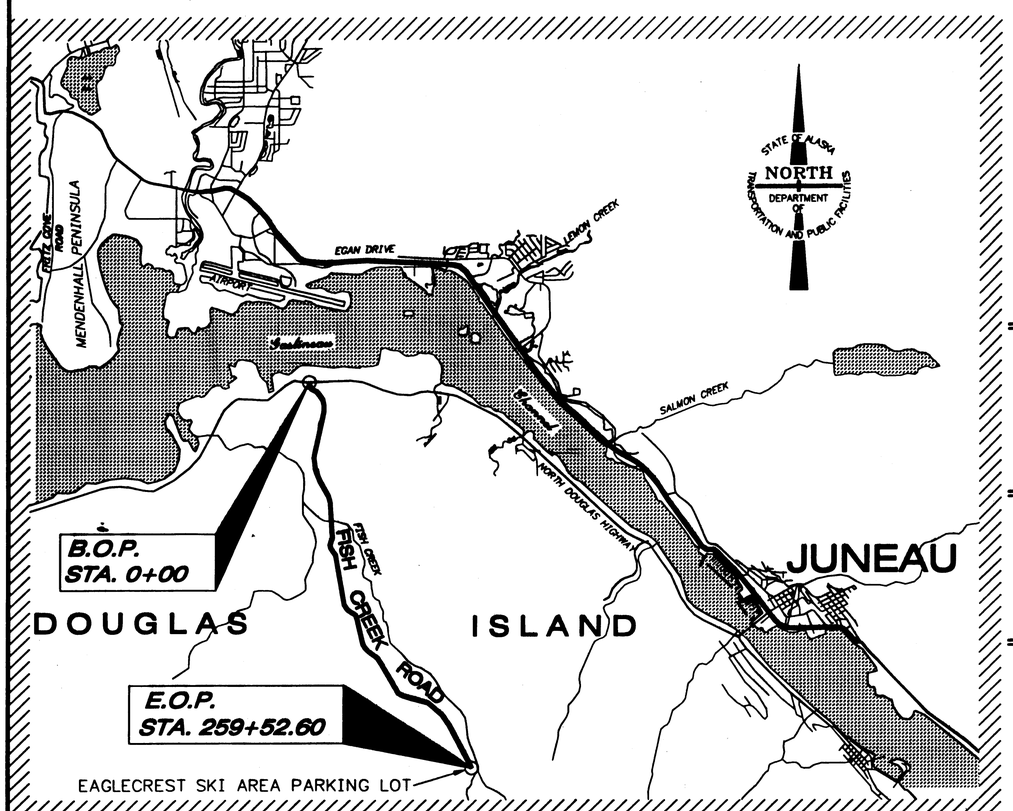


AS-BUILT PLANS

CONTRACTOR: GLACIER STATE CONTRACTORS
PROJ. ENGINEER: THAD HOPPER
BEG. DATE: APRIL 29, 2002
END DATE: OCTOBER 31, 2002

Project As-Built Drawings have been reviewed by the Project Engineer and represent to the best of my knowledge, the project as constructed.
Proj.Engr. Thad Hopper Date 7-22-03

## DESIGN DESIGNATION

| | |
|---|---|
| ADT 2002 | 170 |
| ADT 2007 | 200 |
| DHV 12% (2007) | 20 |
| %T | 3.8 |

## PROJECT SUMMARY

| | |
|---|---|
| LENGTH OF PROJECT | 5.15 mi. |
| LENGTH OF GRADING | 5.15 mi. |
| LENGTH OF PAVING | 5.15 mi. |
| WIDTH OF PAVING | VARIES 28' MAX. |
| DESIGN SPEED | V=40 MPH |

## THE FOLLOWING STANDARD DRAWINGS APPLY TO THIS PROJECT

A-1
D-01.02 L-23.01
D-04.20 S-30.02
D-06.10 S-34.00

G-00.01
G-04.06S
G-09.04S
G-10.01
G-20.00
G-29.03S


| | |
|---|---|
| A1 | TITLE SHEET |
| A2 | CONTROL LAYOUT |
| A3 | PROJECT LAYOUT PLAN |
| B1–B5 | TYPICAL SECTIONS |
| C1 | ESTIMATE OF QUANTITIES |
| C2 | SUPERELEVATION TABLE |
| D1 | CULVERT SUMMARY |
| E1–10 | PLAN AND PROFILE |
| F1–F3 | CULVERT INSTALLATION DETAILS |
| F4 | GUARDRAIL PLAN VIEW |
| F5–F6 | BRIDGE TRANSITION DETAILS |
| G1–G2 | TRAFFIC CONTROL PLAN |
| H1–H2 | EROSION AND SEDIMENT CONTROL |
| L1–L4 | TRAFFIC LOOPS |
| M1–M5 | NINEMILE CREEK FISH PASSAGE |
| M6 | INTERPRETIVE SIGN SUPPORT |


ROUTE: – MILEPOINT: –

PATH: Q:\Jnu\68269\Planset\A_Tsht.dwg
Tue, 15/Jan/02 02:12PM Kris
PLOT: PSPACE OR MSPACE: 1000mm=1m(F) TAB: TSHT

**STATE OF ALASKA**
DEPARTMENT OF TRANSPORTATION
& PUBLIC FACILITIES
STATEWIDE DESIGN & ENGINEERING SERVICES DIVISION

STATE OF ALASKA 49th Jack Daniel Beedle CE-5309 PROFESSIONAL ENGINEER

RECOMMENDED FOR APPROVAL:
PATRICK J. KEMP — DATE 1/16/02
REGIONAL PRE-CONSTRUCTION ENGINEER

APPROVED:
ROBERT DOLL — DATE 1-16-02
DIRECTOR, CONSTRUCTION & MAINTENANCE

CERTIFIED TRUE & CORRECT AS-BUILT OF ACTUAL FIELD CONDITION:
CONSTRUCTION PROJECT MANAGER — DATE

| STATE | PROJECT DESIGNATION | YEAR | SHEET NO. | TOTAL SHEETS |
|---|---|---|---|---|
| ALASKA | ACHRO-0953(4) | 2001 | A1 | 41 |

## PROJECT CONTROL

| PT | NORTHING | EASTING | ELEV | DESC |
|---|---|---|---|---|
| 1, | 492113.401, | 502047.380, | 153.58, | FCR-1 |
| 2, | 489370.703, | 501522.729, | 197.72, | FCR-2 |
| 3, | 488770.294, | 501412.349, | 248.78, | FCR-3 |
| 4, | 488452.696, | 501729.970, | 287.40, | FCR-4 |
| 5, | 470765.659, | 510471.988, | 1130.55, | FCR-5 |
| 6, | 484299.271, | 502773.947, | 541.20, | FCR-6 |
| 7, | 487084.877, | 502800.028, | 452.90, | FCR-7 |
| 8, | 486281.976, | 502930.409, | 512.78, | FCR-8 |
| 9, | 484791.735, | 503078.660, | 518.99, | FCR-9 |
| 10, | 484113.963, | 502779.757, | 548.95, | FCR-10 |
| 11, | 483072.688, | 503096.912, | 593.52, | FCR-11 |
| 12, | 481446.723, | 503279.159, | 722.37, | FCR-12 |
| 13, | 480965.021, | 503348.518, | 742.09, | FCR-13 |
| 14, | 480308.805, | 503688.003, | 772.92, | FCR-14 |
| 15, | 479644.805, | 504087.602, | 774.72, | FCR-15 |
| 16, | 478824.907, | 504143.903, | 749.95, | FCR-16 |
| 17, | 477569.211, | 504616.921, | 746.15, | FCR-17 |
| 18, | 477344.668, | 505044.679, | 782.63, | FCR-18 |
| 19, | 477076.634, | 505396.685, | 790.71, | FCR-19 |
| 20, | 476391.522, | 505795.106, | 834.28, | FCR-20 |
| 21, | 474878.284, | 506280.843, | 952.05, | FCR-21 |
| 22, | 474329.573, | 507327.823, | 1052.35, | FCR-22 |
| 23, | 474176.212, | 507814.246, | 1058.85, | FCR-23 |
| 24, | 474139.135, | 508570.487, | 1087.01, | FCR-24 |

HORIZONTAL CONTROL

HORIZONTAL CONTROL FOR THIS PROJECT IS BASED ON THE DOT/PF 2000 JUNEAU GRID

THE DOT/PF 2000 JUNEAU GRID SYSTEM IS A LOCAL GROUND COORDINATE SYSTEM BASED AT USC&GS FIRST ORDER CONTROL STATION EDDIE (1992/2000GPS). IT RELATES TO AKSPC ZONE 1 NAD83 THROUGH THE FOLLOWING PARAMETERS:
ZONE = NAD83 AKSPC ZONE 1
GRID SCALE = 0.999928875
CONVERGENCE = -0°45'27.26"
TRANSLATION ABOUT USC&GS POINT EDDIE AS FOLLOWS:
AKSPC NORTHING = 726482.8570M (2383469.17310 FT US)
AKSPC EASTING = 765832.8870M (2512570.06318 FT US)
LOCAL NORTHING = 152400.3048M (500000.0000 FT US)
LOCAL EASTING = 152400.3048M (500000.0000 FT US)

BASIS OF COORDINATES FOR THIS PROJECT ESTABLISHED WITH SKI PRO STATIC GPS PROCESSING
FCR-8, N 486281.976, E 502930.409
FCR-9, N 484791.735, E 503078.660

VERTICAL CONTROL

THE VERTICAL DATUM IS BASED ON GEOID '99 MODELED HEIGHTS. LEVELS WERE RUN FROM THE NOS BENCHMARK 2210C LOCATED DOWNTOWN, HAVING A PUBLISHED ELEVATION OF 8.960M (29.396FT) ABOVE MLLW TO USC&GS FIRST ORDER HORIZONTAL CONTROL STATION EDDIE. THE TIDAL EPOCH IS 1960-1978, BUT THIS ELEVATION HAS BEEN UPDATED WITH A 5 YEAR OBSERVATION PERIOD FROM JAN '94 TO DEC '98 PUBLISHED NOV '99. EDDIE HAS AN OBSERVED ELEVATION OF 26.516FT ABOVE MLLW. ELLIPSOID ELEVATION OF EDDIE ADJUSTED TO 40.643 FEET.

THE PROJECT SPECIFIC BASIS OF VERTICAL CONTROL IS FCR-9 WITH A GEOID'99 ELEVATION OF 518.99' ABOVE MLLW. FCR-9 IS A #5 REBAR WITH A 2" PLASTIC CAP.

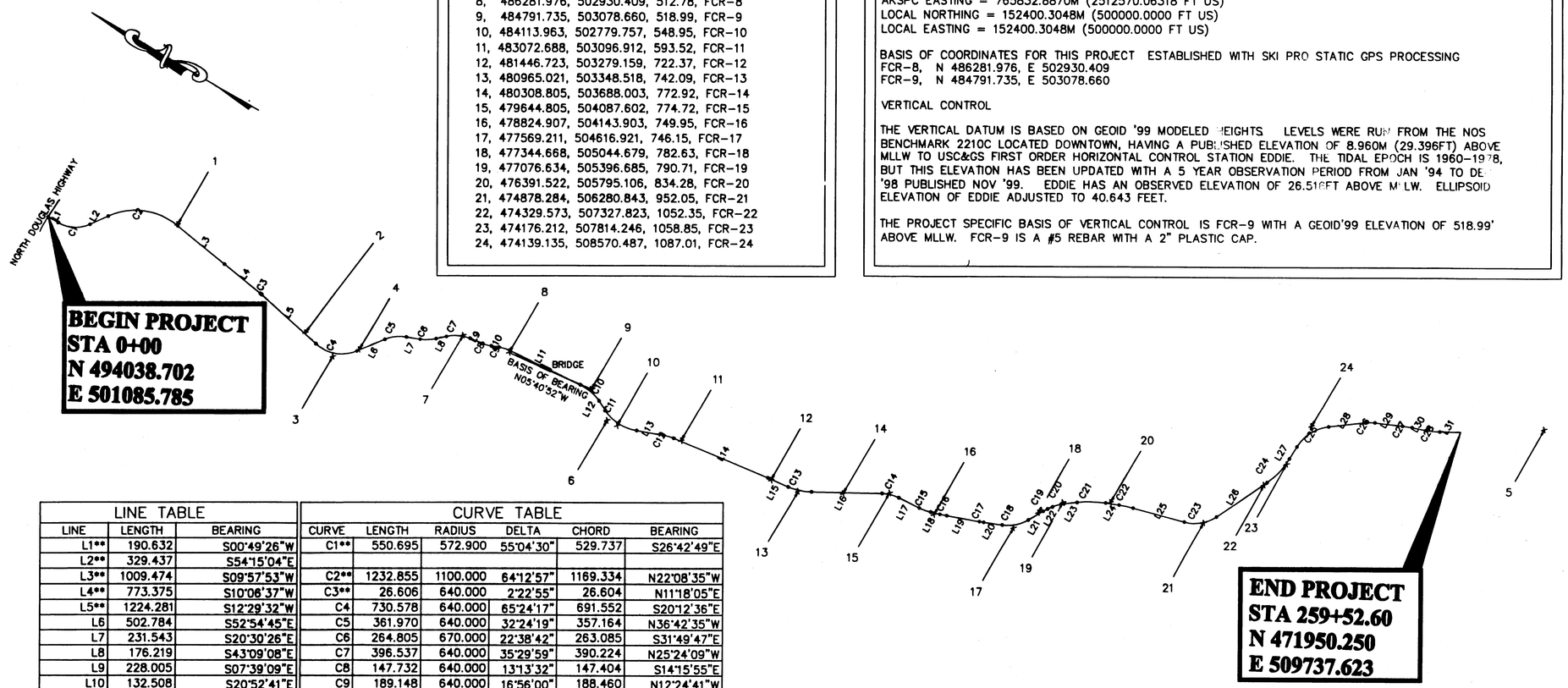


| LINE TABLE | | |
|---|---|---|
| LINE | LENGTH | BEARING |
| L1** | 190.632 | S00°49'26"W |
| L2** | 329.437 | S54°15'04"E |
| L3** | 1009.474 | S09°57'53"W |
| L4** | 773.375 | S10°06'37"W |
| L5** | 1224.281 | S12°29'32"W |
| L6 | 502.784 | S52°54'45"E |
| L7 | 231.543 | S20°30'26"E |
| L8 | 176.219 | S43°09'08"E |
| L9 | 228.005 | S07°39'09"E |
| L10 | 132.508 | S20°52'41"E |
| L11 | 1304.696 | S03°56'41"E |
| L12 | 186.294 | S25°24'32"W |
| L13 | 444.227 | S20°23'50"E |
| L14** | 1704.046 | S07°15'08"E |
| L15** | 367.774 | S06°36'29"E |
| L16** | 1171.322 | S29°05'18"E |
| L17 | 384.806 | S03°04'30"E |
| L18 | 155.820 | S17°29'29"E |
| L19** | 550.516 | S19°51'14"E |
| L20** | 313.944 | S21°16'56"E |
| L21 | 285.585 | S61°21'51"E |
| L22 | 88.609 | S53°49'27"E |
| L23 | 220.640 | S36°11'41"E |
| L24 | 219.21 | S21°50'10"E |
| L25 | 1034.35 | S16°17'04"E |
| L26 | 995.34 | S65°34'18"E |
| L27 | 236.57 | S88°30'33"E |
| L28** | 611.908 | S36°44'08"E |
| L29** | 459.201 | S23°32'20"E |
| L30** | 237.839 | S18°41'54"E |
| L31** | 348.503 | S29°33'52"E |

| CURVE TABLE | | | | | |
|---|---|---|---|---|---|
| CURVE | LENGTH | RADIUS | DELTA | CHORD | BEARING |
| C1** | 550.695 | 572.900 | 55°04'30" | 529.737 | S26°42'49"E |
| | | | | | |
| C2** | 1232.855 | 1100.000 | 64°12'57" | 1169.334 | N22°08'35"W |
| C3** | 26.606 | 640.000 | 2°22'55" | 26.604 | N11°18'05"E |
| C4 | 730.578 | 640.000 | 65°24'17" | 691.552 | S20°12'36"E |
| C5 | 361.970 | 640.000 | 32°24'19" | 357.164 | N36°42'35"W |
| C6 | 264.805 | 670.000 | 22°38'42" | 263.085 | S31°49'47"E |
| C7 | 396.537 | 640.000 | 35°29'59" | 390.224 | N25°24'09"W |
| C8 | 147.732 | 640.000 | 13°13'32" | 147.404 | S14°15'55"E |
| C9 | 189.148 | 640.000 | 16°56'00" | 188.460 | N12°24'41"W |
| C10 | 409.856 | 800.000 | 29°21'13" | 405.388 | N10°43'56"E |
| C11 | 639.575 | 800.000 | 45°48'22" | 622.678 | S02°30'21"W |
| C12 | 183.540 | 800.000 | 13°08'42" | 183.138 | N13°49'29"W |
| | | | | | |
| C13** | 392.353 | 1000.000 | 22°28'49" | 389.841 | S17°50'54"E |
| C14 | 290.573 | 640.000 | 26°00'48" | 288.083 | N16°04'54"W |
| C15 | 201.292 | 800.000 | 14°24'59" | 200.761 | S10°16'59"E |
| C16 | 118.125 | 2864.790 | 2°21'45" | 118.117 | S18°40'22"E |
| C17** | 71.412 | 2864.790 | 1°25'42" | 71.410 | S20°34'05"E |
| C18 | 447.721 | 640.000 | 40°04'55" | 438.647 | S41°19'23"E |
| C19 | 84.223 | 640.000 | 7°32'24" | 84.162 | N57°35'39"W |
| C20 | 196.923 | 640.000 | 17°37'46" | 196.147 | N45°00'34"W |
| C21 | 478.616 | 1909.860 | 14°21'30" | 477.364 | N29°00'56"W |
| C22 | 184.11 | 1900.000 | 5°33'07" | 184.04 | N19°03'37"W |
| C23 | 516.13 | 600.000 | 49°17'14" | 500.37 | S40°55'41"E |
| C24 | 520.44 | 1300.000 | 22°56'15" | 516.97 | S77°02'25"E |
| C25 | 647.173 | 716.200 | 51°46'25" | 625.378 | N62°37'21"W |
| C26** | 161.229 | 700.000 | 13°11'48" | 160.873 | N30°08'14"W |
| C27** | 161.351 | 1909.860 | 4°50'26" | 161.303 | N21°07'07"W |
| C28** | 227.579 | 1200.000 | 10°51'58" | 227.238 | S24°07'53"E |

** APPROXIMATE ONLY, MATCH EXISTING ROADWAY CENTERLINE.

GRAPHIC SCALE

1000 0 500 1000 2000 4000

( IN FEET )
1 inch = 1000 ft.

| REALIGNMENT WORK | | |
|---|---|---|
| STATION | NORTHING | EASTING |
| 51+50.00 | 489,305.26 | 501,489.33 |
| 87+86.95 | 486,197.96 | 502,970.54 |
| | | |
| 99+15.00 | 485,072.76 | 503,048.13 |
| 120+00.00 | 483,069.66 | 503,086.93 |
| | | |
| 154+92.63 | 479,759.77 | 504,011.57 |
| 166+65.00 | 478,620.87 | 504,241.38 |
| | | |
| 174+25.00 | 477,907.67 | 504,503.83 |
| 239+15.00 | 473,751.30 | 508,809.54 |

TH 7-22-03

PATH:
Q:\Jnu\68269\Planset\A2.dwg
Wed, 16/Jan/02 10:14AM Kris
PLOT:
PSPACE 1=1(F) OR MSPACE 1=1(F)
TAB: ESTIMATE

| ADDENDUM NUMBER |
|---|
| |
| ATTACHMENT NUMBER |
| |

RECORD OF REVISIONS

| No. | DATE | DESCRIPTION |
|---|---|---|
| | | |
| | | |
| | | |

JNU-FISH CREEK ROAD
SAFETY IMPROVEMENTS
PROJECT NO. 68269

**Control Layout**

DESIGNED BY: G. McLean

STATE OF ALASKA 49th Garrith Mclean S-9019 REGISTERED PROFESSIONAL ENGINEER

CHECKED BY: T. MOORE
DRAWN BY: G. McLean

STATE OF ALASKA
DEPARTMENT OF TRANSPORTATION & PUBLIC FACILITIES
STATEWIDE DESIGN & ENGINEERING SERVICES DIVISION

JNU-FISH CREEK ROAD
SAFETY IMPROVEMENTS
PROJECT NO. 68269

**Control Layout**

| PROJECT DESIGNATION NUMBER | |
|---|---|
| ACHRO-0953(4) | |
| STATE | YEAR |
| ALASKA | 2001 |
| SHEET NUMBER | TOTAL SHEETS |
| A2 | 41 |

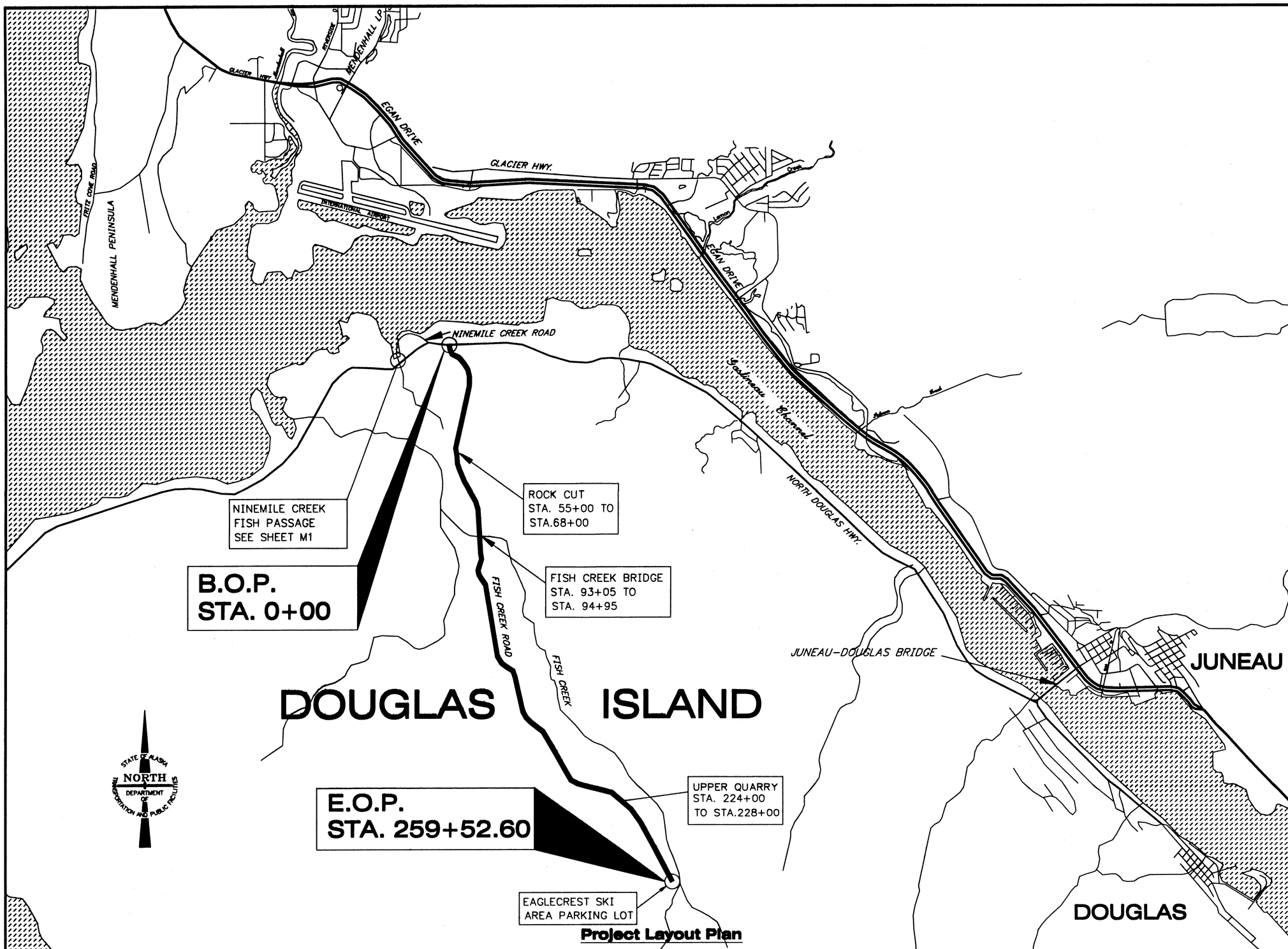


PATH:
Q:\Jnu\68269\Planset\A_Layout.dwg
Wed, 09/Jan/02 09:51AM Kris
PLOT:
PSPACE 1=1(F) OR MSPACE 1=1(F)
TAB: PLAN

| ADDENDUM NUMBER |
|---|
| |

| ATTACHMENT NUMBER |
|---|
| |

RECORD OF REVISIONS

| No. | DATE | DESCRIPTION |
|---|---|---|
| | | |
| | | |
| | | |

JNU-FISH CREEK ROAD
SAFETY IMPROVEMENTS
PROJECT NO. 68269

**Project Layout Plan**

TDT 7-22-03

DESIGNED BY: M. LAVERING

STATE OF ALASKA 49th Jack Daniel Beedle CE-5309 REGISTERED PROFESSIONAL ENGINEER

1/10/02

CHECKED BY: T. MOORE
DRAWN BY: K.K.

STATE OF ALASKA
DEPARTMENT OF TRANSPORTATION & PUBLIC FACILITIES
STATEWIDE DESIGN & ENGINEERING SERVICES DIVISION

JNU-FISH CREEK ROAD
SAFETY IMPROVEMENTS
PROJECT NO. 68269

**Project Layout Plan**

PROJECT DESIGNATION NUMBER
ACHRO-0953(4)

| STATE | YEAR |
|---|---|
| ALASKA | 2001 |
| SHEET NUMBER | TOTAL SHEETS |
| A3 | 41 |

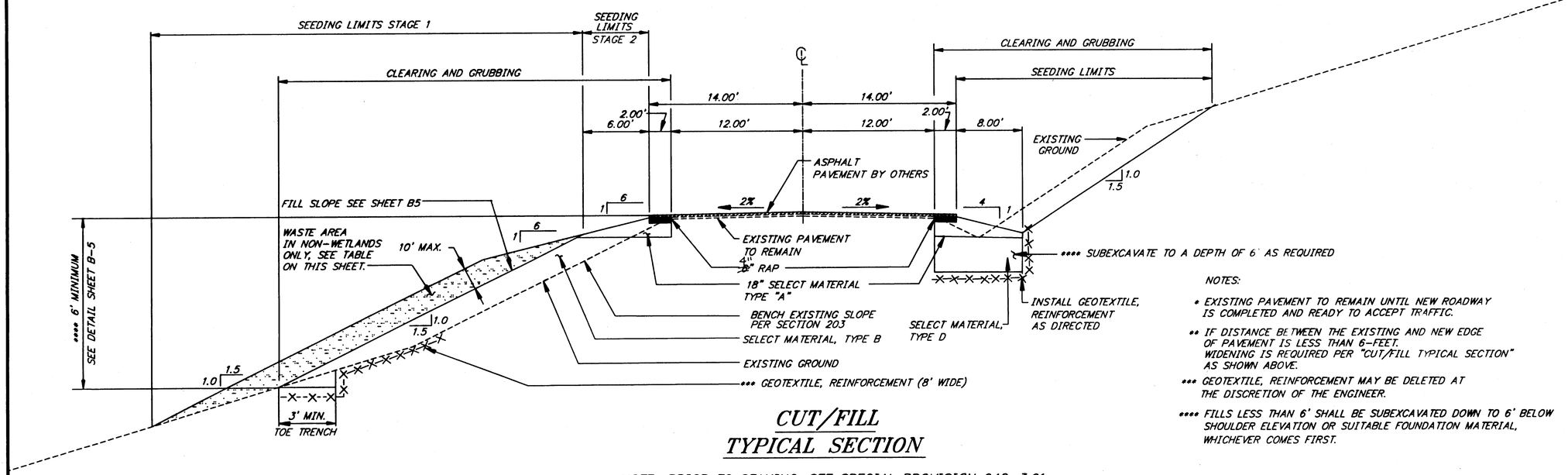


NOTES:

* EXISTING PAVEMENT TO REMAIN UNTIL NEW ROADWAY IS COMPLETED AND READY TO ACCEPT TRAFFIC.

** IF DISTANCE BETWEEN THE EXISTING AND NEW EDGE OF PAVEMENT IS LESS THAN 6-FEET. WIDENING IS REQUIRED PER "CUT/FILL TYPICAL SECTION" AS SHOWN ABOVE.

*** GEOTEXTILE, REINFORCEMENT MAY BE DELETED AT THE DISCRETION OF THE ENGINEER.

**** FILLS LESS THAN 6' SHALL BE SUBEXCAVATED DOWN TO 6' BELOW SHOULDER ELEVATION OR SUITABLE FOUNDATION MATERIAL, WHICHEVER COMES FIRST.

## CUT/FILL TYPICAL SECTION

NOTE: PRIOR TO STAKING, SEE SPECIAL PROVISION 642-3.01

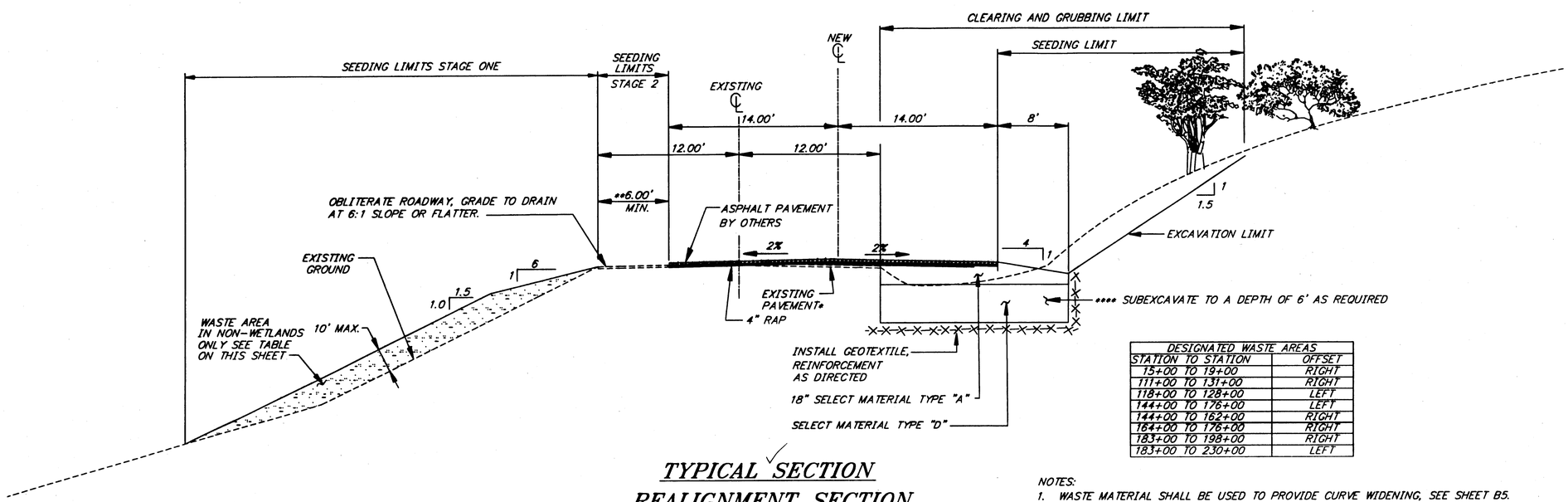


| DESIGNATED WASTE AREAS | |
|---|---|
| STATION TO STATION | OFFSET |
| 15+00 TO 19+00 | RIGHT |
| 111+00 TO 131+00 | RIGHT |
| 118+00 TO 128+00 | LEFT |
| 144+00 TO 176+00 | LEFT |
| 144+00 TO 162+00 | RIGHT |
| 164+00 TO 176+00 | RIGHT |
| 183+00 TO 198+00 | RIGHT |
| 183+00 TO 230+00 | LEFT |

## TYPICAL SECTION REALIGNMENT SECTION

NOTE: PRIOR TO STAKING, SEE SPECIAL PROVISION 642-3.01

NOTES:

1. WASTE MATERIAL SHALL BE USED TO PROVIDE CURVE WIDENING, SEE SHEET B5.
2. ANY REMAINING WASTE MATERIAL SHALL BE DEPOSITED ADJACENT TO FILL SLOPES IN DESIGNATED AREAS SHOWN IN THE TABLE ABOVE.
3. PLACE NO WASTE WITHIN 25 FEET OF CULVERT PIPE ENDS.
4. WASTE AREAS CONSTRUCTED PRIOR TO MAY 1, 2002 SHALL BE SEEDED BEFORE MAY 15, 2002. CUT AND FILL AND WASTE AREA CONSTRUCTED AFTER MAY 1, 2002 SHALL BE SEEDED WITHIN 15-DAYS OF COMPLETION.

PATH:
Q:\Jnu\68269\Planset\B_Typsec.dwg
Tue, 15/Jan/02 02:23PM Kris
PLOT:
PSPACE 1=1(F) OR MSPACE 1=1(F)
TAB: TYP1

ADDENDUM NUMBER

ATTACHMENT NUMBER

Tue, 15/Jan/02 02:23PM

RECORD OF REVISIONS

| No. | DATE | DESCRIPTION |
|---|---|---|
| | | |
| | | |
| | | |

JNU-FISH CREEK ROAD
SAFETY IMPROVEMENTS
PROJECT NO. 68269

**Typical Sections**

TH 7-22-03

DESIGNED BY: M. LAVERING

STATE OF ALASKA 49th Professional Engineer Jock Daniel Beedle CE-5309 REGISTERED PROFESSIONAL ENGINEER
1/16/02

CHECKED BY: T. MOORE

DRAWN BY: R. SNYDER

STATE OF ALASKA
DEPARTMENT OF TRANSPORTATION & PUBLIC FACILITIES
STATEWIDE DESIGN & ENGINEERING SERVICES DIVISION

JNU-FISH CREEK ROAD
SAFETY IMPROVEMENTS
PROJECT NO. 68269

**Typical Sections**

PROJECT DESIGNATION NUMBER

ACHRO-0953(4)

| STATE | YEAR |
|---|---|
| ALASKA | 2001 |

| SHEET NUMBER | TOTAL SHEETS |
|---|---|
| B1 | 41 |

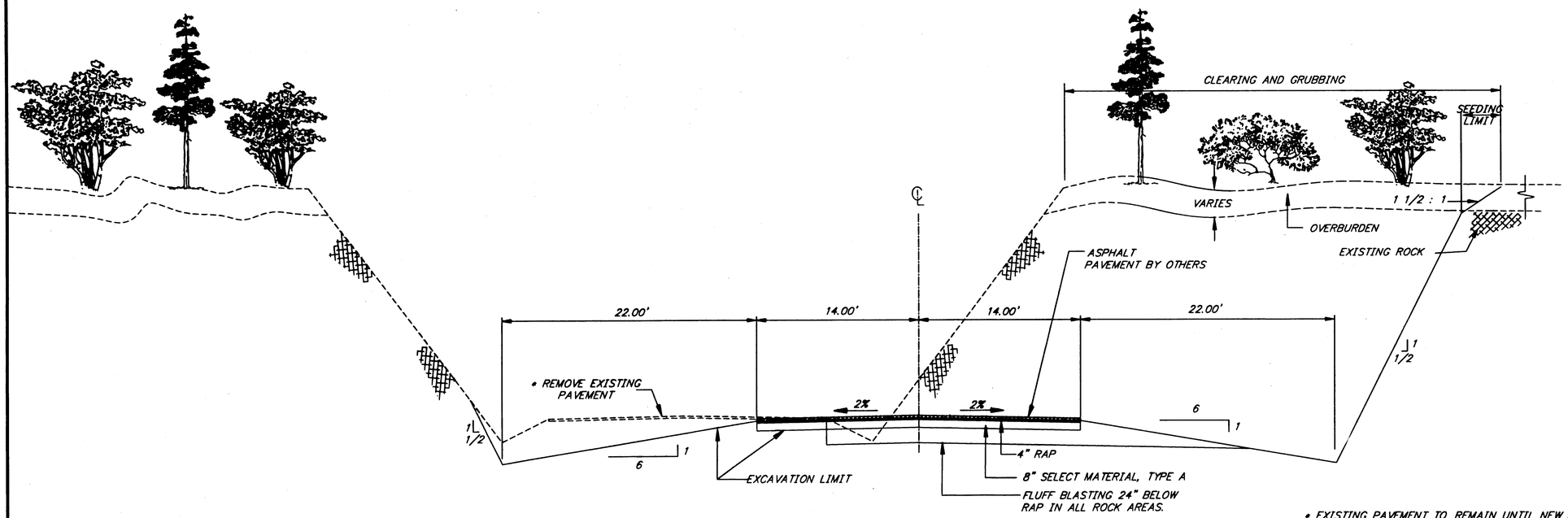


## ROCK CUT ✓
## TYPICAL SECTION
## STA 55+00 TO STA 68+00

NOTE: PRIOR TO STAKING, SEE SPECIAL PROVISION 642-3.01

* EXISTING PAVEMENT TO REMAIN UNTIL NEW ROADWAY IS COMPLETED AND READY TO ACCEPT TRAFFIC.

*** GEOTEXTILE, REINFORCEMENT MAY BE DELETED. AT THE DISCRETION OF THE ENGINEER.

**** FILLS LESS THAN 6' SHALL BE SUBEXCAVATED DOWN TO 6' BELOW SHOULDER ELEVATION OR SUITABLE FOUNDATION MATERIAL, WHICHEVER COMES FIRST.

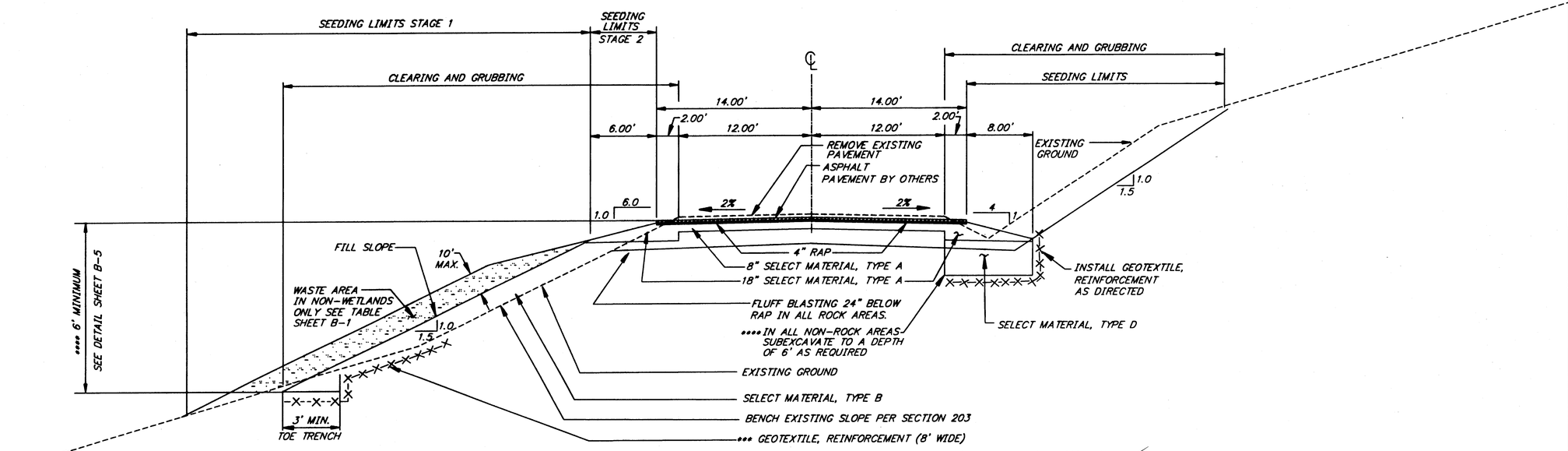


## SIGHT DISTANCE WORK TYPICAL SECTION ✓

NOTE: PRIOR TO STAKING, SEE SPECIAL PROVISION 642-3.01

PATH:
Q:\Jnu\68269\Planset\B_Typsec.dwg
Tue, 15/Jan/02 02:24PM Kris
PLOT:
PSPACE 1=1(F) OR MSPACE 1=1(F)
TAB: SAFETY TYPS

| ADDENDUM NUMBER |
|---|
| |

| ATTACHMENT NUMBER |
|---|
| Tue, 15/Jan/02 02:24PM |

RECORD OF REVISIONS

| No. | DATE | DESCRIPTION |
|---|---|---|
| | | |
| | | |
| | | |

JNU-FISH CREEK ROAD
SAFETY IMPROVEMENTS
PROJECT NO. 68269

**Typical Sections**

7-22-03 TB

DESIGNED BY: M. LAVERING

STATE OF ALASKA 49th Jack Daniel Beedle CE-5309 REGISTERED PROFESSIONAL ENGINEER

1/16/02

CHECKED BY: T. MOORE

DRAWN BY: R. SNYDER

STATE OF ALASKA
DEPARTMENT OF TRANSPORTATION & PUBLIC FACILITIES
STATEWIDE DESIGN & ENGINEERING SERVICES DIVISION

JNU-FISH CREEK ROAD
SAFETY IMPROVEMENTS
PROJECT NO. 68269

**Typical Sections**

PROJECT DESIGNATION NUMBER
ACHRO-0953(4)

| STATE | YEAR |
|---|---|
| ALASKA | 2001 |

| SHEET NUMBER | TOTAL SHEETS |
|---|---|
| B2 | 41 |

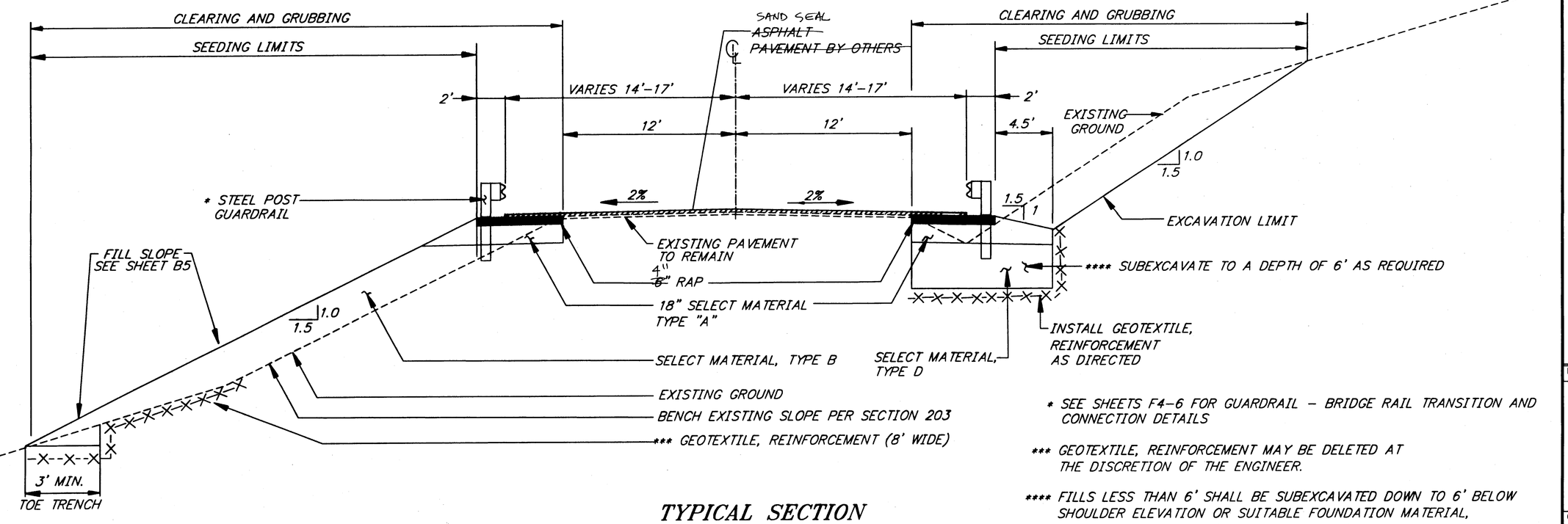


## TYPICAL SECTION AT FISH CREEK BRIDGE APPROACH

NOTE: PRIOR TO STAKING, SEE SPECIAL PROVISION 642-3.01

* SEE SHEETS F4-6 FOR GUARDRAIL - BRIDGE RAIL TRANSITION AND CONNECTION DETAILS

*** GEOTEXTILE, REINFORCEMENT MAY BE DELETED AT THE DISCRETION OF THE ENGINEER.

**** FILLS LESS THAN 6' SHALL BE SUBEXCAVATED DOWN TO 6' BELOW SHOULDER ELEVATION OR SUITABLE FOUNDATION MATERIAL, WHICHEVER COMES FIRST.

PATH:
Q:\Jnu\68269\Planset\B_Typsec.dwg
Tue, 15/Jan/02 02:24PM Kris
PLOT:
PSPACE 1=1(F) OR MSPACE 1=1(F)
TAB: SAFETY TYPS

ADDENDUM NUMBER

ATTACHMENT NUMBER

Tue, 15/Jan/02 02:24PM

RECORD OF REVISIONS

| No. | DATE | DESCRIPTION |
|---|---|---|
| | | |
| | | |
| | | |

JNU-FISH CREEK ROAD
SAFETY IMPROVEMENTS
PROJECT NO. 68269

**Typical Sections**

TH 7-22-03

DESIGNED BY: M. LAVERING

STATE OF ALASKA 49th Jack Daniel Beedle CE-5309 REGISTERED PROFESSIONAL ENGINEER
1/16/02

CHECKED BY: T. MOORE

DRAWN BY: R. SNYDER

STATE OF ALASKA
DEPARTMENT OF TRANSPORTATION & PUBLIC FACILITIES
STATEWIDE DESIGN & ENGINEERING SERVICES DIVISION

**JNU-FISH CREEK ROAD SAFETY IMPROVEMENTS PROJECT NO. 68269**

**Typical Sections**

PROJECT DESIGNATION NUMBER

**ACHRO-0953(4)**

| STATE | YEAR |
|---|---|
| ALASKA | 2001 |
| SHEET NUMBER | TOTAL SHEETS |
| B3 | 41 |

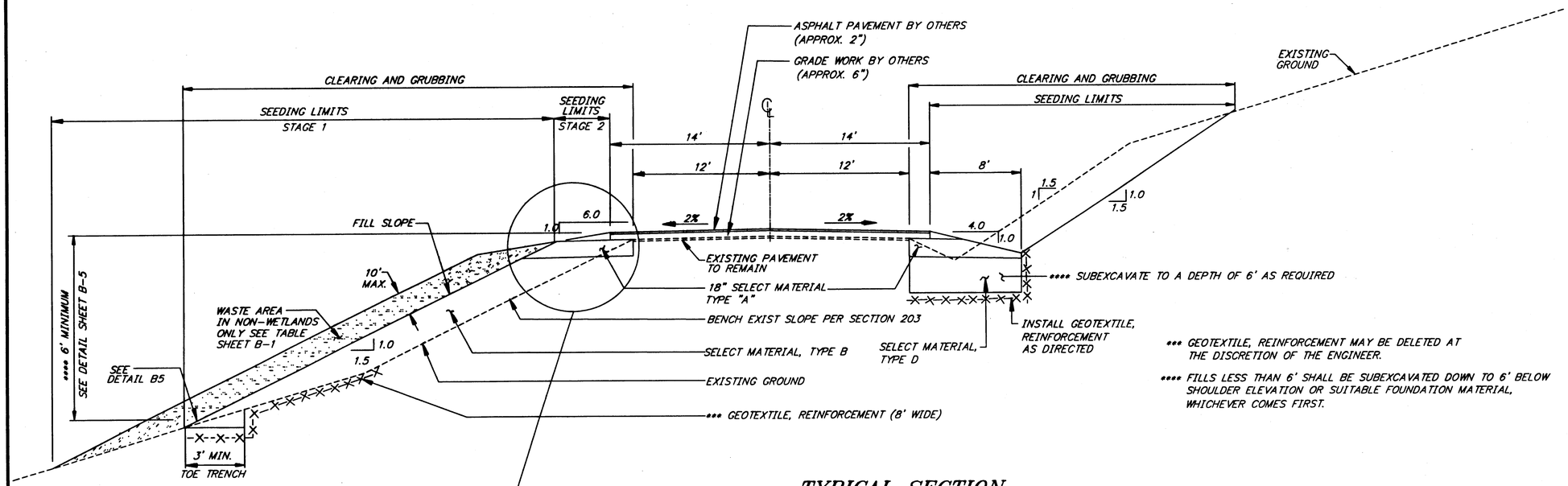


*** GEOTEXTILE, REINFORCEMENT MAY BE DELETED AT THE DISCRETION OF THE ENGINEER.

**** FILLS LESS THAN 6' SHALL BE SUBEXCAVATED DOWN TO 6' BELOW SHOULDER ELEVATION OR SUITABLE FOUNDATION MATERIAL, WHICHEVER COMES FIRST.

## TYPICAL SECTION
## GRADE WORK BY OTHERS

NOTE: PRIOR TO STAKING, SEE SPECIAL PROVISION 642-3.01

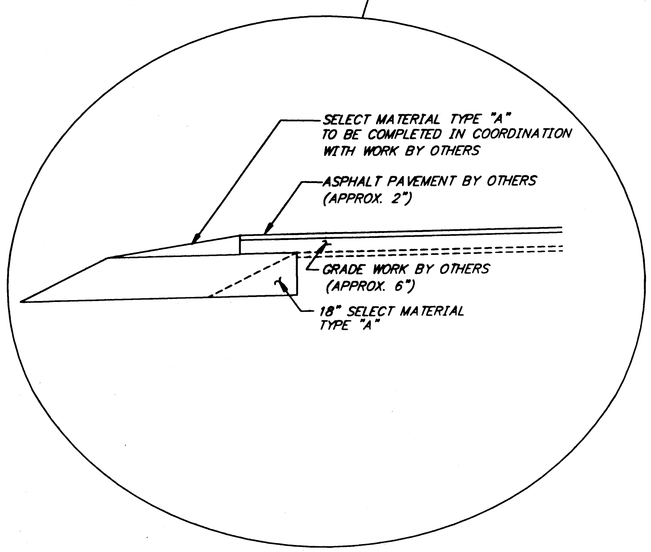


### GRADE WORK BY OTHERS

| SEGMENT NUMBER | NOTES | BEGIN TRANSITION | | FULL DEPTH FROM | | FULL DEPTH TO | | END TRANSITION | | NOTES |
|---|---|---|---|---|---|---|---|---|---|---|
| | | STATION | REMARKS | STATION | REMARKS | STATION | REMARKS | STATION | REMARKS | |
| 1 | 1 | 0+66 | MATCH EXISTING | 1+66 | ADD 0.48 | 23+25 | ADD 0.48 | 24+25 | MATCH EXISTING | 1 |
| 2 | 1 | 39+50 | MATCH EXISTING | 40+50 | ADD 0.48 | 41+25 | ADD 0.48 | 42+25 | MATCH EXISTING | 1 |
| 3 | 2 | 91+95 | MATCH SIGHT DISTANCE WORK | 91+95 | ADD 0.48 | TRANSITION TO | | 93+05 | MATCH BRIDGE DECK | 3 |
| 4 | 3 | 94+95 | MATCH BRIDGE DECK | 95+95 | ADD 0.48 | 99+00 | ADD 0.48 | 99+00 | MATCH REALIGNMENT | 2 |
| 5 | 1,4 | 138+25 | MATCH EXISTING | 139+25 | ADD 0.48 | 148+00 | ADD 0.48 | 149+00 | MATCH EXISTING | 1,4 |
| 6 | 2 | 167+04 | MATCH REALIGNMENT | 167+04 | ADD 0.48 | 174+25 | ADD 0.48 | 174+25 | MATCH REALIGNMENT | 2 |
| 7 | 2,4 | 239+15 | MATCH REALIGNMENT | 239+15 | ADD 0.48 | 258+52 | ADD 0.48 | E.O.P. | MATCH EXISTING | 1,4 |
| | | | | | | | | | | |
| | | | | | | | | | | |

NOTES:

1. WHEN THE REMARKS ARE "MATCH EXISTING" CONSTRUCT THE RAP SHOULDERS PER THE "CUT/FILL" TYPICAL SECTION FOR THE FULL LENGTH OF THE TRANSITION.
2. WHEN THE REMARKS ARE "MATCH SIGHT DISTANCE WORK" OR "MATCH REALIGNMENT WORK" THE TRANSITION BETWEEN THE TYPICAL SECTIONS IS ABRUPT. CONSTRUCT A TEMPORARY RAMP (10' MIN) UPON THE COMPLETION OF THE ADJACENT WORK, PER DETAIL SHEET F4.
3. WHEN THE REMARKS ARE "MATCH BRIDGE DECK" CONSTRUCT RAP SHOULDERS AND EMBANKMENT WIDTHS PER "APPROACH TO BRIDGE" TYPICAL.
4. WITHIN THIS SEGMENT "SIGHT DISTANCE WORK" IS ALSO SPECIFIED. CONSTRUCT THE SIGHT DISTANCE WORK AS SPECIFIED. STAKE THE WORK FOR THE ADDITIONAL EMBANKMENT REQUIRED FOR "GRADE WORK BY OTHERS" TYPICAL.

PATH:
Q:\Jnu\68269\Plonset\B_Typsec.dwg
Tue, 15/Jan/02 02:24PM Kris
PLOT:
PSPACE 1=1(F) OR MSPACE 1=1(F)
TAB: SAFETY TYPS

ADDENDUM NUMBER

ATTACHMENT NUMBER

Tue, 15/Jan/02 02:24PM

RECORD OF REVISIONS

| No. | DATE | DESCRIPTION |
|---|---|---|
| | | |
| | | |
| | | |

JNU-FISH CREEK ROAD
SAFETY IMPROVEMENTS
PROJECT NO. 68269

**Typical Sections**

7-22-03

DESIGNED BY: M. LAVERING

STATE OF ALASKA 49th Jack Daniel Beede CE-5309 REGISTERED PROFESSIONAL ENGINEER

1/16/02

CHECKED BY: T. MOORE

DRAWN BY: R. SNYDER

STATE OF ALASKA
DEPARTMENT OF TRANSPORTATION
& PUBLIC FACILITIES
STATEWIDE DESIGN & ENGINEERING
SERVICES DIVISION

JNU-FISH CREEK ROAD
SAFETY IMPROVEMENTS
PROJECT NO. 68269

**Typical Sections**

PROJECT DESIGNATION NUMBER

ACHRO-0953(4)

| STATE | YEAR |
|---|---|
| ALASKA | 2001 |

| SHEET NUMBER | TOTAL SHEETS |
|---|---|
| B4 | 41 |

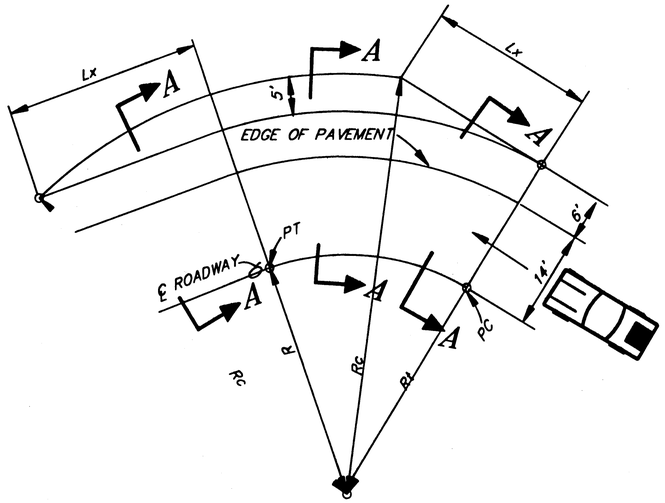


## HORIZONTAL CURVE WIDENING
N.T.S.

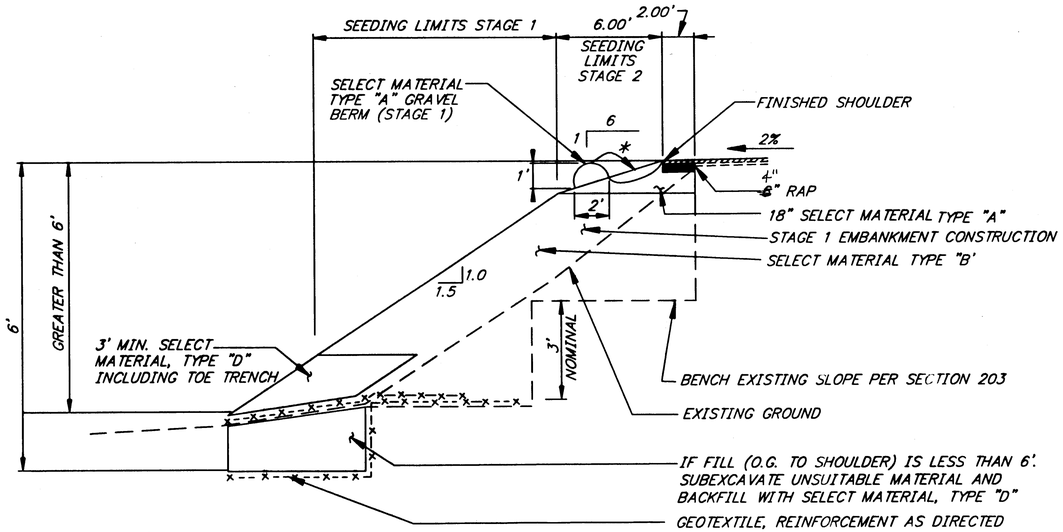


## SUBEXCAVATION/EMBANKMENT CONSTRUCTION DETAIL

NOTES:

* 1. WHEN STAGE 1 SEEDING IS SATISFACTORLY ESTABLISHED, BERM MAY BE GRADED INTO FINAL POSITION

2. BREAK BERM AT, AND DIRECT FLOW TO ROCK FLUME LOCATIONS SHOWN ON THE PLAN AND PROFILE SHEETS.

3. STAGE 1 SEEDING AND BERM ARE NOT REQUIRED IF STAGE 1 IS CONSTRUCTED WITH SELECT MATERIAL, TYPE "D"

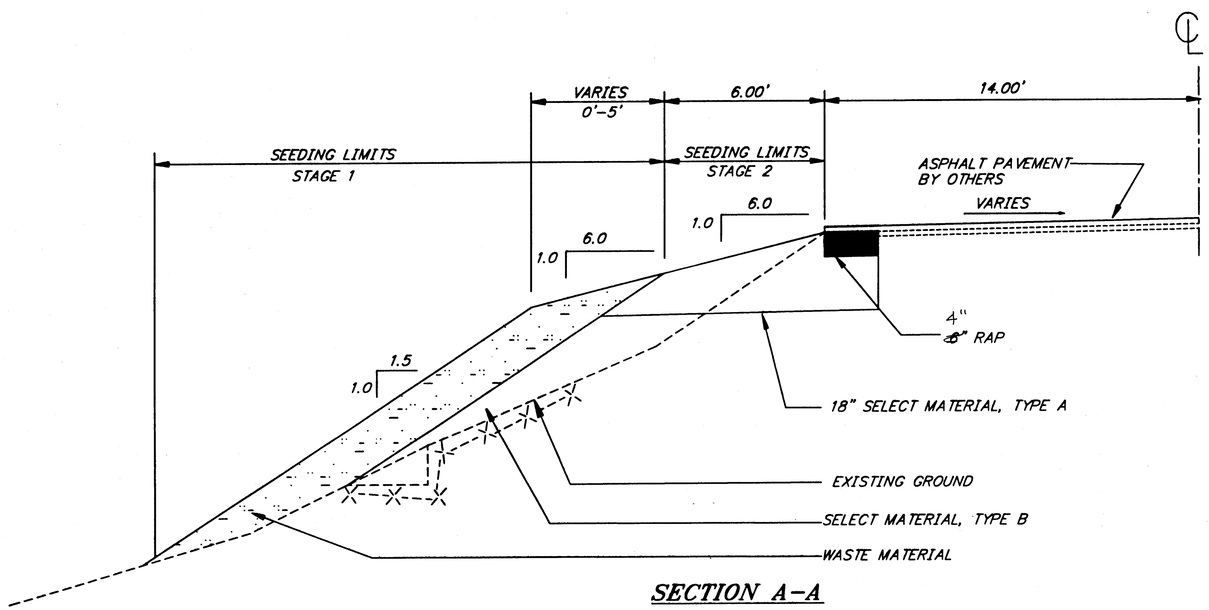


## SECTION A-A

HORIZONTAL CURVE WIDENING SUMMARY

| CURVE P.I. | Rt DIMENSION | Rc DIMENSION | Lx DIMENSION | R RADIUS |
|---|---|---|---|---|
| | | | | |
| 57+48.27 | 660 | 665 | 80 | 640' |
| 67+56.69 | 660 | 665 | 80 | 640' |
| 102+13.41 | 820 | 825 | 90 | 800' |
| 109+38.01 | 820 | 825 | 90 | 800' |
| 156+50.70 | 660 | 665 | 80 | 640' |
| 162+79.42 | 820 | 825 | 90 | 800' |
| 178+22.81 | 660 | 665 | 80 | 640' |
| 210+41.16 | 620 | 625 | 80 | 600' |
| | | | | |

PATH:
Q:\Jnu\68269\Planset\B5_det.dwg
Wed, 09/Jan/02 11:03AM Kris
PLOT:
PSPACE 1=1(F) OR MSPACE 1=1(F)
TAB: ESTIMATE

ADDENDUM NUMBER

ATTACHMENT NUMBER

Wed, 09/Jan/02 11:03AM

RECORD OF REVISIONS

| No. | DATE | DESCRIPTION |
|---|---|---|
| | | |
| | | |
| | | |

JNU-FISH CREEK ROAD
SAFETY IMPROVEMENTS
PROJECT NO. 68269

**Typical Details**

7-22-03 TJ

DESIGNED BY: M. LAVERING

STATE OF ALASKA 49th Jack Daniel Beedle Jr. CE-5309 REGISTERED PROFESSIONAL ENGINEER

1/16/02

CHECKED BY: T. MOORE

DRAWN BY: K.K.

STATE OF ALASKA
DEPARTMENT OF TRANSPORTATION & PUBLIC FACILITIES
STATEWIDE DESIGN & ENGINEERING SERVICES DIVISION

JNU-FISH CREEK ROAD
SAFETY IMPROVEMENTS
PROJECT NO. 68269

**Typical Details**

PROJECT DESIGNATION NUMBER

ACHRO-0953(4)

| STATE | YEAR |
|---|---|
| ALASKA | 2001 |
| SHEET NUMBER | TOTAL SHEETS |
| B5 | 41 |

# ESTIMATE OF QUANTITIES

| ITEM No. | ITEM | UNIT | TOTAL |
|---|---|---|---|
| | | | |
| 201 (3B) | Clearing And Grubbing | Lump Sum | All Required |
| 201 (6) | Selective Tree Removal | Each | 100 |
| 202 (13) | Removal and Disposal of Culvert Pipe | Lump Sum | All Required |
| 203 (11) | Unclassified Excavation | Lump Sum | All Required |
| 203 (12) | Embankment | Lump Sum | All Required |
| 204 (2) | Culvert Subexcavation and Backfill | Contingent Sum | All Required |
| | | | |
| 312(1) | Haulage & Placement Reprocessed Asphalt Pavement (RAP) | Cubic Yard | 3548.93 ~~5650~~ |
| | | | |
| 602 (2A) | Structural Plate Pipe-Arch, Span 8'2", Rise 6'2" | Linear Foot | 20 ~~40~~ |
| 602 (2B) | Structural Plate Pipe-Arch, Span 11'4", Rise 7'4" | Linear Foot | 64 |
| | | | |
| 603 (9-24) | 24" Corrugated Aluminum Pipe | Linear Foot | 1603.5 ~~948~~ |
| 603 (9-36) | 36" Corrugated Aluminum Pipe | Linear Foot | ~~0~~ ~~28~~ |
| 603 (9-48) | 48" Corrugated Aluminum Pipe | Linear Foot | 93 ~~70~~ |
| 603 (9-60) | 60" Corrugated Aluminum Pipe | Linear Foot | 107 ~~48~~ |
| 603 (21-24) | 24" Corrugated Polethylene Pipe | Linear Foot | 227 ~~423~~ |
| 603 (11-24) | End Section for 24" Corrugated Aluminum Pipe | Each | ~~0~~ ~~33~~ |
| 606 (1) | W-Beam Guardrail | Linear Foot | 500 |
| 606 (11) | ET-2000 End Section | Each | 4 |
| | | | |
| 618 (1) | Seeding | Lump Sum | All Required |
| 630 (2) | Geotextile, Reinforcement | Square Yard | 22,584 ~~24,000~~ |
| 640 (1) | Mobilization and Demobilization | Lump Sum | All Required |
| 641 (1) | Erosion and Pollution Control Administration | Lump Sum | All Required |
| 641 (2) | Erosion and Pollution Control | Contingent Sum | All Required |
| 641 (3) | Erosion and Pollution Control Devices | Lump Sum | All Required |
| 642 (1) | Construction Surveying | Lump Sum | All Required |
| 642 (3) | Three Person Survey Party | Hour | ~~0~~ ~~5~~ |
| 643 (2) | Traffic Maintenance | Lump Sum | All Required |
| 669 (1) | Permanent Traffic Recorder | Lump Sum | All Required |
| 690 (1) | Nine Mile Fish Passage | Lump Sum | All Required |
| | | | |

NOTES: 1. IT IS ANTICIPATED THAT ALL UNCLASSIFIED EXCAVATION WITH THE EXCEPTION OF ROCK AND THE EXISTING ROADWAY EMBANKMENT IS WASTE.

2 THE UNCLASSIFIED EXCAVATION QUANITY, SHOWN ON THE PLAN SHEETS DO NOT INCLUDE AN ANTICIPATED 20,000 C.Y. OF SUBEXCAVATION.

CHANGE ORDER ITEMS

| | | |
|---|---|---|
| 201(3C) | ADDITIONAL CLEARING & GRUBBING | L.S. |
| 203(11A) | ADDITIONAL EXCAVATION | L.S. |
| 203(12A) | ADDITIONAL EMBANKMENT | L.S. |
| 203(13) | ADDITIONAL CRUSHING | L.S. |
| 203(14) | CREEK REALIGNMENT | L.S. |
| 203(15) | ADDITIONAL GRADING | L.S. |
| 203(16) | ROADWAY SUB-EXCAVATION | L.S. |
| 611(3) | RIPRAP SLOPE STABILIZATION | L.S. |
| 618(1A) | ADDITIONAL SEEDING | L.S. |
| 643(2A) | ADDITIONAL TRAFFIC MAINTENANCE | L.S. |
| 644(8) | OFFICE SPACE RENT | MONTH |
| 690(1A) | ADDITIONAL FISH WEIR WORK | L.S. |

PATH:
Q:\Jnu\68269\Planset\C_Est.dwg
Wed, 16/Jan/02 03:18PM Kris
PLOT:
PSPACE 1=1(F) OR MSPACE 1=1(F)
TAB: ESTIMATE

ADDENDUM NUMBER

ATTACHMENT NUMBER

RECORD OF REVISIONS

| No. | DATE | DESCRIPTION |
|---|---|---|
| | | |
| | | |
| | | |

JNU-FISH CREEK ROAD
SAFETY IMPROVEMENTS
PROJECT NO. 68269

Estimate of Quantities

TH 7-22-03

DESIGNED BY: M. LAVERING

STATE OF ALASKA 49th Jack Daniel Beedle CE-5309 REGISTERED PROFESSIONAL ENGINEER

1/16/02

CHECKED BY: T. MOORE

DRAWN BY: K.K.

STATE OF ALASKA
DEPARTMENT OF TRANSPORTATION & PUBLIC FACILITIES
STATEWIDE DESIGN & ENGINEERING SERVICES DIVISION

JNU-FISH CREEK ROAD
SAFETY IMPROVEMENTS
PROJECT NO. 68269

**Estimate of Quantities**

PROJECT DESIGNATION NUMBER
ACHRO-0953(4)

| STATE | YEAR |
|---|---|
| ALASKA | 2001 |

| SHEET NUMBER | TOTAL SHEETS |
|---|---|
| C1 | 41 |

# CROSS SLOPE TABLE

| STATION | LEFT | RIGHT | REMARKS | STATION | LEFT | RIGHT | REMARKS | STATION | LEFT | RIGHT | REMARKS | STATION | LEFT | RIGHT | REMARKS |
|---|---|---|---|---|---|---|---|---|---|---|---|---|---|---|---|
| B.O.P. | −0.020 | −0.020 | | 80+54.45 | 0.000 | −0.020 | | 154+40.34 | 0.020 | −0.020 | | 194+14.71 | 0.020 | −0.020 | |
| 0+66.46 | −0.020 | −0.020 | | 80+87.36 | −0.020 | −0.020 | | 155+02.87 | 0.058 | −0.058 | P.C. | 194+47.62 | 0.000 | −0.020 | |
| 0+97.50 | −0.020 | 0.000 | | 81+44.22 | −0.020 | −0.020 | | 157+93.44 | 0.058 | −0.058 | P.T. | 194+80.53 | −0.020 | −0.020 | |
| 1+28.55 | −0.020 | 0.020 | | 81+77.13 | −0.020 | 0.000 | | 158+55.97 | 0.020 | −0.020 | | 195+29.48 | −0.020 | −0.020 | |
| 1+90.63 | −0.060 | 0.060 | P.C. | 82+10.04 | −0.020 | 0.020 | | 158+88.88 | 0.000 | −0.020 | | 195+62.39 | 0.000 | −0.020 | |
| 7+41.33 | −0.060 | 0.060 | P.T. | 82+29.79 | −0.032 | 0.032 | P.C. | 159+21.80 | −0.020 | −0.020 | | 195+95.30 | 0.020 | −0.020 | |
| 8+03.41 | −0.020 | 0.020 | | 82+72.58 | −0.058 | 0.058 | | 160+97.06 | −0.020 | −0.020 | | 196+18.34 | 0.034 | −0.034 | P.C. |
| 8+34.46 | −0.020 | 0.000 | | 83+34.74 | −0.058 | 0.058 | | 161+29.97 | −0.020 | 0.000 | | 198+57.58 | 0.034 | −0.034 | P.T. |
| 8+65.50 | −0.020 | −0.020 | | 83+77.53 | −0.032 | 0.032 | P.T. | 161+62.88 | −0.020 | 0.020 | | 198+80.62 | 0.020 | −0.020 | |
| 9+60.50 | −0.020 | −0.020 | | 83+97.28 | −0.020 | 0.020 | | 161+78.24 | −0.029 | 0.029 | P.C. | 199+13.53 | 0.000 | −0.020 | |
| 9+93.42 | 0.000 | −0.020 | | 84+24.46 | −0.020 | 0.003 | | 162+18.83 | −0.054 | 0.054 | P.T. | 199+46.44 | −0.020 | −0.020 | |
| 10+26.33 | 0.020 | −0.020 | | 84+30.19 | −0.017 | 0.000 | | 163+38.95 | −0.054 | 0.054 | | 206+99.34 | −0.020 | −0.020 | |
| 10+70.76 | 0.047 | −0.047 | P.C. | 84+43.78 | −0.011 | −0.011 | | 163+79.54 | −0.029 | 0.029 | | 207+32.25 | −0.020 | 0.000 | |
| 23+03.62 | 0.047 | −0.047 | P.T. | 84+57.37 | 0.000 | −0.017 | | 163+94.90 | −0.020 | 0.020 | | 207+65.16 | −0.020 | 0.020 | |
| 23+48.05 | 0.020 | −0.020 | | 84+63.10 | 0.003 | −0.020 | | 164+27.81 | −0.020 | 0.000 | | 208+29.34 | −0.059 | 0.059 | P.C. |
| 23+80.96 | 0.000 | −0.020 | | 84+90.28 | 0.020 | −0.020 | | 164+60.72 | −0.020 | −0.020 | | 213+45.47 | −0.059 | 0.059 | P.T. |
| 24+13.88 | −0.020 | −0.020 | | 85+10.03 | 0.032 | −0.032 | P.C. | 164+84.89 | −0.020 | −0.020 | | 2140+9.65 | −0.020 | 0.020 | |
| 39+58.11 | −0.020 | −0.020 | | 85+52.82 | 0.058 | −0.058 | | 165+17.81 | −0.020 | 0.000 | | 214+42.56 | −0.020 | 0.000 | |
| 39+91.03 | 0.000 | −0.020 | | 86+56.39 | 0.058 | −0.058 | | 165+35.36 | −0.017 | 0.017 | P.C. | 214+75.47 | −0.020 | −0.020 | |
| 40+23.94 | 0.020 | −0.020 | | 86+99.18 | 0.032 | −0.032 | P.T. | 165+50.72 | −0.020 | 0.020 | | 222+37.14 | −0.020 | −0.020 | |
| 40+86.47 | 0.058 | −0.058 | P.C. | 87+18.93 | 0.020 | −0.020 | | 165+60.59 | −0.026 | 0.026 | | 222+70.05 | −0.020 | 0.000 | |
| 41+13.07 | 0.058 | −0.058 | P.T. | 87+51.84 | 0.000 | −0.020 | | 166+28.25 | −0.026 | 0.026 | | 223+02.96 | −0.020 | 0.020 | |
| 41+75.60 | 0.020 | −0.020 | | 87+84.75 | −0.020 | −0.020 | | 166+38.12 | −0.020 | 0.020 | | 223+40.81 | −0.043 | 0.043 | P.C. |
| 42+08.51 | 0.000 | −0.020 | | 99+22.70 | −0.020 | −0.020 | | 166+53.48 | −0.017 | 0.017 | P.T. | 228+61.25 | −0.043 | 0.043 | P.T. |
| 42+41.43 | −0.020 | −0.020 | | 99+55.61 | 0.000 | −0.020 | | 166+71.03 | −0.020 | 0.000 | | 228+99.10 | −0.020 | 0.000 | |
| 52+09.00 | −0.020 | −0.020 | | 99+88.52 | 0.020 | −0.020 | | 167+03.95 | −0.020 | −0.020 | | 229+32.01 | −0.020 | 0.020 | |
| 52+41.92 | −0.020 | 0.000 | | 100+03.88 | 0.029 | −0.029 | P.C. | 171+28.30 | −0.020 | −0.020 | | 229+64.92 | −0.020 | −0.020 | |
| 52+74.83 | −0.020 | 0.020 | | 100+44.47 | 0.054 | −0.054 | | 171+61.21 | −0.020 | 0.000 | | 229+71.11 | −0.020 | −0.020 | |
| 53+37.36 | −0.058 | 0.058 | P.C. | 103+73.14 | 0.054 | −0.054 | | 171+94.13 | −0.020 | 0.020 | | 230+04.02 | 0.000 | −0.020 | |
| 60+67.93 | −0.058 | 0.058 | P.T. | 104+13.73 | 0.029 | −0.029 | P.T. | 172+04.00 | −0.026 | 0.026 | P.C. | 230+36.93 | 0.020 | −0.020 | |
| 61+30.46 | −0.020 | 0.020 | | 104+29.09 | 0.020 | −0.020 | | 172+75.41 | −0.026 | 0.026 | P.T. | 230+97.82 | 0.057 | −0.057 | P.C. |
| 61+63.37 | −0.020 | 0.000 | | 104+62.00 | 0.000 | −0.020 | | 172+85.28 | −0.020 | 0.020 | | 237+44.99 | 0.057 | −0.057 | P.T. |
| 61+96.29 | −0.020 | −0.020 | | 104+94.91 | −0.020 | −0.020 | | 173+18.20 | −0.020 | 0.000 | | 238+05.88 | 0.020 | −0.020 | |
| 64+85.15 | −0.020 | −0.020 | | 105+18.85 | −0.020 | −0.020 | | 173+51.11 | −0.020 | −0.020 | | 238+38.79 | 0.000 | −0.020 | |
| 65+18.06 | 0.000 | −0.020 | | 105+51.76 | −0.020 | 0.000 | | 174+60.99 | −0.020 | −0.020 | | 238+71.70 | −0.020 | −0.020 | |
| 65+50.97 | 0.020 | −0.020 | | 105+84.67 | −0.020 | 0.020 | | 174+93.91 | −0.020 | 0.000 | | 242+30.19 | −0.020 | −0.020 | |
| 65+70.72 | 0.032 | −0.032 | P.C. | 106+00.03 | −0.029 | 0.029 | P.C. | 175+26.82 | −0.020 | 0.020 | | 242+63.10 | 0.000 | −0.020 | |
| 66+13.51 | 0.058 | −0.058 | | 106+40.62 | −0.054 | 0.054 | | 175+89.35 | −0.058 | 0.058 | P.C. | 242+96.01 | 0.020 | −0.020 | |
| 68+89.90 | 0.058 | −0.058 | | 111+99.01 | −0.054 | 0.054 | | 180+37.07 | −0.058 | 0.058 | P.T. | 243+56.90 | 0.057 | −0.057 | P.C. |
| 69+32.69 | 0.032 | −0.032 | P.T. | 112+39.60 | −0.029 | 0.029 | P.T. | 180+99.60 | −0.020 | 0.020 | | 245+18.13 | 0.057 | −0.057 | P.T. |
| 69+52.44 | 0.020 | −0.020 | | 112+54.96 | −0.020 | 0.020 | | 181+32.51 | −0.020 | 0.000 | | 245+79.02 | 0.020 | −0.020 | |
| 69+85.35 | 0.000 | −0.020 | | 112+87.87 | −0.020 | 0.000 | | 181+65.43 | −0.020 | −0.020 | | 246+11.93 | 0.000 | −0.020 | |
| 70+18.26 | −0.020 | −0.020 | | 113+20.78 | −0.020 | −0.020 | | 182+37.09 | −0.020 | −0.020 | | 246+44.84 | −0.020 | −0.020 | |
| 70+78.66 | −0.020 | −0.020 | | 115+62.06 | −0.020 | −0.020 | | 182+70.00 | 0.000 | −0.020 | | 248+88.47 | −0.020 | −0.020 | |
| 71+11.57 | −0.020 | 0.000 | | 115+94.97 | 0.000 | −0.020 | | 183+02.91 | 0.020 | −0.020 | | 249+21.38 | 0.000 | −0.020 | |
| 71+44.48 | −0.020 | 0.020 | | 116+27.88 | 0.020 | −0.020 | | 183+22.66 | 0.032 | −0.032 | P.C. | 249+54.29 | 0.020 | −0.020 | |
| 71+64.23 | −0.032 | 0.032 | P.C. | 116+83.83 | 0.054 | −0.054 | P.C. | 183+65.45 | 0.058 | −0.058 | P.T. | 249+77.33 | 0.034 | −0.034 | P.C. |
| 72+07.02 | −0.058 | 0.058 | | 118+67.37 | 0.054 | −0.054 | P.T. | 183+64.09 | 0.058 | −0.058 | | 251+38.68 | 0.034 | −0.034 | P.T. |
| 73+86.24 | −0.058 | 0.058 | | 119+23.32 | 0.020 | −0.020 | | 184+06.88 | 0.032 | −0.032 | | 251+61.72 | 0.020 | −0.020 | |
| 74+29.03 | −0.032 | 0.032 | P.T. | 119+56.23 | 0.000 | −0.020 | | 184+26.63 | 0.020 | −0.020 | | 251+94.63 | 0.000 | −0.020 | |
| 74+48.78 | −0.020 | 0.020 | | 119+89.14 | −0.020 | −0.020 | | 184+32.96 | 0.020 | −0.020 | | 252+27.54 | −0.020 | −0.020 | |
| 74+81.69 | −0.020 | 0.000 | | 138+25.64 | −0.020 | −0.020 | | 184+95.49 | 0.058 | −0.058 | P.C. | 252+69.56 | −0.020 | −0.020 | |
| 75+14.60 | −0.020 | −0.020 | | 138+58.56 | −0.020 | 0.000 | | 186+92.41 | 0.058 | −0.058 | P.T. | 253+02.47 | −0.020 | 0.000 | |
| 75+19.68 | −0.020 | −0.020 | | 138+91.47 | −0.020 | 0.020 | | 187+54.94 | 0.020 | −0.020 | | 253+35.38 | −0.020 | 0.020 | |
| 75+52.59 | 0.000 | −0.020 | | 139+39.19 | −0.049 | 0.049 | P.C. | 187+87.85 | 0.000 | −0.020 | | 253+76.52 | −0.045 | 0.045 | P.C. |
| 75+85.50 | 0.020 | −0.020 | | 143+31.54 | −0.049 | 0.049 | P.T. | 188+20.77 | −0.020 | −0.020 | | 256+04.10 | −0.045 | 0.045 | P.T. |
| 76+05.25 | −0.032 | 0.032 | P.C. | 14379.26 | −0.020 | 0.020 | | 188+24.19 | −0.020 | −0.020 | | 256+45.24 | −0.020 | 0.020 | |
| 76+48.04 | 0.058 | −0.058 | | 144+12.17 | −0.020 | 0.000 | | 188+57.10 | 0.000 | −0.020 | | 256+78.15 | −0.020 | 0.000 | |
| 79+59.00 | 0.058 | −0.058 | | 144+45.09 | −0.020 | −0.020 | | 188+90.01 | 0.020 | −0.020 | | 257+11.06 | −0.020 | −0.020 | |
| 80+01.79 | −0.032 | 0.032 | P.T. | 153+74.51 | −0.020 | −0.020 | | 189+13.05 | 0.034 | −0.034 | P.C. | E.O.P | −0.020 | −0.020 | |
| 80+21.54 | 0.020 | −0.020 | | 154+07.43 | 0.000 | −0.020 | | 193+91.67 | 0.034 | −0.034 | P.T. | | | | |

PATH:
Q:\Jnu\68269\Planset\C_super elev.dwg
Wed, 09/Jan/02 11:53AM Kris
PLOT:
PSPACE 1=1(F) OR MSPACE 1=1(F)
TAB: ESTIMATE

ADDENDUM NUMBER

ATTACHMENT NUMBER

RECORD OF REVISIONS

| No. | DATE | DESCRIPTION |
|---|---|---|
| | | |

JNU-FISH CREEK ROAD
SAFETY IMPROVEMENTS
PROJECT NO. 68269

**Super Elevation Table**

7-22-03 TB

DESIGNED BY: M. LAVERING

STATE OF ALASKA 49th Jack Daniel Beedle CE-5309 REGISTERED PROFESSIONAL ENGINEER

1/16/02

CHECKED BY: T. MOORE

DRAWN BY: M.L./ K.K.

STATE OF ALASKA
DEPARTMENT OF TRANSPORTATION & PUBLIC FACILITIES
STATEWIDE DESIGN & ENGINEERING SERVICES DIVISION

JNU-FISH CREEK ROAD
SAFETY IMPROVEMENTS
PROJECT NO. 68269

**Super Elevation Table**

PROJECT DESIGNATION NUMBER

ACHRO-0953(4)

| STATE | YEAR |
|---|---|
| ALASKA | 2001 |

| SHEET NUMBER | TOTAL SHEETS |
|---|---|
| C2 | 41 |

## CULVERT SUMMARY

| STATION | TYPE | DIAMETER (IN.) | LENGTH (FT.) LT | LENGTH (FT.) RT | REMARKS |
|---|---|---|---|---|---|
| 15+00 | CPP | 24 | 46 | | REMOVE EXISTING AND REPLACE WITH NEW |
| 25+40 | CAP | 24 | 10 | 10 | EXTEND |
| 41+75 | CAP | 24 | 20 | 20 | 2 CULVERTS/EXTEND |
| 46+60 | CAP | 24 | 20 | 20 | 2 CULVERTS/EXTEND |
| 54+50 | CAP | 24 | 17 | 6 | EXTEND |
| 68+35 | CPP | 24 | 84 | | REMOVE & REPLACE SKEW 30'± LEFT AHEAD |
| 70+35 | CAP | 24 | 7 | 10 | EXTEND |
| 73+35 | CAP | 24 | 3 | 16 | EXTEND |
| 74+35 | CAP | 36 | 12 | 16 | SKEW 45'± LEFT AHEAD/EXTEND |
| 78+15 | CAP | 24 | 5 | 12 | EXTEND |
| 79+25 | CAP | 24 | 14 | 20 | 2 CULVERTS/EXTEND |
| 79+75 | CAP | 24 | 13 | 10 | SKEW 30'± LEFT AHEAD/EXTEND |
| 82+85 | CAP | 24 | 12 | 12 | SKEW 30'± LEFT AHEAD/EXTEND |
| 84+85 | CAP | 24 | 12 | 12 | SKEW 30'± RIGHT AHEAD/EXTEND |
| 104+00 | CAP | 24 | 0 | 20 | SKEW 30'± RIGHT AHEAD/EXTEND |
| 109+60 | CAP | 24 | 23 | 0 | SKEW 30'± RIGHT AHEAD/EXTEND |
| 113+60 | CAP | 24 | 0 | 28 | SKEW 45'± LEFT AHEAD/EXTEND |
| 121+05 | CAP | 24 | 10 | 7 | EXTEND |
| 127+60 | CAP | 24 | 10 | 7 | EXTEND |
| 137+30 | CAP | 24 | 12 | 12 | SKEW 30'± RIGHT AHEAD/EXTEND |
| 142+90 | CPP | 24 | 66 | | REMOVE EXISTING AND REPLACE WITH NEW |
| 147+20 | CPP | 24 | 82 | | REMOVE EXISTING AND REPLACE WITH NEW |
| 162+25 | CAP | 24 | 17 | 6 | EXTEND |
| 166+75 | CPP | 24 | 48 | | REMOVE EXISTING AND REPLACE WITH NEW |
| 168+60 | CAP | 24 | 14 | 6 | EXTEND |
| 171+90 | CAP | 60 | 10 | 10 | EXTEND |
| 176+30 | CSP | 11'4" X 7'4" | 32 | 32 | 2 STRUCTURAL PLATE PIPE ARCHES, SEE SHEET F2 & F3 |
| 185+75 | CPP | 24 | 45 | | REMOVE EXISTING AND REPLACE |
| 189+40 | CAP | 24 | 0 | 17 | EXTEND |
| 196+50 | CAP | 24 | 0 | 17 | EXTEND |
| 199+65 | CAP | 24 | 0 | 20 | SKEW 30'± RIGHT AHEAD/EXTEND |
| 203+00 | CAP | 24 | 0 | 17 | EXTEND |
| 206+35 | CAP | 24 | 0 | 17 | EXTEND |
| 208+45 | CAP | 24 | 0 | 32 | EXTEND |
| 210+40 | CAP | 24 | 0 | 32 | EXTEND |
| 210+70 | CAP | 24 | 34 | | REMOVE AND DISPOSE, SEE NOTE #4. |
| 211+75 | CPP | 24 | 52 | | INSTALL NEW SKEW 30'± RIGHT AHEAD |
| 212+45 | CSP | 8'2" x 6'2" | 0 | 40 | STRUCTURAL PLATE PIPE ARCH/EXTEND |
| 213+45 | CAP | 48 | 0 | 42 | SKEW 25'± RIGHT AHEAD/EXTEND |
| 214+85 | CAP | 24 | 0 | 27 | SKEW 30'± RIGHT AHEAD/EXTEND |
| 222+30 | CAP | 60 | 0 | 28 | SKEW 45'± RIGHT AHEAD/EXTEND |
| 229+60 | CAP | 24 | 10 | 9 | SKEW 20'± LEFT AHEAD/EXTEND |
| 232+35 | CAP | 24 | 20 | 17 | SKEW 60'± RIGHT AHEAD/EXTEND |

## CULVERT SUMMARY

| STATION | TYPE | DIAMETER (IN.) | LENGTH (FT.) LT | LENGTH (FT.) RT | REMARKS |
|---|---|---|---|---|---|
| 235+60 | CAP | 24 | 20 | 17 | SKEW 60'± RIGHT AHEAD/EXTEND |
| 236+25 | CAP | 24 | 14 | 11 | SKEW 45'± LEFT AHEAD/EXTEND |
| 242+85 | CAP | 24 | 10 | 7 | EXTEND |
| 245+00 | CAP | 24 | 12 | 9 | SKEW 30'± RIGHT AHEAD/EXTEND |
| 245+85 | CAP | 24 | 20 | 14 | 2 CULVERTS/EXTEND |
| 250+95 | CAP | 24 | 10 | 7 | EXTEND |
| 252+25 | CAP | 24 | 12 | 9 | SKEW 30'± RIGHT AHEAD/EXTEND |
| 253+85 | CAP | 24 | 12 | 9 | SKEW 30'± LEFT AHEAD/EXTEND |
| 254+85 | CAP | 24 | 12 | 9 | SKEW 30'± RIGHT AHEAD/EXTEND |
| 256+15 | CAP | 24 | 10 | 7 | EXTEND |
| 257+35 | CAP | 24 | 10 | 7 | EXTEND |
| 258+55 | CAP | 24 | 10 | 7 | EXTEND |
| 259+40 | CAP | 48 | 14 | 14 | SKEW 45'± LEFT AHEAD/EXTEND |

NOTES:

1. Culverts scheduled for removal shall be replaced with new culverts in the same trench.
2. Culverts not shown in the summary but requiring replacement or extension shall be accomplished at the direction of the Engineer.
3. See sheets F1,F2 and F3 for culvert installation details.
4. The Contractor has the option of removing the culvert or filling the pipe w/ lean concrete mix and plugging the ends.

CAP = CORRUGATED ALUMINUM PIPE
CPP = CORRUGATED POLYETHYLENE PIPE
CSP = CORRUGATED STEEL PIPE

NOTE: SEE NEW CULVERT SUMMARY, SHEET D1A.

PATH: Q:\Jnu\68269\Planset\D_Sum.dwg
Wed, 09/Jan/02 01:43PM Kris
PLOT: PSPACE 1=1(F) OR MSPACE 1=1(F)
TAB: ESTIMATE

ADDENDUM NUMBER

ATTACHMENT NUMBER

RECORD OF REVISIONS

| No. | DATE | DESCRIPTION |
|---|---|---|
| | | |

JNU-FISH CREEK ROAD SAFETY IMPROVEMENTS PROJECT NO. 68269

Culvert Summary

TH 7-22-03

DESIGNED BY: M. LAVERING

STATE OF ALASKA 49th Jock Daniel Beedle CE-5309 REGISTERED PROFESSIONAL ENGINEER 1/16/02

CHECKED BY: T. MOORE

DRAWN BY: M.L./ K.K.

STATE OF ALASKA
DEPARTMENT OF TRANSPORTATION & PUBLIC FACILITIES
STATEWIDE DESIGN & ENGINEERING SERVICES DIVISION

JNU-FISH CREEK ROAD SAFETY IMPROVEMENTS PROJECT NO. 68269

**Culvert Summary**

PROJECT DESIGNATION NUMBER: ACHRO-0953(4)

| STATE | YEAR |
|---|---|
| ALASKA | 2001 |

| SHEET NUMBER | TOTAL SHEETS |
|---|---|
| D1 | 41 |

## CULVERT SUMMARY

| STATION | TYPE | DIAMETER (IN.) | LENGTH (FT.) LT | LENGTH (FT.) RT | REMARKS |
|---|---|---|---|---|---|
| 25+50 | CAP | 24 | 13 | 0 | |
| 25+50 | CAP | 24 | 0 | 7 | |
| 33+00 | CAP | 24 | 20 | 0 | 2 PIPES |
| 33+15 | CAP | 24 | 0 | 9.5 | |
| 37+50 | CAP | 24 | 0 | 22 | 2 PIPES |
| 38+00 | CAP | 24 | 28 | 0 | 2 PIPES |
| 41+35 | CAP | 24 | 30 | 0 | 2 PIPES |
| 41+50 | CAP | 24 | 0 | 16 | 2 PIPES |
| 46+50 | CAP | 24 | 23 | 19.5 | 2 PIPES |
| 53+40 | CAP | 24 | 18 | 13.5 | |
| 69+75 | CAP | 24 | 0 | 10 | |
| 70+00 | CAP | 24 | 9 | 0 | |
| 71+25 | CAP | 24 | 0 | 17 | |
| 71+50 | CAP | 24 | 4 | 0 | |
| 72+50 | CAP | 24 | 0 | 30 | |
| 73+40 | CAP | 24 | 6 | 0 | |
| 73+75 | CAP | 24 | 0 | 20 | |
| 74+29 | CAP | 24 | 4 | 0 | |
| 76+00 | CAP | 24 | 0 | 8.5 | |
| 76+00 | CAP | 24 | 3 | 0 | |
| 77+50 | CAP | 24 | 0 | 16 | |
| 78+75 | CAP | 24 | 12 | 24 | |
| 84+15 | CAP | 24 | 18 | 8 | |
| 103+50 | CAP | 24 | 0 | 55 | |
| 109+00 | CAP | 24 | 40 | 0 | |
| 113+00 | CPP | 24 | 0 | 30.5 | |
| 113+00 | CAP | 24 | 17.5 | 0 | |
| 120+55 | CAP | 24 | 15 | 7 | |
| 126+92 | CAP | 24 | 17 | 5 | |
| 136+65 | CAP | 24 | 14 | 0 | |
| 136+70 | CAP | 24 | 0 | 11.5 | |
| 141+90 | CAP | 24 | 5 | 0 | |
| 142+10 | CAP | 24 | 0 | 8.5 | |
| 146+25 | CAP | 24 | 29 | 0 | |
| 147+15 | CAP | 24 | 0 | 20 | |
| 161+50 | CAP | 24 | 20 | 0 | |
| 167+60 | CAP | 24 | 11.5 | 11.5 | |
| 193+25 | CAP | 24 | 0 | 20 | |
| 195+50 | CAP | 24 | 0 | 17 | |
| 198+50 | CAP | 24 | 0 | 34 | |
| 201+83 | CAP | 24 | 0 | 29 | |
| 205+60 | CAP | 24 | 0 | 52 | |
| 207+20 | CAP | 24 | 0 | 44 | |
| 209+10 | CAP | 24 | 0 | 48 | |
| 210+25 | CAP | 24 | 0 | 76 | |

## CULVERT SUMMARY

| STATION | TYPE | DIAMETER (IN.) | LENGTH (FT.) LT | LENGTH (FT.) RT | REMARKS |
|---|---|---|---|---|---|
| 213+00 | CAP | 24 | 0 | 48 | |
| 213+45 | CAP | 24 | 0 | 57 | |
| 217+80 | CAP | 24 | 0 | 36 | |
| 228+50 | CAP | 24 | 10 | 0 | |
| 228+67 | CAP | 24 | 0 | 12 | |
| 230+50 | CAP | 24 | 17 | 12 | |
| 233+50 | CAP | 24 | 73 | 43 | 2 PIPES |
| 235+00 | CAP | 24 | 18 | 10 | |
| 241+50 | CAP | 24 | 21 | 17 | 2 PIPES |
| 243+50 | CAP | 24 | 23 | 26 | 2 PIPES |
| 248+50 | CAP | 24 | 12 | 24 | 2 PIPES |
| 249+50 | CAP | 24 | 11 | 10 | |
| 250+60 | CAP | 24 | 8 | 10 | |
| 252+50 | CAP | 24 | 12 | 10 | |
| 253+25 | CAP | 24 | 22 | 0 | 2 PIPES |
| 254+65 | CAP | 24 | 0 | 5 | |
| 254+75 | CAP | 24 | 10 | 0 | |
| 255+75 | CAP | 24 | 11 | 0 | |
| 257+00 | CAP | 24 | 0 | 8 | |
| 257+25 | CAP | 24 | 13 | 0 | |
| | | | | | |
| 212+00 | CAP | 48 | 0 | 70 | |
| 258+50 | CAP | 48 | 0 | 3 | |
| 258+75 | CAP | 48 | 20 | 0 | |
| | | | | | |
| 170+50 | CAP | 60 | 20.5 | 10.5 | |
| 220+50 | CAP | 60 | 76 | | CROSS-PIPE |
| | | | | | |
| 15+00 | CPP | 24 | 52 | | CROSS-PIPE |
| 68+00 | CPP | 24 | 60 | | CROSS-PIPE |
| 184+50 | CPP | 24 | 55 | | CROSS-PIPE |
| 188+40 | CPP | 24 | 60 | | CROSS-PIPE |
| NOTE: THERE WERE NO 36" CULVERTS INSTALLED ON THIS PROJECT | | | | | |
| | | | | | |
| | | | | | |

**NOTES:**

1. Culverts scheduled for removal shall be replaced with new culverts in the same trench.
2. Culverts not shown in the summary but requiring replacement or extension shall be accomplished at the direction of the Engineer.
3. See sheets F1,F2 and F3 for culvert installation details.
4. The Contractor has the option of removing the culvert or filling the pipe w/ lean concrete mix and plugging the ends.

CAP = CORRUGATED ALUMINUM PIPE
CPP = CORRUGATED POLYETHYLENE PIPE
CSP = CORRUGATED STEEL PIPE

PATH:
Q:\Jnu\68269\Planset\D_Sum.dwg
Wed, 17/Sep/03 10:29AM kklemmetson
PLOT:
PSPACE 1=1(F) OR MSPACE 1=1(F)
TAB: ESTIMATE

ADDENDUM NUMBER

ATTACHMENT NUMBER

RECORD OF REVISIONS

| No. | DATE | DESCRIPTION |
|---|---|---|
| | | |

JNU-FISH CREEK ROAD
SAFETY IMPROVEMENTS
PROJECT NO. 68269

**Culvert Summary**

TB 9-18-03

DESIGNED BY: M. LAVERING

STATE OF ALASKA 49th Jack Daniel Beedle CE-5309 REGISTERED PROFESSIONAL ENGINEER

CHECKED BY: T. MOORE
DRAWN BY: M.L./ K.K.

STATE OF ALASKA
DEPARTMENT OF TRANSPORTATION & PUBLIC FACILITIES
STATEWIDE DESIGN & ENGINEERING SERVICES DIVISION
JNU-FISH CREEK ROAD
SAFETY IMPROVEMENTS
PROJECT NO. 68269
**Culvert Summary**

PROJECT DESIGNATION NUMBER
ACHRO-0953(4)

| STATE | YEAR |
|---|---|
| ALASKA | 2001 |

| SHEET NUMBER | TOTAL SHEETS |
|---|---|
| D1 A | 41 |

| STATE | PROJECT DESIGNATION | YEAR | SHEET NO. | TOTAL SHEETS |
|---|---|---|---|---|
| ALASKA | ACHRO-0953(4) | 2002 | F5 | 41 |

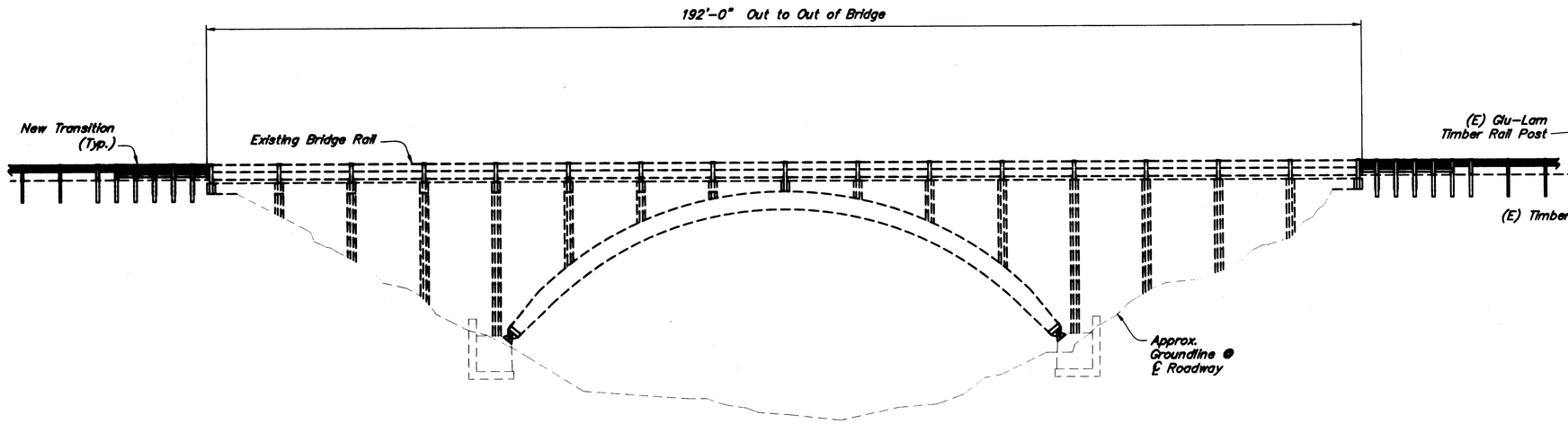


Elevation View

0 5 10 15 20 Feet

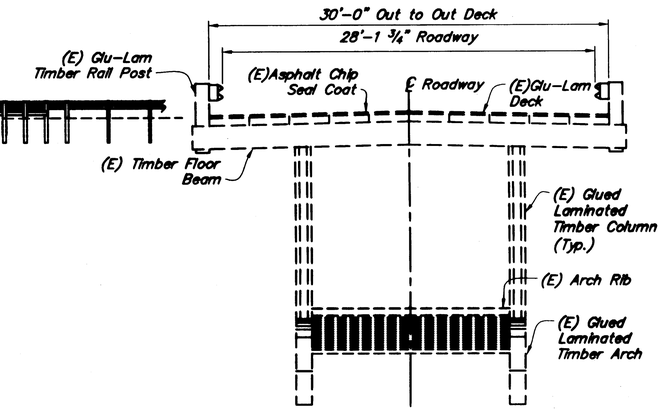


Typical Section

12 0 5 10 In. Feet

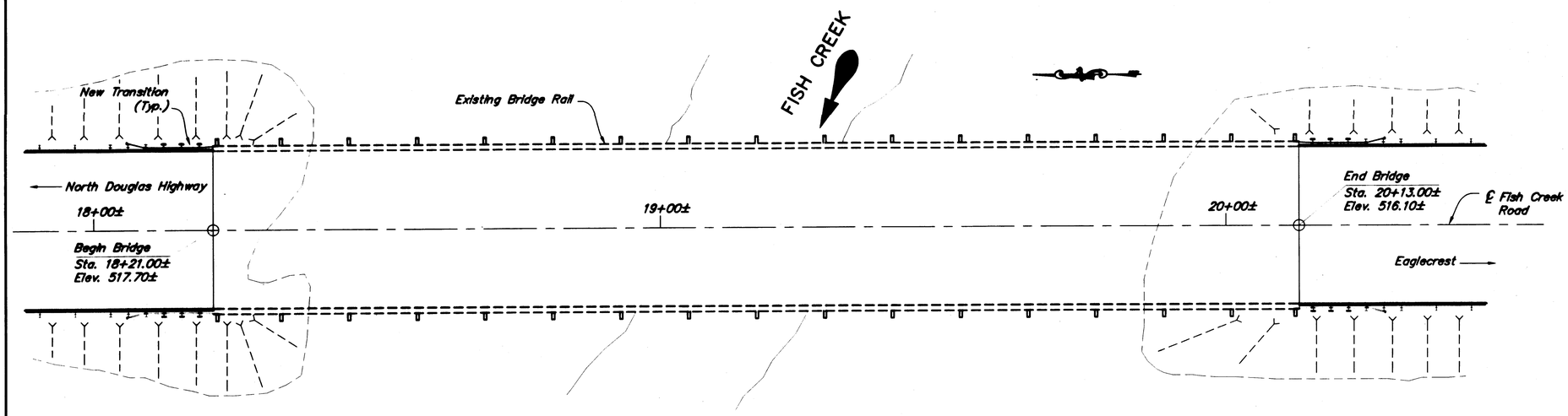


Plan View

0 5 10 15 20 Feet

GENERAL NOTES:

1. Elevation, Bearings, and Dimensions are based on "As-Built" plans.
2. Field verify all controlling dimensions before ordering or fabricating any material.

| LEGEND | | |
|---|---|---|
| SYMBOL | ABV. | DESCRIPTION |
| — — | (E) | EXISTING |
| ——— | NEW | NEW CONSTRUCTION |
| | | |
| | | |

ESTIMATE OF QUANTITIES

| ITEM NO. | ITEM | UNIT | SUBSTR. | SUPERSTR. | TOTAL |
|---|---|---|---|---|---|
| 606(13) | Bridge Rail/Guardrail Connection | Each | | 4 | 4 |
| | | | | | |
| | | | | | |

DRAWING INDEX

| TITLE | DWG. NO. |
|---|---|
| General Layout | 1 |
| Bridge Transition Details | 2 |
| | |

| | | | |
|---|---|---|---|
| DESIGNED BY: Mark Egger | CHECKED: Drew Siebach | LAYOUT BY: Mark Egger | CHECKED BY: Drew Siebach |
| DRAWN BY: L. Robertson | CHECKED: Mark Egger | SPECIFICATIONS BY: Mark Egger | PLANS & SPEC. COMPARED: Drew Siebach |
| QUANTITIES BY: | CHECKED: | APPROVAL RECOMMENDED BY: | |

STATE OF ALASKA
DEPARTMENT OF TRANSPORTATION AND PUBLIC FACILITIES
BRIDGE SECTION

STATE OF ALASKA 49TH Drew Siebach No. CE-9931 REGISTERED PROFESSIONAL ENGINEER

# FISH CREEK BRIDGE

## FISH CREEK ROAD

## GENERAL LAYOUT

BRIDGE NO. 1291

DWG. NO. 1

| STATE | PROJECT DESIGNATION | YEAR | SHEET NO. | TOTAL SHEETS |
|---|---|---|---|---|
| ALASKA | ACHR0-0953(4) | 2002 | F6 | 41 |

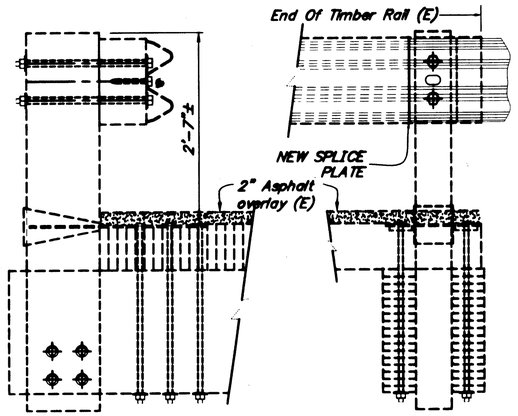


Side Elevation

End Railpost Traffic Side-Elevation

Railpost Details

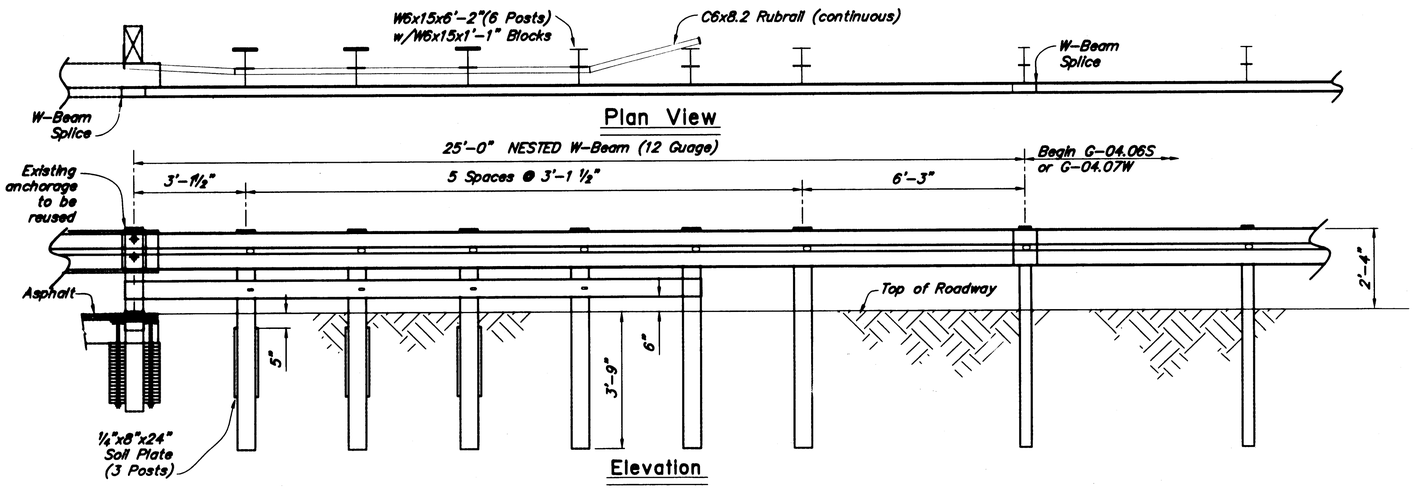


Plan View

Elevation

Transition Layout Plan

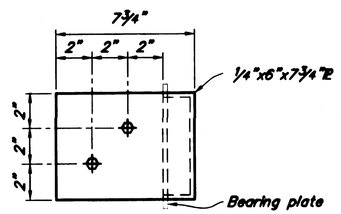


C6x8.2 Rubrail End Elevation

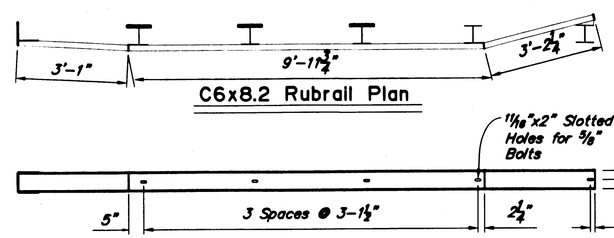


C6x8.2 Rubrail Plan

C6x8.2 Rubrail Elevation

Dimensions measured along face of channel

| LEGEND | | |
|---|---|---|
| SYMBOL | ABV. | DESCRIPTION |
| — — | (E) | EXISTING |
| ——— | NEW | NEW CONSTRUCTION |
| | | |
| | | |

NOTE:

1. Field verify all controlling dimensions before ordering or fabricating any material.

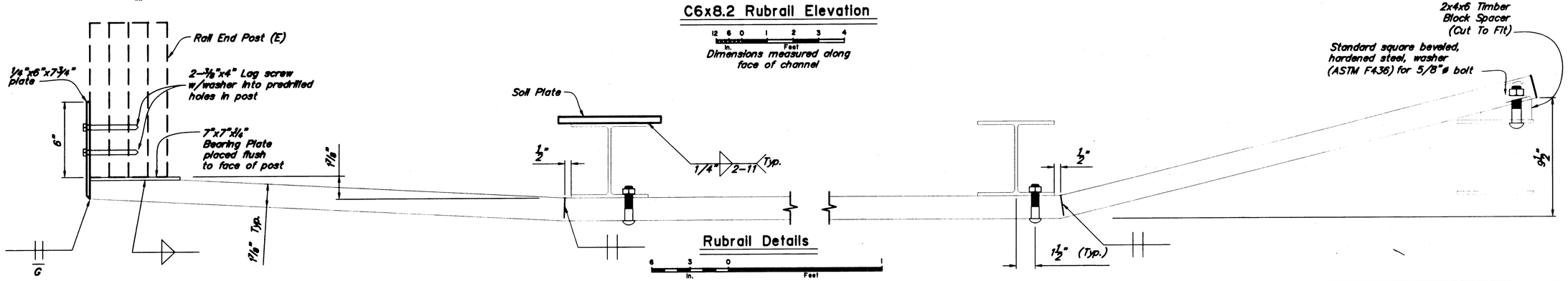


Rubrail Details

| | |
|---|---|
| DESIGNED BY: | CHECKED: |
| DRAWN BY: L. Robertson | CHECKED: |
| QUANTITIES BY: | CHECKED: |

STATE OF ALASKA
DEPARTMENT OF TRANSPORTATION AND PUBLIC FACILITIES
BRIDGE SECTION

STATE OF ALASKA 49TH Drew Stelboch No. CE-9931 REGISTERED PROFESSIONAL ENGINEER

# FISH CREEK BRIDGE

## FISH CREEK ROAD

## BRIDGE TRANSITION DETAILS

BRIDGE NO. 1291

DWG. NO. 2

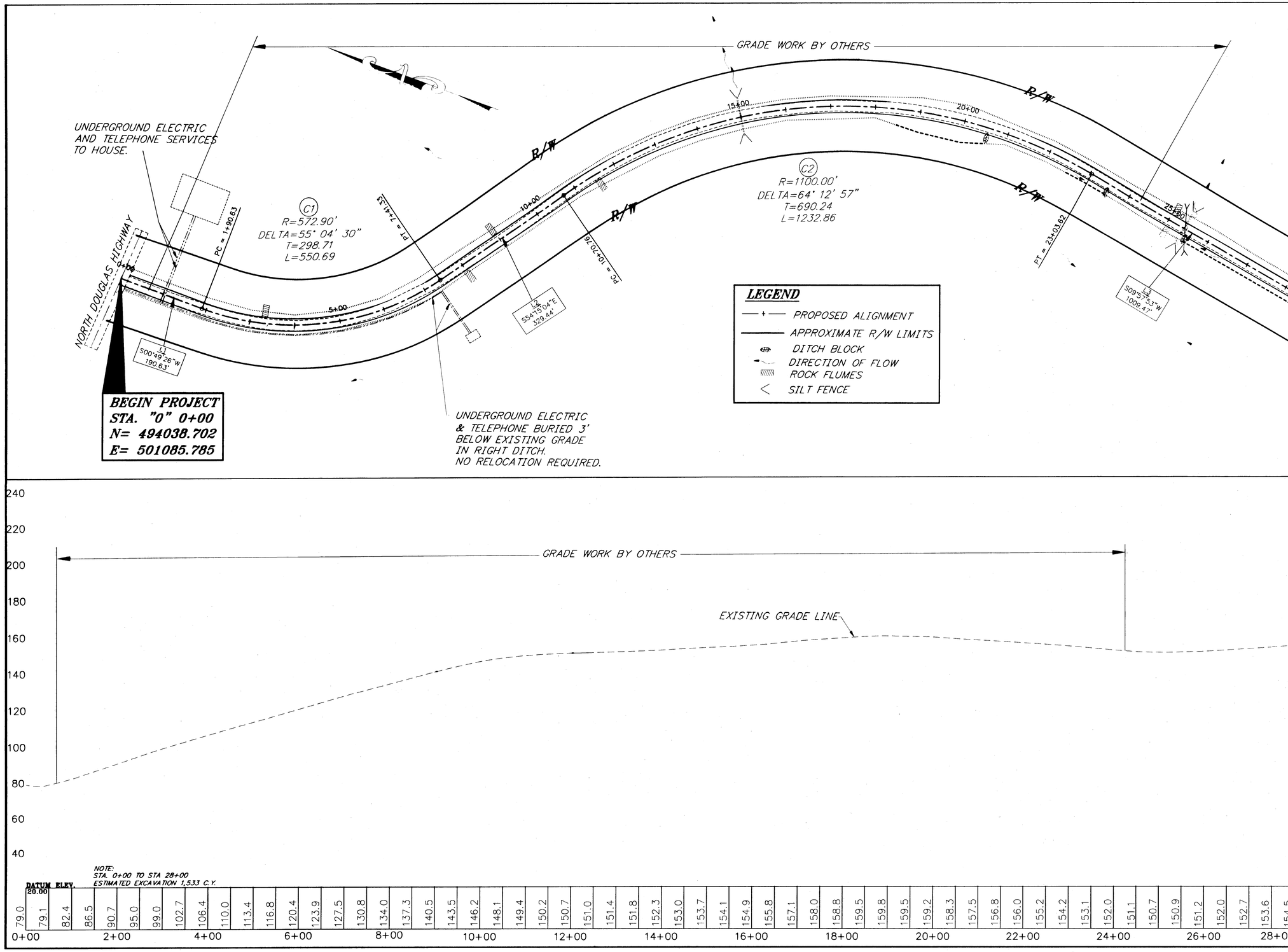


Q:\Jnu\68269\Planset\E_Plan&Profile.DWG
Tue, 15/Jan/02 04:02PM Kris

| ADDENDUM NUMBER |
|---|
| |

| ATTACHMENT NUMBER |
|---|
| |

| RECORD OF REVISIONS | | |
|---|---|---|
| No. | DATE | DESCRIPTION |
| | | |

JNU-FISH CREEK ROAD
SAFETY IMPROVEMENTS
PROJECT NO. 68269

# PLAN AND PROFILE
# STA 0+00 TO STA 28+00

TH 7-22-03

DESIGNED BY:

STATE OF ALASKA 49th REGISTERED PROFESSIONAL ENGINEER

1/16/02

CHECKED BY:

DRAWN BY:

STATE OF ALASKA
DEPARTMENT OF TRANSPORTATION & PUBLIC FACILITIES
STATEWIDE DESIGN & ENGINEERING SERVICES DIVISION

JNU-FISH CREEK ROAD
SAFETY IMPROVEMENTS
PROJECT NO. 68269

## PLAN AND PROFILE

| PROJECT DESIGNATION NUMBER | |
|---|---|
| ACHRO-0953(4) | |
| STATE | YEAR |
| ALASKA | 2001 |
| SHEET NUMBER | TOTAL SHEETS |
| E1 | 41 |

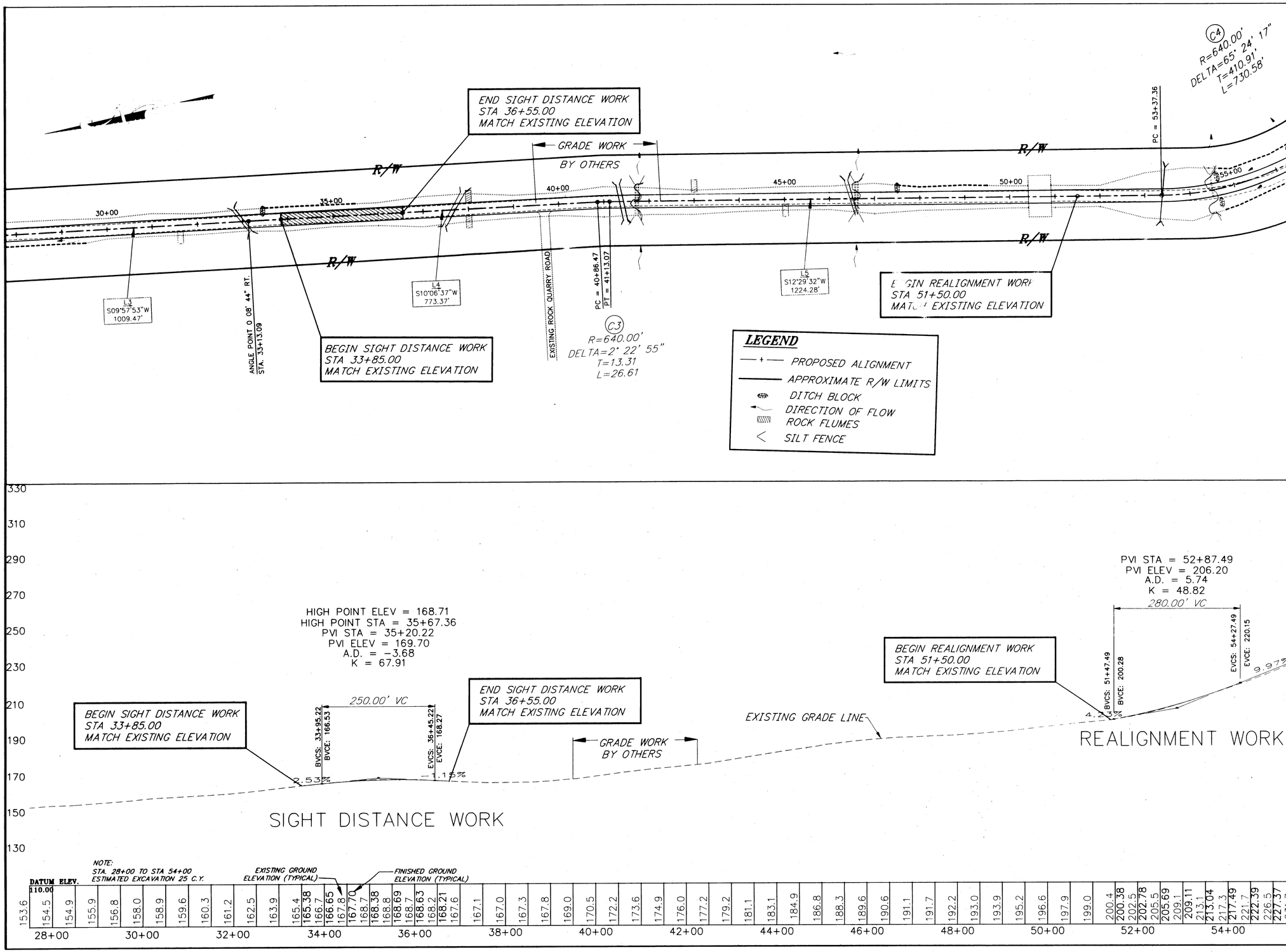


Q:\Jnu\68269\Planset\E_Plan&Profile.DWG
Tue, 15/Jan/02 04:03PM Kris

| ADDENDUM NUMBER |
|---|
| ATTACHMENT NUMBER |

RECORD OF REVISIONS

| No. | DATE | DESCRIPTION |
|---|---|---|
| | | |

JNU-FISH CREEK ROAD
SAFETY IMPROVEMENTS
PROJECT NO. 68269

**PLAN AND PROFILE**
**STA 28+00 TO STA 54+00**

7-22-03

DESIGNED BY: M LAVERTY

STATE OF ALASKA 49th PROFESSIONAL ENGINEER

CHECKED BY: M LAVERTY

DRAWN BY: [illegible]

STATE OF ALASKA
DEPARTMENT OF TRANSPORTATION & PUBLIC FACILITIES
STATEWIDE DESIGN & ENGINEERING SERVICES DIVISION

**JNU-FISH CREEK ROAD SAFETY IMPROVEMENTS PROJECT NO. 68269**

**PLAN AND PROFILE**

| PROJECT DESIGNATION NUMBER | |
|---|---|
| ACHRO-0953(4) | |
| STATE | YEAR |
| ALASKA | 2001 |
| SHEET NUMBER | TOTAL SHEETS |
| E2 | 41 |

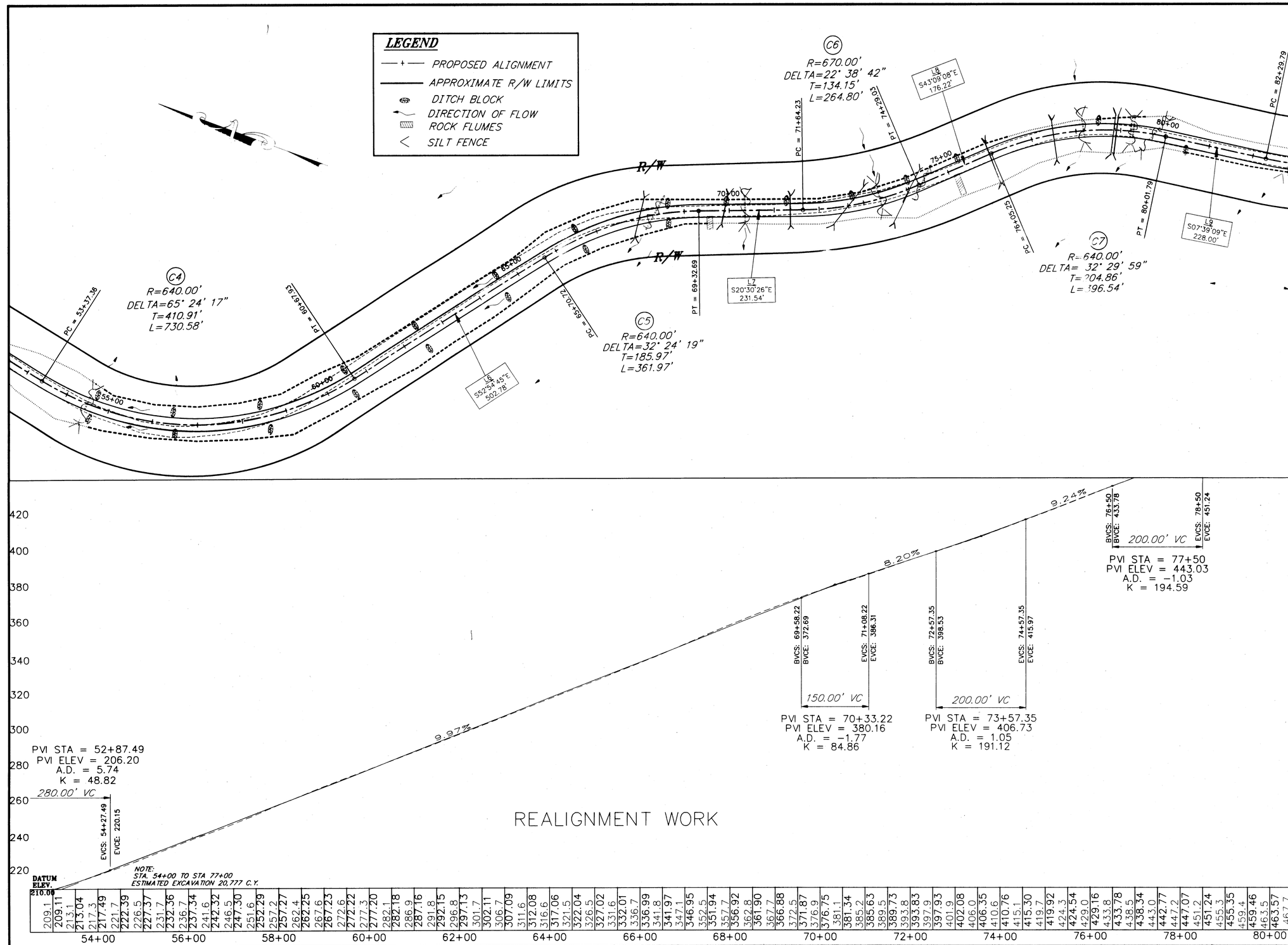


Q:\Jnu\68269\Planset\E_Plan&Profile.DWG
Tue, 15 Jan 02 04:03PM Kris

ADDENDUM NUMBER

ATTACHMENT NUMBER

RECORD OF REVISIONS

| No. | DATE | DESCRIPTION |
|---|---|---|
| | | |

JNU-FISH CREEK ROAD
SAFETY IMPROVEMENTS
PROJECT NO. 68269

**PLAN AND PROFILE**
**STA 54+00 TO 77+00**

7-22-03 TD

DESIGNED BY: M. LAVERIN

STATE OF ALASKA 49th Jack Daniel Beedle REGISTERED PROFESSIONAL ENGINEER CE-5309

1/16/02

CHECKED BY: [illegible]

DRAWN BY: [illegible]

STATE OF ALASKA
DEPARTMENT OF TRANSPORTATION & PUBLIC FACILITIES
STATEWIDE DESIGN & ENGINEERING SERVICES DIVISION

JNU-FISH CREEK ROAD
SAFETY IMPROVEMENTS
PROJECT NO. 68269

**PLAN AND PROFILE**

PROJECT DESIGNATION NUMBER

ACHRO-0953(4)

| STATE | YEAR |
|---|---|
| ALASKA | 2001 |
| SHEET NUMBER | TOTAL SHEETS |
| E3 | 41 |

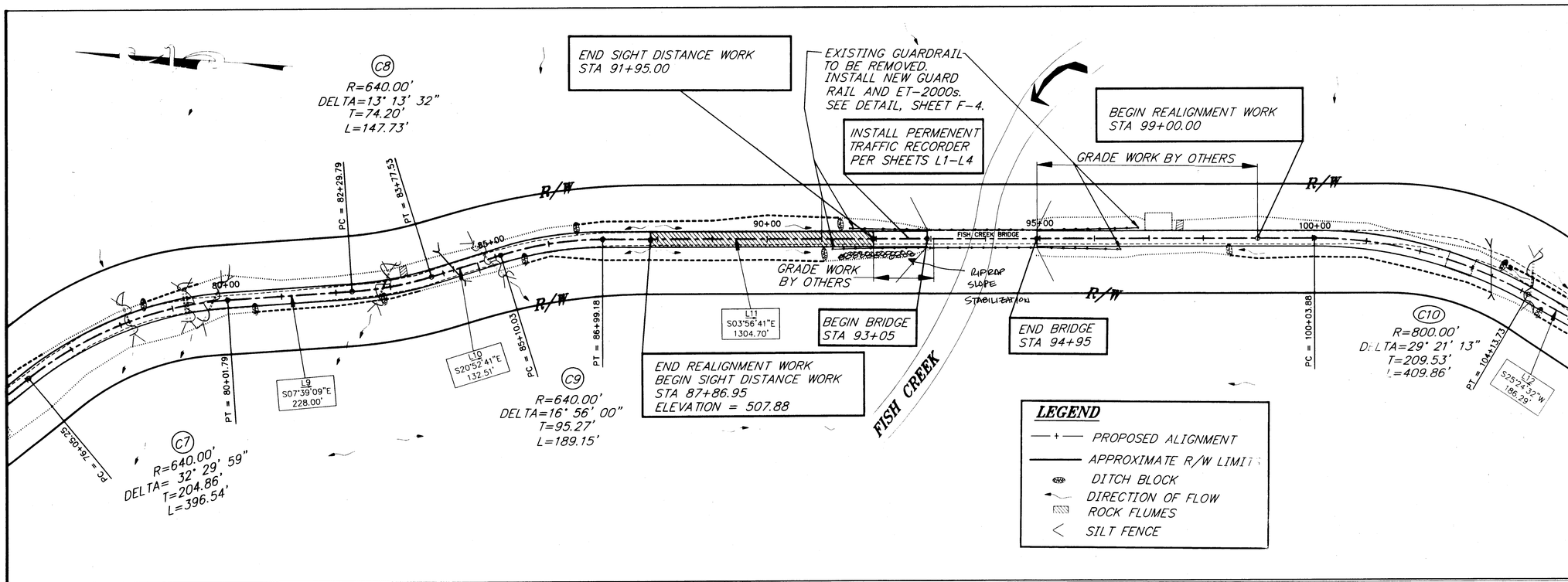


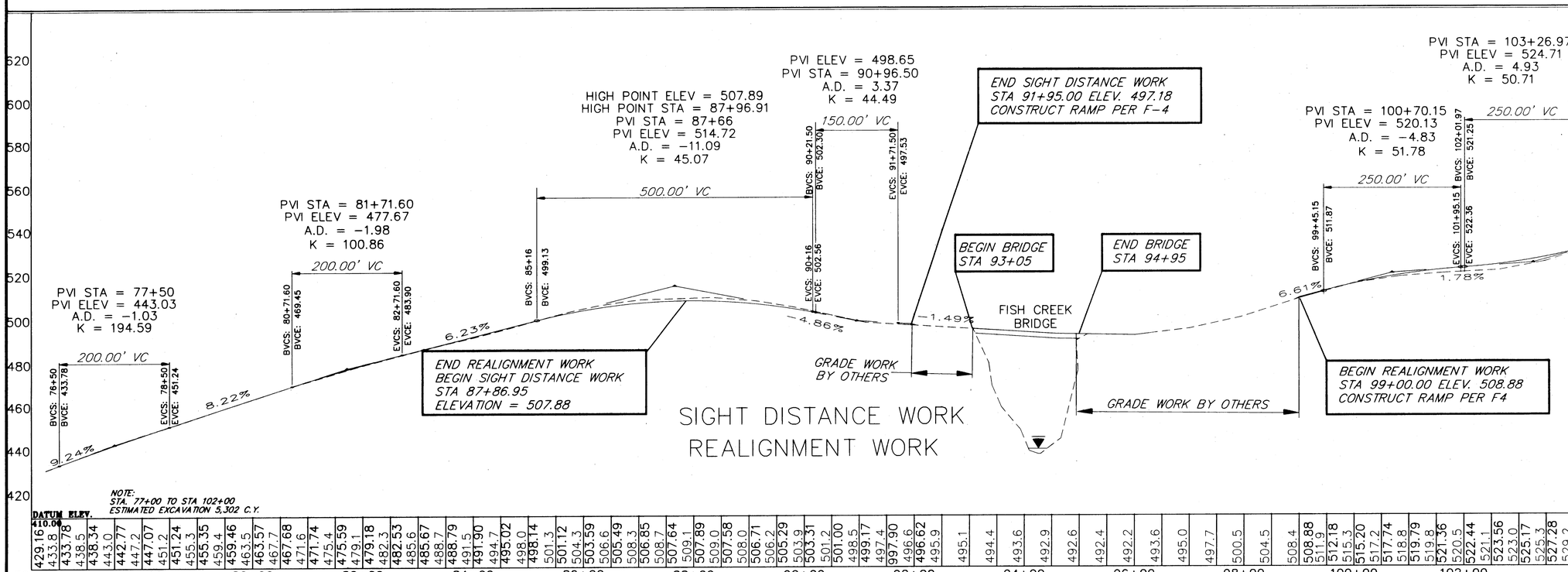


Q:\Jnu\68269\Planset\E_Plan&Profile.DWG
Tue, 15/Jan/02 04:04PM Kris

| ADDENDUM NUMBER |
|---|
| ATTACHMENT NUMBER |

RECORD OF REVISIONS

| No. | DATE | DESCRIPTION |
|---|---|---|
| | | |

JNU-FISH CREEK ROAD
SAFETY IMPROVEMENTS
PROJECT NO. 68269

# PLAN AND PROFILE
# STA 77+00 TO STA 102+00

DESIGNED BY: TH 7-22-03
CHECKED BY: 1/14/02
DRAWN BY:

STATE OF ALASKA
DEPARTMENT OF TRANSPORTATION & PUBLIC FACILITIES
STATEWIDE DESIGN & ENGINEERING SERVICES DIVISION

JNU-FISH CREEK ROAD
SAFETY IMPROVEMENTS
PROJECT NO. 68269

PLAN AND PROFILE

| PROJECT DESIGNATION NUMBER | |
|---|---|
| ACHRO-0953(4) | |
| STATE | YEAR |
| ALASKA | 2001 |
| SHEET NUMBER | TOTAL SHEETS |
| E4 | 41 |

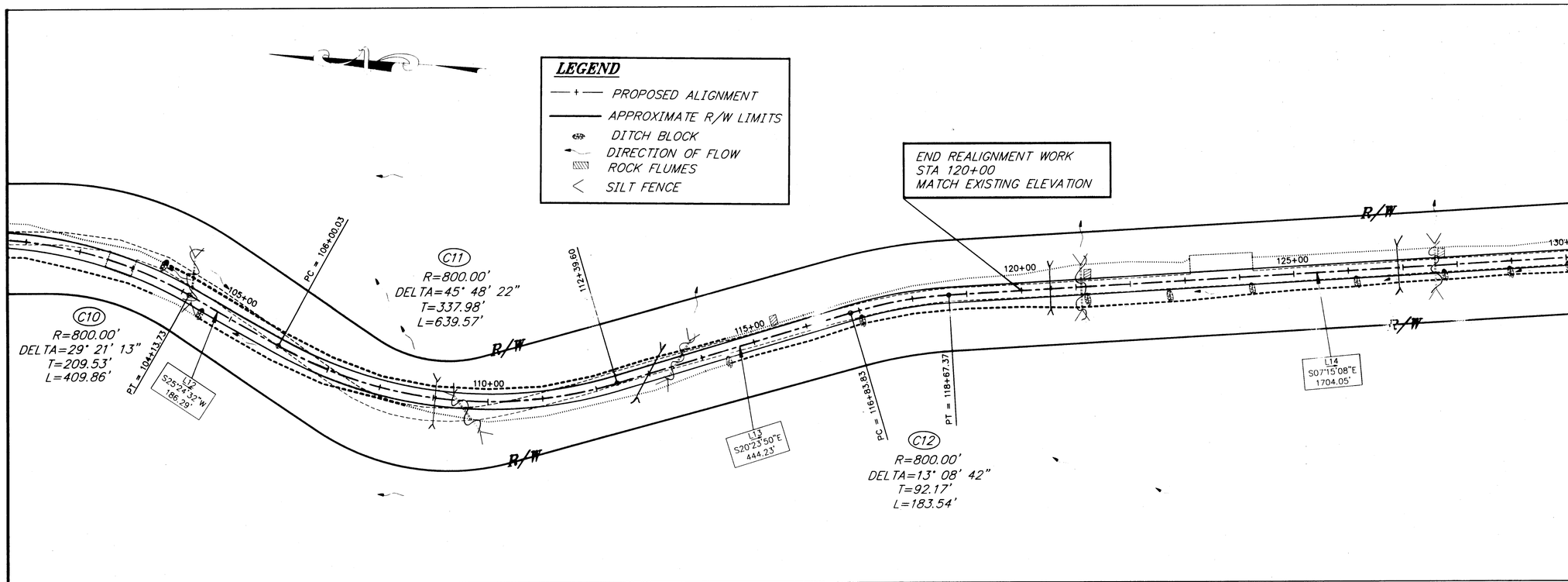


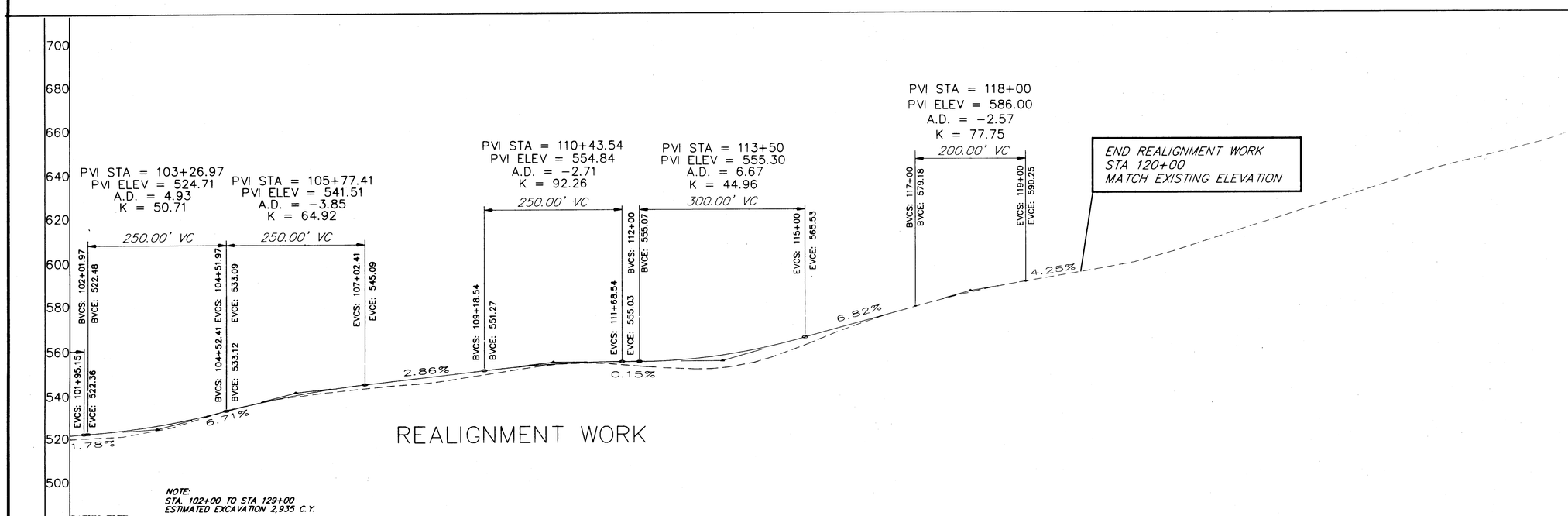


NOTE:
STA. 102+00 TO STA 129+00
ESTIMATED EXCAVATION 2,935 C.Y.

DATUM ELEV.
480.00

| | | |

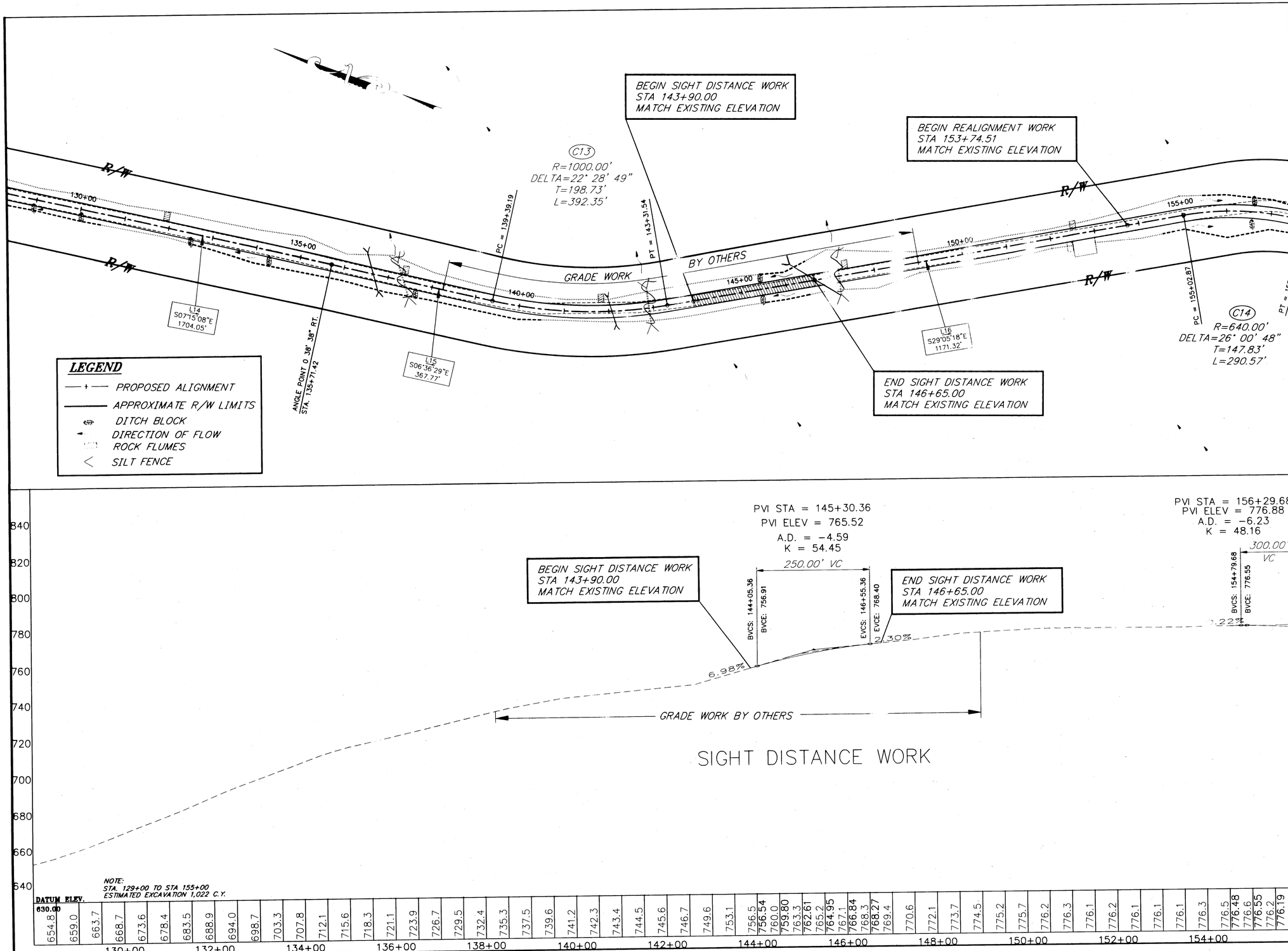


Q:\Jnu\68269\Planset\E_Plan&Profile.DWG
Tue, 15 Jan 02 04:04PM Kris

ADDENDUM NUMBER

ATTACHMENT NUMBER

RECORD OF REVISIONS

| No. | DATE | DESCRIPTION |
|---|---|---|
| | | |

JNU-FISH CREEK ROAD
SAFETY IMPROVEMENTS
PROJECT NO. 68269

# PLAN AND PROFILE
# STA 129+00 TO STA 155+00

TH 7-22-03

DESIGNED BY: M. LAVERING

STATE OF ALASKA
49th
Jack Daniel Beedle
CL 5307
REGISTERED PROFESSIONAL ENGINEER

1/16/02

CHECKED BY: T. MOORE

DRAWN BY: K.K.

STATE OF ALASKA
DEPARTMENT OF TRANSPORTATION
& PUBLIC FACILITIES
STATEWIDE DESIGN & ENGINEERING
SERVICES DIVISION

**JNU-FISH CREEK ROAD**
**SAFETY IMPROVEMENTS**
**PROJECT NO. 68269**

## PLAN AND PROFILE

PROJECT DESIGNATION NUMBER

**ACHRO-0953(4)**

| STATE | YEAR |
|---|---|
| ALASKA | 2001 |
| SHEET NUMBER | TOTAL SHEETS |
| E6 | 41 |

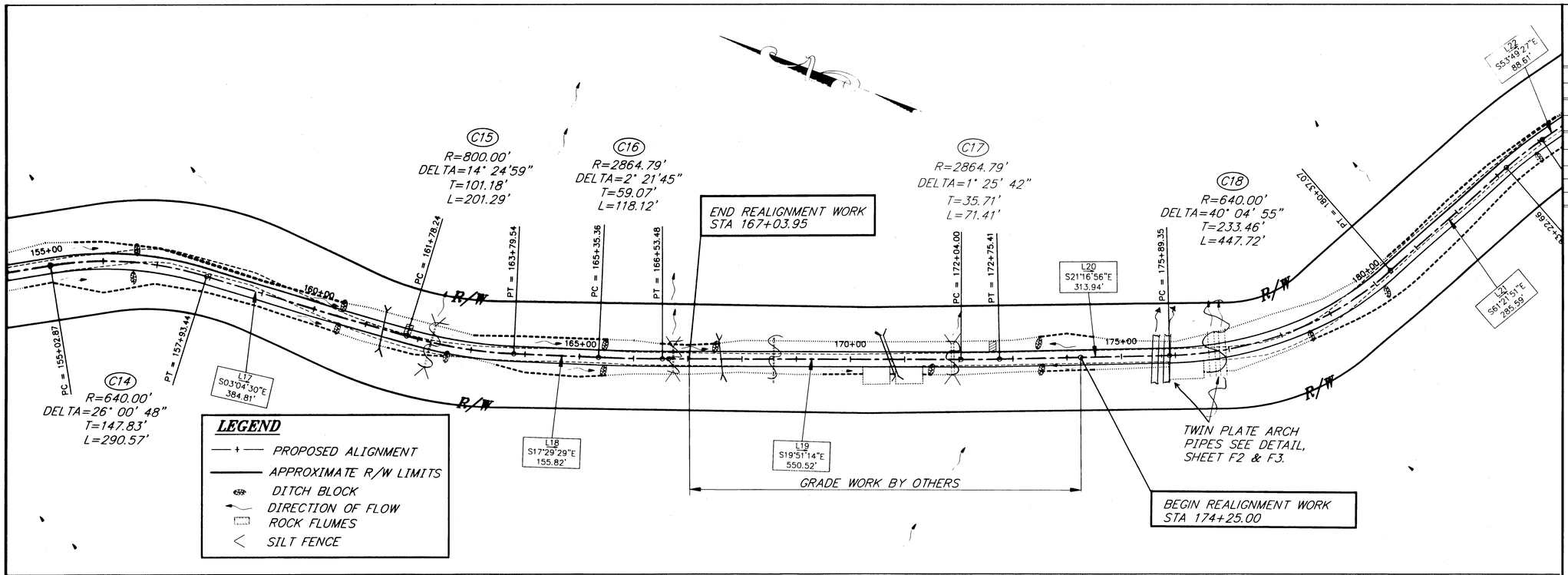


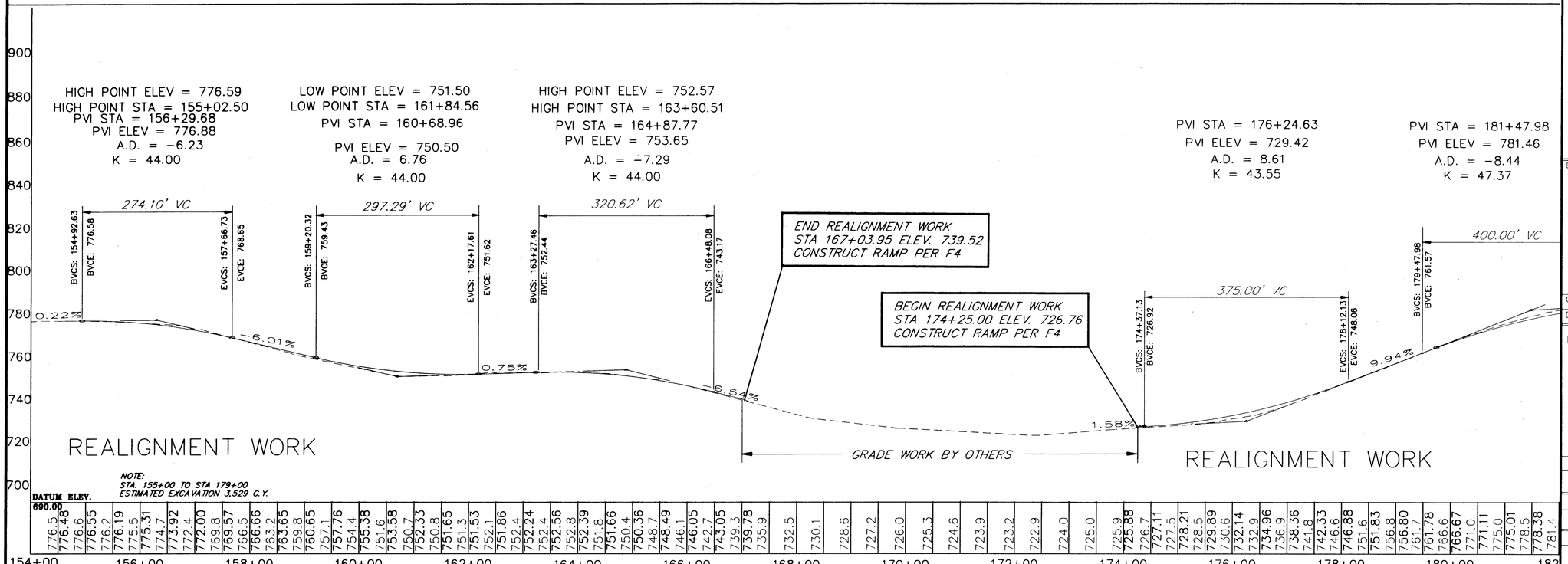


NOTE:
STA 155+00 TO STA 179+00
ESTIMATED EXCAVATION 3,529 C.Y.

Q:\Jnu\68269\Planset\E_Plan&Profile.DWG
Tue, 15/Jan/02 04:05PM Kris

ADDENDUM NUMBER

ATTACHMENT NUMBER

RECORD OF REVISIONS

| No. | DATE | DESCRIPTION |
|---|---|---|
| | | |

JNU-FISH CREEK ROAD
SAFETY IMPROVEMENTS
PROJECT NO. 68269

# PLAN AND PROFILE
# STA 155
# 155+00 TO STA 179+00

TH 7-22-03
DESIGNED BY: LA VERNE
STATE OF ALASKA 49th Jack Daniel Bradley Registered Professional Engineer 1/16/02
CHECKED BY:
DRAWN BY:

STATE OF ALASKA
DEPARTMENT OF TRANSPORTATION
& PUBLIC FACILITIES
STATEWIDE DESIGN & ENGINEERING
SERVICES DIVISION

JNU-FISH CREEK ROAD
SAFETY IMPROVEMENTS
PROJECT NO. 68269

PLAN AND
PROFILE

| PROJECT DESIGNATION NUMBER | |
|---|---|
| ACHRO-0953(4) | |
| STATE | YEAR |
| ALASKA | 2001 |
| SHEET NUMBER | TOTAL SHEETS |
| E7 | 41 |

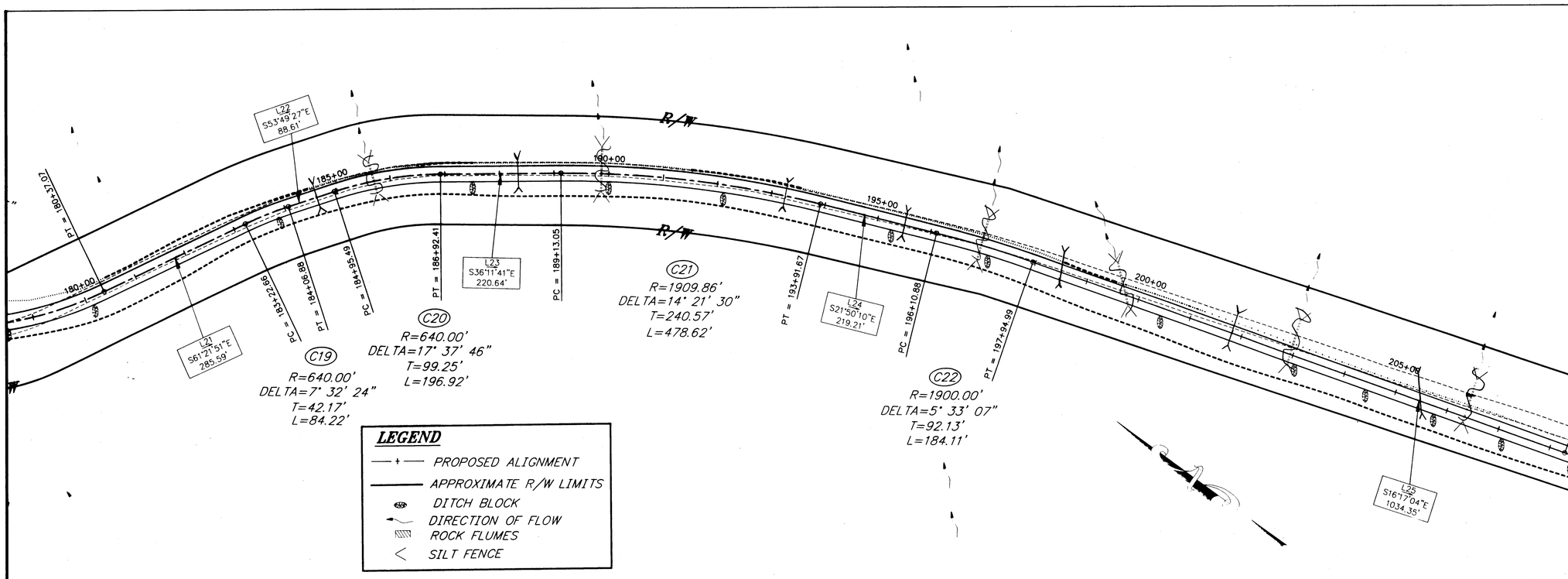


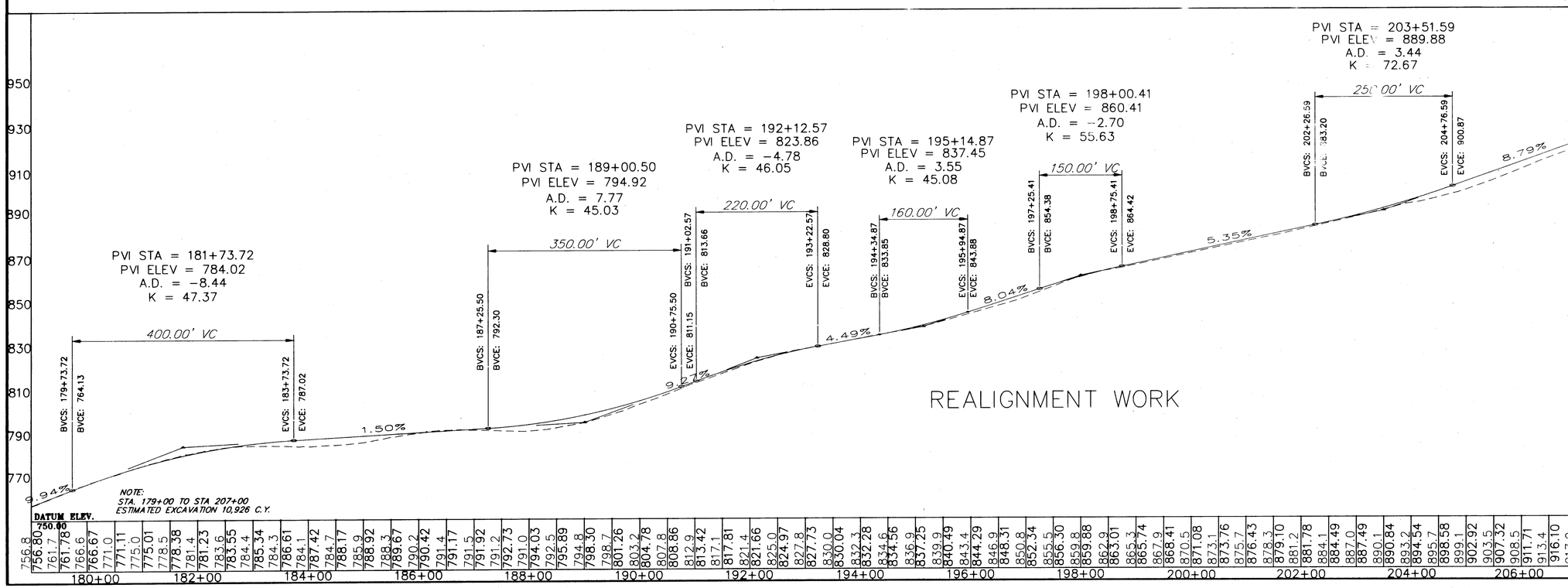


NOTE:
STA. 179+00 TO STA 207+00
ESTIMATED EXCAVATION 10,926 C.Y.

Q:\Jnu\68269\Planset\E_Plan&Profile.DWG
Wed, 16/Jan/02 07:41AM Kris

| ADDENDUM NUMBER |
|---|
| |

| ATTACHMENT NUMBER |
|---|
| |

RECORD OF REVISIONS

| No. | DATE | DESCRIPTION |
|---|---|---|
| | | |

JNU-FISH CREEK ROAD
SAFETY IMPROVEMENTS
PROJECT NO. 68269

# PLAN AND PROFILE
# STA 179+00 TO STA 207+00

TH 2-22-03

DESIGNED BY: ENGINEERING

STATE OF ALASKA 49th REGISTERED PROFESSIONAL ENGINEER

1/16/02

CHECKED BY:

DRAWN BY:

STATE OF ALASKA
DEPARTMENT OF TRANSPORTATION
& PUBLIC FACILITIES
STATEWIDE DESIGN & ENGINEERING
SERVICES DIVISION

JNU-FISH CREEK ROAD
SAFETY IMPROVEMENTS
PROJECT NO. 68269

PLAN AND
PROFILE

| PROJECT DESIGNATION NUMBER | |
|---|---|
| ACHRO-0953(4) | |
| STATE | YEAR |
| ALASKA | 2001 |
| SHEET NUMBER | TOTAL SHEETS |
| E8 | 41 |

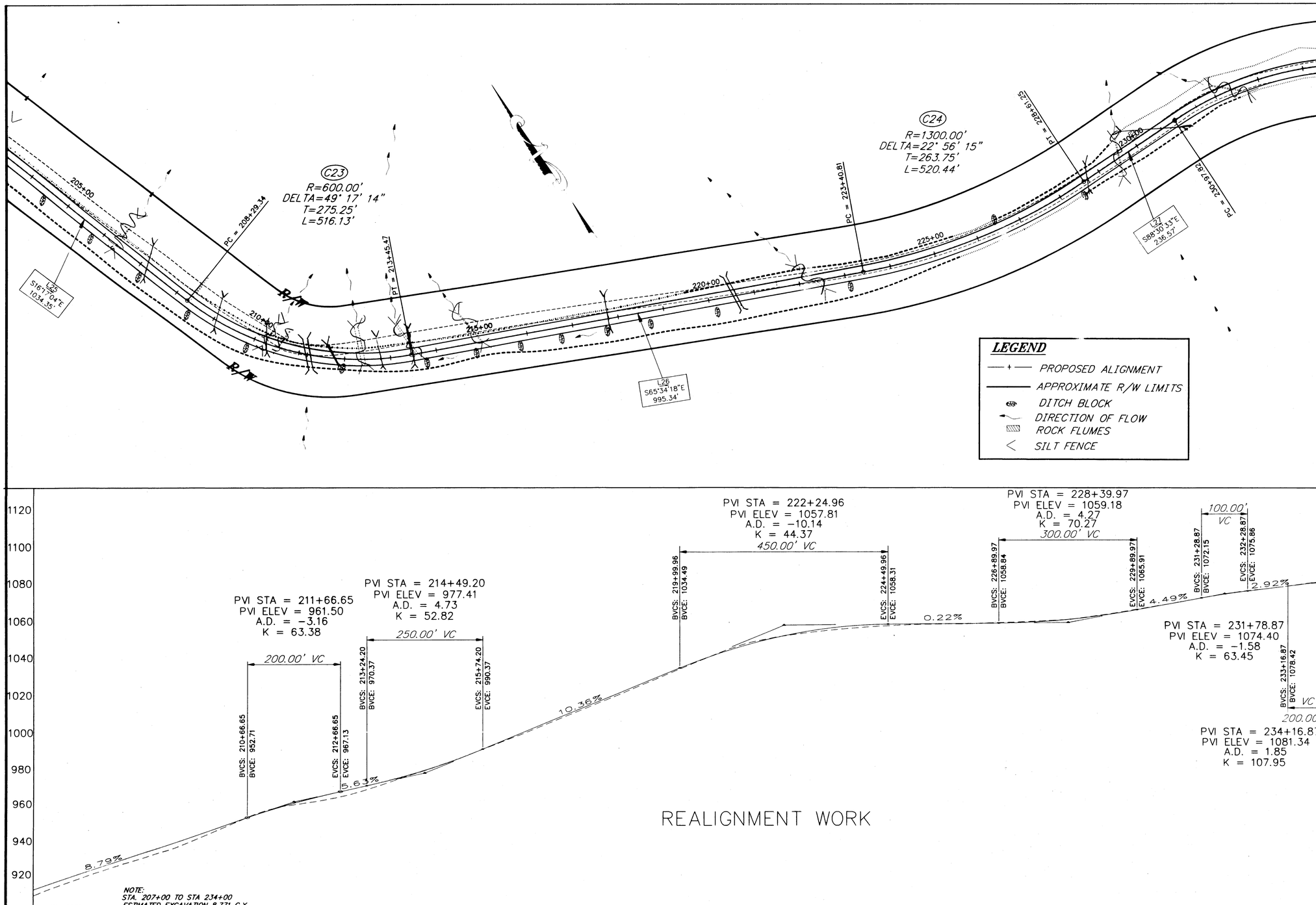


Q:\Jnu\68269\Planset\E_Plan&Profile.DWG
Wed, 16/Jan/02 07:42AM Kris

| ADDENDUM NUMBER |
|---|
| |
| ATTACHMENT NUMBER |
| |

| RECORD OF REVISIONS | | |
|---|---|---|
| No. | DATE | DESCRIPTION |
| | | |

JNU-FISH CREEK ROAD
SAFETY IMPROVEMENTS
PROJECT NO. 68269

**PLAN AND PROFILE**
**STA 207+00 TO STA 234+00**

TH 7-22-03

DESIGNED BY: M. LAVERING

STATE OF ALASKA 49th Joseph Daniel Roedle CE 5309 REGISTERED PROFESSIONAL ENGINEER

1/16/02

CHECKED BY: T. MOORE

DRAWN BY: K.K.

STATE OF ALASKA
DEPARTMENT OF TRANSPORTATION & PUBLIC FACILITIES
STATEWIDE DESIGN & ENGINEERING SERVICES DIVISION

**JNU-FISH CREEK ROAD SAFETY IMPROVEMENTS PROJECT NO. 68269**

**PLAN AND PROFILE**

| PROJECT DESIGNATION NUMBER | |
|---|---|
| ACHRO-0953(4) | |
| STATE | YEAR |
| ALASKA | 2001 |
| SHEET NUMBER | TOTAL SHEETS |
| E9 | 41 |

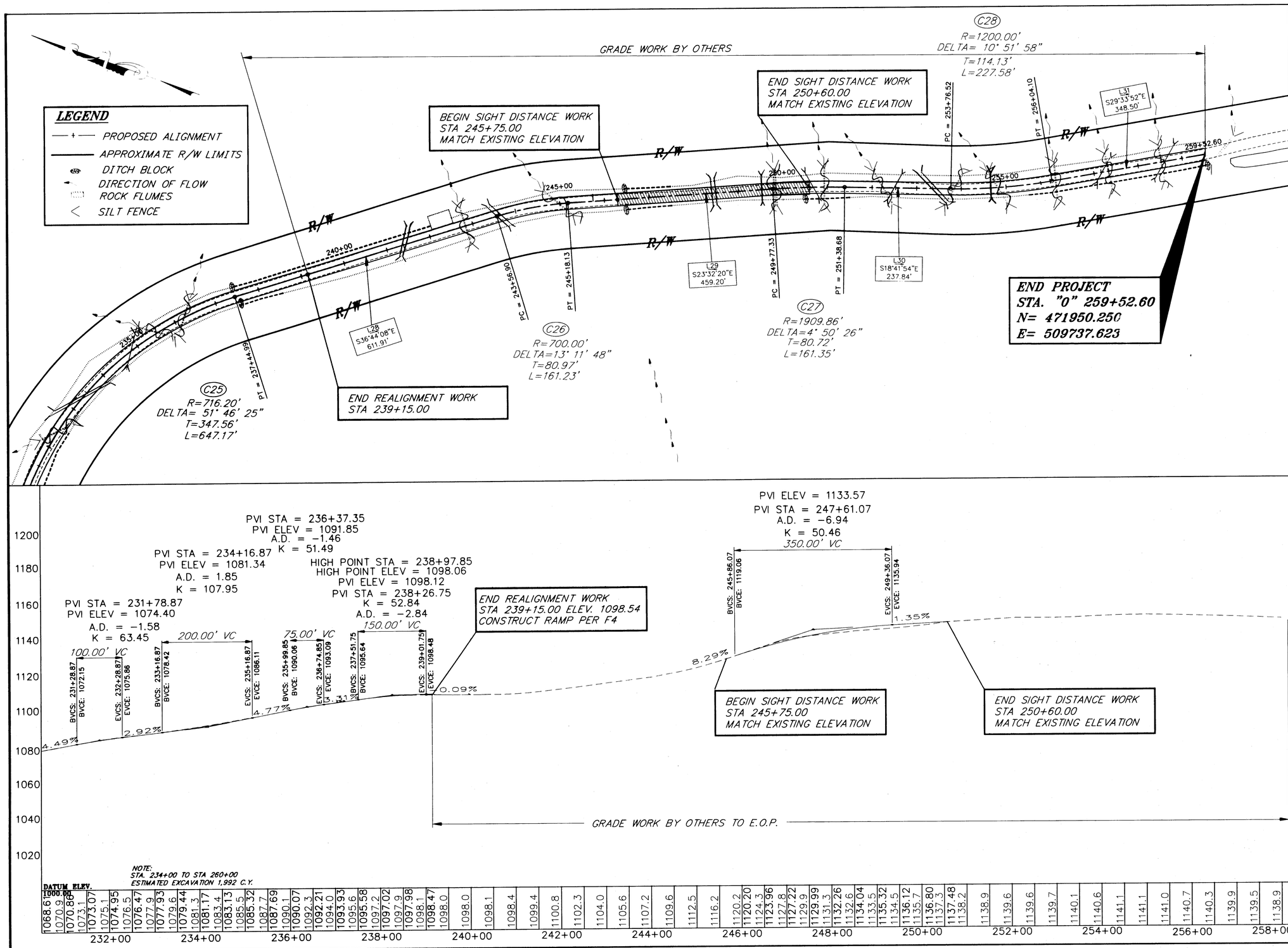


Q:\Jnu\68269\Planset\E_Plan&Profile.DWG
Wed, 16/Jan/02 07:42AM Kris

| ADDENDUM NUMBER |
|---|
| |

| ATTACHMENT NUMBER |
|---|
| |

RECORD OF REVISIONS

| No. | DATE | DESCRIPTION |
|---|---|---|
| | | |

JNU-FISH CREEK ROAD
SAFETY IMPROVEMENTS
PROJECT NO. 68269

# PLAN AND PROFILE
# STA 234+00 TO STA 260+00

TH 7-22-03

DESIGNED BY:

STATE OF ALASKA 49th PROFESSIONAL ENGINEER

1/16/02

CHECKED BY:

DRAWN BY:

STATE OF ALASKA
DEPARTMENT OF TRANSPORTATION
& PUBLIC FACILITIES
STATEWIDE DESIGN & ENGINEERING
SERVICES DIVISION

JNU-FISH CREEK ROAD
SAFETY IMPROVEMENTS
PROJECT NO. 68269

**PLAN AND PROFILE**

| PROJECT DESIGNATION NUMBER | |
|---|---|
| ACHRO-0953(4) | |
| STATE | YEAR |
| ALASKA | 2001 |
| SHEET NUMBER | TOTAL SHEETS |
| E10 | 41 |

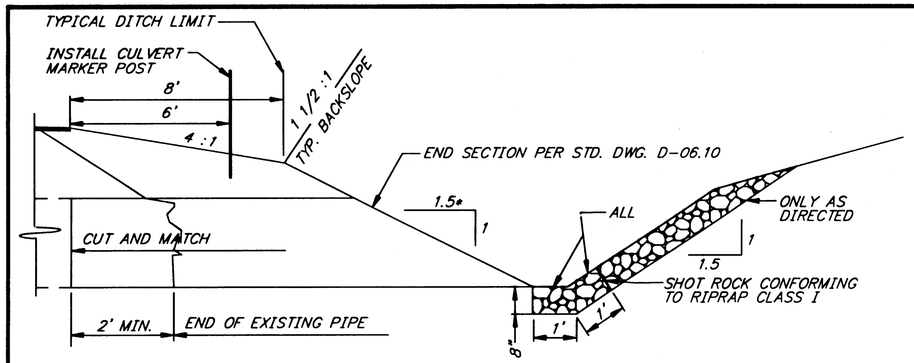


## INLET DETAIL
## TYPICAL DITCH SECTION
## SECTION VIEW

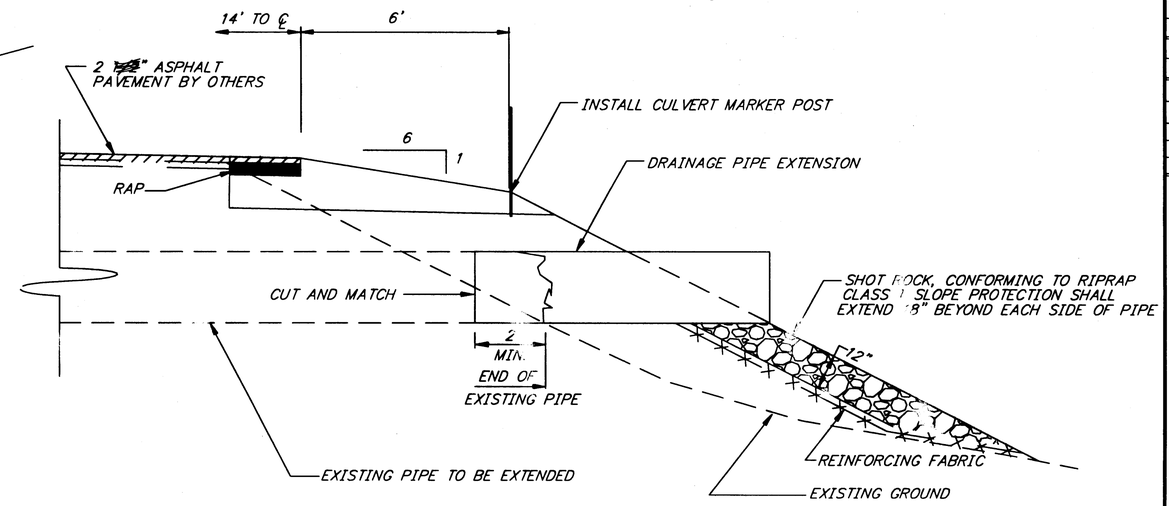


## PIPE EXTENSION DETAIL
## OUTLET END

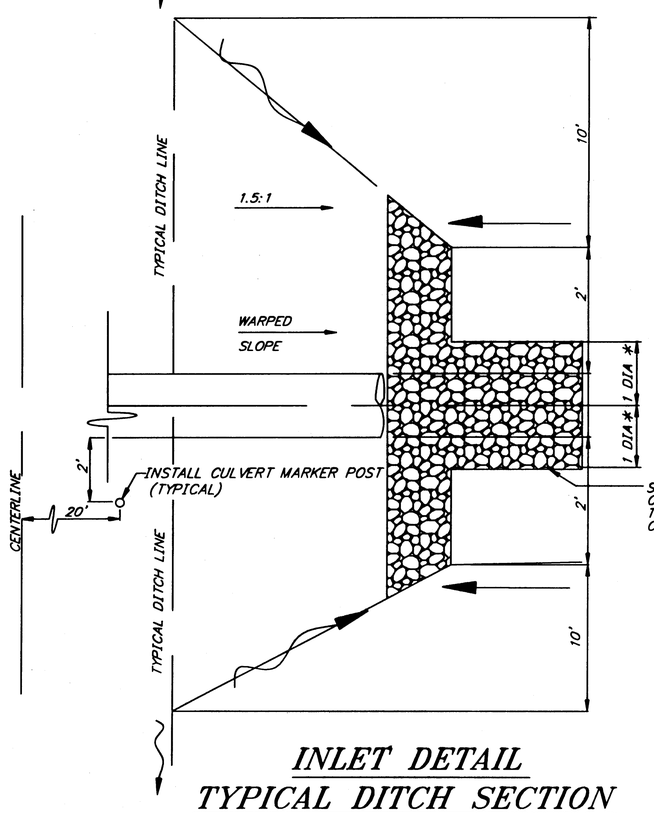


## INLET DETAIL
## TYPICAL DITCH SECTION
## PLAN VIEW

*LINE BACK SLOPE TWO PIPE DIAMETERS WIDE IN CUT SECTIONS AS DIRECTED.

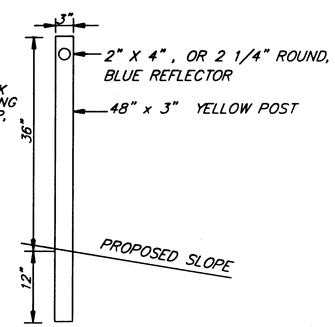


## CULVERT MARKER DETAIL

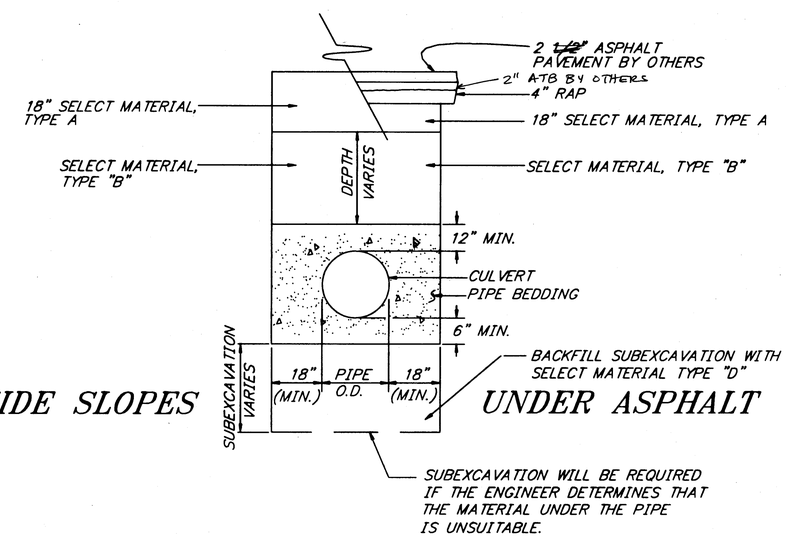


## SIDE SLOPES
## UNDER ASPHALT

## CULVERT BEDDING/BACKFILL DETAIL

N.T.S.

PATH:
Q:\Jnu\68269\Pionset\F_det.dwg
Tue, 15/Jan/02 02:33PM Kris
PLOT:
PSPACE 1=1(F) OR MSPACE 1=1(F)
TAB: ESTIMATE

| ADDENDUM NUMBER |
|---|
| |

| ATTACHMENT NUMBER |
|---|
| |

RECORD OF REVISIONS

| No. | DATE | DESCRIPTION |
|---|---|---|
| | | |
| | | |
| | | |

JNU-FISH CREEK ROAD
SAFETY IMPROVEMENTS
PROJECT NO. 68269

**Culvert Installation Details**

72 722.03

DESIGNED BY: M. LAVERING

STATE OF ALASKA 49th Jock Daniel Beedle CE-5309 REGISTERED PROFESSIONAL ENGINEER 1/16/02

CHECKED BY: T. MOORE

DRAWN BY: K.K.

STATE OF ALASKA
DEPARTMENT OF TRANSPORTATION & PUBLIC FACILITIES
STATEWIDE DESIGN & ENGINEERING SERVICES DIVISION

JNU-FISH CREEK ROAD
SAFETY IMPROVEMENTS
PROJECT NO. 68269

**Culvert Installation Details**

| PROJECT DESIGNATION NUMBER | |
|---|---|
| ACHRO-0953(4) | |
| STATE | YEAR |
| ALASKA | 2001 |
| SHEET NUMBER | TOTAL SHEETS |
| F1 | 41 |

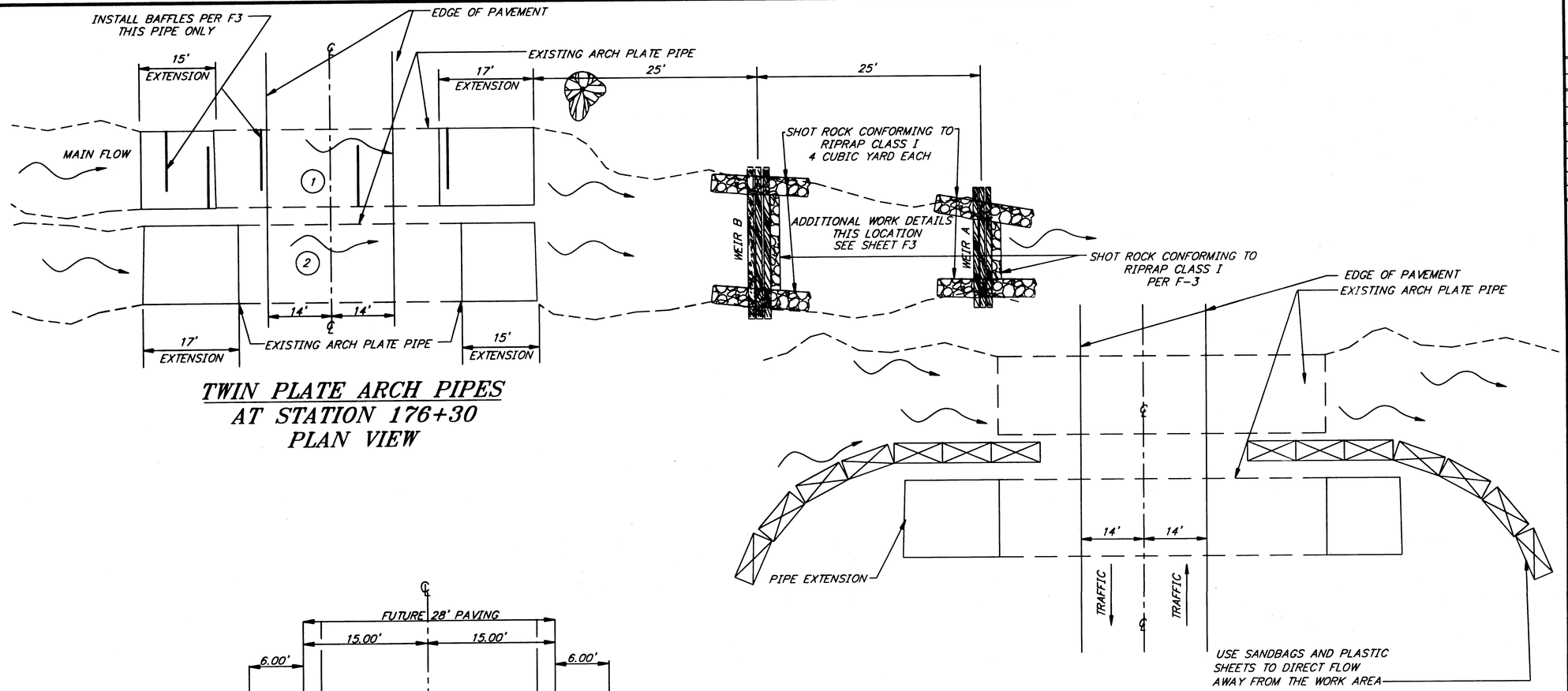


## TWIN PLATE ARCH PIPES
## AT STATION 176+30
## PLAN VIEW

## CONSTRUCTION WORK PLAN

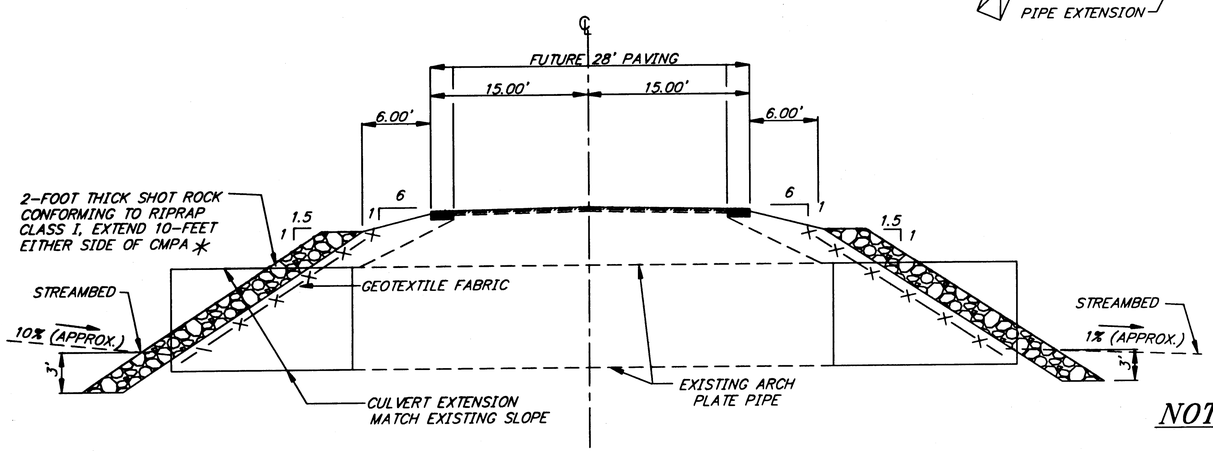


## TWIN PLATE ARCH PIPES
## AT STATION 176+30
## PROFILE VIEW

* USE THESE DIMENSION FOR SHOT ROCK, CONFORMING TO RIPRAP CLASS I ON THE INLET END OF CMPA @ STATION 212+45

## NOTES:

1. A WORK PLAN BASED ON THESE DETAILS AND THE FISH AND GAME PERMIT (SEE APPENDIX B.) SHALL BE SUBMITTED FOR APPROVAL BEFORE WORKING IN THE STREAM. THE PLAN WILL INCLUDE WILLOW PLANTINGS ABOVE ORDINARY HIGH WATER AND NATIVE GRASS MIX IN ALL DISTURBED AREAS. THE STREAM FLOW SHALL BE DIVERTED TO ONE OF THE PIPES WHILE WORKING ON THE OTHER. A COMBINATION OF SILT FENCE, STRAW BALES, PLASTIC SHEETS, AND SANDBAGS SHALL BE USED TO MINIMIZE IMPACTS TO THE STREAM. SANDBAGS AND PLASTIC SHEETS SHALL BE USED TO DIRECT FLOW AWAY FROM THE WORK AREA.

2. IF PUMPING IS REQUIRED, DISCHARGE SHALL BE SITUATED A MINIMUM OF 50' FROM STREAMBED HIGHWATER LINE. THE 50' SEPARATION MUST BE VEGETATED; AND THE DISCARD END SHALL BE RELOCATED PERIODICALLY AS REQUIRED.

3. REVEGETATE STREAM BANKS AND ALL UPLAND AREAS DISTURBED BY CONSTRUCTION ACTIVITY PER SECTIONS 618 & 621.

4. NOTIFY THE ENGINEER AT LEAST 5 WORKING DAYS IN ADVANCE OF IN WATER WORK.

PATH: Q:\Jnu\68269\Planset\F_Det2.dwg
Tue, 15/Jan/02 02:36PM Kris
PLOT: Tue, 15/Jan/02 02:36PM
PSPACE 1=1(F) OR MSPACE 1=1(F)
TAB: ESTIMATE

ADDENDUM NUMBER

ATTACHMENT NUMBER

RECORD OF REVISIONS

| No. | DATE | DESCRIPTION |
|---|---|---|
| | | |
| | | |
| | | |

JNU-FISH CREEK ROAD
SAFETY IMPROVEMENTS
PROJECT NO. 68269

**Culvert Installation Details**

TH 7-22-03

DESIGNED BY: M. LAVERING

STATE OF ALASKA 49th Jock Daniel Beedle CE-5309 REGISTERED PROFESSIONAL ENGINEER

1/16/02

CHECKED BY: T. MOORE

DRAWN BY: K.K.

STATE OF ALASKA
DEPARTMENT OF TRANSPORTATION & PUBLIC FACILITIES
STATEWIDE DESIGN & ENGINEERING SERVICES DIVISION

JNU-FISH CREEK ROAD
SAFETY IMPROVEMENTS
PROJECT NO. 68269

**Culvert Installation Details**

| PROJECT DESIGNATION NUMBER | |
|---|---|
| ACHRO-0953(4) | |
| STATE | YEAR |
| ALASKA | 2001 |
| SHEET NUMBER | TOTAL SHEETS |
| F2 | 41 |

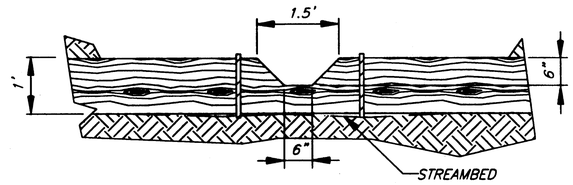


## WEIR "A"

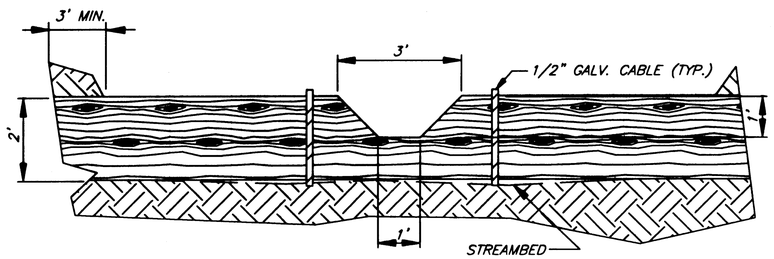


## WEIR "B"

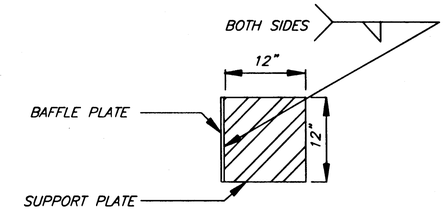


## SUPPORT PLATE

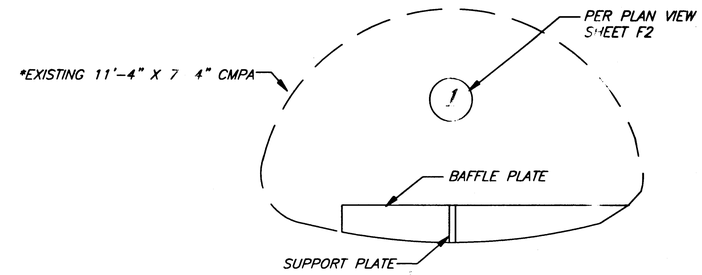


## SECTION VIEW

* FIELD VERIFY PIPE DIMENSIONS BEFORE FABRICACATION

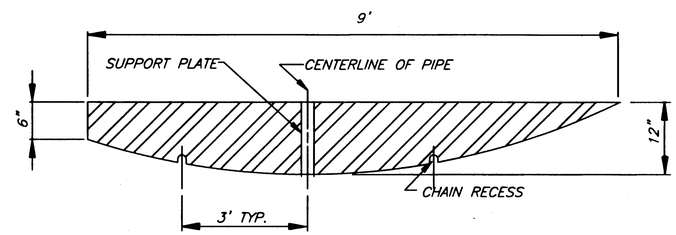


## BAFFLE DETAILS

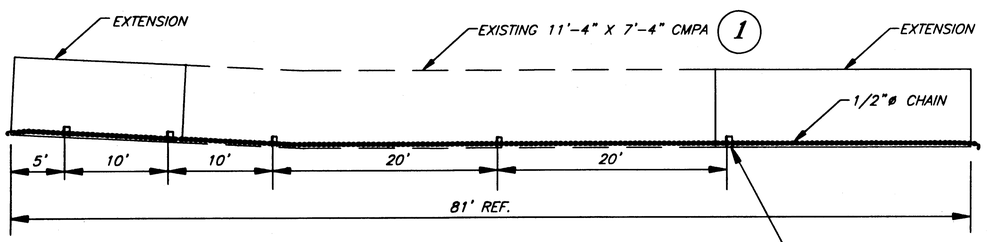


## PROFILE VIEW

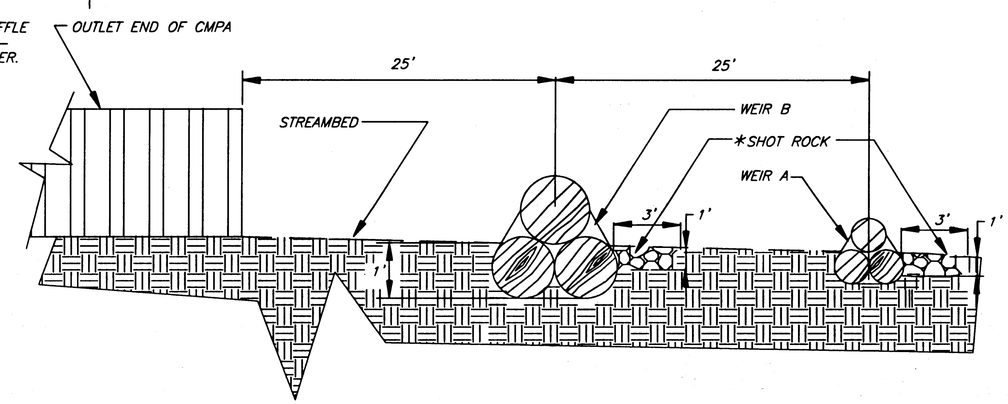


## WEIR PLACEMENT DETAIL

* SHOT ROCK SHALL CONFORM TO RIPRAP, CLASS I

## NOTE:

1. SEE SHEET M4 & M5, FOR ALL CONNECTION AND AND FABRICATION DETAIL NOT SHOWN HERE.
2. BAFFLES TO BE INSTALLED IN CMPA (1) ONLY.

PATH:
Q:\Jnu\68269\Planset\F3det.dwg
Wed, 09/Jan/02 02:32PM Kris
PLOT:
PSPACE 1=1(F) OR MSPACE 1=1(F)
TAB: ESTIMATE

| ADDENDUM NUMBER |
|---|
| |

| ATTACHMENT NUMBER |
|---|
| Wed, 09/Jan/02 02:32PM |

RECORD OF REVISIONS

| No. | DATE | DESCRIPTION |
|---|---|---|
| | | |
| | | |
| | | |

JNU-FISH CREEK ROAD
SAFETY IMPROVEMENTS
PROJECT NO. 68269

**Fish Pipe Station 176+30**
**Fish Passage Improvements**
**Culvert Details**

7-22-03

DESIGNED BY: M. LAVERING

STATE OF ALASKA 49th Jack Daniel Beedle CE-5309 PROFESSIONAL ENGINEER 1/16/02

CHECKED BY: T. MOORE
DRAWN BY: K.K.

STATE OF ALASKA
DEPARTMENT OF TRANSPORTATION & PUBLIC FACILITIES
STATEWIDE DESIGN & ENGINEERING SERVICES DIVISION

**JNU-FISH CREEK ROAD**
**SAFETY IMPROVEMENTS**
**PROJECT NO. 68269**
**Fish Pipe Station 177**
**Passage Improvements**
**Culvert Details**

| PROJECT DESIGNATION NUMBER | |
|---|---|
| ACHRO-0953(4) | |
| STATE | YEAR |
| ALASKA | 2001 |
| SHEET NUMBER | TOTAL SHEETS |
| F3 | 41 |

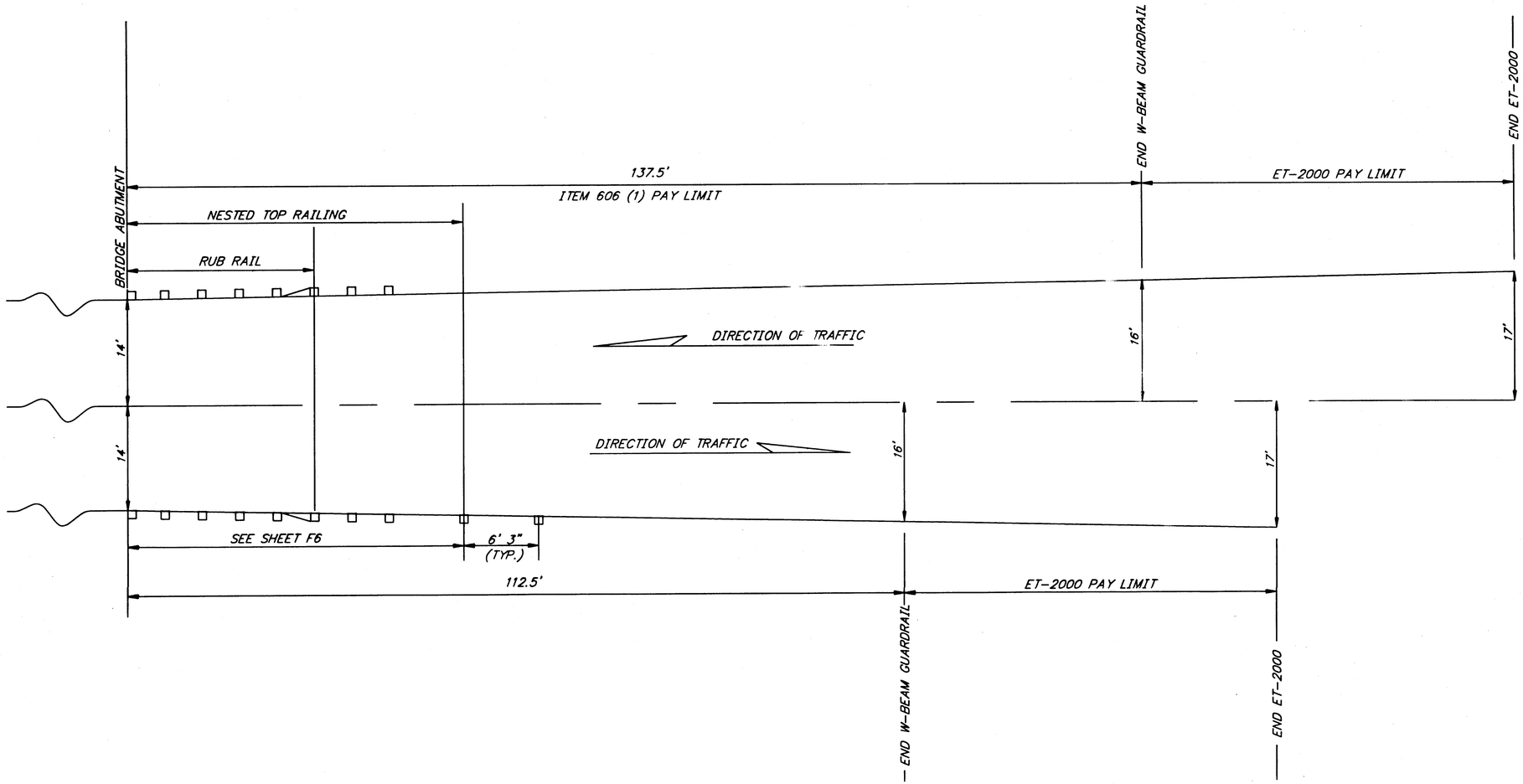


## GUARDRAIL – BRIDGE RAIL TRANSITION
## PLAN VIEW

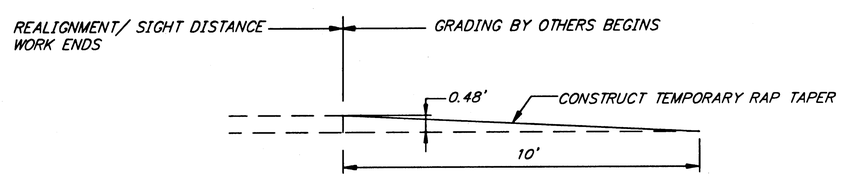


## TRANSITION REALIGNMENT / SIGHT DISTANCE WORK
## & GRADE WORK BY OTHERS

PATH:
Q:\Jnu\68269\Planset\F_det.dwg
Wed, 09/Jan/02 02:25PM Kris
PLOT:
PSPACE 1=1(F) OR MSPACE 1=1(F)
TAB: ESTIMATE

ADDENDUM NUMBER

ATTACHMENT NUMBER

RECORD OF REVISIONS

| No. | DATE | DESCRIPTION |
|---|---|---|
| | | |
| | | |
| | | |

JNU-FISH CREEK ROAD
SAFETY IMPROVEMENTS
PROJECT NO. 68269

**Guardrail Plan View**

DESIGNED BY: M. LAVERING

STATE OF ALASKA 49th Jack Daniel Beede CE-5309 REGISTERED PROFESSIONAL ENGINEER
1/16/02

CHECKED BY: T. MOORE

DRAWN BY: K.K.

STATE OF ALASKA
DEPARTMENT OF TRANSPORTATION
& PUBLIC FACILITIES
STATEWIDE DESIGN & ENGINEERING
SERVICES DIVISION

JNU-FISH CREEK ROAD
SAFETY IMPROVEMENTS
PROJECT NO. 68269

**Guardrail Plan View**

PROJECT DESIGNATION NUMBER

ACHRO-0953(4)

| STATE | YEAR |
|---|---|
| ALASKA | 2001 |

| SHEET NUMBER | TOTAL SHEETS |
|---|---|
| F4 | 41 |

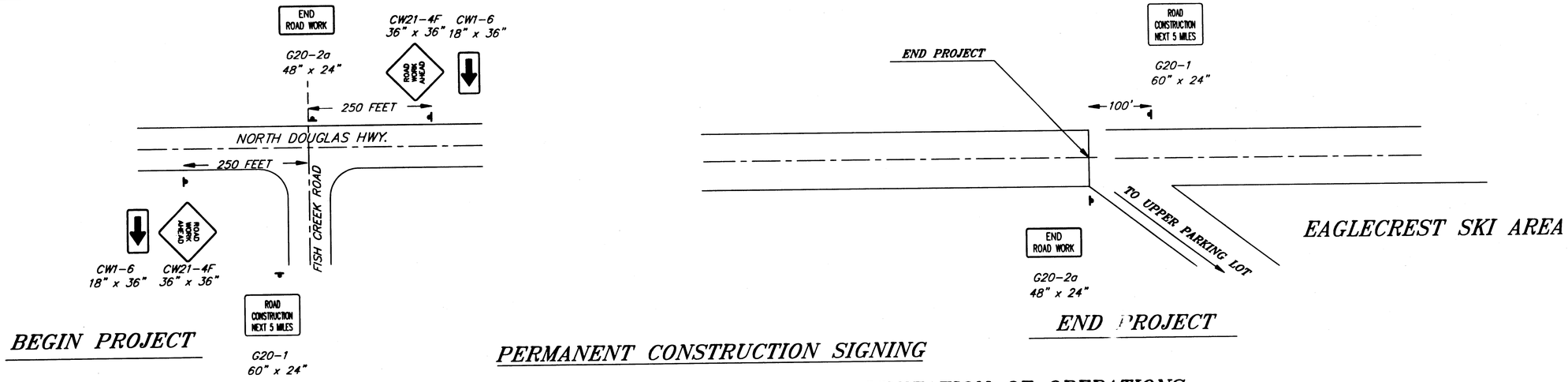


## PERMANENT CONSTRUCTION SIGNING

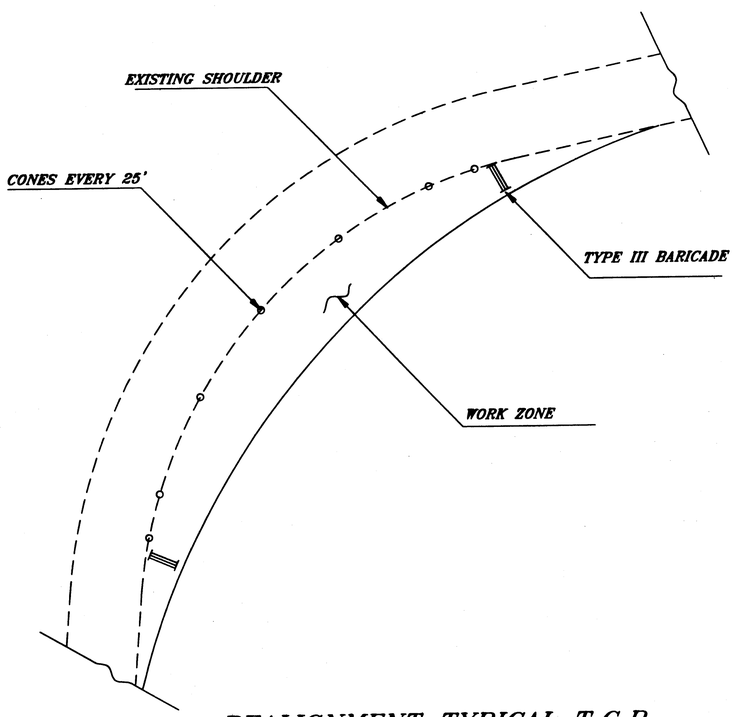


## REALIGNMENT TYPICAL T.C.P.

## LIMITATION OF OPERATIONS

1. TO MINIMIZE DISRUPTING THE SEASONAL OPERATIONS OF THE EAGLECREST SKI AREA, THE CONTRACTOR SHALL ABIDE TO THE STIPULATIONS LISTED BELOW FOR ANY CONSTRUCTION ACTIVITIES BETWEEN NOVEMBER 15, 2001 AND APRIL 14, 2002.
   a. FRIDAY, SATURDAY, AND SUNDAY: TWO LANES OF TRAFFIC SHALL BE MAINTAINED BETWEEN 8:00 AM AND 5:00 PM AND ONE LANE OF TRAFFIC BETWEEN 5:00 PM AND 8:00 AM
   b. MONDAY AND THURSDAY: TWO LANES OF TRAFFIC SHALL BE MAINTAINED BETWEEN 8:00 AM AND 10:00 AM AND ONE LANE OF TRAFFIC TRAFFIC BETWEEN 10:00 AM AND 8:00 AM.
   c. TUESDAY AND WEDNESDAY: ONE LANE OF TRAFFIC SHALL BE MAINTAINED.
   d. SCHOOL BREAKS: TWO LANES OF TRAFFIC BETWEEN 8:00 AM AND 5:00 PM AND ONE LANE OF TRAFFIC BETWEEN 5:00 PM AND 8:00AM SHALL BE MAINTAINED. SCHOOL BREAKS START APPROXIMATELY DECEMBER 21, 2001 AND ENDS JANUARY 7, 2002 AND MARCH 21, 2002 AND ENDS MARCH 31, 2002. BLASTING DURING THIS TIME WILL NOT BE ALLOWED UNLESS THE SKI AREA IS NOT OPERATING..
   e. BLASTING OPERATION SHALL BE ACCOMPLISHED ONLY ON TUESDAY AND WEDNESDAY, EXCEPT FOR THOSE WEEKS DESCRIBED IN PARAGRAPH NO. 1d. BLASTING MAY BE ALLOWED DURING DAYS THAT THE EAGLECREST SKI AREA IS NOT OPERATING.
   f. THE ROADWAY MAY BE CLOSED A MAXIMUM OF 20-MINUTES DURING BLASTING OPERATIONS. PRIOR TO CLOSING THE ROADWAY FOR BLASTING OPERATIONS, THE EAGLECREST SKI AREA, LOCAL FIRE DEPARTMENT, JUNEAU FLIGHT SERVICE STATION AND LOCAL POLICE DEPARTMENT SHALL BE NOTIFIED AT LEAST 48-HOURS IN ADVANCE OF BLAST. ROADWAY CLOSURES SHALL ALSO BE PUBLISHED IN THE LOCAL NEWSPAPER AND ANNOUNCED THRU AT LEAST TWO RADIO STATIONS (1 AM AND 1 FM STATION).
   g. TWO LANES OF TRAFFIC SHALL BE MAINTAINED DURING NON-WORKING HOURS.
2. ROADWAY WORK INCLUDING BLASTING OPERATIONS AFTER APRIL 14, 2002 COULD BE ACCOMPLISHED ANY TIME DURING THE WEEK.
3. THE CONTRACTOR'S WORK AREAS SHALL BE A MINIMUM OF 3,000-FEET APART AND LIMITED TO THREE WORK AREAS AT A GIVEN TIME. THE WORK ZONES SHALL NOT EXCEED 2,500-FEET EACH. A NEW WORK AREA WILL NOT BE ALLOWED UNTIL ONE OF THE PREVIOUS WORK AREAS IS COMPLETED AND READY TO RECIEVE RAP (CUT) OR IN CONFORMANCE WITH STAGE I DETAIL AS SHOWN ON SHEET B5 (FILL).
4. THE CONTRACTOR SHALL MAINTAIN THE EXISTING ROADWAY IN THE REALIGNMENT AREAS UNTIL THE NEW ROADWAY IS READY TO ACCEPT VEHICLE TRAFFIC.

## TRAFFIC CONTROL NOTES

1. IT IS THE INTENT OF THIS TRAFFIC CONTROL PLAN (TCP) TO ILLUSTRATE SOME BUT NOT ALL OF THE TRAFFIC CONTROL CONFIGURATIONS THAT WILL BE REQUIRED BY THIS PROJECT. TRAFFIC CONTROL PLANS FOR CONFIGURATIONS NOT COVERED BY THIS TCP SHALL BE DEVELOPED BY THE CONTRACTOR AND SUBMITTED TO THE ENGINEER FOR APPROVAL PRIOR TO USE.
2. TWO WAY TRAFFIC WILL BE MAINTAINED AT ALL TIMES. EXCEPT FOR WHEN THE ROAD IS CLOSED FOR BLASTING (SEE SECTION 108-1.04).
3. TRAFFIC LANES SHALL BE A MINIMUM OF 10 FEET WIDE.
4. THE CONTRACTOR SHALL KEEP THE PUBLIC INFORMED OF HIS CONSTRUCTION ACTIVITIES THROUGH THE USE OF THE LOCAL NEWS MEDIA. NEWS RELEASES SHALL BE APPROVED BY THE PROJECT ENGINEER PRIOR TO THEIR RELEASE. NEWS RELEASES WILL BE REQUIRED BUT NOT LIMITED TO, THE ONSET OF WORK, ROAD CLOSURES FOR BLASTING, AND CHANGES IN THE LANE CONFIGURATIONS.
5. IF TRAFFIC DELAYS BECOME LONGER THAN 3 MINUTES AVERAGE PER VEHICLE, THE PROJECT ENGINEER MAY REQUIRE NIGHTTIME OPERATIONS.
6. FLOOD LIGHTS SHALL BE PROVIDED FOR FLAGGER STATIONS DURING NIGHTIME OPERATIONS.
7. CHANNELIZATION DEVICES IF USED AT NIGHT SHALL BE LIT IN ACCORDANCE WITH THE ALASKA TRAFFIC MANUAL.
8. TWO LANES SHALL BE MAINTAINED AT ALL TIMES IN NON-WORK AREAS AND DURING NON-WORKING HOURS. A MINIMUM OF ONE LANE SHALL BE MAINTANED AT ALL TIMES THROUGH ALL WORK AREAS EXCEPT DURING BLASTING.

Q:\Jnu\68269\Planset\G_Tcp1.dwg
Wed, 09/Jan/02 02:49PM Kris
PLOT:
PSPACE 1=1(F) OR MSPACE 1=1(F)
TAB: ESTIMATE

| ADDENDUM NUMBER |
|---|
| |

| ATTACHMENT NUMBER |
|---|
| Wed, 09/Jan/02 02:49PM |

RECORD OF REVISIONS

| No. | DATE | DESCRIPTION |
|---|---|---|
| | | |
| | | |
| | | |

JNU-FISH CREEK ROAD
SAFETY IMPROVEMENTS
PROJECT NO. 68269

**Traffic Control Plan**

TH 7-22-03 TH

DESIGNED BY: M. LAVERING

STATE OF ALASKA 49th Jack Daniel Beedle CE-5309 REGISTERED PROFESSIONAL ENGINEER
1/16/02

CHECKED BY: T. MOORE
DRAWN BY: K.K.

STATE OF ALASKA
DEPARTMENT OF TRANSPORTATION & PUBLIC FACILITIES
STATEWIDE DESIGN & ENGINEERING SERVICES DIVISION

JNU-FISH CREEK ROAD
SAFETY IMPROVEMENTS
PROJECT NO. 68269

**Traffic Control Plan**

| PROJECT DESIGNATION NUMBER | |
|---|---|
| ACHRO-0953(4) | |
| STATE | YEAR |
| ALASKA | 2001 |
| SHEET NUMBER | TOTAL SHEETS |
| G1 | 41 |

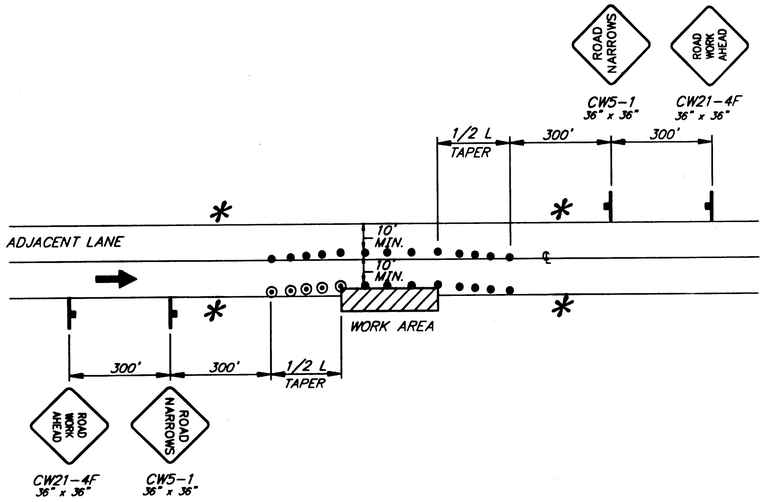


## ROADWAY ENCROACHMENT

NOTE: IF ONLY ONE LANE IS EFFECTED BY ROAD WORK (THAT IS, THE CONES ALONG THE WORK AREA ARE NO CLOSER THAN 10' TO CENTERLINE) THE SIGNS AND CENTERLINE CONES FOR THE OPPOSING LANE MAY BE DELETED.

**A SINGLE FLAGGER MAY BE USED INSTEAD OF TWO FLAGGERS IF APPROVED BY THE ENGINEER.

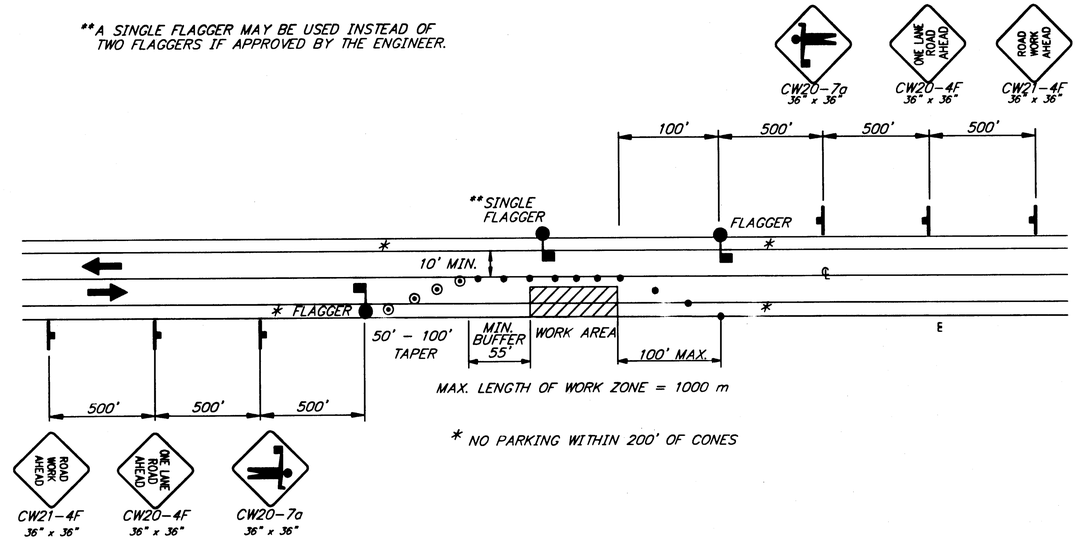


MAX. LENGTH OF WORK ZONE = 1000 m

* NO PARKING WITHIN 200' OF CONES

## SINGLE LANE CLOSURE
## TWO LANE ROAD

### LEGEND

- ..... SIGN
- ..... CONE
- ..... DRUM
- ..... TYPE III BARRICADE
- ..... FLAGGING STATION
- ..... HI-LEVEL WARNING DEVICE

* NO PARKING WITHIN 200' OF CONES

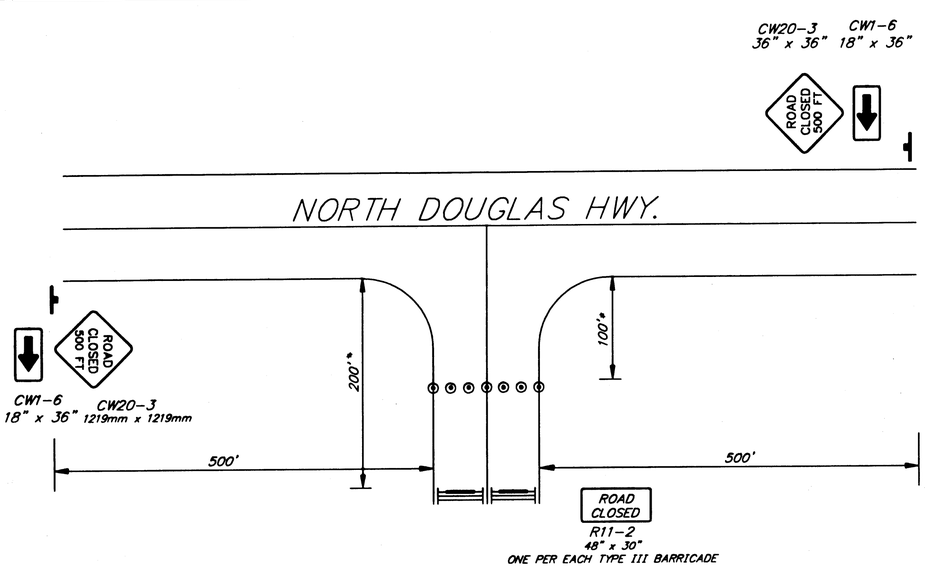


* OR AS DIRECTED

## BLASTING TRAFFIC CONTROL PLAN

$L = W \times T$

WHERE:
L= LENGTH OF TAPER
W= WIDTH OF OFFSET
T= TAPER FACTOR

### TCP TABLE SETUP

| | SPEED (MILES PER HOUR) | BUFFER/ LENGTH FEET | CONE/DRUM SPACING FEET | TAPER FACTOR (T) |
|---|---|---|---|---|
| | | | | |
| | | | | |
| | 20 | 35 | 20 | 6:1 |
| | 25 | 55 | 25 | 10:1 |
| | 30 | 85 | 30 | 16:1 |
| | 40 | 170 | 45 | 27:1 |

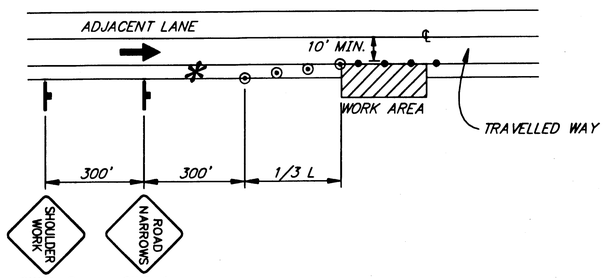


## SHOULDER WORK

PATH:
Q:\Jnu\68269\Planset\G_Tcp2.dwg
Wed, 09/Jan/02 02:51PM Kris
PLOT:
PSPACE 1=1(F) OR MSPACE 1=1(F)
TAB: ESTIMATE

| ADDENDUM NUMBER |
|---|
| |
| ATTACHMENT NUMBER |
| Wed, 09/Jan/02 02:51PM |

RECORD OF REVISIONS

| No. | DATE | DESCRIPTION |
|---|---|---|
| | | |
| | | |
| | | |

JNU-FISH CREEK ROAD
SAFETY IMPROVEMENTS
PROJECT NO. 68269

**Traffic Control Plan**

TH 7-22-03

DESIGNED BY: M. LAVERING

STATE OF ALASKA 49th Jock Daniel Beedle CE-5309 REGISTERED PROFESSIONAL ENGINEER 1/16/02

CHECKED BY: T. MOORE
DRAWN BY: K.K.

STATE OF ALASKA
DEPARTMENT OF TRANSPORTATION & PUBLIC FACILITIES
STATEWIDE DESIGN & ENGINEERING SERVICES DIVISION

JNU-FISH CREEK ROAD
SAFETY IMPROVEMENTS
PROJECT NO. 68269

**Traffic Control Plan**

PROJECT DESIGNATION NUMBER
ACHRO-0953(4)

| STATE | YEAR |
|---|---|
| ALASKA | 2001 |
| SHEET NUMBER | TOTAL SHEETS |
| G2 | 41 |

** INTERMEDIATE DITCH BLOCK = 1.0'
** "6 INCHES BELOW PROPOSED SHOULDER" SHALL GOVERN OVER THIS DIMENSION

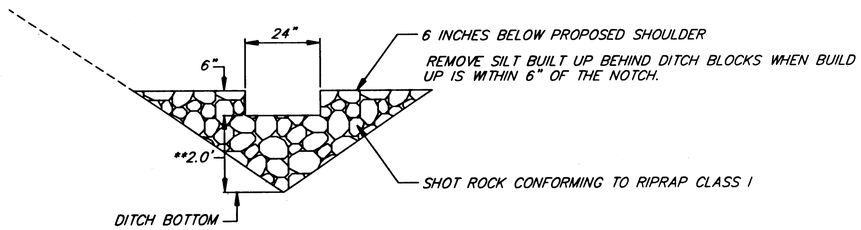


## SECTION

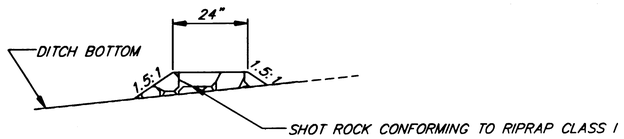


## PROFILE

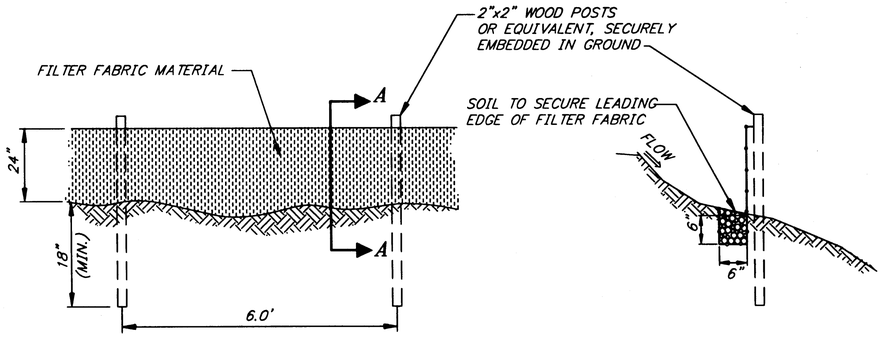


ELEVATION

SECTION A–A

## SILT FENCE DETAILS

## DITCH BLOCK LOCATION TABLE

| STATION | RIGHT | LEFT | BLOCK TYPE | STATION | RIGHT | LEFT | SEE NOTE No. |
|---|---|---|---|---|---|---|---|
| 20+50 | X | | INITIAL | 137+26 | X | | *INTERMEDIATE |
| 23+50 | X | | INITIAL | 145+50 | X | X | INITIAL |
| 25+50 | X | | INITIAL | 156+62 | X | X | INTERMEDIATE |
| 34+50 | | X | INITIAL | 160+50 | X | X | INITIAL |
| 47+50 | | X | INITIAL | 162+50 | X | | INITIAL |
| 54+50 | X | X | INITIAL | 165+50 | X | X | INITIAL |
| 56+51 | X | X | INTERMEDIATE | 167+50 | | X | INITIAL |
| 58+53 | X | X | INTERMEDIATE | 171+50 | X | | INITIAL |
| 60+54 | X | X | INTERMEDIATE | 173+50 | X | X | INITIAL |
| 62+56 | X | X | INTERMEDIATE | 178+50 | X | | INITIAL |
| 64+57 | X | X | INTERMEDIATE | 180+08 | X | | INTERMEDIATE |
| 66+58 | X | X | INTERMEDIATE | 183+82 | X | | INTERMEDIATE |
| 68+74 | X | X | *INTERMEDIATE | 187+50 | X | | *INTERMEDIATE |
| 69+98 | | X | *INTERMEDIATE | 190+04 | X | X | *INTERMEDIATE |
| 71+32 | | X | INTERMEDIATE | 192+16 | X | | INTERMEDIATE |
| 72+70 | | X | INTERMEDIATE | 195+29 | X | | INTERMEDIATE |
| 74+02 | | X | *INTERMEDIATE | 197+34 | X | | *INTERMEDIATE |
| 75+27 | | X | *INTERMEDIATE | 200+42 | X | | *INTERMEDIATE |
| 78+50 | | X | INITIAL | 203+02 | X | | *INTERMEDIATE |
| 80+50 | X | | INITIAL | 204+49 | X | | INTERMEDIATE |
| 82+64 | X | | *INTERMEDIATE | 205+79 | X | | *INTERMEDIATE |
| 85+50 | X | | INITIAL | 207+08 | X | | INTERMEDIATE |
| 86+50 | | X | INITIAL | 208+38 | X | | *INTERMEDIATE |
| 91+00 | X | | INITIAL | 209+90 | X | | *INTERMEDIATE |
| 91+50 | | X | INITIAL | 211+89 | X | | *INTERMEDIATE |
| 98+50 | X | | INITIAL | 213+67 | X | | *INTERMEDIATE |
| 103+50 | | X | INITIAL | 214+86 | X | | *INTERMEDIATE |
| 104+50 | X | | INITIAL | 215+82 | X | | INTERMEDIATE |
| 114+50 | X | | INITIAL | 216+74 | X | | INTERMEDIATE |
| 116+94 | X | | INTERMEDIATE | 217+69 | X | | INTERMEDIATE |
| 120+98 | X | | INTERMEDIATE | 218+74 | X | | INTERMEDIATE |
| 122+61 | X | | INTERMEDIATE | 220+10 | X | | INTERMEDIATE |
| 124+22 | X | | INTERMEDIATE | 223+02 | X | | *INTERMEDIATE |
| 126+12 | X | | INTERMEDIATE | 226+50 | | X | INITIAL |
| 127+86 | X | | *INTERMEDIATE | 228+50 | X | | INITIAL |
| 129+00 | X | | INTERMEDIATE | 237+50 | X | X | INITIAL |
| 130+02 | X | | *INTERMEDIATE | 246+50 | X | X | INITIAL |
| 132+50 | X | | INITIAL | 250+50 | X | | INITIAL |
| 134+29 | X | | INTERMEDIATE | 259+50 | X | | INITIAL |

* MAY REQUIRE "INITIAL" DITCH BLOCK PLACEMENT (SEE SHEET H2) AND DIMENSIONS, IF THE DITCH DAYLIGHTS UPHILL FROM THE CULVERT INLET.

PATH:
Q:\Jnu\68269\Planset\H_detail.dwg
Wed, 09/Jan/02 03:39PM Kris
PLOT:
PSPACE 1=1(F) OR MSPACE 1=1(F)
TAB: ESTIMATE

ADDENDUM NUMBER

ATTACHMENT NUMBER
Wed, 09/Jan/02 03:39PM

RECORD OF REVISIONS

| No. | DATE | DESCRIPTION |
|---|---|---|
| | | |

JNU-FISH CREEK ROAD
SAFETY IMPROVEMENTS
PROJECT NO. 68269

**Erosion and Sediment Control**

TJ 7-22-03

DESIGNED BY: M. LAVERING

STATE OF ALASKA 49th Jack Daniel Beedle CE-8307 REGISTERED PROFESSIONAL ENGINEER
1/6/02

CHECKED BY: T. MOORE
DRAWN BY: K.K.

STATE OF ALASKA
DEPARTMENT OF TRANSPORTATION & PUBLIC FACILITIES
STATEWIDE DESIGN & ENGINEERING SERVICES DIVISION

JNU-FISH CREEK ROAD
SAFETY IMPROVEMENTS
PROJECT NO. 68269

**Erosion and Sediment Control**

PROJECT DESIGNATION NUMBER
ACHRO-0953(4)

| STATE | YEAR |
|---|---|
| ALASKA | 2001 |

| SHEET NUMBER | TOTAL SHEETS |
|---|---|
| H1 | 41 |

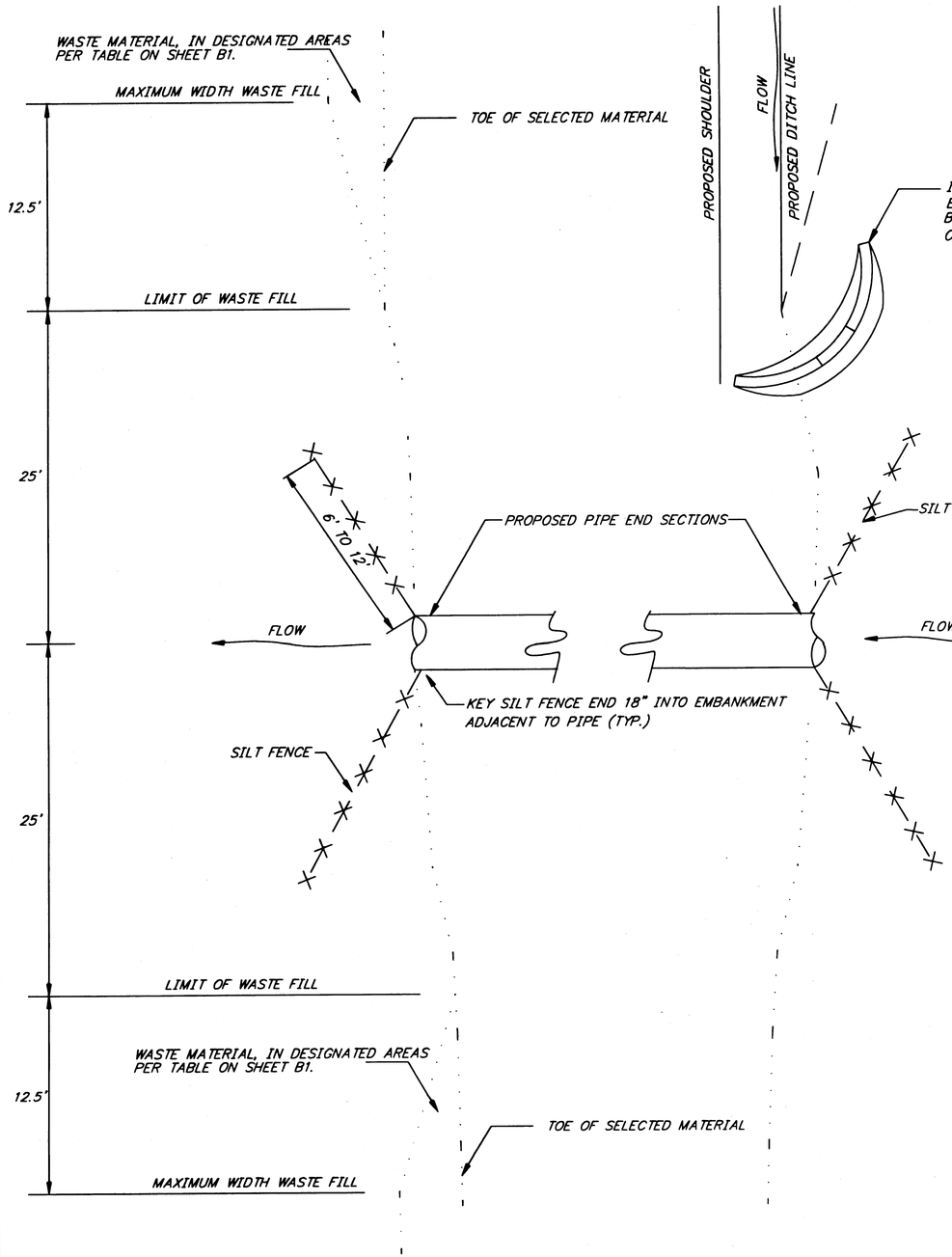


## SILTATION / SEDIMENT CONTROL AT CULVERT

NOTE: SILT FENCE AND/OR ROCK FLUMES ARE NOT REQUIRED IF ADJACENT EMBANKMENT IS CONSTRUCTED OUT OF SELECT MATERIAL TYPE "D"

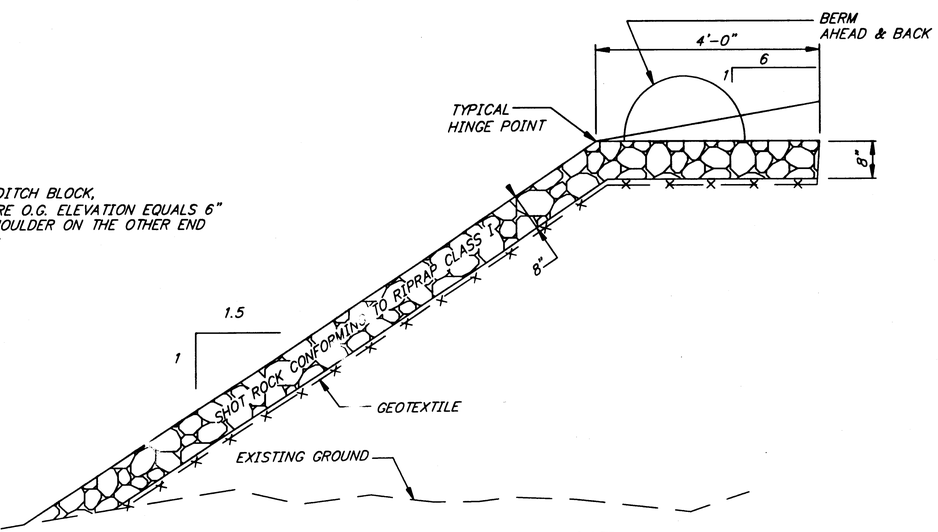


## ROCK FLUME TYPICAL SECTION VIEW

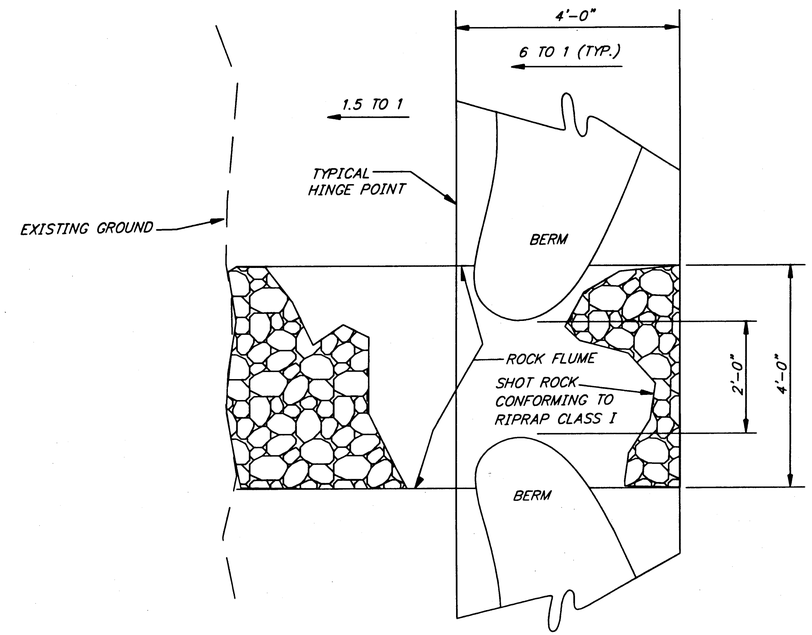


## ROCK FLUME PLAN VIEW

PATH:
Q:\Jnu\68269\Planset\H_detail.dwg
Tue, 15/Jan/02 02:38PM Kris
PLOT:
PSPACE 1=1(F) OR MSPACE 1=1(F)
TAB: ESTIMATE

| ADDENDUM NUMBER |
|---|
| |

| ATTACHMENT NUMBER |
|---|
| Tue, 15/Jan/02 02:38PM |

RECORD OF REVISIONS

| No. | DATE | DESCRIPTION |
|---|---|---|
| | | |
| | | |
| | | |

JNU-FISH CREEK ROAD SAFETY IMPROVEMENTS PROJECT NO. 68269

**Erosion and Sediment Control**

TH 7-22-03

DESIGNED BY: M. LAVERING

STATE OF ALASKA 49th Jack Daniel Beedle CE-5309 REGISTERED PROFESSIONAL ENGINEER

1/16/02

CHECKED BY: T. MOORE

DRAWN BY: K.K./ M.L.

STATE OF ALASKA
DEPARTMENT OF TRANSPORTATION & PUBLIC FACILITIES
STATEWIDE DESIGN & ENGINEERING SERVICES DIVISION

JNU-FISH CREEK ROAD SAFETY IMPROVEMENTS PROJECT NO. 68269

**Erosion and Sediment Control**

| PROJECT DESIGNATION NUMBER | |
|---|---|
| ACHRO-0953(4) | |
| STATE | YEAR |
| ALASKA | 2001 |
| SHEET NUMBER | TOTAL SHEETS |
| H2 | 41 |

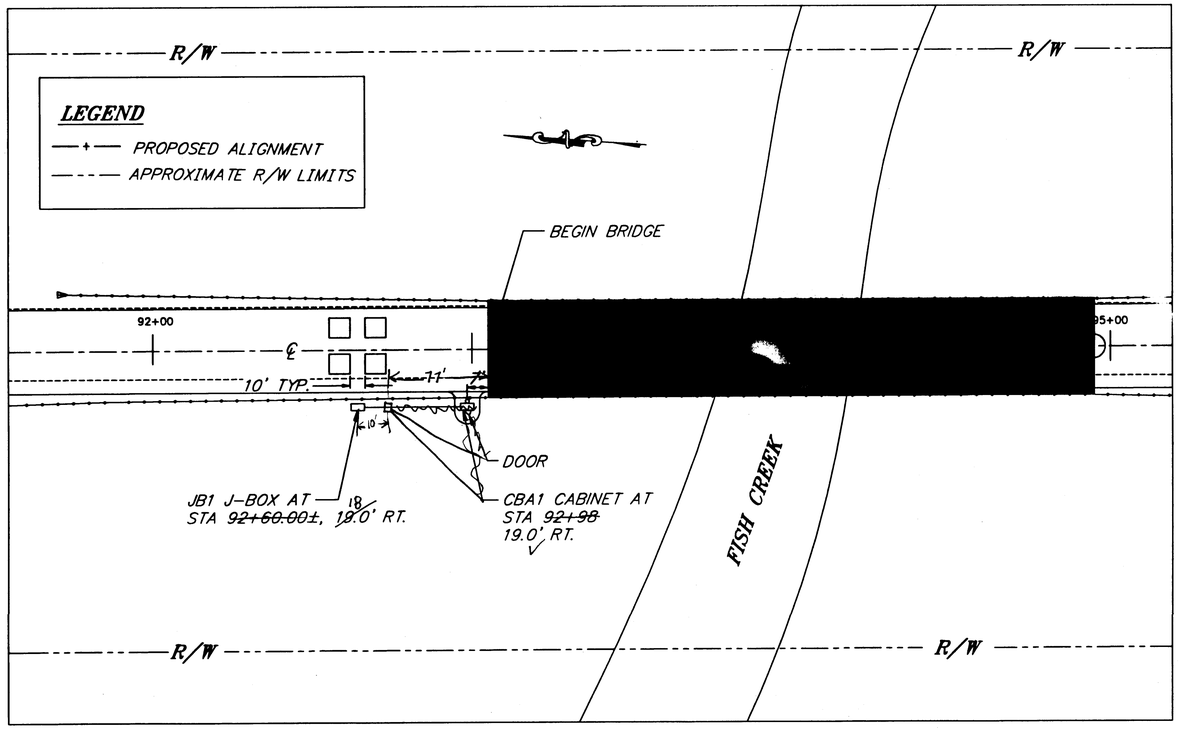


## SITE PLAN

N.T.S.

Prime Contractor: Glacier State
Sub Contractor: Alaska Elec.
P.E. Thad Hopper

## BASIS OF HORIZONTAL & VERTICLE CONTROL

1. HORIZONTAL AND VERTICAL CONTROL IS BASED ON THE EXISTING CENTERLINE OF FISH CREEK BRIDGE, AS SHOWN ON THE PLANS AND IS FOR INFORMATIONAL PURPOSES ONLY AND SUBJECT TO CHANGE PER THE ENGINEER.

## REFERENCE SPECIFICATIONS

ALL WIRING IN THIS SECTION SHALL BE CONSTRUCTED PER SPECIFICATION SECTION 660 SIGNALS AND LIGHTING, EXCEPT WHERE NOTED ON THE PLANS OR IN THE SPECIAL PROVISIONS. IN PARTICULAR, ALL CONSTRUCTION SHALL CONFORM TO SPECIFICATION SECTIONS 660-2.05 CONDUIT, 660-2.06 JUNCTION BOXES, 660-2.08 CONDUCTORS, 660-2.09(A) WIRING, 660-2.10 BONDING AND GROUNDING, AND 660-2.13 FIELD TESTS, EXCEPT AS MODIFIED BY SECTION 669 PERMANENT TRAFFIC RECORDERS.

## LABELS

ALL CABLES SHALL BE LABELED AT BOTH ENDS AND AT EVERY JUNCTION BOX THROUGH WHICH THE CABLES PASS, PER SPECIFICATION SECTION 660-209(a)

ALL WIRE PAIRS SHALL BE LABELED AT THE TERMINAL BLOCK AND AT ANY LOOSE ENDS.

THE CONVENTIONS BELOW SHALL APPLY TO DESIGNATING AND LABELING CABLES AND WIRE PAIRS:

LANES: TRAFFIC LANES AND THEIR RESPECTIVE LOOPS AND SENSORS SHALL BE LABELED FROM THE OUTSIDE EDGE OF THE ROAD TOWARD THE CENTER AS FOLLOWS:

℄ | A | B | ROAD EDGE →

TERMINAL BLOCKS: WIRES FROM SENSORS PLACED IN LANES WHICH ARE CLOSEST TO THE CONTROL BOX SHALL BE PLACED AT THE LEFT OR AT THE TOP OF THE TERMINAL BLOCK, DEPENDING ON ORIENTATION.

WIRES FOR INDUCTIVE LOOPS, SENSORS AND RESERVES SHALL BE LABELED AS FOLLOWS:

PnDLc

WHERE:

P IS THE PREFIX:
- V = TRAFFIC VOLUME LOOP
- H = VEHICLE CLASSIFICATION / SPEED LOOP
- ~~Cs = AUTOMATIC VEHICLE CLASSIFICATION (AVC) SENSOR~~
- ~~D = PIEZO WEIGH-IN-MOTION (WIM) SENSOR~~

n NUMBER SUFFIX FOR MULTIPLE LOOPS

D DIRECTION (N, S, E, W)

Lc LANE DESIGNATION (A, B, C, D)

(X) CONDUIT REFERENCE NUMBER

[XX] NOTE REFERENCE NUMBER

## GENERAL NOTES:

1. INSTALLATION OF EQUIPMENT AND MATERIALS SHALL CONFORM TO APPLICABLE REQUIREMENTS OF THE CURRENT NEC, ALASKA DOT/PF STANDARD SPECIFICATION FOR HIGHWAY CONSTRUCTION.
2. EVERY EFFORT HAS BEEN MADE TO MAKE THE INFORMATION CONTAINED IN THESE DOCUMENTS COMPLETE AND ACCURATE, HOWEVER THE CONTRACTOR SHALL FIELD VERIFY ALL EXISTING SITE CONDITIONS AND DIMENSIONS.
3. USE ONLY RMC CONDUIT.
4. ALL CONSTRUCTION SHALL BE WITHIN STATE RIGHT-OF-WAY.
5. ALL EXCAVATION SHALL BE WASTE AND HAULED TO APPROVED WASTE SITE PER THE ENGINEERS APPROVAL OF WHICH PAYMENT WILL BE INCIDENTAL TO ITEM 669(1).
6. ALL REQUIRED RAP MATERIAL AND CLASS "A" CONCRETE SHALL BE INCIDENTAL TO ITEM 669(1).

| PAY ITEM | STATION | [1] CABINET OFFSET | CABINET ASSEMBLY STYLE | INDUCTIVE LOOPS | WIM SENSOR & TYPE | AVC SENSOR & TYPE | LOAD CENTER & TYPE | ELECTRICAL AND TELEPHONE SERVICE |
|---|---|---|---|---|---|---|---|---|
| 669(1) | AS SHOWN SITE PLANS | 19.0' RT. | CBA1 | 4 | NONE | NONE | NONE | NO |

[1] CABINET OFFSET AS MEASURED FROM CENTERLINE, TO BE FIELD ADJUSTED, INSTALLATION NOT TO EXCEED

## ESTIMATE OF QUANTITIES

| ITEM NO. | ITEM | UNIT | QUANTITY |
|---|---|---|---|
| 669(1) | PERMANENT TRAFFIC RECORDER | LUMP SUM | ALL REQ'D. |

PATH:
Q:\Jnu\68269\Planset\L_LOOPS.DWG
Wed, 16/Jan/02 01:11PM Kris
PLOT:
PSPACE 1=1(F) OR MSPACE 1=1(F)
TAB: L1

ADDENDUM NUMBER

ATTACHMENT NUMBER

RECORD OF REVISIONS

| No. | DATE | DESCRIPTION |
|---|---|---|
| | | |

EAGLECREST ROAD
PERMANENT TRAFFIC RECORDER
PROJECT NO. 68269

SITE PLAN & ESTIMATE OF QUANTITIES

TH 7-22-03

DESIGNED BY: P. JONES

STATE OF ALASKA 49th Kenneth L. Mattson CE-10049 REGISTERED PROFESSIONAL ENGINEER

CHECKED BY: K. MATTSON
DRAWN BY: D. STEVENS

STATE OF ALASKA
DEPARTMENT OF TRANSPORTATION & PUBLIC FACILITIES
STATEWIDE DESIGN & ENGINEERING SERVICES DIVISION

EAGLECREST ROAD
PERMANENT TRAFFIC RECORDER
SITE PLAN & ESTIMATE OF QUANTITIES

PROJECT DESIGNATION NUMBER
ACHRO-0953(4)

| STATE | YEAR |
|---|---|
| ALASKA | 2001 |

| SHEET NUMBER | TOTAL SHEETS |
|---|---|
| L1 | 41 |

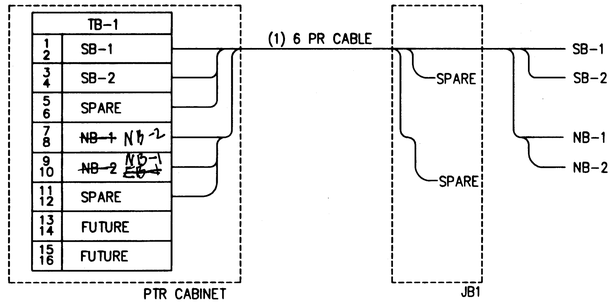


## WIRING SCHEMATIC DETAIL

| RMC NO. | CONDUIT SIZE | FROM | TO | CABLE QTY. | CABLE TYPE |
|---|---|---|---|---|---|
| 1 | 2" | CBA1 | JB1 | 1 | 6 PR CABLE |
| 2 | 1" | JB1 | SB-1 | 1 | 1PR No.12 |
| 3 | 1" | JB1 | SB-2 | 1 | 1PR No.12 |
| 4 | 1" | JB1 | NB-1 | 1 | 1PR No.12 |
| 5 | 1" | JB1 | NB-2 | 1 | 1PR No.12 |
| | | | | | |

## CONDUIT/CONDUCTOR SCHEDULE

## SHEET NOTES

1. JUNCTION BOX SHOWN HERE IS JB1 ON SITE PLAN.
2. CONTROLLER CABINET DOORS TO OPEN AWAY FROM TRAFFIC.
3. USE FACTORY 90° ELBOWS TO/FROM J-BOXES ON ALL CONDUITS LARGER THAN 1".
4. ALL CONDUIT SHALL BE GALVANIZED STEEL UNLESS NOTED OTHERWISE.
5. NOT ALL CONDUITS MAY BE SHOWN IN DETAIL. ADD OTHERS AS REQUIRED.
6. ~~PROVIDE SLIP BASE AND FOUNDATION PER DOT STD DETAIL S-34.00.~~
7. PROVIDE CONDUIT DRAIN HOLES PER STANDARD SPECIFICATIONS SECTION 660-2.05.
8. SEE TYPICAL SECTIONS FOR DIMENSIONS.
9. INDUCTION LOOPS TO BE CENTERED IN TRAFFIC LANES.
10. DIMENSIONS ARE TYPICAL FOR ALL LANES.
11. CABINET TO BE EQUAL TO OR BETTER THAN HENNESEY PRODUCTS SINGLE DOOR ALUMINUM ENCLOSURE: CATALOG NUMBER SM201715 (20" X 17" X 16") WITH NEMA 3R RATING, CORBIN LOCK, EQUIPMENT MOUNTING PANEL AND ADJUSTING SHELF.
12. 6 PR. CABLE SHALL TERMINATE IN A RE-ENTRYABLE SPLICE KIT.

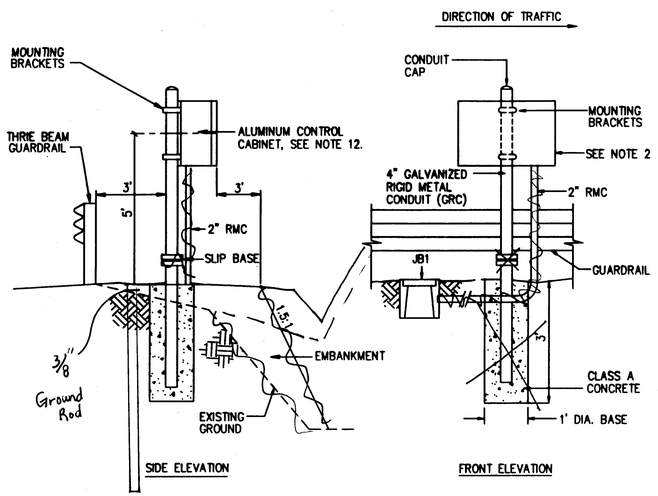


## SECTION "A-A"
## CABINET TYPE CBA1 DETAIL

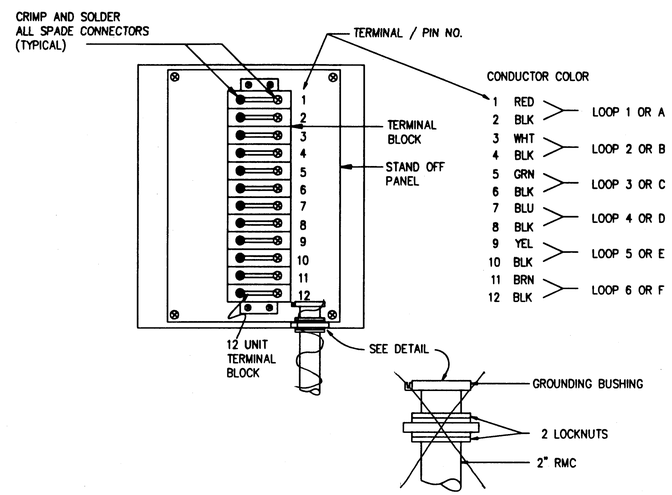


## CABINET TYPE CBA1 DETAIL
FRONT VIEW, DOOR OPEN

| JUNCTION BOX SUMMARY | |
|---|---|
| NUMBER | TYPE |
| JB1 | II |
| | |

NOT TO SCALE
USE DIMENSIONS

PATH:
Q:\Jnu\68269\Planset\L_LOOPS.DWG
Wed, 16/Jan/02 01:13PM Kris
PLOT:
PSPACE 1=1(F) OR MSPACE 1=1(F)
TAB: ESTIMATE

ADDENDUM NUMBER

ATTACHMENT NUMBER

RECORD OF REVISIONS

| No. | DATE | DESCRIPTION |
|---|---|---|
| | | |
| | | |
| | | |

EAGLECREST ROAD
PERMANENT TRAFFIC RECORDER
PROJECT NO. 68269

MISCELLANEOUS DETAILS

7-22-03

DESIGNED BY: P. JONES

STATE OF ALASKA 49th Kenneth L. Mattson CE-10049 REGISTERED PROFESSIONAL ENGINEER

CHECKED BY: K. MATTSON
DRAWN BY: D. STEVENS

STATE OF ALASKA
DEPARTMENT OF TRANSPORTATION & PUBLIC FACILITIES
STATEWIDE DESIGN & ENGINEERING SERVICES DIVISION
EAGLECREST ROAD
PERMANENT TRAFFIC RECORDER

MISCELLANEOUS DETAILS

PROJECT DESIGNATION NUMBER
ACHRO-0953(4)

| STATE | YEAR |
|---|---|
| ALASKA | 2001 |
| SHEET NUMBER | TOTAL SHEETS |
| L2 | 41 |

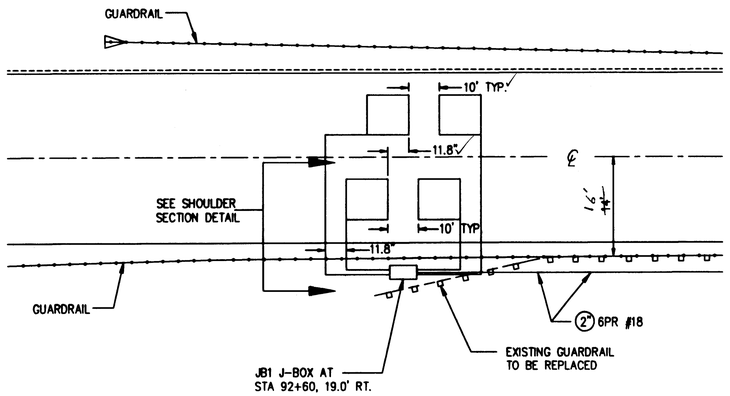


## LOOP INSTALLATION DETAIL

NTS

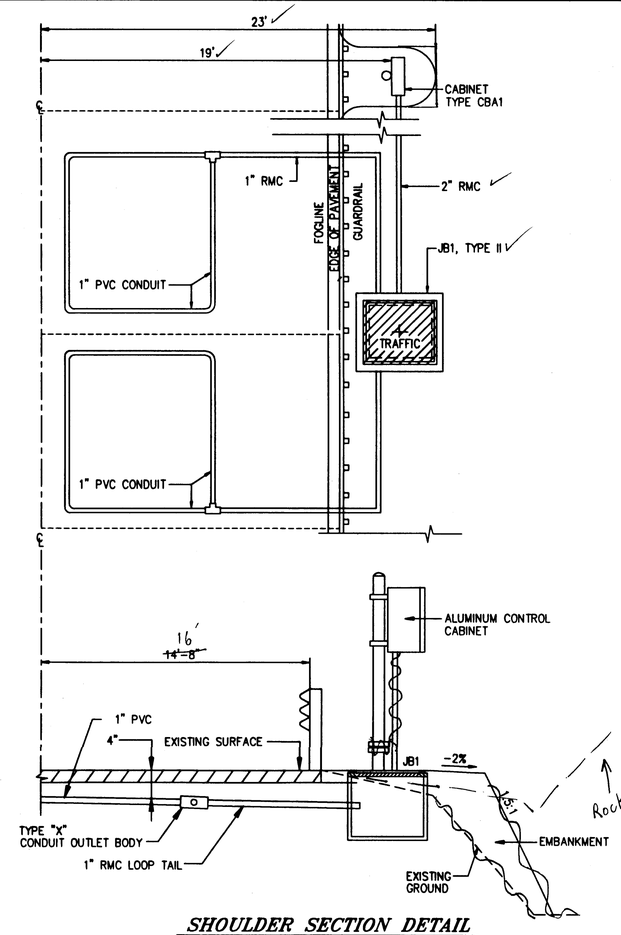


## SHOULDER SECTION DETAIL

NTS

## SHEET NOTES

1. WHEN NEW ASPHALT PAVEMENT IS BEING INSTALLED, COMPLETE LOOP INSTALLATIONS PRIOR TO PAVING.
2. PRIOR TO FINAL ACCEPTANCE OF THE PROJECT, EACH LOOP SHALL BE CHECKED FOR CONTINUITY AND CONDUCTOR INSULATION INTEGRITY IN ACCORDANCE WITH SECTION 660-2.14 OF THE SPECIFICATIONS.
3. SPLICING OF THE LOOP TAIL WIRES TO THE LEAD-IN CABLE SHALL CONFORM TO SECTION 660-2.09(A) OF THE SPECIFICATIONS.
4. LABEL ALL LOOP TAILS AND LEAD-IN CABLE IN ACCORDANCE WITH SECTION 660-2.08 AND TABLE 660(4) OF THE SPECIFICATIONS.
5. ALL DETECTOR LOOPS SHALL BE 6' WIDE BY 6' LONG, UNLESS DIMENSIONED OTHERWISE IN THE PLANS.
6. LEAD IN WIRES FOR EACH LOOP SHALL BE IN SEPARATE CONDUITS TO THE FIRST JUNCTION BOX WITH A MINIMUM SEPARATION BETWEEN CONDUITS OF 12".
7. INDUCTIVE LOOPS SHALL BE INSTALLED IMMEDIATELY PRIOR TO PAVING. FINAL LIFT ASPHALT PAVEMENT SHALL BE SMOOTH OVER ALL INDUCTIVE LOOPS AND WITHOUT TRANSVERSE SEAMS, JOINTS, OR ROUGHNESS WITHIN 50' OF LOOPS.
8. ALL PVC CONDUIT COUPLINGS, ELBOWS AND ADAPTERS SHALL BE 1" SCHED. 80.
9. ALL PVC JOINTS SHALL BE SOLVENT WELDED AND WATERTIGHT.
10. INSTALL 1/2" PREFORMED BITUMINOUS JOINT MATERIAL AROUND ALL JUNCTION BOXES WHEN LOCATED IN A SIDEWALK.
11. PROVIDE GROUNDING BUSHINGS ON ALL CONDUITS. GROUND WITH MIN. No. 4 BARE CU.
12. ALL JUNCTION BOX COVERS SHALL BE BONDED WITH COPPER BRAID OF #8 AWG CROSS SECTION. FOR TYPES I & I-A THE LENGTH SHALL BE 3', AND 5' FOR TYPES II & III.
13. J-BOX TO BE LOCATED 2' BEHIND UTILIWALK OR SIDEWALK WHEN PRESENT.
14. JUNCTION BOXES SHALL BE SET FLUSH WITH THE SURROUNDING SURFACE EXCEPT IN AN UNPAVED SHOULDER, WHEN THEY SHALL BE LOCATED 2" BELOW GRADE.
15. JUNCTION BOX COVERS TO BE EMBOSSED WITH "TRAFFIC".
16. PROVIDE CONDUIT DRAIN HOLES PER STANDARD SPECIFICATIONS SECTION 660-2.05.
17. ALL OPEN END CONDUIT INSIDE THE JUNCTION BOX SHALL BE DUCK SEALED.
18. J-BOX SHALL BE MARKED WITH A 4" ORANGE EMS (ELECTRONIC MARKING SYSTEM) BALL. THE BALL SHALL BE 3m SCOTCHMARK® OR EQUAL.

## LEGEND

(X") = X" DIAMETER RMC CONDUIT.

| LOCATION SUMMARY | | | |
|---|---|---|---|
| NUMBER | TYPE | STATION | OFFSET |
| JB1 | J-BOX | ~~92+50~~ | ~~19'~~ RT. 18' |
| CBA1 | CABINET | ~~92+84~~ | ~~18'~~ RT. |

8

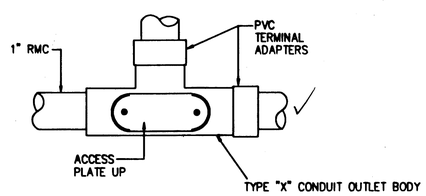


## TYPE "X" CONDUIT DETAIL

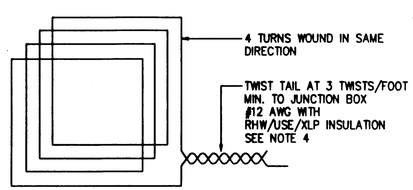


## LOOP WIRING DETAIL

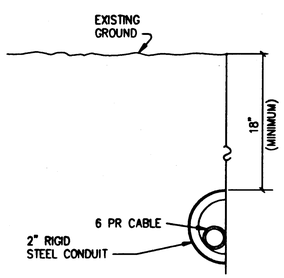


## 2" RIGID METAL CONDUIT INSTALLATION DETAIL

N.T.S.

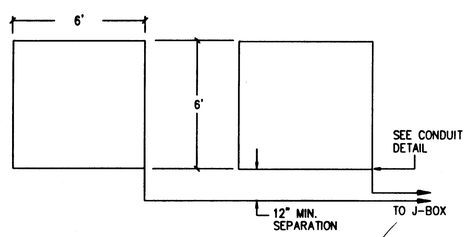


## LOOP INSTALLATION PLAN

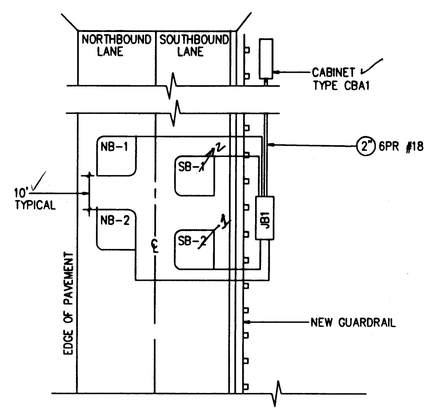


## TRAFFIC COUNTER TYPICAL

CENTER LOOPS IN THE LANES

NOT TO SCALE

USE DIMENSIONS

PATH: Q:\Jnu\68269\Planset\L_LOOPS.DWG
Wed, 16/Jan/02 01:14PM Kris
PLOT: PSPACE 1=1(F) OR MSPACE 1=1(F)
TAB: L3

| ADDENDUM NUMBER |
|---|
| |

| ATTACHMENT NUMBER |
|---|
| |

RECORD OF REVISIONS

| No. | DATE | DESCRIPTION |
|---|---|---|
| | | |

EAGLECREST ROAD PERMANENT TRAFFIC RECORDER PROJECT NO. 68269

MISCELLANEOUS DETAILS

TH 7-22-03

DESIGNED BY: P. JONES

STATE OF ALASKA 49th Kenneth L. Mattson CE-10049 REGISTERED PROFESSIONAL ENGINEER

CHECKED BY: K. MATTSON

DRAWN BY: D. STEVENS

STATE OF ALASKA
DEPARTMENT OF TRANSPORTATION & PUBLIC FACILITIES
STATEWIDE DESIGN & ENGINEERING SERVICES DIVISION

EAGLECREST ROAD PERMANENT TRAFFIC RECORDER

# MISCELLANEOUS DETAILS

| PROJECT DESIGNATION NUMBER | |
|---|---|
| ACHRO-0953(4) | |
| STATE | YEAR |
| ALASKA | 2001 |
| SHEET NUMBER | TOTAL SHEETS |
| L3 | 41 |

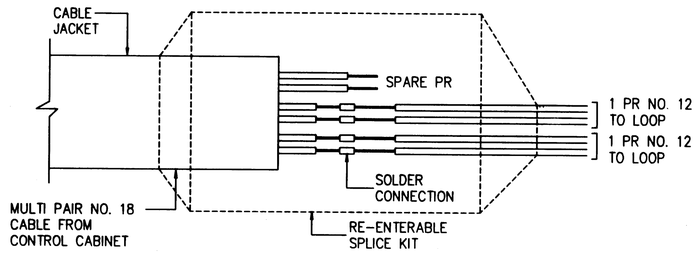


## *TYPICAL SPLICE DETAILS*

NOTES:

1. SCHEMATIC SKETCH SHOWS AN EXAMPLE OF TWO PAIRS USED WITH ONE SPARE
2. TERMINATE ALL SPARES WITHIN THE SPLICE BODY.
3. SPLICE BODY TO ENCLOSE ALL CABLE JACKETS.
4. SOLDER CONNECTIONS. DO NOT USE COMPRESSION CONNECTORS WRAP EACH CONDUCTOR OVER OTHER CONDUCTOR BEFORE SOLDERING.
5. USE COMMERCIAL SPLICE KITS SIMILAR OR EQUAL TO 3M PRODUCTS, TYPE 82-F1.

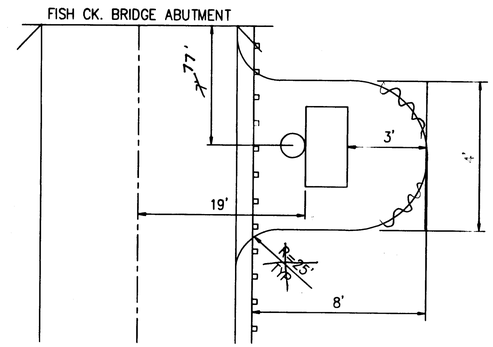


## *PAD TYPICAL*

OR AS DIRECTED BY THE ENGINEER

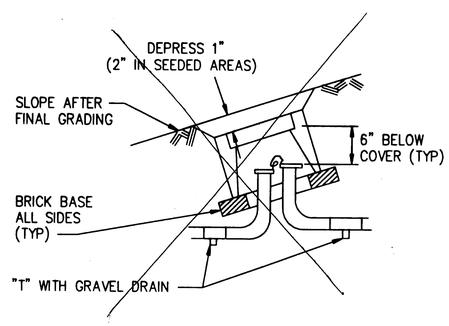


## *TYPE IA J-BOX INSTALLATION ON SLOPE*

*NOT TO SCALE*

USE DIMENSIONS

PATH:
Q:\Jnu\68269\Planset\L_LOOPS.DWG
Wed, 16/Jan/02 01:19PM Kris
PLOT:
PSPACE 1=1(F) OR MSPACE 1=1(F)
TAB: L4

| ADDENDUM NUMBER |
|---|
| |
| ATTACHMENT NUMBER |
| |

RECORD OF REVISIONS

| No. | DATE | DESCRIPTION |
|---|---|---|
| | | |
| | | |
| | | |

EAGLECREST ROAD
PERMANENT TRAFFIC RECORDER
PROJECT NO. 68269

MISCELLANEOUS DETAILS

PA 7-22-03

DESIGNED BY: P. JONES

STATE OF ALASKA 49th Kenneth L Mattson CE-10049 REGISTERED PROFESSIONAL ENGINEER

CHECKED BY: K. MATTSON

DRAWN BY: D. STEVENS

STATE OF ALASKA
DEPARTMENT OF TRANSPORTATION & PUBLIC FACILITIES
STATEWIDE DESIGN & ENGINEERING SERVICES DIVISION

EAGLECREST ROAD
PERMANENT TRAFFIC RECORDER

**MISCELLANEOUS DETAILS**

PROJECT DESIGNATION NUMBER

**ACHRO-0953(4)**

| STATE | YEAR |
|---|---|
| ALASKA | 2001 |
| SHEET NUMBER | TOTAL SHEETS |
| L4 | 41 |

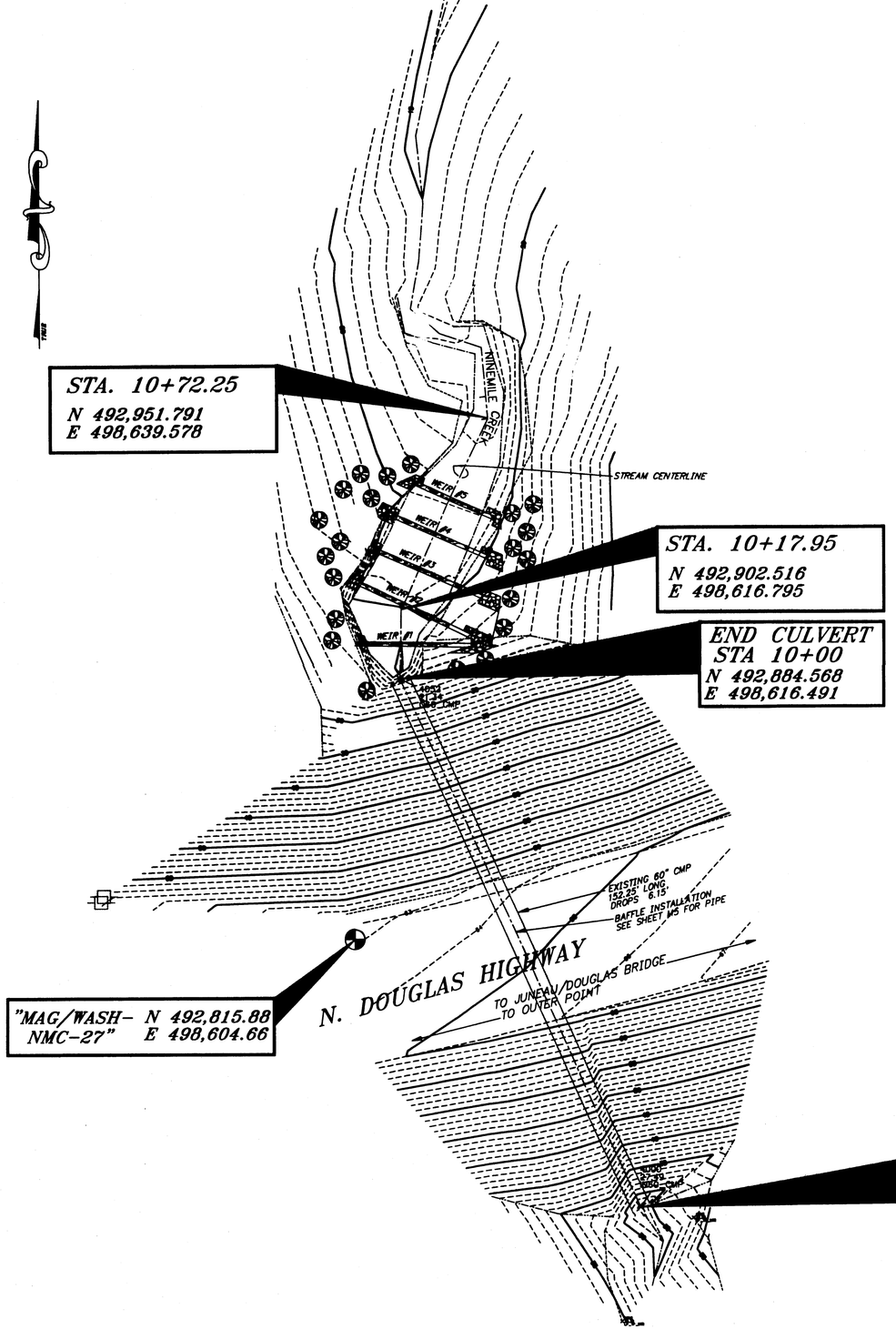


## ACCESS NOTES

WORK SITE SHALL BE ACCESSED DIRECTLY FROM THE NORTH DOUGLAS HIGHWAY RIGHT OF WAY. TRAFFIC CONTROL SHALL BE CONSIDERED SUBSIDIARY.

TIMBER MATS AS DEPICTED BELOW, OR EQUAL WILL BE REQUIRED TO PROTECT WETLANDS AND PROVIDE SUPPORT TO EQUIPMENT BELOW ELEVATION 24.

UPON COMPLETION OF SITE WORK, REMOVE TIMBER MATS, APPLY A SINGLE APPLICATION OF FERTILIZER AS SPECIFIED IN SECTION 618 TO ALL VEGETATED AREAS PREVIOUSLY COVERED BY THE MATS. IF THE SOIL IS DISTURBED THEN ALSO SEED WITH NATIVE GRASS MIX (SEE SECTION 618).

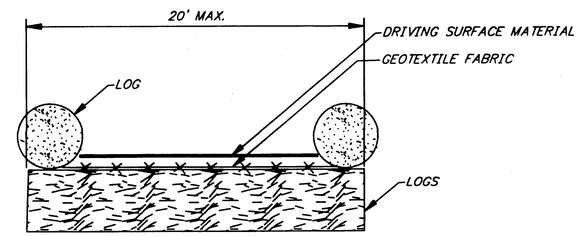


## TIMBER MAT USE BELOW ELEVATION +24'

## GENERAL NOTES:

1. NOTIFY THE ENGINEER AT LEAST 5 WORKING DAYS IN ADVANCE OF IN-WATER WORK.
2. FROM CULVERT OUTLET DOWNSTREAM, ANY REMOVED HEMLOCK AND SPRUCE TREES SHALL BE REPLACED WITH LIVE, ROOTED HEMLOCK AND SPRUCE, RESPECTIVELY, 2 TO 4 FEET TALL. ALL DISTURBED AREAS SHALL BE SEEDED WITH NATIVE GRASS MIX (SECTION 618). WILLOWS (SECTION 621) SHALL BE PLANTED IN DISTURBED AREAS ABOVE BOTH THE ORDINARY HIGH WATER LINE IN THE STREAM AND THE HIGH TIDE LINE (ELEVATION 20.8 FEET)
3. COMPLY WITH THE FISH AND GAME PERMIT (SEE APPENDIX B).

O:\Jnu\68269\Planset\M2-9-mile.dwg
Thu, 10/Jan/02 08:24AM Kris
PLOT:
PSPACE 1=1(F) OR MSPACE 1=1(F)
TAB: plan1

| ADDENDUM NUMBER |
|---|
| |

| ATTACHMENT NUMBER |
|---|
| Thu, 10/Jan/02 08:24AM |

RECORD OF REVISIONS

| No. | DATE | DESCRIPTION |
|---|---|---|
| | | |
| | | |
| | | |

JNU-FISH CREEK ROAD
SAFETY IMPROVEMENTS
PROJECT NO. 68269

**Ninemile Creek**
**Fish Passage Improvements**
**Access Plan**

TH 7-22-03

DESIGNED BY: M. LAVERING

STATE OF ALASKA 49th Jack Daniel Beedle CE-5309 REGISTERED PROFESSIONAL ENGINEER 1/16/02

CHECKED BY: T. MORRE

DRAWN BY: K.K.

STATE OF ALASKA
DEPARTMENT OF TRANSPORTATION & PUBLIC FACILITIES
STATEWIDE DESIGN & ENGINEERING SERVICES DIVISION

**JNU-FISH CREEK ROAD SAFETY IMPROVEMENTS PROJECT NO. 68269 Ninemile Ck. Fish Passage Improvements Access Plan**

PROJECT DESIGNATION NUMBER
**ACHRO-0953(4)**

| STATE | YEAR |
|---|---|
| ALASKA | 2001 |
| SHEET NUMBER | TOTAL SHEETS |
| M1 | 41 |

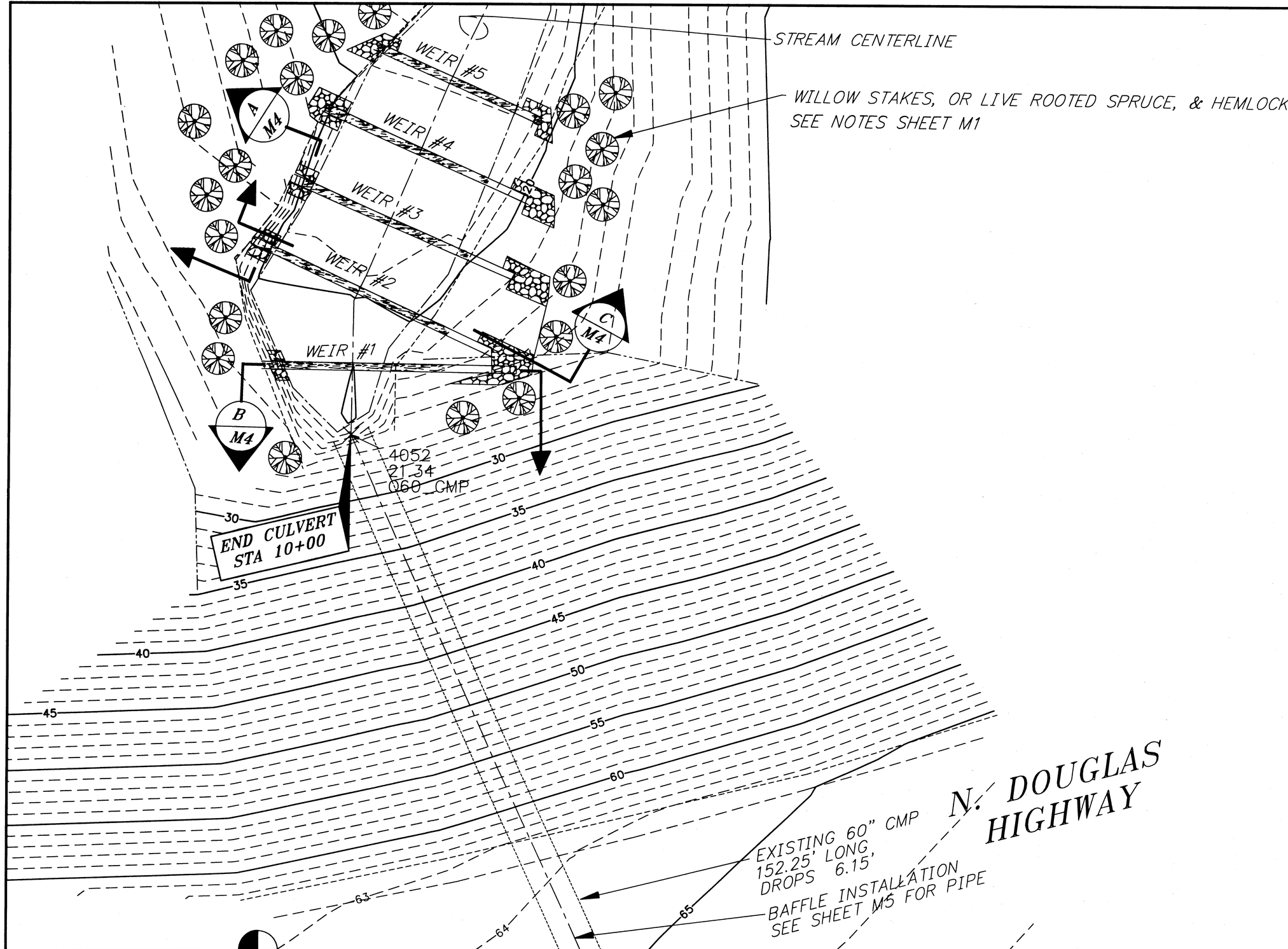


PATH:
O:\Jnu\68269\Planset\M2-9-mile.dwg
Thu, 10/Jan/02 08:30AM Kris
PLOT:
PSPACE 1=1(F) OR MSPACE 1=1(F)
TAB:plan2

| ADDENDUM NUMBER |
|---|
| |

| ATTACHMENT NUMBER |
|---|
| Thu, 10/Jan/02 08:30AM |

RECORD OF REVISIONS

| No. | DATE | DESCRIPTION |
|---|---|---|
| | | |
| | | |
| | | |

JNU-FISH CREEK ROAD
SAFETY IMPROVEMENTS
PROJECT NO. 68269

**Ninemile Creek**
**Fish Passage Improvements**
**Mitigation Plan Detail**

TB 7-22-03

DESIGNED BY: M. LAVERING

STATE OF ALASKA
49th
Jack Daniel Beedle
CE-5307
REGISTERED PROFESSIONAL ENGINEER
1/16/02

CHECKED BY: T. MOORE
DRAWN BY: K.K.

STATE OF ALASKA
DEPARTMENT OF TRANSPORTATION
& PUBLIC FACILITIES
STATEWIDE DESIGN & ENGINEERING
SERVICES DIVISION
**JNU-FISH CREEK ROAD**
**SAFETY IMPROVEMENTS**
**PROJECT NO. 68269**
**Ninemile Ck. Fish**
**Passage Improvements**
**Mitigation Plan Detail**

PROJECT DESIGNATION NUMBER
**ACHRO-0953(4)**

| STATE | YEAR |
|---|---|
| ALASKA | 2001 |
| SHEET NUMBER | TOTAL SHEETS |
| M2 | 41 |

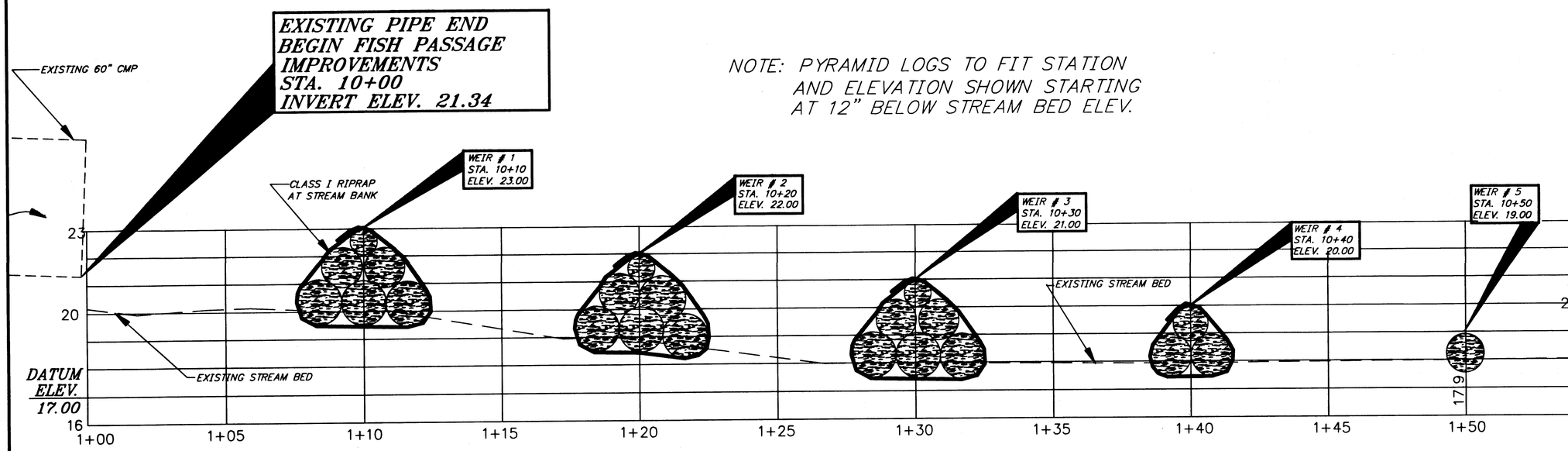


NOTE: PYRAMID LOGS TO FIT STATION AND ELEVATION SHOWN STARTING AT 12" BELOW STREAM BED ELEV.

## PROFILE

NOTE: LOGS SHOWN ABOVE ARE NOT DRAWN TO SCALE BUT MERELY DEPICT THE PYRAMIDING THAT IS REQUIRED.

PATH:
Q:\Jnu\68269\Plonset\M2-9-mile.dwg
Wed, 09/Jan/02 04:14PM Kris
PLOT:
PSPACE 1=1(F) OR MSPACE 1=1(F)
TAB: profile

ADDENDUM NUMBER

ATTACHMENT NUMBER

Wed, 09/Jan/02 04:14PM

RECORD OF REVISIONS

| No. | DATE | DESCRIPTION |
|---|---|---|
| | | |
| | | |
| | | |

JNU-FISH CREEK ROAD
SAFETY IMPROVEMENTS
PROJECT NO. 68269

**Ninemile Creek Fish Passage Improvements Profile**

7-22-03

DESIGNED BY: M. LAVERING

STATE OF ALASKA 49th Jack Daniel Beedle CE-5309 PROFESSIONAL ENGINEER

1/8/02

CHECKED BY: T. MOORE

DRAWN BY: K.K.

STATE OF ALASKA
DEPARTMENT OF TRANSPORTATION & PUBLIC FACILITIES
STATEWIDE DESIGN & ENGINEERING SERVICES DIVISION

**JNU-FISH CREEK ROAD SAFETY IMPROVEMENTS PROJECT NO. 68269**

**Ninemile Ck. Fish Passage Improvements Profile Plan**

PROJECT DESIGNATION NUMBER

ACHRO-0953(4)

| STATE | YEAR |
|---|---|
| ALASKA | 2001 |
| SHEET NUMBER | TOTAL SHEETS |
| M3 | 41 |

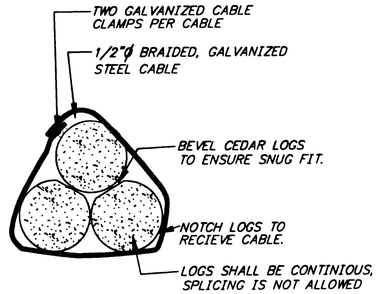


## CEDAR LOG DETAIL

NOTE: LOGS SHALL BE BARK FREE ~~CEDAR~~ Hemlock
WEIR SHALL BE INSTALLED PERPENDICULAR TO STREAM CENTERLINE.

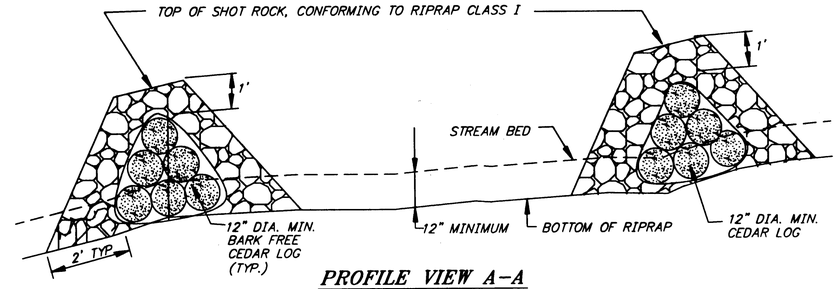


## PROFILE VIEW A–A

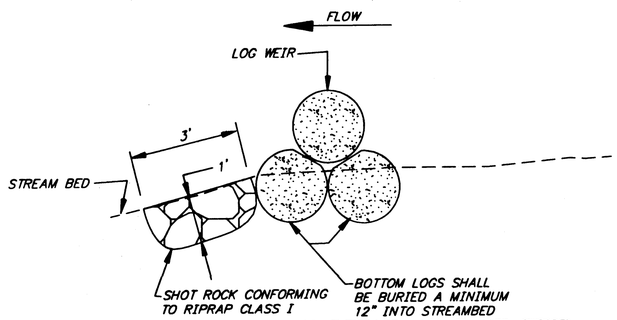


## SCOUR PROTECTION DETAIL AT EACH WEIR

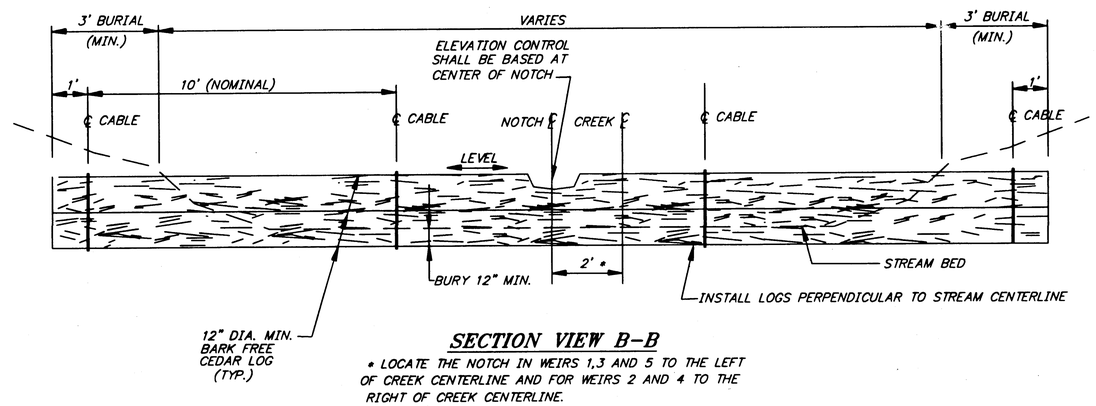


## SECTION VIEW B–B

* LOCATE THE NOTCH IN WEIRS 1,3 AND 5 TO THE LEFT OF CREEK CENTERLINE AND FOR WEIRS 2 AND 4 TO THE RIGHT OF CREEK CENTERLINE.

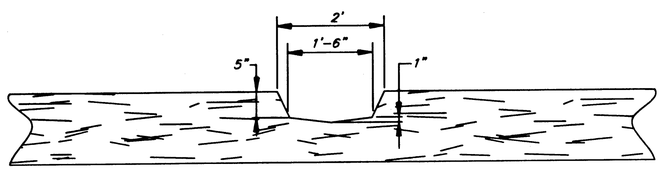


## DOWNSTREAM VIEW
## NOTCH DETAIL

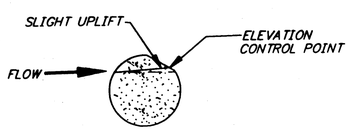


## END VIEW

## LOW FLOW DETAILS

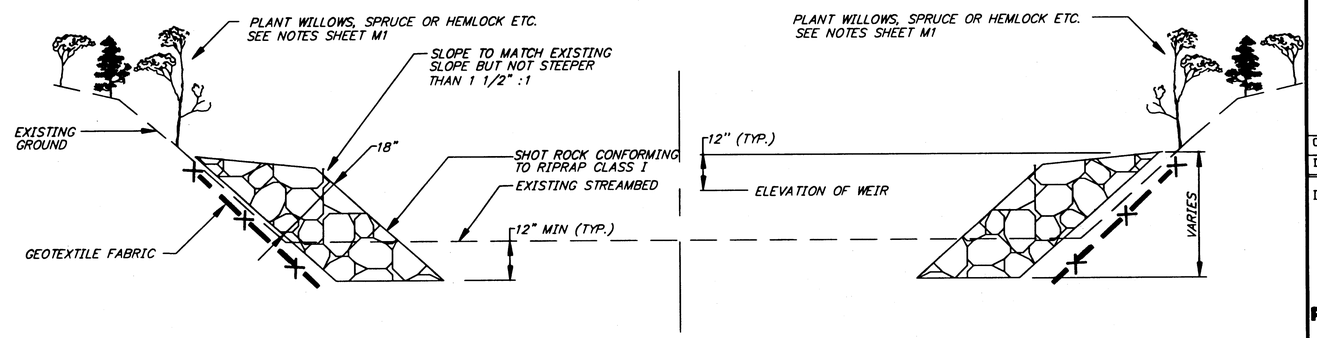


## SECTION VIEW C–C

PATH: O:\Jnu\68269\Planset\M2-9-mile.dwg
Tue, 15/Jan/02 02:41PM Kris
PLOT: PSPACE 1=1(F) OR MSPACE 1=1(F)
TAB: details

| ADDENDUM NUMBER |
|---|
| |

| ATTACHMENT NUMBER |
|---|
| Tue, 15/Jan/02 02:41PM |

RECORD OF REVISIONS

| No. | DATE | DESCRIPTION |
|---|---|---|
| | | |
| | | |
| | | |

JNU-FISH CREEK ROAD
SAFETY IMPROVEMENTS
PROJECT NO. 68269

**Ninemile Creek Fish Passage Improvements Details**

TH 7-22-03

DESIGNED BY: M. LAVERING

STATE OF ALASKA 49th Jack Daniel Beedle CE-5307 REGISTERED PROFESSIONAL ENGINEER
1/16/02

CHECKED BY: T. MOORE
DRAWN BY: K.K.

STATE OF ALASKA
DEPARTMENT OF TRANSPORTATION & PUBLIC FACILITIES
STATEWIDE DESIGN & ENGINEERING SERVICES DIVISION

**JNU-FISH CREEK ROAD SAFETY IMPROVEMENTS PROJECT NO. 68269**
**Ninemile Ck. Fish Passage Improvements Details**

PROJECT DESIGNATION NUMBER
**ACHRO-0953(4)**

| STATE | YEAR |
|---|---|
| ALASKA | 2001 |
| SHEET NUMBER | TOTAL SHEETS |
| M4 | 41 |

NOTE: THESE DETAILS ARE INTENDED TO BE USED IN CONJUNCTION WITH THE STIPULATIONS IN THE CORRESPONDING FISH AND GAME PERMITS AND THE PROJECT ENVIRONMENTAL COMMITMENTS.

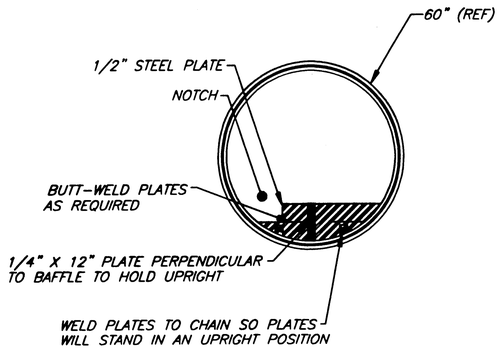


SECTION A-A

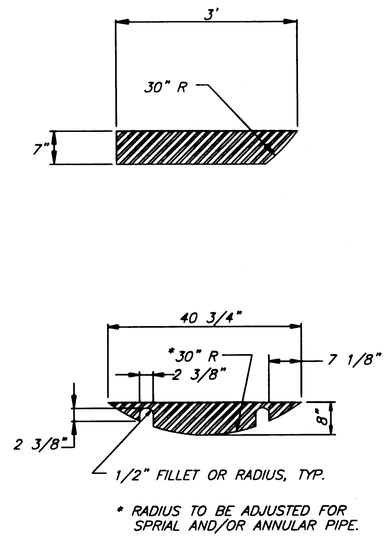


BAFFLE DETAILS

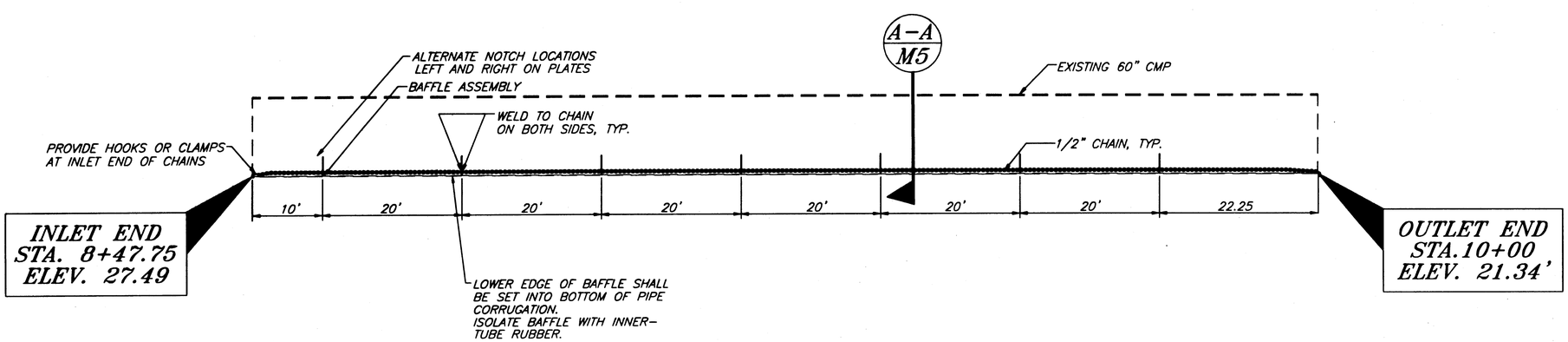


CULVERT SECTION

PATH:
O:\Jnu\68269\Planset\M5det2.dwg
Tue, 15/Jan/02 02:43PM Kris
PLOT:
PSPACE 1=1(F) OR MSPACE 1=1(F)
TAB: ESTIMATE

| ADDENDUM NUMBER |
|---|
| |

| ATTACHMENT NUMBER |
|---|
| Tue, 15/Jan/02 02:43PM |

RECORD OF REVISIONS

| No. | DATE | DESCRIPTION |
|---|---|---|
| | | |
| | | |
| | | |

JNU-FISH CREEK ROAD
SAFETY IMPROVEMENTS
PROJECT NO. 68269

**Ninemile Creek Fish Passage Improvements Culvert Details**

TH 7-22-03

DESIGNED BY: M. LAVERING

STATE OF ALASKA 49th Jack Daniel Beedle CE-5309 REGISTERED PROFESSIONAL ENGINEER
1/16/02

CHECKED BY: T. MOORE
DRAWN BY: K.K.

STATE OF ALASKA
DEPARTMENT OF TRANSPORTATION & PUBLIC FACILITIES
STATEWIDE DESIGN & ENGINEERING SERVICES DIVISION

JNU-FISH CREEK ROAD
SAFETY IMPROVEMENTS
PROJECT NO. 68269
Ninemile Ck. Fish Passage Improvements
Culvert Details

PROJECT DESIGNATION NUMBER
ACHRO-0953(4)

| STATE | YEAR |
|---|---|
| ALASKA | 2001 |
| SHEET NUMBER | TOTAL SHEETS |
| M5 | 41 |

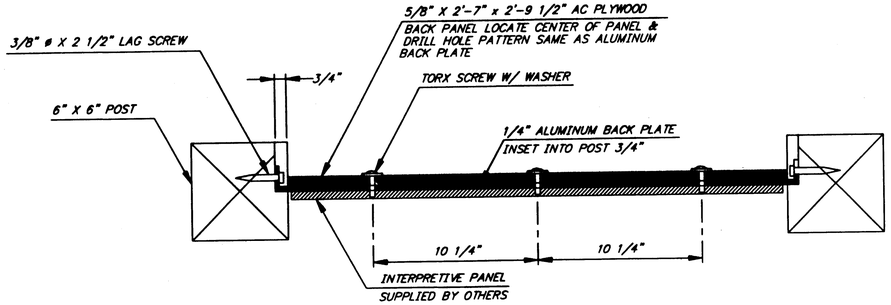


1/1 SECTION

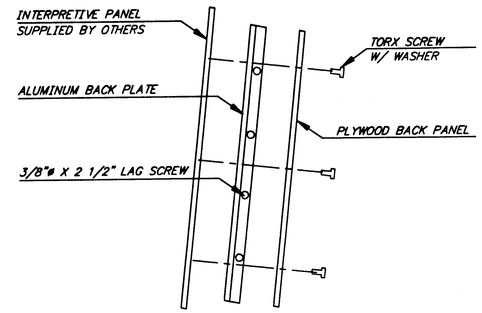


2/1 EXPLODED VIEW
INTERPRETIVE PANEL ASSEMBLY

## NOTES:

1. INTERPRETIVE PANEL SUPPLIED BY OTHERS MEASURES 1/2" X 2'-6 1/2" X 3'-0 1/2".
2. 1/4"-20 X 1 1/4" BUTTON HEAD "PIN IN HEAD" TORX TAMPER RESISTANT STAINLESS STEEL SCREWS WITH FINISHING WASHERS SHALL BE USED TO ATTACH THE INTERPRETIVE PANEL & THE PLYWOOD BACK PANEL TO THE ALUMINUM BACK PLATE.

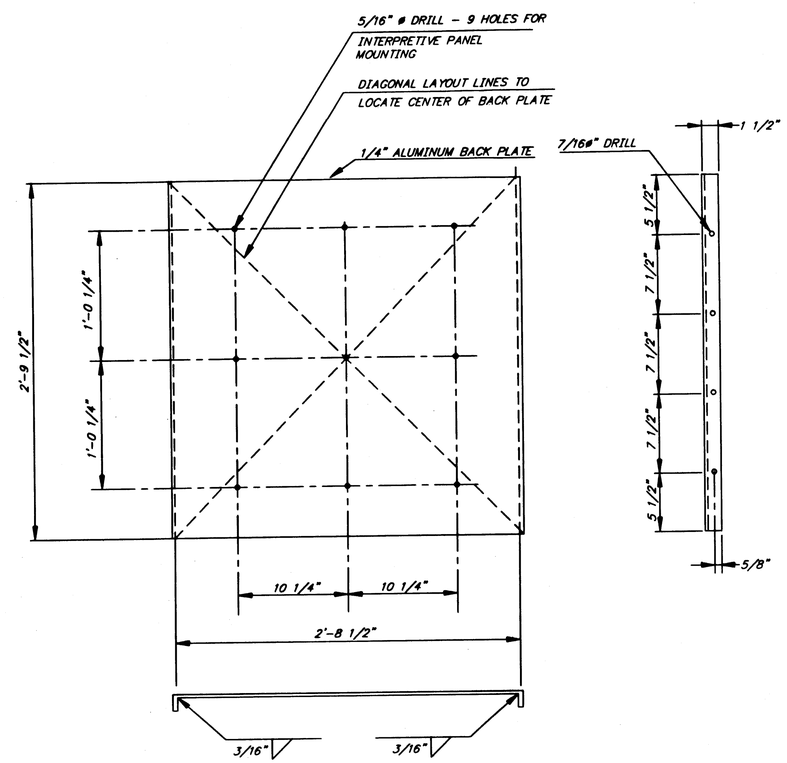


3/1 ALUMINUM BACK PLATE

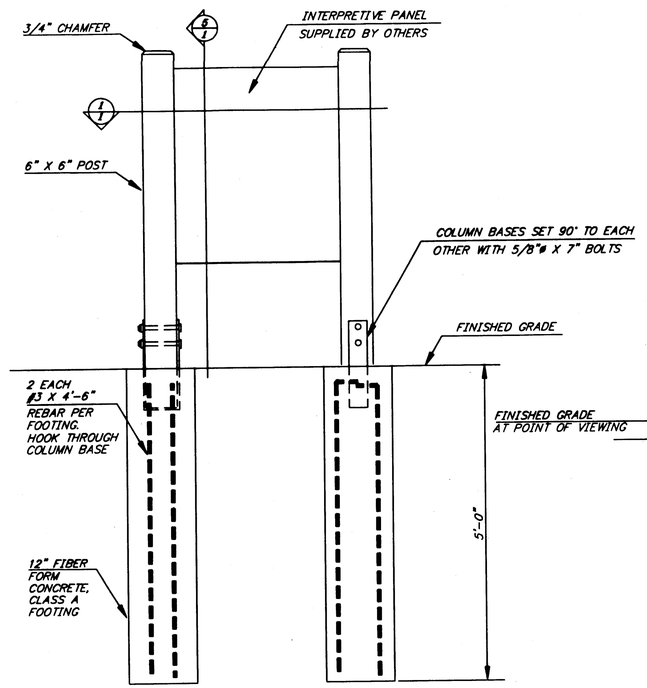


4/1 FRONT ELEVATION

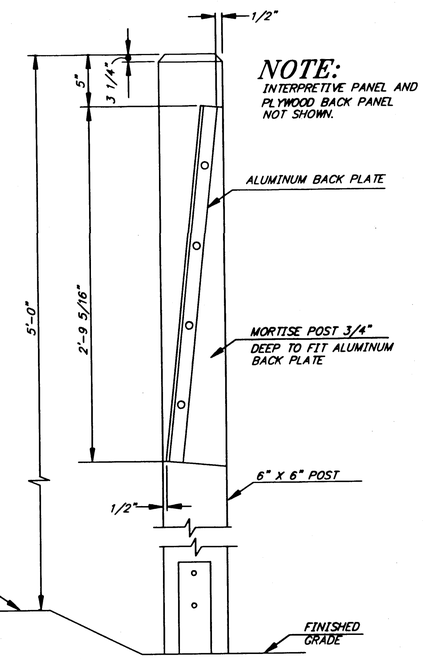


## NOTE:

INTERPRETIVE PANEL AND PLYWOOD BACK PANEL NOT SHOWN.

5/1 SECTION

Q:\Jnu\68269\Planset\M_Det5.DWG
Tue, 15/Jan/02 02:44PM Kris
PLOT:
PSPACE 1=1(F) OR MSPACE 1=1(F)
TAB: ESTIMATE

| ADDENDUM NUMBER |
|---|
| |

| ATTACHMENT NUMBER |
|---|
| Tue, 15/Jan/02 02:44PM |

RECORD OF REVISIONS

| No. | DATE | DESCRIPTION |
|---|---|---|
| | | |
| | | |
| | | |

JNU-FISH CREEK ROAD
SAFETY IMPROVEMENTS
PROJECT NO. 68269

**Interpretive Sign Support**

TH 7-22-03

DESIGNED BY: M. LAVERING

STATE OF ALASKA 49th Jack Daniel Beeder CE-5309 REGISTERED PROFESSIONAL ENGINEER

1/16/02

CHECKED BY: T. MOORE

DRAWN BY: K.K.

STATE OF ALASKA
DEPARTMENT OF TRANSPORTATION & PUBLIC FACILITIES
STATEWIDE DESIGN & ENGINEERING SERVICES DIVISION

JNU-FISH CREEK ROAD
SAFETY IMPROVEMENTS
PROJECT NO. 68269

**Interpretive Sign Support**

| PROJECT DESIGNATION NUMBER | |
|---|---|
| ACHRO-0953(4) | |
| STATE | YEAR |
| ALASKA | 2001 |
| SHEET NUMBER | TOTAL SHEETS |
| M6 | 41 |