State of Alaska

Department of Transportation and Public Facilities

Statewide Design and Engineering Services Division

JUNEAU, ALASKA

MENDENHALL VALLEY MULTI-USE PATH IMPROVEMENTS I

PROJECT No. CM-0966(22)/68308

FLOYD DRYDEN SCHOOL CROSSWALK

PROJECT No. HHE-0966(21)/68179

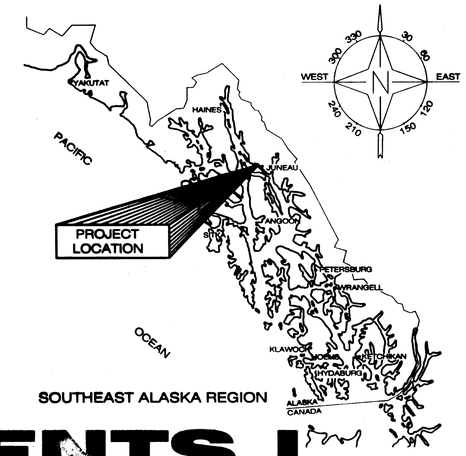

SOUTHEAST ALASKA REGION

REBID

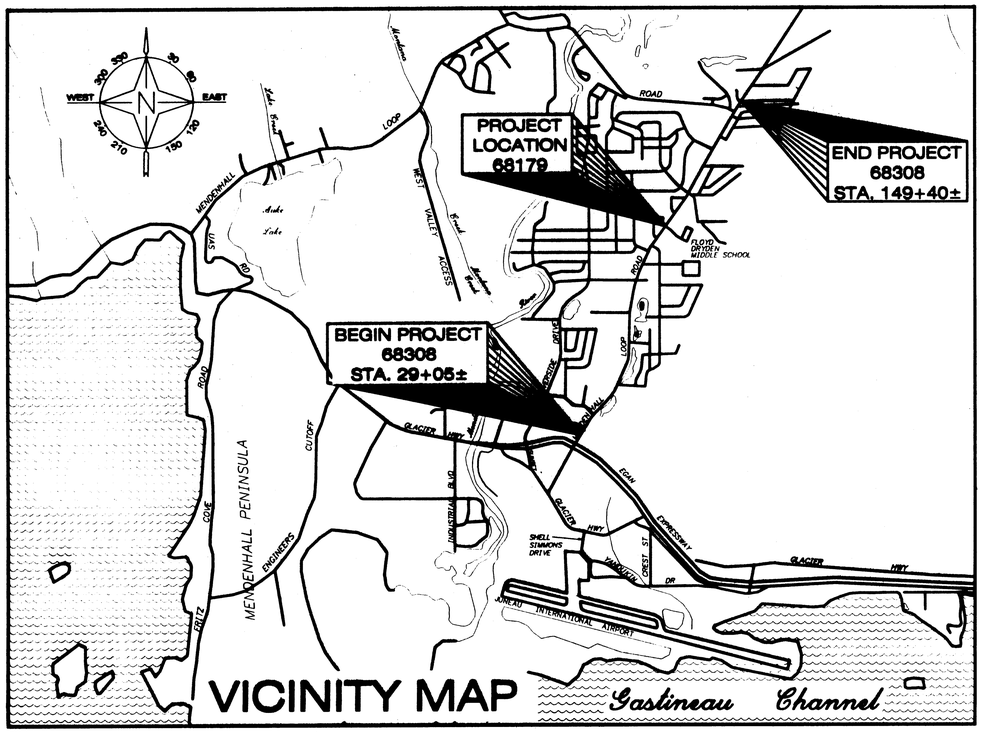

VICINITY MAP

Gastineau Channel

DESIGN DESIGNATION

MENDENHALL LOOP ROAD

A.D.T. 1999		14,220
A.D.T. 2012	=	18,400
D.H.V. 13.8% (2012)	=	2,170
% T	=	3.0%

PROJECT SUMMARY

APPROXIMATE LENGTH OF GRADING	=	4.25 miles
APPROXIMATE LENGTH OF PAVING	=	4.25 miles
APPROXIMATE WIDTH OF PAVING	=	10 ft.
APPROXIMATE LENGTH OF PROJECT	=	2.34 miles

THE FOLLOWING STANDARD DRAWINGS APPLY TO THIS PROJECT:

A-1	C-04.11	D-22.00	D-26.02	I-20.13	I-21.00
I-22.00	S-05.01	T-52.15			

INDEX

SHEET NO.	DESCRIPTION
	PROJECT No. 68308 & 68179
A1	TITLE SHEET
B1	ESTIMATE OF QUANTITES
C1-C2	TRAFFIC CONTROL PLANS
D1	EROSION & SEDIMENT CONTROL DETAILS
	PROJECT No. 68308
E1-E2	TYPICAL SECTIONS
F1	PROJECT SUMMARIES
G1-G4	DETAIL SHEETS
H1-H7	PLAN SHEETS
	PROJECT No. 68179
J1	PROJECT SUMMARIES
K1-K2	SIGN & SIGNAL POLE, SECTION & DIAGRAM
L1-L3	DETAIL SHEETS
M1	PLAN SHEET

As-Built Plans

CONTRACTOR: SOUTHEAST EARTHMOVERS, INC.

PROJECT ENGINEER: Al Colbreath

BEGIN DATE: February 18, 2003

END DATE: August 21, 2003

TOTAL CONTRACT AMOUNT: $ 918,804.75

PATH: Q:\Jnu\68308\Planset\A-B-F_Tsht&Sums.dwg
Wed, 28/Aug/02 10:48AM

PLOT: PSPACE OR MSPACE: 1000mm=1m(F)

STATE OF ALASKA
DEPARTMENT OF TRANSPORTATION
& PUBLIC FACILITIES
STATEWIDE DESIGN & ENGINEERING SERVICES DIVISION

STATE OF ALASKA 49th Russell P. Kroemer CE-10478 REGISTERED PROFESSIONAL ENGINEER

8/28/02

RECOMMENDED FOR APPROVAL:

PATRICK J. KEMP — 8/28/02
REGIONAL PRE-CONSTRUCTION ENGINEER — DATE

APPROVED:

ROBERT DOLL — 8/28/02
DIRECTOR, SOUTHEAST REGION — DATE

CERTIFIED TRUE & CORRECT AS-BUILT OF ACTUAL FIELD CONDITION:

AL COLBREATH — 2/20/04
CONSTRUCTION PROJECT MANAGER — DATE

STATE	PROJECT DESIGNATION	YEAR	SHEET NO.	TOTAL SHEETS
ALASKA	CM-0966(22) / (68308)	2002		
ALASKA	HHE-0966(21) / (68179)	2002	A1	26

Estimate of Quantities

ITEM	PAY ITEM	UNIT	Pr # 68308 QTY.	Pr # 68179 QTY.	TOTAL QTY.
201 (3B)	Clearing and Grubbing	Lump Sum	All Required		All Required
202 (1)	Removal of Structures and Obstructions	Lump Sum	All Required		All Required
203 (6)	Borrow	Ton	14,828 ~~29500~~		14,828 ~~29500~~
203(11)	Ditch Excavation	Linear Foot	6,700 ~~5600~~		6,700 ~~5600~~
203(12)	Rockery Wall	Linear Foot	1,238 ~~2400~~		1,238 ~~2400~~
603 (1-18)	18 Inch CSP	Linear Foot	138 ~~150~~		138 ~~150~~
603 (1-24)	24 Inch CSP	Linear Foot	6 ~~60~~		6 ~~60~~
603 (3-18)	End Section for 18 Inch CSP	Each	0 ~~4~~		0 ~~4~~
603 (3-24)	End Section for 24 Inch CSP	Each	3 ~~2~~		3 ~~2~~
603 (9-24)	24 Inch Corrugated Aluminum Pipe	Foot	0 ~~25~~		0 ~~25~~
603(11-24)	End Section for 24 Inch Corrugated Aluminum Pipe	Each	0 ~~1~~		0 ~~1~~
604 (3)	Reconstruct Existing Manhole	Each	11 ~~3~~		11 ~~3~~
604 (5)	Inlet, Type A	Each	2 ~~1~~		2 ~~1~~
605 (3)	8 Inch Perforated Pipe Underdrain	Linear Foot	0 ~~50~~		0 ~~50~~
608 (2)	Asphalt Sidewalk	Linear Foot	21,210 ~~21200~~		21,210 ~~21200~~
608 (4)	Bed Course Material, Grading C	Linear Foot	21,029 ~~21200~~		21,029 ~~21200~~
608 (7)	Floyd Dryden Intersection	Lump Sum	All Required		All Required
609 (2)	Curb And Gutter, Type 1	Linear Foot	400 ~~250~~		400 ~~250~~
618 (1)	Seeding	Lump Sum	All Required		All Required
627 (10)	Adjustment of Valve Box	Each	22 ~~15~~		22 ~~15~~
634 (1)	Geomembrane, Root Barrier	Linear Foot	1,119.5 ~~3000~~		1,119.5 ~~3000~~
640 (1)	Mobilization and Demobilization	Lump Sum	All Required	All Required	All Required
641 (1)	Erosion and Pollution Control Administration	Lump Sum	All Required		All Required
641 (2)	Erosion and Pollution Control	Contingent Sum	0 ~~All Required~~	0 ~~All Required~~	0 ~~All Required~~
641 (3)	Silt Fence	Linear Foot	3,724 ~~3500~~		3,724 ~~3500~~
641 (4)	Temporary Check Dam	Each	13 ~~12~~		13 ~~12~~
642 (1)	Construction Surveying	Lump Sum	All Required	All Required	All Required
643 (2)	Traffic Maintenance	Lump Sum	All Required	All Required	All Required
660 (14)	Reconstruct Handhole	Each	2 ~~1~~		2 ~~1~~
660 (15)	School Crossing Flasher System - Complete	Lump Sum		All Required	All Required
660 (16)	Adjust Electrolier, Deleted, CO 2	Each	0 ~~10~~		0 ~~10~~
670 (10)	Methyl Methacrylate Pavement Markings	Lump Sum	All Required		All Required
603(1-12a)	12 Inch Corrugated Poly Pipe, CO 3	Linear foot	332		332
603(1-18a)	18 Inch Corrugated Poly Pipe, CO 3	Linear foot	455		455
608(8)	Floyd Dryden Approach Road Paving, CO 1 (Project No. #68740)	Lump Sum			ALL REQUIRED
660(15a)	Complete Flasher System Circuit, CO 2	Lump Sum		ALL REQUIRED	ALL REQUIRED
660(16a)	Electrolier Vertical Adjustment, CO 2	Each	2,310		2,310
660(18)	Steet light Retrofit, CO 2	Lump Sum	ALL		

UPDATED 8/28/02 11:37 AM

TOTAL CONTRACT AMOUNT : $918,804.75

Basis Of Estimate

ITEM	PAY ITEM	ESTIMATING FACTOR	
203 (6)	Borrow	1.81	ton/cy
608 (2)	Asphalt Sidewalk	117	lb/sy/in
608 (4)	Bed Course Material, Grading C	1.96	ton/cy

UPDATED 08/27/2002 3:07 PM

Removal of Structures and Obstructions

ITEM	ESTIMATED QTY.	UNIT
Chain Link Fence	700	Linear Foot
Asphalt Pavement	22500	Square Yard
Concrete Curb and Gutter	250	Linear Foot
Miscellaneous Culverts	100	Linear Foot

UPDATED 8/28/02 9:13 AM

PATH:
Q:\Jnu\68308\Planset\A-B-F_Tsht&Sums.dwg
Wed, 28/Aug/02 01:27PM Michael Limbaugh
PLOT:
PSPACE 1=1(F) OR MSPACE 1=1(F)
TAB: B1

ADDENDUM NUMBER

ATTACHMENT NUMBER

RECORD OF REVISIONS

No.	DATE	DESCRIPTION

JUNEAU
MENDENHALL VALLEY MUTI-USE PATH IMPROVEMENTS I
PROJECT NO. 68308
&
FLOYD DRYDEN SCHOOL CROSSWALK
PROJECT NO. 68179
Estimate of Quantities

DESIGNED BY: R. KRAEMER

STATE OF ALASKA 49th Russell P. Kraemer CE-10478 REGISTERED PROFESSIONAL ENGINEER

CHECKED BY: PETE BEDNAROWICZ

DRAWN BY: MICHAEL LIMBAUGH

STATE OF ALASKA
DEPARTMENT OF TRANSPORTATION & PUBLIC FACILITIES
STATEWIDE DESIGN & ENGINEERING SERVICES DIVISION

MENDENHALL VALLEY MULTI-USE PATH IMPROVEMENTS I

Estimate of Quantities

PROJECT DESIGNATION NUMBER
CM-0966(22) / 68308

STATE	YEAR
ALASKA	2002
SHEET NUMBER	TOTAL SHEETS
B1	26

TRAFFIC CONTROL NOTES

1. IT IS THE INTENT OF THIS TRAFFIC CONTROL PLAN (TCP) TO ILLUSTRATE SOME BUT NOT ALL OF THE TRAFFIC CONTROL CONFIGURATIONS THAT WILL BE REQUIRED BY THIS PROJECT. TRAFFIC CONTROL PLANS FOR CONFIGURATIONS NOT COVERED BY THIS TCP SHALL BE DEVELOPED BY THE CONTRACTOR AND SUBMITTED TO THE ENGINEER FOR APPROVAL PRIOR TO USE.
2. TWO WAY TRAFFIC (ON LOOP ROAD AND SIDE STREETS) SHALL BE MAINTAINED AT ALL TIMES.
3. TRAFFIC LANES SHALL BE A MINIMUM OF 10ft. WIDE.
4. A FLAGGER SHALL BE USED TO DIRECT TRUCKS AND CONSTRUCTION EQUIPMENT WHEN THEY ENTER OR CROSS THE TRAVELLED WAY.
5. ACCESS TO BUSINESSES AND HOMES WILL BE OPENED AT THE END OF THE DAILY WORK SHIFT.
6. THE CONTRACTOR SHALL KEEP THE PUBLIC INFORMED OF HIS CONSTRUCTION ACTIVITIES THROUGH THE USE OF THE LOCAL NEWS MEDIA. NEWS RELEASES SHALL BE APPROVED BY THE PROJECT ENGINEER PRIOR TO THEIR RELEASE. NEWS RELEASES WILL BE REQUIRED BUT NOT LIMITED TO, THE ONSET OF WORK, GRINDING, PAVING, AND CHANGES IN THE LANE CONFIGURATIONS.
7. THE CONTRACTOR SHALL STAGE OPERATIONS SO THAT AT LEAST ONE PAVED PATH IS OPEN FOR UNRESTRICTED USE. AT NO TIME WILL BOTH THE LEFT AND RIGHT PATH BE UNDER CONSTRUCTION AT THE SAME STATION.
8. DOUBLE TRAFFIC FINE SIGNS SHALL BE USED IN ACCORDANCE WITH STANDARD DRAWING C-04.11.

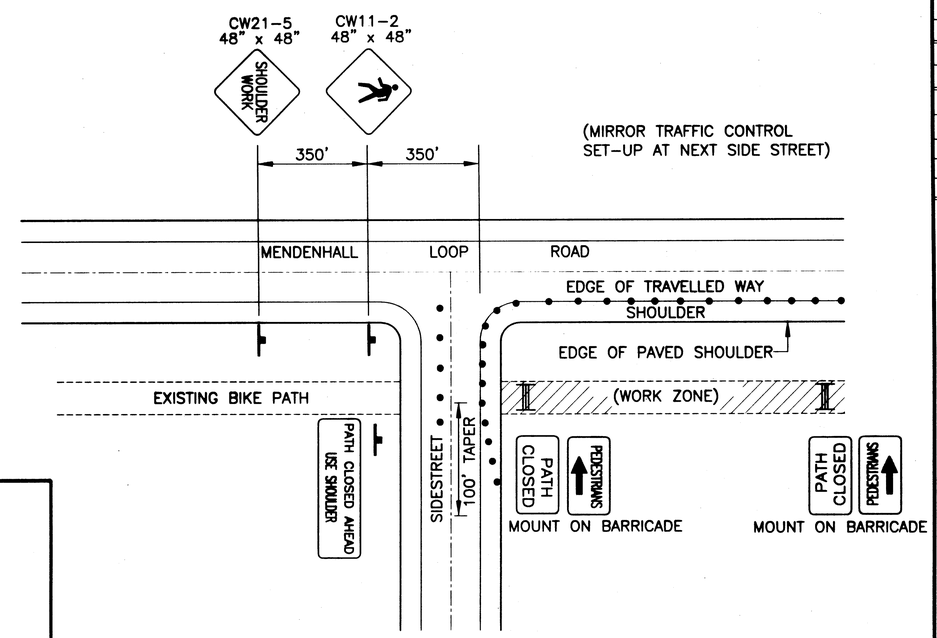

PATHWAY WORK

LEGEND

- SIGN
- CONE
- DRUM
- TYPE III BARRICADE
- FLAGGING STATION

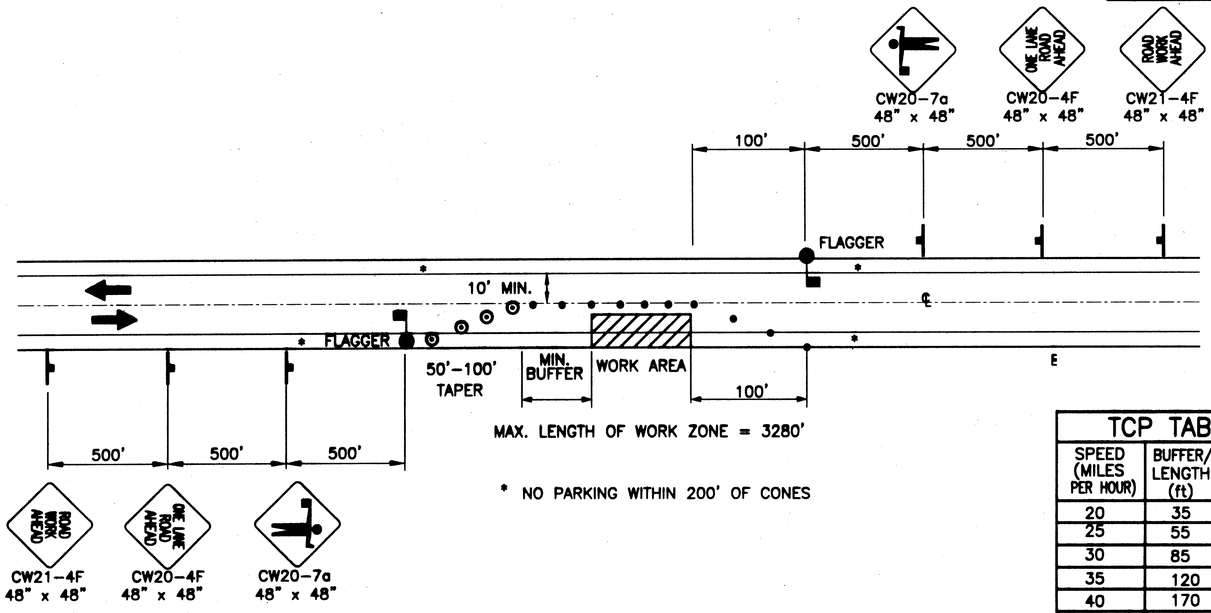

MAX. LENGTH OF WORK ZONE = 3280'

* NO PARKING WITHIN 200' OF CONES

SINGLE LANE CLOSURE TWO LANE ROAD

L= W x T

WHERE:

L= LENGTH OF TAPER

W= WIDTH OF OFFSET

T= TAPER FACTOR

TCP TABLE SETUP

SPEED (MILES PER HOUR)	BUFFER/ LENGTH (ft)	CONE/DRUM SPACING (ft)	TAPER FACTOR (T)
20	35	20	7
25	55	25	10
30	85	30	15
35	120	35	20
40	170	40	27
45	220	45	45
50	280	50	50
55	335	55	55
60	415	60	60
65	485	65	65

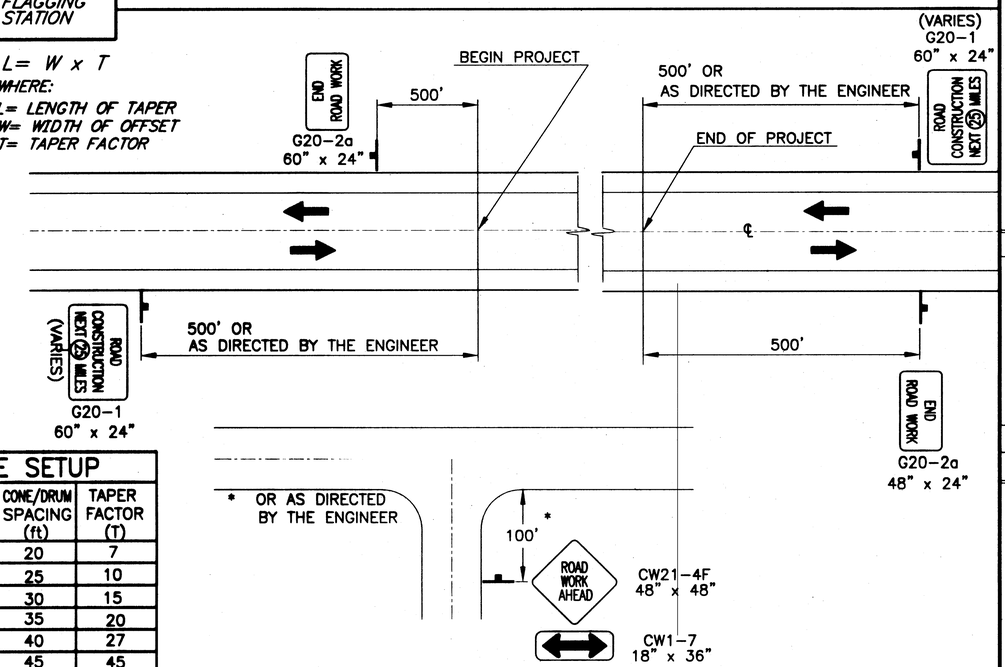

PERMANENT CONSTRUCTION SIGNING

PATH:
Q:\Jnu\68308\Planset\C_Tcps.dwg
Wed, 28/Aug/02 01:28PM Michael Limbaugh
PLOT:
PSPACE 1=1(F) OR MSPACE 1=1(F)
TAB: C1

ADDENDUM NUMBER

ATTACHMENT NUMBER

RECORD OF REVISIONS

No.	DATE	DESCRIPTION

JUNEAU
MENDENHALL VALLEY MUTI-USE
PATH IMPROVEMENTS I
PROJECT NO. 68308

Traffic Control Plans

DESIGNED BY: Ken Mattson

STATE OF ALASKA 49th Ken T. Mattson CE-10049 REGISTERED PROFESSIONAL ENGINEER

CHECKED BY: Ken Mattson

DRAWN BY: MICHAEL LIMBAUGH

STATE OF ALASKA
DEPARTMENT OF TRANSPORTATION & PUBLIC FACILITIES
STATEWIDE DESIGN & ENGINEERING SERVICES DIVISION
JUNEAU
MENDENHALL
BIKE PATH

Traffic Control Plans

PROJECT DESIGNATION NUMBER

CM-0966(22) / 68308

STATE	YEAR
ALASKA	2002
SHEET NUMBER	TOTAL SHEETS
C1	26

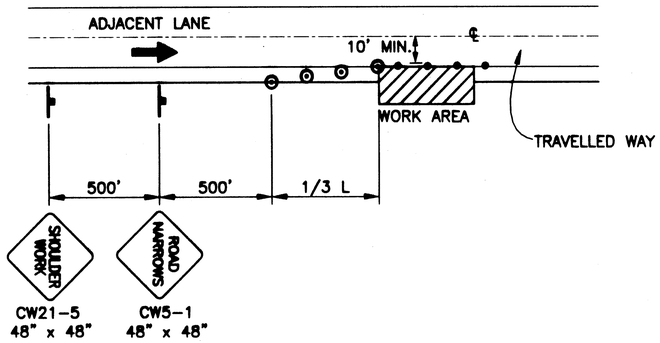

SHOULDER WORK

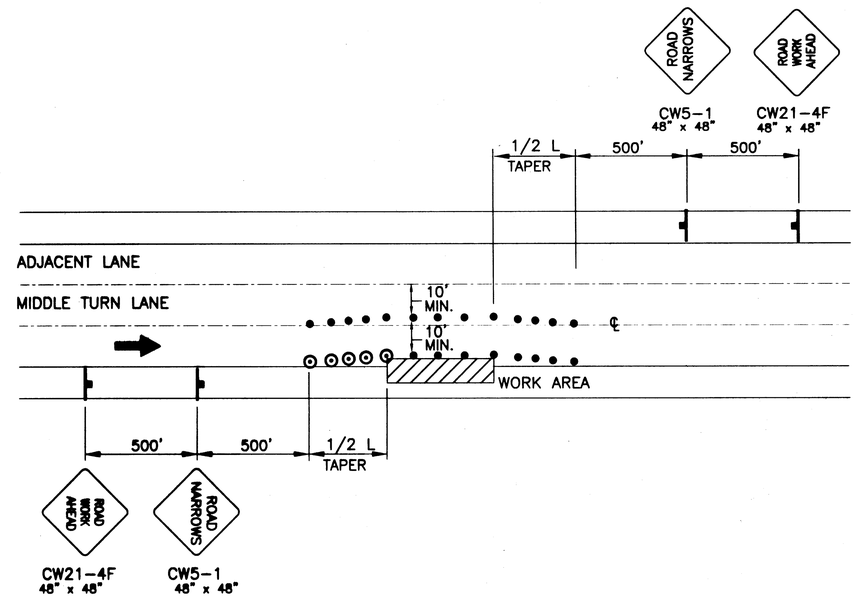

NOTE:
IF ONLY ONE LANE IS AFFECTED BY ROAD WORK (THAT IS, THE CONES ALONG THE WORK AREA ARE NO CLOSER THAN 10 FEET TO CENTERLINE). THE SIGNS AND CENTERLINE CONES FOR THE OPPOSING LANE MAY BE DELETED.

ROADWAY ENCROACHMENT

LEGEND

- ..... *SIGN*
- ..... *CONE*
- ..... *DRUM*
- ..... *TYPE III BARRICADE*
- ..... *FLAGGING STATION*

L= W x T

WHERE:
L= LENGTH OF TAPER
W= WIDTH OF OFFSET
T= TAPER FACTOR

TCP TABLE SETUP

SPEED (MILES PER HOUR)	BUFFER/ LENGTH (ft)	CONE/DRUM SPACING (ft)	TAPER FACTOR (T)
20	35	20	7
25	55	25	10
30	85	30	15
35	120	35	20
40	170	40	27
45	220	45	45
50	280	50	50
55	335	55	55
60	415	60	60
65	485	65	65

PATH:
Q:\Jnu\68308\Planset\C_Tcps.dwg
Wed, 28/Aug/02 01:28PM Michael Limbaugh
PLOT:
PSPACE 1=1(F) OR MSPACE 1=1(F)
TAB: C2

ADDENDUM NUMBER

ATTACHMENT NUMBER

RECORD OF REVISIONS

No.	DATE	DESCRIPTION

JUNEAU
MENDENHALL VALLEY MUTI-USE
PATH IMPROVEMENTS I
PROJECT NO. 68308

Traffic Control Plans

DESIGNED BY: Ken Mattson

STATE OF ALASKA 49th Ken L Mattson CE-10049 REGISTERED PROFESSIONAL ENGINEER

CHECKED BY: Ken Mattson

DRAWN BY: MICHAEL LIMBAUGH

STATE OF ALASKA
DEPARTMENT OF TRANSPORTATION & PUBLIC FACILITIES
STATEWIDE DESIGN & ENGINEERING SERVICES DIVISION

JUNEAU MENDENHALL BIKE PATH

Traffic Control Plans

PROJECT DESIGNATION NUMBER

CM-0966(22) / 68308

STATE	YEAR
ALASKA	2002
SHEET NUMBER	TOTAL SHEETS
C2	26

Notes:

1. THE PROJECT IS LOCATED IN THE DUCK CREEK WATERSHED; ALL DRAINAGE FROM THE PROJECT WORK LIMITS DISCHARGES INTO DUCK CREEK. DUCK CREEK IS A DESIGNATED IMPAIRED WATERBODY, LISTED UNDER SECTION 303(D) OF THE CLEAN WATER ACT. SPECIAL CONTROLS ARE REQUIRED TO RESTORE DUCK CREEK'S WATER QUALITY. THE STREAM IS THE FOCUS OF A JOINT AGENCY RECOVERY EFFORT.
2. INSTALL EROSION AND SEDIMENT CONTROL DEVICES FOR EARTH DISTURBING ACTIVITIES.
3. MAINTAIN DEVICES. MONITOR DAILY. EXCAVATE CHECK DAMS WHEN 4" OR MORE SEDIMENT. ENSURE SILT FENCE IS TIGHT AGAINST GROUND.
4. IF INSPECTION REVEALS WATER IS DISCHARGING BEYOND THE PROJECT WORK LIMITS, IMMEDIATLY IMPLEMENT CORRECTIVE ACTION. ADDITIONAL SILT FENCING OR CHECK DAMS MAY BE REQUIRED. SWEEPING OF PAVED SURFACES AND TEMPORARY SEEDING AND MATTING MAY ALSO BE REQUIRED.
5. STABALIZE DISTURBED GROUD AS SOON AS POSSIBLE. UNSTABALIZED SURFACES MUST BE TEMPORARILY STABALIZED WITH SEEDING, MATTING, OR OTHER EFFECTIVE MEASURES. THE CONTRACTOR IS RESPONSIBLE FOR MAINTAINING EROSION AND SEDIMENT CONTROL UNTIL PROJECT WORK AREAS ARE PAVED AND SEEDED AREAS HAVE ACHIEVED 70% VEGITATIVE COVER.

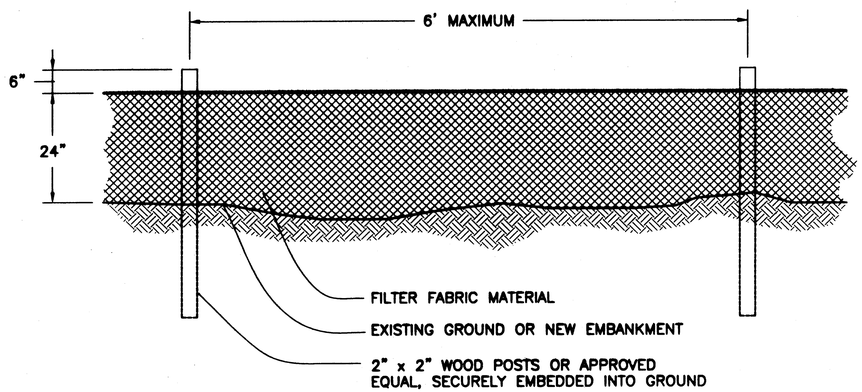

Elevation

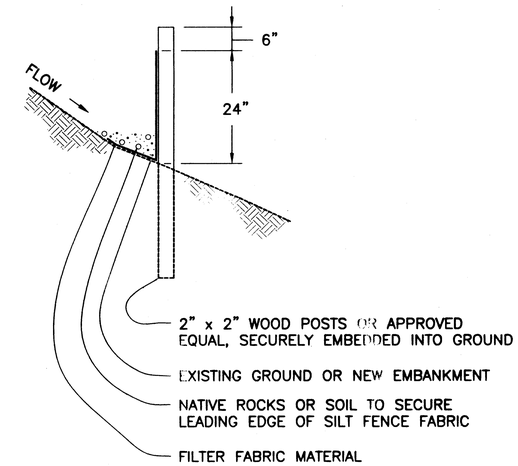

Section

Silt Fence Details

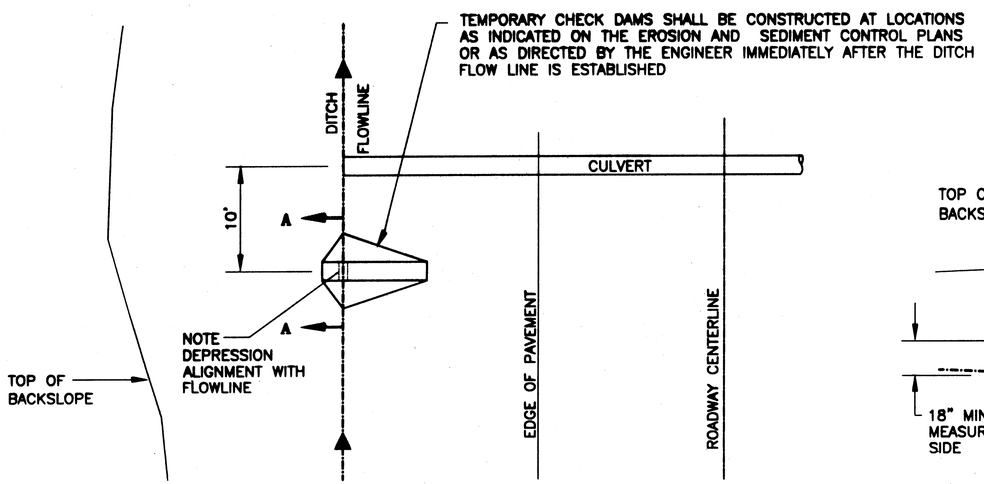

Plan

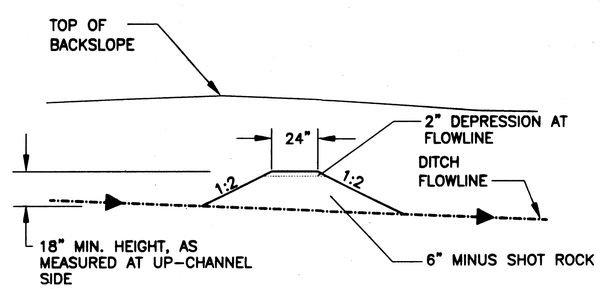

Section A-A

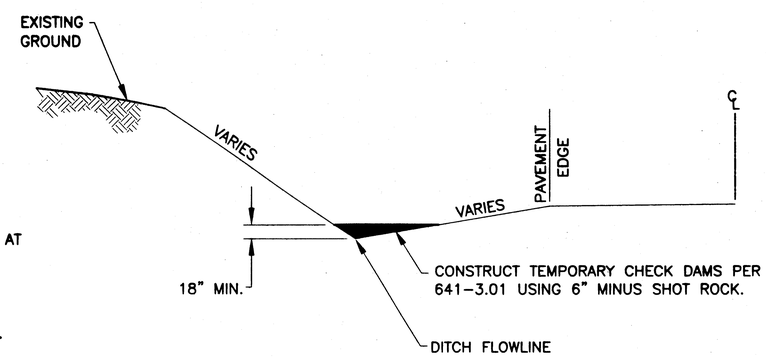

Elevation

Temporary Check Dam Details

PATH: Q:\Jnu\68308\Planset\D_ErosionDet.dwg
Wed, 28/Aug/02 01:29PM Michael Limbaugh
PLOT: PSPACE 1=1(F) OR MSPACE 1=1(F)
TAB: D1

ADDENDUM NUMBER

ATTACHMENT NUMBER

RECORD OF REVISIONS

No.	DATE	DESCRIPTION

JUNEAU
MENDENHALL VALLEY MUTI-USE PATH IMPROVEMENTS I
PROJECT NO. 68308

Erosion & Sediment Control Details

DESIGNED BY: R. KRAEMER

STATE OF ALASKA 49th Russell P. Kraemer CE-10478 REGISTERED PROFESSIONAL ENGINEER

CHECKED BY: PETE BEDNAROWICZ
DRAWN BY: MICHAEL LIMBAUGH

STATE OF ALASKA
DEPARTMENT OF TRANSPORTATION & PUBLIC FACILITIES
STATEWIDE DESIGN & ENGINEERING SERVICES DIVISION

MENDENHALL VALLEY MULTI-USE PATH IMPROVEMENTS I

ESCP Details

PROJECT DESIGNATION NUMBER	
CM-0966(22) / 68308	
STATE	YEAR
ALASKA	2002
SHEET NUMBER	TOTAL SHEETS
D1	26

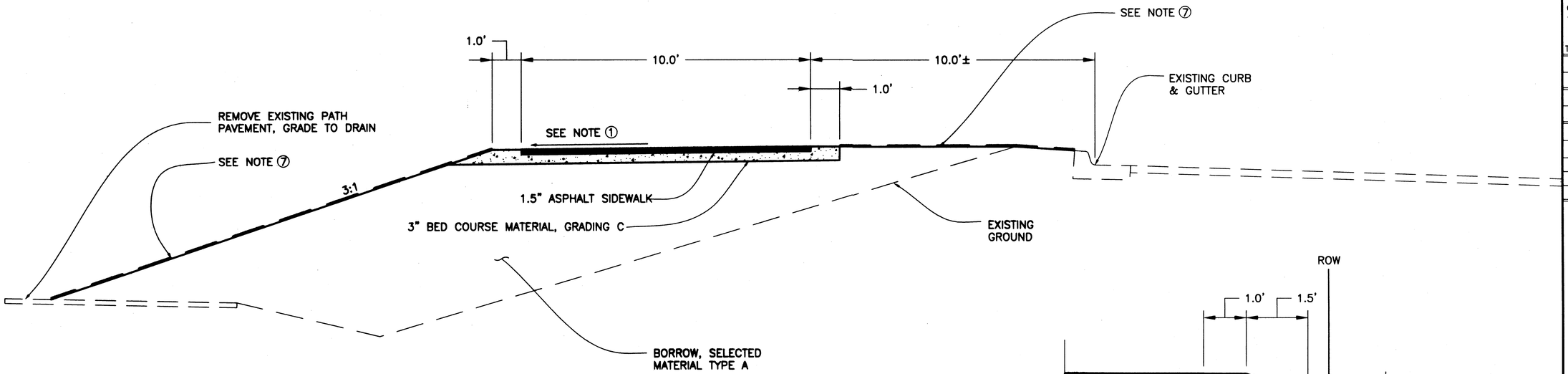

Typical Section #1

Left Path Sta. 32+27± To Sta. 33+15±

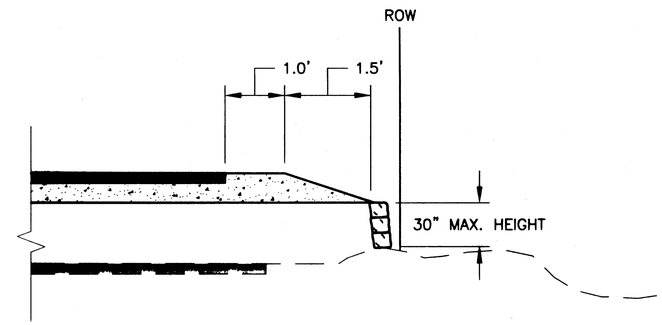

Alternate Fill Slope Detail

See Note⑨

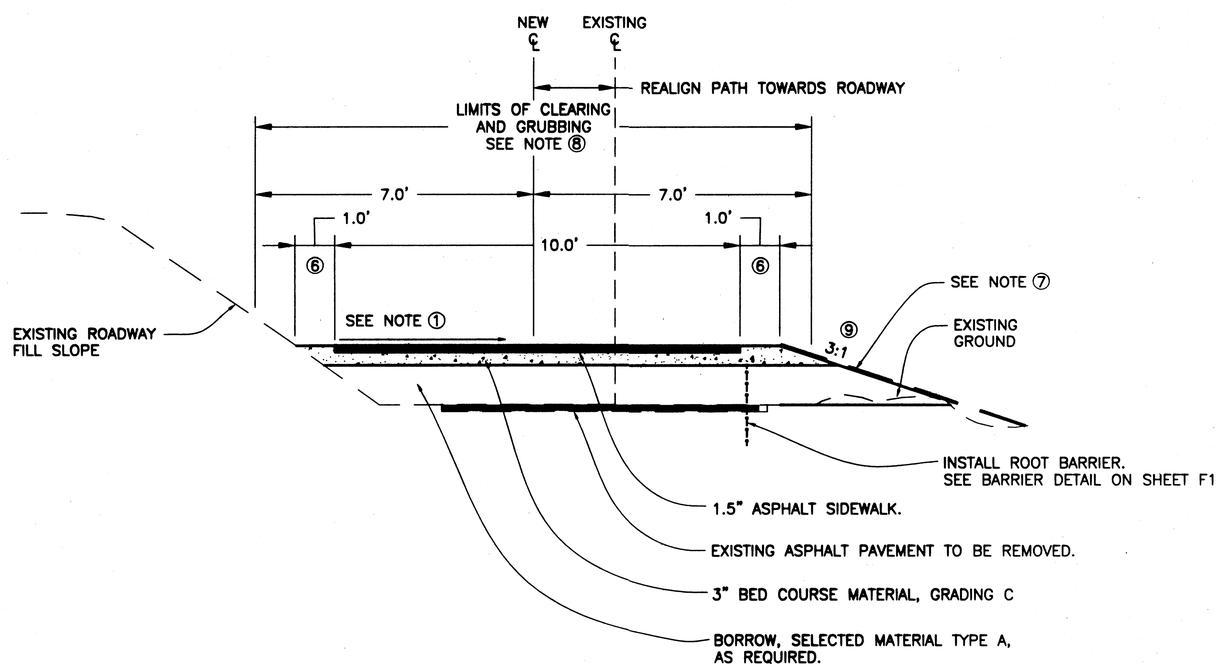

Typical Section #2

(Shown With Grade Raise)

Typical Section Notes:

① CROSS SLOPE WILL BE 2.0%. DIRECTION OF CROSS SLOPE WILL VARY BY LOCATION AS INDICATED IN THE PLANS OR AS DIRECTED.

② SEE PLAN SHEETS FOR TYPICAL LOCATIONS.

③ GRADE RAISE AREAS WILL TAPER TO MATCH EXISTING ELEVATIONS AT INTERSECTIONS AND DRIVEWAYS. THE INTENTION OF GRADE RAISE IS TO ELIMINATE STANDING WATER FROM PAVED PATHWAY SURFACES. HEIGHT OF GRADE RAISE WILL BE SHOWN ON THE PLANS OR AS DIRECTED.

④ MAXIMUM LONGITUDINAL GRADE IS 4.5%.

⑤ MINIMUM HORIZONTAL CURVE RADIUS ON CENTERLINE OF PATH IS 40ft.

⑥ OMIT PATH SHOULDER AND VARY PATH WIDTH TO FIT PHYSICAL CONSTRAINTS AS DIRECTED.

⑦ TOPSOIL AND SEED ALL NEW SLOPES AND DISTURBED AREAS. TOPSOIL SHALL BE PLACED WITH A MINIMUM DEPTH OF 2". EXISTING TOPSOIL MAY BE STRIPPED AND REUSED WHEN PRESENT. DO NOT PLACE TOPSOIL ON PATH SHOULDERS.

⑧ CLEARING AND GRUBBING ONLY AS REQUIRED OR DIRECTED WITHIN THE RIGHT OF WAY LIMITS. THIS WORK INCLUDES STUMP REMOVAL AS SPECIFIED IN SECTION 201. ALL TREES WITHIN THE RIGHT-OF-WAY THAT ARE DAMAGING THE EXISTING PATH WILL BE CLEARED AND GRUBBED AS DIRECTED.

⑨ USE OF ROCKERY OR OTHER RETAINING STRUCTURES MAY BE REQUIRED TO KEEP FILL LIMITS WITHIN THE RIGHT-OF-WAY OR TO AVOID IMPACTS TO ENVIRONMENTALLY SENSITIVE AREAS. TYPE AND DESIGN OF RETAINING STRUCTURES IS SUBJECT TO THE APPROVAL OF THE ENGINEER. SEE ALTERNATE FILL SLOPE DETAIL THIS SHEET.

NOTE: DO NOT SCALE FROM THESE PLANS-USE DIMENSIONS

PATH:
Q:\Jnu\68308\Planset\E_Typs.dwg
Wed, 28/Aug/02 01:29PM Michael Limbaugh
PLOT:
PSPACE 1=1(F) OR MSPACE 1=1(F)
TAB: E1

ADDENDUM NUMBER

ATTACHMENT NUMBER

RECORD OF REVISIONS

No.	DATE	DESCRIPTION

JUNEAU
MENDENHALL VALLEY MUTI-USE
PATH IMPROVEMENTS I
PROJECT NO. 68308

Typical Sections

DESIGNED BY: R. KRAEMER

STATE OF ALASKA 49th Russell P. Kraemer CE-10478 REGISTERED PROFESSIONAL ENGINEER

CHECKED BY: PETE BEDNAROWICZ

DRAWN BY: MICHAEL LIMBAUGH

STATE OF ALASKA
DEPARTMENT OF TRANSPORTATION & PUBLIC FACILITIES
STATEWIDE DESIGN & ENGINEERING SERVICES DIVISION

MENDENHALL VALLEY MULTI-USE PATH IMPROVEMENTS I

Typical Sections

PROJECT DESIGNATION NUMBER	
CM-0966(22) / 68308	
STATE	YEAR
ALASKA	2002
SHEET NUMBER	TOTAL SHEETS
E1	26

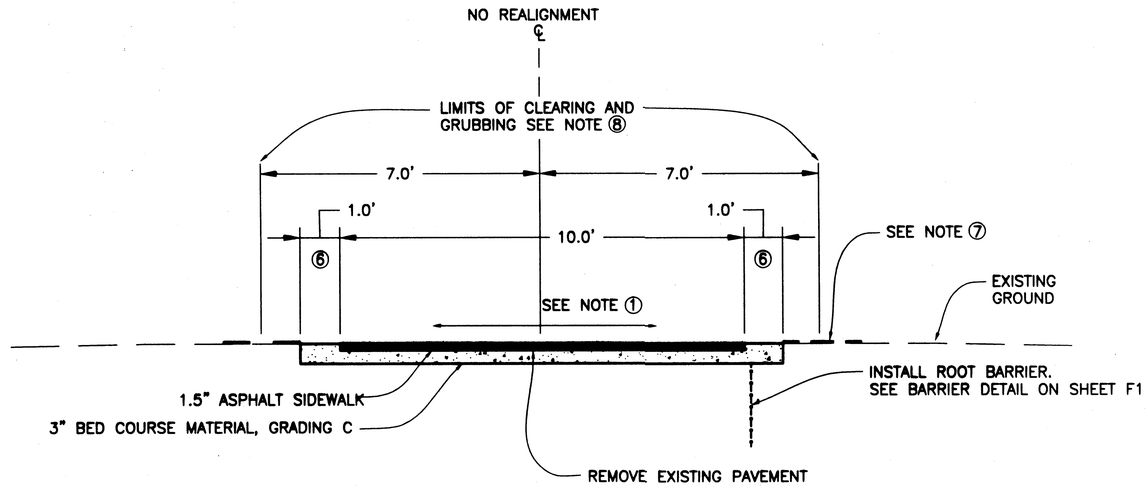

Typical Section #3

(Shown With No Grade Raise)

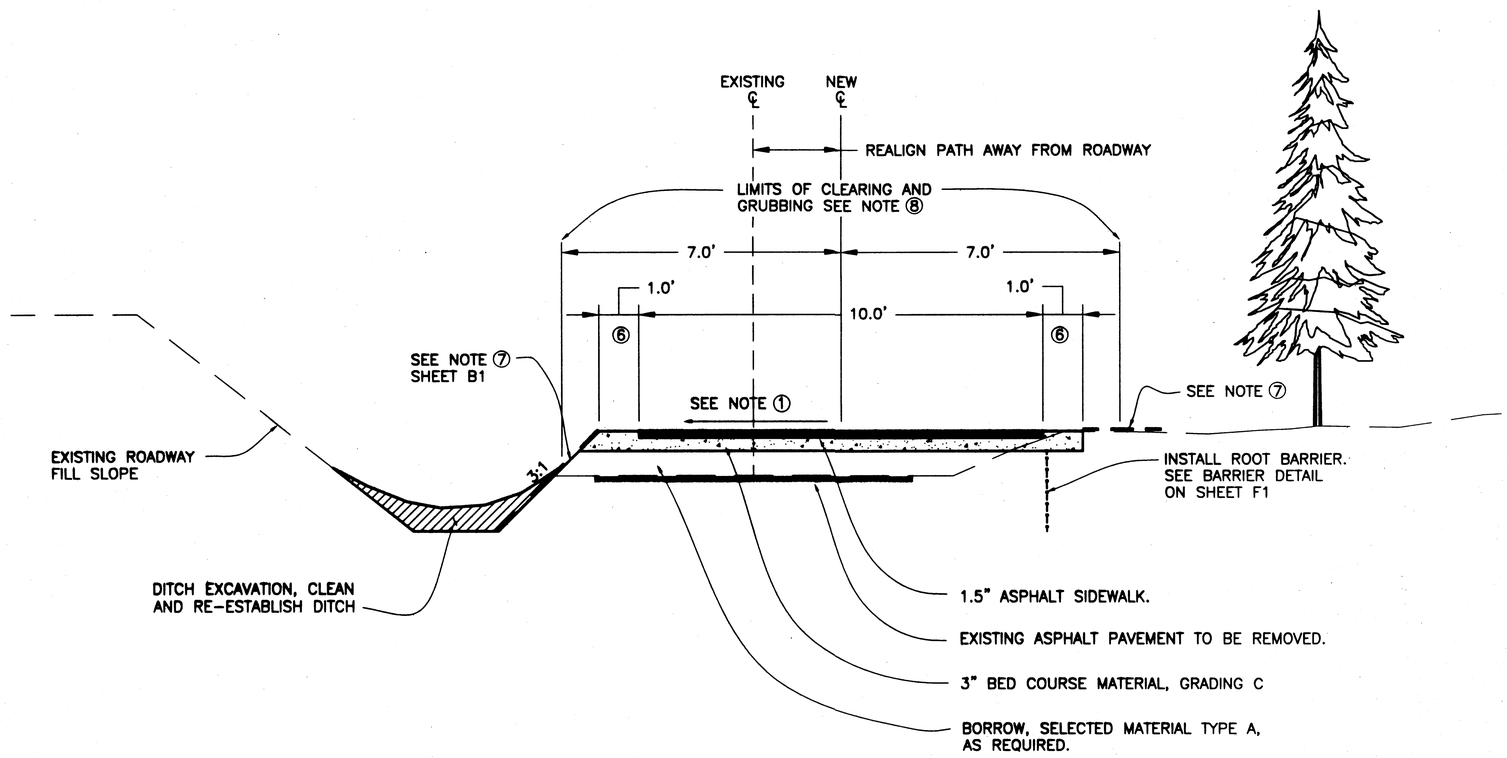

Typical Section #4

(Shown With Grade Raise)

NOTE: DO NOT SCALE FROM THESE PLANS-USE DIMENSIONS

PATH:
Q:\Jnu\68308\Planset\E_Typs.dwg
Wed, 28/Aug/02 01:29PM Michael Limbaugh
PLOT:
PSPACE 1=1(F) OR MSPACE 1=1(F)
TAB: E2

ADDENDUM NUMBER

ATTACHMENT NUMBER

RECORD OF REVISIONS

No.	DATE	DESCRIPTION

JUNEAU
MENDENHALL VALLEY MUTI-USE
PATH IMPROVEMENTS I
PROJECT NO. 68308

Typical Sections

DESIGNED BY: R. KRAEMER

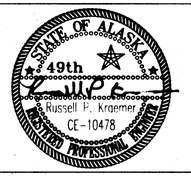

CHECKED BY: PETE BEDNAROWICZ

DRAWN BY: MICHAEL LIMBAUGH

STATE OF ALASKA
DEPARTMENT OF TRANSPORTATION
& PUBLIC FACILITIES
STATEWIDE DESIGN & ENGINEERING
SERVICES DIVISION

MENDENHALL VALLEY
MULTI-USE PATH
IMPROVEMENTS I

Typical Sections

PROJECT DESIGNATION NUMBER	
CM-0966(22) / 68308	
STATE	YEAR
ALASKA	2002
SHEET NUMBER	TOTAL SHEETS
E2	26

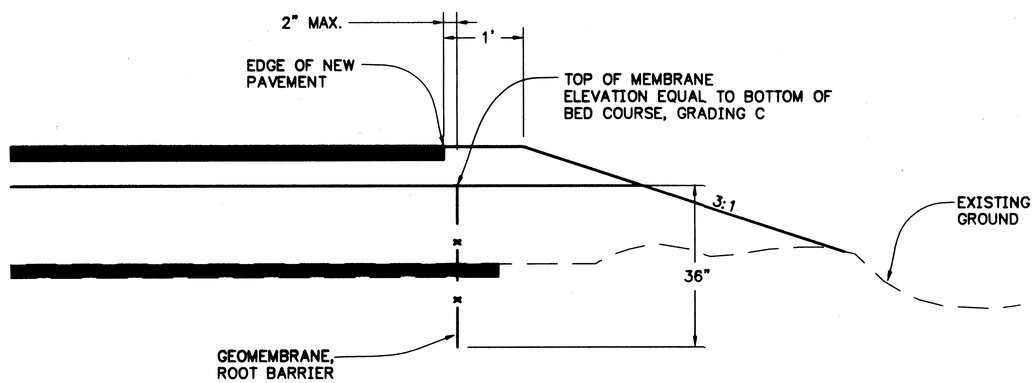

NOTE:
AT LOCATIONS DETERMINED BY THE ENGINEER.

Detail Of Geomembrane Root Barrier

PATH:
Q:\Jnu\68308\Planset\A-B-F_Tsht&Sums.dwg
Wed, 28/Aug/02 01:28PM Michael Limbaugh
PLOT:
PSPACE 1=1(F) OR MSPACE 1=1(F)
TAB: F1

ADDENDUM NUMBER

ATTACHMENT NUMBER

RECORD OF REVISIONS

No.	DATE	DESCRIPTION

JUNEAU
MENDENHALL VALLEY MUTI-USE PATH IMPROVEMENTS I
PROJECT NO. 68308

Project Summaries

DESIGNED BY: R. KRAEMER

STATE OF ALASKA 49th Russell P. Kraemer CE-10478 REGISTERED PROFESSIONAL ENGINEER

CHECKED BY: PETE BEDNAROWICZ

DRAWN BY: MICHAEL LIMBAUGH

STATE OF ALASKA
DEPARTMENT OF TRANSPORTATION & PUBLIC FACILITIES
STATEWIDE DESIGN & ENGINEERING SERVICES DIVISION

MENDENHALL VALLEY MULTI-USE PATH IMPROVEMENTS I

Project Summaries

PROJECT DESIGNATION NUMBER

CM-0966(22) / 68308

STATE	YEAR
ALASKA	2002
SHEET NUMBER	TOTAL SHEETS
F1	26

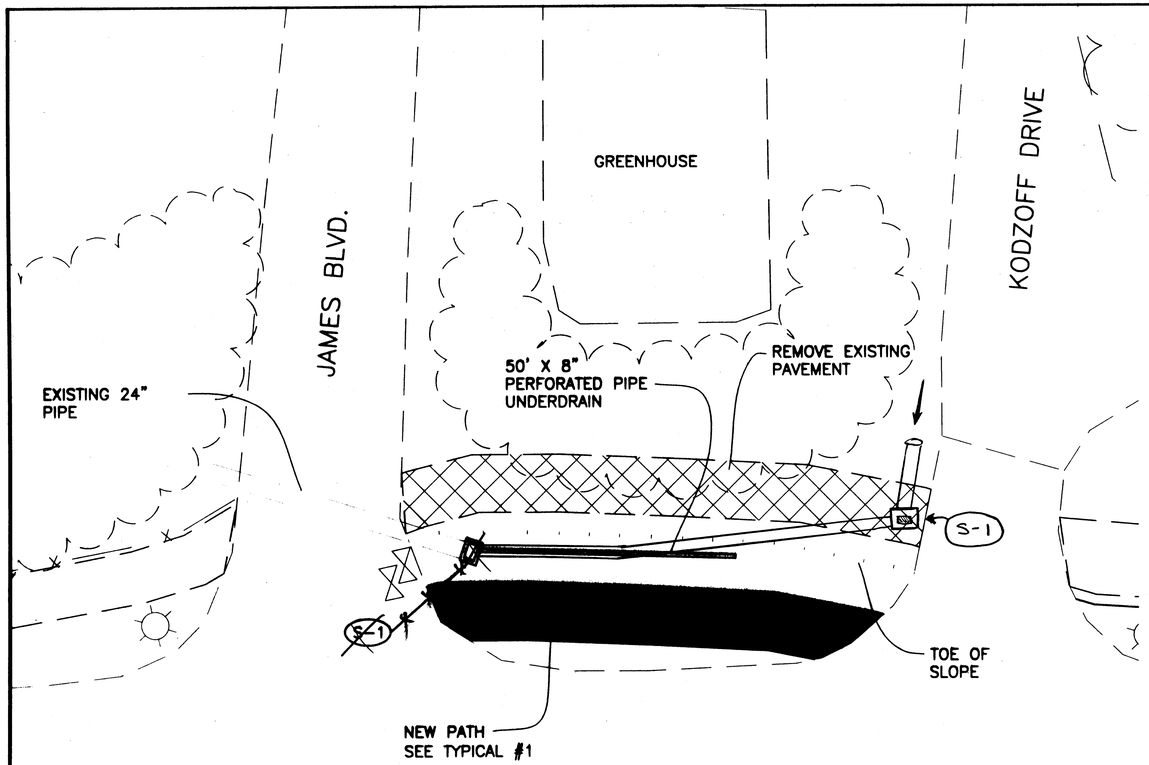

Plan View Of Structure S-1

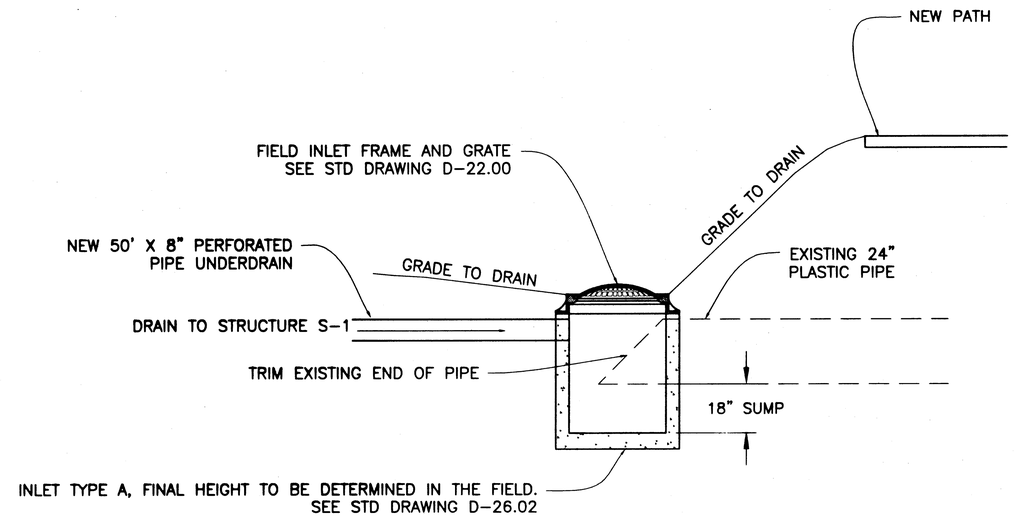

Profile View of Structure S-1

PATH:
Q:\Jnu\68308\Planset\G_Path Dets.dwg
Wed, 28/Aug/02 01:30PM Michael Limbaugh
PLOT:
PSPACE 1=1(F) OR MSPACE 1=1(F)
TAB: G1

ADDENDUM NUMBER

ATTACHMENT NUMBER

RECORD OF REVISIONS

No.	DATE	DESCRIPTION

JUNEAU
MENDENHALL VALLEY MUTI-USE
PATH IMPROVEMENTS I
PROJECT NO. 68308

Miscellaneous Details

DESIGNED BY: R. KRAEMER

STATE OF ALASKA 49th Russell P. Kraemer CE-10478 REGISTERED PROFESSIONAL ENGINEER

CHECKED BY: PETE BEDNAROWICZ

DRAWN BY: MICHAEL LIMBAUGH

STATE OF ALASKA
DEPARTMENT OF TRANSPORTATION & PUBLIC FACILITIES
STATEWIDE DESIGN & ENGINEERING SERVICES DIVISION

MENDENHALL VALLEY MULTI-USE PATH IMPROVEMENTS I

Miscellaneous Details

PROJECT DESIGNATION NUMBER

CM-0966(22) / 68308

STATE	YEAR
ALASKA	2002
SHEET NUMBER	TOTAL SHEETS
G1	26

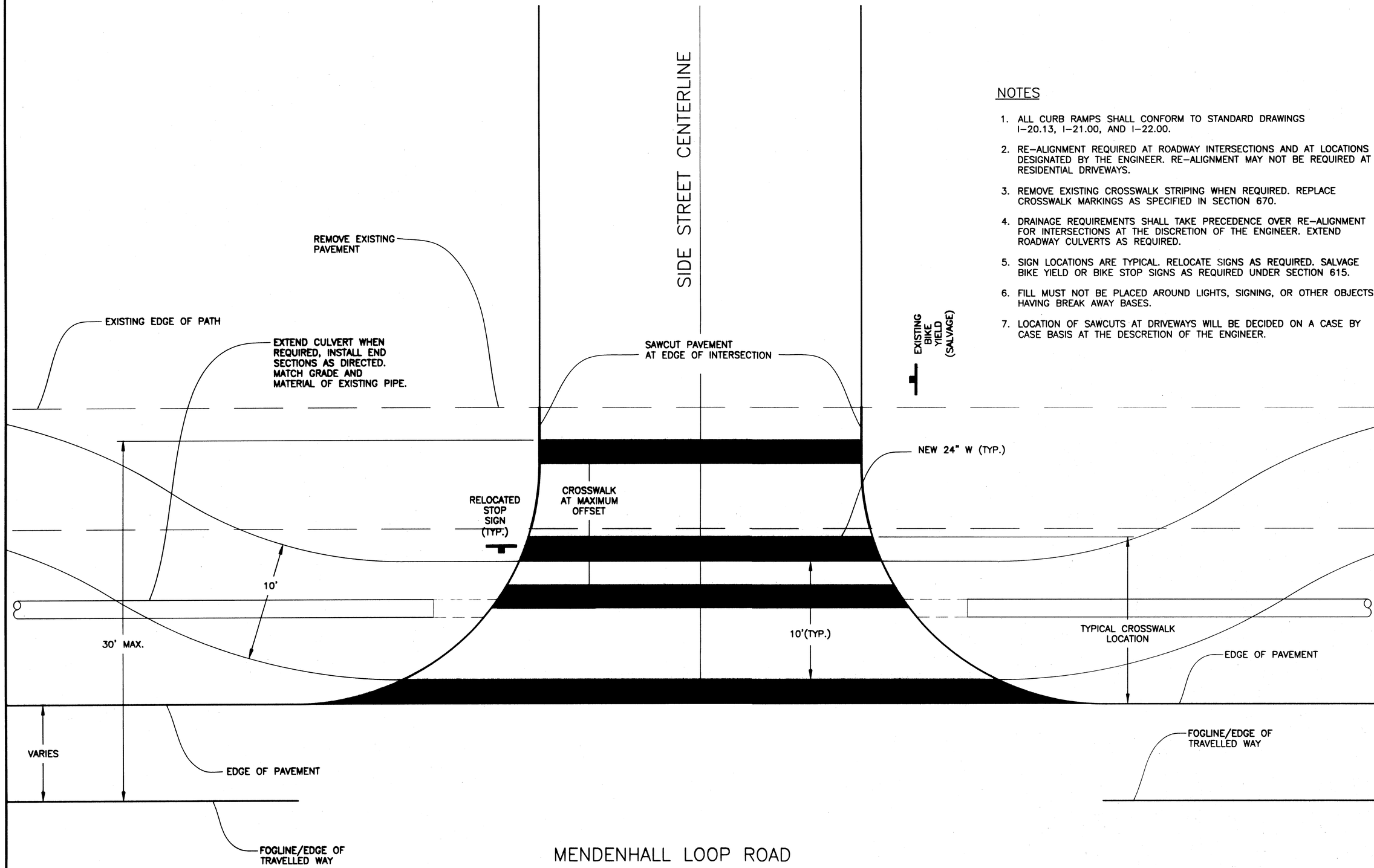

NOTES

1. ALL CURB RAMPS SHALL CONFORM TO STANDARD DRAWINGS I-20.13, I-21.00, AND I-22.00.
2. RE-ALIGNMENT REQUIRED AT ROADWAY INTERSECTIONS AND AT LOCATIONS DESIGNATED BY THE ENGINEER. RE-ALIGNMENT MAY NOT BE REQUIRED AT RESIDENTIAL DRIVEWAYS.
3. REMOVE EXISTING CROSSWALK STRIPING WHEN REQUIRED. REPLACE CROSSWALK MARKINGS AS SPECIFIED IN SECTION 670.
4. DRAINAGE REQUIREMENTS SHALL TAKE PRECEDENCE OVER RE-ALIGNMENT FOR INTERSECTIONS AT THE DISCRETION OF THE ENGINEER. EXTEND ROADWAY CULVERTS AS REQUIRED.
5. SIGN LOCATIONS ARE TYPICAL. RELOCATE SIGNS AS REQUIRED. SALVAGE BIKE YIELD OR BIKE STOP SIGNS AS REQUIRED UNDER SECTION 615.
6. FILL MUST NOT BE PLACED AROUND LIGHTS, SIGNING, OR OTHER OBJECTS HAVING BREAK AWAY BASES.
7. LOCATION OF SAWCUTS AT DRIVEWAYS WILL BE DECIDED ON A CASE BY CASE BASIS AT THE DESCRETION OF THE ENGINEER.

DETAIL OF PATH RE-ALIGNMENT AT INTERSECTION

NOTE: DO NOT SCALE FROM THESE PLANS-USE DIMENSIONS

PATH:
Q:\Jnu\68308\Planset\G_Path Dets.dwg
Wed, 28/Aug/02 04:18PM Michael Limbaugh
PLOT:
PSPACE 1=1(F) OR MSPACE 1=1(F)
TAB: G2

ADDENDUM NUMBER

ATTACHMENT NUMBER

RECORD OF REVISIONS

No.	DATE	DESCRIPTION

JUNEAU
MENDENHALL VALLEY MUTI-USE PATH IMPROVEMENTS I
PROJECT NO. 68308

Miscellaneous Details

DESIGNED BY: R. KRAEMER

STATE OF ALASKA 49th Russell P. Kraemer CE-10478 REGISTERED PROFESSIONAL ENGINEER

CHECKED BY: PETE BEDNAROWICZ
DRAWN BY: MICHAEL LIMBAUGH

STATE OF ALASKA
DEPARTMENT OF TRANSPORTATION & PUBLIC FACILITIES
STATEWIDE DESIGN & ENGINEERING SERVICES DIVISION

MENDENHALL VALLEY MULTI-USE PATH IMPROVEMENTS I

Miscellaneous Details

PROJECT DESIGNATION NUMBER
CM-0966(22) / 68308

STATE	YEAR
ALASKA	2002
SHEET NUMBER	TOTAL SHEETS
G2	26

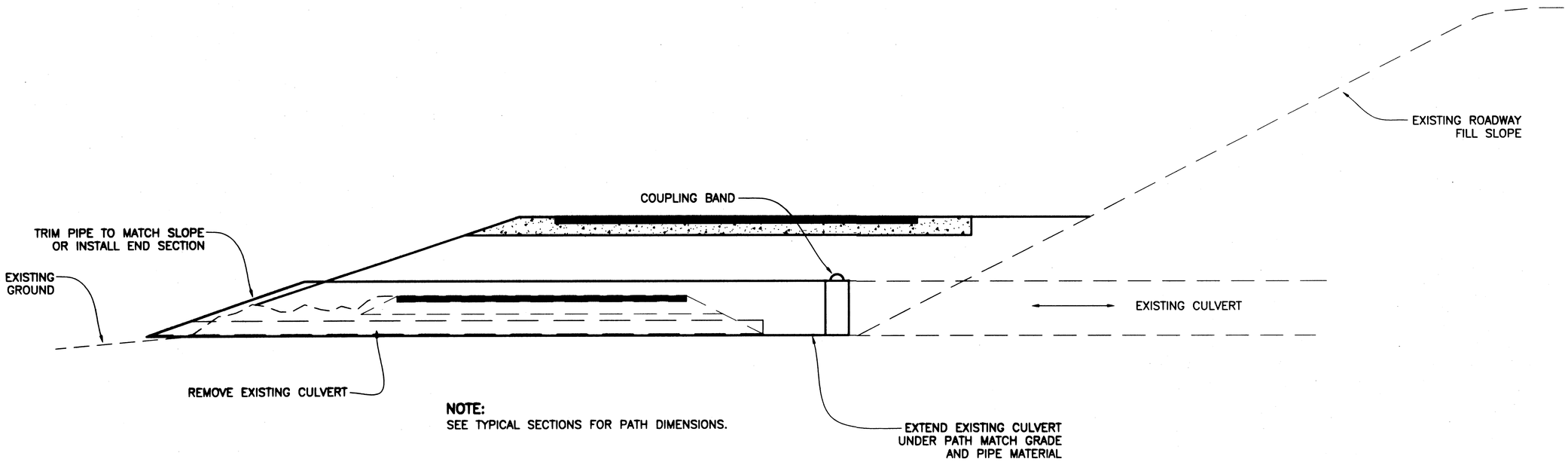

Mendenhall Loop Cross Culvert Extension

Approx. Left Path Sta. 141+00

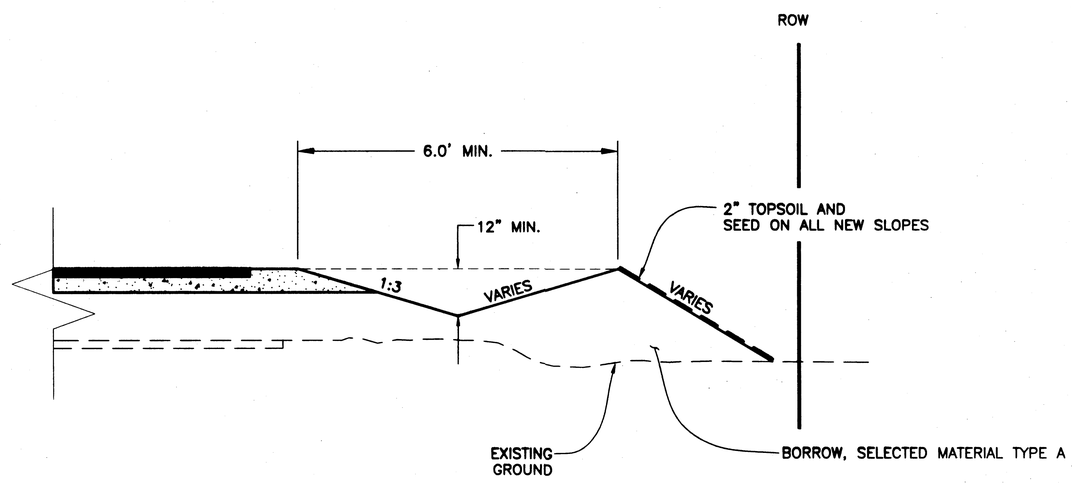

Special Ditch Detail

Approx. Left Path Sta. 135+50 To 136+50
& Sta. 138+50 To 141+00
& As Directed

PATH:
Q:\Jnu\68308\Planset\G_Path Dets.dwg
Wed, 28/Aug/02 01:30PM Michael Limbaugh
PLOT:
PSPACE 1=1(F) OR MSPACE 1=1(F)
TAB: G3

ADDENDUM NUMBER

ATTACHMENT NUMBER

RECORD OF REVISIONS

No.	DATE	DESCRIPTION

JUNEAU
MENDENHALL VALLEY MUTI-USE
PATH IMPROVEMENTS I
PROJECT NO. 68308

Miscellaneous Details

DESIGNED BY: R. KRAEMER

STATE OF ALASKA
49th
Russell P. Kraemer
CE-10478
REGISTERED PROFESSIONAL ENGINEER

CHECKED BY: PETE BEDNAROWICZ
DRAWN BY: MICHAEL LIMBAUGH

STATE OF ALASKA
DEPARTMENT OF TRANSPORTATION
& PUBLIC FACILITIES
STATEWIDE DESIGN & ENGINEERING
SERVICES DIVISION

MENDENHALL VALLEY
MULTI-USE PATH
IMPROVEMENTS I

Miscellaneous Details

PROJECT DESIGNATION NUMBER	
CM-0966(22) / 68308	
STATE	YEAR
ALASKA	2002
SHEET NUMBER	TOTAL SHEETS
G3	26

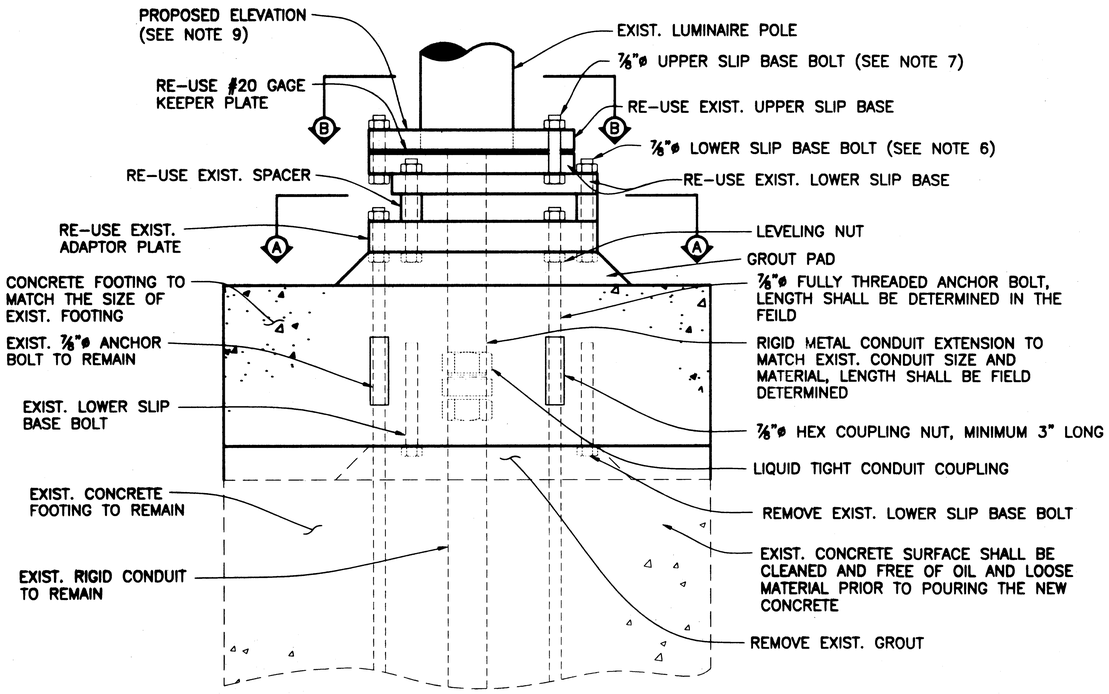

LUMINAIRE FOUNDATION NOTES

1. WRENCH TIGHTEN THE LOWER SLIP BASE BOLTS. THERE IS NO TORQUE REQUIREMENT.
2. A LIQUID TIGHT CONDUIT COUPLING SHALL BE USED FOR SPLICING AN EXTENSION OF THE EXIST. CONDUIT. THE LENGTH OF THE EXTENSION SHALL BE FIELD DETERMINED.
3. BOLTS, NUTS, WASHER SHALL CONFORM TO ASTM A325 AND GALVANIZED IN ACCORDANCE WITH ASTM A153.
4. LUMINAIRE FOOTING SHALL BE CONSTRUCTED USING CLASS "A" CONCRETE WITH MINIMUM 28 DAY COMPRESSION STRENGTH OF f'c=3,000 p.s.i.
5. GROUT SHALL BE 2" MIN TO 3" MAX. IN THICKNESS. GROUT MIX SHALL BE 3 PARTS SAND TO 1 PART CEMENT WITH ONLY ENOUGH WATER TO PERMIT PLACING AND PACKING.
6. THE LOWER SLIP BASE BOLT SHALL BE 7/8"ø-9NCx7" LONG WITH NUTS AND WASHER.
7. THE EXIST. UPPER SLIP BASE DOES NOT HAVE TO BE SEPARATED FROM THE LOWER SLIP BASE DURING CONSTRUCTION. IF THE UPPER SLIP BASE BOLT DOES GET UNBOLTED A NEW BOLT, NUT, AND WASHER SHALL BE PROVIDED AND TORQUE TO 1,800 in-lbs.
8. NEW CONDUCTORS WILL BE REQUIRED IF THERE IS NOT ENOUGH SLACK IN EXISTING CONDUCTOR.
9. PROPOSED ELEVATION WILL BE DETERMINED IN THE FIELD.

LUMINAIRE FOUNDATION EXTENSION DETAIL

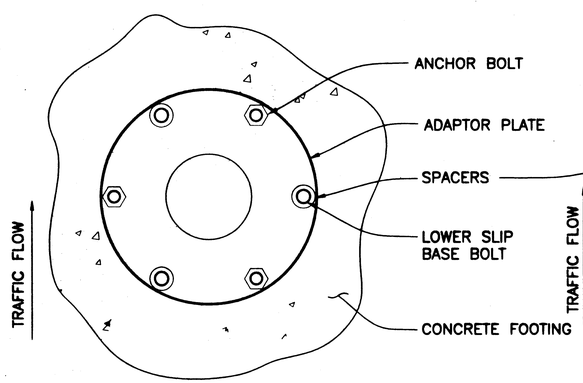

SECTION A-A

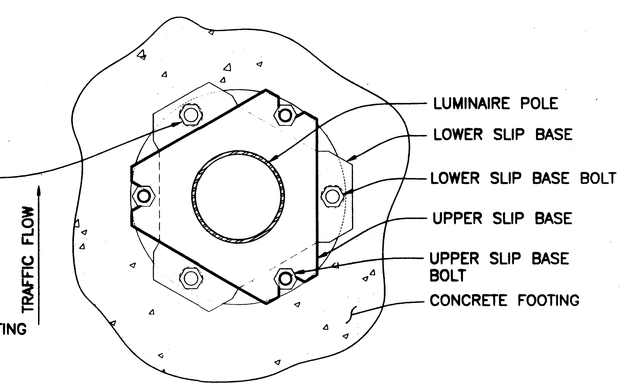

SECTION B-B

PATH:
Q:\Jnu\68308\Planset\G4_Luminaire.dwg
Wed, 28/Aug/02 01:32PM Michael Limbaugh
PLOT:
PSPACE 1=1(F) OR MSPACE 1=1(F)

ADDENDUM NUMBER

ATTACHMENT NUMBER

RECORD OF REVISIONS

No.	DATE	DESCRIPTION

JUNEAU
MENDENHALL VALLEY MUTI-USE PATH IMPROVEMENTS I
PROJECT NO. 68308

LUMINAIRE FOUNDATION EXTENSION

DESIGNED BY: R. KRAEMER

STATE OF ALASKA 49th Russell P. Kraemer CE-10478 REGISTERED PROFESSIONAL ENGINEER

CHECKED BY: PETE BEDNAROWICZ
DRAWN BY: MICHAEL LIMBAUGH

STATE OF ALASKA
DEPARTMENT OF TRANSPORTATION & PUBLIC FACILITIES
STATEWIDE DESIGN & ENGINEERING SERVICES DIVISION

MENDENHALL VALLEY MULTI-USE PATH IMPROVEMENTS I
LUMINAIRE FOUNDATION EXTENSION

PROJECT DESIGNATION NUMBER
CM-0966(22) / 68308

STATE	YEAR
ALASKA	2002
SHEET NUMBER	TOTAL SHEETS
G4	26

PATH:
Q:\Jnu\68308\Planset\H_Plan308.dwg
Wed, 28/Aug/02 01:24PM Michael Limbaugh
PLOT:
PSPACE 1=1(F) OR MSPACE 1=1(F)
TAB: H1

ADDENDUM NUMBER

ATTACHMENT NUMBER

RECORD OF REVISIONS

No.	DATE	DESCRIPTION

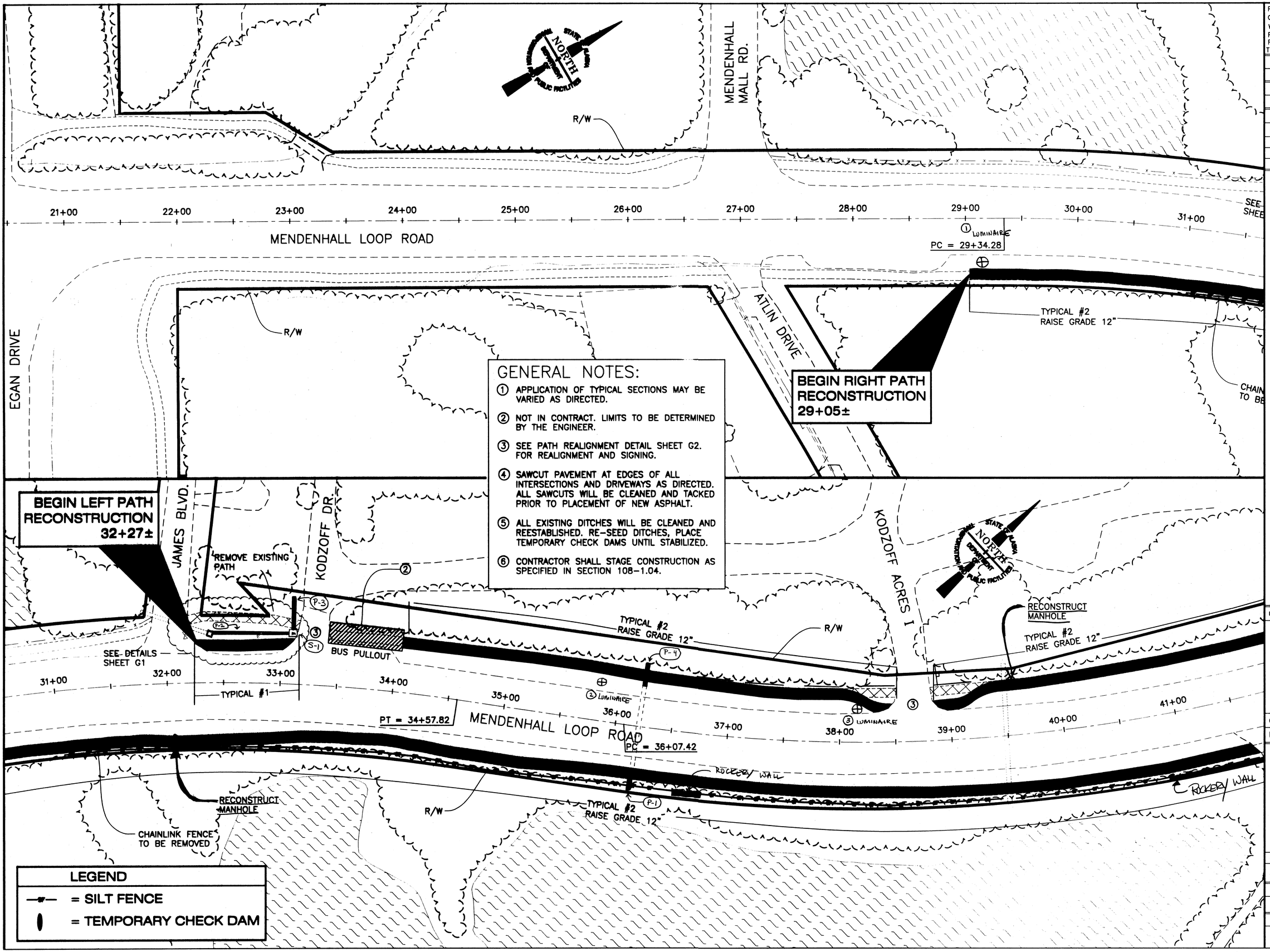

GENERAL NOTES:

1. APPLICATION OF TYPICAL SECTIONS MAY BE VARIED AS DIRECTED.
2. NOT IN CONTRACT. LIMITS TO BE DETERMINED BY THE ENGINEER.
3. SEE PATH REALIGNMENT DETAIL SHEET G2. FOR REALIGNMENT AND SIGNING.
4. SAWCUT PAVEMENT AT EDGES OF ALL INTERSECTIONS AND DRIVEWAYS AS DIRECTED. ALL SAWCUTS WILL BE CLEANED AND TACKED PRIOR TO PLACEMENT OF NEW ASPHALT.
5. ALL EXISTING DITCHES WILL BE CLEANED AND REESTABLISHED. RE-SEED DITCHES, PLACE TEMPORARY CHECK DAMS UNTIL STABILIZED.
6. CONTRACTOR SHALL STAGE CONSTRUCTION AS SPECIFIED IN SECTION 108-1.04.

LEGEND

—▼— = SILT FENCE

▮ = TEMPORARY CHECK DAM

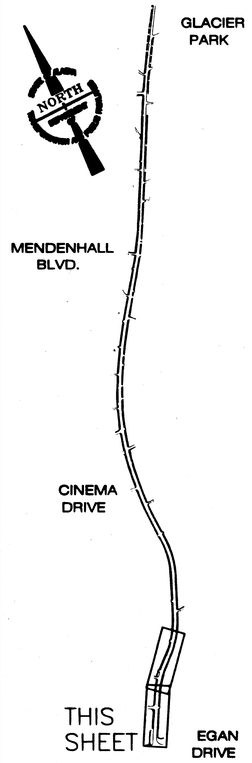

DESIGNED BY: R. KRAEMER

STATE OF ALASKA 49th
Russell P. Kraemer
CE-10478
REGISTERED PROFESSIONAL ENGINEER

CHECKED BY: PETE BEDNAROWICZ

DRAWN BY: MICHAEL LIMBAUGH

STATE OF ALASKA
DEPARTMENT OF TRANSPORTATION & PUBLIC FACILITIES
STATEWIDE DESIGN & ENGINEERING SERVICES DIVISION

MENDENHALL VALLEY MULTI-USE PATH IMPROVEMENTS I

Plan Sheet

PROJECT DESIGNATION NUMBER	
CM-0966(22) / 68308	
STATE	YEAR
ALASKA	2002
SHEET NUMBER	TOTAL SHEETS
H1	26

PATH:
Q:\Jnu\68308\Planset\H_Plan308.dwg
Wed, 28/Aug/02 01:24PM Michael Limbaugh
PLOT:
PSPACE 1=1(F) OR MSPACE 1=1(F)

ADDENDUM NUMBER

ATTACHMENT NUMBER

RECORD OF REVISIONS

No.	DATE	DESCRIPTION

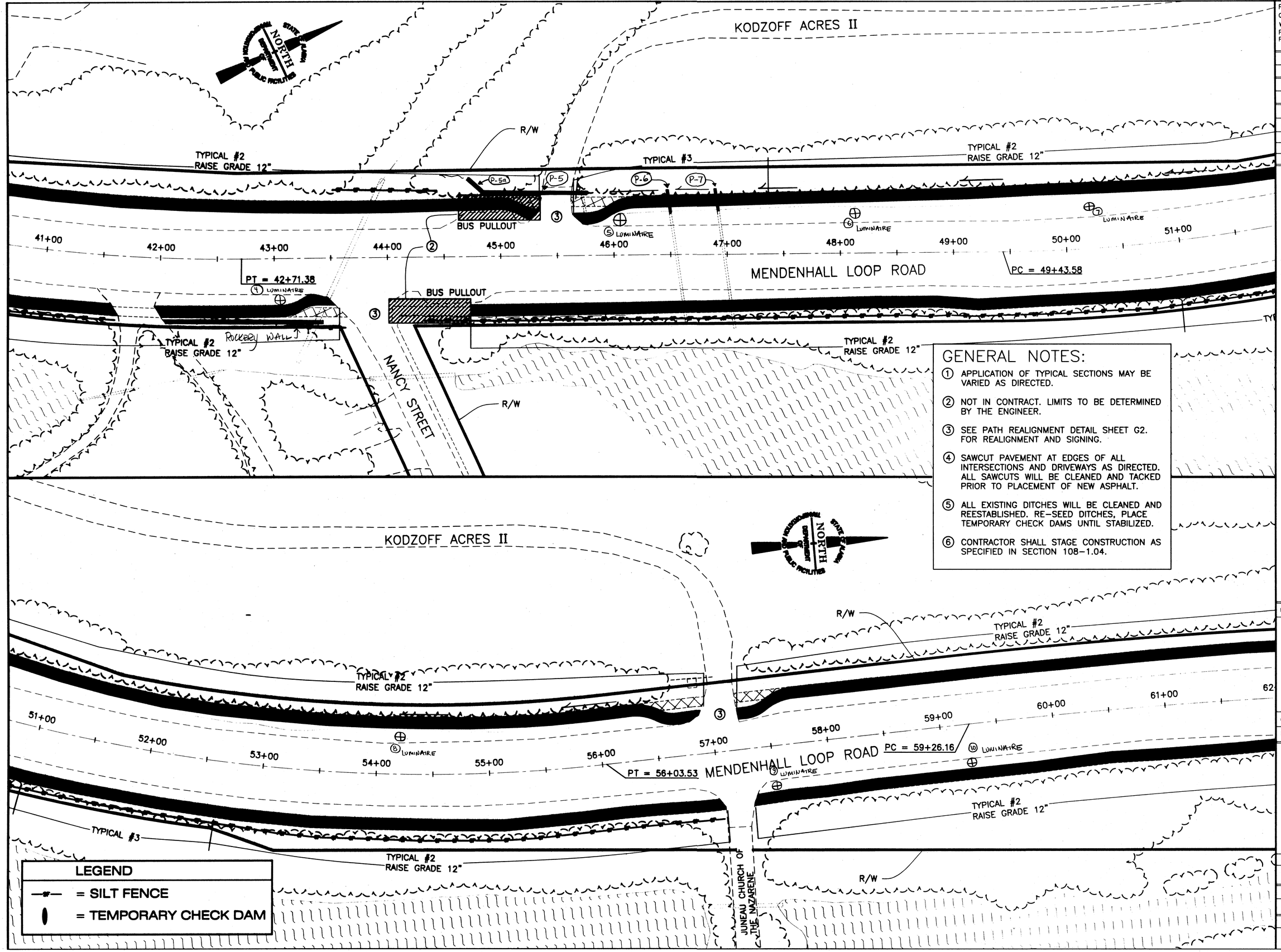

GENERAL NOTES:

1. APPLICATION OF TYPICAL SECTIONS MAY BE VARIED AS DIRECTED.
2. NOT IN CONTRACT. LIMITS TO BE DETERMINED BY THE ENGINEER.
3. SEE PATH REALIGNMENT DETAIL SHEET G2. FOR REALIGNMENT AND SIGNING.
4. SAWCUT PAVEMENT AT EDGES OF ALL INTERSECTIONS AND DRIVEWAYS AS DIRECTED. ALL SAWCUTS WILL BE CLEANED AND TACKED PRIOR TO PLACEMENT OF NEW ASPHALT.
5. ALL EXISTING DITCHES WILL BE CLEANED AND REESTABLISHED. RE-SEED DITCHES, PLACE TEMPORARY CHECK DAMS UNTIL STABILIZED.
6. CONTRACTOR SHALL STAGE CONSTRUCTION AS SPECIFIED IN SECTION 108-1.04.

LEGEND

—#— = SILT FENCE

● = TEMPORARY CHECK DAM

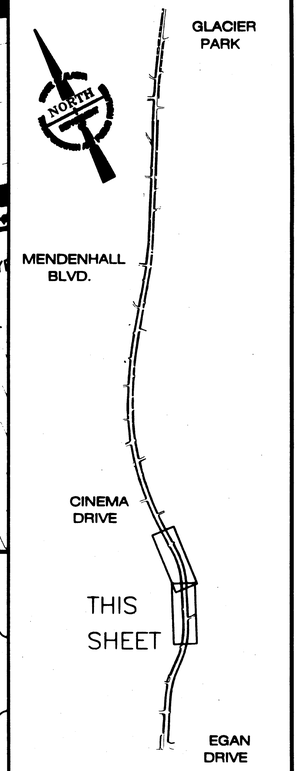

DESIGNED BY: R. KRAEMER

STATE OF ALASKA 49th Russell P. Kraemer CE-10478 REGISTERED PROFESSIONAL ENGINEER

CHECKED BY: PETE BEDNAROWICZ

DRAWN BY: MICHAEL LIMBAUGH

STATE OF ALASKA
DEPARTMENT OF TRANSPORTATION & PUBLIC FACILITIES
STATEWIDE DESIGN & ENGINEERING SERVICES DIVISION

MENDENHALL VALLEY MULTI-USE PATH IMPROVEMENTS I

Plan Sheet

PROJECT DESIGNATION NUMBER	
CM-0966(22) / 68308	
STATE	YEAR
ALASKA	2002
SHEET NUMBER	TOTAL SHEETS
H2	26

PATH:
Q:\Jnu\68308\Planset\H_Plan308.dwg
Wed, 28/Aug/02 01:25PM Michael Limbaugh
PLOT:
PSPACE 1=1(F) OR MSPACE 1=1(F)
TAB: H3

ADDENDUM NUMBER

ATTACHMENT NUMBER

RECORD OF REVISIONS

No.	DATE	DESCRIPTION

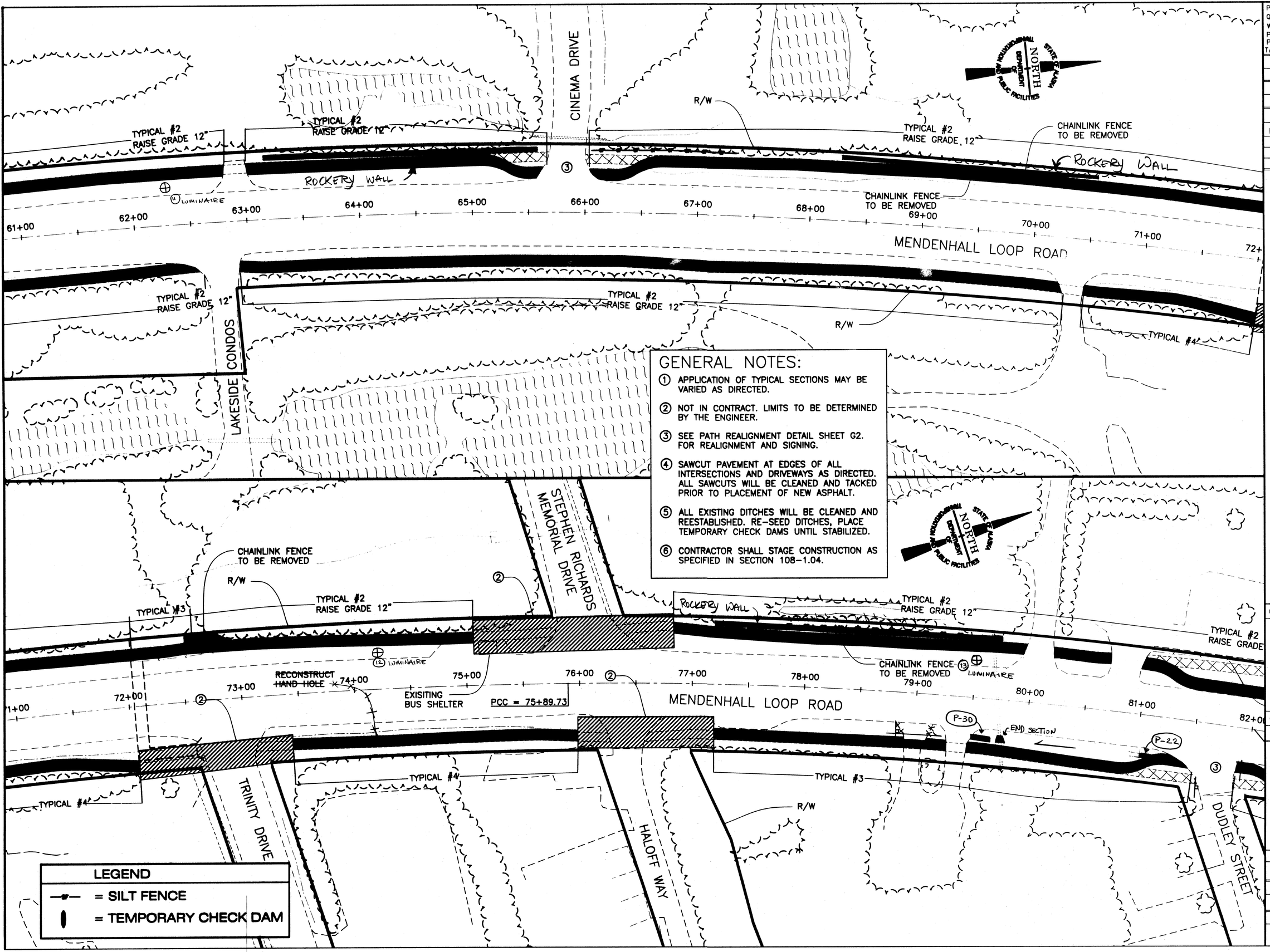

GENERAL NOTES:

1. APPLICATION OF TYPICAL SECTIONS MAY BE VARIED AS DIRECTED.
2. NOT IN CONTRACT. LIMITS TO BE DETERMINED BY THE ENGINEER.
3. SEE PATH REALIGNMENT DETAIL SHEET G2. FOR REALIGNMENT AND SIGNING.
4. SAWCUT PAVEMENT AT EDGES OF ALL INTERSECTIONS AND DRIVEWAYS AS DIRECTED. ALL SAWCUTS WILL BE CLEANED AND TACKED PRIOR TO PLACEMENT OF NEW ASPHALT.
5. ALL EXISTING DITCHES WILL BE CLEANED AND REESTABLISHED. RE-SEED DITCHES, PLACE TEMPORARY CHECK DAMS UNTIL STABILIZED.
6. CONTRACTOR SHALL STAGE CONSTRUCTION AS SPECIFIED IN SECTION 108-1.04.

LEGEND

= SILT FENCE

= TEMPORARY CHECK DAM

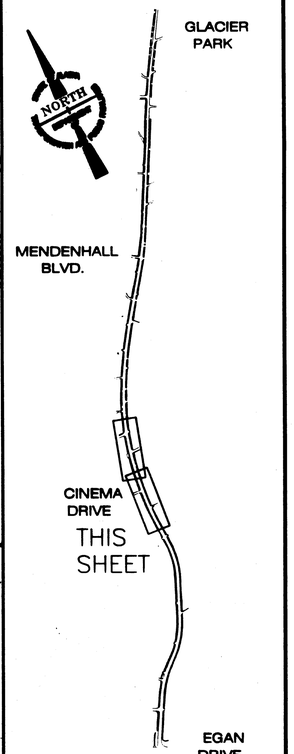

DESIGNED BY: R. KRAEMER

STATE OF ALASKA
49th
Russell P. Kraemer
CE-10478
REGISTERED PROFESSIONAL ENGINEER

CHECKED BY: PETE BEDNAROWICZ

DRAWN BY: MICHAEL LIMBAUGH

STATE OF ALASKA
DEPARTMENT OF TRANSPORTATION & PUBLIC FACILITIES
STATEWIDE DESIGN & ENGINEERING SERVICES DIVISION

MENDENHALL VALLEY MULTI-USE PATH IMPROVEMENTS I

Plan Sheet

PROJECT DESIGNATION NUMBER	
CM-0966(22) / 68308	
STATE	YEAR
ALASKA	2002
SHEET NUMBER	TOTAL SHEETS
H3	26

PATH:
Q:\Jnu\68308\Planset\H_Plan308.dwg
Wed, 28/Aug/02 01:25PM Michael Limbaugh
PLOT:
PSPACE 1=1(F) OR MSPACE 1=1(F)
TAB: H4

ADDENDUM NUMBER

ATTACHMENT NUMBER

RECORD OF REVISIONS

No.	DATE	DESCRIPTION

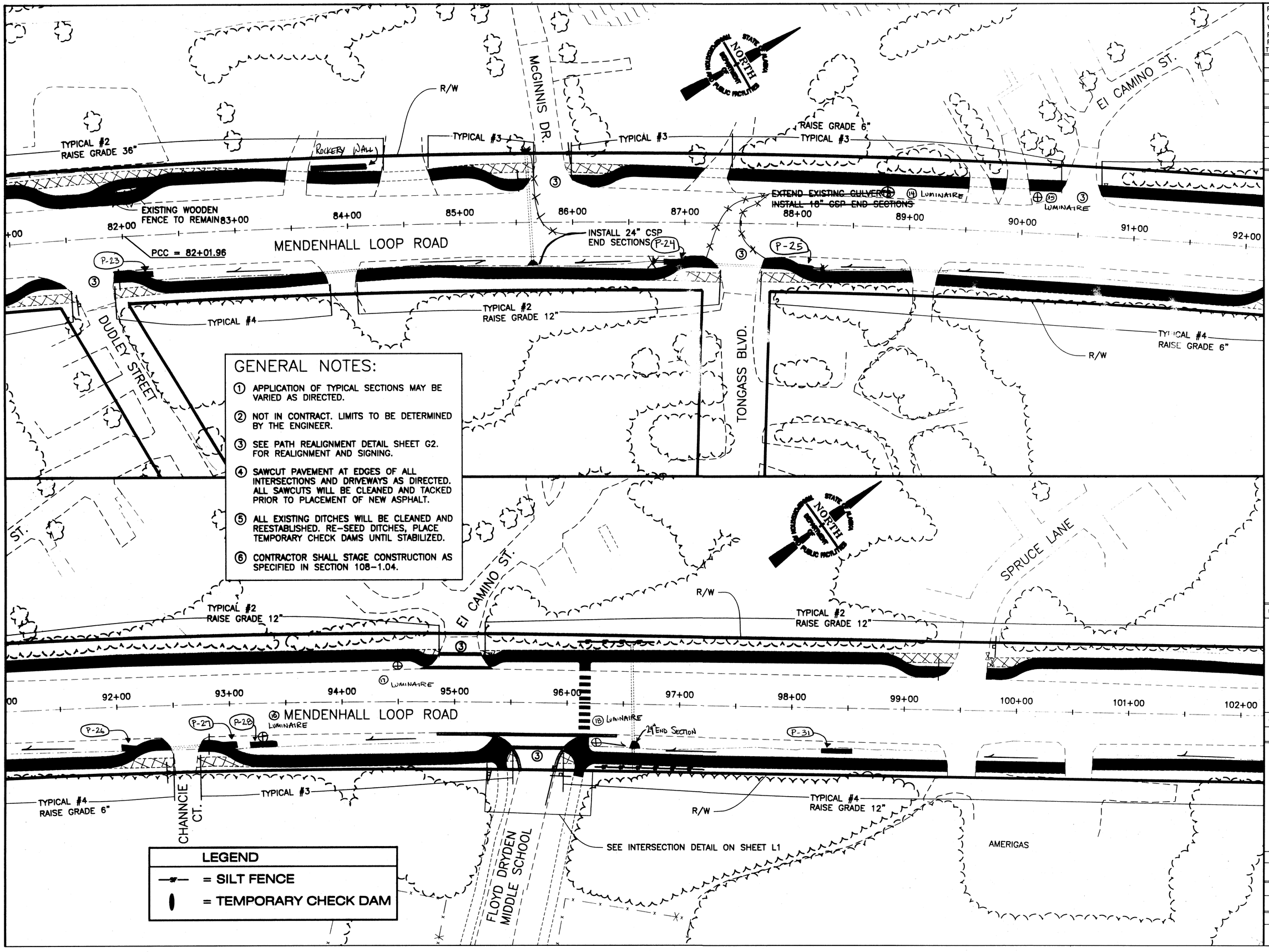

GENERAL NOTES:

1. APPLICATION OF TYPICAL SECTIONS MAY BE VARIED AS DIRECTED.
2. NOT IN CONTRACT. LIMITS TO BE DETERMINED BY THE ENGINEER.
3. SEE PATH REALIGNMENT DETAIL SHEET G2. FOR REALIGNMENT AND SIGNING.
4. SAWCUT PAVEMENT AT EDGES OF ALL INTERSECTIONS AND DRIVEWAYS AS DIRECTED. ALL SAWCUTS WILL BE CLEANED AND TACKED PRIOR TO PLACEMENT OF NEW ASPHALT.
5. ALL EXISTING DITCHES WILL BE CLEANED AND REESTABLISHED. RE-SEED DITCHES, PLACE TEMPORARY CHECK DAMS UNTIL STABILIZED.
6. CONTRACTOR SHALL STAGE CONSTRUCTION AS SPECIFIED IN SECTION 108-1.04.

LEGEND

—x—	= SILT FENCE
▮	= TEMPORARY CHECK DAM

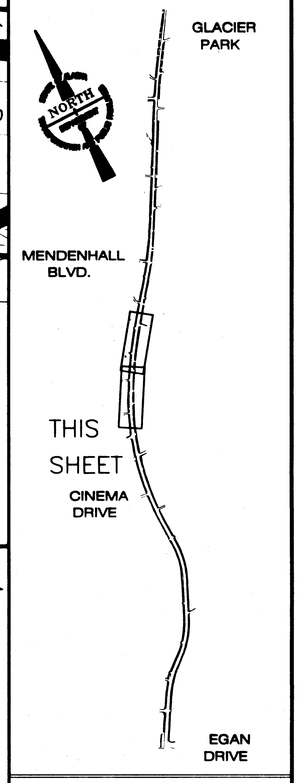

DESIGNED BY: R. KRAEMER

STATE OF ALASKA 49th Russell P. Kraemer CE-10478 REGISTERED PROFESSIONAL ENGINEER

CHECKED BY: PETE BEDNAROWICZ

DRAWN BY: MICHAEL LIMBAUGH

STATE OF ALASKA
DEPARTMENT OF TRANSPORTATION & PUBLIC FACILITIES
STATEWIDE DESIGN & ENGINEERING SERVICES DIVISION

MENDENHALL VALLEY MULTI-USE PATH IMPROVEMENTS I

Plan Sheet

PROJECT DESIGNATION NUMBER	
CM-0966(22) / 68308	
STATE	YEAR
ALASKA	2002
SHEET NUMBER	TOTAL SHEETS
H4	26

PATH:
Q:\Jnu\68308\Planset\H_Plan308.dwg
Wed, 28/Aug/02 01:26PM Michael Limbaugh
PLOT:
PSPACE 1=1(F) OR MSPACE 1=1(F)
TAB: H5

ADDENDUM NUMBER

ATTACHMENT NUMBER

RECORD OF REVISIONS

No.	DATE	DESCRIPTION

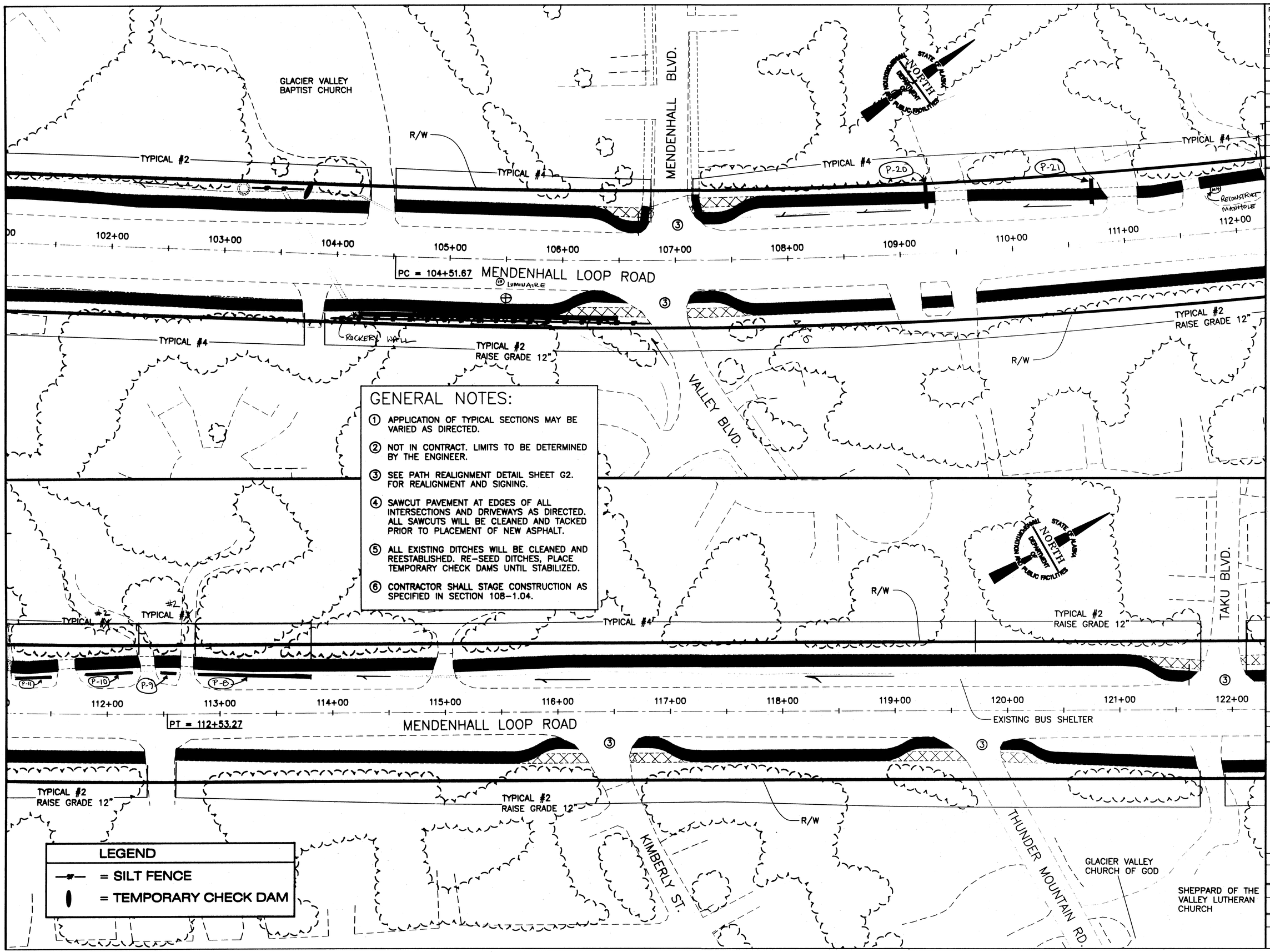

GENERAL NOTES:

1. APPLICATION OF TYPICAL SECTIONS MAY BE VARIED AS DIRECTED.
2. NOT IN CONTRACT. LIMITS TO BE DETERMINED BY THE ENGINEER.
3. SEE PATH REALIGNMENT DETAIL SHEET G2. FOR REALIGNMENT AND SIGNING.
4. SAWCUT PAVEMENT AT EDGES OF ALL INTERSECTIONS AND DRIVEWAYS AS DIRECTED. ALL SAWCUTS WILL BE CLEANED AND TACKED PRIOR TO PLACEMENT OF NEW ASPHALT.
5. ALL EXISTING DITCHES WILL BE CLEANED AND REESTABLISHED. RE-SEED DITCHES, PLACE TEMPORARY CHECK DAMS UNTIL STABILIZED.
6. CONTRACTOR SHALL STAGE CONSTRUCTION AS SPECIFIED IN SECTION 108-1.04.

LEGEND

—▼— = SILT FENCE

▮ = TEMPORARY CHECK DAM

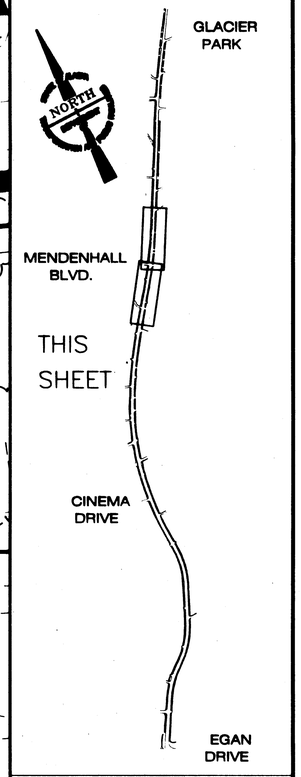

DESIGNED BY: R. KRAEMER

STATE OF ALASKA 49th Russell P. Kraemer CE-10478 REGISTERED PROFESSIONAL ENGINEER

CHECKED BY: PETE BEDNAROWICZ

DRAWN BY: MICHAEL LIMBAUGH

STATE OF ALASKA
DEPARTMENT OF TRANSPORTATION & PUBLIC FACILITIES
STATEWIDE DESIGN & ENGINEERING SERVICES DIVISION

MENDENHALL VALLEY MULTI-USE PATH IMPROVEMENTS I

Plan Sheet

PROJECT DESIGNATION NUMBER

CM-0966(22) / 68308

STATE	YEAR
ALASKA	2002
SHEET NUMBER	TOTAL SHEETS
H5	26

PATH:
Q:\Jnu\68308\Planset\H_Plan308.dwg
Wed, 28/Aug/02 01:26PM Michael Limbaugh
PLOT:
PSPACE 1=1(F) OR MSPACE 1=1(F)
TAB: H6

ADDENDUM NUMBER

ATTACHMENT NUMBER

RECORD OF REVISIONS

No.	DATE	DESCRIPTION

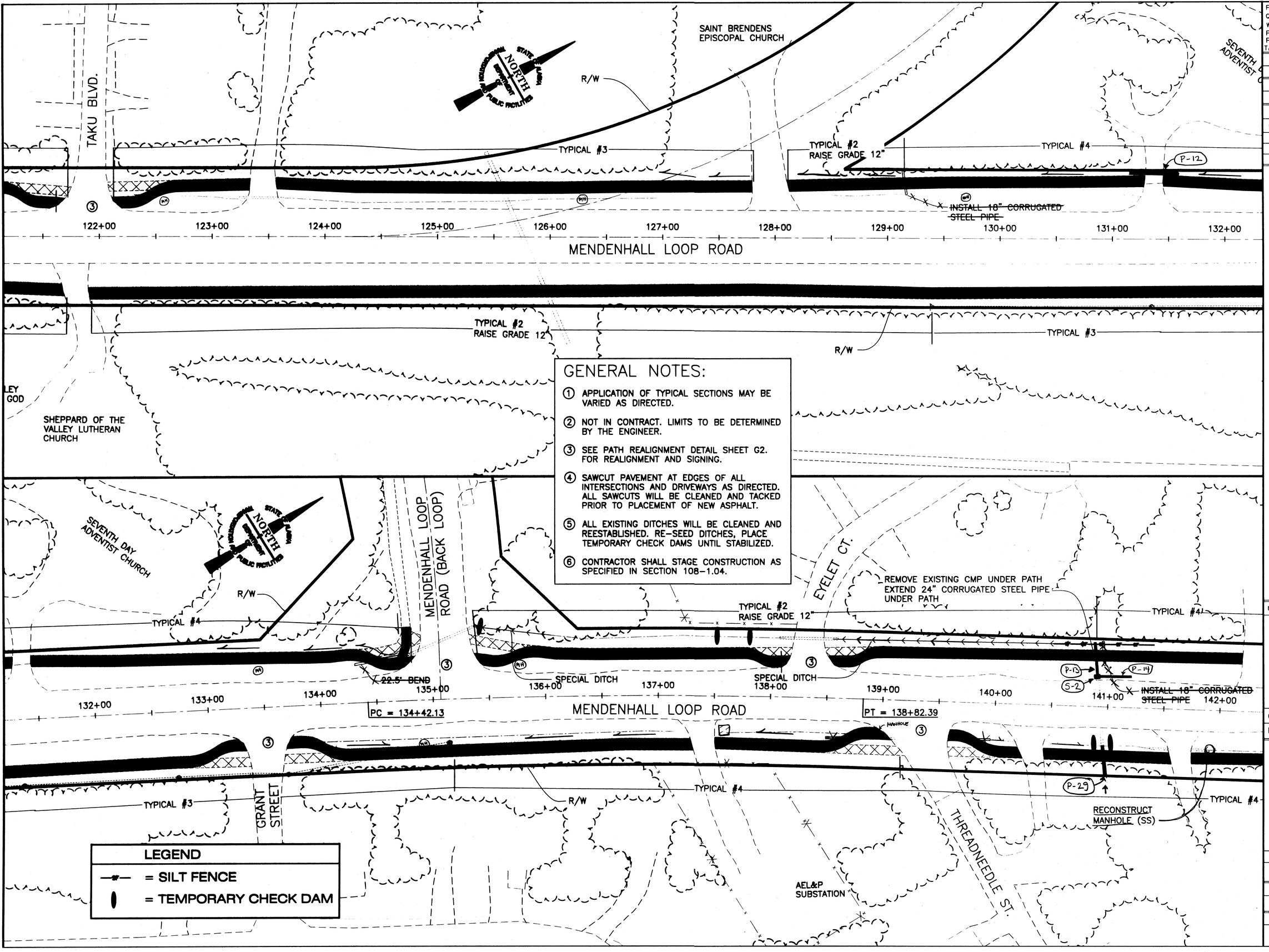

GENERAL NOTES:

1. APPLICATION OF TYPICAL SECTIONS MAY BE VARIED AS DIRECTED.
2. NOT IN CONTRACT. LIMITS TO BE DETERMINED BY THE ENGINEER.
3. SEE PATH REALIGNMENT DETAIL SHEET G2. FOR REALIGNMENT AND SIGNING.
4. SAWCUT PAVEMENT AT EDGES OF ALL INTERSECTIONS AND DRIVEWAYS AS DIRECTED. ALL SAWCUTS WILL BE CLEANED AND TACKED PRIOR TO PLACEMENT OF NEW ASPHALT.
5. ALL EXISTING DITCHES WILL BE CLEANED AND REESTABLISHED. RE-SEED DITCHES, PLACE TEMPORARY CHECK DAMS UNTIL STABILIZED.
6. CONTRACTOR SHALL STAGE CONSTRUCTION AS SPECIFIED IN SECTION 108-1.04.

LEGEND

- = SILT FENCE
- = TEMPORARY CHECK DAM

DESIGNED BY: R. KRAEMER

STATE OF ALASKA 49th Russell P. Kraemer CE-10478 REGISTERED PROFESSIONAL ENGINEER

CHECKED BY: PETE BEDNAROWICZ

DRAWN BY: MICHAEL LIMBAUGH

STATE OF ALASKA
DEPARTMENT OF TRANSPORTATION & PUBLIC FACILITIES
STATEWIDE DESIGN & ENGINEERING SERVICES DIVISION

MENDENHALL VALLEY MULTI-USE PATH IMPROVEMENTS I

Plan Sheet

PROJECT DESIGNATION NUMBER	
CM-0966(22) / 68308	
STATE	YEAR
ALASKA	2002
SHEET NUMBER	TOTAL SHEETS
H6	26

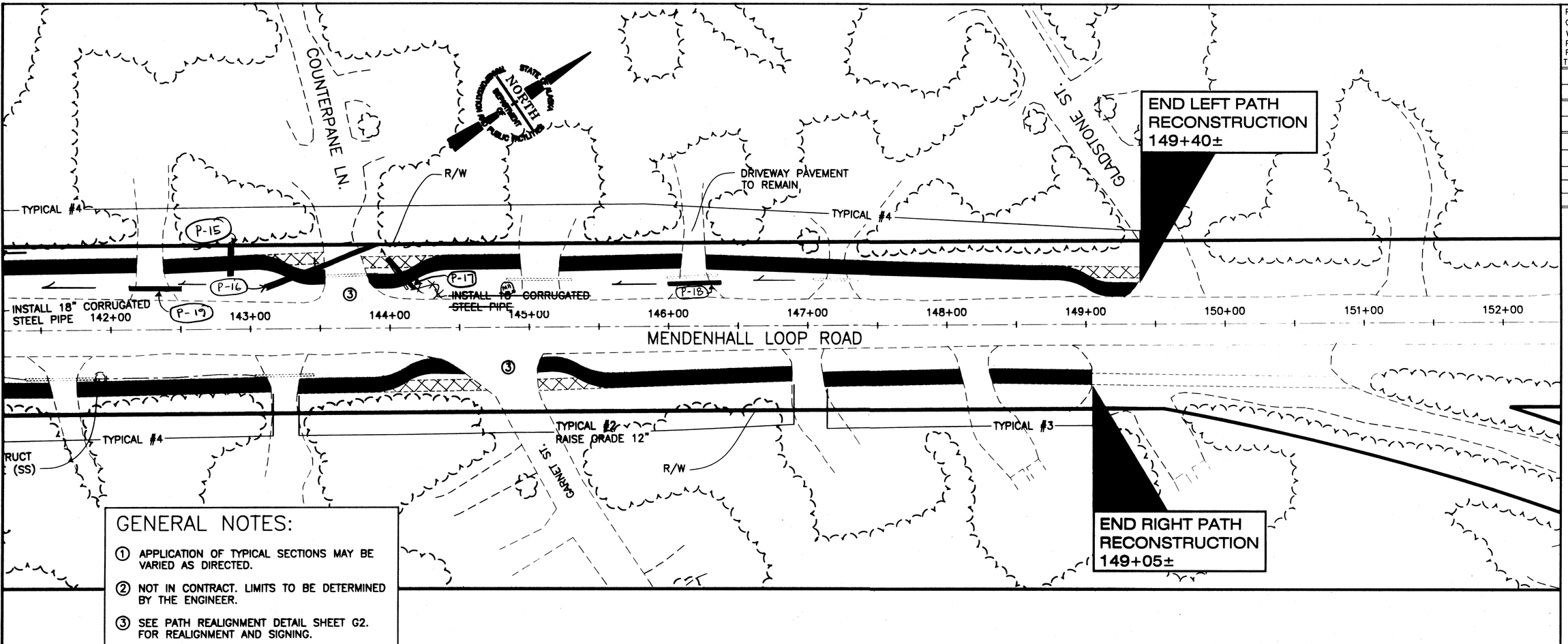

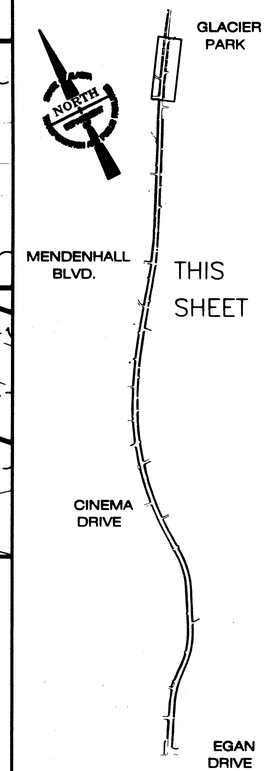

GENERAL NOTES:

1. APPLICATION OF TYPICAL SECTIONS MAY BE VARIED AS DIRECTED.
2. NOT IN CONTRACT. LIMITS TO BE DETERMINED BY THE ENGINEER.
3. SEE PATH REALIGNMENT DETAIL SHEET G2. FOR REALIGNMENT AND SIGNING.
4. SAWCUT PAVEMENT AT EDGES OF ALL INTERSECTIONS AND DRIVEWAYS AS DIRECTED. ALL SAWCUTS WILL BE CLEANED AND TACKED PRIOR TO PLACEMENT OF NEW ASPHALT.
5. ALL EXISTING DITCHES WILL BE CLEANED AND REESTABLISHED. RE-SEED DITCHES, PLACE TEMPORARY CHECK DAMS UNTIL STABILIZED.
6. CONTRACTOR SHALL STAGE CONSTRUCTION AS SPECIFIED IN SECTION 108-1.04.

LEGEND	
—▼—	= SILT FENCE
▮	= TEMPORARY CHECK DAM

PATH:
Q:\Jnu\68308\Planset\H_Plan308.dwg
Wed, 28/Aug/02 01:27PM Michael Limbaugh
PLOT:
PSPACE 1=1(F) OR MSPACE 1=1(F)
TAB: H7

ADDENDUM NUMBER

ATTACHMENT NUMBER

RECORD OF REVISIONS

No.	DATE	DESCRIPTION

DESIGNED BY: R. KRAEMER

STATE OF ALASKA 49th Russell P. Kraemer CE-10478 REGISTERED PROFESSIONAL ENGINEER

CHECKED BY: PETE BEDNAROWICZ

DRAWN BY: MICHAEL LIMBAUGH

STATE OF ALASKA
DEPARTMENT OF TRANSPORTATION & PUBLIC FACILITIES
STATEWIDE DESIGN & ENGINEERING SERVICES DIVISION

MENDENHALL VALLEY MULTI-USE PATH IMPROVEMENTS I

Plan Sheet

PROJECT DESIGNATION NUMBER

CM-0966(22) / 68308

STATE	YEAR
ALASKA	2002
SHEET NUMBER	TOTAL SHEETS
H7	26

FLOYD DRYDEN SCHOOL CROSSWALK
PROJECT No. HHE-0966(21)/68179

Removal Of Structure & Obstructions

NO.	ITEM	STATION	OFFSET
1	Crosswalk Flashing Beacon	95+00	34.38' RT.
2	Luminaire (Pole to Remain)	96+08	35.14' RT.
3	Electrolier	96+10	35.14' LT.
4	Crosswalk Flashing Beacon	96+20	30.94' LT.

NOTE: DELIVER ALL SALVAGED ELECTRICAL MATERIALS TO THE JUNEAU M&O STATION.

J-BOX Summary

NUMBER	STATION	OFFSET	TYPE	REMARKS
1	92+27.5	37.5' RT.	IA	–
2	93+40	41' RT.	IA	–
3	95+20	34' RT.	IA	–
4	96+03	38' RT.	IA	–
5	96+09.5	33' RT.	IA	–
6	97+31	33' RT.	IA	–
7	99+09	33' RT.	IA	–
8	100+26	33' RT.	IA	–
9	101+75	32' RT.	IA	–
10	102+95	32' RT.	IA	–
11	104+09	32' RT.	IA	–
12	106+41	30' RT.	II	–

GENERAL NOTES:

1. CONDUIT SHALL BE BORED OR JACKED UNDER LOOP ROAD PAVEMENT IN A MANNER THAT DOES NOT DAMAGE PAVEMENT, UNLESS ALTERNATIVE TRENCHING HAS BEEN APPROVED BY THE ENGINEER.
2. J-BOX LOCATIONS ARE APPROXIMATE AND SUBJECT TO MINOR REVISIONS.

Pole Summary

POLE NO.	STATIONING	OFFSET FEET	NORTHING	EASTING	SPECIAL FEATURES	MAST ARM LENGTH	LUMINAIRE MAST ARM	REMARKS
1	94+97	33' RT.	N 511841.94	E 499642.65	NEW	24'	15'	Install New 250w MC-III Luminaire
2	96+10	33' LT.	N 511725.85	E 499637.99	NEW	24'	15'	Install New 250w MC-III Luminaire
3	96+08	34.5' RT.			EXISTING	–	15'	Install New 250w MC-III Luminaire

NOTE: SEE PLAN SHEET K1 FOR INTERNALLY ILLUMINATED SIGN DETAILS.

PATH:
Q:\Jnu\68179\Planset\J_Est&Sums.dwg
Wed, 28/Aug/02 01:32PM
PLOT:
PSPACE 1=1(F) OR MSPACE 1=1(F)
TAB: J1

ADDENDUM NUMBER

ATTACHMENT NUMBER

RECORD OF REVISIONS

No.	DATE	DESCRIPTION

JNU-MENDENHALL LOOP ROAD
FLOYD DRYDEN
SCHOOL CROSSWALK
PROJECT NO. 68179

Project Summaries

DESIGNED BY: KEN MATTSON

STATE OF ALASKA 49th Ken L. Mattson CE-10049 REGISTERED PROFESSIONAL ENGINEER

CHECKED BY: KEN MATTSON

DRAWN BY: MICHAEL LIMBAUGH

STATE OF ALASKA
DEPARTMENT OF TRANSPORTATION
& PUBLIC FACILITIES
STATEWIDE DESIGN &
ENGINEERING SERVICES DIVISION
JNU-MENDENHALL LOOP ROAD
FLOYD DRYDEN
SCHOOL CROSSWALK
PROJECT NO. 68179

Project Summaries

PROJECT DESIGNATION NUMBER
HHE-0966(21)-(68179)

STATE	YEAR
ALASKA	2002

SHEET NUMBER	TOTAL SHEETS
J1	26

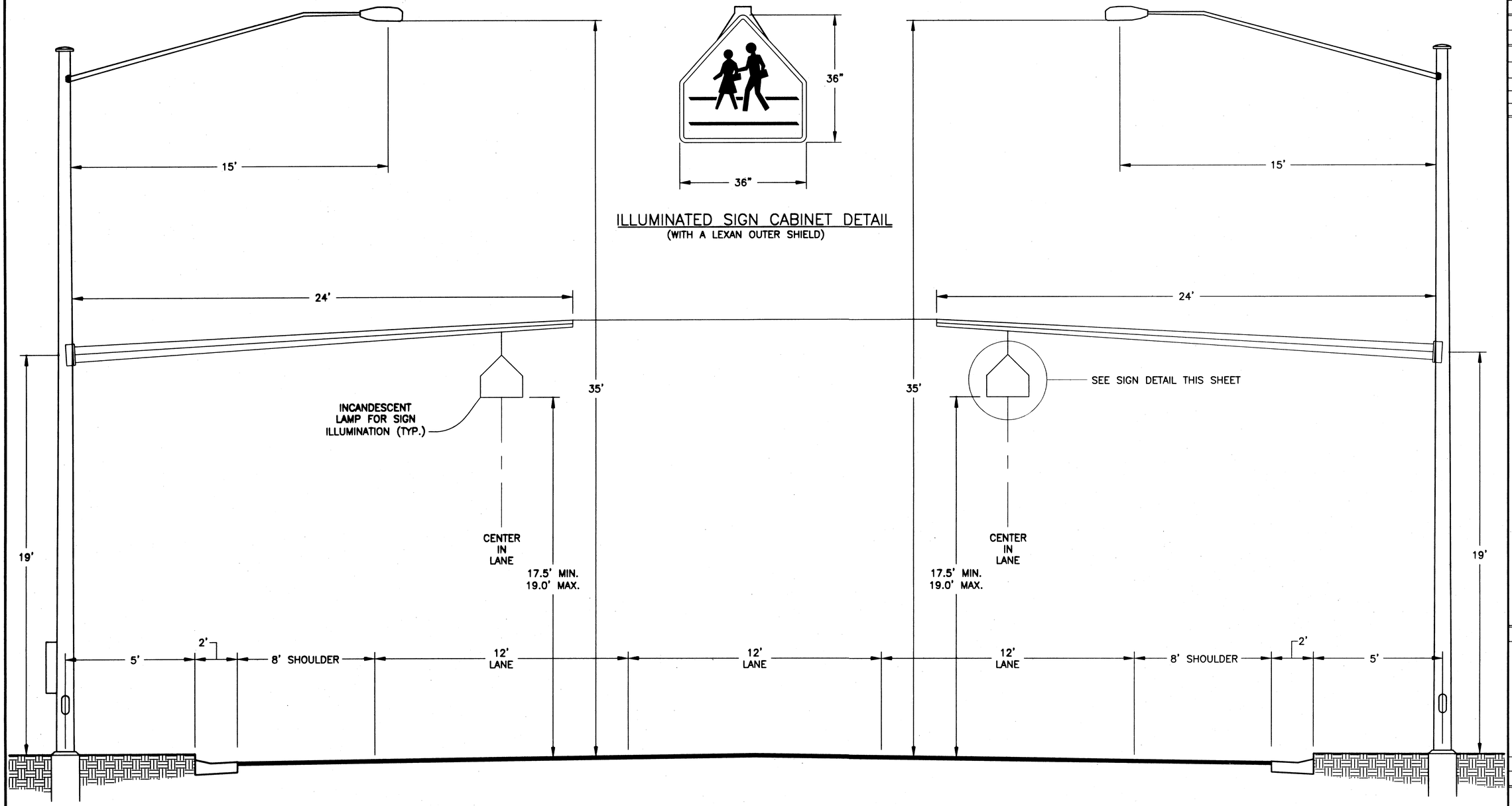

POLE #2 SOUTHBOUND

POLE #1 NORTHBOUND

Signal Pole Elevations

SEE STANDARD DRAWING T-52.15

PATH:
Q:\Jnu\68179\Planset\K_SignalDet.dwg
Wed, 28/Aug/02 01:33PM
PLOT:
PSPACE 1=1(F) OR MSPACE 1=1(F)
TAB: K1

ADDENDUM NUMBER

ATTACHMENT NUMBER

RECORD OF REVISIONS

No.	DATE	DESCRIPTION

JNU-MENDENHALL LOOP ROAD
FLOYD DRYDEN
SCHOOL CROSSWALK
PROJECT NO. 68179

Sign & Signal Pole Sections

DESIGNED BY: KEN MATTSON

STATE OF ALASKA 49th Ken L Mattson CE 10049 REGISTERED PROFESSIONAL ENGINEER

CHECKED BY: KEN MATTSON

DRAWN BY: MICHAEL LIMBAUGH

STATE OF ALASKA
DEPARTMENT OF TRANSPORTATION
& PUBLIC FACILITIES
STATEWIDE DESIGN &
ENGINEERING SERVICES DIVISION

JNU-MENDENHALL LOOP ROAD
FLOYD DRYDEN
SCHOOL CROSSWALK
PROJECT NO. 68179

Sign & Signal Pole Sections

PROJECT DESIGNATION NUMBER

HHE-0966(21)-(68179)

STATE	YEAR
ALASKA	2002

SHEET NUMBER	TOTAL SHEETS
K1	26

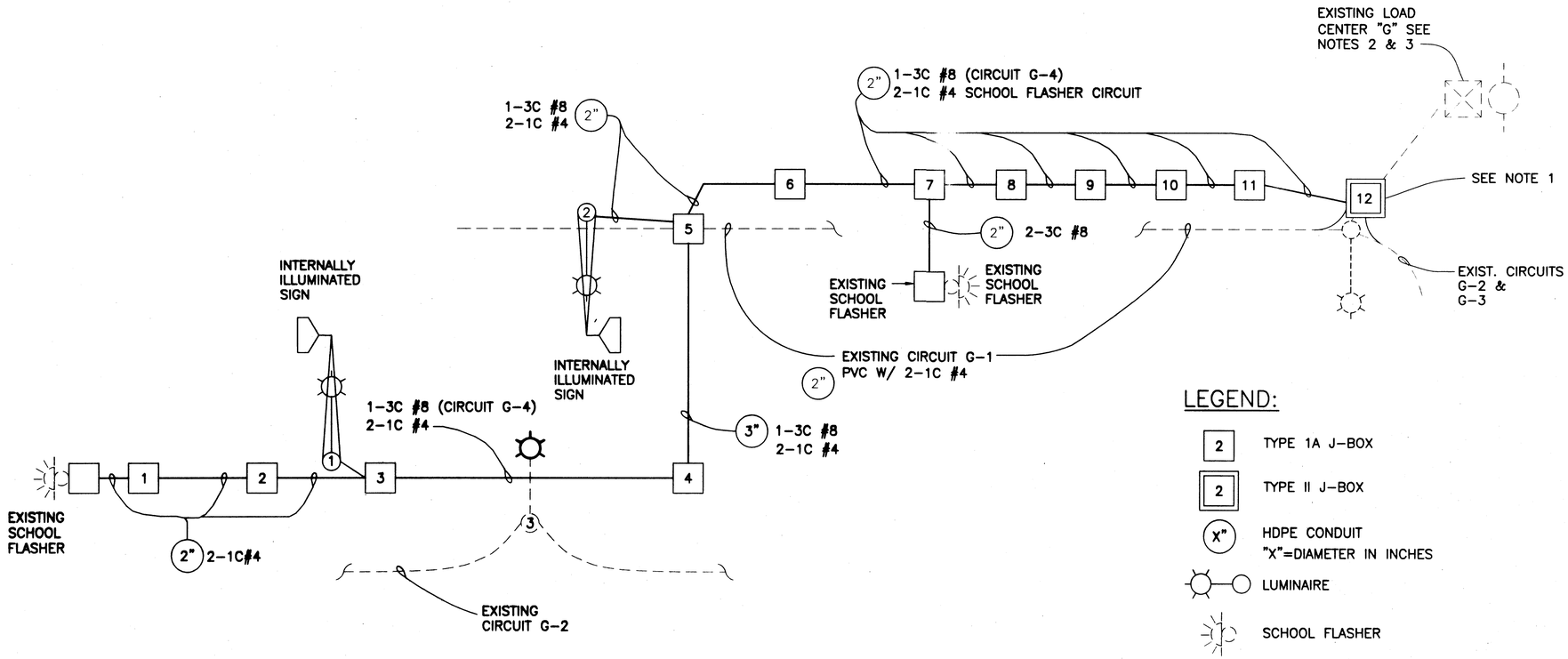

LEGEND:

- 2 — TYPE 1A J-BOX
- 2 — TYPE II J-BOX
- X" — HDPE CONDUIT "X"=DIAMETER IN INCHES
- LUMINAIRE
- SCHOOL FLASHER

NOTES:

1. EXISTING LUMINAIRE CIRCUITS G-1 THROUGH G-3 HAVE BEEN ROUTED DIRECTLTY FROM LOAD CENTER "G" TO THE LUMINAIRE AT STA. 111+85 LT. THE CONTRACTOR SHALL REPLACE AND REROUTE THE EXISTING CONDUIT FROM LOAD CENTER "G" TO J-BOX 12 AND BRING IT UP TO CODE.
2. EXISTING ADVANCED SCHOOL FLASHERS ARE WIRED ONTO THE LUMINAIRE PHOTO-ELECTRIC CIRCUIT. THE CONTRACTOR SHALL REWIRE THE ADVANCED SCHOOL FLASHERS AND THE INTERNALLY ILLUMINATED SIGNS ONTO A NEW 120v, 10A CIRCUIT.
3. LUMINAIRES ON POLES 1 AND 2 SHALL BE WIRED ONTO A NEW 10 AMP CIRCUIT.

PATH:
Q:\Jnu\68179\Planset\K_WireDet.dwg
Wed, 28/Aug/02 01:34PM
PLOT:
PSPACE 1=1(F) OR MSPACE 1=1(F)
TAB: K2

ADDENDUM NUMBER

ATTACHMENT NUMBER

RECORD OF REVISIONS

No.	DATE	DESCRIPTION

JNU-MENDENHALL LOOP ROAD
FLOYD DRYDEN
SCHOOL CROSSWALK
PROJECT NO. 68179

Sign And Signal Pole Wiring Diagram

DESIGNED BY: KEN MATTSON

STATE OF ALASKA 49th Ken J. Mattson CE-10049 REGISTERED PROFESSIONAL ENGINEER

CHECKED BY: KEN MATTSON

DRAWN BY: MICHAEL LIMBAUGH

STATE OF ALASKA
DEPARTMENT OF TRANSPORTATION & PUBLIC FACILITIES
STATEWIDE DESIGN & ENGINEERING SERVICES DIVISION

JNU-MENDENHALL LOOP ROAD
FLOYD DRYDEN
SCHOOL CROSSWALK
PROJECT NO. 68179

Sign And Signal Pole Wiring Diagram

PROJECT DESIGNATION NUMBER
HHE-0966(21)-(68179)

STATE	YEAR
ALASKA	2002
SHEET NUMBER	TOTAL SHEETS
K2	26

REFERENCE POINT TABLE

NO.	POINT	N	E	COMMENTS
1	POC MONUMENT	511731.62	499601.20	FOUND
2	POC MONUMENT	511792.32	499646.46	NOT FOUND
3	PT MONUMENT	511809.34	499659.34	FOUND
4	PC CURB	511726.75	499632.44	
5	END CURB CUT	511740.08	499659.98	
6	END CURB	511734.43	499677.43	
7	BEGIN CURB	511760.78	499697.23	
8	PC CURB	511763.93	499694.30	
9	BEGIN CURB CUT	511776.17	499687.11	
10	PT CURB	511806.31	499692.19	

NOTE: ALL CURB POINTS ARE AT BACK OF CURB.

NOTE:
CURBING, ADA LANDINGS & CURB RAMPS SHALL BE INCIDENTAL TO PAY ITEM 609(2).

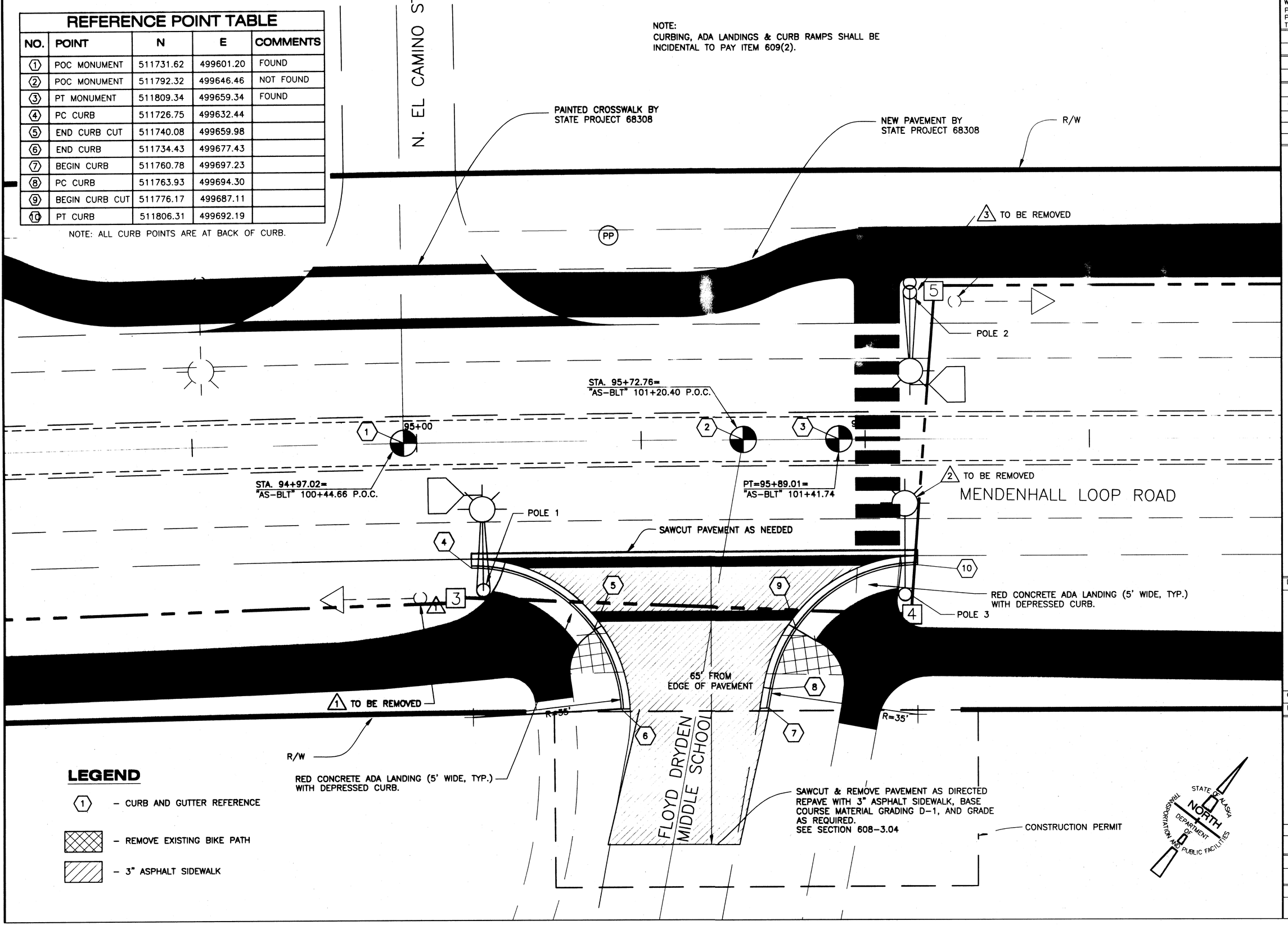

LEGEND

- (1) – CURB AND GUTTER REFERENCE
- – REMOVE EXISTING BIKE PATH
- – 3" ASPHALT SIDEWALK

PATH:
Q:\Jnu\68179\Planset\L_FDMS-Det.dwg
Wed, 28/Aug/02 01:34PM
PLOT:
PSPACE 1=1(F) OR MSPACE 1=1(F)
TAB: L1

ADDENDUM NUMBER

ATTACHMENT NUMBER

RECORD OF REVISIONS

No.	DATE	DESCRIPTION

JNU-MENDENHALL LOOP ROAD
FLOYD DRYDEN
SCHOOL CROSSWALK
PROJECT NO. 68179

Floyd Dryden Detail

DESIGNED BY: KEN MATTSON

STATE OF ALASKA 49th Kenn L Mattson CE-10049 REGISTERED PROFESSIONAL ENGINEER

CHECKED BY: KEN MATTSON

DRAWN BY: MICHAEL LIMBAUGH

STATE OF ALASKA
DEPARTMENT OF TRANSPORTATION & PUBLIC FACILITIES
STATEWIDE DESIGN & ENGINEERING SERVICES DIVISION
JNU-MENDENHALL LOOP ROAD
FLOYD DRYDEN
SCHOOL CROSSWALK
PROJECT NO. 68179

Floyd Dryden Detail

PROJECT DESIGNATION NUMBER	
HHE-0966(21)-(68179)	
STATE	YEAR
ALASKA	2002
SHEET NUMBER	TOTAL SHEETS
L1	26

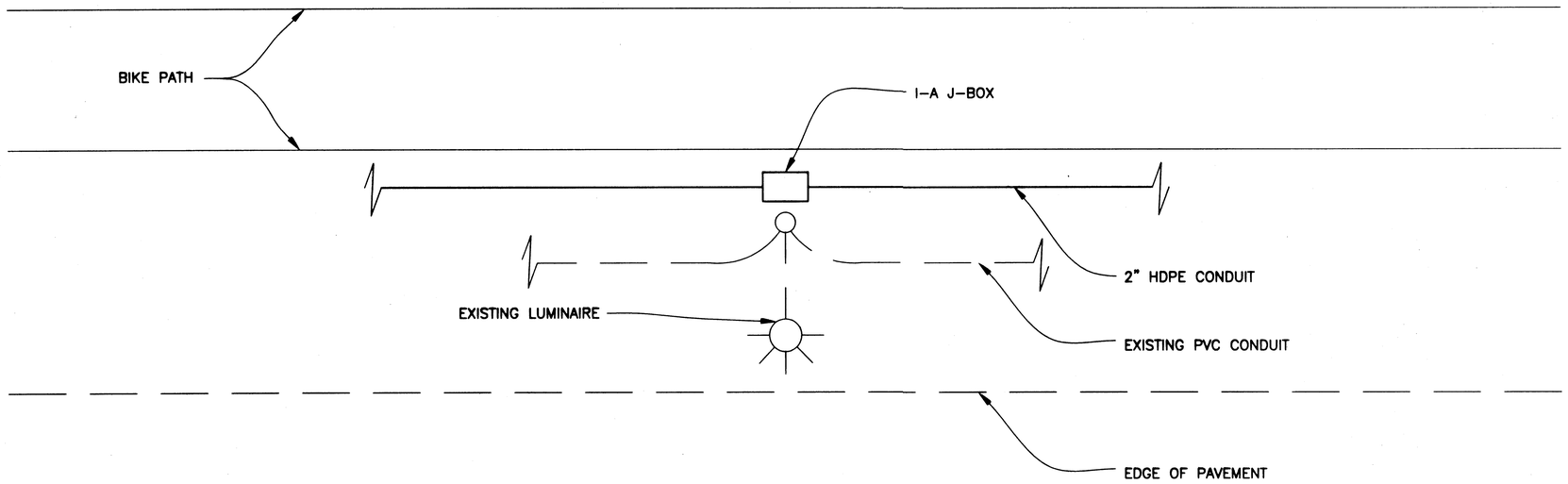

INSTALL J-BOXES AND HDPE CONDUIT UNDER THE BIKE PATH.

Plan

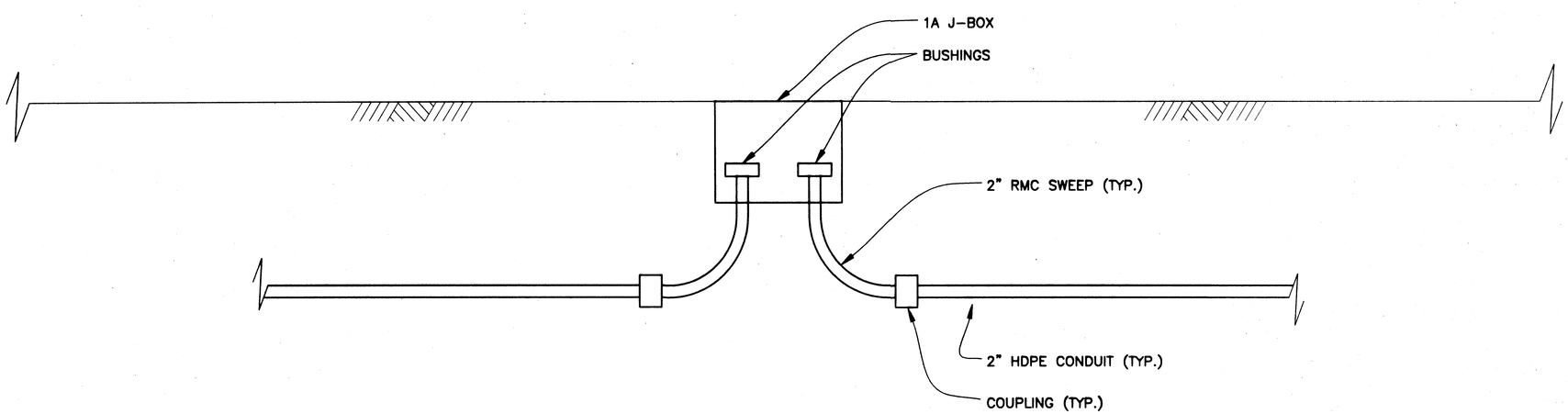

Elevation

PATH:
Q:\Jnu\68179\Planset\L_ConduitDet.dwg
Wed, 28/Aug/02 01:34PM
PLOT:
PSPACE 1=1(F) OR MSPACE 1=1(F)
TAB: L2

ADDENDUM NUMBER

ATTACHMENT NUMBER

RECORD OF REVISIONS

No.	DATE	DESCRIPTION

JNU-MENDENHALL LOOP ROAD
FLOYD DRYDEN
SCHOOL CROSSWALK
PROJECT NO. 68179

Conduit and Path Details

DESIGNED BY: KEN MATTSON

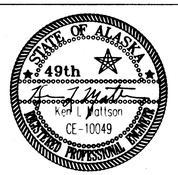

CHECKED BY: KEN MATTSON
DRAWN BY: MICHAEL LIMBAUGH

STATE OF ALASKA
DEPARTMENT OF TRANSPORTATION
& PUBLIC FACILITIES
STATEWIDE DESIGN &
ENGINEERING SERVICES DIVISION
JNU-MENDENHALL LOOP ROAD
FLOYD DRYDEN
SCHOOL CROSSWALK
PROJECT NO. 68179

Conduit and Path Details

PROJECT DESIGNATION NUMBER	
HHE-0966(21)-(68179)	
STATE	YEAR
ALASKA	2002
SHEET NUMBER	TOTAL SHEETS
L2	26

GENERAL NOTES:

1. THE NEMA 3R CABINET HOUSING THE SCHOOL FLASHER CONTROLS SHALL BE MOUNTED ON A 150 mm X 200 mm WOOD POST, AND BE LARGE ENOUGH TO ACCOMMODATE THE FOLLOWING EQUIPMENT AND THE WIRING THEREOF.
   - A. TWO 120 VOLT SINGLE POLE BREAKERS: ONE 15A AND ONE 20A.
   - B. ONE TRANSIENT VOLTAGE SUPPRESSOR.
   - C. ONE RADIO INTERFERENCE SUPPRESSOR.
   - D. ONE TIME SWITCH AS DESCRIBED BELOW.
   - E. ONE NEMA TYPE 3 DUAL CIRCUIT FLASHER.
   - F. TWO 30A SIX CIRCUIT TERMINAL BLOCKS.
   - G. NEUTRAL AND GROUND BUSSES.
   - H. THERMOSTAT AND 150 WATT HEATER.
2. THE TIME SWITCH MAY BE MODEL AP41-L AS MANUFACTURED BY RTC MANUFACTURING, OR AN APPROVED EQUAL CONFORMING TO THE FOLLOWING SPECIFICATIONS. THE TIME SWITCH SHALL BE A COMPACT, SOLID STATE, PROGRAMMABLE DEVICE WITH A LIQUID CRYSTAL DISPLAY (LCD) AND KEYBOARD, AND SHALL CONFORM TO THE FOLLOWING MINIMUM REQUIREMENTS:
   - A. THE LCD SHALL PROVIDE 2 LINES OF ALPHA-NUMERIC LEGEND WITH 16 CHARACTERS PER LINE AND SHALL BE BACKLIT. THE DISPLAY SHALL AUTOMATICALLY PROMPT THE OPERATOR DURING THE PROGRAMMING PROCESS FOR EASE OF USE.
   - B. THE TIME SWITCH SHALL BE PROGRAMMABLE THROUGH THE KEYBOARD AND BY DOWN LOADING THROUGH AN INPUT PORT. THE KEYBOARD SHALL BE PUSH BUTTON TYPE.
   - C. THE TIME SWITCH SHALL BE POWERED BY A NOMINAL 120 VOLTS AC, 60 HZ SINGLE PHASE LINE VOLTAGE. THE TIME AND PROGRAM MEMORY SHALL BE RETAINED FOR AT LEAST 48 HOURS UPON REMOVAL FROM AC POWER.
   - D. THE TIME SWITCH SHALL PROVIDE FOUR SINGLE POLE DOUBLE THROW RELAY CONTROLLED OUTPUTS, WHICH ARE RATED AT 15 AMPERES EACH. ALL OF THE RELAYS SHALL BE MANUALLY OPERABLE THROUGH THE KEYBOARD.
   - E. THE TIME SWITCH SHALL AUTOMATICALLY COMPENSATE FOR DAYLIGHT SAVINGS TIME CHANGES AND LEAP YEARS.
   - F. THE TIME SWITCH SHALL PROVIDE TEN BASIC PLANS FOR DAILY AND/OR WEEKLY USE, AND 20 ANNUAL PLANS WHICH ACTIVATE THE BASIC PLANS. EACH BASIC PLAN SHALL PROVIDE UP TO 20 STEPS. EACH STEP SHALL BE ASSIGNABLE TO A SINGLE DAY, A WEEKEND, A WEEKDAY, OR EVERYDAY.

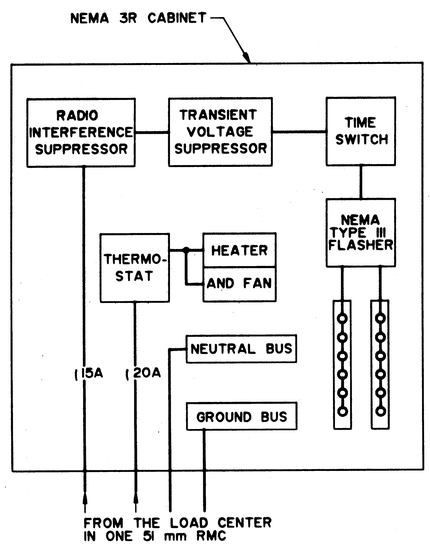

WIRING DIAGRAM FOR CONTROL UNIT

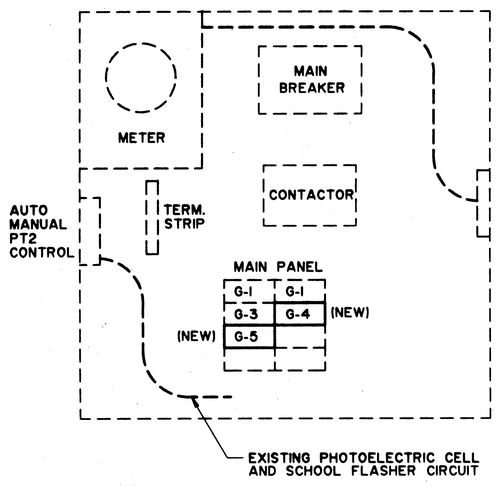

LOAD CENTER "G"

LOAD CENTER NOTES:

1. THE TWO NEW LUMINAIRES ON POLES 1 AND 2 SHALL BE WIRED TO A NEW 10A 240V CIRCUIT ON THE MAIN PANEL (G-4).
2. THE EXISTING SCHOOL FLASHER CIRCUIT IS WIRED TO THE 120V PHOTO ELECTRIC CIRCUIT. THE CONTRACTOR SHALL REWIRE THE NEW SCHOOL FLASHER CIRCUIT (WHICH INCLUDES THE TWO SCHOOL FLASHERS AND THE OVERHEAD FLASHING SIGNS) TO A NEW 120V CIRCUIT (G-5). THIS CIRCUIT SHALL BYPASS THE PHOTOELECTRIC CONTROL.
3. THE CONTRACTOR SHALL PROVIDE A WEATHERPROOF LABEL FOR THE MAIN CIRCUIT PANEL.

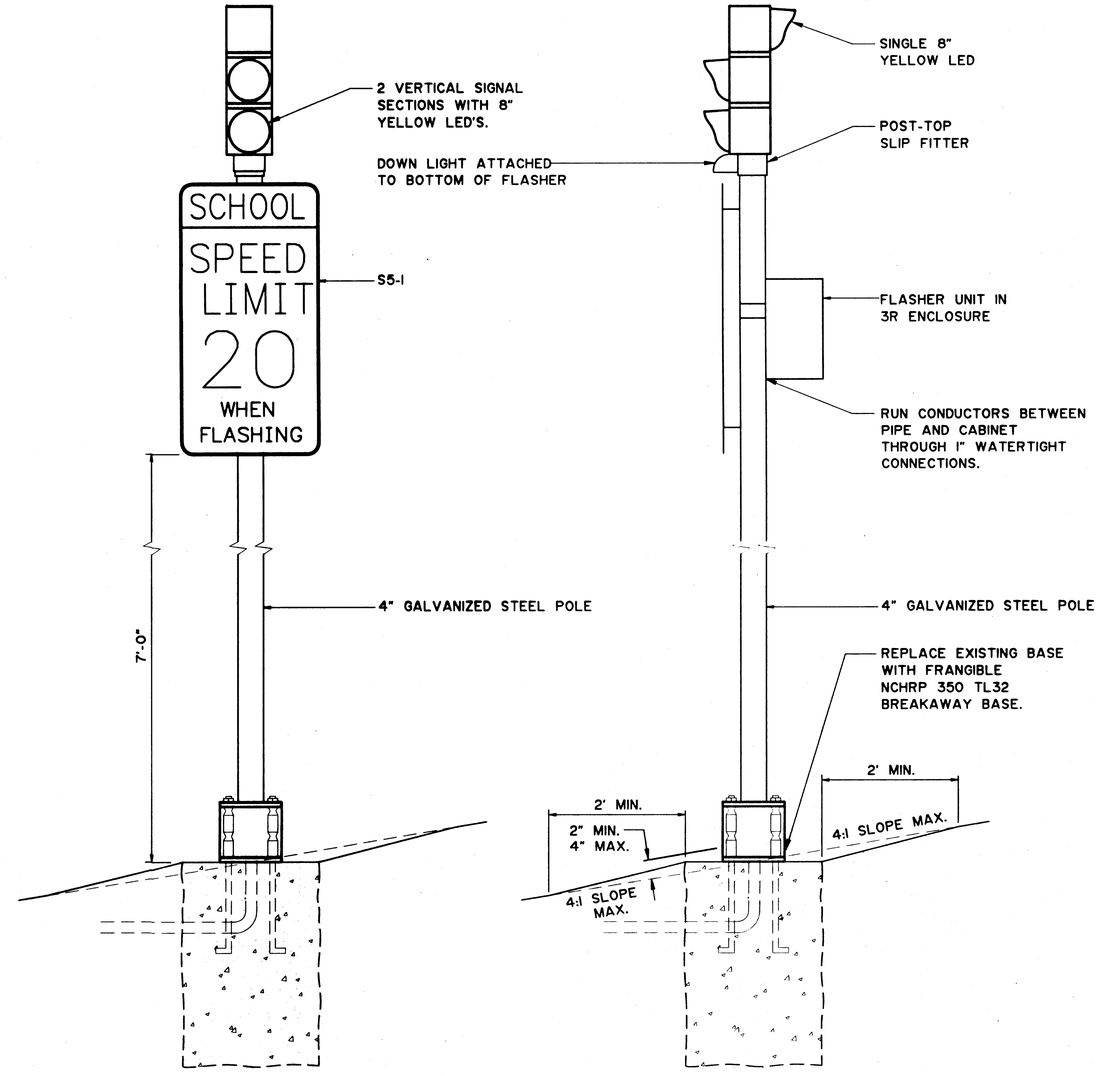

(SCHOOL) FLASHER DETAIL

BACK VIEW

SCHOOL FLASHER NOTES:

1. EACH FLASHER SHALL CONSIST OF THREE 8" SIGNAL FACES WITH YELLOW LED'S AND VISORS.
2. THE CONTRACTOR SHALL WIRE SIGNAL FACES 1 AND 3 ON FLASHER CIRCUITS 1 AND 2, RESPECTIVELY. FACE 2 SHALL BE WIRED TO CIRCUIT 1 OR 2 AS REQUIRED TO BALANCE THE LOAD.
3. THE CONTRACTOR SHALL FURNISH A SINGLE PIECE POST THAT WILL YIELD THE 7' MOUNTING HEIGHT SHOWN.
4. THE SIGN POST AND BREAKAWAY BASE ASSEMBLY SHALL CONFORM TO SECTION 660-2.04 OF THE STANDARD SPECIFICATIONS FOR HIGHWAY CONSTRUCTION.
5. THE CONTRACTOR SHALL SALVAGE THE EXISTING FLASHER POLE ASSEMBLIES AND DELIVER THEM TO THE SE/DOT MAINTENANCE YARD AT 6860 GLACIER HWY.

PATH:
Q:\Jnu\68179\Planset\L_FlasherDet.dwg
Wed, 28/Aug/02 01:35PM
PLOT:
PSPACE 1=1(F) OR MSPACE 1=1(F)
TAB: Model

ADDENDUM NUMBER

ATTACHMENT NUMBER

RECORD OF REVISIONS

No.	DATE	DESCRIPTION

JNU-MENDENHALL LOOP ROAD
FLOYD DRYDEN
SCHOOL CROSSWALK
PROJECT NO. 68179

School Flasher Detail

DESIGNED BY: KEN MATTSON

STATE OF ALASKA 49th Ken L. Mattson CE-10049 REGISTERED PROFESSIONAL ENGINEER

CHECKED BY: KEN MATTSON

DRAWN BY: DAVE STEVENS

STATE OF ALASKA
DEPARTMENT OF TRANSPORTATION & PUBLIC FACILITIES
STATEWIDE DESIGN & ENGINEERING SERVICES DIVISION
JNU-MENDENHALL LOOP ROAD
FLOYD DRYDEN
SCHOOL CROSSWALK
PROJECT NO. 68179

School Flasher Detail

PROJECT DESIGNATION NUMBER	
HHE-0966(21)-(68179)	
STATE	YEAR
ALASKA	2002
SHEET NUMBER	TOTAL SHEETS
L3	26

PATH:
Q:\Jnu\68179\Planset\M_Plan179.dwg
Wed, 28/Aug/02 01:35PM
PLOT:
PSPACE 1=1(F) OR MSPACE 1=1(F)
TAB: M1

ADDENDUM NUMBER

ATTACHMENT NUMBER

RECORD OF REVISIONS

No.	DATE	DESCRIPTION

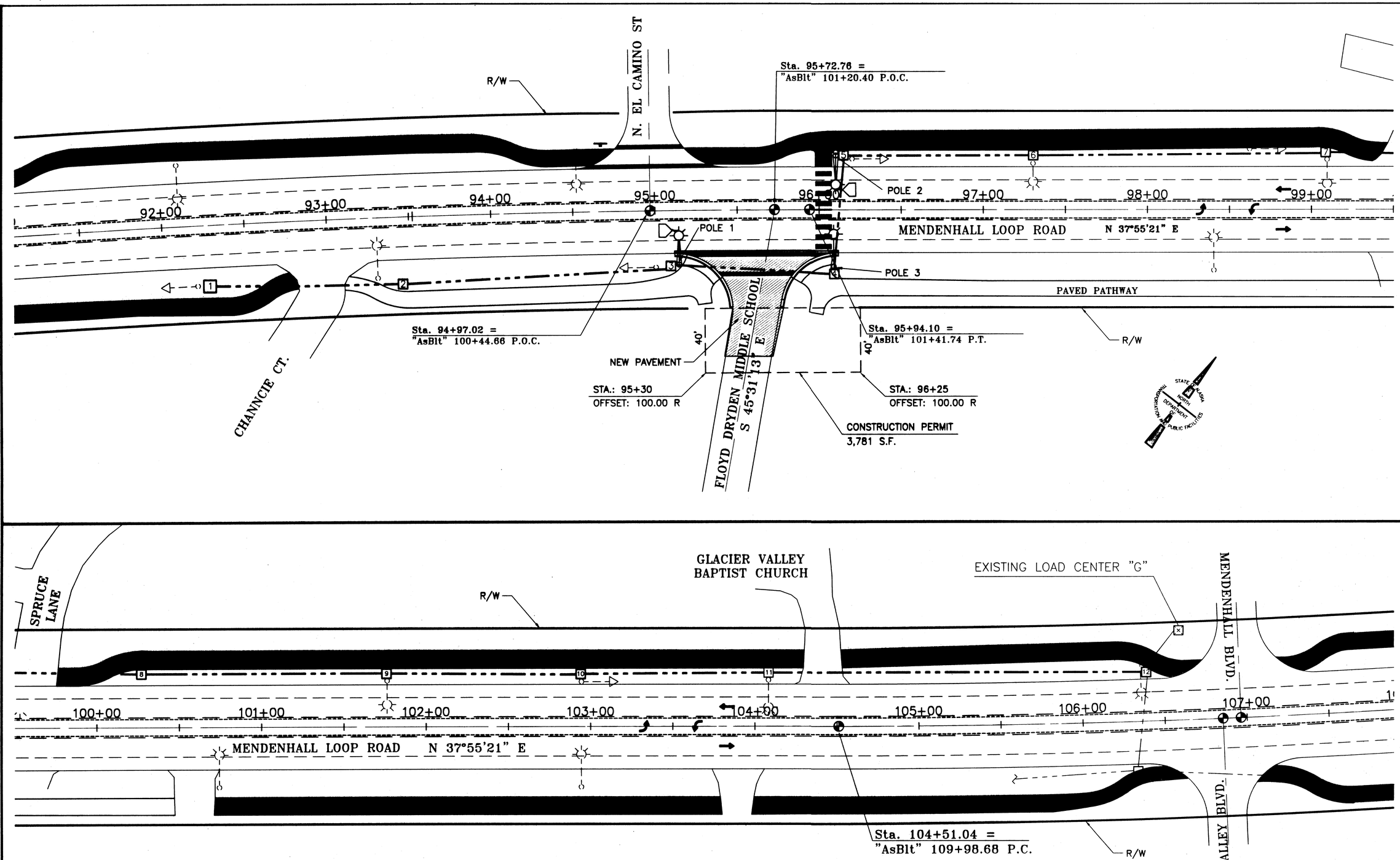

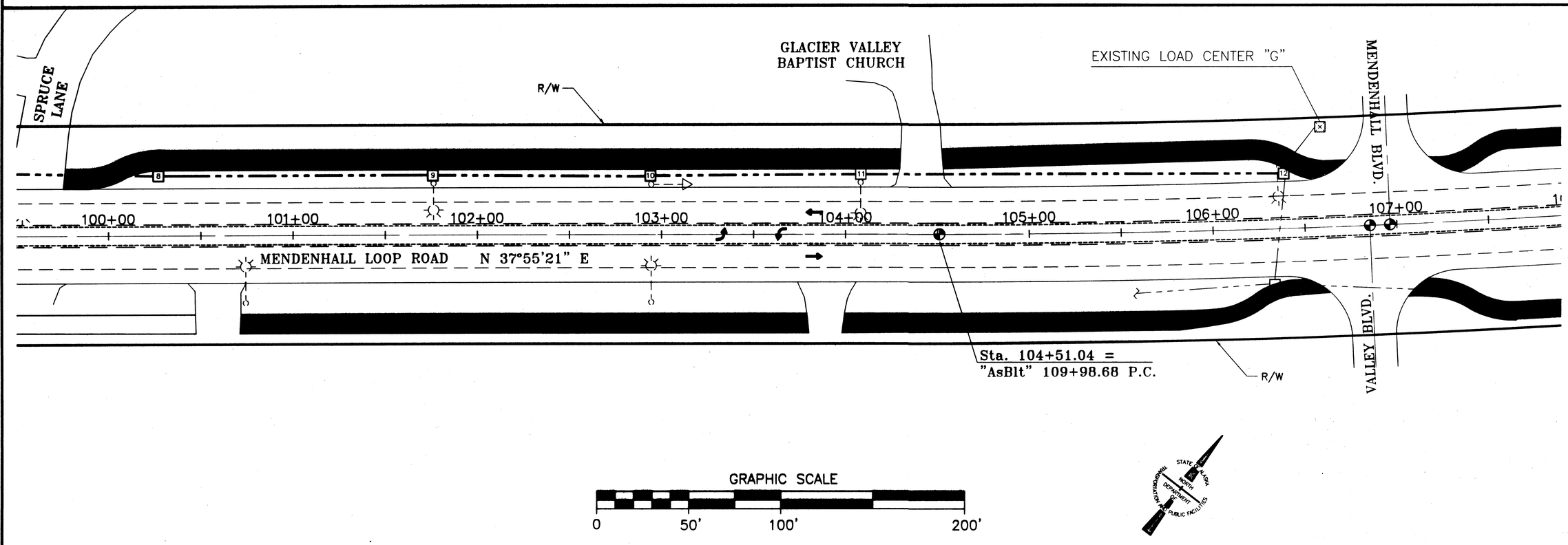

JNU-MENDENHALL LOOP ROAD
FLOYD DRYDEN
SCHOOL CROSSWALK
PROJECT NO. 68179

Plan View

DESIGNED BY: KEN MATTSON

STATE OF ALASKA
49th
Ken L Mattson
CE-10049
REGISTERED PROFESSIONAL ENGINEER

CHECKED BY: KEN MATTSON
DRAWN BY: MICHAEL LIMBAUGH

STATE OF ALASKA
DEPARTMENT OF TRANSPORTATION
& PUBLIC FACILITIES
STATEWIDE DESIGN &
ENGINEERING SERVICES DIVISION
JNU-MENDENHALL LOOP ROAD
FLOYD DRYDEN
SCHOOL CROSSWALK
PROJECT NO. 68179

Plan View

PROJECT DESIGNATION NUMBER	
HHE-0966(21)-(68179)	
STATE	YEAR
ALASKA	2002
SHEET NUMBER	TOTAL SHEETS
M1	26