STATE OF ALASKA

DEPARTMENT OF TRANSPORTATION & PUBLIC FACILITIES

PROPOSED HIGHWAY PROJECT

JNU GLACIER HWY IMPROVEMENTS (LEMON CREEK AREA) 0955016/Z681240000

GRADING, DRAINAGE, PAVING, SIGNING, STRIPING, ILLUMINATION & SIGNALIZATION, PEDESTRIAN FACILITIES
ADA IMPROVEMENTS, BUS PULLOUTS, ROUNDABOUT, RETAINING WALL AND SIDE SLOPE STABILIZATION

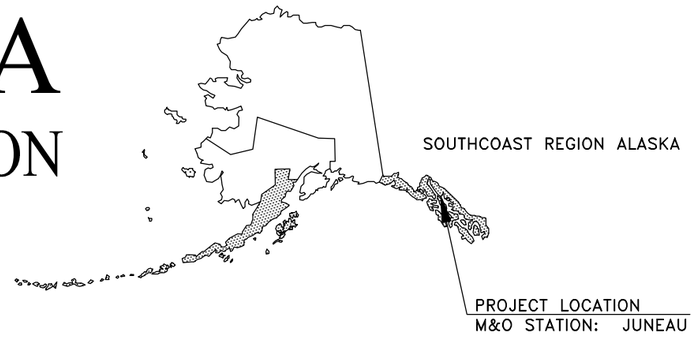

STATE	PROJECT DESIGNATION	YEAR	SHEET NO.	TOTAL SHEETS
ALASKA	TEA-0955(016)/Z68124	2020	A-1	235
			PLAN SET TOTAL	235
CDS ROUTE: 296229		MILEPOINT: 1.7 TO 3.2		

As-Built Plans

Contractor: SECON
Project Engineer: Steve Mielke
Start Date of Physical Work: 4/1/21
End Date of Physical Work: 7/31/23

PROJECT SUMMARY	
	GLACIER HWY
WIDTH OF PAVEMENT	VARIES: 45'-48'
LENGTH OF PAVING	8,480'
LENGTH OF PROJECT	8,480'

DESIGN DESIGNATIONS	
FUNCTIONAL CLASS	MINOR ARTERIAL
PROJECT TYPE	RECONSTRUCTION
ADT (2015)	10,580
ADT (2039)	11,230
DHV (2015)	1,500
DHV (2039)	1,590
PERCENT TRUCKS (T)	6.7%
DIRECTIONAL SPLIT (D)	55/45
DESIGN SPEED (V)	40 MPH
DESIGN SPEED OF ROUNDABOUT	25 MPH
DESIGN EAL'S (20 YEARS)	2,638,177

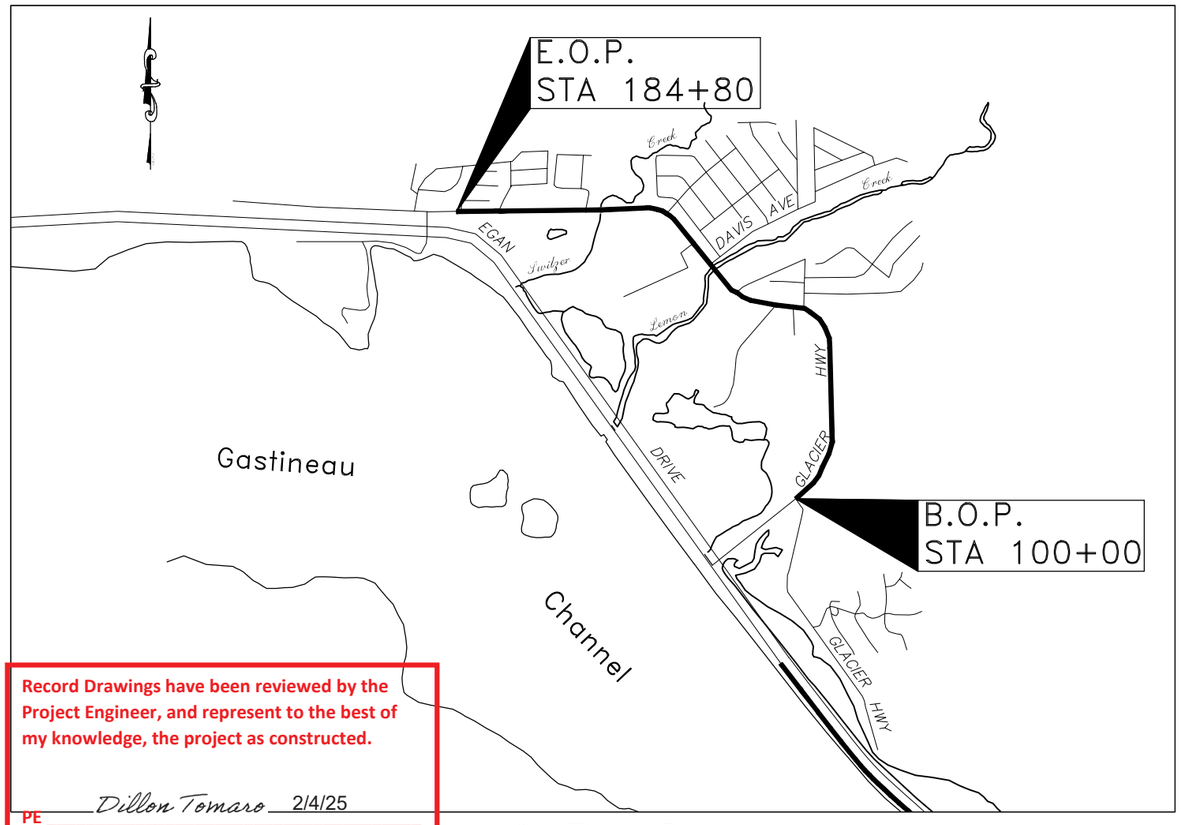

VICINITY MAP

Record Drawings have been reviewed by the Project Engineer, and represent to the best of my knowledge, the project as constructed.

PE Dillon Tomaro 2/4/25

The undersigned hereby certifies that this duplicated document is an exact and true copy of the original.
Jessica Purkale
March 04, 2021

REGISTRANT INFORMATION	
FIRM #1	FIRM #2
KITTELSON & ASSOCIATES, INC.	STATE OF ALASKA, DOT & PF, SOUTHCOAST REGION
TONY ROOS, P.E.	ELMER MARX, P.E.
JOHN RINGERT, P.E.	DANIEL IGNATOV, P.L.S.
851 SW 6th Avenue, Suite 600 Portland, OR 97204 (503) 228-5230	6860 GLACIER HIGHWAY JUNEAU, AK 99811 (907) 465-1763
CERTIFICATE OF AUTH # 254741	

BASIS OF ESTIMATE		
ITEM NO.	*ITEM*	*ESTIMATING FACTOR*
201.003.0000	CLEARING AND GRUBBING	4.2 ACRES
203.0006.0000	BORROW	1.96 TONS/CY
301.001.0000	AGGREGATE BASE COURSE, GRADING D-1	1.95 TONS/C.Y.
304.0001.0000	SUBBASE, GRADING A	2.3 TONS/C.Y.
306.0001.0000	ATB	117 LBS./S.Y./IN.
401.0001.0000	HMA, TYPE II; CLASS B	117 LBS./S.Y./IN.
401.0001.0000	SUPERPAVE (HMA), SP TYPE B	120 LBS./S.Y./IN.
401.0004.0000	ASPHALT BINDER	5.5% OF 401(1B)
401.0001.STE1	STE-1 ASPHALT FOR TACK COAT	0.1 GAL/S.Y.; 243 GAL/TON
615.0005.0000	DELINEATOR, FLEXIBLE	5 TYPE A, 102 TYPE B
643.0031.0000	INTERIM PAVEMENT MARKING	1,500 L.F.
670.0010.0000	METHYL METHACRYLATE PAVEMENT MARKINGS	5,617 S.F
670.0013.0000	PAINTED TRAFFIC MARKINGS	65,130 L.F.

STANDARD PLANS LIST DELETED

STATE OF ALASKA
DEPARTMENT OF TRANSPORTATION
&
PUBLIC FACILITIES

APPROVED BY:
Digitally signed by Kirk Miller Date: 2020.11.24 10:12:33 -09'00' DATE
KIRK D. MILLER, P.E.
Preconstruction Engineer, Southcoast Region
ACCEPTED FOR CONSTRUCTION:
2020.11.24 10:31:55 -09'00' DATE
D. LANCE MEARIG, P.E.
Regional Director, Southcoast Region

PLANS DEVELOPED BY: KITTELSON & ASSOCIATES, INC. CERT. OF AUTHORIZATION NO.: 254741, 851 SW 6TH AVE. SUITE 600, PORTLAND, OR 97204
H:\20\20487 - glacier highway - juneau traffic design\design_CD\68124_A_CVR&NOTES-A-1 Tue, Nov/24/20 11:37am

NO.	DATE	REVISION
1	12/07/20	ADDENDUM 4
2	01/04/21	ADDENDUM 7
3	01/22/21	ADDENDUM 9

STATE	PROJECT DESIGNATION	YEAR	SHEET NO.	TOTAL SHEETS
ALASKA	TEA-0955(016)/Z68124	2020	A-2	235

*Deleted by CO11

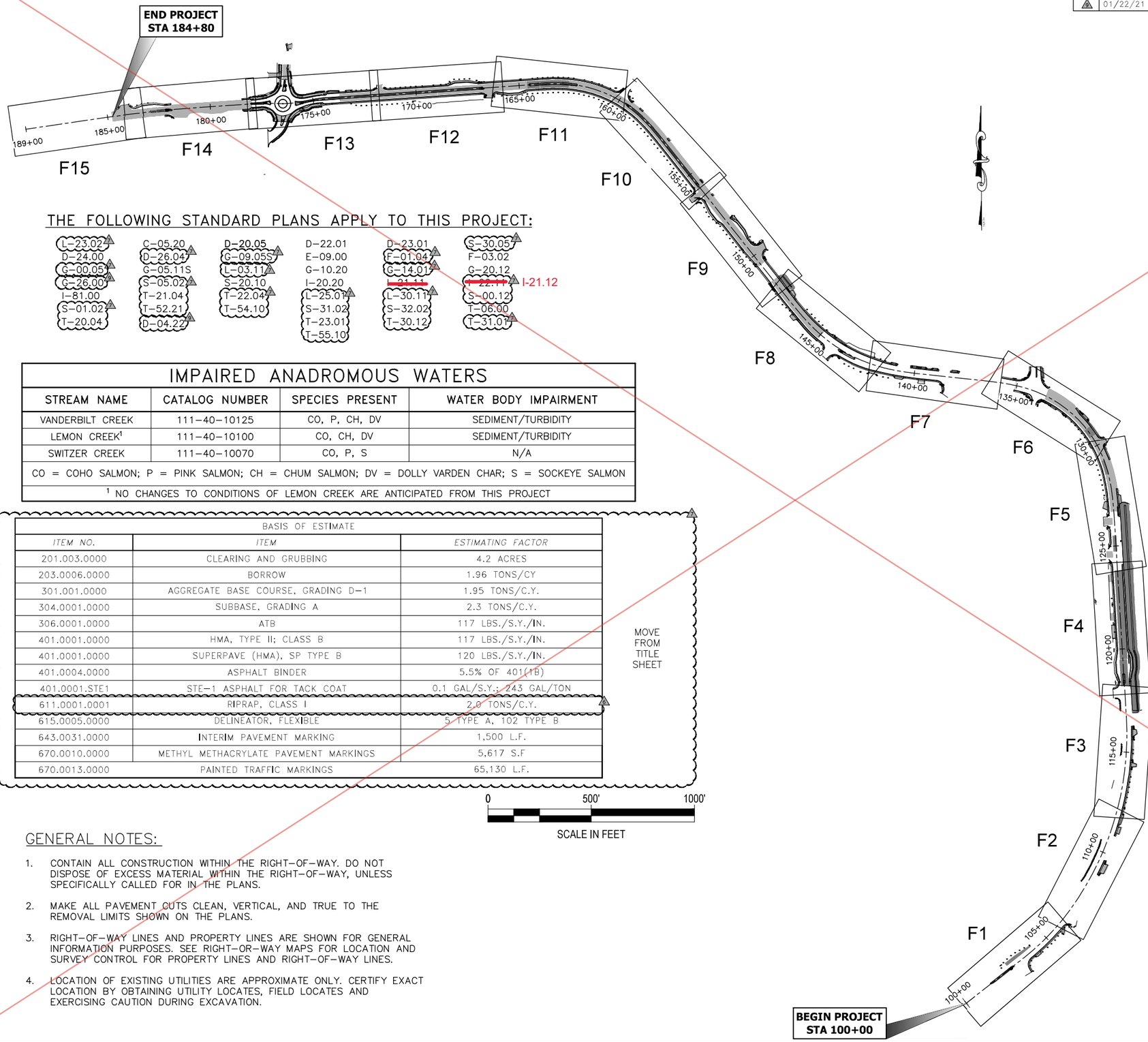

THE FOLLOWING STANDARD PLANS APPLY TO THIS PROJECT:

L-23.02	C-05.20	D-20.05	D-22.01	D-23.01	S-30.05
D-24.00	D-26.04	G-09.05S	E-09.00	F-01.04	F-03.02
G-00.05	G-05.11S	L-03.11	G-10.20	G-14.01	G-20.12
G-26.00	S-05.02	S-20.10	I-20.20	I-21.11	I-22.11 I-21.12
I-81.00	T-21.04	T-22.04	L-25.01	L-30.11	S-00.12
S-01.02	T-52.21	T-54.10	S-31.02	S-32.02	T-06.00
T-20.04	D-04.22		T-23.01	T-30.12	T-31.01
			T-55.10		

IMPAIRED ANADROMOUS WATERS

STREAM NAME	CATALOG NUMBER	SPECIES PRESENT	WATER BODY IMPAIRMENT
VANDERBILT CREEK	111-40-10125	CO, P, CH, DV	SEDIMENT/TURBIDITY
LEMON CREEK[1]	111-40-10100	CO, CH, DV	SEDIMENT/TURBIDITY
SWITZER CREEK	111-40-10070	CO, P, S	N/A

CO = COHO SALMON; P = PINK SALMON; CH = CHUM SALMON; DV = DOLLY VARDEN CHAR; S = SOCKEYE SALMON

[1] NO CHANGES TO CONDITIONS OF LEMON CREEK ARE ANTICIPATED FROM THIS PROJECT

BASIS OF ESTIMATE		
ITEM NO.	*ITEM*	*ESTIMATING FACTOR*
201.003.0000	CLEARING AND GRUBBING	4.2 ACRES
203.0006.0000	BORROW	1.96 TONS/CY
301.001.0000	AGGREGATE BASE COURSE, GRADING D-1	1.95 TONS/C.Y.
304.0001.0000	SUBBASE, GRADING A	2.3 TONS/C.Y.
306.0001.0000	ATB	117 LBS./S.Y./IN.
401.0001.0000	HMA, TYPE II; CLASS B	117 LBS./S.Y./IN.
401.0001.0000	SUPERPAVE (HMA), SP TYPE B	120 LBS./S.Y./IN.
401.0004.0000	ASPHALT BINDER	5.5% OF 401(1B)
401.0001.STE1	STE-1 ASPHALT FOR TACK COAT	0.1 GAL/S.Y.; 243 GAL/TON
611.0001.0001	RIPRAP, CLASS I	2.0 TONS/C.Y.
615.0005.0000	DELINEATOR, FLEXIBLE	5 TYPE A, 102 TYPE B
643.0031.0000	INTERIM PAVEMENT MARKING	1,500 L.F.
670.0010.0000	METHYL METHACRYLATE PAVEMENT MARKINGS	5,617 S.F
670.0013.0000	PAINTED TRAFFIC MARKINGS	65,130 L.F.

MOVE FROM TITLE SHEET

0 500' 1000'

SCALE IN FEET

GENERAL NOTES:

1. CONTAIN ALL CONSTRUCTION WITHIN THE RIGHT-OF-WAY. DO NOT DISPOSE OF EXCESS MATERIAL WITHIN THE RIGHT-OF-WAY, UNLESS SPECIFICALLY CALLED FOR IN THE PLANS.
2. MAKE ALL PAVEMENT CUTS CLEAN, VERTICAL, AND TRUE TO THE REMOVAL LIMITS SHOWN ON THE PLANS.
3. RIGHT-OF-WAY LINES AND PROPERTY LINES ARE SHOWN FOR GENERAL INFORMATION PURPOSES. SEE RIGHT-OR-WAY MAPS FOR LOCATION AND SURVEY CONTROL FOR PROPERTY LINES AND RIGHT-OF-WAY LINES.
4. LOCATION OF EXISTING UTILITIES ARE APPROXIMATE ONLY. CERTIFY EXACT LOCATION BY OBTAINING UTILITY LOCATES, FIELD LOCATES AND EXERCISING CAUTION DURING EXCAVATION.

INDEX OF SHEETS

SHEET NO.	DESCRIPTION
A1	TITLE SHEET
A2	SHEET LAYOUT INDEX
A3	LEGEND & SHEET LAYOUT INDEX
A4-A12	SURVEY CONTROL PLAN
B1-B3	TYPICAL SECTIONS
C1	ESTIMATE OF QUANTITIES & GENERAL NOTES
D1-D12	SUMMARIES
E1-E8	MISCELLANEOUS DETAILS
F1-F26	PLAN & PROFILE
G1-G24	GRADING & POINT TABLES
H1	TRAFFIC LEGEND, NOTES, AND SHEET INDEX
H2-H17	SIGNING AND STRIPING PLANS
H18-H24	SIGN SUMMARIES
H25-H29	SIGN DETAILS
H30-H34	ANKA STREET SIGNAL PLANS
H35-H38	DAVIS AVENUE SIGNAL PLANS
H39-H41	VANDERBILT ROAD RRFB PLANS
H42-H44	CONCRETE WAY RRFB PLANS
H45-H47	RENNINGER STREET ROUNDABOUT RRFB & SCHOOL ZONE FLASHER PLANS
H48-H51	SHOPPING CENTER ACCESS RRFB PLANS
H52-H59	SIGNAL DETAILS
H60-H67	ILLUMINATION PLANS
H68-H81	ILLUMINATION GENERAL NOTES & DETAILS
J1-J4	FISH PASSAGE PLANS AND DETAILS
M1-M8	RETAINING WALL PLAN & PROFILE
N1-N7	BRIDGE STRUCTURES
P1-P22	STORM DRAIN PLANS
Q1-Q8	EROSION SEDIMENT CONTROL PLANS
S1-S19	CONSTRUCTION STAGING PLANS

Record Drawings have been reviewed by the Project Engineer, and represent to the best of my knowledge, the project as constructed.

PE Dillon Tomaro 2/4/25

PLAN SCHEMATIC, INDEX, & GENERAL NOTES

STATE OF ALASKA 49TH ANTHONY M. ROOS CE 12759 REGISTERED PROFESSIONAL ENGINEER 1/8/21

PLANS DEVELOPED BY: KITTELSON & ASSOCIATES, INC. CERT. OF AUTHORIZATION NO.: 254741, 851 SW 6TH AVE. SUITE 600, PORTLAND, OR 97204, (503) 228-5230
H:\20\20487 - Glacier Highway - Juneau Traffic Design\design_CD\68124_A_CVR&NOTES-A-2 Fri, Jan/08/21 08:57am

CO 11

NO.	DATE	REVISION
3	12/07/20	ADDENDUM 4
4	01/04/21	ADDENDUM 7
5	08/11/21	STANDARD PLAN ADDITIONS

STATE	PROJECT DESIGNATION	YEAR	SHEET NO.	TOTAL SHEETS
ALASKA	TEA-0955(016)/Z68124	2020	A-2	235

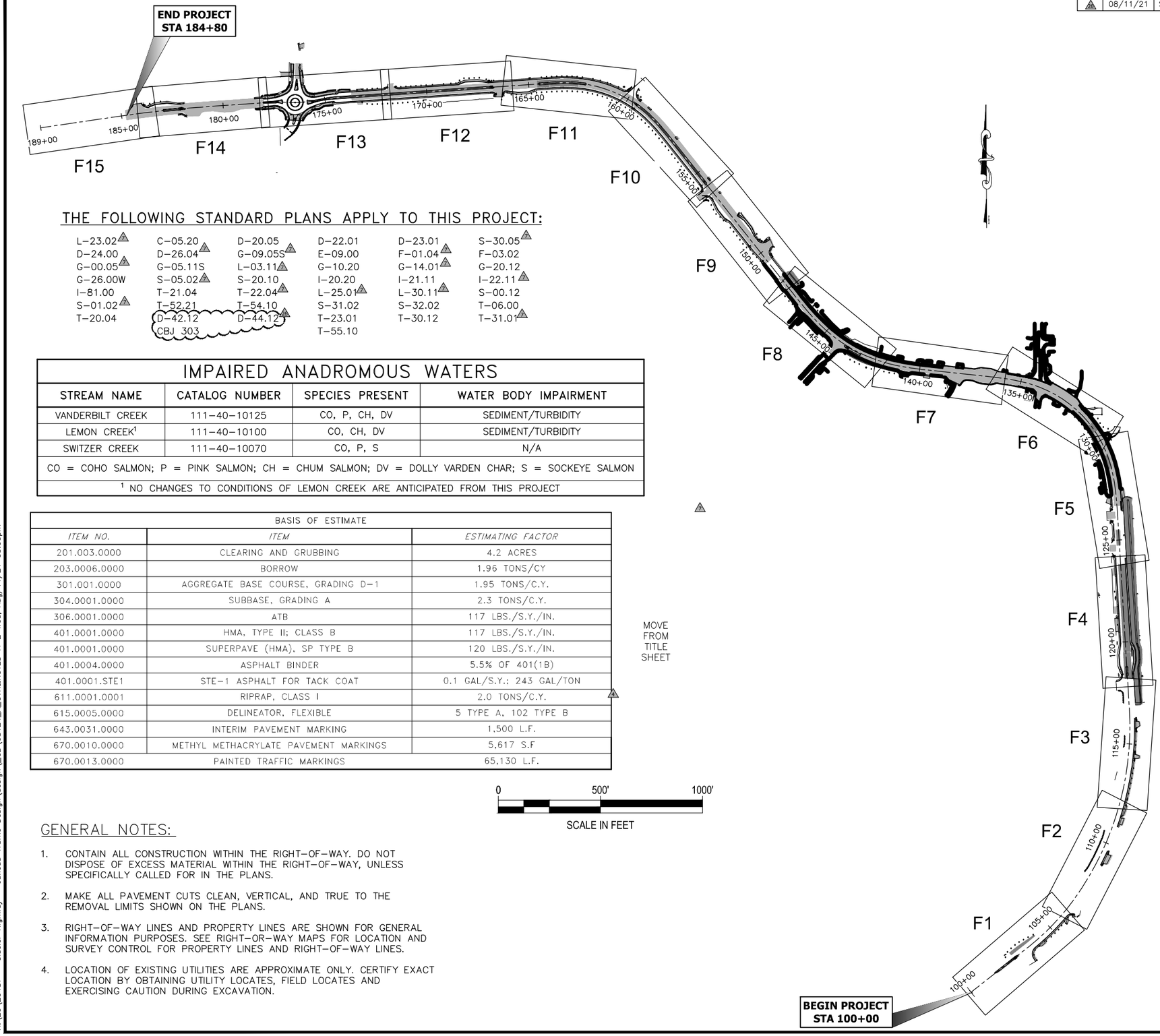

THE FOLLOWING STANDARD PLANS APPLY TO THIS PROJECT:

L-23.02 3	C-05.20 3	D-20.05	D-22.01	D-23.01 3	S-30.05 3
D-24.00	D-26.04 3	G-09.05S 3	E-09.00	F-01.04 3	F-03.02
G-00.05 3	G-05.11S	L-03.11 3	G-10.20	G-14.01 3	G-20.12
G-26.00W	S-05.02 3	S-20.10	I-20.20	I-21.11	I-22.11 3
I-81.00	T-21.04	T-22.04 3	L-25.01 3	L-30.11 3	S-00.12
S-01.02 3	T-52.21	T-54.10	S-31.02	S-32.02	T-06.00
T-20.04	D-42.12	D-44.12 3	T-23.01	T-30.12	T-31.01 3
	CBJ 303		T-55.10		

IMPAIRED ANADROMOUS WATERS

STREAM NAME	CATALOG NUMBER	SPECIES PRESENT	WATER BODY IMPAIRMENT
VANDERBILT CREEK	111-40-10125	CO, P, CH, DV	SEDIMENT/TURBIDITY
LEMON CREEK[1]	111-40-10100	CO, CH, DV	SEDIMENT/TURBIDITY
SWITZER CREEK	111-40-10070	CO, P, S	N/A

CO = COHO SALMON; P = PINK SALMON; CH = CHUM SALMON; DV = DOLLY VARDEN CHAR; S = SOCKEYE SALMON

[1] NO CHANGES TO CONDITIONS OF LEMON CREEK ARE ANTICIPATED FROM THIS PROJECT

BASIS OF ESTIMATE

ITEM NO.	ITEM	ESTIMATING FACTOR
201.003.0000	CLEARING AND GRUBBING	4.2 ACRES
203.0006.0000	BORROW	1.96 TONS/CY
301.001.0000	AGGREGATE BASE COURSE, GRADING D-1	1.95 TONS/C.Y.
304.0001.0000	SUBBASE, GRADING A	2.3 TONS/C.Y.
306.0001.0000	ATB	117 LBS./S.Y./IN.
401.0001.0000	HMA, TYPE II; CLASS B	117 LBS./S.Y./IN.
401.0001.0000	SUPERPAVE (HMA), SP TYPE B	120 LBS./S.Y./IN.
401.0004.0000	ASPHALT BINDER	5.5% OF 401(1B)
401.0001.STE1	STE-1 ASPHALT FOR TACK COAT	0.1 GAL/S.Y.; 243 GAL/TON
611.0001.0001	RIPRAP, CLASS I	2.0 TONS/C.Y.
615.0005.0000	DELINEATOR, FLEXIBLE	5 TYPE A, 102 TYPE B
643.0031.0000	INTERIM PAVEMENT MARKING	1,500 L.F.
670.0010.0000	METHYL METHACRYLATE PAVEMENT MARKINGS	5,617 S.F
670.0013.0000	PAINTED TRAFFIC MARKINGS	65,130 L.F.

MOVE FROM TITLE SHEET 3

0 500' 1000'

SCALE IN FEET

GENERAL NOTES:

1. CONTAIN ALL CONSTRUCTION WITHIN THE RIGHT-OF-WAY. DO NOT DISPOSE OF EXCESS MATERIAL WITHIN THE RIGHT-OF-WAY, UNLESS SPECIFICALLY CALLED FOR IN THE PLANS.
2. MAKE ALL PAVEMENT CUTS CLEAN, VERTICAL, AND TRUE TO THE REMOVAL LIMITS SHOWN ON THE PLANS.
3. RIGHT-OF-WAY LINES AND PROPERTY LINES ARE SHOWN FOR GENERAL INFORMATION PURPOSES. SEE RIGHT-OR-WAY MAPS FOR LOCATION AND SURVEY CONTROL FOR PROPERTY LINES AND RIGHT-OF-WAY LINES.
4. LOCATION OF EXISTING UTILITIES ARE APPROXIMATE ONLY. CERTIFY EXACT LOCATION BY OBTAINING UTILITY LOCATES, FIELD LOCATES AND EXERCISING CAUTION DURING EXCAVATION.

INDEX OF SHEETS

SHEET NO.	DESCRIPTION
A1	TITLE SHEET
A2	SHEET LAYOUT INDEX
A3	LEGEND & SHEET LAYOUT INDEX
A4-A12	SURVEY CONTROL PLAN
B1-B3	TYPICAL SECTIONS
C1	ESTIMATE OF QUANTITIES & GENERAL NOTES
D1-D12	SUMMARIES
E1-E8	MISCELLANEOUS DETAILS
F1-F26	PLAN & PROFILE
G1-G24	GRADING & POINT TABLES
H1	TRAFFIC LEGEND, NOTES, AND SHEET INDEX
H2-H17	SIGNING AND STRIPING PLANS
H18-H24	SIGN SUMMARIES
H25-H29	SIGN DETAILS
H30-H34	ANKA STREET SIGNAL PLANS
H35-H38	DAVIS AVENUE SIGNAL PLANS
H39-H41	VANDERBILT ROAD RRFB PLANS
H42-H44	CONCRETE WAY RRFB PLANS
H45-H47	RENNINGER STREET ROUNDABOUT RRFB & SCHOOL ZONE FLASHER PLANS
H48-H51	SHOPPING CENTER ACCESS RRFB PLANS
H52-H59	SIGNAL DETAILS
H60-H67	ILLUMINATION PLANS
H68-H81 4	ILLUMINATION GENERAL NOTES & DETAILS
J1-J4	FISH PASSAGE PLANS AND DETAILS
M1-M8	RETAINING WALL PLAN & PROFILE
N1-N7	BRIDGE STRUCTURES
P1-P22	STORM DRAIN PLANS
Q1-Q8	EROSION SEDIMENT CONTROL PLANS
S1-S19	CONSTRUCTION STAGING PLANS

Record Drawings have been reviewed by the Project Engineer, and represent to the best of my knowledge, the project as constructed.

PE *Dillon Tomaro* 2/4/25

PLAN SCHEMATIC, INDEX, & GENERAL NOTES

STATE OF ALASKA 49TH
ANTHONY M. ROOS CE 127591
REGISTERED PROFESSIONAL ENGINEER
8/11/21

PLANS DEVELOPED BY: KITTELSON & ASSOCIATES, INC. CERT. OF AUTHORIZATION NO.: 254741, 851 SW 6TH AVE. SUITE 600, PORTLAND, OR 97204, (503) 228-5230
H:\20\20487 - Glacier Highway - Juneau Traffic Design\design_CD\68124_A_CVR&NOTES-A-2 Wed, Aug/11/21 05:00pm

NO.	DATE	REVISION

STATE	PROJECT DESIGNATION	YEAR	SHEET NO.	TOTAL SHEETS
ALASKA	TEA-0955(016)/Z68124	2020	A-3	235

	RECOVERED	SET
BLM MONUMENT	✠	
GLO MONUMENT	✠	
USC&GS MONUMENT	▲	
PRIMARY MONUMENT	✠	✠
CENTERLINE MONUMENT IN CASING	⊕	⊕
PRIMARY R.O.W. MONUMENT	⊕	◕
BEARING OBJECT	✳	
MISCELLANEOUS MONUMENT	⊗	
LINE OF SIGHT MONUMENT		⊕
CONCRETE R.O.W. MONUMENT	■	
BENCHMARK		BM
REBAR AND CAP	⊙	⊙
REBAR	⊕	●
IRON PIPE	◉	
PK NAIL		▽
SPIKE		×
HUB AND TACK		⊡
CONSTRUCTION CENTERLINE	5+00	
MISCELLANEOUS CENTERLINE	10+00	
STATION EQUATION	"L"48+97.23 POT BK= "O"48+97.23 PC AHD	
PROJECT RIGHT-OF-WAY LINE		
EXISTING RIGHT-OF-WAY LINE		
EXISTING PROPERTY LINE		
CONTROLLED ACCESS LINE	C/A	
UTILITY EASEMENT LINE	PUE	
TEMPORARY EASEMENT LINE (TCP OR TCE)		
ACCESS OR SECTION LINE EASEMENT		
PROPOSED CUT SLOPE LIMIT	C C	
PROPOSED FILL SLOPE LIMIT	F F F	
REMOVE / ABANDON PIPE		
SECTION LINE		
1/4 SECTION LINE		
1/16 SECTION LINE		
TOWNSHIP & RANGE LINE	T. 2 N. / T. 1 N. ; T. 1 E. ; T. 2 E.	

	EXISTING	PROPOSED
SANITARY SEWER (FLOW DIRECTION →)		
FUEL LINE		
GAS LINE		
WATER LINE		
METER, VALVE, FIRE HYDRANT		
EXISTING STORM DRAIN (FLOW DIRECTION →)		
PROPOSED STORM DRAIN	S-10, S-11, P-11, P-10, MH	
FIBER OPTIC LINE		
DIRECT BURIAL TELEPHONE CABLE		
DIRECT BURIAL ELECTRIC CABLE		
ELECTRIC LINE (OVERHEAD)		
POWER POLE LINE		
JOINT USE POWER & TELEPHONE		
TELEPHONE POLE LINE		
POLE ANCHOR		
STUB POLE (POWER OR TELEPHONE)		
TELEPHONE DUCT		
TELEPHONE PEDESTAL		
BURIED CABLE MARKER		
PIPELINE MARKER OR VALVE		
CATCH BASIN OR DROP INLET		
MANHOLE	MH	MH
SANITARY SEWER CLEAN OUT		
INLET/DRAIN PROTECTION		
SEDIMENT FENCE		
LEFT EDGE OF PAVEMENT	LT LT	
RIGHT EDGE OF PAVEMENT	RT RT	
SPECIAL DITCH CENTERLINE		
MEANDER LINE	M1 M2 M3	

	EXISTING	PROPOSED
ROADWAY/PAVEMENT EDGE		
FENCE		
CURB AND GUTTER		
DETECTABLE WARNINGS		
GUARDRAIL		
CULVERT PIPE		
SIGN		
MAILBOX	MB	MB
RAILROAD TRACKS		
RAILROAD DEVICES	CROSS-BUCK, FLASHING LIGHT	CANTILEVER, SWITCH
TREE LINE		
WATER BOUNDARY		
ORDINARY HIGH WATER LINE		
FLOW CENTERLINE		
FLOW DIRECTION		
WETLANDS		
EXISTING BUILDINGS	H	H = HOUSE, G = GARAGE, M = MERCHANT/STORE, B = BARN, S = SHED, P = PRIVY, SS = SERVICE STATION, W = WAREHOUSE
POST OR BOLLARD		
WELL OR MONITORING WELL	W	
SEPTIC PIPE	S VW	
FUEL TANK FILL PIPE/VENT	P	
SATELLITE DISH	SAT. DISH	
TEST HOLE	TH	
CONIFER TREE		
DECIDUOUS TREE		
GRAVE		
THERMOSIPHON		
PARKING METER		
VEHICLE PLUG-IN		
DELINEATOR/GUIDE MARKER		

LIST OF ABBREVIATION

BOC	=	BACK OF CURB
BOW	=	BACK OF WALK
EOP	=	EDGE OF PAVEMENT
FOC	=	FACE OF CURB
GCP	=	GRADING CONTROL POINT
RT	=	RIGHT
LT	=	LEFT
PI	=	POINT OF INTERSECTION
PC	=	POINT OF CURVATURE
PT	=	POINT OF TANGENT
PCC	=	POINT OF COMPOUND CURVATURE
PRC	=	POINT OF REVERSE CURVATURE
OFF	=	OFFSET
STA	=	STATION

Record Drawings have been reviewed by the Project Engineer, and represent to the best of my knowledge, the project as constructed.

PE *Dillon Tomaro* 2/4/25

STATE OF ALASKA 49TH ANTHONY M. ROOS CE 127591 REGISTERED PROFESSIONAL ENGINEER

7/31/2020

LEGEND & SYMBOLS

PLANS DEVELOPED BY: KITTELSON & ASSOCIATES, INC. CERT. OF AUTHORIZATION NO.: 254741, 851 SW 6TH AVE. SUITE 600, PORTLAND, OR 97204, (503) 228-5230
H:\20\20487 - Glacier Highway - Juneau Traffic Design\design_CD\68124_A_CVR&NOTES-A-3 Thu, Jul/30/20 03:15am

NO.	DATE	REVISION	STATE	PROJECT DESIGNATION	YEAR	SHEET NO.	TOTAL SHEETS
			ALASKA	TEA0955(016)/Z68124	2020	A4	235

DESIGNED J Poppi
CHECKED D Glover
DRAFTED J Poppi

XREFS

SCALE

LAYOUT A4

DATE TIME 6/30/2020 12:36

DRAWING LOCATION: C:\Jnu\68124\SVC\SD\SOURCE DWGS\BASEMAP\Glacier_SCS_050217.dwg

HORIZONTAL CONTROL

Horizontal Control for this project is based on the DOT/PF 2000 Juneau Grid

The DOT/PF Juneau Grid-2000 System is a local ground coordinate system based at USC&GS first order control station EDDIE (Destroyed). It relates to AKSPC zone 1 NAD83 (1992) through the following parameters:
Zone = NAD83 (1992) AKSPC ZONE 1
Grid Scale = 0.999928875
Convergence = -0°45'27.26"
Translation about USC&GS point EDDIE (Destroyed) as follows:
AKSPC Northing = 2383469.17 FT US
AKSPC Easting = 2512570.06 FT US
Local Northing = 500000.00 FT US
Local Easting = 500000.00 FT US

Project Specific Horizontal Control

120: 2.5" Aluminum Cap on Aluminum Rod 12' from Edge Pavement, sub graded 0.35' across from of entrance of DOT&PF 7 mile building.
RP PK W\ Plastic Washer # 330 in Power Pole #12249
Bearing N69E Distance 10.78'

JNU-Grid N 500927.35 FT US, E 508066.21 FT US
AKSPC N 2384289.74 FT US , E 2520647.25 FT US

121 : 2" Aluminum Cap on Aluminum Rod set 7.15' from Top Back Curb. sub graded 0.40' +\- 50' West of intersection of Egan Drive & Glacier Hwy
RP PK W\ Plastic Washer # 331 in Power Pole #11910
Bearing N58E Distance 9.56'

JNU-Grid N 500965.66 FT US, E 509692.83 FT US
AKSPC N 2384306.53 FT US, E 2522274.12 FT US

VERTICAL CONTROL

The Vertical Datum for JNU Grid-2000 is Mean Lower Low Water = 0.00' Gastineau Channel - Stephens Pass tidal datum based on NOAA NOS tidal benchmark series 9452210. The tidal epoch is 1960-1978, time period 1994-1998, published 11/1999. The latest NOS publication (May 2014) on the 2007 - 2011 tidal epoch, time period 2007-2011 indicates the tidal benchmark series has risen 0.56' at benchmark 9452210 C.

** Deleted by CO18

Survey Control Table

Point #	Northing	Easting	Elevation	Description	Station	Offset
120	500927.38	508066.21	29.54	ALCTRL2"/REBAR-120	N\A	N\A
121	500965.66	509692.83	34.07	ALCTRL2"/REBAR-121(DISTURBED 052020)	188+65.36	33.38L
122	501154.89	510862.62	28.53	ALCTRL2"/REBAR-122	176+84.95	36.58R
123	501214.70	511762.47	26.90	ALCTRL2"/REBAR-123	167+78.47	29.19R
124	501176.98	512523.52	28.18	ALCTRL2"/REBAR-124	160+23.97	35.42R
125	500282.09	513295.76	34.97	MAG_CNTL-125	148+50.34	29.80R
126	499888.70	513609.97	36.00	ALCTRL2"/REBAR-126	143+50.20	27.53L
127	499730.22	514635.03	31.21	ALCTRL2"/REBAR-127	133+27.32	44.06R
128	499402.48	514903.80	30.72	ALCTRL2"/REBAR-128	129+21.13	30.63R
129	498253.77	515007.80	26.42	ALCTRL2"/REBAR-129	117+74.36	30.91R
130	497562.23	514930.83	29.06	ALCTRL2"/REBAR-130	110+85.54	32.34R
131	496959.85	514520.61	27.55	ALCTRL2"/REBAR-131	103+67.14	38.45R
132	496180.48	513141.50	25.59	ALCTRL2"/REBAR-132	141+00.22	3736.29L
330	500922.78	508056.47	35.54	PK/WASH_RP-120	N\A	N\A
331	500960.62	509684.76	40.00	MAG/WASH_RP-121	188+74.06	37.20L
332	501158.77	510859.10	33.91	PK/WASH_RP-122	176+88.63	40.31R
333	501211.42	511677.28	33.19	PK/WASH_RP-123	168+63.69	31.72R
334	499841.87	513610.01	36.20	PK/WASH_RP-126	143+28.97	68.55L
335	499454.35	514880.64	35.82	PK/WASH_RP-128	129+75.09	30.02R

ALL SURVEY CONTROL MONUMENTS IN THIS TABLE ARE PROVIDED STRICTLY FOR SURVEY CONTROL. SHOULD ANY OF THEM BE DESTROYED DURING CONSTRUCTION THEY SHALL NOT BE REPLACED.

Centerline Monuments To Be Removed

Point #	Northing	Easting	Description	Station	Offset
25	500203.85	513318.45	CL_MON_"L"_PST_267+33.50_"KM-25"	147+74.94	1.06L
26	500918.91	512751.25	CL_MON_"L" PTS_276+46.57_"KM-26"	156+87.64	0.92L
27	501068.42	512618.26	CL_MON_"L"_PSC_278+46.57_"KM-27"	158+88.09	0.18L
28	501209.60	512298.92	CL_MON_"L" PCS_282+01.40_"KM-28"	162+42.91	0.32L
29	501207.27	512099.30	CL_MON_"L"_PST_284+01.40_"KM-29"	164+42.93	1.17L
30	501097.35	510480.29	CL_MON_"L" PC_300+27.02_"KM-30"	180+66.68	0.53L
31	501045.08	510003.76	CL_MON_"L" PT_305+03.50_"KM-31"	185+46.21	0.31R
1001	499982.83	513520.46	CL_MON	144+75.05	0.59L
1002	499801.56	514050.41	CL_MON	139+05.42	0.25L
1003	499723.35	514544.54	CL_MON	134+03.71	0.25L
1004	499370.29	514882.43	CL_MON	128+98.58	0.32L
1005	499074.36	514926.80	CL_MON	125+98.37	0.28L
1007	499780.52	514251.01	CL_MON	137+03.72	0.16L
1014	498148.71	514983.13	CL_MON-DOH	116+71.00	0.10L
1200	496937.94	514441.47	CL_MON_BC2.5"_RTK	102+91.75	6.57R

Existing Centerline Monuments to be Removed.

SHOULDER MONUMENT TO BE SET AFTER CONSTRUCTION

Approximate Location Of New Shoulder Monuments

Point #	Northing	Easting	Description	Station	Offset
1600	496961.02	514518.16	APPROX_SH_MON	103+66.00	36.00R
1601	497563.52	514925.62	APPROX_SH_MON	110+85.00	27.00R
1602	498253.11	515002.92	APPROX_SH_MON	117+74.00	26.00R
1603	499399.74	514899.89	APPROX_SH_MON	129+20.00	26.00R
1604	499728.25	514634.35	APPROX_SH_MON	133+27.00	42.00R
1605	499886.46	513608.93	APPROX_SH_MON	143+50.00	30.00L
1606	500280.09	513293.77	APPROX_SH_MON	148+50.00	27.00R
1607	501174.66	512522.36	APPROX_SH_MON	160+24.00	33.00R
1608	501211.48	511762.16	APPROX_SH_MON	167+79.00	26.00R
1609	501152.31	510862.47	APPROX_SH_MON	176+85.00	34.00R
1610	500969.90	509691.56	APPROX_SH_MON	188+86.00	29.00L

PROPOSED LOCATION OF SHOULDER MONUMENTS TO BE SET AFTER CONSTRUCTION. SHOULDER MONUMENTS MUST BE LINE OF SIGHT BETWEEN EACH MONUMENT. CONTRACTOR CAN MOVE THE SHOULDER MONUMENTS AND CASES AS NEEDED TO MAINTAIN SIGHT LINE BETWEEN SHOULDER MONUMENTS AS DIRECTED BY ENGINEER.

MONUMENT NOTES:

1. IF ANY PAIR OF CONTROL POINTS DISAGREES FROM PUBLISHED VALUE BY MORE THAN 1:10,000 HORIZONTALLY OR VERTICALLY THEN A THIRD NETWORK POINT MUST BE TIED TO ASCERTAIN WHICH POINT IS IN ERROR OR HAS BEEN DISTURBED.

2. WHETHER LISTED OR NOT, ALL PROPERTY MONUMENTS, OR PROPERTY MARKERS, CORNERS OR ACCESSORIES WHICH WILL BE DISTURBED OR BURIED SHALL BE REFERENCED PRIOR TO BEING DISTURBED, AND RE-ESTABLISHED IN THEIR ORIGINAL HORIZONTAL POSITION AND A RECORD OF MONUMENT FORM IN ACCORDANCE WITH (A.S.34.65.040) AND (A.S.19.10.260) SHALL BE SUBMITTED TO THE CONSTRUCTION ENGINEER FOR REVIEW PRIOR TO RECORDING. COORDINATE VALUES LISTED ARE FOR INFORMATIONAL PURPOSES AND SHOULD BE USED TO RESET MONUMENTS ONLY AS A LAST RESORT.

3. WHEN POSSIBLE ALL ORIGINAL PRIMARY MONUMENTS SHALL BE SAVED AND RESET IN THEIR ORIGINAL HORIZONTAL POSITION AND A RECORD OF MONUMENT FORM IN ACCORDANCE WITH (A.S.34.65.040) AND (A.S.19.10.260) SHALL BE SUBMITTED TO THE CONSTRUCTION ENGINEER FOR REVIEW PRIOR TO RECORDING

4. RIGHT OF WAY LOCATION IS SHOWN FOR GRAPHICAL ORIENTATION PURPOSES ONLY. REFER TO ALASKA DOT&PF RIGHT OF WAY MAPS FOR RIGHT OF WAY INFORMATION.

5. HORIZONTAL AND VERTICAL CONTROL MUST BE FIELD VERSIFIED BY THE CONTRACTOR. DISCREPANCIES WILL BE REPORTED TO DOT&PF CONSTRUCTION PROJECT ENGINEER.

Record Drawings have been reviewed by the Project Engineer, and represent to the best of my knowledge, the project as constructed.

PE Dillon Tomaro 2/4/25

6.30.20
STATE OF ALASKA 49 TH
Daniel M. Poppi No. 11296
REGISTERED PROFESSIONAL LAND SURVEYOR

STATE OF ALASKA
DEPARTMENT OF TRANSPORTATION AND PUBLIC FACILITIES

Glacier Highway Improvements
(Lemon Creek Area)
Project # Z681240000

Survey Control Sheet

NO.	DATE	REVISION
17	6/4/21	ADJUSTED SURVEY CONTROL ELEVATIONS

STATE	PROJECT DESIGNATION	YEAR	SHEET NO.	TOTAL SHEETS
ALASKA	TEA0955(016)/Z68124	2020	A4	230

DESIGNED J.Papoi
CHECKED D.Tomaro
DRAFTED J.Papoi
XREFS
SCALE
LAYOUT A4
DATE TIME 6/4/2021 16:05
DRAWING LOCATION Q:\jnu\68124\SVY\C3D\SOURCE DWGS\BASEMAP\Glacier_SCS_050217_Revised.dwg

HORIZONTAL CONTROL

Horizontal Control for this project is based on the DOT/PF 2000 Juneau Grid

The DOT/PF Juneau Grid-2000 System is a local ground coordinate system based at USC&GS first order control station EDDIE (Destroyed). It relates to AKSPC zone 1 NAD83 (1992) through the following parameters:
Zone = NAD83 (1992) AKSPC ZONE 1
Grid Scale = 0.999928875
Convergence = -0°45'27.26"
Translation about USC&GS point EDDIE (Destroyed) as follows:
AKSPC Northing = 2383469.17 FT US
AKSPC Easting = 2512570.06 FT US
Local Northing = 500000.00 FT US
Local Easting = 500000.00 FT US

Project Specific Horizontal Control

120: 2.5" Aluminum Cap on Aluminum Rod 12' from Edge Pavement, sub graded 0.35' across from of entrance of DOT&PF 7 mile building.
RP PK W\ Plastic Washer # 330 in Power Pole #12249
Bearing N69E Distance 10.78'

JNU-Grid N 500927.35 FT US, E 508066.21 FT US
AKSPC N 2384289.74 FT US , E 2520647.25 FT US

121 : 2" Aluminum Cap on Aluminum Rod set 7.15' from Top Back Curb. sub graded 0.40' +\- 50' West of intersection of Egan Drive & Glacier Hwy
RP PK W\ Plastic Washer # 331 in Power Pole #11910
Bearing N58E Distance 9.56'

JNU-Grid N 500965.66 FT US, E 509692.83 FT US
AKSPC N 2384306.53 FT US, E 2522274.12 FT US

VERTICAL CONTROL

The Vertical Datum for JNU Grid-2000 is Mean Lower Low Water = 0.00' Gastineau Channel - Stephens Pass tidal datum based on NOAA NOS tidal benchmark series 9452210. The tidal epoch is 1960-1978, time period 1994-1998, published 11/1999. The latest NOS publication (May 2014) on the 2007 - 2011 tidal epoch, time period 2007-2011 indicates the tidal benchmark series has risen 0.56' at benchmark 9452210 C.

17

CONTROL POINT ELEVATIONS HAVE BEEN RAISED 0.12' FOR BETTER CONFORMITY TO THE ORIGINAL GROUND SURFACE.

Survey Control Table

Point #	Northing	Easting	Elevation	Description	Station	Offset
120	500927.36	508066.21	29.66	ALCTRL2"/REBAR-120	N\A	N\A
121	500965.66	509692.83	34.19	ALCTRL2"/REBAR-121(DISTURBED 052020)	188+65.36	33.38L
122	501154.89	510862.62	28.65	ALCTRL2"/REBAR-122	176+84.95	36.58R
123	501214.70	511762.47	27.02	ALCTRL2"/REBAR-123	167+78.47	29.19R
124	501176.98	512523.52	28.30	ALCTRL2"/REBAR-124	160+23.97	35.42R
125	500282.09	513295.76	35.09	MAG_CNTL-125	148+50.34	29.80R
126	499888.70	513609.97	36.12	ALCTRL2"/REBAR-126	143+50.20	27.53L
127	499730.22	514635.03	31.33	ALCTRL2"/REBAR-127	133+27.32	44.06R
128	499402.48	514903.80	30.84	ALCTRL2"/REBAR-128	129+21.13	30.63R
129	498253.77	515007.80	26.54	ALCTRL2"/REBAR-129	117+74.36	30.91R
130	497562.23	514930.83	29.18	ALCTRL2"/REBAR-130	110+85.54	32.34R
131	496959.85	514520.61	27.67	ALCTRL2"/REBAR-131	103+67.14	38.45R
132	496160.48	513141.50	25.71	ALCTRL2"/REBAR-132	141+00.22	3736.29L

ALL SURVEY CONTROL MONUMENTS IN THIS TABLE ARE PROVIDED STRICTLY FOR SURVEY CONTROL. SHOULD ANY OF THEM BE DESTROYED DURING CONSTRUCTION THEY SHALL NOT BE REPLACED.

SHOULDER MONUMENT TO BE SET AFTER CONSTRUCTION

Approximate Location Of New Shoulder Monuments

Point #	Northing	Easting	Description	Station	Offset
1600	496961.02	514518.16	APPROX_SH_MON	103+66.00	36.00R
1601	497563.52	514925.62	APPROX_SH_MON	110+85.00	27.00R
1602	498253.11	515002.92	APPROX_SH_MON	117+74.00	26.00R
1603	499399.74	514899.89	APPROX_SH_MON	129+20.00	26.00R
1604	499728.25	514634.35	APPROX_SH_MON	133+27.00	42.00R
1605	499886.46	513608.93	APPROX_SH_MON	143+50.00	30.00L
1606	500280.09	513293.77	APPROX_SH_MON	148+50.00	27.00R
1607	501174.86	512522.36	APPROX_SH_MON	160+24.00	33.00R
1608	501211.48	511762.16	APPROX_SH_MON	167+79.00	26.00R
1609	501152.31	510862.47	APPROX_SH_MON	176+85.00	34.00R
1610	500969.90	509691.56	APPROX_SH_MON	188+66.00	29.00L

Centerline Monuments To Be Removed

Point #	Northing	Easting	Description	Station	Offset
25	500203.85	513318.45	CL_MON_"L"_PST_267+33.50_"KM-25"	147+74.94	1.06L
26	500918.91	512751.25	CL_MON_"L" PTS_276+46.57_"KM-26"	156+87.64	0.92L
27	501068.42	512618.26	CL_MON_"L"_PSC_278+46.57_"KM-27"	158+88.09	0.18L
28	501209.60	512298.92	CL_MON_"L" PCS_282+01.40_"KM-28"	162+42.91	0.32L
29	501207.27	512099.30	CL_MON_"L"_PST_284+01.40_"KM-29"	164+42.93	1.17L
30	501097.35	510480.29	CL_MON_"L" PC_300+27.02_"KM-30"	180+66.68	0.53L
31	501045.08	510003.76	CL_MON_"L" PT_305+03.50_"KM-31"	185+46.21	0.31R
1001	499982.83	513520.46	CL_MON	144+75.05	0.59L
1002	499801.56	514050.41	CL_MON	139+05.42	0.25L
1003	499723.35	514544.54	CL_MON	134+03.71	0.25L
1004	499370.29	514882.43	CL_MON	128+98.58	0.32L
1005	499074.36	514926.60	CL_MON	125+98.37	0.28L
1007	499780.52	514251.01	CL_MON	137+03.72	0.16L
1014	498148.71	514983.13	CL_MON-DOH	116+71.00	0.10L
1200	496937.94	514441.47	CL_MON_BC2.5"_RTK	102+91.75	6.57R

Existing Centerline Monuments to be Removed.

PROPOSED LOCATION OF SHOULDER MONUMENTS TO BE SET AFTER CONSTRUCTION. SHOULDER MONUMENTS MUST BE LINE OF SIGHT BETWEEN EACH MONUMENT. CONTRACTOR CAN MOVE THE SHOULDER MONUMENTS AND CASES AS NEEDED TO MAINTAIN SIGHT LINE BETWEEN SHOULDER MONUMENTS AS DIRECTED BY ENGINEER.

MONUMENT NOTES:

1. IF ANY PAIR OF CONTROL POINTS DISAGREES FROM PUBLISHED VALUE BY MORE THAN 1:10,000 HORIZONTALLY OR VERTICALLY THEN A THIRD NETWORK POINT MUST BE TIED TO ASCERTAIN WHICH POINT IS IN ERROR OR HAS BEEN DISTURBED.

2. WHETHER LISTED OR NOT, ALL PROPERTY MONUMENTS, OR PROPERTY MARKERS, CORNERS OR ACCESSORIES WHICH WILL BE DISTURBED OR BURIED SHALL BE REFERENCED PRIOR TO BEING DISTURBED, AND RE-ESTABLISHED IN THEIR ORIGINAL HORIZONTAL POSITION AND A RECORD OF MONUMENT FORM IN ACCORDANCE WITH (A.S.34.65.040) AND (A.S.19.10.260) SHALL BE SUBMITTED TO THE CONSTRUCTION ENGINEER FOR REVIEW PRIOR TO RECORDING. COORDINATE VALUES LISTED ARE FOR INFORMATIONAL PURPOSES AND SHOULD BE USED TO RESET MONUMENTS ONLY AS A LAST RESORT.

3.WHEN POSSIBLE ALL ORIGINAL PRIMARY MONUMENTS SHALL BE SAVED AND RESET IN THEIR ORIGINAL HORIZONTAL POSITION AND A RECORD OF MONUMENT FORM IN ACCORDANCE WITH (A.S.34.65.040) AND (A.S.19.10.260) SHALL BE SUBMITTED TO THE CONSTRUCTION ENGINEER FOR REVIEW PRIOR TO RECORDING

4. RIGHT OF WAY LOCATION IS SHOWN FOR GRAPHICAL ORIENTATION PURPOSES ONLY. REFER TO ALASKA DOT&PF RIGHT OF WAY MAPS FOR RIGHT OF WAY INFORMATION.

5. HORIZONTAL AND VERTICAL CONTROL MUST BE FIELD VERSIFIED BY THE CONTRACTOR. DISCREPANCIES WILL BE REPORTED TO DOT&PF CONSTRUCTION PROJECT ENGINEER.

Record Drawings have been reviewed by the Project Engineer, and represent to the best of my knowledge, the project as constructed.

PE Dillon Tomaro 2/4/25

STATE OF ALASKA
H. Erik Pedersen
06/04/21
No. 14828
REGISTERED PROFESSIONAL LAND SURVEYOR

STATE OF ALASKA
DEPARTMENT OF TRANSPORTATION
AND PUBLIC FACILITIES

Glacier Highway Improvements
(Lemon Creek Area)
Project # Z681240000

Survey Control Sheet

NO.	DATE	REVISION	STATE	PROJECT DESIGNATION	YEAR	SHEET NO.	TOTAL SHEETS
			ALASKA	TEA0955(016)/Z68124	2020	A5	235

DESIGNED J Papi
CHECKED D Jordan
DRAFTED J Papi

XREFS:

SCALE

LAYOUT
A5

DATE TIME
6/30/2020 12:36

DRAWING LOCATION
O:\Proj\68124\SIV\C3D\SOURCE DWGS\BASEMAP\Glacier_SCS_050217.dwg

Existing Property Monuments					
Point #	Northing	Easting	Description	Station	Offset
32	500977.94	509563.26	CL_MON_"L" PTS_309+49.08_"KM-32"	N\A	N\A
33	500958.00	509414.66	CL_MON_"L" PCS_310+99.08_"KM-33"	N\A	N\A
34	500950.25	509381.21	CL_MON_"L"_PI_311+33.35_"KM-34"	N\A	N\A
35	500952.86	509346.87	CL_MON_"L" PCS_311+67.11_"KM-35"	N\A	N\A
1024	500983.36	509890.80	REBAR_FND	186+66.90	44.45L
1026	500957.12	509717.27	REBAR_FND	188+42.41	45.36L
1027	500942.64	509568.85	PLASCAP_FND_1410S	N\A	N\A
1031	500932.82	509498.74	ALCAP3.25"_L1_2002	N\A	N\A
1032	500922.09	509418.19	SURVSPIKE/WASH_7570-S	N\A	N\A
1033	500916.86	509348.67	PLASCAP_FND_7570-S	N\A	N\A
1049	497269.06	514861.24	BLM_BC3.25"_S204/C2-L3-TB-S3263_1953	106+94.35	71.94L
1051	501449.18	510919.85	PLASCAP_5713-S	176+05.95	330.39R
1052	501448.72	510833.69	BC3"_NO-SKETCH	177+25.41	329.05R
1053	501448.55	510771.46	ALCAP3.5"_NO-SKETCH	177+52.26	330.02R
1101	501141.24	511865.42	ALCAP3.25"_FR-S2121	166+80.77	51.11L
1109	501126.14	511645.04	ALCAP3.25"_FR_S-2121	169+01.67	51.17L
1110	500968.94	511618.78	ALCAP3.25"_FR_S-2121	169+38.59	206.21L
1233	501330.31	510871.79	SPINHOLE_1.25"1410S	176+82.68	212.22R
1235	501069.88	511017.93	PLASCAP_1.25"7570S	175+37.90	56.58L
1238	501199.28	511232.51	REBAR_FND5/8"	173+08.26	49.91R
1239	501121.19	511571.65	PLASCAP_1.25"7570S	169+75.22	51.10L
1240	501101.15	511573.02	PLASCAP_1.25"7570S	169+75.22	71.19L
1241	501230.82	512426.43	PLASCAP_1.25"1410S	161+27.14	47.32R
1242	501234.09	512429.91	REBAR_FND5/8"	161+25.01	51.50R
1243	501246.48	511925.42	ALCAP1_3"TR1_S2121_ROW	166+13.74	49.79R
1245	501187.55	512600.80	PLASCAP_1.25"JWBEAN3650	159+68.60	84.02R
1246	501090.53	512650.91	PLASCAP_1.25"JWBEAN3650	158+78.83	38.07R
1247	501230.45	512558.58	PLASCAP_1.25"JWBEAN3650	160+18.95	99.10R
1248	500085.77	513327.76	SPINHOLE_1.25"JOHNSON7570	148+77.88	67.68L
1251	500373.15	513493.20	PLASCAP_1.25"JOHNSON7570	147+98.94	241.07R
1252	499731.89	513652.36	PLASCAP_1.25"TN	142+54.94	150.27L

Existing Property Monuments					
Point #	Northing	Easting	Description	Station	Offset
1254	499659.49	513257.60	PLASCAP_1.25"JOHNSON7570	144+73.78	417.30L
1255	499674.08	513271.08	PLASCAP_1.25"JOHNSON7570	144+73.01	397.47L
1256	499838.90	513409.47	PLASCAP_1.25"JOHNSON7570	144+70.61	182.29L
1257	499839.40	513423.75	PLASCAP_1.25"JOHNSON7570	144+61.90	172.96L
1264	499663.26	514757.93	ALCAP1_FND	131+99.54	59.86R
1265	499429.45	514896.81	PLASCAP_1.25"JWBEAN3650	129+47.27	34.28R
1267	501001.59	510010.46	ALCAP1_2"L2_ROW_8535S	185+45.86	43.69L
1268	497123.63	514738.69	PLASCAP_1.25"JWBEAN3650	106+24.89	77.41R
1269	497097.17	514857.14	PLASCAP_1.25"JWBEAN3650	106+70.80	187.52R
1270	497077.09	514945.73	PLASCAP_1.25"JWBEAN3650	107+00.98	271.19R
1271	497058.21	515034.00	PLASCAP_1.25"JWBEAN3650	107+29.28	354.63R
1272	497037.35	515122.81	PLASCAP_1.25"JWBEAN3650	107+54.02	440.23R
1273	497053.55	515187.79	PLASCAP_1.25"JWBEAN3650	107+90.63	486.56R
1274	497133.37	514968.65	PLASCAP_1.25"JWBEAN3650	107+51.23	258.65R
1275	497153.91	514876.97	PLASCAP_1.25"JWBEAN3650	107+21.89	170.94R
1276	501449.05	510942.20	ALCAP3.25"_S2321\T4\E.5L11A\T3S2121_1410S	175+83.64	328.89R
1277	501448.76	510846.90	PLASCAP_1.25"_1410S	177+12.21	329.61R
1278	499814.67	513473.89	PLASCAP_1.25"_7570S	144+17.12	162.90L
1280	499662.48	514964.12	ALCAP2.5"/1"Driverod_SPINHOLE_R&M_1410LS_Disturbed	130+85.42	211.16R
1281	499664.76	514861.00	ALCAP3.25"/1"Driverod_SPINHOLE_R&M_1410LS_L1/L2/S668_Disturbed	131+37.52	133.28R
1284	497269.55	514560.49	BC3"_S204 C11_S668 C1_S3263 LOT13_BLM1953	106+28.09	152.89L
1286	498291.19	514748.76	REBAR 5/8"	118+27.46	225.38L
1290	499603.34	513510.94	PLASCAP_DOWL-7712S	143+12.01	325.95L
1291	500051.00	513208.23	REBAR_5/8"	147+24.37	182.45L
1292	500129.12	513282.30	SURVSPIKE/WASHER_1410S	147+38.96	75.83L
1294	499187.90	514969.61	REBAR_5/8"	127+07.35	50.83R
1295	499181.11	514998.54	REBAR_5/8"	126+98.27	79.02R
1296	499616.97	513525.51	ALCAP3.25"_1410S_NOT READABLE	143+07.14	307.25L
1297	497613.54	515168.19	ALCAP3"_LEANING-0.3S75W_1410S	111+95.79	243.19R
1298	497268.80	515169.88	ALCAP3"_OIGMON_1410S_1973	109+29.70	367.21R
1299	499399.21	514592.41	PLASCAP_9016S	131+11.27	243.77L

Property Monuments To Be Referenced and Replaced					
Point #	Northing	Easting	Description	Station	Offset
1023	501071.62	510840.25	ALCAP3.5"_L2/FR_S2121_1992	177+04.03	47.51L
1231	501160.43	510851.45	PLASCAP_1.25"LS5713	176+96.33	41.67R
1232	501182.61	510872.36	PLASCAP_1.25"LS5713	176+76.32	64.66R
1234	501082.79	511017.01	PLASCAP_1.25"7570S	175+36.49	43.71L
1236	501067.26	510977.95	PLASCAP_1.25"7570S	175+71.34	54.37L
1237	501080.05	510977.11	PLASCAP_1.25"7570S	175+71.40	41.56L
1244	501162.13	512019.26	PLASCAP_1.25"1410-S	165+25.86	40.76L
1249	500113.64	513353.25	PLASCAP_1.25"JOHNSON7570	146+83.12	30.29L
1250	500079.80	513370.34	SURVSPIKE_FND	146+46.83	38.85L
1253	499891.92	513582.44	PLASCAP_1.25"DOWL-HKM7712	143+74.44	38.77L
1258	499918.98	513497.02	PLASCAP_1.25"JOHNSON7570	144+54.48	65.14L
1259	499857.85	513867.62	SURVSPIKE_JWBEAN3650	140+95.88	31.70R
1260	499892.26	513763.60	PLASCAP_1.75"NOMARKING	142+10.22	38.98R
1261	499775.95	513971.55	PLASCAP_1.25"TNA6262S	139+80.81	34.21L
1262	499729.74	514087.41	PLASCAP_1.25"TN6262S	138+61.11	67.80L
1263	499797.80	514504.53	SURVSPIKE_FND	134+62.48	57.97R
1266	499861.34	514097.27	SPINHOLE_REBAR_DAMAGED	123+87.53	42.49L
1279	499624.63	514759.05	PLASCAP_LS3650	131+74.55	32.20R
1282	499221.81	514953.68	ALCAP2"_LS3650	127+41.66	38.62R
1283	499077.24	514966.53	ALCAP2"_LS3650	125+98.82	39.75R

ALL PROPERTY MONUMENTS IN THIS TABLE SHALL BE REFERENCED PRIOR TO DISTURBANCE FROM CONSTRUCTION AND RE-ESTABLISHED IN THEIR ORIGINAL HORIZONTAL POSITION AND A RECORD OF MONUMENT FORM IN ACCORDANCE WITH A.S.34.65.040 SHALL BE SUBMITTED TO DOT FOR REVIEW PRIOR TO RECORDING.

MONUMENT NOTES:

1. IF ANY PAIR OF CONTROL POINTS DISAGREES FROM PUBLISHED VALUE BY MORE THAN 1:10,000 HORIZONTALLY OR VERTICALLY THEN A THIRD NETWORK POINT MUST BE TIED TO ASCERTAIN WHICH POINT IS IN ERROR OR HAS BEEN DISTURBED.

2. WHETHER LISTED OR NOT, ALL PROPERTY MONUMENTS, OR PROPERTY MARKERS, CORNERS OR ACCESSORIES WHICH WILL BE DISTURBED OR BURIED SHALL BE REFERENCED PRIOR TO BEING DISTURBED, AND RE-ESTABLISHED IN THEIR ORIGINAL HORIZONTAL POSITION AND A RECORD OF MONUMENT FORM IN ACCORDANCE WITH (A.S.34.65.040) AND (A.S.19.10.260) SHALL BE SUBMITTED TO THE CONSTRUCTION ENGINEER FOR REVIEW PRIOR TO RECORDING. COORDINATE VALUES LISTED ARE FOR INFORMATIONAL PURPOSES AND SHOULD BE USED TO RESET MONUMENTS ONLY AS A LAST RESORT.

3.WHEN POSSIBLE ALL ORIGINAL PRIMARY MONUMENTS SHALL BE SAVED AND RESET IN THEIR ORIGINAL HORIZONTAL POSITION AND A RECORD OF MONUMENT FORM IN ACCORDANCE WITH (A.S.34.65.040) AND (A.S.19.10.260) SHALL BE SUBMITTED TO THE CONSTRUCTION ENGINEER FOR REVIEW PRIOR TO RECORDING

4. RIGHT OF WAY LOCATION IS SHOWN FOR GRAPHICAL ORIENTATION PURPOSES ONLY. REFER TO ALASKA DOT&PF RIGHT OF WAY MAPS FOR RIGHT OF WAY INFORMATION.

5. HORIZONTAL AND VERTICAL CONTROL MUST BE FIELD VERSIFIED BY THE CONTRACTOR. DISCREPANCIES WILL BE REPORTED TO DOT&PF CONSTRUCTION PROJECT ENGINEER.

Record Drawings have been reviewed by the Project Engineer, and represent to the best of my knowledge, the project as constructed.

PE Dillon Tomaro 2/4/25

6.30.20

STATE OF ALASKA
49 TH
Daniel M. Ignatov
No. 11296
REGISTERED PROFESSIONAL LAND SURVEYOR

STATE OF ALASKA
DEPARTMENT OF TRANSPORTATION
AND PUBLIC FACILITIES

Glacier Highway Improvements
(Lemon Creek Area)
Project # Z681240000

Survey Control Sheet

NO.	DATE	REVISION	STATE	PROJECT DESIGNATION	YEAR	SHEET NO.	TOTAL SHEETS
			ALASKA	TEA0955(016)/Z68124	2020	A6	235

DESIGNED J.Papp
CHECKED D.Ignatov
DRAFTED J.Papp

XREFS

SCALE

LAYOUT
A6

DATE TIME
6/30/2020 12:36

DRAWING LOCATION
O:\proj\68124\SVY\C3D\SOURCE DWGS\BASEMAP\Glacier_SGS_050217.dwg

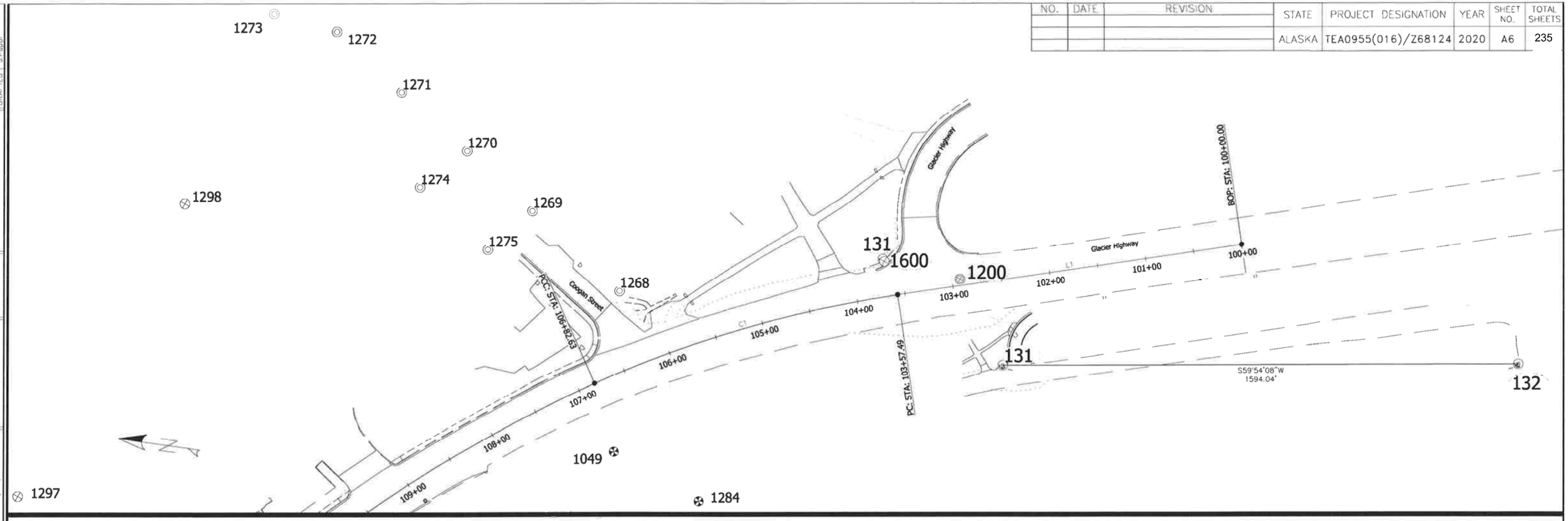

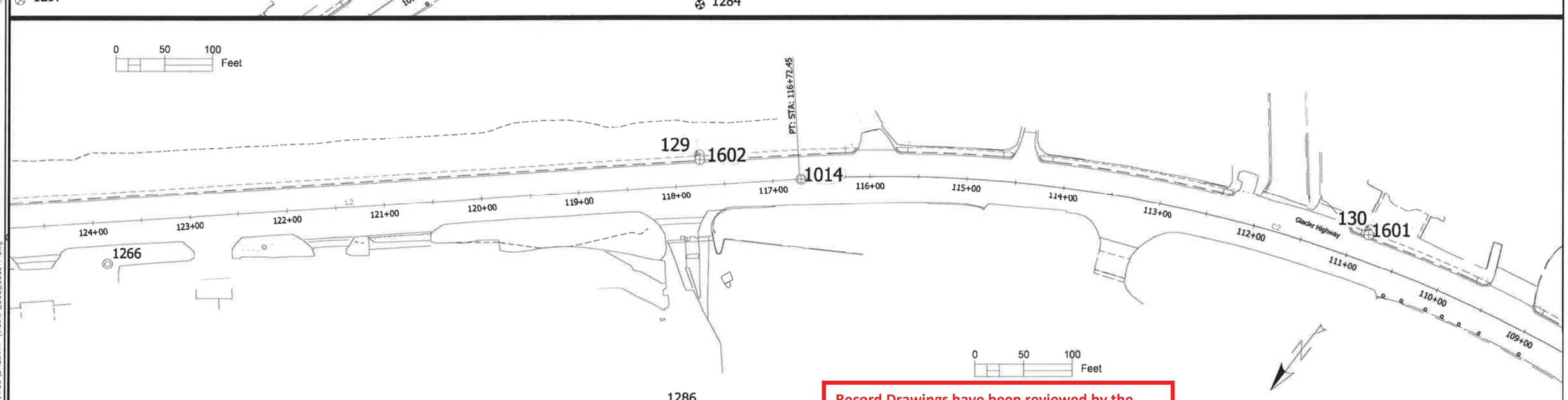

Record Drawings have been reviewed by the Project Engineer, and represent to the best of my knowledge, the project as constructed.

PE Dillon Tomaro 2/4/25

STATE OF ALASKA
DEPARTMENT OF TRANSPORTATION
AND PUBLIC FACILITIES

Glacier Highway Improvements
(Lemon Creek Area)
Project # Z681240000

Survey Control Sheet

NO.	DATE	REVISION	STATE	PROJECT DESIGNATION	YEAR	SHEET NO.	TOTAL SHEETS
			ALASKA	TEA0955(016)/Z68124	2020	A7	235

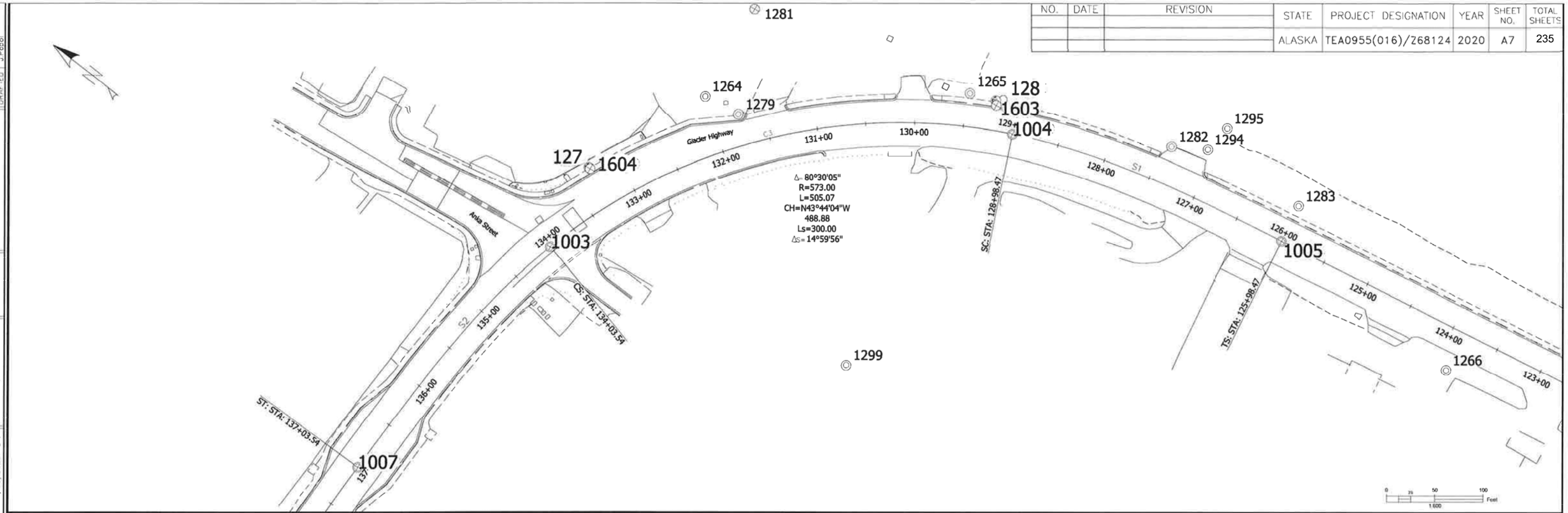

Record Drawings have been reviewed by the Project Engineer, and represent to the best of my knowledge, the project as constructed.

PE Dillon Tomaro 2/4/25

STATE OF ALASKA
DEPARTMENT OF TRANSPORTATION AND PUBLIC FACILITIES

Glacier Highway Improvements
(Lemon Creek Area)
Project # Z681240000

Survey Control Sheet

6.30.20

STATE OF ALASKA 49TH Daniel M. Ignatov No. 11296 REGISTERED PROFESSIONAL LAND SURVEYOR

DESIGNED J.Popol
CHECKED D.Ignatov
DRAFTED J.Popol
XREFS
SCALE
LAYOUT A7
DATE TIME 6/30/2020 12:36
DRAWING LOCATION Q:\Jnu\68124\SV\C3D\SOURCE DWGS\BASEMAP\Glacier_SCS_050217.dwg

NO.	DATE	REVISION	STATE	PROJECT DESIGNATION	YEAR	SHEET NO.	TOTAL SHEETS
			ALASKA	TEA0955(016)/Z68124	2020	A8	235

DESIGNED J.Popp
CHECKED D.Taylor
DRAFTED J.Popp

XREFS

SCALE

LAYOUT A8

DATE TIME 6/30/2020 12:36

DRAWING LOCATION
Q:\Juneau\681240\SV\C3D\SOURCE DWGS\BASEMAP\Glacier_SCS_050217.dwg

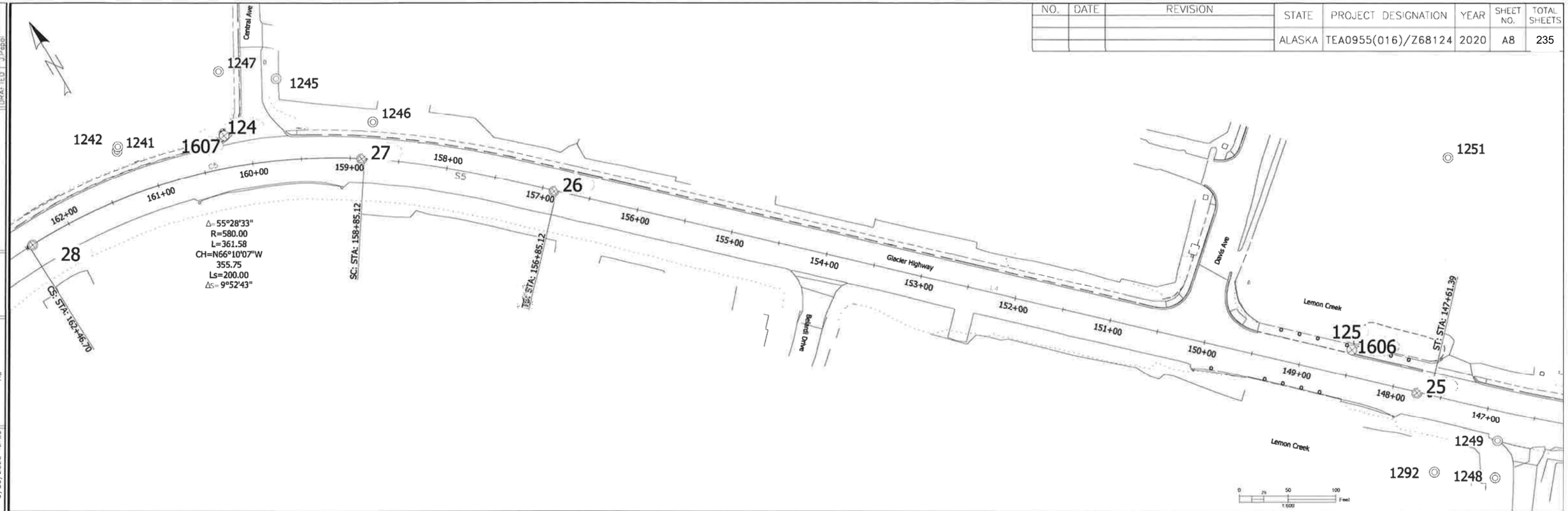

Record Drawings have been reviewed by the Project Engineer, and represent to the best of my knowledge, the project as constructed.

PE Dillon Tomaro 2/4/25

6.30.20
STATE OF ALASKA
49 TH
Daniel M. Ignatov
No. 11296
REGISTERED PROFESSIONAL LAND SURVEYOR

STATE OF ALASKA
DEPARTMENT OF TRANSPORTATION
AND PUBLIC FACILITIES

Glacier Highway Improvements (Lemon Creek Area) Project # Z681240000

Survey Control Sheet

NO.	DATE	REVISION	STATE	PROJECT DESIGNATION	YEAR	SHEET NO.	TOTAL SHEETS
			ALASKA	TEA0955(016)/Z68124	2020	A9	235

COORDINATES HOLD OVER DISTANCES AND BEARINGS

Record Drawings have been reviewed by the Project Engineer, and represent to the best of my knowledge, the project as constructed.

PE *Dillon Tomaro* 2/4/25

GLACIER HIGHWAY DESIGN ALIGNMENT

SEGMENT	STATION	NORTHING	EASTING	DISTANCE	BEARING	STATION	RADIUS	LENGTH	DELTA	SPRIAL LENGTH	SPIRAL A	SPIRAL DELTA
L1	100+00.00	496762.32	514208.39	357.49	N51° 42' 48"E	103+57.49						
C1	103+57.49	496983.82	514488.99			106+82.63	1170.00	325.14	15°55'20"			
C2	106+82.63	497217.93	514713.12			116+72.45	1444.00	989.82	39°16'29"			
L2	116+72.45	498150.17	514983.14	926.01	N3° 29' 02"W	125+98.47						
S1	125+98.47	499074.47	514926.87			128+98.47				300.00	414.61	14°59'56"
C3	128+98.47	499370.29	514882.76			134+03.54	573.00	505.07	50°30'13"			
S2	134+03.54	499723.53	514544.79			137+03.54				300.00	414.61	14°59'56"
L3	137+03.54	499780.86	514251.21	213.47	N83° 59' 06"W	139+17.01						
S3	139+17.01	499803.03	514038.92			141+77.01				260.00	437.15	10°08'02"
C4	141+77.01	499845.40	513782.76			145+01.39	735.00	324.38	25°17'11"			
S4	145+01.39	500000.38	513500.78			147+61.39				260.00	437.15	10°08'02"
L4	147+61.39	500193.89	513327.70	923.73	N38° 25' 51"W	156+85.12						
S5	156+85.12	500917.51	512753.54			158+85.12				200.00	340.59	9°52'43"
C5	158+85.12	501066.59	512820.61			162+46.70	580.00	361.58	35°43'08"			
S6	162+46.70	501210.33	512295.19			164+46.70				200.00	340.59	9°52'43"
L5	164+46.70	501208.18	512095.46	989.65	S86° 05' 36"W	174+36.35						
C6	174+36.35	501140.76	511108.11			174+90.46	482.00	54.11	6°25'55"			
L6	174+90.46	501134.05	511054.45	58.28	S79° 39' 41"W	175+48.74						
C7	175+48.74	501123.59	510997.12			175+60.18	96.00	11.44	6°49'37"			
L7	175+60.18	501122.21	510985.77	87.31	S86° 29' 18"W	176+47.49						
L8	176+47.49	501116.87	510898.62	84.23	N87° 44' 52"W	177+31.72						
C8	177+31.72	501120.18	510814.45			177+41.50	91.00	9.78	6°09'32"			
L9	177+41.50	501120.04	510804.88	317.34	S86° 05' 36"W	180+58.85						
C9	180+58.85	501098.41	510488.07			184+98.64	5730.00	439.79	4°23'51"			
L10	184+98.64	501051.65	510050.88	401.36	S81° 41' 45"W	189+00.00						

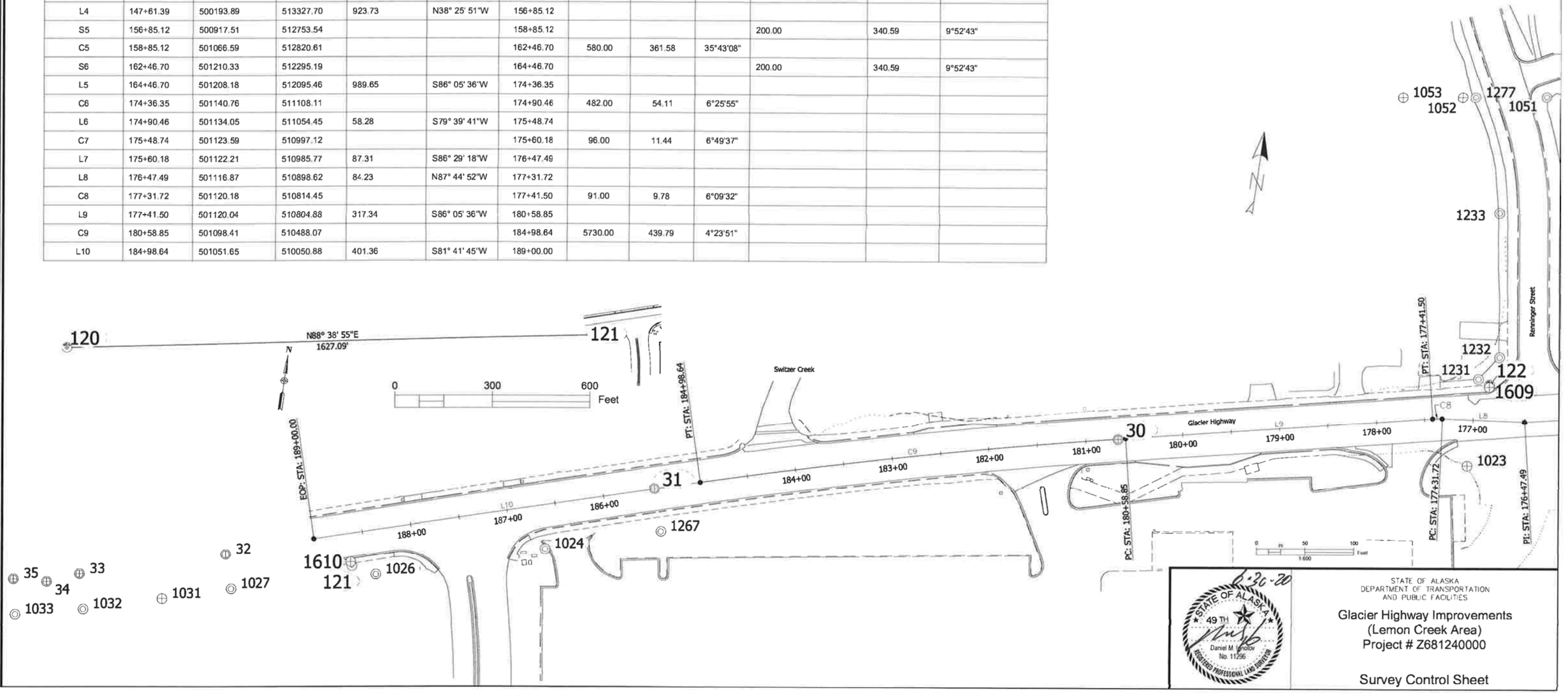

STATE OF ALASKA
DEPARTMENT OF TRANSPORTATION AND PUBLIC FACILITIES

Glacier Highway Improvements
(Lemon Creek Area)
Project # Z681240000

Survey Control Sheet

DESIGNED J.Popol
CHECKED D.Ignatov
DRAFTED J.Popol
XREFS
SCALE
LAYOUT A9
DATE TIME 6/30/2020 12:36
DRAWING LOCATION Q:\Jnu\68124\SV\C3D\SOURCE DWGS\BASEMAP\Glacier_SCS_050217.dwg

NO.	DATE	REVISION

STATE	PROJECT DESIGNATION	YEAR	SHEET NO.	TOTAL SHEETS
ALASKA	TEA-0955(016)/Z68124	2020	A-10	235

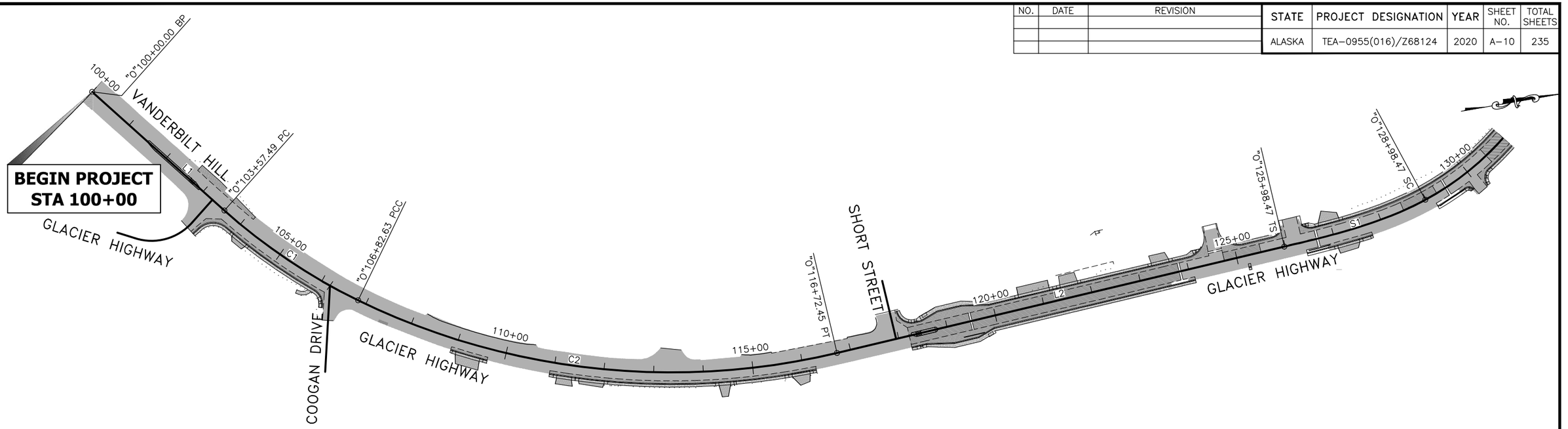

GLACIER HIGHWAY DESIGN ALIGNMENT

SEGMENT	STATION	NORTHING	EASTING	DISTANCE	BEARING	STATION	RADIUS	LENGTH	DELTA	SPRIAL LENGTH	SPIRAL A	SPIRAL DELTA
L1	100+00.00	496762.32	514208.39	357.49	N51° 42' 48"E	103+57.49						
C1	103+57.49	496983.82	514488.99			106+82.63	1170.00	325.14	15°55'20"			
C2	106+82.63	497217.93	514713.12			116+72.45	1444.00	989.82	39°16'29"			
L2	116+72.45	498150.17	514983.14	926.01	N3° 29' 02"W	125+98.47						
S1	125+98.47	499074.47	514926.87			128+98.47				300.00	414.61	14°59'56"

Record Drawings have been reviewed by the Project Engineer, and represent to the best of my knowledge, the project as constructed.

PE Dillon Tomaro 2/4/25

SURVEY CONTROL 1

STATE OF ALASKA 49TH ANTHONY M. ROOS CE 127591 REGISTERED PROFESSIONAL ENGINEER

7/31/2020

PLANS DEVELOPED BY: KITTELSON & ASSOCIATES, INC. CERT. OF AUTHORIZATION NO.: 254741, 851 SW 6TH AVE. SUITE 600, PORTLAND, OR 97204, (503) 228-5230
H:\20\20487 - Glacier Highway - Juneau Traffic Design\design_CD\68124_A_DESIGN CONTROL_A-9 Thu, Jul/30/20 03:15pm

NO.	DATE	REVISION

STATE	PROJECT DESIGNATION	YEAR	SHEET NO.	TOTAL SHEETS
ALASKA	TEA-0955(016)/Z68124	2020	A-11	235

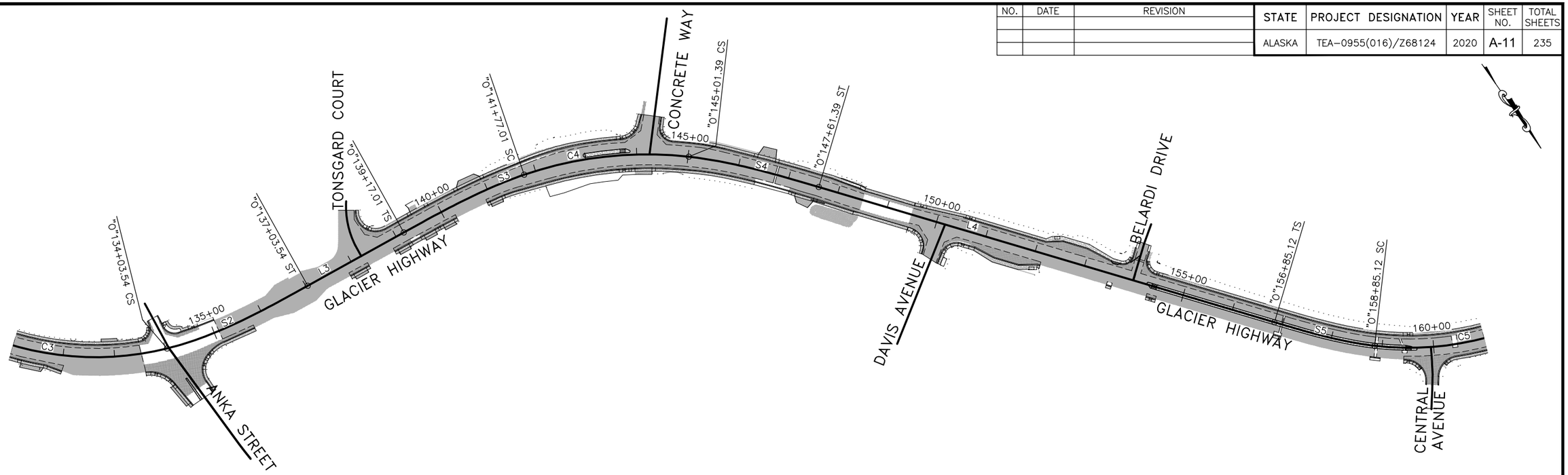

GLACIER HIGHWAY DESIGN ALIGNMENT

SEGMENT	STATION	NORTHING	EASTING	DISTANCE	BEARING	STATION	RADIUS	LENGTH	DELTA	SPRIAL LENGTH	SPIRAL A	SPIRAL DELTA
C3	128+98.47	499370.29	514882.76			134+03.54	573.00	505.07	50°30'13"			
S2	134+03.54	499723.53	514544.79			137+03.54				300.00	414.61	14°59'56"
L3	137+03.54	499780.66	514251.21	213.47	N83° 59' 06"W	139+17.01						
S3	139+17.01	499803.03	514038.92			141+77.01				260.00	437.15	10°08'02"
C4	141+77.01	499845.40	513782.76			145+01.39	735.00	324.38	25°17'11"			
S4	145+01.39	500000.36	513500.78			147+61.39				260.00	437.15	10°08'02"
L4	147+61.39	500193.89	513327.70	923.73	N38° 25' 51"W	156+85.12						
S5	156+85.12	500917.51	512753.54			158+85.12				200.00	340.59	9°52'43"
C5	158+85.12	501066.59	512620.61			162+46.70	580.00	361.58	35°43'08"			

Record Drawings have been reviewed by the Project Engineer, and represent to the best of my knowledge, the project as constructed.

PE Dillon Tomaro 2/4/25

SURVEY CONTROL 2

STATE OF ALASKA 49TH ANTHONY M. ROOS CE 127591 REGISTERED PROFESSIONAL ENGINEER

7/31/2020

PLANS DEVELOPED BY: KITTELSON & ASSOCIATES, INC. CERT. OF AUTHORIZATION NO.: 254741, 851 SW 6TH AVE. SUITE 600, PORTLAND, OR 97204, (503) 228-5230
H:\20\20487 - Glacier Highway - Juneau Traffic Design\design_CD\68124_A_DESIGN CONTROL_A-10 Thu, Jul/30/20 03:15am

NO.	DATE	REVISION

STATE	PROJECT DESIGNATION	YEAR	SHEET NO.	TOTAL SHEETS
ALASKA	TEA-0955(016)/Z68124	2020	A-12	235

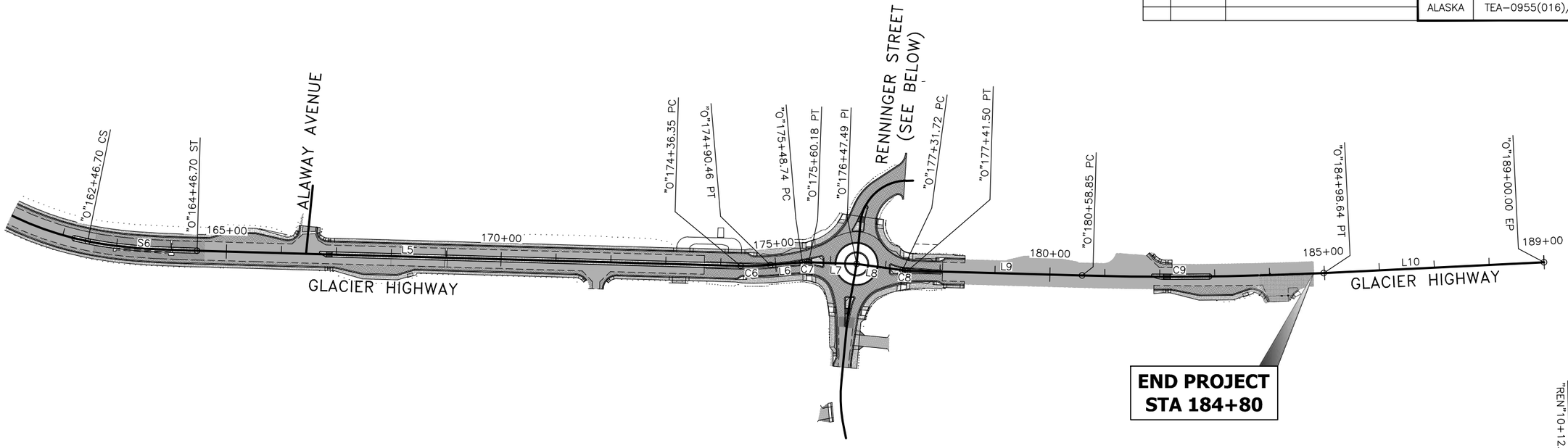

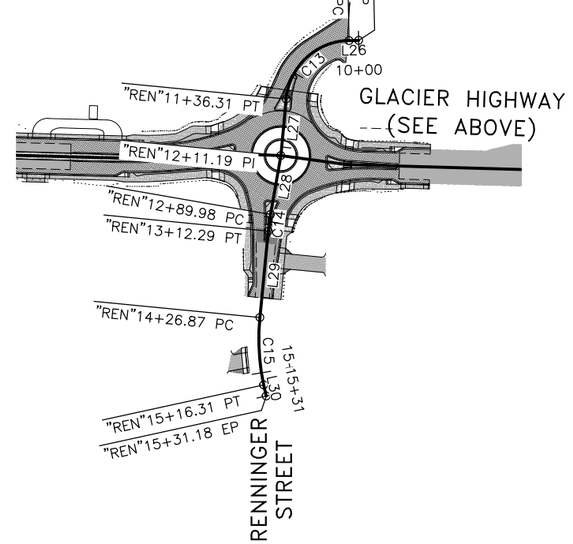

GLACIER HIGHWAY DESIGN ALIGNMENT

SEGMENT	STATION	NORTHING	EASTING	DISTANCE	BEARING	STATION	RADIUS	LENGTH	DELTA	SPRIAL LENGTH	SPIRAL A	SPIRAL DELTA
S6	162+46.70	501210.33	512295.19			164+46.70				200.00	340.59	9°52'43"
L5	164+46.70	501208.18	512095.46	989.65	S86° 05' 36"W	174+36.35						
C6	174+36.35	501140.76	511108.11			174+90.46	482.00	54.11	6°25'55"			
L6	174+90.46	501134.05	511054.45	58.28	S79° 39' 41"W	175+48.74						
C7	175+48.74	501123.59	510997.12			175+60.18	96.00	11.44	6°49'37"			
L7	175+60.18	501122.21	510985.77	87.31	S86° 29' 18"W	176+47.49						
L8	176+47.49	501116.87	510898.62	84.23	N87° 44' 52"W	177+31.72						
C8	177+31.72	501120.18	510814.45			177+41.50	91.00	9.78	6°09'32"			
L9	177+41.50	501120.04	510804.68	317.34	S86° 05' 36"W	180+58.85						
C9	180+58.85	501098.41	510488.07			184+98.64	5730.00	439.79	4°23'51"			
L10	184+98.64	501051.65	510050.88	401.36	S81° 41' 45"W	189+00.00						

RENNINGER STREET DESIGN ALIGNMENTS

SEGMENT	STATION	NORTHING	EASTING	DISTANCE	BEARING	STATION	RADIUS	LENGTH	DELTA	SPRIAL LENGTH	SPIRAL A	SPIRAL DELTA
L26	10+00.00	500956.07	510810.89	12.79	N83° 15' 35"E	10+12.79						
C13	10+12.79	500957.57	510823.59			11+36.31	85.00	123.52	83°15'35"			
L27	11+36.31	501041.98	510898.62	74.88	N0° 00' 00"E	12+11.19						
L28	12+11.19	501116.87	510898.62	78.78	N4° 19' 36"E	12+89.98						
C14	12+89.98	501195.43	510904.56			13+12.29	300.00	22.31	4°15'42"			
L29	13+12.29	501217.72	510905.42	114.58	N0° 03' 54"E	14+26.87						
C15	14+26.87	501332.30	510905.55			15+16.31	287.00	89.44	17°51'21"			
L30	15+16.31	501420.31	510891.82	14.87	N17° 47' 27"W	15+31.18						
L25	8+75.17	501069.84	511897.15	124.83	N0° 09' 28"E	10+00.00						

Record Drawings have been reviewed by the Project Engineer, and represent to the best of my knowledge, the project as constructed.

PE *Dillon Tomaro* 2/4/25

SURVEY CONTROL 3

STATE OF ALASKA
49TH
ANTHONY M. ROOS
CE 127591
REGISTERED PROFESSIONAL ENGINEER

7/31/2020

PLANS DEVELOPED BY: KITTELSON & ASSOCIATES, INC. CERT. OF AUTHORIZATION NO.: 254741, 851 SW 6TH AVE. SUITE 600, PORTLAND, OR 97204, (503) 228-5230
H:\20\20487 - Glacier Highway - Juneau Traffic Design\design_CD\68124_A_DESIGN CONTROL-A-11 Thu, Jul/30/20 03:16pm

NO.	DATE	REVISION
3	12/15/20	ADDENDUM 4
2	01/05/21	ADDENDUM 7
1	01/17/21	ADDENDUM 9

STATE	PROJECT DESIGNATION	YEAR	SHEET NO.	TOTAL SHEETS
ALASKA	TEA-0955(016)/Z68124	2020	B-1	235

** Deleted by CO12

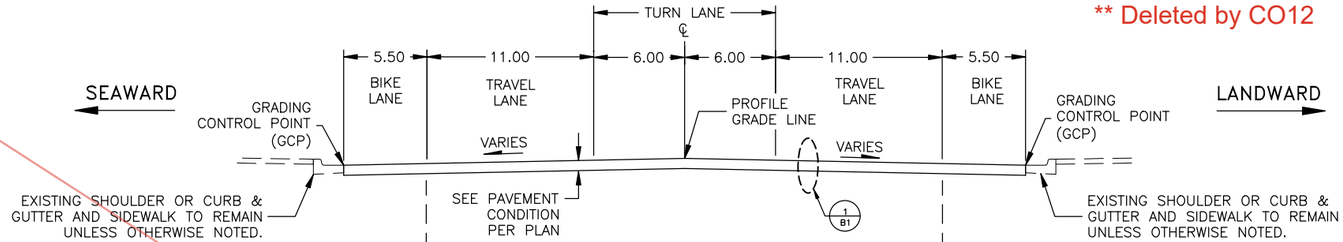

MATCH EXISTING CURB/SHOULDER SECTION

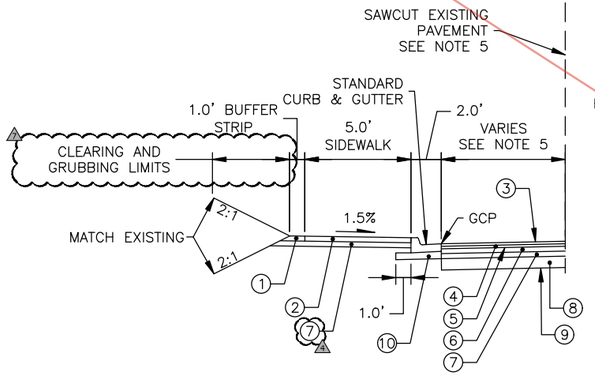

NEW SEAWARD WIDENING

INCLUDES WIDENING, SIDEWALK AND BUS STOP IMPROVEMENTS

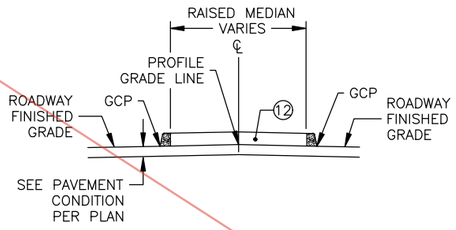

NEW DOWELED CONCRETE MEDIAN

SEE SHEET E-5 FOR MEDIAN DETAILS

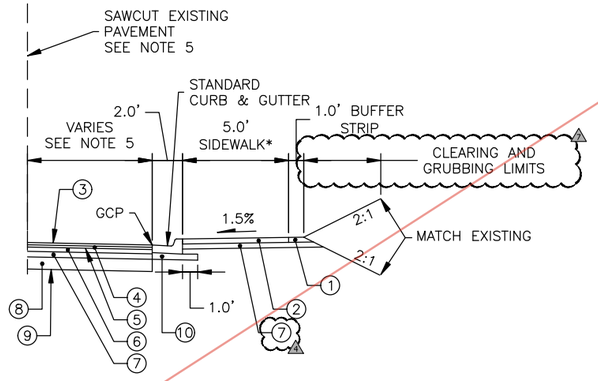

NEW LANDWARD WIDENING

INCLUDES WIDENING, SIDEWALK AND BUS STOP IMPROVEMENTS

LEGEND

1. 4" TOPSOIL
2. 4" CONCRETE SIDEWALK
3. 2" HOT MIX ASPHALT (HMA), SP, TYPE B
4. 2" HMA, TYPE II, CLASS B
5. TACK COAT
6. 4" ASPHALT TREATED BASE (ATB) COURSE, 2" MAX LIFTS
7. 4" AGGREGATE BASE COURSE, GRADING D-1
8. 16", BORROW, TYPE A
9. BORROW, TYPE C
10. 5" AGGREGATE BASE COURSE, GRADING D-1
11. 4" COLORED TEXTURED CONCRETE
12. 6" COLORED TEXTURE CONCRETE MEDIAN. SEE SHEET E-5 FOR DETAILS
13. 6" COLORED TEXTURED CONCRETE MEDIAN

NOTES

1. TYPICAL SECTIONS PROVIDE CROSS SECTION ELEMENT DEPTHS, MATERIALS, WIDTHS, AND SLOPES OVER APPROXIMATE RANGES OF STATIONS WHERE APPLICABLE. SEE GRADING SHEETS (G SERIES) FOR DETAILED GEOMETRY AND LAYOUT GRADING CONTROL POINTS.
2. ROADWAY CROSS SLOPE AND SUPERELEVATION WILL BE CONTROLLED BY GRADING CONTROL POINTS.
3. HOT MIX ASPHALT (HMA) AND ASPHALT TREATED BASE (ATB) TO BE INSTALLED USING A MAXIMUM OF 2" LIFTS. TACK COAT TO BE PLACED BETWEEN HMA AND ATB COURSES.
4. SEE STANDARD DRAWING I.20.20 AND DETAIL SHEETS FOR DIMENSIONS OF CURB AND GUTTER OF SPECIFIED TYPE.
5. SEE F SERIES FOR SAWCUT LOCATIONS.
6. FROM "O" STA. 142+11.10 TO STA 144+30.06, THE LANDWARD SIDEWALK SHALL SLOPE AWAY FROM THE CURBLINE AT 1.50%. TRANSITION SLOPE OVER 10'.

GLACIER HIGHWAY TYPICAL SECTIONS

SEE NOTE 6

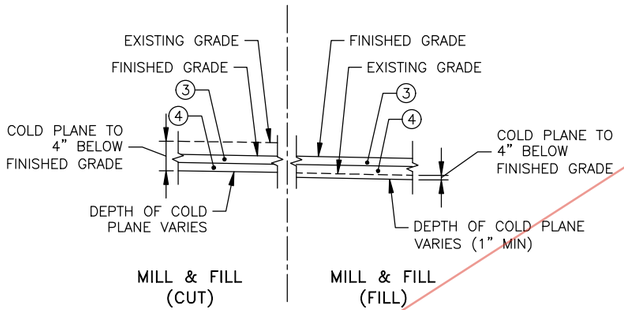

PAVEMENT CONDITION

A

MILL & FILL

CONTRACTOR TO COLD PLANE EXISTING ASPHALT TO FINISHED GRADE -4", AND INSTALL PAVEMENT SYSTEM AS NOTED TO FINISHED GRADE.

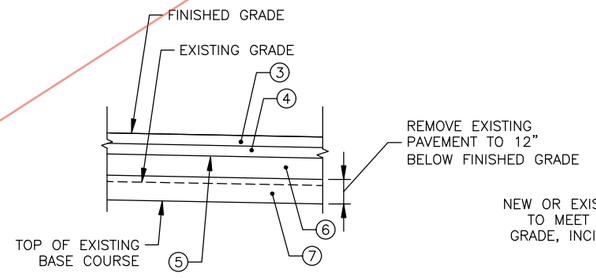

PAVEMENT CONDITION

B

RECONSTRUCT

CONTRACTOR TO REMOVE EXISTING PAVEMENT AND BASE COURSE (IF ENCOUNTERED) TO FINISHED GRADE -12" AND INSTALL PAVEMENT SYSTEM AS NOTED TO FINISHED GRADE.

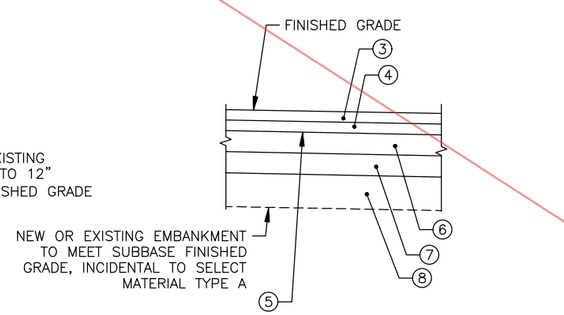

PAVEMENT CONDITION

C

NEW ROADWAY

CONTRACTOR TO REMOVE EXISTING PAVEMENT AND INSTALL PAVEMENT SYSTEM AS NOTED TO FINISHED GRADE.

1 / B1 ROADWAY STRUCTURAL SECTION CONDITIONS

SEE F SERIES SHEETS FOR SECTION CONDITIONS AND LOCATIONS

PAVEMENT LEGEND

- PAVEMENT CONDITION A – MILL & FILL
- PAVEMENT CONDITION B – RECONSTRUCT
- PAVEMENT CONDITION C – NEW ROADWAY

Record Drawings have been reviewed by the Project Engineer, and represent to the best of my knowledge, the project as constructed.

PE Dillon Tomaro 2/4/25

STATE OF ALASKA 49TH ANTHONY M. RODS CE-127591 REGISTERED PROFESSIONAL ENGINEER 1/17/21

TYPICAL SECTIONS

PLANS DEVELOPED BY: KITTELSON & ASSOCIATES, INC. CERT. OF AUTHORIZATION NO.: 254741, 851 SW 6TH AVE. SUITE 600, PORTLAND, OR 97204, (503) 228-5230
H:\26\20487 - Glacier Highway - Juneau Traffic Design\design_CD\68124_B_TYP-B-1 Sun, Jan/17/21 02:37pm

NO.	DATE	REVISION
4	12/15/20	ADDENDUM 4
7	01/05/21	ADDENDUM 7
9	01/17/21	ADDENDUM 9

STATE	PROJECT DESIGNATION	YEAR	SHEET NO.	TOTAL SHEETS
ALASKA	TEA-0955(016)/Z68124	2020	B-1	235

** Deleted by CO34

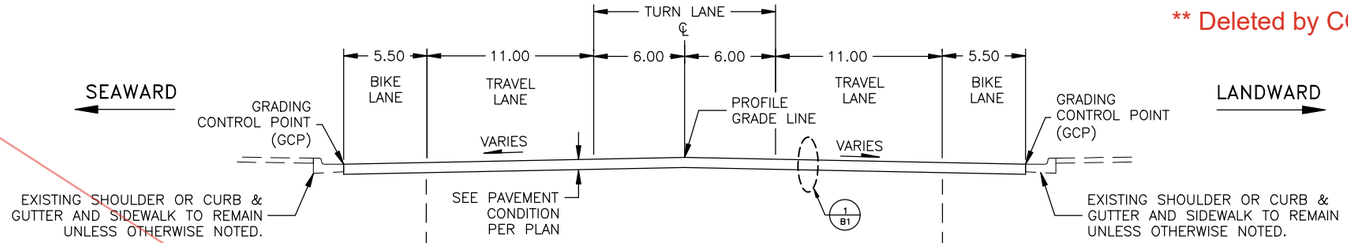

MATCH EXISTING CURB/SHOULDER SECTION

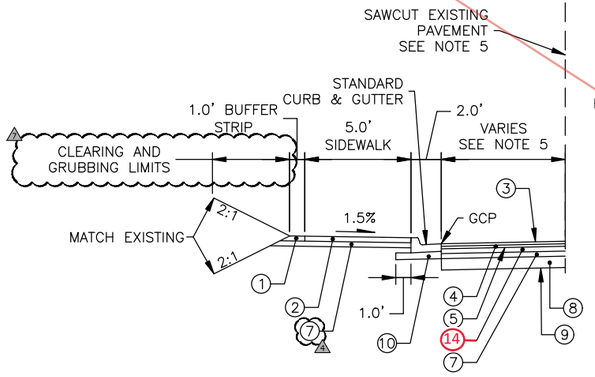

NEW SEAWARD WIDENING

INCLUDES WIDENING, SIDEWALK AND BUS STOP IMPROVEMENTS

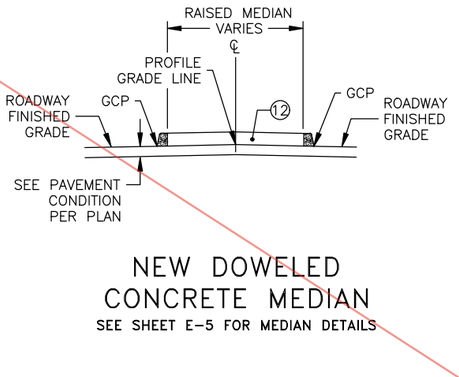

NEW DOWELED CONCRETE MEDIAN

SEE SHEET E-5 FOR MEDIAN DETAILS

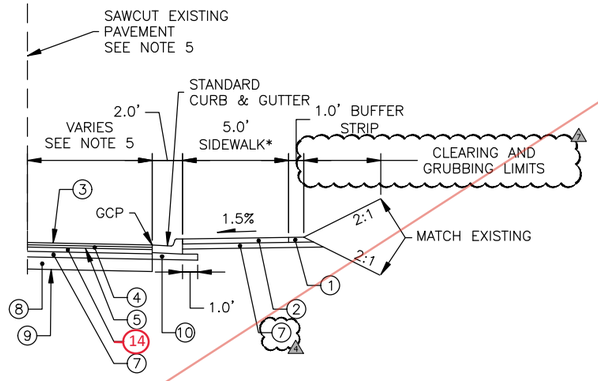

NEW LANDWARD WIDENING

INCLUDES WIDENING, SIDEWALK AND BUS STOP IMPROVEMENTS

LEGEND

1. 4" TOPSOIL
2. 4" CONCRETE SIDEWALK
3. 2" HOT MIX ASPHALT (HMA), SP, TYPE B
4. 2" HMA, TYPE II, CLASS B
5. TACK COAT
6. 4" ASPHALT TREATED BASE (ATB) COURSE, 2" MAX LIFTS
7. 4" AGGREGATE BASE COURSE, GRADING D-1
8. 16", BORROW, TYPE A
9. BORROW, TYPE C
10. 5" AGGREGATE BASE COURSE, GRADING D-1
11. 4" COLORED TEXTURED CONCRETE
12. 6" COLORED TEXTURE CONCRETE MEDIAN. SEE SHEET E-5 FOR DETAILS
13. 6" COLORED TEXTURED CONCRETE MEDIAN
14. 2" ASPHALT TREATED BASE (ATB) COURSE, 2" MAX LIFTS

NOTES

1. TYPICAL SECTIONS PROVIDE CROSS SECTION ELEMENT DEPTHS, MATERIALS, WIDTHS, AND SLOPES OVER APPROXIMATE RANGES OF STATIONS WHERE APPLICABLE. SEE GRADING SHEETS (G SERIES) FOR DETAILED GEOMETRY AND LAYOUT GRADING CONTROL POINTS.
2. ROADWAY CROSS SLOPE AND SUPERELEVATION WILL BE CONTROLLED BY GRADING CONTROL POINTS.
3. HOT MIX ASPHALT (HMA) AND ASPHALT TREATED BASE (ATB) TO BE INSTALLED USING A MAXIMUM OF 2" LIFTS. TACK COAT TO BE PLACED BETWEEN HMA AND ATB COURSES.
4. SEE STANDARD DRAWING I.20.20 AND DETAIL SHEETS FOR DIMENSIONS OF CURB AND GUTTER OF SPECIFIED TYPE.
5. SEE F SERIES FOR SAWCUT LOCATIONS.
6. FROM "0" STA. 142+11.10 TO STA 144+30.06, THE LANDWARD SIDEWALK SHALL SLOPE AWAY FROM THE CURBLINE AT 1.50%. TRANSITION SLOPE OVER 10'.
7. PAY LIMITS FOR ATB, ROADWAY PATCHES & TEMPORARY IN LANDWARD AND SEAWARD WIDENING SECTIONS SHALL BE LIMITED TO 0' TO 8' FROM LIP OF CURB (LOC), WITH THE EXCEPTION THAT DISTANCES MAY BE GREATER THAN 8' FROM LOC AT BUS STOPS.

GLACIER HIGHWAY TYPICAL SECTIONS

SEE NOTE 6

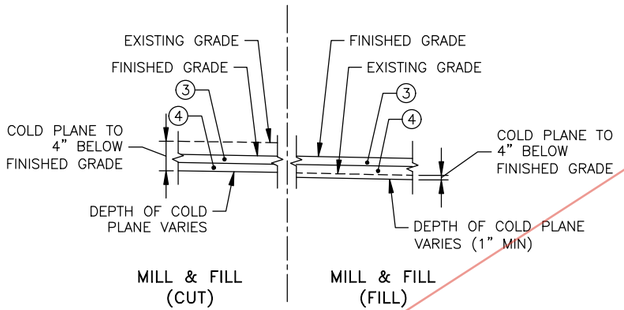

PAVEMENT CONDITION

A

MILL & FILL

CONTRACTOR TO COLD PLANE EXISTING ASPHALT TO FINISHED GRADE -4", AND INSTALL PAVEMENT SYSTEM AS NOTED TO FINISHED GRADE.

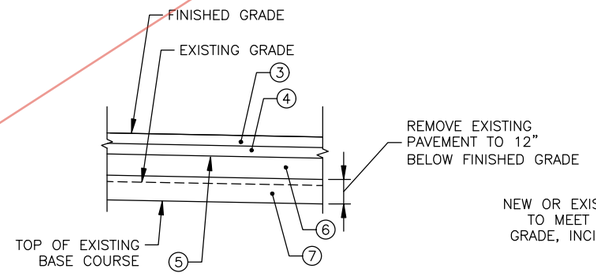

PAVEMENT CONDITION

B

RECONSTRUCT

CONTRACTOR TO REMOVE EXISTING PAVEMENT AND BASE COURSE (IF ENCOUNTERED) TO FINISHED GRADE -12" AND INSTALL PAVEMENT SYSTEM AS NOTED TO FINISHED GRADE.

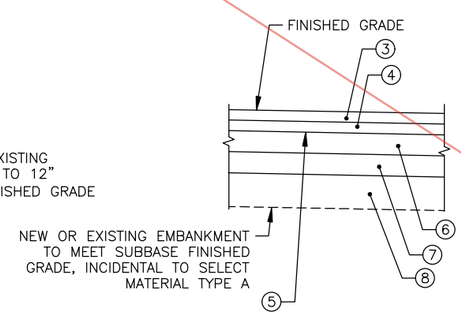

PAVEMENT CONDITION

C

NEW ROADWAY

CONTRACTOR TO REMOVE EXISTING PAVEMENT AND INSTALL PAVEMENT SYSTEM AS NOTED TO FINISHED GRADE.

PAVEMENT LEGEND

- PAVEMENT CONDITION A – MILL & FILL
- PAVEMENT CONDITION B – RECONSTRUCT
- PAVEMENT CONDITION C – NEW ROADWAY

1 B1 ROADWAY STRUCTURAL SECTION CONDITIONS

SEE F SERIES SHEETS FOR SECTION CONDITIONS AND LOCATIONS

Record Drawings have been reviewed by the Project Engineer, and represent to the best of my knowledge, the project as constructed.

PE Dillon Tomaro 2/4/25

STATE OF ALASKA 49TH ANTHONY M. RODS CE-127591 REGISTERED PROFESSIONAL ENGINEER 1/17/21

TYPICAL SECTIONS

PLANS DEVELOPED BY: KITTELSON & ASSOCIATES, INC. CERT. OF AUTHORIZATION NO.: 254741, 851 SW 6TH AVE. SUITE 600, PORTLAND, OR 97204, (503) 228-5230
H:\20\20487 - Glacier Highway - Juneau Traffic Design\design_CD\68124_B_TYP-B-1 Sun, Jan/17/21 02:37pm

NO.	DATE	REVISION
4	12/15/20	ADDENDUM 4
7	01/05/21	ADDENDUM 7
9	01/17/21	ADDENDUM 9
11	07/19/21	LINEAR GRADING DETAIL AND SUMMARY
13	03/28/22	TYPICAL SECTION REVISIONS

STATE	PROJECT DESIGNATION	YEAR	SHEET NO.	TOTAL SHEETS
ALASKA	TEA-0955(016)/Z68124	2020	B-1	235

CO 34

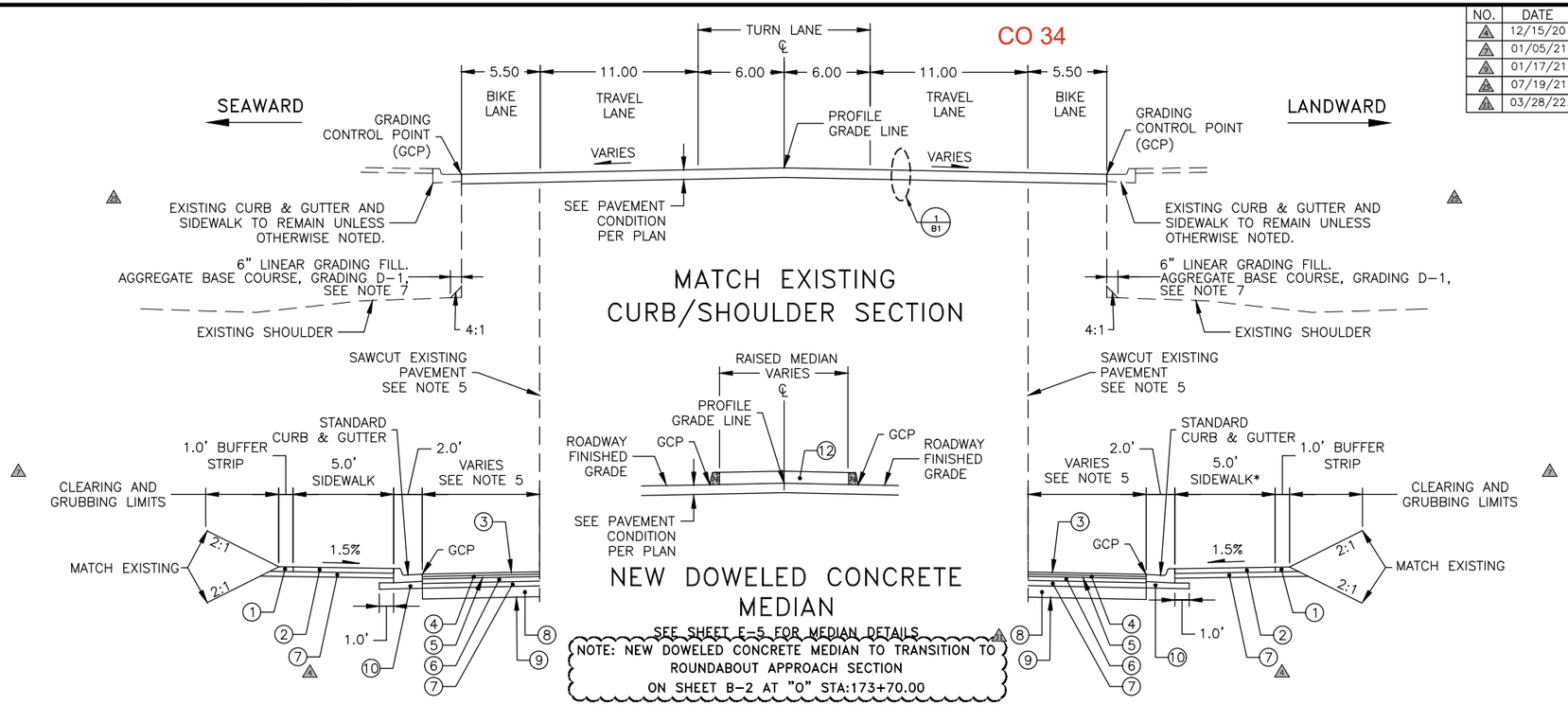

NEW SEAWARD WIDENING

INCLUDES WIDENING, SIDEWALK AND BUS STOP IMPROVEMENTS

NEW LANDWARD WIDENING

INCLUDES WIDENING, SIDEWALK AND BUS STOP IMPROVEMENTS

GLACIER HIGHWAY TYPICAL SECTIONS

SEE NOTE 6

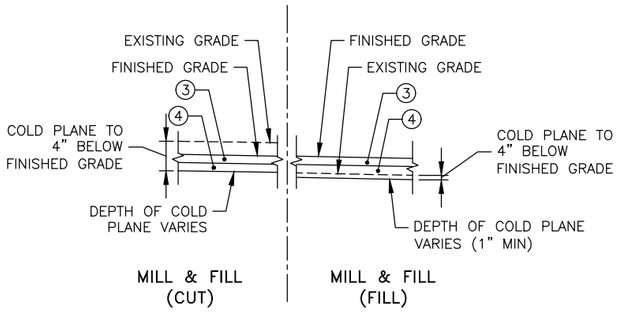

PAVEMENT CONDITION

A

MILL & FILL

CONTRACTOR TO COLD PLANE EXISTING ASPHALT TO FINISHED GRADE -4", AND INSTALL PAVEMENT SYSTEM AS NOTED TO FINISHED GRADE.

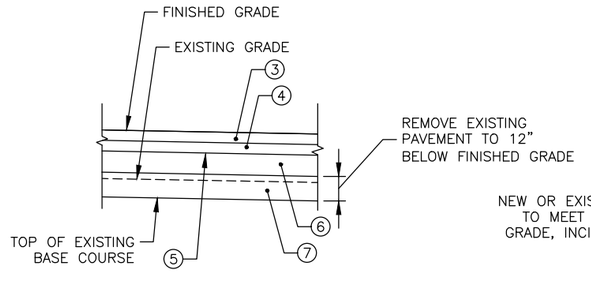

PAVEMENT CONDITION

B

RECONSTRUCT

CONTRACTOR TO REMOVE EXISTING PAVEMENT AND BASE COURSE (IF ENCOUNTERED) TO FINISHED GRADE -12" AND INSTALL PAVEMENT SYSTEM AS NOTED TO FINISHED GRADE.

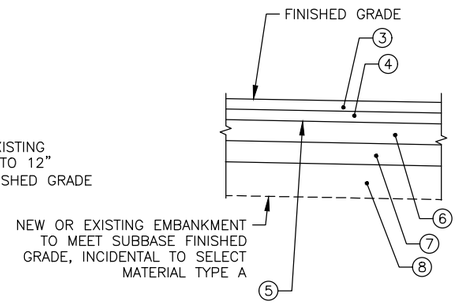

PAVEMENT CONDITION

C

NEW ROADWAY

CONTRACTOR TO REMOVE EXISTING PAVEMENT AND INSTALL PAVEMENT SYSTEM AS NOTED TO FINISHED GRADE.

1 / B1 ROADWAY STRUCTURAL SECTION CONDITIONS

SEE F SERIES SHEETS FOR SECTION CONDITIONS AND LOCATIONS

LEGEND

1. 4" TOPSOIL
2. 4" CONCRETE SIDEWALK
3. 2" HOT MIX ASPHALT (HMA), SP, TYPE B
4. 2" HMA, TYPE II, CLASS B
5. TACK COAT
6. 4" ASPHALT TREATED BASE (ATB) COURSE, 2" MAX LIFTS
7. 4" AGGREGATE BASE COURSE, GRADING D-1
8. 16", BORROW, TYPE A
9. BORROW, TYPE C
10. 5" AGGREGATE BASE COURSE, GRADING D-1
11. 4" COLORED TEXTURED CONCRETE
12. 6" COLORED TEXTURE CONCRETE MEDIAN. SEE SHEET E-5 FOR DETAILS
13. 6" COLORED TEXTURED CONCRETE MEDIAN

NOTES

1. TYPICAL SECTIONS PROVIDE CROSS SECTION ELEMENT DEPTHS, MATERIALS, WIDTHS, AND SLOPES OVER APPROXIMATE RANGES OF STATIONS WHERE APPLICABLE. SEE GRADING SHEETS (G SERIES) FOR DETAILED GEOMETRY AND LAYOUT GRADING CONTROL POINTS.
2. ROADWAY CROSS SLOPE AND SUPERELEVATION WILL BE CONTROLLED BY GRADING CONTROL POINTS.
3. HOT MIX ASPHALT (HMA) AND ASPHALT TREATED BASE (ATB) TO BE INSTALLED USING A MAXIMUM OF 2" LIFTS. TACK COAT TO BE PLACED BETWEEN HMA AND ATB COURSES.
4. SEE STANDARD DRAWING I.20.20 AND DETAIL SHEETS FOR DIMENSIONS OF CURB AND GUTTER OF SPECIFIED TYPE.
5. SEE F SERIES FOR SAWCUT LOCATIONS.
6. FROM "0" STA. 142+11.10 TO STA 144+30.06, THE LANDWARD SIDEWALK SHALL SLOPE AWAY FROM THE CURBLINE AT 1.50%. TRANSITION SLOPE OVER 10'.
7. PLANE AND REPLACE ASPHALT TO OUTSIDE EDGE OF EXISTING ASPALT. LINEAR GRADING WILL REQUIRE CUTS AND FILLS AS SHOWN.

PAVEMENT LEGEND

- PAVEMENT CONDITION A – MILL & FILL
- PAVEMENT CONDITION B – RECONSTRUCT
- PAVEMENT CONDITION C – NEW ROADWAY

Record Drawings have been reviewed by the Project Engineer, and represent to the best of my knowledge, the project as constructed.

PE Dillon Tomaro 2/4/25

TYPICAL SECTIONS

STATE OF ALASKA 49TH — ANTHONY M. RODS CE 127591 REGISTERED PROFESSIONAL ENGINEER — 3/28/22

PLANS DEVELOPED BY: KITTELSON & ASSOCIATES, INC. CERT. OF AUTHORIZATION NO.: 254741, 851 SW 6TH AVE. SUITE 600, PORTLAND, OR 97204, (503) 228-5230
H:\20\20487 - Glacier Highway - Juneau Traffic Design\design_CD\68124_B_TYP-B-1 Mon, Mar/28/22 01:22pm

** Deleted by CO5

** Deleted by CO34

NO.	DATE	REVISION
4	12/10/20	ADDENDUM 4
7	01/05/21	ADDENDUM 7
9	01/17/21	ADDENDUM 9

STATE	PROJECT DESIGNATION	YEAR	SHEET NO.	TOTAL SHEETS
ALASKA	TEA-0955(016)/Z68124	2020	B-2	235

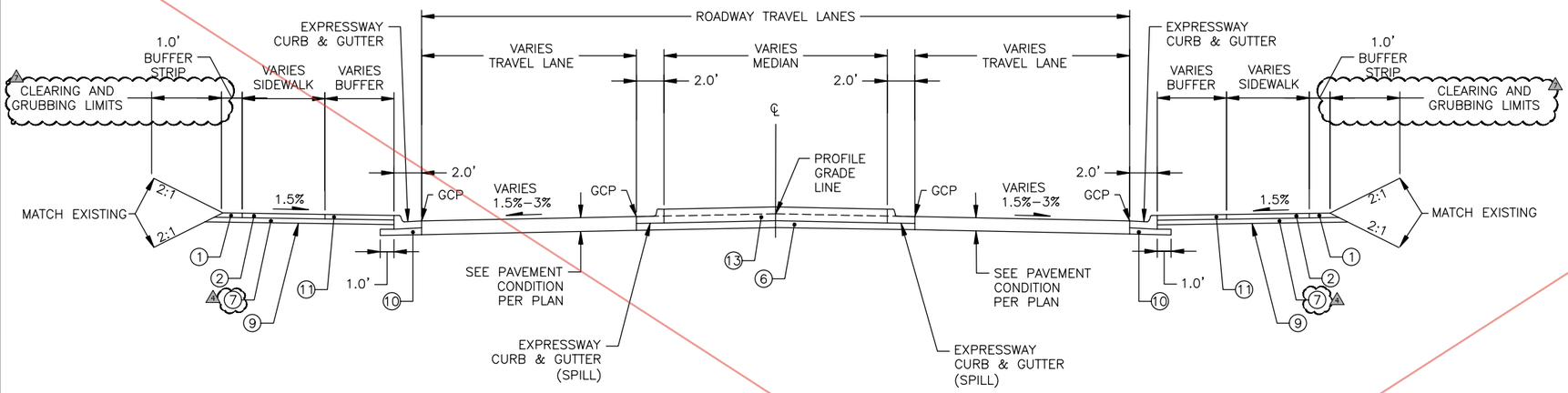

ROUNDABOUT APPROACH

"O" STA. 173+75 TO STA. 175+87
"O" STA. 177+09 TO STA. 178+02
"REN" STA. 12+72.72 TO 13+25.45

LEGEND

1. 4" TOPSOIL
2. 4" CONCRETE SIDEWALK
3. 2" HOT MIX ASPHALT (HMA), SP, TYPE B
4. 2" HMA, TYPE II, CLASS B
5. TACK COAT
6. 4" ASPHALT TREATED BASE (ATB) COURSE, 2" MAX LIFTS
7. 4" AGGREGATE BASE COURSE, GRADING D-1
8. 16", BORROW, TYPE A
9. BORROW, TYPE C
10. 5" AGGREGATE BASE COURSE, GRADING D-1
11. 4" COLORED TEXTURED CONCRETE
12. 6" COLORED TEXTURED CONCRETE MEDIAN. SEE SHEET E-5 FOR DETAILS
13. 6" COLORED TEXTURED CONCRETE MEDIAN

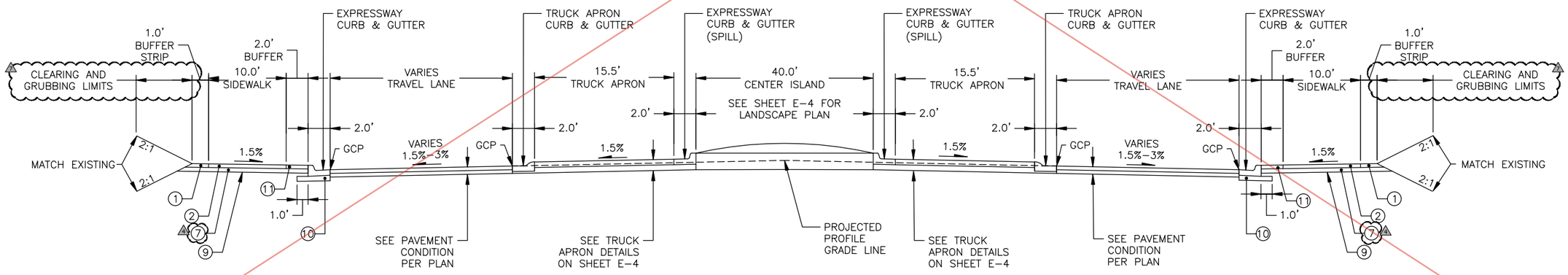

ROUNDABOUT CIRCULATORY ROADWAY

AT CENTER OF ROUNDABOUT
"O" STA. 176+85 TO STA. 176+09
"REN" STA. 11+73.19 TO 12+49.49

Record Drawings have been reviewed by the Project Engineer, and represent to the best of my knowledge, the project as constructed.

PE Dillon Tomaro 2/4/25

TYPICAL SECTIONS

STATE OF ALASKA
49TH
ANTHONY M. ROOS
CE 127591
REGISTERED PROFESSIONAL ENGINEER
1/17/21

PLANS DEVELOPED BY: KITTELSON & ASSOCIATES, INC. CERT. OF AUTHORIZATION NO.: 254741, 851 SW 6TH AVE. SUITE 600, PORTLAND, OR 97204, (503) 228-5230
H:\20\20487 - Glacier Highway - Juneau Traffic Design\design_CD\68124_B_TYP-B-2 Sun, Jan/17/21 02:37pm

CO 34

NO.	DATE	REVISION
4	12/10/20	ADDENDUM 4
7	01/05/21	ADDENDUM 7
9	01/17/21	ADDENDUM 9
11	03/28/22	TYPICAL SECTION REVISIONS

STATE	PROJECT DESIGNATION	YEAR	SHEET NO.	TOTAL SHEETS
ALASKA	TEA-0955(016)/Z68124	2020	B-2	235

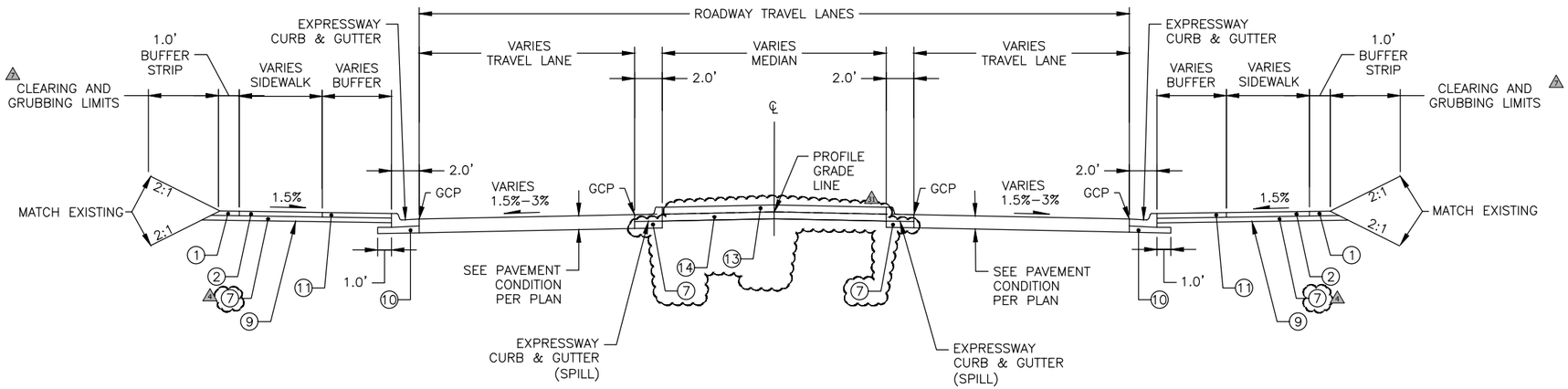

ROUNDABOUT APPROACH

"O" STA. 173+70 TO STA. 175+87
"O" STA. 177+09 TO STA. 178+02
"REN" STA. 12+72.72 TO 13+25.45

LEGEND

1. 4" TOPSOIL
2. 4" CONCRETE SIDEWALK
3. 2" HOT MIX ASPHALT (HMA), SP, TYPE B
4. 2" HMA, TYPE II, CLASS B
5. TACK COAT
6. 4" ASPHALT TREATED BASE (ATB) COURSE, 2" MAX LIFTS
7. 4" AGGREGATE BASE COURSE, GRADING D-1
8. 16", BORROW, TYPE A
9. BORROW, TYPE C
10. 5" AGGREGATE BASE COURSE, GRADING D-1
11. 4" COLORED TEXTURED CONCRETE
12. 6" COLORED TEXTURED CONCRETE MEDIAN. SEE SHEET E-5 FOR DETAILS
13. 6" CONCRETE MEDIAN
14. 6" AGGREGATE BASE COURSE, GRADING D-1

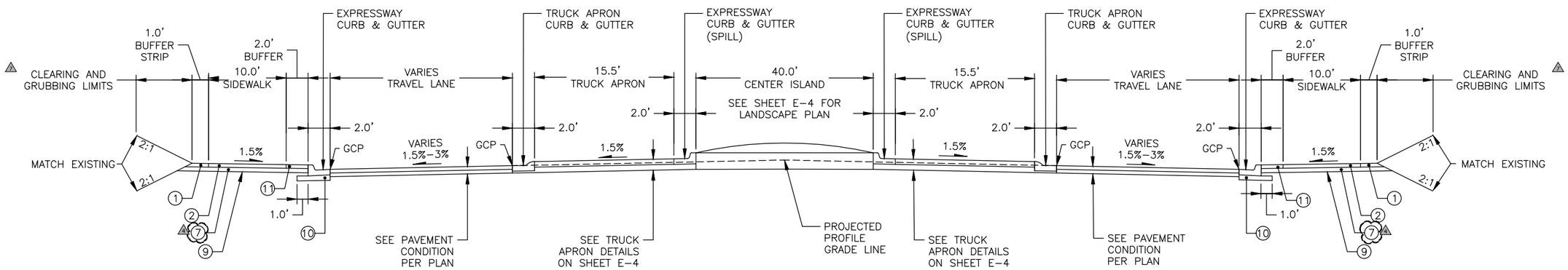

ROUNDABOUT CIRCULATORY ROADWAY

AT CENTER OF ROUNDABOUT
"O" STA. 176+85 TO STA. 176+09
"REN" STA. 11+73.19 TO 12+49.49

Record Drawings have been reviewed by the Project Engineer, and represent to the best of my knowledge, the project as constructed.

PE Dillon Tomaro 2/4/25

STATE OF ALASKA 49TH
ANTHONY M. ROOS
CE 127591
REGISTERED PROFESSIONAL ENGINEER
3/28/22

TYPICAL SECTIONS

PLANS DEVELOPED BY: KITTELSON & ASSOCIATES, INC. CERT. OF AUTHORIZATION NO.: 254741, 851 SW 6TH AVE. SUITE 600, PORTLAND, OR 97204, (503) 228-5230
H:\20\20487 - Glacier Highway - Juneau Traffic Design\design_CD\68124_B_TYP-B-2 Mon, Mar/28/22 01:22pm

NO.	DATE	REVISION
2	01/05/21	ADDENDUM 7
3	01/17/21	ADDENDUM 9

STATE	PROJECT DESIGNATION	YEAR	SHEET NO.	TOTAL SHEETS
ALASKA	TEA-0955(016)/Z68124	2020	B-3	235

** Deleted by CO27

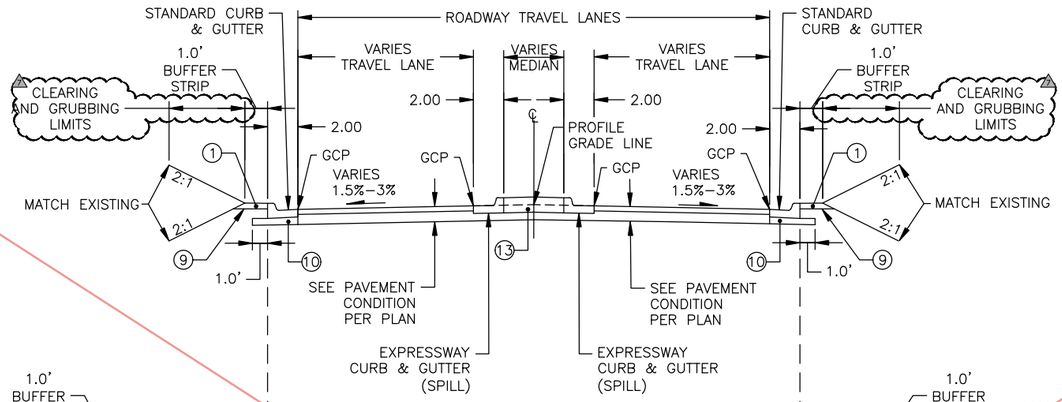

RENNINGER STREET TYPICAL SECTION

"REN" STA. 10+00.00 TO 11+24.65
"REN" STA. 13+25.45 TO 14+00.71

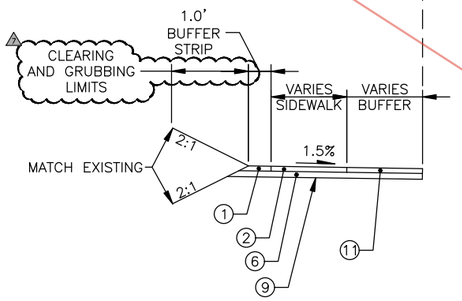

"REN" STA. 13+25.45 TO 14+00.71

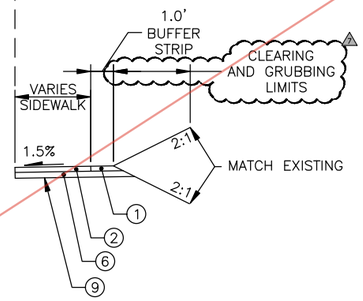

"REN" STA. 13+25.45 TO 14+00.71

LEGEND

1. 4" TOPSOIL
2. 4" CONCRETE SIDEWALK
3. 2" HOT MIX ASPHALT (HMA), SP, TYPE B
4. 2" HMA, TYPE II, CLASS B
5. TACK COAT
6. 4" ASPHALT TREATED BASE (ATB) COURSE, 2" MAX LIFTS
7. 4" AGGREGATE BASE COURSE, GRADING D-1
8. 16", BORROW, TYPE A
9. BORROW, TYPE C
10. 5" AGGREGATE BASE COURSE, GRADING D-1
11. 4" COLORED TEXTURED CONCRETE
12. 6" COLORED TEXTURE CONCRETE MEDIAN. SEE SHEET E-5 FOR DETAILS
13. 6" COLORED TEXTURE CONCRETE MEDIAN

Record Drawings have been reviewed by the Project Engineer, and represent to the best of my knowledge, the project as constructed.

PE Dillon Tomaro 2/4/25

TYPICAL SECTIONS

STATE OF ALASKA 49TH ANTHONY M. ROOS CE 127591 REGISTERED PROFESSIONAL ENGINEER
1/17/21

PLANS DEVELOPED BY: KITTELSON & ASSOCIATES, INC. CERT. OF AUTHORIZATION NO.: 254741, 851 SW 6TH AVE. SUITE 600, PORTLAND, OR 97204, (503) 228-5230
H:\20\20487 - Glacier Highway - Juneau Traffic Design\design_CD\68124_B_TYP-B-3 Sun, Jan/17/21 02:38pm

CO 27

** Deleted by CO34

NO.	DATE	REVISION
7	01/05/21	ADDENDUM 7
9	01/17/21	ADDENDUM 9
33	06/08/21	RFI 33: SUBGRADE STABILIZATION TYPICAL
1	08/17/21	SIDESTREET & DRIVEWAY REPAIR SECTION
1	03/28/22	TYPICAL SECTION REVISIONS

STATE	PROJECT DESIGNATION	YEAR	SHEET NO.	TOTAL SHEETS
ALASKA	TEA-0955(016)/Z68124	2020	B-3	235

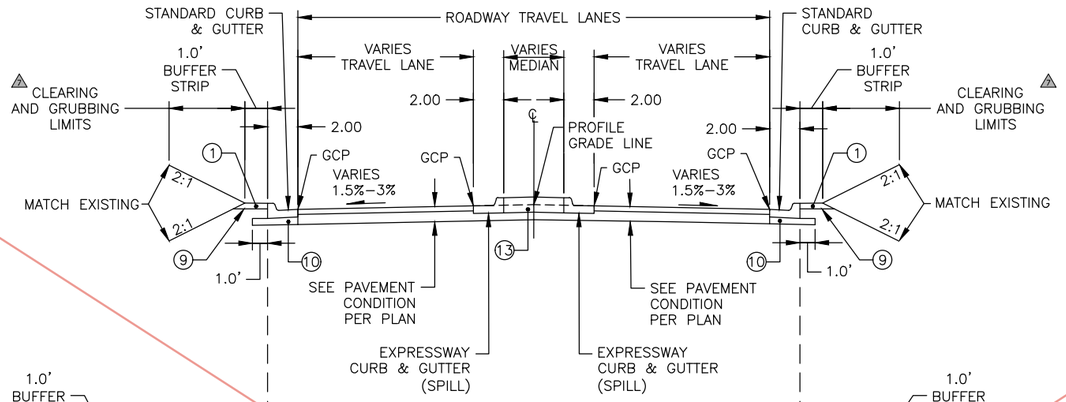

RENNINGER STREET TYPICAL SECTION

"REN" STA. 10+00.00 TO 11+24.65
"REN" STA. 13+25.45 TO 14+00.71

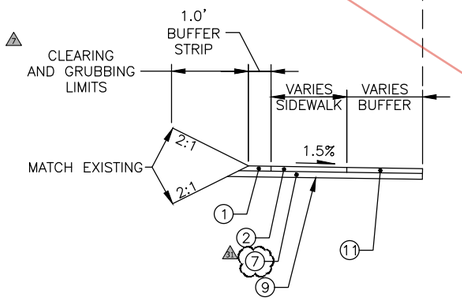

"REN" STA. 13+25.45 TO 14+00.71

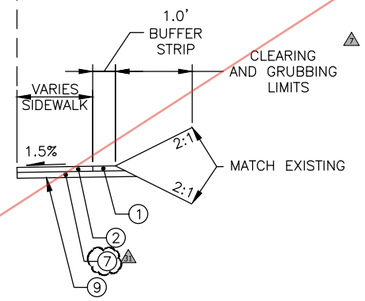

"REN" STA. 13+25.45 TO 14+00.71

LEGEND

1. 4" TOPSOIL
2. 4" CONCRETE SIDEWALK
3. 2" HOT MIX ASPHALT (HMA), SP, TYPE B
4. 2" HMA, TYPE II, CLASS B
5. TACK COAT
6. 4" ASPHALT TREATED BASE (ATB) COURSE, 2" MAX LIFTS
7. 4" AGGREGATE BASE COURSE, GRADING D-1
8. 16", BORROW, TYPE A
9. BORROW, TYPE C
10. 5" AGGREGATE BASE COURSE, GRADING D-1
11. 4" COLORED TEXTURED CONCRETE
12. 6" COLORED TEXTURE CONCRETE MEDIAN. SEE SHEET E-5 FOR DETAILS
13. 6" COLORED TEXTURE CONCRETE MEDIAN
14. 36" BORROW, TYPE C

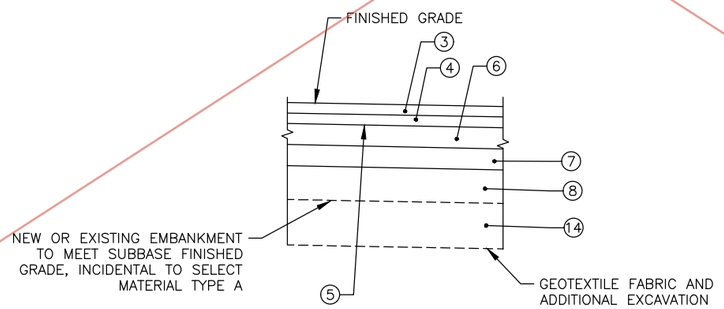

SUBGRADE STABILIZATION

CONTRACTOR TO REMOVE AREA AND INSTALL PAVEMENT SYSTEM AS NOTED TO FINISHED GRADE AT THE DIRECTION OF THE ENGINEER OR DOT INSPECTOR.

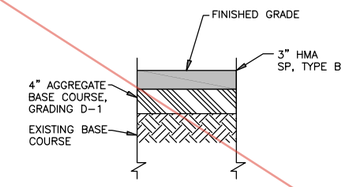

SIDESTREET & DRIVEWAY REPAIR SECTION

SCALE:NOT TO SCALE

CONTRACTOR TO USE THIS SECTION WHEN EXISTING ASPHALT IS LESS THAN 4" ALONG SIDESTREETS OR PRIVATE DRIVEWAYS. CONTRACTOR TO DETERMINE EXISTING AGGREGATE THICKNESS, IF 4" OR GREATER TO MEET SECTION ABOVE THEN RESHAPE AND RE-COMPACT THE AGGREGATE ACCORDINGLY.

Record Drawings have been reviewed by the Project Engineer, and represent to the best of my knowledge, the project as constructed.

PE Dillon Tomaro 2/4/25

TYPICAL SECTIONS

STATE OF ALASKA 49TH
ANTHONY M. ROOS
CE-12759
REGISTERED PROFESSIONAL ENGINEER
3/28/22

PLANS DEVELOPED BY: KITTELSON & ASSOCIATES, INC. CERT. OF AUTHORIZATION NO.: 254741, 851 SW 6TH AVE. SUITE 600, PORTLAND, OR 97204, (503) 228-5230
H:\20\20487 - Glacier Highway - Juneau Traffic Design\design_CD\68124_B_TYP-B-3 Mon, Mar/28/22 01:22pm

CO 34

NO.	DATE	REVISION
1	01/05/21	ADDENDUM 7
2	01/17/21	ADDENDUM 9
3	06/08/21	RFI 33: SUBGRADE STABILIZATION TYPICAL
4	08/17/21	SIDESTREET & DRIVEWAY REPAIR SECTION
5	03/28/22	TYPICAL SECTION REVISIONS

STATE	PROJECT DESIGNATION	YEAR	SHEET NO.	TOTAL SHEETS
ALASKA	TEA-0955(016)/Z68124	2020	B-3	235

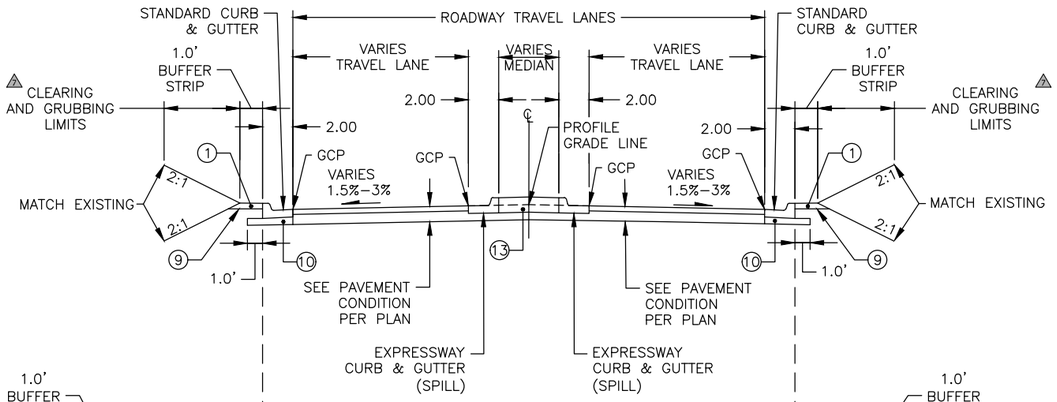

RENNINGER STREET TYPICAL SECTION

"REN" STA. 10+00.00 TO 11+24.65
"REN" STA. 13+25.45 TO 14+00.71

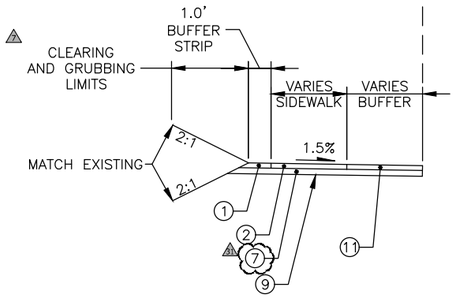

"REN" STA. 13+25.45 TO 14+00.71

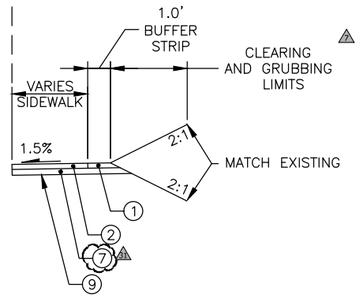

"REN" STA. 13+25.45 TO 14+00.71

LEGEND

1. 4" TOPSOIL
2. 4" CONCRETE SIDEWALK
3. 2" HOT MIX ASPHALT (HMA), SP, TYPE B
4. 2" HMA, TYPE II, CLASS B
5. TACK COAT
6. 4" ASPHALT TREATED BASE (ATB) COURSE, 2" MAX LIFTS
7. 4" AGGREGATE BASE COURSE, GRADING D-1
8. 16", BORROW, TYPE A
9. BORROW, TYPE C
10. 5" AGGREGATE BASE COURSE, GRADING D-1
11. 4" COLORED TEXTURED CONCRETE
12. 6" COLORED TEXTURE CONCRETE MEDIAN. SEE SHEET E-5 FOR DETAILS
13. 6" COLORED TEXTURE CONCRETE MEDIAN
14. 36" BORROW, TYPE C

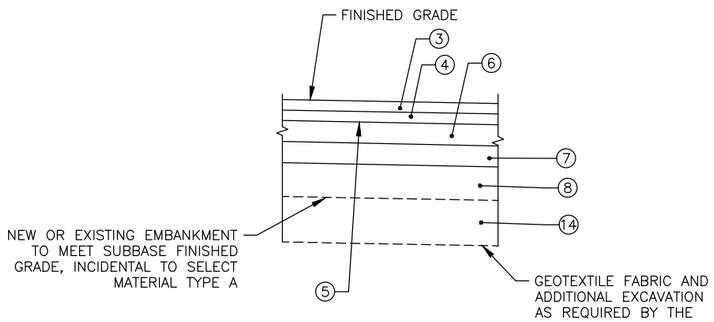

SUBGRADE STABILIZATION

CONTRACTOR TO REMOVE AREA AND INSTALL PAVEMENT SYSTEM AS NOTED TO FINISHED GRADE AT THE DIRECTION OF THE ENGINEER OR DOT INSPECTOR.

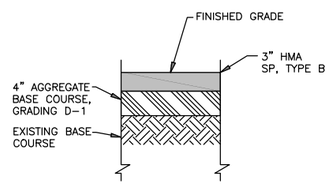

SIDESTREET & DRIVEWAY REPAIR SECTION

SCALE:NOT TO SCALE

CONTRACTOR TO USE THIS SECTION WHEN EXISTING ASPHALT IS LESS THAN 4" ALONG SIDESTREETS OR PRIVATE DRIVEWAYS. CONTRACTOR TO DETERMINE EXISTING AGGREGATE THICKNESS, IF 4" OR GREATER TO MEET SECTION ABOVE THEN RESHAPE AND RE-COMPACT THE AGGREGATE ACCORDINGLY.

Record Drawings have been reviewed by the Project Engineer, and represent to the best of my knowledge, the project as constructed.

PE Dillon Tomaro 2/4/25

TYPICAL SECTIONS

STATE OF ALASKA 49TH ANTHONY M. ROOS CE 127591 REGISTERED PROFESSIONAL ENGINEER 3/28/22

PLANS DEVELOPED BY: KITTELSON & ASSOCIATES, INC. CERT. OF AUTHORIZATION NO.: 254741, 851 SW 6TH AVE. SUITE 600, PORTLAND, OR 97204, (503) 228-5230
H:\20\20487 - Glacier Highway - Juneau Traffic Design\design_CD\68124_B_TYP-B-3 Mon, Mar/28/22 01:22pm

CO 13

NO.	DATE	REVISION

STATE	PROJECT DESIGNATION	YEAR	SHEET NO.	TOTAL SHEETS
ALASKA	TEA-0955(016)/Z68124	2021	B4	B3

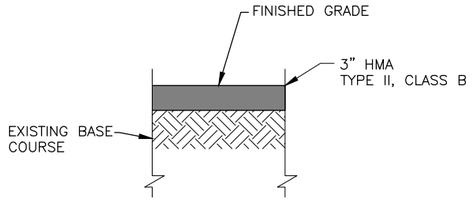

1/B1 PAVEMENT SECTION NO. 1

SCALE:NOT TO SCALE

CONTRACTOR TO REMOVE 3" OF PAVEMENT FROM EXISTING GRADE, AND INSTALL PAVEMENT SYSTEM AS NOTED TO FINISHED GRADE. ADD OR REMOVE BASE COURSE AS NEEDED. FINISHED GRADE CONTROLLED BY TOPOGRAPHIC SURVEY OF THE EXISTING ROAD.

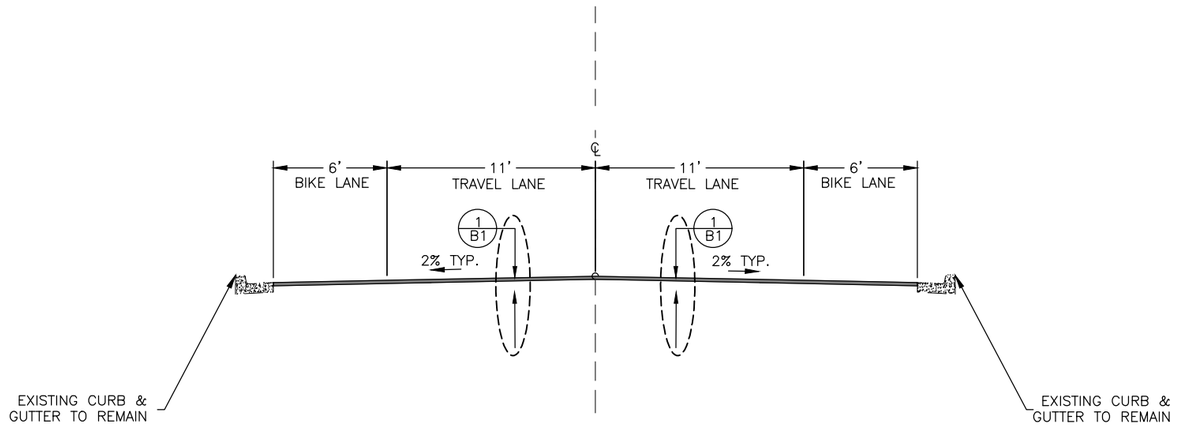

GLACIER HIGHWAY (TWIN LAKES AREA)
TYPICAL SECTION

Record Drawings have been reviewed by the Project Engineer, and represent to the best of my knowledge, the project as constructed.

PE Dillon Tomaro 2/4/25

STATE OF ALASKA
49 TH
KIRK MILLER
CE 8550
REGISTERED PROFESSIONAL ENGINEER
8/31/2021

STATE OF ALASKA DEPARTMENT OF TRANSPORTATION
AND PUBLIC FACILITIES
6860 GLACIER HIGHWAY, JUNEAU, AK 99811
(907) 465-1763

JNU GLACIER HWY IMPROVEMENTS
(LEMON CREEK AREA)-TWIN LAKES
INTERSECTION ADDITION

TYPICAL SECTIONS

FILE | C:\Jnu\68124\Planset\68124_Twin Lakes_B4.dwg | DATE | 8/31/2021 13:30 | LAYOUT | B4 | DESIGNED | BC | CHECKED | | DRAFTED | BC

See AS Built sheet for final QTY

NO.	DATE	REVISION
7	01/05/21	ADDENDUM 7
9	01/13/21	ADDENDUM 9
10	01/25/21	ADDENDUM 10

STATE	PROJECT DESIGNATION	YEAR	SHEET NO.	TOTAL SHEETS
ALASKA	TEA-0955(016)/Z68124	2020	C-1	235

ESTIMATE QUANTITIES

Item Number	Pay Item	Pay Unit	Plan Quantity
201.0003.0000	Clearing and Grubbing	ACRE	3.40
201.2001.0000	Invasive Plant Species Control, Removal, and Disposal	SY	5,963
202.0001.0000	Removal of Structures and Obstructions	LS	All Required
202.0001.0000	Removal of Structures and Obstructions (Lemon Creek Bridge)	LS	All Required
202.0002.0000	Removal of Pavement	SY	25,468
202.0003.0000	Removal of Sidewalk	SY	3,019.00
202.0004.0000	Removal of Culvert Pipe	LF	1,161.00
202.0008.0000	Removal of Inlet	EACH	5.00
202.0009.0000	Removal of Curb and Gutter	LF	4,485.00
202.0015.0000	Removal of Sidewalk (Lemon Creek Bridge)	LS	All Required
202.2022.0000	Removal of Fence	LF	435.00 (4)
203.0003.0000	Unclassified Excavation	CY	10,861.00 (9)
203.0006.000A	Borrow, Type A	TON	13,234.00
203.0006.000C	Borrow, Type C	TON	5,552.00
301.0001.0000	Aggregate Base Course, Grading D-1	TON	6,198.00
	Bid Item Removed		(9)
306.0001.0000	ATB	TON	3,413.00 (4)
401.0001.002B	HMA, Type II; Class B	TON	5,647.00
401.0004.6428	Asphalt Binder, Grade PG 64-28	TON	311.00
401.0008.002B	HMA Price Adjustment, Type II; Class B	CS	All Required
401.0015.0000	Asphalt Material Price Adjustment	CS	All Required
402.0001.STE1	STE-1 Asphalt for Tack Coat	TON	5.20
408.2001.000B	HMA, SP; Type B	TON	5,640.00
408.2004.6428	Asphalt Binder, Grade PG 64-28	TON	310.00
408.2008.000B	HMA Price Adjustment, SP; Type B	CS	All Required
408.2009.0000	Longitudinal Joint Density Price Adjustment	CS	All Required
408.2015.0000	Asphalt Material Price Adjustment	CS	All Required
410.2001.0000	Pavement Cold Planing	SY	41,161.00
501.0001.0000	Class A Concrete (Lemon Creek Bridge)	LS	All Required
501.2005.0000	Cast-in-Place Wall Concrete Retaining Wall	LS	All Required
501.2007.0002	Headwall, Type II	EACH	1.00
503.0002.0000	Epoxy-Coated Reinforcing Steel	LS	All Required
503.0003.0000	Drill and Bond Dowels	EACH	304.00
507.0001.0003	Steel Bridge Railing, 3-Tube	LF	200.00
	Bid Item Removed		(9)
508.0001.0000	Waterproofing Membrane, Spray-Applied	LS	All Required
511.0001.0000	Mechanically Stabilized Earth Wall - Concrete Faced	SF	430.00
530.2000.0000	Gravity Block Wall	SF	203.00 (9)
603.0009.0018	Corrugated Aluminum Pipe 18 Inch	LF	247.00 (4)
603.0009.0024	Corrugated Aluminum Pipe 24 Inch	LF	47.00
603.0021.0018	Corrugated Polyethylene Pipe 18 Inch	LF	1,968.00
603.0021.0024	Corrugated Polyethylene Pipe 24 Inch	LF	1,676.00
603.0021.0030	Corrugated Polyethylene Pipe 30 Inch	LF	150.00
603.0021.0042	Corrugated Polyethylene Pipe 42 Inch	LF	272.00
603.2004.0018	HDPE 18 Inch	LF	505.00
603.2004.0024	HDPE 24 Inch	LF	166.00
604.0001.0001	Storm Sewer Manhole, Type I	EACH	32.00 (7)
604.0001.0002	Storm Sewer Manhole, Type II	EACH	1.00
604.0004.0000	Adjust Existing Manhole	EACH	2.00
604.0005.000A	Inlet, Type A	EACH	70.00 (4)
604.0005.000C	Inlet, Type C , 18 Inch	EACH	3.00 (4A)
604.0005.000C	Inlet, Type C , 24 Inch	EACH	1.00
606.0001.0000	W-Beam Guardrail	LF	423.00 (9)
606.0013.0000	Parallel Guardrail Terminal	EACH	8.00
606.0016.0000	Transition Rail , Thrie Beam	EACH	4.00
606.0016.0000	Transition Rail , W Beam	EACH	2.00 (7)
606.0017.0000	Removing and Disposing of Guardrail	LS	All Required
607.0003.0000	Chain Link Fence	LF	360.00 (6)
607.0005.0000	Drive Gate	EACH	1.00 (4)
608.0001.0004	Concrete Sidewalk, 4 inches thick	SY	6,183.00
608.0006.0000	Curb Ramp	EACH	83.00
608.2013.0004	Concrete Slabs, Colored & Pattern Imprinted, 4 Inches Thick	SY	160.00 (7)
608.2013.0005	Concrete Slabs, Colored & Pattern Imprinted, 6 Inches Thick	SY	1,973.00
608.2027.0000	Concrete Sidewalk, 8 Inches Thick	SY	983.00 (7)
609.0001.0001	Curb, Type 1	LF	3,697.00
609.0002.0001	Curb and Gutter, Type 1	LF	17,331.00
610.0004.0000	Ditch Lining , Reinstall Existing Vegetated Mat	LS	All Required

ESTIMATE QUANTITIES

Item Number	Pay Item	Pay Unit	Plan Quantity
611.0002.0001	Riprap, Class I	TON	480.00 (5)
615.0001.0000	Standard Sign	SF	1,365.00 (10)
615.0002.0000	Remove and Relocate Sign	EACH	22.00
615.0005.0000	Delineator, Flexible	EACH	107.00
615.0006.0000	Salvage Sign	EACH	48.00 (10)
618.0002.0000	Seeding	LB	50.00
619.0001.0000	Mulching	SY	140.00
619.0002.0000	Matting	SY	140.00
619.2013.0000	Bonded Fiber Matrix (BFM)	LB	285
620.0001.0000	Topsoil	SY	770.00
627.0001.0016	Ductile Iron Water Conduit, 16 Inch, Class 52	LF	90.00 (7)
627.0004.0000	Fire Hydrant Adjustment	EACH	2.00
627.0010.0000	Adjustment of Valve Box	EACH	10.00
628.2002.0000	Fish Passage, Unnamed Tributary to Vanderbuilt Creek	LS	All Required
628.2002.0000	Fish Passage, Switzer Creek	LS	All Required
631.0001.0002	Geotextile, Drainage, Class 2	SY	748.00
635.0002.0000	Insulation Board	SF	1,344.00 (7)
639.0002.0000	Driveway, Residential	EACH	8.00 (10)
639.0003.0000	Driveway, Commercial	EACH	20.00 (1)
640.0001.0000	Mobilization and Demobilization	LS	All Required
641.0001.0000	Erosion, Sediment and Pollution Control Administration	LS	All Required
641.0003.0000	Temporary Erosion, Sediment and Pollution Control	LS	All Required
641.0005.0000	Temporary Erosion, Sediment and Pollution Control by Directive	CS	All Required
641.0006.0000	Withholding	CS	All Required
642.0001.0000	Construction Surveying	LS	All Required
642.0003.0000	Three Person Survey Party	HR	80.00
642.0004.0000	Set Primary Monument	EACH	11.00
642.0006.0000	Replace Existing with Primary Monument	EACH	1.00
642.0007.0000	Replace Existing with Secondary Monument	EACH	19.00
642.0009.0000	Reference Existing Monument	EACH	20.00
642.0010.0000	Monument Case	EACH	11.00
643.0002.0000	Traffic Maintenance	LS	All Required
643.0003.0000	Permanent Construction Signs	LS	All Required
	Bid Item Removed		(7)
643.0014.0000	Interim Pavement Marking	STA	200.00
643.0023.0000	Traffic Price Adjustment	CS	All Required
643.0025.0000	Traffic Control	CS	All Required
643.0032.0000	Flagging	CS	All Required
643.2005.0000	Public Information Program	LS	All Required
644.0001.0000	Field Office	LS	All Required
644.0002.0000	Field Laboratory	LS	All Required
644.0006.0000	Vehicle	LS	All Required
644.2008.0000	Web-based Submittals	LS	All Required
645.0001.0000	Training Program, 3 Trainees / Apprentices	LH	1,500.00
660.0001.0000	Traffic Signal System Complete, Davis Avenue	LS	All Required
660.0002.0000	Flashing Beacon System Complete, Concrete Way	LS	All Required
660.0002.0000	Flashing Beacon System Complete, Renninger Roundabout	LS	All Required
660.0002.0000	Flashing Beacon System Complete, Shopping Center Access	LS	All Required
660.0002.0000	Flashing Beacon System Complete, Vanderbilt Hill Road	LS	All Required
660.0003.0000	Highway Lighting System Complete, Glacier Highway	LS	All Required
660.2003.0000	Traffic Signal System Modifications , Anka Street	LS	All Required
661.0002.0000	Load Center, Type 1A	EACH	5.00 (9)
661.0005.0000	Modify Load Center	EACH	2.00
670.0001.0000	Painted Traffic Markings	LS	All Required
670.2002.0000	MMA Pavement Markings, Inlaid	LS	All Required

* SEE SHEETS H-29 THROUGH H-74 FOR SIGNAL, BEACON, AND LIGHTING INSTALLATION ITEMS

Record Drawings have been reviewed by the Project Engineer, and represent to the best of my knowledge, the project as constructed.

PE Dillon Tomaro 2/4/25

ESTIMATE OF QUANTITIES

STATE OF ALASKA 49TH ANTI ANTHONY MS REGISTERED PROFESSIONAL ENGINEER CE 12759 1/25/21

PLANS DEVELOPED BY: KITTELSON & ASSOCIATES, INC. CERT. OF AUTHORIZATION NO.: 254741, 851 SW 6TH AVE. SUITE 600, PORTLAND, OR 97204, (503) 228-5230
H:\20\20487 - glacier highway - juneau traffic design\design_CD\68124_C&D_EQ0&SUM-C-1 Mon, Jon/25/21 04:51pm

STATE	PROJECT DESIGNATION	YEAR	SHEET NO.	TOTAL SHEETS
ALASKA	TEA-0955(016)/Z68124	2020	C-1.1	235

AS BUILT QUANTITIES

Item Number	Pay Item	Pay Unit	Quantity
201.0003.0000	Clearing and Grubbing	ACRE	3.01
201.2001.0000	Invasive Plant Species Control, Removal, and Disposal	SY	4,129.30
202.0001.0000	Removal of Structures and Obstructions	LS	1.00
202.0001.0000	Removal of Structures and Obstructions (Lemon Creek Bridge)	LS	1.00
202.0002.0000	Removal of Pavement	SY	23,541.20
202.0003.0000	Removal of Sidewalk	SY	3,638.40
202.0004.0000	Removal of Culvert Pipe	LF	1,928.60
202.0008.0000	Removal of Inlet	EACH	17.00
202.0009.0000	Removal of Curb and Gutter	LF	6,766.00
202.0015.0000	Removal of Sidewalk (Lemon Creek Bridge)	LS	1.00
202.2022.0000	Removal of Fence	LF	436.10
203.0003.0000	Unclassified Excavation	CY	15,389.30
203.0006.000A	Borrow, Type A	TON	15,469.28
203.0006.000C	Borrow, Type C	TON	17,117.68
301.0001.00D1	Aggregate Base Course, Grading D-1	TON	19,720.09
306.0001.0000	ATB	TON	2,258.90
401.0001.002B	HMA, Type II; Class B	TON	6,795.73
401.0004.6428	Asphalt Binder, Grade PG 64-28	TON	364.82
401.0008.002B	HMA Price Adjustment, Type II; Class B	CS	-109,675.53
401.0015.0000	Asphalt Material Price Adjustment	CS	34,850.01
402.0001.STE1	STE-1 Asphalt for Tack Coat	TON	31.35
408.2001.000B	HMA, SP; Type B	TON	6,266.84
408.2004.6428	Asphalt Binder, Grade PG 64-28	TON	386.48
408.2008.000B	HMA Price Adjustment, SP; Type B	CS	42,013.55
408.2009.0000	Longitudinal Joint Density Price Adjustment	CS	33,021.15
408.2015.0000	Asphalt Material Price Adjustment	CS	29,080.34
410.2001.0000	Pavement Cold Planing	SY	35,085.90
501.0001.0000	Class A Concrete (Lemon Creek Bridge)	LS	1.00
501.2005.0000	Cast-in-Place Concrete Retaining Wall	LS	1.00
501.2007.0002	Headwall, Type II	EACH	0.00
503.0002.0000	Epoxy-Coated Reinforcing Steel	LS	1.00
503.0003.0000	Drill and Bond Dowels	EACH	246.00
507.0001.0003	Steel Bridge Railing, 3-Tube	LF	200.00
508.0001.0000	Waterproofing Membrane, Spray-Applied	LS	1.00
511.0001.0000	Mechanically Stabilized Earth Wall , Concrete Faced	SF	799.50
530.2000.0000	Gravity Block Wall	SF	176.50
603.2004.0018	HDPE Pipe 18 Inch	LF	506.60
603.2004.0024	HDPE Pipe 24 Inch	LF	0.00
603.0009.0018	Corrugated Aluminum Pipe 18 Inch	LF	243.04
603.0009.0024	Corrugated Aluminum Pipe 24 Inch	LF	58.33
603.0021.0042	Corrugated Polyethylene Pipe 42 Inch	LF	271.42
603.0021.0018	Corrugated Polyethylene Pipe 18 Inch	LF	2,896.92
603.0021.0024	Corrugated Polyethylene Pipe 24 Inch	LF	1,759.89
603.0021.0030	Corrugated Polyethylene Pipe 30 Inch	LF	166.58
604.0001.0001	Storm Sewer Manhole, Type I	EACH	30.00
604.0001.0002	Storm Sewer Manhole, Type II	EACH	4.00
604.0004.0000	Adjust Existing Manhole	EACH	11.00
604.0005.000A	Inlet, Type A	EACH	69.00
604.0005.000C	Inlet, Type C , 18 Inch	EACH	2.00
604.0005.000C	Inlet, Type C , 24 Inch	EACH	3.00
606.0001.0000	W-Beam Guardrail	LF	373.90
606.0013.0000	Parallel Guardrail Terminal	EACH	4.00
606.0016.0000	Transition Rail , Thrie Beam	EACH	3.00
606.0016.0000	Transition Rail W Beam	EACH	2.00
606.0017.0000	Removing and Disposing of Guardrail	LS	1.00
607.0003.0000	Chain Link Fence	LF	348.00
607.0005.0000	Drive Gate	EACH	1.00
608.0001.0004	Concrete Sidewalk, 4 inches thick	SY	6,876.70
608.0006.0000	Curb Ramp	EACH	78.00
608.2013.0004	Concrete Slabs, Pattern Imprinted, 4 inches thick	SY	0.00

AS BUILT QUANTITES

Item Number	Pay Item	Pay Unit	Quantity
608.2013.0005	Concrete Slabs, Colored & Pattern Imprinted, 4 Inches Thick	SY	152.47
608.2013.0005	Concrete Slabs, Colored & Pattern Imprinted, 6 Inches Thick	SY	2,105.73
608.2027.0000	Concrete Sidewalk, 8 inches thick	SY	191.84
609.0001.0001	Curb, Type 1	LF	288.65
609.0002.0001	Curb and Gutter, Type 1	LF	13,160.75
610.0004.0000	Ditch Lining , Reinstall Exisiting Vegetated Mat	LS	1.00
611.0002.0001	Riprap, Class I	TON	556.84
615.0001.0000	Standard Sign	SF	1,315.25
615.0002.0000	Remove and Relocate Sign	EACH	22.00
615.0005.0000	Delineator, Flexible	EACH	125.00
615.0006.0000	Salvage Sign	EACH	48.00
618.0002.0000	Seeding	LB	95.69
619.0001.0000	Mulching	SY	0.00
619.0002.0000	Matting	SY	0.00
619.2013.0000	Bonded Fiber Matrix (BFM)	LB	2,589.30
620.0001.0000	Topsoil	SY	256.50
~~627.0001.0016~~	~~Ductile Iron Water Conduit, 16 Inch, Class 52 Deleted by CO37~~	~~LF~~	~~0.00~~
627.0004.0000	Fire Hydrant Adjustment	EACH	1.00
627.0010.0000	Adjustment of Valve Box	EACH	27.00
628.2002.0000	Fish Passage, Switzer Creek	LS	1.00
~~628.2002.0000~~	~~Fish Passage, Unnamed Tributary to Vanderbilt Creek_Deleted CO19~~	~~LS~~	~~0.00~~
631.0001.0002	Geotextile, Drainage, Class 2	SY	0.00
635.0002.0000	Insulation Board	SF	1,564.00
639.0002.0000	Driveway, Residential	EACH	9.00
639.0003.0000	Driveway, Commercial	EACH	21.00
640.0001.0000	Mobilization and Demobilization	LS	1.00
641.0001.0000	Erosion, Sediment and Pollution Control Administration	LS	1.00
641.0003.0000	Temporary Erosion, Sediment and Pollution Control	LS	1.00
641.0005.0000	Temporary Erosion, Sediment and Pollution Control by Directive	CS	2,844.19
641.0006.0000	Withholding	CS	0.00
642.0001.0000	Construction Surveying	LS	1.00
642.0003.0000	Three Person Survey Party	HR	21.65
642.0004.0000	Set Primary Monument	EACH	11.00
642.0006.0000	Replace Existing with Primary Monument - CO 48	EACH	2.00
642.0007.0000	Replace Existing with Secondary Monument - CO 48	EACH	19.00
642.0009.0000	Reference Existing Monument - CO 48	EACH	32.00
642.0010.0000	Monument Case	EACH	11.00
643.0002.0000	Traffic Maintenance	LS	1.00
643.0003.0000	Permanent Construction Signs	LS	1.00
643.0014.0000	Interim Pavement Marking	STA	618.76
643.0023.0000	Traffic Price Adjustment	CS	0.00
643.0025.0000	Traffic Control	CS	310,605.30
643.0032.0000	Flagging	CS	880,777.00
643.2005.0000	Public Information Program	LS	1.00
644.0001.0000	Field Office	LS	1.00
644.0002.0000	Field Laboratory	LS	1.00
644.0006.0000	Vehicle	LS	1.00
644.2008.0000	Web-based Submittals	LS	1.00
645.0001.0000	Training Program, 3 Trainees / Apprentices	LH	1,500.00
660.0001.0000	Traffic Signal System Complete, Davis Avenue	LS	1.00
660.0002.0000	Flashing Beacon System Complete, Concrete Way	LS	1.00
660.0002.0000	Flashing Beacon System Complete, Renninger Roundabout	LS	1.00
660.0002.0000	Flashing Beacon System Complete, Shopping Center Access	LS	1.00
660.0002.0000	Flashing Beacon System Complete, Vanderbilt Hill Road	LS	1.00
660.0003.0000	Hwy Lighting System Complete, Glacier Hwy (CO-11)	LS	0.00
660.2003.0000	Traffic Signal System Modifications , Anka Street	LS	1.00
661.0002.0000	Load Center, Type 1A	EACH	5.00
661.0005.0000	Modify Load Center	EACH	2.00
670.0001.0000	Painted Traffic Markings	LS	1.00
670.2002.0000	MMA Pavement Markings, Inlaid	LS	1.00

Record Drawings have been reviewed by the Project Engineer, and represent to the best of my knowledge, the project as constructed.

PE Dillon Tomaro 2/4/25

PLANS DEVELOPED BY: KITTELSON & ASSOCIATES, INC. CERT. OF AUTHORIZATION NO.: 254741.; 851 SW 6TH AVE. SUITE 600, PORTLAND, OR 97204, (503) 228-5230
H:\20\20487 - glacier highway - juneau traffic design\design_CD\68124_C&D_EOQ&SUM-C-1 Mon, Jan/25/21 04:51pm

STATE	PROJECT DESIGNATION	YEAR	SHEET NO.	TOTAL SHEETS
ALASKA	TEA-0955(016)/Z68124	2020	C-1.2	235

NEW ITEMS BY CHANGE ORDER

Item Number	Pay Item	Pay Unit	Quantity
644.2004.0000	Engineering Communications (CO-3)	CS	9,911.03
202.0001.0000	Removal and Salvage of Bus Shelter (CO-4)	LS	1.00
671.2003.0000	Imported Streambed Material - (IWA-06) CO 7	TON	245.11
626.2007.0000	Repair Sanitary Sewer Conduit - (IWA-01) CO 15	LS	1.00
608.0001.0006	Concrete Sidewalk, 6in Thick - (IWA-12) CO 25	SY	1,074.85
610.0004.0000	Rock Filter Berm (CO-17)	LS	1.00
682.2001.0000	Waterline Potholing - (IWA-15) CO 37	LS	1.00
604.2009.0000	Storm Sewer Structure Modification - (IWA-16) CO 22	LS	1.00
628.2002.0001	Switzer Culvert P-143 Modifications - (IWA-04) CO 24	LS	1.00
642.0013.0000	Special Construction Surveying - (IWA-8 & 34) CO 18	LS	1.00
627.2019.0000	Relocate Water Service - (IWA-17) CO 23	LS	1.00
401.0018.0000	Repair Unstable Pavement (IWA-28)	SY	1,646.31
306.0001.0001	ATB, Roadway Patches & Temporary (CO-12)	TON	2,473.42
301.2002.00D1	Reconstruct Aggregate Base Course - (IWA-07) CO 18	LS	1.00
604.0004.0001	Furnish Manhole Covers (IWA-19)	LS	7,160.04
627.2019.0000	Relocate Water Service II - (IWA-20) CO 23	LS	1.00
603.0021.0012	Storm System Pipe P-24 Modifications (IWA-23)	CS	4,612.65
603.0021.1018	Remove and Reinstall Storm (IWA-25)	CS	530.96
604.0016.0010	Adjust Inlet S-1 (IWA-26)	CS	1,168.59
660.2005.0001	Furnish and Install J-box Type A (CO-09)	LS	3.00
303.2000.0000	Lineair Grading (CO-13)	LS	13.71
660.0003.0000	Highway Lighting System Complete, Glacier Hwy (CO-11)	LS	1.00
603.0021.0012	Add 12-Inch CPP (P-108A) (IWA-33)	LS	4,358.07
660.2005.0002	Adjust Type II Junction Box (IWA-36)	LS	616.03
604.0001.0001	Storm Sewer Manhole, Type I Modification (S-75) (IWA-35)	CS	264.39
604.0000.0000	Storm Drain System Modifications S-42 & S-134 (IWA-29)	LS	1.00
641.0003.0000	Temporary Erosion, Sediment and Pollution Control - Twin Lakes Paving Extension (CO-14)	LS	1.00
670.0001.0000	Painted Traffic Markings - Twin Lake Paving Extension - (IWA-31) CO 14	LS	1.00
608.0008.0006	Concrete Sidewalk, 6-Inch Thick, Modifications (IWA-32)	LS	1.00
202.0001.0001	ECO Blocks at Bus Stops (IWA-37)	LS	1.00
609.0007.0001	Curb & Gutter Revisions - (IWA-38) CO 19	LS	1.00
683.2001.0000	Utility System Service, Sewer (IWA-40)	LS	1.00
205.0009.0000	Structural Fill (CO-26)	TON	904.46
626.2007.0000	Sanitary Sewer Repair II (IWA-47)	LS	1.00
202.0001.0000	Temporary Relocate Bus Shelter (IWA-46)	CS	1.00
660.2001.0000	Signal and Lighting, Adjust Existing Vaults - IWA 42	CS	3,332.57
603.0021.0012	Connect Existing 12-Inch CPP to S-46 (IWA-48)	LS	1.00
603.2041.0001	Extra Work, P-95 Revisions (IWA-51)	LS	1.00
511.0001.0001	MSE Wall D, Redesign Costs - IWA 49 and 52	LS	1.00
642.9999.0000	Additional Model Building - Various Areas - IWA 53	CS	1.00
606.9999.0000	Guardrail Changes - Cost Recovery (CO-30)	LS	1.00
604.0003.0000	Reconstruct Existing Manhole - (CO-28)	EACH	1.00
603.2019.0054	54 Inch Liner Pipe - CO 19	LS	1.00
660.2001.0000	Highway Lighting System Salvage (CO-28)	LS	1.00
201.0007.0000	Clearing, SEAL Trust - CO 28	LS	1.00

NEW ITEMS BY CHANGE ORDER

Item Number	Pay Item	Pay Unit	Quantity
660.2016.0000	Renninger Street Lighting Modifications - CO 32	LS	1.00
504.9999.0000	Bridge No. 793 Deck Drains (CO-33)	LS	1.00
510.2000.0000	Bridge No. 793 Deck Repair (CO-33)	SF	0.00
510.9999.0000	Bridge No. 793 Deck Repairs (CO-38)	LS	1.00
603.2041.0000	Standby and Extra Work, P-112 (IWA 50)	LS	1.00
621.2010.0000	Roundabout Center Island Landscaping (IWA 56)	LS	1.00
604.0005.001A	S-117 Standby (IWA 59)	LS	1.00
606.9999.0001	Long Span W31 Guardrail (CO-39)	LS	1.00
203.9999.0000	Special Ditching (CO-42)	LS	1.00
604.0004.0001	Adjust Manole, Improved Collar - CO 40	EACH	20.00
503.0002.000A	Epoxy Coated Reinforcing Steel Credit - CO 40	LS	1.00
670.0001.0010	Additional Painted Traffic Markings - CO 35	LS	1.00
643.0003.2023	Permanent Construction Signs for 2023 - CO 41	LS	1.00
203.9999.0001	Armor Wall C & Grade Ditch - IWA 60	CS	1.00
431.9999.0000	Miscellaneous T&M - IWA 55	LS	1.00
603.9999.0000	PVC Pipe, 6-INCH - IWA 63	CS	1.00
603.9999.0000	Storm System Standby Time - DIR 10/CO 43	CS	1.00
639.0002.0000	Temporary Pavement for Residential Driveway - IWA 64	CS	8,335.00
660.0003.0000	Highway Lighting System - Relocate J-Box - IWA-58	CS	1.00
603.9999.0001	PVC Pipe, 8-Inch - CO 44	LS	1.00
660.0003.0001	Damaged Conduit Standby - CO 44	LS	1.00
660.0003.0002	Decommission Abandoned Lighting Conduit - CO 44	LS	1.00
640.0001.2023	Mobilization and Demobilization for 2023 - CO 45	LS	1.00
641.0001.2023	Erosion, Sediment and Pollution Control Administration for 2023 - CO 45	LS	1.00
641.0003.2023	Temporary Erosion, Sediment and Pollution Control for 2023 - CO 45	LS	1.00
642.0001.2023	Construction Survey for 2023 - CO 45	LS	1.00
643.0002.2023	Traffic Maintenance for 2023 - CO 45	LS	1.00
643.2005.2023	Public Information Program for 2023 - CO 45	LS	1.00
202.0015.0000	Controlled Low-Strength Material - CO 21	CY	29.00
609.9999.0000	20" Vertical Backing Curb (Complete) - CO 46	LS	1.00
660.2016.0000	Furnish Flange Style David Pole, Glacier Highway - CO 31	LS	1.00
606.2011.0000	Downstream End Anchor - CO 30	EACH	3.00
606.0009.0000	Short Radius Rail	EACH	1.00
670.2002.0010	Additional MMA Pavement Markings, Inlaid - CO 35	LS	1.00
660.9999.0000	Pedestrian Push Button Extensions - CO 49	LS	1.00
202.0001.2023	Bus Shelter Modification, U-Haul - IWA 67	LS	1.00
303.0003.0000	Ditch Reconditioning - IWA 66	LS	1.00
107.2000.1000	Wage Rate Adjustment - Alaska Juneau Construction - CO 51	LS	1.00
107.2000.1001	Wage Rate Adjustment - Chatham Electric - CO 51	LS	1.00
107.2000.1002	Wage Rate Adjustment - Glacier State Construction - CO 51	LS	1.00
107.2000.1003	Wage Rate Adjustment - Specialized Pavement Markings - CO 51	LS	1.00
107.2000.1004	Wage Rate Adjustment - Secon - CO 51	LS	1.00
107.2000.1005	Wage Rate Adjustment - Southeast Concrete - CO 51	LS	1.00
606.9999.0000	Transition Rail Modifications - CO 53	LS	1.00

Record Drawings have been reviewed by the Project Engineer, and represent to the best of my knowledge, the project as constructed.

PE Dillon Tomaro 2/4/25

PLANS DEVELOPED BY: KITTELSON & ASSOCIATES, INC. CERT. OF AUTHORIZATION NO.: 254741, 851 SW 6TH AVE. SUITE 600, PORTLAND, OR 97204, (503) 228-5230
H:\20\20487 - glacier highway - juneau traffic design\design_CD\68124_C&D_EOQ&SUM-C-1 Mon, Jan/25/21 04:51pm

NO.	DATE	REVISION

STATE	PROJECT DESIGNATION	YEAR	SHEET NO.	TOTAL SHEETS
ALASKA	TEA-0955(016)/Z68124	2020	D-1	235

201.2001.0000 REMOVAL OF INVASIVE SPECIES

STATION	OFFSET	SPECIES	APPROXIMATE SIZE	LATITUDE	LONGITUDE	AREA (SF)	AREA (SY)
"O"103+39	LT	REED CANARY GRASS	4X1	58.348045	-134.494034	4	0.4
"O"106+20	RT	REED CANARYGRASS	2x2	58.348396	-134.49263	4	0.4
"O"106+73	RT	OXEYE DAISY & ORANGE HAWKWEED	4x12	58.348495	-134.492401	48	5.3
"O"106+82	RT	OXEYE DAISY	1.5x1.5	58.348564	-134.492493	2.25	0.3
"O"107+10	RT	OXEYE DAISY	6x4	58.348629	-134.492416	24	2.7
"O"107+17	RT	REED CANARYGRASS	8x4	58.348667	-134.492447	32	3.6
"O"107+53	LT	REED CANARYGRASS	150x17	58.348885	-134.492569	2550	283.3
"O"107+64	RT	REED CANARYGRASS	5x3	58.348763	-134.492279	15	1.7
"O"108+81	RT	OXEYE DAISY	25x3	58.349041	-134.491943	75	8.3
"O"109+04	RT	REED CANARYGRASS	1.5x1.5	58.349064	-134.49176	2.25	0.3
"O"109+10	LT	REED CANARYGRASS	150x20	58.349094	-134.492294	3000	333.3
"O"110+36	LT	REED CANARYGRASS	195x1	58.349449	-134.492004	195	21.7
"O"112+11	RT	REED CANARYGRASS	2x12	58.349915	-134.491287	24	2.7
"O"112+31	RT	REED CANARYGRASS	2.5x8	58.349957	-134.491302	20	2.2
"O"115+79	RT	REED CANARYGRASS	4x12	58.350922	-134.491043	48	5.3
"O"116+19	RT	REED CANARYGRASS	3x4	58.351032	-134.491074	12	1.3
"O"116+30	LT	REED CANARYGRASS	180x12	58.351059	-134.491425	2160	240.0
"O"117+30	LT	REED CANARYGRASS	25x12	58.35133	-134.491425	300	33.3
"O"117+59	LT	REED CANARYGRASS	11x10	58.351414	-134.49144	110	12.2
"O"117+44	RT	REED CANARYGRASS	3x1	58.351376	-134.491104	3	0.3
"O"119+56	RT	REED CANARYGRASS	3x3	58.351959	-134.49118	9	1.0
"O"119+70	LT	REED CANARYGRASS	140x20	58.351601	-134.491531	2800	311.1
"O"119+89	RT	REED CANARYGRASS	35x4	58.352047	-134.491196	140	15.6
"O"120+06	LT	REED CANARYGRASS	1x1	58.352081	-134.491547	1	0.1
"O"120+14	LT	OXEYE DAISY	1x1	58.352104	-134.491516	1	0.1
"O"120+34	RT	REED CANARYGRASS	1.5x1.5	58.352169	-134.491211	2.25	0.3
"O"124+26	RT	ORANGE HAWKWEED	4x12	58.353241	-134.491364	48	5.3
"O"126+56	LT	REED CANARYGRASS	.5x.5	58.353855	-134.49176	0.25	0.0
"O"126+83	LT	REED CANARYGRASS	2x2	58.353928	-134.491791	4	0.4
"O"127+59	RT	REED CANARYGRASS & QUACKGRASS	5x4	58.354153	-134.49147	20	2.2
"O"127+79	RT	QUACKGRASS	5x1	58.35421	-134.491486	5	0.6
"O"128+01	RT	REED CANARYGRASS	1x1	58.354271	-134.491486	1	0.1
"O"129+89	LT	REED CANARYGRASS	230x12	58.354256	-134.491852	2760	306.7
"O"134+67	RT	REED CANARYGRASS	135x1	58.355682	-134.493835	135	15.0
"O"136+07	LT	REED CANARYGRASS	14x6	58.355457	-134.494583	84	9.3
"O"136+71	RT	REED CANARYGRASS	12x1	58.355675	-134.494858	12	1.3
"O"137+15	RT	REED CANARYGRASS	2x2	58.35564	-134.494873	4	0.4
"O"137+89	RT	REED CANARYGRASS	3x2	58.355659	-134.495468	6	0.7
"O"138+28	RT	REED CANARYGRASS	3x2	58.355638	-134.495621	6	0.7
"O"139+08	LT	REED CANARYGRASS	6x5	58.355595	-134.496124	30	3.3
"O"139+99	LT	REED CANARYGRASS	5x3	58.35564	-134.496597	15	1.7
"O"140+41	LT	REED CANARYGRASS	4x3	58.355667	-134.496811	12	1.3
"O"142+66	LT	REED CANARYGRASS	50x8	58.355824	-134.497986	400	44.4
"O"143+02	LT	REED CANARYGRASS	6x4	58.355858	-134.498169	24	2.7
"O"143+17	LT	REED CANARYGRASS	4x7	58.355877	-134.498245	28	3.1
"O"144+62	RT	REED CANARYGRASS	3x1	58.356247	-134.498688	3	0.3
"O"145+11	RT	REED CANARYGRASS	.5x.5	58.356331	-134.498871	0.25	0.0
"O"145+34	LT	REED CANARYGRASS	2x2	58.356224	-134.499222	4	0.4
"O"146+03	RT	REED CANARYGRASS	115x8	58.356583	-134.499329	920	102.2
"O"146+96	LT	REED CANARYGRASS	3x1	58.35656	-134.499817	3	0.3
"O"147+56	RT	REED CANARYGRASS	55x13	58.356846	-134.499664	715	79.4
"O"147+60	RT	REED CANARYGRASS	25x6	58.356861	-134.499771	150	16.7
"O"147+99	LT	REED CANARYGRASS	12x1	58.356808	-134.500076	12	1.3
"O"148+14	RT	REED CANARYGRASS	3x3	58.356941	-134.499969	9	1.0
"O"148+50	RT	REED CANARYGRASS	4x4	58.357002	-134.500046	16	1.8
"O"150+17	LT	REED CANARYGRASS	60x15	58.357269	-134.500809	900	100.0
"O"150+29	RT	REED CANARYGRASS	4x14	58.357426	-134.500443	56	6.2
"O"150+50	LT	REED CANARYGRASS	2x1	58.357327	-134.500946	2	0.2
"O"150+79	LT	REED CANARYGRASS	14x1	58.357384	-134.501053	14	1.6
"O"151+69	LT	REED CANARYGRASS	25x2	58.357601	-134.501282	50	5.6

201.2001.0000 REMOVAL OF INVASIVE SPECIES

STATION	OFFSET	SPECIES	APPROXIMATE SIZE	LATITUDE	LONGITUDE	AREA (SF)	AREA (SY)
"O"152+23	LT	REED CANARYGRASS	45x15	58.357719	-134.50145	675	75.0
"O"152+51	RT	REED CANARYGRASS	220x3	58.358337	-134.502045	660	73.3
"O"153+52	LT	REED CANARYGRASS	90x20	58.35791	-134.50177	1800	200.0
"O"155+78	RT	REED CANARYGRASS	20x3	58.358681	-134.502563	60	6.7
"O"156+31	RT	REED CANARYGRASS	8x3	58.359039	-134.503143	24	2.7
"O"158+02	RT	REED CANARYGRASS	4x1	58.359211	-134.50351	4	0.4
"O"158+94	RT	REED CANARYGRASS	50x15	58.359608	-134.504974	750	83.3
"O"160+04	LT	REED CANARYGRASS	675x23	58.359303	-134.504089	15525	1725.0
"O"161+35	LT	REED CANARYGRASS	48x4	58.359447	-134.504684	192	21.3
"O"161+97	RT	QUACKGRASS	18x4	58.359623	-134.505051	72	8.0
"O"162+19	RT	REED CANARYGRASS	5x3	58.359623	-134.505157	15	1.7
"O"162+38	RT	REED CANARYGRASS	3x1	58.359615	-134.505692	3	0.3
"O"162+47	LT	REED CANARYGRASS	75x25	58.359505	-134.505234	1875	208.3
"O"163+37	RT	REED CANARYGRASS	9x3	58.359634	-134.505951	27	3.0
"O"163+56	LT	REED CANARYGRASS	12x4	58.359524	-134.505783	48	5.3
"O"163+86	RT	REED CANARYGRASS	12x3	58.3596	-134.506393	36	4.0
"O"163+91	LT	REED CANARYGRASS	3x6	58.359486	-134.505966	18	2.0
"O"164+72	RT	REED CANARYGRASS	10x3	58.35957	-134.507782	30	3.3
"O"165+18	LT	REED CANARYGRASS	20x2	58.359493	-134.506622	40	4.4
"O"165+77	LT	REED CANARYGRASS	4x2	58.359463	-134.506927	8	0.9
"O"167+38	RT	REED CANARYGRASS	3x5	58.359535	-134.50914	15	1.7
"O"167+60	LT	REED CANARYGRASS	14x3	58.359379	-134.507874	45	5.0
"O"168+30	LT	REED CANARYGRASS	25x5	58.359375	-134.50824	125	13.9
"O"168+41	LT	ORANGE HAWKWEED	10x4	58.359406	-134.508301	40	4.4
"O"168+97	LT	REED CANARYGRASS	45x5	58.359425	-134.508591	225	25.0
"O"169+20	LT	ORANGE HAWKWEED	12x6	58.359432	-134.508713	72	8.0
"O"169+33	LT	REED CANARYGRASS	3x1	58.359455	-134.508774	3	0.3
"O"169+99	RT	REED CANARYGRASS	14x6	58.359558	-134.509354	84	9.3
"O"170+35	LT	REED CANARYGRASS	16x5	58.359417	-134.509308	80	8.9
"O"170+39	RT	REED CANARYGRASS	95x20	58.359344	-134.513214	1900	211.1
"O"171+50	LT	REED CANARYGRASS	50x6	58.359413	-134.509903	300	33.3
"O"173+14	LT	REED CANARYGRASS	3.5x1	58.359333	-134.510773	3.5	0.4
"O"175+94	LT	REED CANARYGRASS	12x4	58.359127	-134.512146	48	5.3
"O"176+09	LT	REED CANARYGRASS	5x3	58.359051	-134.512451	15	1.7
"O"176+42	LT	REED CANARYGRASS	3x3	58.359005	-134.512238	9	1.0
"O"176+52	LT	REED CANARYGRASS	4x1	58.358936	-134.512543	4	0.4
"O"176+53	LT	REED CANARYGRASS	2x2	58.35894	-134.512543	4	0.4
"O"176+54	LT	REED CANARYGRASS	2x2	58.358936	-134.512543	4	0.4
"O"176+66	LT	REED CANARYGRASS	6x3	58.359001	-134.512711	18	2.0
"O"176+89	LT	REED CANARYGRASS	10x10	58.358967	-134.512756	100	11.1
"O"176+95	LT	REED CANARYGRASS	10x1	58.358871	-134.512711	10	1.1
"O"176+95	LT	REED CANARYGRASS	3x3	58.358894	-134.512436	9	1.0
"O"176+95	LT	REED CANARYGRASS	12x5	58.358952	-134.512772	60	6.7
"O"176+96	LT	REED CANARYGRASS	6x6	58.358864	-134.512756	36	4.0
"O"176+96	LT	REED CANARYGRASS	5x5	58.358868	-134.512741	25	2.8
"O"177+11	LT	JAPANESE KNOTWEED	20x20	58.359249	-134.512741	400	44.4
"O"177+19	LT	REED CANARYGRASS	200x50	58.359035	-134.512756	10000	1111.1
"O"177+84	RT	REED CANARYGRASS	10x2	58.359375	-134.513535	20	2.2
"O"178+46	RT	REED CANARYGRASS & QUACKGRASS	50x2	58.35939	-134.513977	100	11.1
"O"179+30	RT	QUACKGRASS	1x1	58.359325	-134.514465	1	0.1
"O"180+25	RT	REED CANARYGRASS	3x2	58.359245	-134.514832	6	0.7
"O"180+98	RT	REED CANARYGRASS	2x2	58.359257	-134.514938	4	0.4
"O"181+17	RT	REED CANARYGRASS	1.5x1.5	58.359211	-134.516983	2.25	0.3

**As-Built Plan Notes:
-The latest version of Sheet D-6 (issued via CO-6) omitted the CO-5 delta 14 modifications and the add

Record Drawings have been reviewed by the Project Engineer, and represent to the best of my knowledge, the project as constructed.

PE Dillon Tomaro 2/4/25

MISCELLANEOUS SUMMARIES

STATE OF ALASKA 49TH ANTHONY M. ROOS CE 127591 REGISTERED PROFESSIONAL ENGINEER

7/31/2020

PLANS DEVELOPED BY: KITTELSON & ASSOCIATES, INC. CERT. OF AUTHORIZATION NO.: 254741, 851 SW 6TH AVE. SUITE 600, PORTLAND, OR 97204, (503) 228-5230
H:\20\20487 - glacier highway - juneau traffic design\design_CD\68124_C&D_EOC&SUM-D-1 Fri, Jul/31/20 12:33am

NO.	DATE	REVISION

STATE	PROJECT DESIGNATION	YEAR	SHEET NO.	TOTAL SHEETS
ALASKA	TEA-0955(016)/Z68124	2020	D-2	235

202.0001.0000 REMOVAL OF OBSTRUCTIONS			
STATION	OFFSET	DESCRIPTION	REMARKS
"O"112+25.0	RT	BUS SHELTER PAD	SALVAGE BUS SHELTER
"O"128+00	LT	CONCRETE SECTION IN ROADWAY	
"O"130+75.0	RT/LT	CONCRETE SECTION IN ROADWAY	
"O" 148+00.0	RT/LT	LEMON CREEK BRIDGE	
"O"151+31.0	LT	BUS SHELTER PAD	SALVAGE BUS SHELTER
"O"182+50.0	RT	BUS SHELTER PAD	SALVAGE BUS SHELTER

202.0002.0000 REMOVAL OF PAVEMENT					
STATION FROM	STATION TO	OFFSET	QUANTITY (SF)	QUANTITY (SY)	REMARKS
"O" 103+35.10	"O" 106+39.87	RT	3196	355	
"O" 108+91.40	"O" 109+66.53	RT	662	74	
"O" 110+92.71	"O" 114+64.42	RT	3346	372	
"O" 115+61.45	"O" 116+24.91	RT	648	72	
"O" 117+42.41	"O" 117+75.90	LT	713	79	
"O" 118+03.14	"O" 124+47.36	LT	78470	8719	
"O" 118+21.87	"O" 123+80.50	RT/LT	18140	2016	
"O" 118+21.87	"O" 124+09.00	RT	2903	323	
"O" 124+74.33	"O" 126+06.25	LT	1482	165	
"O" 124+74.33	"O" 125+50.00	LT	1324	147	
"O" 125+19.53	"O" 125+24.53	RT	31	3	
"O" 126+35.81	"O" 133+50.54	LT	4094	455	
"O" 126+40.22	"O" 127+75.09	RT	760	84	
"O" 128+50.00	"O" 129+25.00	LT	1257	140	
"O" 129+14.12	"O" 129+91.50	RT	485	54	
"O" 130+12.08	"O" 132+03.05	RT	1368	152	
"O" 130+50.0	"O" 131+00.00	RT/LT	1969	219	
"O" 133+52.16	"O" 135+10.00	RT/LT	13958	1551	ANKA INTERSECTION
"O" 135+10.00	"O" 135+75.12	RT	335	37	
"O" 137+85.78	"O" 138+27.06	RT	232	26	
"O" 138+48.42	"O" 144+08.80	LT	3603	400	
"O" 138+84.30	"O" 140+21.96	RT	748	83	
"O" 140+89.02	"O" 148+49.31	RT	4099	455	
"O" 144+38.67	"O" 148+49.34	LT	2595	288	
"O" 148+49.34	"O" 149+49.28	LT/RT	4300	478	BRIDGE
"O" 149+49.33	"O" 149+93.42	RT	394	44	
"O" 149+49.33	"O" 153+90.46	LT	4329	481	
"O" 150+25.47	"O" 152+16.54	RT	1142	127	
"O" 153+51.01	"O" 153+60.87	RT	55	6	
"O" 154+31.55	"O" 154+50.57	RT	104	12	
"O" 154+08.94	"O" 166+36.69	LT	9497	1055	
"O" 159+42.38	"O" 173+00.03	LT	9763	1085	
"O" 159+42.38	"O" 171+67.63	RT	8852	984	
"O" 162+60.0	"O" 164+60.0	RT/LT	6800	756	
"O" 166+61.57	"O" 173+70.00	LT	3931	437	
"O" 173+70.00	"O" 178+44.85	RT/LT	31926	3547	ROUNDABOUT
"O" 181+78.40	"O" 182+22.46	LT	225	25	
"O" 181+89.61	"O" 183+98.72	RT	1262	140	
"O" 184+33.00	"O" 184+51.50	RT	214	24	
			TOTAL	25,468	SY

202.0003.0000 REMOVAL OF SIDEWALK					
STATION FROM	STATION TO	OFFSET	QUANTITY(SF)	QUANTITY (SY)	REMARKS
"O" 103+42.61	"O" 103+86.94	RT	338	38	
"O" 108+91.32	"O" 109+02.11	RT	42	5	
"O" 109+53.57	"O" 109+66.53	RT	49	5	
"O" 110+92.62	"O" 111+04.87	RT	49	5	
"O" 112+28.74	"O" 114+27.81	RT	927	103	
"O" 114+54.52	"O" 114+64.30	RT	41	5	
"O" 115+61.33	"O" 115+73.52	RT	46	5	
"O" 116+13.55	"O" 116+24.79	RT	42	5	
"O" 118+21.87	"O" 118+50.74	RT	85	9	
"O" 119+43.84	"O" 123+34.89	RT	2417	269	
"O" 125+19.06	"O" 125+24.35	RT	22	2	
"O" 129+65.43	"O" 129+83.65	RT	84	9	
"O" 130+18.79	"O" 130+79.45	RT	502	56	
"O" 131+19.95	"O" 131+26.65	RT	31	3	
"O" 131+67.16	"O" 131+78.91	RT	56	6	
"O" 133+55.14	"O" 134+17.32	RT	558	62	
"O" 134+52.41	"O" 134+74.92	LT	120	13	
"O" 134+61.93	"O" 135+27.25	RT	927	103	
"O" 137+85.69	"O" 138+26.97	RT	220	24	
"O" 138+84.22	"O" 139+21.66	RT	205	23	
"O" 139+41.67	"O" 140+21.82	RT	397	44	
"O" 140+88.93	"O" 145+90.49	RT	2940	327	
"O" 143+57.39	"O" 144+30.00	LT	938	104	
"O" 144+53.30	"O" 144+79.81	LT	830	92	
"O" 147+07.70	"O" 147+2.78	RT	48	5	
"O" 147+56.31	"O" 149+88.81	RT	2890	321	
"O" 150+25.20	"O" 152.16.40	RT	1177	131	
"O" 160+13.12	"O" 171+55.21	RT	5411	601	
"O" 171+93.03	"O" 173+00.73	RT	499	55	
"O" 173+44.54	"O" 175+87.93	RT	1158	129	
"O" 176+62.90	"O" 178+43.28	RT	2576	286	
"O" 177+15.09	"O" 177+48.63	LT	179	20	
"O" 177+94.95	"O" 178+45.12	LT	205	23	
"O" 181+89.57	"O" 183+83.18	RT	1152	128	
			TOTAL	3,019	SY

202.0004.0000 REMOVAL OF CULVERT PIPE				
STATION FROM	STATION TO	OFFSET	LENGTH (LF)	REMARKS
122+28.20	123+08.49	LT	80.29	
124+22.63	124+96.19	LT	73.56	
125+95.50	125+52.13	LT	56.35	
126+69.66	127+20.88	LT	50.29	
126+96.09	126+54.83	RT	60.24	
130+47.64	131+83.61	LT/RT	154.33	PIPE CROSSES GLACIER HWY
130.47.97	131+01.96	LT	50.65	
131+03.63	132+14.78	LT	106.35	
134+85.65	134+87.36	LT/RT	50.02	PIPE CROSSES GLACIER HWY
139+40.97	139+80.69	LT	40.05	
140+06.98	140+07.35	LT	32.6	PIPE TERMINATES AT CL "O"
141+80.28	142+17.68	RT	36.32	
152+23.36	152+78.12	LT	54.75	
153+74.70	154+22.27	RT	47.58	
165+83.48	167+08.49	LT	125.02	
175+66.78	175+92.27	RT	25.49	
175+92.82	176+07.93	RT	25.6	
175+93.29	176+73.91	RT	76.85	PIPE CROSSES RENNINGER ST
176+59.05	176+73.47	RT	14.42	REMOVE WITH EXISTING INLET
		TOTAL	1,160.76	LF

202.0008.0000 REMOVAL OF INLET		
STATION	OFFSET	REMARKS
123+30	RT	SCUPPER
133+73	LT	SCUPPER
146+37	RT	SCUPPER
167+21.5	RT	SCUPPER
176+58	RT	INLET ON W. SIDE OF RENNINGER

202.0009.0000 REMOVAL OF CURB & GUTTER				
STATION FROM	STATION TO	OFFSET	QUANTITY (LF)	REMARKS
"O" 103+42.61	"O" 103+86.94	RT	76	
"O" 108+91.32	"O" 109+02.11	RT	13	
"O" 109+53.57	"O" 109+66.53	RT	15	
"O" 110+92.62	"O" 111+04.87	RT	15	
"O" 112+28.74	"O" 114+27.81	RT	208	
"O" 114+54.52	"O" 114+64.30	RT	13	
"O" 115+61.33	"O" 115+73.52	RT	14	
"O" 116+13.55	"O" 116+24.79	RT	13	
"O" 118+21.87	"O" 123+34.93	RT	513	
"O" 123+95.00	"O" 124+09.00	RT	14	
"O" 125+19.06	"O" 125+24.35	RT	5	
"O" 129+65.43	"O" 129+83.65	RT	22	
"O" 130+18.79	"O" 130+40.61	RT	26	
"O" 131+19.95	"O" 131+26.65	RT	10	
"O" 131+67.16	"O" 131+78.91	RT	15	
"O" 133+55.14	"O" 134+01.22	RT	63	
"O" 134+17.76	"O" 134+39.61	RT	136	RAISED MEDIAN AT ANKA ST
"O" 134+52.41	"O" 134+74.92	LT	21	
"O" 134+56.68	"O" 135+27.25	RT	120	
"O" 137+85.69	"O" 138+26.97	RT	41	
"O" 138+84.22	"O" 139+21.66	RT	37	
"O" 139+41.67	"O" 140+21.82	RT	80	
"O" 140+88.93	"O" 145+90.49	RT	486	
"O" 143+57.39	"O" 144+30.00	LT	181	
"O" 144+53.30	"O" 144+79.81	LT	171	
"O" 147+07.70	"O" 147+2.78	RT	15	
"O" 147+56.31	"O" 149+88.81	RT	262	
"O" 150+25.20	"O" 152.16.40	RT	229	
"O" 160+13.12	"O" 166+80.22	RT	686	
"O" 171+93.03	"O" 173+00.73	RT	115	
"O" 173+44.54	"O" 175+87.93	RT	248	
"O" 176+62.90	"O" 178+43.28	RT	331	
"O" 177+15.09	"O" 177+48.63	LT	38	
"O" 177+94.95	"O" 178+45.12	LT	56	
"O" 181+89.57	"O" 183+83.18	RT	198	
		TOTAL	4,485	

Record Drawings have been reviewed by the Project Engineer, and represent to the best of my knowledge, the project as constructed.

PE *Dillon Tomaro* 2/4/25

STATE OF ALASKA 49TH ANTHONY M. ROOS CE 127591 REGISTERED PROFESSIONAL ENGINEER

7/31/2020

MISCELLANEOUS SUMMARIES

PLANS DEVELOPED BY: KITTELSON & ASSOCIATES, INC. CERT. OF AUTHORIZATION NO.: 254741, 851 SW 6TH AVE. SUITE 600, PORTLAND, OR 97204, (503) 228-5230
H:\20\20487 - glacier highway - juneau traffic design\design_CD\68124_C&D_EOQ&SUM-D-2 Fri, Jul/31/20 12:33am

NO.	DATE	REVISION
2	12/10/20	ADDENDUM 3
3	01/13/21	ADDENDUM 9

STATE	PROJECT DESIGNATION	YEAR	SHEET NO.	TOTAL SHEETS
ALASKA	TEA-0955(016)/Z68124	2020	D-3	235

** Deleted by CO6

202.2022.0000 REMOVAL OF FENCE				
STATION FROM	STATION TO	OFFSET	LENGTH (LF)	REMARKS
"O" 150+99.0	"O" 152+25.50	RT	126.5	REMOVE EXISTING FENCE BEHIND NEW BUS STOP AT DAVIS
"REN" 12+86.20	"REN" 14+00.69	RT	117.0	REMOVE EXISTING FENCE ALONG EAST SIDE OF RENNINGER
"REN" 12+45.40	"REN" 14+00.69	LT	191.4	REMOVE EXISTING FENCE ALONG WEST SIDE OF RENNINGER
		TOTAL	434.8	

203.0003.0000 UNCLASSIFIED EXCAVATION				
DESCRIPTION	AREA (SY)	CUT (CY)	FILL (CY)	REMARKS
PAVEMENT CONDITION B	356	7774	56	CALCUCALTED FROM ACAD CIVIL 3D
PAVEMENT CONDITION C	1351	1172	0	CALCUCALTED FROM ACAD CIVIL 3D
CURB AND GUTTERS	2889	3159	122	CALCUCALTED FROM ACAD CIVIL 3D
SIDEWALKS	6183	3620	305	CALCUCALTED FROM ACAD CIVIL 3D
DAYLIGHTS	5684	118	4064	CALCUCALTED FROM ACAD CIVIL 3D
STANDRD DITCHES	5308	2610	1005	CALCUCALTED FROM ACAD CIVIL 3D
ROUNDED TOTAL		18453	5552	
CLASSIFIED EXCAVATIOIN				
202.0002.0000 REMOVAL PAVEMENT VOLUME	25468	7075	0.00	AREA FROM 202.0002.0000, AVG 10" THICK
202.0003.0000 REMOVAL SIDEWALK VOLUME	3019	504	0.00	AREA FROM 202.0003.0000 AVG 6" THICK
202.0009.000 REMOVAL OF CURB & GUTTER	44	13	0	AREA = LENGTH C&G * 2' WIDE, AVG 10" THICK
ROUNDED TOTAL		7592	0	
NET UNCLASSIFIED EXCAVATION (CY)		10861		TOTAL EX. VOL - (REMOVAL FROM BID ITEMS

203.0006.000A BORROW, TYPE A						
PAVEMENT CONDITION C - NEW ROADWAY						
STATION FROM	STATION TO	OFFSET	AREA (SF)	AREA (SY)	QUANTITY (TONS)	REMARKS
"O" 102+63.59	"O" 104+14.10	LT	1748	194	199	
"O" 103+35.09	"O" 106+39.87	RT	1967	219	223	
"O" 108+91.40	"O" 109+66.52	RT	419	47	48	
"O" 110+92.071	"O" 116+24.91	RT	3729	414	424	
"O" 118+21.87	"O" 123+49.99	RT	3943	438	448	
"O" 118+79.50	"O" 123+40.0	LT	5478	609	622	
"O" 123+49.99	"O" 124+08.99	RT	77	9	9	
"O" 124+74.33	"O" 126+06.22	LT	1543	171	175	
"O" 126+35.80	"O" 133+50.0	LT	4117	457	468	
"O" 126+83.77	"O" 127+59.29	RT	422	47	48	
"O" 129+65.57	"O" 129+91.42	RT	203	23	23	
"O" 133+50.0	"O" 135+10.56	RT	13958	1551	1585	ANKA INTERSECTION
"O" 135+10.56	"O" 135+75.12	RT	338	38	38	
"O" 137+85.79	"O" 138+27.06	RT	232	26	26	
"O" 138+53.41	"O" 144+16.56	LT	3750	417	426	
"O" 138+84.31	"O" 140+21.83	RT	747	83	85	
"O" 140+89.22	"O" 146+36.34	RT	2939	327	334	
"O" 144+42.83	"O" 153+86.63	LT	6875	764	781	
"O" 147+06.12	"O" 149+91.30	RT	1896	211	215	
"O" 150+21.37	"O" 152+16.56	RT	2350	261	267	
"O" 154+31.56	"O" 154+50.58	RT	104	12	12	
"O" 154+08.94	"O" 164+60.0	LT	5943	660	675	
"O" 159+42.39	"O" 171+67.36	RT	10351	1150	1176	
"O" 166+61.58	"O" 173+00	LT	3549	394	403	
"O" 173+00	"O" 178+04.68	RT/LT	24716	2746	2807	NEW ROUNDABOUT
"O" 176+27.50	"O" 176+67.50	RT/LT	1257	140	143	ROUNDABOUT CENTER ISLAND
"O" 181+78.42	"O" 182+22.48	LT	226	25	26	
"O" 181+89.62	"O" 183+98.74	RT	2286	254	260	
CURB CUT APPROACH SECTIONS						
"O" 100+00.0	"O" 184+80.00	RT/LT	10576	1175	1201	SEE H-SERIES FOR IMPROVEMENT LIMITS
				TOTAL	13147	

301.0001.0000 CRUSHED AGGREGATE BASECOURSE, GRADING D-1						
PAVEMENT CONDITION C - NEW ROADWAY						
STATION FROM	STATION TO	OFFSET	AREA (SF)	AREA (SY)	QUANTITY (TONS)	REMARKS
"O" 102+63.59	"O" 104+14.10	LT	1748	194	42	
"O" 103+35.09	"O" 106+39.87	RT	1967	219	47	
"O" 108+91.40	"O" 109+66.52	RT	419	47	10	
"O" 110+92.071	"O" 116+24.91	RT	3729	414	90	
"O" 118+21.87	"O" 123+49.99	RT	3943	438	95	
"O" 118+79.50	"O" 123+40.0	LT	5478	609	132	
"O" 123+49.99	"O" 124+08.99	RT	77	9	2	
"O" 124+74.33	"O" 126+06.22	LT	1543	171	37	
"O" 126+35.80	"O" 133+50.0	LT	4117	457	99	
"O" 126+83.77	"O" 127+59.29	RT	422	47	10	
"O" 129+65.57	"O" 129+91.42	RT	203	23	5	
"O" 133+50.0	"O" 135+10.56	RT	13958	1551	336	ANKA INTERSECTION
"O" 135+10.56	"O" 135+75.12	RT	338	38	8	
"O" 137+85.79	"O" 138+27.06	RT	232	26	6	
"O" 138+53.41	"O" 144+16.56	LT	3750	417	90	
"O" 138+84.31	"O" 140+21.83	RT	747	83	18	
"O" 140+89.22	"O" 146+36.34	RT	2939	327	71	
"O" 144+42.83	"O" 153+86.63	LT	6875	764	166	
"O" 147+06.12	"O" 149+91.30	RT	1896	211	46	
"O" 150+21.37	"O" 152+16.56	RT	2350	261	57	
"O" 154+31.56	"O" 154+50.58	RT	104	12	3	
"O" 154+08.94	"O" 164+60.0	LT	5943	660	143	
"O" 159+42.39	"O" 171+67.36	RT	10351	1150	249	
"O" 166+61.58	"O" 173+00	LT	3549	394	85	
"O" 173+00	"O" 178+04.68	RT/LT	24716	2746	595	NEW ROUNDABOUT
"O" 176+27.50	"O" 176+67.50	RT/LT	1257	140	30	ROUNDABOUT CENTER ISLAND
"O" 181+78.42	"O" 182+22.48	LT	226	25	5	
"O" 181+89.62	"O" 183+98.74	RT	2286	254	55	
PAVEMENT CONDITION B - RECONSTRUCT						
"O" 118+21.87	"O" 123+60.0	RT/LT	18177	2020	656	
"O" 124+74.33	"O" 125+50.0	RT/LT	1324	147	48	
"O" 128+50.0	"O" 126+24.99	RT/LT	1257	140	45	
"O" 130+50.0	"O" 131+00.0	RT/LT	1699	189	61	
"O" 162+60.0	"O" 164+60.0	RT/LT	4893	544	177	
CURB CUT SECTIONS						
"O" 100+00.0	"O" 184+80.00	RT/LT	10576	1175	382	
CURB AND GUTTER						
		RT/LT	25997	2889	782	
SIDEWALK						
		0	61750	6861	1487	
				TOTAL	6170	

Record Drawings have been reviewed by the Project Engineer, and represent to the best of my knowledge, the project as constructed.

PE Dillon Tomaro 2/4/25

STATE OF ALASKA 49TH ANTHONY M. ROOS CE 127591 REGISTERED PROFESSIONAL ENGINEER 1/17/21

MISCELLANEOUS SUMMARIES

PLANS DEVELOPED BY: KITTELSON & ASSOCIATES, INC. CERT. OF AUTHORIZATION NO.: 254741, 851 SW 6TH AVE. SUITE 600, PORTLAND, OR 97204, (503) 228-5230
H:\20\20487 - Glacier Highway - Juneau Traffic Design\design_CD\68124_C&D_EOQ&SUM-D-3 Sun, Jan/17/21 02:38pm

CO 6

NO.	DATE	REVISION
1	05/07/2021	SIDEWALK, C&G QUANTITY REVISIONS

STATE	PROJECT DESIGNATION	YEAR	SHEET NO.	TOTAL SHEETS
ALASKA	TEA-0955(016)/Z68124	2020	D-3	235

202.2022.0000 REMOVAL OF FENCE				
STATION FROM	STATION TO	OFFSET	LENGTH (LF)	REMARKS
"O" 150+99.0	"O" 152+25.50	RT	126.5	REMOVE EXISTING FENCE BEHIND NEW BUS STOP AT DAVIS
"REN" 12+86.20	"REN" 14+00.69	RT	117.0	REMOVE EXISTING FENCE ALONG EAST SIDE OF RENNINGER
"REN" 12+45.40	"REN" 14+00.69	LT	191.4	REMOVE EXISTING FENCE ALONG WEST SIDE OF RENNINGER
		TOTAL	434.8	

203.0003.0000 UNCLASSIFIED EXCAVATION				
DESCRIPTION	AREA (SY)	CUT (CY)	FILL (CY)	REMARKS
PAVEMENT CONDITION B	356	7774	56	CALCUCALTED FROM ACAD CIVIL 3D
PAVEMENT CONDITION C	1351	1172	0	CALCUCALTED FROM ACAD CIVIL 3D
CURB AND GUTTERS	2889	3159	122	CALCUCALTED FROM ACAD CIVIL 3D
SIDEWALKS	6183	3620	305	CALCUCALTED FROM ACAD CIVIL 3D
DAYLIGHTS	5684	118	4064	CALCUCALTED FROM ACAD CIVIL 3D
STANDRD DITCHES	5308	2610	1005	CALCUCALTED FROM ACAD CIVIL 3D
ROUNDED TOTAL		18453	5552	
CLASSIFIED EXCAVATIOIN				
202.0002.0000 REMOVAL PAVEMENT VOLUME	25468	7075	0.00	AREA FROM 202.0002.0050, AVG 10" THICK
202.0003.0000 REMOVAL SIDEWALK VOLUME	3019	504	0.00	AREA FROM 202.0003.0000 AVG 6" THICK
202.0009.000 REMOVAL OF CURB & GUTTER	44	13	0	AREA = LENGTH C&G * 2' WIDE, AVG 10" THICK
ROUNDED TOTAL		7592	0	
NET UNCLASSIFIED EXCAVATION (CY)		10861		TOTAL EX. VOL - (REMOVAL FROM BID ITEMS

203.0006.000A BORROW, TYPE A						
PAVEMENT CONDITION C - NEW ROADWAY						
STATION FROM	STATION TO	OFFSET	AREA (SF)	AREA (SY)	QUANTITY (TONS)	REMARKS
"O" 102+63.59	"O" 104+14.10	LT	1748	194	199	
"O" 103+35.09	"O" 106+39.87	RT	1967	219	223	
"O" 108+91.40	"O" 109+66.52	RT	419	47	48	
"O" 110+92.071	"O" 116+24.91	RT	3729	414	424	
"O" 118+21.87	"O" 123+49.99	RT	3943	438	448	
"O" 118+79.50	"O" 123+40.0	LT	5478	609	622	
"O" 123+49.99	"O" 124+08.99	RT	77	9	9	
"O" 124+74.33	"O" 126+06.22	LT	1543	171	175	
"O" 126+35.80	"O" 133+50.0	LT	4117	457	468	
"O" 126+83.77	"O" 127+59.29	RT	422	47	48	
"O" 129+65.57	"O" 129+91.42	RT	203	23	23	
"O" 133+50.0	"O" 135+10.56	RT	13958	1551	1585	ANKA INTERSECTION
"O" 135+10.56	"O" 135+75.12	RT	338	38	38	
"O" 137+85.79	"O" 138+27.06	RT	232	26	26	
"O" 138+53.41	"O" 144+16.56	LT	3750	417	426	
"O" 138+84.31	"O" 140+21.83	RT	747	83	85	
"O" 140+89.22	"O" 146+36.34	RT	2939	327	334	
"O" 144+42.83	"O" 153+86.63	LT	6875	764	781	
"O" 147+06.12	"O" 149+91.30	RT	1896	211	215	
"O" 150+21.37	"O" 152+16.56	RT	2350	261	267	
"O" 154+31.56	"O" 154+50.58	RT	104	12	12	
"O" 154+08.94	"O" 164+60.0	LT	5943	660	675	
"O" 159+42.39	"O" 171+67.36	RT	10351	1150	1176	
"O" 166+61.58	"O" 173+00	LT	3549	394	403	
"O" 173+00	"O" 178+04.68	RT/LT	24716	2746	2807	NEW ROUNDABOUT
"O" 176+27.50	"O" 176+67.50	RT/LT	1257	140	143	ROUNDABOUT CENTER ISLAND
"O" 181+78.42	"O" 182+22.48	LT	226	25	26	
"O" 181+89.62	"O" 183+98.74	RT	2286	254	260	
CURB CUT APPROACH SECTIONS						
"O" 100+00.0	"O" 184+80.00	RT/LT	10576	1175	1201	SEE H-SERIES FOR IMPROVEMENT LIMITS
				TOTAL	13147	

301.0001.0000 CRUSHED AGGREGATE BASECOURSE, GRADING D-1						
PAVEMENT CONDITION C - NEW ROADWAY						
STATION FROM	STATION TO	OFFSET	AREA (SF)	AREA (SY)	QUANTITY (TONS)	REMARKS
"O" 102+63.59	"O" 104+14.10	LT	1748	194	42	
"O" 103+35.09	"O" 106+39.87	RT	1967	219	47	
"O" 108+91.40	"O" 109+66.52	RT	419	47	10	
"O" 110+92.071	"O" 116+24.91	RT	3729	414	90	
"O" 118+21.87	"O" 123+49.99	RT	3943	438	95	
"O" 118+79.50	"O" 123+40.0	LT	5478	609	132	
"O" 123+49.99	"O" 124+08.99	RT	77	9	2	
"O" 124+74.33	"O" 126+06.22	LT	1543	171	37	
"O" 126+35.80	"O" 133+50.0	LT	4117	457	99	
"O" 126+83.77	"O" 127+59.29	RT	422	47	10	
"O" 129+65.57	"O" 129+91.42	RT	203	23	5	
"O" 133+50.0	"O" 135+10.56	RT	13958	1551	336	ANKA INTERSECTION
"O" 135+10.56	"O" 135+75.12	RT	338	38	8	
"O" 137+85.79	"O" 138+27.06	RT	232	26	6	
"O" 138+53.41	"O" 144+16.56	LT	3750	417	90	
"O" 138+84.31	"O" 140+21.83	RT	747	83	18	
"O" 140+89.22	"O" 146+36.34	RT	2939	327	71	
"O" 144+42.83	"O" 153+86.63	LT	6875	764	166	
"O" 147+06.12	"O" 149+91.30	RT	1896	211	46	
"O" 150+21.37	"O" 152+16.56	RT	2350	261	57	
"O" 154+31.56	"O" 154+50.58	RT	104	12	3	
"O" 154+08.94	"O" 164+60.0	LT	5943	660	143	
"O" 159+42.39	"O" 171+67.36	RT	10351	1150	249	
"O" 166+61.58	"O" 173+00	LT	3549	394	85	
"O" 173+00	"O" 178+04.68	RT/LT	24716	2746	595	NEW ROUNDABOUT
"O" 176+27.50	"O" 176+67.50	RT/LT	1257	140	30	ROUNDABOUT CENTER ISLAND
"O" 181+78.42	"O" 182+22.48	LT	226	25	5	
"O" 181+89.62	"O" 183+98.74	RT	2286	254	55	
PAVEMENT CONDITION B - RECONSTRUCT						
"O" 118+21.87	"O" 123+60.0	RT/LT	18177	2020	656	
"O" 124+74.33	"O" 125+50.0	RT/LT	1324	147	48	
"O" 128+50.0	"O" 126+24.99	RT/LT	1257	140	45	
"O" 130+50.0	"O" 131+00.0	RT/LT	1699	189	61	
"O" 162+60.0	"O" 164+60.0	RT/LT	4893	544	177	
CURB CUT SECTIONS						
"O" 100+00.0	"O" 184+80.00	RT/LT	11348	1261	410	
CURB AND GUTTER						
		RT/LT	20214	2246	608	
SIDEWALK						
		RT/LT	64752	7195	1559	
				TOTAL	6096	

Record Drawings have been reviewed by the Project Engineer, and represent to the best of my knowledge, the project as constructed.

PE Dillon Tomaro 2/4/25

MISCELLANEOUS SUMMARIES

STATE OF ALASKA 49TH ANTHONY M. ROOS CE 127591 REGISTERED PROFESSIONAL ENGINEER 5/10/21

PLANS DEVELOPED BY: KITTELSON & ASSOCIATES, INC. CERT. OF AUTHORIZATION NO.: 254741, 851 SW 6TH AVE. SUITE 600, PORTLAND, OR 97204, (503) 228-5230
H:\20\20487 - glacier highway - juneau traffic design\design_CD\68124_C&D_EOQ&SUM-D-3 Mon, May/10/21 11:23am

NO.	DATE	REVISION
1	12/14/20	ADDENDUM 4
2	01/13/21	ADDENDUM 9

STATE	PROJECT DESIGNATION	YEAR	SHEET NO.	TOTAL SHEETS
ALASKA	TEA-0955(016)/Z68124	2020	D-4	235

203.0006.000C BORROW, TYPE C				
DESCRIPTION	AREA (SY)	CUT (CY)	FILL (CY)	REMARKS
PAVEMENT CONDITION B	356	7774	56	CALCUCALTED FROM ACAD CIVIL 3D
PAVEMENT CONDITION C	1351	1172	0	CALCUCALTED FROM ACAD CIVIL 3D
CURB AND GUTTERS	2889	3159	122	CALCUCALTED FROM ACAD CIVIL 3D
SIDEWALKS	6183	3620	305	CALCUCALTED FROM ACAD CIVIL 3D
DAYLIGHTS	5684	118	4064	CALCUCALTED FROM ACAD CIVIL 3D
STANDRD DITCHES	5308	2610	1005	CALCUCALTED FROM ACAD CIVIL 3D
	ROUNDED TOTAL	18453	5552	
CLASSIFIED EXCAVATIOIN				
202.0002.0000 REMOVAL PAVEMENT VOLUME	25468	7075	0.00	AREA FROM 202.0002.0000, AVG 10" THICK
202.0003.0000 REMOVAL SIDEWALK VOLUME	3019	504	0.00	AREA FROM 202.0003.0000 AVG 6" THICK
202.0009.000 REMOVAL OF CURB & GUTTER	44	13	0	AREA = LENGTH C&G * 2' WIDE, AVG 10" THICK
	ROUNDED TOTAL	7592	0	
TOTAL BORROW, TYPE C (CY)			5552	

306.0001.0000 ASPHALT TREATED BASE (ATB)						
PAVEMENT CONDITION C – NEW ROADWAY						
STATION FROM	STATION TO	OFFSET	AREA (SF)	AREA (SY)	QUANTITY (TONS)	REMARKS
"O" 102+63.59	"O" 104+14.10	LT	1748	194	45	
"O" 103+35.09	"O" 106+39.87	RT	1967	219	51	
"O" 108+91.40	"O" 109+66.52	RT	419	47	11	
"O" 110+92.071	"O" 116+24.91	RT	3729	414	97	
"O" 118+21.87	"O" 123+49.99	RT	3943	438	103	
"O" 118+79.50	"O" 123+40.0	LT	5478	609	142	
"O" 123+49.99	"O" 124+08.99	RT	77	9	2	
"O" 124+74.33	"O" 126+06.22	LT	1543	171	40	
"O" 126+35.80	"O" 133+50.0	LT	4117	457	107	
"O" 126+83.77	"O" 127+59.29	RT	422	47	11	
"O" 129+65.57	"O" 129+91.42	RT	203	23	5	
"O" 133+50.0	"O" 135+10.56	RT	13958	1551	363	ANKA INTERSECTION
"O" 135+10.56	"O" 135+75.12	RT	338	38	9	
"O" 137+85.79	"O" 138+27.06	RT	232	26	6	
"O" 138+53.41	"O" 144+16.56	LT	3750	417	98	
"O" 138+84.31	"O" 140+21.83	RT	747	83	19	
"O" 140+89.22	"O" 146+36.34	RT	2939	327	76	
"O" 144+42.83	"O" 153+86.63	LT	6875	764	179	
"O" 147+06.12	"O" 149+91.30	RT	1896	211	49	
"O" 150+21.37	"O" 152+16.56	RT	2350	261	61	
"O" 154+31.56	"O" 154+50.58	RT	104	12	3	
"O" 154+08.94	"O" 164+60.0	LT	5943	660	155	
"O" 159+42.39	"O" 171+67.36	RT	10351	1150	269	
"O" 166+61.58	"O" 173+00	LT	3549	394	92	
"O" 173+00	"O" 178+04.68	RT/LT	24716	2746	643	NEW ROUNDABOUT
"O" 181+78.42	"O" 182+22.48	LT	226	25	6	
"O" 181+89.62	"O" 183+98.74	RT	2286	254	59	
PAVEMENT CONDITION B – RECONSTRUCT						
"O" 118+21.87	"O" 123+60.0	RT/LT	18177	2020	473	
"O" 124+74.33	"O" 125+50.0	RT/LT	1324	147	34	
"O" 128+50.0	"O" 126+24.99	RT/LT	1257	140	33	
"O" 130+50.0	"O" 131+00.0	RT/LT	1699	189	44	
"O" 162+60.0	"O" 164+60.0	RT/LT	4893	544	127	
			TOTAL	14584	3413	

401.0001.0000 ASPHALT CONCRETE, TYPE II; CLASS B						
PAVEMENT CONDITION C – NEW ROADWAY						
STATION FROM	STATION TO	OFFSET	AREA (SF)	AREA (SY)	QUANTITY (TONS)	REMARKS
"O" 102+63.59	"O" 104+14.10	LT	1748	194	23	
"O" 103+35.09	"O" 106+39.87	RT	1967	219	26	
"O" 108+91.40	"O" 109+66.52	RT	419	47	5	
"O" 110+92.071	"O" 116+24.91	RT	3729	414	48	
"O" 118+21.87	"O" 123+49.99	RT	3943	438	51	
"O" 118+79.50	"O" 123+40.0	LT	5478	609	71	
"O" 123+49.99	"O" 124+08.99	RT	77	9	1	
"O" 124+74.33	"O" 126+06.22	LT	1543	171	20	
"O" 126+35.80	"O" 133+50.0	LT	4117	457	54	
"O" 126+83.77	"O" 127+59.29	RT	422	47	5	
"O" 129+65.57	"O" 129+91.42	RT	203	23	3	
"O" 133+50.0	"O" 135+10.56	RT	13958	1551	181	ANKA INTERSECTION
"O" 135+10.56	"O" 135+75.12	RT	338	38	4	
"O" 137+85.79	"O" 138+27.06	RT	232	26	3	
"O" 138+53.41	"O" 144+16.56	LT	3750	417	49	
"O" 138+84.31	"O" 140+21.83	RT	747	83	10	
"O" 140+89.22	"O" 146+36.34	RT	2939	327	38	
"O" 144+42.83	"O" 153+86.63	LT	6875	764	89	
"O" 147+06.12	"O" 149+91.30	RT	1896	211	25	
"O" 150+21.37	"O" 152+16.56	RT	2350	261	31	
"O" 154+31.56	"O" 154+50.58	RT	104	12	1	
"O" 154+08.94	"O" 164+60.0	LT	5943	660	77	
"O" 159+42.39	"O" 171+67.36	RT	10351	1150	135	
"O" 166+61.58	"O" 173+00	LT	3549	394	46	
"O" 173+00	"O" 178+04.68	RT/LT	24716	2746	321	NEW ROUNDABOUT
"O" 181+78.42	"O" 182+22.48	LT	226	25	3	
"O" 181+89.62	"O" 183+98.74	RT	2286	254	30	
PAVEMENT CONDITION B – RECONSTRUCT						
"O" 118+21.87	"O" 123+60.0	RT/LT	18177	2020	236	
"O" 124+74.33	"O" 125+50.0	RT/LT	1324	147	17	
"O" 128+50.0	"O" 126+24.99	RT/LT	1257	140	16	
"O" 130+50.0	"O" 131+00.0	RT/LT	1699	189	22	
"O" 162+60.0	"O" 164+60.0	RT/LT	4893	544	64	
PAVEMENT CONDITION A – MILL & FILL						
"O" 100+00	"O" 173+00	RT/LT	259644	28849	3375	SEE PLAN FOR COLD PLANE LIMITS
"O" 178+05	"O" 189+00	RT/LT	32115	3568	417	SEE PLAN FOR COLD PLANE LIMITS
CURB CUT APPROACH SECTIONS						
"O" 100+00.0	"O" 184+80.00	RT/LT	10576	1175	137	SEE H-SERIES FOR IMPROVEMENT LIMITS
				TOTAL	5637	

Record Drawings have been reviewed by the Project Engineer, and represent to the best of my knowledge, the project as constructed.

PE Dillon Tomaro 2/4/25

STATE OF ALASKA 49TH ANTHONY M. ROOS CE 127591 REGISTERED PROFESSIONAL ENGINEER 1/17/21

MISCELLANEOUS SUMMARIES

PLANS DEVELOPED BY: KITTELSON & ASSOCIATES, INC. CERT. OF AUTHORIZATION NO.: 254741, 851 SW 6TH AVE. SUITE 600, PORTLAND, OR 97204, (503) 228-5230
H:\20\20487 – Glacier Highway – Juneau Traffic Design\design_CD\68124_C&D_EOQ&SUM-D-4 Sun, Jan/17/21 02:38pm

NO.	DATE	REVISION
1	12/10/20	ADDENDUM 4
2	01/14/21	ADDENDUM 9

STATE	PROJECT DESIGNATION	YEAR	SHEET NO.	TOTAL SHEETS
ALASKA	TEA-0955(016)/Z68124	2020	D-5	235

** Deleted by CO6

408.2001.000B SUPERPAVE (HMA), SP TYPE B						
PAVEMENT CONDITION C – NEW ROADWAY						
STATION FROM	STATION TO	OFFSET	AREA (SF)	AREA (SY)	QUANTITY (TONS)	REMARKS
"O" 102+63.59	"O" 104+14.10	LT	1748	194	23	
"O" 103+35.09	"O" 106+39.87	RT	1967	219	26	
"O" 108+91.40	"O" 109+66.52	RT	419	47	6	
"O" 110+92.071	"O" 116+24.91	RT	3729	414	50	
"O" 118+21.87	"O" 123+49.99	RT	3943	438	53	
"O" 118+79.50	"O" 123+40.0	LT	5478	609	73	
"O" 123+49.99	"O" 124+08.99	RT	77	9	1	
"O" 124+74.33	"O" 126+06.22	LT	1543	171	21	
"O" 126+35.80	"O" 133+50.0	LT	4117	457	55	
"O" 126+83.77	"O" 127+59.29	RT	422	47	6	
"O" 129+65.57	"O" 129+91.42	RT	203	23	3	
"O" 133+50.0	"O" 135+10.56	RT	13958	1551	186	ANKA INTERSECTION
"O" 135+10.56	"O" 135+75.12	RT	338	38	5	
"O" 137+85.79	"O" 138+27.06	RT	232	26	3	
"O" 138+53.41	"O" 144+16.56	LT	3750	417	50	
"O" 138+84.31	"O" 140+21.83	RT	747	83	10	
"O" 140+89.22	"O" 146+36.34	RT	2939	327	39	
"O" 144+42.83	"O" 153+86.63	LT	6875	764	92	
"O" 147+06.12	"O" 149+91.30	RT	1896	211	25	
"O" 150+21.37	"O" 152+16.56	RT	2350	261	31	
"O" 154+31.56	"O" 154+50.58	RT	104	12	1	
"O" 154+08.94	"O" 164+60.0	LT	5943	660	79	
"O" 159+42.39	"O" 171+67.36	RT	10351	1150	138	
"O" 166+61.58	"O" 173+00	LT	3549	394	47	
"O" 173+00	"O" 178+04.68	RT/LT	24716	2746	330	NEW ROUNDABOUT
"O" 181+78.42	"O" 182+22.48	LT	226	25	3	
"O" 181+89.62	"O" 183+98.74	RT	2286	254	30	
PAVEMENT CONDITION B – RECONSTRUCT						
"O" 118+21.87	"O" 123+60.0	RT/LT	18177	2020	242	
"O" 124+74.33	"O" 125+50.0	RT/LT	1324	147	18	
"O" 128+50.0	"O" 126+24.99	RT/LT	1257	140	17	
"O" 130+50.0	"O" 131+00.0	RT/LT	1699	189	23	
"O" 162+60.0	"O" 164+60.0	RT/LT	4893	544	65	
PAVEMENT CONDITION A – MILL & FILL						
"O" 100+00	"O" 173+00	RT/LT	259644	28849	3462	SEE PLAN FOR COLD PLANE LIMITS
"O" 178+05	"O" 189+00	RT/LT	32115	3568	428	SEE PLAN FOR COLD PLANE LIMITS
				TOTAL	5640	

**As-Built Plan Notes: L

410.2001.0000 PAVEMENT COLD PLANING				
STATION FROM	STATION TO	AREA (SF)	AREA (SY)	REMARKS
"O" 100+00	"O" 173+00	316610	35179	
"O" 178+05	"O" 189+00	53838	5982	
		TOTAL	41161	SY

511.0001.0000 MECHANICALLY STABILIZED EARTH WALL – CONCRETE FACED				
STATION FROM	STATION TO	OFFSET	AREA (SF)	REMARKS
"O" 144+95.01	"O" 146+29.90	LT	430	WALL D
		TOTAL	430	

Record Drawings have been reviewed by the Project Engineer, and represent to the best of my knowledge, the project as constructed.

PE Dillon Tomaro 2/4/25

530.2000.0000 GRAVITY BLOCK WALL				
STATION FROM	STATION TO	OFFSET	AREA (SF)	REMARKS
"O" 132+12.5	"O" 132+19.90	LT	17.00	WALL A
"O" 133+25.98	"O" 133+35.16	LT	20.00	WALL B
"O" 144+52.48	"O" 144+93.29	RT	141.75	WALL C
"O" 170+04.45	"O" 170+20+.61	LT	24.00	WALL F
		TOTAL	203	

607.0003.0000 CHAIN LINK FENCE				
STATION FROM	STATION TO	OFFSET	LENGTH (LF)	REMARKS
"O" 144+95.00	"O" 146+29.90	LT	140	FALL PROTECTION FENCE AT TOP OF WALL
"REN" 12+42.35	"REN" 14+08.40	LT	220	NEW FENCE FOR PRIVATE PROPERTY
		TOTAL	360	

608.0001.0004 CONCRETE SIDEWALK, 4" THICK					
STATION FROM	STATION TO	OFFSET	QUANTITY(SF)	QUANTITY (SY)	REMARKS
"O" 103+41.92	"O" 106+36.86	RT	1688	188	
"O' 107+37.32	"O" 107+56.12	RT	82	9	
"O" 108+91.40	"O" 109+66.53	RT	382	42	
"O" 110+92.71	"O" 114+64.42	RT	1902	211	
"O" 115+61.45	"O" 116+24.91	RT	319	35	
"O" 117+42.41	"O" 117+72.41	LT	143	16	
"O" 118+08.91	"O" 122+52.16	LT	2174	242	
"O" 118+21.87	"O" 123+34.93	RT	2417	269	
"O" 123+95.00	"O" 124+09.00	RT	65	7	
"O" 124+86.82	"O" 133+75.52	LT	4118	458	
"O" 125+19.51	"O" 125+24.51	RT	22	2	
"O" 126+40.23	"O" 126+83.80	RT	219	24	
"O" 129+14.12	"O" 1239+65.57	RT	265	29	
"O" 129+65.57	"O" 129+87.19	RT	102	11	
"O" 130+15.15	"O" 130+36.81	RT	91	10	
"O" 131+36.81	"O" 131+80.97	RT	813	90	
"O" 133+55.26	"O" 134+01.98	RT	145	16	
"O" 133+75.52	"O" 134+74.92	LT	258	29	
"O" 134+56.2	"O" 135+27.33	RT	347	39	
"O" 137+85.78	"O" 138+27.04	RT	207	23	
"O" 138+84.30	"O" 139+21.75	RT	185	21	
"O" 138+56.39	"O" 144+30.53	LT	3624	403	
"O" 139+41.75	"O" 140+21.9	RT	395	44	
"O" 140+89.02	"O" 145+90.65	RT	2325	258	
"O" 144+53.02	"O" 146+37.17	LT	1602	178	
"O" 146+63.51	"O" 153+83.99	LT	3696	411	
"O" 147+07.77	"O" 149+89.45	RT	1335	148	
"O" 150+24.84	"O" 152+16.54	RT	1005	112	
"O" 154+12.99	"O" 166+32.94	LT	5913	657	
"O" 159+42.40	"O" 159+81.40	RT	35	4	
"O" 160+05.06	"O" 176+11.19	RT	9634	1070	
"O" 166+65.06	"O" 177+08.89	LT	5395	599	
"O" 176+62.52	"O" 178+44.99	RT	2274	253	
"O" 177+02.04	"O" 178+45.00	LT	1370	152	
"O" 179+85.13	"O" 180+14.76	RT	50	6	
"O" 181+81.20	"O" 182+22.55	LT	22	2	
"O" 181+89.63	"O" 183+95.83	RT	1032	115	
			Total	6183	

STATE OF ALASKA 49TH ANTHONY M. ROOS CE 127591 REGISTERED PROFESSIONAL ENGINEER 1/17/21

MISCELLANEOUS SUMMARIES

PLANS DEVELOPED BY: KITTELSON & ASSOCIATES, INC. CERT. OF AUTHORIZATION NO.: 254741, 851 SW 6TH AVE. SUITE 600, PORTLAND, OR 97204, (503) 228-5230
H:\20\20487 - Glacier Highway - Juneau Traffic Design\design_CD\68124_C&D_EOQ&SUM-D-5 Sun, Jan/17/21 02:38pm

CO 6

NO.	DATE	REVISION
1	05/07/2021	SIDEWALK, C&G QUANTITY REVISIONS

STATE	PROJECT DESIGNATION	YEAR	SHEET NO.	TOTAL SHEETS
ALASKA	TEA-0955(016)/Z68124	2020	D-5	235

408.2001.000B SUPERPAVE (HMA), SP TYPE B						
PAVEMENT CONDITION C – NEW ROADWAY						
STATION FROM	STATION TO	OFFSET	AREA (SF)	AREA (SY)	QUANTITY (TONS)	REMARKS
"O" 102+63.59	"O" 104+14.10	LT	1748	194	23	
"O" 103+35.09	"O" 106+39.87	RT	1967	219	26	
"O" 108+91.40	"O" 109+66.52	RT	419	47	6	
"O" 110+92.071	"O" 116+24.91	RT	3729	414	50	
"O" 118+21.87	"O" 123+49.99	RT	3943	438	53	
"O" 118+79.50	"O" 123+40.0	LT	5478	609	73	
"O" 123+49.99	"O" 124+08.99	RT	77	9	1	
"O" 124+74.33	"O" 126+06.22	LT	1543	171	21	
"O" 126+35.80	"O" 133+50.0	LT	4117	457	55	
"O" 126+83.77	"O" 127+59.29	RT	422	47	6	
"O" 129+65.57	"O" 129+91.42	RT	203	23	3	
"O" 133+50.0	"O" 135+10.56	RT	13958	1551	186	ANKA INTERSECTION
"O" 135+10.56	"O" 135+75.12	RT	338	38	5	
"O" 137+85.79	"O" 138+27.06	RT	232	26	3	
"O" 138+53.41	"O" 144+16.56	LT	3750	417	50	
"O" 138+84.31	"O" 140+21.83	RT	747	83	10	
"O" 140+89.22	"O" 146+36.34	RT	2939	327	39	
"O" 144+42.83	"O" 153+86.63	LT	6875	764	92	
"O" 147+06.12	"O" 149+91.30	RT	1896	211	25	
"O" 150+21.37	"O" 152+16.56	RT	2350	261	31	
"O" 154+31.56	"O" 154+50.58	RT	104	12	1	
"O" 154+08.94	"O" 164+60.0	LT	5943	660	79	
"O" 159+42.39	"O" 171+67.36	RT	10351	1150	138	
"O" 166+61.58	"O" 173+00	LT	3549	394	47	
"O" 173+00	"O" 178+04.68	RT/LT	24716	2746	330	NEW ROUNDABOUT
"O" 181+78.42	"O" 182+22.48	LT	226	25	3	
"O" 181+89.62	"O" 183+98.74	RT	2286	254	30	
PAVEMENT CONDITION B – RECONSTRUCT						
"O" 118+21.87	"O" 123+60.0	RT/LT	18177	2020	242	
"O" 124+74.33	"O" 125+50.0	RT/LT	1324	147	18	
"O" 128+50.0	"O" 126+24.99	RT/LT	1257	140	17	
"O" 130+50.0	"O" 131+00.0	RT/LT	1699	189	23	
"O" 162+60.0	"O" 164+60.0	RT/LT	4893	544	65	
PAVEMENT CONDITION A – MILL & FILL						
"O" 100+00	"O" 173+00	RT/LT	259644	28849	3462	SEE PLAN FOR COLD PLANE LIMITS
"O" 178+05	"O" 189+00	RT/LT	32115	3568	428	SEE PLAN FOR COLD PLANE LIMITS
				TOTAL	5640	

410.2001.0000 PAVEMENT COLD PLANING				
STATION FROM	STATION TO	AREA (SF)	AREA (SY)	REMARKS
"O" 100+00	"O" 173+00	316610	35179	
"O" 178+05	"O" 189+00	53838	5982	
		TOTAL	41161	SY

511.0001.0000 MECHANICALLY STABILIZED EARTH WALL – CONCRETE FACED				
STATION FROM	STATION TO	OFFSET	AREA (SF)	REMARKS
"O" 144+95.01	"O" 146+29.90	LT	430	WALL D
		TOTAL	430	

Record Drawings have been reviewed by the Project Engineer, and represent to the best of my knowledge, the project as constructed.

PE *Dillon Tomaro* 2/4/25

530.2000.0000 GRAVITY BLOCK WALL				
STATION FROM	STATION TO	OFFSET	AREA (SF)	REMARKS
"O" 132+12.5	"O" 132+19.90	LT	17.00	WALL A
"O" 133+25.98	"O" 133+35.16	LT	20.00	WALL B
"O" 144+52.48	"O" 144+93.29	RT	141.75	WALL C
"O" 170+04.45	"O" 170+20+.61	LT	24.00	WALL F
		TOTAL	203	

607.0003.0000 CHAIN LINK FENCE				
STATION FROM	STATION TO	OFFSET	LENGTH (LF)	REMARKS
"O" 144+95.00	"O" 146+29.90	LT	140	FALL PROTECTION FENCE AT TOP OF WALL
"REN" 12+42.35	"REN" 14+08.40	LT	220	NEW FENCE FOR PRIVATE PROPERTY
		TOTAL	360	

608.0001.0004 CONCRETE SIDEWALK, 4" THICK					
STATION FROM	STATION TO	OFFSET	QUANTITY(SF)	QUANTITY (SY)	REMARKS
"O" 103+41.92	"O" 106+36.86	RT	1803	200	
"O" 108+91.40	"O" 109+66.53	RT	382	42	
"O" 110+92.71	"O" 116+24.91	RT	2705	301	
"O" 118+08.91	"O" 124+30.79	LT	3643	405	
"O" 118+21.87	"O" 124+08.99	RT	3249	361	
"O" 124+91.88	"O" 125+98.56	LT	608	68	
"O" 125+19.51	"O" 125+24.51	RT	22	2	
"O" 126+40.23	"O" 133+78.18	LT	3658	406	
"O" 126+40.23	"O" 127+75.09	RT	650	72	
"O" 129+14.12	"O" 129+80.36	RT	403	45	
"O" 130+15.15	"O" 132+00.00	RT	1008	112	
"O" 133+55.26	"O" 134+21.07	RT	580	64	
"O" 134+05.92	"O" 135+09.22	LT	517	57	
"O" 134+56.2	"O" 135+75.12	RT	906	101	
"O" 137+85.78	"O" 138+27.04	RT	207	23	
"O" 138+84.30	"O" 140+21.96	RT	685	76	
"O" 138+56.39	"O" 144+02.29	LT	3179	353	
"O" 140+89.02	"O" 149+88.95	RT	4583	509	
"O" 144+53.02	"O" 153+83.99	LT	5372	597	
"O" 150+24.84	"O" 152+16.54	RT	1428	159	
"O" 153+51.01	"O" 153+61.01	LT	46	5	
"O" 154+12.99	"O" 166+32.94	LT	6478	720	
"O" 154+31.55	"O" 154+50.57	RT	89	10	
"O" 156+89.49	"O" 157+04.92	RT	72	8	
"O" 158+79.08	"O" 158+98.30	RT	91	10	
"O" 159+42.40	"O" 159+81.40	RT	184	20	
"O" 160+17.56	"O" 171+50.83	RT	6112	679	
"O" 166+65.06	"O" 176+31.21	LT	5850	650	
"O" 171+92.97	"O" 176+10.69	RT	4076	453	
"O" 176+62.52	"O" 178+44.99	RT	2739	304	
"O" 176+73.39	"O" 178+45.00	LT	1665	185	
"O" 181+81.20	"O" 182+22.55	LT	229	25	
"O" 181+89.63	"O" 183+95.83	RT	1450	161	
"O" 184+36.07	"O" 184+51.16	RT	84	9	
		Total	64752	7195	

MISCELLANEOUS SUMMARIES

STATE OF ALASKA 49TH ANTHONY M. ROOS CE 127591 REGISTERED PROFESSIONAL ENGINEER 5/10/21

PLANS DEVELOPED BY: KITTELSON & ASSOCIATES, INC. CERT. OF AUTHORIZATION NO.: 254741, 851 SW 6TH AVE. SUITE 600, PORTLAND, OR 97204, (503) 228-5230
H:\20\20487 – glacier highway – juneau traffic design\design_CD\68124_C&D_EOQ&SUM-D-5 Mon, May/10/21 11:23am

** Deleted by CO5

NO.	DATE	REVISION

STATE	PROJECT DESIGNATION	YEAR	SHEET NO.	TOTAL SHEETS
ALASKA	TEA-0955(016)/Z68124	2020	D-6	235

608.0006.0000 CURB RAMP

STATION	OFFSET	TYPE	REMARKS
"O" 102+69.91	4.00, RT	D	MEDIAN RAMPS
"O" 102+69.91	4.00, LT	D	MEDIAN RAMPS
"O" 106+21.81	36.29' RT	A	AK DOT & PF STD DRAWING I-21.10
"O" 118+41.39	23.22' RT	A	AK DOT & PF STD DRAWING I-21.10
"O" 118+41.39	22.50' LT	A	AK DOT & PF STD DRAWING I-21.10
"O" 118+41.39	5.00, RT	D	MEDIAN RAMPS
"O" 118+41.39	5.00, LT	D	MEDIAN RAMPS
"O" 122+47.41	32.00' LT	C	DIRECTIONAL CURB RAMPS
"O" 123+08.20	32.00' LT	C	DIRECTIONAL CURB RAMPS
"O" 124+30.94	32.00' LT	C	DIRECTIONAL CURB RAMPS
"O" 124+91.73	32.00' LT	C	DIRECTIONAL CURB RAMPS
"O" 125+98.90	31.71' LT	E	SIDEWALK TERMINUS, 5' LANDING
"O" 126+45.96	31.64' LT	E	SIDEWALK TERMINUS, 5' LANDING
"O" 129+88.08	29.01' RT	E	SIDEWALK TERMINUS, 5' LANDING
"O" 130+20.75	29.33' RT	A	AK DOT & PF STD DRAWING I-21.10
"O" 133+63.51	25.31' LT	A	AK DOT & PF STD DRAWING I-21.10
"O" 133+74.65	40.73' RT	A	AK DOT & PF STD DRAWING I-21.10
"O" 133+79.26	43.23' LT	A	AK DOT & PF STD DRAWING I-21.10
"O" 133+97.90	61.00' RT	A	AK DOT & PF STD DRAWING I-21.10
"O" 134+04.38	46.56' LT	A	AK DOT & PF STD DRAWING I-21.10
"O" 134+59.05	49.07' RT	A	AK DOT & PF STD DRAWING I-21.10
"O" 134+65.09	22.46' LT	A	AK DOT & PF STD DRAWING I-21.10
"O" 134+75.85	33.08' RT	A	AK DOT & PF STD DRAWING I-21.10
"O" 138+56.32	39.70' LT	A	AK DOT & PF STD DRAWING I-21.10
"O" 143+72.69	30.17' LT	A	AK DOT & PF STD DRAWING I-21.10
"O" 143+73.02	12.04' LT	D	MEDIAN RAMPS
"O" 143+73.02	4.04' LT	D	MEDIAN RAMPS
"O" 143+73.48	25.94' RT	A	AK DOT & PF STD DRAWING I-21.10
"O" 143+98.74	44.07' LT	A	AK DOT & PF STD DRAWING I-21.10
"O" 144+46.07	37.92' LT	A	AK DOT & PF STD DRAWING I-21.10
"O" 149+64.09	18.75' LT	NA	SEE SHEET E-8 FOR DETAIL
"O" 149+63.84	26.47' RT	NA	SEE SHEET E-8 FOR DETAIL
"O" 149+85.18	42.18' RT	NA	SEE SHEET E-8 FOR DETAIL
"O" 150+28.33	43.72' RT	A	AK DOT & PF STD DRAWING I-21.10
"O" 150+61.52	25.21' RT	A	AK DOT & PF STD DRAWING I-21.10

608.0006.0000 CURB RAMP

STATION	OFFSET	TYPE	REMARKS
"O" 150+61.55	22.50' LT	A	AK DOT & PF STD DRAWING I-21.10
"O" 153+85.34	36.48' LT	A	AK DOT & PF STD DRAWING I-21.10
"O" 154+13.80	38.58' LT	A	AK DOT & PF STD DRAWING I-21.10
"O" 154+41.09	22.50' LT	A	AK DOT & PF STD DRAWING I-21.10
"O" 154+41.09	5.00' RT	D	MEDIAN RAMPS
"O" 154+41.09	5.00' LT	D	MEDIAN RAMPS
"O" 154+41.09	22.50' RT	A	AK DOT & PF STD DRAWING I-21.10
"O" 159+51.22	22.90' LT	A	AK DOT & PF STD DRAWING I-21.10
"O" 159+51.22	5.00' RT	D	MEDIAN RAMPS
"O" 159+51.22	4.00' LT	D	MEDIAN RAMPS
"O" 159+51.55	22.95' RT	A	AK DOT & PF STD DRAWING I-21.10
"O" 159+74.44	36.69' RT	A	AK DOT & PF STD DRAWING I-21.10
"O" 160+18.52	30.40' RT	A	AK DOT & PF STD DRAWING I-21.10
"O" 166+31.38	35.96' LT	A	AK DOT & PF STD DRAWING I-21.10
"O" 166+64.25	34.19' LT	A	AK DOT & PF STD DRAWING I-21.10
"O" 166+87.28	22.50' LT	A	AK DOT & PF STD DRAWING I-21.10
"O" 166+87.28	5.00' RT	D	MEDIAN RAMPS
"O" 166+87.28	5.00' LT	D	MEDIAN RAMPS
"O" 166+87.28	22.50' RT	A	AK DOT & PF STD DRAWING I-21.10
"O" 171+54.60	30.26' RT	E	SIDEWALK TERMINUS
"O" 171+93.62	30.26' RT	E	SIDEWALK TERMINUS
"O" 174+34.74	21.75' RT	F	BIKE RAMPS
"O" 174+53.26	21.46' LT	F	BIKE RAMPS
"O" 175+59.76	22.60' LT	B	ROUNDABOUT CURB RAMPS
"O" 175+61.00	5.90' RT	D	MEDIAN RAMPS
"O" 175+61.00	7.50' LT	D	MEDIAN RAMPS
"O" 175+61.95	19.50' RT	B	ROUNDABOUT CURB RAMPS
"O" 176+13.25	179.00' RT	F	BIKE RAMPS
"O" 176+13.97	85.40' RT	B	ROUNDABOUT CURB RAMPS
"O" 176+31.33	83.56' LT	E	SIDEWALK TERMINUS
"O" 176+28.98	86.32' RT	D	MEDIAN RAMPS
"O" 176+46.97	81.95' LT	D	MEDIAN RAMPS
"O" 176+40.30	87.01' RT	D	MEDIAN RAMPS
"O" 176+51.70	81.47' LT	D	MEDIAN RAMPS
"O" 176+62.74	86.76' RT	B	ROUNDABOUT CURB RAMPS
"O" 176+70.97	81.41' LT	E	SIDEWALK TERMINUS

609.0001.0000 CURB, TYPE 1

STATION FROM	STATION TO	OFFSET	QUANTITY (LF)	REMARKS
"O" 118+27.38	"O" 118+36.38	CNTR	29	MEDIAN VERTICAL CURB
"O" 118+46.38	"O" 118+79.50	CNTR	78	MEDIAN VERTICAL CURB
"O" 134+23.37	"O" 134+39.61	RT	104	RAISED MEDIAN AT ANKA ST
"O" 142+49.99	"O" 143+68.07	CNTR	251	MEDIAN VERTICAL CURB
"O" 143+77.96	"O" 143+87.84	CNTR	31	MEDIAN VERTICAL CURB
"O" 154+26.04	"O" 154+36.03	CNTR	34	MEDIAN VERTICAL CURB
"O" 154+46.03	"O" 159+46.22	CNTR	1020	MEDIAN VERTICAL CURB
"O" 159+56.22	"O" 159+68.00	CNTR	35	MEDIAN VERTICAL CURB
"O" 162+17.06	"O" 164+54.70	CNTR	481	MEDIAN VERTICAL CURB
"O" 166+69.14	"O" 166.82.28	CNTR	36	MEDIAN VERTICAL CURB
"O" 166+92.28	"O" 173+70.00	CNTR	1374	MEDIAN VERTICAL CURB
"O" 181+85.04	"O" 182+07.06	CNTR	58	MEDIAN VERTICAL CURB
"O" 182+19.06	"O" 182+94.98	CNTR	168	MEDIAN VERTICAL CURB

609.0002.0000 CURB & GUTTER, TYPE 1

STATION FROM	STATION TO	OFFSET	QUANTITY (LF)	REMARKS
"O" 101+50	"O" 102+91.71	CNTR	290	MEDIAN
"O" 103+41.92	"O" 106+36.86	RT	363	RIGHT SIDE GLACIER HIGHWAY PLUS PARTIAL APPROACH
"O" 107+37.32	"O"107+56.12	RT	19	NEW SIDEWALK SECTION
"O" 108+91.40	"O" 109+66.53	RT	76	NEW DRIVEWAY
"O" 110+92.71	"O" 114+64.42	RT	381	RIGHT SIDE GLACIER HIGHWAY PLUS BUS PULLOUT
"O" 115+61.45	"O" 116+24.91	RT	65	NEW DRIVEWAY
"O" 117+42.41	"O" 117+72.41	LT	47	NEW CURB RETURNS
"O" 118+08.91	"O" 122+52.16	LT	468	LEFT SIDE GLACIER HIGHWAY
"O" 118+21.87	"O" 123+34.93	RT	484	RIGHT SIDE GLACIER HIGHWAY
"O" 123+95.00	"O" 124+09.00	RT	9	RIGHT SIDE GLACIER HIGHWAY
"O" 123+03.30	"O" 124+35.85	LT	142	NEW SIDEWALK SECTION
"O" 123+27.31	"O" 123+32.31	RT	5	NEW SIDEWALK SECTION
"O" 123+95.00	"O" 124+09.00	RT	14	NEW SIDEWALK SECTION
"O" 124+86.82	"O" 133+75.52	LT	899	NEW SIDEWALK SECTION
"O" 125+19.51	"O" 125+24.51	RT	5	NEW SIDEWALK SECTION
"O" 126+40.23	"O" 126+83.80	RT	44	NEW SIDEWALK SECTION
"O" 129+14.17	"O" 129+65.57	RT	53	NEW SIDEWALK SECTION
"O" 129+65.57	"O" 129+87.19	RT	37	NEW CURB RETURNS
"O" 130+15.15	"O" 131+80.97	RT	36	RIGHT SIDE GLACIER HIGHWAY. CURB RETURN. DRIVEWAY.
"O" 133+55.26	"O" 134+00.64	RT	61	NEW CURB RETURNS
"O" 134+23.86	"O" 134+25.41	RT	12	NEW MEDIAN SPLITTER
"O" 134+03.68	"O" 134+74.92	LT	86	NEW SIDEWALK SECTION PLUS CURB RETURN
"O" 134+55.50	"O" 135+27.33	RT	112	NEW CURB RETURNS
"O" 137+85.78	"O" 138+27.04	RT	41	NEW DRIVEWAY
"O" 138+84.30	"O" 139+21.75	RT	37	NEW DRIVEWAY
"O" 138+56.39	"O" 144+30.53	LT	741	NEW SIDEWALK SECTION
"O" 139+41.75	"O" 140+21.9	RT	79	NEW DRIVEWAY
"O" 140+89.02	"O" 145+90.65	RT	4847	NEW SIDEWALK SECTION
"O" 144+53.02	"O" 146+37.17	LT	346	NEW SIDEWALK SECITON PLUS CURB RETURNS AND APPROACHES
"O" 146+63.51	"O" 153+83.99	LT	763	NEW SIDEWALK SECTION
"O" 147+07.77	"O" 149+89.45	RT	307	NEW SIDEWALK SECTION PLUS CURB RETURNS
"O" 150+24.84	"O" 152+16.54	RT	232	NEW SIDEWALK SECTION PLUS BUS PULLOUT
"O" 154+12.99	"O" 166+32.94	LT	1256	LEFT SIDE GLACIER HIGHWAY PLUS BUS PULLOUT
"O" 159+42.40	"O" 159+81.40	RT	64	NEW CURB RETURNS
"O" 160+05.06	"O" 176+11.19	RT	1787	RIGHT SIDE GLACIER HIGHWAY THROUGH RDBT ONTO RENNINGER STREET
"O" 166+65.06	"O" 177+08.89	LT	1198	LEFT SIDE GLACIER HIGHWAY THROUGH RDBT INTO NEW WALMART ACCESS
"O" 173+75.00	"O" 175+86.86	CNTR	257	RDBT EAST APPROACH SPLITTER ISLAND
"O" 176+09.49	"O" 176+85.49	CNTR	239	OUTER C&G ON RDBT CENTRAL ISLAND
"O" 176+26.99	"O" 176+67.98	CNTR	129	INNER C&G ON RDBT CENTRAL ISLAND
"O" 176+29.14	"O" 176+52.00	RT	122	RDBT NORTH APPROACH SPLITTER ISLAND
"O" 176+62.52	"O" 178+44.99	RT	317	RIGHT SIDE GLACIER HIGHWAY FROM RENNINGER STREET TO END OF RDBT CONSTRUCTION
"O" 176+39.17	"O" 176+50.81	LT	113	RDBT SOUTH APPROACH SPLITTER ISLAND
"O" 177+02.04	"O" 178+45.00	LT	268	LEFT SIDE GLACIER HIGHWAY FROM NEW WALMART ACCESS TO END OF RDBT CONSTRUCTION
"O" 177+08.99	"O" 178+03.00	CNTR	201	RDBT WEST APPROACH SPLITTER ISLAND
"O" 179+85.13	"O" 180+14.76	RT	10	NEW SIDEWALK
"O" 181+81.20	"O" 182+22.55	LT	48	NEW CURB RETURNS
"O" 181+89.63	"O" 183+95.83	RT	221	NEW SIDEWALK SECTION AND BUS PULLOUT
		TOTAL	17331	

TOTAL 3697

Record Drawings have been reviewed by the Project Engineer, and represent to the best of my knowledge, the project as constructed.

PE Dillon Tomaro 2/4/25

STATE OF ALASKA 49TH ANTHONY M. ROOS CE 127591 REGISTERED PROFESSIONAL ENGINEER 7/31/2020

MISCELLANEOUS SUMMARIES

PLANS DEVELOPED BY: KITTELSON & ASSOCIATES, INC. CERT. OF AUTHORIZATION NO.: 254741, 851 SW 6TH AVE. SUITE 600, PORTLAND, OR 97204, (503) 228-5230
H:\20\20487 - glacier highway - juneau traffic design\design_CD\68124_C&D_EOQ&SUM-D-6 Fri, Jul/31/20 12:33am

CO5

** Deleted by CO6

NO.	DATE	REVISION
1	05/07/2021	SIDEWALK, C&G QUANTITY REVISIONS

STATE	PROJECT DESIGNATION	YEAR	SHEET NO.	TOTAL SHEETS
ALASKA	TEA-0955(016)/Z68124	2020	D-6	235

609.0002.0000 CURB & GUTTER, TYPE 1

STATION FROM	STATION TO	OFFSET	QUANTITY (LF)	REMARKS
"0" 101+50.02	"0" 102+91.67	CNTR	290	SPLITTER ISLAND
"0" 103+41.92	"0" 103+95.87	RT	89	RIGHT SIDE GLACIER HIGHWAY PLUS PARTIAL APPROACH
"0" 103+95.87	"0" 104+40.51	RT	45	NEW DRIVEWAY
"0" 104+40.51	"0" 106+25.15	RT	199	RIGHT SIDE GLACIER HIGHWAY TO CURB RETURN OF COOGAN ST
"0" 108+91.40	"0" 109+66.53	RT	76	NEW DRIVEWAY
"0" 110+92.71	"0" 112+09.43	RT	119	TWO NEW DRIVEWAYS
"0" 112+09.43	"0" 114+23.07	RT	217	RIGHT SIDE GLACIER HIGHWAY
"0" 114+23.07	"0" 114+59.57	RT	37	NEW DRIVEWAY
"0" 114+59.57	"0" 115+61.45	RT	104	RIGHT SIDE GLACIER HIGHWAY
"0" 115+61.45	"0" 116+24.87	RT	64	NEW DRIVEWAY
"0" 118+08.91	"0" 120+47.16	LT	258	CURB RETURN, CURB RAMP, BUS PULL OUT, LEFT SIDE GLACIER HIGHWAY,
"0" 120+47.16	"0" 121+83.38	LT	136	TWO NEW DRIVEWAYS
"0" 121+83.38	"0" 124+34.92	LT	256	LEFT SIDE GLACIER HIGHWAY, CURB RETURN,
"0" 118+08.91	"0" 118+50.87	RT	29	RIGHT SIDE GALCIER HWY, CURB RAMP,
"0" 118+50.87	"0" 124+09.00	RT	582	BUS PULLOUT, RIGHT SIDE GLACIER HIGHWAY
"0" 124+87.75	"0" 125+98.56	LT	119	CURB RETURN, LEFT SIDE GLACIER HIGHWAY, CURB RETURN,
"0" 125+19.52	"0" 125+24.53	RT	5	REMOVE AND REPLACE, REMOVE SCUPPER,
"0" 126+40.22	"0" 126+95.90	RT	56	RIGHT SIDE GLACIER HIGHWAY
"0" 126+95.90	"0" 127+53.89	RT	59	NEW DRIVEWAY
"0" 127+53.89	"0" 127+75.00	RT	22	RIGHT SIDE GLACIER HIGHWAY
"0" 126+43.01	"0" 126+68.72	LT	29	CURB RETURN
"0" 126+68.72	"0" 127+26.72	LT	57	NEW DRIVEWAY
"0" 127+26.72	"0" 129+96.23	LT	260	LEFT SIDE GLACIER HIGHWAY
"0" 129+96.23	"0" 130+34.03	LT	36	NEW DRIVEWAY
"0" 130+34.03	"0" 133+76.64	LT	355	LEFT SIDE GLACIER HIGHWAY, CURB RETURN,
"0" 129+14.13	"0" 129+89.08	RT	83	RIGHT SIDE GLACIER HIGHWAY, CURB RETURN,
"0" 130+15.61	"0" 131+16.72	RT	119	CURB RETURN, RIGHT SIDE GLACIER HIGHWAY,
"0" 131+16.72	"0" 131+72.76	RT	58	NEW DRIVEWAY
"0" 131+72.76	"0" 132+00.00	RT	29	RIGHT SIDE GLACIER HIGHWAY
"0" 133+55.24	"0" 134+02.36	RT	65	CURB RETURN
"0" 134+02.36	"0" 134+21.07	RT	53	NEW DRIVEWAY ON ANKA
"0" 134+00.50	"0" 135+09.22	LT	131	CURB RUTURN AND CURB RAMPS
"0" 134+23.43	"0" 134+38.81	RT	103	ANKA MEDIAN REPLACEMENT
"0" 134+61.93	"0" 135+75.00	RT	184	CURB RETURN
"0" 137+85.78	"0" 138+27.04	RT	41	NEW DRIVEWAY
"0" 138+59.59	"0" 139+39.90	LT	133	CURB RETURN, LEFT SIDE GLACIER HIGHWAY,
"0" 139+39.90	"0" 139+83.86	LT	44	NEW DRIVEWAY
"0" 139+83.86	"0" 140+41.22	LT	58	LEFT SIDE GLACIER HIGHWAY
"0" 140+41.22	"0" 141+03.15	LT	63	NEW DRIVEWAY
"0" 141+03.15	"0" 144+09.86	LT	346	LEFT SIDE GLACIER HIGHWAY, CURB RETURN,
"0" 138+84.30	"0" 140+21.90	RT	117	THREE NEW DRIVEWAYS
"0" 140+89.02	"0" 141+26.49	RT	37	NEW DRIVEWAY
"0" 141+26.49	"0" 143+88.54	RT	253	RIGHT SIDE GLACIER HIGHWAY, CURB RAMP,
"0" 143+88.54	"0" 144+37.31	RT	47	NEW DRIVEWAY
"0" 144+37.31	"0" 147+07.77	RT	252	RIGHT SIDE GLACIER HIGHWAY
"0" 147+07.77	"0" 147+65.43	RT	58	NEW DRIVEWAY
"0" 147+65.43	"0" 148+49.32	RT	84	RIGHT SIDE GLACIER HIGHWAY
"0" 148+49.32	"0" 149+49.34	RT	101	BRIDGE
"0" 149+49.34	"0" 149+88.95	RT	65	CURB RETURN
"0" 144+45.32	"0" 146+24.69	LT	222	CURB RETURN, LEFT SIDE GLACIER HIGHWAY
"0" 146+24.69	"0" 146+73.54	LT	50	NEW DRIVEWAY
"0" 146+73.54	"0" 148+49.26	LT	177	LEFT SIDE GLACIER HIGHWAY
"0" 148+49.26	"0" 149+49.26	LT	100	BRIDGE
"0" 149+49.26	"0" 153+84.96	LT	469	LEFT SIDE GLACIER HIGHWAY, CURB RAMPS, BUS PULLOUT, CURB RETURN,
"0" 150+25.34	"0" 152+16.54	RT	229	CURB RETURN, CURB RAMPS, BUS PULLOUT,
"0" 153+50.99	"0" 153+60.95	RT	10	REMOVE AND REPLACE
"0" 154+12.99	"0" 166+32.10	LT	1241	CURB RETURN, CURB RAMP, LEFT SIDE GLACIER HIGHWAY, BUS PULLOUT, CURB RETURN,
"0" 154+31.57	"0" 154+50.57	RT	19	REMOVE AND REPACE, CURB RAMP,
"0" 156+89.57	"0" 157+05.00	RT	15	REMOVE AND REPLACE,
"0" 158+79.08	"0" 158+98.30	RT	20	REMOVE AND REPLACE,
"0" 159+42.40	"0" 159+81.40	RT	73	CURB RETURN
"0" 160+02.99	"0" 171+55.23	RT	1207	CURB RETURN, CURB RAMPS, BUS PULLOUT, CURB RETURN AND RAMPS,
"0" 166+64.67	"0" 173+12.96	LT	666	CURB RETURN, CURB RAMPS, LEFT SIDE GLACIER HIGHWAY,
"0" 173+12.96	"0" 173+48.96	LT	36	NEW DRIVEWAY
"0" 173+48.96	"0" 177+08.89	LT	468	LEFT SIDE GLACIER HIGHWAY, BIKE RAMP, ROUNDABOUT CURB RETURT AND RAMPS, WALLMART CONNECTION,
"0" 171+87.36	"0" 173+06.95	RT	134	CURB RETURN, CURB RAMPS, RIGHT SIDE GLACIER HIGHWAY,
"0" 173+06.95	"0" 173+42.95	RT	36	NEW DRIVEWAY
"0" 173+42.95	"0" 176+10.69	RT	414	RIGHT SIDE GLACIER HIGHWAY, BIKE RAMP, ROUNDABOUT CURB RETURN AND RAMPS, BIKE RAMP ON RENNIGER,
"0" 173+70.00	"0" 175+86.86	CNTR	452	ROUNDABOUT EAST LEG SPLITTER ISLAND
"0" 176+09.49	"0" 176+88.49	CNTR	239	OUTER C&G ON RDBT CENTRAL ISLAND
"0" 176+26.99	"0" 176+67.98	CNTR	129	INNER C&G ON RDBT CENTRAL ISLAND
"0" 176+31.96	"0" 176+39.10	RT	122	ROUNDABOUT NORTH LEG SPLITTLER ISLAND
"0" 177+08.99	"0" 178+02.79	CNTR	207	ROUNDABOUT WEST LEG SPLITTER ISLAND
"0" 176+39.17	"0" 176+50.81	LT	113	ROUNDABOUT SOUTH LEG SPLITTER ISLAND
"0" 176+63.08	"0" 178+45.00	RT	317	RIGHT SIDE RENNIGER, NEW DRIVEWAY, ROUNDABOUT CURB RETURN AND RAMPS, BIKE RAMP, NEW DRIVEWAY,
"0" 181+81.08	"0" 182+22.55	LT	48	CURB RETURN AND RAMPS
"0" 181+89.63	"0" 183+95.79	RT	219	RIGHT SIDE GLACIER HIGHWAY, CURB RAMPS, BUS PULLOUT, CURB RETURN AND RAMP,
"0" 184+36.07	"0" 184+51.16	RT	23	CURB RETURN AND RAMP
		TOTAL	13476	

608.0006.0000 CURB RAMP

STATION	OFFSET	TYPE	REMARKS
"0" 102+69.91	4.00, RT	D	MEDIAN RAMPS
"0" 102+69.91	4.00, LT	D	MEDIAN RAMPS
"0" 106+21.81	36.29' RT	A	AK DOT & PF STD DRAWING I-21.10
"0" 118+41.39	23.22' RT	A	AK DOT & PF STD DRAWING I-21.10
"0" 118+41.39	22.50' LT	A	AK DOT & PF STD DRAWING I-21.10
"0" 118+41.39	5.00, RT	D	MEDIAN RAMPS
"0" 118+41.39	5.00, LT	D	MEDIAN RAMPS
"0" 122+47.41	32.00' LT	C	DIRECTIONAL CURB RAMPS
"0" 123+08.20	32.00' LT	C	DIRECTIONAL CURB RAMPS
"0" 124+30.94	32.00' LT	C	DIRECTIONAL CURB RAMPS
"0" 124+91.73	32.00' LT	C	DIRECTIONAL CURB RAMPS
"0" 125+98.90	31.71' LT	E	SIDEWALK TERMINUS, 5' LANDING
"0" 126+45.96	31.64' LT	E	SIDEWALK TERMINUS, 5' LANDING
"0" 129+88.08	29.01' RT	E	SIDEWALK TERMINUS, 5' LANDING
"0" 130+20.75	29.33' RT	A	AK DOT & PF STD DRAWING I-21.10
"0" 133+63.51	25.31' LT	A	AK DOT & PF STD DRAWING I-21.10
"0" 133+74.65	40.73' RT	A	AK DOT & PF STD DRAWING I-21.10
"0" 133+79.26	43.23' LT	A	AK DOT & PF STD DRAWING I-21.10
"0" 133+97.90	61.00' RT	A	AK DOT & PF STD DRAWING I-21.10
"0" 134+04.38	46.56' LT	A	AK DOT & PF STD DRAWING I-21.10
"0" 134+59.05	49.07' RT	A	AK DOT & PF STD DRAWING I-21.10
"0" 134+65.09	22.46' LT	A	AK DOT & PF STD DRAWING I-21.10
"0" 134+75.85	33.08' RT	A	AK DOT & PF STD DRAWING I-21.10
"0" 138+56.32	39.70' LT	A	AK DOT & PF STD DRAWING I-21.10
"0" 143+72.69	30.17' LT	A	AK DOT & PF STD DRAWING I-21.10
"0" 143+73.02	12.04' LT	D	MEDIAN RAMPS
"0" 143+73.02	4.04' LT	D	MEDIAN RAMPS
"0" 143+73.48	25.94' RT	A	AK DOT & PF STD DRAWING I-21.10
"0" 143+98.74	44.07' LT	A	AK DOT & PF STD DRAWING I-21.10
"0" 144+46.07	37.92' LT	A	AK DOT & PF STD DRAWING I-21.10
"0" 149+64.09	18.75' LT	NA	SEE SHEET E-8 FOR DETAIL
"0" 149+63.84	26.47' RT	NA	SEE SHEET E-8 FOR DETAIL
"0" 149+85.18	42.18' RT	NA	SEE SHEET E-8 FOR DETAIL
"0" 150+28.33	43.72' RT	A	AK DOT & PF STD DRAWING I-21.10
"0" 150+61.52	25.21' RT	A	AK DOT & PF STD DRAWING I-21.10
"0" 150+61.55	22.50' LT	A	AK DOT & PF STD DRAWING I-21.10
"0" 153+85.34	36.48' LT	A	AK DOT & PF STD DRAWING I-21.10
"0" 154+13.80	38.58' LT	A	AK DOT & PF STD DRAWING I-21.10
"0" 154+41.09	22.50' LT	A	AK DOT & PF STD DRAWING I-21.10
"0" 154+41.09	5.00' RT	D	MEDIAN RAMPS
"0" 154+41.09	5.00' LT	D	MEDIAN RAMPS

608.0006.0000 CURB RAMP

STATION	OFFSET	TYPE	REMARKS
"0" 154+41.09	22.50' RT	A	AK DOT & PF STD DRAWING I-21.10
"0" 159+51.22	22.90' LT	A	AK DOT & PF STD DRAWING I-21.10
"0" 159+51.22	5.00' RT	D	MEDIAN RAMPS
"0" 159+51.22	4.00' LT	D	MEDIAN RAMPS
"0" 159+51.55	22.95' RT	A	AK DOT & PF STD DRAWING I-21.10
"0" 159+74.44	36.69' RT	A	AK DOT & PF STD DRAWING I-21.10
"0" 160+18.52	30.40' RT	A	AK DOT & PF STD DRAWING I-21.10
"0" 166+31.38	35.96' LT	A	AK DOT & PF STD DRAWING I-21.10
"0" 166+64.25	34.19' LT	A	AK DOT & PF STD DRAWING I-21.10
"0" 166+87.28	22.50' LT	A	AK DOT & PF STD DRAWING I-21.10
"0" 166+87.28	5.00' RT	D	MEDIAN RAMPS
"0" 166+87.28	5.00' LT	D	MEDIAN RAMPS
"0" 166+87.28	22.50' RT	A	AK DOT & PF STD DRAWING I-21.10
"0" 171+54.60	30.26' RT	E	SIDEWALK TERMINUS
"0" 171+93.62	30.26' RT	E	SIDEWALK TERMINUS
"0" 174+34.74	21.75' RT	F	BIKE RAMPS
"0" 174+53.26	21.46' LT	F	BIKE RAMPS
"0" 175+59.76	22.60' LT	B	ROUNDABOUT CURB RAMPS
"0" 175+61.00	5.90' RT	D	MEDIAN RAMPS
"0" 175+61.00	7.50' LT	D	MEDIAN RAMPS
"0" 175+61.95	19.50' RT	B	ROUNDABOUT CURB RAMPS
"0" 176+13.25	179.00' RT	F	BIKE RAMPS
"0" 176+13.97	85.40' RT	B	ROUNDABOUT CURB RAMPS
"0" 176+31.33	83.56' LT	E	SIDEWALK TERMINUS
"0" 176+28.98	86.32' RT	D	MEDIAN RAMPS
"0" 176+46.97	81.95' LT	D	MEDIAN RAMPS
"0" 176+40.30	87.01' RT	D	MEDIAN RAMPS
"0" 176+51.70	81.47' LT	D	MEDIAN RAMPS
"0" 176+62.74	86.76' RT	B	ROUNDABOUT CURB RAMPS
"0" 176+70.97	81.41' LT	E	SIDEWALK TERMINUS
"0" 177+36.83	18.69' LT	B	ROUNDABOUT CURB RAMPS
"0" 177+36.43	6.60' RT	D	MEDIAN RAMPS
"0" 177+36.60	5.57' LT	D	MEDIAN RAMPS
"0" 177+36.29	20.56' RT	B	ROUNDABOUT CURB RAMPS
"0" 178+01.13	21.60' RT	F	BIKE RAMPS
"0" 178+05.20	22.00' LT	F	BIKE RAMPS
"0" 181+86.67	34.32' LT	A	AK DOT & PF STD DRAWING I-21.10
"0" 182+12.97	23.06' LT	A	AK DOT & PF STD DRAWING I-21.10
"0" 182+13.05	5.00' LT	D	MEDIAN RAMPS
"0" 182+13.05	5.00' LT	D	MEDIAN RAMPS
"0" 182+13.05	22.30' RT	A	AK DOT & PF STD DRAWING I-21.10
"0" 183+91.77	36.78 RT	A	AK DOT & PF STD DRAWING I-21.10
	Total	83	

609.0001.0000 CURB, TYPE 1

STATION FROM	STATION TO	OFFSET	QUANTITY (LF)	REMARKS
"0" 118+27.38	"0" 118+36.38	CNTR	29	MEDIAN VERTICAL CURB
"0" 118+46.38	"0" 118+79.50	CNTR	78	MEDIAN VERTICAL CURB
"0" 134+23.37	"0" 134+39.61	RT	104	RAISED MEDIAN AT ANKA ST
"0" 142+49.99	"0" 143+68.07	CNTR	251	MEDIAN VERTICAL CURB
"0" 143+77.96	"0" 143+87.84	CNTR	31	MEDIAN VERTICAL CURB
"0" 154+26.04	"0" 154+36.03	CNTR	34	MEDIAN VERTICAL CURB
"0" 154+46.03	"0" 159+46.22	CNTR	1020	MEDIAN VERTICAL CURB
"0" 159+56.22	"0" 159+68.00	CNTR	35	MEDIAN VERTICAL CURB
"0" 162+17.06	"0" 164+54.70	CNTR	481	MEDIAN VERTICAL CURB
"0" 166+69.14	"0" 166.82.28	CNTR	36	MEDIAN VERTICAL CURB
"0" 166+92.28	"0" 173+70.00	CNTR	1374	MEDIAN VERTICAL CURB
"0" 181+85.04	"0" 182+07.06	CNTR	58	MEDIAN VERTICAL CURB
"0" 182+19.06	"0" 182+94.98	CNTR	168	MEDIAN VERTICAL CURB
		TOTAL	3697	

Record Drawings have been reviewed by the Project Engineer, and represent to the best of my knowledge, the project as constructed.

PE Dillon Tomaro 2/4/25

STATE OF ALASKA
49TH
ANTHONY M. ROOS
CE 12759
REGISTERED PROFESSIONAL ENGINEER
5/10/21

MISCELLANEOUS SUMMARIES

PLANS DEVELOPED BY: KITTELSON & ASSOCIATES, INC. CERT. OF AUTHORIZATION NO.: 254741, 851 SW 6TH AVE. SUITE 600, PORTLAND, OR 97204, (503) 228-5230
H:\20\20487 - glacier highway - juneau traffic design\design_CD\68124_C&D_EOQ&SUM-D-6 Mon, May/10/21 11:23am

CO 5

Record Drawings have been reviewed by the Project Engineer, and represent to the best of my knowledge, the project as constructed.

PE Dillon Tomaro 2/4/25

Curb Ramps omitted from tables on sheet D-6 of the Plans.

Add To Curb Ramp Tables on Sheet D-6.

608.0006.0000 CURB RAMP			
STATION	OFFSET	TYPE	REMARKS
"O" 177+36.83	18.69' LT	B	ROUNDABOUT CURB RAMPS
"O" 177+36.43	6.60' RT	D	MEDIAN RAMPS
"O" 177+36.60	5.57' LT	D	MEDIAN RAMPS
"O" 177+36.29	20.56' RT	B	ROUNDABOUT CURB RAMPS
"O" 178+01.13	21.60' RT	F	BIKE RAMPS
"O" 178+05.20	22.00' LT	F	BIKE RAMPS
"O" 181+86.67	34.32' LT	A	AK DOT & PF STD PLAN I-21.12
"O" 182+12.97	23.06' LT	A	AK DOT & PF STD PLAN I-21.12
"O" 182+13.05	5.00' LT	D	MEDIAN RAMPS
"O" 182+13.05	5.00' LT	D	MEDIAN RAMPS
"O" 182+13.05	22.30' RT	A	AK DOT & PF STD PLAN I-21.12
"O" 183+91.77	36.78 RT	A	AK DOT & PF STD PLAN I-21.12

CO 6

NO.	DATE	REVISION

STATE	PROJECT DESIGNATION	YEAR	SHEET NO.	TOTAL SHEETS
ALASKA	TEA-0955(016)/Z68124	2020	D-6	235

All Type A Remarks: Replace AK DOT&PF STD Drawing I-21.10 with AK DOT&PF STD Plan I-21.12.

608.0006.0000 CURB RAMP

STATION	OFFSET	TYPE	REMARKS
"O" 102+69.91	4.00' RT	D	MEDIAN RAMPS
"O" 102+69.91	4.00' LT	D	MEDIAN RAMPS
"O" 106+21.81	36.29' RT	A	AK DOT & PF STD DRAWING I-21.10
"O" 118+41.39	23.22' RT	A	AK DOT & PF STD DRAWING I-21.10
"O" 118+41.39	22.50' LT	A	AK DOT & PF STD DRAWING I-21.10
"O" 118+41.39	5.00' RT	D	MEDIAN RAMPS
"O" 118+41.39	5.00' LT	D	MEDIAN RAMPS
"O" 122+47.41	32.00' LT	C	DIRECTIONAL CURB RAMPS
"O" 123+08.20	32.00' LT	C	DIRECTIONAL CURB RAMPS
"O" 124+30.94	32.00' LT	C	DIRECTIONAL CURB RAMPS
"O" 124+91.73	32.00' LT	C	DIRECTIONAL CURB RAMPS
"O" 125+98.90	31.71' LT	E	SIDEWALK TERMINUS, 5' LANDING
"O" 126+45.96	31.64' LT	E	SIDEWALK TERMINUS, 5' LANDING
"O" 129+88.08	29.01' RT	E	SIDEWALK TERMINUS, 5' LANDING
"O" 130+20.75	29.33' RT	A	AK DOT & PF STD DRAWING I-21.10
"O" 133+63.51	25.31' LT	A	AK DOT & PF STD DRAWING I-21.10
"O" 133+74.65	40.73' RT	A	AK DOT & PF STD DRAWING I-21.10
"O" 133+79.26	43.23' LT	A	AK DOT & PF STD DRAWING I-21.10
"O" 133+97.90	61.00' RT	A	AK DOT & PF STD DRAWING I-21.10
"O" 134+04.38	46.56' LT	A	AK DOT & PF STD DRAWING I-21.10
"O" 134+59.05	49.07' RT	A	AK DOT & PF STD DRAWING I-21.10
"O" 134+65.09	22.46' LT	A	AK DOT & PF STD DRAWING I-21.10
"O" 134+75.85	33.08' RT	A	AK DOT & PF STD DRAWING I-21.10
"O" 138+56.32	39.70' LT	A	AK DOT & PF STD DRAWING I-21.10
"O" 143+72.69	30.17' LT	A	AK DOT & PF STD DRAWING I-21.10
"O" 143+73.02	12.04' LT	D	MEDIAN RAMPS
"O" 143+73.02	4.04' LT	D	MEDIAN RAMPS
"O" 143+73.48	25.94' RT	A	AK DOT & PF STD DRAWING I-21.10
"O" 143+98.74	44.07' LT	A	AK DOT & PF STD DRAWING I-21.10
"O" 144+46.07	37.92' LT	A	AK DOT & PF STD DRAWING I-21.10
"O" 149+64.09	18.75' LT	NA	SEE SHEET E-8 FOR DETAIL
"O" 149+63.84	26.47' RT	NA	SEE SHEET E-8 FOR DETAIL
"O" 149+85.18	42.18' RT	NA	SEE SHEET E-8 FOR DETAIL
"O" 150+28.33	43.72' RT	A	AK DOT & PF STD DRAWING I-21.10
"O" 150+61.52	25.21' RT	A	AK DOT & PF STD DRAWING I-21.10

608.0006.0000 CURB RAMP

STATION	OFFSET	TYPE	REMARKS
"O" 150+61.55	22.50' LT	A	AK DOT & PF STD DRAWING I-21.10
"O" 153+85.34	36.48' LT	A	AK DOT & PF STD DRAWING I-21.10
"O" 154+13.80	38.58' LT	A	AK DOT & PF STD DRAWING I-21.10
"O" 154+41.09	22.50' LT	A	AK DOT & PF STD DRAWING I-21.10
"O" 154+41.09	5.00' RT	D	MEDIAN RAMPS
"O" 154+41.09	5.00' LT	D	MEDIAN RAMPS
"O" 154+41.09	22.50' RT	A	AK DOT & PF STD DRAWING I-21.10
"O" 159+51.22	22.90' LT	A	AK DOT & PF STD DRAWING I-21.10
"O" 159+51.22	5.00' RT	D	MEDIAN RAMPS
"O" 159+51.22	4.00' LT	D	MEDIAN RAMPS
"O" 159+51.55	22.95' RT	A	AK DOT & PF STD DRAWING I-21.10
"O" 159+74.44	36.69' RT	A	AK DOT & PF STD DRAWING I-21.10
"O" 160+18.52	30.40' RT	A	AK DOT & PF STD DRAWING I-21.10
"O" 166+31.38	35.96' LT	A	AK DOT & PF STD DRAWING I-21.10
"O" 166+64.25	34.19' LT	A	AK DOT & PF STD DRAWING I-21.10
"O" 166+87.28	22.50' LT	A	AK DOT & PF STD DRAWING I-21.10
"O" 166+87.28	5.00' RT	D	MEDIAN RAMPS
"O" 166+87.28	5.00' LT	D	MEDIAN RAMPS
"O" 166+87.28	22.50' RT	A	AK DOT & PF STD DRAWING I-21.10
"O" 171+54.60	30.26' RT	E	SIDEWALK TERMINUS
"O" 171+93.62	30.26' RT	E	SIDEWALK TERMINUS
"O" 174+34.74	21.75' RT	F	BIKE RAMPS
"O" 174+53.26	21.46' LT	F	BIKE RAMPS
"O" 175+59.76	22.60' LT	B	ROUNDABOUT CURB RAMPS
"O" 175+61.00	5.90' RT	D	MEDIAN RAMPS
"O" 175+61.00	7.50' LT	D	MEDIAN RAMPS
"O" 175+61.95	19.50' RT	B	ROUNDABOUT CURB RAMPS
"O" 176+13.25	179.00' RT	F	BIKE RAMPS
"O" 176+13.97	85.40' RT	B	ROUNDABOUT CURB RAMPS
"O" 176+31.33	83.56' LT	E	SIDEWALK TERMINUS
"O" 176+28.98	86.32' RT	D	MEDIAN RAMPS
"O" 176+46.97	81.95' LT	D	MEDIAN RAMPS
"O" 176+40.30	87.01' RT	D	MEDIAN RAMPS
"O" 176+51.70	81.47' LT	D	MEDIAN RAMPS
"O" 176+62.74	86.76' RT	B	ROUNDABOUT CURB RAMPS
"O" 176+70.97	81.41' LT	E	SIDEWALK TERMINUS

609.0002.0000 CURB & GUTTER, TYPE 1

STATION FROM	STATION TO	OFFSET	QUANTITY (LF)	REMARKS
"O" 101+50	"O" 102+91.71	CNTR	290	MEDIAN
"O" 103+41.92	"O" 106+36.86	RT	363	RIGHT SIDE GLACIER HIGHWAY PLUS PARTIAL APPROACH
"O" 107+37.32	"O"107+56.12	RT	19	NEW SIDEWALK SECTION
"O" 108+91.40	"O" 109+66.53	RT	76	NEW DRIVEWAY
"O" 110+92.71	"O" 114+64.42	RT	381	RIGHT SIDE GLACIER HIGHWAY PLUS BUS PULLOUT
"O" 115+61.45	"O" 116+24.91	RT	65	NEW DRIVEWAY
"O" 117+42.41	"O" 117+72.41	LT	47	NEW CURB RETURNS
"O" 118+08.91	"O" 122+52.16	LT	468	LEFT SIDE GLACIER HIGHWAY
"O" 118+21.87	"O" 123+34.93	RT	484	RIGHT SIDE GLACIER HIGHWAY
"O" 123+95.00	"O" 124+09.00	RT	9	RIGHT SIDE GLACIER HIGHWAY
"O" 123+03.30	"O" 124+35.85	LT	142	NEW SIDEWALK SECTION
"O" 123+27.31	"O" 123+32.31	RT	5	NEW SIDEWALK SECTION
"O" 123+95.00	"O" 124+09.00	RT	14	NEW SIDEWALK SECTION
"O" 124+86.82	"O" 133+75.52	LT	899	NEW SIDEWALK SECTION
"O" 125+19.51	"O" 125+24.51	RT	5	NEW SIDEWALK SECTION
"O" 126+40.23	"O" 126+83.80	RT	44	NEW SIDEWALK SECTION
"O" 129+14.17	"O" 129+65.57	RT	53	NEW SIDEWALK SECTION
"O" 129+65.57	"O" 129+87.19	RT	37	NEW CURB RETURNS
"O" 130+15.15	"O" 131+80.97	RT	36	RIGHT SIDE GLACIER HIGHWAY. CURB RETURN. DRIVEWAY.
"O" 133+55.26	"O" 134+00.64	RT	61	NEW CURB RETURNS
"O" 134+23.86	"O" 134+25.41	RT	12	NEW MEDIAN SPLITTER
"O" 134+03.68	"O" 134+74.92	LT	86	NEW SIDEWALK SECTION PLUS CURB RETURN
"O" 134+55.50	"O" 135+27.33	RT	112	NEW CURB RETURNS
"O" 137+85.78	"O" 138+27.04	RT	41	NEW DRIVEWAY
"O" 138+84.30	"O" 139+21.75	RT	37	NEW DRIVEWAY
"O" 138+56.39	"O" 144+30.53	LT	741	NEW SIDEWALK SECTION
"O" 139+41.75	"O" 140+21.9	RT	79	NEW DRIVEWAY
"O" 140+89.02	"O" 145+90.65	RT	4847	NEW SIDEWALK SECTION
"O" 144+53.02	"O" 146+37.17	LT	346	NEW SIDEWALK SECITON PLUS CURB RETURNS AND APPROACHES
"O" 146+63.51	"O" 153+83.99	LT	763	NEW SIDEWALK SECTION
"O" 147+07.77	"O" 149+89.45	RT	307	NEW SIDEWALK SECTION PLUS CURB RETURNS
"O" 150+24.84	"O" 152+16.54	RT	232	NEW SIDEWALK SECTION PLUS BUS PULLOUT
"O" 154+12.99	"O" 166+32.94	LT	1256	LEFT SIDE GLACIER HIGHWAY PLUS BUS PULLOUT
"O" 159+42.40	"O" 159+81.40	RT	64	NEW CURB RETURNS
"O" 160+05.06	"O" 176+11.19	RT	1787	RIGHT SIDE GLACIER HIGHWAY THROUGH RDBT ONTO RENNINGER STREET
"O" 166+65.06	"O" 177+08.89	LT	1198	LEFT SIDE GLACIER HIGHWAY THROUGH RDBT INTO NEW WALMART ACCESS
"O" 173+75.00	"O" 175+86.86	CNTR	257	RDBT EAST APPROACH SPLITTER ISLAND
"O" 176+09.49	"O" 176+85.49	CNTR	239	OUTER C&G ON RDBT CENTRAL ISLAND
"O" 176+26.99	"O" 176+67.98	CNTR	129	INNER C&G ON RDBT CENTRAL ISLAND
"O" 176+29.14	"O" 176+52.00	RT	122	RDBT NORTH APPROACH SPLITTER ISLAND
"O" 176+62.52	"O" 178+44.99	RT	317	RIGHT SIDE GLACIER HIGHWAY FROM RENNINGER STREET TO END OF RDBT CONSTRUCTION
"O" 176+39.17	"O" 176+50.81	LT	113	RDBT SOUTH APPROACH SPLITTER ISLAND
"O" 177+02.04	"O" 178+45.00	LT	268	LEFT SIDE GLACIER HIGHWAY FROM NEW WALMART ACCESS TO END OF RDBT CONSTRUCTION
"O" 177+08.99	"O" 178+03.00	CNTR	201	RDBT WEST APPROACH SPLITTER ISLAND
"O" 179+85.13	"O" 180+14.76	RT	10	NEW SIDEWALK
"O" 181+81.20	"O" 182+22.55	LT	48	NEW CURB RETURNS
"O" 181+89.63	"O" 183+95.83	RT	221	NEW SIDEWALK SECTION AND BUS PULLOUT
		TOTAL	17331	

TOTAL 3697

**As-Built Plan Note (Sheet D-6):
-The latest issued version of Sheet D-6 (issued via CO-6) ommited the CO-5 delta 14 modifications (Sidewalk Curb and Gutter Revisions) and the addional curb ramps that were added to the Curb Ramp Table via CO-5, however those modifications still apply to the current version of Sheet D-6.

609.0001.0000 CURB, TYPE 1

STATION FROM	STATION TO	OFFSET	QUANTITY (LF)	REMARKS
"O" 118+27.38	"O" 118+36.38	CNTR	29	MEDIAN VERTICAL CURB
"O" 118+46.38	"O" 118+79.50	CNTR	78	MEDIAN VERTICAL CURB
"O" 134+23.37	"O" 134+39.61	RT	104	RAISED MEDIAN AT ANKA ST
"O" 142+49.99	"O" 143+68.07	CNTR	251	MEDIAN VERTICAL CURB
"O" 143+77.96	"O" 143+87.84	CNTR	31	MEDIAN VERTICAL CURB
"O" 154+26.04	"O" 154+36.03	CNTR	34	MEDIAN VERTICAL CURB
"O" 154+46.03	"O" 159+46.22	CNTR	1020	MEDIAN VERTICAL CURB
"O" 159+56.22	"O" 159+68.00	CNTR	35	MEDIAN VERTICAL CURB
"O" 162+17.06	"O" 164+54.70	CNTR	481	MEDIAN VERTICAL CURB
"O" 166+69.14	"O" 166.82.28	CNTR	36	MEDIAN VERTICAL CURB
"O" 166+92.28	"O" 173+70.00	CNTR	1374	MEDIAN VERTICAL CURB
"O" 181+85.04	"O" 182+07.06	CNTR	58	MEDIAN VERTICAL CURB
"O" 182+19.06	"O" 182+94.98	CNTR	168	MEDIAN VERTICAL CURB

Record Drawings have been reviewed by the Project Engineer, and represent to the best of my knowledge, the project as constructed.

PE Dillon Tomaro 2/4/25

MISCELLANEOUS SUMMARIES

STATE OF ALASKA 49TH ANTHONY M. ROOS CE 12759 REGISTERED PROFESSIONAL ENGINEER 7/31/2020

PLANS DEVELOPED BY: KITTELSON & ASSOCIATES, INC. CERT. OF AUTHORIZATION NO.: 254741, 851 SW 6TH AVE. SUITE 600, PORTLAND, OR 97204, (503) 228-5230
H:\20\20487 - glacier highway - juneau traffic design\design_CD\68124_C&D_EOQ&SUM-D-6 Fri, Jul/31/20 12:33am

NO.	DATE	REVISION
1	12/22/20	ADDENDUM 5
2	01/04/21	ADDENDUM 7
3	01/25/21	ADDENDUM 10

STATE	PROJECT DESIGNATION	YEAR	SHEET NO.	TOTAL SHEETS
ALASKA	TEA-0955(016)/Z68124	2020	D-7	235

606.0017.0000 REMOVE AND DISPOSE GUARDRAIL

STATION FROM	STATION TO	OFFSET	QUANTITY (LF)	REMARKS
108+23.97	110+55.37	LT	239	VANDERBILT CREEK RAIL
114+80.27	115+41.34	LT	66	SOUTH RAIL AT SHORT ST
116+99.59	117+64.52	LT	87	NORTH RAIL AT SHORT ST
147+57.24	149+83.29	RT	253	RAIL INTO LEMON CREEK BRIDGE
147+92.05	150+05.19	LT	226	RAIL INTO LEMON CREEK BRIDGE
159+06.39	160+64.64	LT	164	
168+58.02	170+35.44	LT	188	
173+36.59	147+61.08	LT	134	
		TOTAL	1357	

606.0001.0000 W-BEAM GUARDRAIL

STATION FROM	STATION TO	OFFSET	QUANTITY (LF)	REMARKS
108+23.97	110+55.37	LT	215.34	VANDERBILT CREEK RAIL
114+80.27	115+41.34	LT	36.48	SOUTH RAIL AT SHORT ST
116+99.59	117+64.52	LT	57.2	NORTH RAIL AT SHORT ST
147+98.41	148+49.33	RT	27.18	RAIL INTO LEMON CREEK BRIDGE
147+98.31	148+49.25	LT	27.34	RAIL INTO LEMON CREEK BRIDGE
149+49.33	149+83.29	RT	32.62	CURVED RAIL AT LEMON CREEK
149+49.29	150+00.19	LT	27.21	RAIL INTO LEMON CREEK BRIDGE
		TOTAL	423.37	

627.0001.0000 DUCTILE IRON WATER CONDUIT, XXX INCH, CLASS XXXX

STATION FROM	OFFSET FROM	STATION TO	OFFSET TO	LENGTH (LF)	RELOCATION TYPE	REMARKS
"O"126+44.72	19.5' RT	"O"126+88.38	18.9' RT	44	VERTICAL	
"O"153+46.7	24.8' LT	"O"153+65.6	25.1' LT	22.5	HORIZONTAL	
"O"153+84.11	32.0' LT	"O"153+97.49	50.3' LT	23	VERTICAL	
			TOTAL	89.5		
			ROUNDED TOTAL	90		

639.0002.0000 RESIDENCE DRIVEWAY

STATION	OFFSET	QUANTITY	LENGTH NEW ASPHALT (FT)	WIDTH NEW ASPHALT (FT)	AREA NEW ASPHALT (SF)	REMARKS
"O" 104+18.2	22.44 RT	1	8	29	230	
"O" 114+40.46	22.48 RT	1	23	18	412	
"O" 127+25.96	22.36 RT	1	10	43	431	
"O" 138+06.42	22.65 RT	1	5	27	136	
"O" 139+03.02	22.61 RT	1	5	24	118	
"O" 173+24.95	22.50 RT	1	5	24	120	
"REN" 13+50.00	20.00 LT	1	16	74	1149	
"REN" 14+81.50	22.50 RT	1	34	14	465	
	TOTAL	8			3060	

627.0004.0000 FIRE HYDRANT ADJUSTMENT

SHEET NO.	STATION	OFFSET	EXISITNG ELEVATION (FT)	FG ELEVATION (FT)	ADJUSTMENT TOTAL (IN)	REMARKS
F-4	"O" 118+22.54	44.40 LT	24.93	24.40	6.36	
F-8	"O" 144+34.78	34.25 RT	33.86	34.31	5.40	
TOTAL =	2					

639.0003.0000 COMMERCIAL DRIVEWAY

STATION	OFFSET	QUANTITY	LENGTH NEW ASPHALT (FT)	WIDTH NEW ASPHALT (FT)	AREA OF ASPHALT (SF)	REMARKS
"O" 109+30.5	22.50 RT	1	18	49	875	
"O" 111+22.9	22.50 RT	1	12	30	385	
"O" 111+73.8	22.50 RT	1	7	51	300	
"O" 115+94.04	22.63 RT	1	18	36	494	
"O" 120+86.14	22.50 LT	1	15	64	961	
"O" 121+59.15	22.50 LT	1	36	24	864	
"O" 123+44.56	22.50 LT	1	36	22	792	
"O" 126+98.60	22.50 LT	1	22	28	634	
"O" 130+15.13	22.63 LT	1	5	24	119	
"O" 131+43.04	22.50 RT	1	8	42	341	
"O" 134+12.74	94.04 RT	1	5	47	235	
"O" 139+60.92	22.97 RT	1	5	24	122	
"O" 139+61.60	22.50 LT	1	8	30	232	
"O" 140+03.00	22.86 RT	1	5	24	120	
"O" 140+72.65	22.51 LT	1	9	40	366	
"O" 141+07.67	22.51 RT	1	5	24	120	
"O" 144+09.12	25.67 RT	1	5	34	169	
"O" 146+50.31	22.51 LT	1	17	31	538	
"O" 147+39.71	23.13 RT	1	15	26	381	
"O" 173+31.00	22.50 LT	1	24	10	240	
	TOTAL	20			8288	

627.0010.0000 ADJUSTMENT OF VALVE BOX

SHEET NO.	STATION	OFFSET	EXISTING ELEVATION (FT)	FG ELEVATION (FT)	ADJUSTMENT TOTAL (IN)	REMARKS
F-2	106+39.75	37.3 RT	28.2	28.60	4.80	
F-3	117+73.67	25.8 RT	26.7	26.70	0.00	RE-SETTING AT EXISTING GRADE
F-5	129+19.08	28.3 RT	31.2	31.20	0.00	RE-SETTING AT EXISTING GRADE
F-7	138+18.46	53.0 LT	32.8	32.60	2.40	
F-8	143+69.81	25.5 RT	34.7	34.30	4.80	
F-8	144+31.02	33.9 RT	34.2	34.30	1.20	
F-8	146+37.91	25.7 RT	34.3	34.70	4.80	
F-9	150+31.12	27.2 RT	34.4	34.30	1.20	
F-9	150+29.14	31.6 RT	34.1	34.10	0.00	RE-SETTING AT PROPOSED GRADE
F-13	175+87.04	42.0 RT	27.9	29.00	13.20	
TOTAL = 10						

635.0002.0000 INSULATION BOARD

STATION FROM	OFFSET FROM	STATION TO	OFFSET TO	AREA	RELOCATION TYPE	REMARKS
"O"119+29.0	28.4' RT	–	–	32	CROSSING	INSTALL 6" INSULATION PER DETAILS ON SHEET P-21
"O"121+25.03	25.17' RT	–	–	32	CROSSING	INSTALL 6" INSULATION PER DETAILS ON SHEET P-21
"O"123+82.60	26.50' RT	–	–	32	CROSSING	INSTALL 6" INSULATION PER DETAILS ON SHEET P-21
"O"124+00.00	26.00' RT	–	–	32	CROSSING	INSTALL 6" INSULATION PER DETAILS ON SHEET P-21
"O"125+22.03	21.68' RT	–	–	32	CROSSING	INSTALL 6" INSULATION PER DETAILS ON SHEET P-21
"O"129+18.75	25.4' RT	–	–	32	CROSSING	INSTALL 6" INSULATION PER DETAILS ON SHEET P-21
"O"130+88.16	30.17' RT	"O"131+28.25	30.0' RT	160	ADJACENT	INSTALL 6" INSULATION PER DETAILS ON SHEET P-21
"O"146+38.25	24.30' RT	–	–	32	CROSSING	INSTALL 6" INSULATION PER DETAILS ON SHEET P-21
"O"145+00.00	27.30' RT	"O"147+70.25	28.3' RT	504	ADJACENT	INSTALL 6" INSULATION PER DETAILS ON SHEET P-21
"O"147+67.35	27.9' RT	–	–	32	CROSSING	INSTALL 6" INSULATION PER DETAILS ON SHEET P-21
"O"150+59.60	24.00' RT	"O"151+49.65	27.50' RT	360	CROSSING	INSTALL 6" INSULATION PER DETAILS ON SHEET P-21
"O"173+45.50	28.75' RT	–	–	32	CROSSING	INSTALL 6" INSULATION PER DETAILS ON SHEET P-21
"O"176+40.25	38.30' RT	–	–	32	CROSSING	INSTALL 6" INSULATION PER DETAILS ON SHEET P-21
			TOTAL	1344		
			ROUNDED TOTAL	1344		

Record Drawings have been reviewed by the Project Engineer, and represent to the best of my knowledge, the project as constructed.

PE *Dillon Tomaro* 2/4/25

MISCELLANEOUS SUMMARIES

STATE OF ALASKA 49TH ANTHONY M. ROOS CE 12759 REGISTERED PROFESSIONAL ENGINEER 1/25/21

PLANS DEVELOPED BY: KITTELSON & ASSOCIATES, INC. CERT. OF AUTHORIZATION NO.: 254741, 851 SW 6TH AVE. SUITE 600, PORTLAND, OR 97204, (503) 228-5230
H:\20\20487 - glacier highway - juneau traffic design\design_CD\68124_C&D_EOQ&SUM-D-7 Mon, Jan/25/21 11:23am

** Deleted by CO6

NO.	DATE	REVISION
1	12/14/20	ADDENDUM 4
2	12/21/20	ADDENDUM 5

STATE	PROJECT DESIGNATION	YEAR	SHEET NO.	TOTAL SHEETS
ALASKA	TEA-0955(016)/Z68124	2020	D-8	235

STORM SYSTEM STRUCTURE TABLE

STRUCTURE #	STRUCTURE TYPE	STATION	OFFSET	RIM ELEVATION	CASTING TYPE	REMARKS
S-1	INLET TYPE A	106+14.54	43.72' RT	28.65	BHIFG	
S-2	EXISTING INLET	106+59.66	40.53' RT			PRESERVE AND PROTECT
S-3	STORM SEWER MANHOLE TYPE I	110+45.76	17.83' RT	28.67	MHFL	REPLACE EXISTNG AREA DRAIN TOP WITH MANHOLE TOP
S-4	INLET TYPE A	118+26.87	24.21' RT	25.87	GCBI	
S-5	STORM SEWER MANHOLE TYPE I	118+40.67	35.00' LT	24.81	MHFL	
S-6	INLET TYPE A	118+39.33	42.26' LT	23.28	BHIFG	CONNECT TO EXISTING
S-7	INLET TYPE A	119+36.41	34.54' LT	25.25	GCBI	
S-8	STORM SEWER MANHOLE TYPE I	119+50.00	36.98' LT	25.84	MHFL	
S-9	INLET TYPE A	119+50.00	35.23' RT	25.16	GCBI	
S-10	EXISTING INLET	117+70.17	34.96' LT	25.52		PRESERVE AND PROTECT
S-11	EXISTING INLET	121+24.50	34.97' LT	24.53		PRESERVE AND PROTECT
S-12	INLET TYPE A	124+04.00	23.95' RT	26.24		INSTALL AT EXISTING CURB FLOWLINE
S-13	INLET TYPE A	119+96.43	40.33' LT	22.07	BHIFG	
S-14	STORM SEWER MANHOLE TYPE I	120+39.66	36.19' LT	24.3	MHFL	CONNECT TO EXISTING
S-15	INLET TYPE A	121+27.62	25.53' LT	25.93	GCBI	
S-16	INLET TYPE A	121+25.02	24.12' RT	25.91	GCBI	
S-17	NOT USED					1
S-18	EXISTING INLET	130+46.99	35.06' LT			PRESERVE AND PROTECT
S-19	INLET TYPE A	131+02.68	35.52' LT	28.05	FIFG	REPLACE EXISTNG AREA DRAIN WITH NEW AREA DRAIN
S-20	STORM SEWER MANHOLE TYPE I	123+82.60	33.00' LT	26.32	MHFL	
S-21	TYPE "C" INLET BOX (18 INCH)	123+82.60	46.18' LT	26.39		RIM ELEVATION IS FLOWLINE
S-22	INLET TYPE A	124+00.00	23.50' LT	26.14	GCBI	
S-23	INLET TYPE A	124+00.00	23.95' RT	26.24	GCBI	INSTALL AT EXISTING CURB FLOWLINE
S-24	INLET TYPE A	125+22.03	24.12' RT	25.99	GCBI	INSTALL AT EXISTING CURB FLOWLINE
S-25	INLET TYPE A	125+20.83	23.50' LT	26.51	GCBI	
S-26	EXISTING INLET	132+16.20	33.94' LT			PRESERVE AND PROTECT
S-27	INLET TYPE A	125+89.78	38.79' LT	25.41	BHIFG	
S-28	STORM SEWER MANHOLE TYPE I	126+66.56	19.40' LT	27.12	MHFL	
S-29	TYPE "C" INLET BOX (18 INCH)	126+66.54	46.08' LT	26.14		RIM ELEVATION IS FLOWLINE
S-30	INLET TYPE A	127+35.18	40.14' LT	25.29	BHIFG	
S-31	INLET TYPE A	127+75.00	23.50' LT	28.02	GCBI	
S-32	EXISTING INLET	133+30.93	32.60' LT			PRESERVE AND PROTECT
S-33	INLET TYPE A	129+25.00	23.50' LT	28.98	GCBI	
S-34	STORM SEWER MANHOLE TYPE II	129+47.77	19.26' LT	29.2	MHFL	
S-35	TYPE "C" INLET BOX (24 INCH)	129+47.78	46.97' LT	26.65		
S-36	STORM SEWER MANHOLE, TYPE I	129+44.93	44.64' RT	27.59	MHFL	
S-37	STORM SEWER MANHOLE TYPE I	129+90.52	32.33' LT	28.79	MHFL	CONNECT TO EXISTING
S-38	STORM SEWER MANHOLE TYPE I	130+27.45	37.08' RT	30.92	MHFL	
S-39	INLET TYPE A	131+03.22	23.50' LT	29.25	GCBI	
S-40	EXISTING MANHOLE	131+83.61	38.72' RT			
S-41	INLET TYPE A	132+00.00	23.50' LT	29.21	GCBI	
S-42	INLET TYPE A	132+15.55	23.50' LT	28.85	GCBI	CONNECT TO EXISTING
S-43	INLET TYPE A	133+28.74	23.50' LT	29.52	GCBI	CONNECT TO EXISTING
S-44	EXISTING INLET	133+81.90	45.84' RT			REMOVE INLET. ABANDON OR CAP PIPES.
S-45	INLET TYPE A	134+45.11	23.53' LT	30.63	GCBI	CONNECT TO EXISTING
S-46	STORM SEWER MANHOLE TYPE I	138+69.53	33.11' LT	33.91	MHFL	CONNECT TO EXISTING
S-47	EXSISTING MANHOLE	134+85.15	27.38' LT			RAISE LID 2.2"
S-48	INLET TYPE A	148+25.00	20.53' LT	34.65	GCBI	
S-49	INLET TYPE A	141+80.28	26.46' RT	34.09	GCBI	CONNECT TO EXISTING
S-50	INLET TYPE A	145+00.74	25.54' RT	34.41	GCBI	
S-51	INLET TYPE A	146+04.76	23.37' RT	34.36	GCBI	
S-52	INLET TYPE A	146+75.00	23.40' RT	34.15	GCBI	
S-53	INLET TYPE A	146+75.00	34.30' RT	34.3	GCBI	
S-54	INLET TYPE A	147+66.93	24.25' RT	34.41	GCBI	
S-55	EXISTING INLET	134+87.36	23.54' RT			REMOVE INLET. ABANDON OR CAP PIPES.
S-56	EXISTING INLET	134+15.41	101.41' RT			PRESERVE AND PROTECT
S-57	INLET TYPE A	150+49.55	23.42' LT	34.37	GCBI	
S-58	INLET TYPE A	152+93.38	34.00' LT	32.93	GCBI	
S-59	STORM SEWER MANHOLE TYPE I	153+59.41	39.33' LT	30	MHFL	
S-60	INLET TYPE A	153+55.99	23.40' RT	32.21	GCBI	
S-61	STORM SEWER MANHOLE TYPE I	154+38.49	39.50' LT	28.56	MHFL	

STRUCTURE LEGEND
FIFG = FIELD INLET FRAME AND GRATE
BHIFG = BEEHIVE INLET FRAME AND GRATE
GCBI = GRATE AND CURB BOX INLET
MHFL = MAN HOLE FRAME AND LID

NOTES:
1. BEEHIVE INLETS SHALL BE NEEHAD FOUNDRY, R-2560-EB OR APPROVED EQUAL.
2. CONSTRUCT CONCRETE HEADWALLS PER CBJ STANDARD DETAIL 104A.
3. CONSTRUCT CONCRETE PAD PER CBJ STANDARD DETAIL 210 ON ALL FIFG AND BHIFG.

Record Drawings have been reviewed by the Project Engineer, and represent to the best of my knowledge, the project as constructed.

PE Dillon Tomaro 2/4/25

STATE OF ALASKA 49TH ANTHONY M. ROOS CE 127591 REGISTERED PROFESSIONAL ENGINEER 12/22/20

MISCELLANEOUS SUMMARIES

PLANS DEVELOPED BY: KITTELSON & ASSOCIATES, INC. CERT. OF AUTHORIZATION NO.: 254741, 851 SW 6TH AVE. SUITE 600, PORTLAND, OR 97204, (503) 228-5230
H:\20\20487 - Glacier Highway - Juneau Traffic Design\design_CD\68124_C&D_EOQ&SUM-D-8 Tue, Dec/22/20 12:30pm

CO 6

NO.	DATE	REVISION
4	12/14/20	ADDENDUM 4
5	12/21/20	ADDENDUM 5
6	05/03/21	STORM IE REVISIONS

STATE	PROJECT DESIGNATION	YEAR	SHEET NO.	TOTAL SHEETS
ALASKA	TEA-0955(016)/Z68124	2020	D-8	235

STRUCTURE LEGEND
FIFG = FIELD INLET FRAME AND GRATE
BHIFG = BEEHIVE INLET FRAME AND GRATE
GCBI = GRATE AND CURB BOX INLET
MHFL = MAN HOLE FRAME AND LID

NOTES:
1. BEEHIVE INLETS SHALL BE NEEHAD FOUNDRY, R-2560-EB OR APPROVED EQUAL.
2. CONSTRUCT CONCRETE HEADWALLS PER CBJ STANDARD DETAIL 104A.
3. CONSTRUCT CONCRETE PAD PER CBJ STANDARD DETAIL 210 ON ALL FIFG AND BHIFG.

STORM SYSTEM STRUCTURE TABLE

STRUCTURE #	STRUCTURE TYPE	STATION	OFFSET	RIM ELEVATION	CASTING TYPE	REMARKS
S-1	INLET TYPE A	106+14.54	43.72' RT	28.65	BHIFG	
S-2	EXISTING INLET	106+59.66	40.53' RT			PRESERVE AND PROTECT
S-3	STORM SEWER MANHOLE TYPE I	110+45.76	17.83' RT	28.67	MHFL	REPLACE EXISTNG AREA DRAIN TOP WITH MANHOLE TOP
S-4	INLET TYPE A	118+26.87	24.21' RT	25.87	GCBI	
S-5	STORM SEWER MANHOLE TYPE I	118+40.67	35.00' LT	24.81	MHFL	
S-6	INLET TYPE A	118+39.33	42.26' LT	23.28	BHIFG	CONNECT TO EXISTING
S-7	INLET TYPE A	119+36.41	34.54' LT	25.25	GCBI	
S-8	STORM SEWER MANHOLE TYPE I	119+50.00	36.98' LT	25.84	MHFL	
S-9	INLET TYPE A	119+50.00	35.23' RT	25.16	GCBI	
S-10	EXISTING INLET	117+70.17	34.96' LT	25.52		PRESERVE AND PROTECT
S-11	EXISTING INLET	121+24.50	34.97' LT	24.53		PRESERVE AND PROTECT
S-12	INLET TYPE A	124+04.00	23.95' RT	26.24		INSTALL AT EXISTING CURB FLOWLINE
S-13	INLET TYPE A	119+96.43	40.33' LT	22.07	BHIFG	
S-14	STORM SEWER MANHOLE TYPE I	120+39.66	36.19' LT	24.3	MHFL	CONNECT TO EXISTING
S-15	INLET TYPE A	121+27.62	25.53' LT	25.93	GCBI	
S-16	INLET TYPE A	121+25.02	24.12' RT	25.91	GCBI	
S-17	NOT USED					4
S-18	EXISTING INLET	130+46.99	35.06' LT			PRESERVE AND PROTECT
S-19	INLET TYPE A	131+02.68	35.52' LT	28.05	FIFG	REPLACE EXISTNG AREA DRAIN WITH NEW AREA DRAIN
S-20	STORM SEWER MANHOLE TYPE I	123+82.60	33.00' LT	26.76	MHFL	6
S-21	TYPE "C" INLET BOX (18 INCH)	123+82.60	46.18' LT	26.39		RIM ELEVATION IS FLOWLINE
S-22	INLET TYPE A	124+00.00	23.50' LT	26.14	GCBI	
S-23	INLET TYPE A	124+00.00	23.95' RT	26.24	GCBI	INSTALL AT EXISTING CURB FLOWLINE
S-24	INLET TYPE A	125+22.03	24.12' RT	25.99	GCBI	INSTALL AT EXISTING CURB FLOWLINE
S-25	INLET TYPE A	125+20.83	23.50' LT	26.51	GCBI	
S-26	EXISTING INLET	132+16.20	33.94' LT			PRESERVE AND PROTECT
S-27	INLET TYPE A	125+89.78	38.79' LT	25.41	BHIFG	
S-28	STORM SEWER MANHOLE TYPE I	126+66.56	19.40' LT	27.12	MHFL	
S-29	TYPE "C" INLET BOX (18 INCH)	126+66.54	46.08' LT	26.14		RIM ELEVATION IS FLOWLINE
S-30	INLET TYPE A	127+35.18	40.14' LT	25.29	BHIFG	
S-31	INLET TYPE A	127+75.00	23.50' LT	27.97	GCBI	6
S-32	EXISTING INLET	133+30.93	32.60' LT			PRESERVE AND PROTECT
S-33	INLET TYPE A	129+25.00	23.50' LT	28.95	GCBI	6
S-34	STORM SEWER MANHOLE TYPE II	129+47.77	19.26' LT	29.2	MHFL	4
S-35	TYPE "C" INLET BOX (24 INCH)	129+47.78	46.97' LT	26.65		4
S-36	STORM SEWER MANHOLE, TYPE II	129+44.93	44.64' RT	28.75	MHFL	4 6
S-37	STORM SEWER MANHOLE TYPE I	129+90.52	32.33' LT	28.79	MHFL	CONNECT TO EXISTING
S-38	STORM SEWER MANHOLE TYPE I	130+27.45	37.08' RT	30.92	MHFL	
S-39	INLET TYPE A	131+03.22	23.50' LT	29.15	GCBI	6
S-40	EXISTING MANHOLE	131+83.61	38.72' RT			
S-41	INLET TYPE A	132+00.00	23.50' LT	29.02	GCBI	6
S-42	INLET TYPE A	132+15.55	23.50' LT	29.07	GCBI	CONNECT TO EXISTING
S-43	INLET TYPE A	133+28.74	23.50' LT	29.56	GCBI	CONNECT TO EXISTING
S-44	EXISTING INLET	133+81.90	45.84' RT			REMOVE INLET. ABANDON OR CAP PIPES.
S-45	INLET TYPE A	134+45.11	23.53' LT	30.63	GCBI	CONNECT TO EXISTING
S-46	STORM SEWER MANHOLE TYPE I	138+69.53	33.11' LT	33.91	MHFL	CONNECT TO EXISTING
S-47	EXSISTING MANHOLE	134+85.15	27.38' LT			RAISE LID 2.2"
S-48	INLET TYPE A	148+25.00	20.53' LT	34.65	GCBI	
S-49	INLET TYPE A	141+80.28	26.46' RT	34.09	GCBI	CONNECT TO EXISTING
S-50	INLET TYPE A	145+00.74	25.54' RT	34.41	GCBI	
S-51	INLET TYPE A	146+04.76	23.37' RT	34.36	GCBI	
S-52	INLET TYPE A 4	146+75.00	23.40' RT	34.15	GCBI	
S-53	INLET TYPE A	146+75.00	34.30' RT	34.3	GCBI	
S-54	INLET TYPE A	147+66.93	24.25' RT	34.41	GCBI	
S-55	EXISTING INLET	134+87.36	23.54' RT			REMOVE INLET. ABANDON OR CAP PIPES.
S-56	EXISTING INLET	134+15.41	101.41' RT			PRESERVE AND PROTECT
S-57	INLET TYPE A	150+49.55	23.42' LT	34.37	GCBI	
S-58	INLET TYPE A	152+93.38	34.00' LT	32.93	GCBI	
S-59	STORM SEWER MANHOLE TYPE I	153+59.41	39.33' LT	31.00	MHFL	6
S-60	INLET TYPE A	153+55.99	23.40' RT	32.21	GCBI	
S-61	STORM SEWER MANHOLE TYPE I	154+38.49	39.50' LT	29.50	MHFL	6

Record Drawings have been reviewed by the Project Engineer, and represent to the best of my knowledge, the project as constructed.

PE Dillon Tomaro 2/4/25

STATE OF ALASKA 49TH ANTHONY M. ROOS CE 127591 REGISTERED PROFESSIONAL ENGINEER 5/10/21

MISCELLANEOUS SUMMARIES

PLANS DEVELOPED BY: KITTELSON & ASSOCIATES, INC. CERT. OF AUTHORIZATION NO.: 254741, 851 SW 6TH AVE. SUITE 600, PORTLAND, OR 97204, (503) 228-5230
H:\20\20487 - glacier highway - juneau traffic design\design_CD\68124_C&D_EOQ&SUM-D-8 Mon, May/10/21 08:20am

NO.	DATE	REVISION
4	12/10/20	ADDENDUM 4

STATE	PROJECT DESIGNATION	YEAR	SHEET NO.	TOTAL SHEETS
ALASKA	TEA-0955(016)/Z68124	2020	D-9	235

** Deleted by CO6

STORM SYSTEM STRUCTURE TABLE

STRUCTURE #	STRUCTURE TYPE	STATION	OFFSET	RIM ELEVATION	CASTING TYPE	REMARKS
S-62	TYPE "C" INLET BOX (18 INCH)	154+36.50	54.47' LT	25.64		RIM ELEVATION IS FLOWLINE
S-63	NOT USED					
S-64	INLET TYPE A	155+75.00	23.50' LT	30.13	GCBI	
S-65	STORM SEWER MANHOLE TYPE I	155+75.00	39.50' LT	28.96	MHFL	
S-66	INLET TYPE A	156+94.56	23.39' RT	29.06	GCBI	
S-67	INLET TYPE A	157+00.00	23.33' RT	29.09	GCBI	
S-68	INLET TYPE A	157+00.00	23.50' LT	28.68	GCBI	
S-69	STORM SEWER MANHOLE TYPE I	157+00.00	39.50' LT	27.51	MHFL	
S-70	STORM SEWER MANHOLE TYPE I	158+28.78	39.50' LT	25.84	MHFL	
S-71	INLET TYPE A	158+28.51	23.50' LT	27.78	GCBI	
S-72	STORM SEWER MANHOLE TYPE I	158+88.19	39.50' LT	25.48	MHFL	60" FLAT TOP
S-73	INLET TYPE A	159+31.18	23.50' LT	27.26	GCBI	
S-74	INLET TYPE A	159+43.79	5.50' RT	28.36	GCBI	
S-75	STORM SEWER MANHOLE TYPE I	159+51.28	39.50' LT	24.92	MHFL	
S-76	STORM SEWER MANHOLE TYPE I	160+15.25	39.50' LT	25.02	MHFL	
S-77	STORM SEWER MANHOLE TYPE I	160+41.00	39.50' LT	24.43	MHFL	
S-78	STORM SEWER MANHOLE TYPE I	160+80.80	39.50' LT	24.79	MHFL	
S-79	INLET TYPE A	161+00.00	23.50' LT	26.59	GCBI	
S-80	NOT USED					
S-81	STORM SEWER MANHOLE TYPE I	162+25.00	39.50' LT	25	MHFL	
S-82	INLET TYPE A	162+25.00	23.50' LT	26.96	GCBI	
S-83	INLET TYPE A	163+00.00	5.50' RT	27.71	GCBI	
S-84	STORM SEWER MANHOLE TYPE I	163+50.00	24.90' LT	24.9	MHFL	
S-85	INLET TYPE A	164+00.00	5.50' RT	27.15	GCBI	
S-86	INLET TYPE A	164+00.00	23.50' LT	26.67	GCBI	
S-87	STORM SEWER MANHOLE TYPE I	164+00.00	40.08' LT	25.65	MHFL	
S-88	INLET TYPE A	164+59.87	23.50' LT	26.59	GCBI	
S-89	STORM SEWER MANHOLE TYPE I	164+65.58	39.50' LT	22.52	MHFL	
S-90	STORM SEWER MANHOLE TYPE I	165+25.94	45.65' LT	27.67	MHFL	
S-91	INLET TYPE A	165+25.89	34.50' LT	26.5	GCBI	
S-92	INLET TYPE A	166+09.60	23.50' LT	26.19	GCBI	
S-93	STORM SEWER MANHOLE TYPE I	166+19.29	36.40' LT	26.19	MHFL	
S-94	INLET TYPE A	165+86.44	23.50' LT	26.12	GCBI	
S-95	INLET TYPE A	169+00.00	23.50' RT	26.46	GCBI	
S-96	INLET TYPE A	169+00.00	23.50' LT	26.46	GCBI	
S-97	EXISTING INLET	134+55.57	86.69' RT			PRESERVE AND PROTECT
S-98	INLET TYPE A	171+50.00	23.50' LT	26.01	GCBI	
S-99	EXISTING INLET	133+54.46	37.58' RT			PRESERVE AND PROTECT
S-100	INLET TYPE A	173+45.45	23.50' RT	26.59	GCBI	
S-101	EXISTING MANHOLE	177+83.14	29.53' RT	29.69		LOWER RIM 3.6"
S-102	INLET TYPE A	176+03.25	46.91' RT	28.24	GCBI	
S-103	STORM SEWER MANHOLE TYPE I	176+37.95	69.30' RT	29.45	MHFL	
S-104	STORM SEWER MANHOLE TYPE I	176+08.18	59.55' RT	28.32	MHFL	CONE TO BE ROTATED TO ALLOW ACCESS
S-105	STORM SEWER MANHOLE TYPE I	176+44.42	24.45' LT	29.48	MHFL	CONNECT TO EXISTING
S-106	INLET TYPE A	176+14.60	101.11' RT	28.52	GCBI	
S-107	INLET TYPE A	176+62.44	109.74' RT	28.54	GCBI	
S-108	EXISTING AREA DRAIN	176+74.27	105.58' RT	28.34		
S-109	STORM SEWER MANHOLE TYPE I	176+74.92	36.01' RT	28.75	MHFL	CONNECT TO EXISTING
S-110	STORM SEWER MANHOLE TYPE I	176+50.80	110.31' LT	27.77	MHFL	
S-111	INLET TYPE A	176+87.55	123.46' LT	26.77	GCBI	
S-112	INLET TYPE A	176+51.58	145.95' LT	27	GCBI	
S-113	INLET TYPE A	177+54.76	18.00' LT	28.68	GCBI	
S-114	INLET TYPE A	178+31.86	24.05' LT	29.56	GCBI	
S-115	NOT USED					
S-116	INLET TYPE A	181+99.82	25.36' LT	33.25	FIFG	GUTTER INLET
S-117	INLET TYPE A	183+82.39	28.97' RT	34.73	GCBI	
S-118	EXISTING INLET	140+06.69	23.95' RT	22.57		
S-119	EXISTING INLET	134+02.33	71.70' RT			REMOVE INLET. ABANDON OR CAP PIPES.
S-120	INLET TYPE A	153+55.99	23.50' LT	32.22	GCBI	WATER CONFLICT. HORIZONTALLY SHIFT WATER LINE.
S-121	STORM SEWER MANHOLE TYPE I	160+42.46	0.00' LT	27.8	MHFL	CONNECT TO EXISTING. SANITARY CROSSING.

STRUCTURE LEGEND
FIFG = FIELD INLET FRAME AND GRATE
BHIFG = BEEHIVE INLET FRAME AND GRATE
GCBI = GRATE AND CURB BOX INLET
MHFL = MAN HOLE FRAME AND LID

NOTES:
1. BEEHIVE INLETS SHALL BE NEEHAD FOUNDRY, R-2560-EB OR APPROVED EQUAL.
2. CONSTRUCT CONCRETE HEADWALLS PER CBJ STANDARD DETAIL 104A.
3. CONSTRUCT CONCRETE PAD PER CBJ STANDARD DETAIL 210 ON ALL FIFG AND BHIFG.

Record Drawings have been reviewed by the Project Engineer, and represent to the best of my knowledge, the project as constructed.

PE Dillon Tomaro 2/4/25

STATE OF ALASKA 49TH ANTHONY M. ROOS CE 127591 REGISTERED PROFESSIONAL ENGINEER 12/15/20

MISCELLANEOUS SUMMARIES

PLANS DEVELOPED BY: KITTELSON & ASSOCIATES, INC. CERT. OF AUTHORIZATION NO.: 254741, 851 SW 6TH AVE. SUITE 600, PORTLAND, OR 97204, (503) 228-5230
H:\20\20487 - Glacier Highway - Juneau Traffic Design\design_CD\68124_C&D_EOQ&SUM-D-9 Tue, Dec/15/20 01:36pm

CO 6

NO.	DATE	REVISION
1	12/10/20	ADDENDUM 4
2	05/03/21	STORM IE REVISIONS
3	06/10/21	RFI 38: STORM STRUCTURE ADJUSTMENTS

STATE	PROJECT DESIGNATION	YEAR	SHEET NO.	TOTAL SHEETS
ALASKA	TEA-0955(016)/Z68124	2020	D-9	235

STORM SYSTEM STRUCTURE TABLE

STRUCTURE #	STRUCTURE TYPE	STATION	OFFSET	RIM ELEVATION	CASTING TYPE	REMARKS
S-62	TYPE "C" INLET BOX (18 INCH)	154+36.50	54.47' LT	25.64		RIM ELEVATION IS FLOWLINE
S-63	NOT USED					
S-64	INLET TYPE A	155+75.00	23.50' LT	30.13	GCBI	
S-65	STORM SEWER MANHOLE TYPE I	155+75.00	39.50' LT	29.25	MHFL	
S-66	INLET TYPE A	156+94.56	23.39' RT	29.06	GCBI	
S-67	INLET TYPE A	157+00.00	23.33' RT	29.09	GCBI	
S-68	INLET TYPE A	157+00.00	23.50' LT	28.68	GCBI	
S-69	STORM SEWER MANHOLE TYPE I	157+00.00	39.50' LT	28.75	MHFL	
S-70	STORM SEWER MANHOLE TYPE II	158+28.78	39.50' LT	25.84	MHFL	
S-71	INLET TYPE A	158+28.51	23.50' LT	27.78	GCBI	
S-72	STORM SEWER MANHOLE TYPE II	158+88.19	39.50' LT	27.25	MHFL	60" FLAT TOP
S-73	INLET TYPE A	159+31.18	23.50' LT	27.26	GCBI	
S-74	INLET TYPE A	159+43.79	5.50' RT	28.36	GCBI	
S-75	STORM SEWER MANHOLE TYPE I	159+51.28	39.50' LT	24.92	MHFL	
S-76						NOT USED
S-77	STORM SEWER MANHOLE TYPE I	160+41.00	31.50' LT	27.38	MHFL	
S-78	STORM SEWER MANHOLE TYPE I	160+80.80	39.50' LT	24.79	MHFL	
S-79	INLET TYPE A	161+00.00	23.50' LT	26.74	GCBI	
S-80	NOT USED					
S-81	STORM SEWER MANHOLE TYPE I	162+25.00	39.50' LT	25	MHFL	
S-82	INLET TYPE A	162+25.00	23.50' LT	26.96	GCBI	
S-83	INLET TYPE A	163+00.00	5.50' RT	27.71	GCBI	
S-84	STORM SEWER MANHOLE TYPE I	163+50.00	24.90' LT	24.9	MHFL	
S-85	INLET TYPE A	164+00.00	5.50' RT	27.15	GCBI	
S-86	INLET TYPE A	164+00.00	23.50' LT	26.67	GCBI	
S-87	STORM SEWER MANHOLE TYPE I	164+00.00	40.08' LT	25.65	MHFL	
S-88	INLET TYPE A	164+59.87	23.50' LT	26.59	GCBI	
S-89	STORM SEWER MANHOLE TYPE I	164+65.58	39.50' LT	26.00	MHFL	
S-90	STORM SEWER MANHOLE TYPE I	165+25.94	40.50' LT	27.09	MHFL	
S-91	INLET TYPE A	165+25.89	34.50' LT	26.5	GCBI	
S-92	INLET TYPE A	166+09.60	23.50' LT	26.19	GCBI	
S-93	STORM SEWER MANHOLE TYPE I	166+19.29	36.40' LT	26.19	MHFL	
S-94	INLET TYPE A	165+86.44	23.50' LT	26.12	GCBI	
S-95	INLET TYPE A	169+00.00	23.50' RT	26.46	GCBI	
S-96	INLET TYPE A	169+00.00	23.50' LT	26.46	GCBI	
S-97	EXISTING INLET	134+55.57	86.69' RT			PRESERVE AND PROTECT
S-98	INLET TYPE A	171+50.00	23.50' LT	26.01	GCBI	
S-99	EXISTING INLET	133+54.46	37.58' RT			PRESERVE AND PROTECT
S-100	INLET TYPE A	173+45.45	23.50' RT	26.59	GCBI	
S-101	EXISTING MANHOLE	177+83.14	29.53' RT	29.69		LOWER RIM 3.6"
S-102	INLET TYPE A	176+03.25	46.91' RT	28.24	GCBI	
S-103	STORM SEWER MANHOLE TYPE I	176+37.95	69.30' RT	29.45	MHFL	
S-104	STORM SEWER MANHOLE TYPE I	176+08.18	59.55' RT	28.40	MHFL	CONE TO BE ROTATED TO ALLOW ACCESS
S-105	STORM SEWER MANHOLE TYPE I	176+44.42	24.45' LT	29.48	MHFL	CONNECT TO EXISTING
S-106	INLET TYPE A	176+14.60	101.11' RT	28.52	GCBI	
S-107	INLET TYPE A	176+62.44	109.74' RT	28.54	GCBI	
S-108	EXISTING AREA DRAIN	176+74.27	105.58' RT	28.34		
S-109	STORM SEWER MANHOLE TYPE I	176+74.92	36.01' RT	29.22	MHFL	CONNECT TO EXISTING
S-110	STORM SEWER MANHOLE TYPE I	176+50.80	110.31' LT	27.77	MHFL	
S-111	INLET TYPE A	176+87.55	123.46' LT	26.77	GCBI	
S-112	INLET TYPE A	176+51.58	145.95' LT	27	GCBI	
S-113	INLET TYPE A	177+54.76	18.00' LT	28.68	GCBI	
S-114	INLET TYPE A	178+31.86	24.05' LT	29.56	GCBI	
S-115	NOT USED					
S-116	INLET TYPE A	181+99.82	25.36' LT	33.25	FIFG	GUTTER INLET
S-117	INLET TYPE A	183+82.39	28.97' RT	34.73	GCBI	
S-118	EXISTING INLET	140+06.69	23.95' RT	22.57		
S-119	EXISTING INLET	134+02.33	71.70' RT			REMOVE INLET. ABANDON OR CAP PIPES.
S-120	INLET TYPE A	153+55.99	23.50' LT	32.22	GCBI	WATER CONFLICT. HORIZONTALLY SHIFT WATER LINE.
S-121	STORM SEWER MANHOLE TYPE I	160+42.46	0.00' LT	27.85	MHFL	CONNECT TO EXISTING. SANITARY CROSSING.

STRUCTURE LEGEND
FIFG = FIELD INLET FRAME AND GRATE
BHIFG = BEEHIVE INLET FRAME AND GRATE
GCBI = GRATE AND CURB BOX INLET
MHFL = MAN HOLE FRAME AND LID

NOTES:
1. BEEHIVE INLETS SHALL BE NEEHAD FOUNDRY, R-2560-EB OR APPROVED EQUAL.
2. CONSTRUCT CONCRETE HEADWALLS PER CBJ STANDARD DETAIL 104A.
3. CONSTRUCT CONCRETE PAD PER CBJ STANDARD DETAIL 210 ON ALL FIFG AND BHIFG.

Record Drawings have been reviewed by the Project Engineer, and represent to the best of my knowledge, the project as constructed.

PE Dillon Tomaro 2/4/25

STATE OF ALASKA 49TH ANTHONY M. ROOS CE 127591 REGISTERED PROFESSIONAL ENGINEER 6/10/21

MISCELLANEOUS SUMMARIES

PLANS DEVELOPED BY: KITTELSON & ASSOCIATES, INC. CERT. OF AUTHORIZATION NO.: 254741, 851 SW 6TH AVE. SUITE 600, PORTLAND, OR 97204, (503) 228-5230
H:\20\20487 - glacier highway - juneau traffic design\design_CD\68124_C&D_EOQ&SUM-D-9 Thu, Jun/10/21 05:30pm

NO.	DATE	REVISION
4	12/14/20	ADDENDUM 4
5	12/23/20	ADDENDUM 5
7	01/05/21	ADDENDUM 7

STATE	PROJECT DESIGNATION	YEAR	SHEET NO.	TOTAL SHEETS
ALASKA	TEA-0955(016)/Z68124	2020	D-10	235

** Deleted by CO6

STORM SYSTEM STRUCTURE TABLE

STRUCTURE #	STRUCTURE TYPE	STATION	OFFSET	RIM ELEVATION	CASTING TYPE	REMARKS
S-122	INLET TYPE A	177+11.67	28.89' RT	28.4	FIFG	GUTTER INLET
S-123	INLET TYPE A	176+80.87	102.33' LT	25.97	FIFG	
S-124	INLET TYPE A	173+00.00	23.50' LT	26.46	GCBI	
S-125	NOT USED					
S-126	INLET TYPE A	170+50.00	23.50' LT	26.51	GCBI	
S-127	EXISTING MANHOLE	182+79.52	30.11' RT	35.12		
S-128						NOT USED
S-129	NOT USED					
S-130	NOT USED					
S-131	INLET TYPE A	166+95.78	23.50' RT	26.44	GCBI	
S-132						NOT USED
S-133	INLET TYPE A	166+98.78	23.50' LT	26.45	GCBI	
S-134	INLET TYPE A	122+15.06	34.42' LT	24.60	FIFG	

STORM SYSTEM PIPE TABLE

PIPE #	SIZE (IN)	LENGTH (FT)	PIPE TYPE	INLET STRUCTURE	INLET INVERT	OUTLET STRUCTURE	OUTLET INVERT	SLOPE (%)	REMARKS
P-1	18	7.7	CPP	S-1	26.65	P-1B	26.32	4.28	CONNECT TO EXISTING
P-1B			EXTG	P-1	26.32	S-2	24.63	4.28	
P-1C			EXTG	S-2	24.39	OUTFALL	23.82	2.69	
P-1D			EXTG						CULVERT OUTFALLS ON SEAWARD SIDE
P-2	60		EXTG						
P-3	60	79.7	SEE J-1	S-3	16.61	OUTFALL	15.48	1.40	REPLACEMENT IN KIND
P-4			EXTG			S-3	19.99		
P-5	66								NOT USED
P-6	66								NOT USED
P-7	18		EXTG	S-5	19.51	S-(434)	19.48	0.04	
P-8	18		EXTG			S-6	20.53	1.22	
P-9	18	20.6	CPP	S-4	22.37	OUTFALL	22.27	0.5	WATER UTILITY CROSSING
P-10	18	7.4	CPP	S-6	19.5	S-5	19.48	0.3	
P-11	18	46.6	CPP	S-13	20.02	S-8	19.88	0.3	
P-12	18	13.8	CPP	S-7	21.75	S-8	21.68	0.5	
P-13	18	72.21	CPP	S-8	19.88	S-9	19.66	0.3	WATER UTILITY CONFLICT. SHIFT VERTICALLY.
P-14			EXTG	S-(434)	19.51	OUTFALL	19.43	0.51	
P-15			EXTG						
P-16	18	26.1	CPP	S-9	19.66	OUTFALL	20.33	0.3	WATER UTILITY CROSSING
P-17			EXTG						
P-18	18	43.43	CPP	S-14	20.15	S-13	20.02	0.3	
P-19	18	11.86	CPP	S-15	21.31	S-11	21.25	0.5	
P-20	18	19.93	CPP	S-16	22.46	OUTFALL	22.4	0.3	
P-21A	24		EXTG	P-16B	20.62	S-14	20.34	0.45	
P-21B	24		EXTG	S-(380)	20.62	P-21A	20.35	0.45	
P-22	24		EXTG	S-17	21.24	S-(380)	20.75	0.54	
P-23	18	120.83	CPP	S-25	23.96	S-22	22.84	0.93	
P-24	12		EXTG			OUTFALL	23.3		
P-25	24	84.8	CPP	S-20	22.38	OUTFALL	22.14	0.3	WATER UTILITY CROSSING
P-26	24	13.2	CPP	S-21	23.88	S-20	23.82	0.5	
P-27	24	19.82	CPP	S-22	22.64	S-20	22.58	0.3	WATER UTILITY CROSSING
P-28	18	21.22	CPP	S-23	22.52	OUTFALL	22.41	0.5	WATER UTILITY CROSSING
P-29	18	4	CPP	S-12	22.74	S-23	22.72	0.5	
P-30	18	21.17	CPP	S-24	22.49	OUTFALL	22.43	0.3	WATER UTILITY CROSSING
P-31	18	12.0	CPP	S-39	25.1	S-19	25.06	0.3	REPLACE EXISTING PIPE. REVERSE FLOW DIRECTION.
P-32	18		EXTG	S-19	24.86	S-18	24.69	0.33	
P-33	18	78.89	CPP	S-27	21.97	S-28	21.73	0.3	
P-34	30	70.1	CPP	S-28	21.38	OUTFALL	21.17	0.3	WATER UTILITY CONFLICT. SHIFT VERTICALLY.
P-35	24	26.68	CPP	S-29	23.38	S-28	23.31	0.3	
P-36	18	70.47	CPP	S-30	21.79	S-28	21.58	0.3	
P-37	42	271.25	CPP	S-36	23.07	OUTFALL	21.23	0.68	
P-38	18	42.1	CPP	S-31	25.6	S-30	21.79	9.05	
P-39	18		EXTG						
P-40	18	22.32	CPP	S-33	25.32	S-34	25.25	0.3	
P-41	24	27.71	CPP	S-35	24.4	S-34	24.48	0.3	

STRUCTURE LEGEND
FIFG = FIELD INLET FRAME AND GRATE
BHIFG = BEEHIVE INLET FRAME AND GRATE
GCBI = GRATE AND CURB BOX INLET
MHFL = MAN HOLE FRAME AND LID

NOTES:
1. BEEHIVE INLETS SHALL BE NEEHAD FOUNDRY, R-2560-EB OR APPROVED EQUAL.
2. CONSTRUCT CONCRETE HEADWALLS PER CBJ STANDARD DETAIL 104A.
3. CONSTRUCT CONCRETE PAD PER CBJ STANDARD DETAIL 210 ON ALL FIFG AND BHIFG.

PIPE LEGEND
CPP = CORRUGATED POLYETHYLENE PIPE
CAP = CORRUGATED (2-2/3" X 1/2") ALUMINUM PIPE (16 GAGE)
EXTG = EXISTING PIPE
LINER = LINER PIPE
OUTFALL = OUTFALLS TO OPEN CHANNEL
HDPE = HIGH DENSITY POLY ETHYLENE PIPE

Record Drawings have been reviewed by the Project Engineer, and represent to the best of my knowledge, the project as constructed.

PE Dillon Tomaro 2/4/25

STATE OF ALASKA 49TH
ANTHONY M. ROOS CE 127591
REGISTERED PROFESSIONAL ENGINEER
1/8/21

MISCELLANEOUS SUMMARIES

PLANS DEVELOPED BY: KITTELSON & ASSOCIATES, INC. CERT. OF AUTHORIZATION NO.: 254741, 851 SW 6TH AVE. SUITE 600, PORTLAND, OR 97204, (503) 228-5230
H:\20_20487 - Glacier Highway - Juneau Traffic Design\design_CD\68124_C&D_EOQ&SUM-D-10 Fri, Jan/08/21 08:49am

CO 6

** Deleted by CO52

NO.	DATE	REVISION
3	01/05/21	ADDENDUM 7
2	03/11/21	RFI #1
1	05/03/21	STORM IE REVISIONS

STATE	PROJECT DESIGNATION	YEAR	SHEET NO.	TOTAL SHEETS
ALASKA	TEA-0955(016)/Z68124	2020	D-10	235

STORM SYSTEM STRUCTURE TABLE

STRUCTURE #	STRUCTURE TYPE	STATION	OFFSET	RIM ELEVATION	CASTING TYPE	REMARKS
S-122	INLET TYPE A	177+11.67	28.89' RT	28.4	FIFG	GUTTER INLET
S-123	INLET TYPE A	176+80.87	102.33' LT	25.97	FIFG	
S-124	INLET TYPE A	173+00.00	23.50' LT	26.46	GCBI	
S-125	NOT USED					
S-126	INLET TYPE A	170+50.00	23.50' LT	26.51	GCBI	
S-127	EXISTING MANHOLE	182+79.52	30.11' RT	35.12		
S-128						NOT USED
S-129	NOT USED					
S-130	NOT USED					
S-131	INLET TYPE A	166+95.78	23.50' RT	26.44	GCBI	
S-132						NOT USED
S-133	INLET TYPE A	166+98.78	23.50' LT	26.45	GCBI	
S-134	INLET TYPE A	122+15.06	34.42' LT	24.60	FIFG	

STRUCTURE LEGEND
FIFG = FIELD INLET FRAME AND GRATE
BHIFG = BEEHIVE INLET FRAME AND GRATE
GCBI = GRATE AND CURB BOX INLET
MHFL = MAN HOLE FRAME AND LID

NOTES:
1. BEEHIVE INLETS SHALL BE NEEHAD FOUNDRY, R-2560-EB OR APPROVED EQUAL.
2. CONSTRUCT CONCRETE HEADWALLS PER CBJ STANDARD DETAIL 104A.
3. CONSTRUCT CONCRETE PAD PER CBJ STANDARD DETAIL 210 ON ALL FIFG AND BHIFG.

PIPE LEGEND
CPP = CORRUGATED POLYETHYLENE PIPE
CAP = CORRUGATED (2-2/3" X 1/2") ALUMINUM PIPE (16 GAGE)
EXTG = EXISTING PIPE
LINER = LINER PIPE
OUTFALL = OUTFALLS TO OPEN CHANNEL
HDPE = HIGH DENSITY POLY ETHYLENE PIPE

STORM SYSTEM PIPE TABLE

PIPE #	SIZE (IN)	LENGTH (FT)	PIPE TYPE	INLET STRUCTURE	INLET INVERT	OUTLET STRUCTURE	OUTLET INVERT	SLOPE (%)	REMARKS
P-1	18	7.7	CPP	S-1	26.65	P-1B	26.32	4.28	CONNECT TO EXISTING
P-1B			EXTG	P-1	26.32	S-2	24.63	4.28	
P-1C			EXTG	S-2	24.39	OUTFALL	23.82	2.69	
P-1D			EXTG						CULVERT OUTFALLS ON SEAWARD SIDE
P-2	60		EXTG						
P-3	60	79.7	SEE J-1	S-3	16.61	OUTFALL	15.48	1.40	REPLACEMENT IN KIND
P-4			EXTG			S-3	19.99		
P-5	66								NOT USED
P-6	66								NOT USED
P-7	18		EXTG	S-5	19.51	S-10	19.48	0.04	
P-8	18		EXTG			S-6	19.78	1.22	
P-9	18	20.6	CPP	S-4	22.37	OUTFALL	22.27	0.5	WATER UTILITY CROSSING
P-10	18	7.4	CPP	S-6	19.5	S-5	19.48	0.3	
P-11	18	46.6	CPP	S-13	20.02	S-8	19.88	0.3	
P-12	18	13.8	CPP	S-7	21.75	S-8	21.68	0.5	
P-13	18	72.21	CPP	S-8	19.88	S-9	19.66	0.3	WATER UTILITY CONFLICT. SHIFT VERTICALLY.
P-14			EXTG	S-10	19.44	OUTFALL	19.25	0.51	
P-15			EXTG						
P-16	18	26.1	CPP	S-9	19.66	OUTFALL	19.58	0.3	WATER UTILITY CROSSING
P-17			EXTG						
P-18	18	43.43	CPP	S-14	20.15	S-13	20.02	0.3	
P-19	18	11.86	CPP	S-15	21.31	S-11	21.25	0.5	
P-20	18	19.93	CPP	S-16	22.46	OUTFALL	22.4	0.3	
P-21A	24		EXTG	P-21B	20.62	S-14	20.34	0.45	
P-21B	24		EXTG	S-11	20.73	P-21A	20.62	0.45	
P-22	24		EXTG	S-134	21.24	S-11	20.75	0.54	
P-23	18	120.83	CPP	S-25	23.96	S-22	22.84	0.93	
P-24	12		EXTG			OUTFALL	23.3		
P-25	24	84.8	CPP	S-20	21.17	OUTFALL	21.75	0.3	WATER UTILITY CROSSING
P-26	24	13.2	CPP	S-21	23.88	S-20	21.37	19.1	
P-27	24	17.4	CPP	S-22	22.64	TEE INTO P-25	21.12	8.75	NOTE REMOVED
P-28	18	21.22	CPP	S-23	22.52	OUTFALL	22.41	0.5	WATER UTILITY CROSSING
P-29	18	4	CPP	S-12	22.74	S-23	22.72	0.5	
P-30	18	21.17	CPP	S-24	22.49	OUTFALL	22.43	0.3	WATER UTILITY CROSSING
P-31	18	12.0	CPP	S-39	25.1	S-19	25.06	0.3	REPLACE EXISTING PIPE. REVERSE FLOW DIREECTION.
P-32	18		EXTG	S-19	24.86	S-18	24.69	0.33	
P-33	18	78.89	CPP	S-27	22.94	S-28	21.73	1.5	
P-34	30	70.1	CPP	S-28	21.38	OUTFALL	21.17	0.3	WATER UTILITY CONFLICT. SHIFT VERTICALLY.
P-35	24	26.68	CPP	S-29	23.38	S-28	23.23	0.3	
P-36	18	70.47	CPP	S-30	22.90	S-28	21.58	0.3	
P-37	42	271.25	CPP	S-36	22.59	OUTFALL	21.23	0.5	
P-38	18	42.1	CPP	S-31	25.6	S-30	23.10	5.94	
P-39	18		EXTG						
P-40	18	22.32	CPP	S-33	25.32	S-34	25.25	0.3	
P-41	24	27.71	CPP	S-35	24.4	S-34	24.32	0.3	

Record Drawings have been reviewed by the Project Engineer, and represent to the best of my knowledge, the project as constructed.

PE Dillon Tomaro 2/4/25

MISCELLANEOUS SUMMARIES

STATE OF ALASKA 49TH ANTHONY M. ROOS CE 127591 REGISTERED PROFESSIONAL ENGINEER 5/10/21

PLANS DEVELOPED BY: KITTELSON & ASSOCIATES, INC. CERT. OF AUTHORIZATION NO.: 254741, 851 SW 6TH AVE. SUITE 600, PORTLAND, OR 97204, (503) 228-5230
H:\20\20487 - glacier highway - juneau traffic design\design_CD\68124_C&D_EOQ&SUM-D-10 Mon, May/10/21 08:20am

CO 52

NO.	DATE	REVISION
4	01/05/21	ADDENDUM 7
3	03/11/21	RFI #1
2	05/03/21	STORM IE REVISIONS

STATE	PROJECT DESIGNATION	YEAR	SHEET NO.	TOTAL SHEETS
ALASKA	TEA-0955(016)/Z68124	2020	D-10	235

STORM SYSTEM STRUCTURE TABLE

STRUCTURE #	STRUCTURE TYPE	STATION	OFFSET	RIM ELEVATION	CASTING TYPE	REMARKS
S-122	INLET TYPE A	177+11.67	28.89' RT	28.4	FIFG	GUTTER INLET
S-123	INLET TYPE A	176+80.87	102.33' LT	25.97	FIFG	
S-124	INLET TYPE A	173+00.00	23.50' LT	26.46	GCBI	
S-125	NOT USED					
S-126	INLET TYPE A	170+50.00	23.50' LT	26.51	GCBI	
S-127	EXISTING MANHOLE	182+79.52	30.11' RT	35.12		
S-128						NOT USED
S-129	NOT USED					
S-130	NOT USED					
S-131	INLET TYPE A	166+95.78	23.50' RT	26.44	GCBI	
S-132						NOT USED
S-133	INLET TYPE A	166+98.78	23.50' LT	26.45	GCBI	
S-134	INLET TYPE A	122+15.06	34.42' LT	24.60	FIFG	

STORM SYSTEM PIPE TABLE

PIPE #	SIZE (IN)	LENGTH (FT)	PIPE TYPE	INLET STRUCTURE	INLET INVERT	OUTLET STRUCTURE	OUTLET INVERT	SLOPE (%)	REMARKS
P-1	18	7.7	CPP	S-1	26.65	P-1B	26.32	4.28	CONNECT TO EXISTING
P-1B			EXTG	P-1	26.32	S-2	24.63	4.28	
P-1C			EXTG	S-2	24.39	OUTFALL	23.82	2.69	
P-1D			EXTG						CULVERT OUTFALLS ON SEAWARD SIDE
P-2	60		EXTG						
P-3	60	79.7	SEE J-1	S-3	16.61	OUTFALL	15.48	1.40	REPLACEMENT IN KIND
P-4			EXTG			S-3	19.99		
P-5	66								NOT USED
P-6	66								NOT USED
P-7	18		EXTG	S-5	19.51	S-10	19.48	0.04	
P-8	18		EXTG			S-6	19.78	1.22	
P-9	18	20.6	CPP	S-4	22.37	OUTFALL	22.27	0.5	WATER UTILITY CROSSING
P-10	18	7.4	CPP	S-6	19.5	S-5	19.48	0.3	
P-11	18	46.6	CPP	S-13	20.02	S-8	19.88	0.3	
P-12	18	13.8	CPP	S-7	21.75	S-8	21.68	0.5	
P-13	18	72.21	CPP	S-8	19.88	S-9	19.66	0.3	WATER UTILITY CONFLICT. SHIFT VERTICALLY.
P-14			EXTG	S-10	19.44	OUTFALL	19.25	0.51	
P-15			EXTG						
P-16	18	26.1	CPP	S-9	19.66	OUTFALL	19.58	0.3	WATER UTILITY CROSSING
P-17			EXTG						
P-18	18	43.43	CPP	S-14	20.15	S-13	20.02	0.3	
P-19	18	11.86	CPP	S-15	21.31	S-11	21.25	0.5	
P-20	18	19.93	CPP	S-16	22.46	OUTFALL	22.4	0.3	
P-21A	24		EXTG	P-21B	20.62	S-14	20.34	0.45	
P-21B	24		EXTG	S-11	20.73	P-21A	20.62	0.45	
P-22	24		EXTG	S-134	21.24	S-11	20.75	0.54	
P-23	18	120.83	CPP	S-25	23.96	S-22	22.84	0.93	
P-24	12		EXTG			OUTFALL	23.3		
P-25	24	84.8	CPP	S-20	21.17	OUTFALL	21.75	0.3	WATER UTILITY CROSSING
P-26	24	13.2	CPP	S-21	23.88	S-20	21.37	19.1	
P-27	24	17.4	CPP	S-22	22.64	TEE INTO P-25	21.12	8.75	NOTE REMOVED
P-28	18	21.22	CPP	S-23	22.52	OUTFALL	22.41	0.5	WATER UTILITY CROSSING
P-29	18	4	CPP	S-12	22.74	S-23	22.72	0.5	
P-30	18	21.17	CPP	S-24	22.49	OUTFALL	22.43	0.3	WATER UTILITY CROSSING
P-31	18	12.0	CPP	S-39	25.1	S-19	25.06	0.3	REPLACE EXISTING PIPE. REVERSE FLOW DIREECTION.
P-32	18		EXTG	S-19	24.86	S-18	24.69	0.33	
P-33	18	78.89	CPP	S-27	22.94	S-28	21.73	1.5	
P-34	30	70.1	CPP	S-28	21.38	OUTFALL	21.17	0.3	WATER UTILITY CONFLICT. SHIFT VERTICALLY.
P-35	24	26.68	CPP	S-29	23.38	S-28	23.23	0.3	
P-36	18	70.47	CPP	S-30	22.90	S-28	21.58	0.3	
P-37	42	271.25	CPP	S-36	22.59	OUTFALL	21.23	0.5	
P-38	18	42.1	CPP	S-31	~~25.6~~ 25.20 AMR	S-30	23.10	5.94	
P-39	18		EXTG						
P-40	18	22.32	CPP	S-33	25.32	S-34	25.25	0.3	
P-41	24	27.71	CPP	S-35	24.4	S-34	24.32	0.3	

STRUCTURE LEGEND
FIFG = FIELD INLET FRAME AND GRATE
BHIFG = BEEHIVE INLET FRAME AND GRATE
GCBI = GRATE AND CURB BOX INLET
MHFL = MAN HOLE FRAME AND LID

NOTES:
1. BEEHIVE INLETS SHALL BE NEEHAD FOUNDRY, R-2560-EB OR APPROVED EQUAL.
2. CONSTRUCT CONCRETE HEADWALLS PER CBJ STANDARD DETAIL 104A.
3. CONSTRUCT CONCRETE PAD PER CBJ STANDARD DETAIL 210 ON ALL FIFG AND BHIFG.

PIPE LEGEND
CPP = CORRUGATED POLYETHYLENE PIPE
CAP = CORRUGATED (2-2/3" X 1/2") ALUMINUM PIPE (16 GAGE)
EXTG = EXISTING PIPE
LINER = LINER PIPE
OUTFALL = OUTFALLS TO OPEN CHANNEL
HDPE = HIGH DENSITY POLY ETHYLENE PIPE

Record Drawings have been reviewed by the Project Engineer, and represent to the best of my knowledge, the project as constructed.

PE Dillon Tomaro 2/4/25

STATE OF ALASKA 49TH ANTHONY M. ROOS CE 127591 REGISTERED PROFESSIONAL ENGINEER 7/1/24

MISCELLANEOUS SUMMARIES

PLANS DEVELOPED BY: KITTELSON & ASSOCIATES, INC. CERT. OF AUTHORIZATION NO.: 254741, 851 SW 6TH AVE. SUITE 600, PORTLAND, OR 97204, (503) 228-5230
H:\20\20487 - glacier highway - juneau traffic design\design_CD\68124_C&D_EOQ&SUM-D-10 Mon, May/10/21 08:20am

NO.	DATE	REVISION
4	12/14/20	ADDENDUM 4
7	01/06/21	ADDENDUM 7
9	01/22/21	ADDENDUM 9

STATE	PROJECT DESIGNATION	YEAR	SHEET NO.	TOTAL SHEETS
ALASKA	TEA-0955(016)/Z68124	2020	D-11	235

** Deleted by CO6

STORM SYSTEM PIPE TABLE

PIPE #	SIZE (IN)	LENGTH (FT)	PIPE TYPE	INLET STRUCTURE	INLET INVERT	OUTLET STRUCTURE	OUTLET INVERT	SLOPE (%)	REMARKS
P-42	24	63.96	CPP	S-34	24.07	S-36	23.88	0.3	WATER UTILITY CONFLICT. SHIFT VERTICALLY.
P-43	18	42.85	CPP	S-37	24.4	S-34	24.27	0.3	
P-44	24	88.65	CPP	S-38	23.71	S-36	23.27	0.5	
P-45	24		EXTG	S-18	24.69	S-37	22.6	0.17	
P-46	24	165.98	HDPE	S-40	24.74	S-38	23.91	0.5	
P-47	18	92.7	CPP	S-41	25.05	S-39	24.78	0.3	
P-48	24		EXTG			S-40	24.94	2.38	
P-49	24		EXTG			S-40	25.17	0.32	
P-50	18	14.91	CPP	S-42	25.34	S-41	25.38	0.3	
P-51	18		EXTG	S-43	25.72	S-43	25.47	0.23	
P-52	18		EXTG	S-45	25.84	S-43	25.82	0.02	
P-53	24	47.0	CAP	OPEN	30.87	OUTFALL	30.44	0.92	
P-54	18		EXTG	S-47	26.59	S-45	26.03	1.44	
-	-		-						
P-55	18		EXTG	S-46	29.19				
P-56	18	14.0	CPP	S-46	30.09	OUTFALL	30.13	0.3	SEE SHEET P-8 FOR MORE INFORMATION.
P-58									NOT USED
P-57	18		EXTG	S-32	25.95	S-43	25.83	1.29	
P-59	24		EXTG						
P-60	18	101.21	HDPE	S-50	31.58	S-51	30.36	1.21	
P-61	18	69.19	HDPE	S-51	30.36	S-52	30.15	0.3	WATER UTILITY CROSSING
P-62	18	46.93	CPP	S-53	30.64	S-52	30.5	0.3	
P-63	18	75.4	CPP	S-48	31.09	S-53	30.64	0.3	
P-64	18	91.47	HDPE	S-52	30.15	S-54	29.88	0.3	
P-65	18	22.94	CPP	S-54	29.88	OUTFALL	28.29	6.93	WATER UTILITY CONFLICT. SHIFT VERTICALLY.
P-66	24	7.44	CPP	P-59	30.72	OUTFALL	30.7	0.3	CONNECT AND EXTEND EXISTING P-59
P-67	18	242.31	HDPE	S-57	30.87	S-58	29.43	0.59	WATER UTILITY CROSSING
P-68	18	67.0	CPP	S-58	27.31	S-59	26.55	1.14	
P-69	18	16.2	CPP	S-120	28.37	S-59	26.35	11.22	
P-70	18	46.9	CPP	S-60	28.71	S-120	28.57	0.3	
P-71	18	79.1	CPP	S-59	26.35	S-61	26.14	0.3	WATER UTILITY CONFLICT. SHIFT VERTICALLY.
P-72	18	15.1	CPP	S-62	23.93	S-61	23.89	0.3	
P-73	18		EXTG	S-49	31.55	S-118	30.85	0.42	
P-74	24	136.51	CPP	S-61	23.89	S-65	23.47	0.31	
P-75	18	16	CPP	S-64	26.43	S-65	26.38	0.3	
P-76	24	124.95	CPP	S-65	23.47	S-69	22.35	0.89	
P-77	18	5.46	CPP	S-66	25.6	S-67	25.58	0.3	
P-78	18	46.84	CPP	S-67	25.58	S-68	25.36	0.47	
P-79	18	16	CPP	S-68	25.36	S-69	25.31	0.3	
P-80	24	125.32	CPP	S-69	22.35	S-70	21.25	0.87	
P-81	18	16	CPP	S-71	24.37	S-70	21.6	17.31	
P-82	24	5.7	CPP	P-83	21.28	S-70	21.26	0.3	CONNNECT AND EXTEND P-83
P-83	18		EXTG			P-28	21.28		VERIFY SLOPE AND ADJUST P-82
P-84	24	55.88	CPP	S-70	21.25	S-72	20.91	0.6	
P-85	30	79.67	CPP		21.42	S-72	21.18	0.3	REPLACE EXISTING PIPE
P-86	24	40.37	CPP	S-72	20.91	TEE	20.74	0.42	
P-87	18	16.96	CPP	S-73	23.76	TEE	20.74	18.09	
P-88	18	31.54	CPP	S-74	24.87	S-73	23.76	3.52	
P-89	24	18.34	CPP	TEE	20.74	S-75	20.66	0.42	
P-90	24	59.62	CPP	S-75	20.66	S-76	20.48	0.3	
P-91	24	23.99	CPP	S-76	20.48	S-77	20.41	0.3	
P-92	24	134.38	CPP	S-78	20.26	S-81	19.86	0.3	
P-93	24		EXTG		21.21	S-121	20.45	1.51	
P-94	24	37.08	CPP	S-77	20.37	S-78	20.26	0.3	
P-95	18	24.2	CPP	S-79	23.09	S-78	23.02	0.3	
P-96									NOT USED
P-97	18	16	CPP	S-82	23.46	S-81	20.86	16.25	
P-98	24	118.3	CPP	S-81	19.86	S-84	19.51	3	
P-99	18	100.43	CPP	S-83	24.47	S-85	24.03	0.44	
P-100	24	48.78	CPP	S-84	19.51	S-87	19.36	0.3	
P-101	18	29	CPP	S-85	24.03	S-86	23.16	3	

PIPE LEGEND
CPP = CORRUGATED POLYETHYLENE PIPE
CAP = CORRUGATED (2-2/3" X 1/2") ALUMINUM PIPE (16 GAGE)
EXTG = EXISTING PIPE
LINER = LINER PIPE
OUTFALL = OUTFALLS TO OPEN CHANNEL
HDPE = HIGH DENSITY POLY ETHYLENE PIPE

Record Drawings have been reviewed by the Project Engineer, and represent to the best of my knowledge, the project as constructed.

PE *Dillon Tomaro* 2/4/25

STATE OF ALASKA 49TH ANTHONY M. ROOS CE 127591 REGISTERED PROFESSIONAL ENGINEER 1/8/21

MISCELLANEOUS SUMMARIES

PLANS DEVELOPED BY: KITTELSON & ASSOCIATES, INC. CERT. OF AUTHORIZATION NO.: 254741, 851 SW 6TH AVE. SUITE 600, PORTLAND, OR 97204, (503) 228-5230
H:\20\20487 - Glacier Highway - Juneau Traffic Design\design_CD\68124_C&D_EOQ&SUM-D-11 Fri, Jan/08/21 08:49am

NO.	DATE	REVISION
3	12/14/20	ADDENDUM 4
2	01/06/21	ADDENDUM 7
1	05/03/21	STORM IE REVISIONS

STATE	PROJECT DESIGNATION	YEAR	SHEET NO.	TOTAL SHEETS
ALASKA	TEA-0955(016)/Z68124	2020	D-11	235

CO 6

STORM SYSTEM PIPE TABLE

PIPE #	SIZE (IN)	LENGTH (FT)	PIPE TYPE	INLET STRUCTURE	INLET INVERT	OUTLET STRUCTURE	OUTLET INVERT	SLOPE (%)	REMARKS
P-42	24	63.96	CPP	S-34	24.07	S-36	23.88	0.3	WATER UTILITY CONFLICT. SHIFT VERTICALLY.
P-43	18	42.85	CPP	S-37	24.4	S-34	24.27	0.3	
P-44	24	88.65	CPP	S-38	23.41	S-36	22.97	0.5	
P-45	24		EXTG	S-18	24.69	S-37	22.6	0.17	
P-46	24	165.98	HDPE	S-40	24.74	S-38	23.91	0.5	
P-47	18	92.7	CPP	S-41	25.38	S-39	25.10	0.3	
P-48	24		EXTG			S-40	24.94	2.38	
P-49	24		EXTG			S-40	25.17	0.32	
P-50	18	14.91	CPP	S-42	25.42	S-41	25.38	0.3	
P-51	18		EXTG	S-43	25.72	S-42	25.47	0.23	
P-52	18		EXTG	S-45	25.84	S-43	25.82	0.02	
P-53	24	47.0	CAP	OPEN	30.87	OUTFALL	30.44	0.92	
P-54	18		EXTG	S-47	26.59	S-45	26.03	1.44	
–	–		–						
P-55	18		EXTG	S-46	29.19				
P-56	18	14.0	CPP	S-46	30.09	OUTFALL	30.13	0.3	
P-58									NOT USED
P-57	18		EXTG	S-32	25.95	S-43	25.83	1.29	
P-59	24		EXTG						
P-60	18	101.21	HDPE	S-50	31.58	S-51	30.36	1.21	
P-61	18	69.19	HDPE	S-51	30.36	S-52	30.15	0.3	WATER UTILITY CROSSING
P-62	18	46.93	CPP	S-53	30.64	S-52	30.5	0.3	
P-63	18	75.4	CPP	S-48	31.09	S-53	30.64	0.3	
P-64	18	91.47	HDPE	S-52	30.15	S-54	29.88	0.3	
P-65	18	22.94	CPP	S-54	29.88	OUTFALL	28.29	6.93	WATER UTILITY CONFLICT. SHIFT VERTICALLY.
P-66	24	7.44	CPP	P-59	30.72	OUTFALL	30.7	0.3	CONNECT AND EXTEND EXISTING P-59
P-67	18	242.31	HDPE	S-57	30.87	S-58	29.43	0.59	WATER UTILITY CROSSING
P-68	18	67.0	CPP	S-58	27.31	S-59	26.55	1.14	
P-69	18	16.2	CPP	S-120	27.28	S-59	26.35	5.74	
P-70	18	46.9	CPP	S-60	27.71	S-120	27.48	0.5	
P-71	18	79.1	CPP	S-59	26.35	S-61	25.05	1.64	WATER UTILITY CONFLICT. SHIFT VERTICALLY.
P-72	18	15.1	CPP	S-62	23.93	S-61	23.89	0.3	
P-73	18		EXTG	S-49	31.55	S-118	30.85	0.42	
P-74	24	136.51	CPP	S-61	23.89	S-65	23.55	0.25	
P-75	18	16	CPP	S-64	26.43	S-65	25.55	5.50	
P-76	24	124.95	CPP	S-65	23.55	S-69	23.24	0.89	
P-77	18	5.46	CPP	S-66	24.99	S-67	24.96	0.5	
P-78	18	46.84	CPP	S-67	24.76	S-68	24.53	0.5	
P-79	18	16	CPP	S-68	24.33	S-69	24.25	0.5	
P-80	24	125.32	CPP	S-69	23.24	S-70	22.93	0.25	
P-81	18	16	CPP	S-71	24.37	S-70	21.6	17.31	
P-82	24	5.7	CPP	P-83	21.28	S-70	21.26	0.3	CONNNECT AND EXTEND P-83
P-83	18		EXTG			P-28	21.28		VERIFY SLOPE AND ADJUST P-82
P-84	24	55.88	CPP	S-70	21.25	S-72	21.11	0.25	
P-85	30	79.67	CPP		21.42	S-72	21.18	0.3	REPLACE EXISTING PIPE
P-86	24	40.37	CPP	S-72	21.11	TEE	21.02	0.25	
P-87	18	14.1	CPP	S-73	22.56	TEE	21.02	10.94	
P-88	18	31.54	CPP	S-74	22.92	S-73	22.76	0.5	
P-89	24	18.34	CPP	TEE	21.02	S-75	20.96	0.25	
P-90	24	83.61	CPP	S-75	20.96	S-77	20.57	0.46	
P-91									NOT USED
P-92	24	134.38	CPP	S-78	20.26	S-81	19.94	0.25	
P-93	24		EXTG		21.21	S-121	20.45	1.96	
P-94	24	37.08	CPP	S-77	20.37	S-78	20.26	0.3	
P-95	18	24.2	CPP	S-79	23.09	S-78	23.02	0.3	
P-96									NOT USED
P-97	18	16	CPP	S-82	23.46	S-81	20.94	5.75	
P-98	24	118.3	CPP	S-81	19.94	S-84	19.96	0.25	
P-99	18	100.43	CPP	S-83	23.01	S-85	22.51	0.5	
P-100	24	48.78	CPP	S-84	19.64	S-87	19.52	0.25	
P-101	18	29	CPP	S-85	22.31	S-86	22.17	0.5	

PIPE LEGEND
CPP = CORRUGATED POLYETHYLENE PIPE
CAP = CORRUGATED (2-2/3" X 1/2") ALUMINUM PIPE (16 GAGE)
EXTG = EXISTING PIPE
LINER = LINER PIPE
OUTFALL = OUTFALLS TO OPEN CHANNEL
HDPE = HIGH DENSITY POLY ETHYLENE PIPE

Record Drawings have been reviewed by the Project Engineer, and represent to the best of my knowledge, the project as constructed.

PE Dillon Tomaro 2/4/25

STATE OF ALASKA 49TH ANTHONY M. ROOS JR CE 12759 REGISTERED PROFESSIONAL ENGINEER 5/10/21

MISCELLANEOUS SUMMARIES

PLANS DEVELOPED BY: KITTELSON & ASSOCIATES, INC. CERT. OF AUTHORIZATION NO.: 254741, 851 SW 6TH AVE. SUITE 600, PORTLAND, OR 97204, (503) 228-5230
H:\20\20487 - glacier highway - juneau traffic design\design_CD\68124_C&D_EOQ&SUM-D-11 Mon, May/10/21 08:21am

NO.	DATE	REVISION
4	12/14/20	ADDENDUM 4
7	01/05/21	ADDENDUM 7
9	01/22/21	ADDENDUM 9

STATE	PROJECT DESIGNATION	YEAR	SHEET NO.	TOTAL SHEETS
ALASKA	TEA-0955(016)/Z68124	2020	D-12	235

** Deleted by CO27

STORM SYSTEM PIPE TABLE

PIPE #	SIZE (IN)	LENGTH (FT)	PIPE TYPE	INLET STRUCTURE	INLET INVERT	OUTLET STRUCTURE	OUTLET INVERT	SLOPE (%)	REMARKS
P-102	18	16.58	CPP	S-86	23.16	S-87	20.36	16.89	
P-103	24	65.2	CPP	S-87	19.25	S-89	19.05	0.3	
P-104	18	20.2	CPP	S-88	23.47	OUTFALL	23.41	0.3	WATER UTILITY CROSSING
P-105	24	60.67	CPP	S-89	18.87	S-90	19.05	0.3	
P-106	18	11.15	CPP	S-91	23.38	S-90	19.87	31.49	
P-107	24	93.81	CPP	S-90	18.87	S-93	18.59	0.3	
P-108	18	16.13	CPP	S-92	22.93	S-93	22.88	0.3	
P-109									NOT USED
P-110	18	13.05	CPP	S-94	22.81	OUTFALL	22.77	0.3	WATER UTILITY CROSSING
P-111	18	47.0	CPP	S-95	21.46	S-96	21.34	0.5	
P-112	18	20.07	CPP	S-98	22.49	OUTFALL	22.43	0.3	
P-113	18		EXTG			S-75	21.92		
P-114A	18		EXTG	P-114B	22.75	OUTFALL	21.27	0.75	
P-114B	18		EXTG	S-101	24.11	P-114A	22.75	0.75	
P-115	18	9.97	CPP	S-100	23.09	P-114A / P-114B	22.75	3.41	TEE CONNECTION
P-116	18	13.57	CAP	S-104	24.83	S-102	24.79	0.3	
P-117	18	31.30	CAP	S-104	24.93	S-103	24.77	0.5	
P-118A	18		EXTG		29.25	P-118B / P-139	25.79	1.59	
P-118B	18		EXTG	P-118A / P-139	25.79	S-104	25.13	1.59	
P-119	18	29.60	CAP	S-109	24.95	S-103	24.80	0.5	
P-120	18	94.00	CAP	S-103	24.60	S-105	24.13	0.5	
P-121	18	86.74	CPP	S-105	23.93	S-110	23.50	0.5	
P-122	18	33.1	CPP	S-123	22.97	S-110	22.87	0.3	
P-123	18	12.54	CPP	S-107	25.66	S-108	25.62	0.3	CONNECT TO EXISTING STRUCTURE
P-124	18		EXTG	S-108	25.62	S-109	25.37	0.74	
P-125A	18		EXTG	S-101	25.89	P-125B / P-140	25.39	0.67	
P-125B	18		EXTG	P-125A / P-140	25.36	S-109	25.14		
P-126A	18		EXTG	P-130 / P-126B	25.5	S-105	25.46	0.03	
P-126B	18		EXTG	P-131 / P-132	25.52	P-130 / P-126A	25.5	0.03	
P-127	18	65.00	CPP	S-110	22.67	OUTFALL	22.34	0.5	
P-128	18	42.4	CAP	S-111	23.27	S-112	23.14	0.3	
P-129	18	35.4	CAP	S-112	23.14	OUTFALL	22.38	2.14	
P-130	18	11.85	CPP	S-113	25.54	P-126A / P-126B	25.5	0.3	TEE CONNECTION
P-131	18	3.15	CPP	S-114	25.53	P-126B / P-132	25.52	0.3	TEE CONNECTION
P-132	18		EXTG			P-126B / P-131	29.47		
P-133									NOT USED
P-134	18		EXTG	P-135	31.2	S-127	30.89	0.34	
P-135	18	3.11	CPP	S-117	31.2	P-134	31.2	0.34	CONNECT TO EXISTING STRUCTURE
P-136	24	48.7	CPP	S-122	25.39	S-109	25.15	0.5	
P-137	18	15.64	CPP	S-124	22.96	OUTFALL	22.91	0.3	
P-138	24	39.5	CPP	S-121	20.45	S-77	20.37	0.3	
P-139	18	6.02	CPP	S-106	25.81	P-118A / P-118B	25.79	0.3	TEE CONNECTION
P-140									NOT USED
P-141	18	14.4	CPP	S-126	22.59	OUTFALL	22.55	0.3	
P-142	96	106.00	LINER	LANDWARD	12.92	SEAWARD	12.66	0.2	LINER FOR SWITZER CULVERT
P-143	96	106.00	LINER	LANDWARD	12.64	SEAWARD	12.96	0.3	LINER FOR SWITZER CULVERT
P-144									NOT USED
P-145									NOT USED
P-146	108		EXTG	LANDWARD	12.51	SEAWARD	12.51	0	EXISTING CULVERT TO BE RELINED
P-147	108		EXTG	LANDWARD	12.33	SEAWARD	12.33	0	EXISTING CULVERT TO BE RELINED
P-148	24	70.2	CPP	S-93	18.45	OUTFALL	18.24	0.3	
P-149	24	16.8	CPP	S-133	18.14	OUTFALL	20.72	0.5	
P-150	24	19.0	CPP	S-130	17.59	OUTFALL	21.13	0.5	OUTFALL ON ALAWAY
P-151									NOT USED
P-152	18	47.1	CPP	S-131	21.00	S-133	21.25	0.5	
P-153									NOT USED
P-154	18		EXTG	S-127	30.74	TEE	27.34	1.21	
P-155	24		EXTG	DITCH	29.02	OUTFALL	28.29	1.25	EXISTING PIPE OUTFALLING INTO SWALE
P-156	24		EXTG	SWALE	25.36	OUTFALL	23.19	N/A	EXISTING PIPE USED AS OUTLET FROM SWALE

PIPE LEGEND
CPP = CORRUGATED POLYETHYLENE PIPE
CAP = CORRUGATED (2-2/3" X 1/2") ALUMINUM PIPE (16 GAGE)
EXTG = EXISTING PIPE
LINER = LINER PIPE
OUTFALL = OUTFALLS TO OPEN CHANNEL
HDPE = HIGH DENSITY POLY ETHYLENE PIPE

**As-Built Plan Notes:
-The latest version of sheet D-6 (issued via CO-6) omitted the CO-5 delta 14 modifications and the a=

Record Drawings have been reviewed by the Project Engineer, and represent to the best of my knowledge, the project as constructed.

PE Dillon Tomaro 2/4/25

MISCELLANEOUS SUMMARIES

STATE OF ALASKA 49TH ANTHONY M. ROOS CE 127591 REGISTERED PROFESSIONAL ENGINEER 1/8/21

PLANS DEVELOPED BY: KITTELSON & ASSOCIATES, INC. CERT. OF AUTHORIZATION NO.: 254741, 851 SW 6TH AVE. SUITE 600, PORTLAND, OR 97204, (503) 228-5230
H:\20\20487 - Glacier Highway - Juneau Traffic Design\design_CD\68124_C&D_EOQ&SUM-D-12 Fri, Jan/08/21 08:49am

CO 27

NO.	DATE	REVISION
3	12/14/20	ADDENDUM 4
2	01/05/21	ADDENDUM 7
1	05/03/21	STORM IE REVISIONS

STATE	PROJECT DESIGNATION	YEAR	SHEET NO.	TOTAL SHEETS
ALASKA	TEA-0955(016)/Z68124	2020	D-12	235

** Deleted by CO52

STORM SYSTEM PIPE TABLE

PIPE #	SIZE (IN)	LENGTH (FT)	PIPE TYPE	INLET STRUCTURE	INLET INVERT	OUTLET STRUCTURE	OUTLET INVERT	SLOPE (%)	REMARKS
P-102	18	16.58	CPP	S-86	21.97	S-87	20.36	9.71	
P-103	24	65.2	CPP	S-87	19.52	S-89	19.36	0.25	
P-104	18	20.2	CPP	S-88	23.47	OUTFALL	23.41	0.3	WATER UTILITY CROSSING
P-105	24	60.67	CPP	S-89	19.36	S-90	19.21	0.25	
P-106	18	11.15	CPP	S-91	23.38	S-90	21.89	25.0	
P-107	24	93.81	CPP	S-90	19.02	S-93	18.74	0.3	
P-108	18	16.13	CPP	S-92	22.93	S-93	22.88	0.3	
P-109									NOT USED
P-110	18	13.05	CPP	S-94	22.81	OUTFALL	22.77	0.3	WATER UTILITY CROSSING
P-111	18	47.0	CPP	S-95	21.66	S-96	21.42	0.5	
P-112	18	20.07	CPP	S-98	22.49	OUTFALL	22.43	0.3	
P-113	18		EXTG			S-75	21.92		
P-114A	18		EXTG	P-114B	22.75	OUTFALL	21.27	0.75	
P-114B	18		EXTG	S-101	24.11	P-114A	22.75	0.75	
P-115	18	9.97	CPP	S-100	23.09	P-114A / P-114B	22.75	3.41	TEE CONNECTION
P-116	18	13.57	CAP	S-102	24.90	S-104	24.83	0.5	
P-117	18	31.30	CAP	S-104	24.63	S-103	24.47	0.5	
P-118A	18		EXTG		29.25	P-118B / P-139	25.79	1.59	
P-118B	18		EXTG	P-118A / P-139	25.79	S-104	25.13	1.59	
P-119	18	29.60	CAP	S-109	24.95	S-103	24.80	0.5	
P-120	18	94.00	CAP	S-103	24.60	S-105	24.13	0.5	
P-121	18	86.74	CPP	S-105	23.93	S-110	23.50	0.5	
P-122	18	33.1	CPP	S-123	22.97	S-110	22.87	0.3	
P-123	18	12.54	CPP	S-107	25.66	S-108	25.62	0.3	CONNECT TO EXISTING STRUCTURE
P-124	18		EXTG	S-108	25.62	S-109	25.37	0.74	
P-125A	18		EXTG	S-101	25.89	S-122	25.39	0.67	
P-125B	18		EXTG	P-125A / P-140	25.36	S-109	25.14		
P-126A	18		EXTG	P-130 / P-126B	25.5	S-105	25.46	0.03	
P-126B	18		EXTG	P-131 / P-132	25.52	P-130 / P-126A	25.5	0.03	
P-127	18	65.00	CPP	S-110	22.67	OUTFALL	22.34	0.5	
P-128	18	42.4	CAP	S-111	22.91	S-112	22.70	0.5	
P-129	18	35.4	CAP	S-112	22.50	OUTFALL	22.38	0.34	
P-130	18	11.85	CPP	S-113	25.54	P-126A / P-126B	25.5	0.3	TEE CONNECTION
P-131	18	3.15	CPP	S-114	25.53	P-126B / P-132	25.52	0.3	TEE CONNECTION
P-132	18		EXTG			P-126B / P-131	29.47		
P-133									NOT USED
P-134	18		EXTG	P-135	31.2	S-127	30.89	0.34	
P-135	18	3.11	CPP	S-117	31.2	P-134	31.2	0.34	CONNECT TO EXISTING STRUCTURE
P-136	24	48.7	CPP	S-122	25.39	S-109	25.15	0.5	NOT USED
P-137	18	15.64	CPP	S-124	22.96	OUTFALL	22.91	0.3	
P-138	24	39.5	CPP	S-121	20.45	S-77	20.37	0.3	
P-139	18	6.02	CPP	S-106	25.81	P-118A / P-118B	25.79	0.3	TEE CONNECTION
P-140									NOT USED
P-141	18	14.4	CPP	S-126	22.59	OUTFALL	22.55	0.3	
P-142	96	106.00	LINER	LANDWARD	12.92	SEAWARD	12.66	0.2	LINER FOR SWITZER CULVERT
P-143	96	106.00	LINER	LANDWARD	12.64	SEAWARD	12.96	0.3	LINER FOR SWITZER CULVERT
P-144									NOT USED
P-145									NOT USED
P-146	108		EXTG	LANDWARD	12.51	SEAWARD	12.51	0	EXISTING CULVERT TO BE RELINED
P-147	108		EXTG	LANDWARD	12.33	SEAWARD	12.33	0	EXISTING CULVERT TO BE RELINED
P-148	24	70.2	CPP	S-93	18.45	OUTFALL	18.24	0.3	
P-149	24	16.8	CPP	S-133	20.80	OUTFALL	20.72	0.5	
P-150	24	19.0	CPP	S-96	21.22	OUTFALL	21.13	0.5	OUTFALL ON ALAWAY
P-151									NOT USED
P-152	18	47.1	CPP	S-131	21.24	S-133	21.00	0.5	
P-153									NOT USED
P-154	18		EXTG	S-127	30.74	TEE	27.34	1.21	
P-155	24		EXTG	DITCH	29.02	OUTFALL	28.29	1.25	EXISTING PIPE OUTFALLING INTO SWALE
P-156	24		EXTG	SWALE	25.36	OUTFALL	23.19	N/A	EXISTING PIPE USED AS OUTLET FROM SWALE
P-157	18		EXTG			S-90	19.13		

PIPE LEGEND
CPP = CORRUGATED POLYETHYLENE PIPE
CAP = CORRUGATED (2-2/3" X 1/2") ALUMINUM PIPE (16 GAGE)
EXTG = EXISTING PIPE
LINER = LINER PIPE
OUTFALL = OUTFALLS TO OPEN CHANNEL
HDPE = HIGH DENSITY POLY ETHYLENE PIPE

Record Drawings have been reviewed by the Project Engineer, and represent to the best of my knowledge, the project as constructed.

PE Dillon Tomaro 2/4/25

STATE OF ALASKA 49TH ANTHONY M. ROOS CE 12759 REGISTERED PROFESSIONAL ENGINEER 5/18/21

MISCELLANEOUS SUMMARIES

PLANS DEVELOPED BY: KITTELSON & ASSOCIATES, INC. CERT. OF AUTHORIZATION NO.: 254741, 851 SW 6TH AVE. SUITE 600, PORTLAND, OR 97204, (503) 228-5230
H:\20\20487 - glacier highway - juneau traffic design\design_CD\68124_C&D_EOQ&SUM-D-12 Tue, May/18/21 09:10am

CO 52

NO.	DATE	REVISION
1	12/14/20	ADDENDUM 4
2	01/05/21	ADDENDUM 7
3	05/03/21	STORM IE REVISIONS

STATE	PROJECT DESIGNATION	YEAR	SHEET NO.	TOTAL SHEETS
ALASKA	TEA-0955(016)/Z68124	2020	D-12	235

STORM SYSTEM PIPE TABLE

PIPE #	SIZE (IN)	LENGTH (FT)	PIPE TYPE	INLET STRUCTURE	INLET INVERT	OUTLET STRUCTURE	OUTLET INVERT	SLOPE (%)	REMARKS
P-102	18	16.58	CPP	S-86	21.97	S-87	20.36	9.71	
P-103	24	65.2	CPP	S-87	19.52	S-89	19.36	0.25	
P-104	18	20.2	CPP	S-88	23.47	OUTFALL	23.41	0.3	WATER UTILITY CROSSING
P-105	24	60.67	CPP	S-89	19.36	S-90	19.21	0.25	
P-106	18	11.15	CPP	S-91	23.38	S-90	21.89	25.0	
P-107	24	93.81	CPP	S-90	19.02	S-93	18.74	0.3	
P-108	18	16.13	CPP	S-92	22.93	S-93	22.88	0.3	
P-109									NOT USED
P-110	18	13.05	CPP	S-94	22.81	OUTFALL	22.77	0.3	WATER UTILITY CROSSING
P-111	18	47.0	CPP	S-95	21.66	S-96	21.42	0.5	
P-112	18	20.07	CPP	S-98	22.49	OUTFALL	22.43	0.3	
P-113	18		EXTG			S-75	21.92		
P-114A	18		EXTG	P-114B	22.75	OUTFALL	21.27	0.75	
P-114B	18		EXTG	S-101	24.11	P-114A	22.75	0.75	
P-115	18	9.97	CPP	S-100	23.09	P-114A / P-114B	22.75	3.41	TEE CONNECTION
P-116	18	13.57	CAP	S-102	24.90	S-104	24.83	0.5	
P-117	18	31.30	CAP	S-104	24.63	S-103	24.47	0.5	
P-118A	18		EXTG		29.25	P-118B / P-139	25.79	1.59	
P-118B	18		EXTG	P-118A / P-139	25.79	S-104	25.13	1.59	
P-119	18	29.60	CAP	S-109	24.95	S-103	24.80	0.5	
P-120	18	94.00	CAP	S-103	24.27	S-105	23.80	0.5	
P-121	18	86.74	CPP	S-105	23.60	S-110	23.17	0.5	
P-122	18	33.1	CPP	S-123	22.97	S-110	22.87	0.3	
P-123	18	12.54	CPP	S-107	25.66	S-108	25.62	0.3	CONNECT TO EXISTING STRUCTURE
P-124	18		EXTG	S-108	25.62	S-109	25.37	0.74	
P-125A	18		EXTG	S-101	25.89	S-122	25.39	0.67	
P-125B	18		EXTG	P-125A / P-140	25.36	S-109	25.14		
P-126A	18		EXTG	P-130 / P-126B	25.5	S-105	25.46	0.03	
P-126B	18		EXTG	P-131 / P-132	25.52	P-130 / P-126A	25.5	0.03	
P-127	18	65.00	CPP	S-110	22.67	OUTFALL	22.34	0.5	
P-128	18	42.4	CAP	S-111	22.91	S-112	22.70	0.5	
P-129	18	35.4	CAP	S-112	22.50	OUTFALL	22.38	0.34	
P-130	18	11.85	CPP	S-113	25.54	P-126A / P-126B	25.5	0.3	TEE CONNECTION
P-131	18	3.15	CPP	S-114	25.53	P-126B / P-132	25.52	0.3	TEE CONNECTION
P-132	18		EXTG			P-126B / P-131	29.47		
P-133									NOT USED
P-134	18		EXTG	P-135	31.2	S-127	30.89	0.34	
P-135	18	3.11	CPP	S-117	31.2	P-134	31.2	0.34	CONNECT TO EXISTING STRUCTURE
P-136	24	48.7	CPP	S-122	25.39	S-109	25.15	0.5	NOT USED
P-137	18	15.64	CPP	S-124	22.96	OUTFALL	22.91	0.3	
P-138	24	39.5	CPP	S-121	20.45	S-77	20.37	0.3	
P-139	18	6.02	CPP	S-106	25.81	P-118A / P-118B	25.79	0.3	TEE CONNECTION
P-140									NOT USED
P-141	18	14.4	CPP	S-126	22.59	OUTFALL	22.55	0.3	
P-142	96	106.00	LINER	LANDWARD	12.92	SEAWARD	12.66	0.2	LINER FOR SWITZER CULVERT
P-143	96	106.00	LINER	LANDWARD	12.64	SEAWARD	12.96	0.3	LINER FOR SWITZER CULVERT
P-144									NOT USED
P-145									NOT USED
P-146	108		EXTG	LANDWARD	12.51	SEAWARD	12.51	0	EXISTING CULVERT TO BE RELINED
P-147	108		EXTG	LANDWARD	12.33	SEAWARD	12.33	0	EXISTING CULVERT TO BE RELINED
P-148	24	70.2	CPP	S-93	18.45	OUTFALL	18.24	0.3	
P-149	24	16.8	CPP	S-133	20.80	OUTFALL	20.72	0.5	
P-150	24	19.0	CPP	S-96	21.22	OUTFALL	21.13	0.5	OUTFALL ON ALAWAY
P-151									NOT USED
P-152	18	47.1	CPP	S-131	21.24	S-133	21.00	0.5	
P-153									NOT USED
P-154	18		EXTG	S-127	30.74	TEE	27.34	1.21	
P-155	24		EXTG	DITCH	29.02	OUTFALL	28.29	1.25	EXISTING PIPE OUTFALLING INTO SWALE
P-156	24		EXTG	SWALE	25.36	OUTFALL	23.19	N/A	EXISTING PIPE USED AS OUTLET FROM SWALE
P-157	18		EXTG			S-90	19.13		

AMR

STORM SYSTEM PIPE TABLE

PIPE #	SIZE (IN)	LENGTH (FT)	PIPE TYPE	INLET STRUCTURE	INLET INVERT	OUTLET STRUCTURE	OUTLET INVERT	SLOPE (%)	REMARKS
P-108A	12	20	CPP		23.30	S-93	22.45	4.25	

PIPE LEGEND
CPP = CORRUGATED POLYETHYLENE PIPE
CAP = CORRUGATED (2-2/3" X 1/2") ALUMINUM PIPE (16 GAGE)
EXTG = EXISTING PIPE
LINER = LINER PIPE
OUTFALL = OUTFALLS TO OPEN CHANNEL
HDPE = HIGH DENSITY POLY ETHYLENE PIPE

Record Drawings have been reviewed by the Project Engineer, and represent to the best of my knowledge, the project as constructed.

PE Dillon Tomaro 2/4/25

STATE OF ALASKA 49TH ANTHONY M. ROOS CE 127591 REGISTERED PROFESSIONAL ENGINEER 7/1/2024

MISCELLANEOUS SUMMARIES

PLANS DEVELOPED BY: KITTELSON & ASSOCIATES, INC. CERT. OF AUTHORIZATION NO.: 254741, 851 SW 6TH AVE. SUITE 600, PORTLAND, OR 97204, (503) 228-5230
H:\20\20487 - glacier highway - juneau traffic design\design_CD\68124_C&D_EOQ&SUM-D-12 Tue, May/18/21 09:18am

NO.	DATE	REVISION
1	01/24/21	ADDENDUM 10

STATE	PROJECT DESIGNATION	YEAR	SHEET NO.	TOTAL SHEETS
ALASKA	TEA-0955(016)/Z68124	2020	E-1	235

** Deleted by CO46

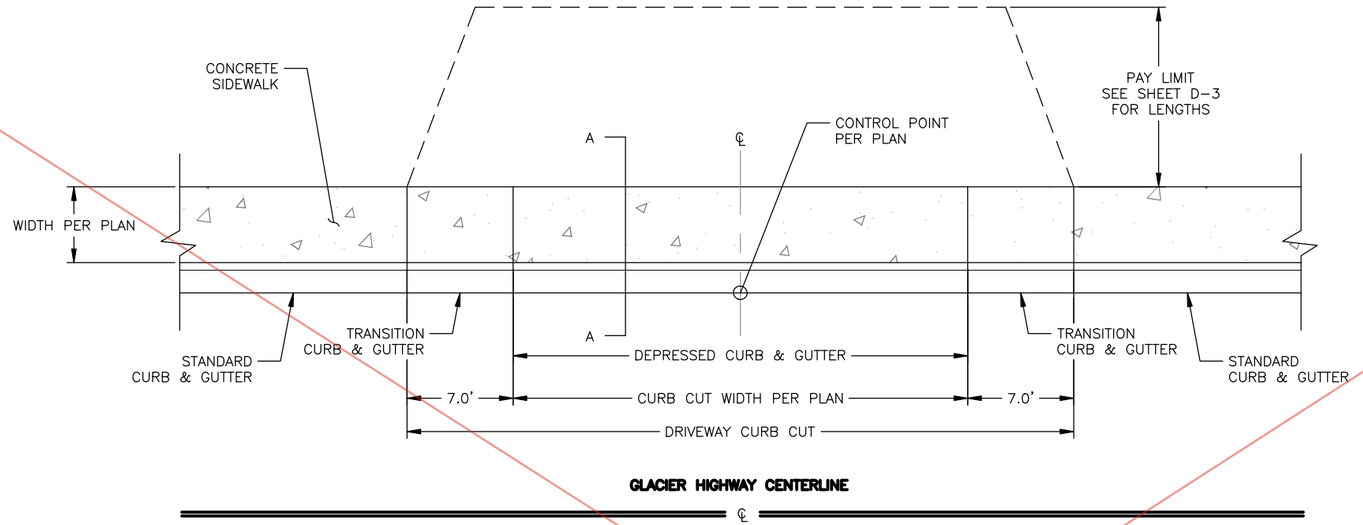

TYPICAL CURB CUT APPROACH PLAN

N.T.S.

NOTES

1. SEE APPROACH SUMMARY TABLE ON SHEET D-3 FOR CONTROL POINT LOCATIONS AND WIDTHS

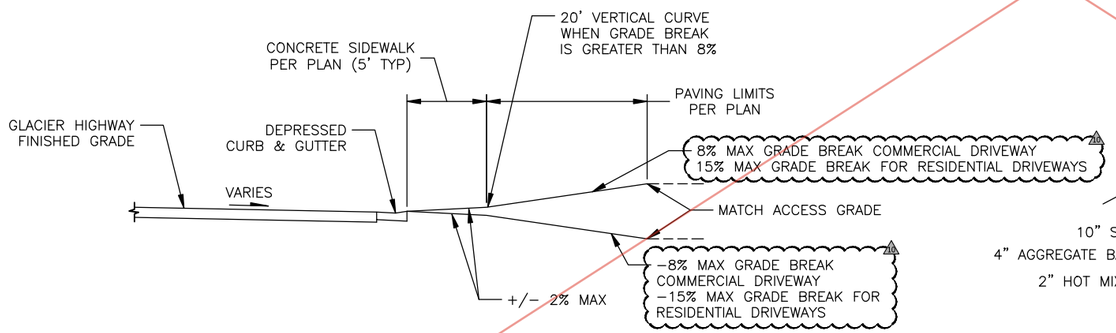

TYPICAL CURB CUT APPROACH PROFILE

N.T.S

BEYOND PAVING LIMITS SHOWN PER PLAN, GRADE AT 10% FOR DRIVEWAYS REQUIRING STEEPER GRADES TO MATCH EXISTING.

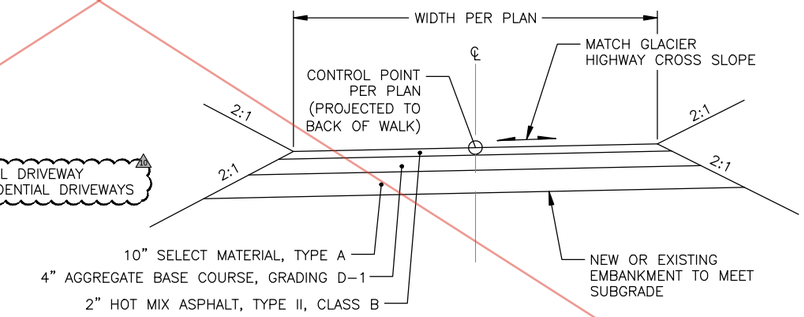

TYPICAL CURB CUT APPROACH SECTION

FOR PAVEMENT IMPROVEMENT AREAS BEHIND CONCRETE SIDE WALK

N.T.S.

Record Drawings have been reviewed by the Project Engineer, and represent to the best of my knowledge, the project as constructed.

PE Dillon Tomaro 2/4/25

STATE OF ALASKA 49TH ANTHONY M. ROOS CE 12759 REGISTERED PROFESSIONAL ENGINEER 1/25/21

APPROACH DETAILS

PLANS DEVELOPED BY: KITTELSON & ASSOCIATES, INC. CERT. OF AUTHORIZATION NO.: 254741, 851 SW 6TH AVE. SUITE 600, PORTLAND, OR 97204, (503) 228-5230
H:\20\20487 - glacier highway - juneau traffic design\design_CD\68124_E_RDBT_S&D-E-1 Mon, Jan/25/21 04:53pm

NO.	DATE	REVISION
1	01/24/21	ADDENDUM 10
2	02/07/23	DELTA 41: BACKING CURB DETAIL

STATE	PROJECT DESIGNATION	YEAR	SHEET NO.	TOTAL SHEETS
ALASKA	TEA-0955(016)/Z68124	2020	E-1	235

Change Order #46, Attachment No. 1.

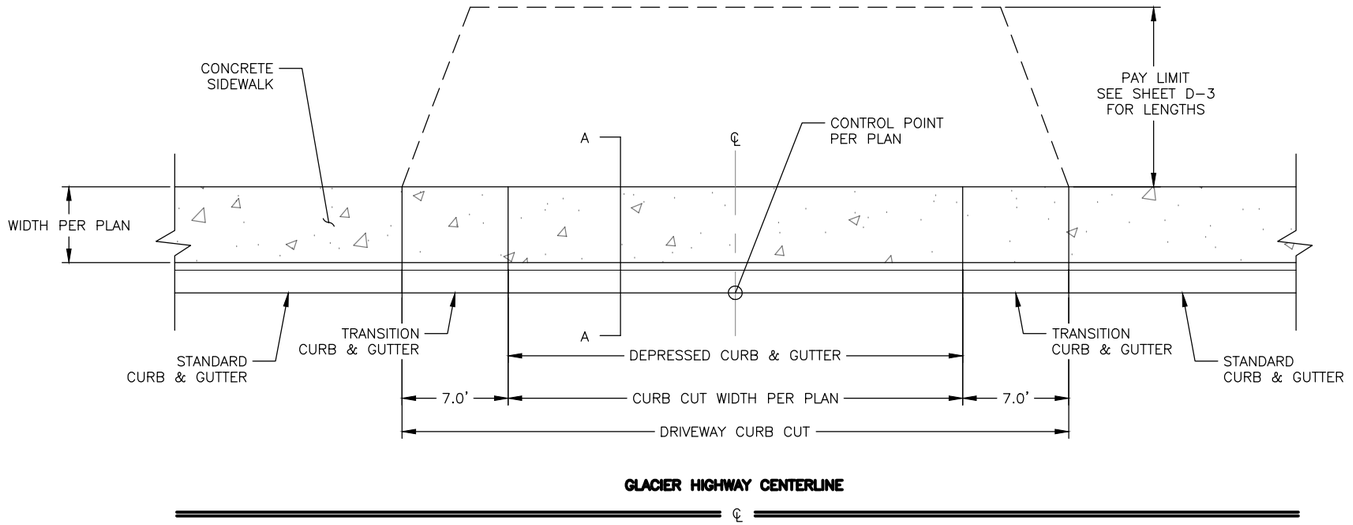

TYPICAL CURB CUT APPROACH PLAN

N.T.S.

NOTES

1. SEE APPROACH SUMMARY TABLE ON SHEET D-3 FOR CONTROL POINT LOCATIONS AND WIDTHS

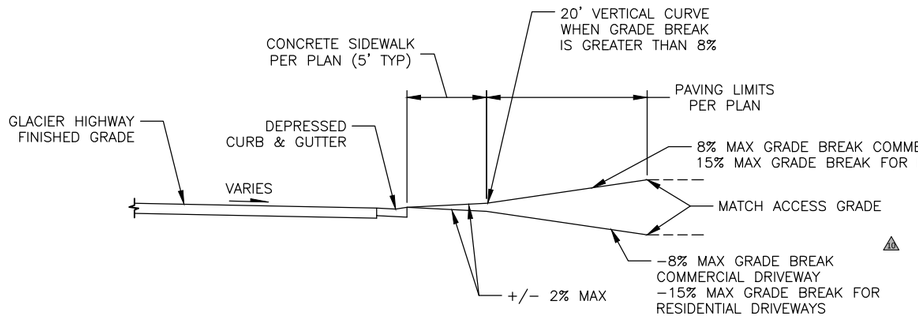

TYPICAL CURB CUT APPROACH PROFILE

N.T.S

BEYOND PAVING LIMITS SHOWN PER PLAN, GRADE AT 10% FOR DRIVEWAYS REQUIRING STEEPER GRADES TO MATCH EXISTING.

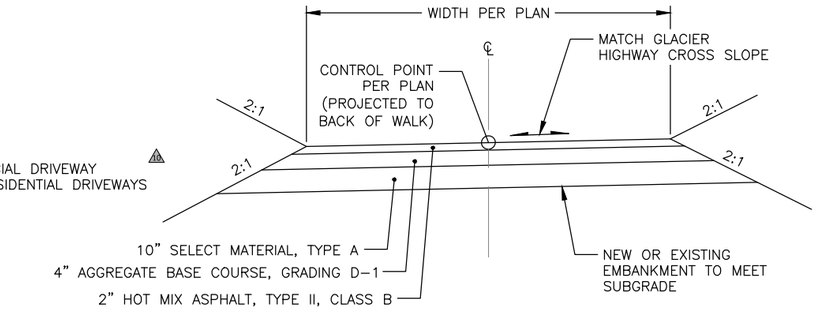

TYPICAL CURB CUT APPROACH SECTION

FOR PAVEMENT IMPROVEMENT AREAS BEHIND CONCRETE SIDE WALK

N.T.S.

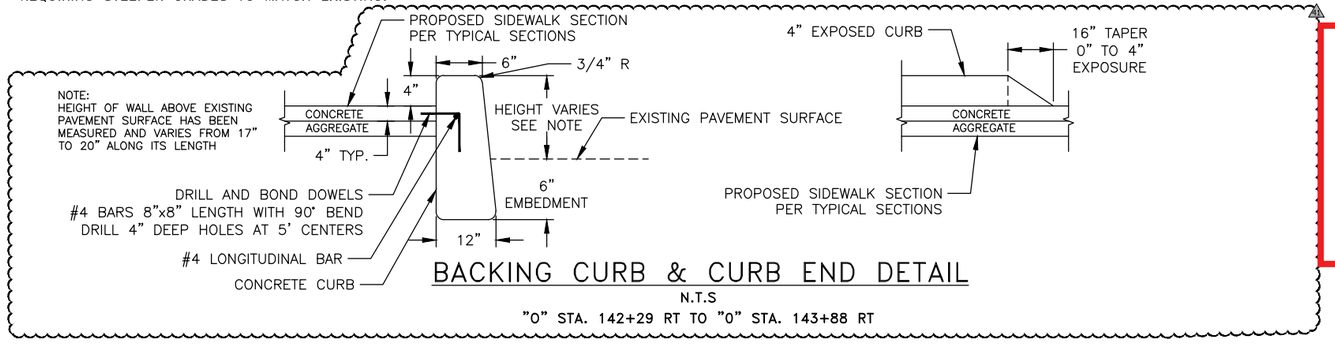

BACKING CURB & CURB END DETAIL

N.T.S

"0" STA. 142+29 RT TO "0" STA. 143+88 RT

Record Drawings have been reviewed by the Project Engineer, and represent to the best of my knowledge, the project as constructed.

PE *Dillon Tomaro* 2/4/25

STATE OF ALASKA 49TH
ANTHONY M. ROOS CE 127591
REGISTERED PROFESSIONAL ENGINEER
2/14/23

APPROACH DETAILS

PLANS DEVELOPED BY: KITTELSON & ASSOCIATES, INC. CERT. OF AUTHORIZATION NO.: 254741, 851 SW 6TH AVE. SUITE 600, PORTLAND, OR 97204, (503) 228-5230
H:\20\20487 - glacier highway - juneau traffic design\design_CD\68124_E_RDBT_S&D-E-1 Tue, Feb/14/23 09:31am

NO.	DATE	REVISION

STATE	PROJECT DESIGNATION	YEAR	SHEET NO.	TOTAL SHEETS
ALASKA	TEA-0955(016)/Z68124	2020	E-2	235

Record Drawings have been reviewed by the Project Engineer, and represent to the best of my knowledge, the project as constructed.

PE *Dillon Tomaro* 2/4/25

** Deleted by CO37

NOTES

1. SEE RAMP SUMMARY TABLE ON SHEET D-6 FOR RAMP TYPES, CONTROL POINT LOCATIONS AND WIDTHS.
2. SEE GRADING SHEETS FOR HORIZONTAL AND VERTICAL STAKING POINTS.
3. CURB AND GUTTER TO BE INSTALLED IN ACCORDANCE WITH AKDOT STANDARD DRAWING I-20.20 UNLESS OTHERWISE SPECIFIED.
4. SEE SHEETS B1 TO B3 FOR TYPICAL SECTIONS AND MATERIAL TYPES.

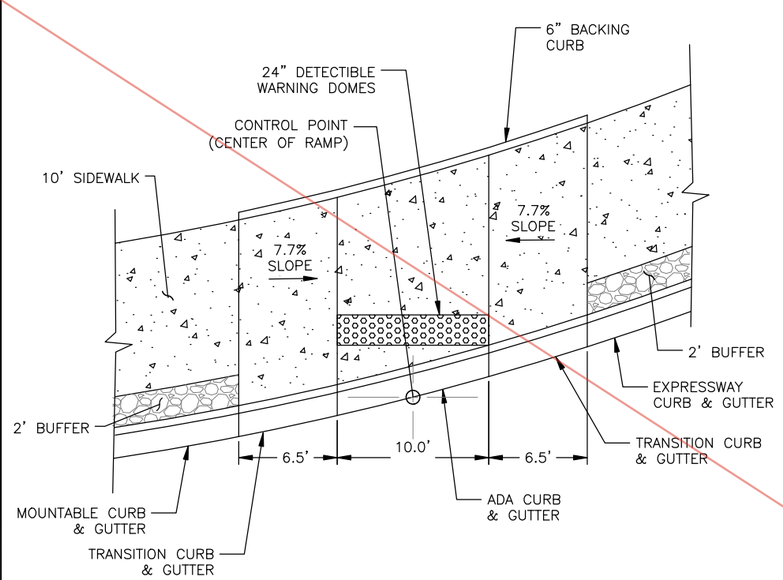

CURB RAMP TYPE B
ROUNDABOUT RAMP DETAIL

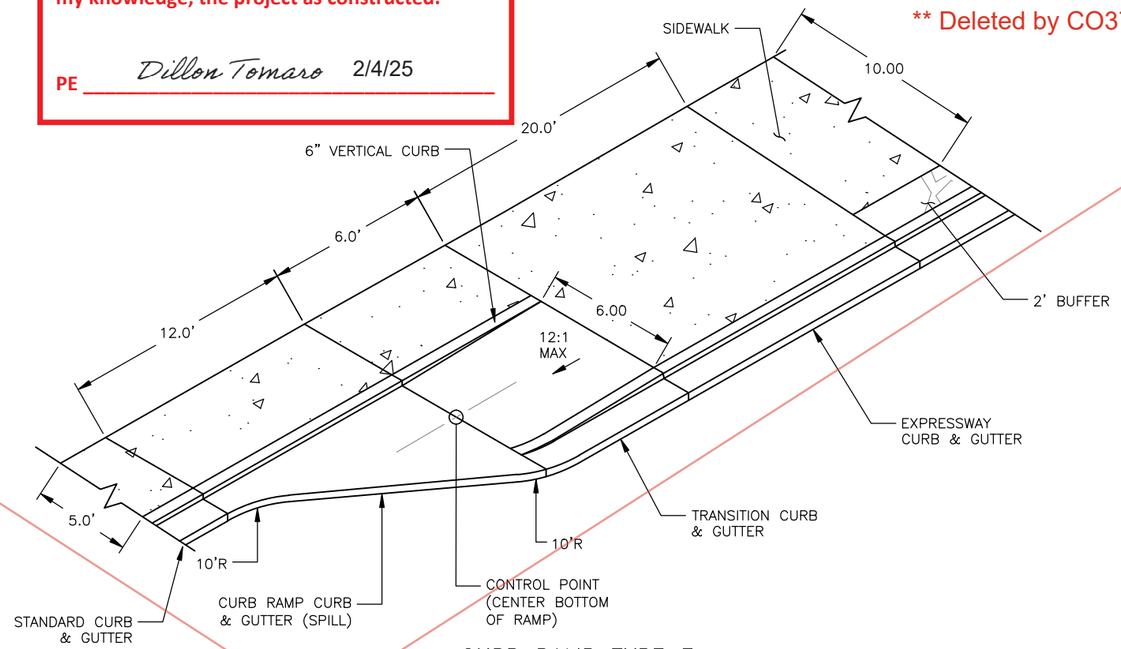

CURB RAMP TYPE F
BIKE RAMP DETAIL

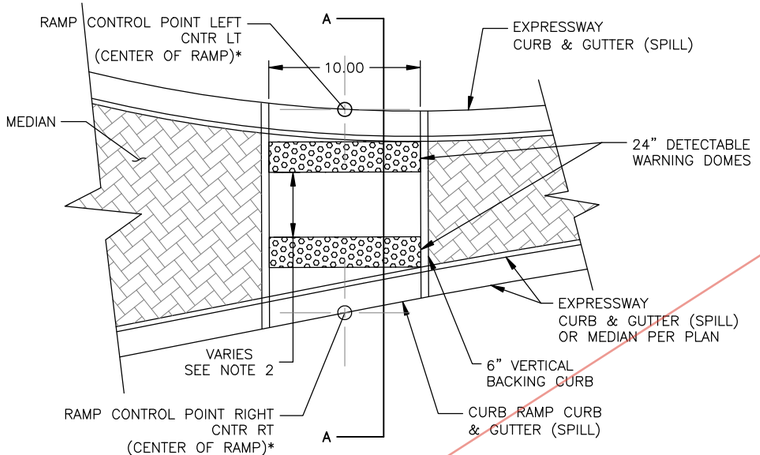

CURB RAMP TYPE D
MEDIAN CROSSING RAMP DETAIL
* CONTROL POINTS TO FACE OF CURB AT MEDIAN LOCATIONS WITHOUT GUTTER

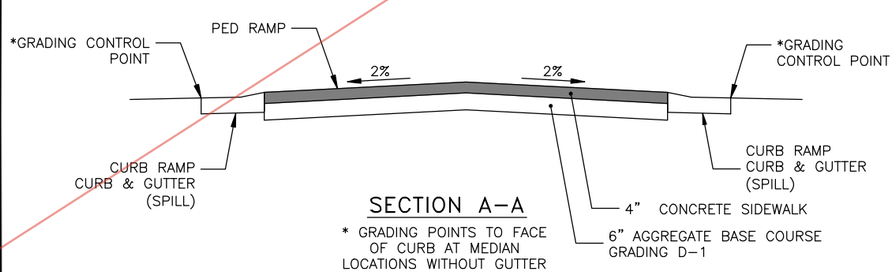

SECTION A-A
* GRADING POINTS TO FACE OF CURB AT MEDIAN LOCATIONS WITHOUT GUTTER

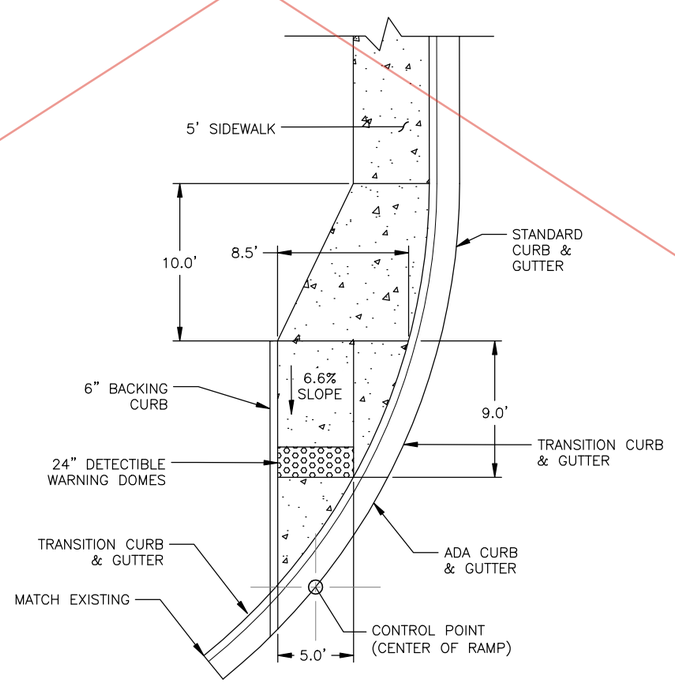

CURB RAMP TYPE C
DIRECTIONAL RAMP DETAIL

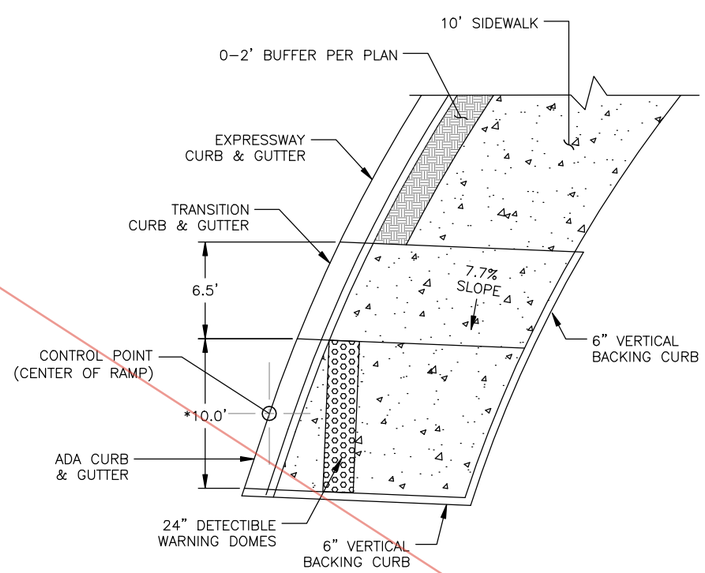

CURB RAMP TYPE E SIDEWALK
TERMINUS RAMP DETAIL
* 10' LANDING UNLESS OTHERWISE SPECIFIED IN CURB RAMP TABLE ON SHEET D-6

CURB RAMP DETAILS

STATE OF ALASKA 49TH
ANTHONY M. ROOS CE 127591
REGISTERED PROFESSIONAL ENGINEER
7/31/2020

PLANS DEVELOPED BY: KITTELSON & ASSOCIATES, INC. CERT. OF AUTHORIZATION NO.: 254741, 851 SW 6TH AVE. SUITE 600, PORTLAND, OR 97204, (503) 228-5230
H:\20\20487 - Glacier Highway - Juneau Traffic Design\design_CD\68124_E_RDBT_S&D-E-2 Thu, Jul/30/20 03:21:am

Record Drawings have been reviewed by the Project Engineer, and represent to the best of my knowledge, the project as constructed.

PE *Dillon Tomaro* 2/4/25

NO.	DATE	REVISION
1	08/02/22	DELTA 38: MEDIAN CROSSING WIDTH REVISIONS

STATE	PROJECT DESIGNATION	YEAR	SHEET NO.	TOTAL SHEETS
ALASKA	TEA-0955(016)/Z68124	2020	E-2	235

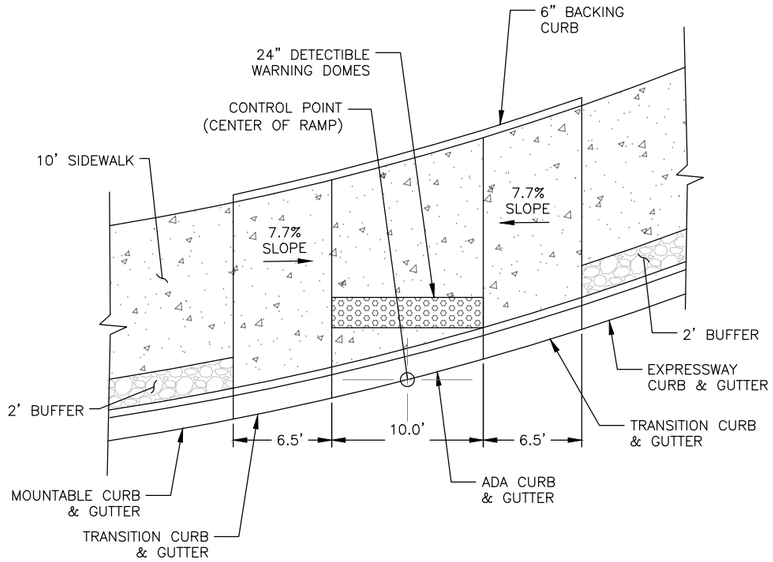

CURB RAMP TYPE B ROUNDABOUT RAMP DETAIL

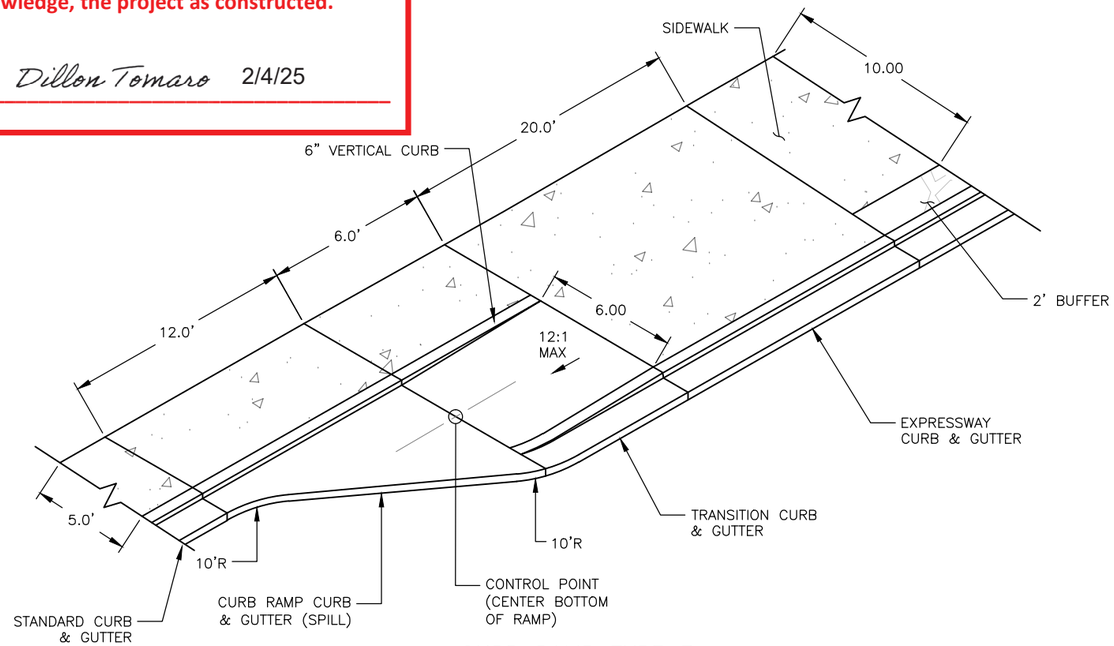

CURB RAMP TYPE F BIKE RAMP DETAIL

NOTES

1. SEE RAMP SUMMARY TABLE ON SHEET D-6 FOR RAMP TYPES, CONTROL POINT LOCATIONS AND WIDTHS.
2. SEE GRADING SHEETS FOR HORIZONTAL AND VERTICAL STAKING POINTS.
3. CURB AND GUTTER TO BE INSTALLED IN ACCORDANCE WITH AKDOT STANDARD DRAWING I-20.20 UNLESS OTHERWISE SPECIFIED.
4. SEE SHEETS B1 TO B3 FOR TYPICAL SECTIONS AND MATERIAL TYPES.

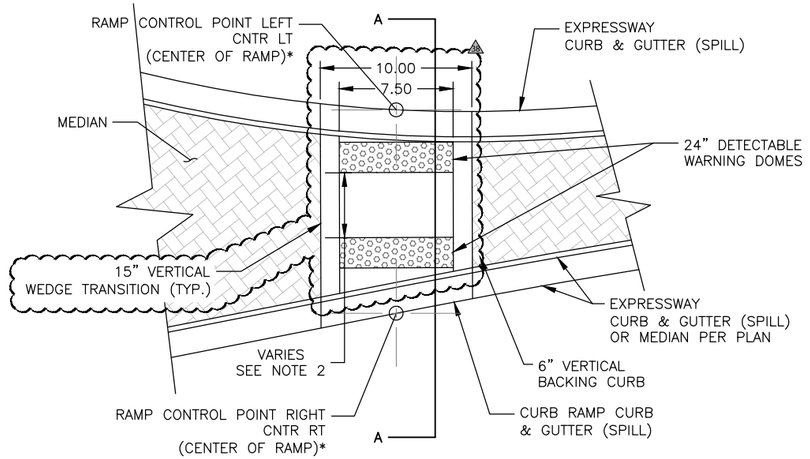

CURB RAMP TYPE D MEDIAN CROSSING RAMP DETAIL

* CONTROL POINTS TO FACE OF CURB AT MEDIAN LOCATIONS WITHOUT GUTTER

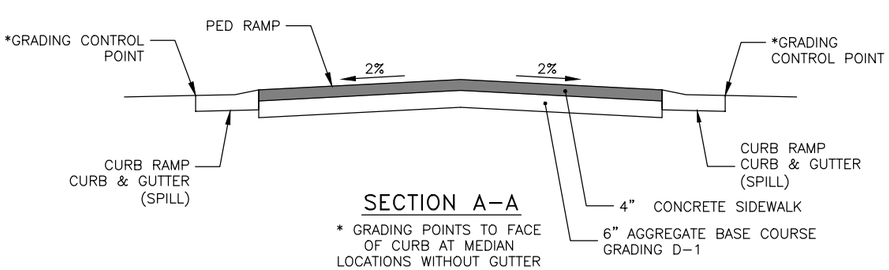

SECTION A-A

* GRADING POINTS TO FACE OF CURB AT MEDIAN LOCATIONS WITHOUT GUTTER

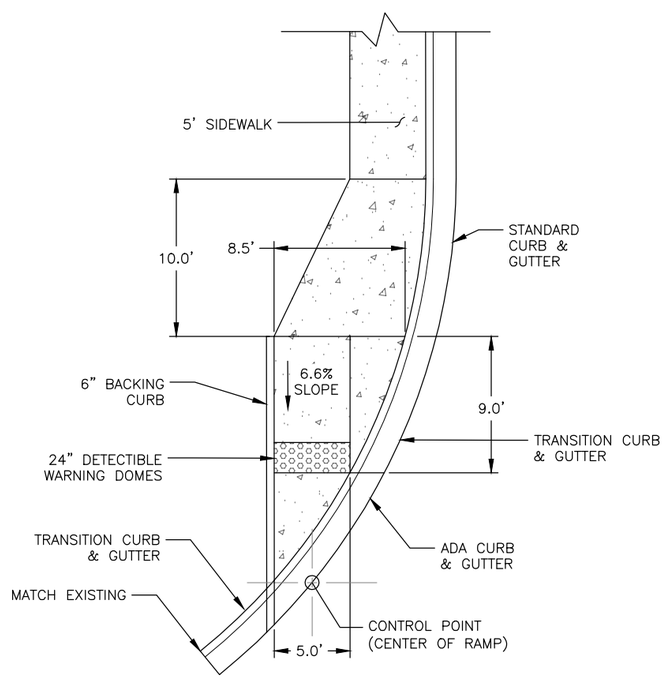

CURB RAMP TYPE C DIRECTIONAL RAMP DETAIL

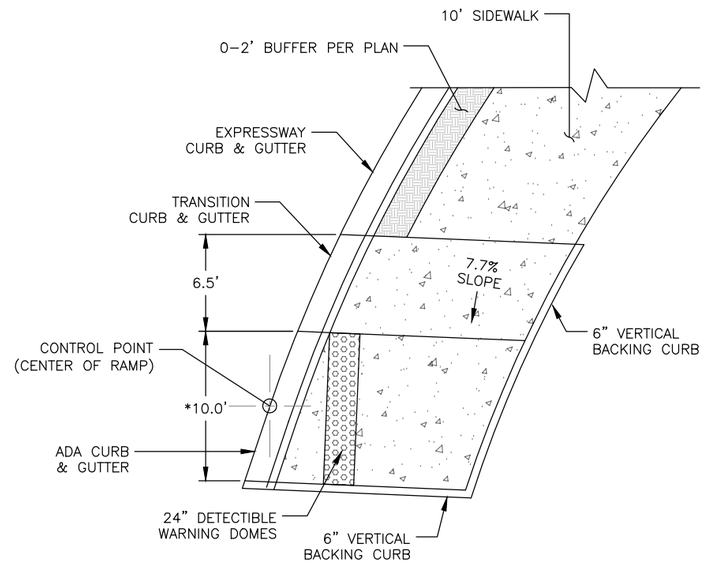

CURB RAMP TYPE E SIDEWALK TERMINUS RAMP DETAIL

* 10' LANDING UNLESS OTHERWISE SPECIFIED IN CURB RAMP TABLE ON SHEET D-6

STATE OF ALASKA 49TH
ANTHONY M. ROOS CE 12759
REGISTERED PROFESSIONAL ENGINEER
8/2/22

CURB RAMP DETAILS

PLANS DEVELOPED BY: KITTELSON & ASSOCIATES, INC. CERT. OF AUTHORIZATION NO.: 254741, 851 SW 6TH AVE. SUITE 600, PORTLAND, OR 97204, (503) 228-5230
H:\20\20487 - Glacier Highway - Juneau Traffic Design\design_CD\68124_E_RDBT_S&D-E-2 Tue, Aug/02/22 11:38am

NO.	DATE	REVISION

STATE	PROJECT DESIGNATION	YEAR	SHEET NO.	TOTAL SHEETS
ALASKA	TEA-0955(016)/Z68124	2020	E-3	235

Record Drawings have been reviewed by the Project Engineer, and represent to the best of my knowledge, the project as constructed.

PE *Dillon Tomaro* 2/4/25

NOTES

1. SEE GRADING SHEETS FOR CURB LOCATIONS, ELEVATIONS, AND RADII.
2. CURB AND GUTTER TO BE INSTALLED IN ACCORDANCE WITH AKDOT STANDARD DRAWING I-20.20 UNLESS OTHERWISE SPECIFIED.

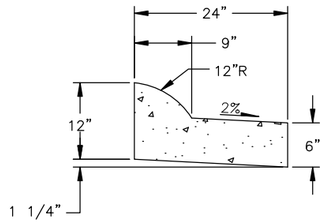

EXPRESSWAY CURB & GUTTER
SPILL

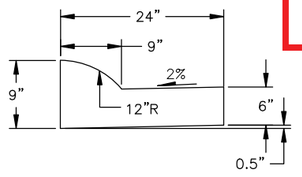

TRAVERSABLE CURB & GUTTER
CATCH

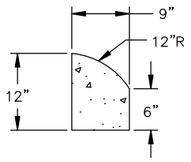

MEDIAN CURB

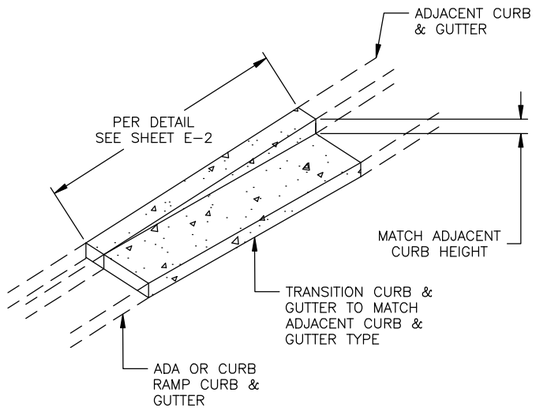

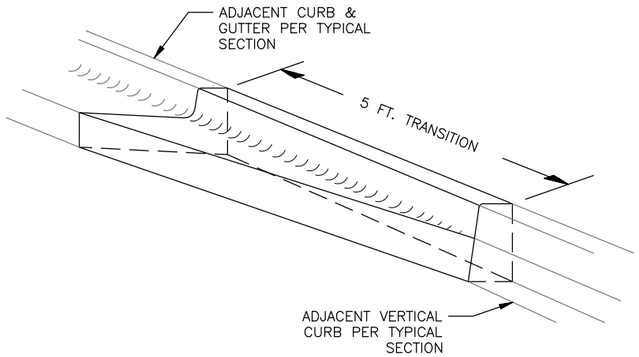

VERTICAL TO STANDARD CURB & GUTTER TRANSITION

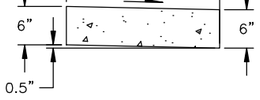

CURB RAMP CURB & GUTTER
SPILL

ALL MEDIAN CURB RAMPS

TRANSITION CURB & GUTTER

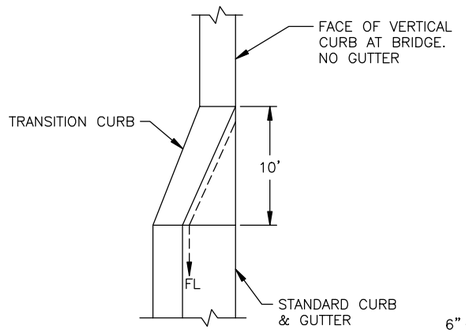

PLAN

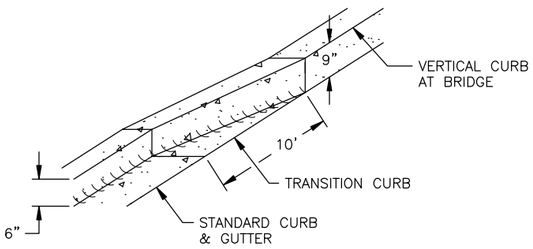

ISOMETRIC

BRIDGE TRANSITION CURB & GUTTER

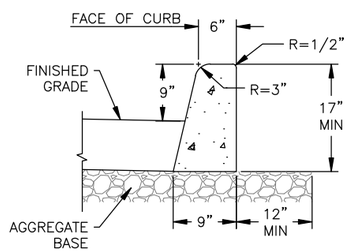

9" VERTICAL CURB
MATCH AT LEMON CREEK BRIDGE

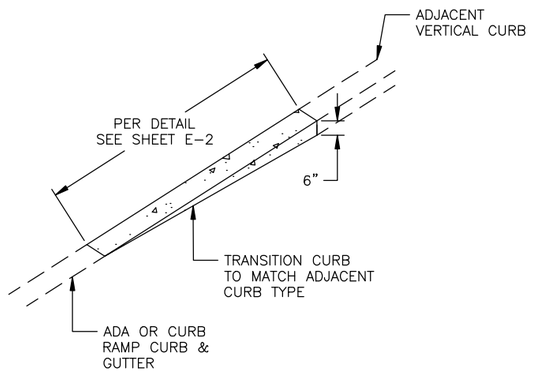

6" VERTICAL CURB TRANSITION

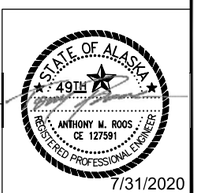

7/31/2020

CURB & GUTTER DETAILS

PLANS DEVELOPED BY: KITTELSON & ASSOCIATES, INC. CERT. OF AUTHORIZATION NO.: 254741, 851 SW 6TH AVE. SUITE 600, PORTLAND, OR 97204, (503) 228-5230
H:\20\20487 - Glacier Highway - Juneau Traffic Design\design_CD\68124_E_RDBT_S&D-E-3 Thu, Jul/30/20 03:22am

** Deleted by CO52

NO.	DATE	REVISION
1	01/05/21	ADDENDUM 7
2	01/17/21	ADDENDUM 9

STATE	PROJECT DESIGNATION	YEAR	SHEET NO.	TOTAL SHEETS
ALASKA	TEA-0955(016)/Z68124	2020	E-4	235

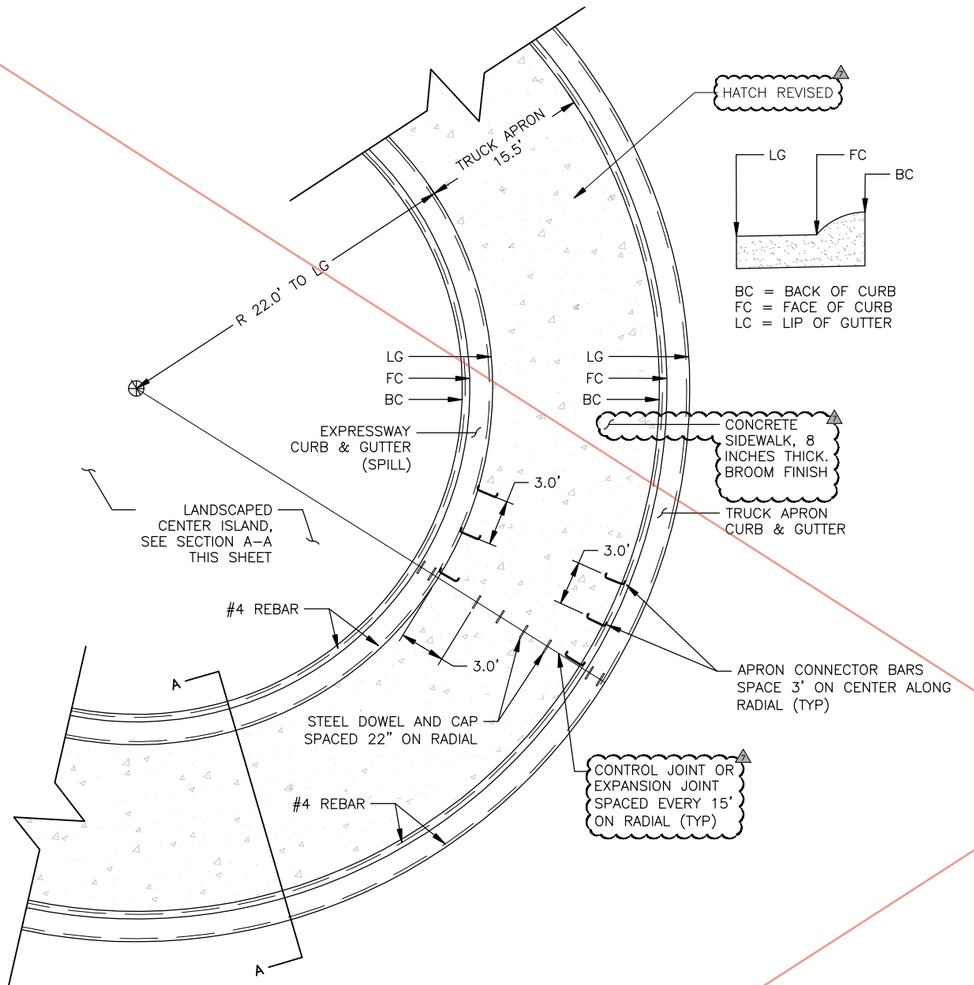

TRUCK APRON DETAIL

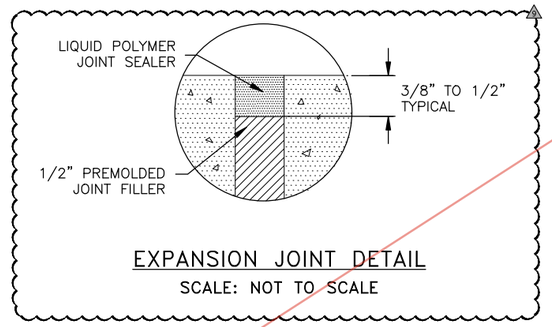

EXPANSION JOINT DETAIL
SCALE: NOT TO SCALE

BC = BACK OF CURB
FC = FACE OF CURB
LC = LIP OF GUTTER

NOTES

1. WWM STEEL REINFORCEMENT FOR TRUCK APRON SHALL BE SET ON SPACERS AND PULLED UP AS REQUIRED TO POSITION STEEL 1 ½" UP FROM THE BOTTOM OF CONCRETE.

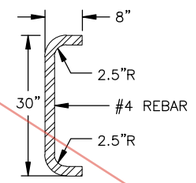

APRON CONNECTOR BAR

**As-Built Plan Notes:

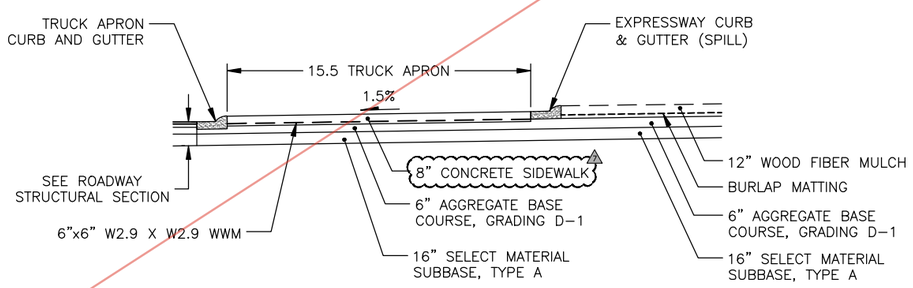

SECTION A-A

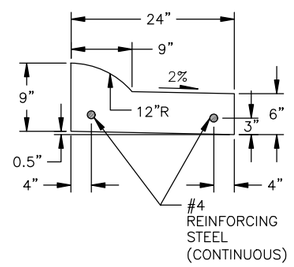

TRUCK APRON CURB & GUTTER

Record Drawings have been reviewed by the Project Engineer, and represent to the best of my knowledge, the project as constructed.

PE Dillon Tomaro 2/4/25

TRUCK APRON DETAILS

STATE OF ALASKA 49TH ANTHONY M. ROOS CE 12759 REGISTERED PROFESSIONAL ENGINEER 1/17/21

PLANS DEVELOPED BY: KITTELSON & ASSOCIATES, INC. CERT. OF AUTHORIZATION NO.: 254741., 851 SW 6TH AVE. SUITE 600, PORTLAND, OR 97204, (503) 228-5230
H:\20\20487 - Glacier Highway - Juneau Traffic Design\design_CD\68124_E_RDBT_S&D-E-4 Sun, Jon/17/21 02:38pm

CO 52

NO.	DATE	REVISION
1	01/05/21	ADDENDUM 7
2	01/17/21	ADDENDUM 9
3	08/29/22	CENTRAL ISLAND LANDSCAPE SLOPE
4	01/25/23	CENTRAL ISLAND SECTION REVISION

STATE	PROJECT DESIGNATION	YEAR	SHEET NO.	TOTAL SHEETS
ALASKA	TEA-0955(016)/Z68124	2020	E-4	235

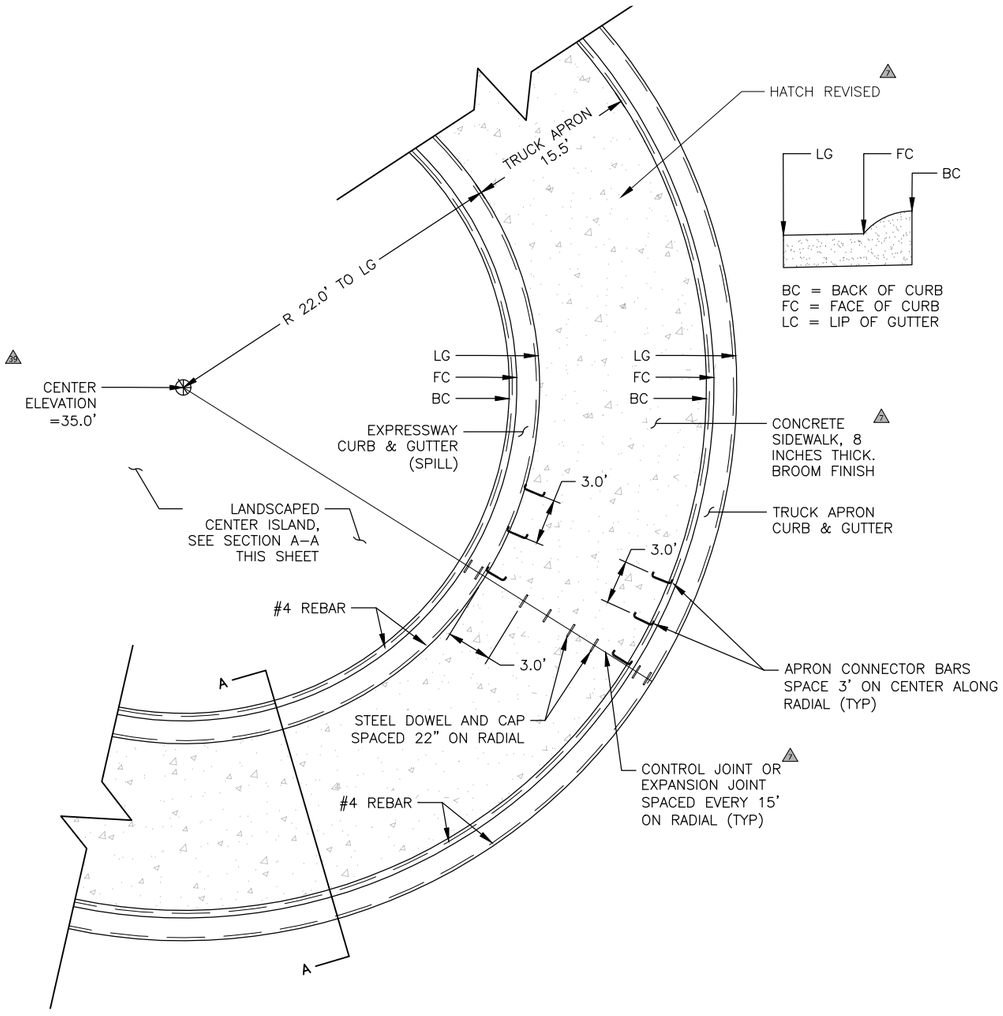

TRUCK APRON DETAIL

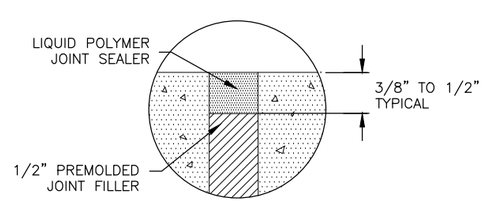

EXPANSION JOINT DETAIL

SCALE: NOT TO SCALE

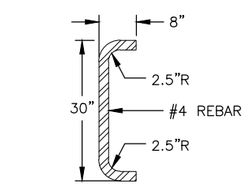

APRON CONNECTOR BAR

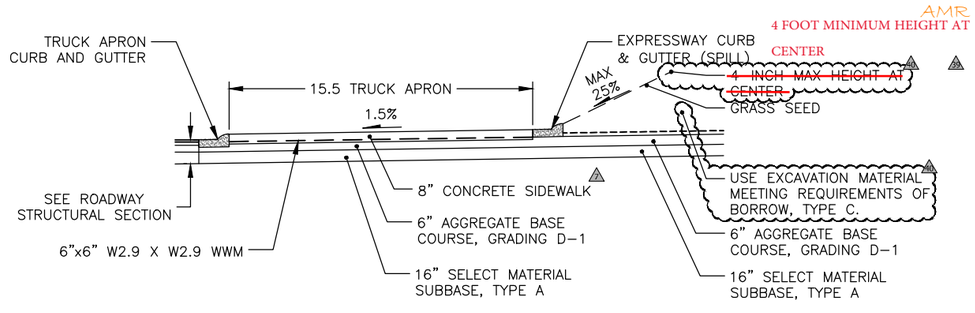

SECTION A-A

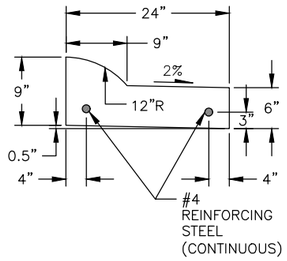

TRUCK APRON CURB & GUTTER

NOTES

1. WWM STEEL REINFORCEMENT FOR TRUCK APRON SHALL BE SET ON SPACERS AND PULLED UP AS REQUIRED TO POSITION STEEL 1 ½" UP FROM THE BOTTOM OF CONCRETE.

Record Drawings have been reviewed by the Project Engineer, and represent to the best of my knowledge, the project as constructed.

PE Dillon Tomaro 2/4/25

STATE OF ALASKA 49TH ANTHONY M. ROOS CE 127591 REGISTERED PROFESSIONAL ENGINEER 7/1/2024

TRUCK APRON DETAILS

PLANS DEVELOPED BY: KITTELSON & ASSOCIATES, INC. CERT. OF AUTHORIZATION NO.: 254741, 851 SW 6TH AVE. SUITE 600, PORTLAND, OR 97204, (503) 228-5230
H:\20\20487 - Glacier Highway - Juneau Traffic Design\design_CD\68124_E_RDBT_S&D-E-4 Wed, Jan/25/23 05:52pm

NO.	DATE	REVISION

STATE	PROJECT DESIGNATION	YEAR	SHEET NO.	TOTAL SHEETS
ALASKA	TEA-0955(016)/Z68124	2020	E-5	235

** Deleted by CO27

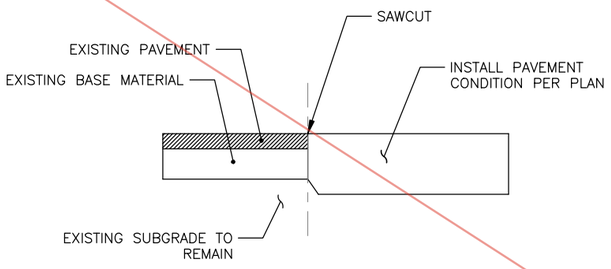

SAWCUT AND PAVEMENT MATCH DETAIL

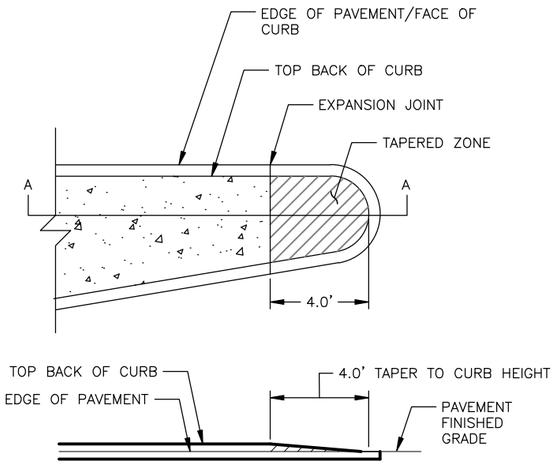

TAPERED MEDIAN NOSE DETAIL

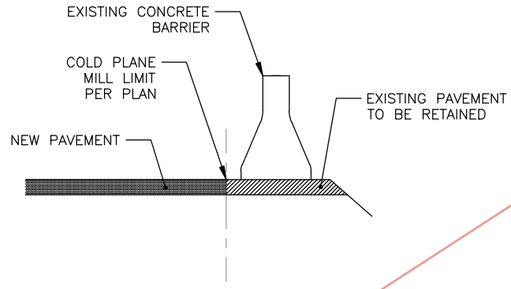

MILL LIMIT DETAIL
STA: 115+41.56 TO 116+99.63

NOTES

1. SET JOINT SPACING AT 200' MAX FOR EXPANSION, AND 15' MAX FOR CONTRACTION.
2. DOWELS SHALL BE DRIVEN INTO NEW ASPHALT PAVEMENT AFTER FINAL LIFT.
3. SEE G SERIES FOR GRADING CONTROL POINTS.
4. FOR AREAS WHERE NEW PAVEMENT ABUTS EXISTING CONCRETE BARRIER, MILL LIMIT TO BE AS CLOSE AS PRACTICAL TO THE EXISTING CONCRETE BARRIER. EXISTING PAVEMENT UNDERNEATH GUARDRAIL OR CONCRETE BARRIER TO REMAIN.
5. CONTRACTOR TO PROVIDE SHOP DRAWING FOR EACH BLOCK WALL IDENTIFIED IN THE PLANS.

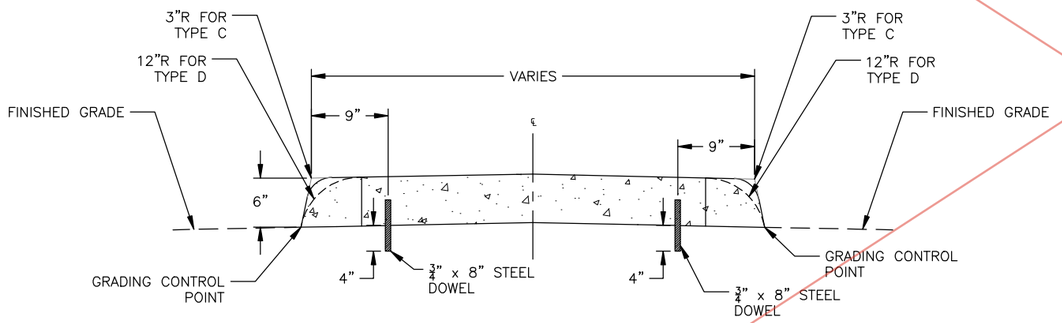

DOWELED CONCRETE MEDIAN DETAIL
TYPE C & D

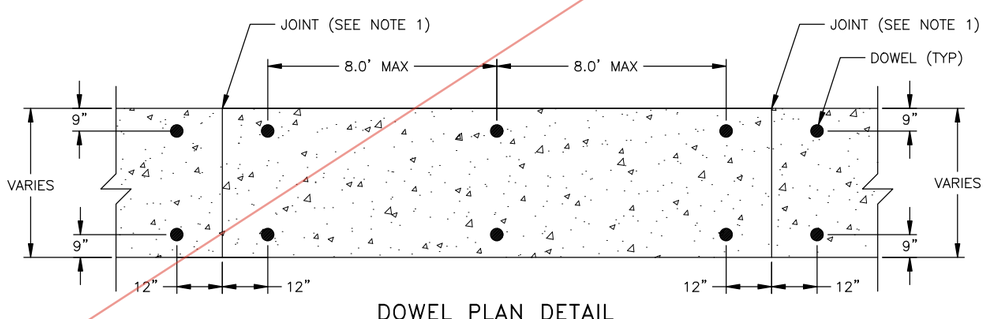

DOWEL PLAN DETAIL

Record Drawings have been reviewed by the Project Engineer, and represent to the best of my knowledge, the project as constructed.

PE Dillon Tomaro 2/4/25

STATE OF ALASKA 49TH ANTHONY M. ROOS CE 127591 REGISTERED PROFESSIONAL ENGINEER
7/31/2020

MISCELLANEOUS ROADWAY DETAILS

PLANS DEVELOPED BY: KITTELSON & ASSOCIATES, INC. CERT. OF AUTHORIZATION NO.: 254741, 851 SW 6TH AVE. SUITE 600, PORTLAND, OR 97204, (503) 228-5230
H:\20\20487 - Glacier Highway - Juneau Traffic Design\design_CD\68124_E_RDBT_S&D-E-5 Thu, Jul/30/20 03:23pm

** Deleted by CO37

NO.	DATE	REVISION
3	03/08/22	DELTA 30: CONCRETE MEDIAN NOSE REVISION

STATE	PROJECT DESIGNATION	YEAR	SHEET NO.	TOTAL SHEETS
ALASKA	TEA-0955(016)/Z68124	2020	E-5	235

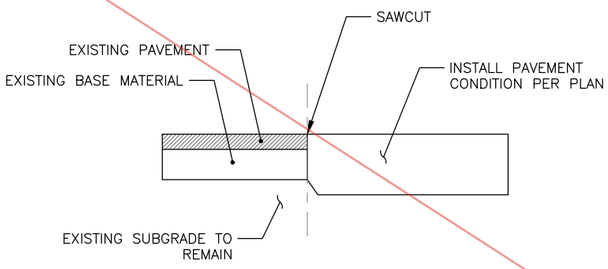

SAWCUT AND PAVEMENT MATCH DETAIL

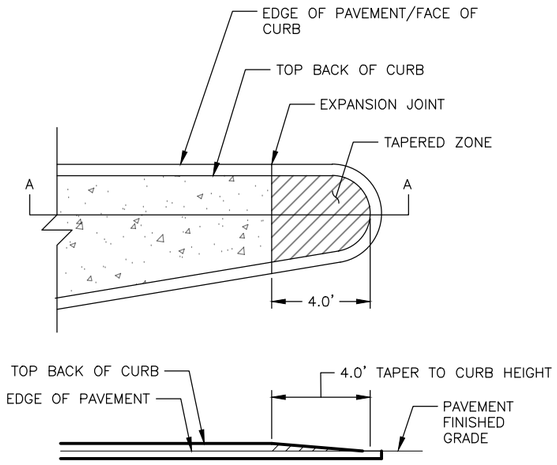

TAPERED MEDIAN NOSE DETAIL

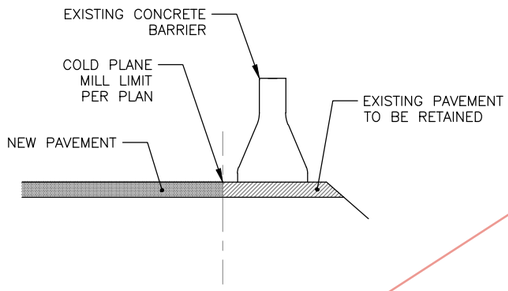

MILL LIMIT DETAIL

STA: 115+41.56 TO 116+99.63

NOTES

1. SET JOINT SPACING AT 200' MAX FOR EXPANSION, AND 15' MAX FOR CONTRACTION.
2. DOWELS SHALL BE DRIVEN INTO NEW ASPHALT PAVEMENT AFTER FINAL LIFT.
3. SEE G SERIES FOR GRADING CONTROL POINTS.
4. FOR AREAS WHERE NEW PAVEMENT ABUTS EXISTING CONCRETE BARRIER, MILL LIMIT TO BE AS CLOSE AS PRACTICAL TO THE EXISTING CONCRETE BARRIER. EXISTING PAVEMENT UNDERNEATH GUARDRAIL OR CONCRETE BARRIER TO REMAIN.
5. CONTRACTOR TO PROVIDE SHOP DRAWING FOR EACH BLOCK WALL IDENTIFIED IN THE PLANS.

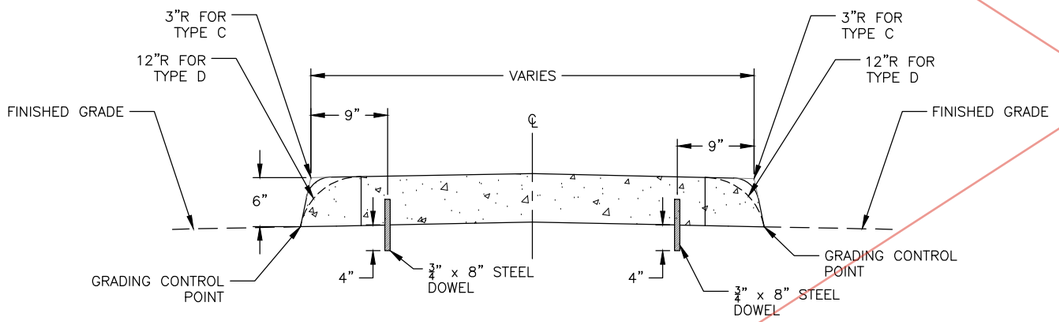

DOWELED CONCRETE MEDIAN DETAIL TYPE C & D

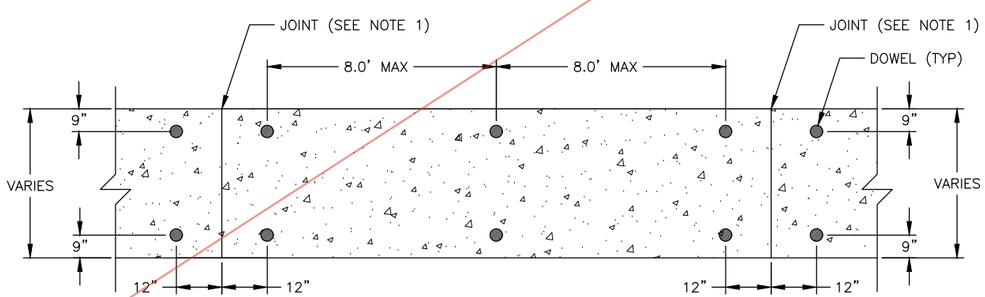

DOWEL PLAN DETAIL

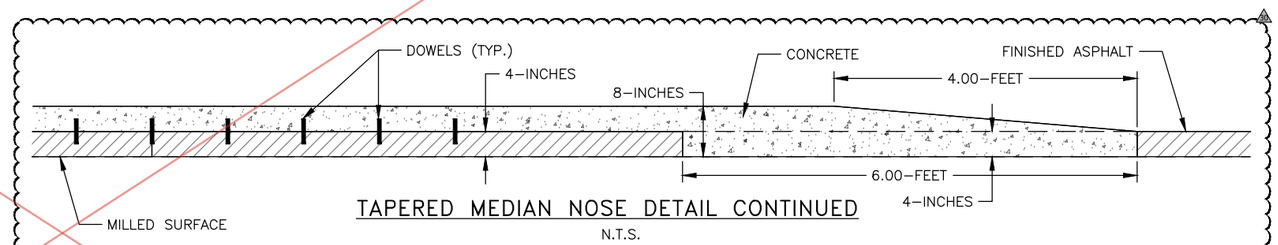

TAPERED MEDIAN NOSE DETAIL CONTINUED

N.T.S.

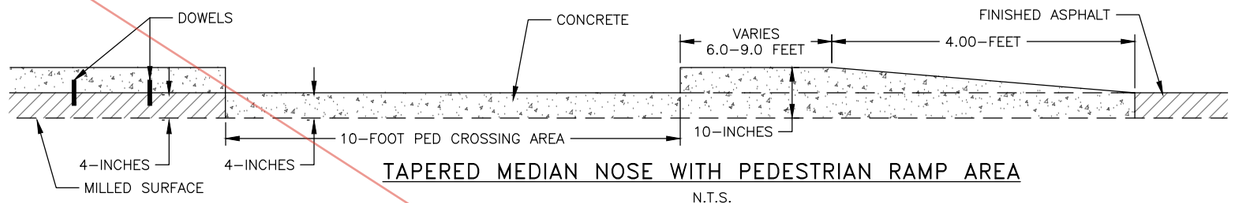

TAPERED MEDIAN NOSE WITH PEDESTRIAN RAMP AREA

N.T.S.

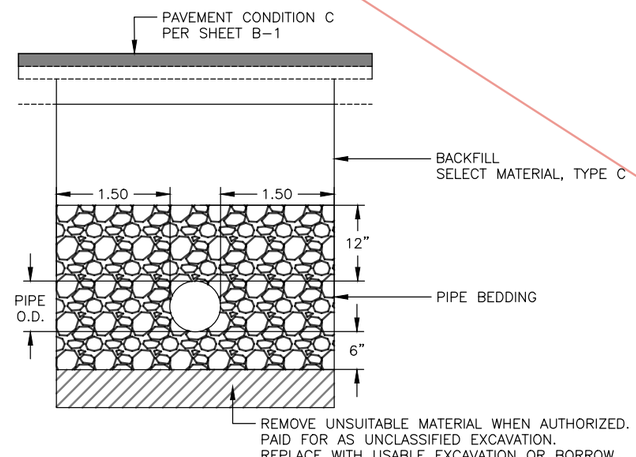

CULVERT BEDDING/BACKFILL DETAIL

PAVEMENT COLD PLANING AREAS (PRIOR TO MILLING)

Record Drawings have been reviewed by the Project Engineer, and represent to the best of my knowledge, the project as constructed.

PE Dillon Tomaro 2/4/25

MISCELLANEOUS ROADWAY DETAILS

STATE OF ALASKA 49TH ANTHONY M. ROOS CE 127591 REGISTERED PROFESSIONAL ENGINEER 4/7/22

PLANS DEVELOPED BY: KITTELSON & ASSOCIATES, INC. CERT. OF AUTHORIZATION NO.: 254741, 851 SW 6TH AVE. SUITE 600, PORTLAND, OR 97204, (503) 228-5230
H:\20\20487 - Glacier Highway - Juneau Traffic Design\design_CD\68124_E_RDBT_S&D-E-5 Thu, Apr/07/22 10:18am

NO.	DATE	REVISION
3	03/08/22	DELTA 30: CONCRETE MEDIAN NOSE REVISION
2	08/02/22	DELTA 38: MEDIAN CROSSING WIDTH REVISIONS

STATE	PROJECT DESIGNATION	YEAR	SHEET NO.	TOTAL SHEETS
ALASKA	TEA-0955(016)/Z68124	2020	E-5	235

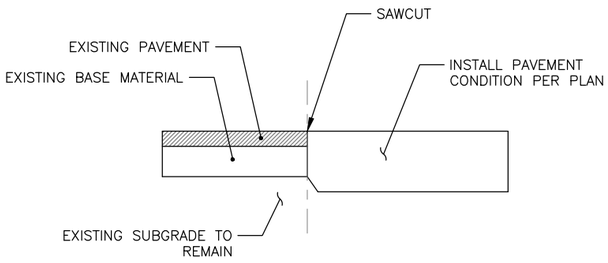

SAWCUT AND PAVEMENT MATCH DETAIL

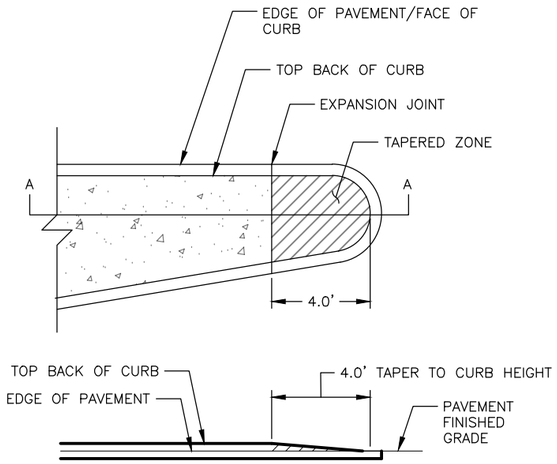

TAPERED MEDIAN NOSE DETAIL

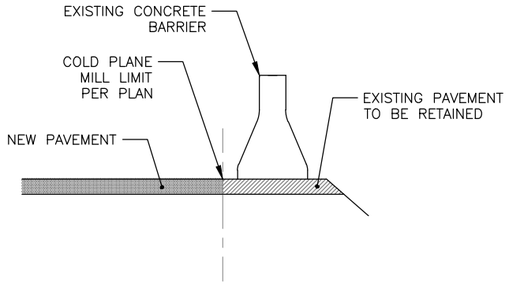

MILL LIMIT DETAIL

STA: 115+41.56 TO 116+99.63

NOTES

1. SET JOINT SPACING AT 200' MAX FOR EXPANSION, AND 15' MAX FOR CONTRACTION.
2. DOWELS SHALL BE DRIVEN INTO NEW ASPHALT PAVEMENT AFTER FINAL LIFT.
3. SEE G SERIES FOR GRADING CONTROL POINTS.
4. FOR AREAS WHERE NEW PAVEMENT ABUTS EXISTING CONCRETE BARRIER, MILL LIMIT TO BE AS CLOSE AS PRACTICAL TO THE EXISTING CONCRETE BARRIER. EXISTING PAVEMENT UNDERNEATH GUARDRAIL OR CONCRETE BARRIER TO REMAIN.
5. CONTRACTOR TO PROVIDE SHOP DRAWING FOR EACH BLOCK WALL IDENTIFIED IN THE PLANS.

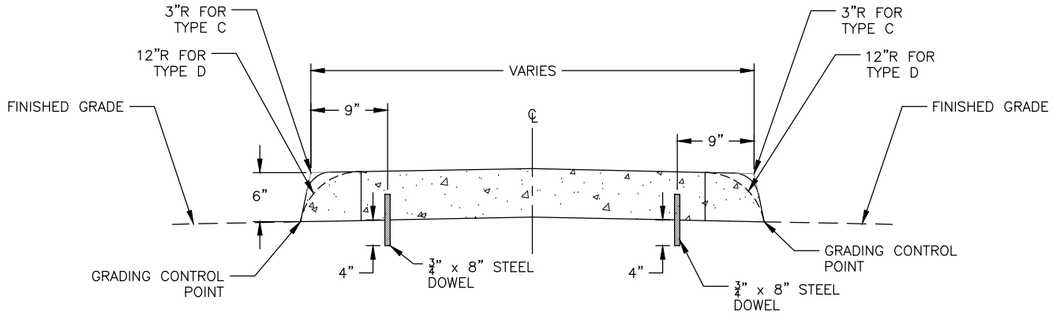

DOWELED CONCRETE MEDIAN DETAIL TYPE C & D

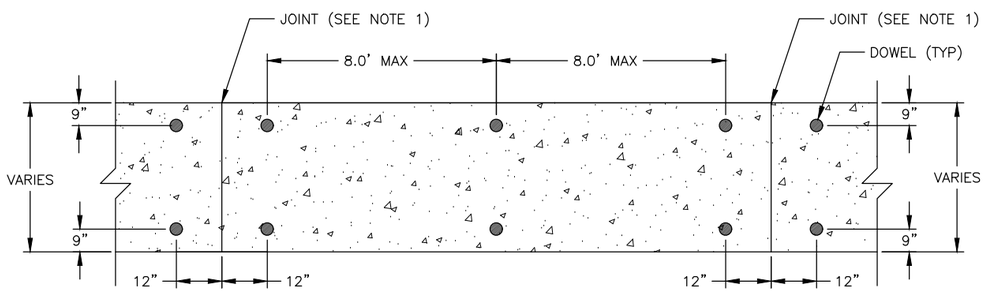

DOWEL PLAN DETAIL

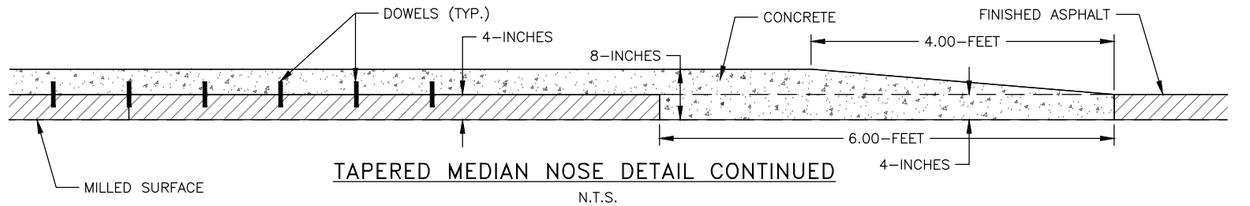

TAPERED MEDIAN NOSE DETAIL CONTINUED

N.T.S.

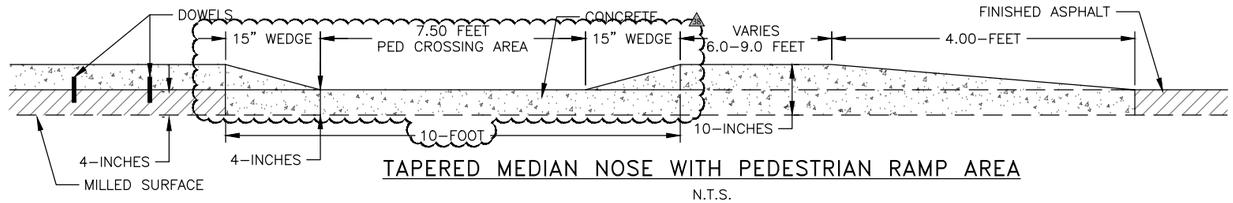

TAPERED MEDIAN NOSE WITH PEDESTRIAN RAMP AREA

N.T.S.

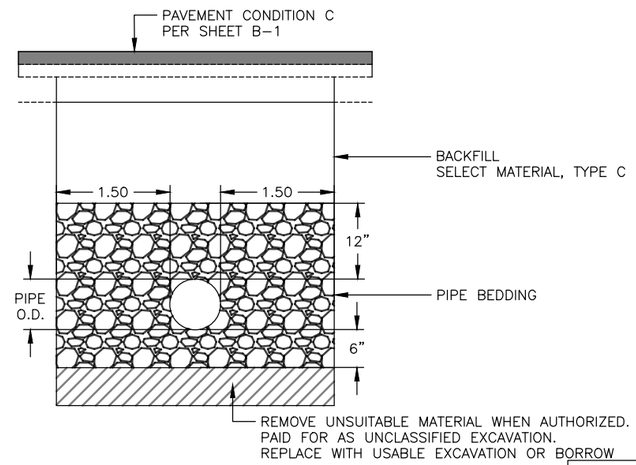

CULVERT BEDDING/BACKFILL DETAIL

PAVEMENT COLD PLANING AREAS (PRIOR TO MILLING)

Record Drawings have been reviewed by the Project Engineer, and represent to the best of my knowledge, the project as constructed.

PE *Dillon Tomaro* 2/4/25

STATE OF ALASKA 49TH ANTHONY M. ROOS CE 127591 REGISTERED PROFESSIONAL ENGINEER 8/2/22

MISCELLANEOUS ROADWAY DETAILS

PLANS DEVELOPED BY: KITTELSON & ASSOCIATES, INC. CERT. OF AUTHORIZATION NO.: 254741, 851 SW 6TH AVE. SUITE 600, PORTLAND, OR 97204, (503) 228-5230
H:\20\20487 - Glacier Highway - Juneau Traffic Design\design_CD\68124_E_RDBT_S&D-E-5 Tue, Aug/02/22 11:38am

NO.	DATE	REVISION
1	12/22/20	ADDENDUM 5

STATE	PROJECT DESIGNATION	YEAR	SHEET NO.	TOTAL SHEETS
ALASKA	TEA-0955(016)/Z68124	2020	E-6	235

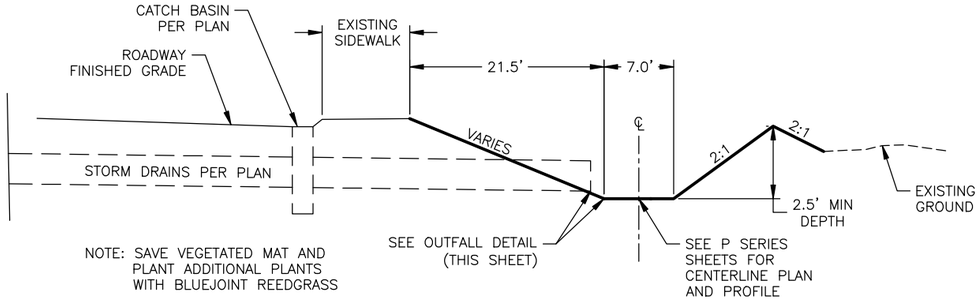

LANDWARD CONVEYANCE DITCH

STA 117+00.70 TO 127+06.66

THE FLATNESS OF THE SLOPE DITCH, 0.3%, MEETS THE INTENT OF TERRACED. 1

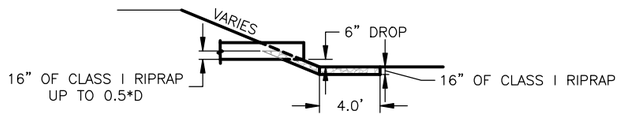

TYPICAL OUTFALL DETAIL

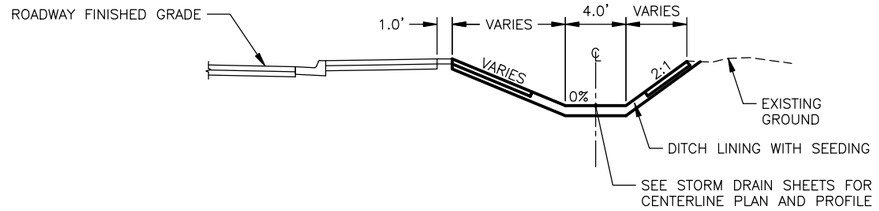

SWALE

STA 147+70 RT TO 148+40 RT
STA 166+80 LT TO 169+40 LT

THE FLATNESS OF THE SLOPE DITCH, 0.3%, MEETS THE INTENT OF TERRACED. 1

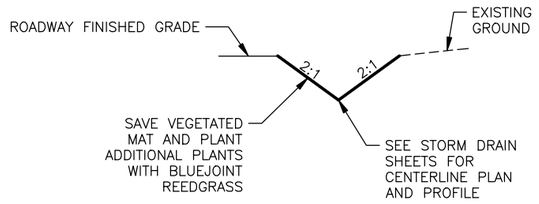

V DITCH DETAIL

THE FLATNESS OF THE SLOPE DITCH, 0.3%, MEETS THE INTENT OF TERRACED. 1

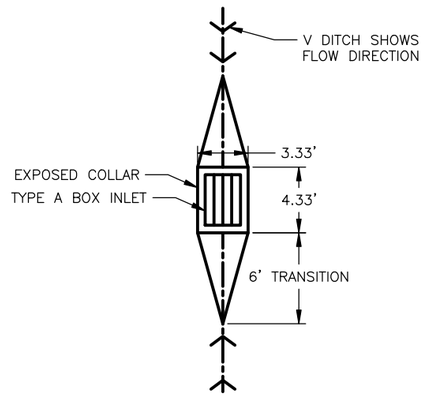

TYPICAL AREA DRAIN DETAIL

THE FLATNESS OF THE SLOPE DITCH, 0.3%, MEETS THE INTENT OF TERRACED. 1

Record Drawings have been reviewed by the Project Engineer, and represent to the best of my knowledge, the project as constructed.

PE *Dillon Tomaro* 2/4/25

DITCH DETAILS

STATE OF ALASKA 49TH ANTHONY M. ROOS CE 127591 REGISTERED PROFESSIONAL ENGINEER 12/22/20

PLANS DEVELOPED BY: KITTELSON & ASSOCIATES, INC. CERT. OF AUTHORIZATION NO.: 25474I, 851 SW 6TH AVE. SUITE 600, PORTLAND, OR 97204, (503) 228-5230
H:\20\20487 - Glacier Highway - Juneau Traffic Design\design_CD\68124_E_RDBT_S&D-E-6 Tue, Dec/22/20 12:35pm

** Deleted by CO34

NO.	DATE	REVISION

STATE	PROJECT DESIGNATION	YEAR	SHEET NO.	TOTAL SHEETS
ALASKA	TEA-0955(016)/Z68124	2020	E-7	235

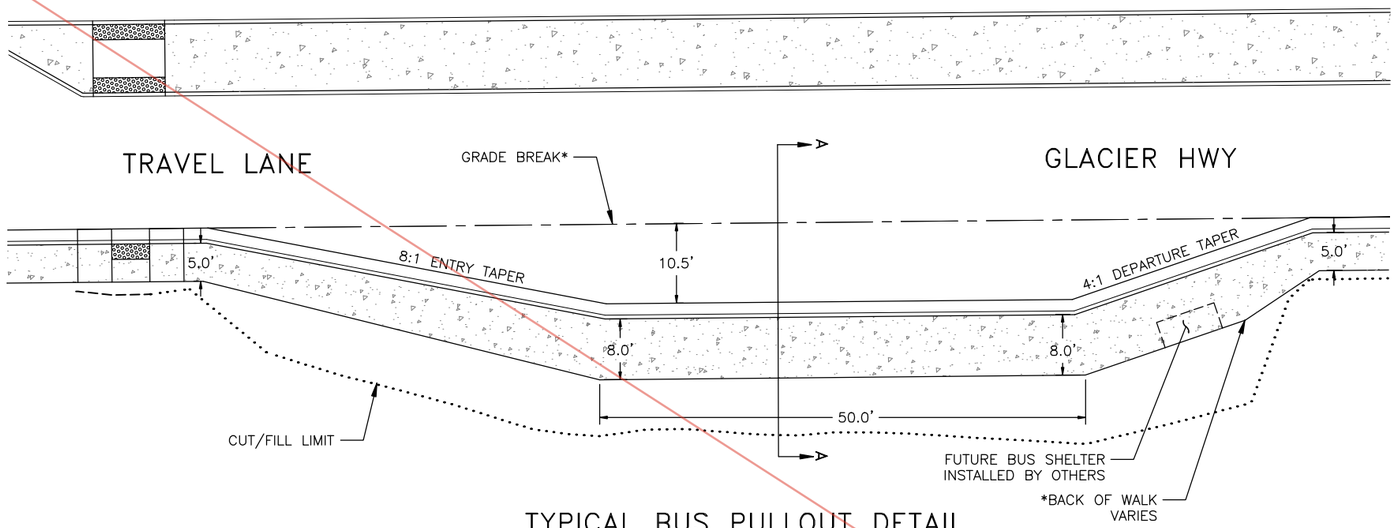

TYPICAL BUS PULLOUT DETAIL

*SEE GRADING SHEETS FOR BUS PULLOUT LOCATIONS AND STAKING DETAILS

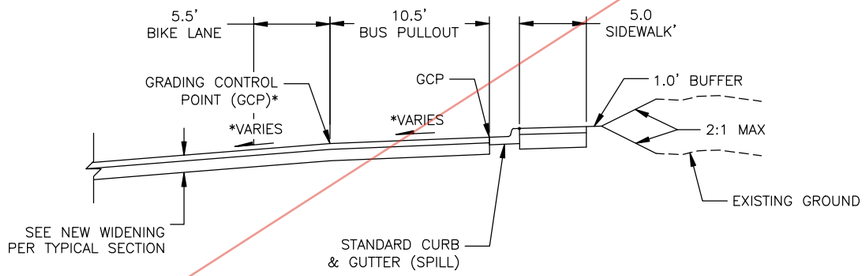

SECTION A-A

*SEE GRADING SHEETS FOR BUS PULLOUT LOCATIONS AND STAKING DETAILS

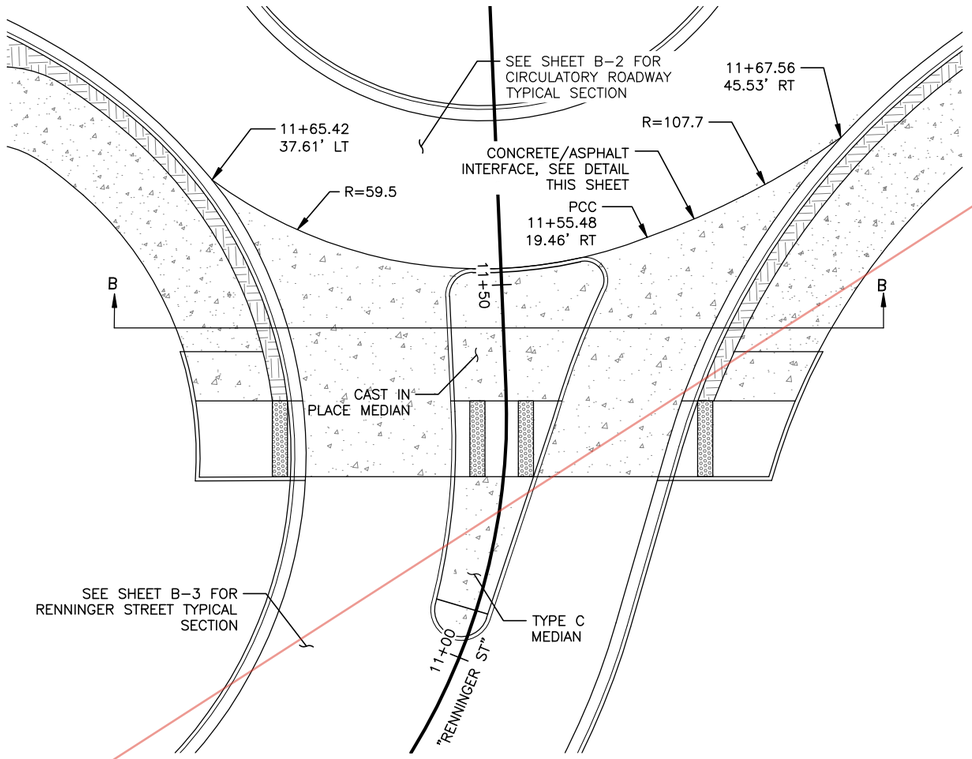

RENNINGER CONCRETE PANEL DETAIL

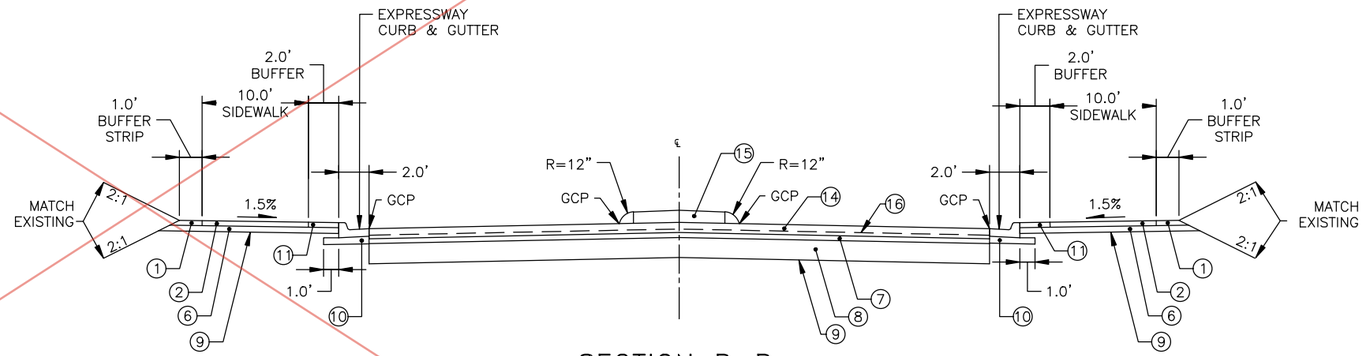

SECTION B-B

RENNINGER CONCRETE PANEL
TYPICAL SECTION
STA 11+24.65 TO 11+52.16

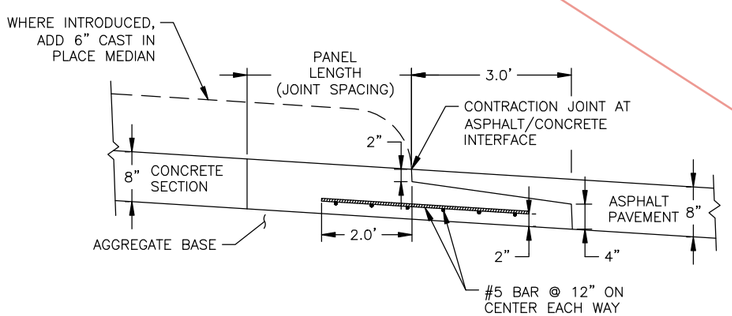

CONCRETE/ASPHALT INTERFACE DETAIL

LEGEND

1. 4" TOPSOIL
2. 4" CONCRETE SIDEWALK
6. 4" ASPHALT TREATED BASE (ATB) COURSE, 2" MAX LIFTS
7. 4" AGGREGATE BASE COURSE, GRADING D-1
8. 16" SUBBASE, GRADING A
9. SELECT MATERIAL, TYPE A
10. 5" AGGREGATE BASE COURSE, GRADING D-1
11. 4" COLORED TEXTURED CONCRETE
14. 8" CONCRETE PAVEMENT
15. 6" CAST IN PLACE CONCRETE MEDIAN
16. 6"x6" W2.9xW2.9 WELDED WIRE MESH

Record Drawings have been reviewed by the Project Engineer, and represent to the best of my knowledge, the project as constructed.

PE Dillon Tomaro 2/4/25

MISCELLANEOUS ROADWAY DETAILS

STATE OF ALASKA 49TH ANTHONY M. ROOS CE 12759 REGISTERED PROFESSIONAL ENGINEER

7/31/2020

PLANS DEVELOPED BY: KITTELSON & ASSOCIATES, INC. CERT. OF AUTHORIZATION NO.: 254741, 851 SW 6TH AVE. SUITE 600, PORTLAND, OR 97204, (503) 228-5230
H:\20_20487 - Glacier Highway - Juneau Traffic Design\design_CD\68124_E_RDBT_S&D-E-7 Thu, Jul/30/20 03:24:am

Attachment No. 4

CO 34

NO.	DATE	REVISION
2	03/08/22	DELTA 30: CONCRETE MEDIAN NOSE REVISION
1	03/28/22	TYPICAL SECTION REVISIONS

STATE	PROJECT DESIGNATION	YEAR	SHEET NO.	TOTAL SHEETS
ALASKA	TEA-0955(016)/Z68124	2020	E-7	235

Record Drawings have been reviewed by the Project Engineer, and represent to the best of my knowledge, the project as constructed.

PE Dillon Tomaro 2/4/25

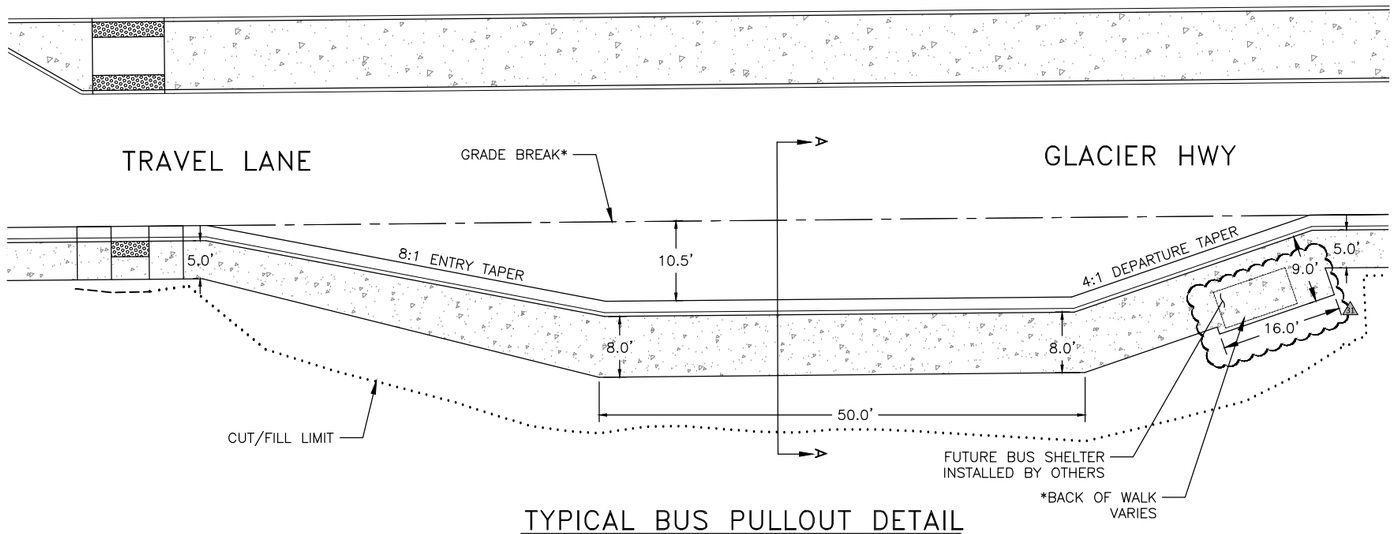

TYPICAL BUS PULLOUT DETAIL

*SEE GRADING SHEETS FOR BUS PULLOUT LOCATIONS AND STAKING DETAILS

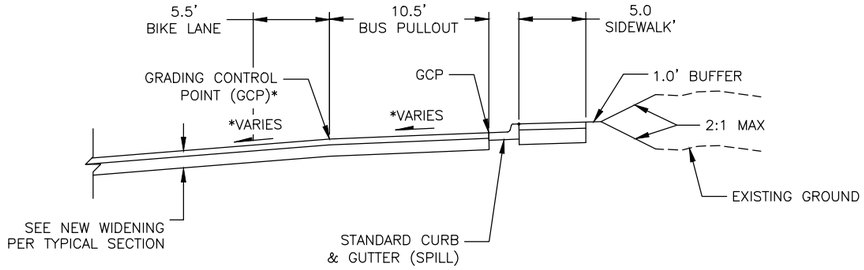

SECTION A-A

*SEE GRADING SHEETS FOR BUS PULLOUT LOCATIONS AND STAKING DETAILS

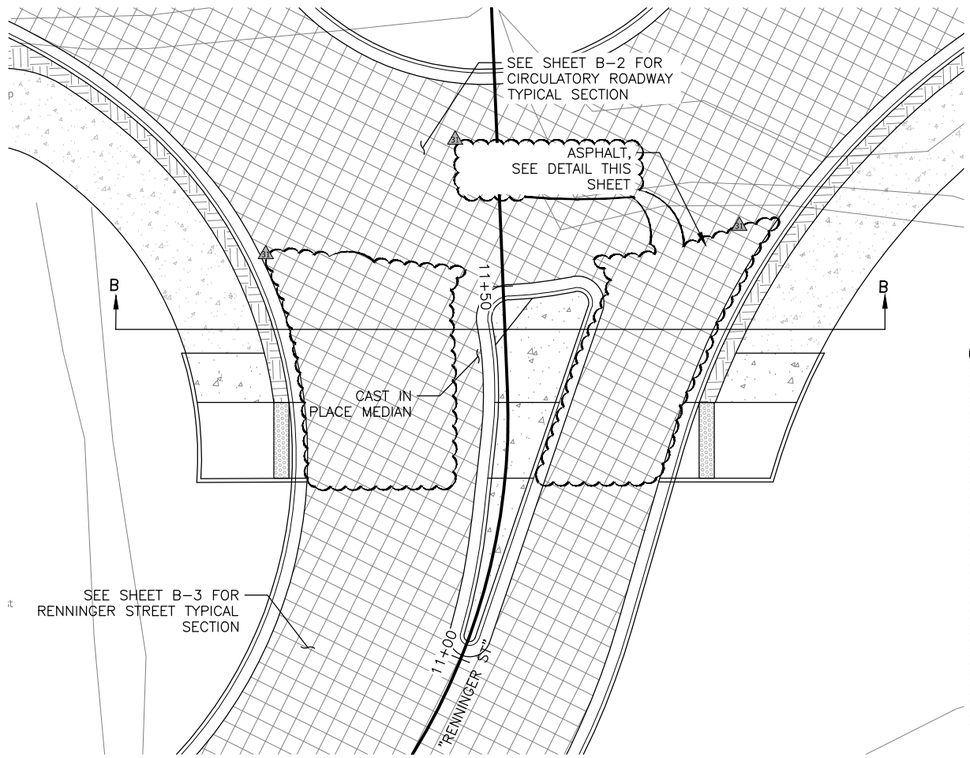

RENNINGER CONCRETE PANEL DETAIL

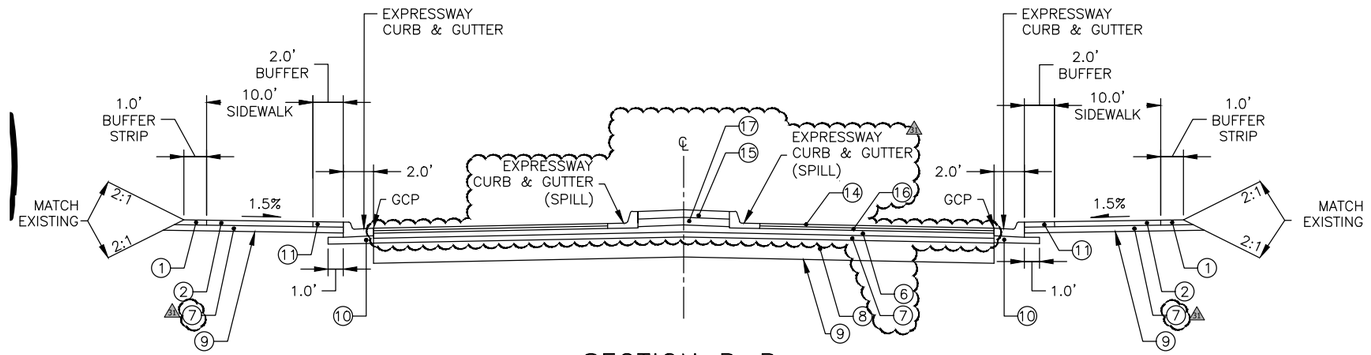

SECTION B-B

RENNINGER CONCRETE PANEL
TYPICAL SECTION
STA 11+24.65 TO 11+52.16

CONCRETE / ASPHALT INTERFACE
DETAIL REMOVED

LEGEND

1. 4" TOPSOIL
2. 4" CONCRETE SIDEWALK
6. 4" ASPHALT TREATED BASE (ATB) COURSE, 2" MAX LIFTS
7. 4" AGGREGATE BASE COURSE, GRADING D-1
8. 16" SUBBASE, GRADING A
9. SELECT MATERIAL, TYPE A
10. 5" AGGREGATE BASE COURSE, GRADING D-1
11. 4" COLORED TEXTURED CONCRETE
14. 2" HOT MIX ASPHALT (HMA), SP, TYPE B
15. 6" CAST IN PLACE CONCRETE MEDIAN
16. 2" HMA, TYPE II, CLASS B
17. 6" AGGREGATE BASE COURSE, GRADING D-1

STATE OF ALASKA 49TH
ANTHONY M. ROOS CE 127591
REGISTERED PROFESSIONAL ENGINEER
5/3/22

MISCELLANEOUS ROADWAY DETAILS

PLANS DEVELOPED BY: KITTELSON & ASSOCIATES, INC. CERT. OF AUTHORIZATION NO.: 254741, 851 SW 6TH AVE. SUITE 600, PORTLAND, OR 97204, (503) 228-5230
H:\20\20487 - Glacier Highway - Juneau Traffic Design\design_CID\68124_E_RDBT_S&D-E-7 Tue, May/03/22 02:42pm

NO.	DATE	REVISION

STATE	PROJECT DESIGNATION	YEAR	SHEET NO.	TOTAL SHEETS
ALASKA	TEA-0955(016)/Z68124	2020	E-8	235

Record Drawings have been reviewed by the Project Engineer, and represent to the best of my knowledge, the project as constructed.

PE Dillon Tomaro 2/4/25

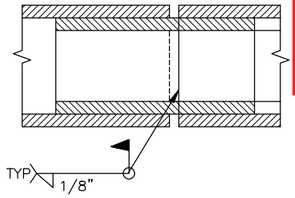

SLIP JOINT DETAIL

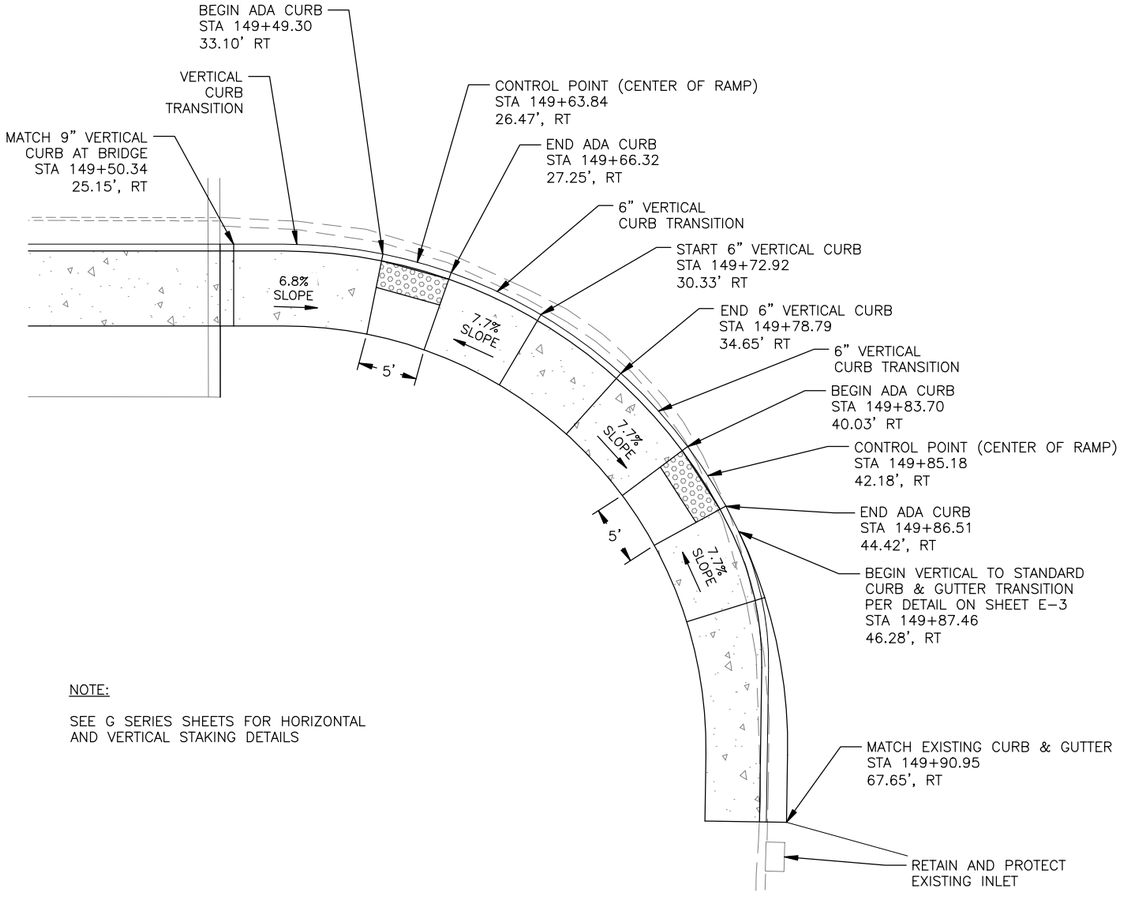

NOTE:

SEE G SERIES SHEETS FOR HORIZONTAL AND VERTICAL STAKING DETAILS

LEMMON CREEK BRIDGE PEDESTRIAN RAMP AND CURB TRANSITION

LANDWARD

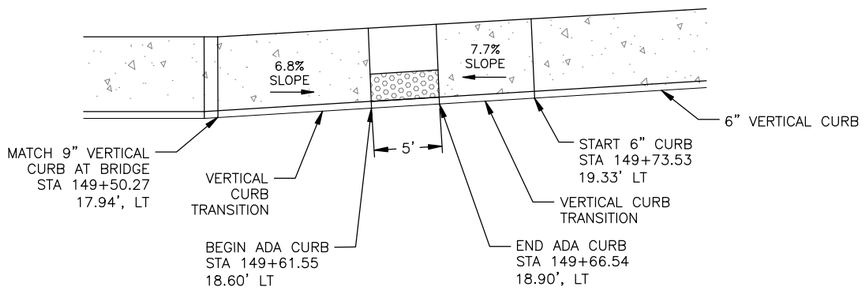

NOTE:

SEE G SERIES SHEETS FOR HORIZONTAL AND VERTICAL STAKING DETAILS

LEMON CREEK BRIDGE PEDESTRIAN RAMP AND CURB TRANSITION

SEAWARD

HANDRAIL DETAILS

STATE OF ALASKA
49TH
ANTHONY M. ROOS
CE 12759
REGISTERED PROFESSIONAL ENGINEER
7/31/2020

PLANS DEVELOPED BY: KITTELSON & ASSOCIATES, INC. CERT. OF AUTHORIZATION NO.: 254741, 851 SW 6TH AVE. SUITE 600, PORTLAND, OR 97204, (503) 228-5230
H:\20\20487 - Glacier Highway - Juneau Traffic Design\design_CD\68124_E_RDBT_S&D-E-8 Thu, Jul/30/20 03:24pm

PLAN VIEW KEY

(A) STATION
TYPE, WIDTH
CONSTRUCT APPROACH

Record Drawings have been reviewed by the Project Engineer, and represent to the best of my knowledge, the project as constructed.

PE *Dillon Tomaro* 2/4/25

HATCHING LEGEND (TYPICAL)

- NEW SEAWARD/LANDWARD WIDENING (NO HATCH)
- PAVEMENT CONDITION A: MILL & FILL
- PAVEMENT CONDITION B: RECONSTRUCT
- PAVEMENT CONDITION C: NEW PAVEMENT
- NEW CONCRETE
- DRIVEWAY APPROACH PAVEMENT
- DETECTABLE WARNING DOMES
- TRUCK APRON
- BUFFER, COLORED TEXTURED CONCRETE
- CONVEYANCE DITCH

NOTES

1. ALL UNDERGROUND UTILITIES SHOWN ARE APPROXIMATE. CONTRACTOR TO CALL ALASKA DIGLINE (811) FOR UTILITY LOCATIONS PRIOR TO CONSTRUCTION.
2. ALL EXISTING UTILITY MANHOLES WITHIN THE PAVING LIMITS TO BE ADJUSTED TO FINAL GRADE.
3. SEE P SERIES FOR ALL DRAINAGE INFRASTRUCTURE IMPROVEMENTS

NO.	DATE	REVISION

STATE	PROJECT DESIGNATION	YEAR	SHEET NO.	TOTAL SHEETS
ALASKA	TEA-0955(016)/Z68124	2020	F-1	235

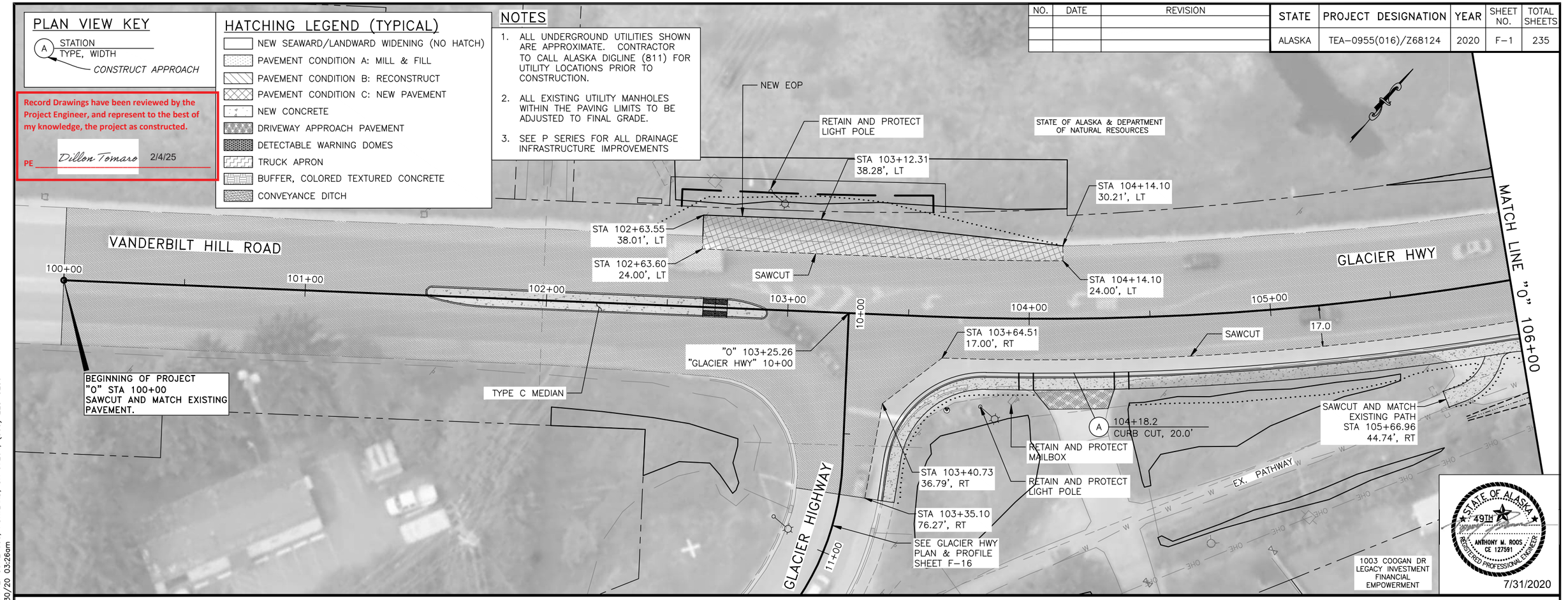

STATE OF ALASKA 49TH
ANTHONY M. ROOS
CE 127591
REGISTERED PROFESSIONAL ENGINEER
7/31/2020

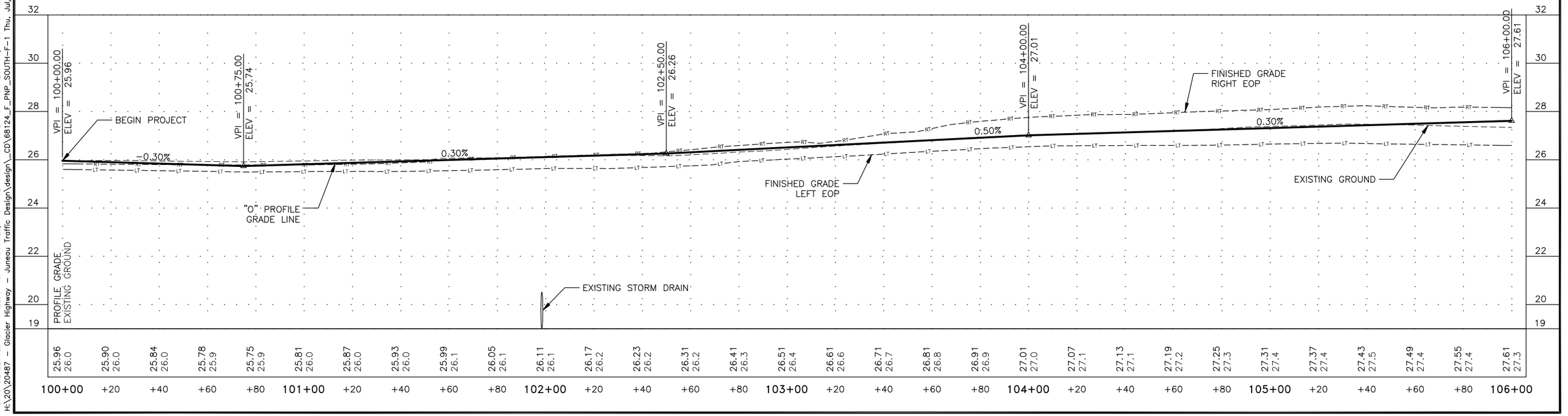

PLANS DEVELOPED BY: KITTELSON & ASSOCIATES, INC. CERT. OF AUTHORIZATION NO.: 254741, 851 SW 6TH AVE. SUITE 600, PORTLAND, OR 97204, (503) 228-5230
H:\20\20487 - Glacier Highway - Juneau Traffic Design\design_CD\68124_F_PNP_SOUTH-F-1 Thu, Jul/30/20 03:26pm

Record Drawings have been reviewed by the Project Engineer, and represent to the best of my knowledge, the project as constructed.

PE Dillon Tomaro 2/4/25

NO.	DATE	REVISION

STATE	PROJECT DESIGNATION	YEAR	SHEET NO.	TOTAL SHEETS
ALASKA	TEA-0955(016)/Z68124	2020	F-2	235

SAWCUT

"0" 106+18.99
"CL-COOGAN DR" 10+00

REMOVE EXISTING GUARDRAIL.
STA 108+24.00 TO STA 110+55.00

BEGIN GUARDRAIL A*
STA 108+24.00
25.00', LT

SEE SHT J-1
FOR CULVERT REHABILITATION
DETAILS

GUARDRAIL A* ASSEMBLY
6'3" TERMINAL ANCHOR
218.5' W BEAM RAIL
6'3" TERMINAL ANCHOR

VANDERBILT CREEK

END GUARDRAIL A*
STA 110+55.00
29.00', LT

ADJUST MANHOLE
TO FINISHED GRADE

SAWCUT

MATCH LINE "0" 106+00

MATCH LINE "0" 112+00

10+00

107+00

108+00

GLACIER HWY

109+00

110+00

111+00

17.0

STA 106+15.59
17.01', RT

STA 108+91.40
17.00', RT

SAWCUT

STA 109+66.53
17.00', RT

STA 110+92.71
17.00', RT

RETAIN &
PROTECT
HYDRANT

STA 106+38.23
68.10', RT

SEE COOGAN DR
PLAN & PROFILE
SHEET F-16

COOGAN DRIVE

11+00

1003 COOGAN DR
LEGACY INVESTMENT
FINANCIAL
EMPOWERMENT

1002 COOGAN DR
KRISTIE L ERICKSON &
MICHAEL J ERICKSON JR.

109+30.5
CURB CUT, 43.1'
A

5000 GLACIER HWY
TIDES COMPLEX INC.

111+22.9
CURB CUT, 30.1'
A

111+73.8
CURB CUT, 44.3'
A

STATE OF ALASKA
49TH
ANTHONY M. ROOS
CE 127591
REGISTERED PROFESSIONAL ENGINEER

7/31/2020

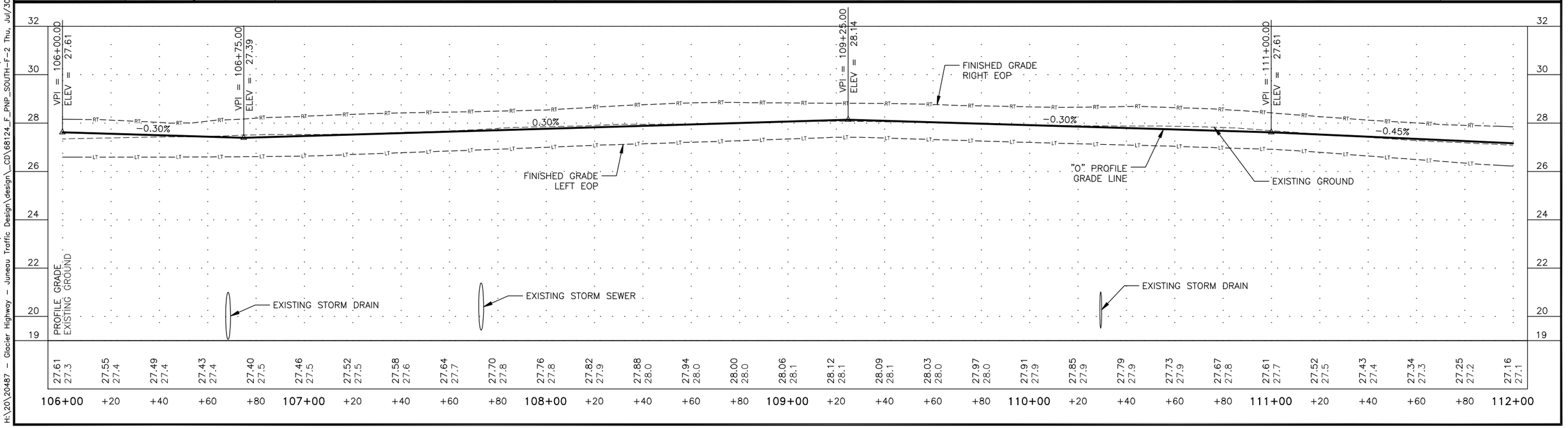

PLANS DEVELOPED BY: KITTELSON & ASSOCIATES, INC. CERT. OF AUTHORIZATION NO.: 254741, 851 SW 6TH AVE. SUITE 600, PORTLAND, OR 97204, (503) 228-5230
H:\20\20487 - Glacier Highway - Juneau Traffic Design\design_CD\68124_F_PNP_SOUTH-F-2 Thu, Jul/30/20 03:27pm

Record Drawings have been reviewed by the Project Engineer, and represent to the best of my knowledge, the project as constructed.

PE Dillon Tomaro 2/4/25

NO.	DATE	REVISION

STATE	PROJECT DESIGNATION	YEAR	SHEET NO.	TOTAL SHEETS
ALASKA	TEA-0955(016)/Z68124	2020	F-3	235

5157 GLACIER HWY
GRANT'S PLAZA LLC

GUARDRAIL B* ASSEMBLY
6'3" TERMINAL ANCHOR
37.0' W BEAM RAIL
17.5' THRIE BEAM TRANSITION
3'9" THRIE BEAM CONNECTOR

GUARDRAIL C* ASSEMBLY
3'9" THRIE BEAM CONNECTOR
17.5' THRIE BEAM TRANSITION
56.0' W BEAM RAIL
6'3" TERMINAL ANCHOR

SEE SHORT STREET PLAN & PROFILE SHEET F-17

END GUARDRAIL C*
STA 117+64.50
48.85', LT

PT
STA 117+64.82
44.91', LT

PC
STA 117+42.04
24.32', LT

R=20'

SHORT STREET

SEE AUTOSHOP PLAN & PROFILE SHEET F-17

9+00

REMOVE EXISTING GUARDRAIL
STA 114+77.00 TO
STA 115.41.50

RETAIN AND PROTECT EXISTING BARRIER

REMOVE EXISTING AND INSTALL NEW GUARDRAIL
STA 116+99.83 TO STA 117+64.50

VANDERBILT CREEK

END GUARDRAIL B*
STA 115+41.50,
26.50' LT

MILL LIMIT. SEE SHEET E-5 FOR DETAIL

BEGIN GUARDRAIL C*
STA 116+99.83
25.69', LT

BEGIN GUARDRAIL B*
STA 114+77.00,
29.00' LT

STA 116+99.63
23.62', LT

MATCH LINE "O" 112+00

"O" 113+30.47
"AUTO SHOP" 10+00

SAWCUT

17.0

STA 112+31.11
17.00', RT

113+00

10+00

GLACIER HWY

STA 115+41.56
24.23', LT

VARIES

117+00

"O" 117+94.57
"CL-SHORT ST" 10+00

MATCH LINE "O" 118+00

114+00

115+00

116+00

STA 113+43.12
17.00', RT

SAWCUT

STA 114+55.78
17.00', RT

STA 115+61.45
17.00', RT

STA 116+24.91
17.00', RT

RETAIN & PROTECT POWER POLE

PROTECT EXISTING FENCE

SHELTER TO BE REMOVED BY OTHERS

RETAIN & PROTECT POWER POLE

A 114+40.5
CURB CUT, 22.8'

PROTECT EXISTING FENCE

115+94.0
CURB CUT, 36.1' A

SEE SHT P-2 FOR CULVERT DETAILS

CONTRACTOR TO REMOVE EXISTING CONCRETE FOUNDATION

5100 GLACIER HWY
LDS CHURCH

5150 GLACIER HWY
JAMES R BAUMGARTNER & PATRICIA L BAUMGARTNER

STATE OF ALASKA
49TH
ANTHONY M. ROOS
CE 12759
REGISTERED PROFESSIONAL ENGINEER
7/31/2020

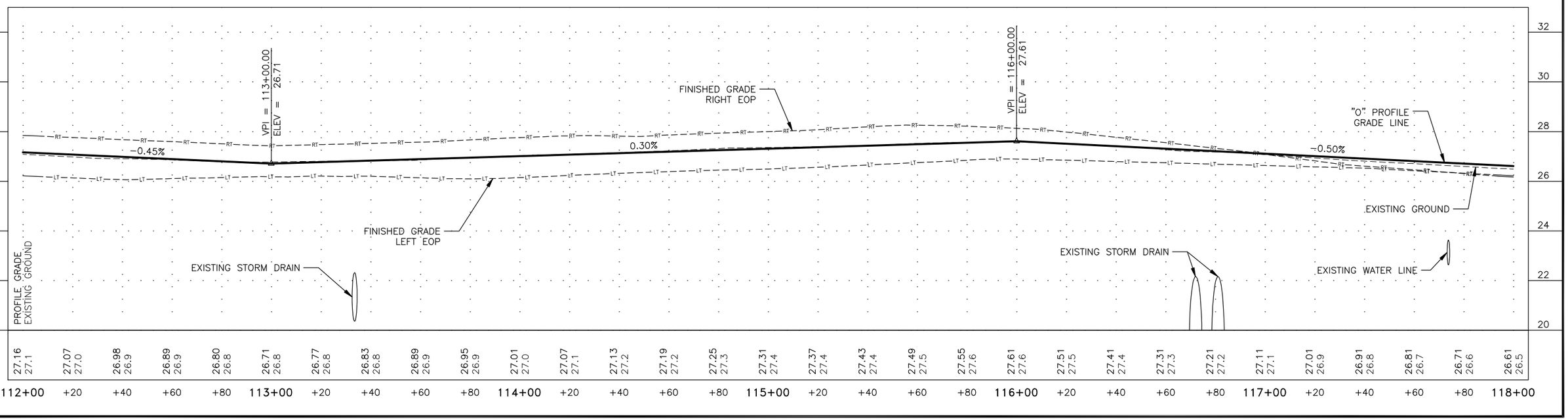

PLANS DEVELOPED BY: KITTELSON & ASSOCIATES, INC. CERT. OF AUTHORIZATION NO.: 254741, 851 SW 6TH AVE. SUITE 600, PORTLAND, OR 97204, (503) 228-5230
H:\20\20487 - Glacier Highway - Juneau Traffic Design\design_CD\68124_F_PNP_SOUTH-F-3 Thu, Jul/30/20 03:27am

Record Drawings have been reviewed by the Project Engineer, and represent to the best of my knowledge, the project as constructed.

PE Dillon Tomaro 2/4/25

NO.	DATE	REVISION
2	01/22/21	ADDENDUM 9

STATE	PROJECT DESIGNATION	YEAR	SHEET NO.	TOTAL SHEETS
ALASKA	TEA-0955(016)/Z68124	2020	F-4	235

5235 GLACIER HWY
MEYER LOT 1 LLC

5245 GLACIER HWY
HPH HOLDINGS LLC

MATCH LINE "O" 118+00

MATCH LINE "O" 124+00

GLACIER HWY

STA 118+05.40
54.09', LT

STA 118+04.25
35.12', LT

RETAIN AND PROTECT
EXISTING UTILITIES

ADJUST FIRE HYDRANT ELEVATION
SEE SHEET D-7

PAVEMENT CONDITION B:
RECONSTRUCT
STA 118+22.00 TO STA 123+80.60

SAWCUT EXISTING PAVEMENT AND
GRADE TO DITCH

REMOVE APPROACH

A 120+86.14
CURB CUT, 64.0'

A 121+59.15
CURB CUT, 36.0'

A 123+44.56
CURB CUT, 36.0'

STA 123+84.60
17.00', LT

SAWCUT

TAPERED
MEDIAN NOSE

STA 118+22.00
17.00', LT

STA 119+48.25
16.96', LT

STA 119+51.75
16.96', LT

119+00

120+00

121+00

122+00

123+00

17.0'

STA 123+80.60
17.00', LT

STA 118+22.00
17.00', RT

TYPE C MEDIAN

STA 119+48.25
17.76', RT

STA 119+51.75
17.76', RT

SAWCUT

17.0'

STA 123+80.60
17.00', RT

STA 123+84.60
17.00', RT

RETAIN & PROTECT POWER POLE

REMOVE SCUPPER

RETAIN & PROTECT POWER POLE

REMOVE SCUPPER

RETAIN & PROTECT POWER POLE

REMOVE SCUPPER

STA 123+94.99
17.46', RT

GUY WIRES TO BE
RELOCATED BY AEL&P

GUY WIRES TO BE
RELOCATED BY AEL&P

GUY WIRES TO BE
RELOCATED BY AEL&P

STATE OF ALASKA
49TH
ANTHONY M. ROOS
CE 127591
REGISTERED PROFESSIONAL ENGINEER

7/31/2020

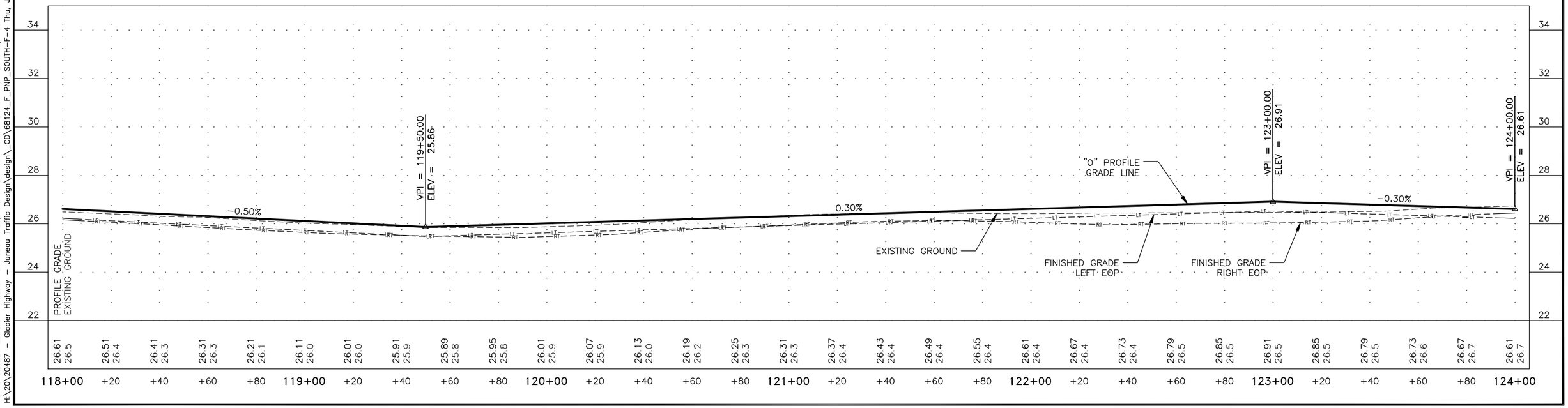

PLANS DEVELOPED BY: KITTELSON & ASSOCIATES, INC. CERT. OF AUTHORIZATION NO.: 254741, 851 SW 6TH AVE. SUITE 600, PORTLAND, OR 97204, (503) 228-5230
H:\20\20487 - Glacier Highway - Juneau Traffic Design\design_CD\68124_F_PNP_SOUTH-F-4 Thu, Jul/30/20 03:28am

Record Drawings have been reviewed by the Project Engineer, and represent to the best of my knowledge, the project as constructed.

PE Dillon Tomaro 2/4/25

NO.	DATE	REVISION

STATE	PROJECT DESIGNATION	YEAR	SHEET NO.	TOTAL SHEETS
ALASKA	TEA-0955(016)/Z68124	2020	F-5	235

** Deleted by CO6

5275 GLACIER HWY
TYLER RENTAL INC.

SEE TYLER RENTAL SOUTH
PLAN & PROFILE SHEET F-19

STA 124+48.33
68.11', LT

STA 124+74.33
68.11', LT

SEE TYLER RENTAL NORTH
PLAN & PROFILE
SHEET F-20

"O" 124+61.33
"TYLER RENTAL
SOUTH" 10+00

9+32

PAVEMENT CONDITION B:
RECONSTRUCT LEFT LANE
STA 124+74.33 TO
STA 125+50

STA 126+06.22
53.02', LT

9+25

STA 126+35.80
52.98', LT

STA 126+68.83
17.00', LT

STA 126+35.81
17.01', LT

A 126+98.6
CURB CUT, 43.0'

5366 GLACIER HWY
CLIFFORD M COLE & ELIZABETH A COLE

PAVEMENT CONDITION B
RECONSTRUCT LEFT LANE
STA 128+50 TO
STA 129+25

STA 129+49.72
17.00', LT

STA 129+45.59
17.00', LT

MATCH LINE "O" 124+00

MATCH LINE "O" 130+00

STA 124+46.27
17.00', LT

STA 124+74.33
17.00', LT
125+00

17.0'

10+00

STA 124+08.99
17.44', RT

STA 126+06.23
17.00', LT
126+00

STA 126+64.30
17.00', LT

127+00

SAWCUT

STA 128+50.00
17.00', LT

17.0'

129+00

STA 129+91.49
16.96', RT

SAWCUT

STA 125+19.53
17.00', RT

STA 125+24.53
17.00', RT

STA 126+64.34
17.00', RT

STA 126+68.81
17.00', RT

128+00

STA 129+44.14
16.98', RT

STA 129+14.12
16.95', RT

"O" 126+22.39
"TYLER RENTAL NORTH" 10+00

SAWCUT

STA 127+75.09
17.51', RT

GLACIER HWY

RETAIN & PROTECT
POWER POLE

RETAIN & PROTECT
POWER POLE

STA 126+40.23
16.99', RT

STA 129+48.03
16.97', RT

RETAIN & PROTECT
POWER POLE

STA 129+91.45
47.63', RT

5370 GLACIER HWY
LEMON GLACIER PROPERTIES INC.

REMOVE EXISTING CONCRETE
PAD AND COMMERCIAL SIGN

GUY WIRES TO BE
RELOCATED BY AEL&P

A 127+26
CURB CUT, 45.0'

GUY WIRES TO BE
RELOCATED BY AEL&P

STATE OF ALASKA
49TH
ANTHONY M. ROOS
CE 127591
REGISTERED PROFESSIONAL ENGINEER

7/31/2020

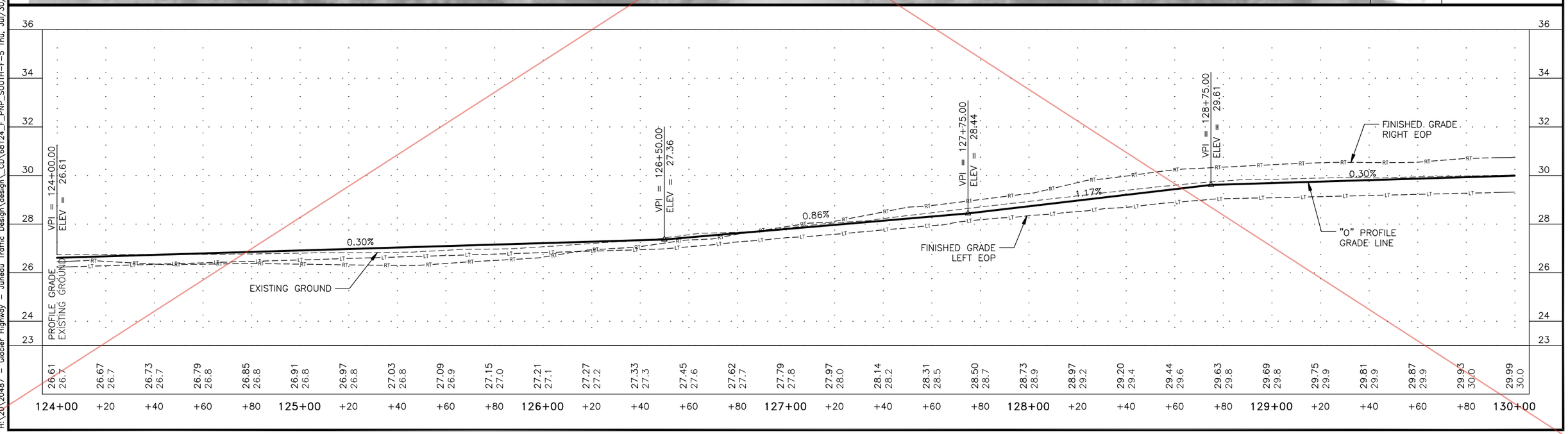

PLANS DEVELOPED BY: KITTELSON & ASSOCIATES, INC. CERT. OF AUTHORIZATION NO.: 254741, 851 SW 6TH AVE. SUITE 600, PORTLAND, OR 97204, (503) 228-5230
H:\20_20487 - Glacier Highway - Juneau Traffic Design\design_CD\68124_F_PNP_SOUTH-F-5 Thu, Jul/30/20 03:28am

CO 6

NO.	DATE	REVISION
1	04/19/21	RFI #15: CENTERLINE ADJUSTMENTS

STATE	PROJECT DESIGNATION	YEAR	SHEET NO.	TOTAL SHEETS
ALASKA	TEA-0955(016)/Z68124	2020	F-5	235

Record Drawings have been reviewed by the Project Engineer, and represent to the best of my knowledge, the project as constructed.

PE Dillon Tomaro 2/4/25

5275 GLACIER HWY
TYLER RENTAL INC.

SEE TYLER RENTAL SOUTH PLAN & PROFILE SHEET F-19

SEE TYLER RENTAL NORTH PLAN & PROFILE SHEET F-20

5366 GLACIER HWY
CLIFFORD M COLE & ELIZABETH A COLE

5370 GLACIER HWY
LEMON GLACIER PROPERTIES INC.

GLACIER HWY

MATCH LINE "0" 124+00

MATCH LINE "0" 130+00

STA 124+48.33
68.11', LT

STA 124+74.33
68.11', LT

"0" 124+61.33
"TYLER RENTAL SOUTH" 10+00

9+32

PAVEMENT CONDITION B:
RECONSTRUCT LEFT LANE
STA 124+74.33 TO
STA 125+50

STA 126+06.22
53.02', LT

9+25

STA 126+35.80
52.98', LT

STA 126+68.83
17.00', LT

STA 126+35.81
17.01', LT

A 126+98.6
CURB CUT, 43.0'

PAVEMENT CONDITION B
RECONSTRUCT LEFT LANE
STA 128+50 TO
STA 129+25

STA 129+49.72
17.00', LT

STA 129+45.59
17.00', LT

STA 124+46.27
17.00', LT

STA 124+74.33
17.00', LT

125+00

17.0'

10+00

STA 126+06.23
17.00', LT

126+00

STA 126+64.30
17.00', LT

127+00

SAWCUT

STA 128+50.00
17.00', LT

17.0'

129+00

STA 129+91.49
16.96', RT

SAWCUT

STA 124+08.99
17.44', RT

STA 125+19.53
17.00', RT

STA 125+24.53
17.00', RT

"0" 126+22.39
"TYLER RENTAL NORTH" 10+00

STA 126+64.34
17.00', RT

STA 126+68.81
17.00', RT

128+00

SAWCUT

STA 127+75.09
17.51', RT

STA 129+14.12
16.95', RT

STA 129+44.14
16.98', RT

STA 129+48.03
16.97', RT

RETAIN & PROTECT
POWER POLE

RETAIN & PROTECT
POWER POLE

STA 126+40.23
16.99', RT

RETAIN & PROTECT
POWER POLE

STA 129+91.45
47.63', RT

REMOVE EXISTING CONCRETE
PAD AND COMMERCIAL SIGN

GUY WIRES TO BE
RELOCATED BY AEL&P

GUY WIRES TO BE
RELOCATED BY AEL&P

A 127+26
CURB CUT, 45.0'

STATE OF ALASKA
49TH
ANTHONY M. ROOS
CE 127591
REGISTERED PROFESSIONAL ENGINEER

4/19/21

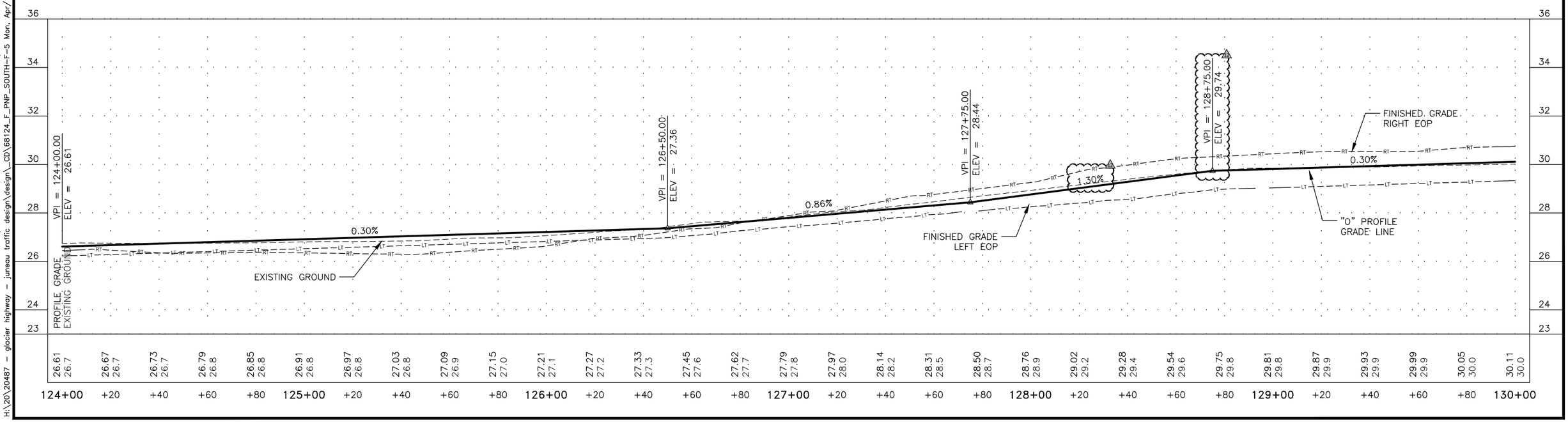

PLANS DEVELOPED BY: KITTELSON & ASSOCIATES, INC. CERT. OF AUTHORIZATION NO.: 254741, 851 SW 6TH AVE. SUITE 600, PORTLAND, OR 97204, (503) 228-5230
H:\20\20487 - glacier highway - juneau traffic design\design_CD\68124_F_PNP_SOUTH-F-5 Mon, Apr/19/21 01:51pm

Record Drawings have been reviewed by the Project Engineer, and represent to the best of my knowledge, the project as constructed.

PE Dillon Tomaro 2/4/25

NO.	DATE	REVISION

STATE	PROJECT DESIGNATION	YEAR	SHEET NO.	TOTAL SHEETS
ALASKA	TEA-0955(016)/Z68124	2020	F-6	235

** Deleted by CO6

"O" 130+01.49
"BOAT SHOP SOUTH" 10+00

5441 GLACIER HWY
JACK J SCHOENMANN & JOHN G SCHOENMANN

5501 GLACIER HWY
CITY AND BOROUGH OF JUNEAU &
J D PHONE CO.

MATCH LINE "O" 130+00

A 130+15.13
CURB CUT, 24.3'

PAVEMENT CONDITION B:
RECONSTRUCT
STA 130+50 TO 131+00

RETAIN & PROTECT
AREA DRAIN

RETAINING WALL A
SEE SHEETS M-1 TO M-4

+91.49
RT

STA 130+12.08
16.96', RT

17.0'

17.0'

131+00

SAWCUT

STA 131+20.05
17.00', RT

SAWCUT

STA 130+11.91
46.80', RT

SEE BOBCAT
PLAN & PROFILE
SHEET F-20

A 131+43.0
CURB CUT, 33.8'

5450 GLACIER HWY
BOBCAT OF JUNEAU LLC

MATCH EXISTING
STA 133+78.35
60.55', LT

RETAIN & PROTECT
FIRE HYDRANTS

ANKA STREET

9+67

10+00

MATCH EXISTING
STA 133+99.17
66.11', LT

RETAIN & PROTECT
EXISTING UTILITIES

RETAIN & PROTECT
SIGNAL POLE

RETAIN & PROTECT
AREA DRAIN

REMOVE
SCUPPER

RETAINING WALL B
SEE SHEETS M-1 TO M-4

INSTALL TRAVERSABLE CURB
STA 132+71.29 TO
STA 133+11.37

STA 132+17.19
17.00', LT

132+00

STA 132+03.05
19.41', RT

GLACIER HWY

133+00

STA 133+50.54
17.00', LT

SAWCUT

STA 133+55.33
36.51', RT

RETAIN & PROTECT
SIGNAL POLE

FULL DEPTH RECONSTRUCTION
OF ANKA STREET INTERSECTION.
SEE PAVEMENT CONDITION C

1610 ANKA ST
NATIONAL BANK OF ALASKA

TYPE D
MEDIAN

A 134+13.14
CURB CUT, 40.0'

RETAIN AND PROTECT
EXISTING INLET

MATCH LINE "O" 136+00

STA 135+75.12
17.60', RT

135+00

STA 135+09.26
22.48', LT

SAWCUT

STA 135+10.55
16.95', RT

"O" 134+06.81
"CL-ANKA ST" 10+65.50

134+00

NEW SIGNAL POLE
LOCATION

11+00

SEE ANKA STREET
PLAN & PROFILE
SHEET F-21

PINEWOOD PARK
GLACIER HWY GROSS ALASKA INC.

ANKA STREET

RETAIN AND PROTECT
EXISTING INLET

MATCH EXISTING
STA 134+60.26
106.11', RT

MATCH EXISTING
STA 134+22.74
119.57', RT

12+00

RETAIN AND PROTECT
EXISTING INLET

NOTES

1. SEE SHEET H-30 FOR ANKA STREET SIGNAL EQUIPMENT INSTALLATIONS AND REMOVALS.

STATE OF ALASKA
49TH
ANTHONY M. ROOS
CE 12759
REGISTERED PROFESSIONAL ENGINEER
7/31/2020

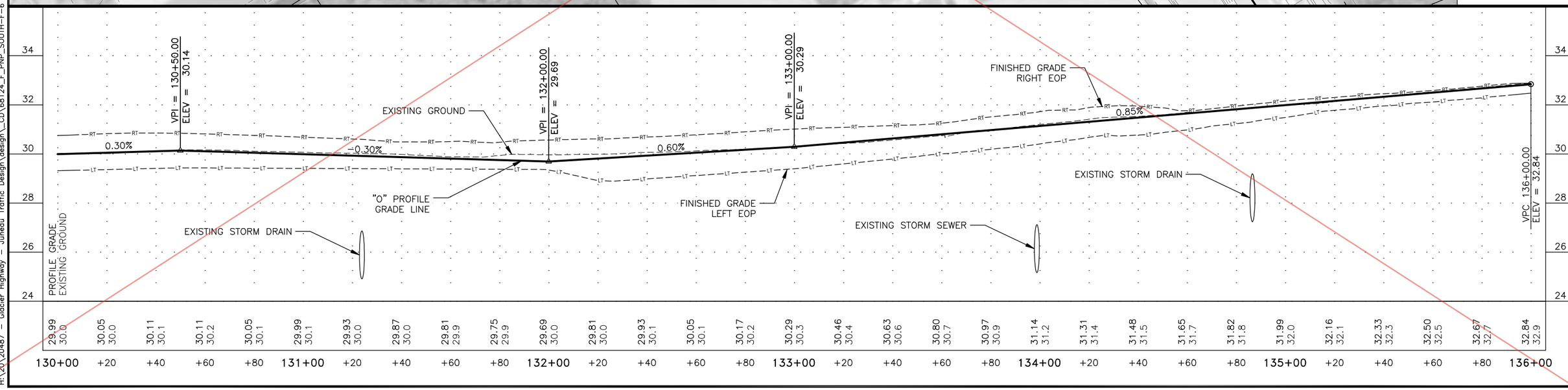

PLANS DEVELOPED BY: KITTELSON & ASSOCIATES, INC. CERT. OF AUTHORIZATION NO.: 254741, 851 SW 6TH AVE, SUITE 600, PORTLAND, OR 97204, (503) 228-5230
H:\20\20487 - Glacier Highway - Juneau Traffic Design\design_CD\68124_F_PNP_SOUTH-F-6 Thu, Jul/30/20 03:29pm

Record Drawings have been reviewed by the Project Engineer, and represent to the best of my knowledge, the project as constructed.

PE Dillon Tomaro 2/4/25

NO.	DATE	REVISION
1	04/19/21	RFI #15: CENTERLINE ADJUSTMENTS

STATE	PROJECT DESIGNATION	YEAR	SHEET NO.	TOTAL SHEETS
ALASKA	TEA-0955(016)/Z68124	2020	F-6	235

CO 6

** Deleted by CO25

"O" 130+01.49
"BOAT SHOP SOUTH" 10+00

5441 GLACIER HWY
JACK J SCHOENMANN & JOHN G SCHOENMANN

A 130+15.13
CURB CUT, 24.3'

PAVEMENT CONDITION B:
RECONSTRUCT
STA 130+50 TO 131+00

RETAIN & PROTECT
AREA DRAIN

RETAINING WALL A
SEE SHEETS M-1 TO M-4

MATCH LINE "O" 130+00

10+91.49
RT

STA 130+12.08
16.96', RT

17.0'

17.0'

131+00

SAWCUT

STA 131+20.05
17.00', RT

STA 130+11.91
46.80', RT

10+78

SEE BOBCAT
PLAN & PROFILE
SHEET F-20

A 131+43.0
CURB CUT, 33.8'

5450 GLACIER HWY
BOBCAT OF JUNEAU LLC

RETAIN & PROTECT
AREA DRAIN

RETAIN & PROTECT
FIRE HYDRANTS

REMOVE
SCUPPER

RETAINING WALL B
SEE SHEETS M-1 TO M-4

INSTALL TRAVERSABLE CURB
STA 132+71.29 TO
STA 133+11.37

STA 132+17.19
17.00', LT

132+00

SAWCUT

STA 132+03.05
19.41', RT

GLACIER HWY

1610 ANKA ST
NATIONAL BANK OF ALASKA

RETAIN & PROTECT
SIGNAL POLE

FULL DEPTH RECONSTRUCTION
OF ANKA STREET INTERSECTION.
SEE PAVEMENT CONDITION C

5501 GLACIER HWY
CITY AND BOROUGH OF JUNEAU &
J D PHONE CO.

MATCH EXISTING
STA 133+78.35
60.55', LT

ANKA STREET

9+67

10+00

MATCH EXISTING
STA 133+99.17
66.11', LT

RETAIN & PROTECT
EXISTING UTILITIES

RETAIN & PROTECT
SIGNAL POLE

STA 135+75.12
17.60', RT

STA 135+09.26
22.48', LT

135+00

SAWCUT

STA 135+10.55
16.95', RT

MATCH LINE "O" 136+00

STA 133+50.54
17.00', LT

133+00

SAWCUT

STA 133+55.33
36.51', RT

134+00

"O" 134+06.81
"CL-ANKA ST" 10+65.50

11+00

NEW SIGNAL POLE
LOCATION

SEE ANKA STREET
PLAN & PROFILE
SHEET F-21

PINEWOOD PARK
GLACIER HWY GROSS ALASKA INC.

RETAIN AND PROTECT
EXISTING INLET

MATCH EXISTING
STA 134+60.26
106.11', RT

MATCH EXISTING
STA 134+22.74
119.57', RT

12+00

TYPE D
MEDIAN

A 134+13.14
CURB CUT, 40.0'

RETAIN AND PROTECT
EXISTING INLET

ANKA STREET

NOTES

1. SEE SHEET H-30 FOR ANKA STREET SIGNAL EQUIPMENT INSTALLATIONS AND REMOVALS.

STATE OF ALASKA
49TH
4/19/21
ANTHONY M. ROOS
CE 12759
REGISTERED PROFESSIONAL ENGINEER

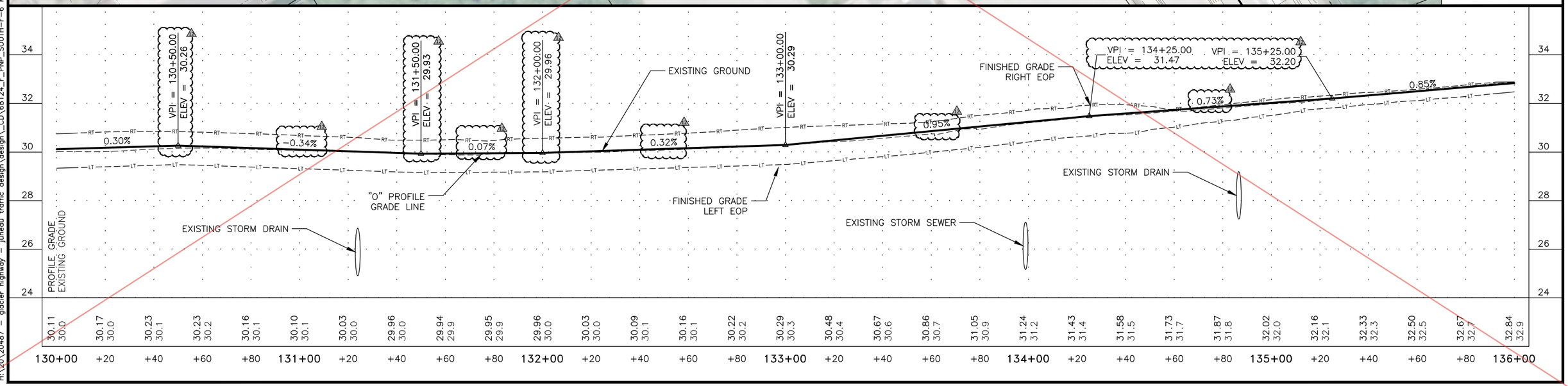

PLANS DEVELOPED BY: KITTELSON & ASSOCIATES, INC. CERT. OF AUTHORIZATION NO.: 254741, 851 SW 6TH AVE. SUITE 600, PORTLAND, OR 97204, (503) 228-5230
H:\20\20487 - glacier highway - juneau traffic design\design_CD\68124_F_PNP_SOUTH-F-6 Mon, Apr/19/21 01:52pm

CO 25 Attachment No. 1

NO.	DATE	REVISION
1	04/19/21	RFI #15: CENTERLINE ADJUSTMENTS

STATE	PROJECT DESIGNATION	YEAR	SHEET NO.	TOTAL SHEETS
ALASKA	TEA-0955(016)/Z68124	2020	F-6	235

** Deleted by CO47

"O" 130+01.49
"BOAT SHOP SOUTH" 10+00

A 130+15.13
CURB CUT, 24.3'

DELETE DRIVEWAY

5441 GLACIER HWY
JACK J SCHOENMANN & JOHN G SCHOENMANN

MATCH LINE "O" 130+00

PAVEMENT CONDITION B:
RECONSTRUCT
STA 130+50 TO 131+00

RETAIN & PROTECT
AREA DRAIN

CUT & REMOVE APSHALT
TO JUST BEYOND FILL SLOPE

RETAINING WALL A
SEE SHEETS M-1 TO M-4

+91.49
RT

10+78

STA 130+12.08
16.96', RT

17.0'

17.0'

131+00

SAWCUT

STA 130+11.91
46.80', RT

SEE BOBCAT
PLAN & PROFILE
SHEET F-20

ADD 34' WIDE DRIVEWAY
STA. 130+79 LT (CURB CUT)

131+43.0
CURB CUT, 33.8'

A

5450 GLACIER HWY
BOBCAT OF JUNEAU LLC

STA 131+20.05
17.00', RT

SAWCUT

132+00

STA 132+17.19
17.00', LT

STA 132+03.05
19.41', RT

RETAIN & PROTECT
AREA DRAIN

RETAIN & PROTECT
FIRE HYDRANTS

RETAINING WALL B
SEE SHEETS M-1 TO M-4

REMOVE
SCUPPER

INSTALL TRAVERSABLE CURB
STA 132+71.29 TO
STA 133+11.37

SAWCUT

133+00

STA 133+50.54
17.00', LT

SAWCUT

GLACIER HWY

STA 133+55.33
36.51', RT

RETAIN & PROTECT
SIGNAL POLE

FULL DEPTH RECONSTRUCTION
OF ANKA STREET INTERSECTION.
SEE PAVEMENT CONDITION C

1610 ANKA ST
NATIONAL BANK OF ALASKA

5501 GLACIER HWY
CITY AND BOROUGH OF JUNEAU &
J D PHONE CO.

MATCH EXISTING
STA 133+78.35
60.55', LT

ANKA STREET

9+67

10+00

MATCH EXISTING
STA 133+99.17
66.11', LT

RETAIN & PROTECT
EXISTING UTILITIES

RETAIN & PROTECT
SIGNAL POLE

STA 135+75.12
17.60', RT

STA 135+09.26
22.48', LT

135+00

SAWCUT

MATCH LINE "O" 136+00

STA 135+10.55
16.95', RT

134+00

"O" 134+06.81
"CL-ANKA ST" 10+65.50

NEW SIGNAL POLE
LOCATION

11+00

SEE ANKA STREET
PLAN & PROFILE
SHEET F-21

PINEWOOD PARK
GLACIER HWY GROSS ALASKA INC.

TYPE D
MEDIAN

134+13.14
CURB CUT, 40.0'

A

RETAIN AND PROTECT
EXISTING INLET

RETAIN AND PROTECT
EXISTING INLET

MATCH EXISTING
STA 134+60.26
106.11', RT

MATCH EXISTING
STA 134+22.74
119.57', RT

12+00

ANKA STREET

NOTES

1. SEE SHEET H-30 FOR ANKA STREET SIGNAL EQUIPMENT INSTALLATIONS AND REMOVALS.

STATE OF ALASKA
49TH
4/19/21
ANTHONY M. ROOS
CE 12759
REGISTERED PROFESSIONAL ENGINEER

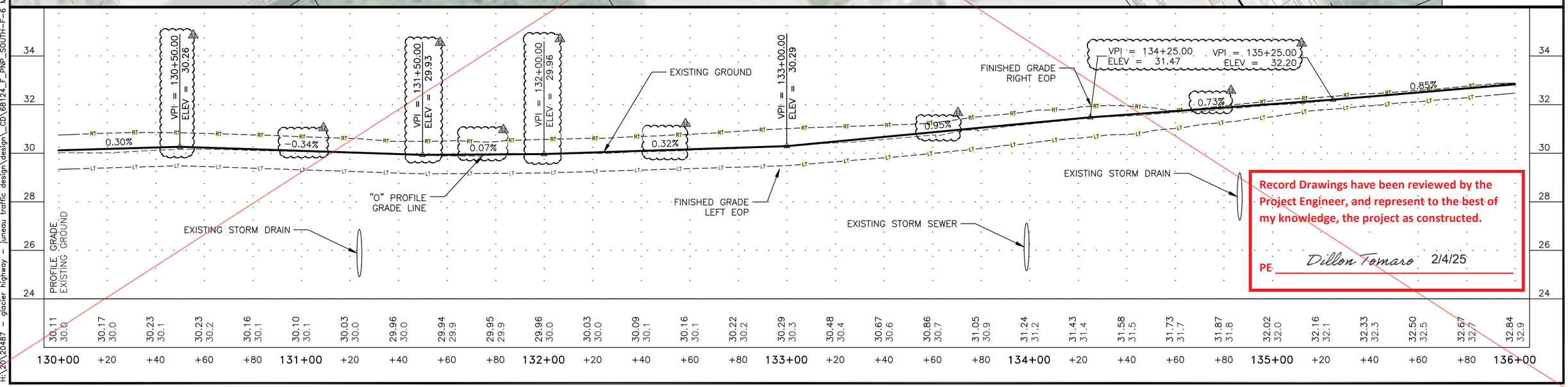

Record Drawings have been reviewed by the Project Engineer, and represent to the best of my knowledge, the project as constructed.

PE Dillon Tomaro 2/4/25

PLANS DEVELOPED BY: KITTELSON & ASSOCIATES, INC. CERT. OF AUTHORIZATION NO.: 254741, 851 SW 6TH AVE. SUITE 600, PORTLAND, OR 97204, (503) 228-5230
H:\20\20487 - glacier highway - juneau traffic design\design_CD\68124_F_PNP_SOUTH-F-6 Mon, Apr/19/21 01:52pm

NO.	DATE	REVISION
1	04/19/21	RFI #15: CENTERLINE ADJUSTMENTS
2	05/22/23	DELTA 43: ANKA MEDIAN REMOVAL

STATE	PROJECT DESIGNATION	YEAR	SHEET NO.	TOTAL SHEETS
ALASKA	TEA-0955(016)/Z68124	2020	F-6	235

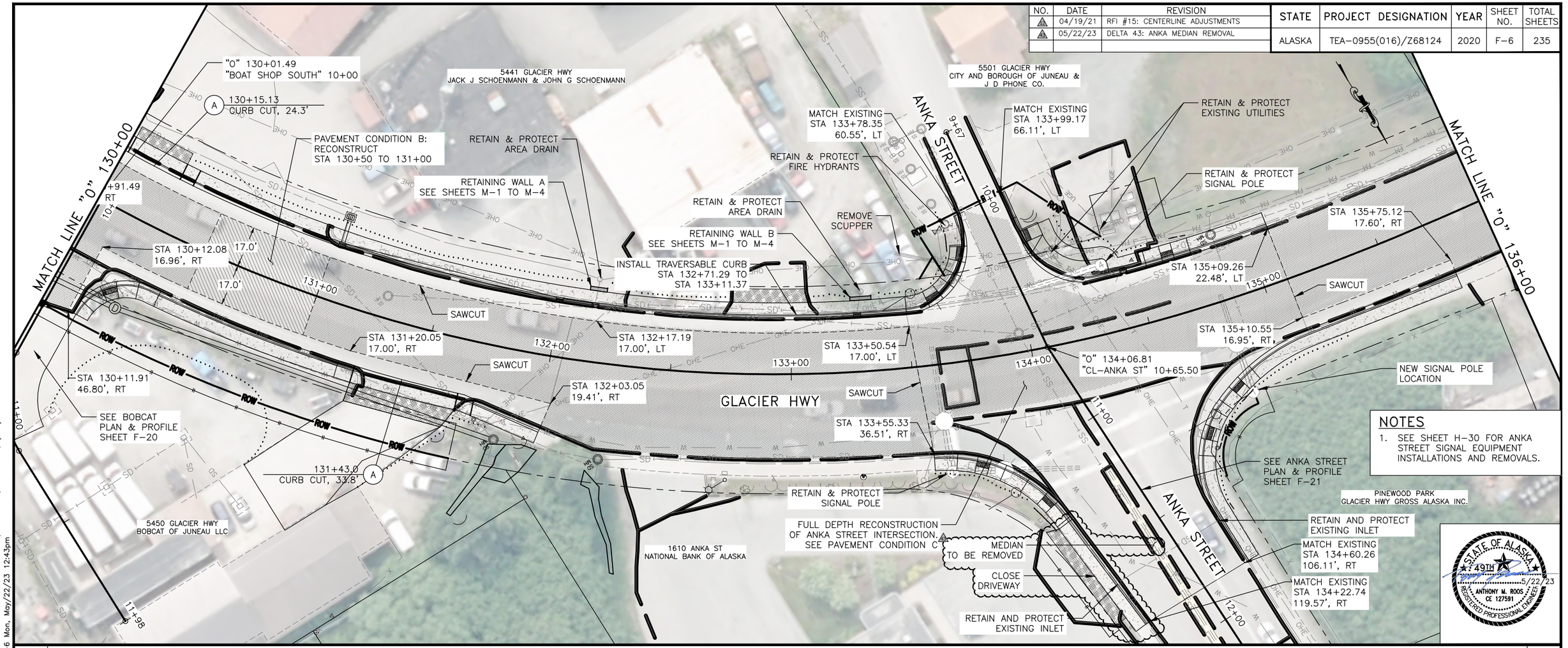

NOTES

1. SEE SHEET H-30 FOR ANKA STREET SIGNAL EQUIPMENT INSTALLATIONS AND REMOVALS.

STATE OF ALASKA
49TH
ANTHONY M. ROOS
CE 12759
REGISTERED PROFESSIONAL ENGINEER
5/22/23

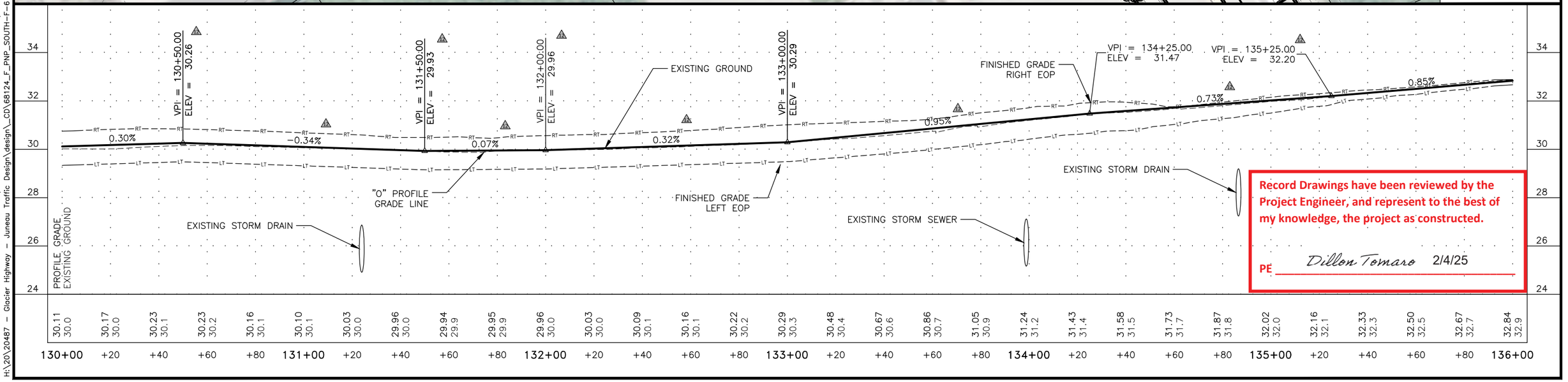

Record Drawings have been reviewed by the Project Engineer, and represent to the best of my knowledge, the project as constructed.

PE *Dillon Tomaro* 2/4/25

PLANS DEVELOPED BY: KITTELSON & ASSOCIATES, INC. CERT. OF AUTHORIZATION NO.: 254741, 851 SW 6TH AVE, SUITE 600, PORTLAND, OR 97204, (503) 228-5230
H:\20\20487 - Glacier Highway - Juneau Traffic Design\design_CD\68124_F_PNP_SOUTH-F-6 Mon, May/22/23 12:43pm

NO.	DATE	REVISION
1	04/19/21	RFI #15: CENTERLINE ADJUSTMENTS
2	05/22/23	DELTA 43: ANKA MEDIAN REMOVAL

STATE	PROJECT DESIGNATION	YEAR	SHEET NO.	TOTAL SHEETS
ALASKA	TEA-0955(016)/Z68124	2020	F-6	235

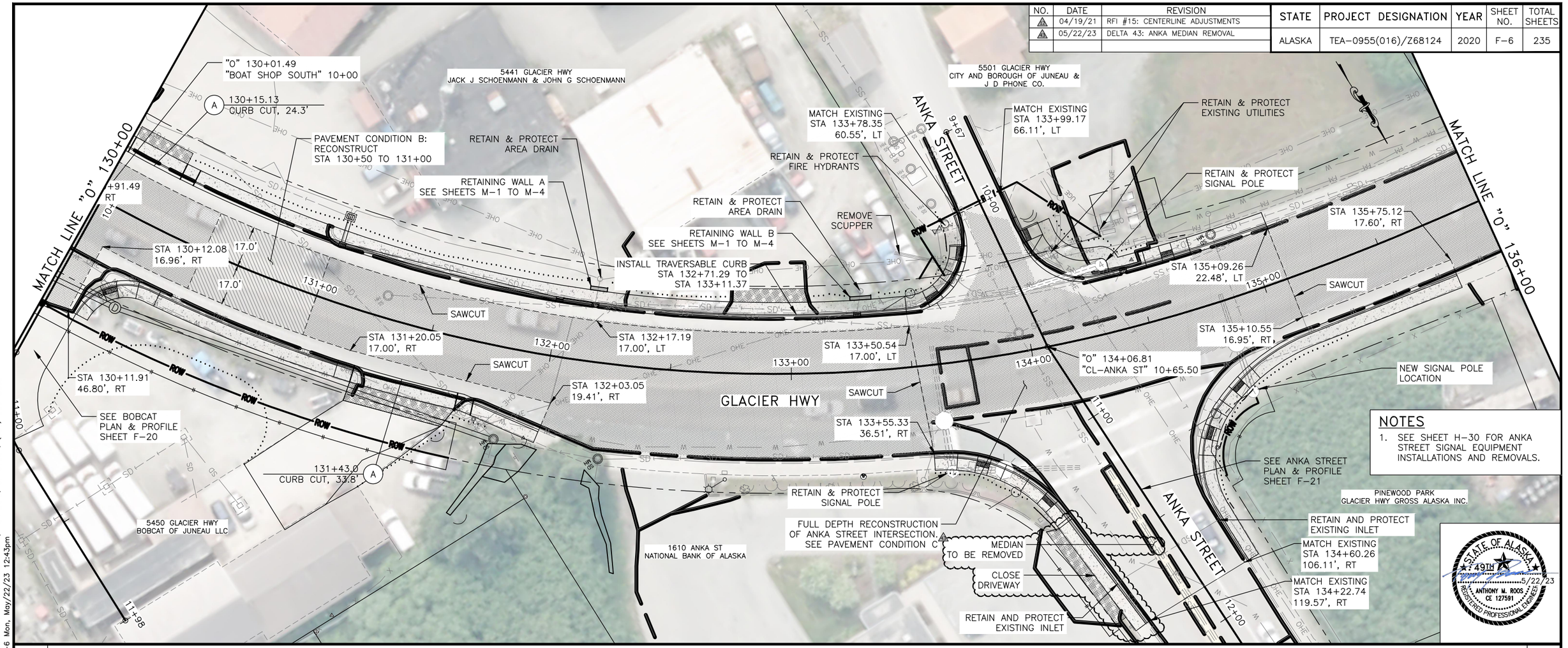

NOTES

1. SEE SHEET H-30 FOR ANKA STREET SIGNAL EQUIPMENT INSTALLATIONS AND REMOVALS.

STATE OF ALASKA
49TH
ANTHONY M. ROOS
CE 12759
REGISTERED PROFESSIONAL ENGINEER
5/22/23

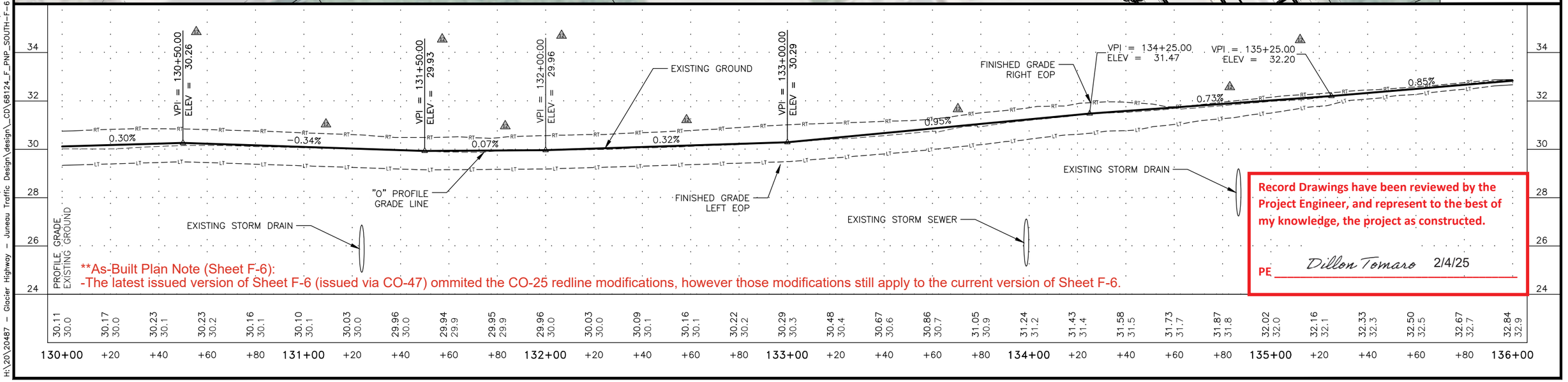

**As-Built Plan Note (Sheet F-6):
-The latest issued version of Sheet F-6 (issued via CO-47) ommited the CO-25 redline modifications, however those modifications still apply to the current version of Sheet F-6.

Record Drawings have been reviewed by the Project Engineer, and represent to the best of my knowledge, the project as constructed.

PE Dillon Tomaro 2/4/25

PLANS DEVELOPED BY: KITTELSON & ASSOCIATES, INC. CERT. OF AUTHORIZATION NO.: 254741, 851 SW 6TH AVE, SUITE 600, PORTLAND, OR 97204, (503) 228-5230
H:\20\20487 - Glacier Highway - Juneau Traffic Design\design_CD\68124_F_PNP_SOUTH-F-6 Mon, May/22/23 12:43pm

NO.	DATE	REVISION

STATE	PROJECT DESIGNATION	YEAR	SHEET NO.	TOTAL SHEETS
ALASKA	TEA-0955(016)/Z68124	2020	F-7	235

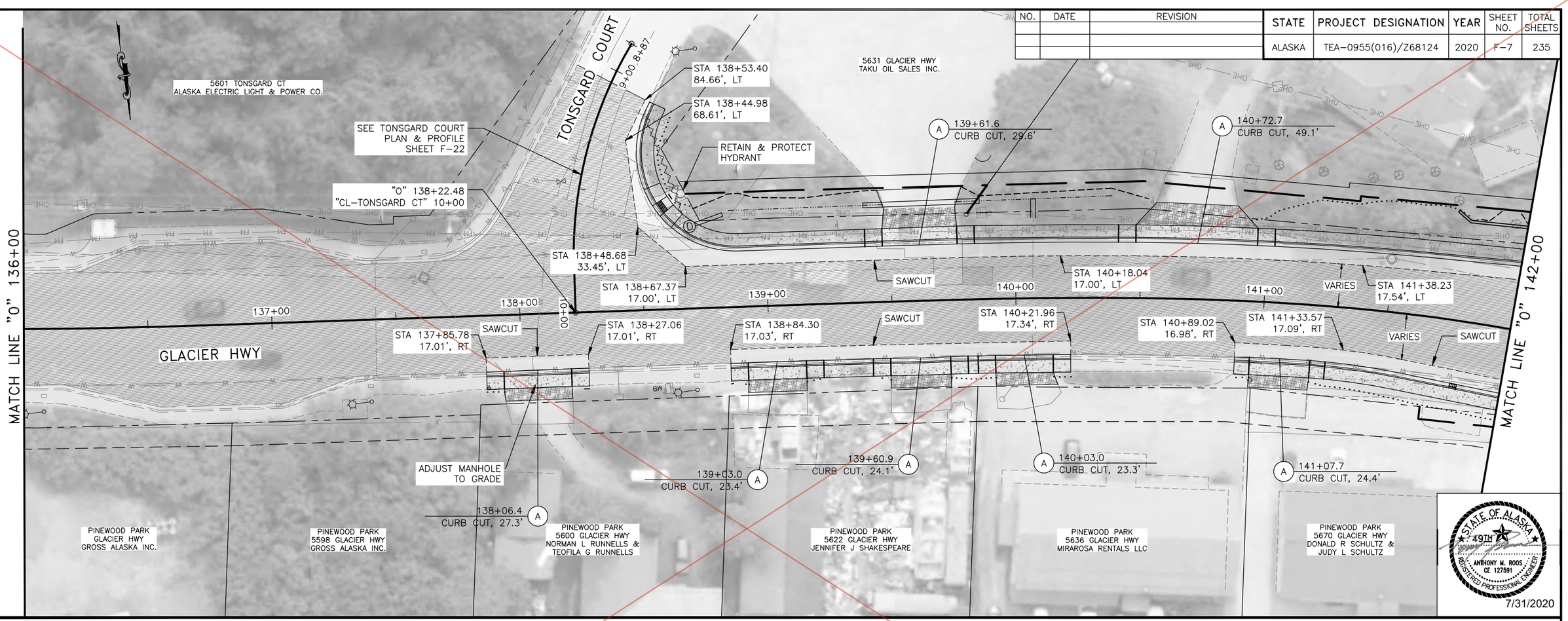

STATE OF ALASKA
49TH
ANTHONY M. ROOS
CE 127591
REGISTERED PROFESSIONAL ENGINEER
7/31/2020

** Deleted by CO6

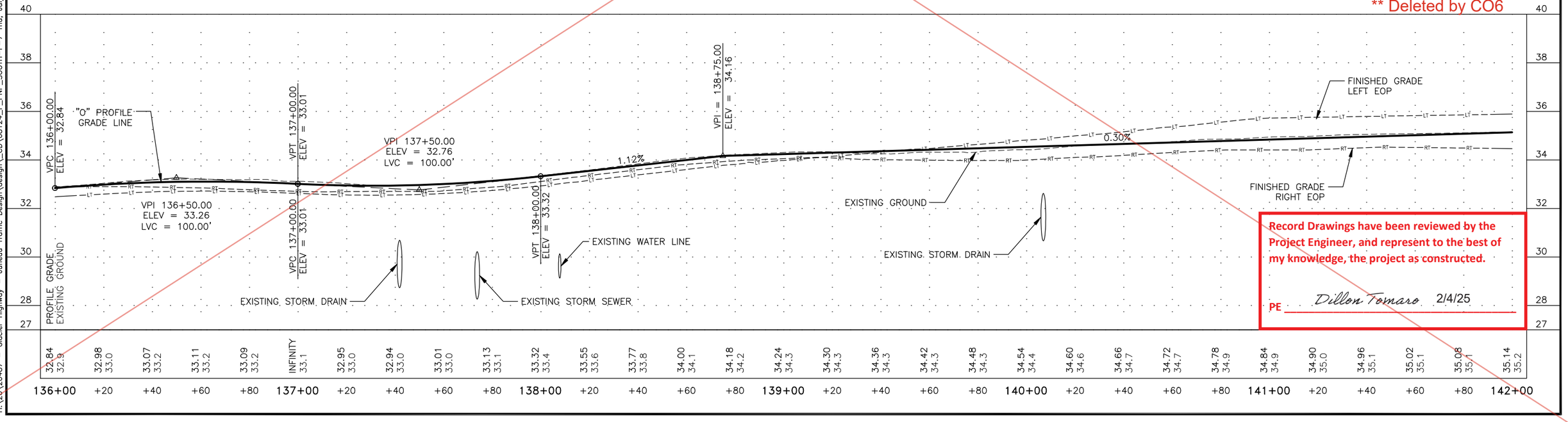

Record Drawings have been reviewed by the Project Engineer, and represent to the best of my knowledge, the project as constructed.

PE Dillon Tomaro 2/4/25

PLANS DEVELOPED BY: KITTELSON & ASSOCIATES, INC. CERT. OF AUTHORIZATION NO.: 254741, 851 SW 6TH AVE. SUITE 600, PORTLAND, OR 97204, (503) 228-5230
H:\20\20487 - Glacier Highway - Juneau Traffic Design\design_CD\68124_F_PNP_SOUTH-F-7 Thu, Jul/30/20 03:30pm

NO.	DATE	REVISION
1	04/19/21	RFI #15: CENTERLINE ADJUSTMENTS

STATE	PROJECT DESIGNATION	YEAR	SHEET NO.	TOTAL SHEETS
ALASKA	TEA-0955(016)/Z68124	2020	F-7	235

5601 TONSGARD CT
ALASKA ELECTRIC LIGHT & POWER CO.

TONSGARD COURT

9+00 8+87

STA 138+53.40
84.66', LT

STA 138+44.98
68.61', LT

5631 GLACIER HWY
TAKU OIL SALES INC.

SEE TONSGARD COURT
PLAN & PROFILE
SHEET F-22

RETAIN & PROTECT
HYDRANT

A 139+61.6
CURB CUT, 29.6'

A 140+72.7
CURB CUT, 49.1'

"O" 138+22.48
"CL-TONSGARD CT" 10+00

STA 138+48.68
33.45', LT

STA 138+67.37
17.00', LT

SAWCUT

STA 140+18.04
17.00', LT

VARIES

STA 141+38.23
17.54', LT

MATCH LINE "O" 136+00

MATCH LINE "O" 142+00

137+00

138+00

10+00

139+00

140+00

141+00

GLACIER HWY

STA 137+85.78
17.01', RT

SAWCUT

STA 138+27.06
17.01', RT

STA 138+84.30
17.03', RT

SAWCUT

STA 140+21.96
17.34', RT

STA 140+89.02
16.98', RT

STA 141+33.57
17.09', RT

VARIES

SAWCUT

ADJUST MANHOLE
TO GRADE

A 139+03.0
CURB CUT, 23.4'

A 139+60.9
CURB CUT, 24.1'

A 140+03.0
CURB CUT, 23.3'

A 141+07.7
CURB CUT, 24.4'

A 138+06.4
CURB CUT, 27.3'

PINEWOOD PARK
GLACIER HWY
GROSS ALASKA INC.

PINEWOOD PARK
5598 GLACIER HWY
GROSS ALASKA INC.

PINEWOOD PARK
5600 GLACIER HWY
NORMAN L RUNNELLS &
TEOFILA G RUNNELLS

PINEWOOD PARK
5622 GLACIER HWY
JENNIFER J SHAKESPEARE

PINEWOOD PARK
5636 GLACIER HWY
MIRAROSA RENTALS LLC

PINEWOOD PARK
5670 GLACIER HWY
DONALD R SCHULTZ &
JUDY L SCHULTZ

CO 6

STATE OF ALASKA
49TH
ANTHONY M. ROOS
CE 127591
REGISTERED PROFESSIONAL ENGINEER
4/19/21

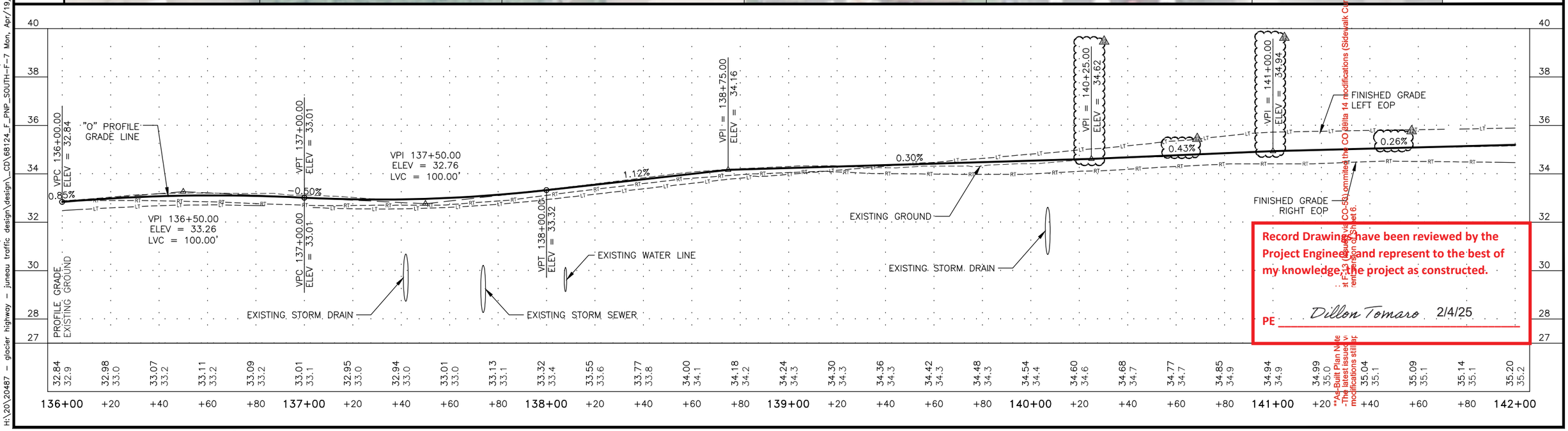

Record Drawings have been reviewed by the Project Engineer and represent to the best of my knowledge, the project as constructed.

PE Dillon Tomaro 2/4/25

**As-Built Plan Note
-The latest issued version of Plans CO-5 commits the CO delta 14 modifications (Sidewalk Curb and Gutter Ramps and the added curb ramps that were added to the Curb Ramp Table via CO-5, however those modifications still appear on Sheet 6.

PLANS DEVELOPED BY: KITTELSON & ASSOCIATES, INC. CERT. OF AUTHORIZATION NO.: 254741, 851 SW 6TH AVE. SUITE 600, PORTLAND, OR 97204, (503) 228-5230
H:\20\20487 - glacier highway - juneau traffic design\design_CD\68124_F_PNP_SOUTH-F-7 Mon, Apr/19/21 01:52pm

Addendum # 9; Attachment # 10

NO.	DATE	REVISION
9	01/13/21	ADDENDUM 9

STATE	PROJECT DESIGNATION	YEAR	SHEET NO.	TOTAL SHEETS
ALASKA	TEA-0955(016)/Z68124	2020	F-8	235

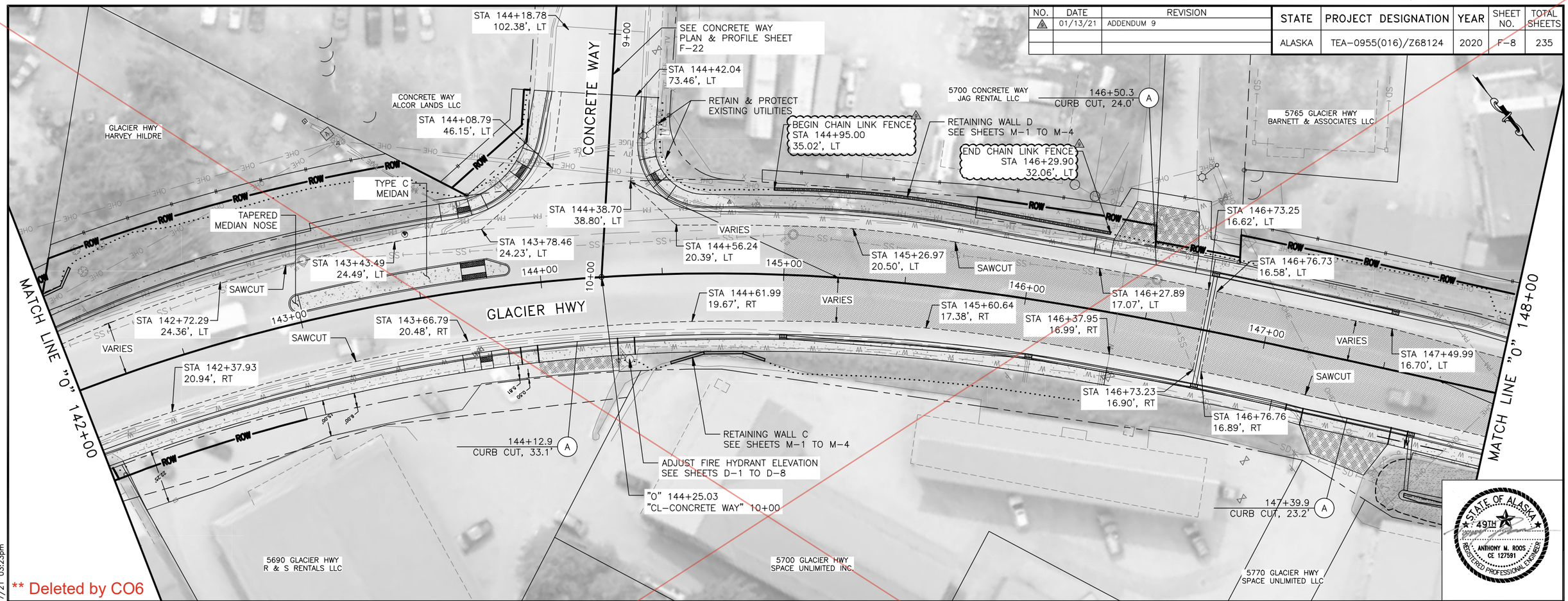

** Deleted by CO6

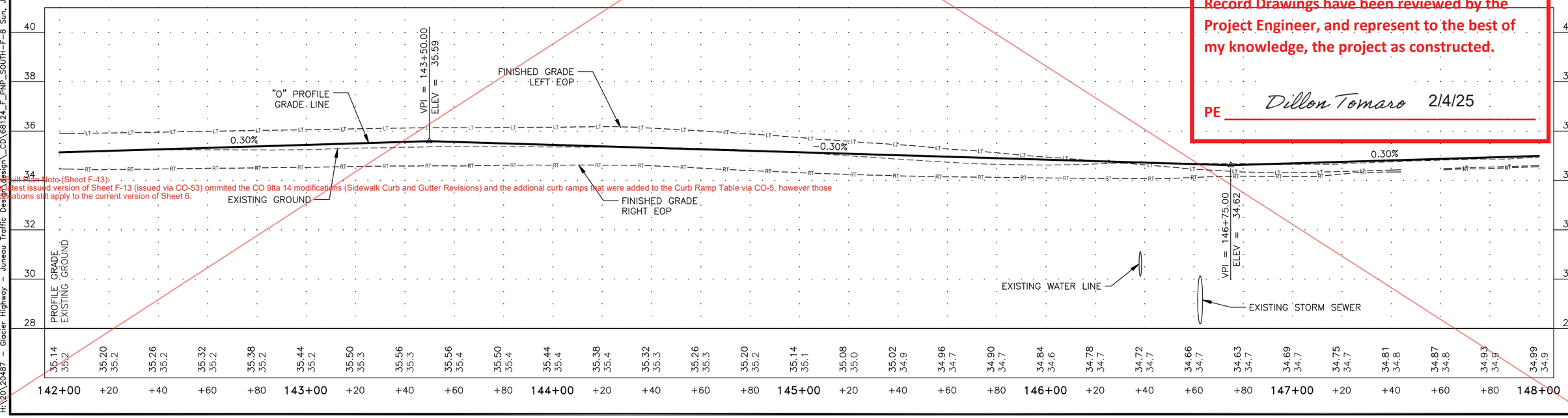

Record Drawings have been reviewed by the Project Engineer, and represent to the best of my knowledge, the project as constructed.

PE Dillon Tomaro 2/4/25

*** As Built Plan Note (Sheet F-13):
- The latest issued version of Sheet F-13 (issued via CO-53) ommited the CO 9lta 14 modifications (Sidewalk Curb and Gutter Revisions) and the addional curb ramps that were added to the Curb Ramp Table via CO-5, however those modifications still apply to the current version of Sheet 6.

PLANS DEVELOPED BY: KITTELSON & ASSOCIATES, INC. CERT. OF AUTHORIZATION NO.: 254741, 851 SW 6TH AVE. SUITE 600, PORTLAND, OR 97204, (503) 228-5230
H:\20\20487 - Glacier Highway - Juneau Traffic Design_CD\68124_F_PNP_SOUTH-F-8 Sun, Jan/17/21 03:23pm

NO.	DATE	REVISION
1	01/13/21	ADDENDUM 9
2	04/19/21	RFI #15: CENTERLINE ADJUSTMENTS

STATE	PROJECT DESIGNATION	YEAR	SHEET NO.	TOTAL SHEETS
ALASKA	TEA-0955(016)/Z68124	2020	F-8	235

STA 144+18.78
102.38', LT

SEE CONCRETE WAY
PLAN & PROFILE SHEET
F-22

CONCRETE WAY

9+00

STA 144+42.04
73.46', LT

RETAIN & PROTECT
EXISTING UTILITIES

CONCRETE WAY
ALCOR LANDS LLC

STA 144+08.79
46.15', LT

GLACIER HWY
HARVEY HILDRE

TYPE C
MEIDAN

TAPERED
MEDIAN NOSE

STA 144+38.70
38.80', LT

STA 143+78.46
24.23', LT

STA 143+43.49
24.49', LT

SAWCUT

144+00

10+00

143+00

GLACIER HWY

STA 142+72.29
24.36', LT

VARIES

STA 143+66.79
20.48', RT

SAWCUT

STA 142+37.93
20.94', RT

MATCH LINE "O" 142+00

144+12.9
CURB CUT, 33.1'

A

RETAINING WALL C
SEE SHEETS M-1 TO M-4

ADJUST FIRE HYDRANT ELEVATION
SEE SHEETS D-1 TO D-8

"O" 144+25.03
"CL-CONCRETE WAY" 10+00

5690 GLACIER HWY
R & S RENTALS LLC

5700 GLACIER HWY
SPACE UNLIMITED INC.

5700 CONCRETE WAY
JAG RENTAL LLC

146+50.3
CURB CUT, 24.0'

A

BEGIN CHAIN LINK FENCE
STA 144+95.00
35.02', LT

RETAINING WALL D
SEE SHEETS M-1 TO M-4

END CHAIN LINK FENCE
STA 146+29.90
32.06', LT

VARIES

STA 144+56.24
20.39', LT

145+00

STA 145+26.97
20.50', LT

SAWCUT

146+00

STA 144+61.99
19.67', RT

VARIES

STA 145+60.64
17.38', RT

STA 146+37.95
16.99', RT

STA 146+27.89
17.07', LT

5765 GLACIER HWY
BARNETT & ASSOCIATES LLC

STA 146+73.25
16.62', LT

STA 146+76.73
16.58', LT

147+00

VARIES

STA 147+49.99
16.70', LT

SAWCUT

STA 146+73.23
16.90', RT

STA 146+76.76
16.89', RT

MATCH LINE "O" 148+00

147+39.9
CURB CUT, 23.2'

A

5770 GLACIER HWY
SPACE UNLIMITED LLC

CO 6

STATE OF ALASKA
49TH
ANTHONY M. ROOS
CE 127591
REGISTERED PROFESSIONAL ENGINEER

4/19/21

** Deleted by CO52

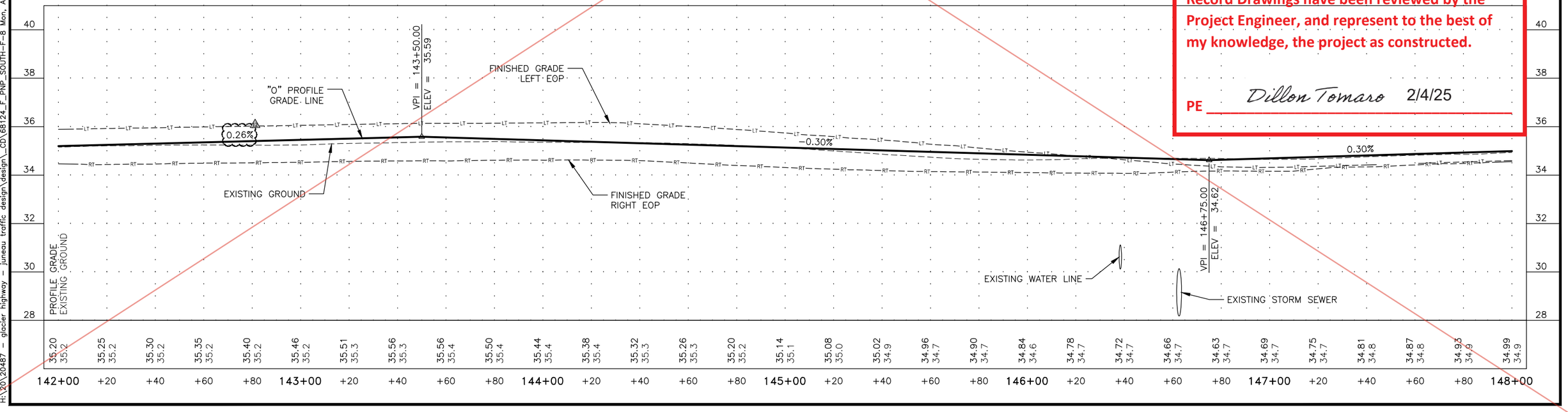

Record Drawings have been reviewed by the Project Engineer, and represent to the best of my knowledge, the project as constructed.

PE Dillon Tomaro 2/4/25

PLANS DEVELOPED BY: KITTELSON & ASSOCIATES, INC. CERT. OF AUTHORIZATION NO.: 254741, 851 SW 6TH AVE. SUITE 600, PORTLAND, OR 97204, (503) 228-5230
H:\20\20487 - glacier highway - juneau traffic design\design_CD\68124_F_PNP_SOUTH-F-8 Mon, Apr/19/21 01:52pm

Attachment 2

NO.	DATE	REVISION
3	01/13/21	ADDENDUM 9
4	04/19/21	RFI #15: CENTERLINE ADJUSTMENTS
5	05/10/22	DELTA 35: BRIDGE GRADING REVISIONS

STATE	PROJECT DESIGNATION	YEAR	SHEET NO.	TOTAL SHEETS
ALASKA	TEA-0955(016)/Z68124	2020	F-8	235

STA 144+18.78
102.38', LT

SEE CONCRETE WAY
PLAN & PROFILE SHEET
F-22

CONCRETE WAY

9+00

STA 144+42.04
73.46', LT

RETAIN & PROTECT
EXISTING UTILITIES

CONCRETE WAY
ALCOR LANDS LLC

STA 144+08.79
46.15', LT

GLACIER HWY
HARVEY HILDRE

BEGIN CHAIN LINK FENCE
STA 144+95.00
35.02', LT

RETAINING WALL D
SEE SHEETS M-1 TO M-4

5700 CONCRETE WAY
JAG RENTAL LLC

146+50.3
CURB CUT, 24.0'

A

END CHAIN LINK FENCE
STA 146+29.90
32.06', LT

5765 GLACIER HWY
BARNETT & ASSOCIATES LLC

TYPE C
MEIDAN

TAPERED
MEDIAN NOSE

STA 144+38.70
38.80', LT

VARIES

STA 143+78.46
24.23', LT

STA 144+56.24
20.39', LT

STA 145+26.97
20.50', LT

SAWCUT

STA 146+73.25
16.62', LT

STA 143+43.49
24.49', LT

144+00

10+00

145+00

146+00

STA 146+76.73
16.58', LT

SAWCUT

STA 144+61.99
19.67', RT

VARIES

STA 145+60.64
17.38', RT

STA 146+27.89
17.07', LT

MATCH LINE "O" 142+00

STA 142+72.29
24.36', LT

143+00

GLACIER HWY

STA 143+66.79
20.48', RT

STA 146+37.95
16.99', RT

147+00

VARIES

STA 147+49.99
16.70', LT

MATCH LINE "O" 148+00

VARIES

SAWCUT

SAWCUT

STA 142+37.93
20.94', RT

STA 146+73.23
16.90', RT

STA 146+76.76
16.89', RT

Armor the ends of Wall C with 8-Inch Minus Angular Rock salvaged from deepening of adjacent ditch (between approximate stations 145+00 to 147+20 RT)

SEE SHEETS M-1 TO M-4

144+12.9
CURB CUT, 33.1'

A

ADJUST FIRE HYDRANT ELEVATION
SEE SHEETS D-1 TO D-8

Deepen ditch as directed by the Engineer. Save 8-Inch Minus Angular Rock and use to armor ends of Wall C.

"O" 144+25.03
"CL-CONCRETE WAY" 10+00

147+39.9
CURB CUT, 23.2'

A

CO 52

Record Drawings have been reviewed by the Project Engineer, and represent to the best of my knowledge, the project as constructed.

PE *Dillon Tomaro* 2/4/25

5690 GLACIER HWY
R & S RENTALS LLC

5700 GLACIER HWY
SPACE UNLIMITED INC.

5770 GLACIER HWY
SPACE UNLIMITED LLC

STATE OF ALASKA
49TH
ANTHONY M. ROOS
CE 127591
REGISTERED PROFESSIONAL ENGINEER
5/10/22

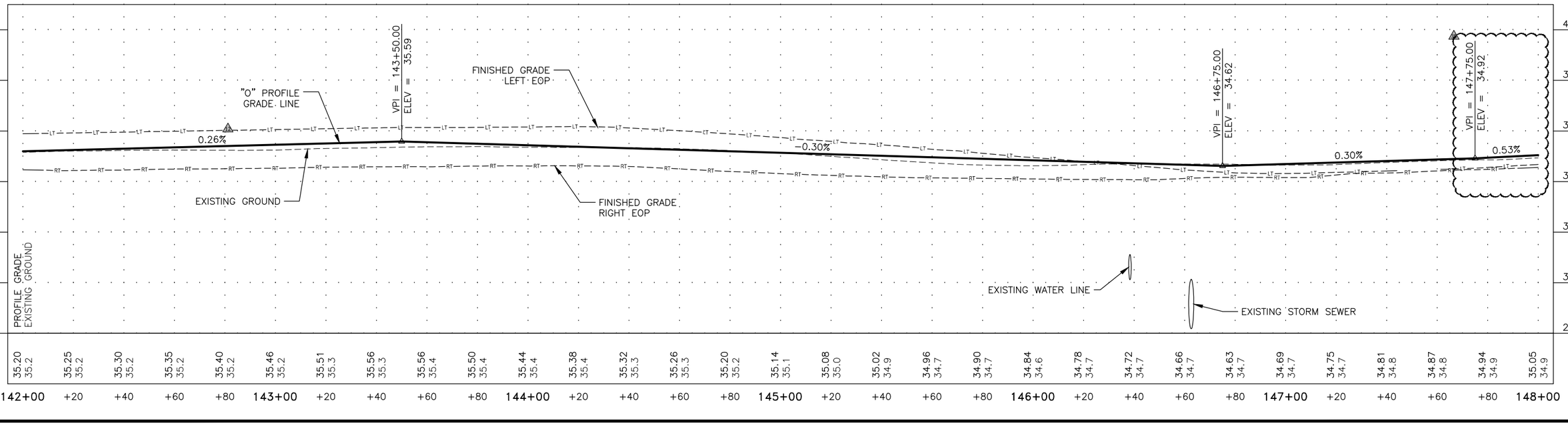

PLANS DEVELOPED BY: KITTELSON & ASSOCIATES, INC. CERT. OF AUTHORIZATION NO.: 254741, 851 SW 6TH AVE, SUITE 600, PORTLAND, OR 97204, (503) 228-5230
H:\20\20487 - Glacier Highway - Juneau Traffic Design\design_CD\68124_F_PNP_SOUTH-F-8 Tue, May/10/22 01:40pm

NOTES

1. SEE SHEET H–35 FOR DAVIS AVENUE SIGNAL EQUIPMENT INSTALLATIONS AND REMOVALS.
2. SEE SHEET E–8 FOR PED RAMP AND CURB & GUTTER DETAILS.
3. REMOVE EXISTING GUARDRAIL AND INSTALL ASSEMBLIES SHOWN.

NO.	DATE	REVISION

STATE	PROJECT DESIGNATION	YEAR	SHEET NO.	TOTAL SHEETS
ALASKA	TEA–0955(016)/Z68124	2020	F–9	235

5763 GLACIER HWY
ADELA M HAMEY

GUARDRAIL F* ASSEMBLY
6'3" TERMINAL ANCHOR
21'9" W BEAM RAIL
MATCH BRIDGE TRANSITION RAIL
SEE N SERIES
SEE NOTE 3

BEGIN GUARDRAIL F*
STA 148+00.00, 29.00' LT

END GUARDRAIL F* AND MATCH BRIDGE TRANSITION RAIL
STA 148+28.00, 26.50 LT

LEMON CREEK BRIDGE
STA 148+49.00 TO
STA 149+49.00
SEE N SERIES FOR CONSTRUCTION DETAILS

MATCH VERTICAL CURB AT BRIDGE
STA 149+49.30
18.92', LT

SEE NOTE 2

MATCH BRIDGE RAIL TRANSITION AND BEGIN GUARDRAIL G*
STA 149+70.30, 26.50' LT

GUARDRAIL G* ASSEMBLY
MATCH BRIDGE TRANSITION RAIL
SEE N SERIES AND INSTALL
23'3" W BEAM RAIL
6'3" TERMINAL ANCHOR
SEE NOTE 3

END GUARDRAIL G*
STA 150+00.00,
27.90' LT

"O" 150+17.21
"CL–DAVIS AVE" 10+00

END 6" VERTICAL CURB AT INLET
STA 150+48.06
24.38', LT

5875 GLACIER HWY
COOGAN GENERAL LLC

RETAIN AND PROTECT POWER POLE

RETAIN AND PROTECT POWER POLE

SEE BELARDI DRIVE PLAN & PROFILE SHEET F–23

STA 153+90.42
75.66', LT

BELARDI DRIVE

STA 153+90.46
17.00', LT

"O" 153+98.69
"CL–BELARDI DR" 10+00

MATCH LINE "O" 148+00

MATCH LINE "O" 154+00

BRIDGE TRANSITION CURB

STA 148+49.00
12.45', LT

149+00

STA 149+49.00
12.75', LT

150+00

STA 150+71.55
17.00', LT

SAWCUT

151+00

152+00

GLACIER HWY

153+00

17.0'

BRIDGE TRANSITION CURB

STA 148+49.00
19.55', RT

STA 149+49.00
17.18', RT

MATCH VERTICAL CURB AT BRIDGE
STA 149+49.00
25.18', RT

STA 149+68.80
16.21', RT

SEE NOTE 2

STA 149+93.42
37.77', RT

10+00

STA 150+45.81
17.00', RT

SAWCUT

STA 152+16.54
17.00', RT

STA 153+51.01
16.90', RT

STA 153+61.01
16.91', RT

END GUARDRAIL D* AND MATCH BRIDGE TRANSITION RAIL
148+28.00, 33.10' RT

GUARDRAIL PC
STA 149+53.32
32.32', RT

R30.0'

BEGIN GUARDRAIL D*
148+00.00
33.80', RT

MATCH BRIDGE RAIL TRANSITION AND BEGIN GUARDRAIL E*
STA 149+69.44
37.0' RT

GUARDRAIL PT
STA 149+83.37
62.79', RT

END GUARDRAIL E*
STA 149+83.24
67.52', RT

PROTECT EXISTING APPLE TREE.

FENCE TO BE REMOVED BY OWNER.

STA 150+25.47
33.37', RT

RETAINING WALL E
SEE SHEETS
M–1 TO M–4

REMOVE EXISTING FENCE
STA 150+99.00 TO
152+25.50

GUARDRAIL D* ASSEMBLY
6'3" TERMINAL ANCHOR
21'9" W BEAM RAIL
MATCH BRIDGE TRANSITION RAIL
SEE N SERIES
SEE NOTE 3

LEMON CREEK

REMOVE EXISTING GUARDRAIL
STA 149+49.30 TO
STA 149+93.00

STA 149+93.58
68.37', RT

DAVIS AVENUE

11+00

STA 150+21.39
76.15', RT

5847 MONTGOMERY ST
SALUD C ELIZARDE &
HENRY ELIZARDE

5849 MONTGOMERY ST
BRYAN C WILSON &
ERICA L WILSON

5851 MONTGOMERY ST
MICHAEL D THOMAS &
TERRY L THOMAS

5871 MONTGOMERY ST
WALLACE R OLDS

SEE DAVIS AVE PLAN & PROFILE SHEET F–23

GUARDRAIL E* ASSEMBLY
MATCH BRIDGE RAIL TRANSITION AND INSTALL
29' W BEAM RAIL, R=30'
6'3" TERMINAL ANCHOR
SEE NOTE 3

STATE OF ALASKA
49TH
ANTHONY M. ROOS
CE 12759
REGISTERED PROFESSIONAL ENGINEER

7/31/2020

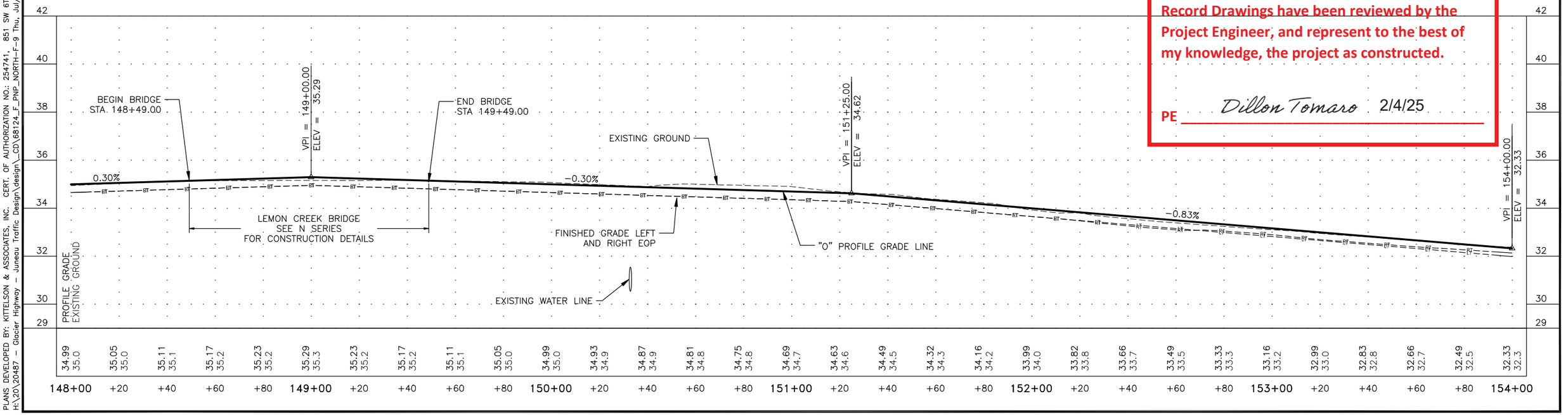

Record Drawings have been reviewed by the Project Engineer, and represent to the best of my knowledge, the project as constructed.

PE Dillon Tomaro 2/4/25

PLANS DEVELOPED BY: KITTELSON & ASSOCIATES, INC. CERT. OF AUTHORIZATION NO.: 254741, 851 SW 6TH AVE. SUITE 600, PORTLAND, OR 97204, (503) 228–5230
H:\20\20487 – Glacier Highway – Juneau Traffic Design\design_CD\68124_F_PNP_NORTH–F–9 Thu, Jul/30/20 03:32pm

NO.	DATE	REVISION

STATE	PROJECT DESIGNATION	YEAR	SHEET NO.	TOTAL SHEETS
ALASKA	TEA-0955(016)/Z68124	2020	F-10	235

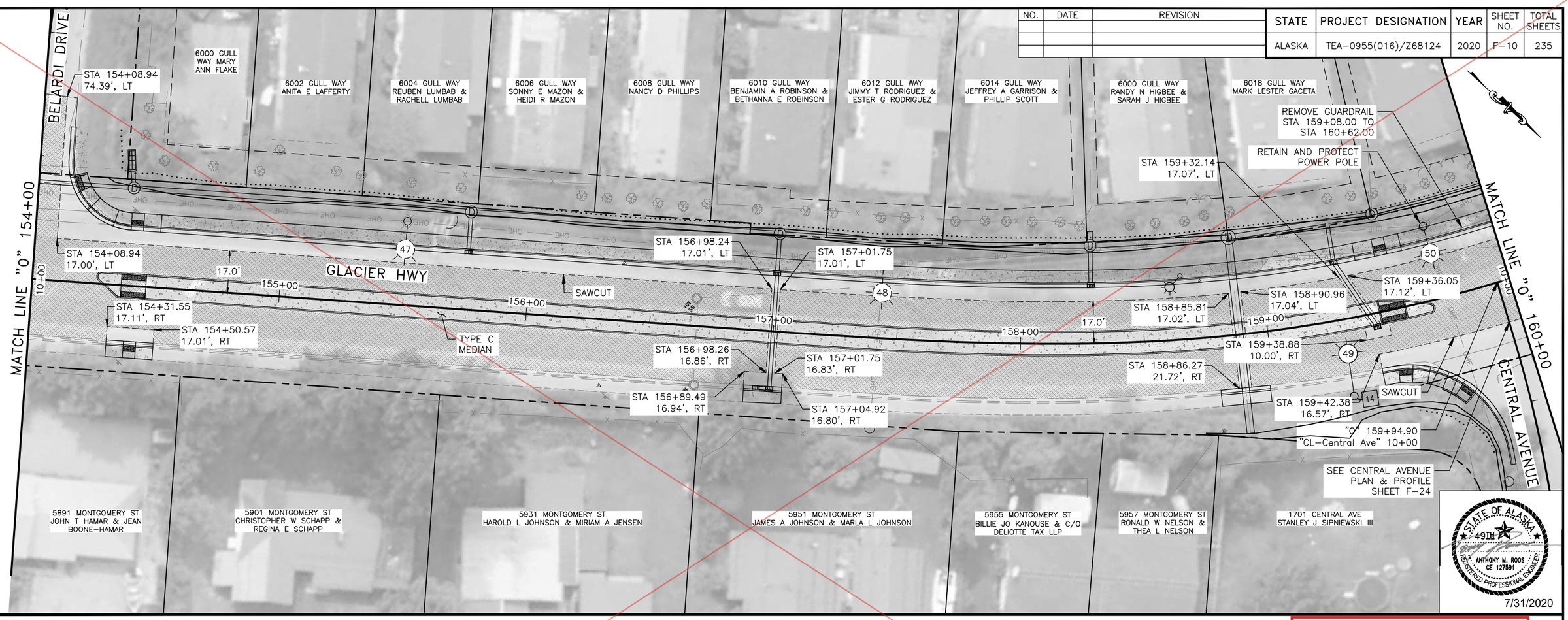

STATE OF ALASKA
49TH
ANTHONY M. ROOS
CE 12759
REGISTERED PROFESSIONAL ENGINEER
7/31/2020

** Deleted by CO6

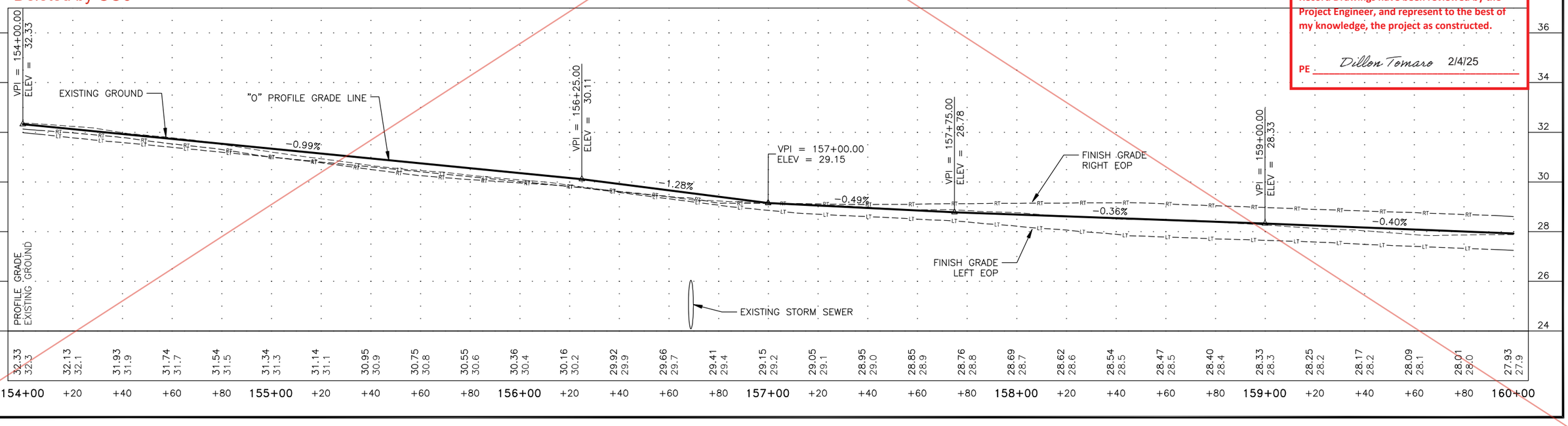

Record Drawings have been reviewed by the Project Engineer, and represent to the best of my knowledge, the project as constructed.

PE Dillon Tomaro 2/4/25

PLANS DEVELOPED BY: KITTELSON & ASSOCIATES, INC. CERT. OF AUTHORIZATION NO.: 254741, 851 SW 6TH AVE. SUITE 600, PORTLAND, OR 97204, (503) 228-5230
H:\20\20487 - Glacier Highway - Juneau Traffic Design\design_CD\68124_F_PNP_NORTH-F-10 Thu, Jul/30/20 03:33pm

CO 6

NO.	DATE	REVISION
1	04/19/21	RFI #15: CENTERLINE ADJUSTMENTS

STATE	PROJECT DESIGNATION	YEAR	SHEET NO.	TOTAL SHEETS
ALASKA	TEA-0955(016)/Z68124	2020	F-10	235

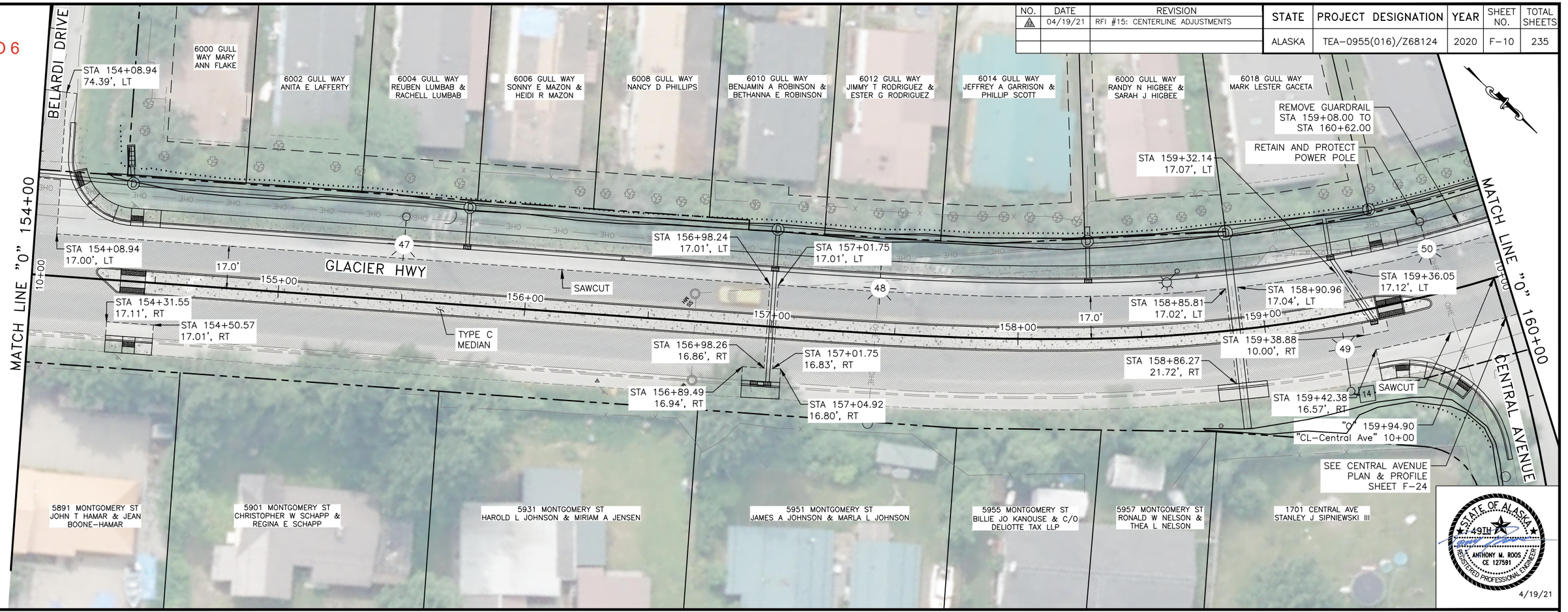

STATE OF ALASKA
49TH
ANTHONY M. ROOS
CE 127591
REGISTERED PROFESSIONAL ENGINEER
4/19/21

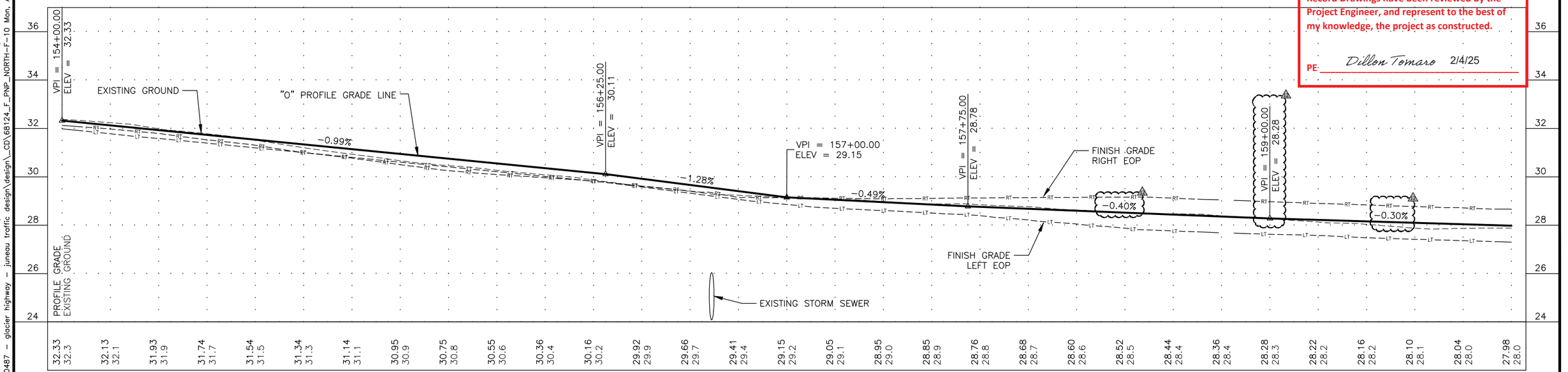

Record Drawings have been reviewed by the Project Engineer, and represent to the best of my knowledge, the project as constructed.

PE: Dillon Tomaro 2/4/25

PLANS DEVELOPED BY: KITTELSON & ASSOCIATES, INC. CERT. OF AUTHORIZATION NO.: 254741, 851 SW 6TH AVE. SUITE 600, PORTLAND, OR 97204, (503) 228-5230
H:\20\20487 - glacier highway - juneau traffic design\design_CD\68124_F_PNP_NORTH-F-10 Mon, Apr/19/21 01:54pm

NO.	DATE	REVISION

STATE	PROJECT DESIGNATION	YEAR	SHEET NO.	TOTAL SHEETS
ALASKA	TEA-0955(016)/Z68124	2020	F-11	235

6022 GULL WAY
MARIAN B DAU

6024 GULL WAY
JOSEPHINE ZANORIA &
PAMPIO ZANORIA

6026 GULL WAY
HENRY S NIEHAUS &
COLETTE M WRIGHT

6028 GULL WAY
JOHN R MORENO &
ELIZABETH P MORENO

6030 GULL WAY
LUTHER L LEWIN

6032 GULL WAY
AGNES L ELIZARDE &
LOPE R ELIZARDE

6034 GULL WAY
ROSEMARY J ELLISON

6036 GULL WAY
BEEZLEY ESPER N GUILTTAP

6038 GULL WAY
WAY ORPIANO MOISES
& ETHEL L MOISES

MATCH LINE "0" 160+00

MATCH LINE "0" 166+00

GLACIER HWY

RETAIN AND PROTECT
POWER POLE

STA 160+36.89
6.00', LT

STA 160+46.99
6.00', LT

STA 160+62.80
17.14', LT

TAPERED
MEDIAN NOSE

SAWCUT

SAWCUT

STA 161+00.00
16.95', RT

STA 162+60.00
17.00', LT

STA 162+60.00
17.00', RT

STA 162+95.06
10.00', RT

STA 163+00.00
10.00', RT

TYPE C
MEDIAN

STA 163+98.24
17.04', LT

STA 164+01.77
17.03', LT

STA 164+60.00
17.00', LT

STA 164+60.00
17.00', RT

TAPERED
MEDIAN NOSE

STA 164+04.98
10.00', RT

STA 163+95.02
10.00', RT

PAVEMENT CONDITION B:
RECONSTRUCT FULL WIDTH
STA 162+60 TO STA 164+60

RETAIN AND
PROTECT HYDRANT

SWITZER CREEK

RETAIN AND PROTECT
POWER POLE

REMOVE SCUPPER

17.0

17.0

17.0

161+00

162+00

163+00

164+00

165+00

51

52

53

54

6015 MONTGOMERY ST
SANDREA ROBIDOUX

6023 MONTGOMERY ST
MELINDA CAMPBELL

6027 MONTGOMERY ST
CHRISTINE A ROBIDOUX

MONTGOMERY ST
CITY AND BOROUGH OF
JUNEAU & LANDS AND RESOURCES

MONTGOMERY ST
CITY AND BOROUGH OF
JUNEAU & LANDS AND RESOURCES

MONTGOMERY ST
CITY AND BOROUGH OF JUNEAU
& LANDS AND RESOURCES

STATE OF ALASKA
49TH
ANTHONY M. ROOS
CE 12759
REGISTERED PROFESSIONAL ENGINEER
7/31/2020

** Deleted by CO6

Record Drawings have been reviewed by the Project Engineer, and represent to the best of my knowledge, the project as constructed.

PE *Dillon Tomaro* 2/4/25

EXISTING GROUND

FINISH GRADE
RIGHT EOP

FINISH GRADE
LEFT EOP

VPI = 161+00.00
ELEV = 27.53

VPI = 162+50.00
ELEV = 27.98

VPI = 163+25.00
ELEV = 27.37

VPI = 165+86.44
ELEV = 26.59

"0" PROFILE GRADE LINE

-0.40%

0.30%

-0.81%

-0.30%

0.30%

PROFILE GRADE
EXISTING GROUND

EXISTING STORM SEWER

EXISTING STORM DRAIN

34 32 30 28 26 24 22 21

27.93 27.9 | 27.85 27.8 | 27.77 27.8 | 27.69 27.7 | 27.61 27.7 | 27.53 27.6 | 27.59 27.7 | 27.65 27.7 | 27.71 27.8 | 27.77 27.9 | 27.83 28.0 | 27.89 28.0 | 27.95 28.0 | 27.90 27.8 | 27.73 27.6 | 27.57 27.5 | 27.41 27.4 | 27.33 27.3 | 27.27 27.2 | 27.21 27.2 | 27.15 27.2 | 27.09 27.1 | 27.03 27.2 | 26.97 27.2 | 26.91 27.1 | 26.85 27.1 | 26.79 27.1 | 26.73 27.0 | 26.67 27.0 | 26.61 27.0 | 26.63 26.9

160+00 +20 +40 +60 +80 161+00 +20 +40 +60 +80 162+00 +20 +40 +60 +80 163+00 +20 +40 +60 +80 164+00 +20 +40 +60 +80 165+00 +20 +40 +60 +80 166+00

PLANS DEVELOPED BY: KITTELSON & ASSOCIATES, INC. CERT. OF AUTHORIZATION NO.: 254741, 851 SW 6TH AVE, SUITE 600, PORTLAND, OR 97204, (503) 228-5230
H:\20\20487 - Glacier Highway - Juneau Traffic Design\design_CD\68124_F_PNP_NORTH-F-11 Thu, Jul/30/20 03:33pm

CO 6

NO.	DATE	REVISION
1	04/19/21	RFI #15: CENTERLINE ADJUSTMENTS

STATE	PROJECT DESIGNATION	YEAR	SHEET NO.	TOTAL SHEETS
ALASKA	TEA-0955(016)/Z68124	2020	F-11	235

6022 GULL WAY
MARIAN B DAU

6024 GULL WAY
JOSEPHINE ZANORIA &
PAMPIO ZANORIA

6026 GULL WAY
HENRY S NIEHAUS &
COLETTE M WRIGHT

6028 GULL WAY
JOHN R MORENO &
ELIZABETH P MORENO

6030 GULL WAY
LUTHER L LEWIN

6032 GULL WAY
AGNES L ELIZARDE &
LOPE R ELIZARDE

6034 GULL WAY
ROSEMARY J ELLISON

6036 GULL WAY
BEEZLEY ESPER N GUILTTAP

6038 GULL WAY
WAY ORPIANO MOISES
& ETHEL L MOISES

MATCH LINE "O" 160+00

MATCH LINE "O" 166+00

GLACIER HWY

STA 160+36.89
6.00', LT

STA 160+46.99
6.00', LT

STA 160+62.80
17.14', LT

STA 161+00.00
16.95', RT

TAPERED
MEDIAN NOSE

SAWCUT

SAWCUT

TYPE C
MEDIAN

STA 162+60.00
17.00', LT

STA 162+60.00
17.00', RT

STA 162+95.06
10.00', RT

STA 163+00.00
10.00', RT

STA 163+98.24
17.04', LT

STA 164+01.77
17.03', LT

STA 164+60.00
17.00', LT

STA 164+60.00
17.00', RT

TAPERED
MEDIAN NOSE

STA 164+04.98
10.00', RT

STA 163+95.02
10.00', RT

RETAIN AND PROTECT
POWER POLE

RETAIN AND
PROTECT HYDRANT

RETAIN AND PROTECT
POWER POLE

REMOVE SCUPPER

PAVEMENT CONDITION B:
RECONSTRUCT FULL WIDTH
STA 162+60 TO STA 164+60

SWITZER CREEK

17.0

6015 MONTGOMERY ST
SANDREA ROBIDOUX

6023 MONTGOMERY ST
MELINDA CAMPBELL

6027 MONTGOMERY ST
CHRISTINE A ROBIDOUX

MONTGOMERY ST
CITY AND BOROUGH OF
JUNEAU & LANDS AND RESOURCES

MONTGOMERY ST
CITY AND BOROUGH OF
JUNEAU & LANDS AND RESOURCES

MONTGOMERY ST
CITY AND BOROUGH OF JUNEAU
& LANDS AND RESOURCES

STATE OF ALASKA
49TH
ANTHONY M. ROOS
CE 12759
REGISTERED PROFESSIONAL ENGINEER
4/19/21

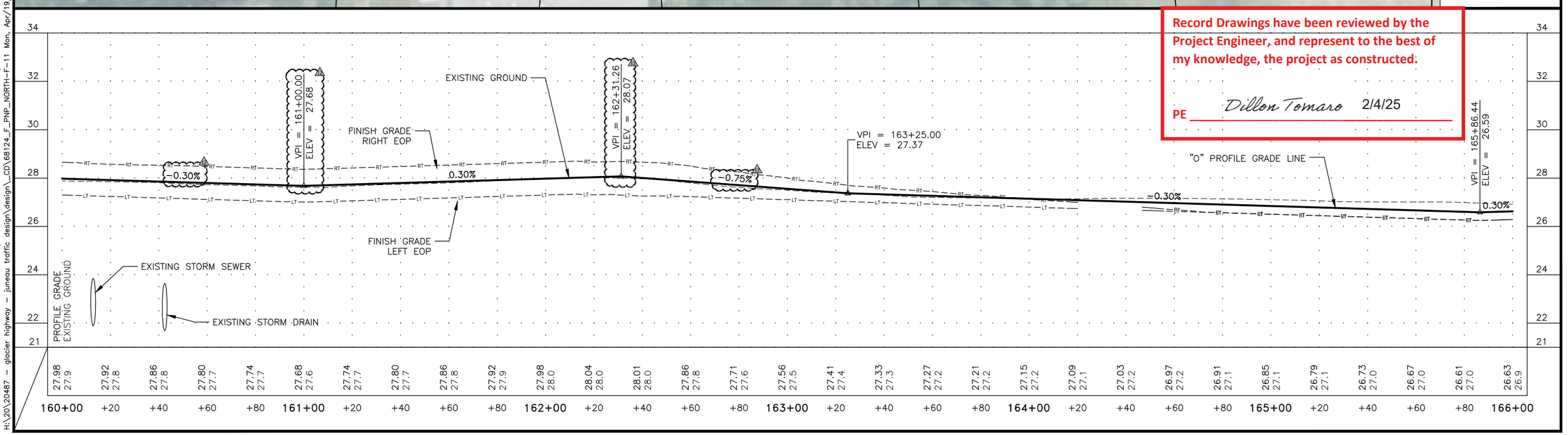

Record Drawings have been reviewed by the Project Engineer, and represent to the best of my knowledge, the project as constructed.

PE *Dillon Tomaro* 2/4/25

PLANS DEVELOPED BY: KITTELSON & ASSOCIATES, INC. CERT. OF AUTHORIZATION NO.: 254741, 851 SW 6TH AVE. SUITE 600, PORTLAND, OR 97204, (503) 228-5230
H:\20\20487 - glacier highway - juneau traffic design\design_CD\68124_F_PNP_NORTH-F-11 Mon, Apr/19/21 01:54pm

NO.	DATE	REVISION

STATE	PROJECT DESIGNATION	YEAR	SHEET NO.	TOTAL SHEETS
ALASKA	TEA-0955(016)/Z68124	2020	F-12	235

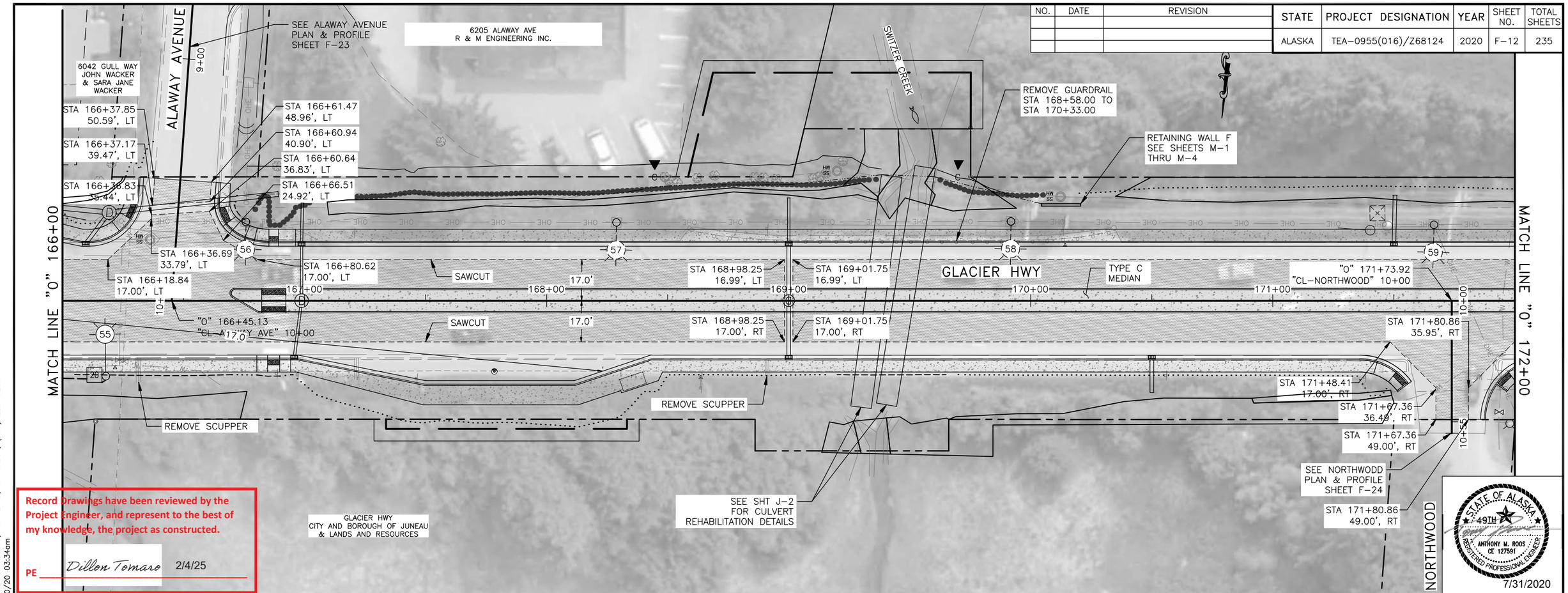

Record Drawings have been reviewed by the Project Engineer, and represent to the best of my knowledge, the project as constructed.

PE Dillon Tomaro 2/4/25

STATE OF ALASKA 49TH ANTHONY M. ROOS CE 127591 REGISTERED PROFESSIONAL ENGINEER

7/31/2020

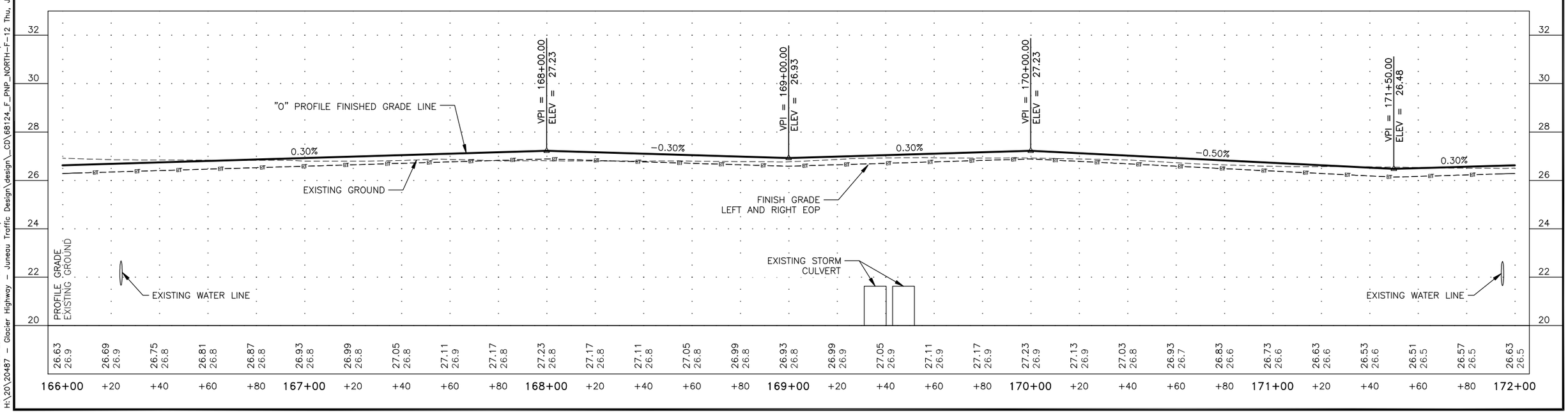

PLANS DEVELOPED BY: KITTELSON & ASSOCIATES, INC. CERT. OF AUTHORIZATION NO.: 254741, 851 SW 6TH AVE. SUITE 600, PORTLAND, OR 97204, (503) 228-5230
H:\20\20487 - Glacier Highway - Juneau Traffic Design\design_CD\68124_F_PNP_NORTH-F-12 Thu, Jul/30/20 03:34am

NO.	DATE	REVISION
1	01/05/21	ADDENDUM 7
2	01/25/21	ADDENDUM 10

STATE	PROJECT DESIGNATION	YEAR	SHEET NO.	TOTAL SHEETS
ALASKA	TEA-0955(016)/Z68124	2020	F-13	235

MATCH LINE "O" 172+00

MATCH LINE "O" 178+00

TYPE C MEDIAN

SAWCUT

SAWCUT

173+00

174+00 "O"

175+00

176+00

177+00

GLACIER HWY

GLACIER HWY

RENNINGER ST

6225 ALAWAY AVE
S & H TRACT S 1 LLC

EXISTING 15' SEWER EASEMENT

REMOVE EXISTING GUARDRAIL
STA 173+35.00 TO
STA 174+62.00

EXISTING PUMP HOUSE
TO BE RELOCATED
BY OTHERS

END TYPE C MEDIAN
BEGIN VERTICAL TO
STANDARD CURB TRANSITION
STA 173+70.00
5.00', LT

DRIVEWAY
NOTE REMOVED

RETAIN & PROTECT
POWER POLE

SEE SHEET F-25 FOR
RENNINGER PLAN AND PROFILE

RENNINGER CONCRETE PANEL
SEE SHEET E-7 FOR DETAIL

TAPERED
MEDIAN NOSE

RETAIN & PROTECT
POWER POLE

CENTER OF ROUNDABOUT
"O" 176+47.49 =
"REN" 12+11.19

ADJUST MANHOLE
TO GRADE

TAPERED
MEDIAN NOSE

TAPERED
MEDIAN NOSE

TAPERED
MEDIAN NOSE

REPLACE EXISTING
AREA DRAIN WITH
MANHOLE

ADJUST MANHOLE TO GRADE

POWER POLES TO BE
REMOVED/RELOCATED BY OTHERS

REMOVE LUMINAIRE

CHAIN LINK FENCE &
GATE. SEE SHEET F-25

REMOVE &
RELOCATE APPROACH
SEE SHEET F-25

RETAIN AND
PROTECT UTILITIES

SAWCUT
SEE SHEET F-26

173+31, LT
CURB CUT, 24'

173+25, RT
CURB CUT, 24'

STA 173+70.00
17.00', LT

STA 173+70.00
17.00', RT

STA 174+72.13
17.82', LT

STA 174+87.91
19.22', LT

STA 174+77.52
21.59', LT

STA 174+52.40
19.22', RT

STA 174+66.69
21.48', RT

STA 174+57.14
23.30', RT

STA 175+55.70
26.02', LT

STA 175+40.36
26.83', LT

STA 175+30.99
25.64', LT

STA 175+11.56
19.32', LT

STA 175+17.83
20.62', LT

STA 176+02.87
34.65', LT

STA 177+86.68
19.02', LT

STA 177+81.68
22.98', LT

STA 177+11.11
32.23', LT

STA 177+17.29
30.66', LT

STA 177+26.11
24.59', LT

STA 177+71.68
21.00', LT

STA 177+82.93
19.00', RT

STA 177+78.00
23.00', RT

STA 177+67.96
21.04', RT

"O" 174+36.35 PC

"O" 174+90.46 PT

"O" 175+48.74 PC

"O" 175+60.18 PT

"O" 176+47.49 PI

"O" 177+31.72 PC

"O" 177+41.50 PT

1700 NORTHWOOD DR
MYRON W. KLEIN

6310 GLACIER HWY
NORTHWOOD CONDO ASSOCIATION

6370 GLACIER HWY,
GENE COOGAN

END TYPE C MEDIAN
BEGIN VERTICAL TO
STANDARD CURB TRANSITION
STA 173+70.00
5.00', RT

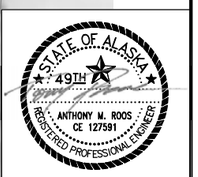

** Deleted by CO29

"O" PROFILE
GRADE LINE

VPI = 173+75.00
ELEV = 27.15

VPI = 176+47.49
ELEV = 29.44

VPI = 177+49.52
ELEV = 28.93

0.30%

0.84%

-0.50%

1.50%

EXISTING GROUND

FINISHED GRADE LEFT
& RIGHT EOP

SEE SHEET F-26 AND F-27
FOR ROUNDABOUT CURB
PROFILES

EXISTING STORM SEWER

PROFILE GRADE
EXISTING GROUND

34 32 30 28 26 24 22 20

26.63 26.5 | 26.69 26.6 | 26.75 26.6 | 26.81 26.7 | 26.87 26.8 | 26.93 26.8 | 26.99 26.8 | 27.05 26.8 | 27.11 26.8 | 27.19 26.8 | 27.36 26.9 | 27.53 27.0 | 27.70 27.0 | 27.87 27.1 | 28.03 27.2 | 28.20 27.3 | 28.37 27.5 | 28.54 27.7 | 28.71 27.8 | 28.87 28.0 | 29.04 28.2 | 29.21 28.4 | 29.38 28.5 | 29.38 28.6 | 29.28 28.8 | 29.18 28.9 | 29.08 29.1 | 28.98 29.3 | 29.09 29.5 | 29.39 29.7 | 29.69 29.9

172+00 +20 +40 +60 +80 173+00 +20 +40 +60 +80 174+00 +20 +40 +60 +80 175+00 +20 +40 +60 +80 176+00 +20 +40 +60 +80 177+00 +20 +40 +60 +80 178+00

Record Drawings have been reviewed by the Project Engineer, and represent to the best of my knowledge, the project as constructed.

PE Dillon Tomaro 2/4/25

PLANS DEVELOPED BY: KITTELSON & ASSOCIATES, INC. CERT. OF AUTHORIZATION NO.: 254741, 851 SW 6TH AVE. SUITE 600, PORTLAND, OR 97204, (503) 228-5230
H:\20\20487 - glacier highway - juneau traffic design\design_CD\68124_F_PNP_RNDBT-F-13 Mon, Jan/25/21 11:03am

Attachment No. 1 CO 29

NO.	DATE	REVISION
3	01/05/21	ADDENDUM 7
2	01/25/21	ADDENDUM 10
1	05/09/22	DELTA 34: RNBT Revisions

STATE	PROJECT DESIGNATION	YEAR	SHEET NO.	TOTAL SHEETS
ALASKA	TEA-0955(016)/Z68124	2020	F-13	235

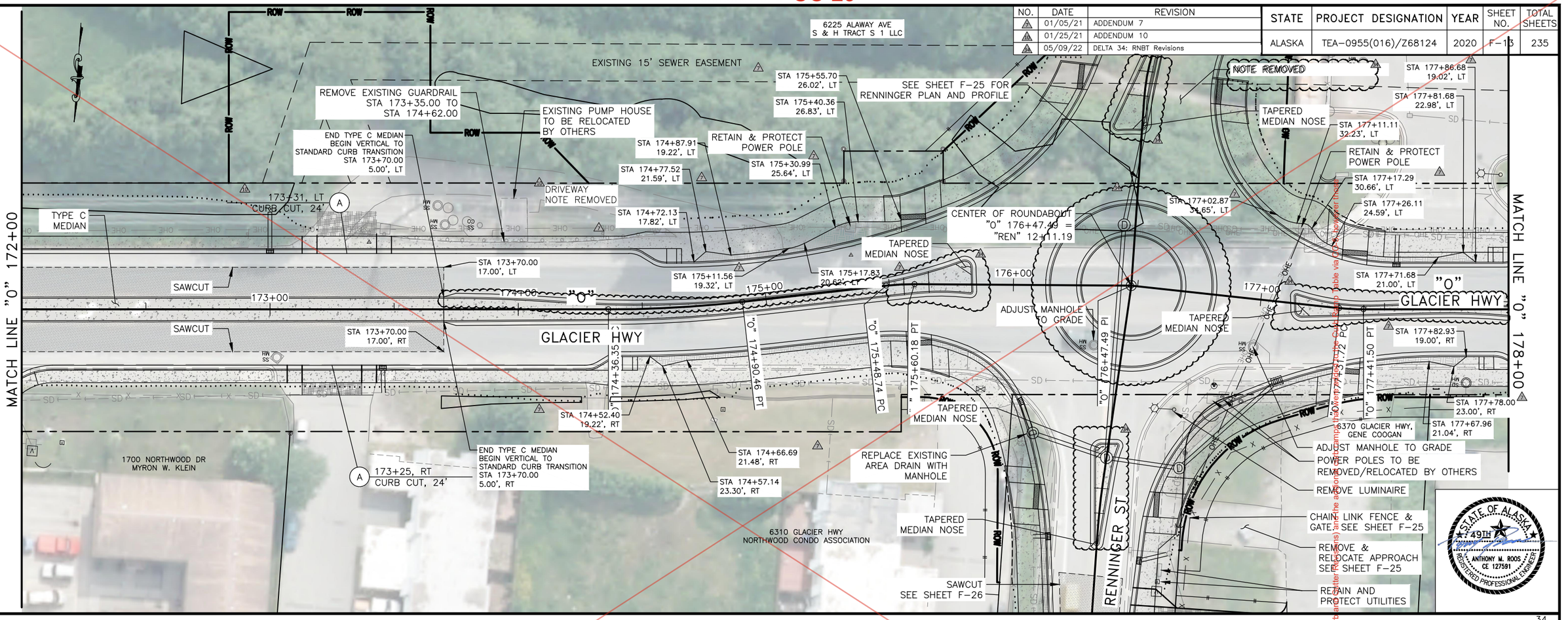

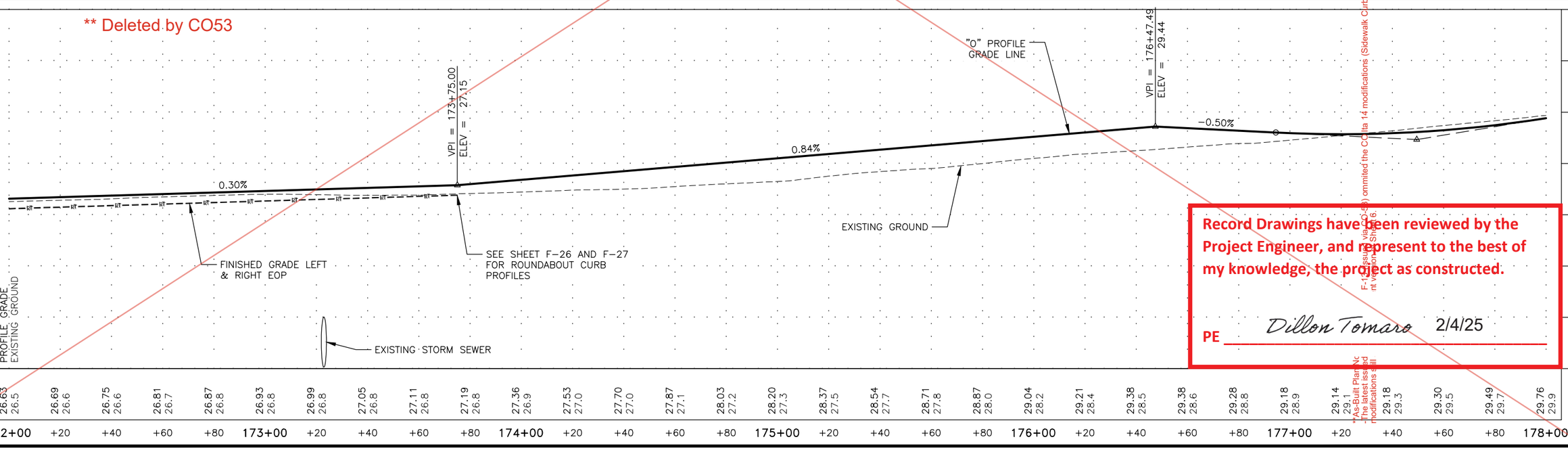

Record Drawings have been reviewed by the Project Engineer, and represent to the best of my knowledge, the project as constructed.

PE Dillon Tomaro 2/4/25

F-13 issued via (CO-53) ommited the CO#a 14 modifications (Sidewalk Curb and Gutter Radius) and Over 77 (1) (2) (3) (4) (5) (6) (7) (8) (9) (10) (11) (12) (13) (14) (15) (16) (17) (18) (19) (20) (21) (22) (23) (24) (25) (26) (27) (28) (29) (30) (31) (32) (33) (34) (35) (36) (37) (38) (39) (40)

CO-53, Attachment No. 3

Addendum # 10; Attachment # 5

NO.	DATE	REVISION
2	01/05/21	ADDENDUM 7
3	01/25/21	ADDENDUM 10

STATE	PROJECT DESIGNATION	YEAR	SHEET NO.	TOTAL SHEETS
ALASKA	TEA-0955(016)/Z68124	2020	F-13	235

6225 ALAWAY AVE
S & H TRACT S 1 LLC

EXISTING 15' SEWER EASEMENT

REMOVE EXISTING GUARDRAIL
STA 173+35.00 TO
STA 174+62.00

END TYPE C MEDIAN
BEGIN VERTICAL TO
STANDARD CURB TRANSITION
STA 173+70.00
5.00', LT

EXISTING PUMP HOUSE
TO BE RELOCATED
BY OTHERS

DRIVEWAY
NOT REMOVED

TYPE C
MEDIAN

173+31, LT
CURB CUT, 24'

SAWCUT

SAWCUT

STA 173+70.00
17.00', LT

STA 173+70.00
17.00', RT

GLACIER HWY

MATCH LINE "O" 172+00

MATCH LINE "O" 178+00

"O"

173+00

174+00

175+00

176+00

177+00

STA 174+87.91
19.22', LT

STA 174+77.52
21.59', LT

STA 174+72.13
17.82', LT

STA 175+55.70
26.02', LT

STA 175+40.36
26.83', LT

RETAIN & PROTECT
POWER POLE

STA 175+30.99
25.64', LT

STA 175+11.56
19.32', LT

STA 175+17.83
20.62', LT

SEE SHEET F-25 FOR
RENNINGER PLAN AND PROFILE

RENNINGER CONCRETE PANEL
SEE SHEET E-7 FOR DETAIL

TAPERED
MEDIAN NOSE

STA 177+86.68
19.02', LT

STA 177+81.68
22.98', LT

STA 177+11.11
32.23', LT

RETAIN & PROTECT
POWER POLE

STA 177+17.29
30.66', LT

STA 177+26.11
24.59', LT

STA 177+02.87
34.65', LT

CENTER OF ROUNDABOUT
"O" 176+47.49 =
"REN" 12+11.19

TAPERED
MEDIAN NOSE

ADJUST MANHOLE
TO GRADE

TAPERED
MEDIAN NOSE

STA 177+71.68
21.00', LT

STA 177+82.93
19.00', RT

STA 177+78.00
23.00', RT

STA 177+67.98
21.04', RT

6370 GLACIER HWY,
GENE COGGAN

ADJUST MANHOLE TO GRADE

POWER POLES TO BE
REMOVED/RELOCATED BY OTHERS

REMOVE LUMINAIRE

CHAIN LINK FENCE &
GATE. SEE SHEET F-25

REMOVE &
RELOCATE APPROACH
SEE SHEET F-25

RETAIN AND
PROTECT UTILITIES

"O" 174+36.35

"O" 174+90.45 PT

"O" 175+48.74 PC

"O" 175+60.18 PT

"O" 176+47.49 PI

"O" 177+31.72 PC

"O" 177+41.50 PT

STA 174+82.48
19.22', RT

STA 174+66.69
21.48', RT

STA 174+57.14
23.30', RT

END TYPE C MEDIAN
BEGIN VERTICAL TO
STANDARD CURB TRANSITION
STA 173+70.00
5.00', RT

A 173+25, RT
CURB CUT, 24'

1700 NORTHWOOD DR.
MYRON W. KLEIN

6310 GLACIER HWY
NORTHWOOD CONDO ASSOCIATION

TAPERED
MEDIAN NOSE

REPLACE EXISTING
AREA DRAIN WITH
MANHOLE

TAPERED
MEDIAN NOSE

SAWCUT
SEE SHEET F-26

RENNINGER ST

contour ditch around light base grade to drain.

Sump pipe controlling elevation cut sump pipe to remove damage.

Construct Rock Basin use shit rock "Type C" shape and compact

Install 12" CPP in ditch line. Match Ditch Bottom Elevations. Reconstruct Fire Hydrant Pad and Repave. Fire Hydrant pad to be 6' in width. Match back of sidewalk elevation.

STATE OF ALASKA
49TH
ANTHONY M. ROOS
CE 12759
REGISTERED PROFESSIONAL ENGINEER

Record Drawings have been reviewed by the Project Engineer, and represent to the best of my knowledge, the project as constructed.

PE Dillon Tomaro 2/4/25

"O" PROFILE
GRADE LINE

VPI = 173+75.00
ELEV = 27.15

VPI = 176+47.49
ELEV = 29.44

VPI = 177+49.52
ELEV = 28.93

0.30%

0.84%

-0.50%

1.50%

Grade ditch at constant slope from sump pipe to inlet elevation of 18" CPP @ 173+48. Rock line basin @ 173+48 per note.

Ditch from 175+60 to 173+48

EXISTING GROUND

FINISHED GRADE LEFT
& RIGHT EOP

SEE SHEET F-26 AND F-27
FOR ROUNDABOUT CURB
PROFILES

PROFILE GRADE
EXISTING GROUND

EXISTING STORM SEWER

Approximate ditch section:

Sidewalk — 5:1 — 6:1 — Existing Ground

34 32 30 28 26 24 22 20

26.63 26.5 | 26.69 26.6 | 26.75 26.6 | 26.81 26.7 | 26.87 26.8 | 26.93 26.8 | 26.99 26.8 | 27.05 26.8 | 27.11 26.8 | 27.19 26.8 | 27.36 26.9 | 27.53 27.0 | 27.70 27.0 | 27.87 27.1 | 28.03 27.2 | 28.20 27.3 | 28.37 27.5 | 28.54 27.7 | 28.71 27.8 | 28.87 28.0 | 29.04 28.2 | 29.21 28.4 | 29.38 28.5 | 29.38 28.6 | 29.28 28.8 | 29.18 28.9 | 29.08 29.1 | 28.98 29.3 | 29.09 29.5 | 29.39 29.7 | 29.69 29.9

172+00 +20 +40 +60 +80 173+00 +20 +40 +60 +80 174+00 +20 +40 +60 +80 175+00 +20 +40 +60 +80 176+00 +20 +40 +60 +80 177+00 +20 +40 +60 +80 178+00

PLANS DEVELOPED BY: KITTELSON & ASSOCIATES, INC. CERT. OF AUTHORIZATION NO.: 254741, 851 SW 6TH AVE. SUITE 600, PORTLAND, OR 97204, (503) 228-5230
H:\20\20487 - glacier highway - juneau traffic design\design_CD\68124_F_PNP_RNDBT-F-13 Mon, Jan/25/21 11:03am

**As-Built Plan Note (Sheet F-13):
-The latest issued version of Sheet F-13 (issued via CO-53) ommited the CO-29 delta 34 modifications (RNBT Revisions), however those modifications still apply to the current version of Sheet F-13.

NO.	DATE	REVISION

STATE	PROJECT DESIGNATION	YEAR	SHEET NO.	TOTAL SHEETS
ALASKA	TEA-0955(016)/Z68124	2020	F-14	235

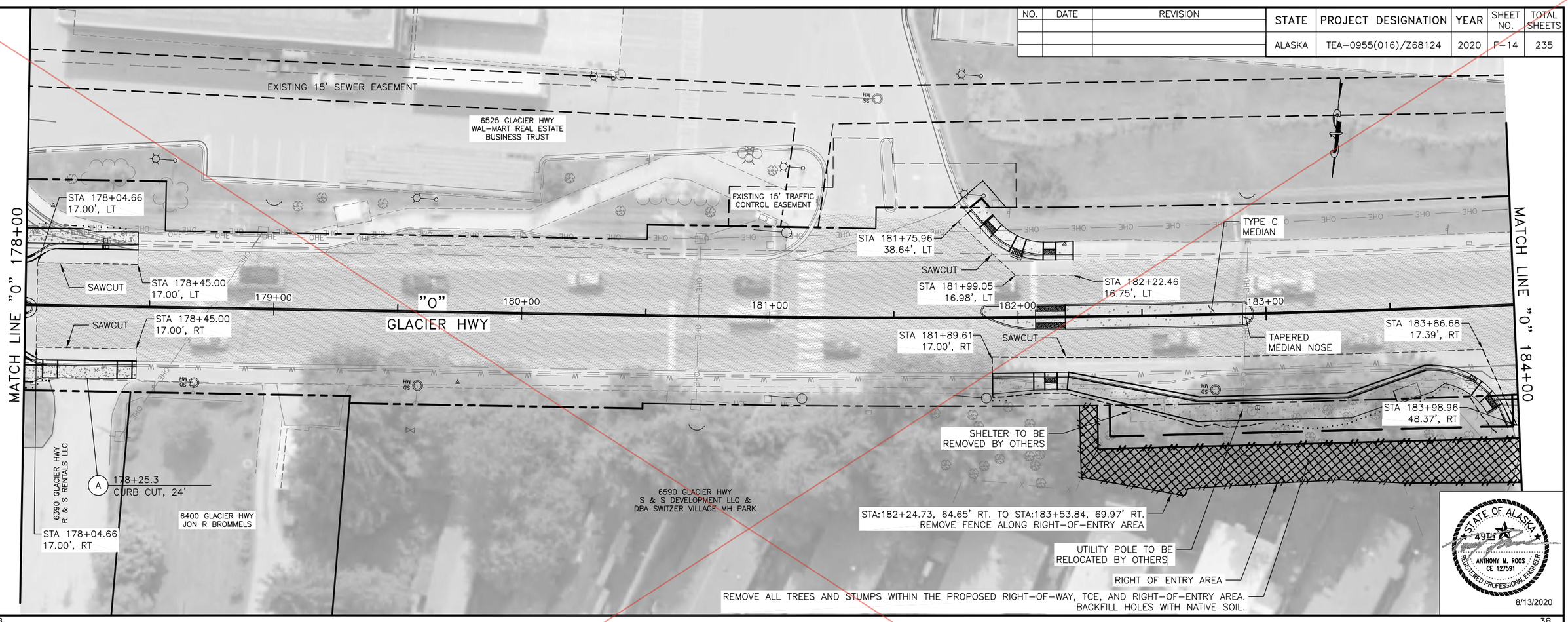

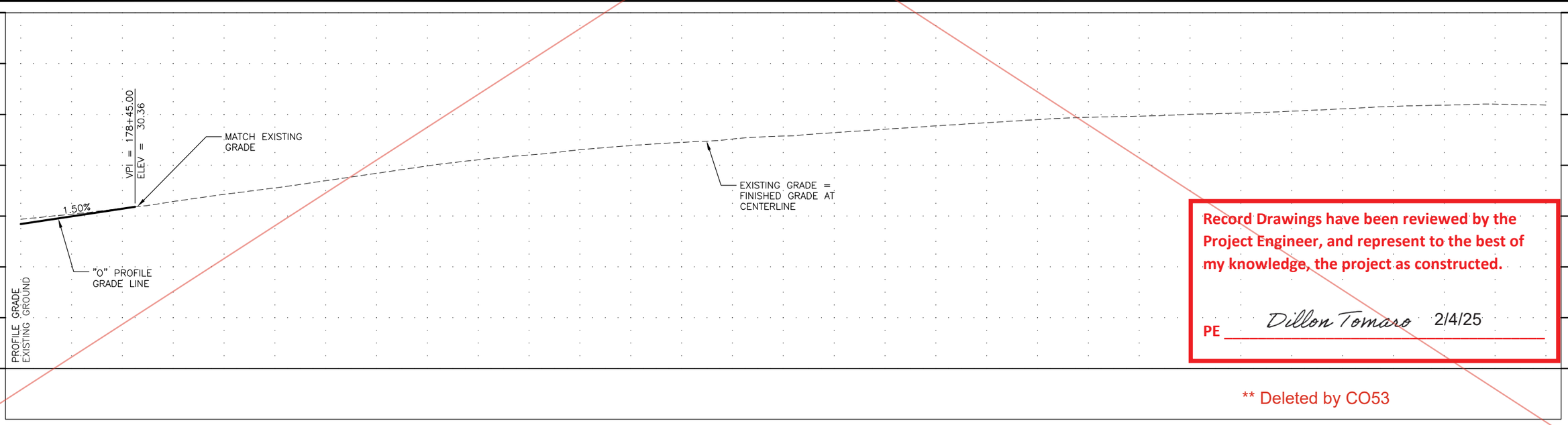

STATE OF ALASKA
49TH
ANTHONY M. ROOS
CE 12759
REGISTERED PROFESSIONAL ENGINEER
8/13/2020

Record Drawings have been reviewed by the Project Engineer, and represent to the best of my knowledge, the project as constructed.

PE Dillon Tomaro 2/4/25

** Deleted by CO53

PLANS DEVELOPED BY: KITTELSON & ASSOCIATES, INC. CERT. OF AUTHORIZATION NO: 254741, 851 SW 6TH AVE. SUITE 600, PORTLAND, OR 97204, (503) 228-5230
H:\20\20487 - Glacier Highway - Juneau Traffic Design\design_CD\68124_F_PNP_RNDBT-F-14 Thu, Aug/13/20 05:16pm

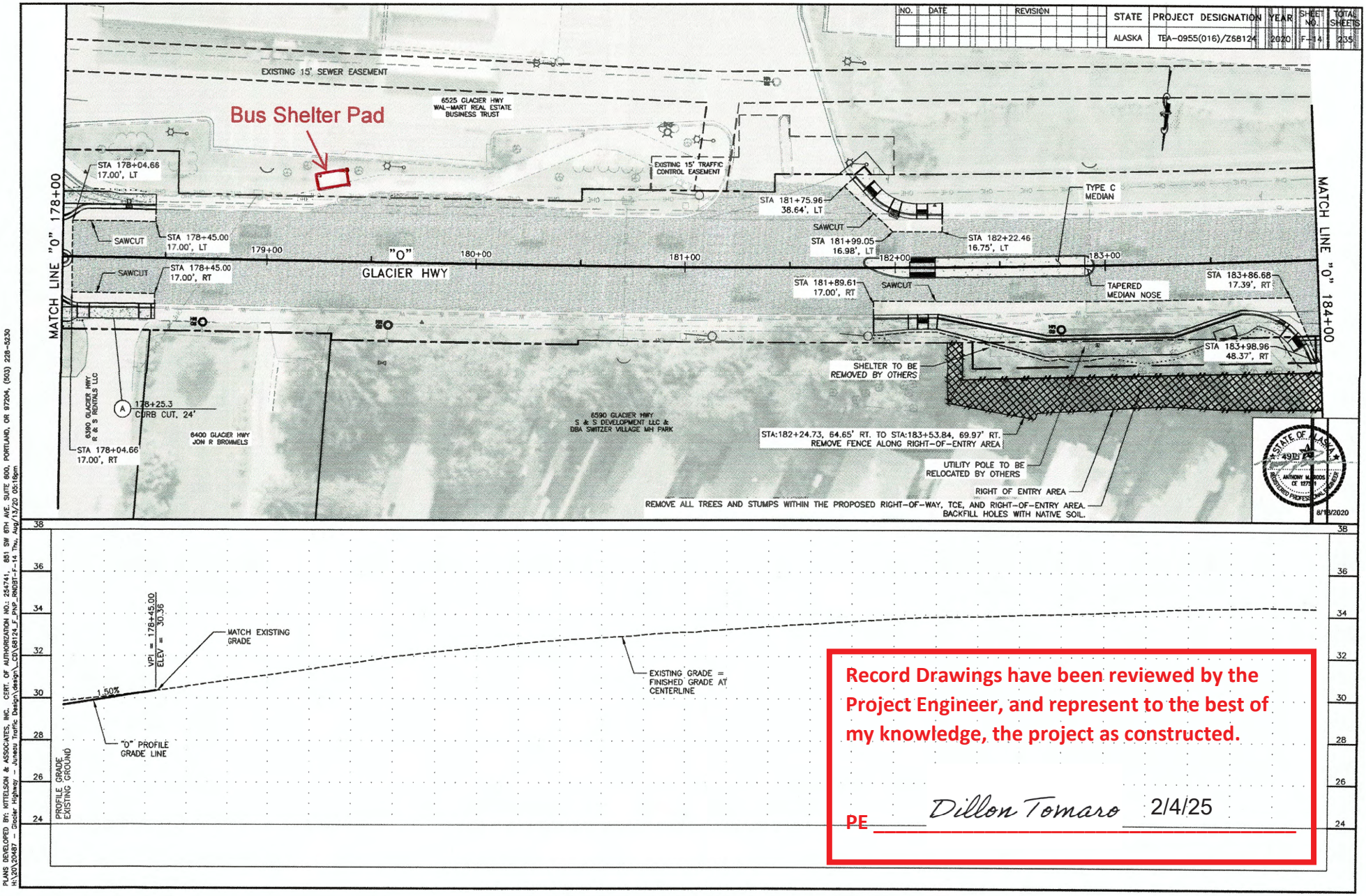

PLANS DEVELOPED BY: KITTELSON & ASSOCIATES, INC. CERT. OF AUTHORIZATION NO.: 254741, 851 SW 6TH AVE. SUITE 600, PORTLAND, OR 97204, (503) 228-5230
H:\20\20487 - Glacier Highway - Juneau Traffic Design\design_CD\68124_F_PNP_RN031-F-14 Thu, Aug/13/20 05:18pm

Record Drawings have been reviewed by the Project Engineer, and represent to the best of my knowledge, the project as constructed.

PE Dillon Tomaro 2/4/25

NO.	DATE	REVISION

STATE	PROJECT DESIGNATION	YEAR	SHEET NO.	TOTAL SHEETS
ALASKA	TEA-0955(016)/Z68124	2020	F-15	235

EXISTING 15' SEWER EASEMENT

6525 GLACIER HWY
WAL-MART REAL ESTATE
BUSINESS TRUST

GLACIER HWY

MATCH LINE "O" 184+00

185+00 186+00 187+00 188+00 189+00

END OF PROJECT
"O" STA. 184+80
SAWCUT AND MATCH EXISTING
PAVEMENT, CURB & GUTTER,
AND SIDEWALK.

6590 GLACIER HWY
S & S DEVELOPMENT LLC &
DBA SWITZER VILLAGE MH PARK

Record Drawings have been reviewed by the Project Engineer, and represent to the best of my knowledge, the project as constructed.

PE Dillon Tomaro 2/4/25

STATE OF ALASKA
49TH
ANTHONY M. ROOS
CE 12759
REGISTERED PROFESSIONAL ENGINEER
7/31/2020

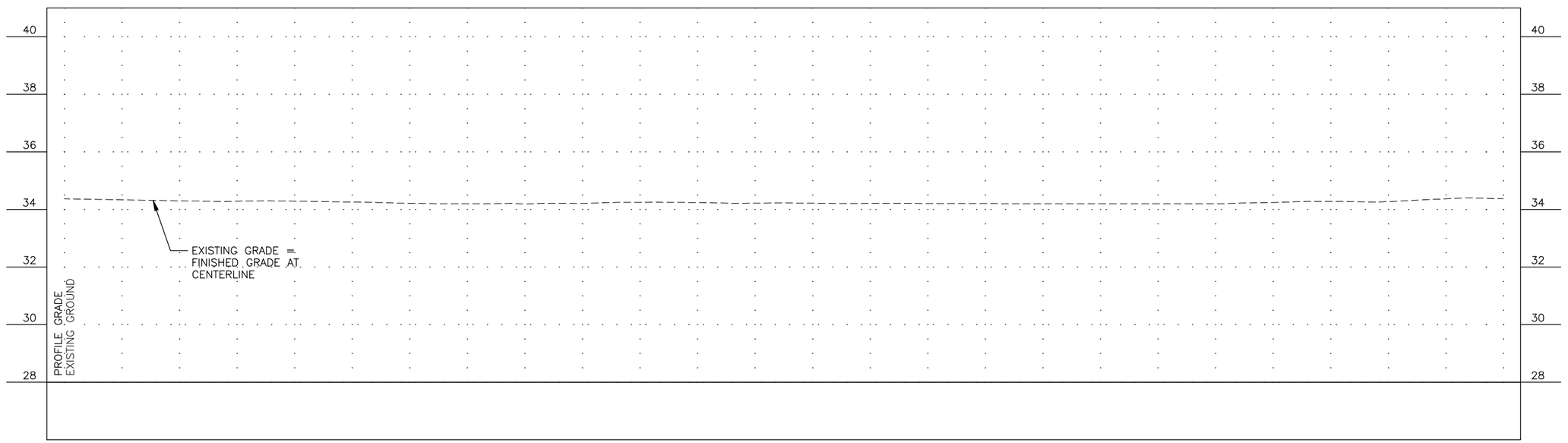

PLANS DEVELOPED BY: KITTELSON & ASSOCIATES, INC. CERT. OF AUTHORIZATION NO.: 254741, 851 SW 6TH AVE. SUITE 600, PORTLAND, OR 97204, (503) 228-5230
H:\20\20487 - Glacier Highway - Juneau Traffic Design\design_CD\68124_F_PNP_RNDBT-F-15 Thu, Jul/30/20 03:39pm

NO.	DATE	REVISION

STATE	PROJECT DESIGNATION	YEAR	SHEET NO.	TOTAL SHEETS
ALASKA	TEA-0955(016)/Z68124	2020	F-16	235

STATE OF ALASKA & DEPARTMENT OF NATURAL RESOURCES

PLANS DEVELOPED BY: KITTELSON & ASSOCIATES, INC. CERT. OF AUTHORIZATION NO.: 254741, 851 SW 6TH AVE. SUITE 600, PORTLAND, OR 97204, (503) 228-5230

H:\20\20487 - Glacier Highway - Juneau Traffic Design\design_CD\68124_F_SS_PNP_SOUTH-F-16 Thu, Jul/30/20 03:42am

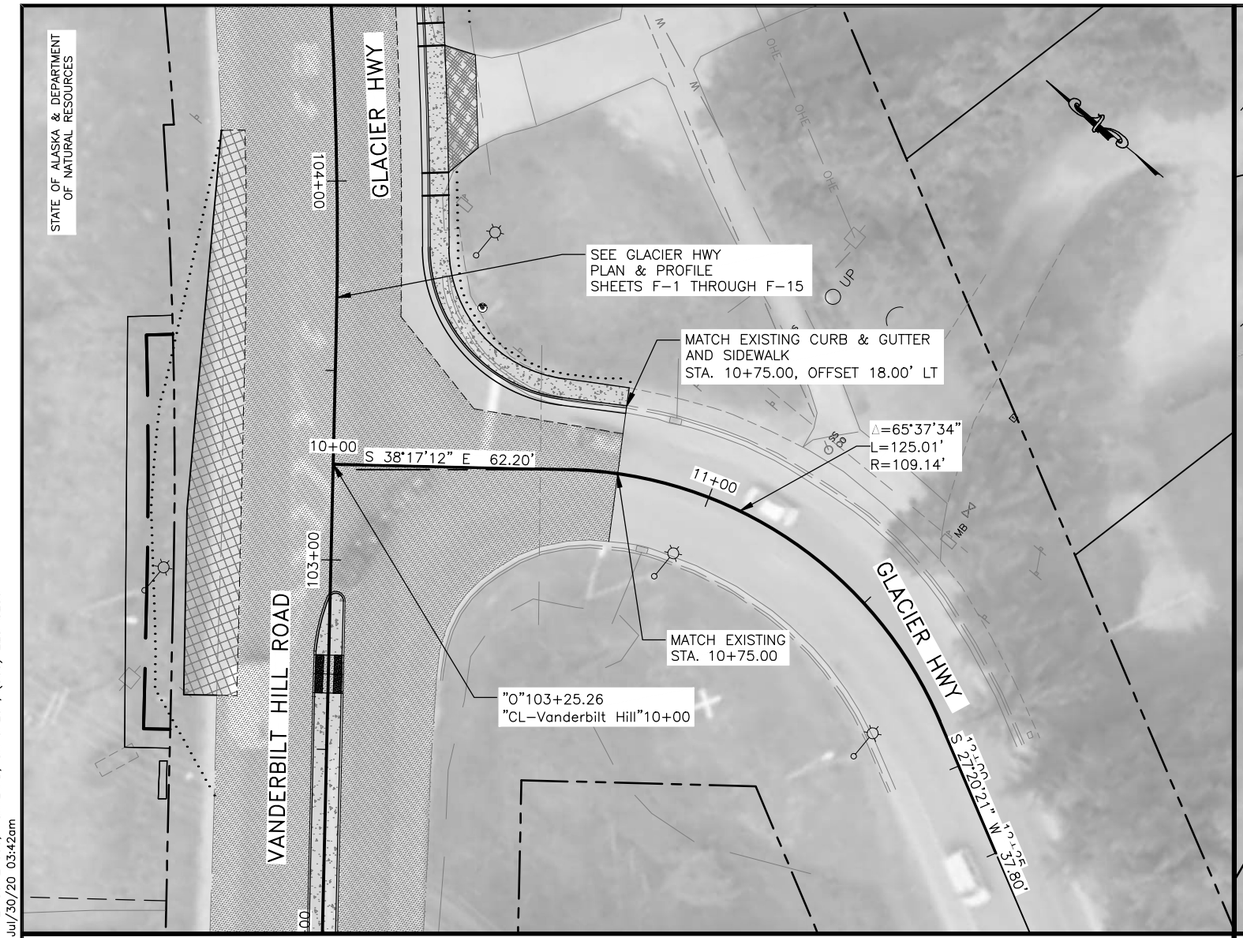

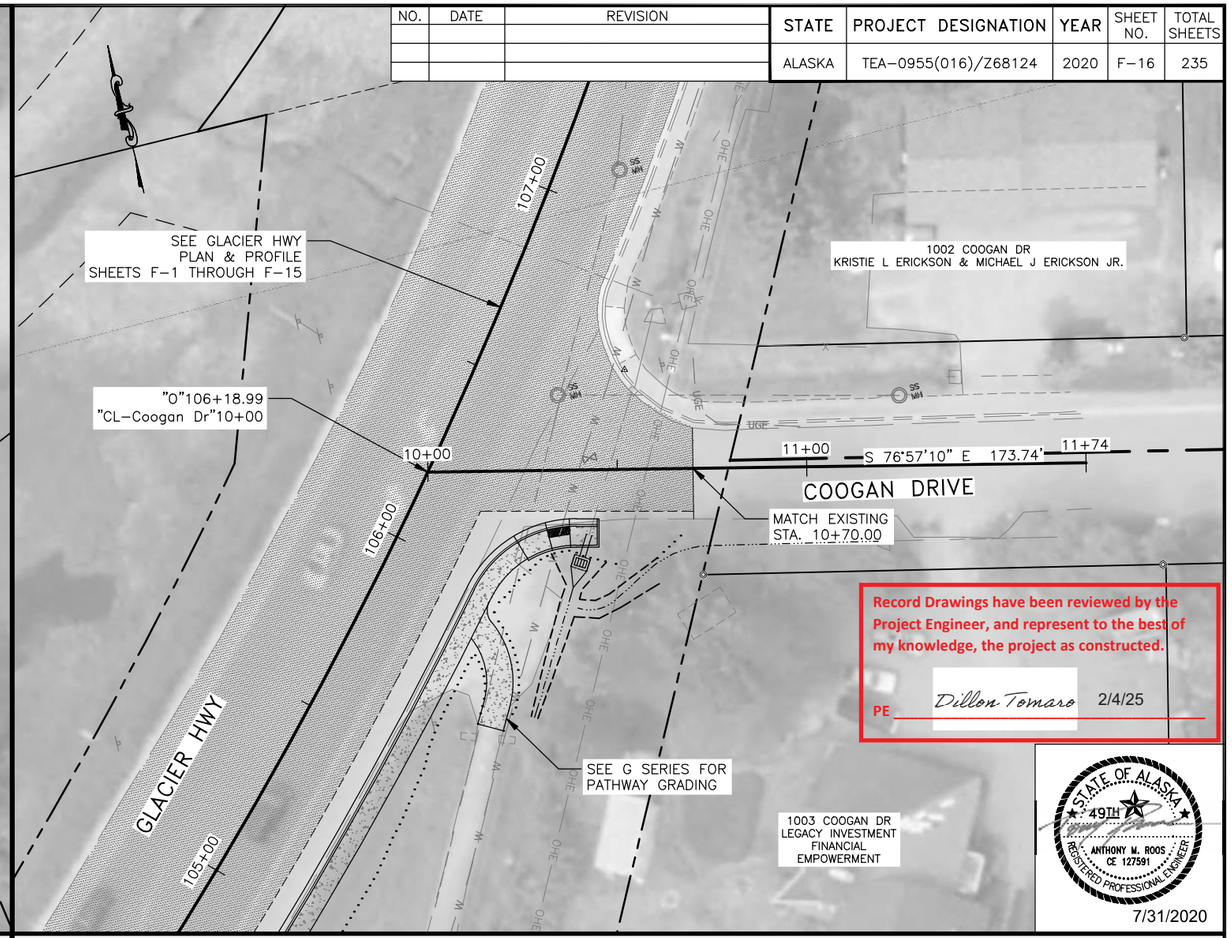

Record Drawings have been reviewed by the Project Engineer, and represent to the best of my knowledge, the project as constructed.

PE Dillon Tomaro 2/4/25

STATE OF ALASKA 49TH ANTHONY M. ROOS CE 127591 REGISTERED PROFESSIONAL ENGINEER

7/31/2020

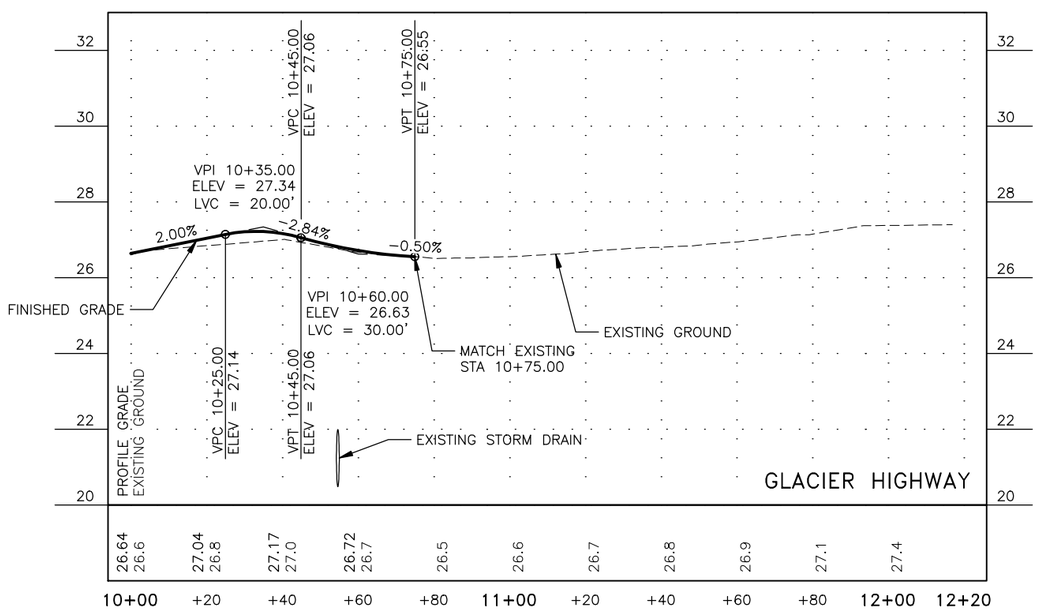

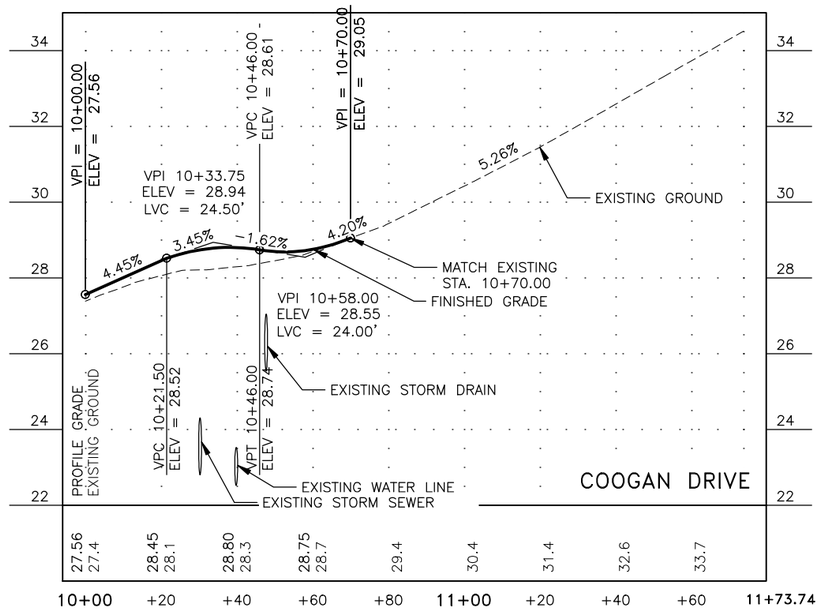

NO.	DATE	REVISION

STATE	PROJECT DESIGNATION	YEAR	SHEET NO.	TOTAL SHEETS
ALASKA	TEA-0955(016)/Z68124	2020	F-17	235

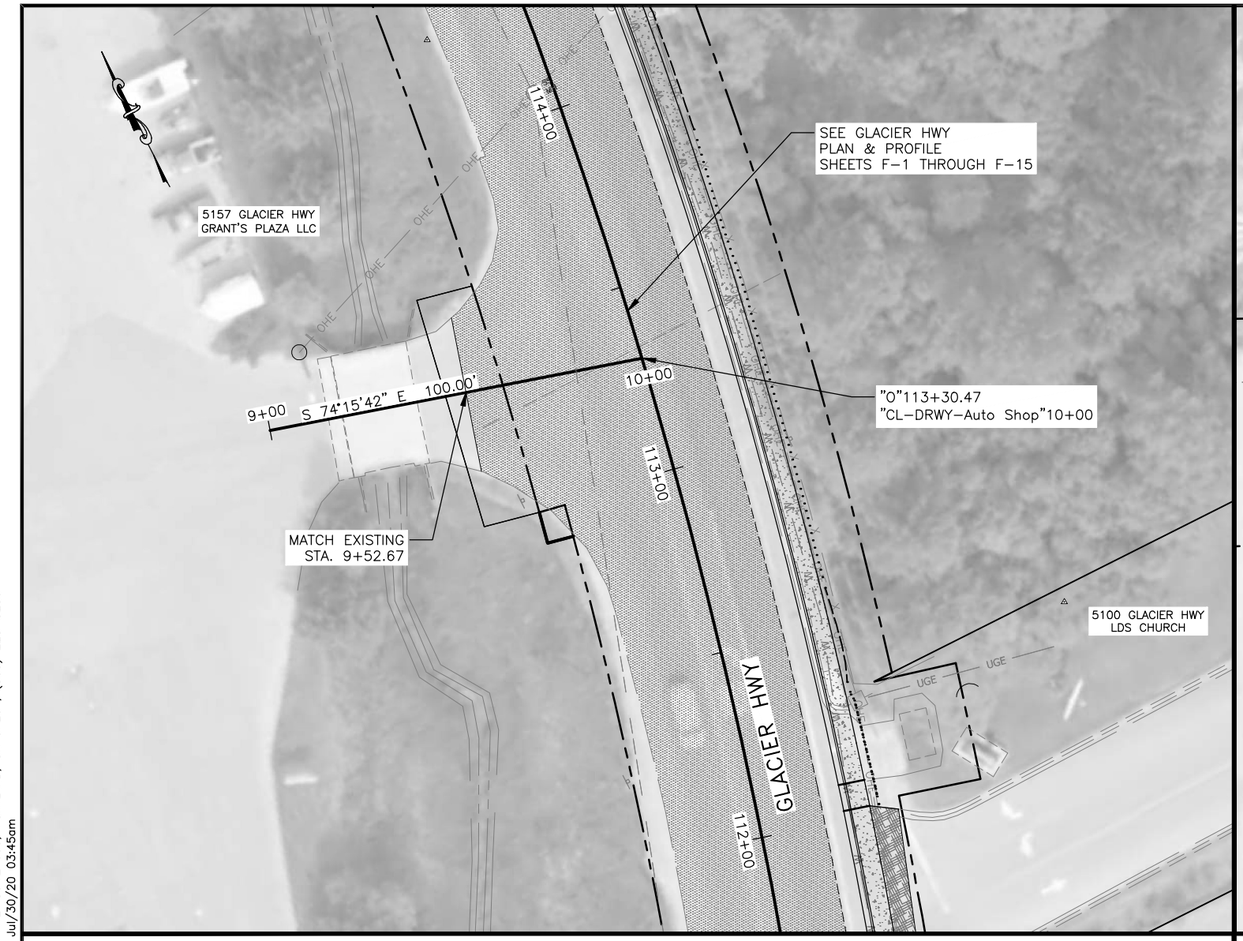

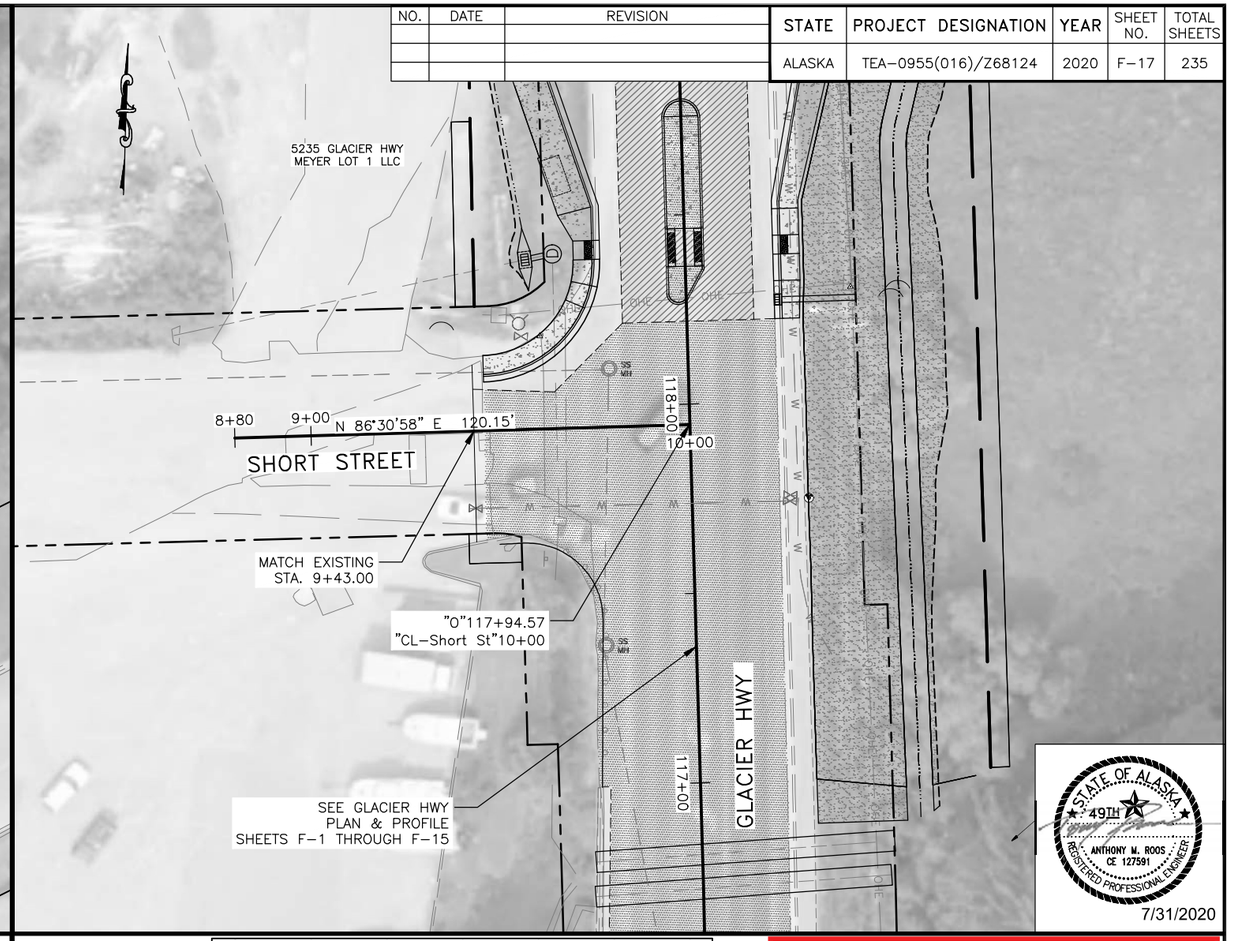

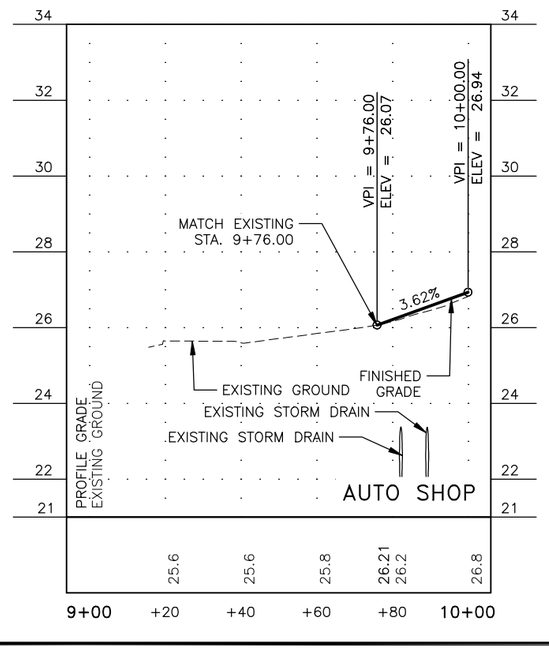

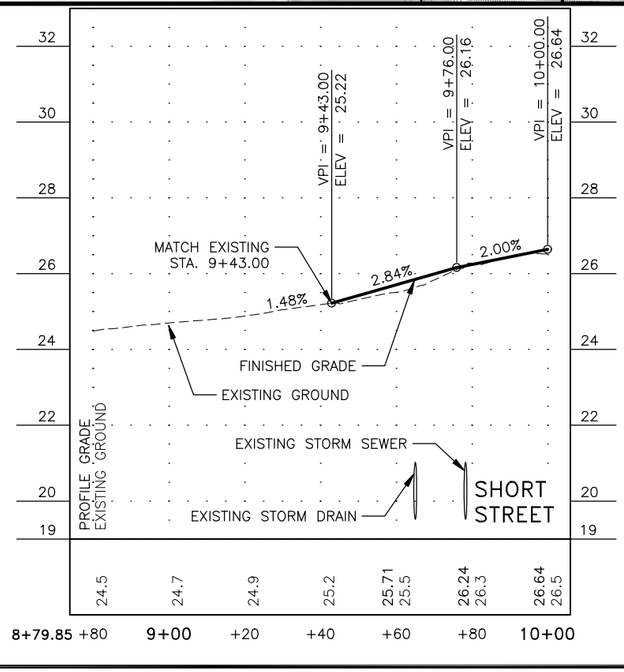

STATE OF ALASKA
49TH
ANTHONY M. ROOS
CE 127591
REGISTERED PROFESSIONAL ENGINEER
7/31/2020

Record Drawings have been reviewed by the Project Engineer, and represent to the best of my knowledge, the project as constructed.

PE *Dillon Tomaro* 2/4/25

PLANS DEVELOPED BY: KITTELSON & ASSOCIATES, INC. CERT. OF AUTHORIZATION NO.: 254741, 851 SW 6TH AVE. SUITE 600, PORTLAND, OR 97204, (503) 228-5230
H:\20\20487 - Glacier Highway - Juneau Traffic Design\design_CD\68124_F_SS_PNP_SOUTH-F-17 Thu, Jul/30/20 03:45pm

NO.	DATE	REVISION

STATE	PROJECT DESIGNATION	YEAR	SHEET NO.	TOTAL SHEETS
ALASKA	TEA-0955(016)/Z68124	2020	F-18	235





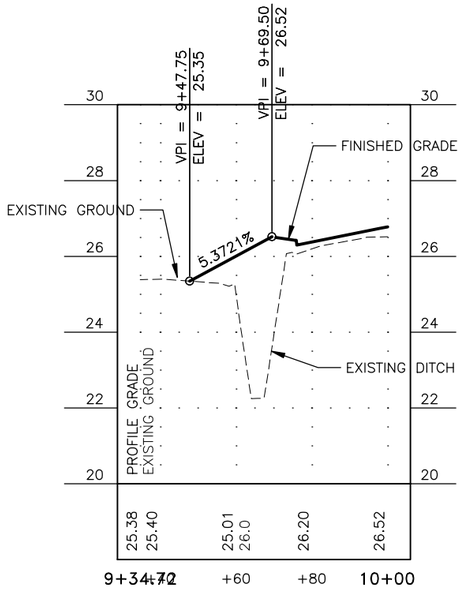

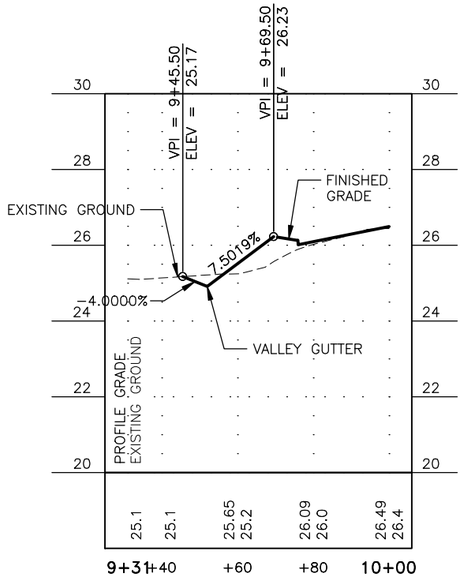

STATE OF ALASKA
49TH
ANTHONY M. ROOS
CE 127591
REGISTERED PROFESSIONAL ENGINEER
7/31/2020

Record Drawings have been reviewed by the Project Engineer, and represent to the best of my knowledge, the project as constructed.

PE *Dillon Tomaro* 2/4/25

PLANS DEVELOPED BY: KITTELSON & ASSOCIATES, INC. CERT. OF AUTHORIZATION NO.: 254741, 851 SW 6TH AVE. SUITE 600, PORTLAND, OR 97204, (503) 228-5230
H:\20\20487 - Glacier Highway - Juneau Traffic Design\design_CD\68124_F_SS_PNP_SOUTH-F-18 Thu, Jul/30/20 03:47am

Record Drawings have been reviewed by the Project Engineer, and represent to the best of my knowledge, the project as constructed.

PE *Dillon Tomaro* 2/4/25

THIS SPACE INTENTIONALLY LEFT BLANK

THIS SPACE INTENTIONALLY LEFT BLANK

NO.	DATE	REVISION

STATE	PROJECT DESIGNATION	YEAR	SHEET NO.	TOTAL SHEETS
ALASKA	TEA-0955(016)/Z68124	2020	F-19	235

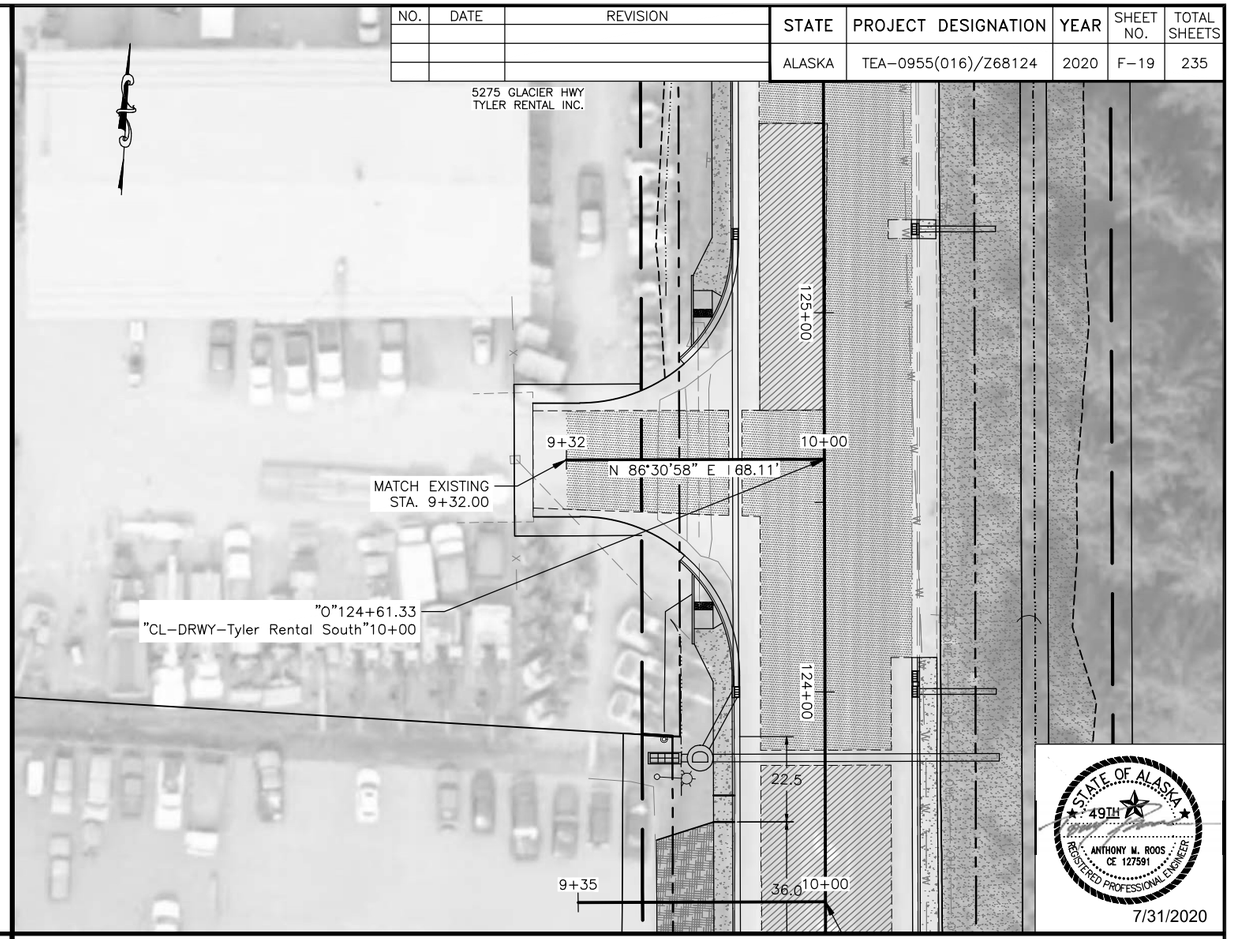

STATE OF ALASKA 49TH
ANTHONY M. ROOS
CE 12759
REGISTERED PROFESSIONAL ENGINEER
7/31/2020

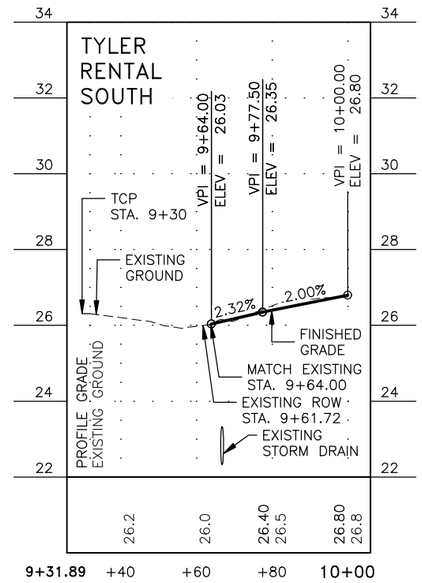

PLANS DEVELOPED BY: KITTELSON & ASSOCIATES, INC. CERT. OF AUTHORIZATION NO.: 254741. 851 SW 6TH AVE. SUITE 600, PORTLAND, OR 97204, (503) 228-5230
H:\20\20487 - Glacier Highway - Juneau Traffic Design\design_CD\68124_F_SS_PNP_SOUTH-F-19 Thu, Jul/30/20 03:48pm

NO.	DATE	REVISION

STATE	PROJECT DESIGNATION	YEAR	SHEET NO.	TOTAL SHEETS
ALASKA	TEA-0955(016)/Z68124	2020	F-20	235

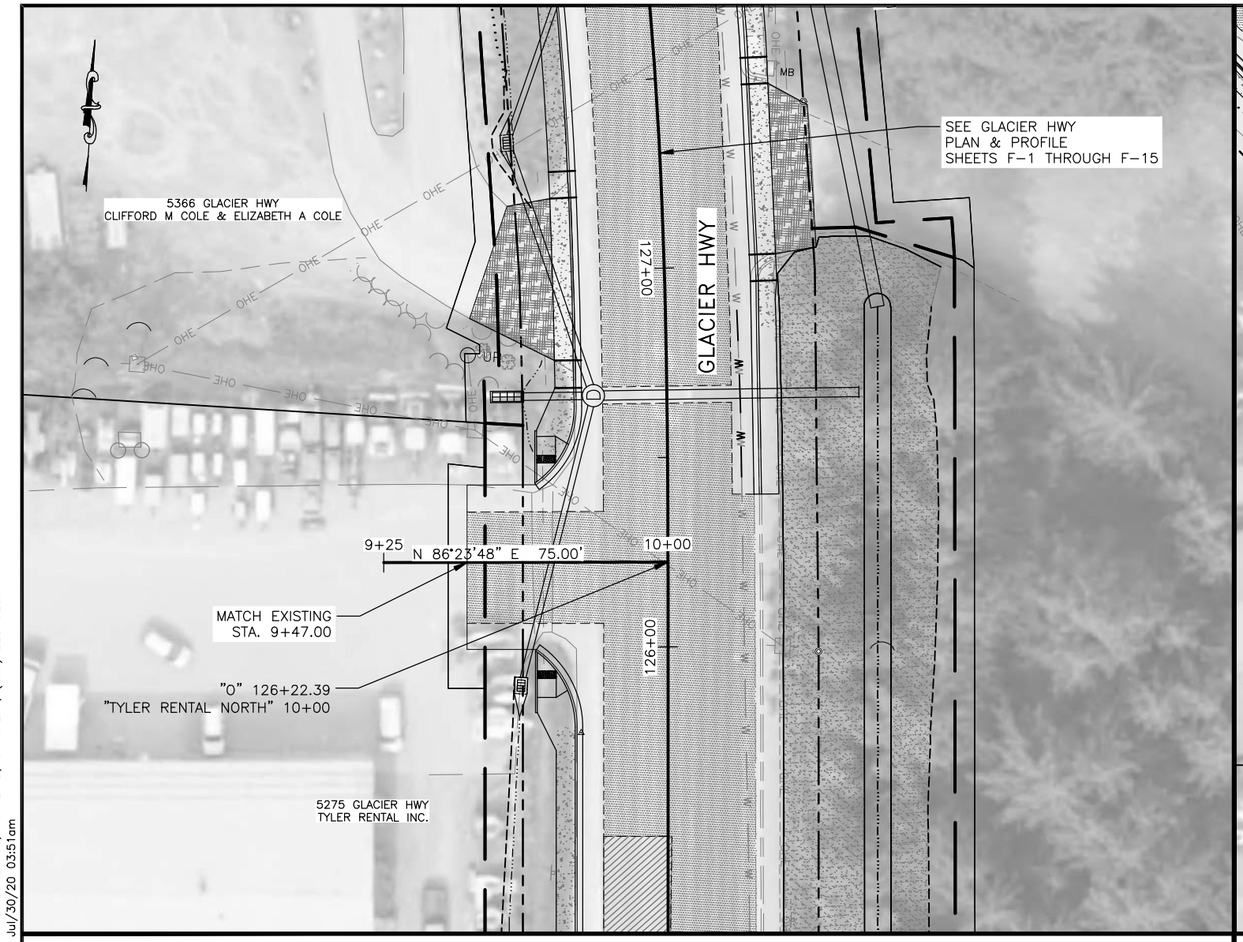

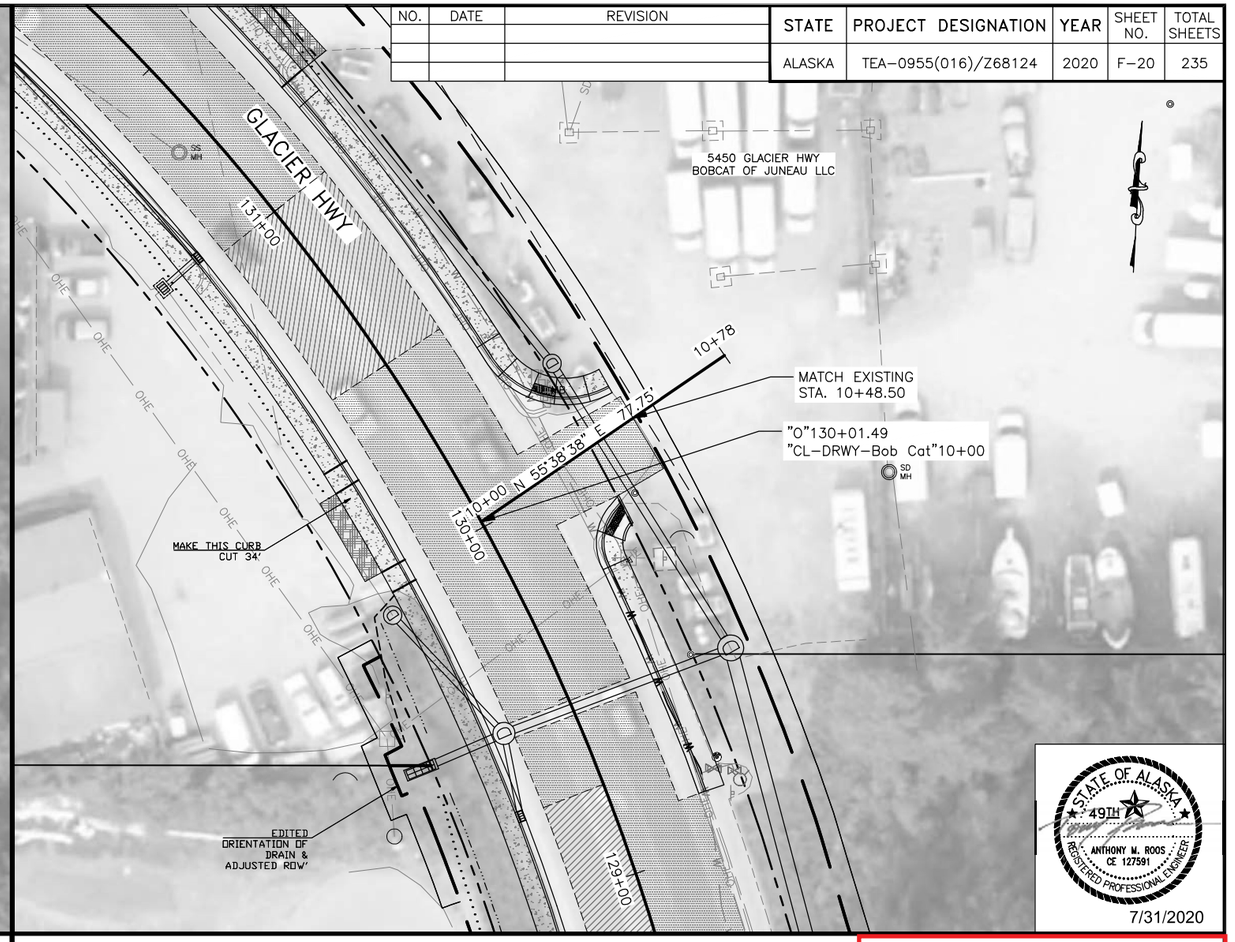

STATE OF ALASKA
49TH
ANTHONY M. ROOS
CE 127591
REGISTERED PROFESSIONAL ENGINEER
7/31/2020

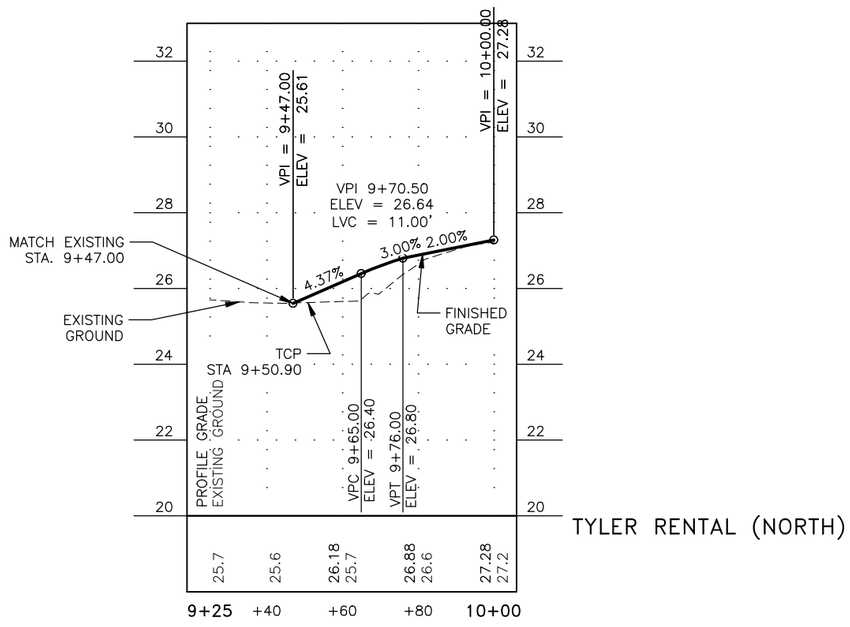

TYLER RENTAL (NORTH)

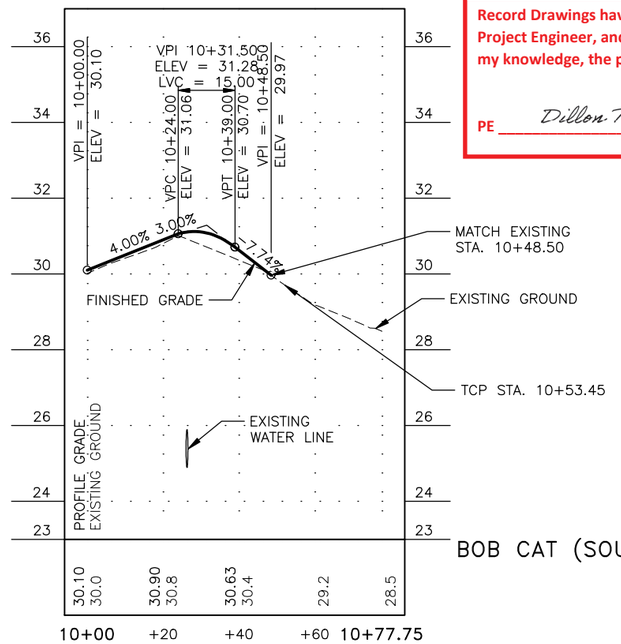

BOB CAT (SOUTH)

Record Drawings have been reviewed by the Project Engineer, and represent to the best of my knowledge, the project as constructed.

PE *Dillon Tomaro* 2/4/25

PLANS DEVELOPED BY: KITTELSON & ASSOCIATES, INC. CERT. OF AUTHORIZATION NO.: 254741, 851 SW 6TH AVE. SUITE 600, PORTLAND, OR 97204, (503) 228-5230
H:\20\20487 - Glacier Highway - Juneau Traffic Design\design_CD\68124_F_SS_PNP_SOUTH-F-20 Thu, Jul/30/20 03:51am

NO.	DATE	REVISION

STATE	PROJECT DESIGNATION	YEAR	SHEET NO.	TOTAL SHEETS
ALASKA	TEA-0955(016)/Z68124	2020	F-21	235

5541 GLACIER HWY
JD PHONE CO

SEE GLACIER HWY
PLAN & PROFILE
SHEETS F-1 THROUGH F-15

PINEWOOD PARK
GLACIER HWY GROSS ALASKA INC.

"O"134+06.81
"CL-Anka St" 10+65.50

MATCH EXISTING CURB &
GUTTER AND SIDEWALK
STA. 10+11.27, 11.21' LT

MATCH EXISTING
STA. 10+00.00

MATCH EXISTING CURB &
GUTTER AND SIDEWALK
STA. 11+84.60, 19.40' LT

ANKA ST.

9+67

10+00

N 6°47'49" E 98.25'

11+00

N 1°08'21" W 229.73'

12+00

13+00

13+33

5501 GLACIER HWY
CITY AND BOROUGH OF JUNEAU & J D PHONE CO.

MATCH EXISTING CURB &
GUTTER AND SIDEWALK
STA. 10+00.00, 12.11' RT

MATCH EXISTING CURB &
GUTTER AND SIDEWALK
STA. 11+84.60, 26.6' RT

REMOVE EXISTING MEDIAN
STA. 11+20 TO STA. 11+84.60

GLACIER HWY

5441 GLACIER HWY
JACK J SCHOENMANN & JOHN G SCHOENMANN

1610 ANKA ST
NATIONAL BANK OF ALASKA

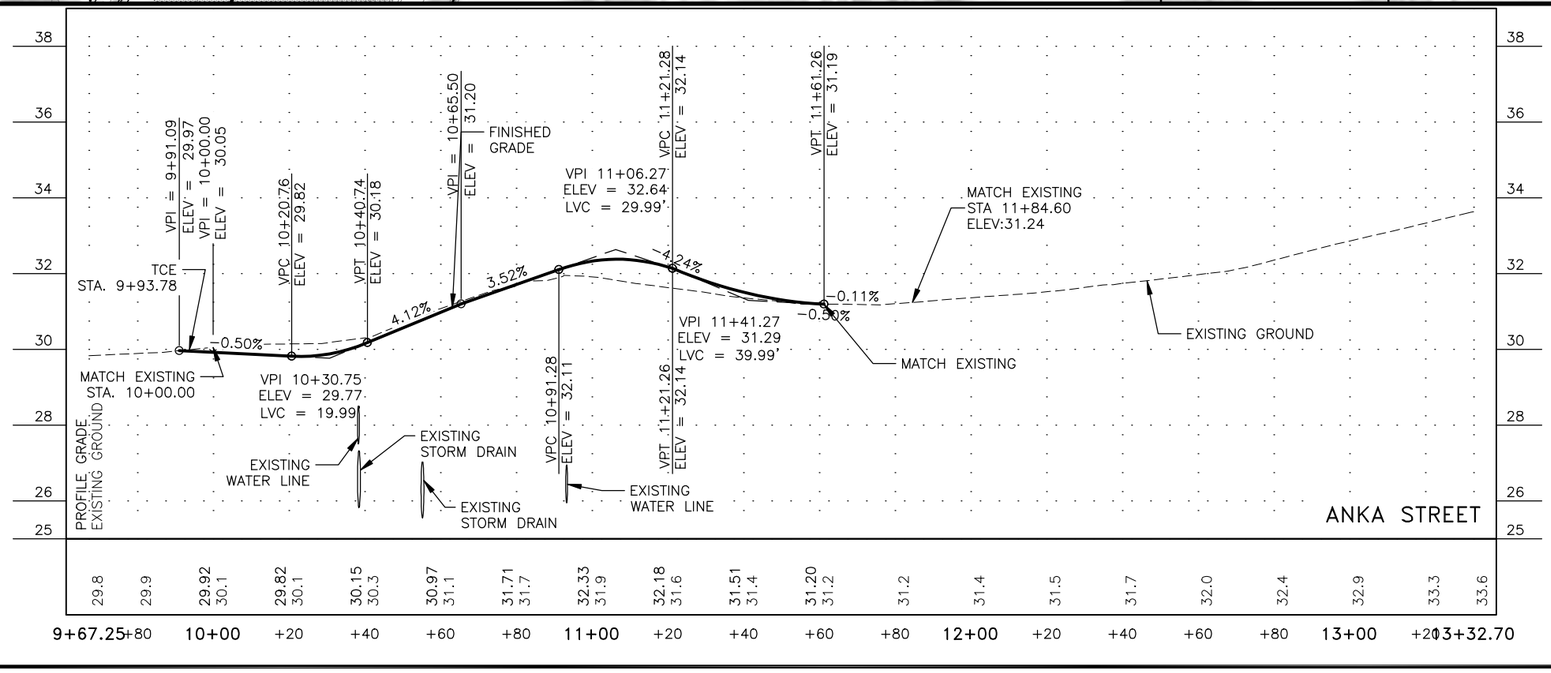

STATE OF ALASKA
49TH
ANTHONY M. ROOS
CE 127591
REGISTERED PROFESSIONAL ENGINEER
7/31/2020

Record Drawings have been reviewed by the Project Engineer, and represent to the best of my knowledge, the project as constructed.

PE Dillon Tomaro 2/4/25

PLANS DEVELOPED BY: KITTELSON & ASSOCIATES, INC. CERT. OF AUTHORIZATION NO.: 254741, 851 SW 6TH AVE. SUITE 600, PORTLAND, OR 97204, (503) 228-5230
H:\20\20487 - Glacier Highway - Juneau Traffic Design\design_CD\68124_F_SS_PNP_SOUTH-F-21 Thu, Jul/30/20 03:52pm

NO.	DATE	REVISION

STATE	PROJECT DESIGNATION	YEAR	SHEET NO.	TOTAL SHEETS
ALASKA	TEA-0955(016)/Z68124	2020	F-22	235

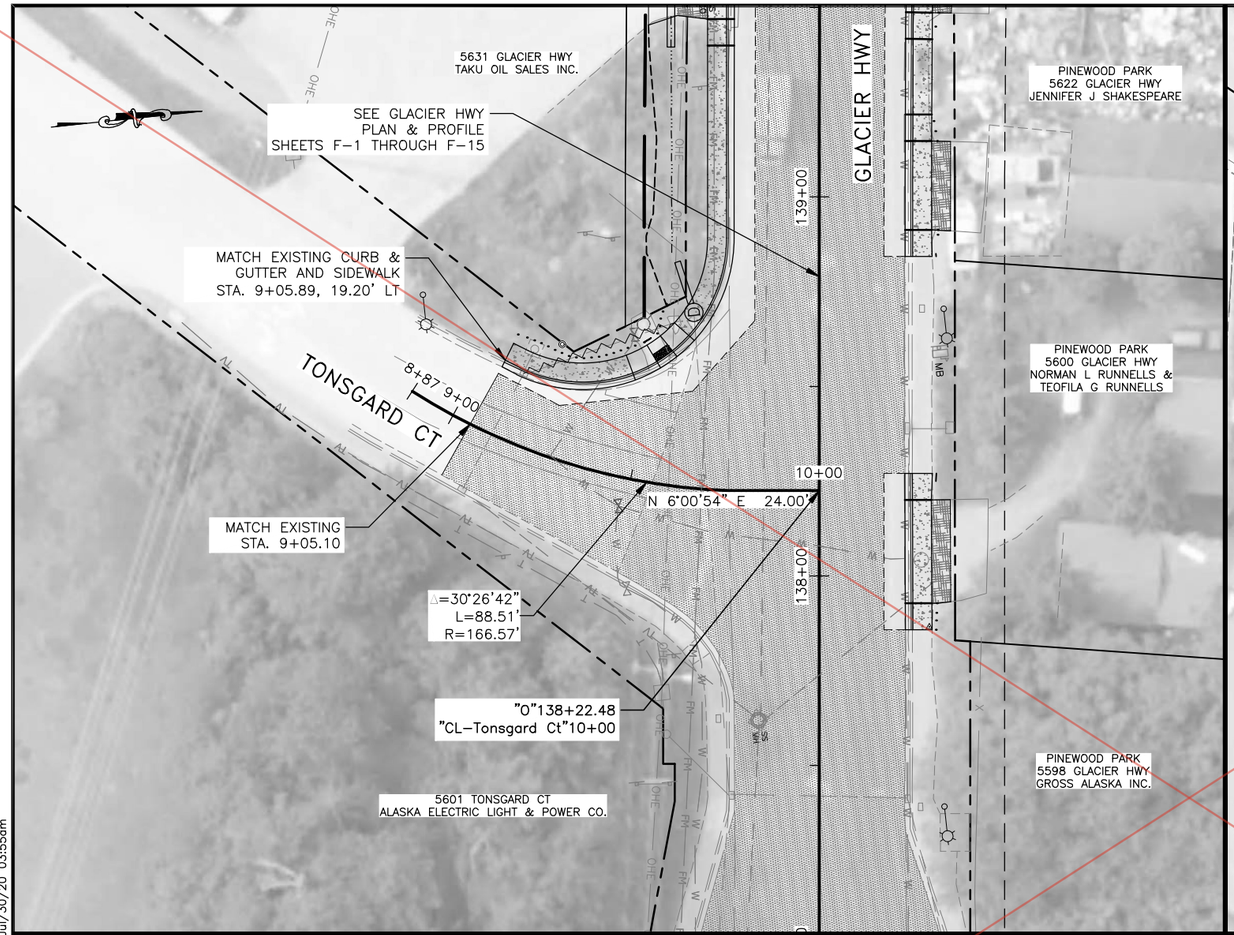

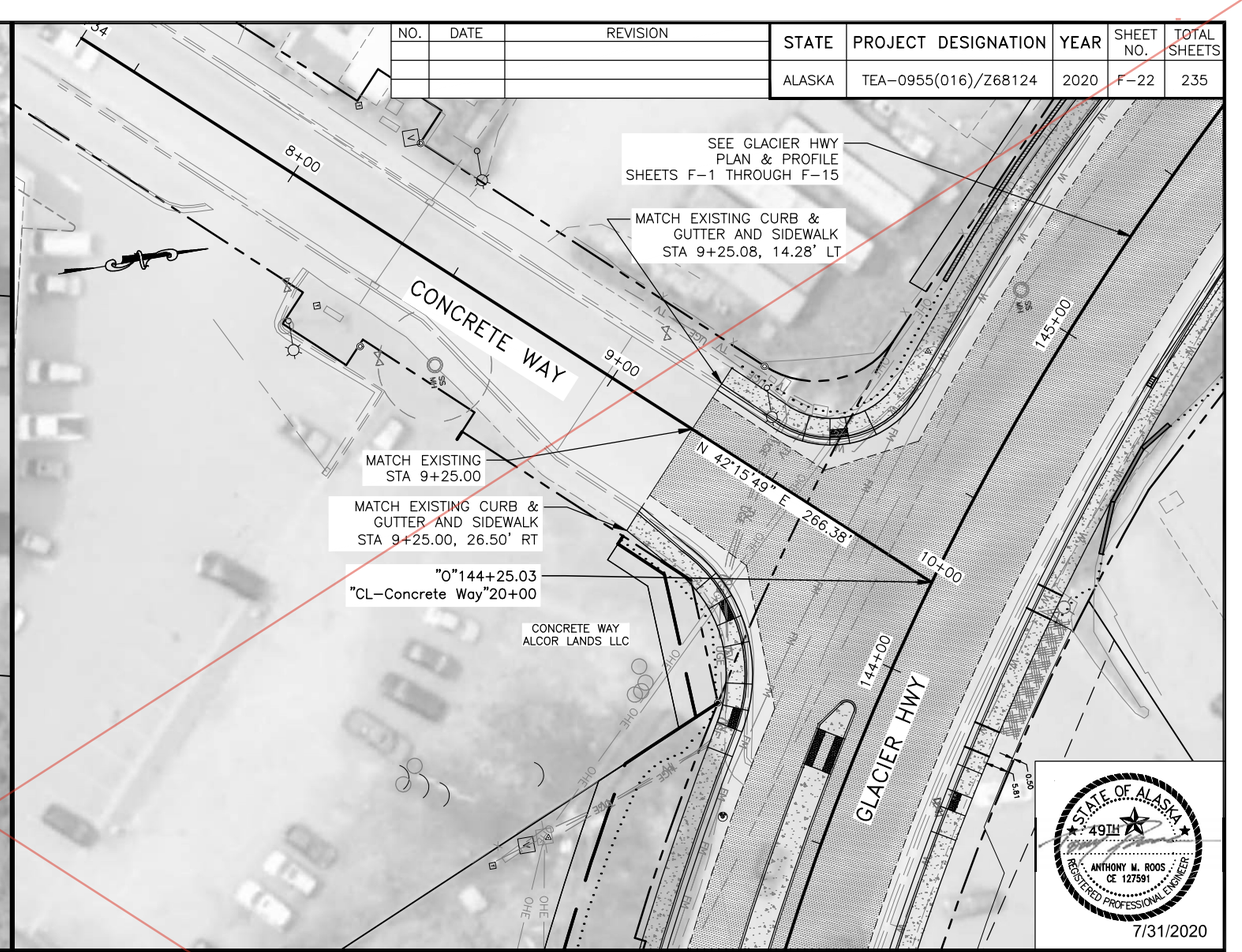

STATE OF ALASKA
49TH
ANTHONY M. ROOS
CE 12759
REGISTERED PROFESSIONAL ENGINEER
7/31/2020

** Deleted by CO27

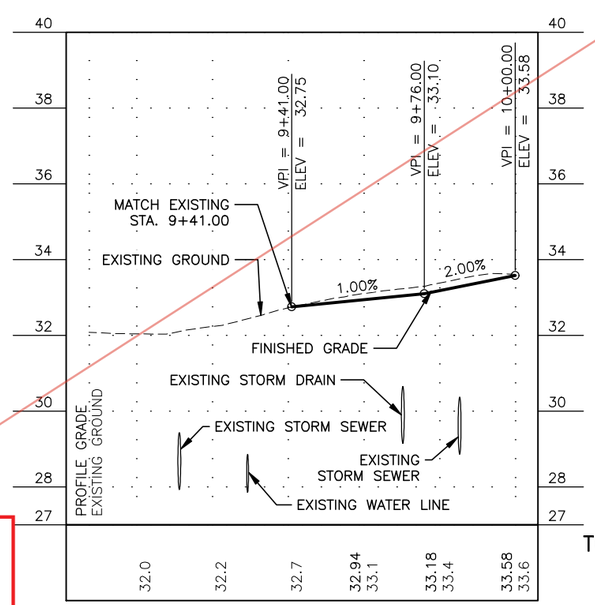

TONSGARD COURT

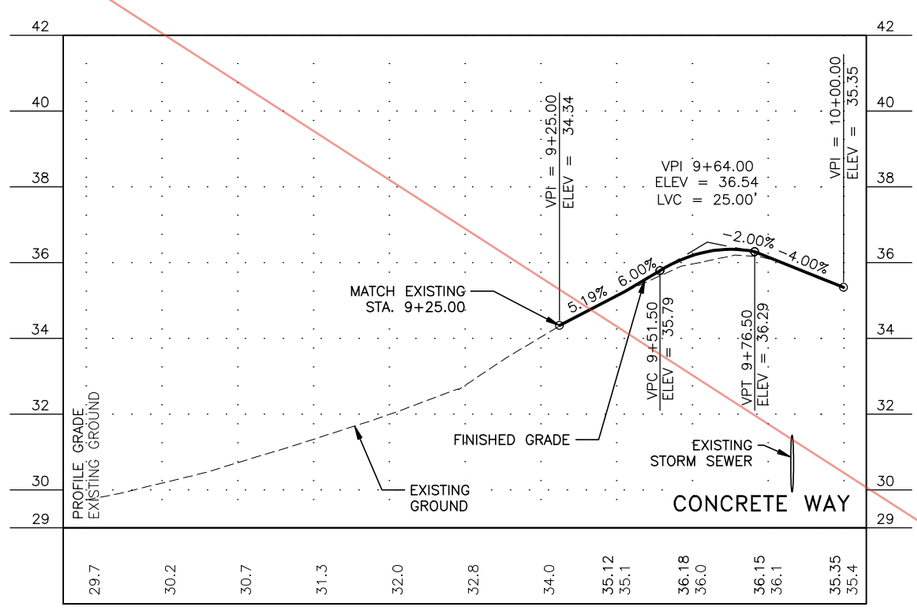

CONCRETE WAY

Record Drawings have been reviewed by the Project Engineer, and represent to the best of my knowledge, the project as constructed.

PE Dillon Tomaro 2/4/25

PLANS DEVELOPED BY: KITTELSON & ASSOCIATES, INC. CERT. OF AUTHORIZATION NO.: 254741, 851 SW 6TH AVE. SUITE 600, PORTLAND, OR 97204, (503) 228-5230
H:\20\20487 - Glacier Highway - Juneau Traffic Design\design_CD\68124_F_SS_PNP_SOUTH-F-22 Thu, Jul/30/20 03:55pm

Attachment No. 4 CO 27

NO.	DATE	REVISION
1	06/18/2021	RFI 37: TONSGARD PAVEMENT REVISION

STATE	PROJECT DESIGNATION	YEAR	SHEET NO.	TOTAL SHEETS
ALASKA	TEA-0955(016)/Z68124	2020	F-22	235

5631 GLACIER HWY
TAKU OIL SALES INC.

SEE GLACIER HWY
PLAN & PROFILE
SHEETS F-1 THROUGH F-15

CONSTRUCT CURB BACK
BEHIND RAMP LIMITS

REMOVE AND REPLACE CONCRETE PAVEMENT.
MATCH EXISTING CONCRETE PAVEMENT THICKNESS

MATCH EXISTING CURB &
GUTTER AND SIDEWALK
STA. 9+36.84, 22.81' LT.

TONSGARD CT

8+87

9+00

10+00

N 6°00'54" E 24.00'

SANDSEAL JOINT/SAWCUT LINE

Δ=30°26'42"
L=88.51'
R=166.57'

MATCH EXISTING CONCRETE EDGE
STA.9+55.75

"O"138+22.48
"CL-Tonsgard Ct"10+00

5601 TONSGARD CT
ALASKA ELECTRIC LIGHT & POWER CO.

GLACIER HWY

139+00

138+00

PINEWOOD PARK
5622 GLACIER HWY
JENNIFER J SHAKESPEARE

PINEWOOD PARK
5600 GLACIER HWY
NORMAN L RUNNELLS &
TEOFILA G RUNNELLS

PINEWOOD PARK
5598 GLACIER HWY
GROSS ALASKA INC.

8+00

SEE GLACIER HWY
PLAN & PROFILE
SHEETS F-1 THROUGH F-15

MATCH EXISTING CURB &
GUTTER AND SIDEWALK
STA 9+25.08, 14.28' LT

CONCRETE WAY

9+00

MATCH EXISTING
STA 9+25.00

MATCH EXISTING CURB &
GUTTER AND SIDEWALK
STA 9+25.00, 26.50' RT

N 42°15'49" E 266.38'

10+00

"O"144+25.03
"CL-Concrete Way"20+00

CONCRETE WAY
ALCOR LANDS LLC

144+00

145+00

GLACIER HWY

STATE OF ALASKA
49TH
ANTHONY M. ROOS
CE 12751
REGISTERED PROFESSIONAL ENGINEER

6/23/21

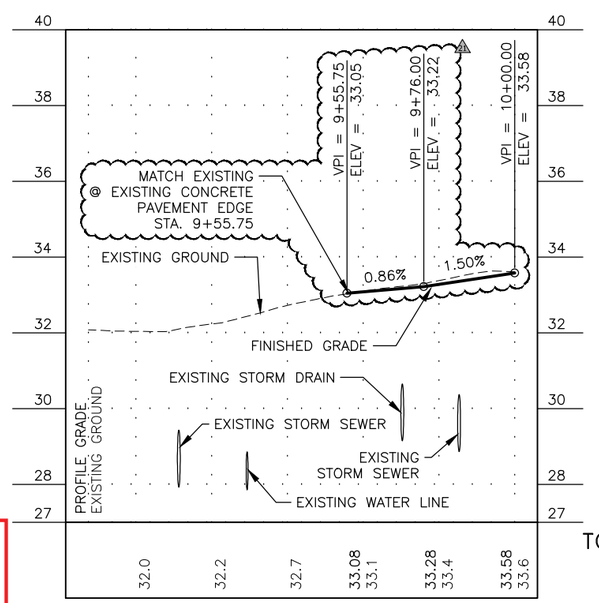

TONSGARD COURT

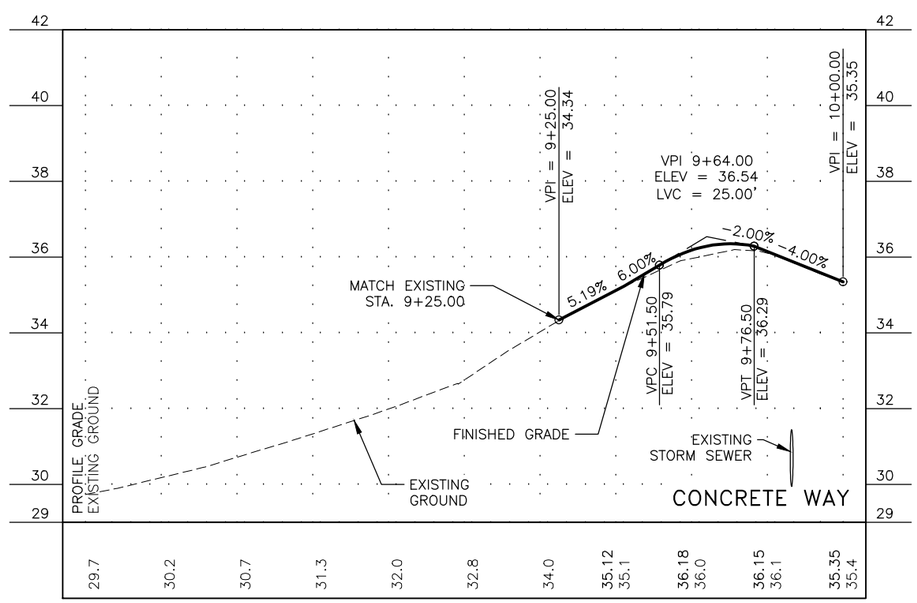

CONCRETE WAY

Record Drawings have been reviewed by the Project Engineer, and represent to the best of my knowledge, the project as constructed.

PE Dillon Tomaro 2/4/25

PLANS DEVELOPED BY: KITTELSON & ASSOCIATES, INC. CERT. OF AUTHORIZATION NO.: 254741, 851 SW 6TH AVE. SUITE 600, PORTLAND, OR 97204, (503) 228-5230
H:\20\20487 - glacier highway - juneau traffic design\design_CD\68124_F_SS_PNP_SOUTH-F-22 Wed, Jun/23/21 02:23pm

NO.	DATE	REVISION

STATE	PROJECT DESIGNATION	YEAR	SHEET NO.	TOTAL SHEETS
ALASKA	TEA-0955(016)/Z68124	2020	F-23	235

SEE GLACIER HWY PLAN & PROFILE SHEETS F-1 THROUGH F-15

5849 MONTGOMERY ST
BRYAN C WILSON &
ERICA L WILSON

5847 MONTGOMERY ST
SALUD C ELIZARDE &
HENRY ELIZARDE

GLACIER HWY

151+00

INSTALL CONCRETE PAD FOR LOAD CENTER. SEE SHEET H-79 FOR DETAILS

MATCH EXISTING CURB & GUTTER AND SIDEWALK STA. 10+75.80

MATCH EXISTING STA. 10+73.00

10+00 N 56°52'36" E 250.00' 11+00 12+00

DAVIS AVENUE

"O"150+17.21
"CL-Davis Ave"10+00

150+00

RETAIN AND PROTECT EXISTING INLET

MATCH EXISTING CURB & GUTTER AND SIDEWALK STA. 10+70.00

SEE SHEET E-2 AND E-3 FOR PED RAMP AND CURB AND GUTTER DETAILS.

SEE SHEET E-2 AND E-3 FOR PED RAMP AND CURB AND GUTTER DETAILS.

5776 GLACIER HWY
SPACE UNLIMITED INC

6002 GULL WAY
ANITA E LAFFERTY

6000 GULL WAY MARY ANN FLAKE

5901 MONTGOMERY ST
CHRISTOPHER W SCHAPP & REGINA E SCHAPP

5891 MONTGOMERY ST
JOHN T HAMAR & JEAN BOONE-HAMAR

5871 MONTGOMERY ST
WALLACE R OLDS

MATCH EXISTING STA. 9+25.00

8+85 9+00 N 51°34'09" E 74.39' 10+00

BELARDI DRIVE

154+00

"O"153+98.69
"CL-Belardi Dr"10+00

SEE GLACIER HWY PLAN & PROFILE SHEETS F-1 THROUGH F-15

GLACIER HWY

153+00

STATE OF ALASKA
49TH
ANTHONY M. ROOS
CE 12759
REGISTERED PROFESSIONAL ENGINEER

7/31/2020

Record Drawings have been reviewed by the Project Engineer, and represent to the best of my knowledge, the project as constructed.

PE Dillon Tomaro 2/4/25

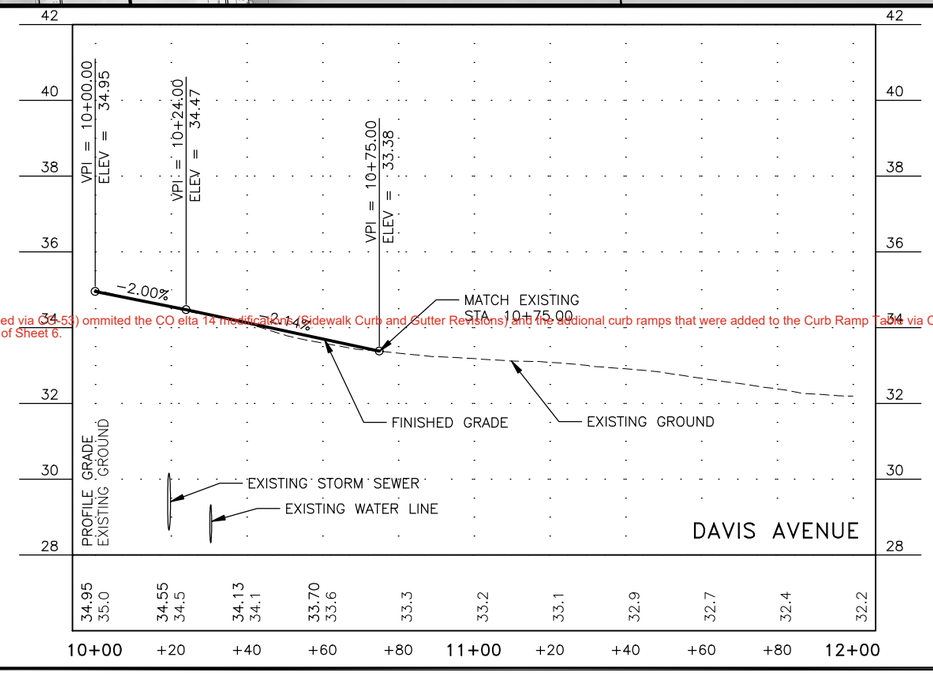

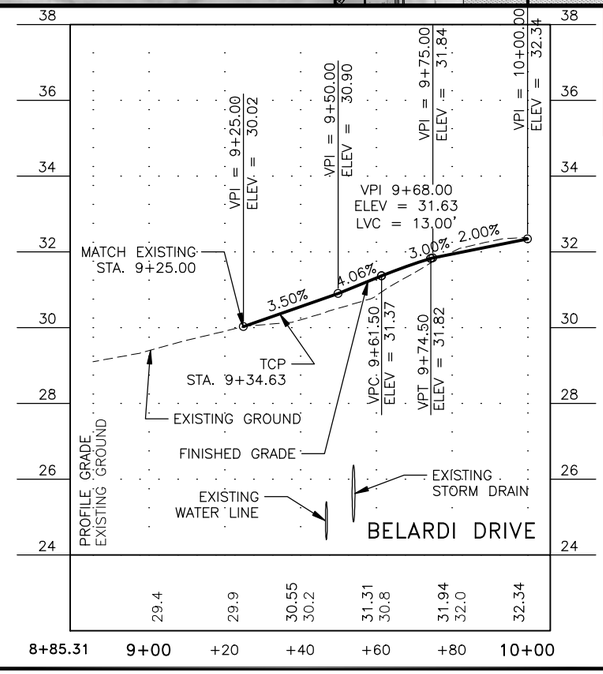

PLANS DEVELOPED BY: KITTELSON & ASSOCIATES, INC. 851 SW 6TH AVE. SUITE 600, PORTLAND, OR 97204, (503) 228-5230
PROJECT OF AUTHORIZATION NO.: 254741
H:\20\20487 - Glacier Highway - Juneau Traffic Design_CD\68124_F_SS_PNP_NORTH-F-23 Thu, Jul/30/20 11:20am

As-Built Plan Note (Sheet F-13):
The latest issued version of Sheet F-13 (issued via CO-53) ommited the CO elta 14 modification (Sidewalk Curb and Gutter Revisions) and the additional curb ramps that were added to the Curb Ramp Table via CO-5, however those modifications still apply to the current version of Sheet 6.

NO.	DATE	REVISION

STATE	PROJECT DESIGNATION	YEAR	SHEET NO.	TOTAL SHEETS
ALASKA	TEA-0955(016)/Z68124	2020	F-24	235

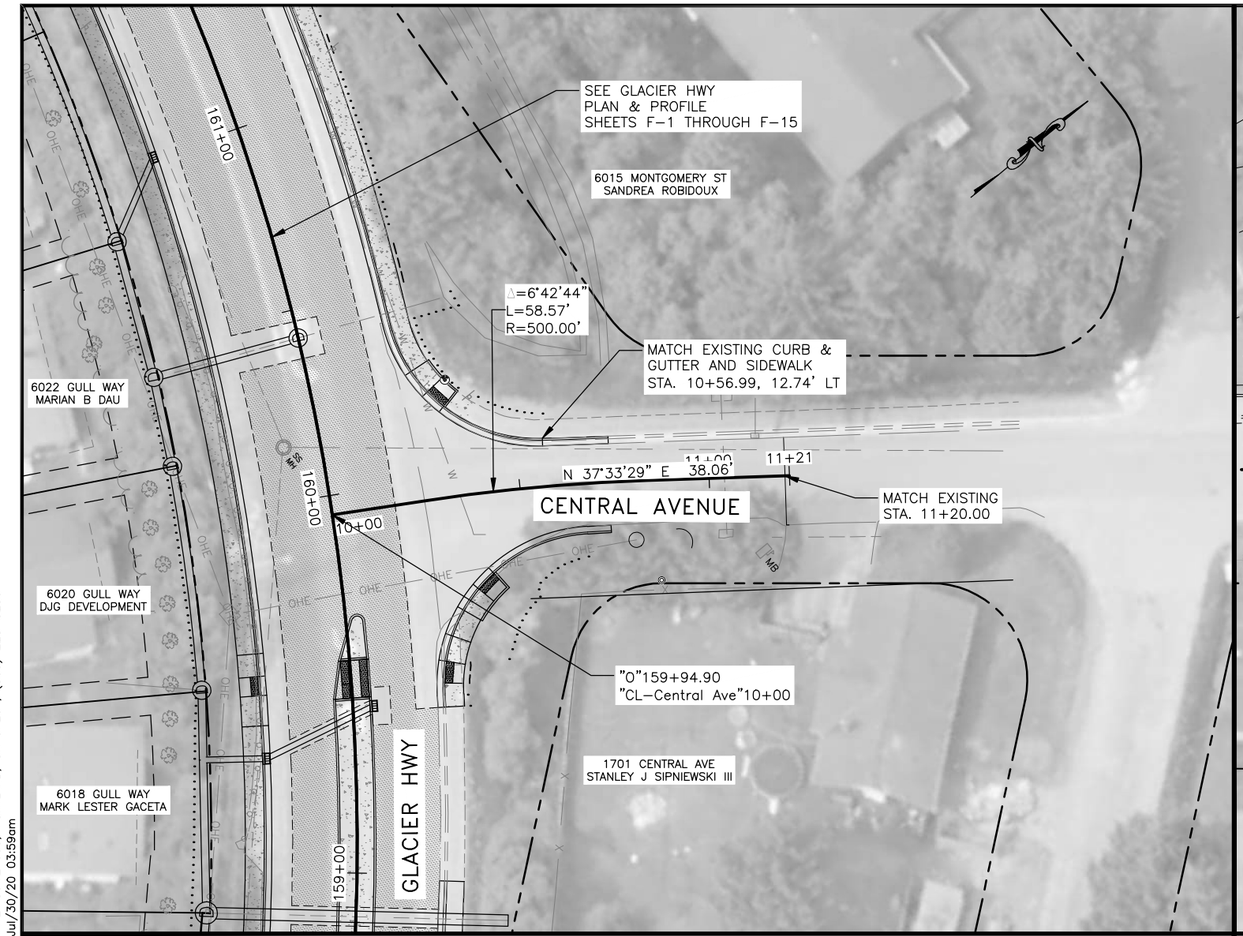

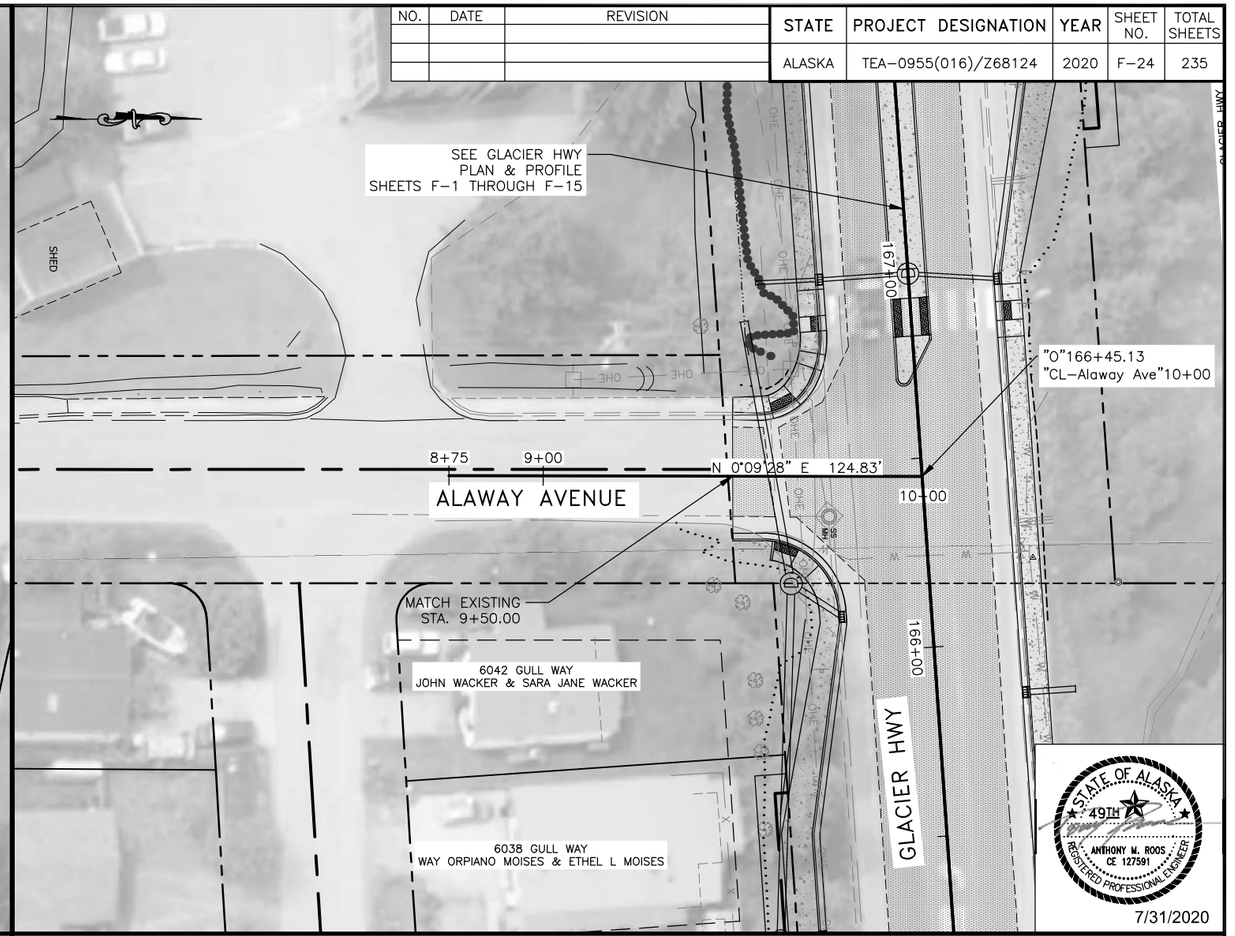

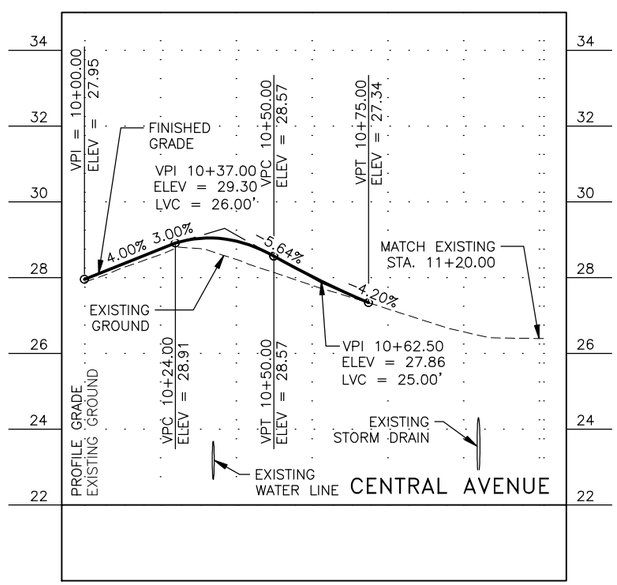

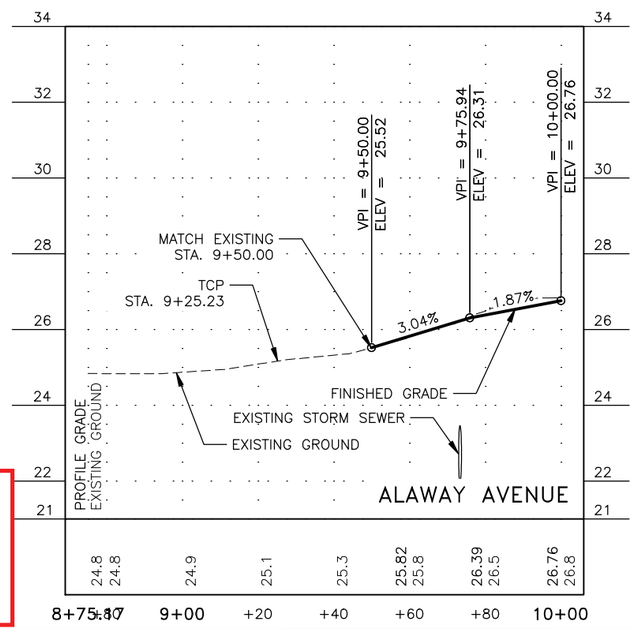

Record Drawings have been reviewed by the Project Engineer, and represent to the best of my knowledge, the project as constructed.

PE Dillon Tomaro 2/4/25

STATE OF ALASKA
49TH
ANTHONY M. ROOS
CE 12759
REGISTERED PROFESSIONAL ENGINEER
7/31/2020

PLANS DEVELOPED BY: KITTELSON & ASSOCIATES, INC. CERT. OF AUTHORIZATION NO.: 254741, 851 SW 6TH AVE. SUITE 600, PORTLAND, OR 97204, (503) 228-5230
H:\20\20487 - Glacier Highway - Juneau Traffic Design\design_CD\68124_F_SS_PNP_NORTH-F-24 Thu, Jul/30/20 03:59am

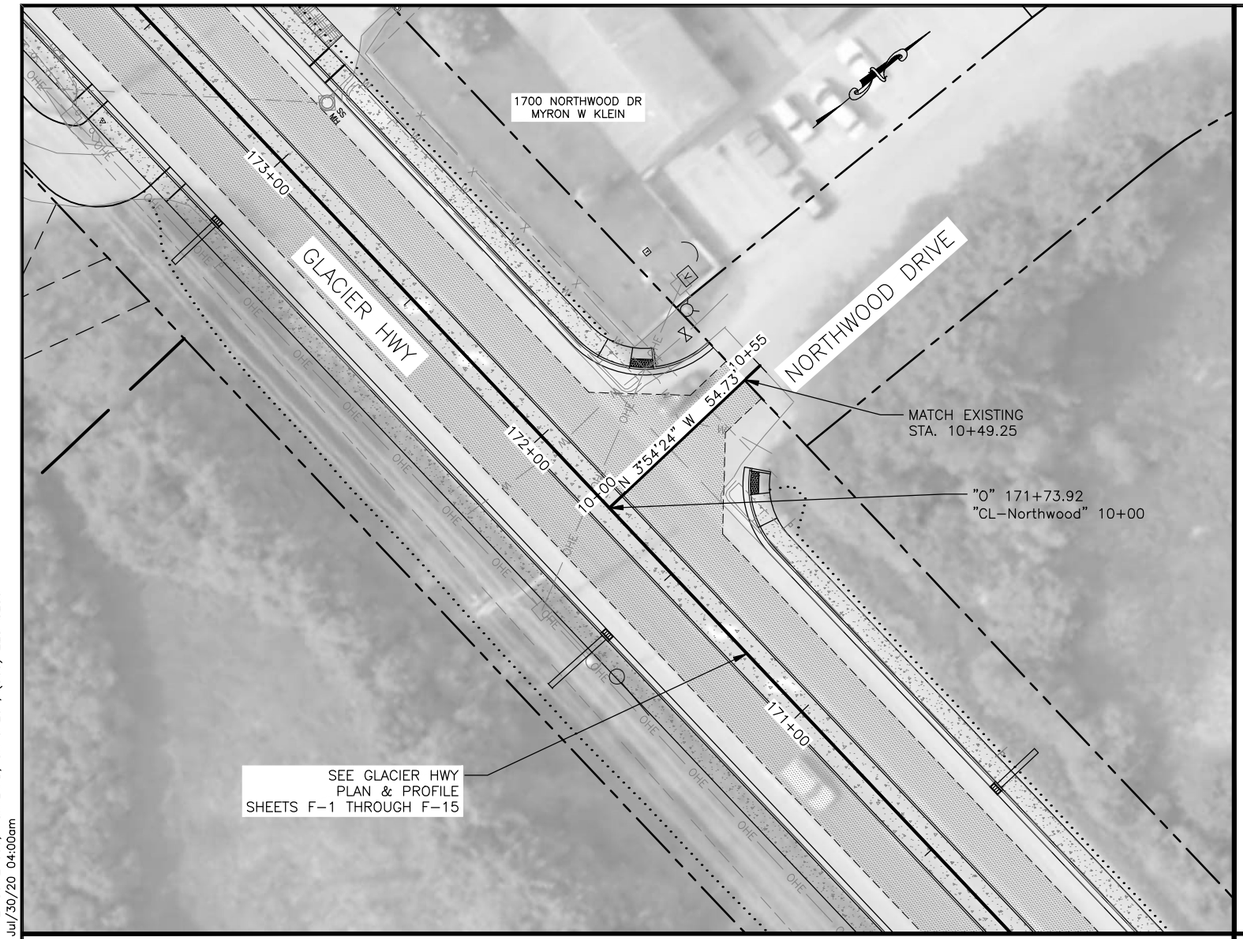

NO.	DATE	REVISION

STATE	PROJECT DESIGNATION	YEAR	SHEET NO.	TOTAL SHEETS
ALASKA	TEA–0955(016)/Z68124	2020	F–25	235

THIS SPACE INTENTIONALLY LEFT BLANK

STATE OF ALASKA
49TH
ANTHONY M. ROOS
CE 127591
REGISTERED PROFESSIONAL ENGINEER

7/31/2020

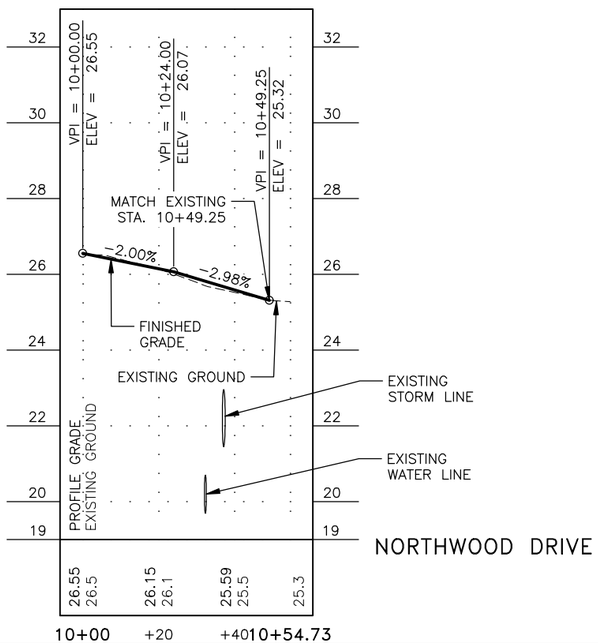

Record Drawings have been reviewed by the Project Engineer, and represent to the best of my knowledge, the project as constructed.

PE Dillon Tomaro 2/4/25

THIS SPACE INTENTIONALLY LEFT BLANK

PLANS DEVELOPED BY: KITTELSON & ASSOCIATES, INC. CERT. OF AUTHORIZATION NO.: 254741, 851 SW 6TH AVE. SUITE 600, PORTLAND, OR 97204, (503) 228-5230
H:\20\20487 – Glacier Highway – Juneau Traffic Design\design_CD\68124_F_SS_PNP_NORTH-F-25 Thu, Jul/30/20 04:00am

NO.	DATE	REVISION
1	12/11/20	ADDENDUM 4
2	01/05/21	ADDENDUM 7

STATE	PROJECT DESIGNATION	YEAR	SHEET NO.	TOTAL SHEETS
ALASKA	TEA-0955(016)/Z68124	2020	F-26	235

BEGIN RENNINGER "REN" STA 10+00.00
BEGIN CONSTRUCTION "REN" 10+15.16
TCE 54
RETAIN & PROTECT POWER POLE
GLACIER HWY
END 6' FENCE AT PROPERTY LINE STA 12+42.35, 125.79' LT
6370 GLACIER HWY GENE COOGAN
STA 13+49.98, 89.11' LT
MATCH EXISTING PARKING PAD
13+50 CURB CUT, 20'
BEGIN 6' DOUBLE SWING GATE STA 13+37.95, 36.99' LT
END 6' DOUBLE SWING GATE STA 13+61.96, 35.46' LT.
TCE 23
PROPOSED UTILITY POLE AND GUY ANCHOR STA 12+84.34 38.01' LT.
REMOVE EXISTING FENCE
MATCH 6' EXISTING FENCE STA 14+08.40 34.49', LT
STA 12+72.06 49.24' LT
STA 13+01.79 36.53' LT
MATCH EXISTING "REN" 14+00.71
END "REN" STA 15+31.00
RENNINGER ST
REMOVE EXISTING BLOCK WALL & PAD
CENTER OF ROUNDABOUT "O" STA 176+47.49= "REN" STA 12+11.19
MATCH EXISTING CURB
CONSTRUCT APPROACH
MATCH EXISTING CURB
MATCH EXISTING
MATCH EXISTING PAD
TCE 19A
STA 13+70.4 15.0', RT
STA 13+65.9 19.5', RT
14+81.5 CURB CUT, 20'
RENNINGER CONCRETE PANEL SEE SHEET E-7 FOR DETAIL
SAWCUT
REPLACE EXISTING AREA DRAIN WITH MANHOLE
STA 13+55.7 18.5', RT
TCE 25
6310 GLACIER HWY NORTHWOOD CONDO ASSOCIATION
RETAIN & PROTECT POWER POLE

Record Drawings have been reviewed by the Project Engineer, and represent to the best of my knowledge, the project as constructed.

PE Dillon Tomaro 2/4/25

STATE OF ALASKA 49TH ANTHONY M. ROOS CE 127591 REGISTERED PROFESSIONAL ENGINEER
1/7/21

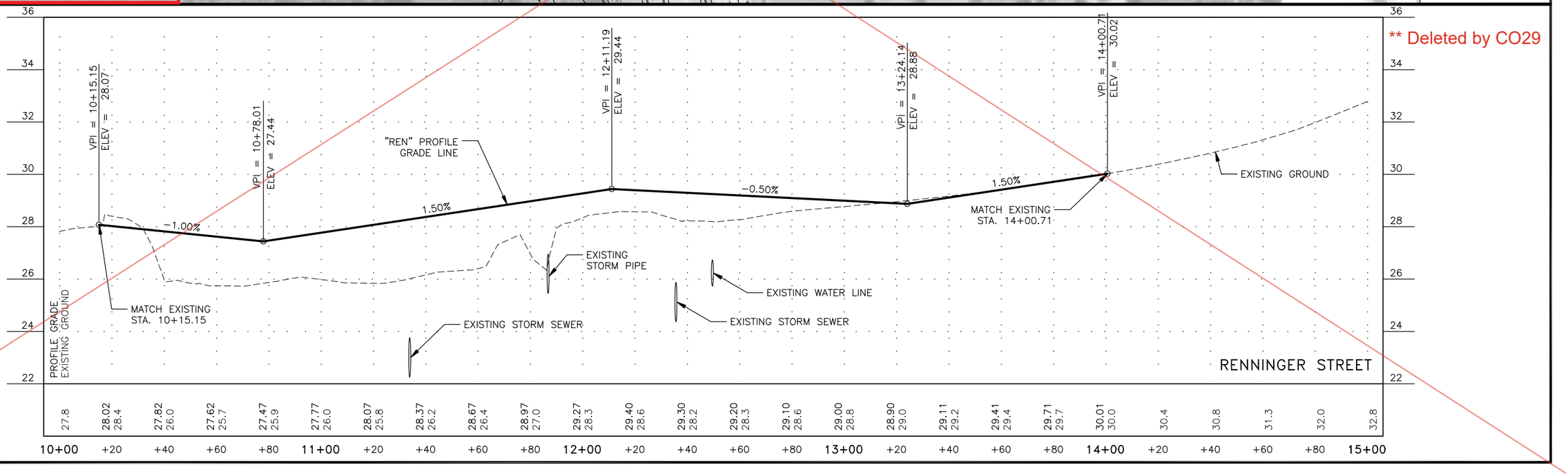

** Deleted by CO29

PLANS DEVELOPED BY: KITTELSON & ASSOCIATES, INC. CERT. OF AUTHORIZATION NO.: 254741, 851 SW 6TH AVE. SUITE 600, PORTLAND, OR 97204, (503) 228-5230
H:\20\20487 - Glacier Highway - Juneau Traffic Design\design_CD\68124_F_SS_PNP_NORTH-F-26 Thu, Jan/07/21 10:57am

NO.	DATE	REVISION
1	12/11/20	ADDENDUM 4
2	01/05/21	ADDENDUM 7
3	06/24/21	RENNINGER SOUTH LEG
4	05/09/22	DELTA 34: RNBT Revisions

STATE	PROJECT DESIGNATION	YEAR	SHEET NO.	TOTAL SHEETS
ALASKA	TEA-0955(016)/Z68124	2020	F-26	235

BEGIN RENNINGER "REN" STA 10+00.00

RETAIN & PROTECT POWER POLE

INSTALL 10' TYPE III BARRICADE WITH SINGLE R6-4 SIGN BOLTED TO CONCRETE PANEL

PROTECT EXISTING BLOCK WALL & PAD

BEGIN CONSTRUCTION "REN" 10+39.16

INSTALL SUBGRADE STABILIZATION TYPICAL SHEET B-3

INSTALL 10' TYPE III BARRICADES MOUNTED INTO AGGREGATE ARE A 1.0' FROM ASPHALT EDGE ASPHALT EDGE STA 10+64.75

TCE 19A

RENNINGER CONCRETE PANEL SEE SHEET E-7 FOR DETAIL

INSTALL 10' TYPE III BARRICADE WITH SINGLE R6-4 SIGN BOLTED TO CONCRETE PANEL

CENTER OF ROUNDABOUT "O" STA 176+47.49= "REN" STA 12+11.19

RETAIN & PROTECT POWER POLE

GLACIER HWY

177+00

176+00

END 6' FENCE AT PROPERTY LINE STA 12+42.35, 125.79' LT

6370 GLACIER HWY GENE COOGAN

STA 13+49.98, 89.11' LT

MATCH EXISTING PARKING PAD

BEGIN 6' DOUBLE SWING GATE STA 13+37.95, 36.99' LT

TCE 23

PROPOSED UTILITY POLE AND GUY ANCHOR STA 12+84.34 38.01' LT.

STA 12+72.06 49.24' LT

STA 13+01.79 36.53' LT

A 13+50 CURB CUT, 20'

END 6' DOUBLE SWING GATE STA 13+61.96, 35.46' LT.

REMOVE EXISTING FENCE

MATCH 6' EXISTING FENCE STA 14+08.40 34.49', LT

MATCH EXISTING "REN" 14+00.71

RENNINGER ST

END "REN" STA 15+31.00

MATCH EXISTING CURB

CONSTRUCT APPROACH

MATCH EXISTING CURB

MATCH EXISTING

MATCH EXISTING PAD

STA 13+70.4 15.0', RT

STA 13+65.9 19.5', RT

14+81.5 A CURB CUT, 20'

SAWCUT

REPLACE EXISTING AREA DRAIN WITH MANHOLE

STA 13+55.7 18.5', RT

TCE 25

6310 GLACIER HWY NORTHWOOD CONDO ASSOCIATION

Record Drawings have been reviewed by the Project Engineer, and represent to the best of my knowledge, the project as constructed.

PE Dillon Tomaro 2/4/25

STATE OF ALASKA 49TH ANTHONY M. ROOS CE 127591 REGISTERED PROFESSIONAL ENGINEER

5/10/22

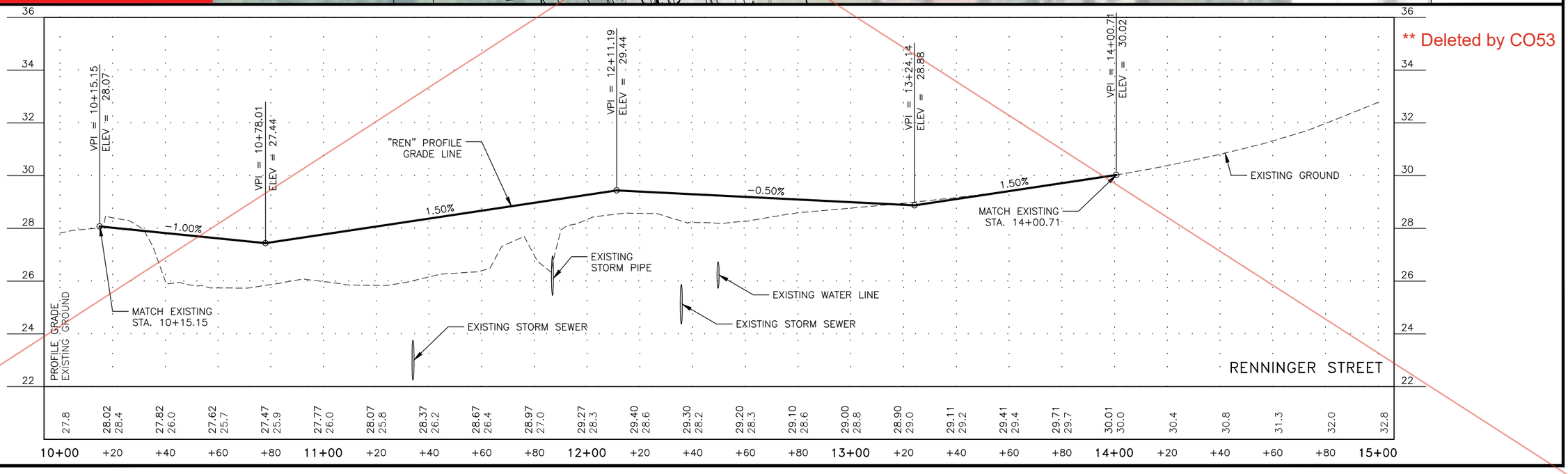

** Deleted by CO53

PLANS DEVELOPED BY: KITTELSON & ASSOCIATES, INC. CERT. OF AUTHORIZATION NO.: 254741, 851 SW 6TH AVE. SUITE 600, PORTLAND, OR 97204, (503) 228-5230
H:\20\20487 - Glacier Highway - Juneau Traffic Design\design_CD\68124_F_SS_PNP_NORTH-F-26 Tue, May/10/22 04:24pm

~~Addendum 7, Attachment # 14~~

NO.	DATE	REVISION
4	12/11/20	ADDENDUM 4
7	01/05/21	ADDENDUM 7

STATE	PROJECT DESIGNATION	YEAR	SHEET NO.	TOTAL SHEETS
ALASKA	TEA-0955(016)/Z68124	2020	F-26	235

CO-53, Attachment No. 4

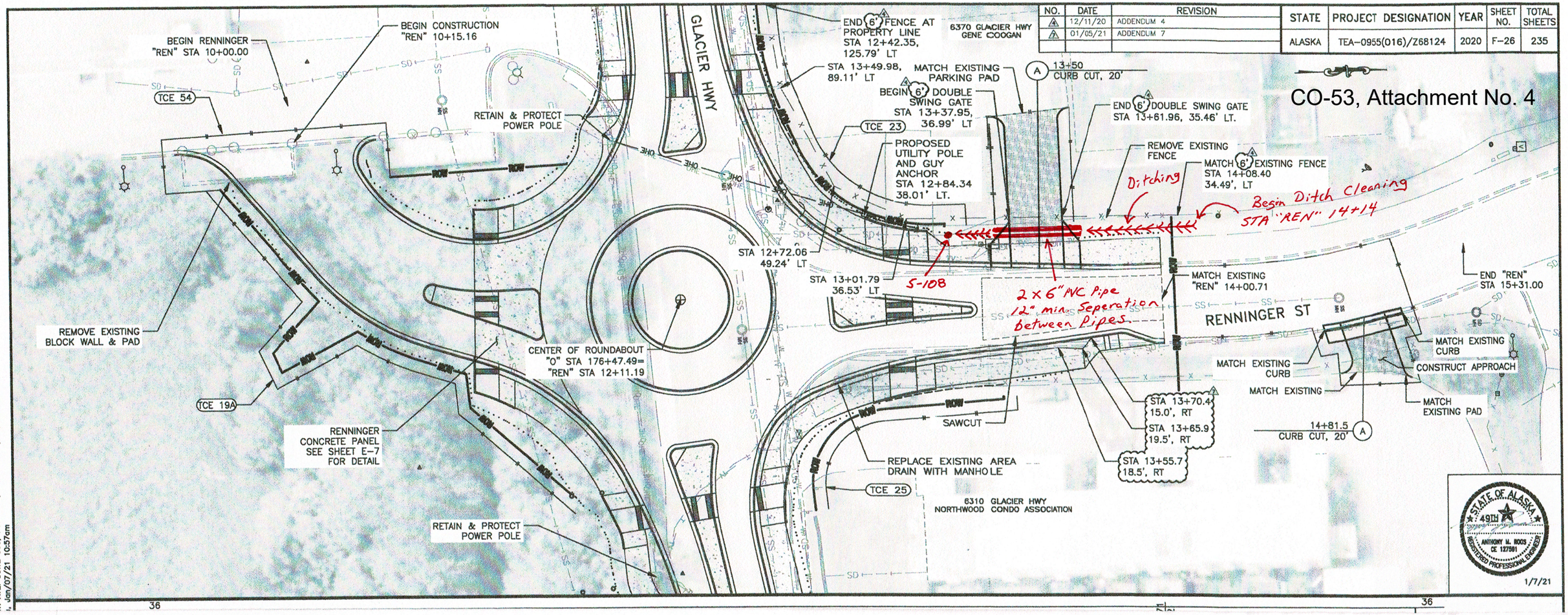

TH AVE. SUITE 600, PORTLAND, OR 97204, (503) 228-5230
, Jan/07/21 10:57am

**As-Built Plan Note (Sheet F-26):
-The latest issued version of Sheet F-26 (issued via CO-53) ommited the CO-29 delta 23 (Renninger South Leg Revisions) and delta 34 (RNBT Revisions) modifications, however those modifications still apply to the current version of Sheet F-26.

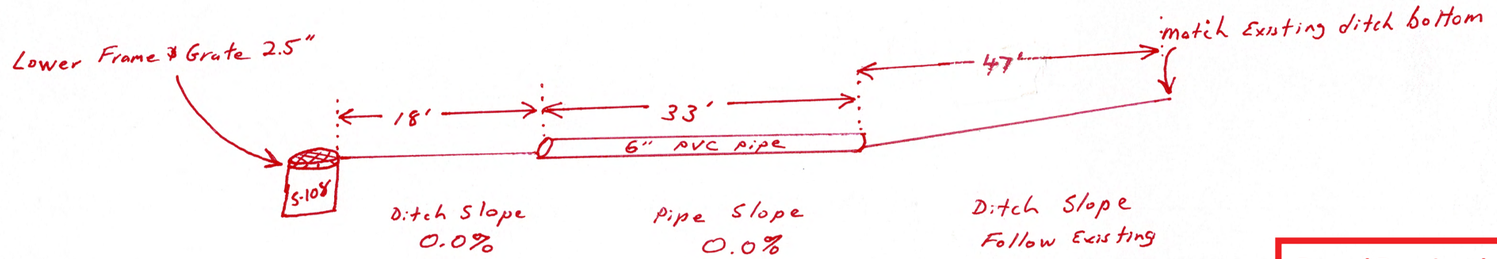

Culverts: inlet and outlet invert elevations to match S-108 rim elevation after lowering frame & grate.

Intent is to achieve the most pipe cover as posable.

Record Drawings have been reviewed by the Project Engineer, and represent to the best of my knowledge, the project as constructed.

PE Dillon Tomaro 2/4/25

Attachment No. 2 CO 13

STATE	PROJECT DESIGNATION	YEAR	SHEET NO.	TOTAL SHEETS
ALASKA	TEA-0955(016)/Z68124	2021	F27	F26

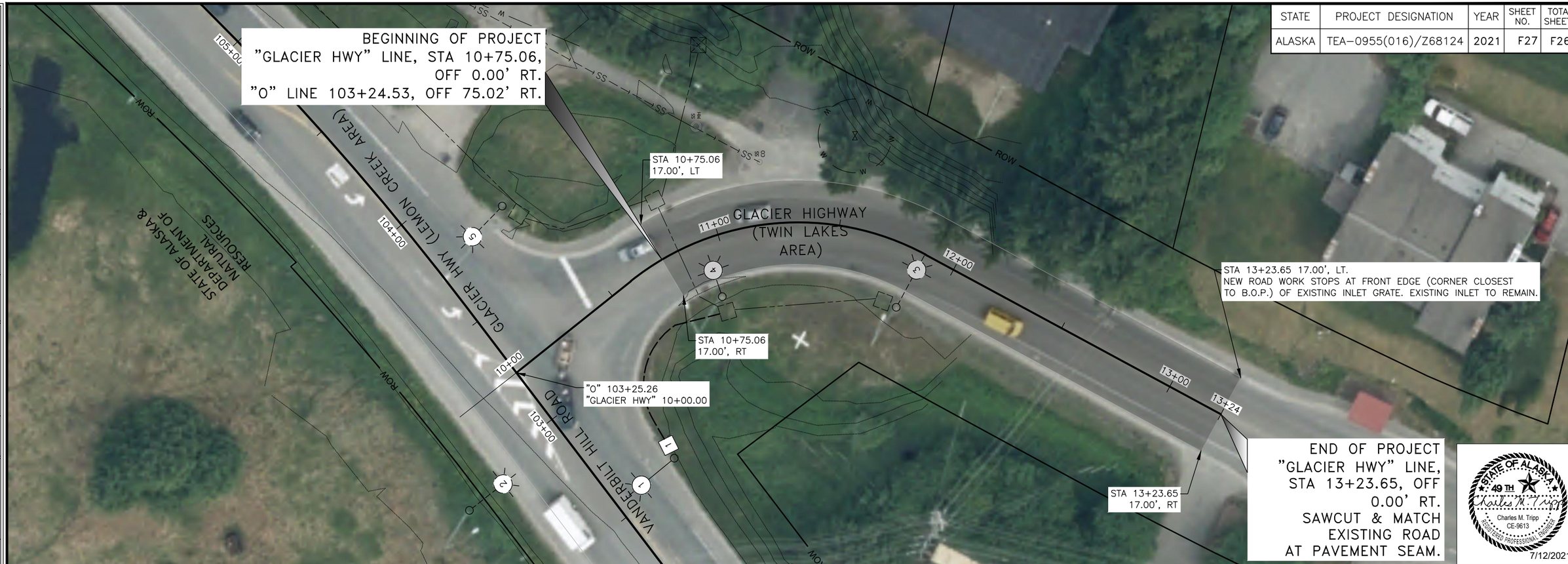

NEW HMA PAVEMENT

— ROW — EXISTING RIGHT-OF-WAY

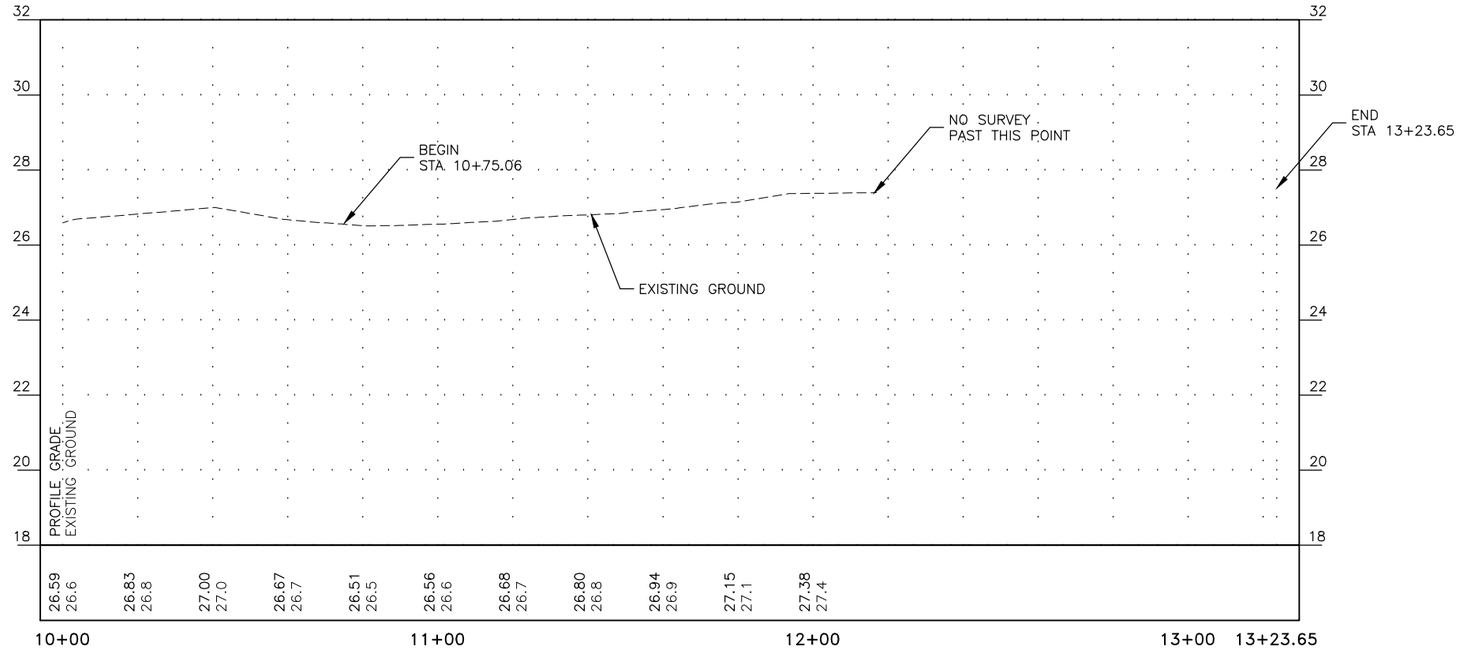

Record Drawings have been reviewed by the Project Engineer, and represent to the best of my knowledge, the project as constructed.

PE Dillon Tomaro 2/4/25

FILE H:\Work_7.21\Work_7.21\68124_Twin Lakes_F27.dwg | DATE 7/12/2021 10:04 | LAYOUT F27 | DESIGNED BC | CHECKED CT | DRAFTED BC

Record Drawings have been reviewed by the Project Engineer, and represent to the best of my knowledge, the project as constructed.

PE Dillon Tomaro 2/4/25

NO.	DATE	REVISION

STATE	PROJECT DESIGNATION	YEAR	SHEET NO.	TOTAL SHEETS
ALASKA	TEA-0955(016)/Z68124	2020	G-1	235

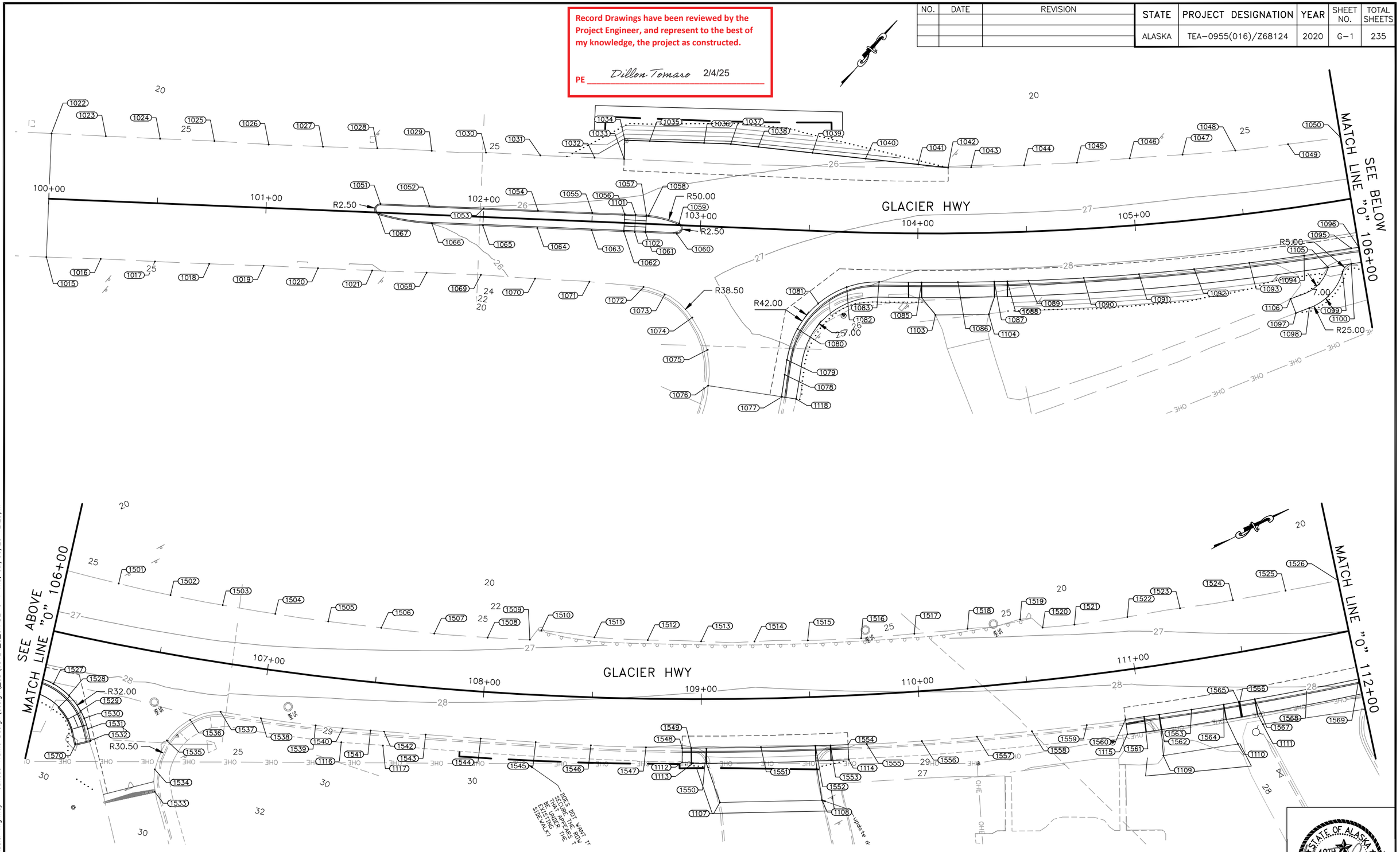

PLANS DEVELOPED BY: KITTELSON & ASSOCIATES, INC. CERT. OF AUTHORIZATION NO.: 254741; 851 SW 6TH AVE. SUITE 600, PORTLAND, OR 97204, (503) 228-5230
H:\20\20487 - Glacier Highway - Juneau Traffic Design\design_CD\68124_G_GRADE-G-1 Thu, Jul/30/20 12:29pm

GRADING PLAN 1

STATE OF ALASKA 49TH JOHN F. RINGERT CE 11096 REGISTERED PROFESSIONAL ENGINEER

7/31/2020

NO.	DATE	REVISION

STATE	PROJECT DESIGNATION	YEAR	SHEET NO.	TOTAL SHEETS
ALASKA	TEA-0955(016)/Z68124	2020	G-2	235

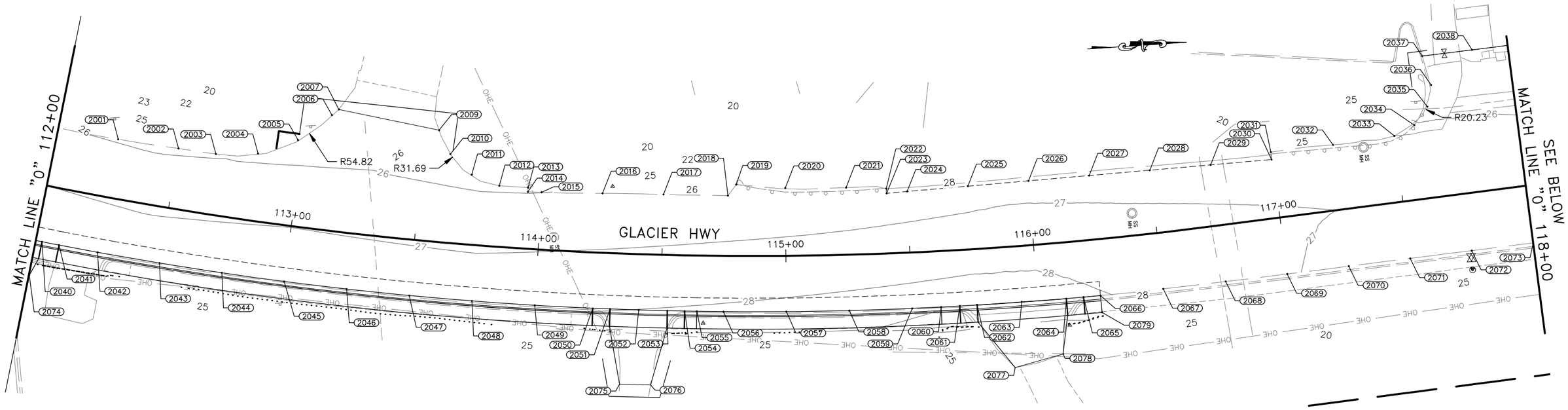

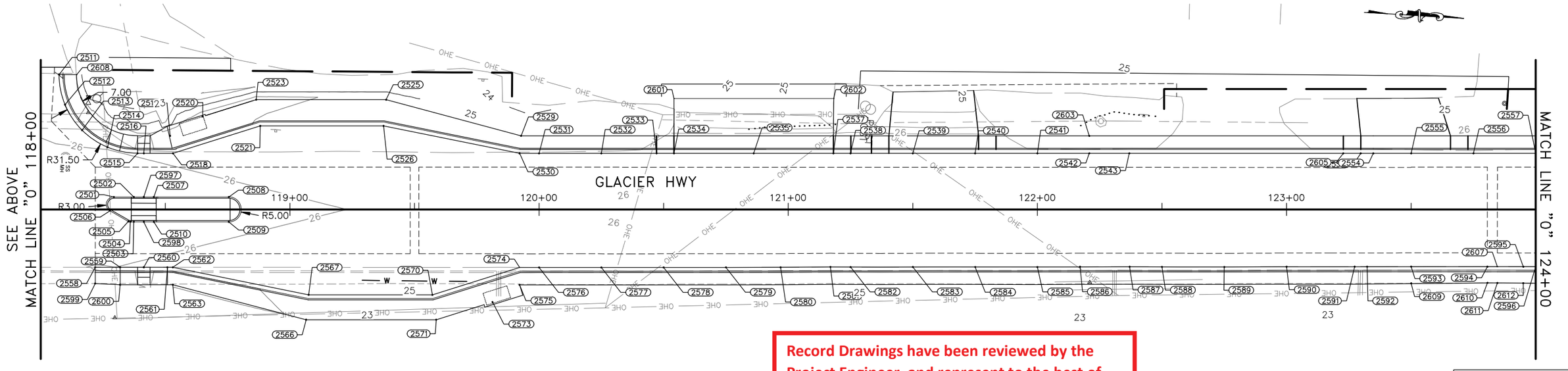

Record Drawings have been reviewed by the Project Engineer, and represent to the best of my knowledge, the project as constructed.

PE Dillon Tomaro 2/4/25

GRADING PLAN 2

STATE OF ALASKA
49TH
JOHN F. RINGERT
CE 11096
REGISTERED PROFESSIONAL ENGINEER
7/31/2020

PLANS DEVELOPED BY: KITTELSON & ASSOCIATES, INC. CERT. OF AUTHORIZATION NO.: 254741, 851 SW 6TH AVE. SUITE 600, PORTLAND, OR 97204, (503) 228-5230
H:\20\20487 - Glacier Highway - Juneau Traffic Design\design_CD\68124_G_GRADE-G-2 Thu, Jul/30/20 12:30pm

NO.	DATE	REVISION

STATE	PROJECT DESIGNATION	YEAR	SHEET NO.	TOTAL SHEETS
ALASKA	TEA-0955(016)/Z68124	2020	G-3	235

MATCH LINE "0" 124+00

SEE BELOW MATCH LINE "0" 130+00

SEE ABOVE MATCH LINE "0" 130+00

MATCH LINE "0" 136+00

GLACIER HWY

R42.00 R42.00 R26.50 R26.50 R14.90 R7.47 R25.00 R550.50 R27.00 R13.25 R82.00 R62.00 R42.00 R1.50

7.00 5.00

125+00 126+00 127+00 128+00 129+00 131+00 132+00 133+00 134+00 135+00

Record Drawings have been reviewed by the Project Engineer, and represent to the best of my knowledge, the project as constructed.

PE *Dillon Tomaro* 2/4/25

GRADING PLAN 3

STATE OF ALASKA 49TH JOHN F. RINGERT CE 11096 REGISTERED PROFESSIONAL ENGINEER

7/31/2020

PLANS DEVELOPED BY: KITTELSON & ASSOCIATES, INC. CERT. OF AUTHORIZATION NO.: 254741, 851 SW 6TH AVE. SUITE 600, PORTLAND, OR 97204, (503) 228-5230
H:\20\20487 - Glacier Highway - Juneau Traffic Design\design_CD\68124_G_GRADE-G-3 Thu, Jul/30/20 12:30pm

NO.	DATE	REVISION

STATE	PROJECT DESIGNATION	YEAR	SHEET NO.	TOTAL SHEETS
ALASKA	TEA-0955(016)/Z68124	2020	G-4	235

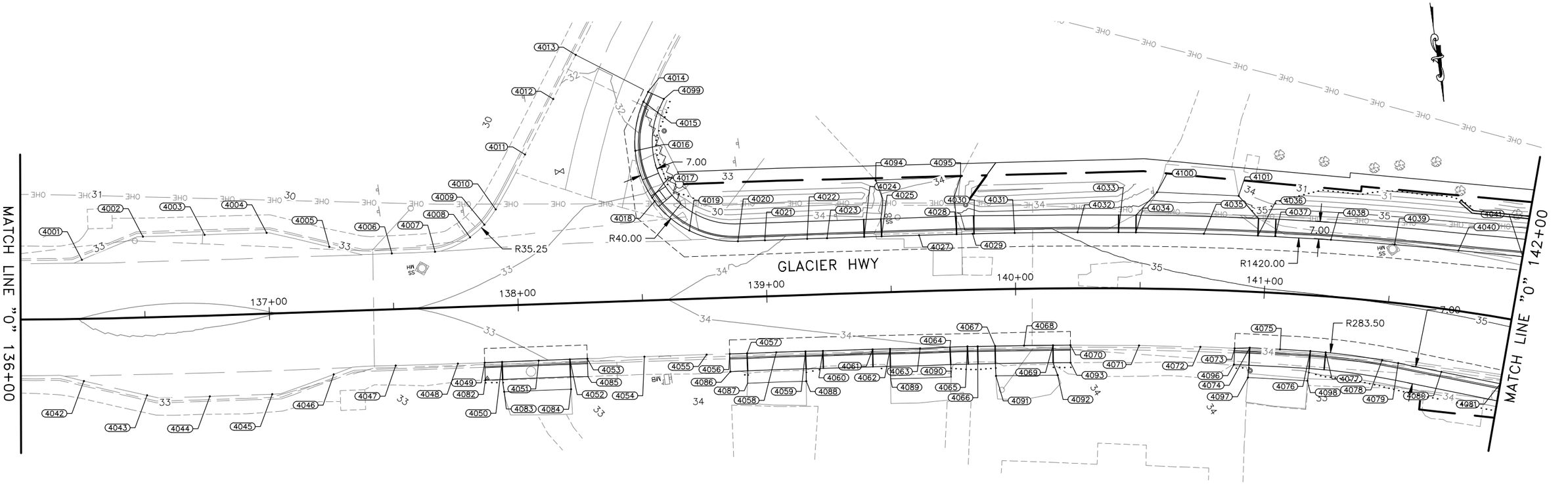

Record Drawings have been reviewed by the Project Engineer, and represent to the best of my knowledge, the project as constructed.

PE *Dillon Tomaro* 2/4/25

GRADING PLAN 4

STATE OF ALASKA 49TH JOHN F. RINGERT CE 11096 REGISTERED PROFESSIONAL ENGINEER

7/31/2020

PLANS DEVELOPED BY: KITTELSON & ASSOCIATES, INC. CERT. OF AUTHORIZATION NO.: 254741, 851 SW 6TH AVE. SUITE 600, PORTLAND, OR 97204, (503) 228-5230
H:\20\20487 - Glacier Highway - Juneau Traffic Design\design_CD\68124_G_GRADE-G-4 Thu, Jul/30/20 12:31pm

NO.	DATE	REVISION

STATE	PROJECT DESIGNATION	YEAR	SHEET NO.	TOTAL SHEETS
ALASKA	TEA-0955(016)/Z68124	2020	G-5	235

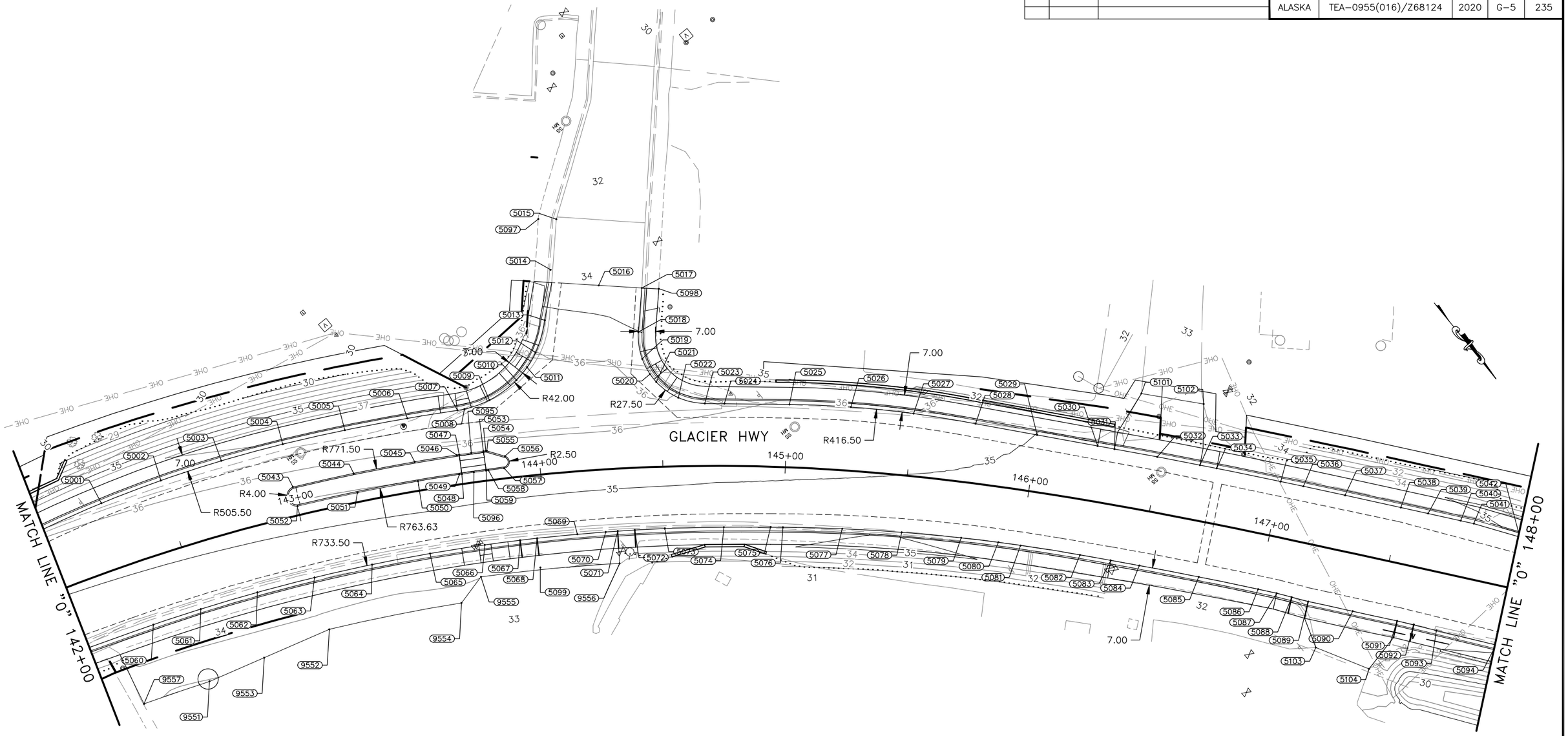

Record Drawings have been reviewed by the Project Engineer, and represent to the best of my knowledge, the project as constructed.

PE Dillon Tomaro 2/4/25

GRADING PLAN 5

STATE OF ALASKA 49TH JOHN F. RINGERT CE 11096 REGISTERED PROFESSIONAL ENGINEER

7/31/2020

PLANS DEVELOPED BY: KITTELSON & ASSOCIATES, INC. CERT. OF AUTHORIZATION NO.: 254741, 851 SW 6TH AVE. SUITE 600, PORTLAND, OR 97204, (503) 228-5230
H:\20\20487 - Glacier Highway - Juneau Traffic Design\design_CD\68124_G_GRADE_G-5 Thu, Jul/30/20 12:31pm

NO.	DATE	REVISION

STATE	PROJECT DESIGNATION	YEAR	SHEET NO.	TOTAL SHEETS
ALASKA	TEA-0955(016)/Z68124	2020	G-6	235

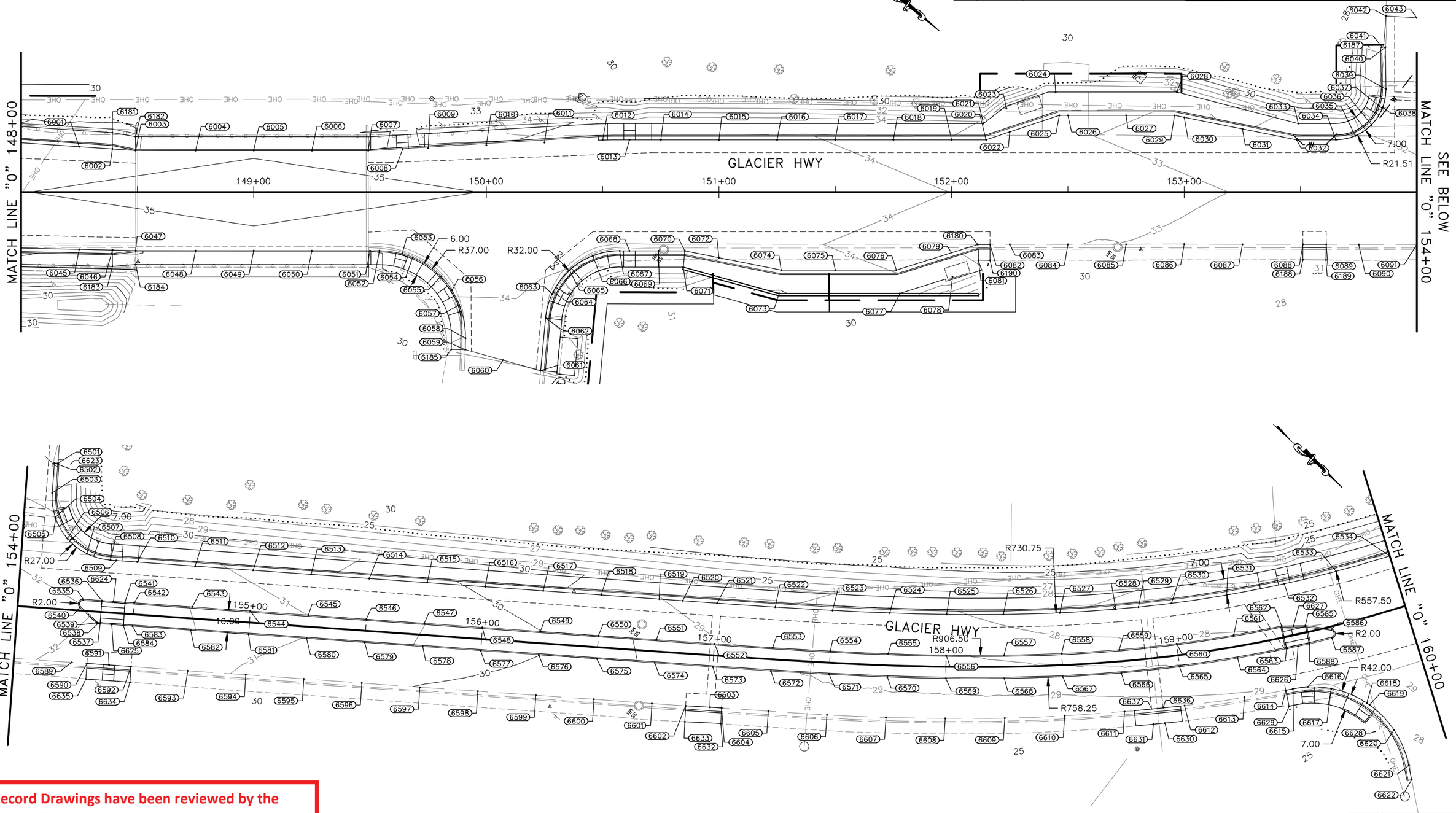

Record Drawings have been reviewed by the Project Engineer, and represent to the best of my knowledge, the project as constructed.

PE *Dillon Tomaro* 2/4/25

STATE OF ALASKA
49TH
JOHN F. RINGERT
CE 11096
REGISTERED PROFESSIONAL ENGINEER
7/31/2020

GRADING PLAN 6

PLANS DEVELOPED BY: KITTELSON & ASSOCIATES, INC. CERT. OF AUTHORIZATION NO.: 254741, 851 SW 6TH AVE. SUITE 600, PORTLAND, OR 97204, (503) 228-5230
H:\20\20487 - Glacier Highway - Juneau Traffic Design\design_CD\68124_G_GRADE-G-6 Thu, Jul/30/20 12:32pm

NO.	DATE	REVISION

STATE	PROJECT DESIGNATION	YEAR	SHEET NO.	TOTAL SHEETS
ALASKA	TEA-0955(016)/Z68124	2020	G-7	235

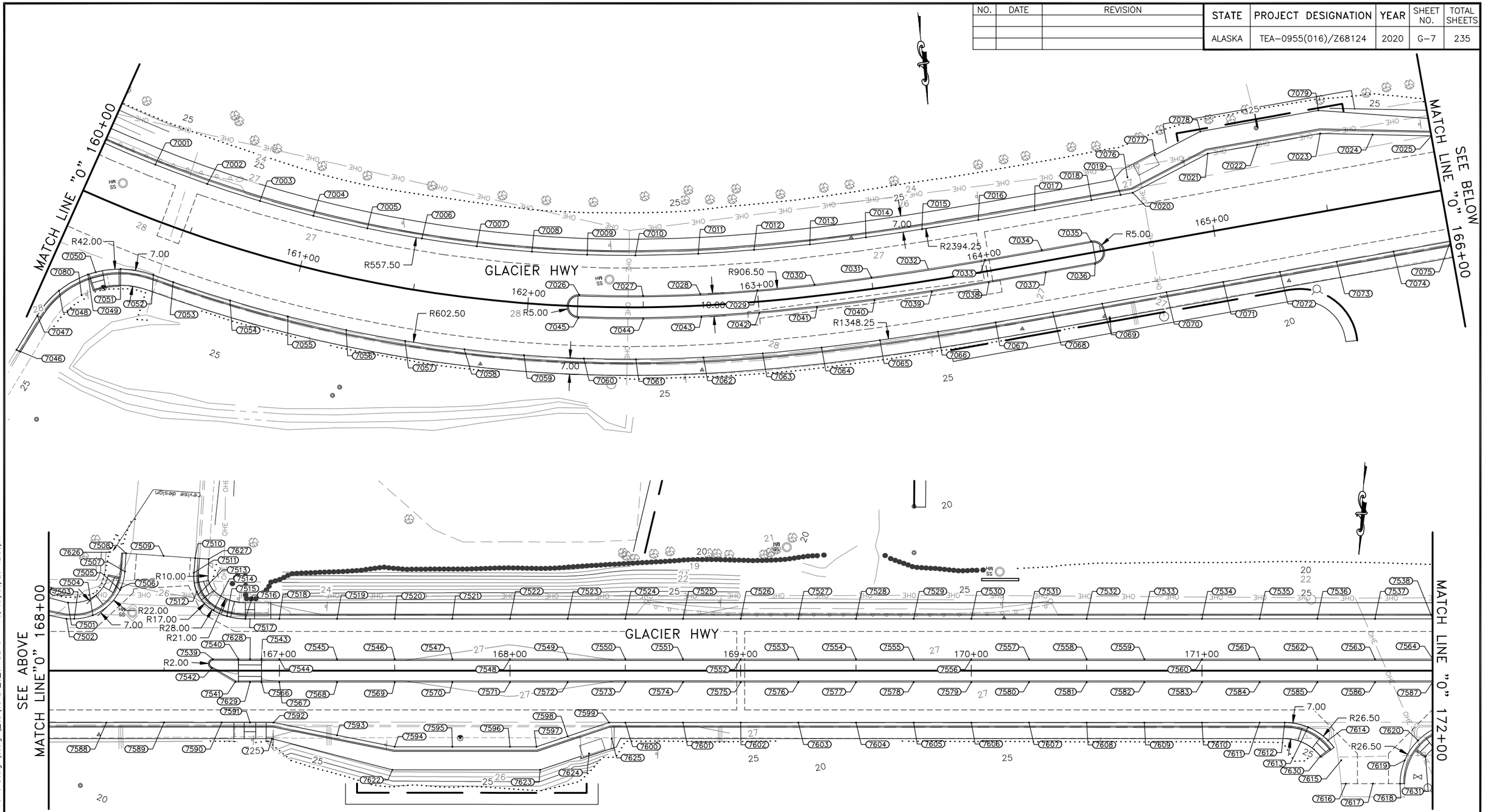

Record Drawings have been reviewed by the Project Engineer, and represent to the best of my knowledge, the project as constructed.

PE *Dillon Tomaro* 2/4/25

STATE OF ALASKA
49TH
JOHN F. RINGERY
CE 11096
REGISTERED PROFESSIONAL ENGINEER
7/31/2020

GRADING PLAN 7

PLANS DEVELOPED BY: KITTELSON & ASSOCIATES, INC. CERT. OF AUTHORIZATION NO.: 254741, 851 SW 6TH AVE. SUITE 600, PORTLAND, OR 97204, (503) 228-5230
H:\20\20487 - Glacier Highway - Juneau Traffic Design\design_CD\68124_G_GRADE-G-7 Thu, Jul/30/20 12:33pm

Record Drawings have been reviewed by the Project Engineer, and represent to the best of my knowledge, the project as constructed.

PE *Dillon Tomaro* 2/4/25

NO.	DATE	REVISION

STATE	PROJECT DESIGNATION	YEAR	SHEET NO.	TOTAL SHEETS
ALASKA	TEA-0955(016)/Z68124	2020	G-8	235

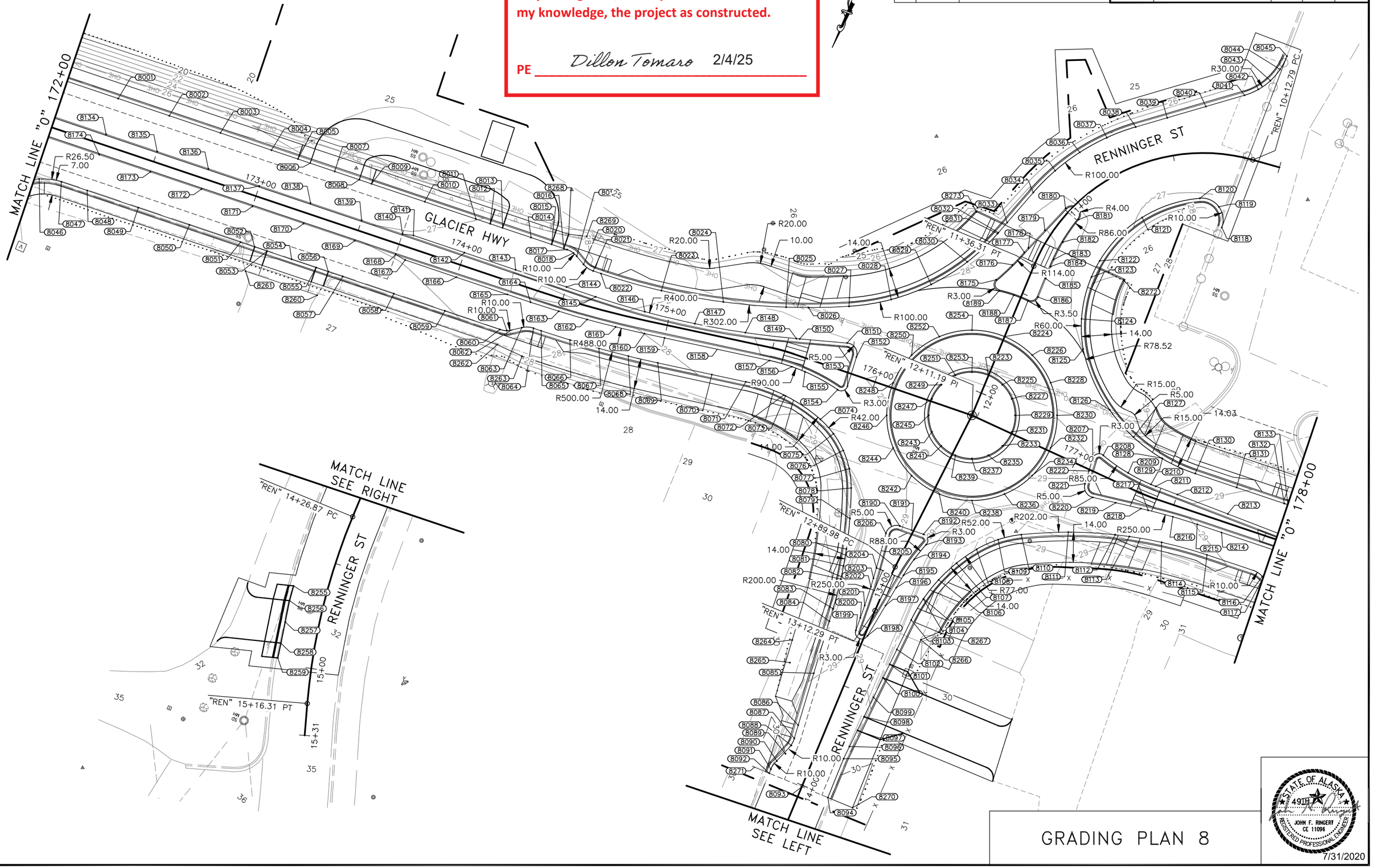

GRADING PLAN 8

STATE OF ALASKA
49TH
JOHN F. RINGERT
CE 11096
REGISTERED PROFESSIONAL ENGINEER

7/31/2020

PLANS DEVELOPED BY: KITTELSON & ASSOCIATES, INC. CERT. OF AUTHORIZATION NO.: 254741, 851 SW 6TH AVE. SUITE 600, PORTLAND, OR 97204, (503) 228-5230
H:\20\20487 - Glacier Highway - Juneau Traffic Design\design_CD\68124_G_GRADE-G-8 Thu, Jul/30/20 12:34pm

NO.	DATE	REVISION

STATE	PROJECT DESIGNATION	YEAR	SHEET NO.	TOTAL SHEETS
ALASKA	TEA-0955(016)/Z68124	2020	G-9	235

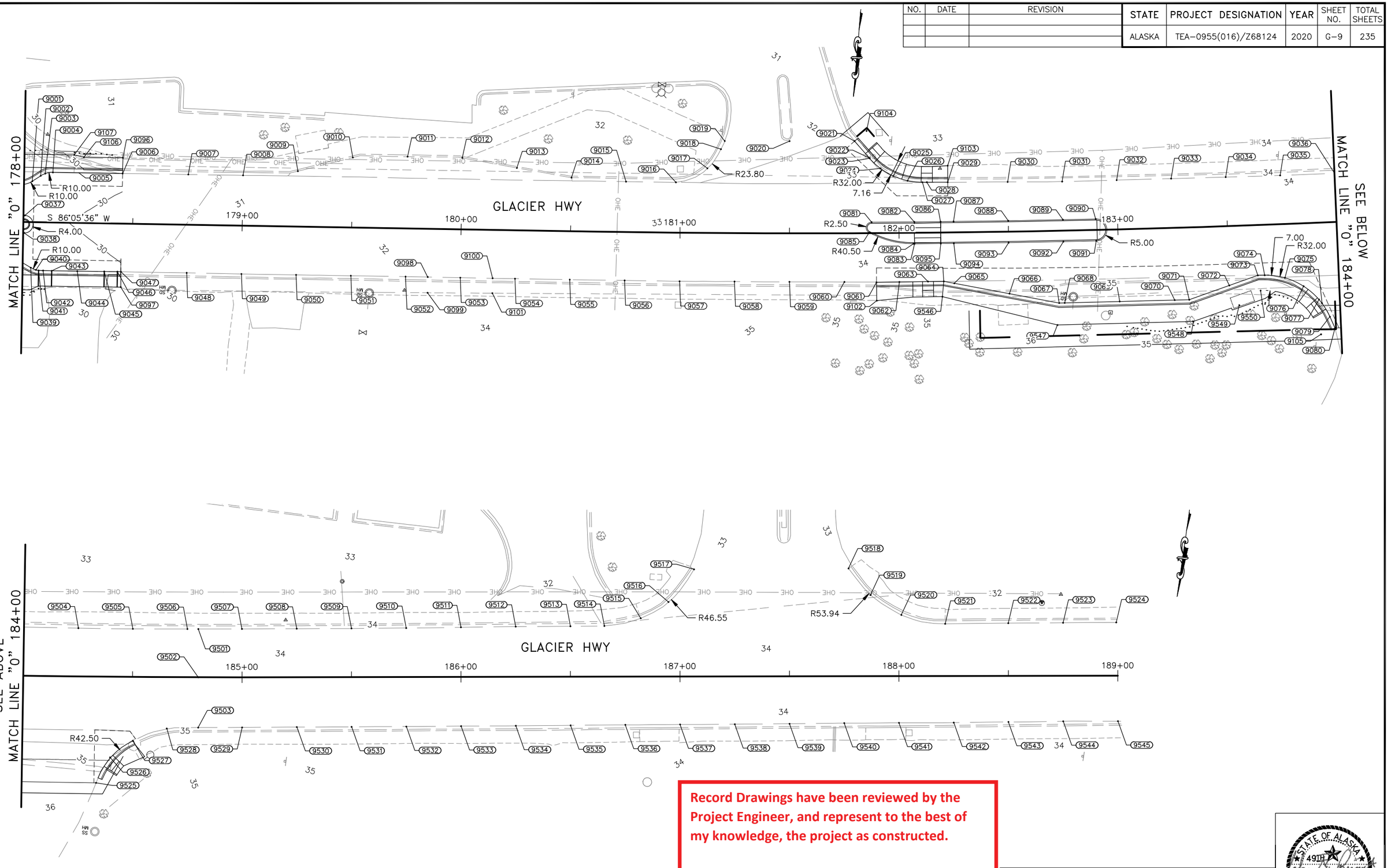

Record Drawings have been reviewed by the Project Engineer, and represent to the best of my knowledge, the project as constructed.

PE *Dillon Tomaro* 2/4/25

GRADING PLAN 9

STATE OF ALASKA 49TH JOHN F. RINGERT CE 11096 REGISTERED PROFESSIONAL ENGINEER

7/31/2020

PLANS DEVELOPED BY: KITTELSON & ASSOCIATES, INC. CERT. OF AUTHORIZATION NO.: 254741; 851 SW 6TH AVE. SUITE 600, PORTLAND, OR 97204, (503) 228-5230
H:\20\20487 - Glacier Highway - Juneau Traffic Design\design_CD\68124_G_GRADE-G-9 Thu, Jul/30/20 12:35pm

NO.	DATE	REVISION

STATE	PROJECT DESIGNATION	YEAR	SHEET NO.	TOTAL SHEETS
ALASKA	TEA-0955(016)/Z68124	2020	G-10	235

Record Drawings have been reviewed by the Project Engineer, and represent to the best of my knowledge, the project as constructed.

PE Dillon Tomaro 2/4/25

Number	Northing (ft)	Easting (ft)	Elevation (ft)	Description	Station	Offset
1015	496741.252	514225.025	25.519	EOP	100+00.00	26.843'
1016	496756.918	514244.509	25.501	EOP	100+25.00	26.620'
1017	496772.28	514264.233	25.472	EOP	100+50.00	26.783'
1018	496787.73	514283.888	25.555	EOP	100+75.00	26.834'
1019	496803.364	514303.397	25.635	EOP	101+00.00	26.649'
1020	496818.785	514323.075	25.64	EOP	101+25.00	26.738'
1021	496834.254	514342.714	25.762	EOP	101+50.00	26.765'
1022	496785.911	514189.777	25.409	EOP	100+00.00	-30.049'
1023	496801.236	514209.526	25.4	EOP	100+25.00	-29.842'
1024	496816.621	514229.232	25.389	EOP	100+50.00	-29.709'
1025	496832.092	514248.869	25.37	EOP	100+75.00	-29.685'
1026	496847.157	514268.828	25.36	EOP	101+00.00	-29.143'
1027	496862.686	514288.42	25.331	EOP	101+25.00	-29.192'
1028	496878.439	514307.836	25.216	EOP	101+50.00	-29.528'
1029	496893.82	514327.544	25.345	EOP	101+75.00	-29.390'
1030	496909.483	514347.031	25.394	EOP	102+00.00	-29.610'
1031	496924.795	514366.794	25.362	EOP	102+25.00	-29.384'
1032	496940.247	514386.447	25.437	EOP	102+50.00	-29.335'
1033	496948.695	514397.101	25.478	EOP	102+63.60	-29.364'
1034	496955.447	514391.709	25.366	EOP	102+63.55	-38.005'
1035	496962.593	514400.658	25.437	EOP	102+75.00	-38.070'
1036	496978.194	514420.194	25.559	EOP	103+00.00	-38.211'
1037	496985.877	514429.815	25.618	EOP	103+12.31	-38.280'
1038	496993.07	514440.301	25.703	EOP	103+25.00	-37.429'
1039	497007.242	514460.964	25.826	EOP	103+50.00	-35.750'
1040	497021.126	514481.206	25.95	EOP	103+75.00	-33.979'
1041	497034.929	514501.33	26.073	EOP	104+00.00	-31.720'
1042	497042.742	514512.72	26.17	EOP	104+14.10	-30.212'
1043	497049.822	514520.629	26.172	EOP	104+25.00	-30.307'
1044	497066.373	514538.491	26.172	EOP	104+50.00	-30.568'
1045	497083.157	514556.126	26.175	EOP	104+75.00	-30.634'
1046	497100.476	514573.233	26.244	EOP	105+00.00	-30.930'
1047	497117.572	514590.574	26.312	EOP	105+25.00	-30.384'
1048	497134.884	514607.727	26.296	EOP	105+50.00	-29.603'
1049	497152.842	514624.207	26.262	EOP	105+75.00	-29.233'
1050	497170.942	514640.558	26.228	EOP	106+00.00	-28.533'
1051	496859.95	514325.615	25.882	PT	101+52.50	-4.000'

Number	Northing (ft)	Easting (ft)	Elevation (ft)	Description	Station	Offset
1052	496873.891	514343.276	25.944	FOC	101+75.00	-4.000'
1053	496889.381	514362.899	26.016	FOC	102+00.00	-4.000'
1054	496904.871	514382.522	26.078	FOC	102+25.00	-4.000'
1055	496920.361	514402.145	26.153	FOC	102+50.00	-4.000'
1056	496929.591	514413.853	26.222	PI	102+64.91	-3.990'
1057	496935.719	514421.762	26.289	PI	102+74.91	-3.900'
1058	496936.33	514422.553	26.296	PC	102+75.91	-3.890'
1059	496942.716	514435.561	26.443	PCC	102+90.08	-0.842'
1060	496938.373	514437.875	26.509	PT	102+89.21	4.000'
1061	496929.479	514426.607	26.424	PI	102+74.85	4.000'
1062	496923.28	514418.754	26.357	PI	102+64.85	4.000'
1063	496914.082	514407.101	26.263	FOC	102+50.00	4.000'
1064	496898.592	514387.478	26.173	FOC	102+25.00	4.000'
1065	496883.102	514367.855	26.082	FOC	102+00.00	4.000'
1066	496868.541	514349.41	26.001	PC	101+76.50	4.000'
1067	496855.705	514328.182	25.956	PCC	101+51.88	0.923'
1068	496849.809	514362.285	25.739	EOP	101+75.00	26.681'
1069	496865.306	514381.903	25.914	EOP	102+00.00	26.672'
1070	496880.268	514401.943	26.086	EOP	102+25.00	27.345'
1071	496895.435	514421.82	26.264	EOP	102+50.00	27.756'
1072	496909.887	514442.263	26.631	LOG	102+75.00	29.079'
1073	496913.57	514451.902	26.695	LOG	102+84.85	32.160'
1074	496913.82	514468.375	26.627	LOG	102+97.93	42.170'
1075	496907.163	514483.445	26.381	LOG	103+05.64	56.733'
1076	496894.818	514494.353	26.017	LOG	103+06.55	73.182'
1077	496913.048	514523.405	26.613	PI	103+40.65	76.873'
1078	496921.608	514517.779	26.793	PI	103+41.54	66.668'
1079	496927.424	514514.104	26.902	PC	103+42.26	59.826'
1080	496941.417	514508.467	27.14	QP	103+46.50	45.350'
1081	496956.5	514508.138	27.409	QP	103+55.59	33.307'
1082	496970.725	514513.159	27.778	QP	103+68.11	25.302'
1083	496982.259	514522.884	27.995	PRC	103+82.64	22.500'
1084	496990.895	514533.236	28.174	VPI	103+95.87	22.502'
1085	496994.776	514537.809	28.23	VPI	104+01.75	22.501'
1086	497005.822	514550.4	28.229	ACP	104+18.19	22.383'
1087	497016.867	514562.99	28.237	VPI	104+34.62	22.500'
1088	497020.884	514567.447	28.239	VPI	104+40.51	22.519'
1089	497027.446	514574.559	28.24	LOG	104+50.00	22.500'
1090	497044.967	514593.058	28.245	LOG	104+75.00	22.493'
1091	497062.87	514611.189	28.25	LOG	105+00.00	22.500'

Number	Northing (ft)	Easting (ft)	Elevation (ft)	Description	Station	Offset
1092	497081.162	514628.928	28.255	LOG	105+25.00	22.500'
1093	497099.828	514646.273	28.26	LOG	105+50.00	22.500'
1094	497118.86	514663.214	28.265	LOG	105+75.00	22.500'
1095	497135.498	514677.442	28.269	PC	105+96.48	22.500'
1096	497138.116	514679.904	28.278	LOG	106+00.00	22.707'
1097	497096.305	514677.537	28.479	BOW, TIE IN	105+67.70	48.139'
1098	497102.107	514680.716	28.577	BOW, PC	105+73.91	46.702'
1099	497124.798	514681.399	29.026	BOW, PRC	105+90.98	32.423'
1100	497130.152	514682.093	29.135	BOW, PT	105+95.40	29.500'
1101	496932.655	514417.807	26.25	RCP	102+69.91	-3.945'
1102	496926.419	514422.73	26.403	RCP	102+69.91	4.000'
1103	496987.622	514552.4	28.163	AMP	104+08.01	37.429'
1104	497003.818	514570.861	28.195	AMP	104+31.81	37.464'
1105	497121.92	514675.108	29.103	TIE IN	105+84.87	29.500'
1106	497099.658	514671.419	28.435	TIE IN	105+66.22	41.334'
1107	497389.078	514872.686	28.809	AMP	109+08.30	47.518'
1108	497431.286	514893.232	27.438	AMP	109+53.75	47.535'
1109	497580.31	514946.814	27.41	AMP	111+07.34	41.420'
1110	497613.242	514957.756	27.91	AMP	111+41.07	41.486'
1111	497627.573	514954.959	27.953	AMP	111+53.59	34.542'
1112	497382.088	514848.344	29.673	BOW, TIE IN	108+91.41	29.054'
1113	497386.31	514851.036	29.651	BOW	108+96.30	29.500'
1114	497450.754	514882.355	29.71	BOW, TIE IN	109+66.53	29.500'
1115	497570.117	514930.523	29.336	BOW, TIE IN	110+92.71	29.394'
1116	497246.895	514768.454	28.924	BOW, TIE IN	107+37.40	29.005'
1117	497263.224	514778.549	29.173	BOW, TIE IN	107+56.22	28.496'
1118	496916.539	514529.029	27.166	BOW, TIE IN	103+47.23	77.617'
1501	497189.253	514656.713	26.264	EOP	106+25.00	-27.598'
1502	497208.017	514672.357	26.3	EOP	106+50.00	-26.824'
1503	497227.266	514687.413	26.336	EOP	106+75.00	-26.288'
1504	497246.916	514702.081	26.356	EOP	107+00.00	-25.803'
1505	497266.966	514716.261	26.459	EOP	107+25.00	-25.519'
1506	497287.299	514730.037	26.562	EOP	107+50.00	-25.303'
1507	497307.832	514743.523	26.665	EOP	107+75.00	-25.014'
1508	497328.761	514756.389	26.769	EOP	108+00.00	-25.034'
1509	497345.582	514766.2	26.85	EOP	108+19.82	-25.200'
1510	497352.308	514764.757	26.442	EOP	108+25.00	-29.835'
1511	497372.52	514778.779	26.811	EOP	108+50.00	-27.646'

LEGEND:

RCP	=	RAMP CENTER POINT
CI	=	CENTER ISLAND
QP	=	QUARTER POINT
HP	=	HALF POINT
VPI	=	VERTICAL POINT OF INTERSECTION
PI	=	POINT OF INT.
PC	=	POINT OF CURVATURE
PT	=	POINT OF TANGENT
PRC	=	POINT OF REVERSE CURVE
PCC	=	POINT OF COMPOUND CURVE
LOG	=	LIP OF GUTTER (PTS @ 25' INTERVALS)
EOP	=	EDGE OF PAVEMENT
TIE IN	=	MATCH EXIST POINT
BOW	=	BACK OF WALK

STATE OF ALASKA
JOHN F. RINGERT
CE 11096
REGISTERED PROFESSIONAL ENGINEER
7/31/2020

POINT TABLES 1

PLANS DEVELOPED BY: KITTELSON & ASSOCIATES, INC. CERT. OF AUTHORIZATION NO.: 254741, 851 SW 6TH AVE. SUITE 600, PORTLAND, OR 97204, (503) 228-5230
H:\20\20487 - Glacier Highway - Juneau Traffic Design\design_CD\68124_G_GRADE-G-10 Thu, Jul/30/20 12:35pm

NO.	DATE	REVISION

STATE	PROJECT DESIGNATION	YEAR	SHEET NO.	TOTAL SHEETS
ALASKA	TEA-0955(016)/Z68124	2020	G-11	235

Record Drawings have been reviewed by the Project Engineer, and represent to the best of my knowledge, the project as constructed.

PE Dillon Tomaro 2/4/25

Number	Northing (ft)	Easting (ft)	Elevation (ft)	Description	Station	Offset
1512	497393.735	514791.103	26.701	EOP	108+75.00	-27.004'
1513	497415.274	514802.861	26.92	EOP	109+00.00	-26.590'
1514	497437.057	514814.172	27.193	EOP	109+25.00	-26.259'
1515	497459.138	514824.892	27.175	EOP	109+50.00	-26.166'
1516	497481.376	514835.29	27.012	EOP	109+75.00	-26.006'
1517	497504.099	514844.588	26.707	EOP	110+00.00	-26.623'
1518	497526.858	514853.762	26.539	EOP	110+25.00	-26.943'
1519	497550.359	514861.013	26.448	EOP	110+50.00	-28.900'
1520	497557.831	514869.082	26.882	EOP	110+60.05	-24.047'
1521	497571.471	514874.573	26.817	EOP	110+75.00	-23.686'
1522	497594.722	514882.575	26.739	EOP	111+00.00	-24.001'
1523	497618.145	514890.041	26.561	EOP	111+25.00	-24.454'
1524	497641.442	514897.886	26.382	EOP	111+50.00	-24.081'
1525	497664.956	514905.059	26.204	EOP	111+75.00	-23.989'
1526	497688.553	514911.965	26.05	EOP	112+00.00	-23.751'
1527	497141.444	514684.045	28.32	QP	106+05.10	23.766'
1528	497145.346	514692.028	28.387	QP	106+13.01	27.459'
1529	497146.903	514700.776	28.395	QP	106+19.56	33.274'
1530	497146.816	514704.579	28.425	RCP	106+21.81	36.291'
1531	497145.993	514709.616	28.399	PT	106+24.24	40.736'
1532	497144.673	514714.968	28.371	PI	106+26.46	45.743'
1533	497160.164	514749.392	27.967	LOG	106+58.31	63.472'
1534	497164.929	514740.285	28.297	LOG	106+56.71	53.332'
1535	497175.892	514731.033	28.003	LOG	106+59.78	39.346'
1536	497189.796	514727.505	28.322	LOG	106+68.56	28.209'
1537	497203.938	514730.58	28.305	LOG	106+81.52	22.346'
1538	497219.076	514741.692	28.455	LOG	107+00.00	22.612'
1539	497239.969	514756.121	28.584	LOG	107+25.00	22.623'
1540	497250.41	514762.968	28.607	PI	107+37.29	22.490'
1541	497261.37	514769.786	28.615	LOG	107+50.00	22.156'
1542	497266.631	514773.038	28.617	PI	107+56.09	22.018'
1543	497283.019	514783.04	28.625	LOG	107+75.00	21.648'
1544	497304.698	514796.224	28.694	LOG	108+00.00	21.504'
1545	497326.448	514809.293	28.823	LOG	108+25.00	21.665'
1546	497348.318	514822.172	28.949	LOG	108+50.00	22.041'
1547	497370.435	514834.633	29.009	LOG	108+75.00	22.370'
1548	497385.104	514842.525	29.053	PI	108+91.40	22.500'
1549	497388.791	514844.439	29.02	VPI	108+95.49	22.500'

Number	Northing (ft)	Easting (ft)	Elevation (ft)	Description	Station	Offset
1550	497394.934	514847.798	29.037	VPI	109+02.38	22.679'
1551	497417.474	514858.737	29.02	ACP	109+27.05	22.375'
1552	497440.014	514869.676	29.011	VPI	109+51.72	22.500'
1553	497446.352	514872.646	28.964	VPI	109+58.61	22.517'
1554	497453.66	514875.987	28.968	LOG, TIE IN	109+66.53	22.500'
1555	497461.402	514879.753	28.936	LOG	109+75.00	22.738'
1556	497484.6	514890.087	28.9	LOG	110+00.00	22.879'
1557	497508.026	514899.893	28.884	LOG	110+25.00	22.884'
1558	497531.655	514909.2	28.886	LOG	110+50.00	22.790'
1559	497555.392	514918.222	28.814	LOG	110+75.00	22.831'
1560	497572.421	514924.025	28.691	PI	110+92.71	22.500'
1561	497580.592	514926.894	28.591	VPI	111+01.24	22.500'
1562	497587.202	514929.176	28.541	VPI	111+08.12	22.500'
1563	497601.443	514933.973	28.435	ACP	111+22.92	22.500'
1564	497615.732	514938.623	28.328	VPI	111+37.71	22.500'
1565	497622.398	514940.737	28.278	VPI	111+44.60	22.500'
1566	497622.874	514940.887	28.275	VPI	111+45.09	22.500'
1567	497629.55	514942.967	28.225	VPI	111+51.98	22.500'
1568	497652.907	514949.971	28.052	ACP	111+75.99	22.500'
1569	497676.379	514956.586	27.906	LOG	112+00.00	22.500'
1570	497137.884	514713.293	28.917	BOW	106+20.36	48.680'
2001	497712.345	514918.176	25.941	EOP	112+25.00	-23.810'
2002	497736.336	514923.561	25.887	EOP	112+50.00	-24.292'
2003	497751.224	514926.774	25.928	EOP	112+65.49	-24.503'
2004	497768.203	514927.725	25.855	EOP	112+82.59	-27.198'
2005	497784.656	514923.426	25.679	EOP	112+98.16	-34.737'
2006	497799	514914.293	25.49	EOP	113+10.84	-46.465'
2007	497801.942	514912.232	25.456	EOP, TIE IN	113+13.42	-49.041'
2009	497841.694	514923.334	25.291	EOP, TIE IN	113+55.88	-44.953'
2010	497845.579	514933.227	25.392	EOP	113+61.41	-35.787'
2011	497853.645	514942.087	25.687	EOP	113+70.93	-28.243'
2012	497864.425	514947.319	25.977	EOP	113+82.56	-24.612'
2013	497875.951	514948.837	25.923	EOP	113+94.39	-24.669'
2014	497875.728	514950.558	25.975	EOP	113+94.40	-22.934'
2015	497881.217	514951.108	25.993	EOP	114+00.00	-23.099'
2016	497905.737	514953.185	26.077	EOP	114+25.00	-23.953'
2017	497930.23	514955.297	26.16	EOP	114+50.00	-24.344'
2018	497956.123	514957.528	26.248	EOP	114+76.43	-24.296'

Number	Northing (ft)	Easting (ft)	Elevation (ft)	Description	Station	Offset
2019	497959.783	514953.316	25.893	EOP	114+79.84	-28.766'
2020	497979.418	514956.05	26.229	EOP	115+00.00	-27.325'
2021	498003.903	514957.55	26.369	EOP	115+25.00	-27.050'
2022	498020.018	514959.057	26.484	EOP	115+41.46	-26.117'
2023	498020.058	514960.942	26.466	EOP	115+41.56	-24.234'
2024	498028.363	514960.78	26.494	EOP	115+50.00	-24.620'
2025	498052.939	514960.302	26.577	EOP	115+75.00	-25.475'
2026	498077.493	514959.824	26.642	EOP	116+00.00	-25.904'
2027	498102.039	514959.347	26.614	EOP	116+25.00	-25.908'
2028	498126.593	514958.869	26.586	EOP	116+50.00	-25.487'
2029	498151.212	514958.39	26.56	EOP	116+75.00	-24.641'
2030	498175.857	514957.911	26.535	EOP	116+99.63	-23.622'
2031	498175.78	514954.915	26.235	EOP	116+99.73	-26.617'
2032	498201.02	514953.701	26.156	EOP	117+25.00	-26.295'
2033	498225.95	514951.803	26.263	EOP	117+50.00	-26.674'
2034	498234.243	514948.007	26.048	EOP	117+58.51	-29.959'
2035	498240.025	514940.954	25.778	EOP	117+64.71	-36.648'
2036	498242.118	514932.323	25.511	EOP	117+67.32	-45.135'
2037	498239.334	514920.453	25.18	TIE IN	117+65.26	-57.153'
2038	498259.579	514919.327	25.32	TIE IN	117+85.54	-57.047'
2040	497678.862	514957.278	27.896	VPI	112+02.54	22.517'
2041	497685.614	514959.125	27.87	VPI	112+09.43	22.550'
2042	497700.929	514963.057	27.805	PI	112+25.00	22.500'
2043	497725.588	514969.102	27.754	LOG	112+50.00	22.500'
2044	497750.348	514974.719	27.817	LOG	112+75.00	22.500'
2045	497775.202	514979.907	27.88	PI	113+00.00	22.500'
2046	497800.141	514984.664	27.843	LOG	113+25.00	22.500'
2047	497825.16	514988.988	27.807	LOG	113+50.00	22.500'
2048	497850.249	514992.879	27.77	LOG	113+75.00	22.500'
2049	497875.404	514996.323	27.861	LOG	114+00.00	22.488'
2050	497898.66	514999.155	27.946	VPI	114+23.07	22.518'
2051	497905.62	514999.902	27.971	VPI	114+29.96	22.500'
2052	497917.095	515001.066	28.011	ACP	114+41.32	22.476'
2053	497928.575	515002.188	28.054	VPI	114+52.68	22.500'
2054	497935.546	515002.827	28.079	VPI	114+59.57	22.517'
2055	497940.455	515003.206	28.096	PI	114+64.42	22.478'
2056	497951.168	515004.065	28.134	LOG	114+75.00	22.482'
2057	497976.499	515005.786	28.226	LOG	115+00.00	22.497'

LEGEND:

RCP	=	RAMP CENTER POINT
CI	=	CENTER ISLAND
QP	=	QUARTER POINT
HP	=	HALF POINT
VPI	=	VERTICAL POINT OF INTERSECTION
PI	=	POINT OF INT.
PC	=	POINT OF CURVATURE
PT	=	POINT OF TANGENT
PRC	=	POINT OF REVERSE CURVE
PCC	=	POINT OF COMPOUND CURVE
LOG	=	LIP OF GUTTER (PTS @ 25' INTERVALS)
EOP	=	EDGE OF PAVEMENT
TIE IN	=	MATCH EXIST POINT
BOW	=	BACK OF WALK

POINT TABLES 2

STATE OF ALASKA 49TH JOHN F. RINGERT CE 11096 REGISTERED PROFESSIONAL ENGINEER 7/31/2020

PLANS DEVELOPED BY: KITTELSON & ASSOCIATES, INC. CERT. OF AUTHORIZATION NO.: 254741, 851 SW 6TH AVE. SUITE 600, PORTLAND, OR 97204, (503) 228-5230
H:\20\20487 - Glacier Highway - Juneau Traffic Design\design_CD\68124_G_GRADE-G-11 Thu, Jul/30/20 12:35pm

NO.	DATE	REVISION

STATE	PROJECT DESIGNATION	YEAR	SHEET NO.	TOTAL SHEETS
ALASKA	TEA-0955(016)/Z68124	2020	G-12	235

Record Drawings have been reviewed by the Project Engineer, and represent to the best of my knowledge, the project as constructed.

PE Dillon Tomaro 2/4/25

Number	Northing (ft)	Easting (ft)	Elevation (ft)	Description	Station	Offset
2058	498001.855	515007.077	28.318	LOG	115+25.00	22.520'
2059	498027.231	515007.938	28.411	LOG	115+50.00	22.551'
2060	498038.856	515008.188	28.453	PI	115+61.45	22.569'
2061	498046.408	515008.238	28.478	VPI	115+68.88	22.517'
2062	498053.408	515008.281	28.497	VPI	115+75.78	22.500'
2063	498071.447	515008.298	28.423	ACP	115+93.54	22.517'
2064	498089.487	515008.223	28.244	VPI	116+11.30	22.664'
2065	498096.485	515008.093	28.149	VPI	116+18.19	22.680'
2066	498103.308	515007.935	28.054	PI	116+24.91	22.696'
2067	498128.77	515006.946	27.737	LOG	116+50.00	22.639'
2068	498154.092	515005.695	27.427	LOG	116+75.00	22.751'
2069	498179.058	515004.379	27.088	LOG	117+00.00	22.955'
2070	498204.015	515002.904	26.712	LOG	117+25.00	22.999'
2071	498228.974	515001.465	26.479	LOG	117+50.00	23.079'
2072	498253.932	515000.021	26.284	LOG	117+75.00	23.155'
2073	498278.889	514998.567	26.112	LOG	118+00.00	23.220'
2074	497672.815	514970.388	27.877	AMP	112+00.19	36.754'
2075	497907.324	515030.366	26.801	AMP	114+34.74	52.615'
2076	497919.825	515031.512	26.78	AMP	114+46.85	52.512'
2077	498067.045	515034.498	26.517	AMP	115+89.13	48.696'
2078	498086.668	515030.362	26.189	AMP	116+08.17	44.751'
2079	498103.498	515014.736	28.584	BOW, TIE IN	116+24.91	29.500'
2501	498306.499	514968.616	26.367	PT	118+29.38	-4.998'
2502	498314.485	514968.13	26.327	PI	118+37.38	-4.998'
2503	498315.092	514978.108	26.327	PI	118+37.38	4.999'
2504	498313.686	514978.194	26.334	PC	118+35.97	4.999'
2505	498312.87	514978.065	26.342	PT	118+35.16	4.821'
2506	498305.263	514974.254	26.462	PC	118+27.80	0.554'
2507	498322.488	514967.642	26.287	PI	118+45.40	-4.998'
2508	498352.535	514965.811	26.136	PC	118+75.50	-5.000'
2509	498353.143	514975.793	26.136	PT	118+75.50	5.000'
2510	498323.096	514977.621	26.287	PI	118+45.40	4.999'
2511	498281.585	514920.961	24.992	PC	118+07.41	-54.078'
2512	498284.688	514932.865	25.336	QP	118+09.78	-42.008'
2513	498292.117	514942.676	25.676	QP	118+16.60	-31.764'
2514	498302.738	514948.892	25.941	QP	118+26.82	-24.914'
2515	498314.93	514950.564	25.969	PT	118+38.89	-22.504'
2516	498317.427	514950.413	25.957	RCP	118+41.39	-22.504'
2517	498327.533	514942.79	26.449	PI	118+51.94	-29.498'
2518	498329.113	514949.705	25.899	PI	118+53.10	-22.500'

Number	Northing (ft)	Easting (ft)	Elevation (ft)	Description	Station	Offset
2520	498340.095	514934.263	26.328	BOW, PI	118+65.00	-37.246'
2521	498363.38	514936.598	25.5	PI	118+88.10	-33.500'
2523	498361.134	514926.215	26.099	BOW, PI	118+86.49	-44.000'
2525	498413.191	514923.046	25.859	BOW, PI	119+38.64	-44.000'
2526	498412.784	514933.591	25.26	PI	119+37.60	-33.500'
2529	498468.118	514934.229	26.087	BOW, PI	119+92.79	-29.500'
2530	498467.945	514941.253	25.518	PI	119+92.19	-22.500'
2531	498475.742	514940.778	25.564	LOG	120+00.00	-22.500'
2532	498500.696	514939.259	25.639	LOG	120+25.00	-22.500'
2533	498522.818	514937.912	25.705	VPI	120+47.16	-22.500'
2534	498529.805	514937.487	25.726	VPI	120+54.16	-22.500'
2535	498561.725	514935.544	25.822	ACP	120+86.14	-22.500'
2537	498593.645	514933.6	25.918	VPI	121+18.12	-22.500'
2538	498600.511	514933.182	25.939	VPI	121+25.00	-22.500'
2539	498625.465	514931.663	26.014	LOG	121+50.00	-22.500'
2540	498650.419	514930.144	26.089	LOG	121+75.00	-22.500'
2541	498675.372	514928.625	26.164	LOG	122+00.00	-22.500'
2542	498696.142	514927.36	26.226	PC	122+20.81	-22.500'
2543	498712.18	514926.38	26.27	LOG	122+36.88	-22.500'
2544	POINT NOT USED					
2545	POINT NOT USED					
2546	POINT NOT USED					
2547	POINT NOT USED					
2548	POINT NOT USED					
2549	POINT NOT USED					
2550	POINT NOT USED					
2551	POINT NOT USED					
2552	POINT NOT USED					
2553	498804.87	514920.74	26.375	LOG	123+29.74	-22.500'
2554	498809.931	514920.433	26.359	PT	123+34.81	-22.500'
2555	498825.095	514919.51	26.314	LOG	123+50.00	-22.500'
2556	498850.049	514917.991	26.239	LOG	123+75.00	-22.500'
2557	498875.002	514916.472	26.164	LOG	124+00.00	-22.500'
2558	498300.717	514997.223	25.974	LOG	118+21.87	23.205'
2559	498310.7	514996.625	25.99	PI	118+31.87	23.214'
2560	498320.182	514996.047	25.943	RCP	118+41.37	23.214'
2561	498329.665	514995.485	25.895	VPI	118+50.87	23.229'
2562	498331.834	514995.353	25.884	PI	118+53.04	23.229'

Number	Northing (ft)	Easting (ft)	Elevation (ft)	Description	Station	Offset
2563	498332.25	515002.337	26.427	BOW, PI	118+53.03	30.226'
2566	498386.496	515013.079	25.907	BOW, PI	119+06.53	44.244'
2567	498386.888	515003.037	25.342	LOG	119+07.53	34.245'
2570	498436.458	515000.033	25.165	LOG	119+57.19	34.259'
2571	498438.595	515009.922	25.664	PI	119+58.72	44.259'
2573	498460.737	515001.458	25.645	PI	119+81.34	37.156'
2574	498470.726	514986.937	25.525	PI	119+92.19	23.268'
2575	498471.151	514993.924	26.051	PI	119+92.19	30.268'
2576	498478.524	514986.474	25.548	LOG	120+00.00	23.281'
2577	498503.477	514984.952	25.623	LOG	120+25.00	23.277'
2578	498528.431	514983.424	25.698	LOG	120+50.00	23.269'
2579	498553.383	514981.883	25.774	LOG	120+75.00	23.247'
2580	498575.274	514980.538	25.84	PI	120+96.93	23.235'
2581	498595.225	514979.166	25.903	PI	121+16.93	23.078'
2582	498603.282	514978.705	25.927	LOG	121+25.00	23.107'
2583	498628.235	514977.163	26.002	LOG	121+50.00	23.084'
2584	498653.188	514975.637	26.077	LOG	121+75.00	23.077'
2585	498678.143	514974.141	26.152	LOG	122+00.00	23.101'
2586	498695.201	514973.016	26.205	PI	122+17.09	23.014'
2587	498715.085	514971.812	26.264	PI	122+37.01	23.020'
2588	498728.048	514971.059	26.303	LOG	122+50.00	23.056'
2589	498753.004	514969.573	26.377	LOG	122+75.00	23.090'
2590	498777.953	514967.967	26.454	LOG	123+00.00	23.003'
2591	498805.217	514966.272	26.373	PI	123+27.32	22.967'
2592	498810.208	514965.969	26.358	PI	123+32.32	22.969'
2593	498827.844	514964.861	26.143	LOG, TIE IN	123+49.99	22.934'
2594	498858.402	514963.011	26.23	LOG, TIE IN	123+80.60	22.945'
2595	498872.773	514962.147	26.284	PI	123+95.00	22.956'
2596	498877.764	514961.841	26.307	PI	124+00.00	22.953'
2597	498318.477	514967.886	26.307	RCP	118+41.38	-4.998'
2598	498319.085	514977.865	26.307	RCP	118+41.38	4.999'
2599	498301.114	515003.734	26.434	BOW, TIE IN	118+21.87	29.728'
2600	498311.125	515003.612	26.537	BOW	118+31.87	30.214'
2601	498528.468	514915.527	24.769	AMP	120+54.16	-44.500'
2602	498592.475	514911.631	24.728	AMP	121+18.29	-44.500'
2603	498695.716	514920.373	26.771	BOW	122+20.81	-29.500'
2604	POINT NOT USED					
2605	498797.890	514921.166	26.39	LOG	123+22.74	-22.500'

LEGEND:

RCP	=	RAMP CENTER POINT
CI	=	CENTER ISLAND
QP	=	QUARTER POINT
HP	=	HALF POINT
VPI	=	VERTICAL POINT OF INTERSECTION
PI	=	POINT OF INT.
PC	=	POINT OF CURVATURE
PT	=	POINT OF TANGENT
PRC	=	POINT OF REVERSE CURVE
PCC	=	POINT OF COMPOUND CURVE
LOG	=	LIP OF GUTTER (PTS @ 25' INTERVALS)
EOP	=	EDGE OF PAVEMENT
TIE IN	=	MATCH EXIST POINT
BOW	=	BACK OF WALK

POINT TABLES 3

STATE OF ALASKA 49TH JOHN F. RINGERT CE 11096 REGISTERED PROFESSIONAL ENGINEER 7/31/2020

PLANS DEVELOPED BY: KITTELSON & ASSOCIATES, INC. CERT. OF AUTHORIZATION NO.: 254741, 851 SW 6TH AVE. SUITE 600, PORTLAND, OR 97204, (503) 228-5230
H:\20\20487 - Glacier Highway - Juneau Traffic Design\design_CD\68124_G_GRADE-G-12 Thu, Jul/30/20 12:36pm

NO.	DATE	REVISION

STATE	PROJECT DESIGNATION	YEAR	SHEET NO.	TOTAL SHEETS
ALASKA	TEA-0955(016)/Z68124	2020	G-13	235

Record Drawings have been reviewed by the Project Engineer, and represent to the best of my knowledge, the project as constructed.

PE Dillon Tomaro 2/4/25

Number	Northing (ft)	Easting (ft)	Elevation (ft)	Description	Station	Offset
2606	POINT NOT USED					
2607	498862.395	514962.774	26.245	LOG, TIE IN	123+84.60	22.951'
2608	498288.577	514920.61	25.532	BOW	118+14.41	-54.004'
2609	498828.265	514971.566	26.64	BOW, TIE IN	123+50.00	29.653'
2610	498858.798	514969.524	26.713	BOW, TIE IN	123+80.60	29.469'
2611	498862.792	514969.306	26.718	BOW, TIE IN	123+84.60	29.495'
2612	498873.147	514968.743	26.734	BOW, TIE IN	123+94.97	29.562'
3101	498879.33	514916.208	26.177	PC	124+04.33	-22.500'
3102	498895.178	514912.04	26.095	QP	124+20.41	-25.697'
3103	498905.307	514905.109	25.964	RCP	124+30.94	-32.000'
3104	498910.999	514898.635	25.908	QP	124+37.01	-38.116'
3105	498916.485	514887.971	25.903	QP	124+43.14	-48.427'
3106	498918.7	514871.734	23.968	PT	124+46.33	-64.500'
3107	498918.481	514868.132	24.006	PI	124+46.33	-68.108'
3108	498933.453	514867.22	24.018	TIE IN	124+61.33	-68.108'
3109	498948.425	514866.309	24.03	PI	124+76.33	-68.108'
3110	498948.644	514869.911	23.992	PC	124+76.33	-64.500'
3111	498952.812	514885.759	26.11	QP	124+79.53	-48.427'
3112	498962.728	514898.807	26.131	QP	124+88.64	-34.802'
3113	498966.185	514901.557	26.169	RCP	124+91.92	-31.847'
3114	498976.882	514907.066	26.358	QP	125+02.26	-25.697'
3115	498993.119	514909.281	26.519	PT	125+18.33	-22.500'
3116	498999.772	514908.876	26.539	LOG	125+25.00	-22.500'
3117	499024.726	514907.357	26.614	LOG	125+50.00	-22.500'
3118	499053.488	514905.606	26.7	PT	125+78.82	-22.500'
3119	499059.908	514904.409	26.704	QP	125+85.30	-23.305'
3120	499065.84	514901.678	26.539	QP	125+91.38	-25.670'
3121	499070.924	514897.58	26.319	QP	125+96.71	-29.452'
3122	499072.974	514895.191	26.261	RCP	125+98.90	-31.711'
3123	499075.101	514891.929	26.187	PI	126+01.22	-34.838'
3124	499067.746	514888.771	26.227	EOP	125+94.07	-38.437'
3125	499066.86	514874.217	25.683	EOP	125+94.07	-53.018'
3126	499091.142	514872.733	25.607	TIE IN	126+18.46	-53.016'
3127	499108.299	514871.684	25.476	EOP	126+35.80	-52.978'
3128	499115.454	514871.227	25.388	PI	126+43.06	-52.964'
3129	499114.912	514881.903	26.049	PI	126+41.80	-42.348'
3130	499119.678	514892.25	26.497	RCP	126+45.90	-31.706'
3131	499117.04	514889.147	26.407	PI	126+43.46	-34.978'
3132	499121.647	514894.044	26.545	QP	126+47.76	-29.784'
3133	499127.338	514897.623	26.759	QP	126+53.24	-25.822'
3134	499133.747	514899.655	26.979	QP	126+59.54	-23.343'
3135	499140.46	514900.009	27.054	PT	126+66.27	-22.502'
3136	499142.883	514899.826	27.075	VPI	126+68.72	-22.503'
3137	499150.139	514899.277	27.138	VPI	126+76.07	-22.495'
3138	499171.542	514897.477	27.325	ACP	126+97.80	-22.499'
3140	499192.921	514895.412	27.513	VPI	127+19.59	-22.500'
3141	499199.882	514894.603	27.573	VPI	127+26.72	-22.568'
3142	499222.587	514891.981	27.775	LOG	127+50.00	-22.502'
3143	499246.814	514888.588	28.041	LOG	127+75.00	-22.500'
3144	499270.863	514884.581	28.247	LOG	128+00.00	-22.505'
3145	499294.706	514879.9	28.451	LOG	128+25.00	-22.498'
3146	499318.3	514874.442	28.654	LOG	128+50.00	-22.503'
3147	499341.601	514868.155	28.904	LOG	128+75.00	-22.498'
3148	499363.155	514861.423	28.958	PCC	128+98.47	-22.500'
3149	499387.135	514852.786	29.021	LOG	129+25.00	-22.500'
3150	499409.342	514843.639	29.079	LOG	129+50.00	-22.500'
3151	499431.128	514833.533	29.138	LOG	129+75.00	-22.500'
3152	499449.269	514824.211	29.187	VPI	129+96.23	-22.500'
3153	499452.453	514822.486	29.196	LOG	130+00.00	-22.500'
3154	498886.746	514961.283	26.352	PI	124+09.00	22.942'
3155	498902.72	514960.347	26.353	LOG	124+25.00	22.978'
3156	498927.681	514958.949	26.31	LOG	124+50.00	23.100'
3157	498952.638	514957.472	26.32	LOG	124+75.00	23.143'
3158	498977.596	514956.025	26.213	LOG	125+00.00	23.214'
3159	498997.08	514954.745	26.139	PI	125+19.53	23.121'
3160	499002.071	514954.443	26.117	PI	125+24.53	23.122'
3161	499027.497	514952.882	26.178	LOG	125+50.00	23.110'
3162	499052.448	514951.31	26.324	LOG	125+75.00	23.057'
3163	499077.397	514949.711	26.54	LOG	126+00.00	22.976'
3164	499102.389	514948.051	26.789	LOG	126+25.00	22.856'
3165	499127.453	514946.235	27.124	LOG	126+50.00	22.682'
3166	499152.584	514944.237	27.434	LOG	126+75.00	22.519'
3167	499168.702	514942.975	27.437	PI	126+90.99	22.576'
3168	499173.658	514942.581	27.513	LOG	126+95.90	22.615'
3169	499180.619	514941.838	27.771	LOG	127+02.81	22.503'
3170	499202.97	514939.453	28.257	ACP	127+24.95	22.354'
3171	499225.321	514937.068	28.687	LOG	127+47.03	22.570'
3172	499232.282	514936.325	28.798	LOG	127+53.89	22.722'
3173	499237.797	514935.735	28.815	PI	127+59.32	22.872'
3174	499253.68	514933.577	28.954	LOG, TIE IN	127+75.00	23.009'
3175	499278.964	514929.37	29.461	LOG	128+00.00	23.010'
3176	499304.162	514924.25	29.962	LOG	128+25.00	22.849'
3177	499329.276	514918.376	30.465	LOG	128+50.00	22.782'
3178	499354.254	514911.63	30.715	LOG	128+75.00	22.781'
3179	499378.994	514903.783	30.77	LOG	129+00.00	22.698'
3180	499403.442	514894.968	30.83	LOG	129+25.00	22.725'
3181	499427.39	514884.879	30.88	LOG	129+50.00	22.516'
3182	499442.119	514878.176	30.916	PI	129+65.57	22.501'
3183	499452.663	514873.261	30.948	PC	129+76.76	22.655'
3184	499460.941	514871.983	30.952	HP	129+84.41	25.232'
3185	499467.205	514874.299	30.891	RCP	129+88.71	30.162'
3186	499468.614	514875.342	30.853	PT	129+89.44	31.739'
3187	499471.52	514877.768	30.752	BOW, PI	129+90.81	35.236'
3188	499477.902	514888.414	29.926	PI	129+91.45	47.629'
3189	499444.982	514884.317	31.359	BOW, PI	129+65.55	29.276'
3190	499454.777	514879.989	31.58	BOW, PC	129+75.73	29.624'
3191	499459.678	514878.885	31.126	BOW, PI	129+80.36	30.818'
3192	499464.357	514880.907	30.913	BOW, PI	129+83.45	34.733'
3193	498877.272	514909.321	26.717	BOW	124+02.70	-29.500'
3194	498886.95	514903.722	26.466	BOW	124+12.70	-34.500'
3195	498984.04	514897.811	26.727	BOW	125+09.97	-34.500'
3196	498994.326	514902.194	27.069	BOW	125+19.97	-29.500'
3197	499159.315	514869.212	25.822	AMP	126+87.87	-51.717'
3198	499189.432	514877.275	26.02	AMP	127+17.95	-40.899'
3199	499392.844	514898.911	30.803	LOG, TIE IN	129+14.12	22.688'
3200	499395.134	514905.527	31.261	BOW, TIE IN	129+14.01	29.689'
3201	499254.641	514939.878	29.477	BOW, TIE IN	127+75.00	29.384'
3202	499249.777	514941.145	29.472	BOW	127+70.15	29.914'
3203	499221.04	514954.729	28.06	AMP	127+40.79	39.577'
3204	499183.764	514959.392	26.99	AMP	127+04.28	40.273'
3205	499117.643	514946.978	26.96	LOG, TIE IN	126+40.22	22.765'
3206	499118.093	514953.517	27.352	BOW, TIE IN	126+40.24	29.319'
3207	498887.161	514967.919	26.806	BOW, TIE IN	124+09.01	29.591'
3208	498997.424	514961.217	26.424	BOW, TIE IN	125+19.48	29.602'

LEGEND:

RCP	=	RAMP CENTER POINT
CI	=	CENTER ISLAND
QP	=	QUARTER POINT
HP	=	HALF POINT
VPI	=	VERTICAL POINT OF INTERSECTION
PI	=	POINT OF INT.
PC	=	POINT OF CURVATURE
PT	=	POINT OF TANGENT
PRC	=	POINT OF REVERSE CURVE
PCC	=	POINT OF COMPOUND CURVE
LOG	=	LIP OF GUTTER (PTS @ 25' INTERVALS)
EOP	=	EDGE OF PAVEMENT
TIE IN	=	MATCH EXIST POINT
BOW	=	BACK OF WALK

POINT TABLES 4

STATE OF ALASKA 49TH JOHN F. RINGERT CE 11096 REGISTERED PROFESSIONAL ENGINEER 7/31/2020

PLANS DEVELOPED BY: KITTELSON & ASSOCIATES, INC. CERT. OF AUTHORIZATION NO.: 254741, 851 SW 6TH AVE. SUITE 600, PORTLAND, OR 97204, (503) 228-5230
H:\20\20487 - Glacier Highway - Juneau Traffic Design\design_CD\68124_G_GRADE-G-13 Thu, Jul/30/20 12:36pm

NO.	DATE	REVISION

STATE	PROJECT DESIGNATION	YEAR	SHEET NO.	TOTAL SHEETS
ALASKA	TEA-0955(016)/Z68124	2020	G-14	235

Record Drawings have been reviewed by the Project Engineer, and represent to the best of my knowledge, the project as constructed.

PE Dillon Tomaro 2/4/25

Number	Northing (ft)	Easting (ft)	Elevation (ft)	Description	Station	Offset
3209	499002.413	514960.883	26.43	BOW, TIE IN	125+24.48	29.571'
3210	499169.291	514949.418	27.958	BOW	126+91.02	29.046'
3211	499174.324	514949.523	28.071	BOW	126+95.95	29.588'
3212	499068.783	514888.874	26.204	BOW	125+95.10	-38.272'
3213	499123.004	514885.437	26.461	BOW	126+49.72	-38.278'
3501	499454.538	514821.342	29.202	VPI	130+02.48	-22.500'
3502	499463.96	514816.023	29.229	ACP	130+13.74	-22.500'
3503	499475.564	514809.13	29.261	VPI	130+27.79	-22.500'
3504	499480.668	514805.975	29.276	VPI	130+34.03	-22.500'
3505	499493.557	514797.656	29.313	LOG	130+50.00	-22.500'
3506	499513.258	514783.921	29.302	LOG	130+75.00	-22.500'
3507	499532.341	514769.339	29.291	LOG	131+00.00	-22.500'
3508	499550.77	514753.939	29.28	LOG	131+25.00	-22.500'
3509	499568.509	514737.749	29.269	LOG	131+50.00	-22.500'
3510	499585.526	514720.801	29.258	LOG	131+75.00	-22.500'
3511	499601.787	514703.128	29.247	LOG	132+00.00	-22.500'
3512	499617.262	514684.761	28.76	LOG	132+25.00	-22.500'
3513	499631.921	514665.738	28.931	LOG	132+50.00	-22.500'
3514	499645.736	514646.093	29.102	LOG	132+75.00	-22.500'
3515	499658.681	514625.864	29.274	LOG	133+00.00	-22.500'
3516	499670.732	514605.09	29.522	LOG	133+25.00	-22.500'
3517	499682.153	514583.227	29.78	PCC	133+50.68	-22.500'
3518	499684.948	514571.157	29.862	QP	133+63.29	-25.210'
3519	499684.946	514570.909	29.863	RCP	133+63.53	-25.317'
3520	499682.057	514559.109	29.935	QP	133+73.57	-32.841'
3521	499674.368	514549.831	29.878	RCP	133+79.36	-43.613'
3522	499674.089	514549.62	29.877	QP	133+79.45	-43.953'
3523	499662.723	514544.69	29.839	PT	133+79.46	-56.343'
3524	499658.464	514543.946	29.823	PI	133+78.33	-60.545'
3525	499659.544	514533.312	29.779	TIE IN	133+89.78	-63.699'
3526	499660.434	514524.547	29.6	LOG	133+99.33	-66.145'
3527	499671.919	514526.176	29.703	PI	134+02.29	-54.852'
3528	499680.328	514527.369	29.853	RCP	134+04.38	-46.575'
3529	499682.81	514527.721	29.885	PC	134+04.98	-44.131'
3530	499692.224	514527.398	30.041	QP	134+08.88	-35.437'
3531	499700.954	514523.859	30.254	QP	134+15.57	-28.462'
3532	499707.937	514517.538	30.552	QP	134+24.23	-23.978'
3533	499712.323	514509.202	30.611	PT	134+33.89	-22.475'
3534	499717.004	514494.362	30.702	LOG	134+50.00	-22.452'
3535	499718.432	514489.458	30.775	PI	134+55.28	-22.476'
3536	499721.066	514480.097	30.914	RCP	134+65.32	-22.504'
3537	499723.552	514471.161	31.051	PI	134+74.89	-22.431'
3538	499724.425	514437.389	32.065	BOW, TIE IN	135+09.02	-29.462'
3539	499731.298	514438.651	31.532	LOG, TIE IN	135+09.26	-22.479'
3540	499734.426	514423.62	31.752	LOG	135+25.00	-22.492'
3541	499738.965	514399.589	31.965	LOG	135+50.00	-22.459'
3542	499743.076	514375.395	32.18	LOG	135+75.00	-22.328'
3543	499746.523	514351.016	32.39	LOG	136+00.00	-22.422'
3544	499498.625	514875.992	29.869	PC	130+13.76	46.768'
3545	499495.611	514867.045	30.51	QP	130+15.51	37.515'
3546	499504.718	514872.545	0	BOW	130+20.23	46.869'
3547	499496.22	514857.266	30.812	RCP	130+20.69	29.393'
3548	499500.107	514849.056	30.994	QP	130+27.92	24.366'
3549	499506.976	514842.579	31.082	PT	130+36.81	22.493'
3550	499510.466	514840.356	31.092	PI	130+40.79	22.494'
3551	499518.483	514835.123	31.113	LOG	130+50.00	22.500'
3552	499539.794	514820.264	31.102	LOG	130+75.00	22.500'
3553	499560.437	514804.49	31.091	LOG	131+00.00	22.500'
3554	499573.877	514793.475	31.085	VPI	131+16.72	22.541'
3555	499579.162	514788.885	31.081	VPI	131+23.46	22.500'
3556	499595.59	514774.07	31.071	ACP	131+44.74	22.500'
3557	499606.527	514763.626	31.066	VPI	131+59.29	22.541'
3558	499611.456	514758.656	31.062	VPI	131+66.03	22.500'
3559	499613.35	514756.737	31.061	PI	131+68.62	22.500'
3561	499641.407	514737.318	31.182	LOG, TIE IN	132+00.50	29.830'
3562	499662.678	514721.364	30.827	LOG	132+25.00	35.830'
3563	499678.671	514700.116	30.992	LOG	132+50.04	35.529'
3564	499693.984	514678.474	31.165	LOG	132+75.00	35.607'
3565	499708.348	514656.142	31.337	LOG	133+00.00	35.668'
3566	499721.818	514633.252	31.589	LOG	133+25.00	35.834'
3567	499737.226	514604.927	31.788	PC	133+55.33	36.507'
3568	499745.818	514592.112	31.704	QP	133+69.64	38.846'
3569	499749.676	514588.058	31.652	RCP	133+74.57	40.707'
3570	499757.308	514581.816	31.486	QP	133+82.73	45.217'
3571	499770.985	514574.675	31.209	QP	133+93.62	55.110'
3572	499778.207	514572.477	31.082	RCP	133+97.90	61.000'
3573	499786.002	514571.133	30.978	PT	134+01.58	67.767'
3574	499788.876	514570.824	30.95	PI	134+02.77	70.337'
3577	499821.821	514549.54	30.469	LOG	134+30.18	94.151'
3578	499798.52	514549.199	31.34	PI	134+23.86	71.979'
3579	499793.52	514549.126	31.462	PC	134+22.45	67.230'
3580	499793.511	514546.126	31.535	PT	134+25.00	66.242'
3581	499798.511	514546.061	31.409	PI	134+26.51	70.952'
3582	499821.856	514545.757	30.417	LOG	134+33.32	92.995'
3585	499819.143	514519.918	30.821	PC	134+54.39	82.736'
3586	499807.411	514518.062	31.119	QP	134+53.01	70.958'
3587	499796.667	514512.995	31.429	QP	134+54.68	59.221'
3588	499788.225	514505.648	31.679	RCP	134+59.05	49.068'
3589	499787.772	514505.123	31.689	QP	134+59.40	48.487'
3590	499781.436	514495.076	31.913	PCC	134+66.91	39.676'
3591	499777.495	514484.301	32.135	RCP	134+75.85	33.081'
3592	499777.197	514483.242	32.154	QP	134+76.76	32.525'
3593	499774.816	514470.9	32.352	QP	134+87.73	27.194'
3594	499774.35	514458.338	32.53	QP	134+99.47	23.837'
3595	499775.809	514445.853	32.624	PT	135+11.65	22.549'
3596	499778.889	514430.1	32.655	PI	135+27.33	22.380'
3597	499783.35	514407.37	32.715	LOG	135+50.00	22.603'
3598	499787.476	514382.243	32.777	LOG, TIE IN	135+75.00	22.597'
3599	499791.171	514357.131	32.839	LOG	136+00.00	22.642'
3600	499679.828	514513.141	30.329	BOW, PI	134+18.76	-51.963'
3601	499684.802	514513.864	30.39	BOW, PC	134+19.83	-47.033'
3602	499698.818	514506.128	30.794	BOW, PT	134+32.53	-36.265'
3603	499700.677	514501.94	30.901	BOW, PC	134+37.36	-35.793'
3604	499708.626	514497.587	31.13	BOW, PI	134+44.25	-29.524'
3605	499448.742	514810.834	28.235	AMP	130+02.48	-34.500'
3606	499469.31	514798.889	28.568	AMP	130+27.79	-34.500'
3607	499789.312	514582.877	31.412	AMP	133+92.96	75.175'
3608	499588.849	514800.501	29.382	AMP	131+23.17	37.622'
3609	499619.309	514772.228	29.783	AMP	131+62.18	37.646'
3610	499618.205	514761.784	31.455	BOW	131+68.44	29.500'
3611	499645.416	514743.093	31.375	BOW, TIE IN	131+98.91	36.656'
3612	499794.762	514383.367	32.907	BOW, TIE IN	135+75.00	29.968'
3613	499796.278	514570.2	30.872	LOG	134+05.63	77.027'
3614	499836.099	514566.623	0	LOG	134+20.31	113.198'

LEGEND:

RCP	=	RAMP CENTER POINT
CI	=	CENTER ISLAND
QP	=	QUARTER POINT
HP	=	HALF POINT
VPI	=	VERTICAL POINT OF INTERSECTION
PI	=	POINT OF INT.
PC	=	POINT OF CURVATURE
PT	=	POINT OF TANGENT
PRC	=	POINT OF REVERSE CURVE
PCC	=	POINT OF COMPOUND CURVE
LOG	=	LIP OF GUTTER (PTS @ 25' INTERVALS)
EOP	=	EDGE OF PAVEMENT
TIE IN	=	MATCH EXIST POINT
BOW	=	BACK OF WALK

POINT TABLES 5

STATE OF ALASKA 49TH JOHN F. RINGERT CE 11096 REGISTERED PROFESSIONAL ENGINEER 7/31/2020

PLANS DEVELOPED BY: KITTELSON & ASSOCIATES, INC. CERT. OF AUTHORIZATION NO.: 254741, 851 SW 6TH AVE. SUITE 600, PORTLAND, OR 97204, (503) 228-5230
H:\20\20487 - Glacier Highway - Juneau Traffic Design\design_CD\68124_G_GRADE-G-14 Thu, Jul/30/20 12:36pm

NO.	DATE	REVISION

STATE	PROJECT DESIGNATION	YEAR	SHEET NO.	TOTAL SHEETS
ALASKA	TEA-0955(016)/Z68124	2020	G-15	235

Record Drawings have been reviewed by the Project Engineer, and represent to the best of my knowledge, the project as constructed.

PE Dillon Tomaro 2/4/25

Number	Northing (ft)	Easting (ft)	Elevation (ft)	Description	Station	Offset
3615	499843.071	514565.997	30.879	LOG, TIE IN	134+22.74	119.573'
3616	499843.685	514573.101	31.443	BOW, TIE IN	134+17.32	122.513'
3617	499837.148	514578.692	31.891	AMP	134+11.10	118.278'
3618	499843.22	514549.854	31.315	LOG, TIE IN	134+35.67	114.576'
3619	499843.216	514545.479	31.417	LOG, TIE IN	134+39.21	113.234'
3620	499843.452	514520.009	30.862	LOG, TIE IN	134+60.26	106.115'
3621	499843.514	514513.283	31.429	BOW, TIE IN	134+65.92	104.360'
3622	499743.271	514608.323	31.934	BOW, TIE IN	133+54.94	43.427'
3623	499657.626	514550.98	30.364	BOW	133+70.77	-58.460'
4001	499748.391	514326.356	32.534	LOG	136+25.00	-23.748'
4002	499742.596	514300.765	32.445	LOG	136+50.00	-32.512'
4003	499745.339	514276.111	32.447	LOG	136+75.00	-32.492'
4004	499748.005	514251.33	32.365	LOG	137+00.00	-32.459'
4005	499757.117	514227.152	32.421	LOG	137+25.00	-25.931'
4006	499763.224	514202.657	32.518	LOG	137+50.00	-22.425'
4007	499764.97	514185.373	32.595	LOG	137+67.37	-22.500'
4008	499761.167	514170.624	32.461	LOG	137+81.64	-27.828'
4009	499756.975	514164.211	32.37	LOG	137+87.58	-32.668'
4010	499751.497	514158.855	32.324	LOG	137+92.33	-38.677'
4011	499731.299	514144.113	32.182	LOG	138+04.88	-60.308'
4012	499710.798	514129.808	32.02	LOG	138+16.96	-82.196'
4013	499694.481	514118.364	31.933	LOG	138+26.63	-99.622'
4014	499713.275	514091.638	31.655	PI	138+55.17	-83.732'
4015	499716.884	514094.045	31.694	PC	138+53.16	-79.891'
4016	499735.97	514099.994	32.342	QP	138+49.24	-60.287'
4017	499755.551	514095.965	33.089	QP	138+55.30	-41.236'
4018	499757.092	514095.128	33.119	RCP	138+56.30	-39.791'
4019	499770.737	514082.963	33.488	QP	138+69.82	-27.496'
4020	499777.734	514064.235	33.842	PT	138+89.18	-22.500'
4021	499778.867	514053.475	33.94	LOG	139+00.00	-22.500'
4022	499780.649	514036.561	34.093	PI	139+17.01	-22.500'
4023	499781.489	514028.61	34.165	LOG	139+25.00	-22.498'
4024	499783.051	514013.769	34.299	VPI	139+39.90	-22.510'
4025	499783.784	514006.807	34.362	VPI	139+46.87	-22.523'
4027	499785.456	513991.834	34.497	ACP	139+61.87	-22.485'
4028	499787.128	513976.86	34.632	VPI	139+76.85	-22.500'
4029	499787.869	513970.45	34.689	PI	139+83.25	-22.503'
4030	499787.927	513969.906	34.694	VPI	139+83.80	-22.509'

Number	Northing (ft)	Easting (ft)	Elevation (ft)	Description	Station	Offset
4031	499789.888	513953.678	34.84	LOG	140+00.00	-22.499'
4032	499793.139	513928.607	35.065	LOG	140+25.00	-22.500'
4033	499795.427	513912.329	35.237	VPI	140+41.22	-22.511'
4034	499796.469	513905.407	35.308	VPI	140+48.11	-22.499'
4035	499800.817	513878.411	35.585	LOG	140+75.00	-22.502'
4036	499804.539	513857.011	35.811	VPI	140+96.30	-22.660'
4037	499805.739	513850.115	35.86	VPI	141+03.15	-22.801'
4038	499810.302	513828.217	35.898	LOG	141+25.00	-22.829'
4039	499815.752	513803.134	35.958	LOG	141+50.00	-23.300'
4040	499821.764	513778.045	36.028	LOG	141+75.03	-24.014'
4041	499827.702	513752.869	36.137	LOG	142+00.00	-25.681'
4042	499796.746	514332.33	32.843	LOG	136+25.00	24.974'
4043	499805.99	514307.979	32.678	LOG	136+50.00	31.292'
4044	499809.908	514283.069	32.448	LOG	136+75.00	32.451'
4045	499812.538	514258.132	32.365	LOG	137+00.00	32.431'
4046	499808.094	514232.524	32.433	LOG	137+25.00	25.328'
4047	499808.032	514207.379	32.514	LOG	137+50.00	22.632'
4048	499810.727	514182.524	32.641	LOG	137+75.00	22.707'
4049	499811.875	514171.809	32.832	LOG, TIE IN	137+85.78	22.726'
4050	499812.582	514164.844	32.794	VPI	137+92.78	22.699'
4051	499814.067	514150.196	32.956	ACP	138+07.50	22.641'
4052	499815.32	514137.703	33.098	VPI	138+20.06	22.578'
4053	499816.044	514130.741	33.34	LOG, TIE IN	138+27.06	22.569'
4054	499818.424	514107.92	33.434	LOG	138+50.00	22.544'
4055	499821.078	514083.061	33.713	LOG	138+75.00	22.579'
4056	499822.107	514073.819	33.74	LOG, TIE IN	138+84.30	22.634'
4057	499822.852	514066.859	33.761	LOG	138+91.30	22.645'
4058	499824.047	514055.197	33.797	ACP	139+03.02	22.612'
4059	499825.323	514043.544	33.831	VPI	139+14.74	22.659'
4060	499826.087	514036.586	33.851	VPI	139+21.75	22.690'
4061	499828.262	514016.708	33.91	VPI	139+41.78	22.757'
4062	499829.065	514009.754	33.93	VPI	139+48.80	22.812'
4063	499830.528	513997.778	33.963	ACP	139+60.92	22.967'
4064	499831.743	513985.775	34.002	VPI	139+73.06	22.838'
4065	499832.434	513978.809	34.026	VPI	139+80.11	22.730'
4066	499832.98	513974.732	34.037	VPI	139+84.25	22.800'
4067	499833.801	513967.78	34.062	VPI	139+91.31	22.796'
4068	499835.279	513956.246	34.595	ACP	140+03.05	22.861'

Number	Northing (ft)	Easting (ft)	Elevation (ft)	Description	Station	Offset
4069	499836.757	513944.711	34.629	VPI	140+14.81	22.865'
4070	499837.669	513937.771	34.149	LOG, TIE IN	140+21.90	22.857'
4071	499841.627	513910.488	34.113	LOG	140+49.86	22.911'
4072	499845.622	513886.115	34.065	LOG	140+75.00	22.961'
4073	499848.111	513872.602	34.035	LOG, TIE IN	140+89.02	23.042'
4074	499848.717	513866.567	34.05	VPI	140+95.19	22.526'
4075	499851.05	513854.584	34.055	ACP	141+07.67	22.505'
4076	499853.43	513842.611	34.081	VPI	141+20.17	22.380'
4077	499854.801	513836.597	34.071	VPI	141+26.49	22.429'
4078	499861.033	513814.552	34.096	LOG	141+50.00	23.398'
4079	499863.148	513808.325	34.102	PT	141+56.75	23.899'
4080	499869.038	513791.626	34.12	LOG	141+75.00	25.173'
4081	499877.069	513768.854	34.146	LOG	142+00.00	26.210'
4082	499818.891	514172.548	32.982	BOW, TIE IN	137+85.78	29.781'
4083	499824.559	514165.68	32.69	AMP	137+93.20	34.697'
4084	499827.256	514138.935	33.036	AMP	138+20.08	34.578'
4085	499823.232	514131.498	33.53	BOW, TIE IN	138+27.06	29.796'
4086	499829.207	514074.567	33.767	BOW, TIE IN	138+84.30	29.773'
4087	499834.761	514068.36	33.527	AMP	138+91.05	34.646'
4088	499837.245	514044.91	33.789	AMP	139+14.64	34.659'
4089	499840.976	514011.214	33.757	AMP	139+48.63	34.811'
4090	499843.676	513987.041	33.661	AMP	139+73.15	34.838'
4091	499845.729	513969.102	33.472	AMP	139+91.42	34.797'
4092	499848.882	513944.502	33.644	AMP	140+16.62	34.860'
4093	499844.661	513938.686	33.968	BOW, TIE IN	140+21.92	29.908'
4094	499761.183	514006.043	33.681	AMP	139+45.22	-45.077'
4095	499764.53	513972.078	34.014	AMP	139+78.99	-45.497'
4096	499854.489	513873.78	34.283	BOW, TIE IN	140+89.02	29.527'
4097	499860.48	513868.946	33.708	AMP	140+95.05	34.526'
4098	499865.092	513845.456	33.452	AMP	141+19.84	34.380'
4099	499716.958	514085.801	32.195	BOW, TIE IN	138+61.37	-80.681'
4100	499781.67	513894.765	34.64	AMP	140+56.20	-38.745'
4101	499787.69	513862.467	34.522	AMP	140+88.06	-38.216'
5001	499834.512	513727.823	36.246	LOG	142+25.00	-27.358'
5002	499842.607	513703.137	36.337	LOG	142+50.00	-28.587'
5003	499851.965	513678.884	36.409	LOG	142+75.00	-29.364'
5004	499862.562	513655.136	36.464	LOG	143+00.00	-29.689'
5005	499874.163	513631.856	36.51	LOG	143+25.00	-29.790'

LEGEND:

RCP	=	RAMP CENTER POINT
CI	=	CENTER ISLAND
QP	=	QUARTER POINT
HP	=	HALF POINT
VPI	=	VERTICAL POINT OF INTERSECTION
PI	=	POINT OF INT.
PC	=	POINT OF CURVATURE
PT	=	POINT OF TANGENT
PRC	=	POINT OF REVERSE CURVE
PCC	=	POINT OF COMPOUND CURVE
LOG	=	LIP OF GUTTER (PTS @ 25' INTERVALS)
EOP	=	EDGE OF PAVEMENT
TIE IN	=	MATCH EXIST POINT
BOW	=	BACK OF WALK

POINT TABLES 6

STATE OF ALASKA 49TH JOHN F. RINGERT CE 11096 REGISTERED PROFESSIONAL ENGINEER

7/31/2020

PLANS DEVELOPED BY: KITTELSON & ASSOCIATES, INC. CERT. OF AUTHORIZATION NO.: 254741, 851 SW 6TH AVE. SUITE 600, PORTLAND, OR 97204, (503) 228-5230
H:\20\20487 - Glacier Highway - Juneau Traffic Design\design_CD\68124_G_GRADE-G-15 Thu, Jul/30/20 12:36pm

NO.	DATE	REVISION

STATE	PROJECT DESIGNATION	YEAR	SHEET NO.	TOTAL SHEETS
ALASKA	TEA-0955(016)/Z68124	2020	G-16	235

Record Drawings have been reviewed by the Project Engineer, and represent to the best of my knowledge, the project as constructed.

PE Dillon Tomaro 2/4/25

Number	Northing (ft)	Easting (ft)	Elevation (ft)	Description	Station	Offset
5006	499886.526	513608.967	36.557	LOG	143+50.00	-29.919'
5007	499896.908	513591.037	36.492	PRC	143+69.91	-30.041'
5008	499898.306	513588.498	36.457	RCP	143+72.69	-30.165'
5009	499901.917	513578.274	36.37	QP	143+82.85	-32.484'
5010	499902.549	513564.579	36.243	QP	143+94.17	-39.338'
5011	499901.209	513557.924	36.164	RCP	143+98.74	-44.108'
5012	499898.737	513551.409	36.013	QP	144+02.56	-49.771'
5013	499890.886	513540.169	35.32	PT	144+07.15	-62.557'
5014	499876.371	513525.309	33.621	LOG	144+10.90	-82.917'
5015	499861.856	513510.448	32.399	PI	144+14.47	-103.298'
5016	499893.749	513514.067	34.277	TIE IN	144+28.22	-75.149'
5017	499905.685	513501.085	34.01	LOG	144+44.15	-73.230'
5018	499918.758	513513.549	35.025	PC	144+42.20	-55.293'
5019	499928.235	513519.243	35.58	QP	144+43.26	-44.294'
5020	499935.112	513520.712	35.743	RCP	144+46.07	-37.919'
5021	499939.189	513520.745	35.806	QP	144+48.39	-34.652'
5022	499949.849	513517.812	36.039	QP	144+56.86	-28.001'
5023	499958.492	513510.917	36.158	PT	144+67.25	-25.504'
5024	499963.625	513504.762	36.123	PI	144+75.00	-25.400'
5025	499980.672	513484.318	35.919	PC	145+00.72	-25.659'
5026	499997.314	513465.54	35.722	LOG	145+25.00	-25.989'
5027	500015.543	513447.342	35.501	LOG	145+50.00	-25.538'
5028	500034.77	513430.32	35.238	LOG	145+75.00	-24.262'
5029	500054.204	513413.714	34.994	LOG	146+00.00	-23.165'
5030	500073.312	513397.387	34.767	VPI	146+24.69	-22.615'
5031	500078.633	513392.839	34.706	VPI	146+31.58	-22.544'
5032	500092.128	513381.309	34.547	ACP	146+49.08	-22.507'
5033	500105.74	513369.916	34.39	VPI	146+66.62	-22.471'
5034	500111.08	513365.39	34.326	VPI	146+73.54	-22.545'
5035	500131.773	513348.529	34.24	LOG	147+00.00	-22.498'
5036	500139.125	513342.592	34.268	PI	147+09.39	-22.500'
5037	500152.735	513331.687	34.32	PI	147+26.74	-22.495'
5038	500170.978	513317.169	34.39	LOG	147+49.99	-22.495'
5039	500179.908	513310.075	34.424	PI	147+61.39	-22.500'
5040	500190.571	513301.614	34.465	LOG	147+75.00	-22.500'
5041	500194.88	513298.195	34.482	PI	147+80.50	-22.500'
5042	500210.964	513287.095	34.566	LOG	148+00.00	-21.198'
5043	499878.776	513662.952	35.744	PCC	143+00.00	-11.689'
5044	499890.102	513640.219	35.79	FOC	143+25.00	-11.790'
5045	499902.172	513617.867	35.836	FOC	143+50.00	-11.919'
5046	499910.857	513602.799	35.834	PI	143+67.11	-12.023'
5047	499911.383	513601.925	35.834	PI	143+68.12	-12.022'
5048	499918.232	513606.061	35.514	FOC,	143+68.11	-4.021'
5049	499917.683	513606.973	35.514	FOC,	143+67.05	-4.022'
5050	499909.126	513621.823	35.518	FOC	143+50.00	-3.919'
5051	499897.186	513643.936	35.471	FOC	143+25.00	-3.790'
5052	499885.983	513666.426	35.424	PRC	143+00.00	-3.689'
5053	499916.541	513593.357	35.841	PI	143+77.96	-12.088'
5054	499917.051	513592.511	35.842	PC	143+78.93	-12.102'
5055	499917.341	513592.202	35.838	PT	143+79.34	-12.019'
5056	499923.661	513587.86	35.715	PC	143+86.28	-8.984'
5057	499927.275	513591.189	35.516	PRC	143+85.41	-4.148'
5058	499923.864	513596.704	35.516	PI	143+78.97	-4.102'
5059	499923.389	513597.493	35.516	PI	143+78.05	-4.089'
5060	499886.367	513742.677	34.179	LOG	142+28.81	26.447'
5061	499893.676	513723.603	34.203	LOG	142+50.00	26.430'
5062	499902.978	513701.37	34.231	LOG	142+75.00	26.385'
5063	499913.007	513679.453	34.26	LOG	143+00.00	26.312'
5064	499923.752	513657.874	34.288	LOG	143+25.00	26.211'
5065	499935.202	513636.657	34.317	LOG	143+50.00	26.082'
5066	499946.591	513617.082	34.315	RCP	143+73.48	25.940'
5067	499954.208	513604.709	34.314	VPI	143+88.54	25.830'
5068	499957.974	513598.791	34.313	VPI	143+95.81	25.775'
5069	499967.072	513584.99	34.314	ACP	144+12.94	25.637'
5070	499973.666	513575.393	34.311	LOG	144+25.00	25.532'
5071	499976.479	513571.397	34.31	VPI	144+30.06	25.486'
5072	499980.554	513565.705	34.31	VPI	144+37.31	25.418'
5073	499987.815	513555.84	34.311	LOG	144+50.00	25.294'
5074	500002.606	513536.756	34.377	LOG	144+75.00	25.030'
5075	500014.676	513521.945	34.424	PCC	144+94.77	24.705'
5076	500017.889	513518.044	34.437	LOG	145+00.00	24.560'
5077	500033.658	513499.66	34.502	LOG	145+25.00	23.861'
5078	500050.093	513481.736	34.526	LOG	145+50.00	23.212'
5079	500067.176	513464.304	34.461	LOG	145+75.00	22.696'
5080	500078.194	513453.654	34.418	PI	145+90.65	22.479'
5081	500084.963	513447.476	34.39	LOG	146+00.00	22.507'
5082	500103.264	513431.095	34.315	LOG	146+25.00	22.477'
5083	500112.891	513422.749	34.276	PI	146+37.94	22.486'
5084	500121.913	513414.997	34.241	LOG	146+50.00	22.450'
5085	500140.838	513399.109	34.167	LOG	146+75.00	22.404'
5086	500160.054	513383.459	34.241	LOG	147+00.00	22.445'
5087	500166.083	513378.641	34.264	PI	147+07.77	22.485'
5088	500171.229	513374.894	34.277	VPI	147+14.17	22.791'
5089	500176.893	513370.77	34.291	VPI	147+21.20	23.116'
5090	500191.414	513359.18	34.347	ACP	147+39.85	23.110'
5091	500205.934	513347.59	34.404	VPI	147+58.46	23.065'
5092	500211.366	513343.22	34.426	VPI	147+65.43	23.018'
5093	500219.122	513337.596	34.446	LOG	147+75.00	23.434'
5094	500239.052	513322.494	34.51	LOG	148+00.00	23.991'
5095	499913.954	513597.655	35.837	RCP	143+73.02	-12.038'
5096	499920.773	513601.838	35.514	RCP	143+73.01	-4.038'
5097	499857.128	513516.114	32.88	BOW, TIE IN	144+08.03	-103.998'
5098	499910.262	513495.893	34.56	BOW, TIE IN	144+50.43	-72.726'
5099	499968.066	513605.283	34.137	AMP	143+95.91	37.775'
5100	499987.661	513576.378	33.886	AMP	144+32.71	37.462'
5101	500067.955	513369.992	34.121	AMP	146+38.28	-46.813'
5102	500087.334	513352.969	34.139	AMP	146+63.39	-47.275'
5103	500193.389	513380.234	32.798	AMP	147+28.22	40.807'
5104	500213.895	513368.861	32.664	AMP	147+51.46	44.675'
6001	500231.586	513272.862	34.674	LOG	148+25.00	-19.530'
6002	500243.35	513264.743	34.736	PI	148+39.26	-18.577'
6003	500251.599	513259.05	34.78	PI	148+49.26	-17.910'
6004	500271.769	513243.064	34.857	LOG	148+75.00	-17.895'
6005	500291.399	513227.507	34.932	LOG	149+00.05	-17.881'
6006	500310.955	513212.008	34.858	LOG	149+25.00	-17.867'
6007	500329.973	513196.936	34.785	PI	149+49.27	-17.853'
6008	500341.146	513187.209	34.727	RCP	149+64.06	-18.528'
6009	500349.492	513180.134	34.687	LOG	149+75.00	-18.882'
6010	500368.277	513163.589	34.587	LOG	150+00.00	-20.167'
6011	500387.153	513147.156	34.489	LOG	150+25.00	-21.307'
6012	500406.038	513130.737	34.391	PI	150+50.00	-22.430'
6013	500415.041	513123.505	34.355	RCP	150+61.55	-22.500'
6014	500425.579	513115.143	34.315	LOG	150+75.00	-22.500'
6015	500445.163	513099.604	34.24	LOG	151+00.00	-22.500'

LEGEND:

RCP	=	RAMP CENTER POINT
CI	=	CENTER ISLAND
QP	=	QUARTER POINT
HP	=	HALF POINT
VPI	=	VERTICAL POINT OF INTERSECTION
PI	=	POINT OF INT.
PC	=	POINT OF CURVATURE
PT	=	POINT OF TANGENT
PRC	=	POINT OF REVERSE CURVE
PCC	=	POINT OF COMPOUND CURVE
LOG	=	LIP OF GUTTER (PTS @ 25' INTERVALS)
EOP	=	EDGE OF PAVEMENT
TIE IN	=	MATCH EXIST POINT
BOW	=	BACK OF WALK

STATE OF ALASKA 49TH
JOHN F. RINGERT CE 11096
REGISTERED PROFESSIONAL ENGINEER
7/31/2020

POINT TABLES 7

PLANS DEVELOPED BY: KITTELSON & ASSOCIATES, INC. CERT. OF AUTHORIZATION NO.: 254741, 851 SW 6TH AVE. SUITE 600, PORTLAND, OR 97204, (503) 228-5230
H:\20\20487 - Glacier Highway - Juneau Traffic Design\design_CD\68124_G_GRADE-G-16 Thu, Jul/30/20 12:37pm

NO.	DATE	REVISION

STATE	PROJECT DESIGNATION	YEAR	SHEET NO.	TOTAL SHEETS
ALASKA	TEA-0955(016)/Z68124	2020	G-17	235

Record Drawings have been reviewed by the Project Engineer, and represent to the best of my knowledge, the project as constructed.

PE Dillon Tomaro 2/4/25

Number	Northing (ft)	Easting (ft)	Elevation (ft)	Description	Station	Offset
6016	500464.747	513084.065	34.165	LOG	151+25.00	-22.500'
6017	500484.331	513068.526	33.957	LOG	151+50.00	-22.500'
6018	500503.915	513052.986	33.749	LOG	151+75.00	-22.500'
6019	500523.499	513037.447	33.541	LOG	152+00.00	-22.500'
6020	500535.108	513028.236	33.417	PI	152+14.82	-22.500'
6021	500529.867	513023.459	33.972	BOW	152+13.68	-29.500'
6022	500540.974	513019.25	33.341	LOG	152+25.00	-25.894'
6023	500533.57	513012.298	33.992	BOW	152+23.52	-35.942'
6024	500545.77	512993.607	33.96	BOW	152+44.70	-43.000'
6025	500553.257	513000.432	33.306	PI	152+46.32	-33.000'
6026	500556.141	512998.144	33.275	LOG	152+50.00	-33.000'
6027	500575.725	512982.604	33.067	LOG	152+75.00	-33.000'
6028	500586.576	512961.229	33.536	BOW	152+96.79	-43.000'
6029	500592.016	512969.678	32.894	PI	152+95.80	-33.000'
6030	500595.831	512967.724	32.842	LOG	153+00.00	-32.159'
6031	500618.523	512956.101	32.534	LOG	153+25.00	-27.159'
6032	500639.668	512945.271	32.307	PI	153+48.30	-22.500'
6033	500635.86	512939.357	32.853	BOW	153+48.99	-29.500'
6034	500652.905	512934.769	32.166	PC	153+65.19	-22.500'
6035	500658.364	512928.312	32.047	QP	153+73.48	-24.164'
6036	500660.913	512920.25	31.583	QP	153+80.49	-28.896'
6037	500660.156	512911.828	31.327	QP	153+85.13	-35.963'
6038	500659.992	512911.295	31.318	RCP	153+85.34	-36.483'
6039	500656.211	512904.349	31.112	PT	153+86.69	-44.274'
6040	500644.785	512890.319	30.392	PI	153+86.46	-62.367'
6041	500643.622	512891.266	30.384	PI	153+84.96	-62.348'
6042	500636.67	512879.717	29.746	PI	153+86.69	-75.716'
6043	500647.526	512872.11	29.958	TIE IN	153+99.93	-74.928'
6045	500258.983	513307.391	34.574	LOG	148+25.00	24.548'
6046	500270.395	513298.743	34.611	PI	148+39.32	24.867'
6047	500278.367	513292.702	34.636	LOG	148+49.32	25.090'
6048	500298.497	513276.749	34.713	LOG	148+75.00	25.105'
6049	500318.09	513261.221	34.788	LOG	149+00.00	25.119'
6050	500337.683	513245.692	34.712	LOG	149+25.00	25.133'
6051	500357.275	513230.164	34.637	LOG	149+50.00	25.148'
6052	500360.454	513227.645	34.625	PC	149+54.06	25.150'
6053	500368.939	513222.601	34.571	RCP	149+63.84	26.472'
6054	500373.433	513221.02	34.548	QP	149+68.34	28.027'

Number	Northing (ft)	Easting (ft)	Elevation (ft)	Description	Station	Offset
6055	500387.964	513219.921	34.268	QP	149+80.41	36.198'
6056	500395.419	513221.637	34.081	RCP	149+85.18	42.176'
6057	500401.792	513224.517	33.929	QP	149+88.38	48.394'
6058	500412.773	513234.097	33.512	PT	149+91.03	62.723'
6059	500415.773	513238.001	33.336	LOG, TIE IN	149+90.95	67.647'
6060	500431.275	513231.479	33.365	TIE IN	150+07.15	72.173'
6061	500446.777	513224.958	33.193	PI	150+23.35	76.700'
6062	500434.467	513205.972	33.551	PC	150+25.51	54.176'
6063	500430.183	513196.03	33.752	RCP	150+28.33	43.725'
6064	500429.978	513195.121	33.767	QP	150+28.73	42.886'
6065	500429.718	513183.38	33.959	QP	150+35.83	33.527'
6066	500433.712	513172.335	34.16	QP	150+45.82	27.357'
6067	500441.421	513163.476	34.291	PT	150+57.37	25.209'
6068	500444.674	513160.898	34.302	RCP	150+61.52	25.211'
6069	500454.47	513153.134	34.264	PI	150+74.02	25.218'
6070	500463.363	513146.087	34.344	PI	150+85.36	25.225'
6071	500467.169	513152.002	34.772	BOW	150+84.67	32.224'
6072	500476.647	513139.283	34.353	LOG	151+00.00	28.152'
6073	500506.483	513135.247	35.017	BOW	151+25.88	43.536'
6074	500500.919	513126.851	34.365	PI	151+26.74	33.500'
6075	500519.139	513112.394	34.171	LOG	151+50.00	33.500'
6076	500539.691	513096.086	33.953	PI	151+76.24	33.500'
6077	500547.109	513102.966	34.349	BOW	151+77.77	43.500'
6078	500560.408	513083.34	34.289	BOW	152+00.39	36.392'
6079	500553.665	513075.465	33.608	LOG	152+00.00	26.031'
6081	500564.695	513070.819	33.986	BOW	152+11.53	29.248'
6082	500564.429	513062.416	33.397	PI	152+16.54	22.500'
6083	500571.012	513057.107	33.299	LOG	152+25.00	22.433'
6084	500590.601	513041.574	33.041	LOG	152+50.00	22.441'
6085	500610.144	513025.983	32.979	LOG	152+75.00	22.375'
6086	500629.693	513010.4	32.809	LOG	153+00.00	22.319'
6087	500649.331	512994.928	32.558	LOG	153+25.00	22.405'
6088	500669.699	512978.763	32.367	LOG, TIE IN	153+51.00	22.402'
6089	500677.543	512972.546	32.299	LOG, TIE IN	153+61.01	22.408'
6090	500688.551	512963.915	32.223	LOG	153+75.00	22.489'
6091	500708.158	512948.404	32.067	LOG	154+00.00	22.526'
6180	500560.272	513065.714	33.45	PI	152+11.24	22.500'
6181	500239	513259.274	35.282	BOW	148+39.25	-25.565'

Number	Northing (ft)	Easting (ft)	Elevation (ft)	Description	Station	Offset
6182	500247.863	513254.352	35.362	BOW	148+49.26	-23.912'
6183	500274.743	513304.229	35.156	BOW	148+39.31	31.867'
6184	500282.103	513297.397	35.4	BOW	148+49.32	31.090'
6185	500411.016	513241.657	33.398	BOW, TIE IN	149+84.95	67.554'
6186	500452.649	513221.146	0	PI	150+30.32	77.364'
6187	500639.357	512894.739	28.492	BOW, TIE IN	153+79.46	-62.278'
6188	500673.805	512983.998	32.631	BOW, TIE IN	153+50.97	29.055'
6189	500681.658	512977.856	32.55	BOW, TIE IN	153+60.94	29.125'
6190	500568.633	513067.714	33.73	BOW, TIE IN	152+16.54	29.264'
6500	500658.382	512864.503	29.227	PI	154+13.16	-74.139'
6501	500665.57	512873.827	29.903	PI	154+12.99	-62.367'
6502	500664.395	512874.759	29.962	PI	154+11.49	-62.367'
6503	500672.393	512884.839	30.678	PC	154+11.49	-49.500'
6504	500680.425	512891.655	31.074	QP	154+13.55	-39.168'
6505	500680.953	512891.941	31.09	RCP	154+13.78	-38.616'
6506	500690.455	512894.879	31.28	QP	154+19.40	-30.408'
6507	500700.954	512894.019	31.498	QP	154+28.16	-24.555'
6508	500710.326	512889.207	31.495	PT	154+38.49	-22.500'
6509	500712.283	512887.654	31.471	RCP	154+40.99	-22.500'
6510	500719.339	512882.055	31.384	LOG	154+50.00	-22.500'
6511	500738.923	512866.516	31.138	LOG	154+75.00	-22.500'
6512	500758.507	512850.977	30.891	LOG	155+00.00	-22.500'
6513	500778.091	512835.438	30.645	LOG	155+25.00	-22.500'
6514	500797.675	512819.898	30.399	LOG	155+50.00	-22.500'
6515	500817.259	512804.359	30.153	LOG	155+75.00	-22.500'
6516	500836.843	512788.82	29.906	LOG	156+00.00	-22.500'
6517	500856.427	512773.281	29.66	LOG	156+25.00	-22.500'
6518	500876.011	512757.742	29.34	LOG	156+50.00	-22.500'
6519	500895.595	512742.202	29.02	LOG	156+75.00	-22.500'
6520	500903.523	512735.912	28.89	PT	156+85.12	-22.500'
6521	500915.157	512726.669	28.7	LOG	157+00.00	-22.505'
6522	500934.679	512711.074	28.576	LOG	157+25.12	-22.500'
6523	500953.784	512695.535	28.453	LOG	157+50.00	-22.500'
6524	500972.668	512679.731	28.33	LOG	157+75.00	-22.502'
6525	500991.153	512663.647	28.089	LOG	158+00.00	-22.500'
6526	501009.143	512647.19	27.849	LOG	158+25.00	-22.501'
6527	501026.542	512630.284	27.608	LOG	158+50.00	-22.501'
6528	501043.247	512612.859	27.517	LOG	158+75.00	-22.499'

LEGEND:

RCP	=	RAMP CENTER POINT
CI	=	CENTER ISLAND
QP	=	QUARTER POINT
HP	=	HALF POINT
VPI	=	VERTICAL POINT OF INTERSECTION
PI	=	POINT OF INT.
PC	=	POINT OF CURVATURE
PT	=	POINT OF TANGENT
PRC	=	POINT OF REVERSE CURVE
PCC	=	POINT OF COMPOUND CURVE
LOG	=	LIP OF GUTTER (PTS @ 25' INTERVALS)
EOP	=	EDGE OF PAVEMENT
TIE IN	=	MATCH EXIST POINT
BOW	=	BACK OF WALK

POINT TABLES 8

STATE OF ALASKA 49TH JOHN F. RINGERT CE 11096 REGISTERED PROFESSIONAL ENGINEER 7/31/2020

PLANS DEVELOPED BY: KITTELSON & ASSOCIATES, INC. CERT. OF AUTHORIZATION NO.: 254741, 851 SW 6TH AVE. SUITE 600, PORTLAND, OR 97204, (503) 228-5230
H:\20\20487 - Glacier Highway - Juneau Traffic Design\design_CD\68124_G_GRADE-G-17 Thu, Jul/30/20 12:37pm

NO.	DATE	REVISION

STATE	PROJECT DESIGNATION	YEAR	SHEET NO.	TOTAL SHEETS
ALASKA	TEA-0955(016)/Z68124	2020	G-18	235

Record Drawings have been reviewed by the Project Engineer, and represent to the best of my knowledge, the project as constructed.

PE Dillon Tomaro 2/4/25

Number	Northing (ft)	Easting (ft)	Elevation (ft)	Description	Station	Offset
6529	501049.784	512605.643	27.48	PC	158+85.12	-22.500'
6530	501059.159	512594.842	27.426	LOG	159+00.00	-22.500'
6531	501074.276	512576.165	27.326	LOG	159+25.00	-22.500'
6532	501089.251	512555.895	27.222	RCP	159+51.22	-22.500'
6533	501102.027	512536.944	27.126	LOG	159+75.00	-22.500'
6534	501114.609	512516.474	27.026	LOG	160+00.00	-22.500'
6535	500713.078	512909.506	31.948	PT	154+28.03	-4.888'
6536	500719.343	512904.531	31.87	PI	154+36.03	-4.891'
6537	500725.562	512912.362	31.93	PI	154+36.04	5.109'
6538	500724.776	512912.986	31.939	PC	154+35.03	5.109'
6539	500724.141	512913.203	31.947	PT	154+34.40	4.884'
6540	500714.295	512913.072	32.035	PC	154+26.77	-1.338'
6541	500727.177	512898.309	31.775	PI	154+46.04	-4.896'
6542	500730.281	512895.845	31.736	FOC	154+50.00	-4.897'
6543	500749.858	512880.297	31.489	FOC	154+75.00	-4.908'
6544	500769.435	512864.749	31.243	FOC	155+00.00	-4.919'
6545	500789.012	512849.201	30.996	FOC	155+25.00	-4.930'
6546	500808.589	512833.653	30.75	FOC	155+50.00	-4.941'
6547	500828.167	512818.106	30.503	FOC	155+75.00	-4.952'
6548	500847.744	512802.558	30.257	FOC	156+00.00	-4.963'
6549	500867.321	512787.01	30.011	FOC	156+25.00	-4.974'
6550	500886.898	512771.462	29.69	FOC	156+50.00	-4.985'
6551	500906.475	512755.915	29.37	FOC	156+75.00	-4.996'
6552	500926.047	512740.368	29.05	FOC	157+00.00	-5.005'
6553	500945.651	512724.708	28.926	FOC	157+25.12	-5.000'
6554	500964.909	512709.045	28.803	FOC	157+50.00	-5.000'
6555	500984.016	512693.053	28.68	FOC	157+75.00	-5.002'
6556	501002.793	512676.716	28.556	FOC	158+00.00	-5.000'
6557	501021.136	512659.934	28.432	FOC	158+25.00	-5.001'
6558	501038.948	512642.627	28.308	FOC	158+50.00	-5.001'
6559	501056.115	512624.719	28.217	FOC	158+75.00	-4.999'
6560	501072.521	512606.142	28.126	FOC	159+00.00	-5.000'
6561	501088.113	512586.879	28.026	FOC	159+25.00	-5.000'
6562	501100.66	512570.048	27.942	PI	159+46.18	-5.000'
6563	501108.836	512575.807	28.338	PI	159+46.26	5.000'
6564	501096.02	512593.001	28.42	FOC	159+25.00	5.000'
6565	501080.157	512612.6	28.516	FOC	159+00.00	5.000'
6566	501063.468	512631.497	28.609	FOC	158+75.00	5.001'
6567	501046.036	512649.68	28.701	FOC	158+50.00	4.999'
6568	501027.99	512667.216	28.761	FOC	158+25.00	4.999'
6569	501009.444	512684.183	28.821	FOC	158+00.00	5.000'
6570	500990.501	512700.666	28.879	FOC	157+75.00	4.998'
6571	500971.265	512716.764	28.961	FOC	157+50.00	5.000'
6572	500951.826	512732.574	29.05	FOC	157+25.00	5.000'
6573	500932.27	512748.195	29.151	FOC	157+00.00	4.995'
6574	500912.691	512763.748	29.402	FOC	156+75.00	5.004'
6575	500893.114	512779.296	29.71	FOC	156+50.00	5.015'
6576	500873.537	512794.844	30.01	FOC	156+25.00	5.026'
6577	500853.96	512810.392	30.239	FOC	156+00.00	5.037'
6578	500834.382	512825.939	30.462	FOC	155+75.00	5.048'
6579	500814.805	512841.487	30.708	FOC	155+50.00	5.059'
6580	500795.228	512857.035	30.979	FOC	155+25.00	5.070'
6581	500775.651	512872.583	31.241	FOC	155+00.00	5.081'
6582	500756.073	512888.13	31.522	FOC	154+75.00	5.092'
6583	500736.496	512903.678	31.781	FOC	154+50.00	5.103'
6584	500733.396	512906.14	31.825	PI	154+46.04	5.104'
6585	501108.093	512563.051	27.983	PI	159+56.25	-2.953'
6586	501117.365	512556.585	28.103	PC	159+66.82	1.092'
6587	501120.174	512559.334	28.26	PT	159+66.09	4.954'
6588	501114.633	512567.658	28.302	PI	159+56.18	5.047'
6589	500727.744	512932.869	31.881	LOG	154+25.00	22.530'
6590	500732.877	512928.768	31.824	PI	154+31.57	22.508'
6591	500740.324	512922.841	31.727	RCP	154+41.09	22.493'
6592	500747.778	512916.979	31.593	PI	154+50.57	22.534'
6593	500766.938	512901.823	31.298	LOG	154+75.00	22.571'
6594	500786.496	512886.251	30.897	LOG	155+00.00	22.529'
6595	500806.073	512870.703	30.578	LOG	155+25.00	22.518'
6596	500825.684	512855.198	30.222	LOG	155+50.00	22.562'
6597	500845.283	512839.678	29.974	LOG	155+75.00	22.586'
6598	500864.817	512824.075	29.834	LOG	156+00.00	22.505'
6599	500884.404	512808.539	29.66	LOG	156+25.00	22.509'
6600	500903.932	512792.93	29.431	LOG	156+50.00	22.420'
6601	500923.565	512777.453	29.163	LOG	156+75.00	22.499'
6602	500934.925	512768.369	29.101	PI	156+89.54	22.444'
6603	500943.059	512761.766	29.154	LOG	157+00.00	22.332'
6604	500946.97	512758.623	29.152	PI	157+05.00	22.307'
6605	500962.666	512746.045	29.13	LOG	157+25.00	22.291'
6606	500982.338	512730.21	29.16	LOG	157+50.00	22.418'
6607	501001.767	512713.891	29.225	LOG	157+75.00	22.371'
6608	501020.843	512696.983	29.271	LOG	158+00.00	22.140'
6609	501039.634	512679.588	29.313	LOG	158+25.00	21.989'
6610	501057.897	512661.482	29.349	LOG	158+50.00	21.731'
6611	501075.701	512642.771	29.245	LOG	158+75.00	21.637'
6612	501093.015	512623.474	29.154	LOG	159+00.00	21.840'
6613	501109.529	512603.462	29.081	LOG	159+25.00	22.086'
6614	501120.651	512589.221	29.038	PI	159+42.40	22.432'
6615	501122.492	512586.676	29.028	PC	159+45.42	22.432'
6616	501126.607	512581.789	29.028	RCP	159+51.55	22.952'
6617	501134.552	512575.448	28.951	QP	159+60.89	25.880'
6618	501150.004	512569.724	28.477	QP	159+73.54	35.588'
6619	501151.449	512569.52	28.456	RCP	159+74.44	36.690'
6620	501166.469	512570.385	28.015	QP	159+81.28	49.819'
6621	501181.412	512577.329	27.2	PT	159+83.15	66.168'
6622	501186.48	512581.043	27.085	PI	159+82.74	72.433'
6623	500669.878	512870.408	30.478	BOW	154+18.49	-62.367'
6624	500723.259	512901.421	31.823	RCP	154+41.03	-4.893'
6625	500729.475	512909.254	31.879	RCP	154+41.03	5.107'
6626	501111.734	512571.733	28.319	RCP	159+51.22	5.002'
6627	501104.376	512566.55	27.962	RCP	159+51.22	-3.998'
6628	501160.796	512576.47	28.719	BOW	159+73.73	48.313'
6629	501126.329	512593.352	29.347	BOW, TIE IN	159+42.40	29.454'
6630	501091.861	512634.707	29.865	BOW, TIE IN	158+91.11	28.284'
6631	501088.514	512638.422	29.918	BOW, TIE IN	158+86.34	28.224'
6632	500951.2	512763.787	29.582	BOW, TIE IN	157+05.09	28.982'
6633	500939.291	512773.644	29.568	BOW, TIE IN	156+89.68	29.290'
6634	500751.936	512922.203	31.901	BOW, TIE IN	154+50.58	29.211'
6635	500737.072	512934.037	32.091	BOW, TIE IN	154+31.58	29.242'
6636	501086.929	512630.432	29.285	LOG, TIE IN	158+91.09	21.757'
6637	501083.597	512634.162	29.292	LOG, TIE IN	158+86.27	21.719'
7001	501126.297	512495.48	26.926	LOG	160+25.00	-22.500'
7002	501137.071	512474.002	26.826	LOG	160+50.00	-22.500'
7003	501146.908	512452.079	26.726	LOG	160+75.00	-22.500'
7004	501155.792	512429.754	26.626	LOG	161+00.00	-22.500'
7005	501163.705	512407.066	26.701	LOG	161+25.00	-22.500'
7006	501170.634	512384.058	26.776	LOG	161+50.00	-22.500'
7007	501176.565	512360.773	26.851	LOG	161+75.00	-22.500'
7008	501181.486	512337.255	26.926	LOG	162+00.00	-22.500'
7009	501185.39	512313.545	27.001	LOG	162+25.00	-22.500'
7010	501187.948	512292.848	27.066	PCC	162+46.70	-22.500'
7011	501190.152	512265.658	27.024	LOG	162+75.00	-22.502'
7012	501191.155	512241.452	26.972	LOG	163+00.00	-22.499'
7013	501191.388	512217.104	26.92	LOG	163+25.00	-22.500'

LEGEND:

RCP	=	RAMP CENTER POINT
CI	=	CENTER ISLAND
QP	=	QUARTER POINT
HP	=	HALF POINT
VPI	=	VERTICAL POINT OF INTERSECTION
PI	=	POINT OF INT.
PC	=	POINT OF CURVATURE
PT	=	POINT OF TANGENT
PRC	=	POINT OF REVERSE CURVE
PCC	=	POINT OF COMPOUND CURVE
LOG	=	LIP OF GUTTER (PTS @ 25' INTERVALS)
EOP	=	EDGE OF PAVEMENT
TIE IN	=	MATCH EXIST POINT
BOW	=	BACK OF WALK

POINT TABLES 9

STATE OF ALASKA 49TH JOHN F. RINGERT CE 11096 REGISTERED PROFESSIONAL ENGINEER 7/31/2020

PLANS DEVELOPED BY: KITTELSON & ASSOCIATES, INC. CERT. OF AUTHORIZATION NO.: 254741, 851 SW 6TH AVE. SUITE 600, PORTLAND, OR 97204, (503) 228-5230
H:\20\20487 - Glacier Highway - Juneau Traffic Design\design_CD\68124_G_GRADE-G-18 Thu, Jul/30/20 12:37pm

NO.	DATE	REVISION

STATE	PROJECT DESIGNATION	YEAR	SHEET NO.	TOTAL SHEETS
ALASKA	TEA-0955(016)/Z68124	2020	G-19	235

Record Drawings have been reviewed by the Project Engineer, and represent to the best of my knowledge, the project as constructed.

PE Dillon Tomaro 2/4/25

Number	Northing (ft)	Easting (ft)	Elevation (ft)	Description	Station	Offset
7014	501190.981	512192.638	26.845	LOG	163+50.00	-22.502'
7015	501190.064	512168.064	26.77	LOG	163+75.00	-22.499'
7016	501188.756	512143.385	26.695	LOG	164+00.00	-22.501'
7017	501187.19	512118.601	26.62	LOG	164+25.00	-22.506'
7018	501185.514	512093.703	26.545	LOG	164+50.00	-22.496'
7019	501184.632	512080.847	26.506	PI	164+62.89	-22.500'
7020	501184.271	512075.552	26.49	PI	164+68.19	-22.500'
7021	501170.912	512041.383	26.549	PI	165+03.19	-33.500'
7022	501169.426	512019.627	26.48	LOG	165+25.00	-33.500'
7023	501167.54	511992.003	26.397	PI	165+52.69	-33.500'
7024	501170.471	511969.439	26.241	LOG	165+75.00	-29.038'
7025	501173.742	511944.156	26.147	LOG	166+00.00	-24.053'
7026	501202.297	512318.896	27.693	PRC	162+22.06	-5.000'
7027	501205.684	512291.412	27.776	FOC	162+50.00	-5.000'
7028	501207.622	512266.688	27.608	FOC	162+75.00	-5.002'
7029	501208.649	512241.882	27.439	FOC	163+00.00	-4.999'
7030	501208.888	512217.028	27.27	FOC	163+25.00	-5.000'
7031	501208.474	512192.15	27.195	FOC	163+50.00	-5.002'
7032	501207.545	512167.258	27.12	FOC	163+75.00	-4.999'
7033	501206.226	512142.357	27.045	FOC	164+00.00	-5.001'
7034	501204.652	512117.444	26.97	FOC	164+25.00	-5.006'
7035	501203.195	512095.805	26.905	PRC	164+46.70	-5.000'
7036	501213.171	512095.123	26.943	PCC	164+46.70	5.000'
7037	501214.63	512116.783	27.037	FOC	164+25.00	4.994'
7038	501216.209	512141.77	27.145	FOC	164+00.00	4.999'
7039	501217.535	512166.798	27.253	FOC	163+75.00	5.001'
7040	501218.47	512191.871	27.362	FOC	163+50.00	4.998'
7041	501218.888	512216.985	27.47	FOC	163+25.00	5.000'
7042	501218.646	512242.127	27.701	FOC	163+00.00	5.001'
7043	501217.604	512267.276	27.932	FOC	162+75.00	4.998'
7044	501215.636	512292.396	28.163	FOC	162+50.00	5.000'
7045	501212.19	512320.358	28.086	PCC	162+22.06	5.000'
7046	501199.572	512564.002	27.234	LOG	160+01.68	74.837'
7047	501185.811	512553.43	27.843	PC	160+03.71	57.632'
7048	501176.087	512542.865	28.326	QP	160+07.70	43.944'
7049	501170.49	512529.642	28.463	QP	160+15.97	32.611'
7050	501169.842	512526.218	28.528	RCP	160+18.52	30.401'
7051	501169.675	512515.306	28.729	QP	160+27.64	25.120'
7052	501173.736	512501.533	28.662	PRC	160+41.20	22.500'
7053	501177.72	512493.306	28.681	LOG	160+50.00	22.500'
7054	501188.351	512469.614	28.598	LOG	160+75.00	22.500'

Number	Northing (ft)	Easting (ft)	Elevation (ft)	Description	Station	Offset
7055	501197.952	512445.486	28.514	LOG	161+00.00	22.500'
7056	501206.504	512420.967	28.564	LOG	161+25.00	22.500'
7057	501213.992	512396.102	28.614	LOG	161+50.00	22.500'
7058	501220.402	512370.938	28.664	LOG	161+75.00	22.500'
7059	501225.721	512345.521	28.714	LOG	162+00.00	22.500'
7060	501229.94	512319.898	28.764	LOG	162+25.00	22.500'
7061	501232.704	512297.529	28.808	PCC	162+46.70	22.500'
7062	501235.074	512268.306	28.483	LOG	162+75.00	22.498'
7063	501236.141	512242.557	28.151	LOG	163+00.00	22.501'
7064	501236.388	512216.909	27.82	LOG	163+25.00	22.500'
7065	501235.963	512191.383	27.595	LOG	163+50.00	22.498'
7066	501235.016	512165.993	27.37	LOG	163+75.00	22.501'
7067	501233.679	512140.742	27.145	LOG	164+00.00	22.499'
7068	501232.092	512115.626	26.92	LOG	164+25.00	22.494'
7069	501230.631	512093.931	26.725	PT	164+46.70	22.500'
7070	501228.703	512065.695	26.47	LOG	164+75.00	22.500'
7071	501226.999	512040.753	26.395	LOG	165+00.00	22.500'
7072	501225.296	512015.811	26.32	LOG	165+25.00	22.500'
7073	501223.593	511990.869	26.245	LOG	165+50.00	22.500'
7074	501221.889	511965.928	26.17	LOG	165+75.00	22.500'
7075	501220.186	511940.985	26.176	LOG	166+00.00	22.500'
7076	501177.36	512077.101	27.038	BOW	164+67.12	-29.500'
7077	501169.141	512064.317	27.132	BOW	164+80.43	-36.829'
7078	501161.04	512043.595	27.203	BOW	165+01.66	-43.500'
7079	501157.495	511991.696	27.049	BOW	165+53.68	-43.500'
7080	501179.008	512533.388	28.663	BOW, TIE IN	160+16.73	41.882'
7501	501167.736	511936.166	26.746	BOW	166+08.38	-29.500'
7502	501174.767	511936.381	26.199	PI	166+07.69	-22.500'
7503	501174.534	511932.975	26.21	PC	166+11.10	-22.500'
7504	501172.455	511925.029	26.203	QP	166+19.17	-24.033'
7505	501160.664	511914.011	26.054	QP	166+30.97	-35.046'
7506	501159.721	511913.663	26.034	RCP	166+31.38	-35.963'
7507	501152.596	511912.474	25.898	PT	166+33.05	-42.991'
7508	501144.686	511912.466	25.741	PI	166+33.60	-50.881'
7509	501144.694	511896.209	25.542	TIE IN	166+49.82	-49.766'
7510	501144.705	511882.47	25.794	PI	166+63.52	-48.819'
7511	501151.078	511882.629	25.581	PC	166+62.93	-42.471'
7512	501159.255	511880.744	25.894	RCP	166+64.25	-34.185'

Number	Northing (ft)	Easting (ft)	Elevation (ft)	Description	Station	Offset
7513	501160.36	511880.121	25.922	HP	166+64.80	-33.040'
7514	501166.797	511872.978	26.174	PCC	166+71.49	-26.131'
7515	501168.805	511867.038	26.384	HP	166+77.28	-23.724'
7516	501169.481	511858.973	26.432	PT	166+85.28	-22.500'
7517	501169.344	511856.977	26.438	RCP	166+87.28	-22.500'
7518	501168.478	511844.284	26.476	LOG	167+00.00	-22.500'
7519	501166.774	511819.342	26.551	LOG	167+25.00	-22.500'
7520	501165.071	511794.4	26.626	LOG	167+50.00	-22.500'
7521	501163.368	511769.458	26.701	LOG	167+75.00	-22.500'
7522	501161.664	511744.516	26.776	LOG	168+00.00	-22.500'
7523	501159.961	511719.574	26.701	LOG	168+25.00	-22.500'
7524	501158.258	511694.632	26.626	LOG	168+50.00	-22.500'
7525	501156.555	511669.691	26.551	LOG	168+75.00	-22.500'
7526	501154.851	511644.749	26.476	LOG	169+00.00	-22.500'
7527	501153.148	511619.807	26.551	LOG	169+25.00	-22.500'
7528	501151.445	511594.865	26.626	LOG	169+50.00	-22.500'
7529	501149.741	511569.923	26.701	LOG	169+75.00	-22.500'
7530	501148.038	511544.981	26.776	LOG	170+00.00	-22.500'
7531	501146.335	511520.039	26.651	LOG	170+25.00	-22.500'
7532	501144.632	511495.097	26.526	LOG	170+50.00	-22.500'
7533	501142.928	511470.155	26.401	LOG	170+75.00	-22.500'
7534	501141.225	511445.213	26.276	LOG	171+00.00	-22.500'
7535	501139.522	511420.271	26.151	LOG	171+25.00	-22.500'
7536	501137.818	511395.33	26.026	LOG	171+50.00	-22.500'
7537	501136.115	511370.388	26.101	LOG	171+75.00	-22.500'
7538	501134.412	511345.445	26.176	LOG	172+00.00	-22.500'
7539	501187.875	511871.879	26.739	PT	166+71.15	-5.028'
7540	501187.147	511860.773	26.773	PI	166+82.28	-4.997'
7541	501197.12	511861.529	26.771	PI	166+80.84	4.901'
7542	501191.841	511872.089	26.817	PC	166+70.67	-1.085'
7543	501186.463	511850.793	26.803	PI	166+92.28	-5.000'
7544	501185.937	511843.092	26.826	EOP	167+00.00	-5.000'
7545	501184.234	511818.15	26.901	EOP	167+25.00	-5.000'
7546	501182.53	511793.208	26.976	EOP	167+50.00	-5.000'
7547	501180.827	511768.266	27.051	EOP	167+75.00	-5.000'
7548	501179.124	511743.324	27.126	EOP	168+00.00	-5.000'
7549	501177.42	511718.382	27.051	EOP	168+25.00	-5.000'
7550	501175.717	511693.44	26.976	EOP	168+50.00	-5.000'

LEGEND:

RCP	=	RAMP CENTER POINT
CI	=	CENTER ISLAND
QP	=	QUARTER POINT
HP	=	HALF POINT
VPI	=	VERTICAL POINT OF INTERSECTION
PI	=	POINT OF INT.
PC	=	POINT OF CURVATURE
PT	=	POINT OF TANGENT
PRC	=	POINT OF REVERSE CURVE
PCC	=	POINT OF COMPOUND CURVE
LOG	=	LIP OF GUTTER (PTS @ 25' INTERVALS)
EOP	=	EDGE OF PAVEMENT
TIE IN	=	MATCH EXIST POINT
BOW	=	BACK OF WALK

POINT TABLES 10

STATE OF ALASKA 49TH JOHN F. RINGERT CE 11096 REGISTERED PROFESSIONAL ENGINEER

7/31/2020

PLANS DEVELOPED BY: KITTELSON & ASSOCIATES, INC. CERT. OF AUTHORIZATION NO.: 254741, 851 SW 6TH AVE. SUITE 600, PORTLAND, OR 97204, (503) 228-5230
H:\20\20487 - Glacier Highway - Juneau Traffic Design\design_CD\68124_G_GRADE-G-19 Thu, Jul/30/20 12:37pm

NO.	DATE	REVISION

STATE	PROJECT DESIGNATION	YEAR	SHEET NO.	TOTAL SHEETS
ALASKA	TEA-0955(016)/Z68124	2020	G-20	235

Record Drawings have been reviewed by the Project Engineer, and represent to the best of my knowledge, the project as constructed.

PE Dillon Tomaro 2/4/25

Number	Northing (ft)	Easting (ft)	Elevation (ft)	Description	Station	Offset
7551	501174.014	511668.498	26.901	EOP	168+75.00	-5.000'
7552	501172.311	511643.556	26.826	EOP	169+00.00	-5.000'
7553	501170.607	511618.614	26.901	EOP	169+25.00	-5.000'
7554	501168.904	511593.672	26.976	EOP	169+50.00	-5.000'
7555	501167.201	511568.731	27.051	EOP	169+75.00	-5.000'
7556	501165.497	511543.789	27.126	EOP	170+00.00	-5.000'
7557	501163.794	511518.847	27.001	EOP	170+25.00	-5.000'
7558	501162.091	511493.905	26.876	EOP	170+50.00	-5.000'
7559	501160.388	511468.963	26.751	EOP	170+75.00	-5.000'
7560	501158.684	511444.021	26.626	EOP	171+00.00	-5.000'
7561	501156.981	511419.079	26.501	EOP	171+25.00	-5.000'
7562	501155.278	511394.137	26.376	EOP	171+50.00	-5.000'
7563	501153.574	511369.195	26.451	EOP	171+75.00	-5.000'
7564	501151.871	511344.253	26.526	EOP	172+00.00	-5.000'
7566	501196.44	511850.115	26.803	PI	166+92.28	5.000'
7567	501195.914	511842.41	26.826	PC	167+00.00	5.000'
7568	501194.21	511817.468	26.901	EOP	167+25.00	5.000'
7569	501192.507	511792.526	26.976	EOP	167+50.00	5.000'
7570	501190.804	511767.585	27.051	EOP	167+75.00	5.000'
7571	501189.1	511742.643	27.126	EOP	168+00.00	5.000'
7572	501187.397	511717.701	27.051	EOP	168+25.00	5.000'
7573	501185.694	511692.759	26.976	EOP	168+50.00	5.000'
7574	501183.991	511667.817	26.901	EOP	168+75.00	5.000'
7575	501182.287	511642.875	26.826	EOP	169+00.00	5.000'
7576	501180.584	511617.933	26.901	EOP	169+25.00	5.000'
7577	501178.881	511592.991	26.976	EOP	169+50.00	5.000'
7578	501177.177	511568.049	27.051	EOP	169+75.00	5.000'
7579	501175.474	511543.107	27.126	EOP	170+00.00	5.000'
7580	501173.771	511518.165	27.001	EOP	170+25.00	5.000'
7581	501172.068	511493.224	26.876	EOP	170+50.00	5.000'
7582	501170.364	511468.282	26.751	EOP	170+75.00	5.000'
7583	501168.661	511443.34	26.626	EOP	171+00.00	5.000'
7584	501166.958	511418.399	26.501	EOP	171+25.00	5.000'
7585	501165.255	511393.457	26.376	EOP	171+50.00	5.000'
7586	501163.551	511368.515	26.451	EOP	171+75.00	5.000'
7587	501161.848	511343.573	26.526	EOP	172+00.00	5.000'
7588	501218.483	511916.044	26.251	LOG	166+25.00	22.500'
7589	501216.78	511891.102	26.326	LOG	166+50.00	22.500'
7590	501215.076	511866.16	26.401	LOG	166+75.00	22.500'
7591	501214.24	511853.912	26.438	RCP	166+87.28	22.500'
7592	501213.545	511843.737	26.469	PI	166+97.47	22.500'
7593	501217.162	511815.901	26.601	LOG	167+25.00	28.005'
7594	501220.442	511790.619	26.776	PI	167+50.00	33.000'
7595	501218.739	511765.677	26.851	LOG	167+75.00	33.000'

Number	Northing (ft)	Easting (ft)	Elevation (ft)	Description	Station	Offset
7596	501217.035	511740.735	26.926	LOG	168+00.00	33.000'
7597	501216.255	511729.309	26.892	PI	168+11.45	33.000'
7598	501210.827	511716.101	26.761	LOG	168+25.00	28.484'
7599	501203.633	511698.598	26.647	PI	168+42.95	22.500'
7600	501203.153	511691.567	26.626	LOG	168+50.00	22.500'
7601	501201.45	511666.625	26.551	LOG	168+75.00	22.500'
7602	501199.747	511641.683	26.476	LOG	169+00.00	22.500'
7603	501198.043	511616.741	26.551	LOG	169+25.00	22.500'
7604	501196.34	511591.799	26.626	LOG	169+50.00	22.500'
7605	501194.637	511566.857	26.701	LOG	169+75.00	22.500'
7606	501192.934	511541.915	26.776	LOG	170+00.00	22.500'
7607	501191.23	511516.973	26.651	LOG	170+25.00	22.500'
7608	501189.527	511492.031	26.526	LOG	170+50.00	22.500'
7609	501187.824	511467.089	26.401	LOG	170+75.00	22.500'
7610	501186.12	511442.147	26.276	LOG	171+00.00	22.500'
7611	501184.417	511417.206	26.151	LOG	171+25.00	22.500'
7612	501183.677	511406.368	26.097	PC	171+35.86	22.500'
7613	501184.999	511396.113	25.979	QP	171+46.00	24.517'
7614	501190.144	511387.144	25.743	VPI	171+54.60	30.262'
7615	501198.33	511380.827	25.537	QP	171+60.35	38.859'
7616	501208.31	511378.124	25.32	PI	171+62.36	49.000'
7617	501207.509	511366.401	25.361	TIE IN	171+74.11	49.000'
7618	501206.709	511354.678	25.402	PI	171+85.86	49.000'
7619	501196.454	511353.357	25.627	QP	171+87.88	38.859'
7620	501187.485	511348.211	25.846	RCP	171+93.62	30.262'
7621	501220.576	511843.952	27.012	BOW	166+96.78	29.500'
7622	501230.488	511790.95	27.422	BOW	167+48.98	43.000'
7623	501226.121	511727.009	27.535	BOW	168+13.08	43.000'
7624	501217.637	511706.364	27.33	BOW	168+34.25	35.942'
7625	501210.54	511696.988	27.22	BOW	168+44.09	29.500'
7626	501144.683	511919.47	26.338	BOW	166+26.61	-51.362'
7627	501144.721	511876.597	25.801	BOW, TIE IN	166+69.38	-48.403'
7628	501186.803	511855.771	26.788	RCP	166+87.29	-5.000'
7629	501196.78	511855.104	26.788	RCP	166+87.28	5.000'
7630	501197.179	511389.971	25.705	BOW	171+51.30	37.088'
7631	501194.07	511344.454	25.807	BOW	171+96.92	37.088'
8001	501132.709	511320.504	26.251	LOG	172+25.00	-22.500'
8002	501131.005	511295.562	26.326	LOG	172+50.00	-22.500'

Number	Northing (ft)	Easting (ft)	Elevation (ft)	Description	Station	Offset
8003	501129.302	511270.62	26.401	LOG	172+75.00	-22.500'
8004	501127.599	511245.678	26.476	LOG	173+00.00	-22.500'
8005	501126.716	511232.753	26.515	VPI	173+12.96	-22.500'
8006	501126.307	511226.767	26.533	VPI	173+18.96	-22.500'
8007	501125.49	511214.795	26.569	LOG	173+30.96	-22.500'
8008	501124.672	511202.823	26.605	VPI	173+42.96	-22.500'
8009	501124.263	511196.837	26.623	VPI	173+48.96	-22.500'
8010	501122.489	511170.852	26.729	LOG	173+75.00	-22.500'
8011	501120.786	511145.91	26.989	LOG	174+00.00	-22.500'
8012	501120.308	511138.921	27.061	VPI	174+07.01	-22.500'
8013	501119.899	511132.935	27.123	VPI	174+13.01	-22.500'
8014	501118.946	511118.967	27.268	LOG	174+27.01	-22.500'
8015	501118.264	511108.99	27.383	VPI	174+37.04	-22.500'
8016	501117.856	511103.004	27.446	VPI	174+43.33	-22.452'
8017	501117.745	511101.385	27.451	PC	174+45.03	-22.425'
8018	501118.072	511098.078	27.494	RCP	174+48.45	-21.803'
8019	501118.853	511096.082	27.512	PT	174+50.46	-20.835'
8020	501121.127	511091.719	27.565	PC	174+54.74	-18.130'
8021	501122.236	511086.416	27.621	PT	174+60.08	-16.436'
8022	501121.98	511082.676	27.66	PI	174+63.95	-16.237'
8023	501118.588	511053.692	27.909	QP	174+93.98	-15.077'
8024	501112.413	511025.17	28.14	QP	175+23.15	-16.032'
8025	501103.515	510997.378	28.371	QP	175+51.51	-19.846'
8026	501099.685	510987.661	28.379	RCP	175+59.76	-22.604'
8027	501091.976	510970.574	28.267	PCC	175+77.19	-29.250'
8028	501081.565	510953.744	28.148	QP	175+94.63	-38.611'
8029	501068.044	510939.293	28.029	QP	176+09.88	-51.222'
8030	501051.941	510927.788	27.91	QP	176+22.35	-66.590'
8031	501034.449	510919.869	27.794	RCP	176+31.33	-83.564'
8032	501033.888	510919.679	27.791	PT	176+31.55	-84.112'
8033	501028.05	510917.725	27.73	LOG	176+33.86	-89.820'
8034	501010.518	510911.856	27.527	PC	176+40.79	-106.959'
8035	500997.342	510906.371	27.37	QP	176+47.07	-119.775'
8036	500985.08	510899.066	27.213	QP	100+18.85	-5,364.977'
8037	500973.984	510890.09	27.055	QP	176+50.40	-143.107'
8038	500964.278	510879.626	27.08	PT	176+60.47	-153.216'
8039	500954.747	510867.752	27.157	LOG	176+71.96	-163.206'

LEGEND:

RCP	=	RAMP CENTER POINT
CI	=	CENTER ISLAND
QP	=	QUARTER POINT
HP	=	HALF POINT
VPI	=	VERTICAL POINT OF INTERSECTION
PI	=	POINT OF INT.
PC	=	POINT OF CURVATURE
PT	=	POINT OF TANGENT
PRC	=	POINT OF REVERSE CURVE
PCC	=	POINT OF COMPOUND CURVE
LOG	=	LIP OF GUTTER (PTS @ 25' INTERVALS)
EOP	=	EDGE OF PAVEMENT
TIE IN	=	MATCH EXIST POINT
BOW	=	BACK OF WALK

POINT TABLES 11

STATE OF ALASKA 49TH JOHN F. RINGERT CE 11096 REGISTERED PROFESSIONAL ENGINEER 7/31/2020

PLANS DEVELOPED BY: KITTELSON & ASSOCIATES, INC. CERT. OF AUTHORIZATION NO.: 254741, 851 SW 6TH AVE, SUITE 600, PORTLAND, OR 97204, (503) 228-5230
H:\20\20487 - Glacier Highway - Juneau Traffic Design\design_CD\68124_G_GRADE-G-20 Thu, Jul/30/20 12:37pm

NO.	DATE	REVISION

STATE	PROJECT DESIGNATION	YEAR	SHEET NO.	TOTAL SHEETS
ALASKA	TEA-0955(016)/Z68124	2020	G-21	235

Record Drawings have been reviewed by the Project Engineer, and represent to the best of my knowledge, the project as constructed.

PE Dillon Tomaro 2/4/25

Number	Northing (ft)	Easting (ft)	Elevation (ft)	Description	Station	Offset
8040	500943.061	510853.193	27.25	LOG	176+86.05	-175.456'
8041	500931.374	510838.633	36.068	PC	177+00.14	-187.706'
8042	500926.454	510833.776	28.097	QP	177+04.80	-192.813'
8043	500920.553	510830.175	28.316	QP	177+08.17	-198.851'
8044	500913.984	510828.019	30.497	QP	177+10.06	-205.500'
8045	500907.096	510827.425	28.269	PI	177+10.38	-212.406'
8046	501181.168	511340.026	26.106	QP	172+02.22	24.517'
8047	501178.465	511330.045	26.213	PT	172+12.36	22.500'
8048	501177.604	511317.438	26.251	LOG	172+25.00	22.500'
8049	501175.901	511292.496	26.326	LOG	172+50.00	22.500'
8050	501174.197	511267.554	26.401	LOG	172+75.00	22.500'
8051	501172.494	511242.612	26.476	LOG	173+00.00	22.500'
8052	501172.02	511235.675	26.497	VPI	173+06.95	22.500'
8053	501171.612	511229.689	26.515	VPI	173+12.95	22.500'
8054	501170.791	511217.67	26.551	LOG	173+25.00	22.500'
8055	501169.976	511205.745	26.587	VPI	173+36.95	22.500'
8056	501169.568	511199.759	26.605	VPI	173+42.95	22.500'
8057	501169.088	511192.728	26.626	LOG	173+50.00	22.500'
8058	501167.384	511167.786	26.737	LOG	173+75.00	22.500'
8059	501165.681	511142.845	26.962	LOG	174+00.00	22.500'
8060	501163.852	511116.062	27.203	PC	174+26.85	22.500'
8061	501163.084	511112.844	27.229	RCP	174+30.11	21.953'
8062	501162.033	511110.959	27.259	PT	174+32.06	21.033'
8063	501159.187	511106.945	27.303	PC	174+36.26	18.467'
8064	501157.368	511101.843	27.37	PT	174+41.30	17.026'
8065	501157.113	511098.103	27.379	PC	174+44.92	17.079'
8066	501155.96	511084.118	27.473	QP	174+58.46	17.329'
8067	501154.416	511070.172	27.599	QP	174+72.00	17.579'
8068	501152.481	511056.275	27.726	QP	174+85.54	17.829'
8069	501150.157	511042.437	27.853	PT	174+99.39	18.000'
8070	501145.56	511017.238	28.084	LOG	175+25.00	18.000'
8071	501142.668	511001.387	28.229	PC	175+41.11	18.000'
8072	501141.566	510982.802	28.397	RCP	175+61.95	19.497'
8073	501141.627	510981.898	28.405	PCC	175+62.85	19.614'
8074	501145.52	510962.774	28.453	PCC	175+81.70	24.670'
8075	501149.297	510954.641	28.4	QP	175+89.59	28.939'
8076	501154.715	510947.495	28.346	QP	175+96.39	34.784'
8077	501161.526	510941.662	28.292	QP	176+01.79	41.940'
8078	501169.421	510937.408	28.28	PCC	176+05.55	50.080'
8079	501182.76	510932.53	28.351	QP	176+09.61	63.693'
8080	501196.412	510928.61	28.422	QP	176+12.68	77.560'
8081	501204.156	510926.845	28.462	RCP	176+13.97	85.397'
8082	501210.308	510925.67	28.493	QP	176+14.77	91.610'
8083	501224.378	510923.723	28.564	PT	176+15.85	105.772'
8084	501230.408	510923.106	28.595	LOG	176+16.09	111.829'
8085	501255.411	510920.547	28.952	LOG	176+17.12	136.942'
8086	501280.414	510917.988	29.366	LOG	176+18.14	162.055'
8087	501286.732	510917.341	29.471	PI	176+18.40	168.401'
8088	501290.331	510917.332	29.531	PC	176+18.19	171.994'
8089	501294.874	510918.409	29.601	PT	176+16.83	176.462'
8090	501299.603	510920.803	29.643	PC	176+14.15	181.035'
8091	501304.145	510921.881	29.681	PT	176+12.80	185.503'
8092	501306.158	510921.875	29.552	PI	176+12.68	187.512'
8093	501306.155	510905.517	30.024	TIE IN	176+29.01	188.511'
8094	501306.153	510892.461	29.793	PI	176+61.08	188.899'
8095	501286.745	510892.6	29.419	PI	176+60.18	169.511'
8096	501280.443	510892.219	29.324	LOG	176+60.31	163.200'
8097	501272.115	510891.715	29.199	VPI	176+60.49	154.858'
8098	501265.115	510891.292	29.094	VPI	176+60.64	147.847'
8099	501255.115	510890.688	28.943	LOG	176+60.85	137.831'
8100	501245.115	510890.083	28.793	VPI	176+61.06	127.814'
8101	501238.115	510889.66	28.688	VPI	176+61.21	120.803'
8102	501230.447	510889.196	28.573	LOG	176+61.37	113.123'
8103	501215.279	510888.279	28.621	PC	176+61.69	97.930'
8104	501204.156	510886.787	28.677	RCP	176+62.74	86.758'
8105	501204.078	510886.771	28.677	QP	176+62.76	86.679'
8106	501193.219	510883.639	28.714	QP	176+65.46	75.706'
8107	501182.935	510878.952	28.658	QP	176+69.74	65.246'
8108	501173.449	510872.81	28.601	PCC	176+75.50	55.525'
8109	501165.453	510865.307	28.546	HP	176+82.68	47.240'
8110	501159.209	510856.294	28.491	PCC	176+91.45	40.647'
8111	501149.795	510836.62	28.382	QP	177+10.73	30.467'
8112	501142.558	510816.046	28.495	QP	177+31.01	22.427'
8113	501140.805	510809.658	28.535	RCP	177+36.29	20.565'
8114	501137.581	510794.811	28.624	QP	177+50.15	18.177'
8115	501134.923	510773.163	28.888	PT	177+71.93	17.000'
8116	501134.358	510745.66	29.273	PT	177+99.41	18.311'
8117	501134.656	510745.044	29.282	LOG	178+00.00	18.650'
8118	500992.033	510824.934	28.629	PI	177+16.21	-127.633'
8119	500983.709	510829.857	28.744	HP	177+10.97	-135.756'
8120	500983.445	510839.523	26.884	PCC	177+01.30	-135.640'
8121	501001.902	510860.809	26.939	QP	176+80.75	-116.361'
8122	501028.039	510871.324	27.365	QP	176+71.27	-89.831'
8123	501036.443	510871.957	27.492	RCP	176+70.97	-81.409'
8124	501056.094	510868.751	27.792	QP	176+74.95	-61.899'
8125	501068.728	510862.719	27.971	PCC	176+81.47	-49.512'
8126	501090.171	510840.501	28.251	QP	177+04.51	-28.959'
8127	501097.505	510825.497	28.401	QP	177+19.79	-22.220'
8128	501101.512	510809.655	28.549	RCP	177+36.83	-18.724'
8129	501101.564	510809.298	28.552	QP	177+37.28	-18.665'
8130	501102.171	510792.609	28.704	PT	177+54.76	-17.000'
8131	501100.792	510772.415	28.945	LOG	177+75.00	-17.000'
8132	501099.206	510749.188	29.221	PC	177+98.28	-17.000'
8133	501098.941	510747.484	29.241	LOG	178+00.00	-17.149'
8134	501150.168	511319.311	26.601	EOP	172+25.00	-5.000'
8135	501148.465	511294.37	26.676	EOP	172+50.00	-5.000'
8136	501146.761	511269.428	26.751	EOP	172+75.00	-5.000'
8137	501145.058	511244.486	26.826	EOP	173+00.00	-5.000'
8138	501143.355	511219.544	26.901	EOP	173+25.00	-5.000'
8139	501141.651	511194.602	26.976	EOP	173+50.00	-5.000'
8140	501140.289	511174.648	27.036	PI, LOG	173+70.00	-5.000'
8141	501138.951	511169.728	27.039	PI, LOG	173+75.00	-6.000'
8142	501137.247	511144.786	27.262	LOG	174+00.00	-6.000'
8143	501135.544	511119.844	27.485	LOG	174+25.00	-6.000'
8144	501133.852	511095.068	27.7	LOG	174+50.00	-5.809'
8145	501132.879	511080.818	27.823	PC	174+64.44	-5.191'
8146	501130.548	511057.105	28.043	QP	174+88.46	-3.919'
8147	501126.81	511033.573	28.249	QP	175+12.30	-3.377'
8148	501121.677	511010.305	28.44	QP	175+36.11	-4.251'
8149	501115.167	510987.384	28.605	PT	175+59.08	-7.139'
8150	501114.704	510985.919	28.608	RCP	175+60.49	-7.505'
8151	501108.055	510964.909	28.629	PC	175+81.86	-12.855'
8152	501112.339	510958.424	28.769	PT	175+88.07	-8.181'
8153	501126.492	510957.052	28.837	PC	175+88.58	6.029'

LEGEND:

RCP	=	RAMP CENTER POINT
CI	=	CENTER ISLAND
QP	=	QUARTER POINT
HP	=	HALF POINT
VPI	=	VERTICAL POINT OF INTERSECTION
PI	=	POINT OF INT.
PC	=	POINT OF CURVATURE
PT	=	POINT OF TANGENT
PRC	=	POINT OF REVERSE CURVE
PCC	=	POINT OF COMPOUND CURVE
LOG	=	LIP OF GUTTER (PTS @ 25' INTERVALS)
EOP	=	EDGE OF PAVEMENT
TIE IN	=	MATCH EXIST POINT
BOW	=	BACK OF WALK

POINT TABLES 12

STATE OF ALASKA 49TH JOHN F. RINGERT CE 11096 REGISTERED PROFESSIONAL ENGINEER 7/31/2020

PLANS DEVELOPED BY: KITTELSON & ASSOCIATES, INC. CERT. OF AUTHORIZATION NO.: 254741, 851 SW 6TH AVE. SUITE 600, PORTLAND, OR 97204, (503) 228-5230
H:\20\20487 - Glacier Highway - Juneau Traffic Design\design_CD\68124_G_GRADE-G-21 Thu, Jul/30/20 12:38pm

NO.	DATE	REVISION

STATE	PROJECT DESIGNATION	YEAR	SHEET NO.	TOTAL SHEETS
ALASKA	TEA-0955(016)/Z68124	2020	G-22	235

Record Drawings have been reviewed by the Project Engineer, and represent to the best of my knowledge, the project as constructed.

PE Dillon Tomaro 2/4/25

Number	Northing (ft)	Easting (ft)	Elevation (ft)	Description	Station	Offset
8154	501129.719	510960.646	28.755	PRC	175+84.79	9.030'
8155	501127.857	510977.822	28.673	HP	175+67.76	6.119'
8156	501128.018	510984.368	28.616	RCP	175+61.22	5.879'
8157	501129.312	510995.038	28.52	PT	175+49.82	5.994'
8158	501133.755	511019.392	28.308	LOG	175+25.00	6.000'
8159	501138.241	511043.986	28.095	LOG	175+00.00	6.000'
8160	501139.954	511053.372	28.014	PC	174+90.46	6.000'
8161	501142.222	511066.878	27.896	QP	174+76.93	6.000'
8162	501144.111	511080.442	27.778	QP	174+63.40	6.000'
8163	501145.618	511094.054	27.663	QP	174+49.88	6.000'
8164	501146.743	511107.702	27.589	PC	174+36.35	6.000'
8165	501147.516	511119.027	27.557	LOG	174+25.00	6.000'
8166	501149.219	511143.969	27.343	LOG	174+00.00	6.000'
8167	501150.923	511168.911	27.13	PI, LOG	173+75.00	6.000'
8168	501150.266	511173.967	27.036	PI, LOG	173+70.00	5.000'
8169	501151.628	511193.921	26.976	EOP	173+50.00	5.000'
8170	501153.332	511218.863	26.901	EOP	173+25.00	5.000'
8171	501155.035	511243.804	26.826	EOP	173+00.00	5.000'
8172	501156.738	511268.746	26.751	EOP	172+75.00	5.000'
8173	501158.441	511293.688	26.676	EOP	172+50.00	5.000'
8174	501160.145	511318.63	26.601	EOP	172+25.00	5.000'
8175	501054.441	510912.271	28.241	PRC	176+37.69	-63.144'
8176	501045.25	510907.965	28.178	HP	176+42.55	-72.054'
8177	501037.709	510905.14	28.126	PT	176+45.83	-79.408'
8178	501035.103	510904.152	28.105	RCP	176+46.97	-81.948'
8179	501024.651	510900.188	28.478	LOG	100+44.25	-5,395.341'
8180	501011.592	510895.235	28.116	PC	100+32.27	-5,388.160'
8181	501014.157	510887.663	27.56	PRC	176+54.40	-103.060'
8182	501026.543	510890.392	27.867	HP	176+52.16	-90.576'
8183	501035.619	510891.212	28.01	RCP	176+51.70	-81.475'
8184	501039.196	510891.271	28.068	PT	176+51.78	-77.898'
8185	501045.175	510891.243	28.164	LOG	176+52.04	-71.925'
8186	501054.43	510891.201	28.323	PRC	176+52.45	-62.679'
8187	501057.94	510894.91	28.743	PT	176+48.88	-59.027'
8188	501057.939	510902.02	28.863	LOG	100+66.31	-5,420.334'
8189	501058.785	510909.08	28.844	PC	176+40.61	-58.612'
8190	501177.097	510909.79	28.965	PT	176+32.65	59.434'
8191	501176.757	510904.018	29.117	LOG	176+38.43	59.448'
8192	501176.417	510898.246	29.052	PC	176+44.21	59.462'
8193	501180.424	510895.245	28.973	PRC	176+53.36	63.376'
8194	501188.87	510897.803	28.974	HP	176+51.13	71.916'
8195	501197.529	510899.502	28.947	PT	176+41.67	80.457'
8196	501204.156	510900.461	28.92	RCP	176+40.30	87.013'

Number	Northing (ft)	Easting (ft)	Elevation (ft)	Description	Station	Offset
8197	501213.667	510901.836	28.887	LOG	176+38.35	96.422'
8198	501229.804	510904.169	28.859	PC	176+35.03	112.386'
8199	501229.531	510910.134	28.806	PT	176+29.09	111.749'
8200	501223.432	510910.453	28.813	LOG	176+29.15	105.641'
8201	501217.332	510910.771	28.822	PC	176+29.21	99.533'
8202	501208.229	510911.414	28.836	HP	176+29.12	90.408'
8203	501204.156	510911.809	28.837	RCP	176+28.98	86.318'
8204	501199.156	510912.388	28.835	PT	176+28.71	81.292'
8205	501190.934	510913.422	28.829	LOG	176+28.18	73.022'
8206	501182.713	510914.457	28.825	PC	176+27.65	64.753'
8207	501113.787	510839.165	28.987	PC	177+06.78	-5.413'
8208	501110.659	510835.267	28.852	PRC	177+10.55	-8.691'
8209	501113.819	510821.429	28.882	HP	177+24.50	-6.078'
8210	501114.661	510809.658	28.868	RCP	177+36.60	-5.577'
8211	501114.631	510807.258	28.859	PT	177+39.15	-5.539'
8212	501114.349	510796.547	28.853	LOG	177+50.00	-5.119'
8213	501113.691	510771.534	29.223	LOG	177+75.00	-4.071'
8214	501122.741	510770.916	29.201	LOG	177+75.00	5.000'
8215	501123.55	510782.754	29.027	PC	177+63.13	5.000'
8216	501124.635	510794.536	28.86	HP	177+51.31	5.280'
8217	501126.276	510806.254	28.85	PT	177+39.63	6.140'
8218	501126.836	510809.658	28.85	RCP	177+36.43	6.597'
8219	501128.784	510821.517	28.84	LOG	177+25.00	8.879'
8220	501130.551	510832.27	28.833	PC	177+14.32	11.067'
8221	501126.065	510838.06	28.966	PT	177+08.36	6.812'
8222	501119.926	510838.613	29.122	LOG	177+07.57	0.700'
8223	501096.866	510898.618	30.011	CI	100+87.76	-5,452.997'
8224	501077.366	510898.618	28.847	CI	100+75.68	-5,437.691'
8225	501098.388	510890.964	30.05	CI	176+54.41	-18.764'
8226	501080.373	510883.502	28.77	CI	176+61.16	-37.059'
8227	501102.724	510884.476	30.09	CI	176+61.07	-14.687'
8228	501088.935	510870.687	28.755	CI	176+74.30	-29.007'
8229	501109.212	510880.14	30.215	CI	176+65.65	-8.374'
8230	501101.75	510862.125	28.981	CI	176+83.36	-16.538'
8231	501116.866	510878.618	30.26	CI	176+67.47	-0.786'
8232	501116.866	510859.118	29.183	CI	176+86.96	-1.552'
8233	501124.52	510880.14	30.238	CI	176+66.25	6.922'
8234	501131.982	510862.125	29.028	CI	176+84.55	13.670'
8235	501131.008	510884.476	30.111	CI	176+62.18	13.575'
8236	501144.797	510870.687	28.795	CI	176+76.50	26.812'

Number	Northing (ft)	Easting (ft)	Elevation (ft)	Description	Station	Offset
8237	501135.344	510890.964	30.132	CI	176+55.86	18.163'
8238	501153.359	510883.502	28.964	CI	176+64.03	35.871'
8239	501136.866	510898.618	30.228	CI	176+46.26	19.962'
8240	501156.366	510898.618	29.198	CI	176+45.07	39.426'
8241	501135.344	510906.272	30.206	CI	176+38.72	17.974'
8242	501153.359	510913.734	29.053	CI	176+30.17	35.499'
8243	501131.008	510912.76	30.151	CI	176+32.51	13.249'
8244	501144.797	510926.549	28.82	CI	176+17.90	26.168'
8245	501124.52	510917.096	30.148	CI	176+28.58	6.508'
8246	501131.982	510935.111	28.922	CI	176+10.14	12.852'
8247	501116.866	510918.618	30.164	CI	176+27.53	-1.225'
8248	501116.866	510938.118	29.079	CI	176+08.06	-2.419'
8249	501109.212	510917.096	30.083	CI	176+29.52	-8.771'
8250	501101.75	510935.111	28.85	CI	176+11.99	-17.323'
8251	501102.724	510912.76	29.95	CI	176+34.24	-14.982'
8252	501088.935	510926.549	28.692	CI	176+21.32	-29.589'
8253	501098.388	510906.272	29.998	CI	176+40.98	-18.912'
8254	501080.373	510913.734	28.769	CI	176+34.64	-37.351'
8255	501372.419	510918.581	31.184	VPI	176+11.91	253.851'
8256	501379.455	510917.687	31.37	VPI	176+12.37	260.928'
8257	501389.318	510915.776	31.752	LOG	176+13.68	270.890'
8258	501399.181	510913.864	32.146	VPI	176+14.98	280.851'
8259	501406.088	510912.533	32.426	VPI	176+15.89	287.826'
8260	501181.636	511200.356	26.736	AMP	173+41.53	34.500'
8261	501184.021	511235.274	26.76	AMP	173+06.54	34.500'
8262	501170.823	511114.442	27.083	PI	174+27.99	29.565'
8263	501171.376	511101.781	27.018	PI	174+40.32	30.996'
8264	501244.982	510935.684	29.408	PI	176+02.65	125.605'
8265	501255.092	510932.637	29.549	PI	176+05.07	135.883'
8266	501222.045	510880.584	29.187	PI	176+69.64	104.390'
8267	501215.657	510874.274	29.277	PI	176+75.70	97.758'
8268	501110.872	511103.481	27.705	PI	174+43.44	-29.451'
8269	501108.573	511095.322	27.985	PI	174+52.33	-30.990'
8270	501306.151	510880.088	30.35	BOW, TIE IN	176+73.44	188.410'
8271	501306.159	510929.286	0	BOW	176+05.29	187.059'
8272	501031.973	510857.711	28.056	BOW	176+85.03	-86.435'
8273	501028.91	510932.779	28.441	BOW	176+18.78	-89.883'
9001	501097.153	510743.768	29.291	PT	178+03.83	-18.679'

LEGEND:

RCP	=	RAMP CENTER POINT
CI	=	CENTER ISLAND
QP	=	QUARTER POINT
HP	=	HALF POINT
VPI	=	VERTICAL POINT OF INTERSECTION
PI	=	POINT OF INT.
PC	=	POINT OF CURVATURE
PT	=	POINT OF TANGENT
PRC	=	POINT OF REVERSE CURVE
PCC	=	POINT OF COMPOUND CURVE
LOG	=	LIP OF GUTTER (PTS @ 25' INTERVALS)
EOP	=	EDGE OF PAVEMENT
TIE IN	=	MATCH EXIST POINT
BOW	=	BACK OF WALK

POINT TABLES 13

STATE OF ALASKA 49TH JOHN F. RINGERT CE 11096 REGISTERED PROFESSIONAL ENGINEER

7/31/2020

PLANS DEVELOPED BY: KITTELSON & ASSOCIATES, INC. CERT. OF AUTHORIZATION NO.: 254741; 851 SW 6TH AVE. SUITE 600, PORTLAND, OR 97204, (503) 228-5230
H:\20\20487 - Glacier Highway - Juneau Traffic Design\design_CD\68124_G_GRADE-G-22 Thu, Jul/30/20 12:38pm

NO.	DATE	REVISION

STATE	PROJECT DESIGNATION	YEAR	SHEET NO.	TOTAL SHEETS
ALASKA	TEA-0955(016)/Z68124	2020	G-23	235

Record Drawings have been reviewed by the Project Engineer, and represent to the best of my knowledge, the project as constructed.

PE Dillon Tomaro 2/4/25

Number	Northing (ft)	Easting (ft)	Elevation (ft)	Description	Station	Offset
9002	501094.406	510740.2	29.344	PC	178+07.57	-21.177'
9003	501093.211	510738.205	29.369	RCP	178+09.65	-22.233'
9004	501092.352	510734.781	29.414	PT	178+13.12	-22.857'
9005	501091.543	510722.93	29.555	LOG	178+25.00	-22.857'
9006	501090.18	510702.98	29.792	PI	178+45.00	-22.857'
9007	501088.063	510673.051	30.492	LOG	178+75.00	-22.930'
9008	501086.321	510648.112	30.849	LOG	179+00.00	-22.969'
9009	501082.258	510623.331	31.134	EOP	179+25.00	-25.334'
9010	501073.939	510598.841	31.638	EOP	179+50.00	-31.965'
9011	501071.416	510573.955	31.856	EOP	179+75.00	-32.786'
9012	501069.842	510549.004	32.135	EOP	180+00.00	-32.657'
9013	501072.29	510523.779	32.229	EOP	180+25.00	-28.496'
9014	501074.592	510498.564	32.352	EOP	180+50.00	-24.482'
9015	501074.303	510473.59	32.561	LOG	180+75.00	-23.046'
9016	501072.675	510450.859	32.687	LOG	180+97.88	-23.012'
9017	501065.092	510437.058	32.377	LOG	181+12.29	-29.521'
9018	501055.839	510431.638	32.228	LOG	181+18.45	-38.323'
9019	501051.986	510430.233	32.158	LOG	181+20.16	-42.054'
9020	501049.498	510400.72	32.467	LOG	181+50.00	-42.131'
9021	501047.004	510371.125	31.993	PI	181+79.92	-42.054'
9022	501054.107	510363.756	32.596	PC	181+86.67	-34.318'
9023	501054.221	510363.638	32.605	RCP	181+86.77	-34.193'
9024	501058.398	510358.261	32.931	QP	181+91.78	-29.545'
9025	501061.343	510352.122	33.164	QP	181+97.65	-26.049'
9026	501062.922	510345.499	33.318	QP	182+04.12	-23.862'
9027	501063.065	510338.692	33.339	PT	182+10.92	-23.080'
9028	501062.89	510336.655	33.35	RCP	182+12.97	-23.061'
9029	501062.075	510327.164	33.4	PI	182+22.53	-22.963'
9030	501059.625	510299.914	33.537	LOG	182+50.00	-22.704'
9031	501057.336	510275.117	33.643	LOG	182+75.00	-22.414'
9032	501054.555	510250.37	33.729	LOG	183+00.00	-22.508'
9033	501051.771	510225.624	33.832	LOG	183+25.00	-22.498'
9034	501048.947	510200.883	33.933	LOG	183+50.00	-22.419'
9035	501046.077	510176.146	33.981	LOG	183+75.00	-22.278'
9036	501043.025	510151.43	33.972	LOG	184+00.00	-22.212'
9037	501113.015	510745.857	29.527	PC	178+00.66	-2.996'
9038	501121.004	510745.479	29.497	PT	178+00.50	5.000'
9039	501136.535	510741.148	29.343	PC	178+03.76	20.790'

Number	Northing (ft)	Easting (ft)	Elevation (ft)	Description	Station	Offset
9040	501137.352	510738.677	29.379	RCP	178+06.17	21.773'
9041	501137.507	510737.474	29.396	VPI	178+07.36	22.009'
9042	501137.374	510735.433	29.426	PT	178+09.40	22.017'
9043	501137.172	510731.496	29.479	VPI	178+13.35	22.083'
9044	501136.332	510719.871	29.641	VPI	178+25.00	22.037'
9045	501135.438	510707.558	29.812	VPI	178+37.35	21.984'
9046	501135.011	510701.574	29.895	VPI	178+43.35	21.965'
9047	501134.892	510699.926	29.918	PI	178+45.00	21.959'
9048	501132.866	510669.992	30.528	LOG	178+75.00	21.977'
9049	501131.226	510645.045	31.001	LOG	179+00.00	22.041'
9050	501129.529	510620.103	31.417	LOG	179+25.00	22.047'
9051	501127.786	510595.164	31.818	LOG	179+50.00	22.007'
9052	501126.071	510570.223	32.153	LOG	179+75.00	21.996'
9053	501124.435	510545.276	32.512	LOG	180+00.00	22.063'
9054	501122.757	510520.333	32.851	LOG	180+25.00	22.088'
9055	501121.055	510495.391	33.143	LOG	180+50.00	22.089'
9056	501119.287	510470.391	33.381	LOG	180+75.00	22.052'
9057	501117.529	510445.356	33.553	LOG	181+00.00	22.129'
9058	501115.531	510420.339	33.84	LOG	181+25.00	22.075'
9059	501113.547	510395.321	34.099	LOG	181+50.00	22.145'
9060	501111.452	510370.312	34.236	LOG	181+75.00	22.212'
9061	501110.377	510355.678	34.261	PI	181+89.61	22.453'
9062	501109.339	510345.303	34.24	LOG	182+00.00	22.371'
9063	501108.034	510332.274	34.242	RCP	182+13.04	22.295'
9064	501107.316	510325.1	34.247	PI	182+20.23	22.266'
9065	501107.807	510320.236	34.284	LOG	182+25.00	23.224'
9066	501110.379	510294.743	34.506	LOG	182+50.00	28.313'
9067	501112.701	510271.731	34.71	PI	182+72.53	33.000'
9068	501112.427	510269.26	34.716	LOG	182+75.00	32.988'
9069	501109.651	510244.27	34.794	LOG	183+00.00	32.924'
9070	501106.875	510219.28	34.869	LOG	183+25.00	32.970'
9071	501106.141	510212.68	34.89	PI	183+31.60	33.000'
9072	501098.125	510195.003	34.896	LOG	183+50.00	27.109'
9073	501092.414	510182.41	34.893	PI	183+63.13	22.949'
9074	501092.09	510179.302	34.858	PC	183+66.24	23.004'
9075	501092.483	510169.992	34.729	QP	183+75.40	24.532'
9076	501095.541	510161.189	34.747	QP	183+83.71	28.657'
9077	501101.006	510153.641	34.722	QP	183+90.48	35.023'

Number	Northing (ft)	Easting (ft)	Elevation (ft)	Description	Station	Offset
9078	501102.581	510152.132	34.729	RCP	183+91.77	36.776'
9079	501108.413	510147.987	34.929	PT	183+95.12	43.085'
9080	501113.389	510145.231	35.193	PI	183+97.21	48.370'
9081	501083.226	510360.247	33.629	PT	181+87.53	-5.000'
9082	501081.427	510340.821	33.746	PI	182+07.06	-5.000'
9083	501091.382	510339.871	33.928	PI	182+07.07	5.000'
9084	501091.429	510340.373	33.926	PC	182+06.56	5.000'
9085	501088.046	510360.928	33.709	PCC	181+86.42	-0.262'
9086	501080.288	510328.875	33.771	PI	182+19.07	-5.000'
9087	501079.716	510322.975	33.783	EOP	182+25.00	-5.000'
9088	501077.238	510298.12	33.867	EOP	182+50.00	-5.000'
9089	501074.652	510273.276	33.944	EOP	182+75.00	-5.000'
9090	501073.05	510258.393	33.98	PC	182+89.98	-5.000'
9091	501082.989	510257.292	34.19	EOP	182+90.00	5.000'
9092	501084.596	510272.219	34.146	EOP	182+75.00	5.000'
9093	501087.186	510297.106	34.075	EOP	182+50.00	5.000'
9094	501089.669	510322.004	34.008	EOP	182+25.00	5.000'
9095	501090.243	510327.925	33.982	PI	182+19.06	5.000'
9096	501083.007	510703.469	30.473	BOW, TIE IN	178+45.00	-30.046'
9097	501141.888	510699.448	30.299	BOW, TIE IN	178+45.00	28.971'
9098	501125.402	510560.117	32.298	PI	179+85.13	22.016'
9099	501132.561	510559.573	32.777	BOW, TIE IN	179+85.18	29.196'
9100	501123.447	510530.545	32.717	PI	180+14.76	22.081'
9101	501130.223	510530.086	33.19	BOW, TIE IN	180+14.76	28.873'
9102	501118.668	510354.848	34.879	BOW, TIE IN	181+89.69	30.786'
9103	501054.553	510327.81	33.918	BOW, TIE IN	182+22.62	-30.513'
9104	501041.922	510366.085	32.386	BOW, TIE IN	181+85.44	-46.663'
9105	501116.781	510151.355	35.826	BOW, TIE IN	183+90.76	50.961'
9106	501084.221	510721.242	29.939	PI	178+27.18	-30.046'
9107	501083.572	510725.729	30.064	PI	178+22.75	-31.000'
9501	501032.513	510072.447	33.901	TIE IN	184+79.99	-22.020'
9502	501054.313	510069.338	34.289	TIE IN	184+79.99	0.000'
9503	501077.055	510066.095	34.955	TIE IN	184+79.99	22.972'
9504	501039.941	510126.719	33.97	LOG	184+25.00	-22.068'
9505	501036.729	510102.022	33.96	LOG	184+50.00	-21.946'
9506	501033.209	510077.368	33.909	LOG	184+75.00	-22.024'
9507	501029.628	510052.718	33.878	LOG	185+00.00	-22.057'
9508	501025.936	510027.992	33.84	LOG	185+25.00	-22.138'
9509	501022.281	510003.26	33.855	LOG	185+50.00	-22.183'
9510	501018.518	509978.545	33.871	LOG	185+75.00	-22.337'

LEGEND:

RCP	=	RAMP CENTER POINT
CI	=	CENTER ISLAND
QP	=	QUARTER POINT
HP	=	HALF POINT
VPI	=	VERTICAL POINT OF INTERSECTION
PI	=	POINT OF INT.
PC	=	POINT OF CURVATURE
PT	=	POINT OF TANGENT
PRC	=	POINT OF REVERSE CURVE
PCC	=	POINT OF COMPOUND CURVE
LOG	=	LIP OF GUTTER (PTS @ 25' INTERVALS)
EOP	=	EDGE OF PAVEMENT
TIE IN	=	MATCH EXIST POINT
BOW	=	BACK OF WALK

POINT TABLES 14

STATE OF ALASKA 49TH JOHN F. RINGERT CE 11096 REGISTERED PROFESSIONAL ENGINEER

7/31/2020

PLANS DEVELOPED BY: KITTELSON & ASSOCIATES, INC. CERT. OF AUTHORIZATION NO.: 254741, 851 SW 6TH AVE. SUITE 600, PORTLAND, OR 97204, (503) 228-5230
H:\20\20487 - Glacier Highway - Juneau Traffic Design\design_CD\68124_G_GRADE-G-23 Thu, Jul/30/20 12:38pm

NO.	DATE	REVISION

STATE	PROJECT DESIGNATION	YEAR	SHEET NO.	TOTAL SHEETS
ALASKA	TEA-0955(016)/Z68124	2020	G-24	235

Record Drawings have been reviewed by the Project Engineer, and represent to the best of my knowledge, the project as constructed.

PE Dillon Tomaro 2/4/25

Number	Northing (ft)	Easting (ft)	Elevation (ft)	Description	Station	Offset
9511	501014.617	509953.849	33.918	LOG	186+00.00	-22.630'
9512	501010.738	509929.151	33.953	LOG	186+25.00	-22.901'
9513	501007.007	509904.43	33.919	LOG	186+50.00	-23.023'
9514	501004.653	509889.101	33.832	LOG	186+65.51	-23.138'
9515	500998.814	509873.141	33.608	LOG	186+82.14	-26.611'
9516	500989.648	509861.668	33.256	LOG	186+94.82	-34.024'
9517	500973.231	509852.236	33.085	LOG	187+06.53	-48.907'
9518	500962.768	509782.509	33.389	LOG	187+77.03	-49.189'
9519	500973.35	509770.855	33.627	LOG	187+87.04	-37.035'
9520	500980.302	509755.584	33.726	LOG	188+01.14	-27.950'
9521	500981.479	509735.174	33.873	LOG	188+21.17	-23.838'
9522	500977.076	509706.68	33.928	LOG	188+50.00	-24.079'
9523	500973.317	509681.964	34.027	LOG	188+75.00	-24.229'
9524	500969.698	509657.94	34.181	LOG	188+99.29	-24.340'
9525	501108.711	510108.64	35.359	LOG	184+33.79	48.491'
9526	501096.287	510103.951	34.835	LOG	184+40.05	36.805'
9527	501087.334	510094.71	34.876	LOG	184+50.36	29.185'
9528	501079.533	510080.2	34.954	LOG	184+65.73	23.451'
9529	501074.118	510046.224	34.849	LOG	185+00.00	22.905'
9530	501070.399	510021.502	34.718	LOG	185+25.00	22.795'
9531	501066.729	509996.773	34.569	LOG	185+50.00	22.735'
9532	501063.01	509972.051	34.474	LOG	185+75.00	22.627'
9533	501059.253	509947.334	34.406	LOG	186+00.00	22.479'
9534	501055.54	509922.611	34.295	LOG	186+25.00	22.375'
9535	501051.78	509897.895	34.199	LOG	186+50.00	22.224'
9536	501047.992	509873.183	34.114	LOG	186+75.00	22.045'
9537	501044.241	509848.466	34.062	LOG	187+00.00	21.904'
9538	501040.543	509823.741	34.041	LOG	187+25.00	21.815'
9539	501036.783	509799.025	33.997	LOG	187+50.00	21.665'
9540	501032.934	509774.321	33.877	LOG	187+75.00	21.424'
9541	501029.233	509749.597	33.984	LOG	188+00.00	21.332'
9542	501025.558	509724.868	34.001	LOG	188+25.00	21.267'
9543	501021.693	509700.189	34.044	LOG	188+49.98	21.008'
9544	501017.834	509675.466	34.066	LOG	188+75.00	20.760'
9545	501014.216	509650.729	34.112	LOG	189+00.00	20.753'
9546	501114.351	510325.102	34.798	BOW	182+19.55	29.268'
9547	501122.757	510271.68	35.363	BOW	182+71.53	43.005'
9548	501115.905	510209.997	35.544	BOW	183+33.13	43.008'

Number	Northing (ft)	Easting (ft)	Elevation (ft)	Description	Station	Offset
9549	501106.698	510189.694	35.546	BOW	183+54.23	36.253'
9550	501099.259	510180.553	35.488	BOW	183+64.14	29.968'
9551	499918.777	513739.467	32.946	AMP	142+44.16	55.687'
9552	499933.259	513688.130	33.436'	AMP	143+01.05	48.323
9553	499925.422	513716.062	33.226	AMP	142+70.27	52.834'
9554	499958.950	513639.413	33.426	AMP	143+60.00	48.023'
9555	499955.718	513626.531	34.039	AMP	143+70.00	38.650'
9556	499987.191	513579.143	34.069	AMP	144+30.06	38.706'
9557	499909.340	513765.951	33.388	AMP	142+13.56	55.657'

LEGEND:

RCP	=	RAMP CENTER POINT
CI	=	CENTER ISLAND
QP	=	QUARTER POINT
HP	=	HALF POINT
VPI	=	VERTICAL POINT OF INTERSECTION
PI	=	POINT OF INT.
PC	=	POINT OF CURVATURE
PT	=	POINT OF TANGENT
PRC	=	POINT OF REVERSE CURVE
PCC	=	POINT OF COMPOUND CURVE
LOG	=	LIP OF GUTTER (PTS @ 25' INTERVALS)
EOP	=	EDGE OF PAVEMENT
TIE IN	=	MATCH EXIST POINT
BOW	=	BACK OF WALK

POINT TABLES 15

STATE OF ALASKA 49TH JOHN F. RINGERT CE 11096 REGISTERED PROFESSIONAL ENGINEER

7/31/2020

PLANS DEVELOPED BY: KITTELSON & ASSOCIATES, INC. CERT. OF AUTHORIZATION NO.: 254741, 851 SW 6TH AVE. SUITE 600, PORTLAND, OR 97204, (503) 228-5230
H:\20\20487 - Glacier Highway - Juneau Traffic Design\design_CD\68124_G_GRADE-G-24 Thu, Jul/30/20 12:38pm

NO.	DATE	REVISION

STATE	PROJECT DESIGNATION	YEAR	SHEET NO.	TOTAL SHEETS
ALASKA	TEA-0955(016)/Z68124	2020	H-1	235

LEGEND

LEGEND APPLIES TO "H" SHEETS ONLY.

	EXISTING	PROPOSED
JUNCTION BOX, TYPE IA		5
JUNCTION BOX, TYPE II		6
JUNCTION BOX, TYPE III		3
SIGNAL FACE, VEHICULAR	42	42
SIGNAL FACE, BACKPLATE	42	42
SIGNAL FACE, LEFT TURN, BACKPLATE	43	43
SIGNAL FACE, PEDESTRIAN	54	54
LOOP DETECTOR	33	73
VIDEO DETECTOR	2	2
RADAR DETECTOR	4	4A
OPTICOM DETECTOR	1	1
PEDESTRIAN PUSH BUTTON	1	1
SIGNAL POST W/O MAST ARM		1
SIGNAL POLE W/MAST ARM		4
SIGNAL CONTROLLER		
LOAD CENTER		
LUMINAIRE		122
RECTANGULAR RAPID FLASHING BEACON	1	1
RIGID METAL CONDUIT		
SIGN		H

SIGNING KEY

(#) STATION
SIGN CODE(S)
SIGN LOCATION #

ABBREVIATIONS

AAWF	ACTIVE ADVANCE WARNING FLASHER
ADT	AVERAGE DAILY TRAFFIC
AH	AHEAD
AVE	AVENUE
BMP	BEST MANAGEMENT PRACTICE
C/A	CONTROL ACCESS
CF	CUBIC FOOT
CGP	CONSTRUCTION GENERAL PERMIT
CRT	CONTROLLED RELEASE TERMINAL
DOT&PF	DEPARTMENT OF TRANSPORTATION & PUBLIC FACILITIES
EB	EASTBOUND
EOP	EDGE OF PAVEMENT
IN OR "	INCH
LBS	POUNDS
LF	LINER FOOT
L.O.C.	LIP OF CURB
NB	NORTHBOUND
NE	NORTHEAST
NO.	NUMBER
N.I.C.	NOT IN CONTRACT
NTS	NOT TO SCALE
NW	NORTHWEST
RP	REFERENCE POINT
RRFB	RECTANGULAR RAPID RECTANGULAR RAPID FLASHING BEACON
SB	SOUTHBOUND
SE	SOUTHEAST
SMFO	SINGLE MODE FIBER OPTIC
SW	SOUTHWEST
SWPPP	STORM WATER POLLUTION PREVENTION PLAN
SF	SQUARE FOOT
SY	SQUARE YARD
USACOE	UNITED STATES ARMY CORP OF ENGINEERS
V	DESIGN SPEED
WB	WESTBOUND

DETAILS

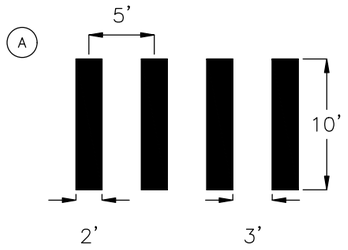

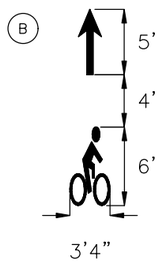

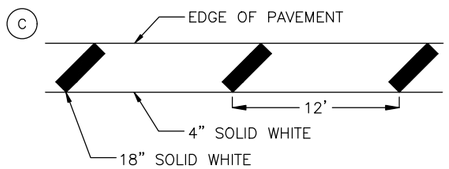

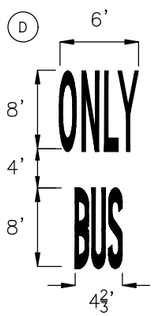

INDEX OF SHEETS

SHEET NO.	DESCRIPTION
H-1	TRAFFIC LEGEND, DETAILS, AND SHEET INDEX
H-2 TO H-17	SIGNING AND STRIPING
H-18 TO H-24	SIGN SUMMARY AND NOTES
H-25 TO H-27	SIGN DETAILS
H-28	SIGN ATTACHMENT DETAILS
H-29	SIGN INSTALLATION DETAILS
H-30 TO H-34	ANKA STREET SIGNAL PLAN
H-35 TO H-38	DAVIS STREET SIGNAL PLAN
H-39 TO H-41	VANDERBILT HILL ROAD RECTANGULAR RAPID FLASHING BEACON PLAN
H-42 TO H-44	CONCRETE WAY RECTANGULAR RAPID FLASHING BEACON PLAN
H-45 TO H-47	RENNINGER ROUNDABOUT RECTANGULAR RAPID FLASHING BEACON & SCHOOL ZONE FLASHER PLAN
H-48 TO H-51	SHOPPING CENTER ACCESS RECTANGULAR RAPID FLASHING BEACON PLAN
H-52 TO H-59	TRAFFIC SIGNAL DETAILS
H-60 TO H-74	ILLUMINATION AND INTERCONNECT PLANS

TRAFFIC MARKINGS SUMMARY

DESCRIPTION	QUANTITY	REMARKS
670(1) – PAINTED TRAFFIC MARKINGS		
4"W	810 LF	
4"WS	79 LF	
4"Y	9,596 LF	
4"YS	6,218 LF	
4"DY	3,943 LF	
8"W	16,038 LF	
8"WD-1	4,149 LF	
18"W	148 LF	
18"Y (STD)	746 LF	
12"WRE	134 LF	
670(10) – METHYL METHACRYLATE PAVEMENT MARKING		
CROSSWALK BARS (ZEBRA)	1,160 SF	
CROSSWALK BARS (LONGITUDINAL)	1,392 SF	
STOP BARS	824 SF	
LEFT TURN ARROWS	930 SF	
RIGHT TURN ARROWS	120 SF	
LEFT TURN/THROUGH ARROWS	54 SF	
BIKE SYMBOLS	357 SF	
"ONLY" LETTERING	231 SF	
"BUS" LETTERING	200 SF	

Record Drawings have been reviewed by the Project Engineer, and represent to the best of my knowledge, the project as constructed.

PE *Dillon Tomaro* 2/4/25

STATE OF ALASKA 49TH ANTHONY M. ROOS CE 127591 REGISTERED PROFESSIONAL ENGINEER
7/31/2020

TRAFFIC LEGEND, DETAILS, AND SHEET INDEX

PLANS DEVELOPED BY: KITTELSON & ASSOCIATES, INC. CERT. OF AUTHORIZATION NO.: 254741, 851 SW 6TH AVE. SUITE 600, PORTLAND, OR 97204, (503) 228-5230
H:\20\20487 - Glacier Highway - Juneau Traffic Design\design_CD\68124_H_SIGNSTRIPE-H-1 Thu, Jul/30/20 09:04am

** Deleted by CO35

NO.	DATE	REVISION

STATE	PROJECT DESIGNATION	YEAR	SHEET NO.	TOTAL SHEETS
ALASKA	TEA-0955(016)/Z68124	2020	H-2	235

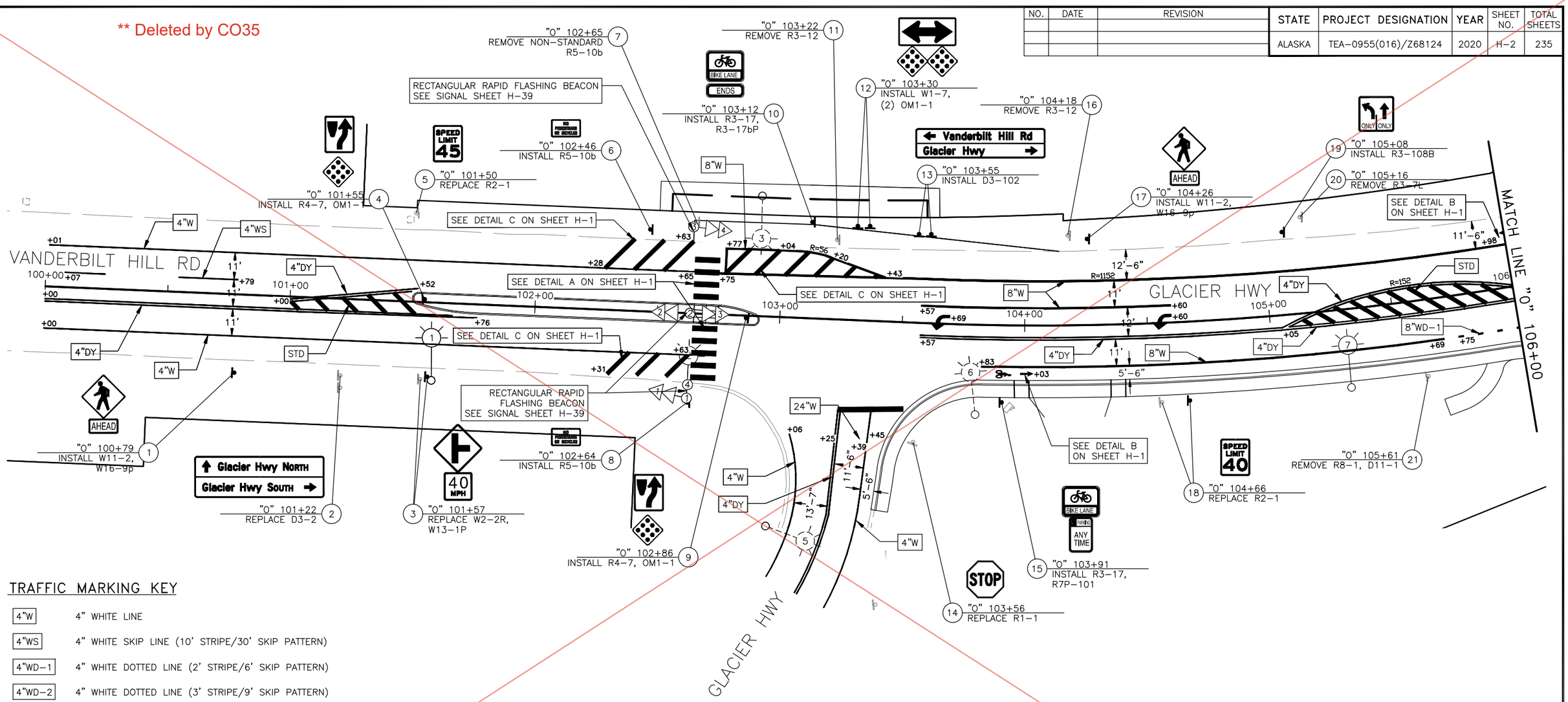

TRAFFIC MARKING KEY

4"W	4" WHITE LINE
4"WS	4" WHITE SKIP LINE (10' STRIPE/30' SKIP PATTERN)
4"WD-1	4" WHITE DOTTED LINE (2' STRIPE/6' SKIP PATTERN)
4"WD-2	4" WHITE DOTTED LINE (3' STRIPE/9' SKIP PATTERN)
4"Y	4" YELLOW LINE
4"YS	4" YELLOW SKIP LINE (10' STRIPE/30' SKIP PATTERN)
4"DY	4" DOUBLE YELLOW LINE
4"Y TWLTL	4" YELLOW TWO-WAY LEFT-TURN LANE STANDARD
8"W	8" WHITE LINE
8"WD-1	8" WHITE WIDE DOTTED LINE (2' STRIPE/4' SKIP PATTERN)
8"WD-2	8" WHITE WIDE DOTTED LINE (3' STRIPE/9' SKIP PATTERN)
12"WD	12" WHITE WIDE DOTTED LINE (2' STRIPE/2' SKIP PATTERN)
12"WRE	12" WHITE ROUNDABOUT ENTRY (2' STRIPE/6' SKIP PATTERN)
24"W	24" WHITE LINE
STD	SEE STANDARD DRAWING

NOTE:
DIMENSIONS ARE TO CENTER OF STRIPE OR STRIPE GROUP.

Record Drawings have been reviewed by the Project Engineer, and represent to the best of my knowledge, the project as constructed.

PE Dillon Tomaro 2/4/25

STATE OF ALASKA 49TH
ANTHONY M. ROOS CE-12759
REGISTERED PROFESSIONAL ENGINEER
7/31/2020

SIGNING AND STRIPING PLAN 1

PLANS DEVELOPED BY: KITTELSON & ASSOCIATES, INC. CERT. OF AUTHORIZATION NO.: 254741, 851 SW 6TH AVE. SUITE 600, PORTLAND, OR 97204, (503) 228-5230
H:\20\20487 - Glacier Highway - Juneau Traffic Design\design_CD\68124_H_SIGNSTRIPE-H-2 Thu, Jul/30/20 09:04am

Record Drawings have been reviewed by the Project Engineer, and represent to the best of my knowledge, the project as constructed.

PE *Dillon Tomaro* 2/4/25

NO.	DATE	REVISION
A	10/22/21	DELTA 28: TEMPORARY STRIPING REVISION

STATE	PROJECT DESIGNATION	YEAR	SHEET NO.	TOTAL SHEETS
ALASKA	TEA-0955(016)/Z68124	2020	H-2	235

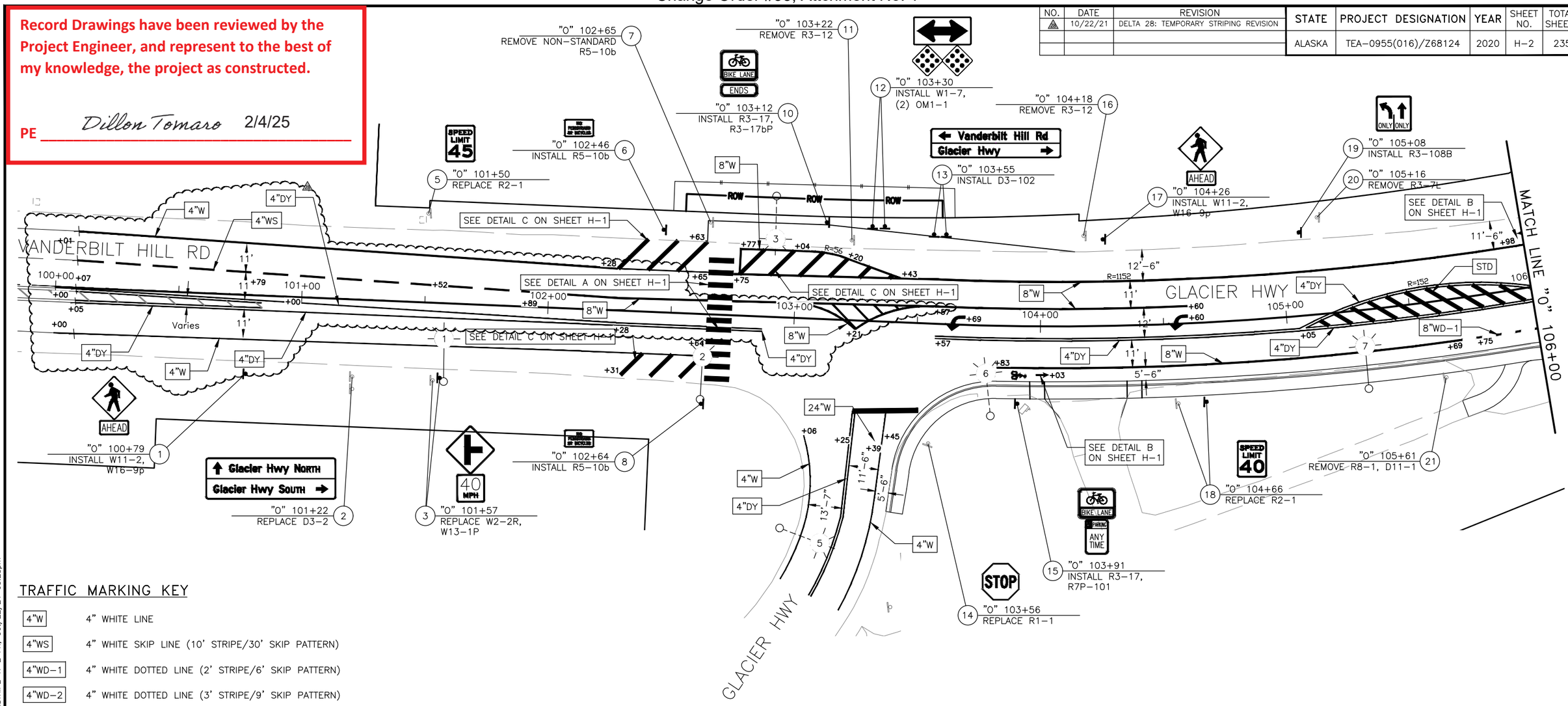

TRAFFIC MARKING KEY

4"W	4" WHITE LINE
4"WS	4" WHITE SKIP LINE (10' STRIPE/30' SKIP PATTERN)
4"WD-1	4" WHITE DOTTED LINE (2' STRIPE/6' SKIP PATTERN)
4"WD-2	4" WHITE DOTTED LINE (3' STRIPE/9' SKIP PATTERN)
4"Y	4" YELLOW LINE
4"YS	4" YELLOW SKIP LINE (10' STRIPE/30' SKIP PATTERN)
4"DY	4" DOUBLE YELLOW LINE
4"Y TWLTL	4" YELLOW TWO-WAY LEFT-TURN LANE STANDARD
8"W	8" WHITE LINE
8"WD-1	8" WHITE WIDE DOTTED LINE (2' STRIPE/4' SKIP PATTERN)
8"WD-2	8" WHITE WIDE DOTTED LINE (3' STRIPE/9' SKIP PATTERN)
12"WD	12" WHITE WIDE DOTTED LINE (2' STRIPE/2' SKIP PATTERN)
12"WRE	12" WHITE ROUNDABOUT ENTRY (2' STRIPE/6' SKIP PATTERN)
24"W	24" WHITE LINE
STD	SEE STANDARD DRAWING

NOTE:
DIMENSIONS ARE TO CENTER OF STRIPE OR STRIPE GROUP.

SIGNING AND STRIPING PLAN 1

STATE OF ALASKA 49TH
ANTHONY M. ROOS CE 127591
REGISTERED PROFESSIONAL ENGINEER
10/22/21

PLANS DEVELOPED BY: KITTELSON & ASSOCIATES, INC. CERT. OF AUTHORIZATION NO.: 254741, 851 SW 6TH AVE. SUITE 600, PORTLAND, OR 97204, (503) 228-5230
H:\20\20487 - Glacier Highway - Juneau Traffic Design\design_CD\68124_H_SIGNSTRIPE-H-2 Fri, Oct/22/21 05:28pm

NO.	DATE	REVISION

STATE	PROJECT DESIGNATION	YEAR	SHEET NO.	TOTAL SHEETS
ALASKA	TEA-0955(016)/Z68124	2020	H-3	235

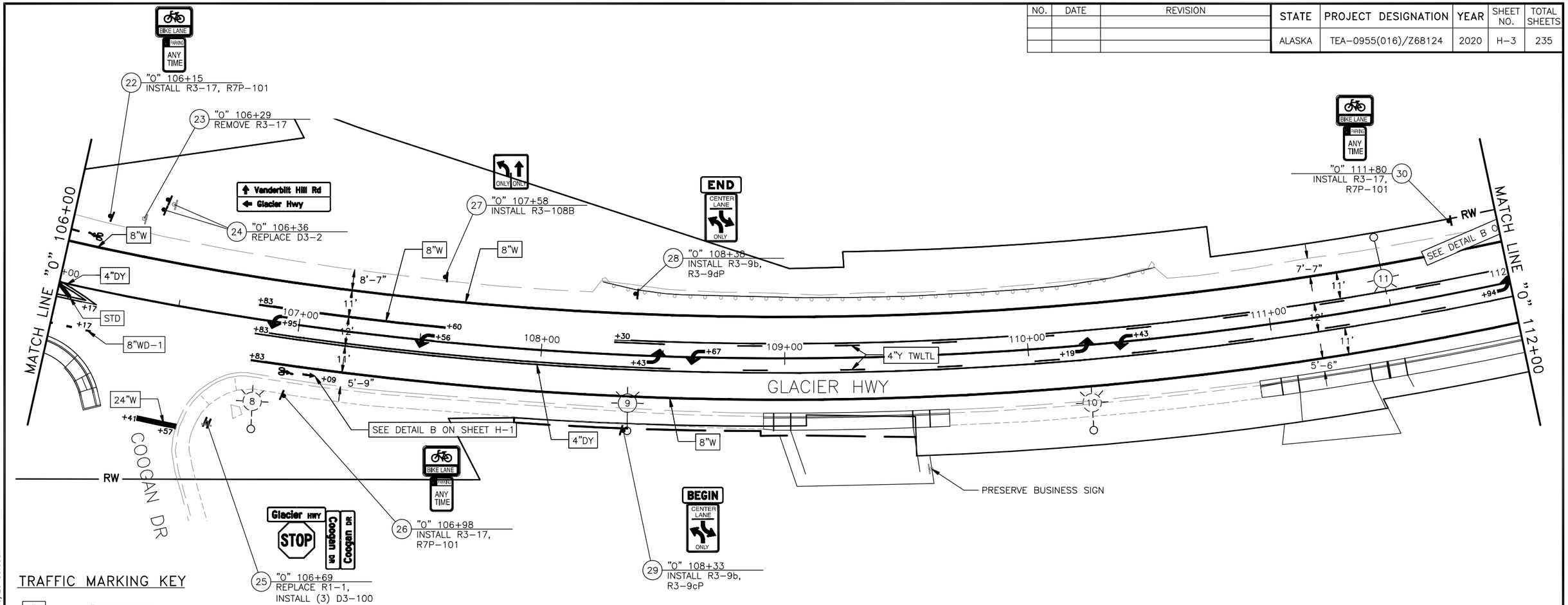

TRAFFIC MARKING KEY

4"W	4" WHITE LINE
4"WS	4" WHITE SKIP LINE (10' STRIPE/30' SKIP PATTERN)
4"WD-1	4" WHITE DOTTED LINE (2' STRIPE/6' SKIP PATTERN)
4"WD-2	4" WHITE DOTTED LINE (3' STRIPE/9' SKIP PATTERN)
4"Y	4" YELLOW LINE
4"YS	4" YELLOW SKIP LINE (10' STRIPE/30' SKIP PATTERN)
4"DY	4" DOUBLE YELLOW LINE
4"Y TWLTL	4" YELLOW TWO-WAY LEFT-TURN LANE STANDARD
8"W	8" WHITE LINE
8"WD-1	8" WHITE WIDE DOTTED LINE (2' STRIPE/4' SKIP PATTERN)
8"WD-2	8" WHITE WIDE DOTTED LINE (3' STRIPE/9' SKIP PATTERN)
12"WD	12" WHITE WIDE DOTTED LINE (2' STRIPE/2' SKIP PATTERN)
12"WRE	12" WHITE ROUNDABOUT ENTRY (2' STRIPE/6' SKIP PATTERN)
24"W	24" WHITE LINE
STD	SEE STANDARD DRAWING

NOTE:
DIMENSIONS ARE TO CENTER OF STRIPE OR STRIPE GROUP.

Record Drawings have been reviewed by the Project Engineer, and represent to the best of my knowledge, the project as constructed.

PE Dillon Tomaro 2/4/25

STATE OF ALASKA 49TH ANTHONY M. ROOS CE 127591 REGISTERED PROFESSIONAL ENGINEER
7/31/2020

SIGNING AND STRIPING PLAN 2

PLANS DEVELOPED BY: KITTELSON & ASSOCIATES, INC. CERT. OF AUTHORIZATION NO.: 254741, 851 SW 6TH AVE. SUITE 600, PORTLAND, OR 97204, (503) 228-5230
H:\20\20487 - Glacier Highway - Juneau Traffic Design\design_CD\68124_H_SIGNSTRIPE-H-3 Thu, Jul/30/20 09:05am

NO.	DATE	REVISION

STATE	PROJECT DESIGNATION	YEAR	SHEET NO.	TOTAL SHEETS
ALASKA	TEA-0955(016)/Z68124	2020	H-4	235

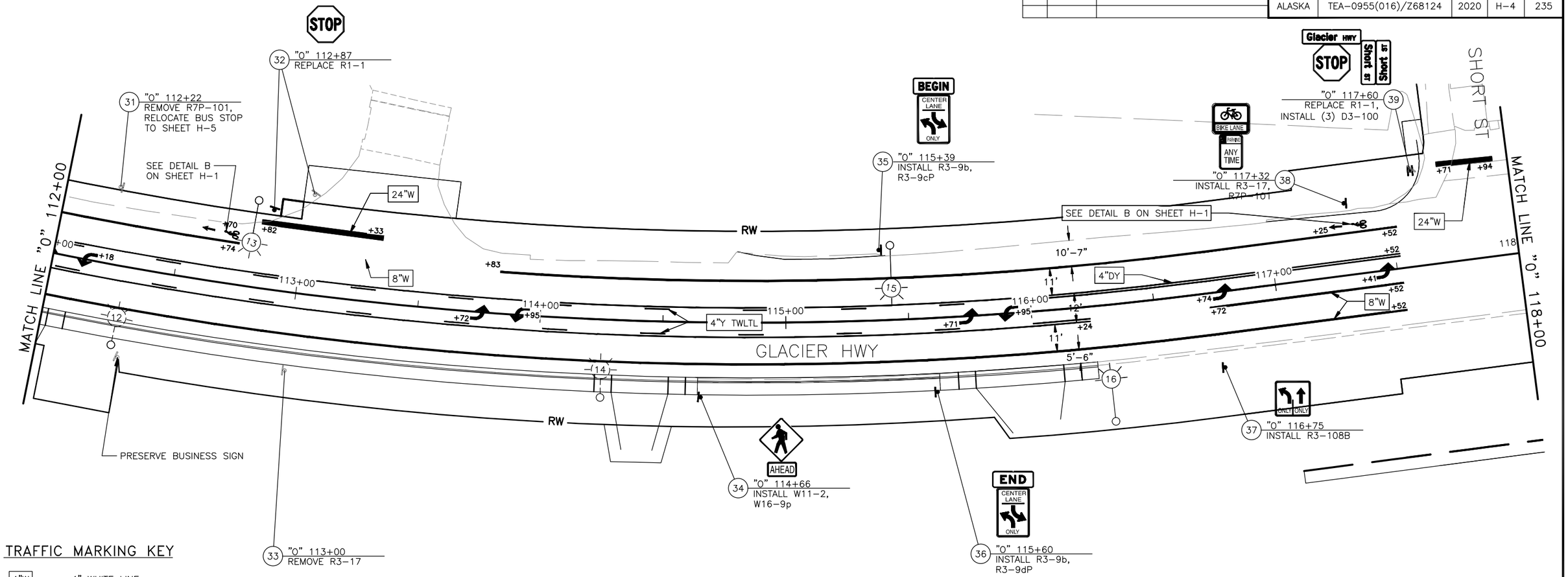

TRAFFIC MARKING KEY

4"W	4" WHITE LINE
4"WS	4" WHITE SKIP LINE (10' STRIPE/30' SKIP PATTERN)
4"WD-1	4" WHITE DOTTED LINE (2' STRIPE/6' SKIP PATTERN)
4"WD-2	4" WHITE DOTTED LINE (3' STRIPE/9' SKIP PATTERN)
4"Y	4" YELLOW LINE
4"YS	4" YELLOW SKIP LINE (10' STRIPE/30' SKIP PATTERN)
4"DY	4" DOUBLE YELLOW LINE
4"Y TWLTL	4" YELLOW TWO-WAY LEFT-TURN LANE STANDARD
8"W	8" WHITE LINE
8"WD-1	8" WHITE WIDE DOTTED LINE (2' STRIPE/4' SKIP PATTERN)
8"WD-2	8" WHITE WIDE DOTTED LINE (3' STRIPE/9' SKIP PATTERN)
12"WD	12" WHITE WIDE DOTTED LINE (2' STRIPE/2' SKIP PATTERN)
12"WRE	12" WHITE ROUNDABOUT ENTRY (2' STRIPE/6' SKIP PATTERN)
24"W	24" WHITE LINE
STD	SEE STANDARD DRAWING

NOTE:
DIMENSIONS ARE TO CENTER OF STRIPE OR STRIPE GROUP.

Record Drawings have been reviewed by the Project Engineer, and represent to the best of my knowledge, the project as constructed.

PE Dillon Tomaro 2/4/25

STATE OF ALASKA 49TH ANTHONY M. ROOS CE 127591 REGISTERED PROFESSIONAL ENGINEER
7/31/2020

SIGNING AND STRIPING PLAN 3

PLANS DEVELOPED BY: KITTELSON & ASSOCIATES, INC. CERT. OF AUTHORIZATION NO.: 254741, 851 SW 6TH AVE. SUITE 600, PORTLAND, OR 97204, (503) 228-5230
H:\20\20487 - Glacier Highway - Juneau Traffic Design\design_CD\68124_H_SIGNSTRIPE-H-4 Thu, Jul/30/20 09:06am

NO.	DATE	REVISION

STATE	PROJECT DESIGNATION	YEAR	SHEET NO.	TOTAL SHEETS
ALASKA	TEA-0955(016)/Z68124	2020	H-5	235

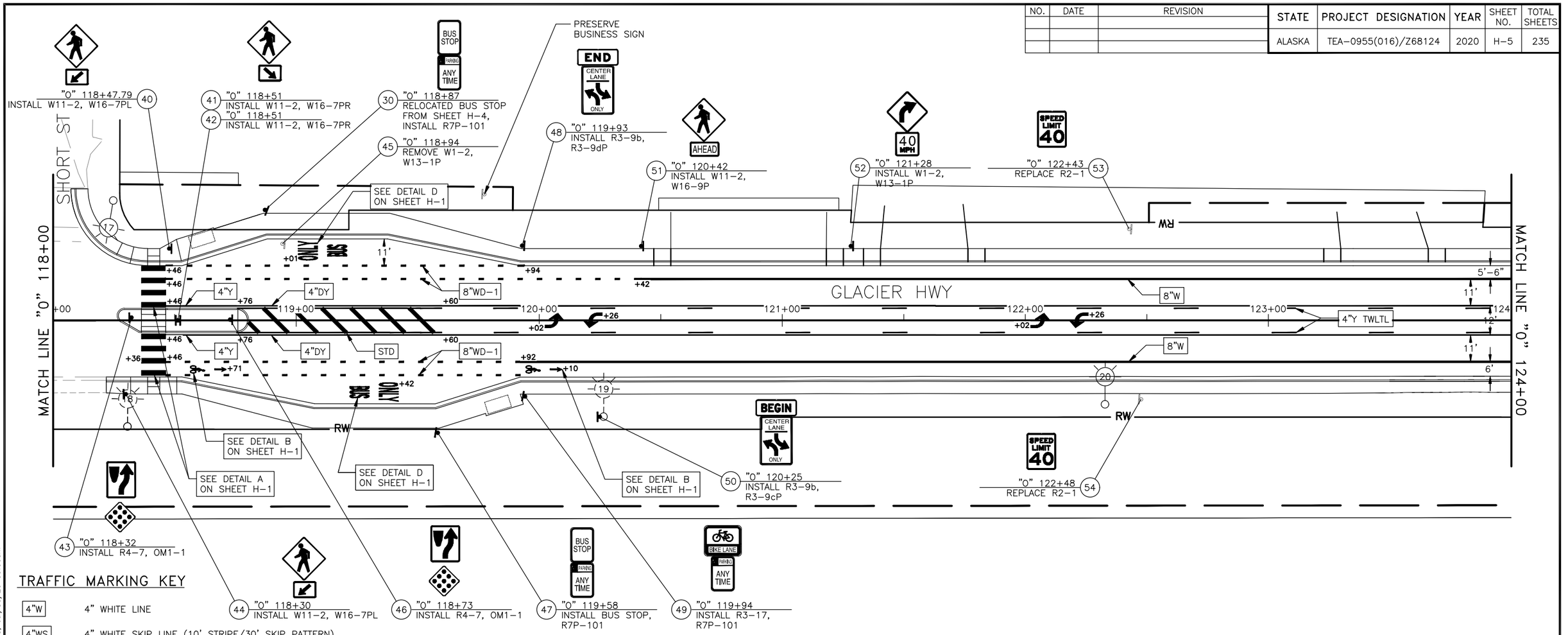

TRAFFIC MARKING KEY

4"W	4" WHITE LINE
4"WS	4" WHITE SKIP LINE (10' STRIPE/30' SKIP PATTERN)
4"WD-1	4" WHITE DOTTED LINE (2' STRIPE/6' SKIP PATTERN)
4"WD-2	4" WHITE DOTTED LINE (3' STRIPE/9' SKIP PATTERN)
4"Y	4" YELLOW LINE
4"YS	4" YELLOW SKIP LINE (10' STRIPE/30' SKIP PATTERN)
4"DY	4" DOUBLE YELLOW LINE
4"Y TWLTL	4" YELLOW TWO-WAY LEFT-TURN LANE STANDARD
8"W	8" WHITE LINE
8"WD-1	8" WHITE WIDE DOTTED LINE (2' STRIPE/4' SKIP PATTERN)
8"WD-2	8" WHITE WIDE DOTTED LINE (3' STRIPE/9' SKIP PATTERN)
12"WD	12" WHITE WIDE DOTTED LINE (2' STRIPE/2' SKIP PATTERN)
12"WRE	12" WHITE ROUNDABOUT ENTRY (2' STRIPE/6' SKIP PATTERN)
24"W	24" WHITE LINE
STD	SEE STANDARD DRAWING

NOTE:
DIMENSIONS ARE TO CENTER OF STRIPE OR STRIPE GROUP.

Record Drawings have been reviewed by the Project Engineer, and represent to the best of my knowledge, the project as constructed.

PE *Dillon Tomaro* 2/4/25

STATE OF ALASKA
49TH
ANTHONY M. ROOS
CE 127591
REGISTERED PROFESSIONAL ENGINEER
7/31/2020

SIGNING AND STRIPING PLAN 4

PLANS DEVELOPED BY: KITTELSON & ASSOCIATES, INC. CERT. OF AUTHORIZATION NO.: 254741, 851 SW 6TH AVE. SUITE 600, PORTLAND, OR 97204, (503) 228-5230
H:\20\20487 - Glacier Highway - Juneau Traffic Design\design_CD\68124_H_SIGNSTRIPE-H-5 Thu, Jul/30/20 09:06am

NO.	DATE	REVISION

STATE	PROJECT DESIGNATION	YEAR	SHEET NO.	TOTAL SHEETS
ALASKA	TEA-0955(016)/Z68124	2020	H-6	235

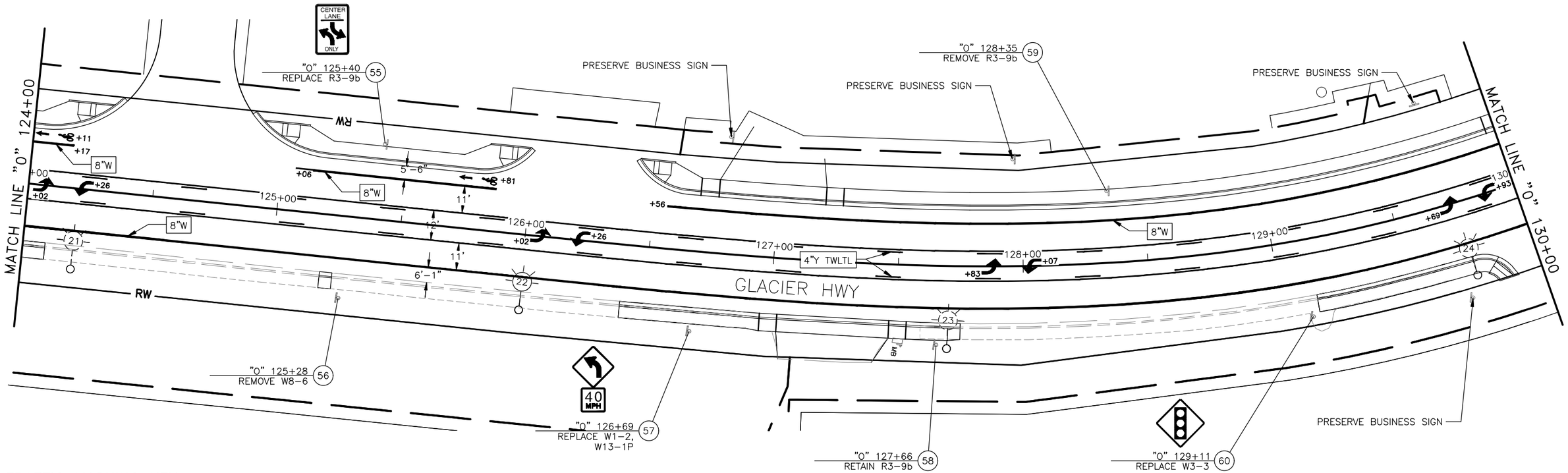

TRAFFIC MARKING KEY

4"W	4" WHITE LINE
4"WS	4" WHITE SKIP LINE (10' STRIPE/30' SKIP PATTERN)
4"WD-1	4" WHITE DOTTED LINE (2' STRIPE/6' SKIP PATTERN)
4"WD-2	4" WHITE DOTTED LINE (3' STRIPE/9' SKIP PATTERN)
4"Y	4" YELLOW LINE
4"YS	4" YELLOW SKIP LINE (10' STRIPE/30' SKIP PATTERN)
4"DY	4" DOUBLE YELLOW LINE
4"Y TWLTL	4" YELLOW TWO-WAY LEFT-TURN LANE STANDARD
8"W	8" WHITE LINE
8"WD-1	8" WHITE WIDE DOTTED LINE (2' STRIPE/4' SKIP PATTERN)
8"WD-2	8" WHITE WIDE DOTTED LINE (3' STRIPE/9' SKIP PATTERN)
12"WD	12" WHITE WIDE DOTTED LINE (2' STRIPE/2' SKIP PATTERN)
12"WRE	12" WHITE ROUNDABOUT ENTRY (2' STRIPE/6' SKIP PATTERN)
24"W	24" WHITE LINE
STD	SEE STANDARD DRAWING

NOTE:
DIMENSIONS ARE TO CENTER OF STRIPE OR STRIPE GROUP.

Record Drawings have been reviewed by the Project Engineer, and represent to the best of my knowledge, the project as constructed.

PE Dillon Tomaro 2/4/25

STATE OF ALASKA 49TH ANTHONY M. ROOS CE 127591 REGISTERED PROFESSIONAL ENGINEER
7/31/2020

SIGNING AND STRIPING PLAN 5

PLANS DEVELOPED BY: KITTELSON & ASSOCIATES, INC. CERT. OF AUTHORIZATION NO.: 254741, 851 SW 6TH AVE. SUITE 600, PORTLAND, OR 97204, (503) 228-5230
H:\20\20487 - Glacier Highway - Juneau Traffic Design\design_CD\68124_H_SIGNSTRIPE-H-6 Thu, Jul/30/20 09:07am

NO.	DATE	REVISION

STATE	PROJECT DESIGNATION	YEAR	SHEET NO.	TOTAL SHEETS
ALASKA	TEA-0955(016)/Z68124	2020	H-7	235

SEE SIGNAL SHEET H-30 FOR TRAFFIC SIGNAL SIGNING

** Deleted by CO47

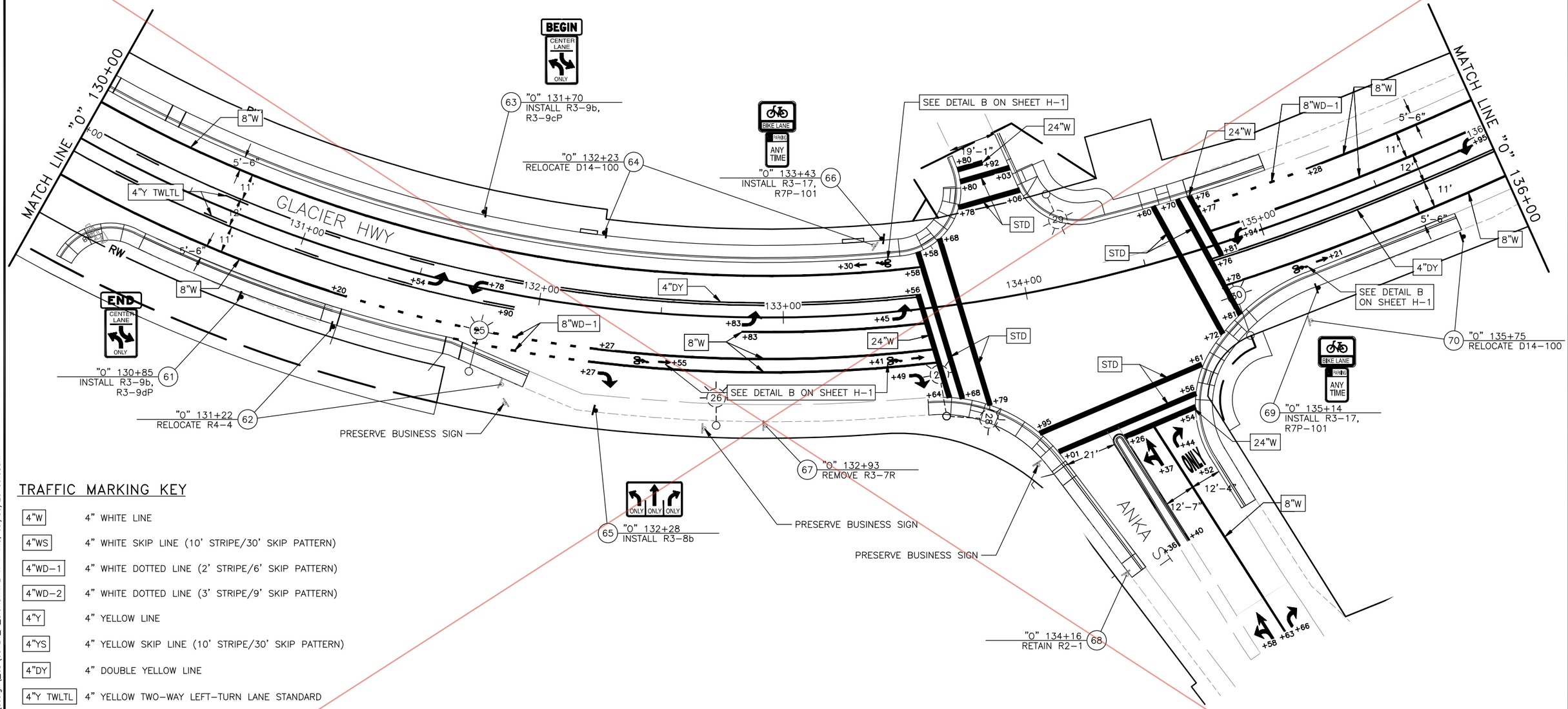

TRAFFIC MARKING KEY

4"W	4" WHITE LINE
4"WS	4" WHITE SKIP LINE (10' STRIPE/30' SKIP PATTERN)
4"WD-1	4" WHITE DOTTED LINE (2' STRIPE/6' SKIP PATTERN)
4"WD-2	4" WHITE DOTTED LINE (3' STRIPE/9' SKIP PATTERN)
4"Y	4" YELLOW LINE
4"YS	4" YELLOW SKIP LINE (10' STRIPE/30' SKIP PATTERN)
4"DY	4" DOUBLE YELLOW LINE
4"Y TWLTL	4" YELLOW TWO-WAY LEFT-TURN LANE STANDARD
8"W	8" WHITE LINE
8"WD-1	8" WHITE WIDE DOTTED LINE (2' STRIPE/4' SKIP PATTERN)
8"WD-2	8" WHITE WIDE DOTTED LINE (3' STRIPE/9' SKIP PATTERN)
12"WD	12" WHITE WIDE DOTTED LINE (2' STRIPE/2' SKIP PATTERN)
12"WRE	12" WHITE ROUNDABOUT ENTRY (2' STRIPE/6' SKIP PATTERN)
24"W	24" WHITE LINE
STD	SEE STANDARD DRAWING

NOTE:
DIMENSIONS ARE TO CENTER OF STRIPE OR STRIPE GROUP.

Record Drawings have been reviewed by the Project Engineer, and represent to the best of my knowledge, the project as constructed.

PE Dillon Tomaro 2/4/25

SIGNING AND STRIPING PLAN 6

STATE OF ALASKA 49TH ANTHONY M. ROOS CE 127591 REGISTERED PROFESSIONAL ENGINEER
7/31/2020

PLANS DEVELOPED BY: KITTELSON & ASSOCIATES, INC. CERT. OF AUTHORIZATION NO.: 254741, 851 SW 6TH AVE. SUITE 600, PORTLAND, OR 97204, (503) 228-5230
H:\20\20487 - Glacier Highway - Juneau Traffic Design\design_CD\68124_H_SIGNSTRIPE-H-7 Thu, Jul/30/20 09:08am

NO.	DATE	REVISION	STATE	PROJECT DESIGNATION	YEAR	SHEET NO.	TOTAL SHEETS
3	05/22/23	DELTA 43: ANKA MEDIAN REMOVAL	ALASKA	TEA-0955(016)/Z68124	2020	H-7	235

CO47

SEE SIGNAL SHEET H-30 FOR TRAFFIC SIGNAL SIGNING

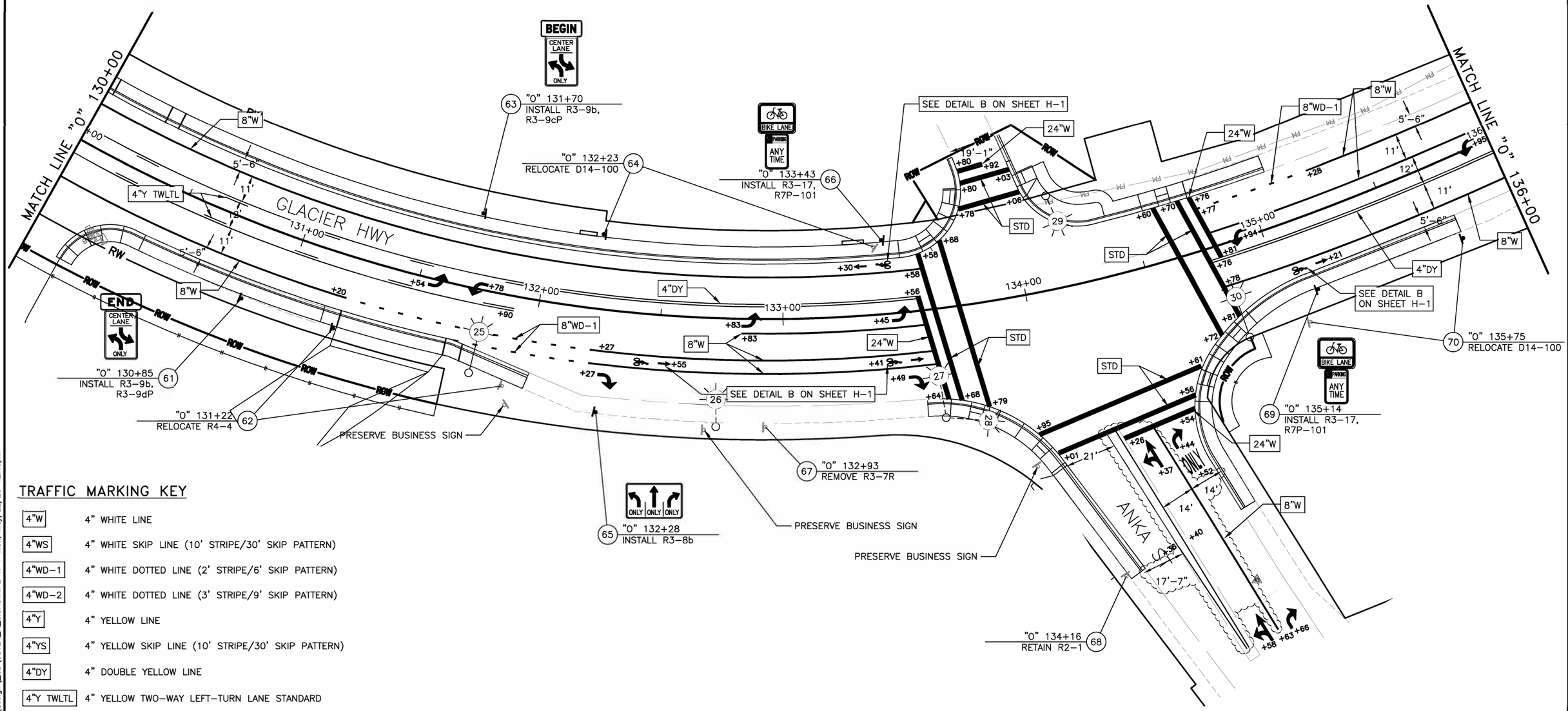

TRAFFIC MARKING KEY

4"W	4" WHITE LINE
4"WS	4" WHITE SKIP LINE (10' STRIPE/30' SKIP PATTERN)
4"WD-1	4" WHITE DOTTED LINE (2' STRIPE/6' SKIP PATTERN)
4"WD-2	4" WHITE DOTTED LINE (3' STRIPE/9' SKIP PATTERN)
4"Y	4" YELLOW LINE
4"YS	4" YELLOW SKIP LINE (10' STRIPE/30' SKIP PATTERN)
4"DY	4" DOUBLE YELLOW LINE
4"Y TWLTL	4" YELLOW TWO-WAY LEFT-TURN LANE STANDARD
8"W	8" WHITE LINE
8"WD-1	8" WHITE WIDE DOTTED LINE (2' STRIPE/4' SKIP PATTERN)
8"WD-2	8" WHITE WIDE DOTTED LINE (3' STRIPE/9' SKIP PATTERN)
12"WD	12" WHITE WIDE DOTTED LINE (2' STRIPE/2' SKIP PATTERN)
12"WRE	12" WHITE ROUNDABOUT ENTRY (2' STRIPE/6' SKIP PATTERN)
24"W	24" WHITE LINE
STD	SEE STANDARD DRAWING

NOTE:
DIMENSIONS ARE TO CENTER OF STRIPE OR STRIPE GROUP.

Record Drawings have been reviewed by the Project Engineer, and represent to the best of my knowledge, the project as constructed.

PE Dillon Tomaro 2/4/25

SIGNING AND STRIPING PLAN 6

STATE OF ALASKA 49TH ANTHONY M. ROOS CE 12759 REGISTERED PROFESSIONAL ENGINEER 5/22/23

PLANS DEVELOPED BY: KITTELSON & ASSOCIATES, INC. CERT. OF AUTHORIZATION NO.: 254741, 851 SW 6TH AVE. SUITE 600, PORTLAND, OR 97204, (503) 228-5230
H:\20\20487 - Glacier Highway - Juneau Traffic Design\design_CD\68124_H_SIGNSTRIPE-H-7 Mon, May/22/23 12:46pm

NO.	DATE	REVISION

STATE	PROJECT DESIGNATION	YEAR	SHEET NO.	TOTAL SHEETS
ALASKA	TEA-0955(016)/Z68124	2020	H-8	235

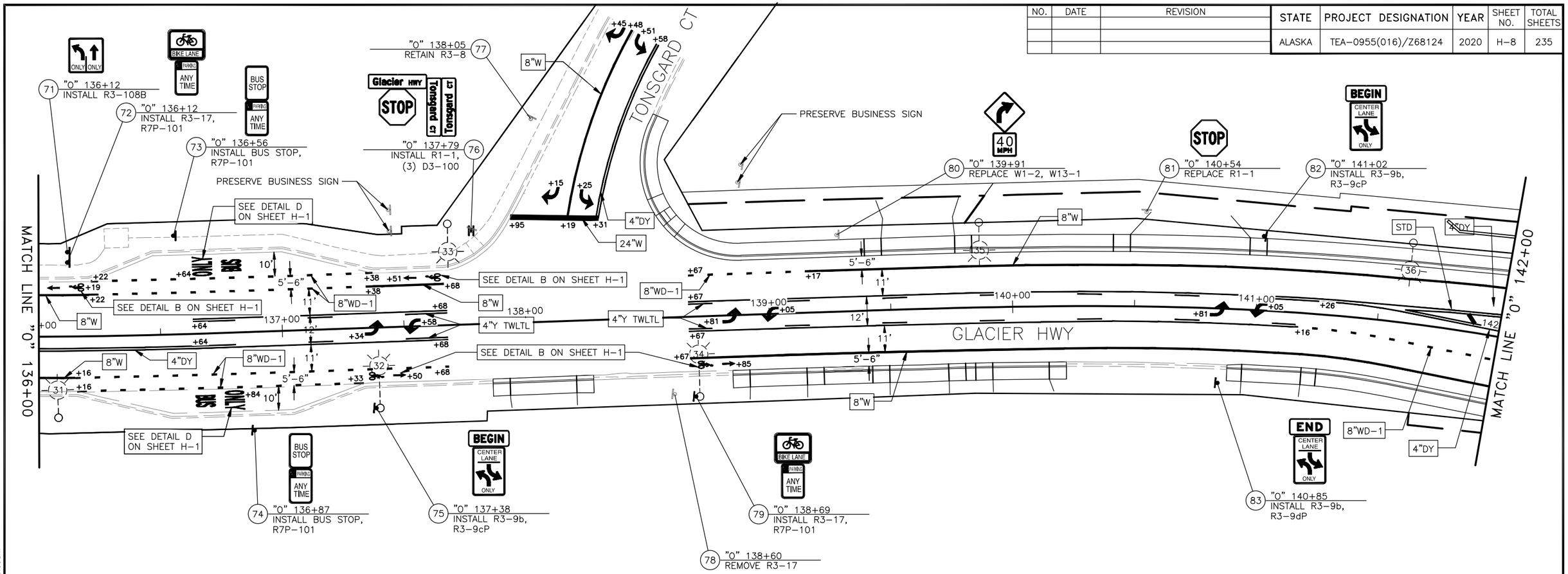

TRAFFIC MARKING KEY

4"W	4" WHITE LINE
4"WS	4" WHITE SKIP LINE (10' STRIPE/30' SKIP PATTERN)
4"WD-1	4" WHITE DOTTED LINE (2' STRIPE/6' SKIP PATTERN)
4"WD-2	4" WHITE DOTTED LINE (3' STRIPE/9' SKIP PATTERN)
4"Y	4" YELLOW LINE
4"YS	4" YELLOW SKIP LINE (10' STRIPE/30' SKIP PATTERN)
4"DY	4" DOUBLE YELLOW LINE
4"Y TWLTL	4" YELLOW TWO-WAY LEFT-TURN LANE STANDARD
8"W	8" WHITE LINE
8"WD-1	8" WHITE WIDE DOTTED LINE (2' STRIPE/4' SKIP PATTERN)
8"WD-2	8" WHITE WIDE DOTTED LINE (3' STRIPE/9' SKIP PATTERN)
12"WD	12" WHITE WIDE DOTTED LINE (2' STRIPE/2' SKIP PATTERN)
12"WRE	12" WHITE ROUNDABOUT ENTRY (2' STRIPE/6' SKIP PATTERN)
24"W	24" WHITE LINE
STD	SEE STANDARD DRAWING

NOTE:
DIMENSIONS ARE TO CENTER OF STRIPE OR STRIPE GROUP.

Record Drawings have been reviewed by the Project Engineer, and represent to the best of my knowledge, the project as constructed.

PE *Dillon Tomaro* 2/4/25

STATE OF ALASKA
49TH
ANTHONY M. ROOS
CE 127591
REGISTERED PROFESSIONAL ENGINEER
7/31/2020

SIGNING AND STRIPING PLAN 7

PLANS DEVELOPED BY: KITTELSON & ASSOCIATES, INC. CERT. OF AUTHORIZATION NO.: 254741, 851 SW 6TH AVE. SUITE 600, PORTLAND, OR 97204, (503) 228-5230
H:\20\20487 - Glacier Highway - Juneau Traffic Design\design_CD\68124_H_SIGNSTRIPE-H-8 Thu, Jul/30/20 09:09am

NO.	DATE	REVISION

STATE	PROJECT DESIGNATION	YEAR	SHEET NO.	TOTAL SHEETS
ALASKA	TEA-0955(016)/Z68124	2020	H-9	235

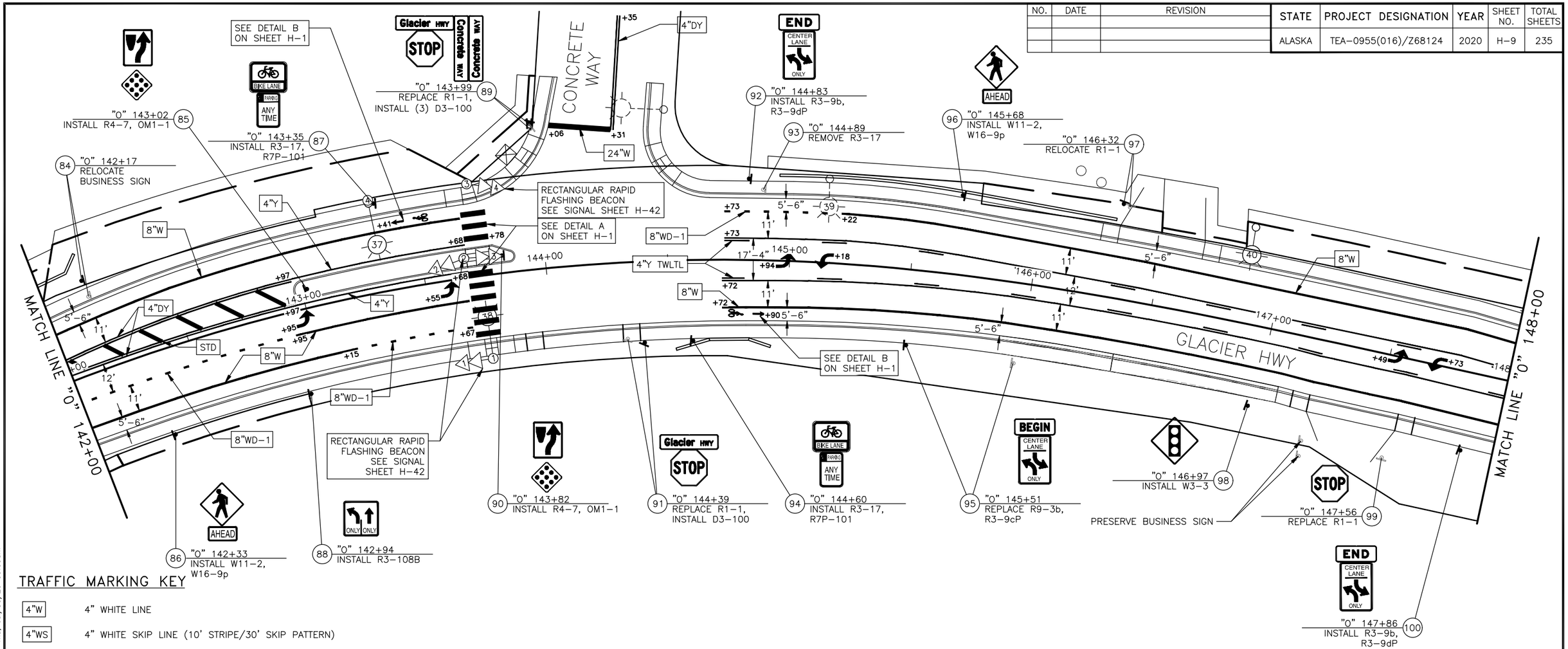

TRAFFIC MARKING KEY

4"W	4" WHITE LINE
4"WS	4" WHITE SKIP LINE (10' STRIPE/30' SKIP PATTERN)
4"WD-1	4" WHITE DOTTED LINE (2' STRIPE/6' SKIP PATTERN)
4"WD-2	4" WHITE DOTTED LINE (3' STRIPE/9' SKIP PATTERN)
4"Y	4" YELLOW LINE
4"YS	4" YELLOW SKIP LINE (10' STRIPE/30' SKIP PATTERN)
4"DY	4" DOUBLE YELLOW LINE
4"Y TWLTL	4" YELLOW TWO-WAY LEFT-TURN LANE STANDARD
8"W	8" WHITE LINE
8"WD-1	8" WHITE WIDE DOTTED LINE (2' STRIPE/4' SKIP PATTERN)
8"WD-2	8" WHITE WIDE DOTTED LINE (3' STRIPE/9' SKIP PATTERN)
12"WD	12" WHITE WIDE DOTTED LINE (2' STRIPE/2' SKIP PATTERN)
12"WRE	12" WHITE ROUNDABOUT ENTRY (2' STRIPE/6' SKIP PATTERN)
24"W	24" WHITE LINE
STD	SEE STANDARD DRAWING

NOTE:
DIMENSIONS ARE TO CENTER OF STRIPE OR STRIPE GROUP.

Record Drawings have been reviewed by the Project Engineer, and represent to the best of my knowledge, the project as constructed.

PE Dillon Tomaro 2/4/25

STATE OF ALASKA
49TH
ANTHONY M. ROOS
CE 127591
REGISTERED PROFESSIONAL ENGINEER
7/31/2020

SIGNING AND STRIPING PLAN 8

PLANS DEVELOPED BY: KITTELSON & ASSOCIATES, INC. CERT. OF AUTHORIZATION NO.: 254741, 851 SW 6TH AVE. SUITE 600, PORTLAND, OR 97204, (503) 228-5230
H:\20\20487 - Glacier Highway - Juneau Traffic Design\design_CD\68124_H_SIGNSTRIPE-H-9 Thu, Jul/30/20 09:09am

NO.	DATE	REVISION

STATE	PROJECT DESIGNATION	YEAR	SHEET NO.	TOTAL SHEETS
ALASKA	TEA-0955(016)/Z68124	2020	H-10	235

SEE SIGNAL SHEET H-35 FOR TRAFFIC SIGNAL SIGNING

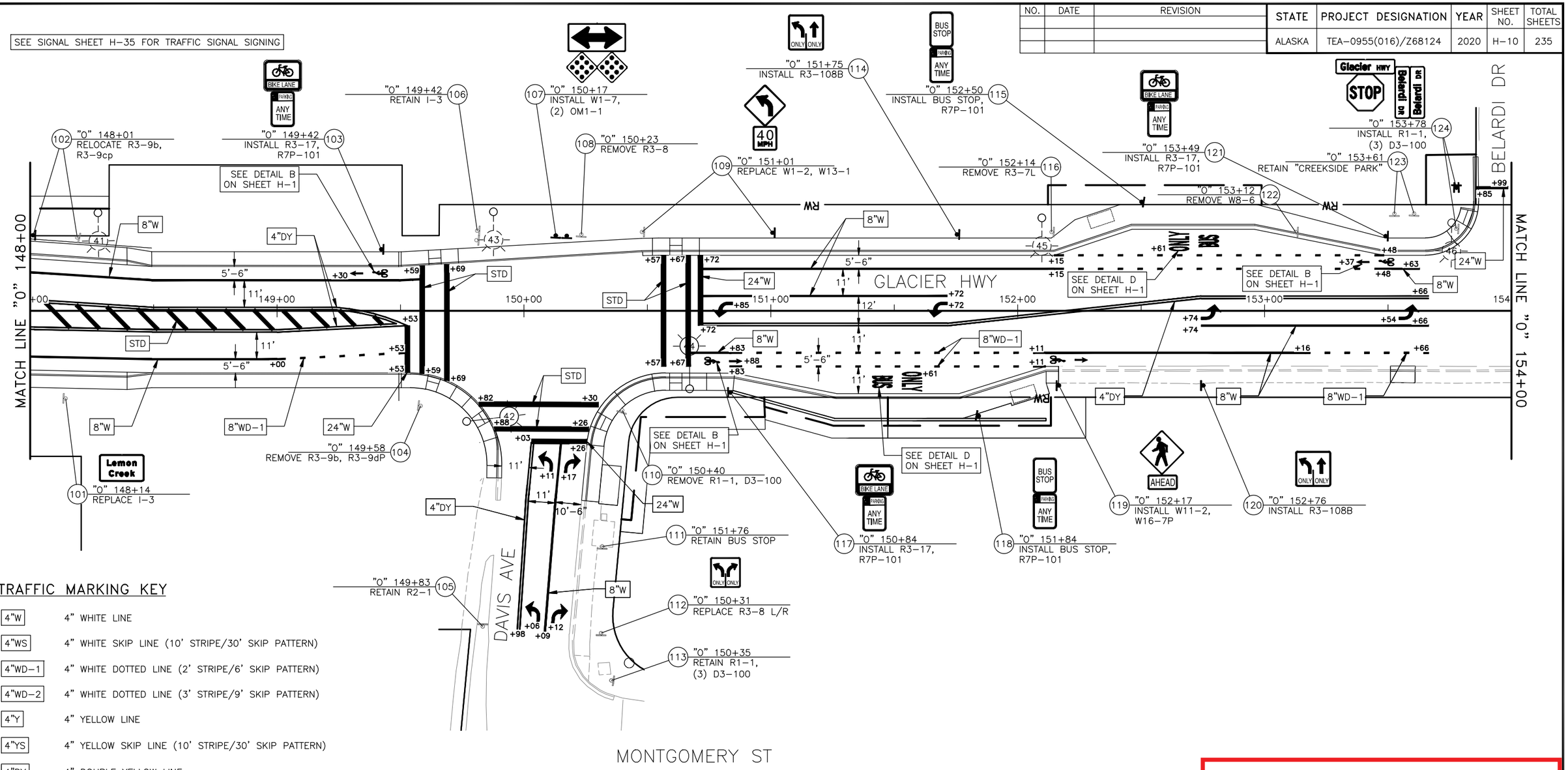

TRAFFIC MARKING KEY

4"W	4" WHITE LINE
4"WS	4" WHITE SKIP LINE (10' STRIPE/30' SKIP PATTERN)
4"WD-1	4" WHITE DOTTED LINE (2' STRIPE/6' SKIP PATTERN)
4"WD-2	4" WHITE DOTTED LINE (3' STRIPE/9' SKIP PATTERN)
4"Y	4" YELLOW LINE
4"YS	4" YELLOW SKIP LINE (10' STRIPE/30' SKIP PATTERN)
4"DY	4" DOUBLE YELLOW LINE
4"Y TWLTL	4" YELLOW TWO-WAY LEFT-TURN LANE STANDARD
8"W	8" WHITE LINE
8"WD-1	8" WHITE WIDE DOTTED LINE (2' STRIPE/4' SKIP PATTERN)
8"WD-2	8" WHITE WIDE DOTTED LINE (3' STRIPE/9' SKIP PATTERN)
12"WD	12" WHITE WIDE DOTTED LINE (2' STRIPE/2' SKIP PATTERN)
12"WRE	12" WHITE ROUNDABOUT ENTRY (2' STRIPE/6' SKIP PATTERN)
24"W	24" WHITE LINE
STD	SEE STANDARD DRAWING

NOTE:
DIMENSIONS ARE TO CENTER OF STRIPE OR STRIPE GROUP.

Record Drawings have been reviewed by the Project Engineer, and represent to the best of my knowledge, the project as constructed.

PE Dillon Tomaro 2/4/25

STATE OF ALASKA 49TH ANTHONY M. ROOS CE 12759 REGISTERED PROFESSIONAL ENGINEER
7/31/2020

SIGNING AND STRIPING PLAN 9

PLANS DEVELOPED BY: KITTELSON & ASSOCIATES, INC. CERT. OF AUTHORIZATION NO.: 254741, 851 SW 6TH AVE. SUITE 600, PORTLAND, OR 97204, (503) 228-5230
H:\20\20487 - Glacier Highway - Juneau Traffic Design\design_CD\68124_H_SIGNSTRIPE-H-10 Thu, Jul/30/20 09:10am

NO.	DATE	REVISION

STATE	PROJECT DESIGNATION	YEAR	SHEET NO.	TOTAL SHEETS
ALASKA	TEA-0955(016)/Z68124	2020	H-11	235

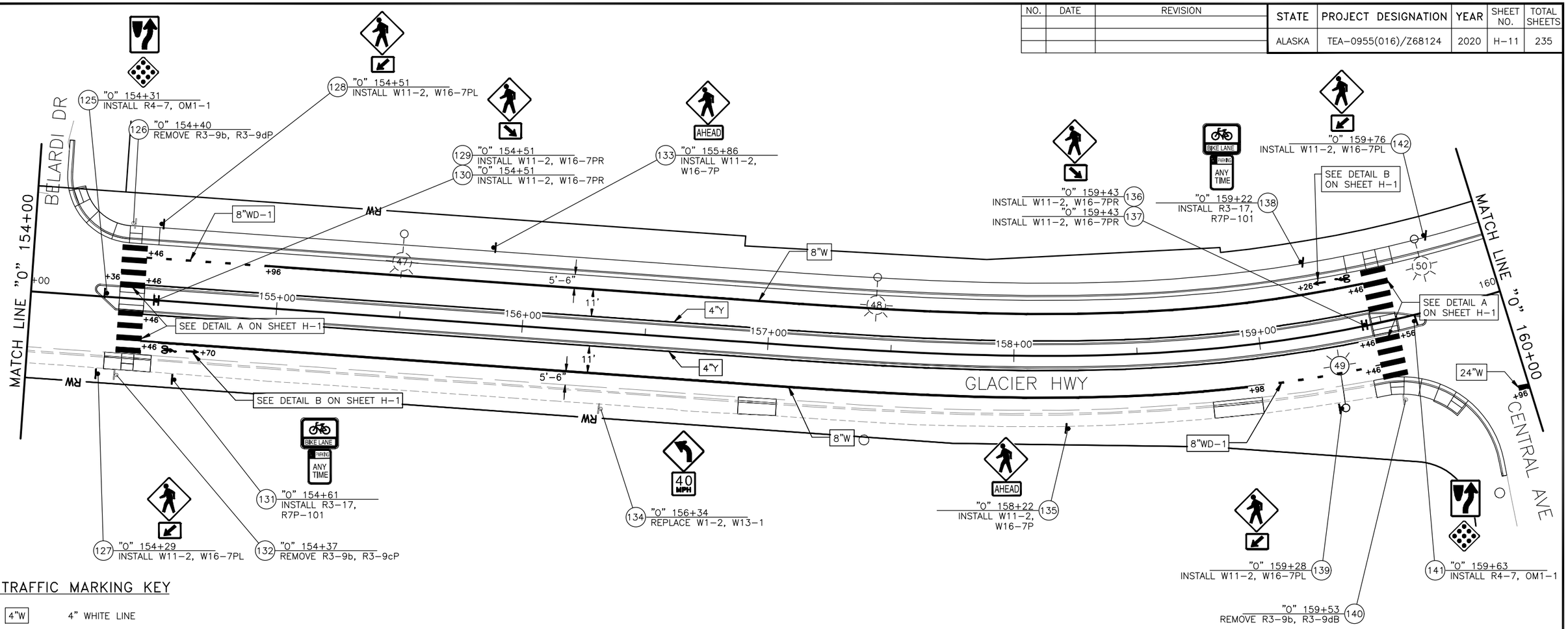

TRAFFIC MARKING KEY

4"W	4" WHITE LINE
4"WS	4" WHITE SKIP LINE (10' STRIPE/30' SKIP PATTERN)
4"WD-1	4" WHITE DOTTED LINE (2' STRIPE/6' SKIP PATTERN)
4"WD-2	4" WHITE DOTTED LINE (3' STRIPE/9' SKIP PATTERN)
4"Y	4" YELLOW LINE
4"YS	4" YELLOW SKIP LINE (10' STRIPE/30' SKIP PATTERN)
4"DY	4" DOUBLE YELLOW LINE
4"Y TWLTL	4" YELLOW TWO-WAY LEFT-TURN LANE STANDARD
8"W	8" WHITE LINE
8"WD-1	8" WHITE WIDE DOTTED LINE (2' STRIPE/4' SKIP PATTERN)
8"WD-2	8" WHITE WIDE DOTTED LINE (3' STRIPE/9' SKIP PATTERN)
12"WD	12" WHITE WIDE DOTTED LINE (2' STRIPE/2' SKIP PATTERN)
12"WRE	12" WHITE ROUNDABOUT ENTRY (2' STRIPE/6' SKIP PATTERN)
24"W	24" WHITE LINE
STD	SEE STANDARD DRAWING

NOTE:
DIMENSIONS ARE TO CENTER OF STRIPE OR STRIPE GROUP.

Record Drawings have been reviewed by the Project Engineer, and represent to the best of my knowledge, the project as constructed.

PE *Dillon Tomaro* 2/4/25

SIGNING AND STRIPING PLAN 10

STATE OF ALASKA 49TH
ANTHONY M. ROOS CE 127591
REGISTERED PROFESSIONAL ENGINEER
7/31/2020

PLANS DEVELOPED BY: KITTELSON & ASSOCIATES, INC. CERT. OF AUTHORIZATION NO.: 254741, 851 SW 6TH AVE. SUITE 600, PORTLAND, OR 97204, (503) 228-5230
H:\20\20487 - Glacier Highway - Juneau Traffic Design\design_CD\68124_H_SIGNSTRIPE-H-11 Thu, Jul/30/20 09:11am

NO.	DATE	REVISION

STATE	PROJECT DESIGNATION	YEAR	SHEET NO.	TOTAL SHEETS
ALASKA	TEA-0955(016)/Z68124	2020	H-12	235

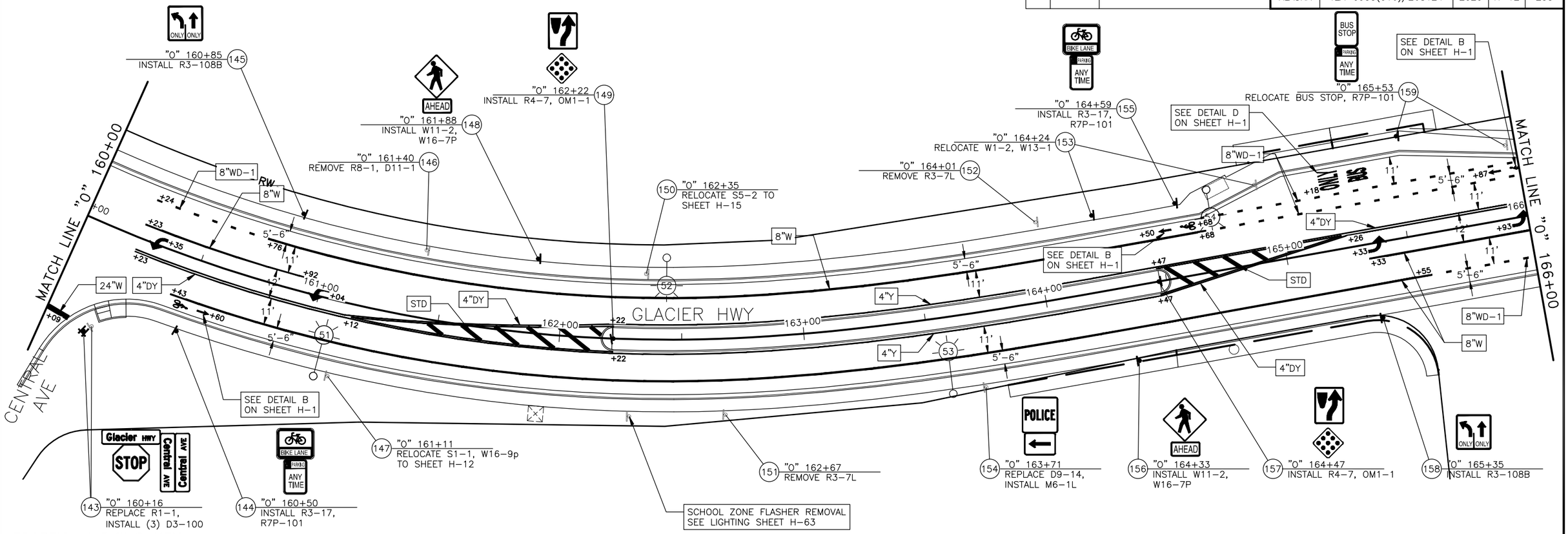

TRAFFIC MARKING KEY

4"W	4" WHITE LINE
4"WS	4" WHITE SKIP LINE (10' STRIPE/30' SKIP PATTERN)
4"WD-1	4" WHITE DOTTED LINE (2' STRIPE/6' SKIP PATTERN)
4"WD-2	4" WHITE DOTTED LINE (3' STRIPE/9' SKIP PATTERN)
4"Y	4" YELLOW LINE
4"YS	4" YELLOW SKIP LINE (10' STRIPE/30' SKIP PATTERN)
4"DY	4" DOUBLE YELLOW LINE
4"Y TWLTL	4" YELLOW TWO-WAY LEFT-TURN LANE STANDARD
8"W	8" WHITE LINE
8"WD-1	8" WHITE WIDE DOTTED LINE (2' STRIPE/4' SKIP PATTERN)
8"WD-2	8" WHITE WIDE DOTTED LINE (3' STRIPE/9' SKIP PATTERN)
12"WD	12" WHITE WIDE DOTTED LINE (2' STRIPE/2' SKIP PATTERN)
12"WRE	12" WHITE ROUNDABOUT ENTRY (2' STRIPE/6' SKIP PATTERN)
24"W	24" WHITE LINE
STD	SEE STANDARD DRAWING

NOTE:
DIMENSIONS ARE TO CENTER OF STRIPE OR STRIPE GROUP.

Record Drawings have been reviewed by the Project Engineer, and represent to the best of my knowledge, the project as constructed.

PE Dillon Tomaro 2/4/25

STATE OF ALASKA
49TH
ANTHONY M. ROOS
CE 127591
REGISTERED PROFESSIONAL ENGINEER
7/31/2020

SIGNING AND STRIPING PLAN 11

PLANS DEVELOPED BY: KITTELSON & ASSOCIATES, INC. CERT. OF AUTHORIZATION NO.: 254741, 851 SW 6TH AVE. SUITE 600, PORTLAND, OR 97204, (503) 228-5230
H:\20\20487 - Glacier Highway - Juneau Traffic Design\design_CD\68124_H_SIGNSTRIPE-H-12 Thu, Jul/30/20 09:12am

NO.	DATE	REVISION

STATE	PROJECT DESIGNATION	YEAR	SHEET NO.	TOTAL SHEETS
ALASKA	TEA-0955(016)/Z68124	2020	H-13	235

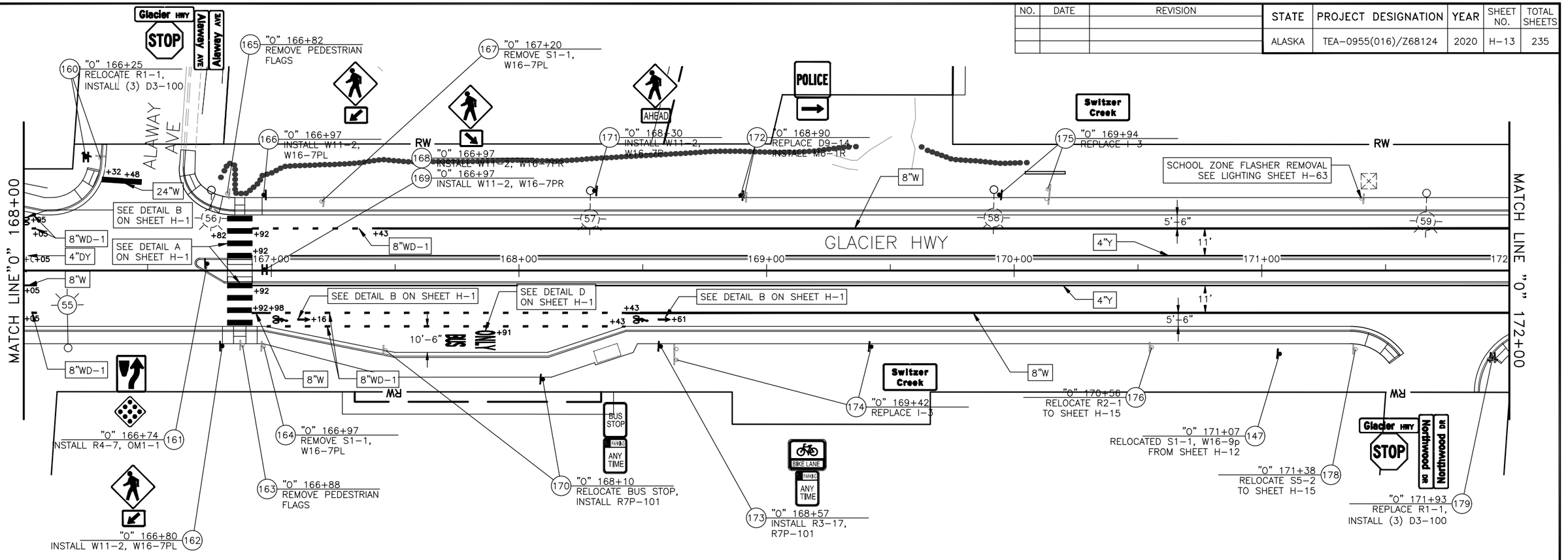

TRAFFIC MARKING KEY

4"W	4" WHITE LINE
4"WS	4" WHITE SKIP LINE (10' STRIPE/30' SKIP PATTERN)
4"WD-1	4" WHITE DOTTED LINE (2' STRIPE/6' SKIP PATTERN)
4"WD-2	4" WHITE DOTTED LINE (3' STRIPE/9' SKIP PATTERN)
4"Y	4" YELLOW LINE
4"YS	4" YELLOW SKIP LINE (10' STRIPE/30' SKIP PATTERN)
4"DY	4" DOUBLE YELLOW LINE
4"Y TWLTL	4" YELLOW TWO-WAY LEFT-TURN LANE STANDARD
8"W	8" WHITE LINE
8"WD-1	8" WHITE WIDE DOTTED LINE (2' STRIPE/4' SKIP PATTERN)
8"WD-2	8" WHITE WIDE DOTTED LINE (3' STRIPE/9' SKIP PATTERN)
12"WD	12" WHITE WIDE DOTTED LINE (2' STRIPE/2' SKIP PATTERN)
12"WRE	12" WHITE ROUNDABOUT ENTRY (2' STRIPE/6' SKIP PATTERN)
24"W	24" WHITE LINE
STD	SEE STANDARD DRAWING

NOTE:
DIMENSIONS ARE TO CENTER OF STRIPE OR STRIPE GROUP.

Record Drawings have been reviewed by the Project Engineer, and represent to the best of my knowledge, the project as constructed.

PE *Dillon Tomaro* 2/4/25

STATE OF ALASKA 49TH
ANTHONY M. ROOS CE 12759
REGISTERED PROFESSIONAL ENGINEER
7/31/2020

SIGNING AND STRIPING PLAN 12

PLANS DEVELOPED BY: KITTELSON & ASSOCIATES, INC. CERT. OF AUTHORIZATION NO.: 254741, 851 SW 6TH AVE. SUITE 600, PORTLAND, OR 97204, (503) 228-5230
H:\20\20487 - Glacier Highway - Juneau Traffic Design\design_CD\68124_H_SIGNSTRIPE_H-13 Thu, Jul/30/20 09:12am

Record Drawings have been reviewed by the Project Engineer, and represent to the best of my knowledge, the project as constructed.

PE *Dillon Tomaro* 2/4/25

** Deleted by CO29

NO.	DATE	REVISION

STATE	PROJECT DESIGNATION	YEAR	SHEET NO.	TOTAL SHEETS
ALASKA	TEA-0955(016)/Z68124	2020	H-14	235

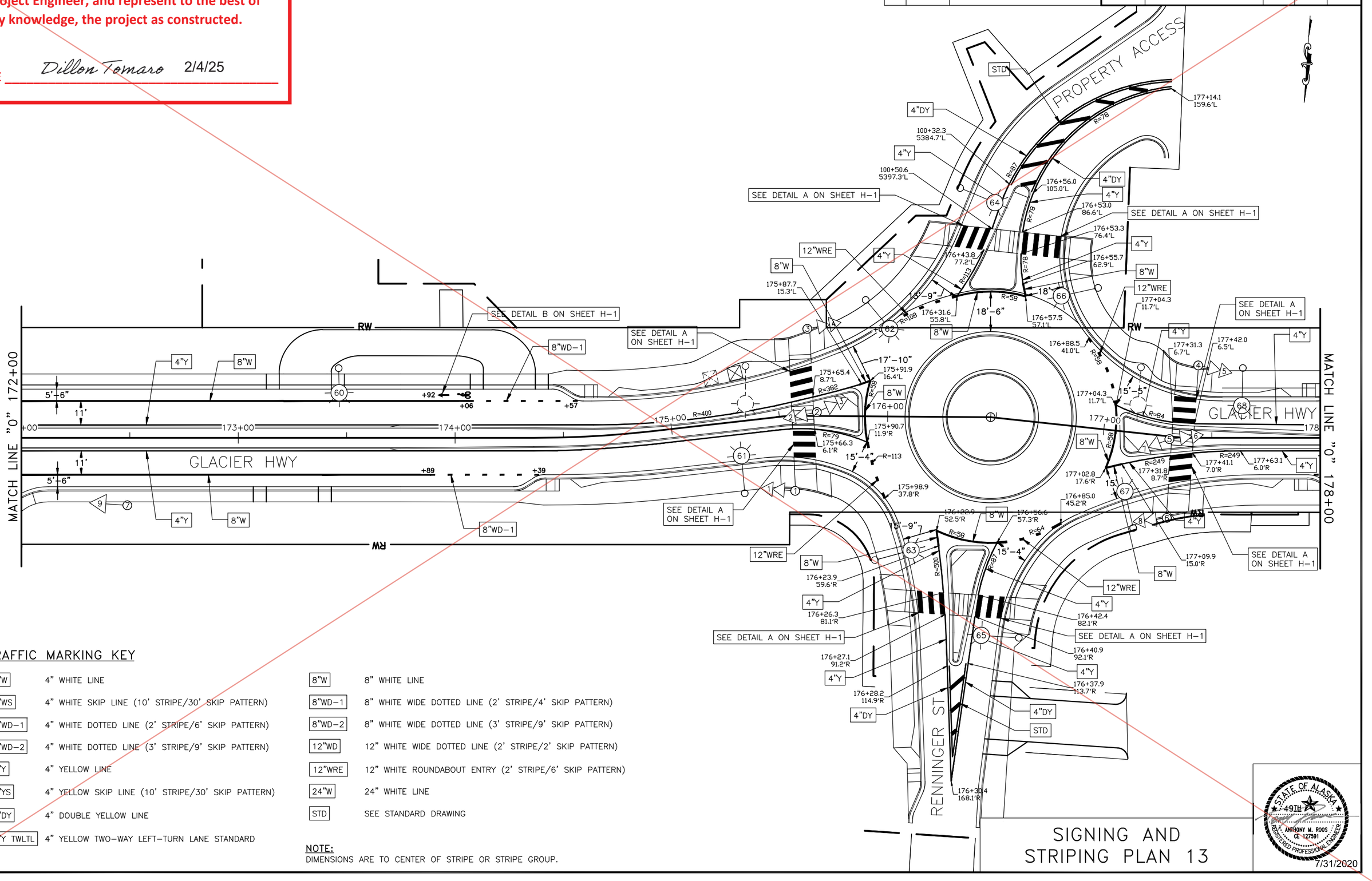

TRAFFIC MARKING KEY

4"W	4" WHITE LINE
4"WS	4" WHITE SKIP LINE (10' STRIPE/30' SKIP PATTERN)
4"WD-1	4" WHITE DOTTED LINE (2' STRIPE/6' SKIP PATTERN)
4"WD-2	4" WHITE DOTTED LINE (3' STRIPE/9' SKIP PATTERN)
4"Y	4" YELLOW LINE
4"YS	4" YELLOW SKIP LINE (10' STRIPE/30' SKIP PATTERN)
4"DY	4" DOUBLE YELLOW LINE
4"Y TWLTL	4" YELLOW TWO-WAY LEFT-TURN LANE STANDARD
8"W	8" WHITE LINE
8"WD-1	8" WHITE WIDE DOTTED LINE (2' STRIPE/4' SKIP PATTERN)
8"WD-2	8" WHITE WIDE DOTTED LINE (3' STRIPE/9' SKIP PATTERN)
12"WD	12" WHITE WIDE DOTTED LINE (2' STRIPE/2' SKIP PATTERN)
12"WRE	12" WHITE ROUNDABOUT ENTRY (2' STRIPE/6' SKIP PATTERN)
24"W	24" WHITE LINE
STD	SEE STANDARD DRAWING

NOTE:
DIMENSIONS ARE TO CENTER OF STRIPE OR STRIPE GROUP.

SIGNING AND STRIPING PLAN 13

STATE OF ALASKA
49TH
ANTHONY M. ROOS
CE 12759
REGISTERED PROFESSIONAL ENGINEER
7/31/2020

PLANS DEVELOPED BY: KITTELSON & ASSOCIATES, INC. CERT. OF AUTHORIZATION NO.: 254741, 851 SW 6TH AVE. SUITE 600, PORTLAND, OR 97204, (503) 228-5230
H:\20\20487 - Glacier Highway - Juneau Traffic Design\design_CD\68124_H_SIGNSTRIPE-H-14 Thu, Jul/30/20 09:13am

Attachment No. 3

CO 29

Record Drawings have been reviewed by the Project Engineer, and represent to the best of my knowledge, the project as constructed.

PE *Dillon Tomaro* 2/4/25

NO.	DATE	REVISION
1	05/09/22	DELTA 34: RNBT Revisions

STATE	PROJECT DESIGNATION	YEAR	SHEET NO.	TOTAL SHEETS
ALASKA	TEA-0955(016)/Z68124	2020	H-14	235

PLANS DEVELOPED BY: KITTELSON & ASSOCIATES, INC. CERT. OF AUTHORIZATION NO.: 254741, 851 SW 6TH AVE, SUITE 600, PORTLAND, OR 97204, (503) 228-5230
H:\20\20487 - Glacier Highway - Juneau Traffic Design\design_CD\68124_H_SIGNSTRIPE-H-14 Tue, May/10/22 12:55pm

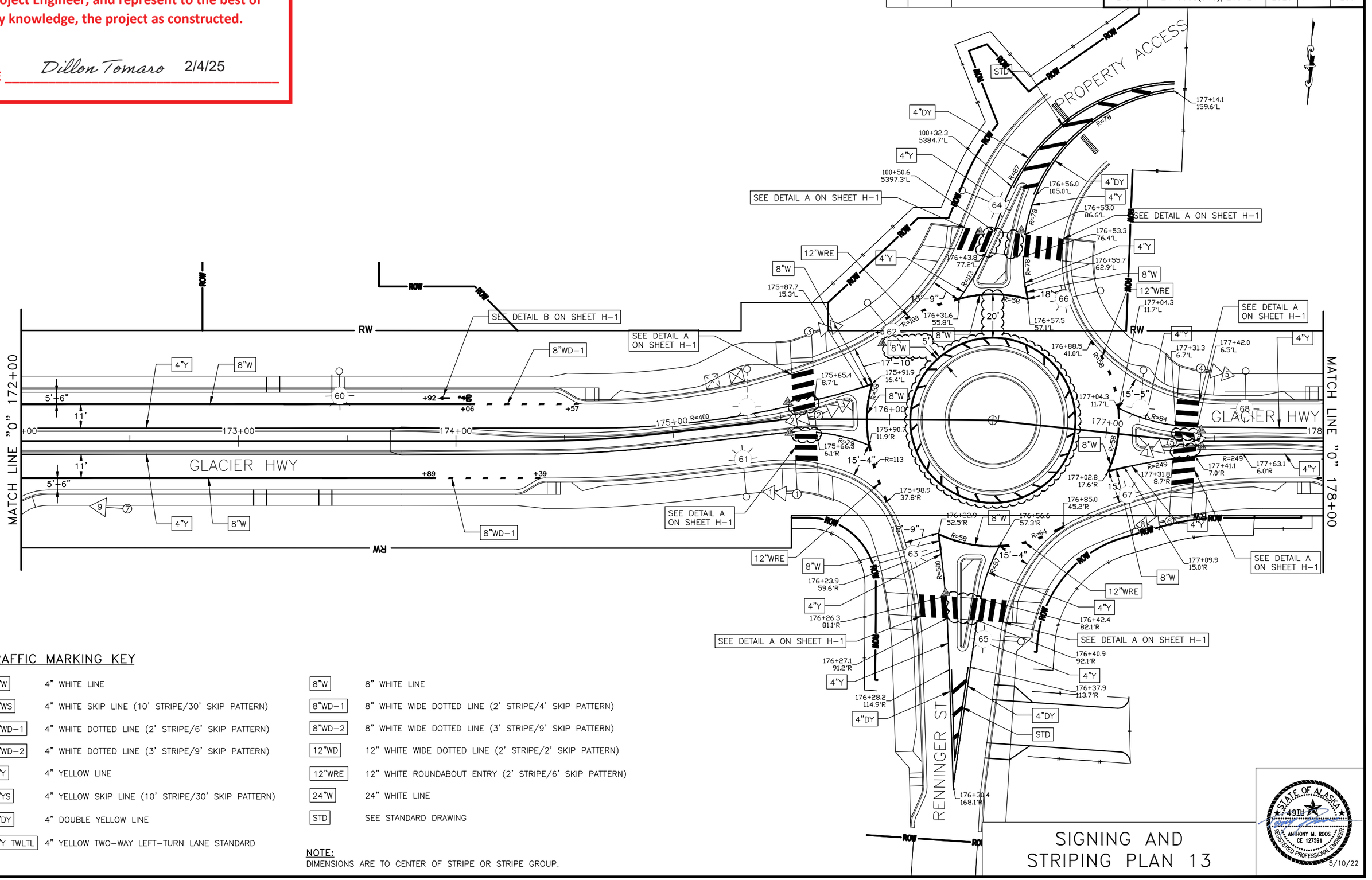

TRAFFIC MARKING KEY

4"W	4" WHITE LINE	8"W	8" WHITE LINE
4"WS	4" WHITE SKIP LINE (10' STRIPE/30' SKIP PATTERN)	8"WD-1	8" WHITE WIDE DOTTED LINE (2' STRIPE/4' SKIP PATTERN)
4"WD-1	4" WHITE DOTTED LINE (2' STRIPE/6' SKIP PATTERN)	8"WD-2	8" WHITE WIDE DOTTED LINE (3' STRIPE/9' SKIP PATTERN)
4"WD-2	4" WHITE DOTTED LINE (3' STRIPE/9' SKIP PATTERN)	12"WD	12" WHITE WIDE DOTTED LINE (2' STRIPE/2' SKIP PATTERN)
4"Y	4" YELLOW LINE	12"WRE	12" WHITE ROUNDABOUT ENTRY (2' STRIPE/6' SKIP PATTERN)
4"YS	4" YELLOW SKIP LINE (10' STRIPE/30' SKIP PATTERN)	24"W	24" WHITE LINE
4"DY	4" DOUBLE YELLOW LINE	STD	SEE STANDARD DRAWING
4"Y TWLTL	4" YELLOW TWO-WAY LEFT-TURN LANE STANDARD		

NOTE:
DIMENSIONS ARE TO CENTER OF STRIPE OR STRIPE GROUP.

SIGNING AND STRIPING PLAN 13

STATE OF ALASKA 49TH
ANTHONY M. ROOS CE 127591
REGISTERED PROFESSIONAL ENGINEER
5/10/22

Record Drawings have been reviewed by the Project Engineer, and represent to the best of my knowledge, the project as constructed.

PE Dillon Tomaro 2/4/25

** Deleted by CO29

NO.	DATE	REVISION

STATE	PROJECT DESIGNATION	YEAR	SHEET NO.	TOTAL SHEETS
ALASKA	TEA-0955(016)/Z68124	2020	H-15	235

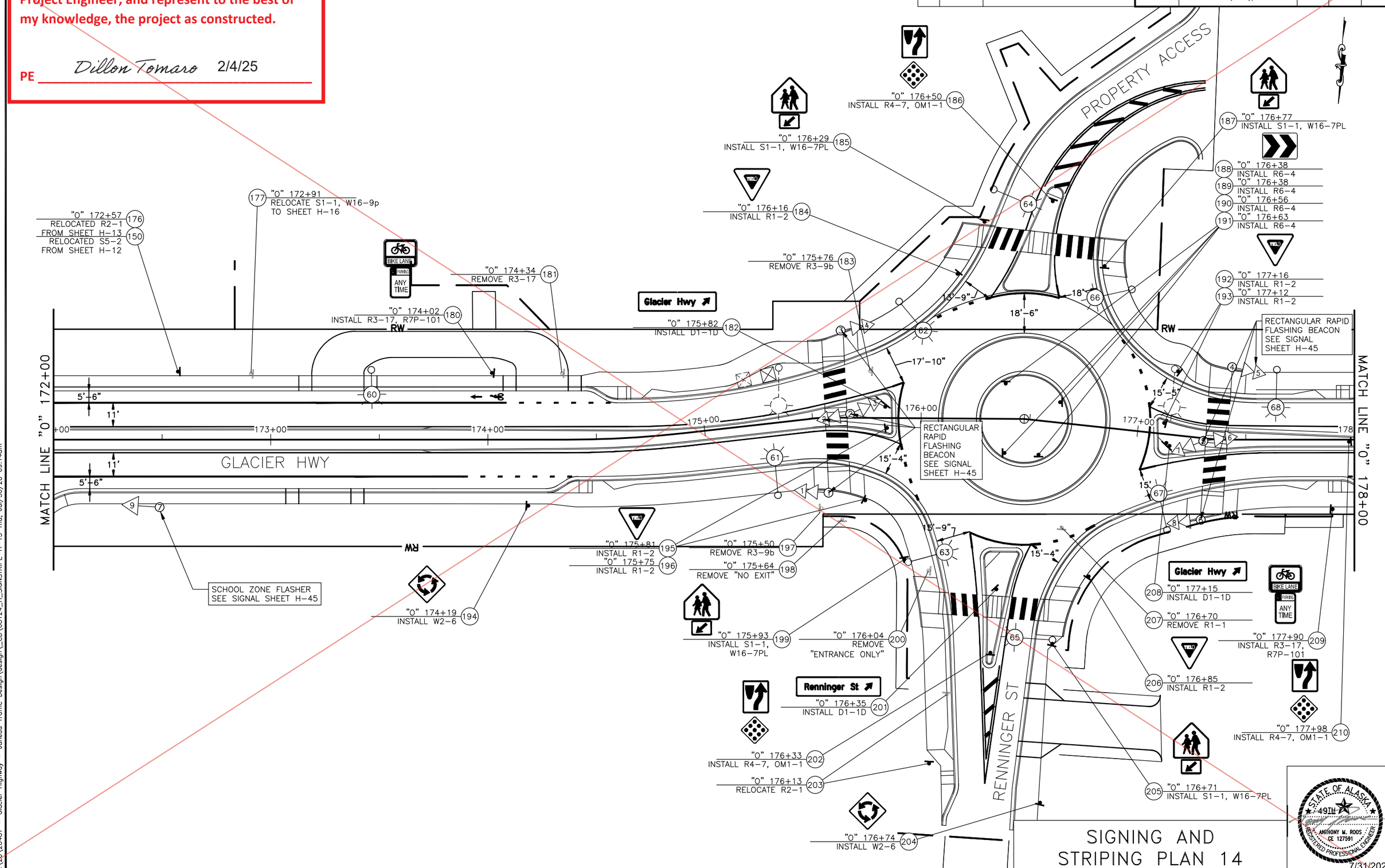

SIGNING AND STRIPING PLAN 14

STATE OF ALASKA 49TH ANTHONY M. ROOS CE 127591 REGISTERED PROFESSIONAL ENGINEER

7/31/2020

PLANS DEVELOPED BY: KITTELSON & ASSOCIATES, INC. CERT. OF AUTHORIZATION NO.: 254741, 851 SW 6TH AVE. SUITE 600, PORTLAND, OR 97204, (503) 228-5230
H:\20\20487 - Glacier Highway - Juneau Traffic Design\design_CD\68124_H_SIGNSTRIPE-H-15 Thu, Jul/30/20 09:14am

Record Drawings have been reviewed by the Project Engineer, and represent to the best of my knowledge, the project as constructed.

PE *Dillon Tomaro* 2/4/25

CO 29

NO.	DATE	REVISION
1	05/09/22	DELTA 34: RNBT Revisions

STATE	PROJECT DESIGNATION	YEAR	SHEET NO.	TOTAL SHEETS
ALASKA	TEA-0955(016)/Z68124	2020	H-15	235

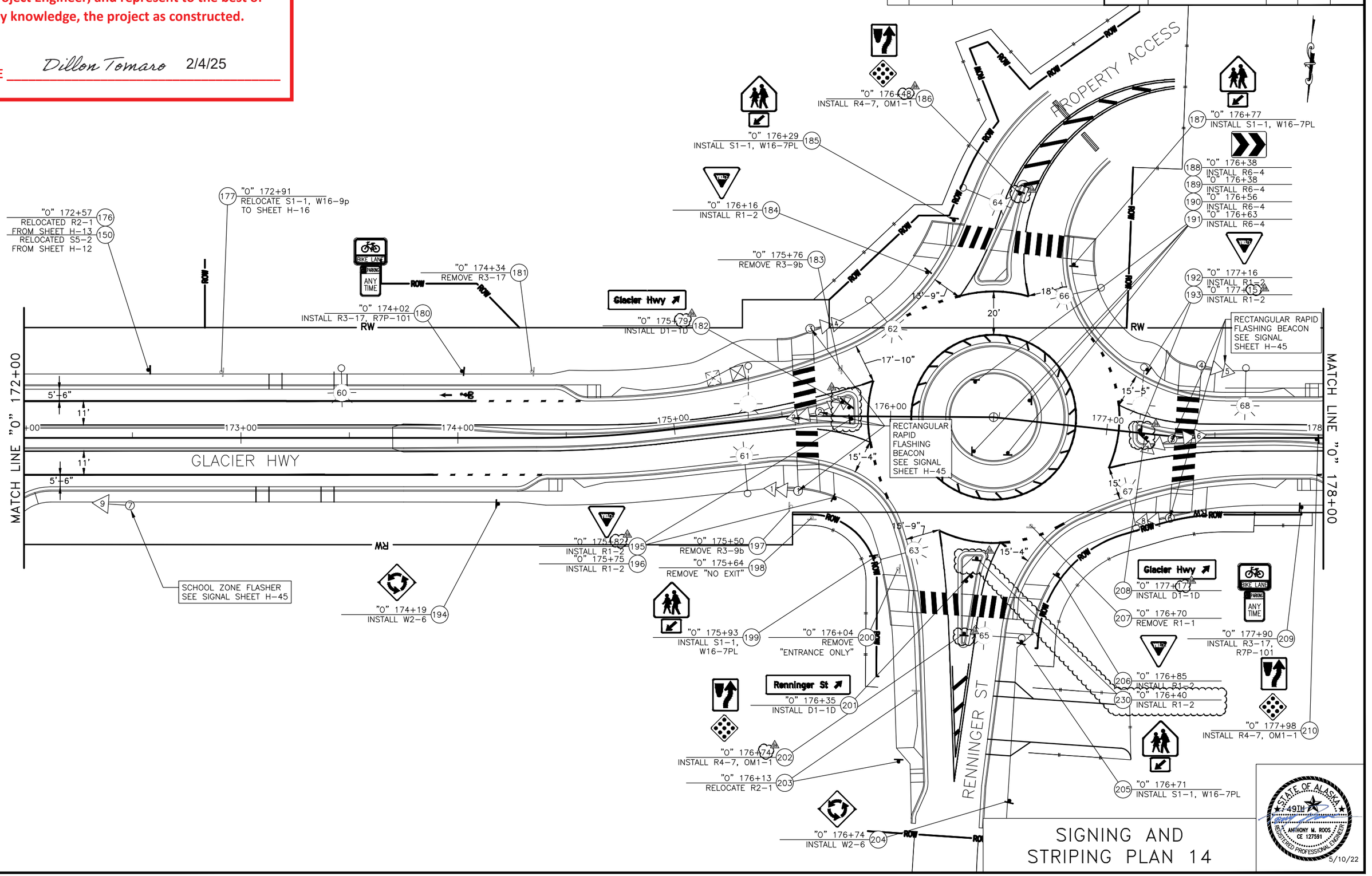

SIGNING AND STRIPING PLAN 14

STATE OF ALASKA 49TH
ANTHONY M. ROOS JR.
CE 12759
REGISTERED PROFESSIONAL ENGINEER
5/10/22

PLANS DEVELOPED BY: KITTELSON & ASSOCIATES, INC. CERT. OF AUTHORIZATION NO.: 254741, 851 SW 6TH AVE. SUITE 600, PORTLAND, OR 97204, (503) 228-5230
H:\20\20487 - Glacier Highway - Juneau Traffic Design\design_CD\68124_H_SIGNSTRIPE-H-15 Tue, May/10/22 12:55pm

NO.	DATE	REVISION

STATE	PROJECT DESIGNATION	YEAR	SHEET NO.	TOTAL SHEETS
ALASKA	TEA-0955(016)/Z68124	2020	H-16	235

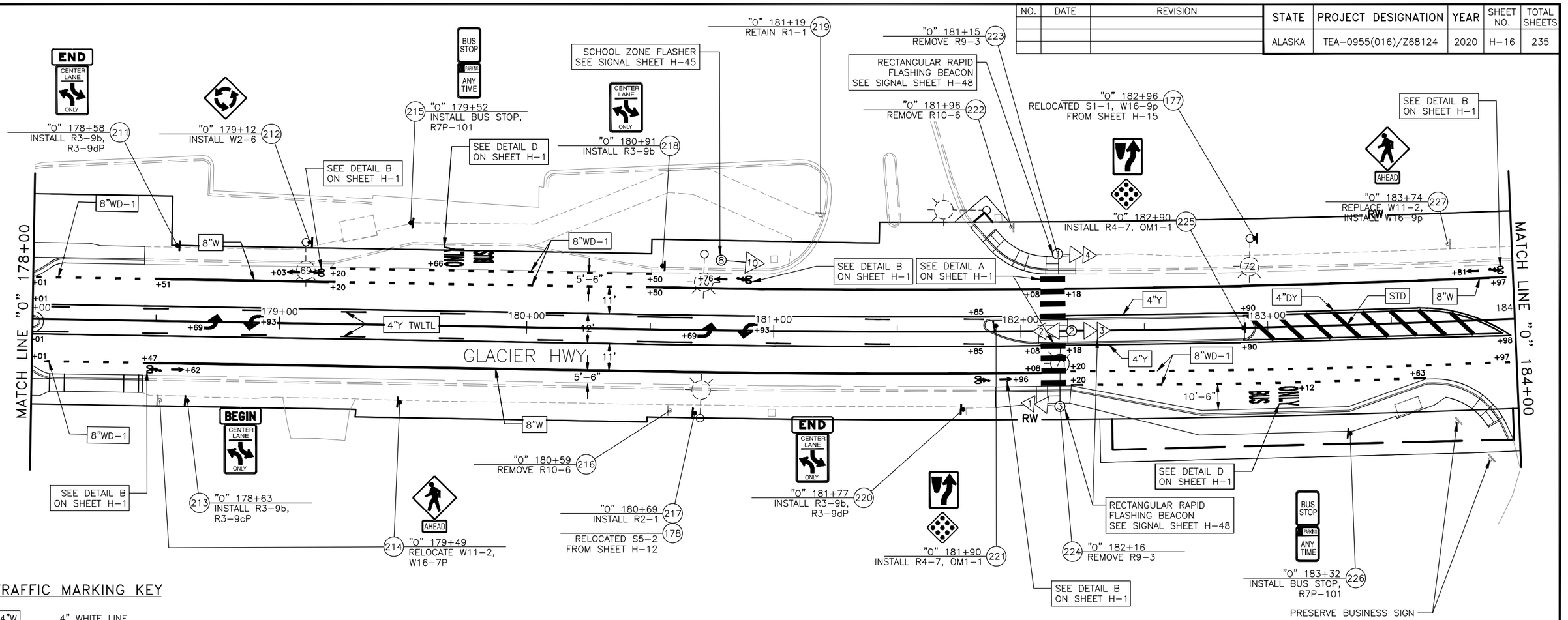

TRAFFIC MARKING KEY

4"W	4" WHITE LINE
4"WS	4" WHITE SKIP LINE (10' STRIPE/30' SKIP PATTERN)
4"WD-1	4" WHITE DOTTED LINE (2' STRIPE/6' SKIP PATTERN)
4"WD-2	4" WHITE DOTTED LINE (3' STRIPE/9' SKIP PATTERN)
4"Y	4" YELLOW LINE
4"YS	4" YELLOW SKIP LINE (10' STRIPE/30' SKIP PATTERN)
4"DY	4" DOUBLE YELLOW LINE
4"Y TWLTL	4" YELLOW TWO-WAY LEFT-TURN LANE STANDARD
8"W	8" WHITE LINE
8"WD-1	8" WHITE WIDE DOTTED LINE (2' STRIPE/4' SKIP PATTERN)
8"WD-2	8" WHITE WIDE DOTTED LINE (3' STRIPE/9' SKIP PATTERN)
12"WD	12" WHITE WIDE DOTTED LINE (2' STRIPE/2' SKIP PATTERN)
12"WRE	12" WHITE ROUNDABOUT ENTRY (2' STRIPE/6' SKIP PATTERN)
24"W	24" WHITE LINE
STD	SEE STANDARD DRAWING

NOTE:
DIMENSIONS ARE TO CENTER OF STRIPE OR STRIPE GROUP.

Record Drawings have been reviewed by the Project Engineer, and represent to the best of my knowledge, the project as constructed.

PE Dillon Tomaro 2/4/25

STATE OF ALASKA 49TH ANTHONY M. ROOS CE 12759 REGISTERED PROFESSIONAL ENGINEER
7/31/2020

SIGNING AND STRIPING PLAN 15

PLANS DEVELOPED BY: KITTELSON & ASSOCIATES, INC. CERT. OF AUTHORIZATION NO.: 254741, 851 SW 6TH AVE. SUITE 600, PORTLAND, OR 97204, (503) 228-5230
H:\20\20487 - Glacier Highway - Juneau Traffic Design\design_CD\68124_H_SIGNSTRIPE-H-16 Thu, Jul/30/20 09:14am

NO.	DATE	REVISION

STATE	PROJECT DESIGNATION	YEAR	SHEET NO.	TOTAL SHEETS
ALASKA	TEA-0955(016)/Z68124	2020	H-17	235

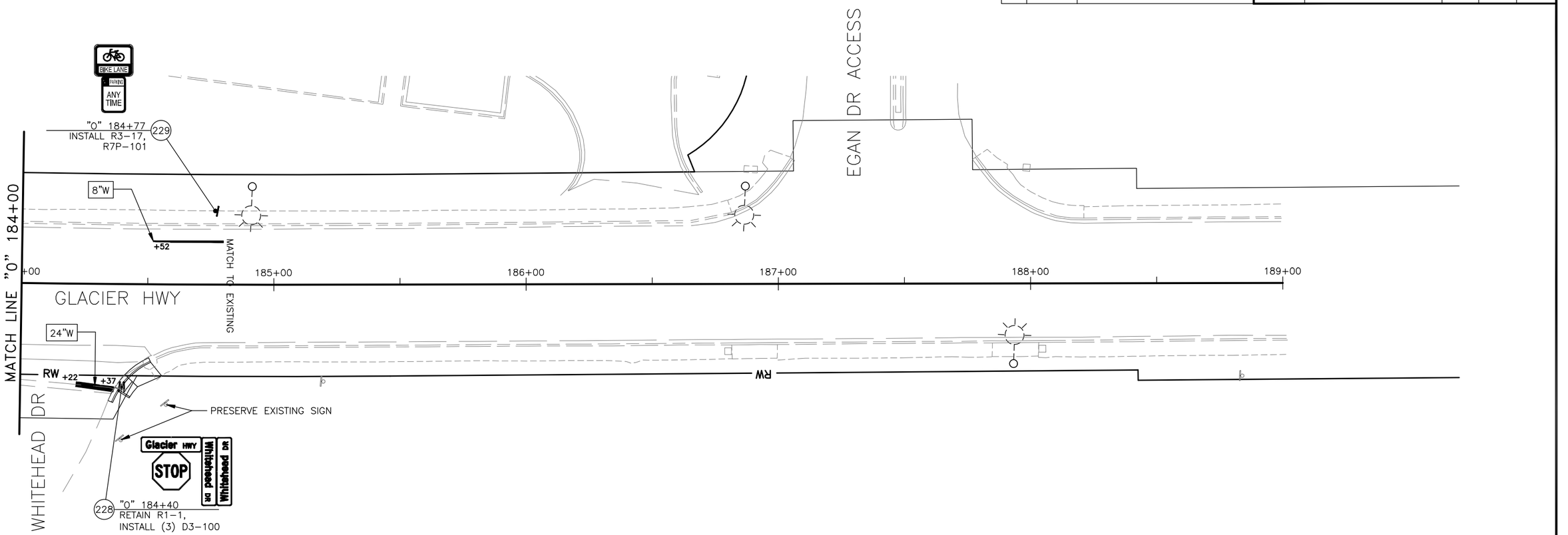

TRAFFIC MARKING KEY

4"W	4" WHITE LINE
4"WS	4" WHITE SKIP LINE (10' STRIPE/30' SKIP PATTERN)
4"WD-1	4" WHITE DOTTED LINE (2' STRIPE/6' SKIP PATTERN)
4"WD-2	4" WHITE DOTTED LINE (3' STRIPE/9' SKIP PATTERN)
4"Y	4" YELLOW LINE
4"YS	4" YELLOW SKIP LINE (10' STRIPE/30' SKIP PATTERN)
4"DY	4" DOUBLE YELLOW LINE
4"Y TWLTL	4" YELLOW TWO-WAY LEFT-TURN LANE STANDARD
8"W	8" WHITE LINE
8"WD-1	8" WHITE WIDE DOTTED LINE (2' STRIPE/4' SKIP PATTERN)
8"WD-2	8" WHITE WIDE DOTTED LINE (3' STRIPE/9' SKIP PATTERN)
12"WD	12" WHITE WIDE DOTTED LINE (2' STRIPE/2' SKIP PATTERN)
12"WRE	12" WHITE ROUNDABOUT ENTRY (2' STRIPE/6' SKIP PATTERN)
24"W	24" WHITE LINE
STD	SEE STANDARD DRAWING

NOTE:
DIMENSIONS ARE TO CENTER OF STRIPE OR STRIPE GROUP.

Record Drawings have been reviewed by the Project Engineer, and represent to the best of my knowledge, the project as constructed.

PE Dillon Tomaro 2/4/25

SIGNING AND STRIPING PLAN 16

STATE OF ALASKA 49TH
ANTHONY M. ROOS
CE 127591
REGISTERED PROFESSIONAL ENGINEER
7/31/2020

PLANS DEVELOPED BY: KITTELSON & ASSOCIATES, INC. CERT. OF AUTHORIZATION NO.: 254741, 851 SW 6TH AVE, SUITE 600, PORTLAND, OR 97204, (503) 228-5230
H:\20\20487 - Glacier Highway - Juneau Traffic Design\design_CD\68124_H_SIGNSTRIPE-H-17 Thu, Jul/30/20 09:15am

SIGNING SUMMARY

LOC. NO.	STATION	LOCATION LT.	LOCATION RT.	ASDS CODE	LEGEND	SIZE H (INCHES)	SIZE X	SIZE V	AREA (SQ FT.)	MTG. HGT. (FT.)	DIR.	POST TYPE	POST SIZE	POST NO.	REMARKS
1	"O" 100+79		32.0	W11-2	PEDESTRIAN CROSSING SYMBOL	30	X	30	6.25		W	PST	2.5	1	NEW
				W16-9P	AHEAD	24	X	12	2						
2	"O" 101+22		31.3	D3-2	GLACIER HWY NORTH/ GLACIER HWY SOUTH	132	X	42	38.5		W	PST	2.5	2	REPLACE
3	REMOVE "O" 101+54 NEW "O" 101+57		30.3	W2-2R	RIGHT SIDE ROAD SYMBOL	30	X	30	6.25		W	REPLACE; RELOCATE TO LIGHT POLE 1			
				W13-1P	40 MPH	18	X	18	2.25						
4	"O" 101+55	1.2		R4-7	KEEP RIGHT SYMBOL	24	X	30	5		W	PST	2.5	1	NEW
				OM1-1	TYPE 1 OBJECT MARKER	18	X	18	2.25						
5	"O" 101+50	36.1		R2-1	SPEED LIMIT - 45	24	X	30	5		E	PST	2.5	1	REPLACE
6	"O" 102+46	33.5		R5-10b	NO PEDESTRIANS OR BICYCLES	30	X	18	3.75		E	PST	2.5	1	NEW
7	"O" 102+65	37.3		-	PEDS AND BICYCLES PROHIBITED						E				REMOVE
8	"O" 102+64		36.4	R5-10b	NO PEDESTRIANS OR BICYCLES	30	X	18	3.75		E	PST	2.5	1	NEW
9	"O" 102+86		1.0	R4-7	KEEP RIGHT SYMBOL	24	X	30	5		E	PST	2.5	1	NEW
				OM1-1	TYPE 1 OBJECT MARKER	18	X	18	2.25						
10	"O" 103+12	31.0		R3-17	BICYCLE SYMBOL BIKE LANE	24	X	18	3		E	PST	2.5	1	NEW
				R3-17bP	BIKE LANE ENDS	30	X	12	2.5						
11	"O" 103+22	32.5		R3-12	RESTRICTED LANE ENDS						E				REMOVE
12	"O" 103+30	32.5		W1-7	LARGE ARROW (TWO-DIRECTION)	48	X	24	8		S	PST	2.5	2	NEW
				OM1-1	TYPE 1 OBJECT MARKER	18	X	18	2.25						
				OM1-1	TYPE 1 OBJECT MARKER	18	X	18	2.25						
13	"O" 103+55	36.4		D3-102	VANDERBILT HILL RD/ GLACIER HWY	132	X	30	27.5		S	PST	2.5	2	NEW
14	"O" 103+56		48.6	R1-1	STOP	30	X	30	6.25		S	PST	2.5	1	REPLACE
15	"O" 103+91		31.5	R3-17	BICYCLE SYMBOL BIKE LANE	24	X	18	3		W	PST	2.5	1	NEW
				R7P-101	NO PARKING ANY TIME	12	X	30	2.5						
16	"O" 104+18	36.7		R3-12	RESTRICTED LANE ENDS						E				REMOVE
17	"O" 104+26	35.1		W11-2	PEDESTRIAN CROSSING SYMBOL	30	X	30	6.25		E	PST	2.5	1	NEW
				W16-9P	AHEAD	24	X	12	2						
18	"O" 104+66		32.1	R2-1	SPEED LIMIT - 40	24	X	30	5		W	PST	2.5	1	REPLACE
19	"O" 105+08	33.8		R3-108B	LEFT TURN ONLY THROUGH ONLY	30	X	18	3.75		N	PST	2.5	1	NEW
20	"O" 105+16	39.3		R3-7L	LEFT LANE MUST TURN LEFT						N				REMOVE
21	"O" 105+61		31.2	R8-1	NO PARKING ON PAVEMENT						S				REMOVE
				D11-1	BICYCLE SYMBOL BIKE ROUTE										
22	"O" 106+15	31.0		R3-17	BICYCLE SYMBOL BIKE LANE	24	X	18	3		S	PST	2.5	1	NEW
				R7P-101	NO PARKING ANY TIME	12	X	30	2.5						
23	"O" 106+29	32.7		R3-17	RIGHT LANE BICYCLE SYMBOL ONLY						S				REMOVE
24	"O" 106+36	37.8		D3-2	VANDERBILT HILL RD/GLACIER HWY	126	X	42	36.75		S	PST	2.5	2	REPLACE

Record Drawings have been reviewed by the Project Engineer, and represent to the best of my knowledge, the project as constructed.

PE Dillon Tomara 2/4/25

NO.	DATE	REVISION
1	01/22/21	ADDENDUM 9

STATE	PROJECT DESIGNATION	YEAR	SHEET NO.	TOTAL SHEETS
ALASKA	TEA-0955(016)/Z68124	2020	H-18	235

SIGNING SUMMARY

LOC. NO.	STATION	LOCATION LT.	LOCATION RT.	ASDS CODE	LEGEND	SIZE H (INCHES)	SIZE X	SIZE V	AREA (SQ FT.)	MTG. HGT. (FT.)	DIR.	POST TYPE	POST SIZE	POST NO.	REMARKS
25	"O" 106+69		45.2	R1-1	STOP	30	X	30	6.25		S	PST	2.5	1	REPLACE R1-1, NEW (3) D3-100
				D3-100	GLACIER HWY	48	X	12	4						
				D3-100	COOGAN DR	48	X	12	4		W				
				D3-100	COOGAN DR	48	X	12	4		E				
26	"O" 106+98		29.6	R3-17	BICYCLE SYMBOL BIKE LANE	24	X	18	3		N	PST	2.5	1	NEW
				R7P-101	NO PARKING ANY TIME	12	X	30	2.5						
27	"O" 107+58	26.7		R3-108B	LEFT TURN ONLY THROUGH ONLY	30	X	18	3.75		N	PST	2.5	1	NEW

SIGNING NOTES:

SEE STANDARD PLANS S-00.12 AND S-01.02 FOR FRAMING AND BRACING REQUIREMENTS

1. REMOVE AND DISPOSE OF ALL EXISTING SIGNS AND SIGN FOUNDATIONS WITHIN THE PROJECT LIMITS, EXCEPT THOSE DESIGNATED FOR REINSTALLATION, SALVAGE, OR OTHERWISE NOTED.
2. OFFSET DISTANCES ARE FROM DESIGN CENTERLINE TO CENTER OF POST OR POLE.
3. MOUNT SIGNS PER STANDARD DRAWING S-05.01. SIGNS THAT PROJECT OVER OR WITHIN 2 FEET OF THE SIDEWALK SHALL BE MOUNTED TO A HEIGHT OF 8 FEET TO BOTTOM OF SIGN.
4. DETERMINE POST LENGTHS IN THE FIELD. DO NOT EXTEND POSTS ABOVE TOP OF SIGN.
5. INSTALL POSTS WITH SLEEVE TYPE CONCRETE FOUNDATION PER STANDARD DRAWING S-30.04. ATTACH THE SIGN POST USING GALVANIZED 3/8" BOLT, NUT, SPLIT LOCK WASHER AND TWO FLAT WASHERS.
6. INSTALL "TUBE POST BRACING" AS SHOWN ON STANDARD DRAWING S-30.04 ON ALL SIGNS MOUNTED ON A SINGLE POST AND HAVING A HORIZONTAL DIMENSION OF 30 INCHES OR GREATER, EXCEPT D3-100 SERIES SIGNS. INSTEAD OF 5/8" GALVANIZED BOLTS AND NYLON LOCKING NUTS SHOWN ON STANDARD DRAWING S-01.01, USE GALVANIZED 3/8" BOLTS, SPLIT LOCK WASHERS AND NUTS. 1/4" X 1-1/2" ALUMINUM ALLOY 6061-T6 BAR MAY ALSO BE USED TO FABRICATE SIGN BRACES.
7. ATTACH ALL SIGNS TO THEIR SUPPORTS WITH 3/8" BOLTS, EXCEPT ATTACH UNFRAMED SIGNS TO POSTS WITH ALUMINUM DRIVE RIVETS. WIND WASHERS ARE NOT REQUIRED WITH DRIVE RIVETS. INCLUDE SPLIT LOCK WASHERS WHEN BOLTS ARE USED.
8. ALL FASTENER HARDWARE SHALL MEET THE REQUIREMENTS OF THE "FASTENER SPECIFICATION TABLE" ON SHEET H-28.
9. SIGNS INSTALLED ON LIGHT POLES MAY REQUIRE TEMPORARY INSTALLATION ON 2-1/2" PST POST UNTIL LIGHT POLES ARE IN PLACE. THIS WORK IS SUBSIDIARY TO PAY ITEM 615.0001.0000.
10. SEE SIGNAL SIGN SCHEDULE ON SHEETS H-30 AND H-35 FOR LOCATION OF SIGNAL POLE AND MAST ARM MOUNTED SIGNS.
11. STOP (R1-1) AND YIELD (R1-2) SIGN LOCATIONS, ESPECIALLY THOSE AT LARGE RADIUS INTERSECTIONS, MAY NEED ADJUSTMENT IN THE FIELD. THE ENGINEER WILL APPROVE FINAL LOCATIONS.
12. INSTALL D3-100 SIGNS ABOVE THEIR RESPECTIVE STOP SIGNS. WHEN TWO D3-100 SERIES SIGNS ARE TO BE LOCATED ON THE SAME POST, INSTALL THE CROSS-STREET PANEL IN THE LOWER POSITION.
13. D3-100 SERIES SIGNS REQUIRE TWO SEPARATE SINGLE SIDED PANELS. END-BRACE PANELS PER SMALL STREET SIGN NAME SIGN BRACING DETAILS ON SHEET H-29.
14. MAINTAIN EXISTING SIGNS UNTIL NEW SIGNS ARE INSTALLED. DO NOT LEAVE DUPLICATE OR CONFLICTING SIGNING UP AT ANY TIME.
15. ALL SIGNS NOTED FOR REMOVAL AND REINSTALLATION SHALL BE REPLACED AT THE CONTRACTOR'S EXPENSE IF THEY ARE DAMAGED DURING THE RELOCATION EFFORT.
16. USE SERIES D LETTERS FOR D3-100 SERIES SIGNS UNLESS OTHERWISE NOTED.
17. LOCATE AND PROTECT ALL NEW AND EXISTING UNDERGROUND UTILITIES PRIOR TO INSTALLING SIGN POSTS. NOT ALL UTILITIES MAY BE SHOWN ON THE PLANS.
18. CLEARING MAY BE REQUIRED TO ENSURE ADEQUATE VISIBILITY OF SIGNS. THIS WORK IS SUBSIDIARY TO PAY ITEM 615.0001.0000.
19. INSTALL WEATHER TIGHT CAPS ON ALL TUBE POSTS, EXCEPT PERFORATED STEEL TUBES.
20. INSTALL FRANGIBLE COUPLING SYSTEMS IN ACCORDANCE WITH STANDARD DRAWING S-31.01.
21. HINGED JOINTS WITH FRANGIBLE FUSE PLATE ARE REQUIRED ON ALL MULTIPLE POST SIGNS WITH FRANGIBLE COUPLING SYSTEMS. THE HINGE LOCATION ON ALL POST SHALL BE THE SAME DISTANCE BELOW THE SIGNS, INSTEAD OF THE 6 INCH MINIMUM SHOW ON STANDARD DRAWING S-31.01. SEE MANUFACTURER'S SPECIFICATION FOR HINGE LOCATION BELOW SIGN.
22. RELOCATION OF EXISTING SIGNS ON TO NEW POSTS SHALL BE SUBSIDIARY TO PAY ITEM 615.0001.0000 STANDARD SIGN.

POST TYPE LEGEND:

PST = PERFORATED STEEL TUBE
TS = TUBE STEEL (SQUARE STRUCTURAL STEEL TUBING)
W_X_ = WIDE FLANGE

STATE OF ALASKA 49TH ANTHONY M. ROOS CE 12759 REGISTERED PROFESSIONAL ENGINEER 7/31/2020

SIGN SUMMARY
(1 OF 7)

PLANS DEVELOPED BY: KITTELSON & ASSOCIATES, INC. CERT. OF AUTHORIZATION NO.: 254741, 851 SW 6TH AVE. SUITE 600, PORTLAND, OR 97204, (503) 228-5230
H:\20\20487 - Glacier Highway - Juneau Traffic Design\design_CD\68124_H_SS_S&D-H-18 Thu, Jul/30/20 09:16am

SIGNING SUMMARY

LOC. NO.	STATION	LOCATION LT.	LOCATION RT.	ASDS CODE	LEGEND	SIZE H (INCHES)	SIZE X	SIZE V	AREA (SQ FT.)	MTG. HGT. (FT.)	DIR.	POST TYPE	POST SIZE	POST NO.	REMARKS
28	"O" 108+38	25.2		R3-9b	CENTER LANE TWO-WAY TURN ONLY	24	X	36	6		S	PST	2.5	1	NEW
				R3-9dP	END	30	X	12	2.5						
29	"O" 108+33		31.1	R3-9b	CENTER LANE TWO-WAY TURN ONLY	24	X	36	6		N	NEW; INSTALL ON LIGHT POLE 9			
				R3-9cP	BEGIN	30	X	12	2.5						
30	"O" 111+80	29.6		R3-17	BICYCLE SYMBOL BIKE LANE	24	X	18	3		S	PST	2.5	1	NEW
				R7P-101	NO PARKING ANY TIME	12	X	30	2.5						
31	REMOVE "O" 112+22 NEW "O" 118+87	45.4		R7P-101	NO PARKING ANY TIME	12	X	30	2.5		N	PST	2.5	1	RELOCATE BUS STOP, REPLACE R7P-101.
				BUS STOP	BUS STOP	12	X	30							
32	"O" 112+87	32.4		R1-1	STOP	30	X	30	6.25		W	PST	2.5	1	REPLACE
33	"O" 113+00		31.8	R3-17	RIGHT LANE BICYCLE SYMBOL ONLY						S				REMOVE
34	"O" 114+66		30.5	W11-2	PEDESTRIAN CROSSING SYMBOL	30	X	30	6.25		S	PST	2.5	1	NEW
				W16-9P	AHEAD	24	X	12	2						
35	"O" 115+39	28.6		R3-9b	CENTER LANE TWO-WAY TURN ONLY	24	X	36	6		N	NEW; INSTALL ON LIGHT POLE 15			
				R3-9cP	BEGIN	30	X	12	2.5						
36	"O" 115+60		30.1	R3-9b	CENTER LANE TWO-WAY TURN ONLY	24	X	36	6		S	PST	2.5	1	NEW
				R3-9dP	END	30	X	12	2.5						
37	"O" 116+75		30.8	R3-108B	LEFT TURN ONLY THROUGH ONLY	30	X	18	3.75		S	PST	2.5	1	NEW
38	"O" 117+32	29.3		R3-17	BICYCLE SYMBOL BIKE LANE	24	X	18	3		N	PST	2.5	1	NEW
				R7P-101	NO PARKING ANY TIME	12	X	30	2.5						
39	"O" 117+60		39.0	R1-1	STOP	30	X	30	6.25		W	PST	2.5	1	REPLACE R1-1, NEW (4) D3-100
				D3-100	GLACIER HWY	48	X	12	4						
				D3-100	SHORT ST	36	X	12	3		N				
				D3-100	SHORT ST	36	X	12	3		S				
				D3-100	GLACIER HWY	48	X	12	4		E				
40	"O" 118+48	29.5		W11-2	PEDESTRIAN CROSSING SYMBOL	30	X	30	6.25		N	PST	2.5	1	NEW
				W16-7pL	LEFT DOWNWARD ANGLED ARROW	24	X	12	2						
41	"O" 118+51	0.0	0.0	W11-2	PEDESTRIAN CROSSING SYMBOL	30	X	30	6.25		N	PST	2.5	1	NEW
				W16-7pR	RIGHT DOWNWARD ANGLED ARROW	24	X	12	2						
42	"O" 118+51	0.0	0.0	W11-2	PEDESTRIAN CROSSING SYMBOL	30	X	30	6.25		S	NEW; INSTALL ON SIGN POST 41			
				W16-7pR	RIGHT DOWNWARD ANGLED ARROW	24	X	12	2						
43	"O" 118+32	1.2		R4-7	KEEP RIGHT SYMBOL	24	X	30	5		S	PST	2.5	1	NEW
				OM1-1	TYPE 1 OBJECT MARKER	18	X	18	2.25						
44	"O" 118+30		30.3	W11-2	PEDESTRIAN CROSSING SYMBOL	30	X	30	6.25		S	PST	2.5	1	NEW
				W16-7pL	LEFT DOWNWARD ANGLED ARROW	24	X	12	2						
45	"O" 118+94	31.5		W1-2	CURVE ADVANCE WARNING						N				REMOVE
				W13-1P	40 MPH										
46	"O" 118+73	0.3		R4-7	KEEP RIGHT SYMBOL	24	X	30	5		S	PST	2.5	1	NEW
				OM1-1	TYPE 1 OBJECT MARKER	18	X	18	2.25						

NO.	DATE	REVISION
1	01/22/21	ADDENDUM 9

STATE	PROJECT DESIGNATION	YEAR	SHEET NO.	TOTAL SHEETS
ALASKA	TEA-0955(016)/Z68124	2020	H-19	235

SIGNING SUMMARY

LOC. NO.	STATION	LOCATION LT.	LOCATION RT.	ASDS CODE	LEGEND	SIZE H (INCHES)	SIZE X	SIZE V	AREA (SQ FT.)	MTG. HGT. (FT.)	DIR.	POST TYPE	POST SIZE	POST NO.	REMARKS
47	"O" 119+58		46.2	BUS STOP	BUS STOP	12	X	18	1.5		S	PST	2.5	1	NEW
				R7P-101	NO PARKING ANY TIME	12	X	30	2.5						
48	"O" 119+93	30.7		R3-9b	CENTER LANE TWO-WAY TURN ONLY	24	X	36	6		N	PST	2.5	1	NEW
				R3-9dP	END	30	X	12	2.5						
49	"O" 119+94		31.3	R3-17	BICYCLE SYMBOL BIKE LANE	24	X	18	3		S	PST	2.5	1	NEW
				R7P-101	NO PARKING ANY TIME	12	X	30	2.5						
50	"O" 120+25		39.6	R3-9b	CENTER LANE TWO-WAY TURN ONLY	24	X	36	6		S	NEW; INSTALL ON LIGHT POLE 19			
				R3-9cP	BEGIN	30	X	12	2.5						
51	"O" 120+42	30.5		W11-2	PEDESTRIAN CROSSING SYMBOL	30	X	30	6.25		N	PST	2.5	1	NEW
				W16-9P	AHEAD	24	X	12	2						
52	"O" 121+28	30.5		W1-2	RIGHT CURVE ADVANCE WARNING	30	X	30	6.25		N	PST	2.5	1	NEW
				W13-1P	40 MPH	18	X	18	2.25						
53	"O" 122+43	37.6		R2-1	SPEED LIMIT - 40	24	X	30	5		N	PST	2.5	1	REPLACE
54	"O" 122+48		32.4	R2-1	SPEED LIMIT - 40	24	X	30	5		S	PST	2.5	1	REPLACE
55	"O" 125+40	30.4		R3-9b	CENTER LANE TWO-WAY TURN ONLY	24	X	36	6		N	PST	2.5	1	REPLACE
56	"O" 125+28		32.9	W8-6	TRUCK CROSSING						S				REMOVE
57	"O" 126+69		32.1	W1-2	LEFT CURVE ADVANCE WARNING	30	X	30	6.25		S	PST	2.5	1	REPLACE
				W13-1P	40 MPH	18	X	18	2.25						
58	"O" 127+66		31.7	R3-9b	CENTER LANE TWO-WAY TURN ONLY						S				RETAIN
59	"O" 128+35	28.8		R3-9b	CENTER LANE TWO-WAY TURN ONLY						N				REMOVE
60	"O" 129+11		31.1	W3-3	SIGNAL AHEAD SYMBOL	36	X	36	9		S	PST	2.5	1	REPLACE
61	"O" 130+85		31.1	R3-9b	CENTER LANE TWO-WAY TURN ONLY	24	X	36	6		S	PST	2.5	1	NEW
				R3-9dP	END	30	X	12	2.5						
62	REMOVE "O" 131+91 NEW "O" 131+22		31.1	R4-4	BEGIN RIGHT TURN LANE YIELD TO BIKES						E				RELOCATE
63	"O" 131+70	30.7		R3-9b	CENTER LANE TWO-WAY TURN ONLY	24	X	36	6		W	PST	2.5	1	NEW
				R3-9cP	BEGIN	30	X	12	2.5						

SEE STANDARD PLANS S-00.12 AND S-01.02 FOR FRAMING AND BRACING REQUIREMENTS

POST TYPE LEGEND:

PST = PERFORATED STEEL TUBE
TS = TUBE STEEL (SQUARE STRUCTURAL STEEL TUBING)
W_X_ = WIDE FLANGE

Record Drawings have been reviewed by the Project Engineer, and represent to the best of my knowledge, the project as constructed.

PE Dillon Tomaro 2/4/25

STATE OF ALASKA 49TH ANTHONY M. ROOS CE 12759 REGISTERED PROFESSIONAL ENGINEER

7/31/2020

SIGN SUMMARY
(2 OF 7)

PLANS DEVELOPED BY: KITTELSON & ASSOCIATES, INC. CERT. OF AUTHORIZATION NO.: 254741, 851 SW 6TH AVE. SUITE 600, PORTLAND, OR 97204, (503) 228-5230
H:\20\20487 - Glacier Highway - Juneau Traffic Design\design_CD\68124_H_SS_S&D-H-19 Thu, Jul/30/20 09:16am

SIGNING SUMMARY

LOC. NO.	STATION	LOCATION LT.	LOCATION RT.	ASDS CODE	LEGEND	SIZE H (INCHES)	SIZE X	SIZE V		AREA (SQ FT.)	MTG. HGT. (FT.)	DIR.	POST TYPE	POST SIZE	POST NO.	REMARKS
64	REMOVE "O" 133+43 NEW "O" 132+23	30.6		D14-100	ADOPT A HIGHWAY							W				RELOCATE
65	"O" 132+28		42.1	R3-8b	ADVANCE INTERSECTION LANE CONTROL	48	X	30		10		E	PST	2.5	1	NEW
66	"O" 133+43	30.2		R3-17	BICYCLE SYMBOL BIKE LANE	24	X	18		3		W	PST	2.5	1	NEW
				R7P-101	NO PARKING ANY TIME	12	X	30		2.5						
67	"O" 132+93		44.3	R3-7R	RIGHT LANE MUST TURN RIGHT							E				REMOVE
68	"O" 134+16		121.0	R2-1	SPEED LIMIT - 30							S				RETAIN
69	"O" 135+14		30.2	R3-17	BICYCLE SYMBOL BIKE LANE	24	X	18		3		E	PST	2.5	1	NEW
				R7P-101	NO PARKING ANY TIME	12	X	30		2.5						
70	REMOVE "O" 135+06 NEW "O" 135+75		32.7	D14-100	ADOPT A HIGHWAY							E				RELOCATE
71	"O" 136+12	34.7		R3-108B	LEFT TURN ONLY THROUGH ONLY	30	X	18		3.75		E	PST	2.5	1	NEW
72	"O" 136+12	30.4		R3-17	BICYCLE SYMBOL BIKE LANE	24	X	18		3		W	PST	2.5	1	NEW
				R7P-101	NO PARKING ANY TIME	12	X	30		2.5						
73	"O" 136+56	40.5		BUS STOP	BUS STOP	12	X	18		1.5		W	PST	2.5	1	NEW
				R7P-101	NO PARKING ANY TIME	12	X	30		2.5						
74	"O" 136+87		40.4	BUS STOP	BUS STOP	12	X	18		1.5		E	PST	2.5	1	NEW
				R7P-101	NO PARKING ANY TIME	12	X	30		2.5						
75	"O" 137+38		33.0	R3-9b	CENTER LANE TWO-WAY TURN ONLY	24	X	36		6		W	NEW; INSTALL ON LIGHT POLE 32			
				R3-9cP	BEGIN	30	X	12		2.5						
76	"O" 137+79	38.4		R1-1	STOP	30	X	30		6.25		S	PST	2.5	1	NEW
				D3-100	GLACIER HWY	48	X	12		4						
				D3-100	TONSGARD CT	48	X	12		4		W				
				D3-100	TONSGARD CT	48	X	12		4		E				
				D3-100	GLACIER HWY	48	X	12		4		N				
77	"O" 138+05	83.4		R3-8	ADVANCE INTERSECTION LANE CONTROL							S				RETAIN
78	"O" 138+60		31.6	R3-17	RIGHT LANE BICYCLE SYMBOL ONLY							E				REMOVE
79	"O" 138+69		32.8	R3-17	RIGHT LANE BICYCLE SYMBOL ONLY	24	X	30		5		E	NEW; INSTALL ON LIGHT POLE 34			
				R7P-101	NO PARKING ANY TIME	12	X	30		2.5						
80	"O" 139+91	31.5		W1-2	CURVE ADVANCE WARNING	30	X	30		6.25		W	PST	2.5	1	REPLACE
				W13-1P	40 MPH	18	X	18		2.25						
81	"O" 140+54	38.8		R1-1	STOP	30	X	30		6.25		S	PST	2.5	1	REPLACE
82	"O" 141+02	30.5		R3-9b	CENTER LANE TWO-WAY TURN ONLY	24	X	36		6		W	PST	2.5	1	NEW
				R3-9cP	BEGIN	30	X	12		2.5						
83	"O" 140+85		30.6	R3-9b	CENTER LANE TWO-WAY TURN ONLY	24	X	36		6		E	PST	2.5	1	NEW
				R3-9dP	END	30	X	12		2.5						

NO.	DATE	REVISION
1	01/22/21	ADDENDUM 9

STATE	PROJECT DESIGNATION	YEAR	SHEET NO.	TOTAL SHEETS
ALASKA	TEA-0955(016)/Z68124	2020	H-20	235

SIGNING SUMMARY

LOC. NO.	STATION	LOCATION LT.	LOCATION RT.	ASDS CODE	LEGEND	SIZE H (INCHES)	SIZE X	SIZE V		AREA (SQ FT.)	MTG. HGT. (FT.)	DIR.	POST TYPE	POST SIZE	POST NO.	REMARKS
84	REMOVE "O" 142+17 NEW "O" 142+17	37.4		N/A	BUSINESS SIGN							W				RELOCATE
85	"O" 143+02	7.7		R4-7	KEEP RIGHT SYMBOL	24	X	30		5		E	PST	2.5	1	NEW
				OM1-1	TYPE 1 OBJECT MARKER	18	X	18		2.25						
86	"O" 142+33		34.9	W11-2	PEDESTRIAN CROSSING SYMBOL	30	X	30		6.25		E	PST	2.5	1	NEW
				W16-9P	AHEAD	24	X	12		2						
87	"O" 143+35	36.4		R3-17	BICYCLE SYMBOL BIKE LANE	24	X	18		3		W	NEW; INSTALL ON LIGHT POLE 37			
				R7P-101	NO PARKING ANY TIME	12	X	30		2.5						
88	"O" 142+94		34.5	R3-108B	LEFT TURN ONLY THROUGH ONLY	30	X	18		3.75		N	PST	2.5	1	NEW
89	"O" 143+99	59.8		R1-1	STOP	30	X	30		6.25		S	PST	2.5	1	REPLACE R1-1, NEW (4) D3-100
				D3-100	GLACIER HWY	48	X	12		4						
				D3-100	CONCRETE WAY	54	X	12		4.5		W				
				D3-100	CONCRETE WAY	54	X	12		4.5		E				
				D3-100	GLACIER HWY	48	X	12		4		N				
90	"O" 143+82	7.2		R4-7	KEEP RIGHT SYMBOL	24	X	30		5		W	PST	2.5	1	NEW
				OM1-1	TYPE 1 OBJECT MARKER	18	X	18		2.25						
91	REMOVE "O" 144+32 NEW "O" 144+39		33.3	R1-1	STOP	30	X	30		6.25		N	PST	2.5	1	REPLACE R1-1, NEW D3-100
				D3-100	GLACIER HWY	48	X	12		4						
92	"O" 144+83	33.3		R3-9b	CENTER LANE TWO-WAY TURN ONLY	24	X	36		6		N	PST	2.5	1	NEW
				R3-9dP	END	30	X	12		2.5						
93	"O" 144+89	23.3		R3-17	RIGHT LANE BICYCLE SYMBOL ONLY							N				REMOVE
94	"O" 144+93		37.8	R3-17	BICYCLE SYMBOL BIKE LANE	24	X	18		3		S	PST	2.5	1	NEW
				R7P-101	NO PARKING ANY TIME	12	X	30		2.5						
95	"O" 145+51		31.1	R3-9b	CENTER LANE TWO-WAY TURN ONLY	24	X	36		6		S	PST	2.5	1	REPLACE
				R3-9cP	BEGIN	30	X	12		2.5						
96	"O" 145+68	32.6		W11-2	PEDESTRIAN CROSSING SYMBOL	30	X	30		6.25		N	PST	2.5	1	NEW
				W16-9P	AHEAD	24	X	12		2						
97	REMOVE "O" 146+34 NEW "O" 146+32	38.8		R1-1	STOP							W				RELOCATE
98	"O" 146+97		32.8	W3-3	SIGNAL AHEAD SYMBOL	36	X	36		9		S	PST	2.5	1	NEW
99	"O" 147+56		42.0	R1-1	STOP	30	X	30		6.25		E	PST	2.5	1	REPLACE

SEE STANDARD PLANS S-00.12 AND S-01.02 FOR FRAMING AND BRACING REQUIREMENTS

POST TYPE LEGEND:

PST = PERFORATED STEEL TUBE
TS = TUBE STEEL (SQUARE STRUCTURAL STEEL TUBING)
W_X_ = WIDE FLANGE

Record Drawings have been reviewed by the Project Engineer, and represent to the best of my knowledge, the project as constructed.

PE Dillon Tomaro 2/4/25

STATE OF ALASKA 49TH ANTHONY M. ROOS CE 127591 REGISTERED PROFESSIONAL ENGINEER

7/31/2020

SIGN SUMMARY
(3 OF 7)

PLANS DEVELOPED BY: KITTELSON & ASSOCIATES, INC. CERT. OF AUTHORIZATION NO.: 254741, 851 SW 6TH AVE. SUITE 600, PORTLAND, OR 97204, (503) 228-5230
H:\20\20487 - Glacier Highway - Juneau Traffic Design\design_CD\68124_H_SS_S&D-H-20 Thu, Jul/30/20 09:16am

SIGNING SUMMARY

LOC. NO.	STATION	LOCATION LT.	LOCATION RT.	ASDS CODE	LEGEND	SIZE H (INCHES)	SIZE X	SIZE V		AREA (SQ FT.)	MTG. HGT. (FT.)	DIR.	POST TYPE	POST SIZE	POST NO.	REMARKS
100	"O" 147+86		32.1	R3-9b	CENTER LANE TWO-WAY TURN ONLY	24	X	36		6		S	PST	2.5	1	NEW
				R3-9dP	END	30	X	12		2.5						
101	"O" 148+14		35.5	I-3	LEMON CREEK	30	X	18		3.75		S	PST	2.5	1	REPLACE
102	REMOVE "O" 148+19 NEW "O" 148+01	30.6		R3-9b	CENTER LANE TWO-WAY TURN ONLY							N				RELOCATE
				R3-9cP	BEGIN											
103	"O" 149+42	24.9		R3-17	BICYCLE SYMBOL BIKE LANE	24	X	18		3		N	PST	2.5	1	NEW
				R7P-101	NO PARKING ANY TIME	12	X	30		2.5						
104	"O" 149+58		38.5	R3-9b	CENTER LANE TWO-WAY TURN ONLY							S				REMOVE
				R3-9dP	END											
105	"O" 149+83		127.8	R2-1	SPEED LIMIT - 30							W				RETAIN
106	"O" 149+42	29.4		I-3	LEMON CREEK							S				RETAIN
107	"O" 150+17	30.3		W1-7	LARGE ARROW (TWO-DIRECTION)	48	X	24		8		E	PST	2.5	2	NEW
				OM1-1	TYPE 1 OBJECT MARKER	18	X	18		2.25						
				OM1-1	TYPE 1 OBJECT MARKER	18	X	18		2.25						
108	"O" 150+23	30.9		R3-8	ADVANCE INTERSECTION LANE CONTROL							E				REMOVE
109	REMOVE "O" 150+48 NEW "O" 151+01	31.6		W1-2	CURVE ADVANCE WARNING	30	X	30		6.25		N	PST	2.5	1	NEW
				W13-1P	40 MPH	18	X	18		2.25						
110	"O" 150+40		40.3	R1-1	STOP							E				REMOVE
				D3-100	GLACIER HWY											
111	"O" 151+76		95.2	BUS STOP	BUS STOP							E				RETAIN
112	"O" 150+31		130.5	R3-8L/R	ADVANCE INTERSECTION LANE CONTROL	30	X	30		6.25		E	PST	2.5	1	REPLACE
113	"O" 150+35		149.6	R1-1	STOP							N				RETAIN
				D3-100	DAVIS AVE											
				D3-100	MONTGOMERY ST							W				
				D3-100	MONTGOMERY ST							E				
114	"O" 151+75	30.9		R3-108B	LEFT TURN ONLY THROUGH ONLY	30	X	18		3.75		N	PST	2.5	1	NEW
115	"O" 152+50	44.1		BUS STOP	BUS STOP	12	X	18		1.5		N	PST	2.5	1	NEW
				R7P-101	NO PARKING ANY TIME	12	X	30		2.5						
116	"O" 152+14	31.9		R3-7L	LEFT LANE MUST TURN LEFT							N				REMOVE
117	"O" 150+40		33.0	R3-17	BICYCLE SYMBOL BIKE LANE	24	X	18		3		S	PST	2.5	1	NEW
				R7P-101	NO PARKING ANY TIME	12	X	30		2.5						
118	"O" 151+84		42.5	BUS STOP	BUS STOP	12	X	18		1.5		S	PST	2.5	1	NEW
				R7P-101	NO PARKING ANY TIME	12	X	30		2.5						
119	"O" 152+17		30.2	W11-2	PEDESTRIAN CROSSING SYMBOL	30	X	30		6.25		S	PST	2.5	1	NEW
				W16-9P	AHEAD	24	X	12		2						
120	"O" 152+76		30.2	R3-108B	LEFT TURN ONLY THROUGH ONLY	30	X	18		3.75		S	PST	2.5	1	NEW

NO.	DATE	REVISION
1	01/22/21	ADDENDUM 9

STATE	PROJECT DESIGNATION	YEAR	SHEET NO.	TOTAL SHEETS
ALASKA	TEA-0955(016)/Z68124	2020	H-21	235

SIGNING SUMMARY

LOC. NO.	STATION	LOCATION LT.	LOCATION RT.	ASDS CODE	LEGEND	SIZE H (INCHES)	SIZE X	SIZE V		AREA (SQ FT.)	MTG. HGT. (FT.)	DIR.	POST TYPE	POST SIZE	POST NO.	REMARKS
121	"O" 153+49	30.2		R3-17	BICYCLE SYMBOL BIKE LANE	24	X	18		3		N	PST	2.5	1	NEW
				R7P-101	NO PARKING ANY TIME	12	X	30		2.5						
122	"O" 153+12	31.9		W8-6	TRUCK CROSSING							N				REMOVE
123	"O" 153+61	39.4		N/A	CREEKSIDE PARK							E				RETAIN
124	"O" 153+78	49.9		R1-1	STOP	30	X	30		6.25		W	PST	2.5	1	NEW
				D3-100	GLACIER HWY	48	X	12		4						
				D3-100	BELARDI DR	42	X	12		3.5		N				
				D3-100	BELARDI DR	42	X	12		3.5		S				
				D3-100	GLACIER HWY	48	X	12		4		E				
125	"O" 154+31	1.4		R4-7	KEEP RIGHT SYMBOL	24	X	30		5		S	PST	2.5	1	NEW
				OM1-1	TYPE 1 OBJECT MARKER	18	X	18		2.25						
126	"O" 154+40	30.6		R3-9b	CENTER LANE TWO-WAY TURN ONLY							N				REMOVE
				R3-9dP	END											
127	"O" 154+29		31.5	W11-2	PEDESTRIAN CROSSING SYMBOL	30	X	30		6.25		S	PST	2.5	1	NEW
				W16-7pL	LEFT DOWNWARD ANGLED ARROW	24	X	12		2						
128	"O" 154+51	31.0		W11-2	PEDESTRIAN CROSSING SYMBOL	30	X	30		6.25		N	PST	2.5	1	NEW
				W16-7pL	LEFT DOWNWARD ANGLED ARROW	24	X	12		2						
129	"O" 154+51		0.1	W11-2	PEDESTRIAN CROSSING SYMBOL	30	X	30		6.25		S	PST	2.5	1	NEW
				W16-7pR	RIGHT DOWNWARD ANGLED ARROW	24	X	12		2						
130	"O" 154+51		0.1	W11-2	PEDESTRIAN CROSSING SYMBOL	30	X	30		6.25		N	NEW; INSTALL ON SIGN POST 129			
				W16-7pR	RIGHT DOWNWARD ANGLED ARROW	24	X	12		2						
131	"O" 154+61		31.7	R3-17	BICYCLE SYMBOL BIKE LANE	24	X	18		3		S	PST	2.5	1	NEW
				R7P-101	NO PARKING ANY TIME	12	X	30		2.5						
132	"O" 154+37		31.4	R3-9b	CENTER LANE TWO-WAY TURN ONLY							S				REMOVE
				R3-9cP	BEGIN											
133	"O" 155+86	31.1		W11-2	PEDESTRIAN CROSSING SYMBOL	30	X	30		6.25		N	PST	2.5	1	NEW
				W16-9P	AHEAD	24	X	12		2						
134	"O" 156+34		31.3	W1-2	CURVE ADVANCE WARNING	30	X	30		6.25		S	PST	2.5	1	REPLACE
				W13-1P	40 MPH	18	X	18		2.25						
135	"O" 158+22		29.6	W11-2	PEDESTRIAN CROSSING SYMBOL	30	X	30		6.25		S	PST	2.5	1	NEW
				W16-9P	AHEAD	24	X	12		2						
136	"O" 159+43	0.4		W11-2	PEDESTRIAN CROSSING SYMBOL	30	X	30		6.25		S	PST	2.5	1	NEW
				W16-7pR	RIGHT DOWNWARD ANGLED ARROW	24	X	12		2						

SEE STANDARD PLANS S-00.12 AND S-01.02 FOR FRAMING AND BRACING REQUIREMENTS

POST TYPE LEGEND:

PST = PERFORATED STEEL TUBE
TS = TUBE STEEL (SQUARE STRUCTURAL STEEL TUBING)
W_X_ = WIDE FLANGE

Record Drawings have been reviewed by the Project Engineer, and represent to the best of my knowledge, the project as constructed.

PE Dillon Tomaro 2/4/25

STATE OF ALASKA 49TH ANTHONY M. ROOS CE 127591 REGISTERED PROFESSIONAL ENGINEER

7/31/2020

SIGN SUMMARY
(4 OF 7)

PLANS DEVELOPED BY: KITTELSON & ASSOCIATES, INC. CERT. OF AUTHORIZATION NO.: 254741, 851 SW 6TH AVE, SUITE 600, PORTLAND, OR 97204, (503) 228-5230
H:\20\20487 - Glacier Highway - Juneau Traffic Design\design_CD\68124_H_SS_S&D-H-21 Thu, Jul/30/20 09:16am

SIGNING SUMMARY

LOC. NO.	STATION	LOCATION LT.	LOCATION RT.	ASDS CODE	LEGEND	SIZE H (INCHES)	SIZE X	SIZE V	AREA (SQ FT.)	MTG. HGT. (FT.)	DIR.	POST TYPE	POST SIZE	POST NO.	REMARKS
137	"O" 159+43	0.4		W11-2	PEDESTRIAN CROSSING SYMBOL	30	X	30	6.25		N	NEW; INSTALL ON SIGN POST 136			
				W16-7pR	RIGHT DOWNWARD ANGLED ARROW	24	X	12	2						
138	"O" 159+22	30.3		R3-17	BICYCLE SYMBOL BIKE LANE	24	X	18	3		N	PST	2.5	1	NEW
				R7P-101	NO PARKING ANY TIME	12	X	30	2.5						
139	"O" 159+28		31.2	W11-2	PEDESTRIAN CROSSING SYMBOL	30	X	30	6.25		S	NEW; INSTALL ON LIGHT POLE 49			
				W16-7pL	LEFT DOWNWARD ANGLED ARROW	24	X	12	2						
140	"O" 159+53		32.7	R3-9b	CENTER LANE TWO-WAY TURN ONLY						S				REMOVE
				R3-9dB	END										
141	"O" 159+63		2.4	R4-7	KEEP RIGHT SYMBOL	24	X	30	5		N	PST	2.5	1	NEW
				OM1-1	TYPE 1 OBJECT MARKER	18	X	18	2.25						
142	"O" 159+76	30.4		W11-2	PEDESTRIAN CROSSING SYMBOL	30	X	30	6.25		N	PST	2.5	1	NEW
				W16-7pL	LEFT DOWNWARD ANGLED ARROW	24	X	12	2						
143	"O" 160+16		40.9	R1-1	STOP	30	X	30	6.25		N	PST	2.5	1	REPLACE R1-1, NEW (4) D3-100
				D3-100	GLACIER HWY	48	X	12	4		E				
				D3-100	CENTRAL AVE	48	X	12	4		W				
				D3-100	CENTRAL AVE	48	X	12	4		S				
				D3-100	GLACIER HWY	48	X	12	4						
144	"O" 160+50		30.5	R3-17	BICYCLE SYMBOL BIKE LANE	24	X	18	3		E	PST	2.5	1	NEW
				R7P-101	NO PARKING ANY TIME	12	X	30	2.5						
145	"O" 160+85	30.9		R3-108B	LEFT TURN ONLY THROUGH ONLY	30	X	18	3.75		W	PST	2.5	1	NEW
146	"O" 161+40	27.7		R8-1	NO PARKING ON PAVEMENT						W				REMOVE
				D11-1	BICYCLE SYMBOL BIKE ROUTE										
147	REMOVE "O" 161+11 NEW "O" 171+07		33.6	S1-1	SCHOOL CROSSING SYMBOL						E				RELOCATE
				W16-9P	AHEAD										
148	"O" 161+88	30.5		W11-2	PEDESTRIAN CROSSING SYMBOL	30	X	30	6.25		W	PST	2.5	1	NEW
				W16-9P	AHEAD	24	X	12	2						
149	"O" 162+22	0.0	0.0	R4-7	KEEP RIGHT SYMBOL	24	X	30	5		E	PST	2.5	1	NEW
				OM1-1	TYPE 1 OBJECT MARKER	18	X	18	2.25						
150	REMOVE "O" 162+35 NEW "O" 172+57	31.4		S5-2	END SCHOOL ZONE						W				RELOCATE
151	"O" 162+67		31.1	R3-7L	LEFT LANE MUST TURN LEFT						E				REMOVE
152	"O" 164+01	32.6		R3-7L	LEFT LANE MUST TURN LEFT						W				REMOVE
153	REMOVE "O" 164+92 NEW "O" 164+24	31.4		W1-2	CURVE ADVANCE WARNING						W				RELOCATE
				W13-1P	40 MPH										
154	"O" 163+71		30.7	D9-14	POLICE	24	X	24	4		E	PST	2.5	1	REPLACE D9-14, NEW M6-1L
				M6-1L	LEFT ARROW	24	X	18	3						
155	"O" 164+59	30.4		R3-17	BICYCLE SYMBOL BIKE LANE	24	X	18	3		W	PST	2.5	1	NEW
				R7P-101	NO PARKING ANY TIME	12	X	30	2.5						
156	"O" 164+33		30.4	W11-2	PEDESTRIAN CROSSING SYMBOL	30	X	30	6.25		E	PST	2.5	1	NEW
				W16-9P	AHEAD	24	X	12	2						

NO.	DATE	REVISION
1	01/22/21	ADDENDUM 9

STATE	PROJECT DESIGNATION	YEAR	SHEET NO.	TOTAL SHEETS
ALASKA	TEA-0955(016)/Z68124	2020	H-22	235

SIGNING SUMMARY

LOC. NO.	STATION	LOCATION LT.	LOCATION RT.	ASDS CODE	LEGEND	SIZE H (INCHES)	SIZE X	SIZE V	AREA (SQ FT.)	MTG. HGT. (FT.)	DIR.	POST TYPE	POST SIZE	POST NO.	REMARKS
157	"O" 164+47	0.0	0.0	R4-7	KEEP RIGHT SYMBOL	24	X	30	5		W	PST	2.5	1	NEW
				OM1-1	TYPE 1 OBJECT MARKER	18	X	18	2.25						
158	"O" 165+35		30.7	R3-108B	LEFT TURN ONLY THROUGH ONLY	30	X	18	3.75		E	PST	2.5	1	NEW
159	REMOVE "O" 165+96 NEW "O" 165+53	41.4		BUS STOP	BUS STOP						W				RELOCATE
				R7P-101	NO PARKING ANY TIME										
160	REMOVE "O" 166+31 NEW "O" 166+25	45.9		R1-1	STOP	30	X	30	6.25		S	PST	2.5	1	RELOCATE R1-1, NEW (4) D3-100
				D3-100	GLACIER HWY	48	X	12	4		W				
				D3-100	ALAWAY AVE	48	X	12	4		E				
				D3-100	ALAWAY AVE	48	X	12	4		N				
				D3-100	GLACIER HWY	48	X	12	4						
161	"O" 166+74	2.8		R4-7	KEEP RIGHT SYMBOL	24	X	30	5		E	PST	2.5	1	NEW
				OM1-1	TYPE 1 OBJECT MARKER	18	X	18	2.25						
162	"O" 166+80		30.5	W11-2	PEDESTRIAN CROSSING SYMBOL	30	X	30	6.25		E	PST	2.5	1	NEW
				W16-7pL	LEFT DOWNWARD ANGLED ARROW	24	X	12	2						
163	"O" 166+88		30.1	N/A	PEDESTRIAN CROSSING FLAGS						E				REMOVE
164	"O" 166+97		30.6	S1-1	SCHOOL CROSSING SYMBOL						W				REMOVE
				W16-7pL	LEFT DOWNWARD ANGLED ARROW										
165	"O" 166+82	31.2		N/A	PEDESTRIAN CROSSING FLAGS						W				REMOVE
166	"O" 166+97	30.6		W11-2	PEDESTRIAN CROSSING SYMBOL	30	X	30	6.25		W	PST	2.5	1	NEW
				W16-7pL	LEFT DOWNWARD ANGLED ARROW	24	X	12	2						
167	"O" 167+20	27.9		S1-1	SCHOOL CROSSING SYMBOL						W				REMOVE
				W16-7pL	LEFT DOWNWARD ANGLED ARROW										
168	"O" 166+97	0.4		W11-2	PEDESTRIAN CROSSING SYMBOL	30	X	30	6.25		W	PST	2.5	1	NEW
				W16-7pR	RIGHT DOWNWARD ANGLED ARROW	24	X	12	2						
169	"O" 166+97	0.4		W11-2	PEDESTRIAN CROSSING SYMBOL	30	X	30	6.25		E	NEW; INSTALL ON SIGN POST 168			
				W16-7pR	RIGHT DOWNWARD ANGLED ARROW	24	X	12	2						
170	REMOVE "O" 167+46 NEW "O" 168+10		43.9	BUS STOP	BUS STOP						E	PST	2.5	1	RELOCATE BUS STOP, NEW R7P-101
				R7P-101	NO PARKING ANY TIME	12	X	30	2.5						
171	"O" 168+30	32.3		W11-2	PEDESTRIAN CROSSING SYMBOL	30	X	30	6.25		W	NEW; INSTALL ON LIGHT POLE 57			
				W16-9P	AHEAD	24	X	12	2						
172	REMOVE "O" 168+91 NEW "O" 168+90	30.4		D9-14	POLICE	24	X	24	4		W	PST	2.5	1	REPLACE D9-14, NEW M6-1R
				M6-1R	RIGHT ARROW	24	X	18	3						

SEE STANDARD PLANS S-00.12 AND S-01.02 FOR FRAMING AND BRACING REQUIREMENTS

POST TYPE LEGEND:

PST = PERFORATED STEEL TUBE
TS = TUBE STEEL (SQUARE STRUCTURAL STEEL TUBING)
W_X_ = WIDE FLANGE

Record Drawings have been reviewed by the Project Engineer, and represent to the best of my knowledge, the project as constructed.

PE Dillon Tomaro 2/4/25

STATE OF ALASKA 49TH ANTHONY M. ROOS CE 127591 REGISTERED PROFESSIONAL ENGINEER

7/31/2020

SIGN SUMMARY
(5 OF 7)

PLANS DEVELOPED BY: KITTELSON & ASSOCIATES, INC. CERT. OF AUTHORIZATION NO.: 254741, 851 SW 6TH AVE. SUITE 600, PORTLAND, OR 97204, (503) 228-5230
H:\20\20487 - Glacier Highway - Juneau Traffic Design\design_CD\68124_H_SS_S&D-H-22 Thu, Jul/30/20 09:16am

SIGNING SUMMARY

LOC. NO.	STATION	LOCATION LT.	LOCATION RT.	ASDS CODE	LEGEND	SIZE H (INCHES)	SIZE X	SIZE V		AREA (SQ.FT.)	MTG. HGT. (FT.)	DIR.	POST TYPE	POST SIZE	POST NO.	REMARKS
173	"O" 168+57		30.6	R3-17	BICYCLE SYMBOL BIKE LANE	24	X	18		3		E	PST	2.5	1	NEW
				R7P-101	NO PARKING ANY TIME	12	X	30		2.5						
174	REMOVE "O" 167+46 NEW "O" 169+42		30.7	I-3	SWITZER CREEK	36	X	18		4.5		E	PST	2.5	1	NEW (1)
175	REMOVE "O" 170+14 NEW "O" 169+94	30.6		I-3	SWITZER CREEK	36	X	18		4.5		W	PST	2.5	1	NEW (1)
176	REMOVE "O" 170+56 NEW "O" 172+57		31.4	R2-1	SPEED LIMIT - 40							E				RELOCATE
177	REMOVE "O" 172+91 NEW "O" 182+96	36.2		S1-1	SCHOOL CROSSING SYMBOL							E				RELOCATE
				W16-9P	AHEAD											
178	REMOVE "O" 171+38 NEW "O" 180+69		33.6	S5-2	END SCHOOL ZONE							E				RELOCATE; INSTALL ON POST 217
179	"O" 171+93		35.2	R1-1	STOP	30	X	30		6.25		N	PST	2.5	1	REPLACE R1-1, NEW (4) D3-100 (1)
				D3-100	GLACIER HWY	48	X	12		4						
				D3-100	NORTHWOOD DR	60	X	12		5		W				
				D3-100	NORTHWOOD DR	60	X	12		5		E				
				D3-100	GLACIER HWY	48	X	12		4		S				
180	"O" 174+02	30.8		R3-17	BICYCLE SYMBOL BIKE LANE	24	X	18		3		W	PST	2.5	1	NEW
				R7P-101	NO PARKING ANY TIME	12	X	30		2.5						
181	"O" 174+34	30.6		R3-17	RIGHT LANE BICYCLE SYMBOL ONLY							W				REMOVE
182	"O" 175+82	6.4		D1-1D	GLACIER HWY (ARROW)	72	X	18		9		W	PST	2.5	2	NEW
183	"O" 175+76	21.5		R3-9b	CENTER LANE TWO-WAY TURN ONLY							W				REMOVE
184	"O" 176+16	66.6		R1-2	YIELD	36	X	36		9		S	PST	2.5	1	NEW
185	"O" 176+29	90.7		S1-1	SCHOOL CROSSING SYMBOL	30	X	30		6.25		S	PST	2.5	1	NEW
				W16-7pL	LEFT DOWNWARD ANGLED ARROW	24	X	12		2						
186	"O" 176+50	101.2		R4-7	KEEP RIGHT SYMBOL	24	X	30		5		S	PST	2.5	1	NEW
				OM1-1	TYPE 1 OBJECT MARKER	18	X	18		2.25						
187	"O" 176+77	74.0		S1-1	SCHOOL CROSSING SYMBOL	30	X	30		6.25		N	PST	2.5	1	NEW
				W16-7pL	LEFT DOWNWARD ANGLED ARROW	24	X	12		2						
188	"O" 176+38		15.8	R6-4	ROUNDABOUT DIRECTIONAL	30	X	24		5		E	PST	2.5	1	NEW
189	"O" 176+38	16.3		R6-4	ROUNDABOUT DIRECTIONAL	30	X	24		5		S	PST	2.5	1	NEW
190	"O" 176+56		15.7	R6-4	ROUNDABOUT DIRECTIONAL	30	X	24		5		N	PST	2.5	1	NEW
191	"O" 176+63	9.4		R6-4	ROUNDABOUT DIRECTIONAL	30	X	24		5		W	PST	2.5	1	NEW
192	"O" 177+16	29.4		R1-2	YIELD	36	X	36		9		W	PST	2.5	1	NEW
193	"O" 177+12	5.1		R1-2	YIELD	36	X	36		9		W	PST	2.5	1	NEW
194	"O" 174+19		30.4	W2-6	CIRCULAR INTERSECTION	30	X	30		6.25		E	PST	2.5	1	NEW

** Deleted by CO29

NO.	DATE	REVISION
1	01/22/21	ADDENDUM 9

STATE	PROJECT DESIGNATION	YEAR	SHEET NO.	TOTAL SHEETS
ALASKA	TEA-0955(016)/Z68124	2020	H-23	235

SIGNING SUMMARY

LOC. NO.	STATION	LOCATION LT.	LOCATION RT.	ASDS CODE	LEGEND	SIZE H (INCHES)	SIZE X	SIZE V		AREA (SQ.FT.)	MTG. HGT. (FT.)	DIR.	POST TYPE	POST SIZE	POST NO.	REMARKS
195	"O" 175+84		4.6	R1-2	YIELD	36	X	36		9		E	PST	2.5	1	NEW
196	"O" 175+75		38.0	R1-2	YIELD	36	X	36		9		E	PST	2.5	1	NEW
197	"O" 175+50		41.5	R3-9b	CENTER LANE TWO-WAY TURN ONLY							E				REMOVE
198	"O" 175+64		46.8	N/A	NO EXIT							N				REMOVE
199	"O" 175+93		65.1	S1-1	SCHOOL CROSSING SYMBOL	30	X	30		6.25		S				NEW; INSTALL ON LIGHT POLE 63
				W16-7pL	LEFT DOWNWARD ANGLED ARROW	24	X	12		2						
200	"O" 176+04		70.2	N/A	ENTRANCE ONLY							W				REMOVE
201	"O" 176+35		78.6	D1-1D	RENNINGER ST (ARROW)	78	X	18		9.75		S	PST	2.5	2	NEW
202	"O" 176+33		107.8	R4-7	KEEP RIGHT SYMBOL	24	X	30		5		N	PST	2.5	1	NEW
				OM1-1	TYPE 1 OBJECT MARKER	18	X	18		2.25						
203	REMOVE "O" 176+05 NEW "O" 176+13		127.3		SPEED LIMIT - 20							S				RELOCATE
204	"O" 176+74		175.0	W2-6	CIRCULAR INTERSECTION	30	X	30		6.25		N	PST	2.5	1	NEW
205	"O" 176+71		101.6	S1-1	SCHOOL CROSSING SYMBOL	30	X	30		6.25		N				NEW; INSTALL ON LIGHT POLE 65
				W16-7pL	LEFT DOWNWARD ANGLED ARROW	24	X	12		2						
206	"O" 176+85		68.9	R1-2	YIELD	36	X	36		9		N	PST	2.5	1	NEW
207	"O" 176+70		47.9	R1-1	STOP							N				REMOVE
208	"O" 177+15		4.6	D1-1D	GLACIER HWY (ARROW)	72	X	18		9		E	PST	2.5	2	NEW
209	"O" 177+90		32.0	R3-17	RIGHT LANE BICYCLE SYMBOL ONLY	24	X	30		5		E	PST	2.5	1	NEW
				R7P-101	NO PARKING ANY TIME	12	X	30		2.5						
210	"O" 177+98		0.9	R4-7	KEEP RIGHT SYMBOL	24	X	30		5		W	PST	2.5	1	NEW
				OM1-1	TYPE 1 OBJECT MARKER	18	X	18		2.25						
211	"O" 178+58	30.7		R3-9b	CENTER LANE TWO-WAY TURN ONLY	24	X	36		6		W	PST	2.5	1	NEW
				R3-9dP	END	30	X	12		2.5						
212	"O" 179+12	32.9		W2-6	CIRCULAR INTERSECTION	30	X	30		6.25		W				NEW; INSTALL ON LIGHT POLE 69
213	"O" 178+63		36.3	R3-9b	CENTER LANE TWO-WAY TURN ONLY	24	X	36		6		E	PST	2.5	1	NEW
				R3-9cP	BEGIN	30	X	12		2.5						

SEE STANDARD PLANS S-00.12 AND S-01.02 FOR FRAMING AND BRACING REQUIREMENTS

Record Drawings have been reviewed by the Project Engineer, and represent to the best of my knowledge, the project as constructed.

PE Dillon Tomaro 2/4/25

POST TYPE LEGEND:

PST = PERFORATED STEEL TUBE
TS = TUBE STEEL (SQUARE STRUCTURAL STEEL TUBING)
W_X_ = WIDE FLANGE

SIGN SUMMARY
(6 OF 7)

STATE OF ALASKA 49TH ANTHONY M. ROOS CE 12759 REGISTERED PROFESSIONAL ENGINEER

7/31/2020

PLANS DEVELOPED BY: KITTELSON & ASSOCIATES, INC. CERT. OF AUTHORIZATION NO.: 254741, 851 SW 6TH AVE. SUITE 600, PORTLAND, OR 97204, (503) 228-5230
H:\20\20487 - Glacier Highway - Juneau Traffic Design\design_CD\68124_H_SS_S&D-H-23 Thu, Jul/30/20 09:17am

SIGNING SUMMARY

LOC. NO.	STATION	LOCATION LT.	LOCATION RT.	ASDS CODE	LEGEND	SIZE H (INCHES)	SIZE X	SIZE V	BRACING/ FRAMING BRA CED	BRACING/ FRAMING FRA MED	AREA (SQ FT.)	MTG. HGT. (FT.)	DIR.	POST TYPE	POST SIZE	POST NO.	REMARKS
173	"O" 168+57		30.6	R3-17	BICYCLE SYMBOL BIKE LANE	24	X	18			3		E	PST	2.5	1	NEW
				R7P-101	NO PARKING ANY TIME	12	X	30			2.5						
174	REMOVE "O" 167+46 NEW "O" 169+42		30.7	I-3	SWITZER CREEK	36	X	18			4.5		E	PST	2.5	1	REPLACE AND RELOCATE
175	REMOVE "O" 170+14 NEW "O" 169+94	30.6		I-3	SWITZER CREEK	36	X	18			4.5		W	PST	2.5	1	REPLACE AND RELOCATE
176	REMOVE "O" 170+56 NEW "O" 172+57		31.4	R2-1	SPEED LIMIT - 40								E				RELOCATE
177	REMOVE "O" 172+91 NEW "O" 182+96	36.2		S1-1	SCHOOL CROSSING SYMBOL								E				RELOCATE
				W16-9P	AHEAD												
178	REMOVE "O" 171+38 NEW "O" 180+69		33.6	S5-2	END SCHOOL ZONE								E				RELOCATE; INSTALL ON POST 217
179	"O" 171+93		35.2	R1-1	STOP	30	X	30			6.25		N	PST	2.5	1	REPLACE R1-1, NEW (3) D3-100
				D3-100	GLACIER HWY	48	X	12			4						
				D3-100	NORTHWOOD DR	60	X	12			5		W				
				D3-100	NORTHWOOD DR	60	X	12			5		E				
180	"O" 174+02	30.8		R3-17	BICYCLE SYMBOL BIKE LANE	24	X	18			3		W	PST	2.5	1	NEW
				R7P-101	NO PARKING ANY TIME	12	X	30			2.5						
181	"O" 174+34	30.6		R3-17	RIGHT LANE BICYCLE SYMBOL ONLY								W				REMOVE
182	"O" 175+79	5.2		D1-1D	GLACIER HWY (ARR0W)	72	X	18			9		W	PST	2.5	2	NEW
183	"O" 175+76	21.5		R3-9b	CENTER LANE TWO-WAY TURN ONLY								W				REMOVE
184	"O" 176+16	66.6		R1-2	YIELD	36	X	36			9		S	PST	2.5	1	NEW
185	"O" 176+29	90.7		S1-1	SCHOOL CROSSING SYMBOL	30	X	30			6.25		S	PST	2.5	1	NEW
				W16-7pL	LEFT DOWNWARD ANGLED ARROW	24	X	12			2						
186	"O" 176+48	103.7		R4-7	KEEP RIGHT SYMBOL	24	X	30			5		S	PST	2.5	1	NEW
				OM1-1	TYPE 1 OBJECT MARKER	18	X	18			2.25						
187	"O" 176+77	74.0		S1-1	SCHOOL CROSSING SYMBOL	30	X	30			6.25		N	PST	2.5	1	NEW
				W16-7pL	LEFT DOWNWARD ANGLED ARROW	24	X	12			2						
188	"O" 176+38		15.8	R6-4	ROUNDABOUT DIRECTIONAL	30	X	24			5		E	PST	2.5	1	NEW
189	"O" 176+38	16.3		R6-4	ROUNDABOUT DIRECTIONAL	30	X	24			5		S	PST	2.5	1	NEW
190	"O" 176+56		15.7	R6-4	ROUNDABOUT DIRECTIONAL	30	X	24			5		N	PST	2.5	1	NEW
191	"O" 176+63	9.4		R6-4	ROUNDABOUT DIRECTIONAL	30	X	24			5		W	PST	2.5	1	NEW
192	"O" 177+16	29.4		R1-2	YIELD	36	X	36			9		W	PST	2.5	1	NEW
193	"O" 177+15	1.2		R1-2	YIELD	36	X	36			9		W	PST	2.5	1	NEW
194	"O" 174+19		30.4	W2-6	CIRCULAR INTERSECTION	30	X	30			6.25		E	PST	2.5	1	NEW

CO 29

NO.	DATE	REVISION
1	05/09/22	DELTA 34: RNBT Revisions

STATE	PROJECT DESIGNATION	YEAR	SHEET NO.	TOTAL SHEETS
ALASKA	TEA-0955(016)/Z68124	2020	H-23	235

SIGNING SUMMARY

LOC. NO.	STATION	LOCATION LT.	LOCATION RT.	ASDS CODE	LEGEND	SIZE H (INCHES)	SIZE X	SIZE V	BRACING/ FRAMING BRA CED	BRACING/ FRAMING FRA MED	AREA (SQ FT.)	MTG. HGT. (FT.)	DIR.	POST TYPE	POST SIZE	POST NO.	REMARKS
195	"O" 175+82		1.2	R1-2	YIELD	36	X	36			9		E	PST	2.5	1	NEW
196	"O" 175+75		38.0	R1-2	YIELD	36	X	36			9		E	PST	2.5	1	NEW
197	"O" 175+50		41.5	R3-9b	CENTER LANE TWO-WAY TURN ONLY								E				REMOVE
198	"O" 175+64		46.8	N/A	NO EXIT								N				REMOVE
199	"O" 175+93		65.1	S1-1	SCHOOL CROSSING SYMBOL	30	X	30			6.25		S				NEW; INSTALL ON LIGHT POLE 63
				W16-7pL	LEFT DOWNWARD ANGLED ARROW	24	X	12			2						
200	"O" 176+04		70.2	N/A	ENTRANCE ONLY								W				REMOVE
201	"O" 176+35		75.0	D1-1D	RENNINGER ST (ARROW)	78	X	18			9.75		S	PST	2.5	2	NEW
202	"O" 176+34		99.8	R4-7	KEEP RIGHT SYMBOL	24	X	30			5		N	PST	2.5	1	NEW
				OM1-1	TYPE 1 OBJECT MARKER	18	X	18			2.25						
203	REMOVE "O" 176+05 NEW "O" 176+13		127.3		SPEED LIMIT - 20								S				RELOCATE
204	"O" 176+74		175.0	W2-6	CIRCULAR INTERSECTION	30	X	30			6.25		N	PST	2.5	1	NEW
205	"O" 176+71		101.6	S1-1	SCHOOL CROSSING SYMBOL	30	X	30			6.25		N				NEW; INSTALL ON LIGHT POLE 65
				W16-7pL	LEFT DOWNWARD ANGLED ARROW	24	X	12			2						
206	"O" 176+85		68.9	R1-2	YIELD	36	X	36			9		N	PST	2.5	1	NEW
207	"O" 176+70		47.9	R1-1	STOP								N				REMOVE
208	"O" 177+18		1.3	D1-1D	GLACIER HWY (ARR0W)	72	X	18			9		E	PST	2.5	2	NEW
209	"O" 177+90		32.0	R3-17	RIGHT LANE BICYCLE SYMBOL ONLY	24	X	30			5		E	PST	2.5	1	NEW
				R7P-101	NO PARKING ANY TIME	12	X	30			2.5						
210	"O" 177+98		0.9	R4-7	KEEP RIGHT SYMBOL	24	X	30			5		W	PST	2.5	1	NEW
				OM1-1	TYPE 1 OBJECT MARKER	18	X	18			2.25						
211	"O" 178+58	30.7		R3-9b	CENTER LANE TWO-WAY TURN ONLY	24	X	36			6		W	PST	2.5	1	NEW
				R3-9dP	END	30	X	12			2.5						
212	"O" 179+12	32.9		W2-6	CIRCULAR INTERSECTION	30	X	30			6.25		W				NEW; INSTALL ON LIGHT POLE 69
213	"O" 178+63		36.3	R3-9b	CENTER LANE TWO-WAY TURN ONLY	24	X	36			6		E	PST	2.5	1	NEW
				R3-9cP	BEGIN	30	X	12			2.5						

POST TYPE LEGEND:

PST = PERFORATED STEEL TUBE
TS = TUBE STEEL (SQUARE STRUCTURAL STEEL TUBING)
W_X_ = WIDE FLANGE

Record Drawings have been reviewed by the Project Engineer, and represent to the best of my knowledge, the project as constructed.

PE Dillon Tomaro 2/4/25

STATE OF ALASKA 49TH ANTHONY M. ROOS CE 127591 REGISTERED PROFESSIONAL ENGINEER

SIGN SUMMARY
(6 OF 7)

PLANS DEVELOPED BY: KITTELSON & ASSOCIATES, INC. CERT. OF AUTHORIZATION NO.: 254741, 851 SW 6TH AVE. SUITE 600, PORTLAND, OR 97204, (503) 228-5230
H:\20\20487 - Glacier Highway - Juneau Traffic Design\design_CO\68124_H_SS_S&D-H-23 Tue, May/10/22 12:59pm

SIGNING SUMMARY

LOC. NO.	STATION	LOCATION LT.	LOCATION RT.	ASDS CODE	LEGEND	SIZE H (INCHES)	SIZE X	SIZE V		AREA (SQ FT.)	MTG. HGT. (FT.)	DIR.	POST TYPE	POST SIZE	POST NO.	REMARKS
214	REMOVE "O" 178+52 NEW "O" 179+49		31.2	W11-2	PEDESTRIAN CROSSING SYMBOL	30	X	30		6.25		E				REPLACE W11-2, NEW W16-9P
				W16-9P	AHEAD	24	X	12		2						
215	"O" 179+52	41.5		BUS STOP	BUS STOP	12	X	18		1.5		W	PST	2.5	1	NEW
				R7P-101	NO PARKING ANY TIME	12	X	30		2.5						
216	"O" 180+59		32.6	R10-6	STOP HERE ON RED							E				REMOVE
217	"O" 180+69		33.6	R2-1	SPEED LIMIT - 40	24	X	30		5		E	PST	2.5	1	NEW
218	"O" 180+91	25.7		R3-9b	CENTER LANE TWO-WAY TURN ONLY	24	X	36		6		W	PST	2.5	1	NEW
219	"O" 181+19	47.0		R1-1	STOP							S				RETAIN
220	"O" 181+77		31.5	R3-9b	CENTER LANE TWO-WAY TURN ONLY	24	X	36		6		E	PST	2.5	1	NEW
				R3-9dP	END	30	X	12		2.5						
221	"O" 181+90	2.3		R4-7	KEEP RIGHT SYMBOL	24	X	30		5		E	PST	2.5	1	NEW
				OM1-1	TYPE 1 OBJECT MARKER	18	X	18		2.25						
222	"O" 181+96	42.2		R10-6	STOP HERE ON RED							W				REMOVE
223	"O" 181+15	31.2		R9-3	NO PEDESTRIAN CROSSING							N				REMOVE
224	"O" 182+16		30.5	R9-3	NO PEDESTRIAN CROSSING							S				REMOVE
225	"O" 182+90	0.0	0.0	R4-7	KEEP RIGHT SYMBOL	24	X	30		5		W	PST	2.5	1	NEW
				OM1-1	TYPE 1 OBJECT MARKER	18	X	18		2.25						
226	"O" 183+32		40.9	BUS STOP	BUS STOP	12	X	18		1.5		E	PST	2.5	1	NEW
				R7P-101	NO PARKING ANY TIME	12	X	30		2.5						
227	"O" 183+74	31.4		W11-2	PEDESTRIAN CROSSING SYMBOL	30	X	30		6.25		W	PST	2.5	1	REPLACE W11-2, NEW W16-9P
				W16-9P	AHEAD	24	X	12		2						
228	"O" 184+40		40.7	R1-1	STOP	30	X	30		6.25		N	PST	2.5	1	RETAIN R1-1, NEW (4) D3-100
				D3-100	GLACIER HWY	48	X	12		4						
				D3-100	WHITEHEAD DR	54	X	12		4.5		W				
				D3-100	WHITEHEAD DR	54	X	12		4.5		E				
				D3-100	GLACIER HWY	48	X	12		4		S				
229	"O" 184+77	29.2		R3-17	BICYCLE SYMBOL BIKE LANE	24	X	18		3		W	PST	2.5	1	NEW
				R7P-101	NO PARKING ANY TIME	12	X	30		2.5						

SEE STANDARD PLANS S-00.12 AND S-01.02 FOR FRAMING AND BRACING REQUIREMENTS

** Deleted by CO29

NO.	DATE	REVISION
1	01/22/21	ADDENDUM 9

STATE	PROJECT DESIGNATION	YEAR	SHEET NO.	TOTAL SHEETS
ALASKA	TEA-0955(016)/Z68124	2020	H-24	235

Record Drawings have been reviewed by the Project Engineer, and represent to the best of my knowledge, the project as constructed.

PE *Dillon Tomaro* 2/4/25

POST TYPE LEGEND:

PST = PERFORATED STEEL TUBE
TS = TUBE STEEL (SQUARE STRUCTURAL STEEL TUBING)
W_X_ = WIDE FLANGE

SIGN SUMMARY
(7 OF 7)

STATE OF ALASKA 49TH
ANTHONY M. ROOS CE 12759
REGISTERED PROFESSIONAL ENGINEER
7/31/2020

PLANS DEVELOPED BY: KITTELSON & ASSOCIATES, INC. CERT. OF AUTHORIZATION NO.: 254741, 851 SW 6TH AVE. SUITE 600, PORTLAND, OR 97204, (503) 228-5230
H:\20\20487 - Glacier Highway - Juneau Traffic Design\design_CD\68124_H_SS_S&D-H-24 Thu, Jul/30/20 09:17am

SIGNING SUMMARY

CO 29

LOC. NO.	STATION	LOCATION LT.	LOCATION RT.	ASDS CODE	LEGEND	SIZE H (INCHES)	SIZE X	SIZE V	BRACING/ FRAMING BRA CED	BRACING/ FRAMING FRA MED	AREA (SQ FT.)	MTG. HGT. (FT.)	DIR.	POST TYPE	POST SIZE	POST NO.	REMARKS
214	REMOVE "O" 178+52 NEW "O" 179+49		31.2	W11-2	PEDESTRIAN CROSSING SYMBOL	30	X	30			6.25		E				REPLACE W11-2, NEW W16-9P
				W16-9P	AHEAD	24	X	12			2						
215	"O" 179+52	41.5		BUS STOP	BUS STOP	12	X	18			1.5		W	PST	2.5	1	NEW
				R7P-101	NO PARKING ANY TIME	12	X	30			2.5						
216	"O" 180+59		32.6	R10-6	STOP HERE ON RED								E				REMOVE
217	"O" 180+69		33.6	R2-1	SPEED LIMIT - 40	24	X	30			5		E	PST	2.5	1	NEW
218	"O" 180+91	25.7		R3-9b	CENTER LANE TWO-WAY TURN ONLY	24	X	36			6		W	PST	2.5	1	NEW
219	"O" 181+19	47.0		R1-1	STOP								S				RETAIN
220	"O" 181+77		31.5	R3-9b	CENTER LANE TWO-WAY TURN ONLY	24	X	36			6		E	PST	2.5	1	NEW
				R3-9dP	END	30	X	12			2.5						
221	"O" 181+90	2.3		R4-7	KEEP RIGHT SYMBOL	24	X	30			5		E	PST	2.5	1	NEW
				OM1-1	TYPE 1 OBJECT MARKER	18	X	18			2.25						
222	"O" 181+96	42.2		R10-6	STOP HERE ON RED								W				REMOVE
223	"O" 181+15	31.2		R9-3	NO PEDESTRIAN CROSSING								N				REMOVE
224	"O" 182+16		30.5	R9-3	NO PEDESTRIAN CROSSING								S				REMOVE
225	"O" 182+90	0.0	0.0	R4-7	KEEP RIGHT SYMBOL	24	X	30			5		W	PST	2.5	1	NEW
				OM1-1	TYPE 1 OBJECT MARKER	18	X	18			2.25						
226	"O" 183+32		40.9	BUS STOP	BUS STOP	12	X	18			1.5		E	PST	2.5	1	NEW
				R7P-101	NO PARKING ANY TIME	12	X	30			2.5						
227	"O" 183+74	31.4		W11-2	PEDESTRIAN CROSSING SYMBOL	30	X	30			6.25		W	PST	2.5	1	REPLACE W11-2, NEW W16-9P
				W16-9P	AHEAD	24	X	12			2						
228	"O" 184+40		40.7	R1-1	STOP	30	X	30			6.25		N	PST	2.5	1	RETAIN R1-1, NEW (3) D3-100
				D3-100	GLACIER HWY	48	X	12			4						
				D3-100	WHITEHEAD DR	54	X	12			4.5		W				
				D3-100	WHITEHEAD DR	54	X	12			4.5		E				
229	"O" 184+77	29.2		R3-17	BICYCLE SYMBOL BIKE LANE	24	X	18			3		W	PST	2.5	1	NEW
				R7P-101	NO PARKING ANY TIME	12	X	30			2.5						
230	"O" 177+15	1.2		R1-2	YIELD	36	X	36			9		N	PST	2.5	1	NEW

NO.	DATE	REVISION
1	05/09/22	DELTA 34: RNBT Revisions

STATE	PROJECT DESIGNATION	YEAR	SHEET NO.	TOTAL SHEETS
ALASKA	TEA-0955(016)/Z68124	2020	H-24	235

Record Drawings have been reviewed by the Project Engineer, and represent to the best of my knowledge, the project as constructed.

PE *Dillon Tomaro* 2/4/25

POST TYPE LEGEND:

PST = PERFORATED STEEL TUBE
TS = TUBE STEEL (SQUARE STRUCTURAL STEEL TUBING)
W_X_ = WIDE FLANGE

SIGN SUMMARY
(7 OF 7)

STATE OF ALASKA
49TH
ANTHONY M. ROOS
CE 127591
REGISTERED PROFESSIONAL ENGINEER

PLANS DEVELOPED BY: KITTELSON & ASSOCIATES, INC. CERT. OF AUTHORIZATION NO.: 254741, 851 SW 6TH AVE. SUITE 600, PORTLAND, OR 97204, (503) 228-5230
H:\20\20487 - Glacier Highway - Juneau Traffic Design\design_CD\68124_H_SS_S&D-H-24 Tue, May/10/22 01:00pm

NO.	DATE	REVISION

STATE	PROJECT DESIGNATION	YEAR	SHEET NO.	TOTAL SHEETS
ALASKA	TEA-0955(016)/Z68124	2020	H-25	235

SIGN 2

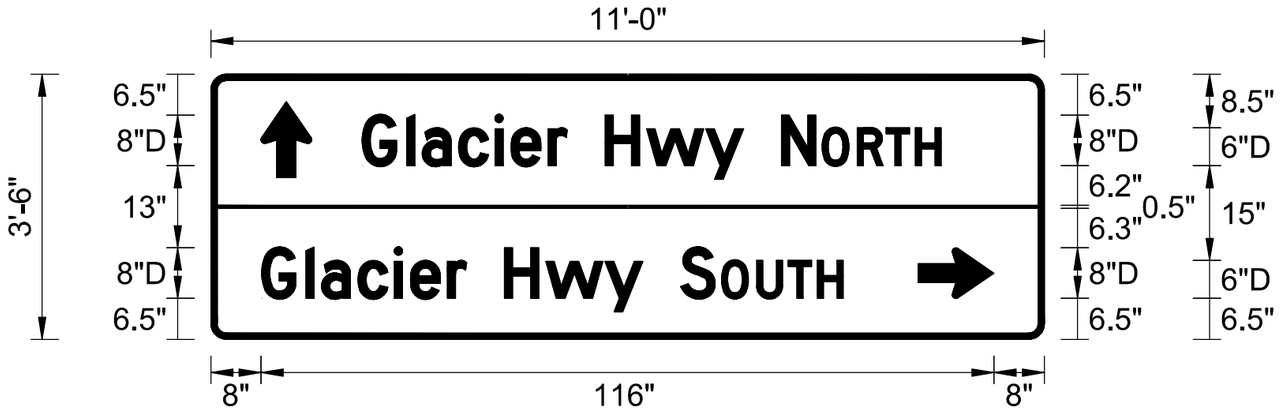

SIGNS 25, 39, 76, 89, 91, 124, 143, 160, 179, 228

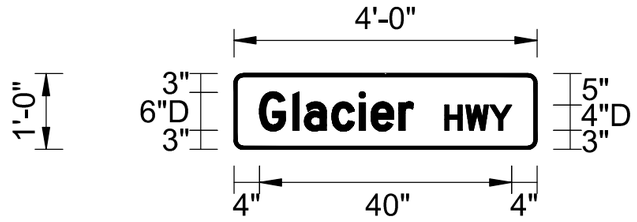

SIGN 13

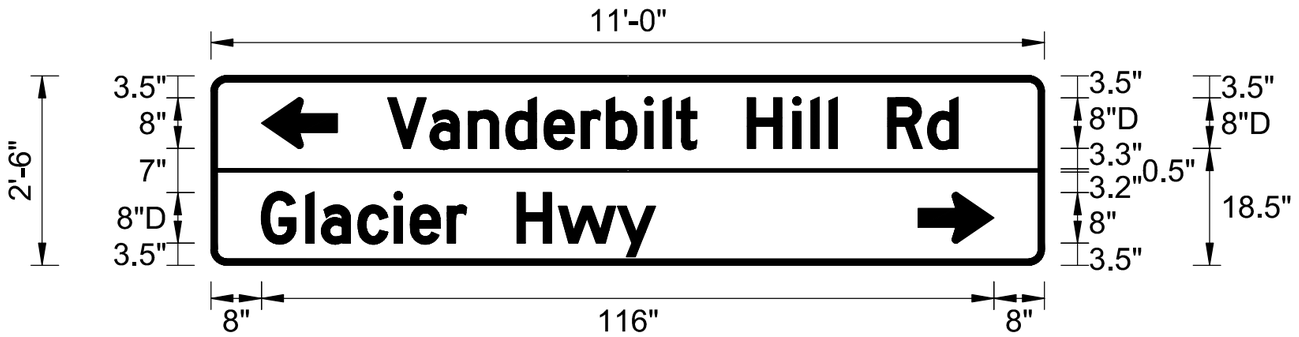

SIGN 25

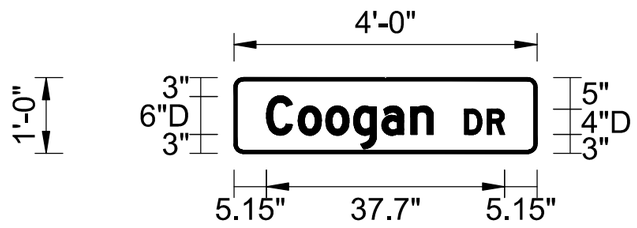

SIGN 24

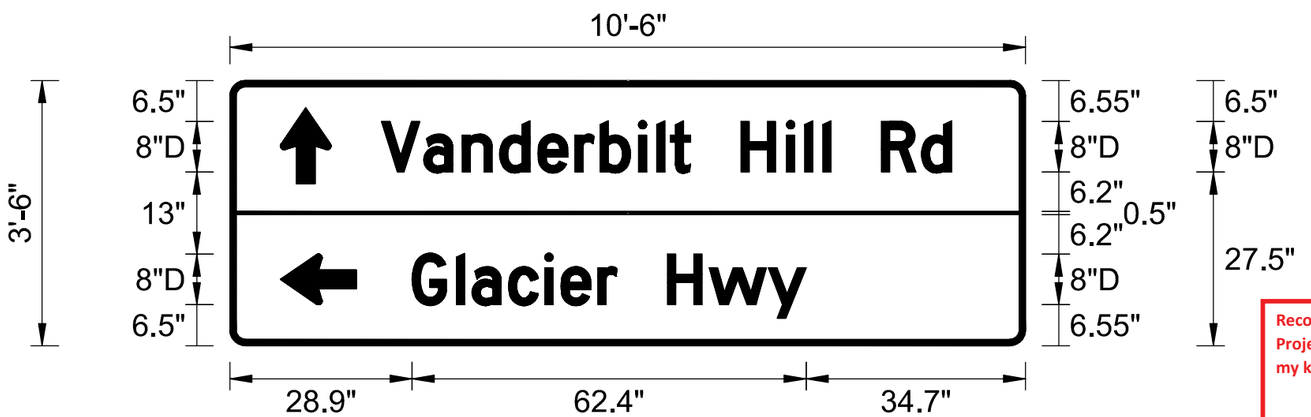

SIGN 39

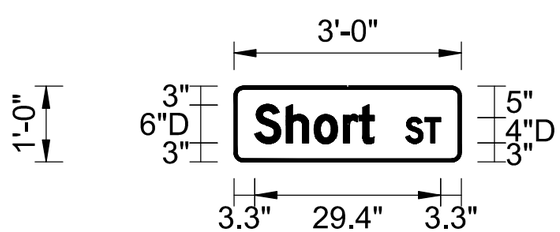

Record Drawings have been reviewed by the Project Engineer, and represent to the best of my knowledge, the project as constructed.

PE Dillon Tomaro 2/4/25

SIGN DETAILS
(1 OF 3)

STATE OF ALASKA
49TH
ANTHONY M. ROOS
CE 12759
REGISTERED PROFESSIONAL ENGINEER
7/31/2020

PLANS DEVELOPED BY: KITTELSON & ASSOCIATES, INC. CERT. OF AUTHORIZATION NO.: 254741, 851 SW 6TH AVE. SUITE 600, PORTLAND, OR 97204, (503) 228-5230
H:\20\20487 - Glacier Highway - Juneau Traffic Design\design_CD\68124_H_SS_S&D-H-25 Thu, Jul/30/20 09:17am

NO.	DATE	REVISION

STATE	PROJECT DESIGNATION	YEAR	SHEET NO.	TOTAL SHEETS
ALASKA	TEA-0955(016)/Z68124	2020	H-26	235

Record Drawings have been reviewed by the Project Engineer, and represent to the best of my knowledge, the project as constructed.

PE Dillon Tomaro 2/4/25

SIGN 76

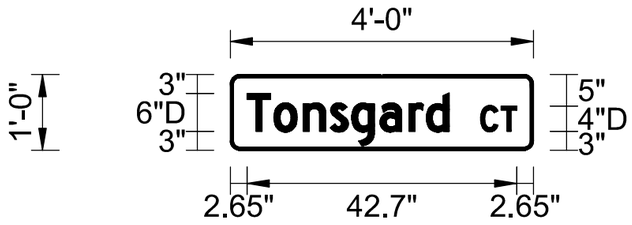

SIGN 124

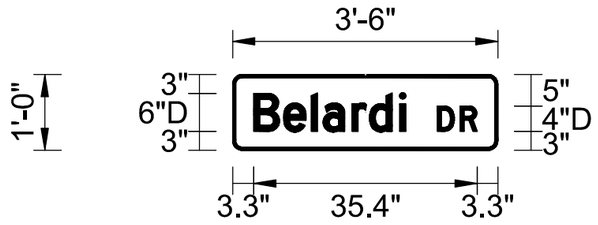

SIGNS 174, 175

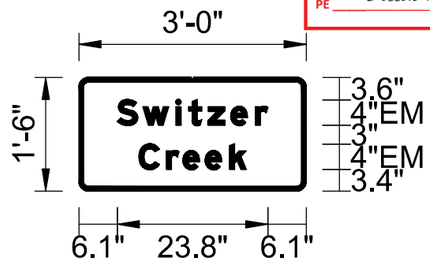

SIGN 89

SIGN 143

SIGN 179

SIGN 101

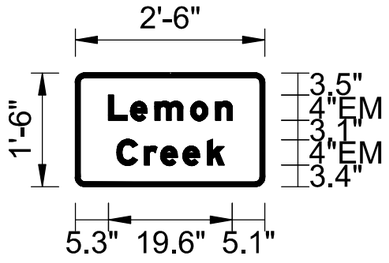

SIGN 160

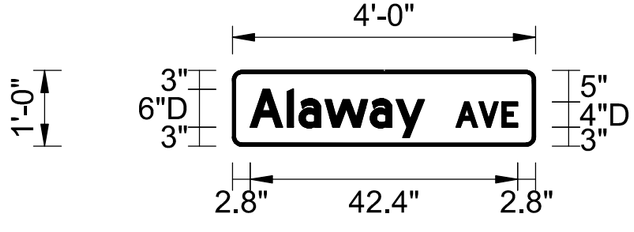

SIGN 228

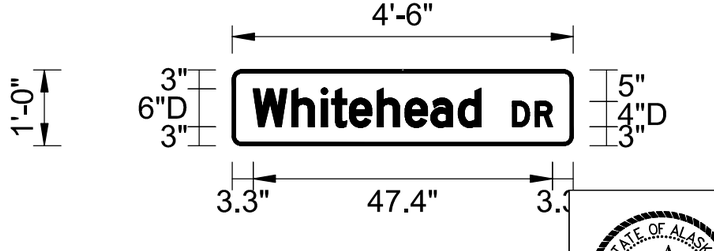

SIGN DETAILS
(2 OF 3)

STATE OF ALASKA
49TH
ANTHONY M. ROOS
CE 127591
REGISTERED PROFESSIONAL ENGINEER
7/31/2020

PLANS DEVELOPED BY: KITTELSON & ASSOCIATES, INC. CERT. OF AUTHORIZATION NO.: 254741, 851 SW 6TH AVE. SUITE 600, PORTLAND, OR 97204, (503) 228-5230
H:\20\20487 - Glacier Highway - Juneau Traffic Design\design_CD\68124_H_SS_S&D-H-26 Thu, Jul/30/20 09:17am

SIGN 201

NO.	DATE	REVISION

STATE	PROJECT DESIGNATION	YEAR	SHEET NO.	TOTAL SHEETS
ALASKA	TEA-0955(016)/Z68124	2020	H-27	235

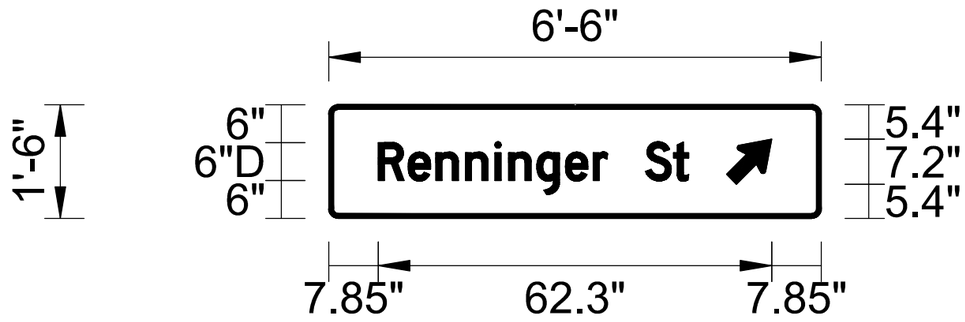

SIGNS 182, 208

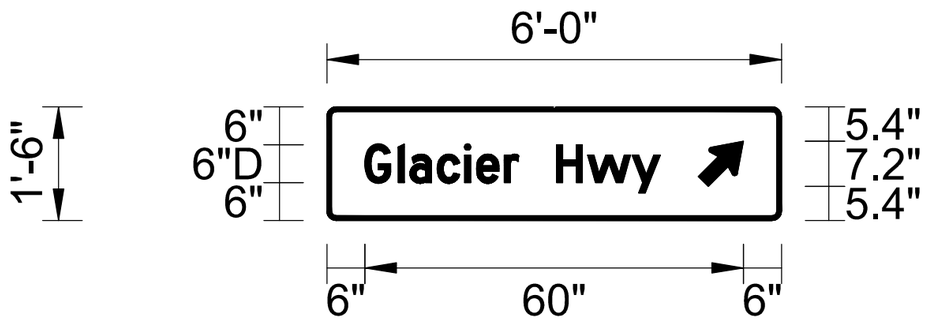

Record Drawings have been reviewed by the Project Engineer, and represent to the best of my knowledge, the project as constructed.

PE *Dillon Tomaro* 2/4/25

SIGN DETAILS
(3 OF 3)

STATE OF ALASKA
49TH
ANTHONY M. ROOS
CE 127591
REGISTERED PROFESSIONAL ENGINEER
7/31/2020

PLANS DEVELOPED BY: KITTELSON & ASSOCIATES, INC. CERT. OF AUTHORIZATION NO.: 254741, 851 SW 6TH AVE. SUITE 600, PORTLAND, OR 97204, (503) 228-5230
H:\20\20487 - Glacier Highway - Juneau Traffic Design\design_CD\68124_H_SS_S&D-H-27 Thu, Jul/30/20 09:17am

NO.	DATE	REVISION

STATE	PROJECT DESIGNATION	YEAR	SHEET NO.	TOTAL SHEETS
ALASKA	TEA-0955(016)/Z68124	2020	H-28	235

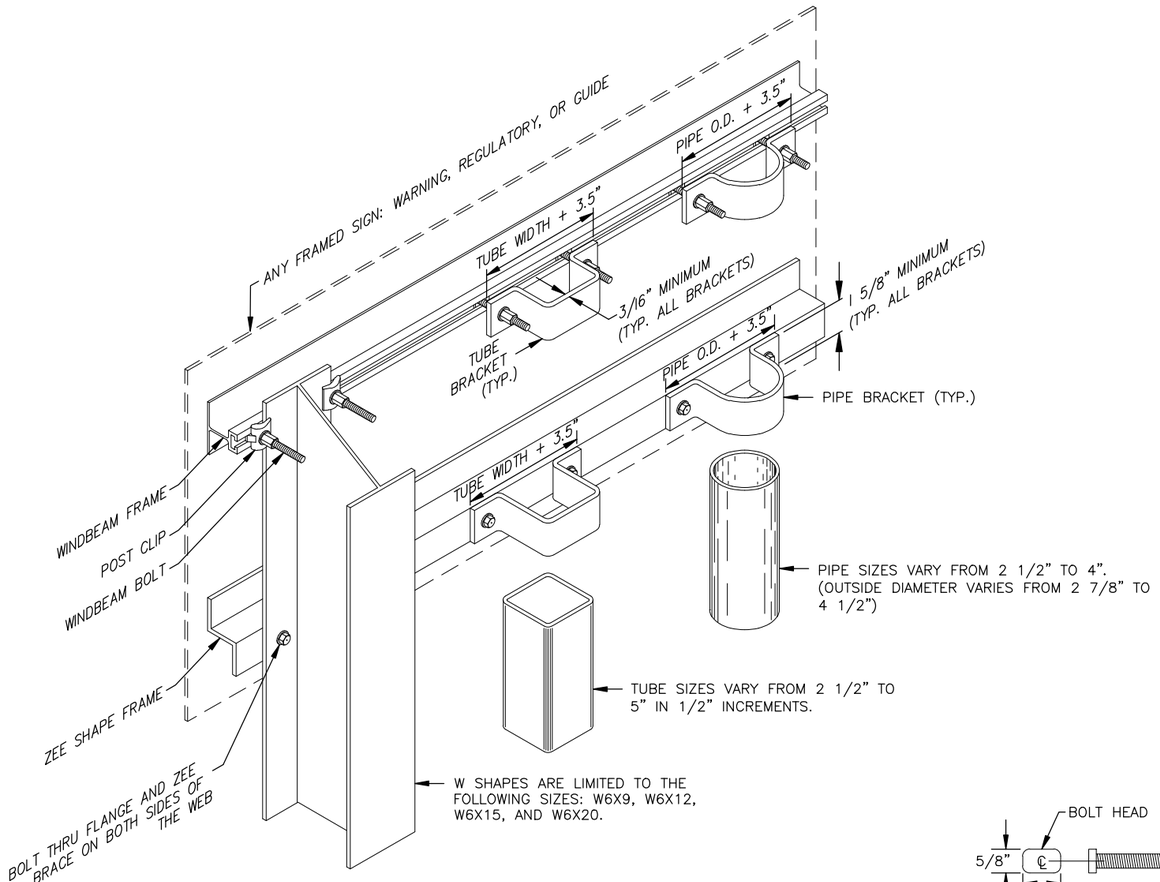

FRAMED SIGN ATTACHMENT BRACKETS

FASTENER SPECIFICATION TABLE

FASTENERS	STEEL	STAINLESS STEEL
BOLTS	ASTM A 307	ASTM F 593
NUTS	ASTM A 563	ASTM F 594
WASHERS	ASTM F 844	ASTM A 480

THESE SPECIFICATIONS APPLY TO ALL SIGN FASTENER HARDWARE ON THE PROJECT.

NOTES:

1. ATTACH FRAMED SIGNS TO POSTS WHEREVER THE FRAMES CROSS THE POSTS. AT EACH CROSSING, ATTACH THE SIGN USING TWO POST CLIPS ON W-SHAPE POSTS, A U-SHAPED BRACKET ON PIPES OR A BRACKET WITH SQUARE CORNERS ON TUBES.
2. THE TUBE BRACKETS USED ON EVEN INCH SIZE TUBES MAY ALSO BE USED ON TUBES 1/2" SMALLER IN SIZE.
3. THE BRACKET DETAILS SHOWN INDICATE GENERAL DESIGNS ONLY. DESIGNS MAY VARY BY MANUFACTURER.
4. ALUMINUM ALLOY 6061-T6 SHALL BE USED FOR ZEE SHAPE FRAMING AND RIVETS.

3/8" WINDBEAM BOLT

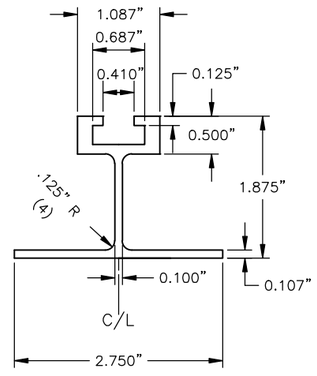

EXTRUDED ALUMINUM WINDBEAM

NOTES:

1. ALUMINUM ALLOY 6061-T6 SHALL BE USED FOR EXTRUDED WINDBEAM AND RIVETS.
2. ATTACH SIGNS TO WINDBEAM WITH 3/6" RIVETS AT 4" STAGGERED SPACING.

Record Drawings have been reviewed by the Project Engineer, and represent to the best of my knowledge, the project as constructed.

PE *Dillon Tomaro* 2/4/25

STATE OF ALASKA 49TH ANTHONY M. ROOS CE 127591 REGISTERED PROFESSIONAL ENGINEER

7/31/2020

SIGN ATTACHMENT DETAILS

PLANS DEVELOPED BY: KITTELSON & ASSOCIATES, INC. CERT. OF AUTHORIZATION NO.: 254741, 851 SW 6TH AVE. SUITE 600, PORTLAND, OR 97204, (503) 228-5230
H:\20\20487 - Glacier Highway - Juneau Traffic Design\design_CD\68124_H_SS_S&D-H-28 Thu, Jul/30/20 09:17am

NO.	DATE	REVISION

STATE	PROJECT DESIGNATION	YEAR	SHEET NO.	TOTAL SHEETS
ALASKA	TEA-0955(016)/Z68124	2020	H-29	235

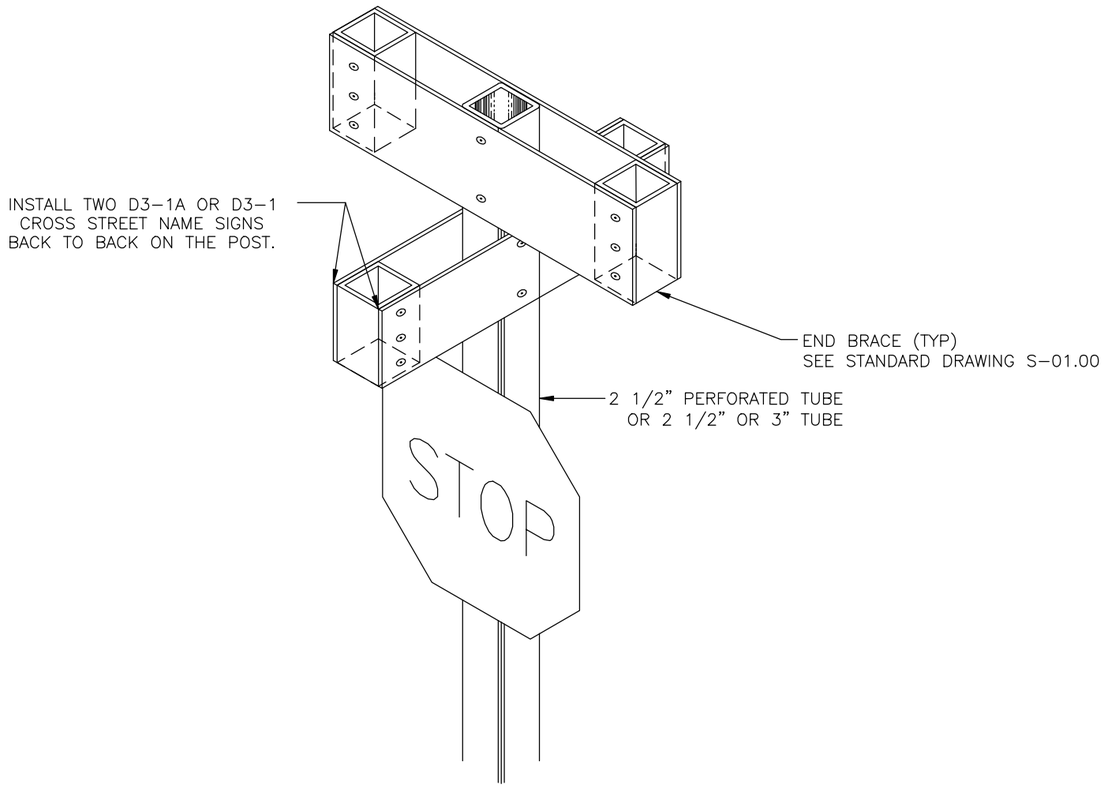

STREET NAME SIGN

STREET NAME SIGN NOTE:

VERTICALLY SEPARATE MULTIPLE SIGNS MOUNTED ON THE SAME POST BY 2 1/2 INCHES.

SIGN INSTALLATION ANGLES

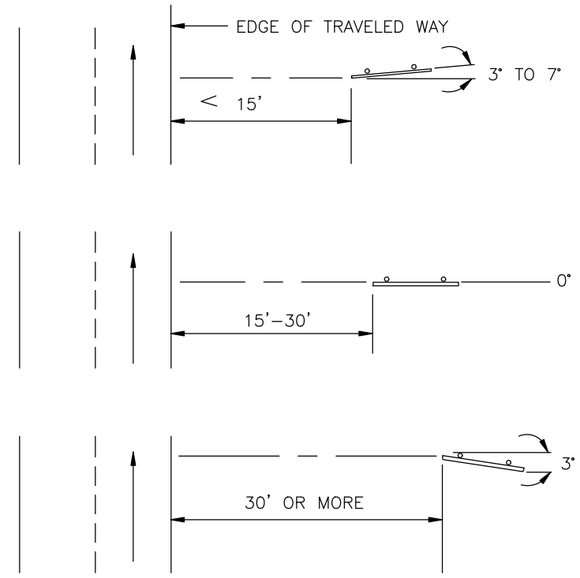

Record Drawings have been reviewed by the Project Engineer, and represent to the best of my knowledge, the project as constructed.

PE Dillon Tomaro 2/4/25

SIGN INSTALLATION DETAILS

STATE OF ALASKA
49TH
ANTHONY M. ROOS
CE 12759
REGISTERED PROFESSIONAL ENGINEER
7/31/2020

PLANS DEVELOPED BY: KITTELSON & ASSOCIATES, INC. CERT. OF AUTHORIZATION NO.: 254741, 851 SW 6TH AVE. SUITE 600, PORTLAND, OR 97204, (503) 228-5230
H:\20\20487 - Glacier Highway - Juneau Traffic Design\design_CD\68124_H_SS_S&D-H-29 Thu, Jul/30/20 09:17am

NO.	DATE	REVISION
1	12/11/20	ADDENDUM 4

STATE	PROJECT DESIGNATION	YEAR	SHEET NO.	TOTAL SHEETS
ALASKA	TEA-0955(016)/Z68124	2020	H-30	235

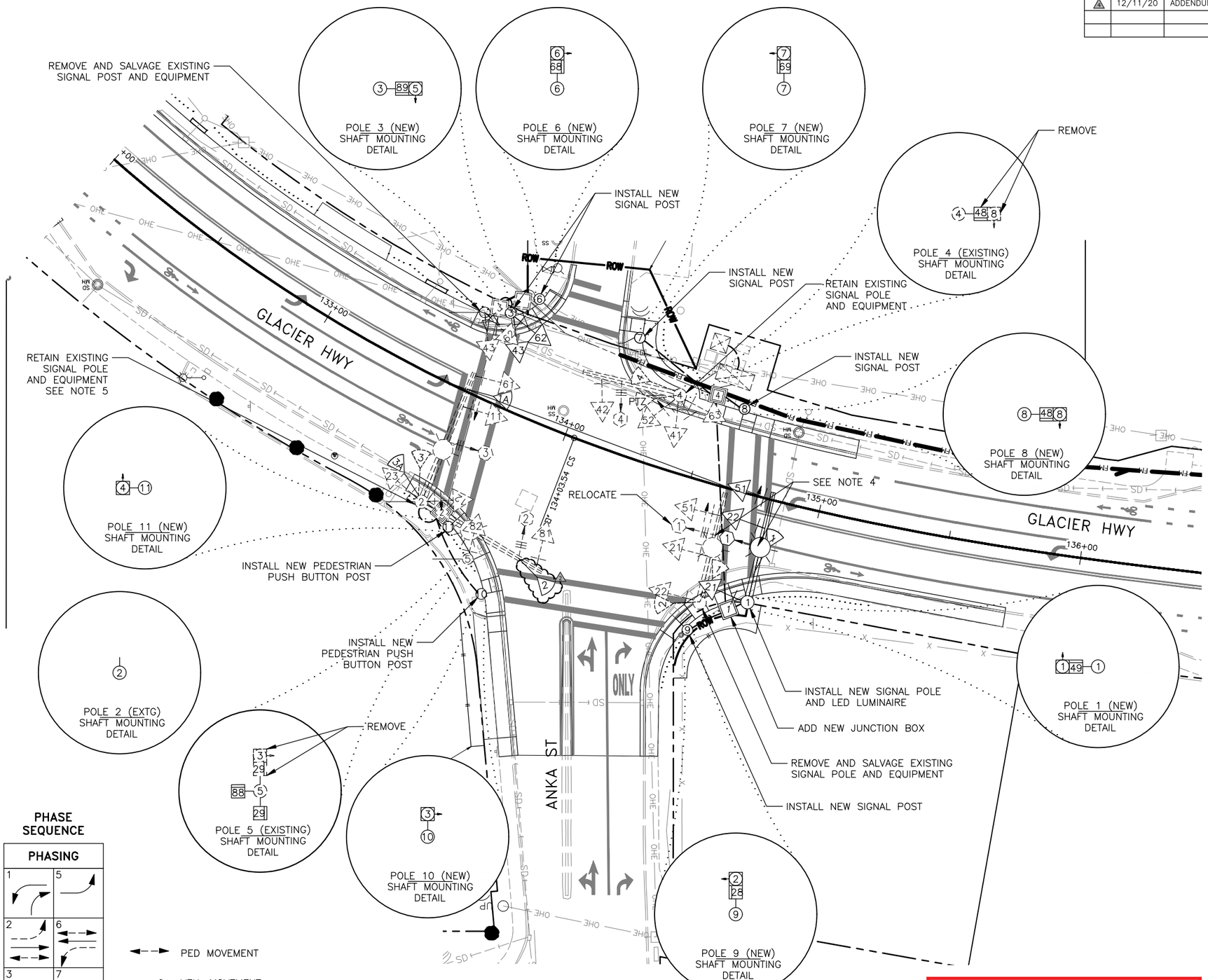

PHASE SEQUENCE

PHASING	
1	5
2	6
3	7
4	8

PED MOVEMENT
VEH. MOVEMENT
LEFT TURN MOVEMENT (PROTECTED)
LEFT TURN MOVEMENT (PERMISSIVE)

PHASE DIAGRAM NORTH ARROW

NOTES:

1. EXISTING SIGNAL LINE WORK IS FROM A COMBINATION OF SURVEY, AS-BUILTS AND SITE VISITS. CONTRACTOR SHALL FIELD VERIFY EXISTING CONDITIONS BEFORE MAKING MODIFICATIONS. NOTIFY THE ENGINEER OF ANY DISCREPANCIES.
2. THE CONTRACTOR SHALL REMOVE AND SALVAGE EQUIPMENT, CONDUIT AND WIRING. EXISTING SIGNAL POLE FOUNDATIONS MAY BE ABANDONED-IN-PLACE PER THE SPECIFICATIONS. CONTRACTOR TO COORDINATE WITH DOT&PF FOR DISPOSAL OF ALL EXISTING EQUIPMENT.
3. INSTALLATION OF NEW SIGNS ON TRAFFIC SIGNAL STRUCTURES WILL BE PAID UNDER SIGNAL PAY ITEM 660.2003.0000
4. RELOCATE EXISTING EMERGENCY PREEMPTION DETECTORS TO NEW POLE AND MAST ARM.
5. REPLACE TWO EXISTING 250W HPS LUMINAIRE FIXTURES WITH LED LUMINAIRE FIXTURE, SEE ILLUMINATION PLANS FOR FIXTURE DETAILS.
6. THIS PLAN PROVIDES THE DETAILS FOR THE REMOVAL OF THE EXISTING LOOP DETECTION TO BE REPLACED BY RADAR DETECTION. ACTUAL LOCATIONS OF EXISTING LOOP DETECTION WIRING AND DETECTORS IS APPROXIMATE, SEE SHEET H-34.
7. EXISTING CONDUIT MAY REQUIRE BONDING AND GROUNDING.
8. NEW PEDESTRIAN PUSH BUTTONS AND PEDESTRIAN SIGNAL HEADS SHALL BE INSTALLED ON ALL NEW POLES AS SHOWN.
9. STABILIZE AND COMPACT SOILS IN THE NEW SIGNAL POLE LOCATIONS PER SPECIFICATIONS FOR STRUCTURAL FILL.

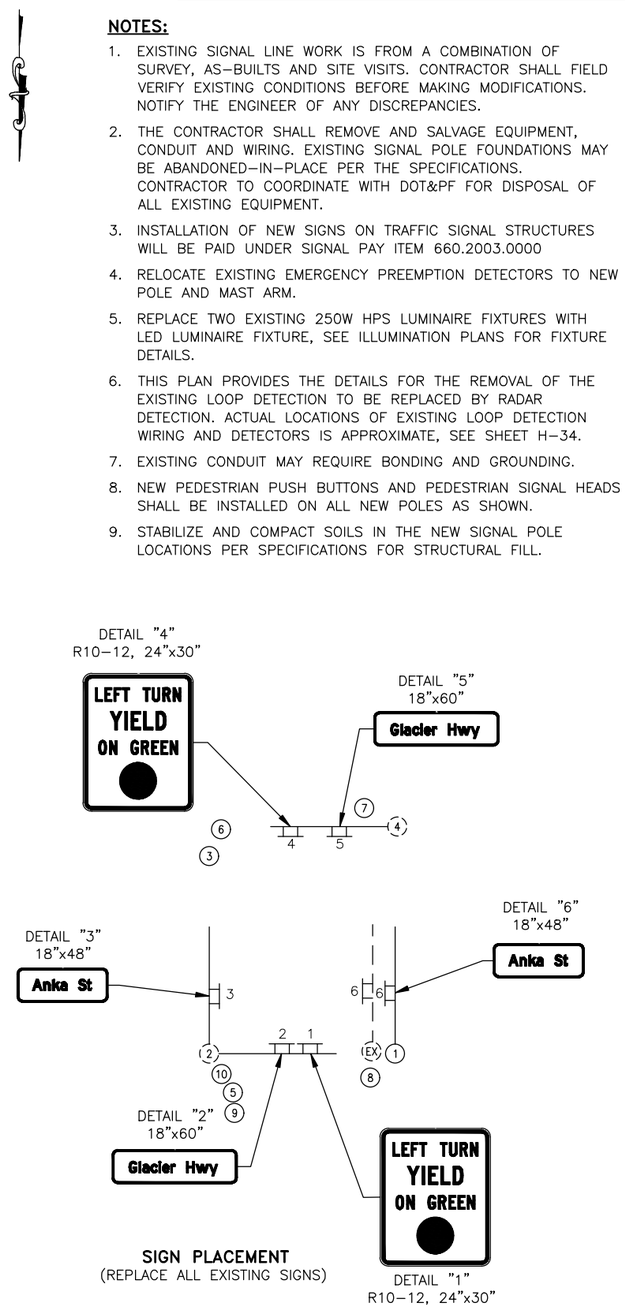

SIGN PLACEMENT
(REPLACE ALL EXISTING SIGNS)

Record Drawings have been reviewed by the Project Engineer, and represent to the best of my knowledge, the project as constructed.

PE Dillon Tomaro 2/4/25

STATE OF ALASKA 49TH JOHN F. RINGERT CE 11096 REGISTERED PROFESSIONAL ENGINEER 12/15/20

ANKA STREET SIGNAL PLAN

PLANS DEVELOPED BY: KITTELSON & ASSOCIATES, INC. CERT. OF AUTHORIZATION NO.: 254741, 851 SW 6TH AVE. SUITE 600, PORTLAND, OR 97204, (503) 228-5230
H:\20\20487 - Glacier Highway - Juneau Traffic Design\design_CD\68124_H_SIGNAL-H-30 Tue, Dec/15/20 01:37pm

NO.	DATE	REVISION
4	12/11/20	ADDENDUM 4

STATE	PROJECT DESIGNATION	YEAR	SHEET NO.	TOTAL SHEETS
ALASKA	TEA-0955(016)/Z68124	2020	H-31	235

PLANS DEVELOPED BY: KITTELSON & ASSOCIATES, INC. CERT. OF AUTHORIZATION NO.: 254741, 851 SW 6TH AVE. SUITE 600, PORTLAND, OR 97204, (503) 228-5230
H:\20\20487 - Glacier Highway - Juneau Traffic Design\design_CD\68124_H_SIGNAL-H-31 Tue, Dec/15/20 01:37pm

WIRING DIAGRAM CODING LEGEND

OPC = OPTICOM CABLE
LL = LOOP LEAD-IN
INT = INTERCONNECT CABLE
PWR = POWER CONDUCTORS FOR SIGNAL CONTROLLER
T = TRANSFORMER
PTZ = PAN, TILT, ZOOM CAMERA
GND = GROUND
ILL = ILLUMINATION
RMC = RIGID METAL CONDUIT
PVC = POLYVINYLCHLORIDE CONDUIT
HDPE = HIGH DENSITY POLYETHYLENE
PPB = PEDESTRIAN PUSH-BUTTON
SIG# = SIGNAL HEAD NUMBER
PED = PEDESTRIAN SIGNAL
DET = DETECTION CONDUIT
F = FUTURE USE
VDET = VIDEO DETECTION
EX = EXISTING
AAWF = ACTIVE ADVANCED WARNING FLASHER

5c#14 TRAFFIC SIGNALS
7c#14 PROTECTED-PERMITTED SIGNALS
5c#14 PEDESTRIAN SIGNALS
2c#14 PEDESTRIAN PUSH-BUTTON
3pr#18, 6pr#18, 9pr#18, 15pr#18 LOOP LEAD-IN CABLE & VDET
3c#8 ILLUMINATION
3c#6 SIGNAL POWER
1c#8 BARE COPPER GROUND
18pr#19 PE-39 INTERCONNECT CABLE
1c#6 BARE COPPER GROUND
APT MATRIX 2 RDET HOME RUN CABLE
CAT-6A PTZ DATA
SMFO SINGLE MODE FIBER OPTIC

NOTES:

1. INSTALL 1-1C#8 BARE COPPER GROUND CONDUCTOR IN ALL CONDUITS UNLESS ANOTHER GROUND CONDUCTOR IS SPECIFIED.
2. ALL LOOP DETECTION CABLES SHALL BE REMOVED FROM CONDUIT BETWEEN DETECTOR LEAD-IN AND SIGNAL CABINET.
3. EXISTING WIRING BASED ON SIGNAL AS-BUILTS AND FIELD REVIEW. ACTUAL WIRING MAY VARY.

Record Drawings have been reviewed by the Project Engineer, and represent to the best of my knowledge, the project as constructed.

PE Dillon Tomaro 2/4/25

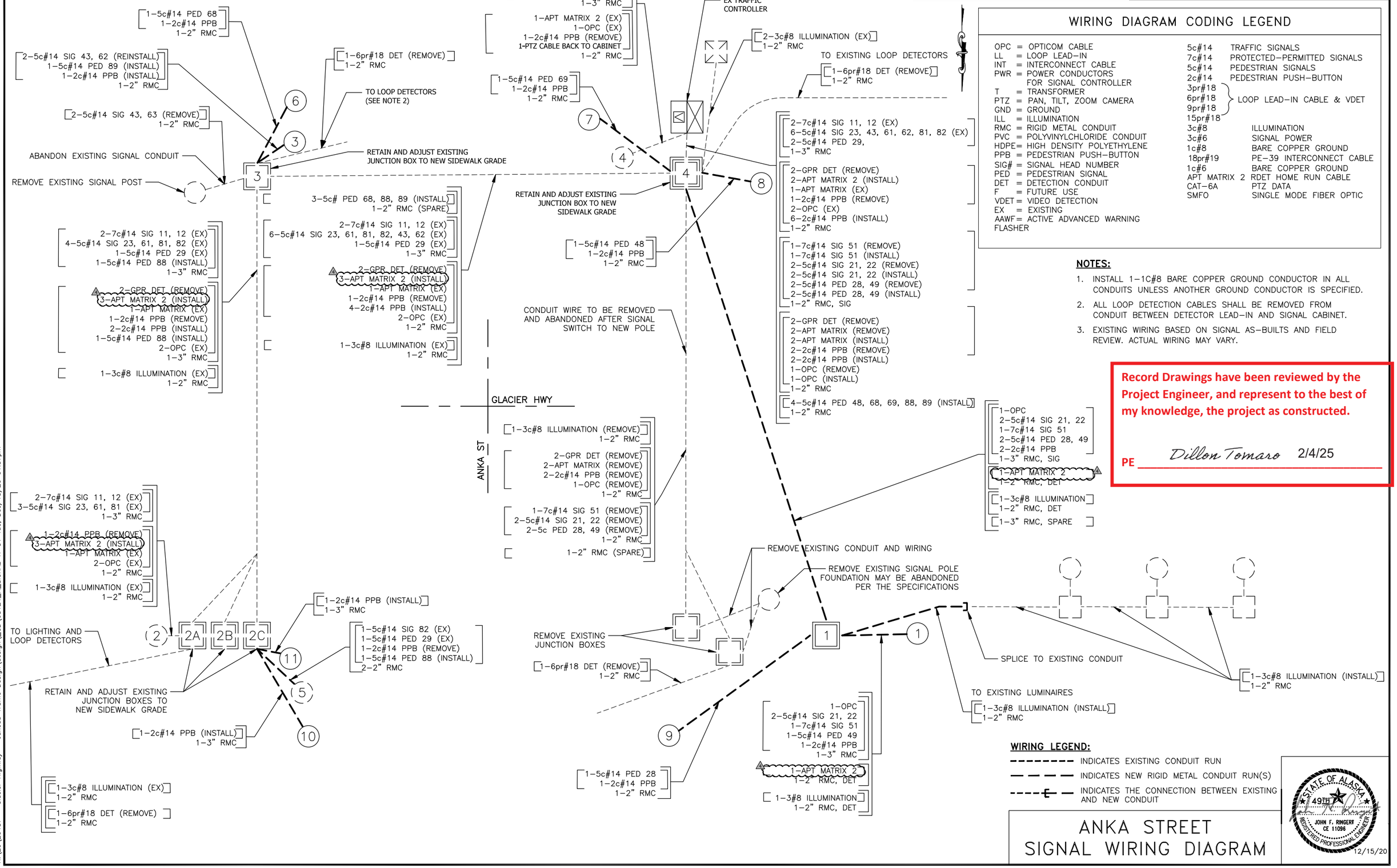

WIRING LEGEND:

- INDICATES EXISTING CONDUIT RUN
- INDICATES NEW RIGID METAL CONDUIT RUN(S)
- INDICATES THE CONNECTION BETWEEN EXISTING AND NEW CONDUIT

ANKA STREET SIGNAL WIRING DIAGRAM

STATE OF ALASKA 49TH JOHN F. RINGERT CE 11096 REGISTERED PROFESSIONAL ENGINEER 12/15/20

NO.	DATE	REVISION

STATE	PROJECT DESIGNATION	YEAR	SHEET NO.	TOTAL SHEETS
ALASKA	TEA-0955(016)/Z68124	2020	H-32	235

SIGNAL SIGN SCHEDULE

SIGN NO.	LOCATION POLE NO.	LOCATION OFFSET	ASDS CODE	LEGEND	SIZE HxV (INCHES)	AREA (SQ FT)	BRACING/FRAMING BRACED	BRACING/FRAMING FRAMED	REMARKS
1	2	44.0	R10-12	LEFT TURN YIELD ON GREEN	24"x30"	5.0		X	REPLACE EXISTING SIGN
2	2	34.0	D3-1	GLACIER HWY	18"x60"	7.5		X	REPLACE EXISTING SIGN
3	2	30.0	D3-1	ANKA ST	18"x48"	6.0		X	REPLACE EXISTING SIGN
4	4	33.0	R10-12	LEFT TURN YIELD ON GREEN	24"x30"	5.0		X	REPLACE EXISTING SIGN
5	4	25.5	D3-1	GLACIER HWY	18"x60"	7.5		X	REPLACE EXISTING SIGN
6	1	20.0	D3-1	ANKA ST	18"x48"	6.0		X	REPLACE EXISTING SIGN
				SUBTOTAL SIGNAL SIGNS		37.0			

1. LOCATION OFFSETS ARE FROM CENTER OF SIGN TO ℄ OF SIGNAL POLE

POLE-POST DESIGN LOADING SCHEDULE

POLE NO.	CORNER	LUM. ARM L. (Ft.)	SIGNAL ARM L. (Ft.)		A	B	C	D	E	F	REMARKS
1 (NEW)	NW	22' (NEW)	40' (NEW)	SIG. OR SIGN	SIGNAL	SIGNAL	SIGN*	RADAR	RADAR		NEW SIGNS
				LOC. OFFSET (Ft.)	39.5	28.5	20.0	12.0	0.0		LUMINAIRE HEIGHT 40'
				L x W OR S.F.	14.1	11.5	5.25	1.00	1.00		
2 (EX)	NE	15' (EX)	50' (EX)	SIG. OR SIGN	SIGNAL	RADAR	SIGN**	SIGN**			EXISTING MAST ARM AND SIGNAL HEADS TO REMAIN
				LOC. OFFSET (Ft.)	49.0	48.0	44.0	34.0			
				L x W OR S.F.	11.5	1.00	5.0	7.5			
	NE	15' (EX)	50' (EX)	SIG. OR SIGN	SIGNAL	RADAR*	SIGNAL	SIGN**			EXISTING MAST ARM AND SIGNAL HEADS TO REMAIN
				LOC. OFFSET (Ft.)	49.0	47.0	37.0	30.0			
				L x W OR S.F.	11.5	1.00	14.1	5.25			
4 (EX)	NE	n/a	35' (EX)	SIG. OR SIGN	SIGN**	RADAR*	SIGNAL	SIGN**	SIGN**		EXISTING MAST ARM AND SIGNAL HEADS TO REMAIN
				LOC. OFFSET (Ft.)	33.0	32.0	30.0	25.5	25.5		
				L x W OR S.F.	7.5	1.0	11.5	7.5	7.5		

1. LOCATION OFFSETS ARE FROM CENTER OF SIGNAL EQUIPMENT TO ℄ OF SIGNAL POLE.
2. BOTH SIGNAL AND LUMINAIRE MAST ARMS ARE ORIENTED IN THE SAME DIRECTION UNLESS NOTED OTHERWISE.
3. ORIENT SIGNAL MAST ARM(S) 90° TO ℄ OF ROADWAY UNLESS NOTED OTHERWISE.

* INDICATES NEW EQUIPMENT.

** INDICATES SIGN REPLACEMENT WITH NEW SIGNS.

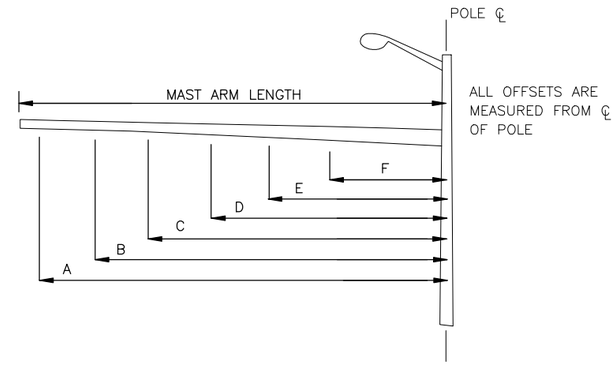

VEHICULAR SIGNAL HEAD SCHEDULE

POLE/POST NO.	FACE NO.	INDICATIONS 12" BALL R	12" BALL Y	12" BALL G	12" ARROW R	12" ARROW Y	12" ARROW FYA	12" ARROW G	8" BALL R	8" BALL Y	8" BALL G	MOUNTING MAST ARM LOC. OFFSET	MAST ARM ELEV. PLUMB.	SIDE MTNG. TYPE	TOP OF POST	REMARKS
1	21	X	X	X										D		RE-USE EXISTING SIGNAL HEAD
	22	X	X	X								28.5	X			RE-USE EXISTING SIGNAL HEAD
	51				L	L	L	L				39.5	X			RE-USE EXISTING SIGNAL HEAD
2	81	X	X	X												EXISTING SIGNAL HEAD
	11				L	L	L	L						D		EXISTING SIGNAL HEAD
	12				L	L	L	L					X			EXISTING SIGNAL HEAD
	23	X	X	X										D		EXISTING SIGNAL HEAD
	61	X	X	X									X			EXISTING SIGNAL HEAD
3	43	X	X	X											X	RE-USE EXISTING SIGNAL HEAD
	62	X	X	X										D		RE-USE EXISTING SIGNAL HEAD
4	41	X	X	X		R		R								EXISTING SIGNAL HEAD
	42	X	X	X												EXISTING SIGNAL HEAD
	52				L	L	L	L								EXISTING SIGNAL HEAD
	63	X	X	X												EXISTING SIGNAL HEAD
5	82	X	X	X											X	EXISTING SIGNAL HEAD

1. LOCATION OFFSETS ARE FROM CENTER OF SIGNAL HEAD TO ℄ OF SIGNAL POLE
2. FYA = FLASHING YELLOW ARROW
3. ALL SIGNAL HEADS INSTALLED PERPENDICULAR TO SIGNAL MAST ARM UNLESS OTHERWISE NOTED.

POLE/POST SIGNAL HEAD SIDE MOUNTING TYPES

(NOT TO SCALE)

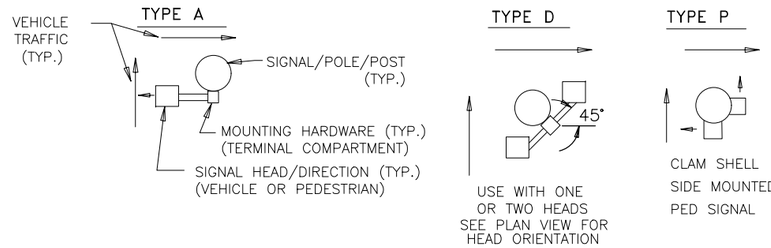

PED SIGNAL HEAD SCHEDULE

POLE/POST NO	FACE NO.	MOUNTING TYPE	REMARKS
1	49	P	
3	89	P	
4	48	P	REMOVE EXISTING PED HEAD
5	29 & 88	P	
6	68	P	
7	69	P	
8	48	P	
9	28	P	

SIGNAL HEAD CONFIGURATIONS

(AREAS ARE FOR WIND LOAD CALCULATIONS)

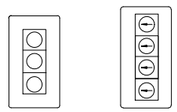

Record Drawings have been reviewed by the Project Engineer, and represent to the best of my knowledge, the project as constructed.

PE *Dillon Tomaro* 2/4/25

ANKA STREET SIGNAL SCHEDULES (1 OF 2)

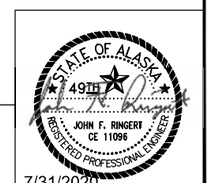

PLANS DEVELOPED BY: KITTELSON & ASSOCIATES, INC. CERT. OF AUTHORIZATION NO.: 254741, 851 SW 6TH AVE. SUITE 600, PORTLAND, OR 97204, (503) 228-5230
H:\20\20487 - Glacier Highway - Juneau Traffic Design\design_CD\68124_H_SIGNAL-H-32 Thu, Jul/30/20 09:18am

NO.	DATE	REVISION
1	12/11/20	ADDENDUM 4

STATE	PROJECT DESIGNATION	YEAR	SHEET NO.	TOTAL SHEETS
ALASKA	TEA-0955(016)/Z68124	2020	H-33	235

Record Drawings have been reviewed by the Project Engineer, and represent to the best of my knowledge, the project as constructed.

PE Dillon Tomaro 2/4/25

BASE & JUNCTION BOX SCHEDULE

LOCATION		DESCRIPTION			BASE TYPE ①						JUNCTION BOX TYPE				REMARKS
STATION	OFFSET	POLE NO.	JUNCTION BOX NO.	CONTROLLER	CIDH	P	A	B	TOFE	FOUND. DEPTH	IA	II	III	IV	
134+82.2	39.7 RT	1			X				32.2'	15.0'					INSTALL NEW SIGNAL POLE W/LUMINAIRE
133+61.7	44.7 RT	2													RETAIN EXISTING SIGNAL POLE
133+61.9	33.9 LT	3					X		30.0'	4.0'					INSTALL NEW PEDESTRIAN SIGNAL POLE
134+36.5	28.4 LT	4													RETAIN EXISTING SIGNAL POLE
133+84.4	57.3 RT	5													RETAIN EXISTING SIGNAL POLE
133+69.7	43.0 LT	6					X		30.0'	4.0'					INSTALL NEW PEDESTRIAN SIGNAL POLE
134+14.0	43.5 LT	7					X		30.0'	4.0'					INSTALL NEW PEDESTRIAN SIGNAL POLE
134+62.5	30.5 LT	8					X		30.9'	4.0'					INSTALL NEW PEDESTRIAN SIGNAL POLE
134+64.1	55.5 RT	9					X		31.7'	4.0'					INSTALL NEW PEDESTRIAN SIGNAL POLE
133+93.2	67.6 RT	10						X	31.1'	2.0'					INSTALL NEW PED PUSH BUTTON POST
133+73.9	49.1 RT	11						X	31.7'	2.0'					INSTALL NEW PED PUSH BUTTON POST
134+76.1	43.9 RT		1									II			INSTALL NEW TYPE II JBOX
133+69.7	45.1 RT		2A												RETAIN EXISTING JBOX LOCATION APPROXIMATE
133+69.7	45.1 RT		2B												RETAIN EXISTING JBOX LOCATION APPROXIMATE
133+69.7	45.1 RT		2C												RETAIN EXISTING JBOX LOCATION APPROXIMATE
133+56.9	33.9 LT		3												RETAIN EXISTING JBOX LOCATION APPROXIMATE
134+50.9	32.6 LT		4												RETAIN EXISTING JBOX LOCATION APPROXIMATE
134+55.3	41.1 LT														RETAIN EXISTING SIGNAL CONTROLLER

① P=PRECAST BASE (FOUNDATION)
A=TYPE A SEE STD. DWG. T-31.00 (DISREGARD DEPTH TABLE ON STD. DWG. T-31.00 AND REFER TO FOUNDATION DEPTH IN TABLE)
B=TYPE B SEE STD. DWG. T-31.00
CIDH=CAST IN DRILLED HOLE
TOFE=TOP OF FOUNDATION ELEVATION
FOUND. DEPTH=FOUNDATION DEPTH (DISREGARD DEPTH TABLE ON SHEET H-59 AND REFER TO FOUNDATION DEPTH IN TABLE ABOVE)

OPTICOM DETECTOR SCHEDULE

LOCATION	DETECTOR NO.	PHASE CALL	FACING DIRECTION	PREEMPTOR PRIORITY
RELOCATE ON TOP OF SIGNAL HEAD 22	1	2	EAST	
EXISTING	2	8	SOUTH	
EXISTING	3	6	WEST	
EXISTING	4	4	NORTH	

(#) OPTICOM DETECTOR NUMBER

PEDESTRIAN DETECTION SCHEDULE

POLE	PUSH BUTTON	PHASE	REMARKS
1	1	4	SEE NOTE 1
9	2	2	SEE NOTE 2
10	3	2	SEE NOTE 1
11	4	8	SEE NOTE 1
3	5	8	SEE NOTE 1
6	6	6	SEE NOTE 1
7	7	6	SEE NOTE 2
8	8	4	SEE NOTE 1

NOTES:
1. INSTALL AN R10-3EL SIGN WITH PEDESTRIAN PUSH BUTTON. SIGN SHALL NOT BE MEASURED FOR PAYMENT AND IS SUBSIDIARY TO TRAFFIC SIGNAL PAY ITEMS.

2. INSTALL AN R10-3ER SIGN WITH PEDESTRIAN PUSH BUTTON. SIGN SHALL NOT BE MEASURED FOR PAYMENT AND IS SUBSIDIARY TO TRAFFIC SIGNAL PAY ITEMS.

RADAR DETECTION SCHEDULE

NEW / EXISTING	DETECTOR NO.	PHASE CALL	TYPE	FACING DIRECTION	POLE/MA NO.	LOCATION	COMMENTS
EXTISTING	1	1&6	STOP BAR	SOUTH	1	SIGNAL ARM	REMOVE & REINSTALL SMARTSENSOR MATRIX
EXISTING	2	4	STOP BAR	NORTH	2	TOP OF SIGNAL POLE	REMOVE & REINSTALL SMARTSENSOR MATRIX ON POLE 1
EXISTING	3	2&5	STOP BAR	SOUTH	2	TOP OF SIGNAL POLE	RETAIN AND PROTECT SMARTSENSOR MATRIX
EXISTING	4	8	STOP BAR	SOUTH	4	TOP OF SIGNAL POLE	RETAIN AND PROTECT SMARTSENSOR MATRIX
NEW	1A	6	ADVANCE	WEST	2	SIGNAL ARM	SMARTSENSOR ADVANCE
NEW	3A	2	ADVANCE	EAST	2	TOP OF SIGNAL POLE	SMARTSENSOR ADVANCE

(#) NEW RADAR DETECTOR NUMBER

(#) EXISTING RADAR DETECTOR NUMBER

FLASH PROGRAM COLOR

PHASE	1	2	3	4	5	6	7	8
COLOR	R	R	R	R	R	R	R	R

ANKA STREET SIGNAL SCHEDULES (2 OF 2)

STATE OF ALASKA 49TH JOHN F. RINGERT CE 11096 REGISTERED PROFESSIONAL ENGINEER 12/15/20

PLANS DEVELOPED BY: KITTELSON & ASSOCIATES, INC. CERT. OF AUTHORIZATION NO.: 254741, 851 SW 6TH AVE. SUITE 600, PORTLAND, OR 97204, (503) 228-5230
H:\20\20487 - Glacier Highway - Juneau Traffic Design\design_CD\68124_H_SIGNAL-H-33 Tue, Dec/15/20 01:37pm

NO.	DATE	REVISION

STATE	PROJECT DESIGNATION	YEAR	SHEET NO.	TOTAL SHEETS
ALASKA	TEA-0955(016)/Z68124	2020	H-34	235

NOTES:

1. THIS SHEET PROVIDES THE DETAILS FOR THE REMOVAL OF THE EXISTING LOOP DETECTION. ACTUAL LOCATIONS OF EXISTING LOOP DETECTION WIRING AND DETECTORS IS BASED OFF OF PREVIOUS AS-BUILTS AND SITE VISITS. LOCATION OF LOOP DETECTION WIRING AND EQUIPMENT IS APPROXIMATE.

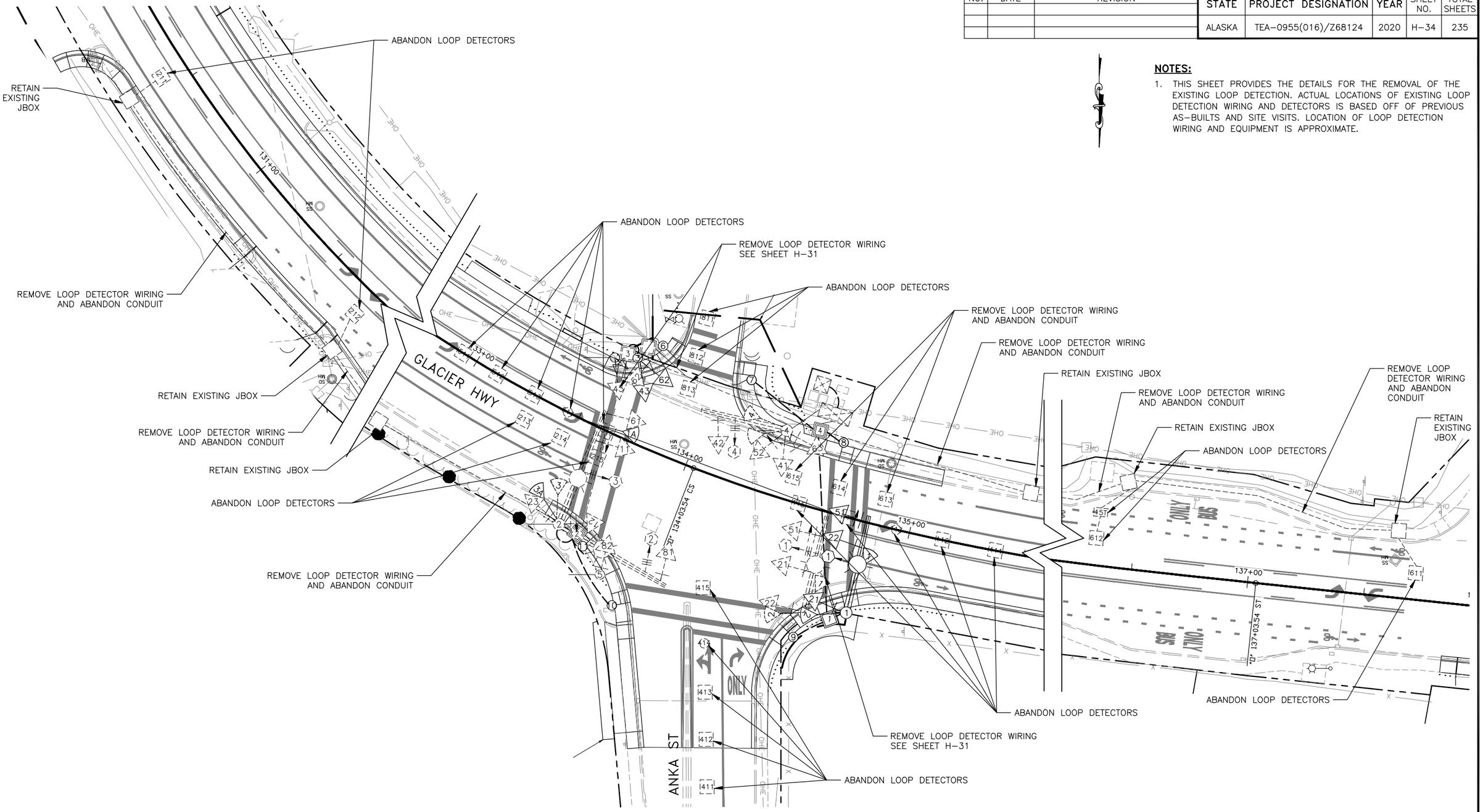

Record Drawings have been reviewed by the Project Engineer, and represent to the best of my knowledge, the project as constructed.

PE Dillon Tomaro 2/4/25

ANKA STREET SIGNAL LOOP DETECTION REMOVAL PLAN

STATE OF ALASKA
49TH
JOHN F. RINGERT
CE 11096
REGISTERED PROFESSIONAL ENGINEER
7/31/2020

PLANS DEVELOPED BY: KITTELSON & ASSOCIATES, INC. CERT. OF AUTHORIZATION NO.: 254741, 851 SW 6TH AVE. SUITE 600, PORTLAND, OR 97204, (503) 228-5230
H:\20\20487 - Glacier Highway - Juneau Traffic Design\design_CD\68124_H_SIGNAL-H-34 Thu, Jul/30/20 01:12pm

NO.	DATE	REVISION

STATE	PROJECT DESIGNATION	YEAR	SHEET NO.	TOTAL SHEETS
ALASKA	TEA-0955(016)/Z68124	2020	H-35	235

NOTES:

1. INSTALLATION OF NEW SIGNS ON TRAFFIC SIGNAL STRUCTURES WILL BE PAID UNDER SIGNAL PAY ITEM 660.0001.0000
2. STABILIZE AND COMPACT SOILS IN THE NEW SIGNAL POLE LOCATIONS PER SPECIFICATIONS FOR STRUCTURAL FILL.

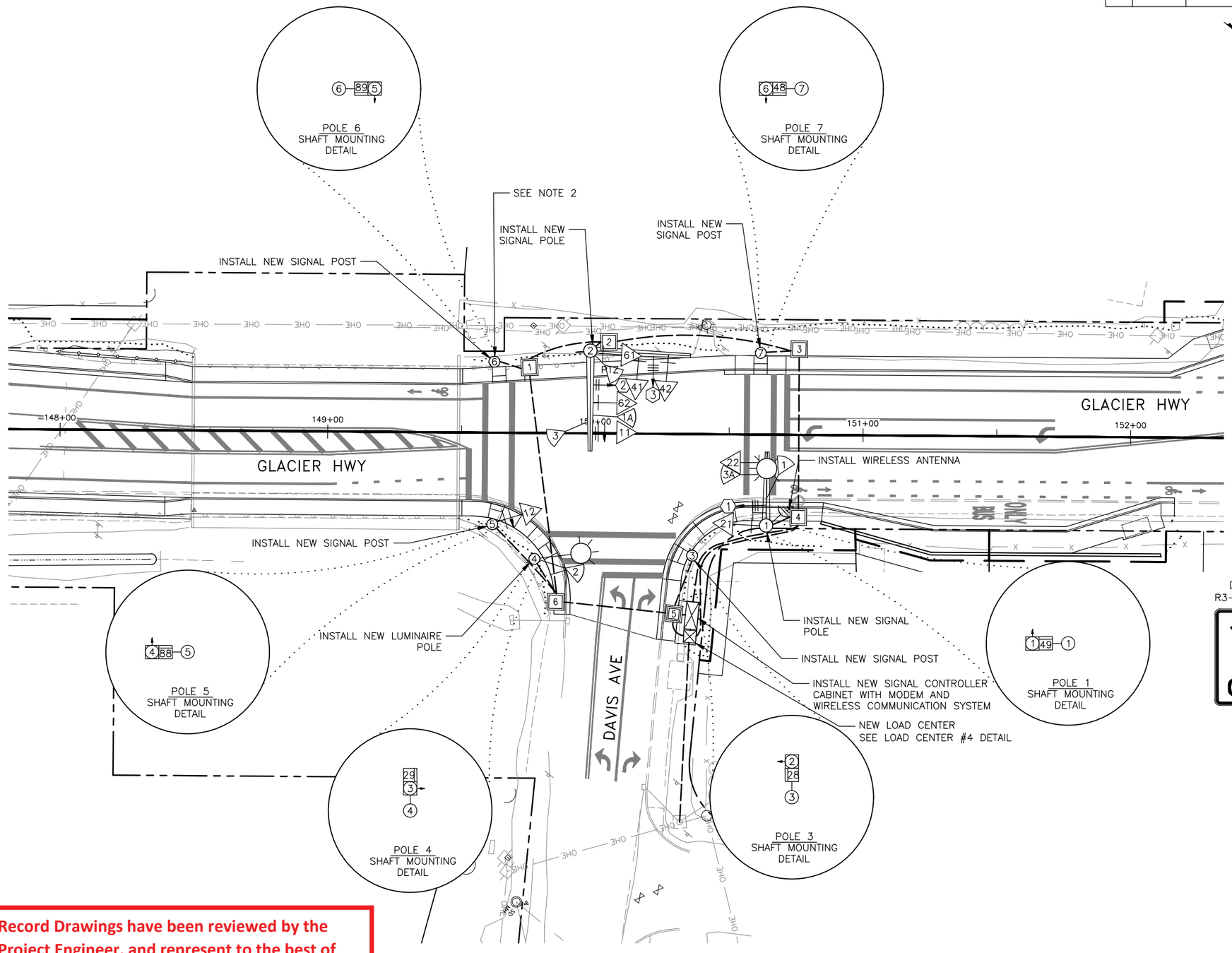

PHASE SEQUENCE

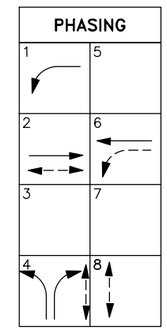

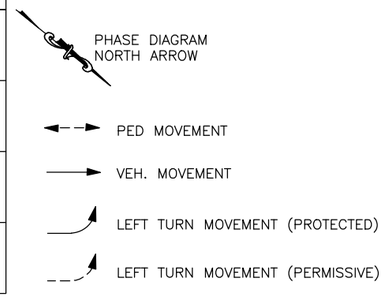

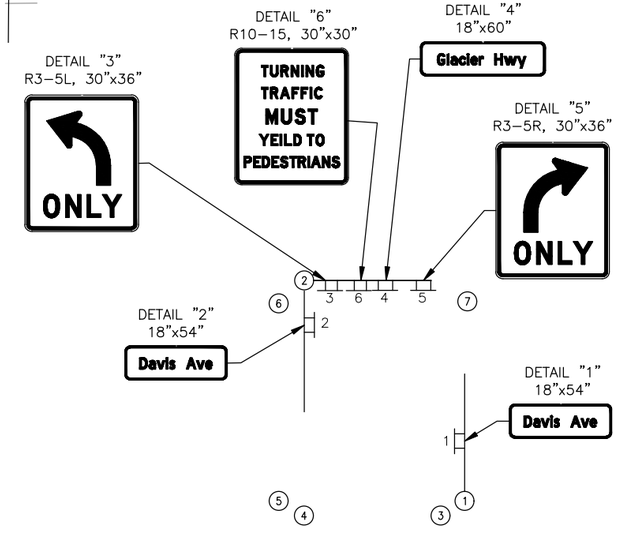

SIGN PLACEMENT

Record Drawings have been reviewed by the Project Engineer, and represent to the best of my knowledge, the project as constructed.

PE *Dillon Tomaro* 2/4/25

STATE OF ALASKA
49TH
JOHN F. RINGERT
CE 11096
REGISTERED PROFESSIONAL ENGINEER
7/31/2020

DAVIS AVENUE SIGNAL PLAN

PLANS DEVELOPED BY: KITTELSON & ASSOCIATES, INC. CERT. OF AUTHORIZATION NO.: 254741, 851 SW 6TH AVE. SUITE 600, PORTLAND, OR 97204, (503) 228-5230
H:\20\20487 - Glacier Highway - Juneau Traffic Design\design_CD\68124_H_SIGNAL_H-35 Thu, Jul/30/20 11:07am

NO.	DATE	REVISION
1	12/11/20	ADDENDUM 4

STATE	PROJECT DESIGNATION	YEAR	SHEET NO.	TOTAL SHEETS
ALASKA	TEA-0955(016)/Z68124	2020	H-36	235

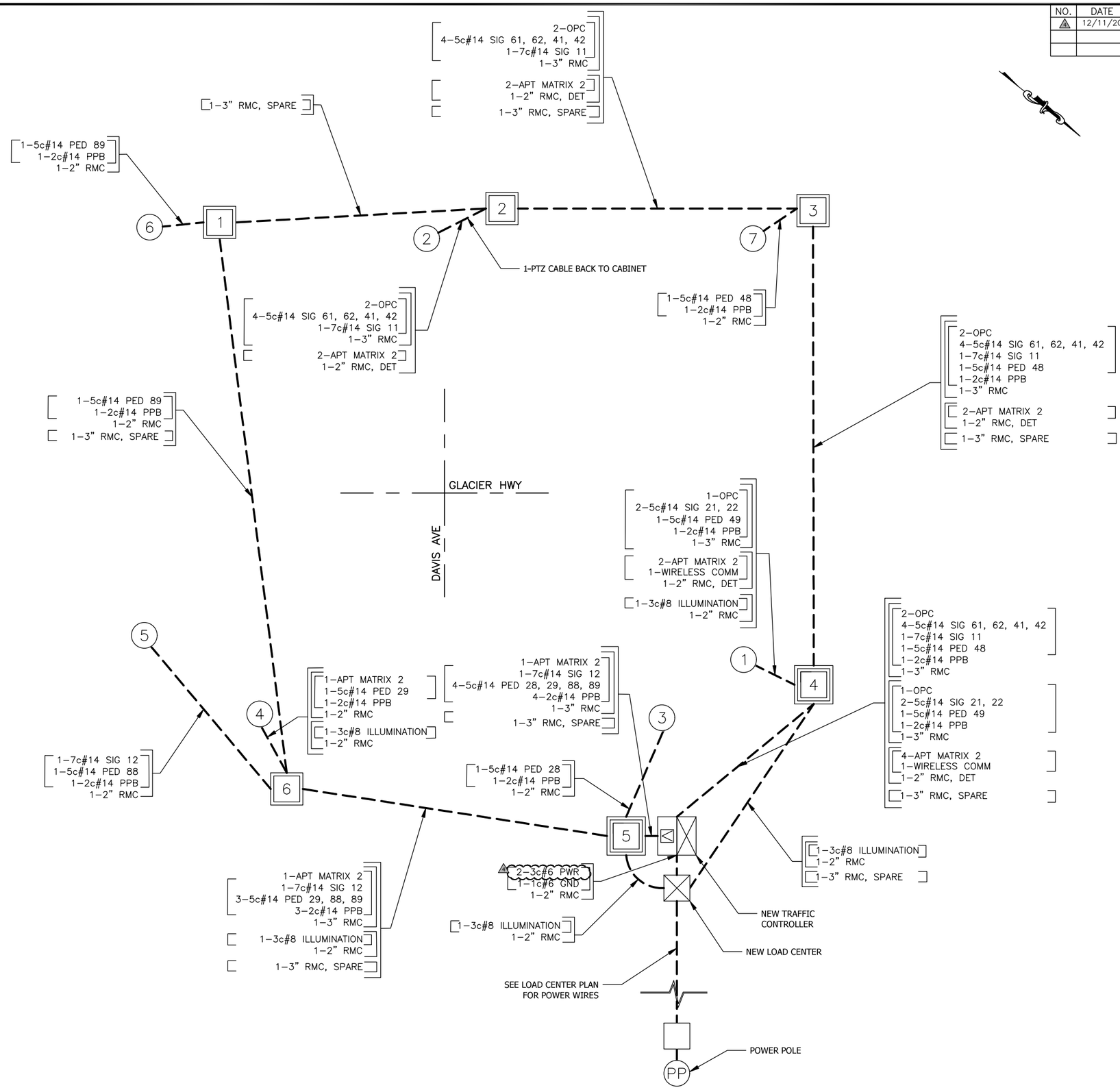

WIRING DIAGRAM CODING LEGEND

OPC = OPTICOM CABLE
LL = LOOP LEAD-IN
INT = INTERCONNECT CABLE
PWR = POWER CONDUCTORS FOR SIGNAL CONTROLLER
T = TRANSFORMER
PTZ = PAN, TILT, ZOOM CAMERA
GND = GROUND
ILL = ILLUMINATION
RMC = RIGID METAL CONDUIT
PVC = POLYVINYLCHLORIDE CONDUIT
HDPE = HIGH DENSITY POLYETHYLENE
PPB = PEDESTRIAN PUSH-BUTTON
SIG# = SIGNAL HEAD NUMBER
PED = PEDESTRIAN SIGNAL
DET = DETECTION CONDUIT
F = FUTURE USE
VDET = VIDEO DETECTION
EX = EXISTING
AAWF = ACTIVE ADVANCED WARNING FLASHER

5c#14 TRAFFIC SIGNALS
7c#14 PROTECTED-PERMITTED SIGNALS
5c#14 PEDESTRIAN SIGNALS
2c#14 PEDESTRIAN PUSH-BUTTON
3pr#18, 6pr#18, 9pr#18, 15pr#18 LOOP LEAD-IN CABLE & VDET
3c#8 ILLUMINATION
3c#6 SIGNAL POWER
1c#8 BARE COPPER GROUND
18pr#19 CABLE PE-39 INTERCONNECT
1c#6 BARE COPPER GROUND
APT MATRIX 2 RDET HOME RUN CABLE
CAT-6A PTZ DATA
SMFO SINGLE MODE FIBER OPTIC

NOTES:

1. INSTALL 1-1C#8 BARE COPPER GROUND CONDUCTOR IN ALL CONDUITS UNLESS ANOTHER GROUND CONDUCTOR IS SPECIFIED.

Record Drawings have been reviewed by the Project Engineer, and represent to the best of my knowledge, the project as constructed.

PE Dillon Tomaro 2/4/25

WIRING LEGEND:

- INDICATES EXISTING CONDUIT RUN
- INDICATES NEW RIGID METAL CONDUIT RUN(S)
- INDICATES THE CONNECTION BETWEEN EXISTING AND NEW CONDUIT

DAVIS AVENUE SIGNAL WIRING DIAGRAM

STATE OF ALASKA 49TH JOHN F. RINGERT CE 11096 REGISTERED PROFESSIONAL ENGINEER 12/15/20

PLANS DEVELOPED BY: KITTELSON & ASSOCIATES, INC. CERT. OF AUTHORIZATION NO.: 254741, 851 SW 6TH AVE. SUITE 600, PORTLAND, OR 97204, (503) 228-5230
H:\20\20487 - Glacier Highway - Juneau Traffic Design\design_CD\68124_H_SIGNAL-H-36 Tue, Dec/15/20 01:37pm

NO.	DATE	REVISION
4	12/22/20	ADDENDUM 4

STATE	PROJECT DESIGNATION	YEAR	SHEET NO.	TOTAL SHEETS
ALASKA	TEA-0955(016)/Z68124	2020	H-37	235

SIGNAL SIGN SCHEDULE

SIGN NO.	LOCATION POLE NO.	LOCATION OFFSET	ASDS CODE	LEGEND	SIZE HxV (INCHES)	AREA (SQ FT)	BRACING/FRAMING BRACED	BRACING/FRAMING FRAMED	REMARKS
1	1	12.0	D3-1B	DAVIS AVE	18"x54"	6.75		X	
2	2	12.0	D3-1B	DAVIS AVE	18"x54"	6.75		X	
3	2	15.0	R3-5L	LEFT ONLY	30"x36"	7.5		X	
4	2	23.5	D3-1B	GLACIER HWY	18"x60"	7.5		X	
5	2	32.0	R3-5R	RIGHT ONLY	30"x36"	7.5		X	
6	2	20.0	R10-15	TURNING TRAFFIC YIELD	30"x30"	6.25		X	
				SUBTOTAL SIGNAL SIGNS		36.0			

1. LOCATION OFFSETS ARE FROM CENTER OF SIGN TO ℄ OF SIGNAL POLE

Record Drawings have been reviewed by the Project Engineer, and represent to the best of my knowledge, the project as constructed.

PE *Dillon Tomaro* 2/4/25

POLE-POST DESIGN LOADING SCHEDULE

POLE NO.	CORNER	LUM. ARM L. (Ft.)	SIGNAL ARM L. (Ft.)		A	B	C	D	E	F	REMARKS
1	NW	22'	25'	SIG. OR SIGN	SIGNAL	RADAR	SIGN	RADAR			LUMINAIRE HEIGHT 40'
				LOC. OFFSET (Ft.)	23.5	21.0	12.0	10.0			
				L x W OR S.F.	11.5	1.00	6.75	1.00			
2	SE	N/A	35'	SIG. OR SIGN	SIGNAL	RADAR	RADAR	SIGNAL	SIGN		
				LOC. OFFSET (Ft.)	30.5	26.0	24.0	19.5	12.0		
				L x W OR S.F.	14.1	1.00	1.00	11.5	6.75		
	SE	N/A	35'	SIG. OR SIGN	SIGN	SIGN	SIGNAL	SIGN	SIGNAL	SIGN	ORIENT SIGNAL MAST ARM PARALLEL TO ℄
				LOC. OFFSET (Ft.)	32.0	30.5	29.0	23.5	18.0	14.0	
				L x W OR S.F.	7.5	6.25	11.5	6.75	11.5	7.5	
4	NE	22'	N/A	SIG. OR SIGN	RADAR						LUMINAIRE HEIGHT 40'
				LOC. OFFSET (Ft.)	0.0						ORIENT LUMINAIRE ARM PARALLEL TO ℄
				L x W OR S.F.	1.00						POLE MOUNT RADAR DETECTION
5	NE	N/A	N/A	SIG. OR SIGN	SIGNAL						
				LOC. OFFSET (Ft.)	0.0						
				L x W OR S.F.	14.1						

1. LOCATION OFFSETS ARE FROM CENTER OF SIGNAL EQUIPMENT TO ℄ OF SIGNAL POLE.
2. BOTH SIGNAL AND LUMINAIRE MAST ARMS ARE ORIENTED IN THE SAME DIRECTION UNLESS NOTED OTHERWISE.
3. ORIENT SIGNAL MAST ARM(S) 90° TO ℄ OF ROADWAY UNLESS NOTED OTHERWISE.

VEHICULAR SIGNAL HEAD SCHEDULE

POLE/POST NO.	FACE NO.	INDICATIONS 12" BALL R	Y	G	12" ARROW R	Y	FYA	G	8" BALL R	Y	G	MOUNTING MAST ARM LOC. OFFSET	ELEV. PLUMB.	SIDE MTNG. TYPE	TOP OF POST	REMARKS
1	21	X	X	X										D		LOCATE ON SIGNAL POLE
	22	X	X	X								23.5	X			LOCATE ON MAST ARM PERP TO CENTERLINE
2	11				L	L	L	L				30.5	X			LOCATE ON MAST ARM PERPENDICULAR TO ℄
	61	X	X	X										D		LOCATE ON SIGNAL POLE
	62	X	X	X								19.5	X			LOCATE ON MAST ARM PERPENDICULAR TO ℄
	41	X	X	X								18.0	X			LOCATE ON MAST ARM PARALLEL TO ℄
	42	X	X	X								29.0	X			LOCATE ON MAST ARM PARALLEL TO ℄
5	12				L	L	L	L							T-1	ALIGN TO LEFT-TURN LANE

1. LOCATION OFFSETS ARE FROM CENTER OF SIGNAL HEAD TO ℄ OF SIGNAL POLE
2. FYA = FLASHING YELLOW ARROW
3. ALL SIGNAL HEADS INSTALLED PERPENDICULAR TO SIGNAL MAST ARM UNLESS OTHERWISE NOTED.

PED SIGNAL HEAD SCHEDULE

POLE/POST NO	FACE NO	MOUNTING TYPE	REMARKS
1	49	P	
3	28	P	
4	29	P	
5	88	P	
6	89	P	
7	48	P	

SIGNAL HEAD CONFIGURATIONS
(AREAS ARE FOR WIND LOAD CALCULATIONS)

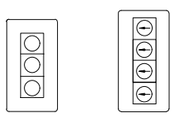

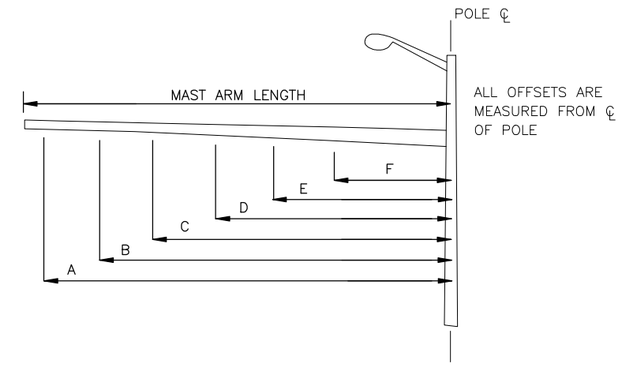

POLE/POST SIGNAL HEAD SIDE MOUNTING TYPES
(NOT TO SCALE)

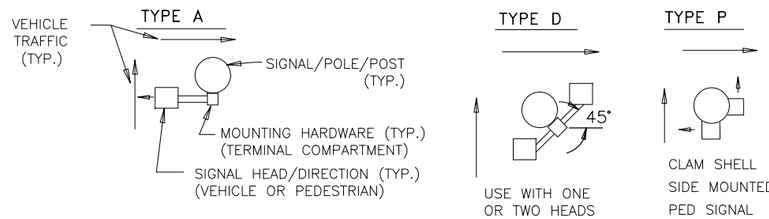

DAVIS AVENUE SIGNAL SCHEDULES (1 OF 2)

STATE OF ALASKA 49TH JOHN F. RINGERT CE 11096 REGISTERED PROFESSIONAL ENGINEER 12/22/20

PLANS DEVELOPED BY: KITTELSON & ASSOCIATES, INC. CERT. OF AUTHORIZATION NO.: 254741, 851 SW 6TH AVE. SUITE 600, PORTLAND, OR 97204, (503) 228-5230
H:\20\20487 - Glacier Highway - Juneau Traffic Design\design_CD\68124_H_SIGNAL-H-37 Tue, Dec/22/20 12:09pm

NO.	DATE	REVISION

STATE	PROJECT DESIGNATION	YEAR	SHEET NO.	TOTAL SHEETS
ALASKA	TEA-0955(016)/Z68124	2020	H-38	235

** Deleted by CO11

BASE & JUNCTION BOX SCHEDULE

LOCATION		DESCRIPTION			BASE TYPE ①						JUNCTION BOX TYPE				REMARKS
STATION	OFFSET	POLE NO.	JUNCTION BOX NO.	CONTROLLER	CIDH	P	A	CSLPF	TOFE	FOUND. DEPTH	IA	II	III	IV	
150+64.0	34.0 RT	1			X				34.3'	17.0'					INSTALL NEW SIGNAL POLE W/LUMINAIRE
149+97.9	30.9 LT	2			X				35.2'	18.0'					INSTALL NEW SIGNAL POLE W/DUAL MAST ARM
150+36.4	45.4 RT	3					X		33.8'	4.0'					INSTALL NEW PEDESTRIAN SIGNAL POLE
149+77.5	47.1 RT	4						X	34.2'	14.0'					INSTALL NEW LUMINAIRE POLE PARALLEL TO ℄
149+61.7	34.4 RT	5					X		34.6'	4.0'					INSTALL NEW PEDESTRIAN SIGNAL POLE
149+62.1	26.5 LT	6					X		34.8'	5.0'					INSTALL NEW PEDESTRIAN SIGNAL POLE
150+61.6	30.5 LT	7					X		34.4'	5.0'					INSTALL NEW PEDESTRIAN SIGNAL POLE
149+75.2	24.6 LT		1									X			INSTALL NEW TYPE II JBOX
150+04.6	29.6 LT		2									X			INSTALL NEW TYPE II JBOX
150+76.0	32.0 LT		3									X			INSTALL NEW TYPE II JBOX
150+76.0	30.7 RT		4										X		INSTALL NEW TYPE III JBOX
150+29.8	67.2 RT		5										X		INSTALL NEW TYPE III JBOX
149+80.4	52.7 RT		6									X			INSTALL NEW TYPE II JBOX
150+36.5	67.7 RT			X											INSTALL ADJACENT TO LOAD CENTER
150+35.6	75.4 RT														LOAD CENTER #3

① P=PRECAST BASE (FOUNDATION)
A=TYPE A SEE STD. DWG, T-31.00 (DISREGARD DEPTH TABLE ON STD. DWG. T-31.00 AND REFER TO FOUNDATION DEPTH IN TABLE)
CIDH=CAST IN DRILLED HOLE
CSLPF=CONCRETE STREET LIGHT POLE FOUNDATION, SEE SHEET H-58 (DISREGARD DEPTH TABLE, SEE SHEETS #### THROUGH ####).

PEDESTRIAN DETECTION SCHEDULE

POLE	PUSH BUTTON	PHASE	REMARKS
1	1	4	SEE NOTE 1
3	2	2	SEE NOTE 2
4	3	2	SEE NOTE 1
5	4	4	SEE NOTE 1
6	5	4	SEE NOTE 1
7	6	4	SEE NOTE 2

NOTES
1. INSTALL AN R10-3EL SIGN WITH PEDESTRIAN PUSH BUTTON. SIGN SHALL NOT BE MEASURED FOR PAYMENT AND IS SUBSIDIARY TO TRAFFIC SIGNAL PAY ITEMS.

2. INSTALL AN R10-3ER SIGN WITH PEDESTRIAN PUSH BUTTON. SIGN SHALL NOT BE MEASURED FOR PAYMENT AND IS SUBSIDIARY TO TRAFFIC SIGNAL PAY ITEMS.

OPTICOM DETECTOR SCHEDULE

LOCATION	DETECTION NO.	PHASE CALL	FACING DIRECTION	PREEMPTOR PRIORITY	REMARKS
ON TOP OF SIGNAL HEAD 22	1	2	EAST		
ON TOP OF SIGNAL HEAD 62	2	1&6	WEST		
ON TOP OF SIGNAL HEAD 42	3	4	NORTH		

(#) OPTICOM DETECTOR NUMBER

GRADING DETAILS FOR DAVIS AVENUE SIGNAL CABINET & LOAD CENTER FOUNDATION

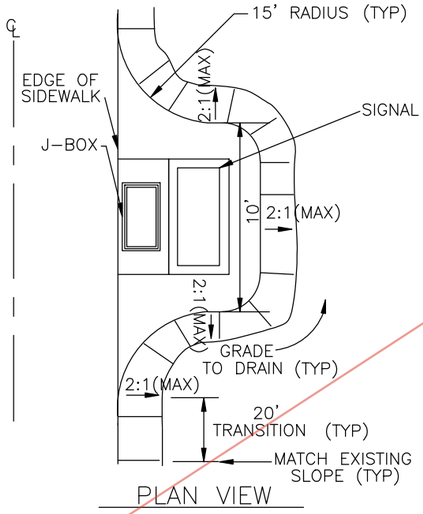

PLAN VIEW

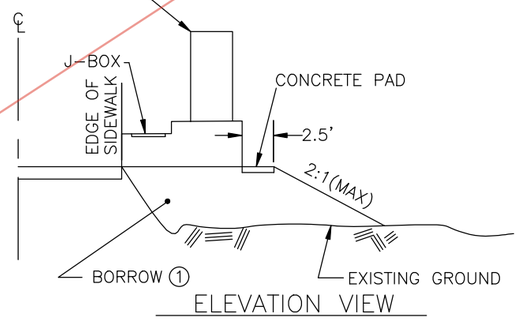

ELEVATION VIEW

1 ALL BORROW AND COMPACTION SHALL MEET THE REQUIREMENTS OF SECTION 203 OF THE SPECIFICATIONS.

2 ALL BORROW, COMPACTION AND GRADING SHOWN ON THESE DETAILS SHALL NOT BE MEASURED FOR PAYMENT BUT BE CONSIDERED SUBSIDIARY TO EXISTING PAY ITEMS.

RADAR DETECTION SCHEDULE

NEW/ EXISTING	DETECTOR NO.	PHASE CALL	TYPE	FACING DIRECTION	POLE NO.	LOCATION	COMMENTS
NEW	1	1&6	STOP BAR	WEST	1	SIGNAL MAST ARM	SMARTSENSOR MATRIX
NEW	2	4	STOP BAR	NORTH	4	LUMINAIRE POLE	SMARTSENSOR MATRIX
NEW	3	2	STOP BAR	EAST	2	SIGNAL MAST ARM	SMARTSENSOR MATRIX
NEW	1A	6	ADVANCE	WEST	2	SIGNAL MAST ARM	SMARTSENSOR ADVANCE
NEW	3A	2	ADVANCE	EAST	1	SIGNAL MAST ARM	SMARTSENSOR ADVANCE

(#) NEW RADAR DETECTOR NUMBER

(#) EXISTING RADAR DETECTOR NUMBER

Record Drawings have been reviewed by the Project Engineer, and represent to the best of my knowledge, the project as constructed.

PE Dillon Tomaro 2/4/25

FLASH PROGRAM COLOR

PHASE	1	2	3	4	5	6	7	8
COLOR	R	R	R	R	R	R	R	R

DAVIS AVENUE SIGNAL SCHEDULES (2 OF 2)

STATE OF ALASKA 49TH JOHN F. RINGERT CE 11096 REGISTERED PROFESSIONAL ENGINEER
7/31/2020

PLANS DEVELOPED BY: KITTELSON & ASSOCIATES, INC. CERT. OF AUTHORIZATION NO.: 254741; 851 SW 6TH AVE. SUITE 600, PORTLAND, OR 97204, (503) 228-5230
H:\20\20487 - Glacier Highway - Juneau Traffic Design\design_CD\68124_H_SIGNAL-H-38 Thu, Jul/30/20 09:20am

CO 11 Attachment No. 2

NO.	DATE	REVISION

STATE	PROJECT DESIGNATION	YEAR	SHEET NO.	TOTAL SHEETS
ALASKA	TEA-0955(016)/Z68124	2020	H-38	235

BASE & JUNCTION BOX SCHEDULE

LOCATION		DESCRIPTION			BASE TYPE ①						JUNCTION BOX TYPE				REMARKS
STATION	OFFSET	POLE NO.	JUNCTION BOX NO.	CONTROLLER	CIDH	P	A	CSLPF	TOFE	FOUND. DEPTH	IA	II	III	IV	
150+64.0	34.0 RT	1			X				34.3'	17.0'					INSTALL NEW SIGNAL POLE W/LUMINAIRE
149+97.9	30.9 LT	2			X				35.2'	18.0'					INSTALL NEW SIGNAL POLE W/DUAL MAST ARM
150+36.4	45.4 RT	3					X		33.8'	4.0'					INSTALL NEW PEDESTRIAN SIGNAL POLE
149+77.5	47.1 RT	4						X	34.2'	~~14.0'~~					INSTALL NEW LUMINAIRE POLE PARALLEL TO ℄
149+61.7	34.4 RT	5					X		34.6'	4.0'					INSTALL NEW PEDESTRIAN SIGNAL POLE
149+62.1	26.5 LT	6					X		34.8'	5.0'					INSTALL NEW PEDESTRIAN SIGNAL POLE
150+61.6	30.5 LT	7					X		34.4'	5.0'					INSTALL NEW PEDESTRIAN SIGNAL POLE
149+75.2	24.6 LT		1									X			INSTALL NEW TYPE II JBOX
150+04.6	29.6 LT		2									X			INSTALL NEW TYPE II JBOX
150+76.0	32.0 LT		3									X			INSTALL NEW TYPE II JBOX
150+76.0	30.7 RT		4										X		INSTALL NEW TYPE III JBOX
150+29.8	67.2 RT		5										X		INSTALL NEW TYPE III JBOX
149+80.4	52.7 RT		6									X			INSTALL NEW TYPE II JBOX
150+36.5	67.7 RT			X											INSTALL ADJACENT TO LOAD CENTER
150+35.6	75.4 RT														LOAD CENTER #3

① P=PRECAST BASE (FOUNDATION)
A=TYPE A SEE STD. DWG, T-31.00 (DISREGARD DEPTH TABLE ON STD. DWG. T-31.00 AND REFER TO FOUNDATION DEPTH IN TABLE)
CIDH=CAST IN DRILLED HOLE
CSLPF=CONCRETE STREET LIGHT POLE FOUNDATION, SEE SHEET H-58 (DISREGARD DEPTH TABLE, SEE SHEETS #### THROUGH ####).

Construct foundation depth per Standard Plan L-30.11

PEDESTRIAN DETECTION SCHEDULE

POLE	PUSH BUTTON	PHASE	REMARKS
1	1	4	SEE NOTE 1
3	2	2	SEE NOTE 2
4	3	2	SEE NOTE 1
5	4	4	SEE NOTE 1
6	5	4	SEE NOTE 1
7	6	4	SEE NOTE 2

NOTES
1. INSTALL AN R10-3EL SIGN WITH PEDESTRIAN PUSH BUTTON. SIGN SHALL NOT BE MEASURED FOR PAYMENT AND IS SUBSIDIARY TO TRAFFIC SIGNAL PAY ITEMS.

2. INSTALL AN R10-3ER SIGN WITH PEDESTRIAN PUSH BUTTON. SIGN SHALL NOT BE MEASURED FOR PAYMENT AND IS SUBSIDIARY TO TRAFFIC SIGNAL PAY ITEMS.

OPTICOM DETECTOR SCHEDULE

LOCATION	DETECTION NO.	PHASE CALL	FACING DIRECTION	PREEMPTOR PRIORITY	REMARKS
ON TOP OF SIGNAL HEAD 22	1	2	EAST		
ON TOP OF SIGNAL HEAD 62	2	1&6	WEST		
ON TOP OF SIGNAL HEAD 42	3	4	NORTH		

(#) OPTICOM DETECTOR NUMBER

GRADING DETAILS FOR DAVIS AVENUE SIGNAL CABINET & LOAD CENTER FOUNDATION

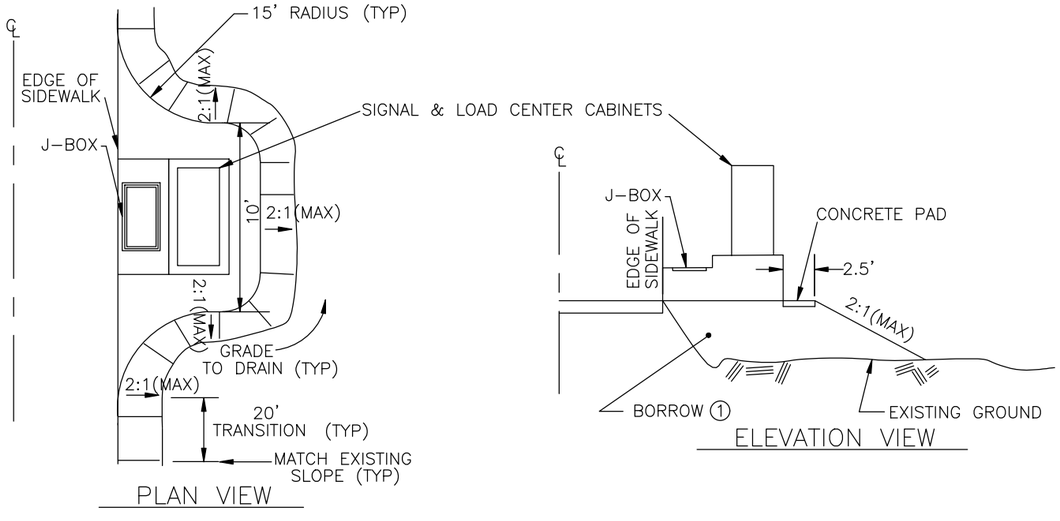

1 ALL BORROW AND COMPACTION SHALL MEET THE REQUIREMENTS OF SECTION 203 OF THE SPECIFICATIONS.

2 ALL BORROW, COMPACTION AND GRADING SHOWN ON THESE DETAILS SHALL NOT BE MEASURED FOR PAYMENT BUT BE CONSIDERED SUBSIDIARY TO EXISTING PAY ITEMS.

RADAR DETECTION SCHEDULE

NEW/ EXISTING	DETECTOR NO.	PHASE CALL	TYPE	FACING DIRECTION	POLE NO.	LOCATION	COMMENTS
NEW	1	1&6	STOP BAR	WEST	1	SIGNAL MAST ARM	SMARTSENSOR MATRIX
NEW	2	4	STOP BAR	NORTH	4	LUMINAIRE POLE	SMARTSENSOR MATRIX
NEW	3	2	STOP BAR	EAST	2	SIGNAL MAST ARM	SMARTSENSOR MATRIX
NEW	1A	6	ADVANCE	WEST	2	SIGNAL MAST ARM	SMARTSENSOR ADVANCE
NEW	3A	2	ADVANCE	EAST	1	SIGNAL MAST ARM	SMARTSENSOR ADVANCE

(#) NEW RADAR DETECTOR NUMBER

(#) EXISTING RADAR DETECTOR NUMBER

Record Drawings have been reviewed by the Project Engineer, and represent to the best of my knowledge, the project as constructed.

PE Dillon Tomaro 2/4/25

FLASH PROGRAM COLOR

PHASE	1	2	3	4	5	6	7	8
COLOR	R	R	R	R	R	R	R	R

STATE OF ALASKA 49TH JOHN F. RINGERT CE 11096 REGISTERED PROFESSIONAL ENGINEER
7/31/2020

DAVIS AVENUE SIGNAL SCHEDULES (2 OF 2)

PLANS DEVELOPED BY: KITTELSON & ASSOCIATES, INC. CERT. OF AUTHORIZATION NO.: 254741, 851 SW 6TH AVE. SUITE 600, PORTLAND, OR 97204, (503) 228-5230
H:\20\20487 - Glacier Highway - Juneau Traffic Design\design_CD\68124_H_SIGNAL-H-38 Thu, Jul/30/20 09:20am

** Deleted by CO54

NO.	DATE	REVISION

STATE	PROJECT DESIGNATION	YEAR	SHEET NO.	TOTAL SHEETS
ALASKA	TEA-0955(016)/Z68124	2020	H-39	235

NOTES:

1. INSTALLATION OF NEW SIGNS ON TRAFFIC SIGNAL STRUCTURES WILL BE PAID UNDER PAY ITEM 660.0002.0000

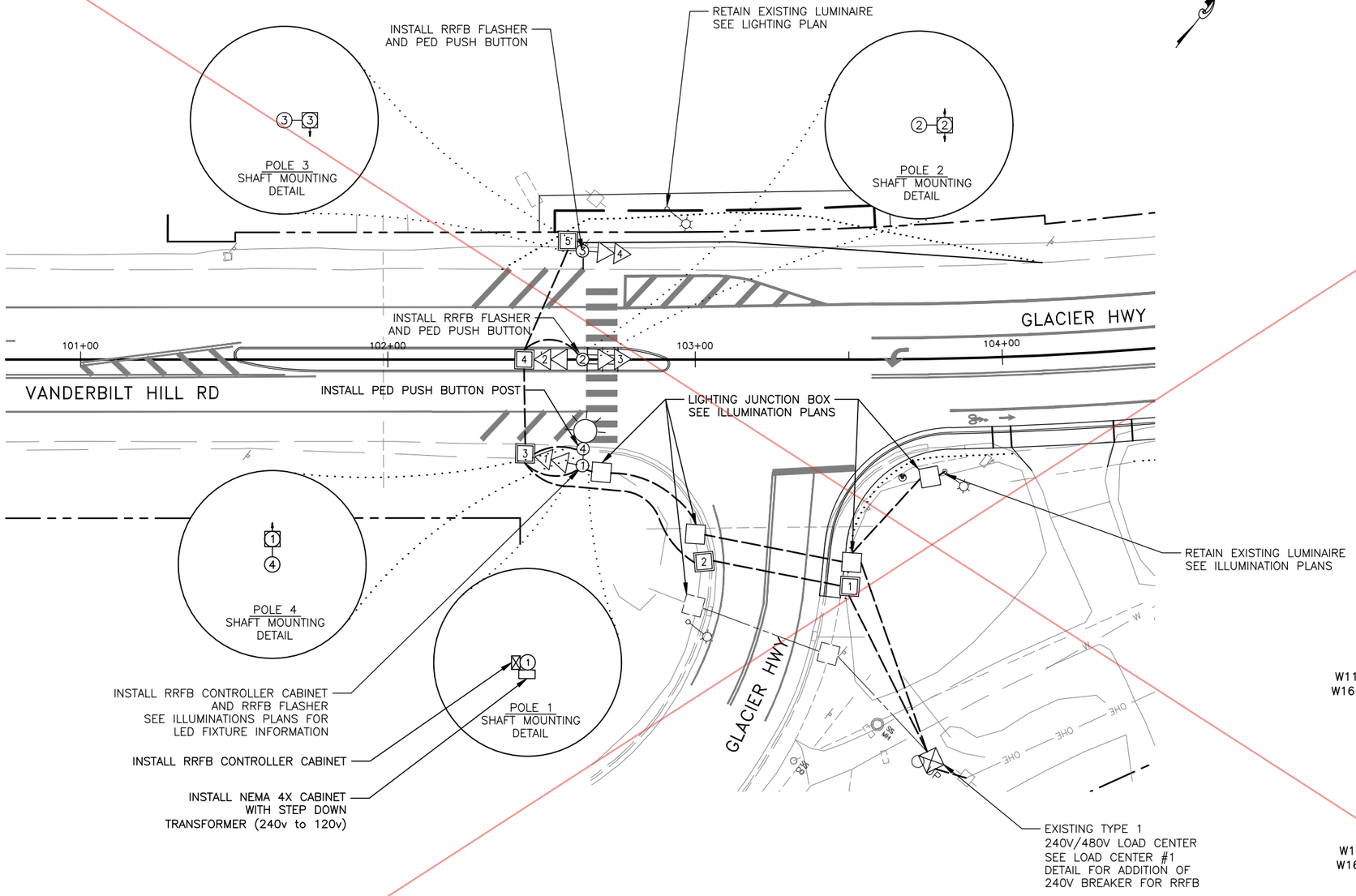

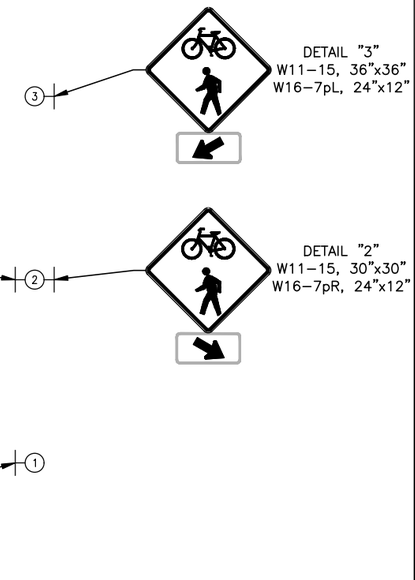

ACTUATED FLASHER BEACON (RRFB) SIGN PLACEMENT

Record Drawings have been reviewed by the Project Engineer, and represent to the best of my knowledge, the project as constructed.

PE Dillon Tomaro 2/4/25

VANDERBILT HILL ROAD
RRFB PLAN

STATE OF ALASKA 49TH JOHN F. RINGERT CE-11096 REGISTERED PROFESSIONAL ENGINEER
7/31/2020

PLANS DEVELOPED BY: KITTELSON & ASSOCIATES, INC. CERT. OF AUTHORIZATION NO.: 254741, 851 SW 6TH AVE. SUITE 600, PORTLAND, OR 97204, (503) 228-5230
H:\20\20487 - Glacier Highway - Juneau Traffic Design\design_CD\68124_H_RRFB-H-39 Thu, Jul/30/20 01:38pm

Type text here CO54

Attachment No. 2

NO.	DATE	REVISION
2	02/25/22	DELTA 29: VANDERBUILT AFB REVISION

STATE	PROJECT DESIGNATION	YEAR	SHEET NO.	TOTAL SHEETS
ALASKA	TEA-0955(016)/Z68124	2020	H-39	235

NOTES:

1. INSTALLATION OF NEW SIGNS ON TRAFFIC SIGNAL STRUCTURES WILL BE PAID UNDER PAY ITEM 660.0002.0000

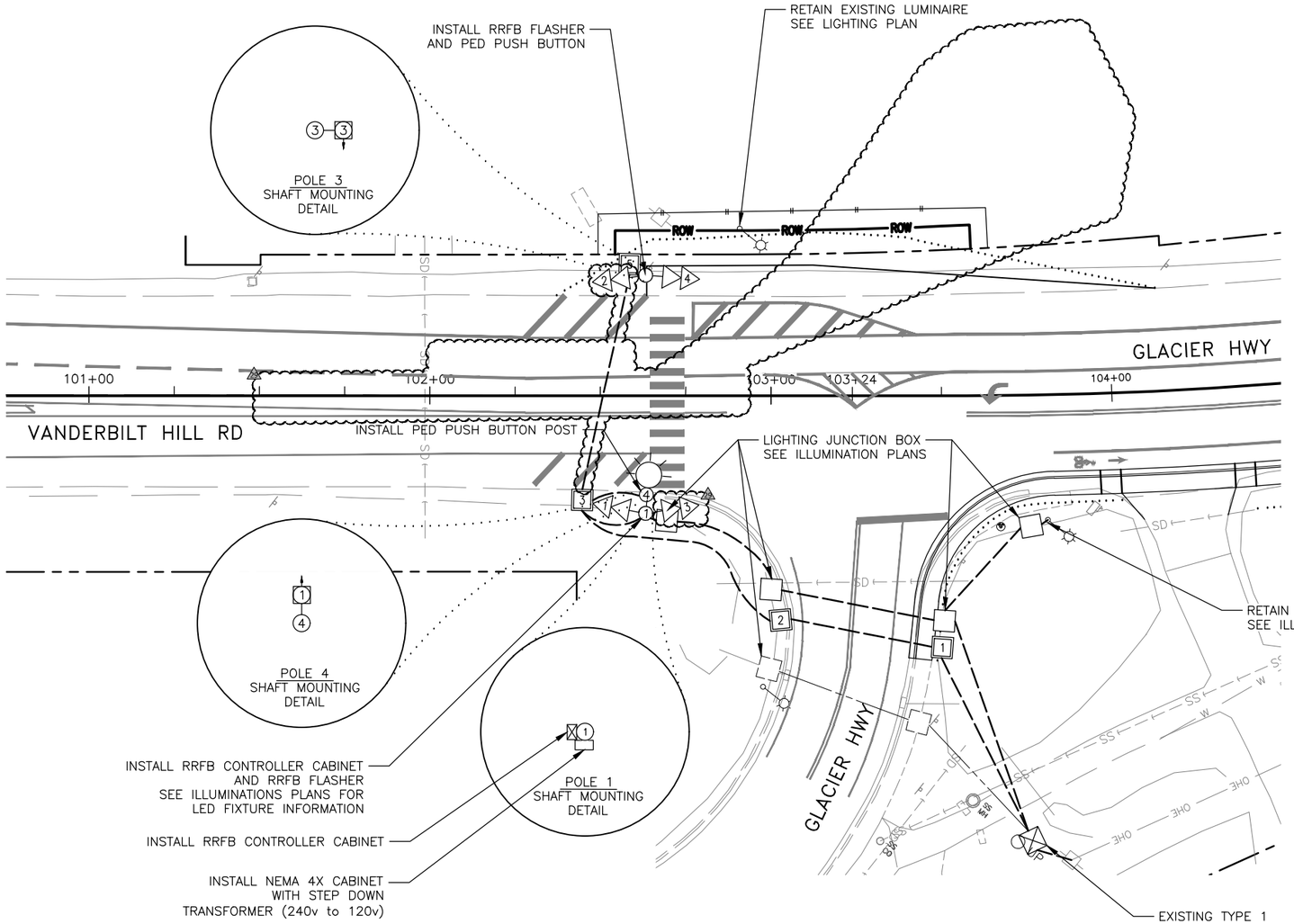

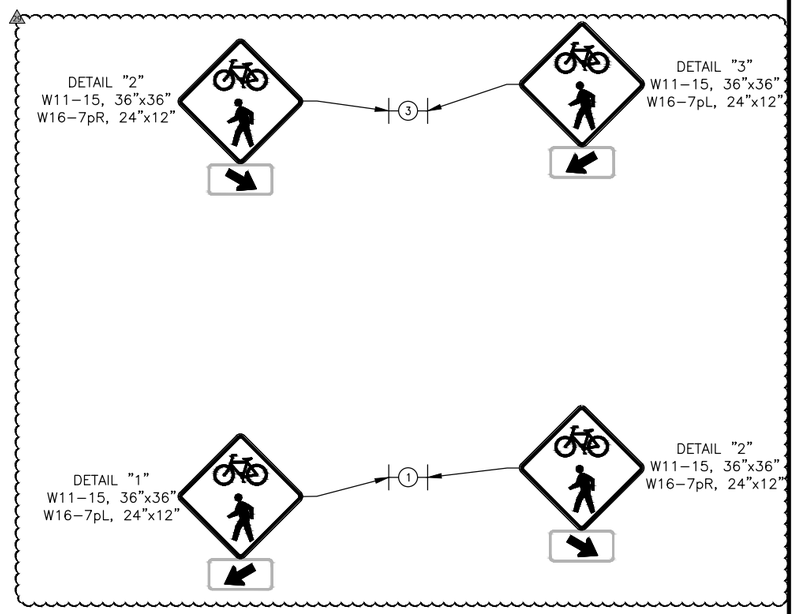

ACTUATED FLASHER BEACON (RRFB) SIGN PLACEMENT

Record Drawings have been reviewed by the Project Engineer, and represent to the best of my knowledge, the project as constructed.

PE Dillon Tomaro 2/4/25

VANDERBILT HILL ROAD
RRFB PLAN

STATE OF ALASKA 49TH
JOHN F. RINGERT CE 11096
REGISTERED PROFESSIONAL ENGINEER
2/25/22

PLANS DEVELOPED BY: KITTELSON & ASSOCIATES, INC. CERT. OF AUTHORIZATION NO.: 254741, 851 SW 6TH AVE. SUITE 600, PORTLAND, OR 97204, (503) 228-5230
H:\20\20487 - Glacier Highway - Juneau Traffic Design\design_CD\68124_H_RRFB-H-39 Fri, Feb/25/22 11:36am

NO.	DATE	REVISION

STATE	PROJECT DESIGNATION	YEAR	SHEET NO.	TOTAL SHEETS
ALASKA	TEA-0955(016)/Z68124	2020	H-40	235

** Deleted by CO54

WIRING DIAGRAM CODING LEGEND

OPC = OPTICOM CABLE
LL = LOOP LEAD-IN
INT = INTERCONNECT CABLE
PWR = POWER CONDUCTORS FOR SIGNAL CONTROLLER
T = TRANSFORMER
PTZ = PAN, TILT, ZOOM CAMERA
GND = GROUND
ILL = ILLUMINATION
RMC = RIGID METAL CONDUIT
PVC = POLYVINYLCHLORIDE CONDUIT
HDPE = HIGH DENSITY POLYETHYLENE
PPB = PEDESTRIAN PUSH-BUTTON
SIG# = SIGNAL HEAD NUMBER
PED = PEDESTRIAN SIGNAL
DET = DETECTION CONDUIT
F = FUTURE USE
VDET = VIDEO DETECTION
EX = EXISTING
AAWF = ACTIVE ADVANCED WARNING FLASHER

5c#14 TRAFFIC SIGNALS
7c#14 PROTECTED-PERMITTED SIGNALS
5c#14 PEDESTRIAN SIGNALS
2c#14 PEDESTRIAN PUSH-BUTTON
3pr#18, 6pr#18, 9pr#18, 15pr#18 LOOP LEAD-IN CABLE & VDET
3c#8 ILLUMINATION
3c#6 SIGNAL POWER
1c#8 BARE COPPER GROUND
18pr#19 CABLE PE-39 INTERCONNECT
1c#6 BARE COPPER GROUND
APT MATRIX 2 RDET HOME RUN CABLE
CAT-6A PTZ DATA
SMFO SINGLE MODE FIBER OPTIC

NOTES:

1. INSTALL 1-1C#8 BARE COPPER GROUND CONDUCTOR IN ALL CONDUITS UNLESS ANOTHER GROUND CONDUCTOR IS SPECIFIED.
2. ADDITIONAL LIGHT CONDUIT AND WIRING NOT SHOWN ON THIS PLAN. SEE STREET LIGHTING PLANS.

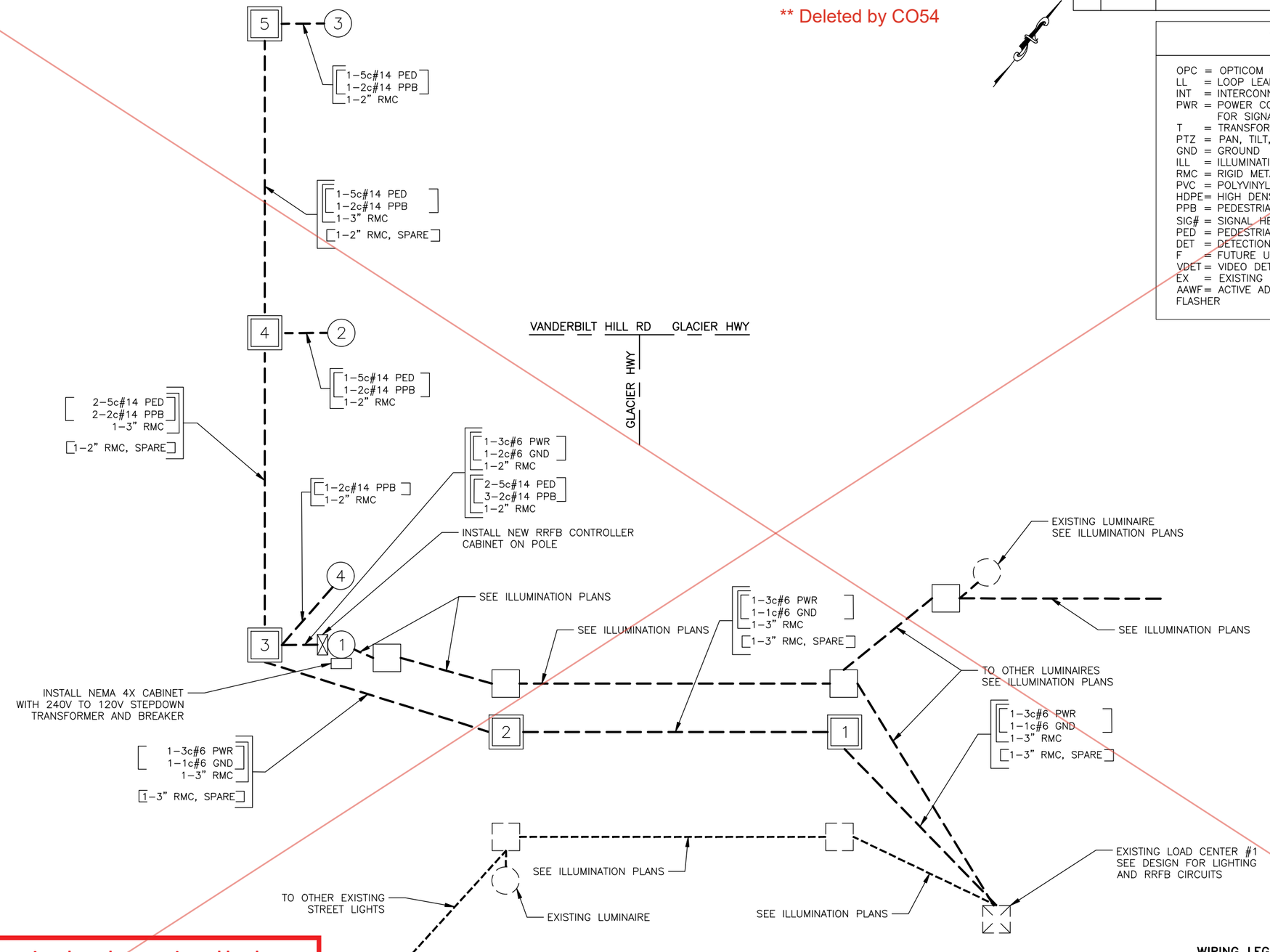

WIRING LEGEND:

- INDICATES EXISTING CONDUIT RUN
- INDICATES NEW RIGID METAL CONDUIT RUN(S)
- INDICATES THE CONNECTION BETWEEN EXISTING AND NEW CONDUIT

Record Drawings have been reviewed by the Project Engineer, and represent to the best of my knowledge, the project as constructed.

PE Dillon Tomaro 2/4/25

STATE OF ALASKA 49TH JOHN F. RINGERT CE 11096 REGISTERED PROFESSIONAL ENGINEER
7/31/2020

VANDERBILT HILL ROAD RRFB WIRING DIAGRAM

PLANS DEVELOPED BY: KITTELSON & ASSOCIATES, INC. CERT. OF AUTHORIZATION NO.: 254741, 851 SW 6TH AVE. SUITE 600, PORTLAND, OR 97204, (503) 228-5230
H:\20_20487 - Glacier Highway - Juneau Traffic Design\design_CD\68124_H_RRFB-H-40 Thu, Jul/30/20 09:21am

CO54 Type text here

Attachment No. 3

NO.	DATE	REVISION
1	02/25/22	DELTA 29: VANDERBUILT AFB REVISION

STATE	PROJECT DESIGNATION	YEAR	SHEET NO.	TOTAL SHEETS
ALASKA	TEA-0955(016)/Z68124	2020	H-40	235

WIRING DIAGRAM CODING LEGEND

OPC = OPTICOM CABLE
LL = LOOP LEAD-IN
INT = INTERCONNECT CABLE
PWR = POWER CONDUCTORS FOR SIGNAL CONTROLLER
T = TRANSFORMER
PTZ = PAN, TILT, ZOOM CAMERA
GND = GROUND
ILL = ILLUMINATION
RMC = RIGID METAL CONDUIT
PVC = POLYVINYLCHLORIDE CONDUIT
HDPE = HIGH DENSITY POLYETHYLENE
PPB = PEDESTRIAN PUSH-BUTTON
SIG# = SIGNAL HEAD NUMBER
PED = PEDESTRIAN SIGNAL
DET = DETECTION CONDUIT
F = FUTURE USE
VDET = VIDEO DETECTION
EX = EXISTING
AAWF = ACTIVE ADVANCED WARNING FLASHER

5c#14 TRAFFIC SIGNALS
7c#14 PROTECTED-PERMITTED SIGNALS
5c#14 PEDESTRIAN SIGNALS
2c#14 PEDESTRIAN PUSH-BUTTON
3pr#18, 6pr#18, 9pr#18, 15pr#18 LOOP LEAD-IN CABLE & VDET
3c#8 ILLUMINATION
3c#6 SIGNAL POWER
1c#8 BARE COPPER GROUND
18pr#19 CABLE PE-39 INTERCONNECT
1c#6 BARE COPPER GROUND
APT MATRIX 2 RDET HOME RUN CABLE
CAT-6A PTZ DATA
SMFO SINGLE MODE FIBER OPTIC

NOTES:

1. INSTALL 1-1C#8 BARE COPPER GROUND CONDUCTOR IN ALL CONDUITS UNLESS ANOTHER GROUND CONDUCTOR IS SPECIFIED.
2. ADDITIONAL LIGHT CONDUIT AND WIRING NOT SHOWN ON THIS PLAN. SEE STREET LIGHTING PLANS.
3. JUNCTION BOX 4 AND POLE 2 NOT USED.

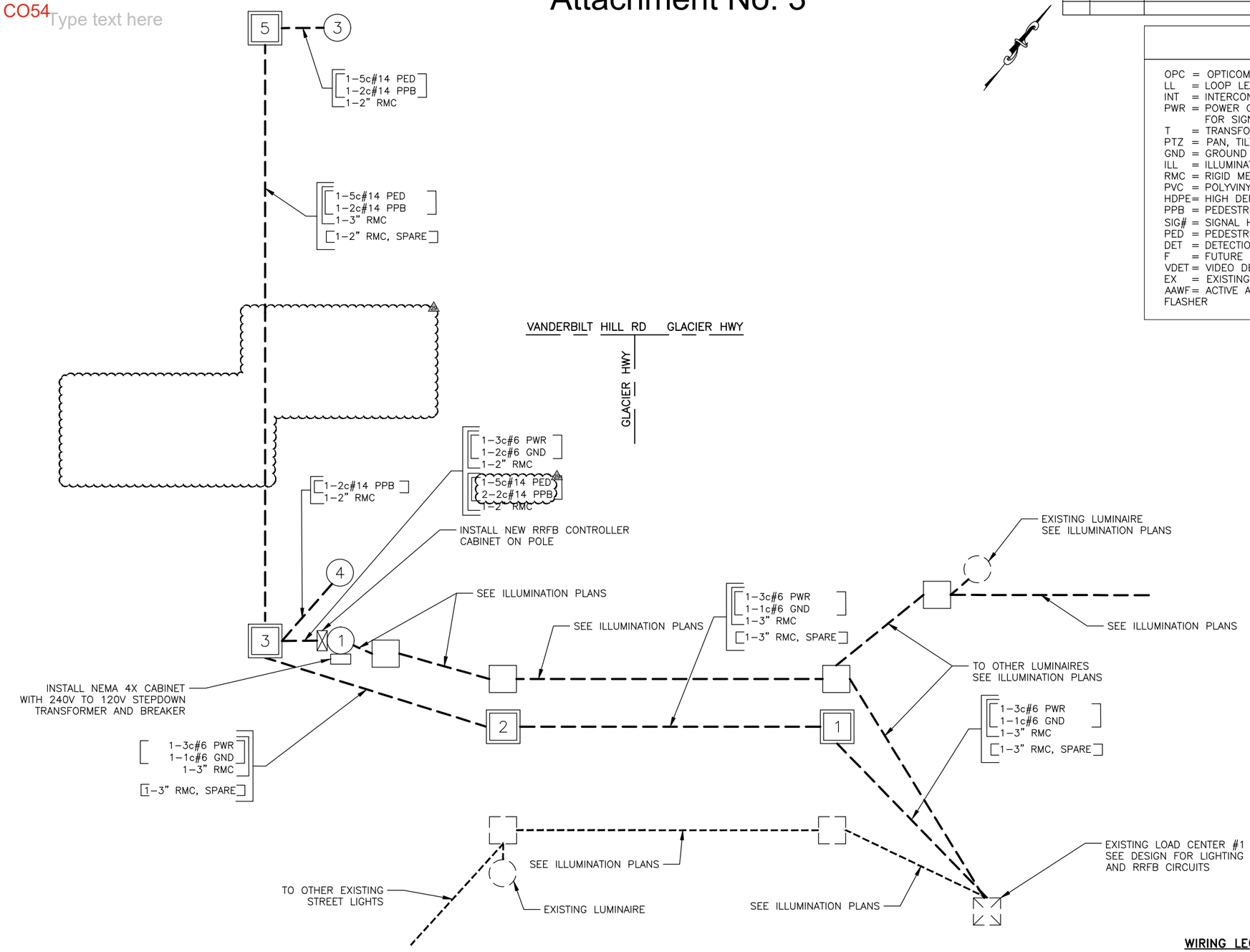

Record Drawings have been reviewed by the Project Engineer, and represent to the best of my knowledge, the project as constructed.

PE Dillon Tomaro 2/4/25

WIRING LEGEND:

- INDICATES EXISTING CONDUIT RUN
- INDICATES NEW RIGID METAL CONDUIT RUN(S)
- INDICATES THE CONNECTION BETWEEN EXISTING AND NEW CONDUIT

STATE OF ALASKA 49TH JOHN F. RINGERT CE 11096 REGISTERED PROFESSIONAL ENGINEER 2/25/22

VANDERBILT HILL ROAD RRFB WIRING DIAGRAM

PLANS DEVELOPED BY: KITTELSON & ASSOCIATES, INC. CERT. OF AUTHORIZATION NO.: 254741, 851 SW 6TH AVE. SUITE 600, PORTLAND, OR 97204, (503) 228-5230
H:\20\20487 - Glacier Highway - Juneau Traffic Design\design_CD\68124_H_RRFB-H-40 Fri, Feb/25/22 11:36am

ACTUATED FLASHING BEACON (RRFB) DESIGN SCHEDULE

NO.	DATE	REVISION

STATE	PROJECT DESIGNATION	YEAR	SHEET NO.	TOTAL SHEETS
ALASKA	TEA-0955(016)/Z68124	2020	H-41	235

POLE NO.	CORNER	LOCATION STATION	LOCATION OFFSET	POLE TYPE	POLE BASE	POLE TOFE	POLE FOUND. DEPTH	LUMINAIRE TYPE	LUMINAIRE ARM LENGTH	RRFB DEVICE	RRFB CONTROLLER	PUSH BUTTON	POLE-MOUNTED SIGNS ASDS CODE	SIZE HxV	AREA (SQ FT)	REMARKS
1	SE	102+63.3	34.6 RT	LUMINAIRE POLE LUMINAIRE MOUNTING HEIGHT = 30'	CIDH	26.5'	20.0'	173W LED NOTE 5	15'	2-12" LEDs	X	N/A	W11-15	36"x36"	9.0	
													W16-7pL	24"x12"	2.0	
2	N/A	102+63.4	00.0	SIGNAL POST (SEE SHEET H-53)	A	26.8'	4.0'	N/A	N/A	4-12" LEDs	N/A	2 1/4" BUTTON	W11-15	30"x30"	12.5	
													W16-7pR	24"x12"	4.0	
													R10-25	9"x12"	0.75	
3	SW	102+63.3	35.3 LT	SIGNAL POST (SEE SHEET H-53)	A	25.4'	5.0'	N/A	N/A	2-12" LEDs	N/A	2 1/4" BUTTON	W11-15	36"x36"	9.0	
													W16-7pL	24"x12"	2.0	
													R10-25	9"x12"	0.75	
4	SE	102+63.5	29.3 LT	PEDESTRIAN PUSH BUTTON POST (SEE SHEET H-53)	B	26.5'	3.0'	N/A	N/A	N/A	N/A	2 1/4" BUTTON	R10-25	9"x12"	0.75	
														SUBTOTAL RRFB SIGNS	40.75	

1. LOCATION OFFSETS ARE FROM ℄ TO CENTER OF RRFB POLE.
2. ORIENT LUMINAIRE ARM 90° TO ℄ OF ROADWAY UNLESS NOTED OTHERWISE.
3. POLE BASE A = SIGNAL BASE POST TYPE "A" (SEE T-31.00 AND SHEET H-59).
4. POLE BASE B = SIGNAL BASE POST TYPE "B" (SEE T-31.00 AND SHEET H-59).
5. POLE BASE CIDH = CAST IN DRILLED HOLE (SEE SHEET H-58).
6. SEE ILLUMINATION PLANS FOR FIXTURE INFORMATION.
7. TOFE = TOP OF FOUNDATION ELEVATION (FEET)
8. FOUND. DEPTH = FOUNDATION DEPTH (DISREGARD DEPTH TABLE ON STD. DWG. T-31.00 OR SHEET H-58 AND REFER TO FOUNDATION DEPTH PROVIDED IN THE TABLE ABOVE)

Record Drawings have been reviewed by the Project Engineer, and represent to the best of my knowledge, the project as constructed.

PE Dillon Tomaro 2/4/25

** Deleted by CO11

JUNCTION BOX SCHEDULE

LOCATION STATION	LOCATION OFFSET	JUNCTION BOX BOX NO.	TYPE IA	TYPE II	TYPE III	TYPE IV	REMARKS
103+50.3	73.9 RT	1		X			
103+02.9	65.8 RT	2		X			
102+58.5	31.3 RT	3		X			
102+58.4	0.0	4		X			
102+58.6	38.6 LT	5		X			

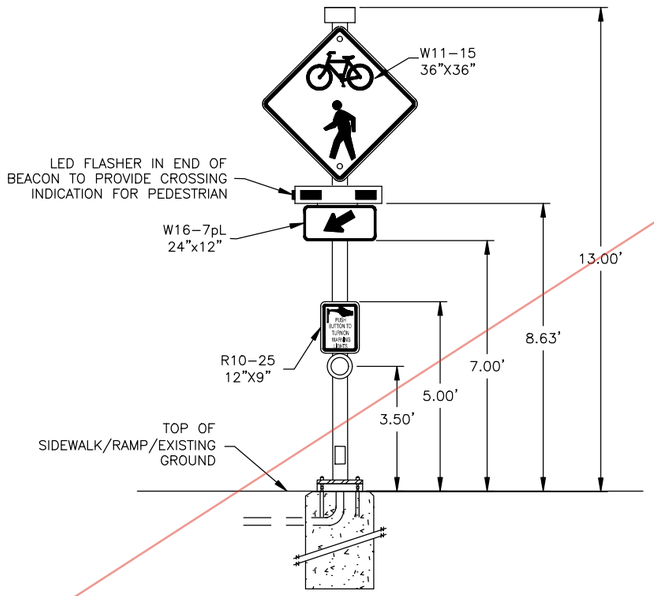

RECTANGULAR RAPID FLASHING BEACON DETAIL
POLE 3
(NOT TO SCALE)

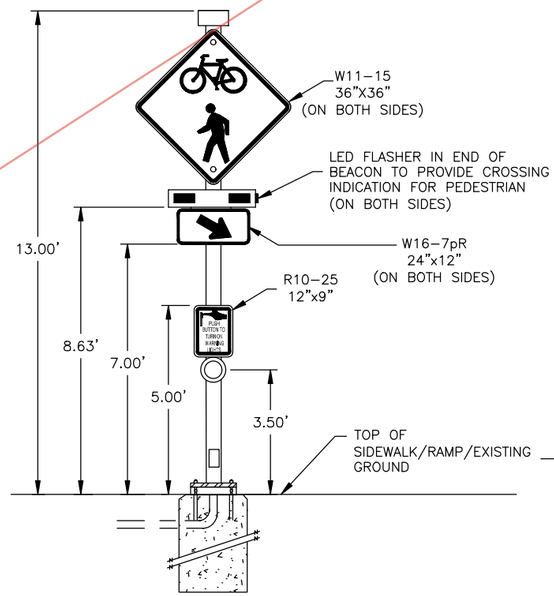

RECTANGULAR RAPID FLASHING BEACON DETAIL
POLE 2 (Double Sided)
(NOT TO SCALE)

LUMINAIRE POLE WITH RRFB DETAI
POLE 1
(NOT TO SCALE)

VANDERBILT HILL ROAD RRFB SCHEDULES

STATE OF ALASKA 49TH JOHN F. RINGERT CE 11096 REGISTERED PROFESSIONAL ENGINEER
7/31/2020

PLANS DEVELOPED BY: KITTELSON & ASSOCIATES, INC. CERT. OF AUTHORIZATION NO.: 254741, 851 SW 6TH AVE. SUITE 600, PORTLAND, OR 97204, (503) 228-5230
H:\20\20487 - Glacier Highway - Juneau Traffic Design\design_CD\68124_H_RRFB-H-41 Thu, Jul/30/20 09:21am

CO 11 Attachment No. 3

NO.	DATE	REVISION

STATE	PROJECT DESIGNATION	YEAR	SHEET NO.	TOTAL SHEETS
ALASKA	TEA-0955(016)/Z68124	2020	H-41	235

ACTUATED FLASHING BEACON (RRFB) DESIGN SCHEDULE

POLE NO.	CORNER	LOCATION STATION	LOCATION OFFSET	POLE TYPE	POLE BASE	POLE TOFE	POLE FOUND. DEPTH	LUMINAIRE TYPE	LUMINAIRE ARM LENGTH	RRFB DEVICE	RRFB CONTROLLER	PUSH BUTTON	POLE-MOUNTED SIGNS ASDS CODE	SIZE HxV	AREA (SQ FT)	REMARKS
1	SE	102+63.3	34.6 RT	LUMINAIRE POLE LUMINAIRE MOUNTING HEIGHT = 30'	CIDH	26.5'	~~20.0'~~	173W LED NOTE 5	15'	2-12" LEDs	X	N/A	W11-15	36"x36"	9.0	Construct foundation depth per Standard Plan L-30.11
													W16-7pL	24"x12"	2.0	
2	N/A	102+63.4	00.0	SIGNAL POST (SEE SHEET H-53)	A	26.8'	4.0'	N/A	N/A	4-12" LEDs	N/A	2 1/4" BUTTON	W11-15	30"x30"	12.5	
													W16-7pR	24"x12"	4.0	
													R10-25	9"x12"	0.75	
3	SW	102+63.3	35.3 LT	SIGNAL POST (SEE SHEET H-53)	A	25.4'	5.0'	N/A	N/A	2-12" LEDs	N/A	2 1/4" BUTTON	W11-15	36"x36"	9.0	
													W16-7pL	24"x12"	2.0	
													R10-25	9"x12"	0.75	
4	SE	102+63.5	29.3 LT	PEDESTRIAN PUSH BUTTON POST (SEE SHEET H-53)	B	26.5'	3.0'	N/A	N/A	N/A	N/A	2 1/4" BUTTON	R10-25	9"x12"	0.75	
														SUBTOTAL RRFB SIGNS	40.75	

1. LOCATION OFFSETS ARE FROM ℄ TO CENTER OF RRFB POLE.
2. ORIENT LUMINAIRE ARM 90° TO ℄ OF ROADWAY UNLESS NOTED OTHERWISE.
3. POLE BASE A = SIGNAL BASE POST TYPE "A" (SEE T-31.00 AND SHEET H-59).
4. POLE BASE B = SIGNAL BASE POST TYPE "B" (SEE T-31.00 AND SHEET H-59).
5. POLE BASE CIDH = CAST IN DRILLED HOLE (SEE SHEET H-58).
6. SEE ILLUMINATION PLANS FOR FIXTURE INFORMATION.
7. TOFE = TOP OF FOUNDATION ELEVATION (FEET)
8. FOUND. DEPTH = FOUNDATION DEPTH (DISREGARD DEPTH TABLE ON STD. DWG. T-31.00 OR SHEET H-58 AND REFER TO FOUNDATION DEPTH PROVIDED IN THE TABLE ABOVE)

** Deleted by CO54

Record Drawings have been reviewed by the Project Engineer, and represent to the best of my knowledge, the project as constructed.

PE Dillon Tomaro 2/4/25

JUNCTION BOX SCHEDULE

LOCATION STATION	LOCATION OFFSET	JUNCTION BOX BOX NO.	TYPE IA	TYPE II	TYPE III	TYPE IV	REMARKS
103+50.3	73.9 RT	1		X			
103+02.9	65.8 RT	2		X			
102+58.5	31.3 RT	3		X			
102+58.4	0.0	4		X			
102+58.6	38.6 LT	5		X			

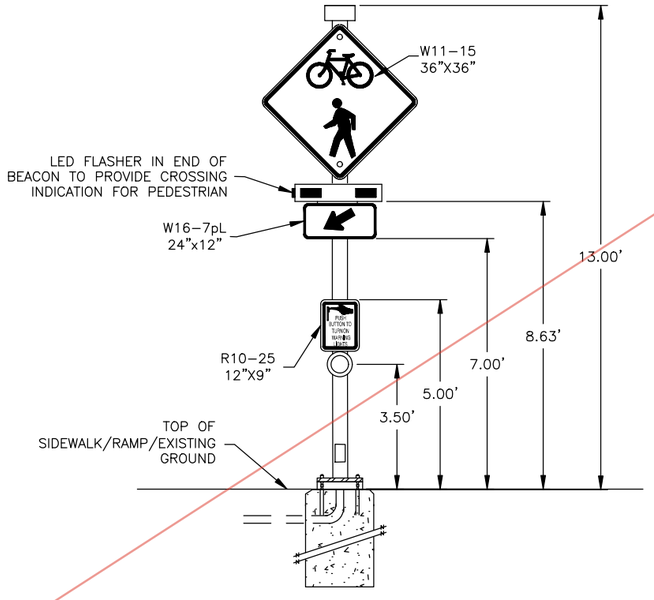

RECTANGULAR RAPID FLASHING BEACON DETAIL
POLE 3
(NOT TO SCALE)

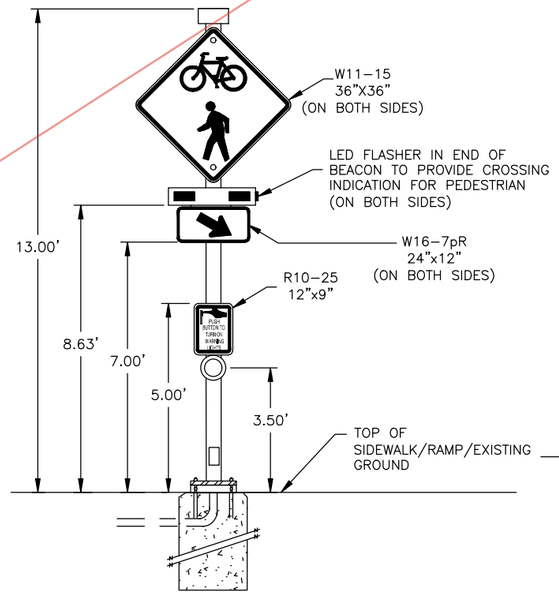

RECTANGULAR RAPID FLASHING BEACON DETAIL
POLE 2 (Double Sided)
(NOT TO SCALE)

LUMINAIRE POLE WITH RRFB DETAI
POLE 1
(NOT TO SCALE)

VANDERBILT HILL ROAD RRFB SCHEDULES

STATE OF ALASKA 49TH JOHN F. RINGERT CE. 11096 REGISTERED PROFESSIONAL ENGINEER
7/31/2020

PLANS DEVELOPED BY: KITTELSON & ASSOCIATES, INC. CERT. OF AUTHORIZATION NO.: 254741; 851 SW 6TH AVE. SUITE 600, PORTLAND, OR 97204, (503) 228-5230
H:\20\20487 - Glacier Highway - Juneau Traffic Design\design_CD\68124_H_RRFB-H-41 Thu, Jul/30/20 09:21am

NO.	DATE	REVISION
1	02/25/22	DELTA 29: VANDERBUILT AFB REVISION

STATE	PROJECT DESIGNATION	YEAR	SHEET NO.	TOTAL SHEETS
ALASKA	TEA-0955(016)/Z68124	2020	H-41	235

ACTUATED FLASHING BEACON (RRFB) DESIGN SCHEDULE

POLE NO.	CORNER	LOCATION STATION	LOCATION OFFSET	POLE TYPE	POLE BASE	POLE TOFE	POLE FOUND. DEPTH	LUMINAIRE TYPE	LUMINAIRE ARM LENGTH	RRFB DEVICE	RRFB CONTROLLER	PUSH BUTTON	POLE-MOUNTED SIGNS ASDS CODE	SIZE HxV	AREA (SQ FT)	REMARKS
1	SE	102+63.3	34.6 RT	LUMINAIRE POLE LUMINAIRE MOUNTING HEIGHT = 30'	CIDH	26.5'	20.0'	173W LED NOTE 5	15'	2-12" LEDs (2 Devices)	X	N/A	W11-15	36"x36"	18.0	SIGNS AND RRFB DEVICE MOUNTED ON BOTH SIDED OF POLE
													W16-7pL	24"x12"	4.0	
2																NOT USED
3	SW	102+63.3	35.3 LT	SIGNAL POST (SEE SHEET H-53)	A	25.4'	5.0'	N/A	N/A	2-12" LEDs (2 Devices)	N/A	2 1/4" BUTTON	W11-15	36"x36"	18.0	SIGNS AND RRFB DEVICE MOUNTED ON BOTH SIDED OF POLE
													W16-7pL	24"x12"	4.0	
													R10-25	9"x12"	0.75	
4	SE	102+63.5	29.3 LT	PEDESTRIAN PUSH BUTTON POST (SEE SHEET H-53)	B	26.5'	3.0'	N/A	N/A	N/A	N/A	2 1/4" BUTTON	R10-25	9"x12"	0.75	
														SUBTOTAL RRFB SIGNS	40.75	

1. LOCATION OFFSETS ARE FROM ℄ TO CENTER OF RRFB POLE.
2. ORIENT LUMINAIRE ARM 90° TO ℄ OF ROADWAY UNLESS NOTED OTHERWISE.
3. POLE BASE A = SIGNAL BASE POST TYPE "A" (SEE T-31.00 AND SHEET H-59).
4. POLE BASE B = SIGNAL BASE POST TYPE "B" (SEE T-31.00 AND SHEET H-59).
5. POLE BASE CIDH = CAST IN DRILLED HOLE (SEE SHEET H-58).
6. SEE ILLUMINATION PLANS FOR FIXTURE INFORMATION.
7. TOFE = TOP OF FOUNDATION ELEVATION (FEET)
8. FOUND. DEPTH = FOUNDATION DEPTH (DISREGARD DEPTH TABLE ON STD. DWG. T-31.00 OR SHEET H-58 AND REFER TO FOUNDATION DEPTH PROVIDED IN THE TABLE ABOVE)

Attachment No. 4

Type text here

CO54

JUNCTION BOX SCHEDULE

LOCATION STATION	LOCATION OFFSET	JUNCTION BOX BOX NO.	TYPE IA	TYPE II	TYPE III	TYPE IV	REMARKS
103+50.3	73.9 RT	1		X			
103+02.9	65.8 RT	2		X			
102+58.5	31.3 RT	3		X			
– NOT USED –		4					NOT USED
102+58.6	38.6 LT	5		X			

Record Drawings have been reviewed by the Project Engineer, and represent to the best of my knowledge, the project as constructed.

PE *Dillon Tomaro* 2/4/25

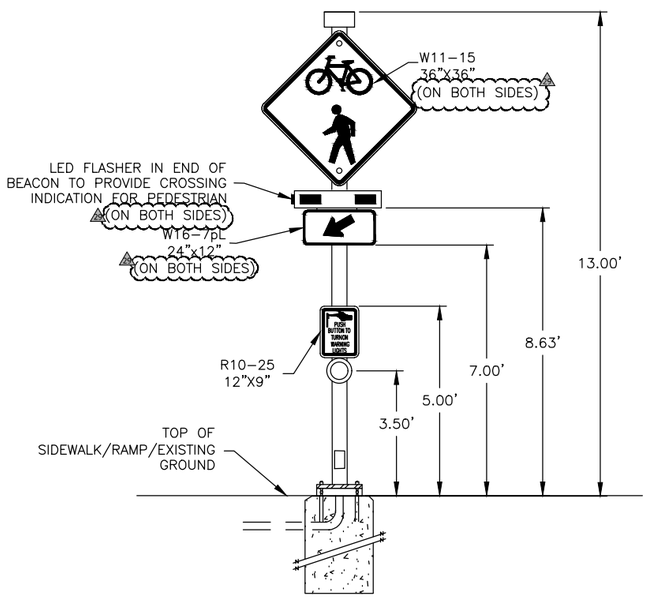

RECTANGULAR RAPID FLASHING BEACON DETAIL
POLE 3 (Double Sided)
(NOT TO SCALE)

POLE 2 NOT USED
(NOT TO SCALE)

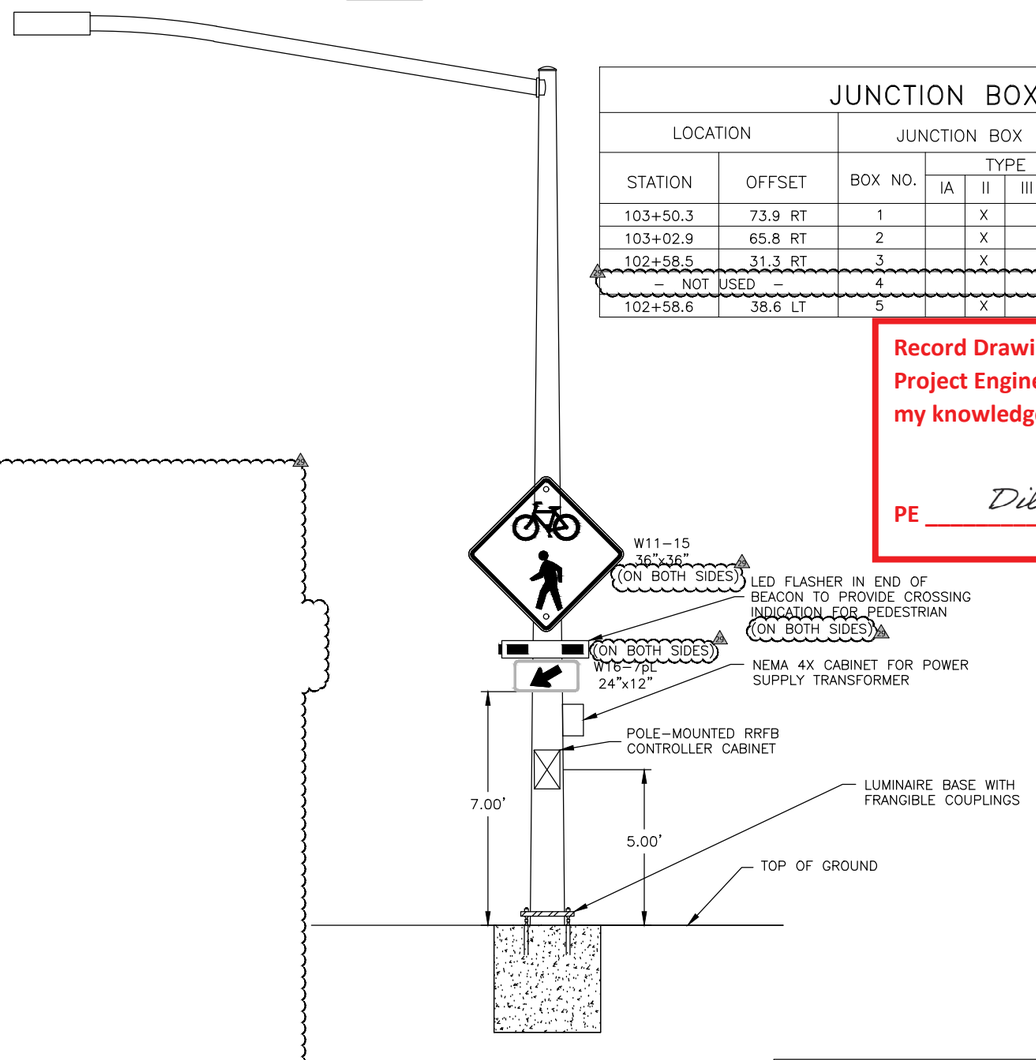

LUMINAIRE POLE WITH RRFB DETAI
POLE 1 (Double Sided)
(NOT TO SCALE)

VANDERBILT HILL ROAD
RRFB SCHEDULES

STATE OF ALASKA
49TH
JOHN F. RINGERT
CE 11096
REGISTERED PROFESSIONAL ENGINEER
2/25/22

PLANS DEVELOPED BY: KITTELSON & ASSOCIATES, INC. CERT. OF AUTHORIZATION NO.: 254741, 851 SW 6TH AVE. SUITE 600, PORTLAND, OR 97204, (503) 228-5230
H:\20\20487 - Glacier Highway - Juneau Traffic Design\design_CD\68124_H_RRFB-H-41 Fri, Feb/25/22 11:36am

NO.	DATE	REVISION

STATE	PROJECT DESIGNATION	YEAR	SHEET NO.	TOTAL SHEETS
ALASKA	TEA-0955(016)/Z68124	2020	H-42	235

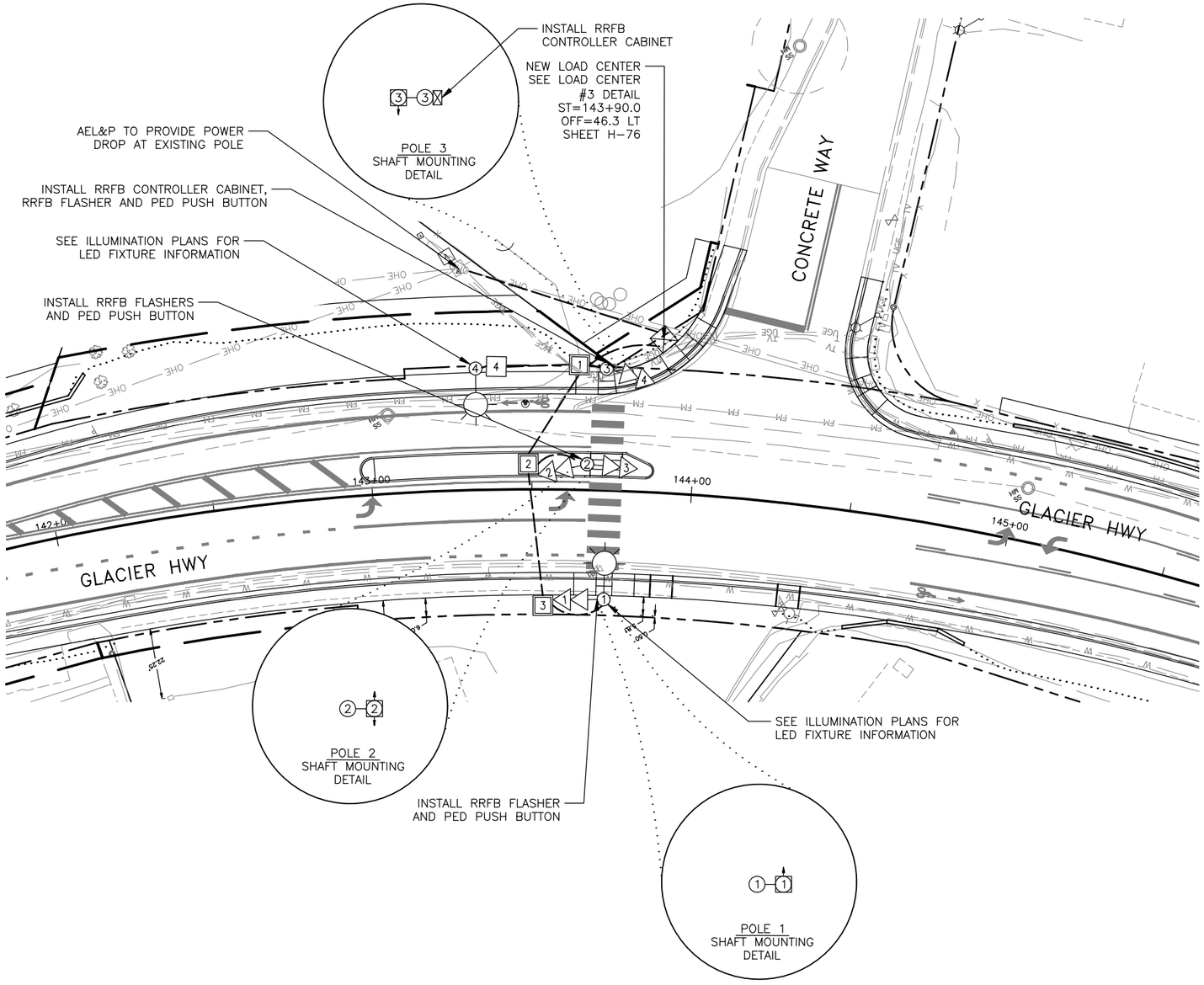

NOTES:

1. INSTALLATION OF NEW SIGNS ON TRAFFIC SIGNAL STRUCTURES WILL BE PAID UNDER PAY ITEM 660.0002.0000

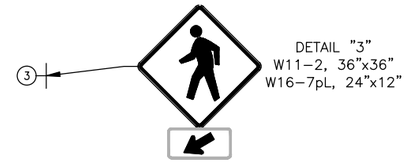

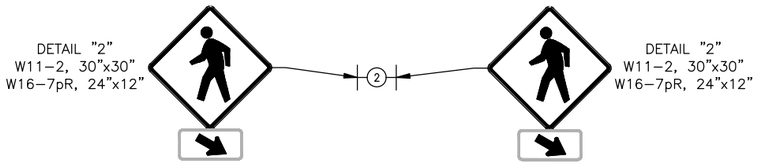



ADVANCED FLASHING BEACON SIGN PLACEMENT

Record Drawings have been reviewed by the Project Engineer, and represent to the best of my knowledge, the project as constructed.

PE Dillon Tomaro 2/4/25

STATE OF ALASKA 49TH JOHN F. RINGERT CE 11096 REGISTERED PROFESSIONAL ENGINEER

7/31/2020

CONCRETE WAY RRFB PLAN

PLANS DEVELOPED BY: KITTELSON & ASSOCIATES, INC. CERT. OF AUTHORIZATION NO.: 254741, 851 SW 6TH AVE. SUITE 600, PORTLAND, OR 97204, (503) 228-5230
H:\20\20487 - Glacier Highway - Juneau Traffic Design\design_CD\68124_H_RRFB-H-42 Thu, Jul/30/20 01:38pm

NO.	DATE	REVISION

STATE	PROJECT DESIGNATION	YEAR	SHEET NO.	TOTAL SHEETS
ALASKA	TEA-0955(016)/Z68124	2020	H-43	235

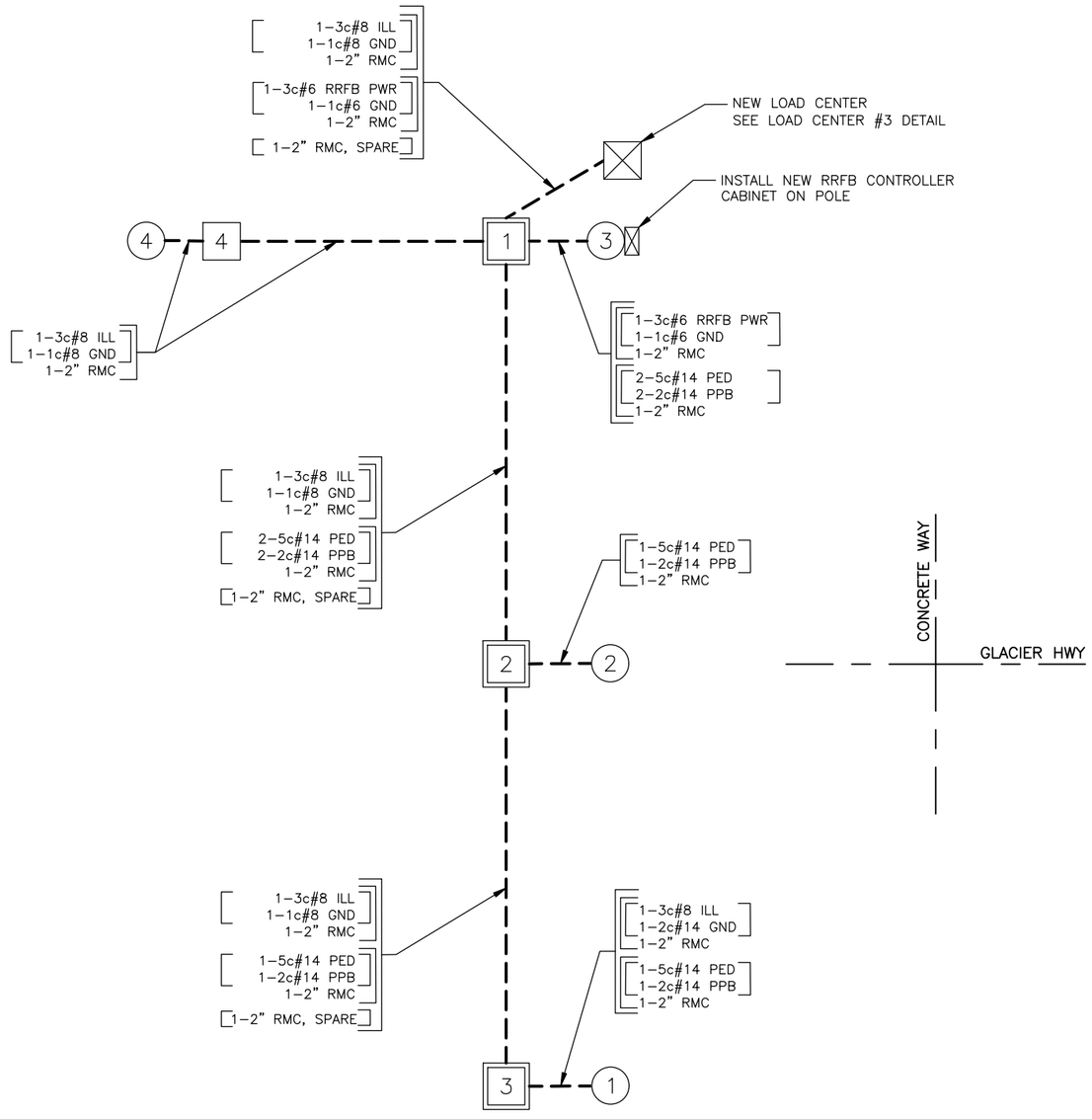

WIRING DIAGRAM CODING LEGEND

OPC = OPTICOM CABLE
LL = LOOP LEAD-IN
INT = INTERCONNECT CABLE
PWR = POWER CONDUCTORS FOR SIGNAL CONTROLLER
T = TRANSFORMER
PTZ = PAN, TILT, ZOOM CAMERA
GND = GROUND
ILL = ILLUMINATION
RMC = RIGID METAL CONDUIT
PVC = POLYVINYLCHLORIDE CONDUIT
HDPE = HIGH DENSITY POLYETHYLENE
PPB = PEDESTRIAN PUSH-BUTTON
SIG# = SIGNAL HEAD NUMBER
PED = PEDESTRIAN SIGNAL
DET = DETECTION CONDUIT
F = FUTURE USE
VDET = VIDEO DETECTION
EX = EXISTING
AAWF = ACTIVE ADVANCED WARNING FLASHER

5c#14 TRAFFIC SIGNALS
7c#14 PROTECTED-PERMITTED SIGNALS
5c#14 PEDESTRIAN SIGNALS
2c#14 PEDESTRIAN PUSH-BUTTON
3pr#18, 6pr#18, 9pr#18, 15pr#18 } LOOP LEAD-IN CABLE & VDET
3c#8 ILLUMINATION
3c#6 SIGNAL POWER
1c#8 BARE COPPER GROUND
18pr#19 CABLE PE-39 INTERCONNECT
1c#6 BARE COPPER GROUND
APT MATRIX 2 RDET HOME RUN CABLE
CAT-6A PTZ DATA
SMFO SINGLE MODE FIBER OPTIC

NOTES:

1. INSTALL 1-1C#8 BARE COPPER GROUND CONDUCTOR IN ALL CONDUITS UNLESS ANOTHER GROUND CONDUCTOR IS SPECIFIED.

Record Drawings have been reviewed by the Project Engineer, and represent to the best of my knowledge, the project as constructed.

PE Dillon Tomaro 2/4/25

WIRING LEGEND:

- INDICATES EXISTING CONDUIT RUN
- INDICATES NEW RIGID METAL CONDUIT RUN(S)
- INDICATES THE CONNECTION BETWEEN EXISTING AND NEW CONDUIT

CONCRETE WAY RRFB WIRING DIAGRAM

STATE OF ALASKA 49TH JOHN F. RINGERT CE 11096 REGISTERED PROFESSIONAL ENGINEER
7/31/2020

PLANS DEVELOPED BY: KITTELSON & ASSOCIATES, INC. CERT. OF AUTHORIZATION NO.: 254741, 851 SW 6TH AVE. SUITE 600, PORTLAND, OR 97204, (503) 228-5230
H:\20\20487 - Glacier Highway - Juneau Traffic Design\design_CD\68124_H_RRFB-H-43 Thu, Jul/30/20 09:21am

NO.	DATE	REVISION

STATE	PROJECT DESIGNATION	YEAR	SHEET NO.	TOTAL SHEETS
ALASKA	TEA-0955(016)/Z68124	2020	H-44	235

** Deleted by CO11

ACTUATED FLASHING BEACON (RRFB) DESIGN SCHEDULE

POLE NO.	CORNER	LOCATION STATION	LOCATION OFFSET	POLE TYPE	POLE BASE	POLE TOFE	POLE FOUND. DEPTH	LUMINAIRE TYPE	LUMINAIRE ARM LENGTH	RRFB DEVICE	RRFB CONTROLLER	PUSH BUTTON	POLE-MOUNTED SIGNS ASDS CODE	SIZE HxV	AREA (SQ FT)	REMARKS
1	NE	143+73.5	34.2 RT	LUMINAIRE POLE LUMINAIRE MOUNTING HEIGHT = 30'	CIDH	34.5'	12.0'	173W LED NOTE 5	15'	2-12" LEDs	N/A	2 1/4" BUTTON	W11-2	36"x36"	9.0	
													W16-7pL	24"x12"	2.0	
													R10-25	9"x12"	0.75	
2	SE	143+67.1	8.1 LT	SIGNAL POST (SEE SHEET H-53)	A	36.2'	4.0'	N/A	N/A	4-12" LEDs	N/A	2 1/4" BUTTON	W11-2	30"x30"	12.5	
													W16-7pR	24"x12"	4.0	
													R10-25	9x12"	0.75	
3	SE	143+72.3	38.2 LT	SIGNAL POST (SEE SHEET H-53)	A	36.7'	6.0'	N/A	N/A	2-12" LEDs	X	2 1/4" BUTTON	W11-2	36"x36"	9.0	
													W16-7pL	24"x12"	2.0	
													R10-25	9x12"	0.75	
4	SE	143+33.1	38.1 LT	LUMINAIRE POLE LUMINAIRE MOUNTING HEIGHT = 30'	CIDH	37.2'	20.0'	173W LED NOTE 5	15'	N/A	N/A	N/A	N/A	N/A	N/A	
														SUBTOTAL RRFB SIGNS	40.75	

1. LOCATION OFFSETS ARE FROM ℄ TO CENTER OF RRFB POLE.
2. ORIENT LUMINAIRE ARM 90° TO ℄ OF ROADWAY UNLESS NOTED OTHERWISE.
3. POLE BASE A = SIGNAL BASE POST TYPE "A" (SEE T-31.00).
4. POLE BASE CIDH = CAST IN DRILLED HOLE (SEE SHEET H-58).
5. SEE ILLUMINATION PLANS FOR FIXTURE INFORMATION.
6. TOFE = TOP OF FOUNDATION ELEVATION (FEET)
7. FOUND. DEPTH = FOUNDATION DEPTH (DISREGARD DEPTH TABLE ON STD. DWG. T-31.00 OR SHEET H-58 AND REFER TO FOUNDATION DEPTH PROVIDED IN THE TABLE ABOVE)

JUNCTION BOX SCHEDULE

LOCATION STATION	LOCATION OFFSET	JUNCTION BOX BOX NO.	TYPE IA	TYPE II	TYPE III	TYPE IV	REMARKS
143+64.1	39.2 LT	1		X			
143+62.7	8.1 LT	2		X			
143+63.2	35.3 RT	3		X			
143+39.4	38.6 LT	4	X				

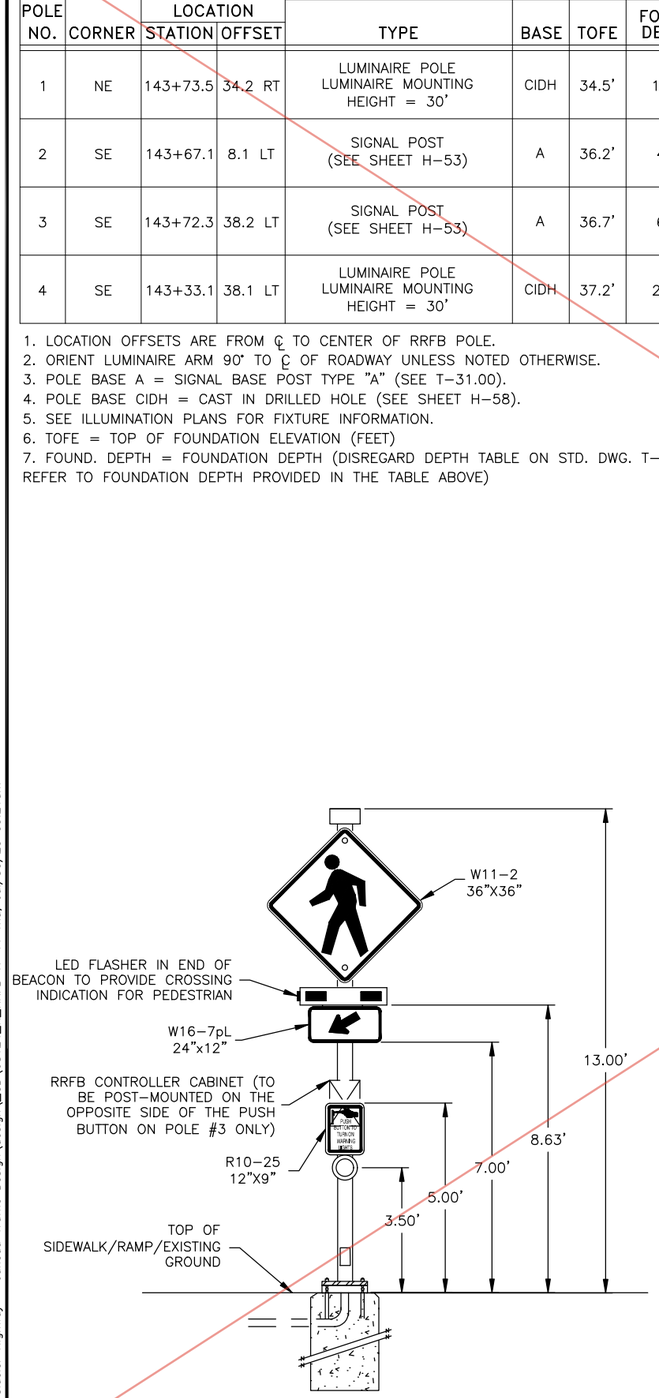

RECTANGULAR RAPID FLASHING BEACON DETAIL
POLE 3
(NOT TO SCALE)

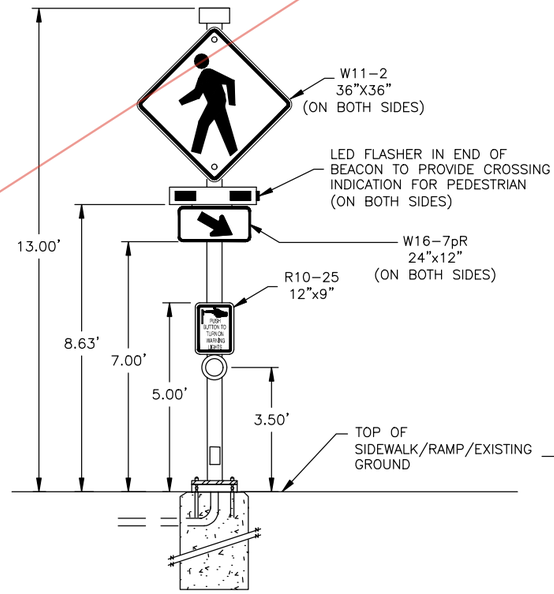

RECTANGULAR RAPID FLASHING BEACON DETAIL
POLE 2 (Double Sided)
(NOT TO SCALE)

LUMINAIRE POLE WITH RRFB DETAIL
POLE 1
(NOT TO SCALE)

Record Drawings have been reviewed by the Project Engineer, and represent to the best of my knowledge, the project as constructed.

PE Dillon Tomaro 2/4/25

STATE OF ALASKA 49TH JOHN F. RINGERT CE 11096 REGISTERED PROFESSIONAL ENGINEER
7/31/2020

CONCRETE WAY RRFB SCHEDULES

PLANS DEVELOPED BY: KITTELSON & ASSOCIATES, INC. CERT. OF AUTHORIZATION NO.: 254741, 851 SW 6TH AVE. SUITE 600, PORTLAND, OR 97204, (503) 228-5230
H:\20\20487 - Glacier Highway - Juneau Traffic Design\design_CD\68124_H_RRFB-H-44 Thu, Jul/30/20 09:21am

CO 11 Attachment No. 4

NO.	DATE	REVISION

STATE	PROJECT DESIGNATION	YEAR	SHEET NO.	TOTAL SHEETS
ALASKA	TEA-0955(016)/Z68124	2020	H-44	235

ACTUATED FLASHING BEACON (RRFB) DESIGN SCHEDULE

POLE NO.	CORNER	LOCATION STATION	LOCATION OFFSET	POLE TYPE	POLE BASE	POLE TOFE	POLE FOUND. DEPTH	LUMINAIRE TYPE	LUMINAIRE ARM LENGTH	RRFB DEVICE	RRFB CONTROLLER	PUSH BUTTON	POLE-MOUNTED SIGNS ASDS CODE	SIZE HxV	AREA (SQ FT)	REMARKS
1	NE	143+73.5	34.2 RT	LUMINAIRE POLE LUMINAIRE MOUNTING HEIGHT = 30'	CIDH	34.5'	~~12.0'~~	173W LED NOTE 5	15'	2-12" LEDs	N/A	2 ¼" BUTTON	W11-2	36"x36"	9.0	Construct foundation depth per Standard Plan L-30.11
													W16-7pL	24"x12"	2.0	
													R10-25	9"x12"	0.75	
2	SE	143+67.1	8.1 LT	SIGNAL POST (SEE SHEET H-53)	A	36.2'	4.0'	N/A	N/A	4-12" LEDs	N/A	2 ¼" BUTTON	W11-2	30"x30"	12.5	
													W16-7pR	24"x12"	4.0	
													R10-25	9x12"	0.75	
3	SE	143+72.3	38.2 LT	SIGNAL POST (SEE SHEET H-53)	A	36.7'	6.0'	N/A	N/A	2-12" LEDs	X	2 ¼" BUTTON	W11-2	36"x36"	9.0	
													W16-7pL	24"x12"	2.0	
													R10-25	9x12"	0.75	
4	SE	143+33.1	38.1 LT	LUMINAIRE POLE LUMINAIRE MOUNTING HEIGHT = 30'	CIDH	37.2'	~~20.0'~~	173W LED NOTE 5	15'	N/A	N/A	N/A	N/A	N/A	N/A	Construct foundation depth per Standard Plan L-30.11
														SUBTOTAL RRFB SIGNS	40.75	

1. LOCATION OFFSETS ARE FROM ℄ TO CENTER OF RRFB POLE.
2. ORIENT LUMINAIRE ARM 90° TO ℄ OF ROADWAY UNLESS NOTED OTHERWISE.
3. POLE BASE A = SIGNAL BASE POST TYPE "A" (SEE T-31.00).
4. POLE BASE CIDH = CAST IN DRILLED HOLE (SEE SHEET H-58).
5. SEE ILLUMINATION PLANS FOR FIXTURE INFORMATION.
6. TOFE = TOP OF FOUNDATION ELEVATION (FEET)
7. FOUND. DEPTH = FOUNDATION DEPTH (DISREGARD DEPTH TABLE ON STD. DWG. T-31.00 OR SHEET H-58 AND REFER TO FOUNDATION DEPTH PROVIDED IN THE TABLE ABOVE)

JUNCTION BOX SCHEDULE

LOCATION STATION	LOCATION OFFSET	JUNCTION BOX BOX NO.	TYPE IA	TYPE II	TYPE III	TYPE IV	REMARKS
143+64.1	39.2 LT	1		X			
143+62.7	8.1 LT	2		X			
143+63.2	35.3 RT	3		X			
143+39.4	38.6 LT	4	X				

Record Drawings have been reviewed by the Project Engineer, and represent to the best of my knowledge, the project as constructed.

PE *Dillon Tomaro* 2/4/25

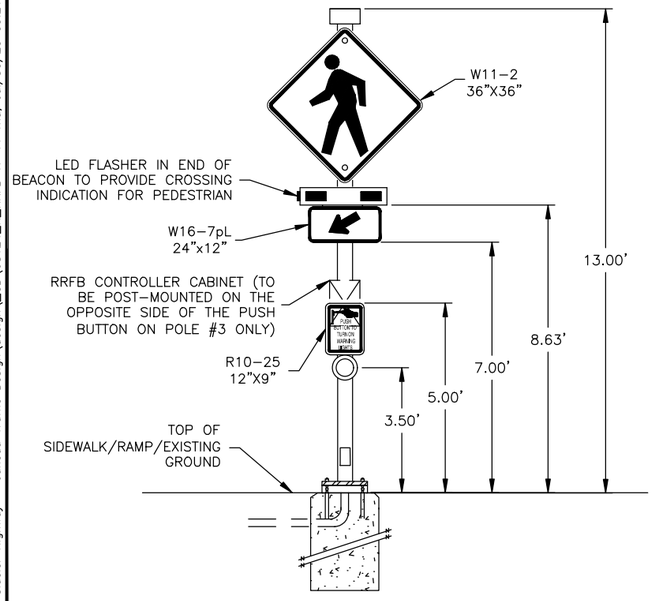

RECTANGULAR RAPID FLASHING BEACON DETAIL
POLE 3
(NOT TO SCALE)

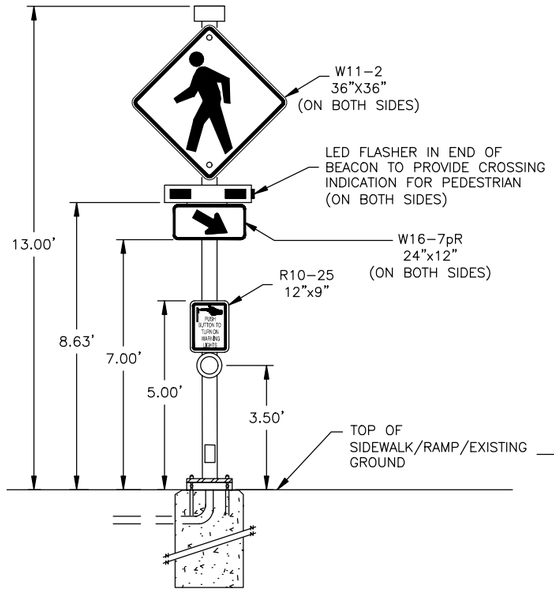

RECTANGULAR RAPID FLASHING BEACON DETAIL
POLE 2 (Double Sided)
(NOT TO SCALE)

LUMINAIRE POLE WITH RRFB DETAIL
POLE 1
(NOT TO SCALE)

CONCRETE WAY
RRFB SCHEDULES

STATE OF ALASKA 49TH JOHN F. RINGERT CE 11096 REGISTERED PROFESSIONAL ENGINEER
7/31/2020

PLANS DEVELOPED BY: KITTELSON & ASSOCIATES, INC. CERT. OF AUTHORIZATION NO.: 254741, 851 SW 6TH AVE. SUITE 600, PORTLAND, OR 97204, (503) 228-5230
H:\20\20487 - Glacier Highway - Juneau Traffic Design\design_CD\68124_H_RRFB-H-44 Thu, Jul/30/20 09:21am

NO.	DATE	REVISION

STATE	PROJECT DESIGNATION	YEAR	SHEET NO.	TOTAL SHEETS
ALASKA	TEA-0955(016)/Z68124	2020	H-45	235

NOTES:

1. INSTALLATION OF NEW SIGNS ON TRAFFIC SIGNAL STRUCTURES WILL BE PAID UNDER SIGNAL PAY ITEM 660.0002.0000

INSTALL RRFB CONTROLLER CABINET

POLE 3
SHAFT MOUNTING
DETAIL

INSTALL RRFB CONTROLLER CABINET,
RRFB FLASHER AND
PED PUSH BUTTON

INSTALL RRFB FLASHERS
WITH PUSH BUTTON

NEW LOAD CENTER
SEE LOAD CENTER #6
DETAIL
SHEET H-77

POLE 4
SHAFT MOUNTING
DETAIL

INSTALL RRFB CONTROLLER CABINET

INSTALL SCHOOL FLASHER
CONTROLLER CABINET

POLE 8
SHAFT MOUNTING
DETAIL

INSTALL RRFB CONTROLLER CABINET,
RRFB FLASHER AND
PED PUSH BUTTON

INSTALL SCHOOL ZONE FLASHER
AND POLE WITH CONTROLLER

GLACIER HWY

175+00 176+00 177+00 178+00 179+00 180+00

GLACIER HWY

INSTALL RRFB FLASHER
AND PED PUSH BUTTON

INSTALL RRFB FLASHERS
AND PED PUSH BUTTON

RENNINGER ST

POLE 1
SHAFT MOUNTING
DETAIL

POLE 2
SHAFT MOUNTING
DETAIL

POLE 6
SHAFT MOUNTING
DETAIL

POLE 5
SHAFT MOUNTING
DETAIL

INSTALL SCHOOL FLASHER
CONTROLLER CABINET

POLE 7
SHAFT MOUNTING
DETAIL

172+00 173+00 174+00

INSTALL SCHOOL ZONE FLASHER
AND POLE WITH CONTROLLER

DETAIL "7"
S5-1, 24"x48"



DETAIL "8"
S5-1, 24"x48"

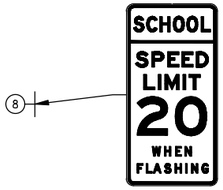

SCHOOL ZONE FLASHER SIGN PLACEMENT

DETAIL "3 & 4"
S1-1, 36"x36"
W16-7pL, 24"x12"

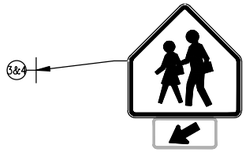

DETAIL "2"
S1-1, 36"x36"
W16-7pR, 24"x12"

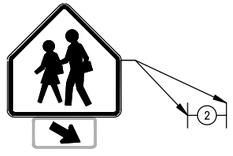

DETAIL "5"
S1-1, 36"x36"
W16-7pR, 24"x12"

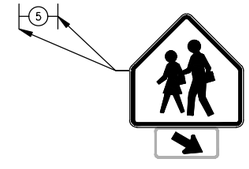

DETAIL "1 & 6"
S1-1, 36"x36"
W16-7pL, 24"x12"

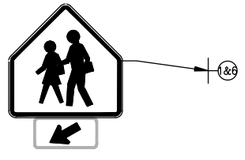

ACTUATED FLASHING BEACON SIGN PLACEMENT

Record Drawings have been reviewed by the Project Engineer, and represent to the best of my knowledge, the project as constructed.

PE Dillon Tomaro 2/4/25

STATE OF ALASKA
49TH
JOHN F. RINGERT
CE 11096
REGISTERED PROFESSIONAL ENGINEER
7/31/2020

RENNINGER ROUNDABOUT RRFB AND SCHOOL ZONE FLASHER PLAN

PLANS DEVELOPED BY: KITTELSON & ASSOCIATES, INC. CERT. OF AUTHORIZATION NO.: 254741, 851 SW 6TH AVE. SUITE 600, PORTLAND, OR 97204, (503) 228-5230
H:\20\20487 - Glacier Highway - Juneau Traffic Design\design_CD\68124_H_RRFB-H-45 Thu, Jul/30/20 01:39pm

NO.	DATE	REVISION

STATE	PROJECT DESIGNATION	YEAR	SHEET NO.	TOTAL SHEETS
ALASKA	TEA-0955(016)/Z68124	2020	H-46	235

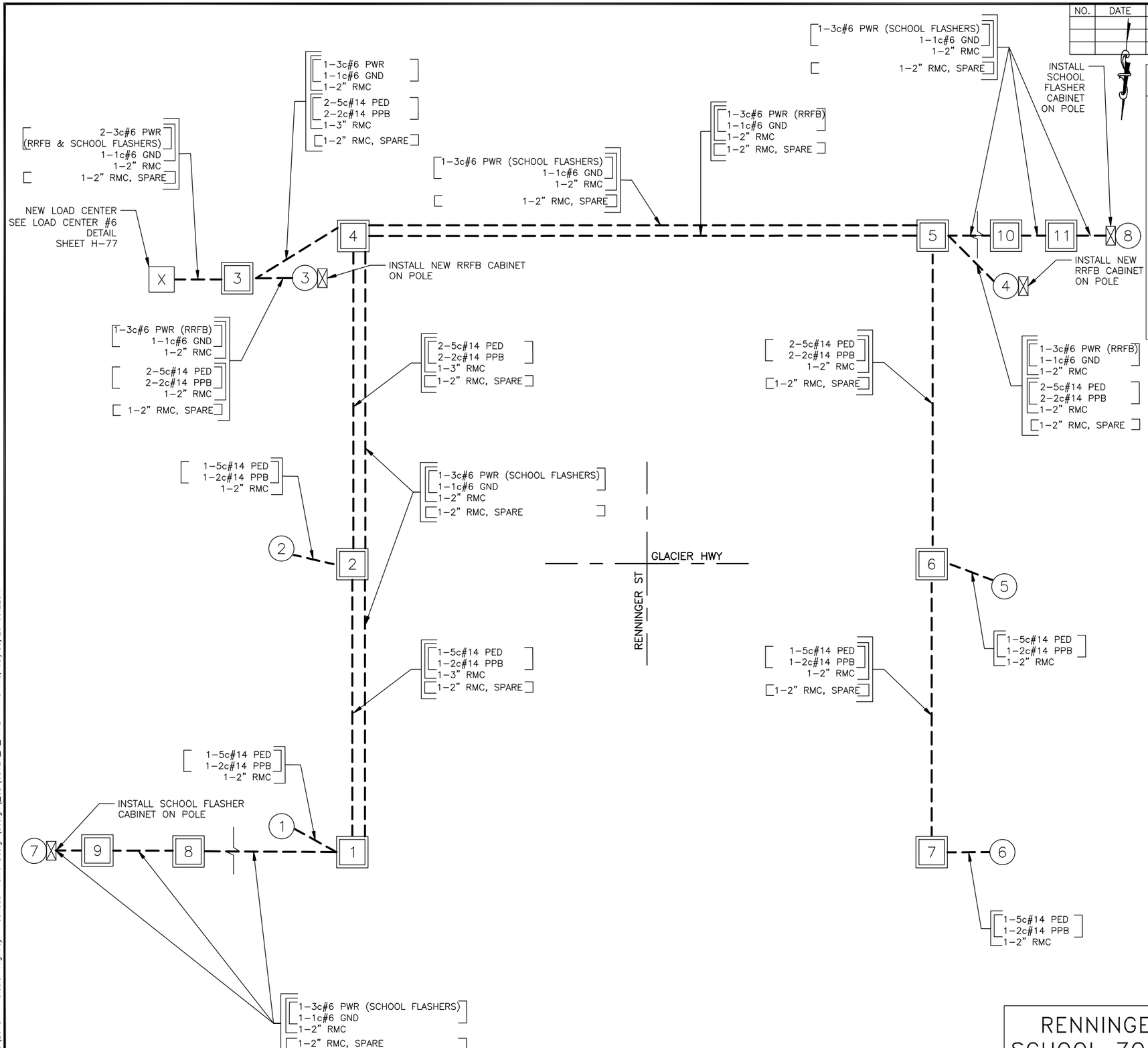

WIRING DIAGRAM CODING LEGEND

OPC = OPTICOM CABLE
LL = LOOP LEAD-IN
INT = INTERCONNECT CABLE
PWR = POWER CONDUCTORS FOR SIGNAL CONTROLLER
T = TRANSFORMER
PTZ = PAN, TILT, ZOOM CAMERA
GND = GROUND
ILL = ILLUMINATION
RMC = RIGID METAL CONDUIT
PVC = POLYVINYLCHLORIDE CONDUIT
HDPE = HIGH DENSITY POLYETHYLENE
PPB = PEDESTRIAN PUSH-BUTTON
SIG# = SIGNAL HEAD NUMBER
PED = PEDESTRIAN SIGNAL
DET = DETECTION CONDUIT
F = FUTURE USE
VDET = VIDEO DETECTION
EX = EXISTING
AAWF = ACTIVE ADVANCED WARNING FLASHER

5c#14 TRAFFIC SIGNALS
7c#14 PROTECTED-PERMITTED SIGNALS
5c#14 PEDESTRIAN SIGNALS
2c#14 PEDESTRIAN PUSH-BUTTON
3pr#18, 6pr#18, 9pr#18, 15pr#18 LOOP LEAD-IN CABLE & VDET
3c#8 ILLUMINATION
3c#6 SIGNAL POWER
1c#8 BARE COPPER GROUND
18pr#19 CABLE PE-39 INTERCONNECT
1c#6 BARE COPPER GROUND
APT MATRIX 2 RDET HOME RUN CABLE
CAT-6A PTZ DATA
SMFO SINGLE MODE FIBER OPTIC

NOTES:

1. INSTALL 1-1C#8 BARE COPPER GROUND CONDUCTOR IN ALL CONDUITS UNLESS ANOTHER GROUND CONDUCTOR IS SPECIFIED.

Record Drawings have been reviewed by the Project Engineer, and represent to the best of my knowledge, the project as constructed.

PE Dillon Tomaro 2/4/25

WIRING LEGEND:

- INDICATES EXISTING CONDUIT RUN
- INDICATES NEW RIGID METAL CONDUIT RUN(S)
- INDICATES THE CONNECTION BETWEEN EXISTING AND NEW CONDUIT

RENNINGER ROUNDABOUT RRFB AND SCHOOL ZONE FLASHER WIRING DIAGRAM

STATE OF ALASKA 49TH JOHN F. RINGERT CE 11096 REGISTERED PROFESSIONAL ENGINEER 7/31/2020

PLANS DEVELOPED BY: KITTELSON & ASSOCIATES, INC. CERT. OF AUTHORIZATION NO.: 254741, 851 SW 6TH AVE. SUITE 600, PORTLAND, OR 97204, (503) 228-5230
H:\20\20487 - Glacier Highway - Juneau Traffic Design\design_CD\68124_H_RRFB-H-46 Thu, Jul/30/20 09:22am

NO.	DATE	REVISION

STATE	PROJECT DESIGNATION	YEAR	SHEET NO.	TOTAL SHEETS
ALASKA	TEA-0955(016)/Z68124	2020	H-47	235

ACTUATED FLASHER BEACON (RRFB) AND SCHOOL FLASHER DESIGN SCHEDULE

POLE NO.	CORNER	LOCATION STATION	LOCATION OFFSET	POLE TYPE	POLE BASE	POLE TOFE	POLE FOUND. DEPTH	LUMINAIRE TYPE	LUMINAIRE ARM LENGTH	RRFB DEVICE	RRFB CONTROLLER	PUSH BUTTON	POLE-MOUNTED SIGNS ASDS CODE	SIZE HxV	AREA (SQ FT)	REMARKS
1	NE	175+56.1	34.6 RT	SIGNAL POST (SEE SHEET H-53)	A	29.0'	6.0'	N/A	N/A	2-12" LEDs	N/A	2 ¼" BUTTON	S1-1	36"x36"	9.0	
													W16-7pL	24"x12"	2.0	
													R10-25	9"x12"	0.75	
2	SE	175+67.4	1.8 LT	SIGNAL POST (SEE SHEET H-53)	A	29.2'	4.0'	N/A	N/A	4-12" LEDs	N/A	2 ¼" BUTTON	S1-1	36"x36"	18.0	
													W16-7pR	24"x12"	4.0	
													R10-25	9x12"	0.75	
3	SE	175+62.7	40.2 LT	SIGNAL POST (SEE SHEET H-53)	A	29.0'	6.0'	N/A	N/A	2-12" LEDs	X	2 ¼" BUTTON	S1-1	36"x36"	9.0	
													W16-7pL	24"x12"	2.0	
													R10-25	9"x12"	0.75	
4	SW	177+43.7	33.4 LT	SIGNAL POST (SEE SHEET H-53)	A	29.2'	4.0'	N/A	N/A	2-12" LEDs	X	2 ¼" BUTTON	S1-1	36"x36"	9.0	
													W16-7pL	24"x12"	2.0	
													R10-25	9"x12"	0.75	
5	NW	177+30.6	1.3 RT	SIGNAL POST (SEE SHEET H-53)	A	29.5'	4.0'	N/A	N/A	4-12" LEDs	N/A	2 ¼" BUTTON	S1-1	36"x36"	18.0	
													W16-7pR	24"x12"	4.0	
													R10-25	9"x12"	0.75	
6	NW	177+32.8	37.5 RT	SIGNAL POST (SEE SHEET H-53)	A	29.1'	4.0'	N/A	N/A	2-12" LEDs	N/A	2 ¼" BUTTON	S1-1	36"x36"	9.0	
													W16-7pL	24"x12"	2.0	
													R10-25	9"x12"	0.75	
7	NE	172+48.9	31.1 RT	SIGNAL POST (SEE SHEET H-53)	A	26.9'	5.0'	N/A	N/A	N/A	N/A	N/A	S5-1	24"x48"	8.0	
													R2-6P	24"x18"	3.0	
8	SW	180+78.4	28.4 LT	SIGNAL POST (SEE SHEET H-53)	A	32.9'	4.0'	N/A	N/A	N/A	N/A	N/A	S5-1	24"x48"	8.0	
													R2-6P	24"x18"	3.0	
													SUBTOTAL RRFB AND SCHOOL FLASHER SIGNS		114.5	

1. LOCATION OFFSETS ARE FROM ℄ TO CENTER OF RRFB POLE.
2. ORIENT LUMINAIRE ARM 90° TO ℄ OF ROADWAY UNLESS NOTED OTHERWISE.
3. POLE BASE A = SIGNAL BASE POST TYPE "A" (SEE T-31.00).
4. TOFE = TOP OF FOUNDATION ELEVATION (FEET)
5. FOUND. DEPTH = FOUNDATION DEPTH (DISREGARD DEPTH TABLE ON STD. DWG. T-31.00 AND REFER TO FOUNDATION DEPTH PROVIDED IN THE TABLE ABOVE)

SCHOOL FLASHER SIGNAL HEAD SCHEDULE

POLE/POST NO.	INDICATIONS 12" BALL R	12" BALL YF	12" BALL G	12" ARROW R	12" ARROW Y	12" ARROW YF	12" ARROW G	8" BALL R	8" BALL Y	8" BALL G	MOUNTING MAST ARM LOC. OFFSET	MAST ARM ELEV. PLUMB.	SIDE MTNG. TYPE	TOP OF POST	REMARKS
8		X												X	3 – 12" YELLOW FLASHING BALLS PER HEAD
9		X												X	3 – 12" YELLOW FLASHING BALLS PER HEAD

1. FLASHING SIGNAL HEAD LOCATED ON POST MOUNTED SIGNAL POLE WITH THE TOP AND BOTTOM FLASHERS FACING ADVANCING TRAFFIC. MIDDLE FLASHER TO FACE OPPOSITE DIRECTION.
2. YF = YELLOW FLASHING BALL

JUNCTION BOX SCHEDULE

LOCATION STATION	LOCATION OFFSET	JUNCTION BOX NO.	TYPE IA	TYPE II	TYPE III	TYPE IV	REMARKS
175+63.7	36.2 RT	1		X			
175+76.9	1.6 RT	2		X			
175+57.9	39.9 LT	3		X			
175+83.2	51.5 LT	4		X			
177+13.8	44.8 LT	5		X			
177+20.2	0.5 LT	6		X			
177+27.5	45.1 RT	7		X			
173+98.7	32.8 RT	8		X			
172+60.1	35.3 RT	9		X			
178+87.1	36.2 LT	10		X			
180+65.1	34.7 LT	11		X			

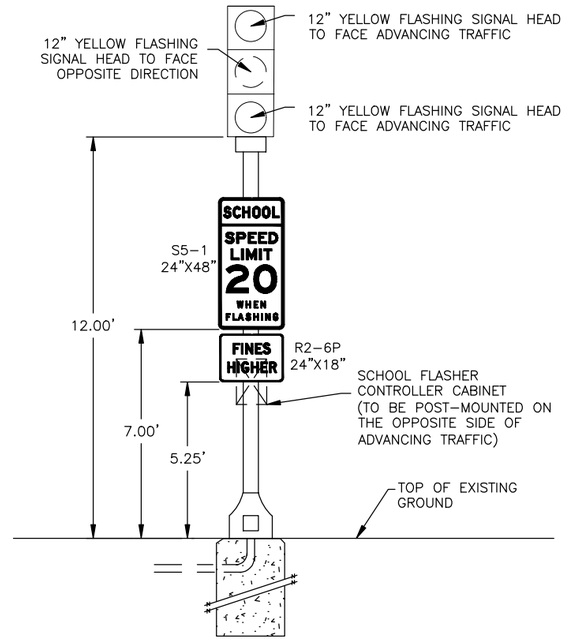

SIGNAL POST WITH SCHOOL FLASHER
POLE 7 & 8
(NOT TO SCALE)

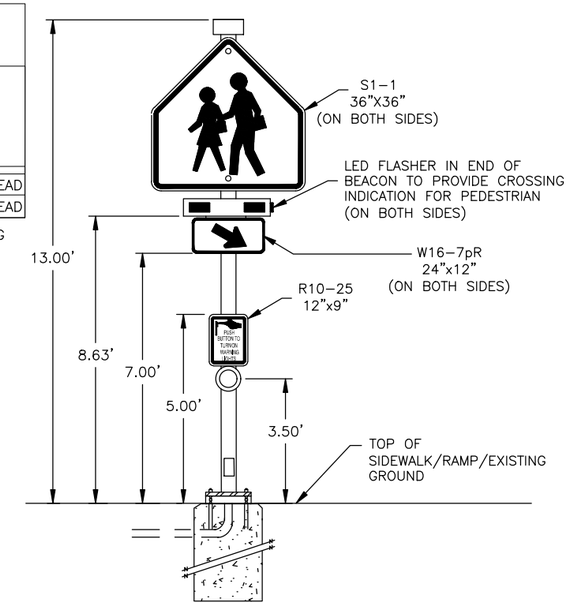

RECTANGULAR RAPID FLASHING BEACON DETAIL
POLE 2 & 5 (Double Sided)
(NOT TO SCALE)

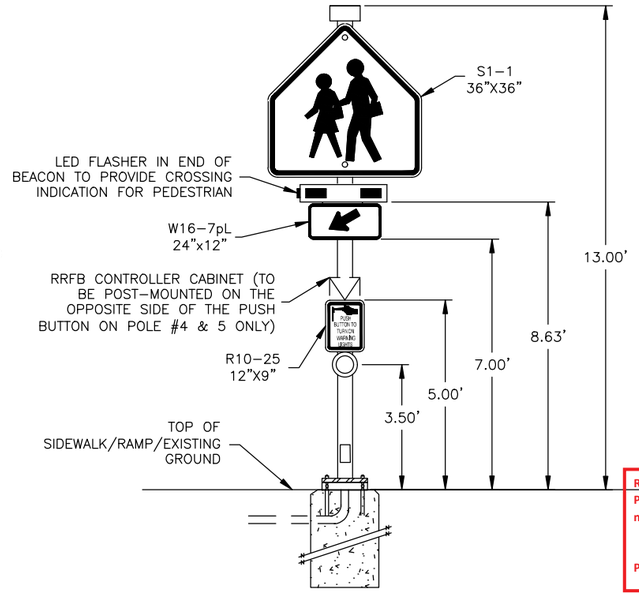

RECTANGULAR RAPID FLASHING BEACON DETAIL
POLE 1, 3, 4, 6
(NOT TO SCALE)

Record Drawings have been reviewed by the Project Engineer, and represent to the best of my knowledge, the project as constructed.

PE Dillon Tomaro 2/4/25

STATE OF ALASKA 49TH JOHN F. RINGERT CE 11096 REGISTERED PROFESSIONAL ENGINEER
7/31/2020

RENNINGER ROUNDABOUT RRFB AND SCHOOL ZONE FLASHER SCHEDULES

PLANS DEVELOPED BY: KITTELSON & ASSOCIATES, INC. CERT. OF AUTHORIZATION NO.: 254741, 851 SW 6TH AVE. SUITE 600, PORTLAND, OR 97204, (503) 228-5230
H:\20_20487 – Glacier Highway – Juneau Traffic Design\design_CD\68124_H_RRFB-H-47 Thu, Jul/30/20 09:22am

NO.	DATE	REVISION

STATE	PROJECT DESIGNATION	YEAR	SHEET NO.	TOTAL SHEETS
ALASKA	TEA-0955(016)/Z68124	2020	H-48	235

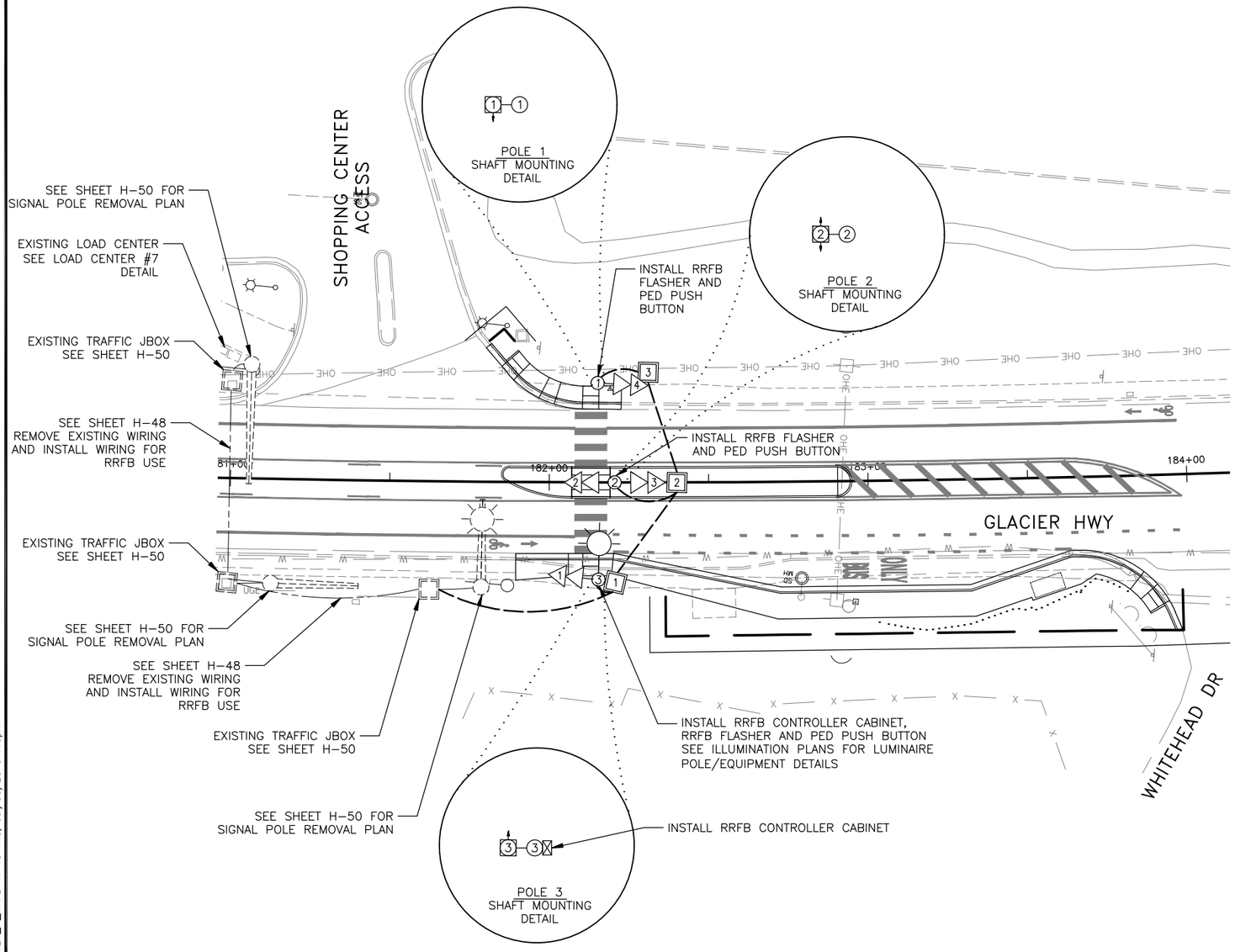

NOTES:

1. EXISTING SIGNAL LINE WORK IS FROM A COMBINATION OF SURVEY, AS-BUILTS AND SITE VISITS. CONTRACTOR SHALL FIELD VERIFY EXISTING CONDITIONS BEFORE MAKING MODIFICATIONS. NOTIFY THE ENGINEER OF ANY DISCREPANCIES.
2. INSTALLATION OF NEW SIGNS ON TRAFFIC SIGNAL STRUCTURES WILL BE PAID UNDER SIGNAL PAY ITEM 660.0002.0000.

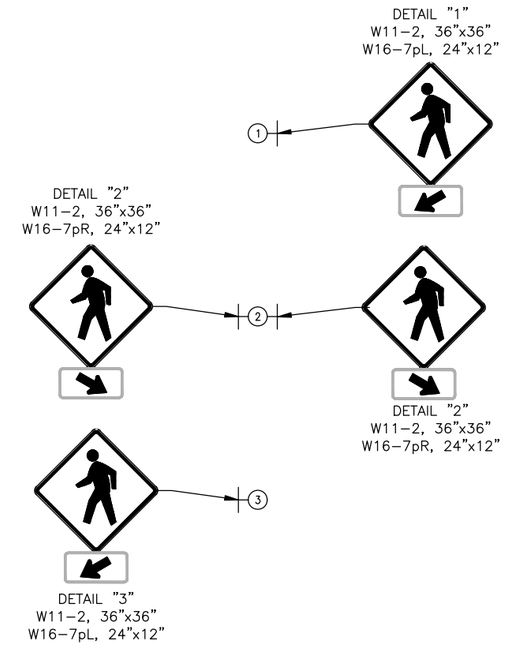

ACTUATED FLASHING BEACON SIGN PLACEMENT

Record Drawings have been reviewed by the Project Engineer, and represent to the best of my knowledge, the project as constructed.

PE *Dillon Tomaro* 2/4/25

STATE OF ALASKA 49TH JOHN F. RINGERT CE 11096 REGISTERED PROFESSIONAL ENGINEER
7/31/2020

SHOPPING CENTER ACCESS RRFB PLAN

PLANS DEVELOPED BY: KITTELSON & ASSOCIATES, INC. CERT. OF AUTHORIZATION NO.: 254741, 851 SW 6TH AVE. SUITE 600, PORTLAND, OR 97204, (503) 228-5230
H:\20\20487 - Glacier Highway - Juneau Traffic Design\design_CD\68124_H_RRFB-H-48 Thu, Jul/30/20 01:40pm

NO.	DATE	REVISION

STATE	PROJECT DESIGNATION	YEAR	SHEET NO.	TOTAL SHEETS
ALASKA	TEA-0955(016)/Z68124	2020	H-49	235

Record Drawings have been reviewed by the Project Engineer, and represent to the best of my knowledge, the project as constructed.

PE *Dillon Tomaro* 2/4/25

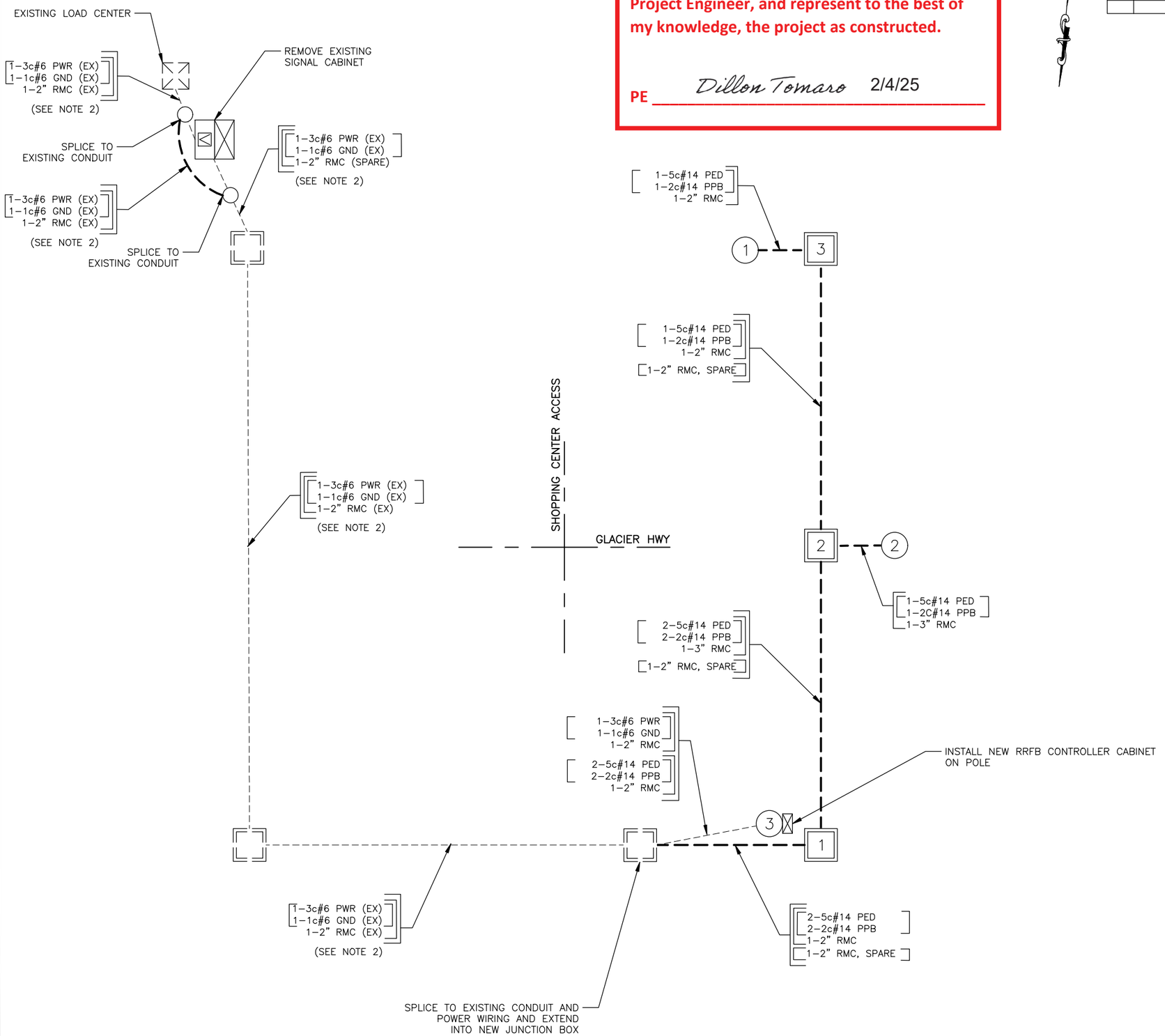

WIRING DIAGRAM CODING LEGEND

OPC	= OPTICOM CABLE	5c#14	TRAFFIC SIGNALS
LL	= LOOP LEAD-IN	7c#14	PROTECTED-PERMITTED SIGNALS
INT	= INTERCONNECT CABLE	5c#14	PEDESTRIAN SIGNALS
PWR	= POWER CONDUCTORS FOR SIGNAL CONTROLLER	2c#14	PEDESTRIAN PUSH-BUTTON
T	= TRANSFORMER	3pr#18 6pr#18 9pr#18 15pr#18	LOOP LEAD-IN CABLE & VDET
PTZ	= PAN, TILT, ZOOM CAMERA		
GND	= GROUND		
ILL	= ILLUMINATION		
RMC	= RIGID METAL CONDUIT	3c#8	ILLUMINATION
PVC	= POLYVINYLCHLORIDE CONDUIT	3c#6	SIGNAL POWER
HDPE	= HIGH DENSITY POLYETHYLENE	1c#8	BARE COPPER GROUND
PPB	= PEDESTRIAN PUSH-BUTTON	18pr#19 CABLE	PE-39 INTERCONNECT
SIG#	= SIGNAL HEAD NUMBER	1c#6	BARE COPPER GROUND
PED	= PEDESTRIAN SIGNAL	APT MATRIX 2 CAT-6A	RDET HOME RUN CABLE PTZ DATA
DET	= DETECTION CONDUIT	SMFO	SINGLE MODE FIBER OPTIC
F	= FUTURE USE		
VDET	= VIDEO DETECTION		
EX	= EXISTING		
AAWF	= ACTIVE ADVANCED WARNING FLASHER		

NOTES:

1. INSTALL 1-1C#8 BARE COPPER GROUND CONDUCTOR IN ALL CONDUITS UNLESS ANOTHER GROUND CONDUCTOR IS SPECIFIED.
2. AS-BUILT OR DESIGN PLANS WERE NOT AVAILABLE FOR THE EXISTING TRAFFIC SIGNAL EQUIPMENT, CONDUIT AND WIRING. INFORMATION SHOWN IS BASED ON LIMITED FIELD OBSERVATIONS OF ABOVE GROUND EQUIPMENT ONLY; UNDERGROUND CONDUIT IS ASSUMED AS SHOWN BUT VERIFIED. CONTRACTOR SHALL FIELD VERIFY EXISTING CONDITIONS BEFORE MAKING MODIFICATIONS. NOTIFY THE ENGINEER OF ANY DISCREPANCIES.

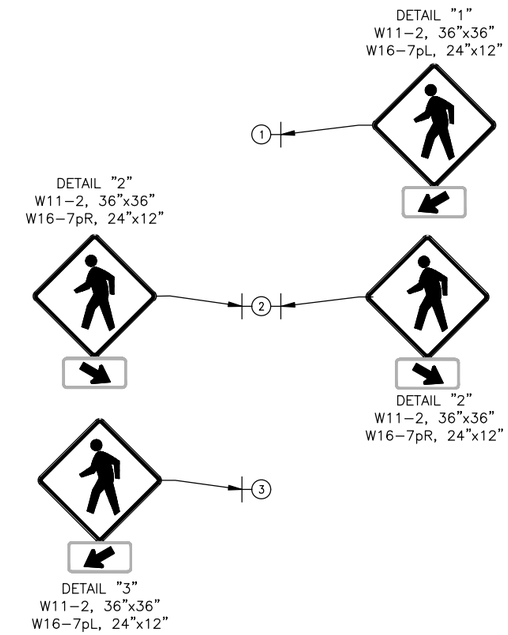

ACTUATED FLASHING BEACON SIGN PLACEMENT

WIRING LEGEND:

- INDICATES EXISTING CONDUIT RUN
- INDICATES NEW RIGID METAL CONDUIT RUN(S)
- INDICATES THE CONNECTION BETWEEN EXISTING AND NEW CONDUIT

SHOPPING CENTER ACCESS RRFB WIRING DIAGRAM

STATE OF ALASKA 49TH JOHN F. RINGERT CE 11096 REGISTERED PROFESSIONAL ENGINEER

7/31/2020

PLANS DEVELOPED BY: KITTELSON & ASSOCIATES, INC. CERT. OF AUTHORIZATION NO.: 254741, 851 SW 6TH AVE. SUITE 600, PORTLAND, OR 97204, (503) 228-5230
H:\20\20487 - Glacier Highway - Juneau Traffic Design\design_CD\68124_H_RRFB-H-49 Thu, Jul/30/20 09:22am

NO.	DATE	REVISION

STATE	PROJECT DESIGNATION	YEAR	SHEET NO.	TOTAL SHEETS
ALASKA	TEA-0955(016)/Z68124	2020	H-50	235

** Deleted by CO11

ACTUATED FLASHER BEACON (RRFB) DESIGN SCHEDULE

POLE NO.	CORNER	LOCATION STATION	LOCATION OFFSET	POLE TYPE	POLE BASE	POLE TOFE	POLE FOUND. DEPTH	LUMINAIRE TYPE	LUMINAIRE ARM LENGTH	RRFB DEVICE	RRFB CONTROLLER	PUSH BUTTON	POLE-MOUNTED SIGNS ASDS CODE	SIZE HxV	AREA (SQ FT)	REMARKS
1	SW	182+15.2	31.2 LT	SIGNAL POST (SEE SHEET H-53)	A	33.9'	4.0'	N/A	N/A	2-MAIN LEDs 1-PED LED	N/A	2 ¼" BUTTON	W11-2	36"x36"	9.0	
													W16-7pL	24"x12"	2.0	
													R10-25	9"x12"	0.75	
2	NW	182+20.6	0.0	SIGNAL POST (SEE SHEET H-53)	A	33.9'	4.0'	N/A	N/A	2-MAIN LEDs 1-PED LED (x2)	N/A	2 ¼" BUTTON	W11-2	36"x36"	18.0	
													W16-7pR	24"x12"	4.0	
													R10-25	9x12"	0.75	
3	NW	182+15.5	30.5 RT	LUMINAIRE POLE LUMINAIRE MOUNTING HEIGHT = 30'	CIDH	34.3'	13.0'	173W LED NOTE 5	15'	2-MAIN LEDs 1-PED LED	X	2 ¼" BUTTON	W11-2	36"x36"	9.0	
													W16-7pL	24"x12"	2.0	
													R10-25	9x12"	0.75	
													SUBTOTAL RRFB SIGNS		46.25	

1. LOCATION OFFSETS ARE FROM ℄ TO CENTER OF RRFB POLE.
2. ORIENT LUMINAIRE ARM 90° TO ℄ OF ROADWAY UNLESS NOTED OTHERWISE.
3. POLE BASE A = SIGNAL BASE POST TYPE "A" (SEE T-31.00).
4. POLE BASE CIDH = CAST IN DRILL HOLE (SEE SHEET H-58).
5. SEE ILLUMINATION PLANS FOR FIXTURE INFORMATION.
6. TOFE = TOP OF FOUNDATION ELEVATION (FEET)
7. FOUND. DEPTH = FOUNDATION DEPTH (DISREGARD DEPTH TABLE ON STD. DWG. T-31.00 OR SHEET H-58 AND REFER TO FOUNDATION DEPTH PROVIDED IN THE TABLE ABOVE)

JUNCTION BOX SCHEDULE

LOCATION STATION	LOCATION OFFSET	JUNCTION BOX BOX NO.	TYPE IA	TYPE II	TYPE III	TYPE IV	REMARKS
182+21.1	32.4 LT	1		X			
182+25.6	0.0	2		X			
182+20.7	31.4 RT	3		X			

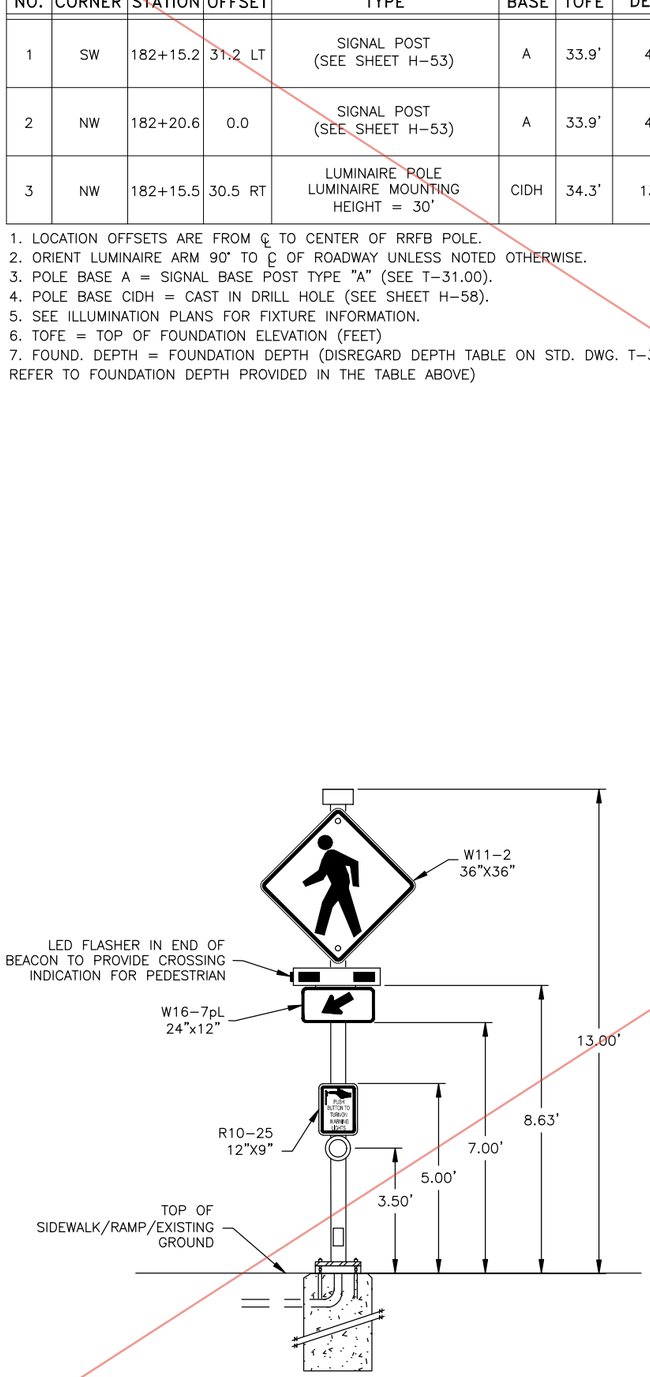

RECTANGULAR RAPID FLASHING BEACON DETAIL
POLE 1
(NOT TO SCALE)

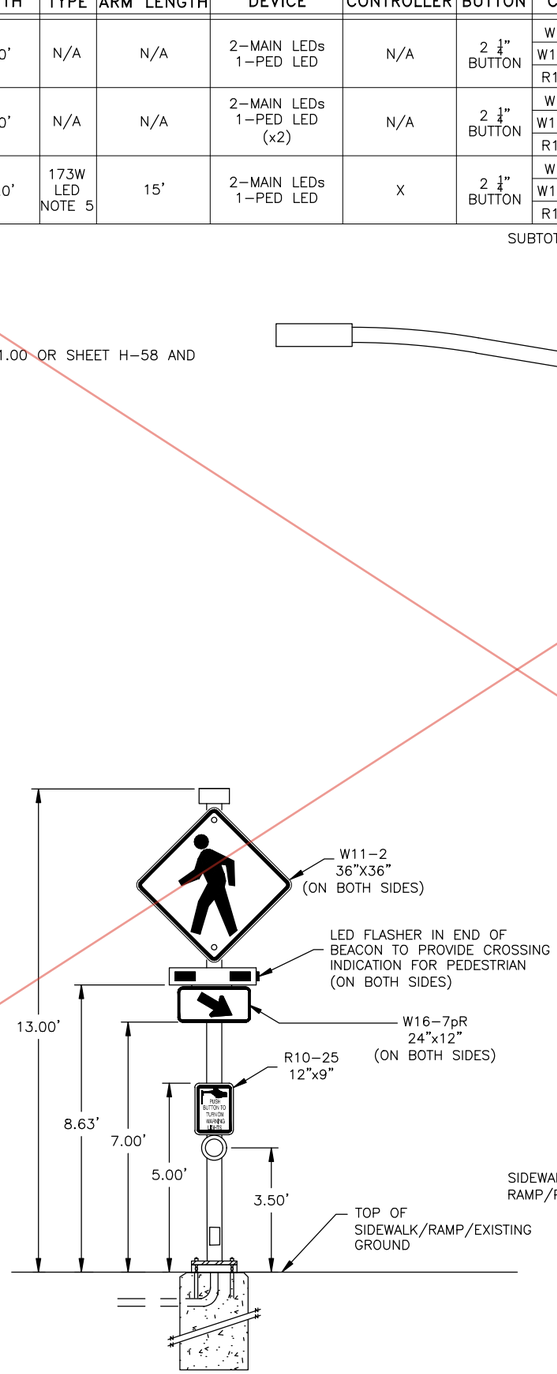

RECTANGULAR RAPID FLASHING BEACON DETAIL
POLE 2 (Double Sided)
(NOT TO SCALE)

LUMINAIRE POLE WITH RRFB DETAIL
POLE 3
(NOT TO SCALE)

Record Drawings have been reviewed by the Project Engineer, and represent to the best of my knowledge, the project as constructed.

PE Dillon Tomaro 2/4/25

STATE OF ALASKA 49TH JOHN F. RINGERT CE 11096 REGISTERED PROFESSIONAL ENGINEER
7/31/2020

SHOPPING CENTER ACCESS RRFB SCHEDULES

PLANS DEVELOPED BY: KITTELSON & ASSOCIATES, INC. CERT. OF AUTHORIZATION NO.: 254741, 851 SW 6TH AVE. SUITE 600, PORTLAND, OR 97204, (503) 228-5230
H:\20\20487 - Glacier Highway - Juneau Traffic Design\design_CD\68124_H_RRFB-H-50 Thu, Jul/30/20 09:23am

CO 11 Attachment No. 5

NO.	DATE	REVISION

STATE	PROJECT DESIGNATION	YEAR	SHEET NO.	TOTAL SHEETS
ALASKA	TEA-0955(016)/Z68124	2020	H-50	235

ACTUATED FLASHER BEACON (RRFB) DESIGN SCHEDULE

POLE NO.	CORNER	LOCATION STATION	LOCATION OFFSET	POLE TYPE	POLE BASE	POLE TOFE	POLE FOUND. DEPTH	LUMINAIRE TYPE	LUMINAIRE ARM LENGTH	RRFB DEVICE	RRFB CONTROLLER	PUSH BUTTON	POLE-MOUNTED SIGNS ASDS CODE	SIZE HxV	AREA (SQ FT)	REMARKS
1	SW	182+15.2	31.2 LT	SIGNAL POST (SEE SHEET H-53)	A	33.9'	4.0'	N/A	N/A	2-MAIN LEDs 1-PED LED	N/A	2 ¼" BUTTON	W11-2	36"x36"	9.0	
													W16-7pL	24"x12"	2.0	
													R10-25	9"x12"	0.75	
2	NW	182+20.6	0.0	SIGNAL POST (SEE SHEET H-53)	A	33.9'	4.0'	N/A	N/A	2-MAIN LEDs 1-PED LED (x2)	N/A	2 ¼" BUTTON	W11-2	36"x36"	18.0	
													W16-7pR	24"x12"	4.0	
													R10-25	9x12"	0.75	
3	NW	182+15.5	30.5 RT	LUMINAIRE POLE LUMINAIRE MOUNTING HEIGHT = 30'	CIDH	34.3'	~~13.0'~~	173W LED NOTE 5	15'	2-MAIN LEDs 1-PED LED	X	2 ¼" BUTTON	W11-2	36"x36"	9.0	Construct foundation depth per Standard Plan L-30.11
													W16-7pL	24"x12"	2.0	
													R10-25	9x12"	0.75	
													SUBTOTAL RRFB SIGNS		46.25	

1. LOCATION OFFSETS ARE FROM ℄ TO CENTER OF RRFB POLE.
2. ORIENT LUMINAIRE ARM 90° TO ℄ OF ROADWAY UNLESS NOTED OTHERWISE.
3. POLE BASE A = SIGNAL BASE POST TYPE "A" (SEE T-31.00).
4. POLE BASE CIDH = CAST IN DRILL HOLE (SEE SHEET H-58).
5. SEE ILLUMINATION PLANS FOR FIXTURE INFORMATION.
6. TOFE = TOP OF FOUNDATION ELEVATION (FEET)
7. FOUND. DEPTH = FOUNDATION DEPTH (DISREGARD DEPTH TABLE ON STD. DWG. T-31.00 OR SHEET H-58 AND REFER TO FOUNDATION DEPTH PROVIDED IN THE TABLE ABOVE)

Record Drawings have been reviewed by the Project Engineer, and represent to the best of my knowledge, the project as constructed.

PE Dillon Tomaro 2/4/25

JUNCTION BOX SCHEDULE

LOCATION STATION	LOCATION OFFSET	JUNCTION BOX BOX NO.	TYPE IA	TYPE II	TYPE III	TYPE IV	REMARKS
182+21.1	32.4 LT	1		X			
182+25.6	0.0	2		X			
182+20.7	31.4 RT	3		X			

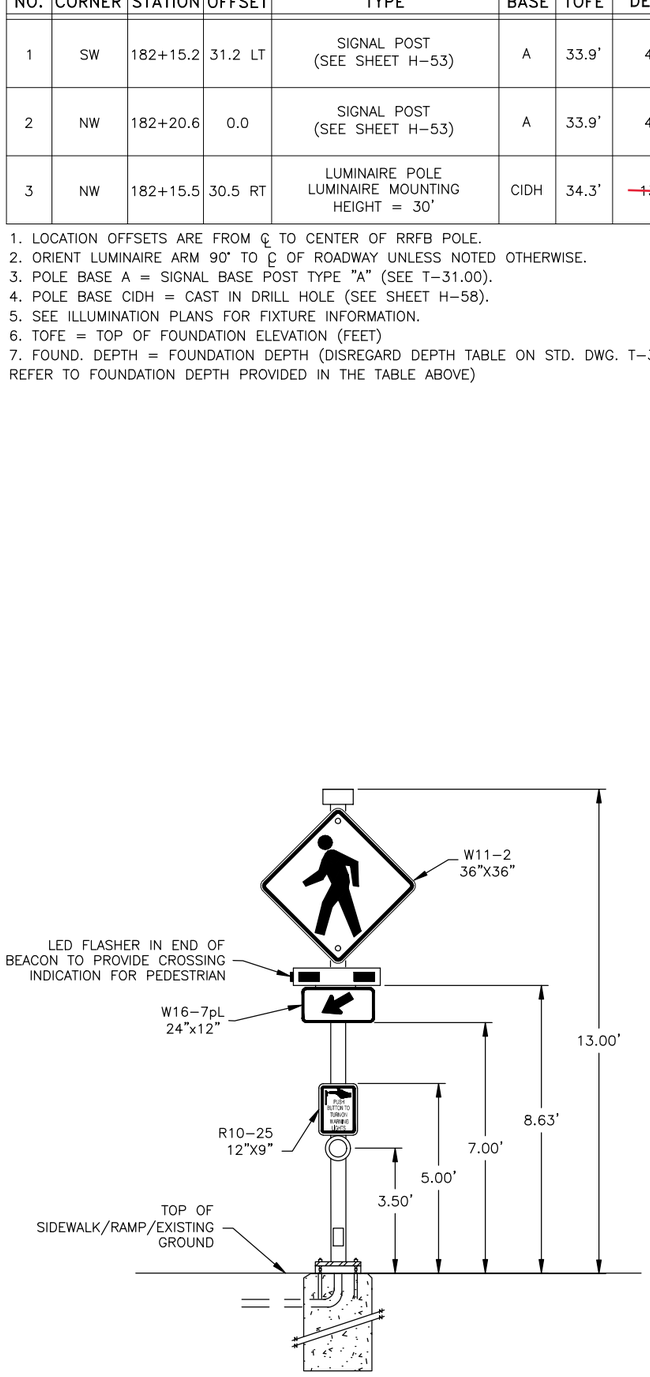

RECTANGULAR RAPID FLASHING BEACON DETAIL
POLE 1
(NOT TO SCALE)

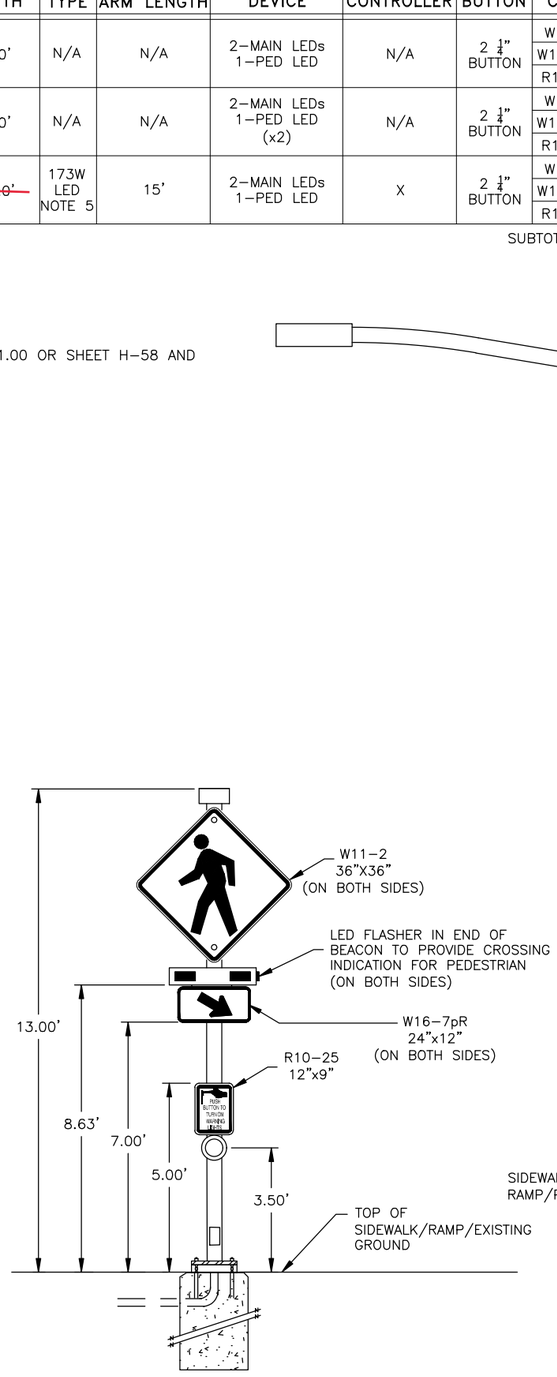

RECTANGULAR RAPID FLASHING BEACON DETAIL
POLE 2 (Double Sided)
(NOT TO SCALE)

LUMINAIRE POLE WITH RRFB DETAIL
POLE 3
(NOT TO SCALE)

SHOPPING CENTER ACCESS RRFB SCHEDULES

STATE OF ALASKA 49TH JOHN F. RINGERT CE 11096 REGISTERED PROFESSIONAL ENGINEER
7/31/2020

PLANS DEVELOPED BY: KITTELSON & ASSOCIATES, INC. CERT. OF AUTHORIZATION NO.: 254741, 851 SW 6TH AVE. SUITE 600, PORTLAND, OR 97204, (503) 228-5230
H:\20\20487 - Glacier Highway - Juneau Traffic Design\design_CD\68124_H_RRFB-H-50 Thu, Jul/30/20 09:23am

NO.	DATE	REVISION
4	12/11/20	ADDENDUM 4

STATE	PROJECT DESIGNATION	YEAR	SHEET NO.	TOTAL SHEETS
ALASKA	TEA-0955(016)/Z68124	2020	H-51	235

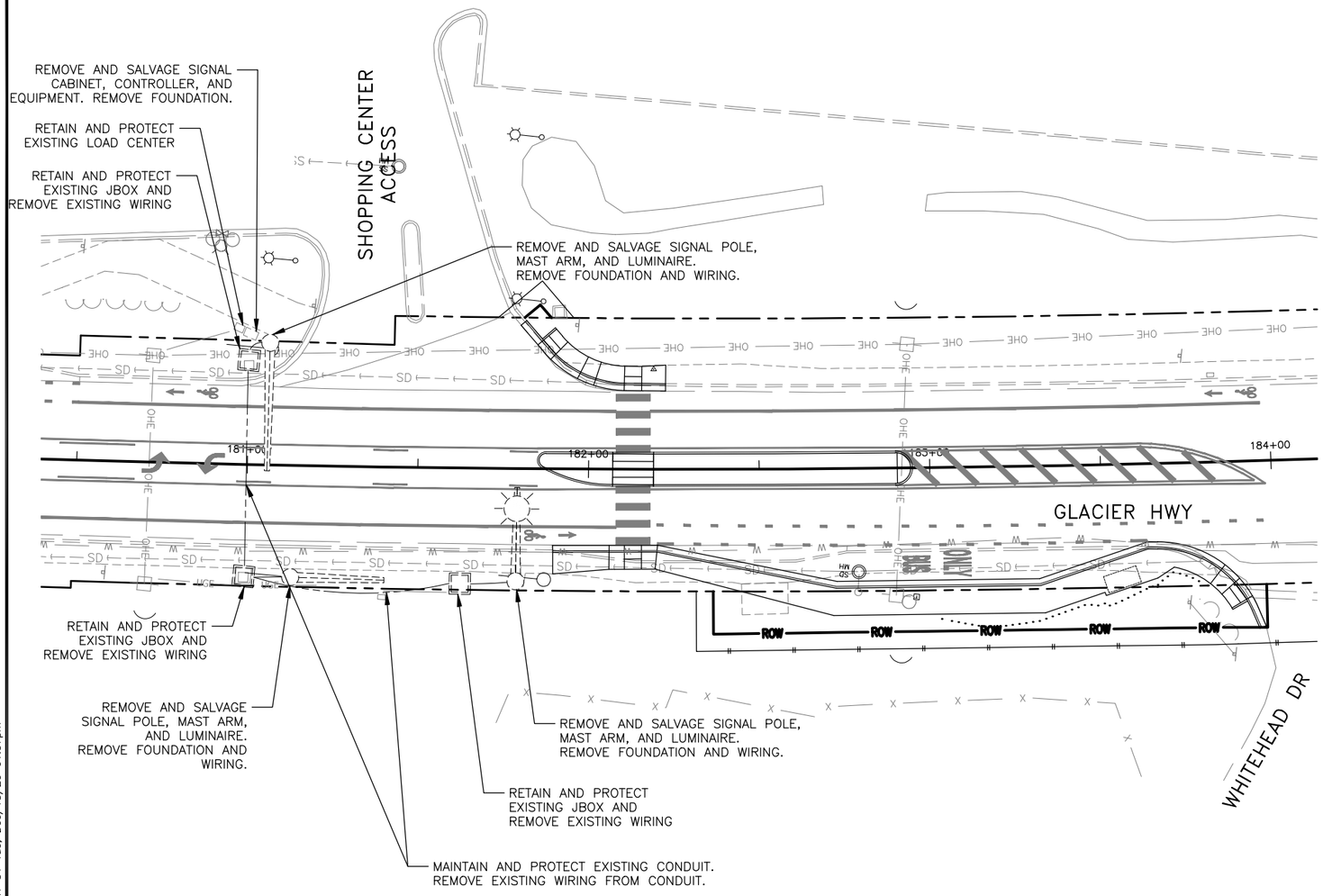

NOTES:

1. EXISTING SIGNAL LINE WORK IS FROM A COMBINATION OF SURVEY, AS-BUILTS AND SITE VISITS. CONTRACTOR SHALL FIELD VERIFY EXISTING CONDITIONS BEFORE MAKING MODIFICATIONS. NOTIFY THE ENGINEER OF ANY DISCREPANCIES.
2. REMOVE AND SALVAGE ABOVE GROUND EXISTING SIGNAL EQUIPMENT AND SIGNAL WIRING. ABANDON UNUSED UNDERGROUND CONDUIT PER THE SPECIFICATIONS. CONTRACTOR TO COORDINATE WITH DOT&PF FOR DISPOSAL OF ALL EXISTING EQUIPMENT.

Record Drawings have been reviewed by the Project Engineer, and represent to the best of my knowledge, the project as constructed.

PE Dillon Tomaro 2/4/25

ENTIRE SHEET REVISED

SHOPPING CENTER ACCESS DEMOLITION SUMMARY

STATE OF ALASKA 49TH JOHN F. RINGERT CE 11096 REGISTERED PROFESSIONAL ENGINEER 12/15/20

PLANS DEVELOPED BY: KITTELSON & ASSOCIATES, INC. CERT. OF AUTHORIZATION NO.: 254741, 851 SW 6TH AVE. SUITE 600, PORTLAND, OR 97204, (503) 228-5230
H:\20\20487 - Glacier Highway - Juneau Traffic Design\design_CD\68124_H_RRFB-H-51 Tue, Dec/15/20 01:37pm

NO.	DATE	REVISION

STATE	PROJECT DESIGNATION	YEAR	SHEET NO.	TOTAL SHEETS
ALASKA	TEA-0955(016)/Z68124	2020	H-52	235

SIGNAL MAST ARM MOUNTED SIGNS (NOT FOR "R" SERIES SIGNS)

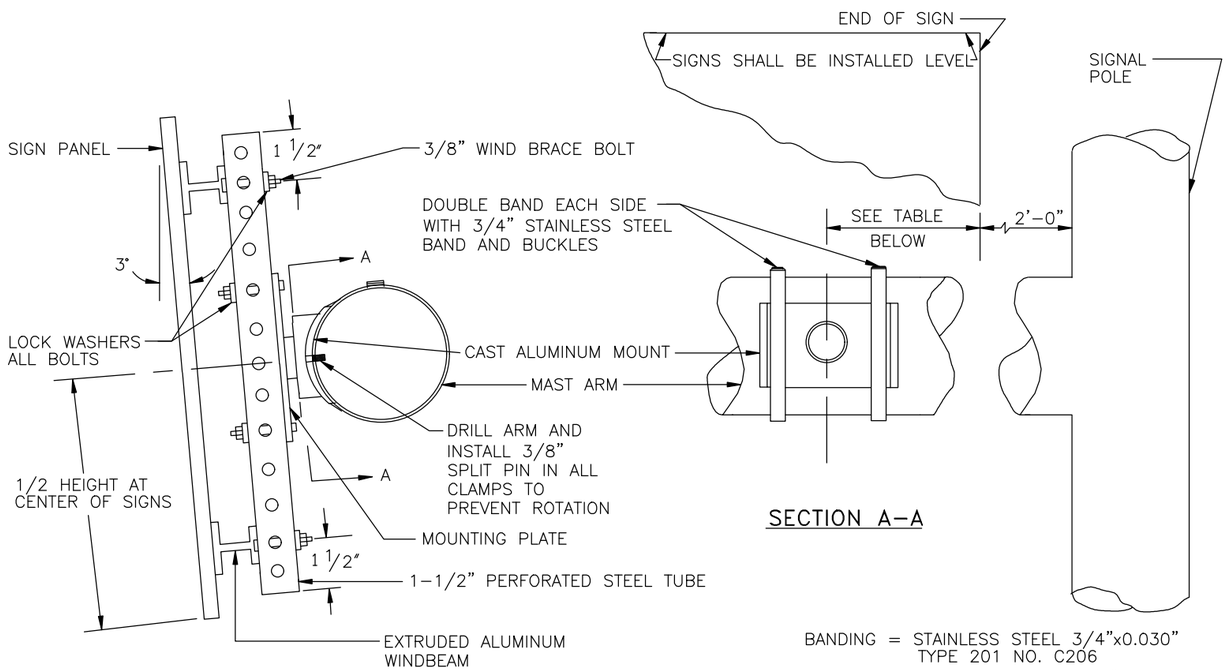

SECTION A-A

BANDING = STAINLESS STEEL 3/4"x0.030" TYPE 201 NO. C206

BUCKLES = STAINLESS STEEL 3/4" TYPE 201 NO. C256

ALUMINUM MOUNT (SIGNAL) = 1-1/2"NPT NO. D040

PIN = NO. D042

SIGN WIDTH(W)	NO. OF CLAMPS	CLAMP SPACING		
		OVERHANG	BETWEEN CLAMPS	OVERHANG
0-12 1/2'	2	0.2W	1 SPACE AT 0.6W	0.2W
13' TO 21'	3	0.15W	2 SPACES AT 0.35W	0.15W

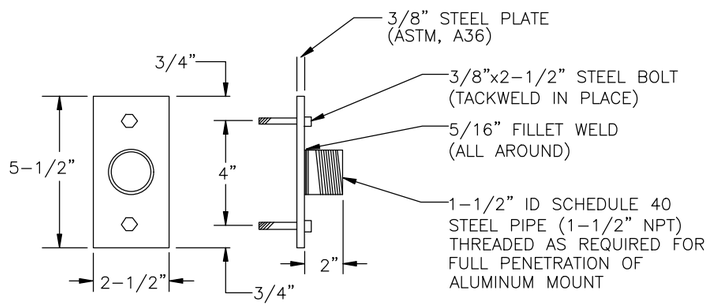

MOUNTING PLATE DETAIL

1. CAST ALUMINUM MOUNTS AND BANDING MATERIALS SHALL BE "BAND-IT" OR APPROVED EQUAL.
2. MOUNTING PLATE SHALL BE GALVANIZED AFTER FABRICATION IN ACCORDANCE WITH ASTM A123.
3. ALL WELDING SHALL MEET AMERICAN WELDING SOCIETY SPECS.
4. BOLTS, NUTS AND WASHERS SHALL MEET THE REQUIREMENTS OF STANDARD DRAWING S-20.10

MAST ARM MOUNTING FOR "R" SERIES SIGNS

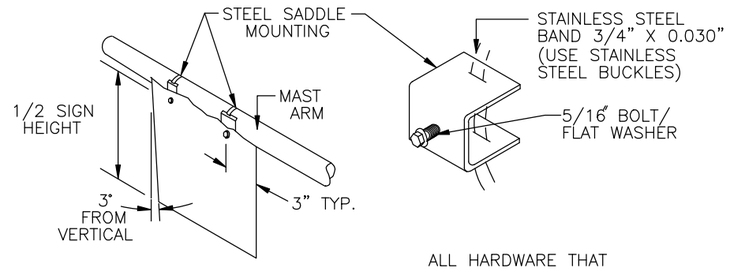

FIELD DRILL SIGNS FOR LEVEL INSTALLATION

ALL HARDWARE THAT IS NOT STAINLESS STEEL SHALL BE GALVANIZED STEEL.

POLE /POST SIDE MOUNTED SIGN BRACKET

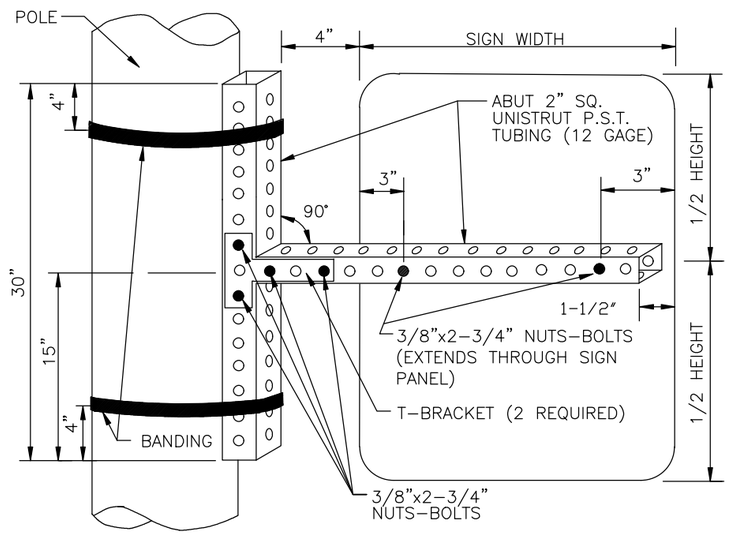

ALL NUTS SHALL BE INSTALLED WITH LOCK WASHERS
BANDING = STAINLESS STEEL 3/4"x0.030" (DOUBLE BANDING REQUIRED)
BUCKLES = STAINLESS STEEL 3/4"

Record Drawings have been reviewed by the Project Engineer, and represent to the best of my knowledge, the project as constructed.

PE *Dillon Tomaro* 2/4/25

STATE OF ALASKA 49TH JOHN F. RINGERT CE 11096 REGISTERED PROFESSIONAL ENGINEER
7/31/2020

SIGNAL MOUNTED SIGN DETAILS

PLANS DEVELOPED BY: KITTELSON & ASSOCIATES, INC. CERT. OF AUTHORIZATION NO.: 254741, 851 SW 6TH AVE. SUITE 600, PORTLAND, OR 97204, (503) 228-5230
H:\20\20487 - Glacier Highway - Juneau Traffic Design\design_CD\68124_H_SIG_DTLS-H-52 Thu, Jul/30/20 09:23am

NO.	DATE	REVISION

STATE	PROJECT DESIGNATION	YEAR	SHEET NO.	TOTAL SHEETS
ALASKA	TEA-0955(016)/Z68124	2020	H-53	235

Record Drawings have been reviewed by the Project Engineer, and represent to the best of my knowledge, the project as constructed.

PE Dillon Tomaro 2/4/25

SIGNAL POST DETAIL

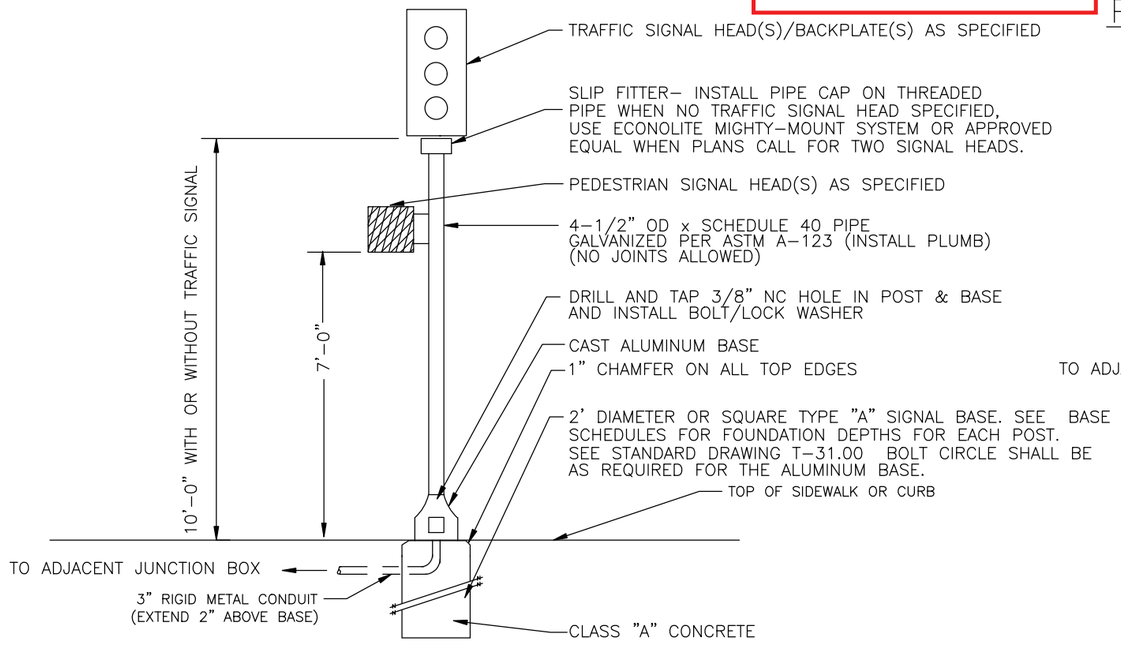

MATERIAL LIST *
1 TWO FOOT DIAMETER OR SQUARE x DEPTH VARIES & 4 ANCHOR BOLTS, AND ONE 3" CONDUIT
1- POST TOP SLIP FITTER. (SEE STANDARD DRAWING T-30.11)
1- POST & BREAKAWAY CAST ALUMINUM BASE; VE PED CATALOG #0-SE-5030 OR APPROVED EQUAL.

MATERIAL LISTED ARE FOR ONE INSTALLATION AND DOES NOT INCLUDE SIGNAL HEADS AND

ANCHOR BOLTS

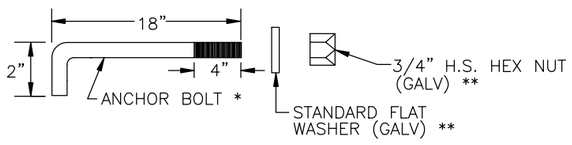

* MEETS ASTM A-572 GALVANIZED PER ASTM A-153

** MEETS ASTM A-325 GALVANIZED

PEDESTRIAN PUSH BUTTON POST DETAIL

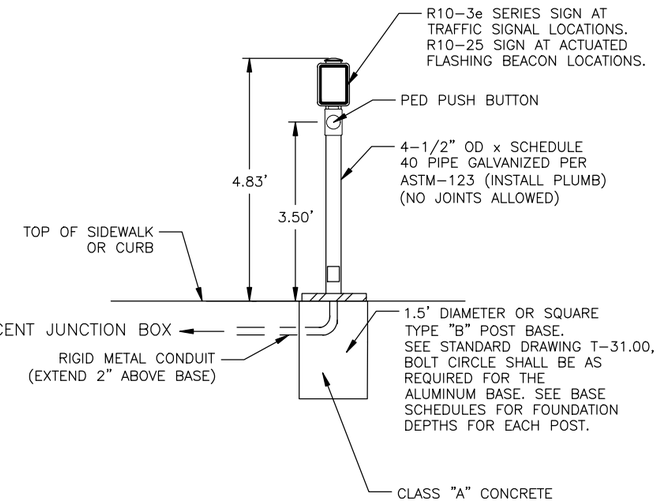

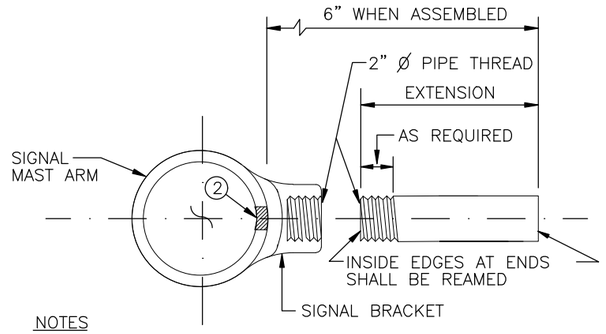

NOTES

1. THESE DETAILS MODIFY STANDARD DRAWING T-30.11.
2. FIELD DRILL WIRING ACCESS HOLE AS REQUIRED. REAM INSIDE & OUTSIDE AND PAINT WITH SPELTER REPAIR MATERIAL.
3. ONE 2" GALVANIZED SCHEDULE 40 RIGID METAL CONDUIT EXTENSION SHALL BE FURNISHED WITH EACH SIGNAL BRACKET.
4. SIGNAL BRACKETS SHALL BE ASTRO-BRAC AB-3008AK OR APPROVED EQUAL AND SHALL BE INSTALLED AS RECOMMENDED BY THE MANUFACTURER. THE ACTUAL LOCATION OF BRACKETS ON EACH ARM SHALL BE DETERMINED BY THE ENGINEER AFTER THE POLES AND ARMS HAVE BEEN INSTALLED.

PLUMBIZER SIGNAL MOUNTING DETAIL

(REQUIRED FOR ALL NEW OR RELOCATED PLUMBIZER [MAST ARM] MOUNTED SIGNALS)

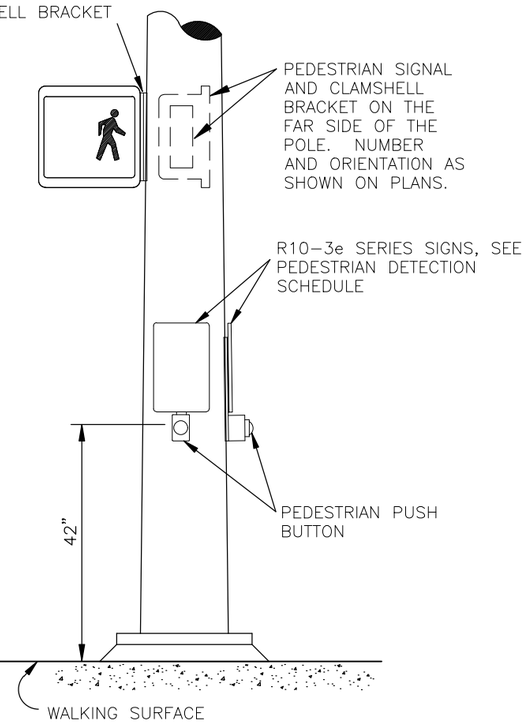

SIGNAL POLE MOUNTED PEDESTRIAN HARDWARE & SIGNAGE

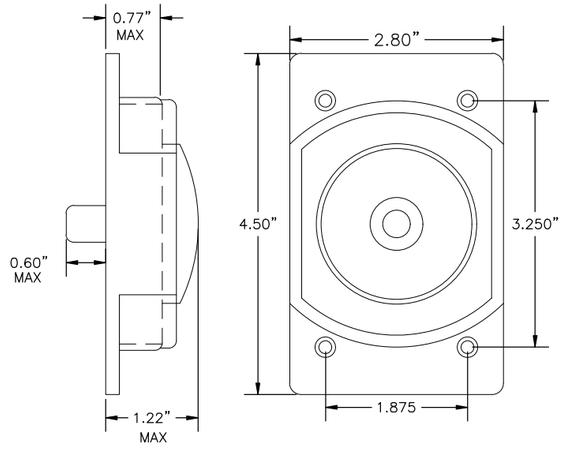

PEDESTRIAN PUSH BUTTON DETAIL

SIGNAL POST, PEDESTRIAN PUSH BUTTON AND SIGNAL MOUNTING DETAIL

STATE OF ALASKA 49TH JOHN F. RINGERT CE 11096 REGISTERED PROFESSIONAL ENGINEER 7/31/2020

PLANS DEVELOPED BY: KITTELSON & ASSOCIATES, INC. CERT. OF AUTHORIZATION NO.: 254741, 851 SW 6TH AVE. SUITE 600, PORTLAND, OR 97204, (503) 228-5230
H:\20\20487 - Glacier Highway - Juneau Traffic Design\design_CD\68124_H_SIG_DTLS-H-53 Thu, Jul/30/20 09:23am

NO.	DATE	REVISION

STATE	PROJECT DESIGNATION	YEAR	SHEET NO.	TOTAL SHEETS
ALASKA	TEA-0955(016)/Z68124	2020	H-54	235

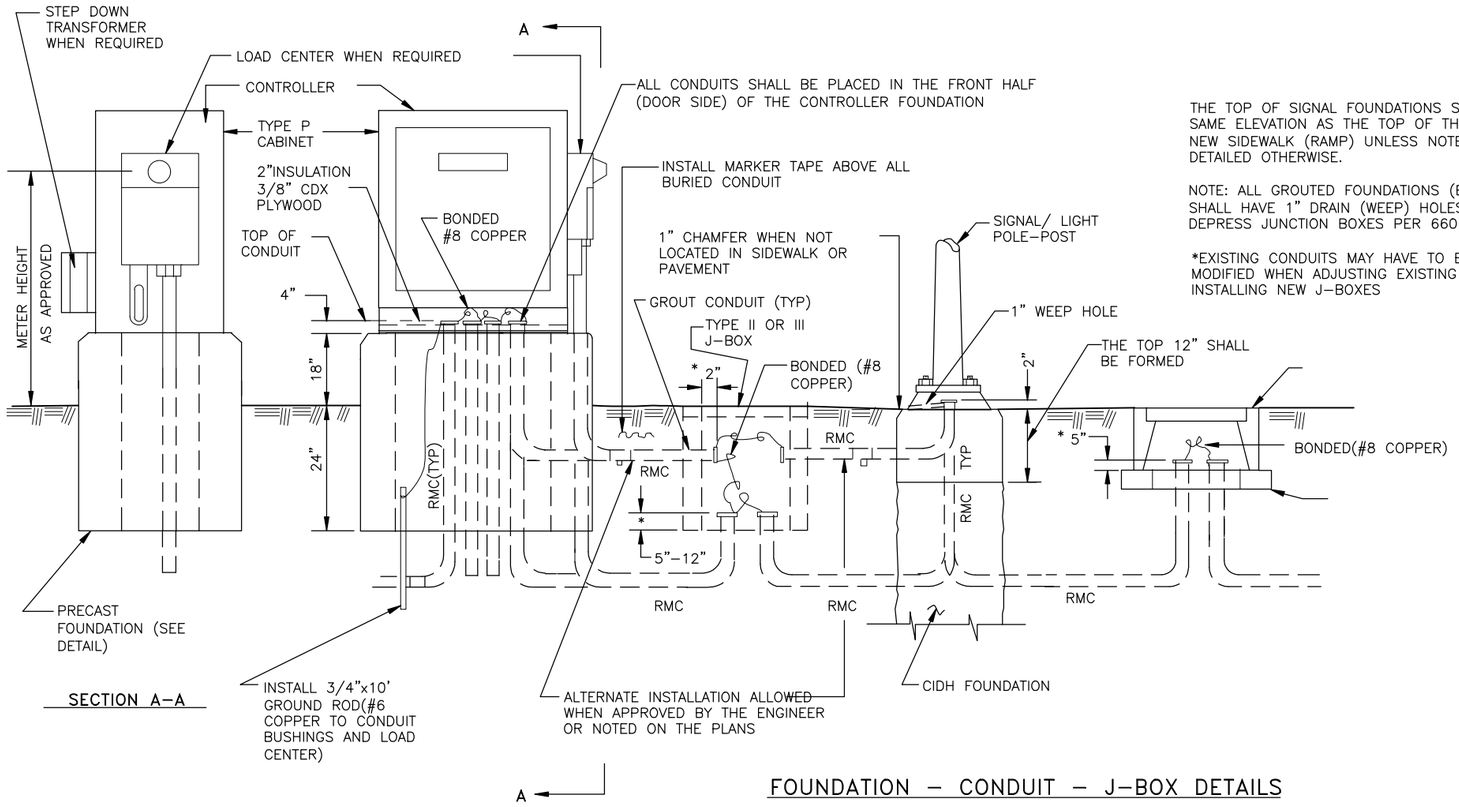

SECTION A-A

THE TOP OF SIGNAL FOUNDATIONS SHALL BE THE SAME ELEVATION AS THE TOP OF THE ADJACENT NEW SIDEWALK (RAMP) UNLESS NOTED OR DETAILED OTHERWISE.

NOTE: ALL GROUTED FOUNDATIONS (BASES) SHALL HAVE 1" DRAIN (WEEP) HOLES. DEPRESS JUNCTION BOXES PER 660-2.06

*EXISTING CONDUITS MAY HAVE TO BE MODIFIED WHEN ADJUSTING EXISTING OR INSTALLING NEW J-BOXES

FOUNDATION - CONDUIT - J-BOX DETAILS

Record Drawings have been reviewed by the Project Engineer, and represent to the best of my knowledge, the project as constructed.

PE Dillon Tomaro 2/4/25

SIGNAL CABINET & CONDUIT DETAILS

STATE OF ALASKA 49TH JOHN F. RINGERT CE 11096 REGISTERED PROFESSIONAL ENGINEER
7/31/2020

PLANS DEVELOPED BY: KITTELSON & ASSOCIATES, INC. CERT. OF AUTHORIZATION NO.: 254741, 851 SW 6TH AVE. SUITE 600, PORTLAND, OR 97204, (503) 228-5230
H:\20\20487 - Glacier Highway - Juneau Traffic Design\design_CD\68124_H_SIG_DTLS-H-54 Thu, Jul/30/20 09:23am

NO.	DATE	REVISION

STATE	PROJECT DESIGNATION	YEAR	SHEET NO.	TOTAL SHEETS
ALASKA	TEA-0955(016)/Z68124	2020	H-55	235

Record Drawings have been reviewed by the Project Engineer, and represent to the best of my knowledge, the project as constructed.

PE Dillon Tomaro 2/4/25

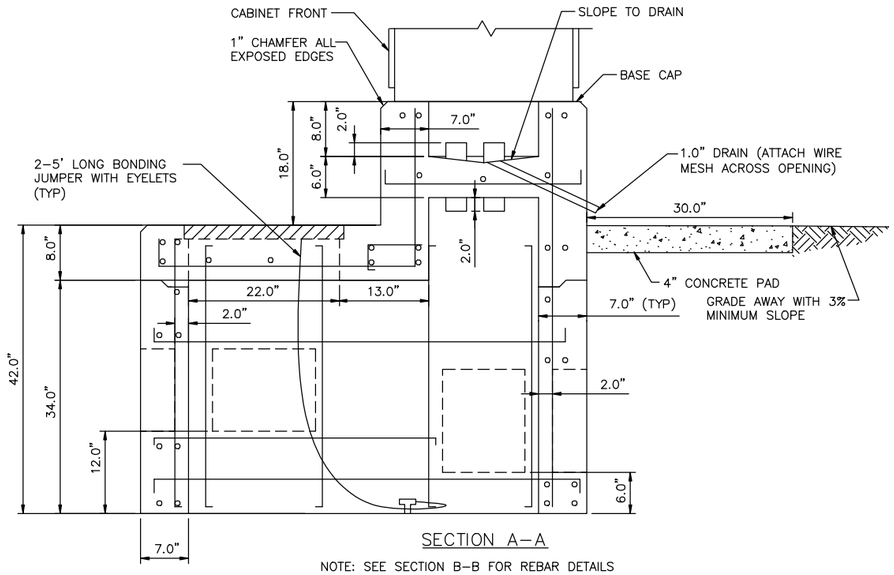

SECTION A-A

NOTE: SEE SECTION B-B FOR REBAR DETAILS

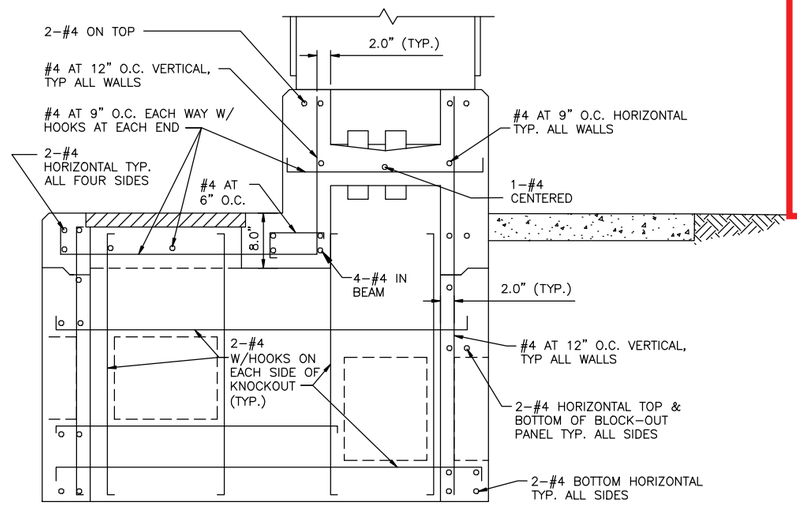

SECTION B-B

NOTE: SEE SECTION A-A FOR DIMENSIONAL DETAILS

NOTES:

1. ANCHOR BOLTS SHALL NOT PROTRUDE MORE THAN 1.5" ABOVE THE TOP OF THE FOUNDATION. ANCHOR BOLT DIMENSIONS SHALL BE AS SPECIFIED BY THE CABINET MANUFACTURER.
2. SEAL UNUSED CONDUIT STUBS WITH WATERTIGHT CAPS. SEAL STUBS CARRYING CONDUCTORS WITH WATERTIGHT SEALING BUSHINGS DESIGNED TO SEAL AROUND CONDUCTORS AND AGAINST THE CONDUIT WALLS.
3. ROUTE THE FIVE FOOT COPPER GROUNDING JUMPER THROUGH THE 2" PIPE NIPPLE AND ATTACH IT TO THE GROUNDING BUSHING ON THE FEEDER CONDUIT.
4. STOP HORIZONTAL & VERTICAL STEEL AT THE BLOCK-OUT PANELS & THE JOINT USING 90 DEGREE HOOKS. USE 2 EXTRA #4 HORIZONTAL & VERTICAL BARS. ALL SIDES AS SHOWN.
5. INSTALL TRAFFIC CONTROLLER WITHIN 1-DEGREE OF PLUMB.

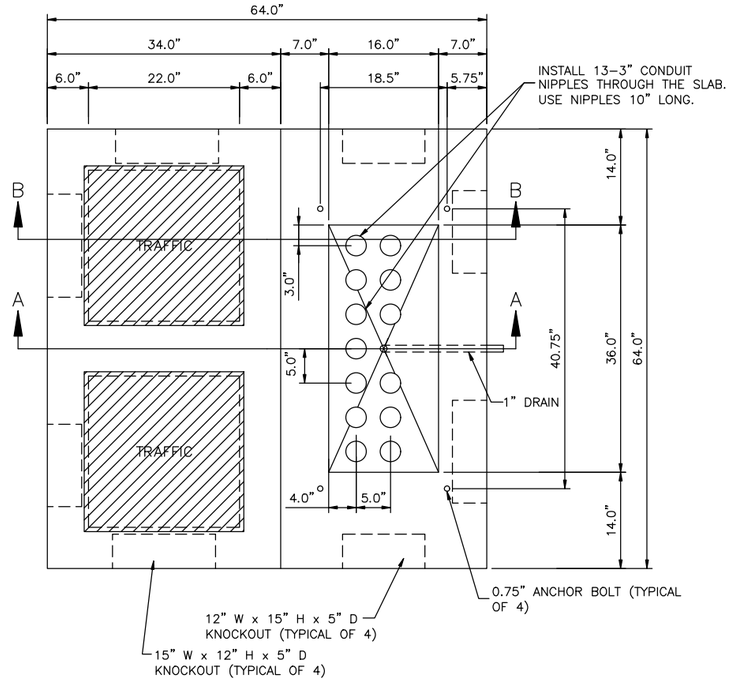

SIZE 6 OR 7 CONTROLLER CABINET FOUNDATION

NOTE: BOLT SPACING DIMENSIONS SHOWN FOR TS2 CONTROLLER CABINETS.

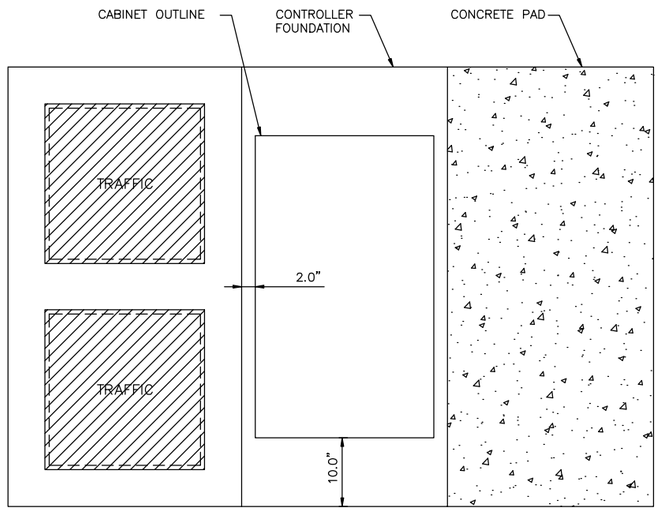

PLAN VIEW

SIGNAL CABINET FOUNDATION DETAILS

STATE OF ALASKA 49TH JOHN F. RINGERT CE 11096 REGISTERED PROFESSIONAL ENGINEER

7/31/2020

PLANS DEVELOPED BY: KITTELSON & ASSOCIATES, INC. CERT. OF AUTHORIZATION NO.: 254741, 851 SW 6TH AVE. SUITE 600, PORTLAND, OR 97204, (503) 228-5230
H:\20\20487 - Glacier Highway - Juneau Traffic Design\design_CD\68124_H_SIG_DTLS-H-55 Thu, Jul/30/20 09:23am

Record Drawings have been reviewed by the Project Engineer, and represent to the best of my knowledge, the project as constructed.

PE *Dillon Tomaro* 2/4/25

NO.	DATE	REVISION

STATE	PROJECT DESIGNATION	YEAR	SHEET NO.	TOTAL SHEETS
ALASKA	TEA-0955(016)/Z68124	2020	H-56	235

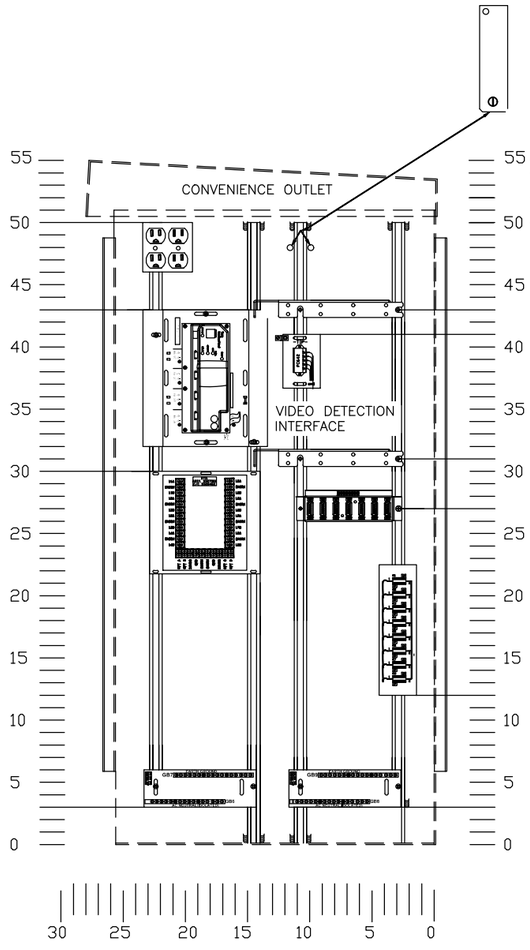

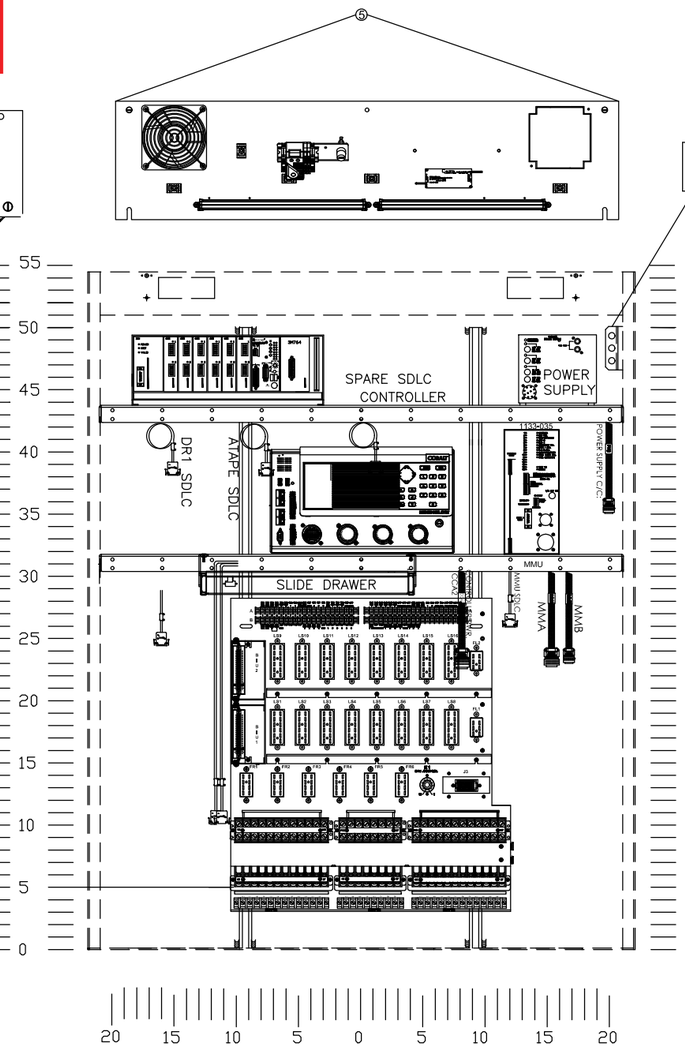

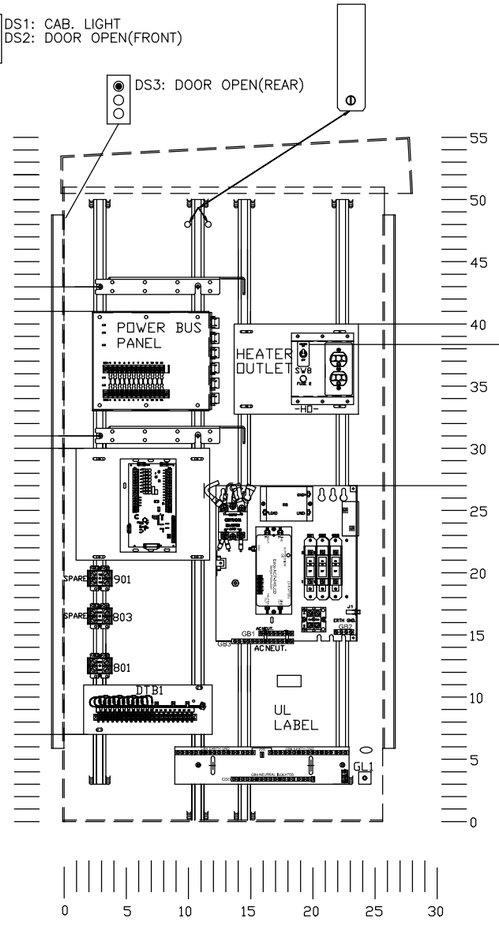

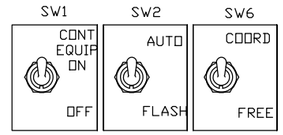

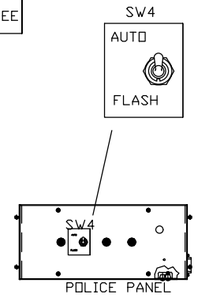

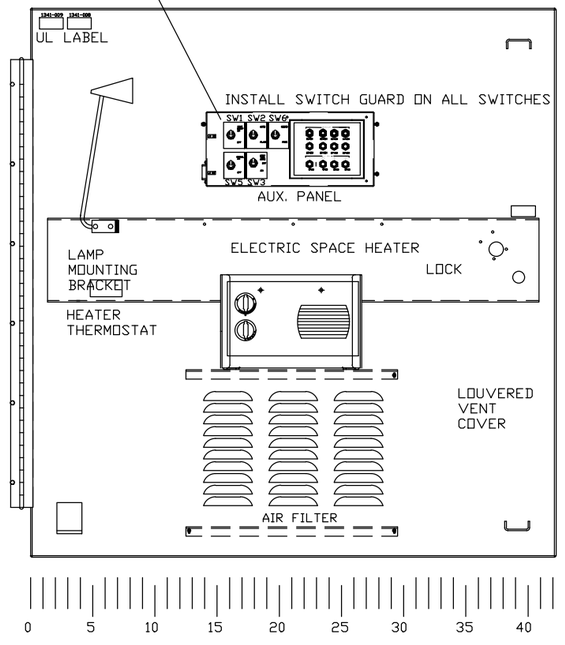

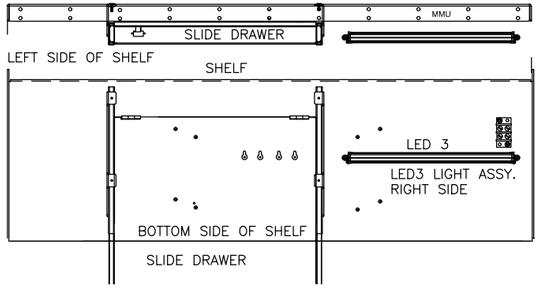

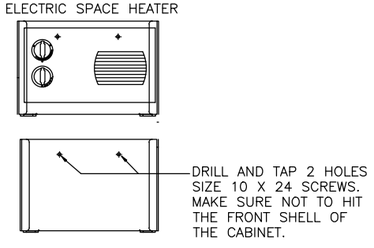

SIGNAL CONTROLLER CABINET DETAILS

STATE OF ALASKA 49TH JOHN F. RINGERT CE 11096 REGISTERED PROFESSIONAL ENGINEER

7/31/2020

PLANS DEVELOPED BY: KITTELSON & ASSOCIATES, INC. CERT. OF AUTHORIZATION NO.: 254741, 851 SW 6TH AVE. SUITE 600, PORTLAND, OR 97204, (503) 228-5230
H:\20\20487 - Glacier Highway - Juneau Traffic Design\design_CD\68124_H_SIG_DTLS-H-56 Thu, Jul/30/20 09:24am

Record Drawings have been reviewed by the Project Engineer, and represent to the best of my knowledge, the project as constructed.

PE *Dillon Tomaro* 2/4/25

NO.	DATE	REVISION

STATE	PROJECT DESIGNATION	YEAR	SHEET NO.	TOTAL SHEETS
ALASKA	TEA-0955(016)/Z68124	2020	H-57	235

NOTES:

1. PROTECT CABLE ENDS FROM MOISTURE AT ALL TIMES.
2. PULL CABLE IN ACCORDANCE WITH SECTION 660 OF THE SPECIAL PROVISIONS. PULL CABLE SO THAT THERE IS SUFFICIENT LENGTH TO REACH THE TOP OF THE CONTROLLER CABINET. CABLES ARE TO BE PULLED WITHOUT CONNECTORS ATTACHED. WHEN CABLE HAS BEEN PULLED TO FINAL LOCATIONS INSTALL AND MAKE FINAL CONNECTIONS.
3. CABLE RUNS ARE TO BE MADE CONTINUOUS WITHOUT SPLICES.
4. CABLE WITH DAMAGED INSULATION, OR THAT HAS BEEN CRIMPED OR BENT BEYOND THE MINIMUM BEND RADIUS MUST BE REPLACED AT CONTRACTORS EXPENSE.
5. THE MINIMUM BEND RADIUS SHALL NOT EXCEED MANUFACTURERS RECOMMENDATIONS.
6. ENSURE ADEQUATE LENGTH OF EACH CABLE TO ALLOW WORK ON THE ENDS OF THE CABLE IN THE CONTROLLER CABINET, AT THE POLE MOUNT ENCLOSURE AND RADAR MOUNTING LOCATION
7. MOUNT THE RADAR AT THE LOCATION STATED IN THE PLANS. PLACEMENT MAY BE ADJUSTED BY THE ENGINEER TO ALLOW FOR BETTER AIMING OF THE RADAR OR TO AVOID OTHER HAZARDS.
8. INSTALL WATERTIGHT RUBBER GROMMETS WHERE CABLE PASSES THROUGH THE POLE.
9. FURNISH ONLY NEW EQUIPMENT OF THE BRAND AND TYPE LISTED OR ITS APPROVED EQUAL. PROVIDE AT NO ADDITIONAL COST ALL NECESSARY DEVICES, WIRES, BRACKETS/HARDWARE ETC. TO PROVIDE A FULLY FUNCTIONING RADAR DETECTION SYSTEM.

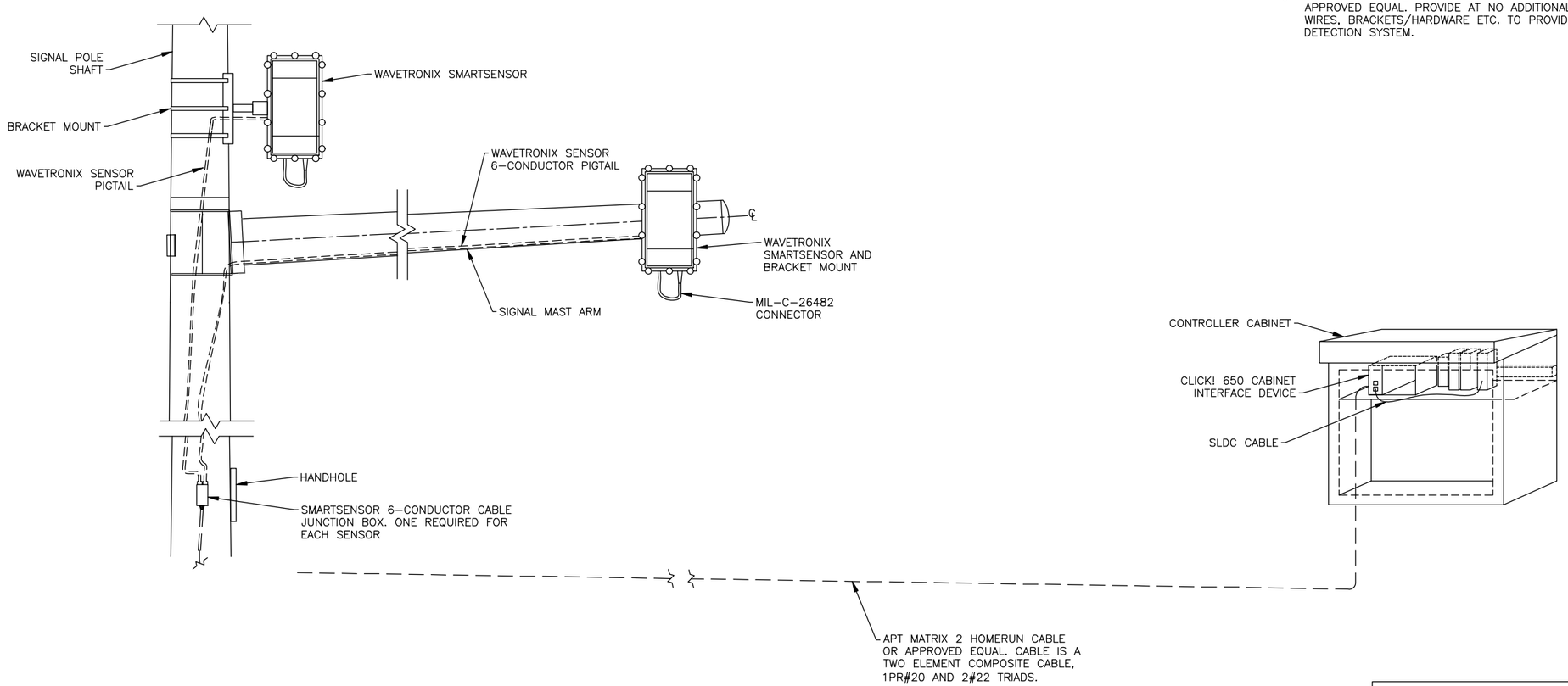

RADAR DETECTION DETAIL
(NOT TO SCALE)

RADAR DETECTION MOUNTING DETAILS

STATE OF ALASKA 49TH JOHN F. RINGERT CE 11096 REGISTERED PROFESSIONAL ENGINEER
7/31/2020

PLANS DEVELOPED BY: KITTELSON & ASSOCIATES, INC. CERT. OF AUTHORIZATION NO.: 254741, 851 SW 6TH AVE. SUITE 600, PORTLAND, OR 97204, (503) 228-5230
H:\20\20487 - Glacier Highway - Juneau Traffic Design\design_CD\68124_H_SIG_DTLS-H-57 Thu, Jul/30/20 09:24am

NO.	DATE	REVISION
4	12/11/20	ADDENDUM 4

STATE	PROJECT DESIGNATION	YEAR	SHEET NO.	TOTAL SHEETS
ALASKA	TEA-0955(016)/Z68124	2020	H-58	235

MASTARM DATA			
MASTARM			
Length (ft.)	Allowed Deflection DueTo Galloping (ft.)	Fixed End O.D. (in.)*	Thick (in.)
15	0.670	9.35	0.239
20	0.670	10.05	0.239
25	0.670	10.75	0.239
30	0.670	11.45	0.239
35	0.670	12.15	0.239

*Fixed end diameter measured at connection to baseplate.

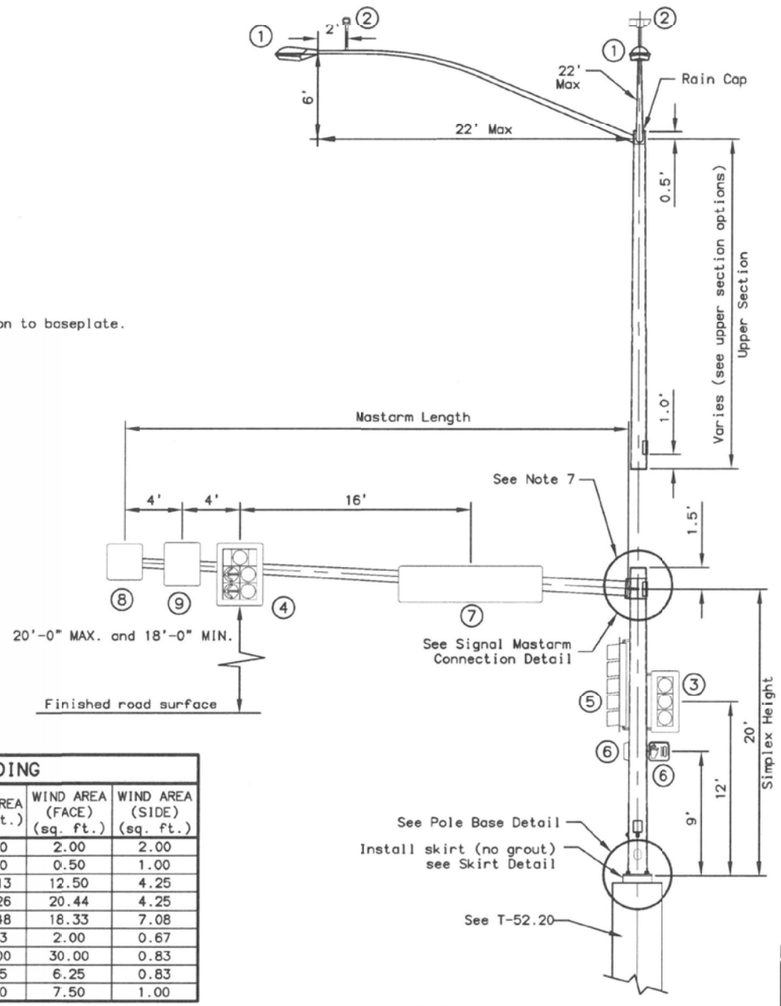

ELEVATION VIEW
NTS

POLE DESIGN LOADING					
LOAD COMPONENT	HEIGHT (ft.)	WEIGHT (lbs.)	ICE AREA (sq ft.)	WIND AREA (FACE) (sq. ft.)	WIND AREA (SIDE) (sq. ft.)
1 = Luminaire	0.67	50	6.00	2.00	2.00
2 = Camera	0.50	20	2.00	0.50	1.00
3 = Signal	5.00	60	29.13	12.50	4.25
4 = Signal	5.33	100	46.26	20.44	4.25
5 = Signal	7.33	100	45.48	18.33	7.08
6 = Ped Head	1.33	25	6.83	2.00	0.67
7 = Sign	2.50	120	30.00	30.00	0.83
8 = Sign	2.50	25	6.25	6.25	0.83
9 = Sign	3.00	30	7.50	7.50	1.00

MATERIAL REQUIREMENTS	
ALL ASSEMBLIES	
Steel Through 1/2" Thick	ASTM A572 or A595
Steel Over 1/2" Thick	AASHTO M270 F3 (50ksi)
Finish	AASHTO M111 & M232
Mastarm Bolts	AASHTO M164
Anchor Rods	See T-52.20
POLE (LOWER SECTION)	
Design Length	21.5'
Section Shape	Round
Simplex Height	20'
Fixed End Diameter	15.0" O.D.
Taper	0.14"/ft
Tube Thickness	0.375"
Base Plate	24" X 24" X 2.25"
Bolt Circle	24"
Signal Arm Plate	20" X 20" X 2.25"
Top Ring Thickness	0.375"
Bottom Ring Thickness	0.375"
Gusset Plate Thickness	0.375"
Handhole Cover Thickness	10 ga
Pole Skirt Thickness	10 ga
MASTARM	
Design Length	35'
Section Shape	Round
Taper	0.14"/ft
Tube Thickness	Mastarm Data
Mastarm Rise	3.0 Degrees
Base Plate	20" X 20" X 2.25"
Bolt Circle	20"
Mastarm Bolts	1.5" X 4.5"

NOTES:

1. Provide pole assemblies meeting the following design criteria; 2001 AASHTO Standard Specifications for Structural Supports for Highway Signs, Luminaires and Traffic Signals, the latest edition of the Alaska Standard Specifications for Highway Construction including Standard Modifications and, Special Provisions. Design for c basic wind speed of 100 mph, Fatigue Category III, with galloping. Measure allowed deflection due to galloping at the free end of mastarm.
2. Provide poles to accommodate the maximum length shown in the Mastarm Data with the given loads, dimensions and material requirements.
3. This drawing shows loads (signs and signals) to be used by manufacturers when designing poles. It does not show actual loading of poles/mastarms on individual projects. This pole/mastarm design may be used without further analysis if the following conditions are met:
   - The guide sign (load #7) is attached to the mastarm base section and,
   - Not more than 4 traffic signals and/or signs are attachec to the mastarm.

   If these conditions are not met, this standard pole/mastarm design may only be used if design computations are submitted that demonstrate conformance to design criteria (Note 1) using actual loads. Note: Devices with less than 1 square foot of projected area may be added to the mastarm without causing a need for additional design computations.
4. The manufacturer is to determine weld sizes. All welds and testing shall conform to the latest edition of the Structural Welding Code AWS D1.1. Provide visual test (VT) of 100% of all welds. Provide magnetic particle test (MT) of 100% of all fillet welds. Provide Radiographic (RT) or ultrasonic test (UT) of 100% of all complete joint penetration welds and a random 25% of all partial joint penetration longitudinal seam welds.
5. Fabricate pole tubes from no more than 2 pieces of steel. When using 2 pieces, place the longitudinal welded seams directly opposite one another.
6. Fabricate luminaire arms and connections according to Standard Drawing L-03.10.
7. Provide permanent tags on all pole sections per Section 740 Table 740-1 of the Specifications. Provide a rain cap when no upper section is specified.
8. The Department will reject damaged or defective poles for any of the following; variances from approved shop drawings, variances from material requirements, sections more than 2-percent out of round, sections bowed more than 1-inch throughout the length of the pole, mastarm, or segment and, damaged or dented finishes.
9. Drill a 1" maximum diameter hole at each traffic signal location. Orient the hole on the horizontal axis of mastarms.
10. Install pole plumb by ensuring the side opposite the mastarm is vertical in its final deflected position.
11. Clean and remove dirt, burrs, mill scale, and excess galvanization on all faying surfaces and threaded parts before assembly. Lubricate the threads of all bolts and nuts with lubricant containing a visible dye. Tighten all bolts according to section 504 of the specifications.

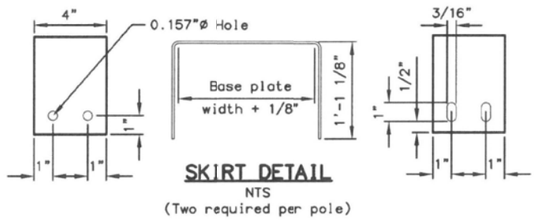

SKIRT DETAIL
NTS
(Two required per pole)

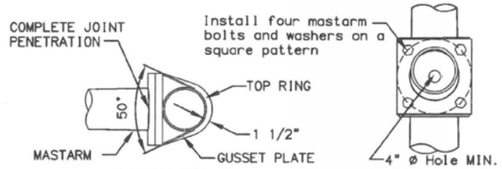

PLAN VIEW FRONT VIEW

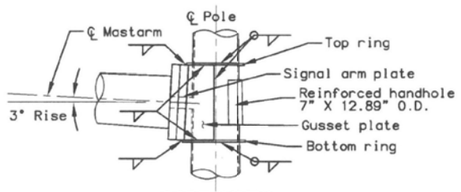

SIDE VIEW

SIGNAL MASTARM CONNECTION DETAIL
NTS
(Elevation view of a ring stiffened built-up box)

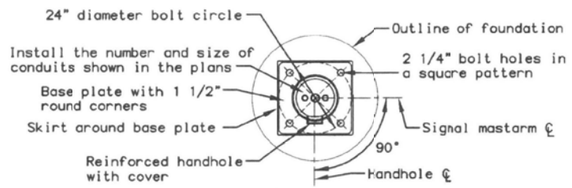

PLAN VIEW
(Shown without anchor bolts and nuts for clarity)

POLE BASE DETAI
NTS

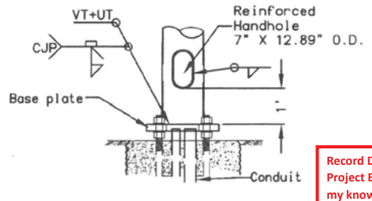

FRONT VIEW
(Skirt omitted for clarity)

PDF QUALITY INCREASED

Record Drawings have been reviewed by the Project Engineer, and represent to the best of my knowledge, the project as constructed.

PE Dillon Tomaro 2/4/25

STATE OF ALASKA 49TH JOHN F. RINGEY CE 11096 REGISTERED PROFESSIONAL ENGINEER 12/15/20

SIGNAL POLE DETAILS (1 of 4)

PLANS DEVELOPED BY: KITTELSON & ASSOCIATES, INC. CERT. OF AUTHORIZATION NO.: 254741, 851 SW 6TH AVE. SUITE 600, PORTLAND, OR 97204, (503) 228-5230
H:\20\20487 - Glacier Highway - Juneau Traffic Design\design_CD\68124_H_SIG_DTLS-H-58 Tue, Dec/15/20 01:38pm

NO.	DATE	REVISION
4	12/11/20	ADDENDUM 4

STATE	PROJECT DESIGNATION	YEAR	SHEET NO.	TOTAL SHEETS
ALASKA	TEA-0955(016)/Z68124	2020	H-59	235

Record Drawings have been reviewed by the Project Engineer, and represent to the best of my knowledge, the project as constructed.

PE *Dillon Tomaro* 2/4/25

MASTARM DATA

MASTARM		END SECTION			BASE SECTION		
Length (ft.)	Allowed Deflection Due To Galloping (in.)	Free End O.D. (in.)	Length (ft.)	Thick (in.)	Length (ft.)	Fixed End O.D. (in.)*	Thick (in.)
40	8.0	7.3	25.0	0.1793	18.34	12.5	0.3125
45	8.0	7.3	25.0	0.1793	23.34	13.2	0.3125
50	8.0	7.3	25.0	0.1793	28.34	13.9	0.3125

*Fixed end diameter measured at connection to baseplate.

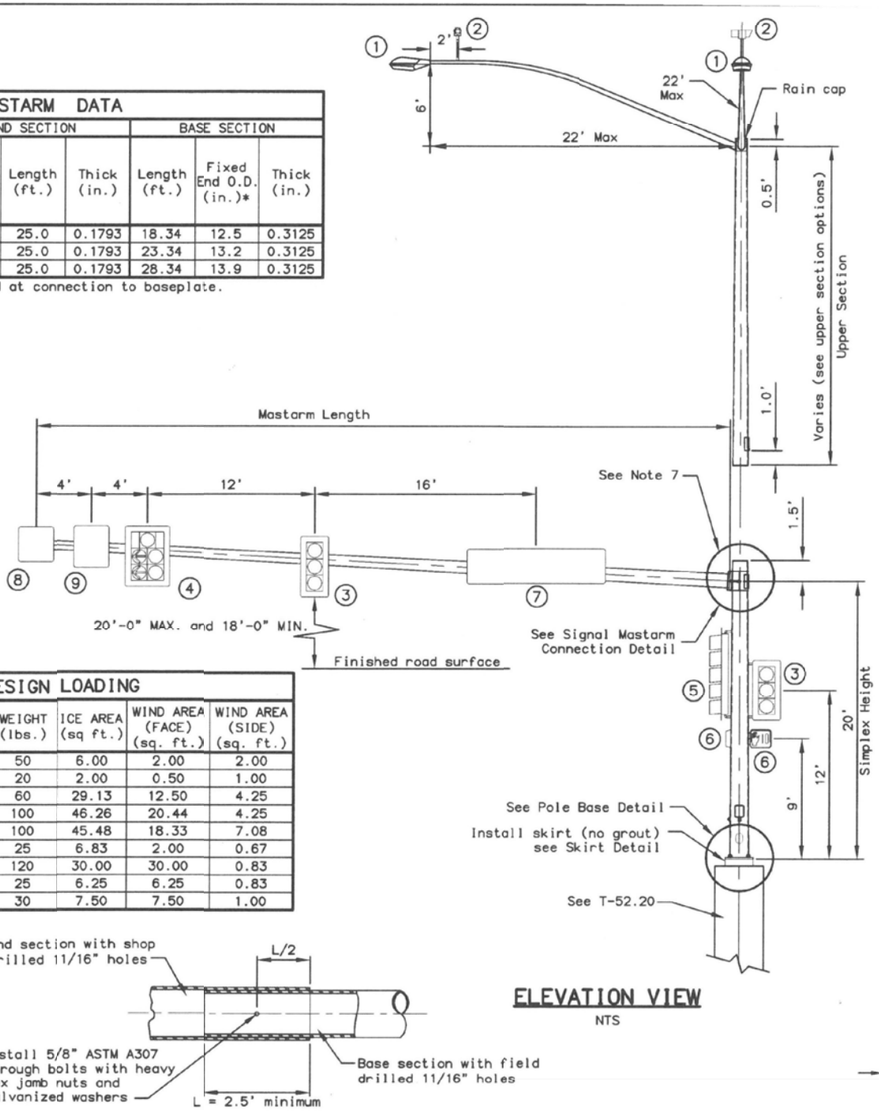

ELEVATION VIEW
NTS

POLE DESIGN LOADING

LOAD COMPONENT	HEIGHT (ft.)	WEIGHT (lbs.)	ICE AREA (sq ft.)	WIND AREA (FACE) (sq. ft.)	WIND AREA (SIDE) (sq. ft.)
1 = Luminaire	0.67	50	6.00	2.00	2.00
2 = Camera	0.50	20	2.00	0.50	1.00
3 = Signal	5.00	60	29.13	12.50	4.25
4 = Signal	5.33	100	46.26	20.44	4.25
5 = Signal	7.33	100	45.48	18.33	7.08
6 = Ped Head	1.33	25	6.83	2.00	0.67
7 = Sign	2.50	120	30.00	30.00	0.83
8 = Sign	2.50	25	6.25	6.25	0.83
9 = Sign	3.00	30	7.50	7.50	1.00

MATERIAL REQUIREMENTS

ALL ASSEMBLIES	
Steel Through 1/2" Thick	ASTM A572 or A595
Steel Over 1/2" Thick	AASHTO M270 F3 (50ksi)
Finish	AASHTO M111 & M232
Mastarm Bolts	AASHTO M164
Anchor Rods	See T-52.20

POLE (LOWER SECTION)	
Design Length	21.5'
Section Shape	Round
Simplex Height	20'
Fixed End Diameter	17" O.D.
Taper	0.14"/ft
Tube Thickness	0.375"
Base Plate	24" X 24" X 2.25"
Bolt Circle	24"
Signal Arm Plate	22" X 22" X 2.25"
Top Ring Thickness	0.375"
Bottom Ring Thickness	0.375"
Gusset Plate Thickness	0.375"
Handhole Cover Thickness	10 ga
Pole Skirt Thickness	10 ga

MASTARM	
Design Length	50'
Section Shape	Round
Taper	0.14"/ft
Tube Thickness	Mastarm Data
Mastarm Rise	3.0 Degrees
Base Plate	22" X 22" X 2.25"
Bolt Circle	22"
Mastarm Bolts	1.5" X 4.5"

NOTES:

1. Provide pole assemblies meeting the following design criteria; 2001 AASHTO Standard Specifications for Structural Supports for Highway Signs, Luminaires and Traffic Signals, the latest edition of the Alaska Standard Specifications for Highway Construction including Standard Modifications and, Special Provisions. Design for a basic wind speed of 100 mph, Fatigue Category III, with galloping. Measure allowed deflection due to galloping at the free end of mastarm.
2. Provide poles to accommodate the maximum length shown in the Mastarm Data with the given loads, dimensions and material requirements.
3. This drawing shows loads (signs and signals) to be used by manufacturers when designing poles. It does not show actual loading of poles/mastarms on individual projects. This pole/mastarm design may be used without further analysis if the following conditions are met:
   - The *guide sign* (load #7) is attached to the mastarm base section and,
   - Not more than 4 traffic signals and/or signs are attached to the end section of the mastarm.

   If these conditions are not met, this standard pole/mastarm design may only be used if design computations are submitted that demonstrate conformance to design criteria (Note 1) using actual loads. Note: Devices with less than 1 square foot of projected area may be added to the mastarm without causing a need for additional design computations.
4. The manufacturer is to determine weld sizes. All welds and testing shall conform to the latest edition of the Structural Welding Code AWS D1.1. Provide visual test (VT) of 100% of all welds. Provide magnetic particle test (MT) of 100% of all fillet welds. Provide Radiographic (RT) or ultrasonic test (UT) of 100% of all complete joint penetration welds and a random 25% of all partial joint penetration longitudinal seam welds.
5. Fabricate pole tubes from no more than 2 pieces of steel. When using 2 pieces, place the longitudinal welded seams directly opposite one another.
6. Fabricate luminaire arms and connections according to Standard Drawing L-03.10.
7. Provide permanent tags on all pole sections per Section 740 Table 740-1 of the Specifications. Provide a rain cap when no upper section is specified.
8. The Department will reject damaged or defective poles for any of the following; variances from approved shop drawings, variances from material requirements, sections more than 2-percent out of round, sections bowed more than 1-inch throughout the length of the pole, mastarm, or segment and, damaged or dented finishes.
9. Drill a 1" maximum diameter hole at each traffic signal location. Orient the hole on the horizontal axis of mastarms.
10. Install pole plumb by ensuring the side opposite the mastarm is vertical in its final deflected position.
11. Align welded seams on adjacent sections of mastarms to form continuous straight seams the length of the mastarm. Mechanically force mastarm sections together for a snug fit.
12. Clean and remove dirt, burrs, mill scale, and excess galvanization on all faying surfaces and threaded parts before assembly. Lubricate the threads of all bolts and nuts with lubricant containing a visible dye. Tighten all bolts according to section 504 of the specifications.

MASTARM SLIP SPLICE ELEVATION DETAIL
NTS

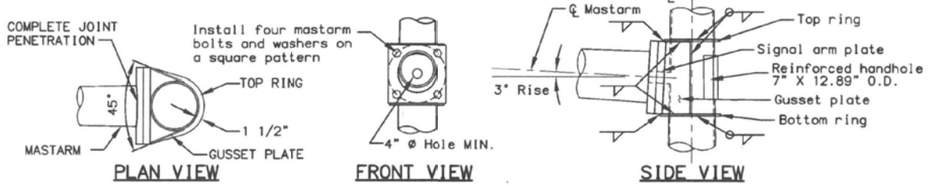

SIGNAL MASTARM CONNECTION DETAIL
NTS
(Elevation view of a ring stiffened built-up box)

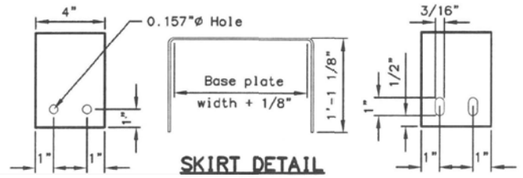

SKIRT DETAIL
NTS
(Two required per pole)

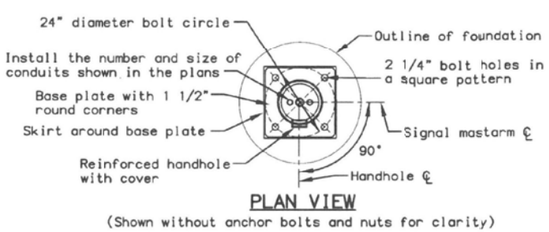

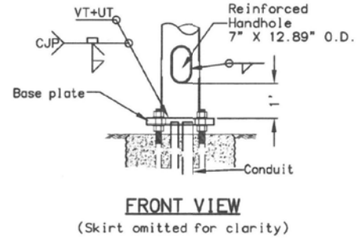

POLE BASE DETAIL
NTS

PDF QUALITY INCREASED

SIGNAL POLE DETAILS (2 of 4)

STATE OF ALASKA 49TH JOHN F. RINGERT CE 11096 REGISTERED PROFESSIONAL ENGINEER 12/15/20

PLANS DEVELOPED BY: KITTELSON & ASSOCIATES, INC. CERT. OF AUTHORIZATION NO.: 254741, 851 SW 6TH AVE. SUITE 600, PORTLAND, OR 97204, (503) 228-5230
H:\20\20487 - Glacier Highway - Juneau Traffic Design\design_CD\68124_H_SIG_DTLS-H-59 Tue, Dec/15/20 01:38pm

NO.	DATE	REVISION
	12/22/20	ADDENDUM 5

STATE	PROJECT DESIGNATION	YEAR	SHEET NO.	TOTAL SHEETS
ALASKA	TEA-0955(016)/Z68124	2020	H-60	235

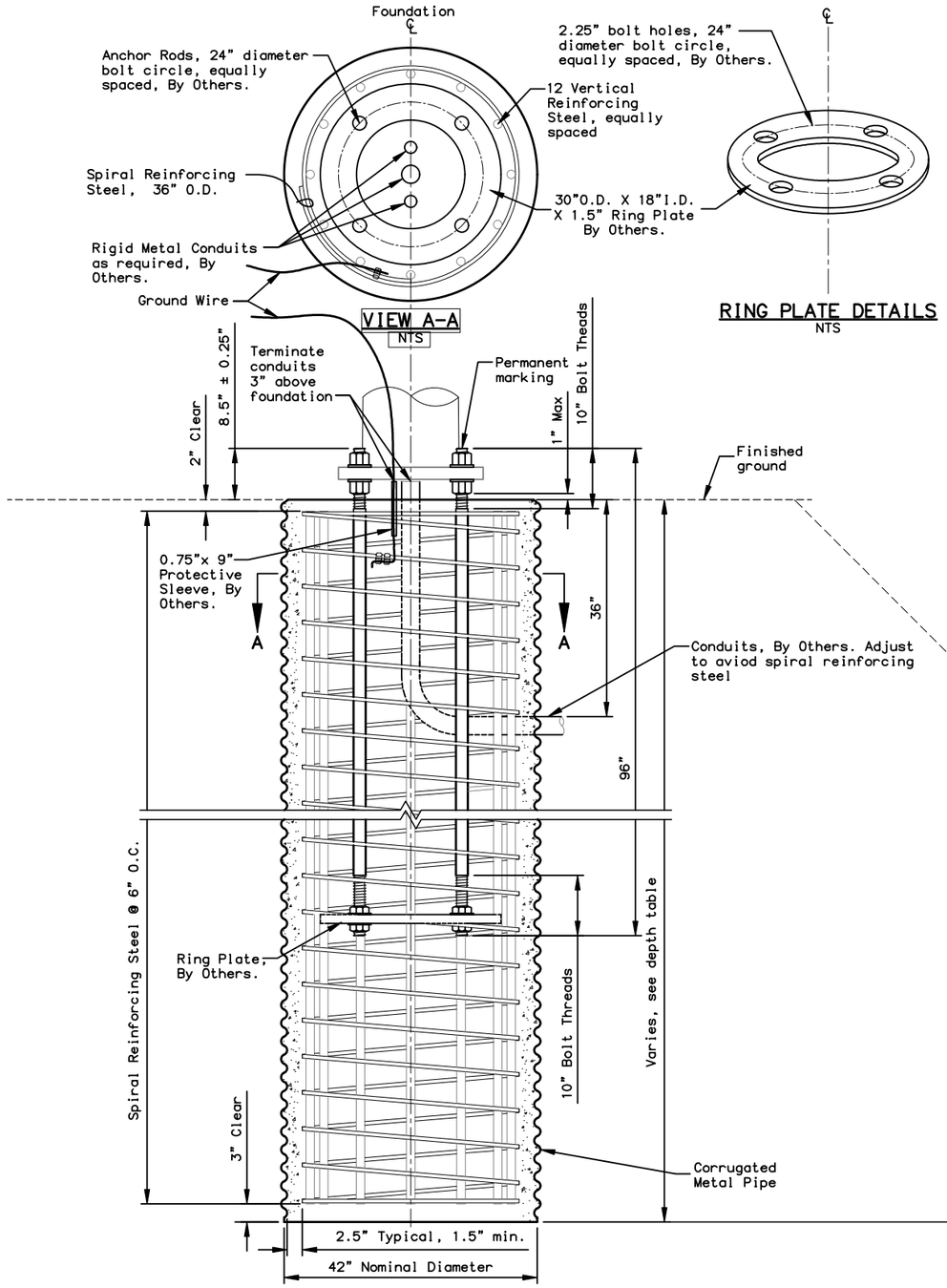

TYPICAL FOUNDATION DETAIL TRAFFIC SIGNAL POLE
NTS
(Skirt omitted for clarity)

RING PLATE DETAILS
NTS

MATERIAL PROPERTIES		
CONCRETE	CLASS A	f'c = 4000 PSI
CMP	AASHTO M218	14 GA.
VERTICAL REINFORCING STEEL	AASHTO M31 #11	GR60
SPIRAL REINFORCING STEEL	AASHTO M31 #5	GR 60
GROUND WIRE, BY OTHERS.	BY OTHERS	
ANCHOR ROD 2" x 96" (BY OTHERS)	ASTM F1554 S2, S3, & S5	GR 105
FASTENERS, WASHERS (BY OTHERS)	AASHTO M293	
FASTENERS, NUTS (BY OTHERS)	AASHTO M292	
FINISH, ANCHOR RODS & FASTENERS	AASHTO M232	
RING PLATE – 2" MIN. (BY OTHERS)	AASHTO M270	GR 36
CONDUIT (BY OTHERS)	(BY OTHERS)	
PROTECTIVE SLEEVE	(BY OTHERS)	

DEPTH TABLE	
MASTARM(S) LENGTH (FT)	FOUNDATION DEPTH BY APPLICATION
	PER DETAIL
SEE DETAIL FOR ALL CONDITIONS	

SAND SLURRY DESIGN (BY OTHERS)		
ITEM	BATCHING QUANTITIES (CUBIC YARDS)	
	BY WEIGHT (LBS.)	BY VOLUME (C.F.)
PORTLAND CEMENT CONCRETE	188	0.96
WATER (52.1 GAL.)	435	6.97
FINE AGGREGATE SSD	3041	18.00
ADMIXTURE: MICROAIR	2.0 OZ.	1.08
TOTAL	3664	27.00

DESIGN NOTES:

DESIGN STANDARD: 2015 EDITION LRFD SPECIFICATIONS FOR STRUCTURAL SUPPORTS FOR HIGHWAY SIGNS, LUMINARIES, AND TRAFFIC SIGNALS.
DESIGN LOAD: 6,500 LBS AXIAL, 6,500 LBS SHEAR, 175,000 FT-LBS MOMENT.
CONSTRUCTION STANDARDS: LIGHT POLES ONLY; 2015 EDITION LRFD SPECIFICATIONS FOR STRUCTURAL SUPPORTS FOR HIGHWAY SIGNS, LUMINARIES, AND TRAFFIC SIGNALS.

NOTES:

1. THIS FOUNDATION IS APPROVED FOR USE IN CONJUNTION WITH THE GEOTECHNICAL REPORT. IF FOOTING IS TO BE PLACED IN A LOCATION OR IN SOILS NOT EXPLICITLY DISCRIBED IN THE GEOTECHNICAL REPORT, NOTIFY THE ENGINEER IMMEDIATELY. REFERENCE GEOTECHNICAL REPORT NUMBER: Z681240000 PROVIDED BY THE DEPARTMENT OF TRANSPORTATION.
2. PLACE FOUNDATION IN DRILLED OR EXCAVATED HOLE WITH CENTERLINE OF FOUNDATION LOCATED AT THE STATION, OFFSET, AND ELEVATION SPECIFIED IN PLANS. SET FOUNDATION FLUSH WITH SURROUNDING SURFACE. GRADE TO DRAIN AWAY FROM THE FOUNDATIONS WITHOUT EXPOSING MORE THAN 4" OF THE FOUNDATION FROM THE SURROUNDING SURFACE.
3. FORM THE FOUNDATIOON IN CORRUGATED METAL PIPE CONFORMING TO SUBSECTION 707-2.01 OF THE SPECIFICATIONS.
4. PROVIDE 1.5 EXTRA TURNS AT EACH END OF THE SPIRAL REINFORCING STEEL. REINFORCING STEEL SHALL NOT BE SPLICED. TIE VERTICAL REINFORCING STEEL TO EACH INTERSECTION OF THE SPIRAL REINFORCING STEEL.
5. GROUNDING WIRE (BY OTHERS).
6. THE RING PLATE (BY OTHERS) MAY BE "BUILT-UP" OF MULTIPLE STEEL PLATES. THE MINIMUM THICKNESS FOR ANY ONE PLATE IS 0.5 INCHES. FASTEN THE RING PLATE TO ANCHOR RODS WITH NUTS AND WASHERS ON BOTH SIDES OF RING PLATE AS SHOWN. TORQUE RING PLATE NUTS TO 600 FT-LBS.
7. ANCHOR RODS ARE SUBJECT TO CHARPY V-NOTCH IMPACT TESTING. SUBMIT MILL CERTIFICATIONS FOR ANCHOR RODS, NUTS, AND WASHERS. GALVANIZE ANCHOR RODS FULL LENGTH. PROVIDE PERMANENT MANUFACTURERS IDENTIFICATION AND PERMANENT GRADE IDENTIFICATION ON EACH END OF ANCHOR ROD BY STEEL DIE STAMP. SECURE EXPOSED ANCHOR RODS WITH A "RING PLATE" WHEN NOT IN SERVICE. INSTALL ANCHOR RODS PLUMB. ANCHOR RODS GREATER THAN 1:40 OUT OF PLUMB WILL RESULT IN FOUNDATION REJECTION. (ANCHOR ROD DESIGN SHALL BE BY OTHERS.)
8. COMPLETE ALL CONCRETE WORK IN CONFORMANCE WITH SECTIONS 501, 503, AND 660 OF THE SPECIFICATIONS. USE A TUBE WITH A HOPPER HEAD OR OTHER APPROVED DEVICE WHEN DROPPING CONCRETE MORE THAN 5 FEET PER SUBSECTION 501-3.08. VIBRATE CONCRETE DURING PLACEMENT BY MECHANICAL VIBRATION PER SUBSECTION L501-3.08. ENSURE UPPER ANCHOR ROD THREADS ARE PROTECTED FROM CONTACT WITH CONCRETE DURING POUR.
9. BACKFILL AND COMPACT ACCORDING TO SECTION 205, AND SUBSECTIONS 203-3.04, AND 660-3.01 OF THE SPECIFICATIONS. USE SELECT MATERIAL, TYPE A OR SAND SLURRY AS BACKFILL MATERIAL. ENSURE AREA BELOW FOUNDATION MEETS COMPACTION REQUIREMENTS AND IS FREE OF LOOSE MATERIAL AND DEBRIS PRIOR TO CONCRETE WORK. (SOIL AND BACKFILL REQUIREMENTS ARE BY OTHERS.)

Record Drawings have been reviewed by the Project Engineer, and represent to the best of my knowledge, the project as constructed.

PE Dillon Tomaro 2/4/25

SIGNAL POLE DETAILS (3 of 4)

STATE OF ALASKA
49TH
DILLON J. TOMARO
No. CE-12975
08/17/20
REGISTERED PROFESSIONAL ENGINEER

PLANS DEVELOPED BY: KITTELSON & ASSOCIATES, INC. CERT. OF AUTHORIZATION NO.: 254741, 851 SW 6TH AVE. SUITE 600, PORTLAND, OR 97204, (503) 228-5230
P:\Projects\2019\219087 Glacier Highway Pole Foundations\S\219087_SK1-SK1 Wed, Jun/24/20 01:05pm

NO.	DATE	REVISION
4	12/11/20	ADDENDUM 4

STATE	PROJECT DESIGNATION	YEAR	SHEET NO.	TOTAL SHEETS
ALASKA	TEA-0955(016)/Z68124	2020	H-61	235

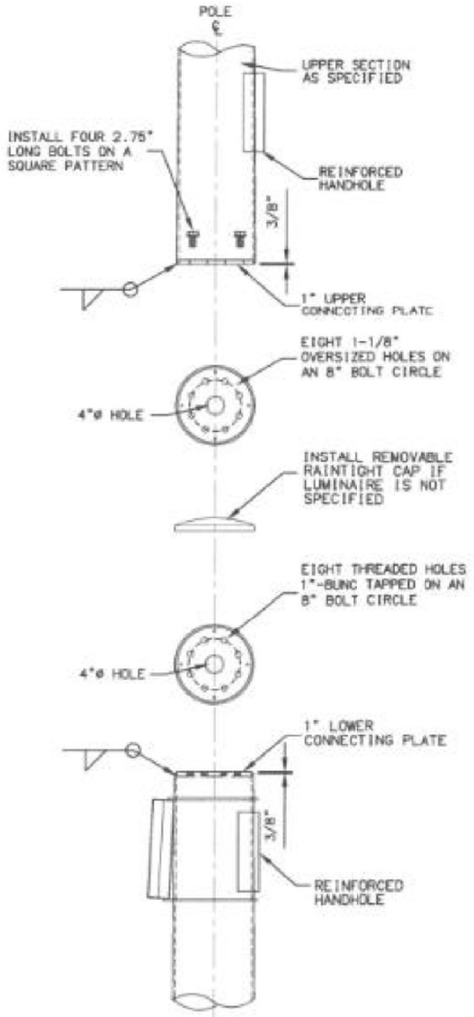

POLE CONNECTING DETAIL

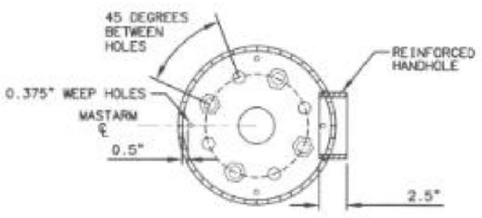

PLATE DETAILS

MATERIAL REQUIREMENTS

MATERIALS	
Tube Material	A572, A595 GR A or A1011 50 ksi min
Single Luminaire Tube	7 ga
Double Luminaire Tube	7 ga
Davit Luminaire Tube	7 ga
Lower Connecting Plate	AASHTO M270 F3
Upper Connecting Plate	AASHTO M270 F3
Concentric Reducer	A572 or A595 GR A
Connection Tube	A572 or A595 GR A
Luminaire Arm Materials	See L-03.10
Upper Section Attachment Bolts	1"-8UNC / AASHTO M164
Luminaire Attachment Bolts	3/4"-10 / AASHTO M164
Slip-fit Through Bolt	5/8" / AASHTO M164
Finish	AASHTO M111 & M232
Handhole	7" X 12.89" O.D.
SINGLE LUMINAIRE	
Design Length	22.5'
Section Shape	Round
Fixed End Diameter	11.99" O.D.
Taper	0.14"/ft
Luminaire Arm Details	See L-03.10
DOUBLE LUMINAIRE	
Design Length	17.5'
Section Shape	Round
Fixed End Diameter	11.99" O.D.
Taper	0.14"/ft
Luminaire Arm Details	See L-03.10
DAVIT LUMINAIRE ARM	
Design Height	28.5'
Design Offset	15'
Radius	10'
Section Shape	Round
Fixed End Diameter	11.99" O.D.
Free End Diameter	2.375" O.D.
Taper	0.14"/ft
Concentric Reducer	7 ga
Connection Tube	7 ga

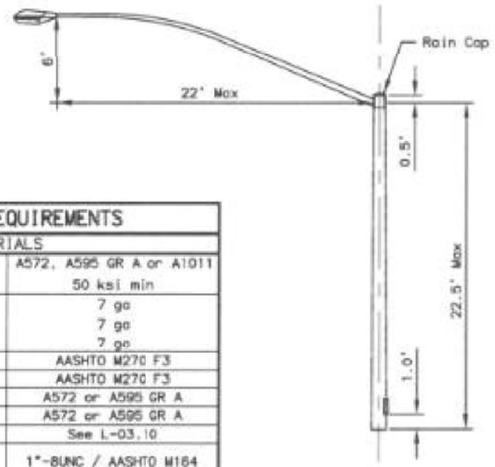

SINGLE LUMINAIRE

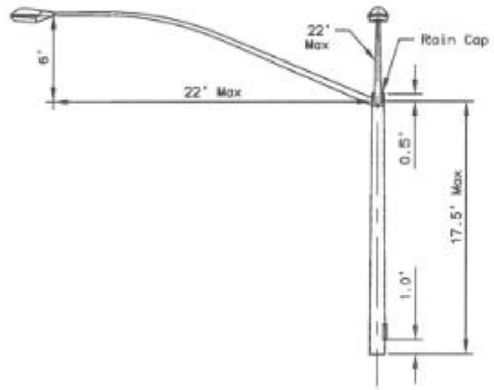

DOUBLE LUMINAIRE

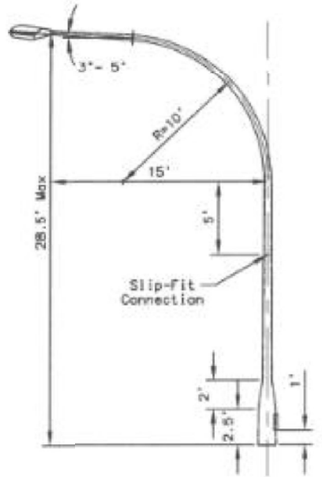

DAVIT LUMINAIRE

UPPER SECTION OPTIONS
NTS

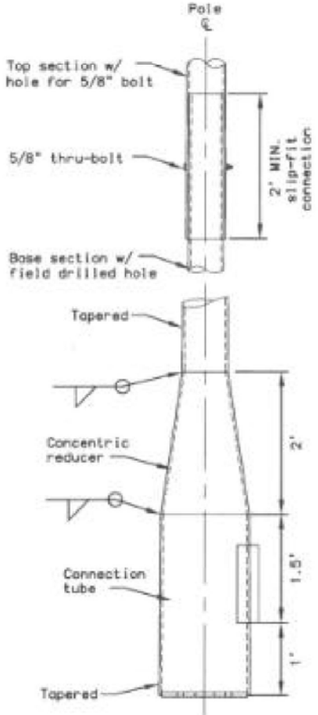

DAVIT CONNECTION DETAIL
NTS



RAIN CAP DETAIL

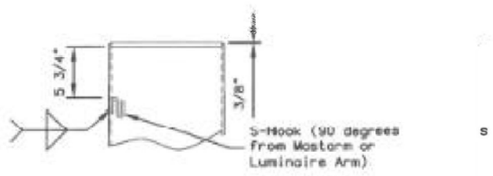

LOWER SECTION POST TOP
NTS

PDF QUALITY INCREASED

Record Drawings have been reviewed by the Project Engineer, and represent to the best of my knowledge, the project as constructed.

PE Dillon Tomaro 2/4/25

STATE OF ALASKA 49TH JOHN F. RINGERT CE 11098 REGISTERED PROFESSIONAL ENGINEER 12/15/20

SIGNAL POLE DETAILS (4 of 4)

PLANS DEVELOPED BY: KITTELSON & ASSOCIATES, INC. CERT. OF AUTHORIZATION NO.: 254741, 851 SW 6TH AVE. SUITE 600, PORTLAND, OR 97204, (503) 228-5230
H:\20\20487 - Glacier Highway - Juneau Traffic Design\design_CD\68124_H_SIG_DTLS-H-61 Tue, Dec/15/20 01:38pm

NOTES:

1. SEE VANDERBILT HILL ROAD RRFB PLANS FOR RRFB CONDUIT, JUNCTION BOXES AND OTHER RRFB EQUIPMENT.

** Deleted by CO11

NO.	DATE	REVISION

STATE	PROJECT DESIGNATION	YEAR	SHEET NO.	TOTAL SHEETS
ALASKA	TEA-0955(016)/Z68124	2020	H-62	235

REPLACE EX HPS LUMINAIRE ON EX LIGHT POLE WITH NEW LED LUMINAIRE (480v)

EDGE OF PAVEMENT

MATCH LINE "0" 106+00 SEE BELOW

GLACIER HWY

100+00 101+00 102+00 103+00 104+00 105+00 106

VANDERBILT HILL RD

NEW LIGHT POLE SEE RRFB PLAN

EDGE OF PAVEMENT

INSTALL 30' LIGHT POLE WITH 15' ARM WITH LED LUMINAIRE

1-3c#8
1-1c#8 GND
1-2" RMC

1-3c#8
1-1c#8 GND
1-2" RMC

REPLACE EX HPS LUMINAIRE ON EX LIGHT POLE WITH NEW LED LUMINAIRE (480v)
RETAIN EXISTING CONDUIT

REPLACE EX HPS LUMINAIRE ON EX LIGHT POLE WITH NEW LED LUMINAIRE (480v)

1-3c#8
1-1c#8 GND
1-2" RMC

REPLACE EX HPS LUMINAIRE ON EX LIGHT POLE WITH NEW LED LUMINAIRE (480v)

1-3c#8
1-1c#8 GND
1-2" RMC

INSTALL 30' LIGHT POLE WITH 15' ARM WITH LED LUMINAIRE

RETAIN EXISTING CONDUIT

EXISTING LOAD CENTER (SEE LOAD CENTER #1 DETAIL FOR ADDITION OF 240v BREAKER FOR NEW LIGHTING CIRCUIT)

GLACIER HWY

110+00 111+00 112

EXISTING LIGHTING SYSTEM CONTINUES ON GLACIER HWY

12+00 12+25

MATCH LINE "0" 106+00 SEE ABOVE

EDGE OF PAVEMENT

107+00 108+00 109+00

GLACIER HWY

COOGAN RD

AEL&P TO REPLACE EX HPS LUMINAIRE ON EX POWER POLE WITH NEW LED LUMINAIRE

AEL&P TO INSTALL NEW LUMINAIRE WITH 8' ARM ON POWER POLE

AFL&P TRANSFORMER ON POLE

AFL&P TO REPLACE EX HPS LUMINAIRE ON EX POWER POLE WITH NEW LED LUMINAIRE

SEE LOAD CENTER #2 POWER SOURCE SCHEDULE FOR WIRING

INSTALL 30' LIGHT POLE WITH 15' ARM WITH LED LUMINAIRE

1-3c#8
1-1c#8 GND
1-2" RMC

NEW LOAD CENTER SEE LOAD CENTER #2 DETAIL

MATCH LINE "0" 112+00

Record Drawings have been reviewed by the Project Engineer, and represent to the best of my knowledge, the project as constructed.

PE *Dillon Tomaro* 2/4/25

STATE OF ALASKA 49TH
JOHN F. RINGERT
OE 11096
REGISTERED PROFESSIONAL ENGINEER
7/31/2020

ILLUMINATION PLAN 1

PLANS DEVELOPED BY: KITTELSON & ASSOCIATES, INC. CERT. OF AUTHORIZATION NO.: 254741, 851 SW 6TH AVE. SUITE 600, PORTLAND, OR 97204, (503) 228-5230
H:\20\20487 - Glacier Highway - Juneau Traffic Design\design_CD\68124_H_LIGHT-H-62. Thu, Jul/30/20 02:11pm

CO 11 Attachment No. 6

NO.	DATE	REVISION

STATE	PROJECT DESIGNATION	YEAR	SHEET NO.	TOTAL SHEETS
ALASKA	TEA-0955(016)/Z68124	2020	H-62	235

NOTES:

1. SEE VANDERBILT HILL ROAD RRFB PLANS FOR RRFB CONDUIT, JUNCTION BOXES AND OTHER RRFB EQUIPMENT.

REPLACE EX HPS LUMINAIRE ON EX LIGHT POLE WITH NEW LED LUMINAIRE (480v)

EDGE OF PAVEMENT

GLACIER HWY

MATCH LINE "0" 106+00 SEE BELOW

100+00 101+00 102+00 103+00 104+00 105+00 106

VANDERBILT HILL RD

NEW LIGHT POLE SEE RRFB PLAN

EDGE OF PAVEMENT

INSTALL 30' LIGHT POLE WITH 15' ARM WITH LED LUMINAIRE

1-3c#8
1-1c#8 GND
1-2" RMC

1-3c#8
1-1c#8 GND
1-2" RMC

REPLACE EX HPS LUMINAIRE ON EX LIGHT POLE WITH NEW LED LUMINAIRE (480v)
RETAIN EXISTING CONDUIT

REPLACE EX HPS LUMINAIRE ON EX LIGHT POLE WITH NEW LED LUMINAIRE (480v)

10+00 11+00

GLACIER HWY

1-3c#8
1-1c#8 GND
1-2" RMC

REPLACE EX HPS LUMINAIRE ON EX LIGHT POLE WITH NEW LED LUMINAIRE (480v)

1-3c#8
1-1c#8 GND
1-2" RMC

INSTALL 30' LIGHT POLE WITH 15' ARM WITH LED LUMINAIRE

RETAIN EXISTING CONDUIT

EXISTING LOAD CENTER (SEE LOAD CENTER #1 DETAIL FOR ADDITION OF 240v BREAKER FOR NEW LIGHTING CIRCUIT)

EXISTING LIGHTING SYSTEM CONTINUES ON GLACIER HWY

12+00 12+25

Record Drawings have been reviewed by the Project Engineer, and represent to the best of my knowledge, the project as constructed.

PE Dillon Tomaro 2/4/25

-Relocate Load Center and J-Box #7 to approximate STA. 112+25 RT as shown on sheet H-63.
-Relocate J-Box # 9 to approximate STA. 112+65 LT and J-Box # 8 to STA. 112+65 RT

-Add 1-2" RMC
-Relocate crossing to approximate STA 112+65 as shown on Sheet H-63.

Delete
1-3c#8
1-1c#8 GND
1-2" RMC

INSTALL 30' LIGHT POLE WITH 15' ARM WITH LED LUMINAIRE

Delete

Delete

MATCH LINE "0" 112+00 SEE ABOVE

EDGE OF PAVEMENT

107+00 108+00 109+00 110+00 111+00 112

GLACIER HWY

COOGAN RD

AFL&P TRANSFORMER ON POLE

AEL&P TO REPLACE EX HPS LUMINAIRE ON EX POWER POLE WITH NEW LED LUMINAIRE

AEL&P TO INSTALL NEW LUMINAIRE WITH 8' ARM ON POWER POLE

AFL&P TO REPLACE EX HPS LUMINAIRE ON EX POWER POLE WITH NEW LED LUMINAIRE

SEE LOAD CENTER #2 POWER SOURCE SCHEDULE FOR WIRING

NEW LOAD CENTER SEE LOAD CENTER #2 DETAIL

ILLUMINATION PLAN 1

STATE OF ALASKA 49TH JOHN F. RINGERT CE 11096 REGISTERED PROFESSIONAL ENGINEER

7/31/2020

PLANS DEVELOPED BY: KITTELSON & ASSOCIATES, INC. CERT. OF AUTHORIZATION NO.: 254741, 851 SW 6TH AVE. SUITE 600, PORTLAND, OR 97204, (503) 228-5230
H:\20\20487 - Glacier Highway - Juneau Traffic Design\design_CD\68124_H_LIGHT-H-62 Thu, Jul/30/20 02:11pm

** Deleted by CO11

Record Drawings have been reviewed by the Project Engineer, and represent to the best of my knowledge, the project as constructed.

PE *Dillon Tomaro* 2/4/25

NO.	DATE	REVISION

STATE	PROJECT DESIGNATION	YEAR	SHEET NO.	TOTAL SHEETS
ALASKA	TEA-0955(016)/Z68124	2020	H-63	235

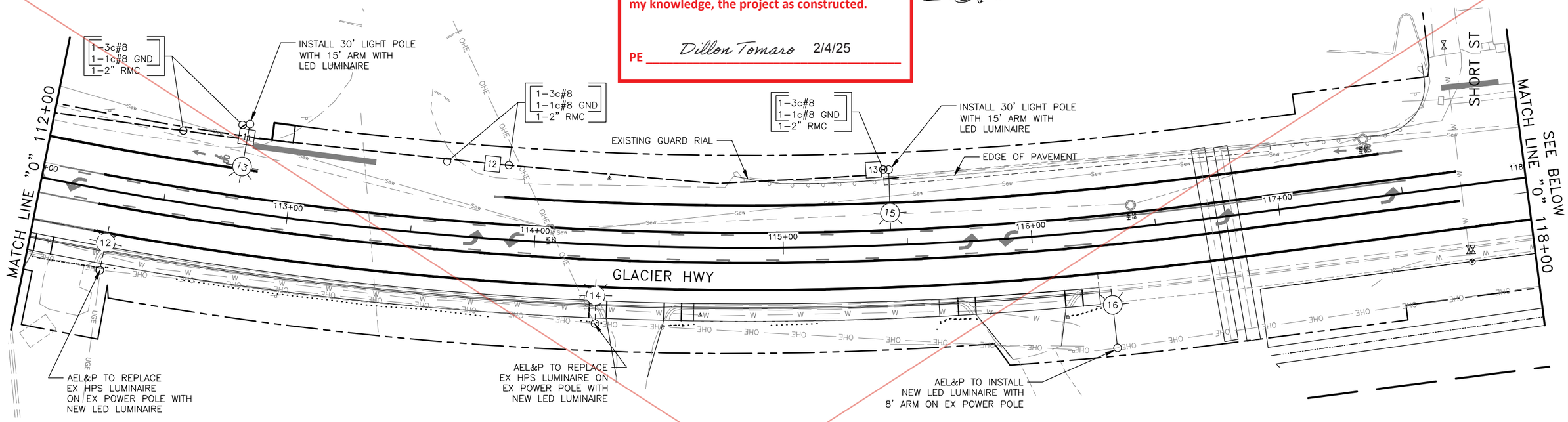

PLANS DEVELOPED BY: KITTELSON & ASSOCIATES, INC. CERT. OF AUTHORIZATION NO.: 254741, 851 SW 6TH AVE. SUITE 600, PORTLAND, OR 97204, (503) 228-5230
H:\20\20487 - Glacier Highway - Juneau Traffic Design\design_CD\68124_H_LIGHT-H-63 Thu, Jul/30/20 02:11pm

ILLUMINATION PLAN 2

STATE OF ALASKA 49TH JOHN F. RINGERT CE. 11096 REGISTERED PROFESSIONAL ENGINEER

7/31/2020

Attachment No. 7 CO 11

-Delete the following J-Boxes in their entirety: #10, #11, #12, and #13.
-Delete the following Electroliers in their entirety (including concrete foundations): #11, #13, and #15.
-Delete 1-2" RMC between J-Box #9 and Electrolier # 15 in its entirety.
-Delete 1-3c#8 conductor and 1-1c#8 ground wire between J-box #8 and Electrolier # 15 in its entirety.

NO.	DATE	REVISION

STATE	PROJECT DESIGNATION	YEAR	SHEET NO.	TOTAL SHEETS
ALASKA	TEA-0955(016)/Z68124	2020	H-63	235

Delete
1-3c#8
1-1c#8 GND
1-2" RMC

INSTALL 30' LIGHT POLE WITH 15' ARM WITH LED LUMINAIRE

EXISTING GUARD RIAL

EDGE OF PAVEMENT

MATCH LINE "0" 112+00

SEE BELOW "0" 118+00

SHORT ST

GLACIER HWY

AEL&P TO REPLACE EX HPS LUMINAIRE ON EX POWER POLE WITH NEW LED LUMINAIRE

-Add 1-2" RMC between J-Box #8 and J-Box #9 (total 2-2" RMC for future use) as shown on plan sheet H-62

AEL&P TO INSTALL NEW LED LUMINAIRE WITH 8' ARM ON EX POWER POLE

SEE ABOVE MATCH LINE "0" 118+00

MATCH LINE "0" 124+00

RETAIN PRIVATE LIGHT ON POWER POLE

ONLY BUS

Record Drawings have been reviewed by the Project Engineer, and represent to the best of my knowledge, the project as constructed.

PE Dillon Tomaro 2/4/25

ILLUMINATION PLAN 2

STATE OF ALASKA 49TH JOHN F. RINGERT CE 11096 REGISTERED PROFESSIONAL ENGINEER

7/31/2020

PLANS DEVELOPED BY: KITTELSON & ASSOCIATES, INC., CERT. OF AUTHORIZATION NO.: 254741, 851 SW 6TH AVE. SUITE 600, PORTLAND, OR 97204, (503) 228-5230
H:\20\20487 - Glacier Highway - Juneau Traffic Design\design_CD\68124_H_LIGHT-H-63 Thu, Jul/30/20 02:11pm

NO.	DATE	REVISION

STATE	PROJECT DESIGNATION	YEAR	SHEET NO.	TOTAL SHEETS
ALASKA	TEA-0955(016)/Z68124	2020	H-64	235

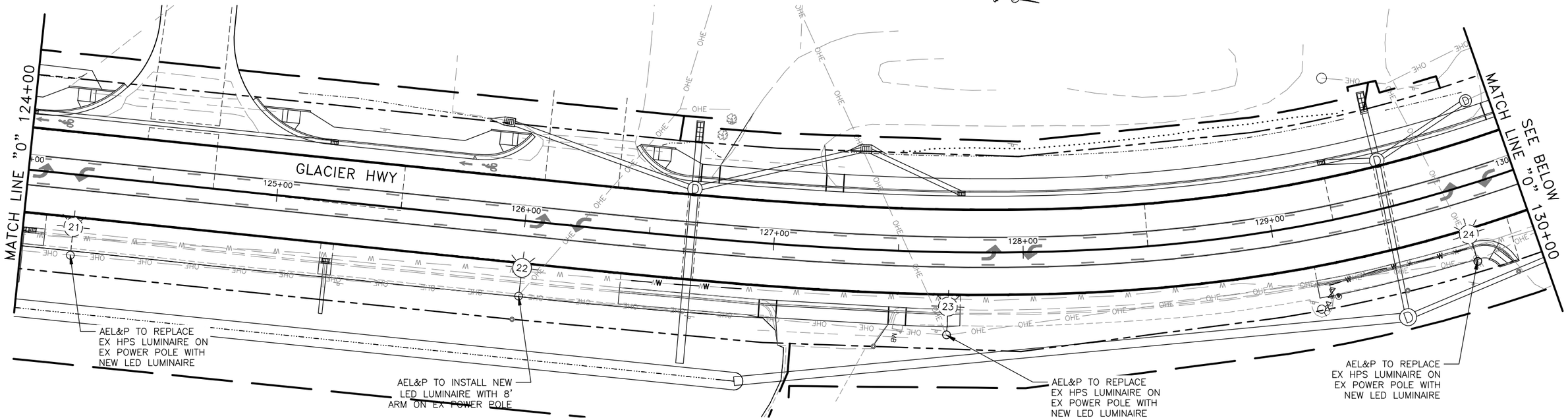

Record Drawings have been reviewed by the Project Engineer, and represent to the best of my knowledge, the project as constructed.

PE Dillon Tomaro 2/4/25

ILLUMINATION PLAN 3

STATE OF ALASKA 49TH
JOHN F. RINGERT
CE 11096
REGISTERED PROFESSIONAL ENGINEER
7/31/2020

PLANS DEVELOPED BY: KITTELSON & ASSOCIATES, INC. CERT. OF AUTHORIZATION NO.: 254741, 851 SW 6TH AVE. SUITE 600, PORTLAND, OR 97204, (503) 228-5230
H:\20\20487 - Glacier Highway - Juneau Traffic Design\design_CD\68124_H_LIGHT-H-64 Thu, Jul/30/20 02:12pm

NOTES:

1. SEE CONCRETE WAY RRFB PLAN FOR RRFB CONDUIT AND WIRING FOR LUMINAIRES AT CONCRETE WAY.

NO.	DATE	REVISION

STATE	PROJECT DESIGNATION	YEAR	SHEET NO.	TOTAL SHEETS
ALASKA	TEA-0955(016)/Z68124	2020	H-65	235

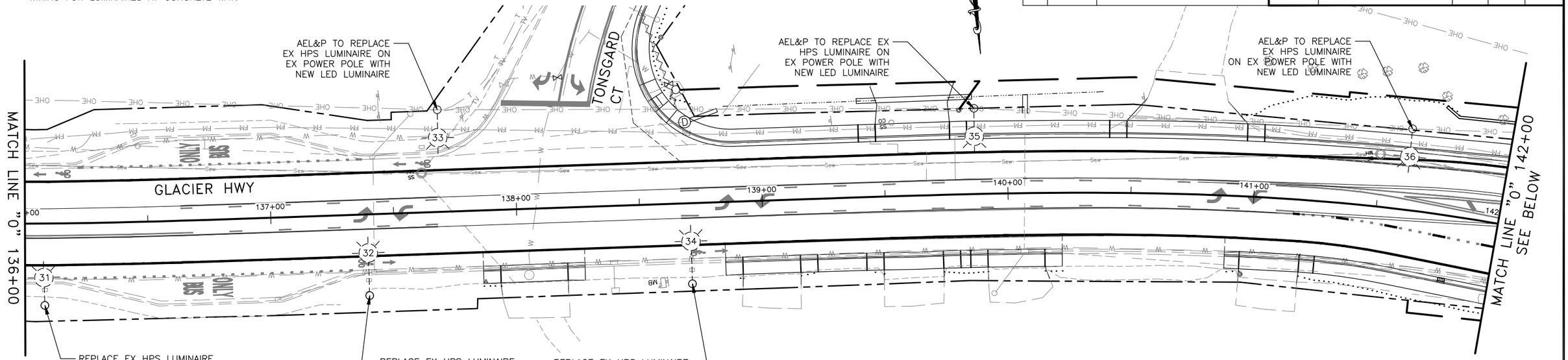

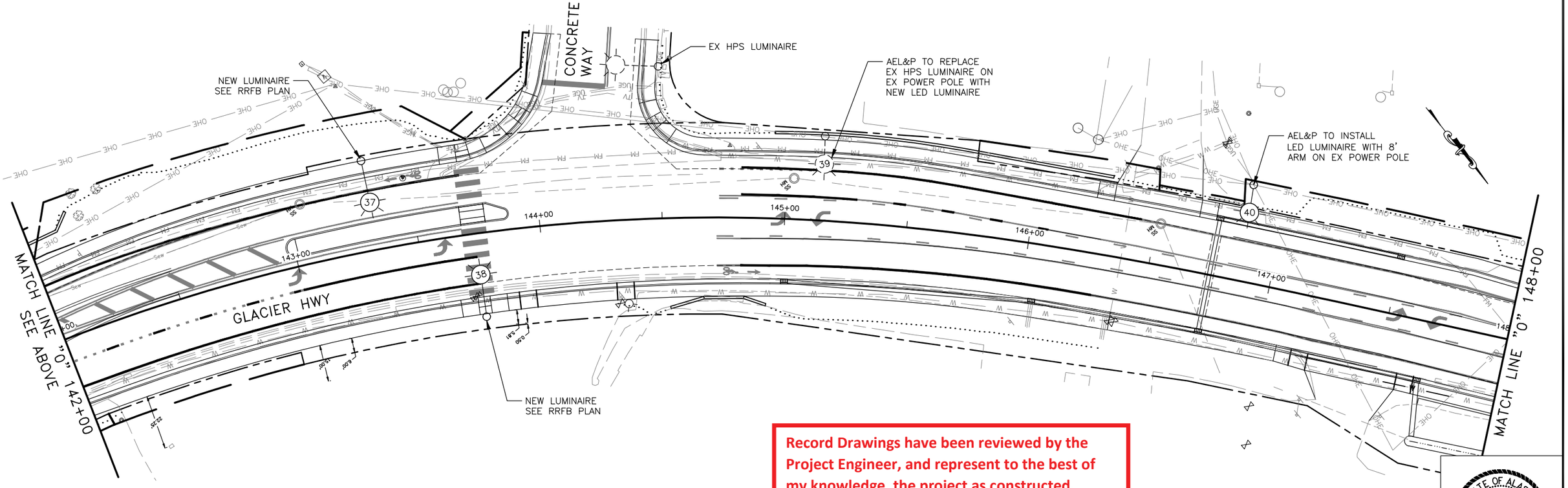

Record Drawings have been reviewed by the Project Engineer, and represent to the best of my knowledge, the project as constructed.

PE Dillon Tomaro 2/4/25

ILLUMINATION PLAN 4

STATE OF ALASKA 49TH JOHN F. RINGERT CE 11096 REGISTERED PROFESSIONAL ENGINEER

7/31/2020

PLANS DEVELOPED BY: KITTELSON & ASSOCIATES, INC. CERT. OF AUTHORIZATION NO.: 254741, 851 SW 6TH AVE. SUITE 600, PORTLAND, OR 97204, (503) 228-5230
H:\20\20487 - Glacier Highway - Juneau Traffic Design\design_CD\68124_H_LIGHT-H-65 Thu, Jul/30/20 02:13pm

NO.	DATE	REVISION

STATE	PROJECT DESIGNATION	YEAR	SHEET NO.	TOTAL SHEETS
ALASKA	TEA-0955(016)/Z68124	2020	H-66	235

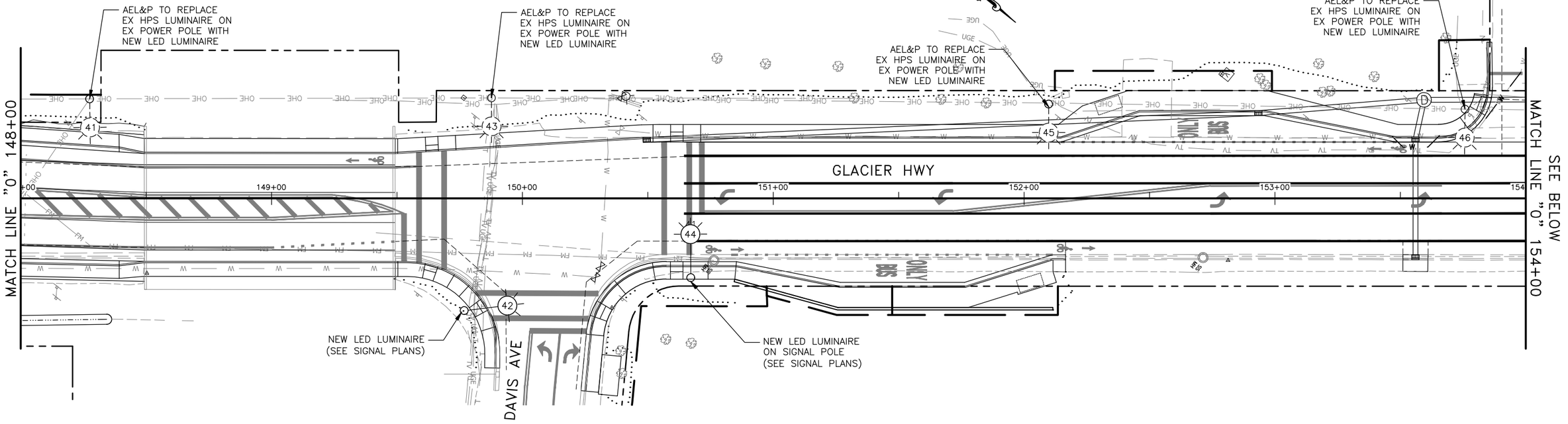

Record Drawings have been reviewed by the Project Engineer, and represent to the best of my knowledge, the project as constructed.

PE *Dillon Tomaro* 2/4/25

ILLUMINATION PLAN 5

STATE OF ALASKA 49TH
JOHN F. RINGERT CE 11096 REGISTERED PROFESSIONAL ENGINEER
7/31/2020

PLANS DEVELOPED BY: KITTELSON & ASSOCIATES, INC. CERT. OF AUTHORIZATION NO.: 254741, 851 SW 6TH AVE. SUITE 600, PORTLAND, OR 97204, (503) 228-5230
H:\20\20487 - Glacier Highway - Juneau Traffic Design\design_CD\68124_H_LIGHT-H-66 Thu, Jul/30/20 02:14pm

NO.	DATE	REVISION

STATE	PROJECT DESIGNATION	YEAR	SHEET NO.	TOTAL SHEETS
ALASKA	TEA-0955(016)/Z68124	2020	H-67	235

MATCH LINE "0" 160+00

SEE BELOW MATCH LINE "0" 166+00

GLACIER HWY

AEL&P TO REPLACE EX HPS LUMINAIRE ON EX POWER POLE WITH NEW LED LUMINAIRE

AEL&P TO REPLACE EX HPS LUMINAIRE ON EX POWER POLE WITH NEW LED LUMINAIRE

INSTALL 30' LIGHT POLE WITH 15' ARM WITH LED LUMINAIRE

1-3c #8
1-1c#8 GND
1-2" RMC

2-3c #8
1-1c#8 GND
1-2" RMC

INSTALL TYPE 1A LOAD CENTER
SEE LOAD CENTER DETAIL #5
APPROX STA 162+30, 32' RT

REMOVE AND SALVAGE EXISTING LOAD CENTER CABINET AND DISCONNECT AND REMOVE WIRING. COORDINATE WITH AEL&P TO DISCONNECT POWER AND VERIFY CABINET IS NOT SERVING ADDITIONAL POWER CONNECTIONS

REMOVE AND SALVAGE EXISTING SCHOOL FLASHER POLE AND CABINET, REMOVE WIRING

INSTALL 30' LIGHT POLE WITH 15' ARM WITH LED LUMINAIRE

1-3c #8
1-1c#8 GND
1-2" RMC

1-3c #8
1-1c#8 GND
1-2" RMC

1-3c #8
1-1c#8 GND
1-2" RMC

REMOVE AND SALVAGE EXISTING LOAD CENTER CABINET AND DISCONNECT AND REMOVE WIRING. COORDINATE WITH AEL&P TO DISCONNECT POWER AND VERIFY CABINET IS NOT SERVING ADDITIONAL POWER CONNECTIONS

AEL&P TO REPLACE EX HPS LUMINAIRE ON EX POWER POLE WITH NEW LED LUMINAIRE

REMOVE AND SALVAGE EXISTING SCHOOL FLASHER POLE AND CABINET REMOVE WIRING

AEL&P TO REPLACE EX HPS LUMINAIRE ON EX POWER POLE WITH NEW LED LUMINAIRE

ALAWAY AVE

SEE ABOVE MATCH LINE "0" 168+00

MATCH LINE "0" 172+00

GLACIER HWY

INSTALL 30' LIGHT POLE WITH 15' ARM WITH LED LUMINAIRE

1-3c #8
1-1c#8 GND
1-2" RMC

Record Drawings have been reviewed by the Project Engineer, and represent to the best of my knowledge, the project as constructed.

PE *Dillon Tomaro* 2/4/25

ILLUMINATION PLAN 6

STATE OF ALASKA
49TH
JOHN F. RINGERT
CE 11096
REGISTERED PROFESSIONAL ENGINEER
7/31/2020

PLANS DEVELOPED BY: KITTELSON & ASSOCIATES, INC. CERT. OF AUTHORIZATION NO.: 254741, 851 SW 6TH AVE. SUITE 600, PORTLAND, OR 97204, (503) 228-5230
H:\20\20487 - Glacier Highway - Juneau Traffic Design\design_CD\68124_H_LIGHT-H-67 Thu, Jul/30/20 02:24pm

NO.	DATE	REVISION

STATE	PROJECT DESIGNATION	YEAR	SHEET NO.	TOTAL SHEETS
ALASKA	TEA-0955(016)/Z68124	2020	H-68	235

PLANS DEVELOPED BY: KITTELSON & ASSOCIATES, INC. CERT. OF AUTHORIZATION NO.: 254741, 851 SW 6TH AVE. SUITE 600, PORTLAND, OR 97204, (503) 228-5230
H:\20\20487 - Glacier Highway - Juneau Traffic Design\design_CD\68124_H_LIGHT-H-68 Thu, Jul/30/20 02:15pm

MATCH LINE "0" 172+00

AEL&P TO INSTALL NEW LUMINAIRE WITH 8' ARM ON EX POWER POLE

EX POLE MOUNTED TRANSFORMER

NEW LOAD CENTER SEE LOAD CENTER #6 DETAIL APPROX STA 175+44, 38'LT

AEL&P TO REMOVE EX HPS LUMINAIRE ON EX POWER POLE

EXISTING ELECTRICAL SWITCH CABINET

INSTALL 40' LIGHT POLE WITH 20' ARM WITH LED LUMINAIRE

1-3c #8
1-1c#8 GND
1-2" RMC

INSTALL 40' LIGHT POLE WITH 20' ARM WITH LED LUMINAIRE

2-3c #8
1-1c#8 GND
2-2" RMC

1-3c #8
1-1c#8 GND
1-2" RMC

INSTALL 40' LIGHT POLE WITH 20'ARM WITH LED LUMINAIRE

1-3c #8
1-1c#8 GND
1-2" RMC

AEL&P TO REMOVE EX HPS LUMINAIRE ON EX POWER POLE

1-3c#8
1-1c#8 GND
1-2" RMC

INSTALL 40' LIGHT POLE WITH 20' ARM WITH LED LUMINAIRE

INSTALL 40' LIGHT POLE WITH 20' ARM WITH LED LUMINAIRE

1-3c#8
1-1c#8 GND
1-2" RMC

INSTALL 40' DAVIT STYLE LIGHT POLE WITH 20' ARM WITH LED LUMINAIRE

INSTALL 40' LIGHT POLE/20'ARM WITH LED LUMINAIRE

1-3c#8
1-1c#8 GND
1-2" RMC

AEL&P TO REMOVE AND SALVAGE EX LIGHT POLE AND LUMINAIRE

INSTALL 40' LIGHT POLE WITH 20'ARM WITH LED LUMINAIRE

GLACIER HWY

RENNINGER ST

MATCH LINE "0" 178+00

Record Drawings have been reviewed by the Project Engineer, and represent to the best of my knowledge, the project as constructed.

PE Dillon Tomaro 2/4/25

STATE OF ALASKA 49TH
JOHN F. RINGERT
CE 11096
REGISTERED PROFESSIONAL ENGINEER
7/31/2020

ILLUMINATION PLAN 7

** Deleted by CO52

NO.	DATE	REVISION

STATE	PROJECT DESIGNATION	YEAR	SHEET NO.	TOTAL SHEETS
ALASKA	TEA-0955(016)/Z68124	2020	H-69	235

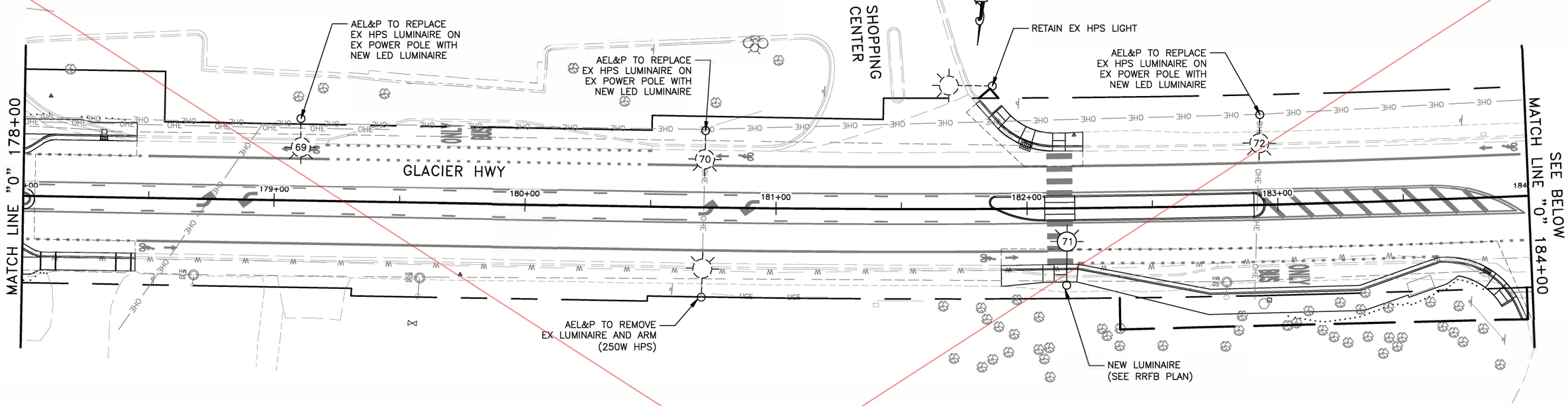

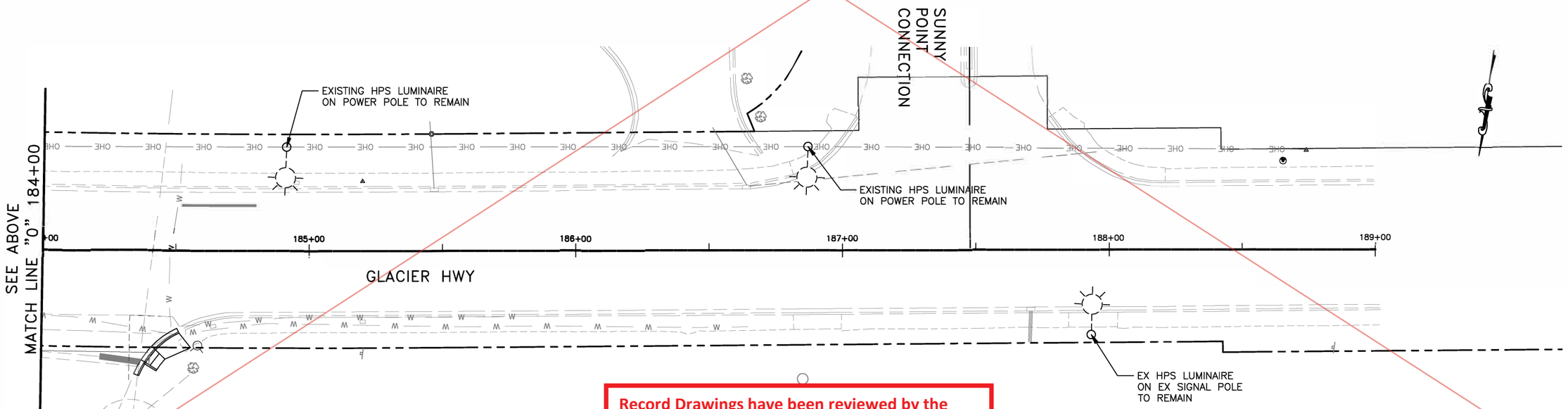

Record Drawings have been reviewed by the Project Engineer, and represent to the best of my knowledge, the project as constructed.

PE Dillon Tomaro 2/4/25

STATE OF ALASKA 49TH JOHN F. RINGERY CE 11096 REGISTERED PROFESSIONAL ENGINEER

7/31/2020

ILLUMINATION PLAN 8

PLANS DEVELOPED BY: KITTELSON & ASSOCIATES, INC. CERT. OF AUTHORIZATION NO.: 254741, 851 SW 6TH AVE. SUITE 600, PORTLAND, OR 97204, (503) 228-5230
H:\20\20487 - Glacier Highway - Juneau Traffic Design\design_CD\68124_H_LIGHT-H-69 Thu, Jul/30/20 02:16pm

NO.	DATE	REVISION

STATE	PROJECT DESIGNATION	YEAR	SHEET NO.	TOTAL SHEETS
ALASKA	TEA-0955(016)/Z68124	2020	H-69	235

CO52

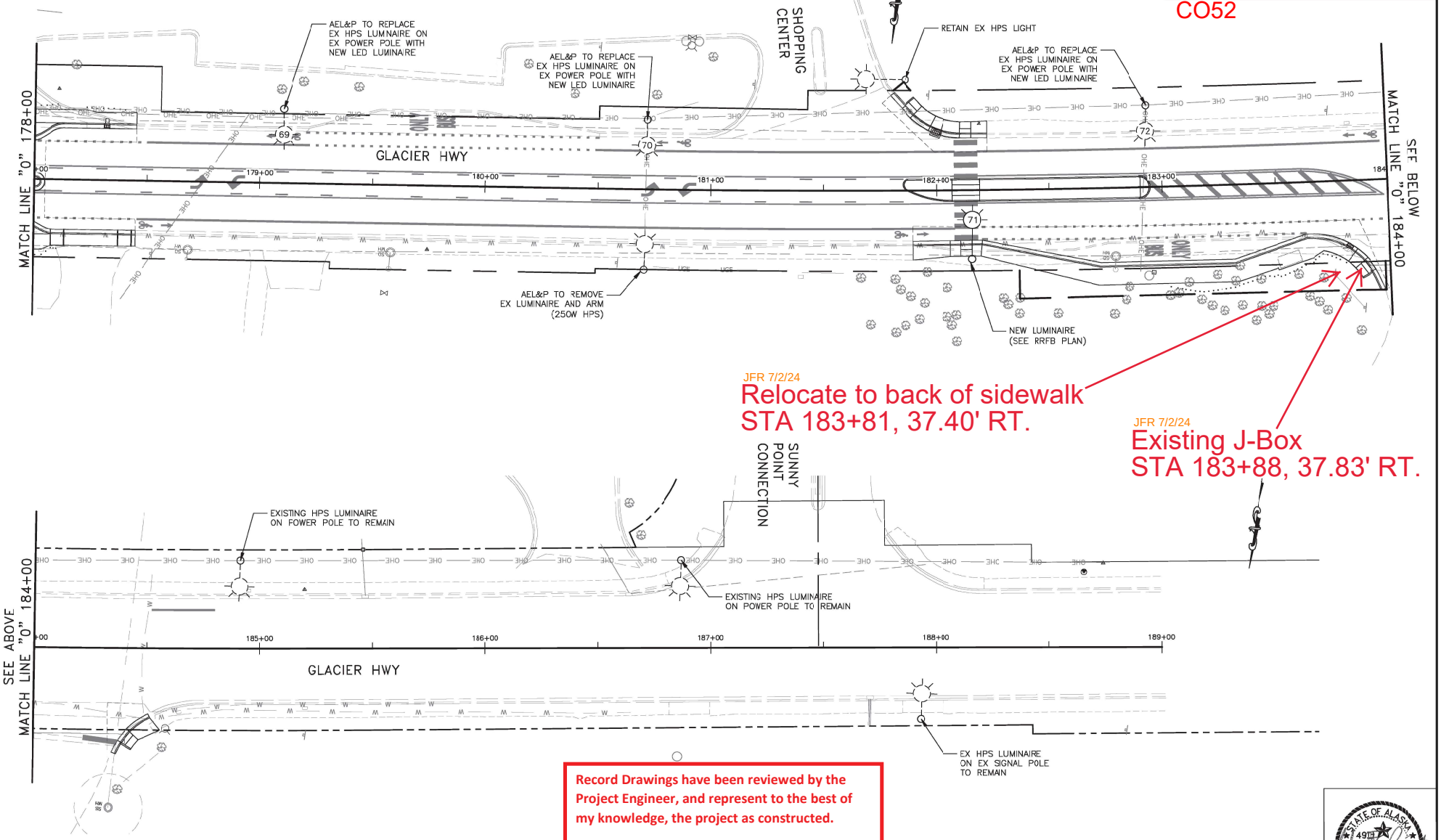

Record Drawings have been reviewed by the Project Engineer, and represent to the best of my knowledge, the project as constructed.

PE *Dillon Tomaro* 2/4/25

ILLUMINATION PLAN 8

STATE OF ALASKA 49TH JOHN F. RINGERT CE 11098 REGISTERED PROFESSIONAL ENGINEER

7/31/2020

PLANS DEVELOPED BY: KITTELSON & ASSOCIATES, INC. 421 SW 6TH AVE. SUITE 600, PORTLAND, OR 97204, (503) 228-2525
H:\20\20487 - Glacier Highway - Juneau Traffic Design\design_CO\68124_H_LIGHT-H-69 Thu, Jul/30/20 02:16pm

NO.	DATE	REVISION

STATE	PROJECT DESIGNATION	YEAR	SHEET NO.	TOTAL SHEETS
ALASKA	TEA-0955(016)/Z68124	2020	H-70	235

ELECTRICAL ANNOTATION LEGEND

SHEET SPECIFIC NOTE KEY – INDICATES SPECIFIC NOTES APPLICABLE ON EACH SHEET

ITEMS TO BE DEMOLISHED

** Deleted by CO27

Type text here

LUMINAIRE SCHEDULE (1)

TYPE	LUMENS	CCT (K)	FIXTURE DESCRIPTION	MOUNTING	MANUFACTURER	MODEL NUMBER	LOAD (W)	NOTES
LED	17,127 LM	4000	TYPE-3 ROADWAY LED LUMINAIRE WITH SLIM PROFILE, RUGGED DIE-CAST ALUMINUM HOUSING PAINTED GRAY, A BUILT-IN WILDLIFE SHIELD, AND A 7-PIN PHOTOCONTROL RECEPTACLE.	POLE MOUNTED	AMERICAN ELECTRIC	ATB2-60BLEDE70-MVOLT-R3-P7 ◁1	133	LUMINAIRE BASIS OF DESIGN
LED	20,481 LM	4000	TYPE-3 ROADWAY LED LUMINAIRE WITH SLIM PROFILE, RUGGED DIE-CAST ALUMINUM HOUSING PAINTED GRAY, A BUILT-IN WILDLIFE SHIELD, AND A 7-PIN PHOTOCONTROL RECEPTACLE.	POLE MOUNTED	AMERICAN ELECTRIC	ATB2-60BLEDE85-480/MVOLT-R3-P7 ◁1	173	LUMINAIRE BASIS OF DESIGN
LED	23,249 LM	4000	TYPE-3 ROADWAY LED LUMINAIRE WITH SLIM PROFILE, RUGGED DIE-CAST ALUMINUM HOUSING PAINTED GRAY, A BUILT-IN WILDLIFE SHIELD, AND A 7-PIN PHOTOCONTROL RECEPTACLE.	POLE MOUNTED	AMERICAN ELECTRIC	ATB2-60BLEDE10-MVOLT-R3-P7 ◁1	208	LUMINAIRE BASIS OF DESIGN

(1) BASED ON MANUFACTURER SPECIFICATIONS AT TIME OF LIGHTING ANALYSIS. SEE SPECIAL PROVISIONS FOR ADDITIONAL INFORMATION.

ROADWAY LIGHTING CLASSIFICATIONS *

CONTINUOUS LIGHTING

METHOD	ROADWAY/PEDESTRIAN CLASSIFICATION	AVG (CD/M2)	MAX/MIN	AVG/MIN	LV RATIO
ILLUMINANCE	PRINCIPLE ARTERIAL	1.6		3:1	
(1) LUMINANCE	MAJOR/HIGH	1.2	5.0	3.1	0.3

(1) DOT&PF CRITERIA FOR USING LED HIGHWAY LIGHTING APPLICATION 6-17-2014.
(2) IES RP-8-14

CONTINUOUS LIGHTING ON 'MAJOR' ROAD

- GLACIER HWY – FROM VANDERBILT HILL RD TO SUNNY POINT

INTERSECTIONS – ILLUMINANCE METHOD

CLASSIFICATION	PEDESTRIAN CLASSIFICATION	AVG (FC)(2)	AVG/MIN
MAJOR/MAJOR	MEDIUM-HIGH	2.6-3.4	3.0
MAJOR/COLLECTOR	MEDIUM-HIGH	2.2-2.9	3.0

APPLICABLE MAJOR/MAJOR INTERSECTIONS WITH GLACIER HIGHWAY

- VANDERBILT HILL RD
- ANKA ST

APPLICABLE MAJOR/COLLECTOR INTERSECTIONS WITH GLACIER HIGHWAY

- COOGAN RD
- ALAWAY AVE
- SHORT ST
- RENNINGER ST
- CONCRETE WAY
- SUNNY POINT

* LIGHTING APPLICABLE TO NEW INSTALLATION LIGHT CRITERIA CAN'T BE MET IN SOME REPLACEMENT AND RETROFIT APPLICATION.

ELECTRICAL NOTES

1. COORDINATE WITH THE ELECTROLIER TABLE SHOWN ON SHEETS H-71 THROUGH H-72 FOR ELECTROLIER INFORMATION.
2. NEW DOT LIGHTING CIRCUITS SHALL BE LOCATED UNDERGROUND, UON.
3. ALL EXISTING UNDERGROUND UTILITIES SHALL BE FIELD LOCATED BEFORE ANY CONDUIT TRENCHING OR FOUNDATION WORK BEGINS. SEE 'U' SHEETS FOR ALL MODIFICATIONS TO UTILITY LINES AND FOR LOCATIONS OF POWER DROPS FOR LIGHTING EQUIPMENT.
4. THE UNDERGROUND ROUTING SHOWN FOR DOT LIGHTING CIRCUITS IS SCHEMATICALLY DRAWN FOR CONCEPTUAL AND MATERIAL TAKE-OFF PURPOSES ONLY. COORDINATE WITH ALL 'NEW' AND 'EXISTING-TO-REMAIN' BURIED UTILITIES AND ROUTE THE LIGHTING CIRCUITS AS NECESSARY TO AVOID CONFLICTS. NOTIFY THE ENGINEER OF ANY DISCREPANCIES OR CONCEPT MODIFICATIONS TO THE LIGHTING CIRCUIT ROUTING.
5. MULTIPLE CIRCUITS FOR THE DOT SYSTEM MAY BE COMBINED IN ONE CONDUIT SO LONG AS ALL CIRCUIT CONDUCTORS ARE LABELED AT EACH JUNCTION BOX INDICATING LOAD CENTER IDENTIFICATION AND CIRCUIT NUMBER, AND ALL NEC CONDUIT FILL CALCULATIONS ARE SATISFIED.
6. LIGHTING CONDUIT SHALL BE:
   -2" RMC FOR ALL SWEEPS.
   -2" RMC BETWEEN JUNCTION BOX AND ADJACENT ELECTROLIER.
   -2" RMC BETWEEN LOAD CENTER AND FIRST JUNCTION BOX.
   -2" HDPE FROM JUNCTION BOX SWEEP TO NEXT JUNCTION BOX SWEEP.
   NOTE, ALL CONNECTORS AND COUPLINGS BETWEEN RMC AND HDPE CONDUIT SHALL BE LISTED AND RATED FOR SUCH USE.
7. FUSIBLE DISCONNECTS SHALL BE LOCATED IN THE ELECTROLIER HANDHOLE AND BE RATED AT 10 AMPS AND A MINIMUM OF 600 VOLTS.
8. ALL DOT LIGHTING CIRCUITS SHALL BE (3) #8 AWG XHHW COPPER UNLESS SHOWN OTHERWISE ON PLANS.
9. ALL ELECTRICAL SYMBOLS AND LINE TYPES ARE SHOWN IN THE GENERAL PROJECT SYMBOL LEGEND ON SHEET H-1.
10. REFER TO TRAFFIC CONTROL PLANS BEFORE BEGINNING ANY WORK THAT MAY EFFECT THE TRAFFIC.
11. THE INSTALLATION OF ALL ELECTROLIER JUNCTION BOXES SHALL SATISFY THE REQUIREMENTS OF THE DOT STANDARD DRAWING L-23.01 AND DETAILS ON SHEETS H-71, H-72, AND H-73.
12. THE INSTALLATION OF ALL ELECTROLIERS AND FOUNDATIONS SHALL SATISFY THE REQUIREMENTS OF THE DOT STANDARD DRAWING L-03.10 AND DETAILS ON SHEETS H-58, H-69, H-70, H-72, AND H-73.
13. THE INSTALLATION OF ALL ELECTROLIER TYPE 1A LOAD CENTERS SHALL SATISFY THE REQUIREMENTS OF THE DOT STANDARD DETAILS ON SHEETS H-74, H-75, H-76 AND H-77.

GENERAL NOTES

1. IF AN ALTERNATIVE LUMINAIRE TO THOSE LISTED IN THE LUMINAIRE SCHEDULE IS CHOSEN:
   -PERFORM AND SUBMIT LIGHTING CALCULATIONS TO THE DOT FOR REVIEW & ACCEPTANCE (BEFORE PROVIDING LUMINAIRES), SHOWING THAT ALL TARGET VALUES LISTED IN THE RP-8-14 ROADWAY LIGHTING CLASSIFICATIONS' TABLES ARE SATISFIED. APPROVAL BY THE ENGINEER IS REQUIRED.
   -ALL LUMINAIRES MUST BE OF THE LED TYPE, MADE BY THE SAME MANUFACTURER, AND MUST SATISFY ALL REQUIREMENTS LISTED IN SPECIAL PROCISIONS SECTION 740-2.18.

SPECIFIC NOTES

◁1 PROVIDE LUMINAIRES WITH VOLTAGE DRIVERS AS INDICATED IN THE ELECTROLIER TABLE ON SHEETS H-69 AND H-70. CONFIRM FINAL PART NUMBER WITH MANUFACTURER BEFORE ORDERING LUMINAIRES.

Record Drawings have been reviewed by the Project Engineer, and represent to the best of my knowledge, the project as constructed.

PE Dillon Tomaro 2/4/25

STATE OF ALASKA 49TH JOHN F. RINGERT CE-11096 REGISTERED PROFESSIONAL ENGINEER

7/31/2020

GENERAL LIGHTING NOTES (1 OF 1)

PLANS DEVELOPED BY: KITTELSON & ASSOCIATES, INC. CERT. OF AUTHORIZATION NO.: 254741. 851 SW 6TH AVE. SUITE 600, PORTLAND, OR 97204, (503) 228-5230
H:\20\20487 - Glacier Highway - Juneau Traffic Design\design_CD\68124_H_LIGHT_S&D-H-70 Thu, Jul/30/20 09:31am

CO 27

NO.	DATE	REVISION
1	06/16/2021	UTILITY TRENCH DETAILS

STATE	PROJECT DESIGNATION	YEAR	SHEET NO.	TOTAL SHEETS
ALASKA	TEA-0955(016)/Z68124	2020	H-70	235

ELECTRICAL ANNOTATION LEGEND

▷1◁ SHEET SPECIFIC NOTE KEY – INDICATES SPECIFIC NOTES APPLICABLE ON EACH SHEET

ITEMS TO BE DEMOLISHED

LUMINAIRE SCHEDULE (1)

TYPE	LUMENS	CCT (K)	FIXTURE DESCRIPTION	MOUNTING	MANUFACTURER	MODEL NUMBER	LOAD (W)	NOTES
LED	17,127 LM	4000	TYPE-3 ROADWAY LED LUMINAIRE WITH SLIM PROFILE, RUGGED DIE-CAST ALUMINUM HOUSING PAINTED GRAY, A BUILT-IN WILDLIFE SHIELD, AND A 7-PIN PHOTOCONTROL RECEPTACLE.	POLE MOUNTED	AMERICAN ELECTRIC	ATB2-60BLEDE70-MVOLT-R3-P7 ◁1	133	LUMINAIRE BASIS OF DESIGN
LED	20,481 LM	4000	TYPE-3 ROADWAY LED LUMINAIRE WITH SLIM PROFILE, RUGGED DIE-CAST ALUMINUM HOUSING PAINTED GRAY, A BUILT-IN WILDLIFE SHIELD, AND A 7-PIN PHOTOCONTROL RECEPTACLE.	POLE MOUNTED	AMERICAN ELECTRIC	ATB2-60BLEDE85-480/MVOLT-R3-P7 ◁1	173	LUMINAIRE BASIS OF DESIGN
LED	23,249 LM	4000	TYPE-3 ROADWAY LED LUMINAIRE WITH SLIM PROFILE, RUGGED DIE-CAST ALUMINUM HOUSING PAINTED GRAY, A BUILT-IN WILDLIFE SHIELD, AND A 7-PIN PHOTOCONTROL RECEPTACLE.	POLE MOUNTED	AMERICAN ELECTRIC	ATB2-60BLEDE10-MVOLT-R3-P7 ◁1	208	LUMINAIRE BASIS OF DESIGN

(1) BASED ON MANUFACTURER SPECIFICATIONS AT TIME OF LIGHTING ANALYSIS. SEE SPECIAL PROVISIONS FOR ADDITIONAL INFORMATION.

ROADWAY LIGHTING CLASSIFICATIONS *

CONTINUOUS LIGHTING

METHOD	ROADWAY/PEDESTRIAN CLASSIFICATION	AVG (CD/M2)	MAX/MIN	AVG/MIN	LV RATIO
ILLUMINANCE	PRINCIPLE ARTERIAL	1.6		3:1	
(1) LUMINANCE	MAJOR/HIGH	1.2	5.0	3.1	0.3

(1) DOT&PF CRITERIA FOR USING LED HIGHWAY LIGHTING APPLICATION 6-17-2014.
(2) IES RP-8-14

CONTINUOUS LIGHTING ON 'MAJOR' ROAD

- GLACIER HWY – FROM VANDERBILT HILL RD TO SUNNY POINT

INTERSECTIONS – ILLUMINANCE METHOD

CLASSIFICATION	PEDESTRIAN CLASSIFICATION	AVG (FC)(2)	AVG/MIN
MAJOR/MAJOR	MEDIUM-HIGH	2.6-3.4	3.0
MAJOR/COLLECTOR	MEDIUM-HIGH	2.2-2.9	3.0

APPLICABLE MAJOR/MAJOR INTERSECTIONS WITH GLACIER HIGHWAY

- VANDERBILT HILL RD
- ANKA ST

APPLICABLE MAJOR/COLLECTOR INTERSECTIONS WITH GLACIER HIGHWAY

- COOGAN RD
- ALAWAY AVE
- SHORT ST
- RENNINGER ST
- CONCRETE WAY
- SUNNY POINT

* LIGHTING APPLICABLE TO NEW INSTALLATION LIGHT CRITERIA CAN'T BE MET IN SOME REPLACEMENT AND RETROFIT APPLICATION.

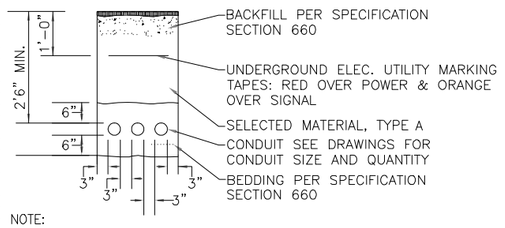

NOTE:

1. ALL DIMENSIONS ARE MINIMUM.

1 TRENCH DETAIL - NON PAVED AREAS
SCALE: NO SCALE

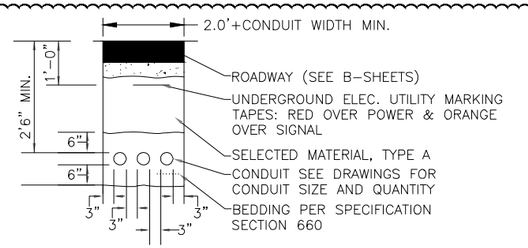

NOTES:

1. ALL DIMENSIONS ARE MINIMUM.
2. SEE B-SHEETS FOR TYPICAL SECTIONS UNDER PAVED AREAS.
3. WHERE UTILITY CONDUITS ARE BURIED, SEPARATE TV AND TELEPHONE UTILITY CONDUITS 12". INCREASE BURIAL DEPTH TO 36" FOR ALL UTILITY CONDUITS. SEE UTILITY TRENCH DETAIL, THIS SHEET.
4. UTILITY TRENCHES IN MILL AND FILL AREAS, REPLACE REMOVED HMA WITH 8" ATB

2 TRENCH DETAIL - PAVED AREAS
SCALE: NO SCALE

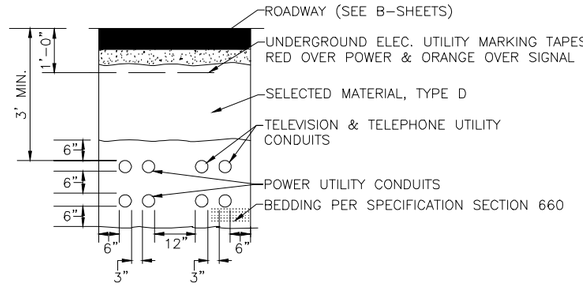

NOTES:

1. ALL DIMENSIONS ARE MINIMUM.
2. SEE B-SHEETS FOR TYPICAL SECTIONS UNDER PAVED AREAS.

3 UTILITY TRENCH DETAIL
SCALE: NO SCALE

GENERAL NOTES

1. IF AN ALTERNATIVE LUMINAIRE TO THOSE LISTED IN THE LUMINAIRE SCHEDULE IS CHOSEN:
   -PERFORM AND SUBMIT LIGHTING CALCULATIONS TO THE DOT FOR REVIEW & ACCEPTANCE (BEFORE PROVIDING LUMINAIRES), SHOWING THAT ALL TARGET VALUES LISTED IN THE RP-8-14 ROADWAY LIGHTING CLASSIFICATIONS' TABLES ARE SATISFIED. APPROVAL BY THE ENGINEER IS REQUIRED.
   -ALL LUMINAIRES MUST BE OF THE LED TYPE, MADE BY THE SAME MANUFACTURER, AND MUST SATISFY ALL REQUIREMENTS LISTED IN SPECIAL PROCISIONS SECTION 740-2.18.

SPECIFIC NOTES

▷1◁ PROVIDE LUMINAIRES WITH VOLTAGE DRIVERS AS INDICATED IN THE ELECTROLIER TABLE ON SHEETS H-69 AND H-70. CONFIRM FINAL PART NUMBER WITH MANUFACTURER BEFORE ORDERING LUMINAIRES.

ELECTRICAL NOTES

1. COORDINATE WITH THE ELECTROLIER TABLE SHOWN ON SHEETS H-71 THROUGH H-72 FOR ELECTROLIER INFORMATION.
2. NEW DOT LIGHTING CIRCUITS SHALL BE LOCATED UNDERGROUND, UON.
3. ALL EXISTING UNDERGROUND UTILITIES SHALL BE FIELD LOCATED BEFORE ANY CONDUIT TRENCHING OR FOUNDATION WORK BEGINS. SEE 'U' SHEETS FOR ALL MODIFICATIONS TO UTILITY LINES AND FOR LOCATIONS OF POWER DROPS FOR LIGHTING EQUIPMENT.
4. THE UNDERGROUND ROUTING SHOWN FOR DOT LIGHTING CIRCUITS IS SCHEMATICALLY DRAWN FOR CONCEPTUAL AND MATERIAL TAKE-OFF PURPOSES ONLY. COORDINATE WITH ALL 'NEW' AND 'EXISTING-TO-REMAIN' BURIED UTILITIES AND ROUTE THE LIGHTING CIRCUITS AS NECESSARY TO AVOID CONFLICTS. NOTIFY THE ENGINEER OF ANY DISCREPANCIES OR CONCEPT MODIFICATIONS TO THE LIGHTING CIRCUIT ROUTING.
5. MULTIPLE CIRCUITS FOR THE DOT SYSTEM MAY BE COMBINED IN ONE CONDUIT SO LONG AS ALL CIRCUIT CONDUCTORS ARE LABELED AT EACH JUNCTION BOX INDICATING LOAD CENTER IDENTIFICATION AND CIRCUIT NUMBER, AND ALL NEC CONDUIT FILL CALCULATIONS ARE SATISFIED.
6. LIGHTING CONDUIT SHALL BE:
   -2" RMC FOR ALL SWEEPS.
   -2" RMC BETWEEN JUNCTION BOX AND ADJACENT ELECTROLIER.
   -2" RMC BETWEEN LOAD CENTER AND FIRST JUNCTION BOX.
   -2" HDPE FROM JUNCTION BOX SWEEP TO NEXT JUNCTION BOX SWEEP.
   NOTE, ALL CONNECTORS AND COUPLINGS BETWEEN RMC AND HDPE CONDUIT SHALL BE LISTED AND RATED FOR SUCH USE.
7. FUSIBLE DISCONNECTS SHALL BE LOCATED IN THE ELECTROLIER HANDHOLE AND BE RATED AT 10 AMPS AND A MINIMUM OF 600 VOLTS.
8. ALL DOT LIGHTING CIRCUITS SHALL BE (3) #8 AWG XHHW COPPER UNLESS SHOWN OTHERWISE ON PLANS.
9. ALL ELECTRICAL SYMBOLS AND LINE TYPES ARE SHOWN IN THE GENERAL PROJECT SYMBOL LEGEND ON SHEET H-1.
10. REFER TO TRAFFIC CONTROL PLANS BEFORE BEGINNING ANY WORK THAT MAY EFFECT THE TRAFFIC.
11. THE INSTALLATION OF ALL ELECTROLIER JUNCTION BOXES SHALL SATISFY THE REQUIREMENTS OF THE DOT STANDARD DRAWING L-23.01 AND DETAILS ON SHEETS H-71, H-72, AND H-73.
12. THE INSTALLATION OF ALL ELECTROLIERS AND FOUNDATIONS SHALL SATISFY THE REQUIREMENTS OF THE DOT STANDARD DRAWING L-03.10 AND DETAILS ON SHEETS H-58, H-69, H-70, H-72, AND H-73.
13. THE INSTALLATION OF ALL ELECTROLIER TYPE 1A LOAD CENTERS SHALL SATISFY THE REQUIREMENTS OF THE DOT STANDARD DETAILS ON SHEETS H-74, H-75, H-76 AND H-77.

Record Drawings have been reviewed by the Project Engineer, and represent to the best of my knowledge, the project as constructed.

PE Dillon Tomaro 2/4/25

STATE OF ALASKA 49TH JOHN F. RINGERT CE 11096 REGISTERED PROFESSIONAL ENGINEER
8/24/21

GENERAL LIGHTING NOTES (1 OF 1)

PLANS DEVELOPED BY: KITTELSON & ASSOCIATES, INC. CERT. OF AUTHORIZATION NO.: 254741, 851 SW 6TH AVE. SUITE 600, PORTLAND, OR 97204, (503) 228-5230
H:\20\20487 - Glacier Highway - Juneau Traffic Design\design_CD\68124_H_LIGHT_S&D-H-70 Tue, Aug/24/21 11:57am

NO.	DATE	REVISION

STATE	PROJECT DESIGNATION	YEAR	SHEET NO.	TOTAL SHEETS
ALASKA	TEA-0955(016)/Z68124	2020	H-71	235

** Deleted by CO11

ELECTROLIER SUMMARY TABLE

NO.	SHEET NO.	POLE STATION	POLE OFFSET	VOLTAGE/ WATTS	CIRCUIT	MAST-ARM LENGTH	LUMINAIRE MOUNTING HEIGHT	SIGNAL POLE	LUMINAIRE CONFIGURATION	WIDENING DETAIL [1]	LED LUMINAIRE		ELECTROLIER QUANTITY	TOFE	FOUNDATION DEPTH	NOTES
											THIS PAY ITEM	BY OTHERS				
1	H-58	"O" 101+58.8	31.7 RT	240V/173W	1A11	15'-0"	30'-0"		SINGLE	A	1		1	25.6'	17.0'	
2	H-58	"O" 102+63.3	34.6 RT	240V/173W	1A11	15'-0"	30'-0"		SINGLE		1					SEE AFB PLANS (POLE IN SIGNAL PAY ITEM)
3	H-58	"O" 102+90.9	49.0 LT	480V/173W	EXISTING	EXISTING	EXISTING		SINGLE		1					REPLACE EXISTING LUMINAIRE FIXTURE
4	H-58	11+86.7	24.5 RT	480V/173W	EXISTING	EXISTING	EXISTING		SINGLE		1					REPLACE EXISTING LUMINAIRE FIXTURE
5	H-58	10+92.4	24.3 RT	480V/173W	EXISTING	EXISTING	EXISTING		SINGLE		1					REPLACE EXISTING LUMINAIRE FIXTURE
6	H-58	"O" 103+80.5	36.7 RT	480V/173W	EXISTING	EXISTING	EXISTING		SINGLE		1					REPLACE EXISTING LUMINAIRE FIXTURE
7	H-58	"O" 105+30.2	32.0 RT	240V/173W	1A11	15'-0"	30'-0"		SINGLE	C	1		1	28.9'	16.0'	
8	H-58	"O" 106+86.6	45.0 RT	240V/173W	EXISTING	EXISTING	EXISTING		SINGLE			1				AEL&P TO REPLACE EXISTING FIXTURE
9	H-58	"O" 108+36.6	31.1 RT	240V/173W	EXISTING	8'-0"	APPROX. 30'-0"		SINGLE			1				AEL&P TO INSTALL NEW LUMINAIRE [3]
10	H-58	"O" 110+24.1	35.1 RT	240V/173W	EXISTING	EXISTING	EXISTING		SINGLE			1				AEL&P TO REPLACE EXISTING FIXTURE
11	H-58	"O" 111+48.0	28.7 LT	240V/173W	2A1	15'-0"	30'-0"		SINGLE	A	1		1	26.6'	18.0'	
12	H-59	"O" 112+29.7	32.2 RT	240V/173W	EXISTING	EXISTING	EXISTING		SINGLE			1				AEL&P TO REPLACE EXISTING FIXTURE [3]
13	H-59	"O" 112+84.2	33.0 LT	240V/173W	2A1	15'-0"	30'-0"		SINGLE	A	1		1	26.0'	20.0'	
14	H-59	"O" 114+25.7	31.8 RT	240V/173W	EXISTING	EXISTING	EXISTING		SINGLE			1				AEL&P TO REPLACE EXISTING FIXTURE [3]
15	H-59	"O" 115+43.5	30.4 LT	240V/173W	2A1	15'-0"	30'-0"		SINGLE	B	1		1	26.5'	22.0'	
16	H-59	"O" 116+29.9	47.5 RT	240V/173W	EXISTING	8'-0"	APPROX. 30'-0"		SINGLE			1				AEL&P TO INSTALL NEW LUMINAIRE
17	H-59	"O" 118+24.8	49.3 LT	240V/173W	EXISTING	8'-0"	APPROX. 30'-0"		SINGLE			1				AEL&P TO INSTALL NEW LUMINAIRE
18	H-59	"O" 118+30.6	43.6 RT	240V/173W	EXISTING	EXISTING	EXISTING		SINGLE			1				AEL&P TO REPLACE EXISTING FIXTURE
19	H-59	"O" 120+26.5	39.5 RT	240V/208W	EXISTING	EXISTING	EXISTING		SINGLE			1				AEL&P TO REPLACE EXISTING FIXTURE
20	H-59	"O" 122+32.8	34.51 RT	240V/208W	EXISTING	8'-0"	APPROX. 30'-0"		SINGLE			1				AEL&P TO INSTALL NEW LUMINAIRE
21	~~H-59~~	"O" 124+20.1	32.3 RT	240V/208W	EXISTING	EXISTING	EXISTING		SINGLE			1				AEL&P TO REPLACE EXISTING FIXTURE [3]
22	H-60	"O" 126+00.4	30.2 RT	240V/208W	EXISTING	8'-0"	APPROX. 30'-0"		SINGLE			1				AEL&P TO INSTALL NEW LUMINAIRE
23	H-60	"O" 127+69.9	33.2 RT	240V/208W	EXISTING	EXISTING	EXISTING		SINGLE			1				AEL&P TO REPLACE EXISTING FIXTURE
24	H-60	"O" 129+75.8	30.4 RT	240V/208W	EXISTING	EXISTING	EXISTING		SINGLE			1				AEL&P TO REPLACE EXISTING FIXTURE
25	H-60	"O" 131+77.5	34.4 RT	240V/208W	EXISTING	8'-0"	APPROX. 30'-0"		SINGLE			1				AEL&P TO INSTALL NEW LUMINAIRE
26	H-60	"O" 132+74.1	44.5 RT	240V/173W	EXISTING	EXISTING	EXISTING		SINGLE		1					REPLACE EXISTING LUMINAIRE FIXTURE
27	H-60	"O" 133+61.7	44.8 RT	240V/133W	EXISTING	EXISTING	EXISTING	•	DOUBLE		1					SEE SIGNAL PLANS (POLE IN SIGNAL PAY ITEM) [2]
28	H-60	"O" 133+61.7	44.8 RT	240V/133W	EXISTING	EXISTING	EXISTING	•	DOUBLE		1					SEE SIGNAL PLANS (POLE IN SIGNAL PAY ITEM)
29	H-60	"O" 134+16.6	38.1 LT	240V/173W	EXISTING	EXISTING	EXISTING		SINGLE			1				AEL&P TO REPLACE EXISTING FIXTURE [3]
30	H-60	"O" 134+82.2	39.7 RT	240V/173W	EXISTING	22'-0"	40'-0"	•	SINGLE		1					SEE SIGNAL PLANS (POLE IN SIGNAL PAY ITEM) [2]
31	H-61	"O" 136+07.8	33.3 RT	240V/173W	EXISTING	EXISTING	EXISTING		SINGLE		1					REPLACE EXISTING LUMINAIRE FIXTURE
32	H-61	"O" 137+39.1	33.0 RT	240V/173W	EXISTING	EXISTING	EXISTING		SINGLE		1					REPLACE EXISTING LUMINAIRE FIXTURE
33	H-61	"O" 137+69.2	41.5 LT	240V/173W	EXISTING	EXISTING	EXISTING		SINGLE			1				AEL&P TO REPLACE EXISTING FIXTURE [3]
34	H-61	"O" 138+70.5	32.8 RT	240V/173W	EXISTING	EXISTING	EXISTING		SINGLE		1					REPLACE EXISTING LUMINAIRE FIXTURE
35	H-61	"O" 139+86.9	34.9 LT	240V/173W	EXISTING	EXISTING	EXISTING		SINGLE			1				AEL&P TO REPLACE EXISTING FIXTURE
36	H-61	"O" 141+60.8	33.1 LT	240V/173W	EXISTING	EXISTING	EXISTING		SINGLE			1				AEL&P TO REPLACE EXISTING FIXTURE [3]
37	H-61	"O" 143+33.1	38.1 LT	240V/173W	3A1	15'-0"	30'-0"		SINGLE		1					SEE RRFB PLANS (POLE IN SIGNAL PAY ITEM)
38	H-61	"O" 143+73.5	34.2 RT	240V/173W	3A1	15'-0"	30'-0"		SINGLE		1					SEE RRFB PLANS (POLE IN SIGNAL PAY ITEM)
39	H-61	"O" 145+14.6	34.4 LT	240V/173W	EXISTING	EXISTING	EXISTING		SINGLE			1				AEL&P TO REPLACE EXISTING FIXTURE
40	H-61	"O" 146+85.5	39.5 LT	240V/173W	EXISTING	8'-0"	30'-0"		SINGLE			1				AEL&P TO INSTALL NEW LUMINAIRE [3]
										TOTALS	19	21	4			

TOFE=TOP OF FOUNDATION ELEVATION
DISREGARD DEPTH TABLE ON STD. DWG. L-30.10 AND REFER TO FOUNDATION DEPTH IN TABLE ABOVE

SPECIFIC NOTES

[1] SEE SHEET H-73 FOR WIDENING DETAILS. COORDINATE WITH ENGINEER IF WIDENING DETAIL SPECIFIED PER ELECTROLIER DOES NOT MATCH FIELD CONDITIONS OR IF ANOTHER WIDENING DETAIL WOULD BE MORE APPLICABLE.

[2] SEE SHEET H-58 AND H-59 FOR FURTHER INFORMATION REGARDING SIGNAL POLE AND FOUNDATION TYPE AND INSTALLATION REQUIREMENTS.

[3] ALL WORK BY AEL&P IS SHOWN FOR REFERENCE ONLY. WORK BY AEL&P WILL BE DONE THROUGH A SEPARATE AGREEMENTS BETWEEN DOT&PF AND AEL&P.

Record Drawings have been reviewed by the Project Engineer, and represent to the best of my knowledge, the project as constructed.

PE Dillon Tomaro 2/4/25

ELECTROLIER SUMMARY
(1 OF 3)

STATE OF ALASKA 49TH JOHN F. RINGERT CE-11096 REGISTERED PROFESSIONAL ENGINEER
7/31/2020

PLANS DEVELOPED BY: KITTELSON & ASSOCIATES, INC. CERT. OF AUTHORIZATION NO.: 254741, 851 SW 6TH AVE. SUITE 600, PORTLAND, OR 97204, (503) 228-5230
H:\20\20487 - Glacier Highway - Juneau Traffic Design\design_CD\68124_H_LIGHT_S&D-H-71 Thu, Jul/30/20 09:31am

CO 11 Attachment No. 8

NO.	DATE	REVISION

STATE	PROJECT DESIGNATION	YEAR	SHEET NO.	TOTAL SHEETS
ALASKA	TEA-0955(016)/Z68124	2020	H-71	235

ELECTROLIER SUMMARY TABLE

NO.	SHEET NO.	POLE STATION	POLE OFFSET	VOLTAGE/ WATTS	CIRCUIT	MAST-ARM LENGTH	LUMINAIRE MOUNTING HEIGHT	SIGNAL POLE	LUMINAIRE CONFIGURATION	WIDENING DETAIL [1]	LED LUMINAIRE THIS PAY ITEM	LED LUMINAIRE BY OTHERS	ELECTROLIER QUANTITY	TOFE	FOUNDATION DEPTH	NOTES
1	H-58	"0" 101+58.8	31.7 RT	240V/173W	1A11	15'-0"	30'-0"		SINGLE	A	1		1	25.6'	~~17.0'~~ Construct foundation depth per Standard Plan L-30.11	
2	H-58	"0" 102+63.3	34.6 RT	240V/173W	1A11	15'-0"	30'-0"		SINGLE		1					SEE AFB PLANS (POLE IN SIGNAL PAY ITEM)
3	H-58	"0" 102+90.9	49.0 LT	480V/173W	EXISTING	EXISTING	EXISTING		SINGLE		1					REPLACE EXISTING LUMINAIRE FIXTURE
4	H-58	11+86.7	24.5 RT	480V/173W	EXISTING	EXISTING	EXISTING		SINGLE		1					REPLACE EXISTING LUMINAIRE FIXTURE
5	H-58	10+92.4	24.3 RT	480V/173W	EXISTING	EXISTING	EXISTING		SINGLE		1					REPLACE EXISTING LUMINAIRE FIXTURE
6	H-58	"0" 103+80.5	36.7 RT	480V/173W	EXISTING	EXISTING	EXISTING		SINGLE		1					REPLACE EXISTING LUMINAIRE FIXTURE
7	H-58	"0" 105+30.2	32.0 RT	240V/173W	1A11	15'-0"	30'-0"		SINGLE	C	1		1	28.9'	~~16.0'~~ Construct foundation depth per Standard Plan L-30.11	
8	H-58	"0" 106+86.6	45.0 RT	240V/173W	EXISTING	EXISTING	EXISTING		SINGLE			1				AEL&P TO REPLACE EXISTING FIXTURE
9	H-58	"0" 108+36.6	31.1 RT	240V/173W	EXISTING	8'-0"	APPROX. 30'-0"		SINGLE			1				AEL&P TO INSTALL NEW LUMINAIRE [3]
10	H-58	"0" 110+24.1	35.1 RT	240V/173W	EXISTING	EXISTING	EXISTING		SINGLE			1				AEL&P TO REPLACE EXISTING FIXTURE
~~11~~	~~H-58~~	~~"0" 111+48.0~~	~~28.7 LT~~	~~240V/173W~~	~~2A1~~	~~15' 0"~~	~~30' 0"~~		~~SINGLE~~	~~A~~	~~1~~		~~1~~	~~26.6'~~	~~18.0'~~	Delete electrolier No. 11 in its entirety.
12	H-59	"0" 112+29.7	32.2 RT	240V/173W	EXISTING	EXISTING	EXISTING		SINGLE			1				AEL&P TO REPLACE EXISTING FIXTURE [3]
~~13~~	~~H-59~~	~~"0" 112+84.2~~	~~33.0 LT~~	~~240V/173W~~	~~2A1~~	~~15' 0"~~	~~30' 0"~~		~~SINGLE~~	~~A~~	~~1~~		~~1~~	~~26.0'~~	~~20.0'~~	Delete electrolier No. 13 in its entirety.
14	H-59	"0" 114+25.7	31.8 RT	240V/173W	EXISTING	EXISTING	EXISTING		SINGLE			1				AEL&P TO REPLACE EXISTING FIXTURE [3]
~~15~~	~~H-59~~	~~"0" 115+43.5~~	~~30.4 LT~~	~~240V/173W~~	~~2A1~~	~~15'-0"~~	~~30'-0"~~		~~SINGLE~~	~~B~~	~~1~~		~~1~~	~~26.5'~~	~~22.0'~~	Delete electrolier No. 15 in its entirety.
16	H-59	"0" 116+29.9	47.5 RT	240V/173W	EXISTING	8'-0"	APPROX. 30'-0"		SINGLE			1				AEL&P TO INSTALL NEW LUMINAIRE
17	H-59	"0" 118+24.8	49.3 LT	240V/173W	EXISTING	8'-0"	APPROX. 30'-0"		SINGLE			1				AEL&P TO INSTALL NEW LUMINAIRE
18	H-59	"0" 118+30.6	43.6 RT	240V/173W	EXISTING	EXISTING	EXISTING		SINGLE			1				AEL&P TO REPLACE EXISTING FIXTURE
19	H-59	"0" 120+26.5	39.5 RT	240V/208W	EXISTING	EXISTING	EXISTING		SINGLE			1				AEL&P TO REPLACE EXISTING FIXTURE
20	H-59	"0" 122+32.8	34.51 RT	240V/208W	EXISTING	8'-0"	APPROX. 30'-0"		SINGLE			1				AEL&P TO INSTALL NEW LUMINAIRE
21	H-60	"0" 124+20.1	32.3 RT	240V/208W	EXISTING	EXISTING	EXISTING		SINGLE			1				AEL&P TO REPLACE EXISTING FIXTURE [3]
22	H-60	"0" 126+00.4	30.2 RT	240V/208W	EXISTING	8'-0"	APPROX. 30'-0"		SINGLE			1				AEL&P TO INSTALL NEW LUMINAIRE
23	H-60	"0" 127+69.9	33.2 RT	240V/208W	EXISTING	EXISTING	EXISTING		SINGLE			1				AEL&P TO REPLACE EXISTING FIXTURE
24	H-60	"0" 129+75.8	30.4 RT	240V/208W	EXISTING	EXISTING	EXISTING		SINGLE			1				AEL&P TO REPLACE EXISTING FIXTURE
25	H-60	"0" 131+77.5	34.4 RT	240V/208W	EXISTING	8'-0"	APPROX. 30'-0"		SINGLE			1				AEL&P TO INSTALL NEW LUMINAIRE
26	H-60	"0" 132+74.1	44.5 RT	240V/173W	EXISTING	EXISTING	EXISTING		SINGLE		1					REPLACE EXISTING LUMINAIRE FIXTURE
27	H-60	"0" 133+61.7	44.8 RT	240V/133W	EXISTING	EXISTING	EXISTING	•	DOUBLE		1					SEE SIGNAL PLANS (POLE IN SIGNAL PAY ITEM) [2]
28	H-60	"0" 133+61.7	44.8 RT	240V/133W	EXISTING	EXISTING	EXISTING	•	DOUBLE		1					SEE SIGNAL PLANS (POLE IN SIGNAL PAY ITEM) [2]
29	H-60	"0" 134+16.6	38.1 LT	240V/173W	EXISTING	EXISTING	EXISTING		SINGLE			1				AEL&P TO REPLACE EXISTING FIXTURE [3]
30	H-60	"0" 134+82.2	39.7 RT	240V/173W	EXISTING	22'-0"	40'-0"	•	SINGLE		1					SEE SIGNAL PLANS (POLE IN SIGNAL PAY ITEM) [2]
31	H-61	"0" 136+07.8	33.3 RT	240V/173W	EXISTING	EXISTING	EXISTING		SINGLE		1					REPLACE EXISTING LUMINAIRE FIXTURE
32	H-61	"0" 137+39.1	33.0 RT	240V/173W	EXISTING	EXISTING	EXISTING		SINGLE		1					REPLACE EXISTING LUMINAIRE FIXTURE
33	H-61	"0" 137+69.2	41.5 LT	240V/173W	EXISTING	EXISTING	EXISTING		SINGLE			1				AEL&P TO REPLACE EXISTING FIXTURE [3]
34	H-61	"0" 138+70.5	32.8 RT	240V/173W	EXISTING	EXISTING	EXISTING		SINGLE		1					REPLACE EXISTING LUMINAIRE FIXTURE
35	H-61	"0" 139+86.9	34.9 LT	240V/173W	EXISTING	EXISTING	EXISTING		SINGLE			1				AEL&P TO REPLACE EXISTING FIXTURE [3]
36	H-61	"0" 141+60.8	33.1 LT	240V/173W	EXISTING	EXISTING	EXISTING		SINGLE			1				AEL&P TO REPLACE EXISTING FIXTURE
37	H-61	"0" 143+33.1	38.1 LT	240V/173W	3A1	15'-0"	30'-0"		SINGLE		1					SEE RRFB PLANS (POLE IN SIGNAL PAY ITEM)
38	H-61	"0" 143+73.5	34.2 RT	240V/173W	3A1	15'-0"	30'-0"		SINGLE		1					SEE RRFB PLANS (POLE IN SIGNAL PAY ITEM)
39	H-61	"0" 145+14.6	34.4 LT	240V/173W	EXISTING	EXISTING	EXISTING		SINGLE			1				AEL&P TO REPLACE EXISTING FIXTURE [3]
40	H-61	"0" 146+85.5	39.5 LT	240V/173W	EXISTING	8'-0"	30'-0"		SINGLE			1				AEL&P TO INSTALL NEW LUMINAIRE [3]
										TOTALS	19	21	2			

TOFE=TOP OF FOUNDATION ELEVATION
DISREGARD DEPTH TABLE ON STD. DWG. L-30.10 AND REFER TO FOUNDATION DEPTH IN TABLE ABOVE

SPECIFIC NOTES

[1] SEE SHEET H-73 FOR WIDENING DETAILS. COORDINATE WITH ENGINEER IF WIDENING DETAIL SPECIFIED PER ELECTROLIER DOES NOT MATCH FIELD CONDITIONS OR IF ANOTHER WIDENING DETAIL WOULD BE MORE APPLICABLE.

[2] SEE SHEET H-58 AND H-59 FOR FURTHER INFORMATION REGARDING SIGNAL POLE AND FOUNDATION TYPE AND INSTALLATION REQUIREMENTS.

[3] ALL WORK BY AEL&P IS SHOWN FOR REFERENCE ONLY. WORK BY AEL&P WILL BE DONE THROUGH A SEPARATE AGREEMENTS BETWEEN DOT&PF AND AEL&P.

Record Drawings have been reviewed by the Project Engineer, and represent to the best of my knowledge, the project as constructed.

PE Dillon Tomaro 2/4/25

ELECTROLIER SUMMARY
(1 OF 3)

STATE OF ALASKA 49TH JOHN F. RINGERT CE 11096 REGISTERED PROFESSIONAL ENGINEER
7/31/2020

PLANS DEVELOPED BY: KITTELSON & ASSOCIATES, INC. CERT. OF AUTHORIZATION NO.: 254741, 851 SW 6TH AVE. SUITE 600, PORTLAND, OR 97204, (503) 228-5230
H:\20\20487 - Glacier Highway - Juneau Traffic Design\design_CD\68124_H_LIGHT_S&D-H-71 Thu, Jul/30/20 09:31am

NO.	DATE	REVISION

STATE	PROJECT DESIGNATION	YEAR	SHEET NO.	TOTAL SHEETS
ALASKA	TEA-0955(016)/Z68124	2020	H-72	235

** Deleted by CO11

ELECTROLIER SUMMARY TABLE

NO.	SHEET NO.	POLE STATION	POLE OFFSET	VOLTAGE/ WATTS	CIRCUIT	MAST-ARM LENGTH	LUMINAIRE MOUNTING HEIGHT	SIGNAL POLE	LUMINAIRE CONFIGURATION	WIDENING DETAIL [1]	LED LUMINAIRE		ELECTROLIER QUANTITY	TOFE	FOUNDATION DEPTH	NOTES
											THIS PAY ITEM	BY OTHERS				
41	H-62	"0" 148+27.5	39.7 LT	240V/173W	EXISTING	EXISTING	EXISTING		SINGLE			1				AEL&P TO REPLACE EXISTING FIXTURE [3]
42	H-62	"0" 149+77.5	47.1 RT	240V/173W	4A1	15'-0"	30'-0"	•	SINGLE		1					SEE SIGNAL PLANS (POLE IN SIGNAL PAY ITEM) [2]
43	H-62	"0" 149+87.7	40.1 LT	240V/173W	EXISTING	EXISTING	EXISTING		SINGLE			1				AEL&P TO REPLACE EXISTING FIXTURE [3]
44	H-62	"0" 150+64.0	34.0 RT	240V/173W	4A1	22'-0"	40'-0"	•	SINGLE		1					SEE SIGNAL PLANS (POLE IN SIGNAL PAY ITEM) [2]
45	H-62	"0" 152+09.8	38.0 LT	240V/173W	EXISTING	EXISTING	EXISTING		SINGLE			1				AEL&P TO REPLACE EXISTING FIXTURE
46	H-62	"0" 153+75.8	35.6 LT	240V/173W	EXISTING	EXISTING	EXISTING		SINGLE			1				AEL&P TO REPLACE EXISTING FIXTURE
47	H-62	"0" 155+49.6	33.9 LT	240V/173W	EXISTING	EXISTING	EXISTING		SINGLE			1				AEL&P TO REPLACE EXISTING FIXTURE [3]
48	H-62	"0" 157+43.0	29.8 LT	240V/173W	EXISTING	EXISTING	EXISTING		SINGLE			1				AEL&P TO REPLACE EXISTING FIXTURE
49	H-62	"0" 159+29.8	31.2 RT	240V/173W	5A1	15'-0"	30'-0"		SINGLE	C	1		1	29.5'	21.0'	
50	H-62	"0" 159+71.5	29.9 LT	240V/173W	EXISTING	EXISTING	EXISTING		SINGLE			1				AEL&P TO REPLACE EXISTING FIXTURE [3]
51	H-63	"0" 161+05.7	31.0 RT	240V/173W	5A1	15'-0"	30'-0"		SINGLE	C	1		1	29.2'	17.0'	
52	H-63	"0" 162+43.9	33.4 LT	240V/173W	EXISTING	EXISTING	EXISTING		SINGLE			1				AEL&P TO REPLACE EXISTING FIXTURE [3]
53	H-63	"0" 163+57.1	31.4 RT	240V/173W	5A1	15'-0"	30'-0"		SINGLE	C	1		1	28.1'	17.0'	
54	H-63	"0" 164+72.4	33.6 LT	240V/173W	EXISTING	EXISTING	EXISTING		SINGLE			1				AEL&P TO REPLACE EXISTING FIXTURE [3]
55	H-63	"0" 166+17.9	31.2 RT	240V/173W	5A1	15'-0"	30'-0"		SINGLE	C	1		1	26.8'	18.0'	
56	H-63	"0" 166+75.8	32.5 LT	240V/173W	EXISTING	EXISTING	EXISTING		SINGLE			1				AEL&P TO REPLACE EXISTING FIXTURE
57	H-63	"0" 168+28.9	32.3 LT	240V/173W	EXISTING	EXISTING	EXISTING		SINGLE			1				AEL&P TO REPLACE EXISTING FIXTURE
58	H-63	"0" 169+91.9	32.7 LT	240V/173W	EXISTING	EXISTING	EXISTING		SINGLE			1				AEL&P TO REPLACE EXISTING FIXTURE
59	H-63	"0" 171+66.6	31.3 LT	240V/173W	EXISTING	EXISTING	EXISTING		SINGLE			1				AEL&P TO REPLACE EXISTING FIXTURE [3]
60	H-64	"0" 173+46.3	32.2 LT	240V/173W	EXISTING	8'-0"	APPROX. 30'-0"		SINGLE			1				AEL&P TO INSTALL NEW LUMINAIRE
61	H-64	"0" 175+30.2	34.5 RT	240V/173W	6A1	20'-0"	40'-0"		SINGLE	C	1		1	28.8'	14.0'	
62	H-64	"0" 175+88.5	54.0 LT	240V/173W	6A1	20'-0"	40'-0"		SINGLE	C	1		1	28.8'	17.0'	
63	H-64	"0" 175+92.3	66.7 RT	240V/173W	6A1	20'-0"	40'-0"		SINGLE	C	1		1	29.0'	13.0'	
64	H-64	"0" 176+30.0	107.0 LT	240V/173W	6A1	20'-0"	40'-0"		SINGLE	A	1		1	28.1'	15.0'	
65	H-64	"0" 176+71.3	99.9 RT	240V/173W	6A1	20'-0"	40'-0"		SINGLE	A	1		1	29.2'	13.0'	
66	H-64	"0" 176+91.2	65.3 RT	240V/173W	6A1	20'-0"	40'-0"		SINGLE	C	1		1	28.5'	15.0'	
67	H-64	"0" 177+19.0	44.3 RT	240V/173W	6A1	20'-0"	40'-0"		SINGLE	C	1		1	29.0'	13.0'	
68	H-64	"0" 177+64.4	33.6 LT	240V/173W	6A1	20'-0"	40'-0"		SINGLE	C	1		1	29.5'	13.0'	
69	H-65	"0" 179+10.1	32.9 LT	240V/173W	EXISTING	EXISTING	EXISTING		SINGLE			1				AEL&P TO REPLACE EXISTING FIXTURE [3]
70	H-65	"0" 180+71.5	30.8 LT	240V/173W	EXISTING	EXISTING	EXISTING		SINGLE			1				AEL&P TO REPLACE EXISTING FIXTURE [3]
71	H-65	"0" 182+15.2	30.5 RT	240V/173W	7A1	15'-0"	30'-0"		SINGLE		1					SEE RRBF PLANS (POLE IN SIGNAL PAY ITEM)
72	H-65	"0" 182+93.6	36.1 RT	240V/173W	EXISTING	EXISTING	EXISTING		SINGLE			1				AEL&P TO REPLACE EXISTING FIXTURE [3]
										TOTALS	15	17	13			

TOFE=TOP OF FOUNDATION ELEVATION (FEET)
DISREGARD DEPTH TABLE ON STD. DWG. L-30.10 AND REFER TO FOUNDATION DEPTH IN TABLE ABOVE

SPECIFIC NOTES

[1] SEE SHEET H-73 FOR WIDENING DETAILS. COORDINATE WITH ENGINEER IF WIDENING DETAIL SPECIFIED PER ELECTROLIER DOES NOT MATCH FIELD CONDITIONS OR IF ANOTHER WIDENING DETAIL WOULD BE MORE APPLICABLE.

[2] SEE SHEET H-58 AND H-59 FOR FURTHER INFORMATION REGARDING SIGNAL POLE AND FOUNDATION TYPE AND INSTALLATION REQUIREMENTS.

[3] ALL WORK BY AEL&P IS SHOWN FOR REFERENCE ONLY. WORK BY AEL&P WILL BE DONE THROUGH A SEPARATE AGREEMENTS BETWEEN DOT&PF AND AEL&P.

Record Drawings have been reviewed by the Project Engineer, and represent to the best of my knowledge, the project as constructed.

PE Dillon Tomaro 2/4/25

ELECTROLIER SUMMARY
(2 OF 3)

STATE OF ALASKA 49TH JOHN F. RINGERT CE-11096 REGISTERED PROFESSIONAL ENGINEER
7/31/2020

PLANS DEVELOPED BY: KITTELSON & ASSOCIATES, INC. CERT. OF AUTHORIZATION NO.: 254741, 851 SW 6TH AVE. SUITE 600, PORTLAND, OR 97204, (503) 228-5230
H:\20\20487 - Glacier Highway - Juneau Traffic Design\design_CD\68124_H_LIGHT_S&D_H-72 Thu, Jul/30/20 09:31am

CO 11 Attachment No. 9

NO.	DATE	REVISION

STATE	PROJECT DESIGNATION	YEAR	SHEET NO.	TOTAL SHEETS
ALASKA	TEA-0955(016)/Z68124	2020	H-72	235

ELECTROLIER SUMMARY TABLE

NO.	SHEET NO.	POLE STATION	POLE OFFSET	VOLTAGE/ WATTS	CIRCUIT	MAST-ARM LENGTH	LUMINAIRE MOUNTING HEIGHT	SIGNAL POLE	LUMINAIRE CONFIGURATION	WIDENING DETAIL [1]	LED LUMINAIRE THIS PAY ITEM	LED LUMINAIRE BY OTHERS	ELECTROLIER QUANTITY	TOFE	FOUNDATION DEPTH	NOTES
41	H-62	"O" 148+27.5	39.7 LT	240V/173W	EXISTING	EXISTING	EXISTING		SINGLE			1				AEL&P TO REPLACE EXISTING FIXTURE [3]
42	H-62	"O" 149+77.5	47.1 RT	240V/173W	4A1	15'-0"	30'-0"	•	SINGLE		1					SEE SIGNAL PLANS (POLE IN SIGNAL PAY ITEM) [2]
43	H-62	"O" 149+87.7	40.1 LT	240V/173W	EXISTING	EXISTING	EXISTING		SINGLE			1				AEL&P TO REPLACE EXISTING FIXTURE [3]
44	H-62	"O" 150+64.0	34.0 RT	240V/173W	4A1	22'-0"	40'-0"	•	SINGLE		1					SEE SIGNAL PLANS (POLE IN SIGNAL PAY ITEM) [2]
45	H-62	"O" 152+09.8	38.0 LT	240V/173W	EXISTING	EXISTING	EXISTING		SINGLE			1				AEL&P TO REPLACE EXISTING FIXTURE
46	H-62	"O" 153+75.8	35.6 LT	240V/173W	EXISTING	EXISTING	EXISTING		SINGLE			1				AEL&P TO REPLACE EXISTING FIXTURE
47	H-62	"O" 155+49.6	33.9 LT	240V/173W	EXISTING	EXISTING	EXISTING		SINGLE			1				AEL&P TO REPLACE EXISTING FIXTURE [3]
48	H-62	"O" 157+43.0	29.8 LT	240V/173W	EXISTING	EXISTING	EXISTING		SINGLE			1				AEL&P TO REPLACE EXISTING FIXTURE
49	H-62	"O" 159+29.8	31.2 RT	240V/173W	5A1	15'-0"	30'-0"		SINGLE	C	1		1	29.5'	~~21.0'~~	Construct foundation depth per Standard Plan L-30.11
50	H-62	"O" 159+71.5	29.9 LT	240V/173W	EXISTING	EXISTING	EXISTING		SINGLE			1				AEL&P TO REPLACE EXISTING FIXTURE [3]
51	H-63	"O" 161+05.7	31.0 RT	240V/173W	5A1	15'-0"	30'-0"		SINGLE	C	1		1	29.2'	~~17.0'~~	Construct foundation depth per Standard Plan L-30.11
52	H-63	"O" 162+43.9	33.4 LT	240V/173W	EXISTING	EXISTING	EXISTING		SINGLE			1				AEL&P TO REPLACE EXISTING FIXTURE [3]
53	H-63	"O" 163+57.1	31.4 RT	240V/173W	5A1	15'-0"	30'-0"		SINGLE	C	1		1	28.1'	~~17.0'~~	Construct foundation depth per Standard Plan L-30.11
54	H-63	"O" 164+72.4	33.6 LT	240V/173W	EXISTING	EXISTING	EXISTING		SINGLE			1				AEL&P TO REPLACE EXISTING FIXTURE [3]
55	H-63	"O" 166+17.9	31.2 RT	240V/173W	5A1	15'-0"	30'-0"		SINGLE	C	1		1	26.8'	~~18.0'~~	Construct foundation depth per Standard Plan L-30.11
56	H-63	"O" 166+75.8	32.5 LT	240V/173W	EXISTING	EXISTING	EXISTING		SINGLE			1				AEL&P TO REPLACE EXISTING FIXTURE
57	H-63	"O" 168+28.9	32.3 LT	240V/173W	EXISTING	EXISTING	EXISTING		SINGLE			1				AEL&P TO REPLACE EXISTING FIXTURE
58	H-63	"O" 169+91.9	32.7 LT	240V/173W	EXISTING	EXISTING	EXISTING		SINGLE			1				AEL&P TO REPLACE EXISTING FIXTURE [3]
59	H-63	"O" 171+66.6	31.3 LT	240V/173W	EXISTING	EXISTING	EXISTING		SINGLE			1				AEL&P TO REPLACE EXISTING FIXTURE
60	H-64	"O" 173+46.3	32.2 LT	240V/173W	EXISTING	8'-0"	APPROX. 30'-0"		SINGLE			1				AEL&P TO INSTALL NEW LUMINAIRE
61	H-64	"O" 175+30.2	34.5 RT	240V/173W	6A1	20'-0"	40'-0"		SINGLE	C	1		1	28.8'	~~14.0'~~	Construct foundation depth per Standard Plan L-30.11
62	H-64	"O" 175+88.5	54.0 LT	240V/173W	6A1	20'-0"	40'-0"		SINGLE	C	1		1	28.8'	~~17.0'~~	Construct foundation depth per Standard Plan L-30.11
63	H-64	"O" 175+92.3	66.7 RT	240V/173W	6A1	20'-0"	40'-0"		SINGLE	C	1		1	29.0'	~~13.0'~~	Construct foundation depth per Standard Plan L-30.11
64	H-64	"O" 176+30.0	107.0 LT	240V/173W	6A1	20'-0"	40'-0"		SINGLE	A	1		1	28.1'	~~15.0'~~	Construct foundation depth per Standard Plan L-30.11
65	H-64	"O" 176+71.3	99.9 RT	240V/173W	6A1	20'-0"	40'-0"		SINGLE	A	1		1	29.2'	~~13.0'~~	Construct foundation depth per Standard Plan L-30.11
66	H-64	"O" 176+91.2	65.3 RT	240V/173W	6A1	20'-0"	40'-0"		SINGLE	C	1		1	28.5'	~~15.0'~~	Construct foundation depth per Standard Plan L-30.11
67	H-64	"O" 177+19.0	44.3 RT	240V/173W	6A1	20'-0"	40'-0"		SINGLE	C	1		1	29.0'	~~13.0'~~	Construct foundation depth per Standard Plan L-30.11
68	H-64	"O" 177+64.4	33.6 LT	240V/173W	6A1	20'-0"	40'-0"		SINGLE	C	1		1	29.5'	~~13.0'~~	Construct foundation depth per Standard Plan L-30.11
69	H-65	"O" 179+10.1	32.9 LT	240V/173W	EXISTING	EXISTING	EXISTING		SINGLE			1				AEL&P TO REPLACE EXISTING FIXTURE [3]
70	H-65	"O" 180+71.5	30.8 LT	240V/173W	EXISTING	EXISTING	EXISTING		SINGLE			1				AEL&P TO REPLACE EXISTING FIXTURE
71	H-65	"O" 182+15.2	30.5 RT	240V/173W	7A1	15'-0"	30'-0"		SINGLE		1					SEE RRBF PLANS (POLE IN SIGNAL PAY ITEM)
72	H-65	"O" 182+93.6	36.1 RT	240V/173W	EXISTING	EXISTING	EXISTING		SINGLE			1				AEL&P TO REPLACE EXISTING FIXTURE [3]
										TOTALS	15	17	12			

TOFE=TOP OF FOUNDATION ELEVATION (FEET)
DISREGARD DEPTH TABLE ON STD. DWG. L-30.10 AND REFER TO FOUNDATION DEPTH IN TABLE ABOVE

SPECIFIC NOTES

[1] SEE SHEET H-73 FOR WIDENING DETAILS. COORDINATE WITH ENGINEER IF WIDENING DETAIL SPECIFIED PER ELECTROLIER DOES NOT MATCH FIELD CONDITIONS OR IF ANOTHER WIDENING DETAIL WOULD BE MORE APPLICABLE.

[2] SEE SHEET H-58 AND H-59 FOR FURTHER INFORMATION REGARDING SIGNAL POLE AND FOUNDATION TYPE AND INSTALLATION REQUIREMENTS.

[3] ALL WORK BY AEL&P IS SHOWN FOR REFERENCE ONLY. WORK BY AEL&P WILL BE DONE THROUGH A SEPARATE AGREEMENTS BETWEEN DOT&PF AND AEL&P.

Record Drawings have been reviewed by the Project Engineer, and represent to the best of my knowledge, the project as constructed.

PE Dillon Tomaro 2/4/25

ELECTROLIER SUMMARY
(2 OF 3)

STATE OF ALASKA 49TH JOHN F. RINGERT CE 11096 REGISTERED PROFESSIONAL ENGINEER
7/31/2020

PLANS DEVELOPED BY: KITTELSON & ASSOCIATES, INC. CERT. OF AUTHORIZATION NO.: 254741, 851 SW 6TH AVE. SUITE 600, PORTLAND, OR 97204, (503) 228-5230
H:\20\20487 - Glacier Highway - Juneau Traffic Design\design_CD\68124_H_LIGHT_S&D-H-72 Thu, Jul/30/20 09:31am

** Deleted by CO11

NO.	DATE	REVISION

STATE	PROJECT DESIGNATION	YEAR	SHEET NO.	TOTAL SHEETS
ALASKA	TEA-0955(016)/Z68124	2020	H-73	235

TYPE 1A JUNCTION BOX SUMMARY TABLE

JUNCTION BOX NO.	SHEET NO.	STATION	OFFSET	TYPE 1A JUNCTION BOX	NOTES
1	H-60	"O" 101+58.8	29.0 RT	1	
2	H-60	"O" 102+63.5	31.7 RT	1	
3	H-60	"O" 103+00.1	56.9 RT	1	
4	H-60	"O" 103+50.9	66.0 RT	1	
5	H-60	"O" 105+23.1	31.2 RT	1	
6	H-60	"O" 110+30.3	35.4 RT	1	
7	H-60	"O" 110+96.0	31.0 RT	1	
8	H-60	"O" 111+04.0	31.0 RT	1	
9	H-60	"O" 111+11.5	27.2 LT	1	
10	H-60	"O" 111+47.6	22.9 LT	1	
11	H-61	"O" 112+84.7	30.0 LT	1	
12	H-61	"O" 113+80.8	30.0 LT	1	
13	H-61	"O" 115+39.5	30.4 LT	1	
14	H-62	"O" 159+34.3	31.2 RT	1	
15	H-64	"O" 160+35.6	31.0 RT	1	
16	H-64	"O" 161+01.2	31.0 RT	1	
17	H-64	"O" 162+25.0	31.5 RT	1	
18	H-64	"O" 163+53.1	31.4 RT	1	
19	H-64	"O" 165+44.0	31.0 RT	1	
20	H-64	"O" 166+13.9	31.2 RT	1	
21	H-66	"O" 175+49.0	38.0 LT	1	
22	H-66	"O" 175+34.2	34.5 RT	1	
23	H-66	"O" 175+92.5	57.0 LT	1	
24	H-66	"O" 175+92.5	62.7 RT	1	
25	H-66	"O" 176+33.0	107.0 LT	1	
26	H-66	"O" 176+67.5	99.9 RT	1	
27	H-66	"O" 176+91.2	69.3 LT	1	
28	H-66	"O" 177+16.0	46.0 RT	1	
29	H-66	"O" 177+60.4	33.6 LT	1	
			TOTALS	29	

TYPE IA JUNCTION BOX DETAIL

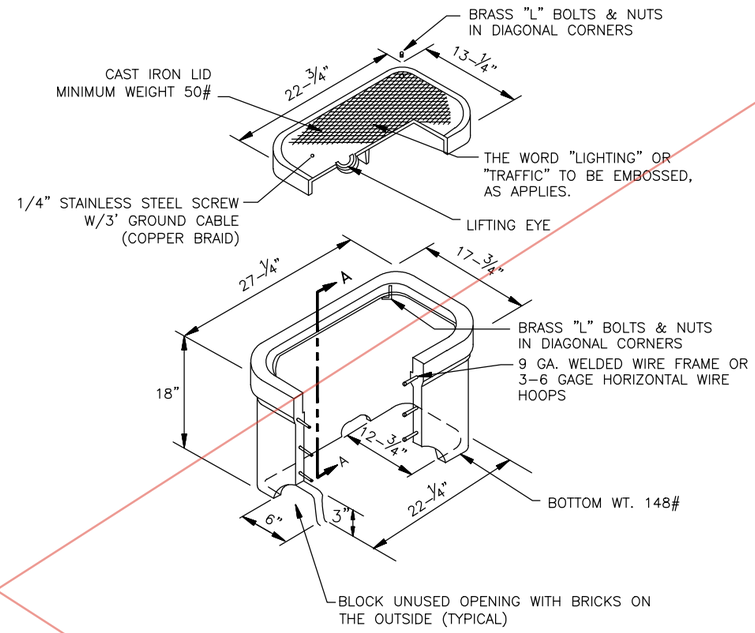

TYPE IA JUNCTION BOX

BRICK BASE – TYPE IA J-BOX

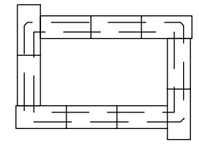

SECTION A–A

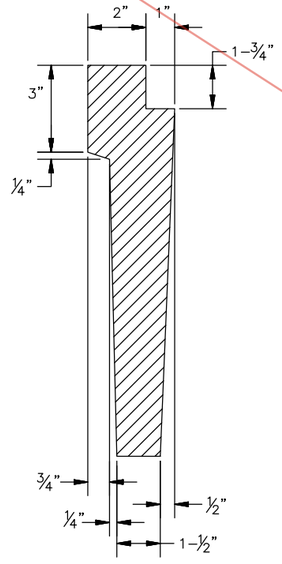

TYPE IA J-BOX INSTALLATION ON SLOPE

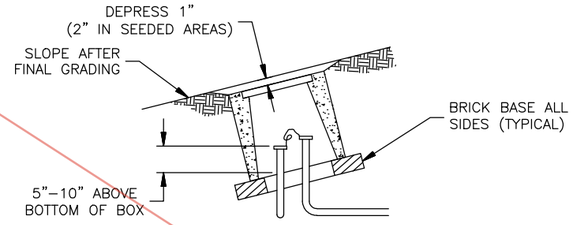

Record Drawings have been reviewed by the Project Engineer, and represent to the best of my knowledge, the project as constructed.

PE Dillon Tomaro 2/4/25

ELECTROLIER SUMMARY (3 OF 3)

STATE OF ALASKA 49TH JOHN F. RINGERT CE 11096 REGISTERED PROFESSIONAL ENGINEER

7/31/2020

PLANS DEVELOPED BY: KITTELSON & ASSOCIATES, INC. CERT. OF AUTHORIZATION NO.: 254741, 851 SW 6TH AVE. SUITE 600, PORTLAND, OR 97204, (503) 228-5230
H:\20\20487 - Glacier Highway - Juneau Traffic Design\design_CD\68124_H_LIGHT_S&D-H-73 Thu, Jul/30/20 09:31am

CO 11 Attachment No. 10

NO.	DATE	REVISION

STATE	PROJECT DESIGNATION	YEAR	SHEET NO.	TOTAL SHEETS
ALASKA	TEA-0955(016)/Z68124	2020	H-73	235

TYPE 1A JUNCTION BOX SUMMARY TABLE

JUNCTION BOX NO.	SHEET NO.	STATION	OFFSET	TYPE 1A JUNCTION BOX	NOTES
1	H-60	"O" 101+58.8	29.0 RT	1	
2	H-60	"O" 102+63.5	31.7 RT	1	
3	H-60	"O" 103+00.1	56.9 RT	1	
4	H-60	"O" 103+50.9	66.0 RT	1	
5	H-60	"O" 105+23.1	31.2 RT	1	
6	H-60	"O" 110+30.3	35.4 RT	1	
7	H-60	"O" 110+96.0	31.0 RT	1	
8	H-60	"O" 111+04.0	31.0 RT	1	
9	H-60	"O" 111+11.5	27.2 LT	1	
~~10~~	~~H-60~~	~~"O" 111+47.6~~	~~22.9 LT~~	~~1~~	Delete J-box No. 10 in its entirety.
~~11~~	~~H-61~~	~~"O" 112+84.7~~	~~30.0 LT~~	~~1~~	Delete J-box No. 11 in its entirety.
~~12~~	~~H-61~~	~~"O" 113+80.8~~	~~30.0 LT~~	~~1~~	Delete J-box No. 12 in its entirety.
~~13~~	~~H-61~~	~~"O" 115+39.5~~	~~30.4 LT~~	~~1~~	Delete J-box No. 13 in its entirety.
14	H-62	"O" 159+34.3	31.2 RT	1	
15	H-64	"O" 160+35.6	31.0 RT	1	
16	H-64	"O" 161+01.2	31.0 RT	1	
17	H-64	"O" 162+25.0	31.5 RT	1	
18	H-64	"O" 163+53.1	31.4 RT	1	
19	H-64	"O" 165+44.0	31.0 RT	1	
20	H-64	"O" 166+13.9	31.2 RT	1	
21	H-66	"O" 175+49.0	38.0 LT	1	
22	H-66	"O" 175+34.2	34.5 RT	1	
23	H-66	"O" 175+92.5	57.0 LT	1	
24	H-66	"O" 175+92.5	62.7 RT	1	
25	H-66	"O" 176+33.0	107.0 LT	1	
26	H-66	"O" 176+67.5	99.9 RT	1	
27	H-66	"O" 176+91.2	69.3 LT	1	
28	H-66	"O" 177+16.0	46.0 RT	1	
29	H-66	"O" 177+60.4	33.6 LT	1	
			TOTALS	25	

TYPE IA JUNCTION BOX DETAIL

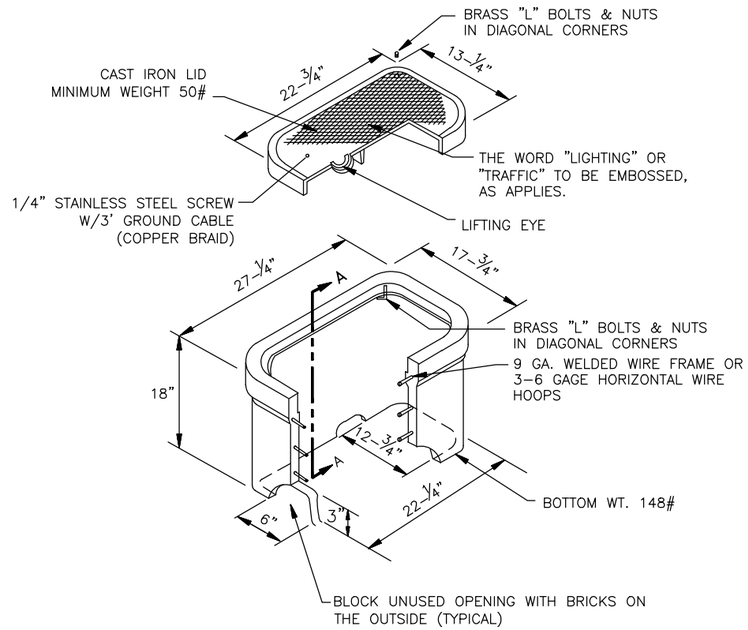

TYPE IA JUNCTION BOX

BRICK BASE – TYPE IA J-BOX

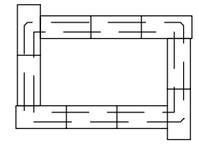

SECTION A–A

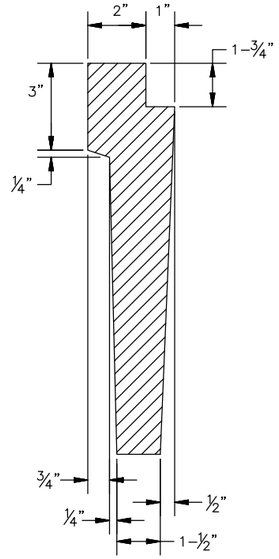

TYPE IA J-BOX INSTALLATION ON SLOPE

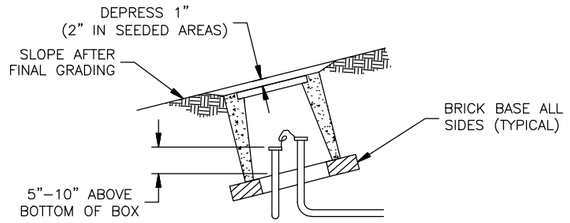

Record Drawings have been reviewed by the Project Engineer, and represent to the best of my knowledge, the project as constructed.

PE Dillon Tomaro 2/4/25

STATE OF ALASKA 49TH JOHN F. RINGERT CE 11096 REGISTERED PROFESSIONAL ENGINEER

7/31/2020

ELECTROLIER SUMMARY (3 OF 3)

PLANS DEVELOPED BY: KITTELSON & ASSOCIATES, INC. CERT. OF AUTHORIZATION NO.: 254741, 851 SW 6TH AVE. SUITE 600, PORTLAND, OR 97204, (503) 228-5230
H:\20\20487 - Glacier Highway - Juneau Traffic Design\design_CD\68124_H_LIGHT_S&D-H-73 Thu, Jul/30/20 09:31am

NO.	DATE	REVISION

STATE	PROJECT DESIGNATION	YEAR	SHEET NO.	TOTAL SHEETS
ALASKA	TEA-0955(016)/Z68124	2020	H-74	235

LIGHTING SYSTEM POLE AND J-BOX WIRING DETAILS

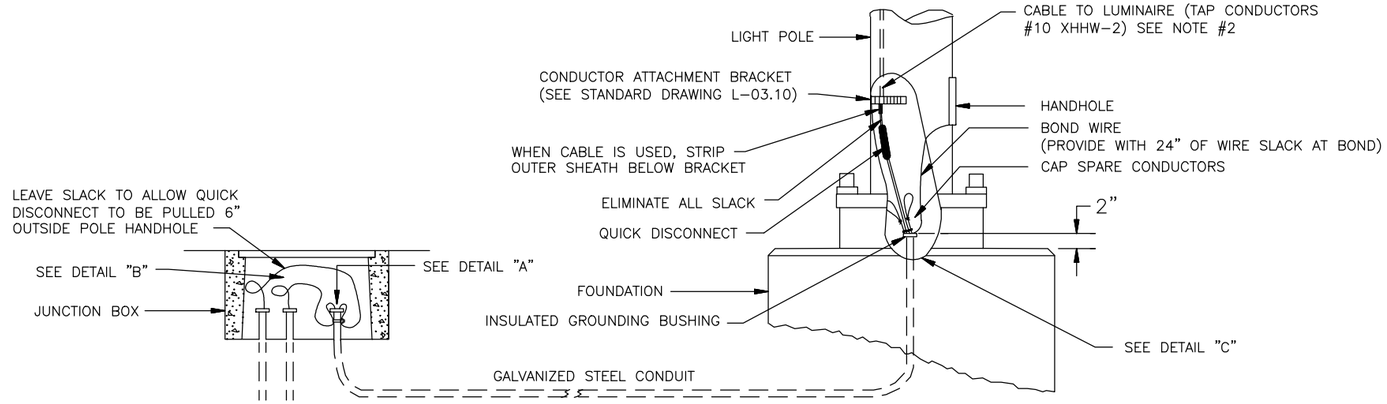

LIGHT STANDARD MAST ARM WIRING DETAIL

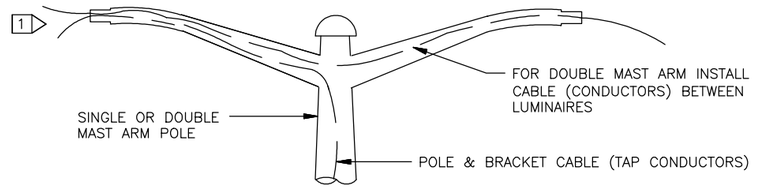

SPECIFIC NOTES

1 INSTALL 2"x1" REDUCING WASHER AND 1" CONNECTOR TO SECURE CONDUCTORS AT THE END OF THE MAST ARM

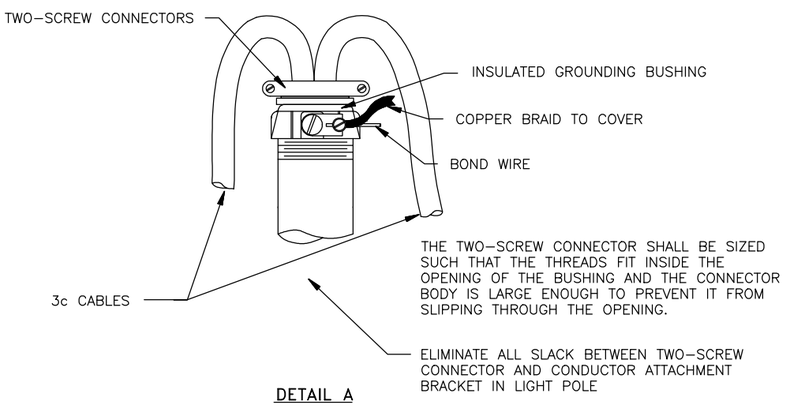

DETAIL A

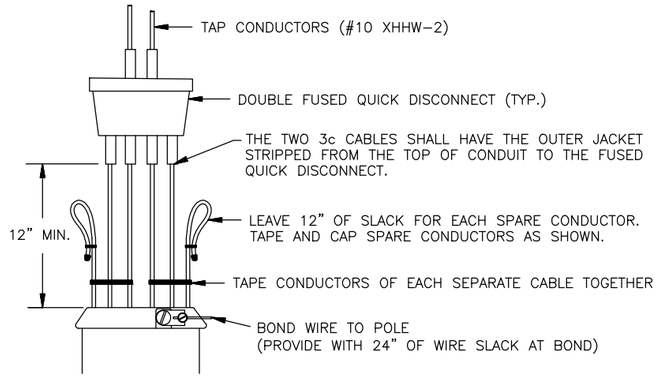

DETAIL C

LIGHT POLE BASE FLANGE DETAIL

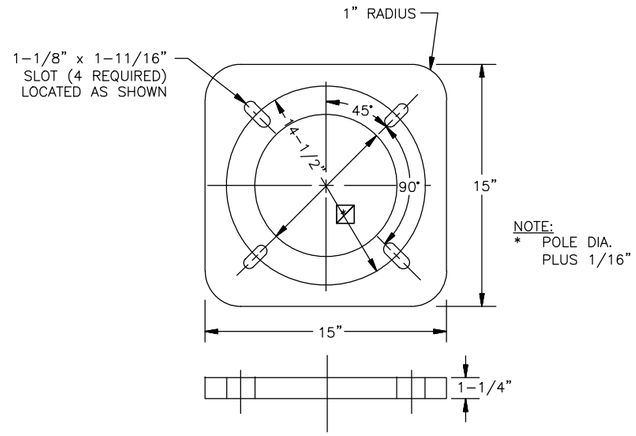

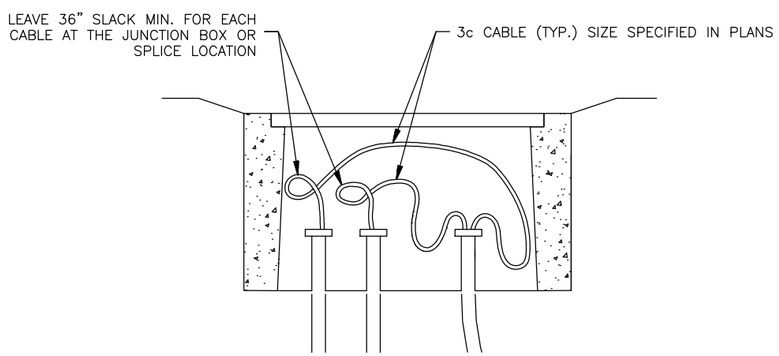

DETAIL B

GENERAL NOTES

1. LABEL ALL CABLES AND CONDUCTORS IN POLE BASE AND J-BOX.
2. LEAVE ENOUGH SLACK ABOVE THE CONDUCTOR ATTACHMENT BRACKET TO ALLOW THE QUICK DISCONNECT TO BE PULLED 6" OUTSIDE OF HANDHOLE.
3. NOT ALL GROUNDING CONDUCTORS, AS REQUIRED BY SECTION 660-3.06, ARE SHOWN IN THESE DETAILS.

   NOT ALL GROUNDING CONDUCTORS, AS REQUIRED BY SECTION 660-3.06, OR NATIONAL ELECTRICAL CODE ARE SHOWN IN THESE DETAILS.

Record Drawings have been reviewed by the Project Engineer, and represent to the best of my knowledge, the project as constructed.

PE *Dillon Tomaro* 2/4/25

STATE OF ALASKA 49TH JOHN F. RINGERT CE 11096 REGISTERED PROFESSIONAL ENGINEER

7/31/2020

ELECTROLIER DETAILS (1 OF 2)

PLANS DEVELOPED BY: KITTELSON & ASSOCIATES, INC. CERT. OF AUTHORIZATION NO.: 254741, 851 SW 6TH AVE. SUITE 600, PORTLAND, OR 97204, (503) 228-5230
H:\20\20487 - Glacier Highway - Juneau Traffic Design\design_CD\68124_H_LIGHT_S&D-H-74 Thu, Jul/30/20 09:31am

NO.	DATE	REVISION

STATE	PROJECT DESIGNATION	YEAR	SHEET NO.	TOTAL SHEETS
ALASKA	TEA-0955(016)/Z68124	2020	H-75	235

LIGHT POLE WIDENING DETAIL "A"

(USE WHEN POLE IS LOCATED OFF SHOULDER)

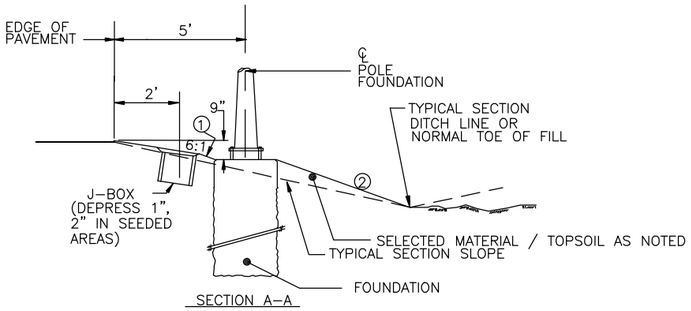

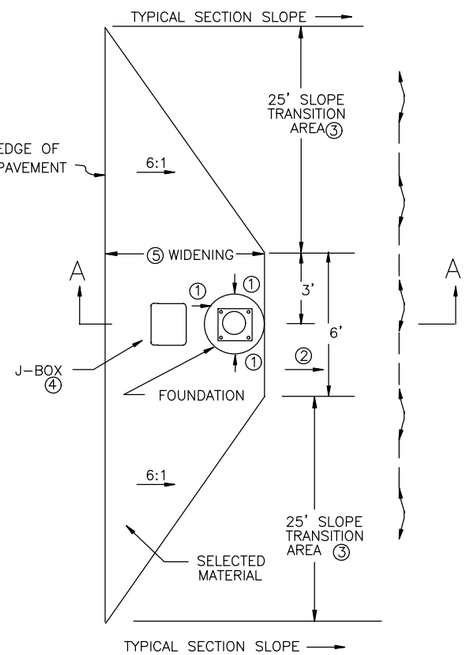

① WARP SLOPE TO TOP CIRCUMFERENCE OF POLE FOUNDATION

② SLOPE FROM TOP EDGE OF POLE FOUNDATION TO TYPICAL SECTION DITCHLINE OR NORMAL TOE OF FILL. NO STEEPER THAN 1-1/2:1.

③ WHEN THE TYPICAL SECTION SLOPE IS STEEPER THAN 2:1 USE 35' FOR THE SLOPE TRANSITION AREA.

④ DEPRESS JUNCTION BOX 1" BELOW SURFACE.

⑤ WIDENING SHALL BE CONSTRUCTED PRIOR TO POURING FOUNDATION OR CONSTRUCTING COUNTERBALANCE STABILIZING BERM.

LIGHT POLE WIDENING DETAIL "B"

(USE WHEN POLE IS LOCATED BACK OF GUARDRAIL OR CONCRETE BARRIER)

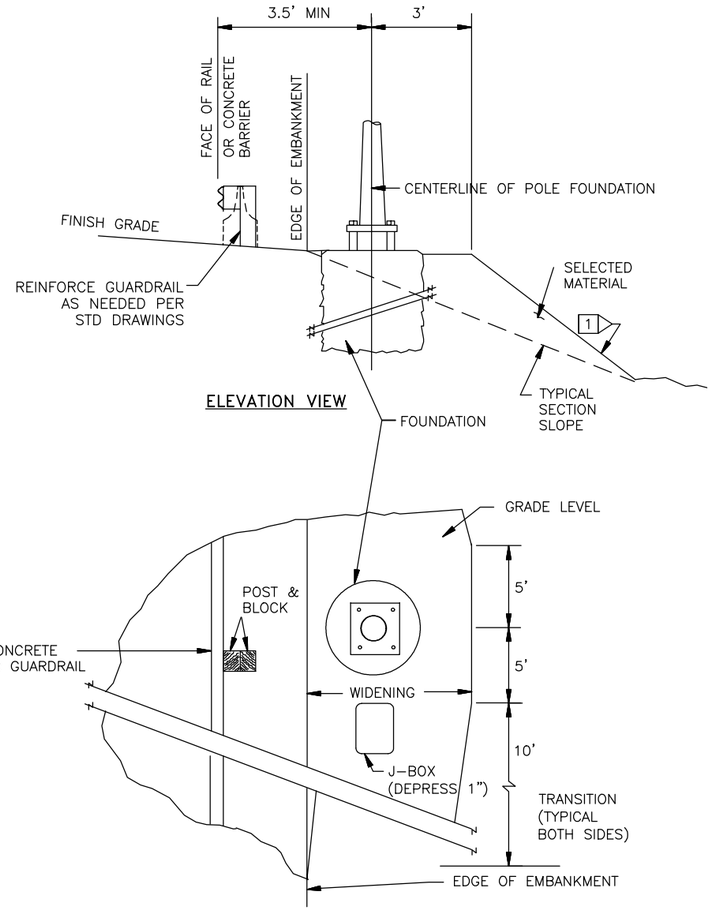

PLAN VIEW

LIGHT POLE WIDENING DETAIL "C"

(USE WHEN POLE IS LOCATED BACK OF SIDEWALK)

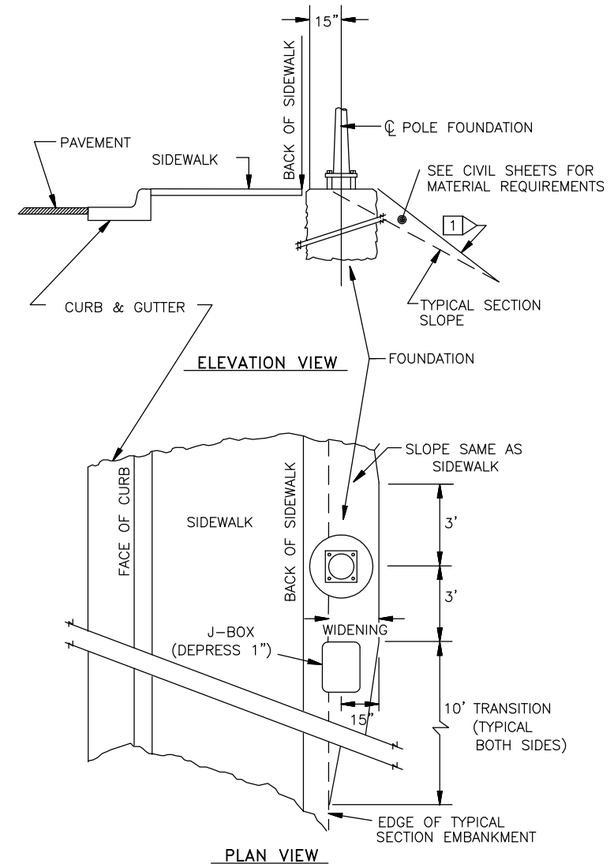

PLAN VIEW

SPECIFIC SHEET NOTES

1 GRADE SLOPE FROM BACK OF FOUNDATION TO TYPICAL SECTION SLOPE CATCH POINT OR DITCH LINE EXCEPT THAT THE SLOPE SHALL BE NO STEEPER THAN 1-1/2:1.

Record Drawings have been reviewed by the Project Engineer, and represent to the best of my knowledge, the project as constructed.

PE Dillon Tomaro 2/4/25

STATE OF ALASKA 49TH JOHN F. RINGERT CE 11096 REGISTERED PROFESSIONAL ENGINEER

7/31/2020

ELECTROLIER DETAILS (2 OF 2)

PLANS DEVELOPED BY: KITTELSON & ASSOCIATES, INC. CERT. OF AUTHORIZATION NO.: 254741, 851 SW 6TH AVE. SUITE 600, PORTLAND, OR 97204, (503) 228-5230
H:\20\20487 - Glacier Highway - Juneau Traffic Design\design_CD\68124_H_LIGHT_S&D-H-75 Thu, Jul/30/20 09:31am

NO.	DATE	REVISION
1	12/7/20	ADDENDUM 4

STATE	PROJECT DESIGNATION	YEAR	SHEET NO.	TOTAL SHEETS
ALASKA	TEA-0955(016)/Z68124	2020	H-76	235

SUMMARY OF EXISTING LOAD CENTER NO. 1 (EXIST.)

LOAD CENTER TYPE: 1A

LOCATION DATA: XXXXXX

LOAD CENTER	STATION:	103+75	OFFSET:	131' RT
POWER SOURCE:	STATION:	103+85	OFFSET:	135' RT
PHOTOELECTRIC CONTROL:		YES		

SERVICE VOLTAGE: 240/480V, 1-PHASE, 3-WIRE
INTERRUPTING CAPACITY OF CIRCUIT BREAKERS -SERIES SERIES RATED 10000 AIC
PROVIDE METER SOCKET: EXISTING
MAIN BREAKER A: 480 VOLT, 2 POLE, 100 AMPERES
CONTACTOR: 600 VOLT, 12 POLE, 30 AMPERES

LOAD PANEL '1' SUMMARY

BUS RATING: 100A, 480/240-VOLT, 1-PHASE 3-WIRE

CIRCUIT NUMBER:	DESCRIPTION	KVA LOAD	BREAKER AMPS	BREAKER POLES
*1A1	EXISTING LIGHTING CIRCUIT 1	2.7	30	2
*1A2	EXISTING LIGHTING CIRCUIT 2	2.7	30	2
*1A3	EXISTING LIGHTING CIRCUIT	1.7	20	2
*1A4	EXISTING LIGHTING CIRCUIT	1.7	20	2
*1A5	EXISTING LIGHTING CIRCUIT	1.1	20	2
*1A6	EXISTING LIGHTING CIRCUIT	0.9	20	2
1A7	SIGNAL (EXISTING)	5.0	20	2
1A8	PHOTOELECTRIC CONTROL (EXISTING)	0.1	15	1
1A9	HEATER (EXISTING)	0.2	15	1
1A10	NEW RRFB CIRCUIT	1.3	20	1
1A11	NEW LIGHTING CIRCUIT	8.5	20	1
1A12	NEW SIGNAL HEATER CIRCUIT	0.2	15	1
	CONNECTED LOAD PANEL A:	18.1	37.7	
	DEMAND LOAD PANEL A (@125%):	22.6	47.1	

NOTES:
* - CIRCUIT ROUTED THROUGH CONTACTOR

4

NOTE:
1. LOAD CENTER #1 AFB CIRCUIT SHALL BE ROUTED TO 240/120V STEP DOWN TRANSFORMER AND 120V 20A, 1P, BREAKER IN NEMA 3R ENCLOSURE AT POWER POLE #2. SEE SHEET H-39.

SUMMARY OF NEW LOAD CENTER NO. 2 (NEW)

LOAD CENTER TYPE: 1A

LOCATION DATA: XXXXXX

LOAD CENTER	STATION:	111+00	OFFSET:	31' RT
POWER SOURCE:	STATION:	110+25	OFFSET:	35' RT
PHOTOELECTRIC CONTROL:		YES		

SERVICE VOLTAGE: 120/240V, 1-PHASE, 3-WIRE
INTERRUPTING CAPACITY OF CIRCUIT BREAKERS -SERIES SERIES RATED 10000 AIC
PROVIDE METER SOCKET: YES
MAIN BREAKER A: 240 VOLT, 2 POLE, 100 AMPERES
CONTACTOR: 600 VOLT, 12 POLE, 30 AMPERES

LOAD PANEL '2' SUMMARY

BUS RATING: 100A, 240/120-VOLT, 1-PHASE 3-WIRE

CIRCUIT NUMBER:	DESCRIPTION	KVA LOAD	BREAKER AMPS	BREAKER POLES
*2A1	LIGHTING CIRCUIT	0.5	20	2
2A2	PHOTOELECTRIC CONTROL	0.1	15	1
2A3	LOAD PANEL HEATER (IF EQUIPPED)	0.2	15	1
	CONNECTED LOAD PANEL A:	0.8	1.7	
	DEMAND LOAD PANEL A (@125%):	1.0	2.1	

NOTES:
* - CIRCUIT ROUTED THROUGH CONTACTOR

4

SUMMARY OF NEW LOAD CENTER NO. 3 (NEW)

LOAD CENTER TYPE: 1A

LOCATION DATA: XXXXXX

LOAD CENTER	STATION:	143+90	OFFSET:	46' LT
POWER SOURCE:	STATION:	143+18	OFFSET:	70' LT
PHOTOELECTRIC CONTROL:		YES		

SERVICE VOLTAGE: 120/240V, 1-PHASE, 3-WIRE
INTERRUPTING CAPACITY OF CIRCUIT BREAKERS -SERIES SERIES RATED 10000 AIC
PROVIDE METER SOCKET: YES
MAIN BREAKER A: 240 VOLT, 2 POLE, 100 AMPERES
CONTACTOR: 600 VOLT, 12 POLE, 30 AMPERES

LOAD PANEL '3' SUMMARY

BUS RATING: 100A, 240/120-VOLT, 1-PHASE 3-WIRE

CIRCUIT NUMBER:	DESCRIPTION	KVA LOAD	BREAKER AMPS	BREAKER POLES
*3A1	LIGHTING CIRCUIT	0.4	20	2
3A2	RRFB CIRCUIT	1.3	20	1
3A3	SIGNAL HEATER CIRCUIT	0.2	15	1
3A4	PHOTOELECTRIC CONTROL	0.1	15	1
3A5	LOAD PANEL HEATER (IF EQUIPPED)	0.2	15	1
	CONNECTED LOAD PANEL A:	2.2	4.6	
	DEMAND LOAD PANEL A (@125%):	2.8	5.7	

NOTES:
* - CIRCUIT ROUTED THROUGH CONTACTOR

4

SUMMARY OF NEW LOAD CENTER NO. 4 (NEW)

LOAD CENTER TYPE: 1A

LOCATION DATA: XXXXXX

LOAD CENTER	STATION:	150+36	OFFSET:	75' RT
POWER SOURCE:	STATION:	150+33	OFFSET:	145' RT
PHOTOELECTRIC CONTROL:		YES		

SERVICE VOLTAGE: 120/240V, 1-PHASE, 3-WIRE
INTERRUPTING CAPACITY OF CIRCUIT BREAKERS -SERIES SERIES RATED 10000 AIC
PROVIDE METER SOCKET: YES
MAIN BREAKER A: 240 VOLT, 2 POLE, 100 AMPERES
CONTACTOR: 600 VOLT, 12 POLE, 30 AMPERES

LOAD PANEL '4' SUMMARY

BUS RATING: 100A, 240/120-VOLT, 1-PHASE 3-WIRE

CIRCUIT NUMBER:	DESCRIPTION	KVA LOAD	BREAKER AMPS	BREAKER POLES
*4A1	LIGHTING CIRCUIT	0.4	20	2
4A2	SIGNAL CIRCUIT	3.3	50	2
4A3	SIGNAL HEATER CIRCUIT	0.2	15	1
4A4	PHOTOELECTRIC CONTROL	0.1	15	1
4A5	LOAD PANEL HEATER (IF EQUIPPED)	0.2	15	1
	CONNECTED LOAD PANEL A:	4.2	8.8	
	DEMAND LOAD PANEL A (@125%):	5.3	10.9	

NOTES:
* - CIRCUIT ROUTED THROUGH CONTACTOR

4

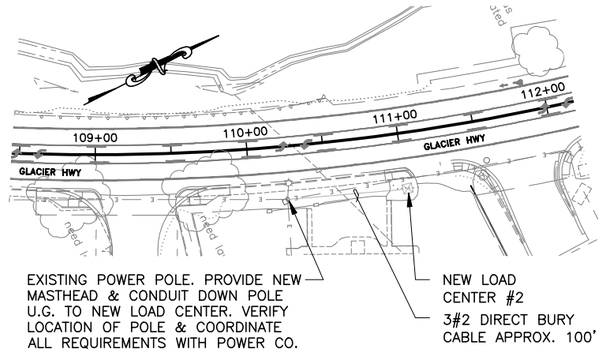

LOAD CENTER #2 POWER SOURCE SCHEMATIC

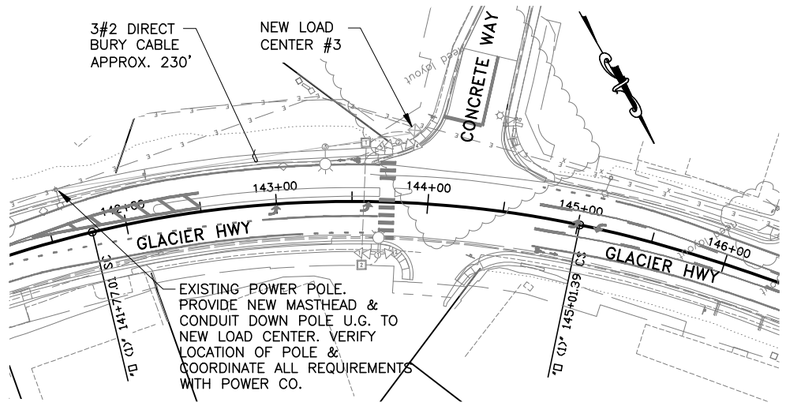

LOAD CENTER #3 POWER SOURCE SCHEMATIC

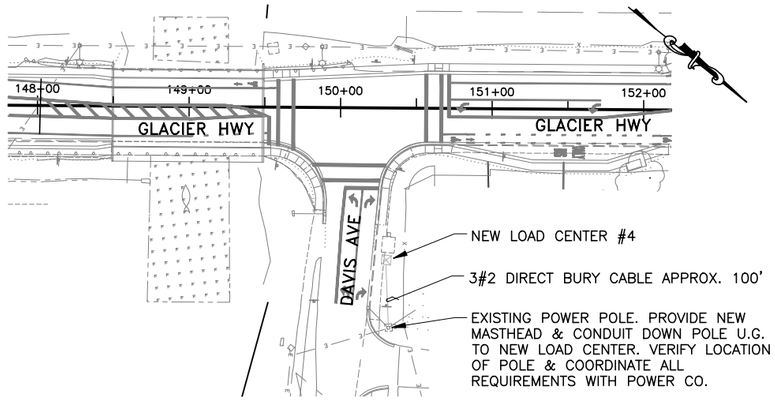

LOAD CENTER #4 POWER SOURCE SCHEMATIC

NOTE:
1. VERIFY CONDITION OF EACH EXISTING LOAD CENTER. PROVIDE BREAKERS AS NOTED ON PANEL SCHEDULE.
2. SEE STANDARD DRAWING L25.01 FOR FOUNDATION DETAILS, AND DETAILS ON SHEET H-78.
3. ELECTRICAL CONTRACTOR SHALL FIELD INSPECT AND VERIFY EXISTING FIELD CONDITIONS, AND PROVIDE UPDATED PANEL SCHEDULE FOR EACH PANEL.
4. SEE LIGHTING AND AFB PLANS FOR ADDITIONAL DETAILS.

Record Drawings have been reviewed by the Project Engineer, and represent to the best of my knowledge, the project as constructed.

PE Dillon Tomaro 2/4/25

STATE OF ALASKA 49TH MICHAEL WILLMON REGISTERED PROFESSIONAL ENGINEER No. EE10405 12-07-2020

LOAD CENTER DETAILS (1 OF 4)

P:\Kittelson & Associates, Inc. (KAI)\P0017567W\Execution\Drawings\Facilities\Electrical\68124_H-76-78-H-76 Mon, Dec/07/20 10:18am

NO.	DATE	REVISION
4	12/7/20	ADDENDUM 4

STATE	PROJECT DESIGNATION	YEAR	SHEET NO.	TOTAL SHEETS
ALASKA	TEA-0955(016)/Z68124	2020	H-77	235

SUMMARY OF EXISTING LOAD CENTER NO. 5 (NEW)

LOAD CENTER TYPE: 1A

LOCATION DATA: XXXXXX

LOAD CENTER	STATION:	162+30	OFFSET:	32' RT
POWER SOURCE:	STATION:		OFFSET:	
PHOTOELECTRIC CONTROL:	YES			

SERVICE VOLTAGE: 120/240V, 1-PHASE, 3-WIRE
INTERRUPTING CAPACITY OF CIRCUIT BREAKERS -SERIES SERIES RATED 10000 AIC
PROVIDE METER SOCKET: YES
MAIN BREAKER A: 240 VOLT, 2 POLE, 100 AMPERES
CONTACTOR: 600 VOLT, 12 POLE, 30 AMPERES

LOAD PANEL '5' SUMMARY

BUS RATING: 100A, 240/120-VOLT, 1-PHASE 3-WIRE

CIRCUIT NUMBER:	DESCRIPTION	KVA LOAD	BREAKER AMPS	BREAKER POLES
*5A1	**NEW LIGHTING CIRCUIT**	**0.7**	**20**	**2**
5A2	**PHOTOELECTRIC CONTROL**	**0.1**	**15**	**1**
5A3	LOAD PANEL HEATER (IF EQUIPPED)	0.2	15	1
	CONNECTED LOAD PANEL A:	1.0	2.1	
	DEMAND LOAD PANEL A (@125%):	1.3	2.6	

NOTES:
* - CIRCUIT ROUTED THROUGH CONTACTOR

4

SUMMARY OF NEW LOAD CENTER NO. 6 (NEW)

LOAD CENTER TYPE: 1A

LOCATION DATA: XXXXXX

LOAD CENTER	STATION:	175+44	OFFSET:	38' LT
POWER SOURCE:	STATION:	175+37	OFFSET:	25LT
PHOTOELECTRIC CONTROL:	YES			

SERVICE VOLTAGE: 120/240V, 1-PHASE, 3-WIRE
INTERRUPTING CAPACITY OF CIRCUIT BREAKERS -SERIES SERIES RATED 10000 AIC
PROVIDE METER SOCKET: YES
MAIN BREAKER A: 240 VOLT, 2 POLE, 100 AMPERES
CONTACTOR: 600 VOLT, 12 POLE, 30 AMPERES

LOAD PANEL '6' SUMMARY

BUS RATING: 100A, 240/120-VOLT, 1-PHASE 3-WIRE

CIRCUIT NUMBER:	DESCRIPTION	KVA LOAD	BREAKER AMPS	BREAKER POLES
*6A1	LIGHTING CIRCUIT	1.4	20	2
6A2	EAST RRFB CIRCUIT	1.3	20	1
6A3	WEST RRFB CIRCUIT	1.3	20	1
6A4	SCHOOL FLASHERS	1.3	20	1
6A5	SIGNAL HEATER CIRCUIT	0.2	15	1
6A6	PHOTOELECTRIC CONTROL	0.1	15	1
6A7	LOAD PANEL HEATER (IF EQUIPPED)	0.2	15	1
	CONNECTED LOAD PANEL A:	**5.8**	12.1	
	DEMAND LOAD PANEL A (@125%):	**7.3**	15.1	

NOTES:
* - CIRCUIT ROUTED THROUGH CONTACTOR

4

SUMMARY OF EXISTING LOAD CENTER NO. 7 (EXIST.)

LOAD CENTER TYPE: 1A

LOCATION DATA: XXXXXX

LOAD CENTER	STATION:	180+95	OFFSET:	40' LT
POWER SOURCE:	STATION:		OFFSET:	
PHOTOELECTRIC CONTROL:	YES			

SERVICE VOLTAGE: UNKNOWN
INTERRUPTING CAPACITY OF CIRCUIT BREAKERS -SERIES SERIES RATED 10000 AIC
PROVIDE METER SOCKET: EXISTING
MAIN BREAKER A: 240 VOLT, 2 POLE, 100 AMPERES
CONTACTOR: 600 VOLT, 12 POLE, 30 AMPERES

LOAD PANEL '7' SUMMARY

BUS RATING: 100A, 480/240-VOLT, 1-PHASE 3-WIRE

CIRCUIT NUMBER:	DESCRIPTION	KVA LOAD	BREAKER AMPS	BREAKER POLES
7A1	EXISTING LOAD		20	2
7A2	EXISTING LOAD		20	2
7A3	EXISTING LOAD		20	2
7A4	EXISTING LOAD		20	2
7A5	EXISTING LOAD		20	2
7A6	EXISTING LOAD		20	2
7A7	EXISTING LOAD		20	2
7A8	EXISTING LOAD		15	1
7A9	EXISTING LOAD		15	1
7A10	**NEW LIGHTING CIRCUIT**	**0.2**	**20**	**2**
*7A11	**NEW RRFB CIRCUIT**	**1.3**	**20**	**1**
1A12	**NEW SIGNAL HEATER CIRCUIT**	**0.2**	15	1
	CONNECTED LOAD PANEL A:	**1.7**	3.5	
	DEMAND LOAD PANEL A (@125%):	**2.1**	4.4	

NOTES:
* - CIRCUIT ROUTED THROUGH CONTACTOR

4

NOTE:
LOAD CENTER #5 REPLACES EXISTING LOAD CENTER. DISCONNECT EXISTING SERVICE AND RECONNECT TO NEW LOAD CENTER UPON VERIFICATION NO OTHER POWER CONNECTIONS NEED TO BE MAINTAINED.

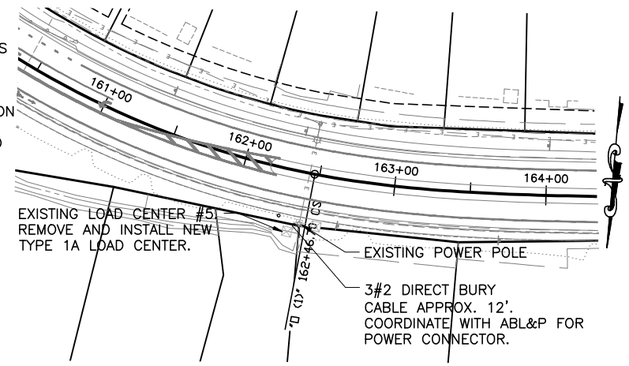

LOAD CENTER #5 POWER SOURCE SCHEMATIC

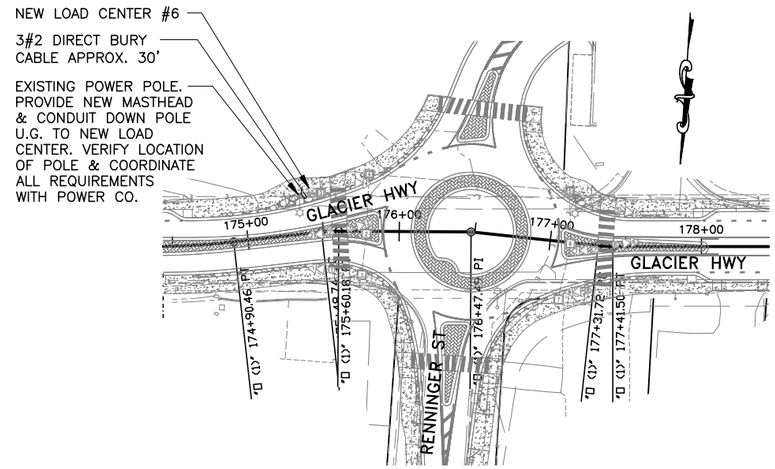

LOAD CENTER #6 POWER SOURCE SCHEMATIC

NOTE:
1. VERIFY CONDITION OF EACH EXISTING LOAD CENTER. PROVIDE BREAKERS AS NOTED ON PANEL SCHEDULE.
2. SEE STANDARD DRAWING L25.01 FOR FOUNDATION DETAILS, AND DETAILS ON SHEET H-78.
3. ELECTRICAL CONTRACTOR SHALL FIELD INSPECT AND VERIFY EXISTING FIELD CONDITIONS, AND PROVIDE UPDATED PANEL SCHEDULE FOR EACH PANEL.
4. SEE LIGHTING AND AFB PLANS FOR ADDITIONAL DETAILS.

Record Drawings have been reviewed by the Project Engineer, and represent to the best of my knowledge, the project as constructed.

PE Dillon Tomaro 2/4/25

STATE OF ALASKA 49TH MICHAEL WILLMON No. EE10405 REGISTERED PROFESSIONAL ENGINEER 12-07-2020

LOAD CENTER DETAILS (2 OF 4)

P:\Kittelson & Associates, Inc. (K4J)\P0017567W\Execution\Drawings\Facilities\Electrical\68124_H-76-78-H-77 Mon, Dec/07/20 10:18am

EQUIPMENT LEGEND/DESCRIPTION

1. METERING SECTION
2. LOAD SECTION
3. UTILITY CONNECTION AND TEST BLOCK SECTION
4. METER READING WINDOW (8"X8")
5. METER SOCKET W/BYPASS & SAFETY SOCKET
6. LIFT AWAY METER SECTION COVER
7. DEADFRONT
8. STAINLESS STEEL PIN HINGE
9. PADLOCKING PROVISIONS
10. DISTRIBUTION PANEL
11. MAIN CIRCUIT BREAKER
12. ACCESSORY EQUIPMENT MOUNTING AREA FOR CONTACTOR, SELECTOR SWITCHES, TERMINAL STRIPS, AND SO ON.
13. SERVICE PULL SECTION
14. SELECTOR SWITCH
15. ENCLOSURE HEATER

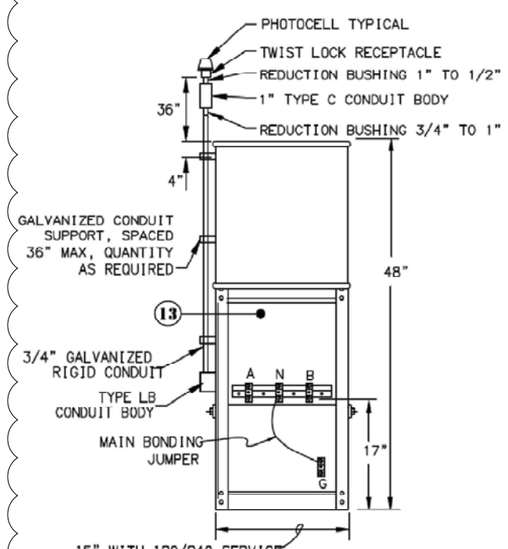

REAR VIEW
(W/ DOOR REMOVED)

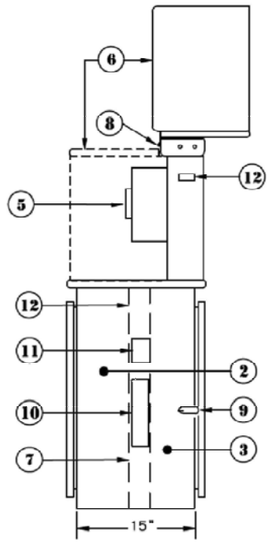

RIGHT SIDE VIEW
(W/ METER SECTION OPEN)

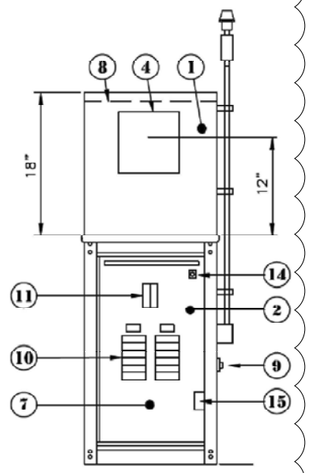

FRONT VIEW
(W/ DOOR REMOVED)

TYPE 1A CABINET DETAILS

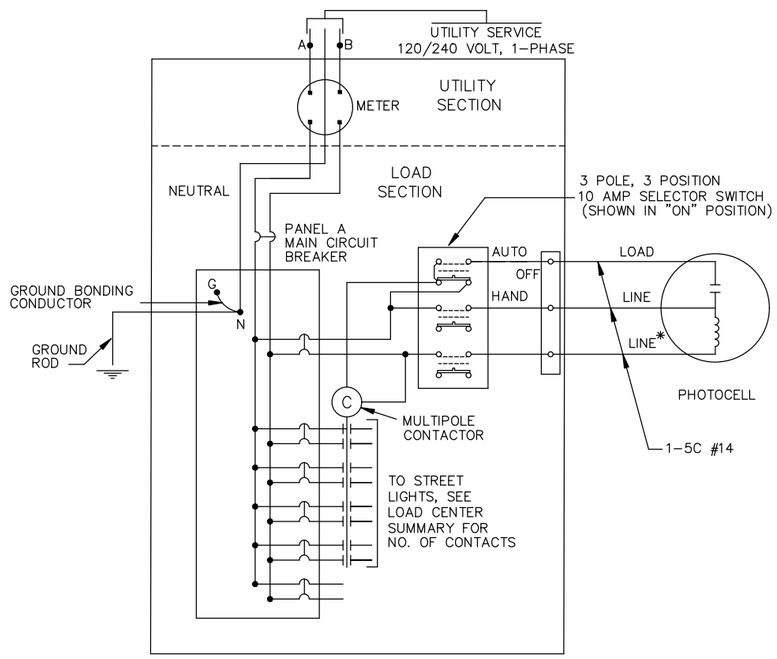

LOAD CENTER ONE LINE DIAGRAM AND SELECTOR SWITCH WIRING

* GROUNDED NEUTRAL

Record Drawings have been reviewed by the Project Engineer, and represent to the best of my knowledge, the project as constructed.

PE Dillon Tomaro 2/4/25

NO.	DATE	REVISION
1	12/7/20	ADDENDUM 4

STATE	PROJECT DESIGNATION	YEAR	SHEET NO.	TOTAL SHEETS
ALASKA	TEA-0955(016)/Z68124	2020	H-78	235

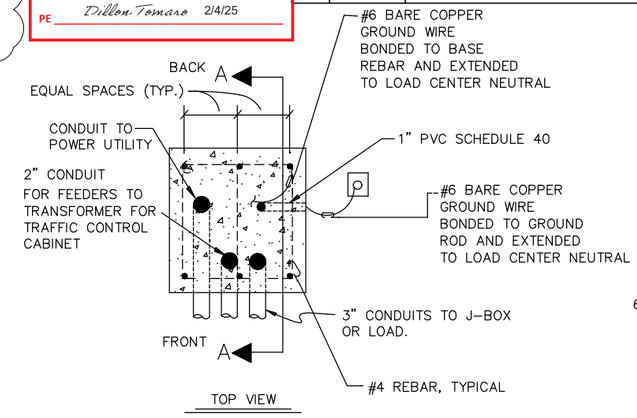

TOP VIEW

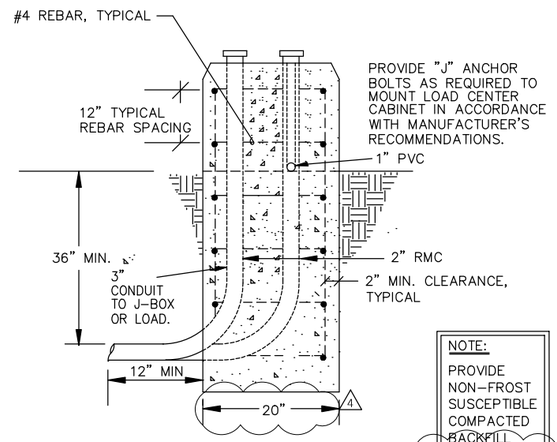

SECTION A-A

NOTE:
PROVIDE NON-FROST SUSCEPTIBLE COMPACTED BACKFILL 2000 PSF

4

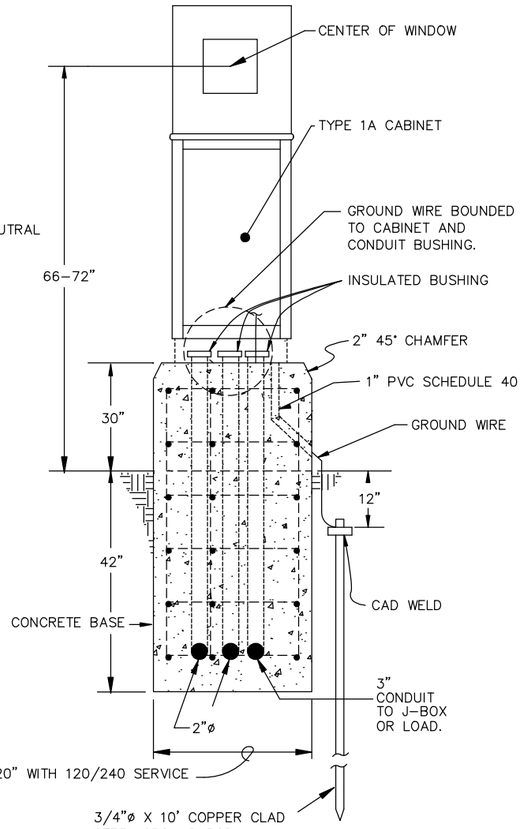

FRONT VIEW

FOUNDATION DETAILS

WIRING NOTES:

1. FURNISH ALL EQUIPMENT NOTED IN THE LOAD CENTER SUMMARY, PLUS TWO 20-AMP 2-POLE SPARE CIRCUIT BREAKERS, AND SPACE FOR A MINIMUM OF TWO ADDITIONAL 2-POLE CIRCUIT BREAKERS IN EACH LOAD PANEL. SEE THE LOAD CENTER SUMMARIES FOR LOAD PANEL VOLTAGES, CURRENT RATINGS, AND THE NAME OF THE SERVING UTILITY.
2. INSTALL GROUNDING HUBS THIRD PARTY CERTIFIED FOR WET LOCATIONS (MYERS TYPE), WHEN ATTACHING CONDUITS TO THE LOAD CENTER ENCLOSURE.
3. LABEL ALL CIRCUIT BREAKERS AS TO FUNCTION AND POSITION. LABEL THE SELECTOR SWITCH "LIGHTING" AND ITS POSITIONS "ON-OFF-AUTO".
4. METER BASES SHALL NOT BE MOUNTED ON MOVABLE PANELS OR DOORS.
5. THE LENGTH AND TYPE OF SERVICE ENTRANCE CONDUIT INSTALLED BY THE CONTRACTOR VARIES BY UTILITY. REGARDLESS OF ITS LENGTH, INSTALL A PULL ROPE IN THE SERVICE CONDUIT AND A CAP ON THE BURIED END: MARK THE BURIED END WITH A 2"X 6" STAKE. SEE THE LOAD CENTER SUMMARIES FOR THE FOLLOWING INFORMATION.
   A. STATION AND OFFSET OF THE LOAD CENTER AND POWER SOURCE.
   B. WHERE THE CONTRACTOR TERMINATES THE SERVICE ENTRANCE CONDUIT.
   C. THE TYPE OF SERVICE ENTRANCE CONDUIT (SUCH AS RIGID METAL CONDUIT OR LIQUID-TIGHT FLEXIBLE METAL CONDUIT).
6. STORE A SCHEMATIC DIAGRAM, A CIRCUIT DIRECTORY, AND A MATERIALS LIST THAT INCLUDES THE MANUFACTURER'S NAME AND PART/CATALOG NUMBERS, ALL LAMINATED IN PLASTIC, IN A METAL POCKET ATTACHED TO THE INSIDE OF THE LOAD CENTER. INSTALL THE POCKET ON THE LOAD CENTER DOOR, PROVIDING DRAIN HOLES TO PREVENT WATER ACCUMULATION.
7. WHEN METAL HALIDE OR MERCURY VAPOR LAMPED FIXTURES ARE USED, PROVIDE A REMOTE BULB THERMOSTAT, SO THAT THE CONTACT CLOSES AND THE LIGHTS TURN ON WHEN THE TEMPERATURE DROPS TO 15° FAHRENHEIT. WIRE THERMOSTAT SO THAT ITS CONTACT IS PARALLEL THE CONTACT IN THE PHOTOELECTRIC CELL.

FOUNDATION NOTES:

1. GRADE AWAY FROM THE BASE WITH A MINIMUM SLOPE OF 3%. USE A PRE-MOULDED BITUMINOUS JOINT BETWEEN THE BASE AND CONCRETE SIDEWALK OR PAVING, WHEN ADJACENT TO A SIDEWALK OR PATHWAY.
2. PROVIDE ANCHOR BOLTS OR EXPANSION ANCHORS IN THE BASE FOR MOUNTING THE CABINET PER THE MANUFACTURER'S SHOP DRAWINGS. ANCHOR BOLTS, NUTS, AND WASHERS SHALL CONFORM TO EITHER ASTM A307 OR A449 AND SHALL BE GALVANIZED IN ACCORDANCE WITH ASTM A153.
3. USE GRADE 60 REINFORCING STEEL CONFORMING TO ASTM 615 AND CLASS "A" CONCRETE CONFORMING TO SECTION 501 OF THE SPECIFICATIONS WHEN CASTING THE BASE.
4. IF THE BASE IS PRECAST, INSTALL TWO 3/4" FERRULE LOOP INSERTS IN TWO SIDES OPPOSITE ONE ANOTHER FOR LIFTING.

STATE OF ALASKA 49TH
MICHAEL WILLMON
No. EE10405
REGISTERED PROFESSIONAL ENGINEER
12-07-2020

LOAD CENTER DETAILS (3 OF 4)

P:\Kittelson & Associates, Inc. (KAI)\P0017567W\Execution\Drawings\Facilities\Electrical\68124_H-76-78-H-78 Mon, Dec/07/20 10:18am

NO.	DATE	REVISION

STATE	PROJECT DESIGNATION	YEAR	SHEET NO.	TOTAL SHEETS
ALASKA	TEA-0955(016)/Z68124	2020	H-79	235

TYPICAL GRADING DETAILS FOR LOAD CENTER FOUNDATION

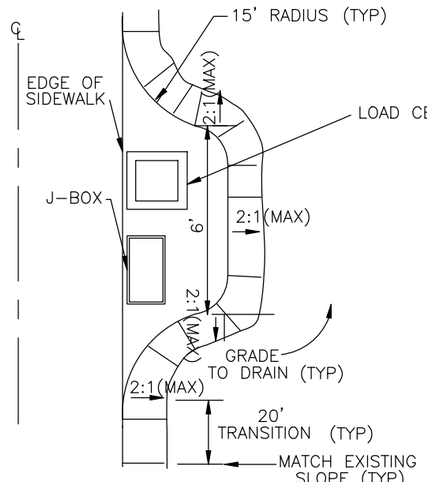

PLAN VIEW

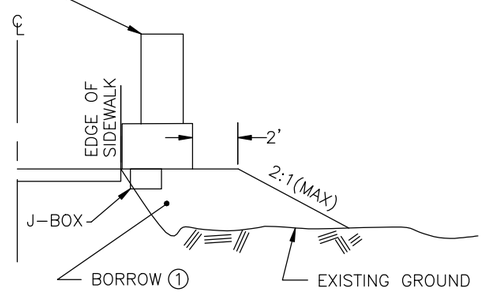

ELEVATION VIEW

1 ALL BORROW AND COMPACTION SHALL MEET THE REQUIREMENTS OF SECTION 203 OF THE SPECIFICATIONS.

2 ALL BORROW, COMPACTION AND GRADING SHOWN ON THESE DETAILS SHALL NOT BE MEASURED FOR PAYMENT BUT BE CONSIDERED SUBSIDIARY TO EXISTING PAY ITEMS.

Record Drawings have been reviewed by the Project Engineer, and represent to the best of my knowledge, the project as constructed.

PE *Dillon Tomaro* 2/4/25

LOAD CENTER DETAILS
(4 OF 4)

STATE OF ALASKA 49TH
JOHN F. RINGERT
CE 11096
REGISTERED PROFESSIONAL ENGINEER
7/31/2020

PLANS DEVELOPED BY: KITTELSON & ASSOCIATES, INC. CERT. OF AUTHORIZATION NO.: 254741, 851 SW 6TH AVE. SUITE 600, PORTLAND, OR 97204, (503) 228-5230
H:\20\20487 - Glacier Highway - Juneau Traffic Design\design_CD\68124_H_LIGHT_S&D-H-79 Thu, Jul/30/20 09:31am

NO.	DATE	REVISION
7	1/8/21	ADDENDUM 7

STATE	PROJECT DESIGNATION	YEAR	SHEET NO.	TOTAL SHEETS
ALASKA	TEA-0955(016)/Z68124	2020	H-80 (7)	235

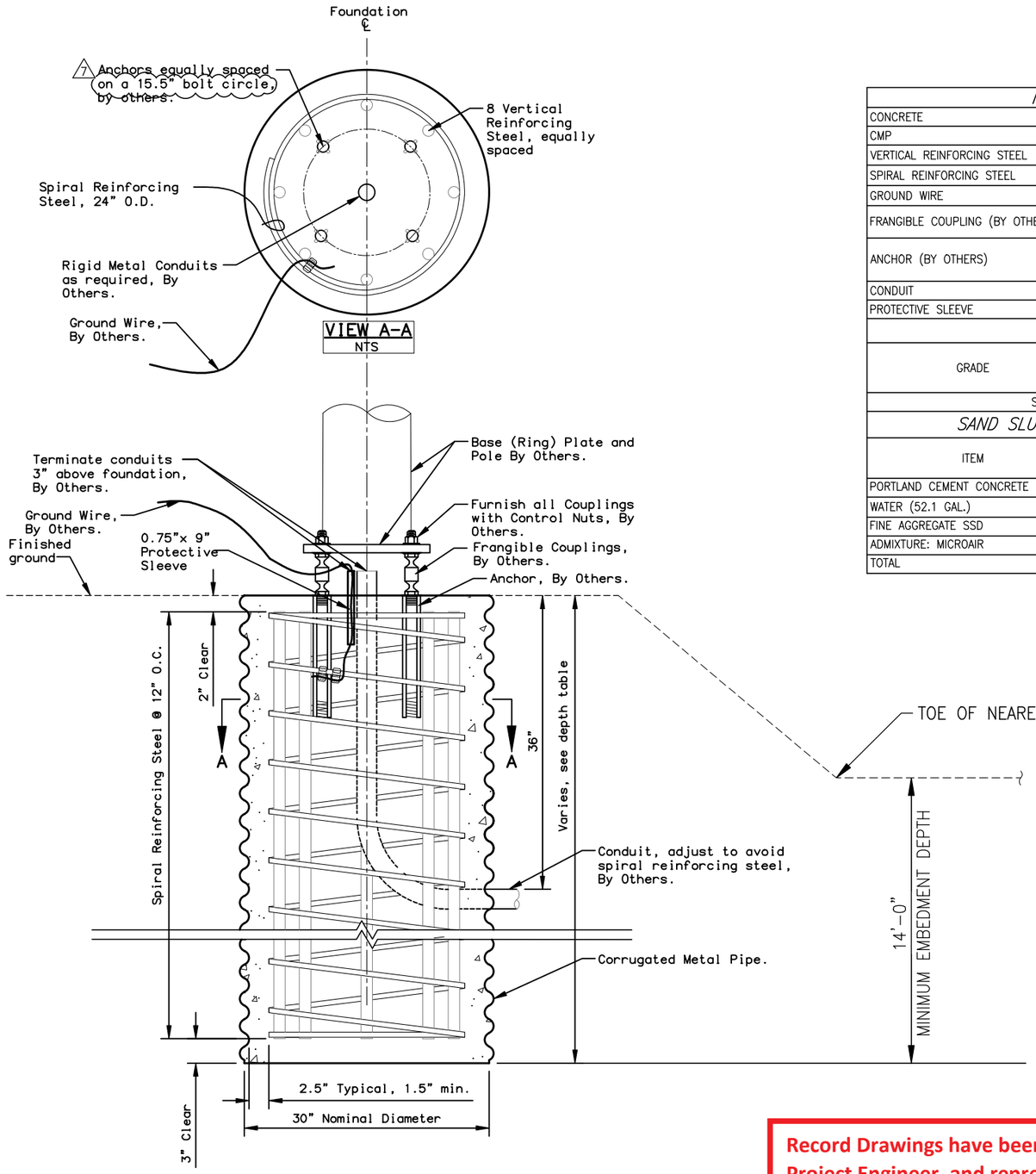

TYPICAL FOUNDATION DETAIL LIGHT POLE
NTS
(Skirt omitted for clarity)

MATERIAL PROPERTIES		
CONCRETE	CLASS A	f'c = 4000 PSI
CMP	AASHTO M218	14 GA.
VERTICAL REINFORCING STEEL	AASHTO M31 #11	GR 60
SPIRAL REINFORCING STEEL	AASHTO M31 #5	GR 60
GROUND WIRE	BY OTHERS	
FRANGIBLE COUPLING (BY OTHERS)	NCHRP 350 TL3 FRANGIBLE COUPLING	Vu = 5.5 kips Tu = 43.2 kips
ANCHOR (BY OTHERS)	NCHRP 350 TL3 FRANGIBLE COUPLING ANCHOR	
CONDUIT	BY OTHERS	
PROTECTIVE SLEEVE	BY OTHERS	

DEPTH TABLE	
GRADE	FOUNDATION DEPTH BY APPLICATION
	TYPICAL LIGHT POLE (NOT TRAFFIC LIGHT) SEE DIMENSION IN DETAIL
SEE DETAIL FOR ALL CONDITIONS	

SAND SLURRY MIX DESIGN (BY OTHERS)		
ITEM	BATCHING QUANTITIES (CUBIC YARDS)	
	BY WEIGHT (LBS.)	APPLICABLE SPECS
PORTLAND CEMENT CONCRETE	188	701-2.01
WATER (52.1 GAL.)	435	712-2.01
FINE AGGREGATE SSD	3041	703-2.01
ADMIXTURE: MICROAIR	2.0 OZ.	.711-2.02
TOTAL	3664	

BOLT CIRCLE (BY OTHERS)	
REGION	DIAMETER
NORTHERN REGION PROJECTS	15.5"
CENTRAL REGION PROJECTS	15.5"
SOUTHEAST REGION PROJECTS	15.5"

(7)

DESIGN NOTES:

DESIGN STANDARD: 2015 EDITION LRFD SPECIFICATIONS FOR STRUCTURAL SUPPORTS FOR HIGHWAY SIGNS, LUMINARIES, AND TRAFFIC SIGNALS.
DESIGN LOAD: 6,500 LBS AXIAL, 6,500 LBS SHEAR, 175,000 FT-LBS MOMENT.
CONSTRUCTION STANDARDS: LIGHT POLES ONLY; 2015 EDITION LRFD SPECIFICATIONS FOR STRUCTURAL SUPPORTS FOR HIGHWAY SIGNS, LUMINARIES, AND TRAFFIC SIGNALS.

NOTES:

1. THIS FOUNDATION IS APPROVED FOR USE IN CONJUNTION WITH THE GEOTECHNICAL REPORT. IF FOOTING IS TO BE PLACED IN A LOCATION OR IN SOILS NOT EXPLICITLY DISCRIBED IN THE GEOTECHNICAL REPORT, NOTIFY THE ENGINEER IMMEDIATELY. REFERENCE GEOTECHNICAL REPORT NUMBER: Z681240000 PROVIDED BY THE DEPARTMENT OF TRANSPORTATION.
2. PLACE FOUNDATION IN DRILLED OR EXCAVATED HOLE WITH CENTERLINE OF FOUNDATION LOCATED AT THE STATION, OFFSET, AND ELEVATION SPECIFIED IN PLANS. SET FOUNDATION FLUSH WITH SURROUNDING SURFACE. GRADE TO DRAIN AWAY FROM THE FOUNDATIONS WITHOUT EXPOSING MORE THAN 4" OF THE FOUNDATION FROM THE SURROUNDING SURFACE.
3. FORM THE FOUNDATIOON IN CORRUGATED METAL PIPE CONFORMING TO SUBSECTION 707-2.01 OF THE SPECIFICATIONS.
4. PROVIDE 1.5 EXTRA TURNS AT EACH END OF THE SPIRAL REINFORCING STEEL. REINFORCING STEEL SHALL NOT BE SPLICED. TIE VERTICAL REINFORCING STEEL TO EACH INTERSECTION OF THE SPIRAL REINFORCING STEEL.
5. GROUNDING WIRE (BY OTHERS).
6. THE RING PLATE (BY OTHERS) MAY BE "BUILT-UP" OF MULTIPLE STEEL PLATES. THE MINIMUM THICKNESS FOR ANY ONE PLATE IS 0.5 INCHES. FASTEN THE RING PLATE TO ANCHOR RODS WITH NUTS AND WASHERS ON BOTH SIDES OF RING PLATE AS SHOWN. TORQUE RING PLATE NUTS TO 600 FT-LBS.
7. ANCHOR RODS ARE SUBJECT TO CHARPY V-NOTCH IMPACT TESTING. SUBMIT MILL CERTIFICATIONS FOR ANCHOR RODS, NUTS, AND WASHERS. GALVANIZE ANCHOR RODS FULL LENGTH. PROVIDE PERMANENT MANUFACTURERS IDENTIFICATION AND PERMANENT GRADE IDENTIFICATION ON EACH END OF ANCHOR ROD BY STEEL DIE STAMP. SECURE EXPOSED ANCHOR RODS WITH A "RING PLATE" WHEN NOT IN SERVICE. INSTALL ANCHOR RODS PLUMB. ANCHOR RODS GREATER THAN 1:40 OUT OF PLUMB WILL RESULT IN FOUNDATION REJECTION. (ANCHOR ROD DESIGN SHALL BE BY OTHERS.)
8. COMPLETE ALL CONCRETE WORK IN CONFORMANCE WITH SECTIONS 501, 503, AND 660 OF THE SPECIFICATIONS. USE A TUBE WITH A HOPPER HEAD OR OTHER APPROVED DEVICE WHEN DROPPING CONCRETE MORE THAN 5 FEET PER SUBSECTION 501-3.08. VIBRATE CONCRETE DURING PLACEMENT BY MECHANICAL VIBRATION PER SUBSECTION L501-3.08. ENSURE UPPER ANCHOR ROD THREADS ARE PROTECTED FROM CONTACT WITH CONCRETE DURING POUR.
9. BACKFILL AND COMPACT ACCORDING TO SECTION 205, AND SUBSECTIONS 203-3.04, AND 660-3.01 OF THE SPECIFICATIONS. USE SELECT MATERIAL, TYPE A OR SAND SLURRY AS BACKFILL MATERIAL. ENSURE AREA BELOW FOUNDATION MEETS COMPACTION REQUIREMENTS AND IS FREE OF LOOSE MATERIAL AND DEBRIS PRIOR TO CONCRETE WORK. (SOIL AND BACKFILL REQUIREMENTS ARE BY OTHERS.)

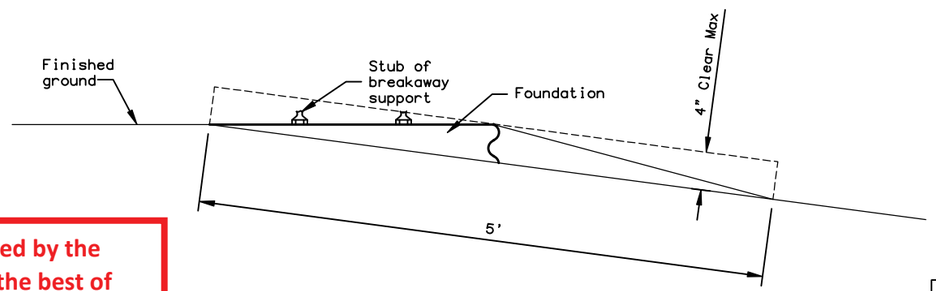

CLEARANCE DETAIL
NTS

Record Drawings have been reviewed by the Project Engineer, and represent to the best of my knowledge, the project as constructed.

PE Dillon Tomaro 2/4/25

STATE OF ALASKA
RONALD H. SCHNEIDER
01/08/21
SE139688
REGISTERED STRUCTURAL ENGINEER

LIGHT POLE (ILLUMINATION) FOUNDATION DETAILS

PLANS DEVELOPED BY: KITTELSON & ASSOCIATES, INC. CERT. OF AUTHORIZATION NO.: 254741, 851 SW 6TH AVE. SUITE 600, PORTLAND, OR 97204, (503) 228-5230
\\DS-AK\Projects-ANC\2019\219087 Glacier Highway Pole Foundations\SV219087_SK2-SK2 Fri, Jan/08/21 10:54am

NO.	DATE	REVISION
1	12/11/20	ADDENDUM 4

STATE	PROJECT DESIGNATION	YEAR	SHEET NO.	TOTAL SHEETS
ALASKA	TEA-0955(016)/Z68124	2020	H-81	235

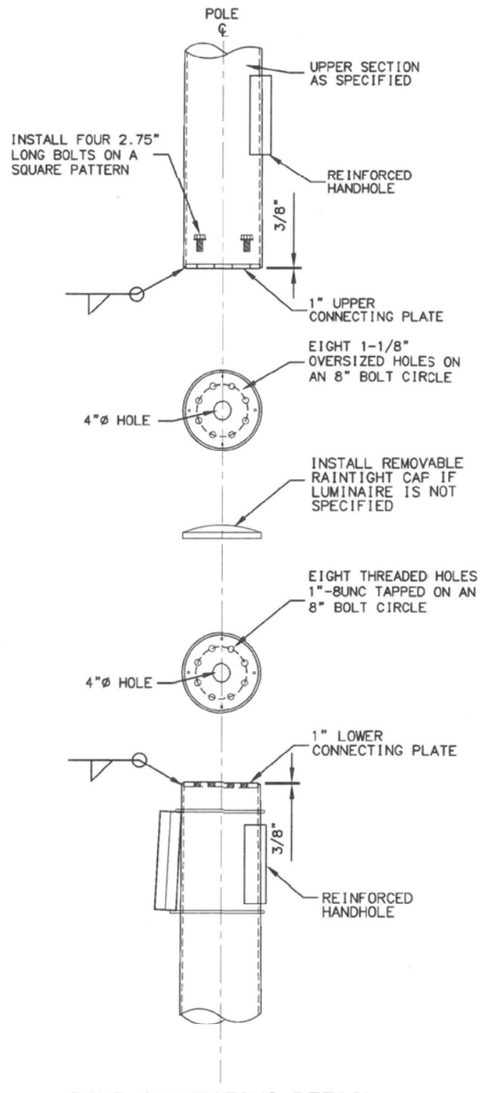

POLE CONNECTING DETAIL

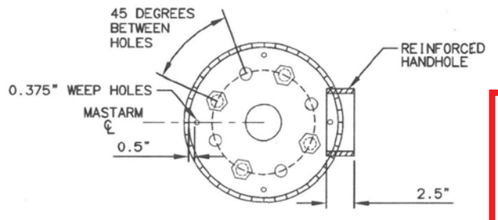

PLATE DETAILS

MATERIAL REQUIREMENTS	
MATERIALS	
Tube Material	A572, A595 GR A or A1011 50 ksi min
Single Luminaire Tube	7 ga
Double Luminaire Tube	7 ga
Davit Luminaire Tube	7 ga
Lower Connecting Plate	AASHTO M270 F3
Upper Connecting Plate	AASHTO M270 F3
Concentric Reducer	A572 or A595 GR A
Connection Tube	A572 or A595 GR A
Luminaire Arm Materials	See L-03.10
Upper Section Attachment Bolts	1"-8UNC / AASHTO M164
Luminaire Attachment Bolts	3/4"-10 / AASHTO M164
Slip-fit Through Bolt	5/8" / AASHTO M164
Finish	AASHTO M111 & M232
Handhole	7" X 12.89" O.D.
SINGLE LUMINAIRE	
Design Length	22.5'
Section Shape	Round
Fixed End Diameter	13.99" O.D.
Taper	0.14"/ft
Luminaire Arm Details	See L-03.10
DOUBLE LUMINAIRE	
Design Length	17.5'
Section Shape	Round
Fixed End Diameter	13.99" O.D.
Taper	0.14"/ft
Luminaire Arm Details	See L-03.10
DAVIT LUMINAIRE ARM	
Design Height	28.5'
Design Offset	15'
Radius	10'
Section Shape	Round
Fixed End Diameter	13.99" O.D.
Free End Diameter	2.375" O.D.
Taper	0.14"/ft
Concentric Reducer	7 ga
Connection Tube	7 ga

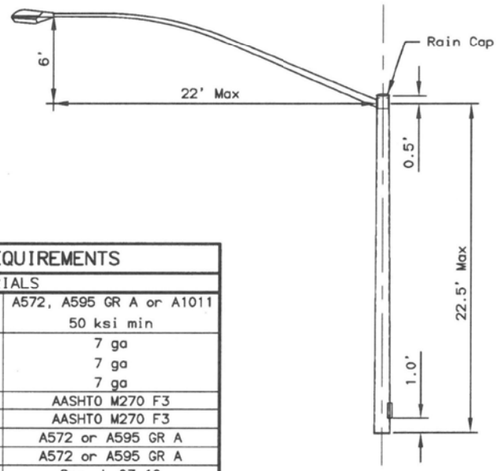

SINGLE LUMINAIRE

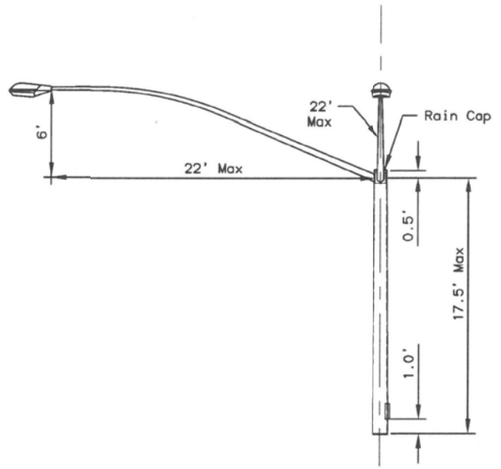

DOUBLE LUMINAIRE

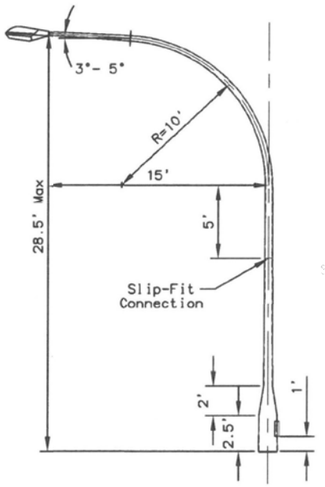

DAVIT LUMINAIRE

UPPER SECTION OPTIONS
NTS

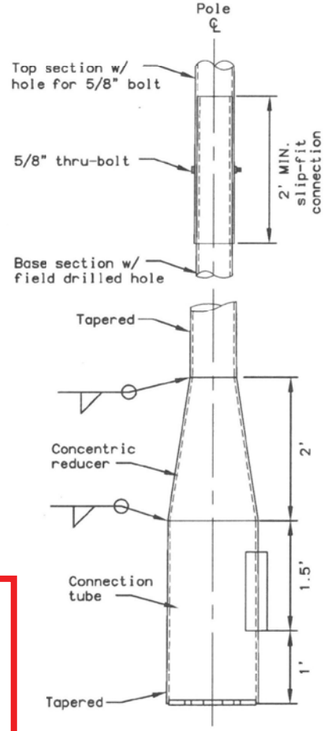

DAVIT CONNECTION DETAIL
NTS

NTS

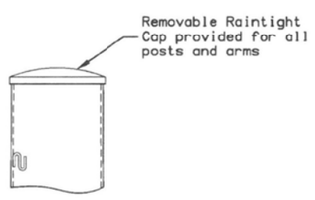

RAIN CAP DETAIL

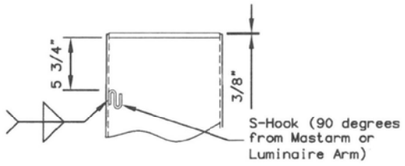

LOWER SECTION POST TOP
NTS

PDF QUALITY INCREASED

Record Drawings have been reviewed by the Project Engineer, and represent to the best of my knowledge, the project as constructed.

PE Dillon Tomaro 2/4/25

STATE OF ALASKA 49TH JOHN F. RINGER CE 11096 REGISTERED PROFESSIONAL ENGINEER 12/15/20

LIGHTING FOUNDATION DETAIL

PLANS DEVELOPED BY: KITTELSON & ASSOCIATES, INC. CERT. OF AUTHORIZATION NO.: 254741, 851 SW 6TH AVE. SUITE 600, PORTLAND, OR 97204, (503) 228-5230
H:\20\20487 - Glacier Highway - Juneau Traffic Design\design_CD\68124_H_LIGHT_S&D-H-81 Tue, Dec/15/20 01:38pm

** Deleted by CO19

NO.	DATE	REVISION

STATE	PROJECT DESIGNATION	YEAR	SHEET NO.	TOTAL SHEETS
ALASKA	TEA-0955(016)/Z68124	2020	J-1	235

NOTE:

1. EXISTING SANITARY SEWER INVERTED SIPHON LOCATION IS APPROXIMATE; USE CAUTION WHEN EXCAVATING.
2. LOCATE AND REMOVE EXISTING STEEL PLATE HEADWALL.
3. AWC STREAM NO. 111-40-10125-2010.
4. HYDRAULICS ENGINEER WILL FIELD DETERMINE INVERT ELEVATIONS OF FISH PASSAGE PIPES AT TIME OF INSTALLATION.
5. SALVAGE AND STOCKPILE STREAMBED MATERIAL. BACKFILL CULVERT WITH STREAMBED MATERIAL TO THE EMBEDMENT DEPTH SHOWN IN THE TABLE. STREAMBED MATERIAL SHALL MEET THE MATERIAL REQUIREMENTS GIVEN ON SHEET J-3, NOTE 6.
6. INSTALL CAST-IN-PLACE TYPE II HEADWALL PARALLEL TO ROAD CENTERLINE AT STA. 109+89.80. SEE SHEET M-7 AND M-8 FOR DETAILED PLANS.

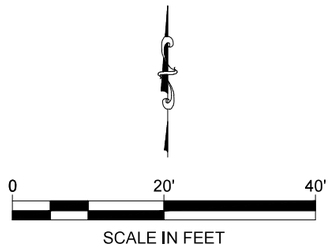

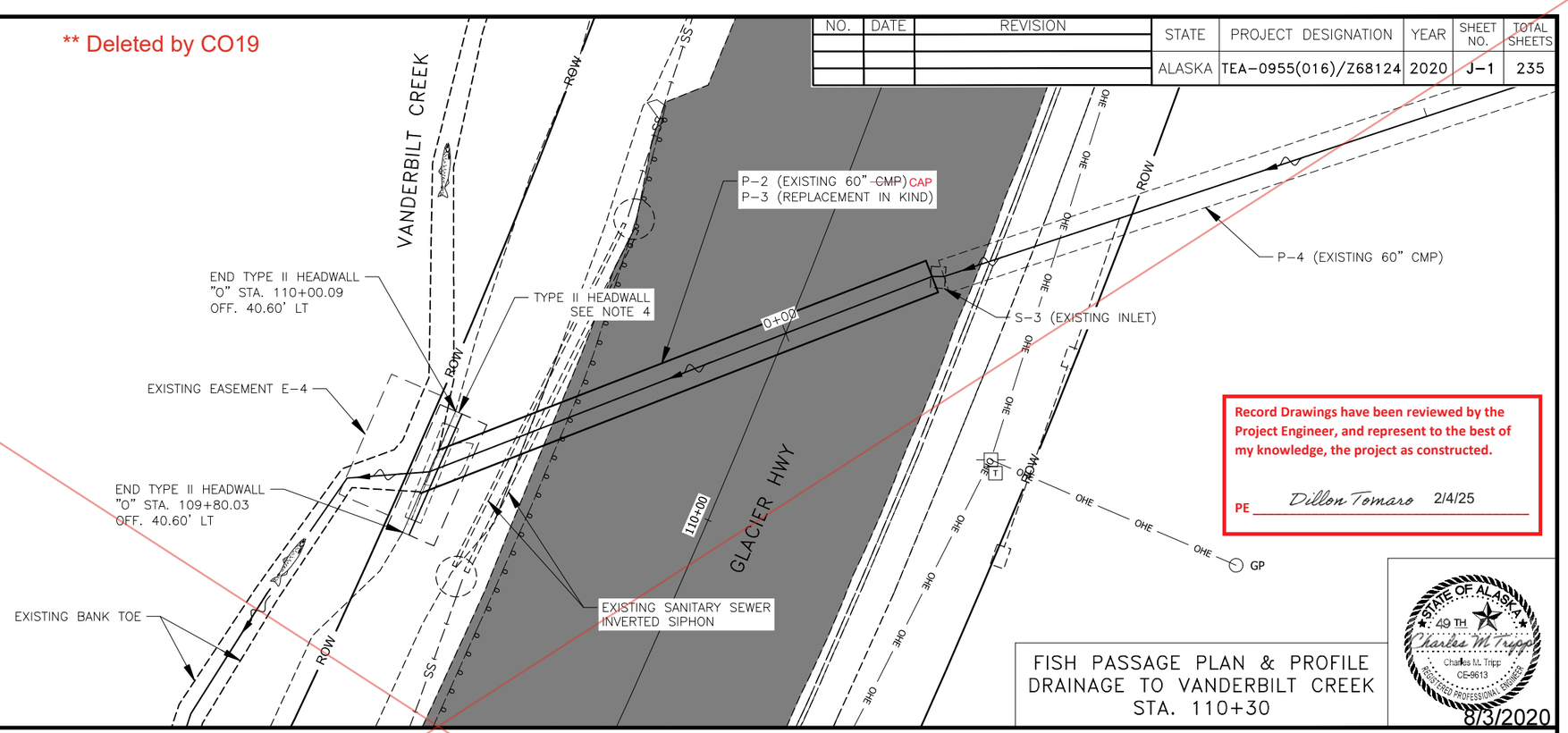

Record Drawings have been reviewed by the Project Engineer, and represent to the best of my knowledge, the project as constructed.

PE Dillon Tomaro 2/4/25

FISH PASSAGE PLAN & PROFILE
DRAINAGE TO VANDERBILT CREEK
STA. 110+30

STATE OF ALASKA 49TH
Charles M. Tripp
Charles M. Tripp
CE-9613
REGISTERED PROFESSIONAL ENGINEER
8/3/2020

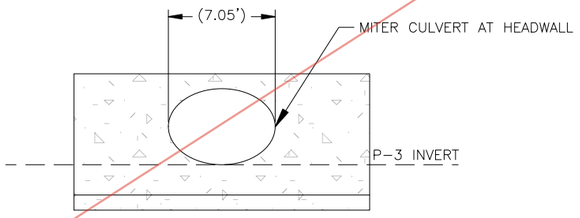

HEADWALL DETAIL
SCALE: NTS

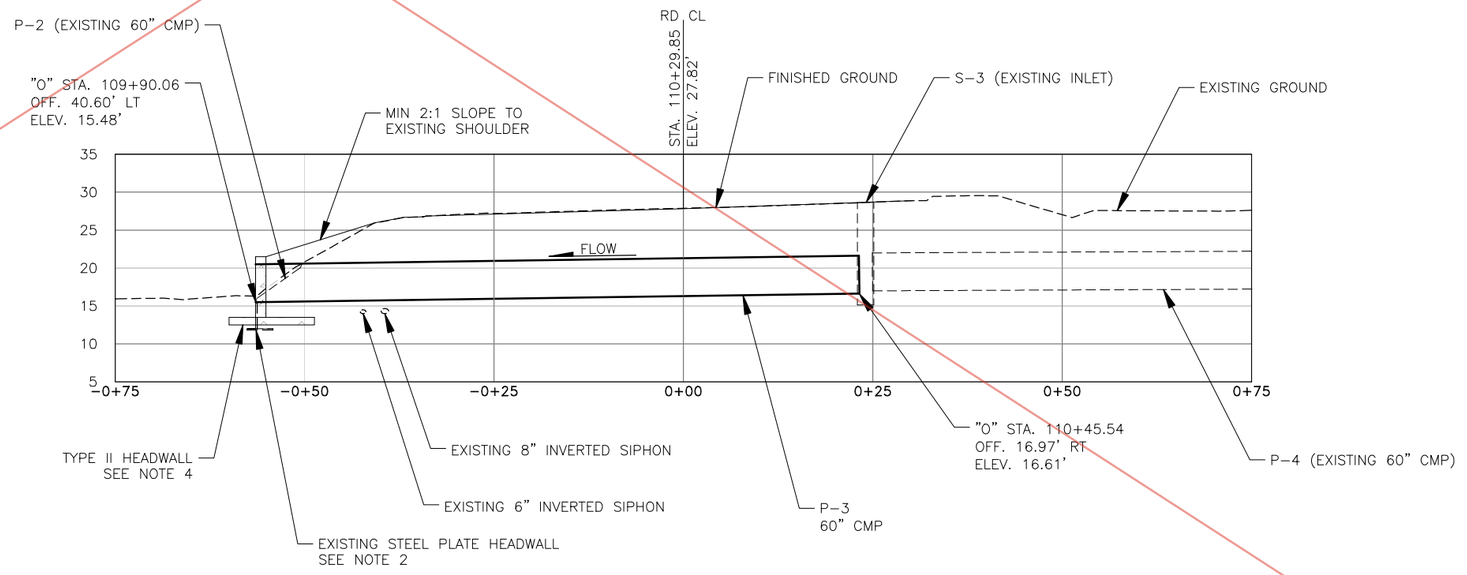

P-3 STA. 110+30
PROFILE

FILE | Q:\jnu\68124\EN\C3D\Fish Passage C3D\68124_Fish_Passage.dwg
DATE | 8/2/2020 17:12
LAYOUT | J-1
DESIGNED | M. WOODBY
CHECKED | C. TRIPP
DRAFTED | M. WOODBY

NO.	DATE	REVISION

STATE	PROJECT DESIGNATION	YEAR	SHEET NO.	TOTAL SHEETS
ALASKA	TEA-0955(016)/Z68124	2022	J-1	235

NOTES:

1. EXISTING SANITARY SEWER INVERTED SIPHON LOCATION IS APPROXIMATE; USE CAUTION WHEN EXCAVATING.
2. AWC STREAM NO. 111-40-10125-2010.

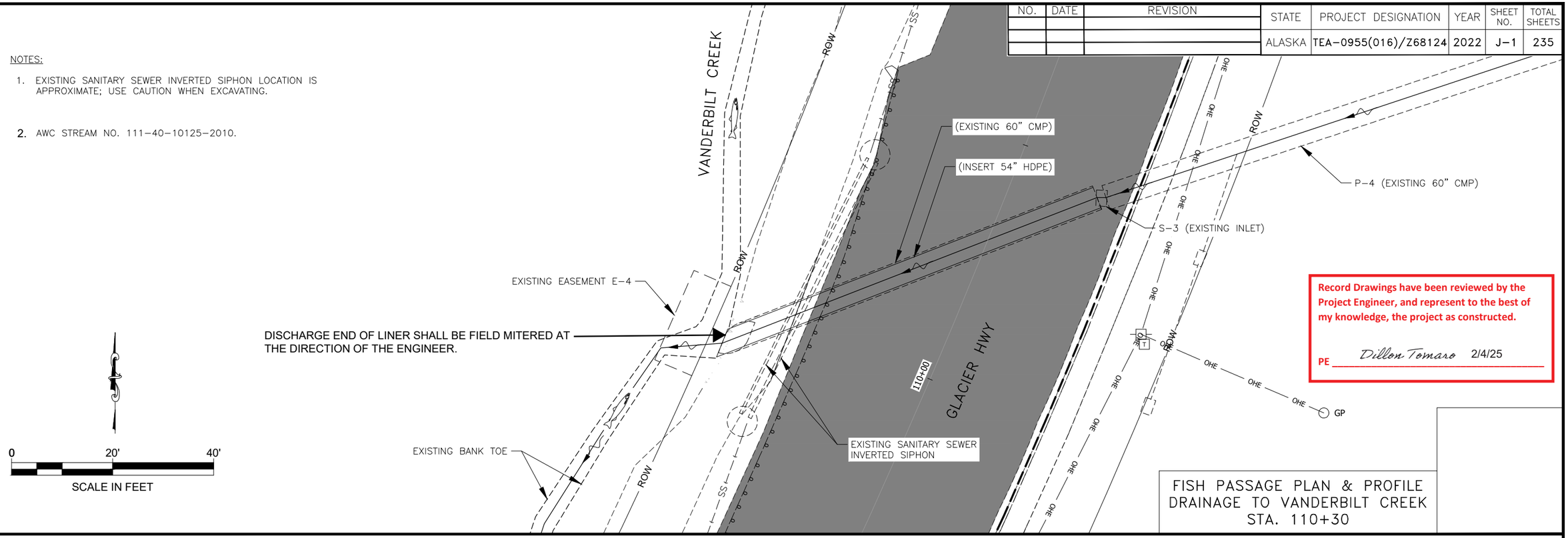

Record Drawings have been reviewed by the Project Engineer, and represent to the best of my knowledge, the project as constructed.

PE Dillon Tomaro 2/4/25

FISH PASSAGE PLAN & PROFILE
DRAINAGE TO VANDERBILT CREEK
STA. 110+30

NOTES:

1. THE PROPOSED NOMINAL BAFFLE SPACING OF 12.20-FT SHALL BE FIELD VERIFIED, AND MAY BE ADJUSTED BY THE FIELD ENGINEER AT TIME OF INSTALLATION. SIX (6) BAFFLES ARE REQUIRED
2. BAFFLES SHALL BE THROUGH BOLTED INTO LINER PIPE PRIOR TO INSERTION INTO HOST PIPE.
3. ROCK WEIR DESIGN AT STA 0+79 PENDING.
4. LAST BAFFLE WILL BE LOCATED AT STA 0+73.

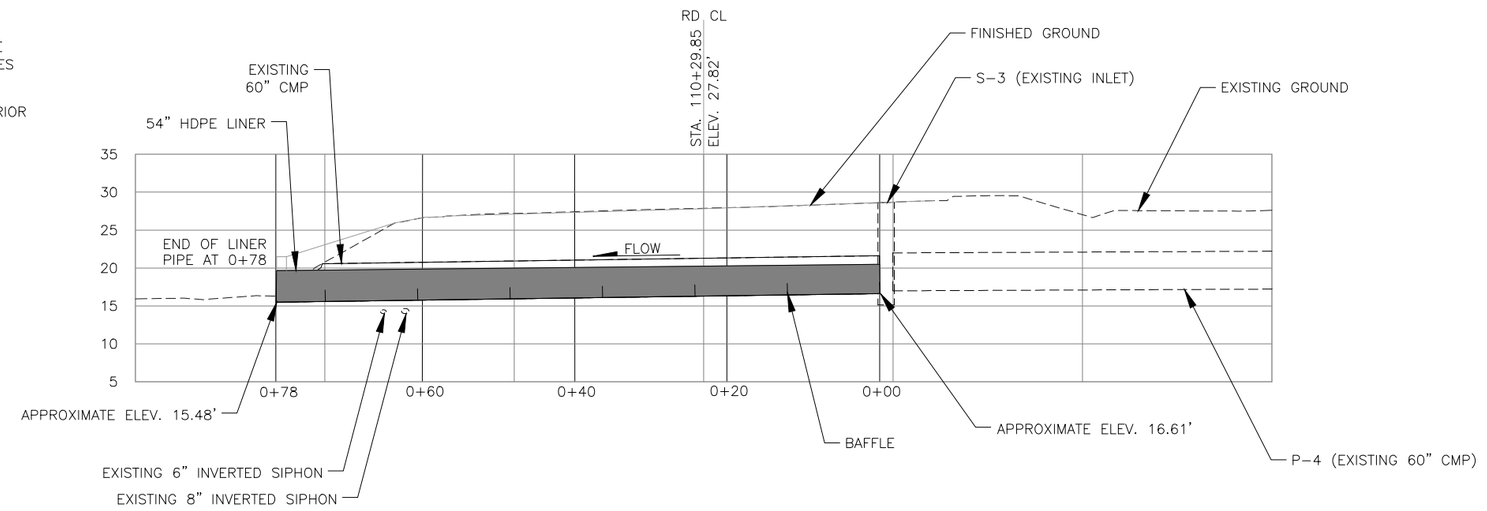

P-3 STA. 110+30
PROFILE

FILE | I:\Materials_v2\15_Kenneth\Projects\Juneau and SR\Fish Passage to Vanderbilt Ck\68124_Fish_Passage.dwg | DATE | 3/2/2022 16:54 | LAYOUT | J-1 | DESIGNED | CHECKED | DRAFTED

NO.	DATE	REVISION
1	1/5/21	ADDENDUM 7

STATE	PROJECT DESIGNATION	YEAR	SHEET NO.	TOTAL SHEETS
ALASKA	TEA-0955(016)/Z68124	2020	J-2	235

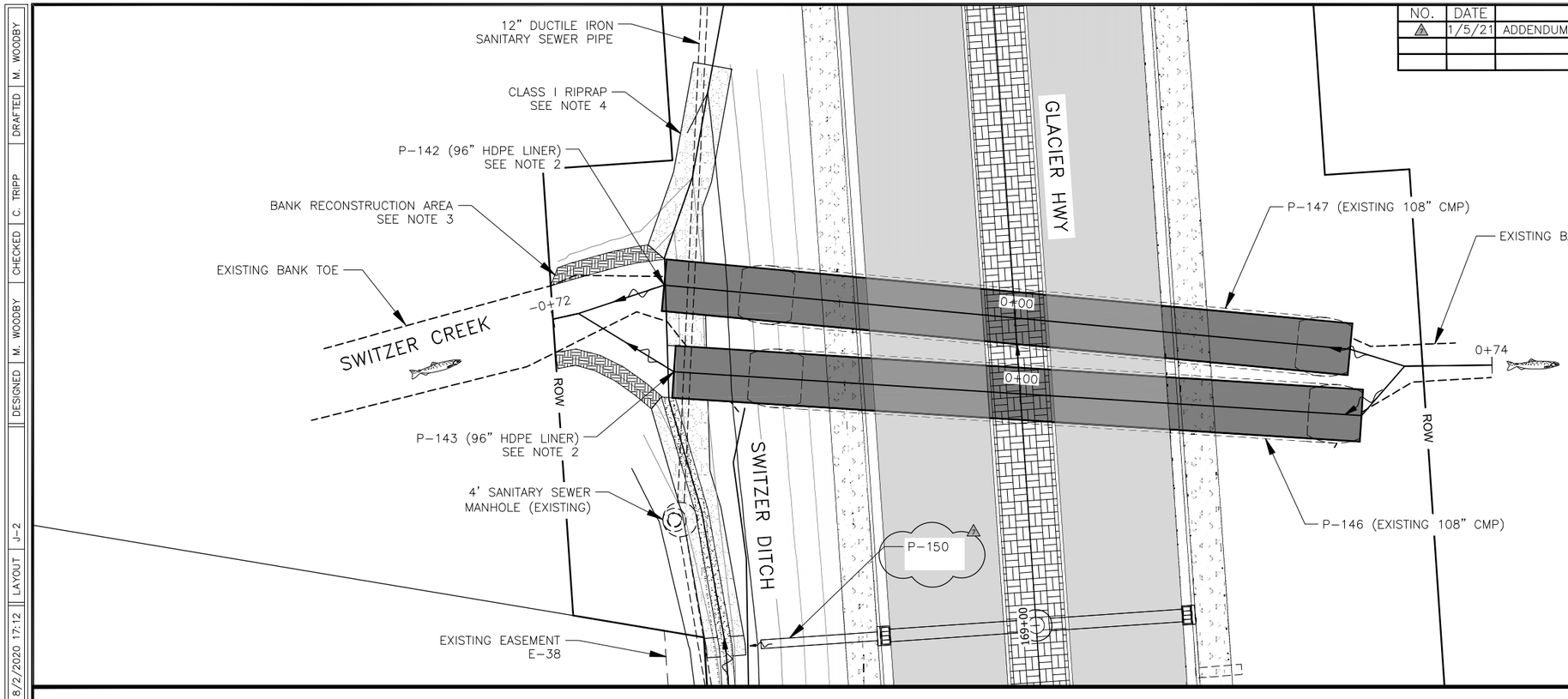

NOTES:

1. AWC STREAM NO. 111-40-10070.
2. PIPE LINER SHALL BE A SNAP-TITE HDPE LINING SYSTEM, MANUFACTURED BY ISCO INDUSTRIES, WITH THE FOLLOWING NOMINAL DIMENSIONS: 96" INNER DIAMETER, 102.6" OUTER DIAMETER, 100 RSC.
3. SLIP-LINER INVERT POSITIONS ARE APPROXIMATE. HYDRAULICS ENGINEER WILL FIELD DETERMINE INVERT ELEVATIONS OF FISH PASSAGE PIPES AT TIME OF INSTALLATION.
4. SEE SHEET J-3, FOR RIPRAP PLACEMENT, TYPICAL SECTIONS, BAFFLE DIMENSIONS, AND BANK RECONSTRUCTION DETAILS.

0 20' 40'

SCALE IN FEET

FISH PASSAGE PLAN & PROFILE SWITZER CREEK "O" STA. 169+36 AND 169+47

STATE OF ALASKA 49TH
Charles M. Tripp
CE-9613
REGISTERED PROFESSIONAL ENGINEER
8/3/2020

Record Drawings have been reviewed by the Project Engineer, and represent to the best of my knowledge, the project as constructed.

PE Dillon Tomaro 2/4/25

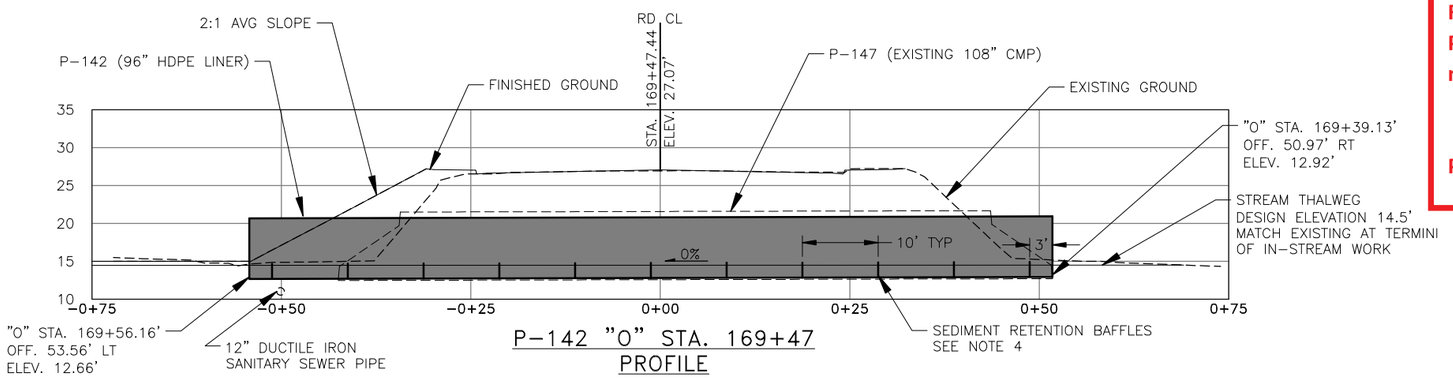

P-142 "O" STA. 169+47 PROFILE

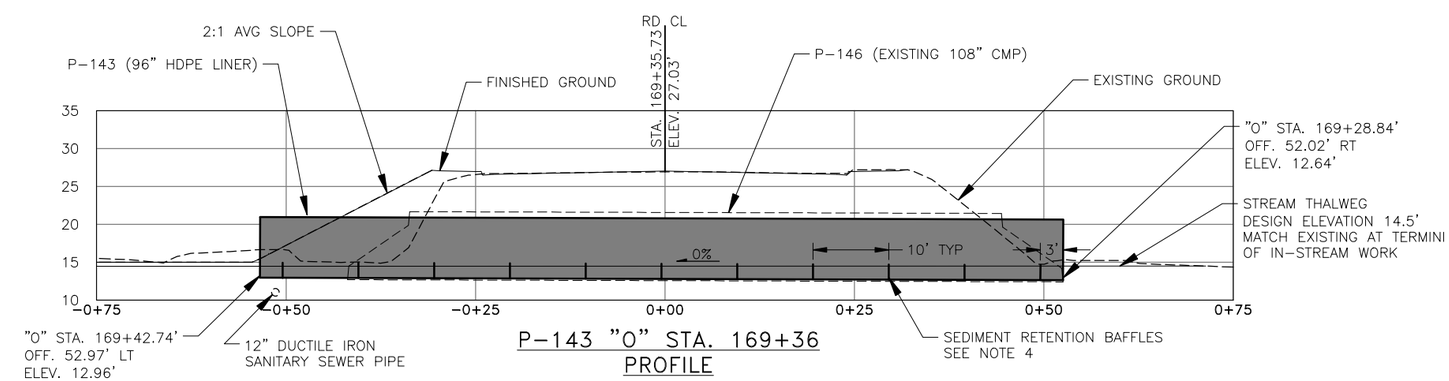

P-143 "O" STA. 169+36 PROFILE

FILE | Q:\anu\68124\EN\C3D\Fish Passage C3D\68124_Fish_Passage.dwg | DATE | 8/2/2020 17:12 | LAYOUT | J-2 | DESIGNED | M. WOODBY | CHECKED | C. TRIPP | DRAFTED | M. WOODBY

NO.	DATE	REVISION	STATE	PROJECT DESIGNATION	YEAR	SHEET NO.	TOTAL SHEETS
1	1/5/21	ADDENDUM 7	ALASKA	TEA-0955(016)/Z68124	2020	J-3	235

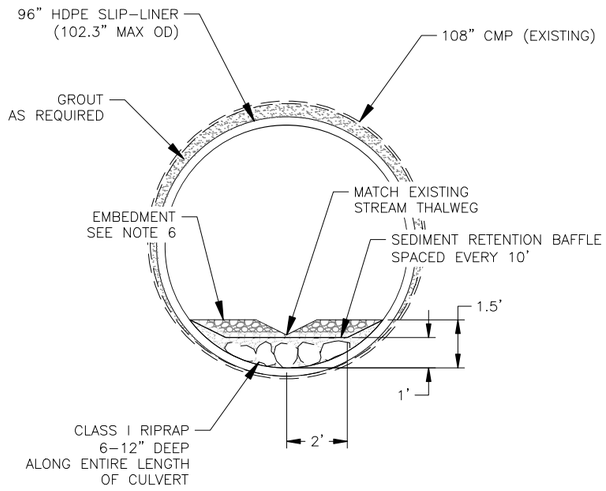

SLIP-LINER TYPICAL SECTION (SECTION A-A)

SCALE: NTS

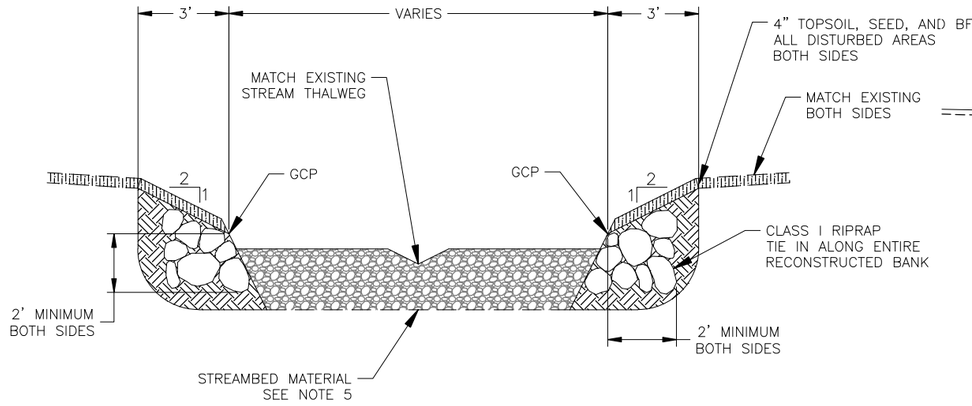

SWITZER CREEK TYPICAL SECTION

SCALE: NTS

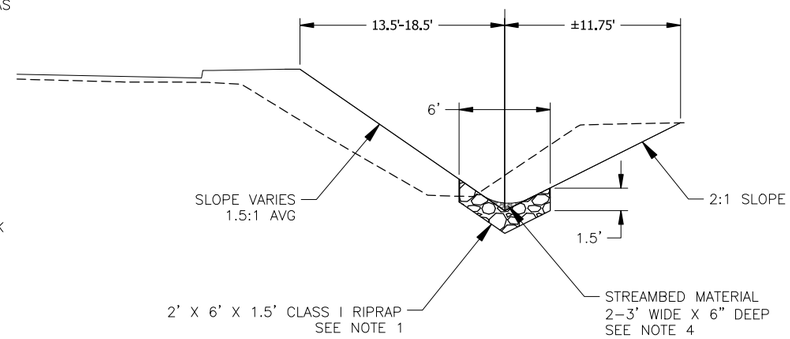

SWITZER DITCH TYPICAL SECTION

SCALE: NTS

Record Drawings have been reviewed by the Project Engineer, and represent to the best of my knowledge, the project as constructed.

PE *Dillon Tomaro* 2/4/25

SWITZER CREEK
AND DITCH DETAILS

STATE OF ALASKA
49 TH
Charles M. Tripp
Charles M. Tripp
CE-9613
REGISTERED PROFESSIONAL ENGINEER
8/3/2020

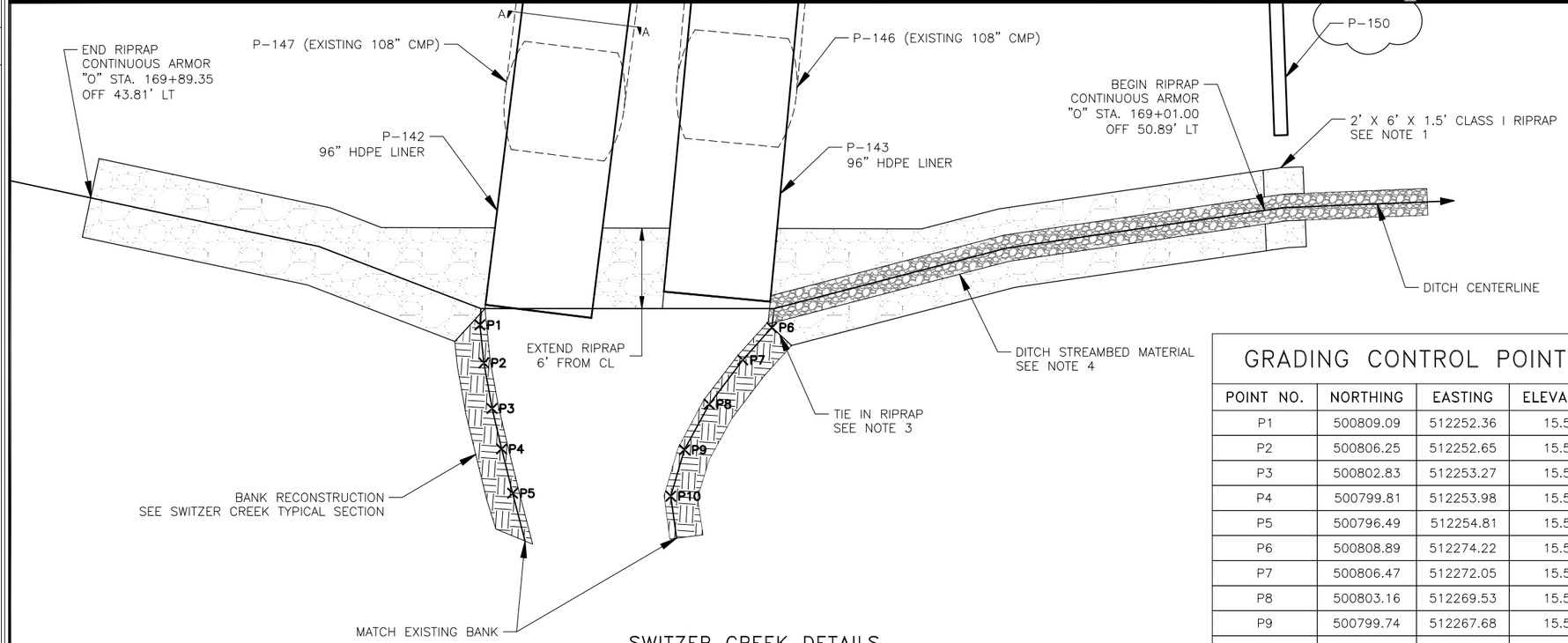

SWITZER CREEK DETAILS

SCALE: NTS

GRADING CONTROL POINTS

POINT NO.	NORTHING	EASTING	ELEVATION
P1	500809.09	512252.36	15.50
P2	500806.25	512252.65	15.50
P3	500802.83	512253.27	15.50
P4	500799.81	512253.98	15.50
P5	500796.49	512254.81	15.50
P6	500808.89	512274.22	15.50
P7	500806.47	512272.05	15.50
P8	500803.16	512269.53	15.50
P9	500799.74	512267.68	15.50
P10	500796.27	512266.66	15.50

NOTES:

1. PLACE 2' X 6' X 1.5' RIPRAP AT OUTFALLS AND 75' IN BETWEEN. PLACE RIPRAP IN CONTINUOUS ARMOR AFTER THE SECOND OUTFALL AS SHOWN IN SWITZER CREEK AND BANK RECONSTRUCTION DETAILS.
2. WITHIN AREA OF BANK RECONSTRUCTION, USE NATIVE MATERIAL TO FILL VOIDS IN RIPRAP. NATIVE MATERIAL SHALL NOT PREVENT ROCK TO ROCK CONTACT.
3. TIE RIPRAP INTO RECONSTRUCTED BANKS ON BOTH SIDES OF THE CHANNEL, AS SHOWN IN SWITZER CREEK TYPICAL SECTION.
4. COVER DITCH CENTERLINE WITH SALVAGED STREAMBED MATERIAL TO THE DIMENSIONS SHOWN IN THE SWITZER DITCH TYPICAL SECTION. THIS STREAMBED MATERIAL SHALL MEET THE REQUIREMENTS OF NOTE 6.
5. FILL DISTURBED AREAS OF STREAM CHANNEL WITH SALVAGED STREAMBED MATERIAL OR NATIVE MATERIAL AS REQUIRED TO BRING CHANNEL TO EXISTING GRADE. MEET MATERIAL REQUIREMENTS OF NOTE 6.
6. SALVAGE AND STOCKPILE STREAMBED MATERIAL FROM EXCAVATION IN SWITZER CREEK. FILL CULVERT LINER WITH SALVAGED STREAMBED MATERIAL OR NATIVE MATERIAL TO THE EMBEDMENT DEPTH SHOWN IN THE TABLES ON SHEET J-2. EMBEDMENT MATERIAL SHALL CONSIST OF SOIL, GRAVEL, AND COBBLES, THOROUGHLY MIXED TO SIMULATE A NATURAL STREAMBED. USE NATURALLY OCCURRING WATER ROUNDED MATERIAL CONFORMING TO THE TABLE BELOW.

SEIVE	PERCENT PASSED BY WEIGHT
10"	100
4"	80-90
2"	40-60
NO. 10	10-15
NO. 200	5-10

FILE | Q:\jnu\68124\EN\C3D\Fish Passage C3D\68124_Fish_Passage.dwg | DATE | 8/2/2020 17:12 | LAYOUT | J-3 | DESIGNED | M. WOODBY | CHECKED | C. TRIPP | DRAFTED | M. WOODBY

Record Drawings have been reviewed by the Project Engineer, and represent to the best of my knowledge, the project as constructed.

PE Dillon Tomaro 2/4/25

NO.	DATE	REVISION
1	1/5/21	ADDENDUM 7

STATE	PROJECT DESIGNATION	YEAR	SHEET NO.	TOTAL SHEETS
ALASKA	TEA-0955(016)/Z68124	2020	J-4	235

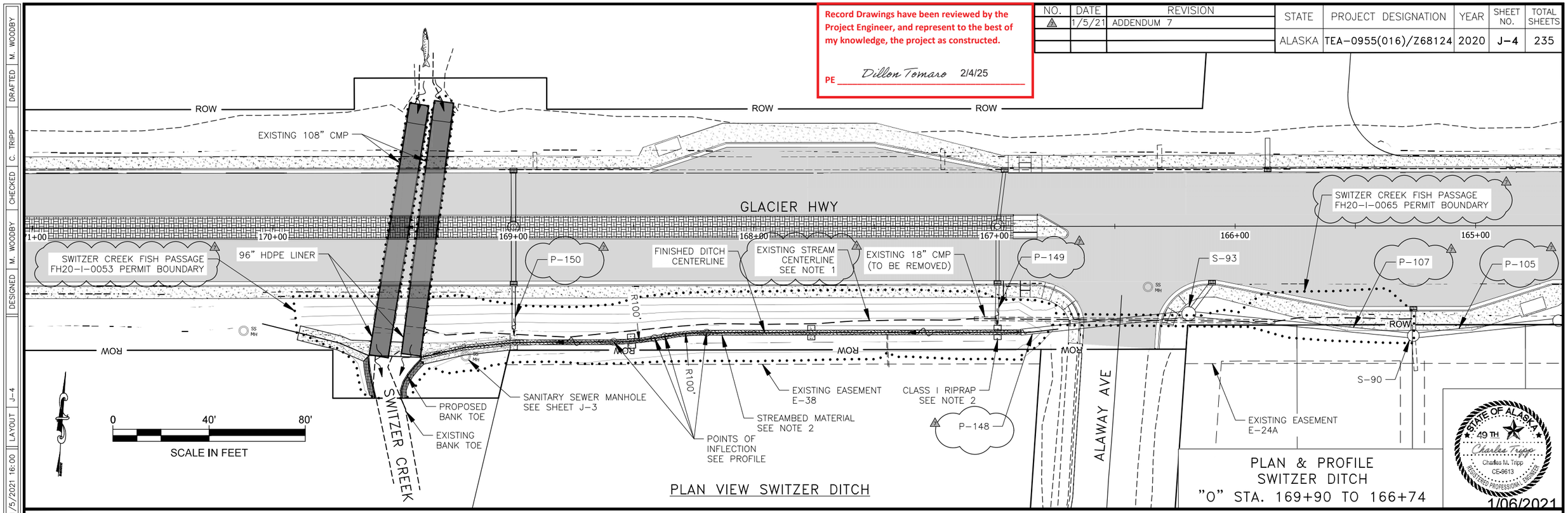

PLAN VIEW SWITZER DITCH

PLAN & PROFILE
SWITZER DITCH
"O" STA. 169+90 TO 166+74

STATE OF ALASKA 49TH
Charles Tripp
Charles M. Tripp
CE-9613
REGISTERED PROFESSIONAL ENGINEER
1/06/2021

NOTES:

1. AWC STREAM NO. 111-40-10070-2010.
2. SEE SHEET J-3 FOR SWITZER DITCH TYPICAL SECTION, STREAMBED MATERIAL, AND RIPRAP PLACEMENT DETAILS.

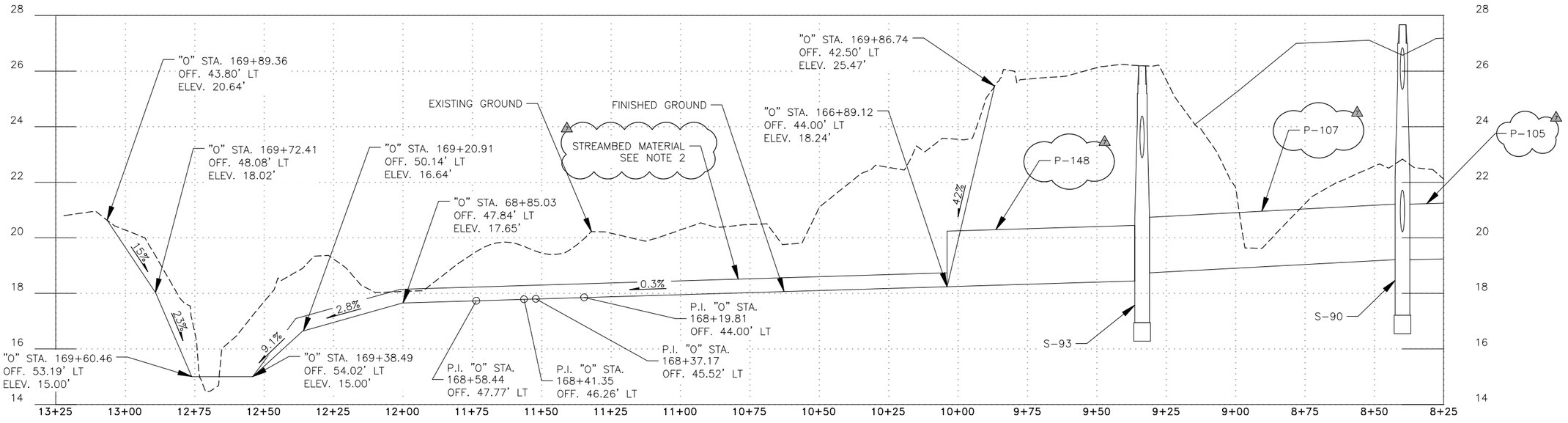

SWITZER DITCH
PROFILE

FILE Q:\jnu\68124\EN\C3D\Fish Passage C3D\68124_Fish_Passage.dwg
DATE 1/5/2021 16:00
LAYOUT J-4
DESIGNED M. WOODBY
CHECKED C. TRIPP
DRAFTED M. WOODBY

NO.	DATE	REVISION

STATE	PROJECT DESIGNATION	YEAR	SHEET NO.	TOTAL SHEETS
ALASKA	TEA-0955(016)/Z68124	2020	M-1	235

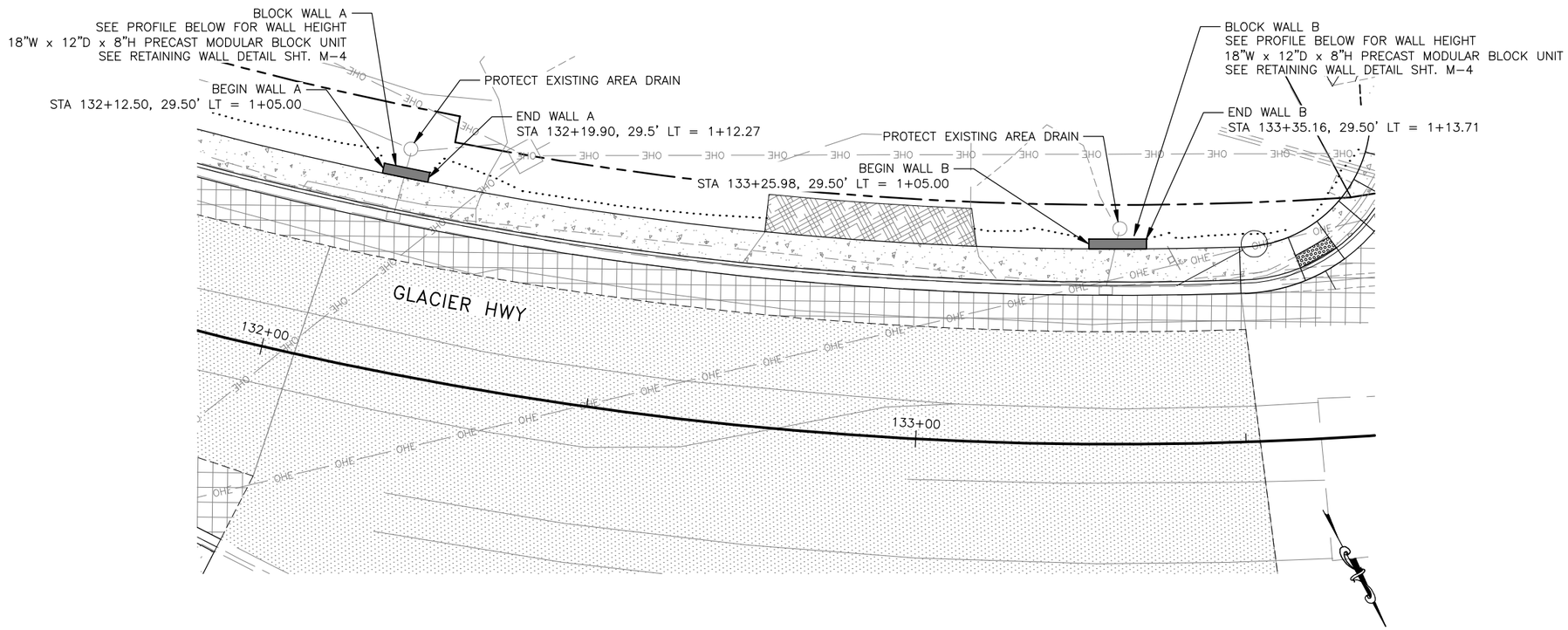

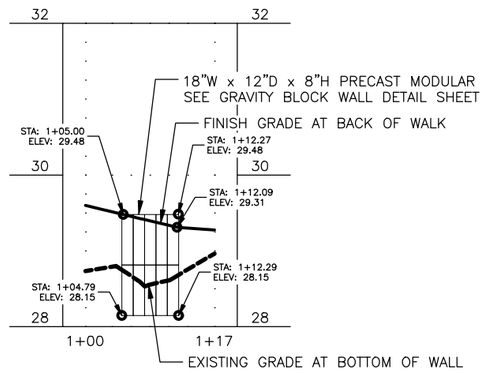

GRAVITY BLOCK
WALL A PROFILE

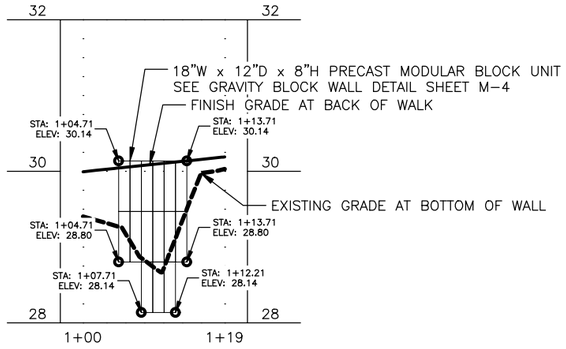

GRAVITY BLOCK
WALL B PROFILE

Record Drawings have been reviewed by the Project Engineer, and represent to the best of my knowledge, the project as constructed.

PE *Dillon Tomaro* 2/4/25

RETAINING WALL
PLAN AND PROFILE

STATE OF ALASKA
49TH
ANTHONY M. ROOS
CE 127591
REGISTERED PROFESSIONAL ENGINEER
7/31/2020

PLANS DEVELOPED BY: KITTELSON & ASSOCIATES, INC. CERT. OF AUTHORIZATION NO.: 254741, 851 SW 6TH AVE. SUITE 600, PORTLAND, OR 97204, (503) 228-5230
H:\20\20487 - Glacier Highway - Juneau Traffic Design\design_CD\68124_M_WALL-M-1 Thu, Jul/30/20 09:32am

Addendum # 9; Attachment # 11

NO.	DATE	REVISION
1	01/13/21	ADDENDUM 9

STATE	PROJECT DESIGNATION	YEAR	SHEET NO.	TOTAL SHEETS
ALASKA	TEA-0955(016)/Z68124	2020	M-2	235

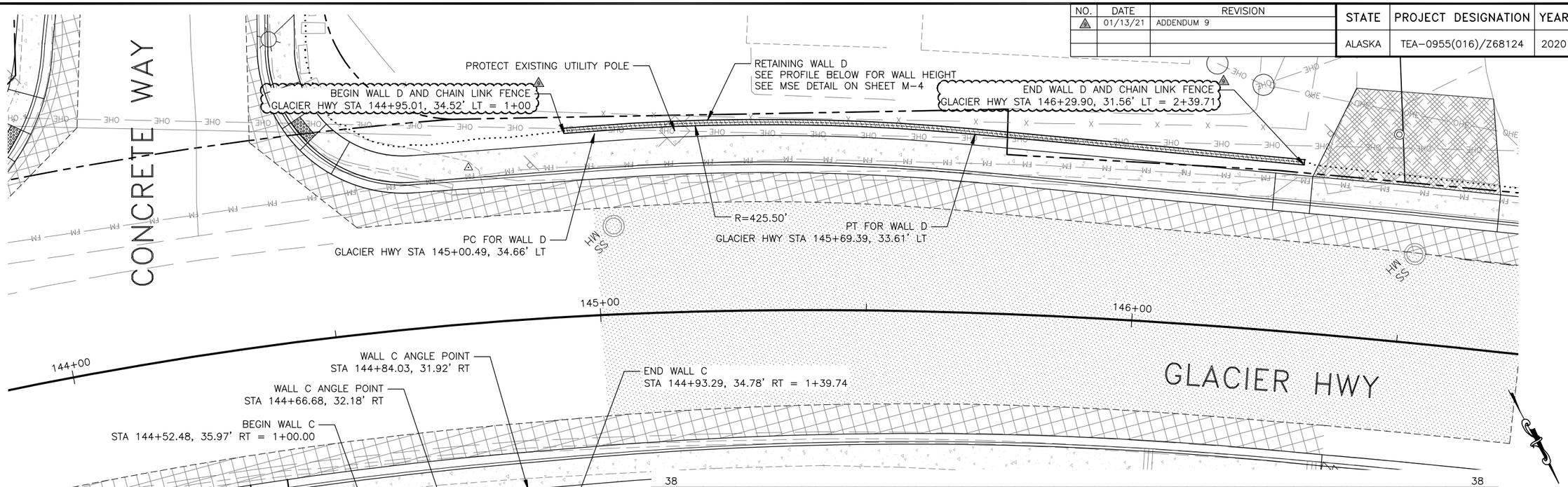

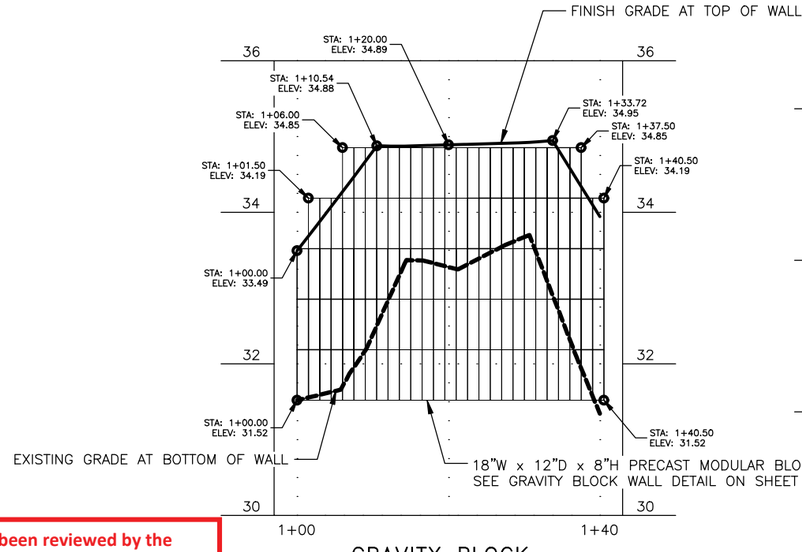

GRAVITY BLOCK
WALL C PROFILE

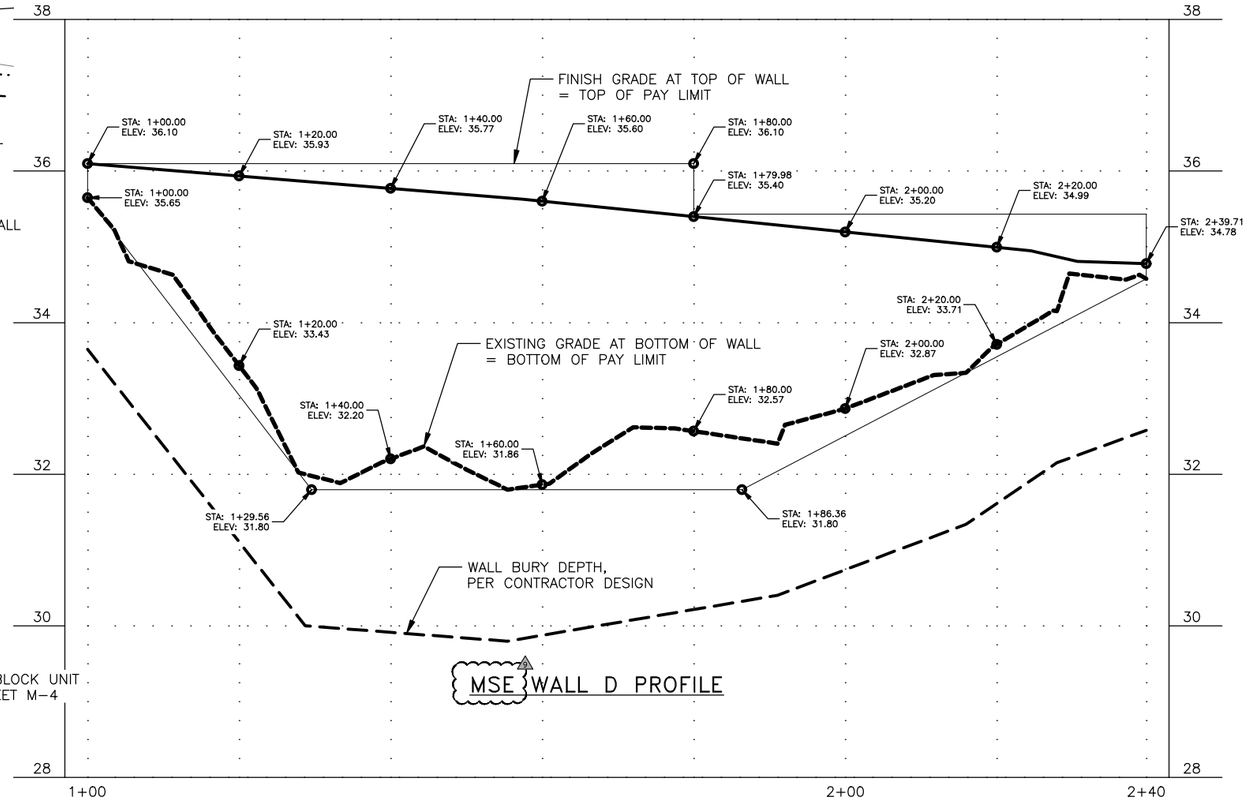

MSE WALL D PROFILE

Record Drawings have been reviewed by the Project Engineer, and represent to the best of my knowledge, the project as constructed.

PE *Dillon Tomaro* 2/4/25

RETAINING WALL PLAN AND PROFILE

STATE OF ALASKA
49TH
ANTHONY M. ROOS
CE 127591
REGISTERED PROFESSIONAL ENGINEER
1/17/21

PLANS DEVELOPED BY: KITTELSON & ASSOCIATES, INC. CERT. OF AUTHORIZATION NO.: 254741, 851 SW 6TH AVE. SUITE 600, PORTLAND, OR 97204, (503) 228-5230
H:\20\20487 - Glacier Highway - Juneau Traffic Design\design_CD\68124_M_WALL-M-2 Sun, Jan/17/21 02:38pm

Record Drawings have been reviewed by the Project Engineer, and represent to the best of my knowledge, the project as constructed.

PE *Dillon Tomaro* 2/4/25

NO.	DATE	REVISION

STATE	PROJECT DESIGNATION	YEAR	SHEET NO.	TOTAL SHEETS
ALASKA	TEA-0955(016)/Z68124	2020	M-3	235

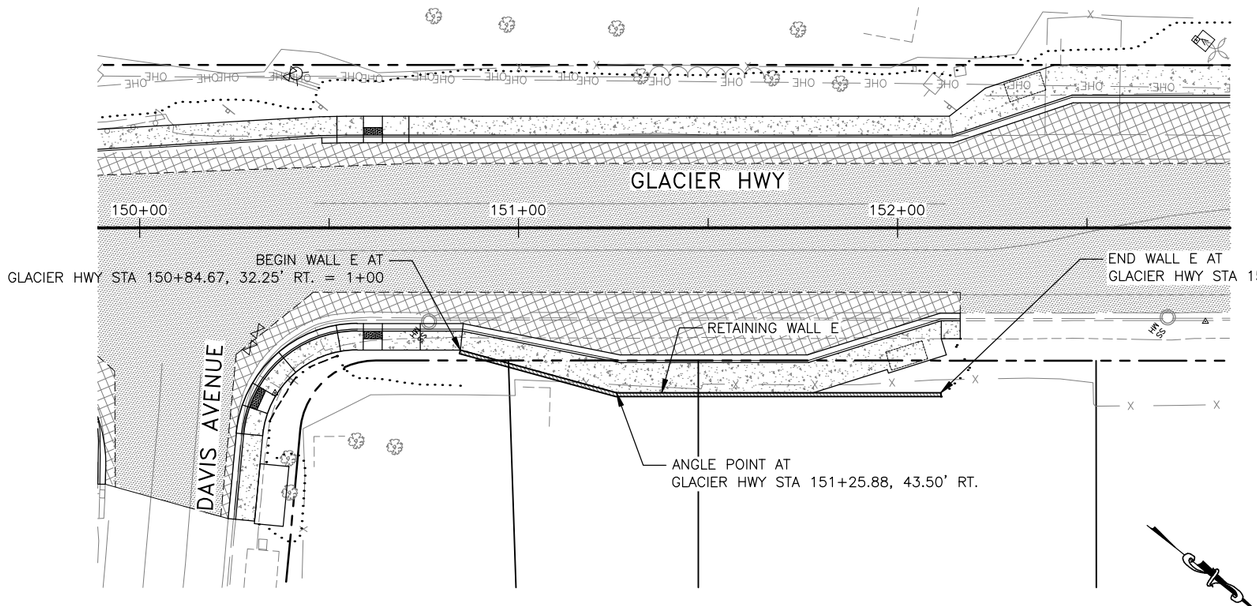

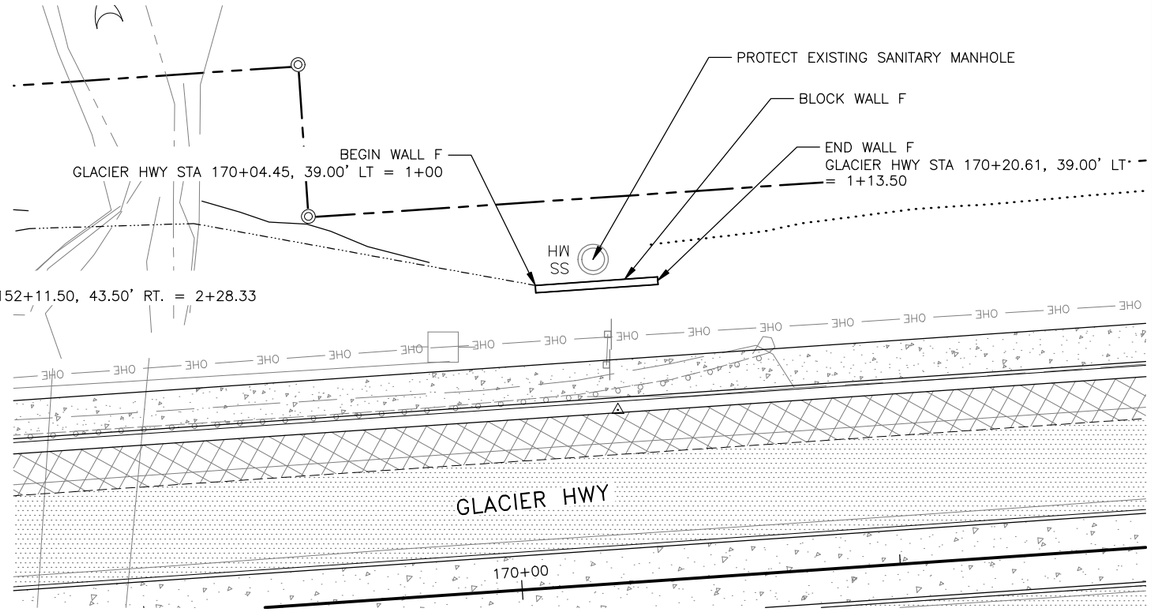

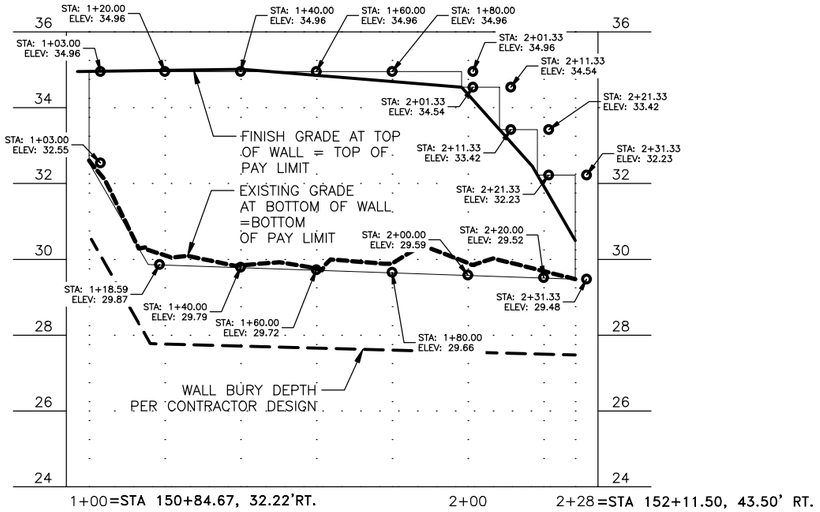

WALL E AT STA 151+00 TOP OF WALL PROFILE

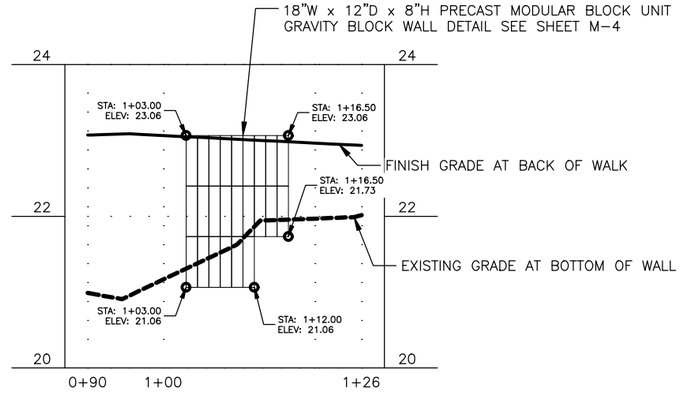

BLOCK WALL F AT STA 170+00

RETAINING WALL PLAN AND PROFILE

STATE OF ALASKA
49TH
ANTHONY M. ROOS
CE 127591
REGISTERED PROFESSIONAL ENGINEER
7/31/2020

PLANS DEVELOPED BY: KITTELSON & ASSOCIATES, INC. CERT. OF AUTHORIZATION NO.: 254741, 851 SW 6TH AVE. SUITE 600, PORTLAND, OR 97204, (503) 228-5230
H:\20\20487 - Glacier Highway - Juneau Traffic Design\design_CD\68124_M_WALL-M-3 Thu, Jul/30/20 09:33am

NO.	DATE	REVISION
1	01/04/2021	ADDENDUM 7

STATE	PROJECT DESIGNATION	YEAR	SHEET NO.	TOTAL SHEETS
ALASKA	TEA-0955(016)/Z68124	2020	M-4	235

** Deleted by CO27

DETAIL REMOVED

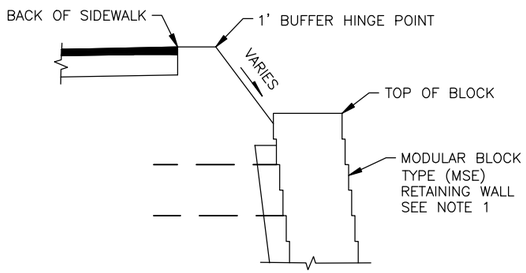

DETAIL A

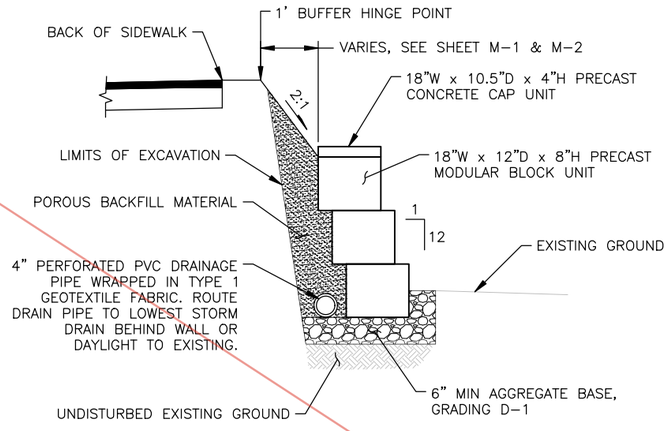

GRAVITY BLOCK WALL DETAIL

GRAVITY BLOCK WALL DIMENSIONS

WALL	W	H
A	8.5'	2.0'
B	10.0'	2.0'
C	40.5'	3.5'
D	140.0'	4.3'
F	13.5'	2.0'

MECHANICALLY STABILIZED EARTH (MSE)
WALL WELDED WIRE FABRIC FACED
(WALLS D & E)

Record Drawings have been reviewed by the Project Engineer, and represent to the best of my knowledge, the project as constructed.

PE Dillon Tomaro 2/4/25

STATE OF ALASKA
49TH
ANTHONY M. ROOS
CE 127591
REGISTERED PROFESSIONAL ENGINEER
1/7/21

RETAINING WALL DETAILS

PLANS DEVELOPED BY: KITTELSON & ASSOCIATES, INC. CERT. OF AUTHORIZATION NO.: 254741, 851 SW 6TH AVE. SUITE 600, PORTLAND, OR 97204, (503) 228-5230
H:\20\20487 - Glacier Highway - Juneau Traffic Design\design_CD\68124_M_WALL-M-4 Thu, Jan/07/21 10:59am

Record Drawings have been reviewed by the Project Engineer, and represent to the best of my knowledge, the project as constructed.

PE Dillon Tomaro 2/4/25

CO 27

NO.	DATE	REVISION
2	01/04/2021	ADDENDUM 7
1	06/24/2021	MODULAR BLOCK DETAIL UPDATE

STATE	PROJECT DESIGNATION	YEAR	SHEET NO.	TOTAL SHEETS
ALASKA	TEA-0955(016)/Z68124	2020	M-4	235

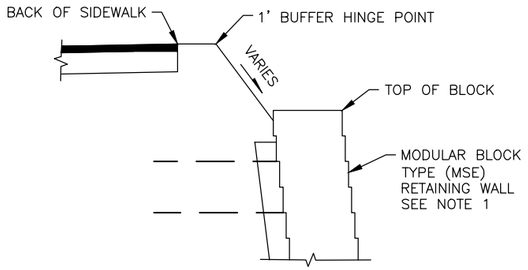

DETAIL A

MECHANICALLY STABILIZED EARTH (MSE)
WALL WELDED WIRE FABRIC FACED
(WALLS D & E)

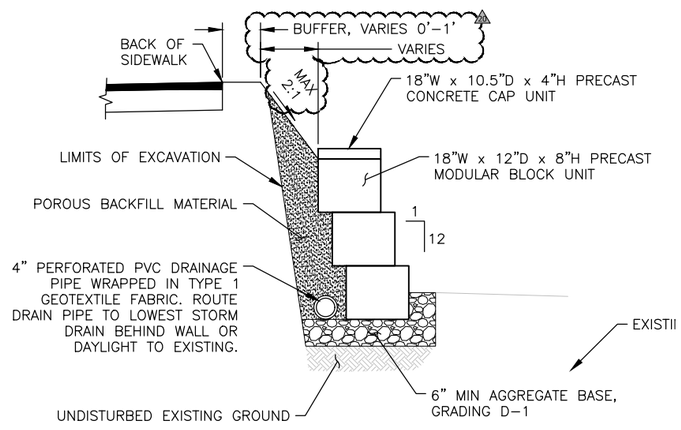

GRAVITY BLOCK C & F WALL DETAIL

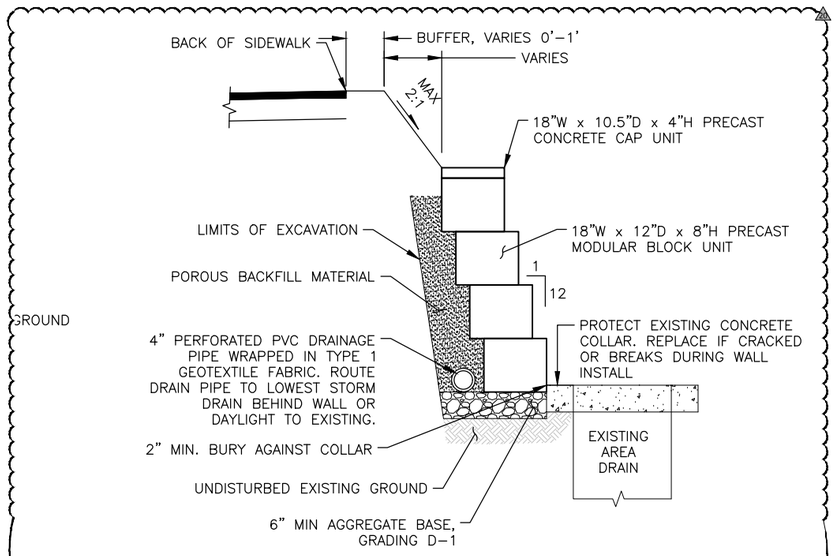

GRAVITY BLOCK WALL A & B DETAIL

GRAVITY BLOCK WALL DIMENSIONS		
WALL	W	H
A	8.5'	2.0'
B	10.0'	2.0'
C	40.5'	3.5'
D	140.0'	4.3'
F	13.5'	2.0'

RETAINING WALL DETAILS

STATE OF ALASKA 49TH ANTHONY M. ROOS CE 127591 REGISTERED PROFESSIONAL ENGINEER 6/24/21

PLANS DEVELOPED BY: KITTELSON & ASSOCIATES, INC. CERT. OF AUTHORIZATION NO.: 254741, 851 SW 6TH AVE. SUITE 600, PORTLAND, OR 97204, (503) 228-5230
H:\20\20487 - glacier highway - juneau traffic design\design_CD\68124_M_WALL-M-4 Thu, Jun/24/21 09:58pm

NO.	DATE	REVISION	STATE	PROJECT DESIGNATION	YEAR	SHEET NO.	TOTAL SHEETS
			ALASKA	TEA-0955(016)/Z68124	2020	M5	235

GENERAL STRUCTURAL NOTES

(APPLY UNLESS NOTED OTHERWISE)

Record Drawings have been reviewed by the Project Engineer, and represent to the best of my knowledge, the project as constructed.

PE Dillon Tomaro 2/4/25

DESIGN CRITERIA:

DESIGN CRITERIA:

2012 EDITION OF AASHTO LRFD BRIDGE DESIGN, WITH LOCAL AMENDMENTS.
(ALTERNATE CODES USED IN CALCULATIONS MUST MEET OR EXCEED 2012 AASHTO REQUIREMENTS)
RISK CATEGORY II.

LOADS:

WIND DESIGN: ULTIMATE WIND SPEED(Vult) = 127 MPH (3 SECOND GUST).NOMINAL DESIGN WIND SPEED (Vasd) = 98 MPH. EXPOSURE B.
INTERNAL PRESSURE COEFFICIENT (GCpi) = +-0.18.
SEISMIC DESIGN: Is = 1.0. Ss = 0.57g. S1 = 0.37g. SOIL SITE CLASS = D. Sds = 0.51g. SD1 =0.409g. SEISMIC DESIGN CATEGORY D.
WIND AND SEISMIC LOADS INDICATED ARE INTENDED FOR ULTIMATE/STRENGTH DESIGN LIMIT STATES PER ASCE 7-10.

GENERAL:

1. THE STRUCTURAL CONSTRUCTION DOCUMENTS REPRESENT THE FINISHED STRUCTURE. THEY DO NOT INDICATE THE METHOD OR SEQUENCE OF CONSTRUCTION. THE CONTRACTOR SHALL BE RESPONSIBLE FOR AND PROVIDE ALL MEASURES NECESSARY TO PROTECT THE STRUCTURE DURING CONSTRUCTION. SUCH MEASURES SHALL INCLUDE, BUT NOT BE LIMITED TO, BRACING, SHORING FOR LOADS DUE TO CONSTRUCTION EQUIPMENT, ETC. THE STRUCTURAL ENGINEER SHALL NOT BE RESPONSIBLE FOR THE CONTRACTOR'S MEANS, METHODS, TECHNIQUES, SEQUENCES FOR PROCEDURE OF CONSTRUCTION, OR THE SAFETY PRECAUTIONS AND THE PROGRAMS INCIDENT THERETO. NOR SHALL OBSERVATION VISITS TO THE SITE INCLUDE INSPECTION OF THESE ITEMS). THE CONTRACTOR SHALL BE RESPONSIBLE FOR THE DESIGN AND IMPLEMENTATION OF ALL SCAFFOLDING, BRACING AND SHORING.
2. WHERE REFERENCE IS MADE TO VARIOUS TEST STANDARDS FOR MATERIALS, SUCH STANDARDS SHALL BE THE LATEST EDITION AND/OR ADDENDA.
3. ESTABLISH AND VERIFY ALL OPENINGS AND INSERTS FOR ARCHITECTURAL, MECHANICAL, PLUMBING AND ELECTRICAL WITH APPROPRIATE TRADES, DRAWINGS AND SUBCONTRACTORS PRIOR TO CONSTRUCTION.
4. OPTIONS ARE FOR CONTRACTOR'S CONVENIENCE. IF AN OPTION IS CHOSEN, THE CONTRACTOR SHALL BE RESPONSIBLE FOR ALL NECESSARY CHANGES AND SHALL COORDINATE ALL DETAILS WITH ALL TRADES.
5. NOTES AND DETAILS ON DRAWINGS SHALL TAKE PRECEDENCE OVER GENERAL STRUCTURAL NOTES AND TYPICAL DETAILS. WHERE NO DETAILS ARE SHOWN, CONSTRUCTION SHALL CONFORM TO SIMILAR WORK ON THE PROJECT. FOR BIDDING PURPOSES, WHERE ANY MEMBER IS SHOWN BUT NOT CALLED OUT, THE LARGEST SIMILAR MEMBER SHALL BE UTILIZED.
6. CONTRACTOR SHALL BE RESPONSIBLE FOR VERIFICATION OF ALL DIMENSIONS WITH ARCHITECTURAL DRAWINGS PRIOR TO START OF CONSTRUCTION. RESOLVE ANY DISCREPANCY WITH THE ARCHITECT. DO NOT USE SCALED DIMENSIONS.
7. ALL DETAILS SHALL BE INCORPORATED INTO THE PROJECT AT ALL APPROPRIATE LOCATIONS, WHETHER SPECIFICALLY CUT OF NOT. TYPICAL DETAILS MAY NOT NECESSARILY BE CUT ON PLANS, BUT APPLY UNLESS NOTED OTHERWISE. FOR CLARITY, DETAILS MAY SHOW ONLY ONE SIDE OF FRAMING CONDITION.
8. WHERE DISCREPANCIES OCCUR BETWEEN PLANS, DETAILS, GENERAL STRUCTURAL NOTES AND SPECIFICATIONS, THE GREATER REQUIREMENTS SHALL GOVERN.
9. ANY ENGINEERING DESIGN, PROVIDED BY OTHERS AND SUBMITTED FOR REVIEW, SHALL BEAR THE SEAL OF AN ENGINEER REGISTERED IN THE STATE IN WHICH THE PROJECT OCCURS.

FOUNDATIONS:

1. FOUNDATION DESIGN IS BASED UPON SOIL RECOMMENDATIONS REPORT BY STATE OF ALASKA DOT; PROJECT NO. Z681240000, DATE JULY 21, 2017, AND DOT SPECIFICATIONS. ALL CONSTRUCTION SHALL CONFORM TO THE REQUIREMENTS OF THE SOILS REPORT. SPREAD FOOTINGS SHALL BEAR ON FIRM, UNDISTURBED SOIL AND/OR ENGINEERED FILL PER THE SOILS REPORT.
2. DOT APPROVED PRESUMPTIVE DESIGN SOIL BEARING VALUE =2,000 PSF AT 2'-8" BELOW LOWEST ADJACENT FINISHED GRADE. ACTIVE SOIL PRESSURE = 45 PSF/FT, PASSIVE SOIL PRESSURE = 250 PCF.
3. ALL SOIL BELOW FOOTINGS SHALL BE COMPACTED TO 95% MINIMUM IN ACCORDANCE TO ASTM D698. IT SHALL BE THE OWNER'S RESPONSIBILITY TO DETERMINE WHETHER UNSUITABLE SOIL CONDITIONS EXIST.
4. PROVIDE POSITIVE DRAINAGE SLOPES, BOTH DURING AND AFTER CONSTRUCTION, FOR SURFACE AND RUNOFF.
5. DO NOT EXCEED DIFFERENTIAL IN FILL LEVEL ON OPPOSITE SIDES OF RETAINING WALLS AS DESRIBED IN CONSTRUCTION DOCUMENTS.
6. THE STRUCTURAL ENGINEER IS NOT RESPONSIBLE FOR ANY GEOTECHNICAL ASPECTS OF THIS PROJECT. THE OWNER SHALL EMPLOY A REGISTERED GEOTECHNICAL ENGINEER TO PERFORM NECESSARY TESTING AND QUALITY CONTROL INSPECTIONS TO ENSURE THAT THE REQUIREMENTS OF THE SOILS REPORT ARE COMPLIED WITH. ALL EARTHWORK SHALL BE INSPECTED AND APPROVED BY THE GEOTECHNICAL ENGINEER.
7. FOR CLARITY, ALL EXTERIOR SLABS AND SIDEWALKS MAY NOT BE SHOWN. FOR EXACT DIMENSIONS, LOCATIONS, JOINT AND SLOPE LINES, ETC. SEE CIVIL DRAWINGS.

CONCRETE:

1. ALL CONCRETE WORK SHALL CONFORM WITH THE REQUIREMENTS OF ACI 301 AND ACI 318. CEMENT PER ASTM C150, TYPE II. AGGREGATE PER ASTM C33. LIGHTWEIGHT AGGREGATE PER ASTM C330. CONCRETE SHALL BE READY MIXED
2. IN ACCORDANCE WITH ASTM C94 AND SHALL BE DESIGNED FOR A MINIMUM 28 DAY COMPRESSIVE STRENGTH AS FOLLOWS:

   FOUNDTION AND RETAINING WALLS ---------- 4,000 PSI
3. FLY ASH - SHALL CONFORM TO ASTM C618, CLASS F AND SHALL BE LIMITED TO 25% OF CEMENTITIOUS MATERIALS AND SHALL HAVE A REPLACEMENT FACTOR OF 1.2.
4. MECHANICALLY VIBRATE ALL CONCRETE WHEN PLACED. DO NOT DROP CONCRETE MORE THAN FIVE FEET WITHOUT THE USE OF TREMIES. UNLESS APPROVED OTHERWISE IN WRITING BY THE ARCHITECT, ALL CONCRETE SLABS ON GRADE SHALL BE BOUNDBY CONTROL JOINTS (KEYED OR SAW CUT), AS SHOWN ON THE FOUNDATION PLAN, SUCH THAT THE ENCLOSED AREA DOES NOT EXCEED 225 SQUARE FEET. KEYED CONTROL JOINTS NEED ONLY OCCUR AT EXPOSED EDGES DURING POURING, ALL OTHER JOINTS MAY BE SAW CUT.
5. PROVIDE SLEEVES FOR ALL UTILITY OPENINGS. DO NOT CUT ANY REINFORCING AT OPENINGS. CONCRETE WHICH HAS CONTAINED WATER FOR MORE THAN 90 MINUTES (60 MINUTES IF AIR TEMPERATURE EXCEEDS 85 DEGREES) SHALL NOT BE USED. RETEMPERING OF CONCRETE AFTER INITIAL SET IS NOT ALLOWED. CURE EXPOSED CONCRETE PER ACI 301 FOR A MINIMUM OF 7 DAYS.
6. TESTING OF COMPRESSIVE STRENGTH AND SLUMP PER ASTM C31, C39 AND C143. PROVIDE A MINIMUM OF 3 CYLINDERS (4 FOR 4"X 8" CYLINDERS) FOR EACH DAY'S PLACEMENT U.N.O. A QUALIFIED TESTING LABORATORY SHALL TEST ONE CYLINDER AT 7 DAYS AND TWO (THREE FOR 4" X 8" CYLINDERS) AT 28 DAYS.

CONCRETE:

1. ALL CONCRETE WORK SHALL CONFORM WITH THE REQUIREMENTS OF ACI 301 AND ACI 318. CEMENT PER ASTM C150, TYPE II. AGGREGATE PER ASTM C33. LIGHTWEIGHT AGGREGATE PER ASTM C330. CONCRETE SHALL BE READY MIXED IN ACCORDANCE WITH ASTM C94 AND SHALL BE DESIGNED FOR A MINIMUM 28 DAY COMPRESSIVE STRENGTH AS FOLLOWS:

   FOUNDTION AND RETAINING WALLS---------- 4,000 PSI
2. FLY ASH - SHALL CONFORM TO ASTM C618, CLASS F AND SHALL BE LIMITED TO 25% OF CEMENTITIOUS MATERIALS AND SHALL HAVE A REPLACEMENT FACTOR OF 1.2 RELATIVE TO CEMENT REPLACED. CONCRETE SHALL BE FREE OF CHLORIDE. MAXIMUM SLUMP 1 1/2" FOR CONCRETE WITHOUT PLASTICIZER. IF PLASTICIZER IS USED, AN 8" MAXIMUM SLUMP IS ALLOWED AT PLACEMENT. ALL MIX DESIGNS SHALL BE DESIGNED BY THE CONCRETE PRODUCTION FACILITY IN ACCORDANCE WITH ACI 301 AND SHALL BE REVIEWED BY THE STRUCTURAL ENGINEER PRIOR TO PLACEMENT. MIX DESIGNS FOR POST-TENSIONING CONCRETE SHALL BE PROPORTIONED SO AS TO MINIMIZE SHRINKAGE CRACKING.
3. MECHANICALLY VIBRATE ALL CONCRETE WHEN PLACED. DO NOT DROP CONCRETE MORE THAN FIVE FEET WITHOUT THE USE OF TREMIES. UNLESS APPROVED OTHERWISE IN WRITING BY THE ARCHITECT, ALL CONCRETE SLABS ON GRADE SHALL BE BOUNDBY CONTROL JOINTS (KEYED OR SAW CUT), AS SHOWN ON THE FOUNDATION PLAN, SUCH THAT THE ENCLOSED AREA DOES NOT EXCEED 225 SQUARE FEET. KEYED CONTROL JOINTS NEED ONLY OCCUR AT EXPOSED EDGES DURING POURING, ALL OTHER JOINTS MAY BE SAW CUT.
4. PROVIDE SLEEVES FOR ALL UTILITY OPENINGS. DO NOT CUT ANY REINFORCING AT OPENINGS. CONCRETE WHICH HAS CONTAINED WATER FOR MORE THAN 90 MINUTES (60 MINUTES IF AIR TEMPERATURE EXCEEDS 85 DEGREES) SHALL NOT BE USED. RETEMPERING OF CONCRETE AFTER INITIAL SET IS NOT ALLOWED. CURE EXPOSED CONCRETE PER ACI 301 FOR A MINIMUM OF 7 DAYS.
5. TESTING OF COMPRESSIVE STRENGTH AND SLUMP PER ASTM C31, C39 AND C143. PROVIDE A MINIMUM OF 3 CYLINDERS (4 FOR 4"X 8" CYLINDERS) FOR EACH DAY'S PLACEMENT U.N.O. A QUALIFIED TESTING LABORATORY SHALL TEST ONE CYLINDER AT 7 DAYS AND TWO (THREE FOR 4" X 8" CYLINDERS) AT 28 DAYS.

REINFORCING STEEL:

1. REINFORCING STEEL SHALL CONFORM TO ASTM A615 (Fy = 60 KSI) DEFORMED BARS FOR ALL REBAR. ALL REINFORCING TO BE WELDED SHALL BE ASTM A706. PROVIDE EPOXY-COATED REBAR WHERE SHOWN ON PLANS. NO TACK WELDING OF REINFORCING BARS ALLOWED WITHOUT PRIOR REVIEW OF PROCEDURE WITH THE STRUCTURAL ENGINEER. LATEST ACI CODE AND DETAILING MANUAL APPLY.
2. ACCURATELY PLACE OR SUPPORT ALL REINFORCING, INCLUDING WELDED WIRE FABRIC, WITH GALVANIZED METAL CHAIRS, SPACERS OR HANGERS FOR THE FOLLOWING CLEAR CONCRETE COVERAGES:
   a. CAST AGAINST AND PERMANENTLY EXPOSED TO EARTH ------- 3"
      EXPOSED TO EARTH OR WEATHER
      i. #6 OR LARGER ---------- 2"
      ii. #5 AND SMALLER ---------- 1 1/2"
      iii. ALL OTHER PER LATEST EDITION OF ACI 318.
3. LAP SPLICES FOR REINFORCING IN CONCRETE SHALL BE 30 BAR DIAMETERS MINIMUM.
4. ALL SPLICE LOCATIONS SUBJECT TO APPROVAL BY THE STRUCTURAL ENGINEER. SPLICED BARS SHALL BE PLACED AT THE SAME EFFECTIVE DEPTH U.N.O. ALL REINFORCING NOTED AS "CONTINUOUS" SHALL BE FULLY CONTINUOUS AND SPLICED. PROVIDE BENT CORNER BARS TO MATCH AND LAP WITH HORIZONTAL BARS AT ALL CORNERS AND INTERSECTIONS PER TYPICAL DETAILS.
5. REINFORCING BAR SPACING GIVEN ARE MAXIMUM ON CENTERS. ALL BARS PER CRSI SPECIFICATIONS AND HANDBOOK. DOWEL ALL VERTICAL REINFORCING TO FOUNDATION WITH STANDARD 90 DEGREE HOOKS UNLESS NOTED OTHERWISE. SKEW HOOKS AS REQUIRED TO MAINTAIN CONCRETE COVER. SECURELY TIE ALL BARS IN LOCATION BEFORE PLACING CONCRETE. CONCRETE COLUMN DOWEL EMBEDMENT SHALL BE A STANDARD COMPRESSION DOWEL WITH EMBEDMENT LENGTH ACCORDING TO THE LATEST EDITION OF THE ACI 318.

SPECIAL INSPECTION AND TESTING:

1. THE OWNER (OR REGISTERED DESIGN PROFESSIONAL IN RESPONSIELE CHARGE ACTING AS THE OWNER'S AGENT) SHALL EMPLOY ONE OR MORE SPECIAL INSPECTORS TO PROVIDE INSPECTION AND TESTING DURING CONSTRUCTION OF THE TYPES OF WORK REQUIRING SPECIAL INSPECTION AS INDICATED ON THE DRAWINGS.
2. EACH SPECIAL INSPECTOR SHALL BE A QUALIFIED PERSON WHO SHALL DEMONSTRATE COMPETENCE, TO THE SATISFACTION OF THE BUILDING OFFICIAL AND STRUCTURAL ENGINEER OF RECORD, FOR INSPECTION OF THE PARTICULAR TYPE OF CONSTRUCTION OR OPERATION REQUIRING SPECIAL INSPECTION.
3. THE CONTRACTOR SHALL CONVENE A MEETING WITH THE SPECIAL INSPECTION AGENCY (AGENCIES), THE BUILDING OFFICIAL, THE ARCHITECT, AND THE STRUCTURAL ENGINEER OF RECORD TO REVIEW INSPECTION REQUIREMENTS AND PROCEDURES, PRIOR TO COMMENCING WITH CONSTRUCTION.
4. DUTIES AND RESPONSIBILITIES OF THE SPECIAL INSPECTOR:
   a. THE SPECIAL INSPECTOR SHALL OBSERVE THE WORK ASSIGNED FOR CONFORMANCE TO THE APPROVED CONSTRUCTION DOCUMENTS.
   b. THE SPECIAL INSPECTOR SHALL FURNISH INSPECTION REPORTS TO THE BUILDING OFFICIAL, AND TO THE ENGINEER OR ARCHITECT OF RECORD. REPORTS SHALL INDICATE THAT WORK INSPECTED WAS DONE IN CONFORMANCE TO APPROVED CONSTRUCTION DOCUMENTS. DISCREPANCIES SHALL BE BROUGHT TO THE IMMEDIATE ATTENTION OF THE CONTRACTOR FOR CORRECTION, THEN, IF UNCORRECTED, TO THE ENGINEER OR ARCHITECT OF RECORD AND THE BUILDING OFFICIAL. IT IS EXPECTED THAT REPORTS WILL BE SUBMITTED ON A WEEKLY BASIS AT A MINIMUM.
   c. UPON COMPLETION OF THE ASSIGNED WORK, THE SPECIAL INSPECTOR SHALL COMPLETE AND SIGN THE APPROPRIATE FORMS CERTIFYING THAT, TO THE BEST OF HIS KNOWLEDGE, THE WORK IS IN CONFORMANCE WITH THE APPROVED CONSTRUCTION DOCUMENTS, AND THE APPLICABLE WORKMANSHIP PROVISIONS OF THE CODE.
5. SEE TABLE ON THIS SHEET FOR REQUIRED SPECIAL INSPECTIONS.

TABLE 1: REQUIRED GEOTECHNICAL SPECIAL INSPECTIONS

890-IBC12

SYSTEM OR MATERIAL	INSPECTION				REMARKS
	IBC CODE REFERENCE	CODE OR STANDARD REFERENCE	FREQUENCY		
			CONTINUOUS	PERIODIC	
1. SOILS					
VERIFY FOOTING BEARING CAPACITY AND SUBGRADE PREPARATION FOR FILLS	1705.6	GEOTECHNICAL REPORT		X	BY THE GEOTECHNICAL ENGINEER
FILL MATERIAL VERIFICATION			X		
FILL PLACEMENT & COMPACTION			X		
LIFT THICKNESS			X		
2. CONCRETE					
REINFORCING STEEL PLACEMENT	1705.3	ACI 318 1.3 ACI 318 3.5 ACI 318 7.5		X	
VERIFY USE OF REQUIRED MIX DESIGN(S)	1705.3 1904.2 1910.2 1910.3	ACI 318 1.3 ACI 318, CHAPTER 4		X	
CONCRETE PLACEMENT	1705.3	ACI 318 1.3 ACI 318 5.9, 5.10	X		

STATE OF ALASKA
49TH
RONALD H. SCHNEIDER
07/06/20
SE139688
REGISTERED STRUCTURAL ENGINEER
7/31/2020

NO.	DATE	REVISION

STATE	PROJECT DESIGNATION	YEAR	SHEET NO.	TOTAL SHEETS
ALASKA	TEA-0955(016)/Z68124	2020	M6	235

	TENSION SPLICE LENGHTS (CLASS B)				COMP. BARS	
CONCRETE PSI	f'c = 4,000 PSI				f'c = ALL	
BAR LOCATION	REGULAR		TOP		STD LAP	ENCLOSED WITH SPIRAL TIES
SPACING / SIZE	≥2db	OTHER	≥2db	OTHER		
#3	19"	28"	25"	37"	12"	12"
#4	25"	37"	33"	49"	15"	12"
#5	31"	47"	41"	61"	19"	15"
#6	37"	56"	49"	73"	23"	18"
#7	54"	81"	71"	106"	27"	21"
#8	62"	93"	81"	121"	30"	23"
#9	70"	105"	91"	136"	34"	26"
#10	79"	118"	102"	153"	39"	30"
#11	87"	131"	114"	170"	43"	33"

NOTES:
1. TOP BARS ARE ANY HORIZONTAL BARS PLACED SO THAT MORE THAN 12" OF FRESH CONCRETE IS CAST IN THE MEMBER BELOW THE REINFORCEMENT.
2. CONCRETE COVERAGE AROUND REINFORCING SHALL NOT BE LESS THAN THE DIAMETER OF THE BAR.

05 *TYPICAL MINIMUM REINFORCING BAR SPLICE LENGTHS IN CONCRETE*
SCALE: NOT TO SCALE 200-040-TYP

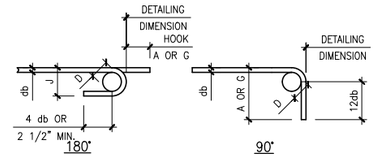

END HOOKS, ALL GRADES				
BAR SIZE	FINISHED BEND DIA. D, IN.	180° HOOKS		90° HOOKS
		A OR G, IN.	J, IN.	A OR G, IN.
#3	2.25	5	3	6
#4	3	6	4	8
#5	3.75	7	5	10
#6	4.5	8	6	12
#7	5.25	10	7	14
#8	6	11	8	16
#9	9.5	15	11.75	19
#10	10.75	17	13.25	22
#11	12	19	14.75	24
#14	18.25	27	21.75	31
#18	24	36	28.5	41

03 *TYPICAL REINFORCING HOOK SCHEDULE*
SCALE: NOT TO SCALE 200-045-TYP

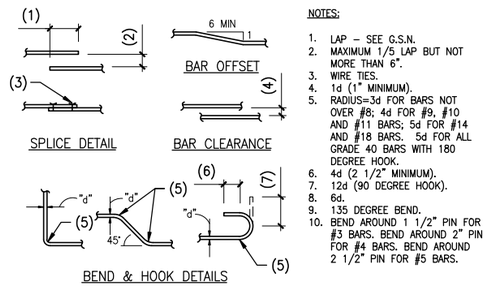

NOTES:
1. LAP – SEE G.S.N.
2. MAXIMUM 1/5 LAP BUT NOT MORE THAN 6".
3. WIRE TIES.
4. 1d (1" MINIMUM).
5. RADIUS=3d FOR BARS NOT OVER #8; 4d FOR #9, #10 AND #11 BARS; 5d FOR #14 AND #18 BARS. 5d FOR ALL GRADE 40 BARS WITH 180 DEGREE HOOK.
6. 4d (2 1/2" MINIMUM).
7. 12d (90 DEGREE HOOK).
8. 6d.
9. 135 DEGREE BEND.
10. BEND AROUND 1 1/2" PIN FOR #3 BARS. BEND AROUND 2" PIN FOR #4 BARS. BEND AROUND 2 1/2" PIN FOR #5 BARS.

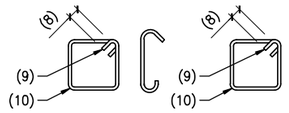

04 *TYPICAL CONCRETE REINFORCING BAR DETAILS*
SCALE: NOT TO SCALE 200-050-TYP

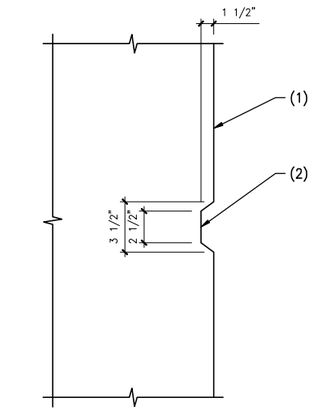

NOTES:
1. CONCRETE.
2. KEYED JOINT – REMOVE FORM MATERIAL PRIOR TO PLACING ADJACENT CONCRETE.

NOTE:
ALL DIMENSIONS ARE ±1/2".

01 *TYPICAL KEY IN CONCRETE*
SCALE: NOT TO SCALE 200-023-TYP

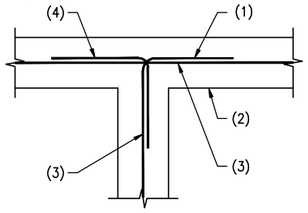

NOTES:
1. ALTERNATE BEND.
2. CONCRETE STEM WALL OR FOOTING.
3. REINFORCING PER PLANS AND/OR G.S.N.
4. CORNER BARS SAME SIZE AND SPACING AS HORIZONTAL REINFORCING. LAP PER G.S.N. (24" MINIMUM).

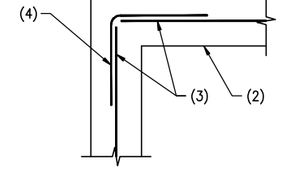

02 *PLAN VIEW – TYPICAL CORNER REINFORCING IN CONCRETE FOOTING AND/OR STEM WALL*
SCALE: NOT TO SCALE 200-030-TYP

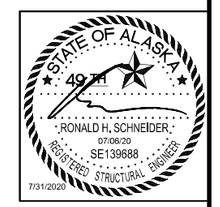

Record Drawings have been reviewed by the Project Engineer, and represent to the best of my knowledge, the project as constructed.

PE Dillon Tomaro 2/4/25

NO.	DATE	REVISION

STATE	PROJECT DESIGNATION	YEAR	SHEET NO.	TOTAL SHEETS
ALASKA	TEA-0955(016)/Z68124	2020	M7	235

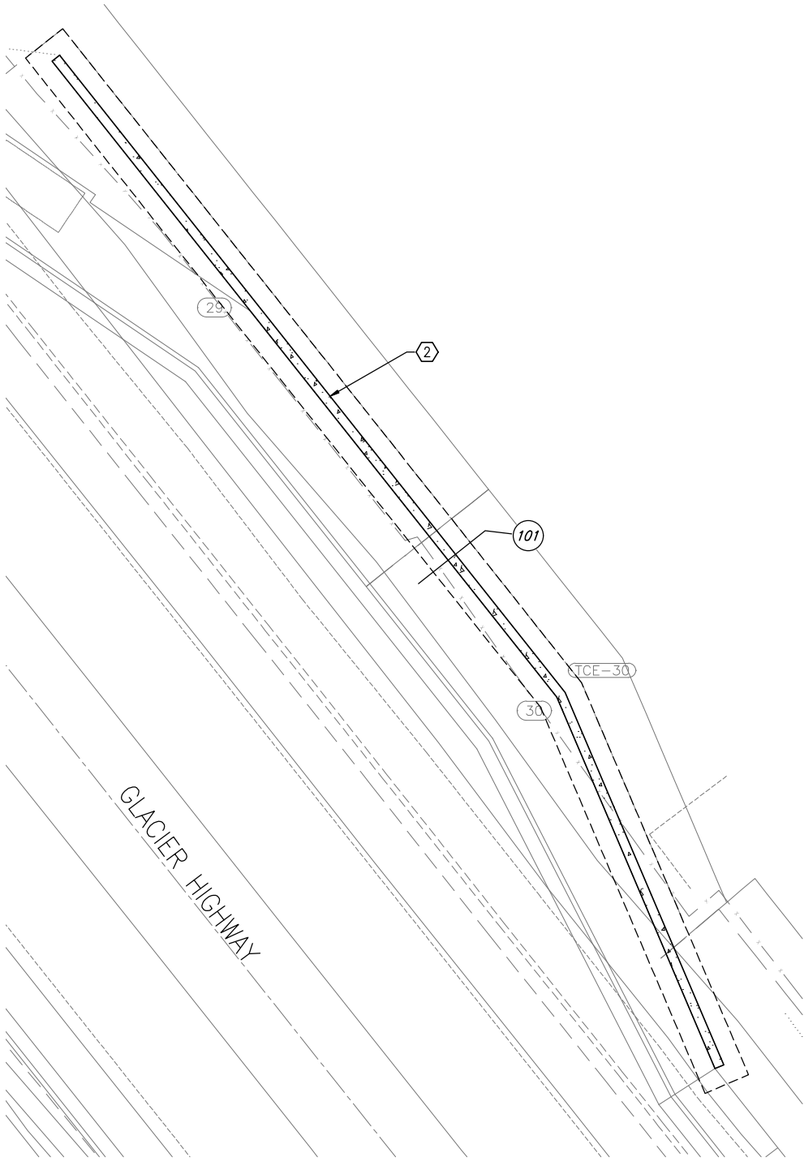

NOTE:
REFERENCE CIVIL DRAWING M-3
FOR RETAINING WALL STATIONING, RIGHT
OF WAY, GRADING, ELEVATIONS AND
OTHER INFORMATION.

RETAINING WALL PLAN

SCALE: 1/8"=1'-0"

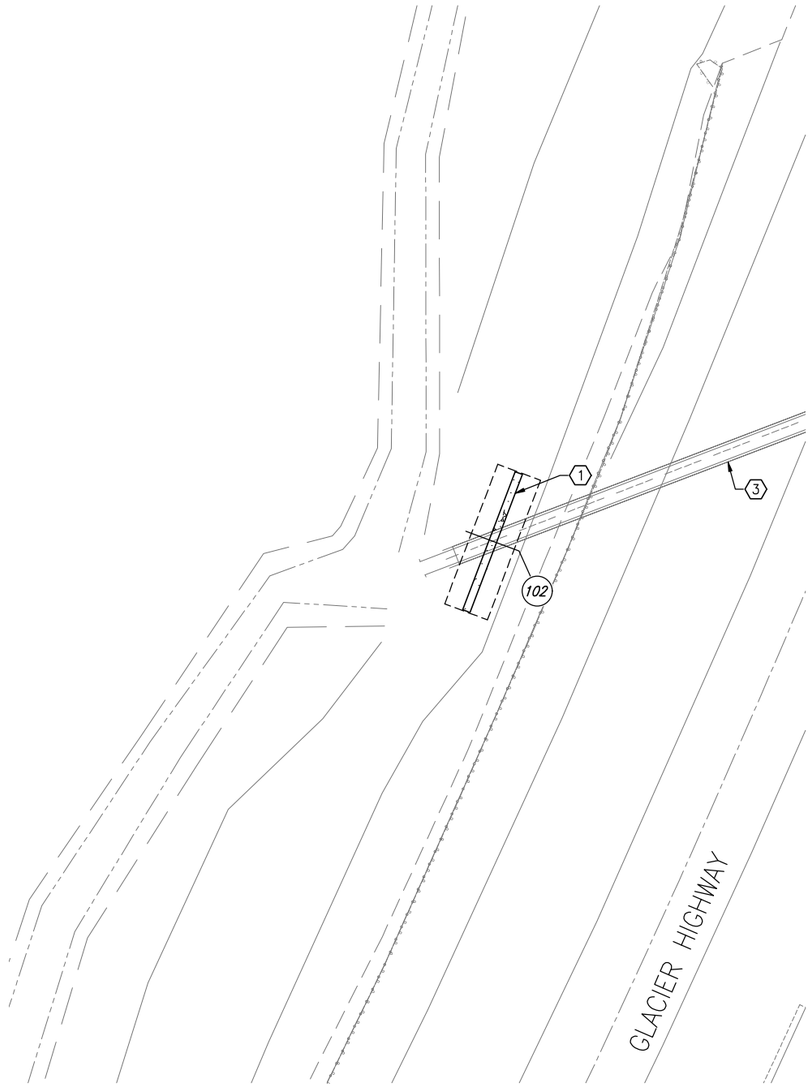

NOTE:
REFERENCE CIVIL DRAWING J-1
FOR HEAD WALL STATIONING, RIGHT
OF WAY, GRADING, ELEVATIONS AND
OTHER INFORMATION.

HEAD WALL PLAN

SCALE: 1/8"=1'-0"

FOUNDATION KEYNOTES:

1. CONCRETE HEADWALL.
2. CONCRETE RETAINING WALL WITH SOUND WALL PANEL ABOVE.
3. CONCRETE CULVERT PER CIVIL DRAWINGS.

STATE OF ALASKA
49TH
RONALD H. SCHNEIDER
07/06/20
SE139688
REGISTERED STRUCTURAL ENGINEER
7/31/2020

Record Drawings have been reviewed by the Project Engineer, and represent to the best of my knowledge, the project as constructed.

PE Dillon Tomaro 2/4/25

NO.	DATE	REVISION

STATE	PROJECT DESIGNATION	YEAR	SHEET NO.	TOTAL SHEETS
ALASKA	TEA-0955(016)/Z68124	2020	M8	235

** Deleted by CO26

NOTES:

1. CONCRETE HEADWALL.
2. (2) #6 EACH FACE.
3. CENTERLINE OF PIPE AND STRUCTURE.

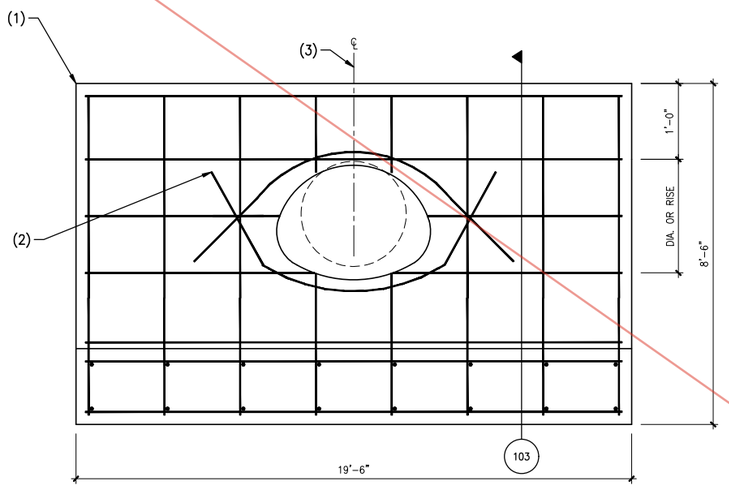

NOTE:
HEADWALL REINFORCING STEEL SHALL BE ASTM A706 EPOXY COATED. SEE ALASKA DOT HEADWALL DESIGN SHEETS D-31.01 FOR TYPE II CAST-IN-PLACE HEADWALLS FOR MORE INFORMATION AS REQUIRED.

102 *HEAD WALL ELEVATION*
SCALE: NOT TO SCALE

220035-S3.0-101

NOTES:

1. CONCRETE HEADWALL.
2. #4 AT 12" O.C.
3. CONCRETE KEY.
4. CULVERT BY OTHERS.
5. #6 BAR AT 6" O.C.
6. #6 BAR AT 12" O.C.
7. FINISH GRADE OR CONCRETE SLAB AS OCCURS.
8. FILL MATERIAL PER G.S.N.
9. BEARING MATERIAL PER G.S.N.

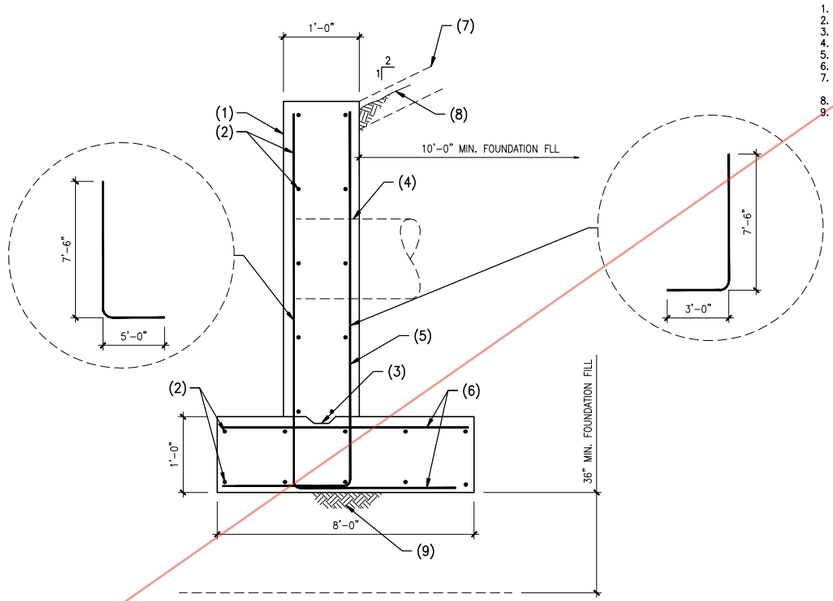

103 *HEAD WALL SECTION*
SCALE: NOT TO SCALE

NOTES:

1. CONCRETE RETAINING WALL.
2. SIDEWALK BY OTHERS.
3. CONCRETE CURB BY OTHERS.
4. CONCRETE FOOTING PER PLANS.
5. WALL STEM IS BATTERED.
6. 3/4" TEXTURE RUBBLE MASONRY LOOSE - PER CLIENT.
7. COLD JOINT BETWEEN WALL SECTIONS AS REQUIRED. EMBED LAPS OR PROTRUDE STUD UP 30 TIMES DIAMTER.
8. CONCRETE KEY.
9. #5 VERTICAL BARS AT 10" O.C., CENTERED IN WALL.
10. #6 VERTICAL BENT L BARS AT 10" O.C., PROVIDE 2" MIN. COVER, POSITION 10" FROM BATTERED FACE TO CENTER OF BAR. LEG LENGTH 24", MIN.
11. #4 HORIZONTAL AT 12" O.C.
12. #5 AT 10" O.C. TOP AND BOTTOM, BOTH WAYS.
13. CONCRETE SOUND WALL.
14. BEARING MATERIAL PER G.S.N.
15. FILL MATERIAL PER G.S.N.
16. R.O.W. LINE - REFER TO DRAWING M3.
17. #4 AT 10" O.C. VERTICAL BARS BENT INTO FOOTING.

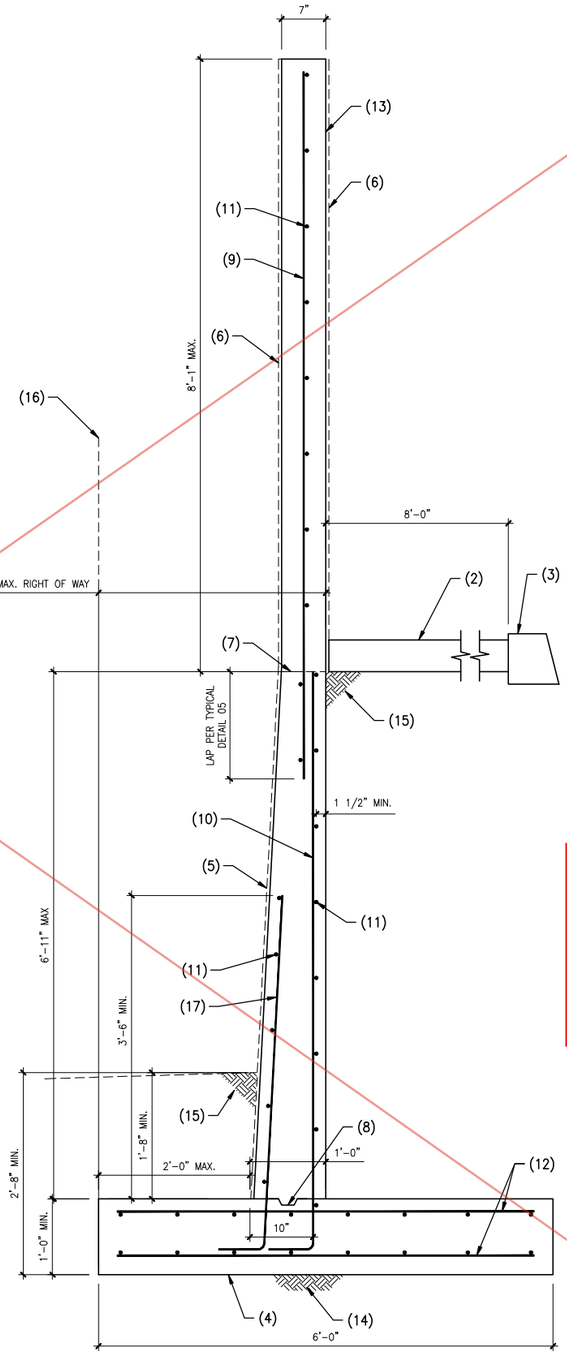

101 *RETAINING WALL SECTION*

220035-S3.0-101

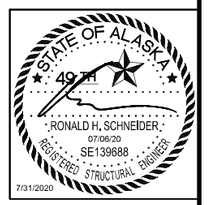

Record Drawings have been reviewed by the Project Engineer, and represent to the best of my knowledge, the project as constructed.

PE Dillon Tomaro 2/4/25

Record Drawings have been reviewed by the Project Engineer, and represent to the best of my knowledge, the project as constructed.

PE *Dillon Tomaro* 2/4/25

CO26

NO.	DATE	REVISION
20	06/16/21	RFI 10 & RETAINING WALL UPDATES

STATE	PROJECT DESIGNATION	YEAR	SHEET NO.	TOTAL SHEETS
ALASKA	TEA-0955(016)/Z68124	2020	M8	230

NOTES:

1. CONCRETE HEADWALL.
2. (2) #6 EACH FACE.
3. CENTERLINE OF PIPE AND STRUCTURE.

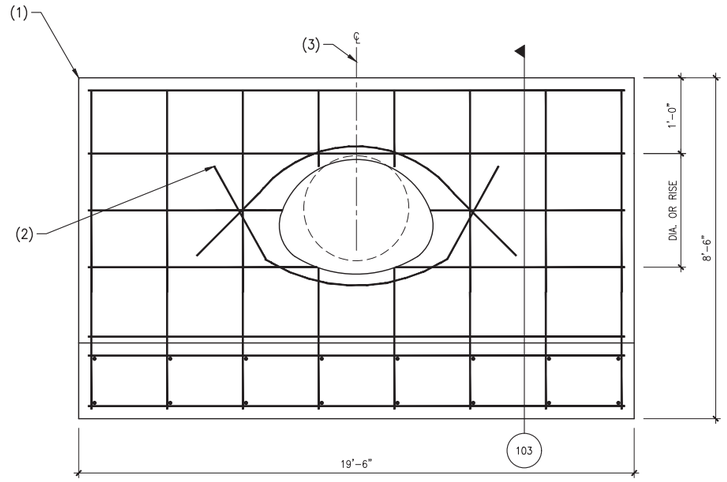

NOTE:
HEADWALL REINFORCING STEEL SHALL BE ASTM A706 EPOXY COATED. SEE ALASKA DOT HEADWALL DESIGN SHEETS D-31.01 FOR TYPE II CAST-IN-PLACE HEADWALLS FOR MORE INFORMATION AS REQUIRED.

102 *HEAD WALL ELEVATION*
SCALE: NOT TO SCALE 220035-S3.0-101

NOTES:

1. CONCRETE HEADWALL.
2. #4 AT 12" O.C.
3. CONCRETE KEY.
4. CULVERT BY OTHERS.
5. #6 BAR AT 6" O.C.
6. #6 BAR AT 12" O.C.
7. FINISH GRADE OR CONCRETE SLAB AS OCCURS.
8. STRUCTURAL BACKFILL SELECTED MATERIAL TYPE A PER DOT SPECIFICATION 511-2.01.
9. STRUCTURAL FILL PER DOT SPECIFICATION 205-3.02 AND 703-2.13.

20

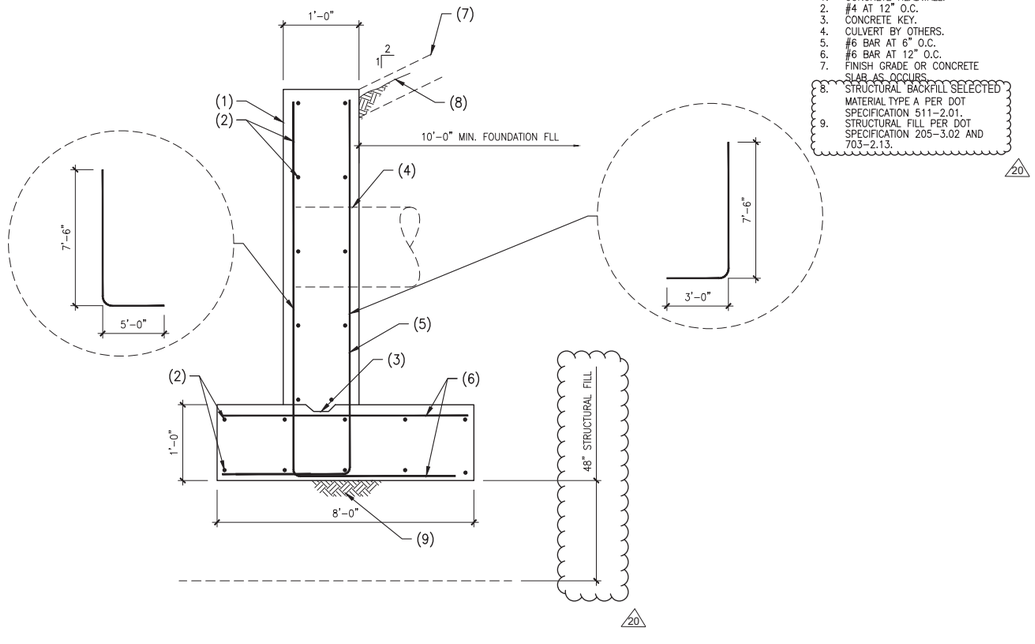

103 *HEAD WALL SECTION*
SCALE: NOT TO SCALE 220035-S3.0-103

NOTES:

1. CONCRETE RETAINING WALL.
2. SIDEWALK BY OTHERS.
3. CONCRETE CURB BY OTHERS.
4. CONCRETE FOOTING PER PLANS.
5. WALL STEM IS BATTERED.
6. 3/4" TEXTURE RUBBLE MASONRY LOOSE - PER CLIENT.
7. COLD JOINT BETWEEN WALL SECTIONS AS REQUIRED. EMBED LAPS OR PROTRUDE STUD UP 30 TIMES DIAMTER.
8. CONCRETE KEY.
9. #5 VERTICAL BARS AT 10" O.C., CENTERED IN WALL.
10. #6 VERTICAL BENT L BARS AT 10" O.C., PROVIDE 2" MIN. COVER, POSITION 10" FROM BATTERED FACE TO CENTER OF BAR. LEG LENGTH 24", MIN.
11. #4 HORIZONTAL AT 12" O.C.
12. #5 AT 10" O.C. TOP AND BOTTOM, BOTH WAYS.
13. CONCRETE SOUND WALL.
14. STRUCTURAL FILL PER DOT SPECIFICATION 205-3.02 AND 703-2.13.
15. STRUCTURAL BACKFILL SELECTED MATERIAL TYPE A PER DOT SPECIFICATION 511-2.01.
16. R.O.W. LINE - REFER TO DRAWING M3.
17. #4 AT 10" O.C. VERTICAL BARS BENT INTO FOOTING.

20

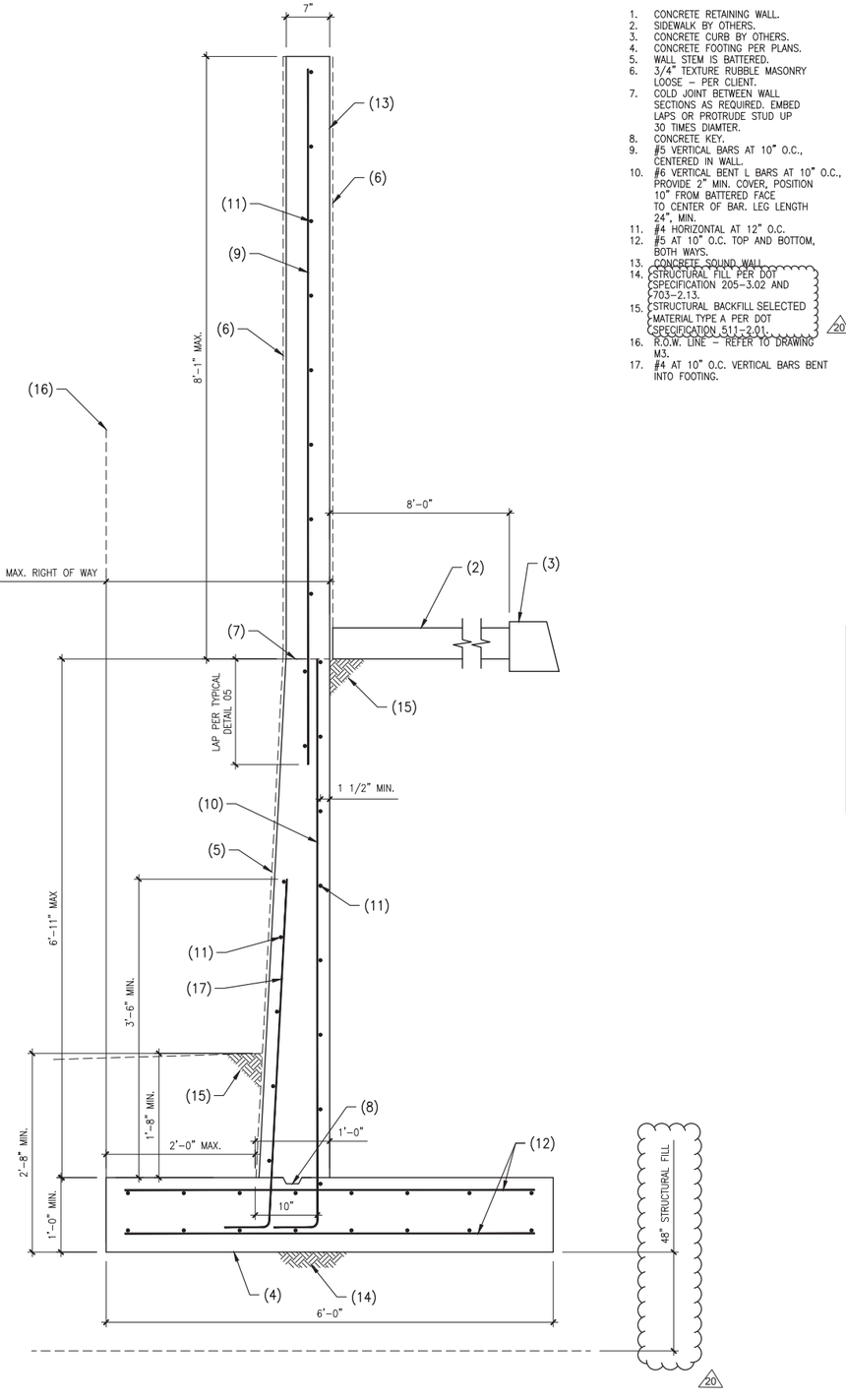

101 *RETAINING WALL SECTION*
220035-S3.0-101

STATE OF ALASKA
DOT&PF
RONALD H. SCHNEIDER
06/18/21
SE139688
REGISTERED STRUCTURAL ENGINEER

STATE	PROJECT DESIGNATION	YEAR	SHEET NO.	TOTAL SHEETS
ALASKA	TEA-0955(016) / Z68124	2020	N1	N7

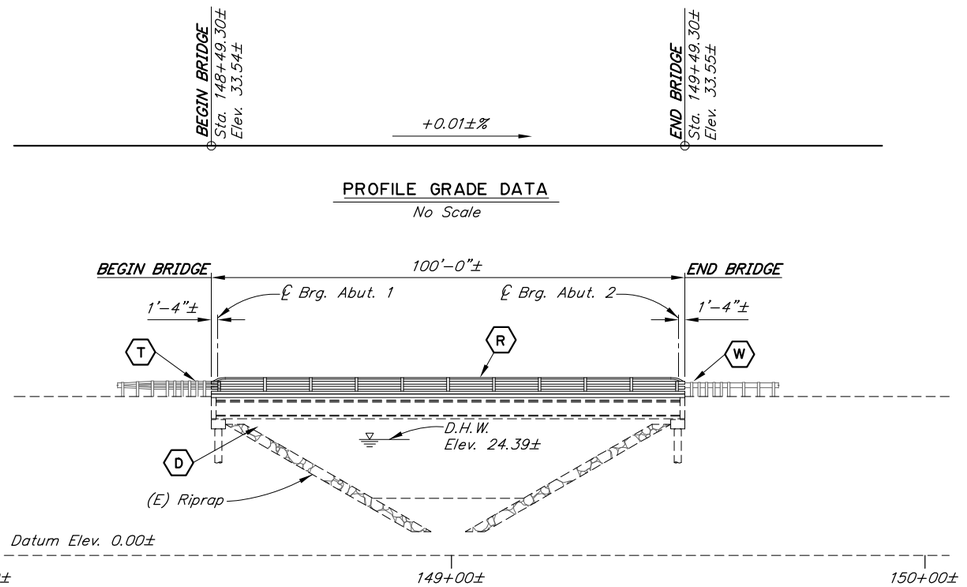

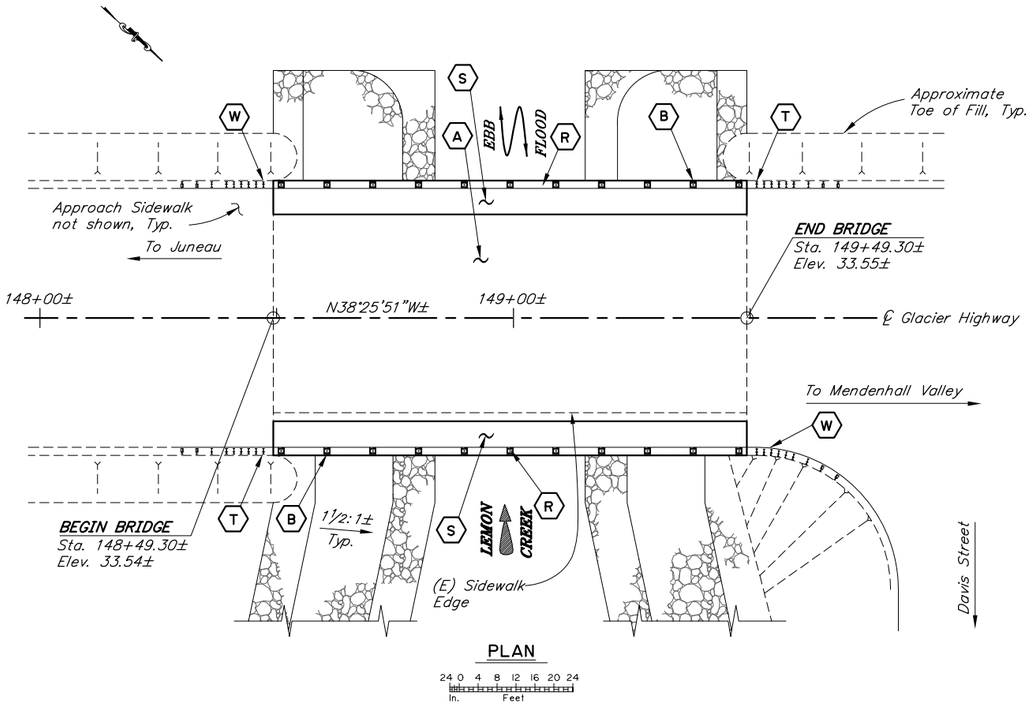

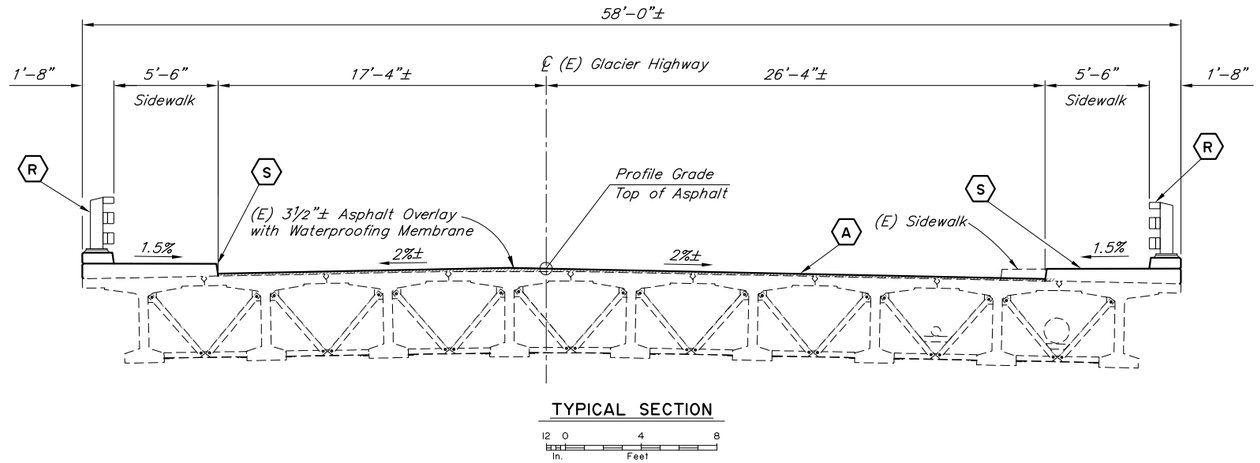

ESTIMATE OF QUANTITIES

ITEM NO.	ITEM	PAY UNIT	ESTIMATING UNIT	TOTAL QUANTITY
202.0001.0000	Removal of Structures and Obstructions	LS	LS	All Req'd
202.0015.0000	Removal of Sidewalk	LS	SF	All Req'd
501.0001.0000	Class A Concrete	LS	CY	46.5
503.0002.0000	Epoxy-Coated Reinforcing Steel	LS	LBS	4,000
503.0003.0000	Drill and Bond Dowels	EA	EA	304
507.0001.0003	Steel Bridge Railing, 3-Tube	LF	LF	200
508.0001.0000	Waterproofing Membrane, Spray-Applied	LS	SF	4,367
606.0016.0000	Transition Rail	EA	EA	4

Item numbers are for reference only. Quantities shown are not necessarily the pay quantities nor the total quantity of the particular item.

BRIDGE DRAWING INDEX

TITLE	DWG. NO.
GENERAL LAYOUT	1
STEEL BRIDGE RAILING LAYOUT	2
SIDEWALK DETAILS	3
ASPHALT OVERLAY	4
STEEL BRIDGE RAILING, 3-TUBE	5
THRIE BEAM TRANSITION RAIL	6
W-BEAM TRANSITION RAIL	7

Record Drawings have been reviewed by the Project Engineer, and represent to the best of my knowledge, the project as constructed.

PE Dillon Tomaro 2/4/25

REHABILITATION

LEGEND

- (A) – Remove existing asphalt, install new waterproofing membrane, place variable thickness asphalt.
- (B) – Approximate location of bridge number plate.
- (R) – Replace steel bridge railing
- (S) – Remove and install sidewalk
- (T) – Install thrie beam transition rail
- (W) – Install W-beam transition rail
- (D) – Dispose of debris under bridge and clean concrete surfaces

NOTES:

(E) = Existing
– – – – – = Existing
——— = Proposed
± = Approximate

Verify controlling field dimensions before ordering or fabricating any material.

Bridge stations are approximate and elevations are based on as-built drawings. For project stations and elevations, see Roadway Sheets.

DESIGNED BY: Elmer Marx	CHECKED: Hannah Bailey	LAYOUT BY: Elmer Marx	CHECKED BY: Hannah Bailey
DRAWN BY: Michael Foster	CHECKED: Elmer Marx	SPECIFICATIONS BY: Elmer Marx	P S & E COMPARED: Hannah Bailey
QUANTITIES BY: Elmer Marx	CHECKED: Hannah Bailey	APPROVAL RECOMMENDED BY: Rich Pratt	

STATE OF ALASKA
DEPARTMENT OF TRANSPORTATION AND PUBLIC FACILITIES
BRIDGE SECTION
3132 Channel Drive
Juneau, Alaska 99801
907-465-2975

STATE OF ALASKA 49 TH
Elmer E. Marx III
05-15-2020
SE# 13260
REGISTERED STRUCTURAL ENGINEER

LEMON CREEK BRIDGE
GLACIER HIGHWAY
GENERAL LAYOUT

BRIDGE NO. 793
DWG. NO. 1

R:\cad\793\793-GENERAL LAYOUT Fri, May/15/20 3:16pm

STATE	PROJECT DESIGNATION	YEAR	SHEET NO.	TOTAL SHEETS
ALASKA	TEA-0955(016) / Z68124	2020	N2	N7

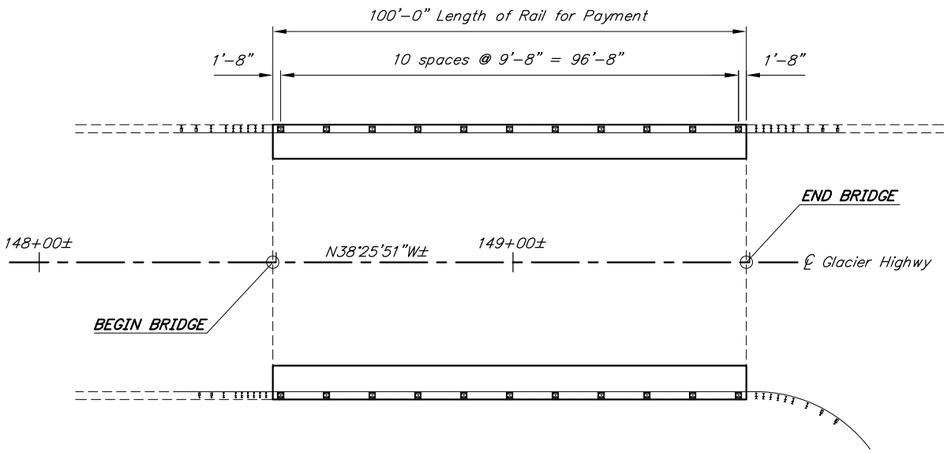

STEEL BRIDGE RAILING LAYOUT

24 0 4 8 12 16 20 24
In. Feet

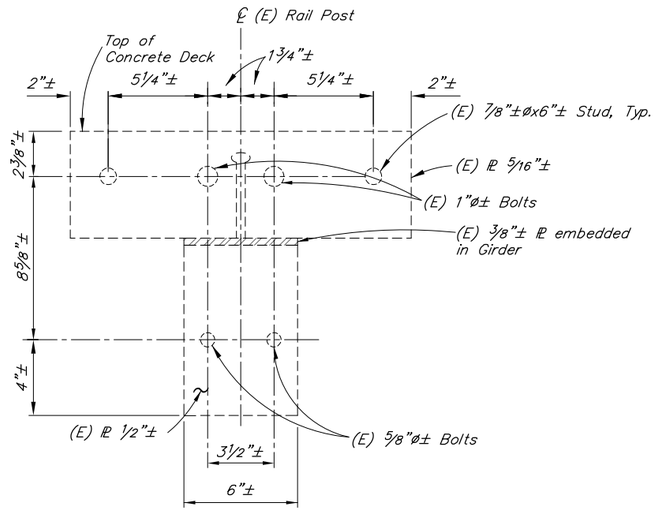

SECTION A-A

6 3 0
In. Feet

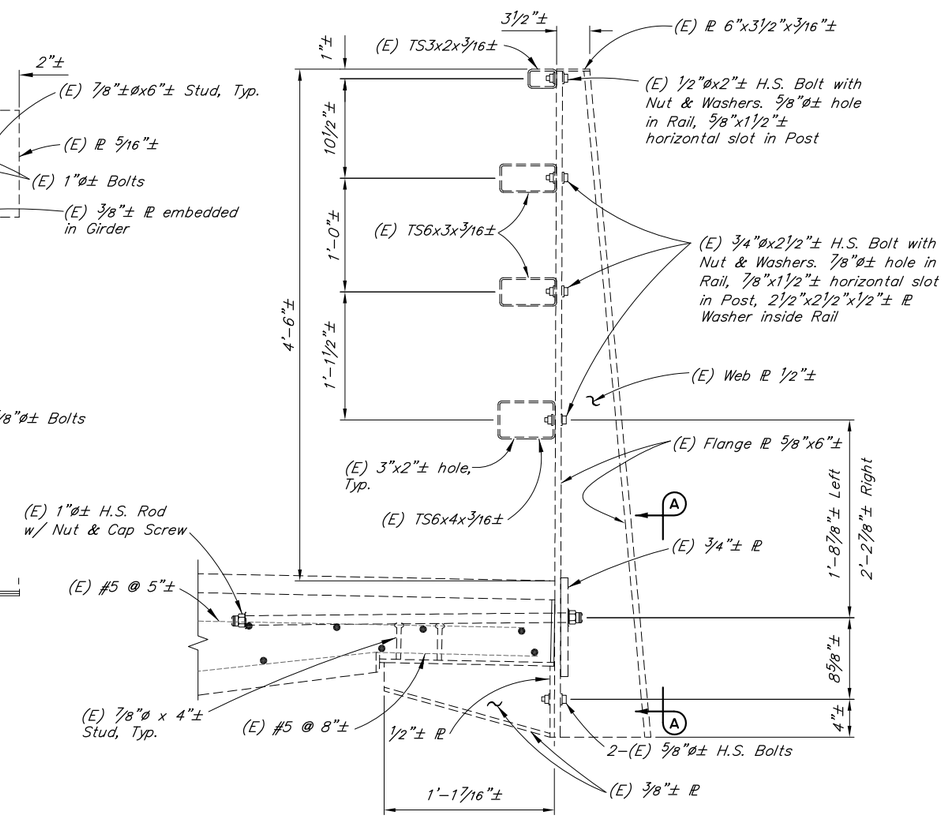

EXISTING RAILING
(To be removed)

12 6 0 1
In. Feet

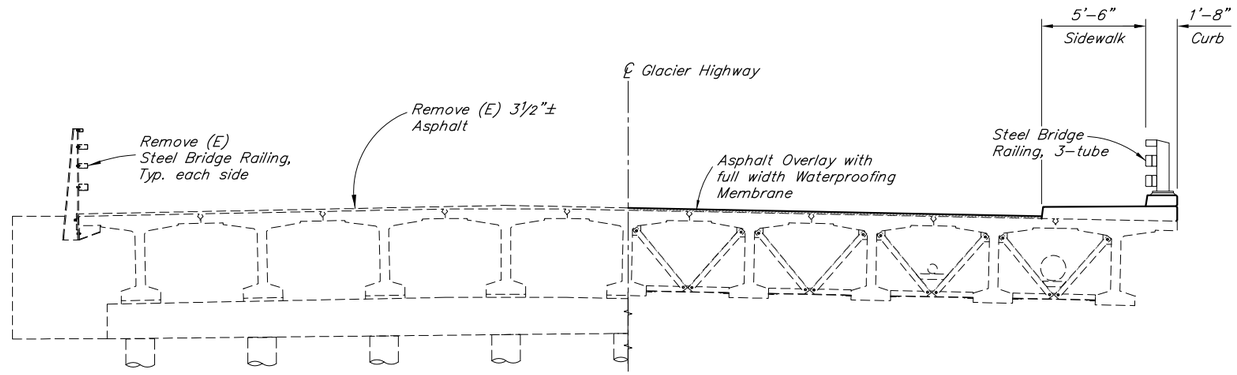

TYPICAL SECTION

12 0 4 8
In. Feet

Record Drawings have been reviewed by the Project Engineer, and represent to the best of my knowledge, the project as constructed.

PE Dillon Tomaro 2/4/25

NOTES:

(E) = Existing
------ = Existing
——— = Proposed
± = Approximate

Verify controlling field dimensions before ordering or fabricating any material.

Cut (E) H.S. Rods flush with edge of deck. Coat cut ends of rods with zinc rich paint or hot stick zinc.

DESIGNED BY: Elmer Marx	CHECKED: Hannah Bailey	**REHABILITATION**
DRAWN BY: Michael Foster	CHECKED: Elmer Marx	
QUANTITIES BY: Elmer Marx	CHECKED: Hannah Bailey	

STATE OF ALASKA
DEPARTMENT OF TRANSPORTATION AND PUBLIC FACILITIES
BRIDGE SECTION
3132 Channel Drive
Juneau, Alaska 99801
907-465-2975

STATE OF ALASKA 49 TH
Elmer E. Marx III
05-15-2020
SE# 13260
REGISTERED STRUCTURAL ENGINEER

LEMON CREEK BRIDGE

GLACIER HIGHWAY

STEEL BRIDGE RAILING LAYOUT

BRIDGE NO. 793
DWG. NO. 2

R:\cad\793\793-RAILING LAYOUT Fri, May/15/20 3:16pm

Record Drawings have been reviewed by the Project Engineer, and represent to the best of my knowledge, the project as constructed.

PE Dillon Tomaro 2/4/25

STATE	PROJECT DESIGNATION	YEAR	SHEET NO.	TOTAL SHEETS
ALASKA	TEA-0955(016) / Z68124	2020	N3	N7

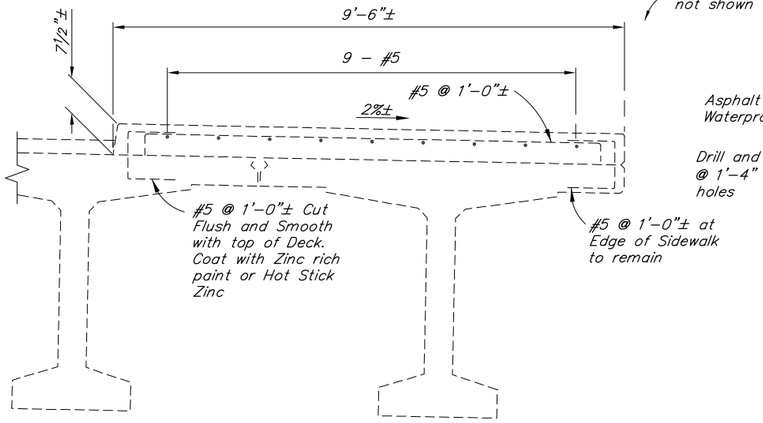

EXISTING SIDEWALK

(Upstream side only)
(To be removed)

12 6 0 1 2 3
In. Feet

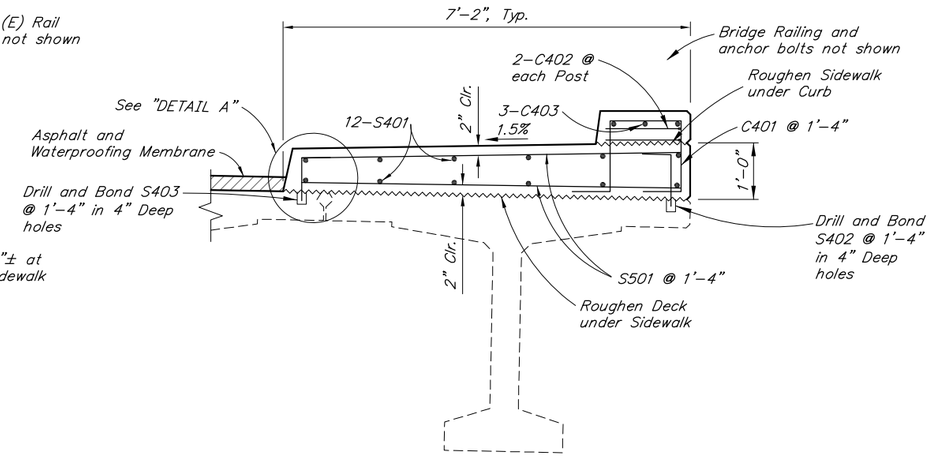

SIDEWALK

12 6 0 1 2 3
In. Feet

REINFORCING STEEL

MARK	NOTE	SIZE	NO.	LENGTH	TYPE
C401	E	4	152	5'-1"	BENT
C402	E	4	44	3'-10"	BENT
C403	E,S	4	6	99'-8"	---
S401	E,S	4	24	99'-8"	---
S402	E	4	152	1'-6"	BENT
S403	E	4	152	1'-3"	BENT
S501	E	5	304	6'-8"	---

BENDING DIAGRAM

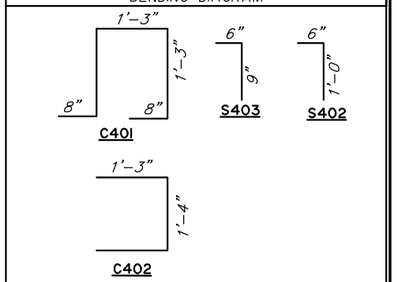

E - Epoxy-Coated
S - Splices permitted. Splice length not included

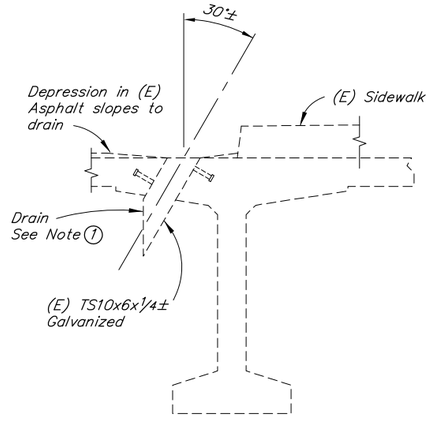

DRAIN DETAILS
See Note ①

12 6 0 1 2 3
In. Feet

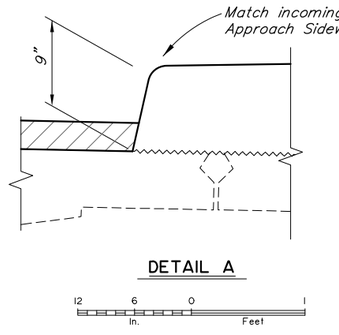

DETAIL A

12 6 0 1
In. Feet

GENERAL NOTES

REINFORCEMENT:..... ASTM A706, Grade 60, Fy = 60,000 psi
Space reinforcement evenly unless otherwise noted.

CONCRETE:..... Class A Concrete unless otherwise noted, f'c = 4000 psi

ABBREVIATIONS

℄	= centerline	dia.	= diameter	LS	= lump sum
℔	= plate	Dwg.	= drawing	Lt.	= left
&	= and	E	= expansion	max.	= maximum
@	= at	(E)	= existing	min.	= minimum
ø	= diameter	EA	= each	n.f.	= near face
±	= approximate	Elev.	= elevation	No.	= number
ASTM	= American Society for Testing and Materials	e.f.	= each face	o.c.	= on center
		e.w.	= each way	O.D.	= outside diameter
Abut.	= abutment	F	= fixed	pcf	= pounds per cubic foot
Approx.	= approximate	ft.	= feet	psf	= pounds per square foot
b.f.	= back/dirt face	f.f.	= front/air face	psi	= pounds per square inch
bot.	= bottom	f'c	= specified concrete compressive strength	Rt.	= right
Br.	= bridge			spcs	= space, spaces
btwn.	= between	Fy	= yield stress	Sta.	= station
Brg.	= Bearings	Glav.	= galvanize	SF	= square feet
C.I.P.	= cast in place	H.S.	= high strength	Symm.	= symmetric
Clr.	= clear, clearance	ksf	= 1000 pounds per square foot	Typ.	= typical
CY	= cubic yard	LB	= pound	w/	= with
D.H.W.	= design high water	LF	= linear foot		

NOTES:

(E) = Existing
----- = Existing
——— = Proposed
± = Approximate

Verify controlling field dimensions before ordering or fabricating any material.

① Fill drains with grout.

DESIGNED BY: Elmer Marx	CHECKED: Hannah Bailey
DRAWN BY: Michael Foster	CHECKED: Elmer Marx
QUANTITIES BY: Elmer Marx	CHECKED: Hannah Bailey

REHABILITATION

STATE OF ALASKA
DEPARTMENT OF TRANSPORTATION AND PUBLIC FACILITIES
BRIDGE SECTION
3132 Channel Drive
Juneau, Alaska 99801
907-465-2975

STATE OF ALASKA 49TH
Elmer E. Marx III
05-15-2020
SE# 13260
REGISTERED STRUCTURAL ENGINEER

LEMON CREEK BRIDGE

GLACIER HIGHWAY

SIDEWALK DETAILS

BRIDGE NO. 793
DWG. NO. 3

R:\cad\793\793-SIDEWALK Fri, May/15/20 3:16pm

STATE	PROJECT DESIGNATION	YEAR	SHEET NO.	TOTAL SHEETS
ALASKA	TEA-0955(016) / Z68124	2020	N4	N7

Record Drawings have been reviewed by the Project Engineer, and represent to the best of my knowledge, the project as constructed.

PE Dillon Tomaro 2/4/25

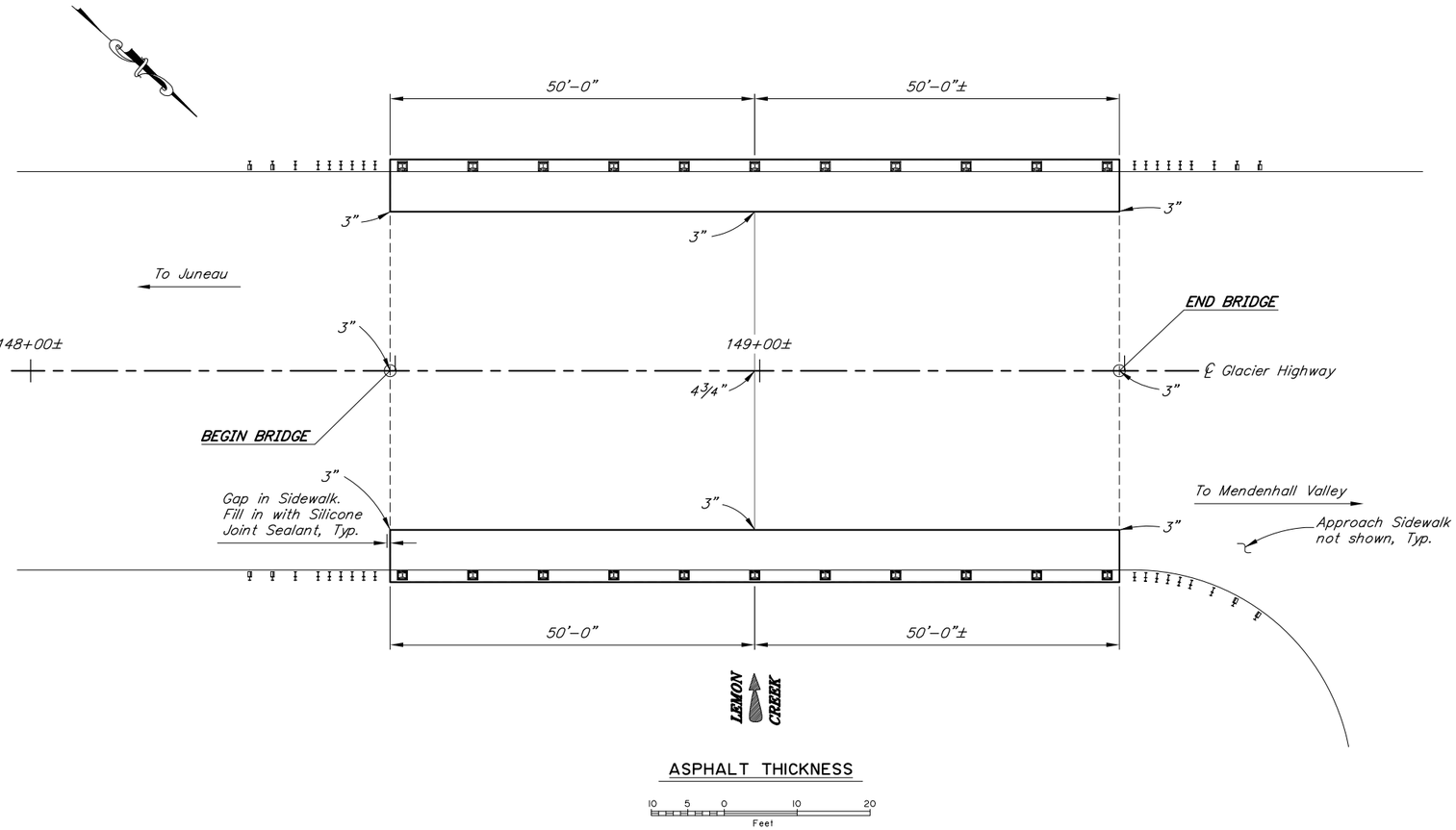

ASPHALT THICKNESS

10 5 0 10 20
Feet

NOTES:

(E) = Existing
----- = Existing
——— = Proposed
± = Approximate

Verify controlling field dimensions before ordering or fabricating any material.

DESIGNED BY: Elmer Marx	CHECKED: Hannah Bailey
DRAWN BY: Michael Foster	CHECKED: Elmer Marx
QUANTITIES BY: Elmer Marx	CHECKED: Hannah Bailey

REHABILITATION

STATE OF ALASKA
DEPARTMENT OF TRANSPORTATION AND PUBLIC FACILITIES
BRIDGE SECTION
3132 Channel Drive
Juneau, Alaska 99801
907-465-2975

STATE OF ALASKA 49 TH
Elmer E. Marx III
05-15-2020
SE# 13260
REGISTERED STRUCTURAL ENGINEER

LEMON CREEK BRIDGE

GLACIER HIGHWAY

ASPHALT OVERLAY

BRIDGE NO. 793
DWG. NO. 4

R:\cad\793\793-ASPHALT Fri, May/15/20 3:16pm

Record Drawings have been reviewed by the Project Engineer, and represent to the best of my knowledge, the project as constructed.

PE Dillon Tomaro 2/4/25

STATE	PROJECT DESIGNATION	YEAR	SHEET NO.	TOTAL SHEETS
ALASKA	TEA-0955(016) / Z68124	2020	N5	N7

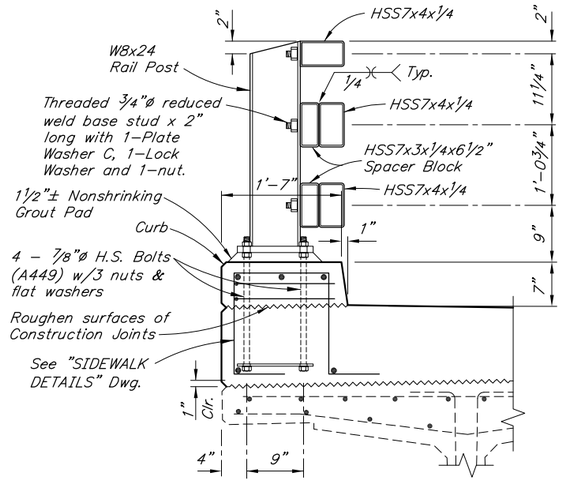

TYPICAL SECTION



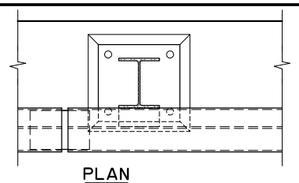

PLAN

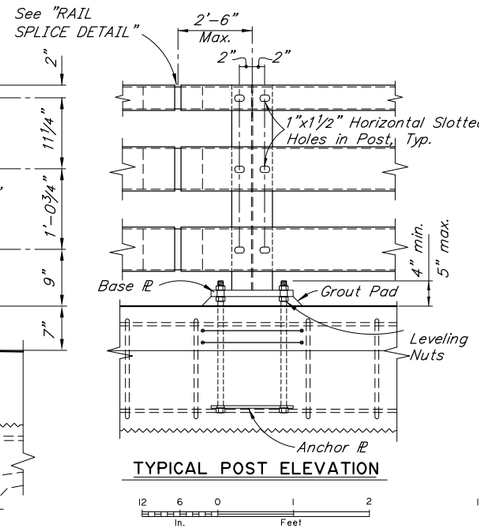

TYPICAL POST ELEVATION

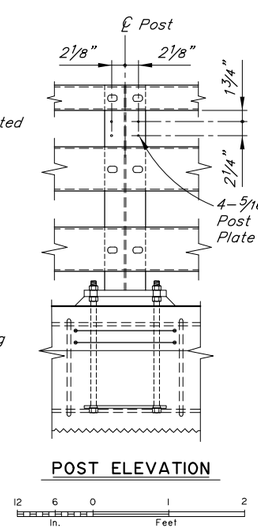

POST ELEVATION

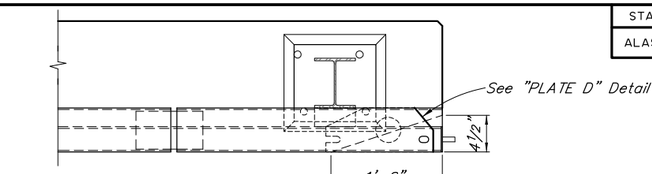

PLAN

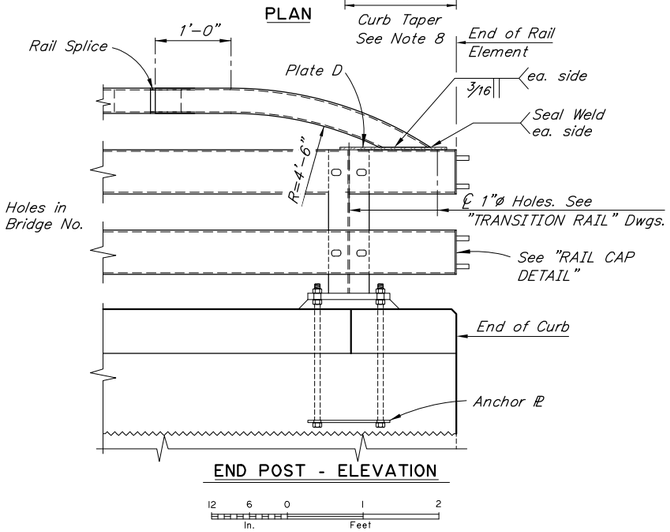

END POST - ELEVATION

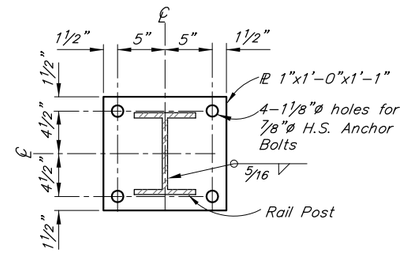

BASE PLATE DETAIL

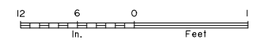

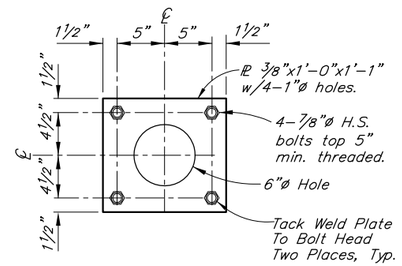

ANCHOR PLATE DETAIL



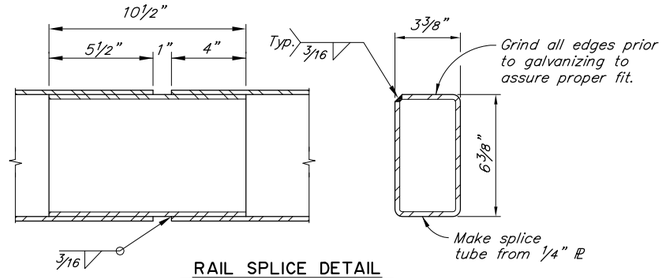

RAIL SPLICE DETAIL

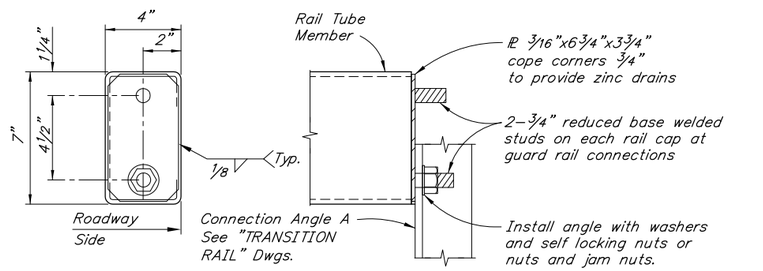

RAIL CAP DETAIL

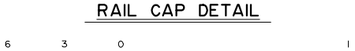

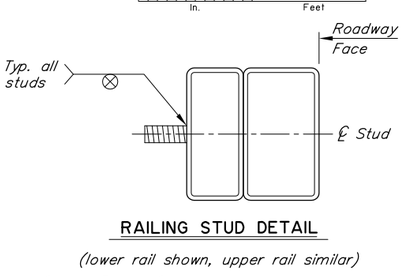

RAILING STUD DETAIL

(lower rail shown, upper rail similar)



NOTES:

1. All guardrail and guardrail connection hardware to conform to AASHTO M 180. Use H.S. Bolts conforming to ASTM F3125 Grade A325. All other steel conforms to ASTM A709 Grade 36 or Grade 50.
2. Locate bridge number plates as shown (2 total) on "GENERAL LAYOUT" Dwg.
3. Furnish bridge number plates. Use bronze with "Century" type style lettering. Use studs and nuts that conform to UNS C65100 or C65500. Braze ¼"ø threaded rod to back of plate with nut - 4 required. Use locking nuts or lock washers on all machine bolts.
4. Provide railing expansion joints at 50'-0" max. intervals. Provide a minimum of 2 rail posts between railing expansion joints. Railing expansion joints are required in rail panels that span bridge expansion joints.
5. Install posts plumb.
6. Use grout with a minimum 24 hour f'c of 3,000 psi.
7. See "STEEL BRIDGE RAILING LAYOUT" Dwg. for rail post spacing and overhang length.
8. Adjust reinforcing to accommodate curb taper.

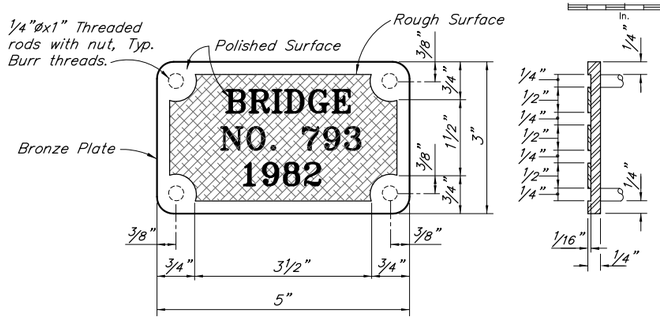

BRONZE BRIDGE NO. PLATE
No Scale

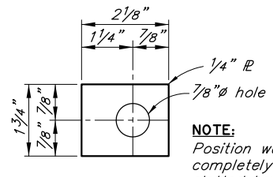

PLATE WASHER C
No Scale

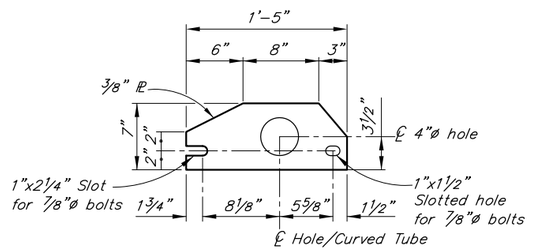

PLATE D



DESIGNED BY: Elmer Marx	CHECKED: Hannah Bailey	**REHABILITATION**
DRAWN BY: Michael Foster	CHECKED: Elmer Marx	
QUANTITIES BY: Elmer Marx	CHECKED: Hannah Bailey	

STATE OF ALASKA
DEPARTMENT OF TRANSPORTATION AND PUBLIC FACILITIES
BRIDGE SECTION
3132 Channel Drive
Juneau, Alaska 99801
907-465-2975

STATE OF ALASKA 49 TH
Elmer E. Marx III
05-15-2020
SE# 13260
REGISTERED STRUCTURAL ENGINEER

LEMON CREEK BRIDGE

GLACIER HIGHWAY

STEEL BRIDGE RAILING, 3-TUBE

BRIDGE NO. 793
DWG. NO. 5

R:\cad\793\793-RAILING Fri, May/15/20 3:16pm

STATE	PROJECT DESIGNATION	YEAR	SHEET NO.	TOTAL SHEETS
ALASKA	TEA-0955(016) / Z68124	2020	N6	N7

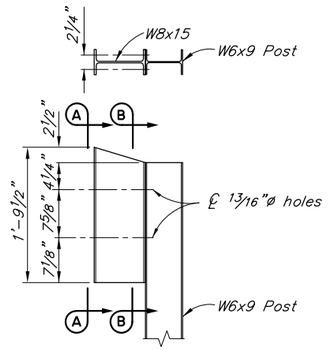

STEEL BLOCKOUT

See Note 2 for additional details



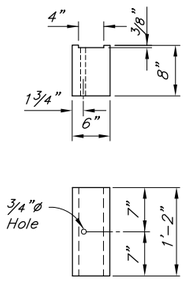

WOOD BLOCKOUT



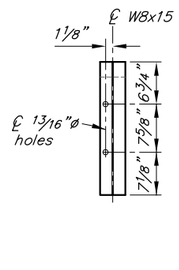

VIEW A-A



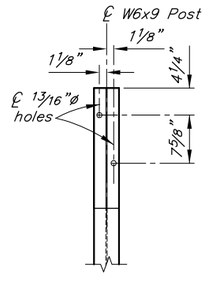

SECTION B-B

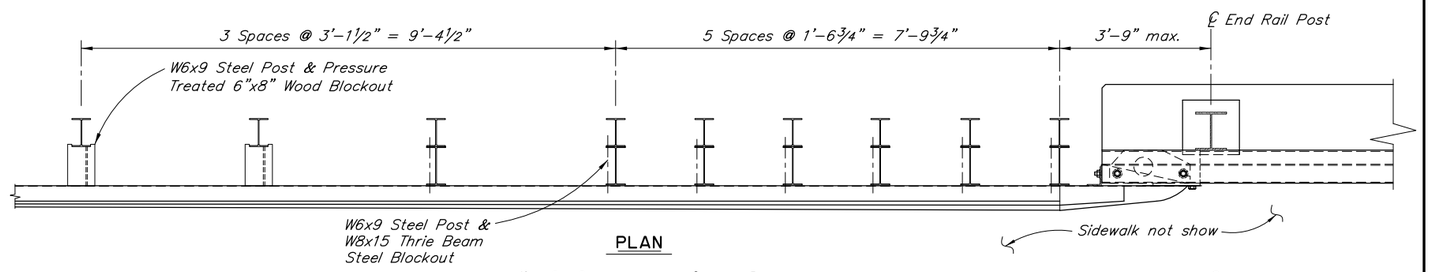

PLAN



ELEVATION



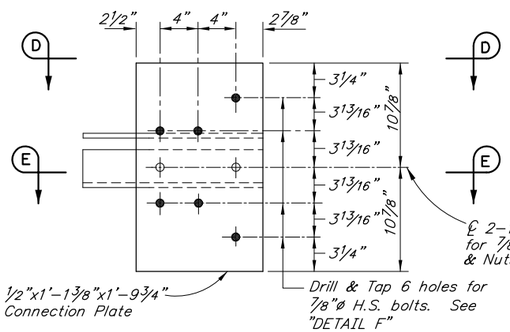

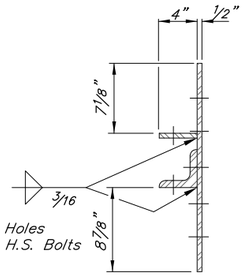

GUARDRAIL CONNECTION PLATE DETAILS

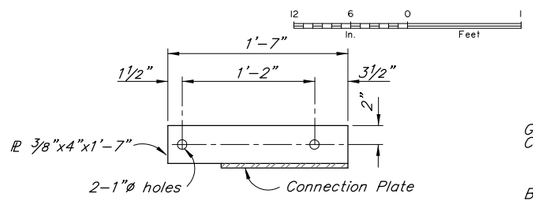

VIEW D-D

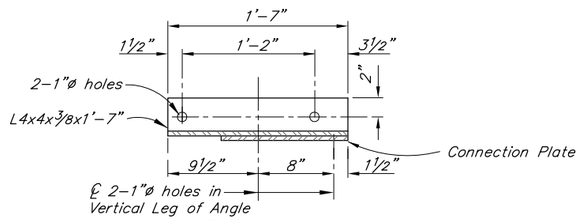

SECTION E-E



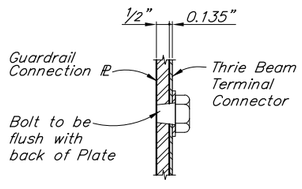

DETAIL F

No Scale

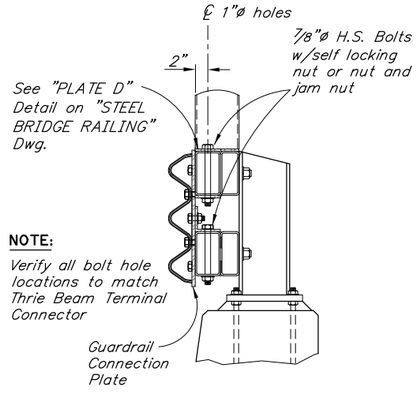

SECTION C-C



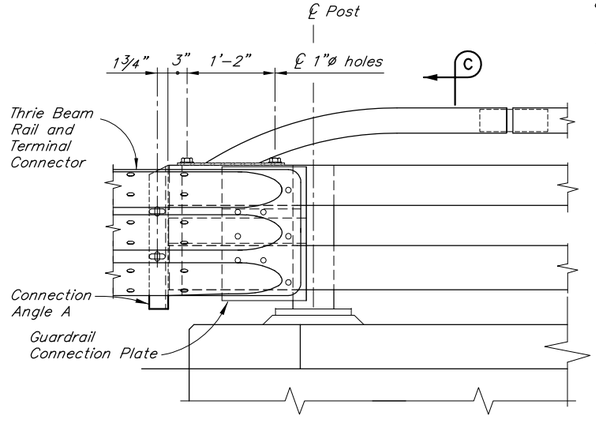

THRIE BEAM CONNECTION



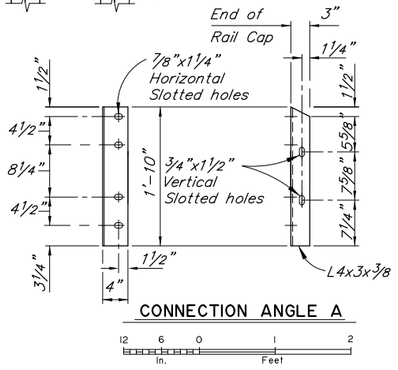

CONNECTION ANGLE A

NOTES:

1. All guardrail and guardrail connection hardware to conform to AASHTO M 180. Use H.S. Bolts conforming to ASTM F3125 Grade A325. All other steel conforms to ASTM A709 Grade 36 or Grade 50.
2. Conform to G-00, G-05 and G-10 of the Standard Plans for all guardrail details not shown. No backup plate is required.
3. Lap approach guardrail to prevent snags from oncoming traffic.
4. Provide 4½" horizontal slots in approach guardrail. Adjust guardrail bolts for sliding fit.
5. Match height of existing or new rail elements and end treatments.
6. Thrie Beam transition to follow roadway alignment.

Record Drawings have been reviewed by the Project Engineer, and represent to the best of my knowledge, the project as constructed.

PE Dillon Tomaro 2/4/25

DESIGNED BY: Elmer Marx	CHECKED: Hannah Bailey	REHABILITATION	STATE OF ALASKA DEPARTMENT OF TRANSPORTATION AND PUBLIC FACILITIES BRIDGE SECTION 3132 Channel Drive Juneau, Alaska 99801 907-465-2975
DRAWN BY: Michael Foster	CHECKED: Elmer Marx		
QUANTITIES BY: Elmer Marx	CHECKED: Hannah Bailey		

STATE OF ALASKA 49TH — Elmer E. Marx III 05-15-2020 SE# 13260 — REGISTERED STRUCTURAL ENGINEER

LEMON CREEK BRIDGE

GLACIER HIGHWAY

THRIE BEAM TRANSITION RAIL

BRIDGE NO. 793

DWG. NO. 6

R:\cad\793\793-TRANSITION Fri, May/15/20 3:16pm

STATE	PROJECT DESIGNATION	YEAR	SHEET NO.	TOTAL SHEETS
ALASKA	TEA-0955(016) / Z68124	2020	N7	N7

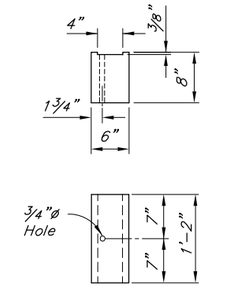

WOOD BLOCKOUT

12 6 0 1 2
In. Feet

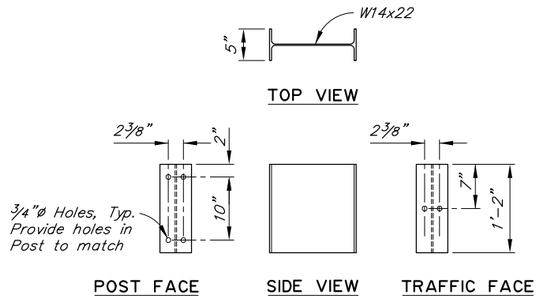

TOP VIEW

POST FACE SIDE VIEW TRAFFIC FACE

DETAIL E

12 6 0 1 2
In. Feet

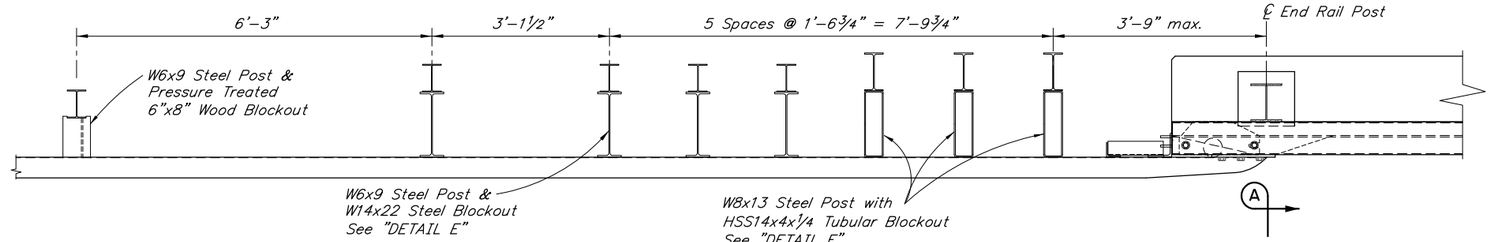

PLAN

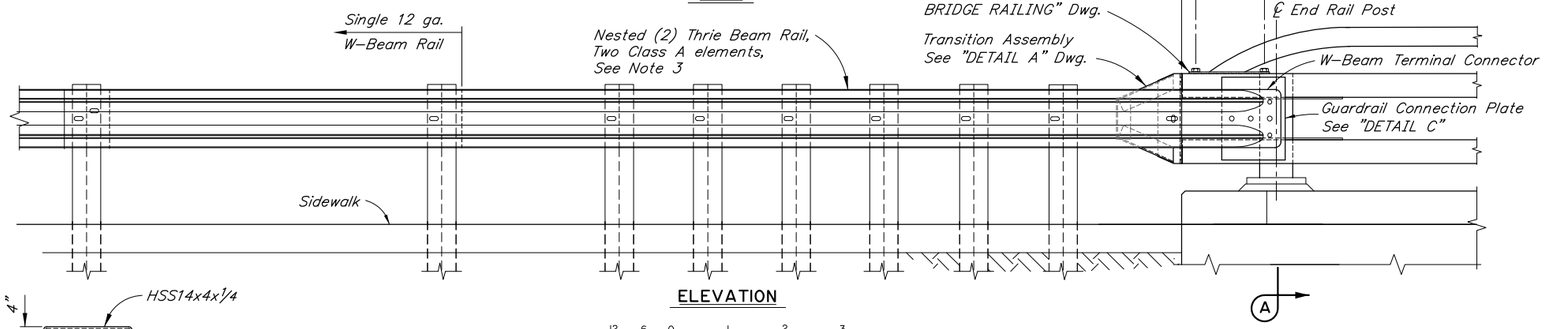

ELEVATION

12 6 0 1 2 3
In. Feet

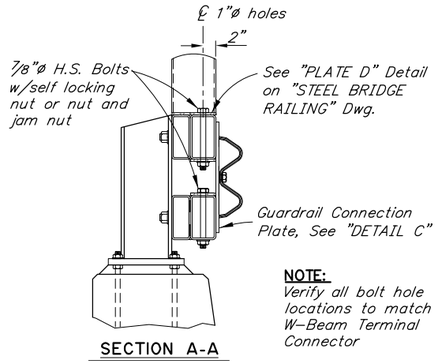

NOTE:
Verify all bolt hole locations to match W-Beam Terminal Connector

SECTION A-A

12 6 0 1 2
In. Feet

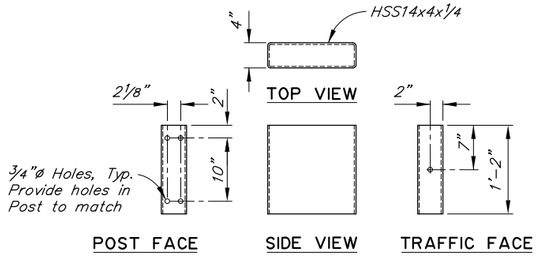

TOP VIEW

POST FACE SIDE VIEW TRAFFIC FACE

DETAIL F

12 6 0 1 2
In. Feet

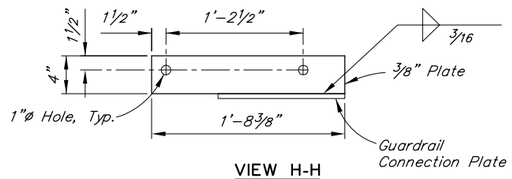

VIEW H-H

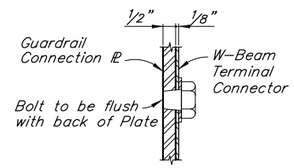

DETAIL G

No Scale

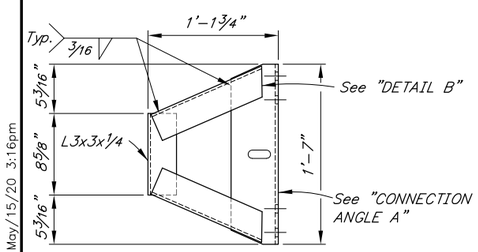

DETAIL A

12 6 0 1
In. Feet

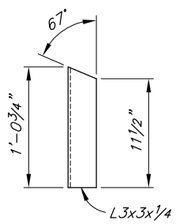

DETAIL B

12 6 0 1
In. Feet

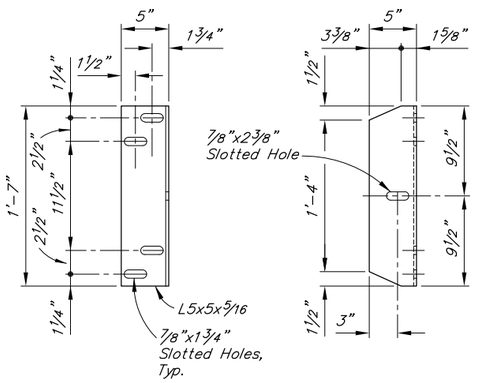

CONNECTION ANGLE A

12 6 0 1
In. Feet

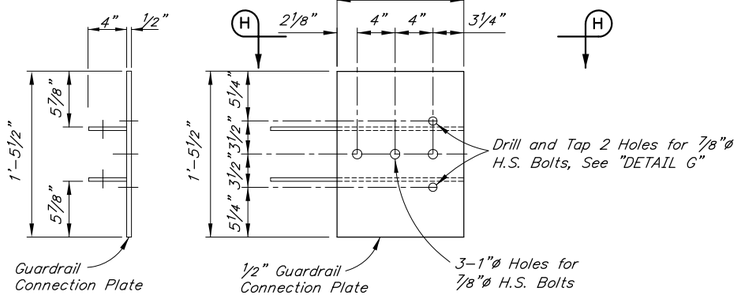

DETAIL C

12 6 0 1
In. Feet

Record Drawings have been reviewed by the Project Engineer, and represent to the best of my knowledge, the project as constructed.

PE Dillon Tomaro 2/4/25

NOTES:

1. All guardrail and guardrail connection hardware to conform to AASHTO M 180. Use H.S. Bolts conforming to ASTM F3125 Grade A325. All other steel conforms to ASTM A709 Grade 36 or Grade 50.
2. Conform to G-00, G-05 and G-10 of the Standard Plans for all guardrail details not shown. No backup plate is required.
3. Lap approach guardrail to prevent snags from oncoming traffic.
4. Provide 4 1/2" horizontal slots in approach guardrail. Adjust guardrail bolts for sliding fit.
5. Match height of existing or new rail elements and end treatments.
6. W-Beam transition to follow roadway alignment.

DESIGNED BY: Elmer Marx	CHECKED: Hannah Bailey
DRAWN BY: Michael Foster	CHECKED: Elmer Marx
QUANTITIES BY: Elmer Marx	CHECKED: Hannah Bailey

REHABILITATION

STATE OF ALASKA
DEPARTMENT OF TRANSPORTATION AND PUBLIC FACILITIES
BRIDGE SECTION
3132 Channel Drive
Juneau, Alaska 99801
907-465-2975

STATE OF ALASKA 49 TH
Elmer E. Marx III
05-15-2020
SE# 13260
REGISTERED STRUCTURAL ENGINEER

LEMON CREEK BRIDGE

GLACIER HIGHWAY

W-BEAM TRANSITION RAIL

BRIDGE NO. 793

DWG. NO. 7

R:\cad\793\793-W-Beam TRANSITION Fri, May/15/20 3:16pm

STATE	PROJECT DESIGNATION	YEAR	SHEET NO.	TOTAL SHEETS
ALASKA	TEA-0955(016) / Z68124	2022	N8	N9

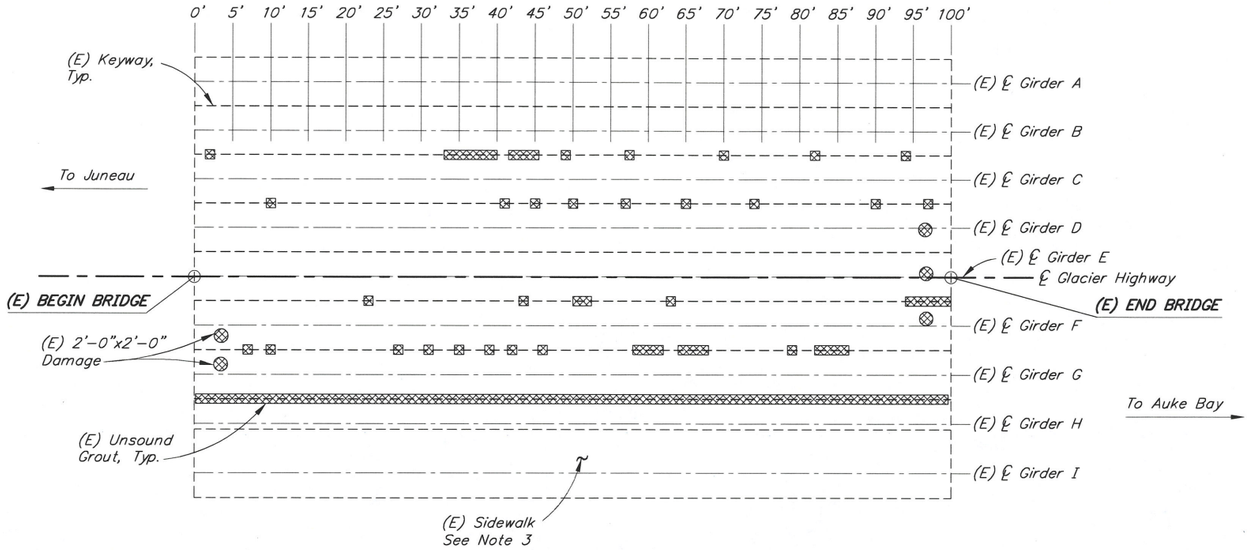

DECK PLAN

10 5 0 10 20
Feet

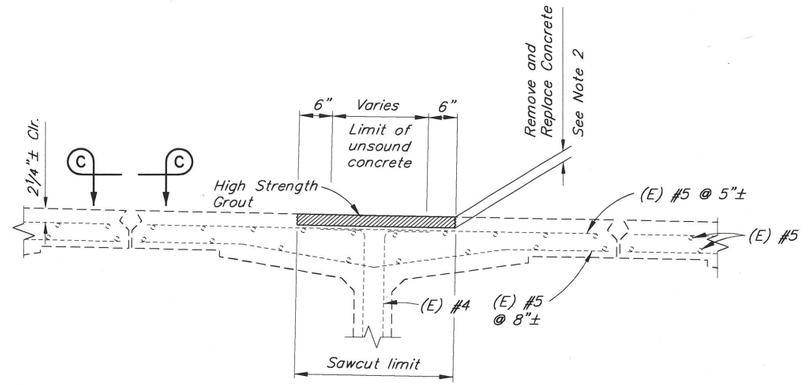

TYPICAL PATCHING DETAIL

12 6 0 1 2
In. Feet

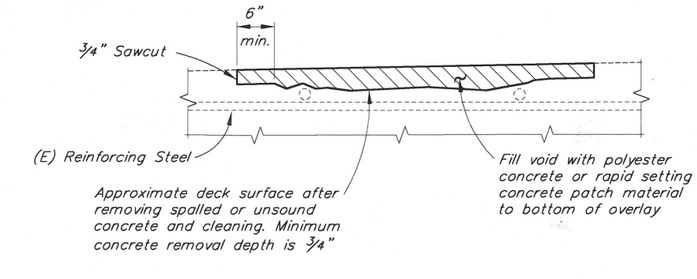

DECK REPAIR DETAIL

No Scale

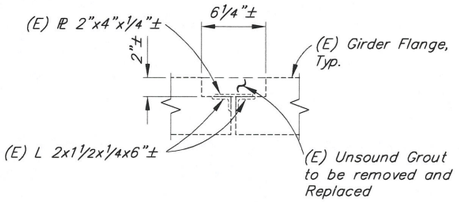

EXISTING SHEAR TABS

12 6 0 1
In. Feet

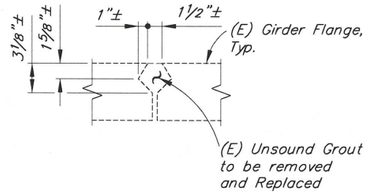

EXISTING KEYWAYS

12 6 0 1
In. Feet

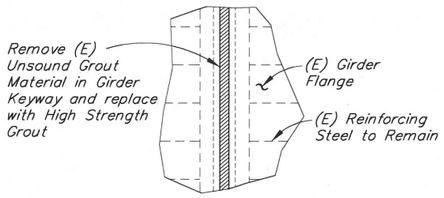

VIEW C-C

12 6 0 1 2
In. Feet

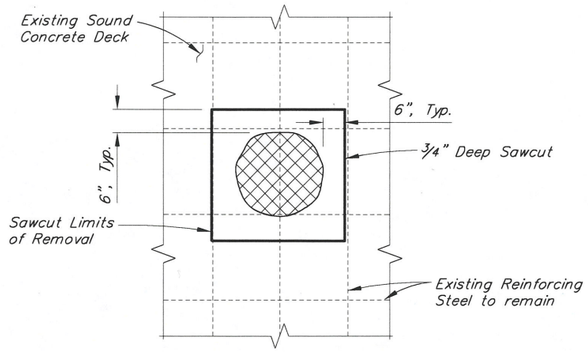

CONCRETE DECK REPAIR - PLAN VIEW

No Scale

Record Drawings have been reviewed by the Project Engineer, and represent to the best of my knowledge, the project as constructed.

PE Dillon Tomaro 2/4/25

NOTES:

▨ = Unsound Concrete
(E) = Existing
- - - - - = Existing
——— = Proposed

1. Locations and sizes are for illustration purposes only.
2. Depth of concrete removal varies. Chip to limits of sound concrete.
3. Sound keyway after (E) sidewalk removed. Repair unsound concrete.

R:\cad\Z793_GROUT Tue, Jul/19/22 8:36am

DESIGNED BY: Noah Soloman-Lopez	CHECKED: Elmer Marx
DRAWN BY: Sam Sollie	CHECKED: Noah Soloman-Lopez
QUANTITIES BY: Noah Soloman-Lopez	CHECKED: Elmer Marx

REHABILITATION

STATE OF ALASKA
DEPARTMENT OF TRANSPORTATION AND PUBLIC FACILITIES
BRIDGE SECTION
3132 Channel Drive
Juneau, Alaska 99801
907-465-2975

STATE OF ALASKA
49TH
Elmer E. Marx III
07-19-2022
SE# 13260
REGISTERED STRUCTURAL ENGINEER

LEMON CREEK BRIDGE

GLACIER HIGHWAY

GROUTED KEYWAYS

BRIDGE NO. 793
DWG. NO. 8

STATE	PROJECT DESIGNATION	YEAR	SHEET NO.	TOTAL SHEETS
ALASKA	TEA-0955(016) / Z68124	2022	N9	N9

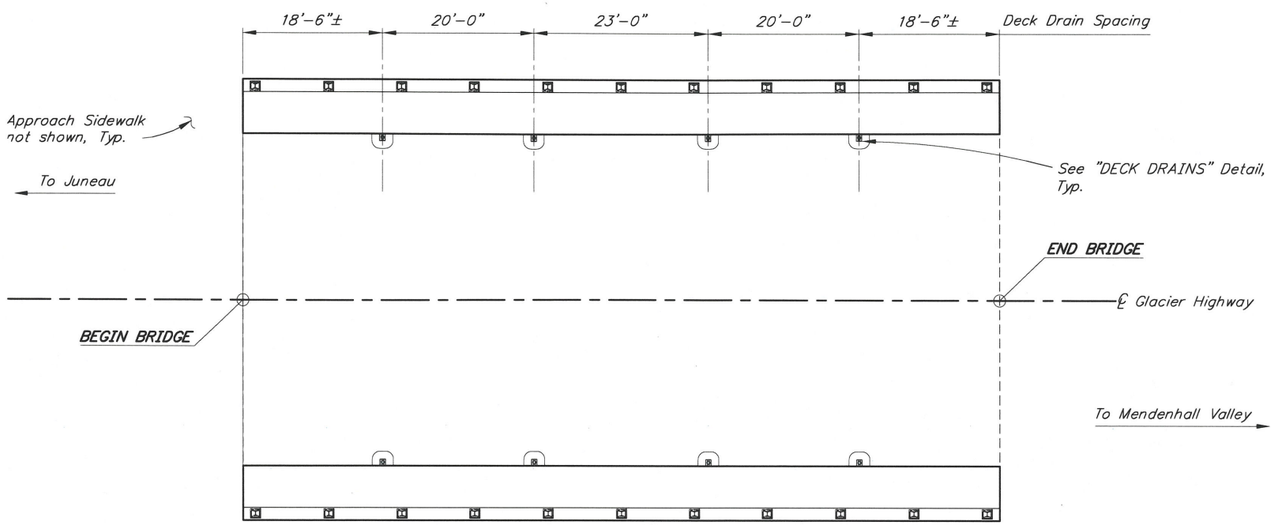

DECK PLAN

10 5 0 10 20
Feet

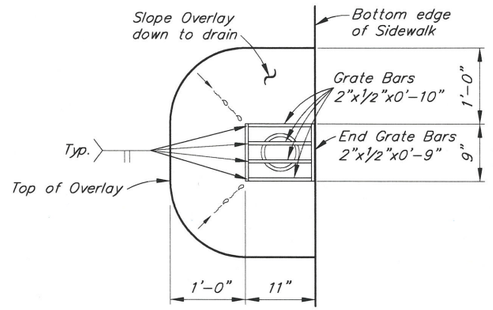

PLAN

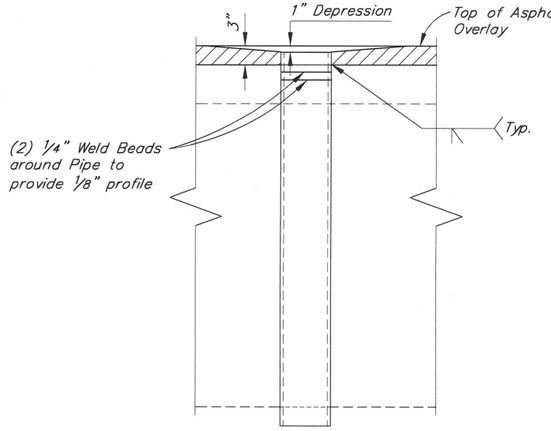

SECTION A-A

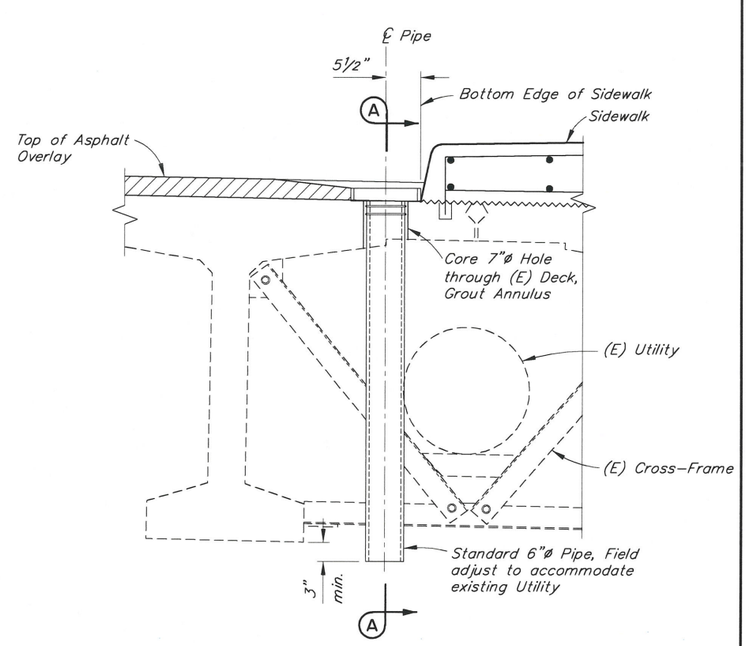

DRAIN DETAILS

DECK DETAILS

12 6 0 1 2
In. Feet

NOTES:
(E) = Existing
- - - - - = Existing
——— = Proposed

Record Drawings have been reviewed by the Project Engineer, and represent to the best of my knowledge, the project as constructed.

PE Dillon Tomaro 2/4/25

DESIGNED BY: Elmer Marx	CHECKED: Noah Solomon-Lopez		
DRAWN BY: Sam Sollie	CHECKED: Elmer Marx		
QUANTITIES BY: Elmer Marx	CHECKED: Noah Solomon-Lopez		

REHABILITATION

STATE OF ALASKA
DEPARTMENT OF TRANSPORTATION AND PUBLIC FACILITIES
BRIDGE SECTION
3132 Channel Drive
Juneau, Alaska 99801
907-465-2975

STATE OF ALASKA
49TH
Elmer E. Marx III
07-19-2022
SE# 13260
REGISTERED STRUCTURAL ENGINEER

LEMON CREEK BRIDGE

GLACIER HIGHWAY

DECK DRAINS

BRIDGE NO. 793
DWG. NO. 9

R:\cad\793\793-DRAINS Tue, Jul/19/22 8:36am

NO.	DATE	REVISION

STATE	PROJECT DESIGNATION	YEAR	SHEET NO.	TOTAL SHEETS
ALASKA	TEA-0955(016)/Z68124	2020	P-1	235

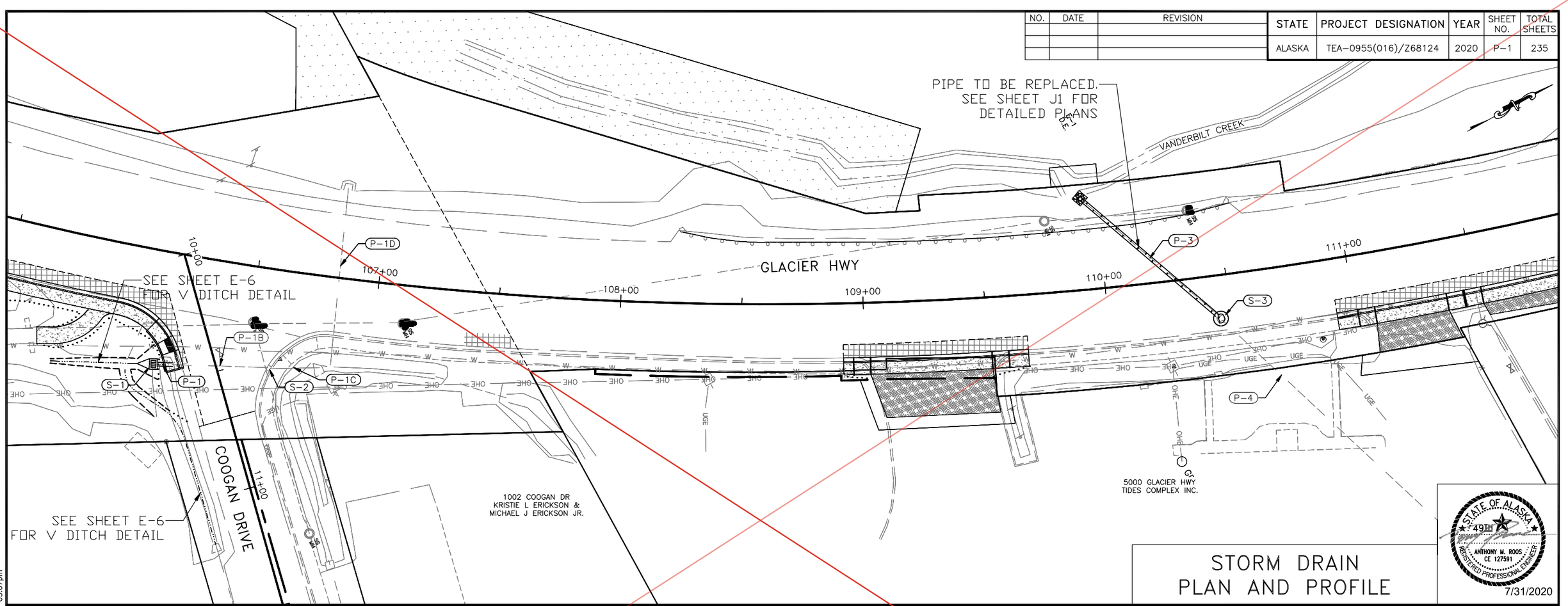

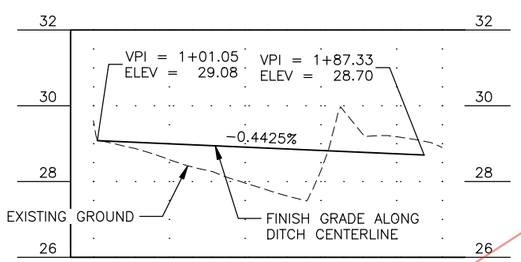

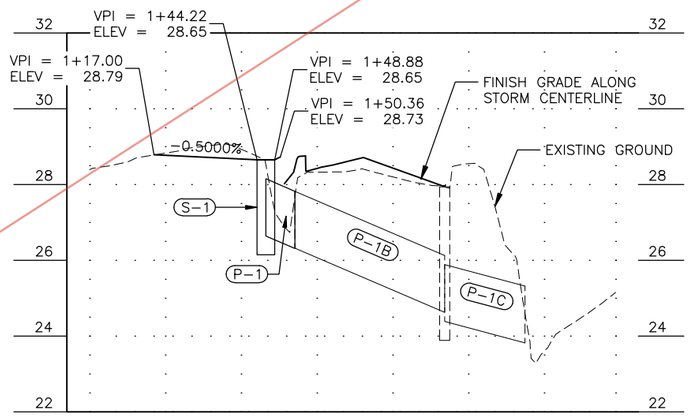

STORM DRAIN PLAN AND PROFILE

STATE OF ALASKA
49TH
ANTHONY M. ROOS
CE 127591
REGISTERED PROFESSIONAL ENGINEER
7/31/2020

Record Drawings have been reviewed by the Project Engineer, and represent to the best of my knowledge, the project as constructed.

PE Dillon Tomaro 2/4/25

** Deleted by CO6

PLANS DEVELOPED BY: KITTELSON & ASSOCIATES, INC. CERT. OF AUTHORIZATION NO.: 254741, 851 SW 6TH AVE. SUITE 600, PORTLAND, OR 97204, (503) 228-5230
H:\20\20487 - Glacier Highway - Juneau Traffic Design\design_CD\68124_P_STORM-P-1 Thu, Jul/30/20 03:07pm

CO-6

NO.	DATE	REVISION
2	01/05/21	ADDENDUM 7
1	05/17/21	CONVEYANCE DITCH STA AND OFFSETS

STATE	PROJECT DESIGNATION	YEAR	SHEET NO.	TOTAL SHEETS
ALASKA	TEA-0955(016)/Z68124	2020	P-1	235

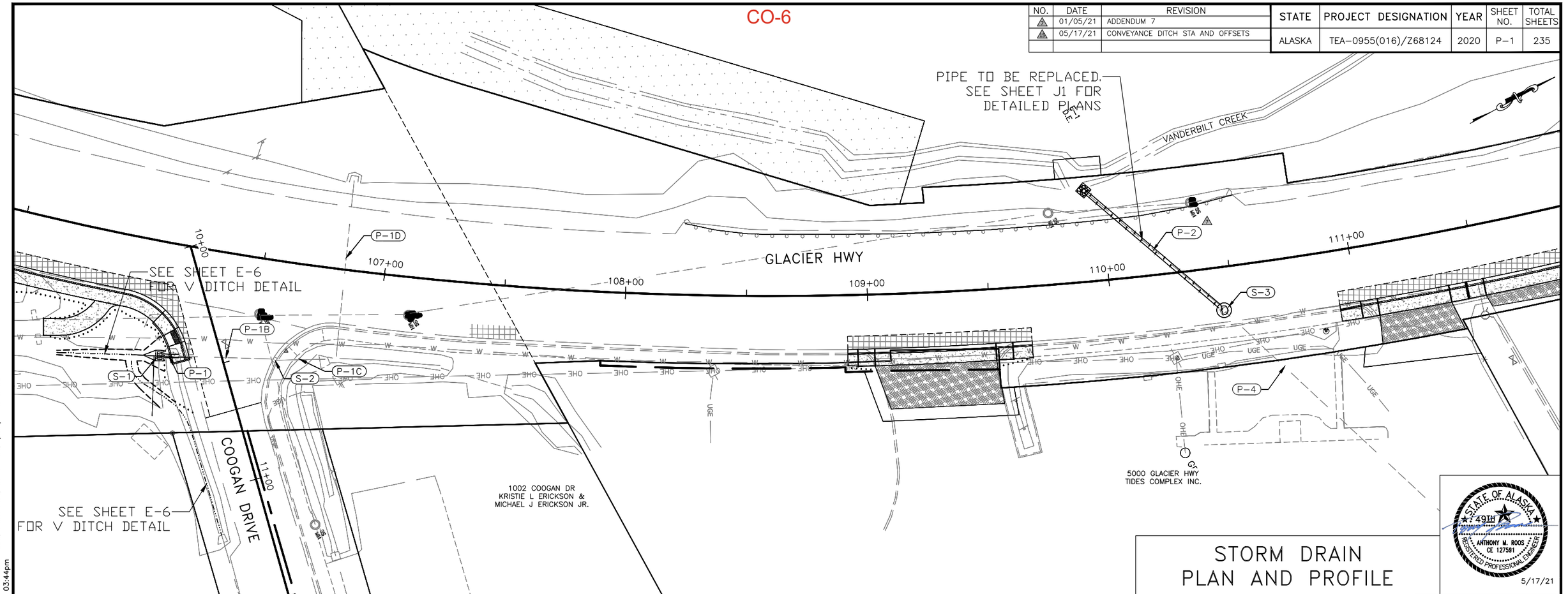

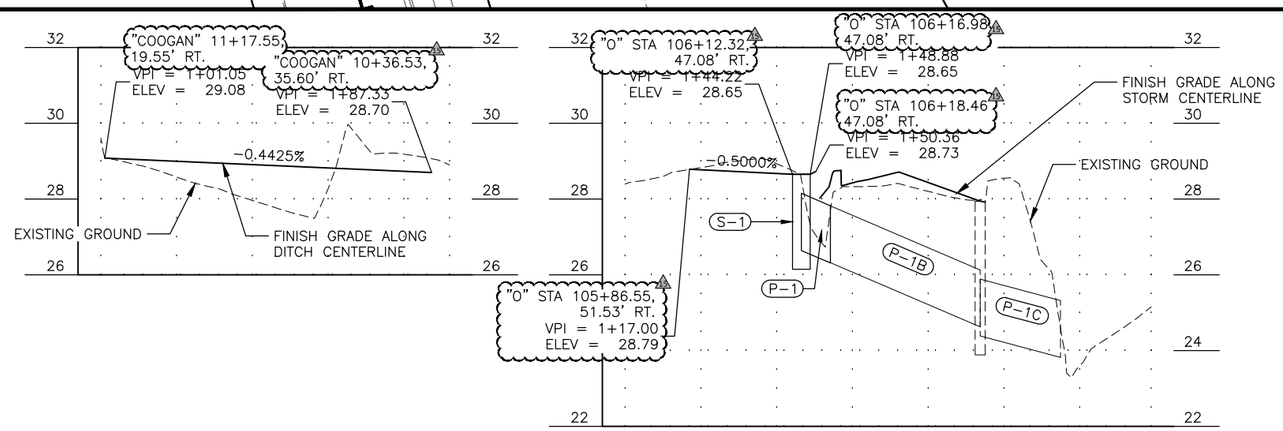

STORM DRAIN PLAN AND PROFILE

STATE OF ALASKA
49TH
ANTHONY M. ROOS
CE 127591
REGISTERED PROFESSIONAL ENGINEER
5/17/21

Record Drawings have been reviewed by the Project Engineer, and represent to the best of my knowledge, the project as constructed.

PE Dillon Tomaro 2/4/25

PLANS DEVELOPED BY: KITTELSON & ASSOCIATES, INC. CERT. OF AUTHORIZATION NO.: 254741, 851 SW 6TH AVE. SUITE 600, PORTLAND, OR 97204, (503) 228-5230
H:\20\20487 - glacier highway - juneau traffic design\design_CD\68124_P_STORM-P-1 Mon, May/17/21 03:44pm

Record Drawings have been reviewed by the Project Engineer, and represent to the best of my knowledge, the project as constructed.

PE Dillon Tomaro 2/4/25

NO.	DATE	REVISION
6	12/28/20	ADDENDUM 6
7	01/04/21	ADDENDUM 7

STATE	PROJECT DESIGNATION	YEAR	SHEET NO.	TOTAL SHEETS
ALASKA	TEA-0955(016)/Z68124	2020	P-2	235

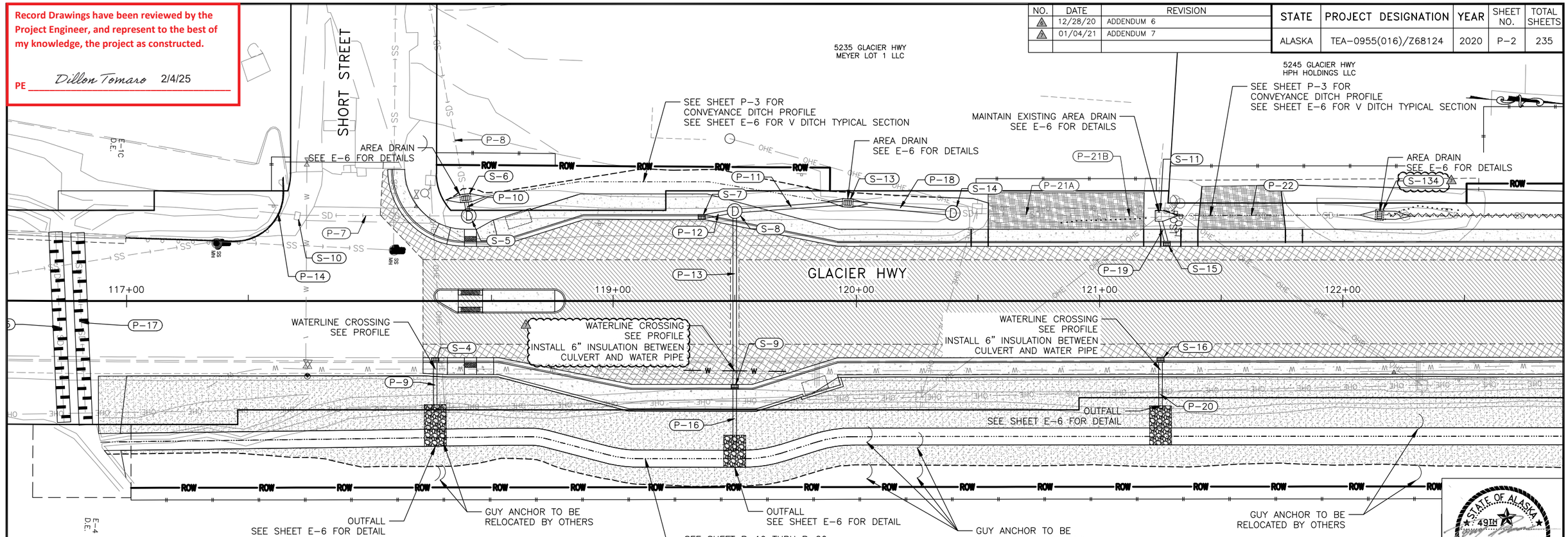

STORM DRAIN PLAN AND PROFILE

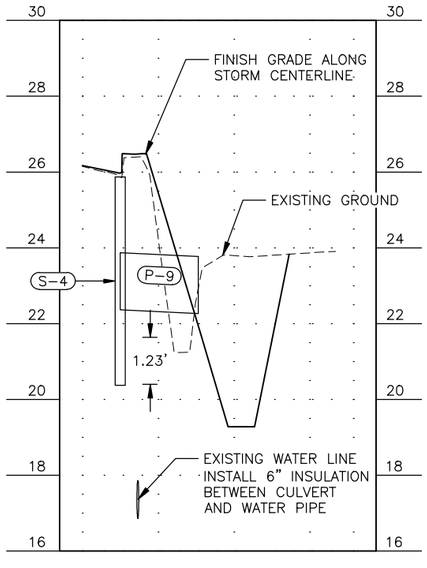

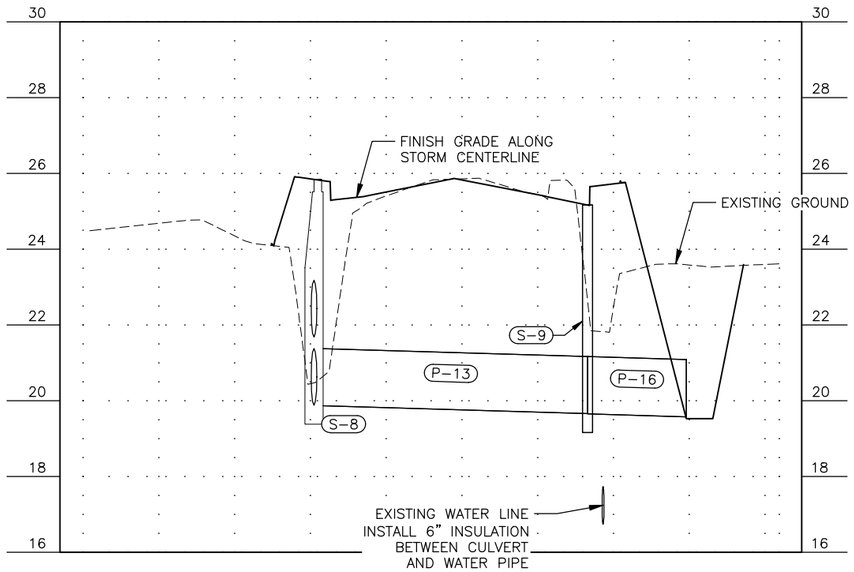

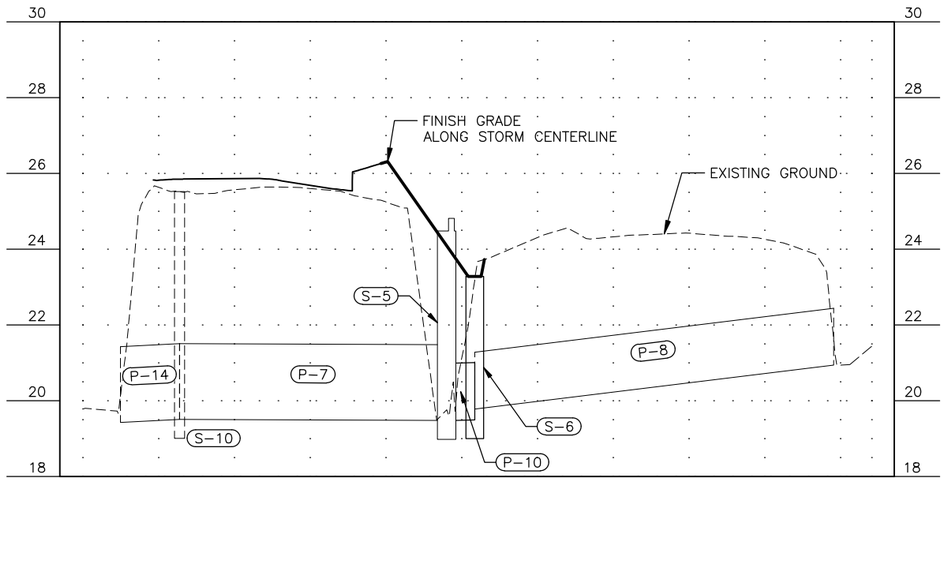

STATE OF ALASKA
49TH
ANTHONY M. ROOS
CE 127591
REGISTERED PROFESSIONAL ENGINEER
1/7/21

PLANS DEVELOPED BY: KITTELSON & ASSOCIATES, INC. CERT. OF AUTHORIZATION NO.: 254741, 851 SW 6TH AVE. SUITE 600, PORTLAND, OR 97204, (503) 228-5230
H:\20\20487 - Glacier Highway - Juneau Traffic Design\design_CD\68124_P_STORM-P-2 Thu, Jan/07/21 11:00am

NO.	DATE	REVISION

STATE	PROJECT DESIGNATION	YEAR	SHEET NO.	TOTAL SHEETS
ALASKA	TEA-0955(016)/Z68124	2020	P-3	235

Record Drawings have been reviewed by the Project Engineer, and represent to the best of my knowledge, the project as constructed.

PE Dillon Tomaro 2/4/25

** Deleted by CO6

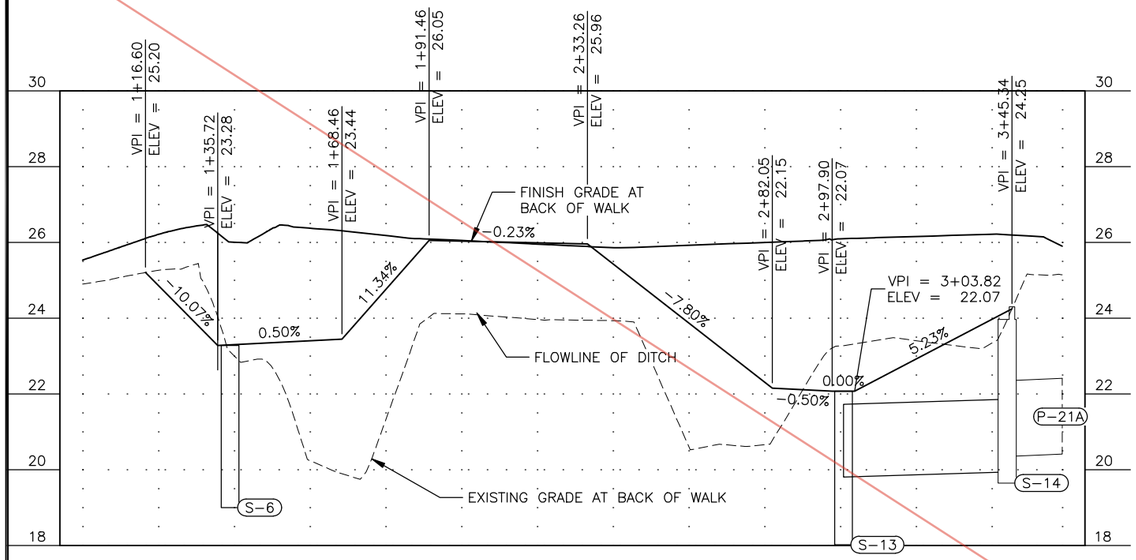

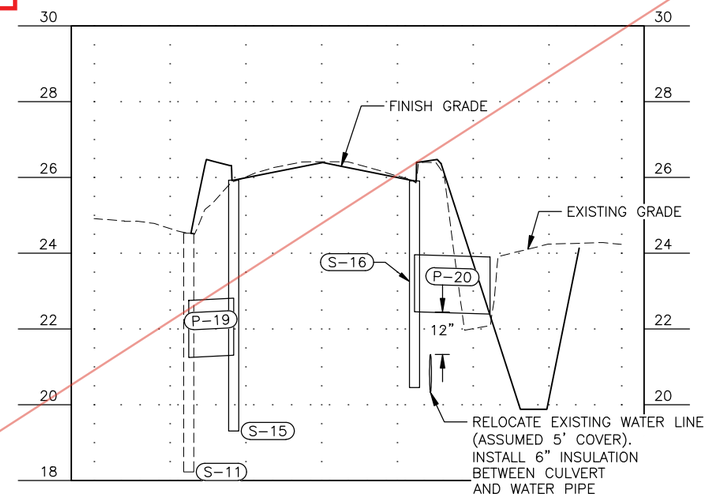

STORM DRAIN PROFILE

STATE OF ALASKA 49TH
ANTHONY M. ROOS CE 12759 REGISTERED PROFESSIONAL ENGINEER
7/31/2020

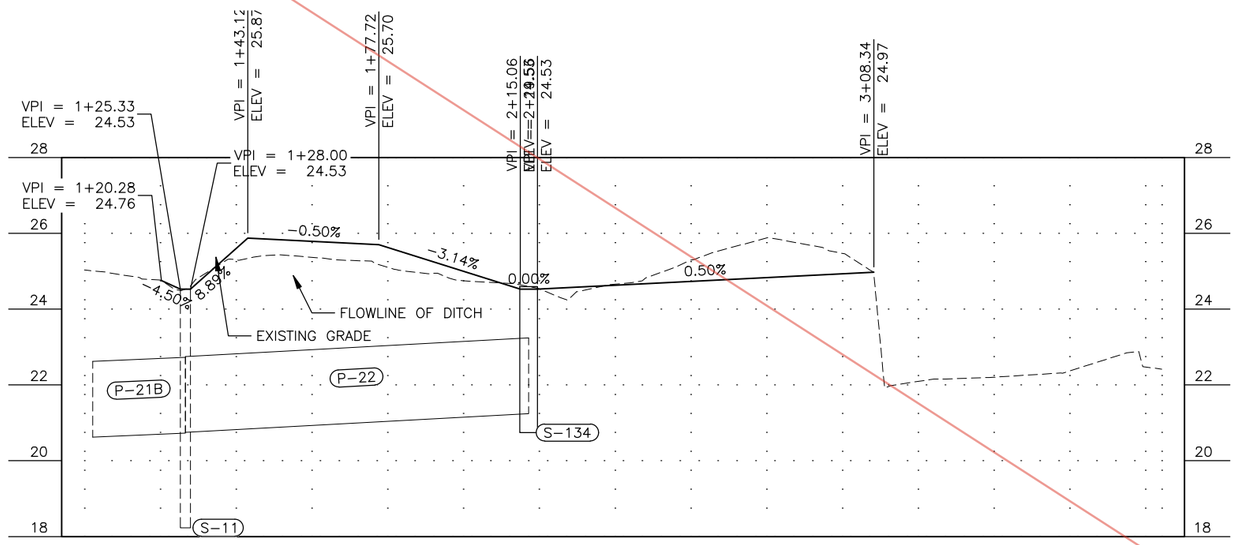

PLANS DEVELOPED BY: KITTELSON & ASSOCIATES, INC. CERT. OF AUTHORIZATION NO.: 254741, 851 SW 6TH AVE. SUITE 600, PORTLAND, OR 97204, (503) 228-5230
H:\20\20487 - Glacier Highway - Juneau Traffic Design\design_CD\68124_P_STORM-P-3 Thu, Jul/30/20 03:08pm

CO 6

NO.	DATE	REVISION
1	05/17/21	CONVEYANCE DITCH STA AND OFFSETS

STATE	PROJECT DESIGNATION	YEAR	SHEET NO.	TOTAL SHEETS
ALASKA	TEA-0955(016)/Z68124	2020	P-3	235

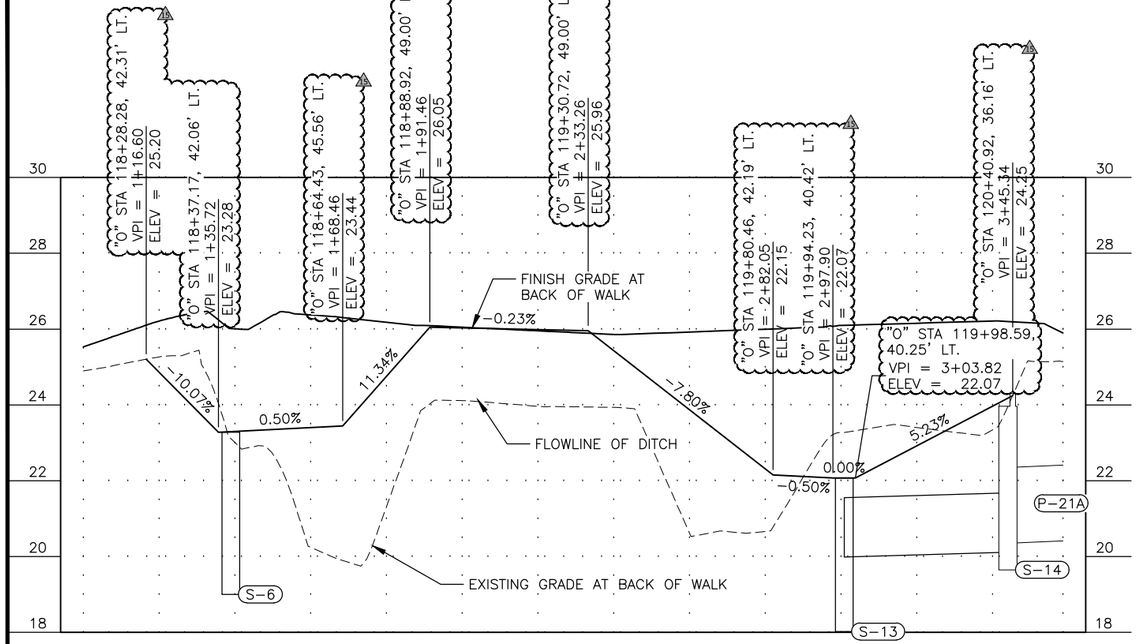

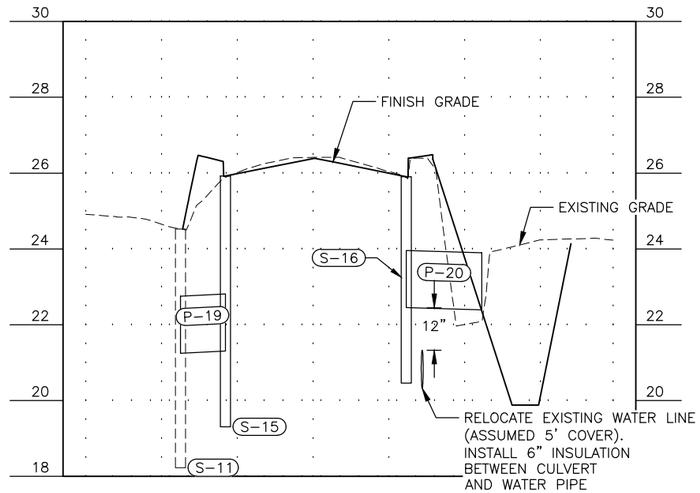

STORM DRAIN PROFILE

STATE OF ALASKA 49TH
ANTHONY M. ROOS
CE 12759
REGISTERED PROFESSIONAL ENGINEER
5/17/21

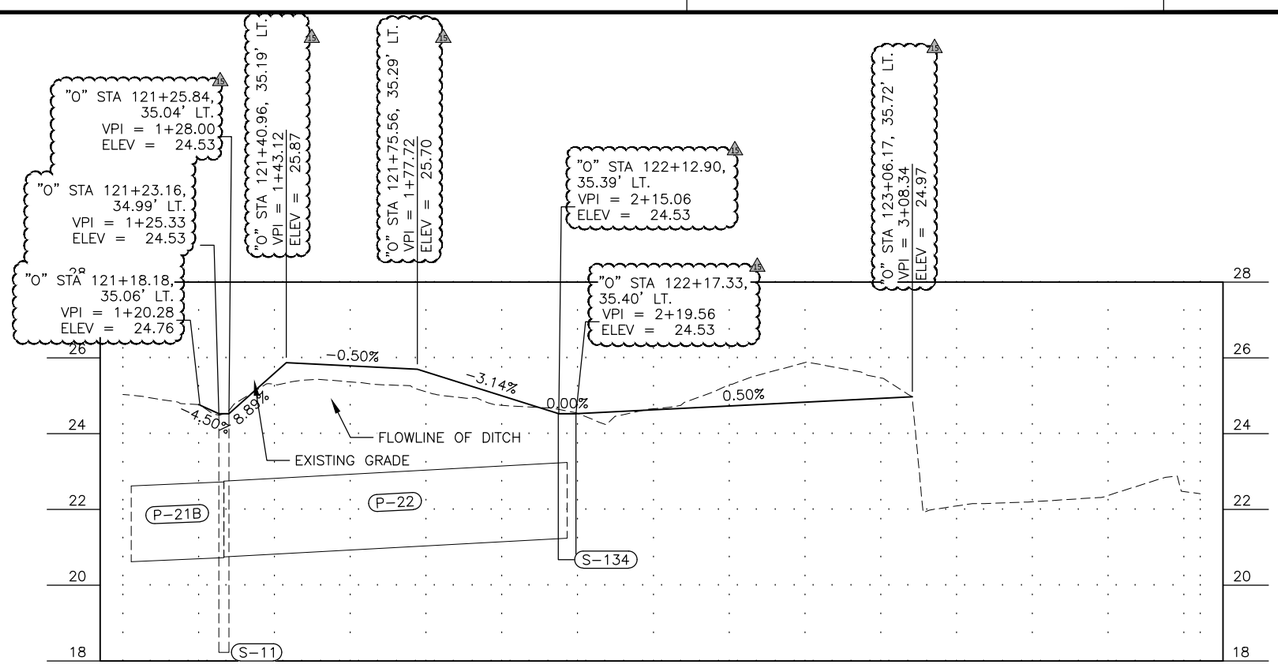

Record Drawings have been reviewed by the Project Engineer, and represent to the best of my knowledge, the project as constructed.

PE *Dillon Tomaro* 2/4/25

PLANS DEVELOPED BY: KITTELSON & ASSOCIATES, INC., CERT. OF AUTHORIZATION NO.: 254741, 851 SW 6TH AVE. SUITE 600, PORTLAND, OR 97204, (503) 228-5230
H:\20\20487 - glacier highway - juneau traffic design\design_CD\68124_P_STORM-P-3 Mon, May/17/21 03:44pm

NO.	DATE	REVISION

STATE	PROJECT DESIGNATION	YEAR	SHEET NO.	TOTAL SHEETS
ALASKA	TEA-0955(016)/Z68124	2020	P-4	235

** Deleted by CO6

SEE SHEET P-3 FOR PROFILE
SEE SHEET E-6 FOR V DITCH TYPICAL

SEE SHEET P-5 FOR
CONVEYANCE DITCH PROFILE
SEE SHEET E-6 FOR V DITCH TYPICAL SECTION

5275 GLACIER HWY
TYLER RENTAL INC.

SEE SHEET P-5 FOR
CONVEYANCE DITCH PROFILE
SEE SHEET E-6 FOR V DITCH TYPICAL SECTION

AREA DRAIN
SEE E-6 FOR DETAILS

SEE SHEET P-7 FOR
CONVEYANCE DITCH PROFILE
SEE SHEET E-6 FOR V DITCH TYPICAL SECTION

AREA DRAIN
SEE E-6 FOR DETAILS

P-24, P-26, S-21, S-20, P-27, S-22, P-23, S-25, P-33, S-27, S-29, P-36, P-35, S-30, S-31, P-38, S-28

123+00 125+00 126+00 127+00 128+00 129+00

GLACIER HWY

EXISTING WATER CROSSING
SEE PROFILE
INSTALL 6" INSULATION
BETWEEN CULVERT
AND WATER PIPE

P-25, S-23, S-12, P-29, P-28

EXISTING WATER CROSSING
SEE PROFILE
INSTALL 6" INSULATION
BETWEEN CULVERT
AND WATER PIPE

S-24, P-30

WATER VERTICAL SHIFT
STA 126+44.72, 19.50' RT TO
STA126+88.38, 18.90' RT
SEE PROFILE
INSTALL 6" INSULATION
BETWEEN CULVERT
AND WATER PIPE

P-34

P-37

5370 GLACIER HWY
LEMON GLACIER PROPERTIES INC.

USE HEADWALL TO ALLOW OUTFALL

OUTFALL
SEE SHEET E-6 FOR DETAIL

OUTFALL
SEE SHEET E-6 FOR DETAIL

GUY ANCHOR TO BE
RELOCATED BY OTHERS

SEE SHEET P-19 THRU P-20
FOR CONVEYANCE DITCH PROFILE
SEE SHEET E-6 FOR LANDWARD CONVEYANCE DITCH SECTION

OUTFALL
SEE SHEET E-6 FOR DETAIL

GUY ANCHOR TO BE
RELOCATED BY OTHERS

STORM DRAIN
PLAN AND PROFILE

STATE OF ALASKA
49TH
ANTHONY M. ROOS
CE 127591
REGISTERED PROFESSIONAL ENGINEER
7/31/2020

Record Drawings have been reviewed by the Project Engineer, and represent to the best of my knowledge, the project as constructed.

PE Dillon Tomaro 2/4/25

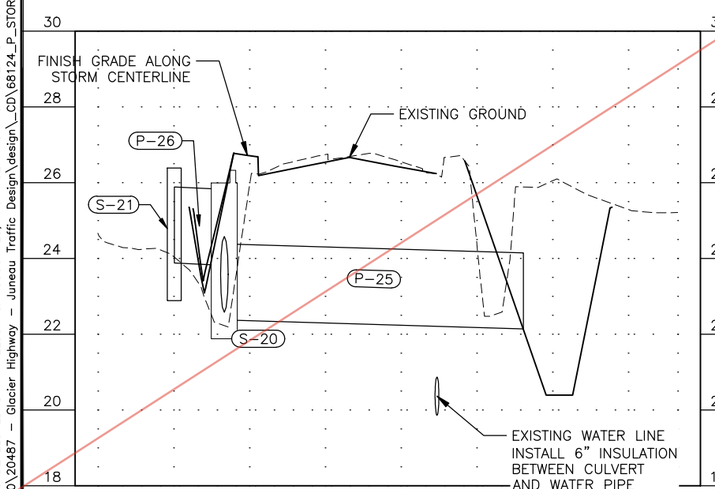

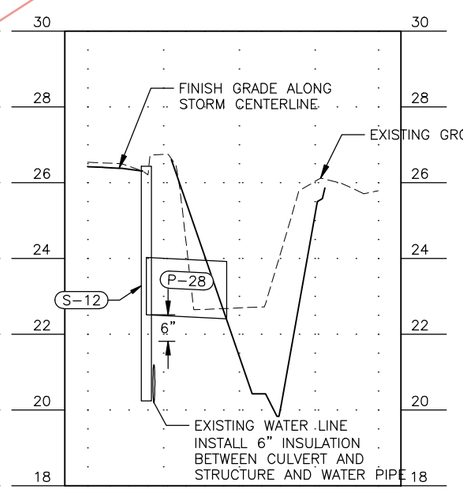

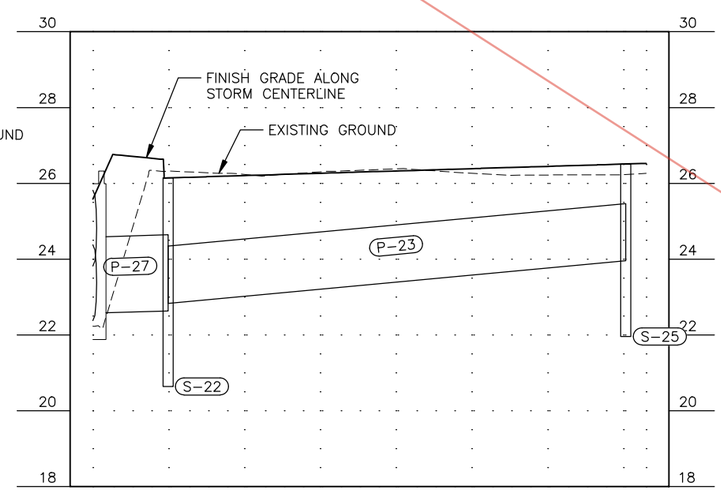

PLANS DEVELOPED BY: KITTELSON & ASSOCIATES, INC. CERT. OF AUTHORIZATION NO.: 254741, 851 SW 6TH AVE. SUITE 600, PORTLAND, OR 97204, (503) 228-5230
H:\20\20487 - Glacier Highway - Juneau Traffic Design\design_CD\68124_P_STORM-P-4 Thu, Jul/30/20 03:09pm

CO 6

NO.	DATE	REVISION
1	05/03/21	STORM IE REVISIONS
2	05/17/21	CONVEYANCE DITCH STA AND OFFSETS

STATE	PROJECT DESIGNATION	YEAR	SHEET NO.	TOTAL SHEETS
ALASKA	TEA-0955(016)/Z68124	2020	P-4	235

** Deleted by CO20

SEE SHEET P-3 FOR PROFILE (BOTTOM RIGHT)
SEE SHEET E-6 FOR V DITCH TYPICAL

SEE SHEET P-5 FOR
CONVEYANCE DITCH PROFILE
SEE SHEET E-6 FOR V DITCH TYPICAL SECTION

5275 GLACIER HWY
TYLER RENTAL INC.

SEE SHEET P-5 FOR
CONVEYANCE DITCH PROFILE
SEE SHEET E-6 FOR V DITCH TYPICAL SECTION

AREA DRAIN
SEE E-6 FOR DETAILS

SEE SHEET P-7 FOR
CONVEYANCE DITCH PROFILE
SEE SHEET E-6 FOR V DITCH TYPICAL SECTION

AREA DRAIN
SEE E-6 FOR DETAILS

P-24, P-26, S-21, S-20, P-25, S-22, P-27, P-23, S-25, P-33, S-27, S-29, P-36, P-35, S-30, S-31, P-38, S-28

123+00 125+00 126+00 127+00 128+00 129+00

GLACIER HWY

EXISTING WATER CROSSING
SEE PROFILE
INSTALL 6" INSULATION
BETWEEN CULVERT
AND WATER PIPE

S-23, S-12, P-29, P-28

EXISTING WATER CROSSING
SEE PROFILE
INSTALL 6" INSULATION
BETWEEN CULVERT
AND WATER PIPE

S-24, P-30

WATER VERTICAL SHIFT
STA 126+44.72, 19.50' RT TO
STA126+88.38, 18.90' RT
SEE PROFILE
INSTALL 6" INSULATION
BETWEEN CULVERT
AND WATER PIPE

P-34

P-37

5370 GLACIER HWY
LEMON GLACIER PROPERTIES INC.

USE HEADWALL TO ALLOW OUTFALL

OUTFALL
SEE SHEET E-6 FOR DETAIL

OUTFALL
SEE SHEET E-6 FOR DETAIL

GUY ANCHOR TO BE
RELOCATED BY OTHERS

SEE SHEET P-19 THRU P-20
FOR CONVEYANCE DITCH PROFILE
SEE SHEET E-6 FOR LANDWARD CONVEYANCE DITCH SECTION

OUTFALL
SEE SHEET E-6 FOR DETAIL

GUY ANCHOR TO BE
RELOCATED BY OTHERS

STORM DRAIN
PLAN AND PROFILE

STATE OF ALASKA
49TH
ANTHONY M. ROOS
CE 127591
REGISTERED PROFESSIONAL ENGINEER
5/17/21

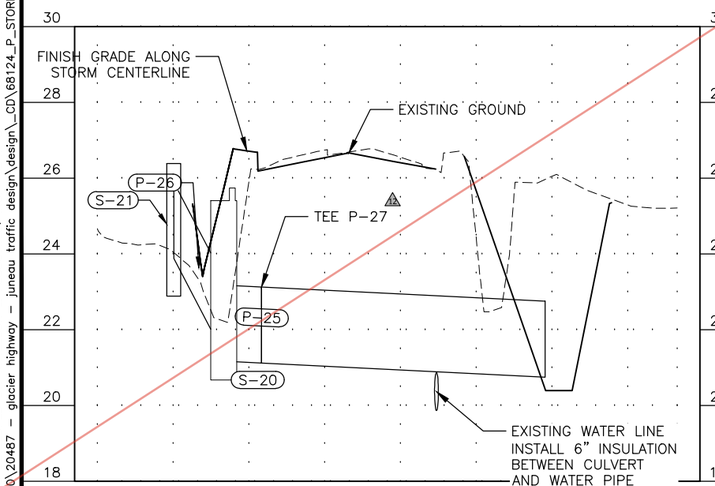

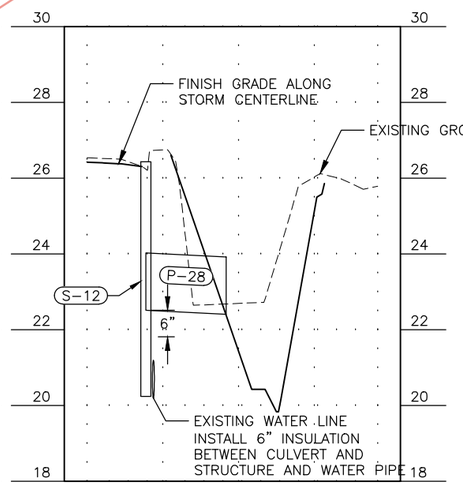

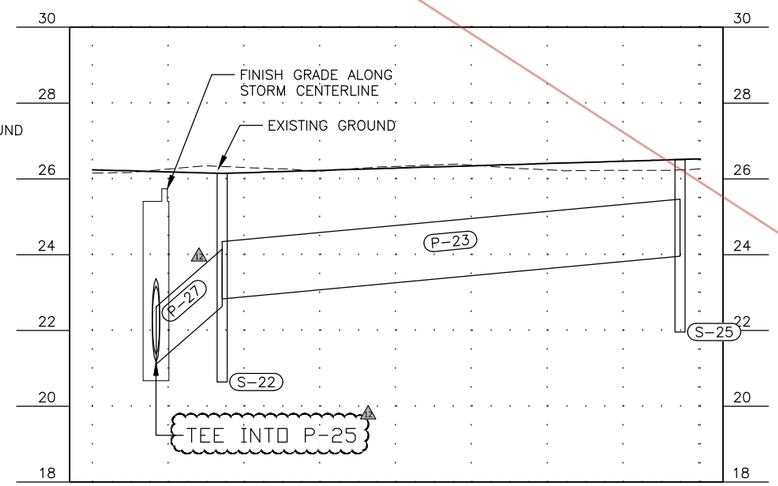

Record Drawings have been reviewed by the Project Engineer, and represent to the best of my knowledge, the project as constructed.

PE Dillon Tomaro 2/4/25

PLANS DEVELOPED BY: KITTELSON & ASSOCIATES, INC. CERT. OF AUTHORIZATION NO.: 254741, 851 SW 6TH AVE. SUITE 600, PORTLAND, OR 97204, (503) 228-5230
H:\20\20487 - glacier highway - juneau traffic design\design_CD\68124_P_STORM-P-4 Mon, May/17/21 03:44pm

ATTACHMENT NO. 1 CO 20

NO.	DATE	REVISION
1	05/03/21	STORM IE REVISIONS
2	05/17/21	CONVEYANCE DITCH STA AND OFFSETS

STATE	PROJECT DESIGNATION	YEAR	SHEET NO.	TOTAL SHEETS
ALASKA	TEA-0955(016)/Z68124	2020	P-4	235

SEE SHEET P-5 FOR PROFILE (BOTTOM RIGHT)
SEE SHEET E-6 FOR V DITCH TYPICAL

SEE SHEET P-5 FOR
CONVEYANCE DITCH PROFILE
SEE SHEET E-6 FOR V DITCH TYPICAL SECTION

5275 GLACIER HWY
TYLER RENTAL INC.

SEE SHEET P-5 FOR
CONVEYANCE DITCH PROFILE
SEE SHEET E-6 FOR V DITCH TYPICAL SECTION

AREA DRAIN
SEE E-6 FOR DETAILS

SEE SHEET P-7 FOR
CONVEYANCE DITCH PROFILE
SEE SHEET E-6 FOR V DITCH TYPICAL SECTION

AREA DRAIN
SEE E-6 FOR DETAILS

P-24, P-26, S-21, S-20, P-25, S-22, P-27, P-23, S-25, P-33, S-27, S-29, P-36, P-35, S-30, S-31, P-38, S-28

GLACIER HWY

123+00 125+00 126+00 127+00 128+00 129+00

EXISTING WATER CROSSING
SEE PROFILE
INSTALL 6" INSULATION
BETWEEN CULVERT
AND WATER PIPE

S-23, S-12, P-29, P-28

EXISTING WATER CROSSING
SEE PROFILE
INSTALL 6" INSULATION
BETWEEN CULVERT
AND WATER PIPE

S-24, P-30

WATER VERTICAL SHIFT
STA 126+44.72, 19.50' RT TO
STA126+88.38, 18.90' RT
SEE PROFILE
INSTALL 6" INSULATION
BETWEEN CULVERT
AND WATER PIPE

P-34

Add Inlet, Type A

X

Existing 12" CPP

P-37

5370 GLACIER HWY
LEMON GLACIER PROPERTIES INC.

USE HEADWALL TO ALLOW OUTFALL

Add 18" X 169' CPP

OUTFALL
SEE SHEET E-6 FOR DETAIL

OUTFALL
SEE SHEET E-6 FOR DETAIL

GUY ANCHOR TO BE
RELOCATED BY OTHERS

SEE SHEET P-19 THRU P-20
FOR CONVEYANCE DITCH PROFILE
SEE SHEET E-6 FOR LANDWARD CONVEYANCE DITCH SECTION

OUTFALL
SEE SHEET E-6 FOR DETAIL

GUY ANCHOR TO BE
RELOCATED BY OTHERS

STORM DRAIN PLAN AND PROFILE

STATE OF ALASKA
49TH
ANTHONY M. ROOS
CE 12759
REGISTERED PROFESSIONAL ENGINEER
5/17/21

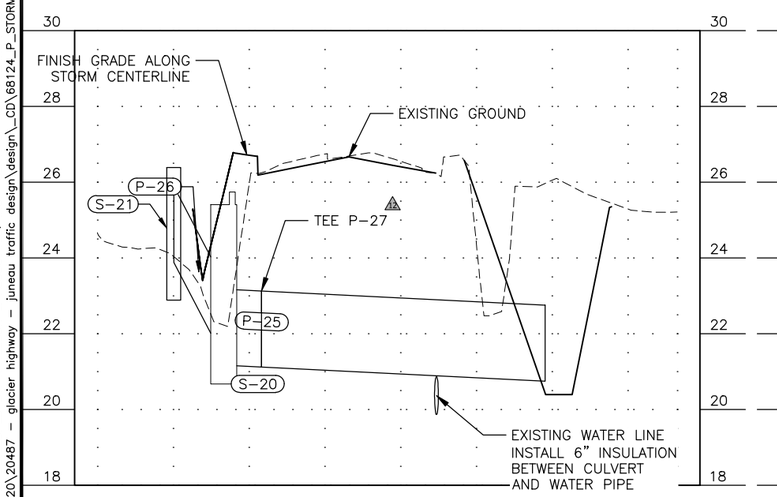

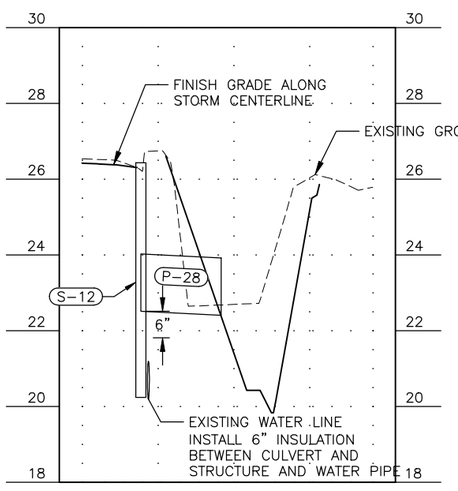

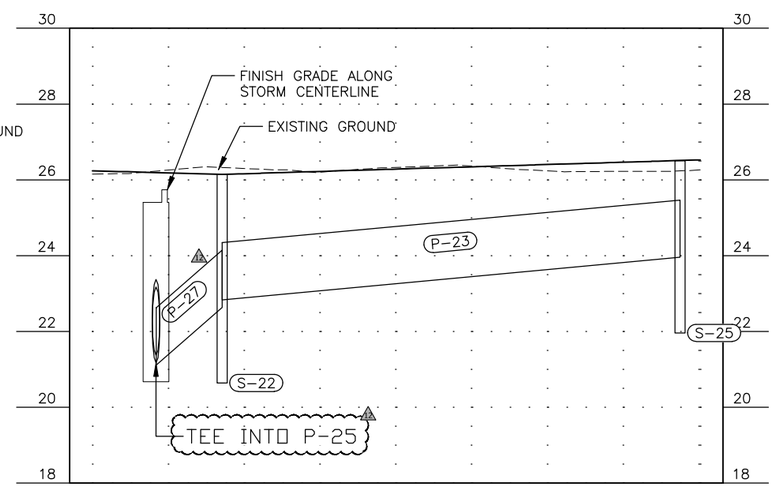

Record Drawings have been reviewed by the Project Engineer, and represent to the best of my knowledge, the project as constructed.

PE Dillon Tomaro 2/4/25

PLANS DEVELOPED BY: KITTELSON & ASSOCIATES, INC. CERT. OF AUTHORIZATION NO.: 254741, 851 SW 6TH AVE. SUITE 600, PORTLAND, OR 97204, (503) 228-5230
H:\20\20487 - glacier highway - juneau traffic design\design_CD\68124_P_STORM-P-4 Mon, May/17/21 03:44pm

NO.	DATE	REVISION

STATE	PROJECT DESIGNATION	YEAR	SHEET NO.	TOTAL SHEETS
ALASKA	TEA-0955(016)/Z68124	2020	P-5	235

Record Drawings have been reviewed by the Project Engineer, and represent to the best of my knowledge, the project as constructed.

PE Dillon Tomaro 2/4/25

** Deleted by CO6

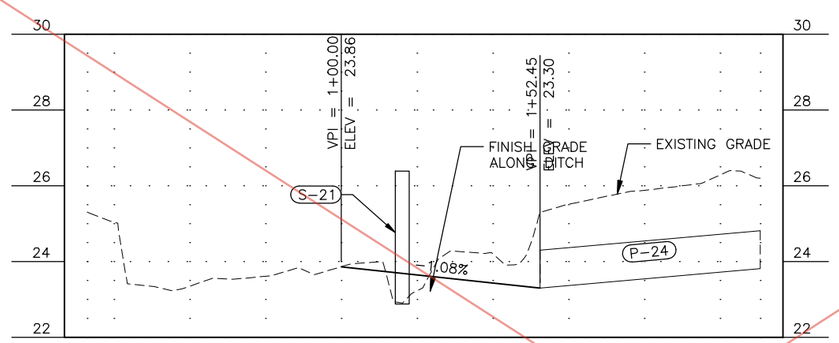

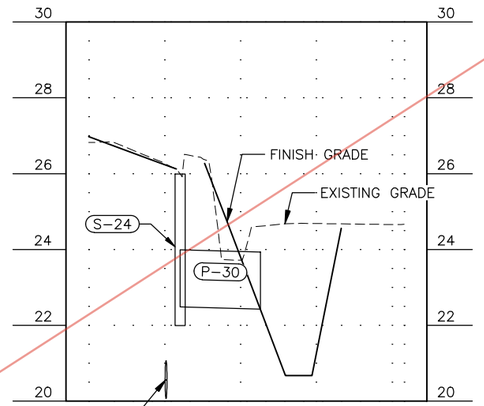

EXISTING WATER LINE (ASSUMED 5' COVER). FIELD VERIFY INSTALL 6" INSULATION BETWEEN CULVERT AND WATER PIPE

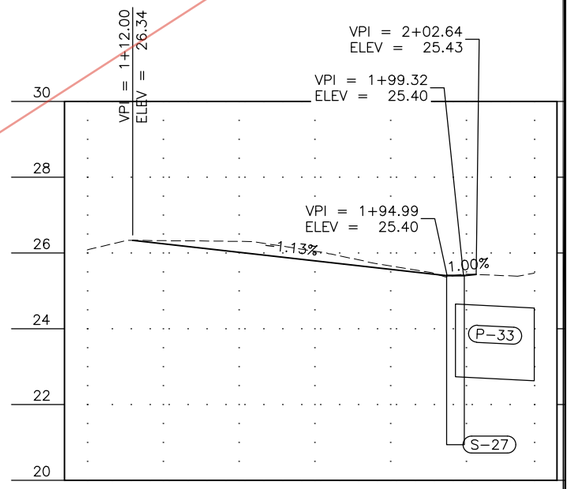

STORM DRAIN PROFILE

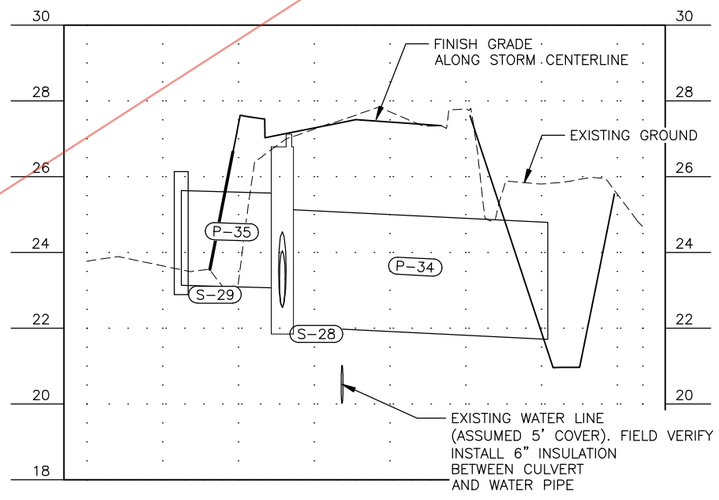

EXISTING WATER LINE (ASSUMED 5' COVER). FIELD VERIFY INSTALL 6" INSULATION BETWEEN CULVERT AND WATER PIPE

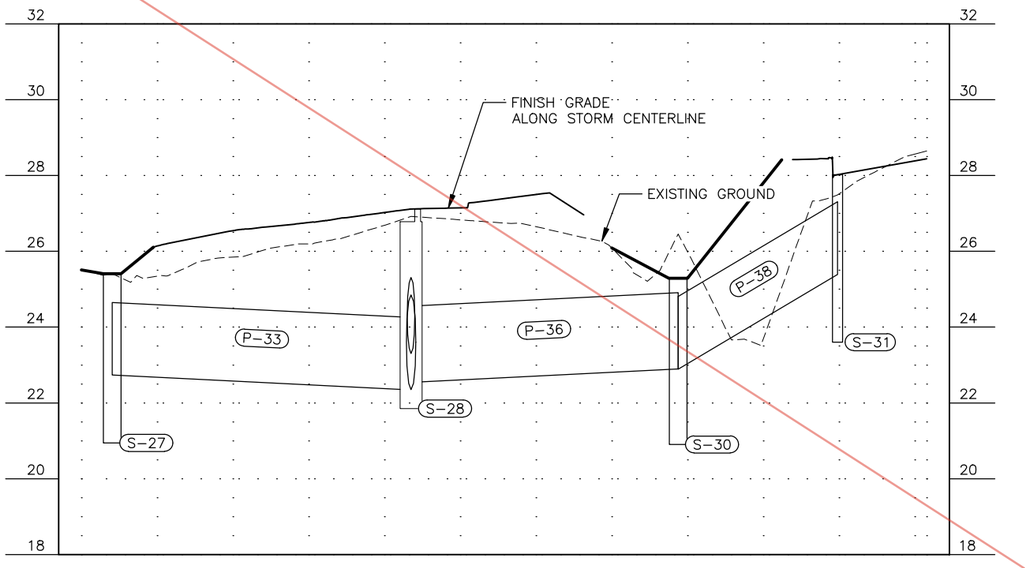

STATE OF ALASKA 49TH ANTHONY M. ROOS CE 12759 REGISTERED PROFESSIONAL ENGINEER
7/31/2020

PLANS DEVELOPED BY: KITTELSON & ASSOCIATES, INC. CERT. OF AUTHORIZATION NO.: 254741, 851 SW 6TH AVE. SUITE 600, PORTLAND, OR 97204, (503) 228-5230
H:\20\20487 - Glacier Highway - Juneau Traffic Design\design_CD\68124_P_STORM-P-5 Thu, Jul/30/20 03:09pm

CO 6

Record Drawings have been reviewed by the Project Engineer, and represent to the best of my knowledge, the project as constructed.

PE Dillon Tomaro 2/4/25

NO.	DATE	REVISION
1	05/17/21	CONVEYANCE DITCH STA AND OFFSETS

STATE	PROJECT DESIGNATION	YEAR	SHEET NO.	TOTAL SHEETS
ALASKA	TEA-0955(016)/Z68124	2020	P-5	235

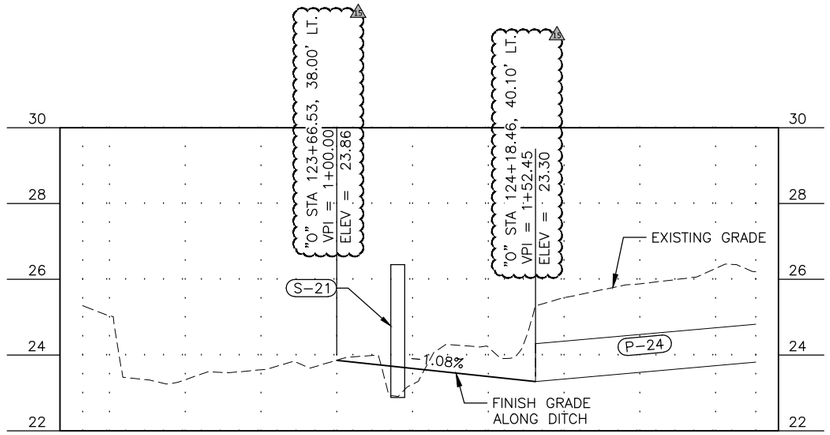

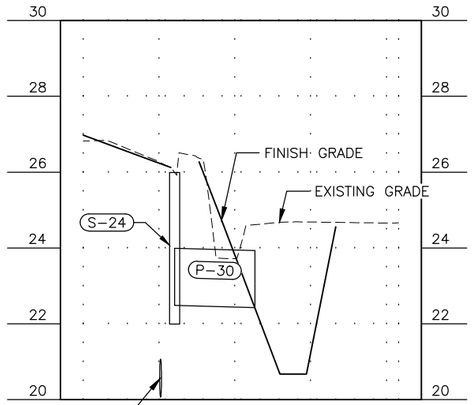

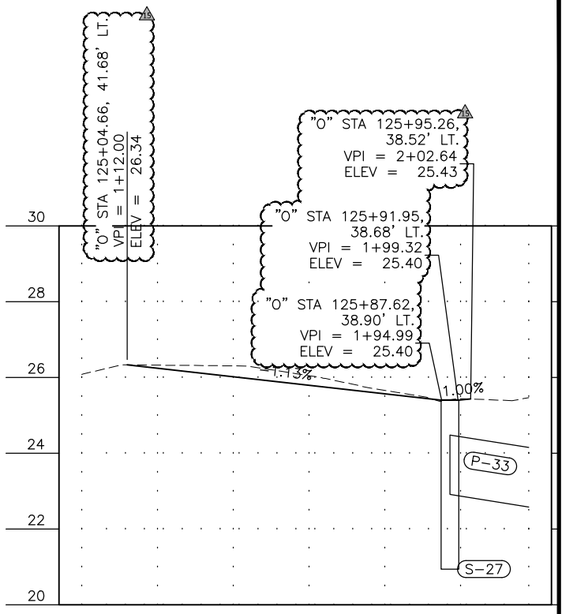

EXISTING WATER LINE
(ASSUMED 5' COVER). FIELD VERIFY
INSTALL 6" INSULATION
BETWEEN CULVERT
AND WATER PIPE

STORM DRAIN PROFILE

STATE OF ALASKA
49TH
ANTHONY M. ROOS
CE 12759
REGISTERED PROFESSIONAL ENGINEER
5/17/21

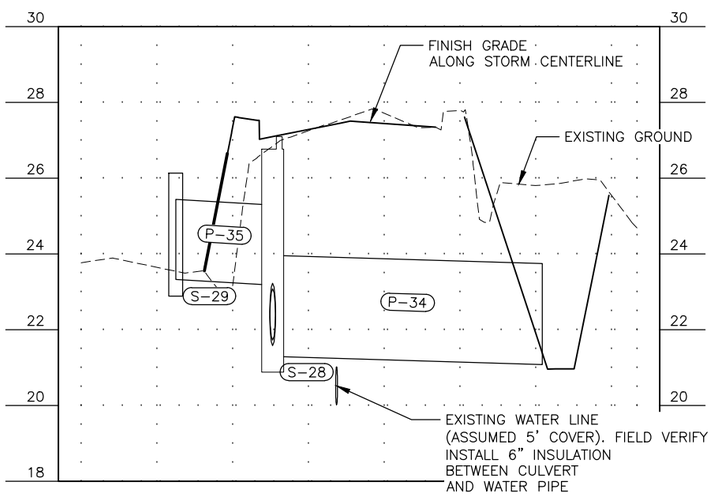

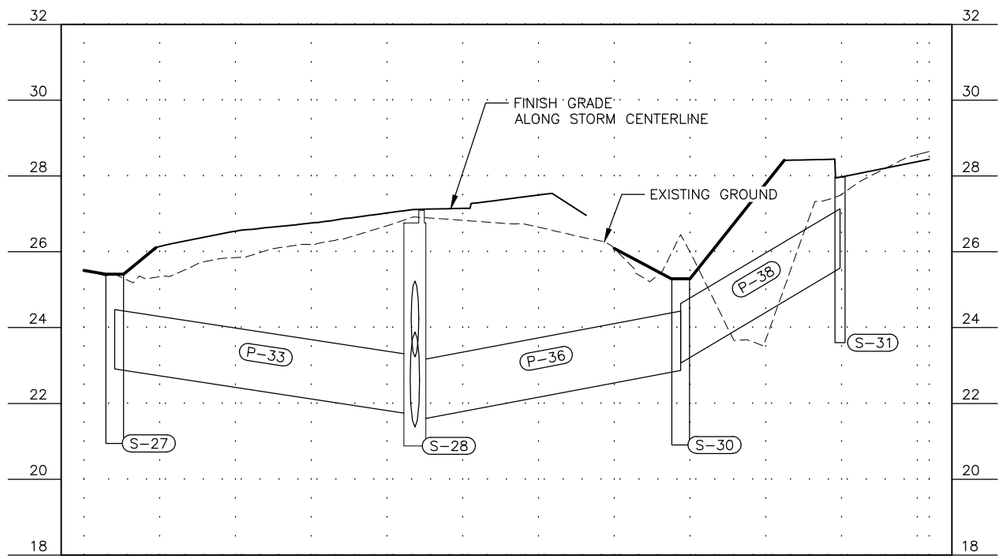

PLANS DEVELOPED BY: KITTELSON & ASSOCIATES, INC. CERT. OF AUTHORIZATION NO.: 254741, 851 SW 6TH AVE. SUITE 600, PORTLAND, OR 97204, (503) 228-5230
H:\20\20487 - glacier highway - juneau traffic design\design_CD\68124_P_STORM-P-5 Mon, May/17/21 03:45pm

Record Drawings have been reviewed by the Project Engineer, and represent to the best of my knowledge, the project as constructed.

PE *Dillon Tomaro* 2/4/25

NO.	DATE	REVISION

STATE	PROJECT DESIGNATION	YEAR	SHEET NO.	TOTAL SHEETS
ALASKA	TEA-0955(016)/Z68124	2020	P-6	235

BETH A COLE

5441
JACK J SCHOENMAN

SEE SHEET P-7 FOR
CONVEYANCE DITCH PROFILE
SEE SHEET E-6 FOR V DITCH TYPICAL SECTION

GLACIER HWY

129+00

131+00

132+00

INC.

WATERLINE VERTICAL SHIFT
STA 129+18.75, 25.85' RT TO
STA 129+73.14, 24.43' RT
SEE PROFILE FOR CONFLICT

INSTALL 6" INSULATION
BETWEEN CULVERT
AND WATER PIPE

5450 GLACIER HWY
BOBCAT OF JUNEAU LLC

P-37 P-38 P-39 P-40 P-41 P-42 P-43 P-44 P-45 P-46 P-47 P-48 P-49 P-50 P-51

S-18 S-19 S-26 S-33 S-34 S-35 S-36 S-37 S-38 S-39 S-40 S-41 S-42

STORM DRAIN
PLAN AND PROFILE

STATE OF ALASKA
49TH
ANTHONY M. ROOS
CE 12759
REGISTERED PROFESSIONAL ENGINEER
7/31/2020

EXISTING GROUND

FINISH GRADE
ALONG STORM CENTERLINE

SEE SHEET P-19 THRU P-20
FOR CONVEYANCE DITCH PROFILE

34 32 30 28 26 24 22 20 18

PLANS DEVELOPED BY: KITTELSON & ASSOCIATES, INC. CERT. OF AUTHORIZATION NO.: 254741, 851 SW 6TH AVE. SUITE 600, PORTLAND, OR 97204, (503) 228-5230
H:\20\20487 - Glacier Highway - Juneau Traffic Design\design_CD\68124_P_STORM-P-6 Thu, Jul/30/20 03:09pm

** Deleted by CO6

Record Drawings have been reviewed by the Project Engineer, and represent to the best of my knowledge, the project as constructed.

PE *Dillon Tomaro* 2/4/25

NO.	DATE	REVISION

STATE	PROJECT DESIGNATION	YEAR	SHEET NO.	TOTAL SHEETS
ALASKA	TEA-0955(016)/Z68124	2020	P-7	235

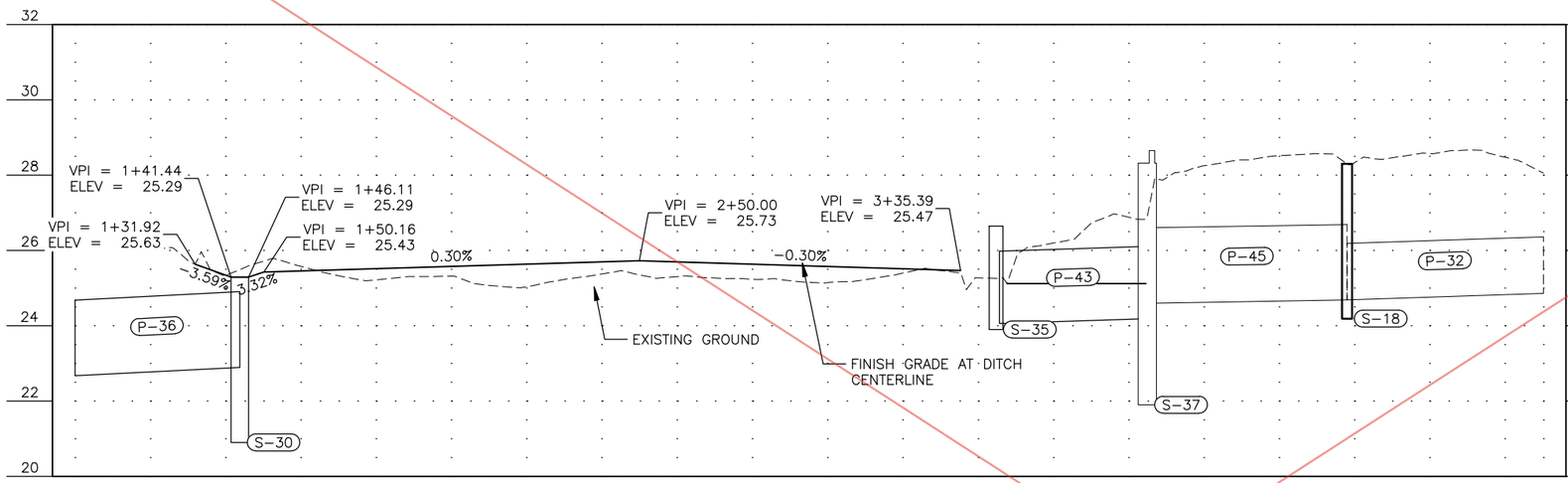

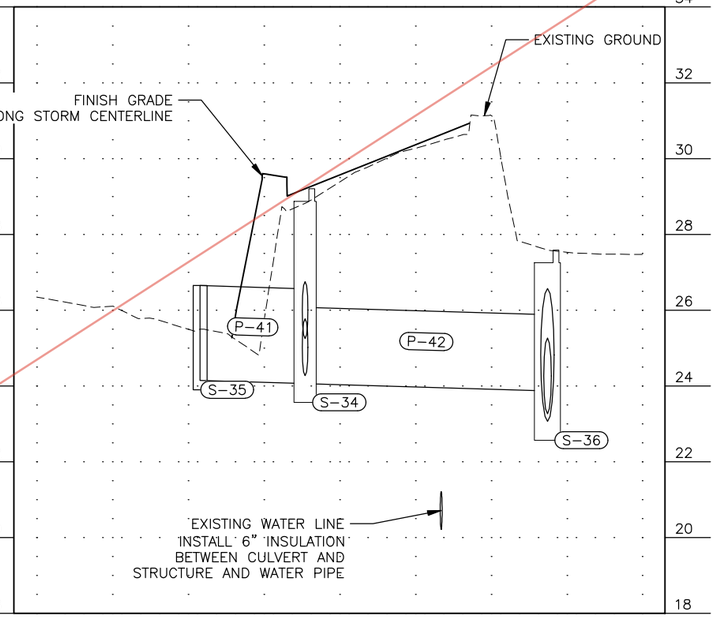

STATE OF ALASKA
49TH
ANTHONY M. ROOS
CE 12759
REGISTERED PROFESSIONAL ENGINEER
7/31/2020

STORM DRAIN PROFILE

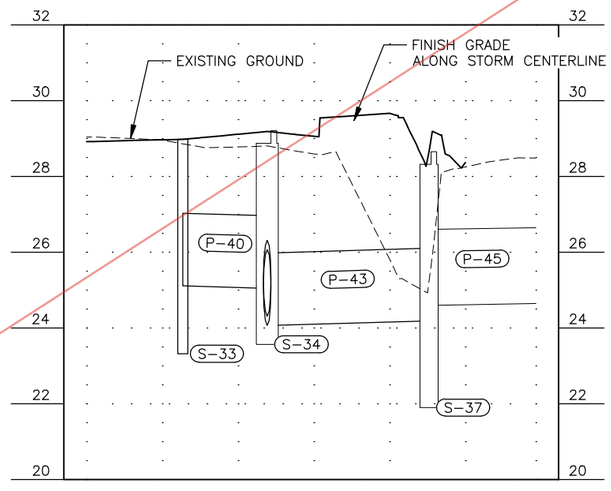

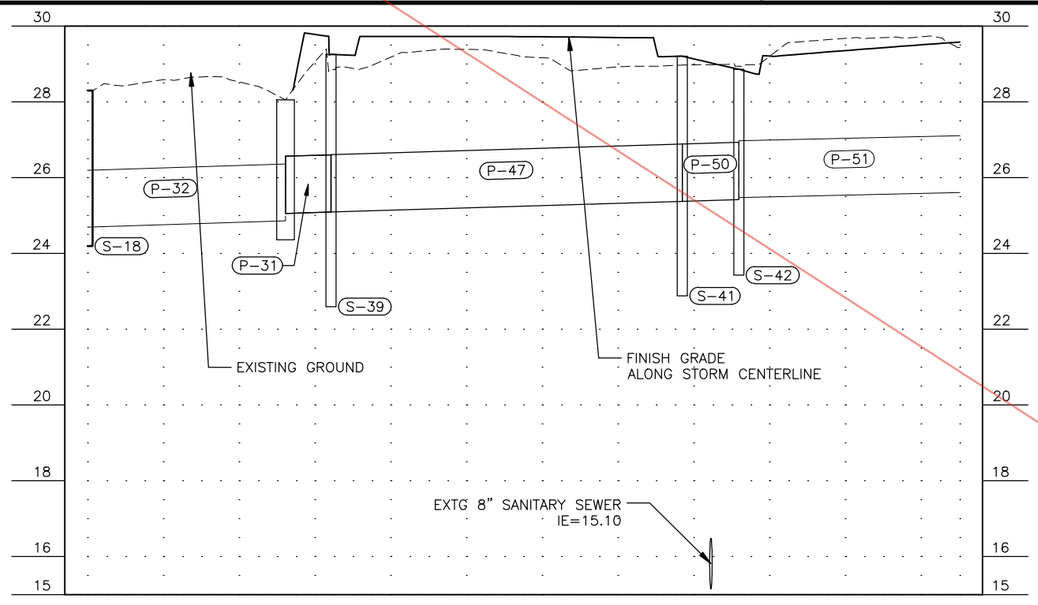

PLANS DEVELOPED BY: KITTELSON & ASSOCIATES, INC. CERT. OF AUTHORIZATION NO.: 254741, 851 SW 6TH AVE. SUITE 600, PORTLAND, OR 97204, (503) 228-5230
H:\20\20487 - Glacier Highway - Juneau Traffic Design\design_CD\68124_P_STORM-P-7 Thu, Jul/30/20 03:10pm

CO 6

Record Drawings have been reviewed by the Project Engineer, and represent to the best of my knowledge, the project as constructed.

PE Dillon Tomaro 2/4/25

NO.	DATE	REVISION
1	05/17/21	CONVEYANCE DITCH STA AND OFFSETS

STATE	PROJECT DESIGNATION	YEAR	SHEET NO.	TOTAL SHEETS
ALASKA	TEA-0955(016)/Z68124	2020	P-7	235

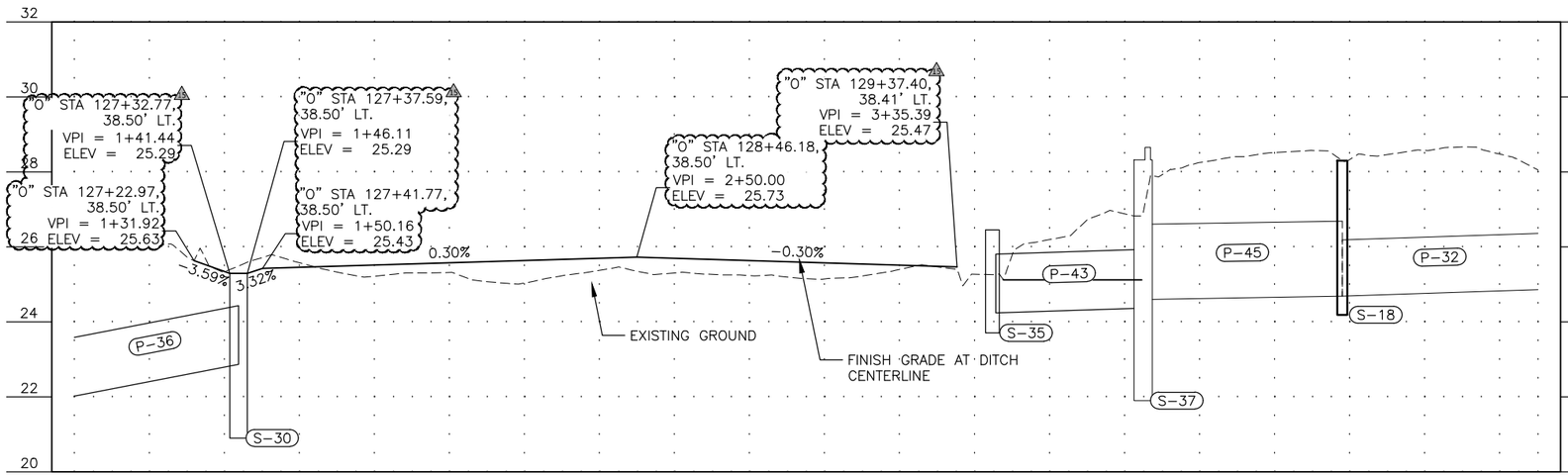

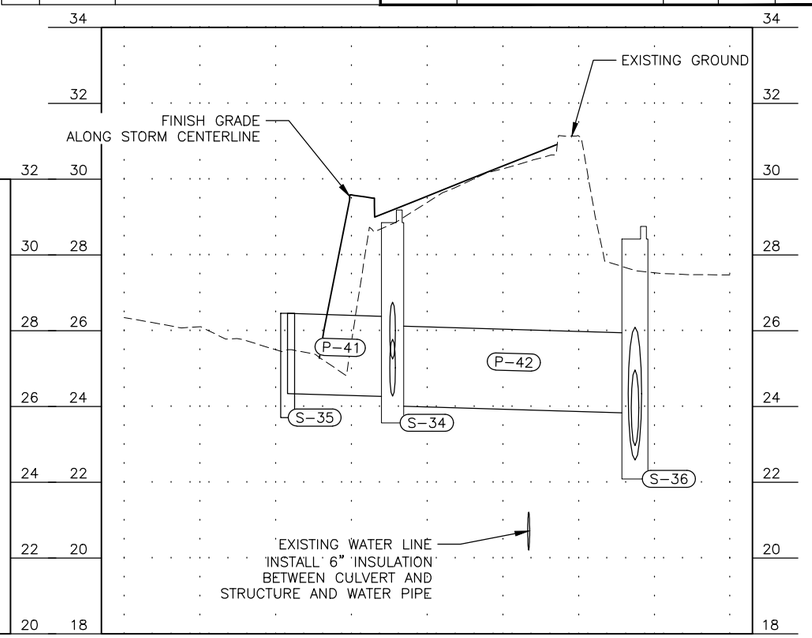

STORM DRAIN PROFILE

STATE OF ALASKA 49TH ANTHONY M. ROOS CE 12759 REGISTERED PROFESSIONAL ENGINEER
5/17/21

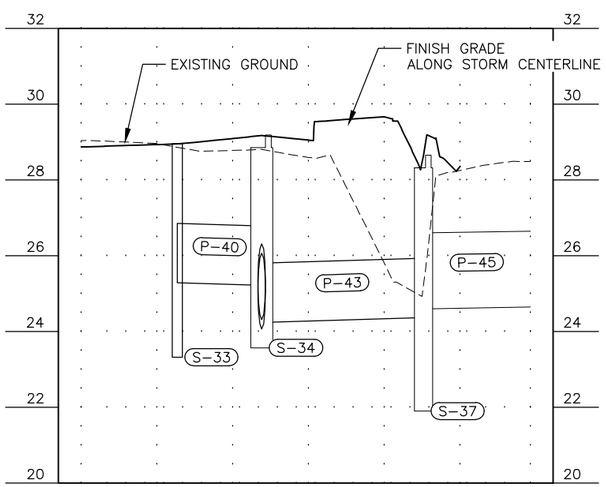

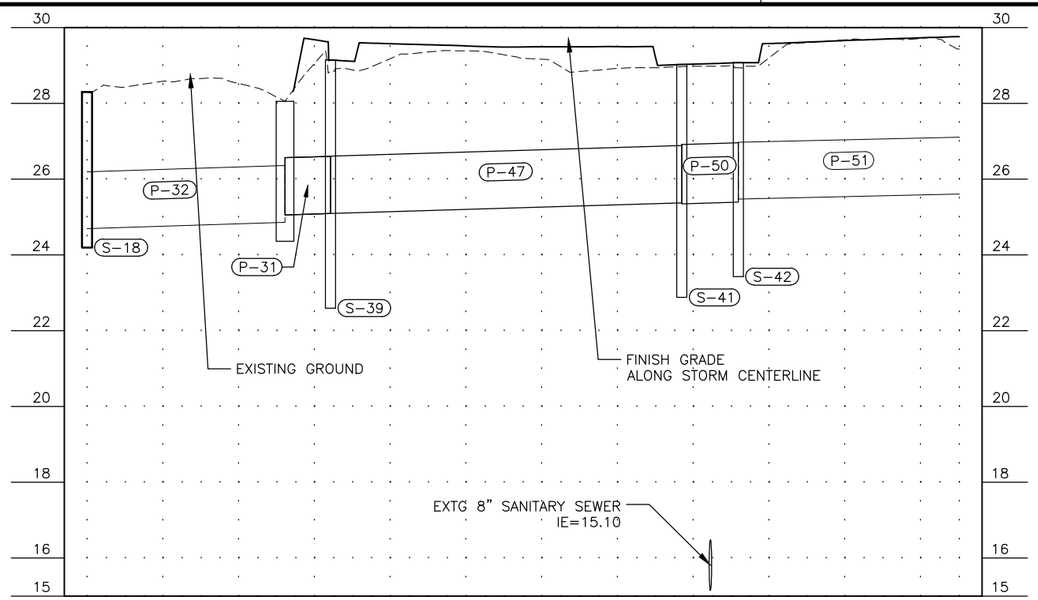

PLANS DEVELOPED BY: KITTELSON & ASSOCIATES, INC. CERT. OF AUTHORIZATION NO.: 254741, 851 SW 6TH AVE. SUITE 600, PORTLAND, OR 97204, (503) 228-5230
H:\20\20487 - glacier highway - juneau traffic design\design_CD\68124_P_STORM-P-7 Mon, May/17/21 03:45pm

NO.	DATE	REVISION

STATE	PROJECT DESIGNATION	YEAR	SHEET NO.	TOTAL SHEETS
ALASKA	TEA-0955(016)/Z68124	2020	P-8	235

** Deleted by CO6

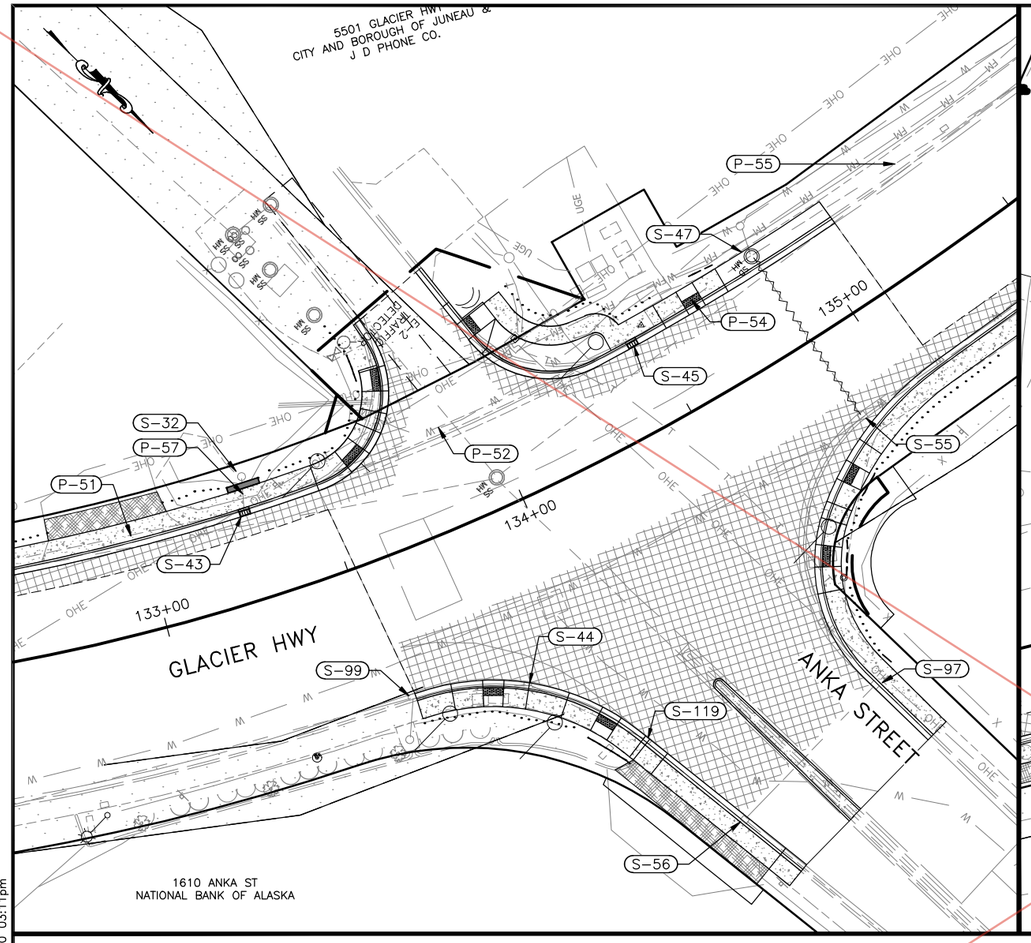

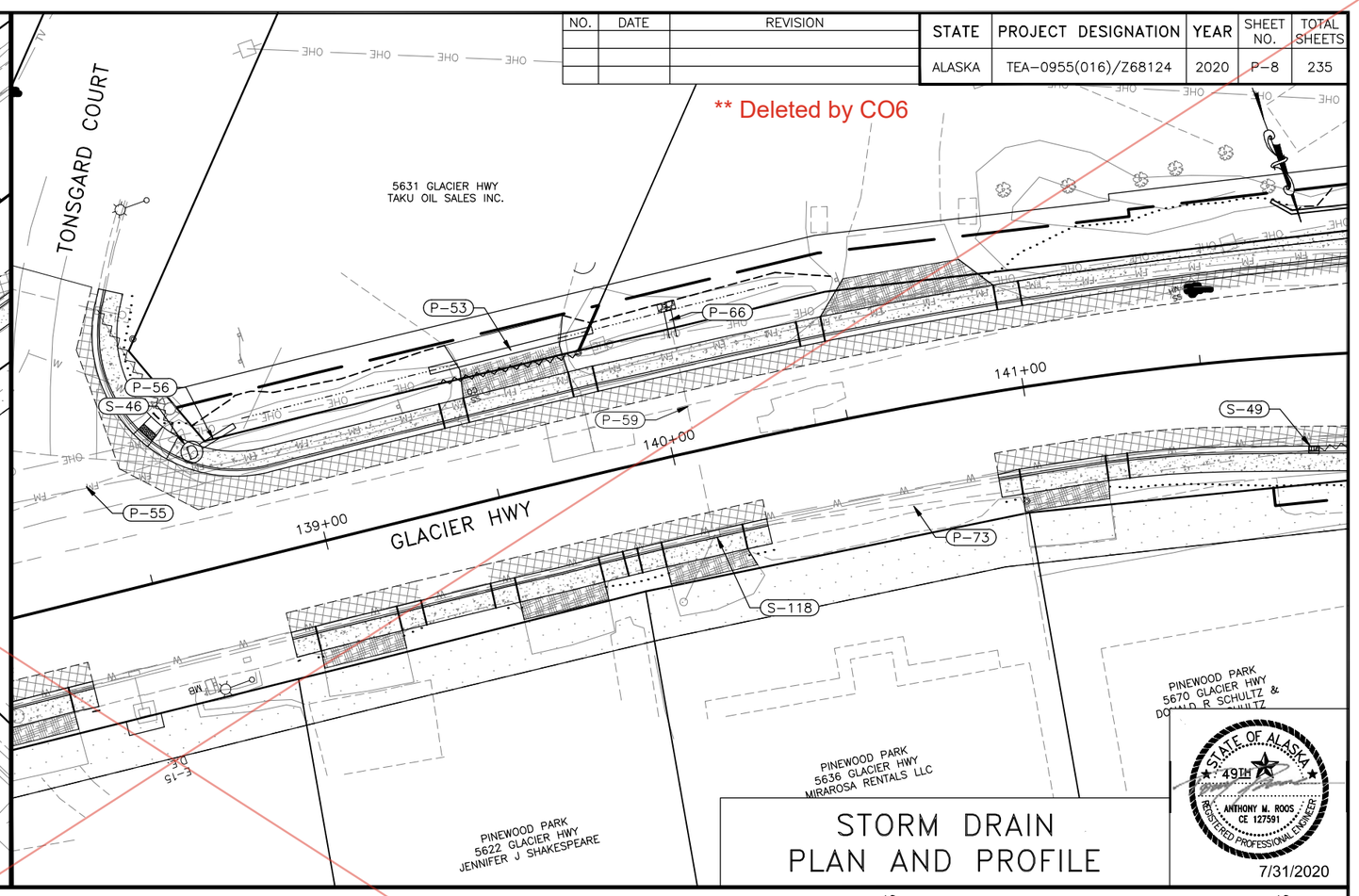

STORM DRAIN PLAN AND PROFILE

STATE OF ALASKA
49TH
ANTHONY M. ROOS
CE 127591
REGISTERED PROFESSIONAL ENGINEER
7/31/2020

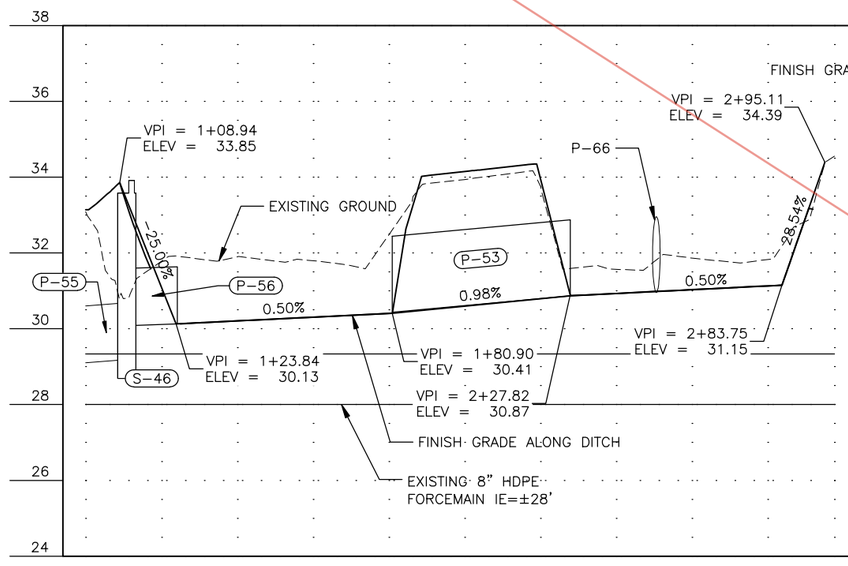

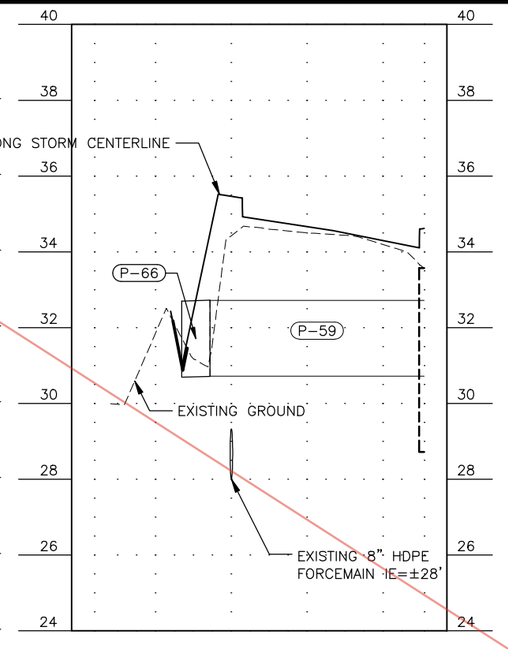

Record Drawings have been reviewed by the Project Engineer, and represent to the best of my knowledge, the project as constructed.

PE Dillon Tomaro 2/4/25

PLANS DEVELOPED BY: KITTELSON & ASSOCIATES, INC. CERT. OF AUTHORIZATION NO.: 254741, 851 SW 6TH AVE. SUITE 600, PORTLAND, OR 97204, (503) 228-5230
H:\20\20487 - Glacier Highway - Juneau Traffic Design\design_CD\68124_P_STORM-P-8 Thu, Jul/30/20 03:11pm

CO 6

NO.	DATE	REVISION
1	05/17/21	CONVEYANCE DITCH STA AND OFFSETS

STATE	PROJECT DESIGNATION	YEAR	SHEET NO.	TOTAL SHEETS
ALASKA	TEA-0955(016)/Z68124	2020	P-8	235

** Deleted by CO27

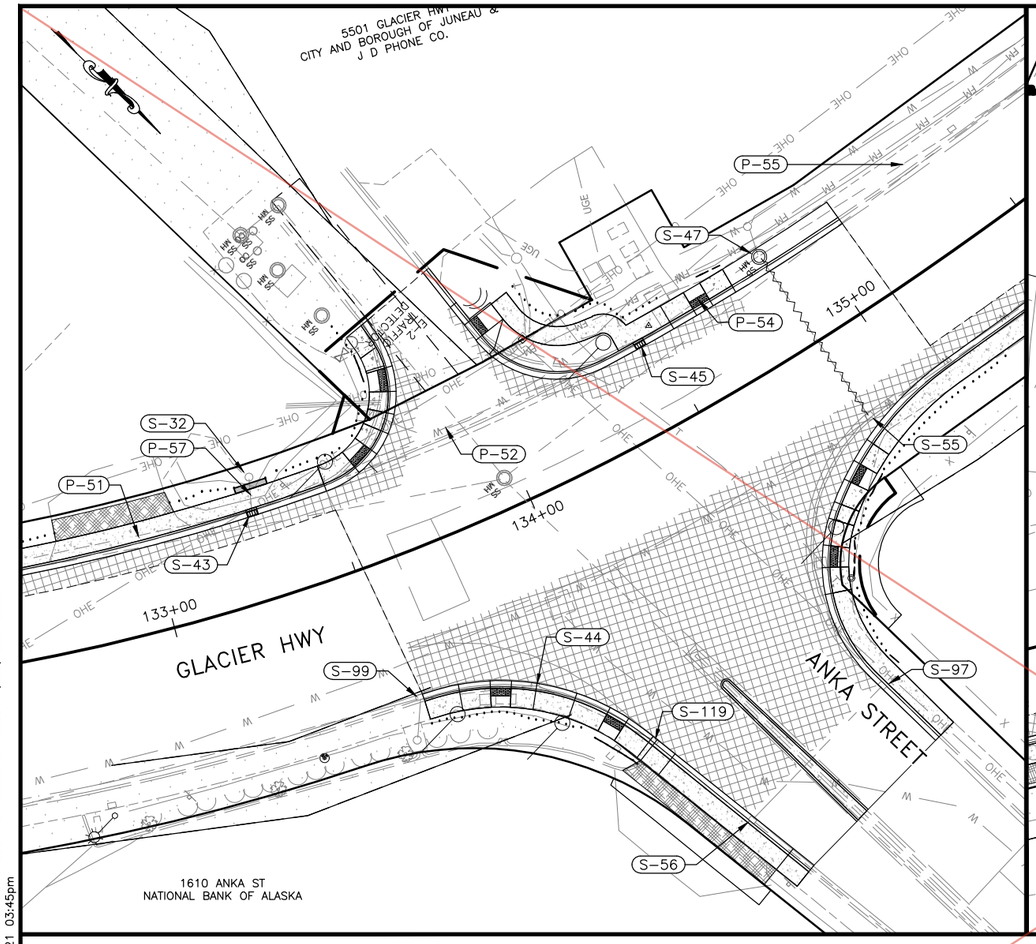

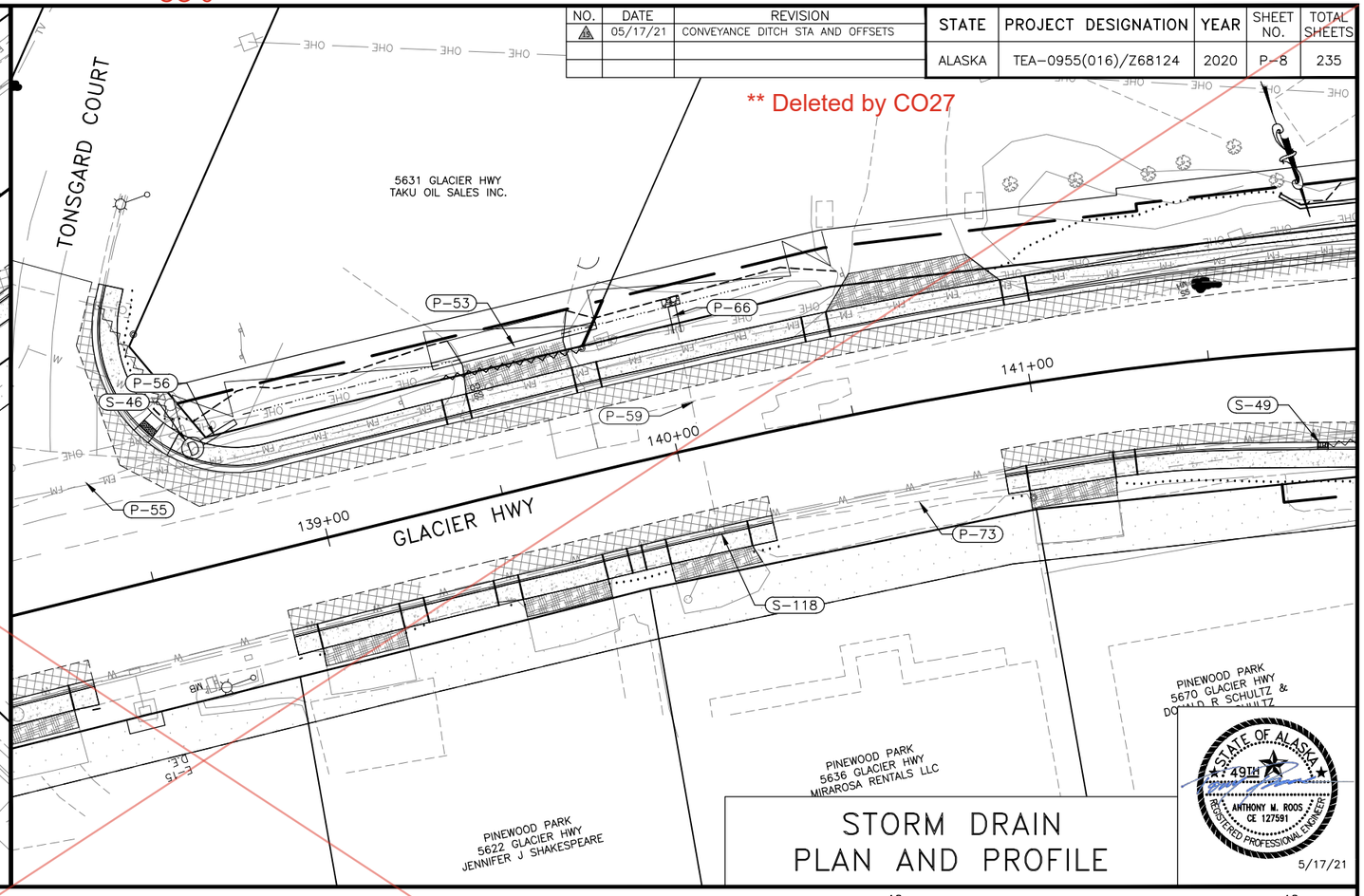

STORM DRAIN PLAN AND PROFILE

STATE OF ALASKA
49TH
ANTHONY M. ROOS
CE 127591
REGISTERED PROFESSIONAL ENGINEER
5/17/21

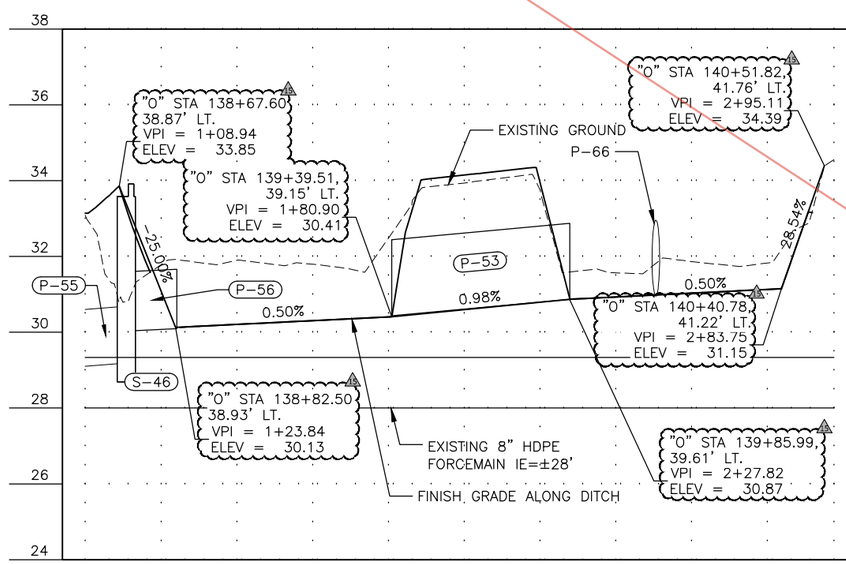

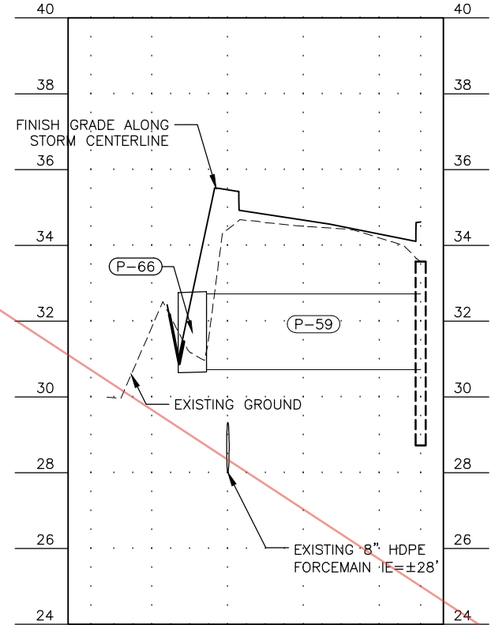

Record Drawings have been reviewed by the Project Engineer, and represent to the best of my knowledge, the project as constructed.

PE Dillon Tomaro 2/4/25

PLANS DEVELOPED BY: KITTELSON & ASSOCIATES, INC. CERT. OF AUTHORIZATION NO.: 254741, 851 SW 6TH AVE. SUITE 600, PORTLAND, OR 97204, (503) 228-5230
H:\20\20487 - glacier highway - juneau traffic design\design_CD\68124_P_STORM-P-8 Mon, May/17/21 03:45pm

Attachment No. 7 CO 27

NO.	DATE	REVISION
2	05/17/21	CONVEYANCE DITCH STA AND OFFSETS
1	06/23/21	RFI 40: DITCH STATIONS

STATE	PROJECT DESIGNATION	YEAR	SHEET NO.	TOTAL SHEETS
ALASKA	TEA-0955(016)/Z68124	2020	P-8	235

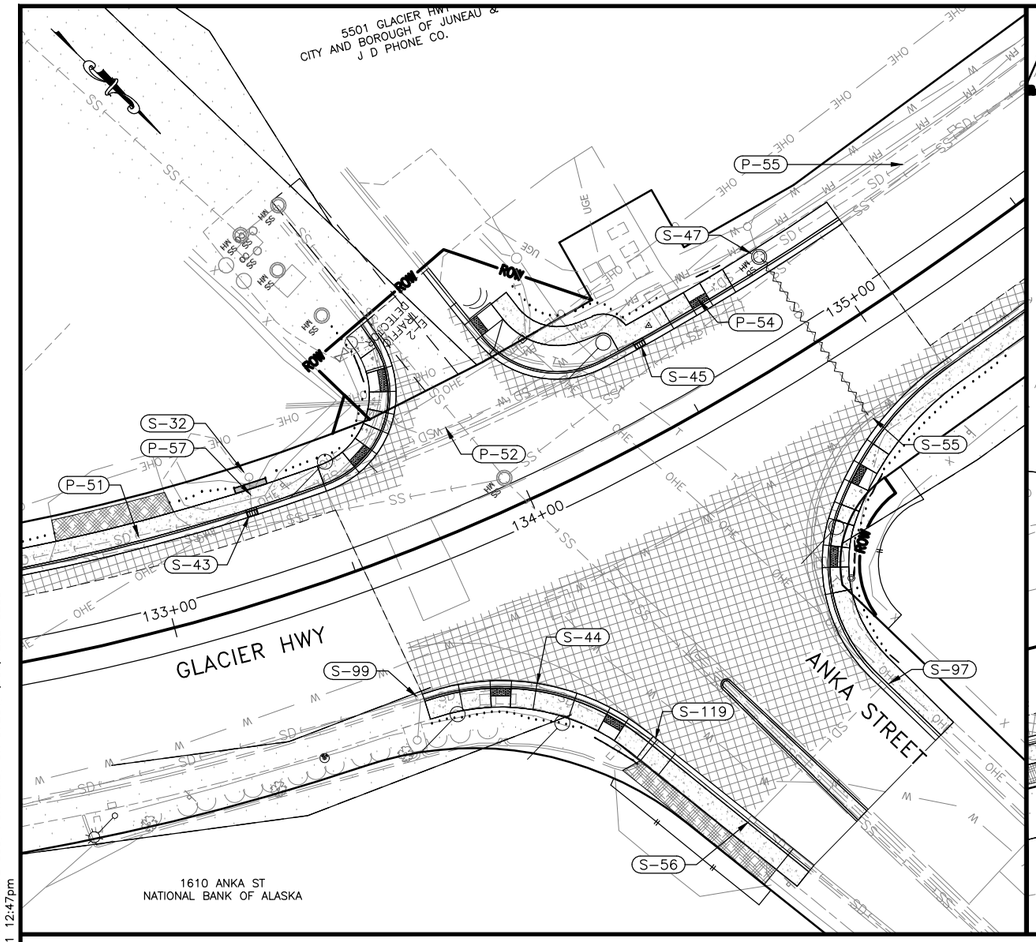

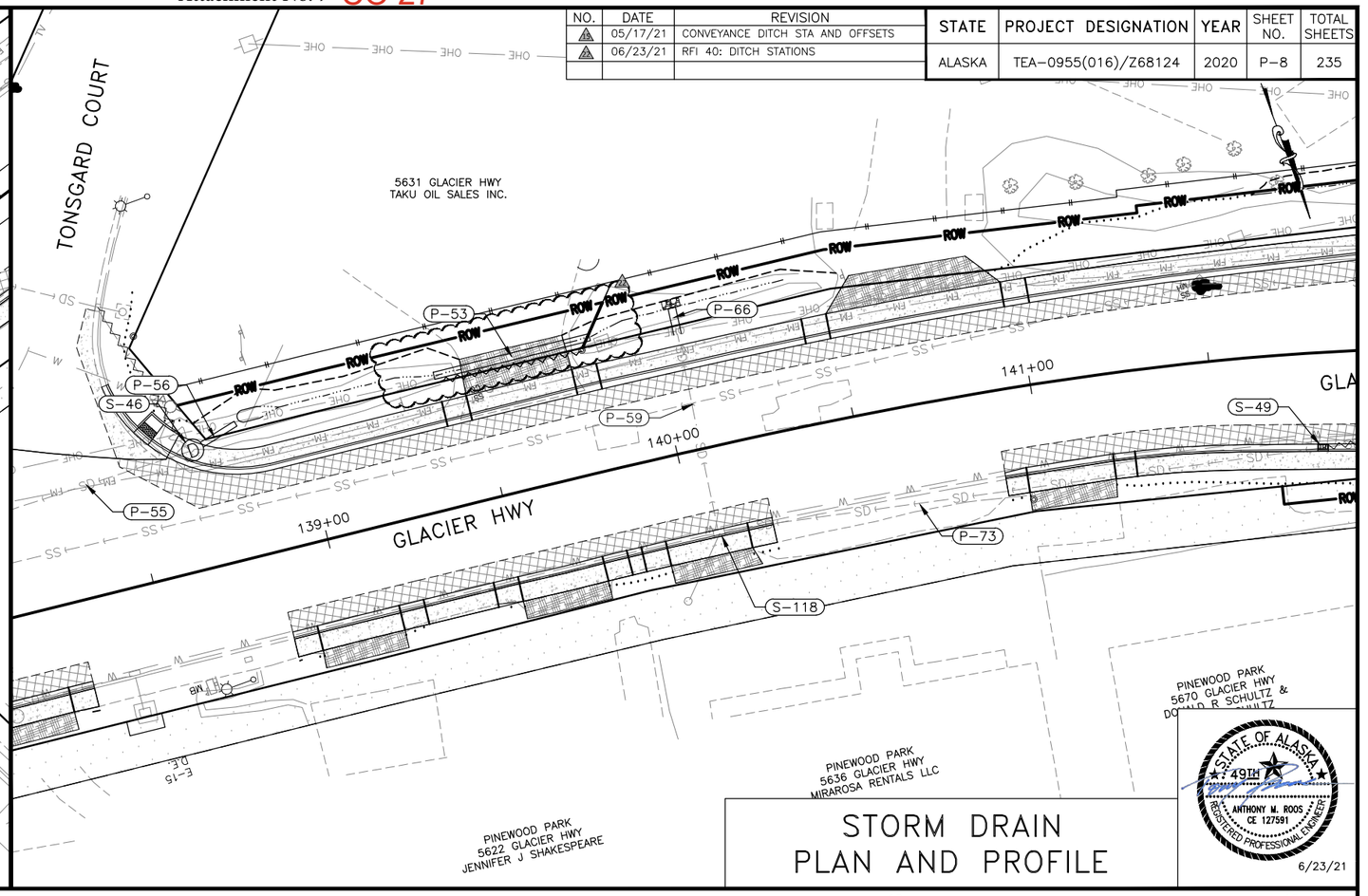

STORM DRAIN PLAN AND PROFILE

STATE OF ALASKA
49TH
ANTHONY M. ROOS
CE 12759
REGISTERED PROFESSIONAL ENGINEER
6/23/21

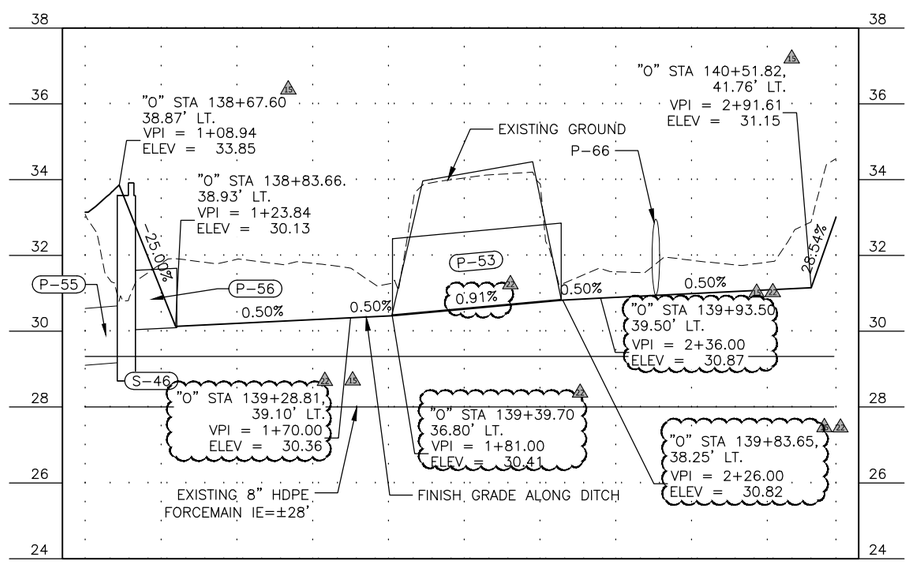

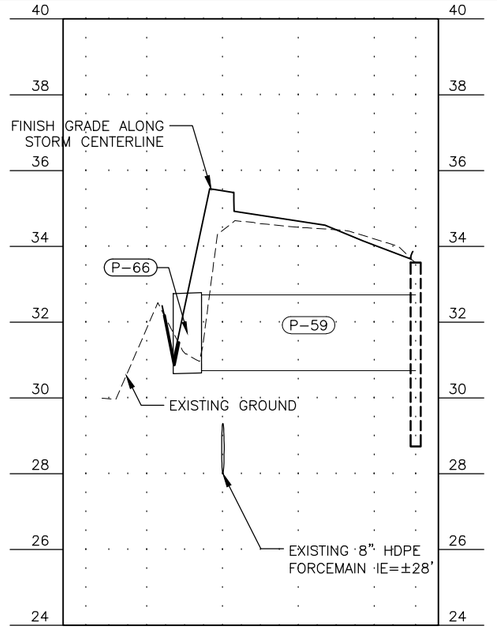

Record Drawings have been reviewed by the Project Engineer, and represent to the best of my knowledge, the project as constructed.

PE Dillon Tomaro 2/4/25

PLANS DEVELOPED BY: KITTELSON & ASSOCIATES, INC. CERT. OF AUTHORIZATION NO.: 254741, 851 SW 6TH AVE. SUITE 600, PORTLAND, OR 97204, (503) 228-5230
H:\20\20487 - glacier highway - juneau traffic design\design_CD\68124_P_STORM-P-8 Wed, Jun/23/21 12:47pm

Record Drawings have been reviewed by the Project Engineer, and represent to the best of my knowledge, the project as constructed.

PE Dillon Tomaro 2/4/25

NO.	DATE	REVISION
5	01/05/21	ADDENDUM 7
BARNE		

STATE	PROJECT DESIGNATION	YEAR	SHEET NO.	TOTAL SHEETS
ALASKA	TEA-0955(016)/Z68124	2020	P-9	235

** Deleted by CO27

5700 CONCRETE WAY
EXISTING SANITARY CROSSING
10" PVC=±21.18
INSTALL 6" INSULATION
BETWEEN CULVERT/STRUCTURE
AND SANITARY PIPE

GLACIER HWY

WATERLINE CROSSINGS
INSTALL 6" INSULATION
BETWEEN CULVERT AND
STRUCTURE AND WATER PIPE

INSTALL 6" INSULATION
BETWEEN STRUCTURE AND WATER PIPE

WATERLINE CROSSINGS
INSTALL 6" INSULATION
BETWEEN CULVERT AND
STRUCTURE AND WATER PIPE

5770 GLACIER HWY
SPACE UNLIMITED LLC
SEE SHEET P-10 FOR SWALE CENTERLINE GRADING
SEE SHT E-6 FOR TYPICAL SECTION

5700 GLACIER HWY
SPACE UNLIMITED INC.

STATE OF ALASKA
49TH
ANTHONY M. ROOS
CE 127591
REGISTERED PROFESSIONAL ENGINEER
1/7/21

STORM DRAIN PLAN AND PROFILE

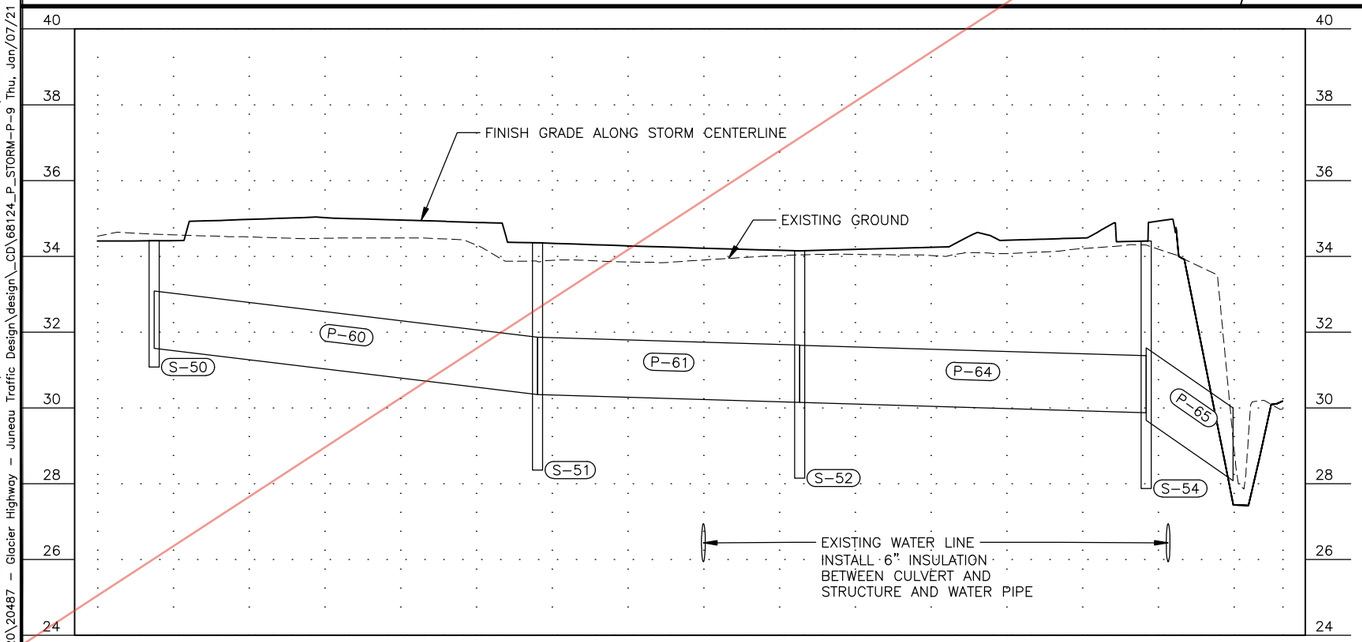

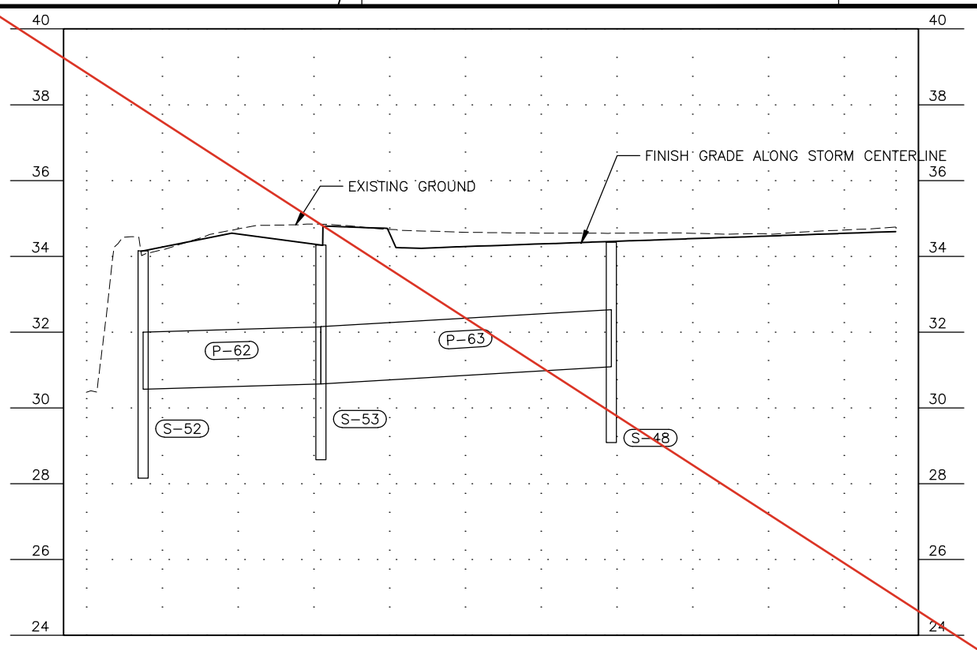

PLANS DEVELOPED BY: KITTELSON & ASSOCIATES, INC. CERT. OF AUTHORIZATION NO.: 254741, 851 SW 6TH AVE. SUITE 600, PORTLAND, OR 97204, (503) 228-5230
H:\20\20487 - Glacier Highway - Juneau Traffic Design\design_CD\68124_P_STORM-P-9 Thu, Jon/07/21 11:01am

Record Drawings have been reviewed by the Project Engineer, and represent to the best of my knowledge, the project as constructed.

PE Dillon Tomaro 2/4/25

CO 27

NO.	DATE	REVISION
2	01/05/21	ADDENDUM 7
1	06/23/21	RFI 40: DITCH STATION 141+50

STATE	PROJECT DESIGNATION	YEAR	SHEET NO.	TOTAL SHEETS
ALASKA	TEA-0955(016)/Z68124	2020	P-9	235

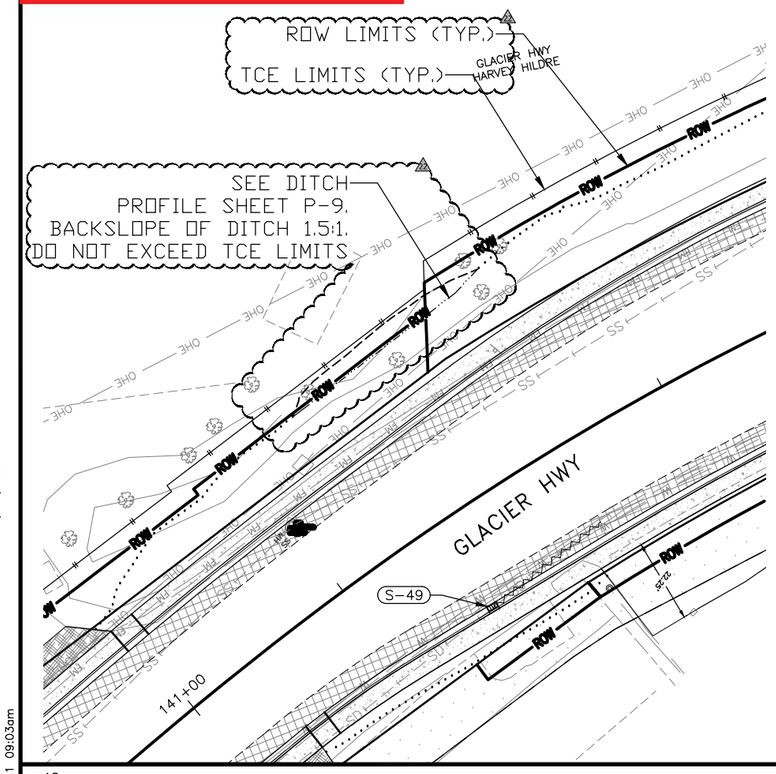

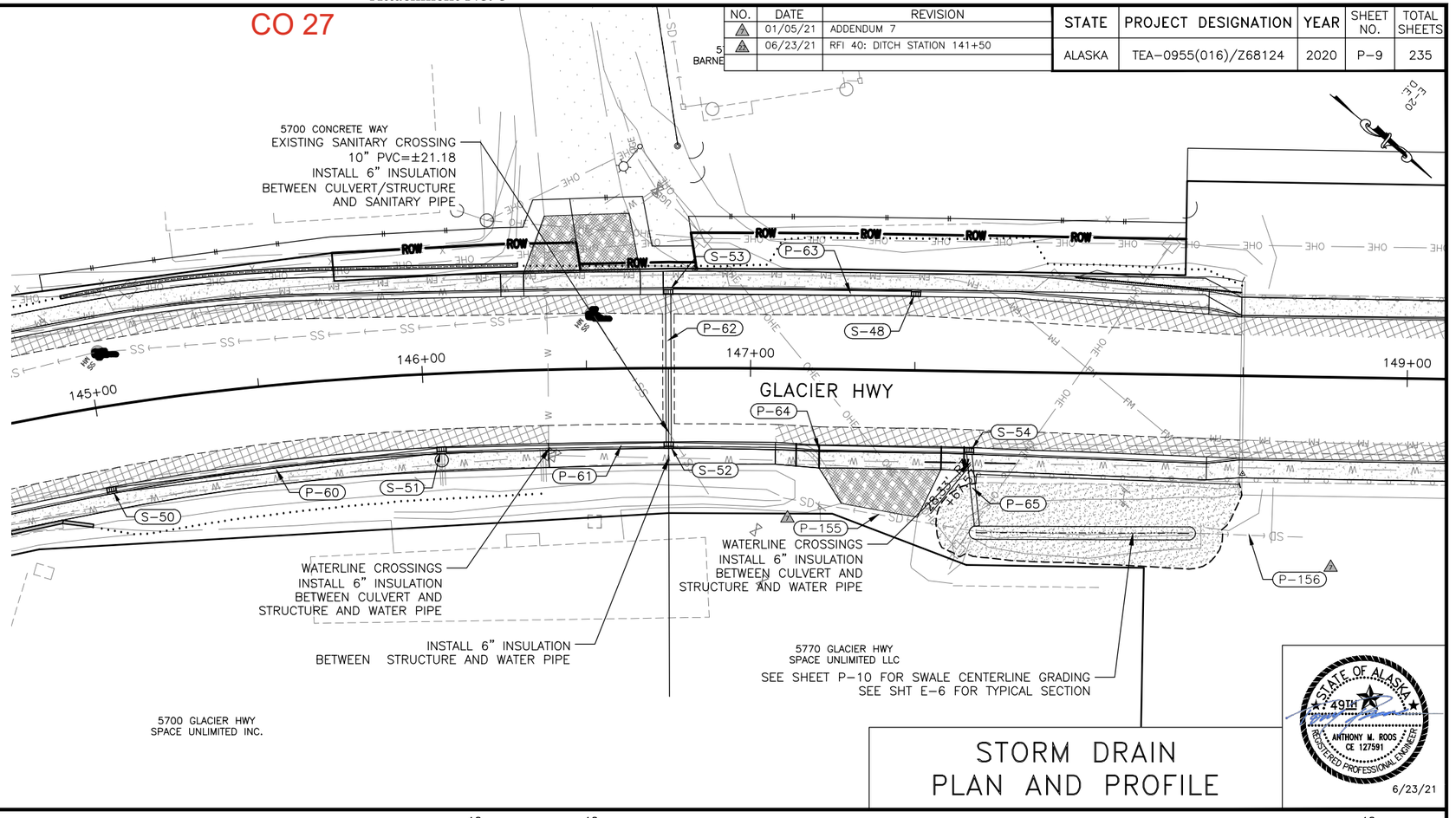

STORM DRAIN PLAN AND PROFILE

STATE OF ALASKA 49TH
ANTHONY M. ROOS
CE 127591
REGISTERED PROFESSIONAL ENGINEER
6/23/21

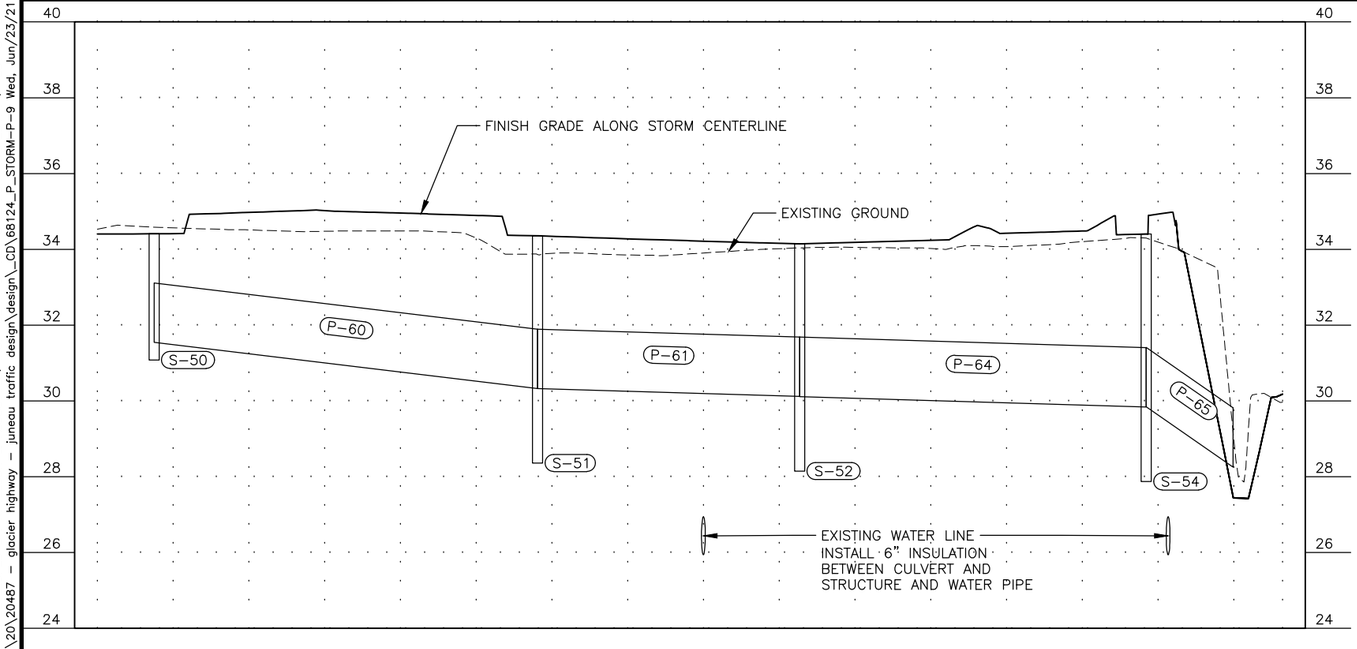

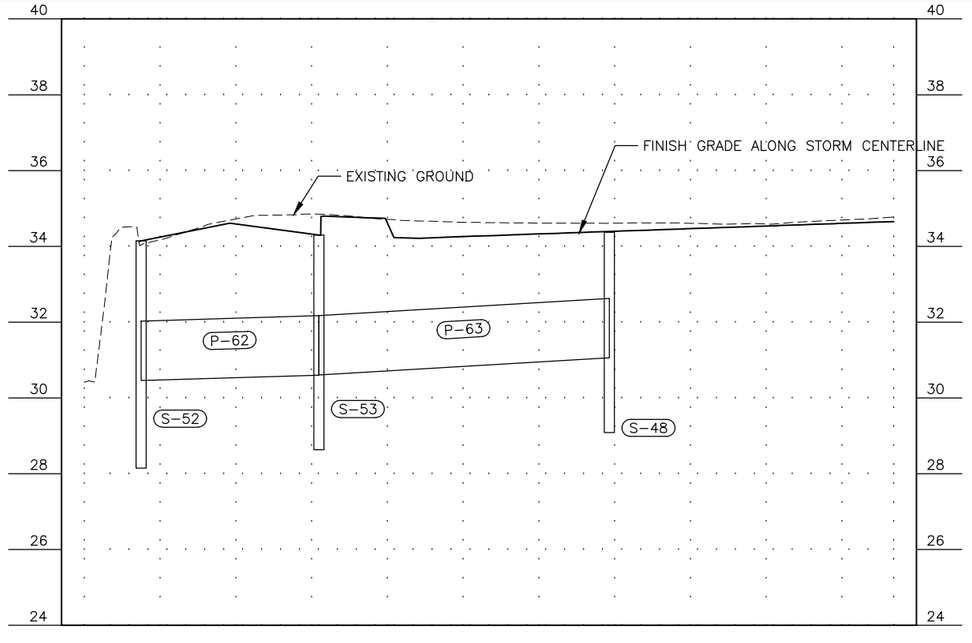

PLANS DEVELOPED BY: KITTELSON & ASSOCIATES, INC. CERT. OF AUTHORIZATION NO.: 254741, 851 SW 6TH AVE. SUITE 600, PORTLAND, OR 97204, (503) 228-5230
H:\20\20487 - glacier highway - juneau traffic design\design_CD\68124_P_STORM-P-9 Wed, Jun/23/21 09:03am

** Deleted by CO6

NO.	DATE	REVISION
1	01/05/21	ADDENDUM 7

STATE	PROJECT DESIGNATION	YEAR	SHEET NO.	TOTAL SHEETS
ALASKA	TEA-0955(016)/Z68124	2020	P-10	235

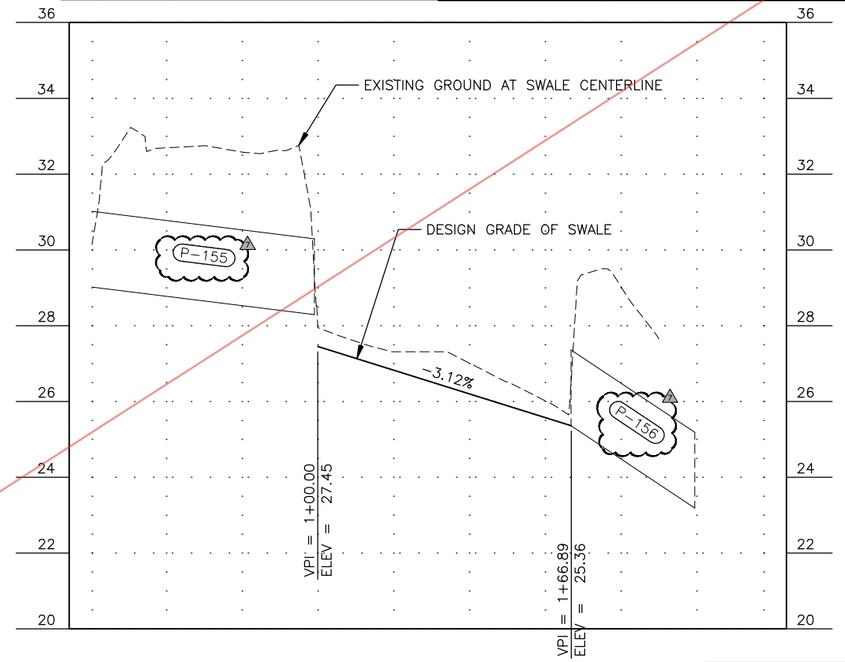

STORM DITCH PROFILE

STATE OF ALASKA
49TH
ANTHONY M. ROOS
CE 127591
REGISTERED PROFESSIONAL ENGINEER
1/7/21

Record Drawings have been reviewed by the Project Engineer, and represent to the best of my knowledge, the project as constructed.

PE Dillon Tomaro 2/4/25

PLANS DEVELOPED BY: KITTELSON & ASSOCIATES, INC. CERT. OF AUTHORIZATION NO.: 254741, 851 SW 6TH AVE. SUITE 600, PORTLAND, OR 97204, (503) 228-5230
H:\20\20487 - Glacier Highway - Juneau Traffic Design\design_CD\68124_P_STORM-P-10 Thu, Jan/07/21 11:01am

CO 6

** Deleted by CO27

NO.	DATE	REVISION
1	05/17/21	CONVEYANCE DITCH STA AND OFFSETS

STATE	PROJECT DESIGNATION	YEAR	SHEET NO.	TOTAL SHEETS
ALASKA	TEA-0955(016)/Z68124	2020	P-10	235

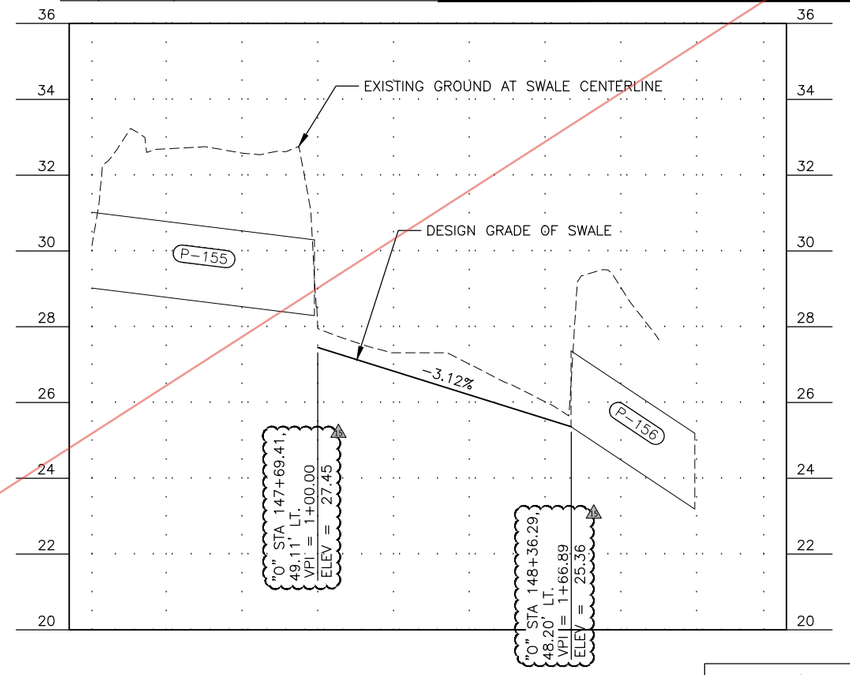

STORM DITCH PROFILE

STATE OF ALASKA 49TH
ANTHONY M. ROOS
CE 127591
REGISTERED PROFESSIONAL ENGINEER
5/18/21

Record Drawings have been reviewed by the Project Engineer, and represent to the best of my knowledge, the project as constructed.

PE Dillon Tomaro 2/4/25

PLANS DEVELOPED BY: KITTELSON & ASSOCIATES, INC. CERT. OF AUTHORIZATION NO.: 254741, 851 SW 6TH AVE. SUITE 600, PORTLAND, OR 97204, (503) 228-5230
H:\20_20487 - glacier highway - juneau traffic design\design_CD\68124_P_STORM-P-10 Tue, May/18/21 08:36am

NO.	DATE	REVISION
3	01/05/21	ADDENDUM 7
2	05/17/21	CONVEYANCE DITCH STA AND OFFSETS
1	06/23/21	RFI 40: DITCH STATION 141+50

STATE	PROJECT DESIGNATION	YEAR	SHEET NO.	TOTAL SHEETS
ALASKA	TEA-0955(016)/Z68124	2020	P-10	235

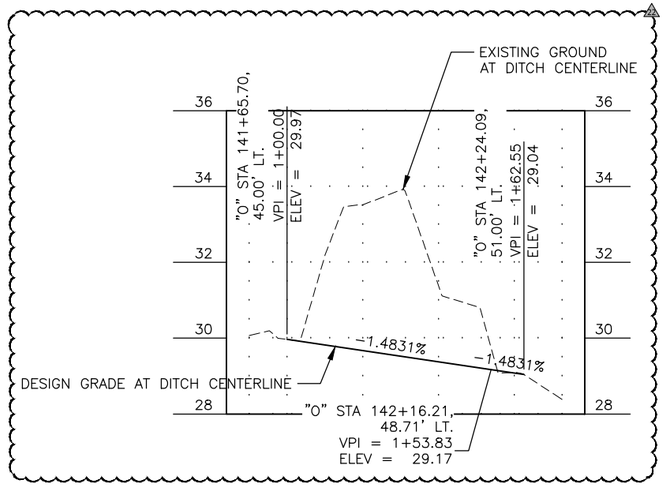

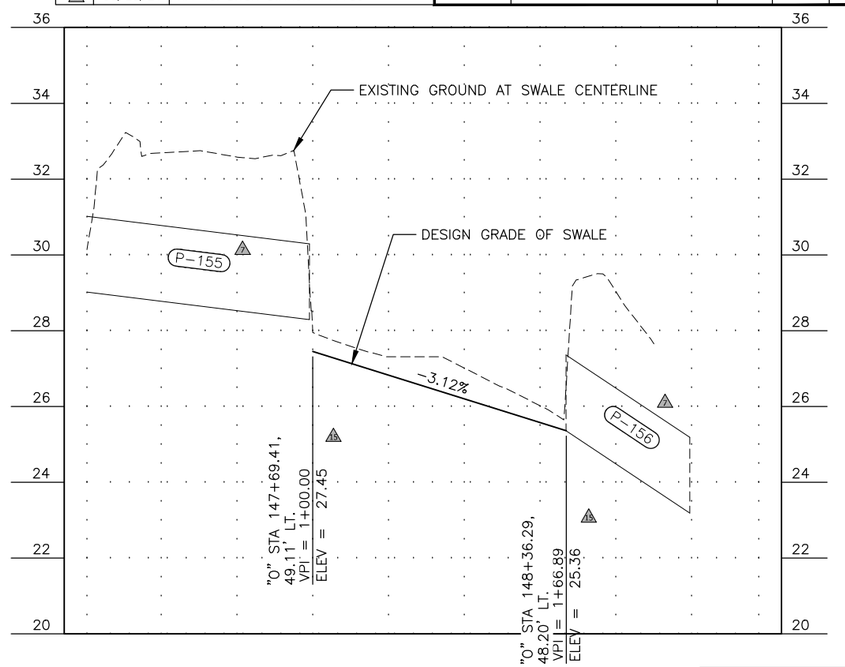

STORM DITCH PROFILE

STATE OF ALASKA 49TH
ANTHONY M. ROOS
CE 12759
REGISTERED PROFESSIONAL ENGINEER
6/23/21

Record Drawings have been reviewed by the Project Engineer, and represent to the best of my knowledge, the project as constructed.

PE Dillon Tomaro 2/4/25

PLANS DEVELOPED BY: KITTELSON & ASSOCIATES, INC. CERT. OF AUTHORIZATION NO.: 254741, 851 SW 6TH AVE. SUITE 600, PORTLAND, OR 97204, (503) 228-5230
H:\20\20487 - glacier highway - juneau traffic design\design_CD\68124_P_STORM-P-10 Wed, Jun/23/21 09:03am

Record Drawings have been reviewed by the Project Engineer, and represent to the best of my knowledge, the project as constructed.

PE Dillon Tomaro 2/4/25

** Deleted by CO29

NO.	DATE	REVISION

STATE	PROJECT DESIGNATION	YEAR	SHEET NO.	TOTAL SHEETS
ALASKA	TEA-0955(016)/Z68124	2020	P-11	235

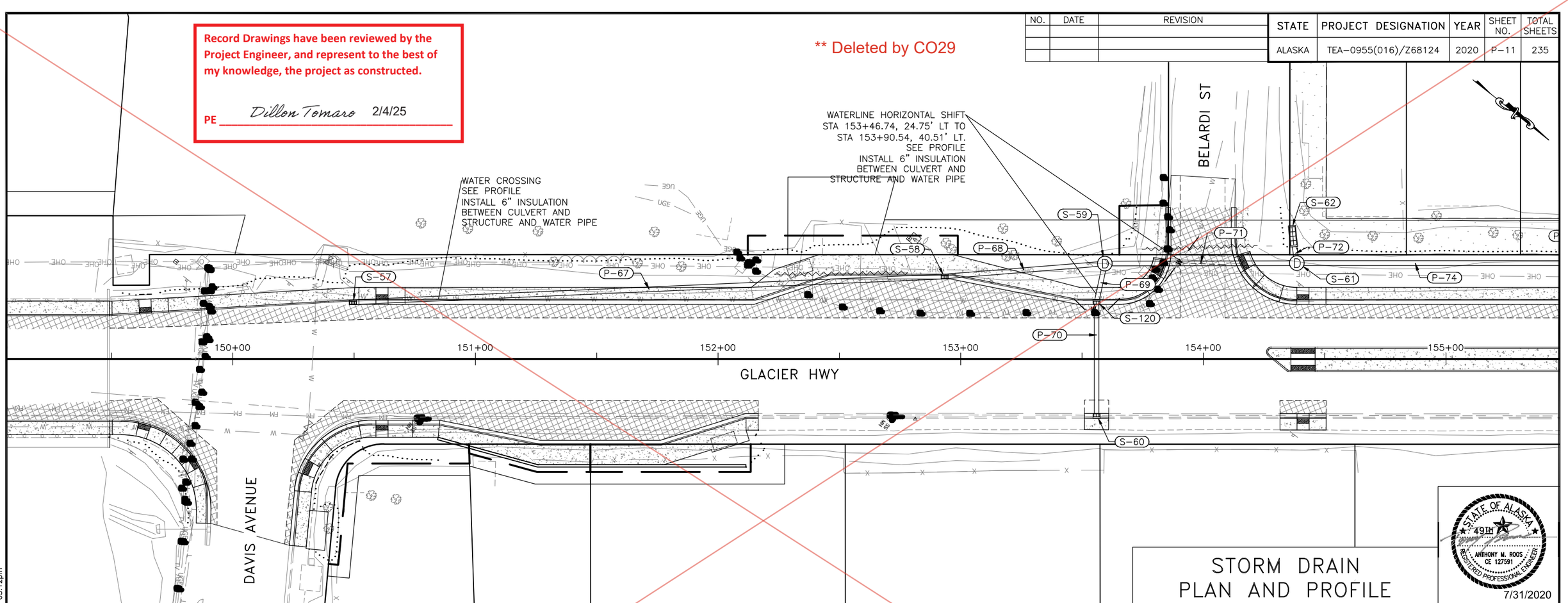

STORM DRAIN PLAN AND PROFILE

STATE OF ALASKA
49TH
ANTHONY M. ROOS
CE 127591
REGISTERED PROFESSIONAL ENGINEER
7/31/2020

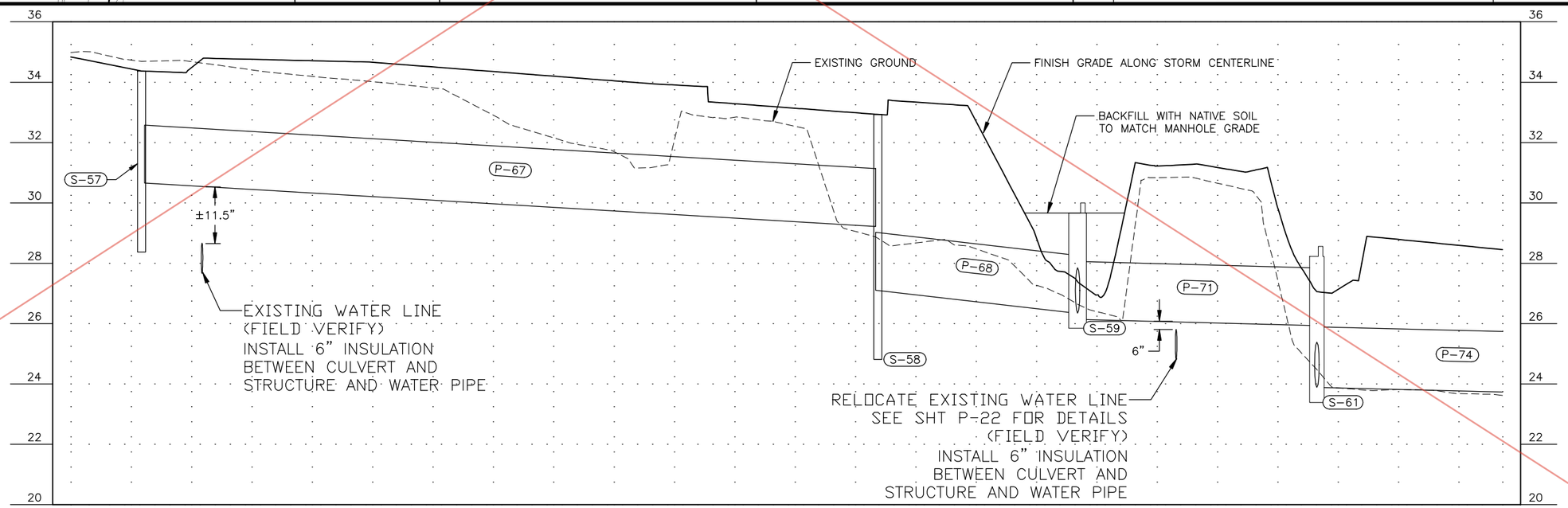

PLANS DEVELOPED BY: KITTELSON & ASSOCIATES, INC. CERT. OF AUTHORIZATION NO.: 254741, 851 SW 6TH AVE. SUITE 600, PORTLAND, OR 97204, (503) 228-5230
H:\20\20487 - Glacier Highway - Juneau Traffic Design\design_CD\68124_P_STORM-P-11 Thu, Jul/30/20 03:12pm

Attachment No. 7

CO 29

Record Drawings have been reviewed by the Project Engineer, and represent to the best of my knowledge, the project as constructed.

PE Dillon Tomaro 2/4/25

NO.	DATE	REVISION
1	04/07/22	STORM STRUCTURE REMOVAL

STATE	PROJECT DESIGNATION	YEAR	SHEET NO.	TOTAL SHEETS
ALASKA	TEA-0955(016)/Z68124	2020	P-11	235

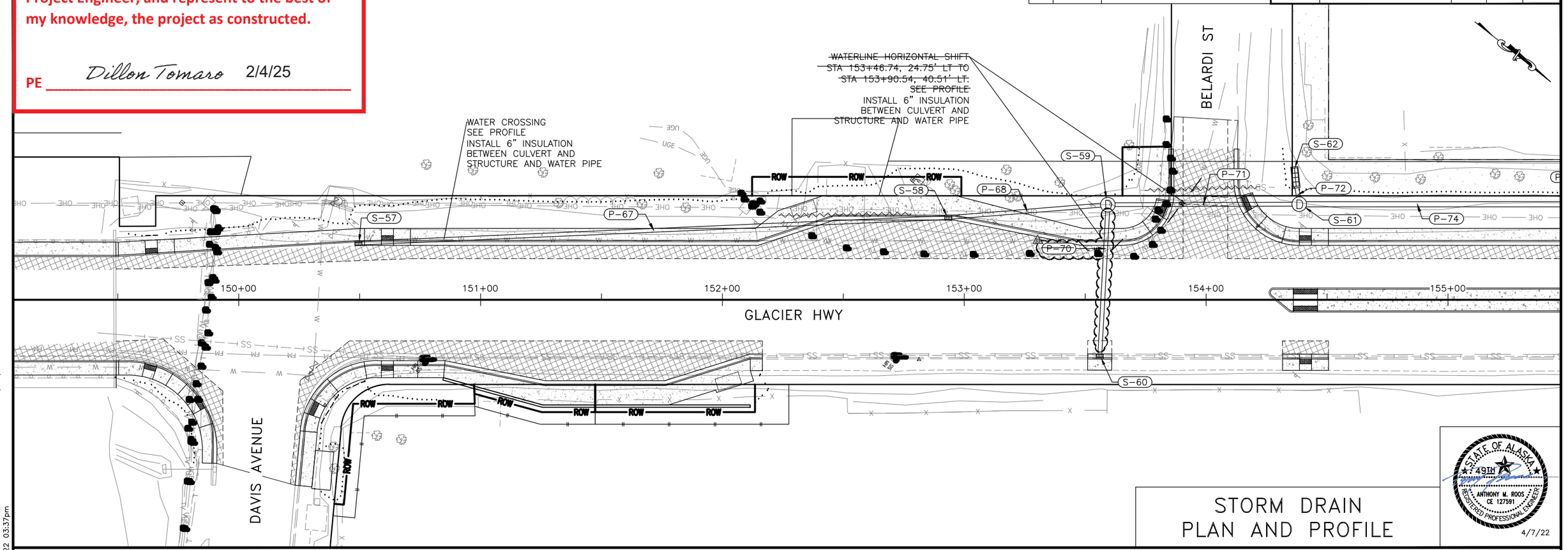

STORM DRAIN PLAN AND PROFILE

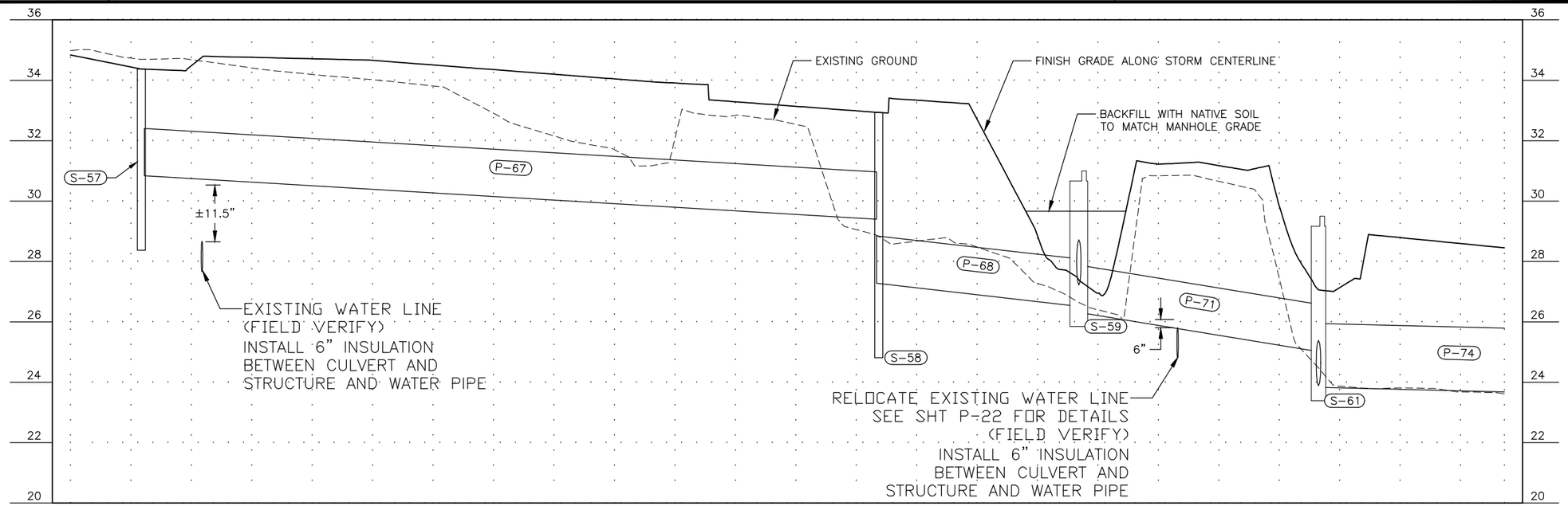

STATE OF ALASKA 49TH
ANTHONY M. ROOS
CE 127591
REGISTERED PROFESSIONAL ENGINEER
4/7/22

PLANS DEVELOPED BY: KITTELSON & ASSOCIATES, INC. CERT. OF AUTHORIZATION NO.: 254741, 851 SW 6TH AVE. SUITE 600, PORTLAND, OR 97204, (503) 228-5230
H:\20\20487 - Glacier Highway - Juneau Traffic Design\design_CD\68124_P_STORM-P-11 Thu, Apr/07/22 03:37pm

Record Drawings have been reviewed by the Project Engineer, and represent to the best of my knowledge, the project as constructed.

PE Dillon Tomaro 2/4/25

** Deleted by CO29

NO.	DATE	REVISION

STATE	PROJECT DESIGNATION	YEAR	SHEET NO.	TOTAL SHEETS
ALASKA	TEA-0955(016)/Z68124	2020	P-12	235

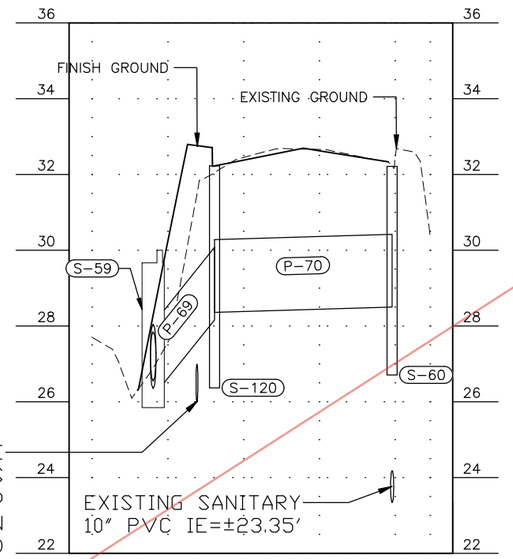

RELOCATE EXISTING WATER LINE
SEE SHT P-22 FOR DETAILS
(FIELD VERIFY)
INSTALL 6" INSULATION
BETWEEN CULVERT AND
STRUCTURE AND WATER PIPE

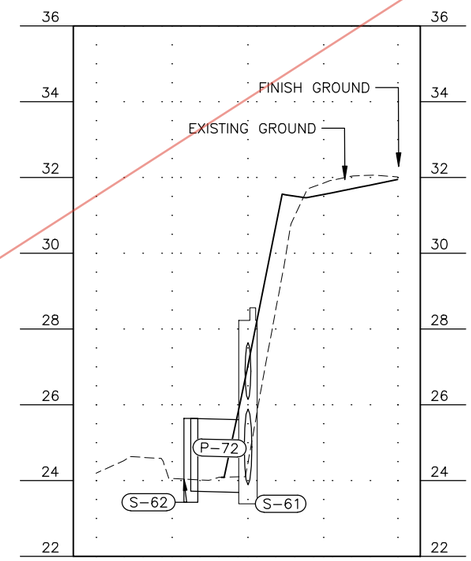

STORM DRAIN PROFILE

STATE OF ALASKA
49TH
ANTHONY M. ROOS
CE 12759
REGISTERED PROFESSIONAL ENGINEER
7/31/2020

PLANS DEVELOPED BY: KITTELSON & ASSOCIATES, INC. CERT. OF AUTHORIZATION NO.: 254741, 851 SW 6TH AVE. SUITE 600, PORTLAND, OR 97204, (503) 228-5230
H:\20\20487 - Glacier Highway - Juneau Traffic Design\design_CD\68124_P_STORM-P-12 Thu, Jul/30/20 03:12pm

CO 29

NO.	DATE	REVISION
1	04/07/22	STORM STRUCTURE REMOVAL

STATE	PROJECT DESIGNATION	YEAR	SHEET NO.	TOTAL SHEETS
ALASKA	TEA-0955(016)/Z68124	2020	P-12	235

Record Drawings have been reviewed by the Project Engineer, and represent to the best of my knowledge, the project as constructed.

PE Dillon Tomaro 2/4/25

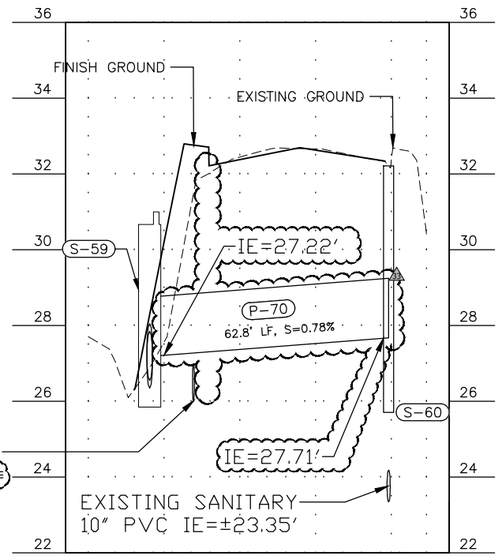

1 PROTECT EXISTING WATER LINE ~~SEE SHT P-22 FOR DETAILS~~ (FIELD VERIFY)

INSTALL 6" INSULATION BETWEEN CULVERT AND STRUCTURE AND WATER PIPE

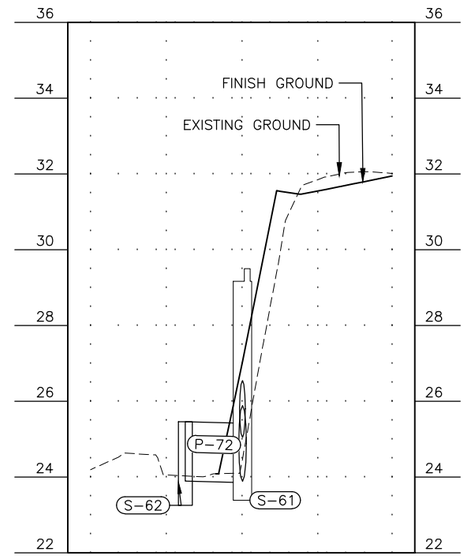

STORM DRAIN PROFILE

STATE OF ALASKA 49TH
ANTHONY M. ROOS
CE 12759
REGISTERED PROFESSIONAL ENGINEER
4/14/22

PLANS DEVELOPED BY: KITTELSON & ASSOCIATES, INC. CERT. OF AUTHORIZATION NO.: 254741, 851 SW 6TH AVE. SUITE 600, PORTLAND, OR 97204, (503) 228-5230
H:\20\20487 - Glacier Highway - Juneau Traffic Design\design_CD\68124_P_STORM-P-12 Thu, Apr/14/22 03:54pm

** Deleted by CO27

NO.	DATE	REVISION

STATE	PROJECT DESIGNATION	YEAR	SHEET NO.	TOTAL SHEETS
ALASKA	TEA-0955(016)/Z68124	2020	P-13	235

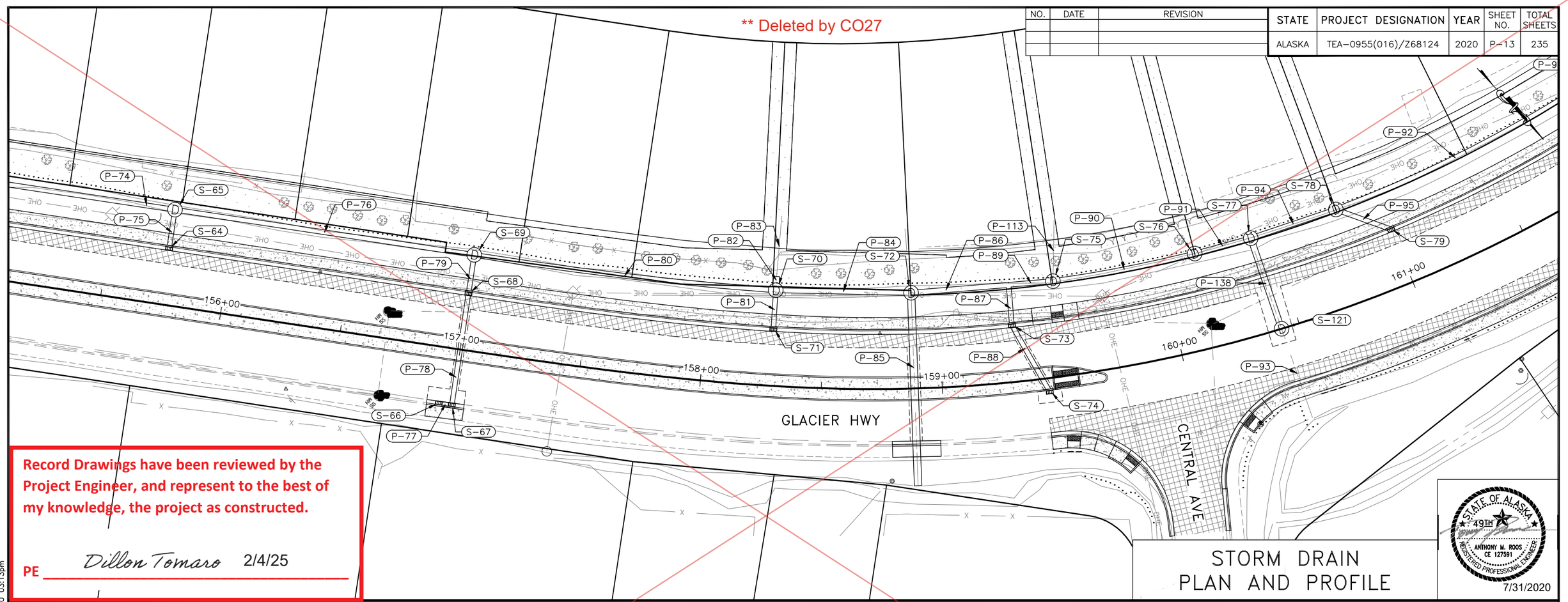

Record Drawings have been reviewed by the Project Engineer, and represent to the best of my knowledge, the project as constructed.

PE *Dillon Tomaro* 2/4/25

STORM DRAIN
PLAN AND PROFILE

STATE OF ALASKA
49TH
ANTHONY M. ROOS
CE 12759 1
REGISTERED PROFESSIONAL ENGINEER
7/31/2020

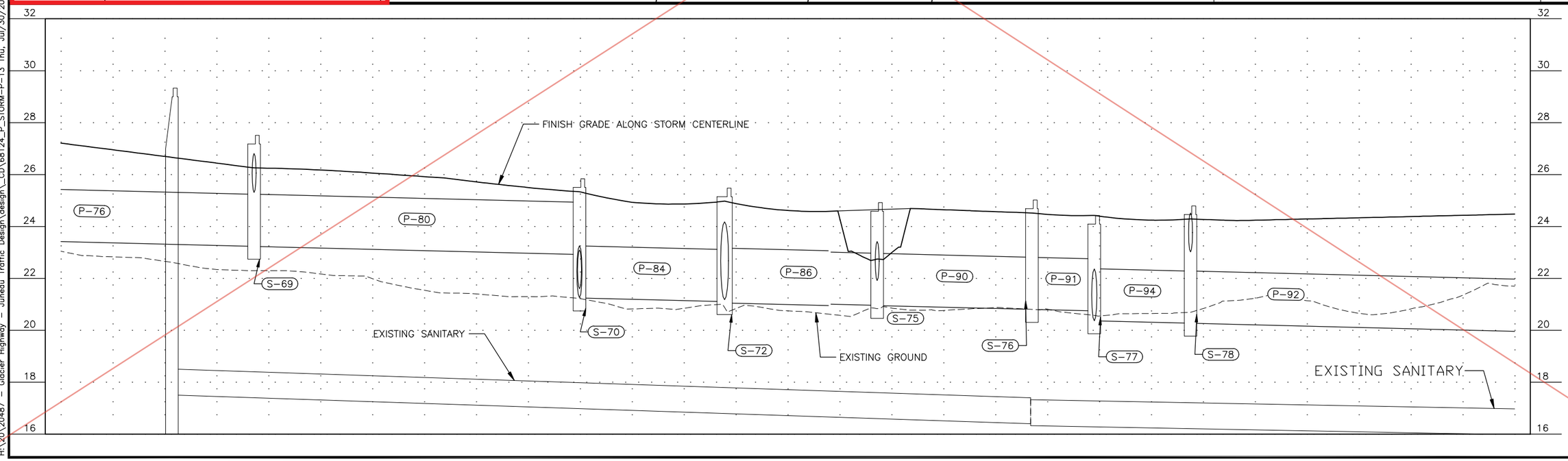

PLANS DEVELOPED BY: KITTELSON & ASSOCIATES, INC. CERT. OF AUTHORIZATION NO.: 254741, 851 SW 6TH AVE. SUITE 600, PORTLAND, OR 97204, (503) 228-5230
H:\20\20487 - Glacier Highway - Juneau Traffic Design\design_CD\68124_P_STORM-P-13 Thu, Jul/30/20 03:13pm

CO 27

NO.	DATE	REVISION
1	05/03/21	STORM IE REVISIONS

STATE	PROJECT DESIGNATION	YEAR	SHEET NO.	TOTAL SHEETS
ALASKA	TEA-0955(016)/Z68124	2020	P-13	235

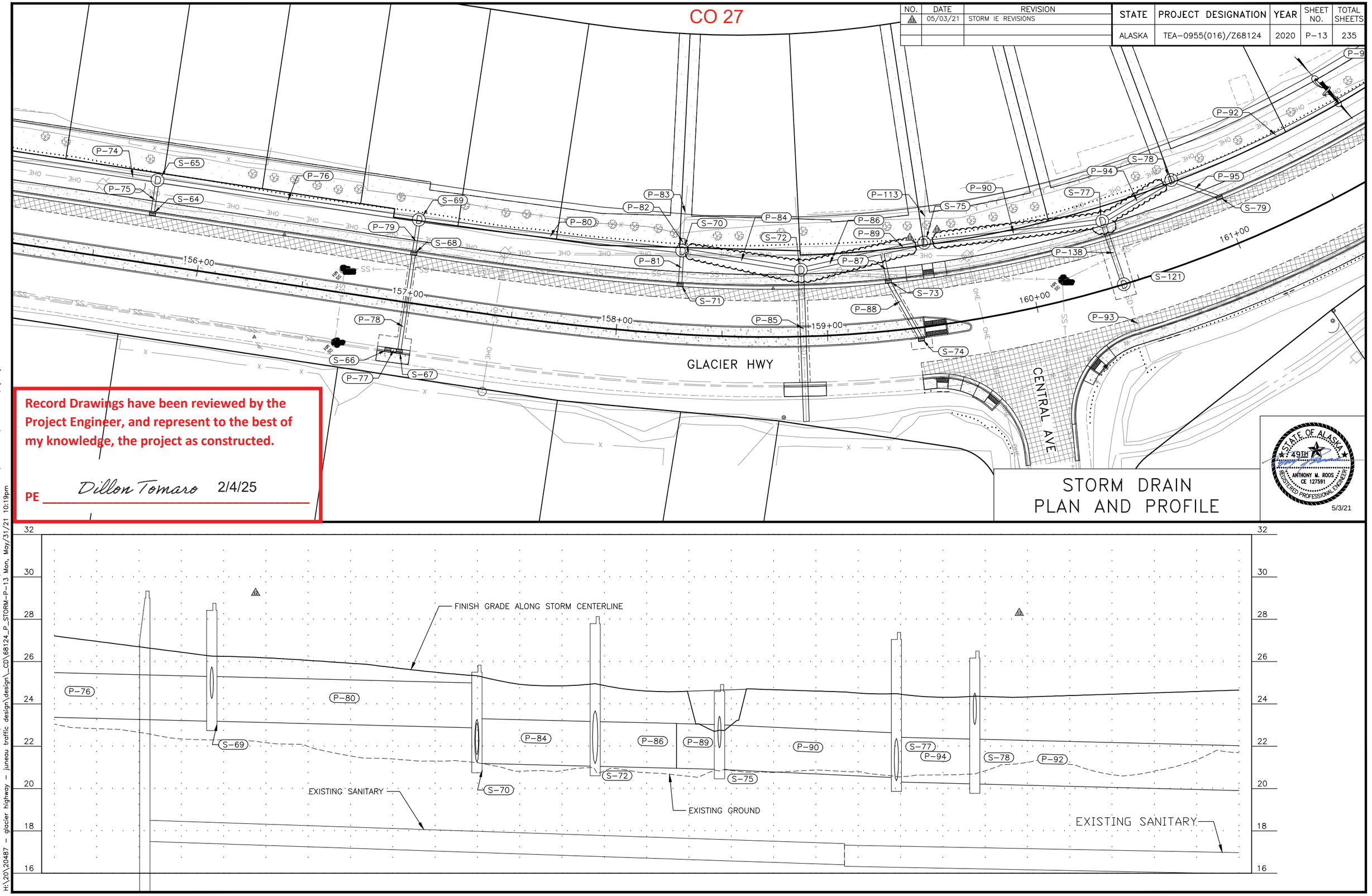

Record Drawings have been reviewed by the Project Engineer, and represent to the best of my knowledge, the project as constructed.

PE *Dillon Tomaro* 2/4/25

STORM DRAIN PLAN AND PROFILE

STATE OF ALASKA 49TH
ANTHONY M. ROOS
CE 127591
REGISTERED PROFESSIONAL ENGINEER
5/3/21

PLANS DEVELOPED BY: KITTELSON & ASSOCIATES, INC. CERT. OF AUTHORIZATION NO.: 254741, 851 SW 6TH AVE. SUITE 600, PORTLAND, OR 97204, (503) 228-5230
H:\20\20487 - glacier highway - juneau traffic design\design_CD\68124_P_STORM-P-13 Mon, May/31/21 10:19pm

Record Drawings have been reviewed by the Project Engineer, and represent to the best of my knowledge, the project as constructed.

PE Dillon Tomaro 2/4/25

NO.	DATE	REVISION

STATE	PROJECT DESIGNATION	YEAR	SHEET NO.	TOTAL SHEETS
ALASKA	TEA-0955(016)/Z68124	2020	P-14	235

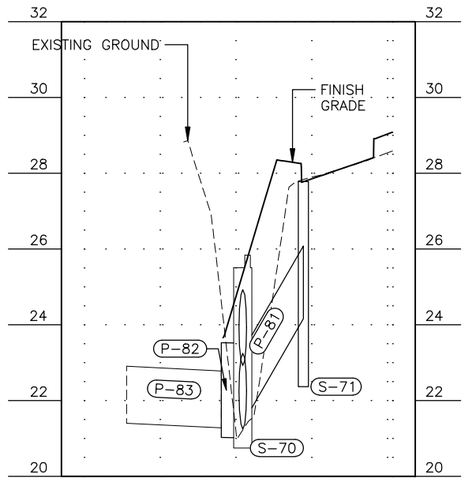

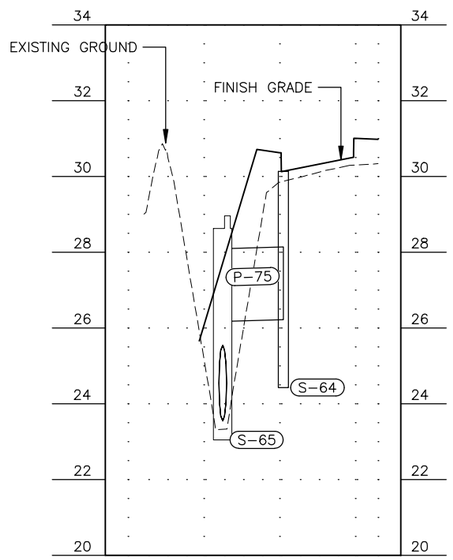

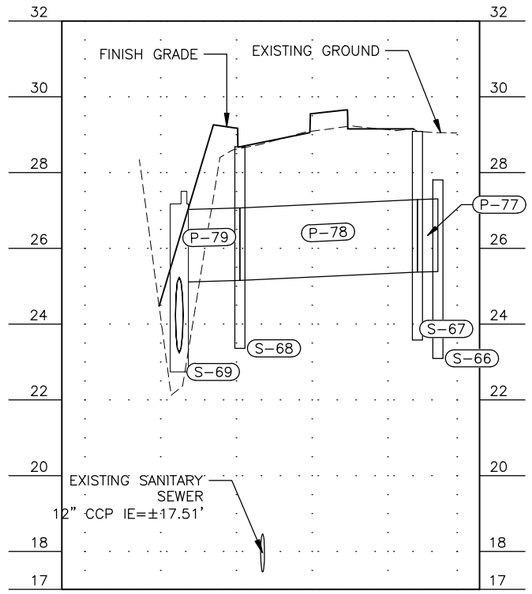

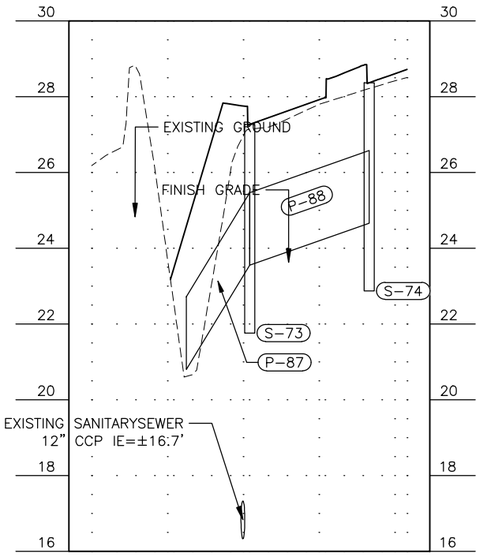

STORM DRAIIN PROFILE

STATE OF ALASKA 49TH
ANTHONY M. ROOS
CE 12759 1
REGISTERED PROFESSIONAL ENGINEER
7/31/2020

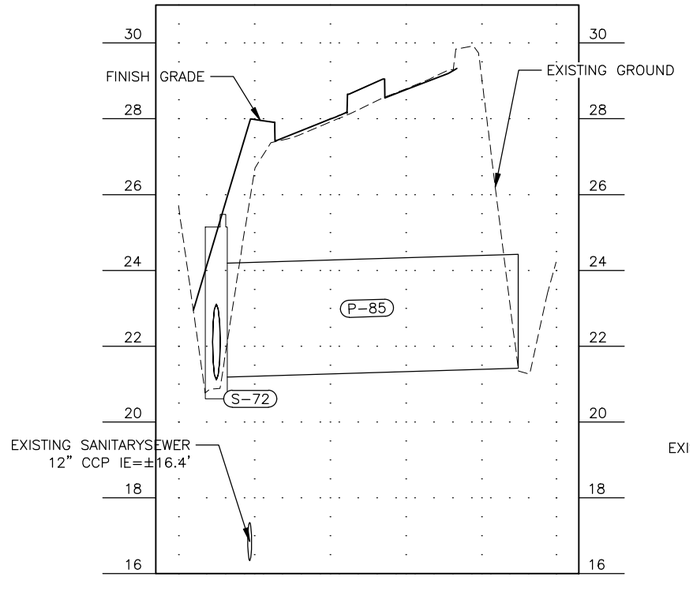

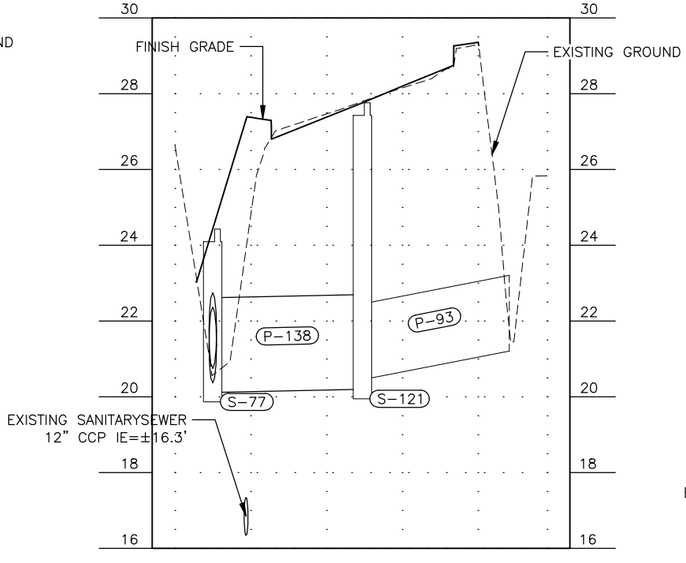

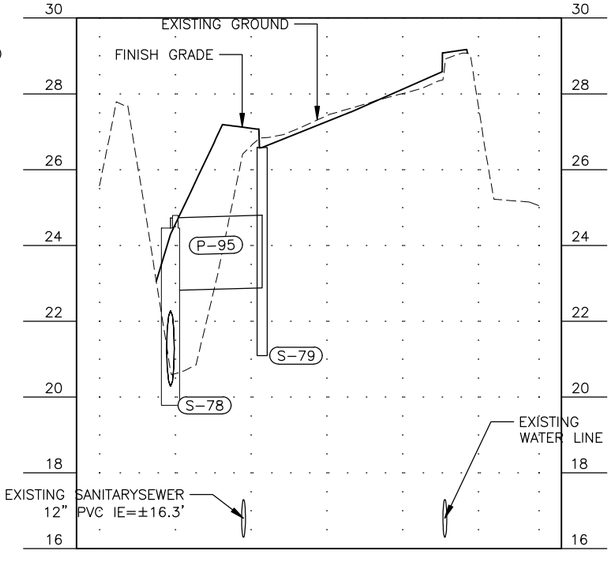

PLANS DEVELOPED BY: KITTELSON & ASSOCIATES, INC. CERT. OF AUTHORIZATION NO.: 254741, 851 SW 6TH AVE. SUITE 600, PORTLAND, OR 97204, (503) 228-5230
H:\20\20487 - Glacier Highway - Juneau Traffic Design\design_CD\68124_P_STORM-P-14 Thu, Jul/30/20 03:13pm

Addendum 7; Attachment # 21

Record Drawings have been reviewed by the Project Engineer, and represent to the best of my knowledge, the project as constructed.

PE Dillon Tomaro 2/4/25

NO.	DATE	REVISION
1	01/05/21	ADDENDUM 7

STATE	PROJECT DESIGNATION	YEAR	SHEET NO.	TOTAL SHEETS
ALASKA	TEA-0955(016)/Z68124	2020	P-15	235

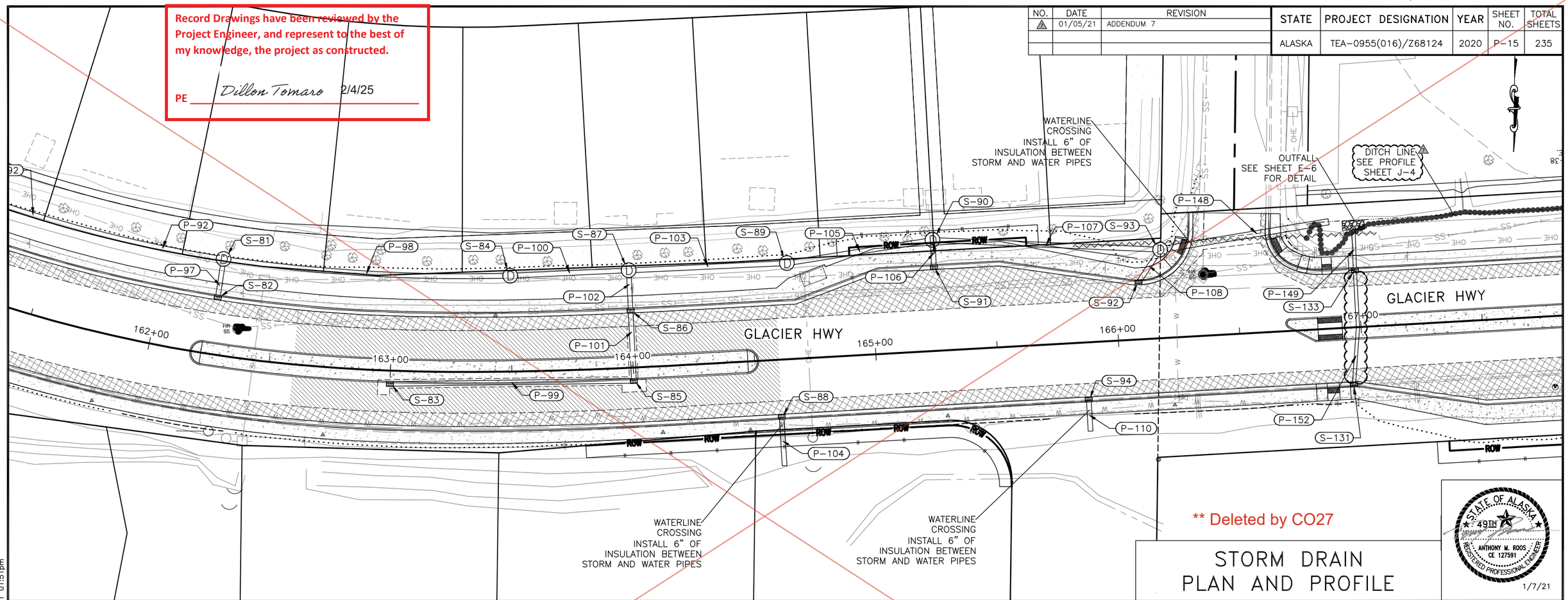

** Deleted by CO27

STORM DRAIN PLAN AND PROFILE

STATE OF ALASKA 49TH
ANTHONY M. ROOS CE 127591
REGISTERED PROFESSIONAL ENGINEER
1/7/21

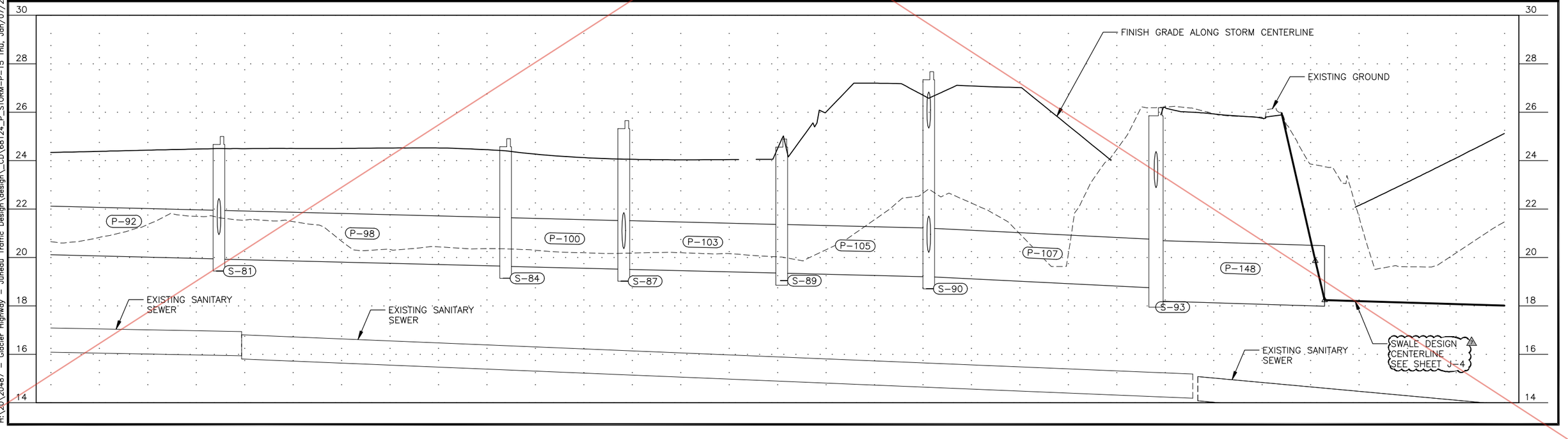

PLANS DEVELOPED BY: KITTELSON & ASSOCIATES, INC. CERT. OF AUTHORIZATION NO.: 254741, 851 SW 6TH AVE. SUITE 600, PORTLAND, OR 97204, (503) 228-5230
H:\20\20487 - Glacier Highway - Juneau Traffic Design\design_CD\68124_P_STORM-P-15 Thu, Jan/07/21 01:51pm

Attachment No. 11 CO 27

NO.	DATE	REVISION
2	01/05/21	ADDENDUM 7
1	05/03/21	STORM IE REVISIONS

STATE	PROJECT DESIGNATION	YEAR	SHEET NO.	TOTAL SHEETS
ALASKA	TEA-0955(016)/Z68124	2020	P-15	235

Record Drawings have been reviewed by the Project Engineer, and represent to the best of my knowledge, the project as constructed.

PE Dillon Tomaro 2/4/25

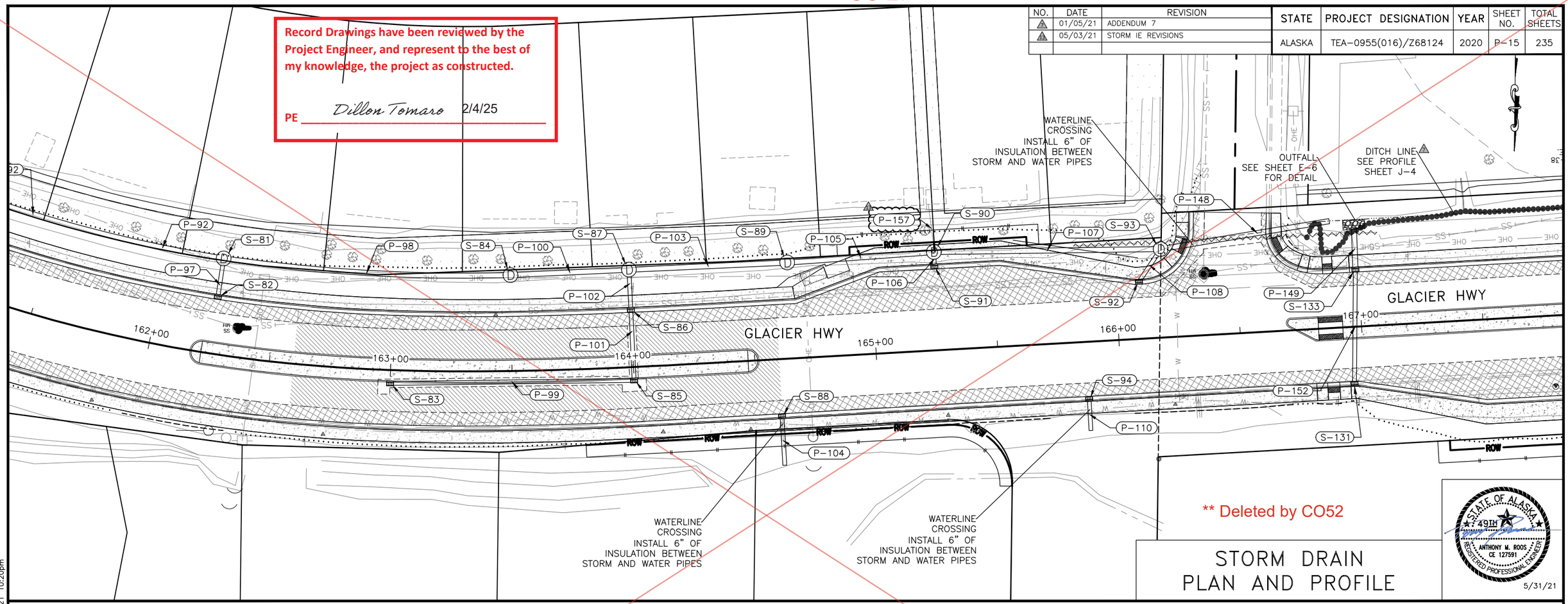

** Deleted by CO52

STORM DRAIN
PLAN AND PROFILE

STATE OF ALASKA 49TH
ANTHONY M. ROOS CE 127591
REGISTERED PROFESSIONAL ENGINEER
5/31/21

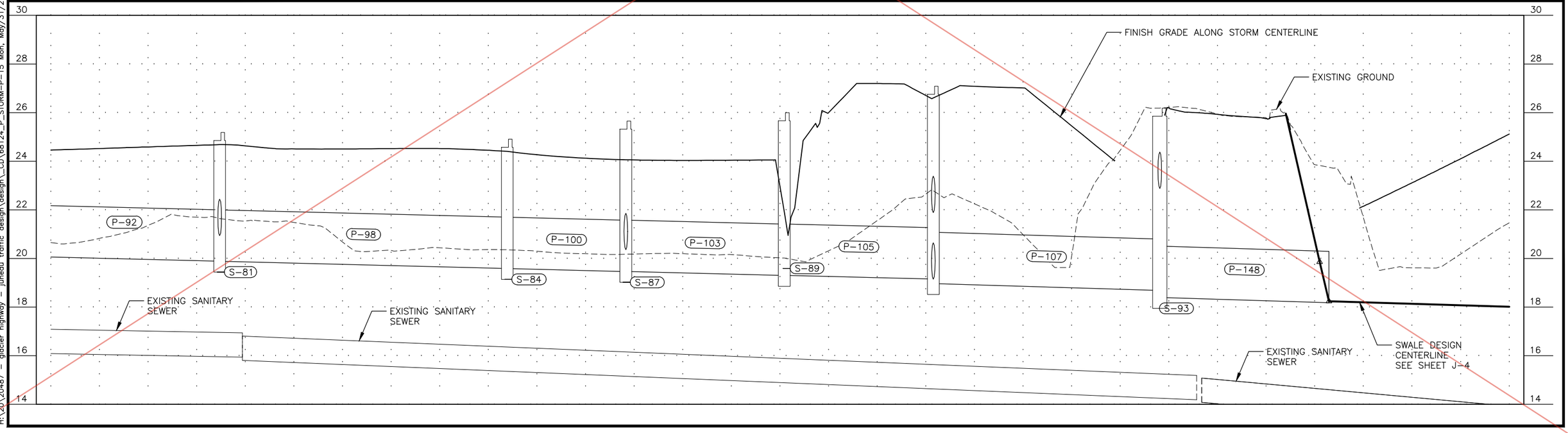

PLANS DEVELOPED BY: KITTELSON & ASSOCIATES, INC. CERT. OF AUTHORIZATION NO.: 254741, 851 SW 6TH AVE. SUITE 600, PORTLAND, OR 97204, (503) 228-5230
H:\20\20487 - glacier highway - juneau traffic design\design_CD\68124_P_STORM-P-15 Mon, May/31/21 10:20pm

CO 52

Record Drawings have been reviewed by the Project Engineer, and represent to the best of my knowledge, the project as constructed.

PE *Dillon Tomaro* 2/4/25

NO.	DATE	REVISION
2	01/05/21	ADDENDUM 7
1	05/03/21	STORM IE REVISIONS

STATE	PROJECT DESIGNATION	YEAR	SHEET NO.	TOTAL SHEETS
ALASKA	TEA-0955(016)/Z68124	2020	P-15	235

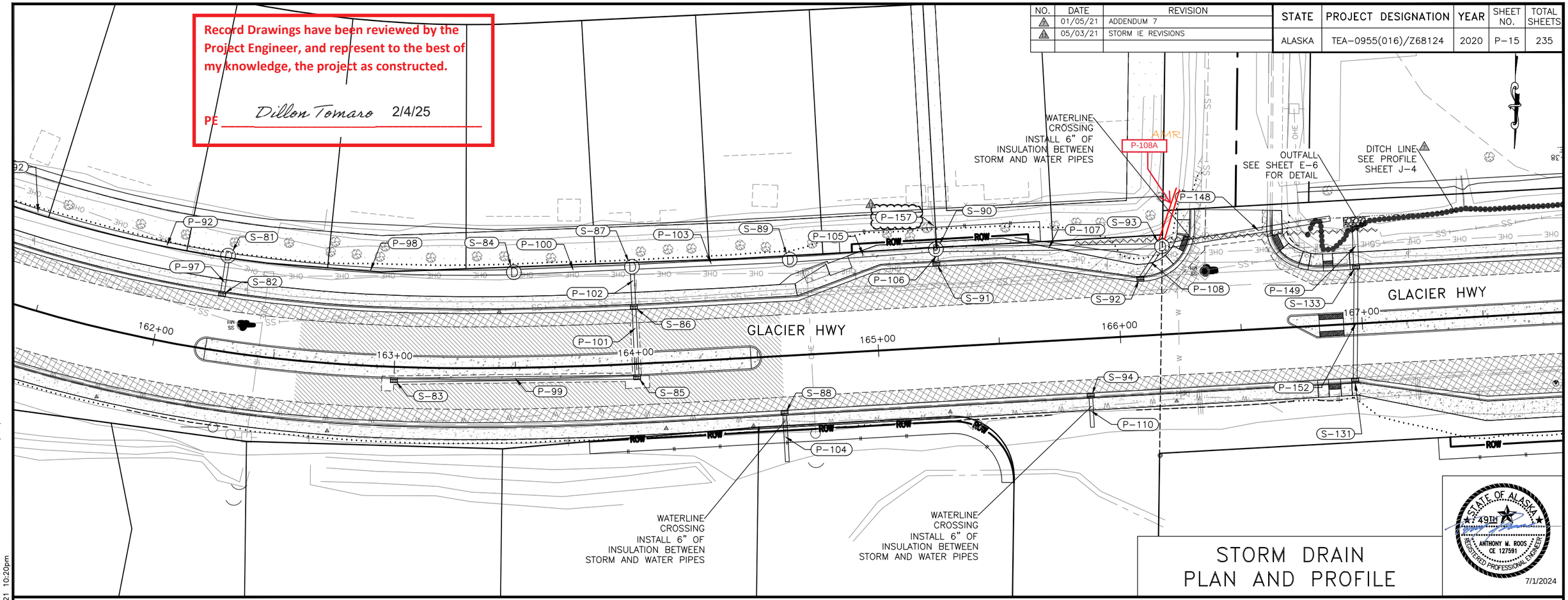

STORM DRAIN PLAN AND PROFILE

STATE OF ALASKA 49TH
ANTHONY M. ROOS CE 127591
REGISTERED PROFESSIONAL ENGINEER
7/1/2024

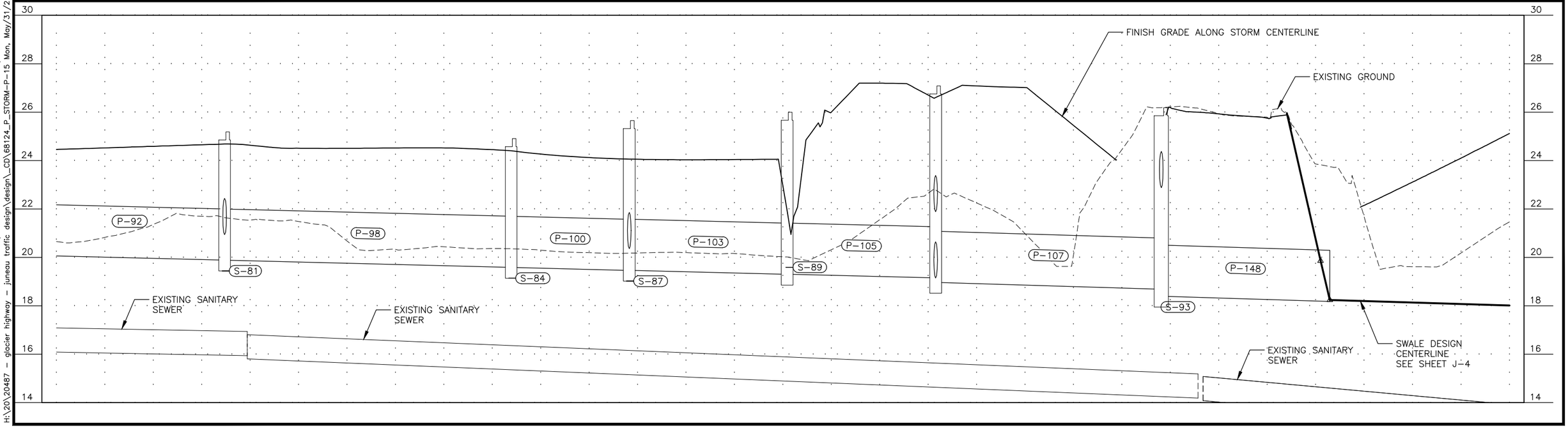

PLANS DEVELOPED BY: KITTELSON & ASSOCIATES, INC. CERT. OF AUTHORIZATION NO.: 254741, 851 SW 6TH AVE. SUITE 600, PORTLAND, OR 97204, (503) 228-5230
H:\20\20487 - glacier highway - juneau traffic design\design_CD\68124_P_STORM-P-15 Mon, May/31/21 10:20pm

** Deleted by CO27

NO.	DATE	REVISION

STATE	PROJECT DESIGNATION	YEAR	SHEET NO.	TOTAL SHEETS
ALASKA	TEA-0955(016)/Z68124	2020	P-16	235

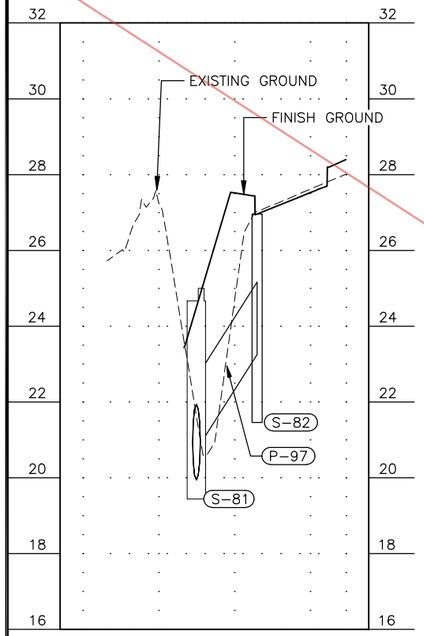

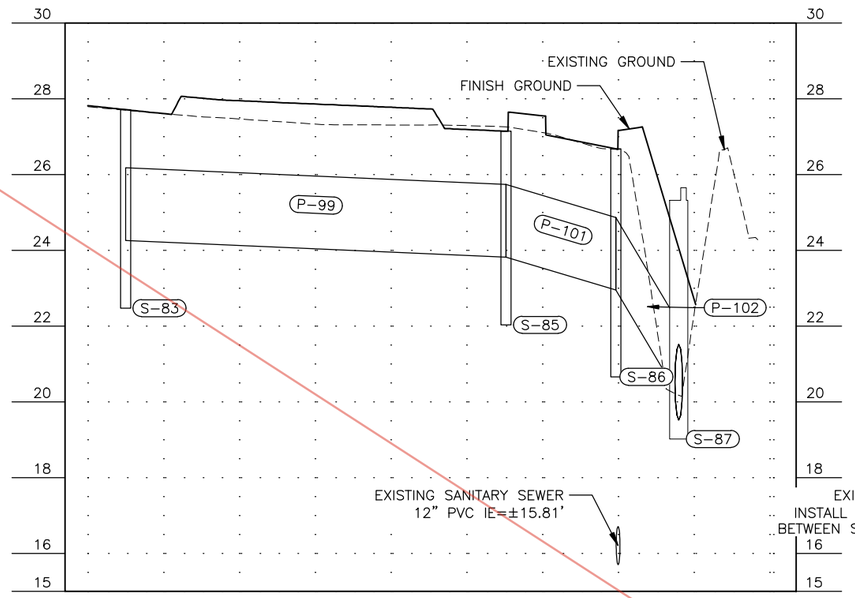

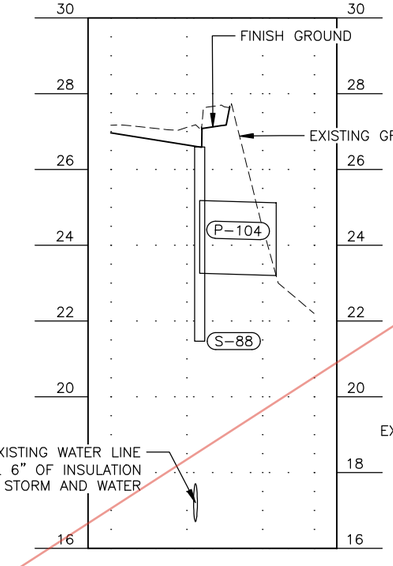

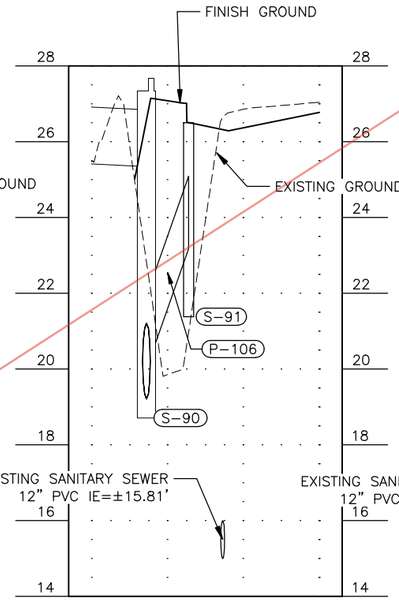

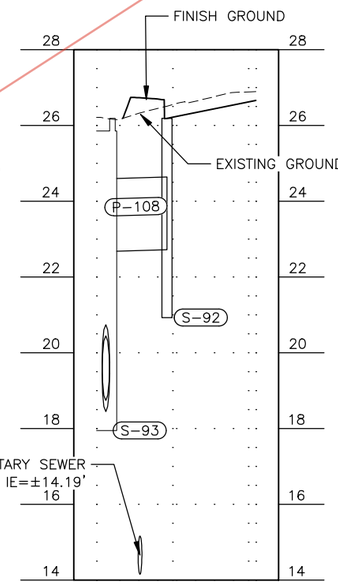

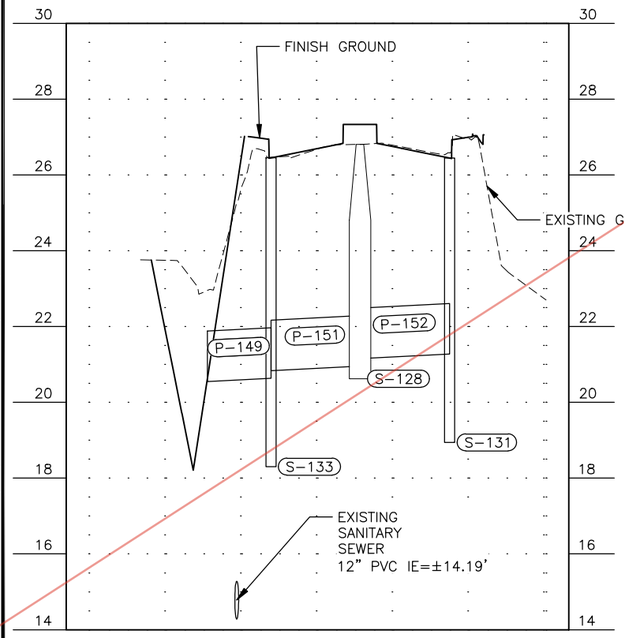

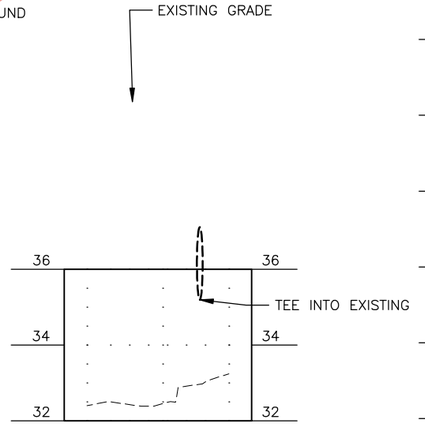

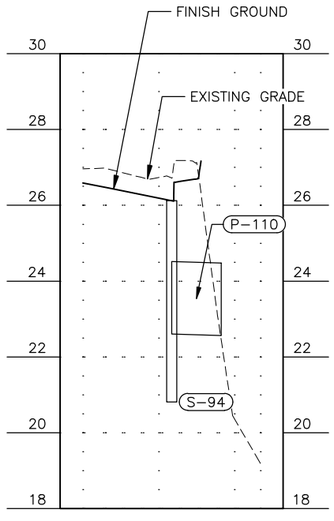

STORM DRAIN PLAN AND PROFILE

STATE OF ALASKA
49TH
ANTHONY M. ROOS
CE 12759 1
REGISTERED PROFESSIONAL ENGINEER
7/31/2020

Record Drawings have been reviewed by the Project Engineer, and represent to the best of my knowledge, the project as constructed.

PE Dillon Tomaro 2/4/25

PLANS DEVELOPED BY: KITTELSON & ASSOCIATES, INC. CERT. OF AUTHORIZATION NO.: 254741, 851 SW 6TH AVE. SUITE 600, PORTLAND, OR 97204, (503) 228-5230
H:\20\20487 - Glacier Highway - Juneau Traffic Design\design_CD\68124_P_STORM-P-16 Thu, Jul/30/20 03:14pm

CO 27

NO.	DATE	REVISION
1	03/11/21	RFI #1

STATE	PROJECT DESIGNATION	YEAR	SHEET NO.	TOTAL SHEETS
ALASKA	TEA-0955(016)/Z68124	2020	P-16	235

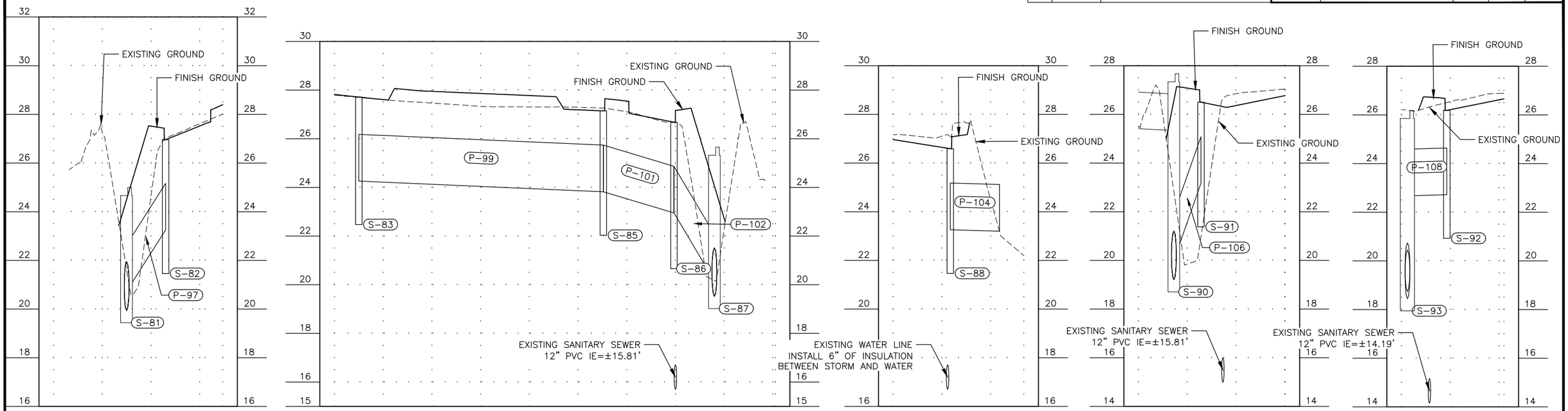

STORM DRAIN
PLAN AND PROFILE

STATE OF ALASKA
49TH
ANTHONY M. ROOS
CE 127591
REGISTERED PROFESSIONAL ENGINEER
3/11/21

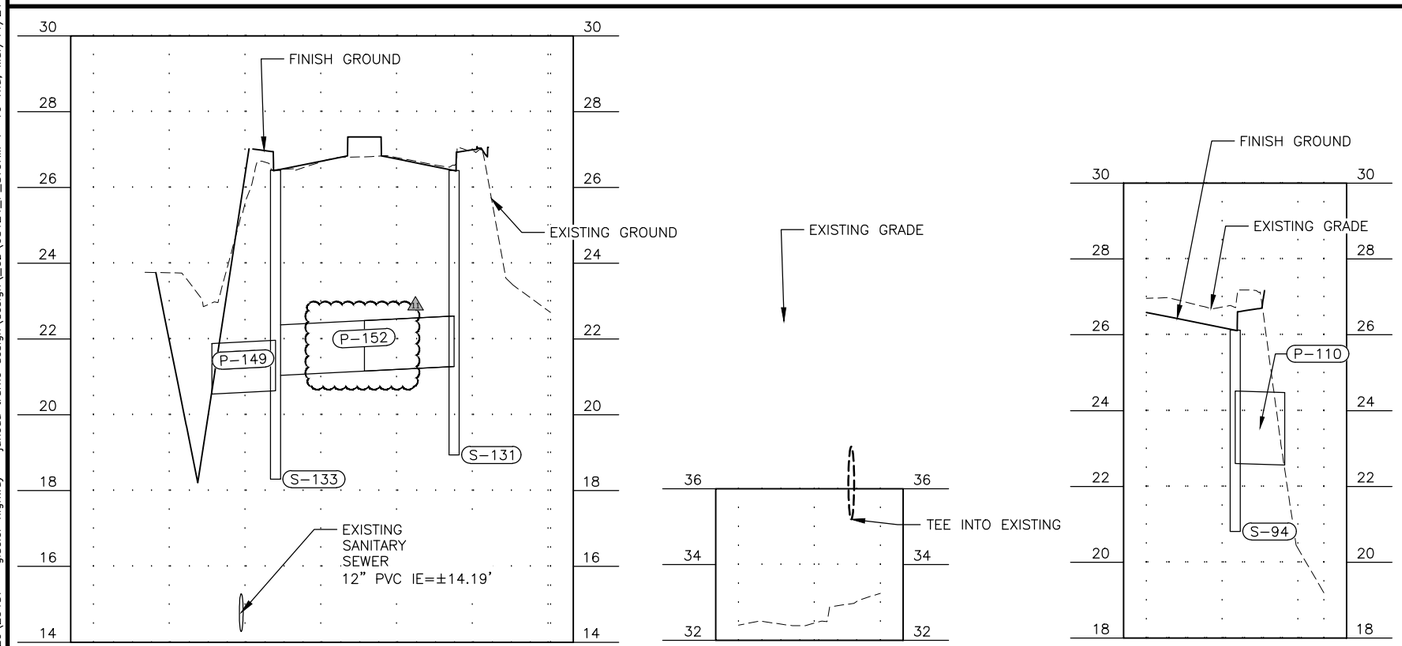

Record Drawings have been reviewed by the Project Engineer, and represent to the best of my knowledge, the project as constructed.

PE Dillon Tomaro 2/4/25

PLANS DEVELOPED BY: KITTELSON & ASSOCIATES, INC. CERT. OF AUTHORIZATION NO.: 254741, 851 SW 6TH AVE. SUITE 600, PORTLAND, OR 97204, (503) 228-5230
H:\20\20487 - glacier highway - juneau traffic design\design_CD\68124_P_STORM-P-16 Thu, Mar/11/21 09:18am

Addendum 7; Attachment # 22

NO.	DATE	REVISION
1	01/05/21	ADDENDUM 7

STATE	PROJECT DESIGNATION	YEAR	SHEET NO.	TOTAL SHEETS
ALASKA	TEA-0955(016)/Z68124	2020	P-17	235

** Deleted by CO42

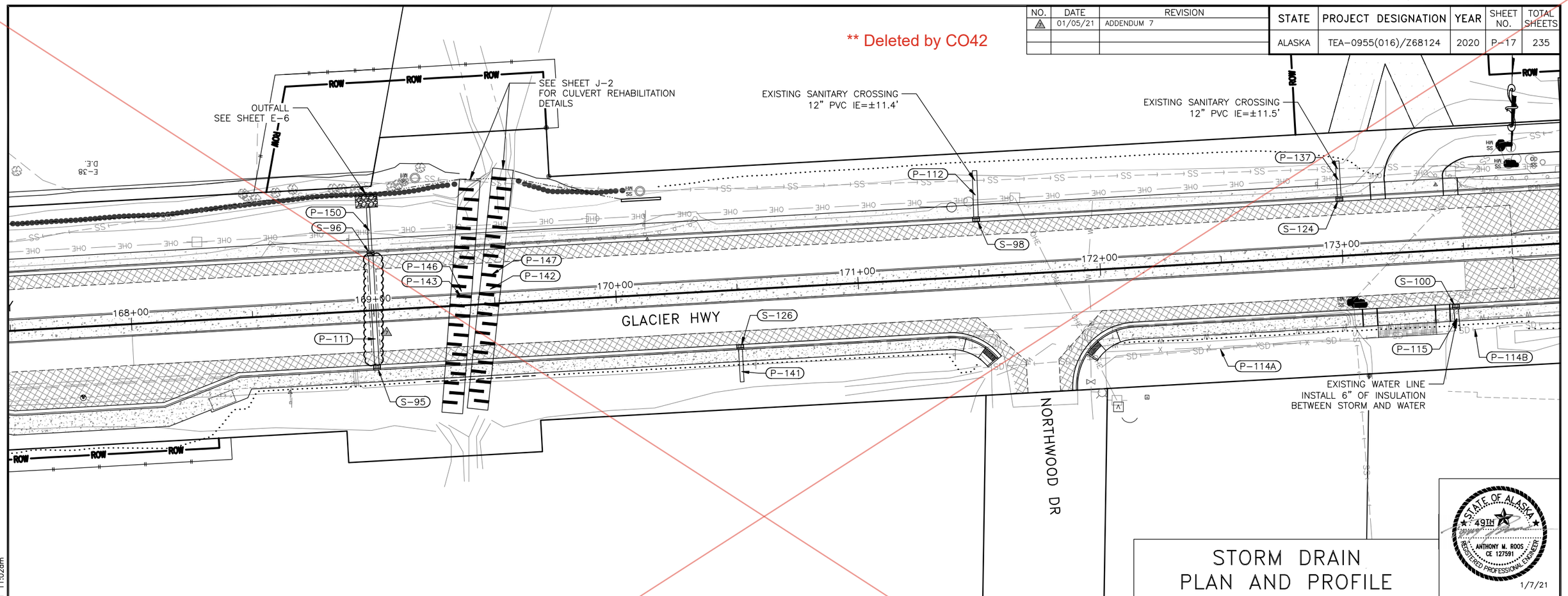

STORM DRAIN PLAN AND PROFILE

Record Drawings have been reviewed by the Project Engineer, and represent to the best of my knowledge, the project as constructed.

PE Dillon Tomaro 2/4/25

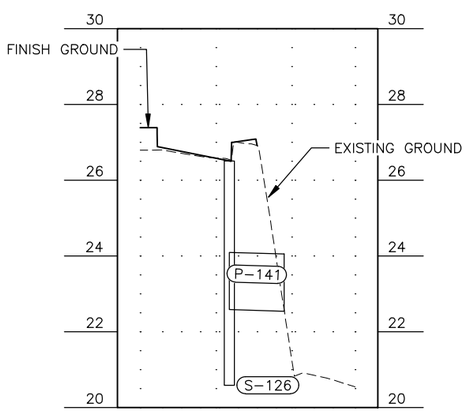

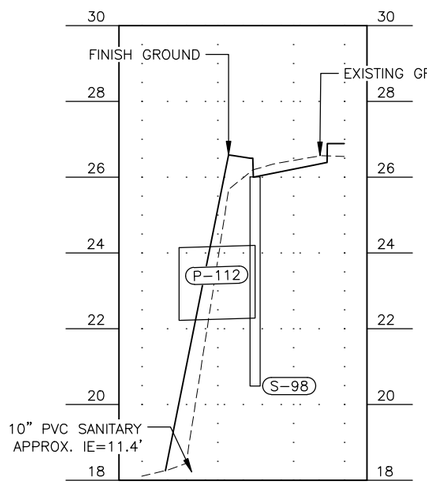

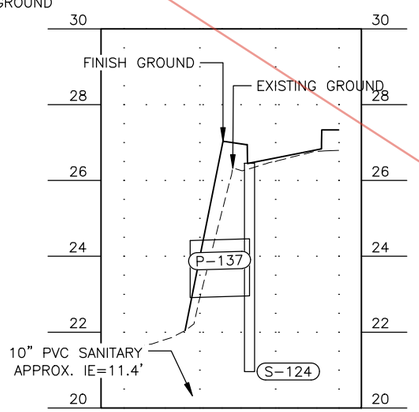

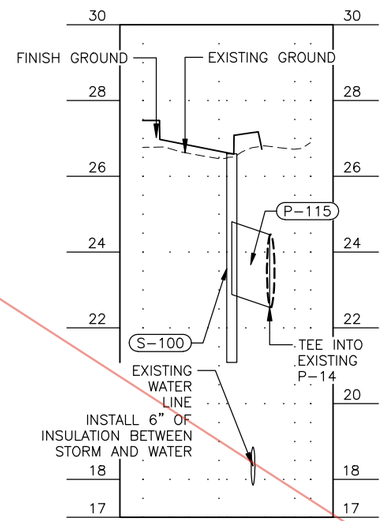

PLANS DEVELOPED BY: KITTELSON & ASSOCIATES, INC. CERT. OF AUTHORIZATION NO.: 254741, 851 SW 6TH AVE. SUITE 600, PORTLAND, OR 97204, (503) 228-5230
H:\20\20487 - Glacier Highway - Juneau Traffic Design\design_CD\68124_P_STORM-P-17 Thu, Jan/07/21 11:02am

NO.	DATE	REVISION
1	01/05/21	ADDENDUM 7

STATE	PROJECT DESIGNATION	YEAR	SHEET NO.	TOTAL SHEETS
ALASKA	TEA-0955(016)/Z68124	2020	P-17	235

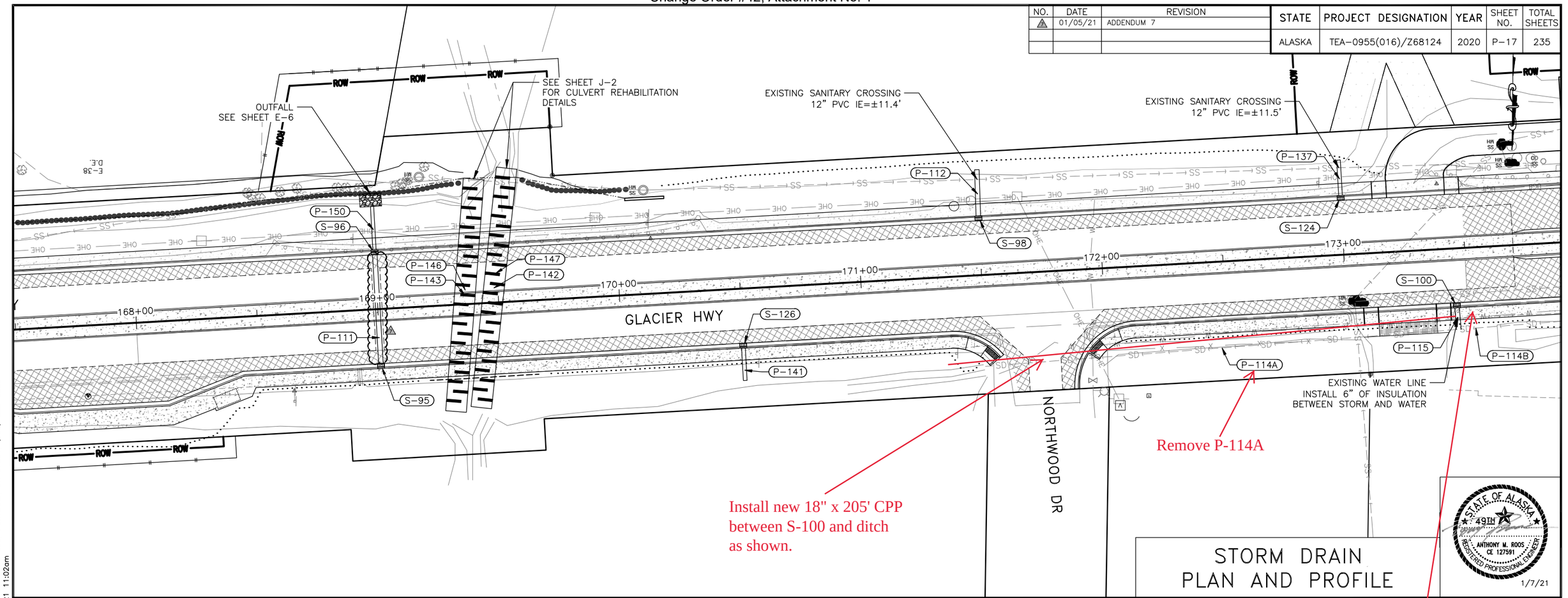

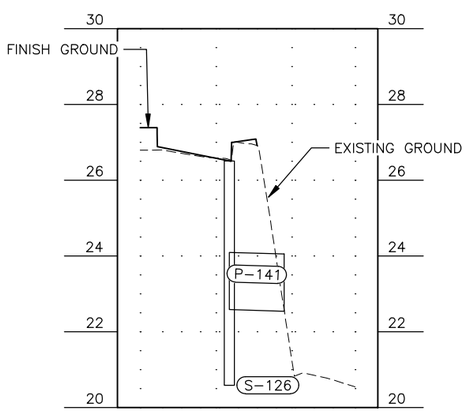

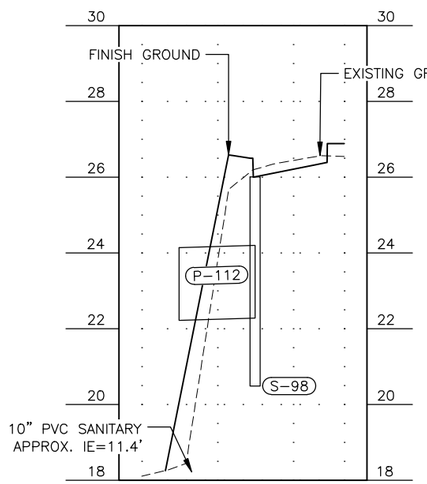

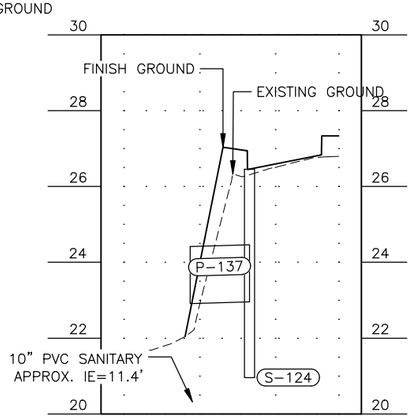

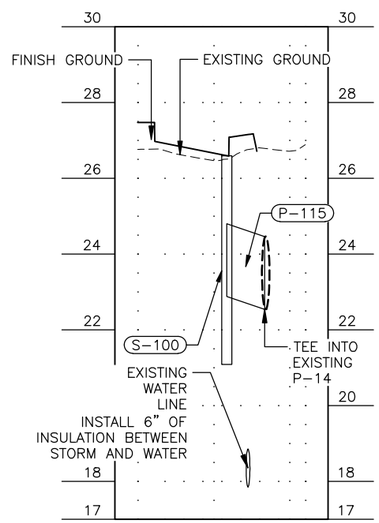

Record Drawings have been reviewed by the Project Engineer, and represent to the best of my knowledge, the project as constructed.

PE Dillon Tomaro 2/4/25

PLANS DEVELOPED BY: KITTELSON & ASSOCIATES, INC. CERT. OF AUTHORIZATION NO.: 254741, 851 SW 6TH AVE. SUITE 600, PORTLAND, OR 97204, (503) 228-5230
H:\20\20487 - Glacier Highway - Juneau Traffic Design\design_CD\68124_P_STORM-P-17 Thu, Jan/07/21 11:02am

NO.	DATE	REVISION
1	01/05/21	ADDENDUM 7

STATE	PROJECT DESIGNATION	YEAR	SHEET NO.	TOTAL SHEETS
ALASKA	TEA-0955(016)/Z68124	2020	P-18	235

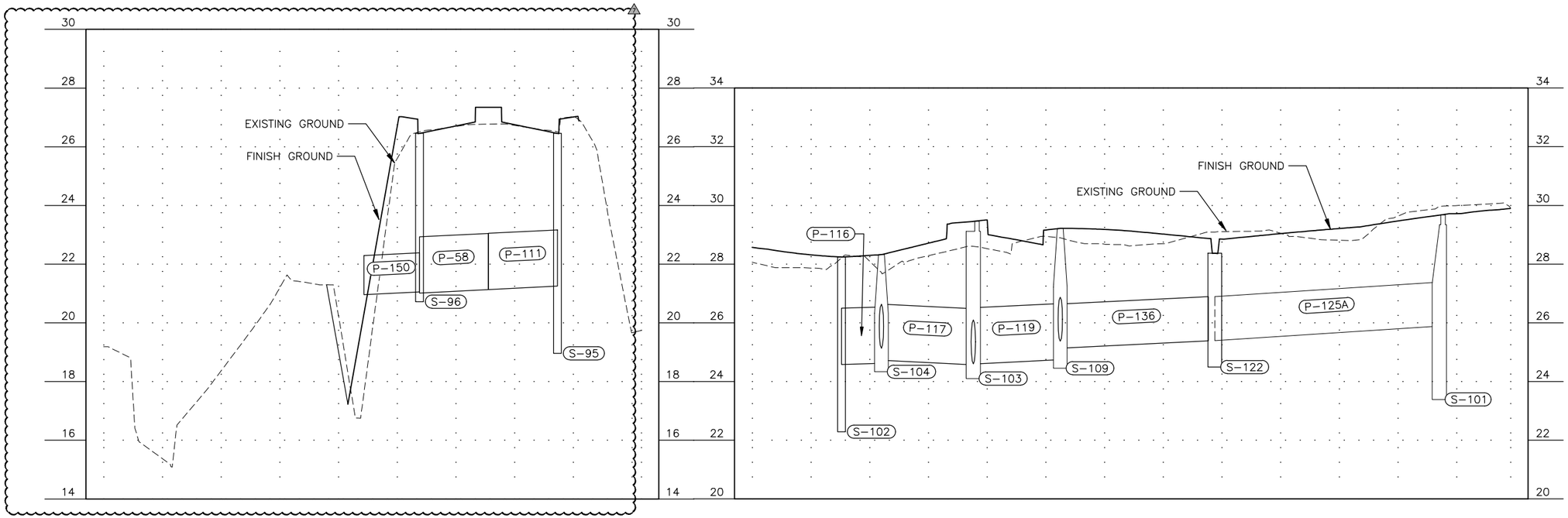

STORM PROFILE

STATE OF ALASKA
49TH
ANTHONY M. ROOS
CE 127591
REGISTERED PROFESSIONAL ENGINEER
1/7/21

Record Drawings have been reviewed by the Project Engineer, and represent to the best of my knowledge, the project as constructed.

PE Dillon Tomaro 2/4/25

PLANS DEVELOPED BY: KITTELSON & ASSOCIATES, INC. CERT. OF AUTHORIZATION NO.: 254741, 851 SW 6TH AVE. SUITE 600, PORTLAND, OR 97204, (503) 228-5230
H:\20\20487 - Glacier Highway - Juneau Traffic Design\design_CD\68124_P_STORM-P-18 Thu, Jan/07/21 01:51pm

Record Drawings have been reviewed by the Project Engineer, and represent to the best of my knowledge, the project as constructed.

PE Dillon Tomaro 2/4/25

NO.	DATE	REVISION

STATE	PROJECT DESIGNATION	YEAR	SHEET NO.	TOTAL SHEETS
ALASKA	TEA-0955(016)/Z68124	2020	P-19	235

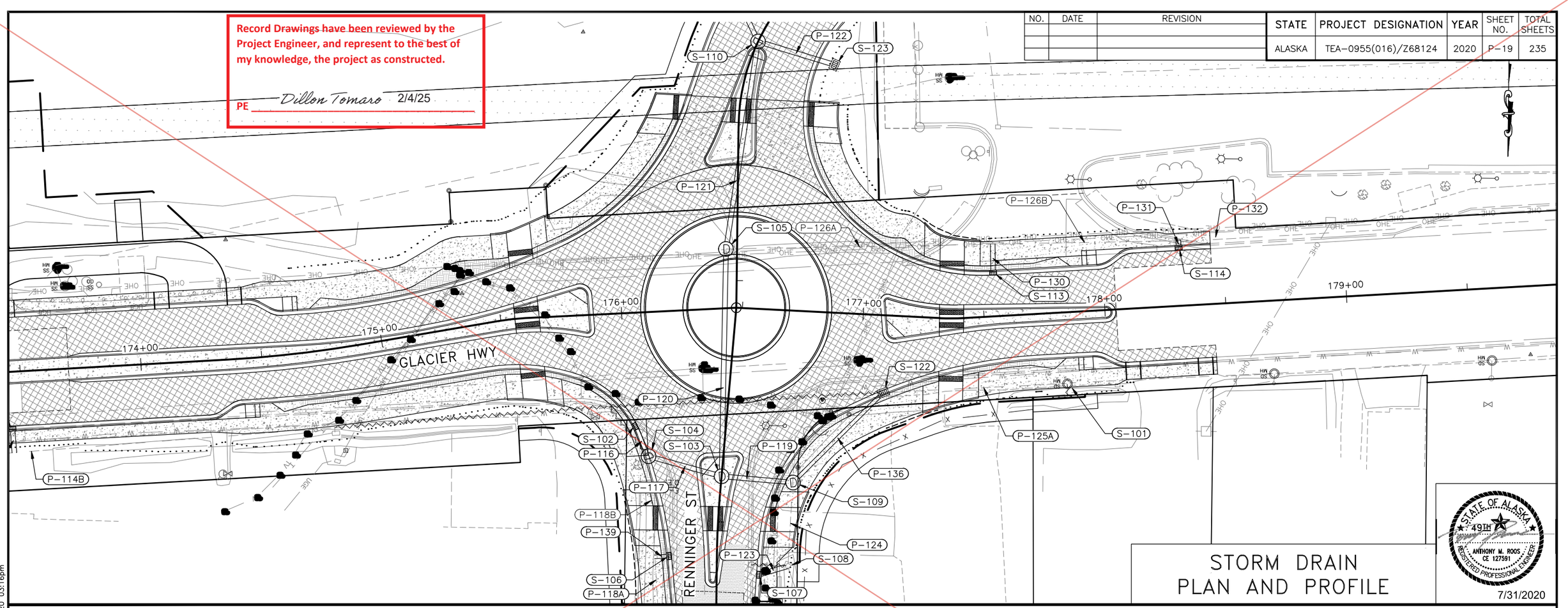

STORM DRAIN
PLAN AND PROFILE

STATE OF ALASKA
49TH
ANTHONY M. ROOS
CE 127591
REGISTERED PROFESSIONAL ENGINEER
7/31/2020

** Deleted by CO36

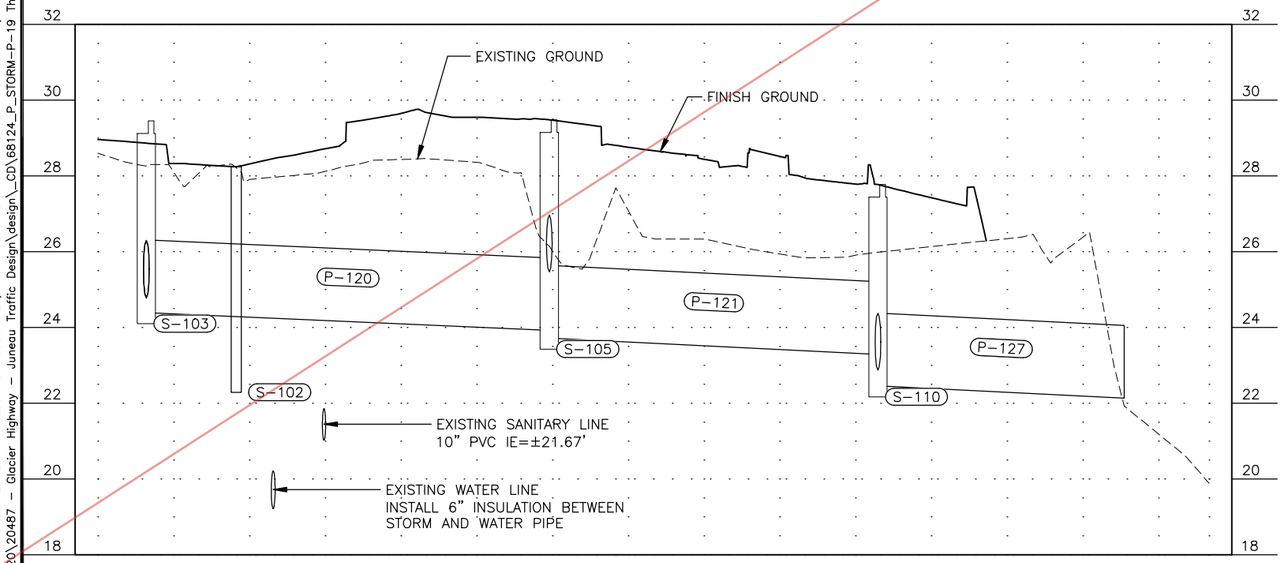

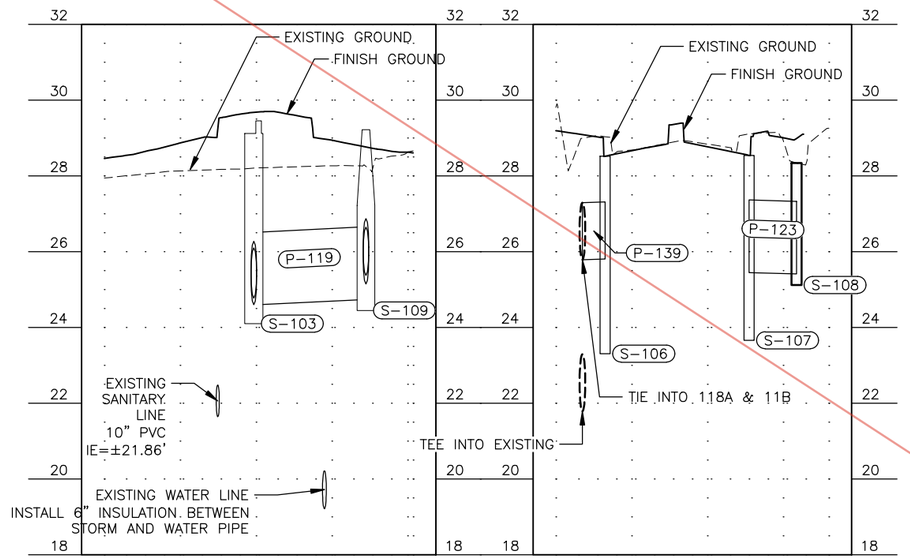

PLANS DEVELOPED BY: KITTELSON & ASSOCIATES, INC. CERT. OF AUTHORIZATION NO.: 254741, 851 SW 6TH AVE. SUITE 600, PORTLAND, OR 97204, (503) 228-5230
H:\20\20487 - Glacier Highway - Juneau Traffic Design\design_CD\68124_P_STORM-P-19 Thu, Jul/30/20 03:16pm

Record Drawings have been reviewed by the Project Engineer, and represent to the best of my knowledge, the project as constructed.

PE Dillon Tomaro 2/4/25

NO.	DATE	REVISION

STATE	PROJECT DESIGNATION	YEAR	SHEET NO.	TOTAL SHEETS
ALASKA	TEA-0955(016)/Z68124	2020	P-19	235

** Deleted by CO27

GLACIER HWY

RENNINGER ST

P-114B P-116 P-117 P-118B P-139 P-118A P-120 P-121 P-122 P-123 P-124 P-119 P-136 P-125A P-126A P-127 P-130 P-131 P-132

S-102 S-103 S-104 S-105 S-106 S-107 S-108 S-109 S-110 S-113 S-114 S-122 S-123 S-101

Rim = 29.47
IE IN (N) = 23.80
IE IN (E) = 23.80
IE Out (S) = 23.60

0.385
New 18"
S = -0.86%
L = 111.25 LF

0.385
New 18"
S = -0.5%
L = 77 LF

Replace Top or New MH
Rim = 30.10
IE IN (18") W = 25.70
IE Out (18") E = 25.70

New MH with Inlet Top
Grate Rim = 28.69
IE 18" In (N) = 24.76
IE 18" In (E) = 25.31
IE 18" Out (W) = 25.11

0.23
New 18"
S = -0.50%
L = 45.25 LF

CJB says
waterline is
8-feet deep
Should clear

Do not install
1% flowline toward RNBT
and captured by S-113.
Otherwise, need MH on
T-connection due to
issues SECON finding in
field

Connect to Existing MH
Rim = 29.66
IE 18" In (W) = 25.89
IE 18" Out (E) = 25.89

0.2025
New 18"
S = -0.50%
L = 40.5 LF

0.1525
New 18"
S = -0.50%
L = 30.5 LF

New MH with Inlet Top
Grate Rim = 28.37
IE 18" Out (E) = 25.39

New MH
Rim = 29.25
IE 18" In (W) = 25.19
IE 18" In (E) = 25.74
IE 18" Out (S) = 24.99

176+00 175+00 174+00 177+00 178+00 179+00

STORM DRAIN PLAN AND PROFILE

STATE OF ALASKA 49TH
ANTHONY M. ROOS CE 127591
REGISTERED PROFESSIONAL ENGINEER
7/31/2020

** Deleted by CO42

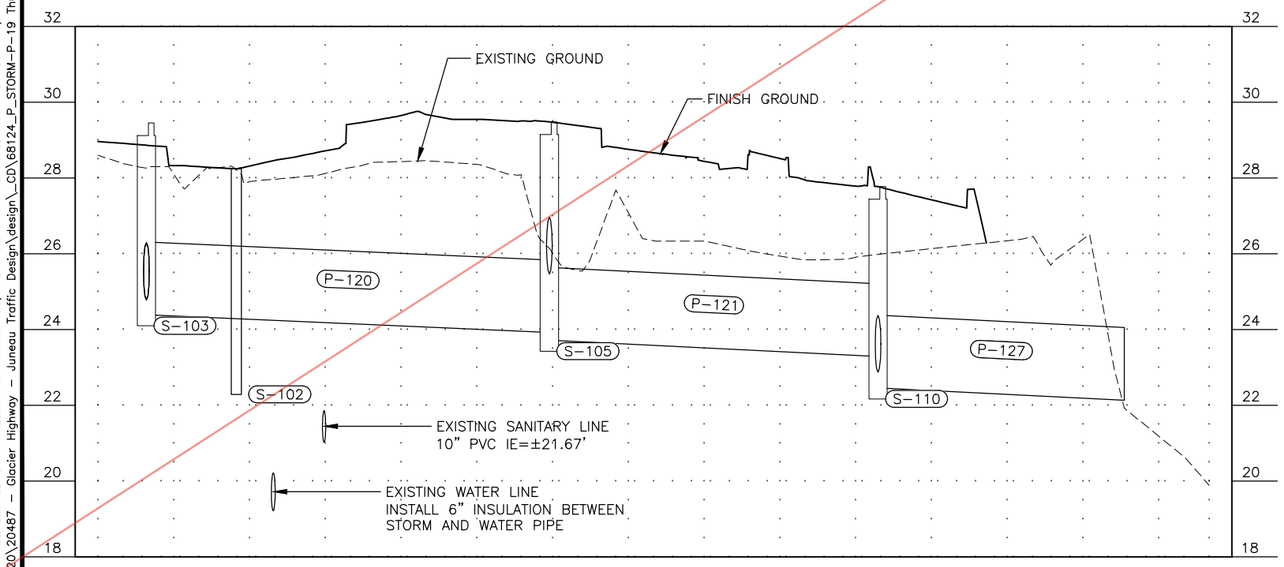

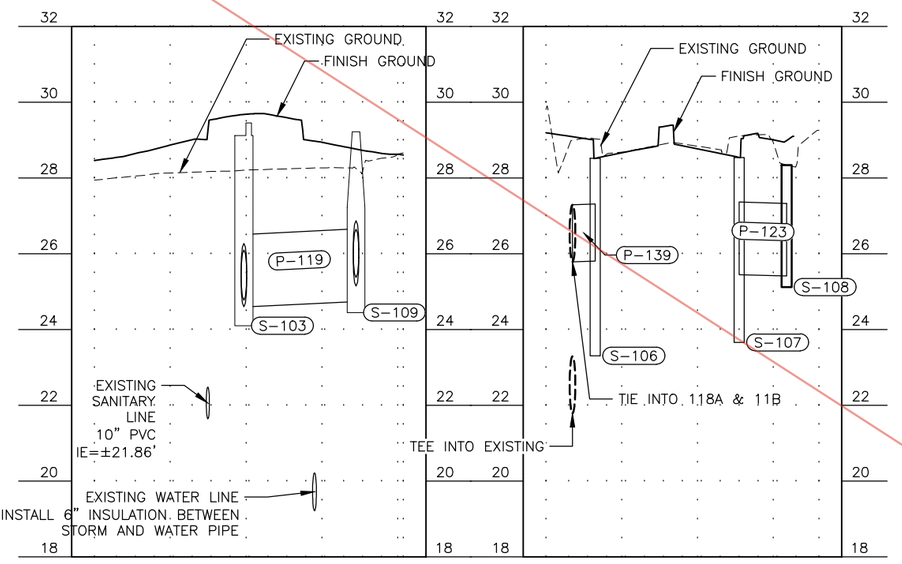

PLANS DEVELOPED BY: KITTELSON & ASSOCIATES, INC. CERT. OF AUTHORIZATION NO.: 254741, 851 SW 6TH AVE. SUITE 600, PORTLAND, OR 97204, (503) 228-5230
H:\20\20487 - Glacier Highway - Juneau Traffic Design\design_CD\68124_P_STORM-P-19 Thu, Jul/30/20 03:16pm

NO.	DATE	REVISION

STATE	PROJECT DESIGNATION	YEAR	SHEET NO.	TOTAL SHEETS
ALASKA	TEA-0955(016)/Z68124	2020	P-19	235

Record Drawings have been reviewed by the Project Engineer, and represent to the best of my knowledge, the project as constructed.

PE *Dillon Tomaro* 2/4/25

GLACIER HWY

RENNINGER ST

Rim = 29.47
IE IN (N) = 23.80
IE IN (W) = 23.80
IE Out (S) = 23.60

New 18"
S = -0.68%
L = 111.25 LF

New 18"
S = -0.5%
L = 77 LF

New MH with Inlet Top
Grate Rim = 28.69
IE 18" In (N) = ~~24.76~~
IE 18" In (W) = ~~25.31~~
IE 18" Out (E) = ~~25.11~~

Replace Top or New MH
Rim = 30.10
IE IN (18") W = 25.70
IE Out (18") E = 25.70

New 18"
S = -0.50%
L = 45.25 LF

CJB says waterline is 8-feet deep Should clear

Do not install 1% flowline toward RNBT and captured by S-113. Otherwise, need MH on T-connection due to issues SECON finding in field

Connect to Existing MH
Rim = 29.66
IE 18" In (W) = 25.89
IE 18" Out (E) = 25.89

New 18"
S = -0.50%
L = 40.5 LF

New 18"
S = -0.50%
L = 30.5 LF

New MH with Inlet Top
Grate Rim = 28.37
IE 18" Out (E) = 25.39

New MH
Rim = 29.25
IE 18" In (W) = ~~25.19~~
IE 18" In (E) = ~~25.74~~
IE 18" Out (S) = 24.99

Remove P-114B between S-100 and field inlet

Remove field inlet STA 174+76 RT

STORM DRAIN PLAN AND PROFILE

STATE OF ALASKA 49TH
ANTHONY M. ROOS CE 127591
REGISTERED PROFESSIONAL ENGINEER
7/31/2020

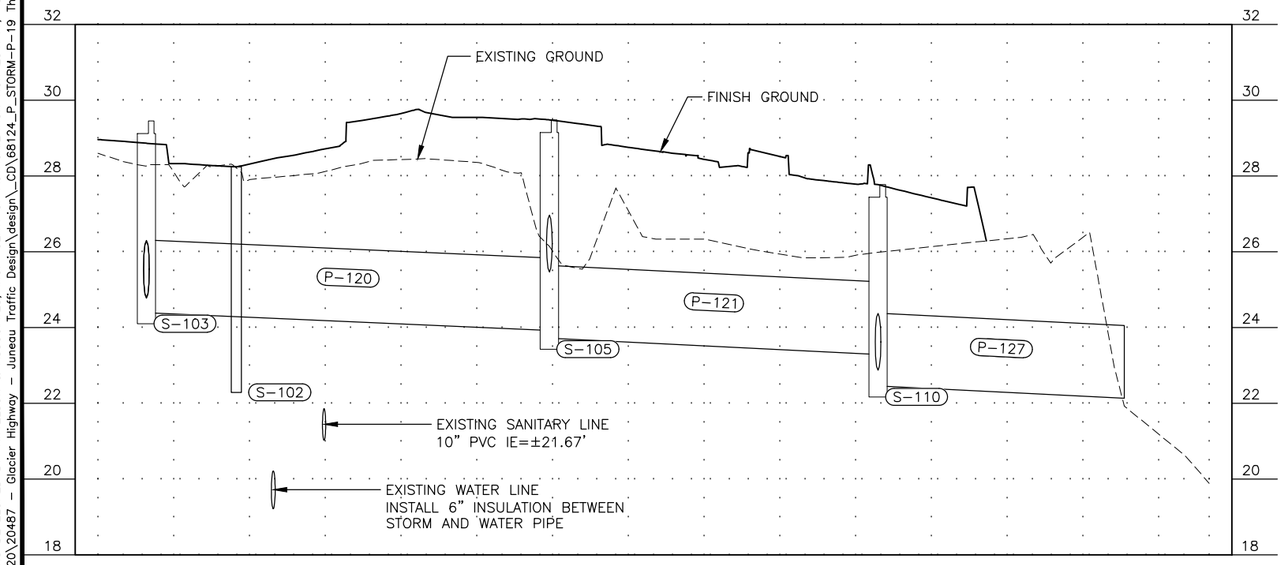

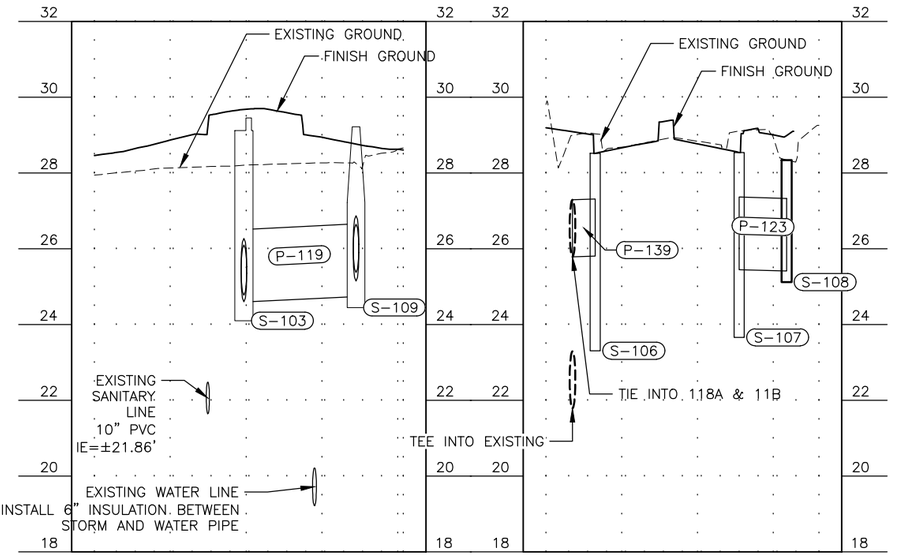

PLANS DEVELOPED BY: KITTELSON & ASSOCIATES, INC. CERT. OF AUTHORIZATION NO.: 254741, 851 SW 6TH AVE. SUITE 600, PORTLAND, OR 97204, (503) 228-5230
H:\20\20487 - Glacier Highway - Juneau Traffic Design\design_CD\68124_P_STORM-P-19 Thu, Jul/30/20 03:16pm

** Deleted by CO27

NO.	DATE	REVISION

STATE	PROJECT DESIGNATION	YEAR	SHEET NO.	TOTAL SHEETS
ALASKA	TEA-0955(016)/Z68124	2020	P-20	235

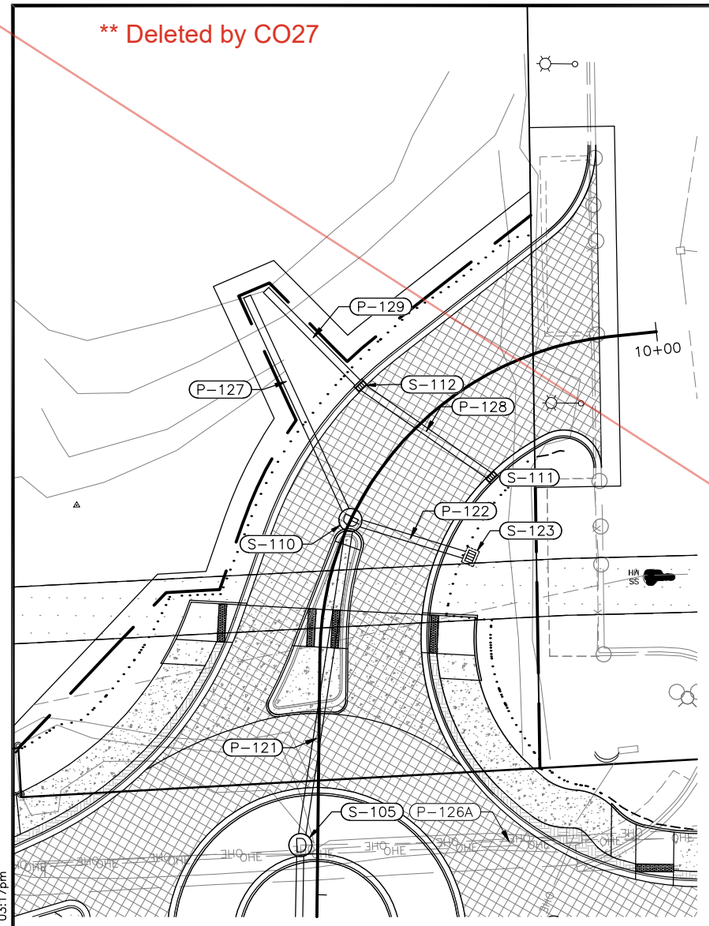

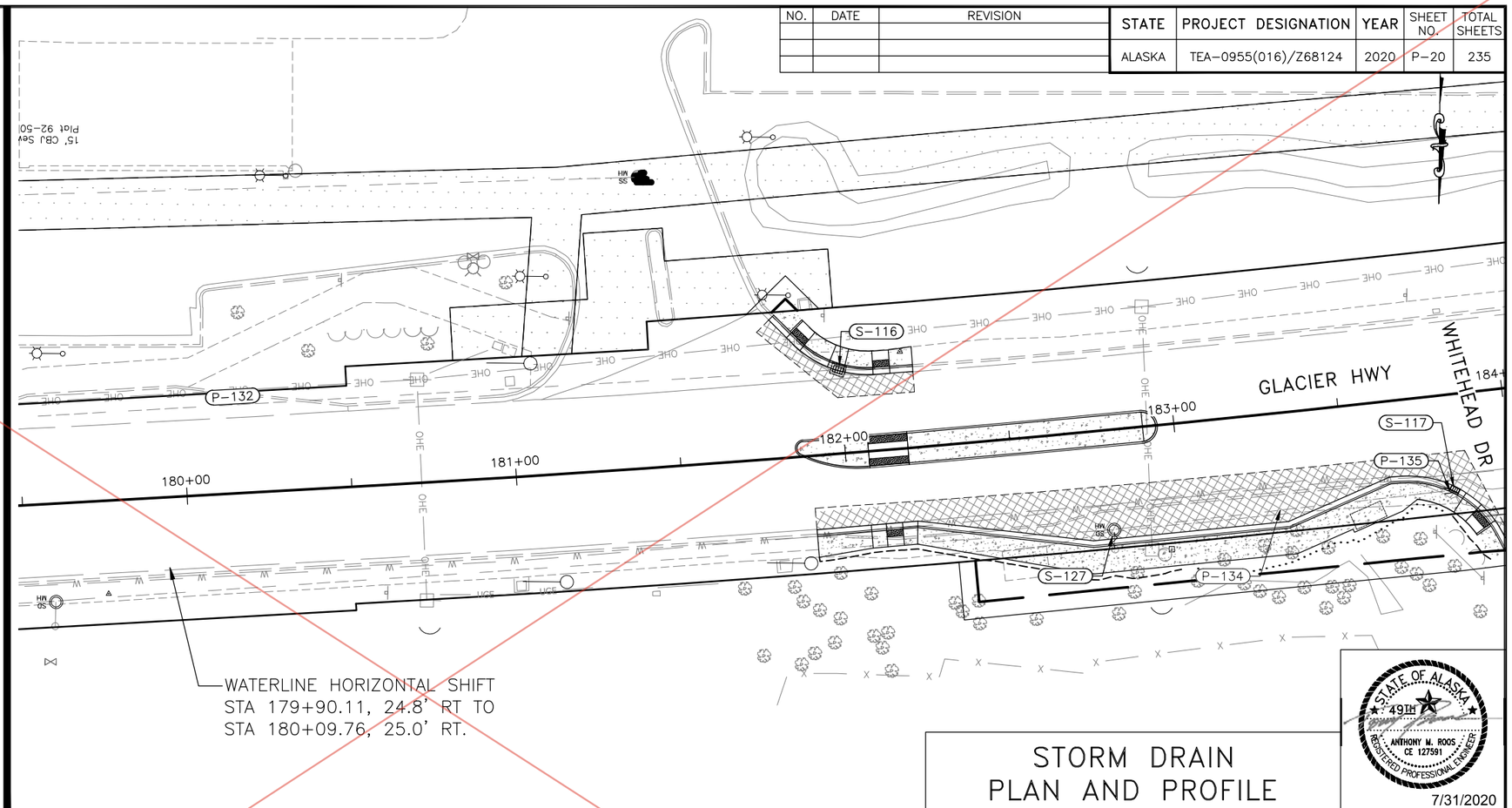

STORM DRAIN PLAN AND PROFILE

STATE OF ALASKA
49TH
ANTHONY M. ROOS
CE 127591
REGISTERED PROFESSIONAL ENGINEER
7/31/2020

Record Drawings have been reviewed by the Project Engineer, and represent to the best of my knowledge, the project as constructed.

PE *Dillon Tomaro* 2/4/25

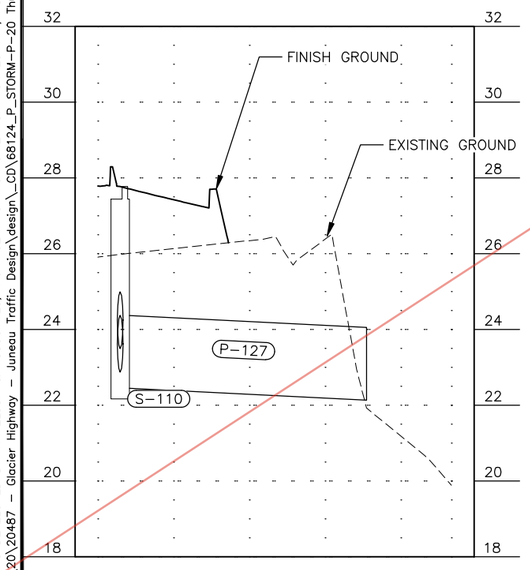

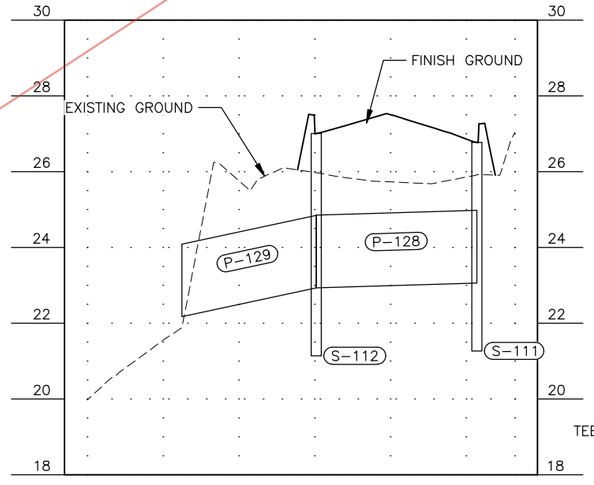

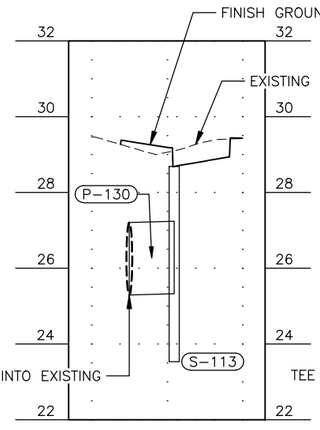

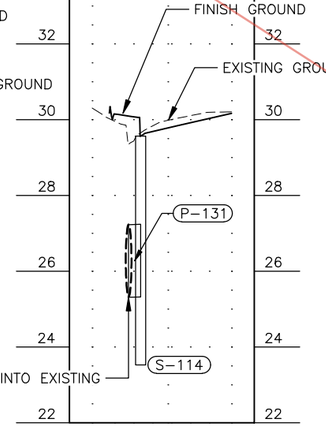

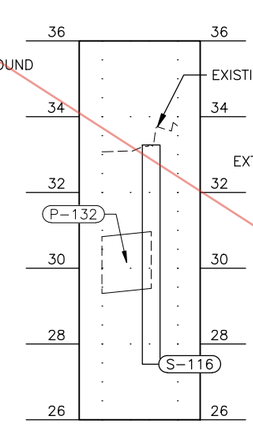

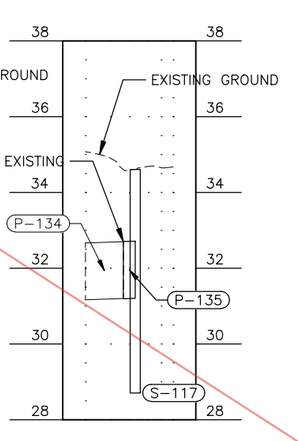

PLANS DEVELOPED BY: KITTELSON & ASSOCIATES, INC. CERT. OF AUTHORIZATION NO.: 254741, 851 SW 6TH AVE. SUITE 600, PORTLAND, OR 97204, (503) 228-5230
H:\20\20487 - Glacier Highway - Juneau Traffic Design\design_CD\68124_P_STORM-P-20 Thu, Jul/30/20 03:17pm

Attachment No. 13

CO 27

NO.	DATE	REVISION
1	03/11/21	RFI #1

STATE	PROJECT DESIGNATION	YEAR	SHEET NO.	TOTAL SHEETS
ALASKA	TEA-0955(016)/Z68124	2020	P-20	235

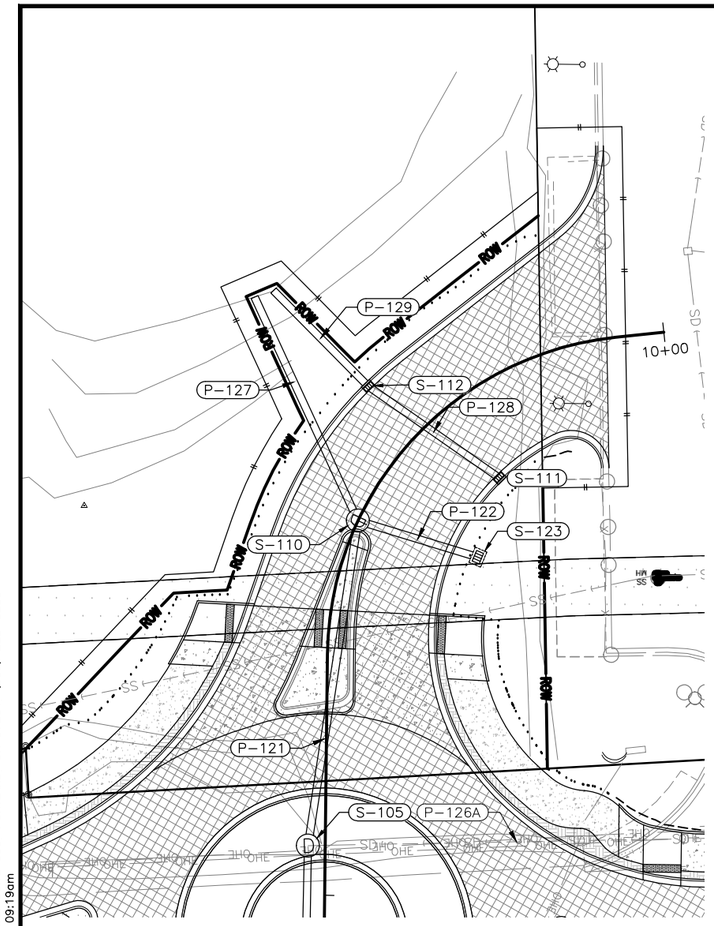

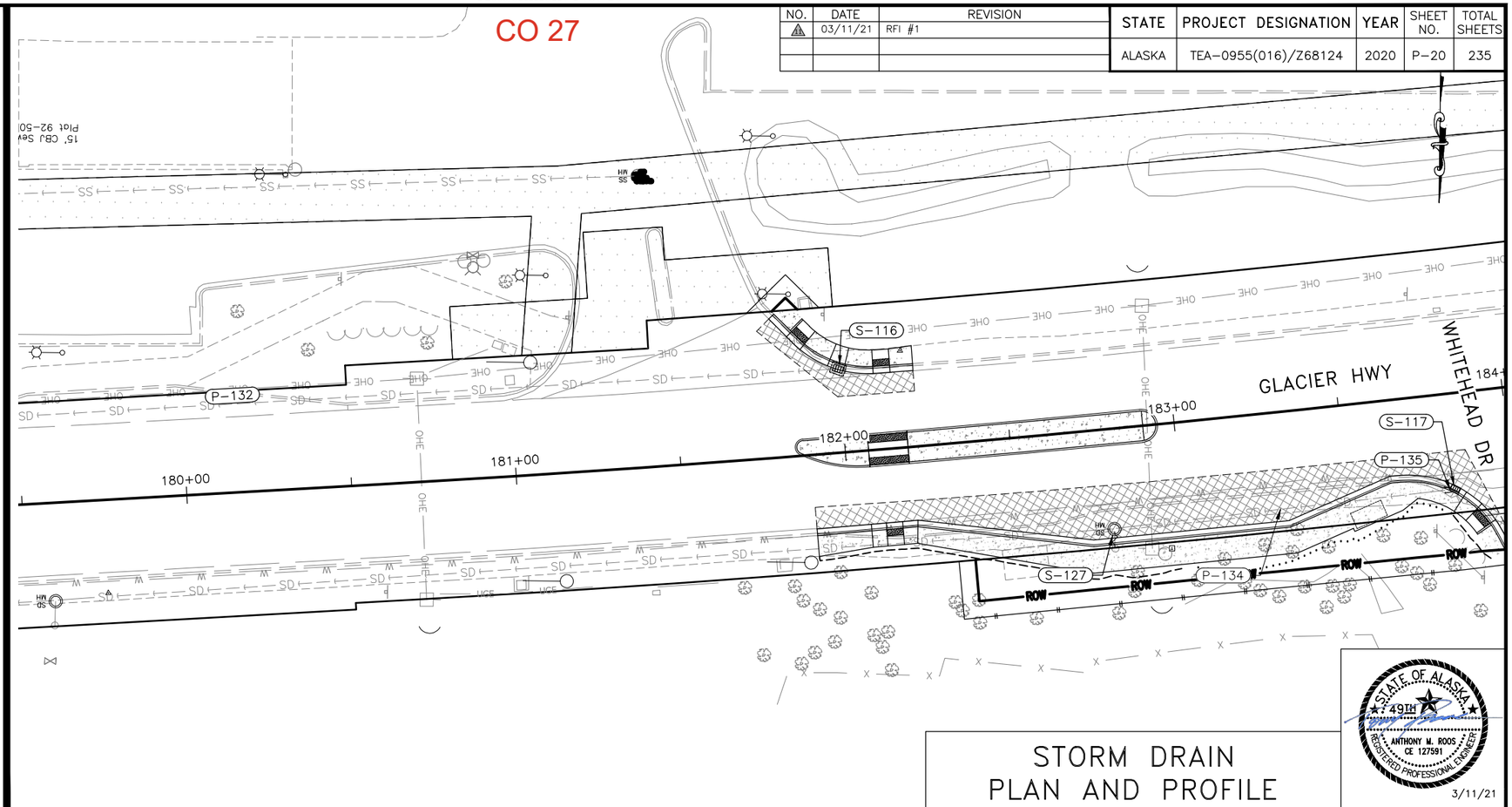

STORM DRAIN
PLAN AND PROFILE

STATE OF ALASKA
49TH
ANTHONY M. ROOS
CE 127591
REGISTERED PROFESSIONAL ENGINEER
3/11/21

Record Drawings have been reviewed by the Project Engineer, and represent to the best of my knowledge, the project as constructed.

PE Dillon Tomaro 2/4/25

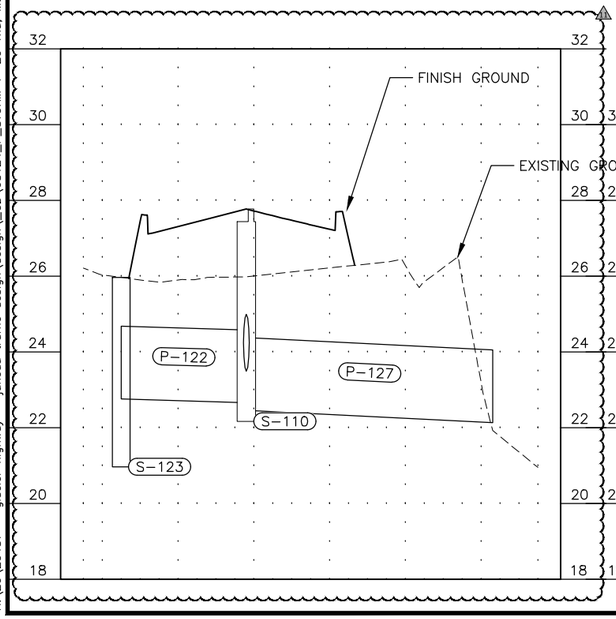

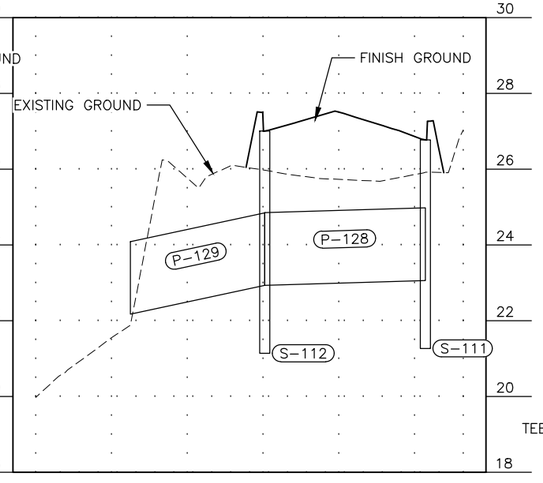

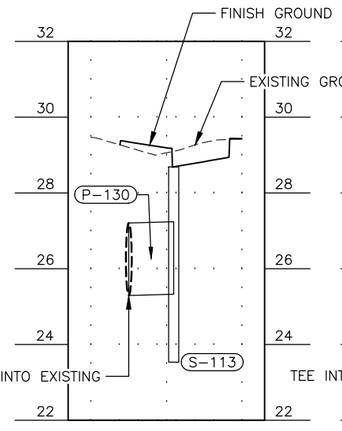

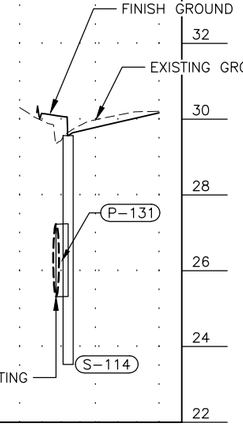

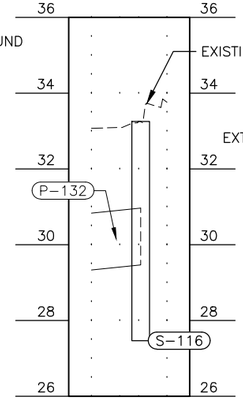

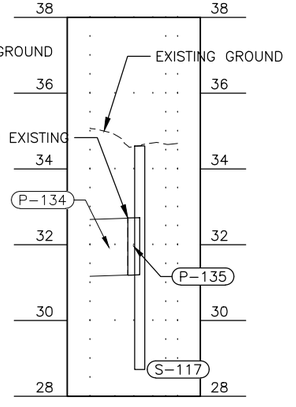

PLANS DEVELOPED BY: KITTELSON & ASSOCIATES, INC. CERT. OF AUTHORIZATION NO.: 254741, 851 SW 6TH AVE. SUITE 600, PORTLAND, OR 97204, (503) 228-5230
H:\20\20487 - glacier highway - juneau traffic design\design_CD\68124_P_STORM-P-20 Thu, Mar/11/21 09:19am

** Deleted by CO6

Record Drawings have been reviewed by the Project Engineer, and represent to the best of my knowledge, the project as constructed.

PE Dillon Tomaro 2/4/25

NO.	DATE	REVISION

STATE	PROJECT DESIGNATION	YEAR	SHEET NO.	TOTAL SHEETS
ALASKA	TEA-0955(016)/Z68124	2020	P-21	235

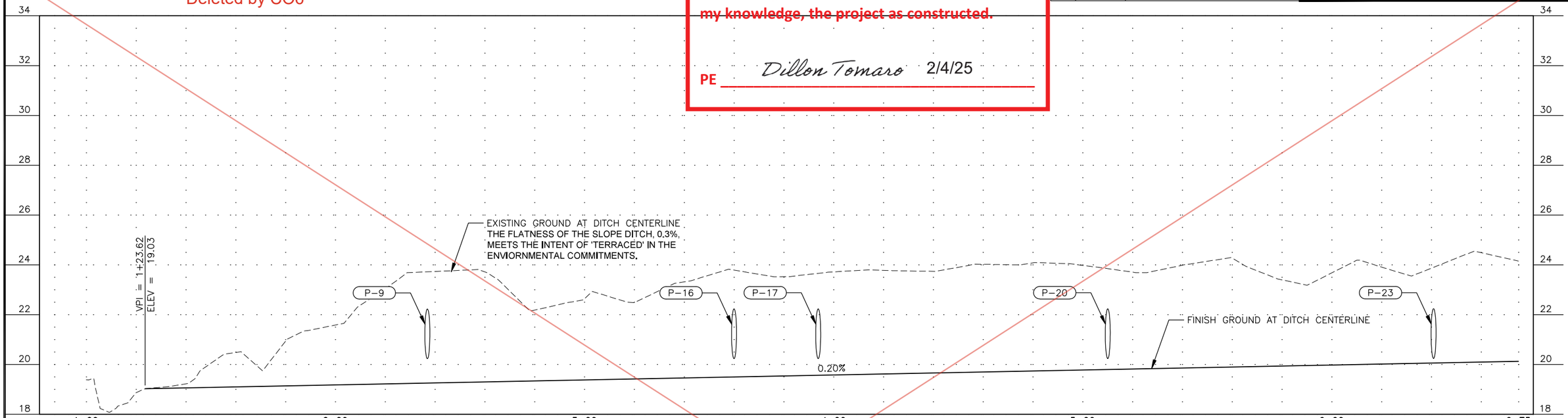

CONVEYANCE DITCH PROFILE

STATE OF ALASKA
49TH
ANTHONY M. ROOS
CE 12759
REGISTERED PROFESSIONAL ENGINEER
7/31/2020

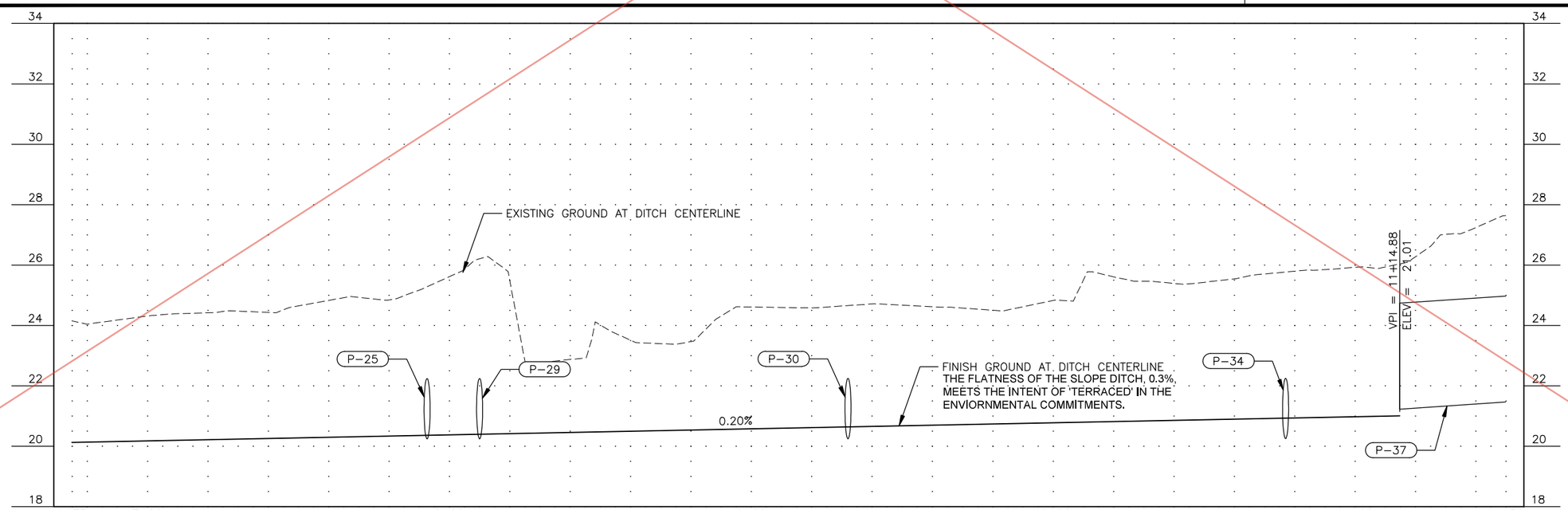

PLANS DEVELOPED BY: KITTELSON & ASSOCIATES, INC. CERT. OF AUTHORIZATION NO.: 254741, 851 SW 6TH AVE. SUITE 600, PORTLAND, OR 97204, (503) 228-5230
H:\20\20487 - Glacier Highway - Juneau Traffic Design\design_CD\68124_P_STORM-P-21 Thu, Jul/30/20 03:17pm

CO 6

Record Drawings have been reviewed by the Project Engineer, and represent to the best of my knowledge, the project as constructed.

PE Dillon Tomaro 2/4/25

NO.	DATE	REVISION
1	05/17/21	CONVEYANCE DITCH STA AND OFFSETS

STATE	PROJECT DESIGNATION	YEAR	SHEET NO.	TOTAL SHEETS
ALASKA	TEA-0955(016)/Z68124	2020	P-21	235

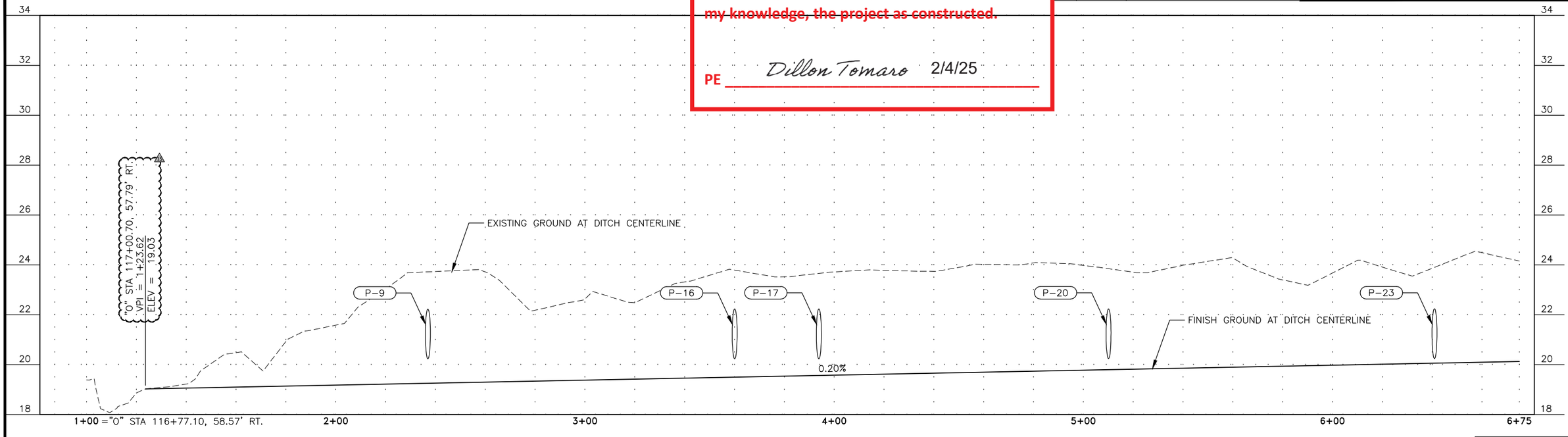

STATE OF ALASKA 49TH
ANTHONY M. ROOS
CE 12759
REGISTERED PROFESSIONAL ENGINEER
5/17/21

CONVEYANCE DITCH PROFILE

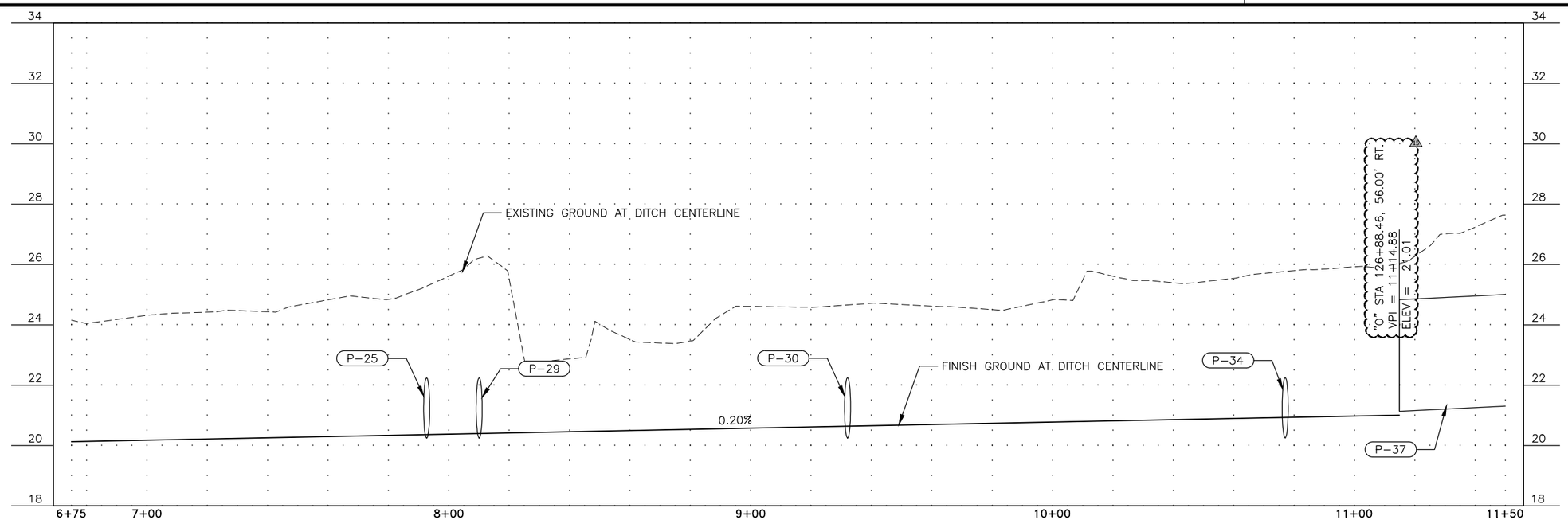

PLANS DEVELOPED BY: KITTELSON & ASSOCIATES, INC. CERT. OF AUTHORIZATION NO.: 254741, 851 SW 6TH AVE. SUITE 600, PORTLAND, OR 97204, (503) 228-5230
H:\20\20487 - glacier highway - juneau traffic design\design_CD\68124_P_STORM-P-21 Mon, May/17/21 03:45pm

NO.	DATE	REVISION
1	01/04/2021	ADDENDUM 7

STATE	PROJECT DESIGNATION	YEAR	SHEET NO.	TOTAL SHEETS
ALASKA	TEA-0955(016)/Z68124	2020	P-22	235

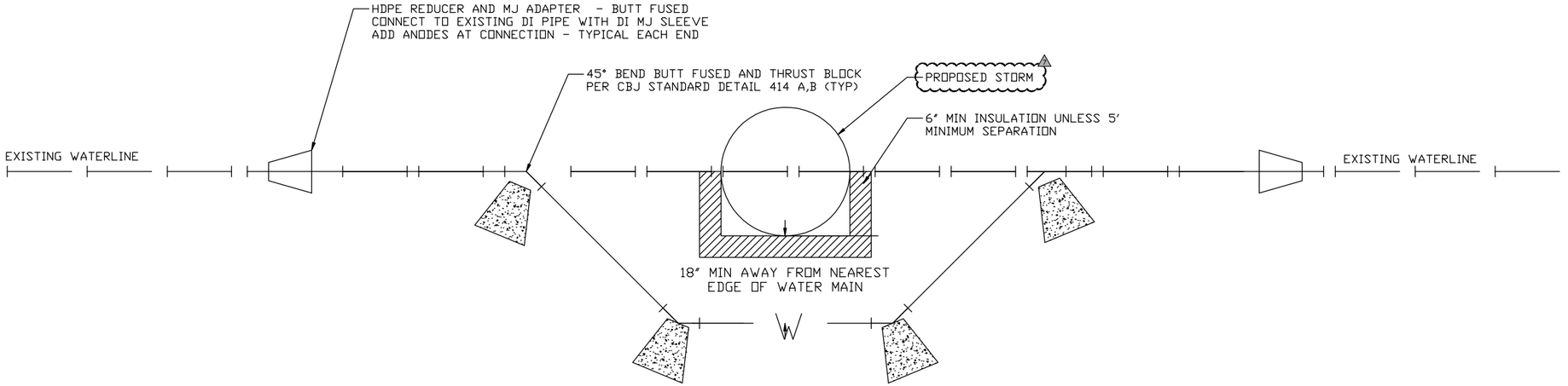

NOTES:
1) ALL NEW PIPE SHALL BE MINIMUM WALL THICKNESS OF PE4710 - DR11 OR HIGHER PRESSURE RATING IF PRESSURE ZONE REQUIRES.
2) ALL NEW PIPE SHALL BE THE SAME INSIDE DIAMETER AS THE PIPE BEING RELOCATED.
3) WHEN RELOCATING DUCTILE IRON PIPE INSTALL THE APPROPRIATE NUMBER OF ANODES AT THE CONNECTION TO THE DIP AT EACH END (1 EA FOR DIAMETER <12" DIP, 2 EA 12" OR GREATER THAN 12" DIP).
4) ALL CONNECTIONS SHALL BE BY BUTT FUSION
5) WHEN RELOCATING HDPE PIPING, THE CONNECTIONS SHOWN AS MJ ADAPTERS SHALL BE CONNECTED BY BUTT FUSION. ELECTRO - FUSION COUPLERS OR FLANGED CONNECTIONS ARE NOT ALLOWED.
6) THRUST BLOCKS SHALL BE AS SPECIFIED IN CBJ STANDARD DETAIL 414 A AND 414 B.
7) MINIMUM 9-FEET BETWEEN JOINTS 1

DETAILS

STATE OF ALASKA 49TH
ANTHONY M. ROOS
CE 127591
REGISTERED PROFESSIONAL ENGINEER
1/8/21

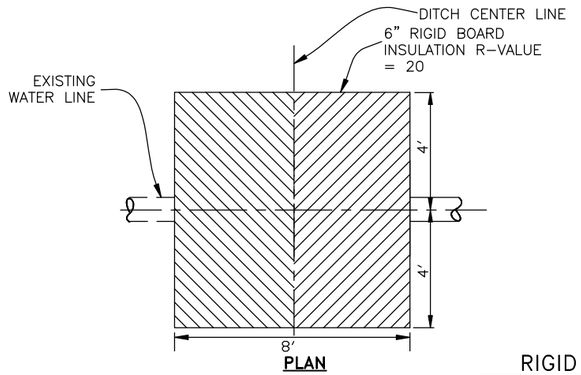

PLAN

RIGID INSULATION
SCALE:NOT TO SCALE

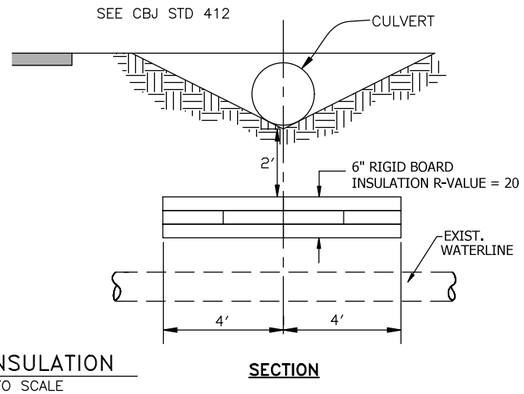

SECTION

RIGID INSULATION NOTES:

1. INSTALL INSULATION AS SHOWN WHEN EXISTING WATERLINE IS LESS 5'-0" BELOW BOTTOM OF DITCH.
2. PIPE INSULATION SHALL BE 8'-0" IN LENGTH, CENTERED OVER EXISTING WATERLINE.
3. PIPE INSULATION WITH R-FACTOR EQUAL TO RIGID BOARD MAY BE SUBSTITUTED IF APPROVED BY ENGINEER.
4. CROSSING SHALL BE PROTECTED WITH A MINIMUM 6" OF INSULATION BOARDS WITH A 12" OVER LAP AS SHOWN.

Record Drawings have been reviewed by the Project Engineer, and represent to the best of my knowledge, the project as constructed.

PE Dillon Tomaro 2/4/25

PLANS DEVELOPED BY: KITTELSON & ASSOCIATES, INC. CERT. OF AUTHORIZATION NO.: 254741, 851 SW 6TH AVE. SUITE 600, PORTLAND, OR 97204, (503) 228-5230
H:\20\20487 - Glacier Highway - Juneau Traffic Design\design_CD\68124_P_STORM-P-22 Fri, Jan/08/21 09:41am

Record Drawings have been reviewed by the Project Engineer, and represent to the best of my knowledge, the project as constructed.

PE *Dillon Tomaro* 2/4/25

NO.	DATE	REVISION
1	01/05/21	ADDENDUM 7

STATE	PROJECT DESIGNATION	YEAR	SHEET NO.	TOTAL SHEETS
ALASKA	TEA-0955(016)/Z68124	2020	Q-1	235

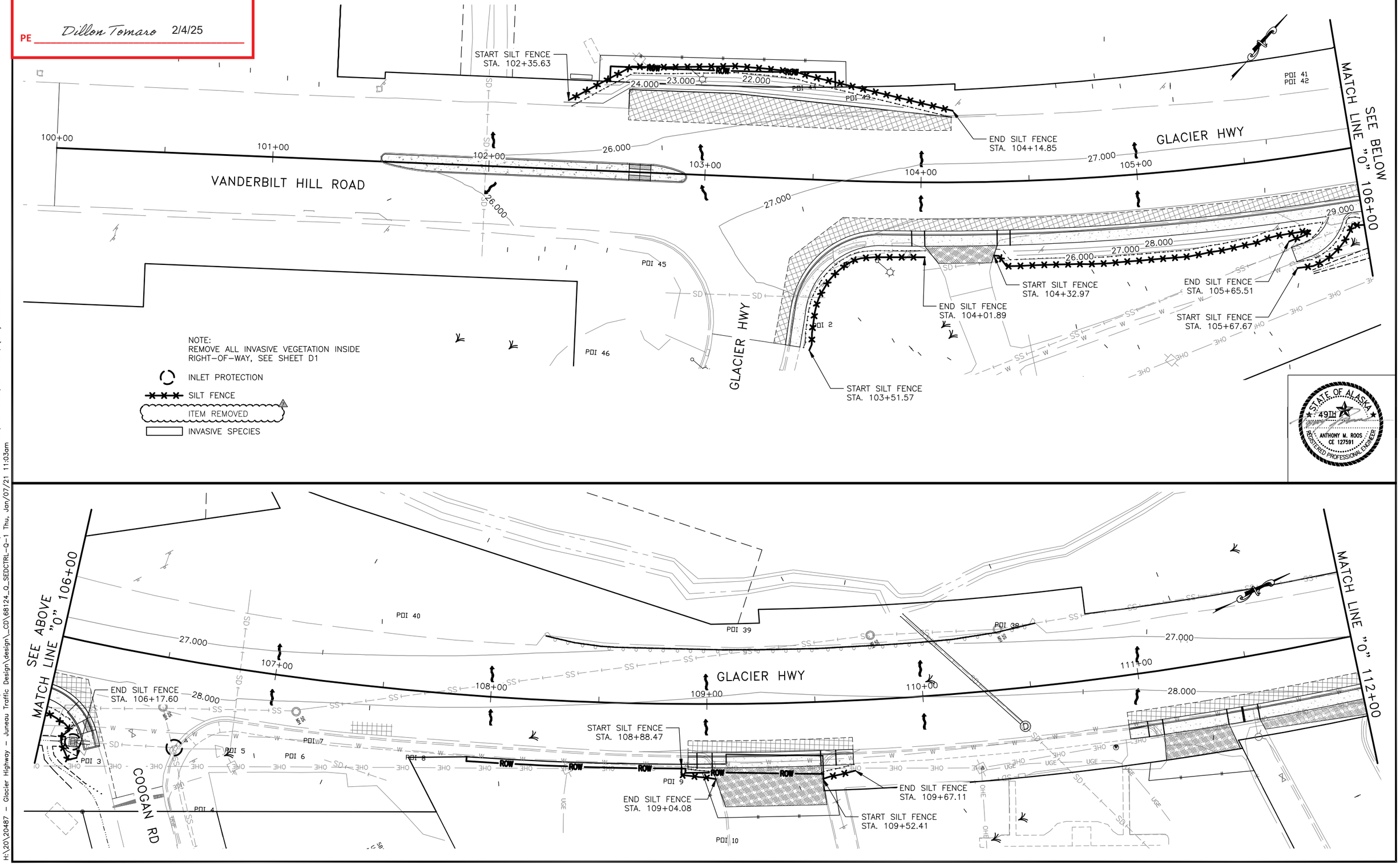

PLANS DEVELOPED BY: KITTELSON & ASSOCIATES, INC. CERT. OF AUTHORIZATION NO.: 254741, 851 SW 6TH AVE. SUITE 600, PORTLAND, OR 97204, (503) 228-5230
H:\20\20487 - Glacier Highway - Juneau Traffic Design\design_CD\68124_Q_SEDCTRL-Q-1 Thu, Jon/07/21 11:03am

NO.	DATE	REVISION
1	01/05/21	ADDENDUM 7

STATE	PROJECT DESIGNATION	YEAR	SHEET NO.	TOTAL SHEETS
ALASKA	TEA-0955(016)/Z68124	2020	Q-2	235

Record Drawings have been reviewed by the Project Engineer, and represent to the best of my knowledge, the project as constructed.

PE *Dillon Tomaro* 2/4/25

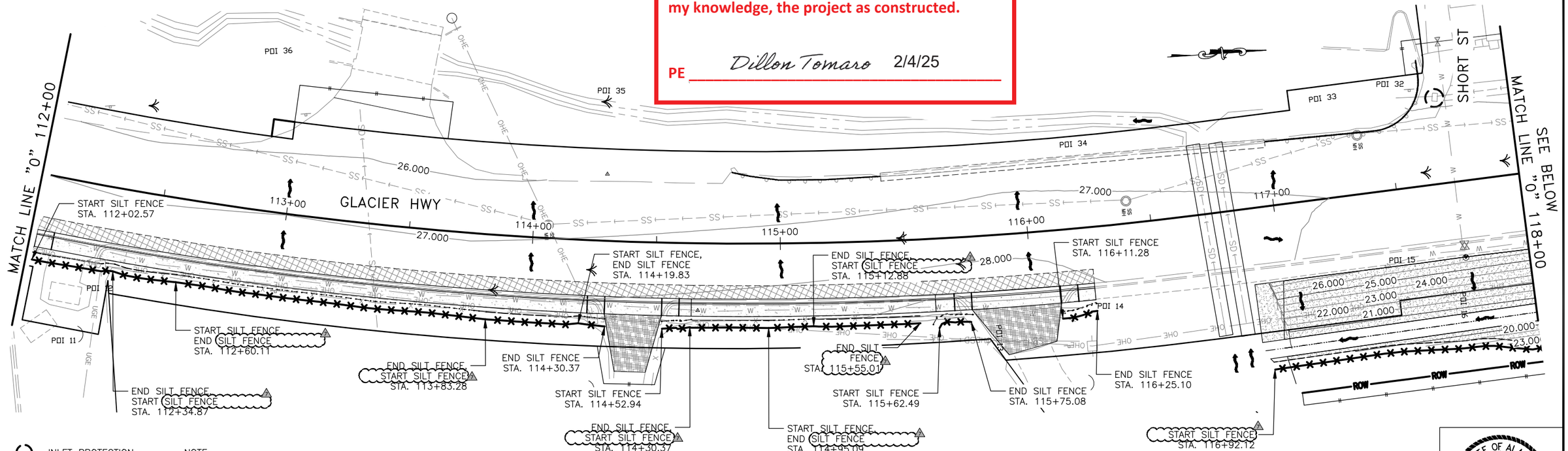

INLET PROTECTION

SILT FENCE

ITEM REMOVED

INVASIVE SPECIES

NOTE:
REMOVE ALL INVASIVE VEGETATION INSIDE RIGHT-OF-WAY, SEE SHEET D1

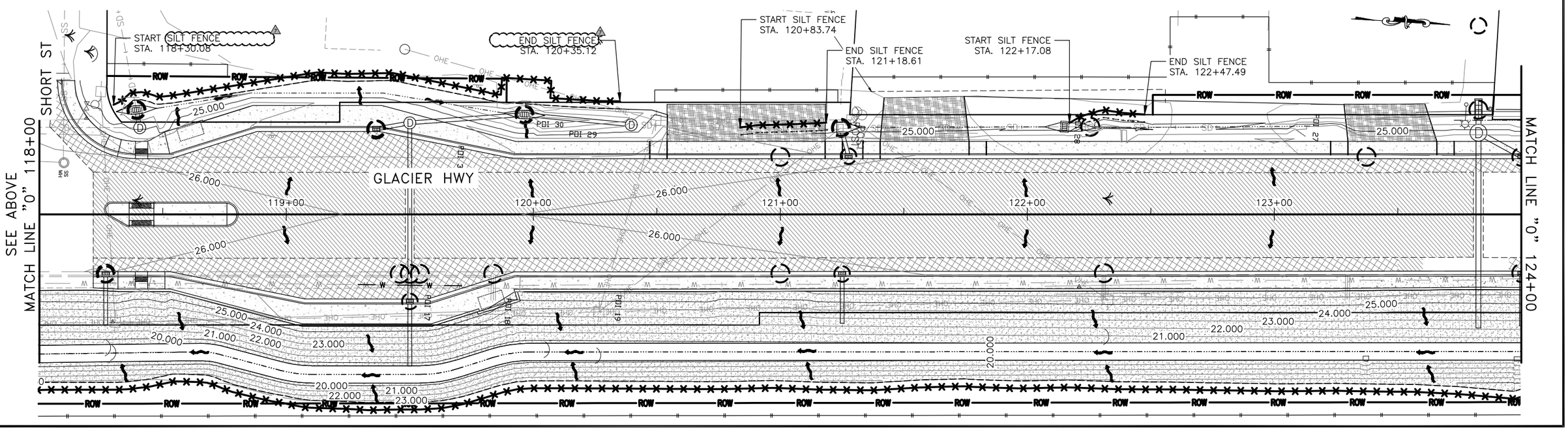

STATE OF ALASKA
49TH
ANTHONY M. ROOS
CE 127591
REGISTERED PROFESSIONAL ENGINEER

PLANS DEVELOPED BY: KITTELSON & ASSOCIATES, INC. CERT. OF AUTHORIZATION NO.: 254741, 851 SW 6TH AVE. SUITE 600, PORTLAND, OR 97204, (503) 228-5230
H:\20\20487 - Glacier Highway - Juneau Traffic Design\design_CD\68124_Q_SEDCTRL-Q-2 Thu, Jan/07/21 11:04am

Record Drawings have been reviewed by the Project Engineer, and represent to the best of my knowledge, the project as constructed.

PE Dillon Tomaro 2/4/25

NO.	DATE	REVISION
1	01/05/21	ADDENDUM 7

STATE	PROJECT DESIGNATION	YEAR	SHEET NO.	TOTAL SHEETS
ALASKA	TEA-0955(016)/Z68124	2020	Q-3	235

PLANS DEVELOPED BY: KITTELSON & ASSOCIATES, INC. CERT. OF AUTHORIZATION NO.: 254741, 851 SW 6TH AVE. SUITE 600, PORTLAND, OR 97204, (503) 228-5230

H:\20\20487 - Glacier Highway - Juneau Traffic Design\design_CD\68124_Q_SEDCTRL-Q-3 Thu, Jan/07/21 11:04am

MATCH LINE "0" 124+00

START SILT FENCE STA. 124+82.66

END SILT FENCE STA. 125+92.22

START SILT FENCE STA. 127+18.26

START SILT FENCE
END SILT FENCE STA. 127+50.76

END SILT FENCE STA. 129+37.29

START SILT FENCE STA. 129+57.21

END SILT FENCE STA. 129+98.16

MATCH LINE "0" 130+00

SEE BELOW

GLACIER HWY

125+00 126+00 127+00 128+00 129+00

26.000 25.000 27.000 26.000 28.000 29.000 30.000

END SILT FENCE STA. 126+87.81

SEE ABOVE

MATCH LINE "0" 130+00

START SILT FENCE STA. 130+27.36

END SILT FENCE STA. 132+05.57

START SILT FENCE STA. 132+26.91

131+00 132+00 133+00 134+00 135+00

30.000 31.000 31.000 30.000 31.000 32.000

END SILT FENCE STA. 133+26.58

END SILT FENCE STA. 133+64.76

START SILT FENCE STA. 134+21.43

START SILT FENCE
END SILT FENCE STA. 133+67.43

END SILT FENCE
START SILT FENCE STA. 133+67.37

START SILT FENCE STA. 133+59.64

END SILT FENCE STA. 133+56.64

START SILT FENCE STA. 133+34.35

START SILT FENCE STA. 133+54.87

START SILT FENCE STA. 133+88.18

START SILT FENCE STA. 133+94.80

END SILT FENCE STA. 133+86.71

START SILT FENCE STA. 1334+68.22

END SILT FENCE STA. 134+54.96

END SILT FENCE STA. 134+54.96

START SILT FENCE
END SILT FENCE STA. 134+70.05

END SILT FENCE STA. 134+65.07

START SILT FENCE
END SILT FENCE STA. 134+84.20

END SILT FENCE
START SILT FENCE STA. 134+77.89

START SILT FENCE STA. 134+65.76

START SILT FENCE STA. 134+63.52

END SILT FENCE STA. 135+25.24

MATCH LINE "0" 136+00

ANKA ST

NOTE:
REMOVE ALL INVASIVE VEGETATION INSIDE RIGHT-OF-WAY, SEE SHEET D1

INLET PROTECTION

SILT FENCE

ITEM REMOVED

INVASIVE SPECIES

STATE OF ALASKA
49TH
ANTHONY M. ROOS
CE 127591
REGISTERED PROFESSIONAL ENGINEER

Addendum 7; Attachment # 28

Record Drawings have been reviewed by the Project Engineer, and represent to the best of my knowledge, the project as constructed.

PE *Dillon Tomaro* 2/4/25

NO.	DATE	REVISION
1	01/05/21	ADDENDUM 7

STATE	PROJECT DESIGNATION	YEAR	SHEET NO.	TOTAL SHEETS
ALASKA	TEA-0955(016)/Z68124	2020	Q-4	235

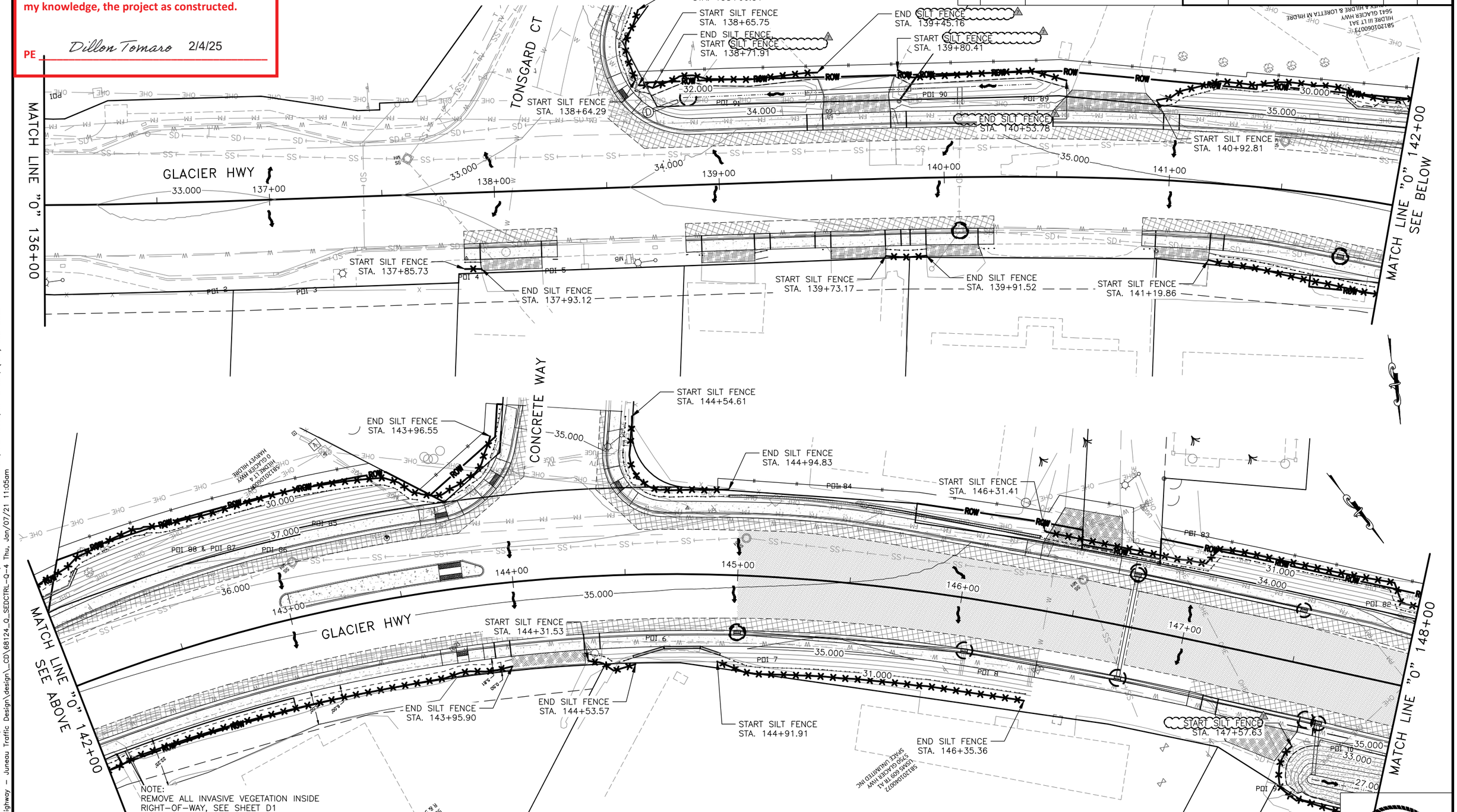

EROSION AND SEDIMENT CONTROL PLAN 4

STATE OF ALASKA 49TH
ANTHONY M. ROOS CE 127591 REGISTERED PROFESSIONAL ENGINEER
1/7/21

PLANS DEVELOPED BY: KITTELSON & ASSOCIATES, INC. CERT. OF AUTHORIZATION NO.: 254741, 851 SW 6TH AVE. SUITE 600, PORTLAND, OR 97204, (503) 228-5230
H:\20\20487 - Glacier Highway - Juneau Traffic Design\design_CD\68124_Q_SEDCTRL - Q-4 Thu, Jon/07/21 11:05am

Record Drawings have been reviewed by the Project Engineer, and represent to the best of my knowledge, the project as constructed.

PE *Dillon Tomaro* 2/4/25

NO.	DATE	REVISION
1	01/05/21	ADDENDUM 7

STATE	PROJECT DESIGNATION	YEAR	SHEET NO.	TOTAL SHEETS
ALASKA	TEA-0955(016)/Z68124	2020	Q-5	235

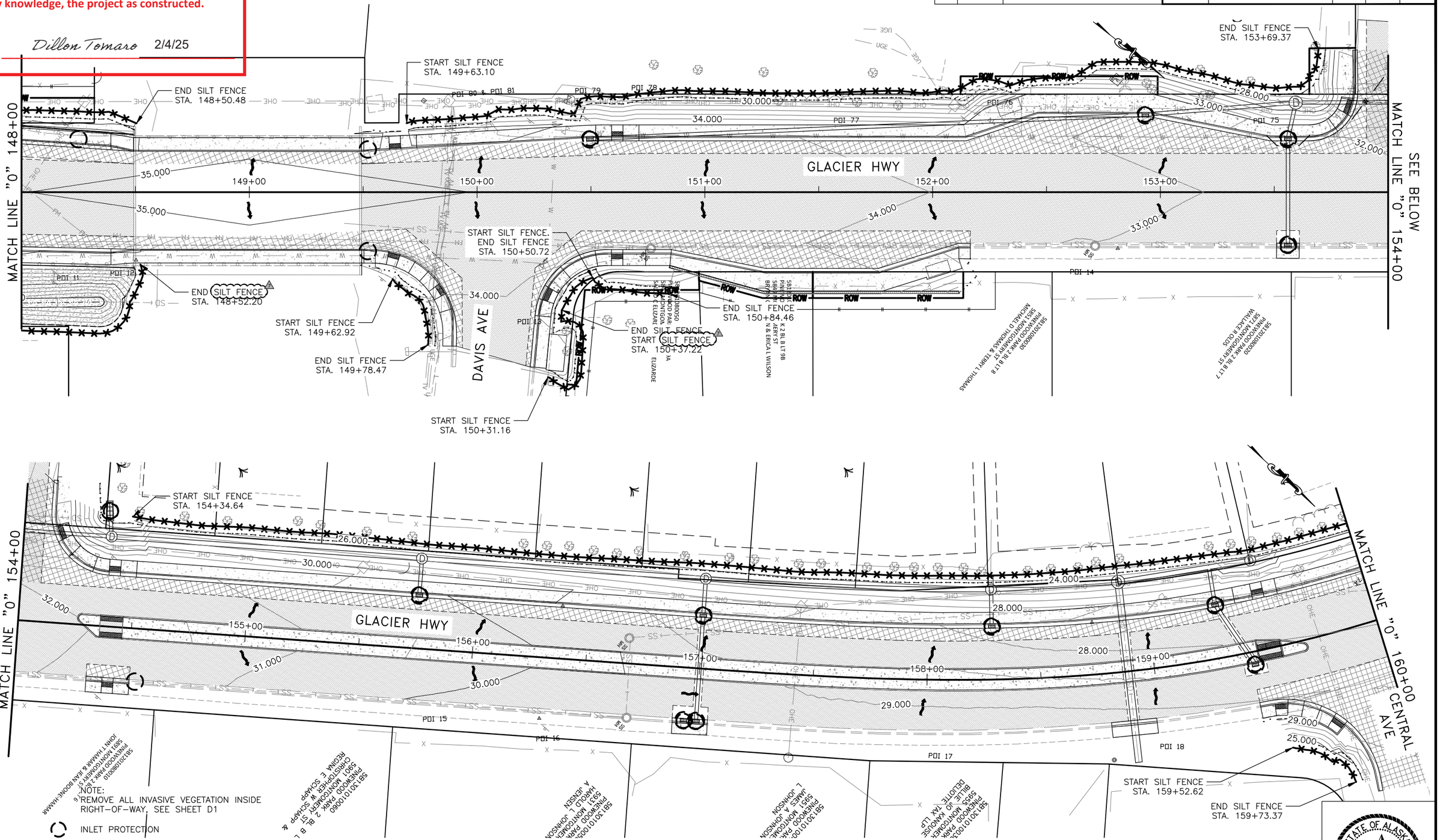

NOTE:
REMOVE ALL INVASIVE VEGETATION INSIDE RIGHT-OF-WAY, SEE SHEET D1

INLET PROTECTION

SILT FENCE

ITEM REMOVED

INVASIVE SPECIES

EROSION AND SEDIMENT CONTROL PLAN 5

STATE OF ALASKA 49TH
ANTHONY M. ROOS CE 127591
REGISTERED PROFESSIONAL ENGINEER
1/7/21

PLANS DEVELOPED BY: KITTELSON & ASSOCIATES, INC. CERT. OF AUTHORIZATION NO.: 254741, 851 SW 6TH AVE. SUITE 600, PORTLAND, OR 97204, (503) 228-5230
H:\20\20487 - Glacier Highway - Juneau Traffic Design\design_CD\68124_0_SEDCTRL-Q-5 Thu, Jan/07/21 11:06am

NO.	DATE	REVISION
1	01/05/21	ADDENDUM 7

STATE	PROJECT DESIGNATION	YEAR	SHEET NO.	TOTAL SHEETS
ALASKA	TEA-0955(016)/Z68124	2020	Q-6	235

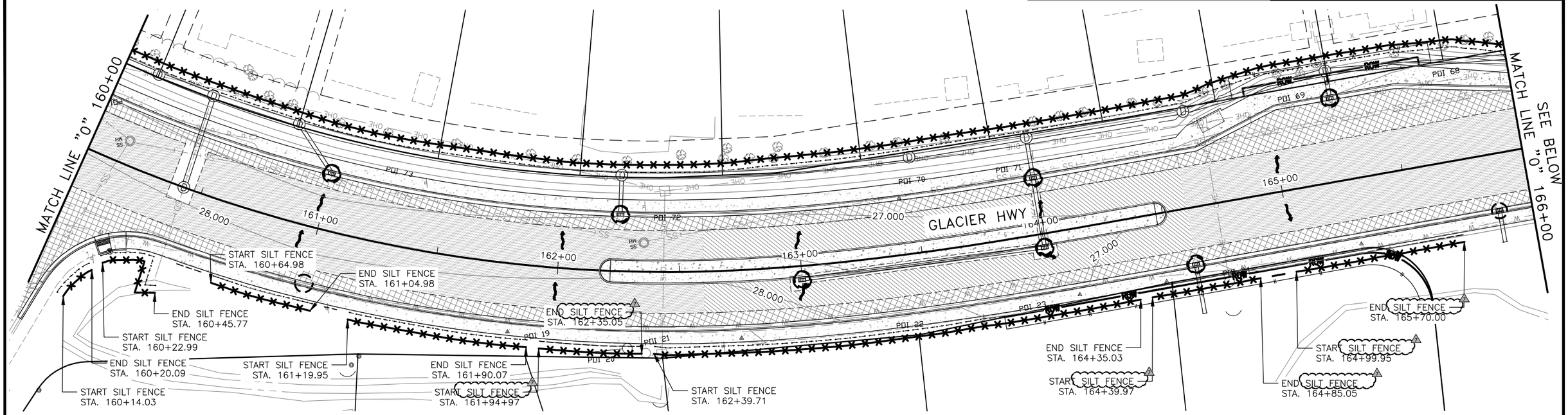

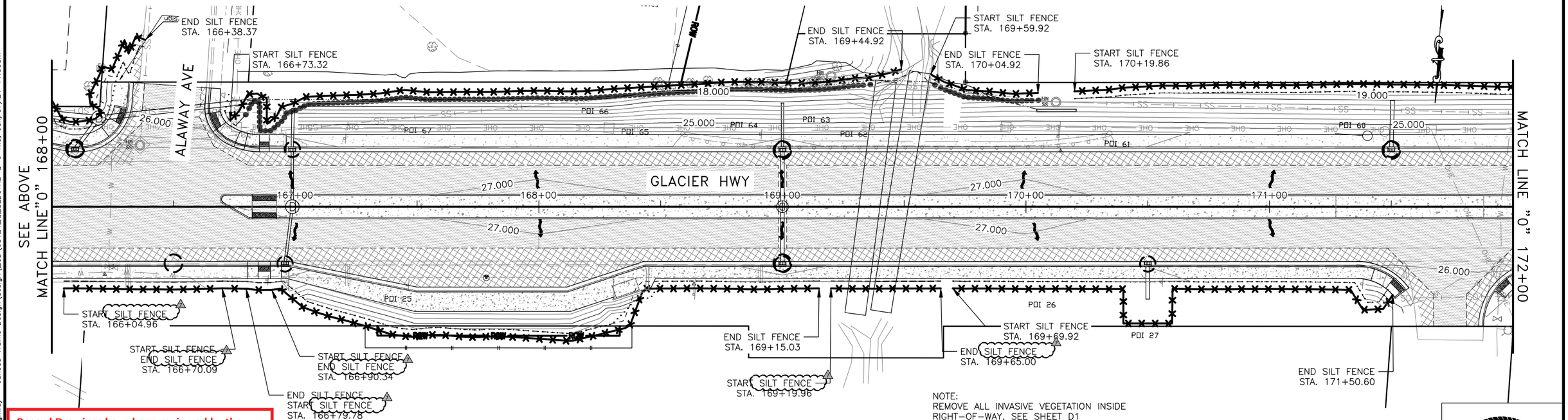

NOTE:
REMOVE ALL INVASIVE VEGETATION INSIDE RIGHT-OF-WAY, SEE SHEET D1

INLET PROTECTION
SILT FENCE
ITEM REMOVED
INVASIVE SPECIES

Record Drawings have been reviewed by the Project Engineer, and represent to the best of my knowledge, the project as constructed.

PE *Dillon Tomaro* 2/4/25

STATE OF ALASKA
49TH
ANTHONY M. ROOS
CE 127591
REGISTERED PROFESSIONAL ENGINEER
1/7/21

EROSION AND SEDIMENT CONTROL PLAN 6

PLANS DEVELOPED BY: KITTELSON & ASSOCIATES, INC. CERT. OF AUTHORIZATION NO.: 254741, 851 SW 6TH AVE. SUITE 600, PORTLAND, OR (503) 228-5230
H:\20\20487 - Glacier Highway - Juneau Traffic Design\design_CD\68124_0_SEDCTRL-Q-6 Thu, Jan/07/21 11:06am

Record Drawings have been reviewed by the Project Engineer, and represent to the best of my knowledge, the project as constructed.

PE *Dillon Tomaro* 2/4/25

NO.	DATE	REVISION
1	01/05/21	ADDENDUM 7

STATE	PROJECT DESIGNATION	YEAR	SHEET NO.	TOTAL SHEETS
ALASKA	TEA-0955(016)/Z68124	2020	Q-7	235

PLANS DEVELOPED BY: KITTELSON & ASSOCIATES, INC. CERT. OF AUTHORIZATION NO.: 254741, 851 SW 6TH AVE. SUITE 600, PORTLAND, OR 97204, (503) 228-5230
H:\20\20487 - Glacier Highway - Juneau Traffic Design\design_CD\68124_Q_SEDCTRL-Q-7 Thu, Jan/07/21 11:07am

MATCH LINE "0" 172+00

MATCH LINE "0" 178+00

GLACIER HWY

RENNINGER ST

ROW

SS

SD

OHE

PDI 41
PDI 42
PDI 44
PDI 43
PDI 45
PDI 46
PDI 55
PDI 54
PDI 53
PDI 50
PDI 51
PDI 47
PDI 48
PDI 49
PDI 58
PDI 59
PDI 56
PDI 57

END
STA 176+82.11
182.47', LT

START SILT FENCE
STA. 177+04.75

END SILT FENCE
START SILT FENCE
STA. 177+22.12

START SILT FENCE
END SILT FENCE
STA. 177+51.21

END SILT FENCE
STA. 173+19.16

START
STA 174+65.21
38.46', LT

173+00
174+00
175+00
176+00
177+00

START SILT FENCE
STA. 172+05.42

END SILT FENCE
START SILT FENCE
STA. 175+94.52

START SILT FENCE
END SILT FENCE
STA. 175+97.33

END SILT FENCE
STA. 176+02.30

START SILT FENCE
STA. 176+83.59

START SILT FENCE
STA. 176+76.09

END SILT FENCE
STA. 176+78.35

END SILT FENCE
STA. 177+71.51

START SILT FENCE
END SILT FENCE
STA. 177+32.87

END SILT FENCE
START SILT FENCE
STA. 177+13.30

5813011000041
USS 2137 LT 2A
6370 GLACIER HWY
GENE COUGAN

5813010900000
USS 2121 TR A-A [NORTHWOOD CONDOS CONDO LAND]
6310 GLACIER HWY
NORTHWOOD CONDO ASSOCIATION

5813011000042
USS 2137 LT 1A
0 GLACIER HWY
CITY AND BOROUGH OF JUNEAU LANDS AND RESOURCES

NOTE:
REMOVE ALL INVASIVE VEGETATION INSIDE RIGHT-OF-WAY, SEE SHEET D1

INLET PROTECTION

SILT FENCE

ITEM REMOVED

INVASIVE SPECIES

EROSION AND SEDIMENT CONTROL PLAN 7

STATE OF ALASKA
49TH
ANTHONY M. ROOS
CE 127591
REGISTERED PROFESSIONAL ENGINEER
1/7/21

NO.	DATE	REVISION
1	01/05/21	ADDENDUM 7

STATE	PROJECT DESIGNATION	YEAR	SHEET NO.	TOTAL SHEETS
ALASKA	TEA-0955(016)/Z68124	2020	Q-8	235

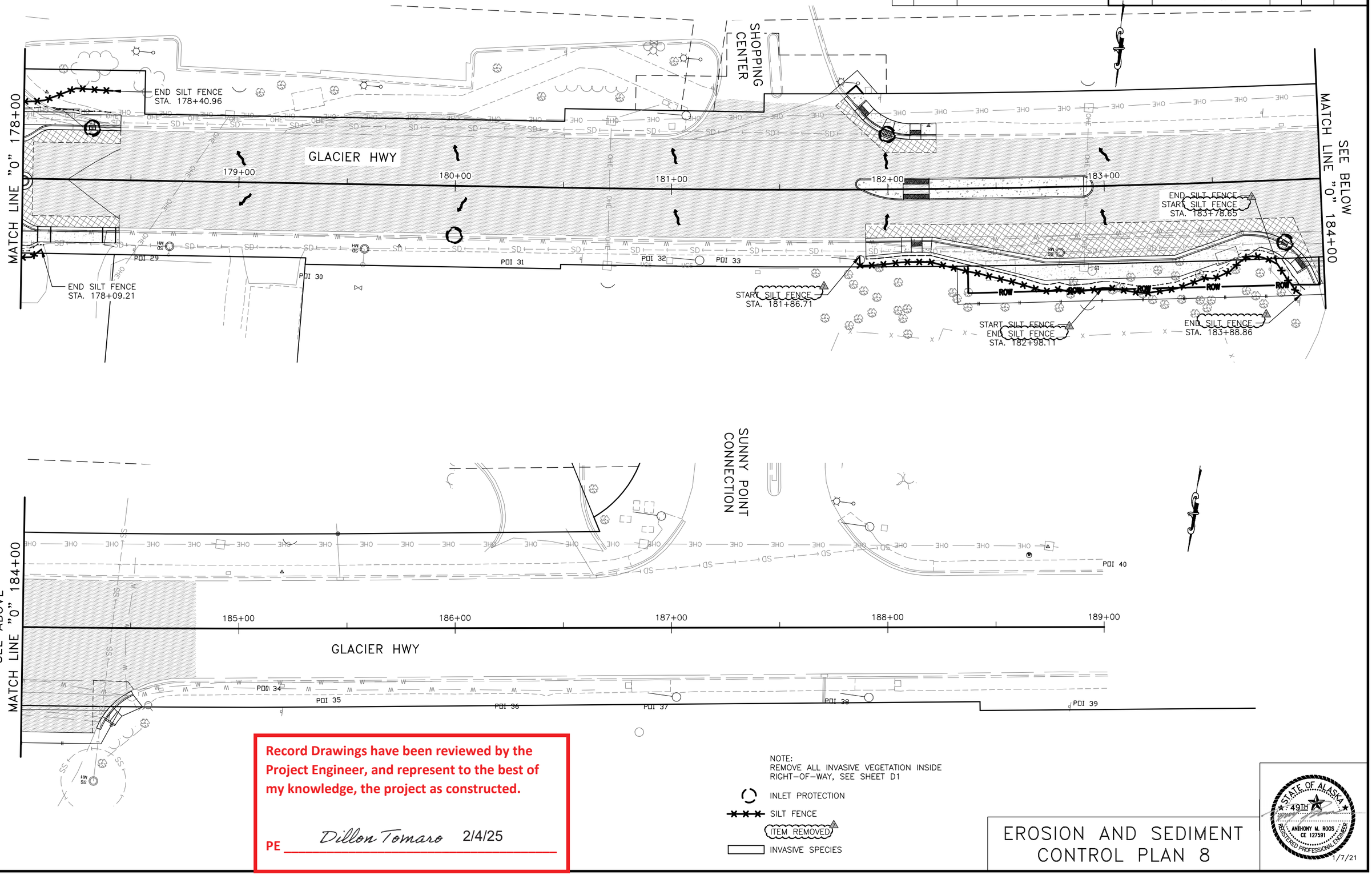

Record Drawings have been reviewed by the Project Engineer, and represent to the best of my knowledge, the project as constructed.

PE *Dillon Tomaro* 2/4/25

NOTE:
REMOVE ALL INVASIVE VEGETATION INSIDE RIGHT-OF-WAY, SEE SHEET D1

INLET PROTECTION
SILT FENCE
ITEM REMOVED
INVASIVE SPECIES

EROSION AND SEDIMENT CONTROL PLAN 8

STATE OF ALASKA 49TH
ANTHONY M. ROOS CE 127591
REGISTERED PROFESSIONAL ENGINEER
1/7/21

PLANS DEVELOPED BY: KITTELSON & ASSOCIATES, INC. CERT. OF AUTHORIZATION NO.: 254741, 851 SW 6TH AVE. SUITE 600, PORTLAND, OR 97204, (503) 228-5230
H:\20\20487 - Glacier Highway - Juneau Traffic Design\design_CD\68124_0_SEDCTRL-Q-8 Thu, Jan/07/21 11:07am

NO.	DATE	REVISION
1	01/22/21	ADDENDUM 10

STATE	PROJECT DESIGNATION	YEAR	SHEET NO.	TOTAL SHEETS
ALASKA	TEA-0955(016)/Z68124	2020	S-1	235

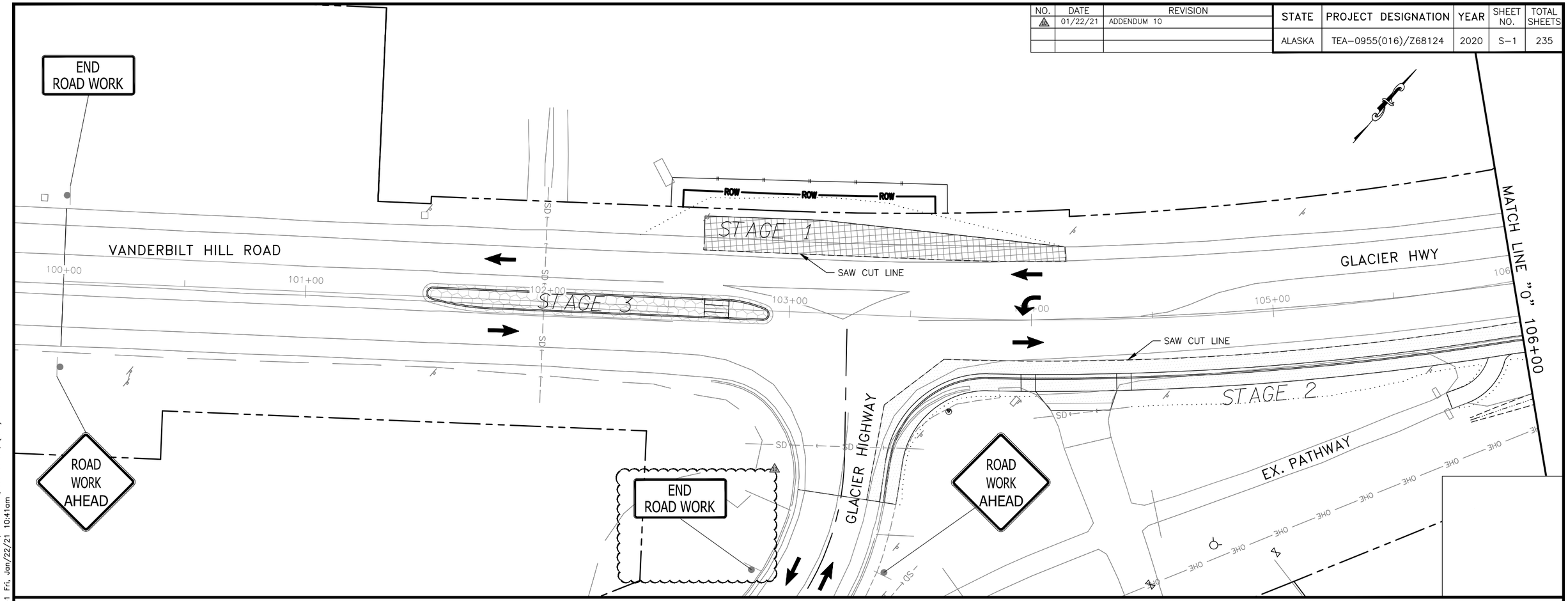

LEGEND

- STAGE 1 CONSTRUCTION
- STAGE 2 CONSTRUCTION
- STAGE 3 CONSTRUCTION

NOTES

SIGNS SHOWN ARE PERMANENT CONSTRUCTION SIGNS.

Record Drawings have been reviewed by the Project Engineer, and represent to the best of my knowledge, the project as constructed.

PE Dillon Tomaro 2/4/25

PLANS DEVELOPED BY: KITTELSON & ASSOCIATES, INC. CERT. OF AUTHORIZATION NO.: 254741, 851 SW 6TH AVE. SUITE 600, PORTLAND, OR 97204, (503) 228-5230
H:\20\20487 - glacier highway - juneau traffic design\design_CD\68124_S_TRAFFIC CONTROL_SOUTH-S-1 Fri, Jan/22/21 10:41am

Addendum # 10; Attachment # 7

NO.	DATE	REVISION
1	01/22/21	ADDENDUM 10

STATE	PROJECT DESIGNATION	YEAR	SHEET NO.	TOTAL SHEETS
ALASKA	TEA-0955(016)/Z68124	2020	S-2	235

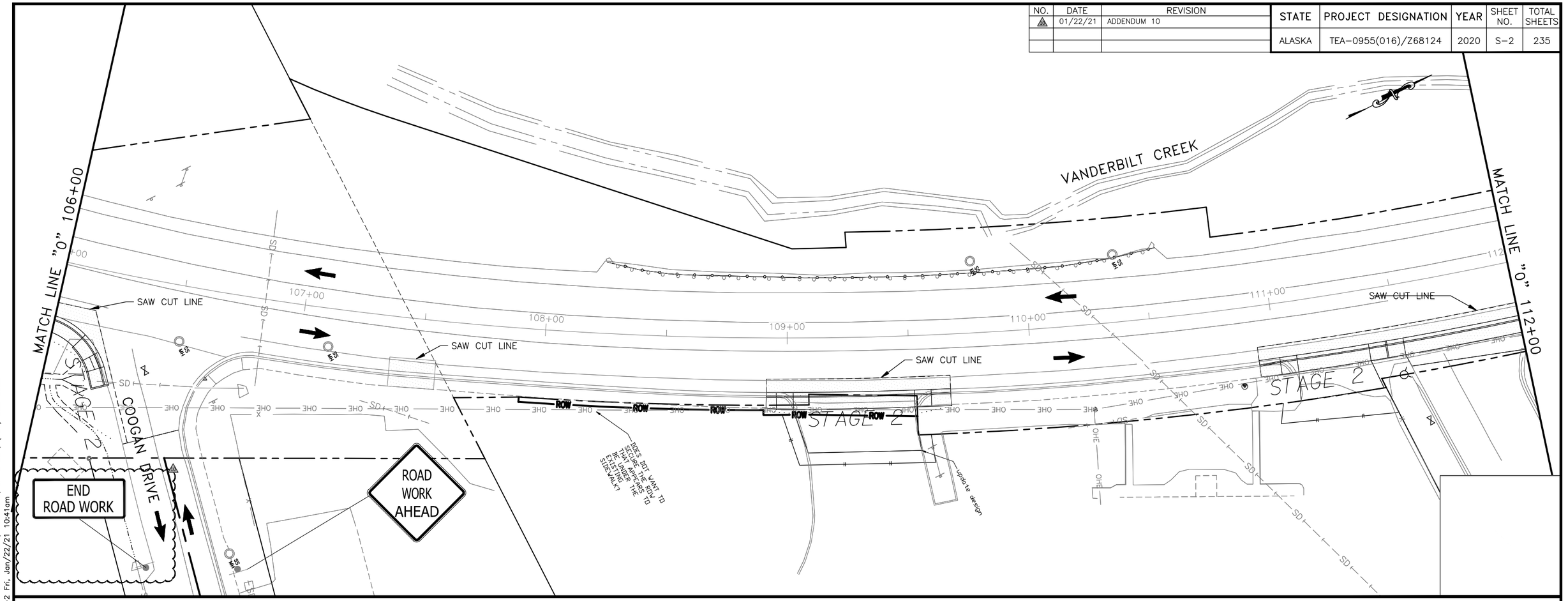

LEGEND

- STAGE 1 CONSTRUCTION
- STAGE 2 CONSTRUCTION
- STAGE 3 CONSTRUCTION

NOTES

SIGNS SHOWN ARE PERMANENT CONSTRUCTION SIGNS.

Record Drawings have been reviewed by the Project Engineer, and represent to the best of my knowledge, the project as constructed.

PE Dillon Tomaro 2/4/25

PLANS DEVELOPED BY: KITTELSON & ASSOCIATES, INC. CERT. OF AUTHORIZATION NO.: 254741, 851 SW 6TH AVE. SUITE 600, PORTLAND, OR 97204, (503) 228-5230
H:\20\20487 - glacier highway - juneau traffic design\design_CD\68124_S_TRAFFIC CONTROL_SOUTH-S-2 Fri, Jan/22/21 10:41am

NO.	DATE	REVISION
1	01/22/21	ADDENDUM 10

STATE	PROJECT DESIGNATION	YEAR	SHEET NO.	TOTAL SHEETS
ALASKA	TEA-0955(016)/Z68124	2020	S-3	235

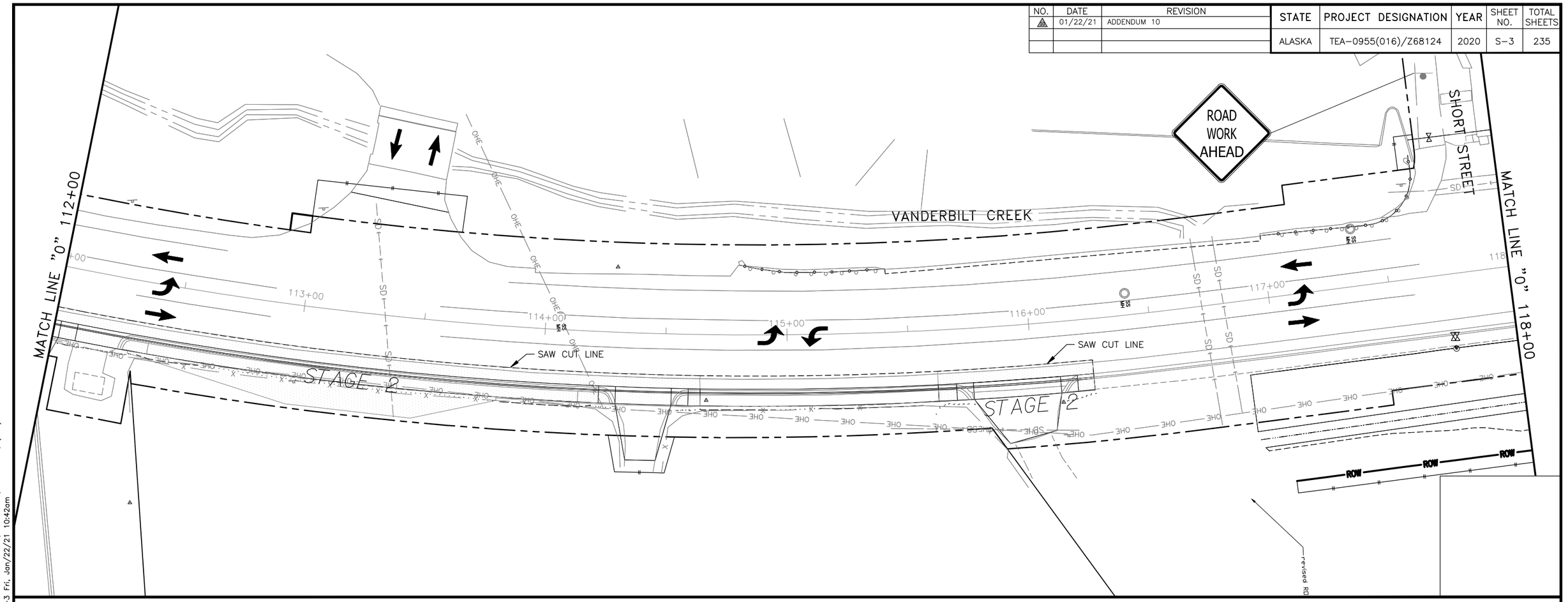

LEGEND

- STAGE 1 CONSTRUCTION
- STAGE 2 CONSTRUCTION
- STAGE 3 CONSTRUCTION

NOTES

SIGNS SHOWN ARE PERMANENT CONSTRUCTION SIGNS.

Record Drawings have been reviewed by the Project Engineer, and represent to the best of my knowledge, the project as constructed.

PE Dillon Tomaro 2/4/25

PLANS DEVELOPED BY: KITTELSON & ASSOCIATES, INC. CERT. OF AUTHORIZATION NO.: 254741, 851 SW 6TH AVE. SUITE 600, PORTLAND, OR 97204, (503) 228-5230
H:\20\20487 - glacier highway - juneau traffic design\design_CD\68124_S_TRAFFIC CONTROL_SOUTH-S-3 Fri, Jan/22/21 10:42am

NO.	DATE	REVISION
1	01/22/21	ADDENDUM 10

STATE	PROJECT DESIGNATION	YEAR	SHEET NO.	TOTAL SHEETS
ALASKA	TEA-0955(016)/Z68124	2020	S-4	235

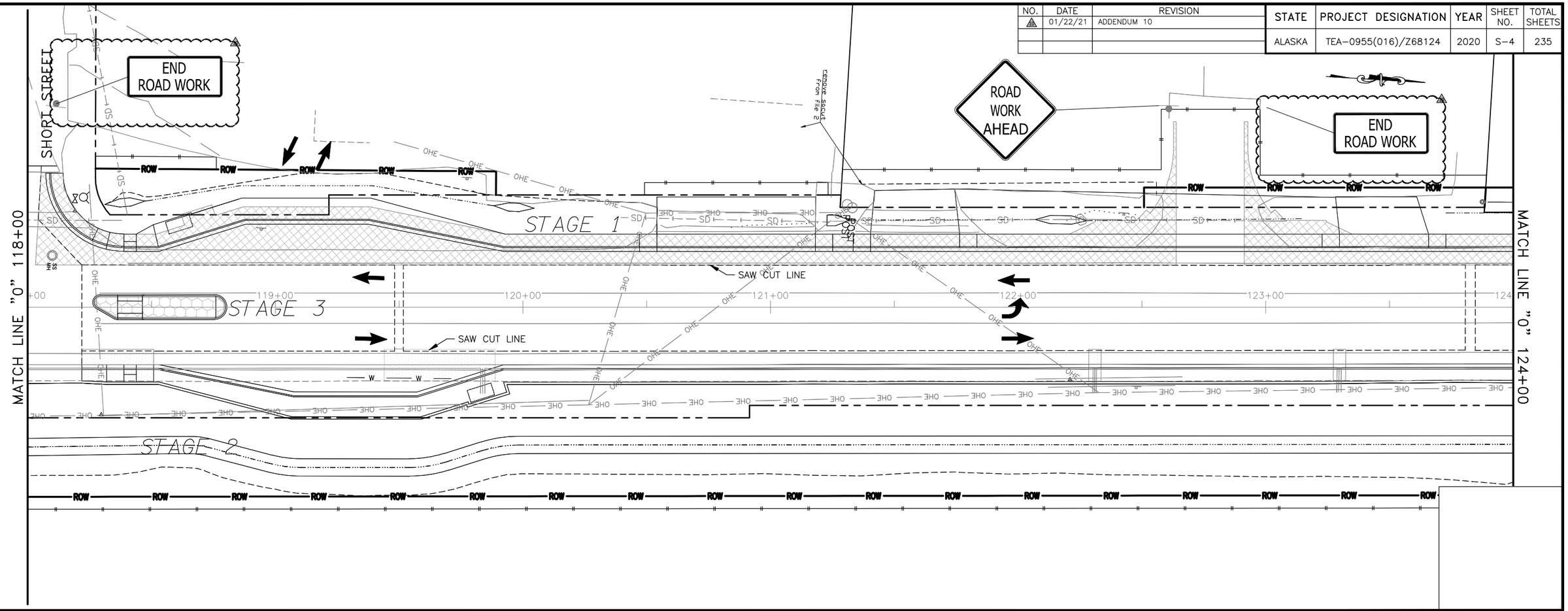

LEGEND

- STAGE 1 CONSTRUCTION
- STAGE 2 CONSTRUCTION
- STAGE 3 CONSTRUCTION

NOTES

1. SIGNS SHOWN ARE PERMANENT CONSTRUCTION SIGNS.

Record Drawings have been reviewed by the Project Engineer, and represent to the best of my knowledge, the project as constructed.

PE Dillon Tomaro 2/4/25

PLANS DEVELOPED BY: KITTELSON & ASSOCIATES, INC. CERT. OF AUTHORIZATION NO.: 254741, 851 SW 6TH AVE. SUITE 600, PORTLAND, OR 97204, (503) 228-5230
H:\20\20487 - glacier highway - juneau traffic design\design_CD\68124_S_TRAFFIC CONTROL_SOUTH-S-4 Fri, Jan/22/21 10:42am

NO.	DATE	REVISION
1	01/22/21	ADDENDUM 10

STATE	PROJECT DESIGNATION	YEAR	SHEET NO.	TOTAL SHEETS
ALASKA	TEA-0955(016)/Z68124	2020	S-5	235

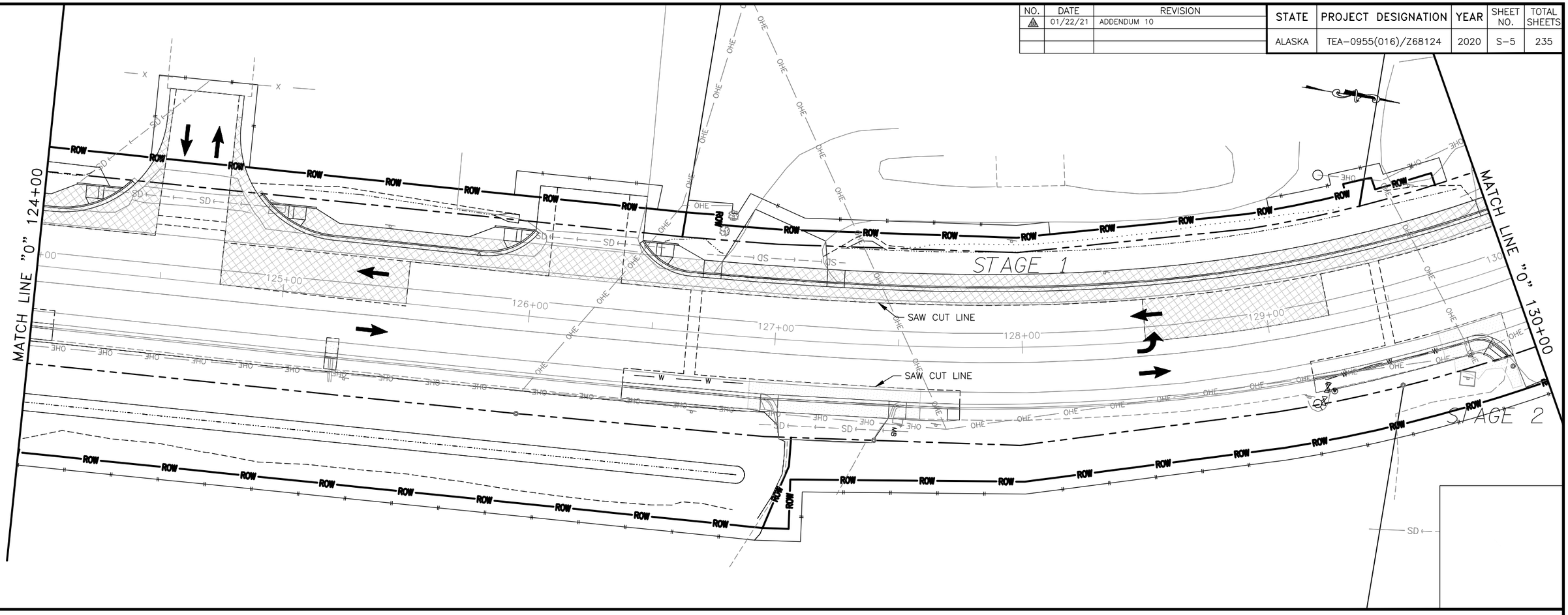

LEGEND

- STAGE 1 CONSTRUCTION
- STAGE 2 CONSTRUCTION
- STAGE 3 CONSTRUCTION

NOTES

1. SIGNS SHOWN ARE PERMANENT CONSTRUCTION SIGNS.

Record Drawings have been reviewed by the Project Engineer, and represent to the best of my knowledge, the project as constructed.

PE Dillon Tomaro 2/4/25

PLANS DEVELOPED BY: KITTELSON & ASSOCIATES, INC. CERT. OF AUTHORIZATION NO.: 254741. 851 SW 6TH AVE. SUITE 600, PORTLAND, OR 97204, (503) 228-5230
H:\20\20487 - glacier highway - juneau traffic design\design_CD\68124_S_TRAFFIC CONTROL_SOUTH-S-5 Fri, Jan/22/21 10:42am

NO.	DATE	REVISION
1	01/22/21	ADDENDUM 10

STATE	PROJECT DESIGNATION	YEAR	SHEET NO.	TOTAL SHEETS
ALASKA	TEA-0955(016)/Z68124	2020	S-6	235

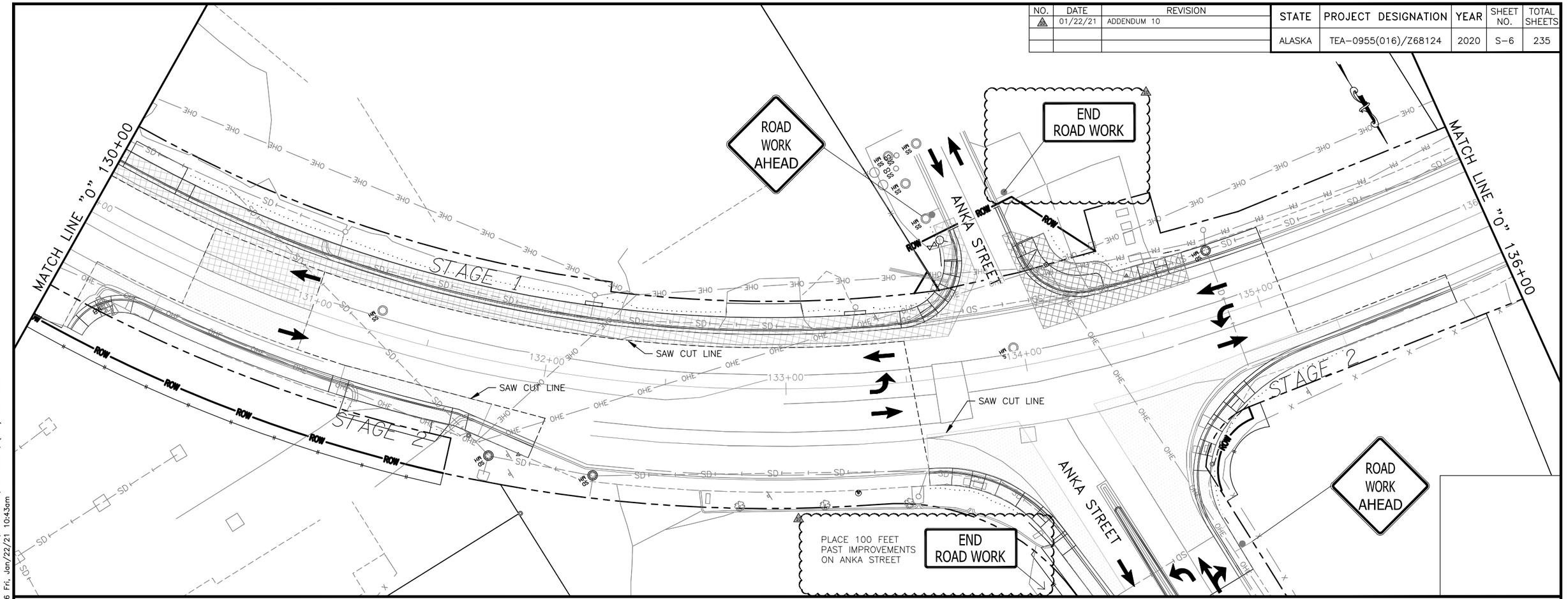

LEGEND

- STAGE 1 CONSTRUCTION
- STAGE 2 CONSTRUCTION
- STAGE 3 CONSTRUCTION

NOTES

SIGNS SHOWN ARE PERMANENT CONSTRUCTION SIGNS.

Record Drawings have been reviewed by the Project Engineer, and represent to the best of my knowledge, the project as constructed.

PE Dillon Tomaro 2/4/25

PLANS DEVELOPED BY: KITTELSON & ASSOCIATES, INC. CERT. OF AUTHORIZATION NO.: 254741, 851 SW 6TH AVE. SUITE 600, PORTLAND, OR 97204, (503) 228-5230
H:\20\20487 - glacier highway - juneau traffic design\design_CD\68124_S_TRAFFIC CONTROL_SOUTH-S-6 Fri, Jan/22/21 10:43am

Addendum # 10; Attachment # 12

NO.	DATE	REVISION
1	01/22/21	ADDENDUM 10

STATE	PROJECT DESIGNATION	YEAR	SHEET NO.	TOTAL SHEETS
ALASKA	TEA-0955(016)/Z68124	2020	S-7	235

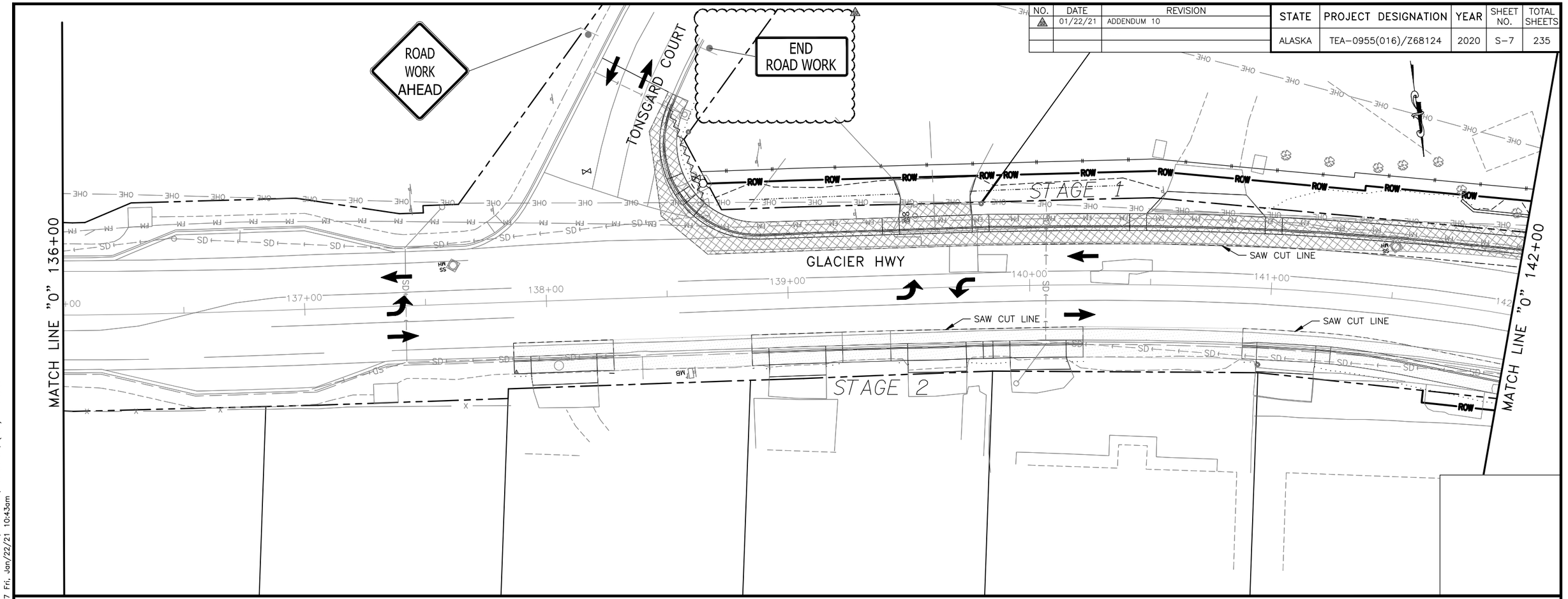

LEGEND

- STAGE 1 CONSTRUCTION
- STAGE 2 CONSTRUCTION
- STAGE 3 CONSTRUCTION

NOTES

1. SIGNS SHOWN ARE PERMANENT CONSTRUCTION SIGNS.

Record Drawings have been reviewed by the Project Engineer, and represent to the best of my knowledge, the project as constructed.

PE Dillon Tomaro 2/4/25

PLANS DEVELOPED BY: KITTELSON & ASSOCIATES, INC. CERT. OF AUTHORIZATION NO.: 254741, 851 SW 6TH AVE. SUITE 600, PORTLAND, OR 97204, (503) 228-5230
H:\20\20487 - glacier highway - juneau traffic design\design_CD\68124_S_TRAFFIC CONTROL_SOUTH-S-7 Fri, Jan/22/21 10:43am

Addendum # 10; Attachment # 13

NO.	DATE	REVISION
1	01/22/21	ADDENDUM 10

STATE	PROJECT DESIGNATION	YEAR	SHEET NO.	TOTAL SHEETS
ALASKA	TEA-0955(016)/Z68124	2020	S-8	235

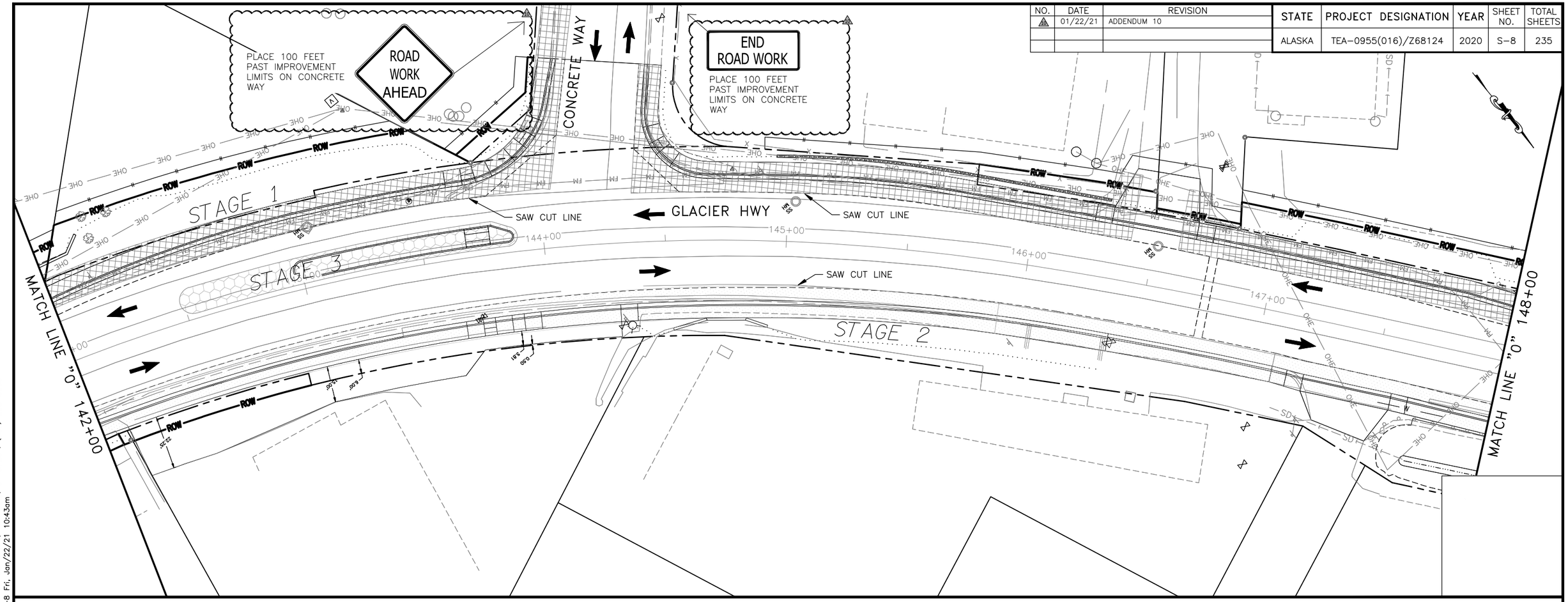

LEGEND

- STAGE 1 CONSTRUCTION
- STAGE 2 CONSTRUCTION
- STAGE 3 CONSTRUCTION

NOTES

SIGNS SHOWN ARE PERMANENT CONSTRUCTION SIGNS.

Record Drawings have been reviewed by the Project Engineer, and represent to the best of my knowledge, the project as constructed.

PE Dillon Tomaro 2/4/25

PLANS DEVELOPED BY: KITTELSON & ASSOCIATES, INC. CERT. OF AUTHORIZATION NO.: 254741, 851 SW 6TH AVE. SUITE 600, PORTLAND, OR 97204, (503) 228-5230
H:\20\20487 - glacier highway - juneau traffic design\design_CD\68124_S_TRAFFIC CONTROL_SOUTH-S--8 Fri, Jan/22/21 10:43am

Addendum # 10; Attachment # 14

NO.	DATE	REVISION
1	01/22/21	ADDENDUM 10

STATE	PROJECT DESIGNATION	YEAR	SHEET NO.	TOTAL SHEETS
ALASKA	TEA-0955(016)/Z68124	2020	S-9	235

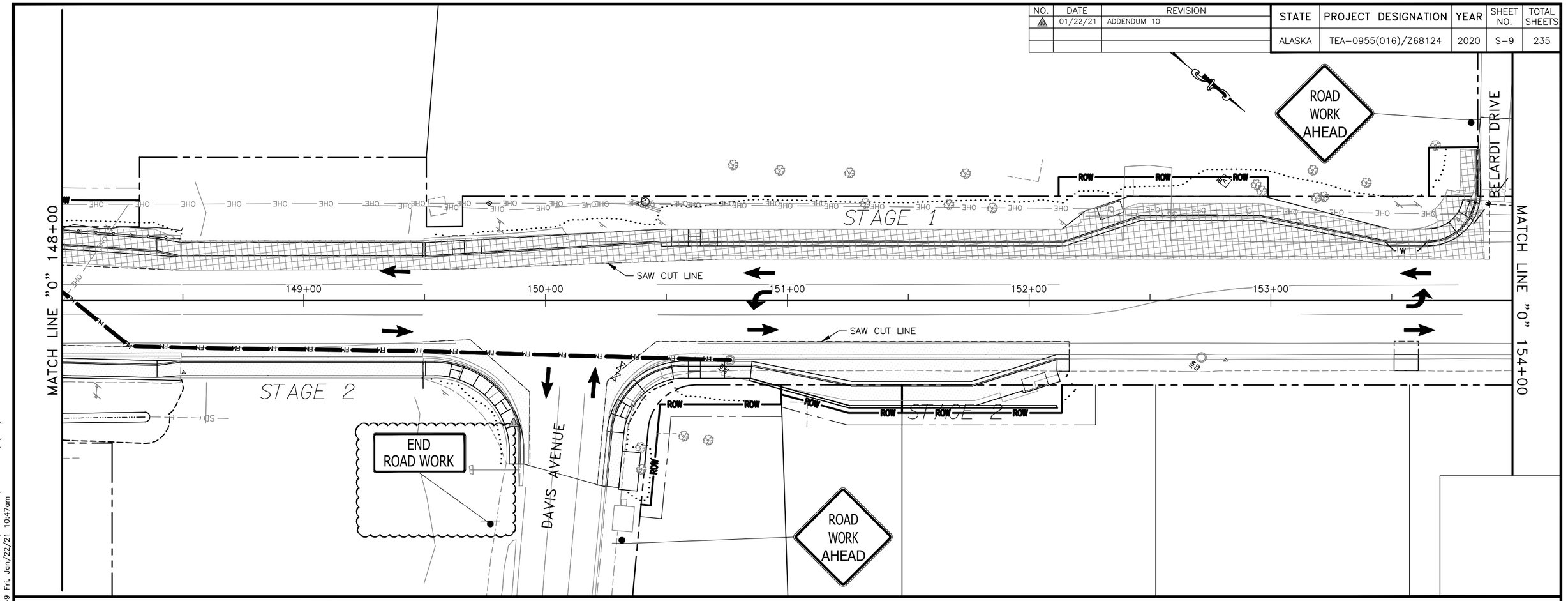

LEGEND

- STAGE 1 CONSTRUCTION
- STAGE 2 CONSTRUCTION
- STAGE 3 CONSTRUCTION

NOTES

SIGNS SHOWN ARE PERMANENT CONSTRUCTION SIGNS.

Record Drawings have been reviewed by the Project Engineer, and represent to the best of my knowledge, the project as constructed.

PE Dillon Tomaro 2/4/25

PLANS DEVELOPED BY: KITTELSON & ASSOCIATES, INC. CERT. OF AUTHORIZATION NO.: 254741, 851 SW 6TH AVE. SUITE 600, PORTLAND, OR 97204, (503) 228-5230
H:\20\20487 - glacier highway - juneau traffic design\design_CD\68124_S_TRAFFIC CONTROL_NORTH-S-9 Fri, Jan/22/21 10:47am

Addendum # 10; Attachment # 15

NO.	DATE	REVISION
1	01/22/21	ADDENDUM 10

STATE	PROJECT DESIGNATION	YEAR	SHEET NO.	TOTAL SHEETS
ALASKA	TEA-0955(016)/Z68124	2020	S-10	235

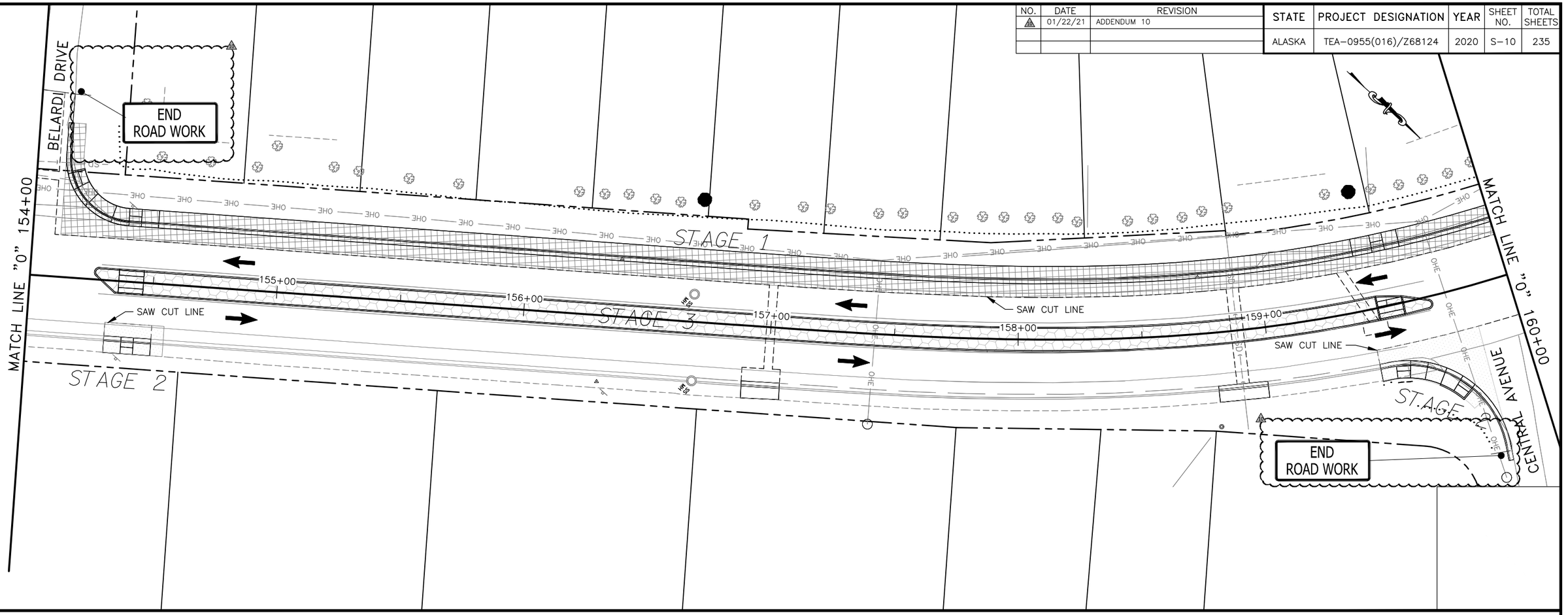

LEGEND

- STAGE 1 CONSTRUCTION
- STAGE 2 CONSTRUCTION
- STAGE 3 CONSTRUCTION

NOTES

SIGNS SHOWN ARE PERMANENT CONSTRUCTION SIGNS.

Record Drawings have been reviewed by the Project Engineer, and represent to the best of my knowledge, the project as constructed.

PE Dillon Tomaro 2/4/25

PLANS DEVELOPED BY: KITTELSON & ASSOCIATES, INC. CERT. OF AUTHORIZATION NO.: 254741, 851 SW 6TH AVE, SUITE 600, PORTLAND, OR 97204, (503) 228-5230
H:\20\20487 - glacier highway - juneau traffic design\design_CD\68124_S_TRAFFIC CONTROL_NORTH-S-10 Fri, Jan/22/21 10:48am

NO.	DATE	REVISION
1	01/22/21	ADDENDUM 10

STATE	PROJECT DESIGNATION	YEAR	SHEET NO.	TOTAL SHEETS
ALASKA	TEA-0955(016)/Z68124	2020	S-11	235

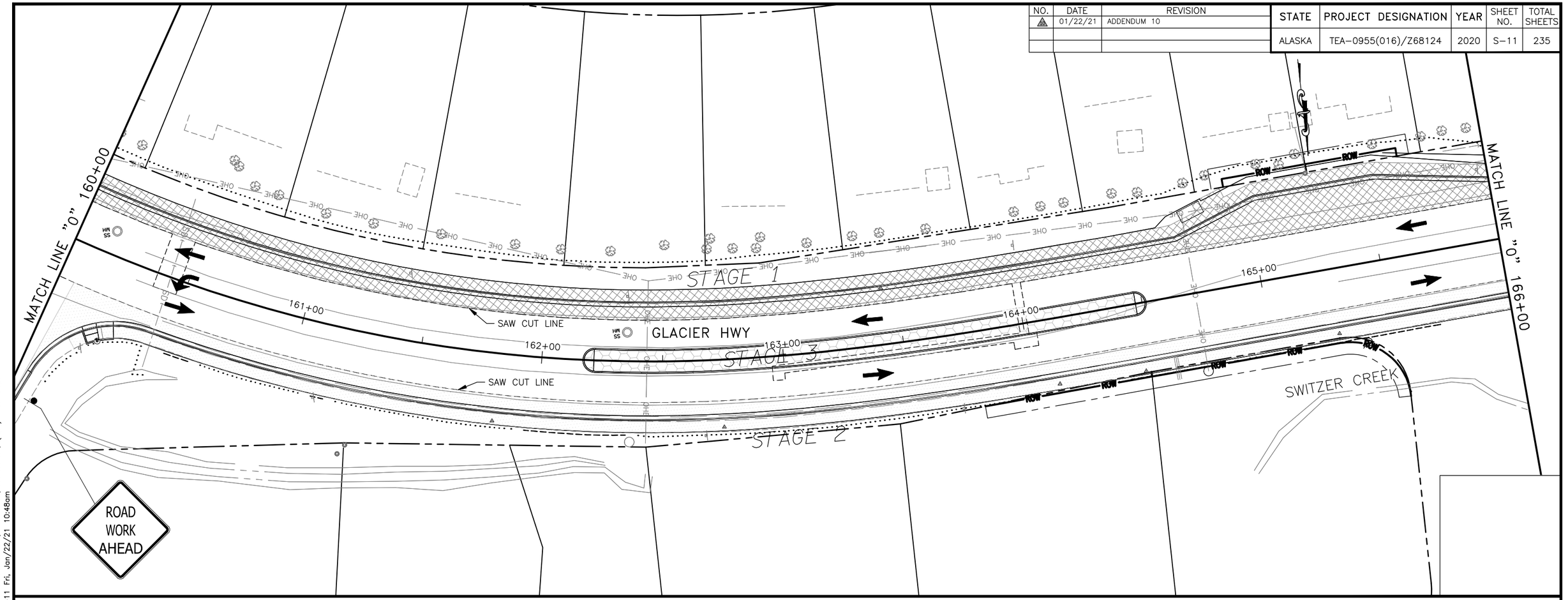

LEGEND

- STAGE 1 CONSTRUCTION
- STAGE 2 CONSTRUCTION
- STAGE 3 CONSTRUCTION

NOTES

SIGNS SHOWN ARE PERMANENT CONSTRUCTION SIGNS.

Record Drawings have been reviewed by the Project Engineer, and represent to the best of my knowledge, the project as constructed.

PE Dillon Tomaro 2/4/25

PLANS DEVELOPED BY: KITTELSON & ASSOCIATES, INC. CERT. OF AUTHORIZATION NO.: 254741, 851 SW 6TH AVE. SUITE 600, PORTLAND, OR 97204, (503) 228-5230
H:\20\20487 - glacier highway - juneau traffic design\design_CD\68124_S_TRAFFIC CONTROL_NORTH-S-11 Fri, Jan/22/21 10:48am

NO.	DATE	REVISION
1	01/22/21	ADDENDUM 10

STATE	PROJECT DESIGNATION	YEAR	SHEET NO.	TOTAL SHEETS
ALASKA	TEA-0955(016)/Z68124	2020	S-12	235

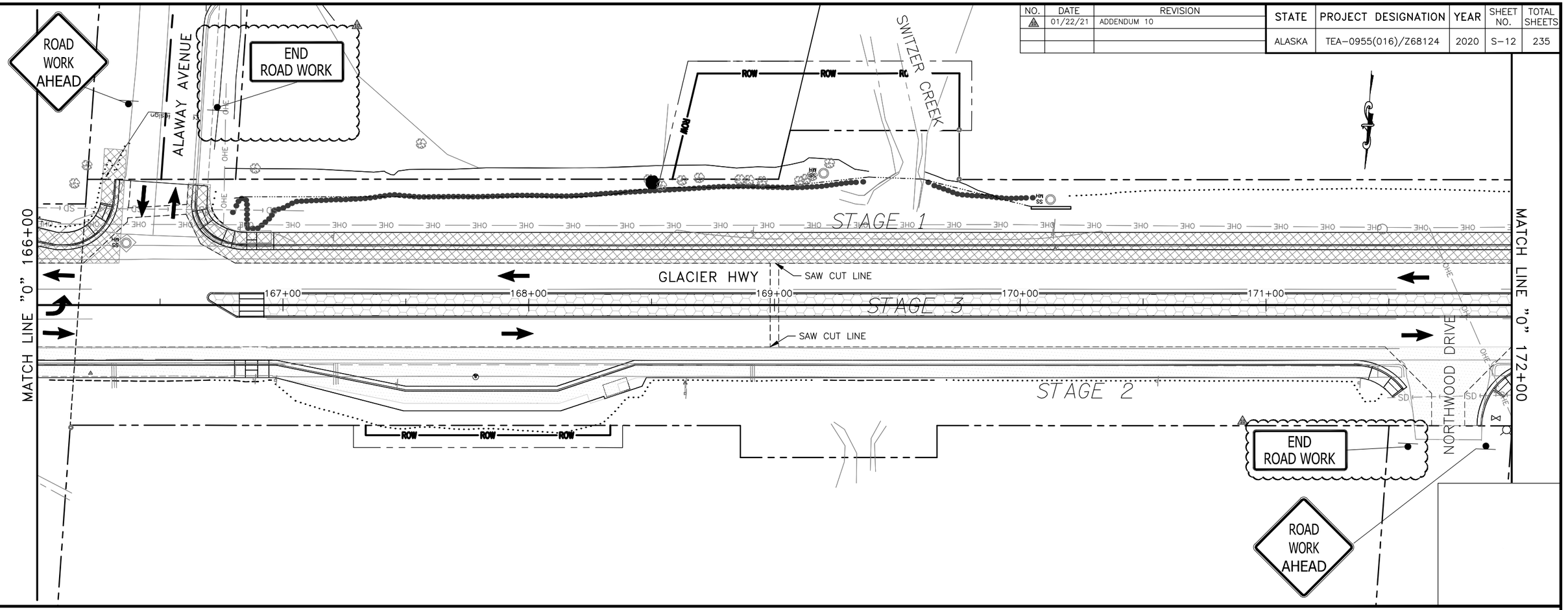

LEGEND

- STAGE 1 CONSTRUCTION
- STAGE 2 CONSTRUCTION
- STAGE 3 CONSTRUCTION

NOTES

SIGNS SHOWN ARE PERMANENT CONSTRUCTION SIGNS.

Record Drawings have been reviewed by the Project Engineer, and represent to the best of my knowledge, the project as constructed.

PE Dillon Tomaro 2/4/25

PLANS DEVELOPED BY: KITTELSON & ASSOCIATES, INC. CERT. OF AUTHORIZATION NO.: 254741, 851 SW 6TH AVE. SUITE 600, PORTLAND, OR 97204, (503) 228-5230
H:\20\20487 - glacier highway - juneau traffic design\design_CD\68124_S_TRAFFIC CONTROL_NORTH-S-12 Fri, Jan/22/21 10:48am Bom

Addendum # 10; Attachment # 18

NO.	DATE	REVISION
1	01/22/21	ADDENDUM 10

STATE	PROJECT DESIGNATION	YEAR	SHEET NO.	TOTAL SHEETS
ALASKA	TEA-0955(016)/Z68124	2020	S-13	235

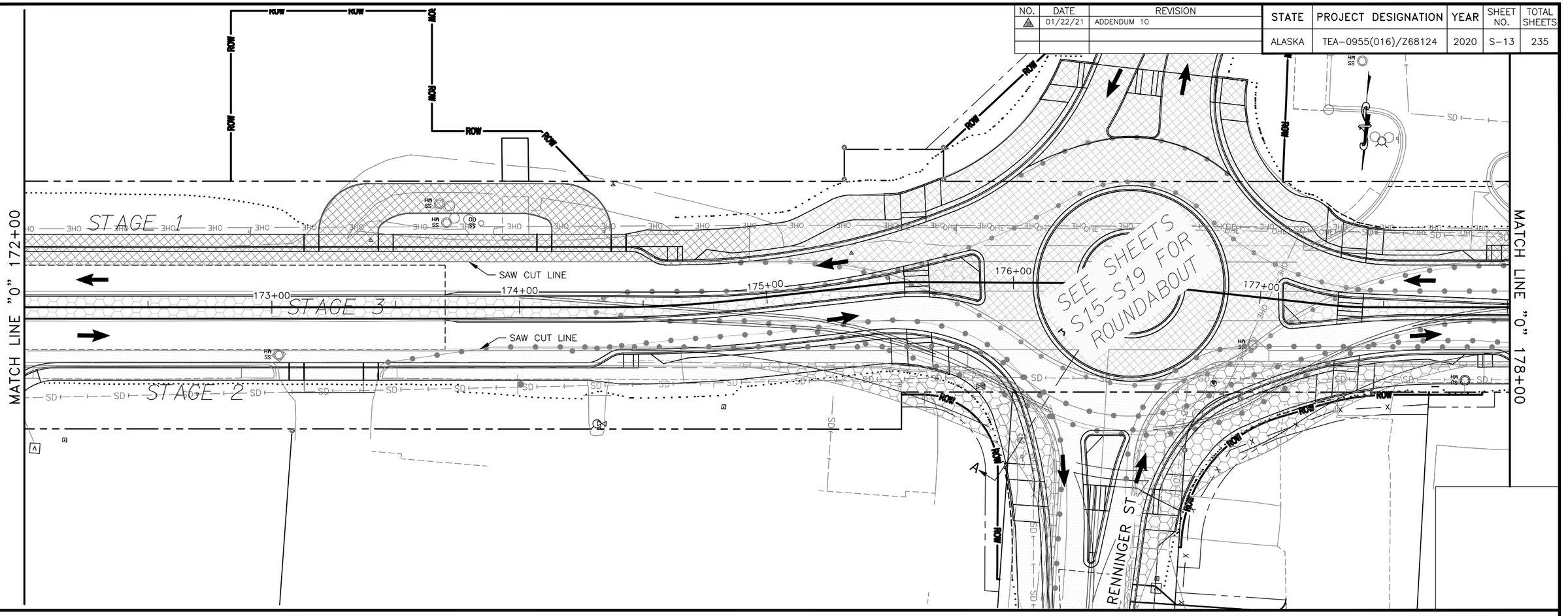

LEGEND

- STAGE 1 CONSTRUCTION
- STAGE 2 CONSTRUCTION
- STAGE 3 CONSTRUCTION

NOTES

SIGNS SHOWN ARE PERMANENT CONSTRUCTION SIGNS.

Record Drawings have been reviewed by the Project Engineer, and represent to the best of my knowledge, the project as constructed.

PE Dillon Tomaro 2/4/25

PLANS DEVELOPED BY: KITTELSON & ASSOCIATES, INC. CERT. OF AUTHORIZATION NO.: 254741. 851 SW 6TH AVE. SUITE 600, PORTLAND, OR 97204, (503) 228-5230
H:\20\20487 - glacier highway - juneau traffic design\design_CD\68124_S_TRAFFIC CONTROL_NORTH-S-13 Fri, Jan/22/21 10:49am

Addendum # 10; Attachment # 19

NO.	DATE	REVISION
1	01/22/21	ADDENDUM 10

STATE	PROJECT DESIGNATION	YEAR	SHEET NO.	TOTAL SHEETS
ALASKA	TEA-0955(016)/Z68124	2020	S-14	235

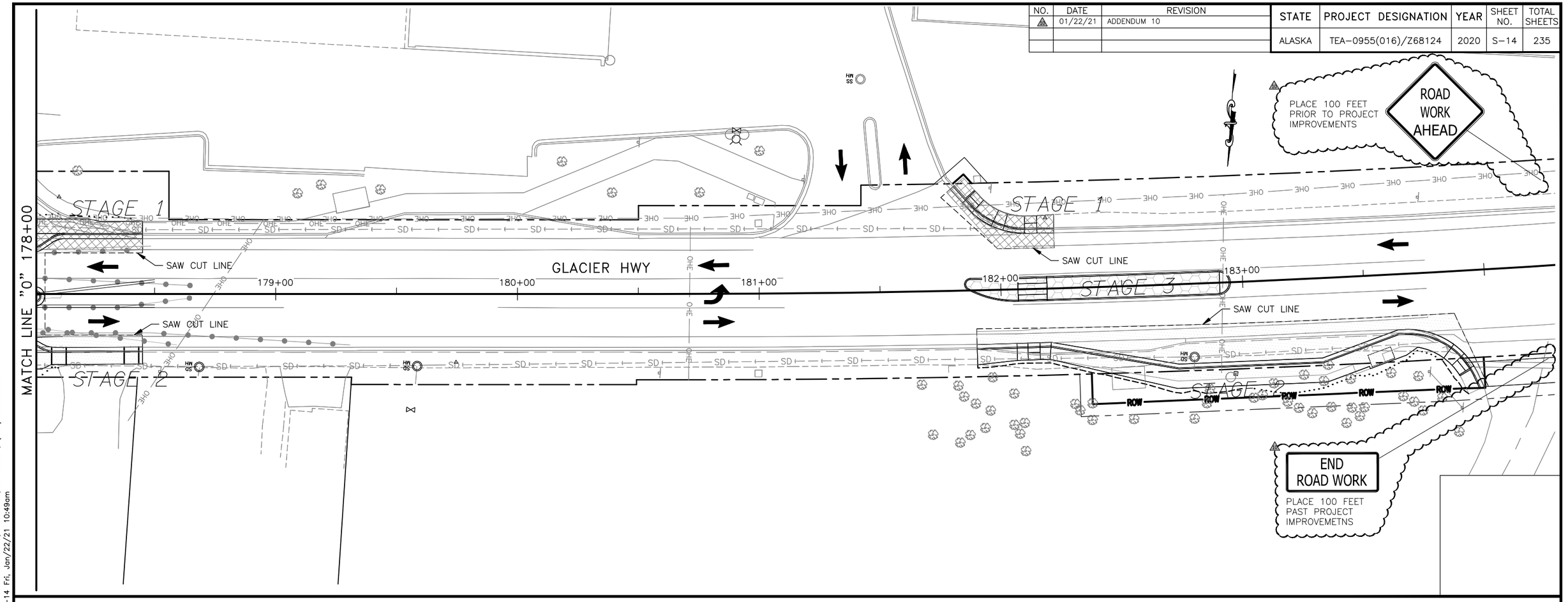

LEGEND

- STAGE 1 CONSTRUCTION
- STAGE 2 CONSTRUCTION
- STAGE 3 CONSTRUCTION

NOTES

1. SIGNS SHOWN ARE PERMANENT CONSTRUCTION SIGNS.

Record Drawings have been reviewed by the Project Engineer, and represent to the best of my knowledge, the project as constructed.

PE Dillon Tomaro 2/4/25

PLANS DEVELOPED BY: KITTELSON & ASSOCIATES, INC. CERT. OF AUTHORIZATION NO.: 254741. 851 SW 6TH AVE. SUITE 600, PORTLAND, OR 97204, (503) 228-5230
H:\20\20487 - glacier highway - juneau traffic design\design_CD\68124_S_TRAFFIC CONTROL_NORTH-S-14 Fri, Jan/22/21 10:49am

NO.	DATE	REVISION
1	01/22/21	ADDENDUM 10

STATE	PROJECT DESIGNATION	YEAR	SHEET NO.	TOTAL SHEETS
ALASKA	TEA-0955(016)/Z68124	2020	S-15	235

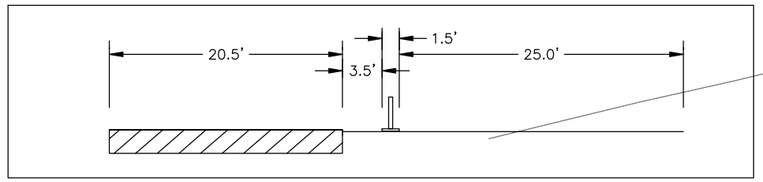

SECTION A-A

Record Drawings have been reviewed by the Project Engineer, and represent to the best of my knowledge, the project as constructed.

PE *Dillon Tomaro* 2/4/25

ROUNDABOUT
PRE-STAGE 1

PLANS DEVELOPED BY: KITTELSON & ASSOCIATES, INC. CERT. OF AUTHORIZATION NO.: 254741, 851 SW 6TH AVE. SUITE 600, PORTLAND, OR 97204, (503) 228-5230
H:\20\20487 - glacier highway - juneau traffic design\design_CD\68124_S_TRAFFIC CONTROL_ROUNDABOUT STAGES-S-15 Fri, Jan/22/21 10:53am

NO.	DATE	REVISION
1	01/22/21	ADDENDUM 10

STATE	PROJECT DESIGNATION	YEAR	SHEET NO.	TOTAL SHEETS
ALASKA	TEA-0955(016)/Z68124	2020	S-16	235

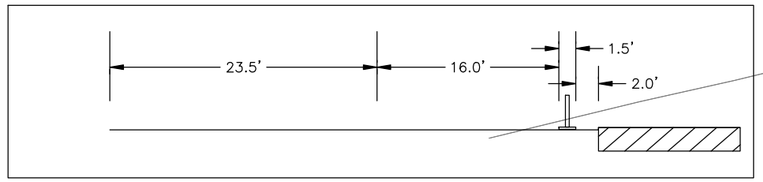

SECTION A-A

Record Drawings have been reviewed by the Project Engineer, and represent to the best of my knowledge, the project as constructed.

PE Dillon Tomaro 2/4/25

ROAD CLOSED

LEGEND

- STAGE 1 CONSTRUCTION
- STAGE 2 CONSTRUCTION
- STAGE 3 CONSTRUCTION

NOTES

SIGNS SHOWN ARE PERMANENT CONSTRUCTION SIGNS.

END ROAD WORK

PLACE 100 FEET PAST IMPROVEMENT LIMITS ON CONCRETE WAY

ROAD WORK AHEAD

PLACE 100 FEET PAST IMPROVEMENT LIMITS ON CONCRETE WAY

RENNINGER ST

ROUNDABOUT STAGE 1

PLANS DEVELOPED BY: KITTELSON & ASSOCIATES, INC. CERT. OF AUTHORIZATION NO.: 254741, 851 SW 6TH AVE. SUITE 600, PORTLAND, OR 97204, (503) 228-5230
H:\20\20487 - glacier highway - juneau traffic design\design_CD\68124_S_TRAFFIC CONTROL_ROUNDABOUT STAGES-S-16 Fri, Jan/22/21 10:54am

NO.	DATE	REVISION
1	01/22/21	ADDENDUM 10

STATE	PROJECT DESIGNATION	YEAR	SHEET NO.	TOTAL SHEETS
ALASKA	TEA-0955(016)/Z68124	2020	S-17	235

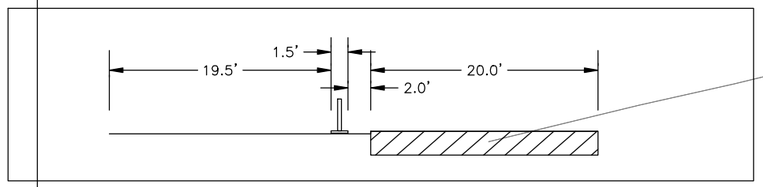

SECTION A-A

ROAD CLOSED

174+00 175+00 176+00 177+00 178+00 179+00

18'

14'

4'

RENNINGER ST

END ROAD WORK

PLACE 100 FEET PAST IMPROVEMENT LIMITS ON CONCRETE WAY

ROAD WORK AHEAD

PLACE 100 FEET PAST IMPROVEMENT LIMITS ON CONCRETE WAY

LEGEND

- STAGE 1 CONSTRUCTION
- STAGE 2 CONSTRUCTION
- STAGE 3 CONSTRUCTION

NOTES

SIGNS SHOWN ARE PERMANENT CONSTRUCTION SIGNS.

Record Drawings have been reviewed by the Project Engineer, and represent to the best of my knowledge, the project as constructed.

PE Dillon Tomaro 2/4/25

ROUNDABOUT STAGE 2a

PLANS DEVELOPED BY: KITTELSON & ASSOCIATES, INC. CERT. OF AUTHORIZATION NO.: 254741, 851 SW 6TH AVE. SUITE 600, PORTLAND, OR 97204, (503) 228-5230
H:\20\20487 - glacier highway - juneau traffic design\design_CD\68124_S_TRAFFIC CONTROL_ROUNDABOUT STAGES-S-17 Fri, Jan/22/21 10:54am

NO.	DATE	REVISION
1	01/22/21	ADDENDUM 10

STATE	PROJECT DESIGNATION	YEAR	SHEET NO.	TOTAL SHEETS
ALASKA	TEA-0955(016)/Z68124	2020	S-18	235

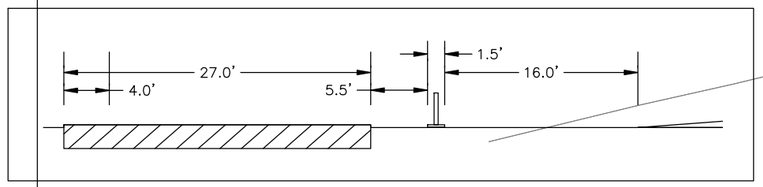

SECTION A-A

ROAD CLOSED

ROAD CLOSED

RENNINGER ST

18'

14'

174+00

175+00

176+00

177+00

178+00

179+00

ON ROADWAY

LEGEND

STAGE 1 CONSTRUCTION

STAGE 2 CONSTRUCTION

STAGE 3 CONSTRUCTION

NOTES

SIGNS SHOWN ARE PERMANENT CONSTRUCTION SIGNS.

Record Drawings have been reviewed by the Project Engineer, and represent to the best of my knowledge, the project as constructed.

PE Dillon Tomaro 2/4/25

ROUNDABOUT STAGE 2b

PLANS DEVELOPED BY: KITTELSON & ASSOCIATES, INC. CERT. OF AUTHORIZATION NO.: 254741, 851 SW 6TH AVE. SUITE 600, PORTLAND, OR 97204, (503) 228-5230
H:\20\20487 - glacier highway - juneau traffic design\design_CD\68124_S_TRAFFIC CONTROL_ROUNDABOUT STAGES-S-18 Fri, Jan/22/21 10:54am

Record Drawings have been reviewed by the Project Engineer, and represent to the best of my knowledge, the project as constructed.

PE *Dillon Tomaro* 2/4/25

NO.	DATE	REVISION

STATE	PROJECT DESIGNATION	YEAR	SHEET NO.	TOTAL SHEETS
ALASKA	TEA-0955(016)/Z68124	2020	S-19	235

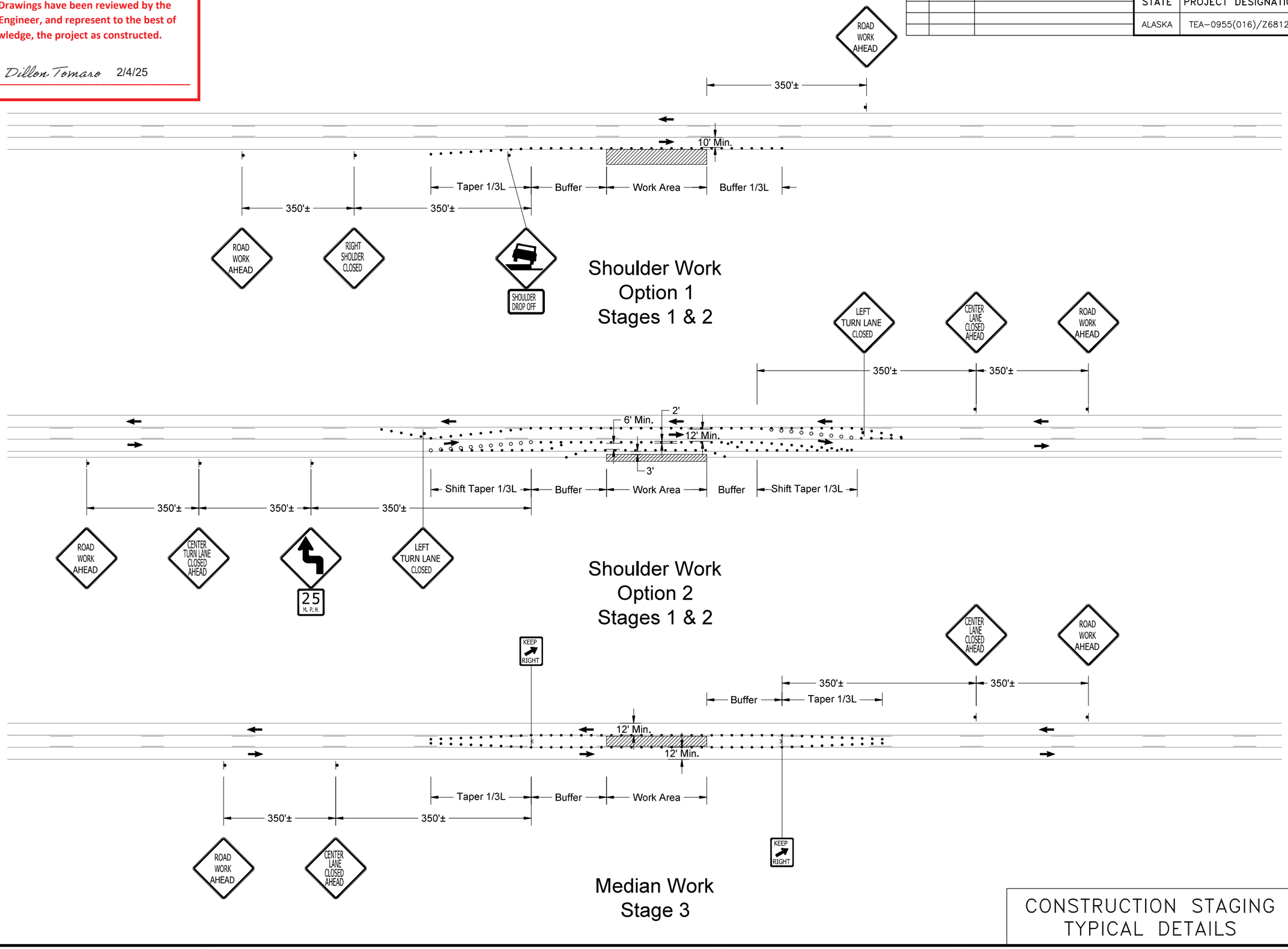

CONSTRUCTION STAGING
TYPICAL DETAILS

PLANS DEVELOPED BY: KITTELSON & ASSOCIATES, INC. CERT. OF AUTHORIZATION NO.: 254741, 851 SW 6TH AVE. SUITE 600, PORTLAND, OR 97204, (503) 228-5230
H:\20\20487 - Glacier Highway - Juneau Traffic Design\design_CD\68124_S_TRAFFIC CONTROL_TYPICALS-S-19 Sun, Jan/17/21 04:34pm