STATE OF ALASKA

DEPARTMENT OF PUBLIC WORKS

DIVISION OF WATER & HARBORS

AUKE BAY FLOAT FACILITIES

PROJECT No. 5-67101

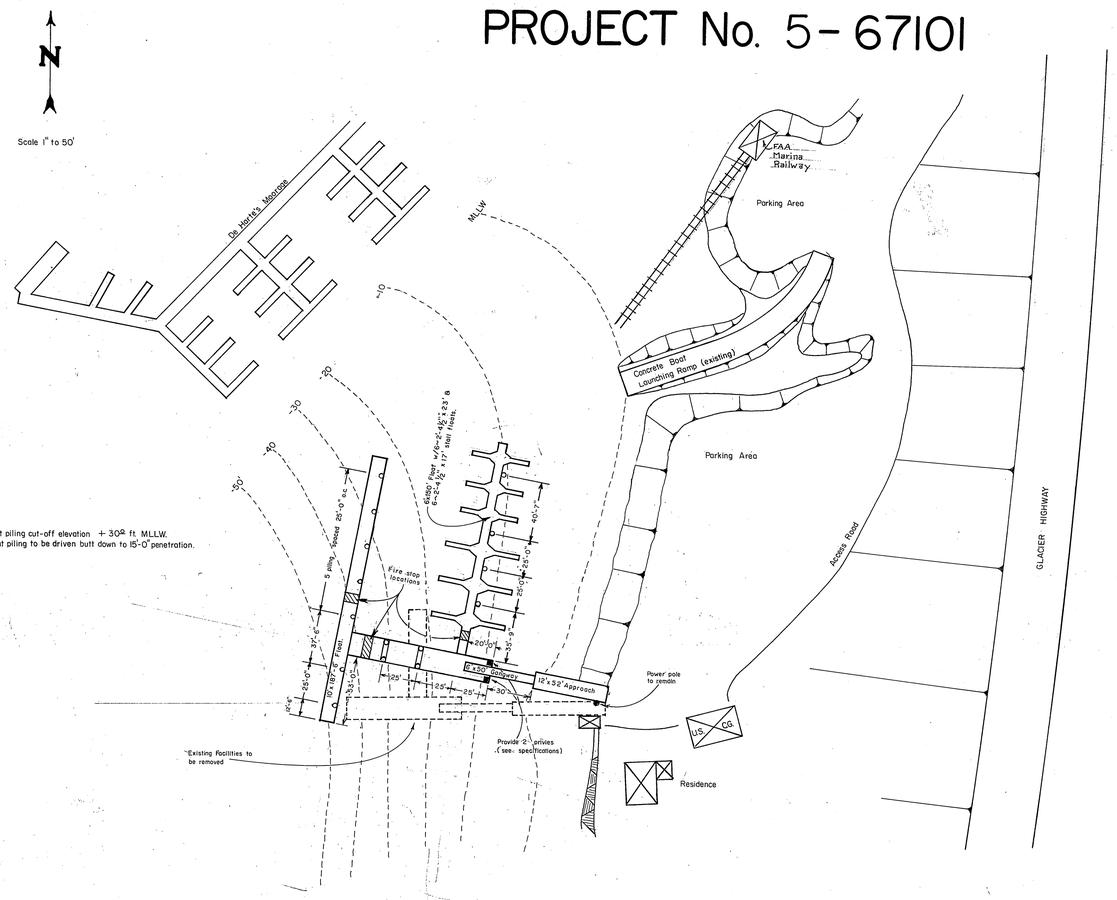

Notes:

1. Float piling cut-off elevation +30.0 ft. M.L.L.W.
2. Float piling to be driven butt down to 15'-0" penetration.

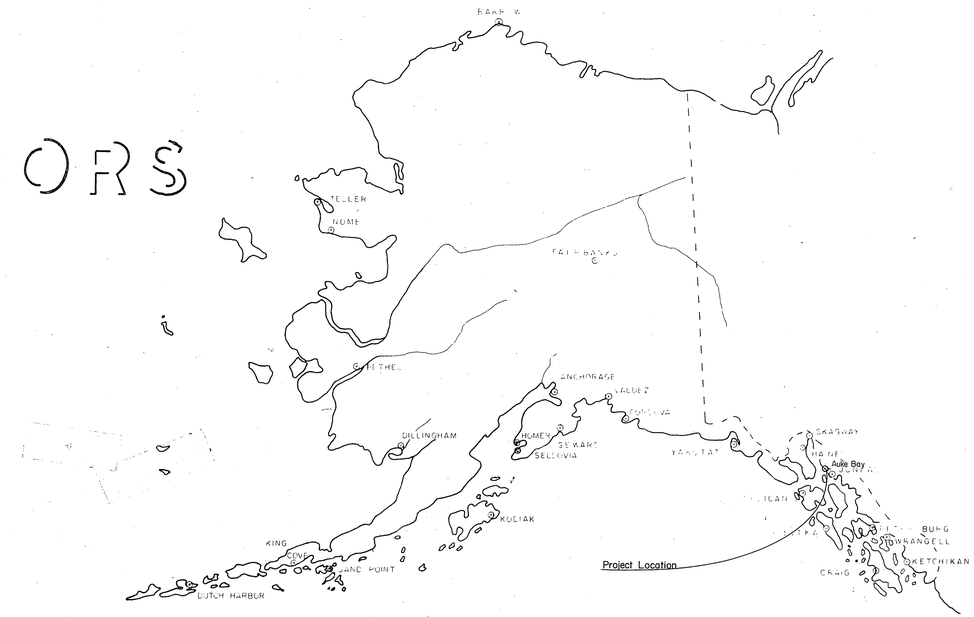

WORK SUMMARY

Major units of this project shall consist of removing and disposing of approximately 140 lin. ft. of existing log floats, a 5'x50' wooden gangway, and an 8'x65' timber approach, pulling 10 creosote piling, furnishing and driving 14 creosote piling (1008 lin. ft.), construction and installation of 5,107 S.F. of polystyrene floats, furnishing and constructing 624 S.F. of timber approach structure and constructing & installing a 6'x50' steel gangway.

INDEX TO SHEETS

TITLE SHEET & PROJECT LAYOUT	SHEET No.	1
TYPICAL FLOATS	" "	2
TYPICAL 6' FLOAT W/ INTEGRAL STALLS	" "	3
TYPICAL 12' APPROACH DETAILS	" "	4
TYPICAL STEEL GANGWAY	" "	5
TYPICAL HINGE CONNECTION DETAILS	" "	6
STRINGER & TIEDOWN RAIL DETAILS., 16' FLOAT CONSTRUCTION DETAILS	" "	7

AS BUILT

DATE 1-11-67 APPROVED [signature] ENGINEER

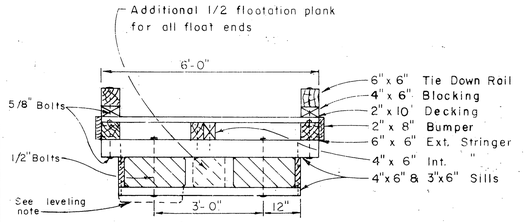

6' FLOAT SECTION

1/2" = 1'-0"

NOTE
6' Float construction shall conform to 10' Float constr. except as noted.

Leveling note
5" x 20" x 4' to 5' leveling floatation shall be installed as directed by the Engr. (required on approx. 20 % of the stall floats including 6' stall floats) Place floatation between lower sill members with the outer edge bearing on siding members (cut side up) Pin floatation together with 1/2" x 14" dowel stock every 12".

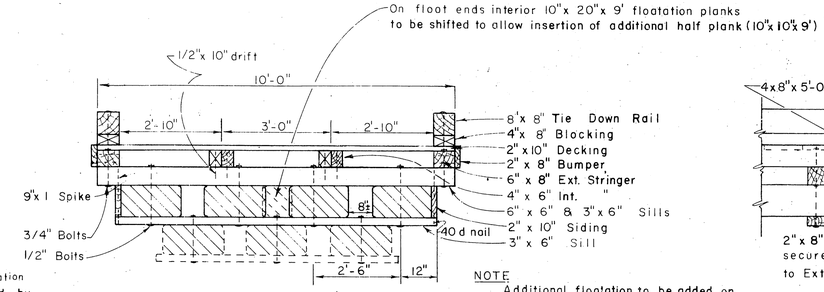

10' FLOAT SECTION

1/2" = 1'-0"

NOTE
Additional floatation to be added on gangway float section - 3 billets as shown timber gangway - 2 for steel gangway.

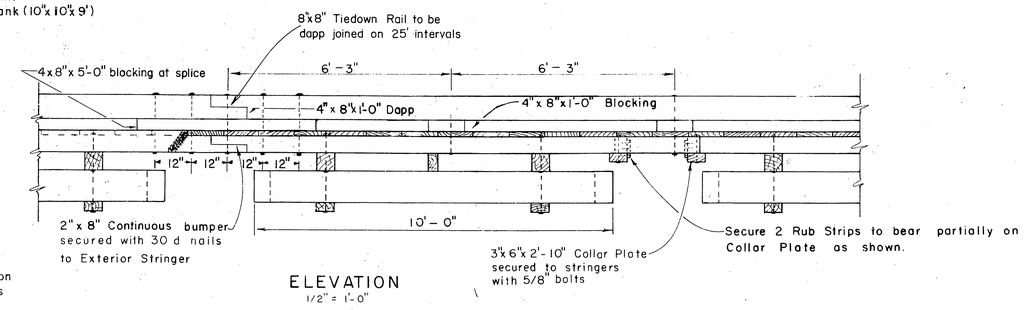

ELEVATION

1/2" = 1'-0"

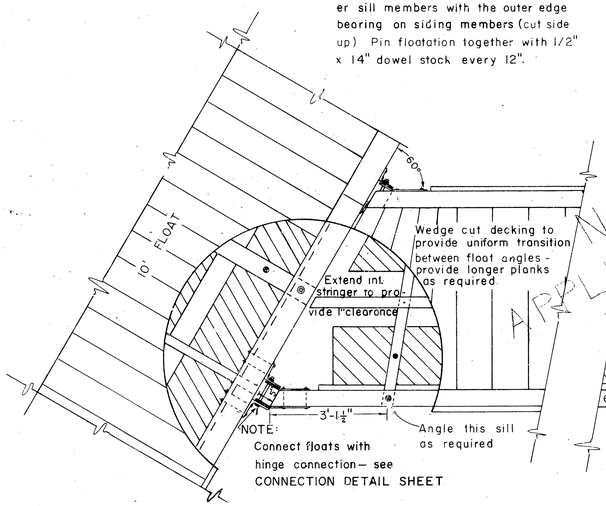

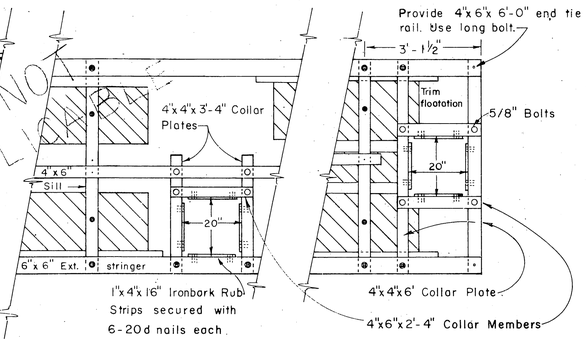

APPLICABLE NOW

CONNECTION & COLLAR DETAIL

6' STALL FLOAT

1/2" = 1'-0"

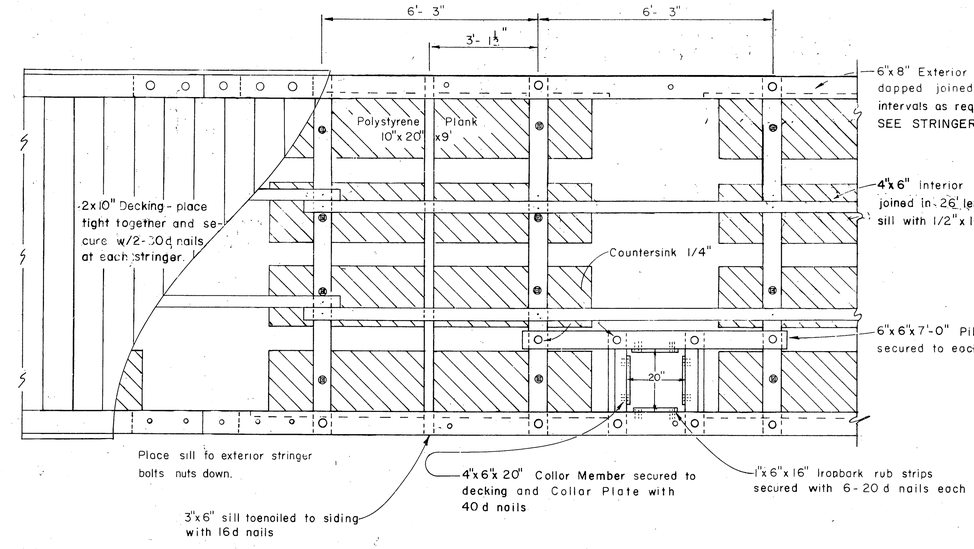

PLAN VIEW 10' FLOAT

1/2" = 1'-0"

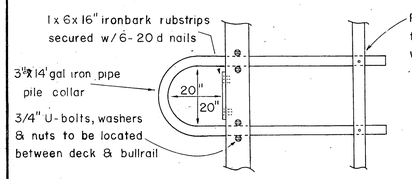

PIPE PILE COLLAR DETAIL

1/2" = 1'-0"

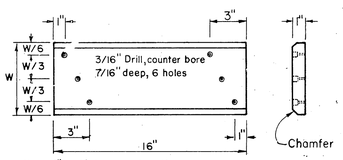

W = 4" - 6' float & 4' stall float
6" - all others

IRONBARK RUB STRIP

1" = 6"

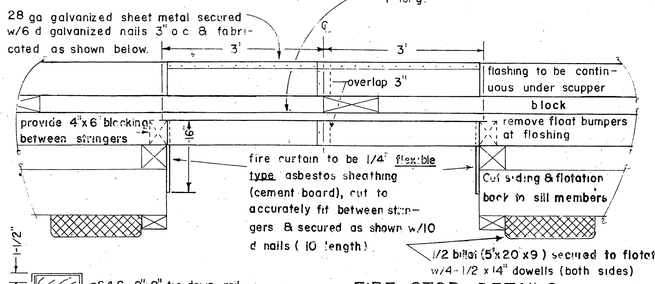

FIRE STOP DETAILS

Scale 3/4" to 1'-0"

NOTES
Prepunch 1/16" holes, 2" o.c., 1/4" from long edges. 1/16" holes, 8" o.c. 1/4" from ends, and 4 evenly spaced rows of 1/16" holes, 8" o.c. throughout sheet.
Provide 2 rows, 6 per row, spaced 12", of 6" x 24" non skid abrasive pad on fire deck.

* Exact width to conform to width of floatation material

MATERIALS		
ITEM	DRESSING	TREATMENT
3x6 - 4x6 & 6x6 upper sill	S-1-E 1/8" off	12 lbs. ret.
* 2x10 Siding	2 x 10 1/2"	" "
3x6 Lower Sill	Rough	" "
4x4 & 3x6 Collar Plates	Rough	8 lbs. ret.
4x6 Collar Members	S-2-E	" "
4x6 Interior Stringers	" "	" "
6x6 & 6x8 Ext Stringers	S-4-S	" "
		" "
6x6 Collar Stringers	" "	" "
2x10 Decking	S-1-S-2-E	" "
4x6 & 4x8 Blocking	S-4-S	" "
6x6 & 8x8 Rail	" "	" "
2x8 Bumper	" "	" "

All material to be construction grade Douglas Fir
All piling will be Class A creosoted to 12 lbs. retention
All 12 lb. ret. creosoted treatment to be Full Cell
All 8 " " " " Empty Cell

PRE-DRILLED BOLT HOLES
COLLAR MEMBERS - all holes
SILLS - holes for floatation plank bolts
STRINGERS - 1. holes for stringer to sill bolts

TIE DOWN RAIL - all holes
PILE COLLAR STRINGER - 10' FLOAT - all holes
FIELD DRILLED BOLT HOLES
SILLS - 1. holes for stringer to sill bolts
2. pile collar stringer to sill
PILE COLLAR INT. STRINGER - 6' FLOAT - all holes
RAIL BLOCKING - all holes
COLLAR PLATES - all holes
EXT. STRINGER - 1. holes for tie down rail bolts
2. " " pile collar plate bolts

REVISIONS MARCH 1965
1. Omit end plates.
2. Clarified pre-drilling note.
3. Change decking gap from 1/2" to 3/4".
4. Change 2" x 10" rough siding members to 2" x 10 1/2" " actual size.
5. Change 3" x 6", 4" x 6" and 6" x 6" upper sills from rough to S-1-E 1/8" off.
6. Revised hinge connection and 6' float pile collar.
7. Change sill spacing from 6'-0" to 6'-3".

REVISIONS JAN 1966
1. Add polyethylene barrier note
2. Delete reference to extruded polystyrene billets
3. Change deck nails from 20 d to 30 d

NOTES
All hardware to be hot-dipped galvanized. A malleable iron washer shall be placed between all nut and wood surfaces. All bolts to be of the economy headed type. Bolt holes to be drilled true size except sill bolt holes for floatation planks 1/8" oversize. Drift holes to be drilled 1/16" undersize. All field drill holes shall be treated with hot creosote oil. All pressure treated creosote material shall be cut to size prior to treatment. Tie down rails shall extend across all float ends except under gongway. All bolt heads facing decking shall be countersunk 1/4" inch previous to treatment. Field drill all drift bolt holes. A barrier of 6 mil black polyethylene shall be placed between the contact surfaces of all creosote timber and floatation material (except float siding members)

REVISIONS JUNE 1966
1. Change deck to 2 x 10 placed tight together.
AUG. 1966
1. Change stringer & rail splice locations - delete splice block

STATE OF ALASKA
DEPARTMENT OF PUBLIC WORKS
DIVISION OF WATER AND HARBORS

TYPICAL FLOATS

SCALE AS Shown	
DATE March 1965	APPROVED DON STATTER, DIRECTOR
PROJ. NO.	
DESIGNED BY RPH - DS	DRAWN BY D.W. / CHECKED BY D.S.

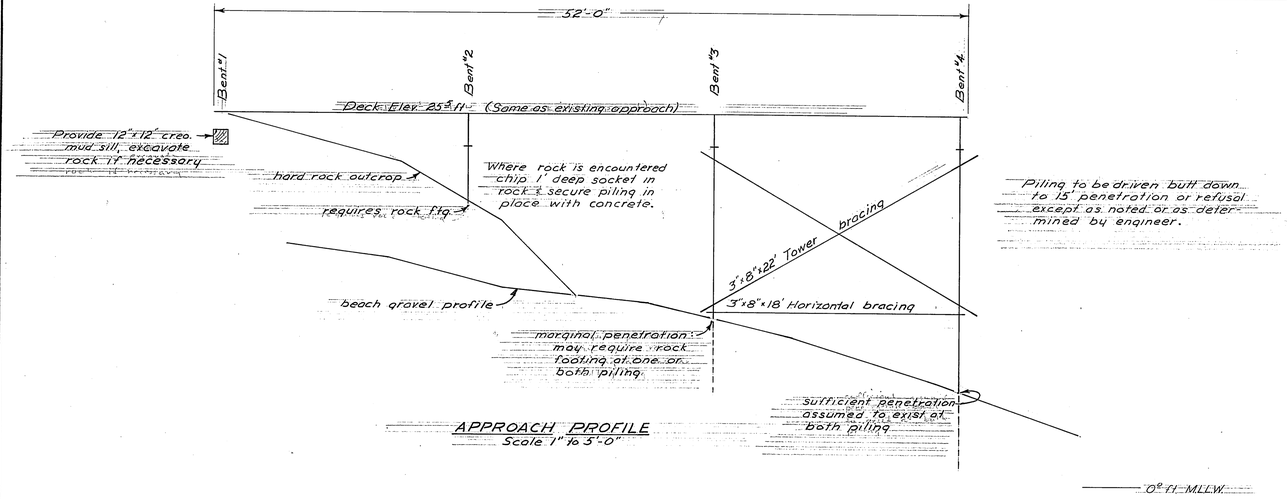

APPROACH PROFILE
Scale 1" to 5'-0"

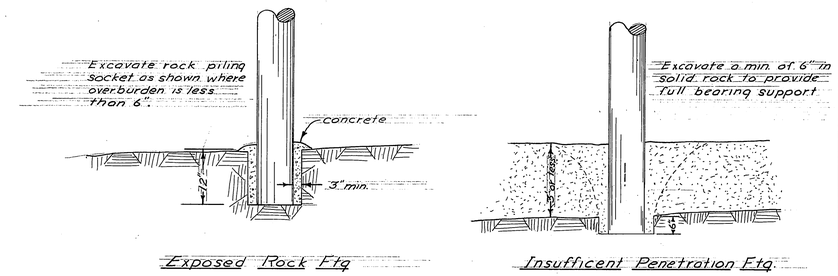

Exposed Rock Ftg. Insufficent Penetration Ftg.

ROCK FOOTINGS
Scale 1" to 2'-0"

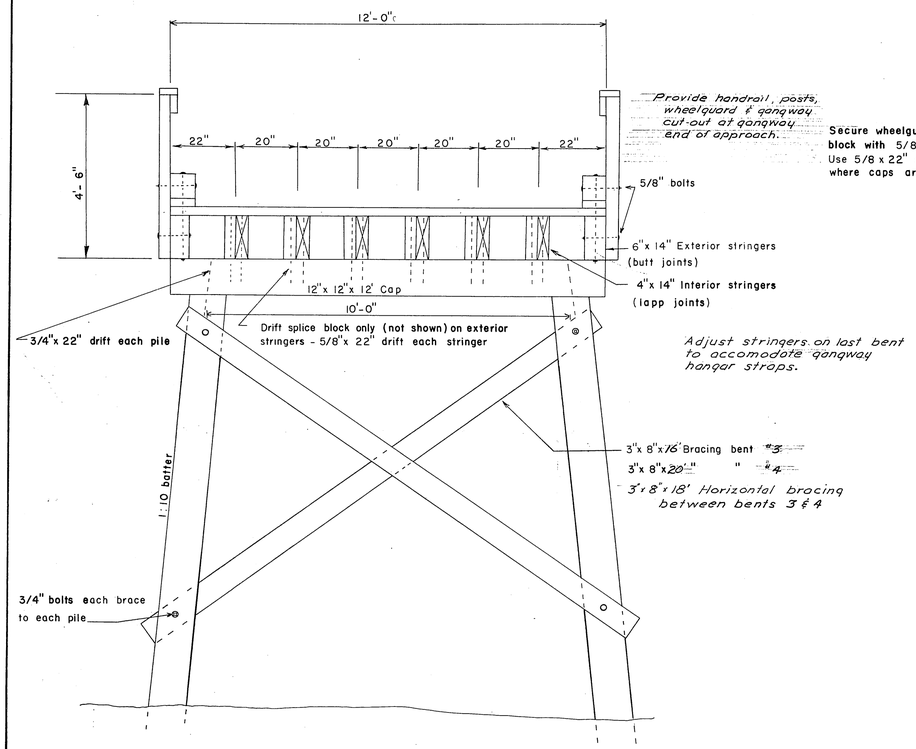

TYPICAL APPROACH SECTION

SCALE 1/2" = 1'-0"

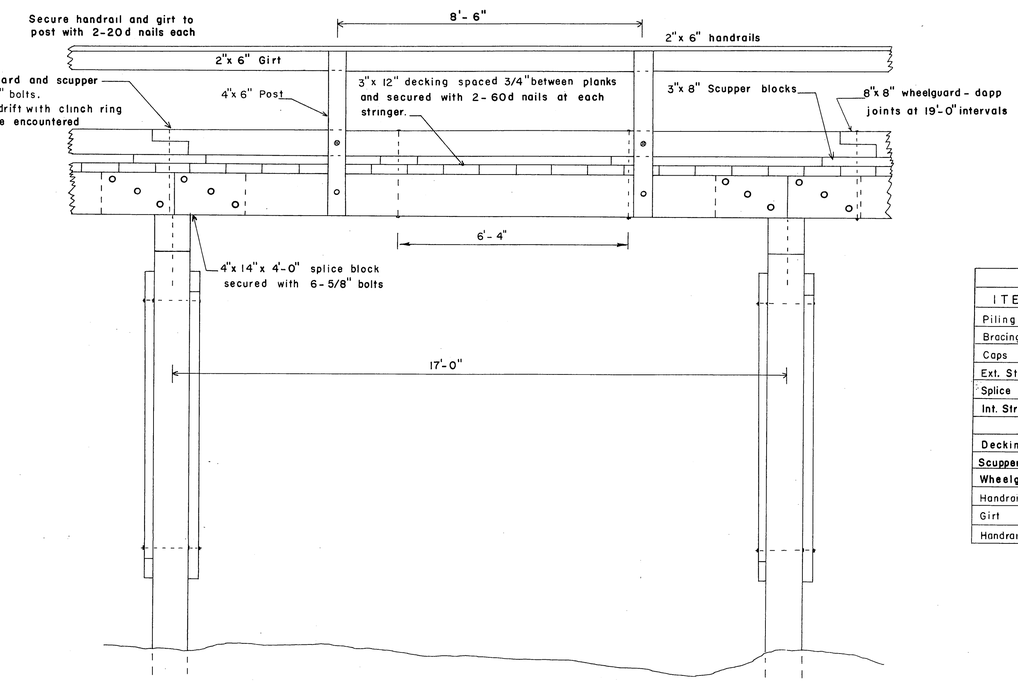

TYPICAL APPROACH ELEVATION

SCALE 1/2" = 1'-0"

NOTES

All hardware to be galvanized with malleable iron washers between nut and wood surfaces. All bolts to be of mushroom head type. Bolt holes to be drilled true size. Drift holes to be drilled 1/16" undersize. All drill holes to be treated with hot creo. oil. All pressure treated creosote material shall be cut to size prior to treatment.

	MATERIALS			
ITEM	GRADE	DRESSING	CREO. TREAT.	TYPE
Piling	Class B		12" Ret.	Douglas Fir
Bracing	Construction	Rough	"	"
Caps	"	S 4 S	8"	"
Ext. Stringers	"	"	"	"
Splice Blocks	"	S 2 E	"	"
Int. Stringers	"	"	"	"
Decking	"	S1S2E	"	"
Scupper Block	"	S 4 S	"	"
Wheelguard	"	"	"	"
Handrail Post	"	"	"	"
Girt	"	"	"	"
Handrail	"	"	"	"

STATE OF ALASKA
DEPARTMENT OF PUBLIC WORKS
DIVISION OF WATER AND HARBORS

TYPICAL 12'-0" APPROACH CONSTRUCTION DETAILS

SCALE AS SHOWN
DATE Aug. '66
PROJ. NO. 5-67101
DESIGNED BY RB
APPROVED DON STATTER DIRECTOR
DRAWN BY WO CHECKED BY DS

NOTE:
All cotter keys to be 3/16" x 1 3/4" - drill holes located 1/2" from end of bolt.

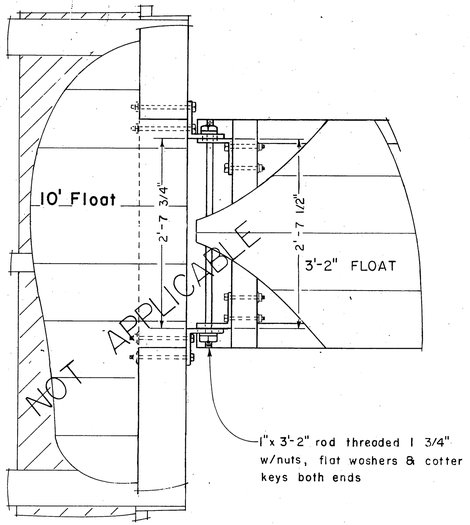

Plan - cutaway view

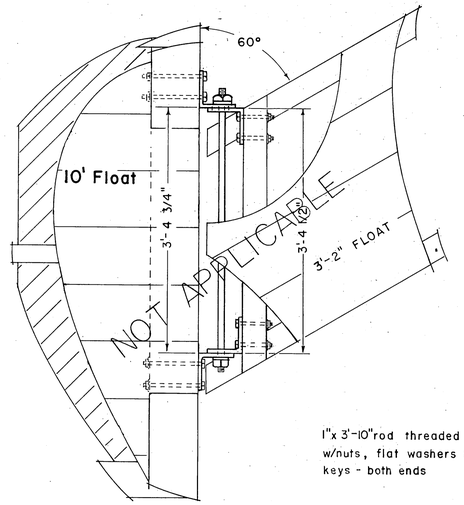

Plan - cutaway view

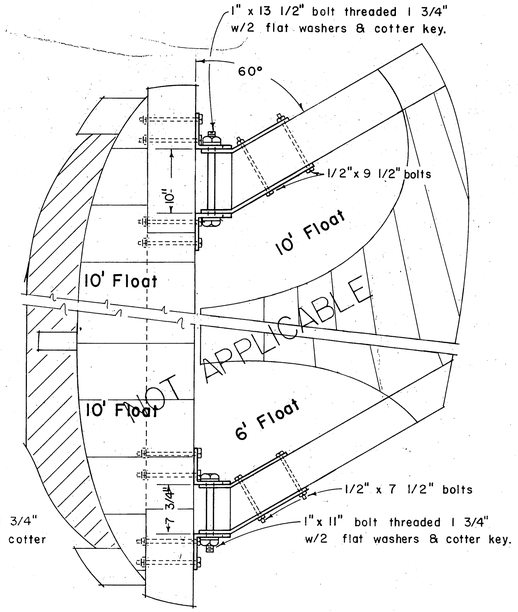

Plan - cutaway views

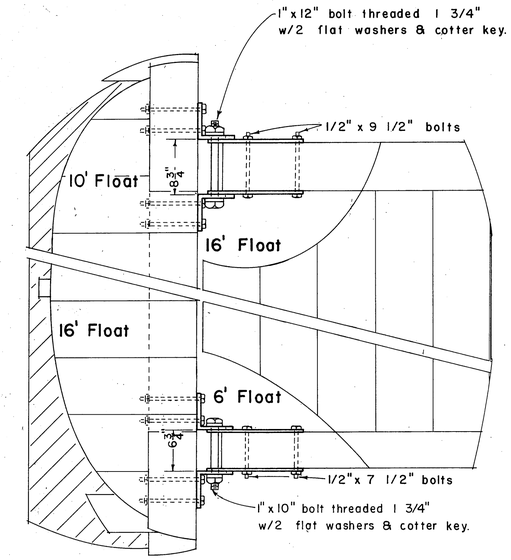

Plan - cutaway views

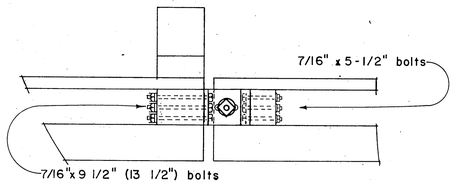

Elevation

4' FLOAT
Right angle connection
Scale 1" to 1'-0"

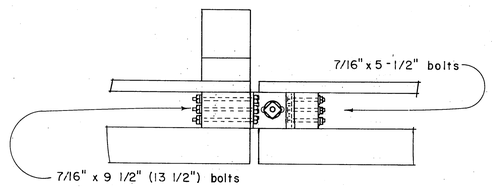

Elevation

4' FLOAT
60° angle connection
Scale 1" to 1'-0"

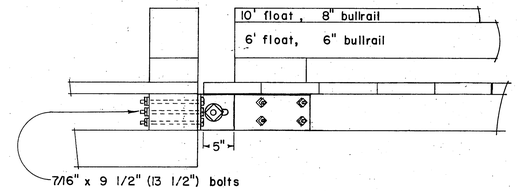

Elevation

6' & 10' FLOATS
60° angle connection
Scale 1" to 1'-0"

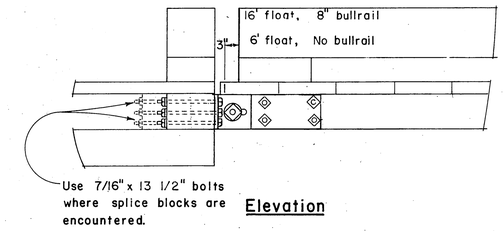

Elevation

6' & 10' FLOATS
Right angle connections
Scale 1" to 1'-0"

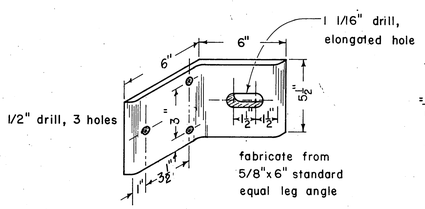

ANGLE CLIP DETAILS

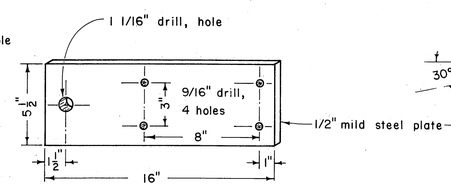

STANDARD PLATE DETAILS
Scale 1" to 5"

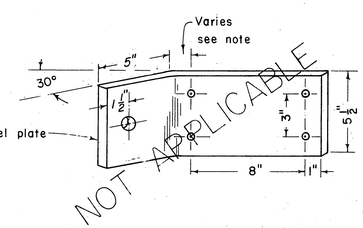

BENT PLATE DETAILS

Variable dimension note:
dimension to be -
2" all short side plates, for 16" plate
5 1/2" outside plates 6' angled float, for 19 1/2" plate
6 5/8" outside plates 10' angled float, for 20 5/8" plate

STATE OF ALASKA
DEPARTMENT OF PUBLIC WORKS
DIVISION OF WATER AND HARBORS

TYPICAL HINGE CONNECTION DETAILS

Scale As shown	
Date April 1965	Approved DON STATTER, Director
Proj. No.	
Designed by RS	Drawn by B — Checked by RS

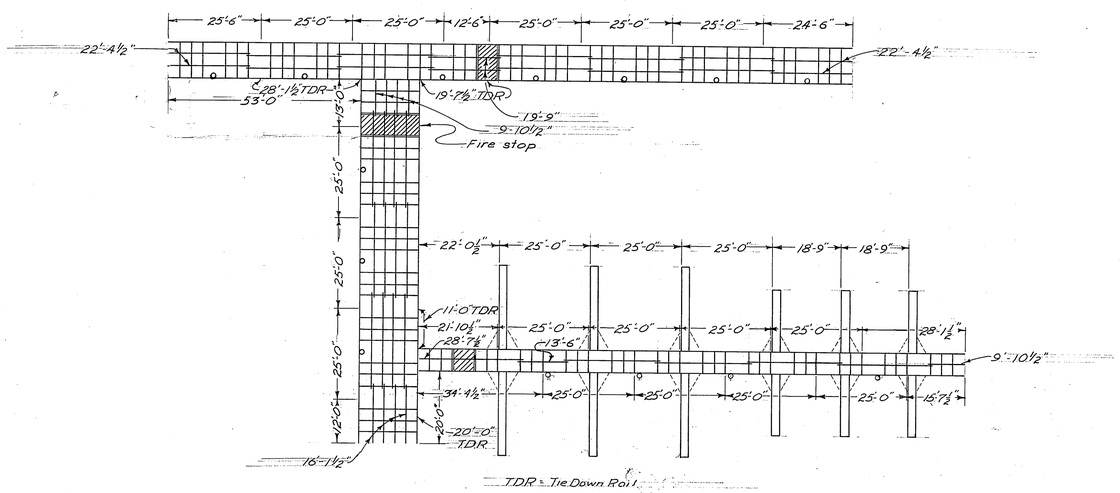

TDR = Tie Down Rail

STRINGER DIAGRAM

10' x 187'-6", 16' x 100' & 6' x 150' Floats

Scale 1" to 20'-0"

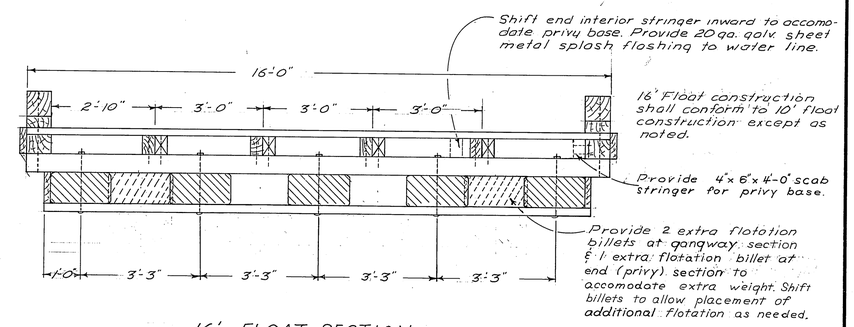

16' FLOAT SECTION

Scale 1/2" to 1'-0"

Notes:

1. All exterior stringers to be spliced at the locations indicated (typical for both sides of 10' & 16' floats). Distances given indicate lengths between centers of dapp joints. 37'-6" stringer lengths may be used in lieu of 12'-6" & 25'-0" lengths.
2. All interior stringers to be in 26'-0" lengths except as noted.
3. Tie down rails to be spliced at the same locations as exterior stringer splices except as noted at locations adjacent to float connections.
4. Omit 14'-9" & 6'-0" rail sections at float connections.

DEPARTMENT OF PUBLIC WORKS
DIVISION OF WATER AND HARBORS

STRINGER & TIEDOWN RAIL DETAILS
16' FLOAT CONSTRUCTION DETAILS

SCALE 1" to 20'-0"
DATE Aug. 1965
DWG. NO. 50-00015

APPROVED DON STATTER

Sheet no. 7 of 7 sheets