State of Alaska

Department of Transportation and Public Facilities

Statewide Design and Engineering Services Division

HYDER, ALASKA

HYDER HARBOR IMPROVEMENTS

AIP NO. 3-02-0382-0102 ~ 68198

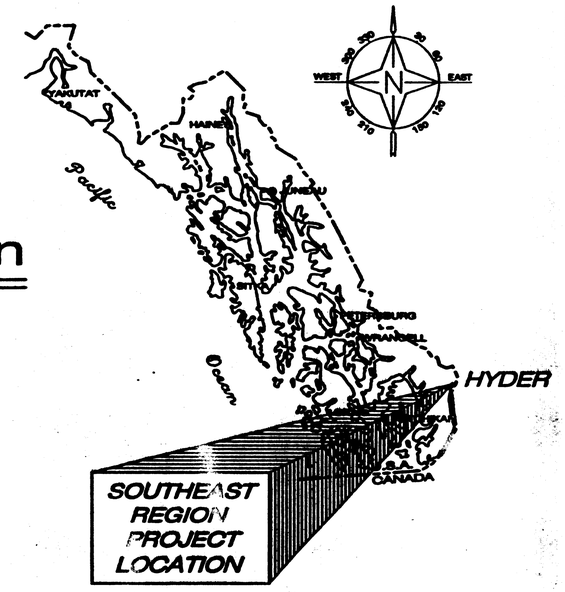

AS BUILT DRAWINGS
Contractor: Western Marine Const. Inc.
Project Engineer: Al Risley
Begin Const: August 8, 2003
Completion Date: September 18, 2003

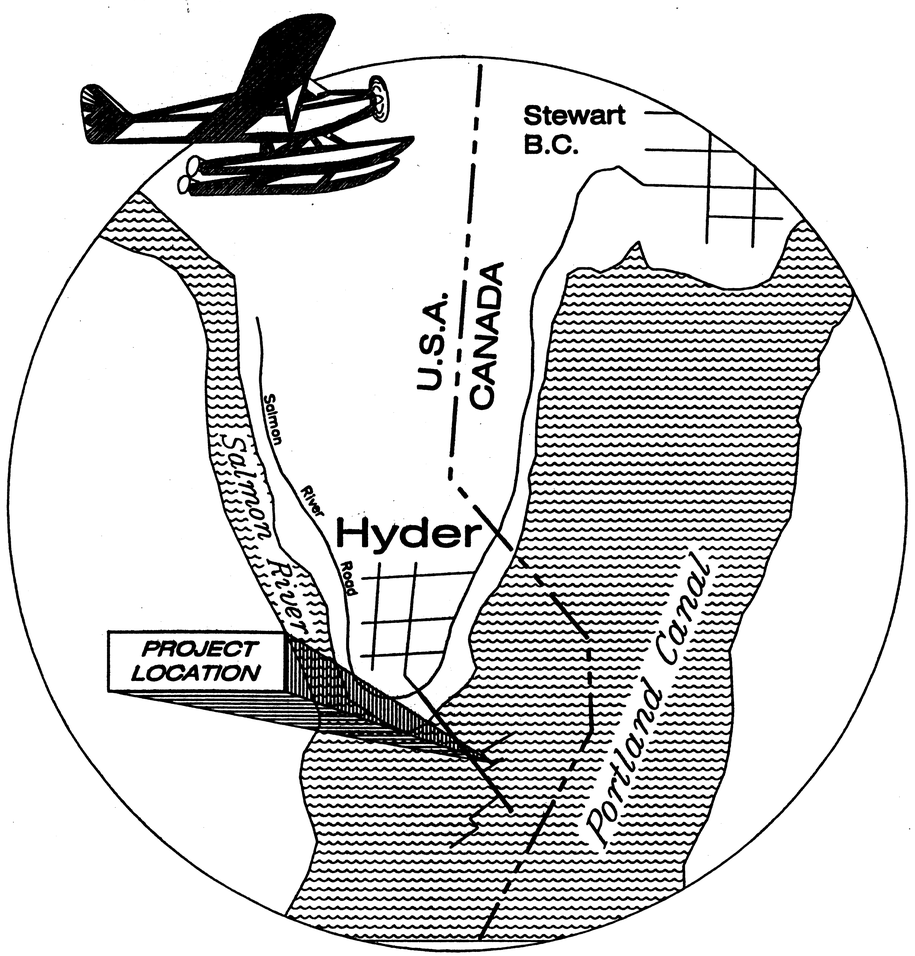

INCORPORATES PROJECTS

AIP 3-02-0382-0102 / 68198
SEAPLANE FLOAT RECONSTRUCTION

68255 HYDER BOAT RAMP IMPROVEMENTS

68392 HYBER HARBOR IMPROVEMENTS

TIDAL DATA

EHW	21.0'
EHT	20.8'
MHW	15.7'
ELT	-4.0'

THE FOLLOWING STANDARD DRAWINGS APPLY TO THIS PROJECT:

A-1 S-05.01 S-30.02

INDEX

SHEET NO.	DESCRIPTION
A1	TITLE SHEET
A2	SURVEY CONTROL PLAN
A3	EXISTING PROJECT LAYOUT PLAN
A4	PROPOSED PROJECT LAYOUT PLAN
B1	DREDGING-TYPICAL SECTIONS
B2	AS-BUILT LAUNCH RAMP TYPICAL SECTIONS
C1	ESTIMATE OF QUANTITIES / MISC. SUMMARIES
E1	SEAPLANE FLOAT DECKING PLAN
E2	SEAPLANE FLOAT FRAMING PLAN
E3	SEAPLANE FLOAT ELEVATION SECTIONS
E4	SEAPLANE FLOAT BUMPER BOARD SUPPORT
E5	SEAPLANE FLOAT PILE COLLAR DETAILS
E6	18'x30' RAMP FLOAT FRAMING PLAN
E7	18'x30' RAMP FLOAT DETAILS
E8	HINGE DETAILS
E9	TRANSITION PLATE LAYOUT & SECTIONS
E10	TRANSITION PLATE DETAILS
E11	SEAPLANE FLOAT MISCELLANEOUS DETAILS
F1	LAUNCH RAMP PROFILE & DETAILS
F2	LAUNCH RAMP DETAILS
H1	LOG BREAKWATER PLAN & DETAILS
J1-J3	SIGN DETAILS

PATH: Q:\Hyd\68198\Planset\A_Tsht.dwg
Tue, 23/Jul/02 09:45AM Kris

PLOT: PSPACE OR MSPACE: 1=1 (Full Size) TAB: TSHT

STATE OF ALASKA
DEPARTMENT OF TRANSPORTATION
& PUBLIC FACILITIES
STATEWIDE DESIGN & ENGINEERING SERVICES DIVISION

STATE OF ALASKA 49th Roger K. Hedy CE-9370 Registered Professional Engineer

STATE OF ALASKA 49th Doug W. Blackburn CE-10052 Registered Professional Engineer

RECOMMENDED FOR APPROVAL:
REGIONAL PRE-CONSTRUCTION ENGINEER — DATE 7/23/02

APPROVED:
DIRECTOR, SOUTHEAST REGION — DATE 7/25/02

CERTIFIED TRUE & CORRECT AS-BUILT OF ACTUAL FIELD CONDITION:
CONSTRUCTION PROJECT MANAGER — DATE

STATE	PROJECT DESIGNATION	YEAR	SHEET NO.	TOTAL SHEETS
ALASKA	AIP # 3-02-0382-0102	2002	A1	24

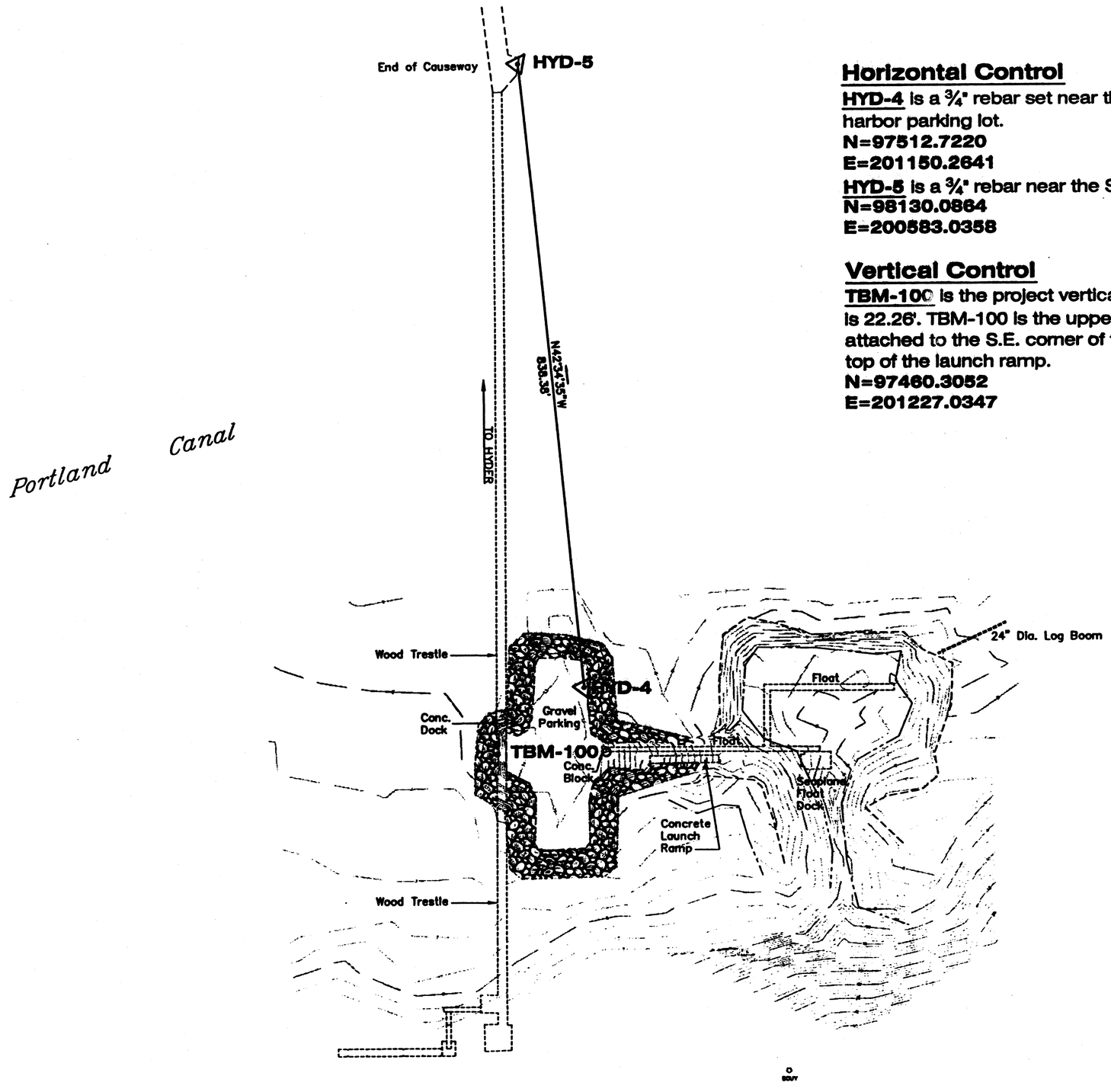

Horizontal Control

HYD-4 is a ¾" rebar set near the N.E. corner of the boat harbor parking lot.
N=97512.7220
E=201150.2641

HYD-5 is a ¾" rebar near the S.E. corner of the causeway.
N=98130.0864
E=200583.0358

Vertical Control

TBM-100 is the project vertical control. Accepted Elevation is 22.26'. TBM-100 is the upper most face of a steel nut attached to the S.E. corner of the concrete approach at the top of the launch ramp.
N=97460.3052
E=201227.0347

Graphic Scale

80 40 0 80 240

Feet

Project As Built Drawings Have Been Reviewed By The Project Engineer & Represent, To The Best Of My Knowledge, The Project As Constructed.

Proj. Eng. Date

Survey Control Plan

PATH:
Q:\Hyd\68198\Planset\A_ControlPlan.dwg
Tue, 23/Jul/02 09:48AM Kris
PLOT:
PSPACE 1=1(F) OR MSPACE 1=1(F)
TAB: PLAN

ADDENDUM NUMBER

ATTACHMENT NUMBER

RECORD OF REVISIONS

No.	DATE	DESCRIPTION

HYDER HARBOR IMPROVEMENTS
Project No. 68198

Survey Control Plan

DESIGNED BY: D. BLACKBURN

STATE OF ALASKA 49th Doug W. Blackburn CE-10052 REGISTERED PROFESSIONAL ENGINEER

CHECKED BY: STAFF
DRAWN BY: R. SNYDER

STATE OF ALASKA
DEPARTMENT OF TRANSPORTATION & PUBLIC FACILITIES
STATEWIDE DESIGN & ENGINEERING SERVICES DIVISION

HYDER HARBOR IMPROVEMENTS

Survey Control Plan

PROJECT DESIGNATION NUMBER
AIP # 3-02-0382-0102

STATE	YEAR
ALASKA	2002
SHEET NUMBER	TOTAL SHEETS
A2	24

Legend

SEE REMOVAL OF STRUCTURES & OBSTRUCTIONS SUMMARY ON SHEET C1.

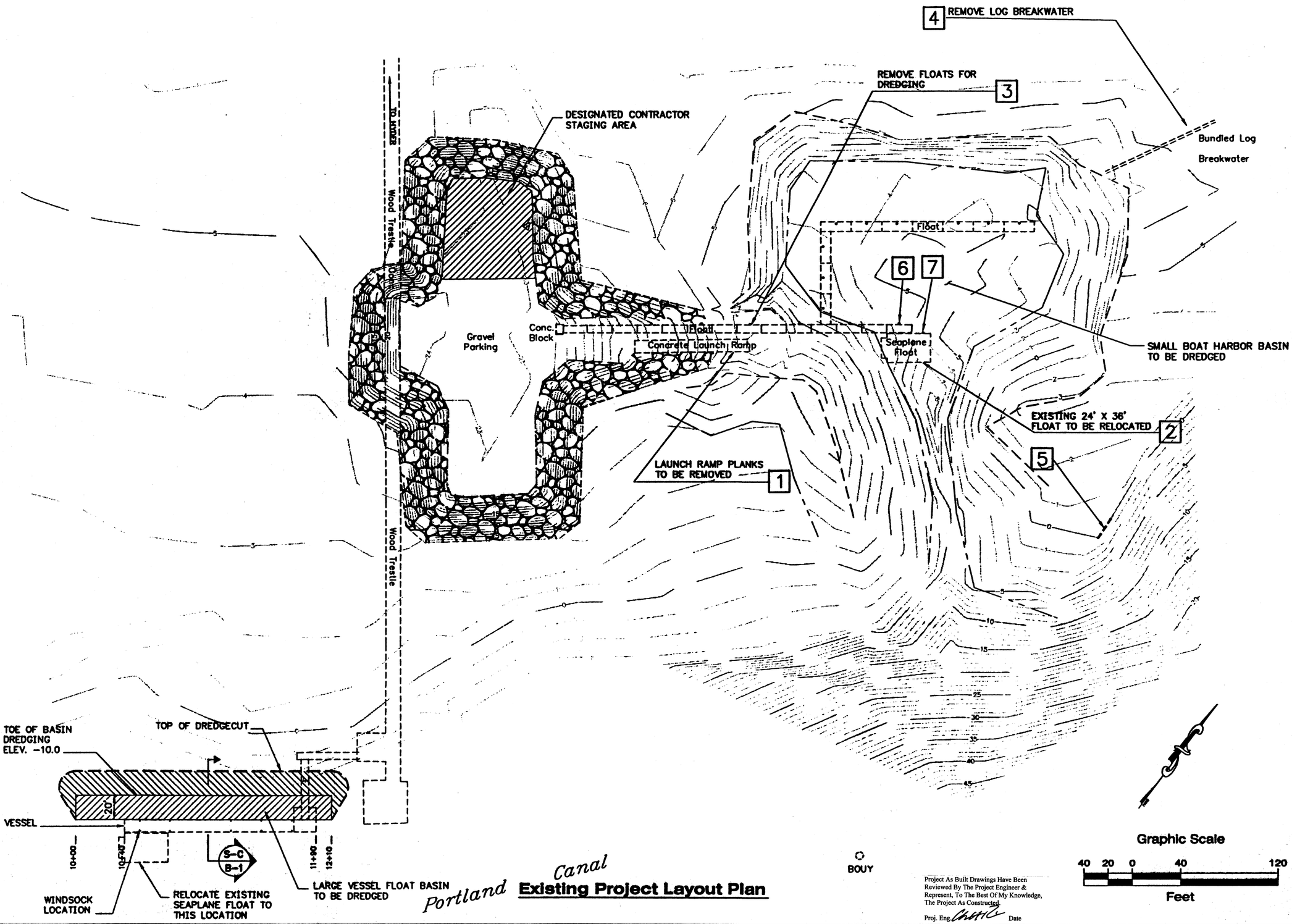

Portland Canal

Existing Project Layout Plan

Project As Built Drawings Have Been Reviewed By The Project Engineer & Represent, To The Best Of My Knowledge, The Project As Constructed.

Proj. Eng. Date

PATH: Q:\Hyd\68198\Planset\A_LayoutPlan.dwg
Tue, 23/Jul/02 09:48AM Kris
PLOT: PSPACE 1=1(F) OR MSPACE 1=1(F)
TAB: PLAN

ADDENDUM NUMBER

ATTACHMENT NUMBER

RECORD OF REVISIONS

No.	DATE	DESCRIPTION

HYDER HARBOR IMPROVEMENTS
Project No. 68198

Existing Project Layout Plan

DESIGNED BY: D. BLACKBURN

STATE OF ALASKA 49th Doug W. Blackburn CE-10052 REGISTERED PROFESSIONAL ENGINEER

CHECKED BY: R. HEALY
DRAWN BY: R. SNYDER

STATE OF ALASKA
DEPARTMENT OF TRANSPORTATION & PUBLIC FACILITIES
STATEWIDE DESIGN & ENGINEERING SERVICES DIVISION

HYDER HARBOR IMPROVEMENTS

Existing Project Layout Plan

PROJECT DESIGNATION NUMBER	
AIP # 3-02-0382-0102	
STATE	YEAR
ALASKA	2002
SHEET NUMBER	TOTAL SHEETS
A3	24

NOTES:
WOOD TRESTLE TO HYDER
MAXIMUM AXLE LOADS:
14,000 LBS. SINGLE LOAD
17,000 LBS. TANDUM AXLE

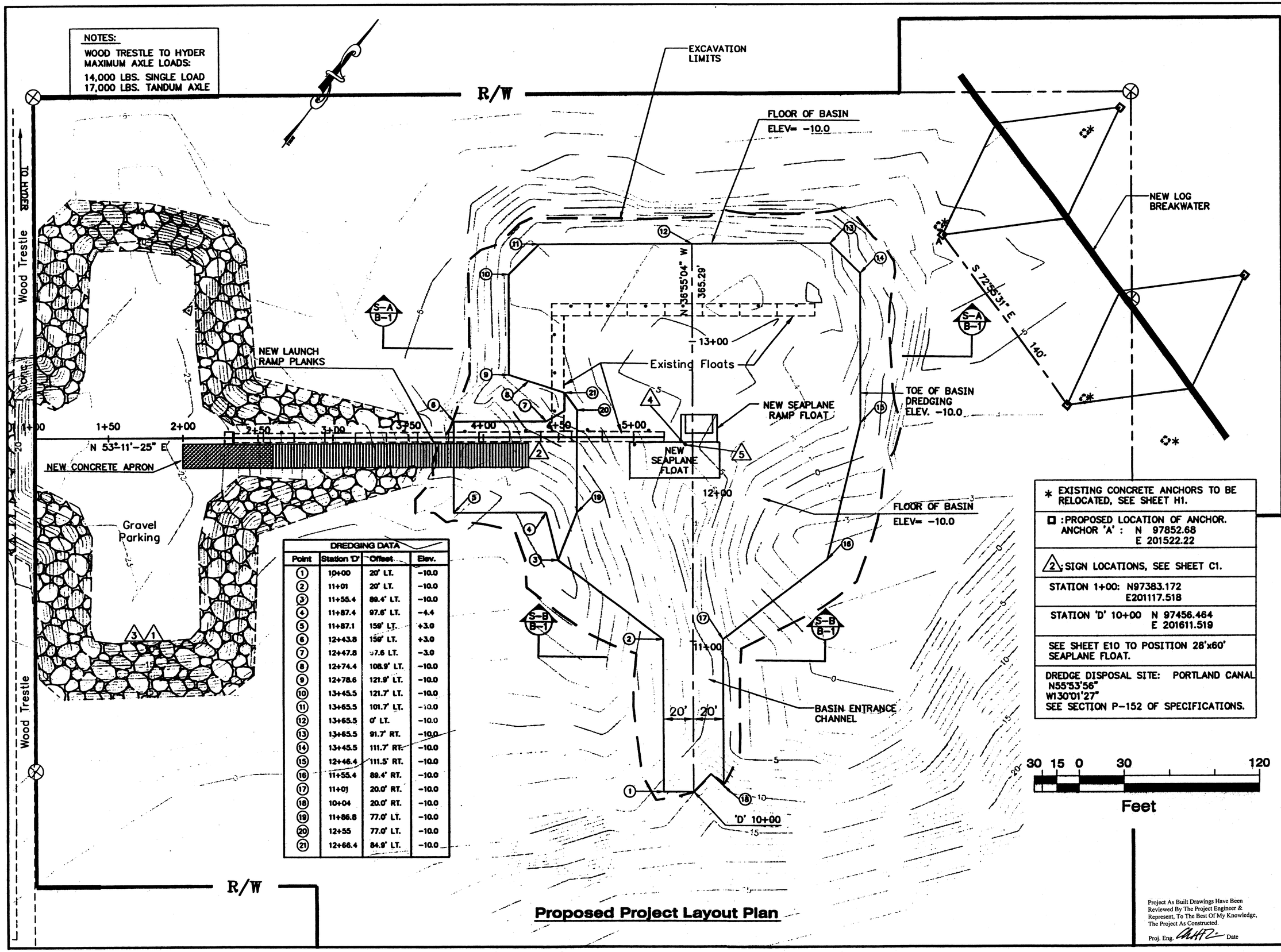

DREDGING DATA			
Point	Station 'D'	Offset	Elev.
1	10+00	20' LT.	-10.0
2	11+01	20' LT.	-10.0
3	11+55.4	89.4' LT.	-10.0
4	11+87.4	97.6' LT.	-4.4
5	11+87.1	159' LT.	+3.0
6	12+43.8	159' LT.	+3.0
7	12+47.8	97.6 LT.	-3.0
8	12+74.4	108.9' LT.	-10.0
9	12+78.6	121.9' LT.	-10.0
10	13+45.5	121.7' LT.	-10.0
11	13+65.5	101.7' LT.	-10.0
12	13+65.5	0' LT.	-10.0
13	13+65.5	91.7' RT.	-10.0
14	13+45.5	111.7' RT.	-10.0
15	12+46.4	111.5' RT.	-10.0
16	11+55.4	89.4' RT.	-10.0
17	11+01	20.0' RT.	-10.0
18	10+04	20.0' RT.	-10.0
19	11+86.8	77.0' LT.	-10.0
20	12+55	77.0' LT.	-10.0
21	12+66.4	84.9' LT.	-10.0

Proposed Project Layout Plan

* EXISTING CONCRETE ANCHORS TO BE RELOCATED, SEE SHEET H1.

□ :PROPOSED LOCATION OF ANCHOR.
ANCHOR 'A' : N 97852.68
E 201522.22

△2 : SIGN LOCATIONS, SEE SHEET C1.

STATION 1+00: N97383.172
E201117.518

STATION 'D' 10+00 N 97456.464
E 201611.519

SEE SHEET E10 TO POSITION 28'x60' SEAPLANE FLOAT.

DREDGE DISPOSAL SITE: PORTLAND CANAL
N55°53'56"
W130°01'27"
SEE SECTION P-152 OF SPECIFICATIONS.

30 15 0 30 120
Feet

Project As Built Drawings Have Been Reviewed By The Project Engineer & Represent, To The Best Of My Knowledge, The Project As Constructed.
Proj. Eng. Date

PATH:
Q:\Hyd\68198\Planset\A_ProposedPlan.dwg
Tue, 23/Jul/02 09:49AM Krie
PLOT:
PSPACE 1=1(F) OR MSPACE 1=1(F)
TAB: PLAN

ADDENDUM NUMBER

ATTACHMENT NUMBER

RECORD OF REVISIONS

No.	DATE	DESCRIPTION

HYDER HARBOR IMPROVEMENTS
Project No. 68198

Proposed Project Layout Plan

DESIGNED BY: D. BLACKBURN

STATE OF ALASKA 49th Doug W. Blackburn CE-10052 REGISTERED PROFESSIONAL ENGINEER

CHECKED BY: STAFF
DRAWN BY: RS\BB

STATE OF ALASKA
DEPARTMENT OF TRANSPORTATION & PUBLIC FACILITIES
STATEWIDE DESIGN & ENGINEERING SERVICES DIVISION

HYDER HARBOR IMPROVEMENTS

Proposed Project Layout Plan

PROJECT DESIGNATION NUMBER	
AIP # 3-02-0382-0102	
STATE	YEAR
ALASKA	2002
SHEET NUMBER	TOTAL SHEETS
A4	24

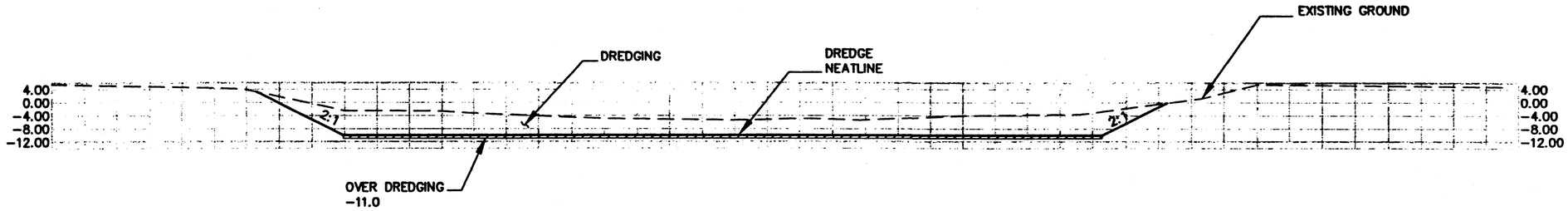

Section A (All units in feet)

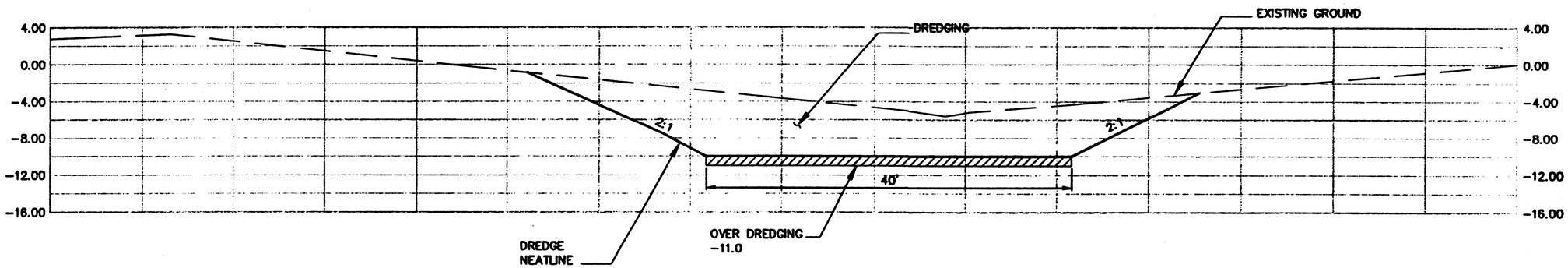

Section B (All units in feet)

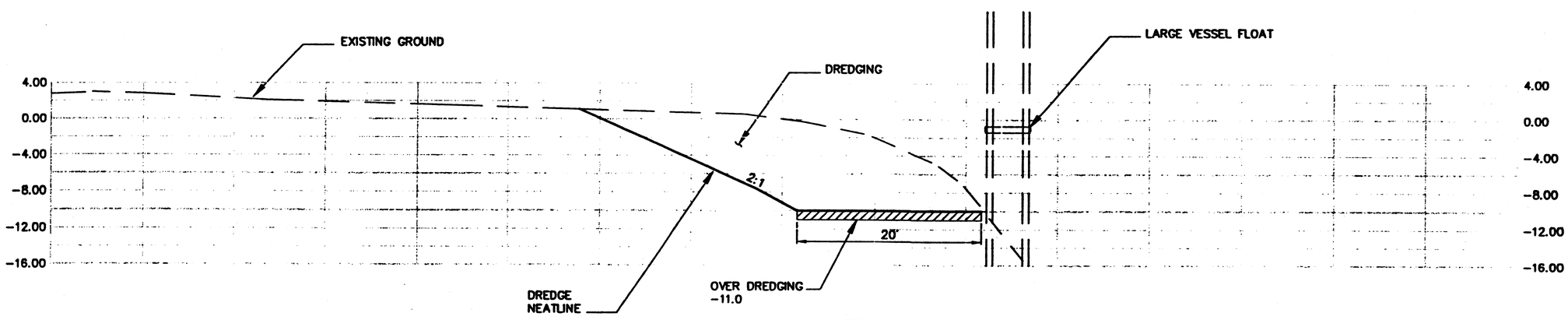

Section C (All units in feet)

Project As Built Drawings Have Been Reviewed By The Project Engineer & Represent, To The Best Of My Knowledge, The Project As Constructed.

Proj. Eng. _____ Date

PATH:
Q:\Hyd\68198\Planset\B_Typs.dwg
Tue, 23/Jul/02 09:50AM Kris
PLOT:
PSPACE 1=1(F) OR MSPACE 1=1(F)
TAB: TYP1

ADDENDUM NUMBER

ATTACHMENT NUMBER

RECORD OF REVISIONS

No.	DATE	DESCRIPTION

HYDER HARBOR IMPROVEMENTS
Project No. 68198

Dredging-Typical Sections

DESIGNED BY: D. BLACKBURN

STATE OF ALASKA 49th Doug W. Blackburn CE-10052 REGISTERED PROFESSIONAL ENGINEER

CHECKED BY: R. HEALY
DRAWN BY: B. BENNETT

STATE OF ALASKA
DEPARTMENT OF TRANSPORTATION & PUBLIC FACILITIES
STATEWIDE DESIGN & ENGINEERING SERVICES DIVISION

HYDER HARBOR IMPROVEMENTS

Dredging-Typical Sections

PROJECT DESIGNATION NUMBER
AIP # 3-02-0382-0102

STATE	YEAR
ALASKA	2002
SHEET NUMBER	TOTAL SHEETS
B1	24

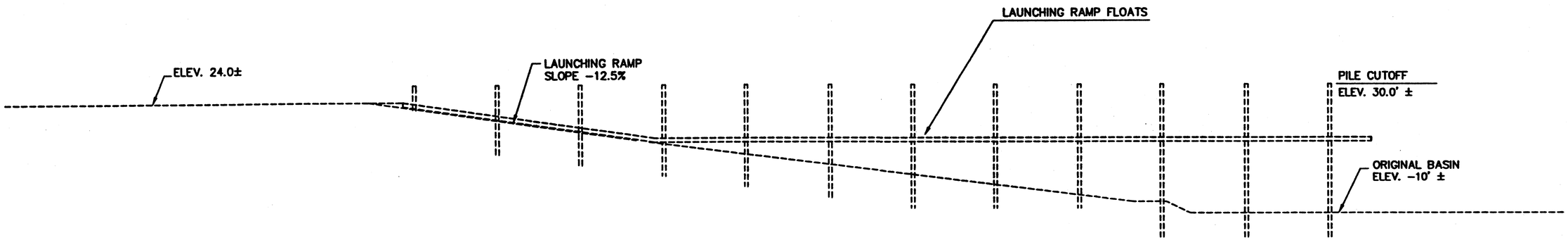

As-Built Ramp
Typical Section

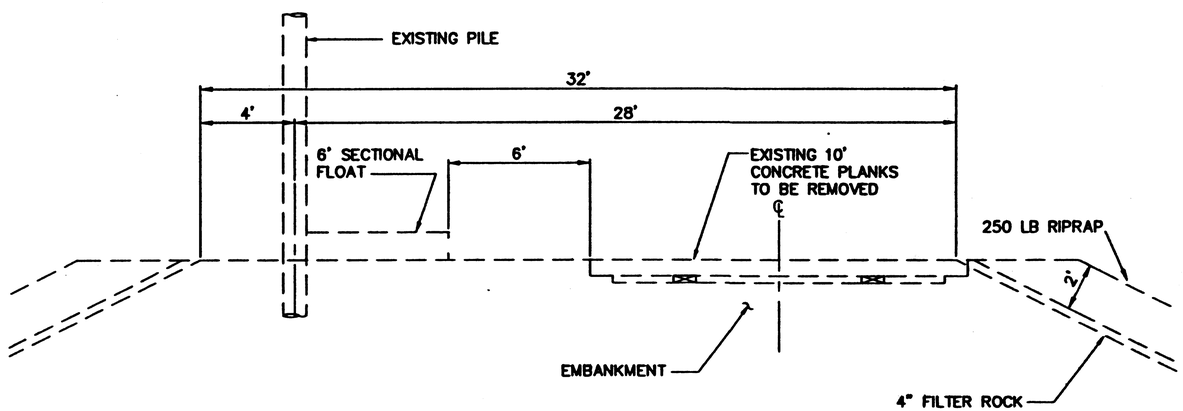

As-built Launch Ramp
Cross Section

Project As Built Drawings Have Been Reviewed By The Project Engineer & Represent, To The Best Of My Knowledge, The Project As Constructed.

Proj. Eng. _____ Date

PATH:
Q:\Hyd\68198\Planset\B_Typs.dwg
Tue, 23/Jul/02 09:50AM Kris
PLOT:
PSPACE 1=1(F) OR MSPACE 1=1(F)
TAB: TYP2

ADDENDUM NUMBER

ATTACHMENT NUMBER

RECORD OF REVISIONS

No.	DATE	DESCRIPTION

HYDER HARBOR IMPROVEMENTS
Project No. 68198

As-Built Launch Ramp Typical Sections

DESIGNED BY: D. BLACKBURN

STATE OF ALASKA 19th Doug W. Blackburn CE-10052 REGISTERED PROFESSIONAL ENGINEER

CHECKED BY: R. HEALY

DRAWN BY: B. BENNETT

STATE OF ALASKA
DEPARTMENT OF TRANSPORTATION & PUBLIC FACILITIES
STATEWIDE DESIGN & ENGINEERING SERVICES DIVISION

HYDER HARBOR IMPROVEMENTS
As-Built Launch Ramp Typical Sections

PROJECT DESIGNATION NUMBER
AIP # 3-02-0382-0102

STATE	YEAR
ALASKA	2002
SHEET NUMBER	TOTAL SHEETS
B2	24

Estimate of Quantities

ITEM NO.	ITEM	UNIT	QUANTITY
G-100a	MOBILIZATION & DEMOBILIZATION	LUMP SUM	ALL REQUIRED
G-130a	FIELD OFFICE	LUMP SUM	ALL REQUIRED
G-135a	CONSTRUCTION SURVEYING	LUMP SUM	ALL REQUIRED
G-135b	THREE PERSON SURVEY PARTY	HOUR	~~2~~ 0
G-131a	ENGINEERING TRANSPORTATION	LUMP SUM	ALL REQUIRED
M-110b	28'x60' SEAPLANE FLOAT	LUMP SUM	ALL REQUIRED
M-110d	Seaplane float Decking, C01	LUMP SUM	ALL REQUIRED
M-110c	18'x30' SEAPLANE RAMP FLOAT	LUMP SUM	ALL REQUIRED
M-110e	float Leveling, C05	LUMP SUM	ALL REQUIRED
M-111a	LOG BREAKWATER	LUMP SUM	ALL REQUIRED
M-111b	Log Breakwater Changes, C02	LUMP SUM	ALL REQUIRED
M-400c	STRUCTURAL STEEL PILES, FURNISHED	LINEAR FOOT	~~140~~ 160
M-400d	STRUCTURAL STEEL PILES, DRIVEN	EACH	2
M-110f	Provide Timber float Mat., C06	LUMP SUM	ALL REQUIRED
M-420a	LAUNCHING RAMP	LUMP SUM	ALL REQUIRED
P-152j	DREDGING, Deleted, C04	CUBIC YARD	~~22,000~~ 0
P-152 K	Dredging C04	LUMP SUM	ALL REQUIRED
P-158b	EROSION ~~&~~ POLLUTION CONTROL	CONTINGENT SUM	~~ALL REQUIRED~~ 0
P-165a	REMOVAL OF STRUCTURES & OBSTRUCTIONS	LUMP SUM	ALL REQUIRED
P-622a	STANDARD SIGNS	SQUARE FOOT	~~44.25~~ 44.26

TOTAL CONTRACT AMOUNT: $871,123.00

Removal of Structures & Obstructions

ITEM NO.	ITEM	QUANTITY	REMARKS
1	CONCRETE LAUNCH RAMP PLANKS	ALL REQUIRED	REMOVE & DISPOSE. THE BOTTOM 45' OF RAMP IS COVERED WITH 4' OF EMBANKMENT
2	24' X 36' SEAPLANE FLOAT	1EACH	RELOCATE, THEN REMOVE & DISPOSE.
3	6' X 20' APPROACH FLOATS	3 EACH	REMOVE TO DREDGE UNDERNEATH FLOATS, INSTALL AFTER DREDGING
4	150' BUNDLED LOG BREAKWATER	1 EACH	REMOVE & DISPOSE. INCLUDES 600' OF 1 1/4" CABLE PIECES ON MUD FLATS
5	12"ø x 20' LOG DEADHEAD AT CHANNEL ENTRANCE TO BASIN	1 EACH	REMOVE & DISPOSE.
6	WINDSOCK	1 EACH	RELOCATE WINDSOCK TO PILE IN OUTER HARBOR AS SHOWN ON EXISTING LAYOUT PLAN.
7	12"ø STEEL PILE	1 EACH	REMOVE & DISPOSE

Pile Summary

PILE NO.	NORTH	EAST	CUTOFF ELEVATION	REMARKS
1	-	-	+30.0	24"ø x 1/2" WALL GALV. STEEL, DRIVE TO ELEVATION ~~-39 FEET~~ -52'
2	-	-	+30.0	24"ø x 1/2" WALL GALV. STEEL, DRIVE TO ELEVATION ~~-39 FEET~~ -50'

PILE NOTES:

ALL PILES SHALL HAVE APF-0-14000 OR APF-0-14001 OPEN END DRIVE SHOES.

Sign Summary

SIGN NO.	LEGEND	SIZE	AREA S.F.	NO. OF	POST SIZE	TYPE	EMBEDMENT TYPE	FACING TRAFFIC	REMARKS
1	HYDER COMMUNITY ASSOCIATION PUBLIC LAUNCH RAMP	56" X 72"	28			TREATED			USE METAL POST
2	END OF RAMP	12" X 42"	3.5						INSTALL ON BUMPER BOARD OF 6' SECTIONAL FLOAT
3	LAUNCH RAMP PARKING	18" X 42"	5.25						USE METAL POST
4	WARINING! BOATS PROHIBITED AT SEAPLANE FLOAT,	30" X 36"	7.5						INSTALL ON SEAPLANE FLOAT PILE
	STATE OF ALASKA DOT&PF	TOTAL	44.25						
5	WINDSOCK LOCATION								

Project As Built Drawings Have Been Reviewed By The Project Engineer & Represent, To The Best Of My Knowledge, The Project As Constructed.

Proj. Eng. _____ Date

PATH:
Q:\Hyd\68198\Pionset\C_Est.dwg
Tue, 23/Jul/02 09:51AM Kris
PLOT:
PSPACE 1=1(F) OR MSPACE 1=1(F)
TAB: EST

ADDENDUM NUMBER

ATTACHMENT NUMBER

RECORD OF REVISIONS

No.	DATE	DESCRIPTION

HYDER HARBOR IMPROVEMENTS
Project No. 68198

Estimate of Quantities
Misc. Summaries

DESIGNED BY: D. BLACKBURN

STATE OF ALASKA 49th Doug W. Blackburn CE-10052 REGISTERED PROFESSIONAL ENGINEER

CHECKED BY: R. HEALY

DRAWN BY: DB/BB

STATE OF ALASKA
DEPARTMENT OF TRANSPORTATION & PUBLIC FACILITIES
STATEWIDE DESIGN & ENGINEERING SERVICES DIVISION

HYDER HARBOR IMPROVEMENTS

Estimate of Quantities
Misc. Summaries

PROJECT DESIGNATION NUMBER

AIP # 3-02-0382-0102

STATE	YEAR
ALASKA	2002
SHEET NUMBER	TOTAL SHEETS
C1	24

Glulam Schedule	
Member	Combination Symbol
6 3/4" Stringers	24F-U4
5 1/8" Diaphragm	24F-U4
3 1/8" Deck Panels	24F-U4

Ⓐ 6~3 1/8"x5'-0"x 9'-7 1/2" GLULAM DECK PANELS
Ⓑ 6~3 1/8"x5'-0"x 9'-8 3/4" GLULAM DECK PANELS
Ⓒ 2~3 1/8"x5'-0"x 24'-7 3/8" GLULAM DECK PANELS
Ⓓ 2~3 1/8"x4'-11 1/2"x 28'-6 1/4" GLULAM DECK PANELS
Ⓔ 2~3 1/8"x5'-0"x 28'-6 1/4" GLULAM DECK PANELS

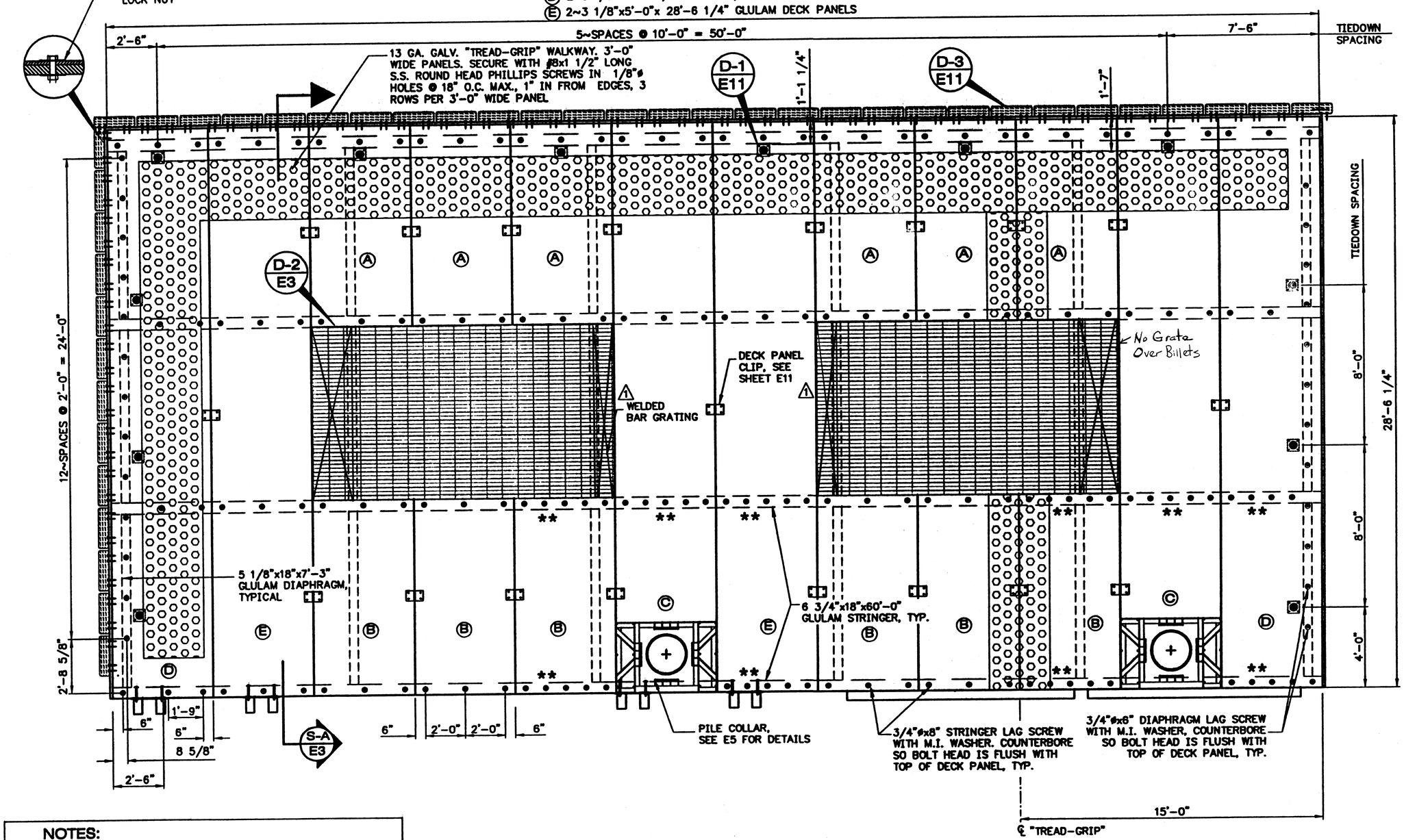

Decking Plan

NOTES:

ALL DECK BOLTS CONNECTED TO STRINGERS ARE 8" LONG, ALL DECK BOLTS CONNECTED TO DIAPHRAGMS ARE 6" LONG.

** EXTRA LAG BOLTS FOR PILE COLLARS.

FLOAT PRECONSTRUCTION DETAILS SHOWN MAY OR MAY NOT REFLECT FABRICATION DETAILS REQUIRED BY OTHER ATTACHMENTS. THIS DRAWING SHOULD BE COORDINATED WITH OTHER SHEETS AND DETAILS FOUND ELSEWHERE.

Project As Built Drawings Have Been Reviewed By The Project Engineer & Represent, To The Best Of My Knowledge, The Project As Constructed.

Proj. Eng. Date

PATH: Q:\Hyd\68198\Planset\E_SeaplaneFloat.dwg
Tue, 23/Jul/02 09:52AM Kris
PLOT: PSPACE 1=1(F) OR MSPACE 1=32(F)
TAB: DECKING

ADDENDUM NUMBER

ATTACHMENT NUMBER

RECORD OF REVISIONS

No.	DATE	DESCRIPTION
1	4/24/02	Grating Per NMFS and U.S. Fish & Wildlife.

HYDER HARBOR IMPROVEMENTS
Project No. 68198

Seaplane Float Decking Plan

DESIGNED BY: Blackburn

STATE OF ALASKA 49th Doug W. Blackburn CE-10052 REGISTERED PROFESSIONAL ENGINEER

CHECKED BY: Healy

DRAWN BY: R. SNYDER

STATE OF ALASKA
DEPARTMENT OF TRANSPORTATION & PUBLIC FACILITIES
STATEWIDE DESIGN & ENGINEERING SERVICES DIVISION

HYDER HARBOR IMPROVEMENTS

Seaplane Float Decking Plan

PROJECT DESIGNATION NUMBER
AIP # 3-02-0382-0102

STATE	YEAR
ALASKA	2002
SHEET NUMBER	TOTAL SHEETS
E1	24

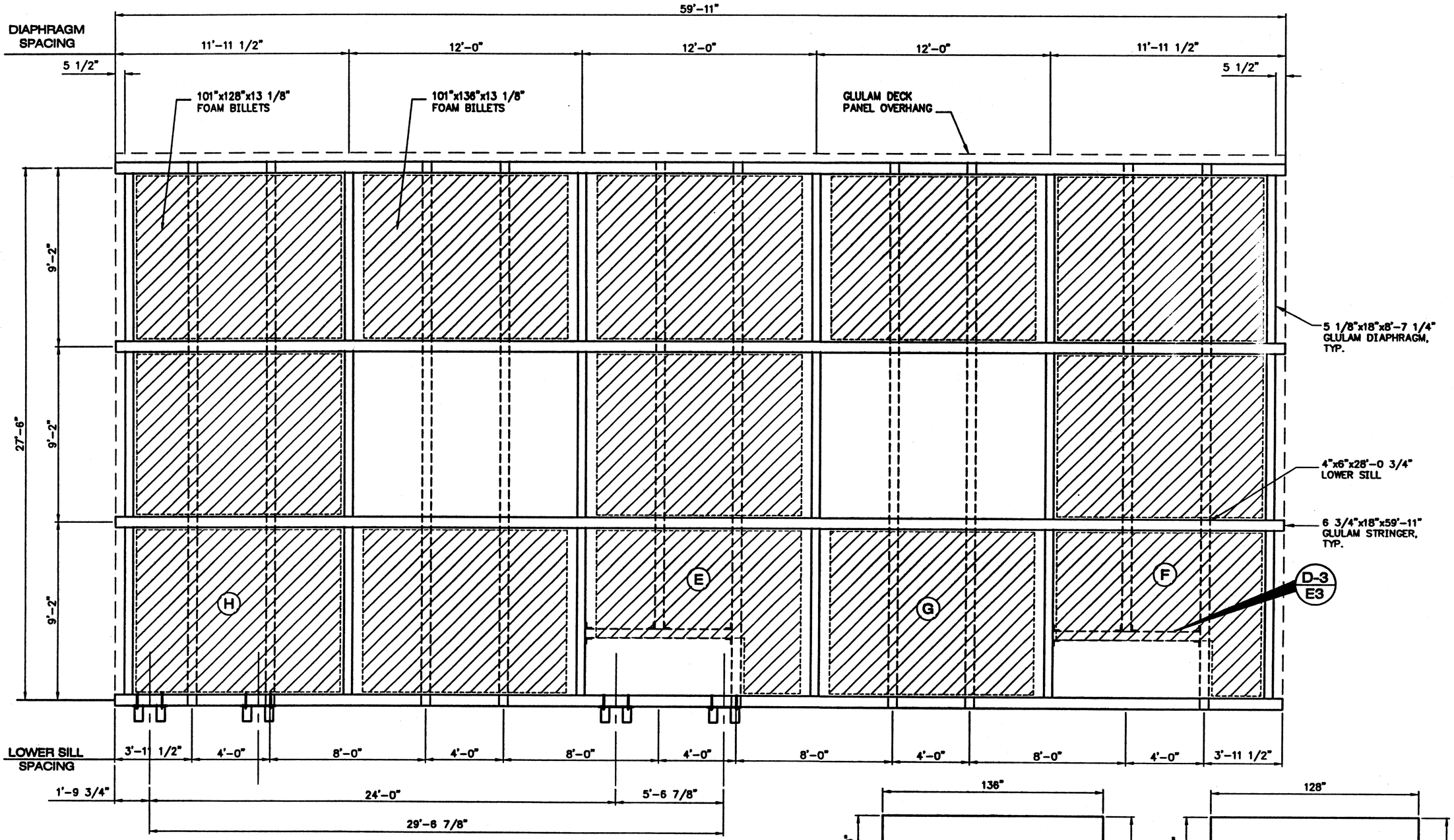

28'x60' Float Framing Plan

FOAM	DEPTH
E	16"
F	16"
G	13 1/2"
H	13 1/2"

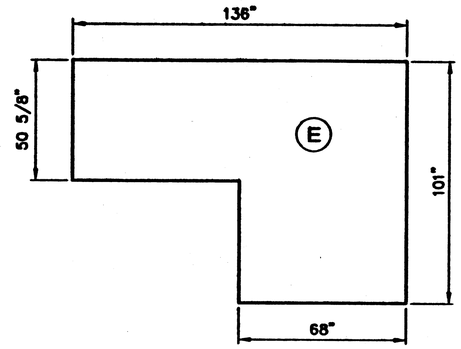

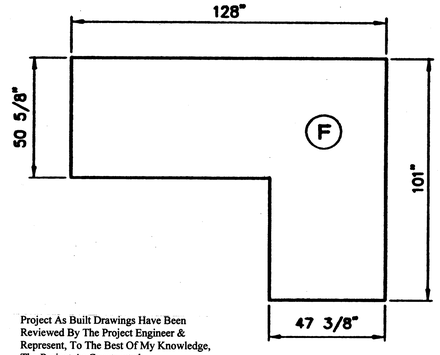

Project As Built Drawings Have Been Reviewed By The Project Engineer & Represent, To The Best Of My Knowledge, The Project As Constructed.

Proj. Eng. Date

PATH:
Q:\Hyd\68198\Planset\E_SeaplaneFloat.dwg
Tue, 23/Jul/02 09:52AM Kris
PLOT:
PSPACE 1=1(F) OR MSPACE 1=32(F)
TAB: FRAMING

ADDENDUM NUMBER

ATTACHMENT NUMBER

RECORD OF REVISIONS

No.	DATE	DESCRIPTION

HYDER HARBOR IMPROVEMENTS
Project No. 68198

Seaplane Float Framing Plan

DESIGNED BY: D. BLACKBURN

STATE OF ALASKA 49th Doug W. Blackburn CE-10052 REGISTERED PROFESSIONAL ENGINEER

CHECKED BY: R. HEALY
DRAWN BY: R. SNYDER

STATE OF ALASKA
DEPARTMENT OF TRANSPORTATION & PUBLIC FACILITIES
STATEWIDE DESIGN & ENGINEERING SERVICES DIVISION
HYDER HARBOR IMPROVEMENTS

Seaplane Float Framing Plan

PROJECT DESIGNATION NUMBER
AIP # 3-02-0382-0102

STATE	YEAR
ALASKA	2002
SHEET NUMBER	TOTAL SHEETS
E2	24

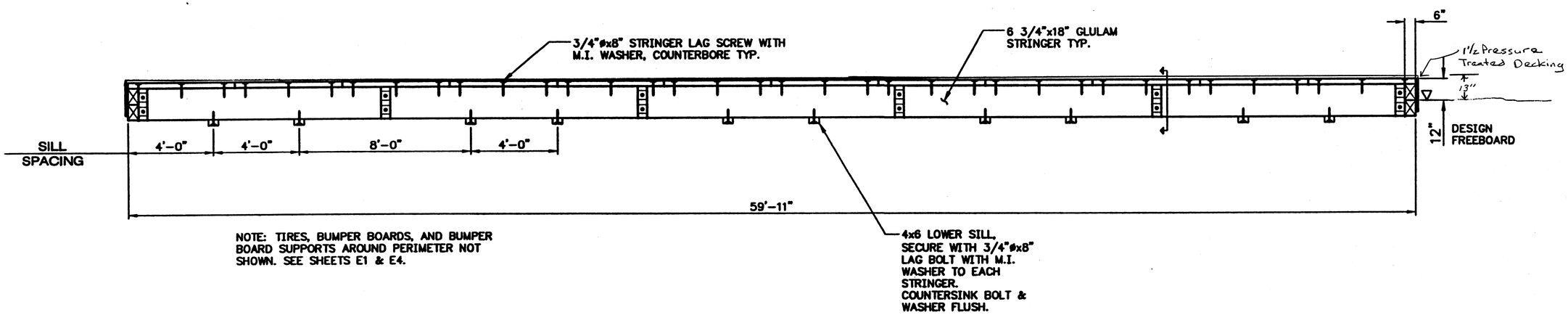

NOTE: TIRES, BUMPER BOARDS, AND BUMPER BOARD SUPPORTS AROUND PERIMETER NOT SHOWN. SEE SHEETS E1 & E4.

Elevation

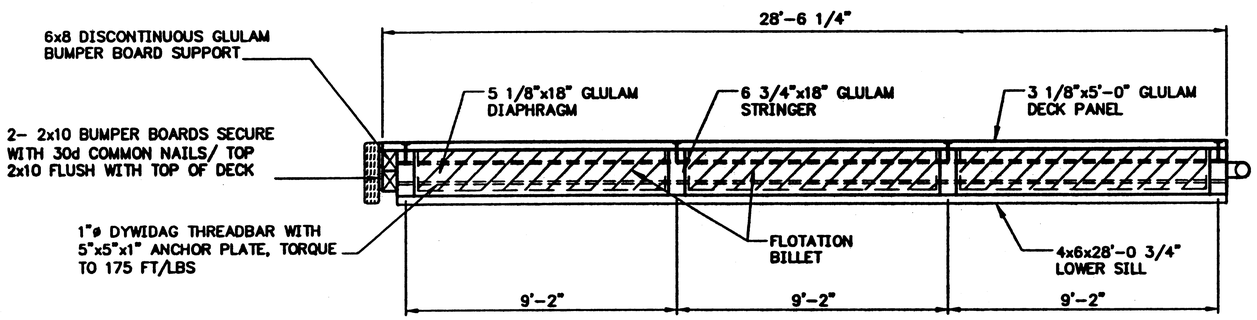

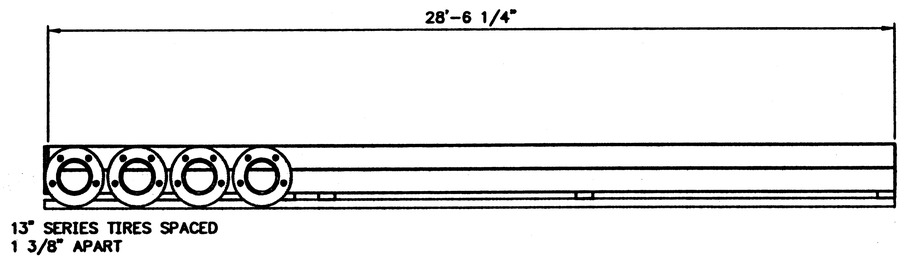

2x10 BUMPER BOARDS (MIN LENGTH = 12'-0") SECURED WITH 30d COMMON NAILS STAGGER ALTERNATELY HIGH AND LOW @ 12" O.C. AND 2 NAILS @ ENDS (PREDRILL ENDS)

Float End

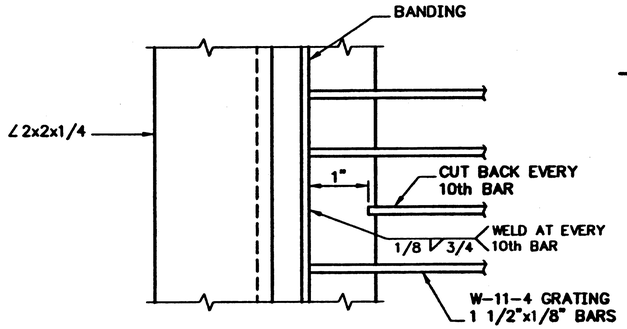

Section (A)

Plan

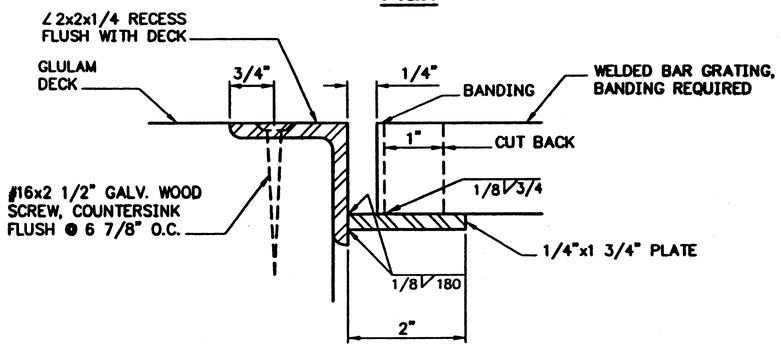

Detail (2)

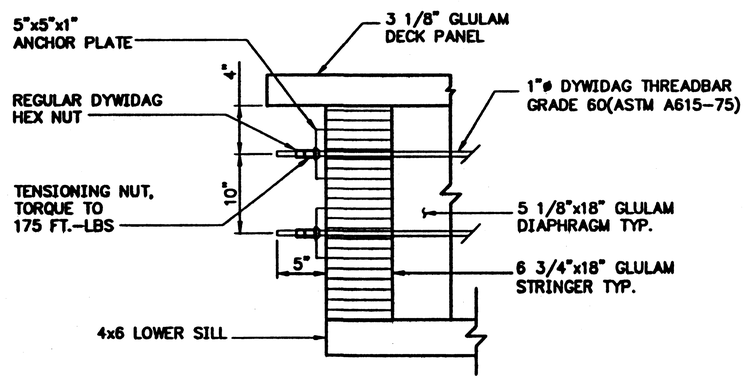

Tensioning Threadbar Detail (1)

TYPICAL AT EACH DIAPHRAGM

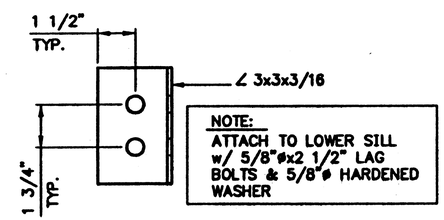

NOTE:
ATTACH TO LOWER SILL w/ 5/8"øx2 1/2" LAG BOLTS & 5/8"ø HARDENED WASHER

Lower Sill Hangers Detail (3)

12 EACH

Project As Built Drawings Have Been Reviewed By The Project Engineer & Represent, To The Best Of My Knowledge, The Project As Constructed.

Proj. Eng. _____ Date

PATH: Q:\Hyd\68198\Planset\E_SeaplaneFloat.dwg
Tue, 23/Jul/02 09:53AM Krie
PLOT: PSPACE 1=1(F) OR MSPACE 1=32(F)
TAB: ELEVATION

ADDENDUM NUMBER

ATTACHMENT NUMBER

RECORD OF REVISIONS

No.	DATE	DESCRIPTION

HYDER HARBOR IMPROVEMENTS
Project No. 68198

Seaplane Float
Elevation Sections

DESIGNED BY: D. BLACKBURN

STATE OF ALASKA 49th Doug W. Blackburn CE-10052 REGISTERED PROFESSIONAL ENGINEER

CHECKED BY: R. HEALY
DRAWN BY: BB

STATE OF ALASKA
DEPARTMENT OF TRANSPORTATION & PUBLIC FACILITIES
STATEWIDE DESIGN & ENGINEERING SERVICES DIVISION
HYDER HARBOR IMPROVEMENTS

Seaplane Float Elevation Sections

PROJECT DESIGNATION NUMBER
AIP # 3-02-0382-0102

STATE	YEAR
ALASKA	2002
SHEET NUMBER	TOTAL SHEETS
E3	24

NOTE:

USE 3/4"ø x 10" LAG BOLT w/M.I. WASHER TO FASTEN BUMPER BOARD SUPPORTS TO 6 3/4" GLULAM STRINGERS. USE 3/4"ø x 9" LAG BOLTS w/M.I. WASHER TO FASTEN BUMPER BOARDS SUPPORTS TO 5 1/8" GLULAM DIAPHRAGM. COUNTERSINK BOLTS SO HEAD IS FLUSH WITH 6x8.

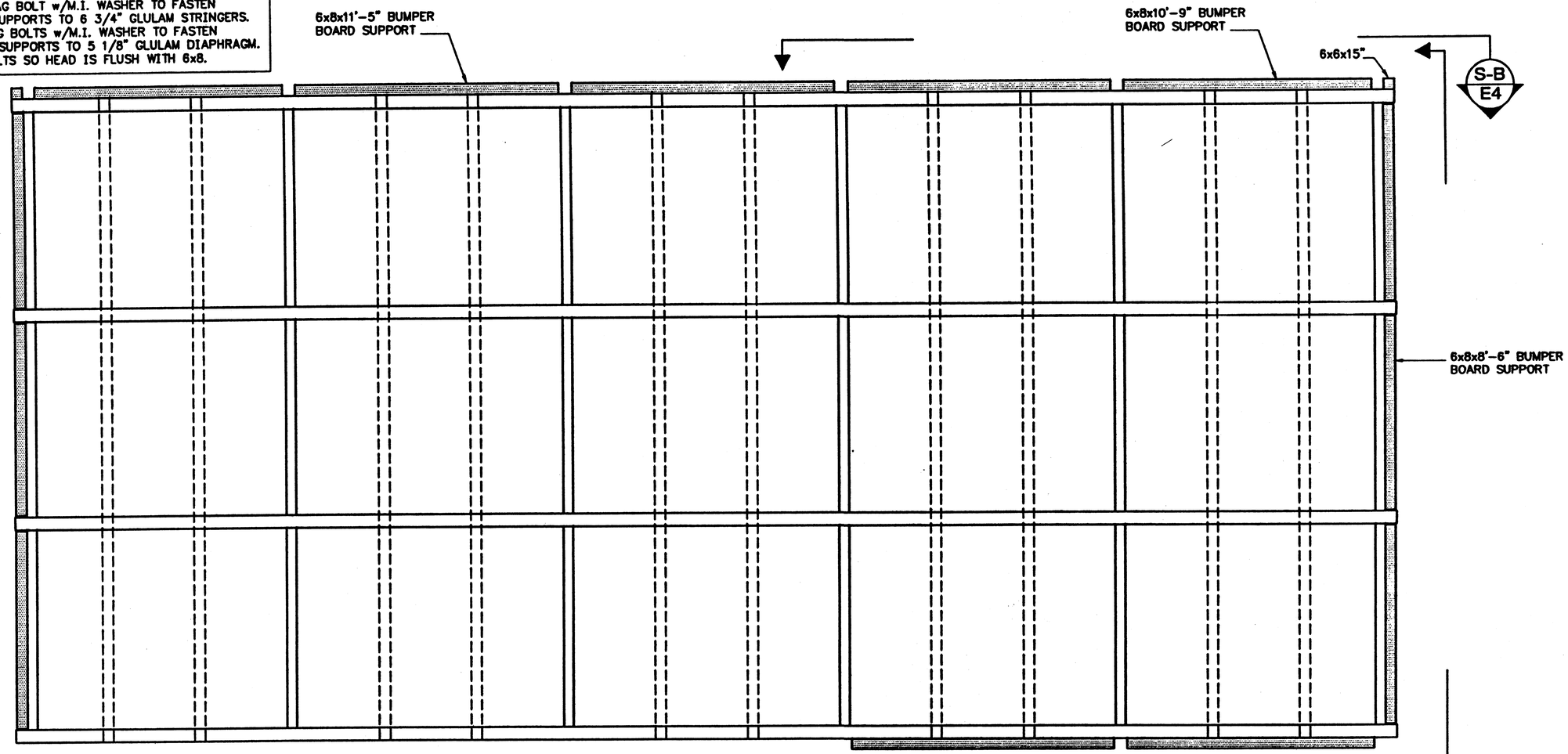

28' x 60' Float Bumper Board Support Layout

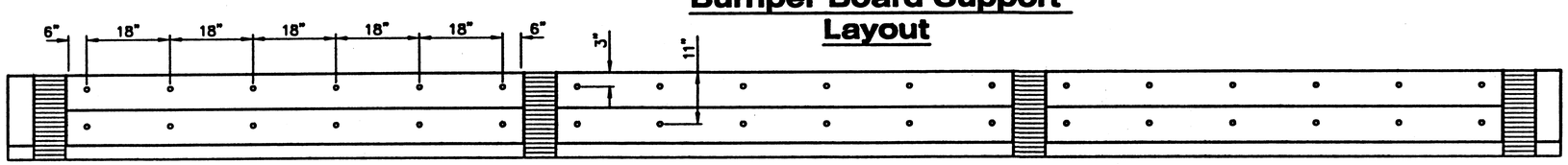

Section S-A / E4

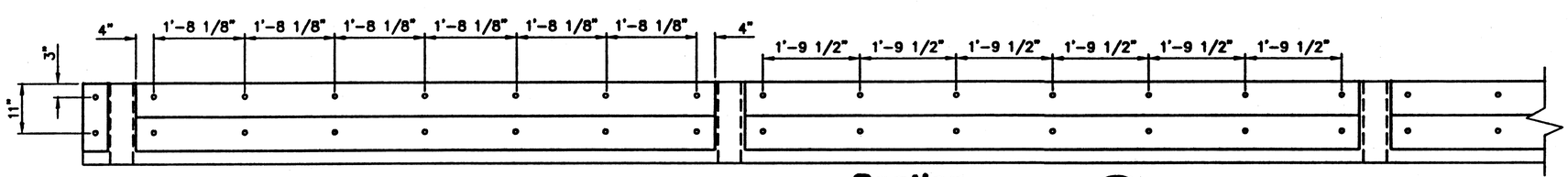

Section S-B / E4

Project As Built Drawings Have Been Reviewed By The Project Engineer & Represent, To The Best Of My Knowledge, The Project As Constructed.

Proj. Eng. _____ Date

PATH:
Q:\Hyd\68198\Planset\E_SeaplaneFloat.dwg
Tue, 23/Jul/02 09:53AM Kris
PLOT:
PSPACE 1=1(F) OR MSPACE 1=32(F)
TAB: BUMPER BOARD

ADDENDUM NUMBER

ATTACHMENT NUMBER

RECORD OF REVISIONS

No.	DATE	DESCRIPTION

HYDER HARBOR IMPROVEMENTS
Project No. 68198

Seaplane Float Bumper Board Support

DESIGNED BY: D. BLACKBURN

STATE OF ALASKA 49th Doug W. Blackburn CE-10052 REGISTERED PROFESSIONAL ENGINEER

CHECKED BY: R. HEALY

DRAWN BY: R. SNYDER

STATE OF ALASKA
DEPARTMENT OF TRANSPORTATION & PUBLIC FACILITIES
STATEWIDE DESIGN & ENGINEERING SERVICES DIVISION

HYDER HARBOR IMPROVEMENTS
Seaplane Float Bumper Board Support

PROJECT DESIGNATION NUMBER	
AIP # 3-02-0382-0102	
STATE	YEAR
ALASKA	2002
SHEET NUMBER	TOTAL SHEETS
E4	24

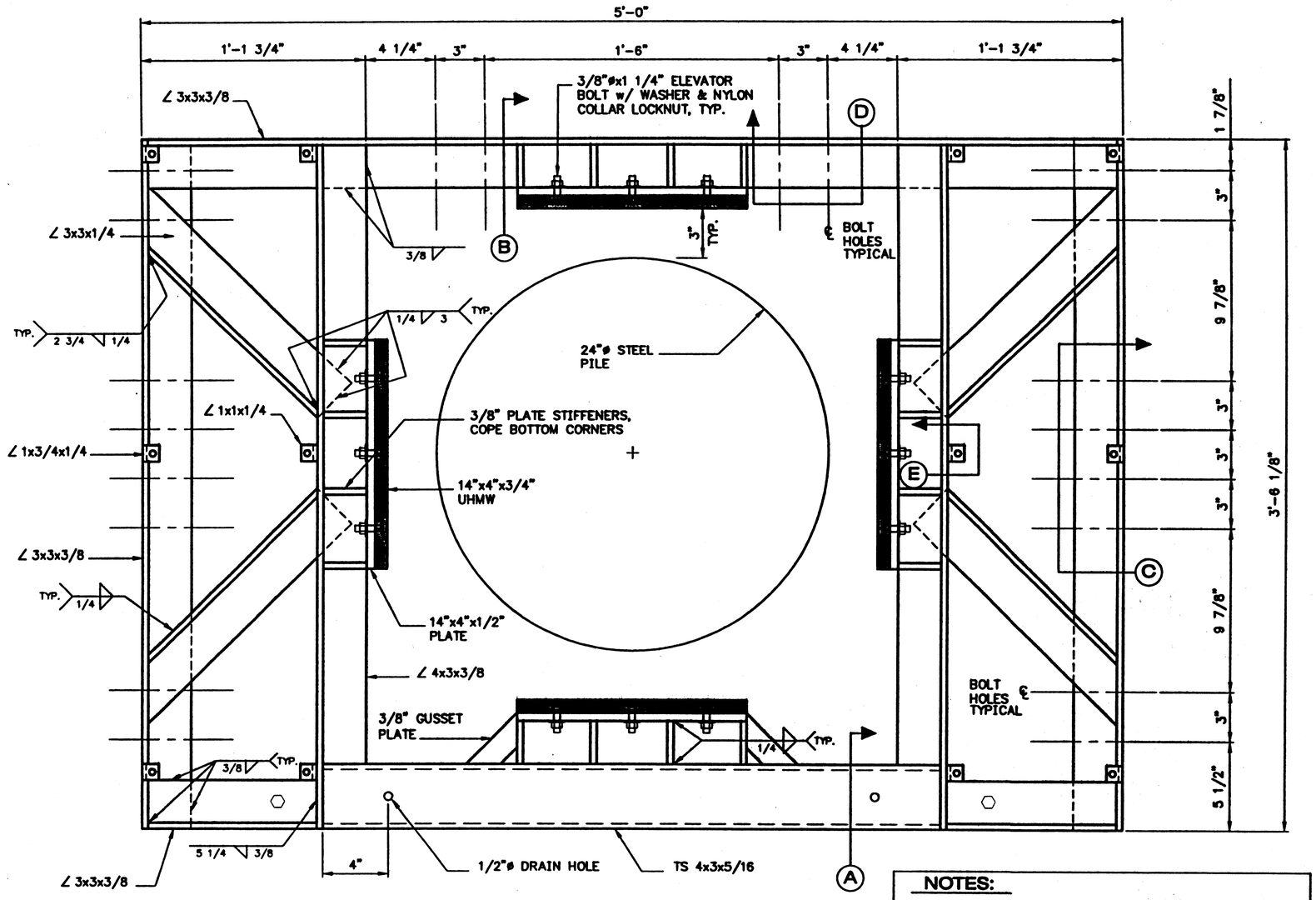

PILE COLLAR PLAN

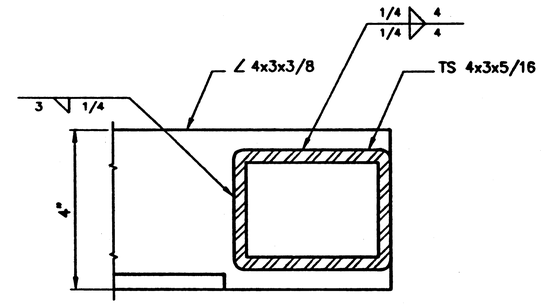

SECTION A

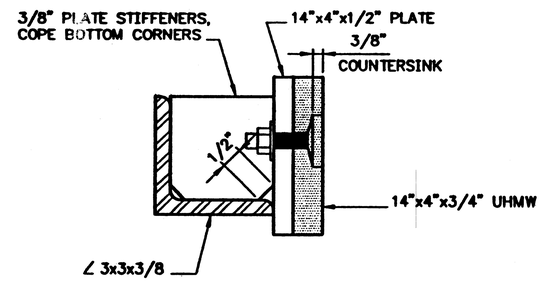

SECTION B

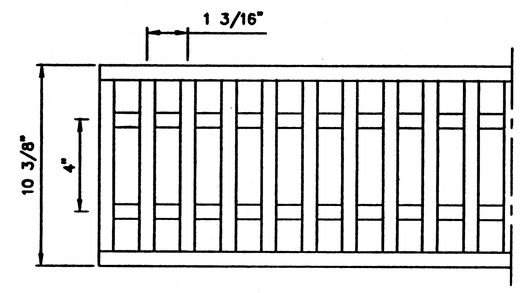

WELDED BAR GRATING

NOTES:

COVER ENDS OF PILE COLLAR WITH WELDED BAR GRATING. 10 3/8" x 41 3/8" (W-19-4, BAR SIZE: 3/4" x 1/8").
BANDING OF GRATING REQUIRED.
FASTEN GRATING WITH SIX GALVANIZED STEEL 'Z' CLIPS.
SECURE PILE COLLAR TO 3 1/8" GLULAM DECKING WITH 3/4" x 6" LAG BOLTS W/ HARDENED WASHERS.

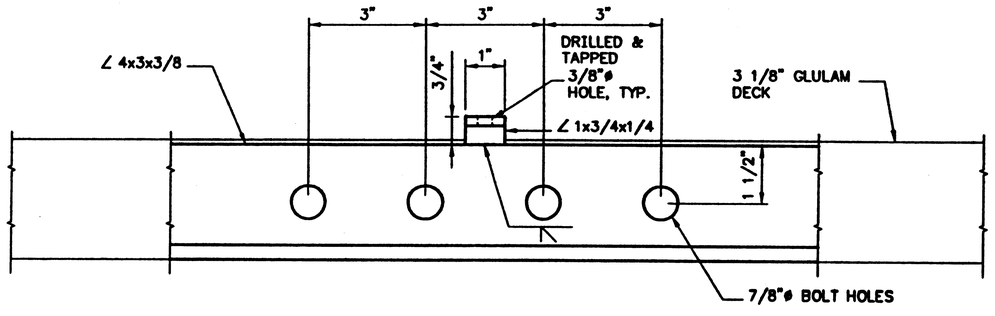

SECTION C

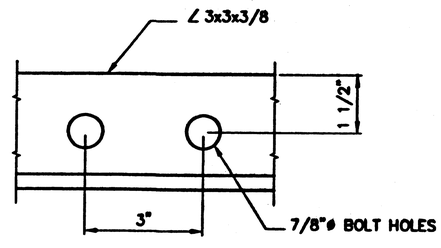

SECTION D

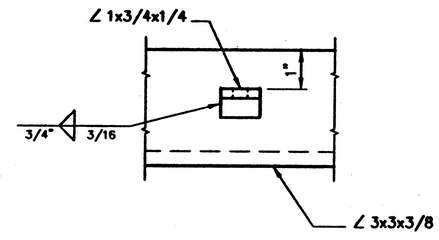

SECTION E

PATH:
Q:\Hyd\68198\Planset\E_SeaplaneFloat.dwg
Tue, 23/Jul/02 09:54AM Kris
PLOT:
PSPACE 1=1(F) OR MSPACE 1=32(F)
TAB: PCOLLAR DETS

ADDENDUM NUMBER

ATTACHMENT NUMBER

RECORD OF REVISIONS

No.	DATE	DESCRIPTION

HYDER HARBOR IMPROVEMENTS
Project No. 68198

Seaplane Float
Pile Collar Details

Project As Built Drawings Have Been Reviewed By The Project Engineer & Represent, To The Best Of My Knowledge, The Project As Constructed.
Proj. Eng. Date

DESIGNED BY: D. BLACKBURN

STATE OF ALASKA 49th Doug W. Blackburn CE-10052 REGISTERED PROFESSIONAL ENGINEER

CHECKED BY: R. HEALY
DRAWN BY: BB

STATE OF ALASKA
DEPARTMENT OF TRANSPORTATION & PUBLIC FACILITIES
STATEWIDE DESIGN & ENGINEERING SERVICES DIVISION

HYDER HARBOR IMPROVEMENTS
Seaplane Float
Pile Collar Details

PROJECT DESIGNATION NUMBER
AIP # 3-02-0382-0102

STATE	YEAR
ALASKA	2002
SHEET NUMBER	TOTAL SHEETS
E5	24

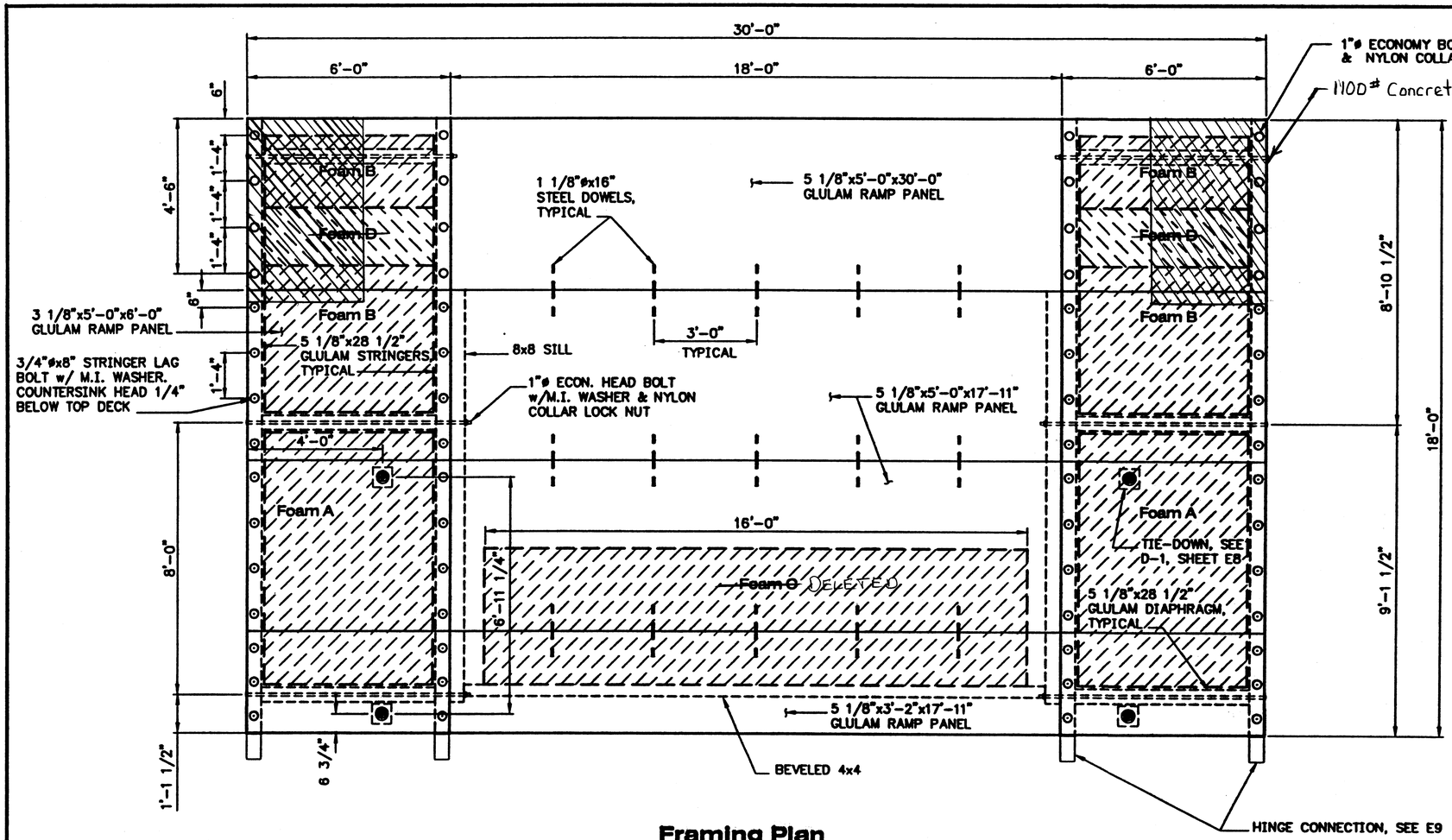

Framing Plan

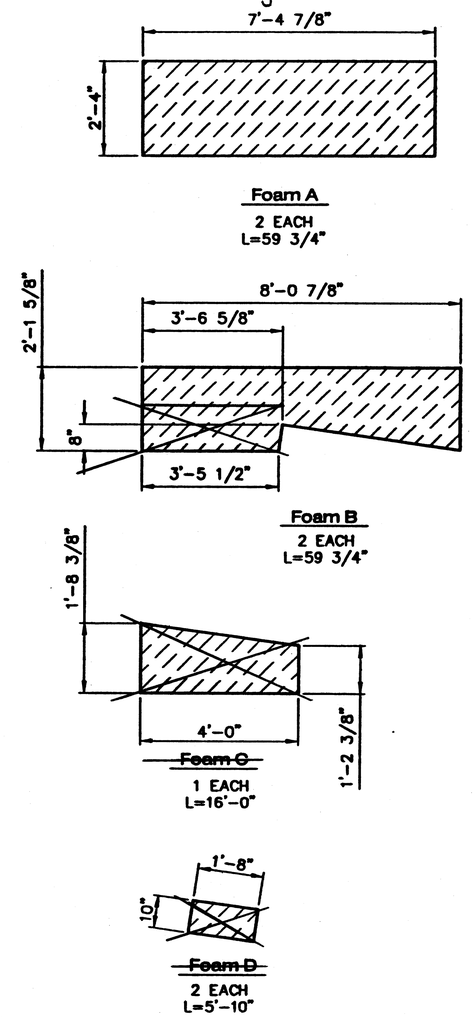

Foam Billets Side Elevation

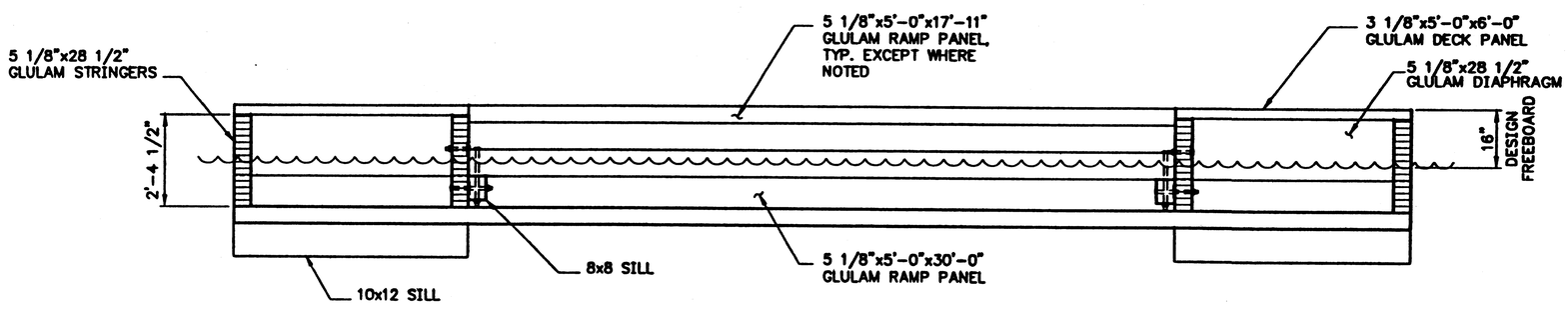

Elevation

GLULAM SCHEDULE	
MEMBER	COMBINATION SYMBOL
STRINGERS	24F-V4
DIAPHRAGMS	24F-V4
RAMP PANELS	24F-V4
3 1/8" GLULAM DECK PANEL	24F-V4

Project As Built Drawings Have Been Reviewed By The Project Engineer & Represent, To The Best Of My Knowledge, The Project As Constructed.

Proj. Eng. Date

PATH: Q:\Hyd\68198\Planset\E_Ramp_Float.dwg
Tue, 23/Jul/02 10:01AM Kris
PLOT: PSPACE 1=1(F) OR MSPACE 1=32(F)
TAB: FRAMING

ADDENDUM NUMBER

ATTACHMENT NUMBER

RECORD OF REVISIONS

No.	DATE	DESCRIPTION

HYDER HARBOR IMPROVEMENTS
Project No. 68198

18'x30' Ramp Float Framing Plan

DESIGNED BY: D. BLACKBURN

STATE OF ALASKA 49th Doug W. Blackburn CE-10052 REGISTERED PROFESSIONAL ENGINEER

CHECKED BY: R. HEALY

DRAWN BY: R. SNYDER

STATE OF ALASKA
DEPARTMENT OF TRANSPORTATION & PUBLIC FACILITIES
STATEWIDE DESIGN & ENGINEERING SERVICES DIVISION

HYDER HARBOR IMPROVEMENTS

18'x30' Ramp Float Framing Plan

PROJECT DESIGNATION NUMBER
AIP # 3-02-0382-0102

STATE	YEAR
ALASKA	2002
SHEET NUMBER	TOTAL SHEETS
E6	24

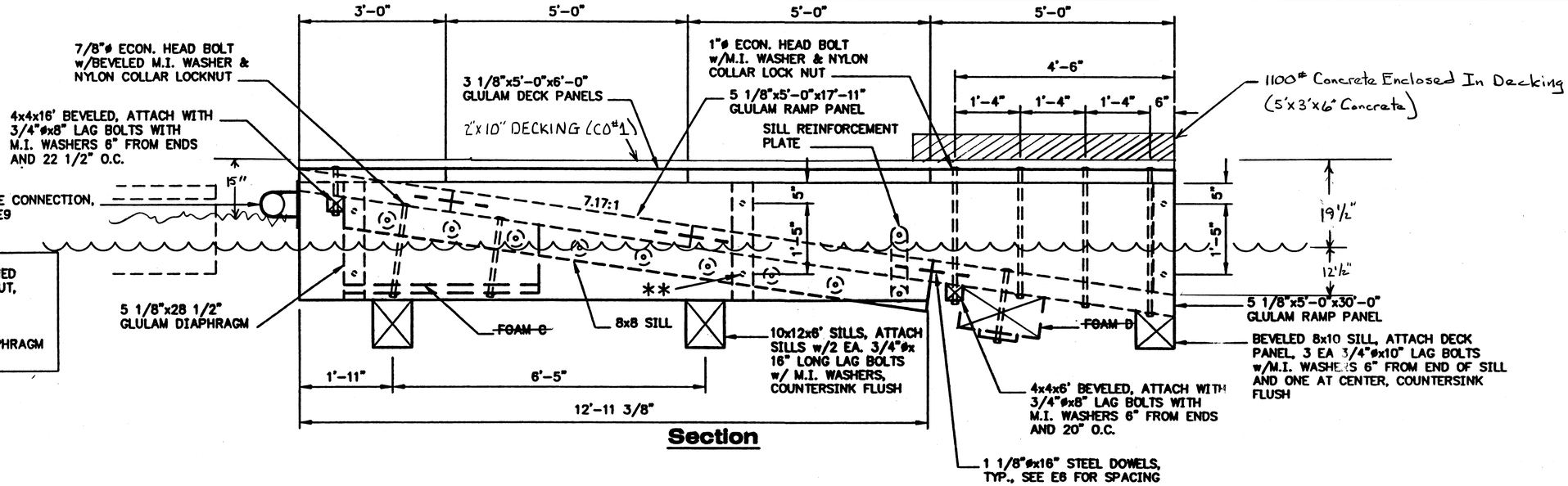

NOTES:

* FOAM FLOTATION TO BE NOTCHED TO ACCOMODATE THE UPPER NUT, WASHER & STUD.

** THESE DIAPHRAGM BOLTS ARE LONGER THAN THE OTHER DIAPHRAGM BOLTS.

Section

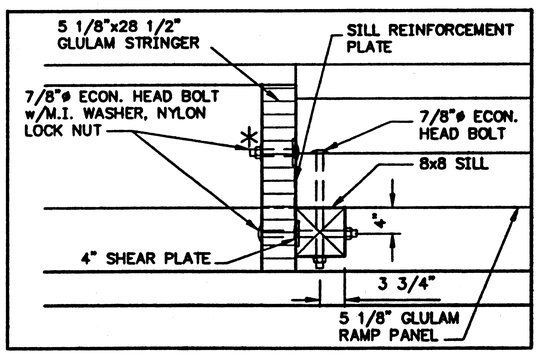

8x8 Sill Detail

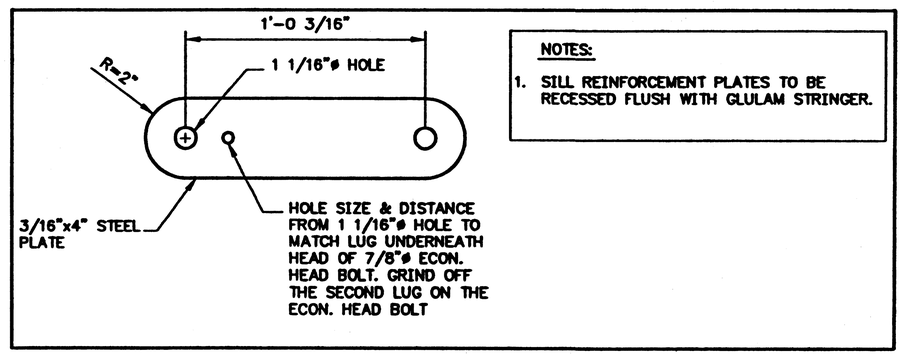

NOTES:

1. SILL REINFORCEMENT PLATES TO BE RECESSED FLUSH WITH GLULAM STRINGER.

Sill Reinforcement Plate

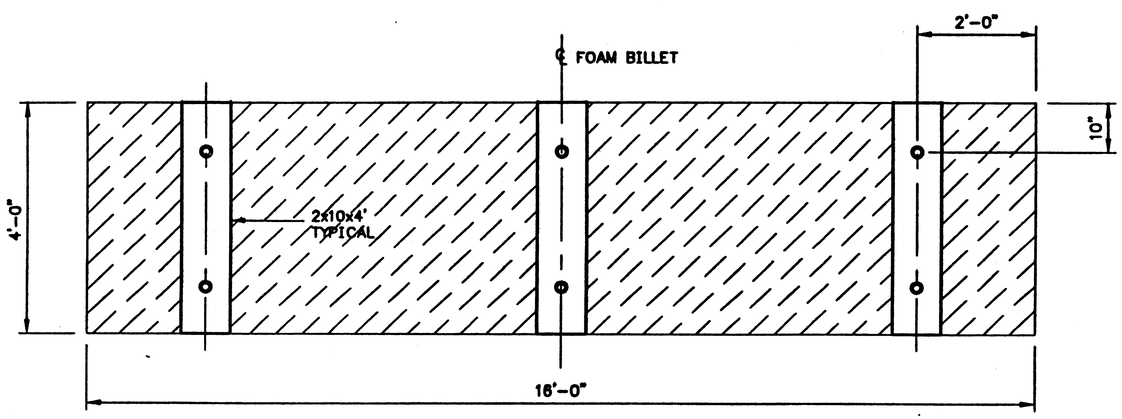

Foam C

(VIEW FROM BENEATH FLOAT)

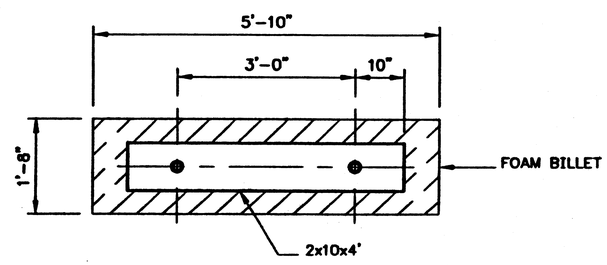

Foam D

(VIEW FROM BENEATH FLOAT)

Project As Built Drawings Have Been Reviewed By The Project Engineer & Represent, To The Best Of My Knowledge, The Project As Constructed.

Proj. Eng. Date

PATH: Q:\Hyd\68198\Planset\E_Ramp_Float.dwg
Tue, 23/Jul/02 10:01AM Kris
PLOT: PSPACE 1=1(F) OR MSPACE 1=32(F)
TAB: X-SECTIONS

ADDENDUM NUMBER

ATTACHMENT NUMBER

RECORD OF REVISIONS

No.	DATE	DESCRIPTION

HYDER HARBOR IMPROVEMENTS
Project No. 68198

18'x30' Ramp Float Details

DESIGNED BY: D. BLACKBURN

STATE OF ALASKA 49th Doug W. Blackburn CE-10052 REGISTERED PROFESSIONAL ENGINEER

CHECKED BY: R. HEALY
DRAWN BY: R. SNYDER

STATE OF ALASKA
DEPARTMENT OF TRANSPORTATION & PUBLIC FACILITIES
STATEWIDE DESIGN & ENGINEERING SERVICES DIVISION

HYDER HARBOR IMPROVEMENTS

18'x30' Ramp Float Details

PROJECT DESIGNATION NUMBER
AIP # 3-02-0382-0102

STATE	YEAR
ALASKA	2002
SHEET NUMBER	TOTAL SHEETS
E7	24

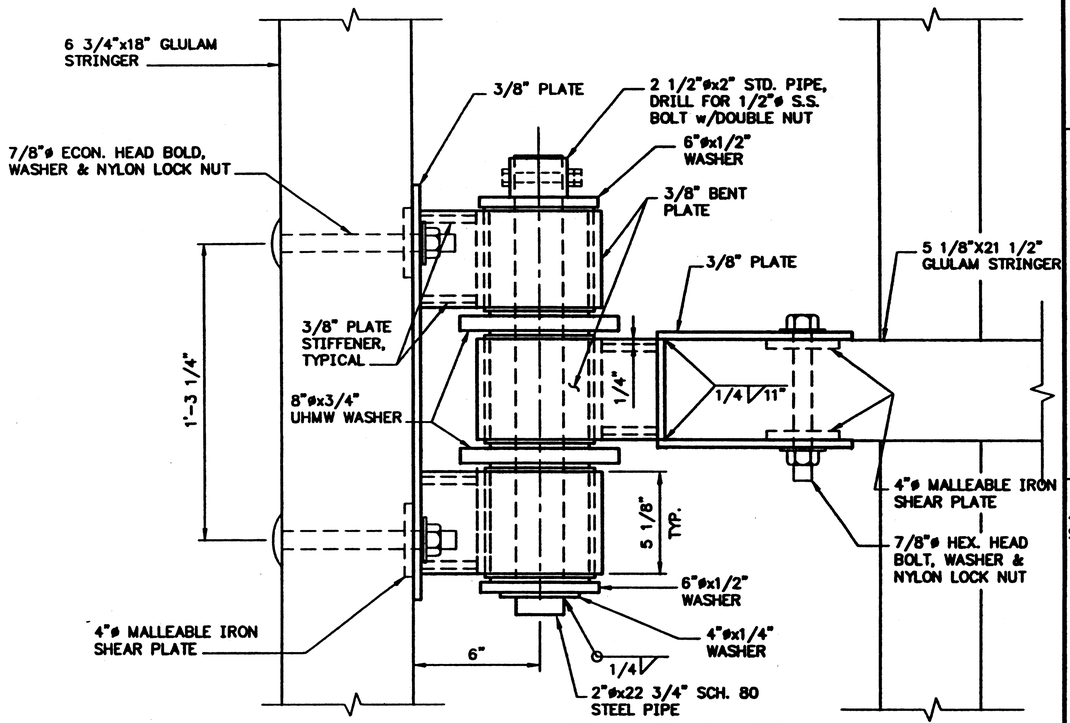

Hinge Assembly Plan

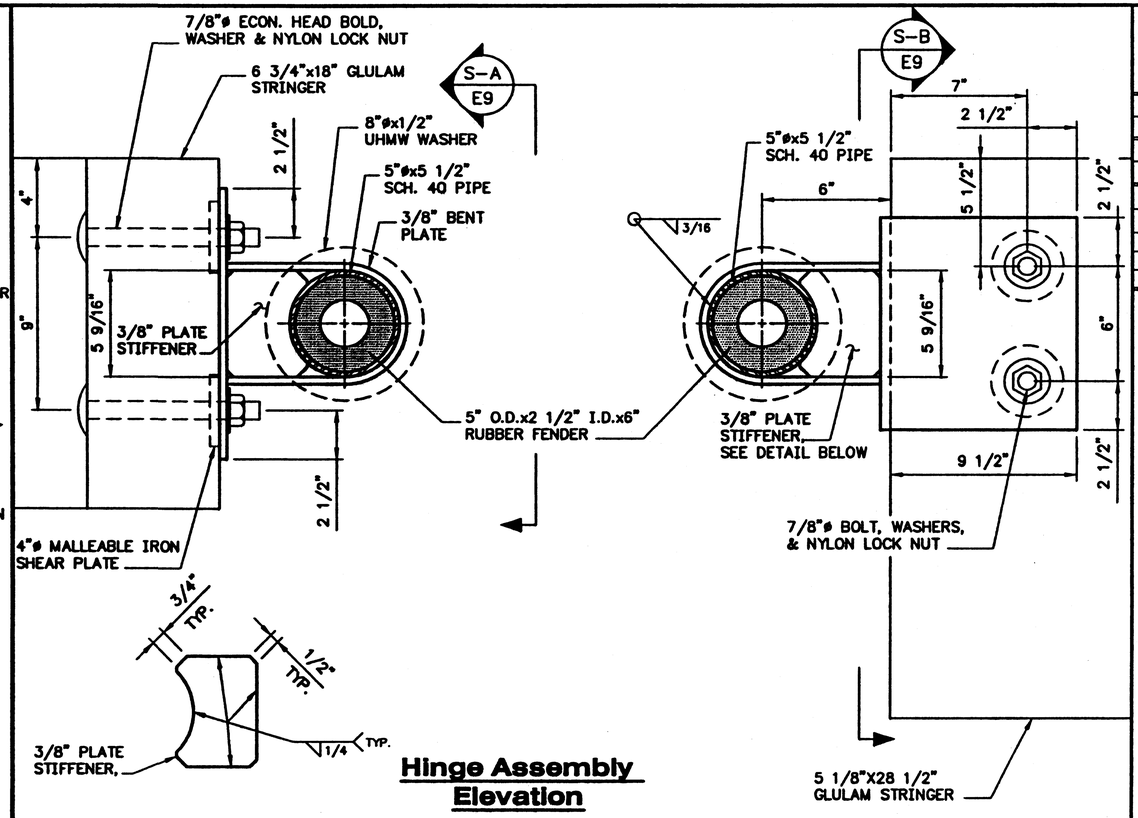

Hinge Assembly Elevation

NOTE:

* HOLES IN BASE PLATE SHALL BE SLOTTED 15/16"x2 3/16" HORIZ.

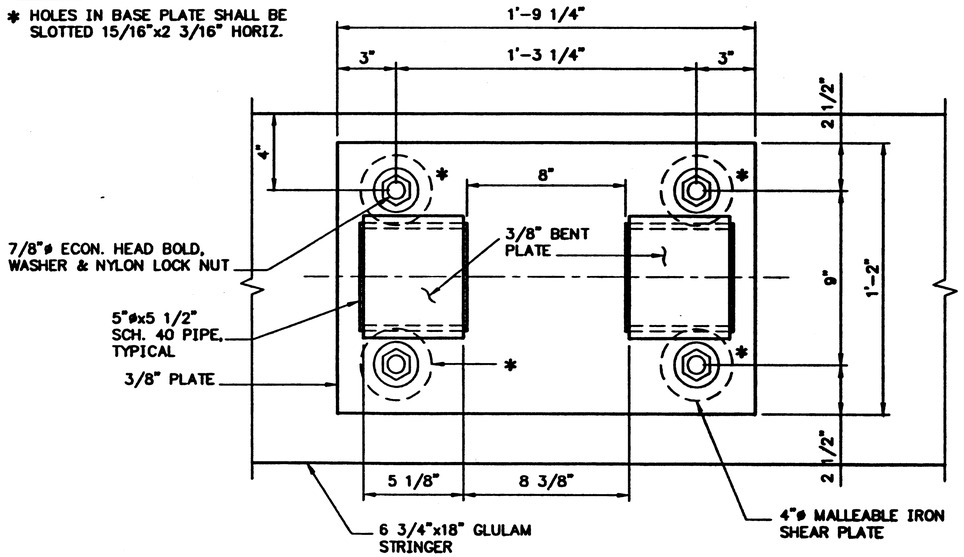

Section (A)

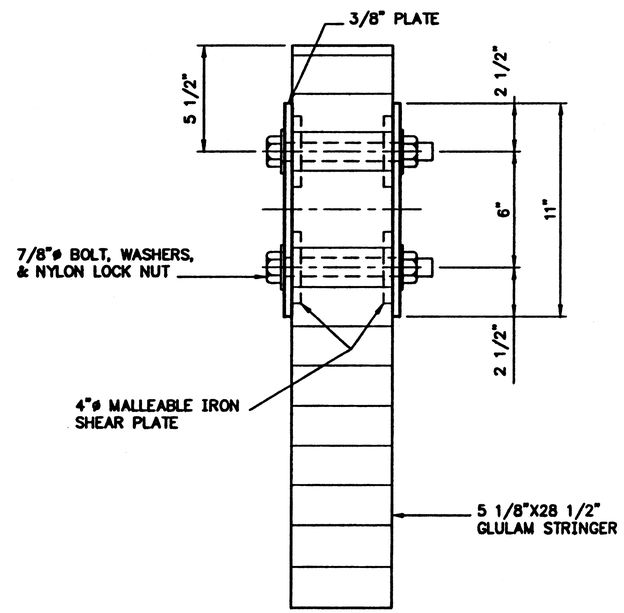

Section (B)

Project As Built Drawings Have Been Reviewed By The Project Engineer & Represent, To The Best Of My Knowledge, The Project As Constructed.

Proj. Eng. Date

PATH: Q:\Hyd\68198\Planset\E_Hinge_Details.dwg
Tue, 23/Jul/02 10:21AM Kris
PLOT: PSPACE 1=1(F) OR MSPACE 1=1(F)
TAB: HINGE CONN.

ADDENDUM NUMBER
ATTACHMENT NUMBER

RECORD OF REVISIONS

No.	DATE	DESCRIPTION

HYDER HARBOR IMPROVEMENTS
Project No. 68198

Hinge Details

DESIGNED BY: D. BLACKBURN

STATE OF ALASKA 49th Doug V. Blackburn CE-10052 REGISTERED PROFESSIONAL ENGINEER

CHECKED BY: R. HEALY
DRAWN BY: R. SNYDER

STATE OF ALASKA
DEPARTMENT OF TRANSPORTATION & PUBLIC FACILITIES
STATEWIDE DESIGN & ENGINEERING SERVICES DIVISION

HYDER HARBOR IMPROVEMENTS

Hinge Details

PROJECT DESIGNATION NUMBER	
AIP # 3-02-0382-0102	
STATE	YEAR
ALASKA	2001
SHEET NUMBER	TOTAL SHEETS
E8	24

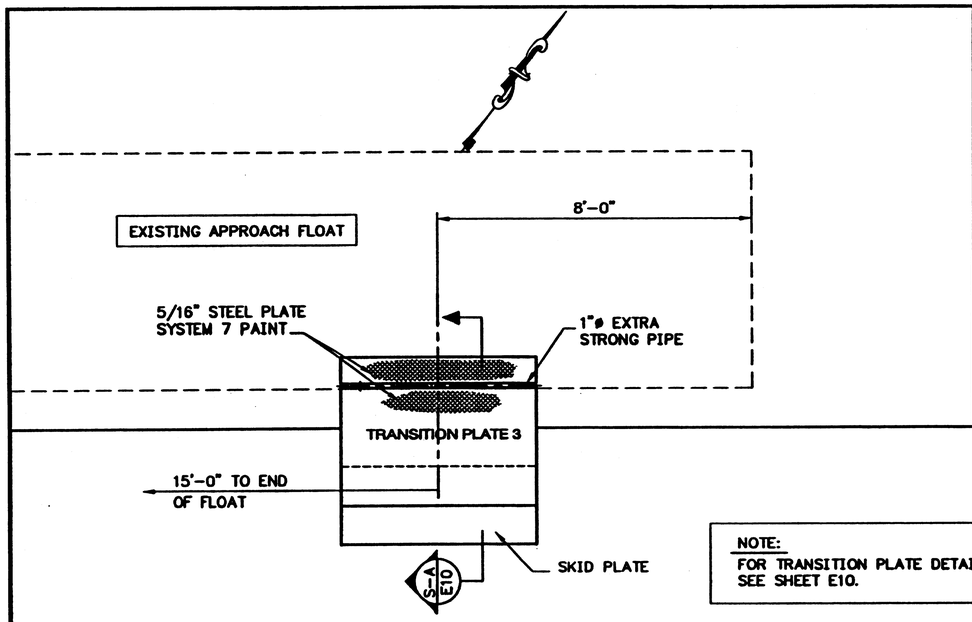

NOTE:
FOR TRANSITION PLATE DETAILS, SEE SHEET E10.

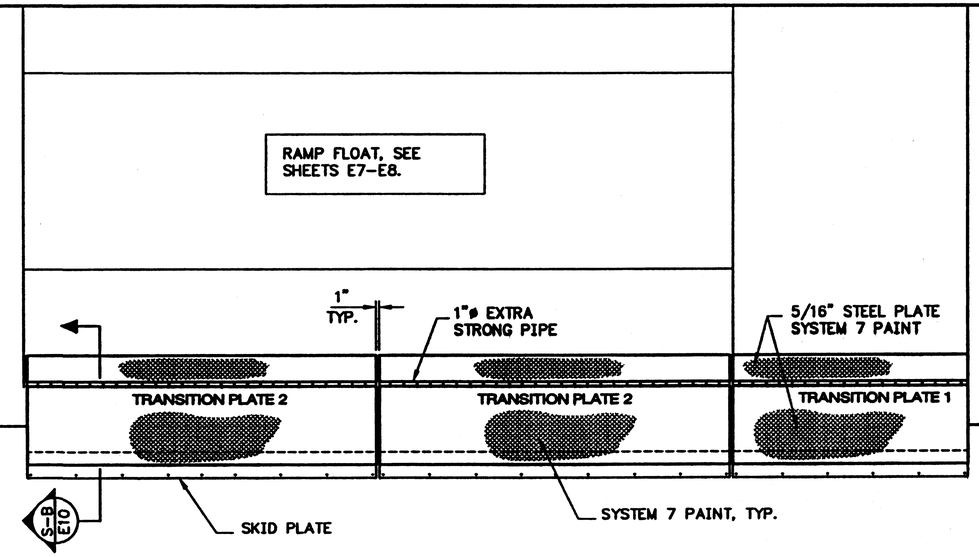

SEAPLANE FLOAT, SEE SHEETS E1-E5.

NOTES:

1. COVER PLATES SHALL BE SHOP ASSEMBLED AFTER GALVANIZING, TO CHECK FIT PRIOR TO SHIPPING.
2. TRANSITION PLATE 3: CENTER SKID PLATE UNDER TRANSITION PLATE AT MEAN HIGH TIDE 8.7'.
3. SYSTEM 7 PAINT, SEE SECTION M-300-2 OF SPECIFICATIONS.

Transition Plates Layout Plan

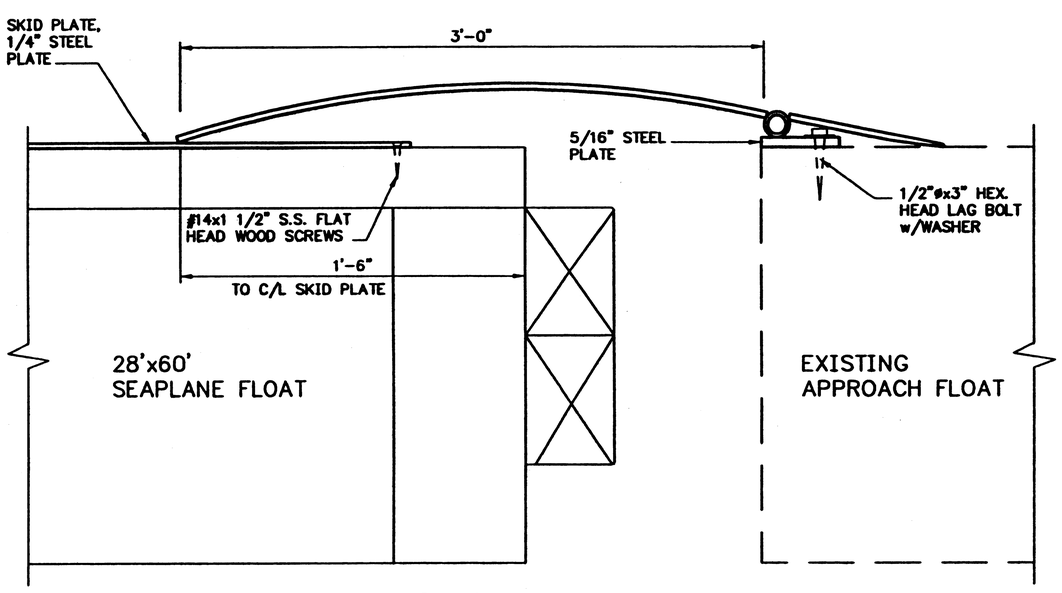

Section (A)

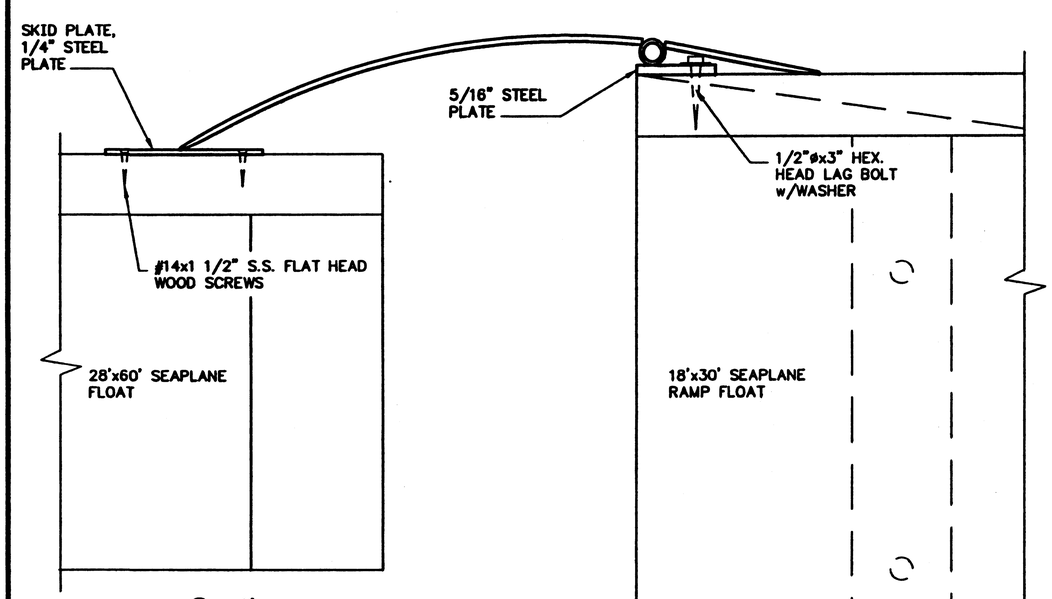

Section (B)

Project As Built Drawings Have Been Reviewed By The Project Engineer & Represent, To The Best Of My Knowledge, The Project As Constructed.

Proj. Eng. _____ Date

PATH: Q:\Hyd\68198\Planset\E_Trans_Plate.dwg
Tue, 23/Jul/02 10:02AM Kris
PLOT: PSPACE 1=1(F) OR MSPACE 1=1(F)
TAB: PLAN

ADDENDUM NUMBER

ATTACHMENT NUMBER

RECORD OF REVISIONS

No.	DATE	DESCRIPTION

HYDER HARBOR IMPROVEMENTS
Project No. 68198

Transition Plate Layout & Sections

DESIGNED BY: D. BLACKBURN

STATE OF ALASKA 49th Doug V. Blackburn CE-10052 REGISTERED PROFESSIONAL ENGINEER

CHECKED BY: R. HEALY

DRAWN BY: R. SNYDER

STATE OF ALASKA
DEPARTMENT OF TRANSPORTATION & PUBLIC FACILITIES
STATEWIDE DESIGN & ENGINEERING SERVICES DIVISION

HYDER HARBOR IMPROVEMENTS

Transition Plate Layout & Sections

PROJECT DESIGNATION NUMBER
AIP # 3-02-0382-0102

STATE	YEAR
ALASKA	2001
SHEET NUMBER	TOTAL SHEETS
E9	24

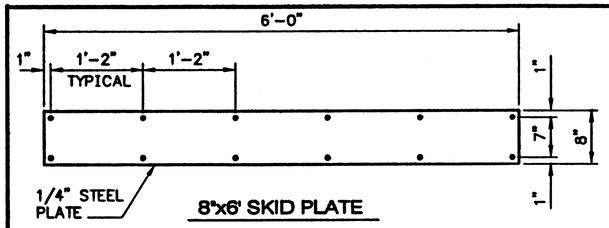

8"x6' SKID PLATE

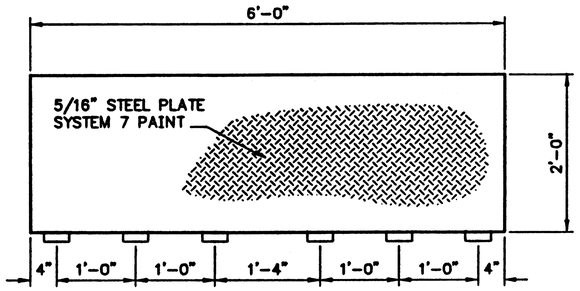

2'x6' TRANSITION PLATE

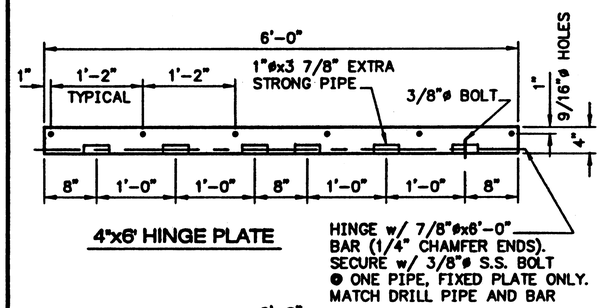

4"x6' HINGE PLATE

HINGE w/ 7/8"øx6'-0" BAR (1/4" CHAMFER ENDS). SECURE w/ 3/8"ø S.S. BOLT @ ONE PIPE, FIXED PLATE ONLY. MATCH DRILL PIPE AND BAR

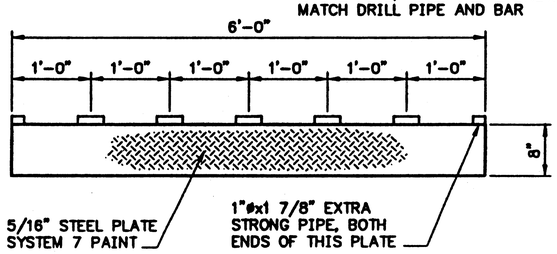

8"x6' TRANSITION PLATE

Transition Plate 1

1~REQUIRED

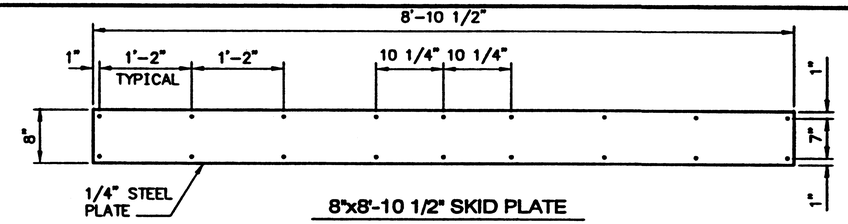

8"x8'-10 1/2" SKID PLATE

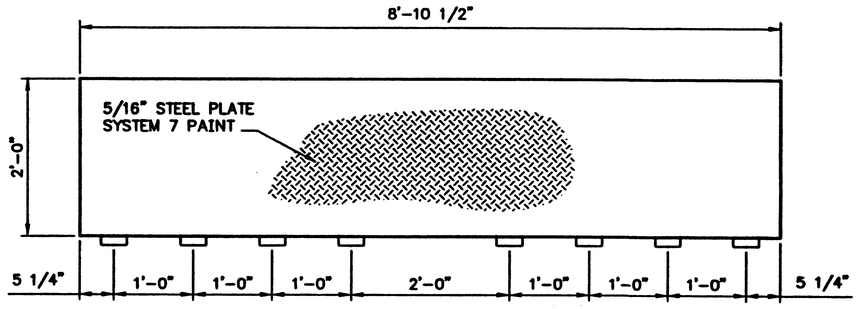

2'x8'-10 1/2" TRANSITION PLATE

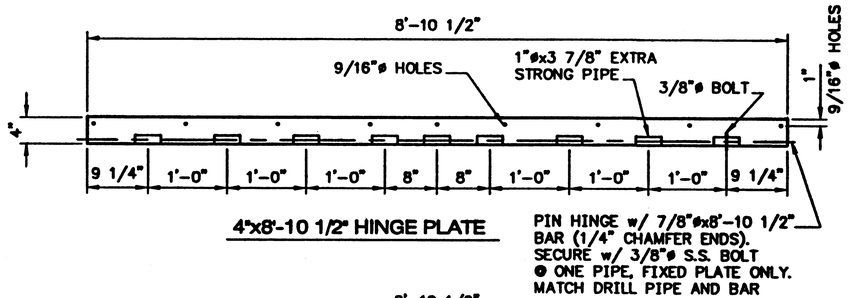

4"x8'-10 1/2" HINGE PLATE

PIN HINGE w/ 7/8"øx8'-10 1/2" BAR (1/4" CHAMFER ENDS). SECURE w/ 3/8"ø S.S. BOLT @ ONE PIPE, FIXED PLATE ONLY. MATCH DRILL PIPE AND BAR

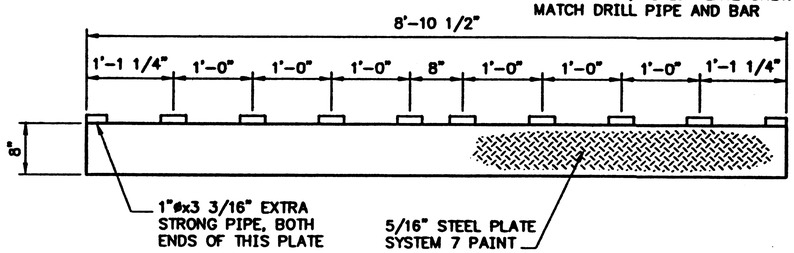

8"x8'-10 1/2" TRANSITION PLATE

Transition Plate 2

2~REQUIRED

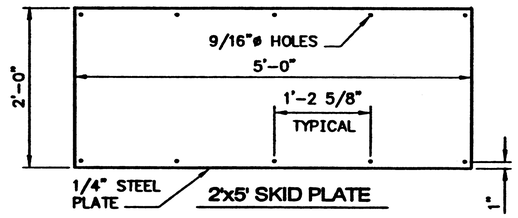

2'x5' SKID PLATE

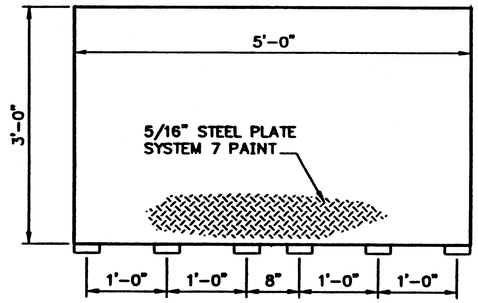

3'x5' TRANSITION PLATE

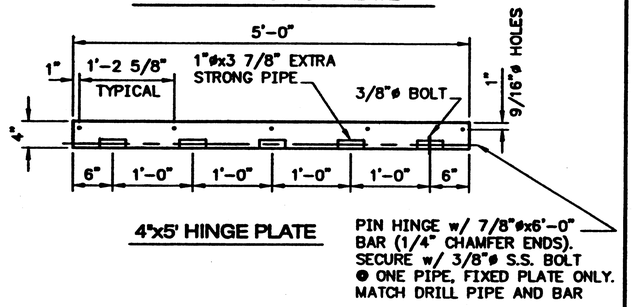

4"x5' HINGE PLATE

PIN HINGE w/ 7/8"øx6'-0" BAR (1/4" CHAMFER ENDS). SECURE w/ 3/8"ø S.S. BOLT @ ONE PIPE, FIXED PLATE ONLY. MATCH DRILL PIPE AND BAR

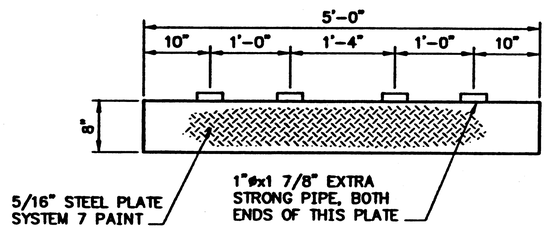

8"x5' TRANSITION PLATE

Transition Plate 3

1~REQUIRED

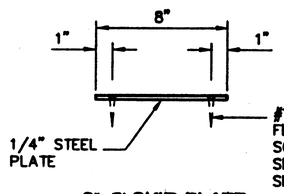

8"x6' SKID PLATE

COUNTERSINK SCREWS FLUSH WITH TOP OF PLATE.

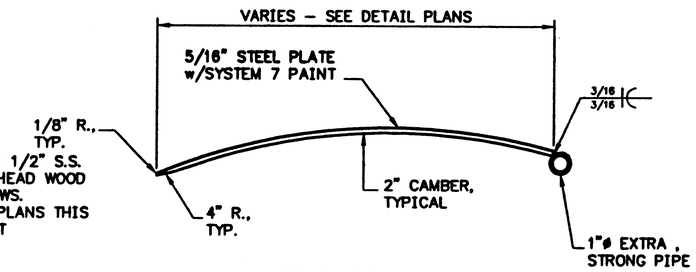

TRANSITION PLATE

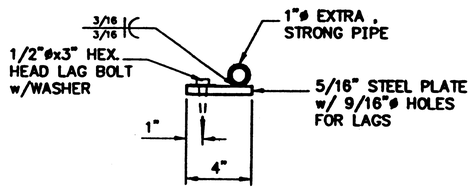

HINGE PLATE

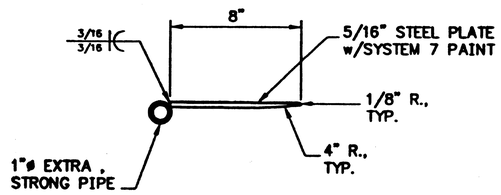

8" TRANSITION PLATE

Transition Plate Details

PATH: Q:\Hyd\68198\Planset\E_Trans_Plate.dwg
Tue, 23/Jul/02 10:03AM Kris
PLOT: PSPACE 1=1(F) OR MSPACE 1=1(F)
TAB: T-PLATES

ADDENDUM NUMBER

ATTACHMENT NUMBER

RECORD OF REVISIONS

No.	DATE	DESCRIPTION

HYDER HARBOR IMPROVEMENTS
Project No. 68198

Transition Plate Details

Project As Built Drawings Have Been Reviewed By The Project Engineer & Represent, To The Best Of My Knowledge, The Project As Constructed.

Proj. Eng. _____ Date

DESIGNED BY: D. BLACKBURN

STATE OF ALASKA
Doug V. Blackburn
CE-10052
REGISTERED PROFESSIONAL ENGINEER

CHECKED BY: R. HEALY
DRAWN BY: R. SNYDER

STATE OF ALASKA
DEPARTMENT OF TRANSPORTATION & PUBLIC FACILITIES
STATEWIDE DESIGN & ENGINEERING SERVICES DIVISION

HYDER HARBOR IMPROVEMENTS

Transition Plate Details

PROJECT DESIGNATION NUMBER	
AIP # 3-02-0382-0102	
STATE	YEAR
ALASKA	2001
SHEET NUMBER	TOTAL SHEETS
E10	24

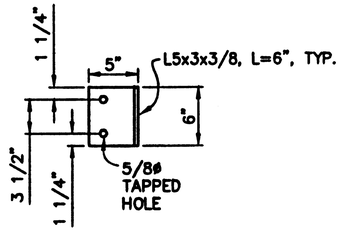

Plan

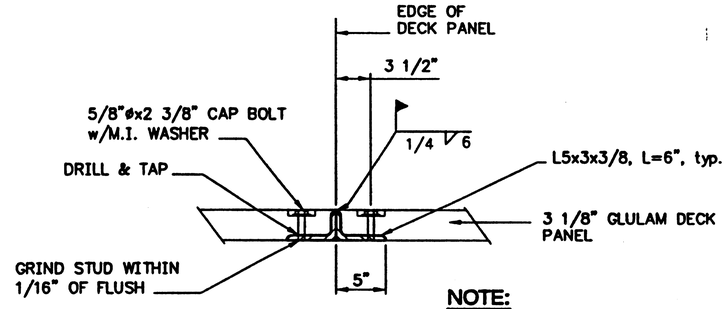

Section

NOTE:

CUT OUT DECK PANEL TO MOUNT OUTSIDE FACES OF ANGLE LEGS FLUSH WITH THE EDGE AND BOTTOM OF THE DECK PANELS, TYPICAL

Deck Panel Clip Detail (2)

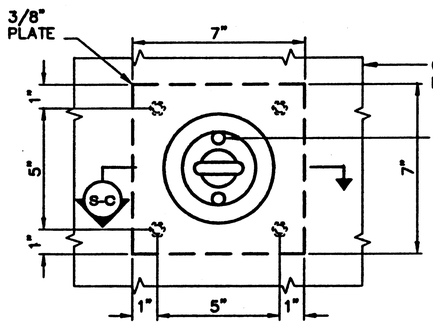

Plan

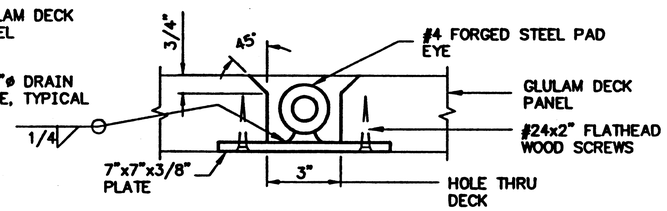

Section (C)

NOTE:

INSTALL 1/2"øx10 L.F. BRAIDED NYLON ROPE AT ALL TIE-DOWN EYES.

Tie-Down Detail (1)

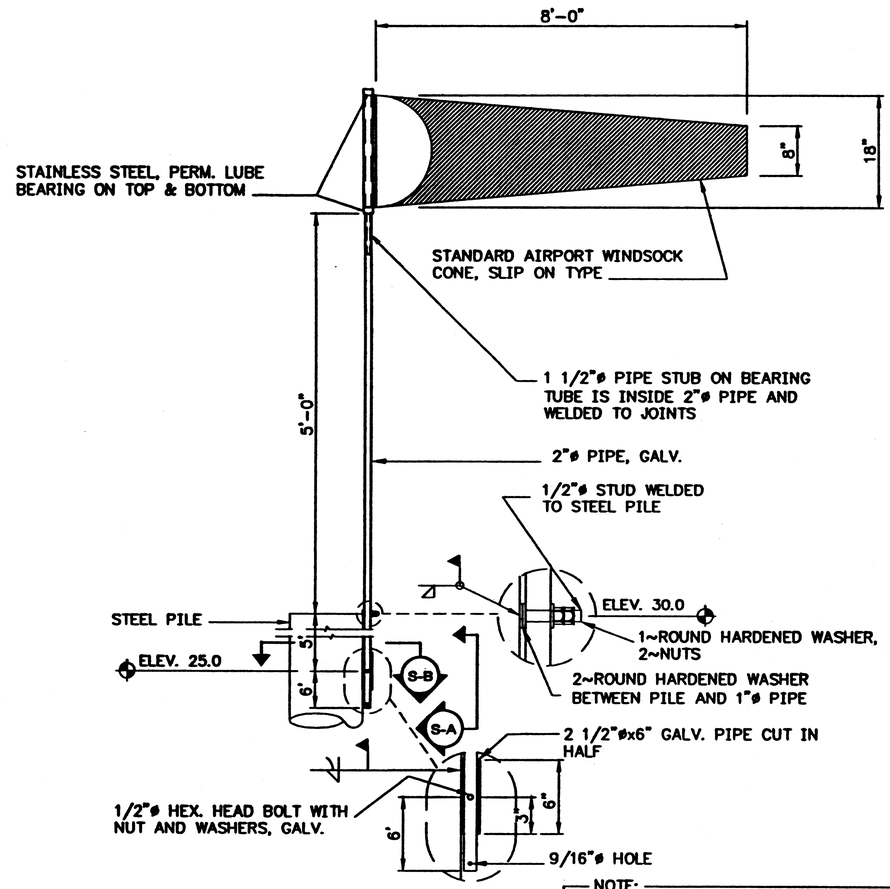

NOTE:

SEE SIGN SUMMARY ON SHEET C1 FOR WIND SOCK LOCATION.

Windsock Detail

1 REQUIRED

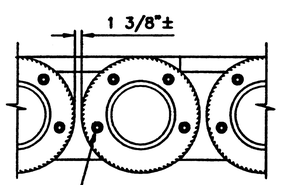

1/2"øx4" LAG SCREW WITH M.I. WASHER, 4 PER TIRE. VARY SPACING TO AVOID TIRE SUPPORT NAILS AND LAG SCREWS.

Tire Detail

TIRE NOTES:

1. 2"ø HOLE THROUGH OUTSIDE FACE OF TIRE TO FACILITATE LAG BOLT INSTALLATION.
2. TIRES SHALL BE 13" SERIES WITH A MINIMUM 1/8" DEEP SUMMER OR ALL SEASON TREAD. NO HEAVY LUGS OR STUDS. ALL OF THE TIRES SHALL BE OF THE SAME WIDTH AND DIAMETER WITH A MAXIMUM ALLOWABLE VARIATION OF 1/2".

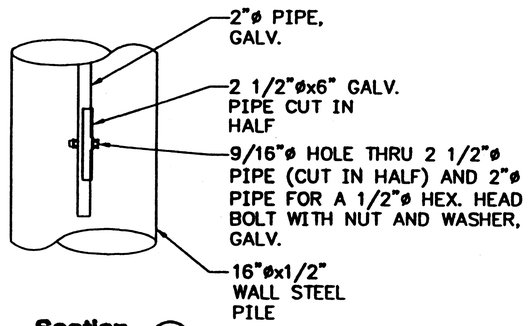

Section (A)

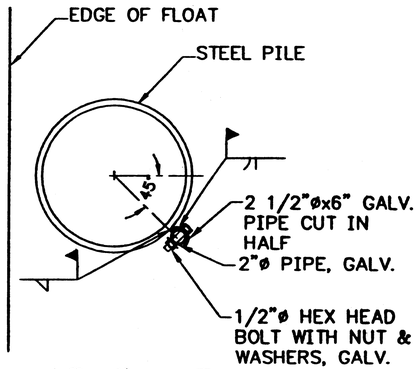

Section (B)

PATH:
Q:\Hyd\68198\Planset\E_SeaplaneFloat.dwg
Tue, 23/Jul/02 10:04AM Kris
PLOT:
PSPACE 1=1(F) OR MSPACE 1=32(F)
TAB: MISC DETAILS

ADDENDUM NUMBER

ATTACHMENT NUMBER

RECORD OF REVISIONS

No.	DATE	DESCRIPTION

HYDER HARBOR IMPROVEMENTS
Project No. 68198

Seaplane Float Miscellaneous Details

Project As Built Drawings Have Been Reviewed By The Project Engineer & Represent, To The Best Of My Knowledge, The Project As Constructed.

Proj. Eng. Date

DESIGNED BY: D. BLACKBURN

STATE OF ALASKA 49th Doug W. Blackburn CE-10052 REGISTERED PROFESSIONAL ENGINEER

CHECKED BY: R. HEALY

DRAWN BY: BB

STATE OF ALASKA
DEPARTMENT OF TRANSPORTATION & PUBLIC FACILITIES
STATEWIDE DESIGN & ENGINEERING SERVICES DIVISION

HYDER HARBOR IMPROVEMENTS

Seaplane Float Miscellaneous Details

PROJECT DESIGNATION NUMBER

AIP # 3-02-0382-0102

STATE	YEAR
ALASKA	2002
SHEET NUMBER	TOTAL SHEETS
E11	24

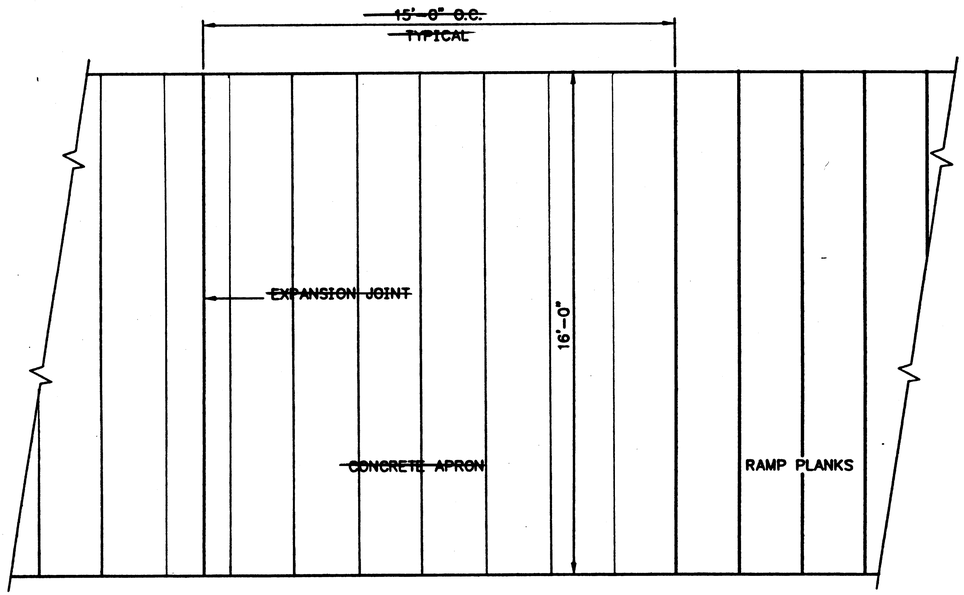

Apron & Ramp Plan

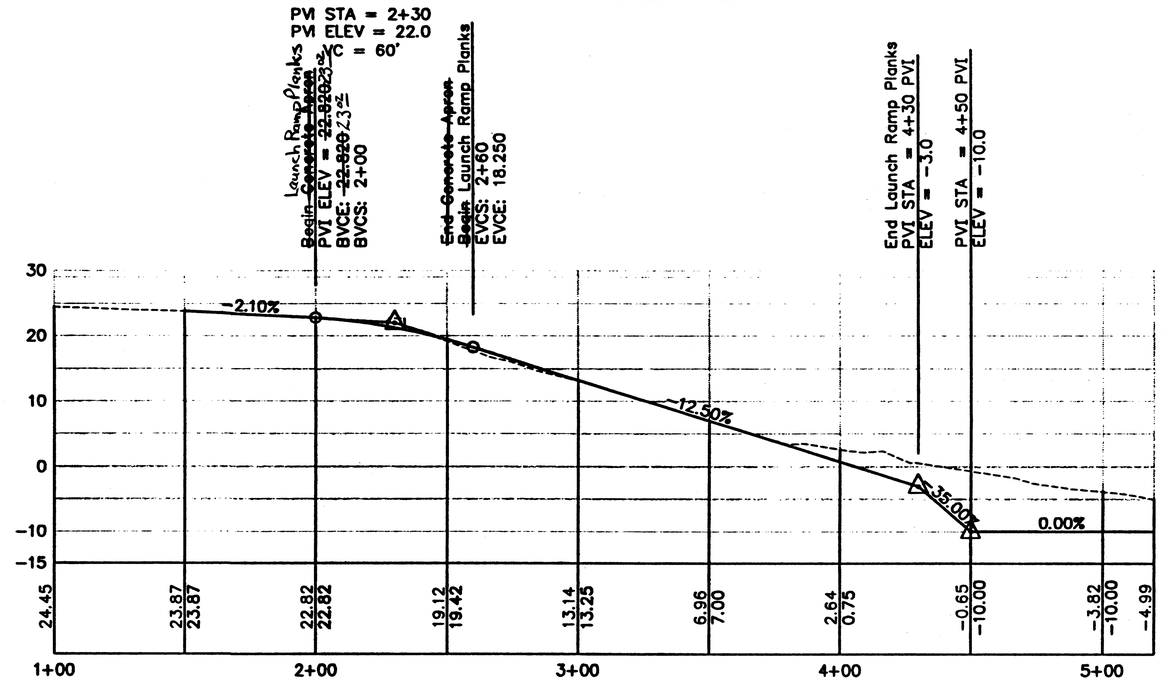

Launch Ramp Profile

Planks Used For Apron

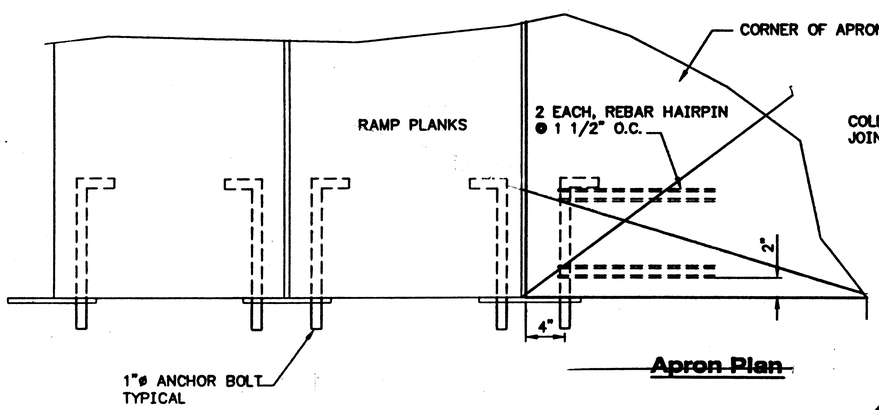

~~**Apron Plan**~~

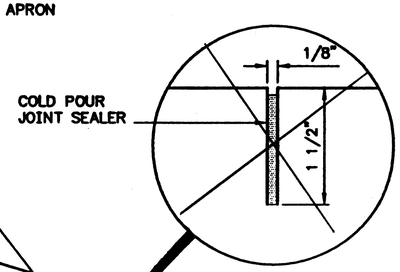

~~**Sawed Expansion Joint Typical Section**~~

NOTES:

1. ~~REBAR ALONG EDGE OF APRON SHALL HAVE MINIMUM COVER OF 2".~~
2. ~~ALL TOP EDGES OF APRON SHALL BE CHAMFERED 1/2".~~
3. ~~TOP OF APRON SHALL BE ROUGH BROOM FINISHED.~~

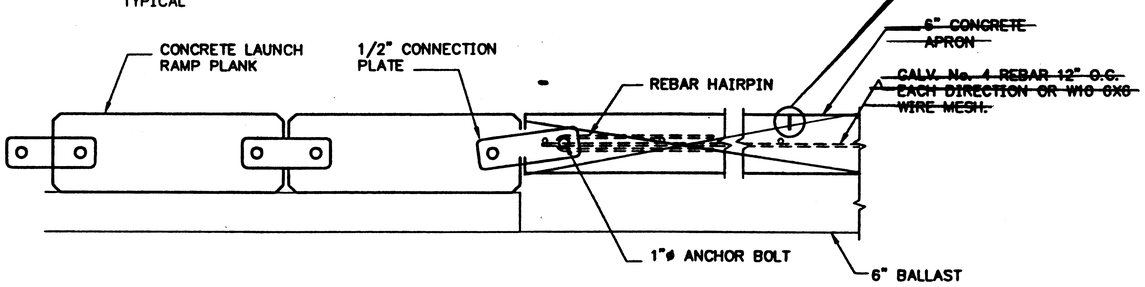

~~**Plank To Apron Connection Detail**~~

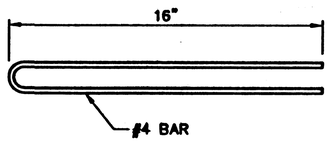

~~**Rebar Hairpin**~~
~~8 EACH~~

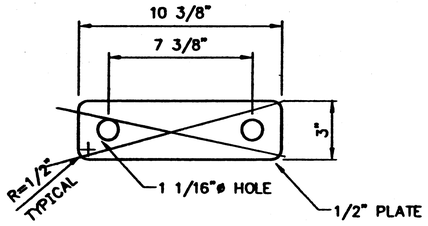

~~**Connection Plate**~~
~~TOP PLANK TO CONCRETE APRON~~

PATH:
Q:\Hyd\68198\Planset\F_LaunchRamp.dwg
Tue, 23/Jul/02 10:16AM Kris
PLOT:
PS 1=1(F) OR MS 1=AS NOTED(F)
TAB: PROFILE

ADDENDUM NUMBER
ATTACHMENT NUMBER

RECORD OF REVISIONS

No.	DATE	DESCRIPTION

HYDER HARBOR IMPROVEMENTS
Project No. 68198

Launch Ramp Profile & Details

Project As Built Drawings Have Been Reviewed By The Project Engineer & Represent, To The Best Of My Knowledge, The Project As Constructed.

Proj. Eng. _____ Date

DESIGNED BY: D. BLACKBURN

STATE OF ALASKA 49th Doug W. Blackburn CE-10052 REGISTERED PROFESSIONAL ENGINEER

CHECKED BY: R. HEALY
DRAWN BY: B.B/R.S.

STATE OF ALASKA
DEPARTMENT OF TRANSPORTATION & PUBLIC FACILITIES
STATEWIDE DESIGN & ENGINEERING SERVICES DIVISION

HYDER HARBOR IMPROVEMENTS

Launch Ramp Profile & Details

PROJECT DESIGNATION NUMBER
AIP # 3-02-0382-0102

STATE	YEAR
ALASKA	2002
SHEET NUMBER	TOTAL SHEETS
F1	24

NOTES

1. BALLAST VOLUMES
   PLANKS 45CY
   APRON 18CY

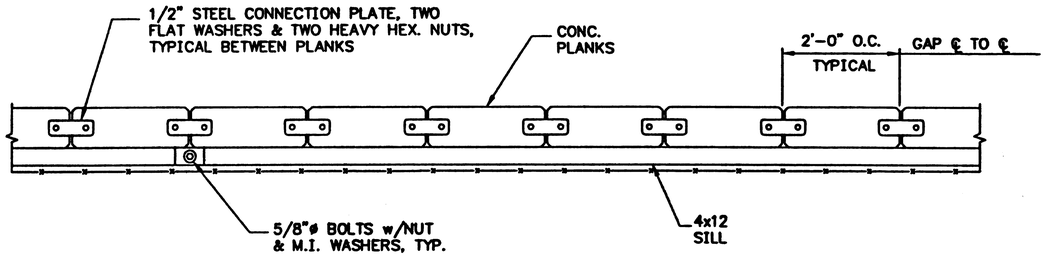

Typical Plank Assembly Detail
(Total: 85 Planks)

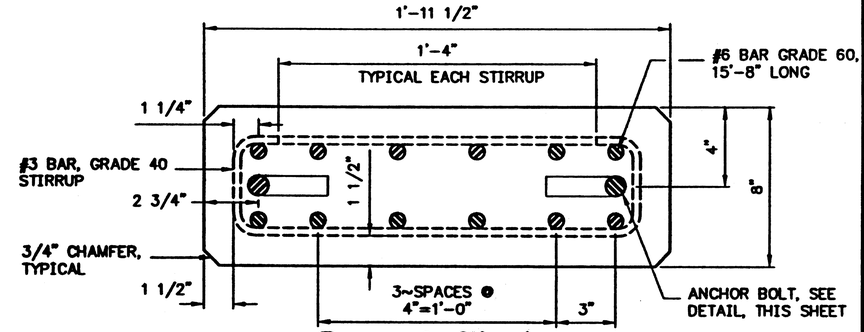

Concrete Plank - Section

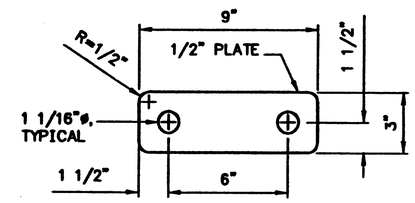

Connection Plate Detail

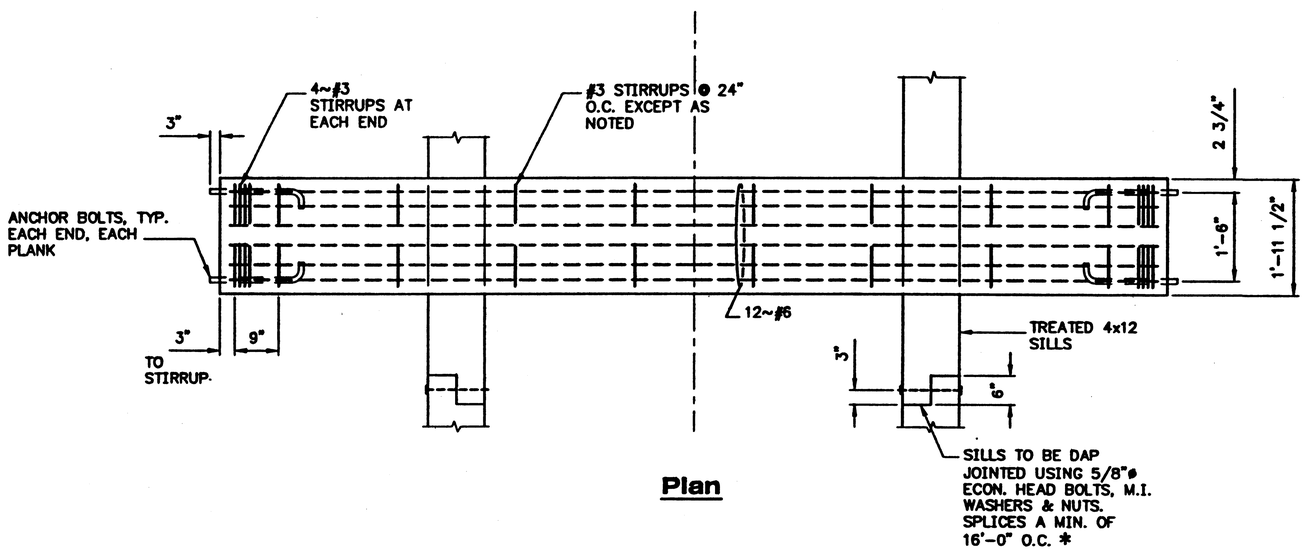

Plan

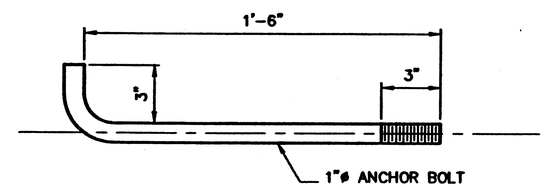

Anchor Bolt Detail

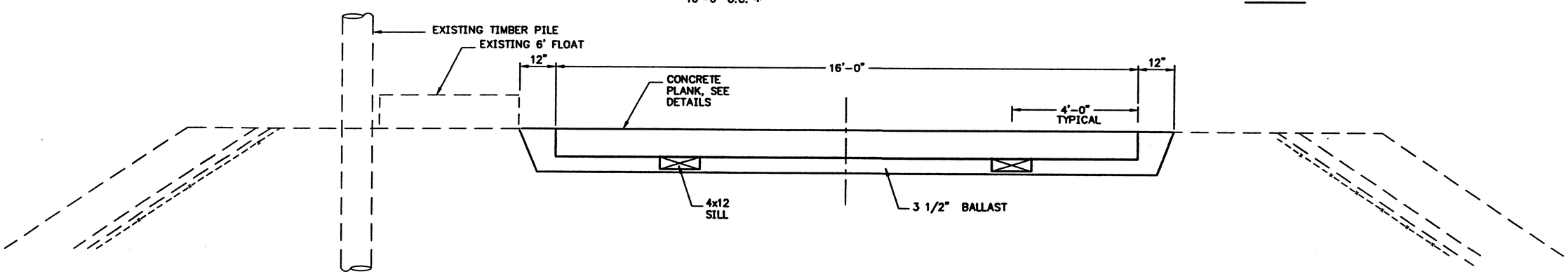

Elevation

Launch Ramp

PATH:
Q:\Hyd\68198\Planset\F_LaunchRamp.dwg
Tue, 23/Jul/02 10:16AM Kris
PLOT:
PS 1=1(F) OR MS 1=AS NOTED(F)
TAB: DETAILS

ADDENDUM NUMBER

ATTACHMENT NUMBER

RECORD OF REVISIONS

No.	DATE	DESCRIPTION

HYDER HARBOR IMPROVEMENTS
Project No. 68198

Launch Ramp Details

Project As Built Drawings Have Been Reviewed By The Project Engineer & Represent, To The Best Of My Knowledge, The Project As Constructed.

Proj. Eng. Date

DESIGNED BY: D. BLACKBURN

STATE OF ALASKA 49th Doug W. Blackburn CE-10052 REGISTERED PROFESSIONAL ENGINEER

CHECKED BY: R. HEALY
DRAWN BY: B.B/R.S.

STATE OF ALASKA
DEPARTMENT OF TRANSPORTATION & PUBLIC FACILITIES
STATEWIDE DESIGN & ENGINEERING SERVICES DIVISION

HYDER HARBOR IMPROVEMENTS

Launch Ramp Details

PROJECT DESIGNATION NUMBER
AIP # 3-02-0382-0102

STATE	YEAR
ALASKA	2002
SHEET NUMBER	TOTAL SHEETS
F2	24

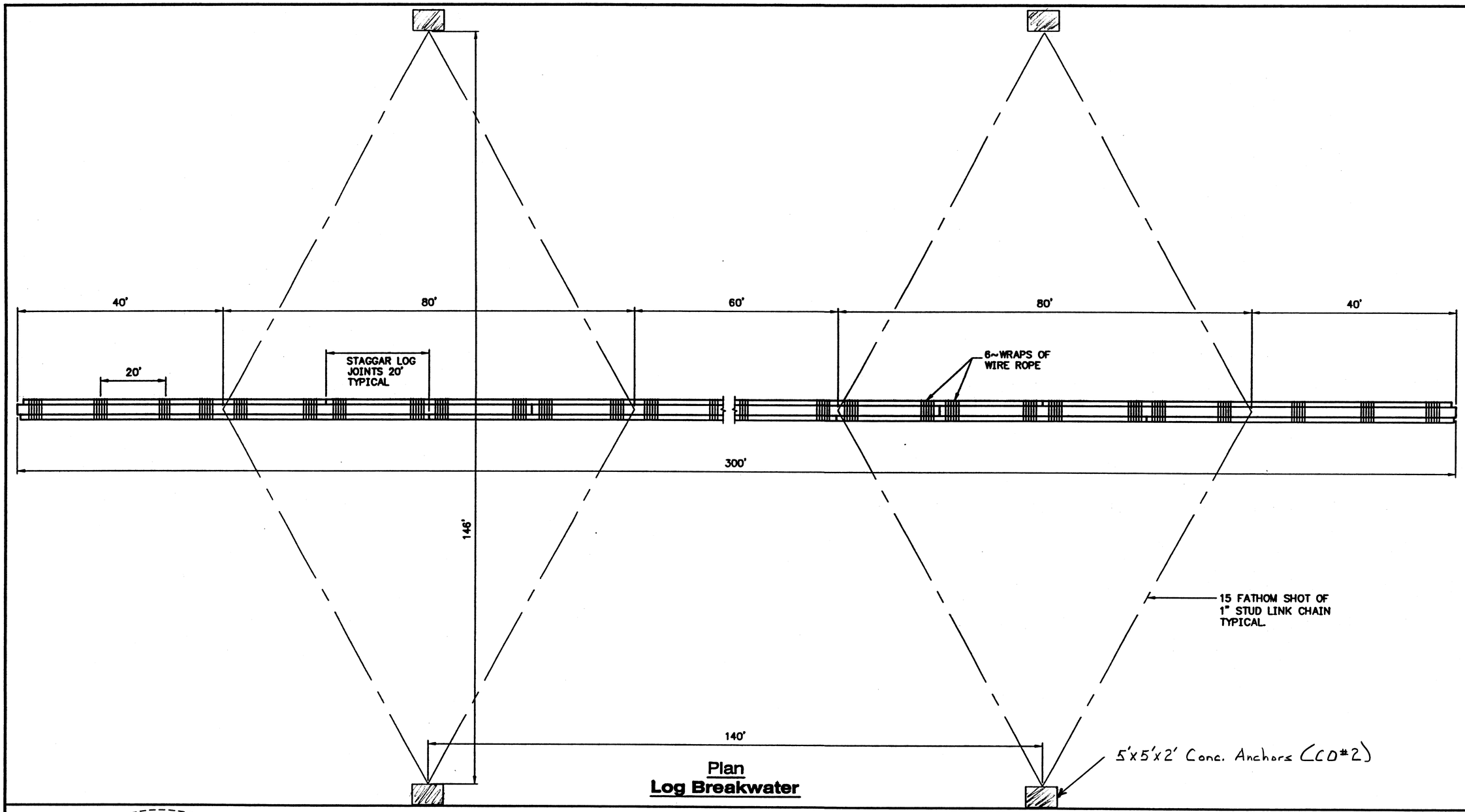

Plan
Log Breakwater

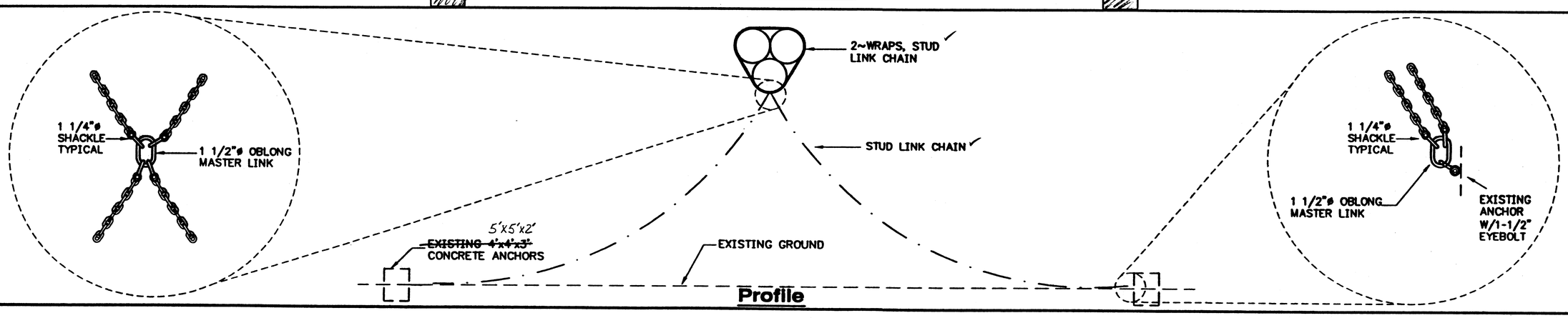

Profile

PATH:
Q:\Hyd\68198\Planset\H_Breakwater.dwg
Tue, 23/Jul/02 10:17AM Kris
PLOT:
PSPACE 1=1(F) OR MSPACE 1=1(F)
TAB: PLAN

ADDENDUM NUMBER

ATTACHMENT NUMBER

RECORD OF REVISIONS

No.	DATE	DESCRIPTION

HYDER HARBOR IMPROVEMENTS
Project No. 68198

Log Breakwater Plan & Details

Project As Built Drawings Have Been Reviewed By The Project Engineer & Represent, To The Best Of My Knowledge, The Project As Constructed.

Proj. Eng. Date

DESIGNED BY: D. BLACKBURN

STATE OF ALASKA 49th Doug W. Blackburn CE-10052 REGISTERED PROFESSIONAL ENGINEER

CHECKED BY: R. HEALY

DRAWN BY: B.B./R.S.

STATE OF ALASKA
DEPARTMENT OF TRANSPORTATION & PUBLIC FACILITIES
STATEWIDE DESIGN & ENGINEERING SERVICES DIVISION

HYDER HARBOR IMPROVEMENTS

Log Breakwater Plan & Details

PROJECT DESIGNATION NUMBER

AIP # 3-02-0382-0102

STATE	YEAR
ALASKA	2002
SHEET NUMBER	TOTAL SHEETS
H1	24

Sign 1
1 REQUIRED

SIGN 1 NOTES:

1. SIGN '1' SHALL HAVE GREEN LEGEND ON WHITE BACKGROUND.
2. SEE SHEET A4 FOR THE LOCATION OF SIGN.
3. LETTERING SHALL CONFORM TO ALASKA SIGN DESIGN DESIGNATION (ASDS).

PATH:
Q:\Hyd\68198\Planset\J_SignDet.dwg
Tue, 23/Jul/02 10:17AM Kris
PLOT:
PSPACE 1=1(F) OR MSPACE 1=1(F)
TAB: SIGN1

ADDENDUM NUMBER

ATTACHMENT NUMBER

RECORD OF REVISIONS

No.	DATE	DESCRIPTION

HYDER HARBOR IMPROVEMENTS
Project No. 68198

Public Lanch Ramp Sign Detail

Project As Built Drawings Have Been Reviewed By The Project Engineer & Represent, To The Best Of My Knowledge, The Project As Constructed.

Proj. Eng. Date

DESIGNED BY: D. BLACKBURN

STATE OF ALASKA 49th Doug W. Blackburn CE-10052 REGISTERED PROFESSIONAL ENGINEER

CHECKED BY: R. HEALY
DRAWN BY: B. BENNETT

STATE OF ALASKA
DEPARTMENT OF TRANSPORTATION & PUBLIC FACILITIES
STATEWIDE DESIGN & ENGINEERING SERVICES DIVISION

HYDER HARBOR IMPROVEMENTS

Public Launch Ramp Sign Detail

PROJECT DESIGNATION NUMBER
AIP # 3-02-0382-0102

STATE	YEAR
ALASKA	2002
SHEET NUMBER	TOTAL SHEETS
J1	24

Sign 4
1 REQUIRED

SIGN 4 NOTES:

1. ALIGN TOP OF SIGN 12" FROM TOP OF FLOAT PILE.
2. SIGN SHALL HAVE WHITE BACKGROUND WITH BLACK LEGEND.
3. SIGN SHALL CONFORM TO ALASKA SIGN DESIGN SPECIFICATIONS.
4. LETTERING SHALL BE SHOWN ON THE PLANS.

*	"B" SERIES LETTERING
**	"C" SERIES LETTERING
***	"D" SERIES LETTERING

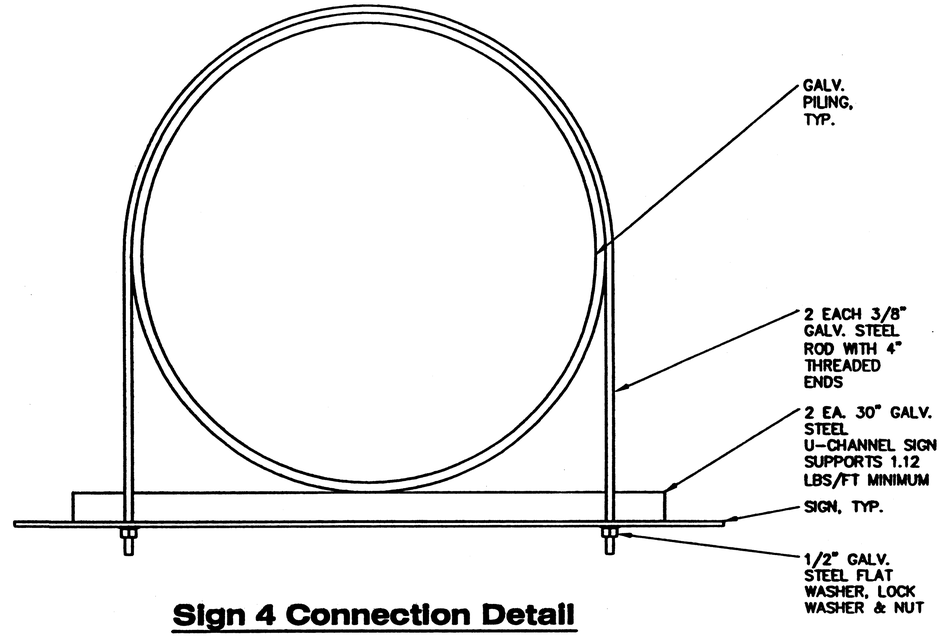

Sign 4 Connection Detail

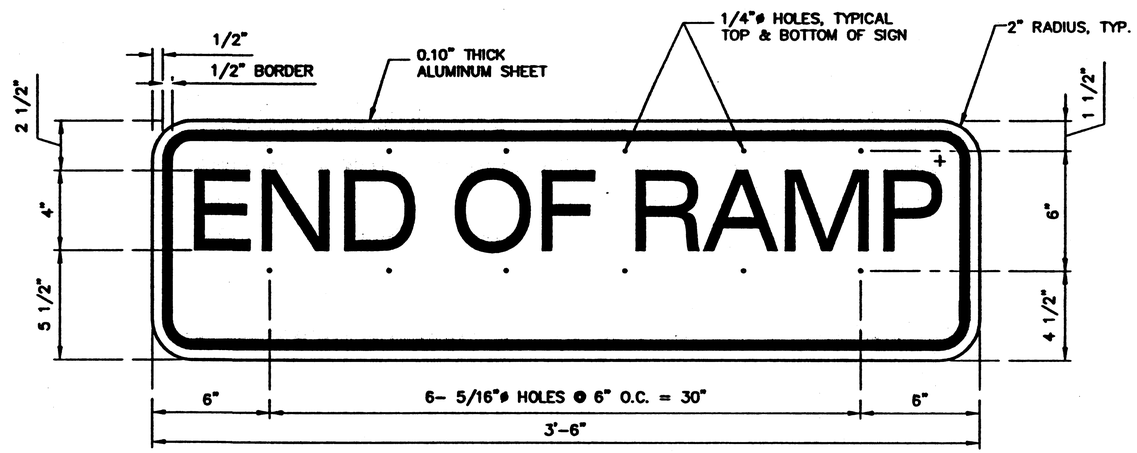

Sign 2
1 REQUIRED

SIGN 2 NOTES:

1. ALIGN TOP OF SIGN WITH TOP OF 6' FLOAT DECK.
2. SIGN '2' SHALL HAVE LETTER TYPE 4C.
3. SEE SHEET A4 FOR THE LOCATION OF SIGN.
4. LETTERING SHALL CONFORM TO ALASKA SIGN DESIGN DESIGNATION (ASDS).
5. USE #10 X 1 1/4" ROUND HEAD STAINLESS STEEL SCREWS.

PATH:
O:\Hyd\68198\Planset\J_SignDet.dwg
Tue, 23/Jul/02 10:18AM Kris
PLOT:
PSPACE 1=1(F) OR MSPACE 1=1(F)
TAB: SIGN2

ADDENDUM NUMBER

ATTACHMENT NUMBER

RECORD OF REVISIONS

No.	DATE	DESCRIPTION

HYDER HARBOR IMPROVEMENTS
Project No. 68198

Public Lanch Ramp Sign Detail

Project As Built Drawings Have Been Reviewed By The Project Engineer & Represent, To The Best Of My Knowledge, The Project As Constructed.

Proj. Eng. _____ Date

DESIGNED BY: D. BLACKBURN

STATE OF ALASKA 49th Doug W. Blackburn CE-10052 REGISTERED PROFESSIONAL ENGINEER

CHECKED BY: R. HEALY
DRAWN BY: B. BENNETT

STATE OF ALASKA
DEPARTMENT OF TRANSPORTATION & PUBLIC FACILITIES
STATEWIDE DESIGN & ENGINEERING SERVICES DIVISION

HYDER HARBOR IMPROVEMENTS

Public Launch Ramp Sign Detail

PROJECT DESIGNATION NUMBER	
AIP # 3-02-0382-0102	
STATE	YEAR
ALASKA	2002
SHEET NUMBER	TOTAL SHEETS
J2	24

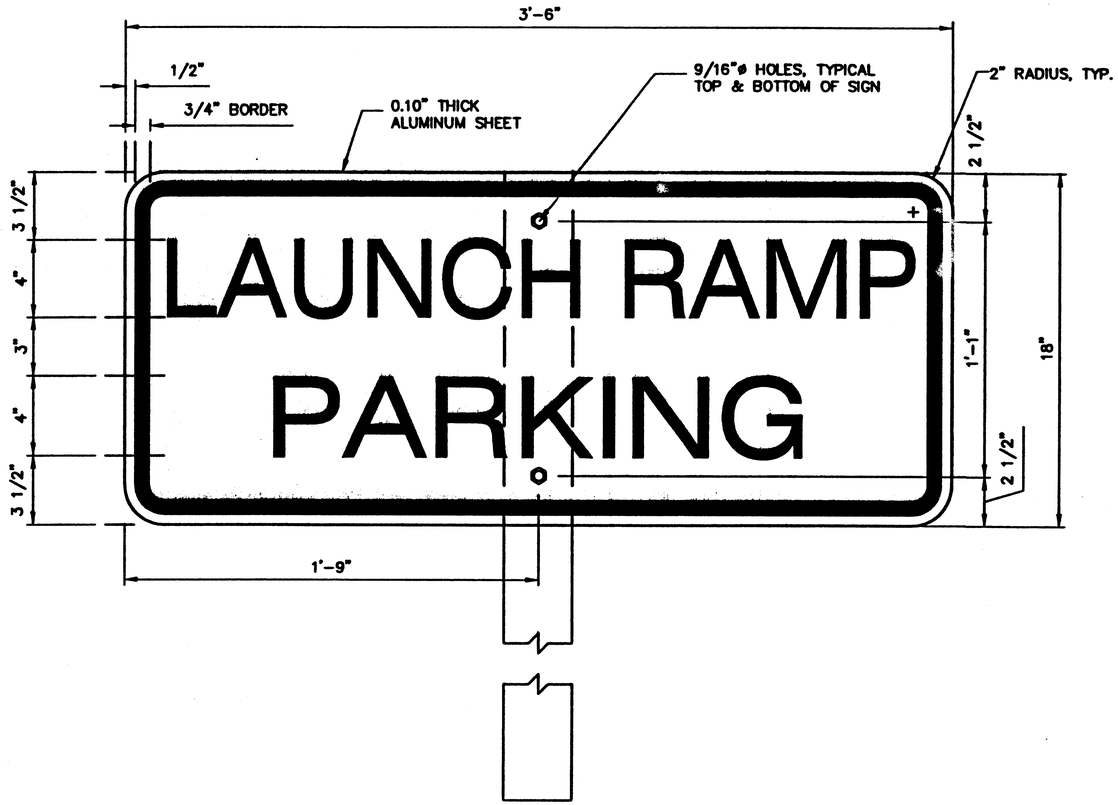

Sign 3

1 REQUIRED

SIGN 3 NOTES:

1. ALIGN TOP OF SIGN WITH TOP OF METAL POST. SEE STANDARD DRAWINGS FOR SIGN INSTALLATION.
2. SIGN '3' SHALL HAVE LETTER TYPE 4C.
3. SEE SHEET A4 FOR THE LOCATION OF SIGN.
4. LETTERING SHALL CONFORM TO ALASKA SIGN DESIGN DESIGNATION (ASDS).
5. LEGEND SHALL BE GREEN. BACKGROUND SHALL BE WHITE.

PATH:
Q:\Hyd\68198\Planset\J_SignDet.dwg
Tue, 23/Jul/02 10:18AM Kris
PLOT:
PSPACE 1=1(F) OR MSPACE 1=1(F)
TAB: SIGN2

ADDENDUM NUMBER

ATTACHMENT NUMBER

RECORD OF REVISIONS

No.	DATE	DESCRIPTION

HYDER HARBOR IMPROVEMENTS
Project No. 68198

Public Lanch Ramp Sign Detail

Project As Built Drawings Have Been Reviewed By The Project Engineer & Represent, To The Best Of My Knowledge, The Project As Constructed.

Proj. Eng. Date

DESIGNED BY: D. BLACKBURN

STATE OF ALASKA 48th Doug W. Blackburn CE-10052 REGISTERED PROFESSIONAL ENGINEER

CHECKED BY: R. HEALY

DRAWN BY: B. BENNETT

STATE OF ALASKA
DEPARTMENT OF TRANSPORTATION & PUBLIC FACILITIES
STATEWIDE DESIGN & ENGINEERING SERVICES DIVISION

HYDER HARBOR IMPROVEMENTS

Public Launch Ramp Sign Detail

PROJECT DESIGNATION NUMBER

AIP # 3-02-0382-0102

STATE	YEAR
ALASKA	2002
SHEET NUMBER	TOTAL SHEETS
J3	24