# State of Alaska

## Department of Transportation and Public Facilities

### Statewide Design and Engineering Services Division

# HOONAH AIRPORT

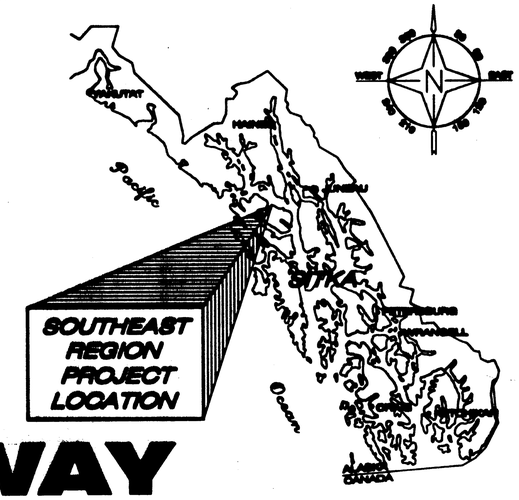


# MEDIUM INTENSITY RUNWAY AND TAXIWAY LIGHTING SYSTEM

# AIP NO. 3-02-0125-0301 ~ 68213

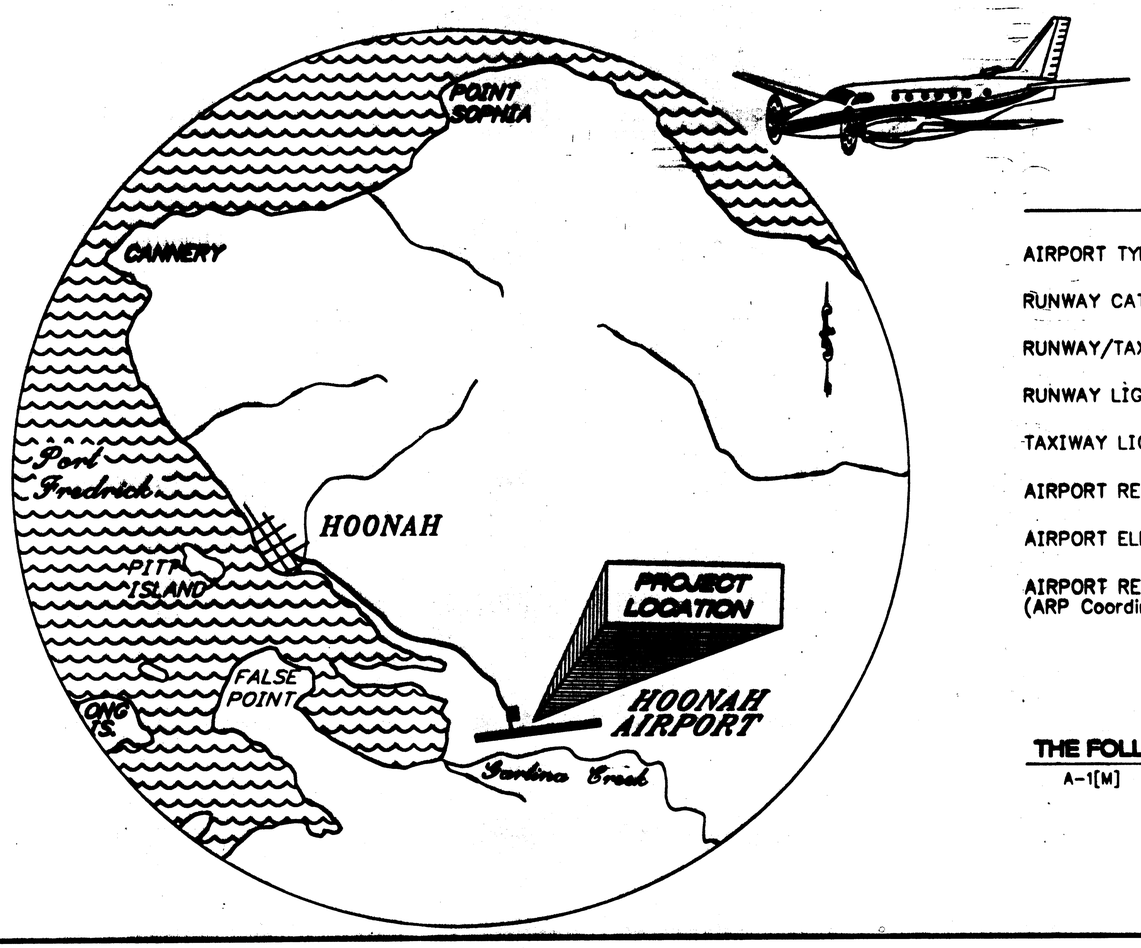


## DESIGN DESIGNATIONS

AIRPORT TYPE.....GENERAL UTILITY

RUNWAY CATEGORY.....COMMUNITY

RUNWAY/TAXIWAY SURFACE.....ASPHALT CONCRETE

RUNWAY LIGHTING..... NONE

TAXIWAY LIGHTING..... NONE

AIRPORT REFERENCE CODE.....B-II

AIRPORT ELEVATION..... 20 ft (MSL)

AIRPORT REFERENCE POINT.....Latitude N 58° 05' 77"
(ARP Coordinates – NAD '83) Longitude W 135° 24' 58"

## THE FOLLOWING STANDARD DRAWINGS APPLY TO THIS PROJECT:

A-1[M]

## INDEX


| SHEET NO. | DESCRIPTION |
|---|---|
| A1 | TITLE SHEET |
| A2 | ESTIMATE OF QUANTITIES |
| E1 | SITE PLAN |
| E2–E3 | TAXIWAY "A" AND "B" APRON |
| E4–E5 | RUNWAY 05–23 |
| E6 | AIRFIELD CIRCUITING & SCHEDULES |
| E7–E8 | DETAILS |
| E9 | SINGLE LINE DIAGRAMS & EQUIPMENT SHELTER |
| E10 | AIRFIELD CONTROLS |
| E11 | DETAILS & HEATING SCHEMATIC |
| E12 | LIGHTING SCHEDULES |
| H1–H2 | SEGMENTED CIRCLE DETAILS |
| H3 | EROSION & POLLUTION CONTROL & SAFETY PLAN |


AS-BUILT PLANS

Contractor: Glacier State Contractors
Project Eng.: Al Risley
Bgn. Const.: April 30, 2002
End Const.: Feb. 7, 2003

PATH: Q:\Hnh\68213\Planset\Title sheet.dwg
Thu, 26/Jul/01 09:41AM Michael Limbaugh

PLOT: PSPACE OR MSPACE: 1000mm=1m(F) TAB: TSHT

**STATE OF ALASKA**
DEPARTMENT OF TRANSPORTATION
& PUBLIC FACILITIES
STATEWIDE DESIGN & ENGINEERING SERVICES DIVISION

Project As Built Drawings Have Been Reviewed By The Project Engineer & Represent, To The Best Of My Knowledge The Project As Constructed.
Proj. Eng. Date

APPROVED:
for Jack D Beddle 7/26/01
REGIONAL PRE-CONSTRUCTION ENGINEER DATE

APPROVED:
Andy Hughes 7-26-01
DIRECTOR, SOUTHEAST REGION for Bob Doll DATE

| STATE | PROJECT DESIGNATION | YEAR | SHEET NO. | TOTAL SHEETS |
|---|---|---|---|---|
| ALASKA | AIP #3-02-0125-0301 | 2001 | A1 | 17 |

# *Estimate of Quantities*

| Item No | Pay Item | Pay Unit | Quantity |
|---|---|---|---|
| G-100a | Mobilization and Demobilization | Lump Sum | All Req'd |
| G-130a | Field Office | Lump Sum | All Req'd |
| G-131 | Engineering Transportation | Lump Sum | All Req'd |
| G-135a | Construction Surveying by the Contractor | Lump Sum | All Req'd |
| G-704a | Hazardous Area Barrier | Each | 10 |
| L-100d | Medium Intensity Runway Edge and Threshold Light, L-861 and L-861E | Each | 46 |
| L-100e | Taxiway Edge Light, L-861T | Each | 59 ~~60~~ |
| L-100f | Handhole, L-867, Size D | Each | 18 ~~14~~ |
| L-100n | Airport Sign, Type L-858, CO# 1 | ~~Each~~ Lump Sum | 1 ~~2~~ |
| L-100o | Control Panel Wiring Modifications, L-821 | ~~Meter~~ Lump Sum | 1 ~~30~~ |
| L-100p | Radio Reciever/Controller | Each | 1 |
| L-100q | Regulator, L-829 | Each | 1 |
| L-101b | Rotating Beacon, Medium Intensity, L-801A | Each | 1 |
| L-103a | Beacon Tower | Lump Sum | All Req'd |
| L-107b | 3.7-m Lighted Wind Cone, in place | Each | 1 |
| L-107d | 3.7-m Unlighted Wind Cone, in place | Each | 2 |
| L-108g | Ground Rod | Each | 8 ~~6~~ |
| L-108l | No. 6, 5 kV Cable, L-824 | Meter | 3918.98 ~~4270~~ |
| L-108m | Cable Connectors, L-823 | Each | 112 ~~140~~ |
| L-108n | #6 Insulated Stranded Copper Ground Conductor | Meter | 30 |
| L-109c | Electrical Enclosure in Place | Lump Sum | All Req'd |
| L-109d | Installation of Electrical Equipment in New or Existing Structure | Lump Sum | All Req'd |
| L-110a | 53 mm Rigid Steel Conduit | Meter | 16.23 ~~6~~ |
| L-110k | 78 mm Rigid Steel Conduit | Meter | 41 |
| L-110l | 50 mm HDPE Conduit | Meter | 3216.90 ~~3353~~ |
| L-110m | 50 mm Liquidtight Flexible Nonmetalic Conduit | Meter | 136.42 ~~91~~ |
| ~~L-110n~~ | ~~50 mm Flexible Metal Conduit~~ | ~~Meter~~ | ~~30~~ |
| L-125a | Runway End Identification Lights (R.E.I.L.) L-859 | Pair | 2 |
| L-~~150a~~ 120a | P.A.P.I.-4, L880, ~~Style A, Class II~~ Style B, Class 1 | Lump Sum | All Req'd |
| P-158a | Erosion & Pollution Control Administration | Lump Sum | All Req'd |
| P-158b | Temporary Erosion & Pollution Control | Contigent Sum | 0.16 ~~All Req'd~~ |
| P-165a | Removal and Disposal of Existing Structures | Lump Sum | All Req'd |
| P-640b | Segmented Circle (Panel-Type) | Lump Sum | All Req'd |
| L-110-1a | Bedding Specification Credit | Lump Sum | All Req'd |
| L-110-k1 | EZ Street Cold Asphalt, CO#3 | Lump Sum | All Req'd |
| L-100s | Light Base Drains, CO#7 | Lump Sum | All Req'd |
| L-100t | Grading for Base Drains, CO#9 | Lump Sum | All Req'd |
| L-107e | 2.5 Meter Wind Socks, CO#8 | Lump Sum | All Req'd |
| L-108o | Existing Wiring Replacement, CO#6 | Lump Sum | All Req'd |
| L-109e | Slab Extension for Electrical Enclosure, CO#4 | Lump Sum | All Req'd |
| L-120b | PAPI Calibration Training, CO#5 | Lump Sum | All Req'd |

Project As Built Drawings Have Been Reviewed By The Project Engineer & Represent, To The Best Of My Knowledge, The Project As Constructed.

Proj. Eng. [signature] Date 3/18/03

NOTE: DO NOT SCALE FROM THESE PLANS-USE DIMENSIONS

HAIGHT & McLAUGHLIN, INC.
CONSULTING ENGINEERS
418 Shatto Street, Juneau, Alaska 99801 (907) 586-6160

| PATH: | | |
|---|---|---|
| PLOT: | | |
| BY: | DATE: | DESCRIPTION OF CHANGE: |
| | | |

RECORD OF REVISIONS

STATE OF ALASKA
DEPARTMENT OF TRANSPORTATION AND PUBLIC FACILITIES
SOUTHEAST REGION

HOONAH — HOONAH AIRPORT MEDIUM INTENSITY RUNWAY AND TAXIWAY LIGHTING SYSTEM — ALASKA
AIP NO. 3-02-0125-0301 ~ PROJECT NO. 68213
*Estimate of Quantities*

| | |
|---|---|
| DESIGNED BY: WFB | PROJECT NO. 68213 |
| DRAWN BY: | DATE: JULY 2001 |
| CHECKED BY: BCH | SHEET A2 OF 17 |

STATE OF ALASKA — REGISTERED PROFESSIONAL ENGINEER — EE 4800

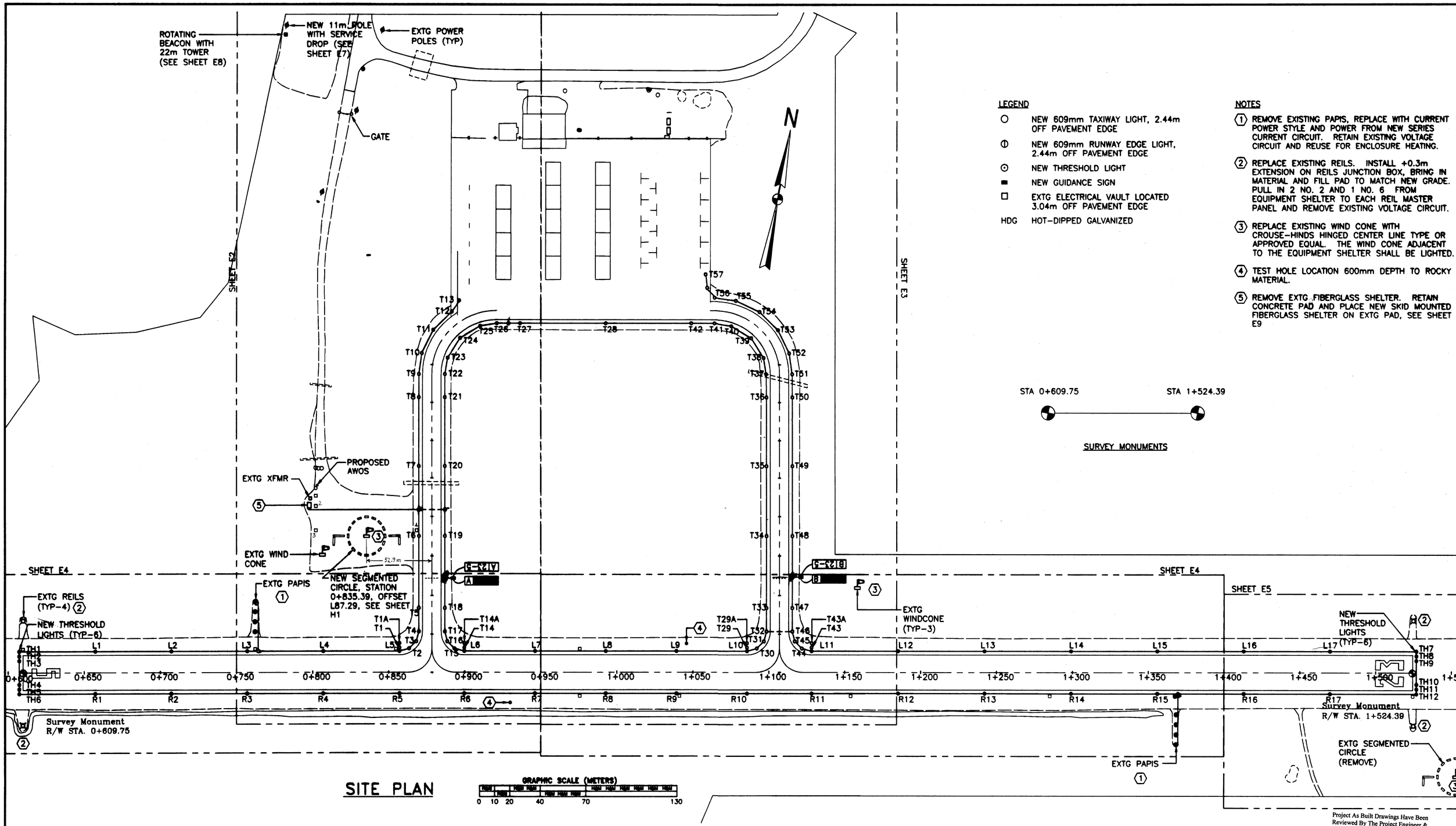


## SITE PLAN

GRAPHIC SCALE (METERS)
0 10 20 40 70 130

**LEGEND**

- ○ NEW 609mm TAXIWAY LIGHT, 2.44m OFF PAVEMENT EDGE
- ⦶ NEW 609mm RUNWAY EDGE LIGHT, 2.44m OFF PAVEMENT EDGE
- ⊙ NEW THRESHOLD LIGHT
- ▬ NEW GUIDANCE SIGN
- □ EXTG ELECTRICAL VAULT LOCATED 3.04m OFF PAVEMENT EDGE
- HDG HOT-DIPPED GALVANIZED

**NOTES**

1. REMOVE EXISTING PAPIS, REPLACE WITH CURRENT POWER STYLE AND POWER FROM NEW SERIES CURRENT CIRCUIT. RETAIN EXISTING VOLTAGE CIRCUIT AND REUSE FOR ENCLOSURE HEATING.
2. REPLACE EXISTING REILS. INSTALL +0.3m EXTENSION ON REILS JUNCTION BOX, BRING IN MATERIAL AND FILL PAD TO MATCH NEW GRADE. PULL IN 2 NO. 2 AND 1 NO. 6 FROM EQUIPMENT SHELTER TO EACH REIL MASTER PANEL AND REMOVE EXISTING VOLTAGE CIRCUIT.
3. REPLACE EXISTING WIND CONE WITH CROUSE-HINDS HINGED CENTER LINE TYPE OR APPROVED EQUAL. THE WIND CONE ADJACENT TO THE EQUIPMENT SHELTER SHALL BE LIGHTED.
4. TEST HOLE LOCATION 600mm DEPTH TO ROCKY MATERIAL.
5. REMOVE EXTG FIBERGLASS SHELTER. RETAIN CONCRETE PAD AND PLACE NEW SKID MOUNTED FIBERGLASS SHELTER ON EXTG PAD, SEE SHEET E9

STA 0+609.75 — STA 1+524.39

**SURVEY MONUMENTS**

Project As Built Drawings Have Been Reviewed By The Project Engineer & Represent, To The Best Of My Knowledge, The Project As Constructed.

Proj. Eng. Date 3/6/03

NOTE: DO NOT SCALE FROM THESE PLANS-USE DIMENSIONS

HAICHT & McLAUGHLIN, INC.
CONSULTING ENGINEERS
416 Harris Street, Juneau, Alaska 99801 (907) 586-9768

| | | |
|---|---|---|
| PATH: | ..\134..\96..\DRAWINGS\96E1.DWG | |
| PLOT: | ???? | |
| BY: | DATE: | DESCRIPTION OF CHANGE: |
| RECORD OF REVISIONS | | |

STATE OF ALASKA
DEPARTMENT OF TRANSPORTATION AND PUBLIC FACILITIES
SOUTHEAST REGION

HOONAH — ALASKA

HOONAH AIRPORT MEDIUM INTENSITY RUNWAY AND TAXIWAY LIGHTING SYSTEM
AIP NO. 3-02-0125-0301 ~ PROJECT NO. 68213

SITE PLAN

| | |
|---|---|
| DESIGNED BY: WFB | PROJECT NO. 67522 |
| DRAWN BY: DRP | DATE: JULY - 2001 |
| CHECKED BY: | SHEET E1 OF 17 |

STATE OF ALASKA 49th B.C. HAICHT EE

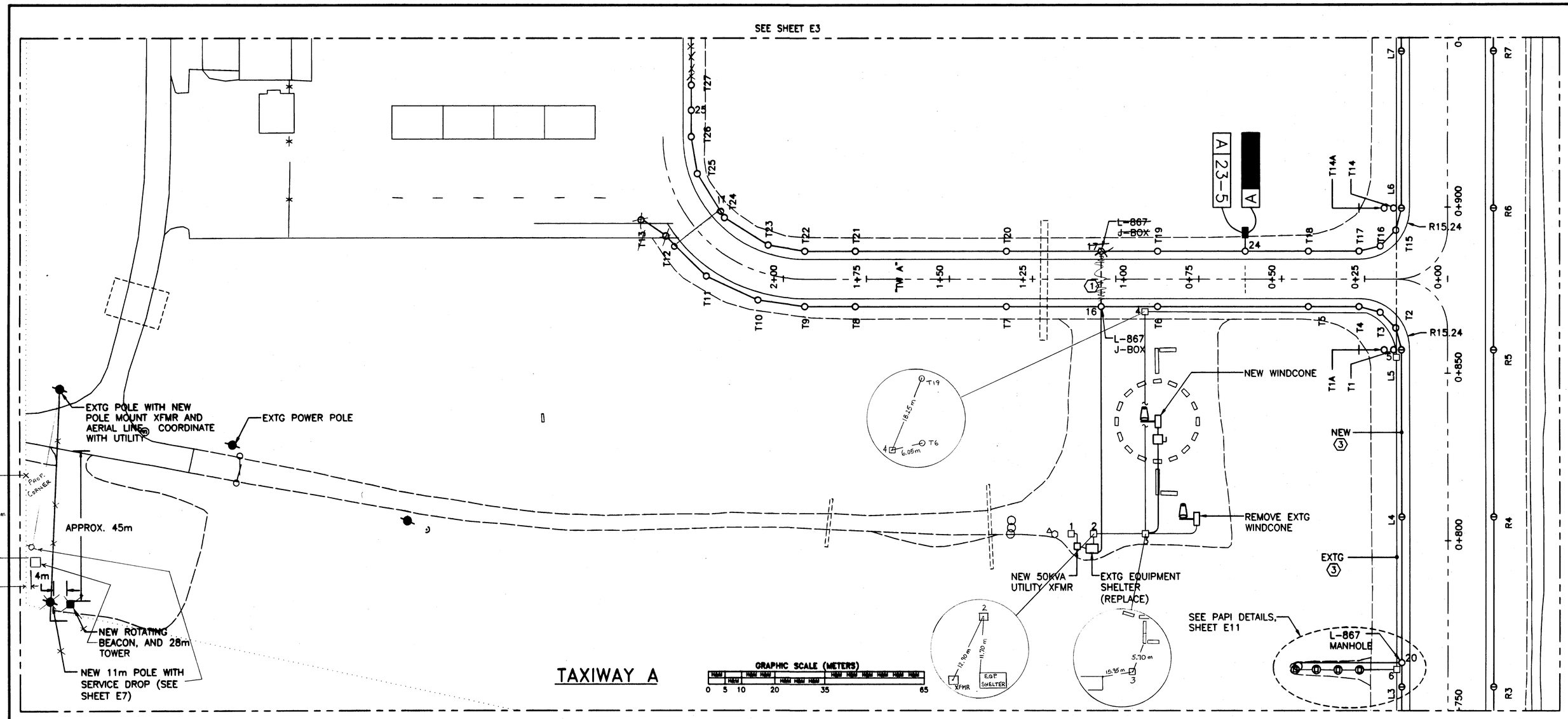


**LEGEND**

- ○ NEW 609mm TAXIWAY LIGHT, 2.44m OFF PAVEMENT EDGE
- ◐ NEW 609mm RUNWAY EDGE LIGHT, 2.44m OFF PAVEMENT EDGE
- ⊙ NEW THRESHOLD LIGHT
- ▬ NEW GUIDANCE SIGN
- □ EXTG ELECTRICAL VAULT LOCATED 3.04m OFF PAVEMENT EDGE
- HDG HOT-DIPPED GALVANIZED

**NOTES**

1. JACK/BORE 76mm RIGID CONDUIT BENEATH TAXIWAY. EXTEND 1.5m FROM EXISTING PAVEMENT EDGES ON BOTH SIDES OF TAXIWAY. RUN 51mm HDPE INTO BOTH L-867 JUNCTION BOXES AND THROUGH 76mm, MINIMUM, GRS. (SEE TAXIWAY CROSSING DETAIL, SHEET E7)
2. AT CONTRACTORS OPTION: JACK/BORE 76mm, MINIMUM, RIGID CONDUIT UNDERNEATH SHOT ROCK EMBANKMENT.
3. COMPONENTS SHOWN WITH DARK LINES SHALL BE NEW. ALL COMPNENTS WITH LIGHT LINES ARE EXISTING

Project As Built Drawings Have Been Reviewed By The Project Engineer & Represent, To The Best Of My Knowledge, The Project As Constructed.

Proj. Eng. Date 3/28/03

NOTE: DO NOT SCALE FROM THESE PLANS–USE DIMENSIONS

HAIGHT & McLAUGHLIN, INC.
CONSULTING ENGINEERS
419 Harris Street, Juneau, Alaska 99801 (907) 586-9760

| | | |
|---|---|---|
| PATH: ..\134...\096...\DRAWINGS\96E2.DWG | | |
| PLOT: ???? | | |
| BY: | DATE: | DESCRIPTION OF CHANGE: |
| | | |
| RECORD OF REVISIONS | | |

STATE OF ALASKA
DEPARTMENT OF TRANSPORTATION AND PUBLIC FACILITIES
SOUTHEAST REGION

HOONAH — HOONAH AIRPORT MEDIUM INTENSITY RUNWAY AND TAXIWAY LIGHTING SYSTEM — ALASKA
AIP NO. 3-02-0125-0301 ~ PROJECT NO. 68213

# TAXIWAY "A" APRON

| | |
|---|---|
| DESIGNED BY: WFB | PROJECT NO. 67522 |
| DRAWN BY: DRP | DATE: JULY – 2001 |
| CHECKED BY: | SHEET E2 OF 17 |

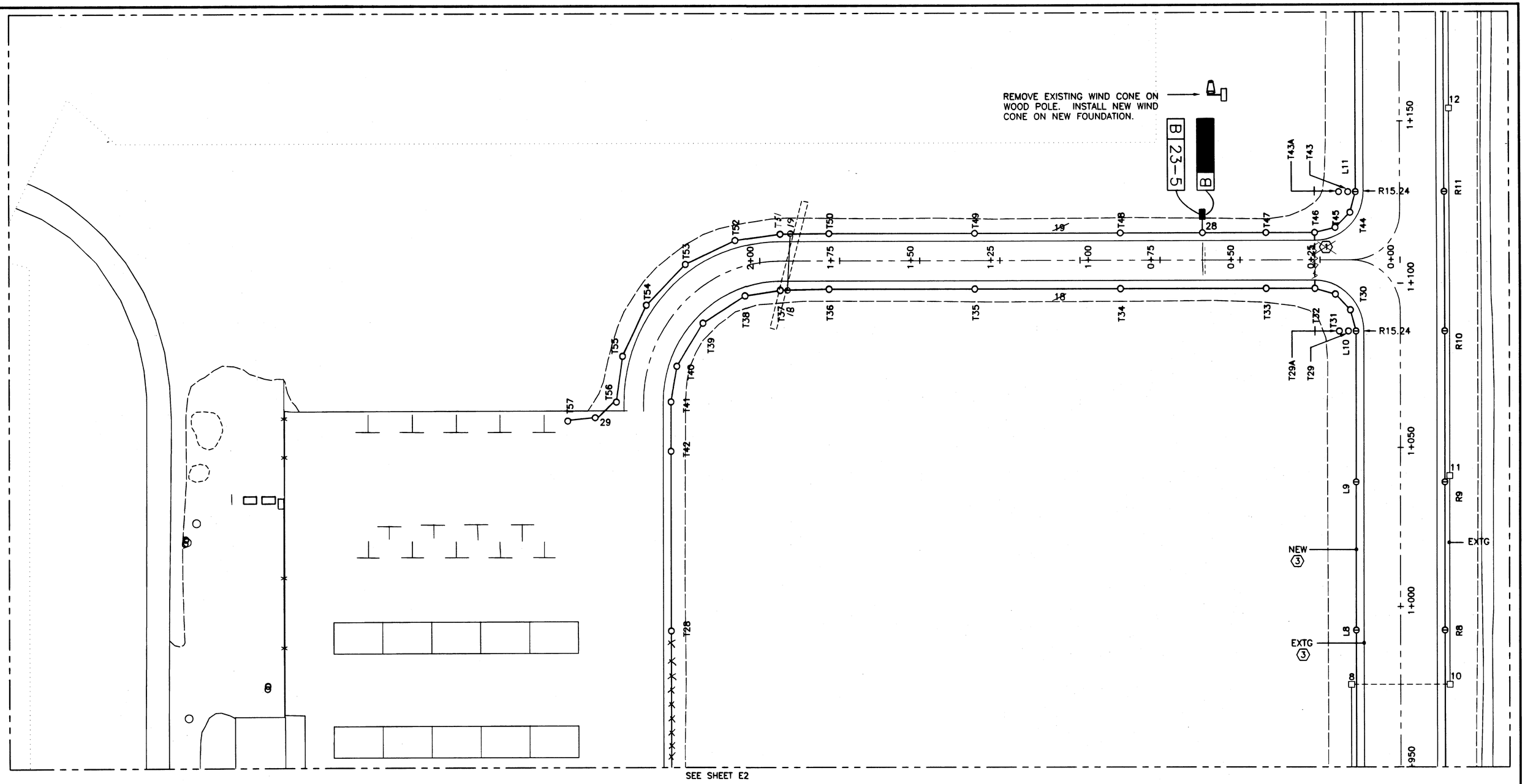


LEGEND

- ○ NEW 609mm TAXIWAY LIGHT, 2.44m OFF PAVEMENT EDGE
- ⦶ NEW 609mm RUNWAY EDGE LIGHT, 2.44m OFF PAVEMENT EDGE
- ⊙ NEW THRESHOLD LIGHT
- ▬ NEW GUIDANCE SIGN
- □ EXTG ELECTRICAL VAULT LOCATED 3.04m OFF PAVEMENT EDGE
- HDG HOT-DIPPED GALVANIZED

NOTES

1. JACK/BORE 76mm RIGID CONDUIT BENEATH TAXIWAY. EXTEND 1.5m FROM EXISTING PAVEMENT EDGES ON BOTH SIDES OF TAXIWAY. RUN 51mm HDPE INTO BOTH L-867 JUNCTION BOXES AND THROUGH 76mm, MINIMUM, GRS. (SEE TAXIWAY CROSSING DETAIL, SHEET E7)
2. AT CONTRACTORS OPTION: JACK/BORE 76mm, MINIMUM, RIGID CONDUIT UNDERNEATH SHOT ROCK EMBANKMENT.
3. COMPONENTS SHOWN WITH DARK LINES SHALL BE NEW. ALL COMPNENTS WITH LIGHT LINES ARE EXISTING

## TAXIWAY B

GRAPHIC SCALE (METERS)
0 5 10 20 35 65

Project As Built Drawings Have Been Reviewed By The Project Engineer & Represent, To The Best Of My Knowledge, The Project As Constructed.
Proj. Eng. [signature] Date 3/18/03

HAIGHT & McLAUGHLIN, INC.
CONSULTING ENGINEERS
418 Harris Street, Juneau, Alaska 99801 (907) 586-6780

NOTE: DO NOT SCALE FROM THESE PLANS—USE DIMENSIONS

| | | |
|---|---|---|
| PATH: ..\134...\096...\DRAWINGS\96E3.DWG | | |
| PLOT: ???? | | |
| BY: | DATE: | DESCRIPTION OF CHANGE: |
| | | |
| RECORD OF REVISIONS | | |

STATE OF ALASKA
DEPARTMENT OF TRANSPORTATION AND PUBLIC FACILITIES
SOUTHEAST REGION

HOONAH — HOONAH AIRPORT MEDIUM INTENSITY RUNWAY AND TAXIWAY LIGHTING SYSTEM — ALASKA
AIP NO. 3-02-0125-0301 ~ PROJECT NO. 68213

TAXIWAY "B" APRON

| | |
|---|---|
| DESIGNED BY: WFB | PROJECT NO. 67522 |
| DRAWN BY: DRP | DATE: JULY - 2001 |
| CHECKED BY: | SHEET E3 OF 17 |

STATE OF ALASKA — B.C. HAIGHT — EE 4

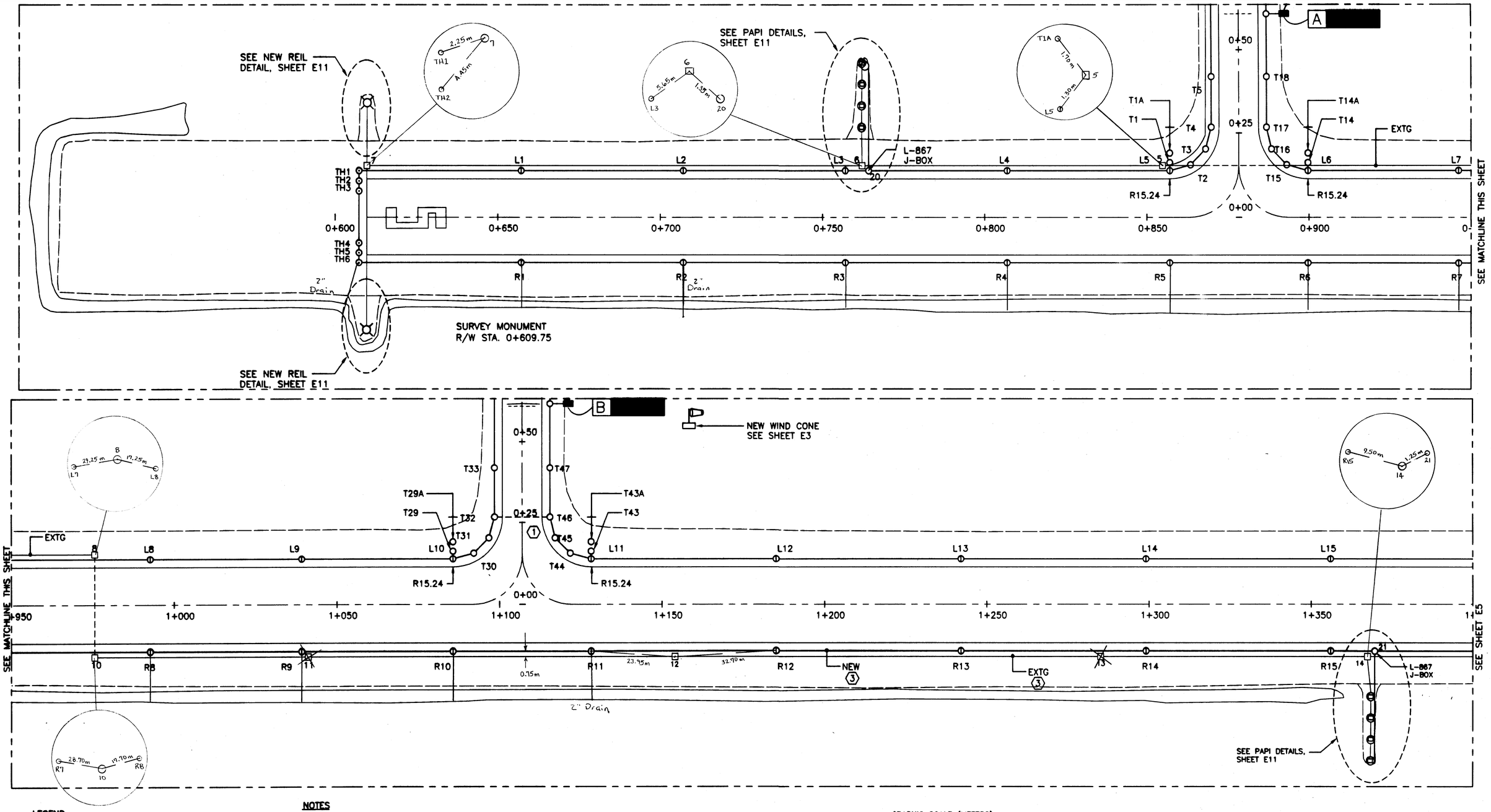


**LEGEND**

- ○ NEW 609mm TAXIWAY LIGHT, 2.44m OFF PAVEMENT EDGE
- ① NEW 609mm RUNWAY EDGE LIGHT, 2.44m OFF PAVEMENT EDGE
- ⊙ NEW THRESHOLD LIGHT
- ▬ NEW GUIDANCE SIGN
- □ EXTG ELECTRICAL VAULT LOCATED 3.04m OFF PAVEMENT EDGE
- HDG HOT-DIPPED GALVANIZED

**NOTES**

1. JACK/BORE 76mm RIGID CONDUIT BENEATH TAXIWAY. EXTEND 1.5m FROM EXISTING PAVEMENT EDGES ON BOTH SIDES OF TAXIWAY. RUN 51mm HDPE INTO BOTH L-867 JUNCTION BOXES AND THROUGH 76mm, MINIMUM, GRS. (SEE TAXIWAY CROSSING DETAIL, SHEET E7)
2. AT CONTRACTORS OPTION: JACK/BORE 76mm, MINIMUM, RIGID CONDUIT UNDERNEATH SHOT ROCK EMBANKMENT.
3. COMPONENTS SHOWN WITH DARK LINES SHALL BE NEW. ALL COMPNENTS WITH LIGHT LINES ARE EXISTING

## RUNWAY 5-23

GRAPHIC SCALE (METERS)
0 5 10 20 35 65

Project As Built Drawings Have Been Reviewed By The Project Engineer & Represent, To The Best Of My Knowledge, The Project As Constructed.
Proj. Eng. [signature] Date 3/18/03

NOTE: DO NOT SCALE FROM THESE PLANS-USE DIMENSIONS

HAIGHT & McLAUGHLIN, INC.
CONSULTING ENGINEERS
418 Harris Street, Juneau, Alaska 99801 (907) 586-9188

| | | |
|---|---|---|
| PATH: ..\134\..96..\DRAWINGS\96E4.DWG | | |
| PLOT: ???? | | |
| BY: | DATE: | DESCRIPTION OF CHANGE: |
| RECORD OF REVISIONS | | |

STATE OF ALASKA
DEPARTMENT OF TRANSPORTATION AND PUBLIC FACILITIES
SOUTHEAST REGION

HOONAH — HOONAH AIRPORT MEDIUM INTENSITY RUNWAY AND TAXIWAY LIGHTING SYSTEM — ALASKA
AIP NO. 3-02-0125-0301 ~ PROJECT NO. 68213
RUNWAY 05-23

| | |
|---|---|
| DESIGNED BY: WFB | PROJECT NO. 67522 |
| DRAWN BY: DRP | DATE: JULY - 2001 |
| CHECKED BY: | SHEET E4 OF 17 |

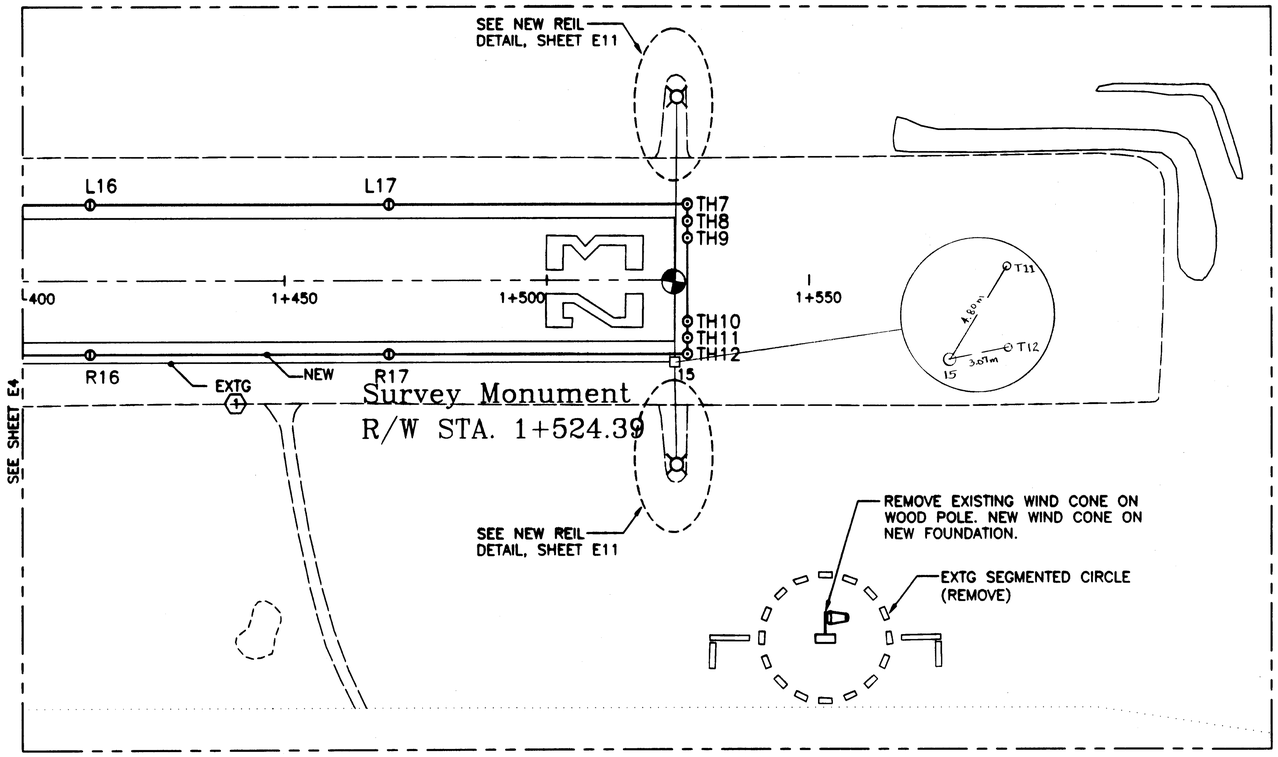


## RUNWAY 5-23

GRAPHIC SCALE (METERS)

0 5 10 20 35 65

**LEGEND**

- ○ NEW 609mm TAXIWAY LIGHT, 2.44m OFF PAVEMENT EDGE
- ◐ NEW 609mm RUNWAY EDGE LIGHT, 2.44m OFF PAVEMENT EDGE
- ⊙ NEW THRESHOLD LIGHT
- ■ NEW GUIDANCE SIGN
- □ EXTG ELECTRICAL VAULT LOCATED 3.04m OFF PAVEMENT EDGE
- HDG HOT-DIPPED GALVANIZED

**NOTES**

(1) COMPONENTS SHOWN WITH DARK LINES SHALL BE NEW. ALL COMPNENTS WITH LIGHT LINES ARE EXISTING

Project As Built Drawings Have Been Reviewed By The Project Engineer & Represent, To The Best Of My Knowledge, The Project As Constructed.

Proj. Eng. [signature] Date 3/18/03

HAIGHT & McLAUGHLIN, INC.
CONSULTING ENGINEERS
418 Harris Street, Juneau, Alaska 99801 (907) 586-9780

NOTE: DO NOT SCALE FROM THESE PLANS–USE DIMENSIONS

| | | |
|---|---|---|
| PATH: | ..\134..\96..\DRAWINGS\96E5.DWG | |
| PLOT: | ???? | |
| BY: | DATE: | DESCRIPTION OF CHANGE: |
| | | |
| RECORD OF REVISIONS | | |

STATE OF ALASKA
DEPARTMENT OF TRANSPORTATION AND PUBLIC FACILITIES
SOUTHEAST REGION

HOONAH — HOONAH AIRPORT MEDIUM INTENSITY RUNWAY AND TAXIWAY LIGHTING SYSTEM — ALASKA
AIP NO. 3-02-0125-0301 ~ PROJECT NO. 68213

RUNWAY 05-23

| | |
|---|---|
| DESIGNED BY: WFB | PROJECT NO. 67522 |
| DRAWN BY: DRP | DATE: JULY – 2001 |
| CHECKED BY: | SHEET E5 OF 17 |

STATE OF ALASKA — B.C. HAIGHT — EE 4650 — REGISTERED PROFESSIONAL ENGINEER

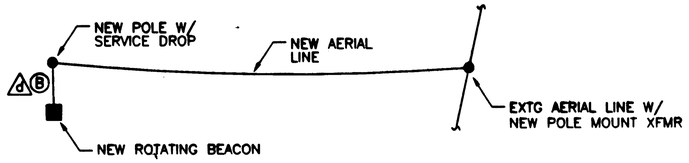


## CABLING SCHEDULE

| DESIGNATION | RACEWAY | CIRCUIT | ROUTE/COMMENT |
|---|---|---|---|
| a | 50mm HDPE | 1 | FROM REGULATOR ALONG TW AND RW |
| b | 76mm GRS | 1 | BENEATH TW CROSSINGS |
| c | 50mm PVC | RLS | EXISTING RACEWAY OUT TO REILS |
| d | 50mm HDPE | B | POWER POLE TO BEACON |

## CIRCUIT SCHEDULE

| DESIGNATION | CABLE/CONDUCTOR | PURPOSE | REMARKS |
|---|---|---|---|
| 1 | NO. 6, 5 kV CLASS B W/ NO. 6 CU GND ~~(BARE)~~ GRN. INSUL. | AIRFIELD LIGHTING | NEW |
| RLS | 2 NO. 2, 1 NO. 6 GND TYPE G OR W CABLE | CONDUCTOR UPGRADE | REMOVE EXISTING CONDUCTORS |
| B | 3 NO. 8, 1 NO. 10 GND TYPE G OR W CABLE | BEACON POWER | NEW |
| WC | 3 NO. 8, 1 NO. ~~10~~ 6 GND TYPE G OR W CABLE | WINDCONE POWER | NEW |
| P | 3 NO. 8, 1 NO. 6 GND TYPE G OR W CABLE | | ~~REUSE EXTG CKT FOR ENCLOSURE HEATING~~ NEW: 2 NO. 6, 1 NO. 6 GND FOR HEATING (ROUTED THROUGH EXISTING CONDUIT) |

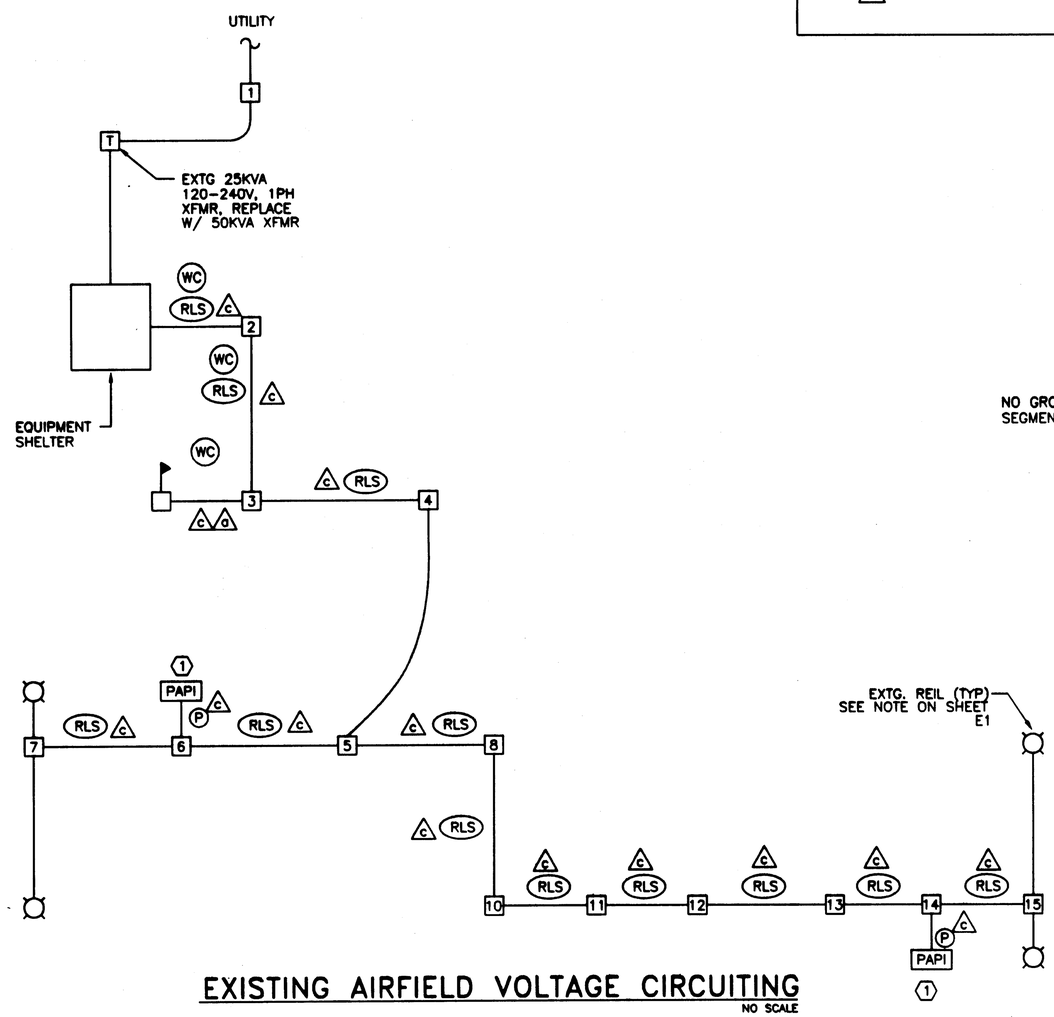


## EXISTING AIRFIELD VOLTAGE CIRCUITING

NO SCALE

NOTES:

1. REMOVE EXISTING PAPIS, REPLACE WITH CURRENT POWERED STYLE AND POWER FROM NEW SERIES CURRENT CIRCUIT. RETAIN EXISTING VOLTAGE CIRCUIT AND REUSE FOR ENCLOSURE HEATING.

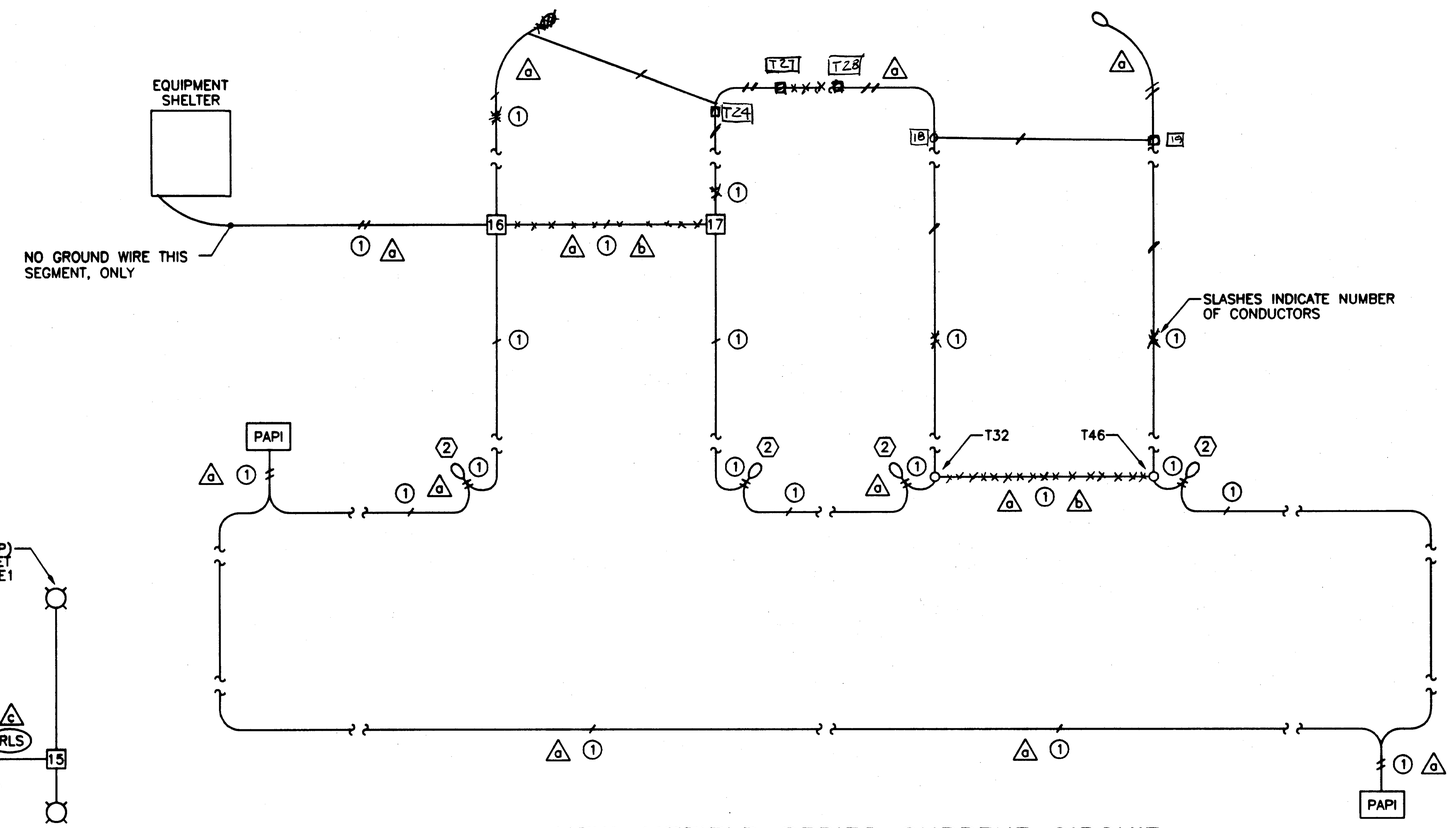


## NEW AIRFIELD SERIES CURRENT CIRCUIT

NO SCALE

NOTES:

1. SEE NOTES ON SHEET E2 AND E3 FOR TAXIWAY CROSSINGS.

2. DOUBLE TAXIWAY LIGHTS

Project As Built Drawings Have Been Reviewed By The Project Engineer & Represent, To The Best Of My Knowledge, The Project As Constructed.

Proj. Eng. Date 3/18/03

NOTE: DO NOT SCALE FROM THESE PLANS–USE DIMENSIONS

HAIGHT & McLAUGHLIN, INC.
CONSULTING ENGINEERS
418 Harris Street, Juneau, Alaska 99801 (907) 586-9700

| | | |
|---|---|---|
| PATH: ..\134...\96...\DRAWINGS\96E6.DWG | | |
| PLOT: ???? | | |
| BY: | DATE: | DESCRIPTION OF CHANGE: |
| | | |
| RECORD OF REVISIONS | | |

STATE OF ALASKA
DEPARTMENT OF TRANSPORTATION AND PUBLIC FACILITIES
SOUTHEAST REGION

HOONAH — HOONAH AIRPORT MEDIUM INTENSITY RUNWAY AND TAXIWAY LIGHTING SYSTEM — ALASKA
AIP NO. 3-02-0125-0301 ~ PROJECT NO. 68213

AIRFIELD CIRCUITING & SCHEDULES

| | |
|---|---|
| DESIGNED BY: WFB | PROJECT NO. 67522 |
| DRAWN BY: DRP/PEL | DATE: JULY – 2001 |
| CHECKED BY: | SHEET E6 OF 17 |

STATE OF ALASKA — B.C. McLAUGHLIN — EE 4900

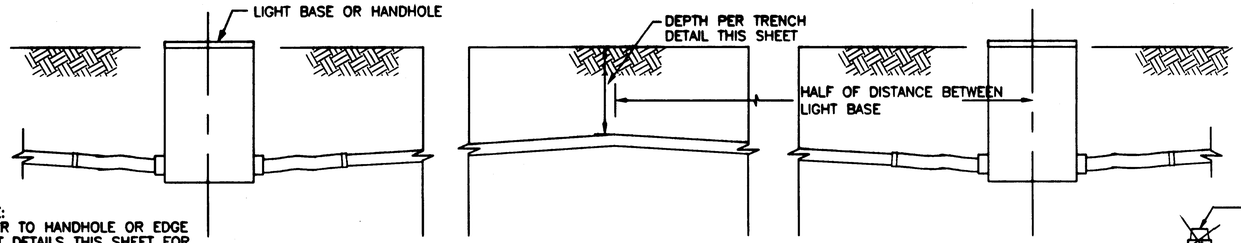


NOTE:
REFER TO HANDHOLE OR EDGE LIGHT DETAILS THIS SHEET FOR CONNECTION OF CONDUITS TO HANDHOLES OR L-867 BASES.

## PROFILE: CONDUIT INSTALLATION (TYP)

NO SCALE

NOTE:

1. SLOPE CONDUIT TO ALLOW FOR DRAINAGE INTO LIGHTING CANS AND JUNCTION BOXES.

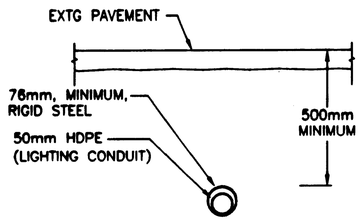


## TAXIWAY CROSSINGS

NO SCALE

NOTES:

1. REFERENCE SHEETS E2, E3, AND E4, FOR TAXIWAY CROSSING LOCATIONS.

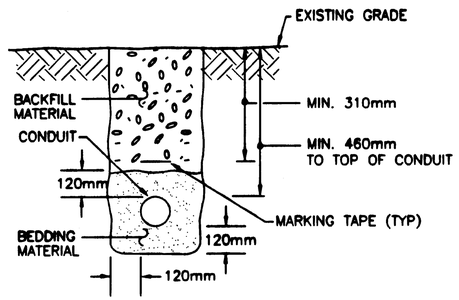


## TRENCH DETAIL

NO SCALE

NOTES:

1. THESE ARE TYPICAL TRENCH SECTIONS SHOWING MINIMUM DIMENSIONS AND REQUIRED MATERIALS. CONFIGURE ALL TRENCHES AS NECESSARY TO COMPLY WITH DIMENSIONS SHOWN
2. ALLOW NO MORE THAN 3% SLOPE IN CONDUIT.
3. EQUIPMENT USED TO DIG THE TRENCH SHALL NOT HAVE A BUCKET OR BLADE WIDTH GREATER THAN 457mm, UNLESS ALLOWED IN WRITING FROM THE ENGINEER ON A CASE BY CASE BASIS.
4. TRENCHING MACHINE MAY BE USED.

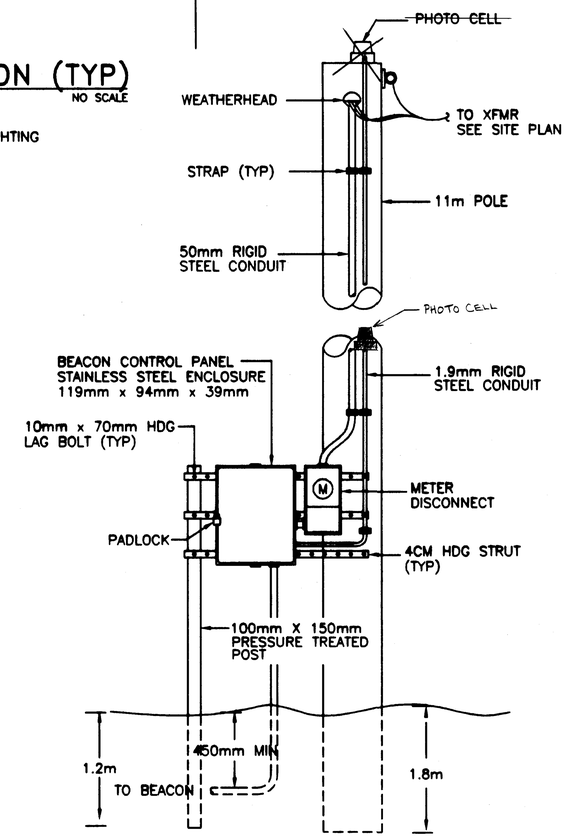


## BEACON SERVICE DETAIL

NO SCALE

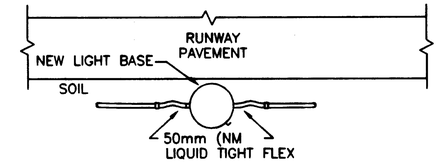


## DETAIL: LIGHT BASE & CONDUIT INSTALLATION (TYP)

NO SCALE

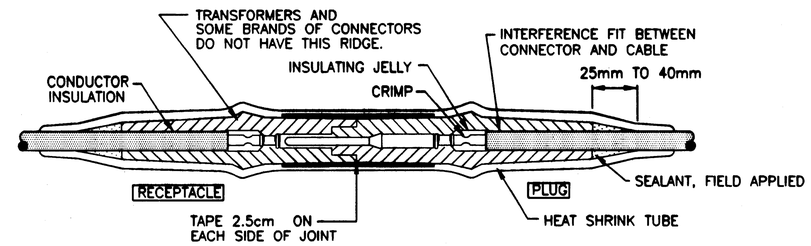


## L-823 CONNECTOR WATERPROOFING DETAIL

NO SCALE

1. CLEAN THE CABLE THOROUGHLY 300mm MIN. FROM THE END.
2. REMOVE INSULATION PER MANUFACTURERS INSTRUCTIONS. DO NOT NICK THE CONDUCTOR.
3. INSTALL PIN AND / OR RECEPTACLE WITH A CRIMPING TOOL WHICH MUST BE COMPLETELY CLOSED BEFORE THE TOOL MAY BE REMOVED.
4. BE SURE CABLE AND CONNECTOR FITTINGS ARE CLEAN. COAT THE CABLE INSULATION WITH INSULATING JELLY FROM THE CONNECTOR.
5. CAREFULLY INSERT CABLE INTO CONNECTOR TO THE PROPER DEPTH.
6. SLIP 410mm LENGTH OF HEAT SHRINK TUBING ON TRANSFORMER LEAD. RANCHER TAPE KIT OR APPROVED EQUAL.
7. COMPLETE CONNECTION BY MATING THE PLUG AND RECEPTACLE. CAUTION: BE SURE THE CABLE DOES NOT SLIP OUT WHEN THE CONNECTION IS MADE.
8. APPLY RUBBER TAPE AND VINYL TAPE ONE HALF LAPPED, 40mm ON EACH SIDE OF JOINT.
9. ANY CONNECTOR WHICH IS CONTAMINATED BY DIRT OR OTHER DAMAGING MATERIAL SHALL BE REMOVED AND NOT REINSTALLED.
10. CLEAN CONNECTOR AND CABLE INSULATION WITH WAX OR GREASE SOLVENT TO REMOVE SURFACE SILICONE JELLY.
11. WRAP SEALANT SECURELY AROUND THE CABLE INSULATION 40mm SEALANT SHALL BE RAYCHEM S-1052 (STRIPS) OR APPROVED EQUAL.
12. CENTER HEAT SHRINK OVER THE CONNECTOR. APPLY HEAT EVENLY BEGINNING AT THE CENTER AND WORKING AROUND CABLE TO ENDS. DO NOT OVER HEAT.
13. THE HEAT SOURCE SHALL BE ELECTRIC HEAT GUN OR A PROPANE TORCH WITH A FLAME SPREADER TO BE APPROVED BY THE ENGINEER.

## INSTALLATION INSTRUCTIONS TO SUPPLEMENT THE MANUFACTURERS INSTRUCTIONS

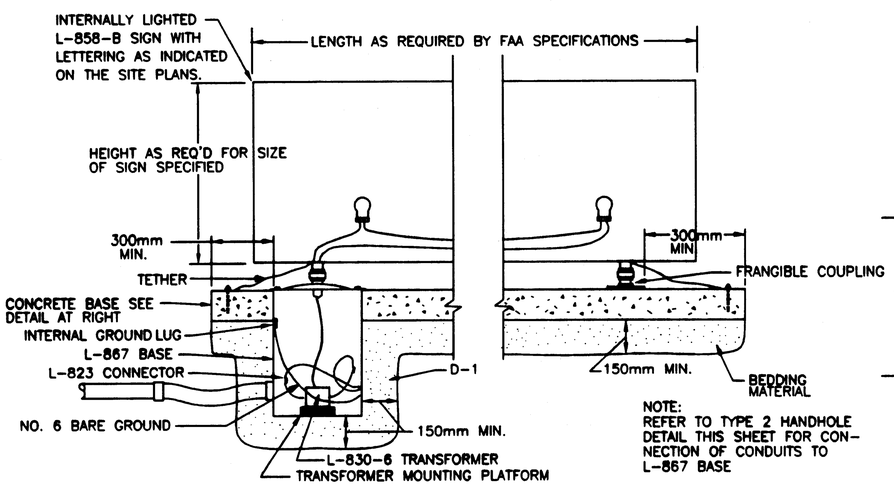


NOTE:
REFER TO TYPE 2 HANDHOLE DETAIL THIS SHEET FOR CONNECTION OF CONDUITS TO L-867 BASE

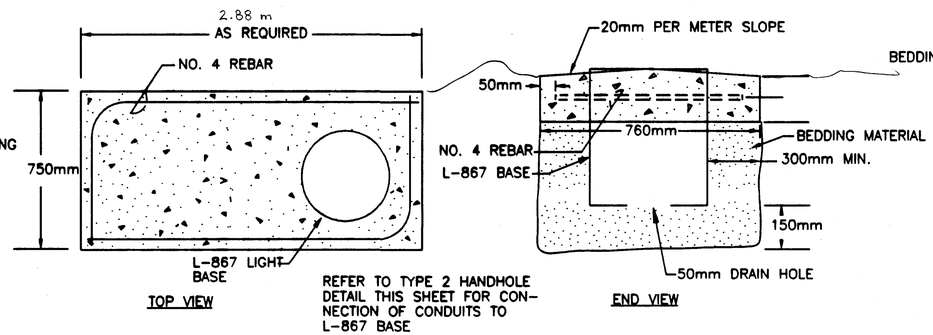


REFER TO TYPE 2 HANDHOLE DETAIL THIS SHEET FOR CONNECTION OF CONDUITS TO L-867 BASE

## DETAIL - LIGHTED SIGN

NO SCALE

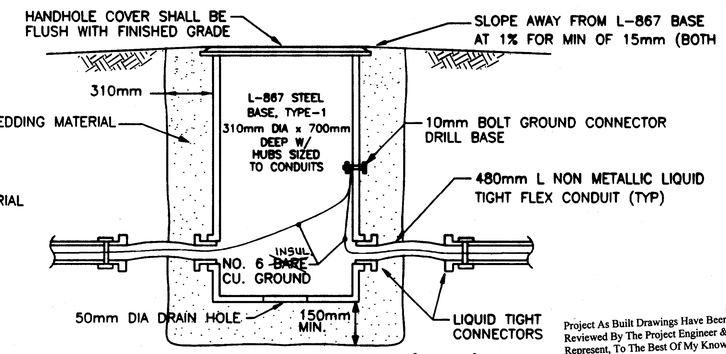


## TYPE 1 VAULT (TYP)

NO SCALE

Project As Built Drawings Have Been Reviewed By The Project Engineer & Represent, To The Best Of My Knowledge, The Project As Constructed.

Proj. Eng. [signature] Date 3/18/

NOTE: DO NOT SCALE FROM THESE PLANS-USE DIMENSIONS

HAIGHT & McLAUGHLIN, INC.
CONSULTING ENGINEERS
418 Harris Street, Juneau, Alaska 99801 (907) 586-9766

| PATH: ..\134...\96...\DRAWINGS\96E7.DWG | | |
|---|---|---|
| PLOT: ???? | | |
| BY: | DATE: | DESCRIPTION OF CHANGE: |
| | | |
| RECORD OF REVISIONS | | |

STATE OF ALASKA
DEPARTMENT OF TRANSPORTATION AND PUBLIC FACILITIES
SOUTHEAST REGION

HOONAH — HOONAH AIRPORT MEDIUM INTENSITY RUNWAY AND TAXIWAY LIGHTING SYSTEM — ALASKA
AIP NO. 3-02-0125-0301 ~ PROJECT NO. 68213

**ELECTRICAL DETAILS**

| DESIGNED BY: WFB | PROJECT NO. 67522 |
|---|---|
| DRAWN BY: DRP | DATE: JULY - 2001 |
| CHECKED BY: | SHEET E7 OF 17 |

STATE OF ALASKA 49th B.C. HAIGHT EE 1800 PROFESSIONAL ENGINEER

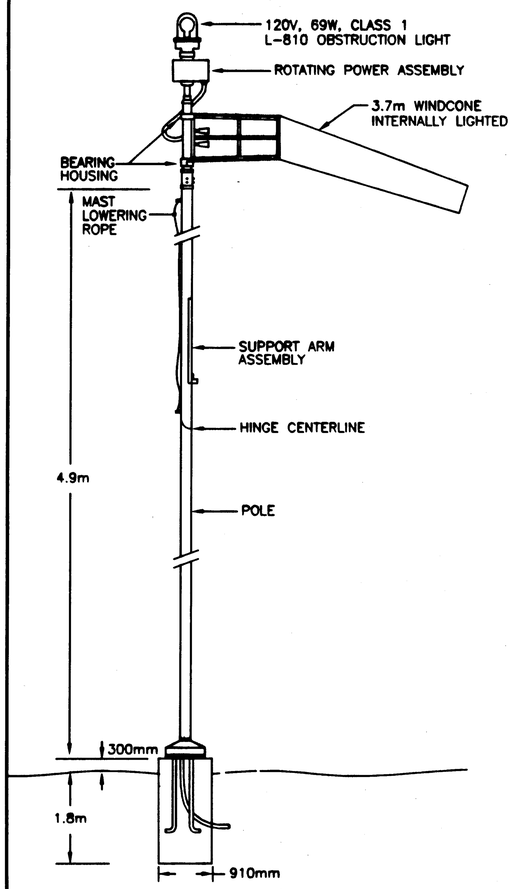


## ELEVATION –WINDCONE (SIZE 2)

NO SCALE

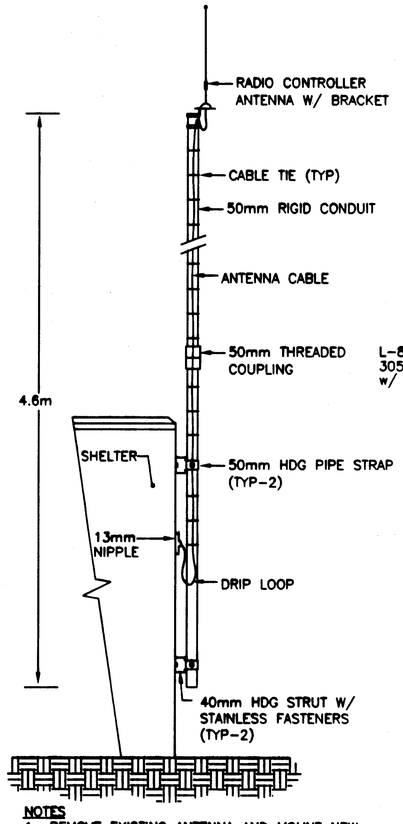


NOTES

1. REMOVE EXISTING ANTENNA AND MOUNT NEW MAST WITH NEW ANTENNA.
2. SEAL ALL SHELTER PENETRATIONS WITH RTV TYPE SEALANT

## RADIO CONTROLLER ANTENNA MAST

NO SCALE

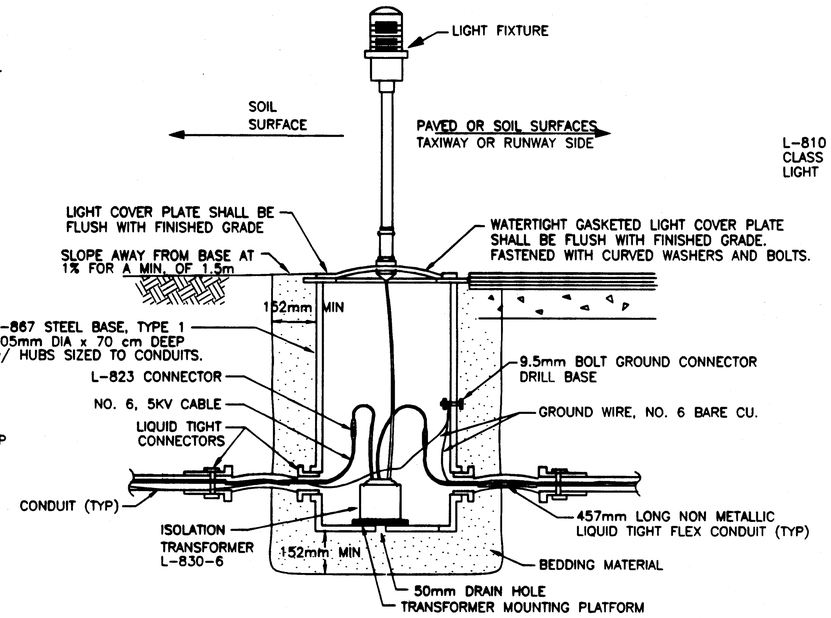


## DETAIL: TAXIWAY/RUNWAY EDGE LIGHT (TYP)

NO SCALE

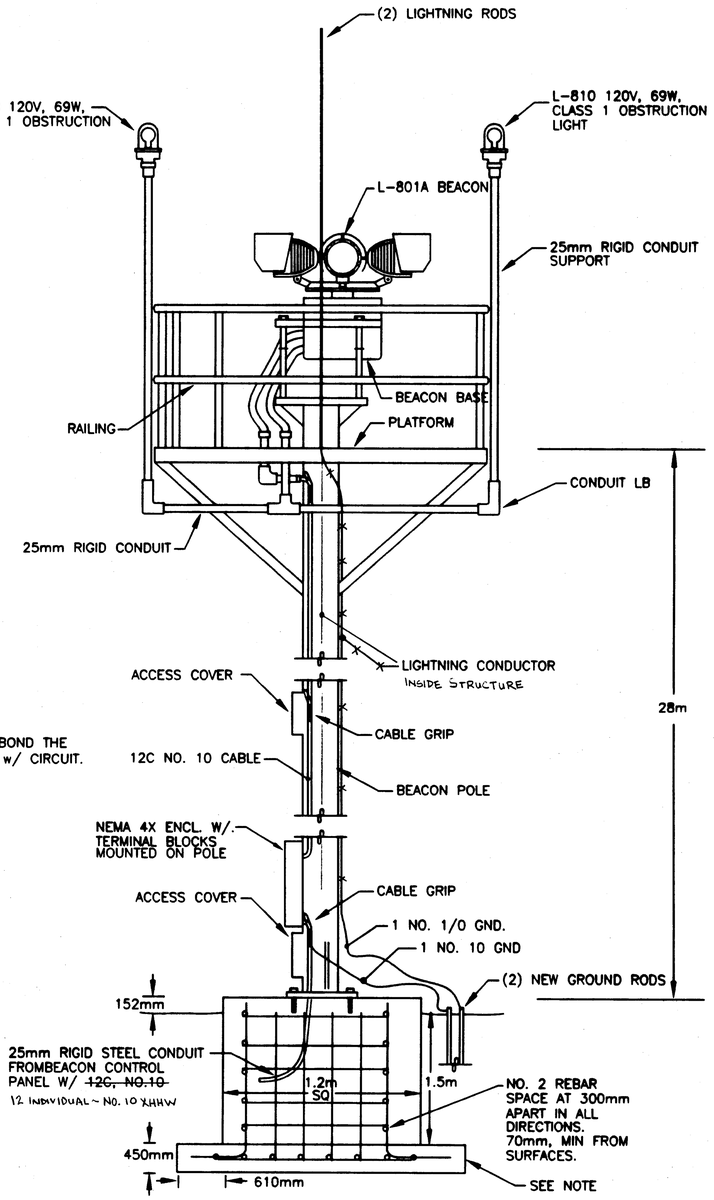


## ROTATING BEACON & BEACON POLE DETAIL

NO SCALE

NOTE: MINIMUM FOUNDATION SHOWN.
FOUNDATION SHALL SUPPORT STRUCTURE
FOR 160kph CONTINUOUS WINDS WITH
1.3 GUST FACTOR MIN, COORDINATE
W/STRUCTURE MANUFACTURER.

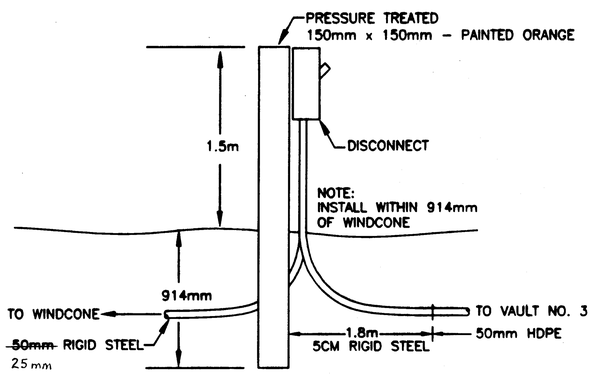


ELEVATION – DISCONNECT

## DETAILS – WINDCONE (L-807)

NO SCALE

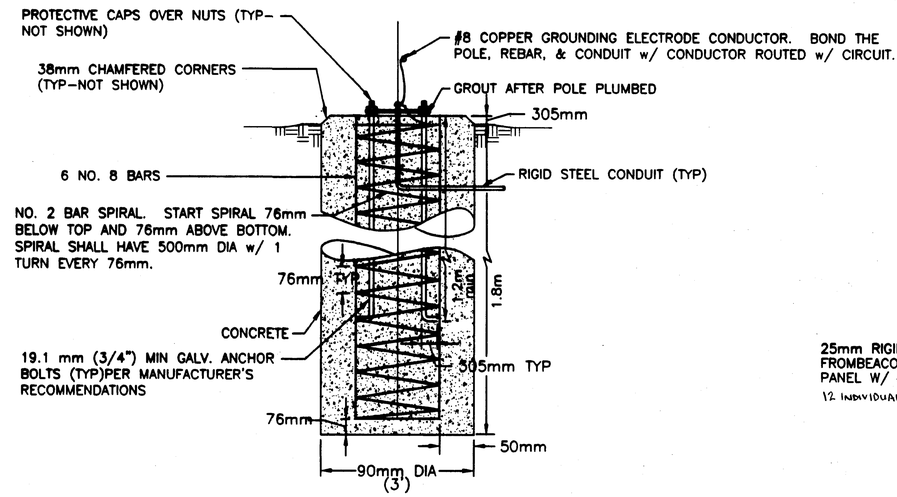


## WINDCONE FOUNDATIONS

NO SCALE

NOTES:

1. BACKFILL w/ N.F.S. SAND & GRAVEL COMPACTED TO 95% MODIFIED PROCTOR DENSITY.
2. ANCHOR BOLTS TO MEET ATSM-A36 w/ MINIMUM YIELD STRESS OF 248 MPA

Project As Built Drawings Have Been Reviewed By The Project Engineer & Represent, To The Best Of My Knowledge, The Project As Constructed.

Proj. Eng. Date 3/12/03

NOTE: DO NOT SCALE FROM THESE PLANS–USE DIMENSIONS

HAIGHT & McLAUGHLIN, INC.
CONSULTING ENGINEERS
418 Harris Street, Juneau, Alaska 99801 (907) 586-9786

| | | |
|---|---|---|
| PATH: | ..\134...\96...\DRAWINGS\96E8.DWG | |
| PLOT: | ???? | |
| BY: | DATE: | DESCRIPTION OF CHANGE: |
| | | |

RECORD OF REVISIONS

STATE OF ALASKA
DEPARTMENT OF TRANSPORTATION
AND PUBLIC FACILITIES
SOUTHEAST REGION

HOONAH — ALASKA

HOONAH AIRPORT MEDIUM INTENSITY RUNWAY
AND TAXIWAY LIGHTING SYSTEM
AIP NO. 3-02-0125-0301 ~ PROJECT NO. 68213

ELECTRICAL DETAILS

| | |
|---|---|
| DESIGNED BY: WFB | PROJECT NO. 67522 |
| DRAWN BY: DRP | DATE: JULY – 2001 |
| CHECKED BY: | SHEET E8 OF 17 |

STATE OF ALASKA — B.C. HAIGHT — EE 4800 — REGISTERED PROFESSIONAL ENGINEER

R&M ENGINEERING, INC.
ENGINEERS GEOLOGISTS SURVEYORS

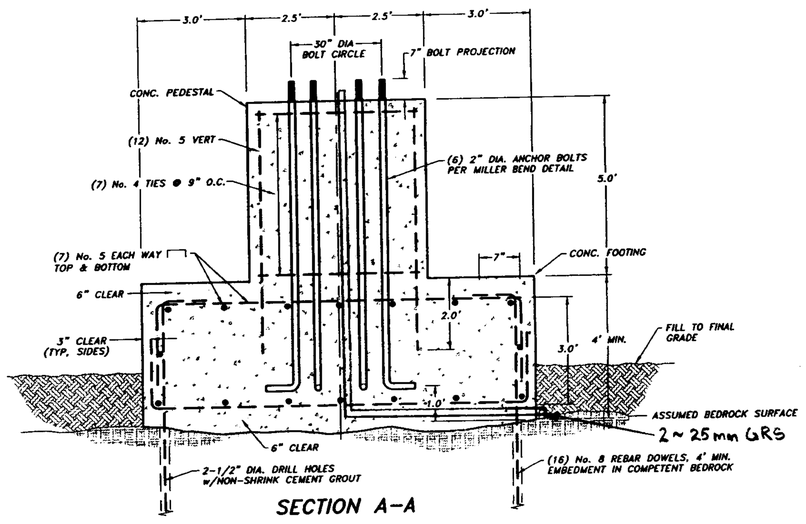


SECTION A-A

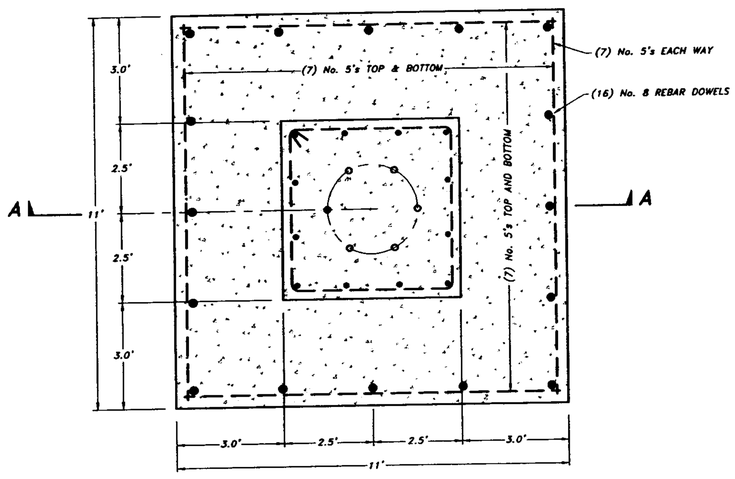


PLAN

## RADIO BEACON TOWER FOUNDATION

## DESIGN CRITERIA

FOUNDATION DESIGN CRITERIA ARE AS SHOWN ON MILLERBEND RADIO BEACON PLAN – B90890, DATED 9-26-01.
DESIGN OVERTURNING MOMENT = 370,000 FT-LB.
TRANSVERSE SHEAR = 6,000 LB.
AXIAL LOAD = 5,800 LB.

ANCHOR BOLTS – (6) 2" DIA. X 96" LONG PER PLAN 460A12

WIND LOAD CRITERIA: 100 MPH, W/ 1.3 GUST FACTOR PER MILLERBEND PLANS

INTERNATIONAL BUILDING CODE: 2000 EDITION

## GENERAL NOTES

1. THE CONTRACTOR SHALL VERIFY ALL DIMENSIONS, ELEVATIONS, AND SITE CONDITIONS BEFORE STARTING WORK. THE ARCHITECT/ENGINEER SHALL IMMEDIATELY BE NOTIFIED IN WRITING OF ANY DISCREPANCIES.
2. WORKING DIMENSIONS SHALL NOT BE SCALED FROM PLANS, SECTIONS, OR DETAILS ON THESE STRUCTURAL DRAWINGS.
3. IN AREAS TO BE EXCAVATED, THE CONTRACTOR SHALL DETERMINE THE LOCATIONS OF EXISTING UTILITY SERVICES PRIOR TO EXCAVATION.
4. CONTRACTOR AGREES THAT HE SHALL ASSUME SOLE AND COMPLETE RESPONSIBILITY FOR JOB SITE CONDITIONS DURING THE COURSE OF CONSTRUCTION OF THIS PROJECT, INCLUDING SAFETY OF ALL PERSONS AND PROPERTY; THAT THIS REQUIREMENT SHALL APPLY CONTINUOUSLY AND NOT BE LIMITED TO NORMAL WORKING HOURS; AND THAT THE CONTRACTOR SHALL DEFEND, INDEMNIFY, AND HOLD THE OWNER AND THE ENGINEER HARMLESS FROM ANY AND ALL LIABILITY, REAL OR ALLEGED, IN CONNECTION WITH THE PERFORMANCE OF WORK ON THIS PROJECT, EXCEPTING LIABILITY ARISING FROM THE SOLE NEGLIGENCE OF THE OWNER OR THE ENGINEER.
5. FOR DETAILS OF CONDUIT, GROUNDING, ACCESS HOLES, ETC. SEE SHEET E8 OF DESIGN PLANS

## FOUNDATION

1. THIS FOUNDATION DESIGN IS BASED UPON INFORMATION IN THE HOONAH SNOW REMOVAL EQUIPMENT BUILDING GEOTECHNICAL INVESTIGATION BY RALPH SWEDELL, REGIONAL GEOLOGIST, SE-REGION, ADOT&PF, FILE NO. 68389, DATED 11/29/01. THE ASSUMED LOCATION FOR THE RADIO BEACON TOWER IS AT THE NORTHWEST CORNER OF THE SNOW REMOVAL EQUIPMENT BUILDING SITE. THE NEAREST TEST PITS TO THIS LOCATION ARE TP-3 AND TP-4, WHICH BOTH INDICATE SOFT GRAYISH BROWN BEDROCK (MUDSTONE), FRACTURED, RIPPABLE, AT 2.5-FEET BELOW ORIGINAL GRADE. ABOVE THIS BEDROCK IS ROCK FILL MATERIAL OF RIPPABLE MUDSTONE THAT READILY BREAKS DOWN TO SILT.
2. THIS DESIGN ASSUMES EXCAVATION TO TOP OF COMPETENT BEDROCK. REMOVE ALL OVERLYING ROCKFILL AND WEATHERED AND FRACTURED BEDROCK PRIOR TO SETTING THE BASE OF FOUNDATION.
3. CONCRETE SHALL BE PLACED DIRECTLY INTO BEDROCK.
4. PRIOR TO THE PLACEMENT OF CONCRETE, THE EXCAVATION SHALL BE INSPECTED AND APPROVED, IN WRITING, BY THE ADOT&PF PROJECT MANAGER, OR BY A REGISTERED ALASKAN CIVIL ENGINEER OR ENGINEERING GEOLOGIST PRACTICING IN THE STATE OF ALASKA.
5. IF THE SOIL/BEDROCK CONDITIONS ARE NOT AS ASSUMED ABOVE, THE CONTRACTOR SHALL NOTIFY R&M ENGINEERING, INC. WHO WILL REVIEW THE REPORTED SOIL CONDITIONS AND MODIFY THE FOUNDATION DESIGN AS NECESSARY.
6. BACKFILL ABOVE BEDROCK WITH GRANULAR FILL (BORROW) COMPACTED TO 90% OPTIMUM DENSITY, PER AASHTO T-180.

## REINFORCED CONCRETE

1. REINFORCED CONCRETE SHALL CONFORM TO THE FOLLOWING;
   A. THE MINIMUM 28-DAY COMPRESSIVE STRENGTH SHALL BE 2,500 PSI.
   B. THE MAXIMUM SLUMP SHALL BE 4 INCHES.
   C. THE MINIMUM CEMENT CONTENT SHALL BE 5 1/2 SACKS PER C.Y. OF CONC.
2. PORTLAND CEMENT SHALL CONFORM TO ASTM C150, TYPE I OR II.
3. AGGREGATES FOR NORMAL WEIGHT CONCRETE SHALL CONFORM TO ASTM C33.
4. CONCRETE WORK SHALL CONFORM TO ALL REQUIREMENTS OF ACI 301, "SPECIFICATIONS FOR STRUCTURAL CONCRETE FOR BUILDINGS."
5. ADMIXTURES MAY BE USED WITH PRIOR APPROVAL OF THE ENGINEER. ADMIXTURES SHALL COMPLY WITH ASTM A494. ADMIXTURES USED TO INCREASE THE WORKABILITY OF THE CONCRETE SHALL NOT BE CONSIDERED TO REDUCE THE SPECIFIED MINIMUM CEMENT CONTENT. ADMIXTURES CONTAINING CHLORIDES SHALL NOT BE USED.
6. READY-MIX CONC. SHALL BE MIXED AND DELIVERED IN ACCORDANCE WITH ASTM C94.
7. SLEEVES, PIPES, OR CONDUITS SHALL NOT BE PLACED THROUGH CONTINUOUS OR SPREAD FOOTINGS, GRADE BEAMS, OR TIE BEAMS.
8. ALL EXPOSED CORNERS SHALL BE CHAMFERED 3/4 INCH, UNLESS OTHERWISE NOTED.
9. ALL VERTICAL SURFACES OF CONCRETE ABOVE FINISHED GRADE SHALL BE FORMED.
10. CONCRETE PLACEMENTS SHALL BE CONTINUOUS BETWEEN CONSTRUCTION JOINTS. CONSTRUCTION JOINTS SHALL BE ADEQUATELY KEYED. THEIR LOCATIONS AND DETAILS, WHEN NOT SHOWN ON THE PLANS, SHALL BE SUBJECT TO THE APPROVAL OF THE STRUCTURAL ENGINEER.
11. NON-SHRINK GROUT SHALL HAVE A MINIMUM COMPRESSIVE STRENGTH AT 28 DAYS OF 7,000 PSI, PER ASTM C-109.

## REINFORCING STEEL

1. BAR REINFORCEMENT SHALL CONFORM TO THE FOLLOWING GRADES OF ASTM A615, INCLUDING SUPPLEMENT S1: #3: GRADE 40, #4 AND LARGER: GRADE 60.
2. DETAILS OF REINFORCEMENT SHALL BE IN ACCORDANCE WITH CHAPTER 7 OF THE AMERICAN CONCRETE INSTITUTE (ACI) 318-89, UNLESS OTHERWISE NOTED.
3. LAPS AT BAR SPLICES IN CONCRETE CONSTRUCTION SHALL BE CLASS A, B, OR C IN ACCORDANCE WITH CHAPTER 12 OF ACI 318-89, UNLESS OTHERWISE NOTED.
4. ALL REINFORCING STEEL SHALL BE SECURELY TIED IN POSITION PRIOR TO PLACING CONCRETE OR GROUT.
5. REINFORCING STEEL DETAILING, BENDING, AND PLACING SHALL BE IN ACCORDANCE WITH THE LATEST EDITION OF THE "MANUAL OF STANDARD PRACTICE" BY CRSI.
6. WELDING OF CROSSING BARS AND TACK WELDING OF REINFORCEMENT SHALL NOT BE PERMITTED.

STATE OF ALASKA
49TH
ADRIAN D. SLATER
CE 7351
REGISTERED PROFESSIONAL ENGINEER

## FOUNDATION PLANS
## RADIO BEACON TOWER
## HOONAH AIRPORT

HOONAH – ALASKA

CLIENT:
GLACIER STATE CONTRACTORS
P.O BOX 32894
JUNEAU, ALASKA 99803
DATE: JUNE, 2002

SHEET 1 OF 1

ENGINEER:
R&M ENGINEERING, INC.
6205 GLACIER HIGHWAY
JUNEAU, ALASKA 99801
R&M PROJ. No. 021336

P:\2002PROJ\021336\FOUNDATION 1:1 PLOT: 6-14-02 at 4:00 PM by SAM
FILE:

FAXED 8/13/02

To: BRUCE WOOD
FROM: JOHN HOLLATZ
945-3128

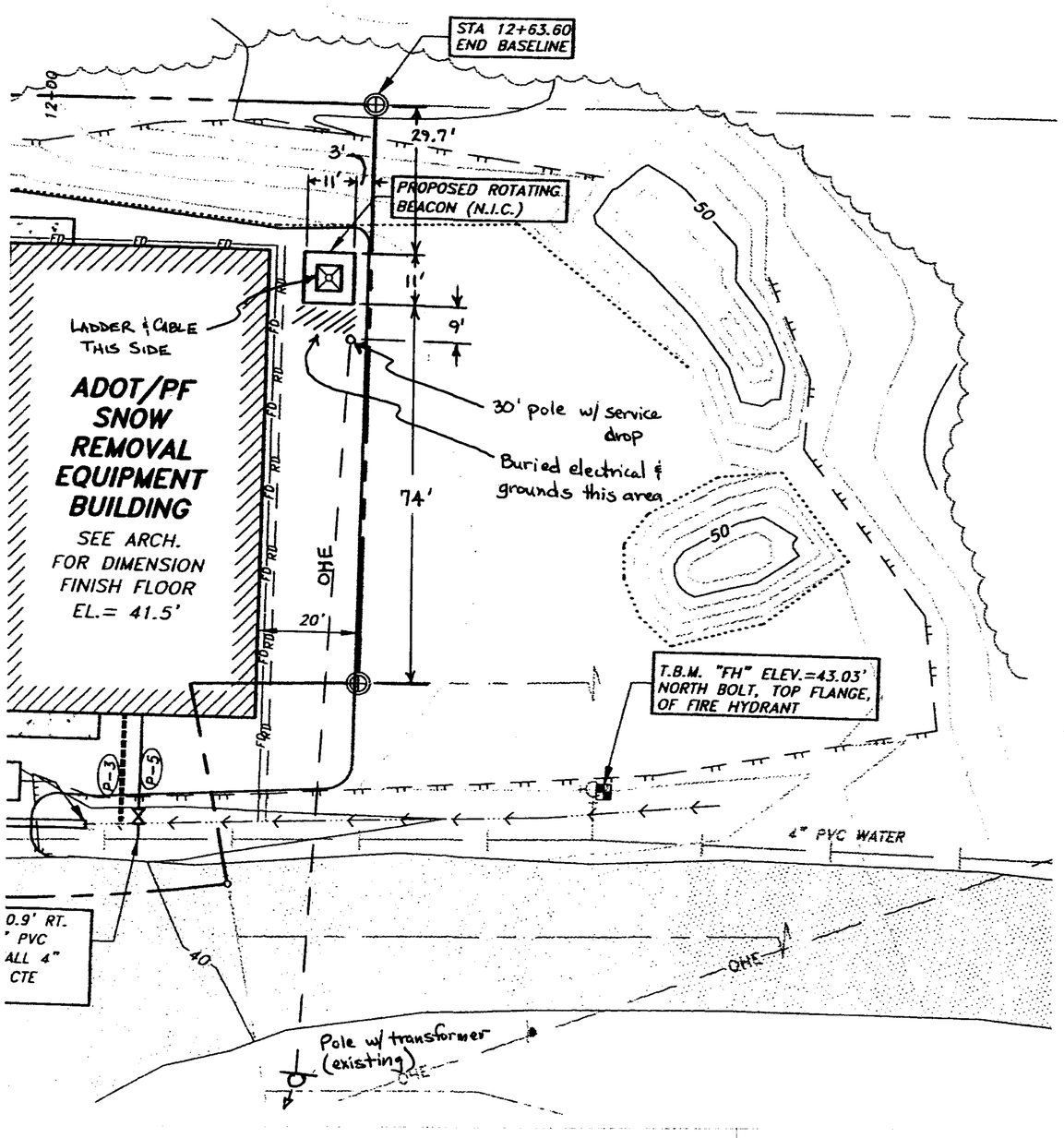

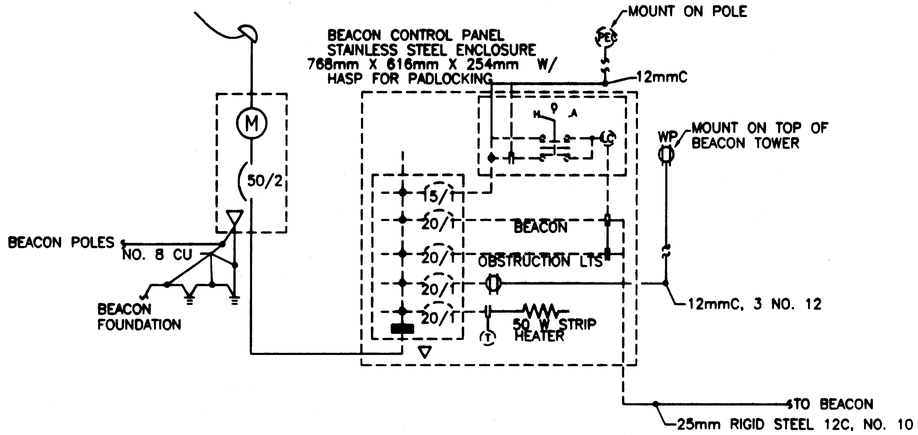


## BEACON – NEW SINGLE LINE

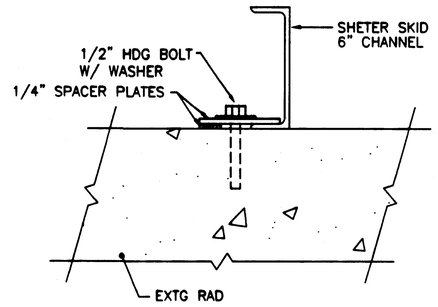


## DETAIL–SHELTER ANCHOR POINT

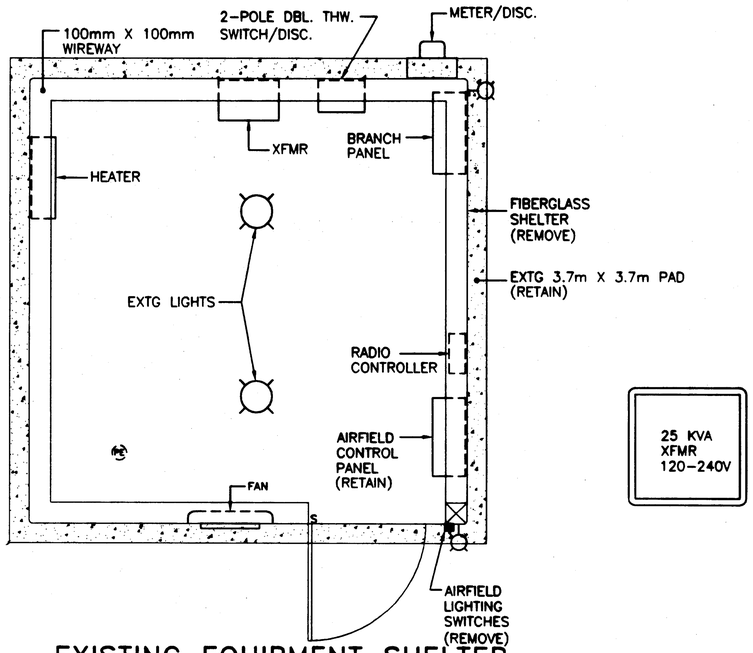


## EXISTING EQUIPMENT SHELTER

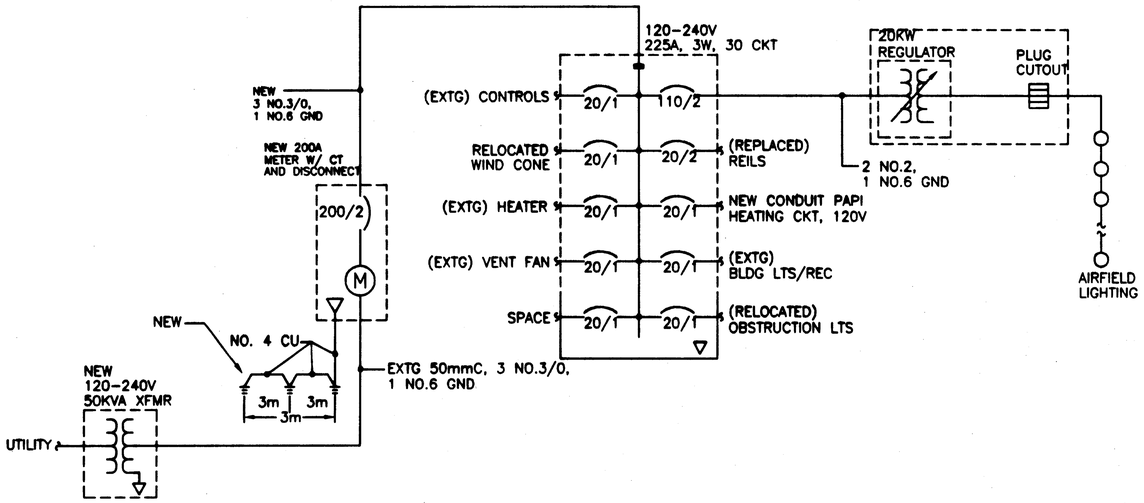


## AIRFIELD LIGHTING – NEW SINGLE LINE DIAGRAM

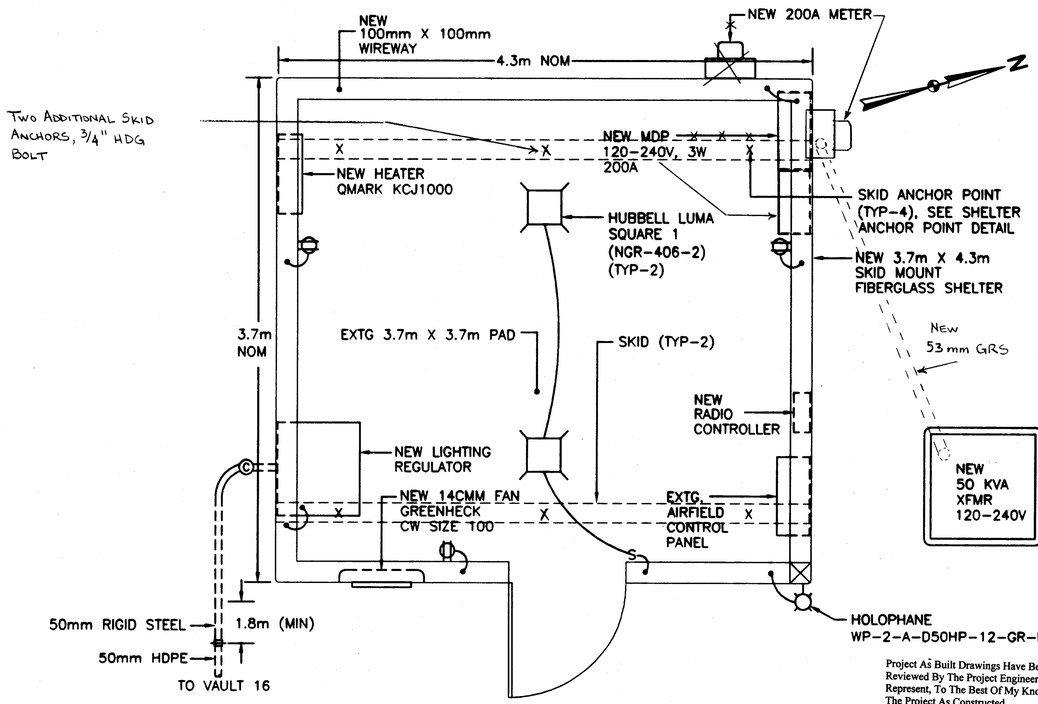


## NEW EQUIPMENT SHELTER

**NEW EQUIPMENT SHELTER NOTES:**

1. CENTER NEW SHELTER ON EXISTING PAD AND ANCHOR AS SHOWN.
2. EXTEND EXTG BELOW GRADE CONDUITS AND ROUTE THROUGH SHELTER FLOOR.
3. ROUTE REGULATOR CONDUIT THROUGH SHELTER FLOOR TO VAULT 16.

Project As Built Drawings Have Been Reviewed By The Project Engineer & Represent, To The Best Of My Knowledge, The Project As Constructed.

Proj. Eng. [signature] Date 3/18/03

NOTE: DO NOT SCALE FROM THESE PLANS–USE DIMENSIONS

HAIGHT & McLAUGHLIN, INC.
CONSULTING ENGINEERS
418 Harris Street, Juneau, Alaska 99801 (907) 586-9700

| | | |
|---|---|---|
| PATH: ..\134...\96...\DRAWINGS\96E9.DWG | STATE OF ALASKA<br>DEPARTMENT OF TRANSPORTATION AND PUBLIC FACILITIES<br>SOUTHEAST REGION | HOONAH — HOONAH AIRPORT MEDIUM INTENSITY RUNWAY AND TAXIWAY LIGHTING SYSTEM — ALASKA<br>AIP NO. 3-02-0125-0301 ~ PROJECT NO. 68213<br>**SINGLE LINE DIAGRAMS AND EQUIPMENT SHELTER** |
| PLOT: ???? | | |
| BY: / DATE: / DESCRIPTION OF CHANGE: | | |
| RECORD OF REVISIONS | | |

| | |
|---|---|
| DESIGNED BY: WFB | PROJECT NO. 67522 |
| DRAWN BY: DRP | DATE: JULY – 2001 |
| CHECKED BY: | SHEET E9 OF 17 |

STATE OF ALASKA — B.C. HAIGHT EE 4800 — REGISTERED PROFESSIONAL ENGINEER

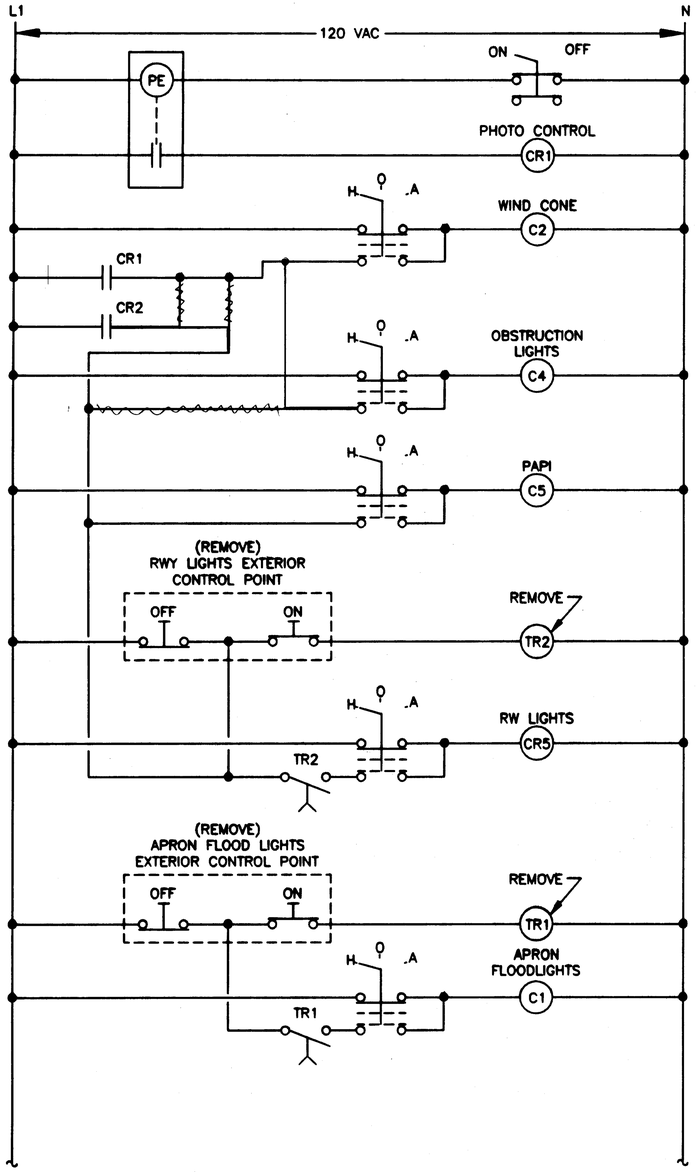


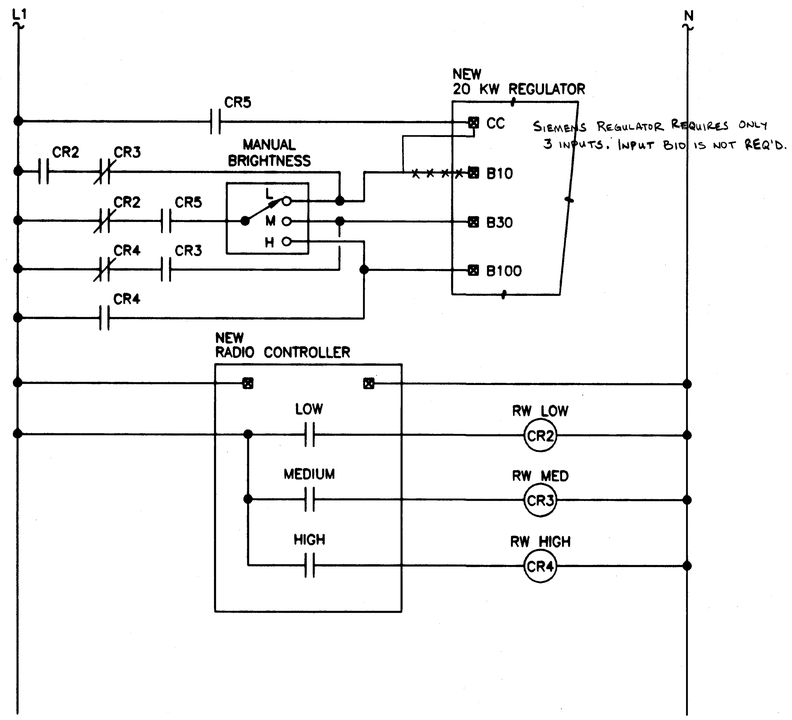


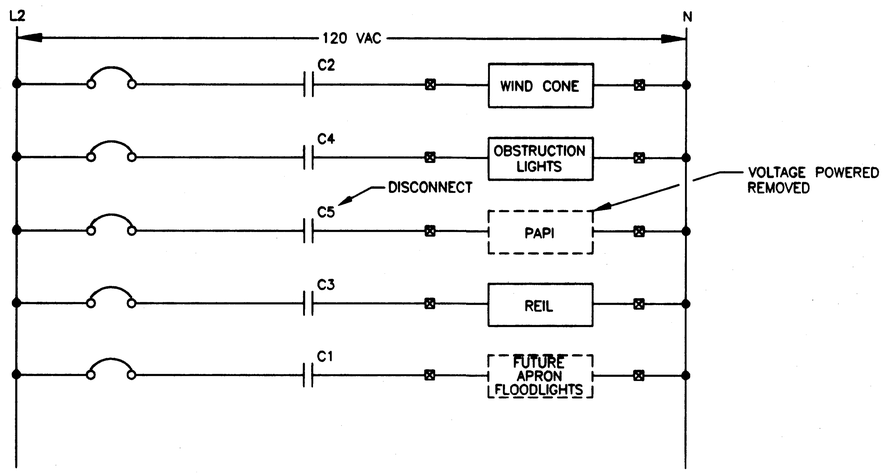


## EXISTING AIRFIELD LIGHTING CONTROLS

NO SCALE

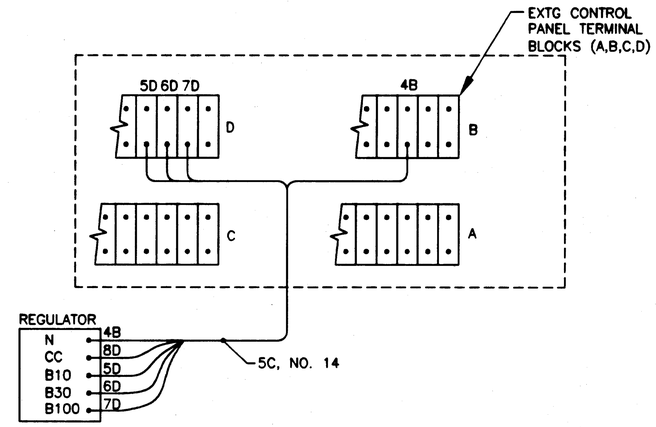


## REGULATOR/CONTROL PANEL CONNECTIONS

NO SCALE

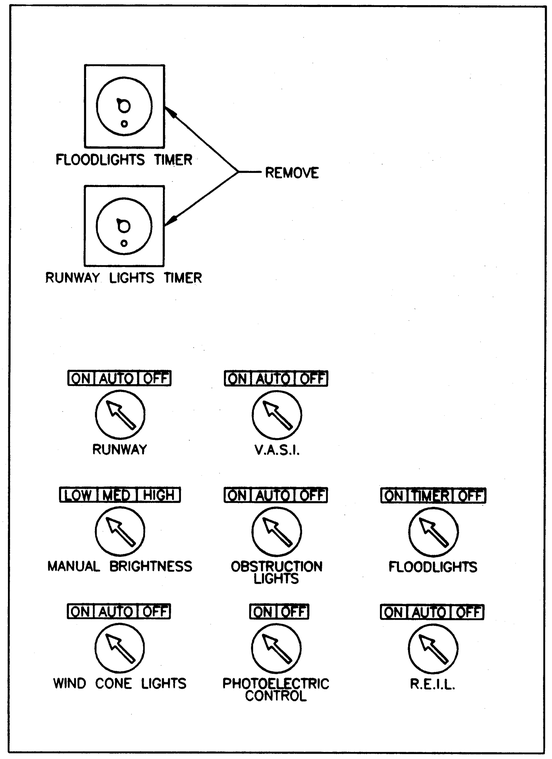


## EXISTING CONTROL PANEL

NO SCALE

Project As Built Drawings Have Been Reviewed By The Project Engineer & Represent, To The Best Of My Knowledge, The Project As Constructed.

Proj. Eng. Date 3/18/03

NOTE: DO NOT SCALE FROM THESE PLANS–USE DIMENSIONS

HAIGHT & McLAUGHLIN, INC.
CONSULTING ENGINEERS
418 Harris Street, Juneau, Alaska 99801 (907) 586-9168

| | | | |
|---|---|---|---|
| PATH: ..\134...\96...\DRAWINGS\96E10.DWG | STATE OF ALASKA<br>DEPARTMENT OF TRANSPORTATION AND PUBLIC FACILITIES<br>SOUTHEAST REGION | HOONAH | HOONAH AIRPORT MEDIUM INTENSITY RUNWAY AND TAXIWAY LIGHTING SYSTEM<br>AIP NO. 3-02-0125-0301 ~ PROJECT NO. 68213<br>AIRFIELD CONTROLS | ALASKA |
| PLOT: ???? | | | | |
| BY: / DATE: / DESCRIPTION OF CHANGE: | | | | |
| RECORD OF REVISIONS | | | | |

| | |
|---|---|
| DESIGNED BY: WFB | PROJECT NO. 67522 |
| DRAWN BY: PEL | DATE: JULY – 2001 |
| CHECKED BY: | SHEET E10 OF 17 |

STATE OF ALASKA · REGISTERED PROFESSIONAL ENGINEER · B.C. HAIGHT · EE 4100

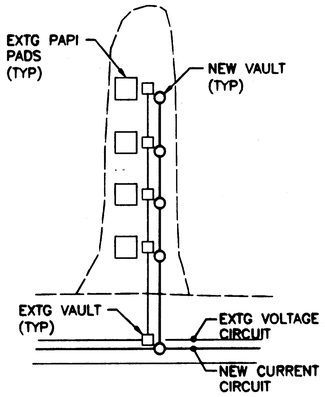


## DETAIL – PAPI CIRCUITING/VAULTS

NO SCALE

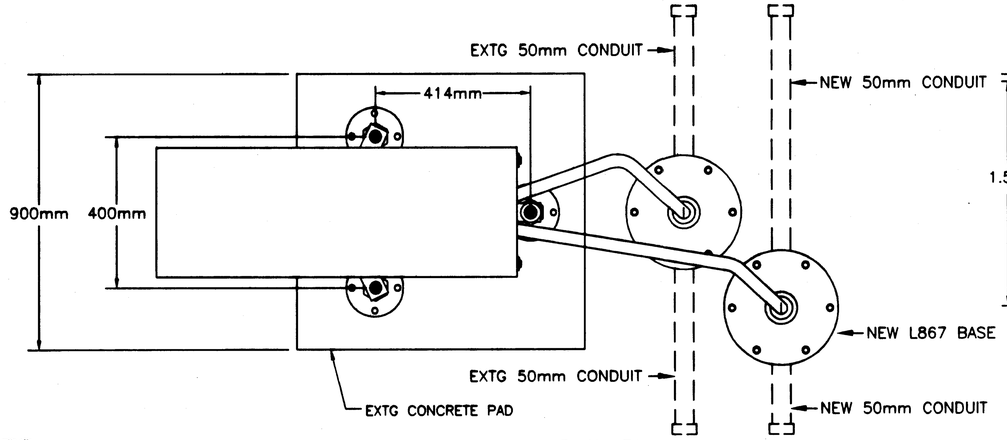


PLAN VIEW

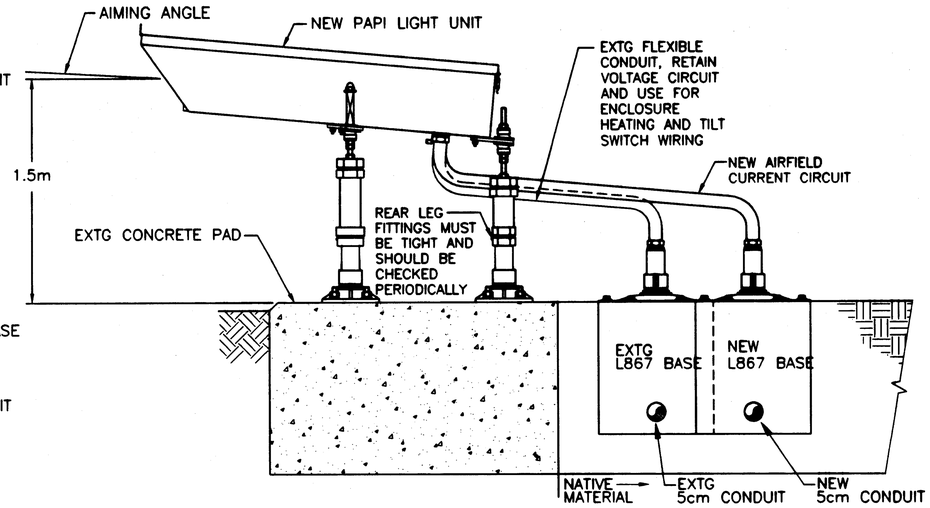


ELEVATION VIEW

## DETAIL – PAPI INSTALLATION

NO SCALE

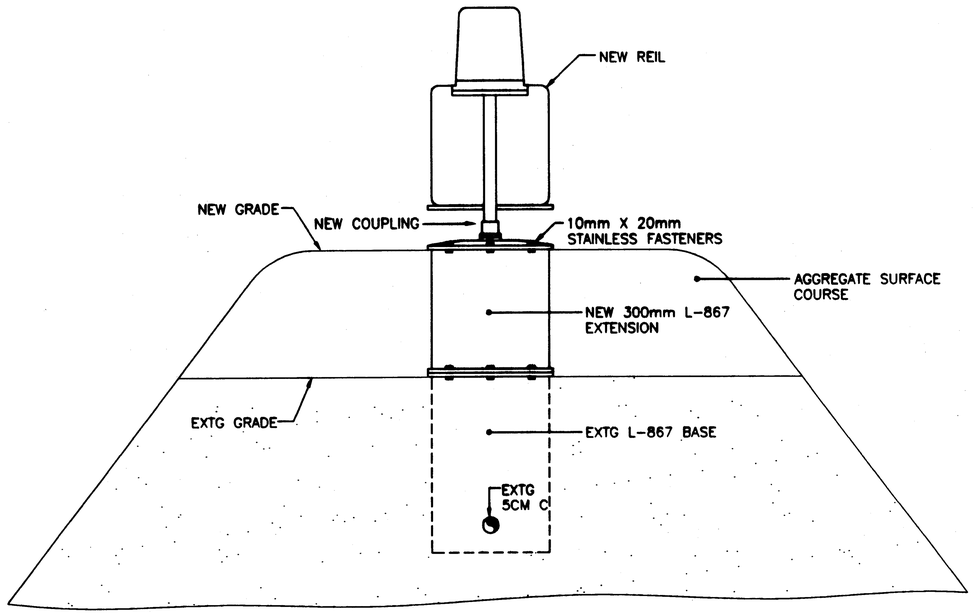


## DETAIL – NEW REILS

NO SCALE

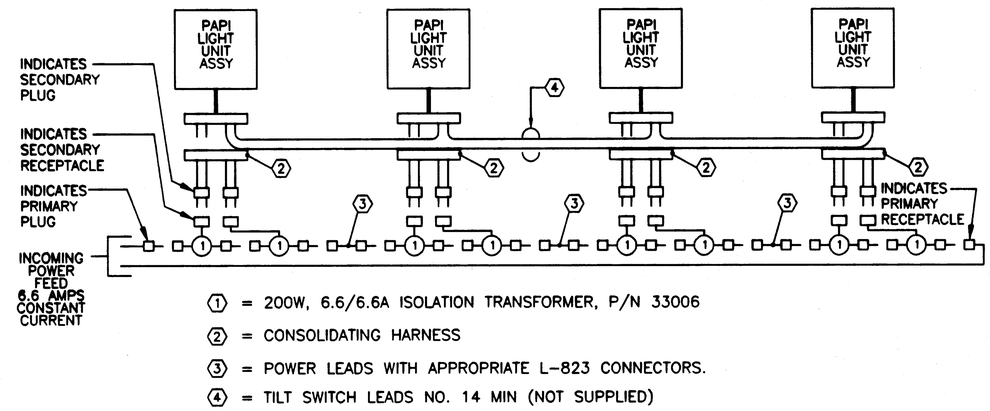


1 = 200W, 6.6/6.6A ISOLATION TRANSFORMER, P/N 33006

2 = CONSOLIDATING HARNESS

3 = POWER LEADS WITH APPROPRIATE L-823 CONNECTORS.

4 = TILT SWITCH LEADS NO. 14 MIN (NOT SUPPLIED)

## CIRCUIT CONFIGURATION – CONSTANT CURRENT POWERED PAPI SYSTEM (WITHOUT TILT SWITCH HEATERS)

NO SCALE

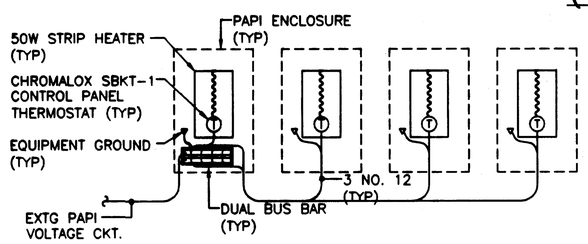


NOTES

1. UTILIZE EXTG CONDUIT AND LIGHT BASE FOR HEATING PURPOSES AND TILT SWITCH WIRING. USE STAINLESS FASTENERS FOR ALL HEATING COMPONENTS AND SEAL PENETRATIONS WITH HIGH TEMPERATURE RTV.

## PAPI ENCLOSURE HEATING SCHEMATIC

NO SCALE

NOTE: DO NOT SCALE FROM THESE PLANS–USE DIMENSIONS

Project As Built Drawings Have Been Reviewed By The Project Engineer & Represent, To The Best Of My Knowledge, The Project As Constructed.

Proj. Eng. Date 3/18/03

HAIGHT & McLAUGHLIN, INC.
CONSULTING ENGINEERS
418 Harris Street, Juneau, Alaska 99801 (907) 586-0799

| | | |
|---|---|---|
| PATH: ..\134\..96..\DRAWINGS\96E11.DWG | | |
| PLOT: ???? | | |
| BY: | DATE: | DESCRIPTION OF CHANGE: |
| | | |
| RECORD OF REVISIONS | | |

STATE OF ALASKA
DEPARTMENT OF TRANSPORTATION AND PUBLIC FACILITIES
SOUTHEAST REGION

HOONAH — HOONAH AIRPORT MEDIUM INTENSITY RUNWAY AND TAXIWAY LIGHTING SYSTEM — ALASKA
AIP NO. 3-02-0125-0301 ~ PROJECT NO. 68213

**DETAILS AND HEATING SCHEMATIC**

| | |
|---|---|
| DESIGNED BY: WFB | PROJECT NO. 67522 |
| DRAWN BY: DRP | DATE: JULY – 2001 |
| CHECKED BY: | SHEET E11 OF 17 |

## TAXIWAY LIGHTS SCHEDULE

| UNIT NO. | STATION | OFFSET | REMARKS |
|---|---|---|---|
| T1 | RW 0+857.01 | 14.77 | BLUE LENS (SIGN ALTERNATIVE) |
| T1A | RW 0+857.01 | 16.27 | BLUE LENS (SIGN ALTERNATIVE) |
| T2 | RW 0+863.42 | 14.88 | BLUE LENS |
| T3 | RW 0+868.10 | 19.78 | " " |
| T4 | A 0+26.68 | 8.54 | " " |
| T5 | A 0+41.92 | " | " " |
| T6 | A 0+87.39 | " | " " |
| T7 | A 1+32.88 | " | " " |
| T8 | A 1+78.35 | " | " " |
| T9 | A 1+92.71 | " | " " |
| T10 | RW 0+871.82 | 207.67 | " " |
| T11 | RW 0+879.27 | 223.21 | " " |
| T12 | RW 0+891.45 | 235.39 | " " |
| T13 | RW 0+892.76 | 242.84 | " " |
| T14 | RW 0+899.70 | 14.77 | BLUE LENS (SIGN ALTERNATIVE) |
| T14A | RW 0+899.70 | 16.27 | BLUE LENS (SIGN ALTERNATIVE) |
| T15 | RW 0+893.14 | 15.60 | BLUE LENS |
| T16 | RW 0+868.45 | 20.28 | " " |
| T17 | A 0+26.68 | 8.54 | " " |
| T18 | A 0+41.92 | " | " " |
| T19 | A 0+87.39 | " | " " |
| T20 | A 1+32.88 | " | " " |
| T21 | A 1+78.35 | " | " " |
| T22 | A 2+18.63 | " | " " |
| T23 | RW 0+868.74 | 204.62 | " " |
| T24 | RW 0+896.91 | 217.75 | " " |
| T25 | RW 0+910.05 | 225.93 | " " |
| T26 | RW 0+921.04 | 227.74 | " " |
| T27 | RW 0+936.28 | " | " " |
| T28 | RW 0+992.63 | " | " " |
| T29 | RW 1+065.67 | 14.77 | BLUE LENS (SIGN ALTERNATIVE) |
| T29A | RW 1+065.67 | 16.27 | BLUE LENS (SIGN ALTERNATIVE) |
| T30 | RW 1+092.08 | 15.60 | BLUE LENS |
| T31 | RW 1+096.76 | 20.28 | " " |
| T32 | B 0+26.68 | 8.54 | " " T/W B XING |
| T33 | B 0+36.92 | " | " " |
| T34 | B 0+82.39 | " | " " |
| T35 | B 1+32.88 | " | " " |
| T36 | B 1+78.35 | " | " " |
| T37 | B 1+88.63 | " | " " |
| T38 | RW 1+096.52 | 204.62 | " " |
| T39 | RW 1+088.35 | 217.75 | " " |
| T40 | RW 1+075.21 | 225.93 | " " |
| T41 | RW 0+064.22 | 227.74 | " " |
| T42 | RW 0+048.98 | 227.74 | " " |
| T43 | RW 1+128.19 | 14.77 | BLUE LENS (SIGN ALTERNATIVE) |
| T43A | RW 1+128.19 | 16.27 | BLUE LENS (SIGN ALTERNATIVE) |
| T44 | RW 1+121.79 | 15.60 | BLUE LENS |
| T45 | RW 1+117.11 | 20.28 | " " |
| T46 | B 0+26.68 | 8.54 | " " T/W B XING |
| T47 | B 0+82.39 | " | " " |
| T49 | B 1+32.88 | " | " " |
| T50 | B 1+78.35 | " | " " |
| T51 | B 1+88.63 | " | " " |
| T52 | RW 1+113.44 | 207.67 | " " |
| T53 | RW 1+105.99 | 223.21 | " " |
| T54 | RW 1+093.80 | 235.39 | " " |
| T55 | RW 1+078.27 | 242.84 | " " |
| T56 | RW 1+064.22 | 244.81 | " " |
| T57 | RW 1+058.31 | 259.97 | " " |

## RUNWAY LIGHTS SCHEDULE

| UNIT NO. | STATION | OFFSET | REMARKS |
|---|---|---|---|
| L1 | 0+657.22 | 13.87M | WHITE/YELLOW LENS |
| R1 | 0+657.22 | 13.87M | " " " |
| L2 | 0+707.12 | 13.87M | " " " |
| R2 | 0+707.12 | 13.87M | " " " |
| L3 | 0+757.02 | 13.87M | " " " |
| R3 | 0+757.02 | 13.87M | " " " |
| L4 | 0+806.92 | 13.87M | " " " |
| R4 | 0+806.92 | 13.87M | " " " |
| L5 | 0+857.01 | 13.87M | " " " |
| R5 | 0+857.01 | 13.87M | WHITE LENS |
| L6 | 0+899.70 | 13.87M | " " |
| R6 | 0+899.70 | 13.87M | " " |
| L7 | 0+948.19 | 13.87M | " " |
| R7 | 0+948.19 | 13.87M | " " |
| L8 | 0+992.68 | 13.87M | " " |
| R8 | 0+992.68 | 13.87M | " " |
| L9 | 1+039.18 | 13.87M | " " |
| R9 | 1+039.18 | 13.87M | " " |
| L10 | 1+085.67 | 13.87M | " " |
| R10 | 1+085.67 | 13.87M | " " |
| L11 | 1+128.19 | 13.87M | " " |
| R11 | 1+128.19 | 13.87M | " " |
| L12 | 1+185.14 | 13.87M | " " |
| R12 | 1+185.14 | 13.87M | WHITE/YELLOW LENS |
| L13 | 1+242.09 | 13.87M | " " " |
| R13 | 1+242.09 | 13.87M | " " " |
| L14 | 1+299.03 | 13.87M | " " " |
| R14 | 1+299.03 | 13.87M | " " " |
| L15 | 1+355.98 | 13.87M | " " " |
| R15 | 1+355.98 | 13.87M | " " " |
| L16 | 1+412.93 | 13.87M | " " " |
| R16 | 1+412.93 | 13.87M | " " " |
| L17 | 1+469.88 | 13.87M | " " " |
| R17 | 1+469.88 | 13.87M | " " " |

## VAULT SCHEDULE

| DESIGNATION | TYPE | STATION (RW 5-23) | OFFSET | REMARKS |
|---|---|---|---|---|
| 1 | -- | 0+814.29 | 113.5L | EXTG |
| 2 | -- | 0+814.29 | 106.73L | EXTG |
| 3 | -- | 0+814.29 | 93.20L | EXTG |
| 4 | -- | 0+868.59 | 91.16L | EXTG |
| 5 | -- | 0+868.90 | 22.68L | EXTG |
| 6 | -- | 0+762.20 | 3.04L | EXTG |
| 7 | -- | 0+609.75 | 3.04L | EXTG |
| 8 | -- | 0+975.60 | 3.04L | EXTG |
| 9 | -- | -- | -- | NOT USED |
| 10 | -- | 0+975.60 | 3.04R | EXTG |
| 11 | -- | 1+141.15 | 3.04R | EXTG |
| 12 | -- | 1+153.96 | 3.04R | EXTG |
| 13 | -- | 1+285.26 | 3.04R | EXTG |
| 14 | -- | 1+367.38 | 3.04R | EXTG |
| 15 | -- | 1+530.31 | 3.04R | EXTG |
| 16 | 1 | 0+869.81 | 104.35L | XING |
| 17 | 1 | 0+886.90 | 104.35L | XING |
| 18 | -- | -- | -- | NOT USED |
| 19 | -- | -- | -- | NOT USED |
| 20 | 1 | 0+764.22 | 13.87 | PAPI |
| 21 | 1 | 1+369.60 | 13.87 | PAPI |
| 22 | -- | -- | -- | NOT USED |
| 23 | -- | -- | -- | NOT USED |
| 24 | 1 | 0+886.89 | 61.00 | SIGN |
| 25 | 1 | 0+928.85 | 227.74 | FUTURE SIGN 3 HUB |
| 26 | -- | -- | -- | NOT USED |
| 27 | -- | -- | -- | NOT USED |
| 28 | 1 | 1+115.55 | 61.00 | SIGN |
| 29 | 1 | 1+059.35 | 251.41 | FUTURE SIGN 3 HUB |

## SIGN SCHEDULE

| SIGN NO. | SIGN SIZE | SIGN TYPE | LEGEND | STATION | OFFSET L/R |
|---|---|---|---|---|---|
| 1 | 1 | 1 3 | A 23-5 | A 0+61.01 | R 9.1 TO 12.1m |
| | | 2 1 | A [redacted] | | |
| 2 | 1 | 2 1 | B [redacted] | B 0+61.01 | R 9.1 TO 12.1m |
| | | 2 3 | B 23-5 | | |

SIGN SCHEDULE LEGEND:

1. YELLOW BACKGROUND BLACK LETTERS, TYPE L-858Y
2. BLACK BACKGROUND YELLOW LETTERS, TYPE L-858L
3. RED BACKGROUND WHITE LETTERS, TYPE L-858R
4. BLACK BACKGROUND WHITE LETTERS, TYPE L-858B
5. BLACK BACKGROUND
6. BLACK DIVIDER

▮ NEW SIGN

GENERAL NOTES:

1. SEE SHEET E1 FOR SIGN ORIENTATION.
2. ALL SIGNS SHALL BE OF THE TYPE SPECIFIED. SIZE 1, STYLE 3, CLASS 2.
3. ALL TAXIWAY SIGNS SHALL BE LOCATED ON SHOULDER, MINIMUM OF 3 TO 6m FROM PAVEMENT EDGE.
4. STYLE 4 (UNLIGHTED) SIGNS SHALL NOT BE ALLOWED.

## THRESHOLD LIGHTS SCHEDULE

| UNIT NO. | STATION | OFFSET | REMARKS |
|---|---|---|---|
| TH1 | RW 0+607.32 | 13.87M | GREEN/RED LENS |
| TH2 | " | 10.82M | " " " |
| TH3 | " | 7.77M | " " " |
| TH4 | " | " | " " " |
| TH5 | " | 10.82M | " " " |
| TH6 | " | 13.87M | " " " |
| TH7 | RW 1+526.83 | " | " " " |
| TH8 | " | 10.82M | " " " |
| TH9 | " | 7.77M | " " " |
| TH10 | " | " | " " " |
| TH11 | " | 10.82M | " " " |
| TH12 | " | 13.87M | " " " |

Project As Built Drawings Have Been Reviewed By The Project Engineer & Represent, To The Best Of My Knowledge, The Project As Constructed.

Proj. Eng. Date 3/18/03

HAIGHT & McLAUGHLIN, INC.
CONSULTING ENGINEERS
418 Harris Street, Juneau, Alaska 99801 (907) 586-9700

NOTE: DO NOT SCALE FROM THESE PLANS-USE DIMENSIONS

| PATH: ..\134..\96..\DRAWINGS\96E12.DWG | | |
|---|---|---|
| PLOT: ???? | | |
| BY: | DATE: | DESCRIPTION OF CHANGE: |
| RECORD OF REVISIONS | | |

STATE OF ALASKA
DEPARTMENT OF TRANSPORTATION AND PUBLIC FACILITIES
SOUTHEAST REGION

HOONAH — HOONAH AIRPORT MEDIUM INTENSITY RUNWAY AND TAXIWAY LIGHTING SYSTEM — ALASKA
AIP NO. 3-02-0125-0301 ~ PROJECT NO. 68213

LIGHTING SCHEDULES

| DESIGNED BY: WFB | PROJECT NO. 67522 |
|---|---|
| DRAWN BY: DRP | DATE: JULY - 2001 |
| CHECKED BY: | SHEET E12 OF 17 |

STATE OF ALASKA — 19th — B.C. HAIGHT — EE 4

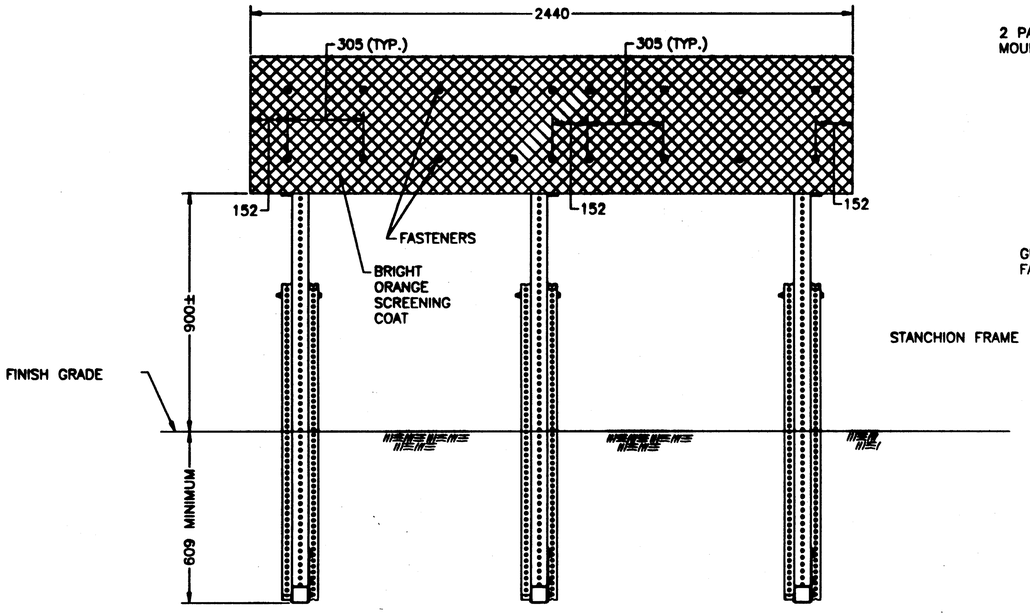


FRONT VIEW DETAIL
NO SCALE

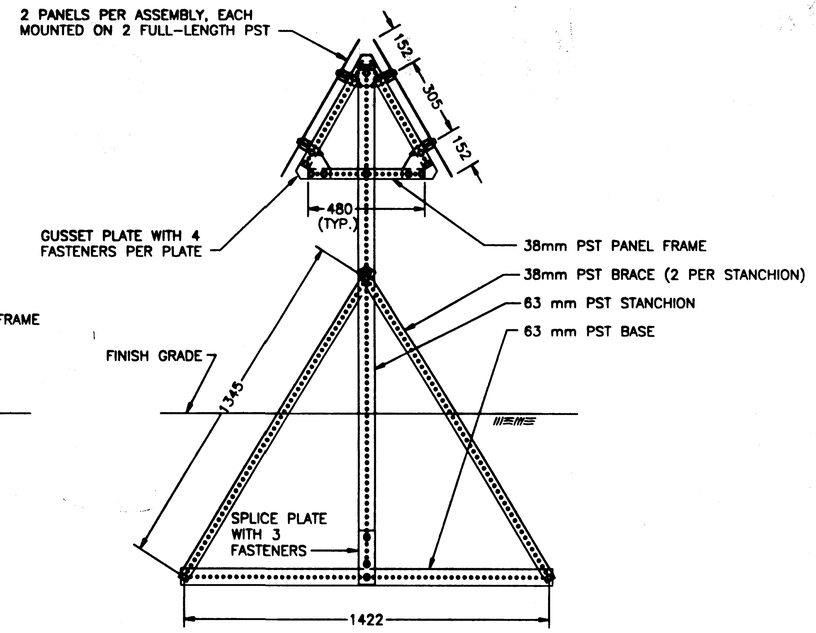


STANCHION FRAME
SIDE VIEW-NO SCALE

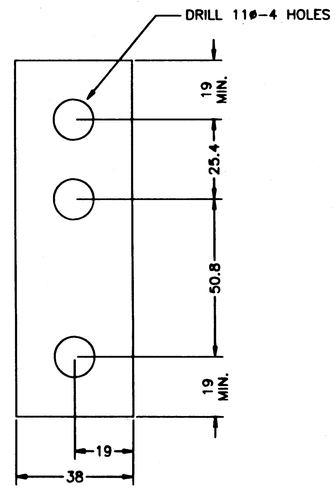


SPLICE PLATE DETAIL
NO SCALE

SEGMENTED CIRCLE PANELS

NOTES:

1. PERFORATED STEEL TUBING (PST) SHALL BE 2.7mm THICK SQUARE, COLD ROLLED CARBON STEEL PER ASTM A 653, CORNER WELDED, GALVANIZED.
2. PLATES SHALL BE 6mm STEEL, ASTM A 36, GALVANIZED.
3. FASTENERS SHALL BE 9mm DIA. GALVANIZED GRADE 2 BOLTS WITH NUT AND 2 25mm DIA. WASHERS EACH. LENGTH SHALL BE AS REQUIRED TO FASTEN MEMBERS.
4. PANELS SHALL BE 2mm ALUMINUM WITH A BRIGHT ORANGE SCREEN COAT ON ONE SIDE.

DIMENSIONS ON THIS SHEET ARE IN MILLIMETERS UNLESS OTHERWISE NOTED

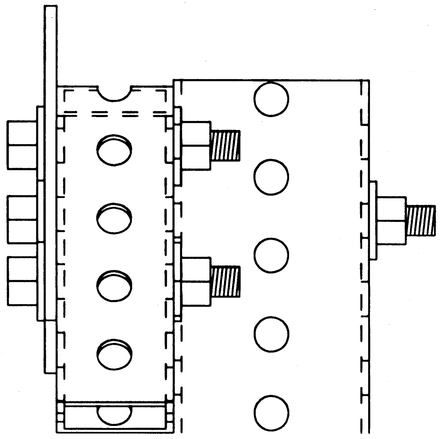

SIDE VIEW

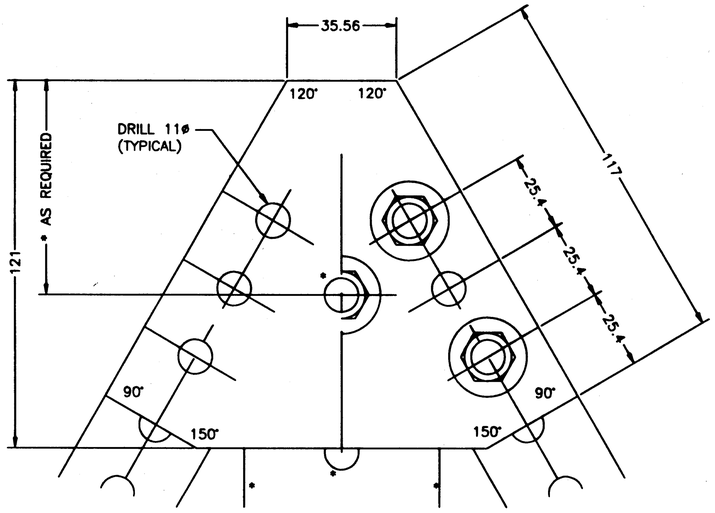


FRONT VIEW

GUSSET PLATE DETAILS
NO SCALE

Project As Built Drawings Have Been Reviewed By The Project Engineer & Represent, To The Best Of My Knowledge, The Project As Constructed.

Proj. Eng. [signature] Date 3/12/03

NOTE: DO NOT SCALE FROM THESE PLANS-USE DIMENSIONS

| | | | |
|---|---|---|---|
| PATH: Q:\Hnh\68213\Planset\SEGMCIRCLE NEW.DWG | STATE OF ALASKA<br>DEPARTMENT OF TRANSPORTATION AND PUBLIC FACILITIES<br>SOUTHEAST REGION | HOONAH | HOONAH AIRPORT MEDIUM INTENSITY RUNWAY AND TAXIWAY LIGHTING SYSTEM<br>AIP NO. 3-02-0125-0301 ~ PROJECT NO. 68213<br>Segmented Circle Details | ALASKA |
| PLOT: | | | | |
| BY: / DATE: / DESCRIPTION OF CHANGE: | | | | |
| RECORD OF REVISIONS | | | | |

| | |
|---|---|
| DESIGNED BY: VW | PROJECT NO. 68213 |
| DRAWN BY: | DATE: JULY 2001 |
| CHECKED BY: VW | SHEET H1 OF 17 |

STATE OF ALASKA 49th Victor Winters CE-8992

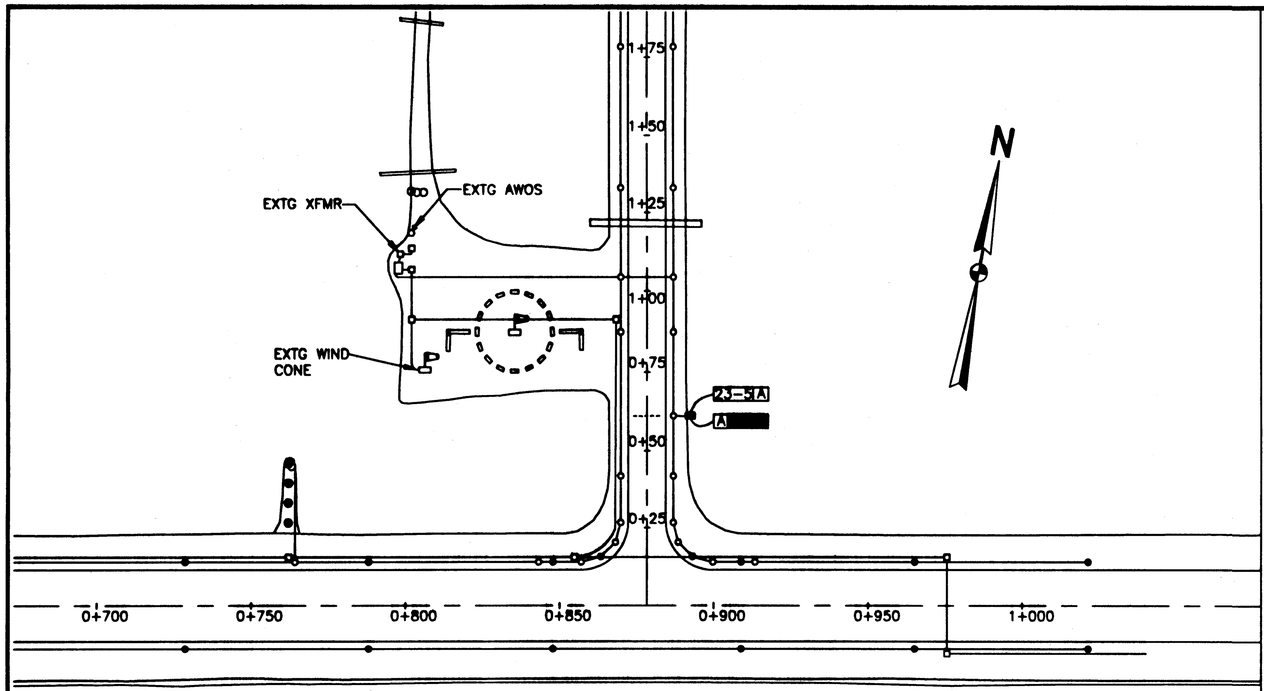


SEGMENTED CIRCLE LOCATION
NO SCALE

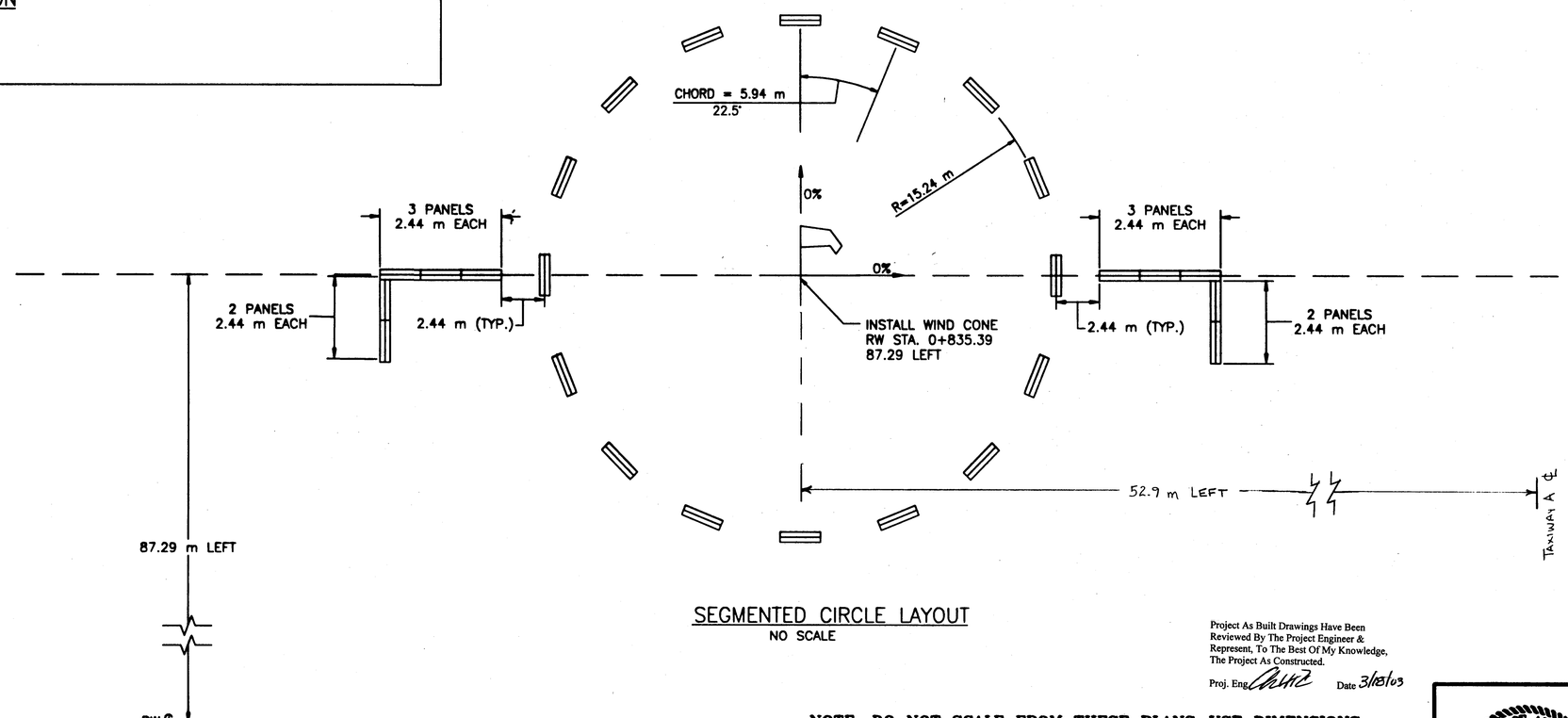


SEGMENTED CIRCLE LAYOUT
NO SCALE

Project As Built Drawings Have Been Reviewed By The Project Engineer & Represent, To The Best Of My Knowledge, The Project As Constructed.

Proj. Eng. Date 3/18/03

NOTE: DO NOT SCALE FROM THESE PLANS–USE DIMENSIONS

| | | |
|---|---|---|
| PATH: Q:\Hnh\68213\Planset\SEGMCIRCLE NEW.DWG | | |
| PLOT: | | |
| BY: | DATE: | DESCRIPTION OF CHANGE: |
| RECORD OF REVISIONS | | |

STATE OF ALASKA
DEPARTMENT OF TRANSPORTATION AND PUBLIC FACILITIES
SOUTHEAST REGION

HOONAH — HOONAH AIRPORT MEDIUM INTENSITY RUNWAY AND TAXIWAY LIGHTING SYSTEM — ALASKA
AIP NO. 3-02-0125-0301 ~ PROJECT NO. 68213

# Segmented Circle Details

| | | | |
|---|---|---|---|
| DESIGNED BY: | VW | PROJECT NO. | 68213 |
| DRAWN BY: | | DATE: | JULY 2001 |
| CHECKED BY: | VW | SHEET H2 OF 17 | |

STATE OF ALASKA 49th Victor Winters CE-8992

**Timber Preparation, Flag and Flasher Mount Detail**

N.T.S.




**Paint Detail**
**Typical Low Style Hazardous Area Barrier**

N.T.S.

**Traffic Control Device Notes**

1. BARRIERS SHALL BE IN PLACE TO LIMIT ACCESS TO CLOSED PORTIONS OF THE TAXIWAY OR APRON WHENEVER THE RUNWAY IS OPEN.
2. DRILL AND NOTCH TIMBER BEFORE PAINTING.
3. REFER TO SECTION G-704. HAZARDOUS AREA BARRIER.
4. ALL DIMENSIONS IN THIS DETAIL ARE IN MILLIMETERS.

# *Erosion & Pollution Control/Safety Plan*

AREAS OF OPEN WATER

DESIGNATED VEHICLE CROSSINGS

—S— SILT FENCE LOCATIONS

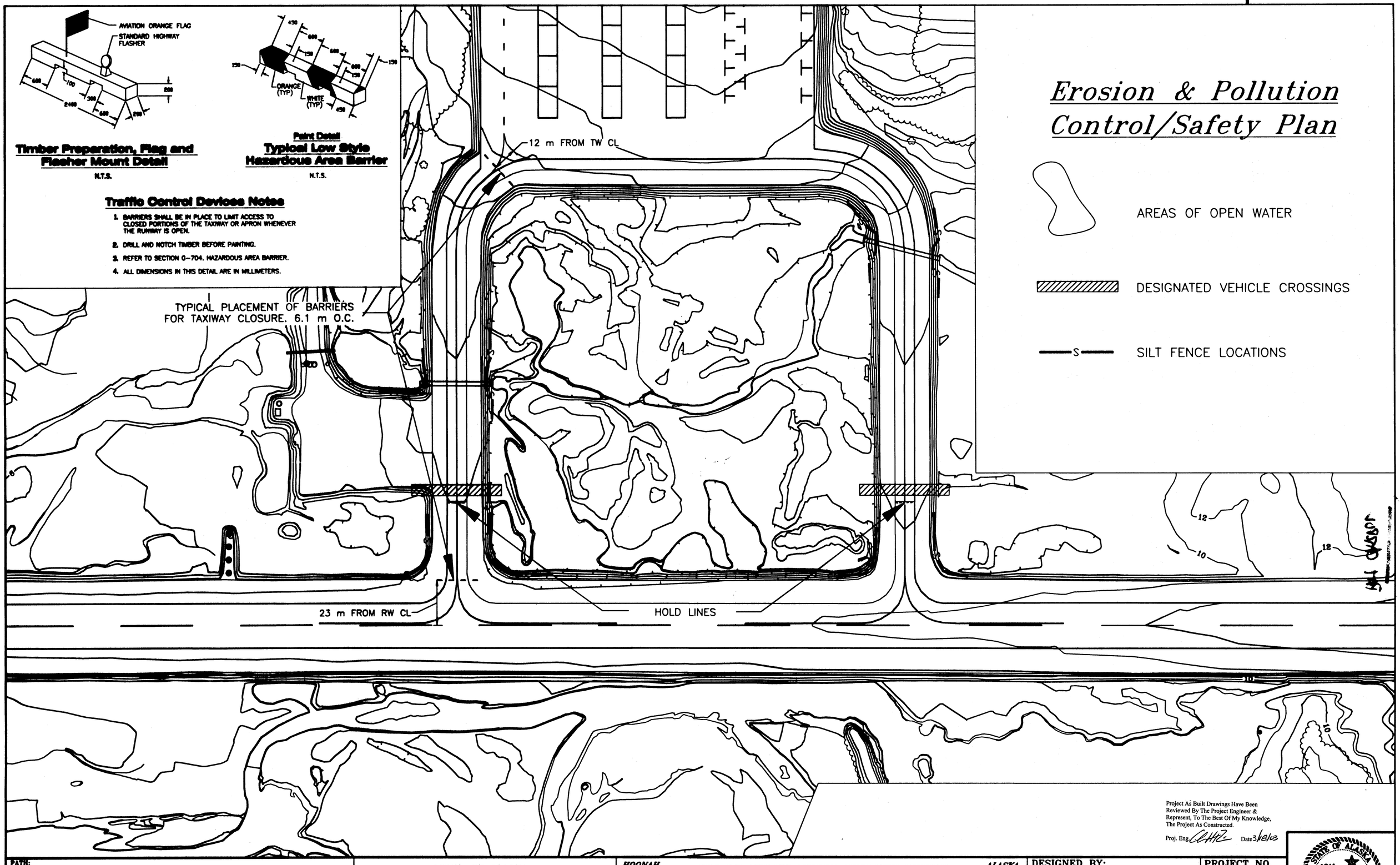


Project As Built Drawings Have Been Reviewed By The Project Engineer & Represent, To The Best Of My Knowledge, The Project As Constructed.

Proj. Eng. Victor Winters Date 3/8/03

STATE OF ALASKA 49th Victor Winters Victor Winters CE-8992

| PATH: | | |
|---|---|---|
| PLOT: | | |
| BY: | DATE: | DESCRIPTION OF CHANGE: |
| | | |

RECORD OF REVISIONS

STATE OF ALASKA
DEPARTMENT OF TRANSPORTATION AND PUBLIC FACILITIES
SOUTHEAST REGION

*HOONAH* — *HOONAH AIRPORT MEDIUM INTENSITY RUNWAY AND TAXIWAY LIGHTING SYSTEM* — *ALASKA*
*AIP NO. 3-02-0125-0301 ~ PROJECT NO. 68213*
*EPCP & Safety Plan*

| DESIGNED BY: VW | PROJECT NO. 68213 |
|---|---|
| DRAWN BY: | DATE: JULY 2001 |
| CHECKED BY: VW | SHEET H3 OF 17 |