DESIGNED BY:
STATE OF ALASKA
DEPARTMENT OF TRANSPORTATION
AND PUBLIC FACILITIES
SOUTHEAST REGION
FOR THE

City of Hoonah

A PROJECT AT
HOONAH, ALASKA

PROJECT SUMMARY
HOONAH
CITY FLOAT REPLACEMENT & HARBOR EXPANSION

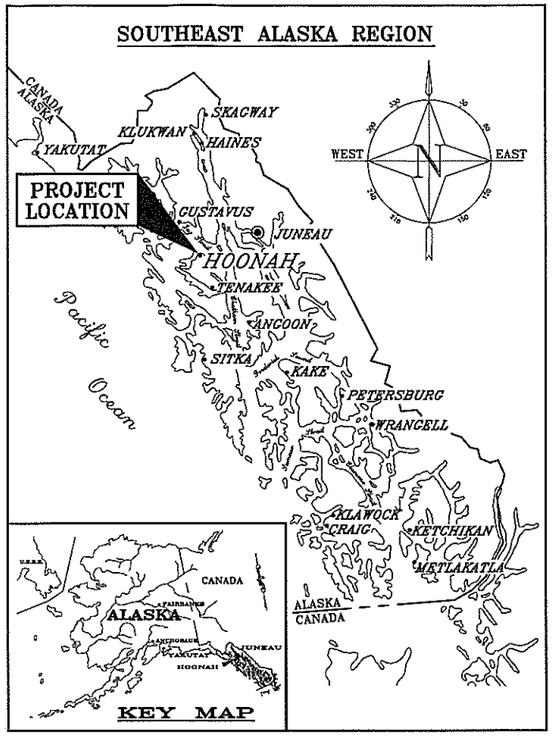

Location Map

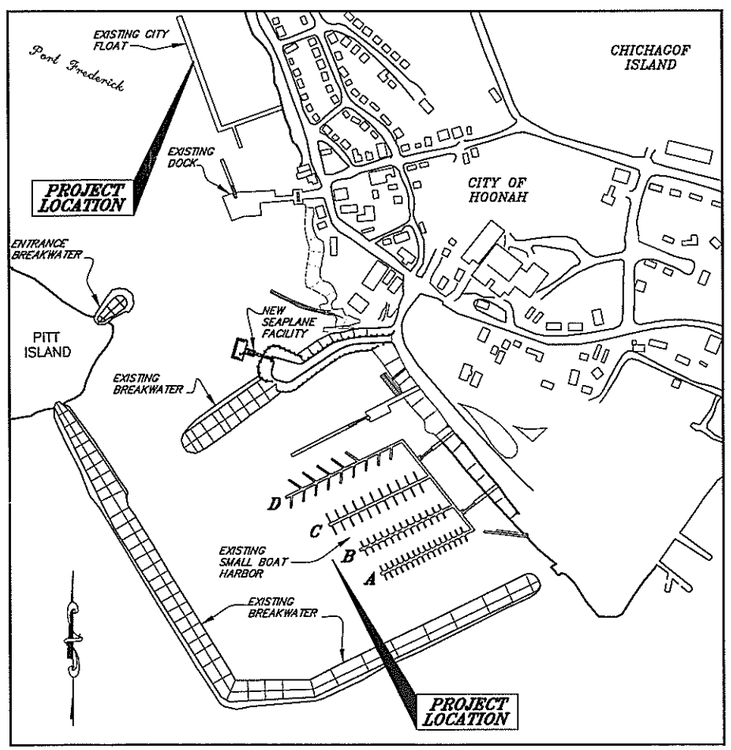

Vicinity Map

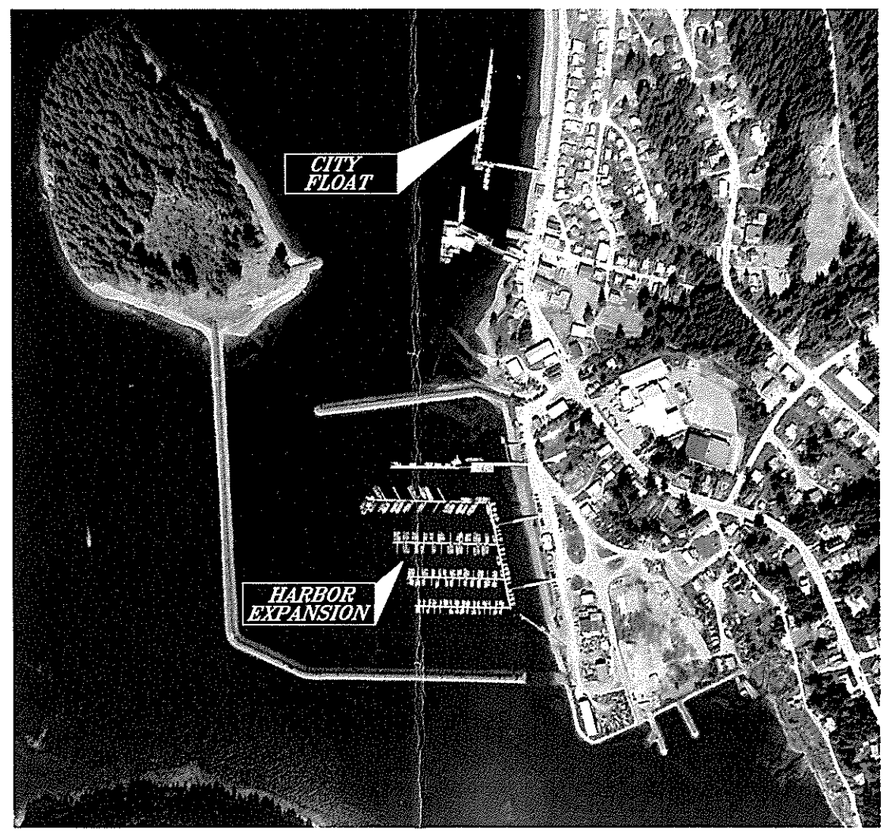

Site Map

PROJECT INDEX
PROJECT SUMMARY
Title & Estimate of Quantities / 2 Sheets
PLANSETS
Planset A- Hoonah City Float Replacement / 34 Sheets
Planset B- Hoonah Harbor Expansion / 28 Sheets

AS-BUILT

DATE COMPLETED: 9/7/07

CONTRACTOR: TRUCANO CONST.

CITY OF HOONAH

APPROVED

Dennis H. Gray, Jr.
Mayor, City of Hoonah
Date 9/1/06

PROJECT NUMBER: 67792

DATE: August, 2006

SHEET 1 OF 2

STATE OF ALASKA 49TH Kirk D. Miller No. CE-8550 REGISTERED PROFESSIONAL ENGINEER

9/8/06

PATH: Q:\Hoh\67792\MP\Planset - Project Summary\01-Main Title Sheet.dwg
TAB: A1 rgrantham Thu, 24/Aug/06 11:26AM

Hoonah City Float & Harbor Expansion Estimate of Quantities
Basic Bid - City Float & Harbor Floats C & D

Item Number	Description	Unit	Quantity
202 (1A)	Demolition & Removal	Lump Sum	All Reqd
504 (1A)	Gangway & Trestle Support Pile Cap Structure	Lump Sum	All Reqd
504 (2A)	11' x 100' Steel Gangway	Lump Sum	All Reqd
504 (3A)	Float Pile Cap	Lump Sum	All Reqd
504 (4A)	Aluminum Transition Plate (City Float)	Lump Sum	All Reqd
504 (5B)	Aluminum Transition Plate (Floats C & D)	Each	2
505 (1B)	12.75" dia. x 1/2" Wall Pipe Piles, Furnished	Linear Foot	1216
505 (2B)	12.75" dia. x 1/2" Wall Pipe Piles, Driven	Each	16
505 (3A)	16" dia. x 1/2" Wall Pipe Piles, Furnished	Linear Foot	1864
505 (4A)	16" dia. x 1/2" Wall Pipe Piles, Driven	Each	22
505 (3B)	16" dia. x 1/2" Wall Pipe Piles, Furnished	Linear Foot	960
505 (4B)	16" dia. x 1/2" Wall Pipe Piles, Driven	Each	12
505 (7A)	18" dia. x 1/2" Wall Pipe Piles, Furnished	Linear Foot	748
505 (8A)	18" dia. x 1/2" Wall Pipe Piles, Driven	Each	8
506 (1A)	Timber Trestle Modifications	Lump Sum	All Reqd
506 (2A)	50' x 80' Glulam Gangway Float	Lump Sum	All Reqd
506 (3A)	12' x 437.5' Timber Mooring Float	Lump Sum	All Reqd
506 (4B)	10' x 200' Timber Main Float (Float C)	Lump Sum	All Reqd
506 (5B)	5' x 40' Timber Stall Float	Each	10
506 (6B)	12' x 150' Timber Main Float (Float D)	Lump Sum	All Reqd
506 (7B)	6' x 48' Timber Stall Float	Each	3
506 (10A)	Fire Extinguisher Station	Each	12
506 (10B)	Fire Extinguisher Station	Each	8
506 (12A)	Leveling Flotation	Cubic Foot	40
506 (12B)	Leveling Flotation	Cubic Foot	113.75
506 (14B)	Repair Existing Concrete Gangway Float (Btwn Floats C & D)	Contingent Sum	All Reqd
640 (1)	Mobilization and Demobilization	Lump Sum	All Reqd
642 (1A)	Construction Surveying (City Float)	Lump Sum	All Reqd
642 (1B)	Construction Surveying (Harbor)	Lump Sum	All Reqd
662 (1A)	Electrical Lighting System (City Float)	Lump Sum	All Reqd
662 (3B)	Electrical Power & Lighting System (Floats C & D)	Lump Sum	All Reqd

Additive Alternate A - Float B

Item Number	Description	Unit	Quantity
504 (6B)	Aluminum Transition Plate (Float B)	Each	1
505 (5B)	16" dia. x 1/2" Wall Pipe Piles, Furnished (Float B)	Linear Foot	480
505 (6B)	16" dia. x 1/2" Wall Pipe Piles, Driven (Float B)	Each	6
505 (11B)	100 lb Anode for 16" dia. Pile (Float B)	Each	6
506 (8B)	10' x 192' Timber Main Float (Float B)	Lump Sum	All Reqd
506 (9B)	3.5' x 30' Timber Stall Float	Each	12
506 (11B)	Fire Extinguisher Station (Float B)	Each	5
506 (13B)	Leveling Flotation (Float B)	Cubic Foot	71.25
506 (15B)	Repair Existing Concrete Gangway Float (Btwn Floats A & B)	Contingent Sum	All Reqd
662 (4B)	Electrical Power & Lighting System (Float B)	Lump Sum	All Reqd

Additive Alternate B - Pile Anodes

Item Number	Description	Unit	Quantity
505 (9B)	100 lb Anode for 12.75" dia. Pile	Each	16
505 (10A)	100 lb Anode for 16" dia. Pile	Each	22
505 (10B)	100 lb Anode for 16" dia. Pile	Each	12
505 (12A)	100 lb Anode for 18" dia. Pile	Each	8

Additive Alternate C - City Float Electrical Power

Item Number	Description	Unit	Quantity
662 (2A)	Electrical Power System (City Float)	Lump Sum	All Reqd

Additive Alternate D - Phased Completion for Harbor Expansion

Item Number	Description	Unit	Quantity
640 (2)	Mobilization & Demobilization for Early Completion of Harbor Expansion Work	Lump Sum	All Reqd

ADDITIVE ALT A
NOT AWARDED

DO NOT SCALE FROM THESE DRAWINGS USE DIMENSIONS

CHECKED BY: J. Beedle

STATE OF ALASKA 49th Kirk D. Miller CE-8550 REGISTERED PROFESSIONAL ENGINEER

1/8/06

DESIGNED BY: K. Miller

DRAWN BY: R. Grantham

CITY OF HOONAH

Hoonah
City Float Replacement
& Harbor Expansion

ESTIMATE OF QUANTITIES

PATH: Q:\Hnh\67792\MF\Planset - Project Summary\02_Sums.dwg
TAB: 2 kdmiller1 Fri, 08/Sep/06 03:09PM

REVISIONS			PROJECT DESIGNATION	YEAR	SHEET NO.	TOTAL SHEETS
NO.	DATE	DESCRIPTION	67792	2006	2	2

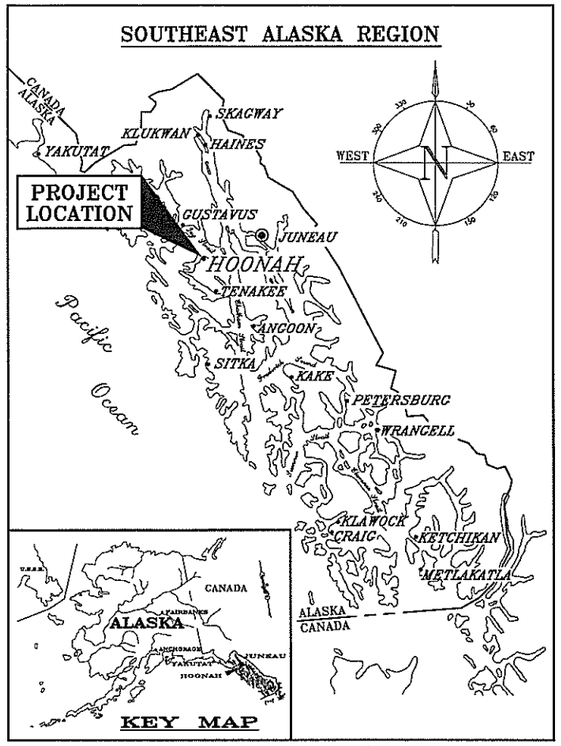

Location Map

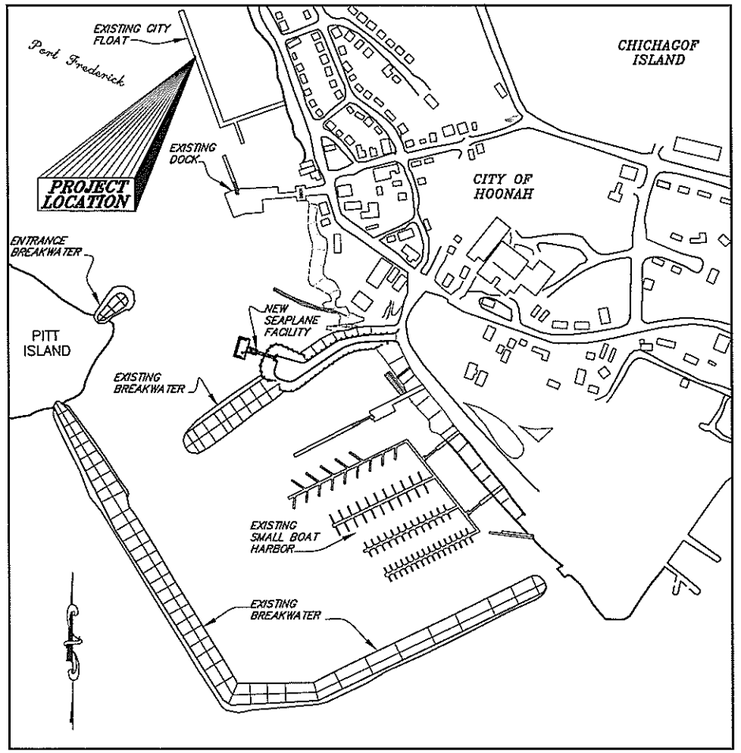

Vicinity Map

City of Hoonah

HOONAH, ALASKA

Planset A
Hoonah City Float Replacement

PROJECT NO. 67792

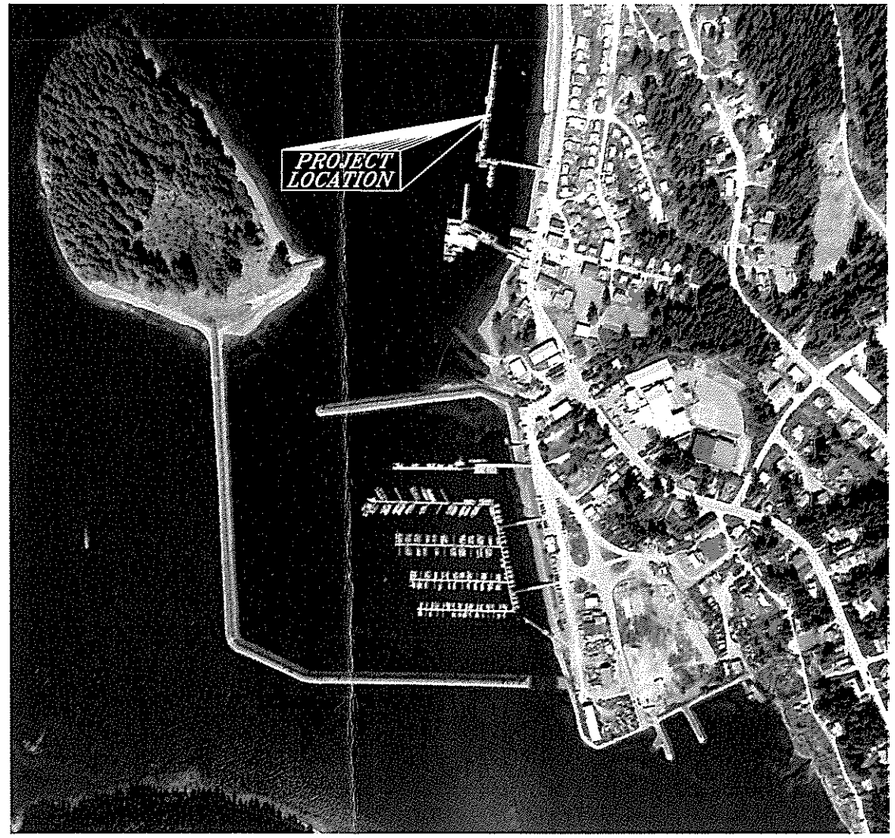

Site Map

INDEX OF SHEETS

SHEET NO.	DESCRIPTION
1	Title Sheet
2	Estimate of Quantities
3	Site Plan
4–6	Trestle & Gangway Support
8–14	Gangway
15–23	Gangway Float
24–28	Mooring Float
29	Miscellaneous Details
E1–E5	Electrical

CITY OF HOONAH

APPROVED

Dennis H. Gray, Jr. Date 9/1/06
Dennis H. Gray, Jr.
Mayor, City of Hoonah

PROJECT NUMBER: 67792

DATE: August 2006

SHEET 1 OF 34

STATE OF ALASKA 49th Kirk D. Miller CE-8550 REGISTERED PROFESSIONAL ENGINEER

9/8/06

PATH: C:\Hoh\67792\MF\Planset-City Dock\01 Title Sheet.dwg
TAB: 1 rgrantham Wed, 23/Aug/06 03:50PM

ESTIMATE OF QUANTITIES
PLANSET A – CITY FLOAT REPLACEMENT

Item Number	Description	Unit	Quantity
202 (1A)	Demolition & Removal	Lump Sum	All Required
504 (1A)	Gangway & Trestle Support Pile Cap Structure	Lump Sum	All Required
504 (2A)	11' x 100' Steel Gangway	Lump Sum	All Required
504 (3A)	Float Pile Cap	Lump Sum	All Required
505 (3A)	16" dia. x 1/2" Wall Pipe Piles, Furnished	Linear Foot	1,864
505 (4A)	16" dia. x 1/2" Wall Pipe Piles, Driven	Each	22
505 (7A)	18" dia. x 1/2" Wall Pipe Piles, Furnished	Linear Foot	748
505 (8A)	18" dia. x 1/2" Wall Pipe Piles, Driven	Each	8
506 (1A)	Timber Trestle Modifications	Lump Sum	All Required
506 (2A)	50' x 80' Glulam Main Float	Lump Sum	All Required
506 (3A)	12' x 437.5' Timber Mooring Float	Lump Sum	All Required
506 (10A)	Fire Extinguisher Stations (City Float)	Each	12
506 (12A)	Leveling Flotation	Cubic Foot	40
640 (1)	Mobilization and Demobilization	Lump Sum	All Required
642 (1A)	Construction Surveying (City Float)	Lump Sum	All Required
662 (1A)	Electrical Lighting System (City Float)	Lump Sum	All Required
Additive Alternate B – Pile Anodes			
505 (10A)	100 lb Anode for 16" dia. Pile	Each	22
505 (12A)	100 lb Anode for 18" dia. Pile	Each	8
Additive Alternate C – City Float Electrical Power			
662 (2A)	Electrical Power System (City Float)	Lump Sum	All Required

TIDAL DATA		
EHW	=	+20.0'
MHHW	=	+14.8'
MLLW	=	0.0'
ELW	=	–5.1'

General Notes

Specifications: *Per Contract Documents. See Special Provisions and ADOT&PF Standard Specifications for Highway Construction.*

Design Standards: *ADOT&PF & Southeast Region Marine Engineering Design Standards AASHTO*

Materials

Steel:

Tube Sections: *ASTM A500 Grade B*

Piles: *Straight Seam, ASTM A252 Grade 3 or equal.*

Pipe: *A53, Grade B, Type E or S*

Stainless: *Type 302, 304 or 316*

Steel Shapes & Plates: *ASTM A36 or equal unless otherwise noted on Plans.*

Pile Tips: *APF 0-14000 or APF 0-14001 welded drive shoes or approved equal. Drive shoes are required on all piling.*

Steel Coatings : *All steel fabrications and hardware shall be hot-dip galvanized after fabrication per ASTM A123 and A153.*

Bolts and Fasteners: *ASTM A325 for steel connections. ASTM A307 for timber connections.*

Tension Rods:
Steel tension rods shall be all-thread rebar, Williams Form Engineering Corp, Grade 75 conforming to ASTM A615 or approved equal. Furnished in the nominal diameter and full length required without internal splices. Tension nuts shall be 2" in overall length. Provide jam nut at all connections after initial and final tensioning. All tension rods & hardware shall be hot-dip galvanized after fabrication.

Timber:
Sawn timber shall be Douglas Fir, No. 1 or better per WCLIB/WWPA grading rules.
Sawn timber decking shall be Douglas Fir, No. 1 or better per WCLIB/WWPA grading rules.
All sawn timber shall be S4S except decking (milled S1S2E).

Glulam Stringers and Diaphrugms shall be DF/DF, Combination 24F-V8.
Glulam Deck Panels and Blocking shall be DF, Combination 2.

UHMW Plastic: *Ultra high moleculer weight plastic (UHMW) shall be made from materials conforming to ASTM D4020. Color shall be black.*

Aluminum: *Shapes - ASTM 6061-T6 Plates - ASTM 5086 H112*

Metal Deck Grating:
Steel interlocking diagonal grid with welded joints. Main rails 5-3/16" deep at 7-1/2" spacing with supplemental cross and diagonal bars. Steel components shall ASTM A709, Grade 50 with a minimum section modulus of 3.64 in^3/ft. Grating shall be hot dip galvanized after fabrication.

Concrete:
Concrete for gangway walkway fill shall in accordance with the Specifications, Section 501. Texture surfaces with a broom finish.

Welding:
All welding shall be done by qualified welders in accordance with AWS D1.1, D1.5 or AWS D1.2.

Float Bumpers:
Float bumpers shall be heavy duty marine grade, vinyl skin w/ expanded polypropylene foam core such as "DocKushion" as manufactured by Dock Edge or approved equal. Bumpers shall be a minimum of 4-inches in overall height. Provide compatible corner and end pieces as may be required. Secure to float with stainless or hot-dip galvanized screws and washers as recommended by the manufacturer.

Timber Treatment:

Sawn timbers for milled decking, bumper boards & wheel guards shall be treated with ACZA to 0.6 pcf retention.
Glulam stringers, diaphragms & bottom sills shall be treated with Creosote, 12 pcf retention.
Glulam sub-deck panels and blocking shall be treated with Copper Naphthenate to 0.06 pcf retention.
Glulam tie-down rails & wheel guards to be treated with ACZA to 0.6 pcf retention.

Polystyrene Flotation:

Flotation billets shall be constructed from closed cell expanded polystyrene (EPS) per ASTM D1621. Minimum density shall be 1.1 pcf. Materials shall have a maximum water absorption of 4 percent by volume in accordance with ASTM C272. The billets shall be cut and notched to the nominal dimensions indicated on the plans. All notches and cuts shall be performed using a hot-wire or other approved methods.

All flotation billets shall be coated after fabrication with a polyurethane elastomeric coating to a minimum dry film thickness of 50 mils. Polyurethane coatings shall be "Hydroseal 2090" brand or approved equal. All field cuts, nicks and abrasions to the coating shall be repaired to the specified thickness.

For leveling of floats (at locations to be directed by the Engineer), provide: 4 ea, 10"x20"x4'-6"L and 4 ea, 6"x20"x4'-6"L coated billets. Also provide 16 ea, 1/2" diameter x 16"L and 16 ea, 1/2" diameter x 20"L sharpened wooden or PVC dowels (pointed at one end). Where leveling is required, submerge leveling billet below float billet and drive 4 dowels thru leveling billet and into overlying float billet to secure in place.

Timber Float System:

Fabricate and incise all timber members prior to treatment. All holes to be drilled and daps to be cut prior to pressure treatment (except where specified). Treat all field drilled holes and cuts with 5% copper naphthenate solution.

All timber bolts are economy head type with lugs and M.I. washers, unless otherwise noted. Provide double nuts or jam nut when indicated on plans.

All fabrication and connection details are not shown. Provide detailed shop drawings showing all members and fabrication methods/sequence and as otherwise provide below:

Machine or power driven nails will not be permitted.

Chamfer or bullnose all glulam and sawn timber bullrail corners prior to treatment.

Glulam sub-decking shall be spaced ¼" apart (except for gangway float, see Plans) and secured to each stringer with galvanized lag screws w/ PL washer of the size and spacing indicated. Predrill proper size shaft and thread holes. Lubricate lags prior to installation. Install lag bolts tight w/o excessive deformation of timber or washer.

Bumper boards shall be provided in nominal 16-foot lengths. Minimum board lengths shall be 10-feet. Butt-splice at top sill locations. Nail all bumper boards with 20d hot-dip galvanized box or spiral shank nails at 12" OC (max) staggered row and 2 nails at ends. Predrill pilot hole to prevent splitting as required.

Milled decking placed over glulam subdecking shall be provided in nominal 16-foot lengths. Minimum length shall be 8-feet unless otherwise required or permitted. Notch/cut as required to fit around pile collar weldments and other items. Space milled decking 1/4" apart and nail to glulam subdecking with 16d hot-dip galvanized box or spiral shank nails. Install 2 nails at 16" OC (max) and 2 nails at each end. Predrill pilot hole to prevent splitting as required. Stagger adjacent deck joints a minimum of 4-feet apart.

Milled decking for the 12-foot wide mooring float shall be continuous from edges of float. Notch or cut to fit pile collar weldments. Space 1/4-inch apart. Secure to stringers with 2 each, 20d hot-dip galvanized box or spiral shank nails. Predrill at ends and other locations if required to prevent splitting.

Counterbore for all bolt heads facing decking to be flush or otherwise covered by other members and where noted on the plans prior to treatment.

Secure exterior glulam blocking to exterior stringers and diaphragm members with, 5/8" diam by 9" L lags (CTSK) within 12" of ends and every 3' OC (max) staggered row or as otherwise noted on plans or approved by the Engineer (reference Sheet 23). Space blocking lags to miss other hardware.

Fabricate glulam diaphragm members with 1-1/4" nominal diameter holes at indicated dimensions for passage of steel tension rods. For initial tensioning, torque tension rods to maximum practical tension without crushing timber bearing surfaces or as otherwise approved by the Engineer. For final tensioning, all tension rods shall be checked and nuts and jam nuts re-tightened after the float has been installed and prior to project completion.

LEGEND

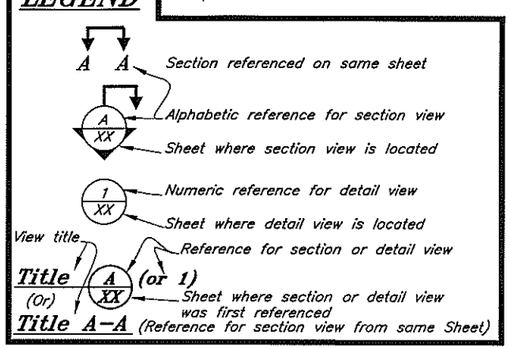

Abbreviations

SS – Stainless Steel
Galv. – Galvanized
Typ – Typical
o.c. – On Center
U.O.N. – Unless Otherwise Noted
Econ. Hd. – Economy Head
Alum – Aluminum
L – Long
W – Wide
FG – Finished grade
O–O – out to out
PT – Pressure treated
btm – bottom
PL – Plate
CL – Centerline
MI – malleable iron

DO NOT SCALE FROM THESE DRAWINGS USE DIMENSIONS

DESIGNED BY: K. Miller

STATE OF ALASKA
249th
Kirk D. Miller
CE-8550
REGISTERED PROFESSIONAL ENGINEER
9/8/06

CHECKED BY: J. Beedle
DRAFTED BY: K. Miller

CITY OF HOONAH

Hoonah City Float Replacement

Estimate of Quantities & General Notes

PATH: O:\Hnh\67792\MF\Planset-City Dock\02 Estimate of Quantities.dwg
PLOT: PSPACE 1=1 Wed, 23/Aug/06 12:56PM

REVISIONS			PROJECT DESIGNATION	YEAR	SHEET NO.	TOTAL SHEETS
NO.	DATE	DESCRIPTION	67792	2006	2	34

PILES LENGTHENED TO HIT BEDROCK

Pile Data

Pile Information				Elevations (ft)				
Structure & Pile Location	Orientation	No. of Piles	Diam x Wall (inches)	Avg OG	Cut-Off	Estimated Tip Elevation	Estimated Penetration (ft)	Estimated Pile Length (ft)
Trestle Support Structure	Vertical	2	16 x 1/2	−2	+16.66	~~−43.34~~ −55.34	41	~~60~~ 72
Trestle Support Structure	3.5:1 Batter	2	16 x 1/2	0	+21.16	~~−38.46~~	38	~~62~~ 77
Gangway Float – Shoreward Side	Vertical	4	18 x 1/2	−15	+32	−60	45	92
Gangway Float – South Side	Vertical	1	18 x 1/2	−17	+32	−60	43	92
Gangway Float – North Side	Vertical	1	18 x 1/2	−20	+32	−64	44	96
Gangway Float – Seaward Side	Vertical	2	18 x 1/2	−22	+32	−64	42	96
12' Wide Mooring Float	Vertical	18	16 x 1/2	−21	+32	−58	38	90

Note: Drive all piles to estimated tip elevation or practical refusal.

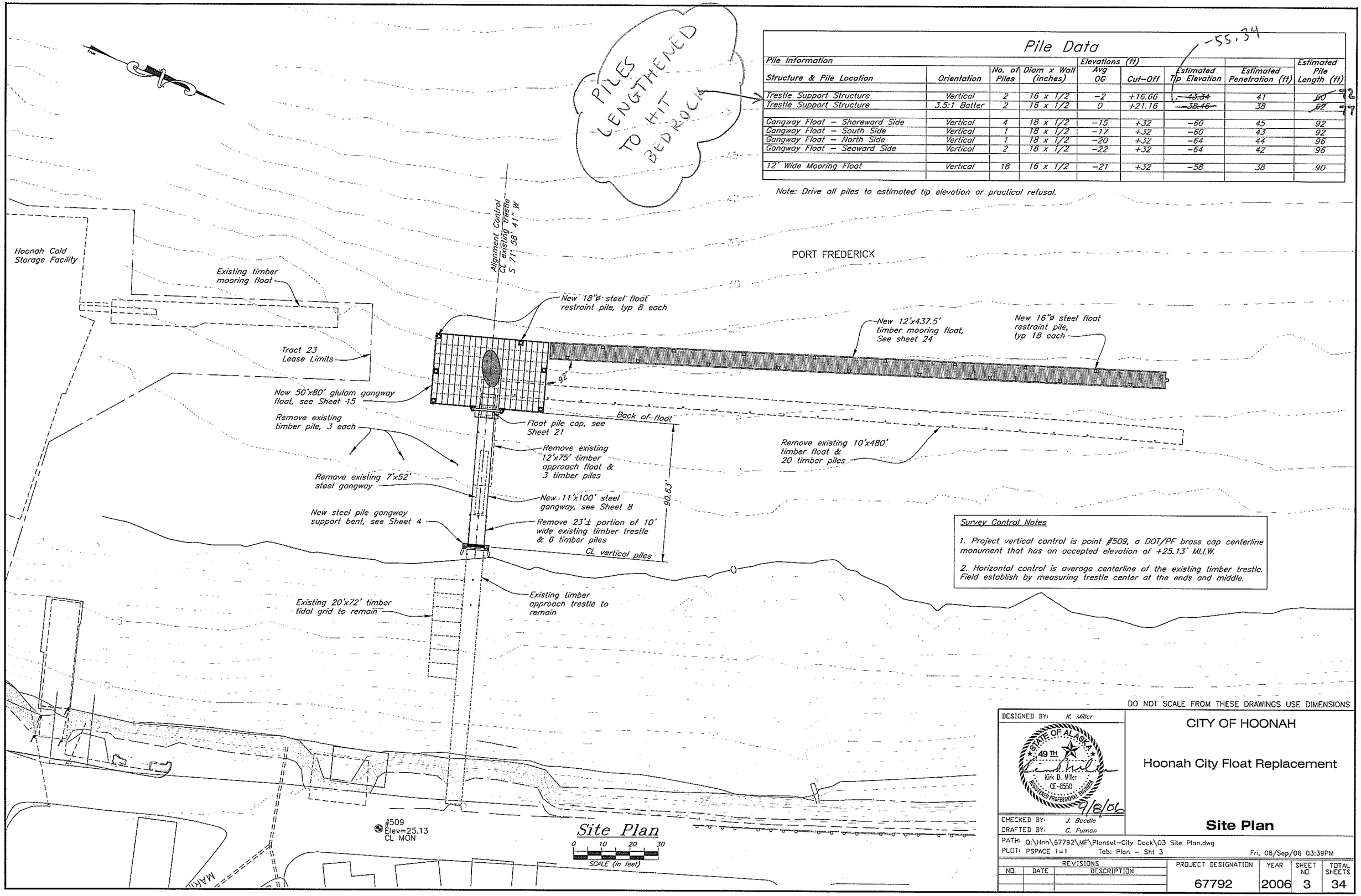

Survey Control Notes

1. Project vertical control is point #509, a DOT/PF brass cap centerline monument that has an accepted elevation of +25.13' MLLW.

2. Horizontal control is average centerline of the existing timber trestle. Field establish by measuring trestle center at the ends and middle.

DO NOT SCALE FROM THESE DRAWINGS USE DIMENSIONS

DESIGNED BY: K. Miller
STATE OF ALASKA 49TH Kirk D. Miller CE-8550 REGISTERED PROFESSIONAL ENGINEER 9/8/06
CHECKED BY: J. Beedle
DRAFTED BY: C. Furman

CITY OF HOONAH

Hoonah City Float Replacement

Site Plan

PATH: Q:\Hnh\67792\MF\Planset-City Dock\03 Site Plan.dwg
PLOT: PSPACE 1=1 Tab: Plan – Sht 3 Fri, 08/Sep/06 03:39PM

REVISIONS			PROJECT DESIGNATION	YEAR	SHEET NO.	TOTAL SHEETS
NO.	DATE	DESCRIPTION	67792	2006	3	34

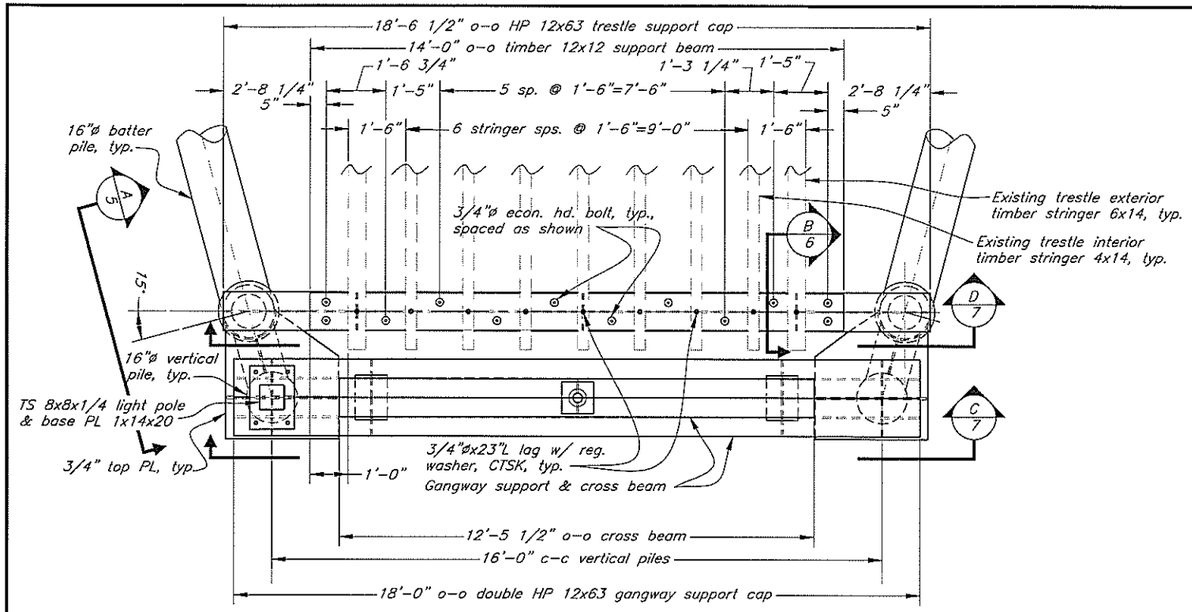

Trestle and Trestle/Gangway Support Cap Plan

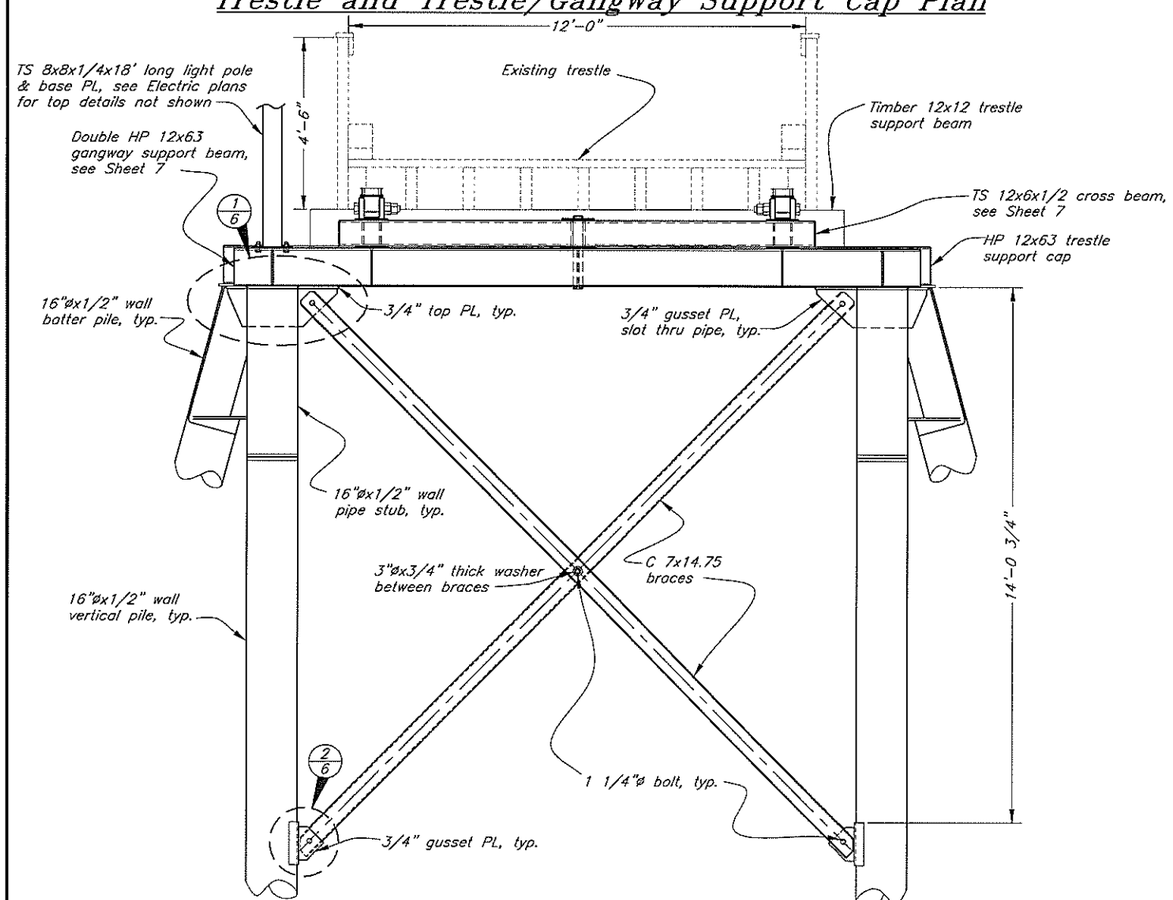

Trestle and Trestle/Gangway Support Elevation

(looking shoreward)

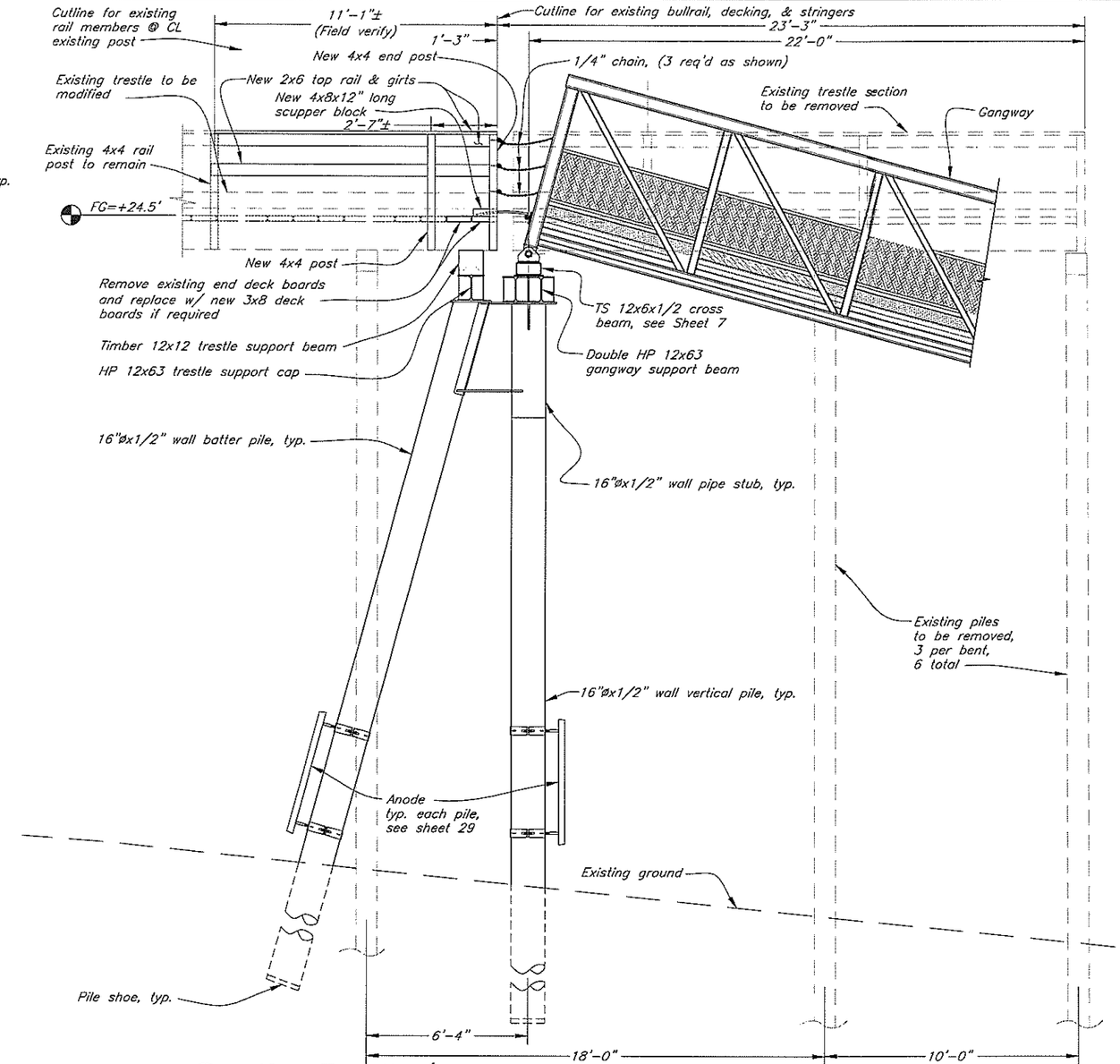

Trestle, Trestle/Gangway Support, & Gangway Side Elevation

DO NOT SCALE FROM THESE DRAWINGS USE DIMENSIONS

DESIGNED BY: K. Miller

STATE OF ALASKA 49TH Kirk D. Miller CE-8550 REGISTERED PROFESSIONAL ENGINEER 9/8/06

CHECKED BY: J. Beedle

DRAFTED BY: C. Fuman

CITY OF HOONAH

Hoonah City Float Replacement

Trestle & Gangway Support

PATH: O:\Hnh\67792\MF\Planset-City Dock\04 Trestle Support.dwg

PLOT: PSPACE 1=1 Tab: Trestle P & E Fri, 08/Sep/06 01:31PM

REVISIONS			PROJECT DESIGNATION	YEAR	SHEET NO.	TOTAL SHEETS
NO.	DATE	DESCRIPTION	67792	2006	4	34

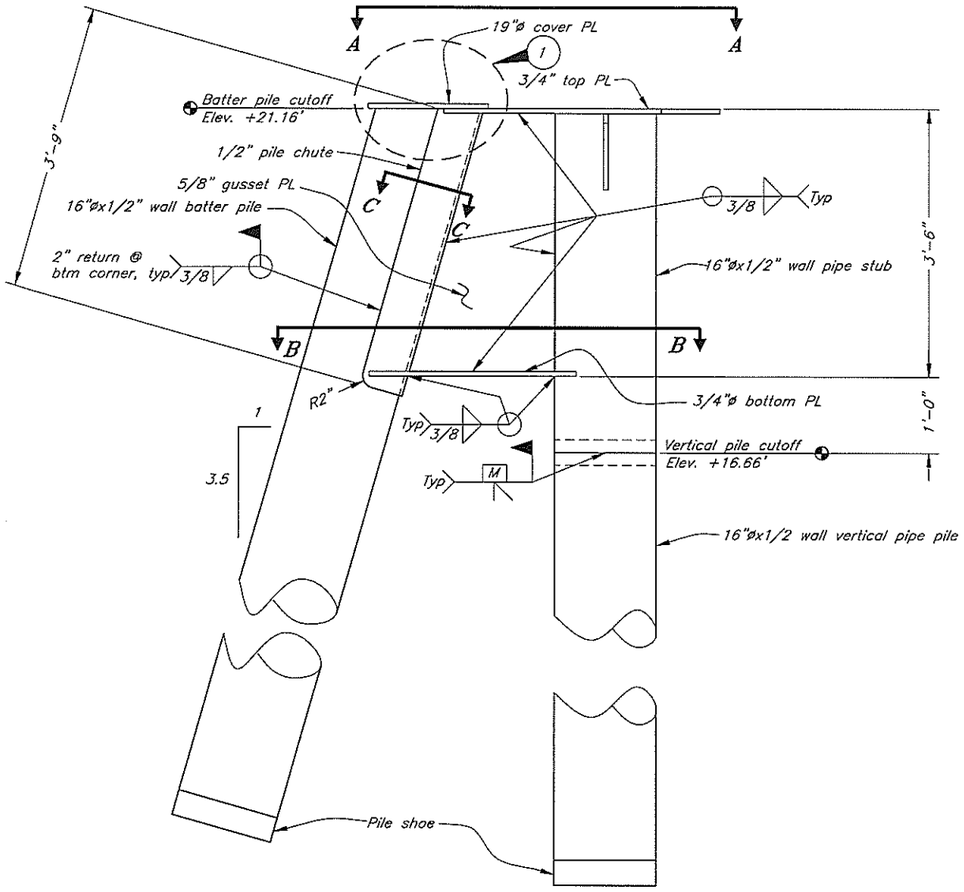

Section A/4

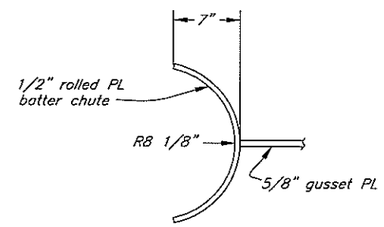

Section C-C
Batter Chute

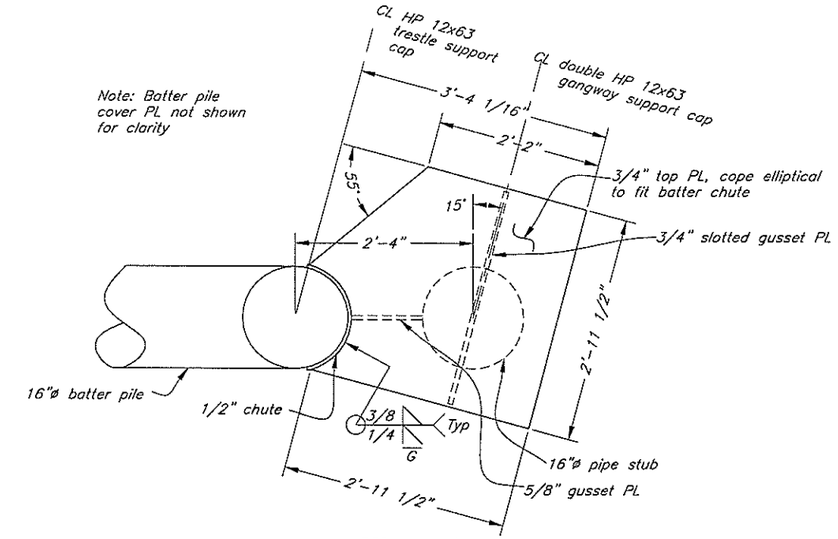

View A-A
Top Plate Plan

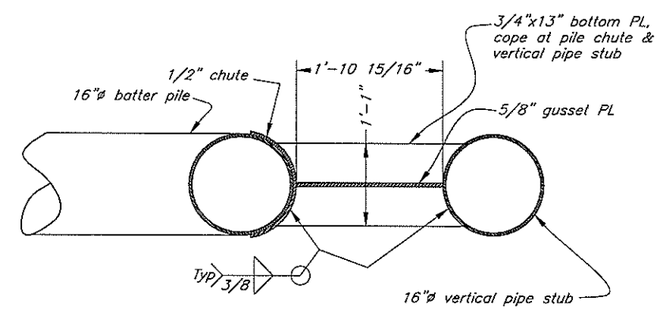

Section B-B
Bottom Plate

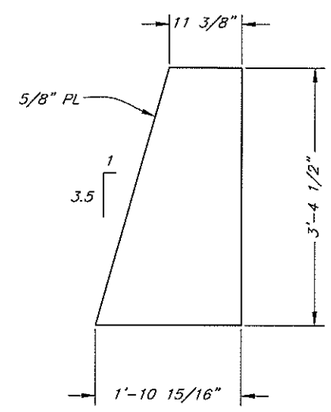

5/8" Gusset Plate

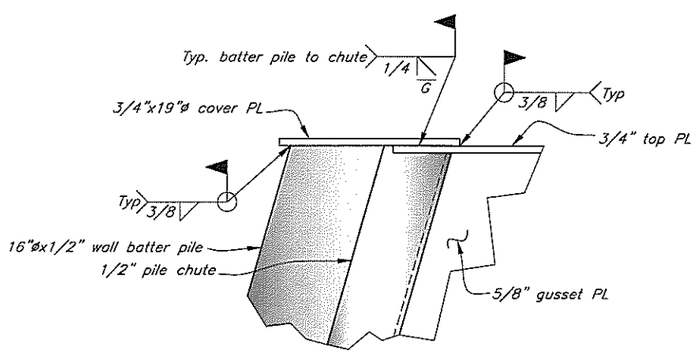

Detail 1

DO NOT SCALE FROM THESE DRAWINGS USE DIMENSIONS

DESIGNED BY: K. Miller

STATE OF ALASKA 49TH Kirk D. Miller CE-8550 REGISTERED PROFESSIONAL ENGINEER 7/8/06

CHECKED BY: J. Beedle
DRAFTED BY: C. Fuman

CITY OF HOONAH

Hoonah City Float Replacement

Trestle Support Piles

PATH: O:\Hnh\67792\MF\Planset-City Dock\05 Trestle Support Pile.dwg
PLOT: PSPACE 1=1 Tab: Support Piles Wed, 23/Aug/06 01:20PM

REVISIONS			PROJECT DESIGNATION	YEAR	SHEET NO.	TOTAL SHEETS
NO.	DATE	DESCRIPTION	67792	2006	5	34

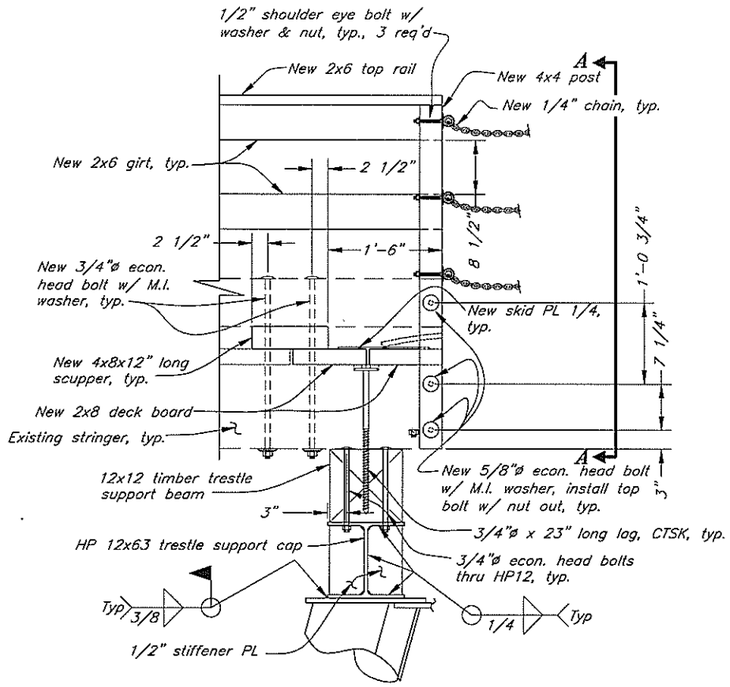

Note: See sheet 4 & As-Built drawings for existing & new timber trestle features not indicated.

Section B/4

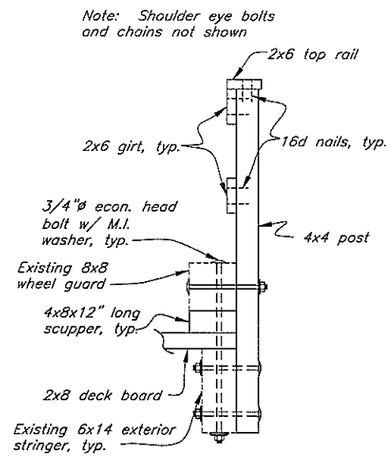

Section A-A

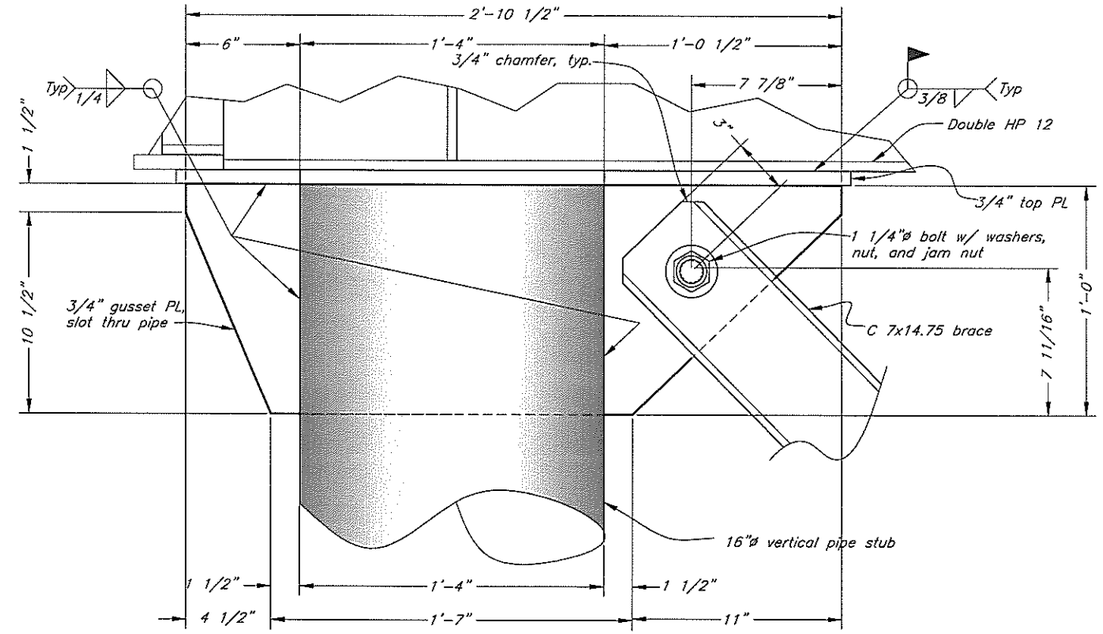

Detail 1/4

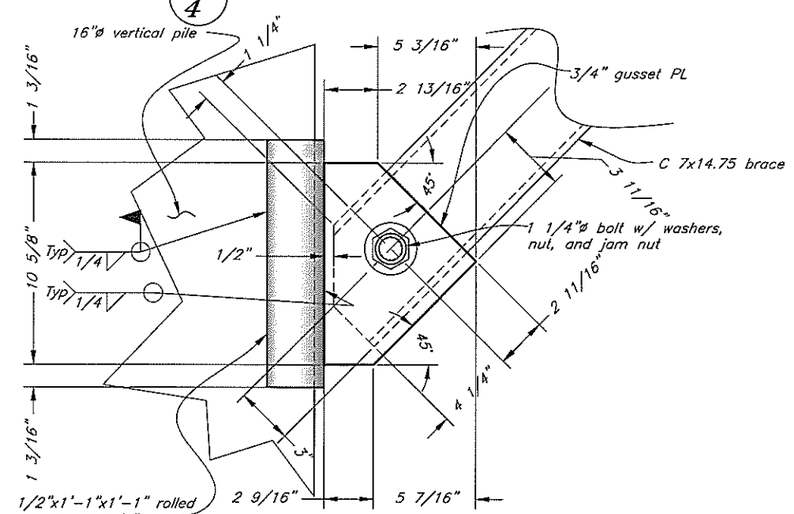

Detail 2/4

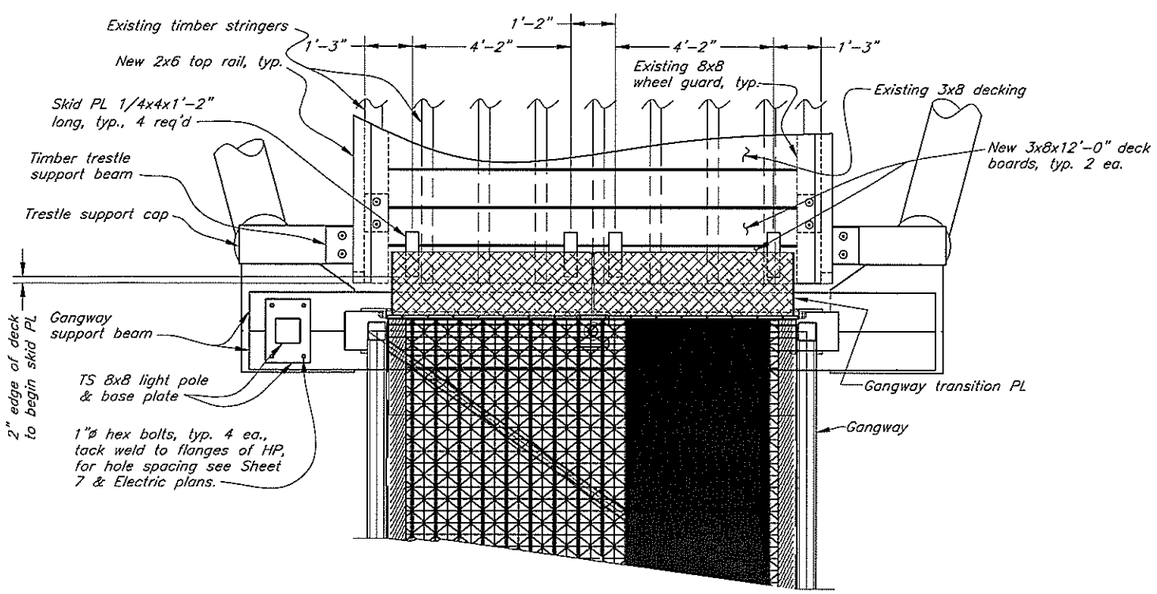

Trestle End Modifications Plan

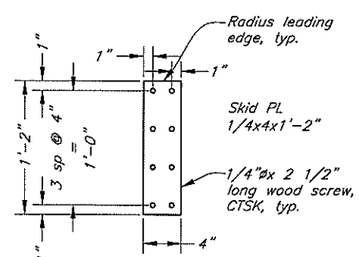

Skid Plate Detail

DO NOT SCALE FROM THESE DRAWINGS USE DIMENSIONS

DESIGNED BY: K. Miller

STATE OF ALASKA 49TH Kirk D. Miller CE-8550 REGISTERED PROFESSIONAL ENGINEER 9/8/06

CHECKED BY: J. Beedle

DRAFTED BY: C. Fumon

CITY OF HOONAH

Hoonah City Float Replacement

Trestle & Gangway Support Details

PATH: O:\Hnh\67792\MF\Planset-City Dock\06 Trestle Support Details.dwg

PLOT: PSPACE 1=1 Tab: Details Wed, 23/Aug/06 01:20PM

REVISIONS			PROJECT DESIGNATION	YEAR	SHEET NO.	TOTAL SHEETS
NO.	DATE	DESCRIPTION	67792	2006	6	34

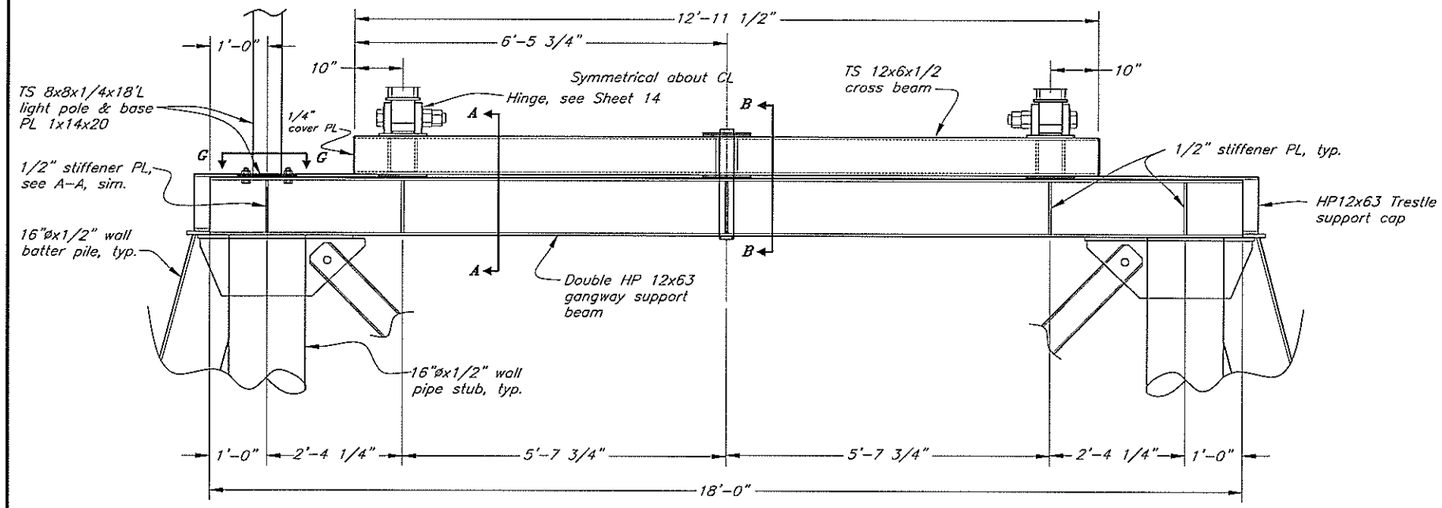

Section C/4
Gangway Support

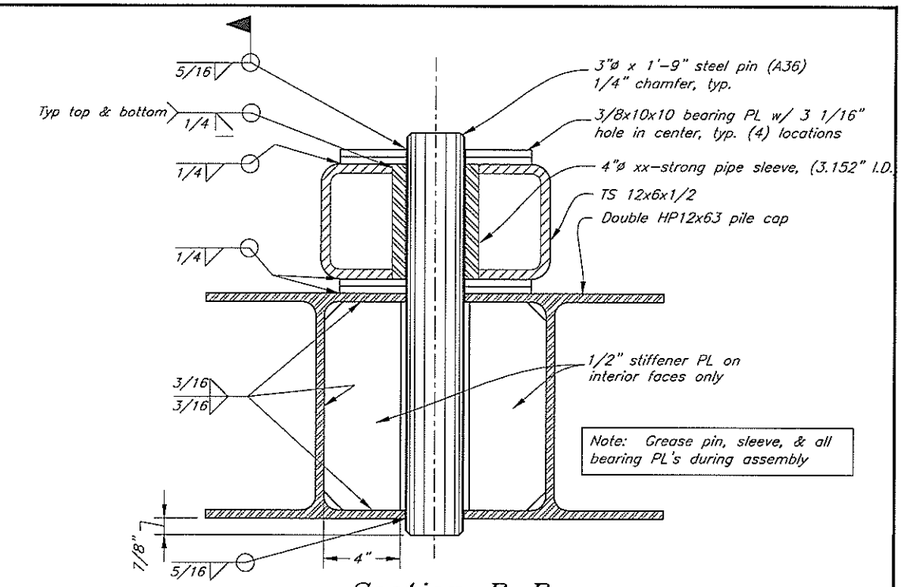

Section B-B

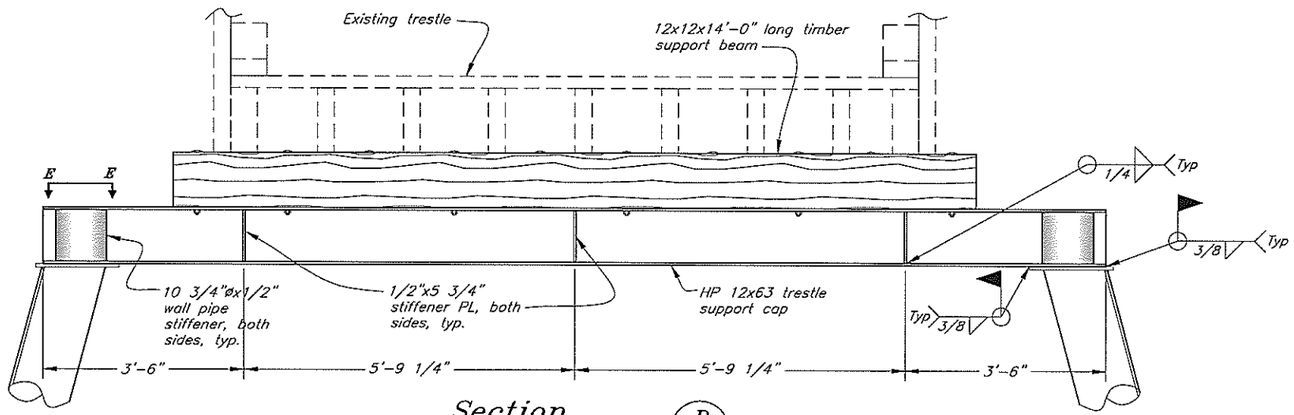

Section D/4
Trestle Support

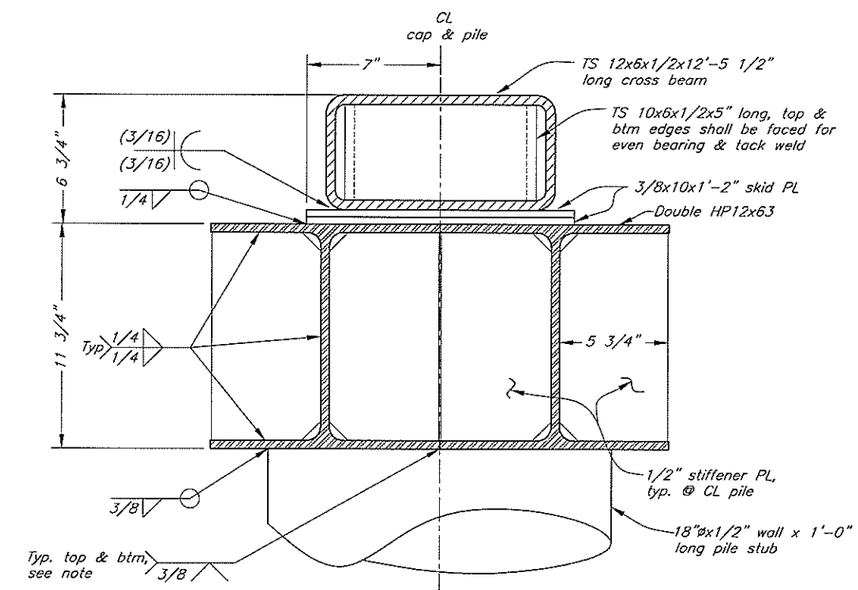

Section A-A

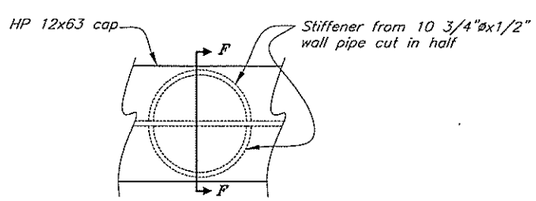

View E-E

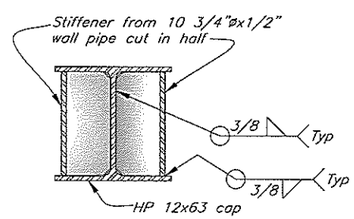

Section F-F

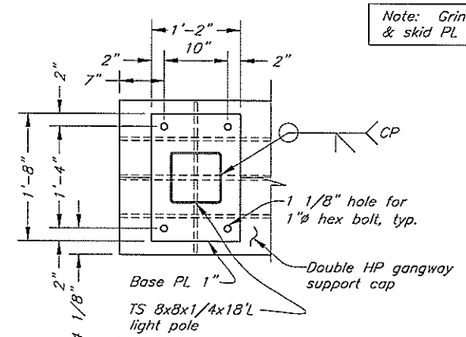

Section G-G

DO NOT SCALE FROM THESE DRAWINGS USE DIMENSIONS

DESIGNED BY: K. Miller

STATE OF ALASKA 49TH Kirk D. Miller CE-8550 REGISTERED PROFESSIONAL ENGINEER

9/8/06

CHECKED BY: J. Beedle

DRAFTED BY: Staff/C. Furman

CITY OF HOONAH

Hoonah City Float Replacement

Trestle & Gangway Support Beams & Gangway Cross Beam Details

PATH: O:\Hnh\67792\MF\Planset-City Dock\07 Cross Beam details.dwg

PLOT: PSPACE 1=1 Tab: Cross beam Fri, 08/Sep/06 03:46PM

REVISIONS			PROJECT DESIGNATION	YEAR	SHEET NO.	TOTAL SHEETS
NO.	DATE	DESCRIPTION	67792	2006	7	34

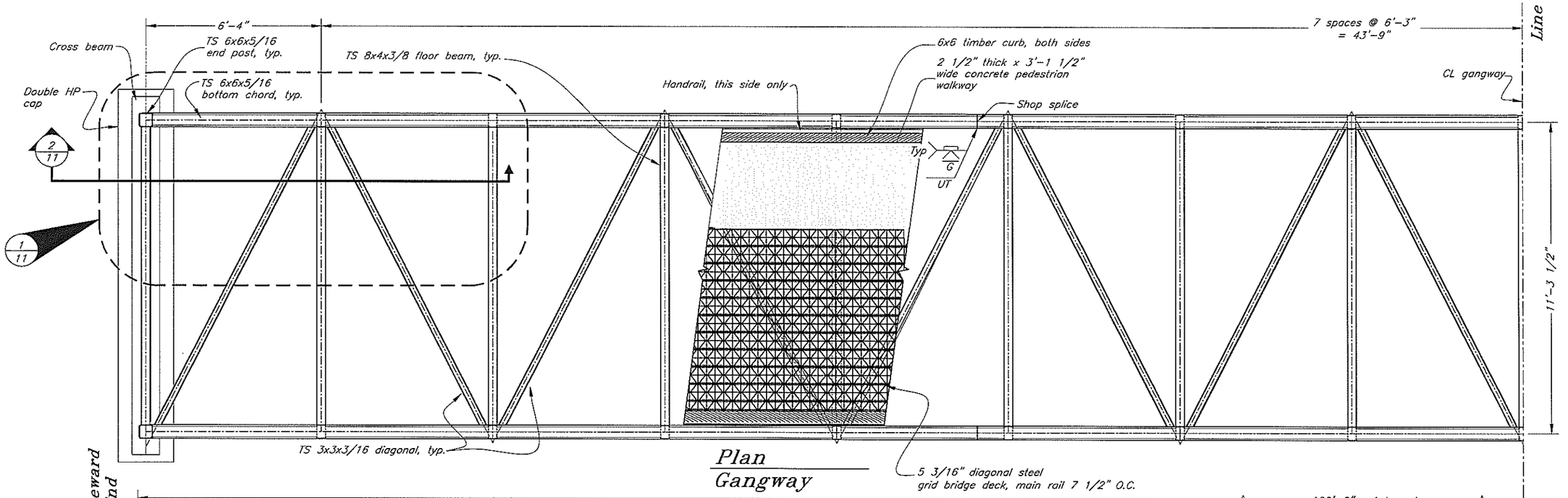

Plan
Gangway

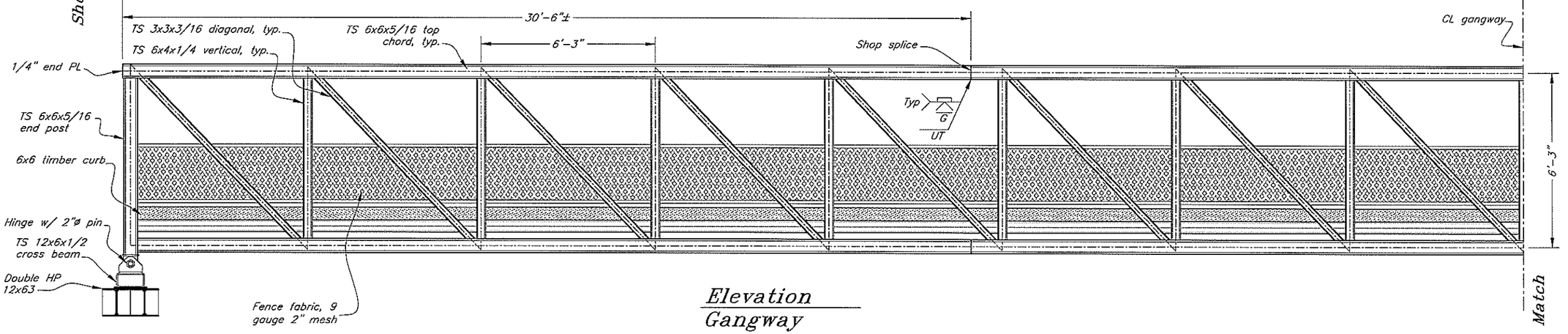

Elevation
Gangway

General Notes

1. Design basis is AASHTO Standard Specifications for Highway Bridges as modified by Guide Specifications for Design of Pedestrian Bridges. Design live pedestrian load is 85 psf (reduced to 65 psf where permitted by AASHTO) and live vehicle load is AASHTO H10 truck.
2. All steel pipe and structural tubing shall conform to ASTM A53 Grade B and ASTM A500 Grade B, respectively. Rolled steel shapes and miscellaneous plates shall conform to ASTM A36.
3. No bottom chord splices may be located in the middle third of the span.
4. Camber to compensate for dead load deflection (see Camber Diagram).
5. Ship assembled. Approximate weight = 60,000 lbs.
6. All welds joining tubular members and end plates are to seal the joint.
7. All steel surfaces to be hot dip galvanized.
8. Weep holes installed to aid in venting during galvanizing shall be plugged if they permit water to enter and accumulate in tubular members.

DO NOT SCALE FROM THESE DRAWINGS USE DIMENSIONS

DESIGNED BY: T. Doggett

STATE OF ALASKA 49TH Timothy H. Doggett CE-9027 REGISTERED PROFESSIONAL ENGINEER 9-11-06

CHECKED BY: J. Beedle

DRAFTED BY: T. Doggett/T. Mores

CITY OF HOONAH

Hoonah City Float Replacement

Gangway Shoreward End

PATH: G:\Hnh\67792\MF\Planset-City Dock\08 Gangway 1.dwg

PLOT: PSPACE 1=1 Tab: Gangway Mon, 11/Sep/06 10:22AM

REVISIONS			PROJECT DESIGNATION	YEAR	SHEET NO.	TOTAL SHEETS
NO.	DATE	DESCRIPTION	67792	2006	8	34

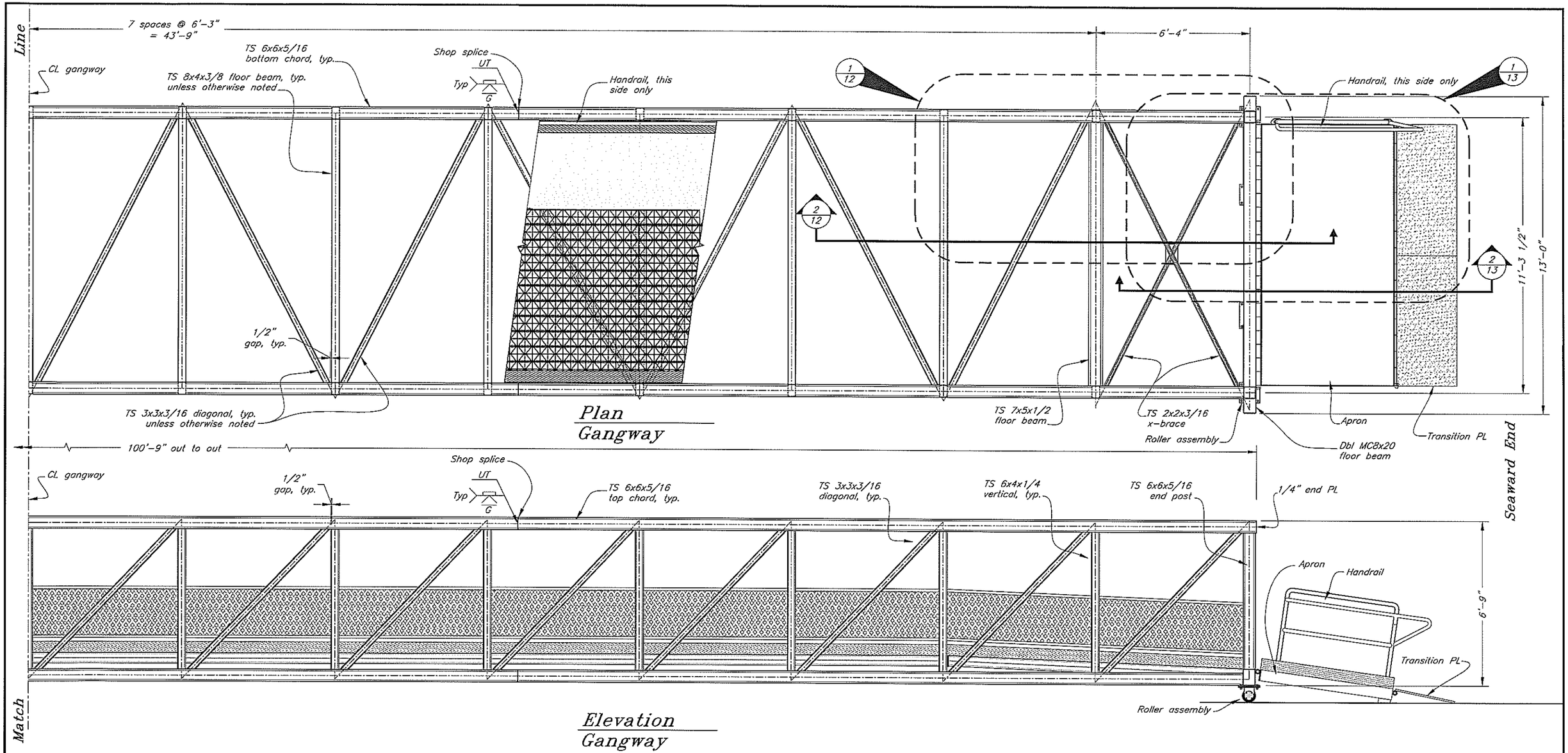

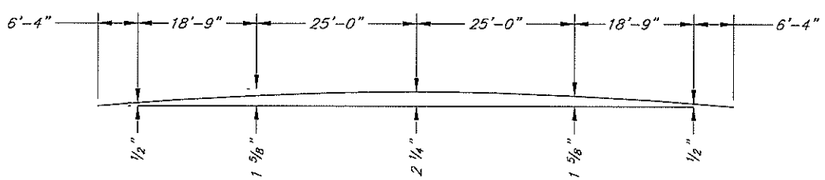

Camber Diagram

DO NOT SCALE FROM THESE DRAWINGS USE DIMENSIONS

DESIGNED BY: T. Doggett

STATE OF ALASKA 49TH Timothy H. Doggett CE-9027 REGISTERED PROFESSIONAL ENGINEER 9.11.06

CHECKED BY: J. Beedle

DRAFTED BY: T. Doggett/T. Moras

CITY OF HOONAH

Hoonah City Float Replacement

Gangway Seaward End

PATH: G:\Hnh\67792\MF\Planset-City Dock\09 Gangway 2.dwg

PLOT: PSPACE 1=1 Tab: Gangway 2 Mon, 11/Sep/06 10:26AM

REVISIONS			PROJECT DESIGNATION	YEAR	SHEET NO.	TOTAL SHEETS
NO.	DATE	DESCRIPTION	67792	2006	9	34

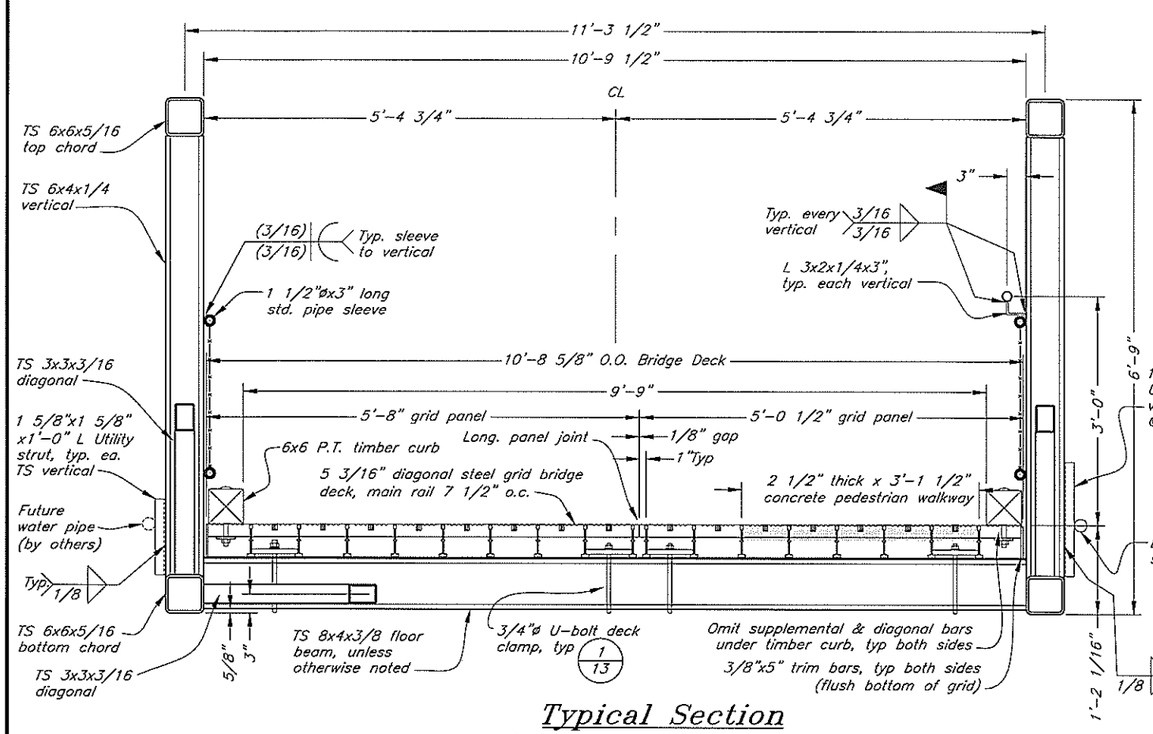

Typical Section
(looking shoreward)

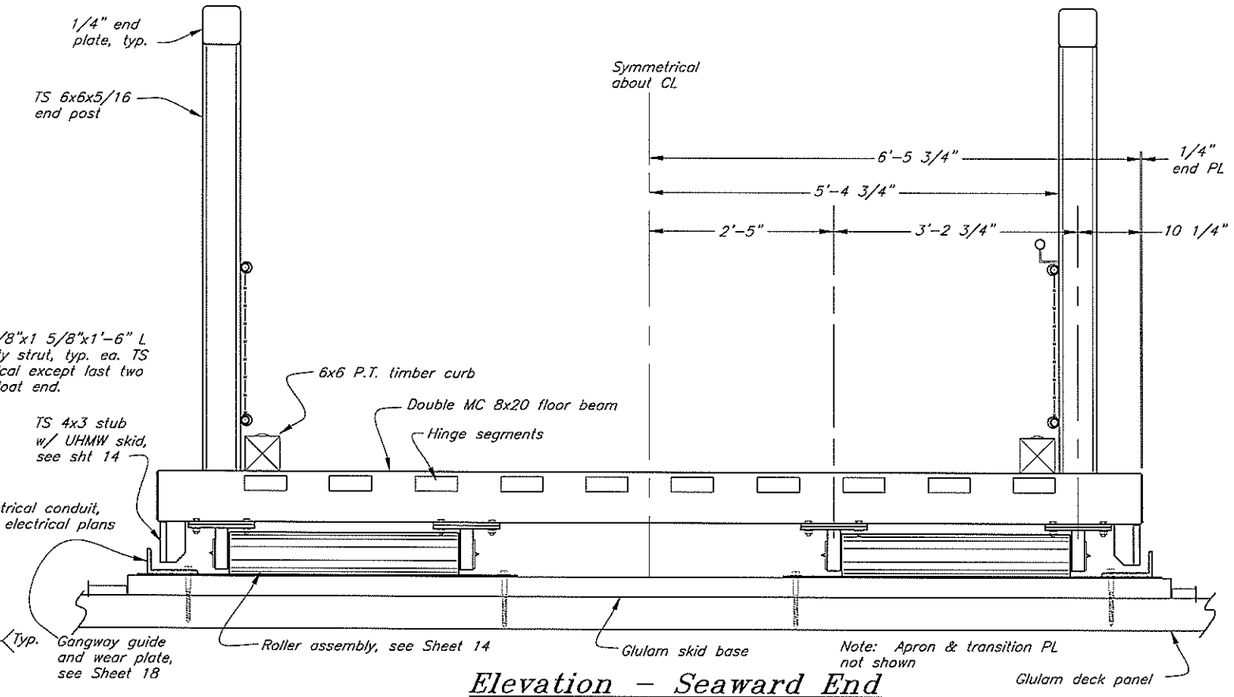

Elevation – Seaward End

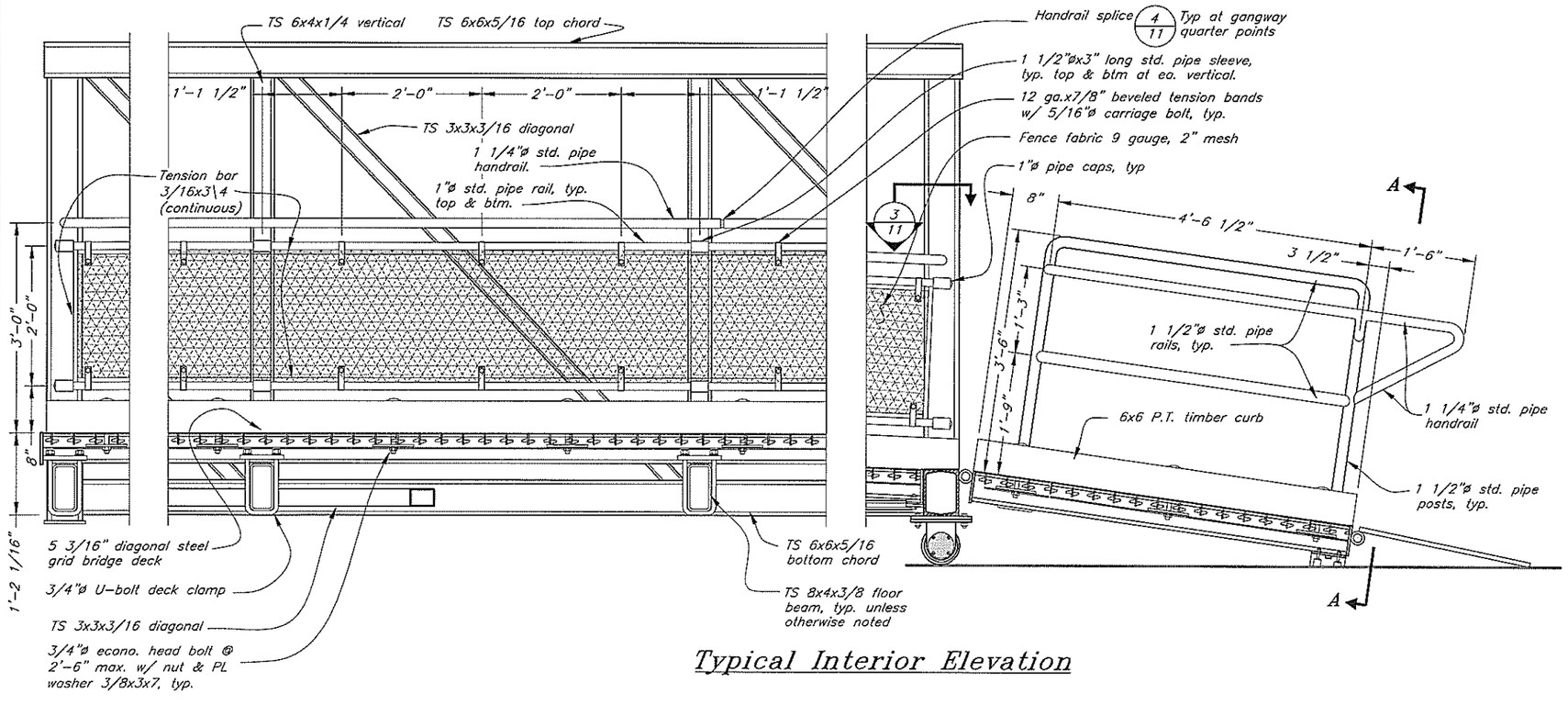

Typical Interior Elevation

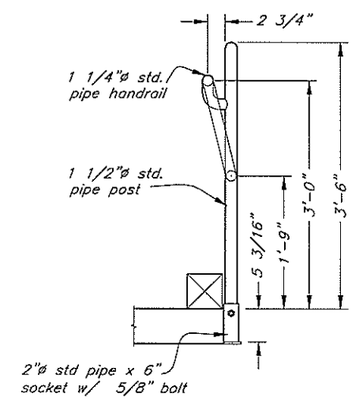

Section A–A

DO NOT SCALE FROM THESE DRAWINGS USE DIMENSIONS

DESIGNED BY: T. Doggett

STATE OF ALASKA 49TH Timothy H. Doggett CE-9027 REGISTERED PROFESSIONAL ENGINEER 9.11.06

CHECKED BY: J. Beedle

DRAFTED BY: T. Doggett/C. Fuman

CITY OF HOONAH

Hoonah City Float Replacement

Gangway Typical Sections & Elevations

PATH: Q:\Hnh\67792\MF\Planset-City Dock\10 Gangway Typ Sections.dwg

PLOT: PSPACE 1=1 Tab: Gangway typ sect Mon, 11/Sep/06 10:30AM

REVISIONS			PROJECT DESIGNATION	YEAR	SHEET NO.	TOTAL SHEETS
NO.	DATE	DESCRIPTION				
			67792	2006	10	34

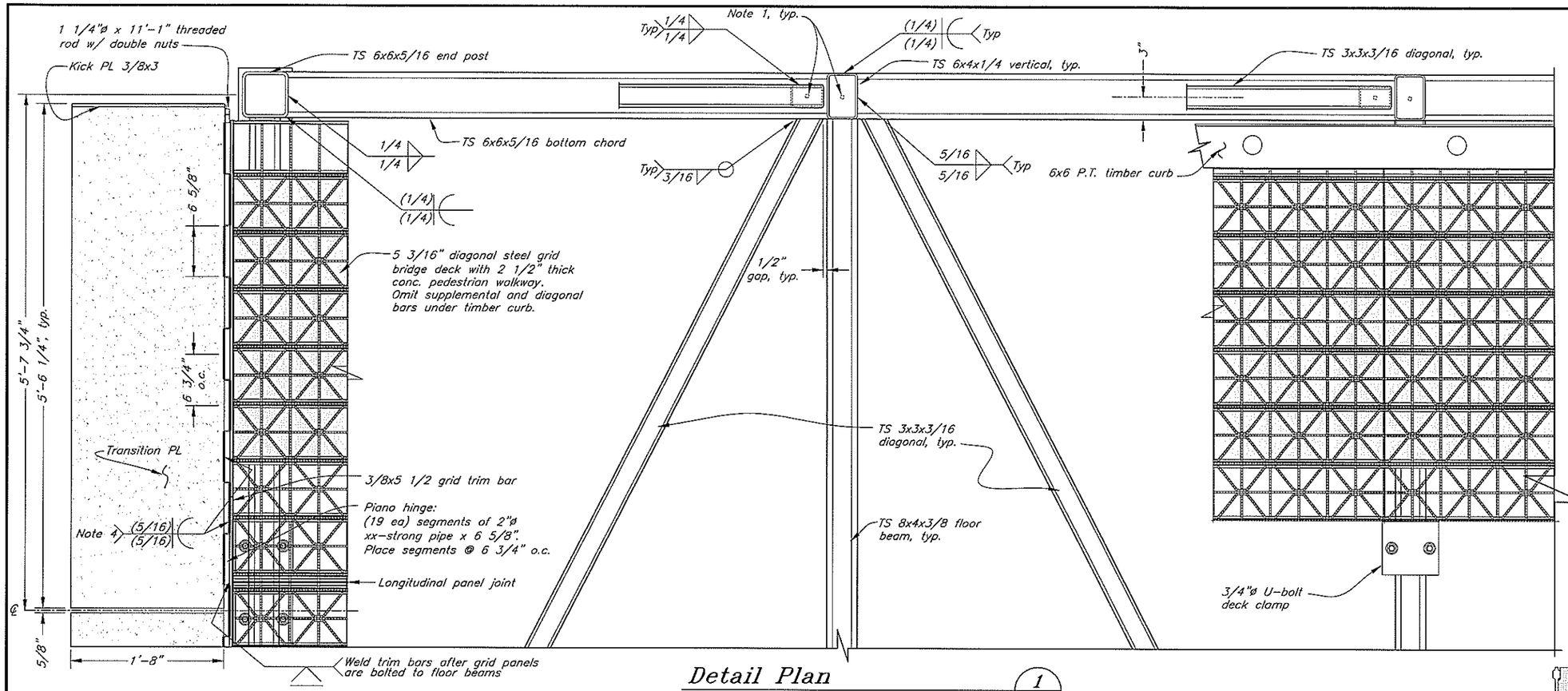

Detail Plan
Gangway Shoreward End (1/8)

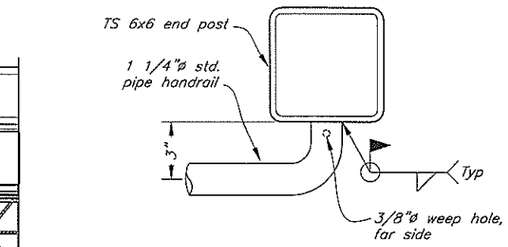

Handrail Detail (3/10)

Typ at both ends of gangway.

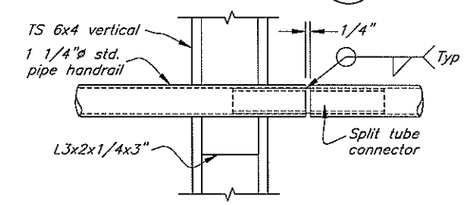

Splice Detail (4/10)

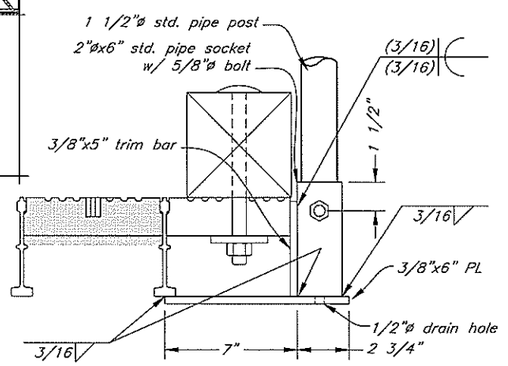

Socket Detail (5/13)

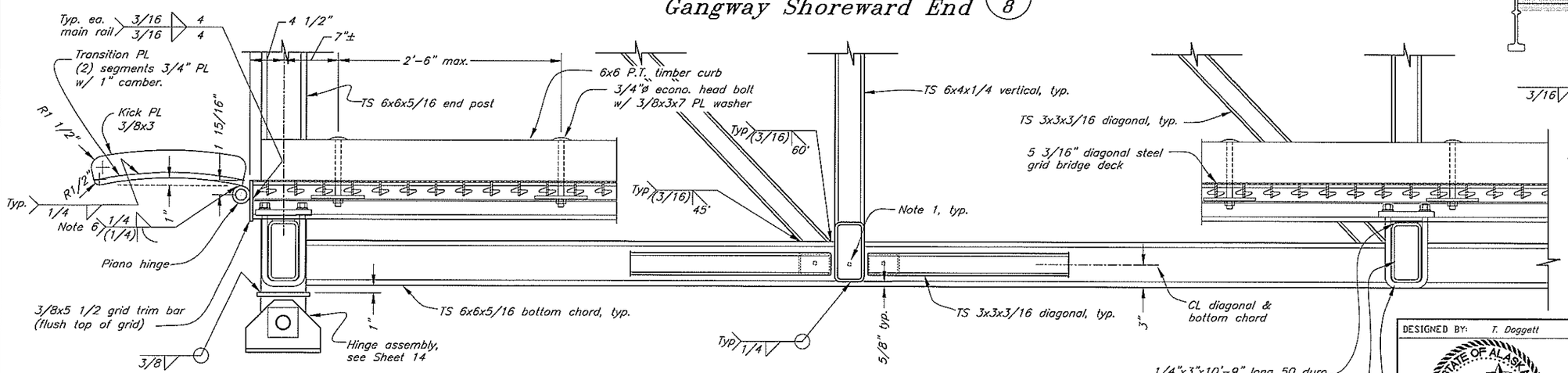

Section
Gangway Shoreward End (2/8)

General Notes:

1. Provide 3/8"ø weep holes in the chords at all joints where the diagonals, verticals, & floor beams overlap.
2. Joints and splices in diagonal steel grid decking shall be detailed by the deck fabricator.
3. Wear surfaces of transition plates shall be coated with a non-slip, spray metallized abrasive prior to galvanizing.
4. Weld alternate hinge segments to transition PL and grid trim bar.
5. Weld alternate hinge segments to floor beam and grid trim bar.
6. Weld alternate hinge segments to transition PL.

DO NOT SCALE FROM THESE DRAWINGS USE DIMENSIONS

DESIGNED BY: T. Doggett

STATE OF ALASKA 49TH Timothy H. Doggett CE-9027 REGISTERED PROFESSIONAL ENGINEER 9.11.06

CHECKED BY: J. Beedle

DRAFTED BY: T. Doggett/C. Furman

CITY OF HOONAH

Hoonah City Float Replacement

Gangway Shoreward End Details

PATH: O:\Hnh\67792\MF\Planset-City Dock\11 Gangway Shoreward Details.dwg

PLOT: PSPACE 1=1 Tab: Gangway end details Mon, 11/Sep/06 11:00AM

REVISIONS			PROJECT DESIGNATION	YEAR	SHEET NO.	TOTAL SHEETS
NO.	DATE	DESCRIPTION	67792	2006	11	34

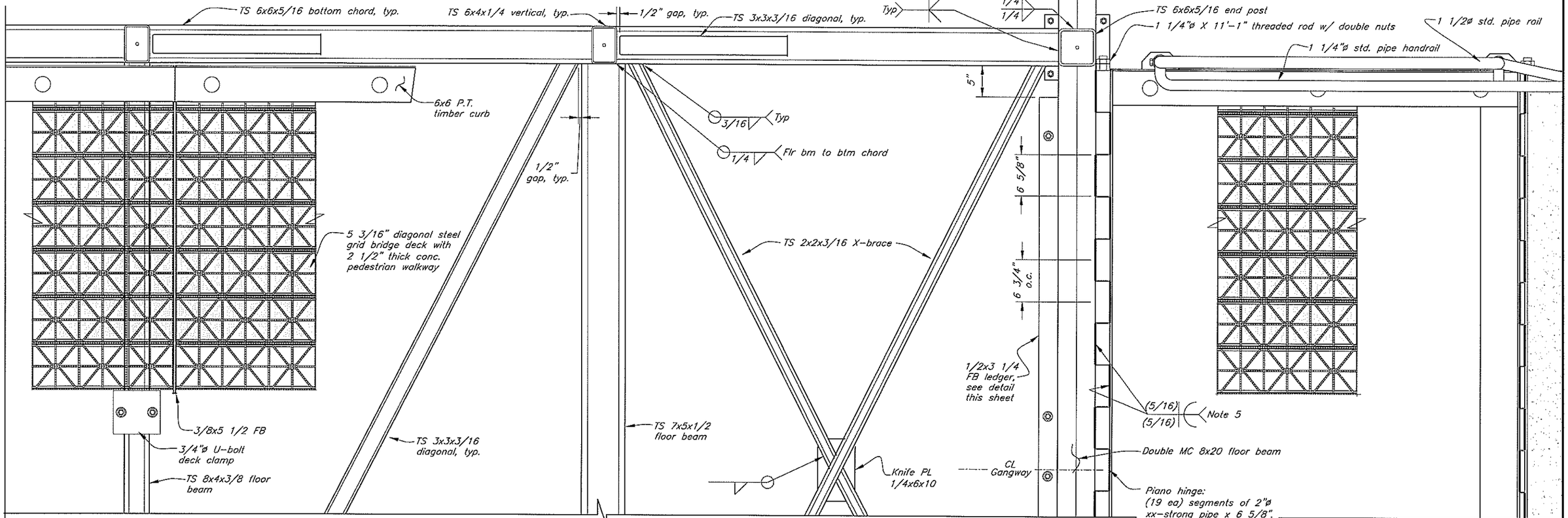

Detail Plan 1/9
Gangway Seaward End

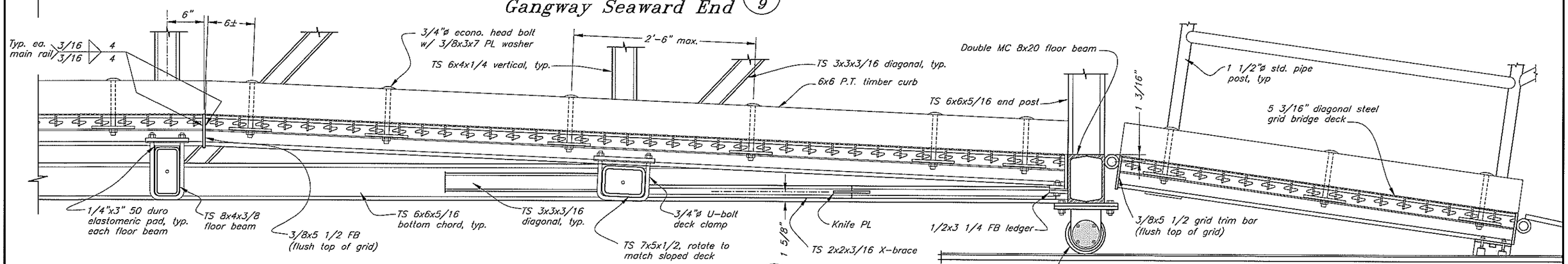

Section 2/9
Gangway Seaward End

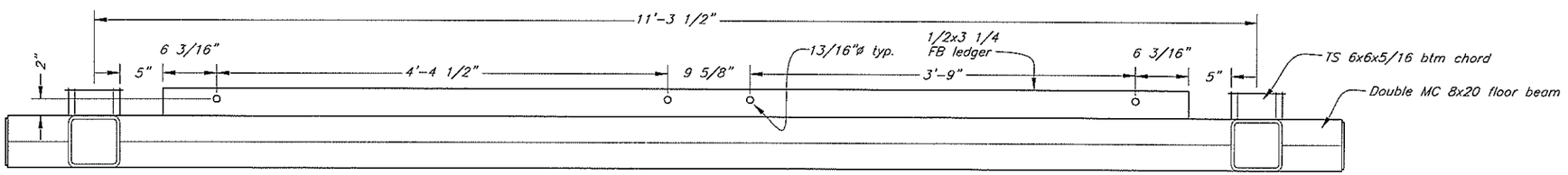

Detail Plan – FB Ledger

DO NOT SCALE FROM THESE DRAWINGS USE DIMENSIONS

DESIGNED BY: T. Doggett

STATE OF ALASKA 49TH Timothy H. Doggett CE-9027 REGISTERED PROFESSIONAL ENGINEER 9.11.06

CHECKED BY: J. Beedle

DRAFTED BY: T. Doggett/C. Furman

CITY OF HOONAH

Hoonah City Float Replacement

Gangway Seaward End Details

PATH: O:\Hnh\67792\MF\Planset-City Dock\12 Gangway Seaward Details.dwg

PLOT: PSPACE 1=1 Tab: GW Details 2 Mon, 11/Sep/06 10:39AM

REVISIONS			PROJECT DESIGNATION	YEAR	SHEET NO.	TOTAL SHEETS
NO.	DATE	DESCRIPTION	67792	2006	12	34

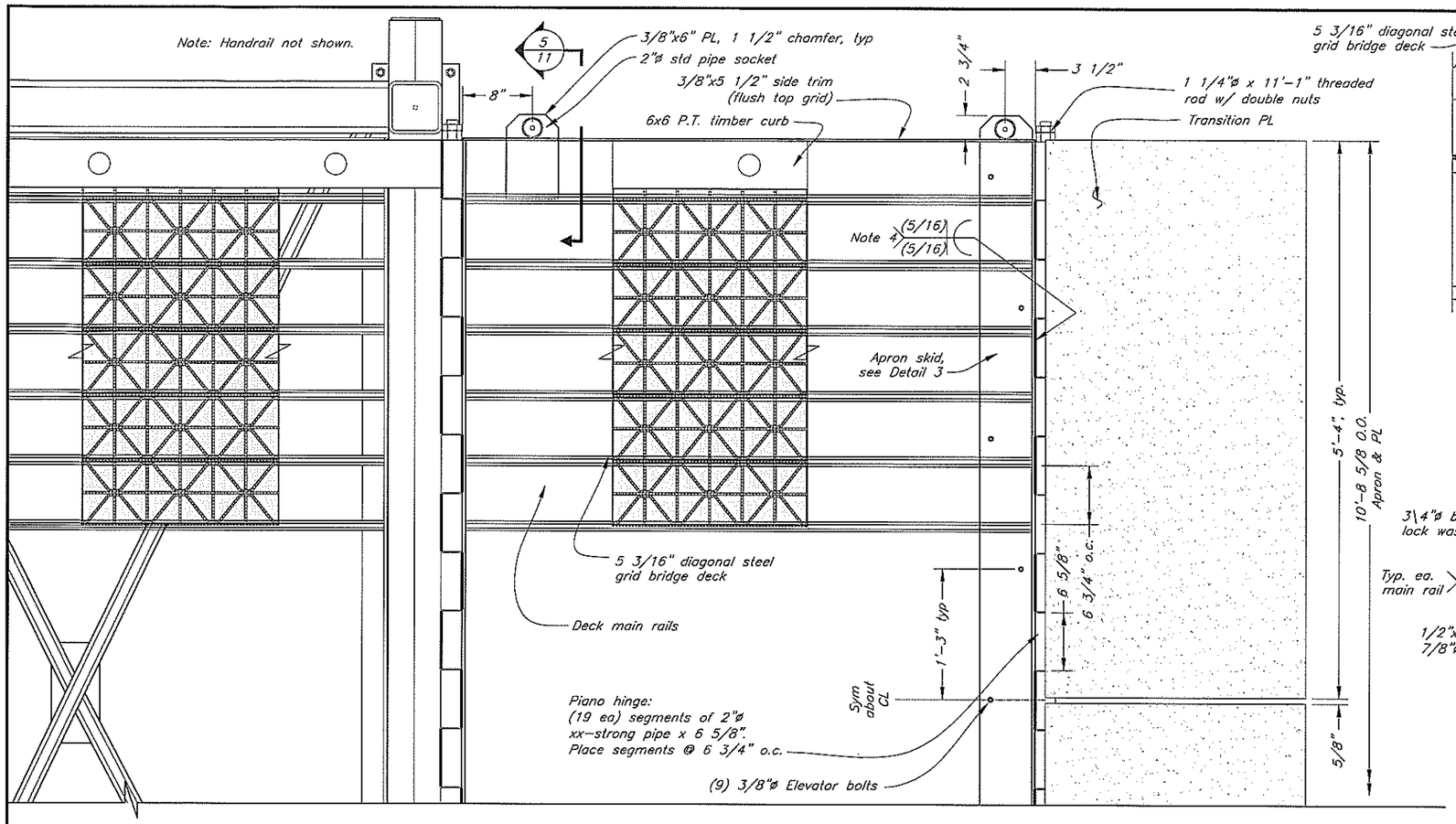

Detail Plan 1/9
Gangway Apron & Transition Plate

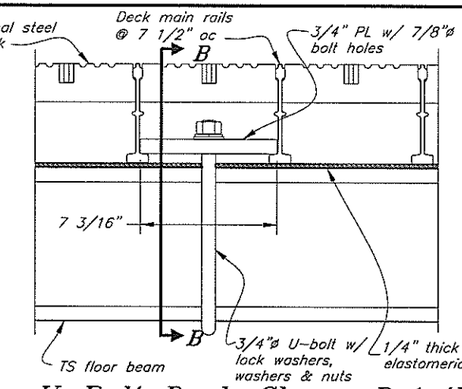

U-Bolt Deck Clamp Detail 1/10

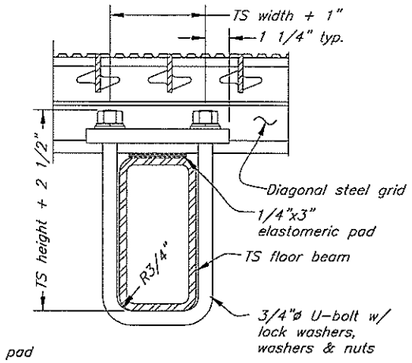

Section B–B

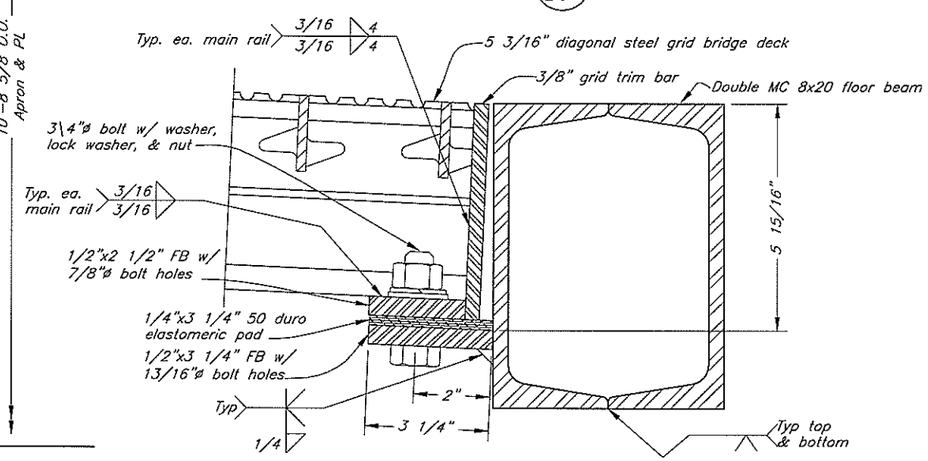

Seaward End Floor Beam Detail 2

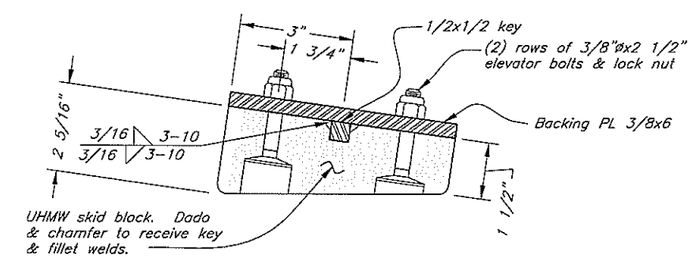

Apron Skid Detail 3

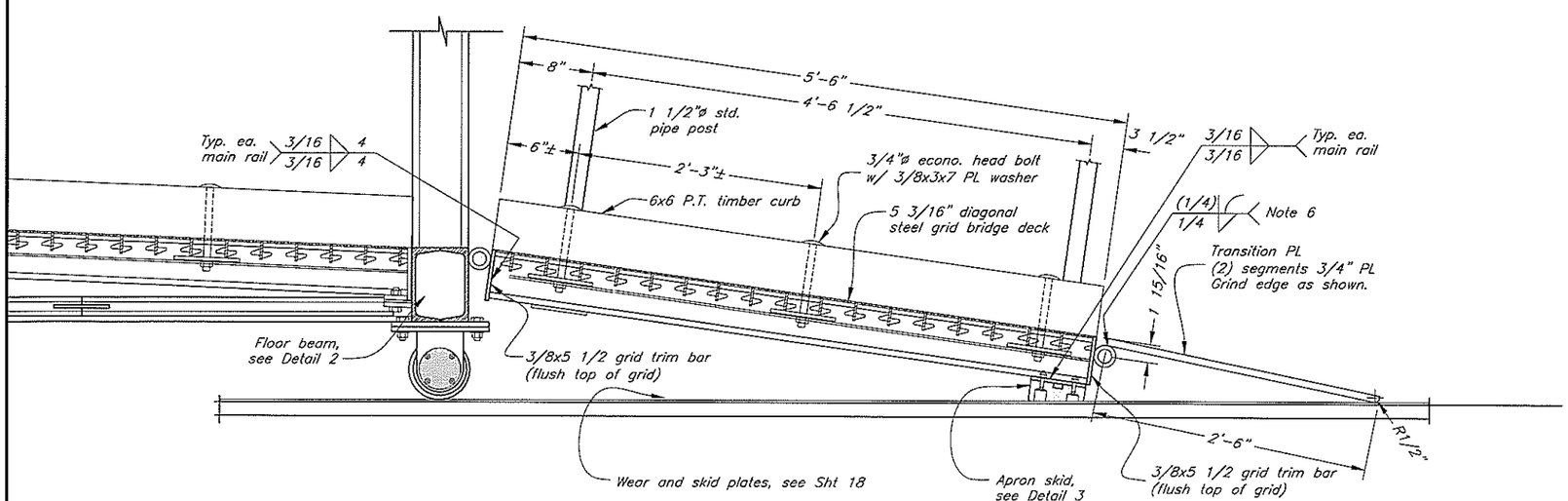

Section 2/9
Gangway Apron & Transition Plate

DO NOT SCALE FROM THESE DRAWINGS USE DIMENSIONS

DESIGNED BY: T. Doggett

STATE OF ALASKA 49TH Timothy H. Doggett CE-9027 REGISTERED PROFESSIONAL ENGINEER 9.11.06

CHECKED BY: J. Beedle

DRAFTED BY: T. Doggett/C. Furman

CITY OF HOONAH

Hoonah City Float Replacement

Gangway Seaward Apron & Transition Plate

PATH: O:\Hnh\67792\MF\Planset-City Dock\13 Gangway Seaward TP.dwg

PLOT: PSPACE 1=1 Tab: GW Details 3 Mon, 11/Sep/06 10:41AM

REVISIONS			PROJECT DESIGNATION	YEAR	SHEET NO.	TOTAL SHEETS
NO.	DATE	DESCRIPTION	67792	2006	13	34

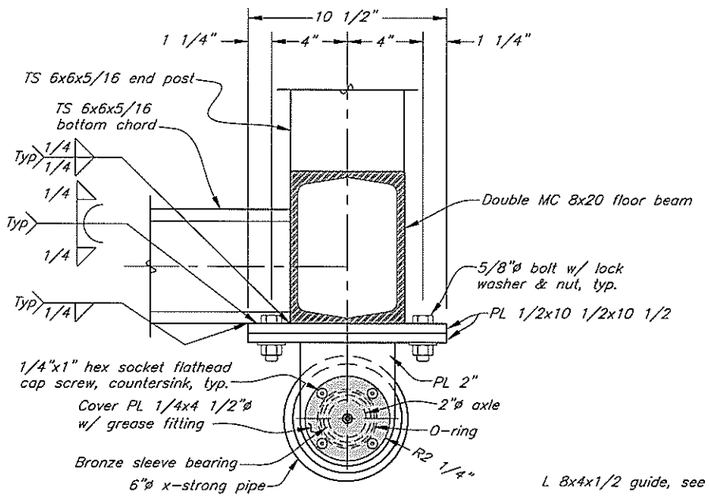

View A-A

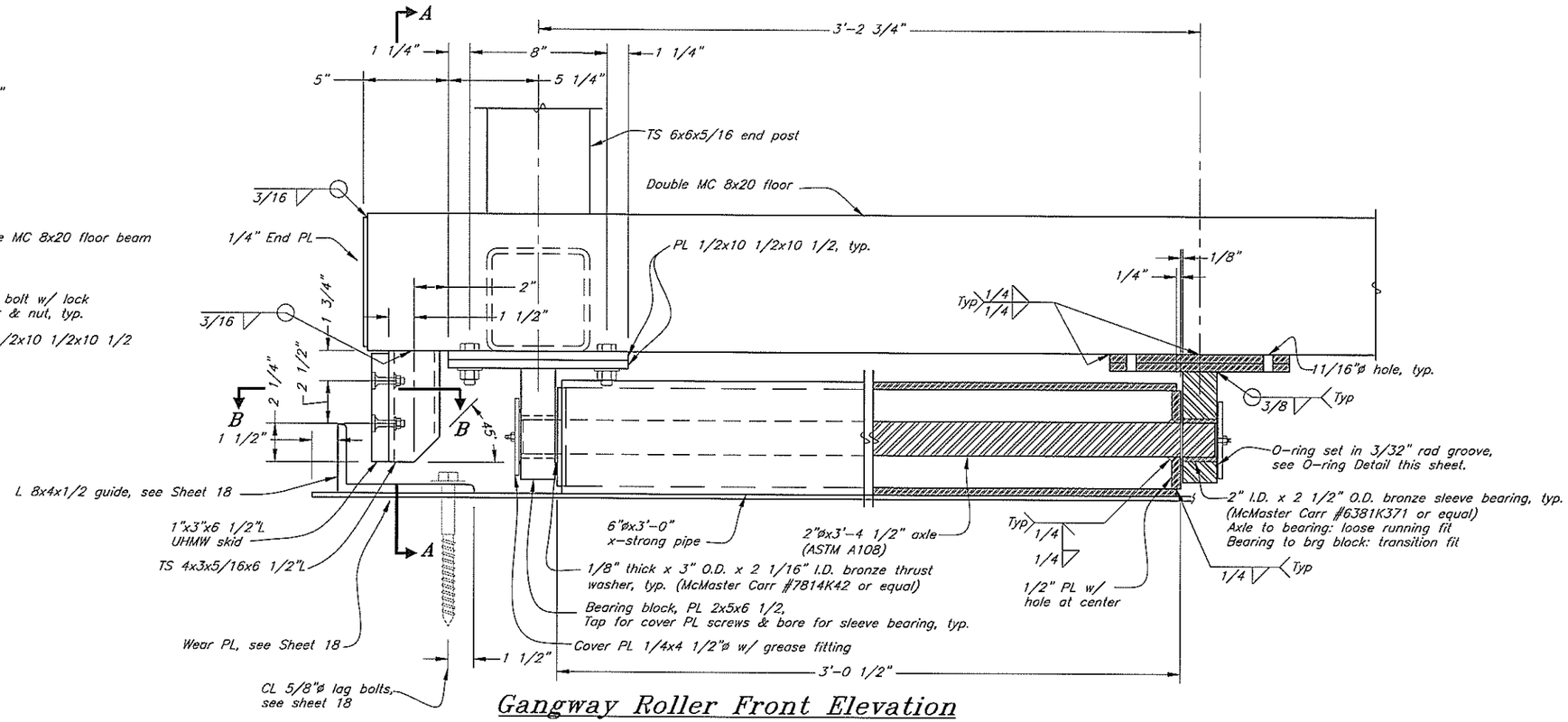

Gangway Roller Front Elevation

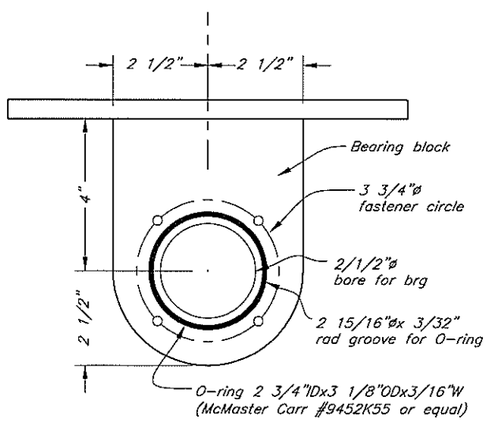

O-Ring Detail

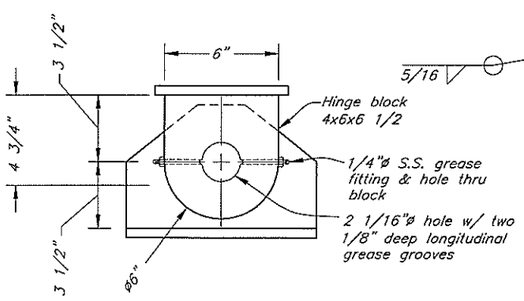

Section C-C

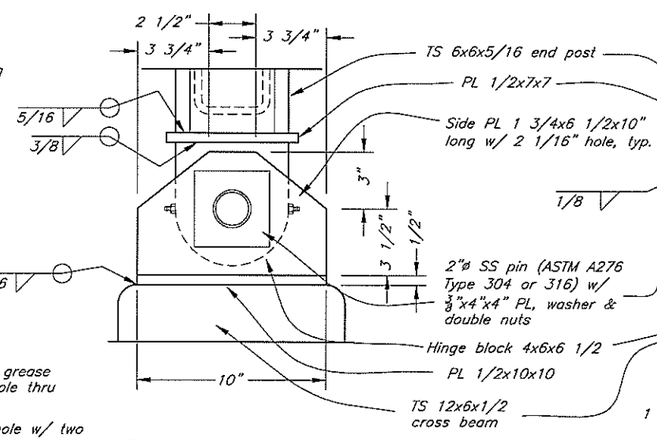

Hinge Assembly Side View

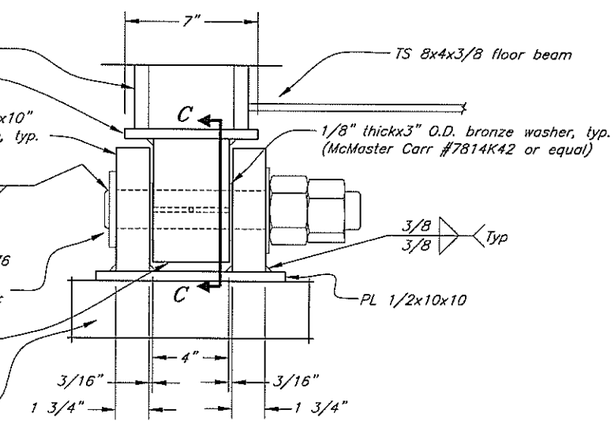

Hinge Assembly Front View

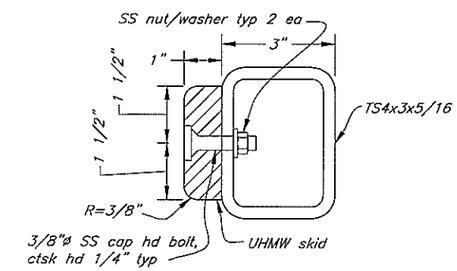

Section B-B

DO NOT SCALE FROM THESE DRAWINGS USE DIMENSIONS

DESIGNED BY: T. Doggett

STATE OF ALASKA 49TH Timothy H. Doggett CE-9027 REGISTERED PROFESSIONAL ENGINEER 9.11.06

CHECKED BY: J. Beedle

DRAFTED BY: T. Doggett/C. Furman

CITY OF HOONAH

Hoonah City Float Replacement

Gangway Shoreward Hinge & Seaward Roller Details

PATH: Q:\Hnh\67792\MF\Planset-City Dock\14 Gangway Roller.dwg

PLOT: PSPACE 1=1 Tab: Layout1 Mon, 11/Sep/06 11:10AM

REVISIONS			PROJECT DESIGNATION	YEAR	SHEET NO.	TOTAL SHEETS
NO	DATE	DESCRIPTION	67792	2006	14	34

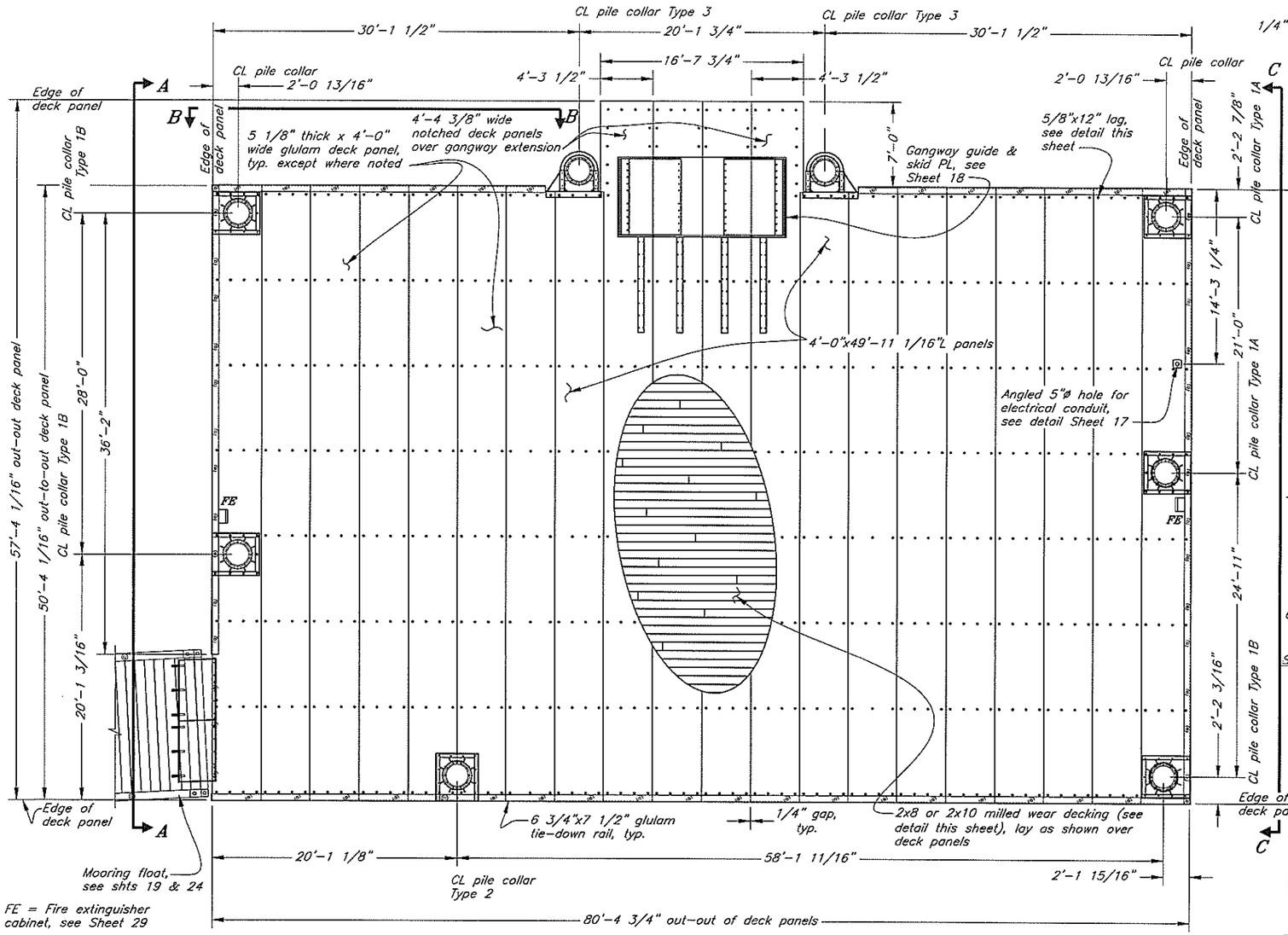

Gangway Float Deck Layout

1. Design Freeboard = 20.5"
2. Approximate weight of float is 193,000 lbs. including pile collars & all hardware.

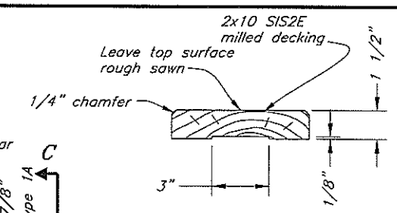

Milled Decking

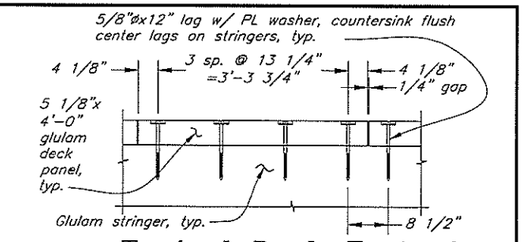

Typical Deck Fastening

(except where noted)

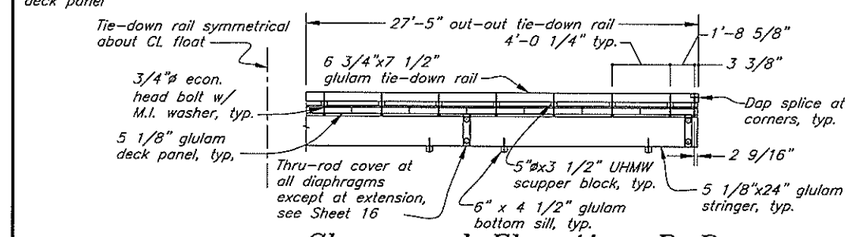

Shoreward Elevation B-B

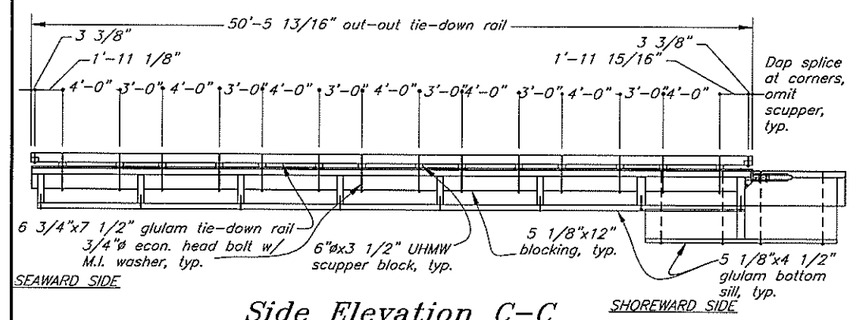

Side Elevation C-C

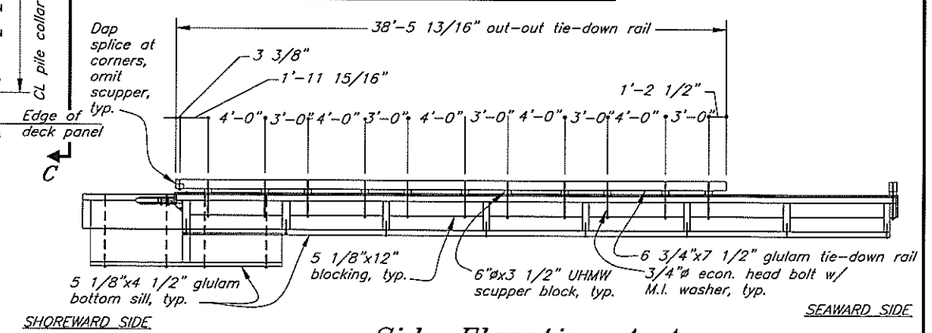

Side Elevation A-A

Note: Side pile collars & bumper boards not shown for clarity

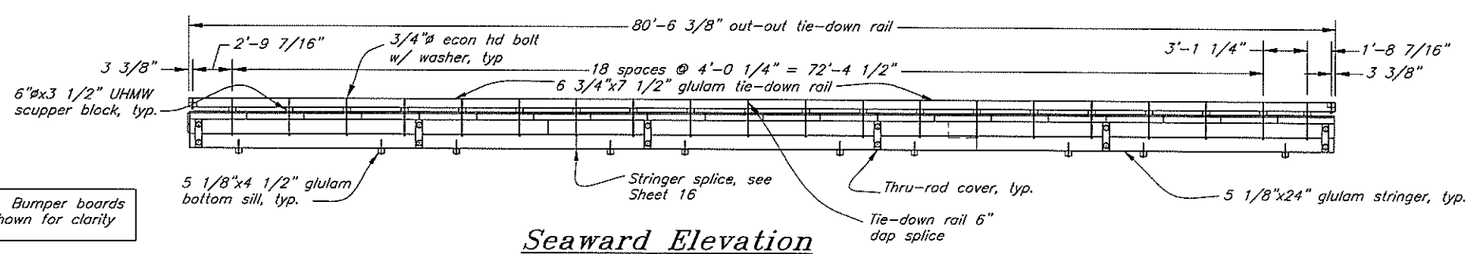

Note: Bumper boards not shown for clarity

Seaward Elevation

DO NOT SCALE FROM THESE DRAWINGS USE DIMENSIONS

DESIGNED BY: K. Miller

STATE OF ALASKA 49TH Kirk D. Miller CE-8550 REGISTERED PROFESSIONAL ENGINEER 9/8/06

CHECKED BY: J. Beedle

DRAFTED BY: C. Fuman

CITY OF HOONAH

Hoonah City Float Replacement

Gangway Float Deck Layout

PATH: Q:\Hnh\67792\MF\Planset-City Dock\15 GW float deck.dwg

PLOT: PSPACE 1=1 Tab: Deck Layout Wed, 23/Aug/06 01:19PM

REVISIONS			PROJECT DESIGNATION	YEAR	SHEET NO.	TOTAL SHEETS
NO.	DATE	DESCRIPTION	67792	2006	15	34

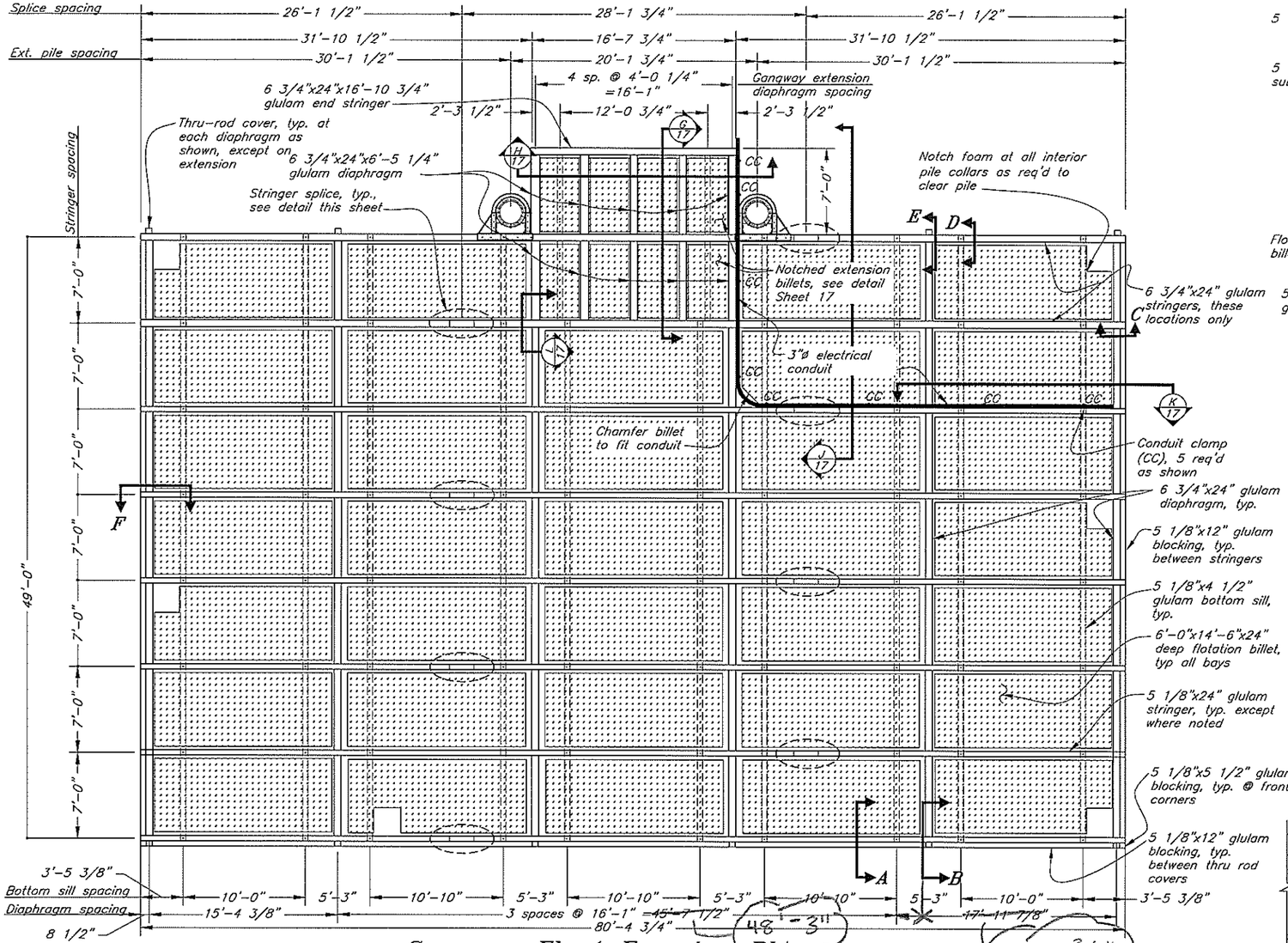

Gangway Float Framing Plan

(Deck and Glulam Subdeck not shown for clarity)

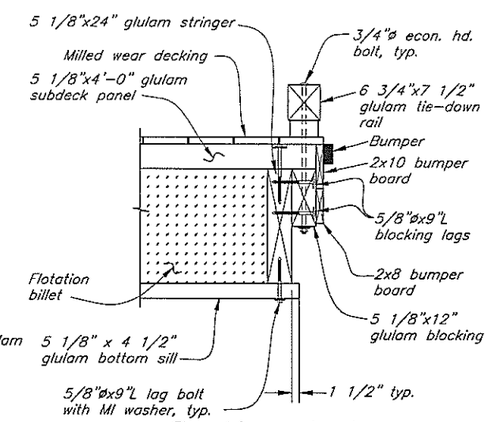

Section A-A

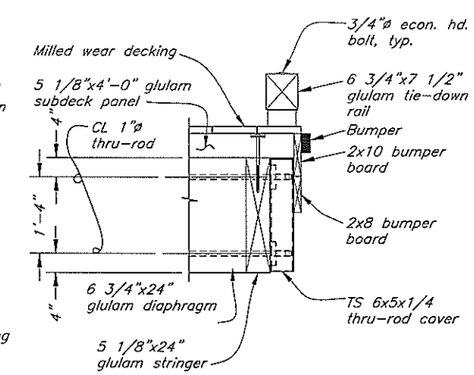

Section B-B

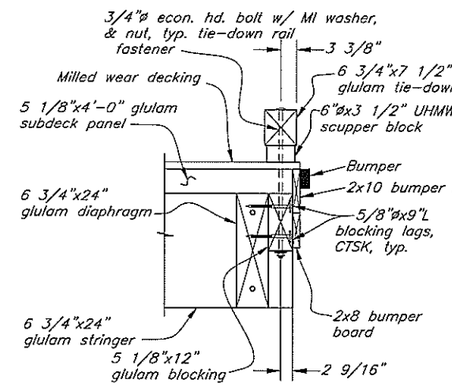

Section C-C

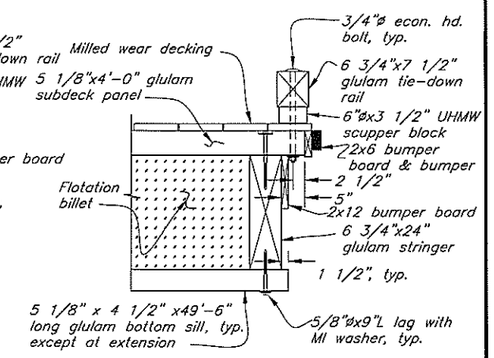

Section D-D

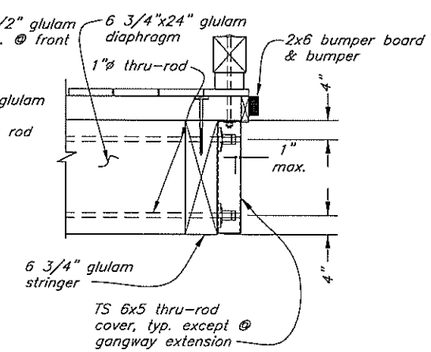

Section E-E

Thru-rod Anchor

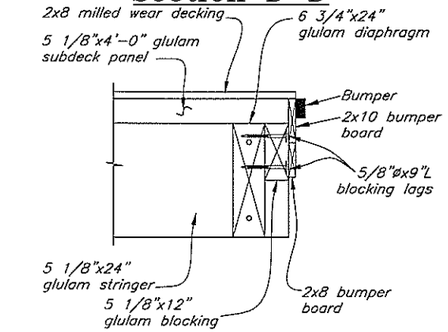

Section F-F

DO NOT SCALE FROM THESE DRAWINGS USE DIMENSIONS

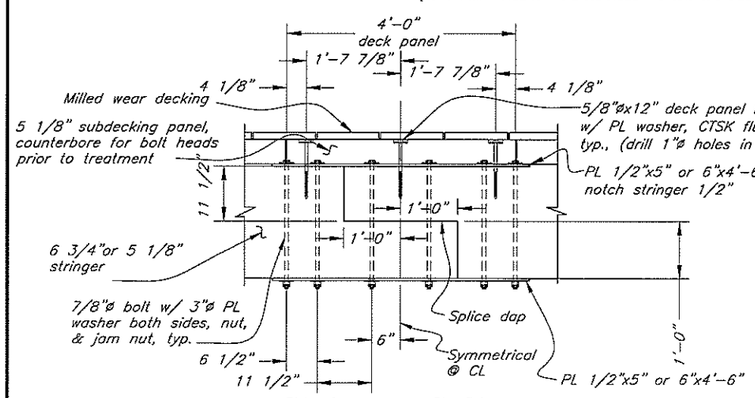

Stringer Splice

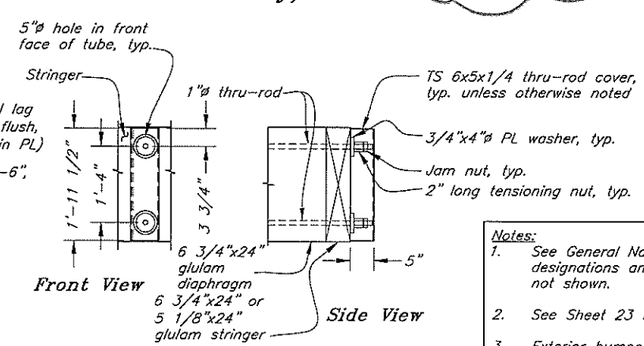

Thru-rod & Cover Detail

Notes:

1. See General Notes Sheet 2 and specifications for material designations and additional connection and hardware requirements not shown.
2. See Sheet 23 for exterior blocking and rail details not shown.
3. Exterior bumper cushion on five sides, approximately 230 LF required.
4. Exterior bumper boards & bumper cushions do not extend across thru-rod covers (provide gap at thru-rod locations).

DESIGNED BY: K. Miller

STATE OF ALASKA 49TH Kirk D. Miller CE-8550 REGISTERED PROFESSIONAL ENGINEER 9/8/06

CHECKED BY: J. Beedle
DRAFTED BY: C. Furman

CITY OF HOONAH

Hoonah City Float Replacement

Gangway Float Framing

PATH: O:\Hnh\67792\MF\Planset-City Dock\16 GW float framing.dwg
PLOT: PSPACE 1=1 Tab: Main Framing Thu, 07/Sep/06 02:13PM

REVISIONS			PROJECT DESIGNATION	YEAR	SHEET NO.	TOTAL SHEETS
NO.	DATE	DESCRIPTION	67792	2006	16	34

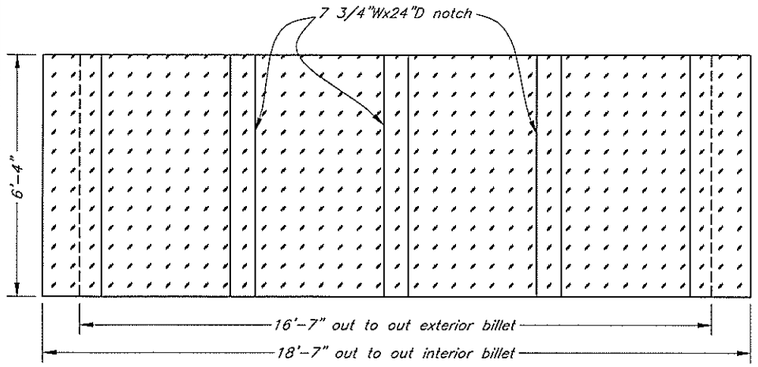

Plan – Notched Extension Flotation Billets

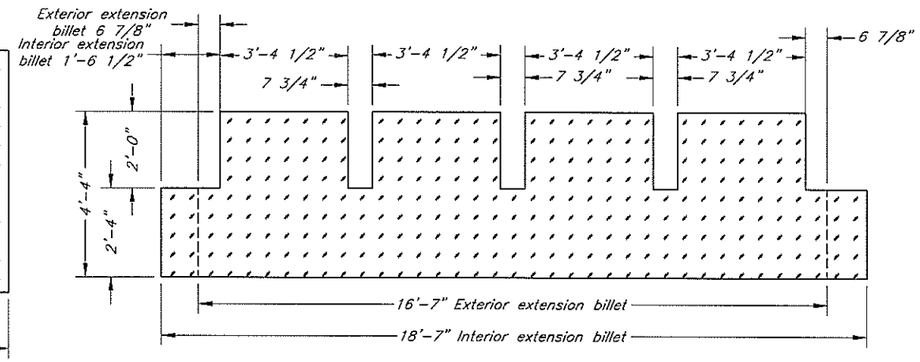

Elevation – Notched Extension Flotation Billets

(2 req'd)

Flotation Billet & Thru-Rod Coupler Notes:

1. Fabricate notched extension billets by fabricating in large of sections as practical and using approved adhesive to combine to the shape shown.

2. Depending on method of float fabrication & assembly, alternative means for obtaining the specified flotation may also be submitted to the Engineer for approval.

3. The maximum length of readily available thru-rods is approximately 50-feet. Construction of the gangway float will require two thru-rods (@ 2 locations) to achieve the specified length and spliced with a coupling nut. This will affect method of float assembly. Suggested thru-rod splice is outlined on Section L. Alternative designs for location and method of splice may be furnished to the Engineer for approval.

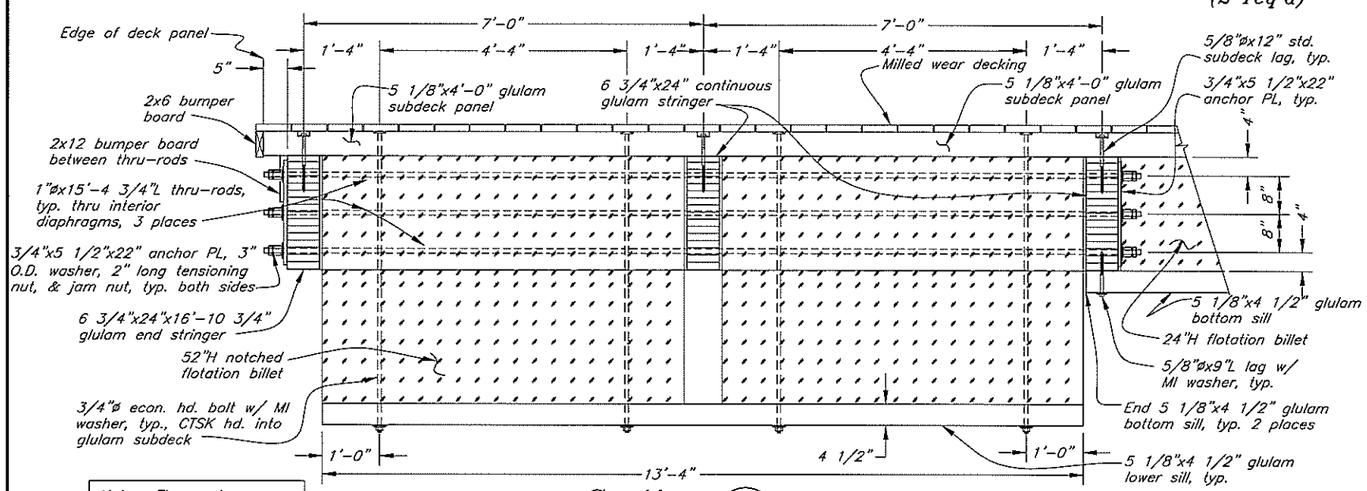

Note: Thru-rod covers not required at extension

Section G / 16

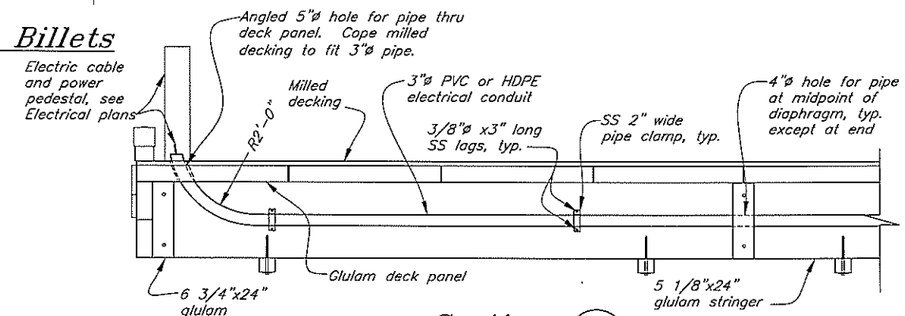

Section K / 16

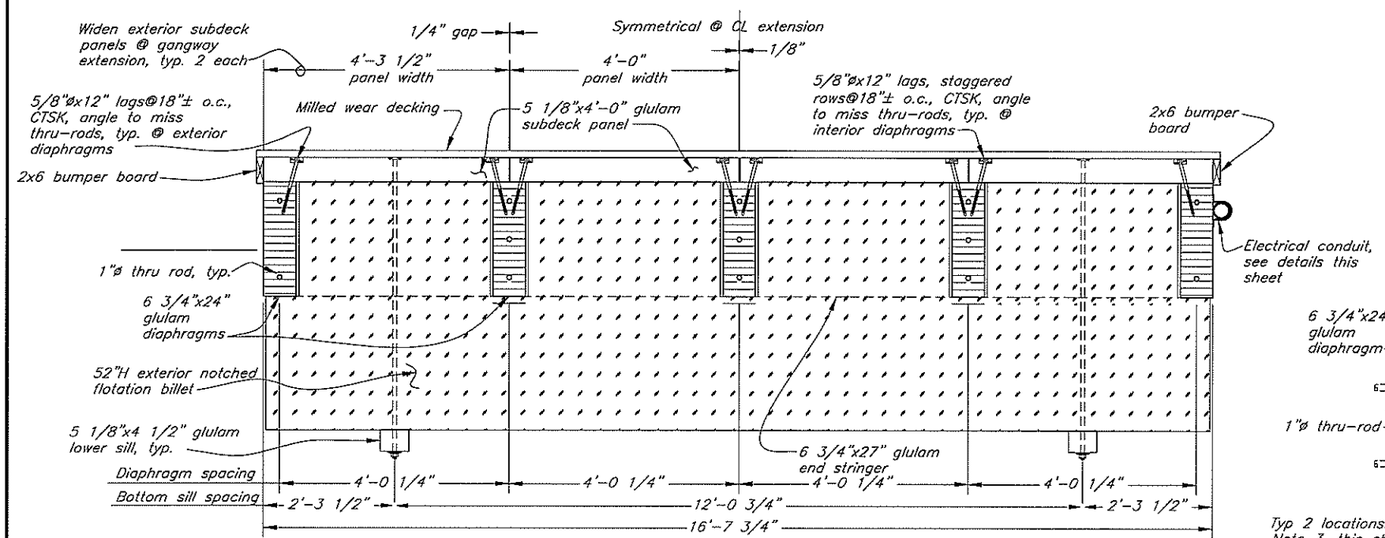

Section H / 16

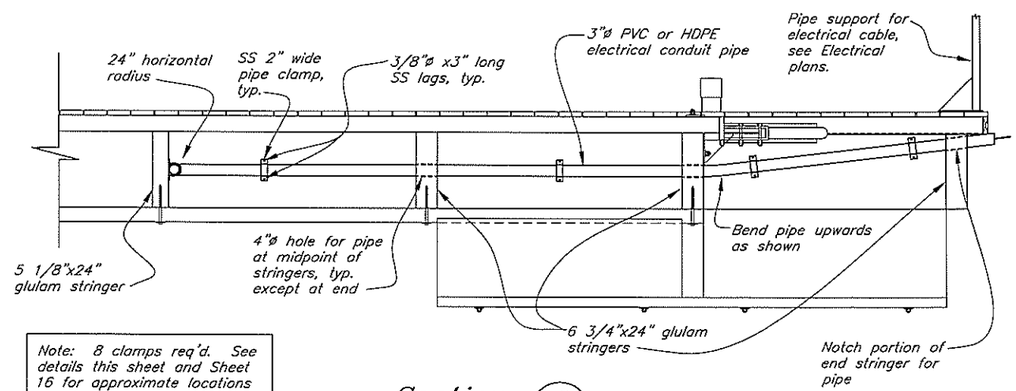

Note: 8 clamps req'd. See details this sheet and Sheet 16 for approximate locations as shown.

Section J / 16

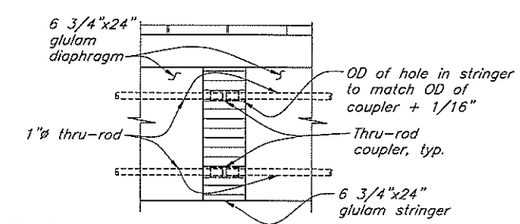

Typ 2 locations. Also see Note 3, this sheet.

Section L / 16

Thru-rod Coupler

DO NOT SCALE FROM THESE DRAWINGS USE DIMENSIONS

DESIGNED BY: K. Miller

STATE OF ALASKA 49TH Kirk D. Miller CE-8550 REGISTERED PROFESSIONAL ENGINEER 9/8/06

CHECKED BY: J. Beedle

DRAFTED BY: C. Fuman

CITY OF HOONAH

Hoonah City Float Replacement

Gangway Float Extension Framing & Conduit Details

PATH: O:\Hnh\67792\MF\Planset-City Dock\17 GW float ext framing.dwg

PLOT: PSPACE 1=1 Tab: Ext. Framing Thu, 07/Sep/06 01:57PM

REVISIONS			PROJECT DESIGNATION	YEAR	SHEET NO.	TOTAL SHEETS
NO.	DATE	DESCRIPTION	67792	2006	17	34

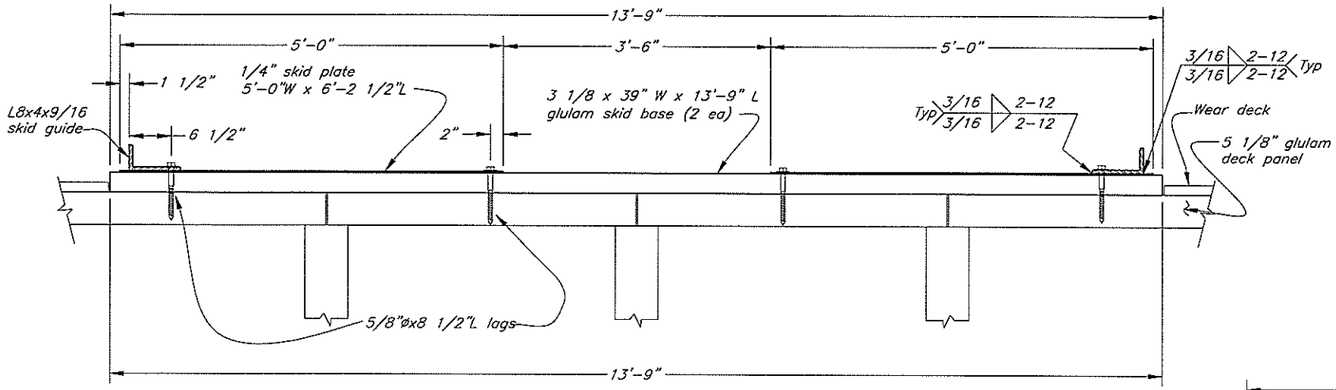

Skid Section A-A

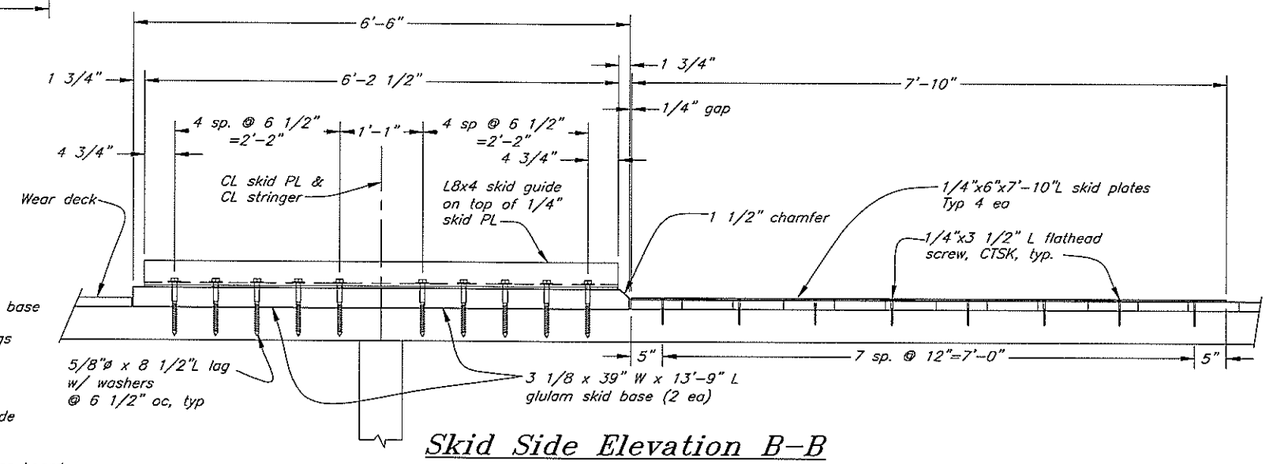

Skid Side Elevation B-B

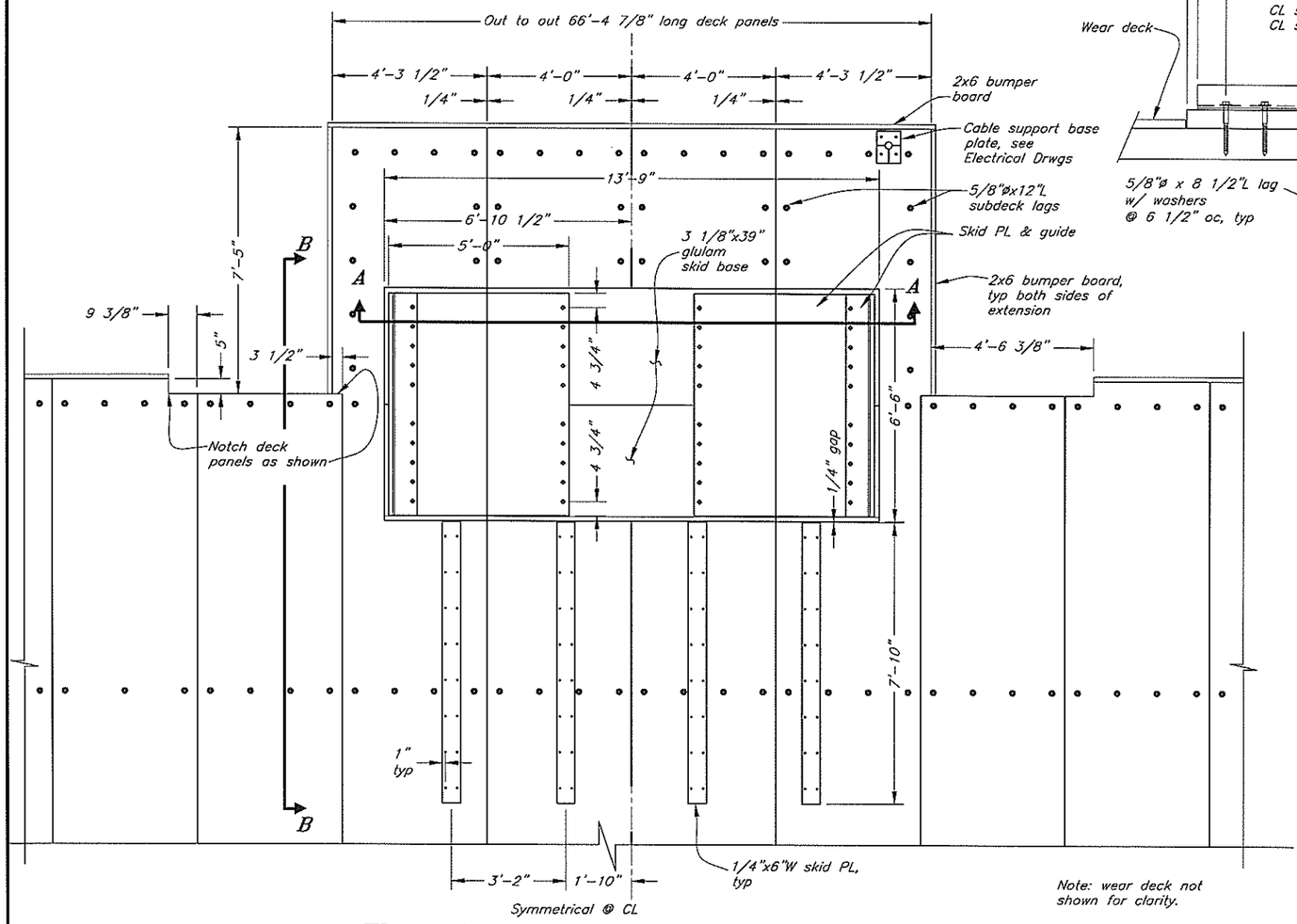

Note: wear deck not shown for clarity.

Float Extension Gangway Skid Plan & Deck Panel Cutouts

Skid Plate Installation Notes:

1. Affix skid plates to float after placement of float & trestle structures & verification of as-built position.
2. Omit wear deck boards in region of skid plates & temporarily place skid plate assemblies at plan location or as otherwise directed by the Engineer based on as-built position of structures.
3. Observe & mark gangway travel for a minimum of 5-days of tidal cycles.
4. Adjust location & alignment of skid plates as required after gangway travel characteristics are known.
5. Install lag bolts as noted on plans and place remaining wear deck boards to match.

DO NOT SCALE FROM THESE DRAWINGS USE DIMENSIONS

DESIGNED BY: K. Miller

STATE OF ALASKA 49TH Kirk D. Miller CE-8550 REGISTERED PROFESSIONAL ENGINEER

9/8/06

CHECKED BY: J. Beedle

DRAFTED BY: C. Furman

CITY OF HOONAH

Hoonah City Float Replacement

Float Extension & Gangway Skid Details

PATH: O:\Hnh\67792\MF\Planset-City Dock\18 GW float Skid PL.dwg

PLOT: PSPACE 1=1 Tab: Extension Deck Fri, 01/Sep/06 06:34PM

REVISIONS			PROJECT DESIGNATION	YEAR	SHEET NO.	TOTAL SHEETS
NO.	DATE	DESCRIPTION	67792	2006	18	34

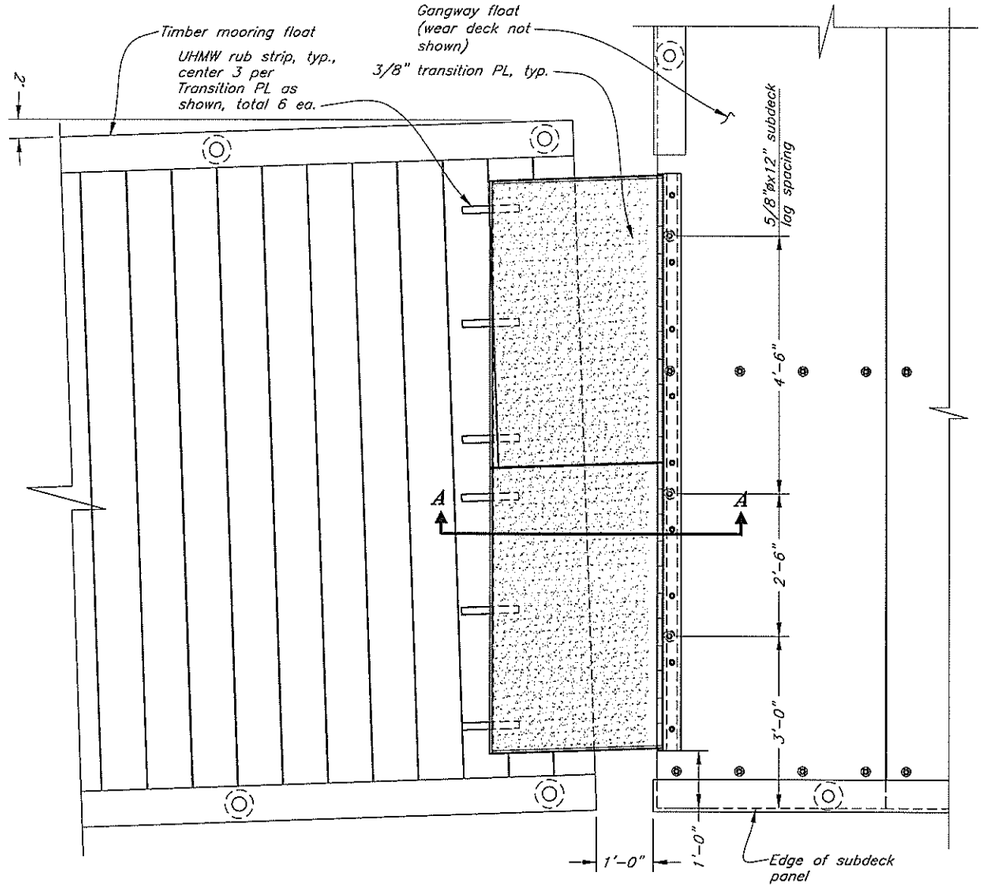

Mooring Float to Gangway Float Transition PL Plan

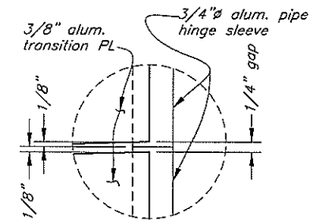

Note: Hinge sleeves extend beyond transition PL's 1/8" to create 1/4" gap between PL's

Detail 1

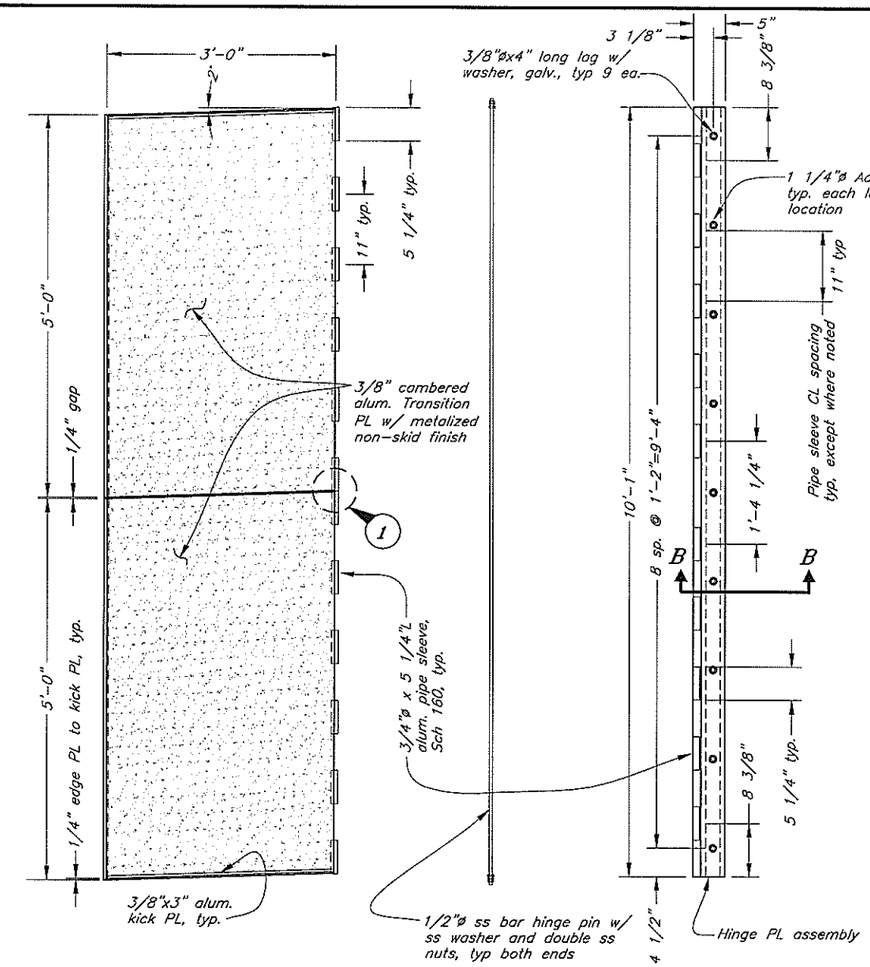

Transition PL Details

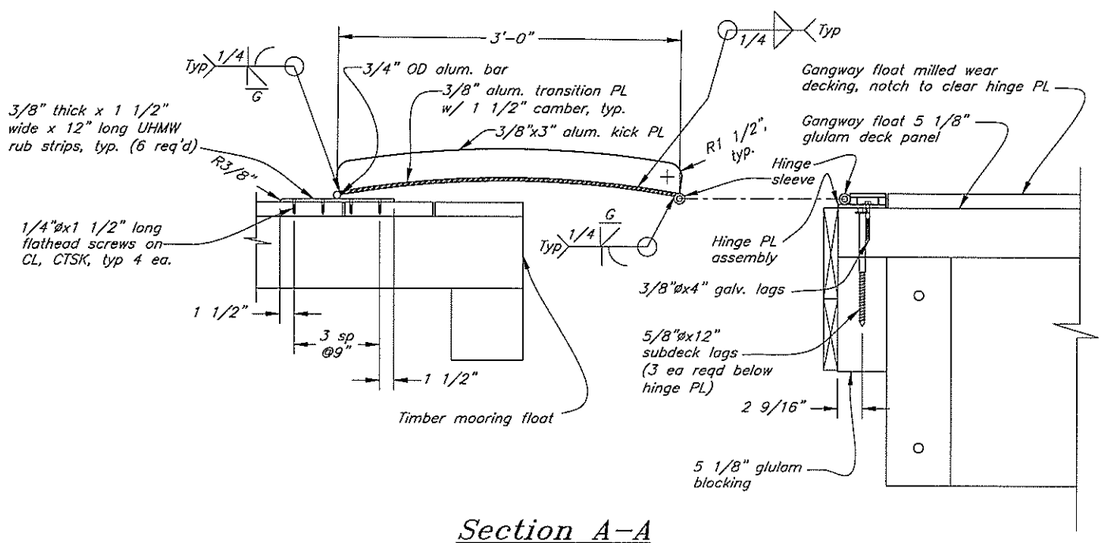

Section A–A

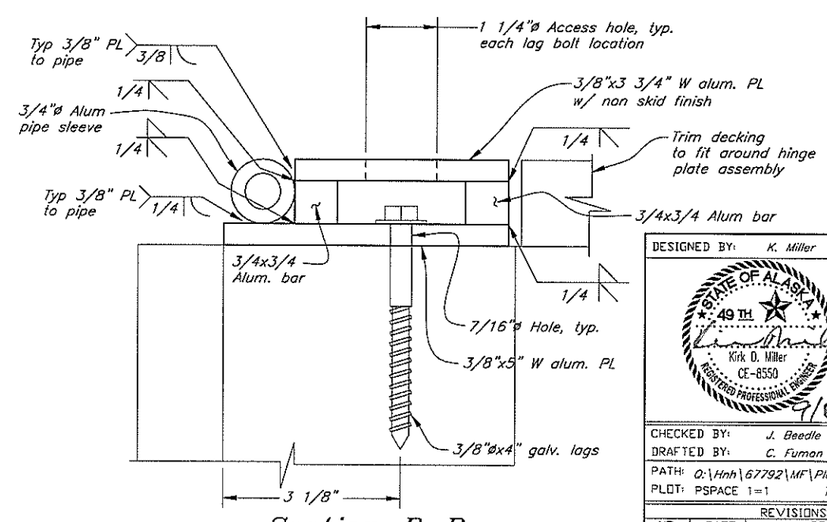

Section B–B

DO NOT SCALE FROM THESE DRAWINGS USE DIMENSIONS

DESIGNED BY: K. Miller

STATE OF ALASKA 49TH Kirk D. Miller CE-8550 REGISTERED PROFESSIONAL ENGINEER 9/8/06

CHECKED BY: J. Beedle

DRAFTED BY: C. Fuman

CITY OF HOONAH

Hoonah City Float Replacement

Main Float to Mooring Float Transition Plate

PATH: O:\Hnh\67792\MF\Planset-City Dock\19 Main to Log Float Trans PL.dwg

PLOT: PSPACE 1=1 Tab: Trans PL Wed, 23/Aug/06 01:18PM

REVISIONS			PROJECT DESIGNATION	YEAR	SHEET NO.	TOTAL SHEETS
NO.	DATE	DESCRIPTION	67792	2006	19	34

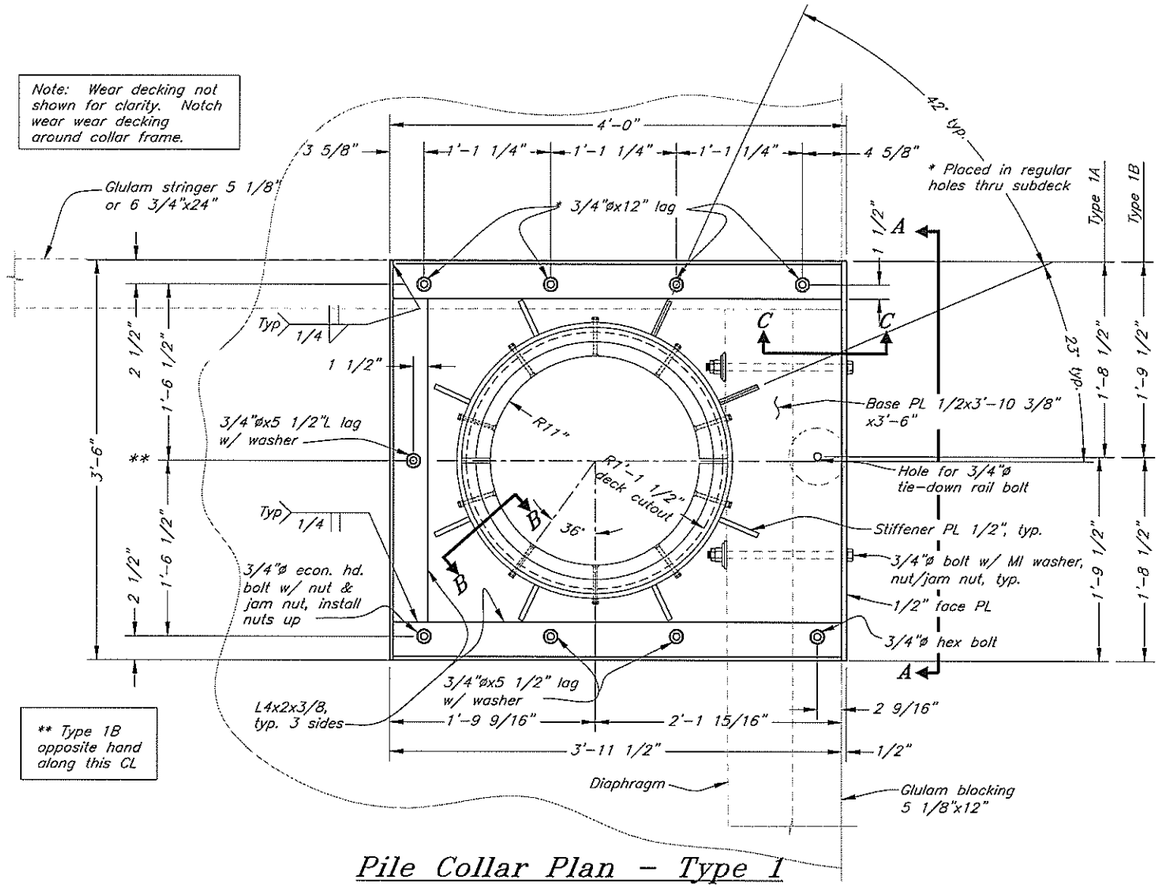

Pile Collar Plan - Type 1

Type 1 A shown - 2 req'd
Type 1B opposite hand - 3 req'd

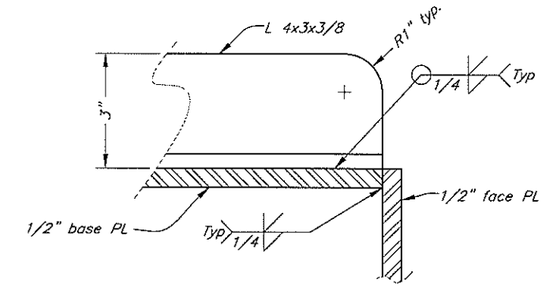

Section C-C

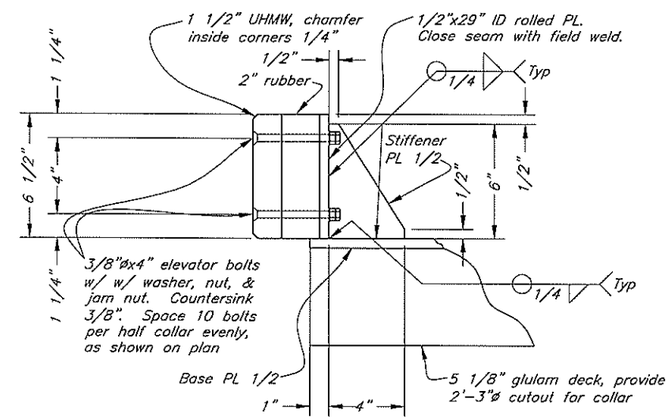

Section B-B

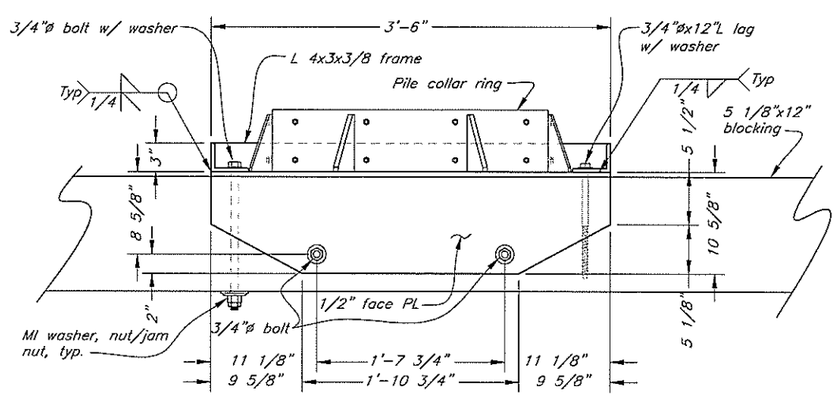

Elevation A-A

DO NOT SCALE FROM THESE DRAWINGS USE DIMENSIONS

DESIGNED BY: K. Miller

STATE OF ALASKA 49TH Kirk D. Miller CE-8550 REGISTERED PROFESSIONAL ENGINEER 9/8/06

CHECKED BY: J. Beedle
DRAFTED BY: C. Fumon

CITY OF HOONAH

Hoonah City Float Replacement

Gangway Float
Pile Collar - Type 1

PATH: Q:\Hnh\67792\MF\Planset-City Dock\20 GW float Pile collar 1.dwg
PLOT: PSPACE 1=1 Tab: Int Pile Collar 1 Fri, 08/Sep/06 01:35PM

REVISIONS			PROJECT DESIGNATION	YEAR	SHEET NO.	TOTAL SHEETS
NO	DATE	DESCRIPTION				
			67792	2006	20	34

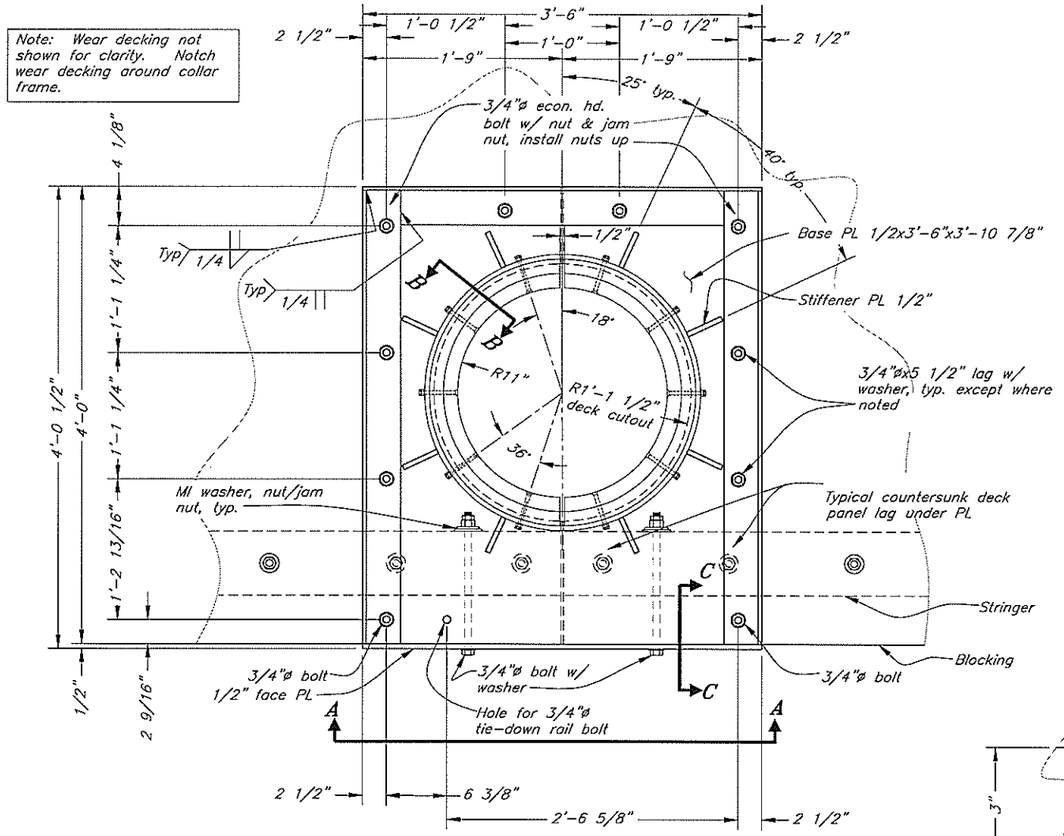

Pile Collar Type 2
(1 req'd,)

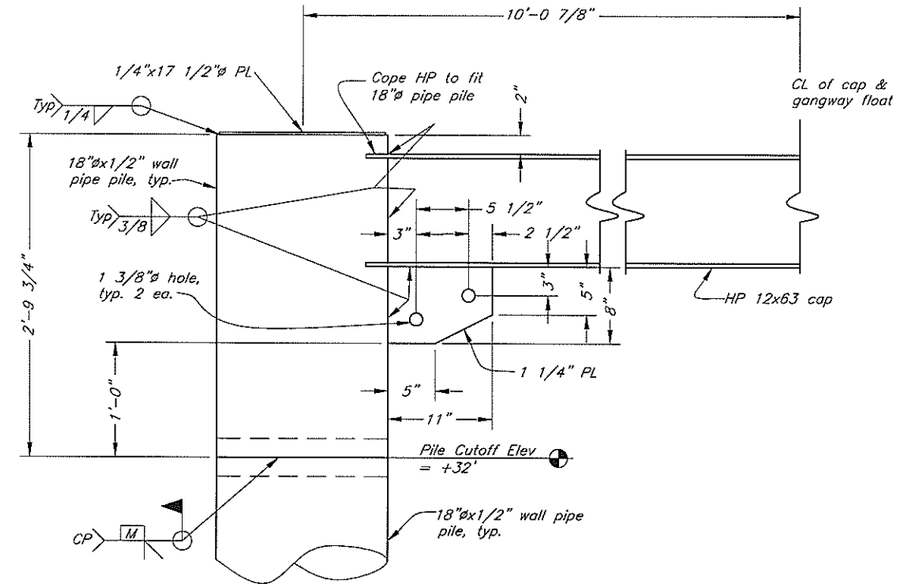

Detail 1

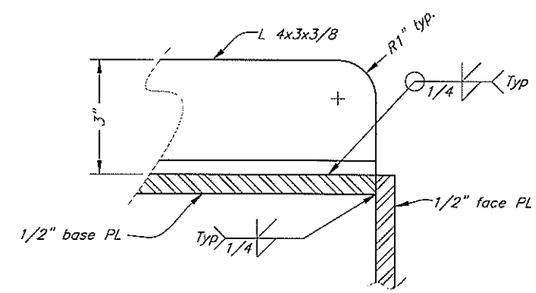

Section C–C

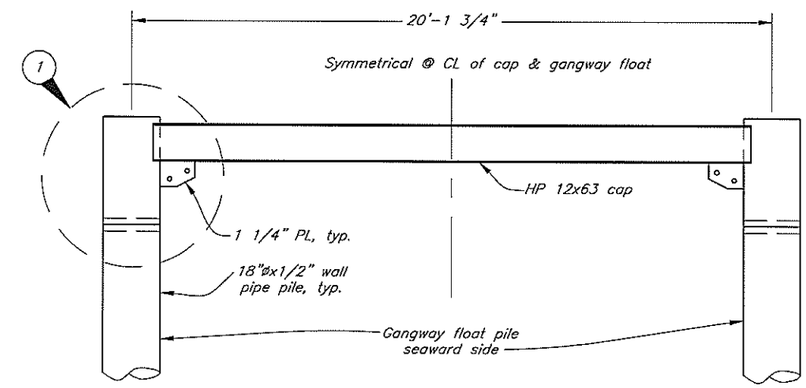

Note: See Electrical Plans for light fixtures & other items affixed to pile cap structure not shown.

Gangway Float Pile Cap

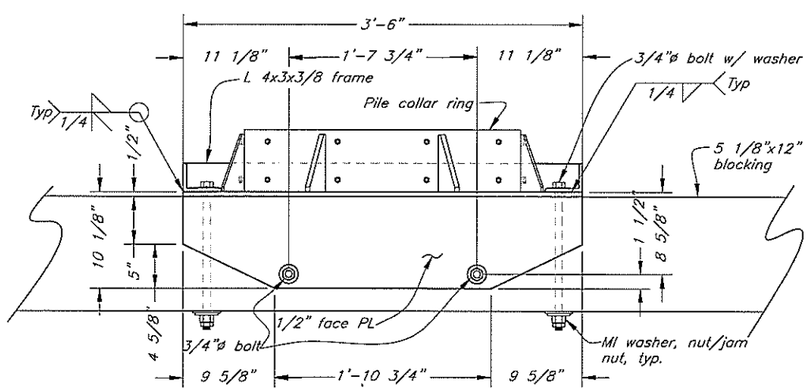

Elevation A–A

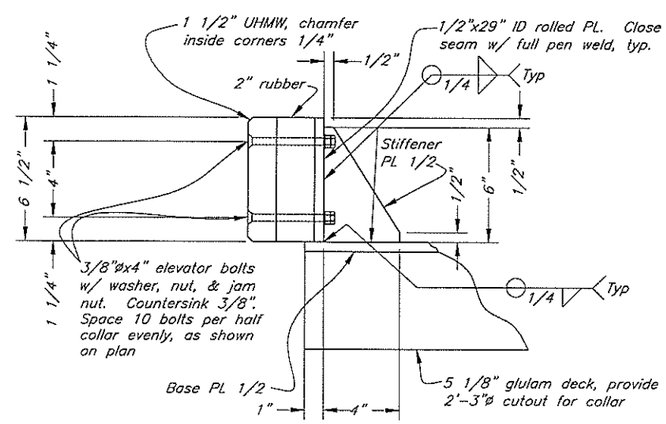

Section B–B

DO NOT SCALE FROM THESE DRAWINGS USE DIMENSIONS

DESIGNED BY: K. Miller

STATE OF ALASKA 49TH Kirk D. Miller CE-8550 REGISTERED PROFESSIONAL ENGINEER 9/8/06

CHECKED BY: J. Beedle
DRAFTED BY: C. Fuman

CITY OF HOONAH

Hoonah City Float Replacement

Gangway Float Pile Collar -Type 2

PATH: Q:\Hnh\67792\MF\Planset-City Dock\21 GW float Pile collar 2.dwg
PLOT: PSPACE 1=1 Tab: Int Pile Collar 2 Fri, 08/Sep/06 01:36PM

REVISIONS			PROJECT DESIGNATION	YEAR	SHEET NO.	TOTAL SHEETS
NO.	DATE	DESCRIPTION	67792	2006	21	34

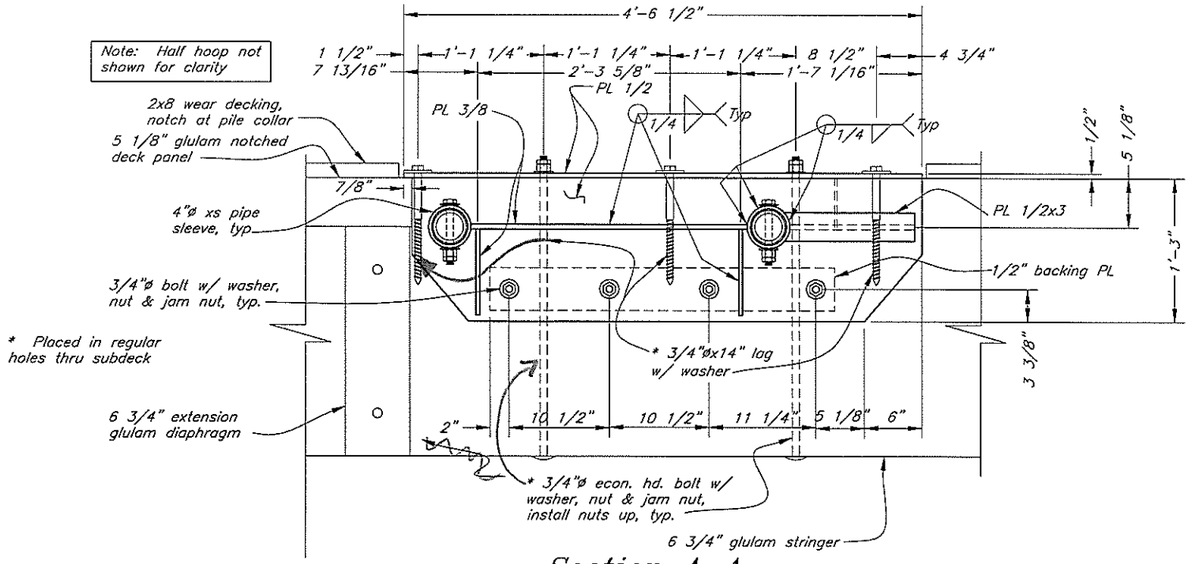

Section A-A

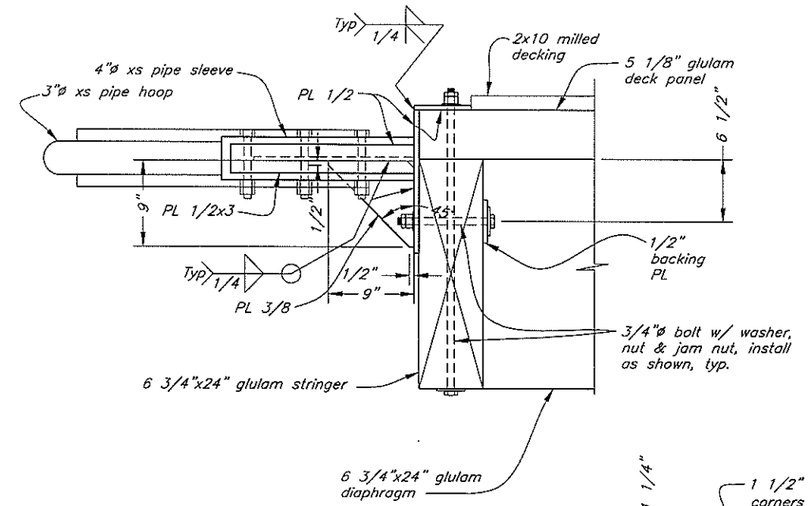

Side View

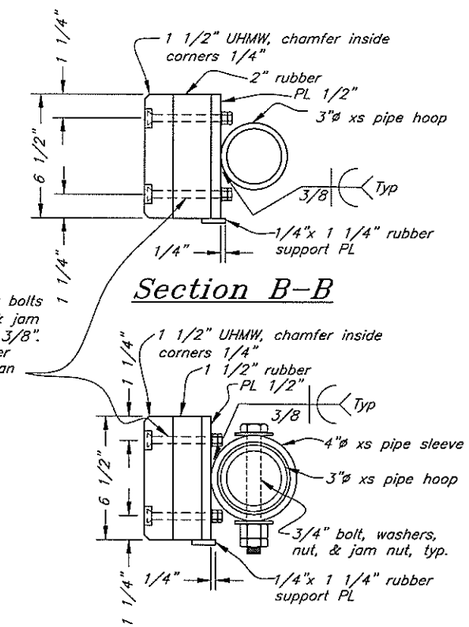

Section B-B

Section C-C

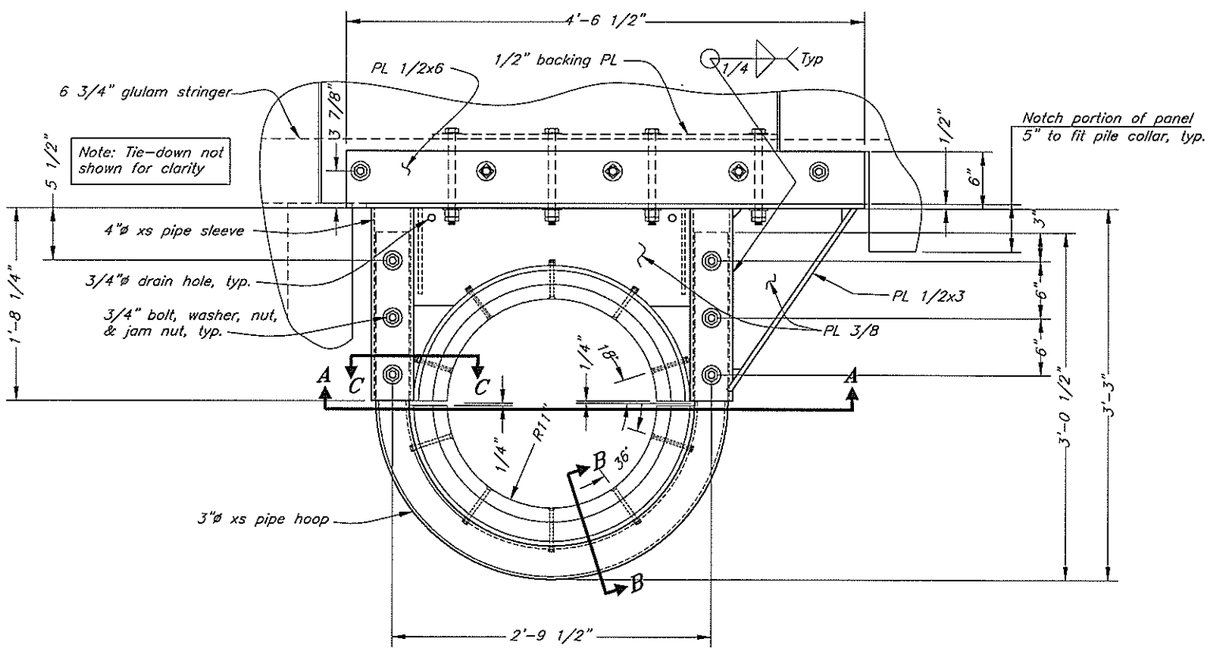

Pile Collar Plan - Type 3

(2 req'd, 1 as shown, 1 opposite hand)

Note: All welds may not be shown. Weld all contacts w/ 1/4" fillet weld unless otherwise noted.

DO NOT SCALE FROM THESE DRAWINGS USE DIMENSIONS

DESIGNED BY: K. Miller

STATE OF ALASKA 49TH Kirk D. Miller CE-8550 REGISTERED PROFESSIONAL ENGINEER

9/8/06

CHECKED BY: J. Beedle

DRAFTED BY: C. Fuman

CITY OF HOONAH

Hoonah City Float Replacement

Gangway Float
Pile Collar Type 3

PATH: O:\Hnh\67792\MF\Planset-City Dock\22 GW float Pile collar 3.dwg

PLOT: PSPACE 1=1 Tab: Pile Collar 3 Wed, 23/Aug/06 01:17PM

REVISIONS			PROJECT DESIGNATION	YEAR	SHEET NO.	TOTAL SHEETS
NO.	DATE	DESCRIPTION	67792	2006	22	34

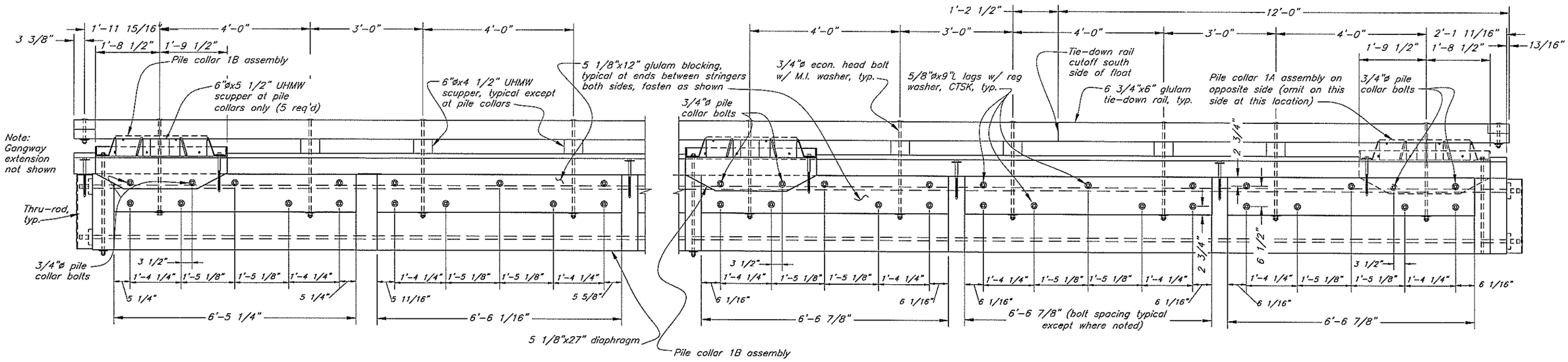

Note: Opposite side mirror image except as noted

Blocking & Rail Elevation – Float Sides

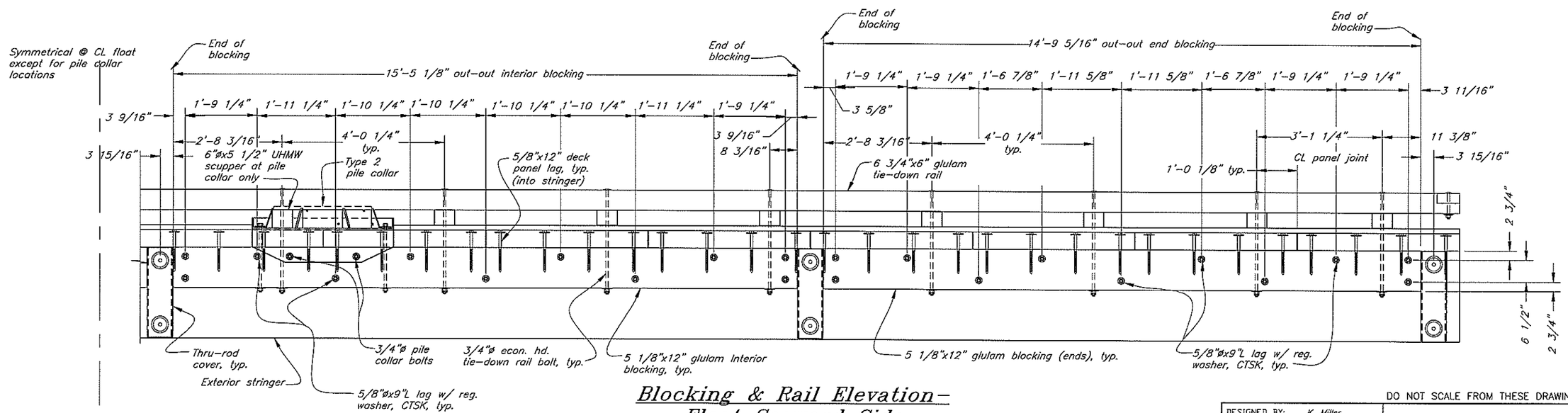

Blocking & Rail Elevation– Float Seaward Side

DO NOT SCALE FROM THESE DRAWINGS USE DIMENSIONS

DESIGNED BY: K. Miller

STATE OF ALASKA 49TH Kirk D. Miller CE-8550 REGISTERED PROFESSIONAL ENGINEER

7/8/06

CHECKED BY: J. Beedle

DRAFTED BY: C. Fuman

CITY OF HOONAH

Hoonah City Float Replacement

Gangway Float Exterior Blocking & Rail

PATH: O:\Hnh\67792\MF\Planset-City Dock\23 GW float blocking.dwg

PLOT: PSPACE 1=1 Tab: Blocking Wed, 23/Aug/06 01:17PM

REVISIONS			PROJECT DESIGNATION	YEAR	SHEET NO.	TOTAL SHEETS
NO.	DATE	DESCRIPTION	67792	2006	23	34

Note: All float logs are 12 3/4"x12" glulam timbers

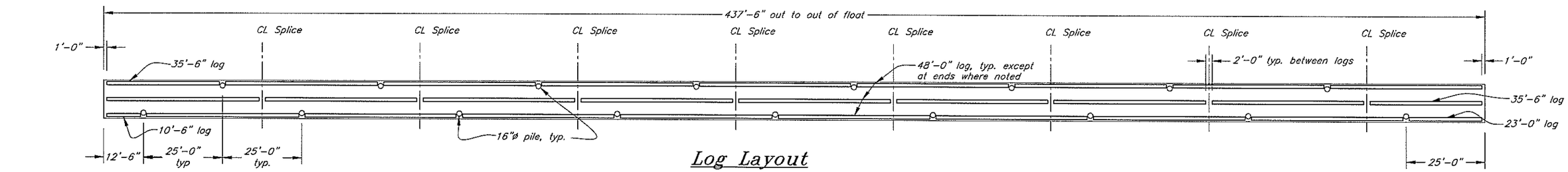

Log Layout

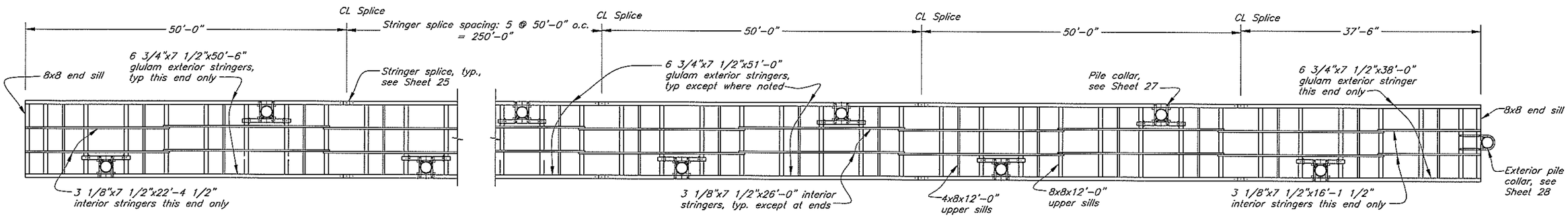

Stringer & Sill Layout

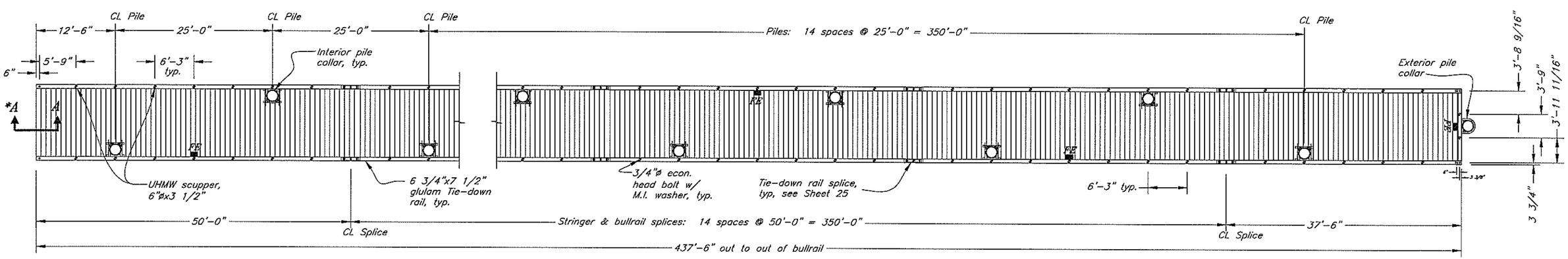

FE – Fire extinguisher cabinet. Locate @ approximately 50' spacing, alternate sides, typ.

Deck Layout

* See section A-A, sheet 26 for end flotation detail, (Similar).

DO NOT SCALE FROM THESE DRAWINGS USE DIMENSIONS

DESIGNED BY: K. Miller

STATE OF ALASKA 49TH Kirk D. Miller CE-8550 REGISTERED PROFESSIONAL ENGINEER 2/8/06

CHECKED BY: J. Beedle

DRAFTED BY: C. Fuman

CITY OF HOONAH

Hoonah City Float Replacement

12' x 437'-6"
Mooring Float Layout

PATH: Q:\Hnh\67792\MF\Planset-City Dock\24 Log Float Layout.dwg
PLOT: PSPACE 1=1 Tab: Layout Wed, 23/Aug/06 01:17PM

REVISIONS			PROJECT DESIGNATION	YEAR	SHEET NO.	TOTAL SHEETS
NO.	DATE	DESCRIPTION	67792	2006	24	34

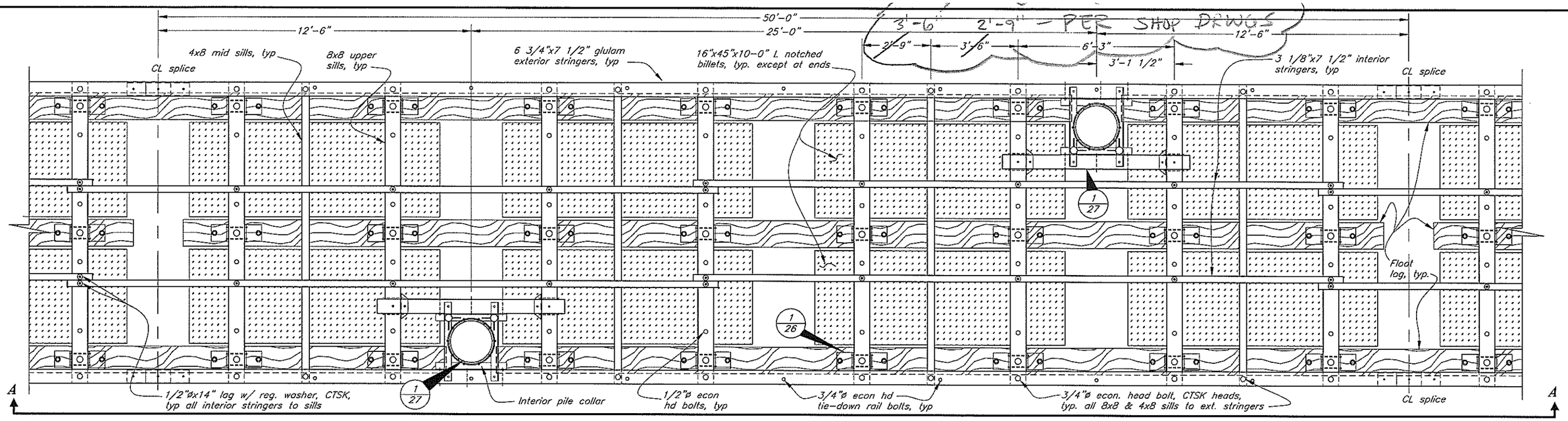

Typical 50' Float Plan

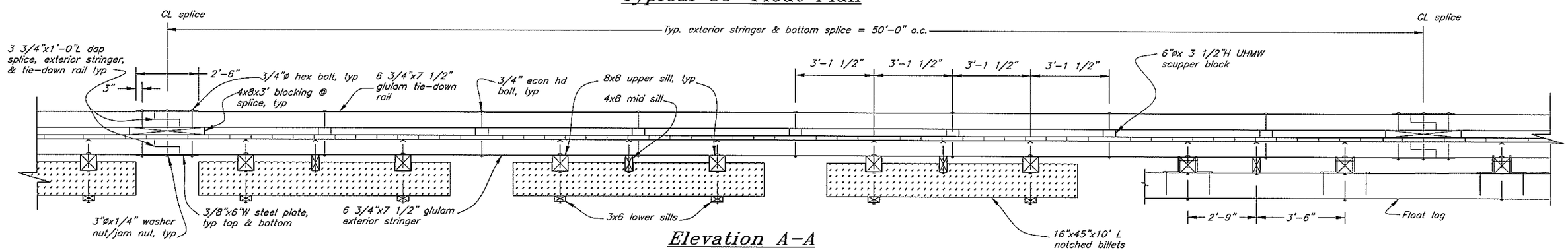

Elevation A-A

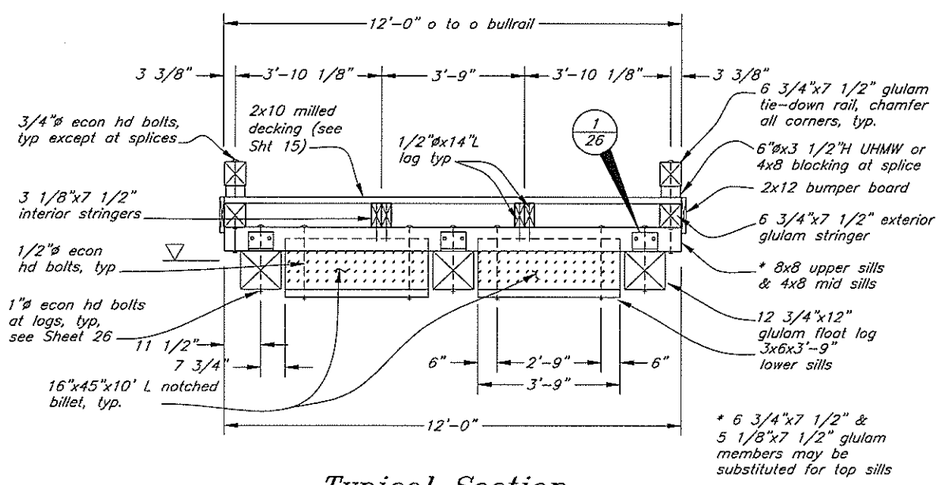

Typical Section

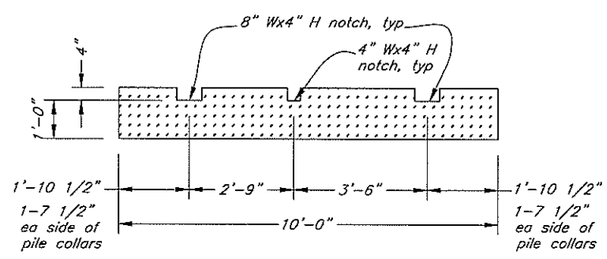

Note: Also see Sht 26 for special end billets (extended to end of float)

Notched Billet Detail

DO NOT SCALE FROM THESE DRAWINGS USE DIMENSIONS

DESIGNED BY: K. Miller

STATE OF ALASKA 49TH Kirk D. Miller CE-8550 REGISTERED PROFESSIONAL ENGINEER 7/8/06

CHECKED BY: J. Beedle

DRAFTED BY: C. Fuman

CITY OF HOONAH

Hoonah City Float Replacement

50' Float Module

PATH: O:\Hnh\67792\MF\Planset-City Dock\25 Log Float 50' module.dwg

PLOT: PSPACE 1=1 Tab: 50' module Wed, 23/Aug/06 01:16PM

REVISIONS			PROJECT DESIGNATION	YEAR	SHEET NO.	TOTAL SHEETS
NO.	DATE	DESCRIPTION	67792	2006	25	34

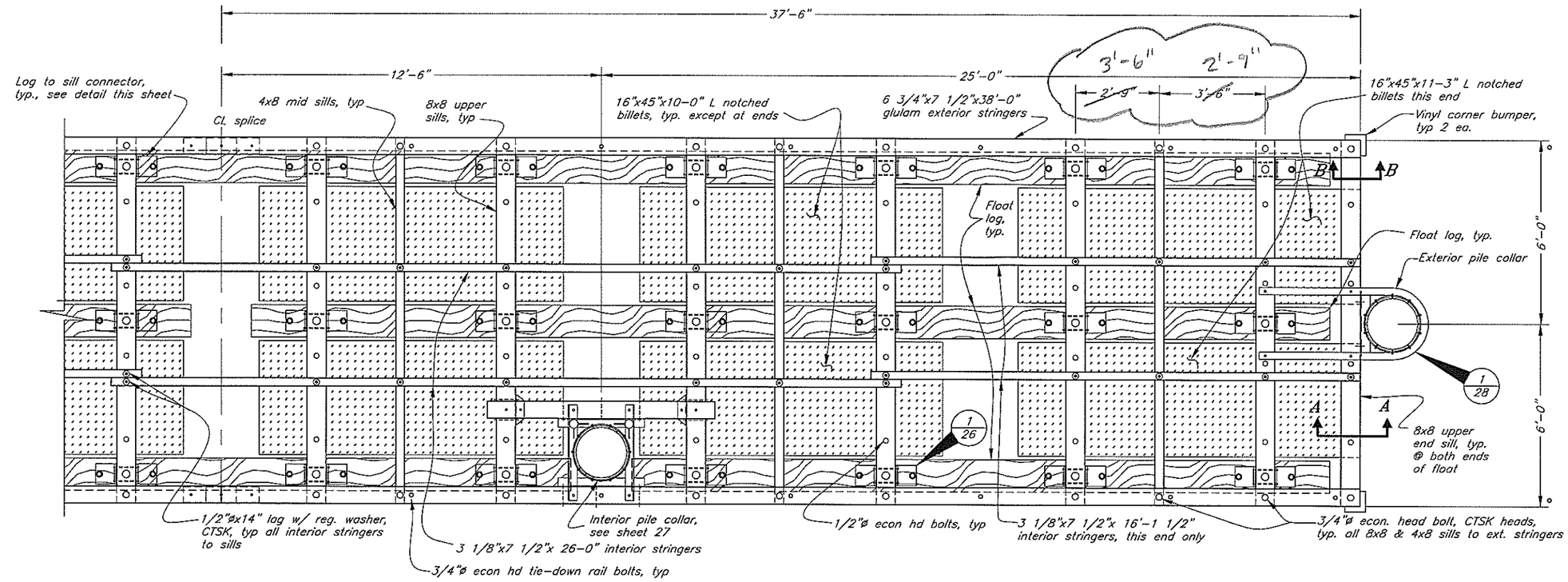

37.5' Float Module Plan

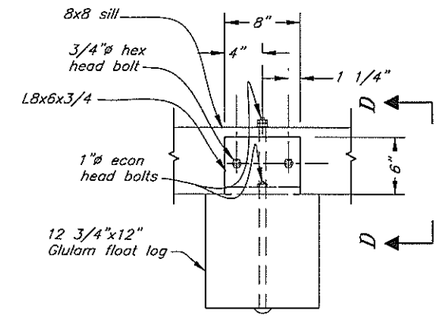

Section C-C

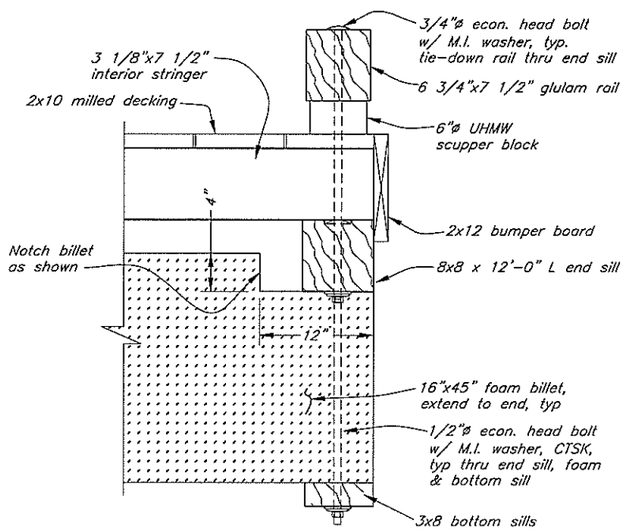

Section A-A

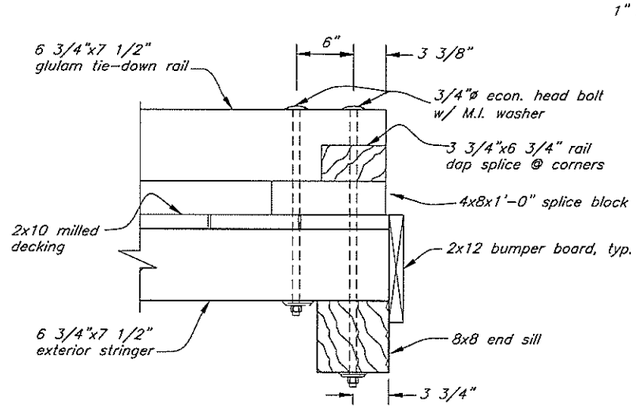

Section B-B

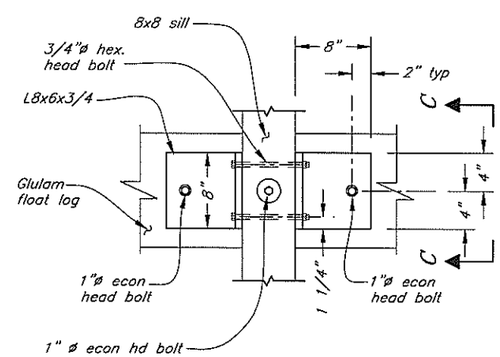

Typ. Log to Sill Connection Detail (1/25)

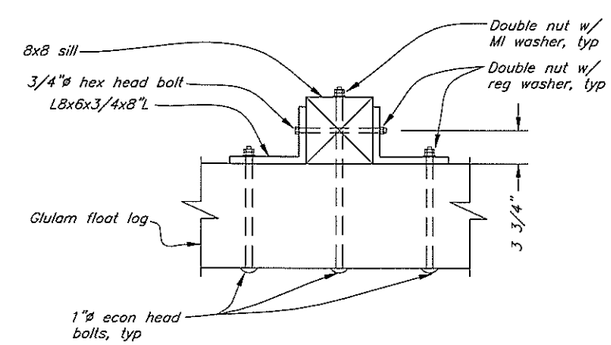

Section D-D

DO NOT SCALE FROM THESE DRAWINGS USE DIMENSIONS

DESIGNED BY: K. Miller

STATE OF ALASKA 49TH Kirk D. Miller CE-8550 REGISTERED PROFESSIONAL ENGINEER 9/8/06

CHECKED BY: J. Beedle

DRAFTED BY: C. Furman

CITY OF HOONAH

Hoonah City Float Replacement

37.5' Float Module & Misc. Details

PATH: O:\Hnh\67792\MF\Plansel-City Dock\26 Log Float 37.5' module.dwg

PLOT: PSPACE 1=1 Tab: 37.5 module Wed, 23/Aug/06 01:16PM

REVISIONS			PROJECT DESIGNATION	YEAR	SHEET NO.	TOTAL SHEETS
NO.	DATE	DESCRIPTION	67792	2006	26	34

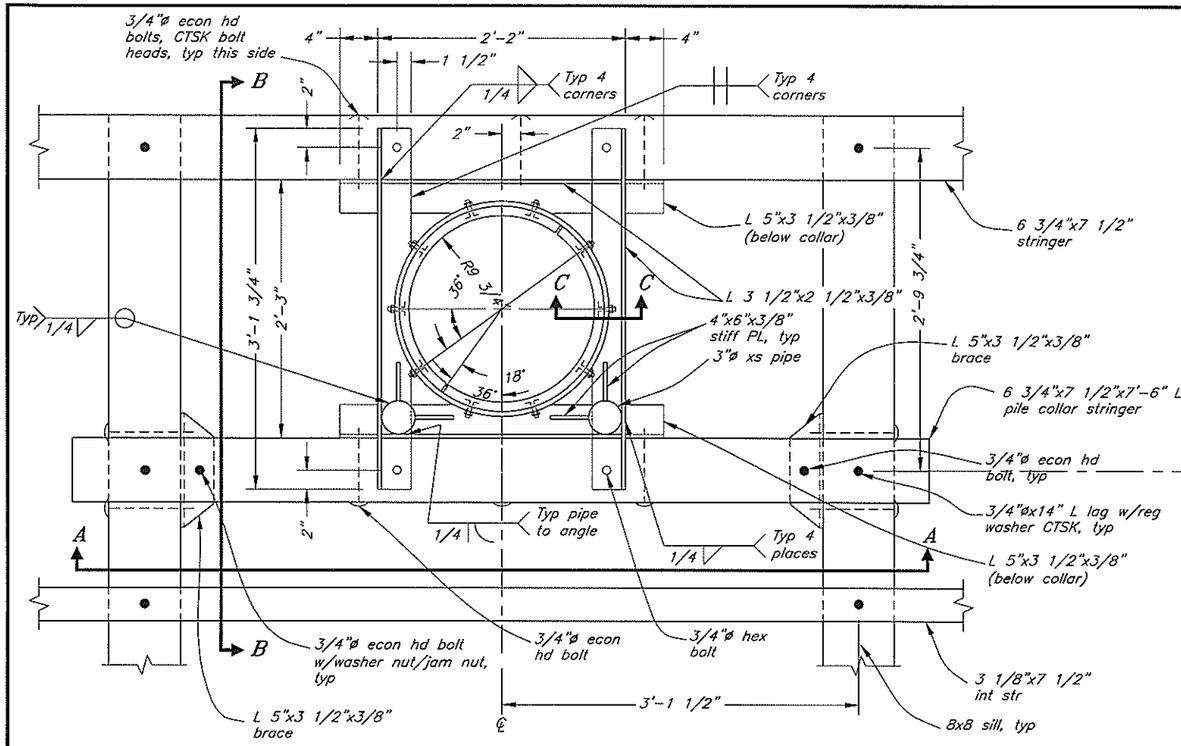

Pile Collar Plan

1/25

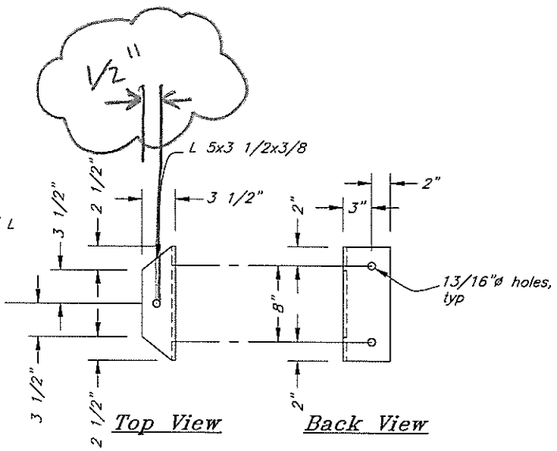

Top View

Back View

Angle Brace Detail

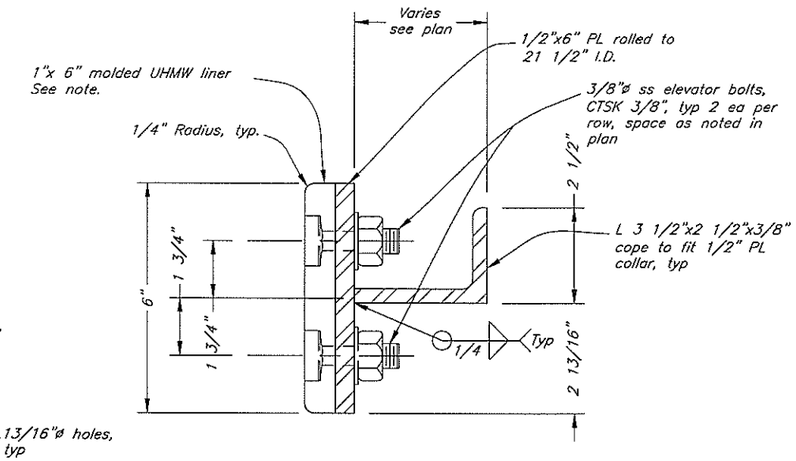

NOTE:

UHMW liners, as shown with 10 bolts per circular half collar spaced as noted. Mold UHMW liners to the diameter shown.

Section C-C

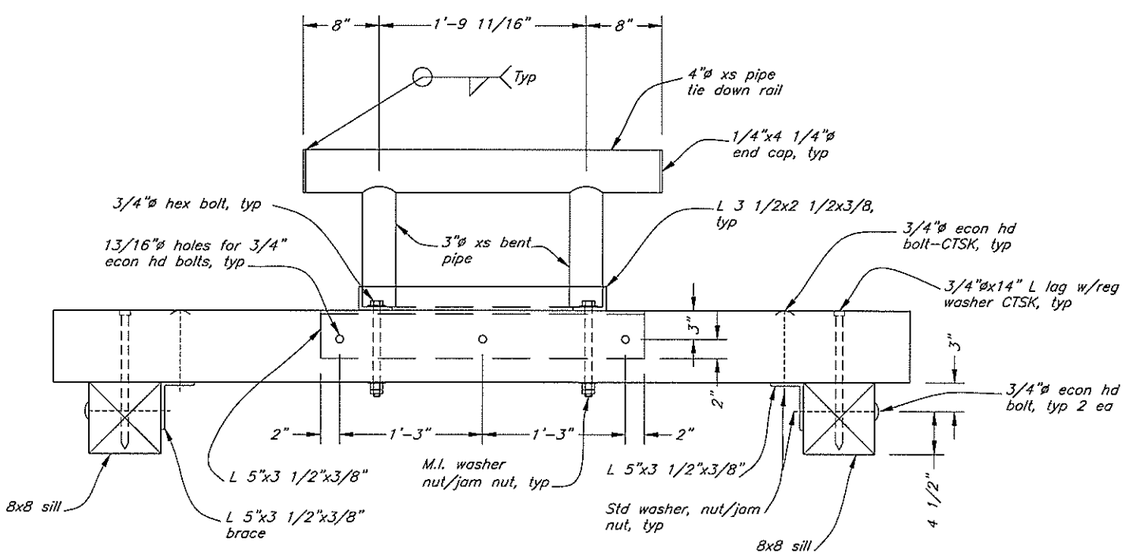

Section A-A

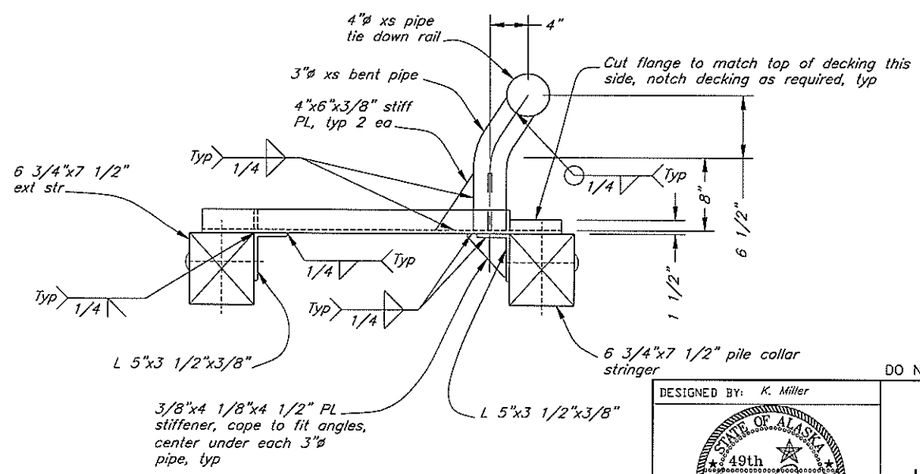

Section B-B

DO NOT SCALE FROM THESE DRAWINGS USE DIMENSIONS

DESIGNED BY: K. Miller

STATE OF ALASKA 49th Kirk D. Miller CE-8550 REGISTERED PROFESSIONAL ENGINEER

9/8/06

CHECKED BY: J. Beedle

DRAFTED BY: B. Bennett

CITY OF HOONAH

Hoonah City Float Replacement

Mooring Float Interior Pile Collar Details

PATH: Q:\Hnh\67792\MF\Planset-City Dock\27 Log Float Interior Pile Collars.dwg

PLOT: PSPACE 1=1 Tab: Int Collar Wed, 23/Aug/06 01:16PM

REVISIONS			PROJECT DESIGNATION	YEAR	SHEET NO.	TOTAL SHEETS
NO.	DATE	DESCRIPTION	67792	2006	27	34

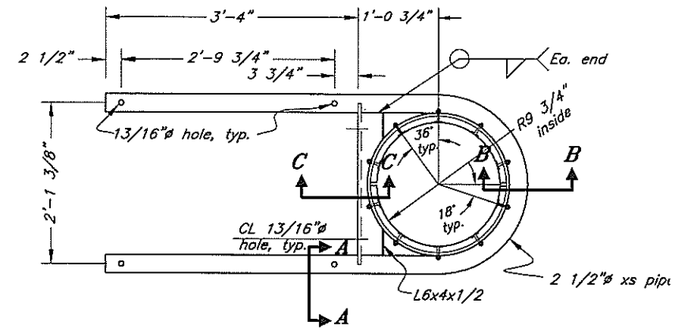

16"ø Exterior Pile Collar Detail (1/26)

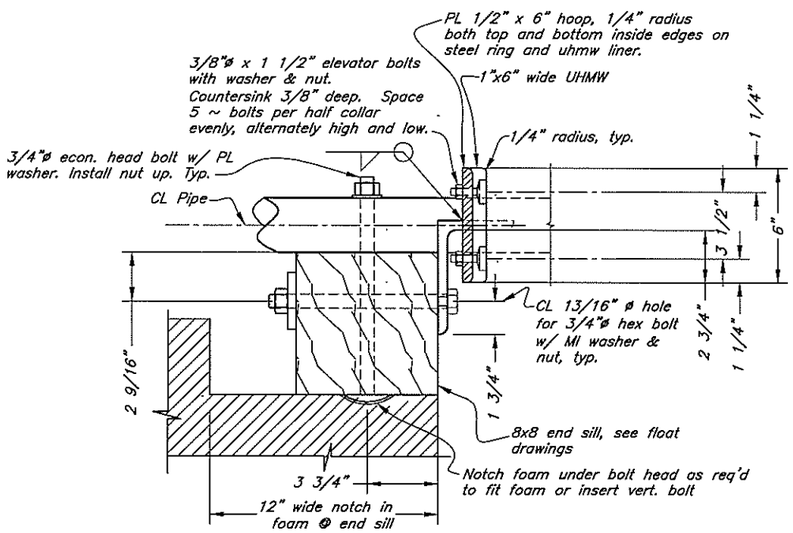

Section C-C

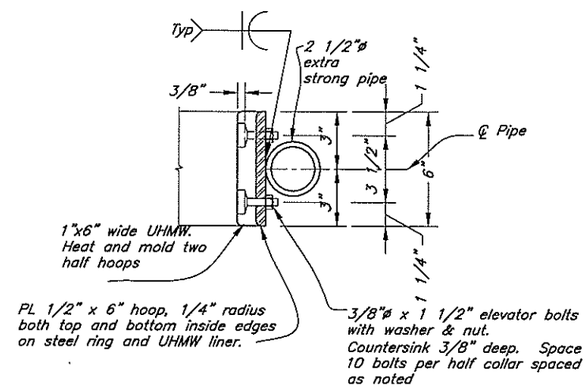

Section B-B

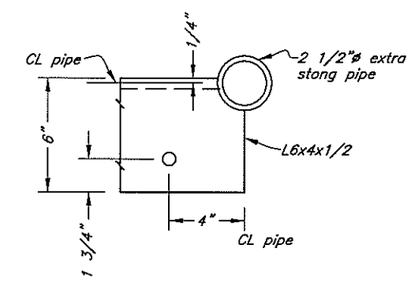

Section A-A

DO NOT SCALE FROM THESE DRAWINGS USE DIMENSIONS

DESIGNED BY: K. Miller

STATE OF ALASKA 49th Kirk D. Miller CE-8550 REGISTERED PROFESSIONAL ENGINEER

9/8/06

CHECKED BY: J. Beedle

DRAFTED BY: C. Furman

CITY OF HOONAH

Hoonah City Float Replacement

Mooring Float Exterior Pile Collar

PATH: O:\Hnh\67792\MF\Planset-City Dock\28 Log Float Exterior pile collar.dwg

PLOT: PSPACE 1=1 Tab: Ext collar Wed, 23/Aug/06 01:16PM

REVISIONS			PROJECT DESIGNATION	YEAR	SHEET NO.	TOTAL SHEETS
NO.	DATE	DESCRIPTION				
			67792	2006	28	34

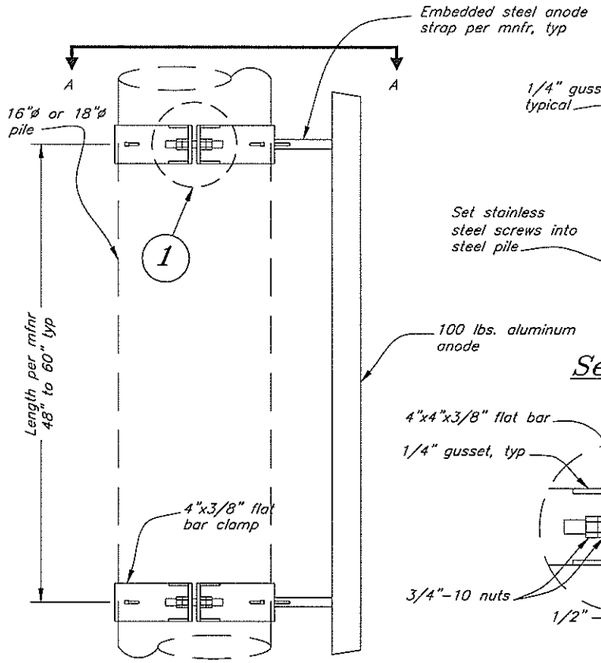

Elevation

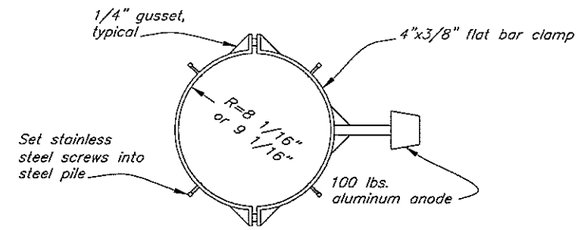

Section A–A

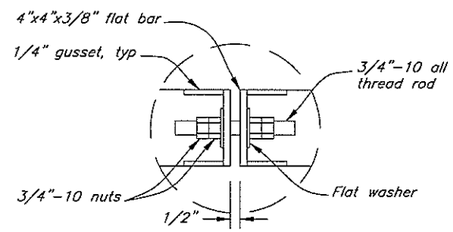

Clamp Connection (1)

NOTE:
Anodes may be welded underwater to pile in lieu of using anode bracelet.

Anode Bracelet Detail

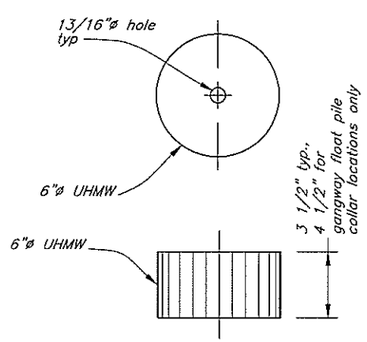

UHMW Scupper Block Detail

Pile Notes:

1. Drive all piles to estimated tip elevation unless otherwise approved by the Engineer. See pile table, Sheet 3 for estimated elevations and pile lengths.

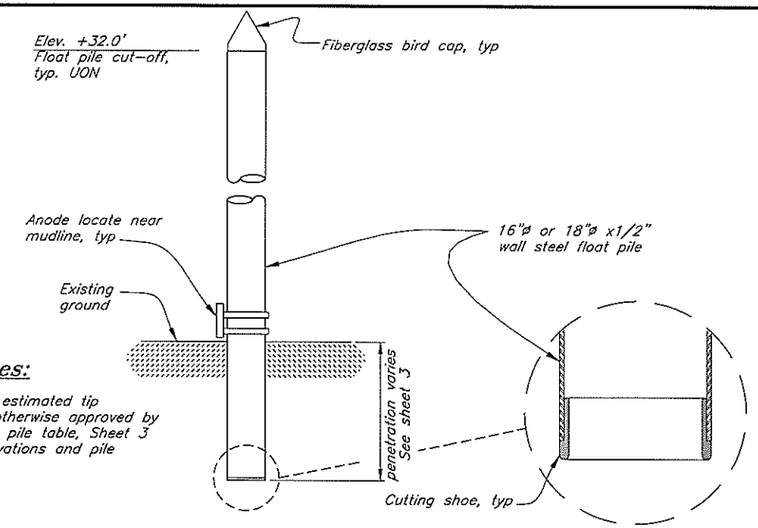

Pile Details

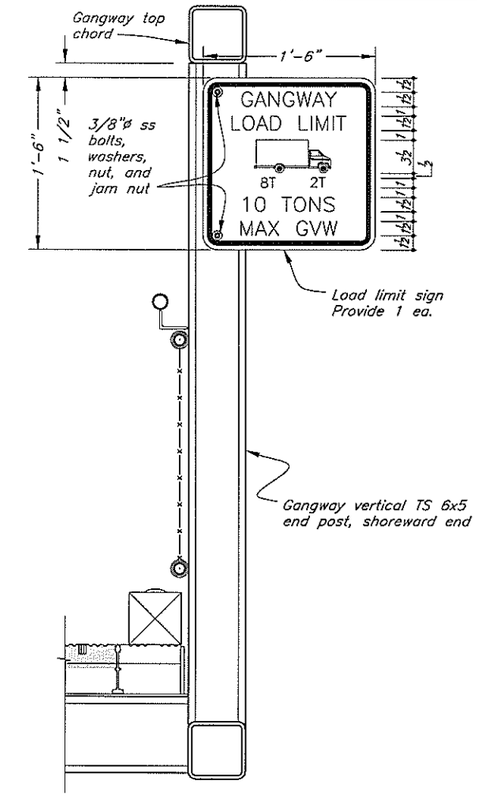

Load Limit Sign

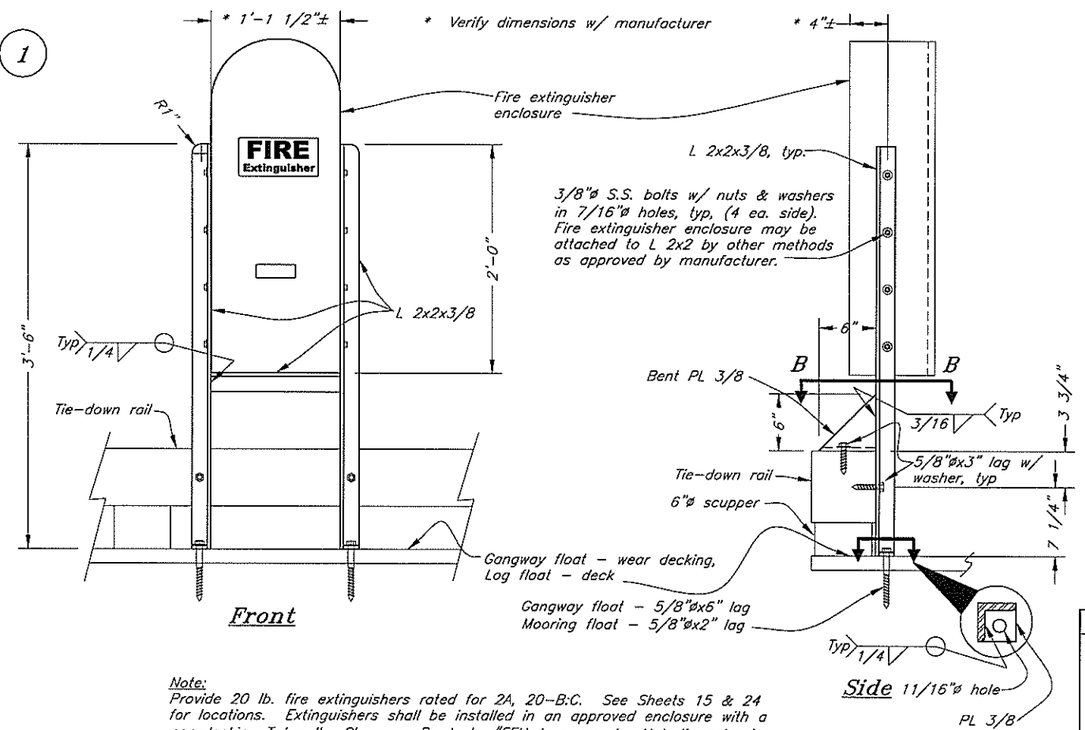

Front

Side

Note:
Provide 20 lb. fire extinguishers rated for 2A, 20–B:C. See Sheets 15 & 24 for locations. Extinguishers shall be installed in an approved enclosure with a non–locking T handle, Cheyenne Products #FEH–L or equal. Hot dip galvanize frame after fabrication.

Fire Extinguisher Enclosure

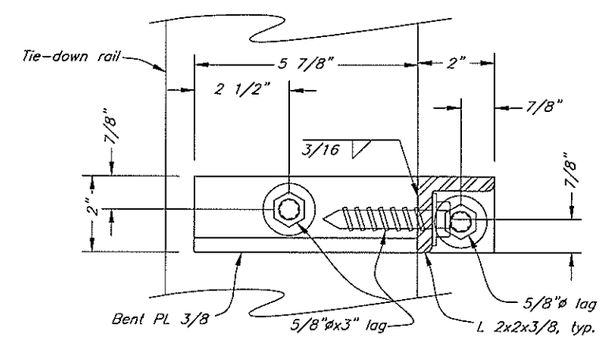

Section B–B

DO NOT SCALE FROM THESE DRAWINGS USE DIMENSIONS

DESIGNED BY: K. Miller
STATE OF ALASKA 49th Kirk D. Miller CE-8550 REGISTERED PROFESSIONAL ENGINEER
9/18/06
CHECKED BY: J. Beedle
DRAFTED BY: B. Bennett/Furman

CITY OF HOONAH

Hoonah City Float Replacement

Miscellaneous Details

PATH: O:\Hnh\67792\MF\Planset-City Dock\29 Misc..dwg
PLOT: PSPACE 1=1 Tab: Misc Wed, 23/Aug/06 01:21PM

REVISIONS			PROJECT DESIGNATION	YEAR	SHEET NO.	TOTAL SHEETS
NO.	DATE	DESCRIPTION	67792	2006	29	34

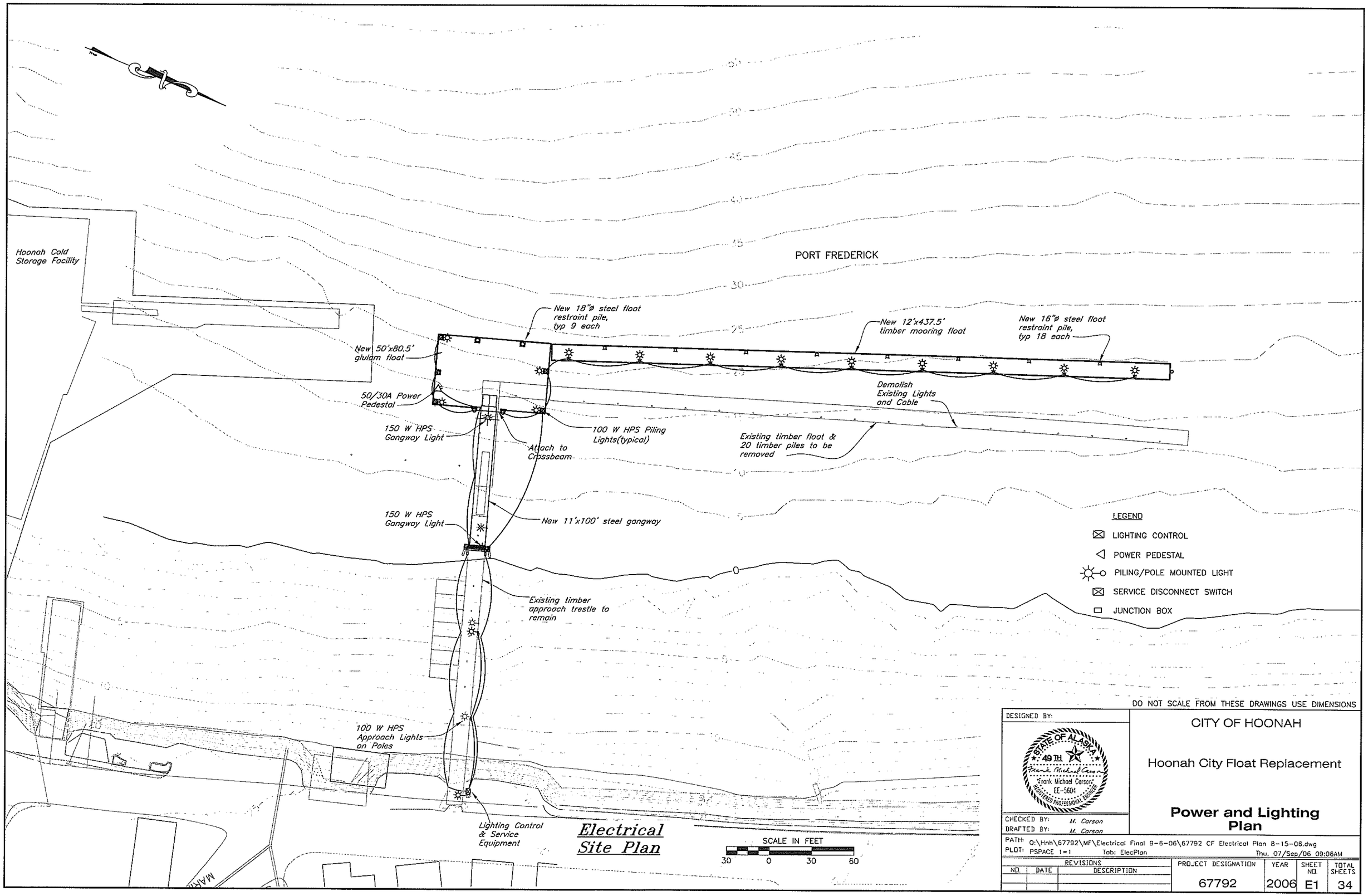
Hoonah Cold Storage Facility
PORT FREDERICK
New 18"ø steel float restraint pile, typ 9 each
New 12'x437.5' timber mooring float
New 16"ø steel float restraint pile, typ 18 each
New 50'x80.5' glulam float
50/30A Power Pedestal
Demolish Existing Lights and Cable
150 W HPS Gangway Light
100 W HPS Piling Lights(typical)
Attach to Crossbeam
Existing timber float & 20 timber piles to be removed
150 W HPS Gangway Light
New 11'x100' steel gangway
Existing timber approach trestle to remain
100 W HPS Approach Lights on Poles
Lighting Control & Service Equipment
Electrical Site Plan
SCALE IN FEET
30 0 30 60
LEGEND
LIGHTING CONTROL
POWER PEDESTAL
PILING/POLE MOUNTED LIGHT
SERVICE DISCONNECT SWITCH
JUNCTION BOX
DO NOT SCALE FROM THESE DRAWINGS USE DIMENSIONS
DESIGNED BY:
STATE OF ALASKA 49TH
Frank Michael Carson
EE-5604
REGISTERED PROFESSIONAL ENGINEER
CHECKED BY: M. Carson
DRAFTED BY: M. Carson
CITY OF HOONAH
Hoonah City Float Replacement
Power and Lighting Plan
PATH: Q:\Hnh\67792\MF\Electrical Final 9-6-06\67792 CF Electrical Plan 8-15-06.dwg
PLOT: PSPACE 1=1 Tab: ElecPlan Thu, 07/Sep/06 09:06AM
REVISIONS
NO. DATE DESCRIPTION
PROJECT DESIGNATION 67792
YEAR 2006
SHEET NO. E1
TOTAL SHEETS 34

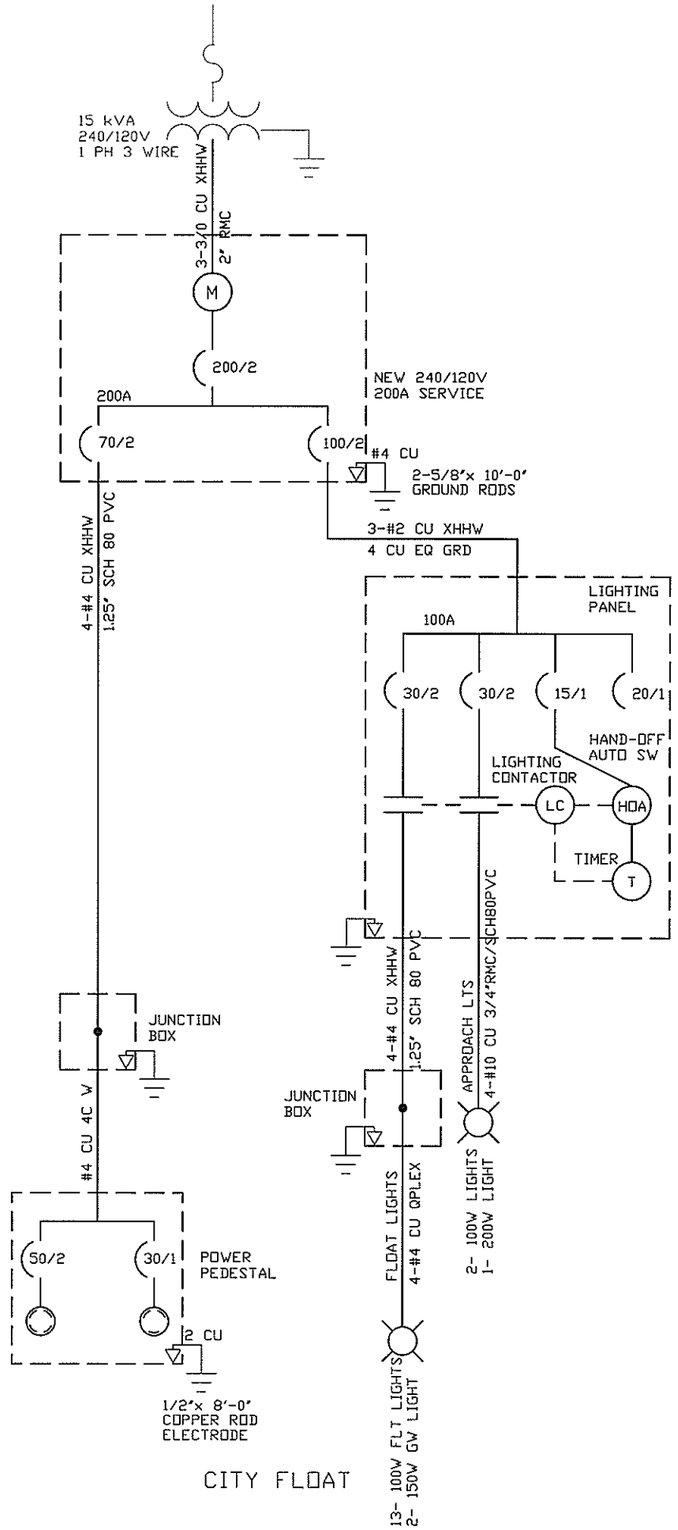

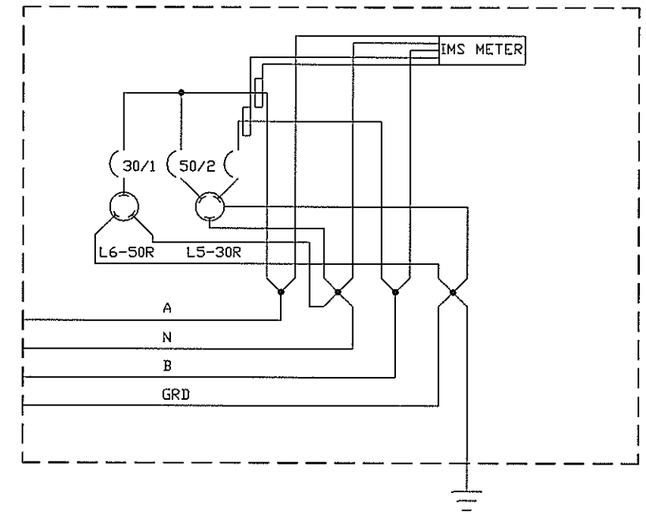

30A-50A 120/240V 1 PH PEDESTAL WIRING DIAGRAM

NOTE: EQUIPMENT AND MATERIALS SHALL CONFORM TO APPLICABLE REQUIREMENTS OF NFPA, ANSI, IEEE NEMA AND UL STANDARDS.

DO NOT SCALE FROM THESE DRAWINGS USE DIMENSIONS

DESIGNED BY:

STATE OF ALASKA 49TH
Frank Michael Carson
EE-5604
REGISTERED PROFESSIONAL ENGINEER

CHECKED BY: M. Carson
DRAFTED BY: M. Carson

CITY OF HOONAH

Hoonah City Float Replacement

One Line Diagram

PATH: O:\Hnh\67792\MF\Electrical Final 9-6-06\67792 CF One Line 8-15-06.dwg
PLOT: PSPACE 1=1 Tab: OneLine Thu, 07/Sep/06 11:27AM

REVISIONS			PROJECT DESIGNATION	YEAR	SHEET NO.	TOTAL SHEETS
NO.	DATE	DESCRIPTION	67792	2006	E2	34

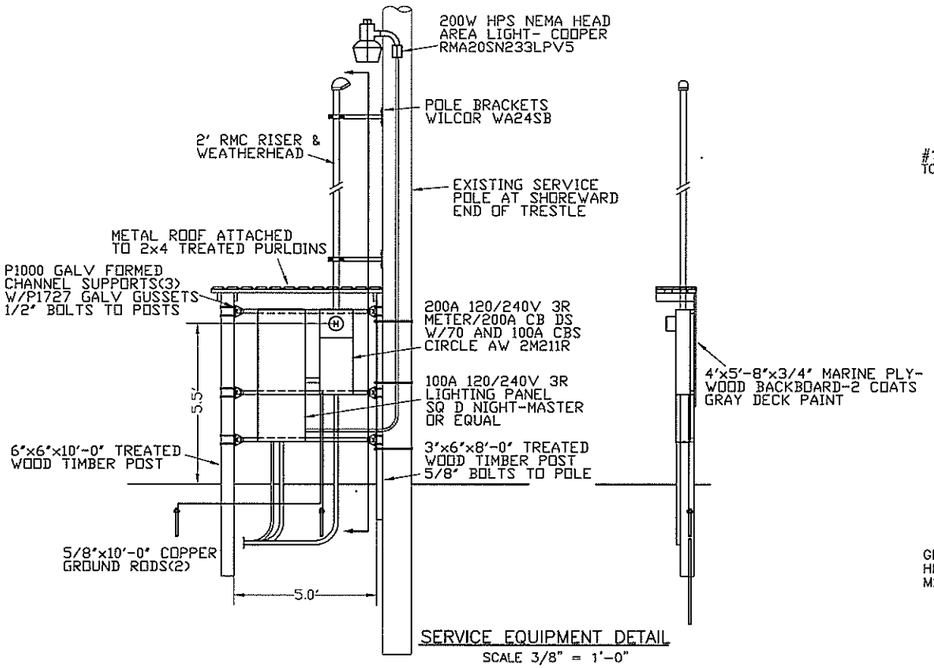

SERVICE EQUIPMENT DETAIL
SCALE 3/8" = 1'-0"

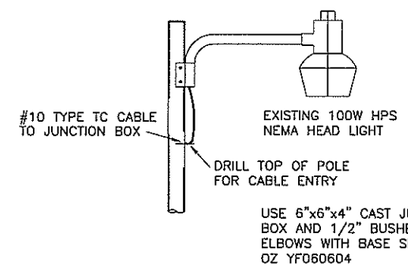

EXISTING TRESTLE LIGHT
SCALE 3/4" = 1'-0"

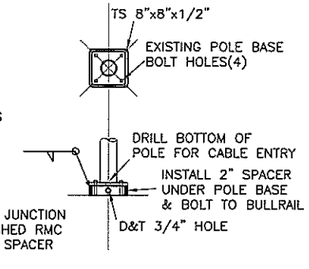

TRESTLE POLE BASE SPACER
SCALE 3/4" = 1'-0"

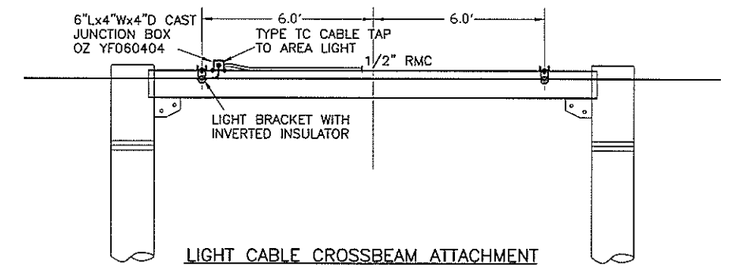

LIGHT CABLE CROSSBEAM ATTACHMENT
SCALE: 3/8" = 1'-0"

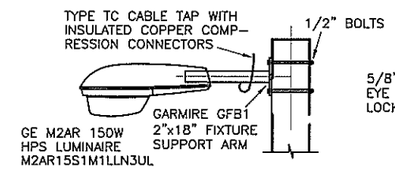

GANGWAY LIGHT
SCALE: 3/4" = 1'-0"

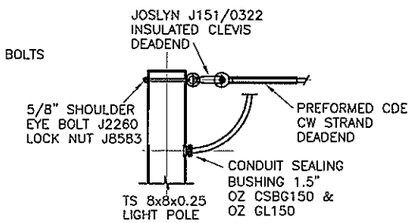

AERIAL LIGHT CABLE DEADEND
SCALE: 3/4" = 1'-0"

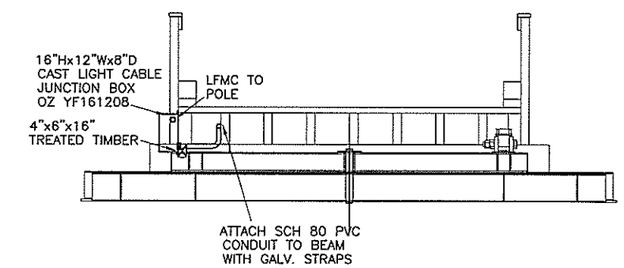

EXISTING TRESTLE CROSS-SECTION
SCALE 3/8" = 1'-0"

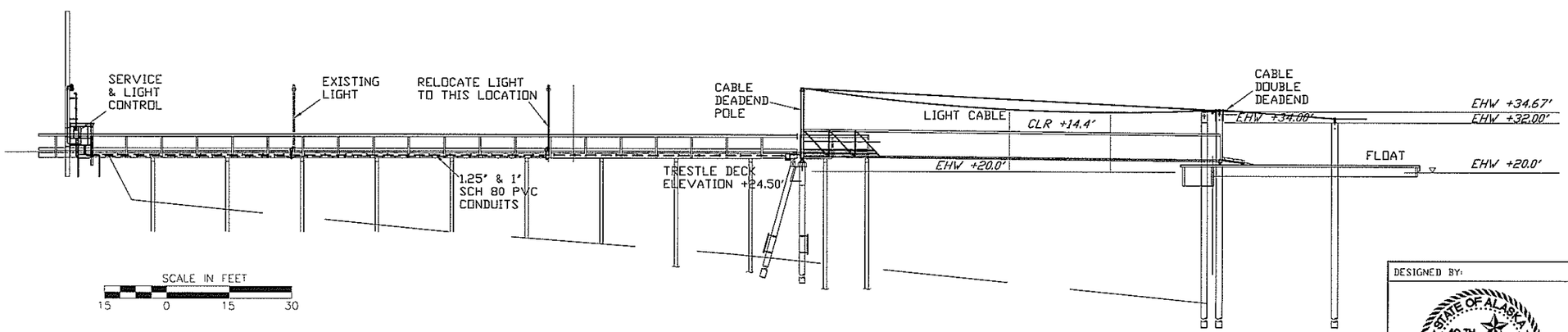

APPROACH ELEVATION
SCALE 1" = 15'-0"

DO NOT SCALE FROM THESE DRAWINGS USE DIMENSIONS

DESIGNED BY:

STATE OF ALASKA 49TH
Frank Michael Carson
Frank Michael Carson
EE-5604
REGISTERED PROFESSIONAL ENGINEER

CHECKED BY: M. Carson
DRAFTED BY: M. Carson

CITY OF HOONAH

Hoonah City Float Replacement

Approach Elevation and Details

PATH: Q:\Hnh\67792\MF\Electrical Final 9-6-06\67792 CF Approach Details 8-15-06.dwg
PLOT: PSPACE 1=1 Tab: Approach Details Thu, 07/Sep/06 09:05AM

REVISIONS			PROJECT DESIGNATION	YEAR	SHEET NO.	TOTAL SHEETS
NO.	DATE	DESCRIPTION				
			67792	2006	E3	34

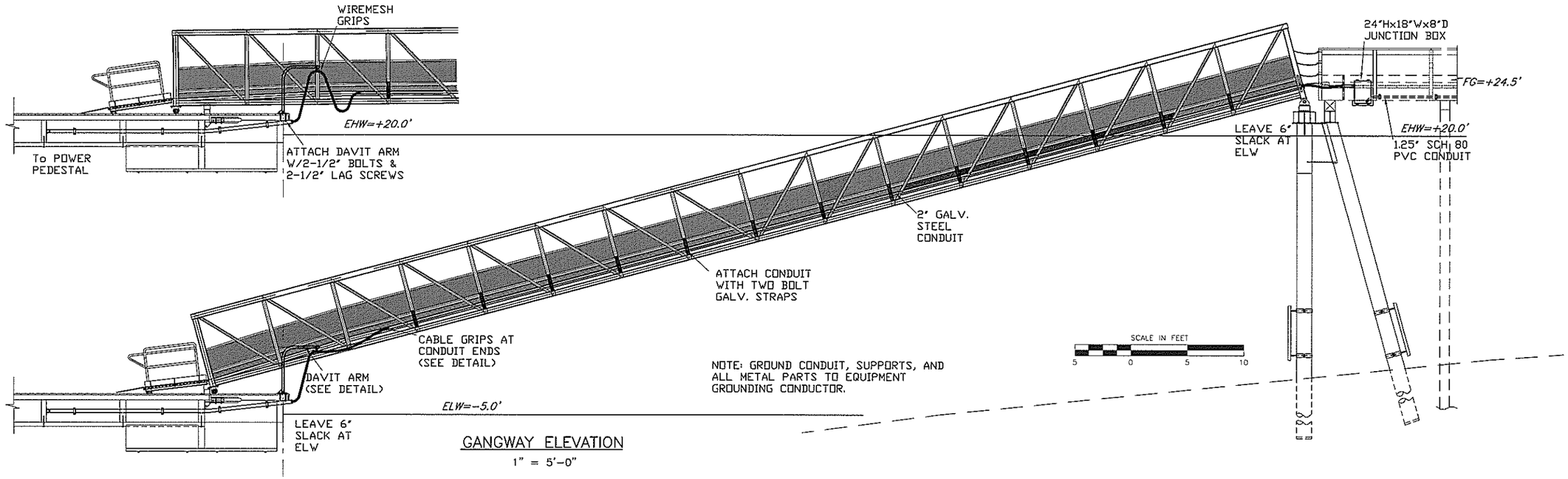

GANGWAY ELEVATION

1" = 5'-0"

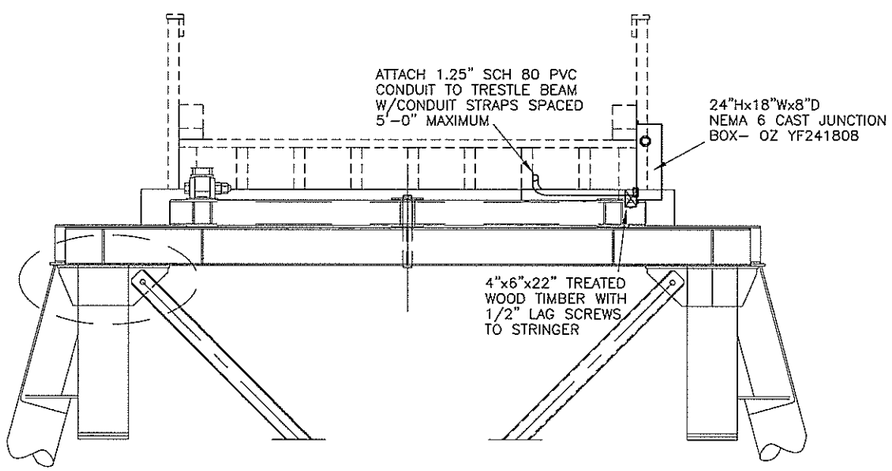

TRESTLE SUPPORT CROSS-SECTION DETAIL

1/2" = 1'-0"

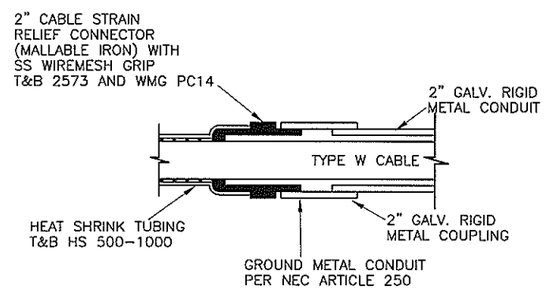

TYPE W CABLE GRIP DETAIL

NO SCALE

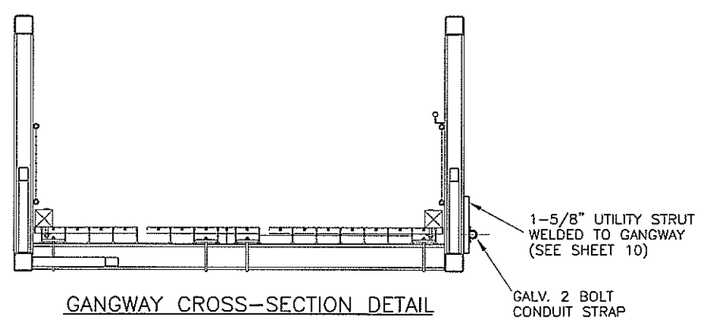

GANGWAY CROSS-SECTION DETAIL

1/2" = 1'-0"

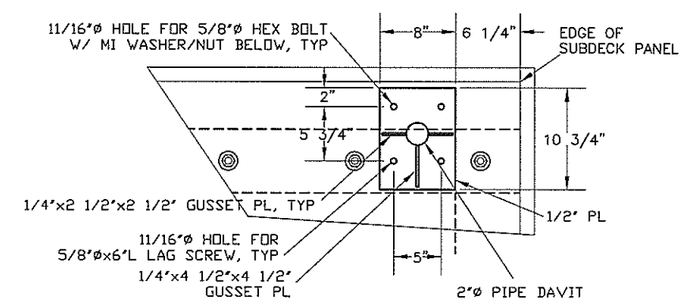

DAVIT INSTALLATION DETAIL

1 1/2" = 1'-0"

DO NOT SCALE FROM THESE DRAWINGS USE DIMENSIONS

DESIGNED BY:

STATE OF ALASKA 49TH Frank Michael Carson CE-5604 REGISTERED PROFESSIONAL ENGINEER

CHECKED BY: M. Carson
DRAFTED BY: M. Carson

CITY OF HOONAH

Hoonah City Float Replacement

Gangway Elevation and Details

PATH: Q:\Hnh\67792\MF\Electrical Final 9-6-06\67792 CF Gangway Details 8-15-06.dwg
PLOT: PSPACE 1=1 Tab: Gangway Details Thu, 07/Sep/06 09:10AM

REVISIONS			PROJECT DESIGNATION	YEAR	SHEET NO.	TOTAL SHEETS
NO.	DATE	DESCRIPTION	67792	2006	E4	34

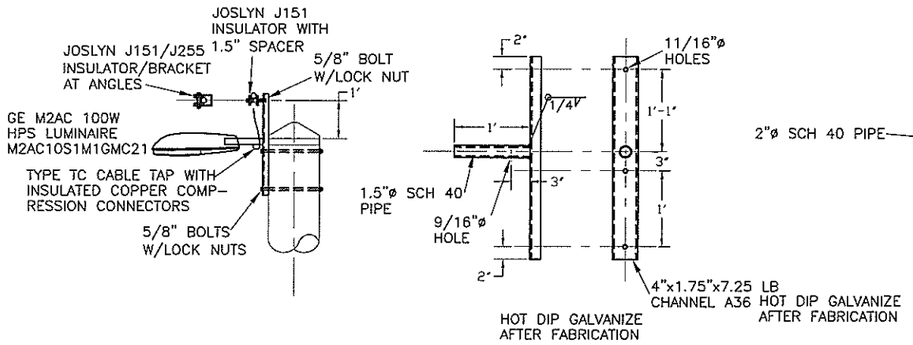

PILING LIGHT BRACKETS(SIDE VIEW)

SCALE: 1/2" = 1'-0"

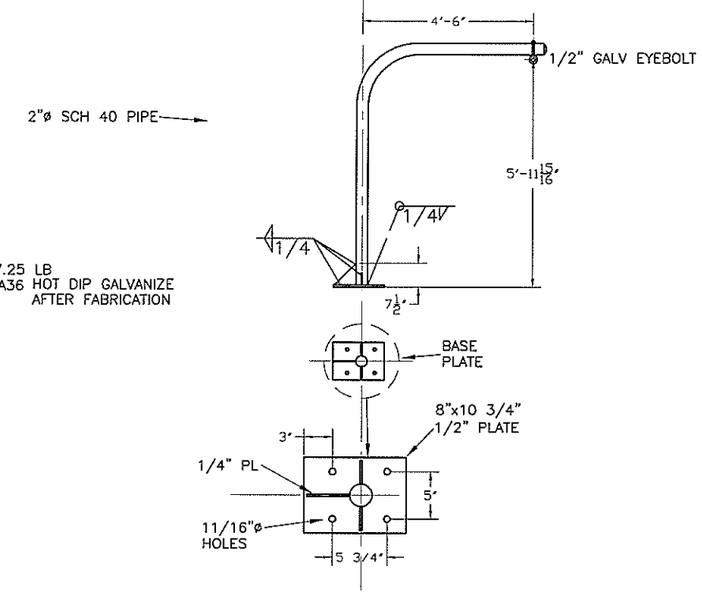

CABLE DAVIT ARM SUPPORT(SIDE VIEW)

SCALE: 3/4" = 1'-0"

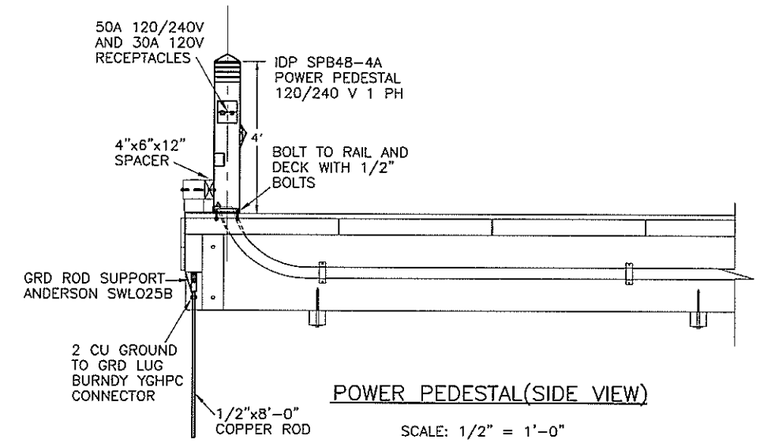

POWER PEDESTAL(SIDE VIEW)

SCALE: 1/2" = 1'-0"

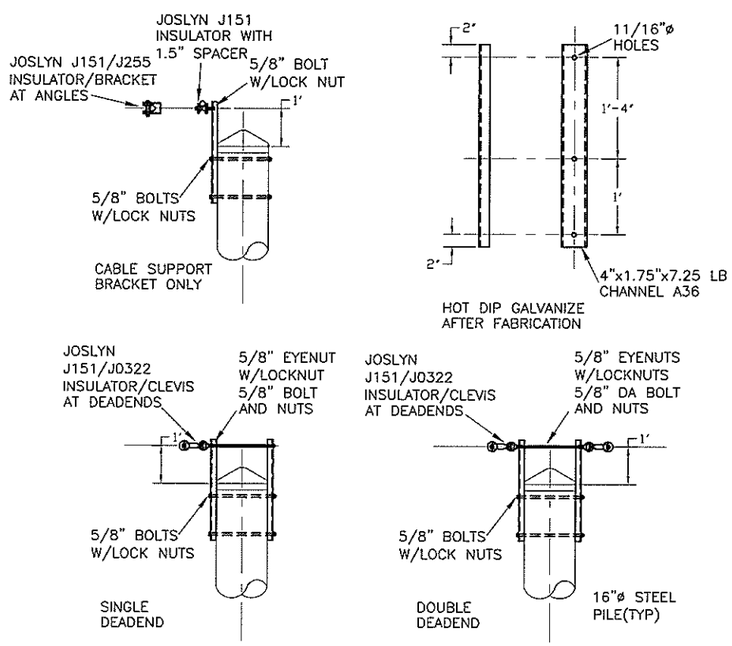

PILING CABLE BRACKETS(SIDE VIEW)

SCALE: 1/2" = 1'-0"

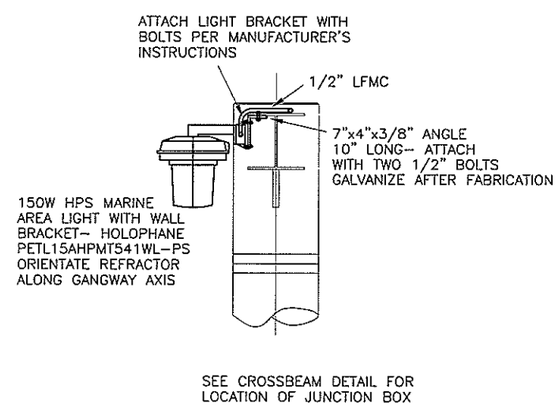

GANGWAY CROSS-BEAM LIGHT DETAIL

SCALE: 3/4" = 1'-0"

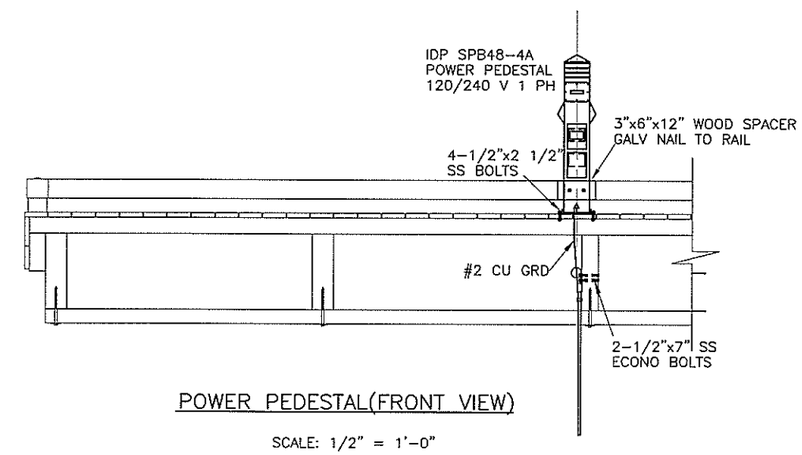

POWER PEDESTAL(FRONT VIEW)

SCALE: 1/2" = 1'-0"

DO NOT SCALE FROM THESE DRAWINGS USE DIMENSIONS

DESIGNED BY:

STATE OF ALASKA 49TH
Frank Michael Carson
Frank Michael Carson
EE-5604
REGISTERED PROFESSIONAL ENGINEER

CHECKED BY: M. Carson
DRAFTED BY: M. Carson

CITY OF HOONAH

Hoonah City Float Replacement

Float Power and Lighting Details

PATH: Q:\Hnh\67792\MF\Electrical Final 9-6-06\67792 CF Float Details 8-15-06.dwg
PLOT: PSPACE 1=1 Tab: Float Details Thu, 07/Sep/06 09:09AM

REVISIONS			PROJECT DESIGNATION	YEAR	SHEET NO.	TOTAL SHEETS
NO.	DATE	DESCRIPTION				
			67792	2006	E5	34

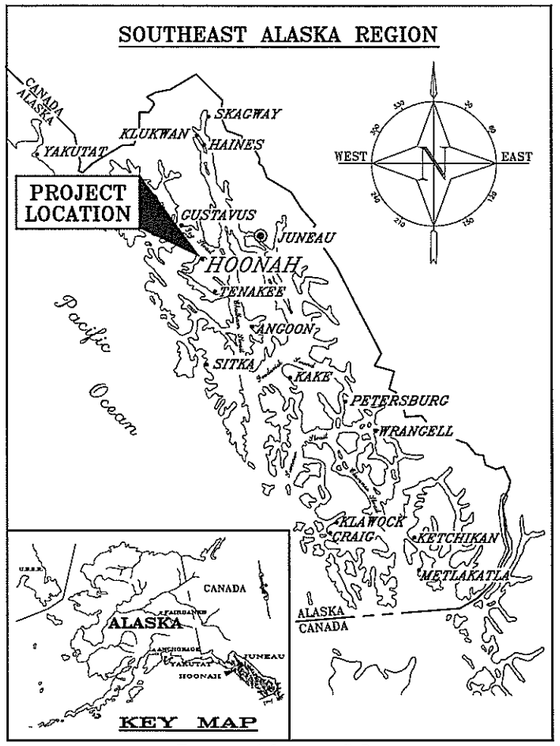

Location Map

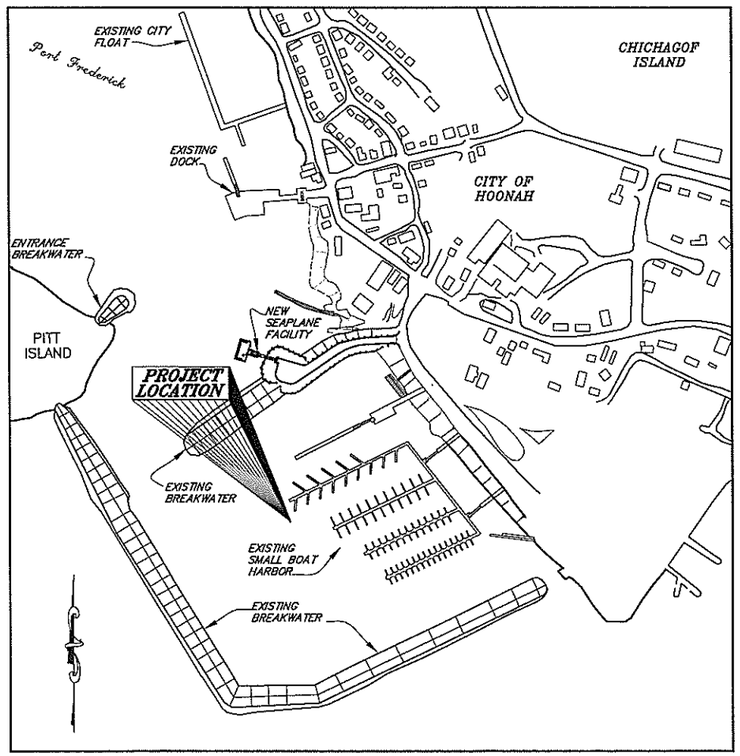

Vicinity Map

City of Hoonah

HOONAH, ALASKA

Planset B

Hoonah Harbor Float Expansion

PROJECT NO. 67792

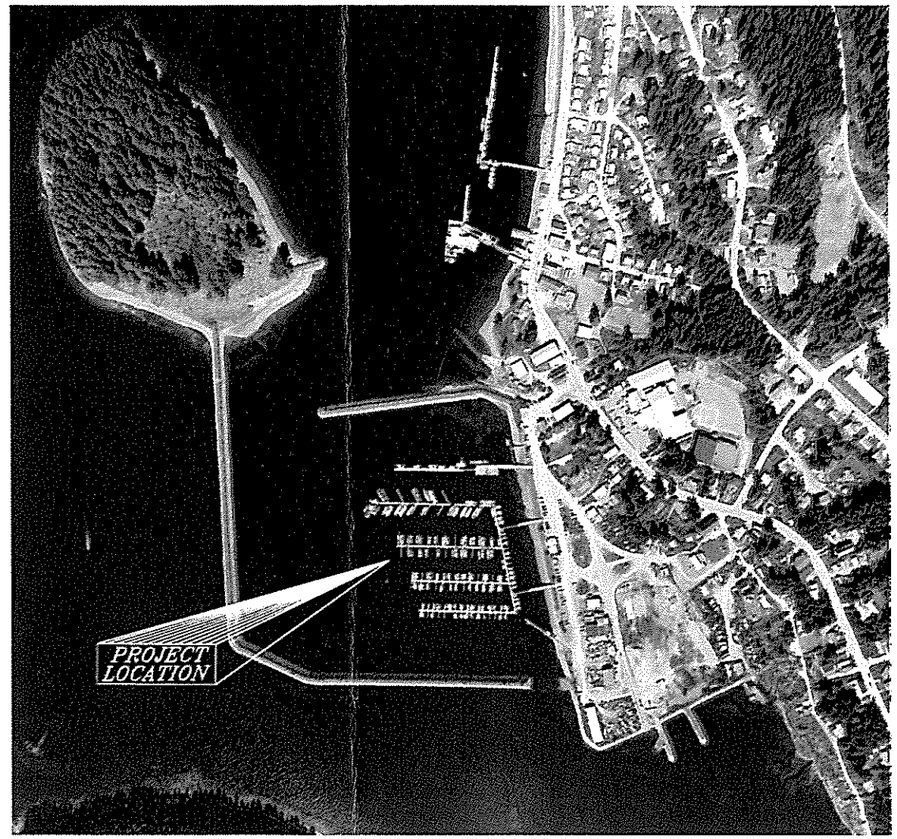

Site Map

INDEX OF SHEETS

SHEET NO.	DESCRIPTION
1	Title Sheet
2	Estimate of Quantities Site
3	Plan
4–7	Float B
8–12	Float C
13–17	Float D
18	Splice & West End Details
19–20	Pile Collars
21	Miscellaneous Details
E1–E7	Electrical

CITY OF HOONAH

APPROVED

Dennis H. Gray, Jr. Date 9/1/06
Dennis H. Gray, Jr.
Mayor, City of Hoonah

PROJECT NUMBER: 67792

DATE: August 2006

SHEET 1 OF 28

STATE OF ALASKA 49th Kirk D. Miller CE-8550 REGISTERED PROFESSIONAL ENGINEER

9/8/06

PATH: Q:\Hnh\67792\MP\Planset-Harbor\01 Title Sheet.dwg
TAB: LAYOut\Hnh Wed, 23/Aug/06 03:52PM

ESTIMATE OF QUANTITIES PLANSET B – HARBOR FLOAT EXPANSION			
Item Number	Description	Unit	Quantity
504 (5B)	Aluminum Transition Plate	Each	2
505 (1B)	12.75" dia. x 1/2" Wall Pipe Piles, Furnished	Linear Foot	1,216
505 (2B)	12.75" dia. x 1/2" Wall Pipe Piles, Driven	Each	16
505 (3B)	16" dia. x 1/2" Wall Pipe Piles, Furnished	Linear Foot	960
505 (4B)	16" dia. x 1/2" Wall Pipe Piles, Driven	Each	12
506 (4B)	10' x 200' Timber Main Float (Float C)	Lump Sum	All Reqd
506 (5B)	5' x 40' Timber Stall Float	Each	10
506 (6B)	12' x 150' Timber Main Float (Float D)	Lump Sum	All Reqd
506 (7B)	6' x 48' Timber Stall Float	Each	3
506 (10B)	Fire Extinguisher Stations	Each	8
506 (12B)	Leveling Flotation	Cubic Foot	113.75
506 (14B)	Repair Existing Concrete Gangway Float (Btwn Floats C & D)	Contingent Sum	All Reqd
640 (1)	Mobilization and Demobilization	Lump Sum	All Reqd
642 (1B)	Construction Surveying (Harbor)	Lump Sum	All Reqd
662 (3B)	Electrical Power & Lighting System (Floats C & D)	Lump Sum	All Reqd
Additive Alternate A – Float B			
504 (6B)	Aluminum Transition Plate	Each	1
505 (5B)	16" dia. x 1/2" Wall Pipe Piles, Furnished (Float B)	Linear Foot	480
505 (6B)	16" dia. x 1/2" Wall Pipe Piles, Driven (Float B)	Each	6
505 (11B)	100 lb Anode for 16" dia. Pile (Float B)	Each	6
506 (8B)	10' x 192' Timber Main Float (Float B)	Lump Sum	All Reqd
506 (9B)	3.5' x 30' Timber Stall Float	Each	12
506 (11B)	Fire Extinguisher Stations (Float B)	Each	5
506 (13B)	Leveling Flotation (Float B)	Cubic Foot	71.25
506 (15B)	Repair Existing Concrete Gangway Float (Btwn Floats A & B)	Contingent Sum	All Reqd
662 (4B)	Electrical Power & Lighting System (Float B)	Lump Sum	All Reqd
Additive Alternate B – Pile Anodes			
505 (9B)	100 lb Anode for 12.75" dia. Pile	Each	16
505 (10B)	100 lb Anode for 16" dia. Pile	Each	12
Additive Alternate D – Phased Completion			
640 (2)	Mobilization & Demobilization for Early Completion...	Lump Sum	All Reqd

Abbreviations

SS – Stainless Steel
Galv. – Galvanized
Typ – Typical
o.c. – On Center
U.O.N. – Unless Otherwise Noted
Econ. Hd. – Economy Head
Alum – Aluminum
L – Long
W – Wide
FG – Finished grade
O–O – out to out
PT – Pressure treated
btm – bottom
PL – Plate
CL – Centerline
MI – malleable iron

TIDAL DATA		
EHW	=	+20.0'
MHHW	=	+14.8'
MLLW	=	0.0'
ELW	=	–5.1'

LEGEND

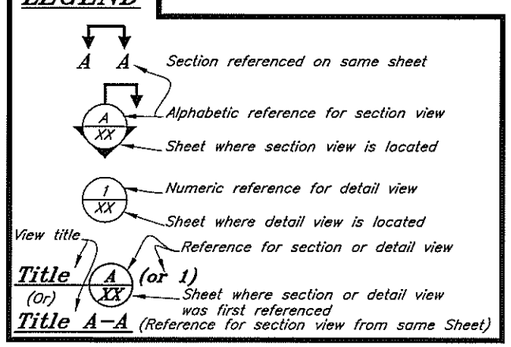

General Notes

Specifications & Other Information: Per Contract Documents, see Specifications. Reference as-built drawings for existing concrete float & harbor features not shown.

Design Standards: ADOT&PF Southeast Region Marine Engineering Design Standards

Materials

Steel:

Tube Sections: ASTM A500 Grade B

Piles: Straight seam, ASTM A252 Grade 3 or equal.

Pipe: ASTM A53, Grade B, type E or S

Stainless: Type 302, 304 or 316

Steel Shapes & Plates: ASTM A36, A572 Grade 50, or as noted.

Pile Tips: APF-0-14000 or APF 0-14001 Drive shoes or approved equal. Drive shoes are required on all piling.

Steel Coatings : All steel fabrications and hardware shall be hot-dip galvanized after fabrication per ASTM A123 and A153.

Aluminum: Shapes - ASTM 6061-T6 Plates- ASTM 5086 H112

Bolts and Fasteners: ASTM A325 for steel connections. ASTM A307 for timber.

Timber: Sawn timber shall be Douglas Fir No. 1 or better per WCLIB/WWPA grading rules. Sawn timber decking shall be Douglas Fir, No. 1 or better per WCLIB/WWPA grading rules. All sawn timber shall be S4S except decking (milled S1S2E).

Glulam members shall be DF/DF, combination 24F-V8.

UHMW Plastic: Ultra high moleculer weight plastic (UHMW) shall be made from materials conforming to ASTM D4020. Color shall be black.

Electrical Utility Trays: Fiberglass. Equipped with 2-inch high siderails and ventilated with holes to allow drainage as manufactured by "MPHusky" or "Seasafe" or approved equal. Width as noted on the Plans. Provide in long of lengths as practical w/ all joints framed at centerline of top sills unless otherwise permitted.

Float Bumpers: Float corner bumpers shall be heavy duty, marine grade vinyl type. Attach to float with stainless steel screws and washers per manufacturers recommendations.

Welding: All welding shall be done by qualified welders in accordance with AWS D1.1 or AWS D1.2.

Timber Treatment:

Sawn timber below deck level to be treated with creosote to 20 pcf retention.
Glulam stringers, sills or other members below deck level shall be treated with creosote, 12 pcf retention.
Glulam float logs shall be treated with creosote, 20 pcf retention.
Timber decking, tiedown rails & bumper boards to be treated with ACZA to 0.6 pcf retention.

Cut all members to length and incise prior to pressure treatment. Drill all holes/counterboring and cut all daps prior to pressure treatment unless otherwise specified or approved by the Engineer. Treat all field drilled holes and cuts with 5% copper naphthenate solution.

Polystyrene Flotation:

Flotation planks shall be constructed from closed cell expanded polystyrene (EPS) per ASTM D1621. Minimum density shall be 1.1 pcf. Materials shall have a maximum water absorption of 4 percent by volume in accordance with ASTM C272. The planks shall be cut and notched to the nominal dimensions indicated on the plans. All notches and cuts shall be performed using a hot-wire or other approved methods.

All flotation planks shall be coated after fabrication with a polyurethane elastomeric coating to a minimum dry film thickness of 50 mils. Polyurethane coatings shall be "Hydroseal 2090" brand or approved equal. All field cuts, nicks and abrasions to the coating shall be repaired with additional coatings to the specified thickness.

For leveling of floats (at locations to be determined by the Engineer), provide the following coated flotation billets:

Float B: 14 ea, 6"x20"x4'-6"L & 3 ea, 10"x20"x4'-6"L
Floats C & D: 22 ea, 6"x20"x4'-6"L & 5 ea, 10"x20"x4'-6"L

Also provide 4 each per billet, sharpened wooden or PVC dowels (sharpened at one end). Dowels shall be 1/2" diameter by 16"L (for 6" thick billets) or 20"L (for 10" thick billets). Where leveling is required, submerge leveling billet below float billet and drive 4 dowels thru leveling billet into overlying float billet to secure in place. Leveling billets may also be directed to be placed under existing concrete gangway floats. No dowels are required to be placed if leveling of concrete floats is required.

Timber Float System:

All fabrication and connection details may not be shown. Provide detailed shop drawings showing all members and fabrication sequence and as otherwise provided below.

Machine or power driven nails will not be permitted.

All timber bolts are economy head type with lugs and M.I. washers, unless otherwise noted. Provide double nuts or jam nuts where noted on the Plans.

Align bumper board splices with exterior stringer splices, minimum bumper board length is 10'-0". Butt-splice at top sill locations. Secure bumper boards with 20d galv box or spiral shank nails spaced at approx 12" OC, staggered row and 2 nails at each end. Predrill pilot hole to prevent splitting.

Decking shall be spaced ¼" apart and secured to each stringer with 2 ea, 20d galvanized box or spiral shank nails at each stringer. Predrill all ends where spliting may occur.

Counterbore for all bolt heads facing decking or otherwise noted to be flush.

Miscellaneous Construction:

Existing concrete gangway floats may require repair and rehabilitation. The exact scope of work is undetermined but may include replacement of timber wales, restoration of spalled concrete surfaces and tightening of connection hardware. This work will be performed as an agreed upon change under contingent sum bid items 506 (14B) and 506 (15B). See specifications.

PILE DATA								
Pile Information				Elevations (ft)				Estimated Pile Length (ft)
Structural & Pile Location	Orientation	No. of Piles	Diam x Wall (inches)	Avg OG	Cut–Off	Estimated Tip Elevation	Estimated Penetration(ft)	
Float B (Main Float)	Vertical	6	16 x 1/2	–15	+32	–48	33	80
Float C (Main Float)	Vertical	6	16 x 1/2	–15	+32	–48	33	80
Float C (Stall Floats)	Vertical	10	12.75 x 1/2	–15	+32	–44	29	76
Float D (Main Float)	Vertical	6	16 x 1/2	–15	+32	–48	33	80
Float D (Stall Floats)	Vertical	6	12.75 x 1/2	–15	+32	–44	29	76

Note: Drive all piles to estimated tip elevation or practical refusal.

DO NOT SCALE FROM THESE DRAWINGS USE DIMENSIONS

DESIGNED BY: K. Miller

STATE OF ALASKA 49th Kirk D. Miller CE-8550 REGISTERED PROFESSIONAL ENGINEER

9/8/06

CHECKED BY: J. Beedle
DRAFTED BY: K. Miller

CITY OF HOONAH

Hoonah Harbor Float Expansion

Estimate of Quantities & General Notes

PATH: O:\Hnh\67792\MF\Planset-Harbor\02 Estimate of Quantities.dwg
PLOT: PSPACE 1=1 Thu, 07/Sep/06 03:37PM

REVISIONS			PROJECT DESIGNATION	YEAR	SHEET NO.	TOTAL SHEETS
NO.	DATE	DESCRIPTION	67792	2006	2	28

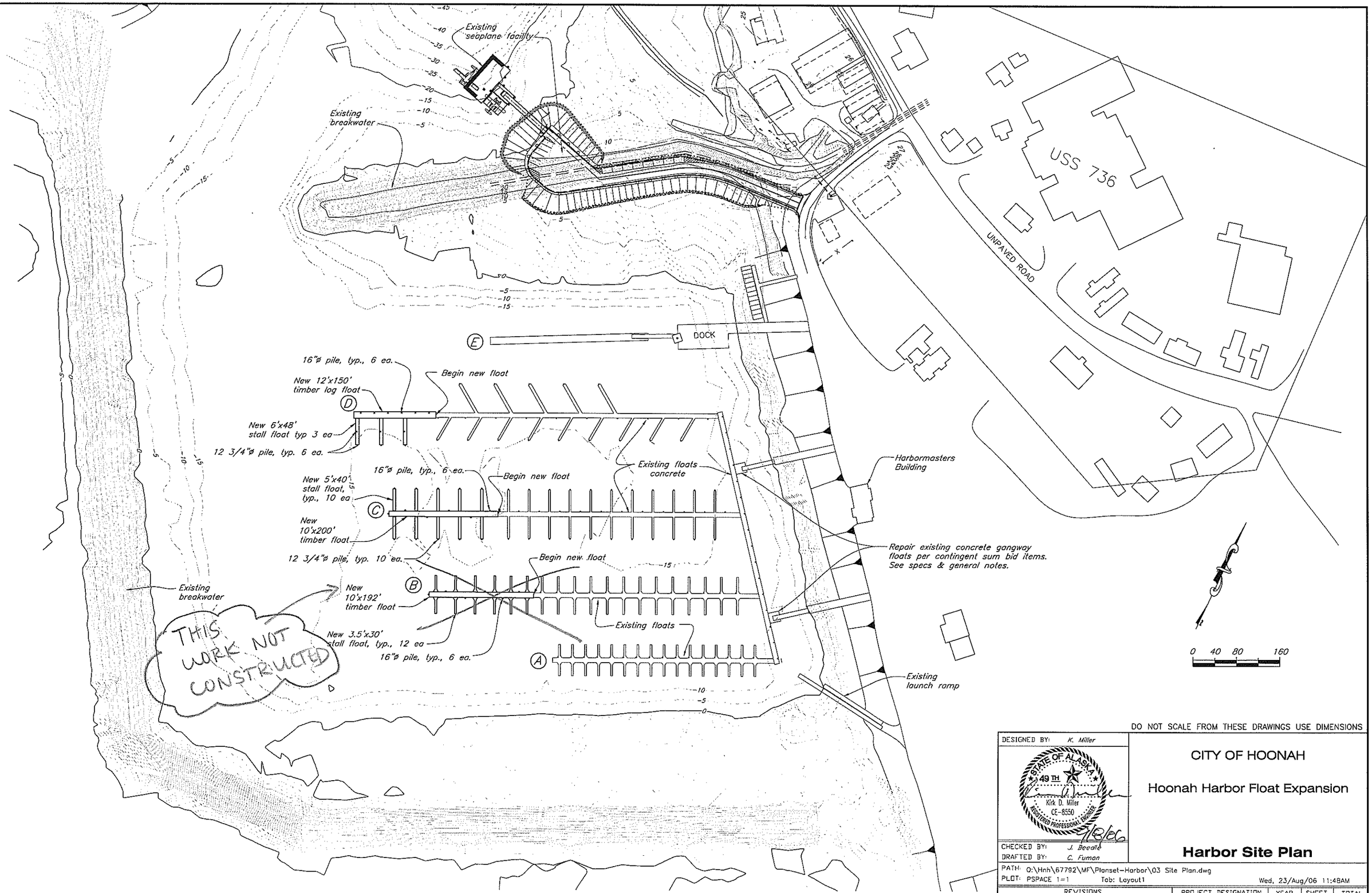

Site Plan

DO NOT SCALE FROM THESE DRAWINGS USE DIMENSIONS

DESIGNED BY: K. Miller

STATE OF ALASKA 49TH Kirk D. Miller CE-8550 REGISTERED PROFESSIONAL ENGINEER

7/18/06

CHECKED BY: J. Beedle

DRAFTED BY: C. Fuman

CITY OF HOONAH

Hoonah Harbor Float Expansion

Harbor Site Plan

PATH: O:\Hnh\67792\MF\Planset-Harbor\03 Site Plan.dwg

PLOT: PSPACE 1=1 Tab: Layout1 Wed, 23/Aug/06 11:48AM

REVISIONS			PROJECT DESIGNATION	YEAR	SHEET NO.	TOTAL SHEETS
NO.	DATE	DESCRIPTION	67792	2006	3	28

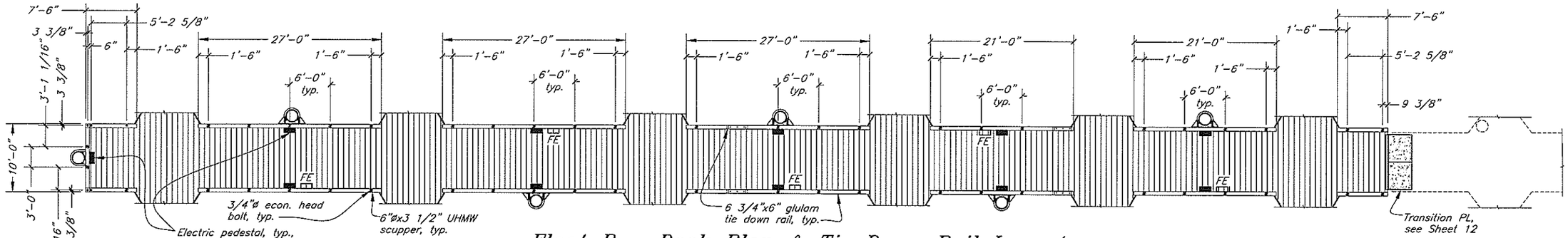

Float B – Deck Plan & Tie Down Rail Layout

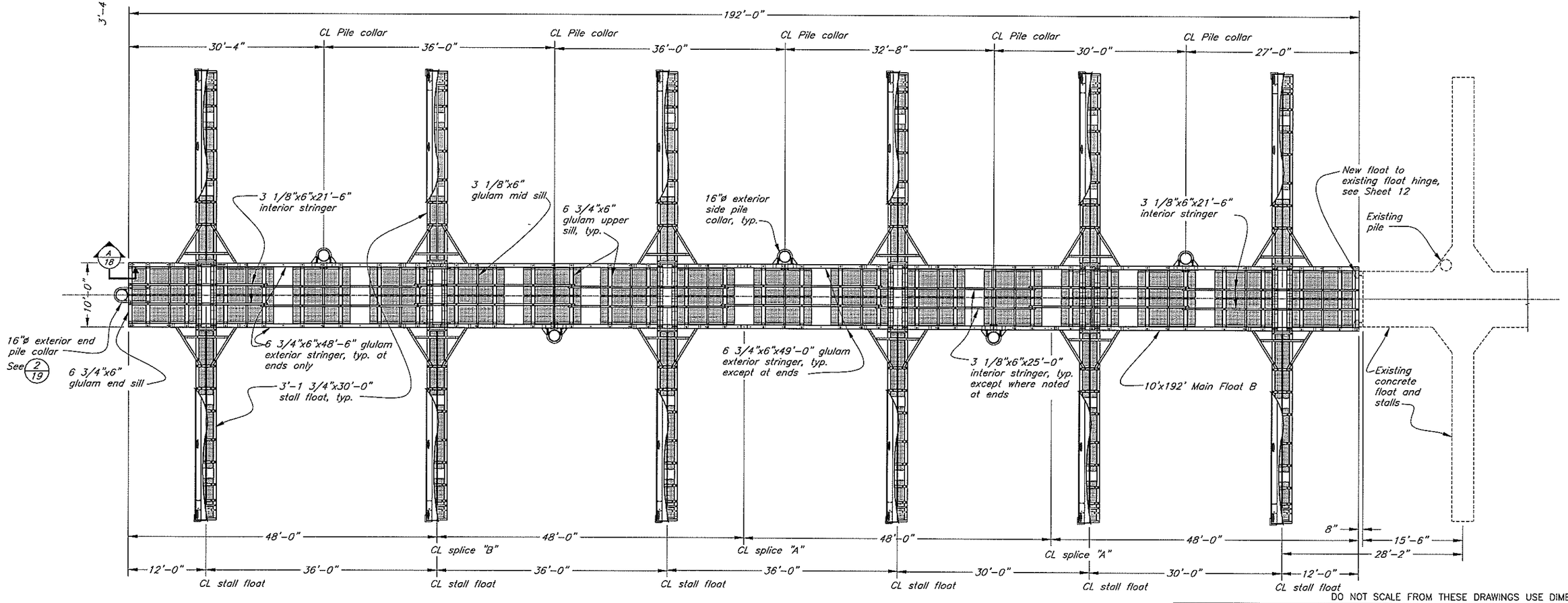

DO NOT SCALE FROM THESE DRAWINGS USE DIMENSIONS

Float B Framing Plan

Note: For splices "A" & "B" see Sheet 18

FE = Fire Extinguisher cabinet see Sheet 21

NOT CONSTRUCTED

DESIGNED BY: K. Miller

STATE OF ALASKA 49TH Kirk D. Miller CE-8550 REGISTERED PROFESSIONAL ENGINEER 9/8/06

CHECKED BY: J. Beedle

DRAFTED BY: C. Fuman

CITY OF HOONAH

Hoonah Harbor Float Expansion

Float B Layout

PATH: O:\Hnh\67792\MF\Planset-Harbor\04 Float B Layout.dwg

PLOT: PSPACE 1=1 Tab: Float B Layout Wed, 23/Aug/06 11:51AM

REVISIONS			PROJECT DESIGNATION	YEAR	SHEET NO.	TOTAL SHEETS
NO.	DATE	DESCRIPTION	67792	2006	4	28

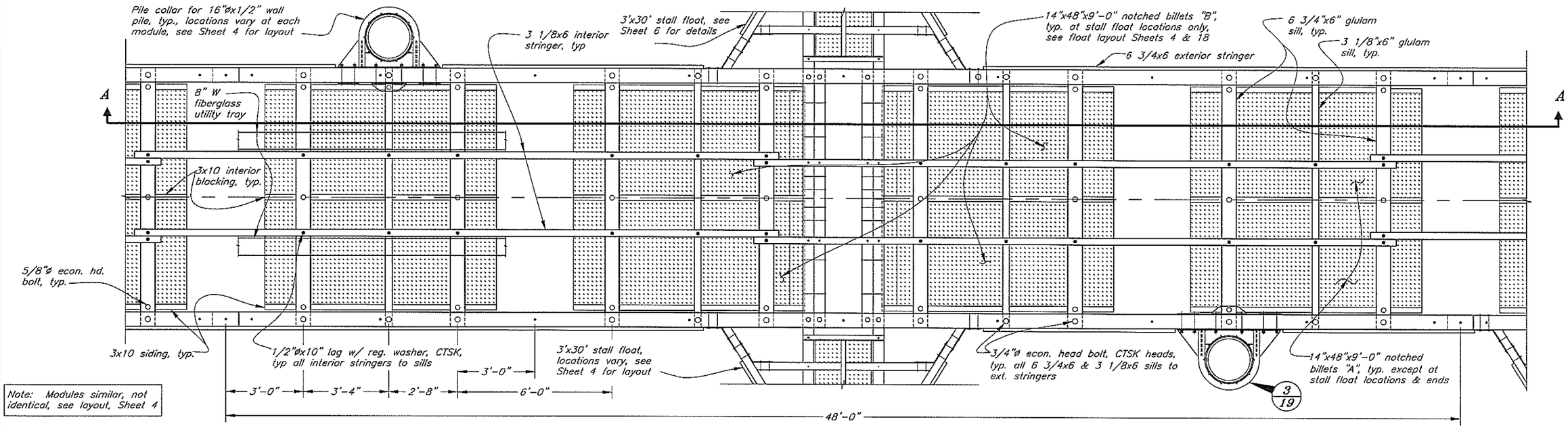

Plan

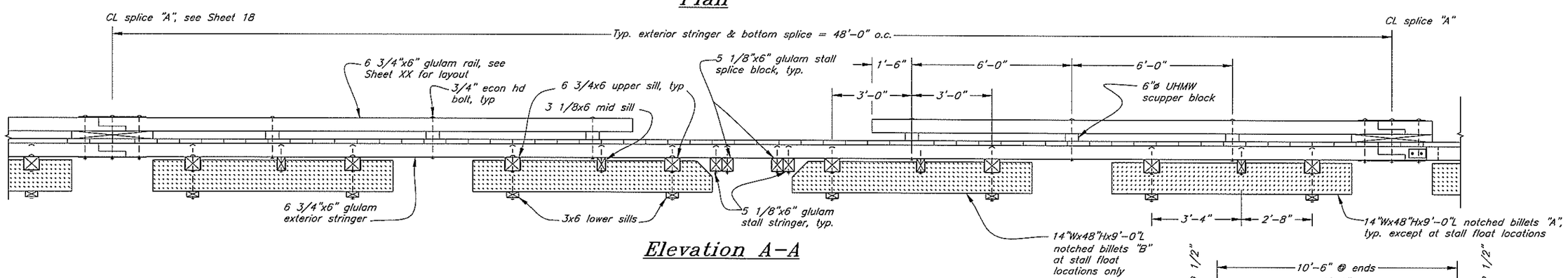

Elevation A-A

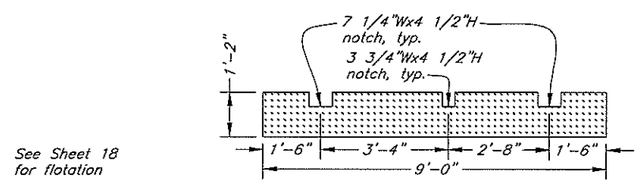

Notched Flotation Billet "A"

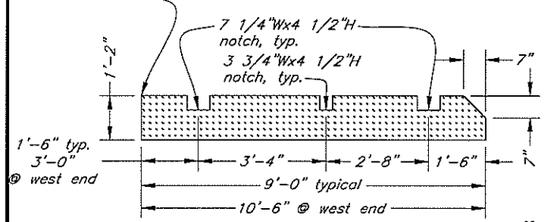

Notched Flotation Billet "B"

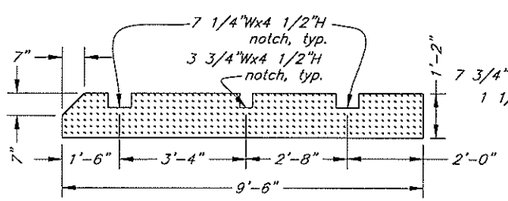

East End Flotation Billet

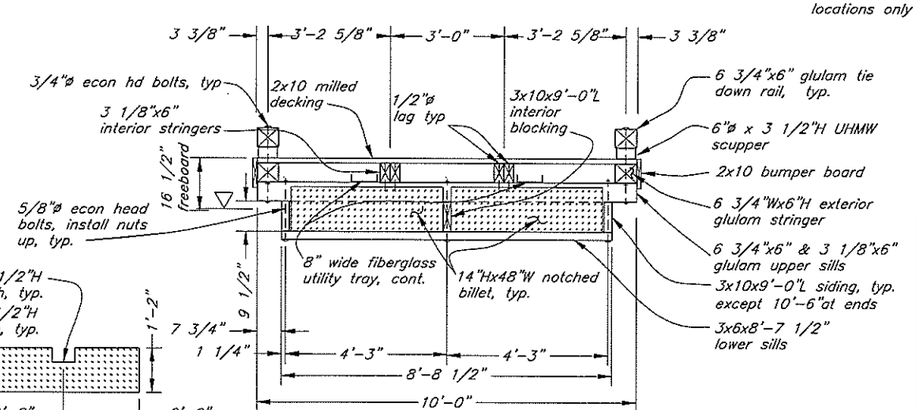

Typical Section

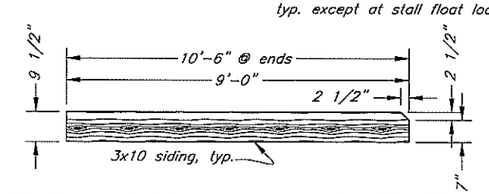

Siding Adjacent to Stall Floats

DO NOT SCALE FROM THESE DRAWINGS USE DIMENSIONS

DESIGNED BY: K. Miller

STATE OF ALASKA 49TH Kirk D. Miller CE-8550 REGISTERED PROFESSIONAL ENGINEER 9/8/06

CHECKED BY: J. Beedle

DRAFTED BY: C. Fuman

CITY OF HOONAH

Hoonah Harbor Float Expansion

NOT CONSTRUCTED

Float B
10'x48' Module

PATH: Q:\Hnh\67792\MF\Planset-Harbor\05 Float B 48' module.dwg

PLOT: PSPACE 1=1 Tab: Float B Module Wed, 23/Aug/06 11:51AM

REVISIONS			PROJECT DESIGNATION	YEAR	SHEET NO.	TOTAL SHEETS
NO.	DATE	DESCRIPTION	67792	2006	5	28

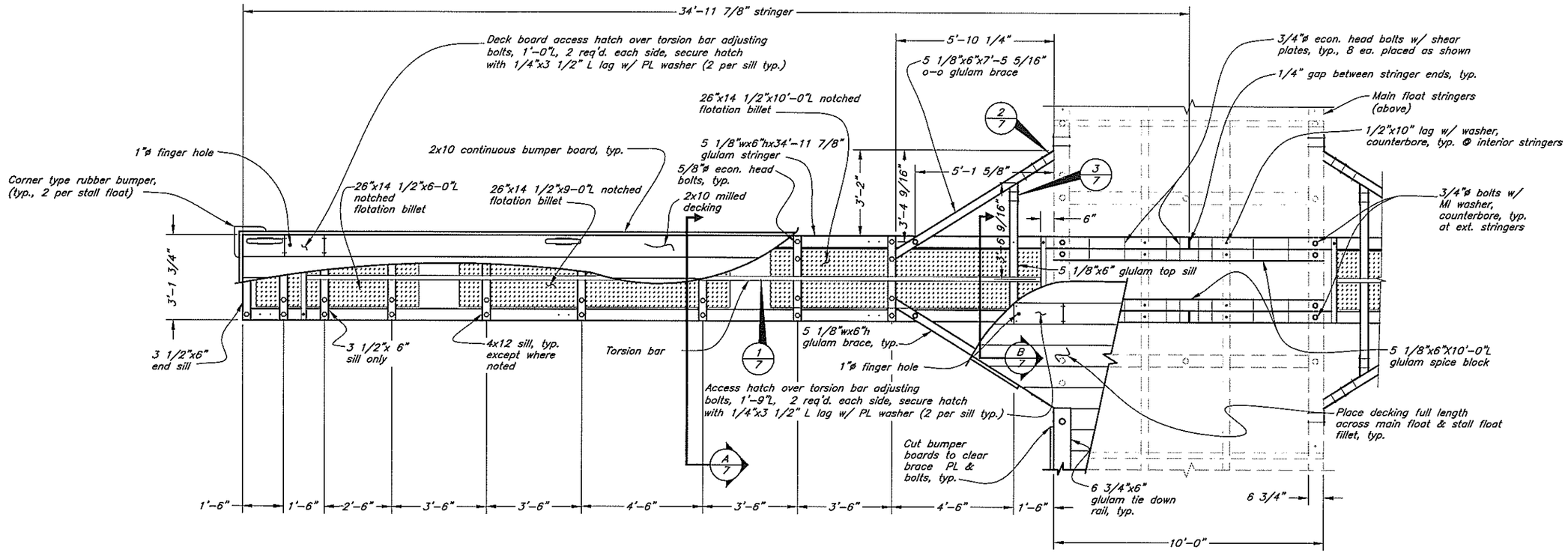

Plan

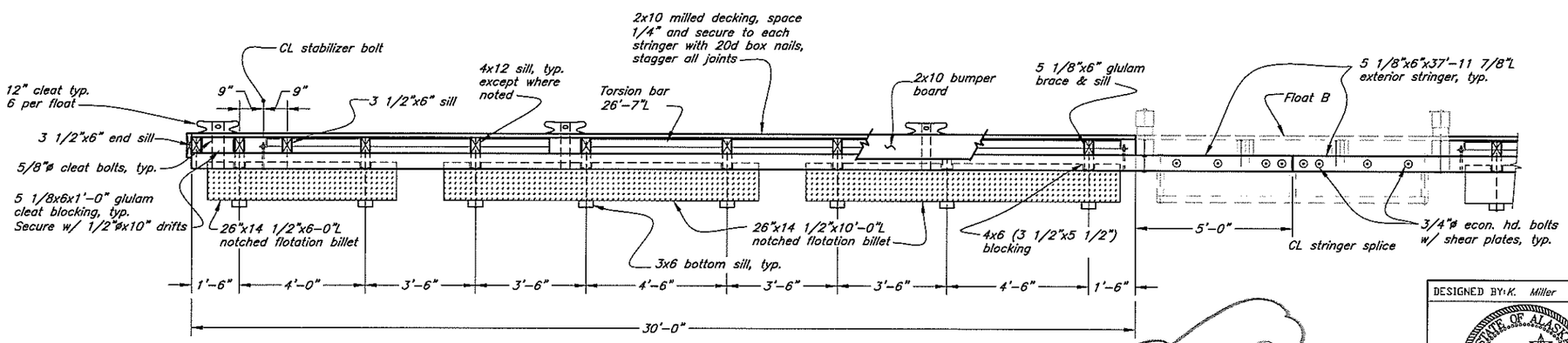

Elevation

NOT CONSTRUCTED

DO NOT SCALE FROM THESE DRAWINGS USE DIMENSIONS

DESIGNED BY: K. Miller

STATE OF ALASKA 49th Kirk D. Miller CE-8550 REGISTERED PROFESSIONAL ENGINEER

7/8/06

CHECKED BY: J. Beedle

DRAFTED BY: C. Furman, T. Mores

CITY OF HOONAH

Hoonah Harbor Float Expansion

Float B
Typical Stall Float
3'-1 3/4" x 30'

PATH: Q:\Hnh\67792\MF\Planset-Harbor\06 3'x30' stall float.dwg Wed, 23/Aug/06 11:51AM
PLOT: PSPACE 1=1 TAB: DETAIL

REVISIONS			PROJECT DESIGNATION	YEAR	SHEET NO.	TOTAL SHEETS
NO.	DATE	DESCRIPTION	67792	2006	6	28

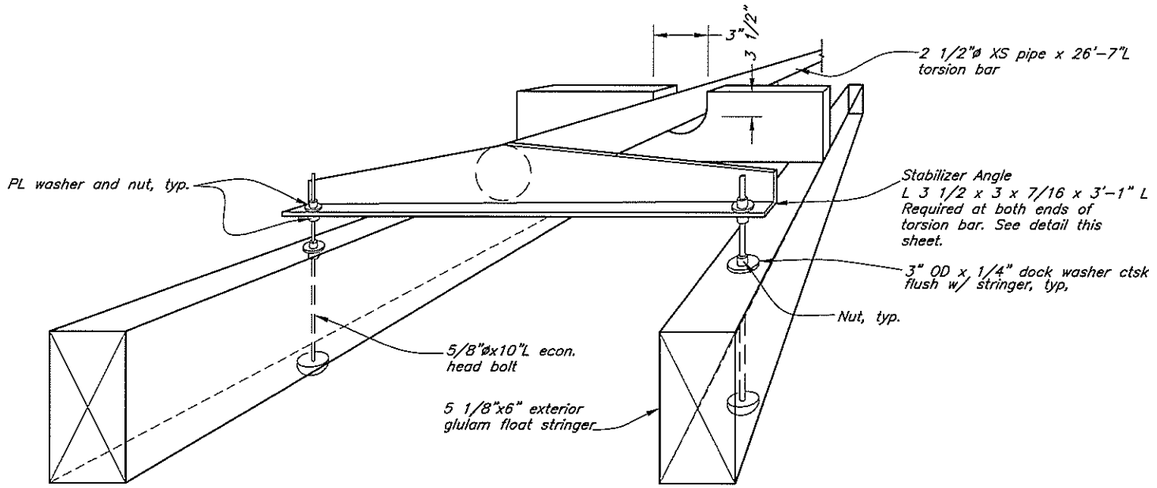

To level float, take-up on nuts as required. Loosen nuts on opposite side of angle iron before attempting adjustment in order to allow unrestricted rotation. Adjust all floats.

Stall Float Stabilizer Detail (1/6)
Isometric

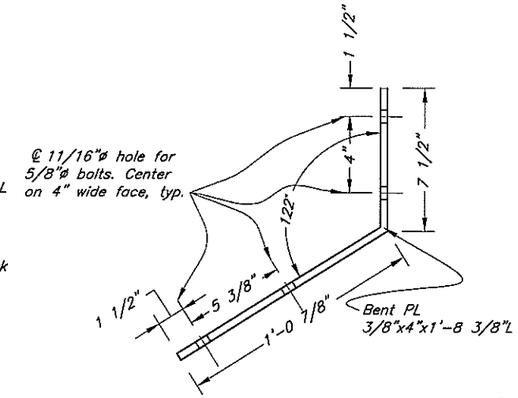

Brace Plate Detail (2/6)

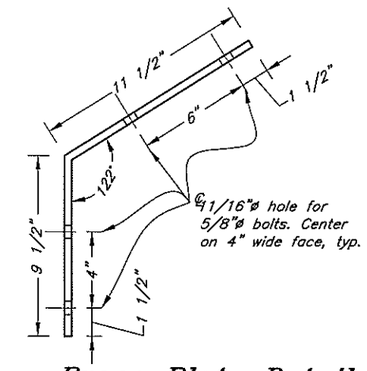

Brace Plate Detail (3/6)

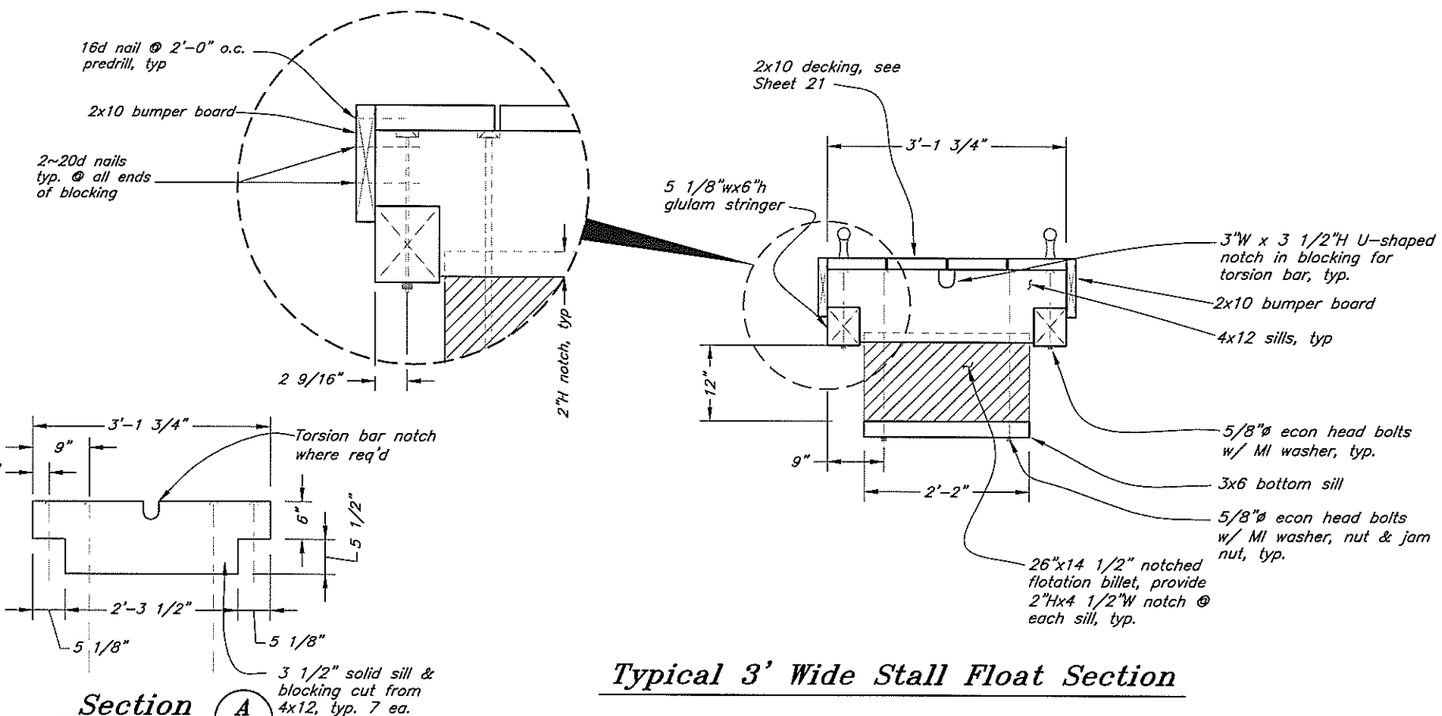

Typical 3' Wide Stall Float Section

Section A (A/6)

Section B (B/6)

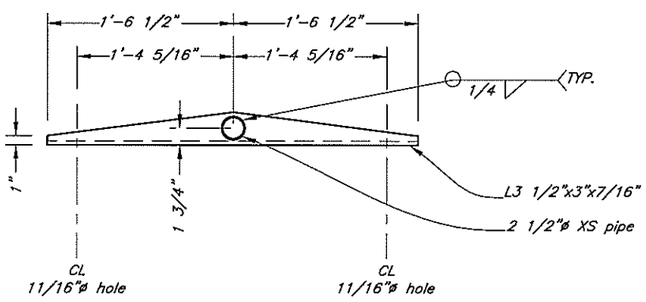

Stabilizer Angle Detail
End View

NOT CONSTRUCTED

DO NOT SCALE FROM THESE DRAWINGS USE DIMENSIONS

DESIGNED BY: K. Miller

STATE OF ALASKA 49th Kirk D. Miller CE-8550 REGISTERED PROFESSIONAL ENGINEER

9/8/06

CHECKED BY: J. Beedle
DRAFTED BY: T. Mores

CITY OF HOONAH

Hoonah Harbor Float Expansion

Float B Stall Float Details

PATH: O:\Hnh\67792\MF\Planset-Harbor\07 3' Stall float details.dwg
PLOT: PSPACE 1=1 Tab: Layout1 Fri, 08/Sep/06 01:40PM

REVISIONS			PROJECT DESIGNATION	YEAR	SHEET NO.	TOTAL SHEETS
NO.	DATE	DESCRIPTION	67792	2006	7	28

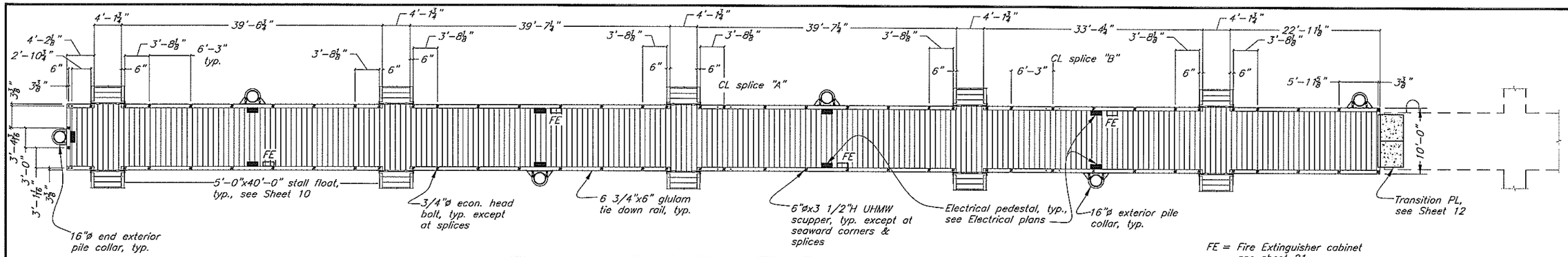

FE = Fire Extinguisher cabinet see sheet 21

Float C – Deck Plan Tie Down Rail Layout

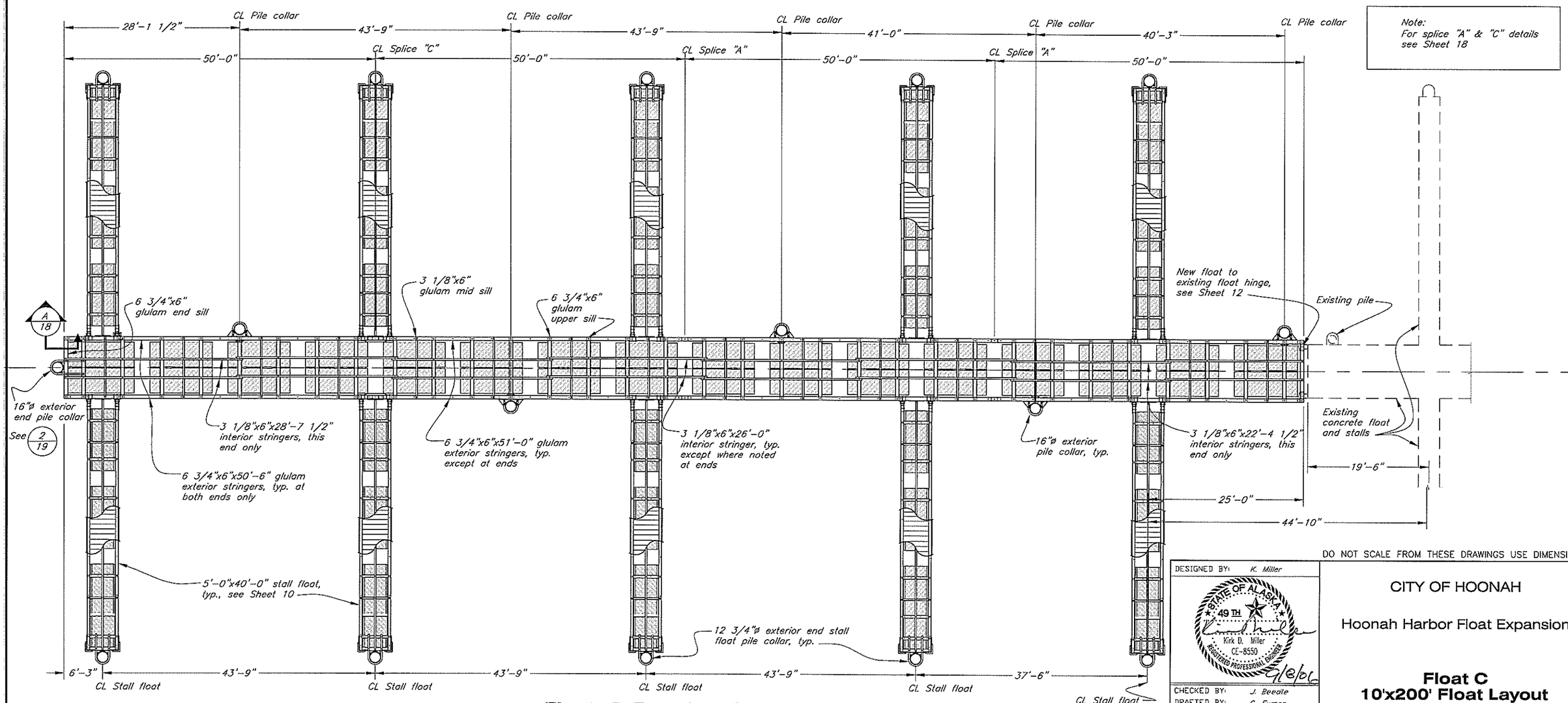

Note:
For splice "A" & "C" details see Sheet 18

Float C Framing Plan

DO NOT SCALE FROM THESE DRAWINGS USE DIMENSIONS

DESIGNED BY: K. Miller

STATE OF ALASKA 49TH Kirk D. Miller CE-8550 REGISTERED PROFESSIONAL ENGINEER 9/8/06

CHECKED BY: J. Beedle
DRAFTED BY: C. Furman

CITY OF HOONAH

Hoonah Harbor Float Expansion

Float C
10'x200' Float Layout

PATH: O:\Hnh\67792\MF\Planset-Harbor\08 Float C layout.dwg
PLOT: PSPACE 1=1 Tab: Float C Fri, 08/Sep/06 01:42PM

REVISIONS			PROJECT DESIGNATION	YEAR	SHEET NO	TOTAL SHEETS
NO.	DATE	DESCRIPTION	67792	2006	8	28

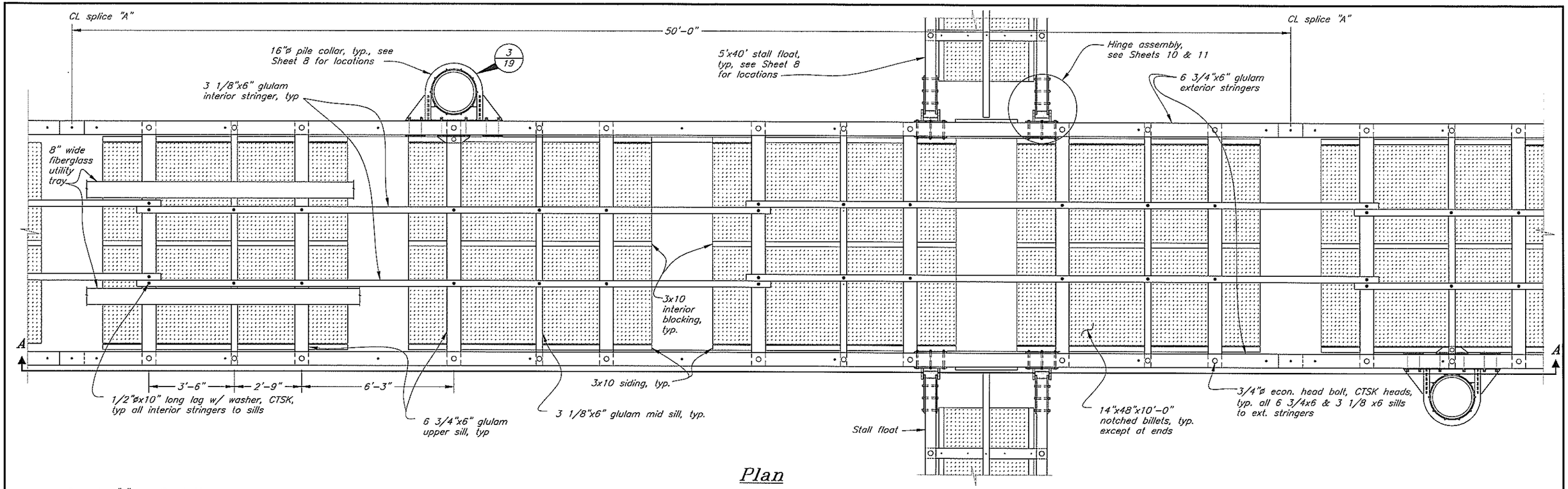

Plan

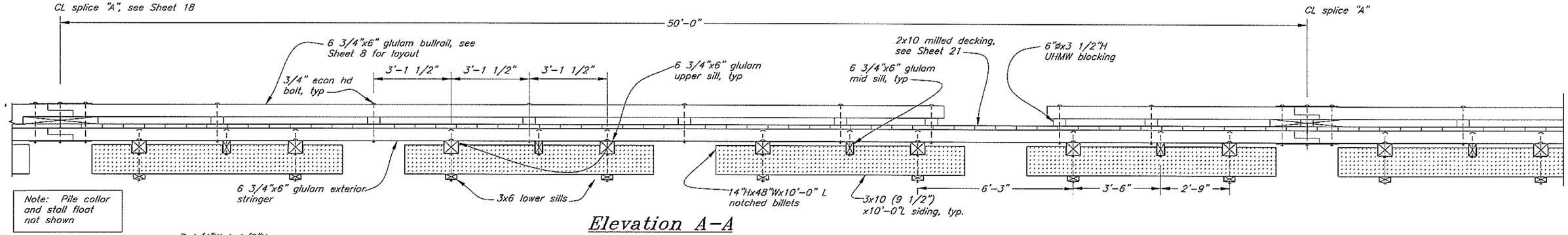

Elevation A–A

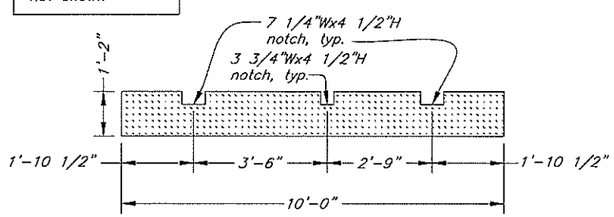

Typical Interior Flotation Billet

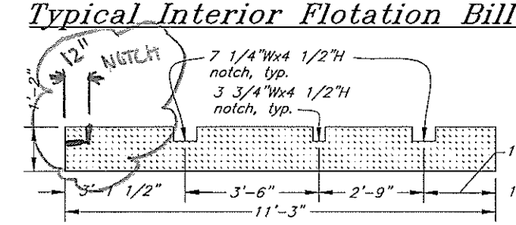

West End Flotation Billet

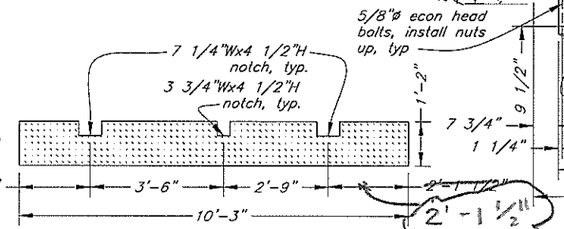

East End Flotation Billet

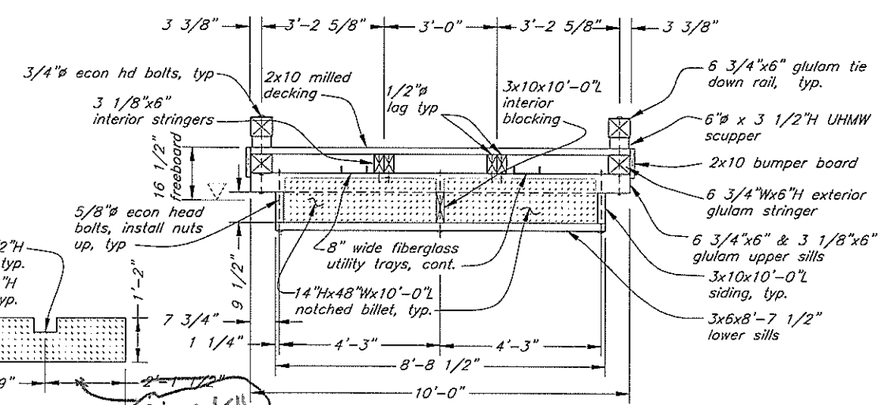

Typical Section

DO NOT SCALE FROM THESE DRAWINGS USE DIMENSIONS

DESIGNED BY: K. Miller

STATE OF ALASKA 49TH Kirk D. Miller CE-8550 REGISTERED PROFESSIONAL ENGINEER

8/8/06

CHECKED BY: J. Beedle

DRAFTED BY: C. Fuman

CITY OF HOONAH

Hoonah Harbor Float Expansion

Float C
10'x50' Module

PATH: O:\Hnh\67792\MF\Planset-Harbor\09 Float C 50' module.dwg

PLOT: PSPACE 1=1 Tab: Float C Fri, 08/Sep/06 01:48PM

REVISIONS			PROJECT DESIGNATION	YEAR	SHEET NO.	TOTAL SHEETS
NO.	DATE	DESCRIPTION	67792	2006	9	28

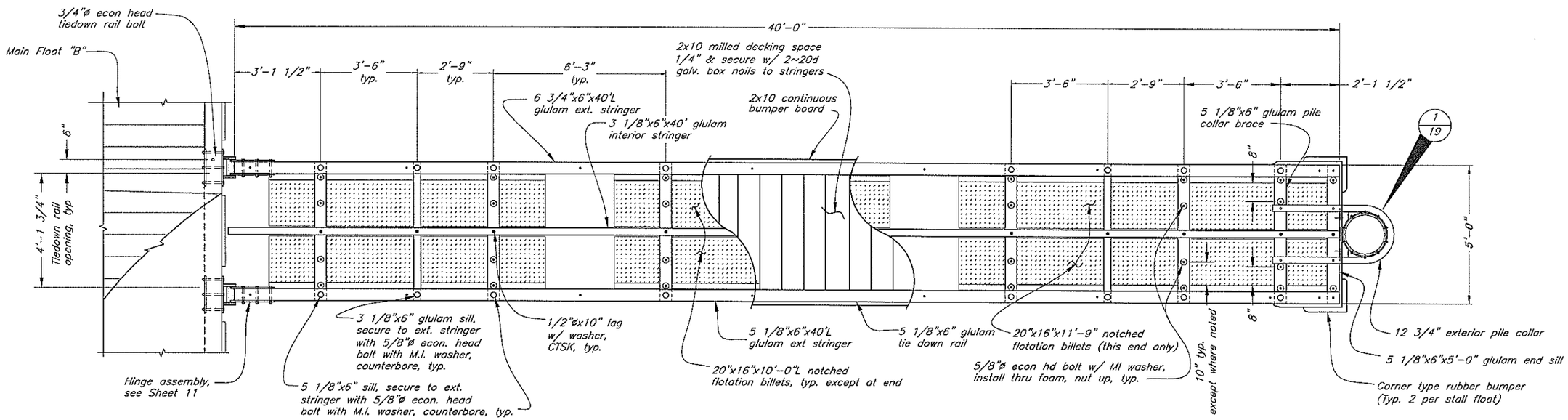

Plan

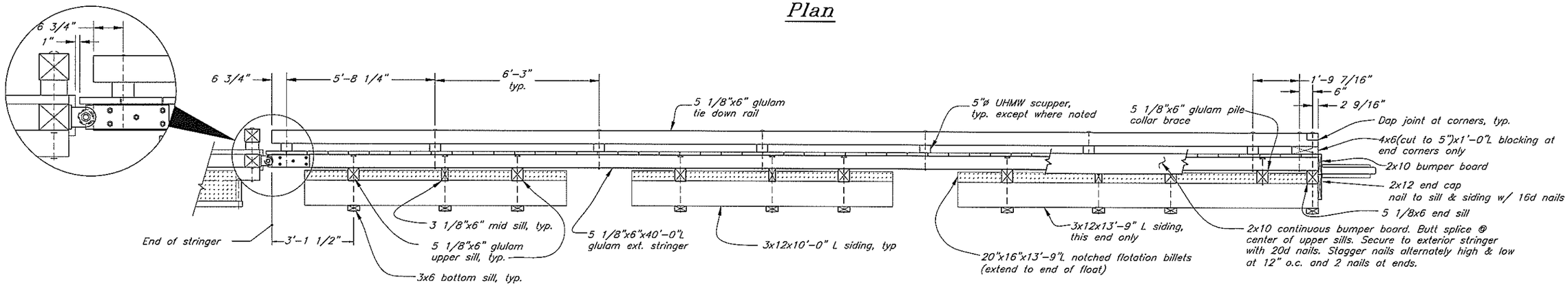

Elevation

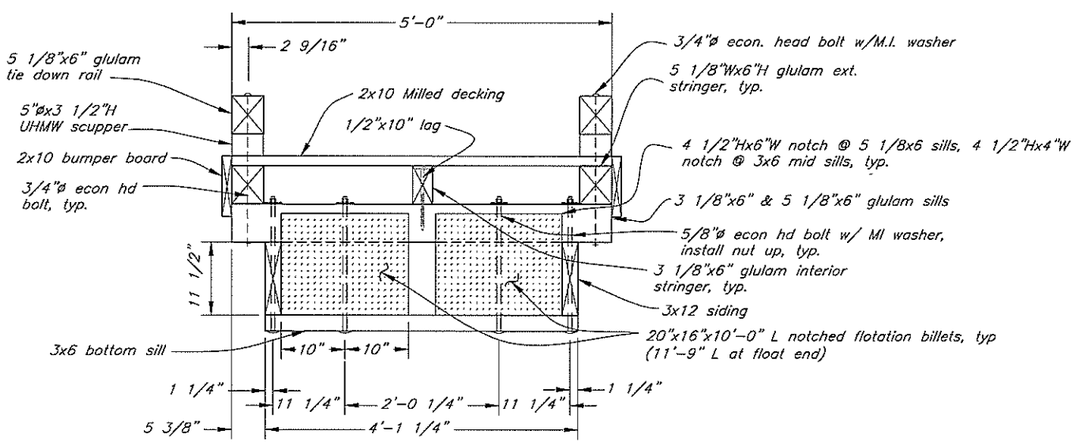

Typical Section

DO NOT SCALE FROM THESE DRAWINGS USE DIMENSIONS

DESIGNED BY: K. Miller

STATE OF ALASKA 49TH Kirk D. Miller CE-8550 REGISTERED PROFESSIONAL ENGINEER 9/8/06

CHECKED BY: J. Beedle

DRAFTED BY: C. Furman

CITY OF HOONAH

Hoonah Harbor Float Expansion

Float C
5x40' Stall Floats

PATH: O:\Hnh\67792\MF\Planset-Harbor\10 40' floats.dwg

PLOT: PSPACE 1=1 Tab: Layout1 Fri, 08/Sep/06 01:50PM

REVISIONS			PROJECT DESIGNATION	YEAR	SHEET NO.	TOTAL SHEETS
NO.	DATE	DESCRIPTION				
			67792	2006	10	28

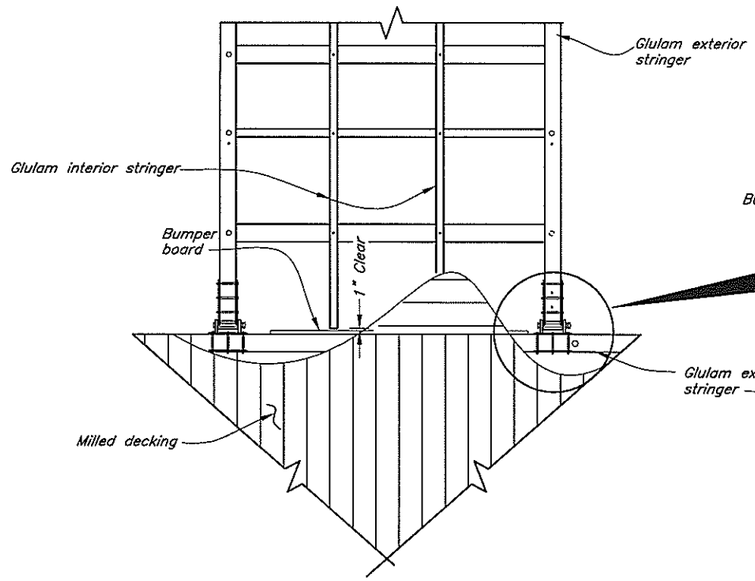

Typ Hinge Connection Plan

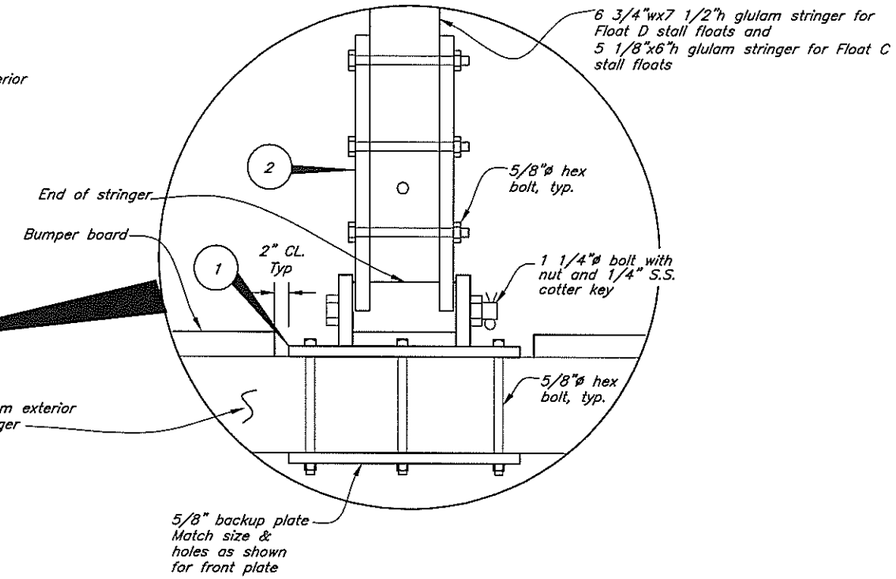

Enlarged Hinge Detail

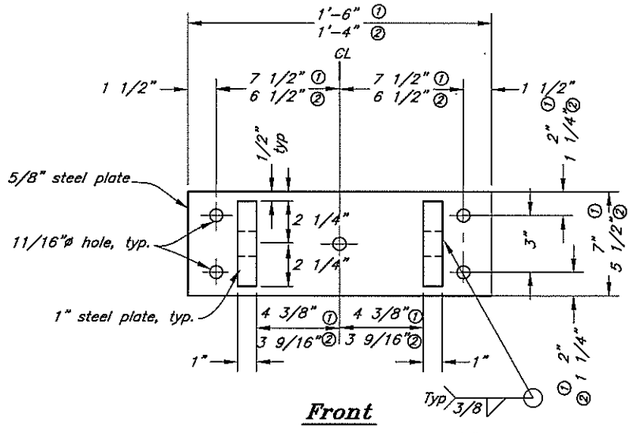

Front

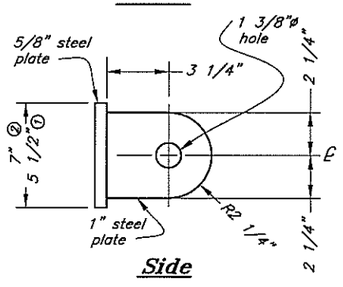

Side

Hinge Weldment Detail 1

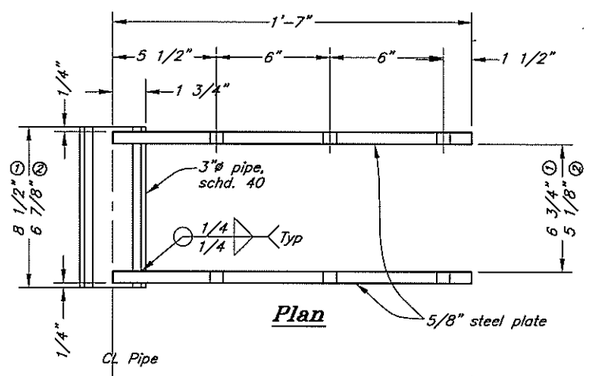

Plan

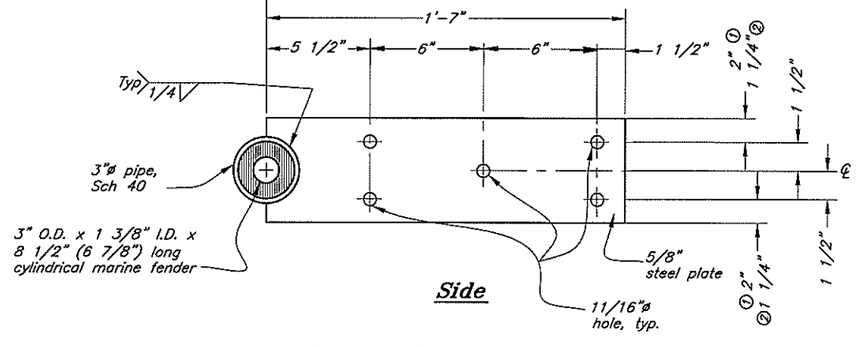

Side

Hinge Weldment Detail 2

Notes:

1. Hinge weldment dimension for Float D stall floats.
2. Hinge weldment dimension for Float C stall floats

All other hinge weldment dimensions typical.

DO NOT SCALE FROM THESE DRAWINGS USE DIMENSIONS

DESIGNED BY: K. Miller

STATE OF ALASKA 49th Kirk D. Miller CE-8550 REGISTERED PROFESSIONAL ENGINEER

9/8/06

CHECKED BY: J. Beedle

DRAFTED BY: C. Furnon

CITY OF HOONAH

Hoonah Harbor Float Expansion

Floats C & D Stall Float Hinges

PATH: Q:\Hnh\67792\MF\Planset-Harbor\11 B & C Stall hinges-.dwg

PLOT: PSPACE 1=1 TAB: DETAIL Wed, 23/Aug/06 11:50AM

REVISIONS			PROJECT DESIGNATION	YEAR	SHEET NO.	TOTAL SHEETS
NO.	DATE	DESCRIPTION	67792	2006	11	28

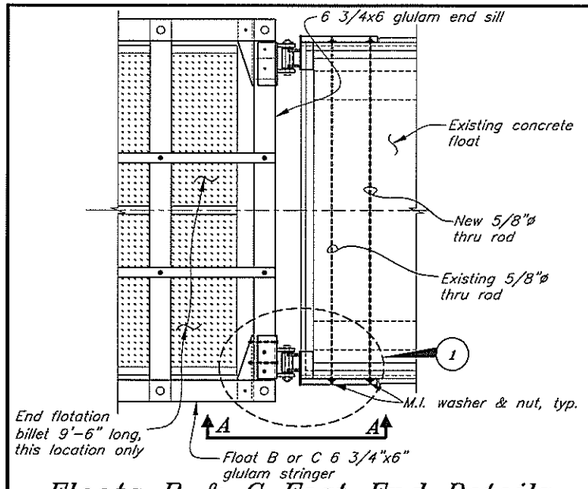

Floats B & C East End Details

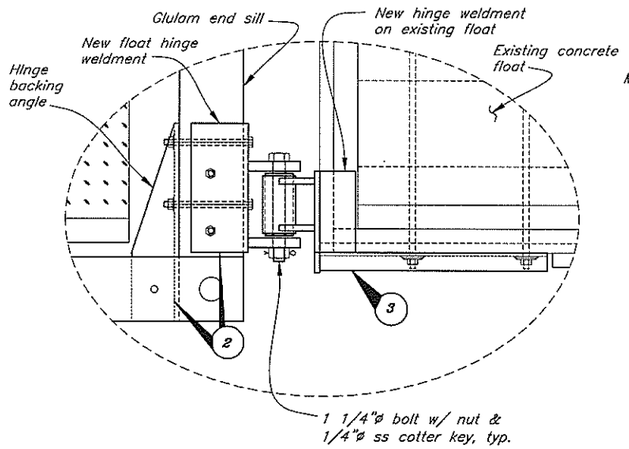

Detail 1

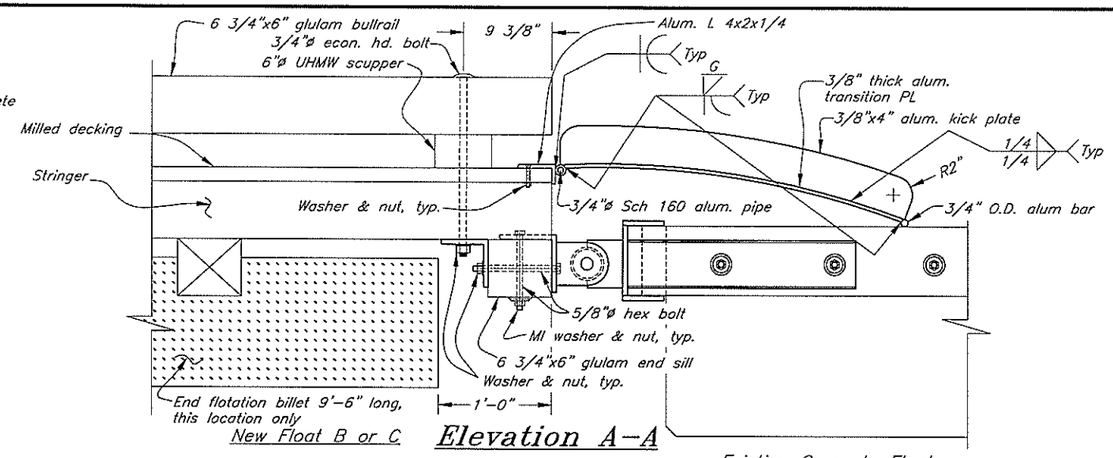

New Float B or C

Elevation A-A

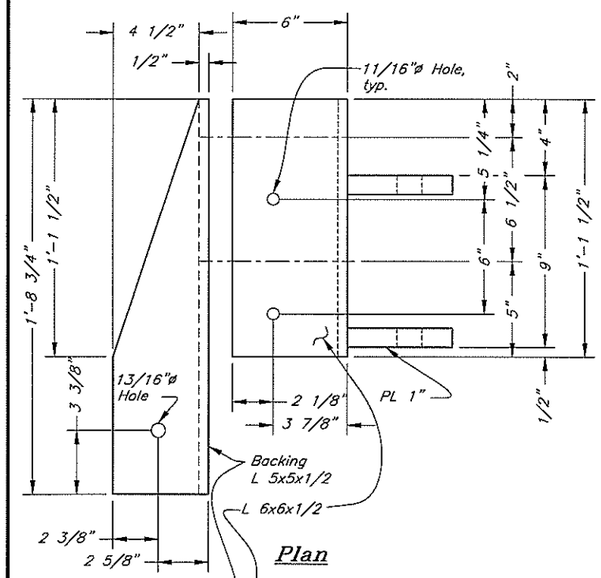

Plan

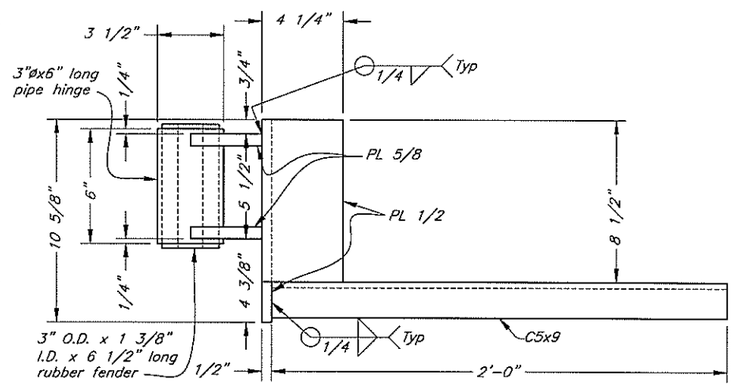

Plan

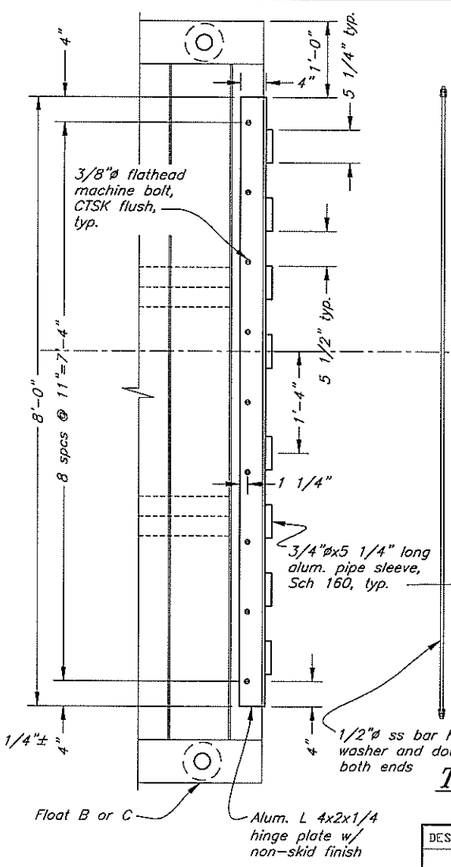

Existing Concrete Float

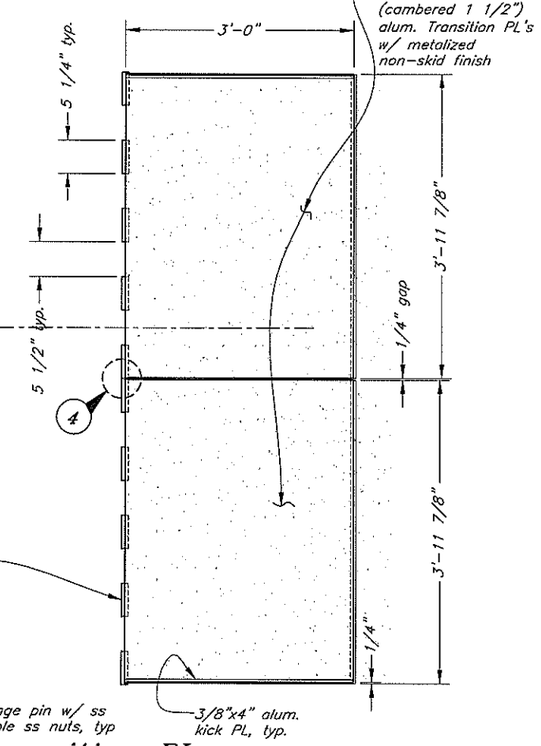

Transition PL

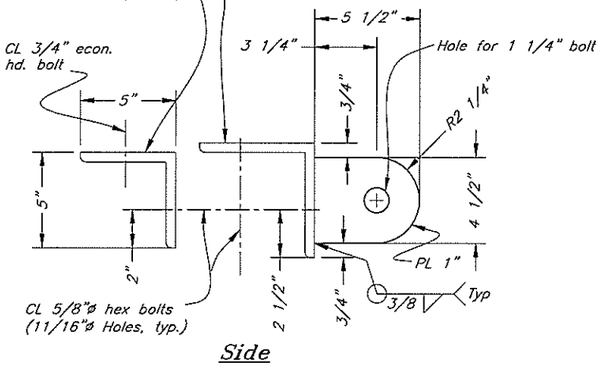

Side

Float B & C Hinge Weldment Detail 2

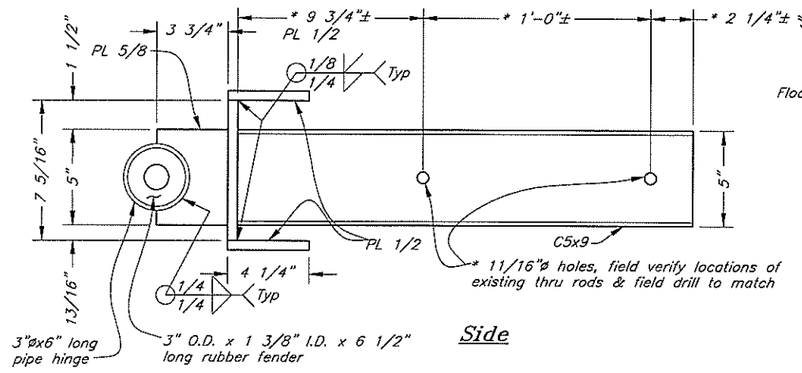

Side

Existing Float Hinge Weldment Detail 3

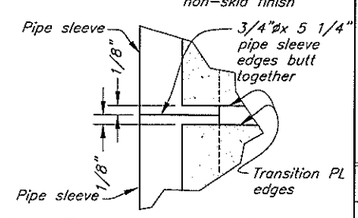

Note: Pipe sleeves extend 1/8" beyond Trans PL's to create 1/4" gap

Detail 4

DO NOT SCALE FROM THESE DRAWINGS USE DIMENSIONS

DESIGNED BY: K. Miller

STATE OF ALASKA 49TH Kirk D. Miller CE-8550 REGISTERED PROFESSIONAL ENGINEER 9/8/06

CHECKED BY: J. Beedle

DRAFTED BY: C. Fuman

CITY OF HOONAH

Hoonah Harbor Float Expansion

Floats B & C East End Hinges

PATH: Q:\Hnh\67792\MF\Planset-Harbor\12 Float B & C east end hinges.dwg

PLOT: PSPACE 1=1 Tab: B&C New-old Hinge&TP Wed, 23/Aug/06 11:50AM

REVISIONS			PROJECT DESIGNATION	YEAR	SHEET NO.	TOTAL SHEETS
NO.	DATE	DESCRIPTION	67792	2006	12	28

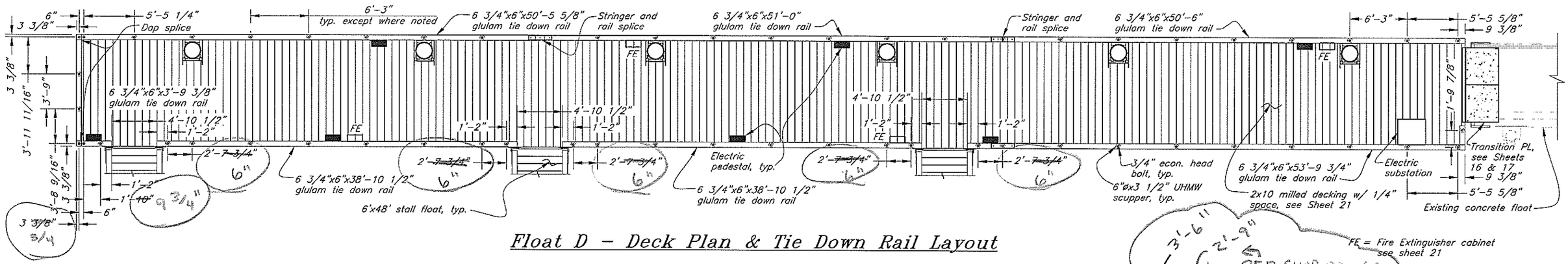

Float D – Deck Plan & Tie Down Rail Layout

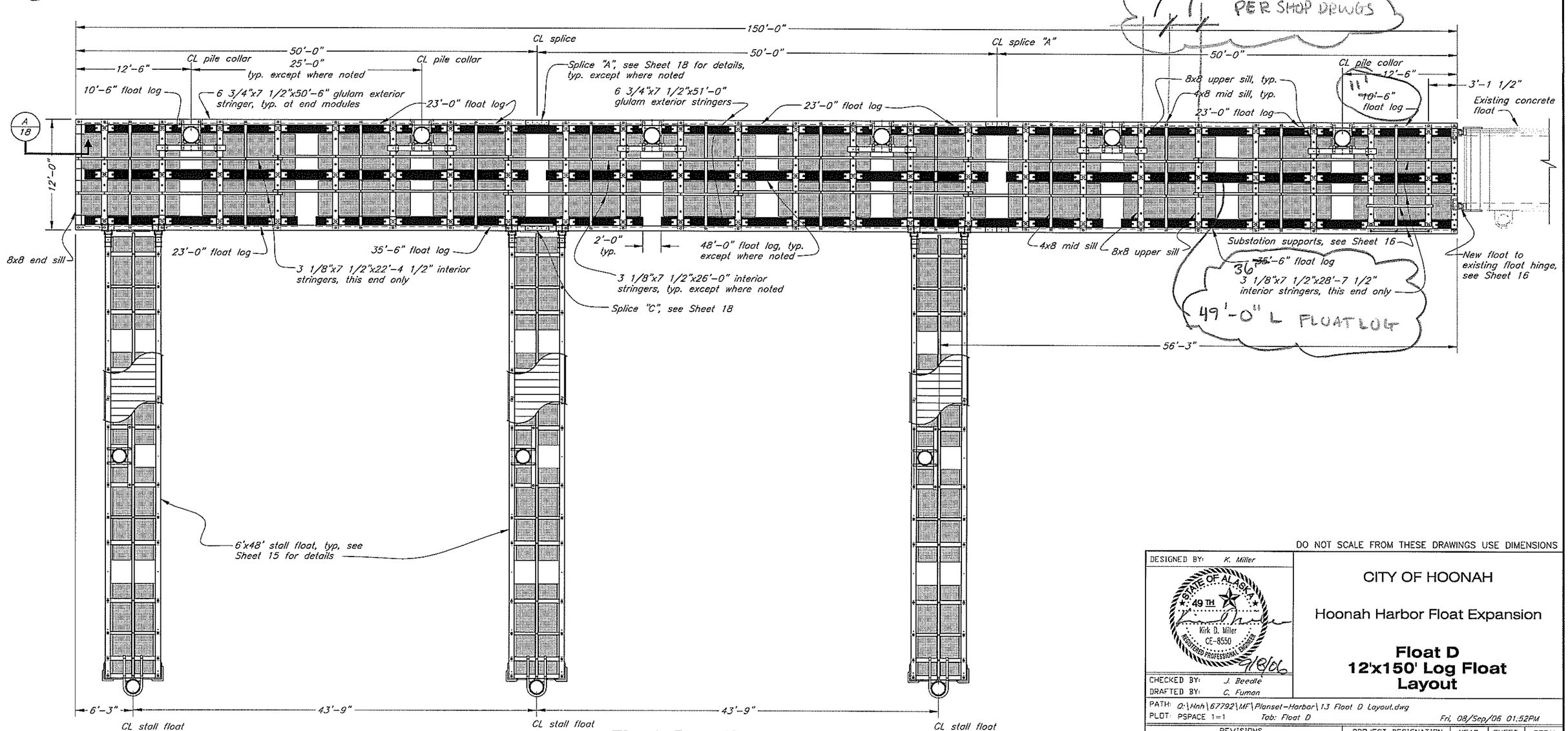

Float D – Framing Plan

FE = Fire Extinguisher cabinet
see sheet 21

PER SHOP DRWGS

3'-6"
2'-9"

36

49'-0" L FLOAT LOG

DO NOT SCALE FROM THESE DRAWINGS USE DIMENSIONS

DESIGNED BY: K. Miller

STATE OF ALASKA 49TH Kirk D. Miller CE-8550 REGISTERED PROFESSIONAL ENGINEER 9/8/06

CHECKED BY: J. Beedle

DRAFTED BY: C. Fuman

CITY OF HOONAH

Hoonah Harbor Float Expansion

Float D
12'x150' Log Float
Layout

PATH: Q:\Hnh\67792\MF\Planset-Harbor\13 Float D Layout.dwg

PLOT: PSPACE 1=1 Tab: Float D Fri, 08/Sep/06 01:52PM

REVISIONS			PROJECT DESIGNATION	YEAR	SHEET NO.	TOTAL SHEETS
NO.	DATE	DESCRIPTION	67792	2006	13	28

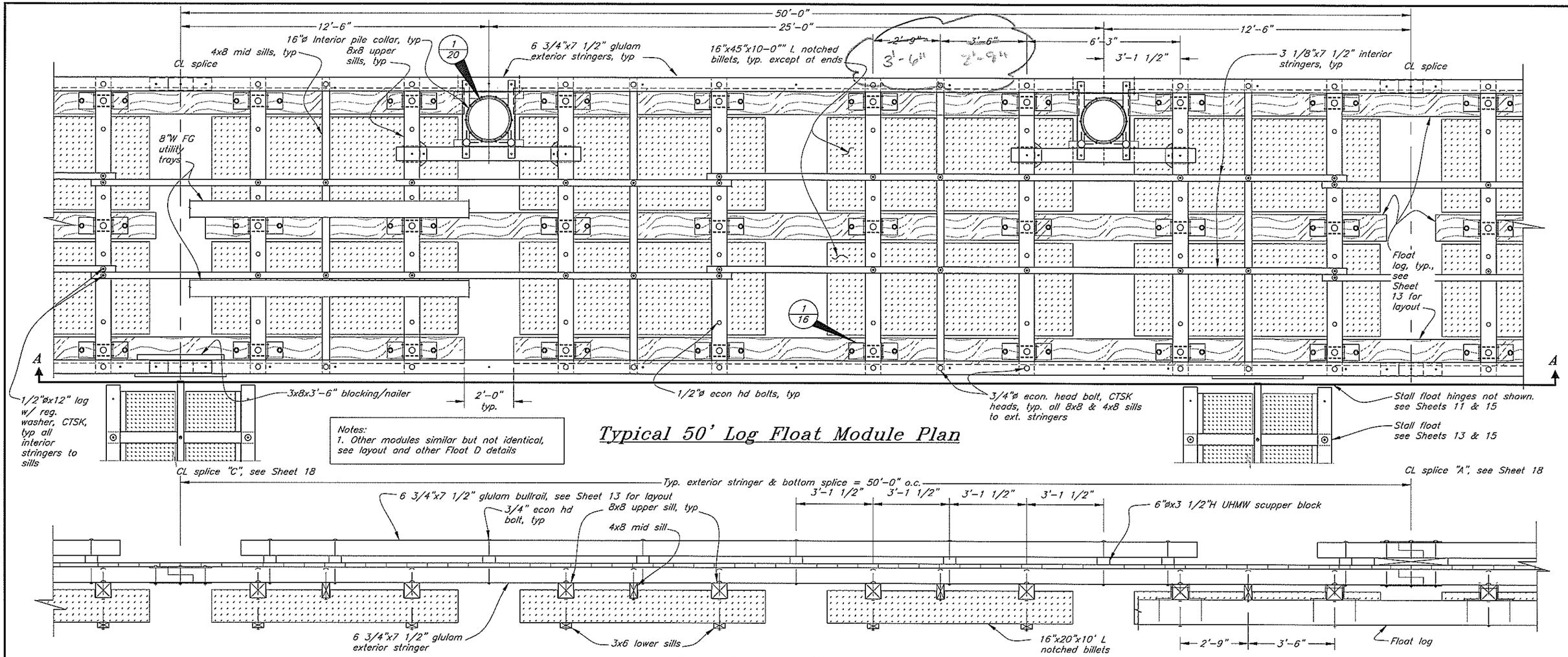

Notes:
1. Other modules similar but not identical, see layout and other Float D details

Typical 50' Log Float Module Plan

Elevation A-A

Note: Stall float hinges not shown

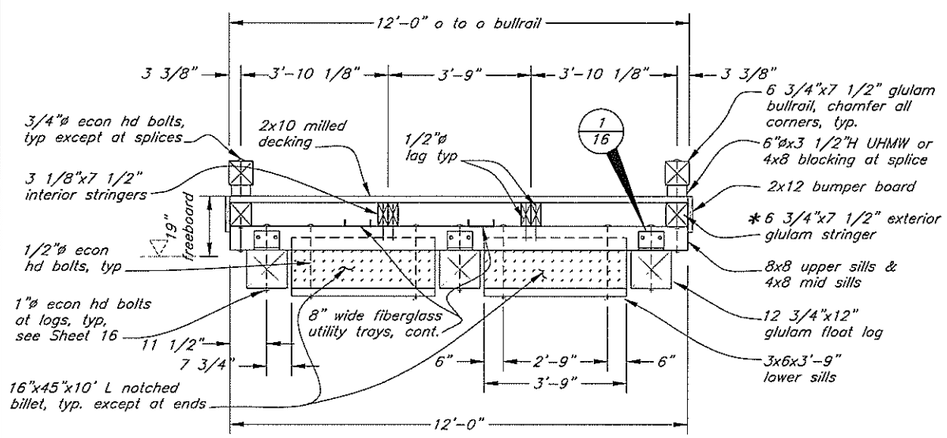

Typical Section

* 6 3/4"x7 1/2" & 5 1/8"x7 1/2" Glulam members maybe substituted for top sills.

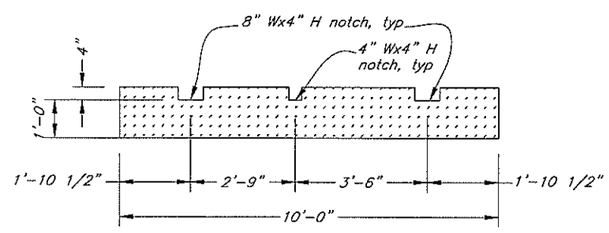

Typical Notched Billet

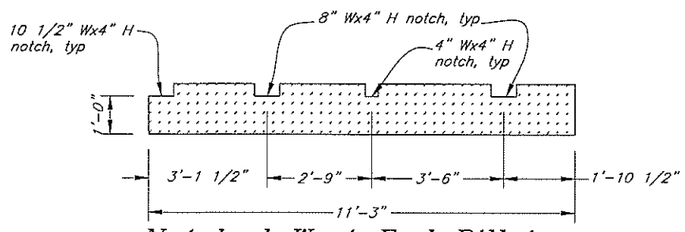

Notched West End Billets

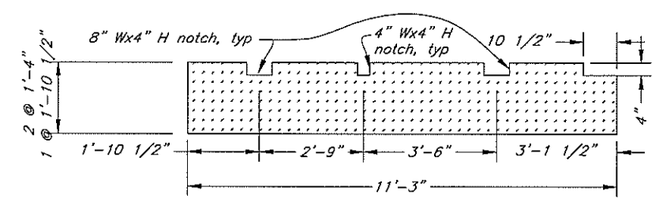

Notched East End Billets

DO NOT SCALE FROM THESE DRAWINGS USE DIMENSIONS

DESIGNED BY: K. Miller

STATE OF ALASKA 49TH Kirk D. Miller CE-8550 REGISTERED PROFESSIONAL ENGINEER 9/8/06

CHECKED BY: J. Beedle
DRAFTED BY: C. Fuman

CITY OF HOONAH

Hoonah Harbor Float Expansion

Float D
50' Log Float Module

PATH: O:\Hnh\67792\MF\Planset-Harbor\14 50' module.dwg
PLOT: PSPACE 1=1 Tab: 50' module Fri, 08/Sep/06 01:56PM

REVISIONS			PROJECT DESIGNATION	YEAR	SHEET NO.	TOTAL SHEETS
NO	DATE	DESCRIPTION	67792	2006	14	28

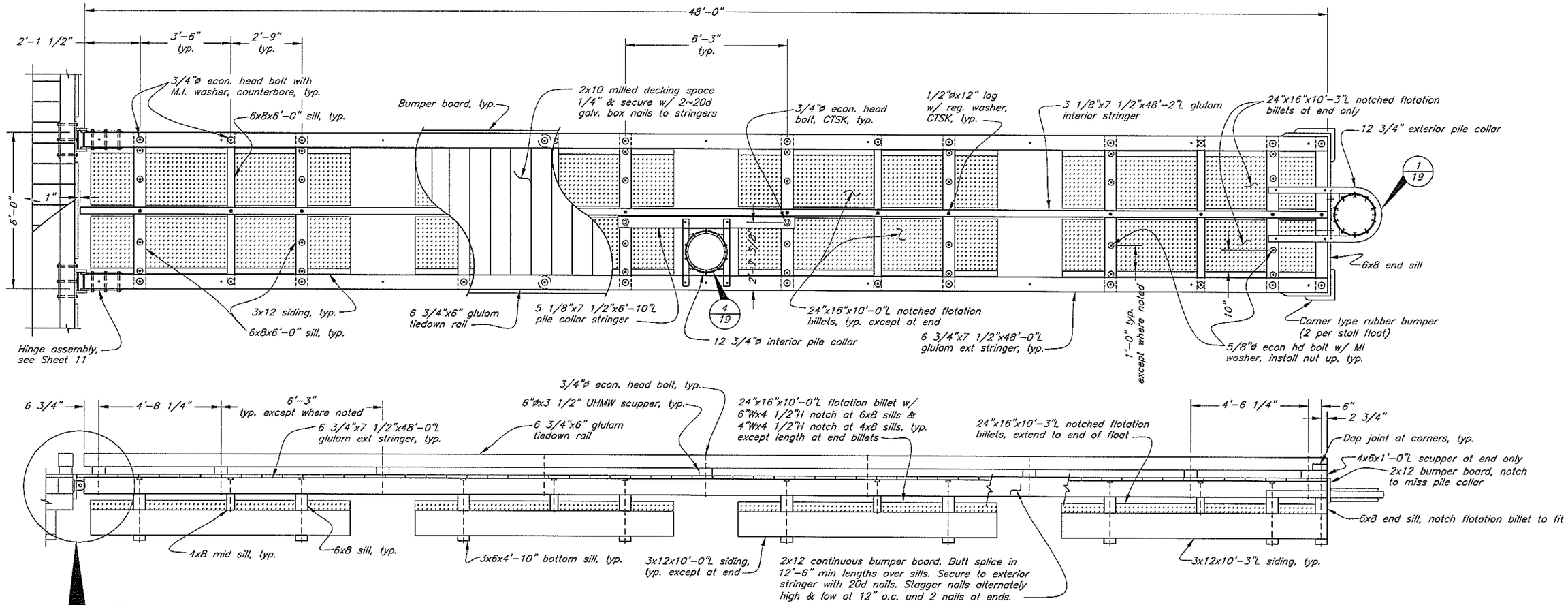

Elevation

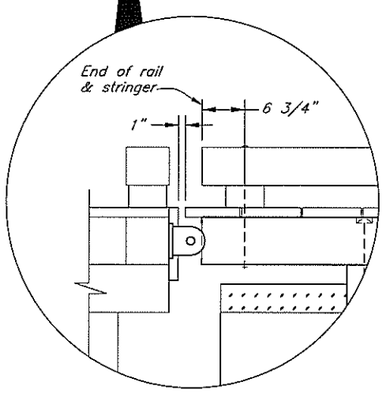

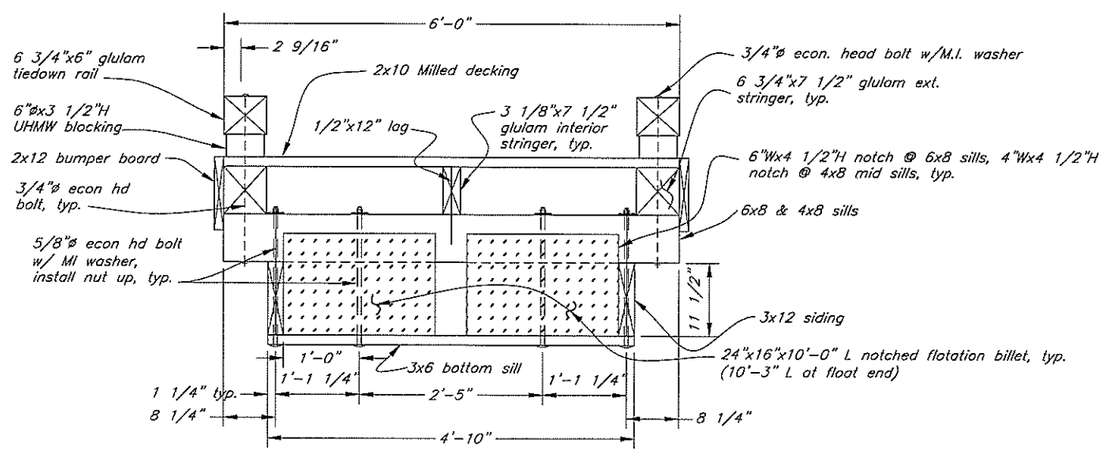

Typical Section

DO NOT SCALE FROM THESE DRAWINGS USE DIMENSIONS

DESIGNED BY: K. Miller

STATE OF ALASKA 49TH Kirk D. Miller CE-8550 REGISTERED PROFESSIONAL ENGINEER 8/23/06

CHECKED BY: J. Beedle

DRAFTED BY: C. Furman

CITY OF HOONAH

Hoonah Harbor Float Expansion

Float D
6'x48' Stall Float

PATH: O:\Hnh\67792\MF\Planset-Harbor\15 48' stall floats.dwg

PLOT: PSPACE 1=1 Tab: Layout1 Wed, 23/Aug/06 11:49AM

REVISIONS			PROJECT DESIGNATION	YEAR	SHEET NO.	TOTAL SHEETS
NO.	DATE	DESCRIPTION				
			67792	2006	15	28

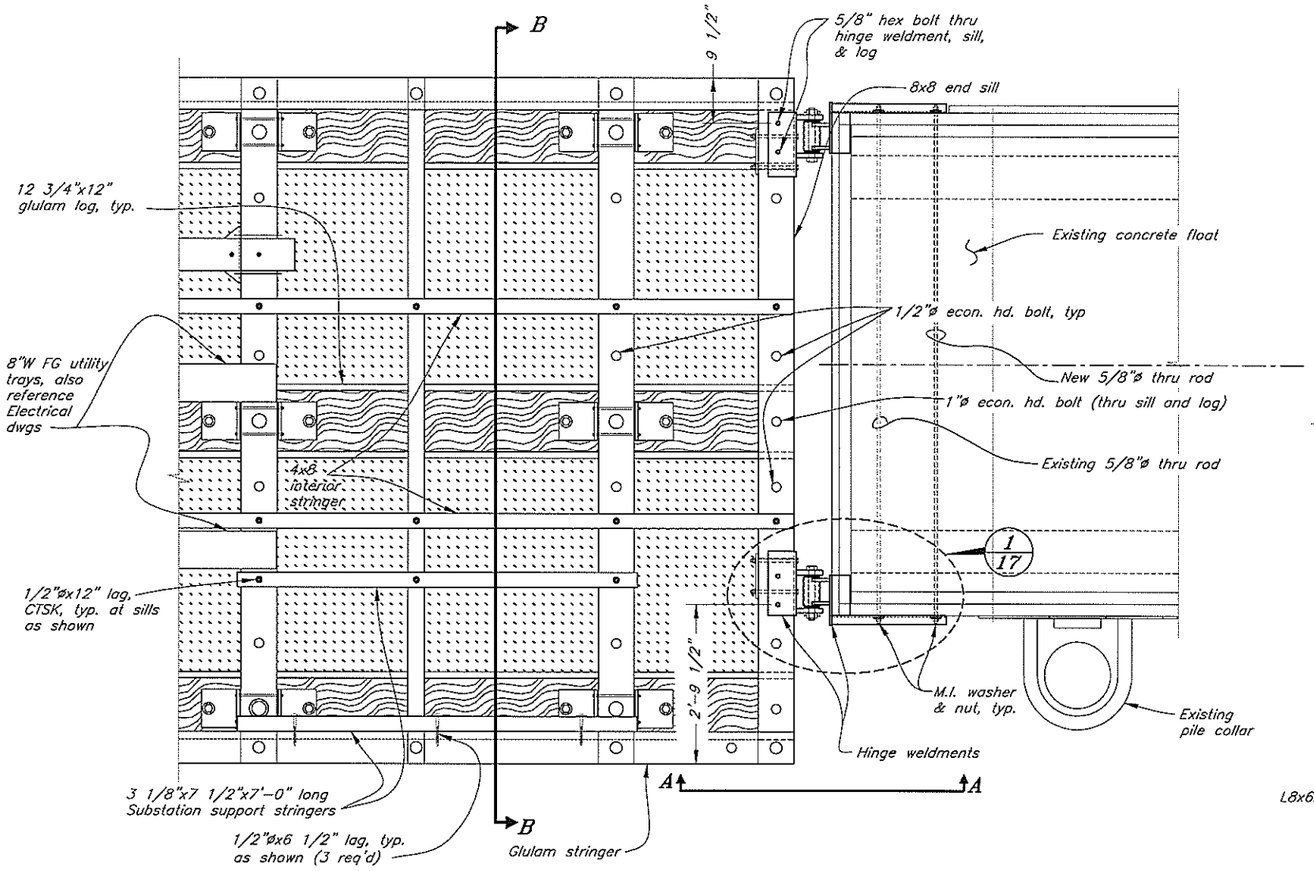

Float D East End Details

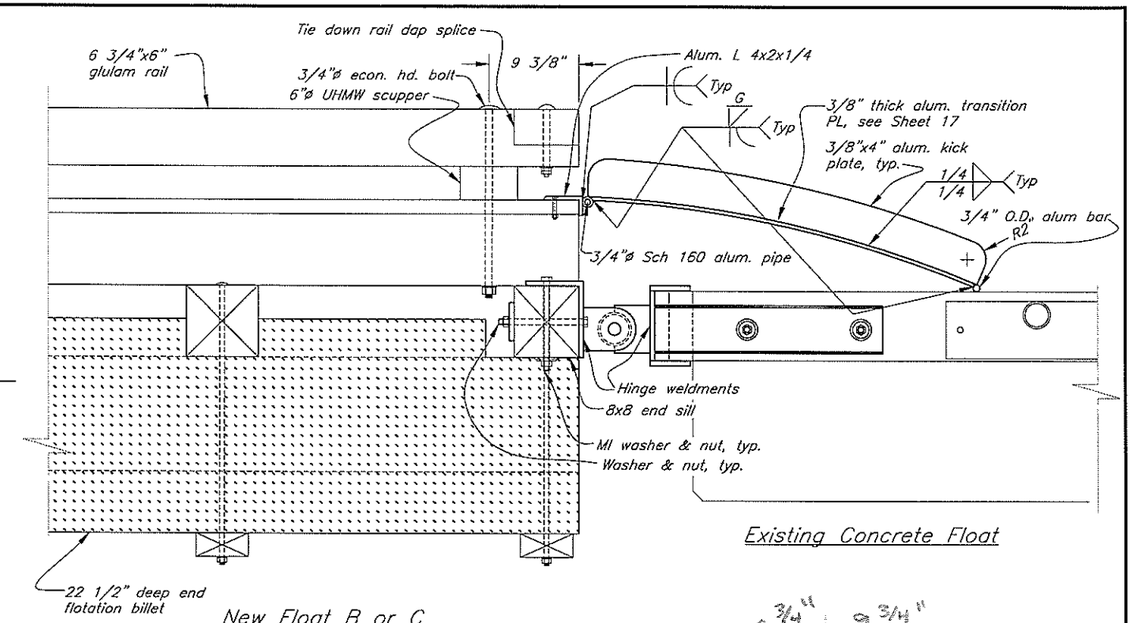

New Float B or C

Existing Concrete Float

Elevation A-A

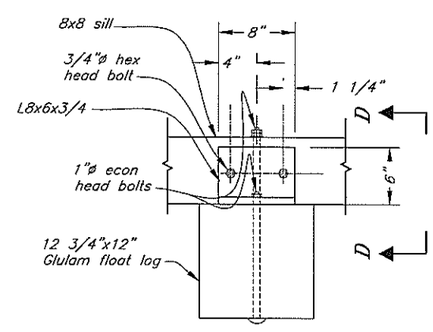

Section C-C

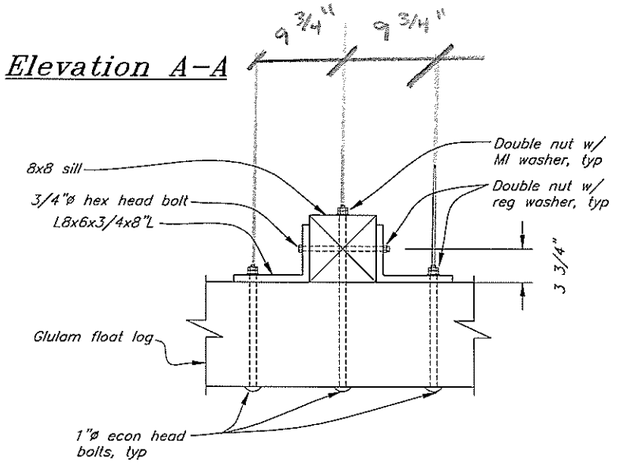

Section D-D

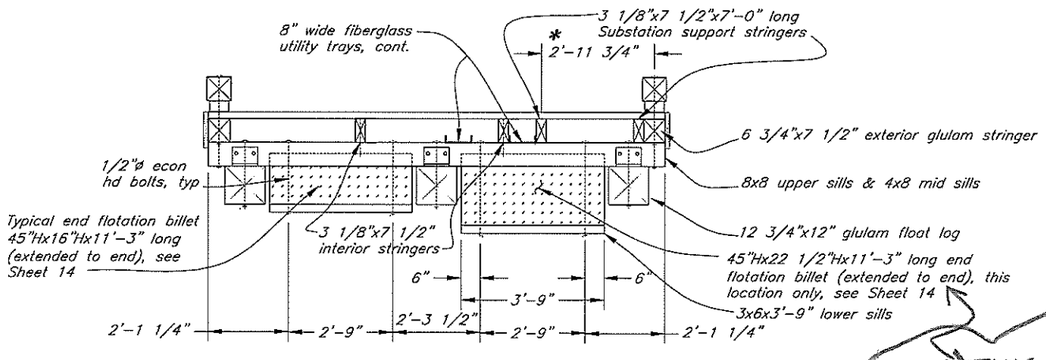

Section B-B

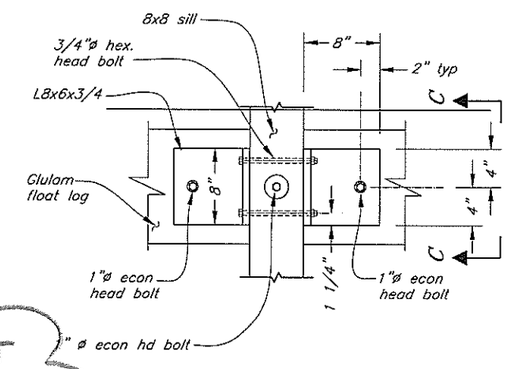

Typ. Log to Sill Connection Detail

1/14

THIS BILLET NOT PROVIDED ONLY 1 ea 10x20x9' w/ NOTCHES PLACED!

DO NOT SCALE FROM THESE DRAWINGS USE DIMENSIONS

DESIGNED BY: K. Miller

STATE OF ALASKA 49TH Kirk D. Miller CE-8550 REGISTERED PROFESSIONAL ENGINEER

9/8/06

CHECKED BY: J. Beedle

DRAFTED BY: C. Fuman

CITY OF HOONAH

Hoonah Harbor Float Expansion

Float D Details

PATH: Q:\Hnh\67792\MF\Planset-Harbor\16 Float D east end.dwg

PLOT: PSPACE 1=1 Tab: D End details Fri, 08/Sep/06 02:03PM

REVISIONS			PROJECT DESIGNATION	YEAR	SHEET NO.	TOTAL SHEETS
NO.	DATE	DESCRIPTION	67792	2006	16	28

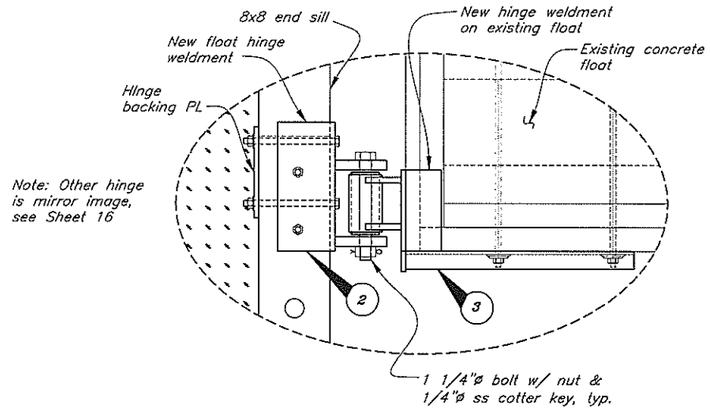

Detail 1/16

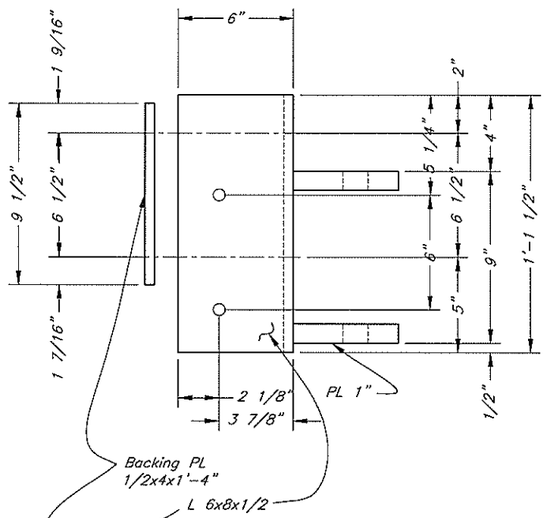

Plan

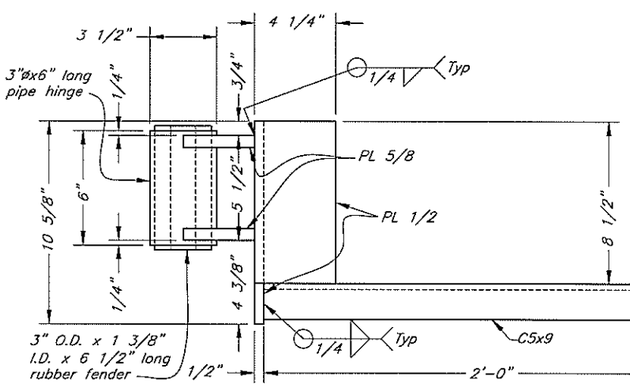

Plan

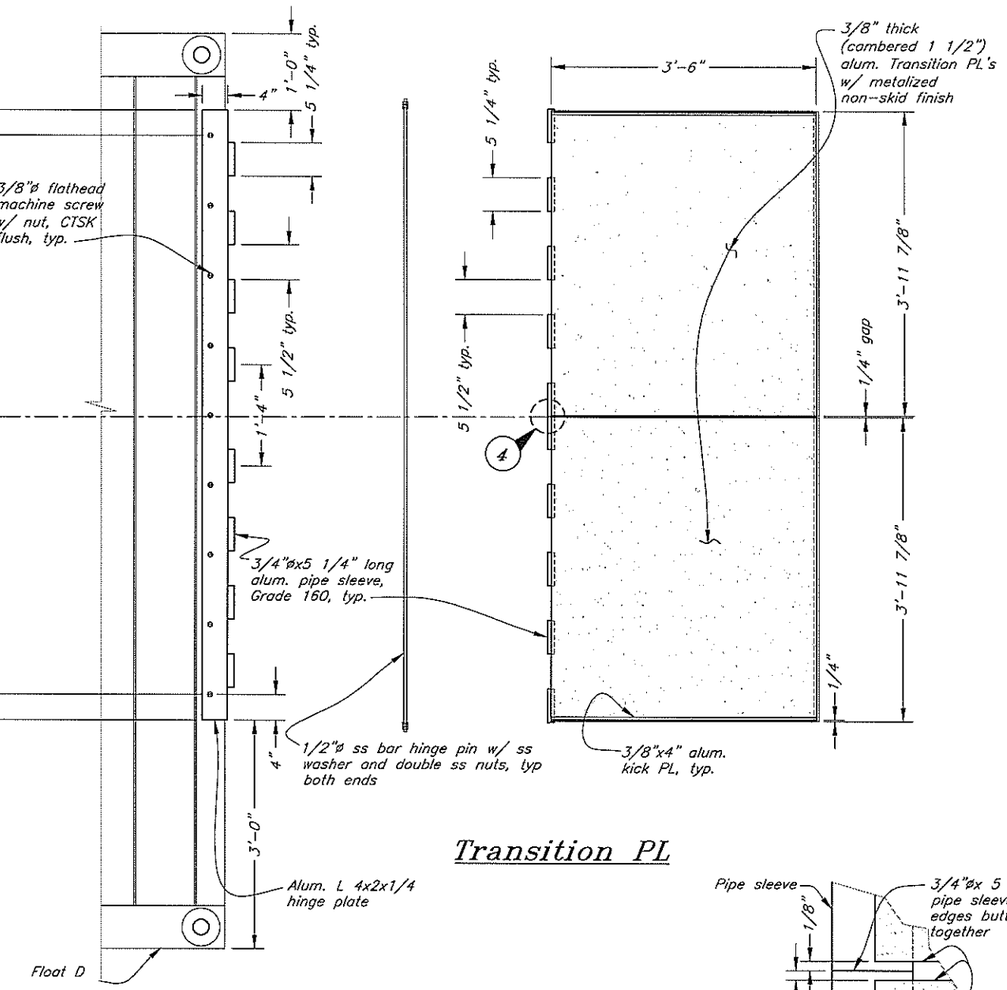

Transition PL

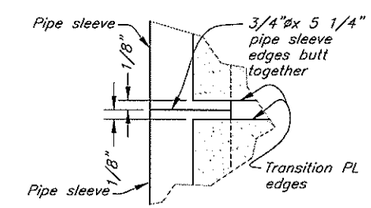

Note: Pipe sleeves extend 1/8" beyond Trans PL's to create 1/4" gap

Detail 4

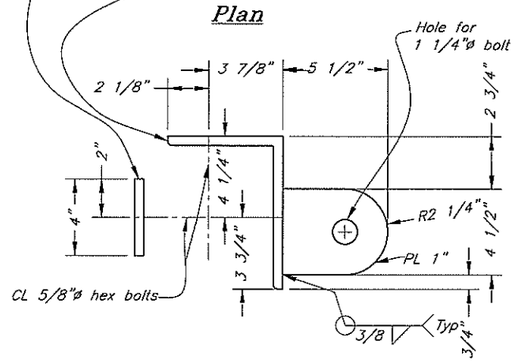

Side

Float D Hinge Weldment Detail 2

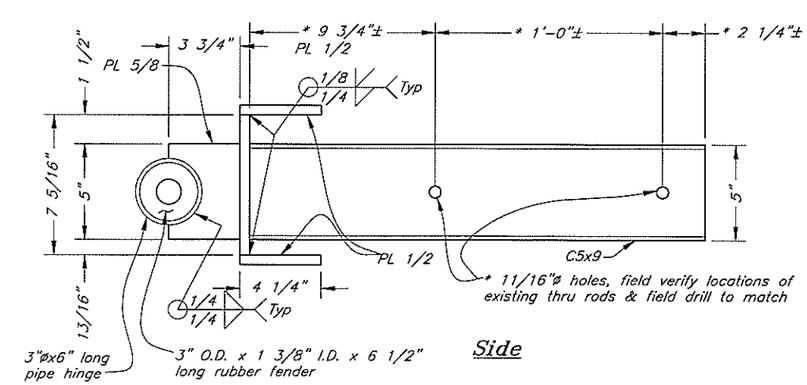

Side

Existing Float Hinge Weldment Detail 3

DO NOT SCALE FROM THESE DRAWINGS USE DIMENSIONS

DESIGNED BY: K. Miller

STATE OF ALASKA 49TH Kirk D. Miller CE-8550 REGISTERED PROFESSIONAL ENGINEER 9/8/06

CHECKED BY: J. Beedle

DRAFTED BY: C. Fuman

CITY OF HOONAH

Hoonah Harbor Float Expansion

Float D East End Hinges & Transition PL

PATH: O:\Hnh\67792\MF\Planset-Harbor\17 Float D east end hinges.dwg

PLOT: PSPACE 1=1 Tab: D New-old Hinge&TP (2) Fri, 08/Sep/06 02:04PM

REVISIONS			PROJECT DESIGNATION	YEAR	SHEET NO.	TOTAL SHEETS
NO.	DATE	DESCRIPTION				
			67792	2006	17	28

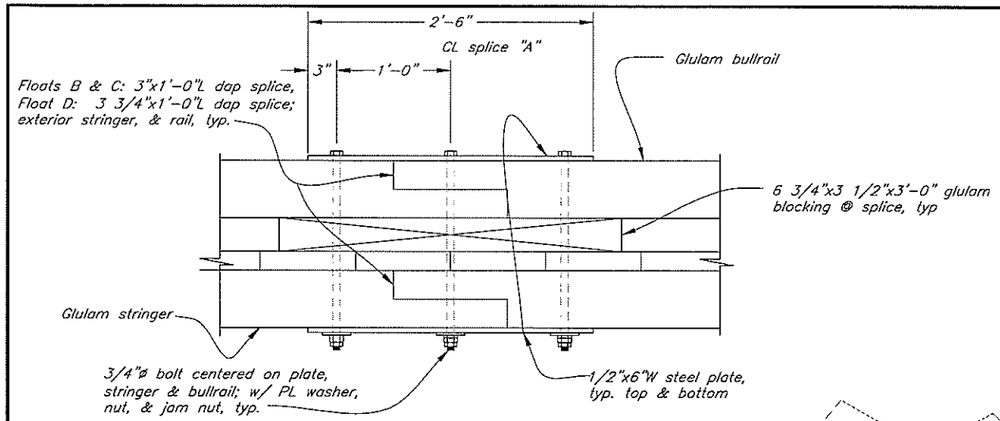

Splice "A" Elevation

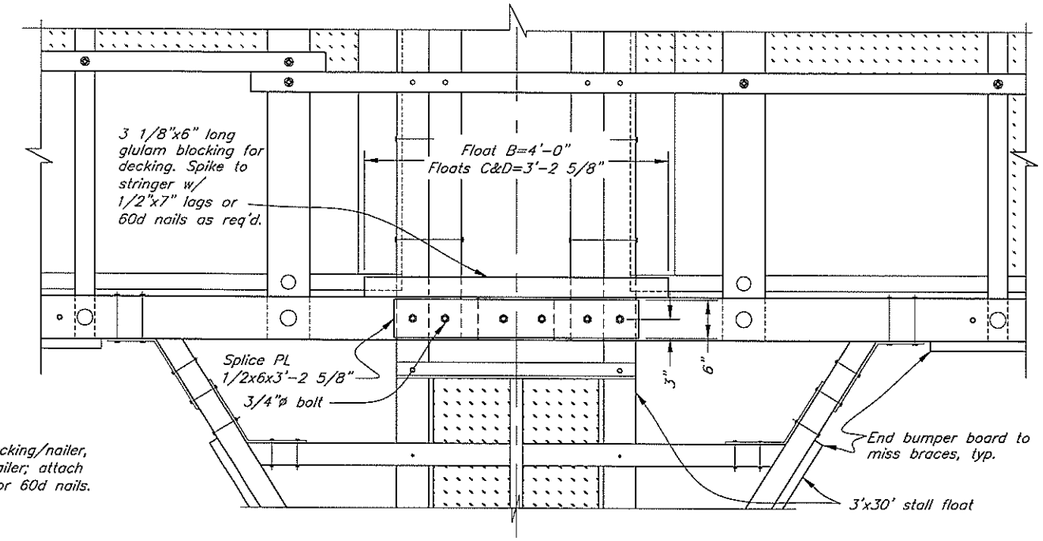

Splice "B" Plan

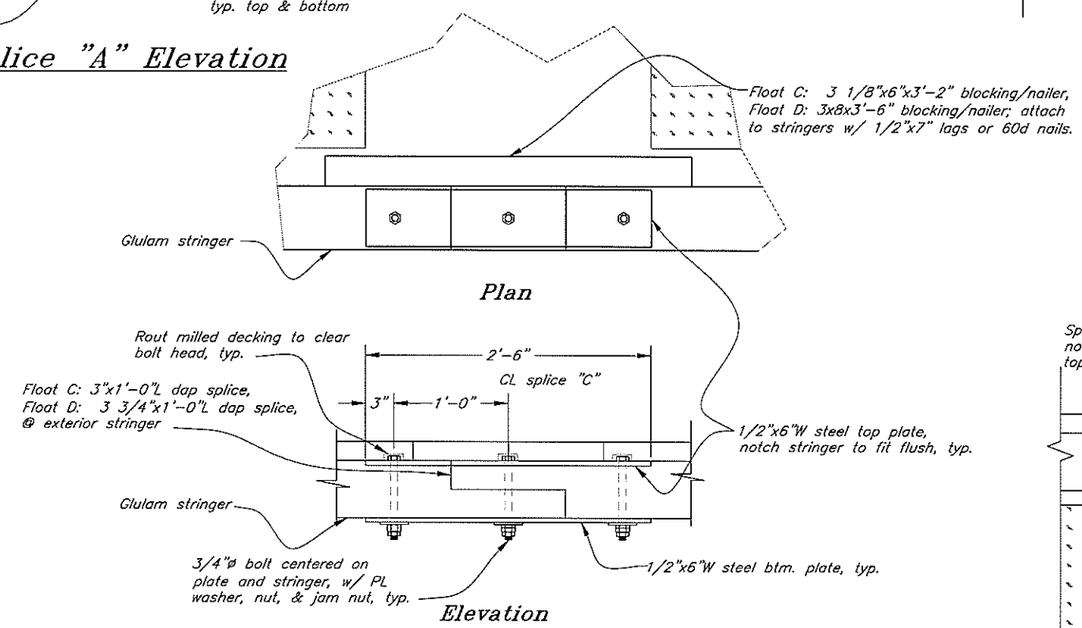

Splice "C"

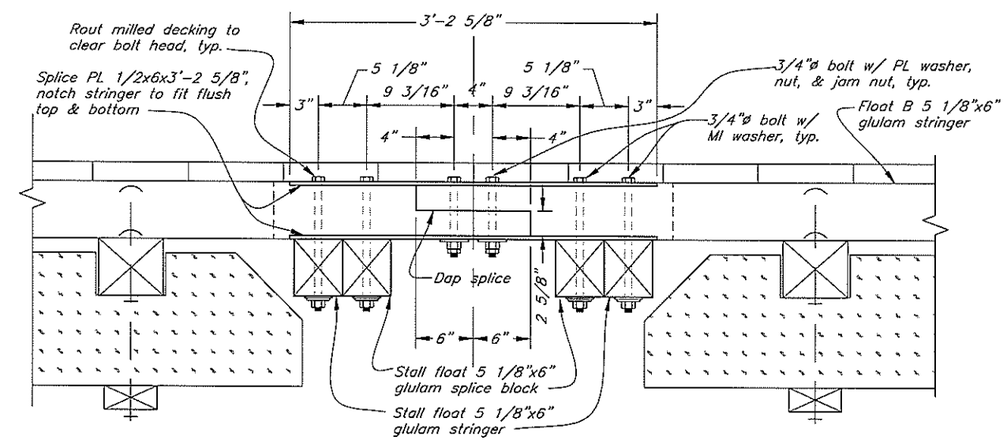

Splice "B" Elevation

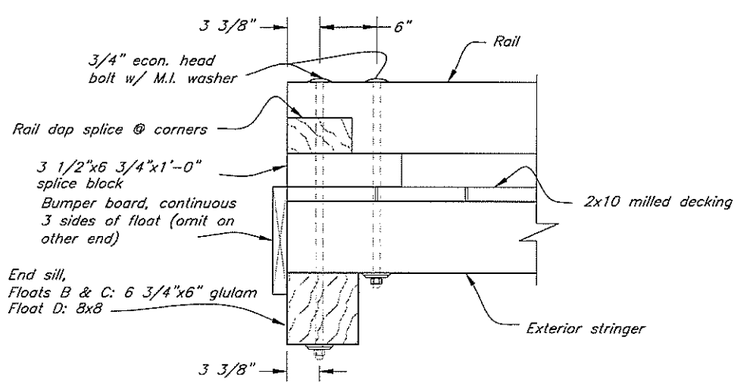

Typical West End Rail Corner Dap Splice

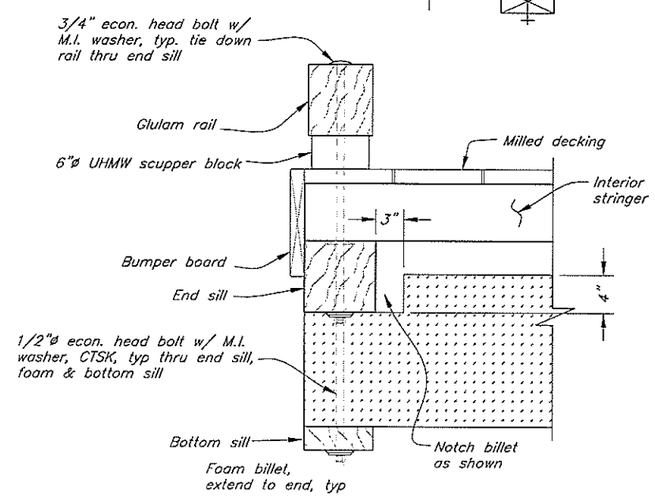

Section A 4, 8,13

DO NOT SCALE FROM THESE DRAWINGS USE DIMENSIONS

DESIGNED BY: K. Miller

STATE OF ALASKA 49TH Kirk D. Miller CE-8550 REGISTERED PROFESSIONAL ENGINEER

9/8/06

CHECKED BY: J. Beedle

DRAFTED BY: C. Furman

CITY OF HOONAH

Hoonah Harbor Float Expansion

Float Splices & West End Details

PATH: Q:\Hnh\67792\MF\Planset-Harbor\18 Splices & west end.dwg

PLOT: PSPACE 1=1 Tab: Splices Fri, 08/Sep/06 02:05PM

REVISIONS			PROJECT DESIGNATION	YEAR	SHEET NO.	TOTAL SHEETS
NO.	DATE	DESCRIPTION	67792	2006	18	28

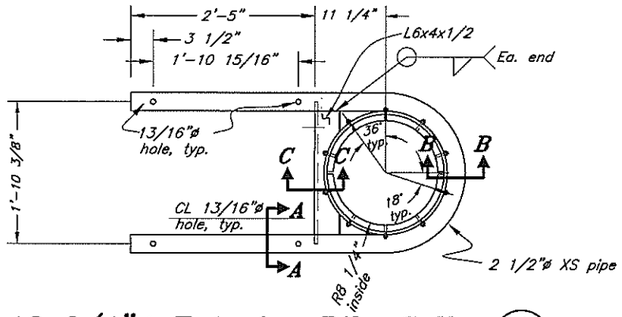

12 3/4"ø Exterior Pile Collar (1/10,15)

Floats C and D Stall Floats

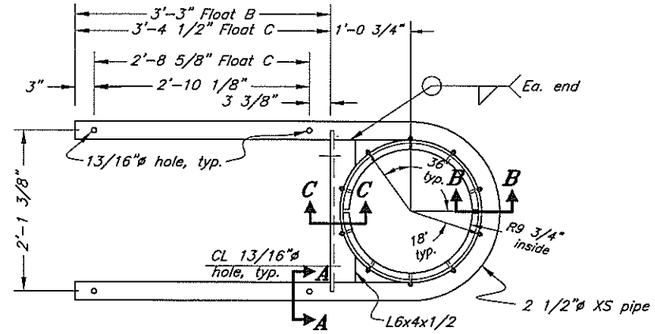

16"ø Exterior Pile Collar (2/4,8)

Main Floats B & C

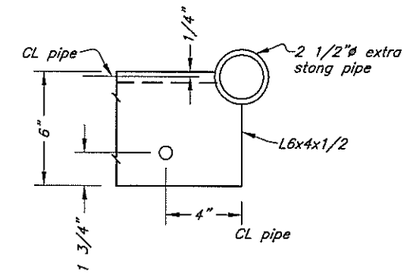

Section A-A

PILE COLLAR NOTES:

1. All welds on inside of steel ring shall be ground smooth.
2. UHMW poly liners, as shown, with 10 bolts per circular half collar. UHMW poly liners shall be heated and then molded to the shape shown on the details.
3. The poly liner securing bolts shall be countersunk as shown.
4. Secure all pile collars to pile collar stringer w/ 3/4"ø hex head bolts w/ MI washers, typ. unless otherwise noted.
5. Match deck boards flush w/ edges of interior pile collars. Notch deck boards around collar angles when required.

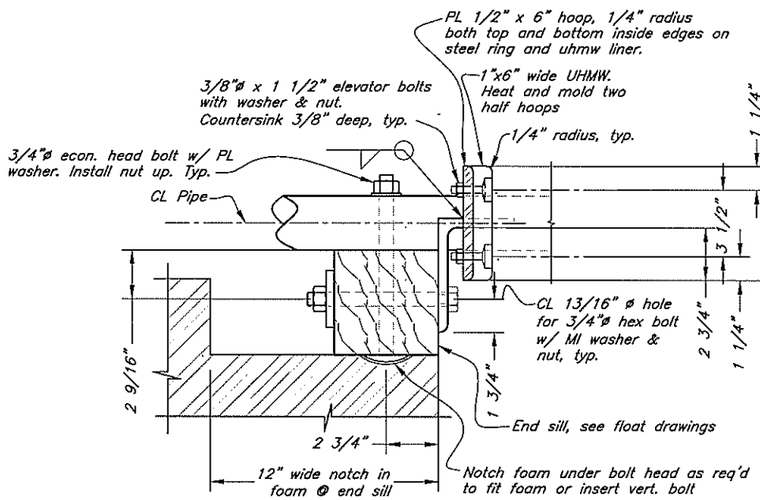

Section C-C

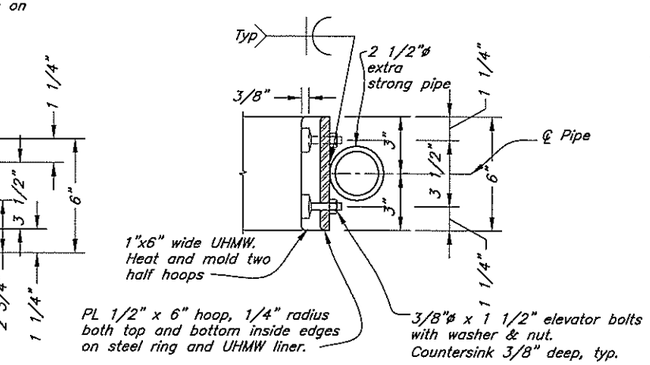

Section B-B

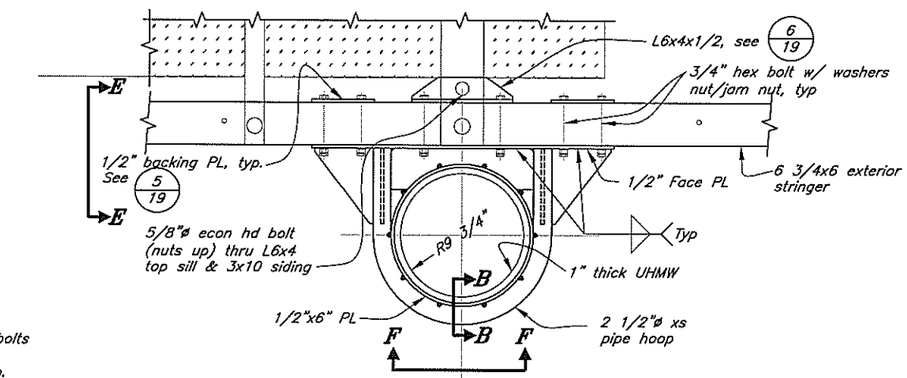

Typ Side Pile Collar (3/5,9)

(Floats B & C)

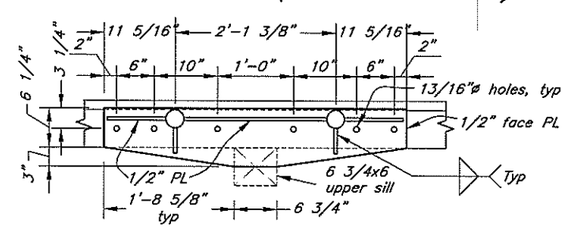

Section F-F

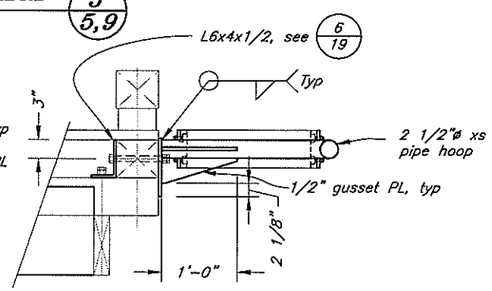

Section E-E

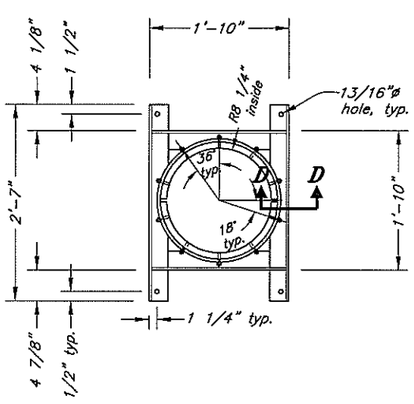

12 3/4"ø Interior Pile Collar (4/15)

Float D Stall Floats

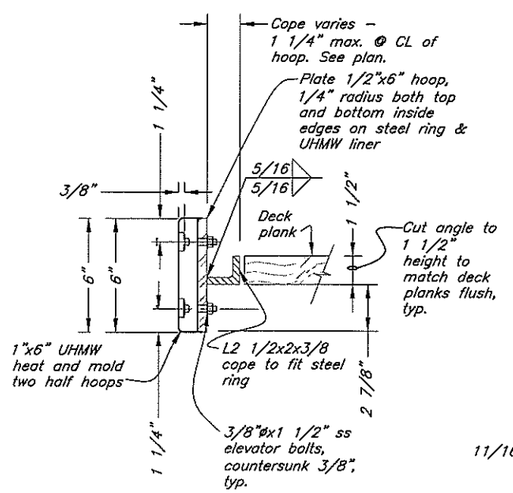

Section D-D

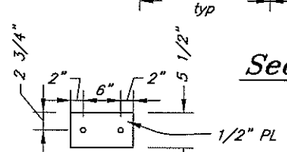

Backing PL (5/19)

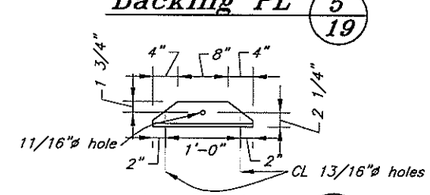

Angle Clip (6/19)

DO NOT SCALE FROM THESE DRAWINGS USE DIMENSIONS

DESIGNED BY: K. Miller

STATE OF ALASKA 49th Kirk D. Miller CE-8550 REGISTERED PROFESSIONAL ENGINEER

9/8/06

CHECKED BY: J. Beedle

DRAFTED BY: C. Fumon

CITY OF HOONAH

Hoonah Harbor Float Expansion

Pile Collars

PATH: Q:\Hnh\67792\MF\Planset-Harbor\19 Float B & C end pile collar.dwg

PLOT: PSPACE 1=1 TAB: DETAIL Fri, 08/Sep/06 02:06PM

REVISIONS			PROJECT DESIGNATION	YEAR	SHEET NO.	TOTAL SHEETS
NO.	DATE	DESCRIPTION	67792	2006	19	28

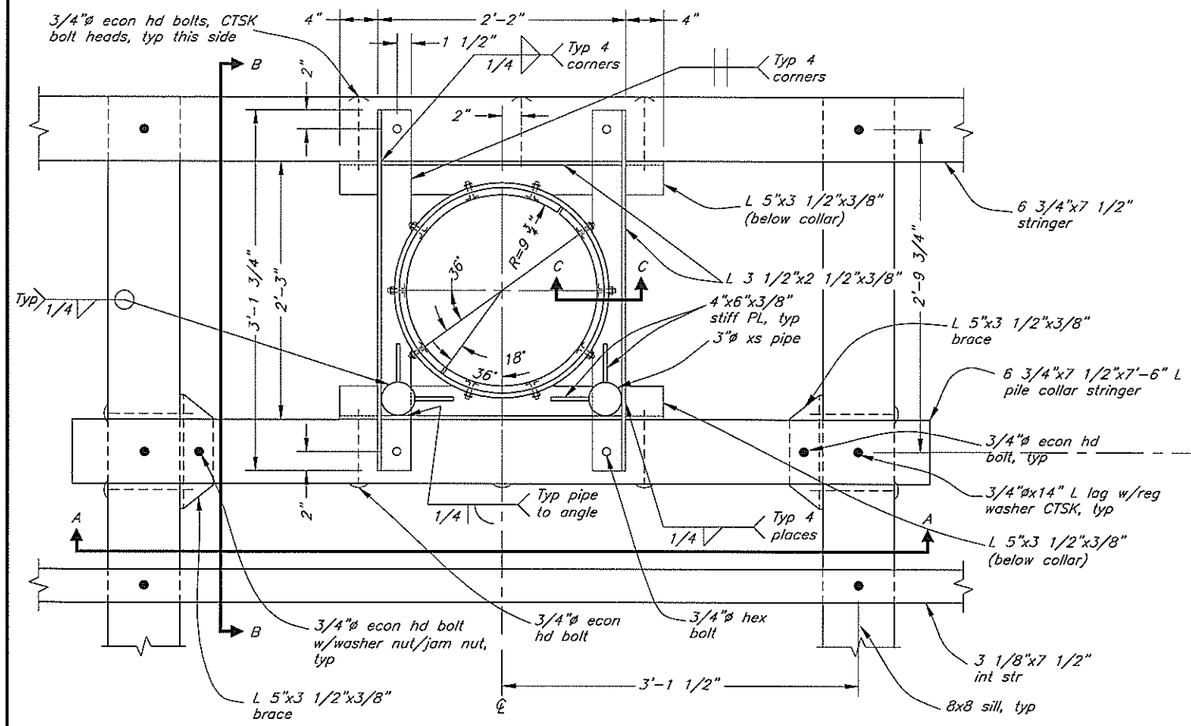

Pile Collar Plan (1/14)

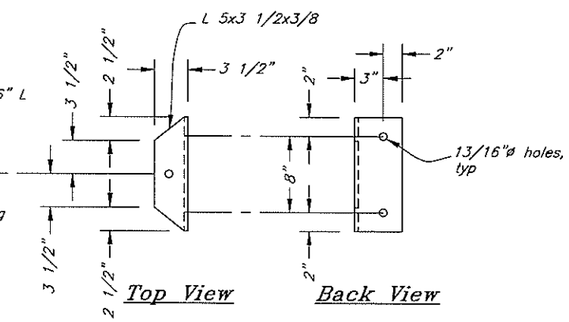

Angle Brace Detail

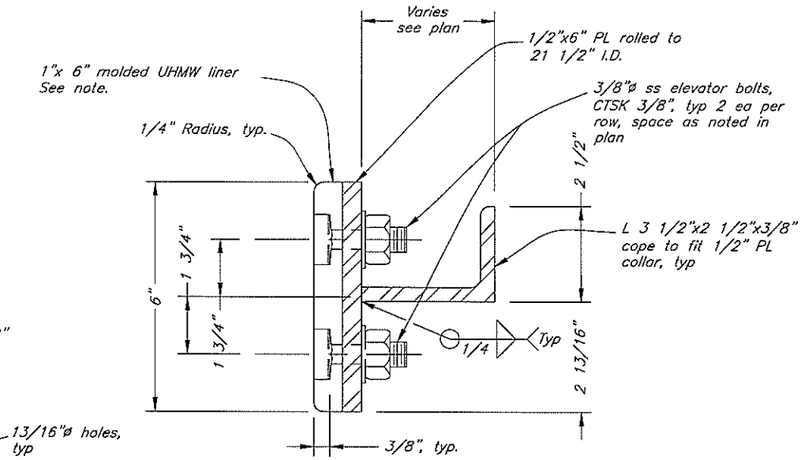

NOTE:

UHMW liners, as shown with 10 bolts per circular half collar spaced as noted. Mold UHMW liners to the diameter shown.

Section C–C

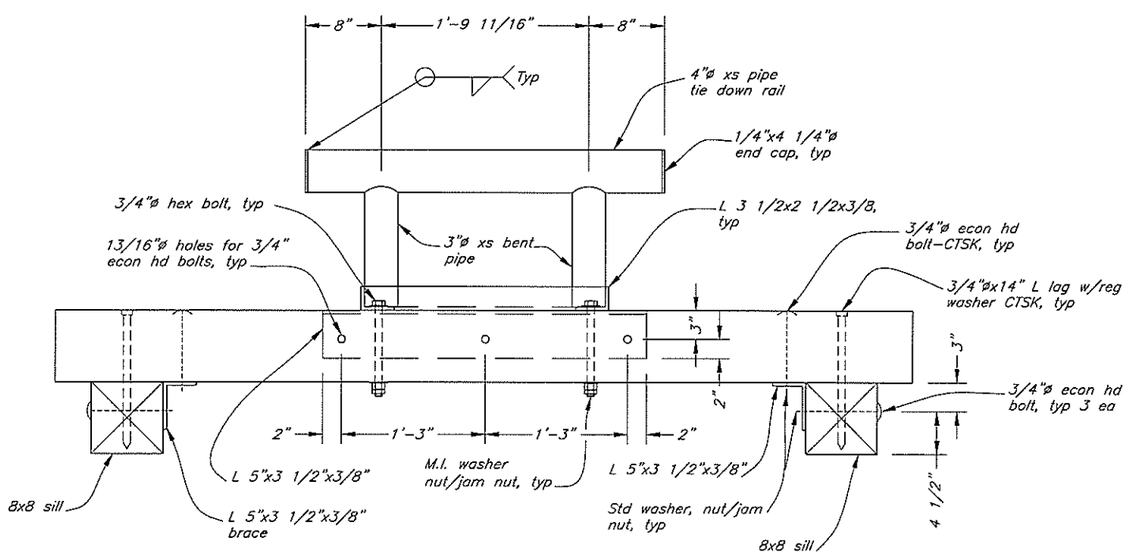

Section A–A

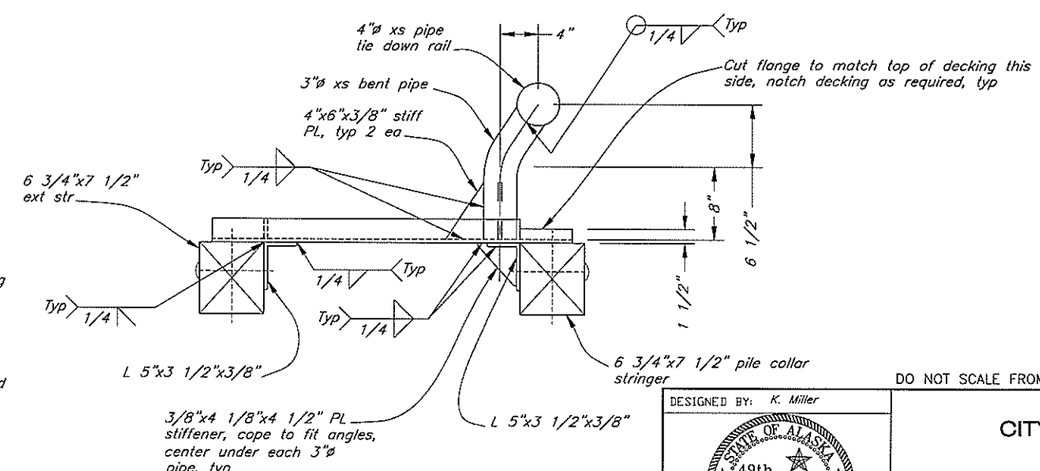

Section B–B

DO NOT SCALE FROM THESE DRAWINGS USE DIMENSIONS

DESIGNED BY: K. Miller

STATE OF ALASKA 49th Kirk D. Miller CE-8550 REGISTERED PROFESSIONAL ENGINEER

9/8/06

CHECKED BY: J. Beedle

DRAFTED BY: B. Bennett

CITY OF HOONAH

Hoonah Harbor Float Expansion

Float D (Main) Interior Pile Collars

PATH: Q:\Hnh\67792\MF\Planset-Harbor\20 Float D Pile Collars.dwg

PLOT: PSPACE 1=1 Tab: Sht 7 Wed, 23/Aug/06 11:48AM

REVISIONS			PROJECT DESIGNATION	YEAR	SHEET NO.	TOTAL SHEETS
NO.	DATE	DESCRIPTION	67792	2006	20	28

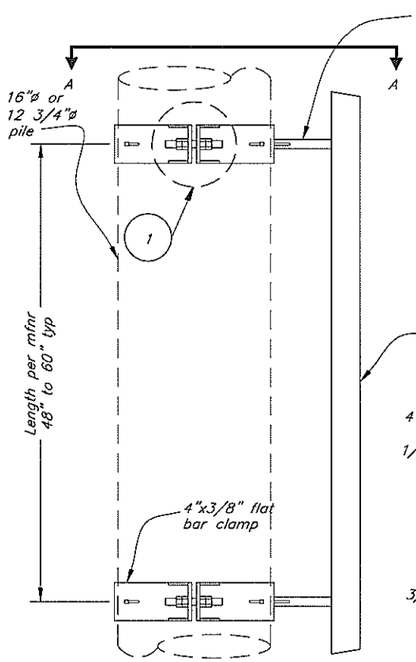

Elevation

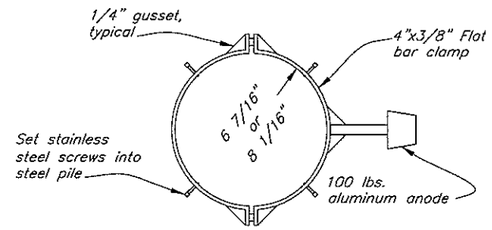

Section A-A

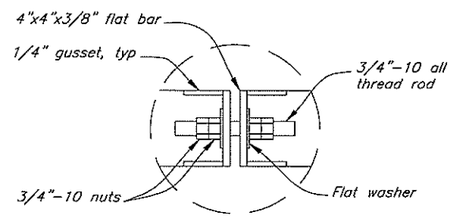

Clamp Connection 1

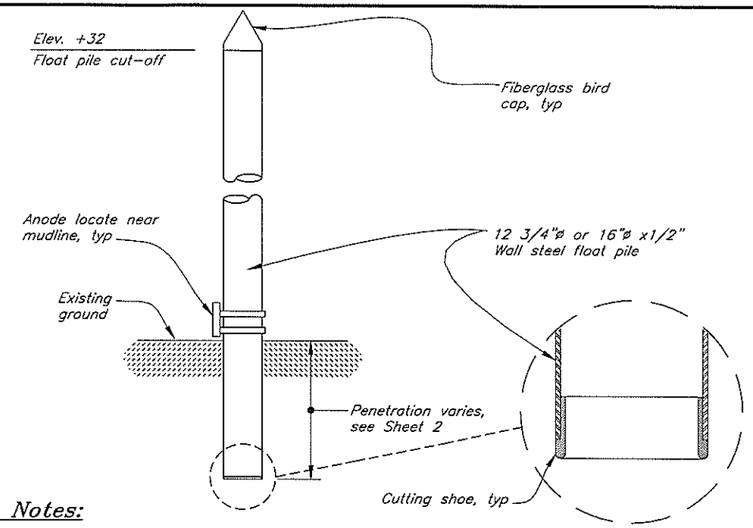

Pile Notes:

Drive all piles to estimated tip elevation unless otherwise approved by the Engineer. See pile table, Sheet 2 for estimated elevations and pile lengths.

Pile Details

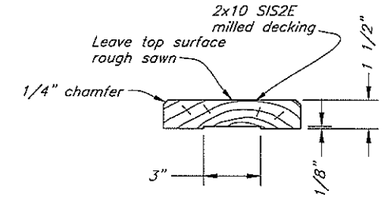

Milled Decking

BOXES ARE 1 5/8" - DO NOT FIT! 4/5/07

FIELD WIDENED TO ~ 1'-2"

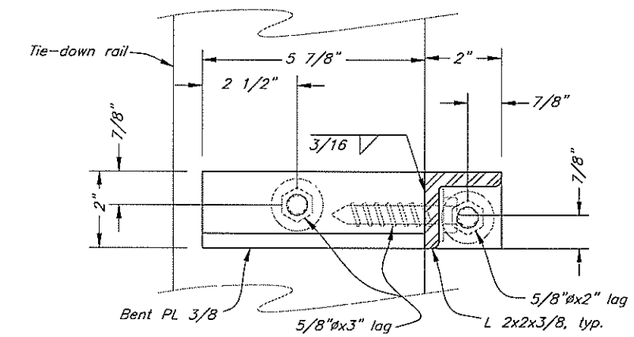

Section B-B

NOTE:
Anodes may be welded underwater to pile in lieu of using anode bracelet.

Anode Bracelet Detail

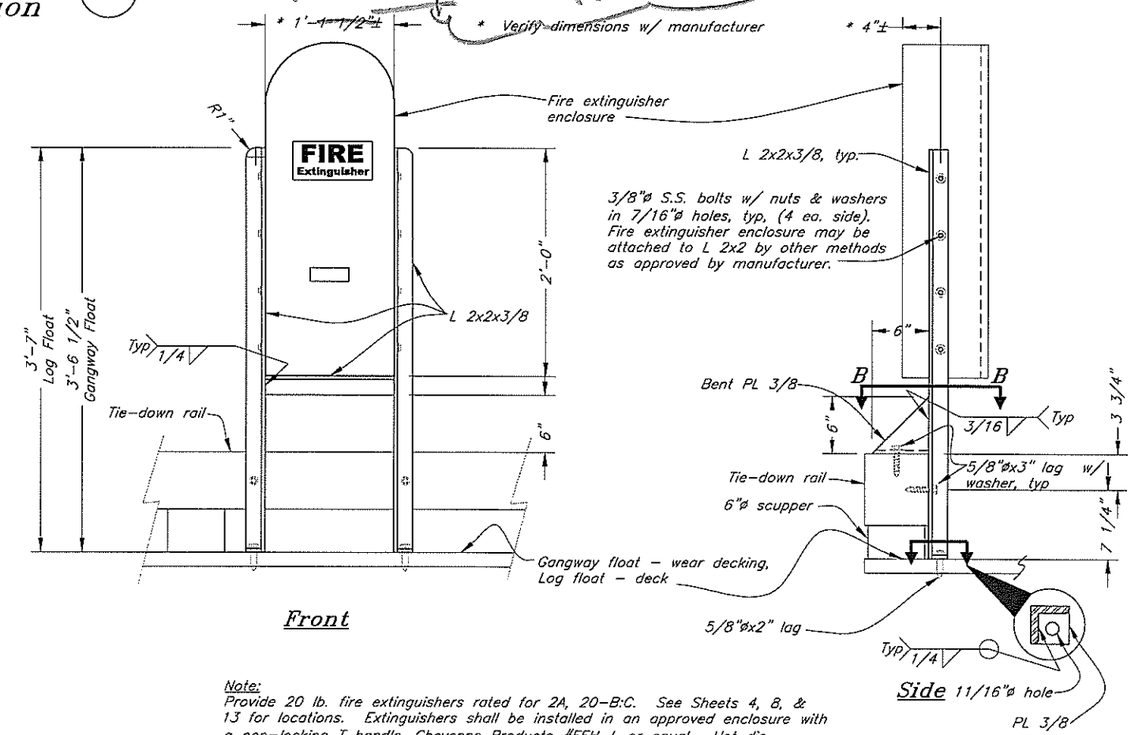

Front

Side

Note:
Provide 20 lb. fire extinguishers rated for 2A, 20-B:C. See Sheets 4, 8, & 13 for locations. Extinguishers shall be installed in an approved enclosure with a non-locking T handle, Cheyenne Products #FEH-L or equal. Hot dip galvanize frame after fabrication.

Fire Extinguisher Enclosure

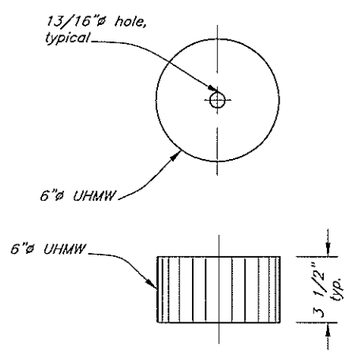

UHMW Scupper Block Detail

DO NOT SCALE FROM THESE DRAWINGS USE DIMENSIONS

DESIGNED BY: K. Miller

STATE OF ALASKA 49th Kirk D. Miller CE-8550 REGISTERED PROFESSIONAL ENGINEER

7/8/06

CHECKED BY: J. Beedle

DRAFTED BY: B. Bennett/Furman

CITY OF HOONAH

Hoonah Harbor Float Expansion

Miscellaneous Details

PATH: Q:\Hnh\67792\MF\Planset-Harbor\21 Misc.dwg

PLOT: PSPACE 1=1 Tab: Misc Fri, 08/Sep/06 02:08PM

REVISIONS			PROJECT DESIGNATION	YEAR	SHEET NO.	TOTAL SHEETS
NO.	DATE	DESCRIPTION	67792	2006	21	28

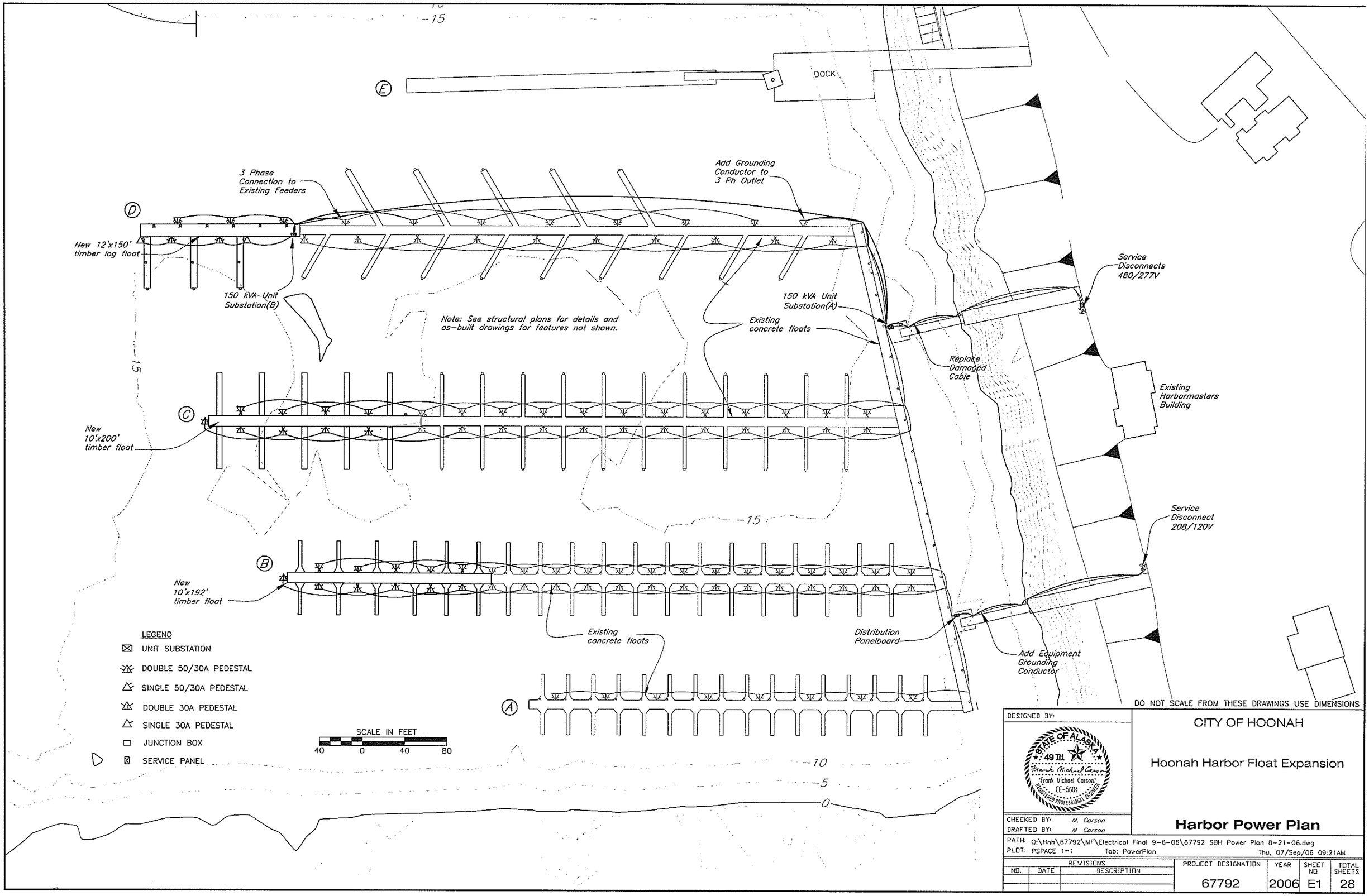
DOCK
E
D
C
B
A
3 Phase Connection to Existing Feeders
Add Grounding Conductor to 3 Ph Outlet
New 12'x150' timber log float
150 kVA Unit Substation(B)
Note: See structural plans for details and as-built drawings for features not shown.
150 kVA Unit Substation(A)
Existing concrete floats
Service Disconnects 480/277V
Replace Damaged Cable
Existing Harbormasters Building
New 10'x200' timber float
Service Disconnect 208/120V
New 10'x192' timber float
Existing concrete floats
Distribution Panelboard
Add Equipment Grounding Conductor
-15
-10
-5
0
LEGEND
UNIT SUBSTATION
DOUBLE 50/30A PEDESTAL
SINGLE 50/30A PEDESTAL
DOUBLE 30A PEDESTAL
SINGLE 30A PEDESTAL
JUNCTION BOX
SERVICE PANEL
SCALE IN FEET
40 0 40 80
DO NOT SCALE FROM THESE DRAWINGS USE DIMENSIONS
DESIGNED BY:
STATE OF ALASKA
49TH
Frank Michael Carson
EE-5604
REGISTERED PROFESSIONAL ENGINEER
CHECKED BY: M. Carson
DRAFTED BY: M. Carson
CITY OF HOONAH
Hoonah Harbor Float Expansion
Harbor Power Plan
PATH: Q:\Hnh\67792\MF\Electrical Final 9-6-06\67792 SBH Power Plan 8-21-06.dwg
PLOT: PSPACE 1=1 Tab: PowerPlan Thu, 07/Sep/06 09:21AM
REVISIONS
NO. DATE DESCRIPTION
PROJECT DESIGNATION 67792
YEAR 2006
SHEET NO. E1
TOTAL SHEETS 28

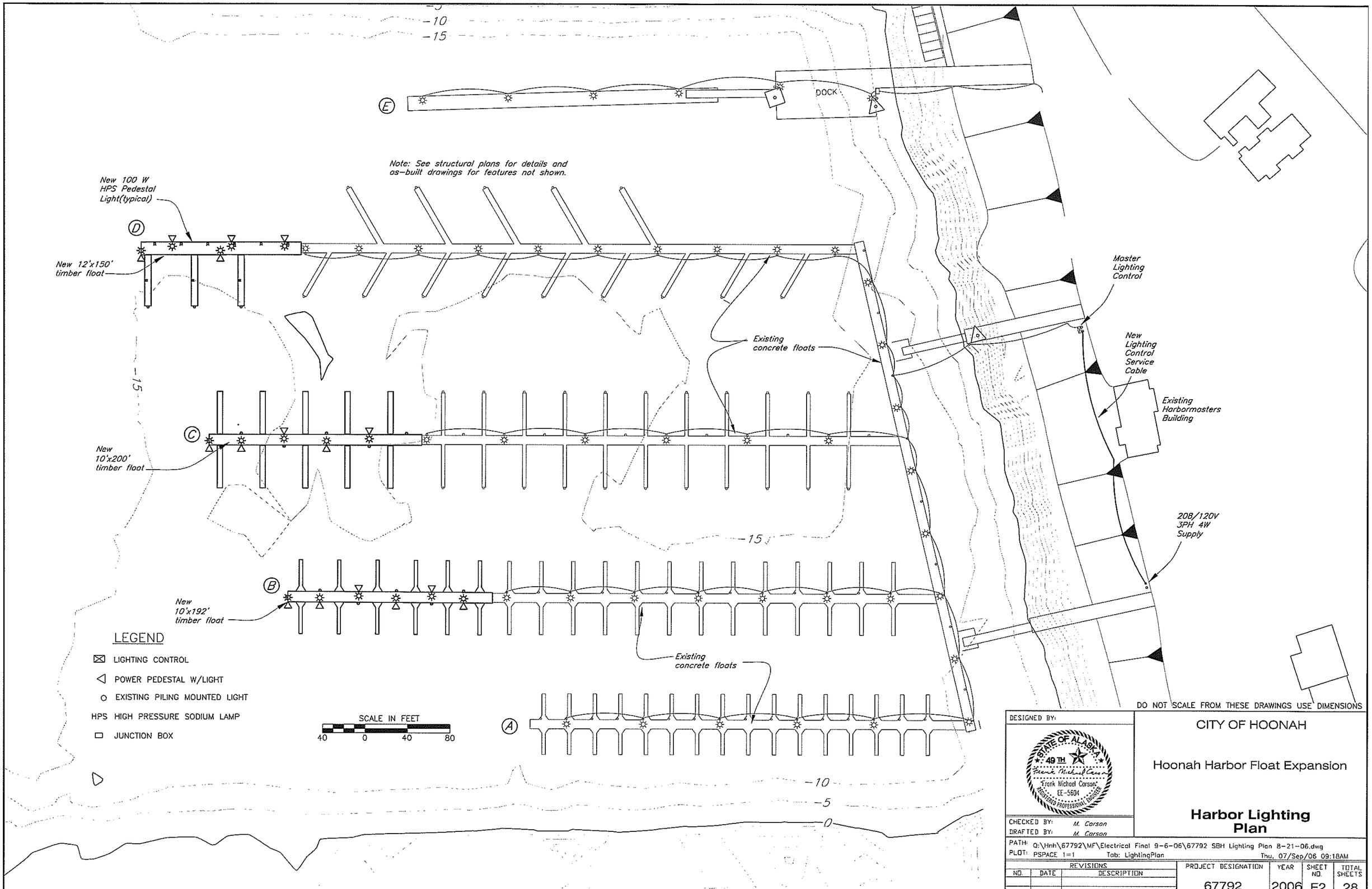
-10
-15
DOCK
E
Note: See structural plans for details and as-built drawings for features not shown.
New 100 W HPS Pedestal Light(typical)
D
New 12'x150' timber float
Master Lighting Control
Existing concrete floats
New Lighting Control Service Cable
Existing Harbormasters Building
-15
C
New 10'x200' timber float
-15
208/120V 3PH 4W Supply
B
New 10'x192' timber float
Existing concrete floats
A
-10
-5
0
LEGEND
LIGHTING CONTROL
POWER PEDESTAL W/LIGHT
EXISTING PILING MOUNTED LIGHT
HPS HIGH PRESSURE SODIUM LAMP
JUNCTION BOX
SCALE IN FEET
40 0 40 80
DO NOT SCALE FROM THESE DRAWINGS USE DIMENSIONS
DESIGNED BY:
STATE OF ALASKA 49TH
Frank Michael Carson
EE-5604
REGISTERED PROFESSIONAL ENGINEER
CHECKED BY: M. Carson
DRAFTED BY: M. Carson
CITY OF HOONAH
Hoonah Harbor Float Expansion
Harbor Lighting Plan
PATH: Q:\Hnh\67792\MF\Electrical Final 9-6-06\67792 SBH Lighting Plan 8-21-06.dwg
PLOT: PSPACE 1=1 Tab: LightingPlan Thu, 07/Sep/06 09:18AM
REVISIONS
NO. DATE DESCRIPTION
PROJECT DESIGNATION 67792
YEAR 2006
SHEET NO. E2
TOTAL SHEETS 28

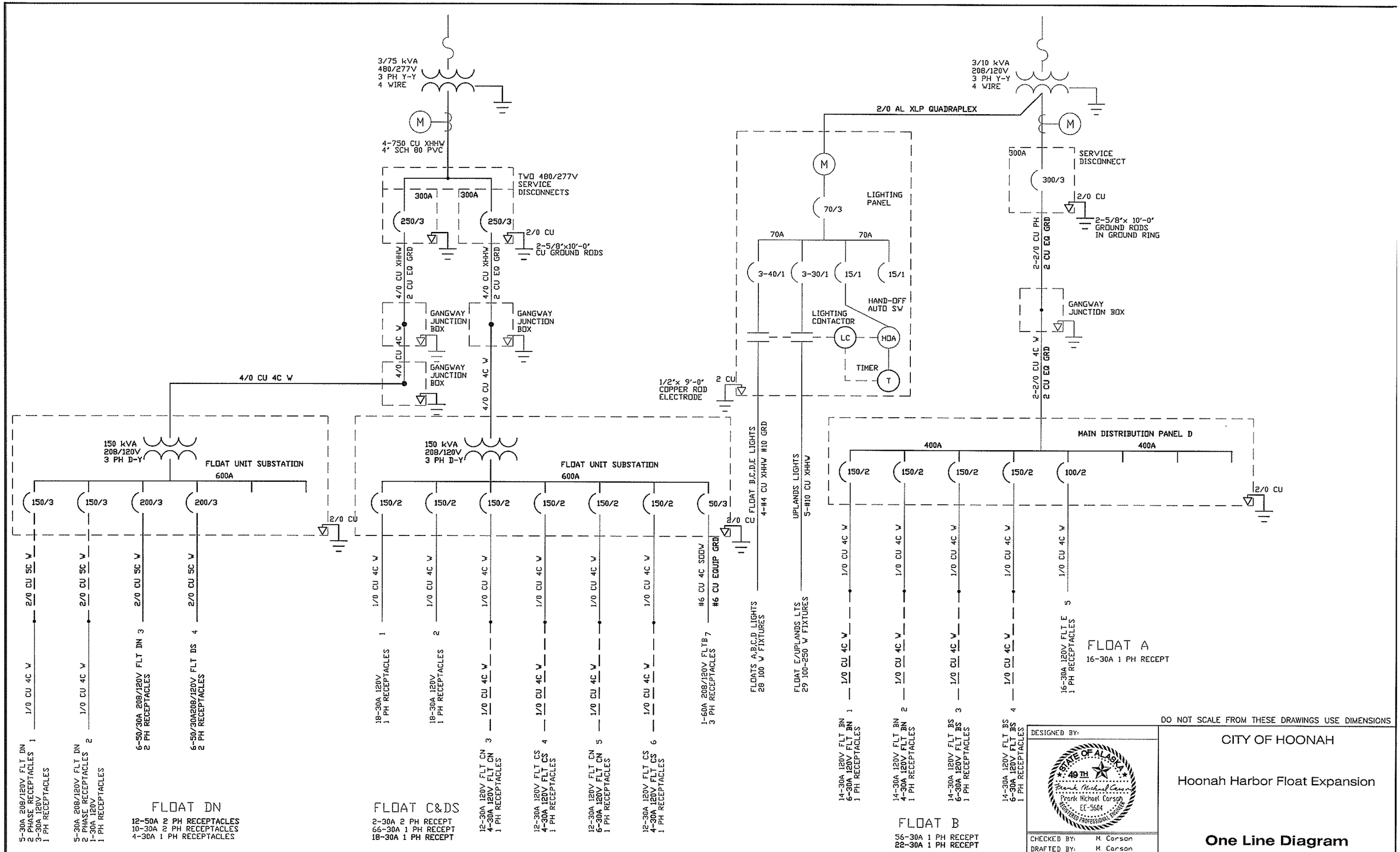

DO NOT SCALE FROM THESE DRAWINGS USE DIMENSIONS

DESIGNED BY:

STATE OF ALASKA 49TH
Frank Michael Carson
CE-5604
REGISTERED PROFESSIONAL ENGINEER

CHECKED BY: M. Carson
DRAFTED BY: M. Carson

CITY OF HOONAH

Hoonah Harbor Float Expansion

One Line Diagram

PATH: O:\Hnh\67792\MF\Electrical Final 9-6-06\67792 SBH One Line 8-21-06.dwg
PLOT: PSPACE 1=1 Tab: OneLine Thu, 07/Sep/06 09:19AM

REVISIONS			PROJECT DESIGNATION	YEAR	SHEET NO.	TOTAL SHEETS
NO.	DATE	DESCRIPTION	67792	2006	E3	28

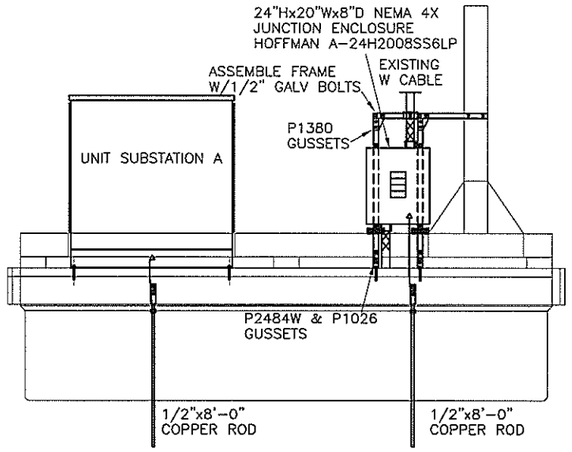

SUBSTATION AND ENCLOSURE(FRONT VIEW)

SCALE: 1/2" = 1'-0"

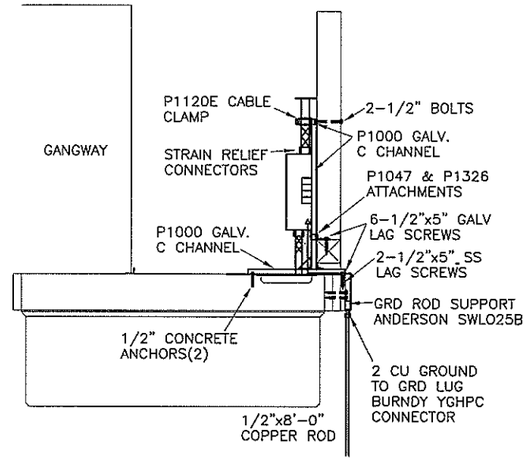

JUNCTION ENCLOSURE(END VIEW)

SCALE: 1/2" = 1'-0"

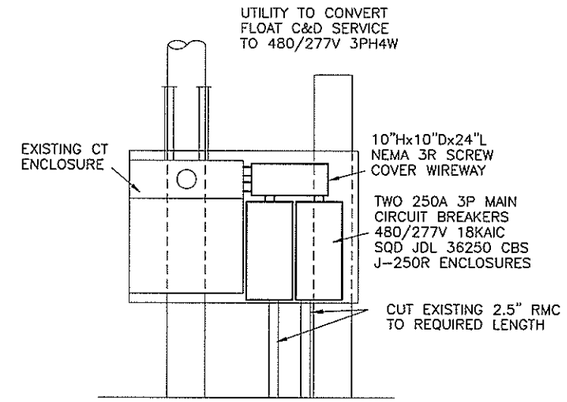

FLOAT C&D SERVICE EQUIPMENT

SCALE: 1/2" = 1'-0"

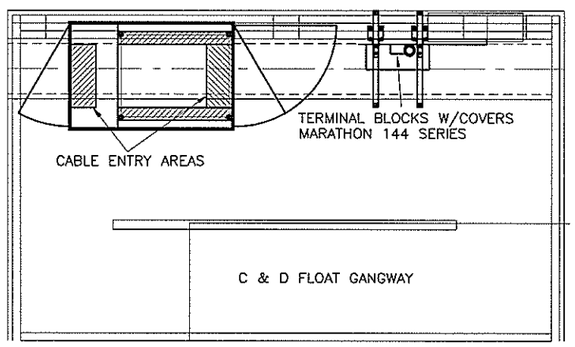

SUBSTATION AND ENCLOSURE(PLAN VIEW)

SCALE: 1/2" = 1'-0"

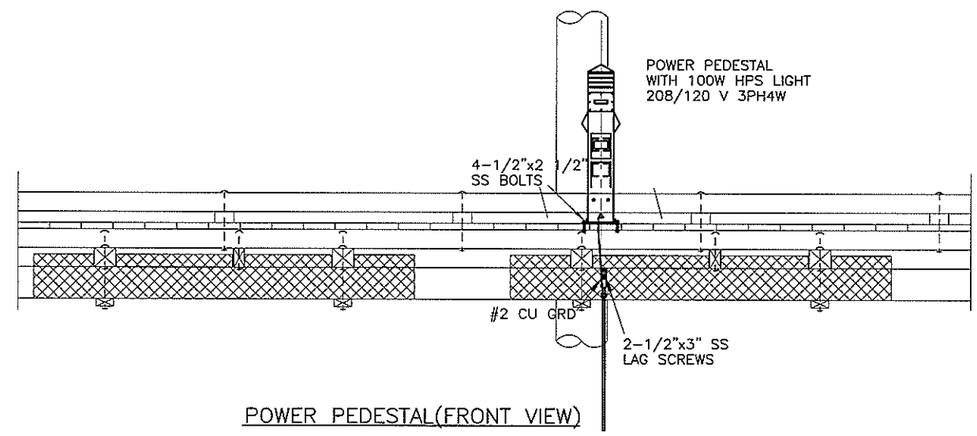

POWER PEDESTAL(FRONT VIEW)

SCALE: 1/2" = 1'-0"

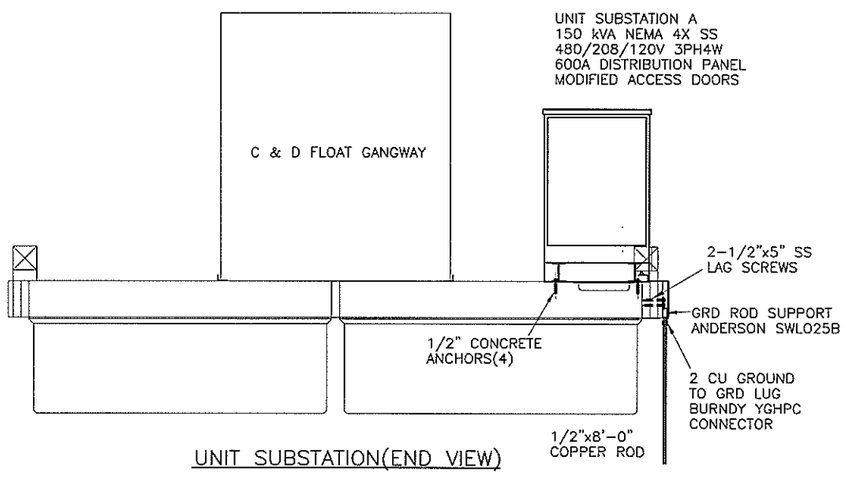

UNIT SUBSTATION(END VIEW)

SCALE: 1/2" = 1'-0"

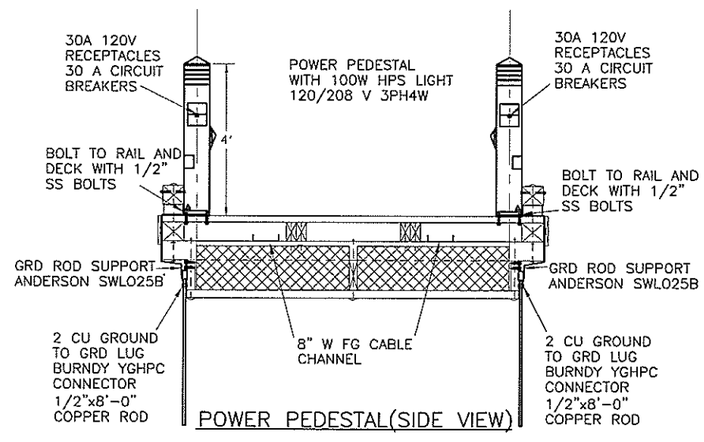

POWER PEDESTAL(SIDE VIEW)

SCALE: 1/2" = 1'-0"

DO NOT SCALE FROM THESE DRAWINGS USE DIMENSIONS

DESIGNED BY:

STATE OF ALASKA 49TH
Frank Michael Carson
Frank Michael Carson
EE-5604
REGISTERED PROFESSIONAL ENGINEER

CHECKED BY: M. Carson
DRAFTED BY: M. Carson

CITY OF HOONAH

Hoonah Harbor Float Expansion

C Float Electrical Details

PATH: O:\Hnh\67792\MF\Electrical Final 9-6-06\67792SBH-Cfloatdetails8-21-06.dwg
PLOT: PSPACE 1=1 Tab: C Float Details Thu, 07/Sep/06 09:24AM

REVISIONS			PROJECT DESIGNATION	YEAR	SHEET NO.	TOTAL SHEETS
NO	DATE	DESCRIPTION	67792	2006	E4	28

NOT CONSTRUCTED

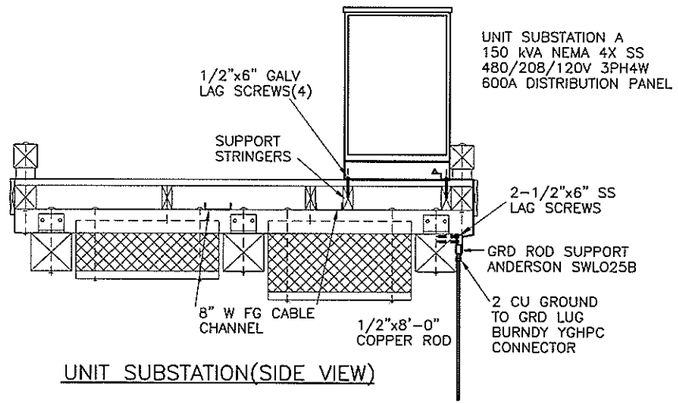

UNIT SUBSTATION(SIDE VIEW)

SCALE: 1/2" = 1'-0"

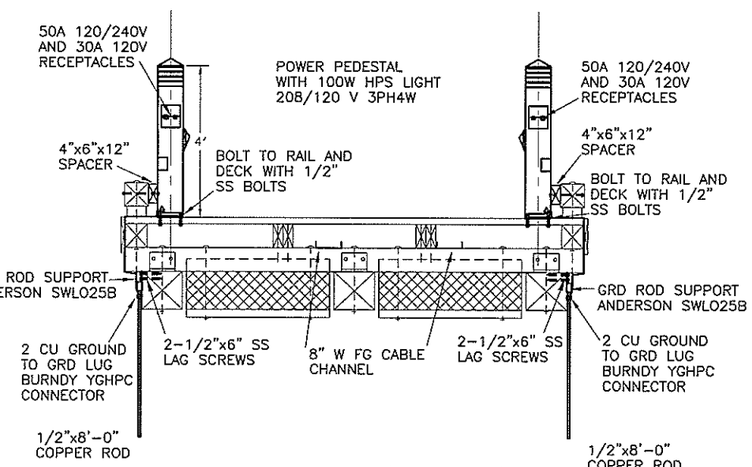

POWER PEDESTAL(SIDE VIEW)

SCALE: 1/2" = 1'-0"

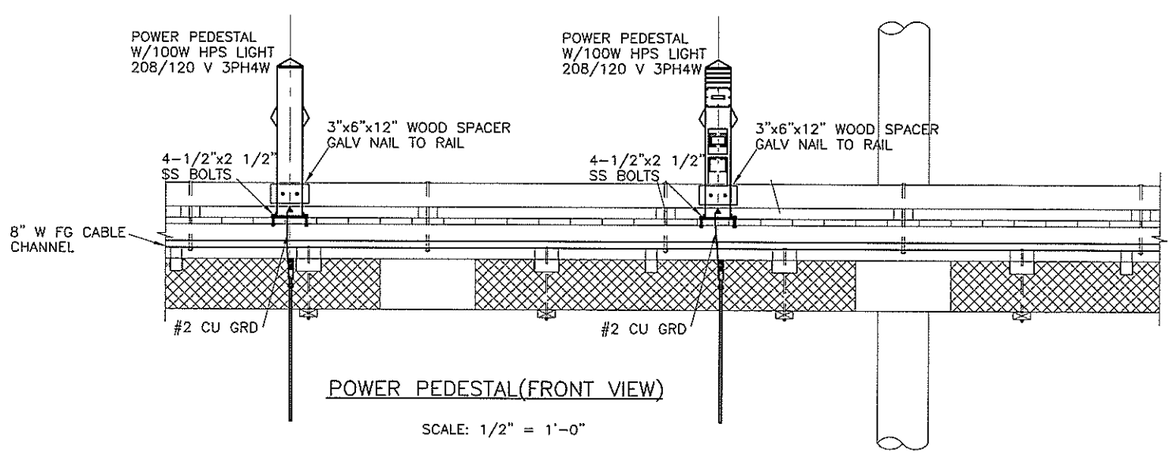

POWER PEDESTAL(FRONT VIEW)

SCALE: 1/2" = 1'-0"

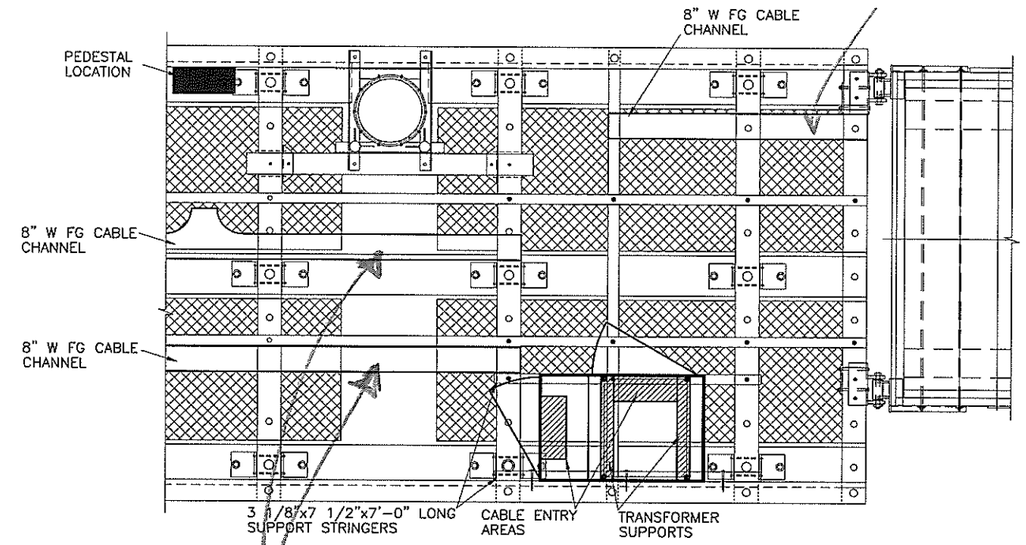

UNIT SUBSTATION(PLAN VIEW)

SCALE: 1/2" = 1'-0"

TRAYS EXTEND TO END OF FLOAT

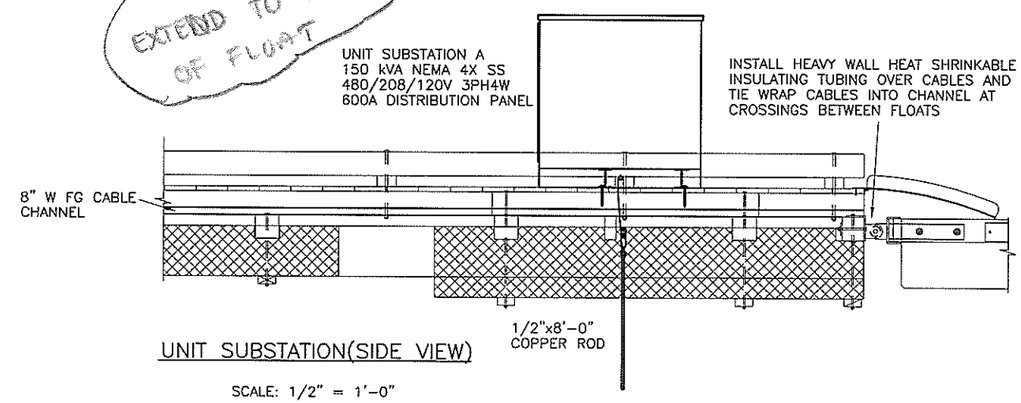

UNIT SUBSTATION(SIDE VIEW)

SCALE: 1/2" = 1'-0"

DO NOT SCALE FROM THESE DRAWINGS USE DIMENSIONS

DESIGNED BY:

STATE OF ALASKA 49TH
Frank Michael Carson
Frank Michael Carson
EE-5604
REGISTERED PROFESSIONAL ENGINEER

CHECKED BY: M. Carson
DRAFTED BY: M. Carson

CITY OF HOONAH

Hoonah Harbor Float Expansion

D Float Electrical Details

PATH: Q:\Hnh\67792\MF\Electrical Final 9-6-06\67792SBH-Dfloatdetails8-21-06.dwg
PLOT: PSPACE 1=1 Tab: DFloatDetails Thu, 07/Sep/06 09:25AM

REVISIONS			PROJECT DESIGNATION	YEAR	SHEET NO.	TOTAL SHEETS
NO.	DATE	DESCRIPTION	67792	2006	E5	28

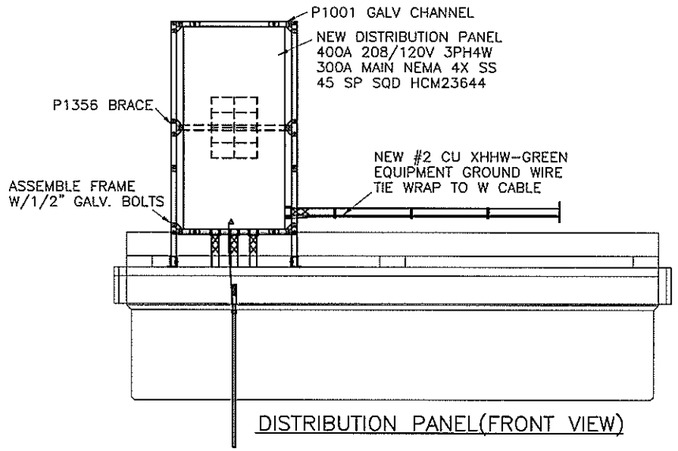

DISTRIBUTION PANEL(FRONT VIEW)

SCALE: 1/2" = 1'-0"

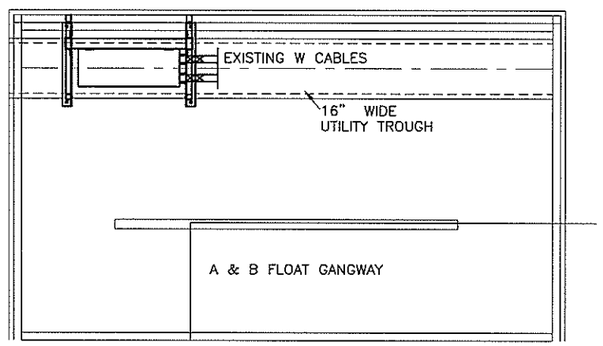

DISTRIBUTION PANEL(PLAN VIEW)

SCALE: 1/2" = 1'-0"

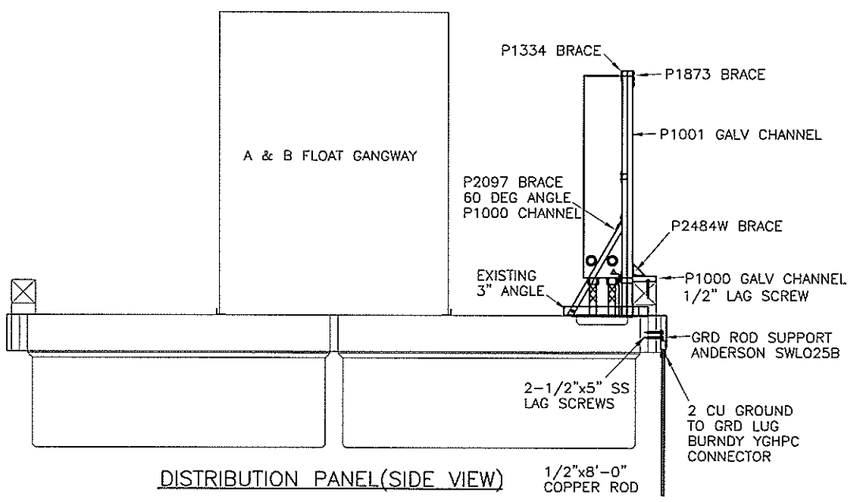

DISTRIBUTION PANEL(SIDE VIEW)

SCALE: 1/2" = 1'-0"

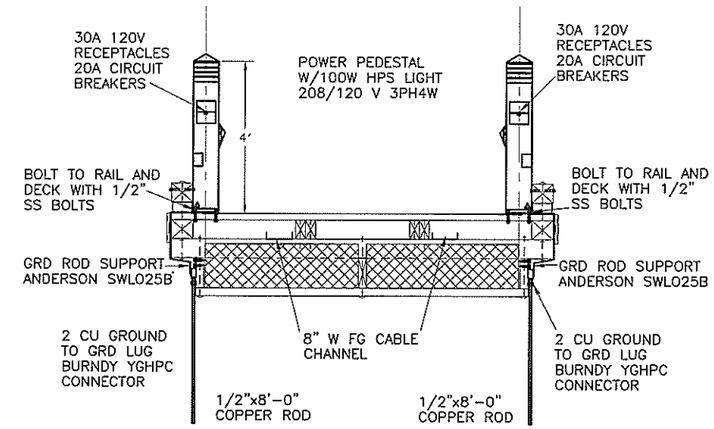

POWER PEDESTAL(SIDE VIEW)

SCALE: 1/2" = 1'-0"

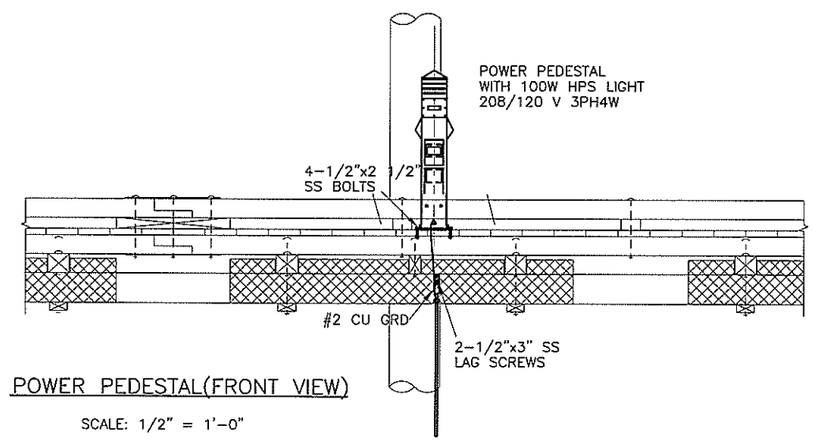

POWER PEDESTAL(FRONT VIEW)

SCALE: 1/2" = 1'-0"

DO NOT SCALE FROM THESE DRAWINGS USE DIMENSIONS

DESIGNED BY:

STATE OF ALASKA 49TH
Frank Michael Carson
Frank Michael Carson
EE-5604
REGISTERED PROFESSIONAL ENGINEER

CHECKED BY: M. Carson
DRAFTED BY: M. Carson

CITY OF HOONAH

Hoonah Harbor Float Expansion

B Float Electrical Details

PATH: O:\Hnh\67792\MF\Electrical Final 9-6-06\67792SBH-BfloatdetailsB-21-06.dwg
PLOT: PSPACE 1=1 Tab: BFloatDetails Thu, 07/Sep/06 09:23AM

REVISIONS			PROJECT DESIGNATION	YEAR	SHEET NO.	TOTAL SHEETS
NO.	DATE	DESCRIPTION				
			67792	2006	E6	28

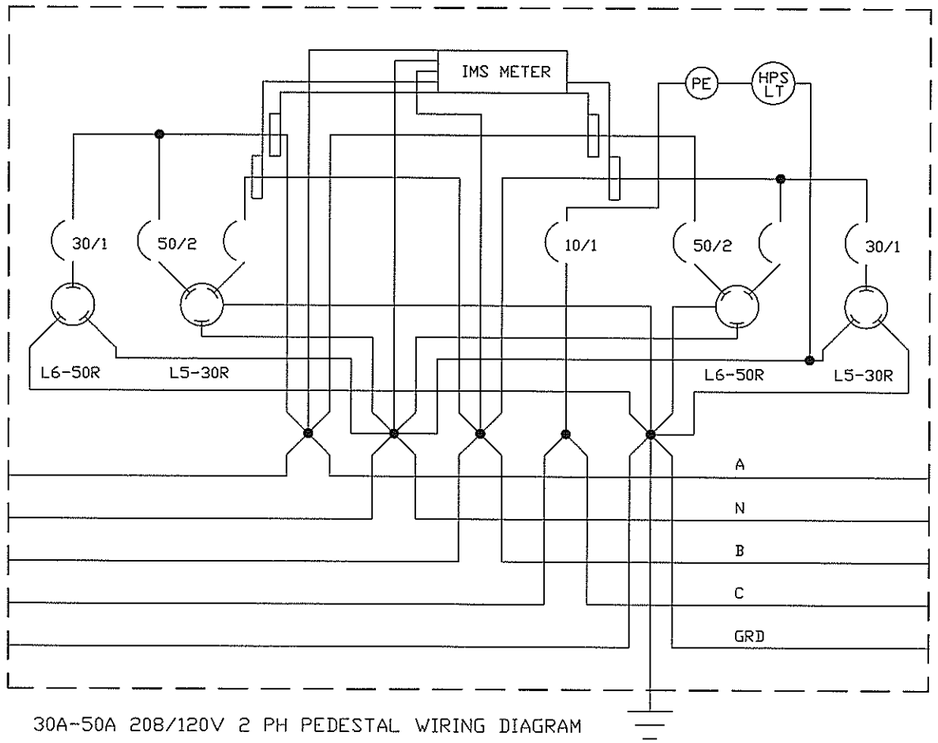

30A-50A 208/120V 2 PH PEDESTAL WIRING DIAGRAM

NOTE: ROTATE SUCCESSIVE PHASES TO BALANCE 3 PHASE LOAD

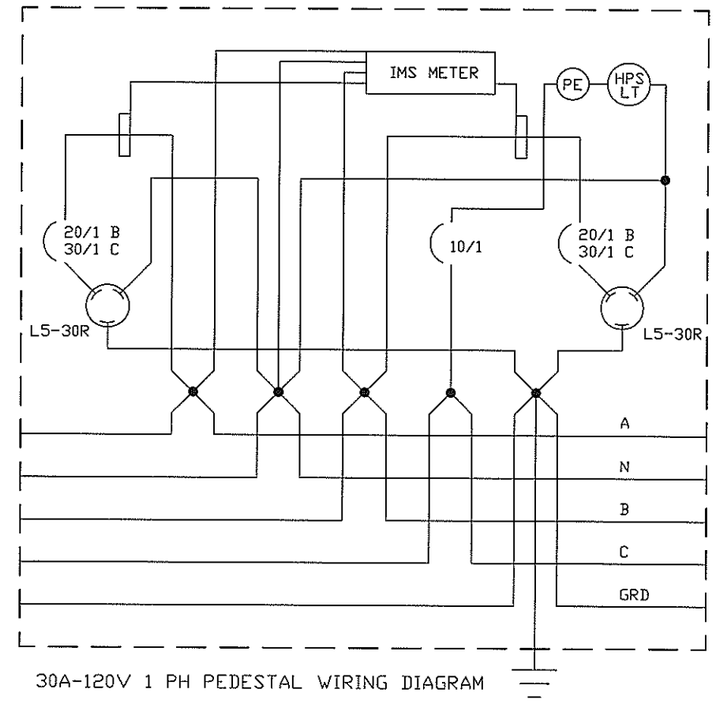

30A-120V 1 PH PEDESTAL WIRING DIAGRAM

NOTE: ROTATE SUCCESSIVE PHASES TO BALANCE 3 PHASE LOAD
20A CIRCUIT BREAKERS ON FLOAT B, 30A CIRCUIT BREAKERS ON FLOAT C

DO NOT SCALE FROM THESE DRAWINGS USE DIMENSIONS

DESIGNED BY:

STATE OF ALASKA 49TH
Frank Michael Carson
EE-5604
REGISTERED PROFESSIONAL ENGINEER

CHECKED BY: M. Carson
DRAFTED BY: M. Carson

CITY OF HOONAH

Hoonah Harbor Float Expansion

Pedestal Wiring Diagrams

PATH: Q:\Hnh\67792\MF\Electrical Final 9-6-06\67792SBH-Wiring Diagrams8-21-06.dwg
PLOT: PSPACE 1=1 Tab: WiringDiagrams Thu, 07/Sep/06 09:25AM

REVISIONS			PROJECT DESIGNATION	YEAR	SHEET NO.	TOTAL SHEETS
NO.	DATE	DESCRIPTION	67792	2006	E7	

CITY OF HOONAH

CHANGE ORDER

Project No.: 67792

Change Order No. 1

Project Name: Hoonah City Float Replacement & Harbor Expansion

Contractor: Trucano Construction Company

Address: 3560 North Douglas Highway
Juneau, AK 99801

Change Order Summary:

Calendar Days (+ / -): 0

or New Completion Date:

Amount of this Change Order: $25,725.77

Recommended By: Kirk Miller, PE
Title: Project Engineer
Date: 7/12/07

Approved By: Dennis H. Gray, Jr. - Mayor, City of Hoonah
Title:
Date: 7/31/07
Seal of an Alaskan Professional Engineer if required.

Acknowledged by indicates receipt of the change order to perform the described work, but not the mutual agreement of the basis of payment and/or time allowance. If the matter cannot be resolved by agreement within 7 days from the date of your signature, you shall, within the next 14 days, submit an Intent to Claim in writing to the Engineer, pursuant to the specifications and contract documents.

Acknowledged By: Douglas Trucano III
Contractor's Representative
Date: 8/1/07

This change order constitutes agreement to terms, conditions and prices stated below.

Accepted By: Douglas Trucano III
Contractor's Representative
Date: 8/1/07

Permission for previously approved subcontractor(s) to perform all or portions of the work described herein is as checked: ☐ Yes ☐ No ☐ N/A

The following change(s) in the above Contract are hereby made in accordance with the terms of the Contract and under the terms and conditions stated below. This document shall become an amendment to the Contract and all provisions of the Contract will be applicable.

DESCRIPTION OF CHANGE

Electrical Modifications – Extra Work at Agreed Lump Sum

This change order authorizes additional compensation at agreed upon lump amounts for the following items of work and in accordance with the attached documentation. Payment shall include all work including materials, labor, equipment and incidentals required to complete all work.

1. Replace CT Enclosure, meter socket and base for Harbor power & lighting. Total Cost = $4,795.07
2. Add ground wire from uplands distribution panel to Float B circuit panel at Harbor. Furnish and install two new light poles and light fixtures on City Float timber trestle. Total Cost = $2,854.95
3. Replace electrical cabinet between B and C floats at Harbor. Total Cost = $18,075.75

Total cost of all work (Items 1-3) under this Change Order = $25,725.77

CITY OF HOONAH

CHANGE ORDER

Project No.: 67792

Change Order No. 2

Project Name: Hoonah City Float Replacement & Harbor Expansion

Contractor: Trucano Construction Company

Address: 3560 North Douglas Highway
Juneau, AK 99801

Change Order Summary:

Calendar Days (+ / -): 0

or New Completion Date:

Amount of this Change Order: $45,292.59

Recommended By: Kirk Miller, PE
Title: Project Engineer
Date: 7/13/07

Approved By: Dennis H. Gray, Jr. - Mayor, City of Hoonah
Title:
Date: 7/31/07
Seal of an Alaskan Professional Engineer if required.

Acknowledged by indicates receipt of the change order to perform the described work, but not the mutual agreement of the basis of payment and/or time allowance. If the matter cannot be resolved by agreement within 7 days from the date of your signature, you shall, within the next 14 days, submit an Intent to Claim in writing to the Engineer, pursuant to the specifications and contract documents.

Acknowledged By: Douglas Trucano III
Contractor's Representative
Date: 8/1/07

This change order constitutes agreement to terms, conditions and prices stated below.

Accepted By: Douglas Trucano III
Contractor's Representative
Date: 8/1/07

Permission for previously approved subcontractor(s) to perform all or portions of the work described herein is as checked: ☐ Yes ☐ No ☐ N/A

The following change(s) in the above Contract are hereby made in accordance with the terms of the Contract and under the terms and conditions stated below. This document shall become an amendment to the Contract and all provisions of the Contract will be applicable.

DESCRIPTION OF CHANGE

Float and Structure Modifications – Extra Work at Agreed Lump Sum

This change order authorizes additional compensation at agreed upon lump amounts for the following items of authorized work and as outlined in the attached documentation. Payment shall include all materials, labor, equipment and incidentals required to complete all work.

1. Furnish, and install additional pile length at the City Float gangway support trestle. Total Cost = $22,015.00
2. Repair of existing gangway landing float at Harbor between C and D floats. Total Cost = $23,277.59

Total cost of all work (Items 1-2) under this Change Order = $45,292.59

CITY OF HOONAH

CHANGE ORDER

Project No.: 67792

Change Order No. 3

Project Name: Hoonah City Float Replacement & Harbor Expansion

Contractor: Trucano Construction Company	**Change Order Summary:**
Address: 3560 North Douglas Highway	Calendar Days (+ / -): 0
Juneau, AK 99801	or New Completion Date:
	Amount of this Change Order: $62,835

Recommended By: Kirk Miller, PE Date: 11/2/07
Title: Project Engineer

Approved By: _____ Date: _____
Title:

Seal of an Alaskan Professional Engineer if required.

Acknowledged by indicates receipt of the change order to perform the described work, but not the mutual agreement of the basis of payment and/or time allowance. If the matter cannot be resolved by agreement within 7 days from the date of your signature, you shall, within the next 14 days, submit an Intent to Claim in writing to the Engineer, pursuant to the specifications and contract documents.

Acknowledged By: _____ Date:
Contractor's Representative

This change order constitutes agreement to terms, conditions and prices stated below.

Accepted By: _____ Date:
Contractor's Representative

Permission for previously approved subcontractor(s) to perform all or portions of the work described herein is as checked: ☐ Yes ☐ No ☐ N/A

The following change(s) in the above Contract are hereby made in accordance with the terms of the Contract and under the terms and conditions stated below. This document shall become an amendment to the Contract and all provisions of the Contract will be applicable.

DESCRIPTION OF CHANGE

Float and Structure Modifications – Extra Work at Agreed Lump Sum
This change order authorizes additional compensation at agreed upon lump amounts for the following items of authorized work that has been completed as outlined in the attached documentation. Payment shall include all materials, labor, equipment and incidentals required to complete all work.

1. **Repair existing gangway float between Floats A & B in Harbor. Total Cost = $25,565.00**
2. **Cut handrail at bottom of vehicle gangway at City Float Facility. Total Cost = $425.00**
3. **Pull piling and redrive to straighten new timber float at Float C in Harbor. Total Cost = $4,610.00**
4. **Remove outer boat grid adjacent to approach trestle at City Float Facility. Total Cost = $6,985.00**
5. **Re-attach existing aluminum cover plates over electrical trench at north gangway float. Total Cost = $885.00**
6. **Perform timber trestle repairs at City Float Facility (new pile, pile encasement & cross bracing).**

   Total Cost = $24,365.00

Total cost of all work (Items 1-6) under this Change Order = $62,835.00