GUSTAVUS FLOAT REPLACEMENT

PROJECT NO. K-32460

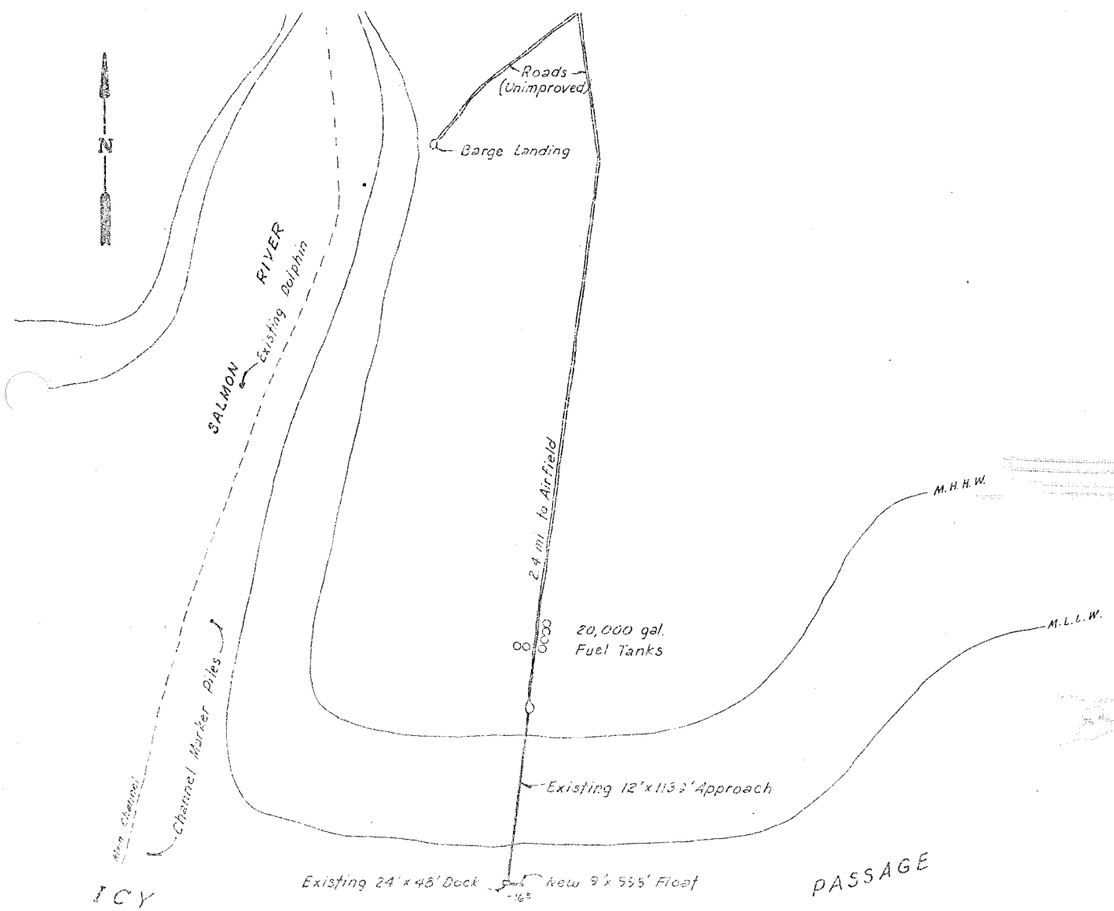

LOCATION MAP
Scale: 1" = 500'

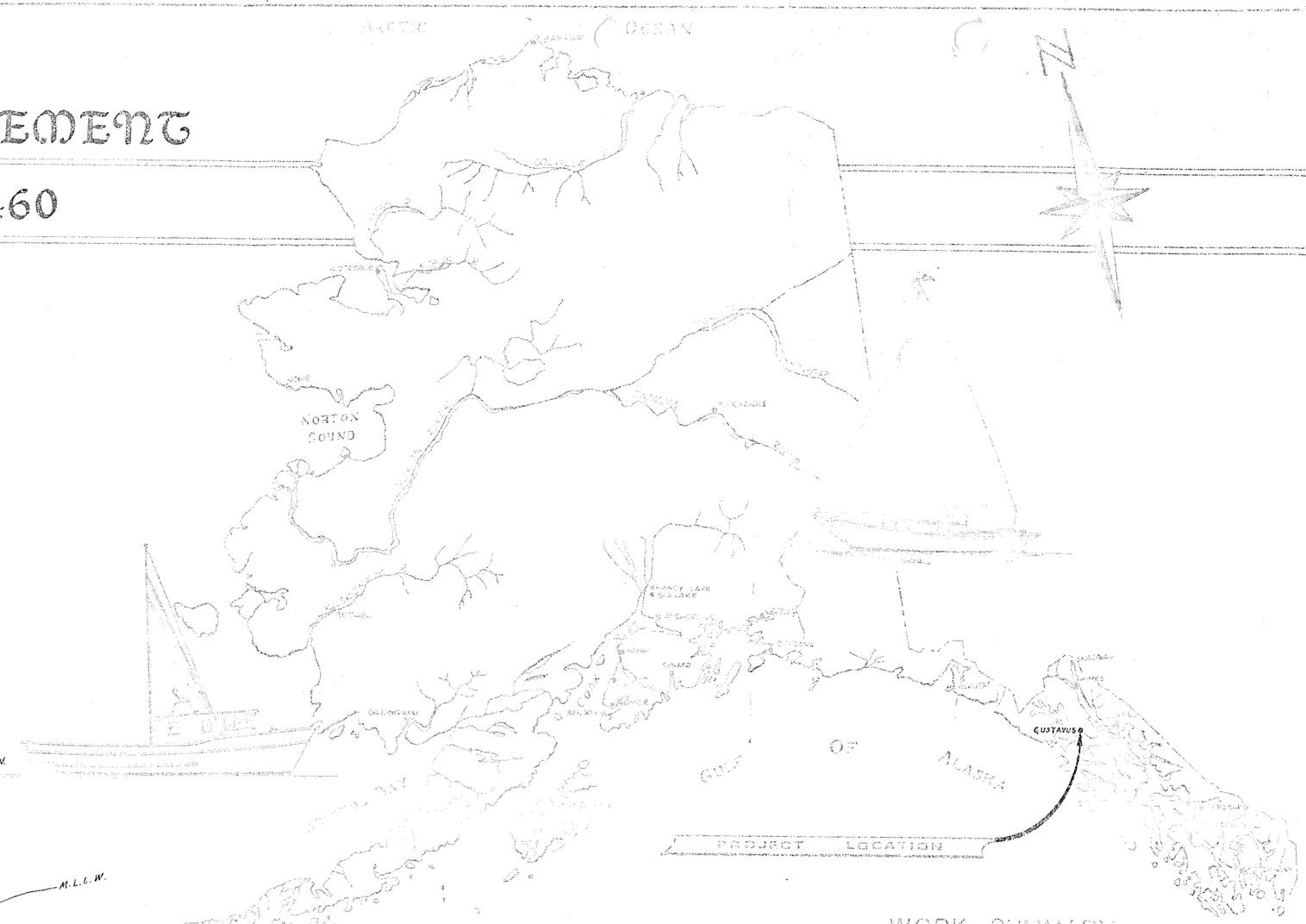

—WORK SUMMARY—

This project consists of constructing a 9'-0" x 99'-6" (895.5 sq. ft.) timber float and furnishing & driving 4 timber piles.

AS-BUILT
Date:
Division of Harbor Design and Construction

INDEX TO SHEETS

1. TITLE SHEET
2. FLOAT LAYOUT & DETAILS

ALASKA

HARBOR DESIGN & CONSTRUCTION

SHEET 1 OF 2

Note: Ext pile collars not shown

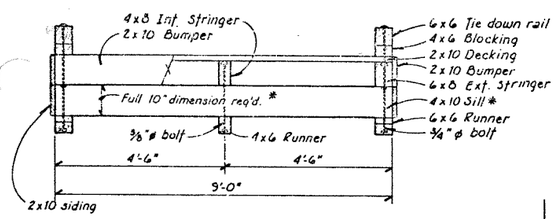

ELEVATION
1/2" = 1'-0"

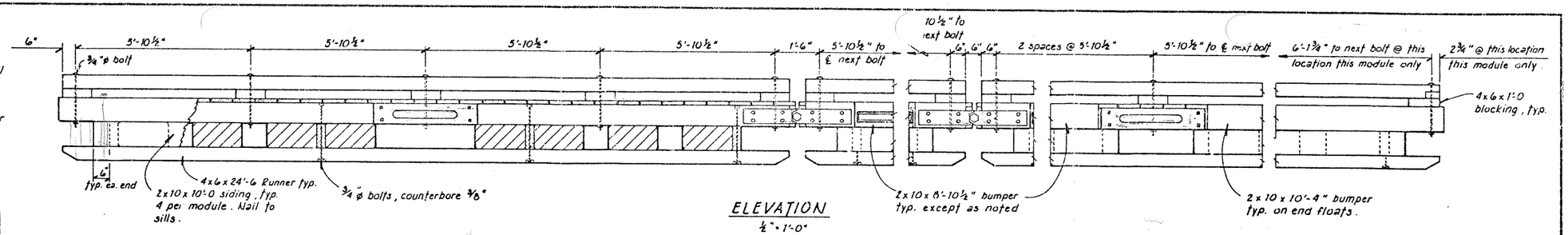

ELEVATION
1/2" = 1'-0"

Notes:
1. Flotation Planks to be provided by the State of Alaska.
2. 6 mill polyethylene film between creo. members and flotation planks.
3. Locate float to allow access by way of existing dock ladder.
4. Drive piling to 20' penatration. Pile cut off at +32.0'. Use +24.5' as elev. of deck of existing dock.

* Finished dimensions to be 3 1/2 x 10. Cut from 4x12 S-4-S
All material to be, no. 1 grade Hem./Fir, 10% max. no 2 grade.

MATERIALS		
ITEM	DRESSING	TREATMENT
4x10 Sills	*	Creosote
2x10 Siding	S-4-S	"
4x8 Interior Stringers	S-4-S	"
6x8 Exterior Stringers	S-4-S	"
2x10 Bumpers	S-4-S	Penta
4x6 & 6x6 Runners	S-4-S	Creosote
10 Decking	Milled (S-1-S-2-E)	Penta
6 Blocking	S-4-S	"
6x6 Tie Down Rail	S-4-S	"
		(See Specs.)

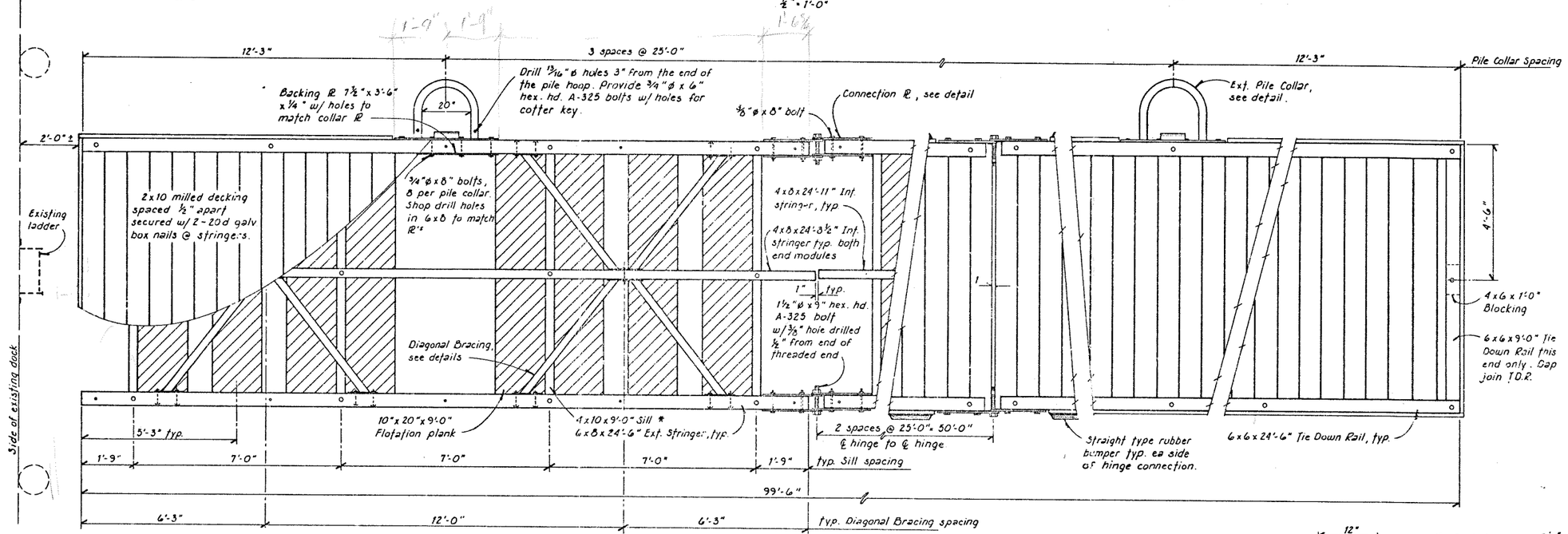

PLAN
1/2" = 1'-0"

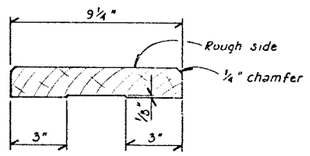

2x10
MILLED DECKING DETAIL
3" = 1'-0"

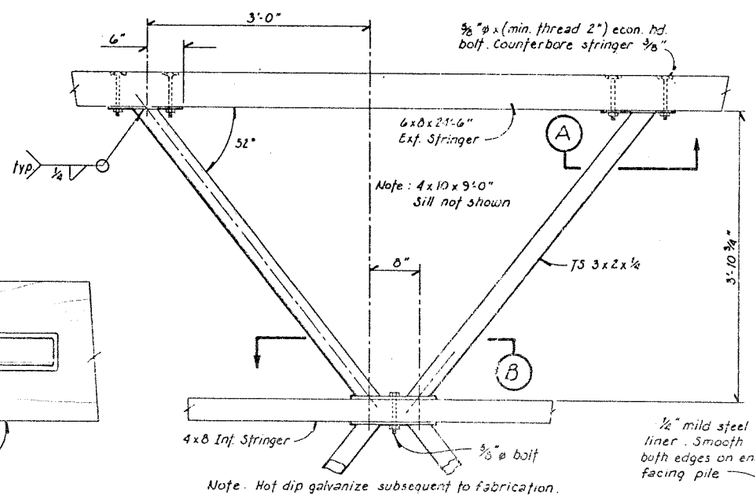

Note: Hot dip galvanize subsequent to fabrication.

PLAN
1" = 1'-0"

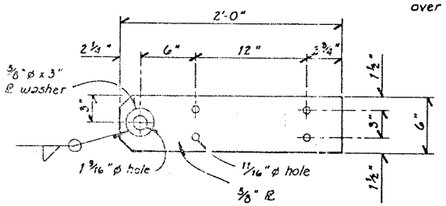

CONNECTION ℞ DETAIL
1 1/2" = 1'-0"

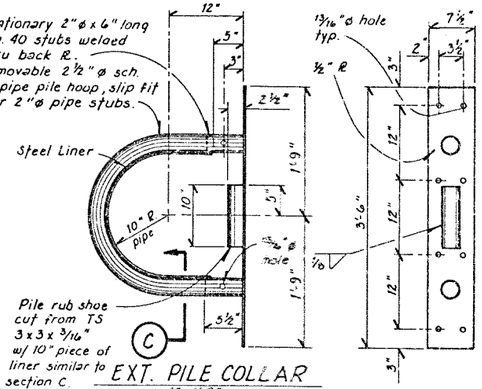

EXT. PILE COLLAR
1" = 1'-0"

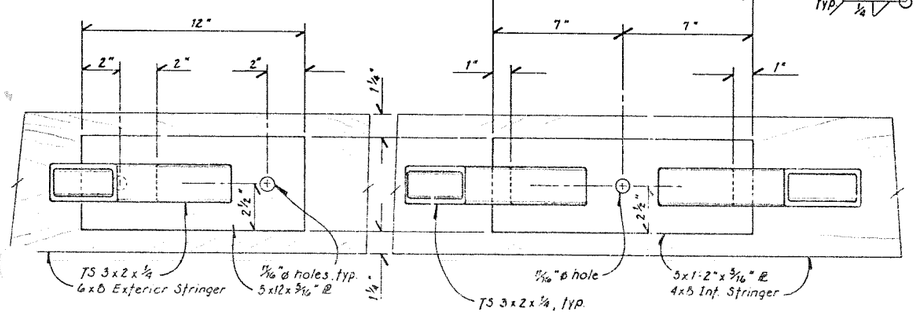

SECTION A
3" = 1'-0"

SECTION B
3" = 1'-0"

DIAGONAL BRACING DETAILS

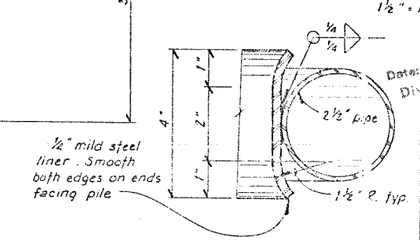

SECTION C
6" = 1'-0"

AS-BUILT
STAMP
Date:
Division of Marine Design and Construction
STATE OF ALASKA
ROBERT P. BECK
No. 7863
REGISTERED PROFESSIONAL ENGINEER

DO NOT SCALE THIS DRAWING – USE DIMENSIONS

STATE OF ALASKA
DEPARTMENT OF TRANSPORTATION AND PUBLIC FACILITIES
HARBOR DESIGN AND CONSTRUCTION

Gustavus Alaska

FLOAT LAYOUT & DETAILS

SCALE As Noted	SURVEYED	APPROVED Robert P. Beck
DESIGNED DCW/TS	DRAWN TS	James A. Lowell
CHECKED	DATE 4-82	
PROJECT NUMBER K-32460	SHEET 2 OF 2	