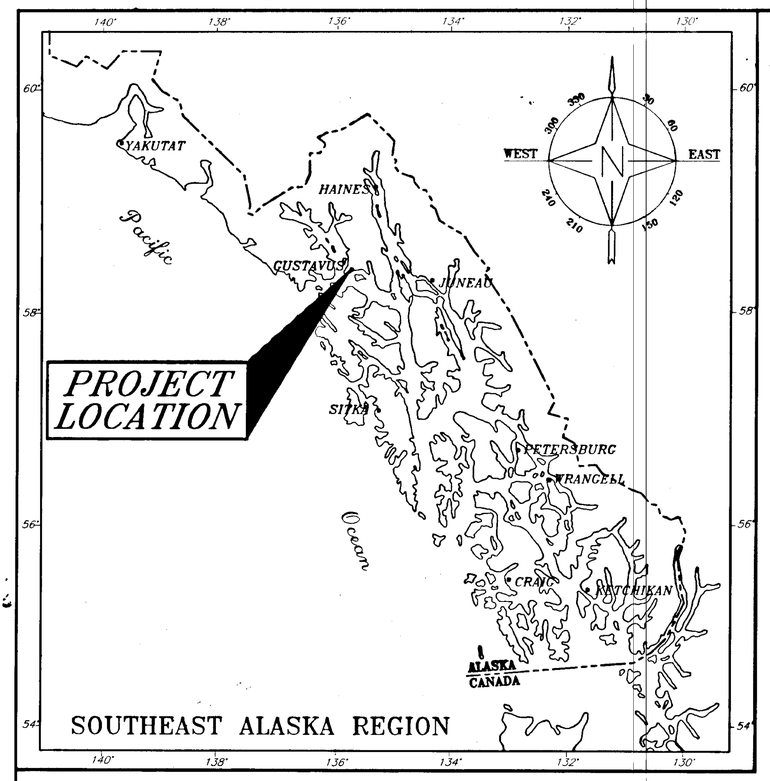

STATE OF ALASKA
DEPARTMENT OF TRANSPORTATION AND PUBLIC FACILITIES
SOUTHEAST REGION

INDEX OF SHEETS

SHEET NO.	DESCRIPTION
1	TITLE SHEET
2	FENCE LAYOUT PLAN
3	CLEARING CLEANUP LAYOUT PLAN (ADD ALT. A)
4	ESTIMATE OF QUANTITIES/TYPICAL SECTION
5-8	FENCING DETAILS
9	GATE OPERATOR & ELECTRICAL LAYOUT DETAILS
10	ELECTRICAL PLAN LAYOUT & DETAILS
11	GATE DETAILS
12	72" CULVERT PLAN & DETAILS
13	SIGN DETAILS

GUSTAVUS, ALASKA

GUSTAVUS AIRPORT SECURITY FENCE

PROJECT NO. 72220

A.I.P. NO. 3-02-0111-06-98

AS-BUILT PLAN SET

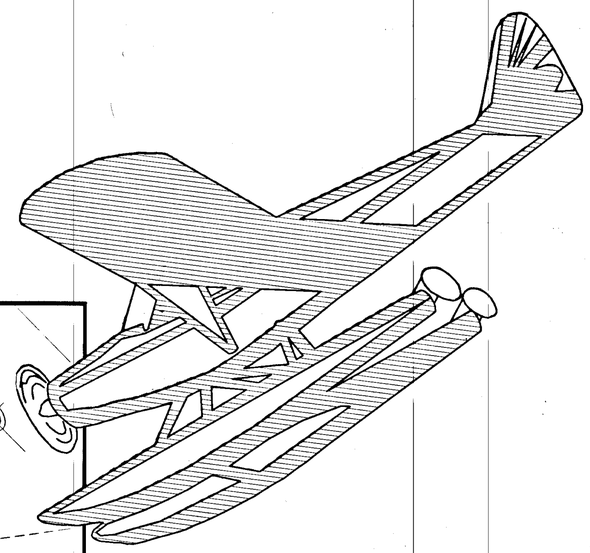

CONTRACTOR - CONSOLIDATED CONTRACTING AND ENGINEERING, ANCHORAGE AK.

PROJECT ENGINEER - JIM MAYER

NOTICE TO PROCEED - 7/31/98

BEGIN WORK - 8/17/98

COMPLETION DATE - 11/30/98

ACTUAL COMPLETION DATE - 10/29/98

CONTRACT AMOUNT - $708,888.00

ACTUAL FINAL AMOUNT - $897,344.25

James O'Mayer
1/27/99

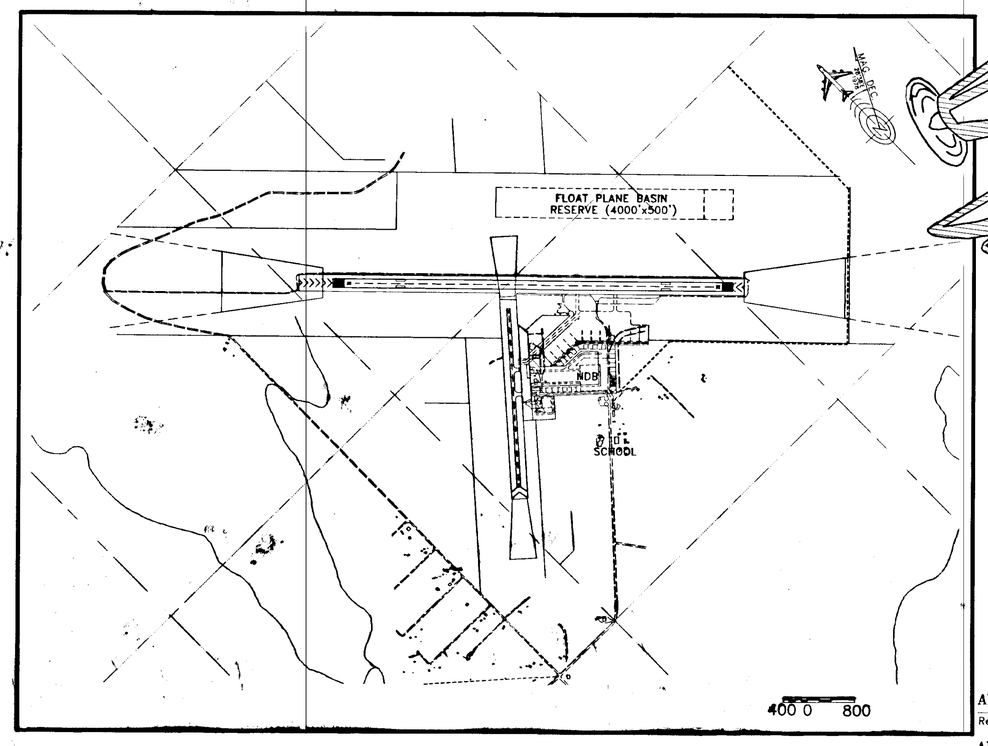

VICINITY MAP

AS-BUILT

BY: JBM DATE: 1/27/99

STATE OF ALASKA
DEPARTMENT OF TRANSPORTATION
AND
PUBLIC FACILITIES
SOUTHEAST REGION

APPROVED _____ Date 6/10/98
Regional Preconstruction Engineer

APPROVED _____ Date 6/10/98
Director, S.E. Region

PROJECT NUMBER: 72220

DATE: 1998

SHEET 1 OF 13

ENGINEER'S SEAL

STATE OF ALASKA 49th Duane T. Doerflinger CE-7567 REGISTERED PROFESSIONAL ENGINEER

Q:\GUS\72220\~~BA~~ ~~TSH~~ PLOTF.PCP(1) OR PLOTH.PCP(2)
AS-BUILT PER CORRECTIONS 1/27/99

HORIZONTAL CONTROL

PROJECT BASIS OF HORIZONTAL CONTROL IS THE BEARING OF S 45° 01' 41" E FROM THE 1/4 CORNER BETWEEN SECTIONS 5/8 T40S, R59E CRM AND THE 1/4 CORNER BETWEEN SECTIONS 8/9 T40S, R59E CRM. THE MEASURED DISTANCE IS 3738.03

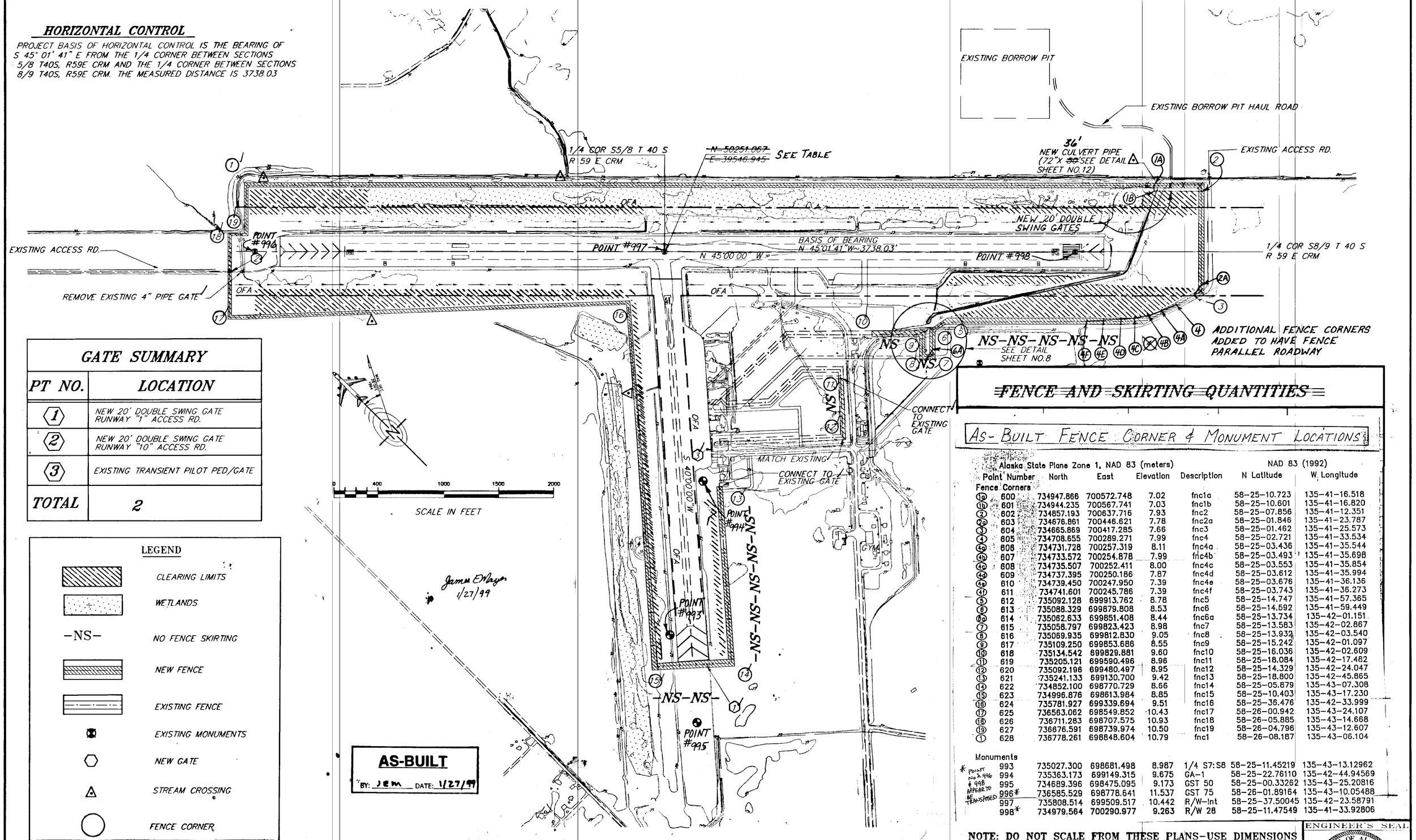

GATE SUMMARY

PT NO.	LOCATION
1	NEW 20' DOUBLE SWING GATE RUNWAY "1" ACCESS RD.
2	NEW 20' DOUBLE SWING GATE RUNWAY "10" ACCESS RD.
3	EXISTING TRANSIENT PILOT PED/GATE
TOTAL	2

LEGEND

- CLEARING LIMITS
- WETLANDS
- -NS- NO FENCE SKIRTING
- NEW FENCE
- EXISTING FENCE
- EXISTING MONUMENTS
- NEW GATE
- STREAM CROSSING
- FENCE CORNER

~~FENCE AND SKIRTING QUANTITIES~~

AS-BUILT FENCE CORNER & MONUMENT LOCATIONS

Point Number	Alaska State Plane Zone 1, NAD 83 (meters) North	East	Elevation	Description	NAD 83 (1992) N Latitude	W. Longitude
Fence Corners						
1a 600	734947.866	700572.748	7.02	fnc1a	58-25-10.723	135-41-16.518
1b 601	734944.235	700567.741	7.03	fnc1b	58-25-10.601	135-41-16.820
2 602	734857.193	700637.716	7.93	fnc2	58-25-07.856	135-41-12.351
2a 603	734676.861	700446.621	7.78	fnc2a	58-25-01.846	135-41-23.787
3 604	734665.869	700417.285	7.66	fnc3	58-25-01.462	135-41-25.573
4 605	734708.655	700289.271	7.99	fnc4	58-25-02.721	135-41-33.534
4a 606	734731.728	700257.319	8.11	fnc4a	58-25-03.436	135-41-35.544
4b 607	734733.572	700254.878	7.99	fnc4b	58-25-03.493	135-41-35.698
4c 608	734735.507	700252.411	8.00	fnc4c	58-25-03.553	135-41-35.854
4d 609	734737.395	700250.186	7.87	fnc4d	58-25-03.612	135-41-35.994
4e 610	734739.450	700247.950	7.39	fnc4e	58-25-03.676	135-41-36.136
4f 611	734741.601	700245.786	7.39	fnc4f	58-25-03.743	135-41-36.273
5 612	735092.128	699913.762	8.78	fnc5	58-25-14.747	135-41-57.365
6 613	735088.329	699879.808	8.53	fnc6	58-25-14.592	135-41-59.449
6a 614	735082.633	699851.408	8.44	fnc6a	58-25-13.734	135-42-01.151
7 615	735058.797	699823.423	8.98	fnc7	58-25-13.583	135-42-02.867
8 616	735069.935	699812.830	9.05	fnc8	58-25-13.932	135-42-03.540
9 617	735109.250	699853.686	8.55	fnc9	58-25-15.242	135-42-01.097
10 618	735134.542	699829.881	9.60	fnc10	58-25-16.036	135-42-02.609
11 619	735205.121	699590.496	8.96	fnc11	58-25-18.084	135-42-17.482
12 620	735092.196	699480.497	8.95	fnc12	58-25-14.329	135-42-24.047
13 621	735241.133	699130.700	9.42	fnc13	58-25-18.800	135-42-45.865
14 622	734852.100	698770.729	8.66	fnc14	58-25-05.879	135-43-07.308
15 623	734996.876	698613.984	8.85	fnc15	58-25-10.403	135-43-17.230
16 624	735781.927	699339.694	9.51	fnc16	58-25-36.476	135-42-33.999
17 625	736563.062	698549.852	10.43	fnc17	58-26-00.942	135-43-24.107
18 626	736711.283	698707.575	10.93	fnc18	58-26-05.885	135-43-14.668
19 627	736676.591	698739.974	10.50	fnc19	58-26-04.796	135-43-12.607
1 628	736778.261	698848.604	10.79	fnc1	58-26-08.187	135-43-06.104
Monuments						
993	735027.300	698681.498	8.987	1/4 S7:S8	58-25-11.45219	135-43-13.12962
994	735363.173	699149.315	9.675	GA-1	58-25-22.76110	135-42-44.94569
995	734689.396	698475.095	9.173	GST 50	58-25-00.33262	135-43-25.20816
996*	736585.529	698778.641	11.537	GST 75	58-26-01.89164	135-43-10.05488
997	735808.514	699509.517	10.442	R/W-Int	58-25-37.50045	135-42-23.58791
998*	734979.564	700290.977	9.263	R/W 28	58-25-11.47549	135-41-33.92806

* POINT NO.S 996 & 998 APPEAR TO BE TRANSPOSED

NOTE: DO NOT SCALE FROM THESE PLANS-USE DIMENSIONS

ENGINEER'S SEAL

STATE OF ALASKA 49th Duane F. Doerflinger CE-7567 REGISTERED PROFESSIONAL ENGINEER

PATH: Q:\GUS\72220\~~DR\FENCE2~~ PLANSET\FENCE 2
PLOT: P:\-LIB\-PLOT\PLOTF.PCP(400) OR PLOTH.PCP(800)

BY:	DATE:	DESCRIPTION OF CHANGE:
JEM	1/27/99	AS-BUILT PER CORRECTIONS

RECORD OF REVISIONS

STATE OF ALASKA
DEPARTMENT OF TRANSPORTATION AND PUBLIC FACILITIES
SOUTHEAST REGION

GUSTAVUS — ALASKA

GUSTAVUS AIRPORT SECURITY FENCING
AIP. NO. 3-02-0111-06-98 ~ PROJECT NO. 72220

FENCE LAYOUT PLAN

DESIGNED BY: P.JONES	PROJECT NO. 72220
DRAWN BY: B.ADAMS	DATE: 1998
CHECKED BY: D.F.DOERFLINGER	SHEET 2 OF 13

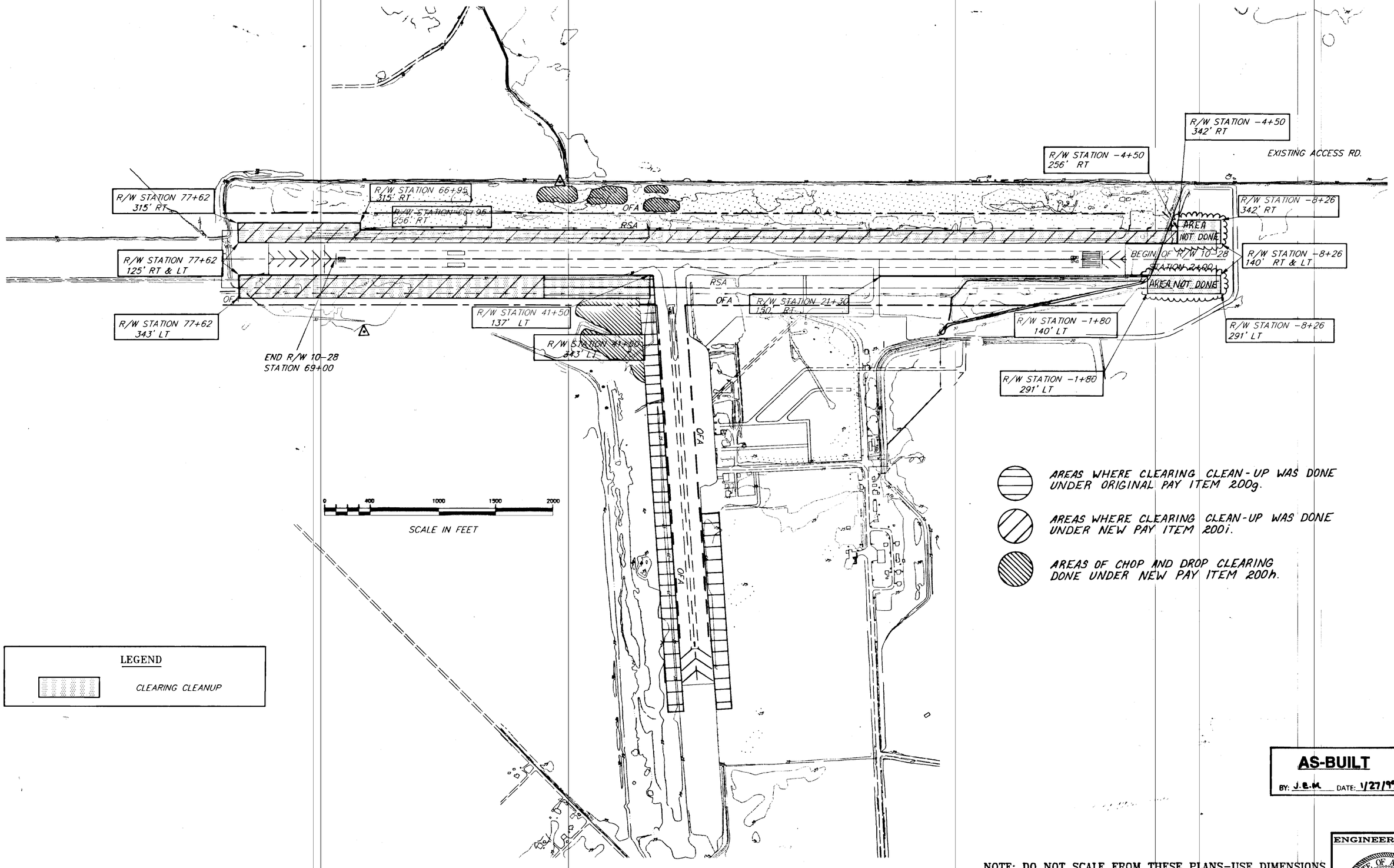

AS-BUILT

BY: J.E.M. DATE: 1/27/99

NOTE: DO NOT SCALE FROM THESE PLANS-USE DIMENSIONS

ENGINEER'S SEAL

STATE OF ALASKA 49th 6/1/99 Duane F. Doerflinger CE-7567 REGISTERED PROFESSIONAL ENGINEER

PATH: Q:\GUS\72220\~~OR~~\-ALTA PLANS\ALTA		
PLOT: P:\-LIB\-PLOT\PLOTF.PCP(400) OR PLOTH.PCP(800)		
BY:	DATE:	DESCRIPTION OF CHANGE:
JMBM	1/27/99	AS-BUILT PER CORRECTIONS

RECORD OF REVISIONS

STATE OF ALASKA
DEPARTMENT OF TRANSPORTATION AND PUBLIC FACILITIES
SOUTHEAST REGION

GUSTAVUS ALASKA

GUSTAVUS AIRPORT SECURITY FENCING
AIP. NO. 3-02-0111-06-98 ~ PROJECT NO. 72220
ADDITIVE ALTERNATE "A"
CLEARING CLEANUP

DESIGNED BY: P.JONES	PROJECT NO. 72220
DRAWN BY: B.ADAMS	DATE: 1998
CHECKED BY: D.F.DOERFLINGER	SHEET 3 OF 13

ESTIMATE OF QUANTITIES

ITEM NO.	ITEM	UNIT	QUANTITY
100	MOBILIZATION AND DEMOBILIZATION	L.S.	ALL REQ'D✓
111	EROSION AND POLLUTION CONTROL NONE REQUIRED	C.S.	ALL REQ'D✓
120	DBE ADJUSTMENT	C.S.	ALL REQ'D✓
121	CONSTRUCTION SURVEYING BY THE CONTRACTOR	L.S.	ALL REQ'D✓
125	ENGINEERING TRANSPORTATION	L.S.	ALL REQ'D✓
200a	CLEARING	ACRE	81.09 ~~51.5~~
330g	BORROW EMBANKMENT	C.Y.V.M.	0 ~~250~~
400a	72 INCH PIPE	L.F.	36✓
440a	CHAIN LINK FENCE	L.F.	23,953 ~~24,261~~
440b	3' FOOT SKIRTING	L.F.	18,249✓
440c	DOUBLE DRIVE THRU SWING GATE (8' X 20')	EA.	4 ~~2~~
~~441~~	~~GATE OPERATOR~~ ITEM DELETED BY CHANGE ORDER #2	~~EA.~~	~~2~~
920	STANDARD SIGNS	S.F.	325 ~~293~~

ADDITIVE ALTERNATE A

ITEM NO.	ITEM	UNIT	QUANTITY
200g	CLEARING CLEANUP	ACRE	10✓

ENGINEER'S ESTIMATE QUANTITIES

CLEARING and GRUBBING FOR FENCE INSTALLATION = 6.5 ACRES
(INCIDENTAL TO ITEM 440)

NEW PAY ITEMS ESTABLISHED BY CHANGE ORDER

ITEM NO.	ITEM	CHANGE ORDER NO.	UNIT	QUANTITY
121(1)	ADDITIONAL CONSTRUCTION SURVEYING	1	L.S.	ALL REQ'D.
200h	CHOP AND DROP CLEARING	3	ACRE	7.74
200i	ADDITIONAL CLEARING CLEAN-UP	4	L.S.	ALL REQ'D.
441(1)	GATE OPERATOR	2	EACH	2

GENERAL NOTES✓

1. THE CLEARING AND GRUBBING LIMIT SHALL BE 2' INSIDE AND 10' OUTSIDE OF THE FENCE LOCATION.
2. THE CLEARING LIMITS MAY BE ADJUSTED BY THE ENGINEER
3. WHEN EXTENDING POSTS, POST ENDS ARE TO BE THREADED AND CONNECTED WITH A COUPLING.
4. THE CONTRACTOR WILL NOT BE ALLOWED TO USE RUNWAYS 10/28 & 1/19 PAVED SURFACES DURING THE CONSTRUCTION OF THIS PROJECT.

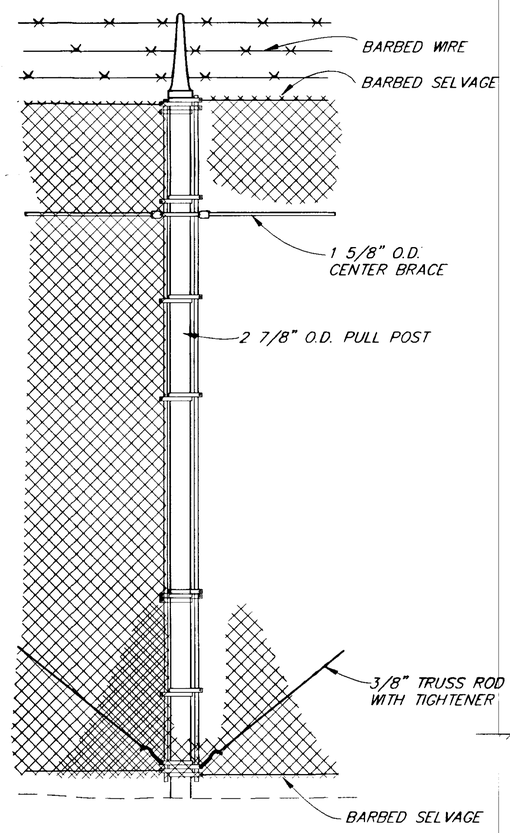

TYPICAL PULL POST DETAIL✓

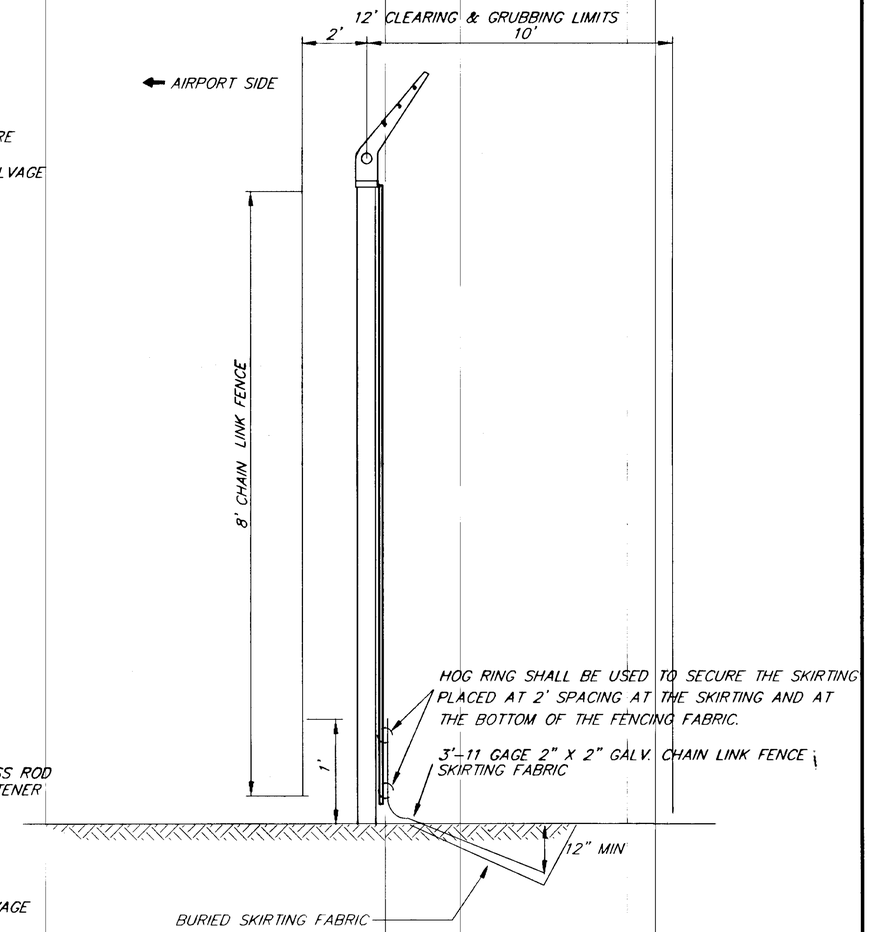

CHAIN LINK SKIRT DETAIL✓

NOT REQUIRED AT GATES AND STREAM CROSSINGS

DETAIL USED IN LIEU OF CONCRETE POST EMBEDMENT WHEN IN WETLANDS AREAS.

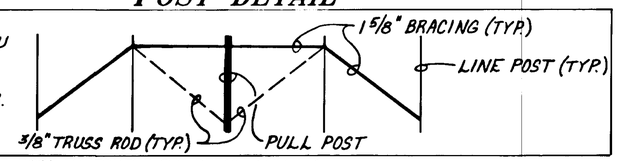

FOR POST EMBEDMENT SEE DETAIL, SHEET 4.

James E Mayer
1/27/99

AS-BUILT
BY: JEM DATE: 1/27/99

NOTE: DO NOT SCALE FROM THESE PLANS-USE DIMENSIONS

PATH:	O:\GUS\72220\~~PR\~~ ~~EST~~ PLANSET\4 EST		
PLOT:	P:\-LIB\-PLOT\PLOTF.PCP(1) OR PLOTH.PCP(2)		
BY:	DATE:	DESCRIPTION OF CHANGE:	
JEM	1/27/99	AS-BUILT PER CORRECTIONS	

RECORD OF REVISIONS

STATE OF ALASKA
DEPARTMENT OF TRANSPORTATION AND PUBLIC FACILITIES
SOUTHEAST REGION

GUSTAVUS — GUSTAVUS AIRPORT SECURITY FENCE — ALASKA
AIP. NO. 3-02-0111-06-98 ~ PROJECT NO. 72220

ESTIMATE OF QUANTITIES & TYPICAL SECTIONS

DESIGNED BY: P. JONES	PROJECT NO. 72220
DRAWN BY: B. ADAMS	DATE: 1998
CHECKED BY: D.F. DOERFLINGER	SHEET 4 OF 13

ENGINEER'S SEAL
STATE OF ALASKA 49th
Duane F. Doerflinger CE-7567
REGISTERED PROFESSIONAL ENGINEER

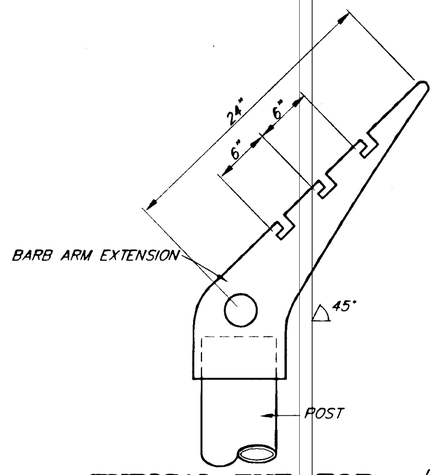

TYPICAL EYE-TOP BARB-TOP EXTENSION

NOTE:

1. TYPICAL TOP FOR ALL LINE AND PULL POSTS.

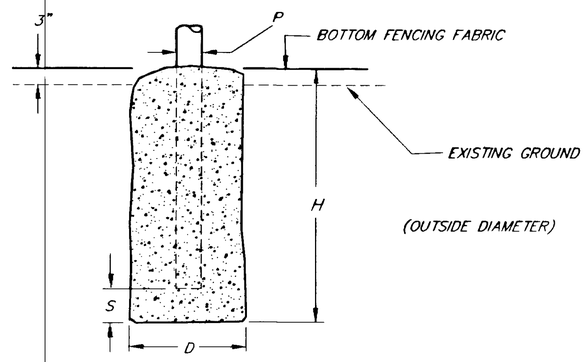

TYPICAL POST EMBEDMENT DETAIL

P	D	H	S
2 3/8"	12"	38"	2"
2 7/8"	20"	38"	2"
6 5/8"	20"	60"	6"

POST INSTALLATION SUMMARY

GATE POST (OUTSIDE DIAMETER)	LINE POST (OUTSIDE DIAMETER)	PULL POST, CORNER POST & STREAM CROSSING (OUTSIDE DIAMETER)
6 5/8"	2 3/8"	2 7/8"

James D. Mayer
1/27/99

AS-BUILT
BY: JEM DATE: 1/27/99

NOTE: DO NOT SCALE FROM THESE PLANS-USE DIMENSIONS

ENGINEER'S SEAL
STATE OF ALASKA 49th
Duane F. Doerflinger
CE-7567
REGISTERED PROFESSIONAL ENGINEER

PATH:	Q:\GUS\72220\~~OR\FENCES~~ PLANSET\& FENCES	
PLOT:	P:\-LIB\-PLOT\PLOTF.PCP(24) OR PLOTH.PCP(48)	
BY:	DATE:	DESCRIPTION OF CHANGE:
JEM	1/27/99	AS-BUILT

RECORD OF REVISIONS

STATE OF ALASKA
DEPARTMENT OF TRANSPORTATION AND PUBLIC FACILITIES
SOUTHEAST REGION

GUSTAVUS — GUSTAVUS AIRPORT SECURITY FENCE — ALASKA
AIP. NO. 3-02-0111-06-98 ~ PROJECT NO. 72220

FENCING DETAILS

DESIGNED BY: P. JONES	PROJECT NO. 72220
DRAWN BY: CSA / B.A.	DATE: 1998
CHECKED BY: D.F.DOERFLINGER	SHEET 5 OF 13

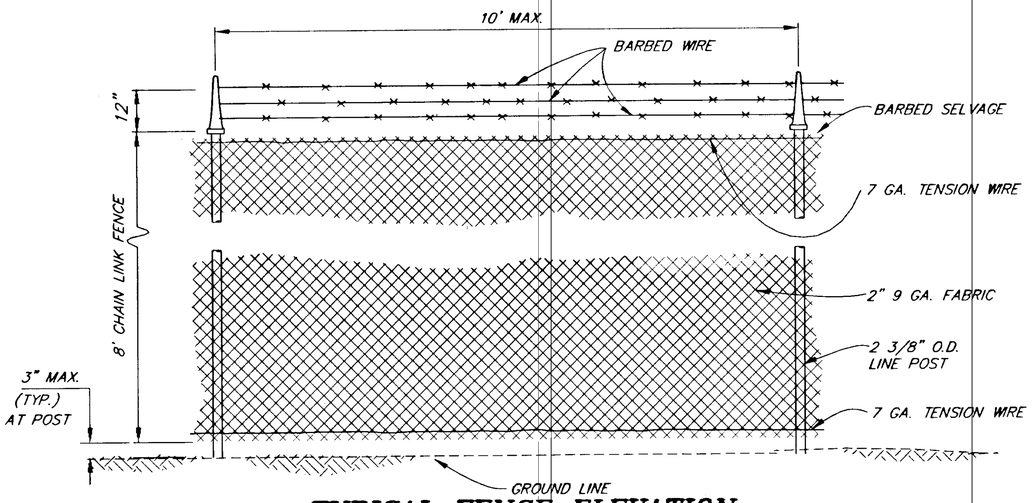

TYPICAL FENCE ELEVATION

FOR POST EMBEDMENT SEE DETAIL, SHEET 5.

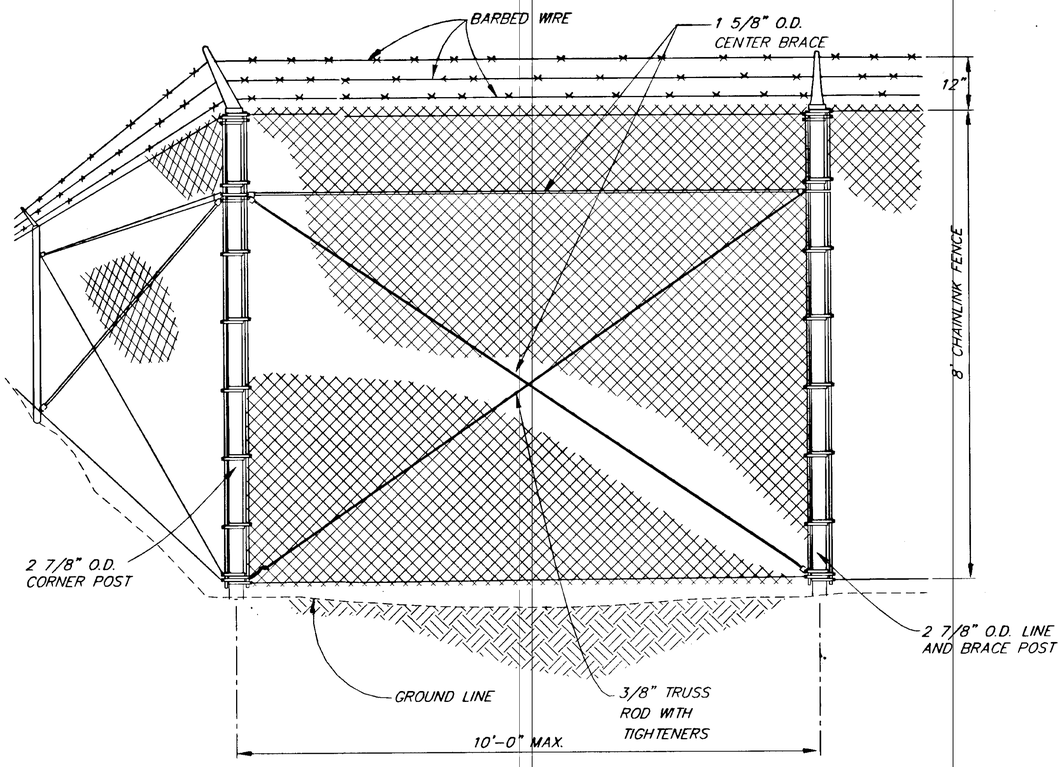

TYPICAL CORNER TERMINAL

FOR POST EMBEDMENT SEE DETAIL, SHEET 5.

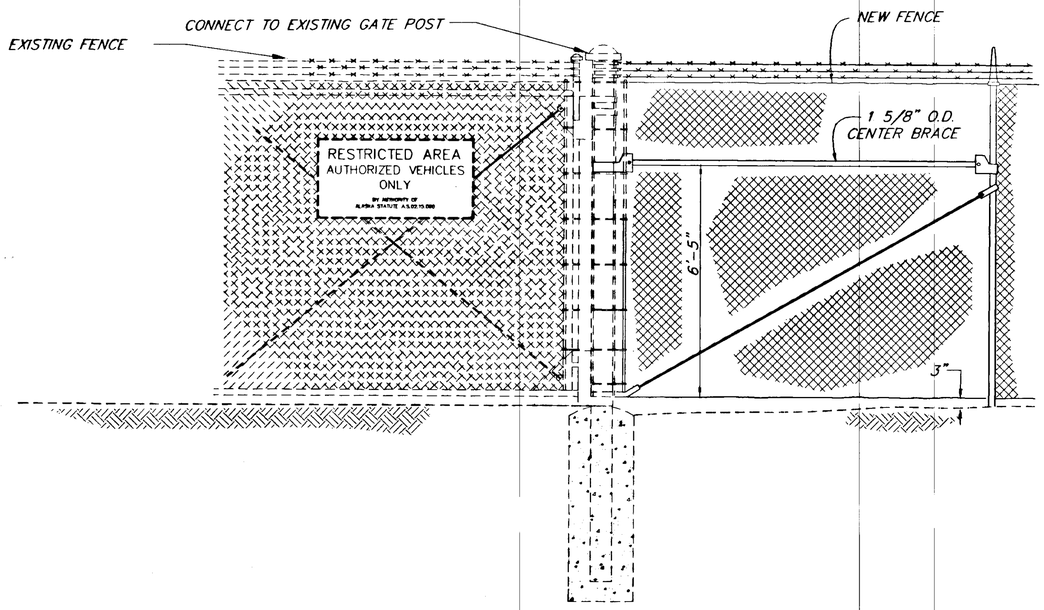

NEW FENCE CONNECTION DETAIL

SEE SHEET NO.8 FOR EXISTING GATE CONNECTION LOCATIONS.

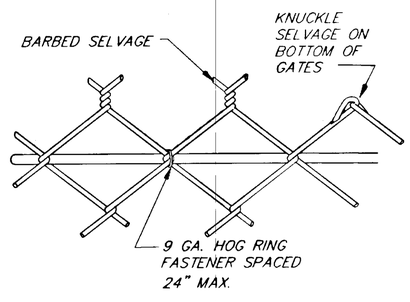

TYPICAL METHOD OF TYING FABRIC TO TENSION WIRE

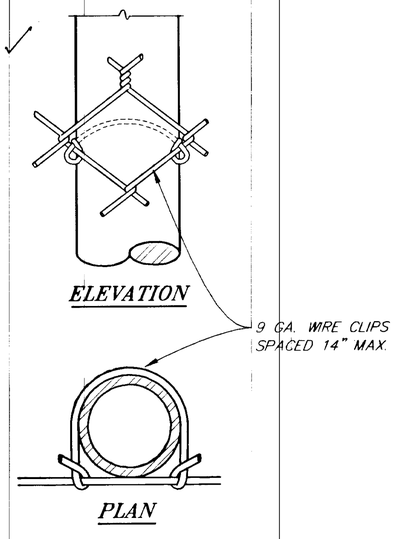

TYPICAL METHOD OF TYING FABRIC TO LINE POSTS

AS-BUILT
BY: JEM DATE: 1/27/99

James D. Doerflinger
1/27/99

NOTE: DO NOT SCALE FROM THESE PLANS-USE DIMENSIONS

ENGINEER'S SEAL
STATE OF ALASKA 49th Duane F. Doerflinger CE-7567 REGISTERED PROFESSIONAL ENGINEER

PATH:	O:\GUS\72220\~~DR\-FENCE4~~ PLANSET\ 8 FENCE 4	
PLOT:	P:\LIB\-PLOT\PLOTF.PCP(24) OR PLOTH.PCP(48)	
BY:	DATE:	DESCRIPTION OF CHANGE:
JEM	1/27/99	AS-BUILT

RECORD OF REVISIONS

STATE OF ALASKA
DEPARTMENT OF TRANSPORTATION
AND PUBLIC FACILITIES
SOUTHEAST REGION

GUSTAVUS — GUSTAVUS AIRPORT SECURITY FENCE — ALASKA
AIP.NO. 3-02-0111-06-98 ~ PROJECT NO. 72220

FENCING DETAILS

DESIGNED BY: P JONES	PROJECT NO. 72220
DRAWN BY: CSA/B.A.	DATE: 1998
CHECKED BY: D.F.DOERFLINGER	SHEET 6 OF 13

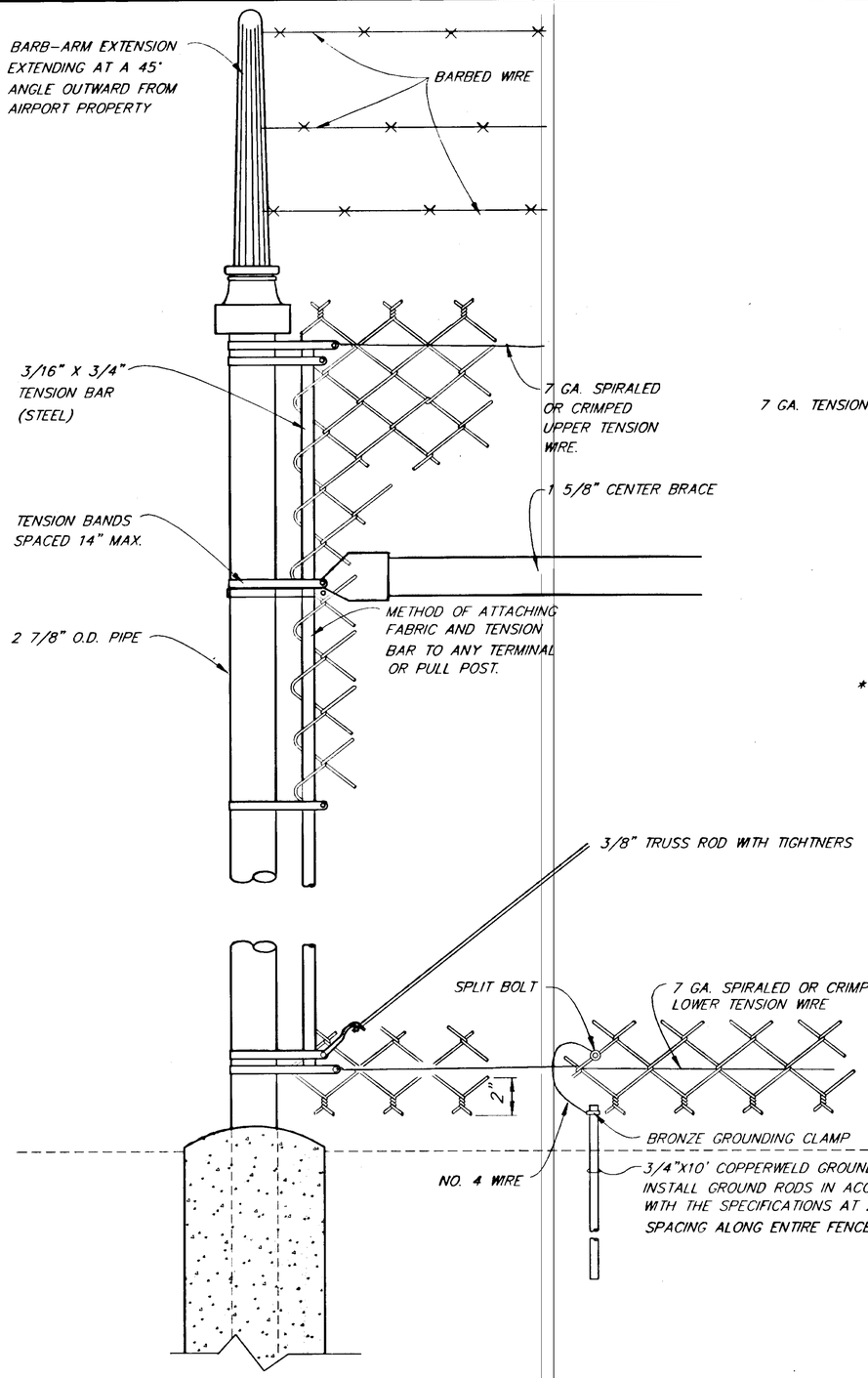

TERMINAL POST DETAIL

FOR POST EMBEDMENT SEE DETAIL, SHEET 4.

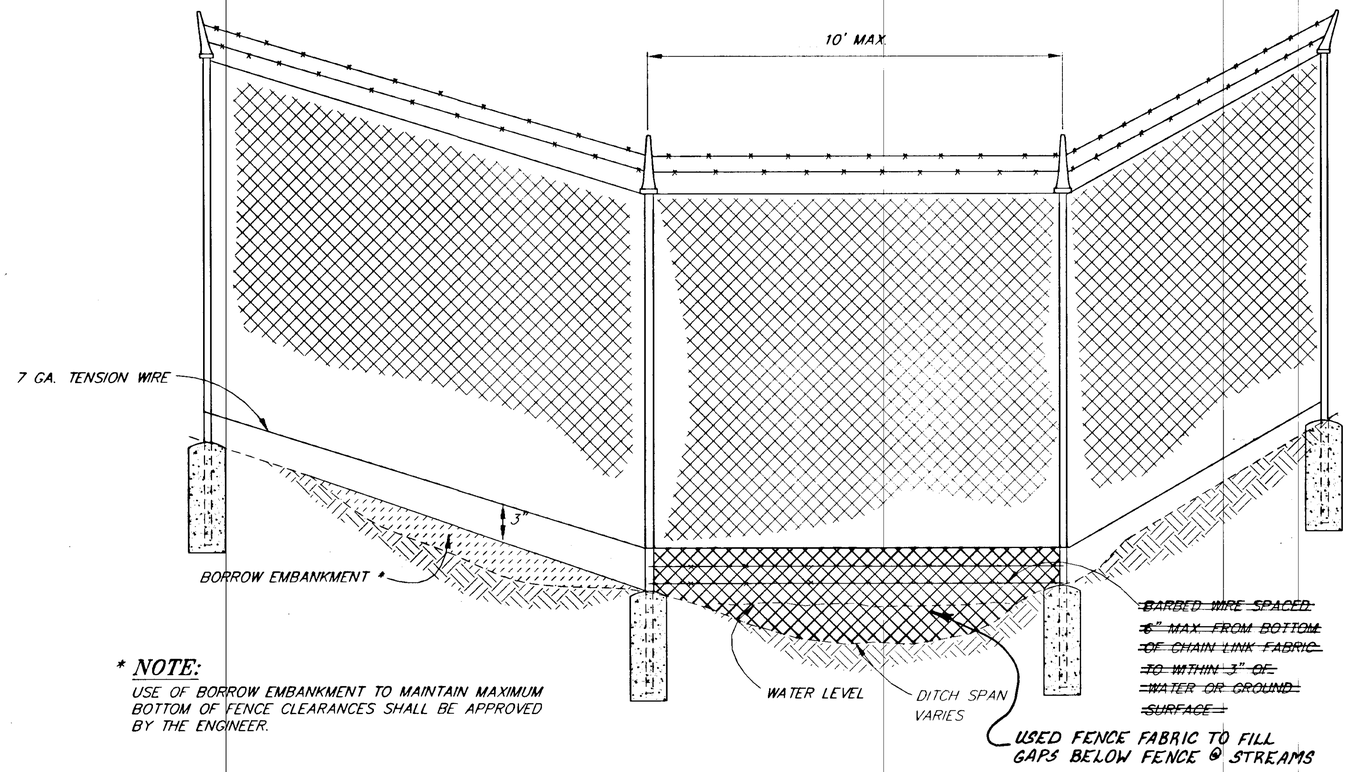

*** NOTE:**
USE OF BORROW EMBANKMENT TO MAINTAIN MAXIMUM BOTTOM OF FENCE CLEARANCES SHALL BE APPROVED BY THE ENGINEER.

STREAM CROSSING DETAIL

NOTES:

1. PLACE WHERE DIRECTED BY THE ENGINEER.

James E. Hagen
1/27/99

AS-BUILT
BY: JEM DATE: 1/27/99

NOTE: DO NOT SCALE FROM THESE PLANS-USE DIMENSIONS

ENGINEER'S SEAL
STATE OF ALASKA 49th D. Duane F. Doerflinger CE-7567 REGISTERED PROFESSIONAL ENGINEER

PATH:	O:\GUS\72220\~~DR\FENCE1~~ 1=24 PLANSET\ FENCE 1	
PLOT:	P:\-LIB\-PLOT\PLOTF.PCP(24) OR PLOTH.PCP(48)	
BY:	DATE:	DESCRIPTION OF CHANGE:
Jem	1/27/99	AS BUILT PER CORRECTIONS

RECORD OF REVISIONS

STATE OF ALASKA
DEPARTMENT OF TRANSPORTATION AND PUBLIC FACILITIES
SOUTHEAST REGION

GUSTAVUS — GUSTAVUS AIRPORT SECURITY FENCE — ALASKA
AIP. NO. 3- 02-0111-06-98 ~ PROJECT NO. 72220

FENCING DETAILS

DESIGNED BY: P. JONES	PROJECT NO. 72220
DRAWN BY: CSA/B.A.	DATE: 1998
CHECKED BY: D.F.DOERFLINGER	SHEET 7 OF 13

EXISTING GATE SUMMARY		
GATE NO.	SIZE	REMARKS
1	20' CANTILEVER GATE W/OPERATOR	(EXISTING) ACCESS RD.
2	20' SWING GATE	(EXISTING) APRON RD
3	20' CANTILEVER GATE W/OPERATOR	(EXISTING) APRON RD
4	20' SWING GATE	MAINTENANCE STATION
5	EXISTING TRANSIENT PILOT PEDESTRIAN GATE	25' LEFT OF CENTER OF GATE NO. 1

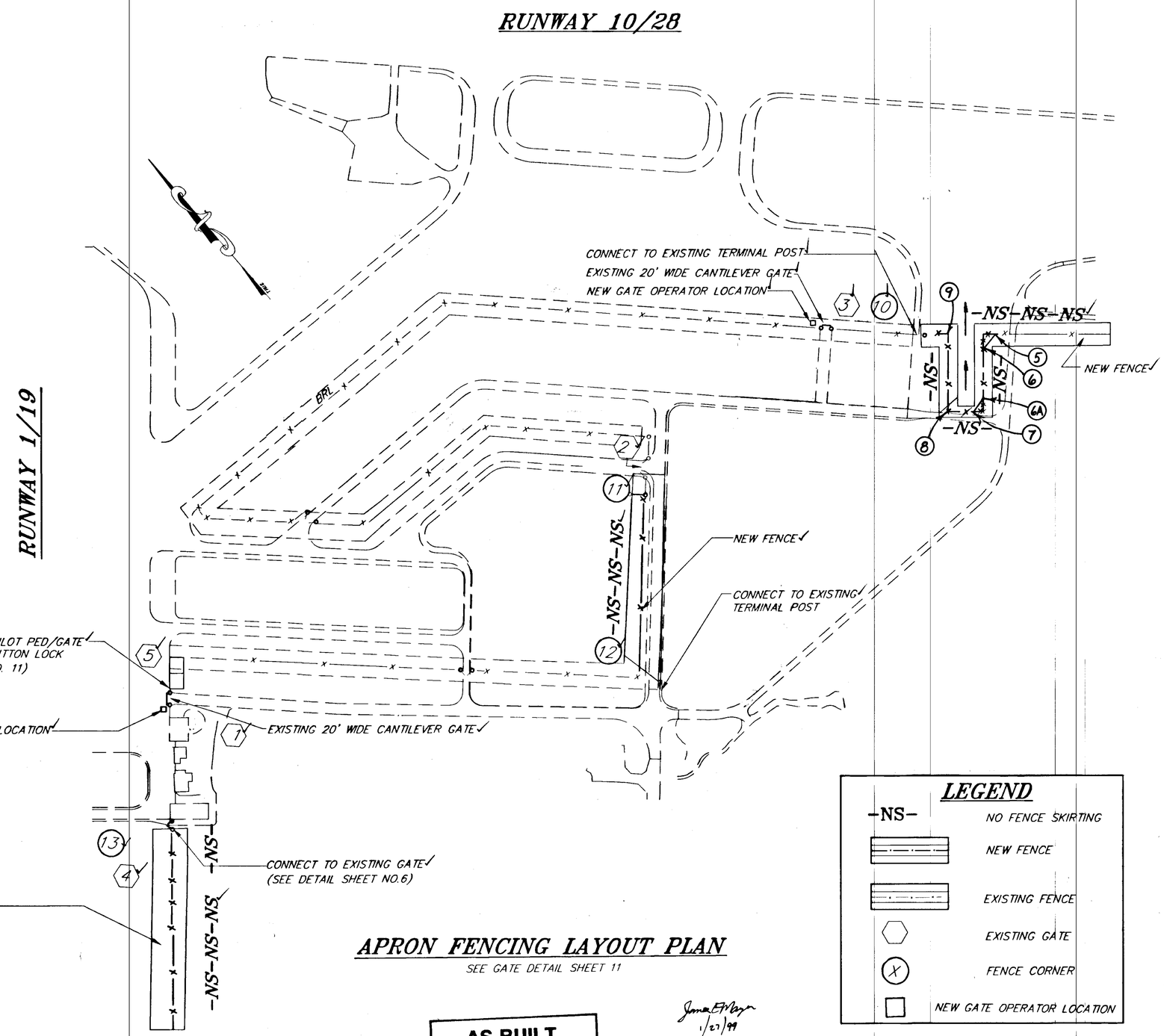

APRON FENCING LAYOUT PLAN

SEE GATE DETAIL SHEET 11

LEGEND

-NS-	NO FENCE SKIRTING
	NEW FENCE
	EXISTING FENCE
	EXISTING GATE
	FENCE CORNER
	NEW GATE OPERATOR LOCATION

AS-BUILT
BY: J.E.M. DATE: 1/27/99

1/27/99

NOTE: DO NOT SCALE FROM THESE PLANS-USE DIMENSIONS

ENGINEER'S SEAL
STATE OF ALASKA 49th
Duane F. Doerflinger
CE-7567
REGISTERED PROFESSIONAL ENGINEER

PATH: Q:\GUS\72220\~~OR\-FENCE6~~ PLANSET\H FENCE6		
PLOT: P:\-LIB\-PLOT\PLOTF.PCP(150) OR PLOTH.PCP(300)		
BY:	DATE:	DESCRIPTION OF CHANGE:
JEM	1/27/99	AS BUILT PER CORRECTIONS
RECORD OF REVISIONS		

STATE OF ALASKA
DEPARTMENT OF TRANSPORTATION AND PUBLIC FACILITIES
SOUTHEAST REGION DESIGN & CONSTRUCTION

GUSTAVUS — GUSTAVUS AIRPORT SECURITY FENCING — ALASKA
AIP. NO. 3-02-0111-06-98 ~ PROJECT NO. 72220

FENCING DETAILS

DESIGNED BY: P. JONES	PROJECT NO. 72220
DRAWN BY: P. JONES	DATE: 1998
CHECKED BY: D. F. DOERFLINGER	SHEET 8 OF 13

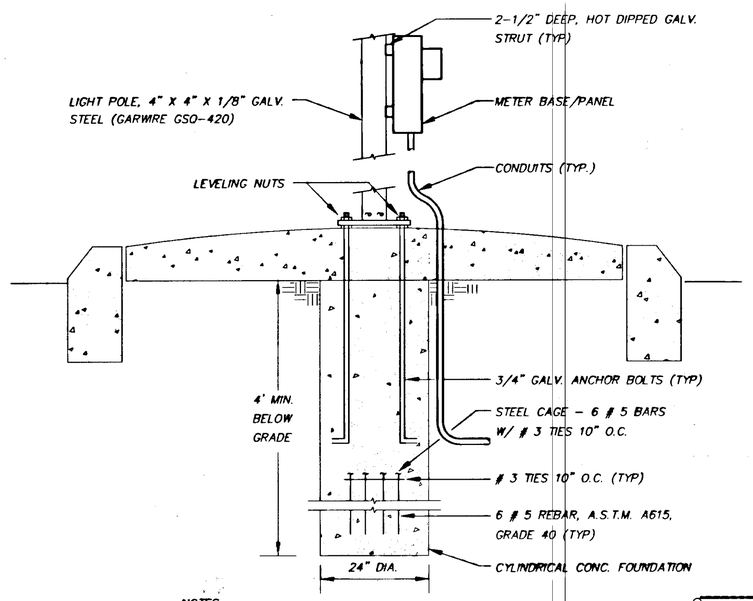

NOTES:

1. BACKFILL W/ N.F.S. SAND & GRAVEL COMPACTED TO 95% MODIFIED PROCTOR DENSITY.
2. ANCHOR BOLTS TO MEET ATSM-A36 W/ MINIMUM YEILD STRESS OF 36.0 KSI.

SECTION Y-Y
POLE BASE FOUNDATION

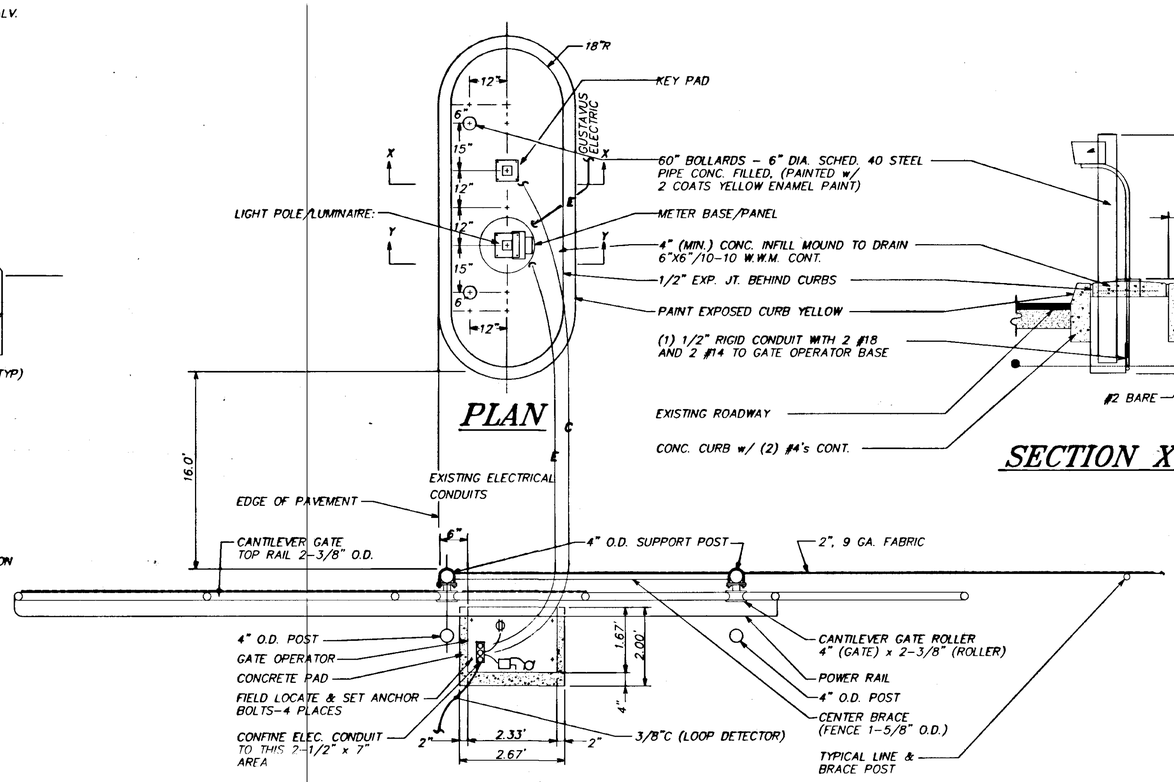

PLAN

ISLAND CURB DETAIL

N.T.S.

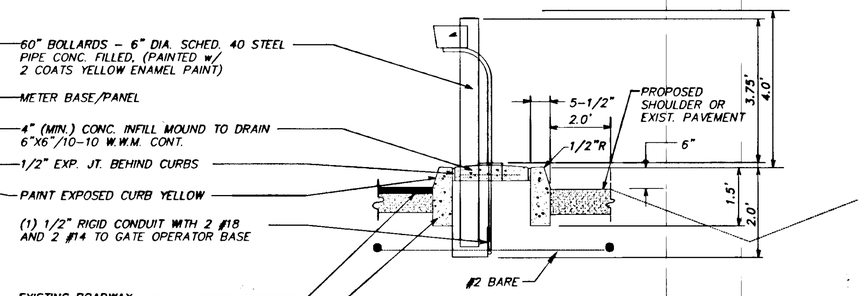

SECTION X-X: KEY PAD & BOLLARDS

NOTES:

1. SAW-CUT AND MATCH EXIST. PAVEMENT WHERE PAVEMENT EXISTS AT GATES 1 AND 5 WITHIN THE AIRPORT OPERATIONS AREA.
2. INSTALL #2 AWG BASE APPROX 22 LF. AT 24" DEPTH WITH #12 EACH WAY FOR EACH CARD READER.
3. SEE SHEET 8 OF 13 FOR GATE LOCATIONS.

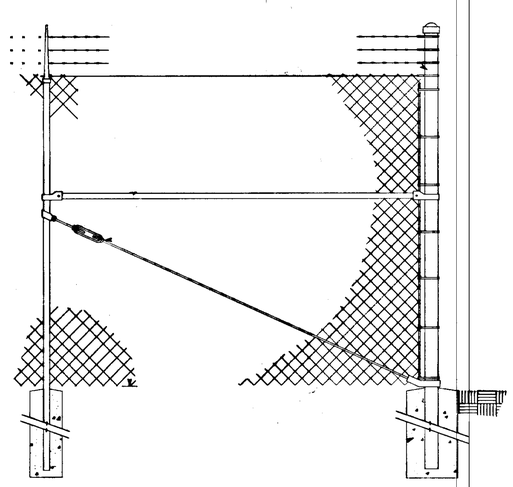

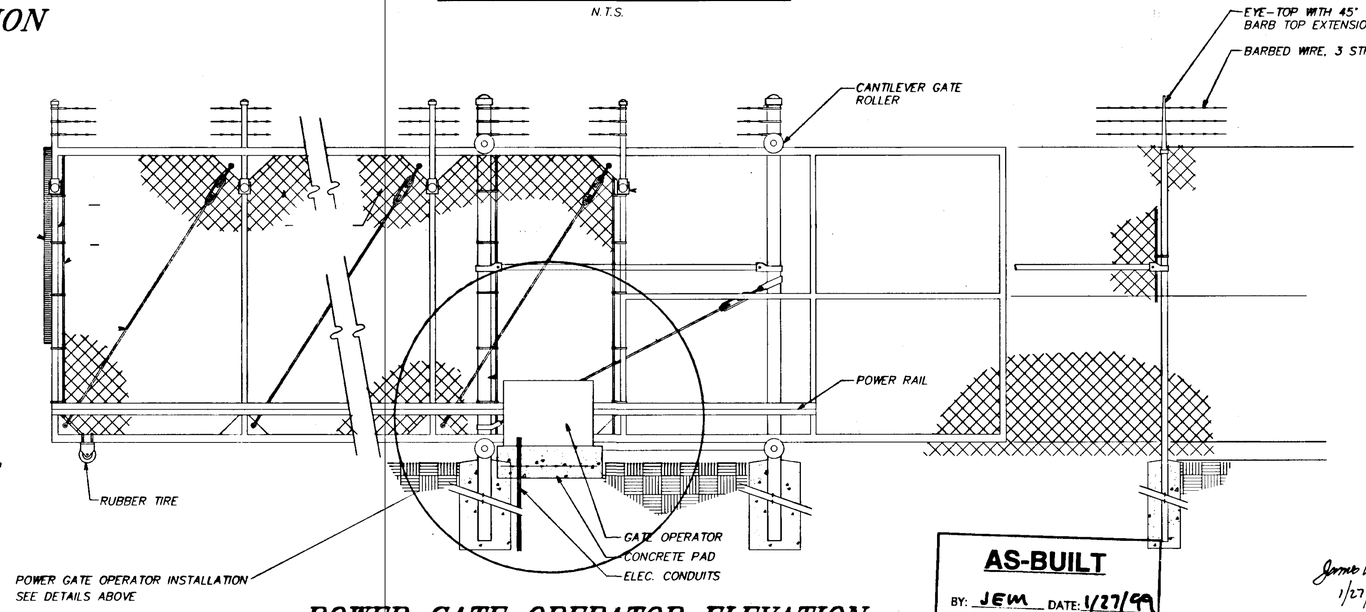

POWER GATE OPERATOR ELEVATION

AS-BUILT
BY: JEM DATE: 1/27/99

James E. Morgan
1/27/99

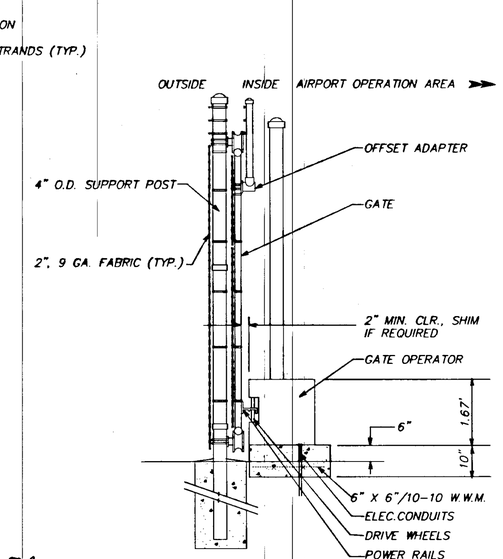

SECTION

NOTE: DO NOT SCALE FROM THESE PLANS-USE DIMENSIONS

PATH: Q:\GUS\72220\~~OPT FENCE~~ PLANSET\ # FENCE 7		
PATH: PLOTF 1=8' OR PLOTH 1=16'		
BY:	DATE:	DESCRIPTION OF CHANGE:
JEM	1/27/99	AS BUILT
RECORD OF REVISIONS		

STATE OF ALASKA
DEPARTMENT OF TRANSPORTATION AND PUBLIC FACILITIES
SOUTHEAST REGION

GUSTAVUS — ALASKA

GUSTAVUS AIRPORT SECURITY FENCE
AIP. NO. 3-02-0111-06-98 ~ PROJECT NO. 72220

GATE OPERATOR & ELECTRICAL LAYOUT DETAILS

DESIGNED BY: B. HAIGHT	PROJECT NO. 72220
DRAWN BY: S. SNYDER	DATE: 1998
CHECKED BY: B. HAIGHT	SHEET 9 OF 13

ENGINEER'S SEAL
STATE OF ALASKA 49th B.C. HAIGHT EE 4800 REGISTERED PROFESSIONAL ENGINEER

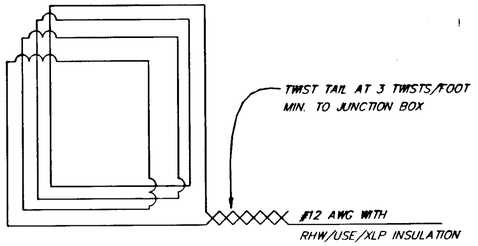

LOOP WIRING DETAIL

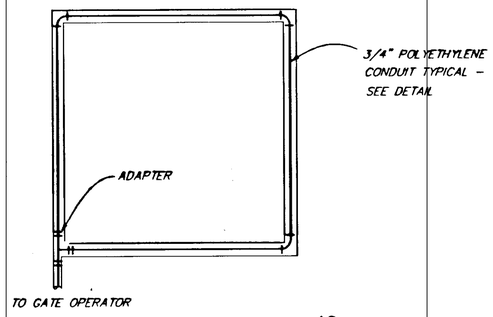

TYPICAL 6 FT. X ~~6~~ 12 FT. LOOP DETECTOR DETAIL

CHANGE ORDER NO. 2 DIRECTED THE INSTALLATION OF 2-6'x 12' SAFETY LOOP DETECTORS AT EACH GATE OPERATOR. ONE LOOP ON EACH SIDE OF EACH OF THE 2 GATES.

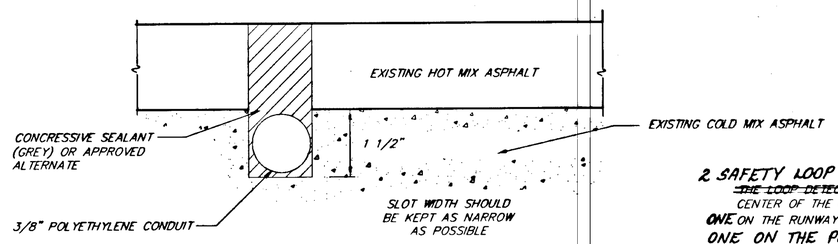

LOOP CONDUIT INSTALLATION DETAIL

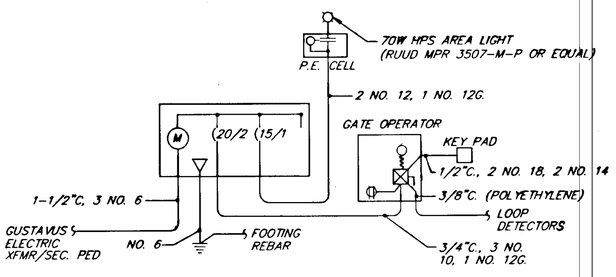

SINGLE LINE DIAGRAM

NO SCALE

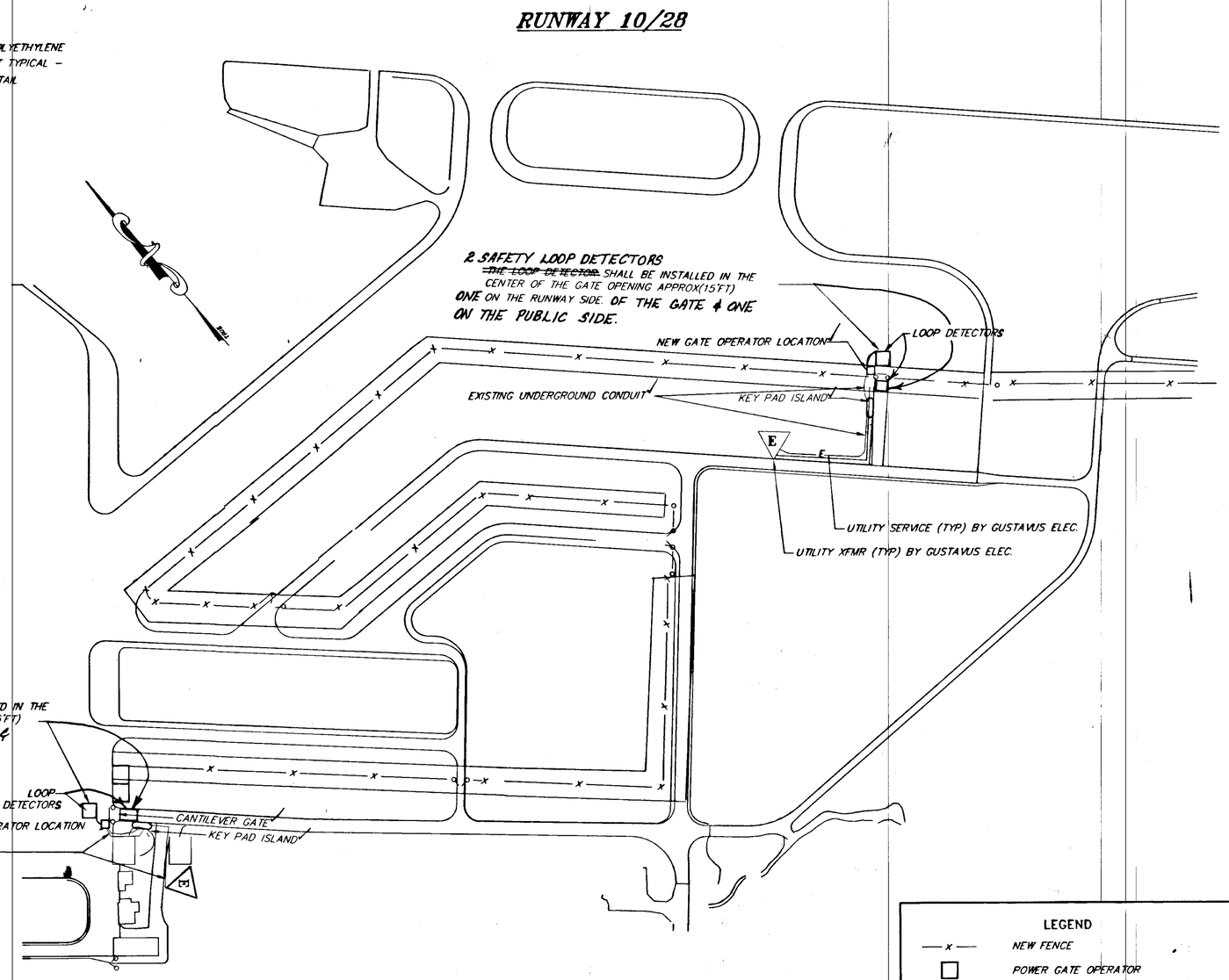

ELECTRICAL LAYOUT PLAN

SEE GATE OPERATOR DETAIL SHEET 9

LEGEND

- —x— NEW FENCE
- □ POWER GATE OPERATOR
- ▽ E EXT. ELECTRIC PED & TRANSFORMER SERVICE PROVIDED BY GUSTAVUS ELECTRIC.
- ⬭ KEY PAD ISLAND
- □ LOOP DETECTOR

AS-BUILT
BY: JEM DATE: 1/27/99

James D. Morgan
1/27/99

NOTE: DO NOT SCALE FROM THESE PLANS–USE DIMENSIONS

ENGINEER'S SEAL
STATE OF ALASKA 49th B.C. HAIGHT EE 4800 REGISTERED PROFESSIONAL ENGINEER

PATH: Q:\GUS\72220\~~DR\FENCE8~~ PLANSET\FENCE 8		
PLOT: P:\-LIB\-PLOT\PLOTF.PCP(600) OR PLOTH.PCP(1200)		
BY: JEM	DATE: 1/27/99	DESCRIPTION OF CHANGE: AS-BUILT PER CORRECTIONS
RECORD OF REVISIONS		

STATE OF ALASKA
DEPARTMENT OF TRANSPORTATION AND PUBLIC FACILITIES
SOUTHEAST REGION

GUSTAVUS — GUSTAVUS AIRPORT SECURITY FENCING — ALASKA
AIP. NO. 3-020111-06-98 ~ PROJECT NO. 72220

ELECTRICAL LAYOUT PLAN

DESIGNED BY: B. HAIGHT	PROJECT NO. 72220
DRAWN BY: S. SNYDER	DATE: 1998
CHECKED BY: B. HAIGHT	SHEET 10 OF 13

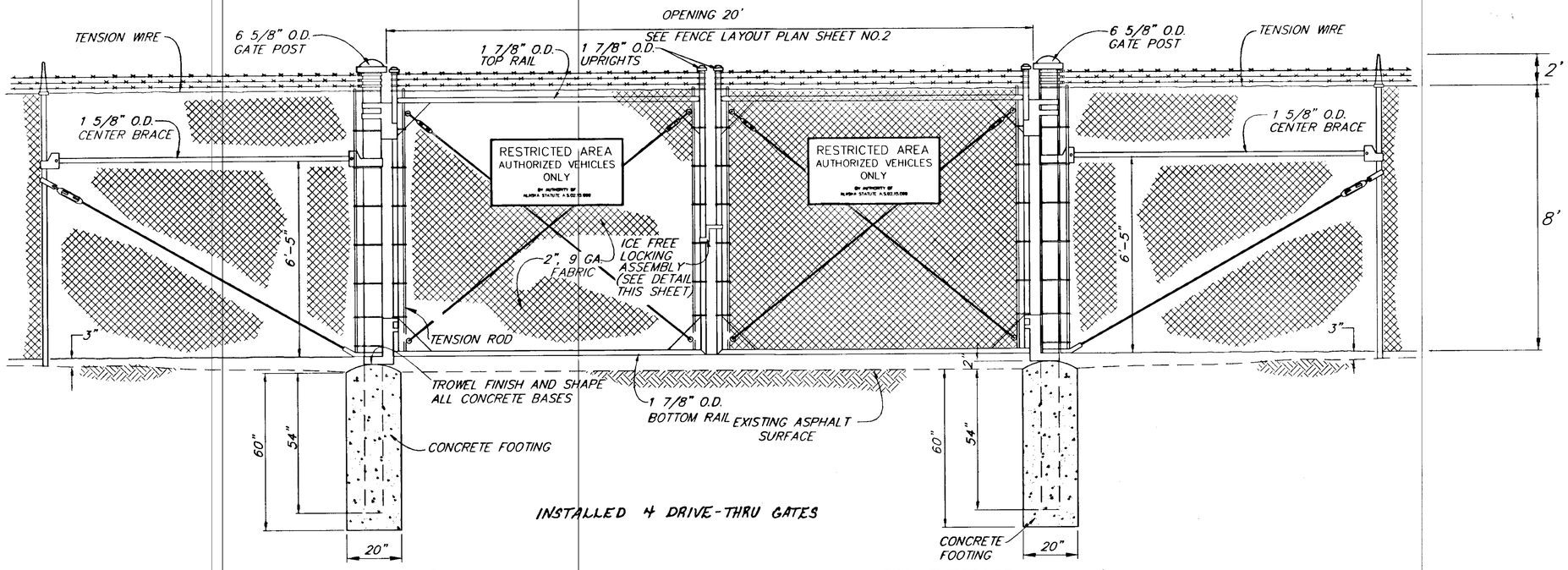

20' DOUBLE DRIVE THRU SWING GATE DETAIL

NOTES:

(1) ALL WELDS SHALL BE CLEAN PRIOR TO GALVANIZING.

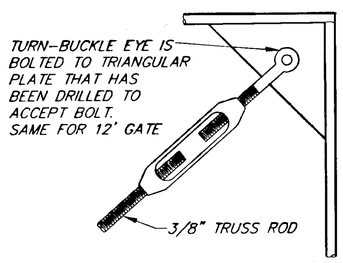

TRUSS ROD AND TIGHTENER DETAIL

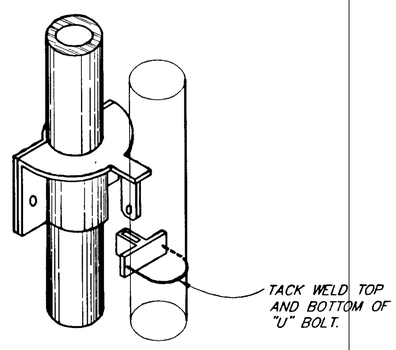

ICE FREE LOCKING ASSEMBLY DETAIL

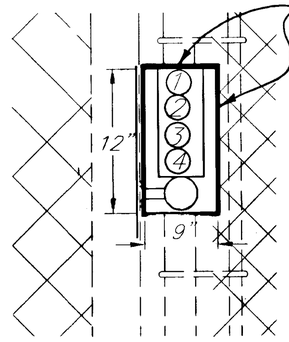

FRONT VIEW

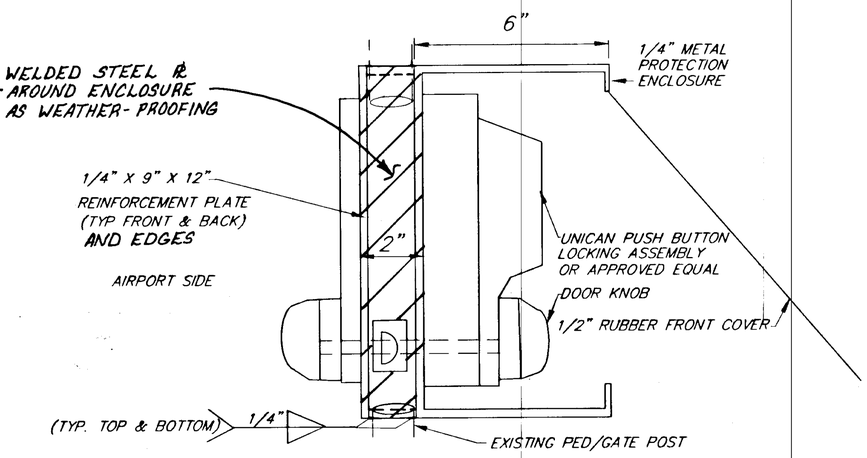

SIDE VIEW

PUSH BUTTON LOCKING DETAIL

(SEE SHEET 8 FOR LOCATION)

(1) PUSH BUTTON LOCKING ASSEMBLY SHALL BE INSTALLED AT THE EXISTING TRANSIENT PILOT PEDESTRIAN GATE.

(2) PUSH BUTTON LOCKING ASSEMBLY AND ASSOCIATED HARDWARE SHALL BE CONSIDERED INCIDENTAL TO OTHER ITEMS OF WORK.

(3) THE LOCK SHALL BE INSTALLED 4'FT FROM THE BOTTOM OF THE TRANSIENT PILOT PEDESTRIAN GATE.

AS-BUILT
BY: JEM DATE: 1/27/99

1/27/99

NOTE: DO NOT SCALE FROM THESE PLANS-USE DIMENSIONS

ENGINEER'S SEAL
STATE OF ALASKA 49th Duane F. Doerflinger CE-7567 REGISTERED PROFESSIONAL ENGINEER

PATH: Q:\GUS\72220\~~DR\-FENCE3~~ PLANSET\ ~~4~~ FENCE3		
PLOT: P:\-LIB\-PLOT\PLOTF.PCP(24) OR PLOTH.PCP(48)		
BY:	DATE:	DESCRIPTION OF CHANGE:
JEM	1/27/99	AS-BUILT PER CORRECTIONS

RECORD OF REVISIONS

STATE OF ALASKA
DEPARTMENT OF TRANSPORTATION AND PUBLIC FACILITIES
SOUTHEAST REGION

GUSTAVUS — GUSTAVUS AIRPORT SECURITY FENCE — ALASKA
AIP. NO. 3-02-0111-06-98 ~ PROJECT NO. 72220

GATE DETAILS

DESIGNED BY: P. JONES	PROJECT NO. 72220
DRAWN BY: CSA/B.A.	DATE: 1998
CHECKED BY: D.F.DOERFLINGER	SHEET 11 OF 13

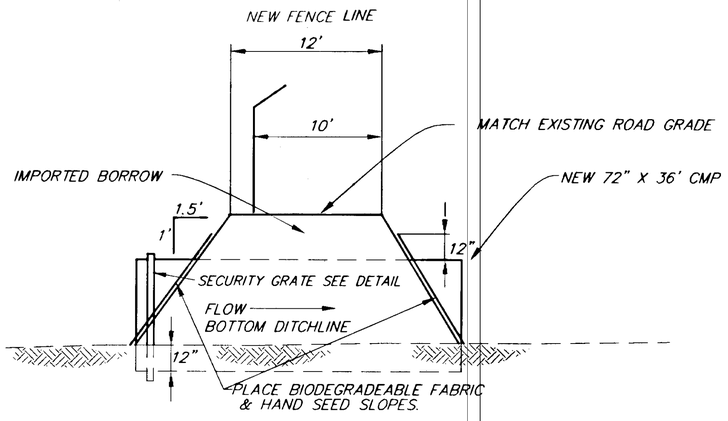

SECTION B–B

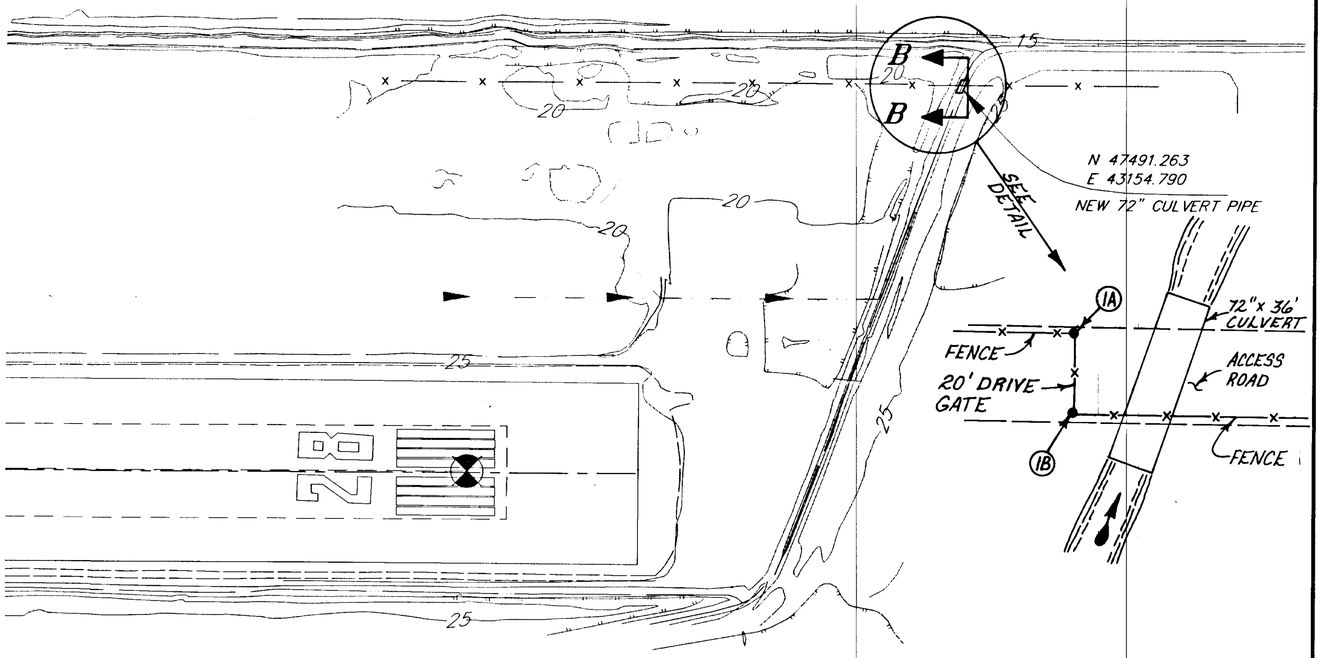

PLAN

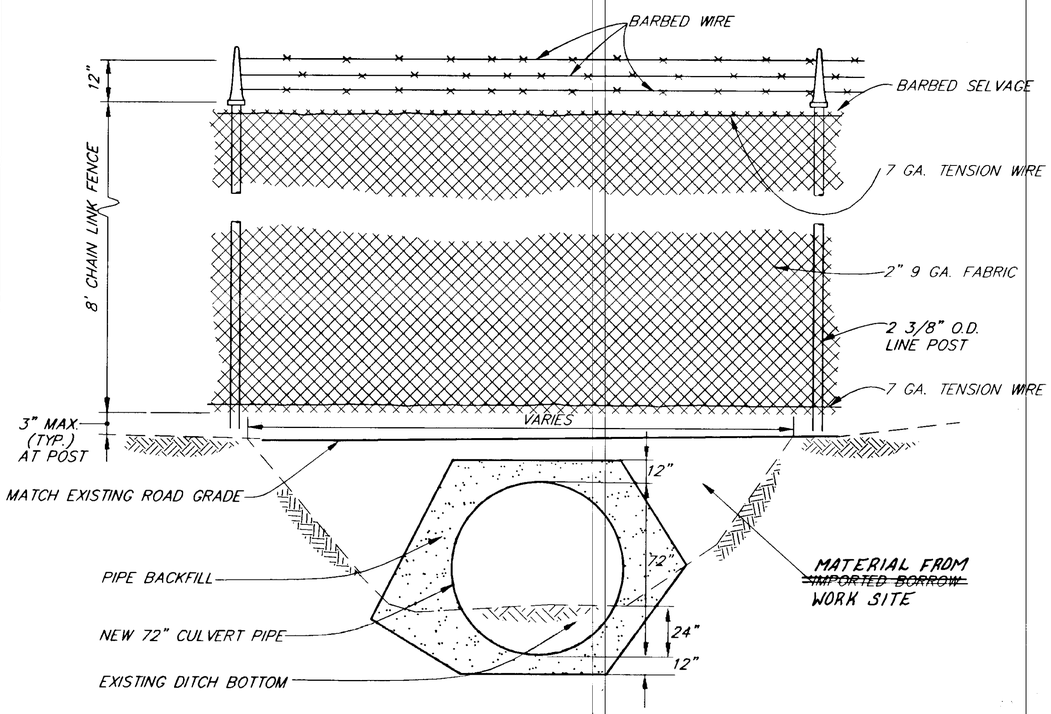

72" CULVERT INSTALLATION

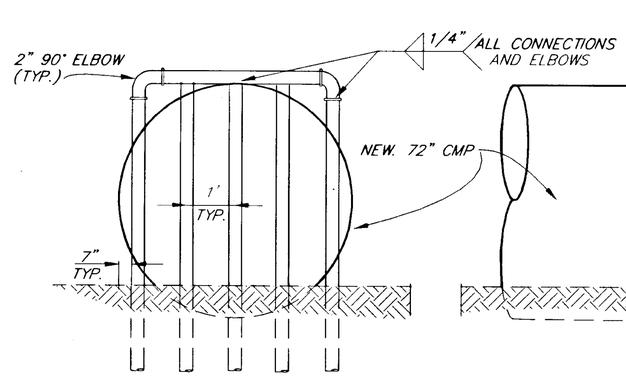

SECTION A–A

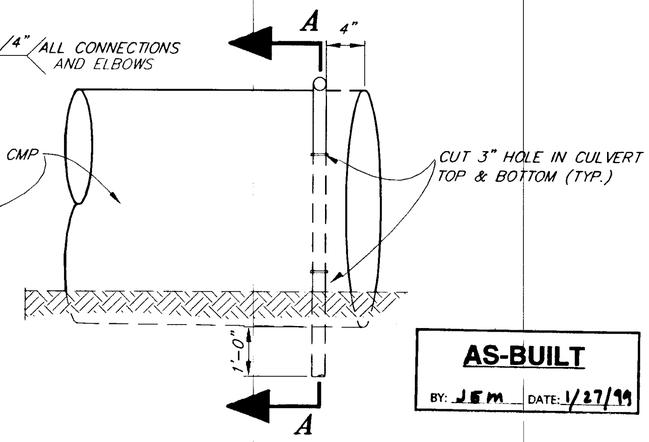

SECURITY GRATE DETAIL

AS-BUILT
BY: JEM DATE: 1/27/99

NOTES:

1. THE CONTRACTOR SHALL CONSTRUCT THE SECURITY GRATE UTILIZING 2" STEEL GALVANIZED PIPE.
2. THE CONTRACTOR WILL USE THE HOT STICK OR SPRAY METHOD FOR GALVANIZING ON ALL WELDS AND FIELD CUT HOLES.
3. SECURITY GRATE IS INCIDENTAL TO OTHER ITEMS OF WORK. SECURITY GRATE SHALL BE INSTALLED ON THE INLET OF THE CULVERT PIPE.

1/27/99

NOTE: DO NOT SCALE FROM THESE PLANS–USE DIMENSIONS

ENGINEER'S SEAL
STATE OF ALASKA 49th Duane F. Doerflinger CE-7567 REGISTERED PROFESSIONAL ENGINEER

PATH: Q:\GUS\72220\~~DR\ FENCE3a~~ PLANSET\& FENCE3A		
PLOT: P:\-LIB\-PLOT\PLOTF.PCP(24) OR PLOTH.PCP(48)		
BY:	DATE:	DESCRIPTION OF CHANGE:
JEM	1/27/99	AS-BUILT PER CORRECTIONS

RECORD OF REVISIONS

STATE OF ALASKA
DEPARTMENT OF TRANSPORTATION AND PUBLIC FACILITIES
SOUTHEAST REGION

GUSTAVUS — ALASKA

GUSTAVUS AIRPORT SECURITY FENCE
AIP. NO. 3-02-0111-06-98 ~ PROJECT NO. 72220

72" CULVERT PLAN & DETAILS

DESIGNED BY: P JONES	PROJECT NO. 72220
DRAWN BY: CSA/B.A.	DATE: 1998
CHECKED BY: D.F.DOERFLINGER	SHEET 12 OF 13

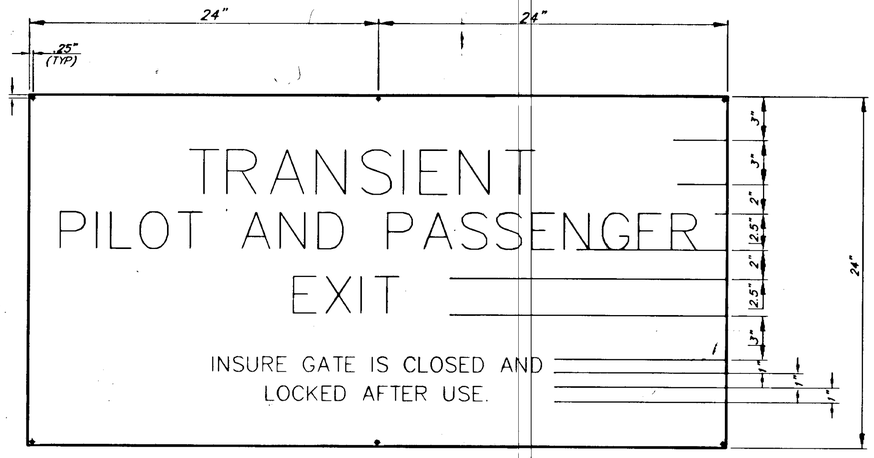

INFORMATIONAL SIGN ✓
SIGN NO. 1

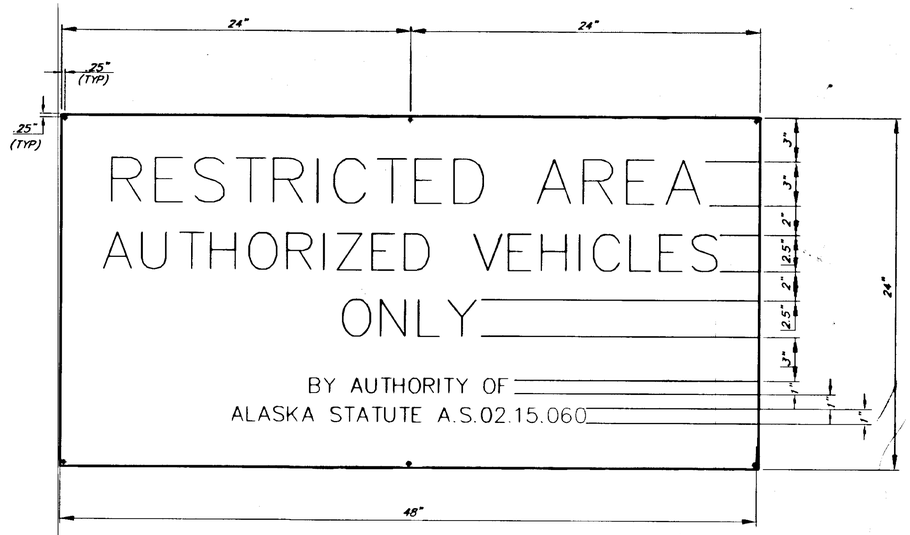

GATE SIGN – VEHICLES ✓
SIGN NO. 3

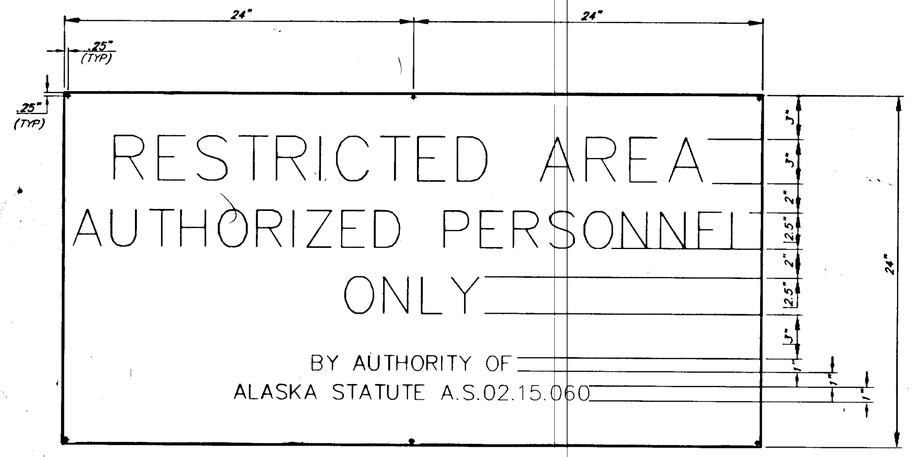

GATE SIGN – PERSONNEL ✓
SIGN NO. 2

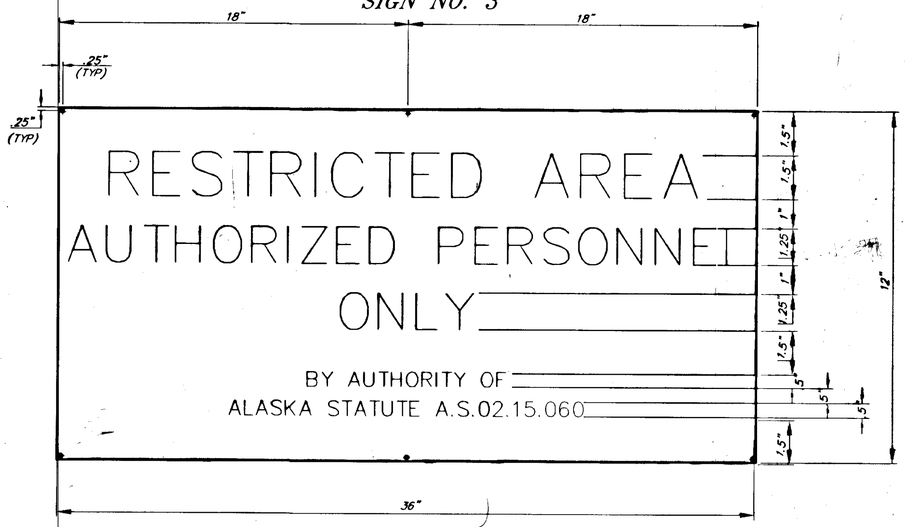

BOUNDARY SIGN PLATE DETAIL ✓
SIGN NO. 4

NOTES: ✓

1. SIGN PLATES SHALL HAVE RED REFLECTIVE SHEETING WITH WHITE LETTERING.
2. SIGN PLATES SHALL BE PLACED ON THE FENCE OR GATES 4" ABOVE THE GROUND. (MEASURED TO BOTTOM OF SIGN)
3. ALL SIGNS SHALL BE ATTACHED TO THE FENCE WITH 9 GAUGE WIRE.
4. THE "BOUNDARY" SIGN PLATES SHALL BE PLACED EVERY 300 FEET ALONG THE 8 FOOT CHAIN LINK FENCE.

SIGN SUMMARY

SIGN NO.	SIGN	NUMBER	SQ. FT. AREA	LOCATION
1	INFORMATIONAL	2 ✓	16 ✓	LOCATED BY PROJECT ENGINEER & AIRPORT SAFETY AND SECURITY OFFICER ✓
2	PERSONNEL	1 ✓	8 ✓	1 EACH ON THE PEDESTRIAN GATE ✓
3	VEHICLES	~~4~~ 8	~~32~~ = 64	2 EACH ON DOUBLE SWING GATE 4 GATES
4	BOUNDARY	79 ✓	237 ✓	EVERY 300' ON PERIMETER FENCE.
		TOTAL	~~293~~ 325	

1/27/99

AS-BUILT
BY: JEM DATE: 1/27/99

NOTE: DO NOT SCALE FROM THESE PLANS–USE DIMENSIONS

ENGINEER'S SEAL
STATE OF ALASKA 49th
Duane F. Doerflinger
CE-7567
REGISTERED PROFESSIONAL ENGINEER

PATH: Q:\GUS\72220\~~DR\-SIGDET~~ PLANSET\8 SIGDET		
PLOT: P:\-LIB\-PLOT\PLOTF.PCP(4) OR PLOTH.PCP(8)		
BY:	DATE:	DESCRIPTION OF CHANGE:
JEM	1/27/99	AS-BUILT PER CORRECTIONS
RECORD OF REVISIONS		

STATE OF ALASKA
DEPARTMENT OF TRANSPORTATION
AND PUBLIC FACILITIES
SOUTHEAST REGION

GUSTAVUS — GUSTAVUS AIRPORT SECURITY FENCE — ALASKA
AIP. NO. 3-02-0111-06-98 ~ PROJECT NO. 72220

SIGN DETAILS

DESIGNED BY: P JONES	PROJECT NO. 72220
DRAWN BY: CSA/B.A.	DATE: 1998
CHECKED BY: D.F.DOERFLINGER	SHEET 13 OF 13