NO.	DATE	REVISION

STATE	PROJECT DESIGNATION	YEAR	SHEET NO.	TOTAL SHEETS
ALASKA	0A24032/Z615970000	2021	A1	71
CDS ROUTE: 190000	MILEPOINT: 358.93 TO 363.59			

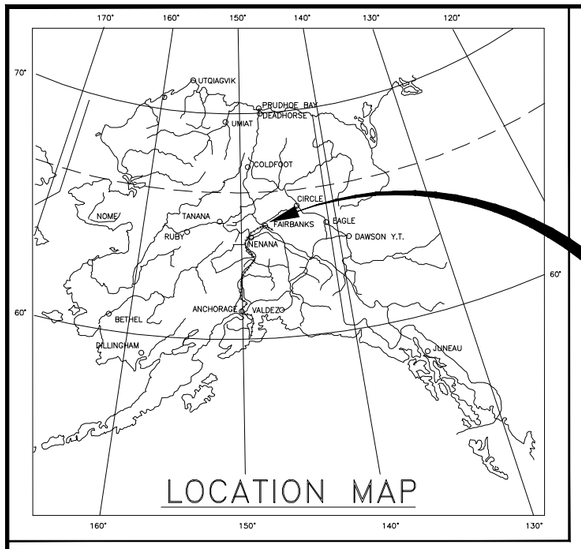

PROJECT LOCATION

STATE OF ALASKA
DEPARTMENT OF TRANSPORTATION
&
PUBLIC FACILITIES

PROPOSED HIGHWAY PROJECT

0A24032/Z615970000

RICHARDSON HIGHWAY MP 357–362 BICYCLE/PEDESTRIAN PATH

GRADING, DRAINAGE, PAVING, & BRIDGES

INDEX OF SHEETS

SHEET NO.	DESCRIPTION
A1	TITLE SHEET
A2	LEGEND
A3–A4	ALIGNMENT CONTROL PLAN
B1	TYPICAL SECTIONS
C1–C2	ESTIMATE OF QUANTITIES & GENERAL NOTES
D1	SUMMARY TABLES
E1–E3	MISCELLANEOUS DETAILS
F1–F17	PLAN & PROFILE SHEETS
H1	SIGNING SUMMARY
H2	SIGN DETAILS
N1–N14	BRIDGE PLANS
Q1–Q10	EROSION SEDIMENT CONTROL PLANS
T1	TRAFFIC CONTROL PLANS
V1–V16	STANDARD PLANS

THE FOLLOWING STANDARD PLANS APPLY TO THIS PROJECT:
D–01.02, D–04.22, D–06.10, D–09.00
E–09.00
F–01.04
S–00.12, S–01.02, S–05.02, S–30.05, S–31.02

PROJECT SUMMARY

WIDTH OF PAVEMENT	10 FT
LENGTH OF GRADING	4.2 MI
LENGTH OF PAVING	4.2 MI
LENGTH OF PROJECT	4.8 MI

COLLEEN M. ACKISS, P.E., PROJECT MANAGER
JAMES MCCURTAIN, P.E., DESIGN ENGINEER

STATE OF ALASKA
DEPARTMENT OF TRANSPORTATION
&
PUBLIC FACILITIES

APPROVED BY:

_____ DATE _____

Sarah E. Schacher, P.E.
Preconstruction Engineer, Northern Region

ACCEPTED FOR CONSTRUCTION:

_____ DATE _____

Joseph P. Kemp, P.E.
Acting Regional Director, Northern Region

Preliminary Plans

PLANS DEVELOPED BY: STATE OF ALASKA DEPARTMENT OF TRANSPORTATION & PUBLIC FACILITIES, NORTHERN REGION, 2301 PEGER ROAD, FAIRBANKS, AK 99709 (907)451-2200
C:\pw_workdir\den001\rk053776\d1598472\61597_A1-A1 Wed, Nov/10/21 09:50am

NO.	DATE	REVISION

STATE	PROJECT DESIGNATION	YEAR	SHEET NO.	TOTAL SHEETS
ALASKA	0A24033/Z607340000	2021	A2	A4

	RECOVERED	SET
BLM MONUMENT		
GLO MONUMENT		
USC&GS MONUMENT		
PRIMARY MONUMENT		
CENTERLINE MONUMENT IN CASING		
PRIMARY R.O.W. MONUMENT		
BEARING OBJECT		
MISCELLANEOUS MONUMENT		
LINE OF SIGHT MONUMENT		
CONCRETE R.O.W. MONUMENT		
BENCHMARK		BM
REBAR AND CAP		
REBAR		
IRON PIPE		
PK NAIL		
SPIKE		
HUB AND TACK		

CONSTRUCTION CENTERLINE	5+00
MISCELLANEOUS CENTERLINE	10+00
STATION EQUATION	"L"48+97.23 POT BK= "O"48+97.23 PC AHD
PROJECT RIGHT-OF-WAY LINE	R/W
EXISTING RIGHT-OF-WAY LINE	
EXISTING PROPERTY LINE	
CONTROLLED ACCESS LINE	C/A
UTILITY EASEMENT LINE	PUE
TEMPORARY EASEMENT LINE (TCP OR TCE)	TCP
ACCESS OR SECTION LINE EASEMENT	ACCESS EASEMENT
PROPOSED CUT SLOPE LIMIT	
PROPOSED FILL SLOPE LIMIT	
SECTION LINE	
1/4 SECTION LINE	
1/16 SECTION LINE	
TOWNSHIP & RANGE LINE	T. 2 N. / T. 1 N. / T. 1 E. / T. 2 E.

	EXISTING	PROPOSED
SANITARY SEWER (FLOW DIRECTION →)	SS	SS
FUEL LINE	O	O
GAS LINE	G	G
WATER LINE	W	W
METER, VALVE, FIRE HYDRANT	W	W
EXISTING STORM DRAIN (FLOW DIRECTION →)	SD	
PROPOSED STORM DRAIN	S-10, P-10, S-11, P-11, MH	
FIBER OPTIC LINE	FO	
DIRECT BURIAL TELEPHONE CABLE	T	T
DIRECT BURIAL ELECTRIC CABLE	E	E
ELECTRIC LINE (OVERHEAD)		
POWER POLE LINE		
JOINT USE POWER & TELEPHONE		
TELEPHONE POLE LINE		
POLE ANCHOR		
STUB POLE (POWER OR TELEPHONE)		
TELEPHONE DUCT	T	T
TELEPHONE PEDESTAL		
BURIED CABLE MARKER		
PIPELINE MARKER OR VALVE		
CATCH BASIN OR DROP INLET		
MANHOLE	MH	MH
SANITARY SEWER CLEAN OUT		
WELL OR MONITORING WELL	W	
SEPTIC PIPE	S, MW	
FUEL TANK FILL PIPE/VENT	P	
SATELLITE DISH	SAT. DISH	

	EXISTING	PROPOSED
ROADWAY/PAVEMENT EDGE		
PATHWAY EDGE		
OVERCROSSING PROJECT		
PATHWAY PROJECT		
FENCE	X	X
CURB AND GUTTER		
DETECTABLE WARNINGS		
GUARDRAIL		
MSE WALL/CONCRETE BARRIER		
CULVERT PIPE		
SIGN		
MAILBOX	MB	MB
RAILROAD TRACKS		
RAILROAD DEVICES	CROSS-BUCK, FLASHING LIGHT	CANTILEVER, SWITCH
TREE LINE		
WATER BOUNDARY		
ORDINARY HIGH WATER LINE		
FLOW CENTERLINE		
FLOW DIRECTION		
WETLANDS		
EXISTING BUILDINGS	H	H = HOUSE G = GARAGE M = MERCHANT/STORE B = BARN S = SHED P = PRIVY SS = SERVICE STATION W = WAREHOUSE
POST OR BOLLARD		
TEST HOLE	TH	
CONIFER TREE		
DECIDUOUS TREE		
GRAVE		
THERMOSIPHON		
PARKING METER		
VEHICLE PLUG-IN		
DELINEATOR/GUIDE MARKER		

	EXISTING	PROPOSED
JUNCTION BOX, TYPE IA		5
JUNCTION BOX, TYPE II		6
JUNCTION BOX, TYPE III		3
SIGNAL FACE, VEHICULAR	42	42
SIGNAL FACE, BACKPLATE	42	42
SIGNAL FACE, LEFT TURN, BACKPLATE	43	43
SIGNAL FACE, PEDESTRIAN		
LOOP DETECTOR	33	73
VIDEO DETECTOR	2	2
RADAR DETECTOR	4	4A
OPTICOM DETECTOR	1	1
PEDESTRIAN PUSH BUTTON	1	1
SIGNAL POST W/O MAST ARM		1
SIGNAL POLE W/MAST ARM		4
SIGNAL CONTROLLER		
LOAD CENTER		
LUMINAIRE		2
RIGID METAL CONDUIT		

LEGEND

PRELIMINARY
NOVEMBER
2021

Preliminary Plans

PLANS DEVELOPED BY: STATE OF ALASKA DEPARTMENT OF TRANSPORTATION & PUBLIC FACILITIES, NORTHERN REGION, 2301 PEGER ROAD, FAIRBANKS, AK 99709 (907)451-2200
C:\pw_workdir\den001\rk053776\d1598472\61597_A2-A2 Thu, Nov/04/21 09:26pm

NO.	DATE	REVISION

STATE	PROJECT DESIGNATION	YEAR	SHEET NO.	TOTAL SHEETS
ALASKA	0A24033/Z607340000	2021	A3	A4

NOTES:

1. SEE SHEET A4 FOR ALIGNMENT CONTROL TABLES.

Preliminary Plans

ALIGNMENT CONTROL PLAN

PRELIMINARY
NOVEMBER
2021

PLANS DEVELOPED BY: STATE OF ALASKA DEPARTMENT OF TRANSPORTATION & PUBLIC FACILITIES, NORTHERN REGION, 2301 PEGER ROAD, FAIRBANKS, AK 99709 (907)451-2200
C:\pw_workdir\den001\rk053776\d1598472\61597_A3-A3 Thu, Nov/04/21 09:27pm

NO.	DATE	REVISION

STATE	PROJECT DESIGNATION	YEAR	SHEET NO.	TOTAL SHEETS
ALASKA	0A24033/Z607340000	2021	A4	A4

NOTES:

1. SEE RECORD OF SURVEY PLAT #2015-77-F.R.D. FOR BASIS CONTROL AND BEARINGS.

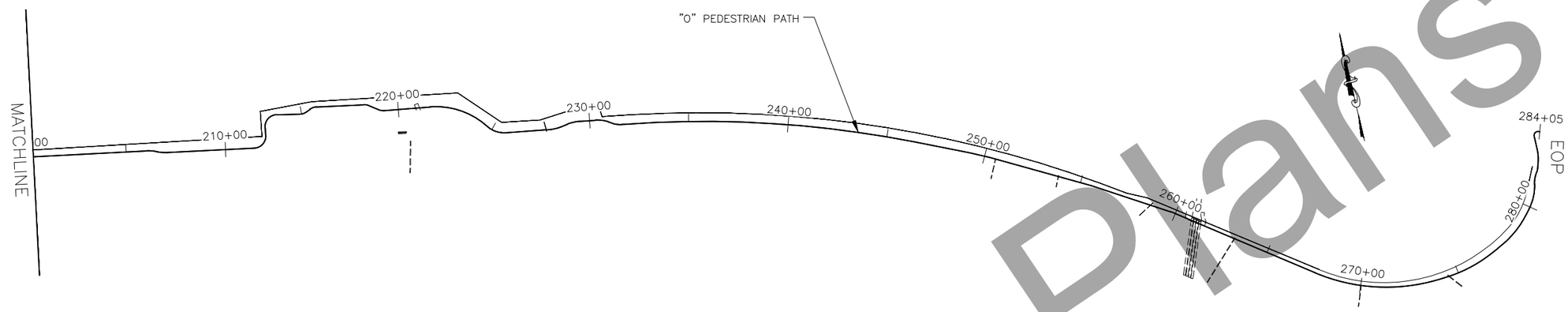

ALIGNMENT CONTROL TABLE

POINT #	DESCRIPTION	ALIGNMENT	STATION	NORTHING	EASTING
1	PI	"O"	24+23.42	1374238.6412	3961714.4677
2	PC	"O"	37+17.95	1374197.1592	3960420.6110
3	PT	"O"	40+45.40	1374262.4185	3960102.7840
4	PC	"O"	43+12.59	1374375.5199	3959860.7096
5	PRC	"O"	50+51.49	1374309.5578	3959159.1151
6	PCC	"O"	52+54.92	1374236.7334	3958971.5128
7	PCC	"O"	52+80.73	1374237.7743	3958945.8283
8	PT	"O"	60+28.05	1374624.3519	3958325.0802
9	PC	"O"	61+69.46	1374736.5986	3958239.0695
10	PT	"O"	62+32.68	1374796.4530	3958231.4295
11	PC	"O"	67+41.28	1375264.9145	3958429.4465
12	PT	"O"	74+89.17	1375961.3785	3958306.0299
13	PC	"O"	76+08.56	1376048.6833	3958224.5852
14	PT	"O"	80+73.43	1376468.9988	3958050.2888
15	PC	"O"	90+05.76	1377400.7446	3958017.1900
16	PRC	"O"	90+41.81	1377435.5604	3958008.8259
17	PT	"O"	90+80.13	1377472.5826	3957999.9879
18	PC	"O"	97+19.96	1378112.0748	3957979.1060
19	PT	"O"	97+87.71	1378179.2531	3957986.0392
20	PC	"O"	98+11.95	1378202.8097	3957991.7621
21	PT	"O"	98+79.80	1378270.0985	3957998.6917
22	PC	"O"	109+25.86	1379315.5818	3957964.0893
23	PT	"O"	111+12.90	1379500.8318	3957940.3495
24	PC	"O"	116+35.30	1380010.4320	3957825.4156
25	PT	"O"	117+73.16	1380141.0709	3957782.0799
26	PC	"O"	120+62.47	1380405.3761	3957664.4377
27	PT	"O"	121+19.36	1380456.8054	3957640.1298
28	PC	"O"	132+17.61	1381438.8045	3957148.3501
29	PT	"O"	132+55.02	1381468.3832	3957125.8017
30	PC	"O"	132+69.16	1381477.8367	3957115.2891
31	PT	"O"	133+06.57	1381507.4155	3957092.7407
32	PC	"O"	136+54.74	1381818.7303	3956936.8360
33	PT	"O"	136+92.15	1381854.5015	3956926.6567
34	PC	"O"	137+06.30	1381868.5866	3956925.3829
35	PT	"O"	137+43.70	1381904.3562	3956915.2044
36	PC	"O"	147+27.64	1382784.1420	3956474.6313
37	PT	"O"	151+20.85	1383150.7519	3956334.2399
38	PC	"O"	156+27.60	1383639.5231	3956200.4569

ALIGNMENT CONTROL TABLE

POINT #	DESCRIPTION	ALIGNMENT	STATION	NORTHING	EASTING
39	PT	"O"	157+25.29	1383734.8594	3956179.2816
40	PC	"O"	174+30.98	1385415.9666	3955890.7820
41	PT	"O"	174+79.56	1385464.0341	3955883.7210
42	PC	"O"	180+25.12	1386005.5535	3955817.4606
43	PT	"O"	181+69.98	1386148.8618	3955796.4048
44	PC	"O"	188+09.66	1386779.3176	3955688.1765
45	PT	"O"	188+50.90	1386816.4229	3955701.5302
46	PC	"O"	188+65.04	1386825.6421	3955712.2586
47	PT	"O"	188+96.05	1386853.5441	3955722.2613
48	PC	"O"	189+71.95	1386928.3251	3955709.2335
49	PRC	"O"	190+31.03	1386976.9005	3955678.3488
50	PT	"O"	190+94.23	1387028.8963	3955645.3736
51	PC	"O"	198+32.84	1387756.8381	3955520.2884
52	PT	"O"	198+99.96	1387823.5248	3955521.7277
53	PC	"O"	199+08.76	1387832.1331	3955523.5924
54	PT	"O"	199+77.23	1387900.1577	3955524.7964
55	PC	"O"	206+03.44	1388516.4780	3955413.9599
56	PT	"O"	206+49.23	1388560.2314	3955400.7881
57	PC	"O"	206+60.52	1388570.5924	3955396.3230
58	PT	"O"	207+06.31	1388614.3458	3955383.1512
59	PC	"O"	211+45.19	1389046.3012	3955305.4701
60	PT	"O"	212+40.70	1389116.1827	3955355.1387
61	PC	"O"	212+78.44	1389122.0861	3955392.4196
62	PT	"O"	213+75.33	1389193.3332	3955441.8262
63	PC	"O"	214+91.57	1389307.2249	3955418.6074
64	PT	"O"	215+28.18	1389343.0808	3955422.3508
65	PC	"O"	215+49.55	1389362.6866	3955430.8525
66	PT	"O"	215+85.14	1389397.5363	3955434.7921
67	PC	"O"	218+22.05	1389630.4376	3955391.4418
68	PT	"O"	218+47.39	1389653.6563	3955381.7549
69	PC	"O"	219+02.29	1389698.7647	3955350.4645
70	PT	"O"	219+29.64	1389723.9579	3955340.4442
71	PC	"O"	221+60.79	1389952.4929	3955305.7525
72	PT	"O"	224+51.65	1390197.4083	3955162.1339
73	PC	"O"	224+78.52	1390213.8958	3955140.9219
74	PT	"O"	225+72.48	1390292.8753	3955094.1975
75	PC	"O"	227+89.73	1390507.4108	3955059.9343
76	PT	"O"	228+51.31	1390568.7436	3955059.6626

ALIGNMENT CONTROL TABLE

POINT #	DESCRIPTION	ALIGNMENT	STATION	NORTHING	EASTING
77	PC	"O"	228+88.24	1390605.2608	3955065.1633
78	PT	"O"	229+49.82	1390666.5936	3955064.8916
79	PC	"O"	230+28.36	1390744.1562	3955052.5042
80	PT	"O"	230+96.48	1390807.6730	3955029.1026
81	PC	"O"	231+16.39	1390824.6750	3955018.7340
82	PT	"O"	231+65.05	1390870.0442	3955002.0186
83	PC	"O"	231+89.93	1390894.6108	3954998.0950
84	PT	"O"	246+42.95	1392282.7245	3954583.1618
85	PC	"O"	249+21.09	1392536.3996	3954469.0984
86	PT	"O"	250+28.26	1392632.3635	3954421.4538
87	PI	"O"	255+55.12	1393094.9485	3954169.2796
88	PC	"O"	259+73.89	1393452.7240	3953951.6425
89	PT	"O"	259+95.06	1393470.3492	3953939.9126
90	PI	"O"	262+43.39	1393671.3103	3953794.0304
91	PC	"O"	267+62.79	1394091.6340	3953488.9080
92	PT	"O"	273+87.01	1394678.6943	3953315.0486
93	PC	"O"	274+24.54	1394716.1791	3953317.0020
94	CS	"O"	276+81.43	1394964.3547	3953377.3372
95	SS	"O"	277+32.10	1395009.9901	3953399.3492
96	SC	"O"	278+12.60	1395080.8853	3953437.4019
97	PT	"O"	279+49.53	1395184.0927	3953526.5314
98	PC	"O"	279+88.52	1395209.2277	3953556.3364
99	PRC	"O"	281+17.45	1395264.7393	3953671.2121
100	PRC	"O"	281+79.43	1395289.0590	3953727.7413
101	PT	"O"	281+97.19	1395296.9936	3953743.5634
102	PC	"O"	282+26.06	1395305.9864	3953770.9946
103	PT	"O"	282+97.27	1395317.1825	3953841.0169
104	PC	"O"	283+60.36	1395317.2020	3953904.1040
105	PT	"O"	283+99.05	1395344.0913	3953923.5765

ALIGNMENT GUIDE

"O" SEPARATED PATH

ALIGNMENT CONTROL PLAN AND TABLE

PRELIMINARY
NOVEMBER
2021

Preliminary Plans

PLANS DEVELOPED BY: STATE OF ALASKA DEPARTMENT OF TRANSPORTATION & PUBLIC FACILITIES, NORTHERN REGION, 2301 PEGER ROAD, FAIRBANKS, AK 99709 (907)451-2200
C:\pw_workdir\den001\ch2mhill_jc065526\d1598472\61597_A4-A4 Thu, Nov/04/21 11:25pm

NO.	DATE	REVISION

STATE	PROJECT DESIGNATION	YEAR	SHEET NO.	TOTAL SHEETS
ALASKA	0A24033/Z607340000	2021	B1	B1

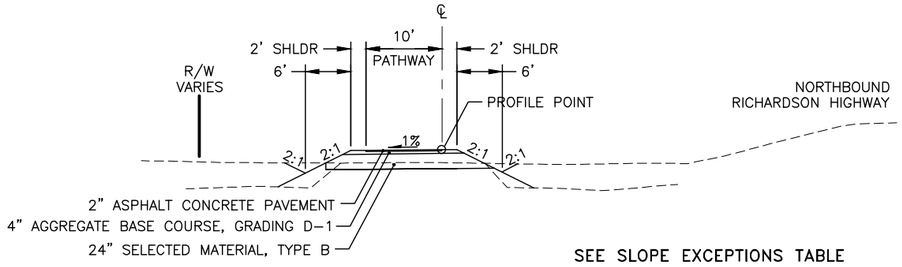

SEE SLOPE EXCEPTIONS TABLE

TYPICAL SECTION I

"0" 27+75 TO "0" 44+70
"0" 52+20 TO "0" 57+90
"0" 81+45 TO "0" 147+27
"0" 182+11 TO "0" 182+78
"0" 195+33 TO "0" 213+14
"0" 226+85 TO "0" 242+63
"0" 243+17 TO "0" 251+10
"0" 283+29 TO "0" 284+05

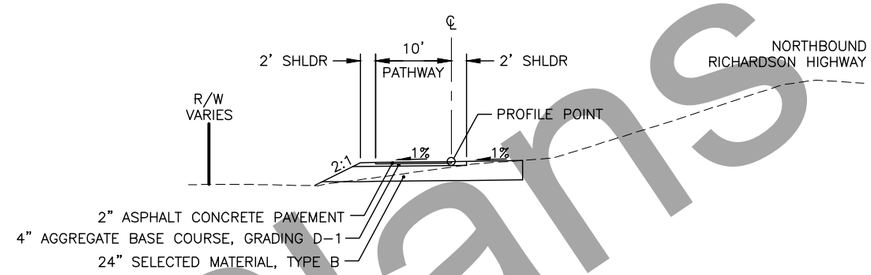

TYPICAL SECTION III

"0" 44+70 TO "0" 51+72
"0" 57+90 TO "0" 81+45
"0" 182+78 TO "0" 189+00
"0" 189+68 TO "0" 195+33
"0" 213+14 TO "0" 226+85
"0" 251+10 TO "0" 252+69
"0" 272+03 TO "0" 274+49

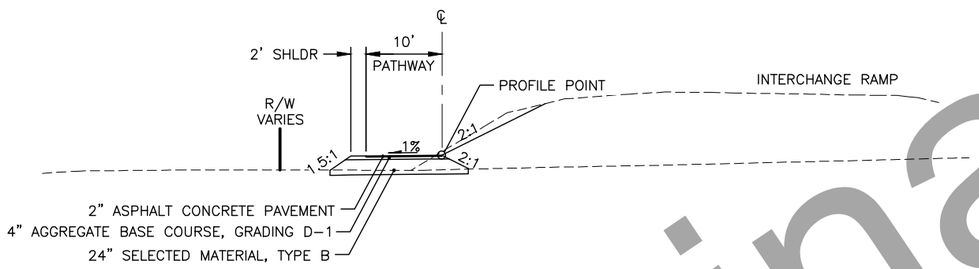

TYPICAL SECTION II

SEE SLOPE EXCEPTIONS TABLE

"0" 51+72 TO "0" 52+20
"0" 252+69 TO "0" 260+50
"0" 261+73 TO "0" 272+03

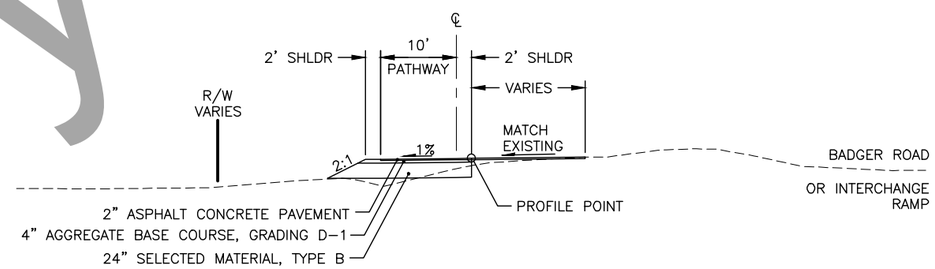

TYPICAL SECTION IV

"0" 274+49 TO "0" 283+29

TABLE OF SLOPE EXCEPTIONS

BEGIN STATION	END STATION	OFFSET	SLOPE	REMARKS
27+75	37+00	LT/RT	4:1	FORESLOPE, BACKSLOPE
51+72	52+20	RT	1.5:1	FORESLOPE
54+00	56+00	RT	4:1	FORESLOPE, BACKSLOPE
81+45	88+65	RT	4:1	FORESLOPE, BACKSLOPE
88+65	97+16	LT/RT	4:1	FORESLOPE, BACKSLOPE
118+22	132+18	LT/RT	4:1	FORESLOPE, BACKSLOPE
137+44	147+27	LT/RT	4:1	FORESLOPE, BACKSLOPE
195+33	213+14	RT	4:1	FORESLOPE, BACKSLOPE
226+85	242+63	LT/RT	4:1	FORESLOPE, BACKSLOPE
243+17	251+10	LT/RT	4:1	FORESLOPE, BACKSLOPE
252+69	254+83	RT	1.5:1	FORESLOPE
257+93	260+50	RT	1.5:1	FORESLOPE
261+73	263+33	RT	1.5:1	FORESLOPE
269+53	272+03	RT	1.5:1	FORESLOPE

NOTES:

1. TRANSITION SLOPES OVER A 25-FT LENGTH OR AS DIRECTED BY ENGINEER.

TYPICAL SECTIONS

PRELIMINARY
NOVEMBER
2021

Preliminary Plans

PLANS DEVELOPED BY: STATE OF ALASKA DEPARTMENT OF TRANSPORTATION & PUBLIC FACILITIES, NORTHERN REGION, 2301 PEGER ROAD, FAIRBANKS, AK 99709 (907)451-2200
C:\pw_workdir\den001\rk053776\d1598905\61597_B01_Typ-B1 Thu, Nov/04/21 06:19pm

NO.	DATE	REVISION

STATE	PROJECT DESIGNATION	YEAR	SHEET NO.	TOTAL SHEETS
ALASKA	0A24033/Z607340000	2021	C1	C2

ESTIMATE OF QUANTITIES

ITEM NO.	PAY ITEM	PAY UNIT	QUANTITY
201.0009.0000	CLEARING AND GRUBBING	LUMP SUM	ALL REQUIRED
202.0001.0000	REMOVAL OF STRUCTURES AND OBSTRUCTIONS	LUMP SUM	ALL REQUIRED
203.0003.0000	UNCLASSIFIED EXCAVATION	CUBIC YARD	12,100
203.0006.0000	BORROW	TON	64,000
205.0006.0000	STRUCTURAL FILL	CUBIC YARD	175
301.0001.00D1	AGGREGATE BASE COURSE, GRADING D-1	TON	12,200
401.2010.0000	HMA, SIDEWALKS AND PATHS	TON	2,950
501.0001.0000	CLASS A CONCRETE	LUMP SUM	ALL REQUIRED
503.0001.0000	REINFORCING STEEL	LUMP SUM	ALL REQUIRED
503.0002.0000	EPOXY-COATED REINFORCING STEEL	LUMP SUM	ALL REQUIRED
504.2000.0000	PREFABRICATED STEEL BRIDGE	LUMP SUM	ALL REQUIRED
505.0005.0001	FURNISH STRUCTURAL STEEL H-PILES, HP14X117	LINEAR FOOT	385
505.0006.0001	DRIVE STRUCTURAL STEEL H-PILES, HP14X117	EACH	4
507.0002.0000	PEDESTRIAN RAILING	LINEAR FOOT	48
603.0001.0018	CSP 18 INCH	LINEAR FOOT	208
603.0001.0024	CSP 24 INCH	LINEAR FOOT	98
603.0001.0036	CSP 36 INCH	LINEAR FOOT	27
603.0003.0018	END SECTION FOR CSP 18 INCH	EACH	16
603.0003.0024	END SECTION FOR CSP 24 INCH	EACH	7
603.0003.0036	END SECTION FOR CSP 36 INCH	EACH	2
606.2002.0000	STEEL BOLLARD, REMOVABLE	EACH	4
607.0003.0000	CHAIN LINK FENCE	LINEAR FOOT	600
608.2017.0000	DETECTABLE WARNING TILE	EACH	5
613.0002.0000	CULVERT MARKER POST	EACH	16
615.0001.0000	STANDARD SIGN	SQUARE FOOT	7
615.0002.0000	REMOVE AND RELOCATE SIGN	EACH	1
616.0002.0050	THAW PIPE 1/2 INCH DIAMETER	EACH	8
618.0002.0000	SEEDING	POUND	850
630.0002.0001	GEOTEXTILE, STABILIZATION, CLASS 1	SQUARE YARD	40,000
640.0001.0000	MOBILIZATION AND DEMOBILIZATION	LUMP SUM	ALL REQUIRED
641.0001.0000	EROSION, SEDIMENT AND POLLUTION CONTROL ADMINISTRATION	LUMP SUM	ALL REQUIRED
641.0003.0000	TEMPORARY EROSION, SEDIMENT AND POLLUTION CONTROL	LUMP SUM	ALL REQUIRED
641.0004.0000	TEMPORARY EROSION, SEDIMENT AND POLLUTION CONTROL ADDITIVES	CONTINGENT SUM	ALL REQUIRED
641.0006.0000	WITHHOLDING	CONTINGENT SUM	ALL REQUIRED
641.0007.0000	SWPPP MANAGER	LUMP SUM	ALL REQUIRED
642.0001.0000	CONSTRUCTION SURVEYING	LUMP SUM	ALL REQUIRED
642.0013.0000	THREE PERSON SURVEY PARTY	CONTINGENT SUM	ALL REQUIRED
643.0002.0000	TRAFFIC MAINTENANCE	LUMP SUM	ALL REQUIRED
643.0003.0000	PERMANENT CONSTRUCTION SIGNS	LUMP SUM	ALL REQUIRED
643.0023.0000	TRAFFIC PRICE ADJUSTMENT	CONTINGENT SUM	ALL REQUIRED
643.0025.0000	TRAFFIC CONTROL	CONTINGENT SUM	ALL REQUIRED
643.2005.0000	PUBLIC INFORMATION	LUMP SUM	ALL REQUIRED
644.0001.0000	FIELD OFFICE	LUMP SUM	ALL REQUIRED
644.0006.0000	VEHICLES	LUMP SUM	ALL REQUIRED
644.0015.0000	NUCLEAR TESTING EQUIPMENT STORAGE SHED	EACH	1
645.0001.0000	TRAINING PROGRAM, 2 TRAINEES/APPRENTICES	LABOR HOUR	1,000
646.0001.0000	CPM SCHEDULING	LUMP SUM	ALL REQUIRED

ESTIMATING FACTORS

ITEM NO.	DESCRIPTION	VALUES
203.0006.0000	BORROW	2 TONS/CY
401.2010.0000	HMA, SIDEWALKS AND PATHS	153 LBS/CF
301.0001.00D1	AGGREGATE BASE COURSE, GRADING D-1	2 TONS/CY
618.0002.0000	SEEDING	2 LBS / 1000 SF

ESTIMATED LUMP SUM QUANTITIES

ITEM NO.	DESCRIPTION	VALUES
201.0009.0000	CLEARING AND GRUBBING	15 ACRES
202.0001.0000	REMOVAL OF STRUCTURES AND OBSTRUCTIONS	
	CULVERT END SECTION	6 EACH
	FENCE	580 LINEAR FEET

Preliminary Plans

ESTIMATE OF QUANTITIES

PRELIMINARY
NOVEMBER
2021

PLANS DEVELOPED BY: STATE OF ALASKA DEPARTMENT OF TRANSPORTATION & PUBLIC FACILITIES, NORTHERN REGION, 2301 PEGER ROAD, FAIRBANKS, AK 99709 (907)451-2200
C:\pw_workdir\den001\rk053776\d1601201\61597_C1_EST-C1 Thu, Nov/04/21 03:20pm

NO.	DATE	REVISION

STATE	PROJECT DESIGNATION	YEAR	SHEET NO.	TOTAL SHEETS
ALASKA	0A24033/Z607340000	2021	C2	C2

GENERAL NOTES:

1. THE CONTRACTOR IS RESPONSIBLE FOR ACQUIRING AND OBTAINING APPROVAL FOR UNCLASSIFIED EXCAVATION DISPOSAL SITES.
2. EXCESS MATERIAL MAY NOT BE DISPOSED OF WITHIN THE RIGHT-OF-WAY UNLESS APPROVED BY THE ENGINEER.
3. BURIED AND OVERHEAD UTILITIES, TO THE EXTENT THEY ARE KNOWN, ARE SHOWN ON THE PLANS. BEFORE CONDUCTING ANY GROUND DISTURBING ACTIVITIES THE CONTRACTOR SHALL VERIFY UTILITY LOCATIONS BY CONTACTING THE DIGLINE OR THE UTILITY COMPANY. UTILITY COMPANIES WITHIN THE PROJECT LIMITS ARE LISTED IN SECTION 651 OF THE SPECIAL PROVISIONS.
4. PROTECT EXISTING FACILITIES UNLESS DESIGNATED FOR RELOCATION THROUGHOUT THE PROJECT.
5. TO MEET THE PROVISIONS OF THE CGP, SEEDING MAY REQUIRE MULTIPLE MOBILIZATIONS. ALL MOBILIZATIONS REQUIRED TO MEET THE CGP ARE SUBSIDIARY TO PAY ITEM 641.0003.0000.
6. CONTRACTOR SHALL RESTORE ALL DISTURBED AREAS OUTSIDE OF THE PROJECT LIMITS TO BETTER OR EQUAL TO EXISTING CONDITION AT THEIR EXPENSE, UNLESS OTHERWISE AGREED TO WITH DOT&PF.
7. CLEARING LIMITS SHALL BE 10-FT BEYOND THE SLOPE CATCH POINTS OR 5-FT INSIDE THE RIGHT-OF-WAY LINE, WHICHEVER IS LESS.

ABBREVIATIONS:

APPROX	APPROXIMATLY
℄	CENTERLINE
CS	CURVE-SPIRAL INTERSECTION
CY	CUBIC YARD
E	EAST, EASTING
ELE, ELEV	ELEVATION
FT. '	FOOT, FEET
H	HORIZONTAL
HW/D	HEADWATER TO DIAMETER RATIO
IE	INVERT ELEVATION
IN, "	INCH, INCHES
L	LENGTH OF CURVE
L.C.L	LEFT OF CENTERLINE
LT	LEFT
LVC	LENGTH OF VERTICAL CURVE
MAX	MAXIMUM
MIN	MINIMUM
N	NORTH, NORTHING
NO.	NUMBER
NTS	NOT TO SCALE
O.C.	ON CENTER
PC	POINT OF CURVATURE
POT	POINT ON TANGENT
PST	PERFORATED STEEL TUBE
PT	POINT OF TANGENCY
PVI	POINT OF VERTICAL INTERSECTION
R	RADIUS
R.C.L	RIGHT OF CENTERLINE
RT	RIGHT
S	SOUTH
SC	SPIRAL-CURVE INTERSECTION
SQ. FT.	SQUARE FOOT
SS	SPIRAL-SPIRAL INTERSECTION
STA	STATION
T	TANGENT
TCE	TEMPORARY CONSTRUCTION EASEMENT
TS	TUBE STEEL
TYP	TYPICAL
V	VERTICAL
VPC	VERTICAL POINT OF CURVATURE
VPI	VERTICAL POINT OF INTERSECTION
VPT	VERTICAL POINT OF TANGENCY
W	WEST
WWR	WELDED WIRE REINFORCEMENT
Ø	DIAMETER

Preliminary Plans

GENERAL NOTES

PRELIMINARY
NOVEMBER
2021

PLANS DEVELOPED BY: STATE OF ALASKA DEPARTMENT OF TRANSPORTATION & PUBLIC FACILITIES, NORTHERN REGION, 2301 PEGER ROAD, FAIRBANKS, AK 99709 (907)451-2200
C:\pw_workdir\den001\k053776\d1601201\61597_C2-C2 Thu, Nov/04/21 09:20pm

NO.	DATE	REVISION

STATE	PROJECT DESIGNATION	YEAR	SHEET NO.	TOTAL SHEETS
ALASKA	0A24033/Z607340000	2021	D1	D1

607.0003.0000 – CHAIN LINK FENCE

SHEET	FROM		TO		LENGTH (LF)	REMARKS
	STATION	OFFSET	STATION	OFFSET		
F13	"O" 228+64	17' LT	"O" 230+39	12' LT	181	
F15	"O" 255+87	21' LT	"O" 259+95	17' LT	409	
				TOTAL	590	
				ROUNDED TOTAL	600	

608.2017.0000 – DETECTABLE WARNING TILE

SHEET	STATION	OFFSET	QUANTITY (EA)	REMARKS
F10	"O" 188+96	0' LT	1	SOUTH GATE – WEST
F10	"O" 189+68	0' LT	1	SOUTH GATE – WEST
F14	"O" 242+82	0' LT	1	APPROACH – WEST
F14	"O" 243+17	0' LT	1	APPROACH – EAST
F17	"O" 284+05	LT/RT	1	INTERSECTION – NW
	TOTAL		5	

Preliminary Plans

SUMMARY SHEETS

PRELIMINARY
NOVEMBER
2021

PLANS DEVELOPED BY: STATE OF ALASKA DEPARTMENT OF TRANSPORTATION & PUBLIC FACILITIES, NORTHERN REGION, 2301 PEGER ROAD, FAIRBANKS, AK 99709 (907)451-2200
C:\pw_workdir\den001\rk053776\d1602421\61597_D1_SUM-D1 Thu, Nov/04/21 06:22pm

NO.	DATE	REVISION

STATE	PROJECT DESIGNATION	YEAR	SHEET NO.	TOTAL SHEETS
ALASKA	0A24033/Z607340000	2021	E1	E3

CULVERT SUMMARY

STATION	DIAMETER & PAY ITEM (LF)			INVERT		END SECTIONS (EA)			613.0002.0000 POSTS (EA)	616.0002.0050 1/2" DIA. THAW PIPE (EA)	REMARKS
	603.0001.0018	603.0001.0024	603.0001.0036								
	18"	24"	36"	IN	OUT	603.0003.0018	603.0003.0024	603.0003.0036			
"O" 43+29	31			440.9 W	440.7 E	2			2	1	
"O" 56+00	23			440.0 W	439.9 E	2			2	1	
"O" 61+03		10		440.2 W	440.1 E		1				EXTEND EXISTING PIPE, SEE NOTE 9.
"O" 62+34		26		440.1 S	440.0 N		1				EXTEND EXISTING PIPE, SEE NOTE 9.
"O" 81+45	22			442.0 S	441.8 N	2			2	1	
"O" 108+00	28			443.1 S	443.0 N	2			2	1	
"O" 117+69	26			443.9 S	443.7 N	2			2	1	
"O" 123+75	33			444.7 S	444.3 N	2			2	1	
"O" 182+76	22			448.0 S	447.8 N	2			2	1	
"O" 198+26	23			450.4 S	449.5 N	2			2	1	
"O" 227+78		3		450.8 S	450.7 N		1				EXTEND EXISTING PIPE, SEE NOTE 9.
"O" 250+57		23		455.8 S	455.7 N		1				EXTEND EXISTING PIPE, SEE NOTE 9.
"O" 253+83		11		456.1 S	456.0 N		1				EXTEND EXISTING PIPE, SEE NOTE 9.
"O" 258+77		2		456.4 S	456.4 N		1				EXTEND EXISTING PIPE, SEE NOTE 9.
"O" 263+24			12	455.4 S	455.4 N			1			EXTEND EXISTING PIPE, SEE NOTE 9.
"O" 270+02		23		456.1 S	455.0 N		1				EXTEND EXISTING PIPE, SEE NOTE 9.
"O" 274+41			15	454.7 S	454.7 N			1			EXTEND EXISTING PIPE, SEE NOTE 9.
TOTAL:	208	98	27			16	7	2	16	8	

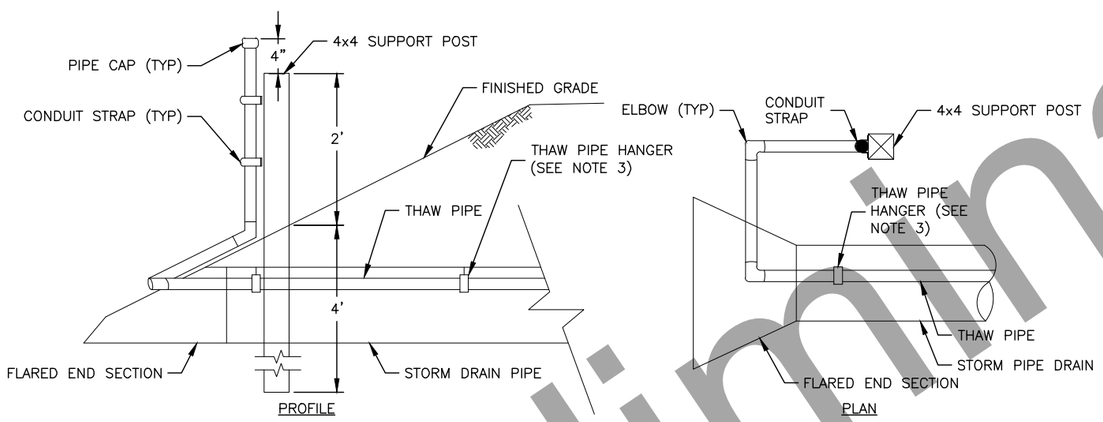

OPEN PIPE END CONDITION

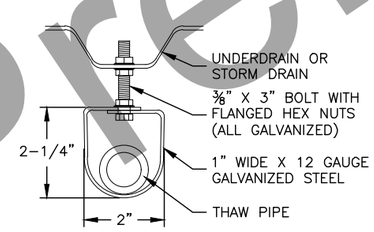

THAW PIPE HANGER DETAIL
NOT TO SCALE

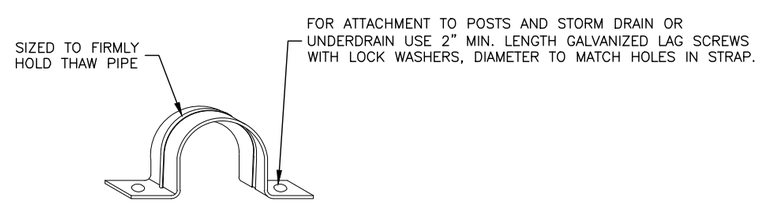

GALVANIZED RIGID CONDUIT STRAP DETAIL
NOT TO SCALE

NOTES:

1. THESE THAW PIPES ARE INTENDED FOR USE IN STEAM THAWING.
2. USE ½" I.D. ASTM A53 GALVANIZED PIPE AND FITTINGS TO MATCH.
3. FASTEN THE THAW PIPE TO THE TOP OF THE STORM DRAIN OR UNDERDRAIN WITH THAW PIPE HANGERS ON 4' CENTERS MAX. THE MAXIMUM DISTANCE FROM END OF PIPE TO FIRST PIPE HANGER IS 12 INCHES.
4. USE PRESSURE TREATED SUPPORT POSTS OF HEM-FIR, NO. 2 OR BETTER. USE AMMONIACAL COPPER ZINC ARSENATE (ACZA) OR CHROMATED COPPER ARSENATE (CCA) PRESERVATIVES ON SUPPORT POSTS. PRESSURE TREAT IN ACCORDANCE WITH AASHTO M133.
5. FASTEN THAW PIPE TO SUPPORT POSTS WITH GALVANIZED RIGID CONDUIT STRAPS AND 2" LONG GALVANIZED LAG SCREWS AT MAX. 12" CENTERS, IF MORE THAN ONE IS REQUIRED.
6. FASTEN THAW PIPE TO INLET OR MANHOLE WITH GALVANIZED RIGID CONDUIT STRAPS AND 2" LONG GALVANIZED HEX BOLTS AT 24" CENTERS, IF MORE THAN ONE IS REQUIRED. DRILL AND EPOXY GROUT BOLTS INTO SIDE OF INLET OR MANHOLE.
7. FILL THAW PIPE WITH A MINUS 50° FAHRENHEIT MIX OF RV ANTIFREEZE AND WATER, THEN CAP.
8. PROVIDE PIPE ELBOWS OR FIELD BENDS AT UNDERDRAIN ELBOWS AS NECESSARY TO FIT UNDERDRAIN ALIGNMENT.
9. USE CONCRETE COLLAR WHEN EXTENDING EXISTING PIPES. SEE CONCRETE COLLAR DETAIL ON SHEET E3. ITEM IS SUBSIDIARY TO 603.0001.00XX PAY ITEMS.

CULVERT SUMMARY AND DETAILS

PRELIMINARY
NOVEMBER
2021

Preliminary Plans

PLANS DEVELOPED BY: STATE OF ALASKA DEPARTMENT OF TRANSPORTATION & PUBLIC FACILITIES, NORTHERN REGION, 2301 PEGER ROAD, FAIRBANKS, AK 99709 (907)451-2200
C:\pw_workdir\den001\rk053776\d1602422\61597_E1_DETAILS-E1 Thu, Nov/04/21 06:38pm

NO.	DATE	REVISION

STATE	PROJECT DESIGNATION	YEAR	SHEET NO.	TOTAL SHEETS
ALASKA	0A24033/Z607340000	2021	E2	E3

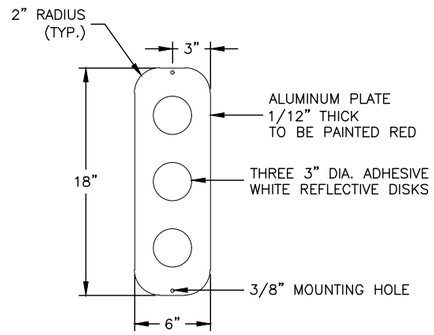

REFLECTOR PLATE

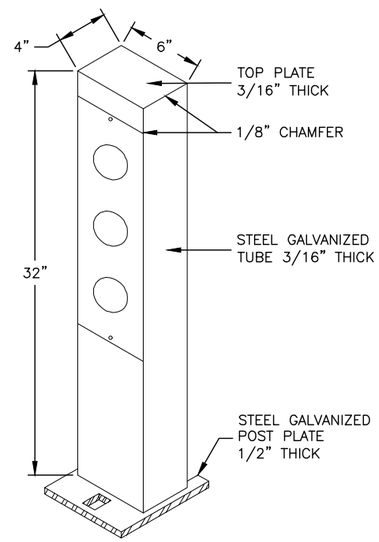

REFLECTOR PLATE AND STEEL POST

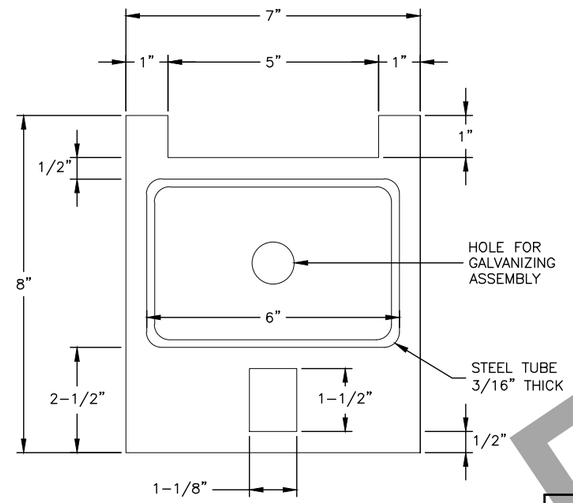

POST BASE PLATE

REMOVABLE STEEL BOLLARD NOTES:

1. ALL WELDS, UNLESS OTHERWISE SHOWN, SHALL BE 3/16-INCH FILLET ON ALL SIDES.
2. BOLLARDS SHALL BE CAST IN PLACE WITH TYPE "A" CONCRETE IN A 12-INCH DIAMETER BY 36-INCH DEEP CONCRETE FOUNDATION TUBE.
3. ALL EXTERIOR CORNERS SHALL BE ROUNDED TO PROVIDE A PROJECTION FREE SURFACE.
4. INSTALL REFLECTOR PLATES WITH ADHESIVE DISK REFLECTORS ON BOTH FRONT AND BACK OF POST.

606.2002.0000 – STEEL BOLLARD, REMOVEABLE

SHEET	STATION	OFFSET	QUANTITY (EA)	REMARKS
F15	"O" 260+38	3' LT	1	
F15	"O" 260+38	7' LT	1	
F15	"O" 261+85	3' LT	1	
F15	"O" 261+85	7' LT	1	
		TOTAL	4	

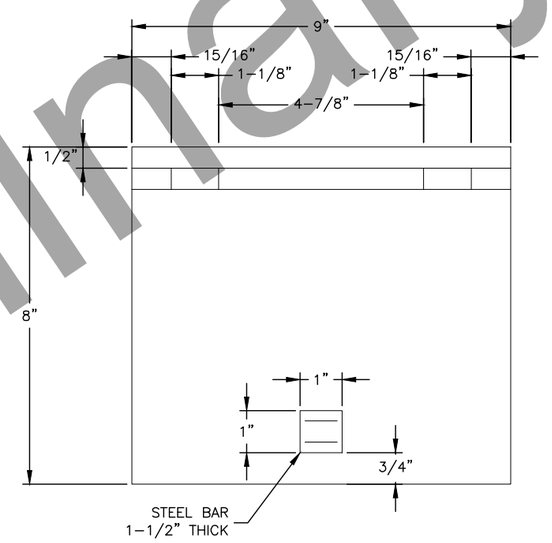

GROUND BASE PLATE

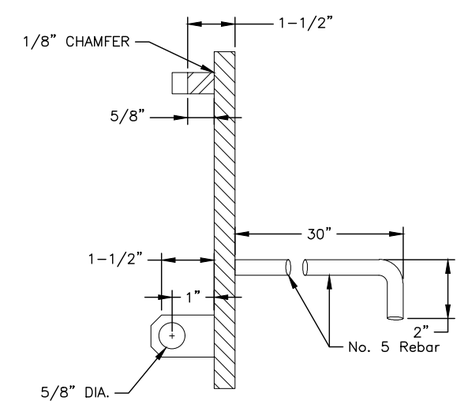

GROUND BASE PLATE (SIDE VIEW)

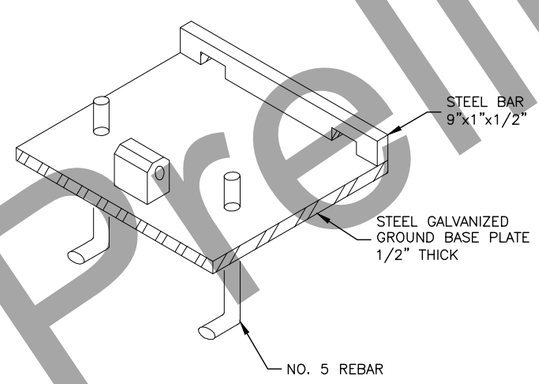

GROUND BASE PLATE (ISOMETRIC VIEW)

REMOVABLE STEEL BOLLARD

STEEL BOLLARD DETAILS

PRELIMINARY NOVEMBER 2021

Preliminary Plans

PLANS DEVELOPED BY: STATE OF ALASKA DEPARTMENT OF TRANSPORTATION & PUBLIC FACILITIES, NORTHERN REGION, 2301 PEGER ROAD, FAIRBANKS, AK 99709 (907)451-2200
C:\pw_workdir\den001\rk053776\d1602422\61597_E2_DETAILS-E2 Thu, Nov/04/21 06:38pm

NO.	DATE	REVISION

STATE	PROJECT DESIGNATION	YEAR	SHEET NO.	TOTAL SHEETS
ALASKA	0A24033/Z607340000	2021	E3	E3

NOTES:

1. WHERE PIPES OF DIFFERENT DIAMETERS AREJOINED WITH A CONCRETE COLLAR, 'L' AND 'T' SHALL BE THOSE OF THE LARGER PIPE. D=D1 OR D2, WHICHEVER IS GREATER.
2. FOR PIPE SIZE NOT LISTED USE NEXT SIZE LARGER.
3. OMIT REINFORCING ON PIPES 24" AND LESS IN DIAMETER AND ON ALL PIPES UP TO 72" DIAMETER WHERE ANGLE A IS LESS THAN 10^.
4. JOIN PIPES AT INVERTS WHERE THE SLOPE OF UPSTREAM PIPE IS LESS THAN THE SLOPE OF THE DOWNSTREAM PIPE, AND JOIN PIPES AT SOFFIT WITH A MITER JOINT WHERE THE SLOPE OF THE UPSTREAM PIPE IS GREATER THAN THE SLOPE OF THE DOWNSTREAM PIPE.
5. REINFORCEMENT SHALL BE PLACED 1 " CLEAR FROM OUTSIDE DIAMETER OF PIPE.
6. 10' Max COVER FOR 108" Dia PIPE COLLAR.

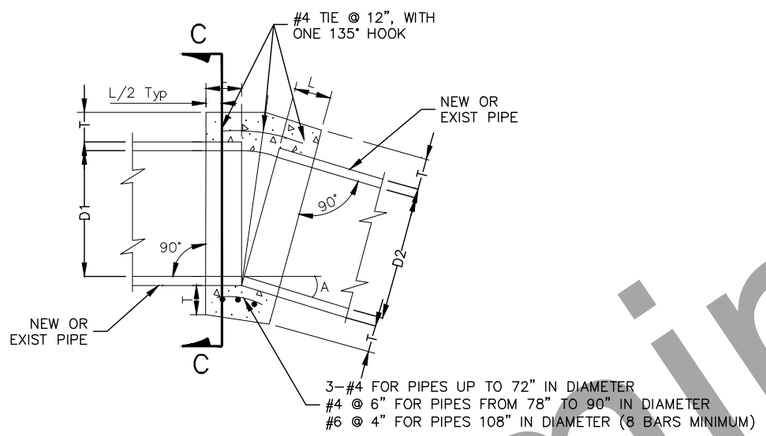

IDENTICAL PIPE DIAMETER
NOT TO SCALE

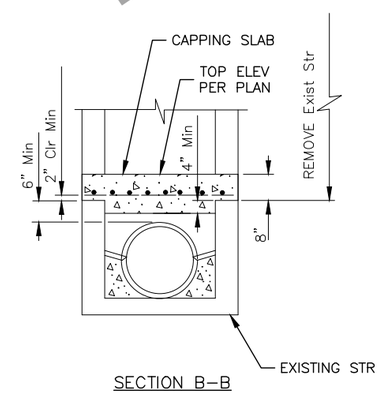

SECTION B-B

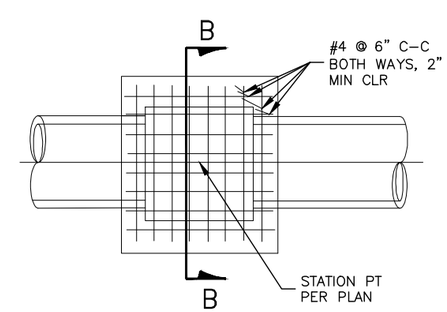

PLAN

CAP INLET
NOT TO SCALE

USE TABLE UNLESS OTHERWISE NOTED ON PLANS

D	L	T
12"	1.0'	6"
18"	1.0'	6"
24"	1.0'	6"
36"	1.5'	8"
48"	1.5'	10"
54"	1.5'	10"
60"	1.75'	11"
66"	1.75'	11"
72"	2.0'	12"
78"	2.0'	14"
84"	2.0'	14"
90"	2.0'	14"
108"	2.9'	18"

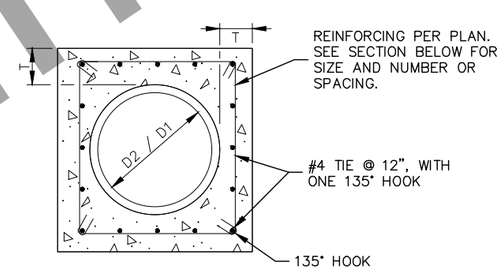

SECTION C-C

CONCRETE COLLAR
NOT TO SCALE

Preliminary Plans

CONCRETE COLLAR DETAIL

PRELIMINARY
NOVEMBER
2021

PLANS DEVELOPED BY: STATE OF ALASKA DEPARTMENT OF TRANSPORTATION & PUBLIC FACILITIES, NORTHERN REGION, 2301 PEGER ROAD, FAIRBANKS, AK 99709 (907)451-2200
C:\pw_workdir\den001\rk053776\d1602422\61597_E3_DETAILS-E3 Thu, Nov/04/21 06:38pm

NO.	DATE	REVISION

STATE	PROJECT DESIGNATION	YEAR	SHEET NO.	TOTAL SHEETS
ALASKA	0A24033/Z607340000	2021	F1	F17

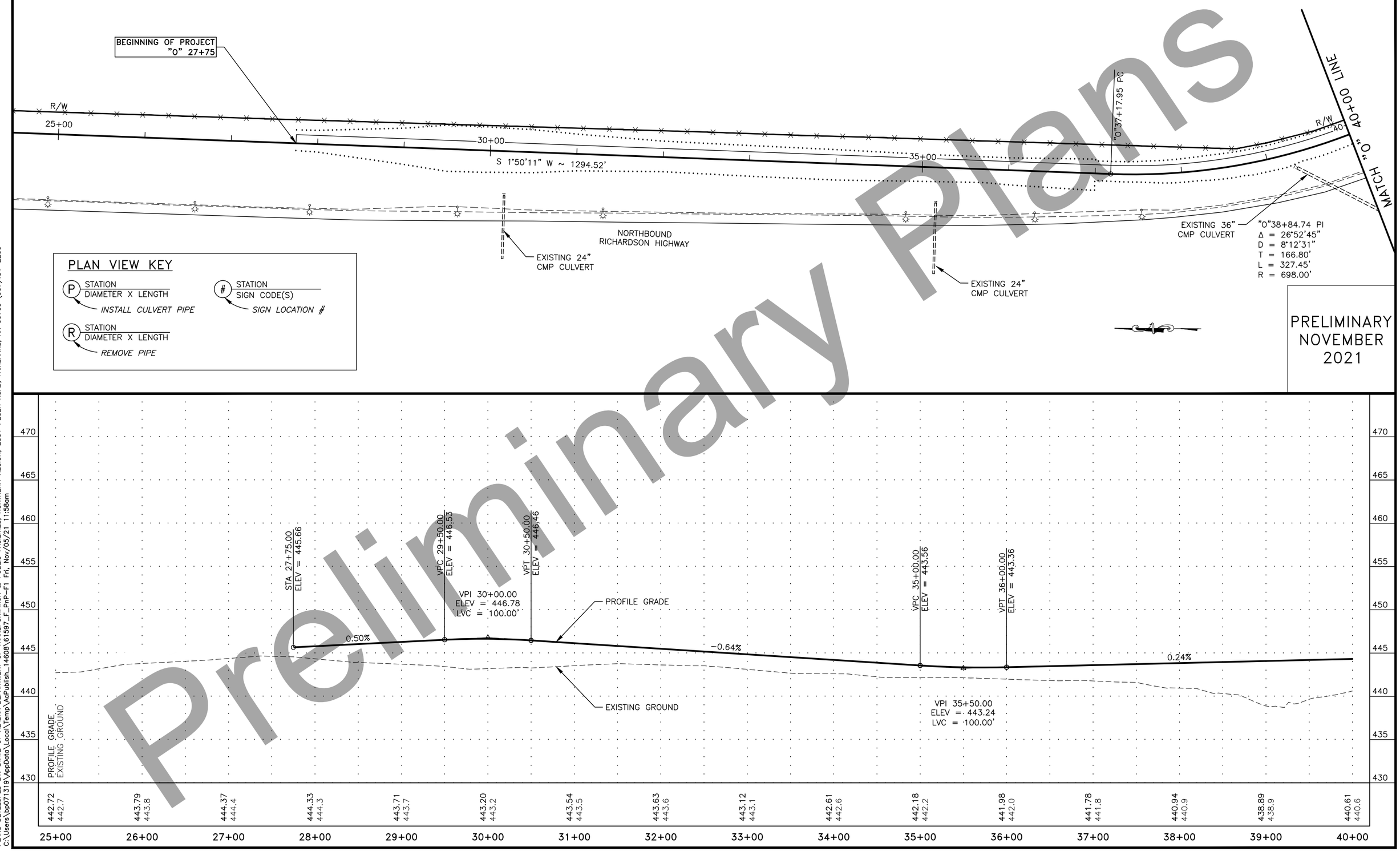

Preliminary Plans

PLANS DEVELOPED BY: STATE OF ALASKA DEPARTMENT OF TRANSPORTATION & PUBLIC FACILITIES, NORTHERN REGION, 2301 PEGER ROAD, FAIRBANKS, AK 99709 (907)451-2200
C:\Users\bp07319\AppData\Local\Temp\AcPublish_14608\61597_F_PnP-F1 Fri, Nov/05/21 11:58am

NO.	DATE	REVISION

STATE	PROJECT DESIGNATION	YEAR	SHEET NO.	TOTAL SHEETS
ALASKA	0A24033/Z607340000	2021	F2	F17

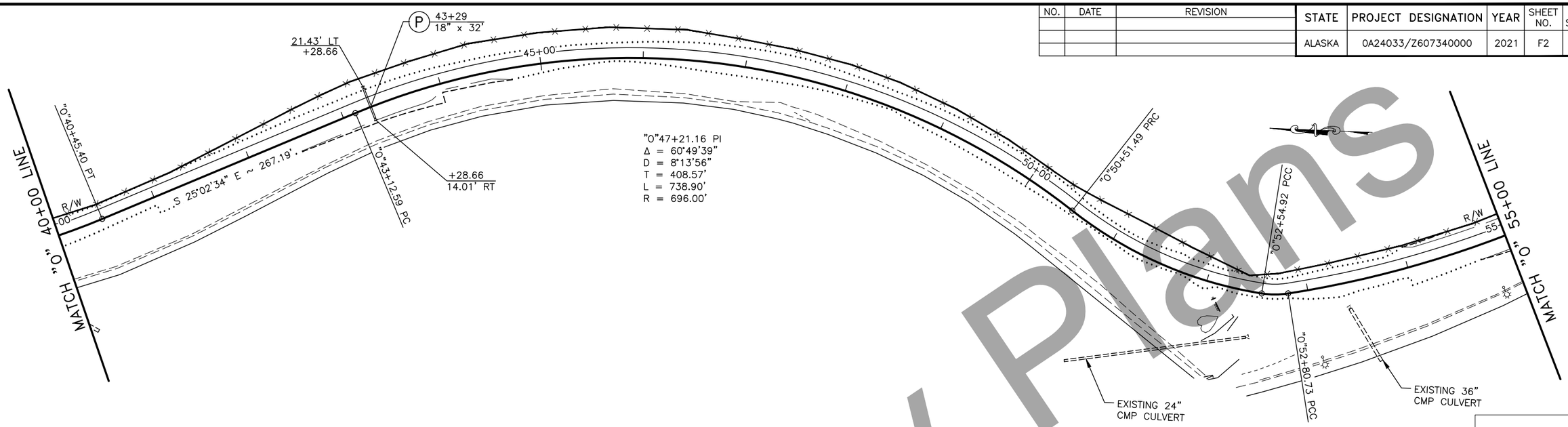

"0"51+55.46 PI
Δ = 29°08'19"
D = 14°19'26"
T = 103.96'
L = 203.43'
R = 400.00'

"0"52+67.93 PI
Δ = 17°56'02"
D = 69°28'55"
T = 13.01'
L = 25.81'
R = 82.46'

PRELIMINARY
NOVEMBER
2021

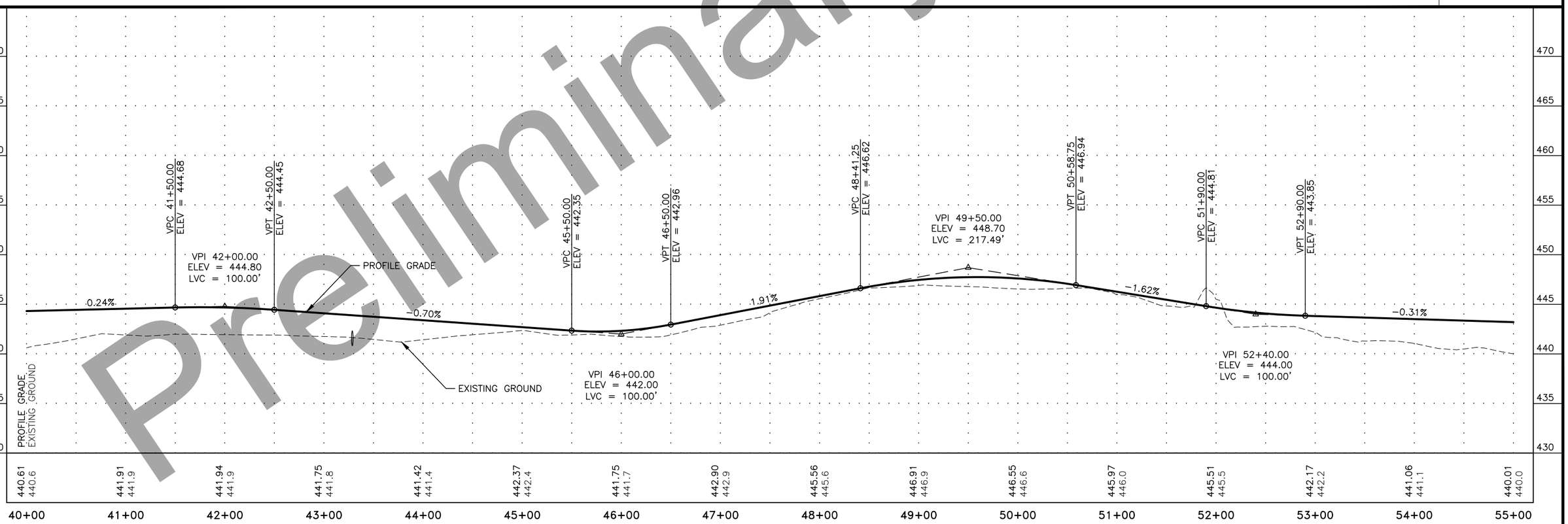

Preliminary Plans

PLANS DEVELOPED BY: STATE OF ALASKA DEPARTMENT OF TRANSPORTATION & PUBLIC FACILITIES, NORTHERN REGION, 2301 PEGER ROAD, FAIRBANKS, AK 99709 (907)451-2200
C:\Users\bp071319\AppData\Local\Temp\AcPublish_14608\61597_F_PnP-F2 Fri, Nov/05/21 11:58am

NO.	DATE	REVISION

STATE	PROJECT DESIGNATION	YEAR	SHEET NO.	TOTAL SHEETS
ALASKA	0A24033/Z607340000	2021	F3	F17

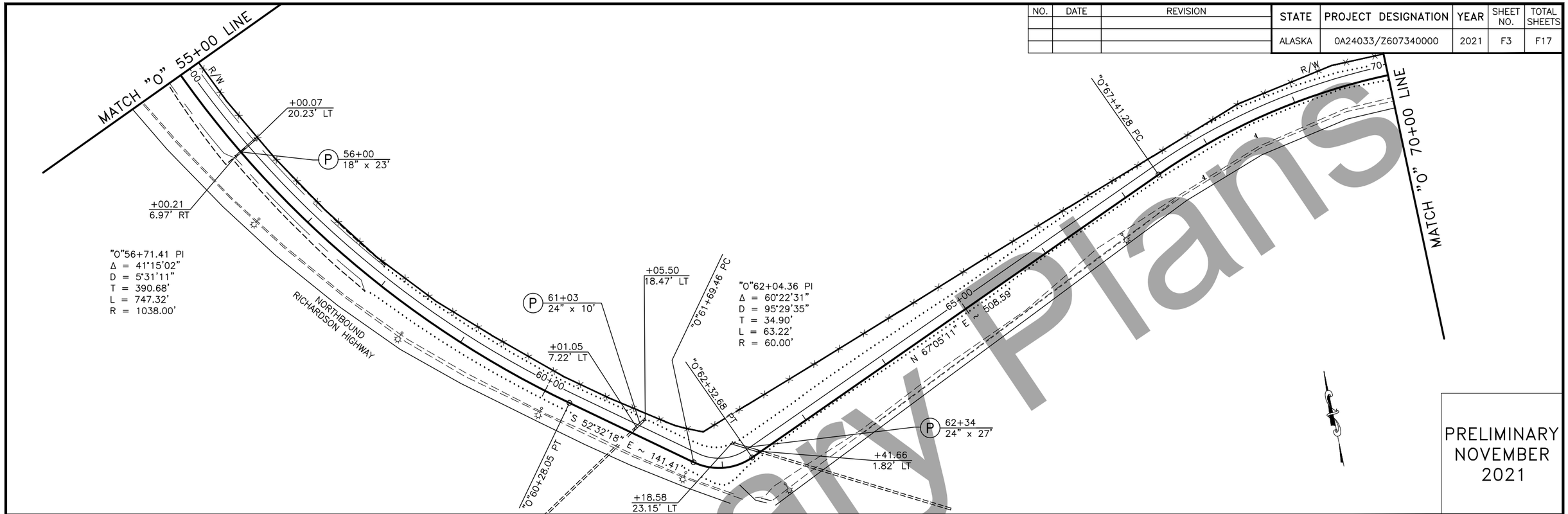

PRELIMINARY
NOVEMBER
2021

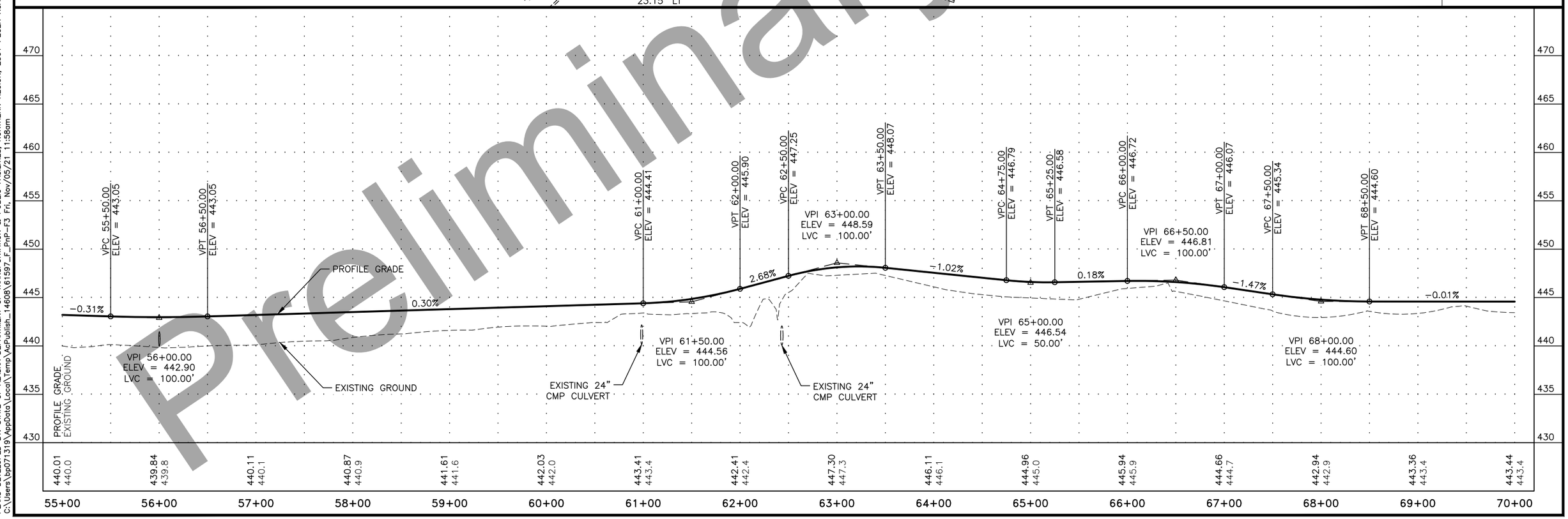

Preliminary Plans

PLANS DEVELOPED BY: STATE OF ALASKA DEPARTMENT OF TRANSPORTATION & PUBLIC FACILITIES, NORTHERN REGION, 2301 PEGER ROAD, FAIRBANKS, AK 99709 (907)451-2200
C:\Users\bp071319\AppData\Local\Temp\AcPublish_14608\61597_F_PnP-F3 Fri, Nov/05/21 11:58am

NO.	DATE	REVISION

STATE	PROJECT DESIGNATION	YEAR	SHEET NO.	TOTAL SHEETS
ALASKA	0A24033/Z607340000	2021	F4	F17

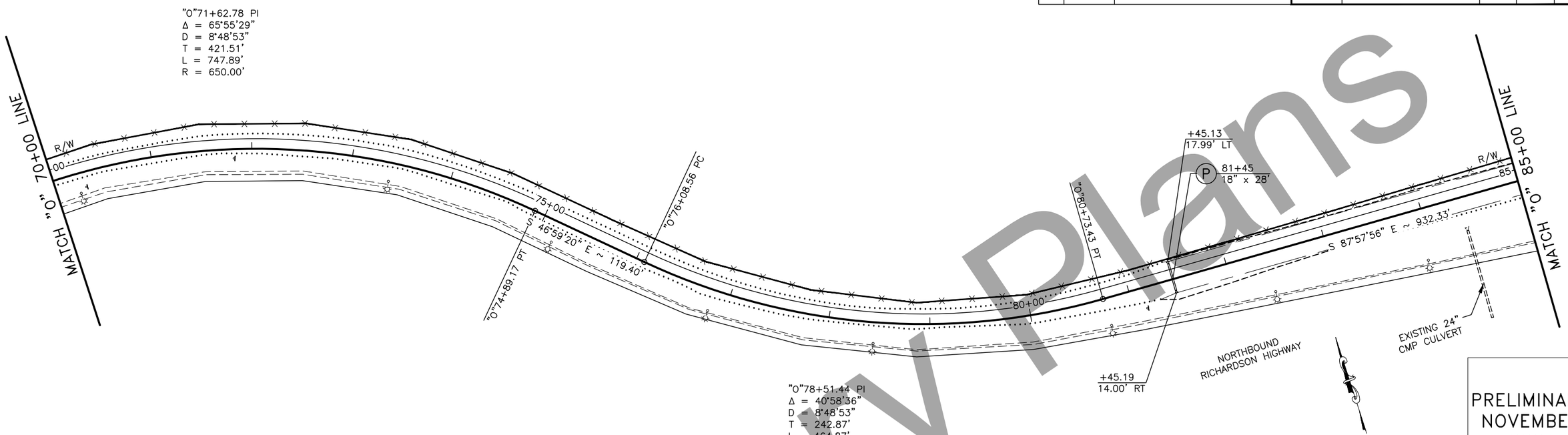

PRELIMINARY
NOVEMBER
2021

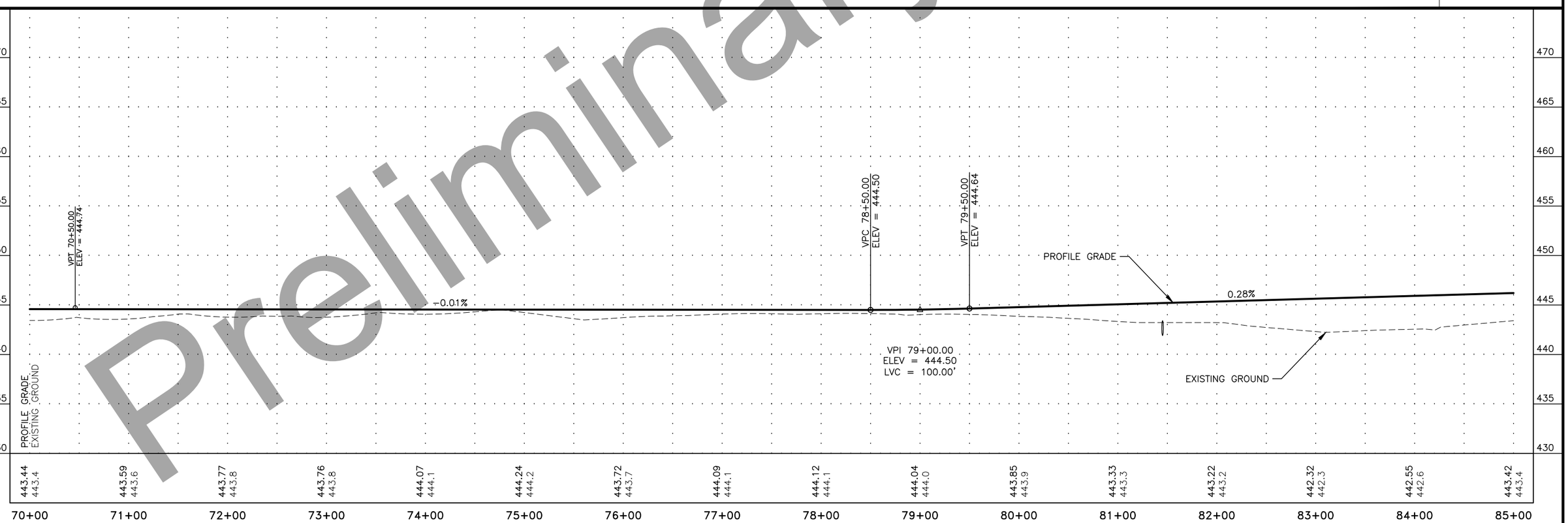

Preliminary Plans

PLANS DEVELOPED BY: STATE OF ALASKA DEPARTMENT OF TRANSPORTATION & PUBLIC FACILITIES, NORTHERN REGION, 2301 PEGER ROAD, FAIRBANKS, AK 99709 (907)451-2200
C:\Users\bp071319\AppData\Local\Temp\AcPublish_14608\61597_F_PnP-F4 Fri, Nov/05/21 11:58am

NO.	DATE	REVISION

STATE	PROJECT DESIGNATION	YEAR	SHEET NO.	TOTAL SHEETS
ALASKA	0A24033/Z607340000	2021	F5	F17

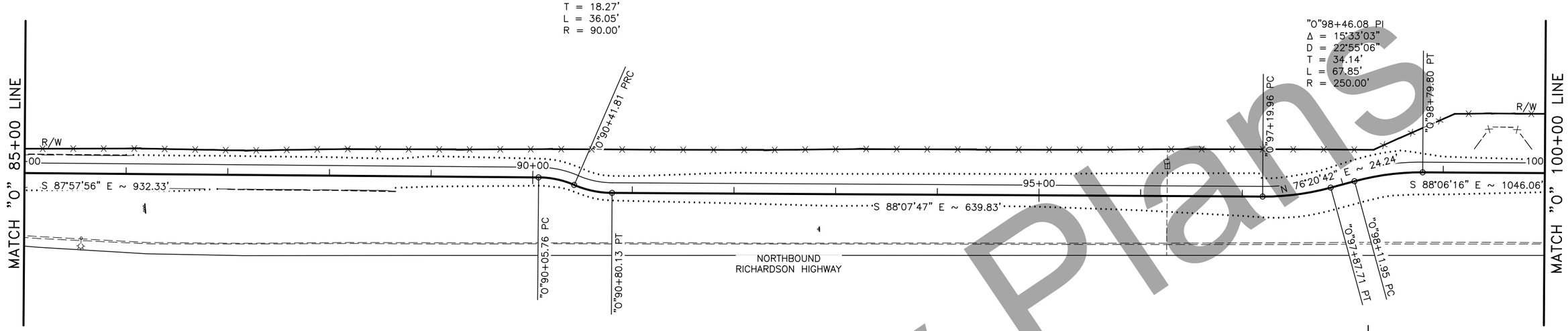

PRELIMINARY
NOVEMBER
2021

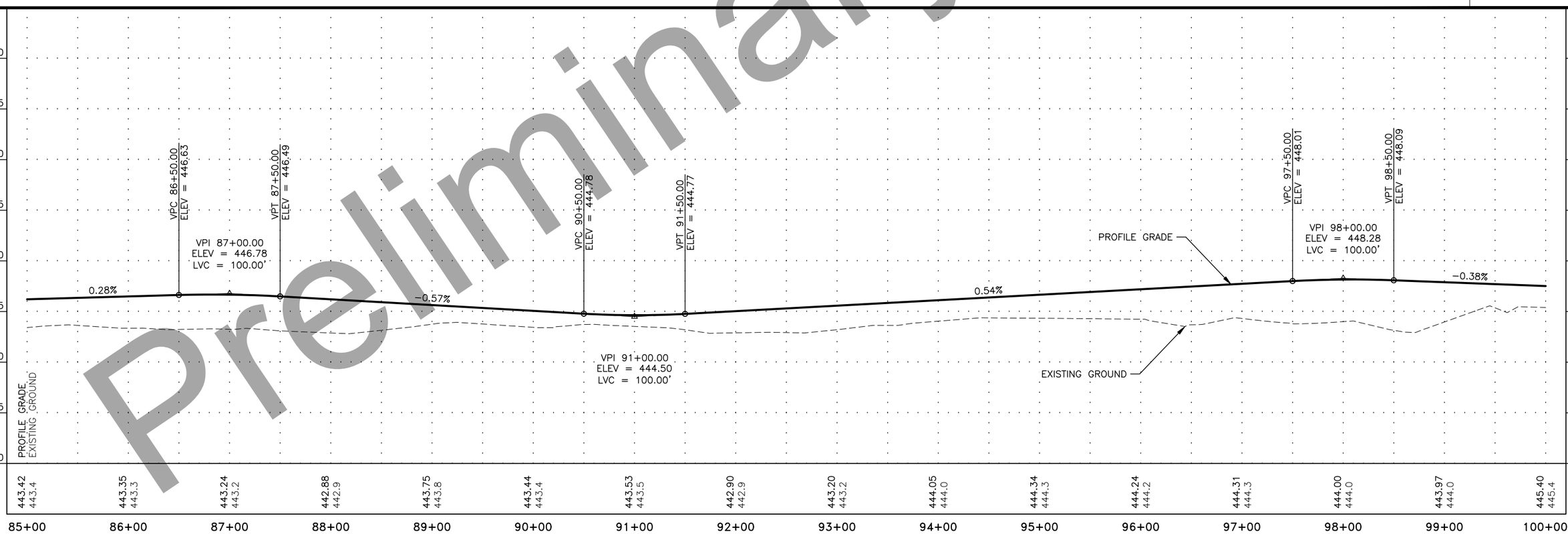

Preliminary Plans

PLANS DEVELOPED BY: STATE OF ALASKA DEPARTMENT OF TRANSPORTATION & PUBLIC FACILITIES, NORTHERN REGION, 2301 PEGER ROAD, FAIRBANKS, AK 99709 (907)451-2200
C:\Users\bp071319\AppData\Local\Temp\AcPublish_14608\61597_F_PnP-F5 Fri, Nov/05/21 11:58am

NO.	DATE	REVISION

STATE	PROJECT DESIGNATION	YEAR	SHEET NO.	TOTAL SHEETS
ALASKA	0A24033/Z607340000	2021	F6	F17

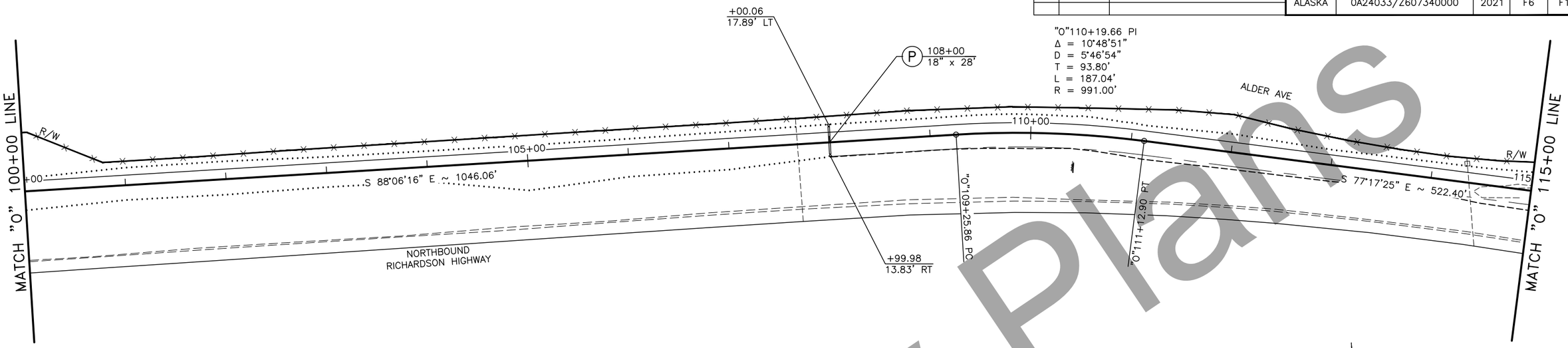

PRELIMINARY
NOVEMBER
2021

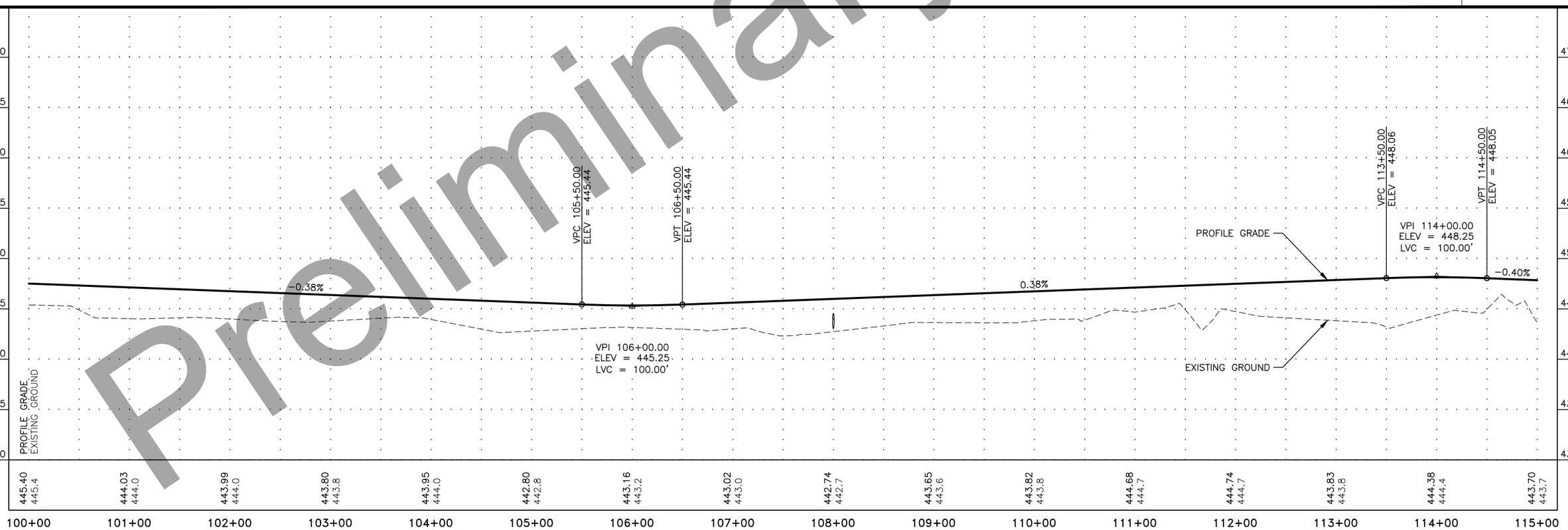

Preliminary Plans

PLANS DEVELOPED BY: STATE OF ALASKA DEPARTMENT OF TRANSPORTATION & PUBLIC FACILITIES, NORTHERN REGION, 2301 PEGER ROAD, FAIRBANKS, AK 99709 (907)451-2200
C:\Users\bp071319\AppData\Local\Temp\AcPublish_14608\61597_F_PnP-F6 Fri, Nov/05/21 11:58am

NO.	DATE	REVISION

STATE	PROJECT DESIGNATION	YEAR	SHEET NO.	TOTAL SHEETS
ALASKA	0A24033/Z607340000	2021	F7	F17

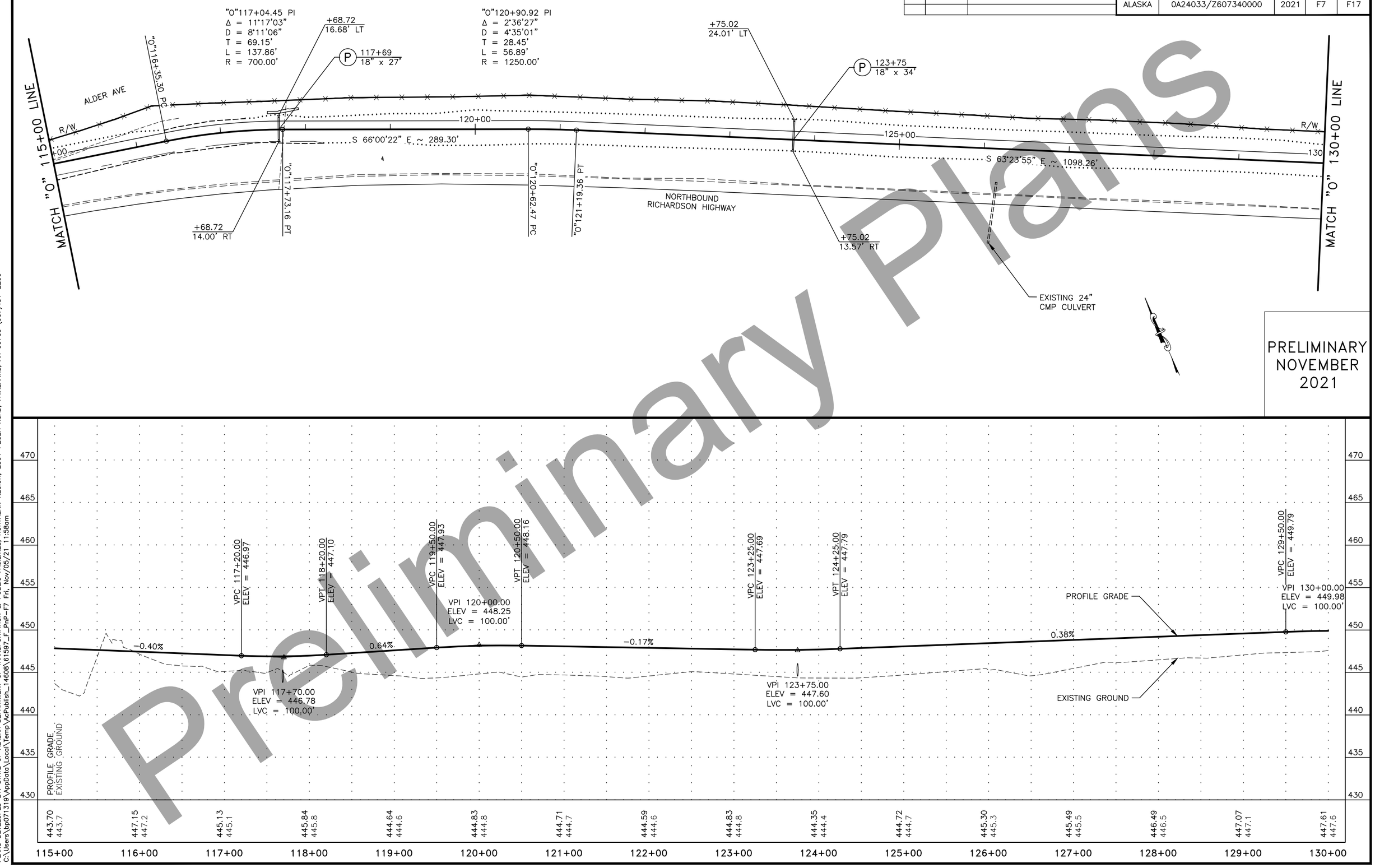

Preliminary Plans

PLANS DEVELOPED BY: STATE OF ALASKA DEPARTMENT OF TRANSPORTATION & PUBLIC FACILITIES, NORTHERN REGION, 2301 PEGER ROAD, FAIRBANKS, AK 99709 (907)451-2200
C:\Users\bp071319\AppData\Local\Temp\AcPublish_14608\61597_F_PnP-F7 Fri, Nov/05/21 11:58am

NO.	DATE	REVISION

STATE	PROJECT DESIGNATION	YEAR	SHEET NO.	TOTAL SHEETS
ALASKA	0A24033/Z607340000	2021	F8	F17

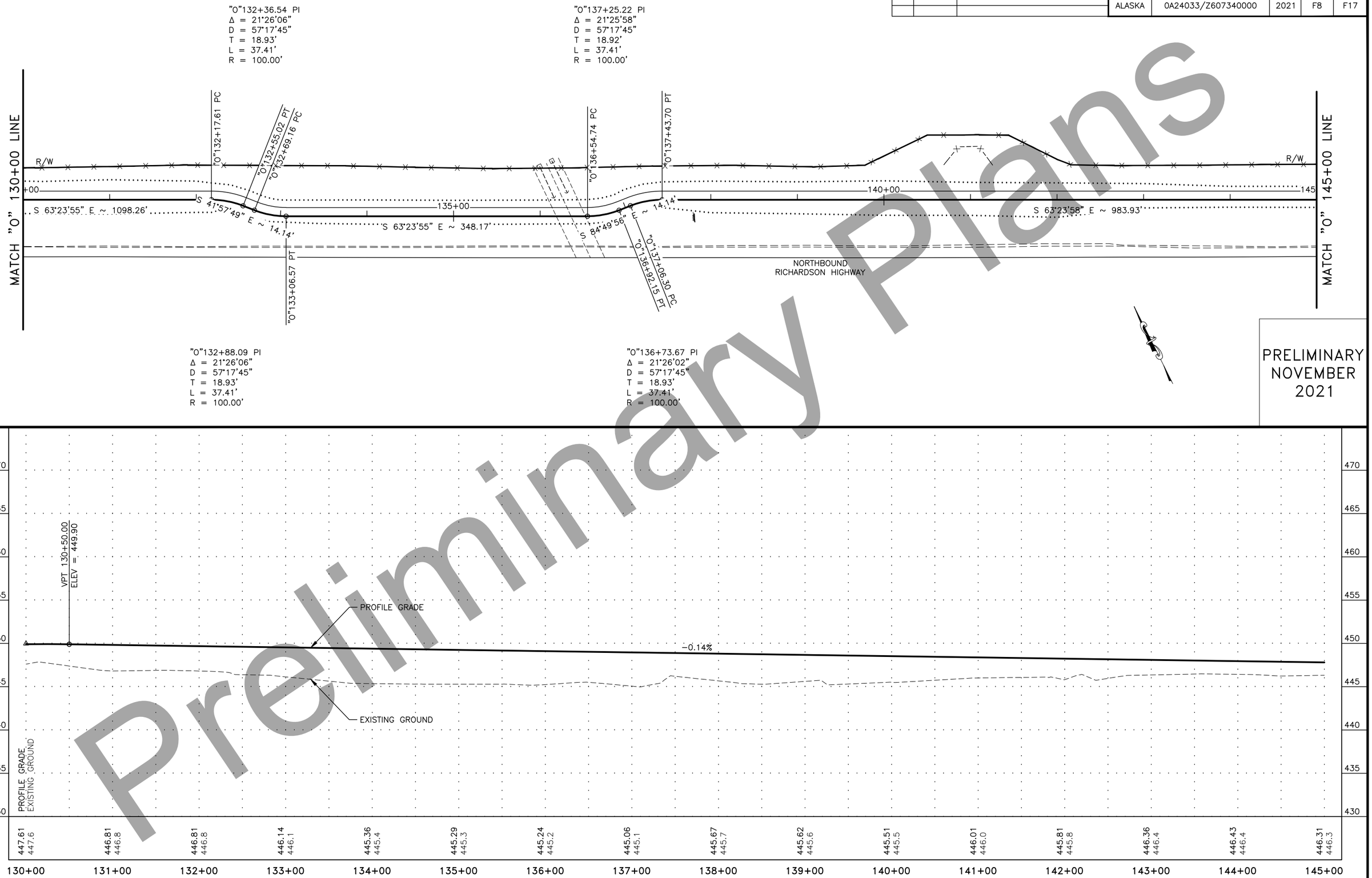

Preliminary Plans

PLANS DEVELOPED BY: STATE OF ALASKA DEPARTMENT OF TRANSPORTATION & PUBLIC FACILITIES, NORTHERN REGION, 2301 PEGER ROAD, FAIRBANKS, AK 99709 (907)451-2200
C:\Users\bp071319\AppData\Local\Temp\AcPublish_14608\61597_F_PnP-F8 Fri, Nov/05/21 11:59am

NO.	DATE	REVISION

STATE	PROJECT DESIGNATION	YEAR	SHEET NO.	TOTAL SHEETS
ALASKA	0A24033/Z607340000	2021	F9	F17

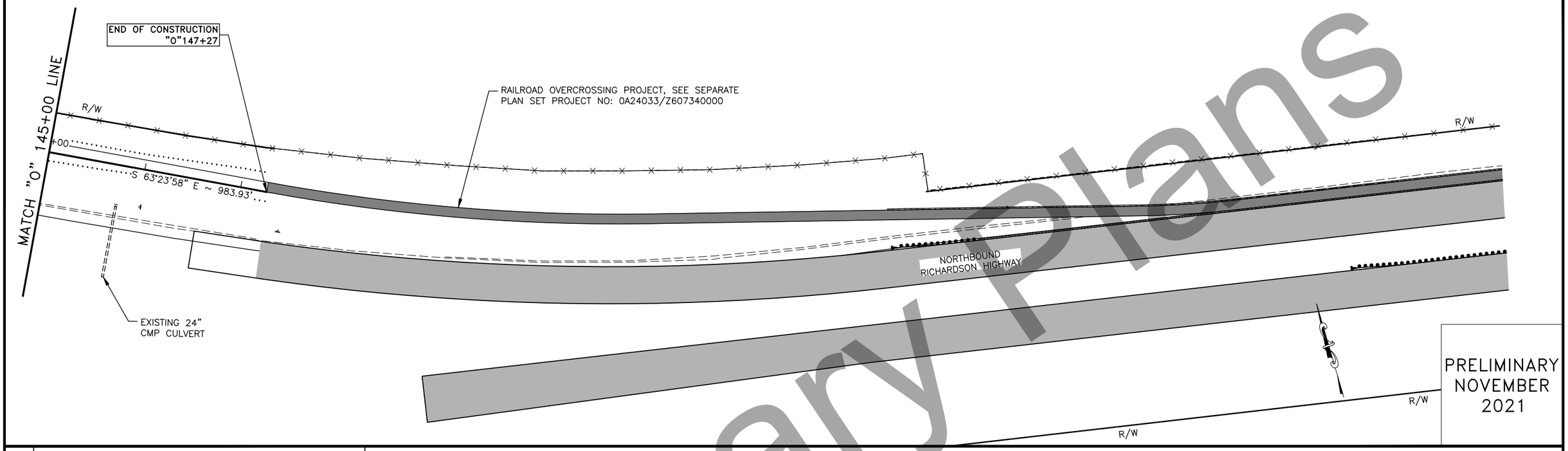

PRELIMINARY
NOVEMBER
2021

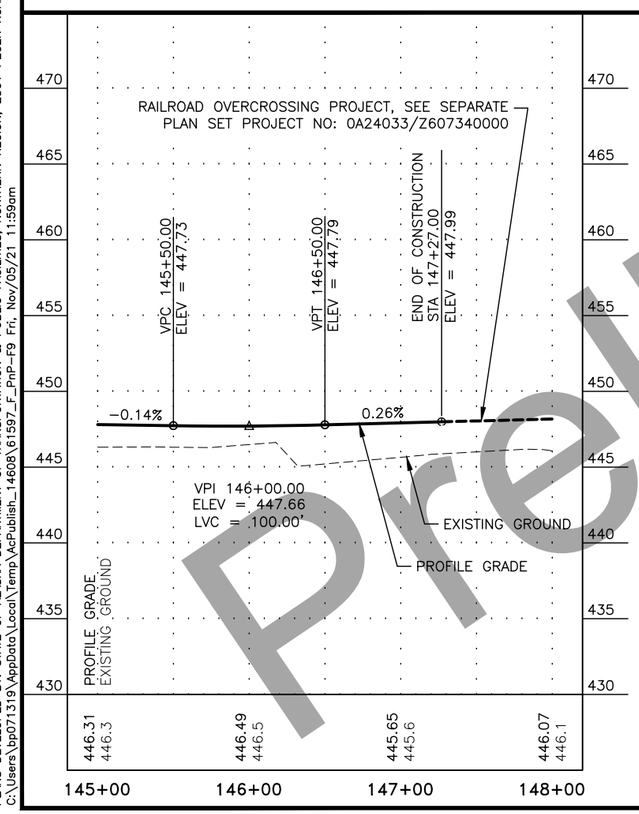

Preliminary Plans

PLANS DEVELOPED BY: STATE OF ALASKA DEPARTMENT OF TRANSPORTATION & PUBLIC FACILITIES, NORTHERN REGION, 2301 PEGER ROAD, FAIRBANKS, AK 99709 (907)451-2200
C:\Users\bp071319\AppData\Local\Temp\AcPublish_14608\61597_F_PnP-F9 Fri, Nov/05/21 11:59am

NO.	DATE	REVISION

STATE	PROJECT DESIGNATION	YEAR	SHEET NO.	TOTAL SHEETS
ALASKA	0A24033/Z607340000	2021	F10	F17

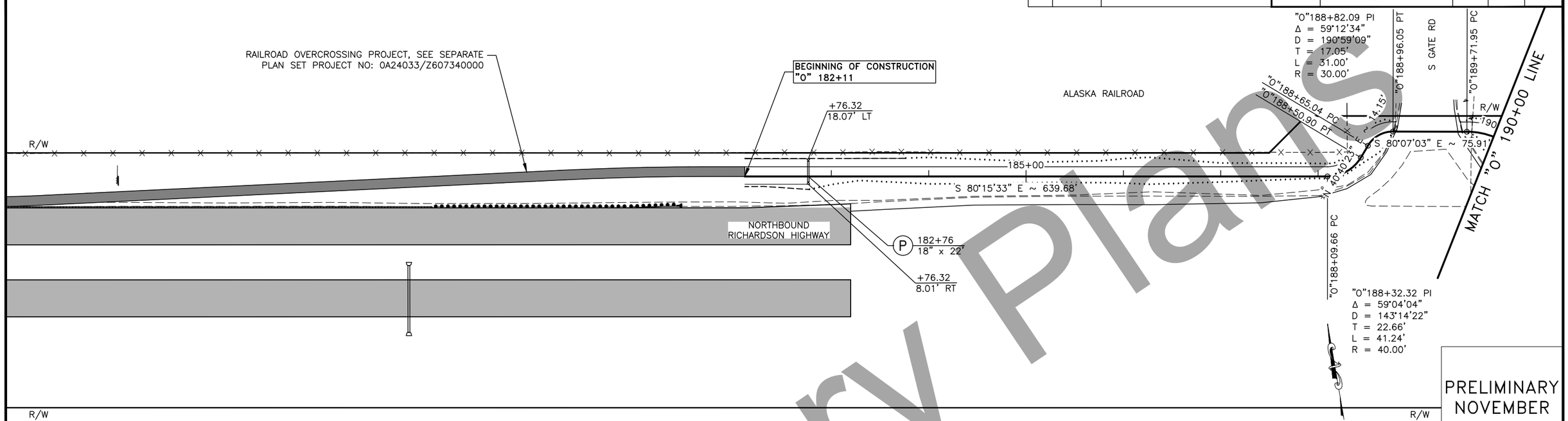

PRELIMINARY
NOVEMBER
2021

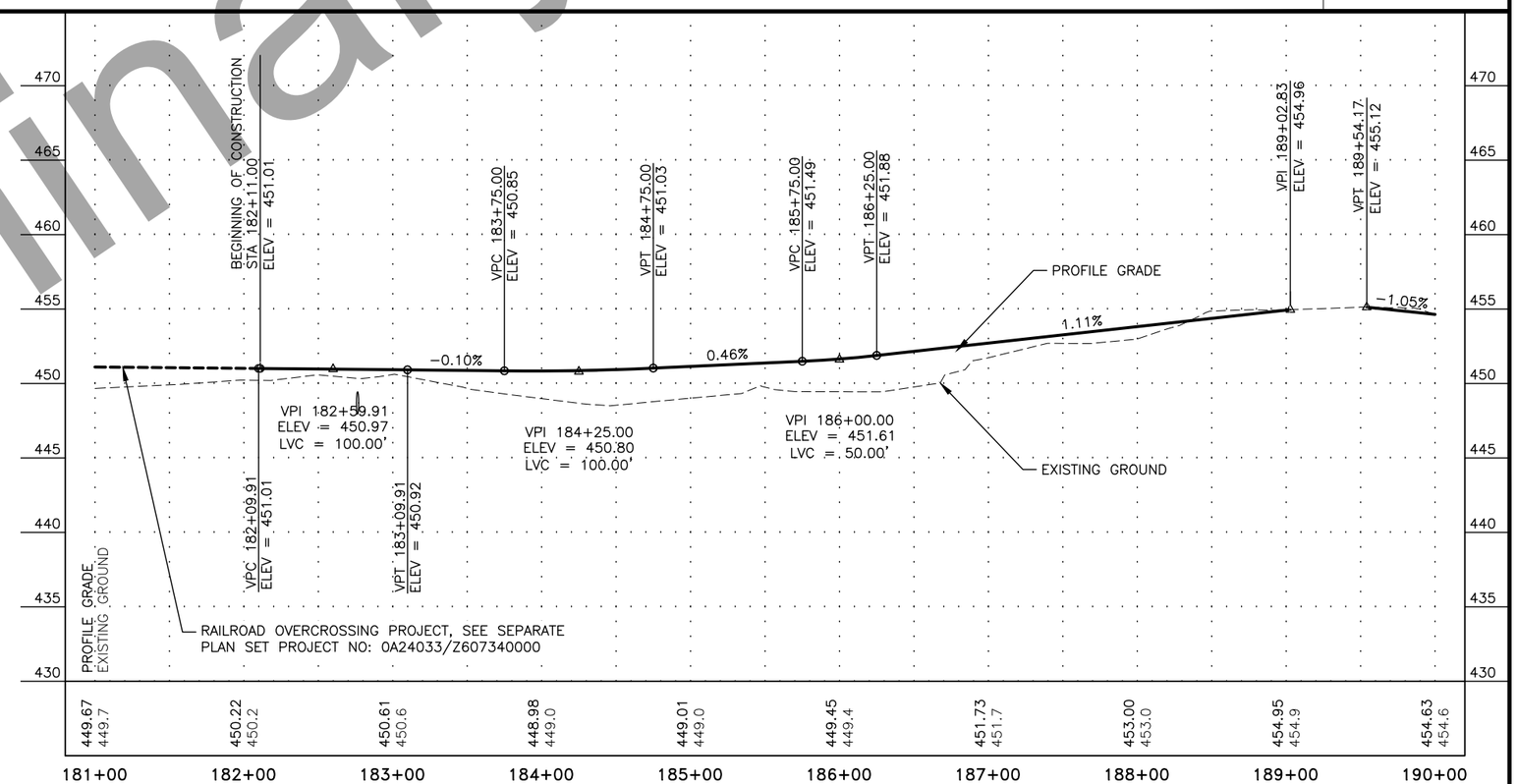

Preliminary Plans

PLANS DEVELOPED BY: STATE OF ALASKA DEPARTMENT OF TRANSPORTATION & PUBLIC FACILITIES, NORTHERN REGION, 2301 PEGER ROAD, FAIRBANKS, AK 99709 (907)451-2200
C:\Users\bp071319\AppData\Local\Temp\AcPublish_14608\61597_F_PnP-F10 Fri, Nov/05/21 11:59am

NO.	DATE	REVISION

STATE	PROJECT DESIGNATION	YEAR	SHEET NO.	TOTAL SHEETS
ALASKA	0A24033/Z607340000	2021	F11	F17

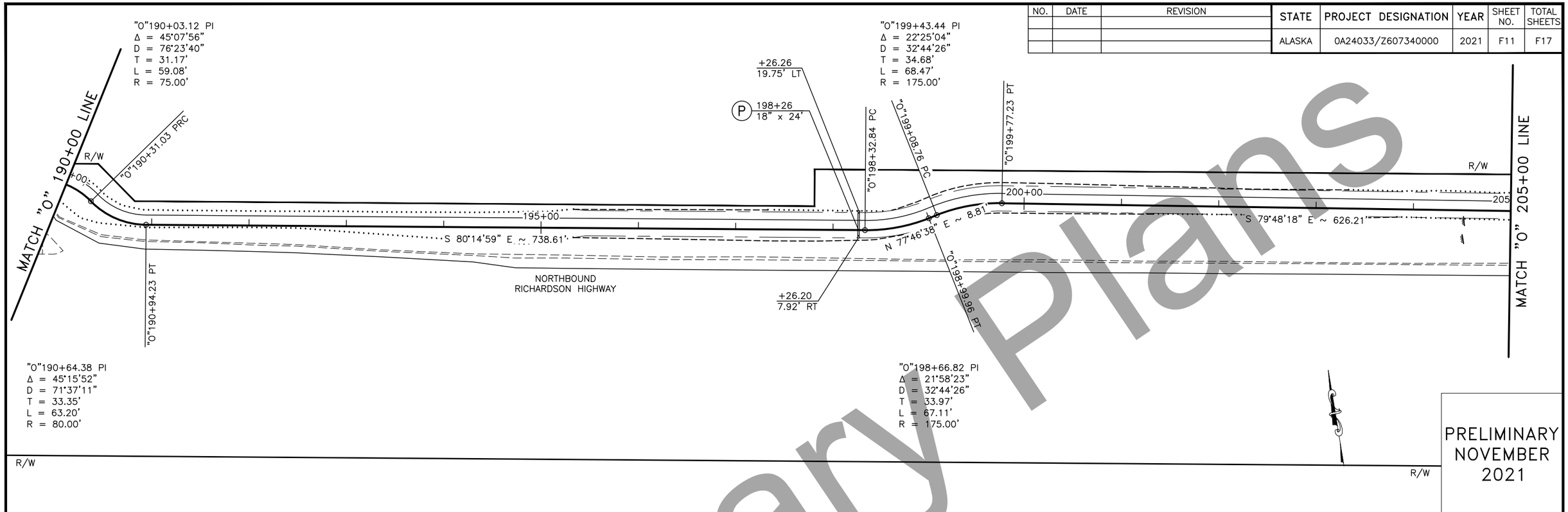

PRELIMINARY
NOVEMBER
2021

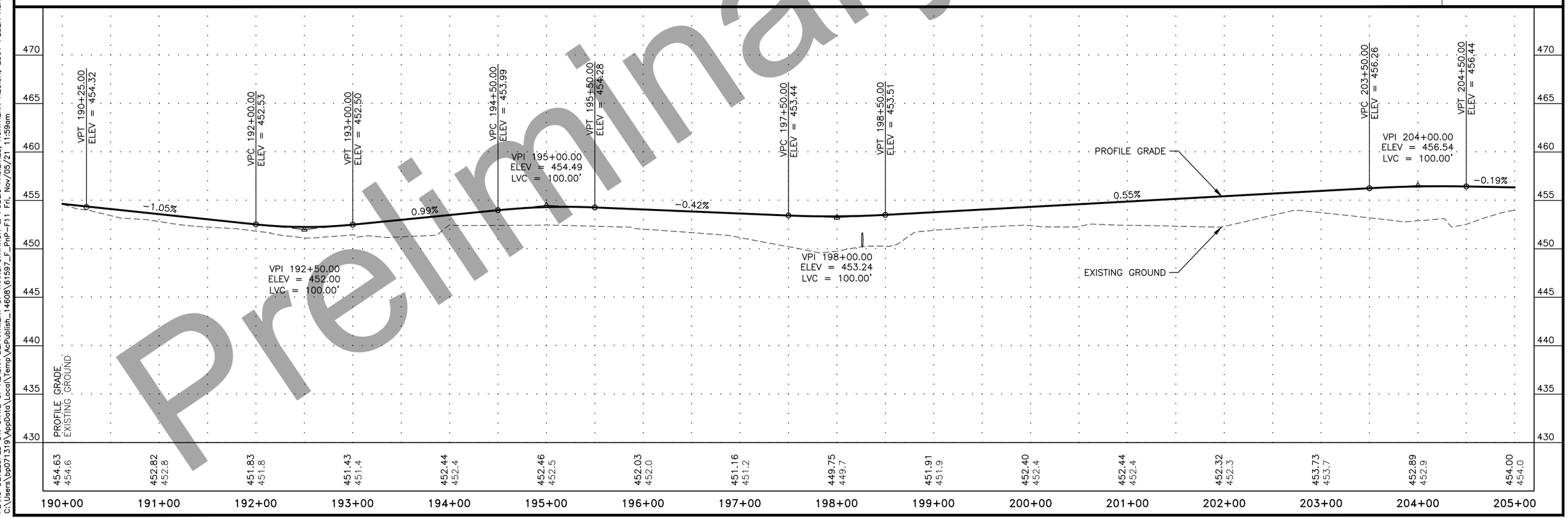

Preliminary Plans

PLANS DEVELOPED BY: STATE OF ALASKA DEPARTMENT OF TRANSPORTATION & PUBLIC FACILITIES, NORTHERN REGION, 2301 PEGER ROAD, FAIRBANKS, AK 99709 (907)451-2200
C:\Users\bp071319\AppData\Local\Temp\AcPublish_14608\61597_F_PnP-F11 Fri, Nov/05/21 11:59am

NO.	DATE	REVISION

STATE	PROJECT DESIGNATION	YEAR	SHEET NO.	TOTAL SHEETS
ALASKA	0A24033/Z607340000	2021	F12	F17

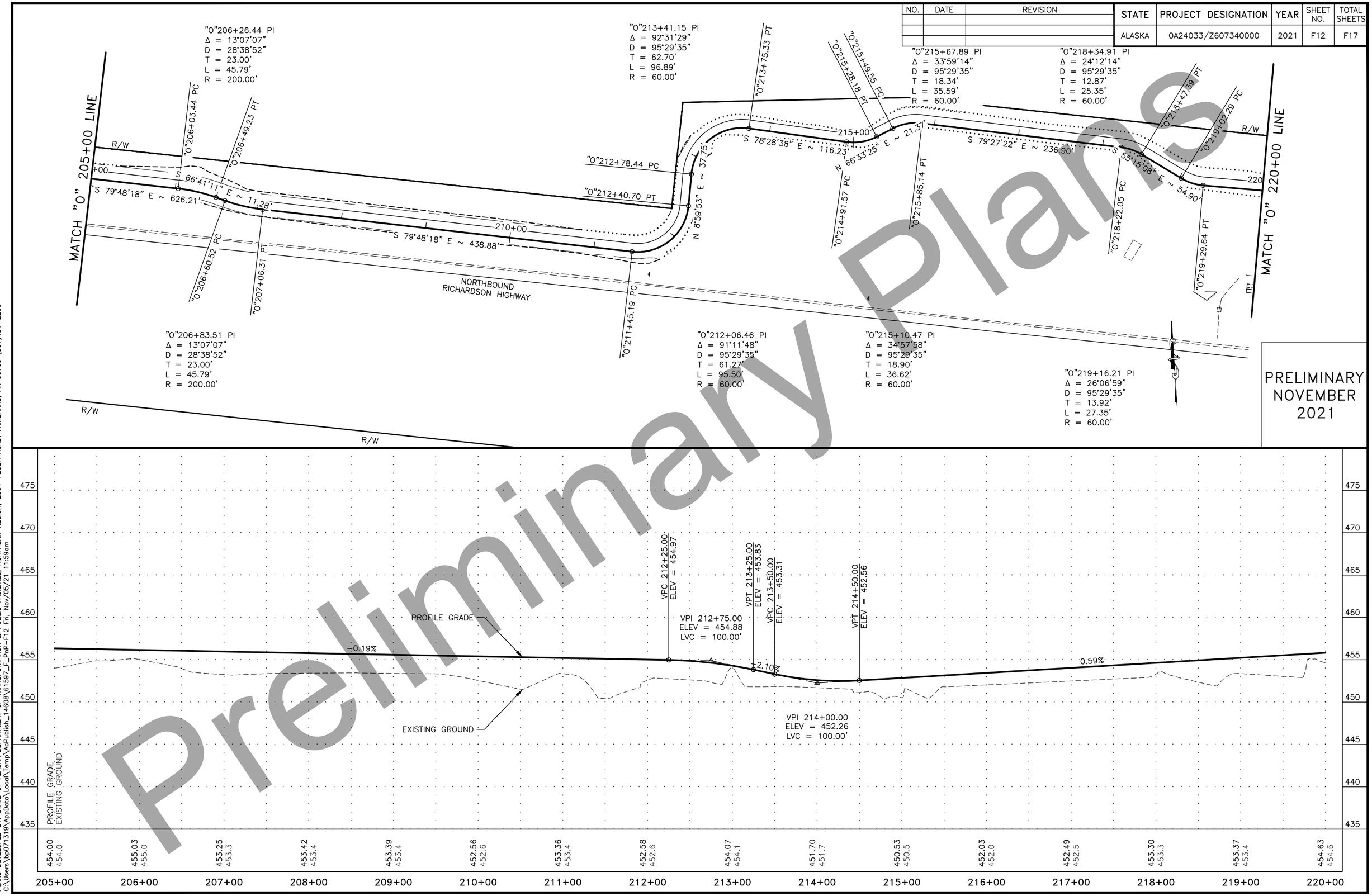

Preliminary Plans

PLANS DEVELOPED BY: STATE OF ALASKA DEPARTMENT OF TRANSPORTATION & PUBLIC FACILITIES, NORTHERN REGION, 2301 PEGER ROAD, FAIRBANKS, AK 99709 (907)451-2200
C:\Users\bp071319\AppData\Local\Temp\AcPublish_14608\61597_F_PnP-F12 Fri, Nov/05/21 11:59am

NO.	DATE	REVISION

STATE	PROJECT DESIGNATION	YEAR	SHEET NO.	TOTAL SHEETS
ALASKA	0A24033/Z607340000	2021	F13	F17

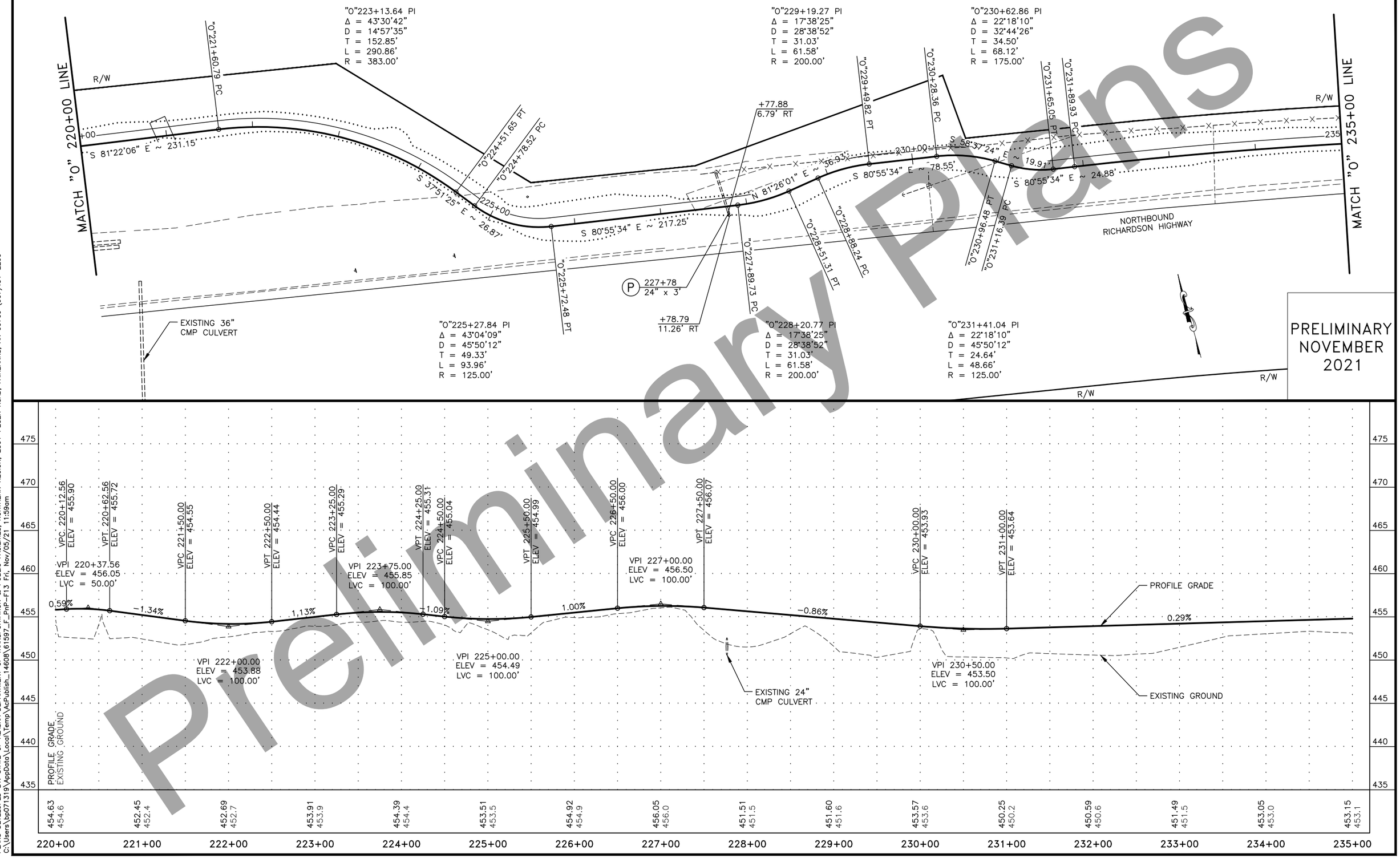

Preliminary Plans

PLANS DEVELOPED BY: STATE OF ALASKA DEPARTMENT OF TRANSPORTATION & PUBLIC FACILITIES, NORTHERN REGION, 2301 PEGER ROAD, FAIRBANKS, AK 99709 (907)451-2200
C:\Users\bp071319\AppData\Local\Temp\AcPublish_14608\61597_F_PnP-F13 Fri, Nov/05/21 11:59am

NO.	DATE	REVISION

STATE	PROJECT DESIGNATION	YEAR	SHEET NO.	TOTAL SHEETS
ALASKA	0A24033/Z607340000	2021	F14	F17

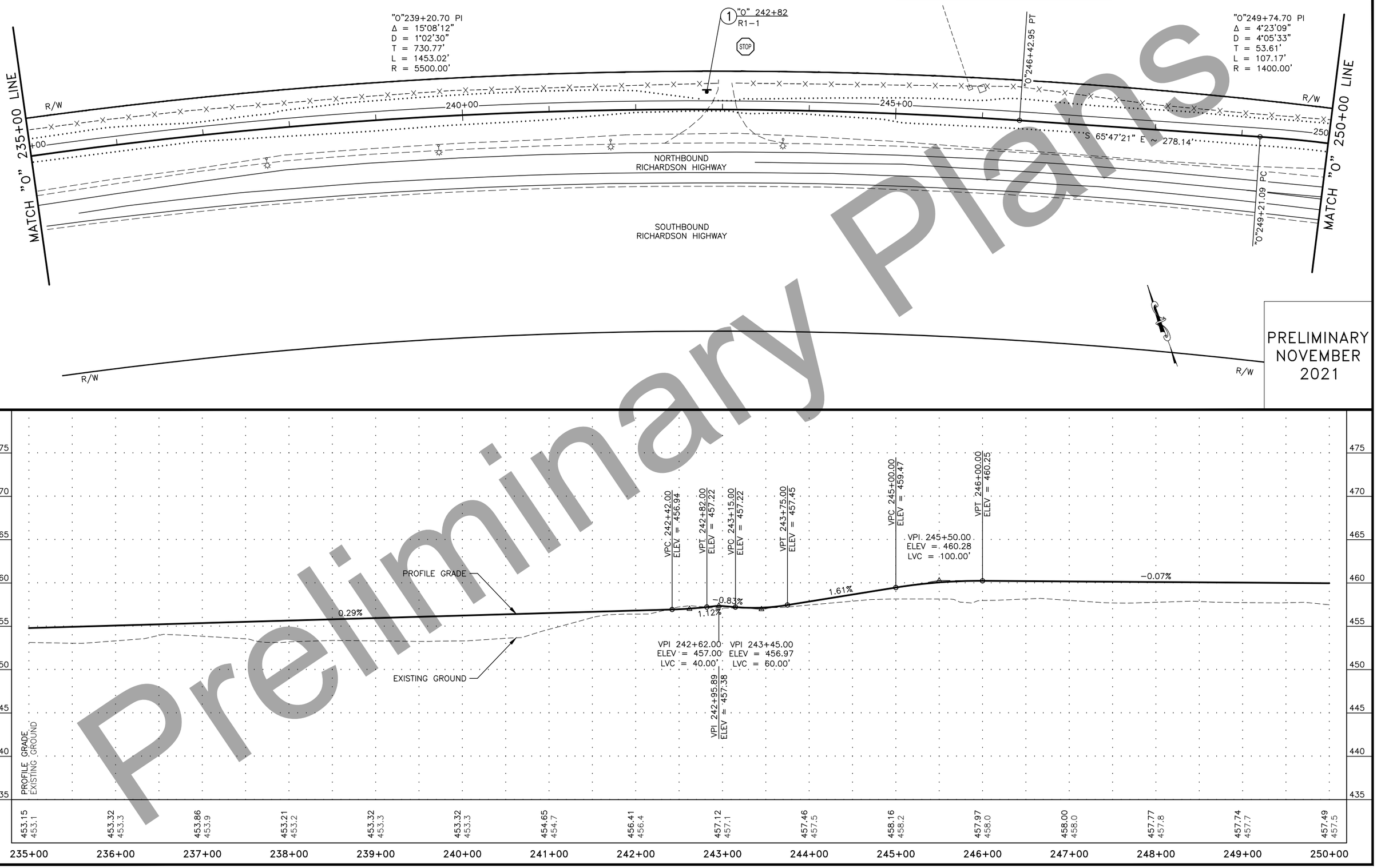

Preliminary Plans

PLANS DEVELOPED BY: STATE OF ALASKA DEPARTMENT OF TRANSPORTATION & PUBLIC FACILITIES, NORTHERN REGION, 2301 PEGER ROAD, FAIRBANKS, AK 99709 (907)451-2200
C:\Users\bp071319\AppData\Local\Temp\AcPublish_14608\61597_F_PnP-F14 Fri, Nov/05/21 11:59am

NO.	DATE	REVISION

STATE	PROJECT DESIGNATION	YEAR	SHEET NO.	TOTAL SHEETS
ALASKA	0A24033/Z607340000	2021	F15	F17

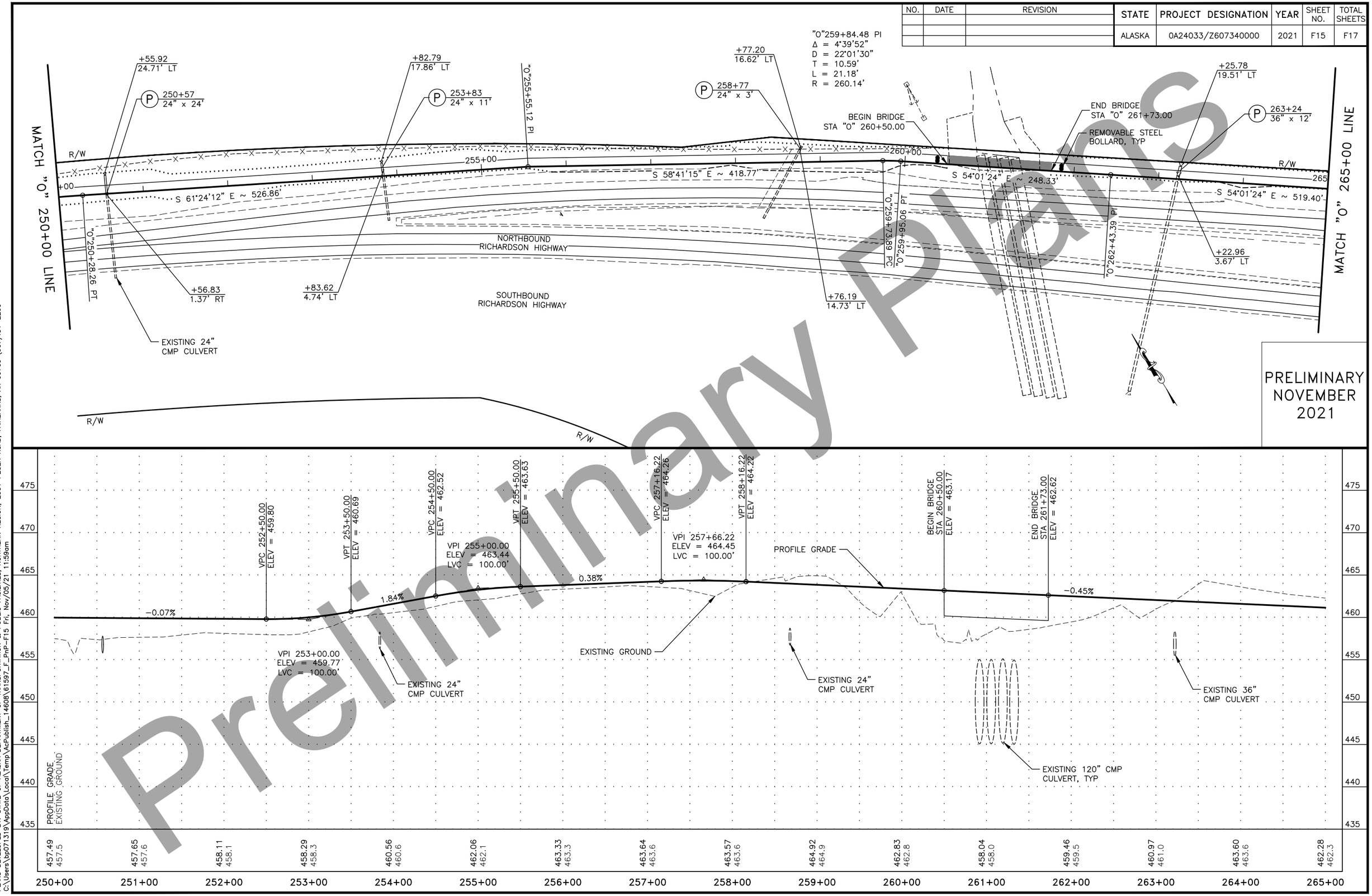

Preliminary Plans

PLANS DEVELOPED BY: STATE OF ALASKA DEPARTMENT OF TRANSPORTATION & PUBLIC FACILITIES, NORTHERN REGION, 2301 PEGER ROAD, FAIRBANKS, AK 99709 (907)451-2200
C:\Users\bp071319\AppData\Local\Temp\AcPublish_14608\61597_F_PnP-F15 Fri, Nov/05/21 11:59am

NO.	DATE	REVISION

STATE	PROJECT DESIGNATION	YEAR	SHEET NO.	TOTAL SHEETS
ALASKA	0A24033/Z607340000	2021	F16	F17

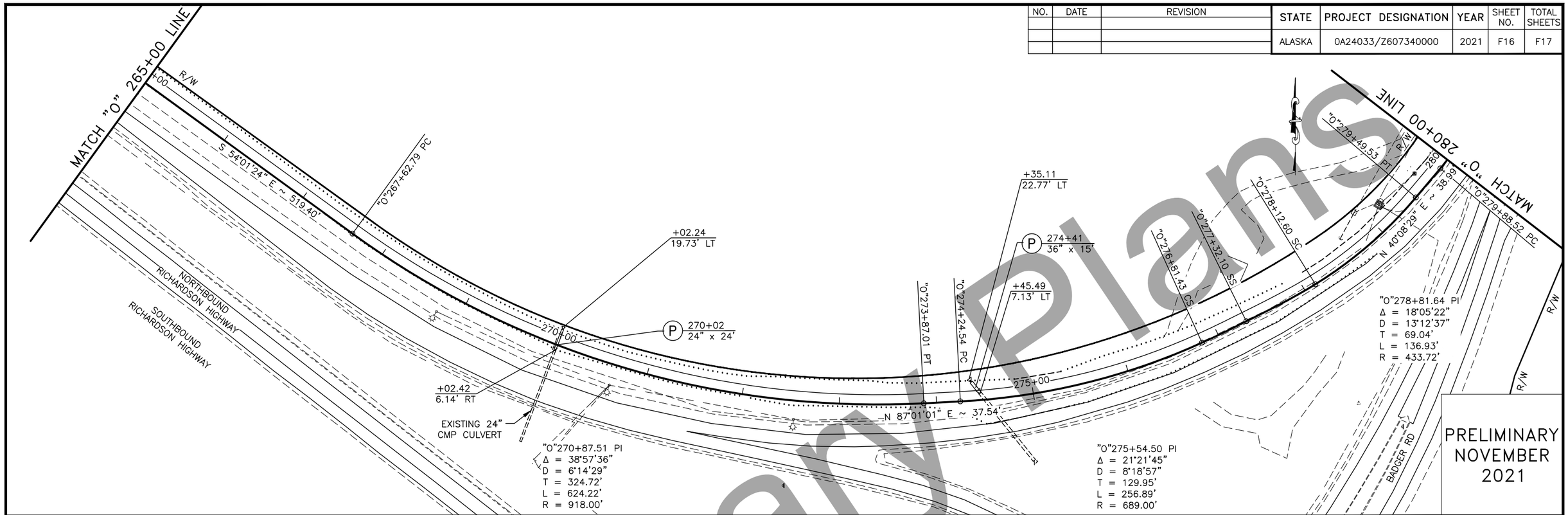

PRELIMINARY
NOVEMBER
2021

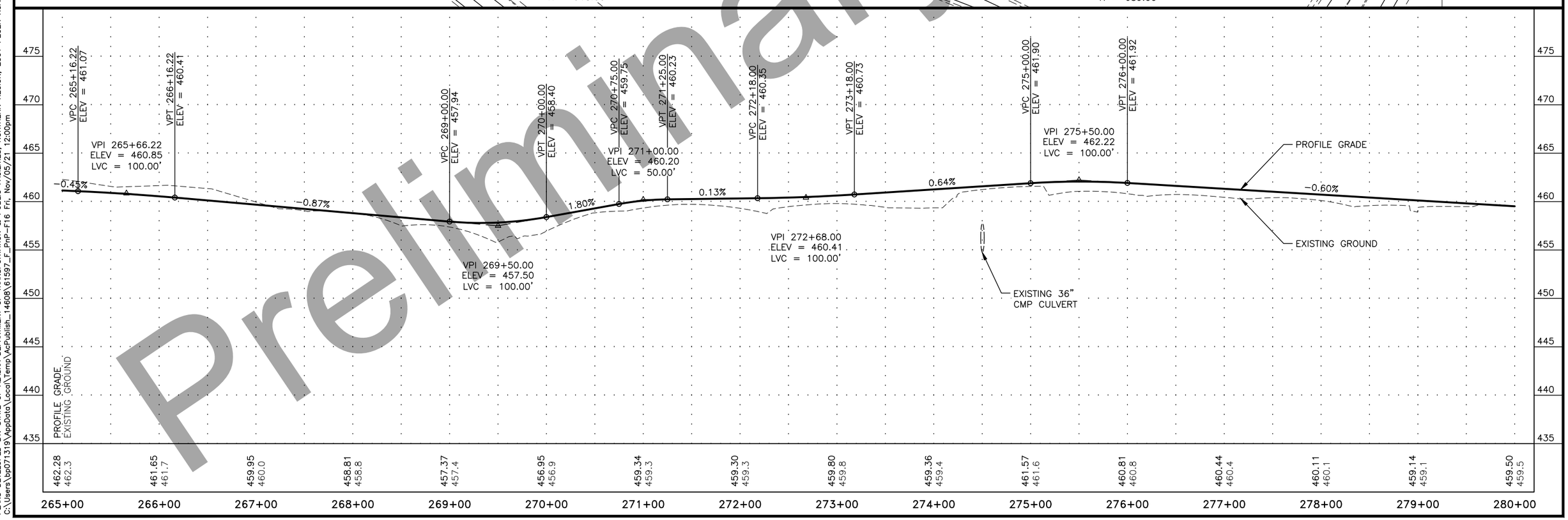

Preliminary Plans

PLANS DEVELOPED BY: STATE OF ALASKA DEPARTMENT OF TRANSPORTATION & PUBLIC FACILITIES, NORTHERN REGION, 2301 PEGER ROAD, FAIRBANKS, AK 99709 (907)451-2200
C:\Users\bp071319\AppData\Local\Temp\AcPublish_14608\61597_F_PnP-F16 Fri, Nov/05/21 12:00pm

NO.	DATE	REVISION

STATE	PROJECT DESIGNATION	YEAR	SHEET NO.	TOTAL SHEETS
ALASKA	0A24033/Z607340000	2021	F17	F17

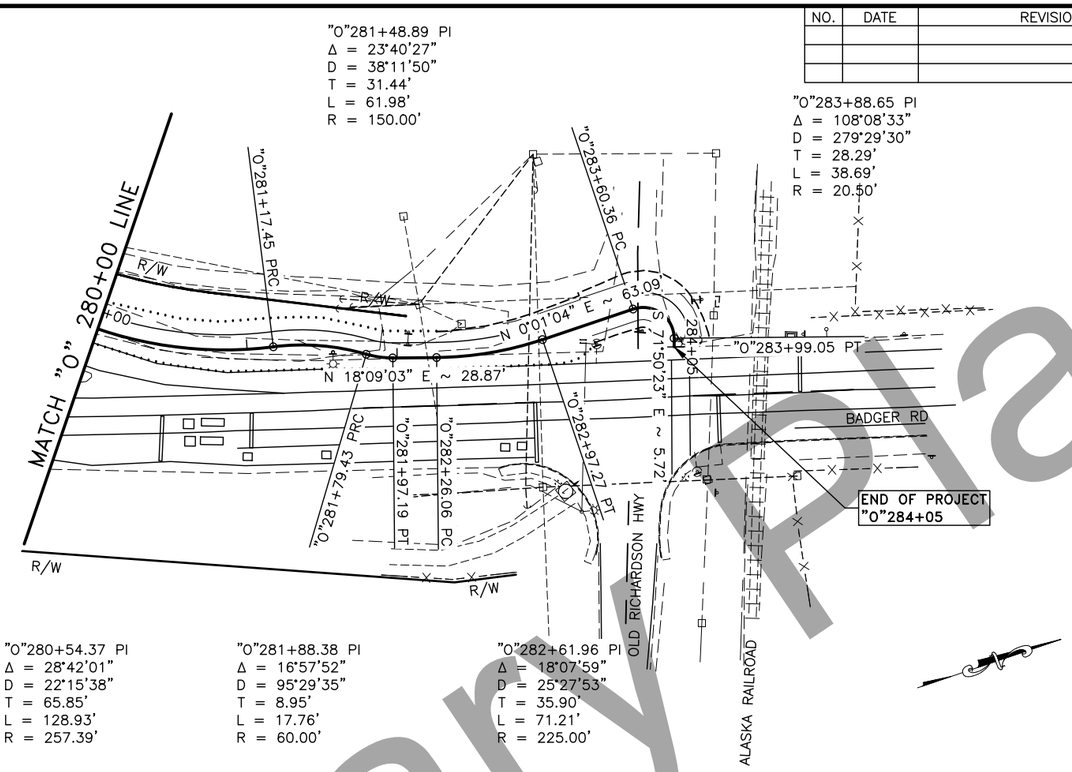

PRELIMINARY
NOVEMBER
2021

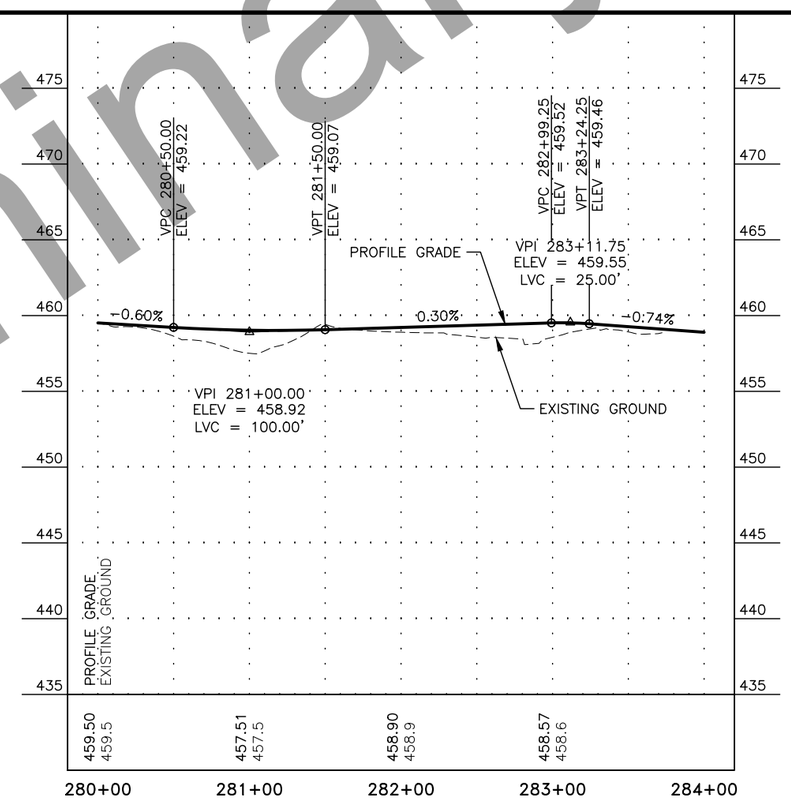

Preliminary Plans

PLANS DEVELOPED BY: STATE OF ALASKA DEPARTMENT OF TRANSPORTATION & PUBLIC FACILITIES, NORTHERN REGION, 2301 PEGER ROAD, FAIRBANKS, AK 99709 (907)451-2200
C:\Users\bp071319\AppData\Local\Temp\AcPublish_14608\61597_F_PnP-F17 Fri, Nov/05/21 12:00pm

NO.	DATE	REVISION

STATE	PROJECT DESIGNATION	YEAR	SHEET NO.	TOTAL SHEETS
ALASKA	0A24033/Z607340000	2021	H1	H2

SIGNING SUMMARY

LOC. NO.	STATION	LOCATION LT.	LOCATION RT.	ASDS CODE	LEGEND	SIZE H X V (INCHES)	BRACING/ FRAMING BRACED	BRACING/ FRAMING FRAMED	AREA (SQ.FT.)	MTG. HGT. (FT.)	DIR.	POST TYPE	POST SIZE (INCHES)	POST NO.	REMARKS
1	"0" 242+82	X		R1-1	STOP	30 X 30			6.25		N	PST	2.5	1	
TOTAL SIGN AREA = 7.00															

SIGN SALVAGE SUMMARY

STATION	LOCATION LT.	LOCATION RT.	ASDS CODE	LEGEND	615.0002.0000 REMOVE AND RELOCATE SIGN (EA)
"0" 282+07	X		D3-201	NORTH POLE FAIRBANKS	1
				PAY ITEM TOTALS	1

SIGNING NOTES:

1. REMOVE AND DISPOSE OF ALL EXISTING SIGNS AND SIGN FOUNDATIONS WITHIN THE PROJECT LIMITS, EXCEPT THOSE DESIGNATED FOR REINSTALLATION, SALVAGE, OR OTHERWISE NOTED.
2. MOUNTING HEIGHTS ARE PER STANDARD PLAN S-05.02 UNLESS OTHERWISE NOTED.
3. DETERMINE POST LENGTHS IN THE FIELD. DO NOT EXTEND POSTS ABOVE TOP OF SIGN.
4. INSTALL PST SIGN POSTS WITH SLEEVE TYPE CONCRETE FOUNDATIONS PER STANDARD PLAN S-30.05. ATTACH THE SIGN SIGN POST TO THE SLEEVE USING GALVANIZED ⅜" BOLT, NUT, SPLIT LOCK WASHERS AND TWO FLAT WASHERS.
5. INSTALL "TUBE POST SIGN BRACING" AS SHOWN ON STANDARD PLAN S-01.02 ON ALL SIGNS MOUNTED ON A SINGLE PST POST AND HAVING A HORIZONTAL DIMENSION OF 30 INCHES OR GREATER, EXCEPT D3-100 SERIES SIGNS. INSTEAD OF THE ⅝" GALVANIZED BOLTS AND NYLON LOCKING NUTS SHOWN ON STANDARD PLAN S-01.02, USE GALVANIZED ⅜" BOLT, SPLIT LOCK WASHERS AND NUTS. STAINLESS STEEL FASTENER HARDWARE MAY BE USED INSTEAD OF GALVANIZED. ¼" X 1 ½" ALUMINUM ALLOY 6061-T6 BAR MAY ALSO BE USED TO FABRICATE SIGN BRACES.
6. ATTACH ALL SIGNS TO THEIR SUPPORTS WITH ⅜" BOLTS, EXCEPT ATTACH UNFRAMED SIGNS TO PST POSTS WITH ALUMINUM DRIVE RIVETS. WIND WASHERS ARE NOT REQUIRED WITH DRIVE RIVETS. INCLUDE SPLIT LOCK WASHERS WHEN BOLTS ARE USED.
7. ALL FASTENER HARDWARE SHALL MEET THE REQUIREMENTS OF THE "FASTENER SPECIFICATION TABLE" ON SHEET H2.
8. SIGNS TO BE INSTALLED ON LIGHT POLES MAY REQUIRE TEMPORARY INSTALLATION ON 2-1/2 INCH PST UNTIL THE LIGHT POLES ARE IN PLACE. THIS WORK IS SUBSIDIARY TO PAY ITEM 615.0001.0000.
9. MAINTAIN EXISTING SIGNS UNTIL NEW SIGNS ARE INSTALLED. DO NOT LEAVE DUPLICATE OR CONFLICTING SIGNING UP AT ANY TIME.
10. ALL LETTERING THAT INCLUDES UPPER AND LOWER CASE LETTERS SHALL BE SERIES E-MODIFIED AS NOTED IN APPENDIX C OF THE ASDS, EXCEPT FOR D3-1 AND D3-100 SIGNS WHICH ARE SERIES 2000 LETTERS.
11. LOCATE AND PROTECT ALL NEW AND EXISTING UNDERGROUND UTILITIES, INCLUDING BUT NOT LIMITED TO: PIPELINES, INTERCONNECT CABLES, SIGNAL SYSTEMS, LIGHTING SYSTEMS, STORM AND SANITARY SEWERS, WATER SYSTEMS, AND TELEPHONE AND ELECTRICAL CABLES, PRIOR TO INSTALLING SIGN POSTS. NOT ALL EXISTING UTILITIES MAY BE SHOWN ON THE PLANS.
12. DELIVER ALL SALVAGED SIGNS TO THE FAIRBANKS MAINTENANCE YARD LOCATED AT 2301 PEGER ROAD.
13. CLEARING MAY BE REQUIRED TO ENSURE ADEQUATE VISIBILITY OF SIGNS, THIS WORK IS SUBSIDIARY TO PAY ITEM 615.0001.0000.
14. INSTALL WEATHER TIGHT CAPS ON ALL PIPE AND TUBE POSTS, EXCEPT PERFORATED STEEL TUBE.
15. INSTALL FRANGIBLE COUPLING BASES IN ACCORDANCE WITH STANDARD PLAN S-31.02.
16. HINGED JOINTS WITH FRANGIBLE FUSE PLATES ARE REQUIRED ON ALL MULTIPLE POST SIGNS WITH FRANGIBLE COUPLING SYSTEMS. THE HINGE LOCATION ON ALL POSTS SHALL BE THE SAME DISTANCE BELOW THE SIGN, INSTEAD OF THE 6" MINIMUM SHOWN ON STANDARD PLAN S-31.02. MANUFACTURERS TYPICALLY SPECIFY THE HINGE LOCATION TO BE 3 ¼" BELOW THE BOTTOM OF THE SIGN.
17. THE 4" MOUNTING AREA ON MILEPOST SIGNS (D10-100 SERIES) SHALL BE BARE ALUMINUM. THIS ELIMINATES THE OPTION OF INSTALLING GREEN REFLECTIVE SHEETING IN THIS AREA AS NOTED IN THE ASDS.
18. CONTRACTOR RESPONSIBLE FOR REPLACING SIGNS BROKEN/DAMAGED DURING CONSTRUCTION ACTIVITIES.
19. DO NOT DISTURB SIGN DURING CONSTRUCTION. IF DISTURBANCE OF SIGN IS UNAVOIDABLE SALVAGE AND REINSTALL WITH SLEEVE TYPE CONCRETE FOUNDATION.
20. INSTALL WEATHER TIGHT CAPS ON ALL PIPE AND TUBE POST (EXCEPT PERFORATED TUBING).
21. INSTALL SIGNS WITH TOP OF POST, MOUNTING BRACKETS, ETC. WITH A MINIMUM OF 3" BELOW TOP OF SIGN.

POST TYPE LEGEND:

PST = PERFORATED STEEL TUBE
TS = TUBE STEEL (SQUARE STRUCTURAL STEEL TUBING)
W_X_ = WIDE FLANGE

Preliminary Plans

SIGN SUMMARY

PRELIMINARY
NOVEMBER
2021

PLANS DEVELOPED BY: STATE OF ALASKA DEPARTMENT OF TRANSPORTATION & PUBLIC FACILITIES, NORTHERN REGION, 2301 PEGER ROAD, FAIRBANKS, AK 99709 (907)451-2200
C:\pw_workdir\den001\rk053776\d1605254\60734_H1_PnP-H1 Thu, Nov/04/21 08:10pm

NO.	DATE	REVISION

STATE	PROJECT DESIGNATION	YEAR	SHEET NO.	TOTAL SHEETS
ALASKA	0A24033/Z607340000	2021	H2	H2

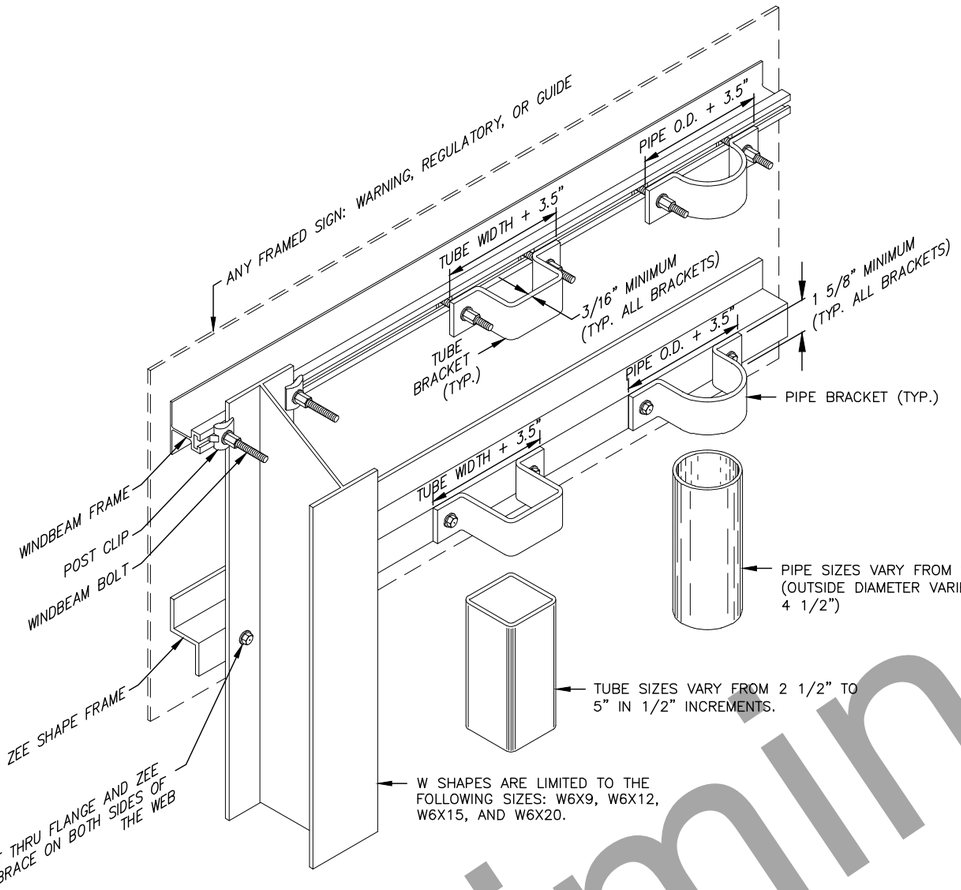

FRAMED SIGN ATTACHMENT BRACKETS

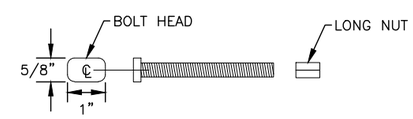

3/8" WINDBEAM BOLT AND LONG NUT

NOTES:

1. ATTACH FRAMED SIGNS TO POSTS WHEREVER THE FRAMES CROSS THE POSTS. AT EACH CROSSING, ATTACH THE SIGN USING TWO POST CLIPS ON W-SHAPE POSTS, A U-SHAPED BRACKET ON PIPES OR A BRACKET WITH SQUARE CORNERS ON TUBES.
2. THE TUBE BRACKETS USED ON EVEN INCH SIZE TUBES MAY ALSO BE USED ON TUBES 1/2" SMALLER IN SIZE.
3. THE BRACKET DETAILS SHOWN INDICATE GENERAL DESIGNS ONLY. DESIGNS MAY VARY BY MANUFACTURER.
4. ALUMINUM ALLOY 6061-T6 SHALL BE USED FOR ZEE SHAPE FRAMING AND RIVETS.

FASTENER SPECIFICATION TABLE

FASTENERS	STEEL	STAINLESS STEEL
BOLTS	ASTM A 307	ASTM F 593
NUTS	ASTM A 563	ASTM F 594
WASHERS	ASTM F 844	ASTM A 580

THESE SPECIFICATIONS APPLY TO ALL SIGN FASTENER HARDWARE ON THE PROJECT.

Preliminary Plans

SIGN DETAILS

PRELIMINARY
NOVEMBER
2021

PLANS DEVELOPED BY: STATE OF ALASKA DEPARTMENT OF TRANSPORTATION & PUBLIC FACILITIES, NORTHERN REGION, 2301 PEGER ROAD, FAIRBANKS, AK 99709 (907)451-2200
C:\pw_workdir\den001\rk053776\d1605254\60734_H2_Details-H2 Thu, Nov/04/21 03:58pm

STATE	PROJECT DESIGNATION	YEAR	SHEET NO.	TOTAL SHEETS
ALASKA	Z615970000/0A24032	2022	N1	N14

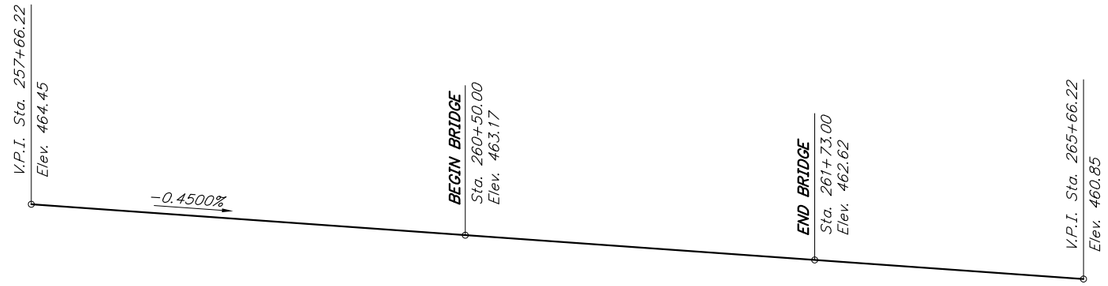

PROFILE GRADE DATA

No Scale

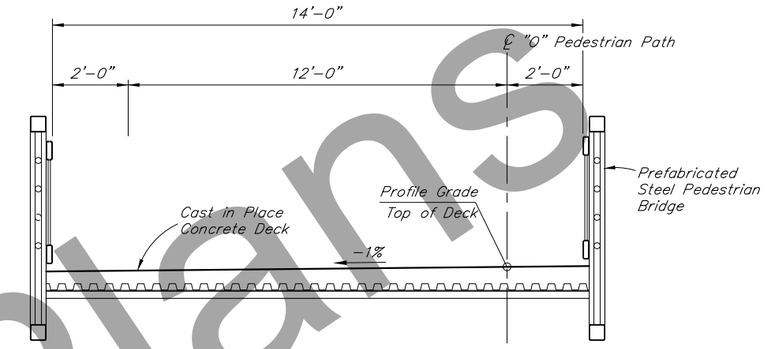

TYPICAL SECTION

12 6 0 1 2 3 4
In. Feet

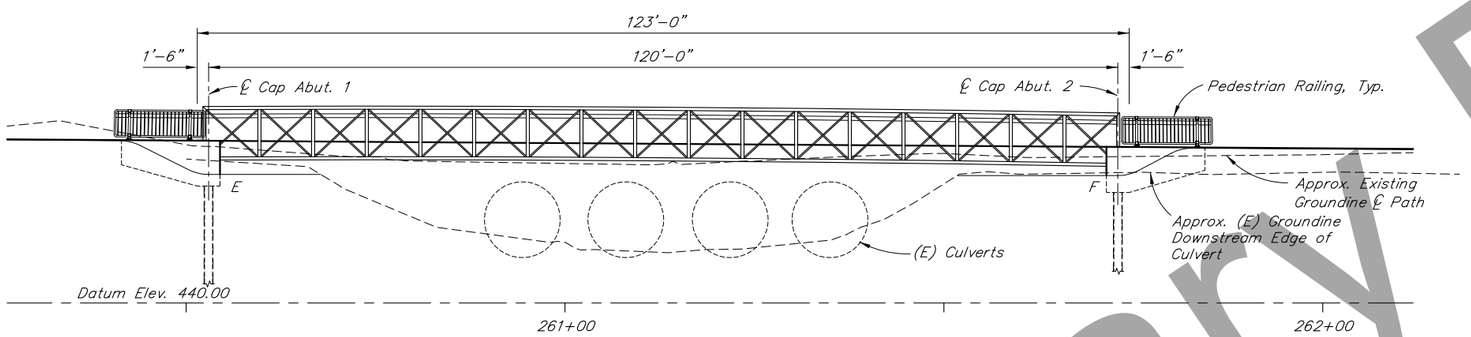

ELEVATION

10 5 0 10 20
Feet

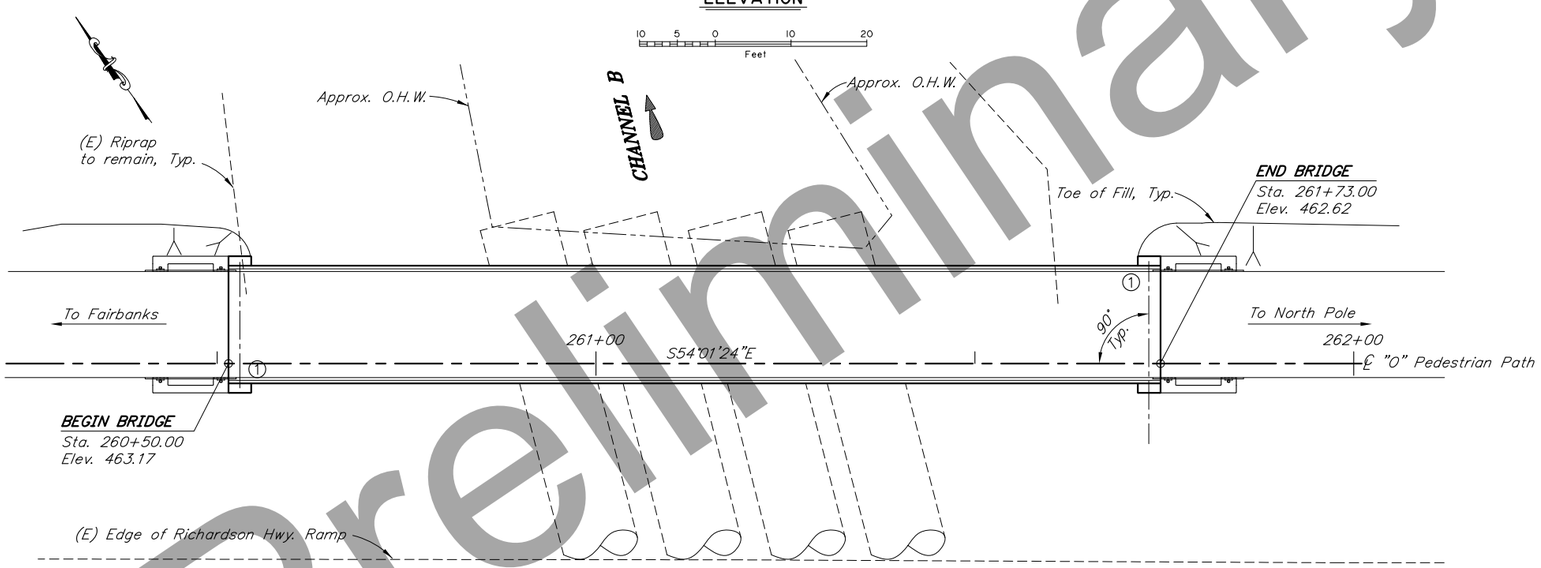

PLAN

10 5 0 10 20
Feet

BRIDGE DRAWING INDEX

TITLE	DWG. NO.
GENERAL LAYOUT	1
SITE PLAN	2
ABUTMENTS	3
WINGWALLS	4
PEDESTRIAN RAILING	5
PEDESTRIAN RAILING DETAILS	6
TEST HOLE LOGS AND LOCATIONS	7-14

NOTES:

① Denotes location of Bridge No. Plate.

Preliminary Plans

DESIGNED BY: Travis Arndt	CHECKED: Elmer Marx	LAYOUT BY: Travis Arndt	CHECKED BY: Elmer Marx
DRAWN BY: Sam Sollie	CHECKED: Travis Arndt	SPECIFICATIONS BY: Travis Arndt	P S & E COMPARED: Elmer Marx
QUANTITIES BY: Travis Arndt	CHECKED: Elmer Marx	APPROVAL RECOMMENDED BY: Rich Pratt	

STATE OF ALASKA
DEPARTMENT OF TRANSPORTATION AND PUBLIC FACILITIES
BRIDGE SECTION
3132 Channel Drive
Juneau, Alaska 99801
907-465-2975

DRAFT

CHANNEL B PEDESTRIAN BRIDGE

NORTH RICHARDSON BIKE PATH

GENERAL LAYOUT

BRIDGE NO. 6022

DWG. NO. 1

R:\cad\6022\6022-GENERAL LAYOUT Fri, Oct/29/21 01:11pm

STATE	PROJECT DESIGNATION	YEAR	SHEET NO.	TOTAL SHEETS
ALASKA	Z615970000/0A24032	2022	N2	N14

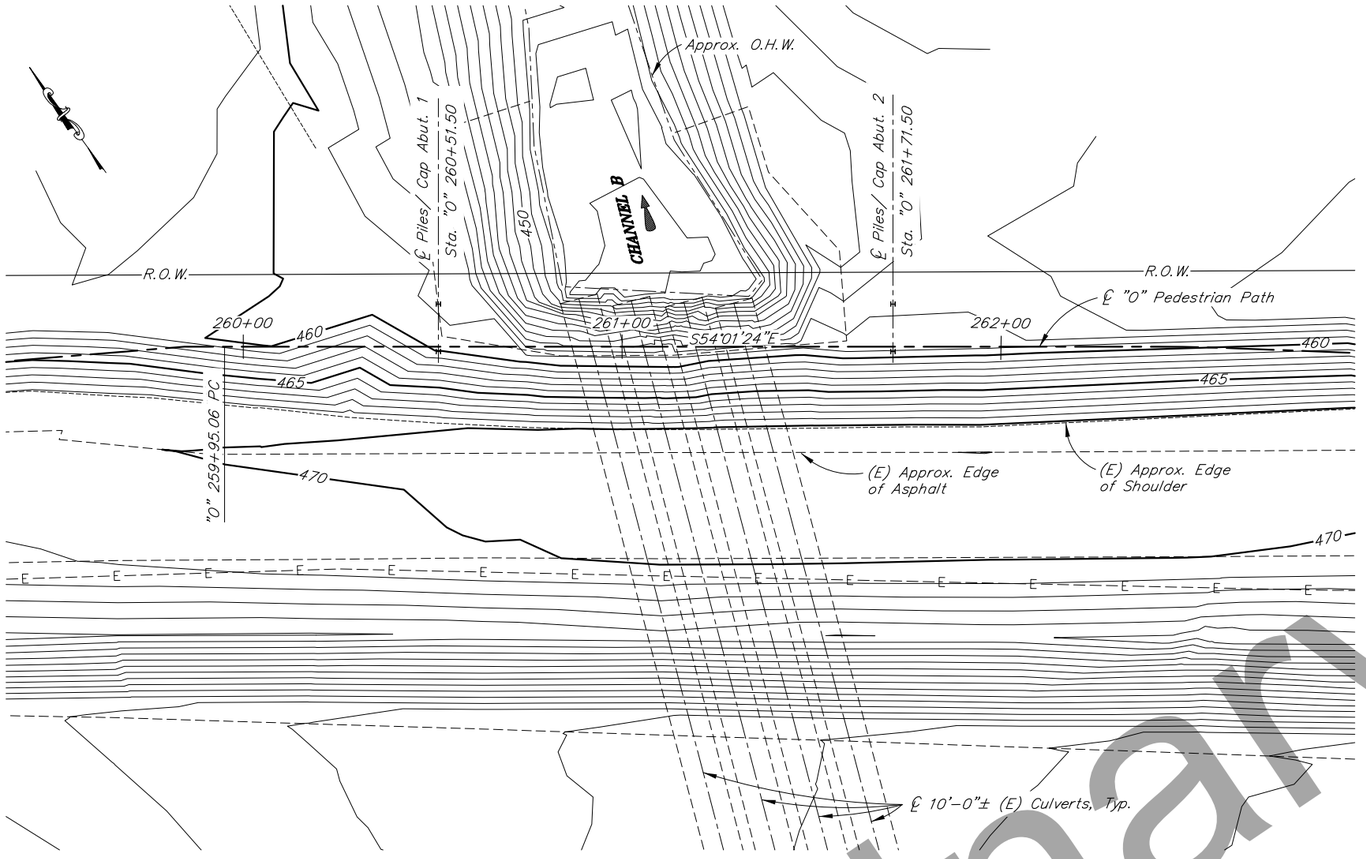

SITE PLAN

10 0 20 40
Feet

GENERAL NOTES

DESIGN:..... AASHTO LRFD Bridge Design Specifications, 2020 Edition, with latest interim specifications.

AASHTO LRFD Guide Specifications for the Design of Pedestrian Bridges, 2009 Edition with latest Interim revisions.

Seismic design per AASHTO Guide Specifications for LRFD Seismic Bridge Design, 2011 with latest interim revisions.

LIVE LOAD:..... 90 psf pedestrian or H10 service vehicle whichever produces maximum effect.

DEAD LOAD:..... Includes 75 psf for C.I.P. Deck

SEISMIC PARAMETERS:..... PGA = 0.28
S_S = 0.65
S_1 = 0.21
Site Class = D
Liquefaction Potential = Moderate
AASHTO 7% probability of exceedance in 75 years.

REINFORCEMENT:..... ASTM A706, Grade 60, Fy = 60,000 psi
ASTM A970 Headed bars, Class HA.
Space reinforcement evenly unless otherwise noted.

CONCRETE:..... Class A Concrete, f'c = 4,000 psi.

PREFABRICATED STEEL BRIDGE:.... See Specifications
Galvanize all structural steel in accordance with AASHTO M111 unless shown otherwise.

STRUCTURAL STEEL PILING:..... ASTM A709, Gr 50T3, Fy = 50,000 psi
Pile Tip reinforcing is required.

PILE DATA TABLE

LOCATION	PILE TYPE	DRIVING CRITERIA: MINIMUM PENETRATION (ft)	DRIVING CRITERIA: ESTIMATED PILE TIP ELEVATION	DRIVING CRITERIA: DRIVING RESISTANCE (K)	DESIGN DATA: STRENGTH I FACTORED LOAD (K)	DESIGN DATA: NOMINAL RESISTANCE (K)	DESIGN DATA: RESISTANCE FACTOR, Φ
Abutment 1	HP14x117	35.0	360	370	185	370	0.50
Abutment 2	HP14x117	35.0	365	370	185	370	0.50

Difficult driving conditions are expected. Pilot bore hole required for each pile.

ABBREVIATIONS:

℄	= centerline	f'c	= specified concrete compressive strength
ℙ	= plate	Fy	= yield stress
&	= and	Glav.	= galvanize
@	= at	Hwy.	= highway
ø	= diameter	ksf	= 1000 pounds per square foot
±	= approximate	LB	= pound
AASHTO	= American Association of State Highway and Transportation Officials	LF	= linear foot
		LS	= lump sum
ASTM	= American Society for Testing and Materials	Lt.	= left
		max.	= maximum
Abut.	= abutment	min.	= minimum
Approx.	= approximate	n.f.	= near face
b.f.	= back/dirt face	No.	= number
bot.	= bottom	o.c.	= on center
Br.	= bridge	O.H.W.	= ordinary high water
btwn.	= between	pcf	= pounds per cubic foot
Brg.	= bearings	psf	= pounds per square foot
C.I.P.	= cast in place	psi	= pounds per square inch
Clr.	= clear, clearance	PVC	= point of vertical curve
CY	= cubic yard	PVI	= point of vertical intersection
dia.	= diameter	PVT	= point of vertical tangent
Dwg.	= drawing	R.O.W.	= right of way
E	= expansion	Rt.	= right
(E)	= existing	Rd.	= road
EA	= each	spc.	= space, spaces
Elev.	= elevation	Sta.	= station
e.f.	= each face	SF	= square feet
e.w.	= each way	Symm.	= symmetric
F	= fixed	Typ.	= typical
f.f.	= front/air face	——E——	= underground electrical line
		w/	= with

ESTIMATE OF QUANTITIES

ITEM NO.	ITEM	PAY UNIT	ESTIMATING UNIT	SUBST.	SUPERST.	TOTAL QUANTITY
205.0006.0000	Structural Fill	CY	CY	175	---	175
501.0001.0000	Class A Concrete	LS	CY	36.3	---	36.3
503.0001.0000	Reinforcing Steel	LS	LBS	5,675	---	5,675
503.0002.0000	Epoxy-Coated Reinforcing Steel	LS	LBS	810	---	810
504.2000.0000	Prefabricated Steel Bridge	LS	EA	---	1	1
505.0005.0001	Furnish Structural Steel H-Piles, HP14x117	LF	LF	385	---	385
505.0006.0001	Drive Structural Steel H-Piles, HP14x117	EA	EA	4	---	4
507.0002.0000	Pedestrian Railing	LF	LF	---	48	48

Item numbers are for reference only. Quantities shown are not necessarily the pay quantities nor the total quantity of the particular item.

Preliminary Plans

DESIGNED BY: Travis Arndt	CHECKED: Elmer Marx	HYDRAULICS BY: Engineer	CHECKED BY: Engineer
DRAWN BY: Sam Sollie	CHECKED: Travis Arndt	FOUNDATIONS REVIEWED BY: Dave Hemstreet	
QUANTITIES BY: Travis Arndt	CHECKED: Elmer Marx		

STATE OF ALASKA
DEPARTMENT OF TRANSPORTATION AND PUBLIC FACILITIES
BRIDGE SECTION
3132 Channel Drive
Juneau, Alaska 99801
907-465-2975

STATE OF ALASKA 49TH
Elmer E. Marx III
10-29-2021
SE# 13260
REGISTERED STRUCTURAL ENGINEER

CHANNEL B PEDESTRIAN BRIDGE

NORTH RICHARDSON BIKE PATH

SITE PLAN

BRIDGE NO. 6022
DWG. NO. 2

R:\cad\6022\6022-SITE PLAN Fri, Oct/29/21 01:24pm

STATE	PROJECT DESIGNATION	YEAR	SHEET NO.	TOTAL SHEETS
ALASKA	Z615970000/0A24032	2022	N3	N14

REINFORCING STEEL - ONE ABUTMENT

MARK	NOTE	SIZE	NO.	LENGTH	TYPE	BENDING DIAGRAM
A401		4	24	11'-1"	STIRRUP	
A402	E	4	10	22'-8"	BENT	
A403	E	4	24	VARIES	STIRRUP	
A1001	H	10	12	18'-8"	HEADED	

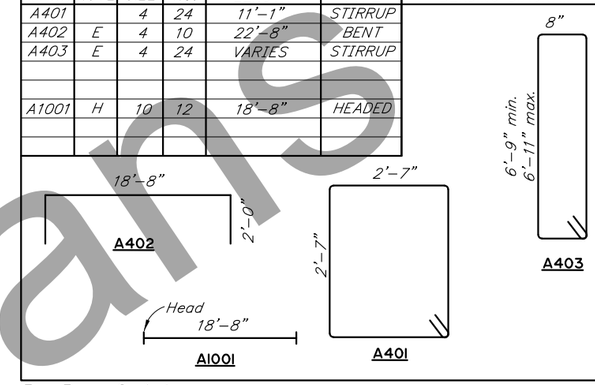

E – Epoxy-Coated
H – Headed reinforcing steel

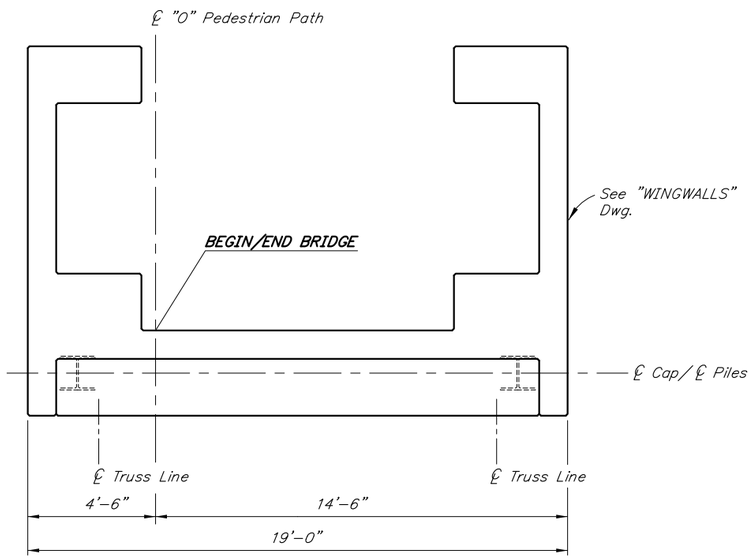

PLAN

(Abutment 1 shown, Abutment 2 Similar)

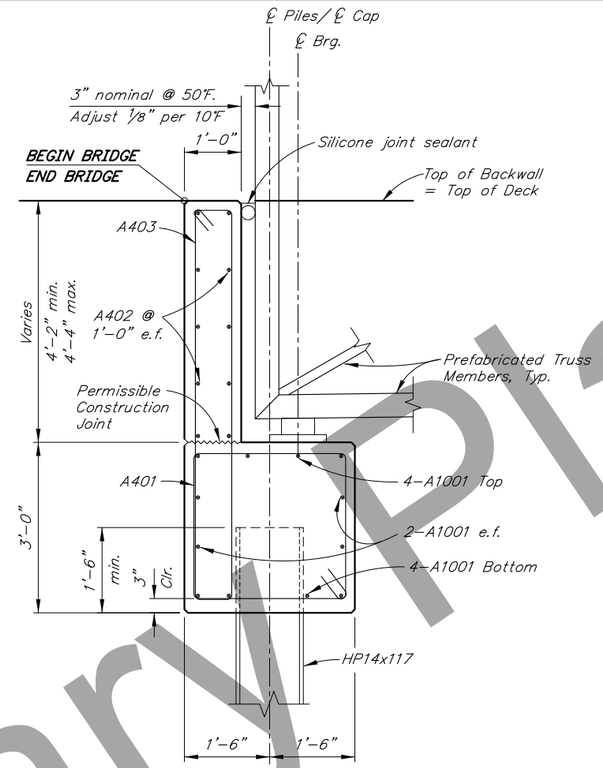

SECTION A-A

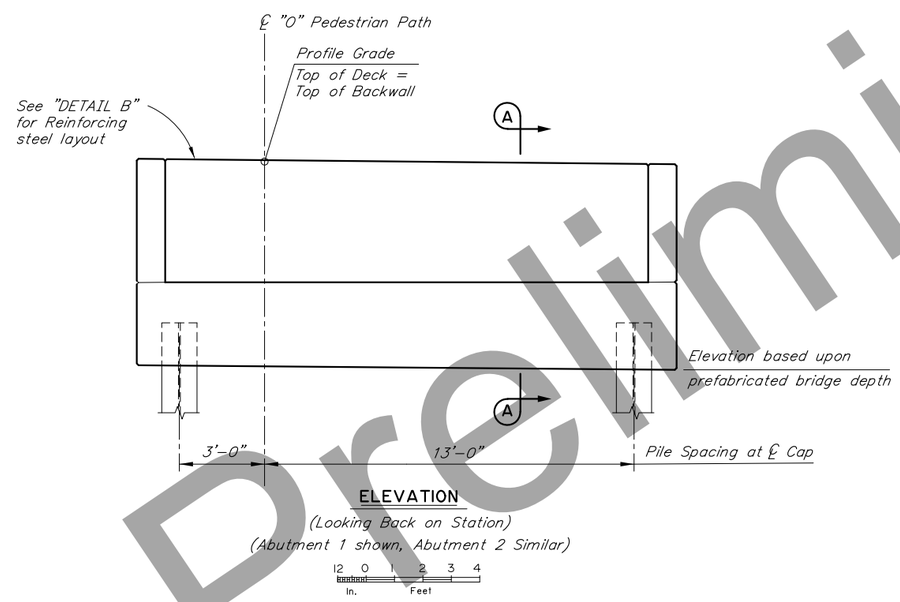

ELEVATION

(Looking Back on Station)
(Abutment 1 shown, Abutment 2 Similar)

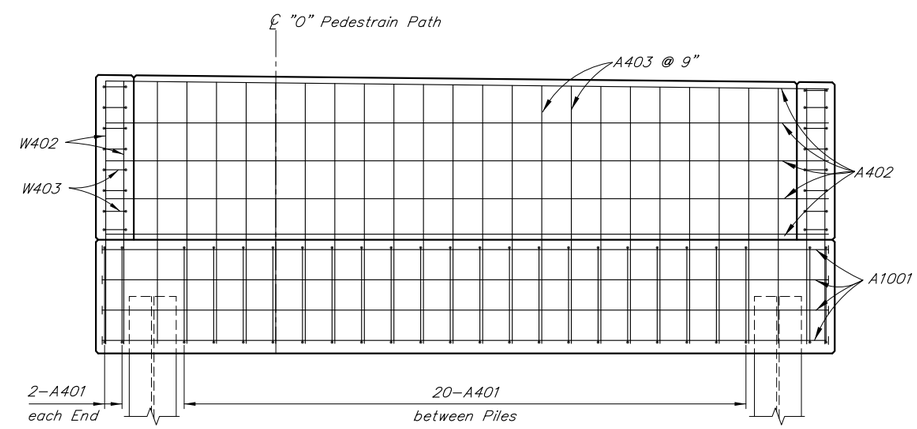

DETAIL B

Preliminary Plans

DESIGNED BY: Travis Arndt	CHECKED: Elmer Marx		
DRAWN BY: Sam Sollie	CHECKED: Travis Arndt		
QUANTITIES BY: Travis Arndt	CHECKED: Elmer Marx		

STATE OF ALASKA
DEPARTMENT OF TRANSPORTATION AND PUBLIC FACILITIES
BRIDGE SECTION
3132 Channel Drive
Juneau, Alaska 99801
907-465-2975

STATE OF ALASKA 49TH
Elmer E. Marx III
10-29-2021
SE# 13260
REGISTERED STRUCTURAL ENGINEER

CHANNEL B PEDESTRIAN BRIDGE

NORTH RICHARDSON BIKE PATH

ABUTMENTS

BRIDGE NO. 6022
DWG. NO. 3

R:\cad\6022\6022-ABUTMENTS Fri, Oct/29/21 01:11pm

STATE	PROJECT DESIGNATION	YEAR	SHEET NO.	TOTAL SHEETS
ALASKA	Z615970000/0A24032	2022	N4	N14

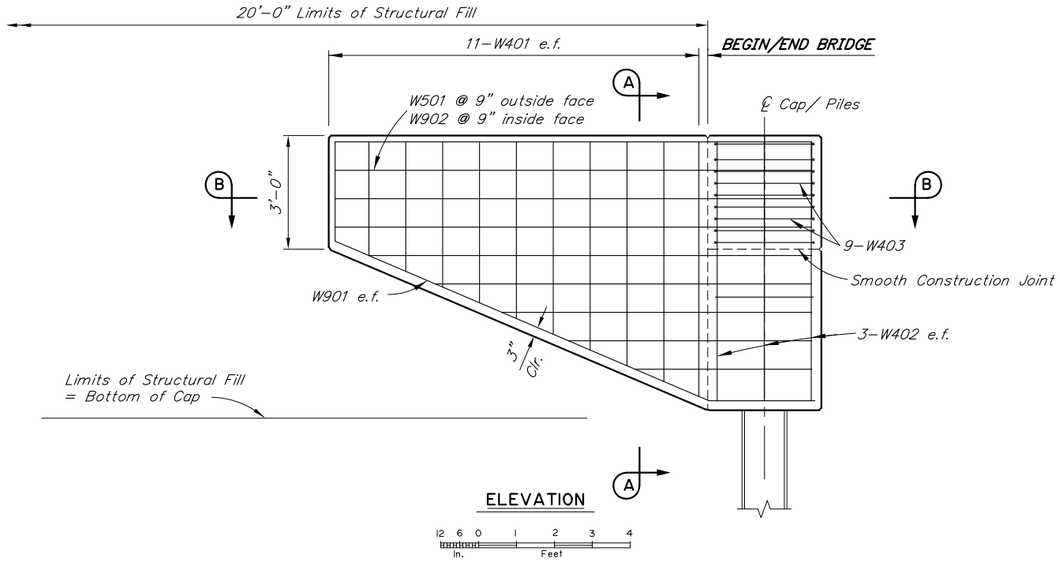

ELEVATION

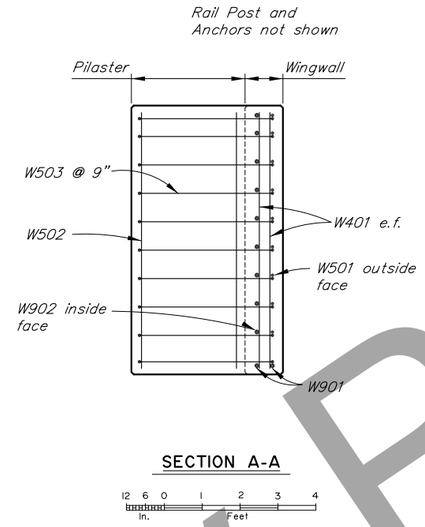

SECTION A-A

REINFORCING STEEL - ONE ABUTMENT

MARK	NOTE	SIZE	NO.	LENGTH	TYPE	BENDING DIAGRAM
W401		4	44	VARIES	---	
W402		4	12	6'-10"	---	
W403		4	18	7'-5"	STIRRUP	
W501		5	18	VARIES	---	
W502		5	36	VARIES	---	
W503		5	30	11'-7"	STIRRUP	
W901		9	4	13'-5"	BENT	
W902		9	18	VARIES	---	

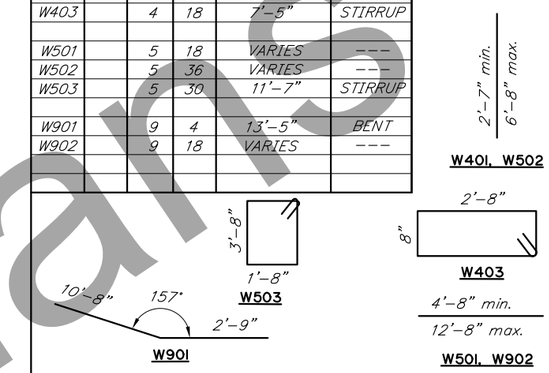

TOP OF WINGWALL ELEVATION TABLE (FT)

LOCATION	A DOWNSTREAM	B DOWNSTREAM	C UPSTREAM	D UPSTREAM
ABUTMENT 1	463.08	463.04	463.25	463.21
ABUTMENT 2	462.44	462.48	462.61	462.65

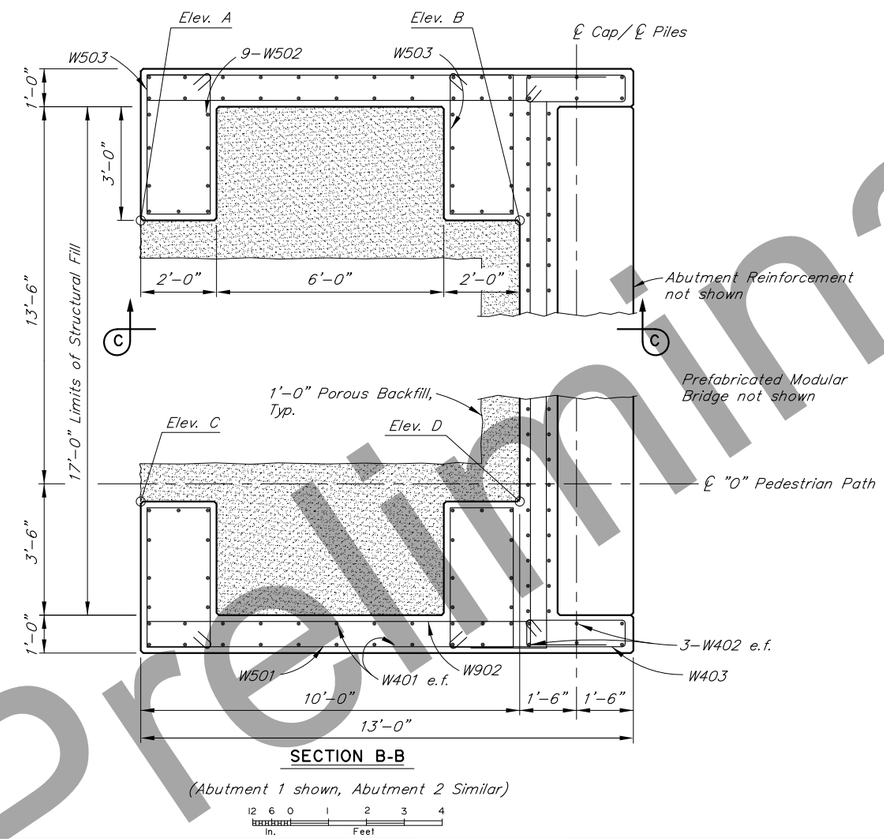

SECTION B-B

(Abutment 1 shown, Abutment 2 Similar)

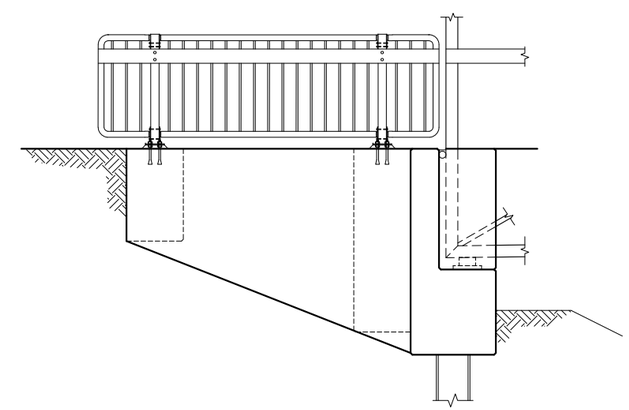

SECTION C-C

12 0 1 2 3 4
In. Feet

Preliminary Plans

DESIGNED BY: Travis Arndt	CHECKED: Elmer Marx		
DRAWN BY: Sam Sollie	CHECKED: Travis Arndt		
QUANTITIES BY: Travis Arndt	CHECKED: Elmer Marx		

STATE OF ALASKA
DEPARTMENT OF TRANSPORTATION AND PUBLIC FACILITIES
BRIDGE SECTION
3132 Channel Drive
Juneau, Alaska 99801
907-465-2975

STATE OF ALASKA 49TH
Elmer E. Marx III
10-29-2021
SE# 13260
REGISTERED STRUCTURAL ENGINEER

CHANNEL B PEDESTRIAN BRIDGE

NORTH RICHARDSON BIKE PATH

WINGWALLS

BRIDGE NO. 6022
DWG. NO. 4

R:\cad\6022\6022-WINGWALLS Fri, Oct/29/21 01:11pm

STATE	PROJECT DESIGNATION	YEAR	SHEET NO.	TOTAL SHEETS
ALASKA	Z615970000/0A24032	2022	N5	N14

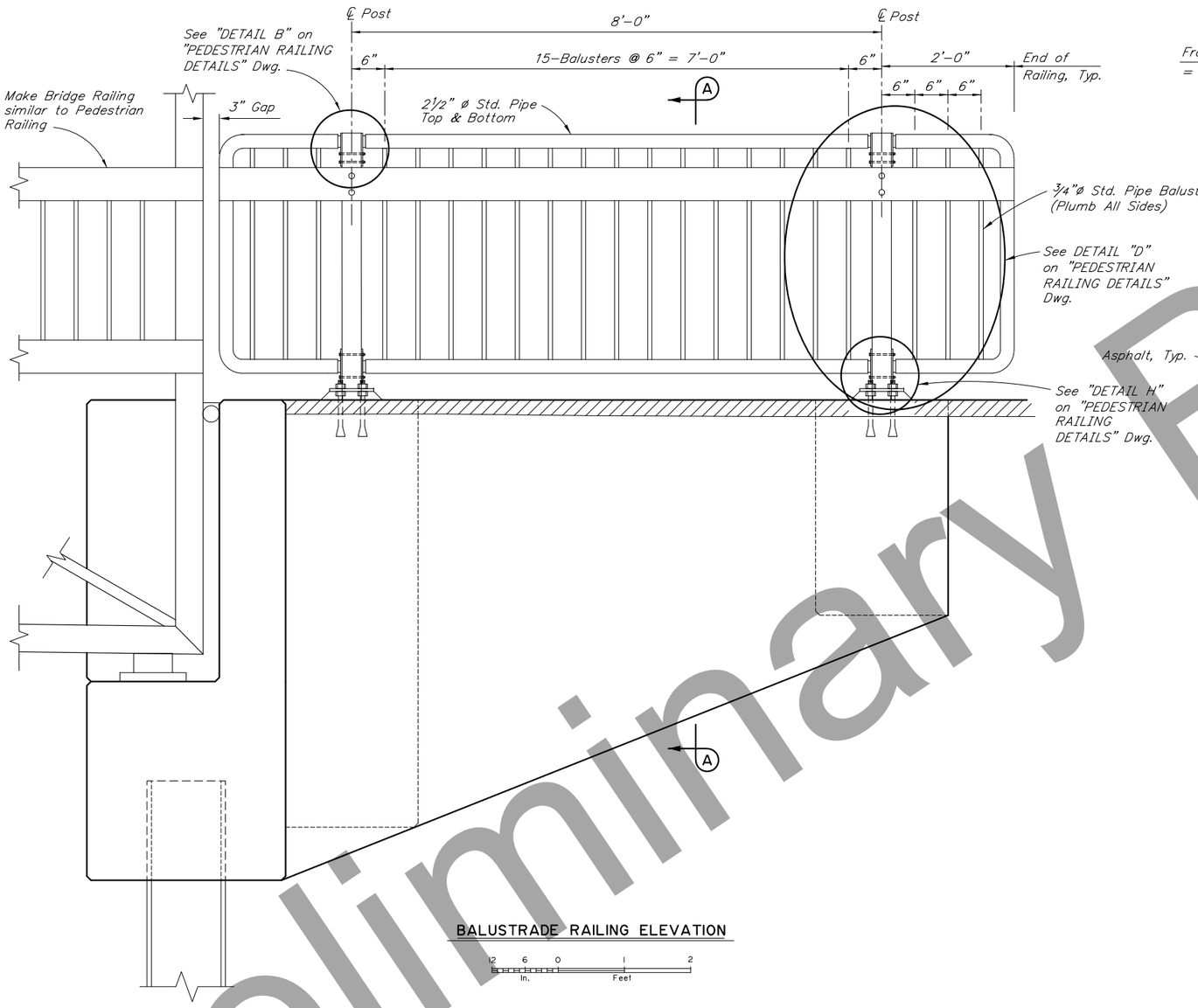

BALUSTRADE RAILING ELEVATION

12 6 0 1 2
In. Feet

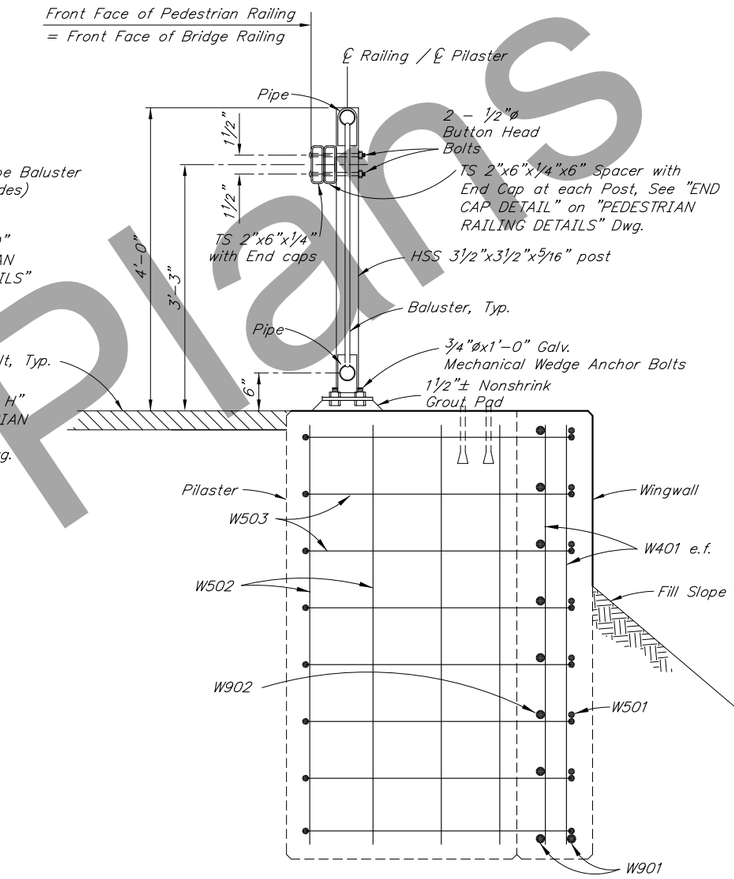

SECTION A-A

12 6 0 1 2
In. Feet

NOTES

1. *Prefabricate the railing panels.*
2. *Install posts plumb.*

Preliminary Plans

DESIGNED BY: Travis Arndt	CHECKED: Elmer Marx		
DRAWN BY: Sam Sollie	CHECKED: Travis Arndt		
QUANTITIES BY: Travis Arndt	CHECKED: Elmer Marx		

STATE OF ALASKA
DEPARTMENT OF TRANSPORTATION AND PUBLIC FACILITIES
BRIDGE SECTION
3132 Channel Drive
Juneau, Alaska 99801
907-465-2975

STATE OF ALASKA 49TH
Elmer E. Marx III
10-29-2021
SE# 13260
REGISTERED STRUCTURAL ENGINEER

CHANNEL B PEDESTRIAN BRIDGE

NORTH RICHARDSON BIKE PATH

PEDESTRIAN RAILING

BRIDGE NO. 6022
DWG. NO. 5

R:\cad\6022\6022-PED RAIL Fri, Oct/29/21 01:12pm

STATE	PROJECT DESIGNATION	YEAR	SHEET NO.	TOTAL SHEETS
ALASKA	Z615970000/0A24032	2022	N6	N14

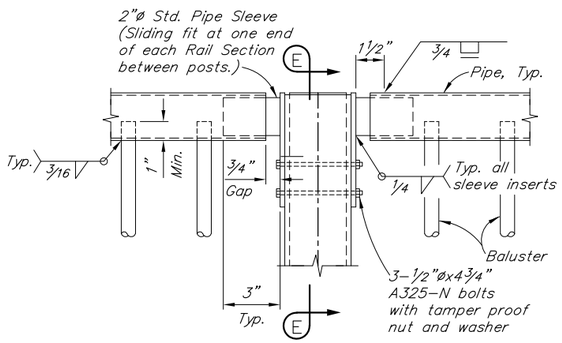

DETAIL B

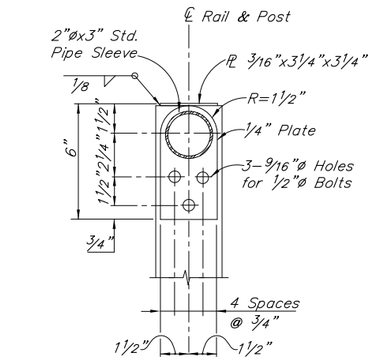

SECTION E-E

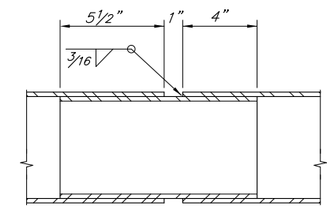

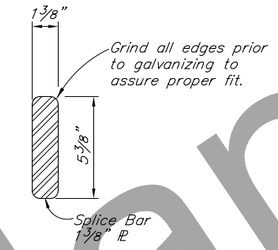

RAIL SPLICE DETAIL

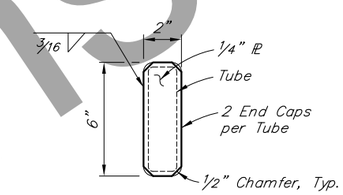

END CAP DETAIL

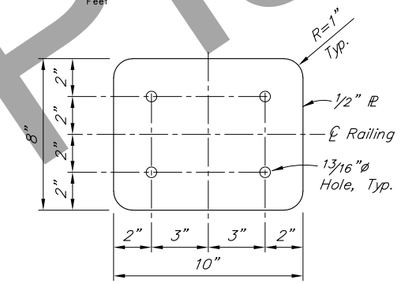

BASE PLATE

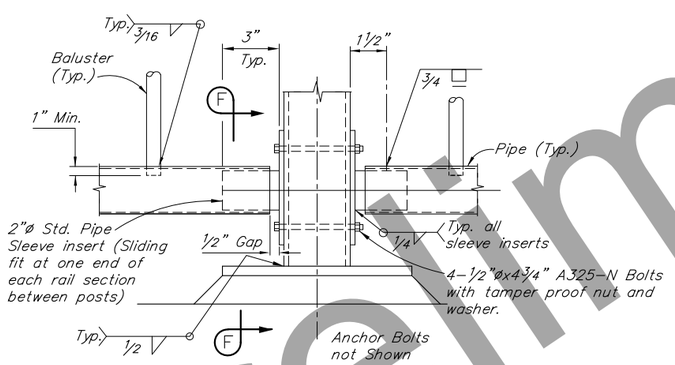

DETAIL H

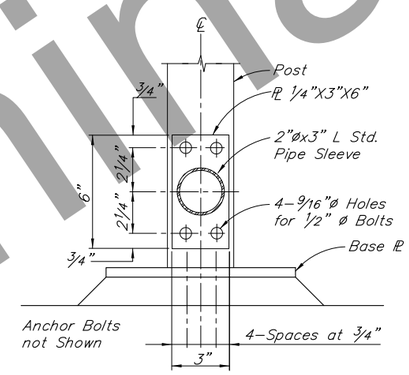

SECTION F-F

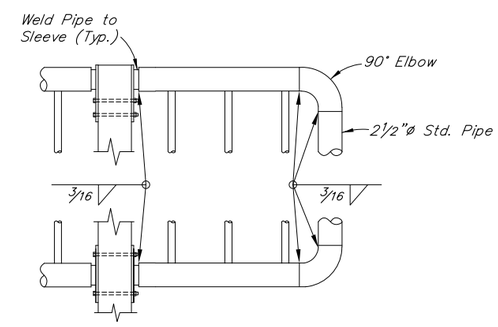

DETAIL D

Preliminary Plans

DESIGNED BY: Travis Arndt	CHECKED: Elmer Marx		
DRAWN BY: Sam Sollie	CHECKED: Travis Arndt		
QUANTITIES BY: Travis Arndt	CHECKED: Elmer Marx		

STATE OF ALASKA
DEPARTMENT OF TRANSPORTATION AND PUBLIC FACILITIES
BRIDGE SECTION
3132 Channel Drive
Juneau, Alaska 99801
907-465-2975

STATE OF ALASKA 49TH
Elmer E. Marx III
10-29-2021
SE# 13260
REGISTERED STRUCTURAL ENGINEER

CHANNEL B PEDESTRIAN BRIDGE
NORTH RICHARDSON BIKE PATH
PEDESTRIAN RAILING DETAILS

BRIDGE NO. 6022
DWG. NO. 6

R:\cad\6022\6022-PED RAIL DETAILS Fri, Oct/29/21 01:12pm

STATE	PROJECT DESIGNATION	YEAR	SHEET NO.	TOTAL SHEETS
ALASKA	Z615970000/0A24032	2017	N7	N14

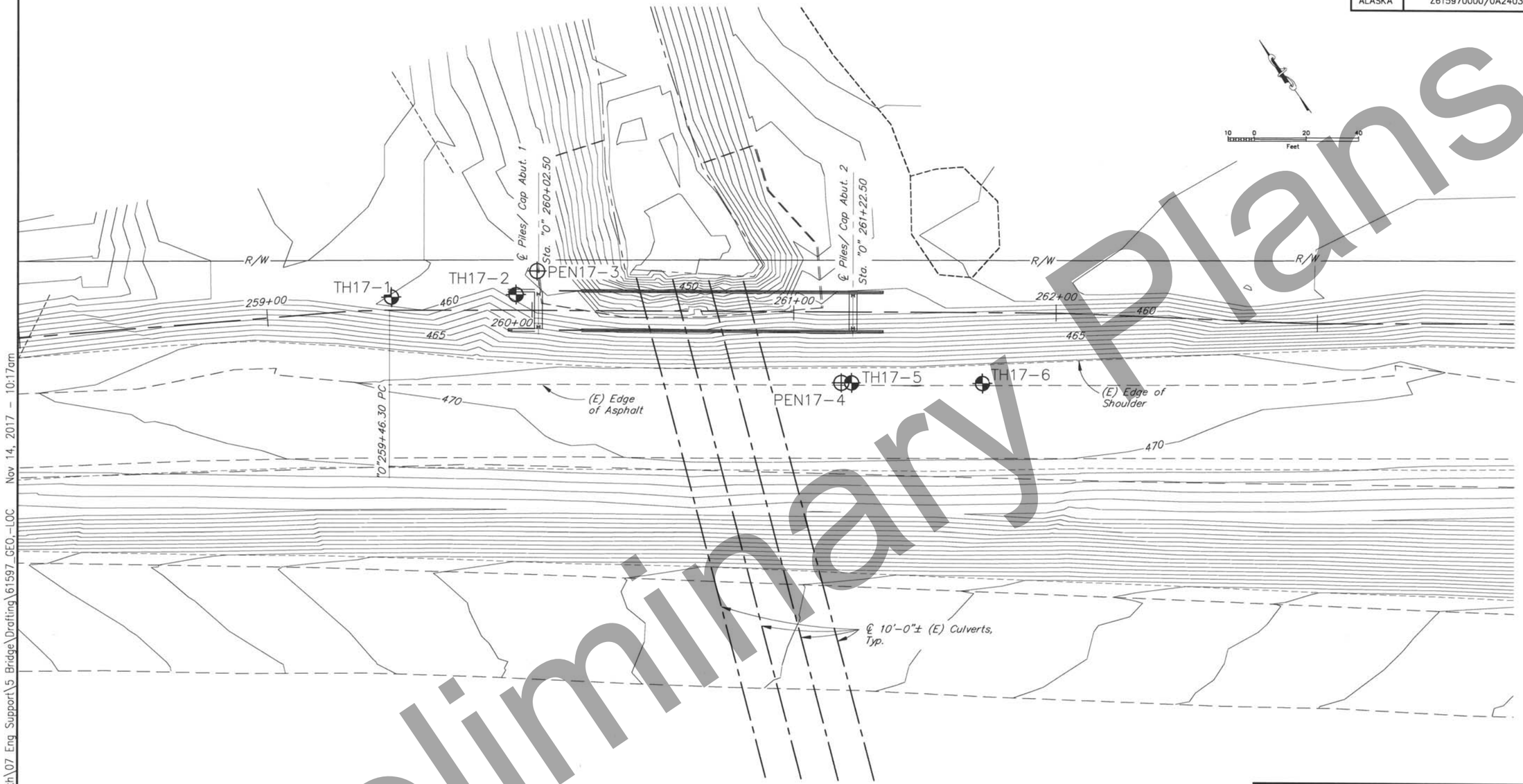

LEGEND

TEST HOLE

PENETROMETER

TEST HOLE AND PENETROMETER LOCATIONS

TEST HOLE / PENETROMETER	STATION	OFFSET	DEPTH	LOCATION
TH17-1	259+47	5' Lt	74.0'	APPROACH 1
TH17-2	259+94	6' Lt	99.5'	ABUTMENT 1
PEN17-3	260+02	15' Lt	97.0'	ABUTMENT 1
PEN17-4	261+18	27' Rt	94.0'	ABUTMENT 2
TH17-5	261+22	27' Rt	93.0'	ABUTMENT 2
TH17-6	261+72	27' Rt	75.5'	APPROACH 2

DESIGNED BY: D. Hemstreet	CHECKED: Engineer		
DRAWN BY: R. Angell	CHECKED: Engineer		
QUANTITIES BY: Engineer	CHECKED: Engineer		

STATE OF ALASKA
DEPARTMENT OF TRANSPORTATION AND PUBLIC FACILITIES
STATEWIDE MATERIALS

STATE OF ALASKA 49TH David A. Hemstreet No. CE 9800 REGISTERED PROFESSIONAL ENGINEER
David A. Hemstreet
11/14/17

CHANNEL B PEDESTRIAN BRIDGE

NORTH RICHARDSON BIKE PATH

TEST HOLE & PENETROMETER LOCATION

BRIDGE NO. 6022

DWG. NO. 7

Preliminary Plans

H:\Projects\Rich_Hwy\61597_Rich_356_362_BikePedPath\07 Eng Support\5 Bridge\Drafting\61597_GEO_-LOC Nov 14, 2017 - 10:17am

STATE	PROJECT DESIGNATION	YEAR	SHEET NO.	TOTAL SHEETS
ALASKA	Z615970000/0A24032	2017	N8	N14

TYPICAL TEST HOLE LOG

DATE: Date begun – Date completed
STATION / OFFSET: XX+XX FEET RT or LT

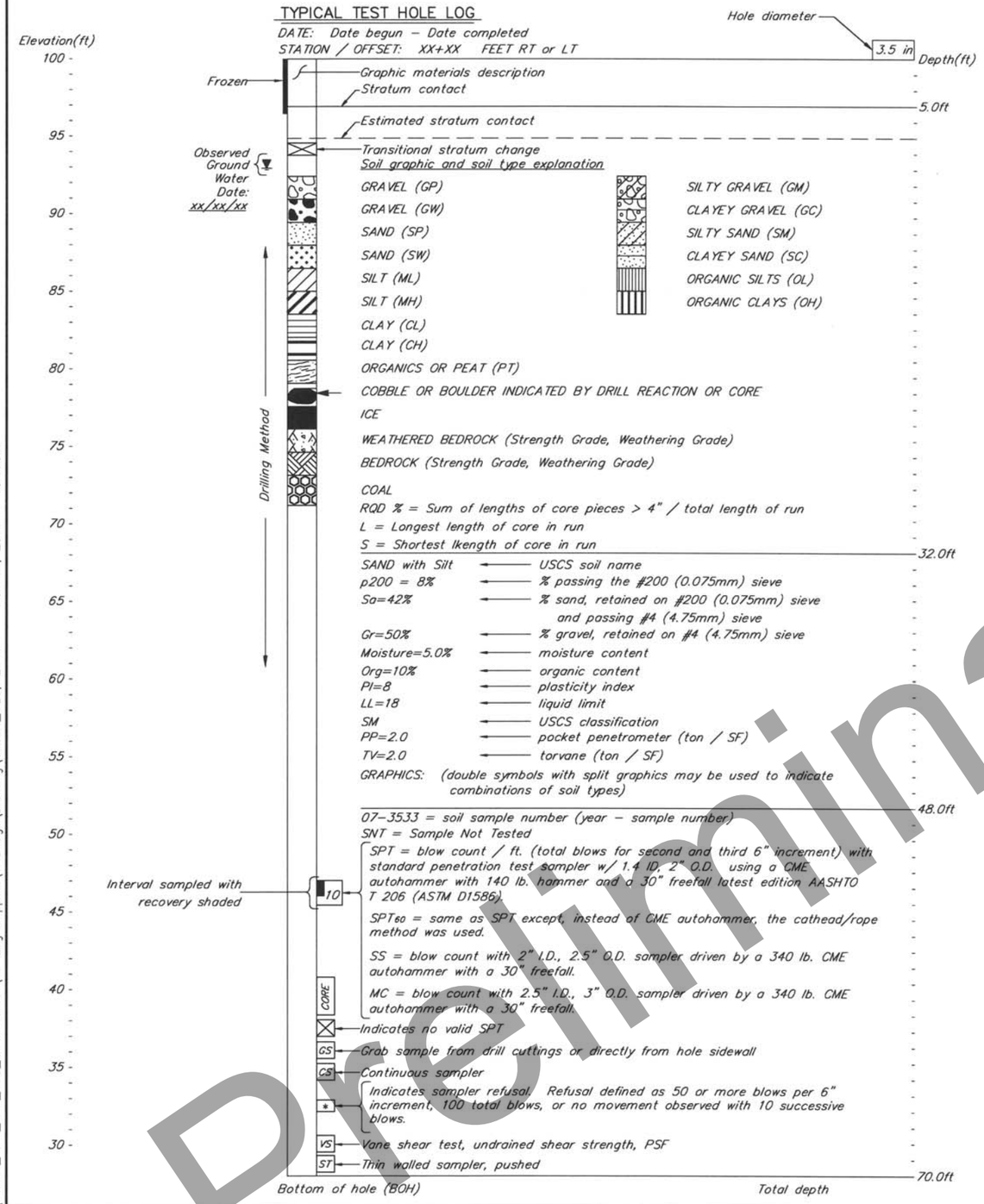

NOTES:

1) The test hole logs depicted graphically in these drawings are distillations of the original field logs, based on post-field investigation review and analysis. These drafted logs include changes made to field descriptions based upon laboratory test data, review and analysis. Detailed field observations of rock and soil sampled during the drilling program are not reproduced in the drafted logs.
2) Description of soils follows Alaska Geotechnical Procedures manual. Classification of soils follows Unified Soil Classification System (ASTM D2487).
3) The test hole logs from these sheets are an integral part of the Foundation Geology Report. See Construction Contract Bid Documents – invitation to bid/notice to bidders. Important information about the test hole logs and the foundation investigation is contained in the report. The test hole logs are not severable from and cannot be completely and correctly interpreted without reference to the Foundation Geology Report.

TYPICAL PENETROMETER TEST LOG

DATE: Date begun – Date completed
STATION / OFFSET: XX+XX / RT or LT (feet)

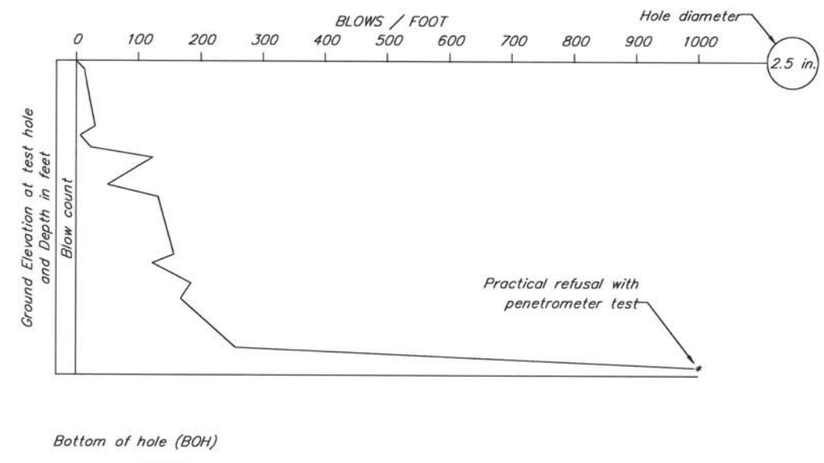

NOTES:
Penetrometer W/2.5" O.D., with a CME AUTOMATIC Hammer using a 340 lb. weight and a 30" freefall

DESIGNED BY: D.Hemstreet	CHECKED: Engineer		
DRAWN BY: R. Angell	CHECKED: Engineer		
QUANTITIES BY: Engineer	CHECKED: Engineer		

STATE OF ALASKA
DEPARTMENT OF TRANSPORTATION AND PUBLIC FACILITIES
STATEWIDE MATERIALS

STATE OF ALASKA 49TH David A. Hemstreet No. CE 9800 REGISTERED PROFESSIONAL ENGINEER
David A. Hemstreet 2/14/17

CHANNEL B PEDESTRIAN BRIDGE
NORTH RICHARDSON BIKE PATH
TEST HOLE & PENETROMETER LEGEND

BRIDGE NO. 6022
DWG. NO. 8

Preliminary Plans

H:\Projects\Rich_Hwy\61597_Rich_356_362_BikePedPath\07 Eng Support\5 Bridge\Drafting\61597_GEO,-2-TYP Nov 14, 2017 – 10:17am

STATE	PROJECT DESIGNATION	YEAR	SHEET NO.	TOTAL SHEETS
ALASKA	Z615970000/0A24032	2017	N9	N14

TH17-1

Date: 1/21/17 - 1/22/17
Station / Offset: 259+47 / 5' Lt

Elevation ft. | 4in | Depth ft.

460 — 0.0 — SAND with Silt and Gravel (Fill) (SP-SM) Brown, Nbn

455 — 4.5 — 3.5ft — SILTY SAND with Gravel (SM) Brown, with organics

moist, Slightly organic

27 — FS-15 SPT — FS-15 p200=33.5%, Sa=40.5%, Gr=26%, Moisture=12.2%, Org=1.4%, PI=NP, LL=NV, SM, Silty sand with gravel drive casing than drill

8.0ft — SAND with Silt and Gravel (SP-SM) Brown, moist

450 — 10.0ft — SILTY SAND with Gravel (SM) Brown, moist

66 — FS-16 SPT — FS-16 sampler pushed on gravel 3rd & 4th interval. Sample combined with FS-15 for lab testing. — 11.5ft

SAND with Silt and Gravel (SP-SM) Brown, moist, with interbedded gravel layers

14.0 ▼ 1/22/17

wet

445 — 15.0ft — GRAVEL with Silt and Sand (GW-GM) Brown Gray, moist to wet, variety of gravel types, rounded to subrounded Alluvium

25 — FS-17 SPT — FS-17 p200=7.8%, Sa=39%, Gr=53%, Moisture=7.6%, PI=NP, LL=NV, GW-GM, Well graded gravel with silt and sand

440 — 23 — FS-18 SPT — FS-18 2-inches slough. Sample combined with FS-17 for lab testing

435 — 32 — FS-19 MC — FS-19 4-inches slough, sampler pushed gravel 1st interval, p200=7.6%, Sa=44%, Gr=49%, Moisture=8.4%, PI=NP, LL=NV, GW-GM, well graded gravel with silt and sand

430 — interbedded sand layers

17 — FS-20 MC — FS-20 3-inches slough, Moisture=7.1%

425 — 24 — FS-21 MC — FS-21 3-inches slough, p200=8.2%, Sa=42%, Gr=50%

36.5ft — SAND with Silt and Gravel (SP-SM) Brown Gray, moist to wet, with interbedded silty sand and/or gravel layers

420 — 20 — FS-22 MC — FS-22 p200=9.2%, Sa=51.1%, Gr=40%, Moisture=9.5%

415 — 20 — FS-23 MC — FS-23 3-inches slough. Sample combined with FS-22 for lab testing

48.0ft — GRAVEL with Silt and Sand (GP-GM) Brown Gray, moist to wet, with interbedded sand layers

410 — 13 — FS-24 MC — FS-24 p200=7.3%, Sa=42%, Gr=51%, Moisture=7.6%

52.0ft — SAND with Silt and Gravel (SP-SM) Brown Gray, moist to wet

405 — 56.0ft — GRAVEL with Silt and Sand (GP-GM) Brown Gray, moist to wet, with interbedded sand layers

400 — 60.0ft — SAND with Silt and Gravel (SP-SM) Brown Gray, moist to wet

24 — FS-25 MC — FS-25 p200=8.8%, Sa=59%, Gr=32%, Moisture=13.2%, PI=NP, LL=NV, SP-SM, poorly graded sand with silt and gravel

395 — 65.0ft — GRAVEL with Silt and Sand (GP-GM) Brown Gray, moist to wet

390

Casing & Tri-Cone

TH17-1 (Cont.)

Date: 1/21/17 - 1/22/17
Station / Offset: 259+47 / 5' Lt

Elevation ft. | 4in | Depth ft.

390 — Casing & Tri-Cone

25 — FS-26 MC — FS-26 p200=5.1%, Sa=45%, Gr=50%, Moisture=7.6%

B.O.H. 74 ft. — 74.0ft

Preliminary Plans

DESIGNED BY: D.Hemstreet	CHECKED: Engineer		
DRAWN BY: R. Angell	CHECKED: Engineer		
QUANTITIES BY: Engineer	CHECKED: Engineer		

STATE OF ALASKA
DEPARTMENT OF TRANSPORTATION AND PUBLIC FACILITIES
STATEWIDE MATERIALS

STATE OF ALASKA 49TH David A. Hemstreet No. CE 9800 REGISTERED PROFESSIONAL ENGINEER
David A. Hemstreet 11/14/17

CHANNEL B PEDESTRIAN BRIDGE

NORTH RICHARDSON BIKE PATH

TEST HOLE & PENETROMETER LOGS

BRIDGE NO. 6022
DWG. NO. 9

H:\Projects\Rich_Hwy\61597_Rich_356_362_BikePedPath\07 Eng Support\5 Bridge\Drafting\61597_GEO,-3-TH17-1 Nov 14, 2017 - 10:17am

STATE	PROJECT DESIGNATION	YEAR	SHEET NO.	TOTAL SHEETS
ALASKA	Z615970000/0A24032	2017	N10	N14

TH17-2

Date: 1/14/17 - 1/20/17
Station / Offset: 259+94 / 6' Lt

6.5in

Elevation ft.	Depth ft.	Sample	Description
460	0.0		SAND with Silt and Gravel (Fill) (SP-SM) Brown Gray, Nbn, Frozen
	3.0		moist to wet, non frozen with organics
455	4.0ft	18 FS-1 SPT	SILT with Sand (ML) Light brown Gray, moist to wet, Trace gravel FS-1 4-inches slough, p200=76.9%, Sa=2.3%, Gr=0%, Moisture=26.8%
	8.0ft		SAND with Silt and Gravel (SP-SM) Brown, dry to moist, some cobbles
450		45 FS-2 SPT	FS-2 p200=10.1%, Sa=49%, Gr=41%, Moisture=4.3%, PI=NP, LL=NV, SP-SM, poorly graded sand with silt and gravel
445	13.0ft	16 FS-3 SPT	GRAVEL with Silt and Sand (GP-GM) Brown, wet, rounded to subrounded gravel and variety of types FS-3 p200=6.9%, Sa=41%, Gr=52%, Moisture=8.2%
	18.0ft		SAND with Silt and Gravel (SP-SM) Brown, moist to wet
440		32 FS-4 SPT	FS-4 p200=9.0%, Sa=46%, Gr=45%, Moisture=8.9%, PI=NP, LL=NV, SP-SM, poorly graded sand with silt and gravel
435		32 FS-5 SPT	FS-5 p200=6.5%, Sa=48%, Gr=45%, Moisture=9.2%, PI=NP, LL=NV, SP-SM, poorly graded sand with silt and gravel
	27.0ft		SAND (SP) Brown, moist to wet
430		31 FS-6 SPT	FS-6 4-inches sand heave, p200=4.8%, Sa=95%, Gr=0%
425		35 SPT	2-feet sand heave, back down to clean out. 1.5-feet sand heave last 5-inches good sample.
	38.0ft		switch to 4-inch casing and tricone bit with water.
420		• FS-8 SPT	GRAVEL with Silt and Sand (GW-GM) Brown, moist to wet FS-8 5-inches sand heave. pushed on gravel or cobble for 3rd interval, p200=7.9%, Sa=43%, Gr=49%, Moisture=7.9%, PI=NP, LL=NV, GW-GM, well graded gravel with silt and sand
	43.0ft		SAND with Gravel (SP) Brown, moist to wet drive casing than drill. 244 casing blows per 5-feet using 340 pound hammer
415		15 FS-9 SPT	FS-9 3-inches heave, p200=2.7%, Sa=64%, Gr=33%, Moisture=15.6%, PI=NP, LL=NV, SP, poorly graded sand with gravel
410		25 FS-10 SPT	FS-10 sampler drove on gravel throughout most interval
	52.0ft		GRAVEL with Silt and Sand (GP-GM) Brown Gray, moist to wet, rounded to subrounded gravel and variety of types
405			
400		36 FS-11 SPT	FS-11 p200=8.7%, Sa=38%, Gr=53%, Moisture=9.9%
395			

13.0 ▼ 1/14/17

Casing & Tri-Cone

TH17-2 (Cont.)

Date: 1/14/17 - 1/20/17
Station / Offset: 259+94 / 6' Lt

6.5in

Elevation ft.	Depth ft.	Sample	Description
390		21 MC	cutting indicate mostly gravel plastic sand catcher frozen and broke, lost sample.
	70.0ft		GRAVEL with Silt and Sand (GP-GM) Brown Gray, moist to wet, with interbedded sand layers
385			
380		19 FS-12 MC	FS-12 rock in sampler shoe, drove on rock most of interval, p200=5.1%, Sa=35%, Gr=60%, Moisture=5.2%
375			
	88.0ft		SAND with Silt and Gravel (SW-SM) Brown Gray, moist to wet, with interbedded gravel layers
370		28 FS-13 MC	FS-13 p200=7.7%, Sa=51%, Gr=41%, Moisture=7.9%, PI=NP, LL=NV, SW-SM, well graded sand with silt and gravel
	93.5		frozen permafrost. most likely water table on top of frozen
365	94.0ft		GRAVEL with Silt and Sand (GP-GM) Brown Gray, Nbn, variety of gravel types and rounded to subrounded. Alluvium material. drill first than drive casing.
	99.5	• FS-14 MC	FS-14 p200=6.3%, Sa=42%, Gr=52%, Moisture=7.4%
	B.O.H. 99.5 ft.		99.5ft

Casing & Tri-Cone

Preliminary Plans

DESIGNED BY: D.Hemstreet	CHECKED: Engineer		
DRAWN BY: R. Angell	CHECKED: Engineer		
QUANTITIES BY: Engineer	CHECKED: Engineer		

STATE OF ALASKA
DEPARTMENT OF TRANSPORTATION AND PUBLIC FACILITIES
STATEWIDE MATERIALS

STATE OF ALASKA 49TH David A. Hemstreet No. CE 9800 REGISTERED PROFESSIONAL ENGINEER
7/14/17

CHANNEL B PEDESTRIAN BRIDGE

NORTH RICHARDSON BIKE PATH

TEST HOLE & PENETROMETER LOGS

BRIDGE NO. 6022
DWG. NO. 10

H:\Projects\Rich_Hwy\61597_Rich_356_362_BikePedPath\07 Eng Support\5 Bridge\Drafting\61597_GEO_-4-TH17-2 Nov 14, 2017 - 10:17am

STATE	PROJECT DESIGNATION	YEAR	SHEET NO.	TOTAL SHEETS
ALASKA	Z615970000/0A24032	2017	N11	N14

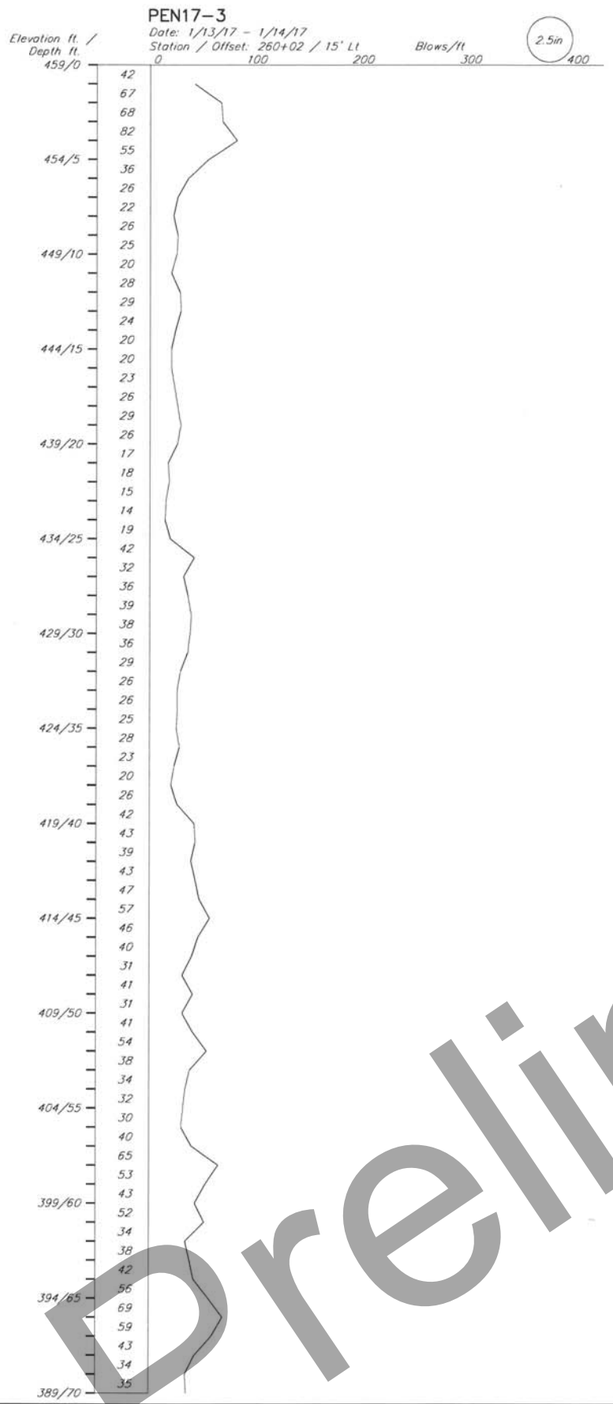

Preliminary Plans

DESIGNED BY: D.Hemstreet	CHECKED: Engineer	STATE OF ALASKA DEPARTMENT OF TRANSPORTATION AND PUBLIC FACILITIES STATEWIDE MATERIALS	CHANNEL B PEDESTRIAN BRIDGE NORTH RICHARDSON BIKE PATH TEST HOLE & PENETROMETER LOGS
DRAWN BY: R. Angell	CHECKED: Engineer		BRIDGE NO. 6022
QUANTITIES BY: Engineer	CHECKED: Engineer		DWG. NO. 11

STATE OF ALASKA 49TH David A. Hemstreet No. CE 9800 REGISTERED PROFESSIONAL ENGINEER
11/14/17

H:\Projects\Rich_Hwy\61597_Rich_356_362_BikePedPath\07 Eng Support\5 Bridge\Drafting\61597_GEO_-5-PEN17-3 Nov 14, 2017 - 10:17am

STATE	PROJECT DESIGNATION	YEAR	SHEET NO.	TOTAL SHEETS
ALASKA	Z615970000/0A24032	2017	N12	N14

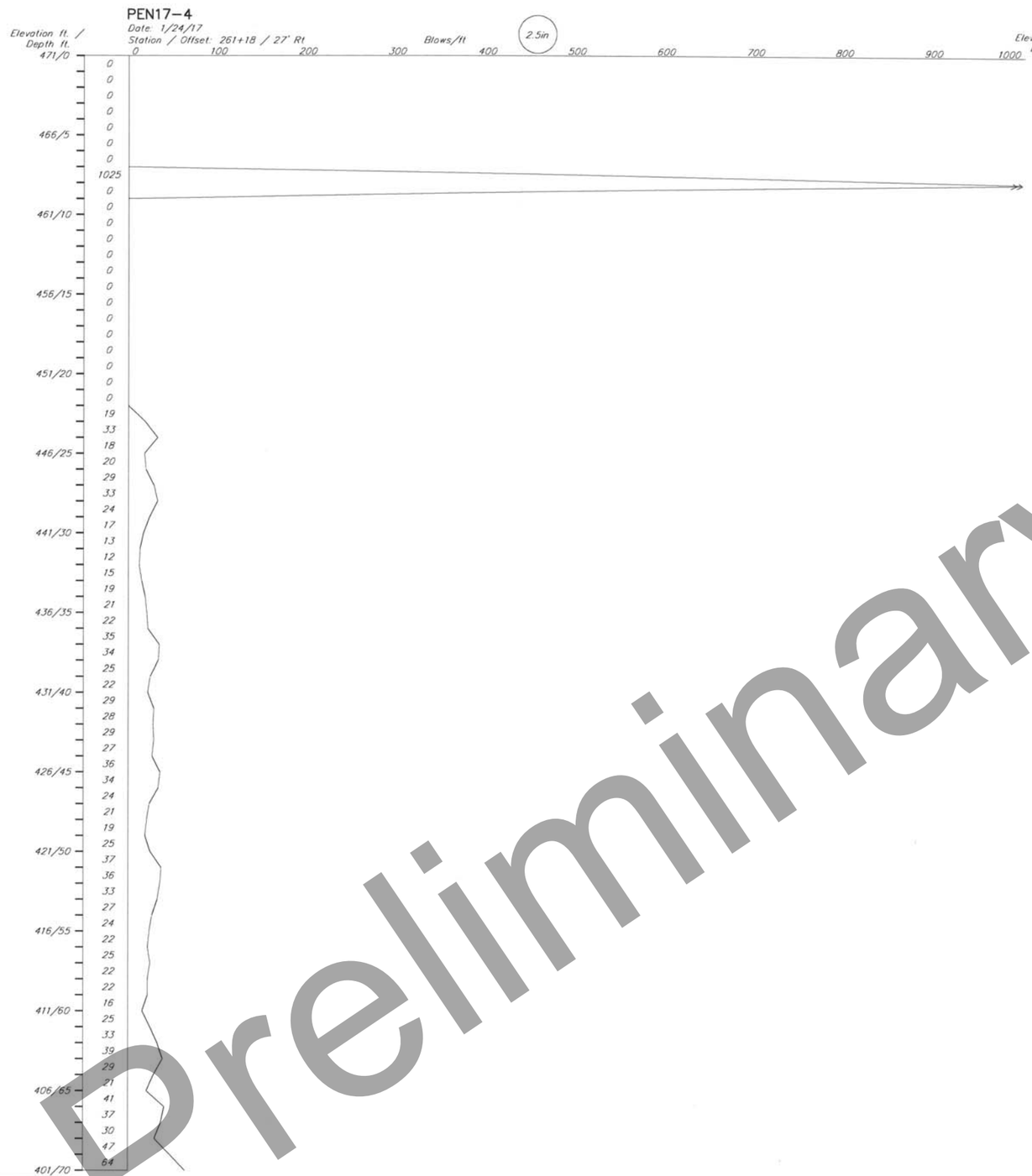

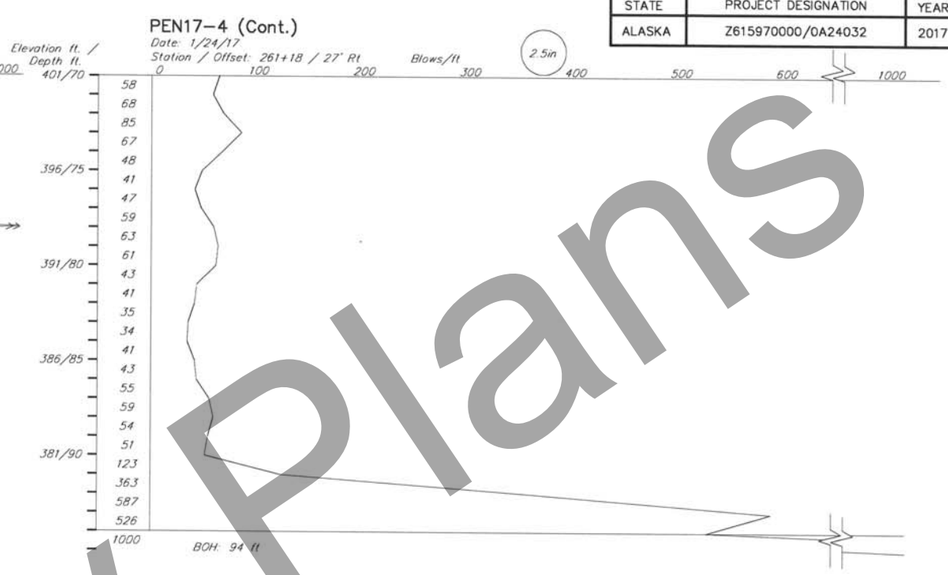

Preliminary Plans

DESIGNED BY: D.Hemstreet	CHECKED: Engineer	
DRAWN BY: R. Angell	CHECKED: Engineer	
QUANTITIES BY: Engineer	CHECKED: Engineer	

STATE OF ALASKA
DEPARTMENT OF TRANSPORTATION AND PUBLIC FACILITIES
STATEWIDE MATERIALS

STATE OF ALASKA 49TH David A. Hemstreet No. CE 9800 REGISTERED PROFESSIONAL ENGINEER
11/14/17

CHANNEL B PEDESTRIAN BRIDGE

NORTH RICHARDSON BIKE PATH

TEST HOLE & PENETROMETER LOGS

BRIDGE NO. 6022
DWG. NO. 12

H:\Projects\Rich_Hwy\61597_Rich_356_362_BikePedPath\07 Eng Support\5 Bridge\Drafting\61597_GEO_-6-PEN17-4 Nov 14, 2017 - 10:17am

STATE	PROJECT DESIGNATION	YEAR	SHEET NO.	TOTAL SHEETS
ALASKA	Z615970000/0A24032	2017	N13	N14

TH17-5

Date: 1/25/17 - 1/26/17
Station / Offset: 261+22 / 27' Rt

Elevation ft. | 4in | Depth ft.

- 0.0 — Asphalt Concrete — 0.2ft
- SAND with Silt and Gravel (Fill) (SP-SM) Brown, Frozen, Nbn. Up to 1-inch rounded to subrounded gravel
- Solid stem auger thru frozen fill, than drive casing to 14-feet
- FS-27 GRAB — GRAVEL with Silt and Sand (Fill) (GW-GM) Brown, Nbn FS-27 p200=9.0%, Sa=41%, Gr=50%, Moisture=1.8%, PI=NP, LL=NV, GW-GM, well graded gravel with silt and sand — 7.0ft
- FS-28 MC — FS-28 p200=10.2%, Sa=43%, Gr=47%, Moisture=4.6%, PI=NP, LL=NV, GP-GM, poorly graded gravel with silt and sand
- 18.0 — GRAVEL with Silt and Sand (GP-GM) Brown Gray, Nbn. Alluvium — 15.0ft
- Drive casing than drill. — 18.0ft
- 66 FS-29 SPT — SAND with Silt and Gravel (SP-SM) Brown Gray, moist, nonfrozen; FS-29 p200=12.7%, Sa=45%, Gr=42%, Moisture=8.1%
- ORGANICS with Silt (OL) Brown, moist, Lag — 23.0ft
- 19 FS-30 SPT — SILTY SAND (SM) Gray, wet, some gravel; FS-30 3-inches slough or heave, p200=43.6%, Sa=47%, Gr=9%, Moisture=25.6%, Org=0.8%, PI=NP, LL=NV, SM, Silty Sand — 23.5ft
- 27.0 ▼ 1/25/17
- GRAVEL with Silt and Sand (GP-GM) Gray, moist to wet — 27.0ft
- SILTY SAND (SM) Gray, moist to wet; 8-inches sand heave and pushed on gravel thru 3rd and 4th interval — 28.0ft
- 19 SPT — 30.5ft
- SAND (SP) Brown, moist to wet, coarse sand
- 9 FS-32 SPT — FS-32 2-feet sand heave, back down to clean out, 1.5-feet heave., p200=1.7%, Sa=9.3%, Gr=5%
- 17 SPT — 12-inches heave; clean heaving sands
- 30 FS-33 SPT — GRAVEL with Silt and Sand (GP-GM) Brown Gray, moist to wet, with interbedded sand layers; FS-33 3-inches slough, p200=7.0%, Sa=34%, Gr=59%, Moisture=10.3% — 44.0ft
- 55 SPT — pushed on gravel thru most of interval, no recovery. Drill cuttings indicate mostly gravel
- GRAVEL with Silt and Sand (GW-GM) Brown Gray, moist to wet, with interbedded sand layers — 52.0ft
- 23 FS-34 MC — FS-34 p200=6.4%, Sa=42%, Gr=52%, PI=NP, LL=NV, GW-GM, well graded gravel with silt and sand
- 23 FS-35 MC — FS-35 p200=9.7%, Sa=45%, Gr=45%, Moisture=9.1%, PI=NP, LL=NV, GW-GM, well graded gravel with silt and sand — 63.0ft
- GRAVEL with Silt and Sand (GP-GM) Brown Gray, moist to wet; FS-36 p200=5.1%, Sa=46%, Gr=49%, Moisture=9.4%
- 32 FS-36 SPT — 67.5ft
- SAND with Silt and Gravel (SP-SM) Brown, moist to wet, with interbedded gravel layers

Elevation ft. 471, 466, 461, 456, 451, 446, 441, 436, 431, 426, 421, 416, 411, 406, 401

Casing & Tri-Cone

TH17-5 (Cont.)

Date: 1/25/17 - 1/26/17
Station / Offset: 261+22 / 27' Rt

Elevation ft. | 4in | Depth ft.

- 34 FS-37 MC — FS-37 pushed on gravel thru 1st interval and 2-inches of 2nd, p200=11.8%, Sa=44%, Gr=44%, Moisture=9.1%, PI=NP, LL=NV, SP-SM, poorly graded sand with silt and gravel
- 38.3 casing blows per 5-feet
- 25 FS-38 MC — FS-38 p200=8.7%, Sa=49%, Gr=42%, Moisture=8.5%
- 8.9 — GRAVEL with Silt and Sand (GP-GM) Brown Gray — 87.0ft
- 9.1.0 — frozen; start per drill; cutting indicate frozen gravel drilling going off vertical, broke drill rod
- B.O.H. 93 ft. — 93.0ft

Elevation ft. 401, 396, 391, 386, 381

Casing & Tri-Cone

Preliminary Plans

DESIGNED BY: D.Hemstreet	CHECKED: Engineer	STATE OF ALASKA DEPARTMENT OF TRANSPORTATION AND PUBLIC FACILITIES STATEWIDE MATERIALS	CHANNEL B PEDESTRIAN BRIDGE
DRAWN BY: R. Angell	CHECKED: Engineer	STATE OF ALASKA 49TH David A. Hemstreet No. CE 9800 REGISTERED PROFESSIONAL ENGINEER 11/14/17	NORTH RICHARDSON BIKE PATH
QUANTITIES BY: Engineer	CHECKED: Engineer		TEST HOLE & PENETROMETER LOGS

BRIDGE NO. 6022
DWG. NO. 13

H:\Projects\Rich_Hwy\61597_Rich_356_362_BikePedPath\07 Eng Support\5 Bridge\Drafting\61597_GEO,-7-TH17-5 Nov 14, 2017 - 10:17am

STATE	PROJECT DESIGNATION	YEAR	SHEET NO.	TOTAL SHEETS
ALASKA	Z615970000/0A24032	2017	N14	N14

TH17-6

Date: 1/27/17
Station / Offset: 261+72 / 27' Rt

Elevation ft. | Depth ft. | 4in

- 0.0 – 0.2ft: Asphalt Concrete
- 0.2ft – 15.5ft: SAND with Silt and Gravel (Fill) (SP-SM) Brown, Frozen. Nbn
- 15.5ft – 18.0ft: GRAVEL with Silt and Sand (GP-GM) Brown Gray, Frozen. Nbn
  Drive Casing than drill
- 18.0ft – 22.0ft: SANDY SILT (ML) Gray, wet, Some gravel, Organic, with wood chips.
  FS-39 p200=51.9%, Sa=43.1%, Gr=5%, Moisture=42.5%, Org=2.0%, PI=NP, LL=NV, ML, sandy silt
  FS-39 SPT 16
- 22.0ft – 26.0ft: SILTY SAND (SM) moist to wet, Some gravel
  wet, wood FS-40 p200=43.0%, Sa=45%, Gr=12%, Moisture=27.0%
  FS-40 SPT 31
- 26.0ft – 37.0ft: SAND with Silt and Gravel (SP-SM) Brown Gray, wet, with interbedded gravel layers
  Gravel in sampler shoe, pushed on gravel thru most of interval. SPT 28
  Drill cuttings are mostly sand
  FS-41 5-inches sand heave, pushed on gravel for 3rd and 4th interval FS-41 SPT 55
- 37.0ft – 43.0ft: GRAVEL with Sand (GP) Brown Gray, moist to wet, rounded to subrounded and variety of gravel types. Alluvium.
  limited heave. No recovery, could have been gravel in sampler shoe. MC 13
  Drill cuttings are mostly gravel
- 43.0ft – 48.0ft: GRAVEL with Silt and Sand (GP-GM) Brown Gray, moist to wet, with interbedded sand layers.
  FS-42 3-inches slough, pushed on gravel 1st interval, p200=5.2%, Sa=38%, Gr=57%, Moisture=8.2%
  FS-42 MC 17
- 48.0ft – 64.5ft: GRAVEL with Sand (GP) Brown Gray, moist to wet, with interbedded sand layers
  Moisture=7.7%, PI=NP, LL=NV, GP, poorly graded gravel with sand
  FS-43 MC 22
  FS-44 4-inches slough. Pushed on gravel for 1st interval, p200=4.9%, Sa=42%, Gr=53%, Moisture=8.2%
  FS-44 MC 28
  FS-45 3-inches slough. Pushed on gravel for 1st interval, p200=7.8%, Sa=84%, Gr=8%, Moisture=21.7%, PI=NP, LL=NV, SP-SM, poorly graded sand with silt
  FS-45 MC 31
- 64.5ft: SAND with Silt (SP-SM) Gray, moist to wet, some gravel

Elevation ft. 471, 466, 461, 456, 451, 446, 441, 436, 431, 426, 421, 416, 411, 406, 401

26.0 ▼ 1/27/17

Casing & Tri-Cone

TH17-6 (Cont.)

Date: 1/27/17
Station / Offset: 261+72 / 27' Rt

Elevation ft. 401, 396

Casing & Tri-Cone

- 70.5ft: SAND (SP) Gray, trace gravel. Frozen, Nbn
- 75.5ft: FS-46 MC
  31.0 degrees F.
  FS-46 p200=4.6%, Sa=94%, Gr=1%, Moisture=26.9%, PI=NP, LL=NV, SP, poorly graded sand
- B.O.H. 75.5 ft.

Preliminary Plans

DESIGNED BY: D.Hemstreet	CHECKED: Engineer		
DRAWN BY: R. Angell	CHECKED: Engineer		
QUANTITIES BY: Engineer	CHECKED: Engineer		

STATE OF ALASKA
DEPARTMENT OF TRANSPORTATION AND PUBLIC FACILITIES
STATEWIDE MATERIALS

STATE OF ALASKA 49TH Davis A. Hemstreet No. CE 9800 REGISTERED PROFESSIONAL ENGINEER
Davis A. Hemstreet 11/14/17

CHANNEL B PEDESTRIAN BRIDGE

NORTH RICHARDSON BIKE PATH

TEST HOLE & PENETROMETER LOGS

BRIDGE NO. 6022
DWG. NO. 14

H:\Projects\Rich_Hwy\61597_Rich_356_362_BikePedPath\07 Eng Support\5 Bridge\Drafting\61597_GEO,-8-TH17-6 Nov 14, 2017 - 10:17am

NO.	DATE	REVISION

STATE	PROJECT DESIGNATION	YEAR	SHEET NO.	TOTAL SHEETS
ALASKA	0A24033/Z607340000	2021	Q1	Q10

GENERAL SITE INFORMATION

1. SITE FUNCTION: ROAD AND SEPARATED PATH
2. 2-YEAR, 24-HOUR RAINFALL EVEN 1.10 TO 2.00 INCHES (SOURCE: http://hdsc.nws.noaa.gov/hdsc/pfds/pfds_map_ak.html)
3. AVERAGE ANNUAL PRECIPITATION: 11.16 INCHES RAINFALL (SOURCE: WESTERN REGIONAL CLIMATE CENTER) FOR NORTH POLE, ALASKA
4. STOCKPILE AND STAGING AREAS: CONTRACTOR MUST SEEK LOCATIONS FOR STOCKPILING MATERIAL AND STAGING AND STORAGE OF EQUIPMENT. STOCKPILE AND EQUIPMENT AREAS MUST COMPLY WITH THE CGP, SWPPP, SECTION 641, SECTION 107-1.11 AND ALL PERMITS.
5. PROJECT AREAS ARE LISTED BELOW (MATERIAL SITES NOT INCLUDED):

PROJECT INFORMATION TABLE	
PROJECT AREA (ACRE)	47.8 ACRES
DISTURBED AREA (ACRE)	15.1 ACRES
PRE-CONSTRUCTION IMPERVIOUS AREA (%)	10%
POST-CONSTRUCTION IMPERVIOUS AREA (%)	21%
PRE-CONSTRUCTION RUNOFF COEFFICIENT	0.64
POST-CONSTRUCTION RUNOFF COEFFICIENT	0.67

6. LANDSCAPE TOPOGRAPHY: RELATIVELY LEVEL
7. DRAINAGE PATTERNS: WATER FLOWS OFF THE PATH TO THE NORTH. WATER DRAINAGE FROM OFF-SITE GENERALLY IS COLLECTED IN CHANNELS AND FLOWS THROUGH TO CULVERTS CARRYING THE WATER FROM SOUTH OF THE PATH TO THE NORTH.
8. SOILS: GRAVEL, SAND, AND SILT. FROST-SUSCEPTIBLE SOILS ARE PRESENT.
9. EXISTING VEGETATION: SHRUB BOGS ARE PRIMARILY FOUND HERE
10. APPROXIMATE GROWING SEASON: MAY 2 TO OCTOBER 4 (SOURCE: USACE WETLANDS DELINEATION MANUAL: ALASKA REGION (VERSION 2))
11. HISTORIC SITE CONTAMINATION: THE CONTAMINATED SITES DATABASE INDICATED 2 CONTAMINATED SITES WITHIN THE PROJECT CORRIDOR. THE 2 ACTIVE CONTAMINATION SITES ARE LOCATED AT MP 357.5 AND 358.5. (SOURCE: https://dec.alaska.gov/Applications/SPAR/PublicMVC/CSP/Search)

ENVIRONMENTAL INFORMATION

1. RECEIVING WATERS: THERE ARE WETLANDS PRESENT WITHIN 2500 FEET OF THE CORRIDOR THROUGHOUT THE ENTIRE PROJECT. THERE ARE THREE SMALL PONDS AND A CREEK, THE PROJECT DRAINS TO, BETWEEN STATIONS 249+00 TO 267+00. THERE WILL BE SMALL IMPACTS TO WETLANDS BETWEEN STATIONS 263+00 TO 275+00.
2. IMPAIRED WATER BODIES: NONE
3. TMDL: NONE
4. STORM SEWER/DRAINAGE SYSTEMS: THERE ARE SIX PROPOSED CULVERTS ALONG WITH 24 EXISTING CULVERTS THROUGHOUT THE CORRIDOR. OF THE EXISTING 24 CULVERTS, NINE OF THEM HAVE PROPOSED EXTENSIONS. THERE AREN'T ANY INLET OR MANHOLE STRUCTURES IN THE PROJECT LIMITS.
5. THREATENED AND ENDANGERED SPECIES: NONE
6. HISTORICAL & CULTURAL RESOURCE PRESENCE: NO KNOWN HISTORIC SITES. IF CULTURAL RESOURCES ARE DISCOVERED DURING CONSTRUCTION, CEASE WORK IMMEDIATELY AND NOTIFY THE PROJECT ENGINEER.
7. FISH & WILDLIFE HABITAT PRESENCE: NONE
8. WETLANDS: EXIST THROUGHOUT THE CORRIDOR.
9. CONTACT THE PROJECT ENGINEER WITH QUESTIONS/CONCERNS REGARDING ENVIRONMENTAL ISSUES OR PERMIT INFORMATION.
10. ALL CONSTRUCTION ACTIVITIES MUST COMPLY WITH THE MIGRATORY BIRD TREATY ACT TO PREVENT THE KILLING OR TAKING OF MIGRATORY BIRDS OR ANY PART, NEST, OR EGGS. SEE THE US FISH AND WILDLIFE SERVICES "LAND CLEARING TIMING GUIDANCE FOR ALASKA" FOR MORE INFORMATION.
11. NO EXISTING PUBLIC WATER SYSTEM (PWS) DRINKING WATER PROTECTION AREAS (DWPA) INTERSECT THE BOUNDARY OF THE PROPOSED PROJECT. (SOURCE: ADEC DRINKING WATER PROTECTION MAP)

GENERAL NOTES:

1. THIS PROJECT WILL RESULT IN GROUND DISTURBANCE OF GREATER THAN 1 ACRE, AND WILL REQUIRE A STORM WATER POLLUTION PREVENTION PLAN (SWPPP).
2. THE CONTRACTOR SHALL COMPLY WITH THE CONSTRUCTION GENERAL PERMIT AND SECTION 641 OF THE PROJECT SPECIFICATIONS.
3. EROSION AND SEDIMENT CONTROL FEATURES MUST BE BASED ON THE DOT&PF MANUAL ALASKA STORM WATER POLLUTION PREVENTION PLAN GUIDE (MARCH 2017 OR LATEST VERSION) AND LATEST BMPs.
4. INITIATE EROSION AND SEDIMENT CONTROLS PRIOR TO ANY EARTH DISTURBING ACTIVITIES.
5. STOCKPILE AND STAGING LOCATIONS MUST BE RECLAIMED TO THEIR ORIGINAL CONDITION. STOCKPILES AND/OR STAGING AREAS ARE NOT ALLOWED IN WETLANDS.
6. ENSURE LOADS ARE STABLE OR COVERED SO THAT NO MATERIAL ESCAPES DURING HAULING ACTIVITIES.
7. CONTRACTOR WILL WATER EXPOSED SOILS TO MITIGATE FUGITIVE DUST AS NECESSARY.
8. EMBANKMENT HEIGHT AND SIDESLOPES ARE SHOWN IN THE PROJECT CROSS SECTIONS AND ARE AVAILABLE FOR THE CONTRACTOR'S USE.
9. IF EXCAVATION DEWATERING WILL OCCUR ON THE PROJECT, THE CONTRACTOR MUST COMPLY WITH THE EXCAVATION DEWATERING GENERAL PERMIT AND SUBMIT A NOI AND A CERTIFIED BMP PLAN TO ADEC FOR APPROVAL BEFORE DEWATERING CAN BEGIN.
10. VEGETATIVE BUFFER IS THE PREFERRED METHOD OF PERIMETER CONTROL FOR THIS PROJECT. WHERE VEGETATION IS NOT 25 FEET WIDE, THEN A BMP MUST BE INSTALLED FOR PERIMETER CONTROL.
11. SWEEP CLEAN STABILIZED CONSTRUCTION EXISTS EACH SHIFT OR AS DIRECTED BY THE ENGINEER.

ESCP LEGEND:

- R/W — PROJECT RIGHT-OF-WAY LINE
- SURFACE WATER FLOW DIRECTION
- P — P — P — TEMPORARY PERIMETER CONTROL – FIBER ROLL, SILT FENCE
- CULVERT INLET PROTECTION (BMP 08.00 DOT&PF SWPPP GUIDE)
- VEHICLE TRACKING ENTRANCE/EXIT
- WETLANDS (DELINEATED)
- SILT CURTAIN (BMP 19.00 DOT&PF SWPPP GUIDE)
- FILL LIMITS
- CUT LIMITS
- DITCH
- INLET & OUTLET PROTECTION

Preliminary Plans

EROSION AND SEDIMENT CONTROL PLAN NOTES & DETAILS

PRELIMINARY
NOVEMBER
2021

PLANS DEVELOPED BY: STATE OF ALASKA DEPARTMENT OF TRANSPORTATION & PUBLIC FACILITIES, NORTHERN REGION, 2301 PEGER ROAD, FAIRBANKS, AK 99709 (907)451-2200
C:\Users\bp071319\AppData\Local\Temp\AcPublish_28024\61597_Q1_ESCP-Q1 Fri, Nov/05/21 09:20am

NO.	DATE	REVISION

STATE	PROJECT DESIGNATION	YEAR	SHEET NO.	TOTAL SHEETS
ALASKA	0A24033/Z607340000	2021	Q2	Q10

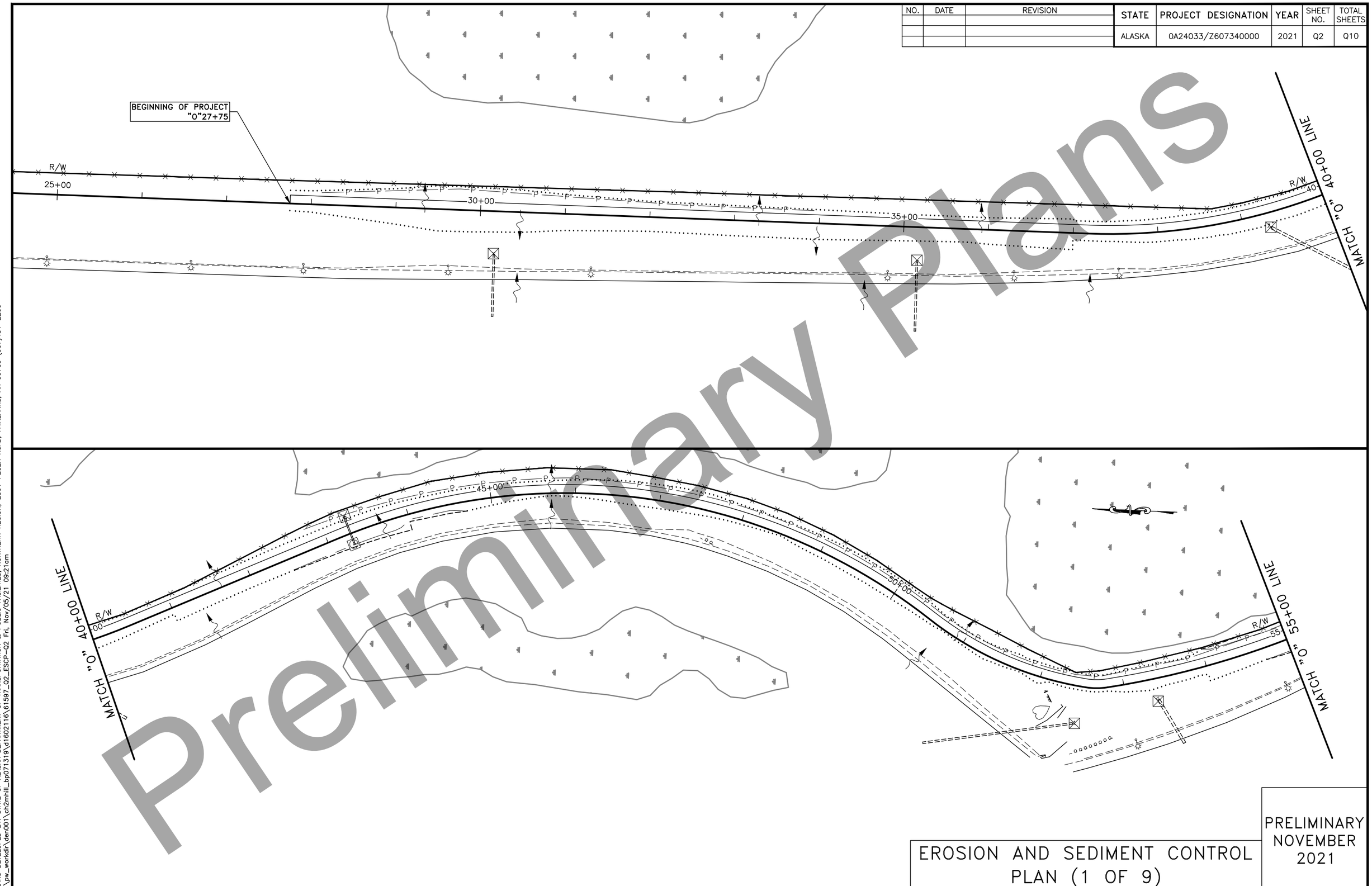

Preliminary Plans

EROSION AND SEDIMENT CONTROL PLAN (1 OF 9)

PRELIMINARY
NOVEMBER
2021

PLANS DEVELOPED BY: STATE OF ALASKA DEPARTMENT OF TRANSPORTATION & PUBLIC FACILITIES, NORTHERN REGION, 2301 PEGER ROAD, FAIRBANKS, AK 99709 (907)451-2200
C:\pw_workdir\den001\ch2mhill_bp071319\d1602116\61597_Q2_ESCP-Q2 Fri, Nov/05/21 09:21am

NO.	DATE	REVISION

STATE	PROJECT DESIGNATION	YEAR	SHEET NO.	TOTAL SHEETS
ALASKA	0A24033/Z607340000	2021	Q3	Q10

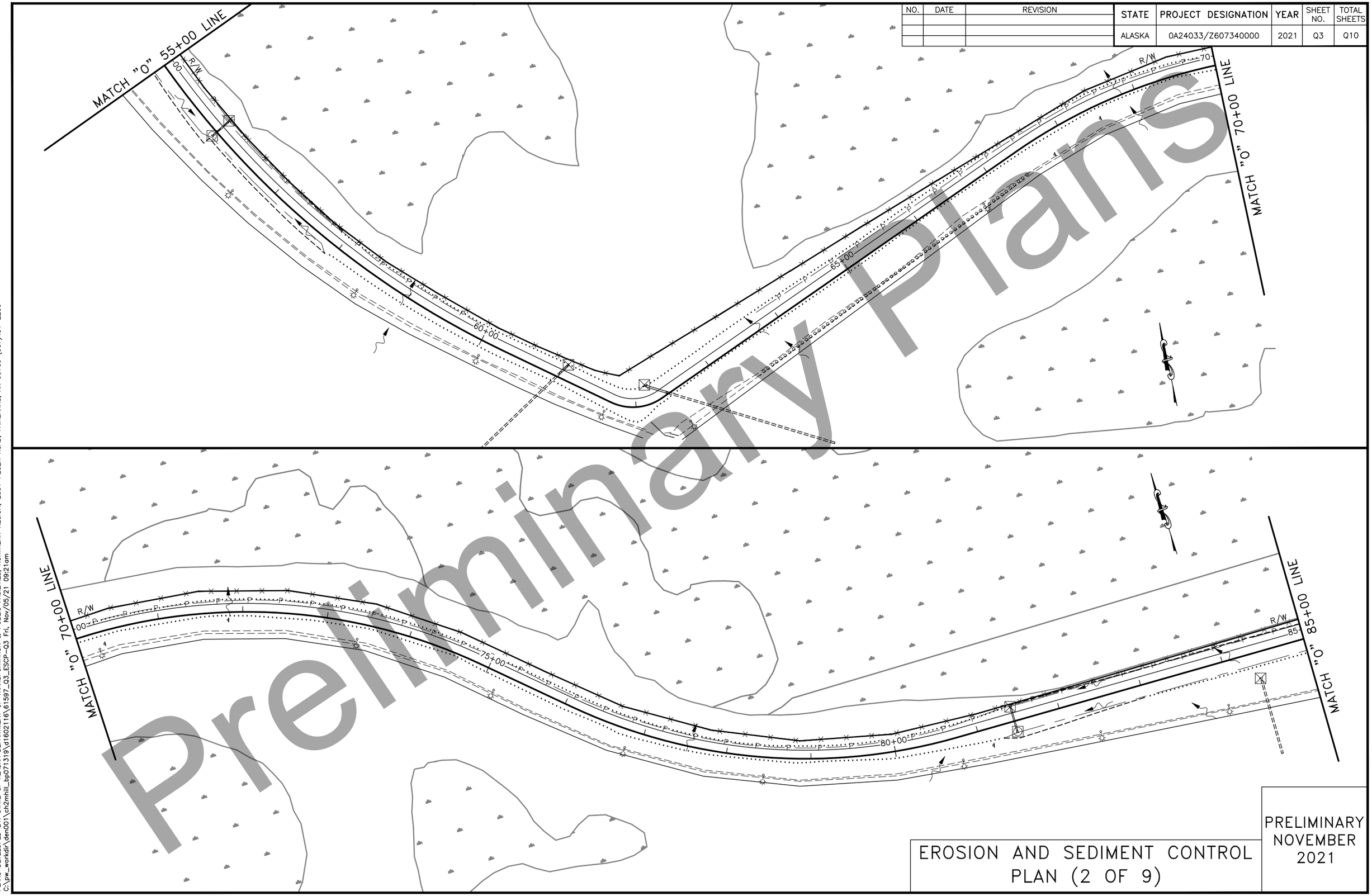

EROSION AND SEDIMENT CONTROL PLAN (2 OF 9)

PRELIMINARY
NOVEMBER
2021

PLANS DEVELOPED BY: STATE OF ALASKA DEPARTMENT OF TRANSPORTATION & PUBLIC FACILITIES, NORTHERN REGION, 2301 PEGER ROAD, FAIRBANKS, AK 99709 (907)451-2200
C:\pw_workdir\den001\ch2mhill_bp071319\d1602116\61597_Q3_ESCP-Q3 Fri, Nov/05/21 09:21am

NO.	DATE	REVISION

STATE	PROJECT DESIGNATION	YEAR	SHEET NO.	TOTAL SHEETS
ALASKA	0A24033/Z607340000	2021	Q4	Q10

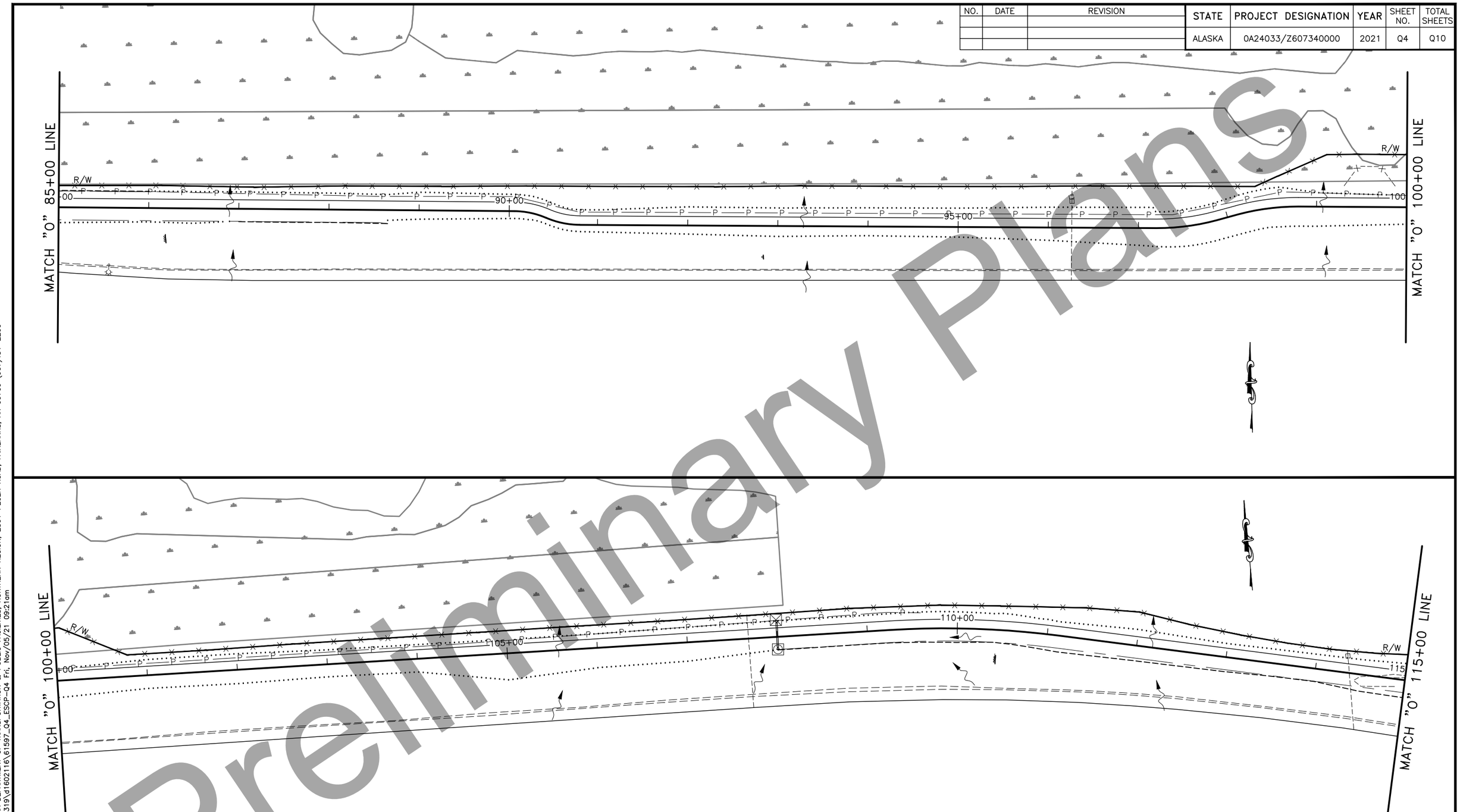

Preliminary Plans

EROSION AND SEDIMENT CONTROL PLAN (3 OF 9)

PRELIMINARY
NOVEMBER
2021

PLANS DEVELOPED BY: STATE OF ALASKA DEPARTMENT OF TRANSPORTATION & PUBLIC FACILITIES, NORTHERN REGION, 2301 PEGER ROAD, FAIRBANKS, AK 99709 (907)451-2200
C:\pw_workdir\den001\ch2mhill_bp071319\d1602116\61597_Q4_ESCP-Q4 Fri, Nov/05/21 09:21am

NO.	DATE	REVISION

STATE	PROJECT DESIGNATION	YEAR	SHEET NO.	TOTAL SHEETS
ALASKA	0A24033/Z607340000	2021	Q5	Q10

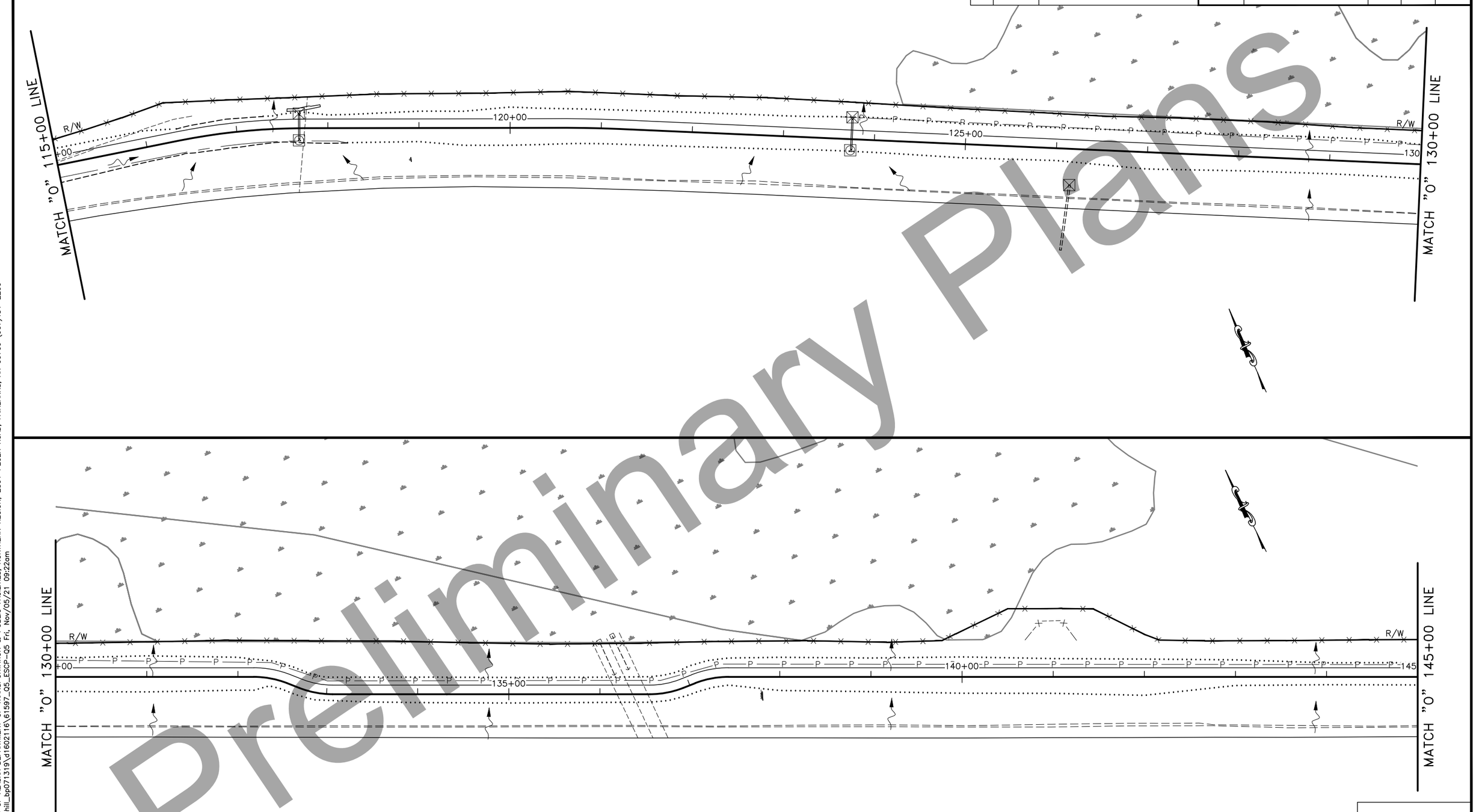

Preliminary Plans

PRELIMINARY
NOVEMBER
2021

EROSION AND SEDIMENT CONTROL
PLAN (4 OF 9)

PLANS DEVELOPED BY: STATE OF ALASKA DEPARTMENT OF TRANSPORTATION & PUBLIC FACILITIES, NORTHERN REGION, 2301 PEGER ROAD, FAIRBANKS, AK 99709 (907)451-2200
C:\pw_workdir\den001\ch2mhill_bp071319\d1602116\61597_Q5_ESCP-Q5 Fri, Nov/05/21 09:22am

NO.	DATE	REVISION

STATE	PROJECT DESIGNATION	YEAR	SHEET NO.	TOTAL SHEETS
ALASKA	0A24033/Z607340000	2021	Q6	Q10

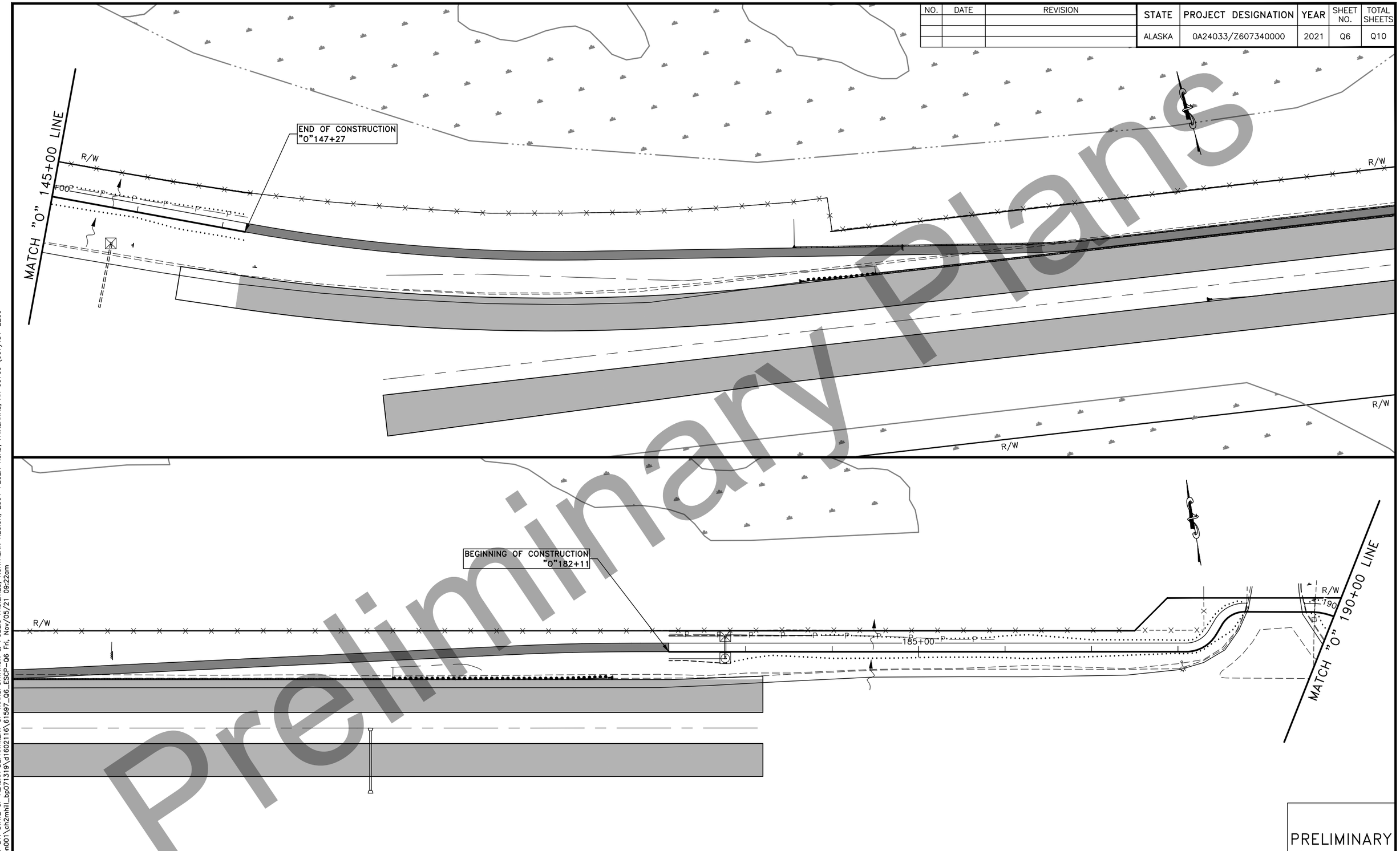

Preliminary Plans

PRELIMINARY
NOVEMBER
2021

EROSION AND SEDIMENT CONTROL PLAN (5 OF 9)

PLANS DEVELOPED BY: STATE OF ALASKA DEPARTMENT OF TRANSPORTATION & PUBLIC FACILITIES, NORTHERN REGION, 2301 PEGER ROAD, FAIRBANKS, AK 99709 (907)451-2200
C:\pw_workdir\den001\ch2mhill_bp071319\d1602116\61597_Q6_ESCP-Q6 Fri, Nov/05/21 09:22am

NO.	DATE	REVISION

STATE	PROJECT DESIGNATION	YEAR	SHEET NO.	TOTAL SHEETS
ALASKA	0A24033/Z607340000	2021	Q7	Q10

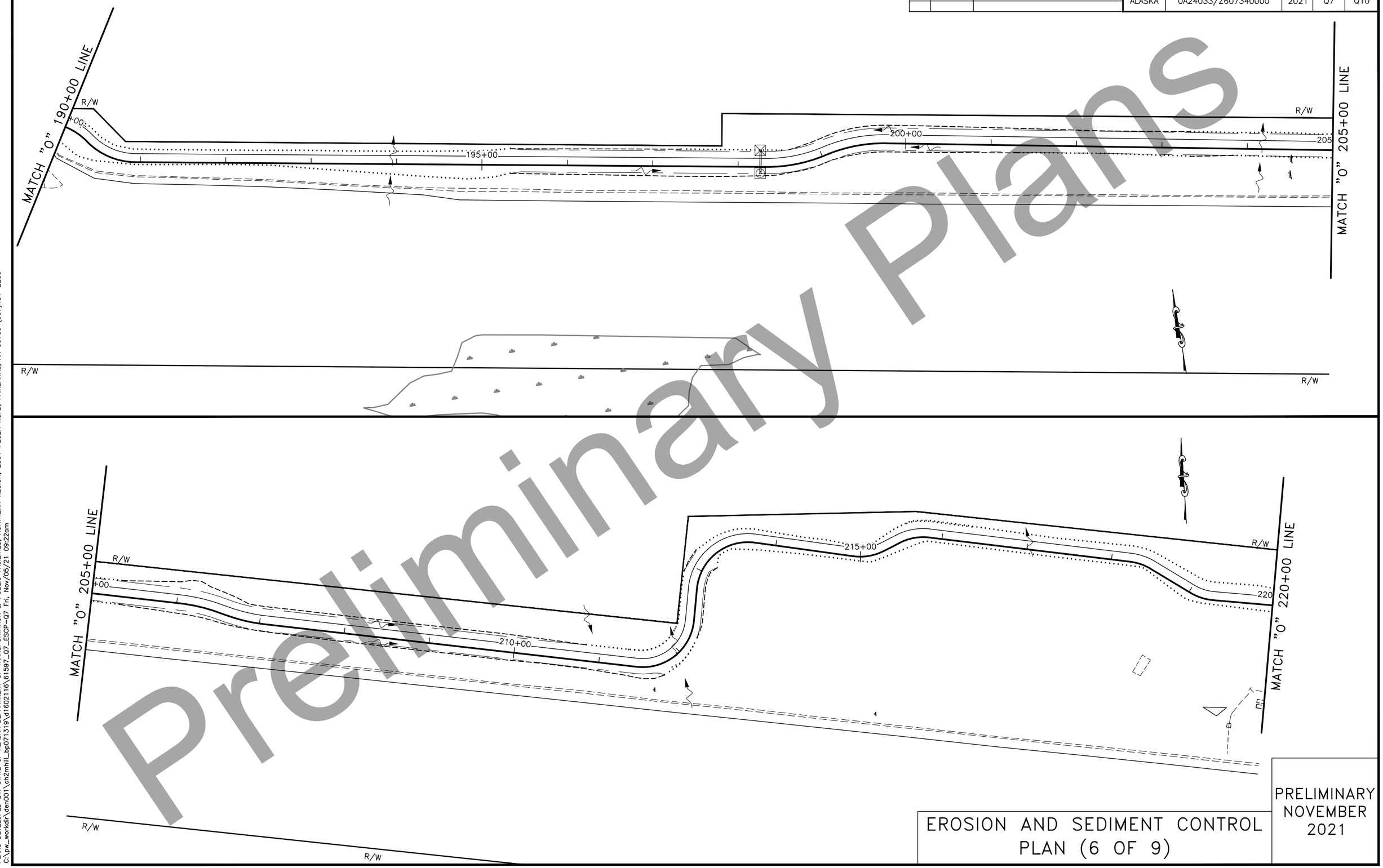

Preliminary Plans

EROSION AND SEDIMENT CONTROL PLAN (6 OF 9)

PRELIMINARY
NOVEMBER
2021

PLANS DEVELOPED BY: STATE OF ALASKA DEPARTMENT OF TRANSPORTATION & PUBLIC FACILITIES, NORTHERN REGION, 2301 PEGER ROAD, FAIRBANKS, AK 99709 (907)451-2200
C:\pw_workdir\den001\ch2mhill_bp071319\d1602116\61597_Q7_ESCP-Q7 Fri, Nov/05/21 09:22am

NO.	DATE	REVISION

STATE	PROJECT DESIGNATION	YEAR	SHEET NO.	TOTAL SHEETS
ALASKA	0A24033/Z607340000	2021	Q8	Q10

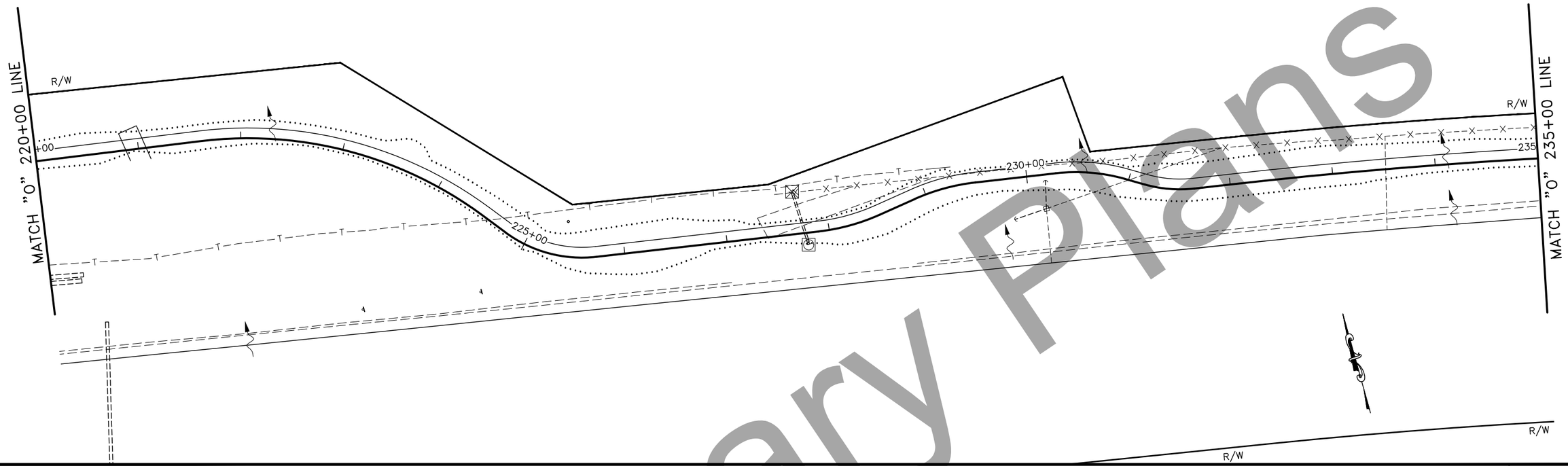

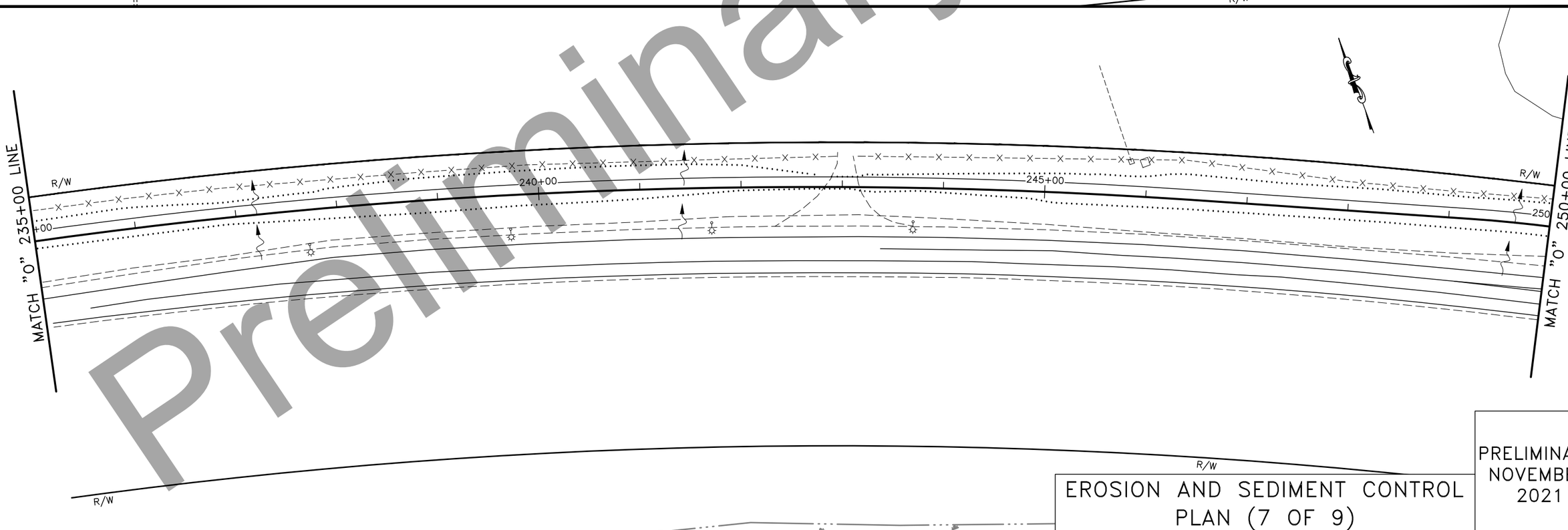

Preliminary Plans

EROSION AND SEDIMENT CONTROL PLAN (7 OF 9)

PRELIMINARY
NOVEMBER
2021

PLANS DEVELOPED BY: STATE OF ALASKA DEPARTMENT OF TRANSPORTATION & PUBLIC FACILITIES, NORTHERN REGION, 2301 PEGER ROAD, FAIRBANKS, AK 99709 (907)451-2200
C:\pw_workdir\den001\ch2mhill_bp071319\d1602116\61597_Q8_ESCP-Q8 Fri, Nov/05/21 09:23am

NO.	DATE	REVISION

STATE	PROJECT DESIGNATION	YEAR	SHEET NO.	TOTAL SHEETS
ALASKA	0A24033/Z607340000	2021	Q9	Q10

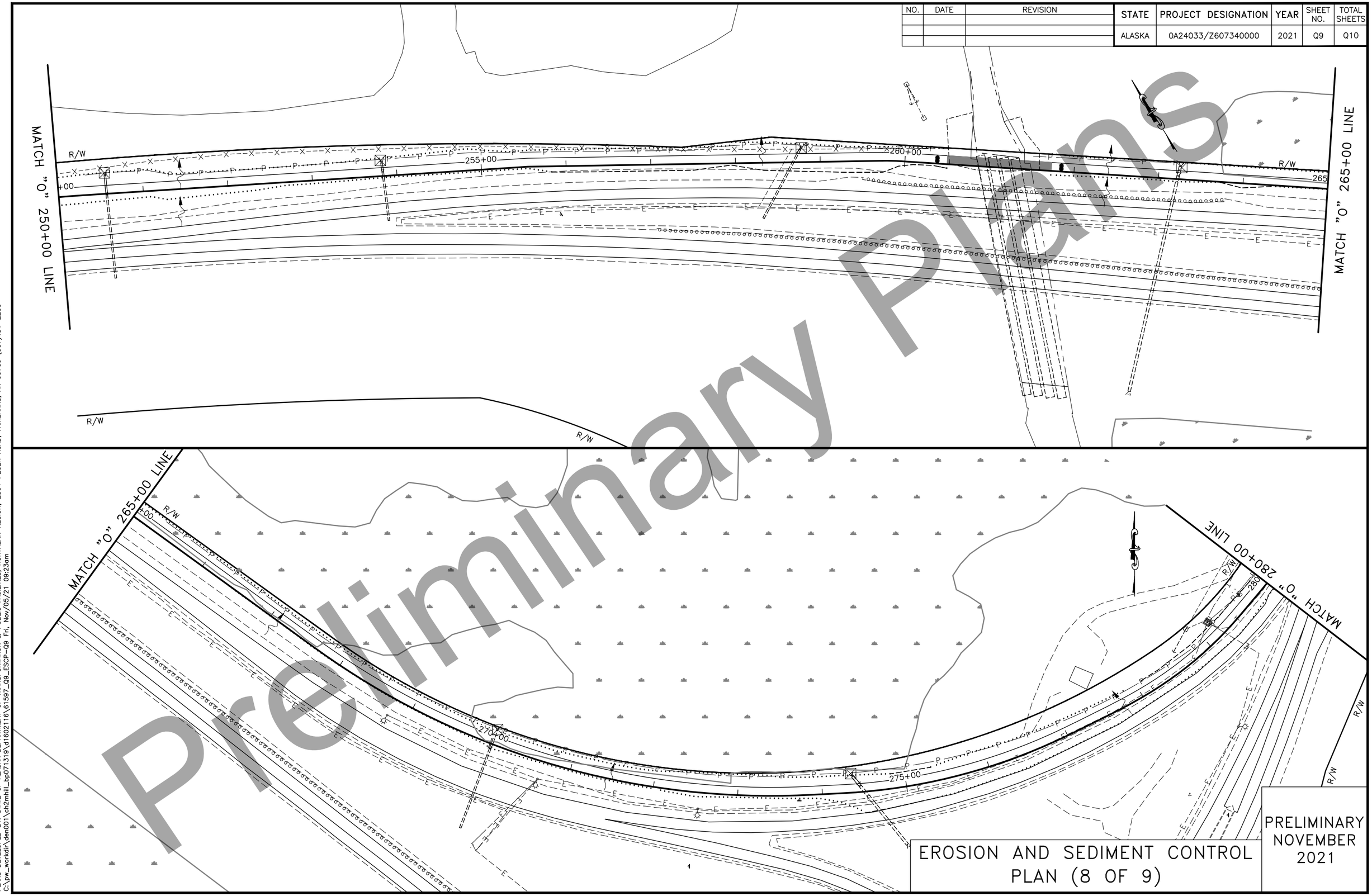

Preliminary Plans

EROSION AND SEDIMENT CONTROL PLAN (8 OF 9)

PRELIMINARY NOVEMBER 2021

PLANS DEVELOPED BY: STATE OF ALASKA DEPARTMENT OF TRANSPORTATION & PUBLIC FACILITIES, NORTHERN REGION, 2301 PEGER ROAD, FAIRBANKS, AK 99709 (907)451-2200
C:\pw_workdir\den001\ch2mhill_bp071319\d1602116\61597_Q9_ESCP-Q9 Fri, Nov/05/21 09:23am

NO.	DATE	REVISION

STATE	PROJECT DESIGNATION	YEAR	SHEET NO.	TOTAL SHEETS
ALASKA	0A24033/Z607340000	2021	Q10	Q10

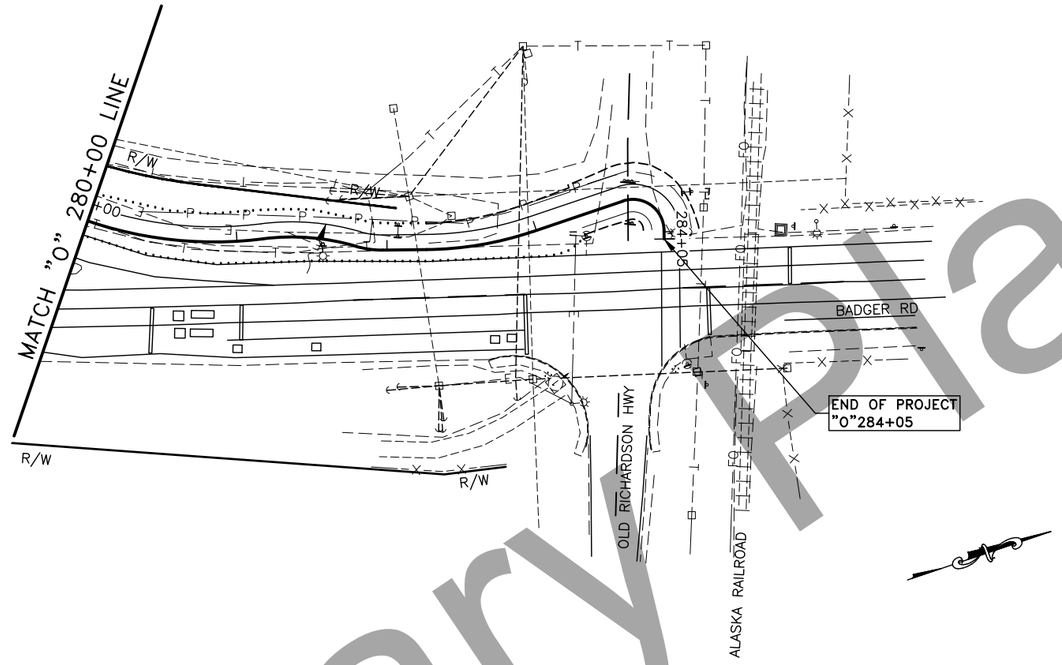

Preliminary Plans

EROSION AND SEDIMENT CONTROL PLAN (9 OF 9)

PRELIMINARY
NOVEMBER
2021

PLANS DEVELOPED BY: STATE OF ALASKA DEPARTMENT OF TRANSPORTATION & PUBLIC FACILITIES, NORTHERN REGION, 2301 PEGER ROAD, FAIRBANKS, AK 99709 (907)451-2200
C:\pw_workdir\den001\ch2mhill_bp071319\d1602116\61597_Q10_ESCP-Q10 Fri, Nov/05/21 09:23am

NO.	DATE	REVISION

STATE	PROJECT DESIGNATION	YEAR	SHEET NO.	TOTAL SHEETS
ALASKA	0A24033/Z607340000	2021	T1	T1

VERTICAL DROP-OFFS

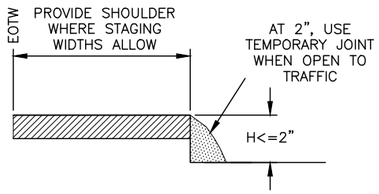

CASE A

DROP-OFFS ≤2 INCHES
(PAVED SURFACES ONLY)

1. USE "UNEVEN LANES" (W8-11) SIGNS FOR ALL DROP-OFFS IN BETWEEN TRAFFIC LANES
2. LEAVE NO DROP-OFFS > 1.5" IN THE TRAFFIC LANE OR ACTIVE WHEEL TRACK

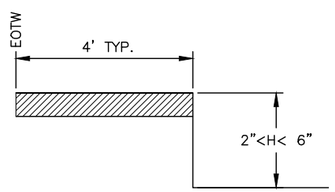

CASE B

2"< DROP-OFFS < 6"
(ALL ROADWAY SURFACES)

1. PLACE CONES OR CANDLES FOR DROP-OFFS ≥ 4 FEET AND ≤ 30 FEET FROM EOTW.
2. USE DRUMS OR TYPE II BARRICADES FOR DROP-OFFS < 4 FEET FROM THE EOTW.

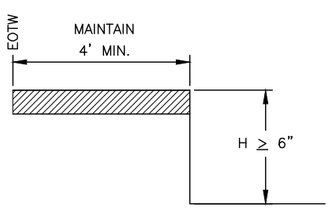

CASE C

DROP-OFFS ≥6"
(ALL ROADWAY SURFACES AND ROADSIDE SLOPES)

1. PLACE DRUMS OR TYPE II BARRICADES FOR DROP-OFFS ≤ 24" WITHIN THE CLEAR AREA.
2. PROVIDE PORTABLE CONCRETE BARRIERS FOR DROP-OFFS > 24" WITHIN 15 FEET OF THE EOTW. USE DRUMS OR TYPE II BARRICADES IF BEYOND 15 FEET.

FILL SLOPES

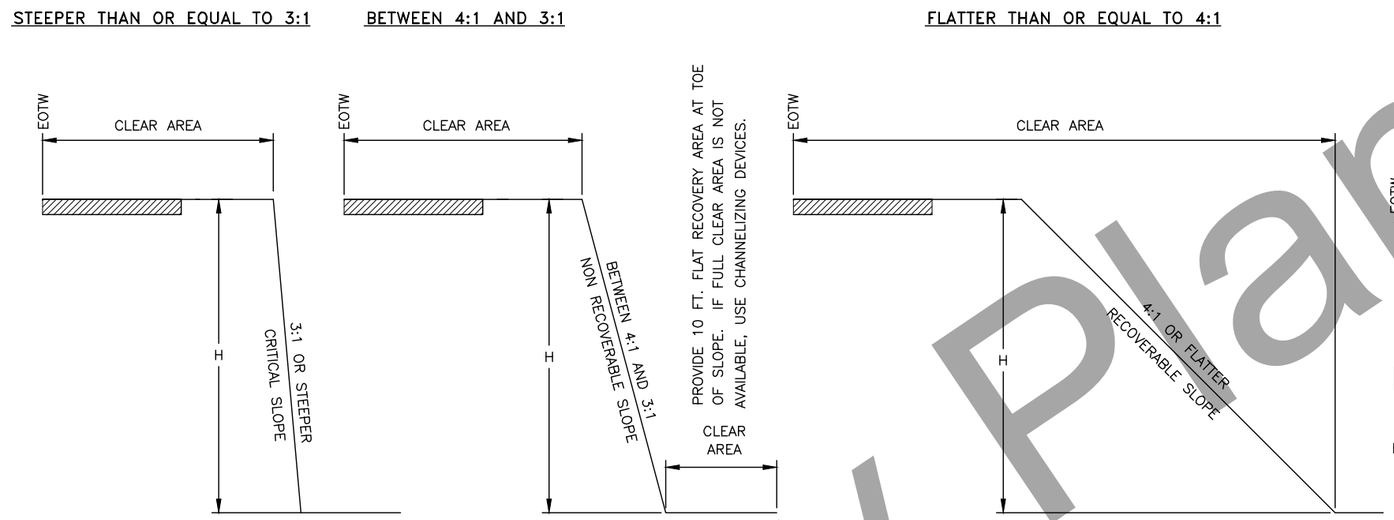

CUT SLOPES

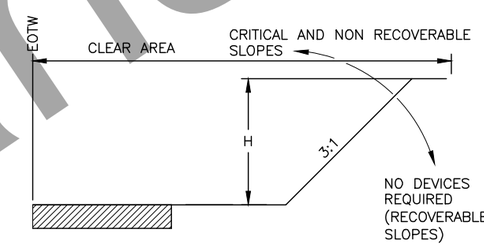

EOTW = EDGE OF TRAVELED WAY

CLEAR AREA REQUIREMENTS

	LOW SPEED < = 35 MPH	INTERMEDIATE SPEED 40 MPH TO 45 MPH	HIGH SPEED ≥ = 50 MPH
RURAL	15'	24'	30'
URBAN	10' DITCH SECTIONS, OR 2' BEHIND CURB	15' DITCH CONDITIONS, OR 2' BEHIND CURB	15' DITCH CONDITIONS, OR 2' BEHIND CURB

CHANNELIZING DEVICE REQUIREMENTS FOR SLOPES 3:1 OR STEEPER WITHIN THE CLEAR AREA

	H <= 15'	H > 15'
< 2000 VPD LOW VOLUME	CANDLES OR CONES	TYPE II BARRICADES OR DRUMS
> 2000 VPD	TYPE II BARRICADE OR DRUMS	PORTABLE CONCRETE BARRIER OR TEMPORARY GUARDRAIL

TRAFFIC CONTROL NOTES:

1. USE THE EXISTING CROSS-SECTION (PRIOR TO CONSTRUCTION) AS A BASIS FOR DETERMINING WHEN CHANNELIZING DEVICES ARE NEEDED.
2. INSTALL CHANNELIZING DEVICES WHEN THE HORIZONTAL OR VERTICAL CURVATURE IS MADE MORE SEVERE.
3. INSTALL FLEXIBLE DELINEATORS WHEN ALL VEGETATION OVER 4 FEET HIGH IS CLEARED FROM FILL SLOPES THAT ARE 3:1 OR STEEPER IN THE CLEAR AREA.
4. USE PORTABLE CONCRETE BARRIER FOR WARRANTING CONDITIONS WHICH LAST LONGER THAN 3 DAYS. FOR CONDITIONS LASTING LESS THAN 3 DAYS, OTHER CHANNELIZING DEVICES MAY BE INSTALLED.
5. TERMINATE RUNS OF PORTABLE CONCRETE BARRIER USING THE FOLLOWING METHODS:
   - A) CONNECT TO A PORTABLE CRASH CUSHION, OR
   - B) PROVIDE A CONCRETE BARRIER WITH THRIE BEAM TRANSITION TO W-BEAM GUARDRAIL, TREATED WITH A PARALLEL TERMINAL (SEE SECTION 710).
   - C) FLARE THE ENDS OF THE PORTABLE CONCRETE BARRIER AWAY FROM THE ROADWAY AT A RATE OF 7:1 ON A COMPACTED SLOPE OF 6:1 OR FLATTER, OUTSIDE OF THE CLEAR AREA. INSTALL A SLOPING PORTABLE CONCRETE BARRIER END TREATMENT, OR
   - D) BURY IN THE BACKSLOPE.
6. TERMINATE THE RUNS OF TEMPORARY W-BEAM GUARDRAIL USING THE FOLLOWING METHODS:
   - A) PROVIDE A PARALLEL TERMINAL (SEE SECTION 710)
   - B) FLARE THE ENDS OF THE TEMPORARY GUARDRAIL AWAY FROM THE ROADWAY AT A RATE OF 6:1 ON A COMPACTED SLOPE OF 6:1 OR FLATTER OUTSIDE OF THE CLEAR AREA, TERMINATE WITH A STANDARD W-BEAM END SECTION, OR
   - C) BURY IN THE BACKSLOPE.

EQUIPMENT NOTES:

1. WHEN THERE IS ACTIVE, NONMOBILE CONSTRUCTION EQUIPMENT WITHIN THE CLEAR AREA, DELINEATE THE ROADSIDE WITH TRAFFIC CONES.
2. SEPARATE PROCEDURES ARE REQUIRED FOR MOBILE WORK ZONE OPERATIONS AND SHORT DURATION WORK OF LESS THAN 12 HOURS.

WINTER SHUTDOWN NOTES:

1. WHEN REQUIRED, USE CHANNELIZING DEVICES WHICH CAN BE MAINTAINED OVER WINTER.
2. NO CHANNELIZING DEVICES ARE REQUIRED IF:
   - A) CONSTRUCTION SLOPES ARE RECOVERABLE, AND
   - B) SLOPES ARE SMOOTH AND COMPACTED, AND
   - C) REQUIRED CLEAR AREA IS PROVIDED

REVISIONS

DESCRIPTION	BY	DATE
CREATED	GG	11/20/03
CLARIFIED DETAILS	CA	01/31/06
UPDATED ET-PLUS NOMENCLATURE	CFJ	02/02/10
UPDATED 6A	CMA	07/18/11
NATIONAL CAD STDS	SP	02/13/15
NOTE TO DESIGNERS & MINOR CHANGES	SP	12/05/18

TRAFFIC CONTROL DEVICES

PRELIMINARY
NOVEMBER
2021

Preliminary Plans

PLANS DEVELOPED BY: STATE OF ALASKA DEPARTMENT OF TRANSPORTATION & PUBLIC FACILITIES, NORTHERN REGION, 2301 PEGER ROAD, FAIRBANKS, AK 99709 (907)451-2200
C:\pw_workdir\den001\rk053776\d1602215\61597_T1_TCP-T1 Thu, Nov/04/21 09:06pm

NO.	DATE	REVISION

STATE	PROJECT DESIGNATION	YEAR	SHEET NO.	TOTAL SHEETS
ALASKA	0A24033/Z607340000	2021	V1	V16

D-01.02

SHEET 1 of 1

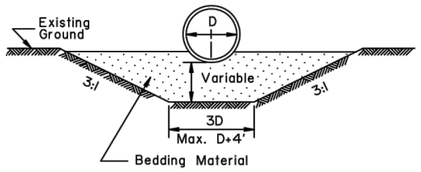

TYPE "A"
FOUNDATION STABILIZATION

To be used in unstable areas as directed by the Engineer.

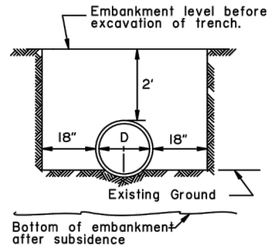

TYPE "B"

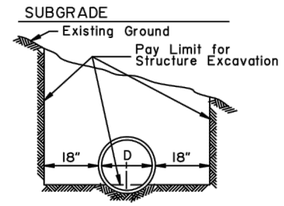

TYPE "C"

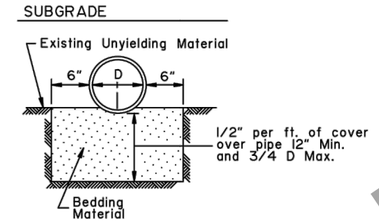

TYPE "D"
ROCK OR UNYIELDING MATERIAL

GENERAL NOTES:

1. Sidefill shall be placed and compacted with care under haunches of pipe and shall be brought up evenly and simultaneously on both sides of pipe to 1 foot above the top of the full length of the pipe.
2. Alternate installation methods may only be used when specified or approved by the Engineer.

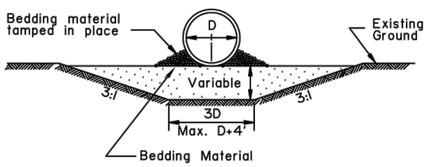

'ALTERNATE'
TYPE "A"
FOUNDATION STABILIZATION

To be used in unstable areas as directed by the Engineer.

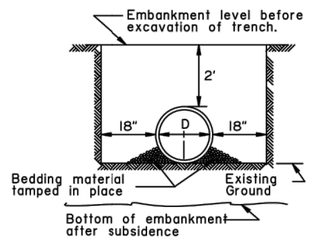

'ALTERNATE'
TYPE "B"

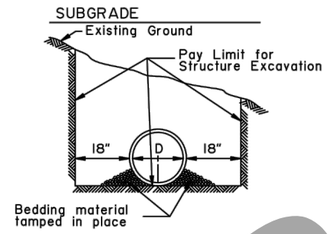

'ALTERNATE'
TYPE "C"

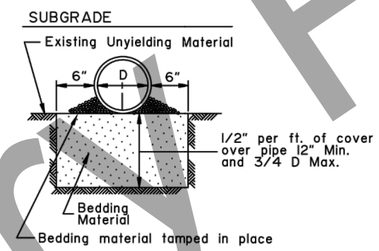

'ALTERNATE' TYPE "D"
ROCK OR UNYIELDING MATERIAL

D = Nominal Pipe Diameter

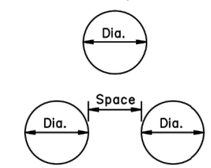

MULTIPLE INSTALLATIONS	
Dia.	Minimum Space Between Pipes
0" - 42"	24"
48" & Over	1/2 Dia. of pipe or 3', whichever is less.

S = Nominal Pipe Arch Span

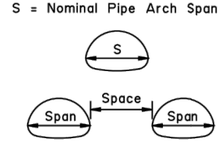

MULTIPLE INSTALLATIONS	
Dia.	Minimum Space Between Pipes
0" - 42"	24"
48" & Over	1/2 Span of pipe arch or 3', whichever is less.

CULVERT PIPE

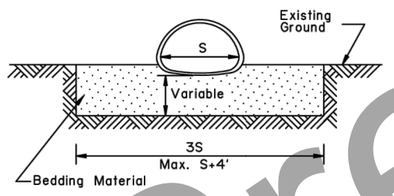

TYPE "A"
FOUNDATION STABILIZATION

To be used in unstable areas as directed by the Engineer.

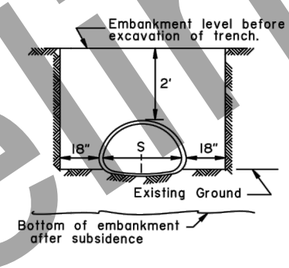

TYPE "B"

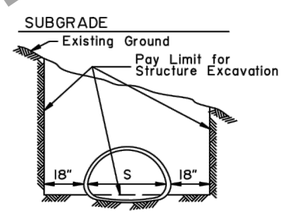

TYPE "C"

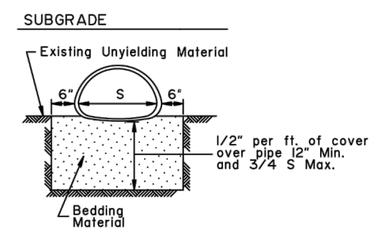

TYPE "D"
ROCK OR UNYIELDING MATERIAL

ARCH

State of Alaska DOT&PF
ALASKA STANDARD PLAN

CULVERT PIPE & ARCH INSTALLATION DETAILS

Adopted as an Alaska Standard Plan by: Kenneth J. Fisher, P.E.
Chief Engineer

Adoption Date: 02/08/2019

Last Code and Stds. Review
By: Date:

Next Code and Standards Review date: 02/08/2029

D-01.02

STANDARD PLAN
D-01.02

PRELIMINARY
NOVEMBER
2021

Preliminary Plans

PLANS DEVELOPED BY: STATE OF ALASKA DEPARTMENT OF TRANSPORTATION & PUBLIC FACILITIES, NORTHERN REGION, 2301 PEGER ROAD, FAIRBANKS, AK 99709 (907)451-2200
C:\pw_workdir\den001\ch2mhill_jc065526\d1602216\61597_V1_DETAILS-V1 Mon, Nov/08/21 11:55am

NO.	DATE	REVISION

STATE	PROJECT DESIGNATION	YEAR	SHEET NO.	TOTAL SHEETS
ALASKA	0A24033/Z607340000	2021	V2	V16

D-04.22

SHEET 1 of 4

Minimum & Maximum Cover for 2 2/3"X 1/2" Aluminum Pipe						
Gage		16	14	12	10	8
Thickness		0.060	0.075	0.105	0.135	0.164
Dia. (In)	Min. (In)	Max. (Ft)	Max. (Ft)	Max. (Ft)	Max. (Ft)	Max. (Ft)
12	12	100+	100+	100+	100+	100+
15	12	100	100+	100+	100+	100+
18	12	83	100+	100+	100+	100+
21	12	71	89	100+	100+	100+
24	12	62	78	100+	100+	100+
27	12		69	97	100+	100+
30	12		62	87	100+	100+
36	12		51	73	94	100+
42	12			62	80	100+
48	12			54	70	85
54	15			48	62	76
60	15				52	64
66	18					52
72	18					43

Minimum & Maximum Cover for 3" x 1" Aluminum Pipe						
Gage		16	14	12	10	8
Thickness		0.060	0.075	0.105	0.135	0.164
Dia. (In)	Min. (In)	Max. (Ft)	Max. (Ft)	Max. (Ft)	Max. (Ft)	Max. (Ft)
30	12	57	72	100+	100+	100+
36	12	47	60	84	100+	100+
42	12	40	51	72	96	100+
48	12	35	44	62	84	99
54	15	31	39	55	74	88
60	15	28	35	50	67	79
66	18	25	32	45	61	72
72	18	23	29	41	56	66
78	21		27	38	51	61
84	21			35	48	56
90	24			33	44	52
96	24			31	41	49
102	24				39	46
108	24				37	43
114	24					39
120	24					36

Minimum & Maximum Cover for 9"X 2 1/2" Aluminum Structural Plate Pipe*			
Thickness		0.125	0.150
Dia. (In)	Min. (In)	Max. (Ft)	Max. (Ft)
84	18	31	
90	18	27	
96	18	27	
102	18	24	
108	18	24	
114	18	21	
120	24	21	
126	24	19	
132	30	19	
138	30	18	
144	30	18	
150	30		22
156	30		22
162	36		20
168	36		20

*5.33 - 3/4" dia. steel bolts per foot.

CORRUGATED CIRCULAR ALUMINUM PIPE

CORRUGATED ALUMINUM PIPE-ARCH

Minimum & Maximum Cover for 2 2/3"X 1/2" Aluminum Pipe-Arch					
				2 Tons/Sf Corner Bearing Pressure	
Span (Ft.-In.)	Rise (Ft.-In.)	Corner Radius (In)	Min. Thickness (In)	Min. Cover (In)	Max. Cover (Ft)
17	13	3 4/8	16 (0.060)	12	13
21	15	4 1/8	16 (0.060)	12	12
24	18	4 7/8	16 (0.060)	12	12
28	20	5 4/8	14 (0.075)	12	12
35	24	6 7/8	14 (0.075)	12	12
42	29	8 2/8	12 (0.105)	12	12
49	33	9 5/8	12 (0.105)	15	12
57	38	11	10 (0.135)	15	12
64	43	12 3/8	10 (0.135)	18	12
71	47	13 6/8	8 (0.164)	18	12

Minimum & Maximum Cover for 3" x 1" Aluminum Pipe-Arch					
				2 Tons/Sf Corner Bearing Pressure	
Span (Ft.-In.)	Rise (Ft.-In.)	Corner Radius (In)	Min. Thickness (In)	Min. Cover (In)	Max. Cover (Ft)
60	46	18 6/8	14 (0.075)	15	20
66	51	20 6/8	14 (0.075)	18	20
73	55	22 7/8	14 (0.075)	21	20
81	59	20 7/8	12 (0.105)	21	16
87	63	22 7/8	12 (0.105)	24	16
95	67	24 3/8	12 (0.105)	24	16
103	71	26 1/8	10 (0.135)	24	16
112	75	27 6/8	8 (0.164)	24	16

Minimum & Maximum Cover for 9" x 2 1/2" Aluminum Multiplate Pipe-Arch*					
Span (Ft.-In.)	Rise (Ft.-In.)	Corner Radius (In)	Min. Thickness (In)	Min. Cover (In)	2 Tons/Sf Corner Bearing Pressure Max. Cover (Ft)
6-7	5-8	31.75	0.125	24	24
6-11	5-9	31.75	0.125	24	24
7-3	5-11	31.75	0.125	24	18
7-9	6-0	31.75	0.125	24	18
8-5	6-3	31.75	0.125	24	16
9-3	6-5	31.75	0.125	24	15
10-3	6-9	31.75	0.125	30	13
10-9	6-10	31.75	0.125	30	13
11-5	7-1	31.75	0.125	30	13
12-7	7-5	31.75	0.125	30	11
12-11	7-6	31.75	0.125	30	11
13-1	8-2	31.75	0.125	30	11
13-11	8-5	31.75	0.125	36	10
14-8	9-8	31.75	0.125	36	9
15-4	10-0	31.75	0.150	36	8
16-1	10-4	31.75	0.150	36	8
16-9	10-8	31.75	0.150	42	7
17-3	11-0	31.75	0.150	42	7
18-0	11-4	31.75	0.175	42	7
18-8	11-8	31.75	0.175	42	7

*5.33 - 3/4" dia. steel bolts per foot.

GENERAL NOTES:

1. All material and workmanship shall be in accordance with the State of Alaska, Standard Specifications for Highway Construction.
2. The contractor shall select only pipes that meet specific height of cover criteria shown on the plans or in the special provisions.
3. No more than one type of pipe may be used on any single installation or installation grouping.
4. All structural plate pipes shall be placed on a pre-shaped foundation conforming to the depth of the bottom plates with clearance for assembling to the adjacent plates allowed.
5. See Standard Plan D-01 "Culvert Pipe & Arch Installation Details" for foundation and structural backfill details.
6. Minimum cover shall be measured from the top of pipe to the top of rigid pavement or to the bottom of flexible pavement subgrade. In all cases, the minimum cover shall not be less than 12". Minimum cover during construction shall be that required to protect the pipe from damage or deflection.
7. These tables have been developed for an HL-93 live load and for compacted soil weighing 120 lbs. per cubic foot or less. If compacted soil cover exceeds 120 lbs. per cubic foot, the contractor shall use the depth of cover shown in the plans for the specific pipe. Where compacted soil cover exceeds 120 lbs. per cubic foot and no specific cover requirements are provided in the plans, the contractor shall determine the required minimum pipe cover in accordance with Section 12 of the 2017 AASHTO "LRFD Bridge Design Specifications".

State of Alaska DOT&PF
ALASKA STANDARD PLAN

PIPE AND ARCH TABLES

Adopted as an Alaska Standard Plan by: Carolyn Morehouse
Carolyn Morehouse, P.E.
Chief Engineer

Adoption Date: 7/17/2020

Last Code and Stds. Review
By: KLH Date: 7/8/2020

Next Code and Standards Review date: 7/8/2030

D-04.22

PRELIMINARY
NOVEMBER
2021

STANDARD PLAN
D-04.22 (1 OF 4)

Preliminary Plans

PLANS DEVELOPED BY: STATE OF ALASKA DEPARTMENT OF TRANSPORTATION & PUBLIC FACILITIES, NORTHERN REGION, 2301 PEGER ROAD, FAIRBANKS, AK 99709 (907)451-2200
C:\pw_workdir\den001\ch2mhill_jc065526\d1602216\61597_V2_DETAILS-V2 Mon, Nov/08/21 11:55am

NO.	DATE	REVISION

STATE	PROJECT DESIGNATION	YEAR	SHEET NO.	TOTAL SHEETS
ALASKA	0A24033/Z607340000	2021	V3	V16

D-04.22

SHEET 2 of 4

Minimum & Maximum Cover for 2 2/3" x 1/2" Steel Pipe						
Gage		16	14	12	10	8
Thickness		0.060	0.075	0.105	0.135	0.164
Dia. (In)	Min. (In)	Max. (Ft)	Max. (Ft)	Max. (Ft)	Max. (Ft)	Max. (Ft)
12	12	100+	100+	100+	100+	100+
15	12	100+	100+	100+	100+	100+
18	12	100+	100+	100+	100+	100+
21	12	100+	100+	100+	100+	100+
24	12	100+	100+	100+	100+	100+
30	12	83	100+	100+	100+	100+
36	12	69	86	100+	100+	100+
42	12	59	74	100+	100+	100+
48	12	51	64	91	100+	100+
54	12		57	80	100+	100+
60	12			72	93	100+
66	12			66	85	100+
72	12				78	95
78	12					84
84	12					73

Minimum & Maximum Cover to 3" x 1" Steel Pipe						
Gage		16	14	12	10	8
Thickness		0.060	0.075	0.105	0.135	0.164
Dia. (In)	Min. (In)	Max. (Ft)	Max. (Ft)	Max. (Ft)	Max. (Ft)	Max. (Ft)
36	12			100+	100+	100+
42	12			100+	100+	100+
48	12		74	100+	100+	100+
54	12	53	66	93	100+	100+
60	12	47	59	83	100+	100+
66	12	43	54	76	98	100+
72	12	39	49	69	89	100+
78	12	36	45	64	82	100+
84	12	33	42	59	77	94
90	12	31	39	55	71	87
96	12	29	37	52	67	82
102	18	27	34	49	63	77
108	18		32	46	59	73
114	18		31	43	56	69
120	18		29	41	53	65
126	18			39	51	62
132	18			37	48	59
138	18			36	46	57
144	18				44	54

Minimum & Maximum Cover for 5" x 1" Steel Pipe						
Gage		16	14	12	10	8
Thickness		0.060	0.075	0.105	0.135	0.164
Dia. (In)	Min. (In)	Max. (Ft)	Max. (Ft)	Max. (Ft)	Max. (Ft)	Max. (Ft)
36	12	71	88	100+	100+	100+
42	12	60	76	100+	100+	100+
48	12	53	66	93	100+	100+
54	12	47	59	82	100+	100+
60	12	42	53	74	96	100+
66	12	38	48	67	87	100+
72	12	35	44	62	79	97
78	12	32	40	57	73	90
84	12	30	37	53	68	83
90	12	28	35	49	63	78
96	12	26	33	46	59	73
102	18	24	31	43	56	69
108	18		29	41	53	65
114	18		27	39	50	61
120	18		26	37	47	58
126	18			35	45	55
132	18			33	43	53
138	18			32	41	50
144	18				39	48

Minimum & Maximum Cover for 6" x 2" Steel Multiplate Pipe*							
Gage		12	10	8	7	5	3	1
Thickness		0.111	0.140	0.170	0.188	0.218	0.249	0.280
Dia. (In)	Min. (In)	Max. (Ft)	Max. (Ft)	Max. (Ft)	Max. (Ft)	Max. (Ft)	Max. (Ft)	Max. (Ft)
60	12	46	67	87	100	100+	100+	100+
66	12	42	60	79	91	100+	100+	100+
72	12	38	55	73	83	100+	100+	100+
78	12	35	51	67	77	93	100+	100+
84	12	32	47	62	71	86	100+	100+
90	12	30	44	58	67	80	95	100+
96	12	28	41	54	62	75	89	97
102	18	27	39	51	59	71	84	91
108	18	25	37	48	55	67	79	86
114	18	24	35	45	52	63	75	82
120	18	22	33	43	50	60	71	77
126	18	21	31	41	47	57	68	74
132	18	20	30	39	45	54	64	70
138	18	19	28	37	43	52	62	67
144	18	18	27	36	41	50	59	64

*4 - 3/4" dia. steel bolts per foot.

GENERAL NOTES

1. All material and workmanship shall be in accordance with the State of Alaska, Standard Specifications for Highway Construction.
2. The contractor shall select only pipes that meet specific height of cover criteria shown on the plans or in the special provisions.
3. No more than one type of pipe may be used on any single installation or installation grouping.
4. All structural plate pipes shall be placed on a pre-shaped foundation conforming to the depth of the bottom plates with clearance for assembling to the adjacent plates allowed.
5. See Standard Plan D-01 "Culvert Pipe & Arch Installation Details" for foundation and structural backfill details.
6. Minimum cover shall be measured from the top of pipe to the top of rigid pavement or to the bottom of flexible pavement subgrade. In all cases, the minimum cover shall not be less than 12". Minimum cover during construction shall be that required to protect the pipe from damage or deflecton.
7. These tables have been developed for an HL-93 live load and for compacted soil weighing 120 lbs. per cubic foot or less. If compacted soil cover exceeds 120 lbs. per cubic foot, the contractor shall use the depth of cover shown in the plans for the specific pipe. Where compacted soil cover exceeds 120 lbs. per cubic foot and no specific cover requirements are provided in the plans, the contractor shall determine the required minimum pipe cover in accordance with Section 12 of the 2017 AASHTO "LRFD Bridge Design Specifications".

CORRUGATED CIRCULAR STEEL PIPE

CORRUGATED STEEL PIPE-ARCH

Minimum & Maximum Cover for 2 2/3"X 1/2" Steel Pipe-Arch					
2 Tons/Sf Corner Bearing Pressure					
Span (Ft.-In.)	Rise (Ft.-In.)	Corner Radius (In)	Min. Thickness (In)	Min. Cover (In)	Max. Cover (Ft)
17	13	3 4/8	16 (0.060)	12	11
21	15	4 1/8	16 (0.060)	12	11
24	18	4 7/8	16 (0.060)	12	11
28	20	5 4/8	16 (0.060)	12	11
35	24	6 7/8	16 (0.060)	12	11
42	29	8 2/8	16 (0.060)	12	11
49	33	9 5/8	14 (0.075)	12	11
57	38	11	12 (0.109)	12	11
64	43	12 3/8	12 (0.109)	12	11
71	47	13 6/8	10 (0.138)	12	11
77	52	15 1/8	10 (0.138)	12	11
83	57	16 4/8	8 (0.168)	12	11

Minimum & Maximum Cover for 3"X 1"Steel Pipe-Arch					
2 Tons/Sf Corner Bearing Pressure					
Span (Ft.-In.)	Rise (Ft.-In.)	Corner Radius (In)	Min. Thickness (In)	Min. Cover (In)	Max. Cover (Ft)
53	41	10 2/8	14 (0.079)	12	10
60	46	18 6/8	14 (0.079)	15	29
66	51	20 6/8	14 (0.079)	15	29
73	55	22 7/8	14 (0.079)	18	18
81	59	20 7/8	14 (0.079)	18	15
87	63	22 7/8	14 (0.079)	18	15
95	67	24 3/8	14 (0.079)	18	15
103	71	26 1/8	14 (0.079)	18	14
112	75	27 6/8	14 (0.079)	21	14
117	79	29 4/8	12 (0.109)	21	14
128	83	31 2/8	10 (0.138)	24	14
137	87	33	10 (0.138)	24	14
142	91	34 6/8	10 (0.138)	24	13
150	96	36	10 (0.138)	30	13
157	96	38	10 (0.138)	30	13
164	105	40	10 (0.138)	30	14
171	110	41	10 (0.138)	30	13

Minimum & Maximum Cover for 5"X 1"Steel Pipe-Arch					
2 Tons/Sf Corner Bearing Pressure					
Span (Ft.-In.)	Rise (Ft.-In.)	Corner Radius (In)	Min. Thickness (In)	Min. Cover (In)	Max. Cover (Ft)
53	41	10 2/8	14 (0.079)	12	10
60	46	18 6/8	14 (0.079)	15	29
66	51	20 6/8	14 (0.079)	15	29
73	55	22 7/8	14 (0.079)	18	18
81	59	20 7/8	14 (0.079)	18	15
87	63	22 7/8	14 (0.079)	18	15
95	67	24 3/8	14 (0.079)	18	15
103	71	26 1/8	14 (0.079)	18	14
112	75	27 6/8	14 (0.079)	21	14
117	79	29 4/8	12 (0.109)	21	14
128	83	31 2/8	10 (0.138)	24	14
137	87	33	10 (0.138)	24	14
142	91	34 6/8	10 (0.138)	24	13
150	96	36	10 (0.138)	30	13
157	96	38	10 (0.138)	30	13
164	105	40	10 (0.138)	30	14
171	110	41	10 (0.138)	30	13

Minimum & Maximum Cover for Steel Multiplate Pipe-Arch 6" x 2" *					
2 Tons/Sf Corner Bearing Pressure					
Span (Ft.-In.)	Rise (Ft.-In.)	Corner Radius (In)	Min. Gage (In)	Min. Cover (In)	Max. Cover (Ft)
6-1	4-7	18	12 (0.111)	12	14
7-0	5-1	18	12 (0.111)	12	12
7-11	5-7	18	12 (0.111)	12	10
8-10	6-1	18	12 (0.111)	18	9
9-9	6-7	18	12 (0.111)	18	8
10-11	7-1	18	12 (0.111)	18	6
11-10	7-7	18	12 (0.111)	18	5
12-10	8-4	18	12 (0.111)	24	5
13-3	9-4	31	10 (0.140)	24	11
14-2	9-10	31	10 (0.140)	24	10
15-4	10-4	31	10 (0.140)	24	9
16-3	10-10	31	10 (0.140)	30	8
17-2	11-4	31	10 (0.140)	30	8
18-1	11-10	31	10 (0.140)	30	7
19-3	12-4	31	10 (0.140)	30	7
19-11	12-10	31	10 (0.140)	30	6
20-7	13-2	31	10 (0.140)	36	6

*4 - 3/4" dia. steel bolts per foot.

State of Alaska DOT&PF
ALASKA STANDARD PLAN

PIPE AND ARCH TABLES

Adopted as an Alaska Standard Plan by: Carolyn Morehouse
Carolyn Morehouse, P.E.
Chief Engineer

Adoption Date: 7/17/2020

Last Code and Stds. Review
By: KLH Date: 7/8/2020

Next Code and Standards Review date: 7/8/2030

D-04.22

STANDARD PLAN
D-04.22 (2 OF 4)

PRELIMINARY
NOVEMBER
2021

Preliminary Plans

PLANS DEVELOPED BY: STATE OF ALASKA DEPARTMENT OF TRANSPORTATION & PUBLIC FACILITIES, NORTHERN REGION, 2301 PEGER ROAD, FAIRBANKS, AK 99709 (907)451-2200
C:\pw_workdir\den001\ch2mhill_jc065526\d1602216\61597_V3_DETAILS-V3 Mon, Nov/08/21 11:56am

NO.	DATE	REVISION

STATE	PROJECT DESIGNATION	YEAR	SHEET NO.	TOTAL SHEETS
ALASKA	0A24033/Z607340000	2021	V4	V16

D-04.22 SHEET 3 of 4

Maximum Cover for Type S Corrugated Polyethelene Pipe	
Size (in)	Max. Cover (ft)
12	24
15	25
18	24
24	20
30	20
36	18
42	16
48	17

GENERAL NOTES

1. All materials and workmanship shall be in accordance with the State of Alaska Standard Specifications for Highway Construction.

2. For foundation and structural backfill details see Standard Plan D-01 "Culvert Pipe & Arch Installation Details".

3. Pipe cover height is measured from top of the pipe to top of rigid pavement, or to the bottom of subgrade for flexible pavement. In all cases the minimum cover shall be no less than 2 ft. Where loads traverse the culvert during construction minimum cover shall be no less than 4 ft.

State of Alaska DOT&PF
ALASKA STANDARD PLAN

PIPE AND ARCH TABLES

Adopted as an Alaska Standard Plan by: Carolyn Morehouse
Carolyn Morehouse, P.E.
Chief Engineer

Adoption Date: 7/17/2020

Last Code and Stds. Review
By: KLH Date: 7/8/2020

Next Code and Standards Review date: 7/8/2030

D-04.22

STANDARD PLAN
D-04.22 (3 OF 4)

PRELIMINARY
NOVEMBER
2021

Preliminary Plans

PLANS DEVELOPED BY: STATE OF ALASKA DEPARTMENT OF TRANSPORTATION & PUBLIC FACILITIES, NORTHERN REGION, 2301 PEGER ROAD, FAIRBANKS, AK 99709 (907)451-2200
C:\pw_workdir\den001\ch2mhill_jc065526\d1602216\61597_V4_DETAILS-V4 Mon, Nov/08/21 11:56am

NO.	DATE	REVISION

STATE	PROJECT DESIGNATION	YEAR	SHEET NO.	TOTAL SHEETS
ALASKA	0A24033/Z607340000	2021	V5	V16

D-04.22 SHEET 4 of 4

GENERAL NOTES

1. All material and workmanship shall be in accordance with the State of Alaska, Standard Specifications for Highway Construction.
2. The contractor shall select only pipes that meet specific height of cover criteria shown on the plans or in the special provisions.
3. No more than one type of pipe may be used on any single installation or installation grouping.
4. All structural plate pipes shall be placed on a pre-shaped foundation conforming to the depth of the bottom plates with clearance for assembling to the adjacent plates allowed.
5. See Standard Plan D-01 "Culvert Pipe & Arch Installation Details" for foundation and structural backfill details.
6. Minimum cover shall be measured from the top of pipe to the top of rigid pavement or to the bottom of flexible pavement subgrade. In all cases, the minimum cover shall not be less than 12". Minimum cover during construction shall be that required to protect the pipe from damage or deflecton.
7. These tables have been developed for an HL-93 live load and for compacted soil weighing 120 lbs. per cubic foot or less. If compacted soil cover exceeds 120 lbs. per cubic foot, the contractor shall use the depth of cover shown in the plans for the specific pipe. Where compacted soil cover exceeds 120 lbs. per cubic foot and no specific cover requirements are provided in the plans, the contractor shall determine the required minimum pipe cover in accordance with Section 12 of the 2017 AASHTO "LRFD Bridge Design Specifications".

Minimum & Maximum Cover for Aluminum Spiral Rib Circular Pipe*

Gage		16	14	12	10
Thickness		0.064	0.079	0.109	0.138
Dia. (In)	Min. (In)	Max. (Ft)	Max. (Ft)	Max. (Ft)	Max. (Ft)
18	12	43	61		
21	12	38	52	84	
24	12	33	45	73	
30	15	26	36	58	
36	18	21	30	49	69
42	21		25	41	59
48	24			36	51
54	24			32	46
60	24			29	41
66	24				37
72	30				34

*¾ x ¾ x 7½ in. Corrugations

Minimum & Maximum Cover for Aluminum Spiral Rib Pipe-Arch*

Gage			16	14	12	10
Thickness			0.060	0.075	0.105	0.135
Span (Ft.-In.)	Rise (Ft.-In.)	Min. Cover (In)	Max. Cover (Ft)			
20	16	12	16			
23	19	12	15			
27	21	15	13	13		
33	26	18	13	13	13	
40	31	21		13	13	
46	36	24			13	13
53	41	24			13	13
60	46	24			13	13
66	51	24				13

*¾ x ¾ x 7½ in. Corrugations

ALUMINUM SPIRAL RIB PIPE

STEEL SPIRAL RIB PIPE

Minimum & Maximum Cover for Steel and Aluminized Steel Spiral Rib Circular Pipe*

Gage		16	14	12	10
Thickness		0.064	0.079	0.109	0.138
Dia. (In)	Min. (In)	Max. (Ft)	Max. (Ft)	Max. (Ft)	Max. (Ft)
18	12	91			
24	12	68	95	100+	
30	12	54	76	100+	
36	12	45	63	100+	
42	12	38	54	90	
48	12	33	47	79	
54	18	30	42	70	
60	18	27	38	63	92
66	18	24	34	57	83
72	18		31	52	76
78	24		29	48	70
84	24		27	45	65
90	24			42	61
96	24			39	56
102	30			36	50
108	30			32	45

*¾ x ¾ x 7½ in. Corrugations.

Minimum & Maximum Cover for Steel Spiral Rib Pipe-Arch*

			2 Tons/Sf Corner Bearing Pressure		
Thickness			0.064	0.079	0.109
Span (Ft.-In.)	Rise (Ft.-In.)	Min. Cover (In)	Max. Cover (Ft)		
20	16	12	13		
23	19	12	13		
27	21	12	11		
33	26	12	11		
40	31	12	11		
46	36	12	11		
53	41	18		11	
60	46	18		19	
66	51	18		19	
73	55	18			18
81	59	18			15
87	63	18			15
95	67	18			15

*¾ x ¾ x 7½ in. Corrugations

State of Alaska DOT&PF
ALASKA STANDARD PLAN

PIPE AND ARCH TABLES

Adopted as an Alaska Standard Plan by: Carolyn Morehouse
Carolyn Morehouse, P.E.
Chief Engineer

Adoption Date: 7/17/2020

Last Code and Stds. Review
By: KLH Date: 7/8/2020

Next Code and Standards Review date: 7/8/2030

D-04.22

STANDARD PLAN
D-04.22 (4 OF 4)

PRELIMINARY
NOVEMBER
2021

Preliminary Plans

PLANS DEVELOPED BY: STATE OF ALASKA DEPARTMENT OF TRANSPORTATION & PUBLIC FACILITIES, NORTHERN REGION, 2301 PEGER ROAD, FAIRBANKS, AK 99709 (907)451-2200
C:\pw_workdir\den001\ch2mhill_jc065526\d1602216\61597_V5_DETAILS-V5 Mon, Nov/08/21 11:56am

NO.	DATE	REVISION

STATE	PROJECT DESIGNATION	YEAR	SHEET NO.	TOTAL SHEETS
ALASKA	0A24033/Z607340000	2021	V6	V16

D-06.10

SHEET 1 of 3

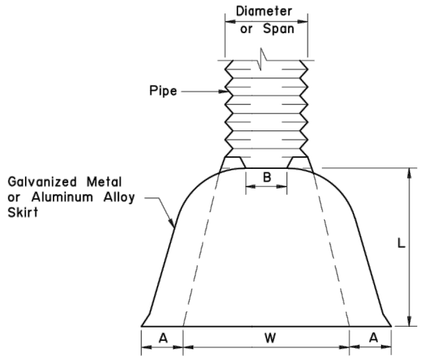

PLAN

ROUND AND PIPE ARCH

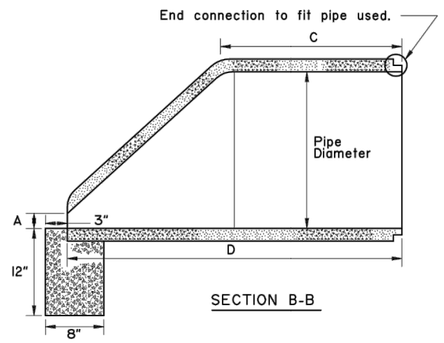

SECTION B-B

MINIMUM DIMENSIONS					
Pipe Diameter	A	B	C	D	E
12"	4"	1 3/4"	24"	46"	24"
18"	9"	2"	25"	50"	36"
24"	9 1/2"	2 1/2"	30"	72"	48"
30"	12"	3"	20"	73"	60"
36"	15"	3 3/8"	35"	97"	72"
42"	21"	3 3/4"	35"	98"	78"
48"	24"	4 1/4"	26"	98"	84"
54"	27"	4 5/8"	33"	99"	82"

ROUND PIPE										
Pipe Diam. Inches	Thickness For Aluminum	Thk. for Galv. Metal	Dimension Inches A 1" Tol.	B Max.	H 1" Tol.	L 1 1/2" Tol.	W 2" Tol.	T 2" Tol.	Skirt	Approx. Slope
12"	0.060	0.064	6"	6"	6"	21"	24"	34"	1 Pc.	2 1/2
15"	0.060	0.064	7"	8"	6"	26"	30"	40"	1 Pc.	2 1/2
18"	0.060	0.064	8"	10"	6"	31"	36"	46"	1 Pc.	2 1/2
21"	0.060	0.064	9"	12"	6"	36"	42"	52"	1 Pc.	2 1/2
24"	0.075	0.064	10"	13"	6"	41"	48"	58"	1 Pc.	2 1/2
30"	0.075	0.079	12"	16"	8"	51"	60"	70"	1 Pc.	2 1/2
36"	0.105	0.079	14"	19"	9"	60"	72"	94"	2 Pc.	2 1/2
42"	0.105	0.109	16"	22"	11"	69"	84"	106"	2 Pc.	2 1/2
48"	0.105	0.109	18"	27"	12"	78"	90"	112"	2 Pc.	2 1/4
54"	0.105	0.109	18"	30"	12"	84"	102"	122"	2 Pc.	2 1/4
60"	0.135	0.109	18"	33"	12"	87"	114"	134"	3 Pc.	2 1/4
66"	0.135	0.109	18"	36"	12"	87"	120"	142"	3 Pc.	2 1/4
72"	0.135	0.109	18"	39"	12"	87"	126"	146"	3 Pc.	2 1/4
78"	— —	0.109	18"	42"	12"	87"	132"	152"	3 Pc.	1 1/4
84"	— —	0.109	18"	45"	12"	87"	138"	158"	3 Pc.	1 1/6

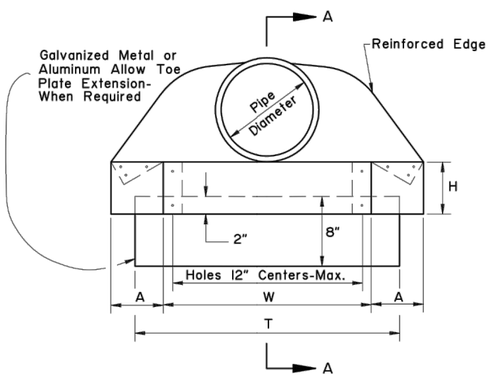

ELEVATION

ROUND PIPE

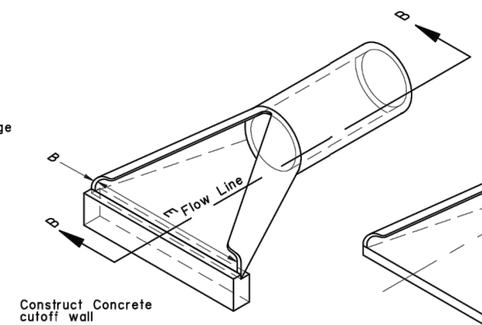

PRECAST CONCRETE END SECTION

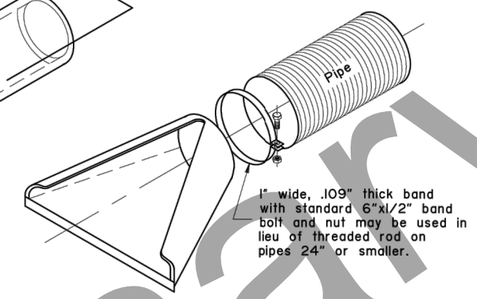

PIPE-ARCH											
Pipe-Arch Dimension Inches Span	Rise	Thickness for Aluminum	Thk. for Galv. Metal	Dimension Inches A 1" Tol.	B Max.	H 1" Tol.	L 1 1/2" Tol.	W 2" Tol.	T 2" Tol.	Skirt	Approx. Slope
17"	13"	0.060	0.064	7"	9"	6"	19"	30"	40"	1 Pc.	2 1/2
21"	15"	0.060	0.064	7"	10"	6"	23"	36"	46"	1 Pc.	2 1/2
24"	18"	0.060	0.064	8"	12"	6"	28"	42"	52"	1 Pc.	2 1/2
28"	20"	0.075	0.064	9"	14"	6"	32"	48"	58"	1 Pc.	2 1/2
35"	24"	0.075	0.079	10"	16"	6"	39"	60"	70"	1 Pc.	2 1/2
42"	29"	0.105	0.079	12"	18"	8"	46"	75"	85"	1 Pc.	2 1/2
49"	33"	0.105	0.109	13"	21"	9"	53"	85"	103"	2 Pc.	2 1/2
57"	38"	0.105	0.109	18"	26"	12"	63"	90"	114"	2 Pc.	2 1/2
64"	43"	0.105	0.109	18"	30"	12"	70"	102"	130"	2 Pc.	2 1/4
71"	47"	0.135	0.109	18"	33"	12"	77"	114"	144"	3 Pc.	2 1/4
77"	52"	0.135	0.109	18"	36"	12"	84"	120"	158"	3 Pc.	2 1/4
83"	57"	0.135	0.109	18"	39"	12"	90"	126"	170"	3 Pc.	2 1/4

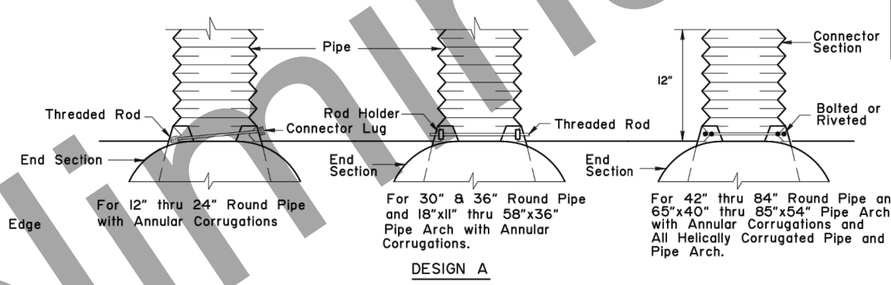

DESIGN A

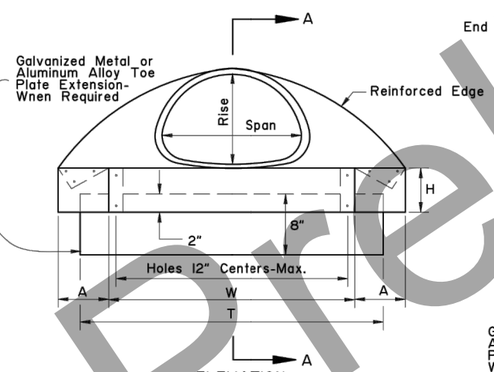

ELEVATION

PIPE ARCH

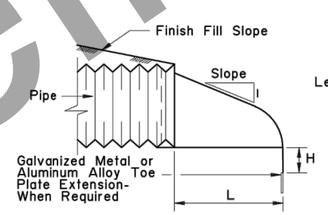

SECTION A-A

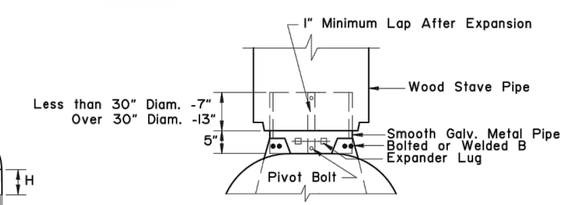

DESIGN B

METAL END SECTION CONNECTED TO WOOD STAVE PIPE

GENERAL NOTES:

1. Toe plate extensions will be required only when provided for on the plans. When required, the toe plate extensions shall be punched with holes to match those in lip of skirt and fastened with 3/8 inch or larger galvanized nuts and bolts and shall be the same gage as the end section.
2. Galvanized Metal or Aluminum Alloy End Sections may be used on Wood Stave and Plastic Pipe.
3. All 3 piece bodies shall have 12 gage sides and 10 gage center panels. Multiple panel bodies shall have lap seams which are to be tightly joined by 3/8" galvanized rivets or bolts.

State of Alaska DOT&PF
ALASKA STANDARD PLAN

CULVERT END SECTIONS

Adopted as an Alaska Standard Plan by: Kenneth J. Fisher, P.E. Chief Engineer

Adoption Date: 02/08/2019

Last Code and Stds. Review
By: Date:

Next Code and Standards Review date: 02/08/2029

D-06.10

PRELIMINARY NOVEMBER 2021

STANDARD PLAN
D-06.10 (1 OF 3)

Preliminary Plans

PLANS DEVELOPED BY: STATE OF ALASKA DEPARTMENT OF TRANSPORTATION & PUBLIC FACILITIES, NORTHERN REGION, 2301 PEGER ROAD, FAIRBANKS, AK 99709 (907)451-2200
C:\pw_workdir\den001\ch2mhill_jc065526\d1602216\61597_V6_DETAILS-V6 Mon, Nov/08/21 11:56am

NO.	DATE	REVISION

STATE	PROJECT DESIGNATION	YEAR	SHEET NO.	TOTAL SHEETS
ALASKA	0A24033/Z607340000	2021	V7	V16

D-06.10 SHEET 2 of 3

GENERAL NOTES

1. See general notes on sheet 1 of 3.
2. See sheet 1 of 3 for metal end section dimensions.
3. Insert bolts, washers and rivets shall be galvanized. Insert thickness is the same as the end section.
4. Use culvert inserts only at inlet.

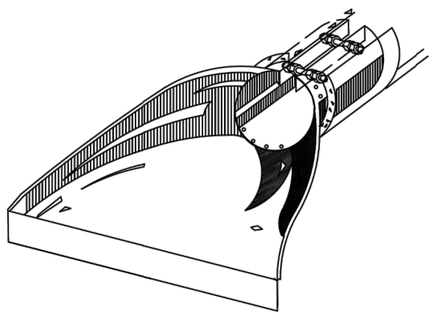

FOR CONNECTING CONCRETE PIPE OR CORRUGATED POLYETHYLENE PIPE TO METAL END SECTION.

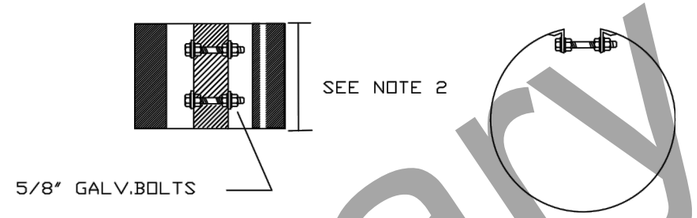

METAL INSERTS FOR USE WITH CORRUGATED PLASTIC PIPE AND METAL END SECTIONS

State of Alaska DOT&PF
ALASKA STANDARD PLAN

CULVERT END SECTIONS

Adopted as an Alaska Standard Plan by: Kenneth J. Fisher, P.E.
Chief Engineer

Adoption Date: 02/08/2019

Last Code and Stds. Review
By: Date:

Next Code and Standards Review date: 02/08/2029

D-06.10

PRELIMINARY
NOVEMBER
2021

STANDARD PLAN
D-06.10 (2 OF 3)

Preliminary Plans

PLANS DEVELOPED BY: STATE OF ALASKA DEPARTMENT OF TRANSPORTATION & PUBLIC FACILITIES, NORTHERN REGION, 2301 PEGER ROAD, FAIRBANKS, AK 99709 (907)451-2200
C:\pw_workdir\den001\ch2mhill_jc065526\d1602216\61597_V7_DETAILS-V7 Mon, Nov/08/21 11:56am

NO.	DATE	REVISION

STATE	PROJECT DESIGNATION	YEAR	SHEET NO.	TOTAL SHEETS
ALASKA	0A24033/Z607340000	2021	V8	V16

D-06.10

SHEET 3 of 3

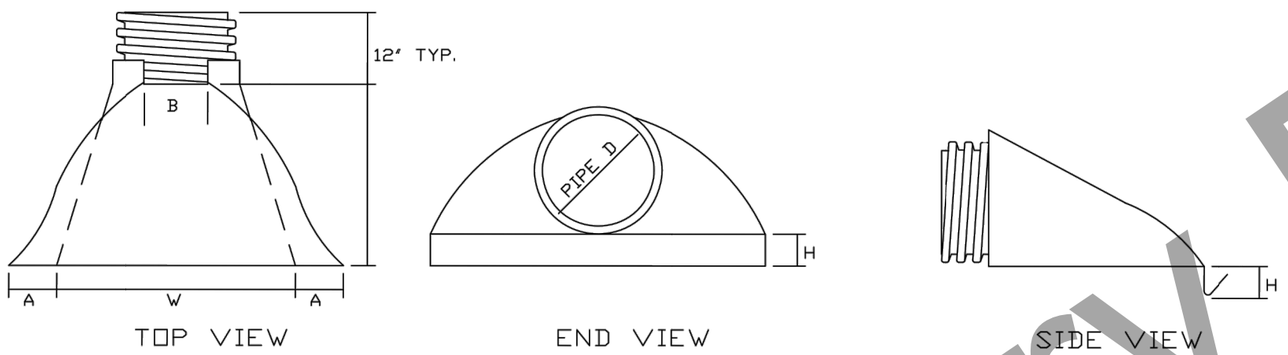

PIPE DIAMETER	DIMENSIONS IN MILLIMETERS				
	A(1"±)	B MAX	H(1"±)	L(1/2"±)	W(2"±)
12" and 15"	6 1/2"	10"	6 1/2"	25"	29"
18"	7 1/2"	15"	6 1/2"	32"	35"
24"	7 1/2"	18"	6 1/2"	36"	45"
30"	10 1/2"	N/A	7"	53"	68"
36"	10 1/2"	N/A	7"	53"	68"

PLASTIC END SECTION FOR CORRUGATED PLASTIC PIPE

GENERAL NOTES

1. Plastic flared end sections may be used with HDPE corrugated culvert pipes where noted in project plans or approved by project engineer.
2. Consult manufacturer's recommendations for proper sizing and coupling devices. Recommended fasteners may include connecting bands or cinch ties. Fittings across dimension B may include threaded rods with wing nuts or bolts and washers. plastic welds may be recommended.
3. Align coupling to accomodate pipe corrugations.
4. Metal components e.g. bolts or washers must be galvanized.
5. Attachment of end section should preserve culvert alignment and not impair pipe function. Use end sections only on culvert inlet.
6. Toe plate extensions will be required only when designated on the plans.
7. End sections will not be used on HDPE culvert pipes larger than 36" unless indicated by project plans or approved by the Engineer.

State of Alaska DOT&PF
ALASKA STANDARD PLAN

CULVERT END SECTIONS

Adopted as an Alaska Standard Plan by: Kenneth J. Fisher, P.E.
Chief Engineer

Adoption Date: 02/08/2019

Last Code and Stds. Review
By: Date:

Next Code and Standards Review date: 02/08/2029

D-06.10

PRELIMINARY
NOVEMBER
2021

STANDARD PLAN
D-06.10 (3 OF 3)

Preliminary Plans

PLANS DEVELOPED BY: STATE OF ALASKA DEPARTMENT OF TRANSPORTATION & PUBLIC FACILITIES, NORTHERN REGION, 2301 PEGER ROAD, FAIRBANKS, AK 99709 (907)451-2200
C:\pw_workdir\den001\ch2mhill_jc065526\d1602216\61597_V8_DETAILS-V8 Mon, Nov/08/21 11:56am

NO.	DATE	REVISION

STATE	PROJECT DESIGNATION	YEAR	SHEET NO.	TOTAL SHEETS
ALASKA	0A24033/Z607340000	2021	V9	V16

D-09.00

SHEET 1 of 1

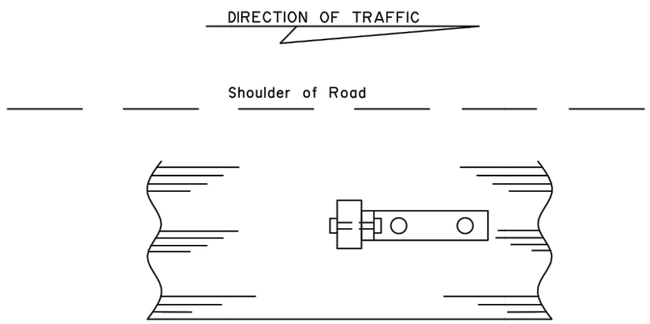

TOP VIEW

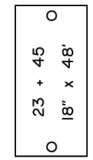

Sta. and size of Culvert to be stamped into a 2"x4"x0.064" thick brass plate, fastened, with No. 8 round head brass screws, to the marker post as shown. Plate to be on side of post facing traffic.

GENERAL NOTES:

1. Culvert marker post shall be installed with galvanized steel hardware meeting the following requirements: Galvanizing for nuts and washers shall meet the requirements of ASTM A-153, Class C. Galvanizing for steel mounting supports shall meet the requirements of MIL-P-26915A, or ASTM A-153, Class C.

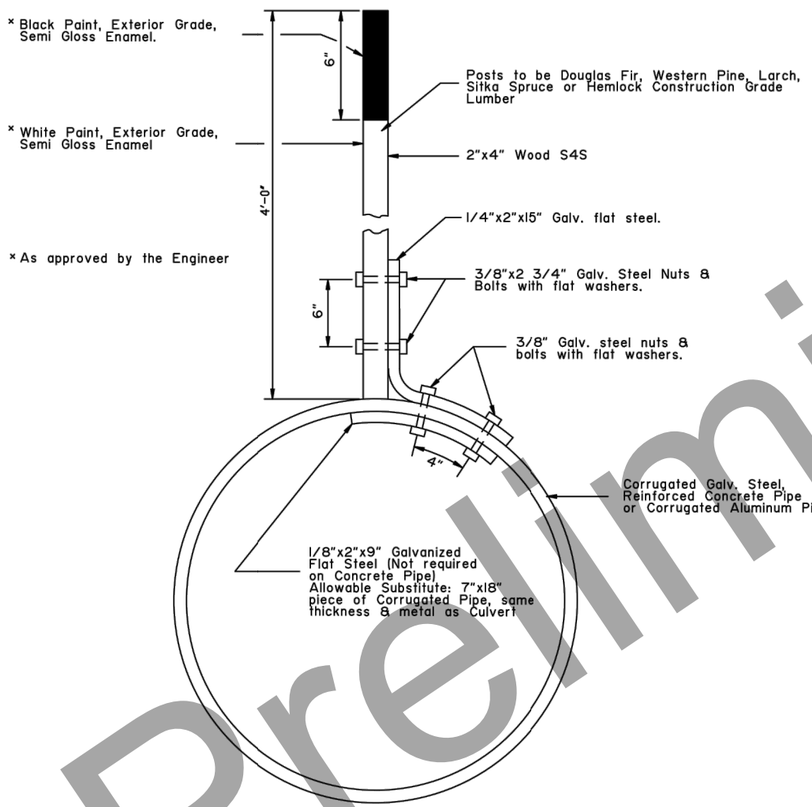

END VIEW

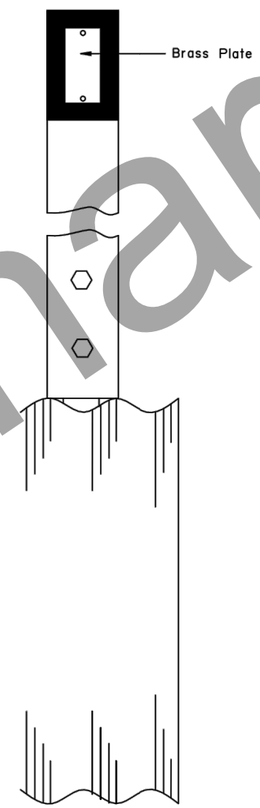

SIDE VIEW

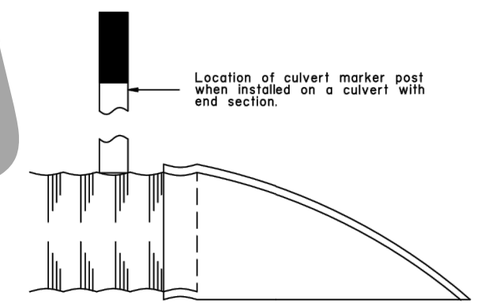

END SECTION SIDE VIEW

State of Alaska DOT&PF
ALASKA STANDARD PLAN

CULVERT MARKER POST

Adopted as an Alaska Standard Plan by: Kenneth J. Fisher, P.E.
Chief Engineer

Adoption Date: 02/08/2019

Last Code and Stds. Review
By: Date:

Next Code and Standards Review date: 02/08/2029

D-09.00

STANDARD PLAN
D-09.00

PRELIMINARY
NOVEMBER
2021

Preliminary Plans

PLANS DEVELOPED BY: STATE OF ALASKA DEPARTMENT OF TRANSPORTATION & PUBLIC FACILITIES, NORTHERN REGION, 2301 PEGER ROAD, FAIRBANKS, AK 99709 (907)451-2200
C:\pw_workdir\den001\ch2mhill_jc065526\d1602216\61597_V9_DETAILS-V9 Mon, Nov/08/21 11:56am

NO.	DATE	REVISION

STATE	PROJECT DESIGNATION	YEAR	SHEET NO.	TOTAL SHEETS
ALASKA	0A24033/Z607340000	2021	V10	V16

E-09.00

SHEET 1 of 1

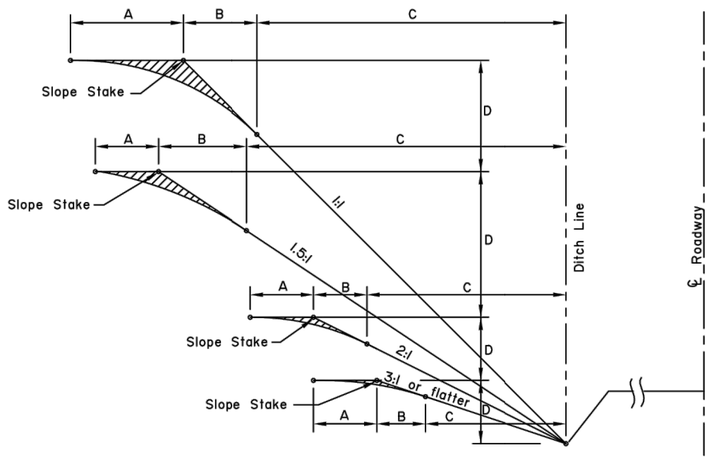

FIG. 1
TYPICAL SECTION OF ROUNDED SLOPES

TABLE OF ROUNDING DIMENSIONS

Rate of Slope	A		B	
	When B's 5.0' or less	When B is more than 5.0'	When D's 15.0' or less	When D is more than 15.0'
3:1 or flatter	B	5.0'	5.0'	5.0'
2:1	B	5.0'	5.0'	D/3
1.5:1	B	5.0'	5.0'	D/3
1:1	B	$\frac{D}{3}$,Max. 10.0'		D/3

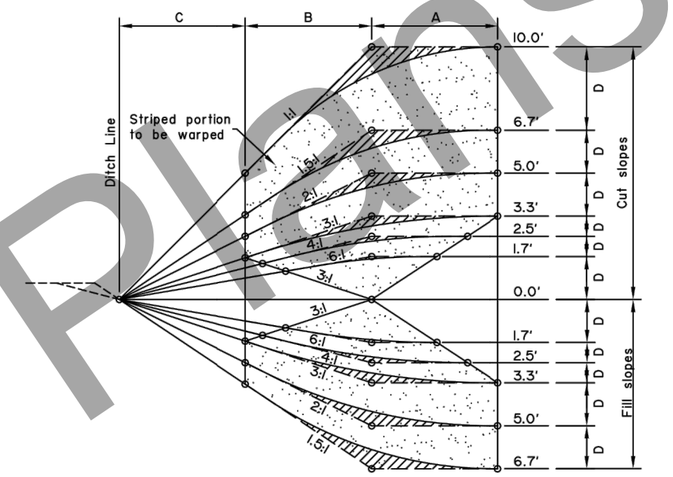

FIG. 4
TYPICAL GRADING FOR WARPING SLOPES

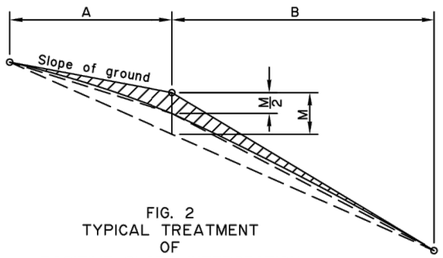

FIG. 2
TYPICAL TREATMENT
OF
POSITIVE SLOPE INTERSECTION

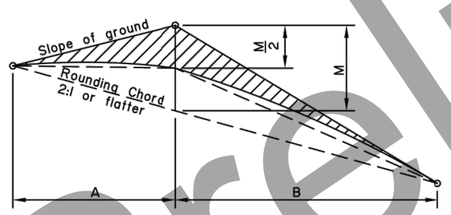

FIG. 3
TYPICAL TREATMENT
OF
NEGATIVE SLOPE INTERSECTION

TYPICAL SLOPE ROUNDING

GENERAL NOTES

1. Cut and fill slopes shall be rounded as shown in fig. 1, 2, and 3 when required by the plans or special provisions. Rounding of fill slopes shall be done in the same manner as shown for cut slopes.

2. Intersections of cut and fill slopes shall be warped as shown in fig. 4 and 5 when required by the plans or special provisions.

3. Warping of cut and fill slopes is for the purpose of attaining a more pleasing appearance and to promote the growth of natural vegetation by causing the fill slope to flow smoothly into the cut slope. The length of slope warping is relatively proportional to the character of the topography, the distance between end limits of warped surfaces being lessended as the terrain steepens and lengthened as the topography flattens out. The procedure as outlined herein is typical and shall be varied to meet special conditions and shall be as staked by the Engineer.

4. SUGGESTED PROCEDURE FOR WARPING SLOPING

A--Select end points for warping to fit specified slope ratios as follows:-

(a) The dimensions A, B, and C shall all be constant throughout the full length of warping, E.

(b) When the average depth of cut or fill is such that the dimension B+C exceeds 10 feet, the ends of warping shall be at points where B+C is 10 feet, provided the warping distance E does not exceed 100 feet. That is, as shown in fig. 4 and 5, warping shall begin at a cut or fill depth of 6.7 feet for 1.5:1 slopes, at 50 feet for 2:1 slopes, etc. if the dimension E exceeds 100 feet, the dimension B+C shall be reduced until the intersections of the prescribed slopes with the natural ground are 100 feet apart.

(c) When the average depth of cut or fill is such that the distance B+C is between 5 feet and 10 feet, the ends of warping shall be at points where C is 0 feet, but such points shall not be more than 150 feet apart.

(d) When the average depth of cut or fill is such that the dimension B is less than 5 feet, the ends of warping shall be 200 feet apart.

B--Set slope stakes at end of warping.

C--Set additional slope stakes at various intervals between end stakes and at the sames distance from centerline.

D--Flatten and round warped slopes as shown in figure 4 for each section.

5. A layer of earth overlying a rock cut shall be rounded as far as possible as though the total height of slope were in earth cut.

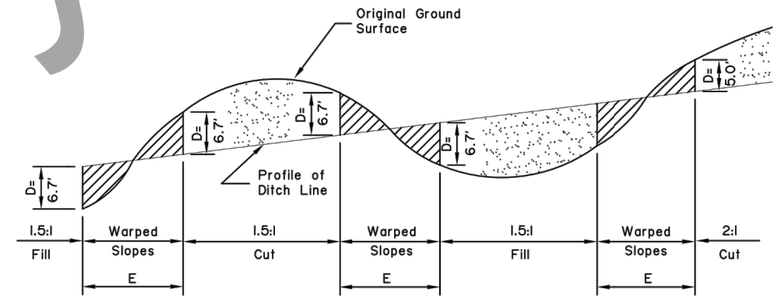

FIG. 5
TYPICAL PROFILE OF WARPED SLOPES

TYPICAL SLOPE WARPING

State of Alaska DOT&PF
ALASKA STANDARD PLAN

SLOPE
ROUNDING AND WARPING

Adopted as an Alaska Standard Plan by: Kenneth J. Fisher, P.E.
Chief Engineer

Adoption Date: 02/08/2019

Last Code and Stds. Review
By: Date:

Next Code and Standards Review date: 02/08/2029

E-09.00

PRELIMINARY
NOVEMBER
2021

STANDARD PLAN
E-09.00

Preliminary Plans

PLANS DEVELOPED BY: STATE OF ALASKA DEPARTMENT OF TRANSPORTATION & PUBLIC FACILITIES, NORTHERN REGION, 2301 PEGER ROAD, FAIRBANKS, AK 99709 (907)451-2200
C:\pw_workdir\den001\ch2mhill_jc065526\d1602216\61597_V10_DETAILS-V10 Mon, Nov/08/21 11:57am

NO.	DATE	REVISION

STATE	PROJECT DESIGNATION	YEAR	SHEET NO.	TOTAL SHEETS
ALASKA	0A24033/Z607340000	2021	V11	V16

F-01.04

SHEET 1 of 1

NOTE: Pull post shall be spaced at 250' maximum intervals.

Fabric shall be placed on highway side of post.

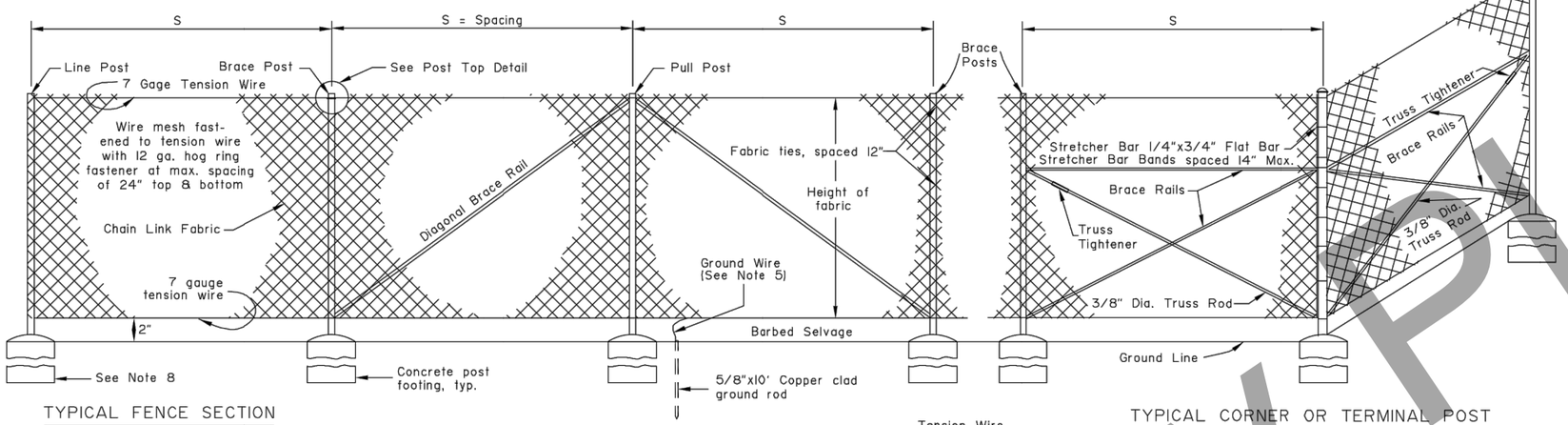

TYPICAL FENCE SECTION

TYPICAL PULL POST

TYPICAL CORNER OR TERMINAL POST

GENERAL NOTES:

1. Use equal pole spacing (S). Maximum pole spacing is 10 feet unless directed otherwise by the Engineer.
2. Securely fasten post tops to post.
3. Securely fasten brace rails and truss rods to post with brace bands.
4. Provide truss rods with a tensioning adjusting mechanism.
5. Attach ground wire to fence fabric with a split bolt.
6. Stretch fabric to a smooth uniform appearance.
7. Details shown indicate general design and dimensions may vary among manufacturers.
8. Set line, pull, corner, and terminal posts in concrete footings unless in muskeg or shown otherwise in the plans.

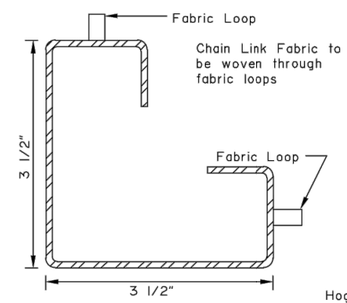

ROLL FORMED POST

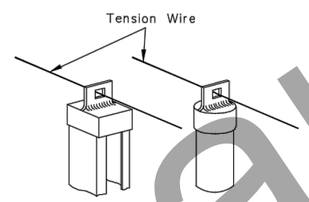

LINE POST TOPS

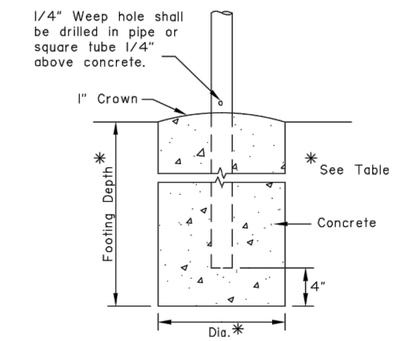

CONCRETE POST FOOTING

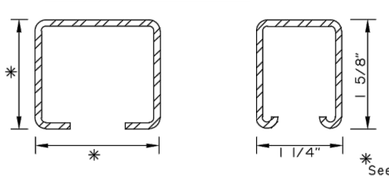

C POST

ROLL FORMED BRACE

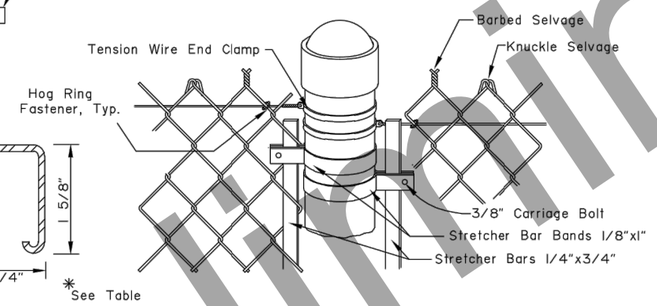

PIPE STYLE POST TOP

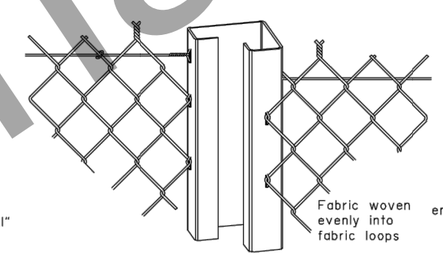

ROLL FORMED POST TOP

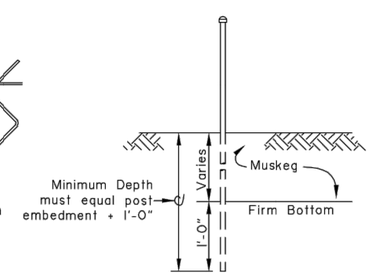

POST SETTING IN MUSKEG AREAS

FABRIC HEIGHT	POST								TOP OR BRACE RAIL						ALTERNATE POST	
	END-CORNER-PULL								LINE-BRACE						LINE-BRACE	
	PIPE		SQUARE TUBE		ROLL FORMED		FOOTING		PIPE		C POST		FOOTING		PIPE		ROLL FORMED		H POST		H POST	
	SIZE	WT/FT.	SIZE	WT/FT.	SIZE	WT/FT.	DEPTH	DIA.	SIZE	WT/FT.	SIZE	WT/FT.	DEPTH	DIA	SIZE	WT/FT.	SIZE	WT/FT.	SIZE	WT/FT.	SIZE	WT/FT.
3'	2"	3.65 #	2" x 2"	4.31 #	3 1/2"x3 1/2"	4.84 #	40"	10"	1 1/2"	2.72 #	1 7/8"x1 5/8"	2.28 #	28"	10"	1 1/4"	2.27 #	1 5/8"	1.35 #	1 1/2"x 1 5/16"	2.27 #	1 7/8"x1 5/8"	2.72 #
4'	"	"	"	"	"	"	"	"	"	"	"	"	"	"	"	"	"	"	"	"	"	"
5'	2"	3.65 #	2" x 2"	4.31 #	3 1/2"x3 1/2"	4.84 #	40"	10"	1 1/2"	2.72 #	1 7/8"x1 5/8"	2.28 #	28"	10"	"	"	"	"	"	"	1 7/8"x1 5/8"	2.72 #
6'	2 1/2"	5.79 #	2 1/2"x2 1/2"	5.59 #	3 1/2"x3 1/2"	4.84 #	48"	15"	2"	3.65 #	2 1/4"x1 45/64"	2.64 #	40"	12"	"	"	"	"	"	"	2 1/4"x2"	4.1 #
7'	"	"	"	"	"	"	"	"	"	"	"	"	"	"	"	"	"	"	"	"	"	"
8'	2 1/2"	5.79 #	2 1/2"x2 1/2"	5.59 #	3 1/2"x3 1/2"	4.84 #	48"	15"	2"	3.65 #	2 1/4"x1 45/64"	2.64 #	40"	12"	"	"	"	"	"	"	2 1/4"x2"	4.1 #

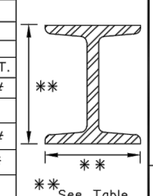

H POST

State of Alaska DOT&PF
ALASKA STANDARD PLAN

CHAIN LINK FENCE

Adopted as an Alaska Standard Plan by: Carolyn Morehouse
Carolyn Morehouse, P.E.
Chief Engineer

Adoption Date: 7/17/2020

Last Code and Stds. Review
By: KLH Date: 7/8/2020

Next Code and Standards Review date: 7/8/2030

F-01.04

PRELIMINARY
NOVEMBER
2021

STANDARD PLAN
F-01.04

Preliminary Plans

PLANS DEVELOPED BY: STATE OF ALASKA DEPARTMENT OF TRANSPORTATION & PUBLIC FACILITIES, NORTHERN REGION, 2301 PEGER ROAD, FAIRBANKS, AK 99709 (907)451-2200
C:\pw_workdir\den001\ch2mhill_jc065526\d1602216\61597_V11_DETAILS-V11 Mon, Nov/08/21 11:57am

NO.	DATE	REVISION

STATE	PROJECT DESIGNATION	YEAR	SHEET NO.	TOTAL SHEETS
ALASKA	0A24033/Z607340000	2021	V12	V16

S-00.12

SHEET 1 of 1

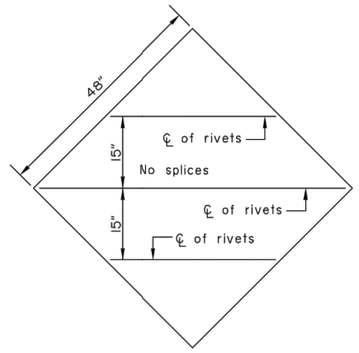

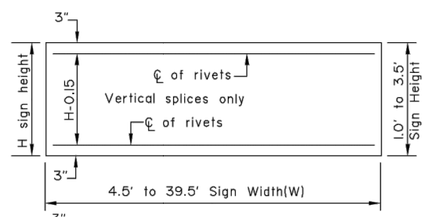

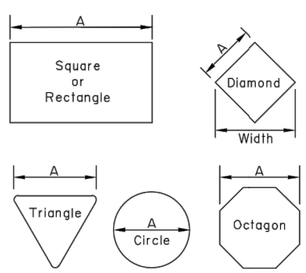

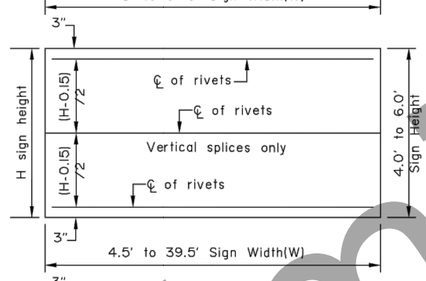

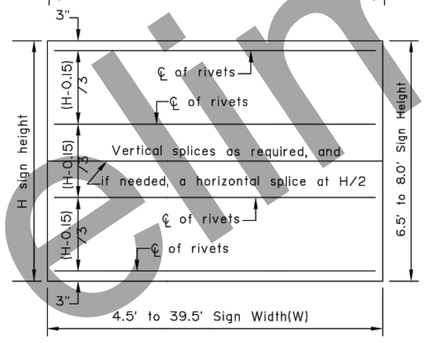

Maximum size unframed signs using 0.125" thick aluminum sheeting.	
Sign Shape	A
Squares, Shields, and Route Markers	48"
Rectangles	48"
Diamonds	48"
Triangles	48"
Rounds and Octagons	48"

Install wind framing on all signs that exceed the dimensions listed.

LIGHT SIGNS

WIND FRAMING LOCATIONS

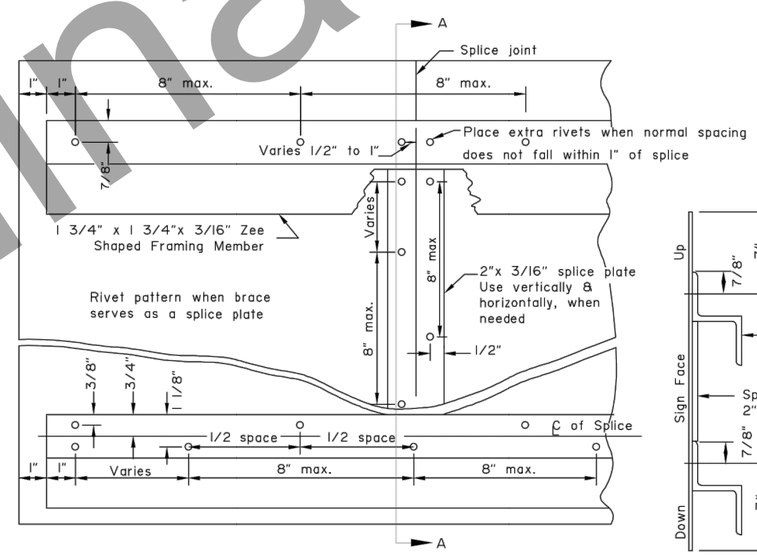

RIVET DETAIL FOR ZEE SHAPED WIND FRAMING & SPLICE PLATE

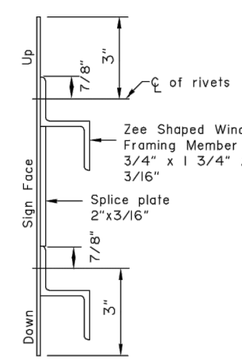

SECTION A-A

Note: Drawing not to scale

GENERAL NOTES

1. See the standard specifications for the aluminum alloys that you may use for sign sheeting and wind framing members.
2. Fabricate all signs from 0.125" thick aluminum sheeting.
3. Sign fabricators may use alternates to the zee shaped framing member with approval of the engineer, if the frame manufacturer certifies their design equals or exceeds the strength of the zee shaped design.
4. Install one piece wind framing members on all signs up to 23.5' wide. Use one splice in each wind frame on all signs wider than 23.5'. Locate splices at least 18" from all posts and panel edges. Stagger splices in adjacent framing members at least 8.0' apart.
5. Attach wind framing members with rivets or with an engineer approved, double sided, high strength, adhesive tape. Clean and handle sheeting and framing members and apply tape in accordance with the tape manufacturer's written instructions. Install two rivets in both ends of each framing member.
6. Use 3/16" diameter rivets conforming to aluminum alloy 6061-T6 for cold driven rivets, or aluminum alloy 6061-T43 for hot driven rivets.
7. Sign fabricators may use sign panels extruded with integral framing with approval of the engineer, if the manufacturer certifies their design equals or exceeds the strength of the 0.125" thick panel with framing attached to it.
8. Frame all signs taller than 8.0' with five wind framing members located (H-0.15)/4 spaces. If needed, make a horizontal splice at the middle wind frame.
9. Do not use round pipes for sign supports.

State of Alaska DOT&PF
ALASKA STANDARD PLAN

SIGN FRAMING

Adopted as an Alaska Standard Plan by: Carolyn Morehouse
Carolyn Morehouse, P.E.
Chief Engineer

Adoption Date: 7/17/2020

Last Code and Stds. Review
By: WTH Date: 7/8/2020

Next Code and Standards Review date: 7/8/2030

S-00.12

PRELIMINARY
NOVEMBER
2021

STANDARD PLAN
S-00.12

Preliminary Plans

PLANS DEVELOPED BY: STATE OF ALASKA DEPARTMENT OF TRANSPORTATION & PUBLIC FACILITIES, NORTHERN REGION, 2301 PEGER ROAD, FAIRBANKS, AK 99709 (907)451-2200
C:\pw_workdir\den001\ch2mhill_jc065526\d1602216\61597_V12_DETAILS-V12 Mon, Nov/08/21 11:57am

NO.	DATE	REVISION

STATE	PROJECT DESIGNATION	YEAR	SHEET NO.	TOTAL SHEETS
ALASKA	0A24033/Z607340000	2021	V13	V16

S-01.02

SHEET 1 of 1

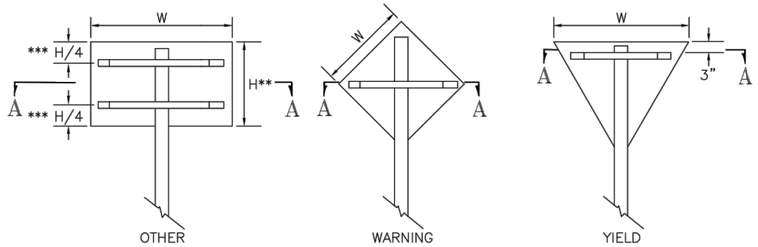

*** Use one brace when H ≤ 18"
Use two braces when 18"< H < 48"
Use three braces when H ≥ 48"

** Position of brace may be varied to match Predrilled mounting holes in panel

SIGN BRACING PLACEMENT

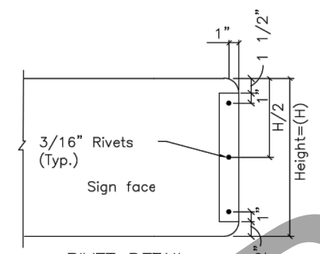

RIVET DETAIL ELEVATION VIEW

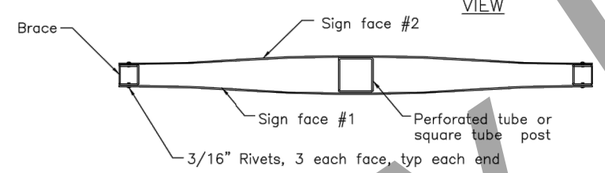

PLAN VIEW

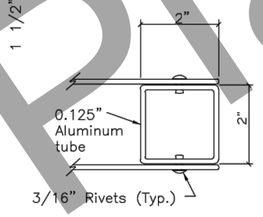

END BRACE DETAIL

SMALL STREET NAME SIGN (D3-1, D3-1A, D3-1D) BRACING DETAILS

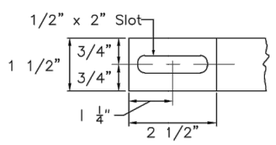

DETAIL OF BRACE SLOT
Elevation view

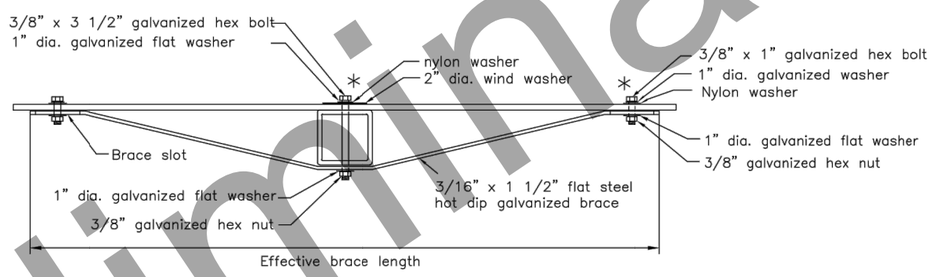

TUBE POST SIGN BRACING SECTION A-A
Plan view

* Adjust location of bracing so that bolts and washers will miss the sign legend

Sign Width(W)	Effective Brace Length		
	Warning	Yield	Other
30"	36"	24"	24"
36"	42"	30"	30"
42"	48"	–	36"
48"	Two posts	36"	42"

< 30" No bracing required and use square tube

Note: Drawing not to scale

State of Alaska DOT&PF
ALASKA STANDARD PLAN

BRACING FOR SIGNS MOUNTED ON SINGLE POST

Adopted as an Alaska Standard Plan by: Carolyn Morehouse
Carolyn Morehouse, P.E.
Chief Engineer

Adoption Date: 7/17/2020

Last Code and Stds. Review
By: WTH Date: 7/8/2020

Next Code and Standards Review date: 7/8/2030

S-01.02

PRELIMINARY
NOVEMBER
2021

STANDARD PLAN
S-01.02

Preliminary Plans

PLANS DEVELOPED BY: STATE OF ALASKA DEPARTMENT OF TRANSPORTATION & PUBLIC FACILITIES, NORTHERN REGION, 2301 PEGER ROAD, FAIRBANKS, AK 99709 (907)451-2200
C:\pw_workdir\den001\ch2mhill_jc065526\d1602216\61597_V13_DETAILS-V13 Mon, Nov/08/21 11:57am

NO.	DATE	REVISION

STATE	PROJECT DESIGNATION	YEAR	SHEET NO.	TOTAL SHEETS
ALASKA	0A24033/Z607340000	2021	V14	V16

S-05.02

SHEET 1 of 1

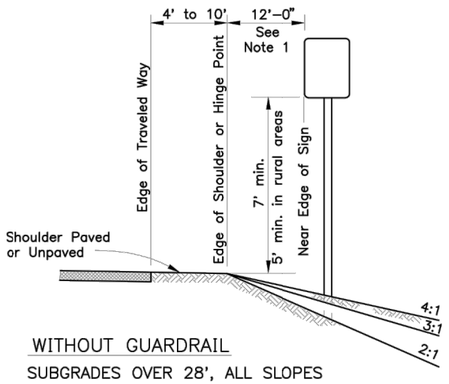

WITHOUT GUARDRAIL

SUBGRADES OVER 28', ALL SLOPES

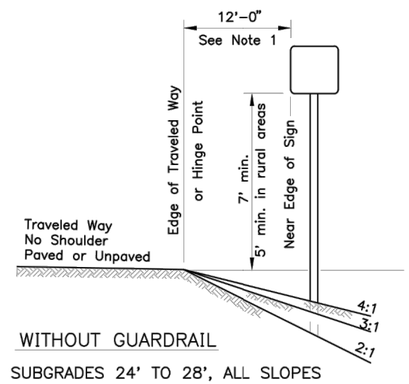

WITHOUT GUARDRAIL

SUBGRADES 24' TO 28', ALL SLOPES

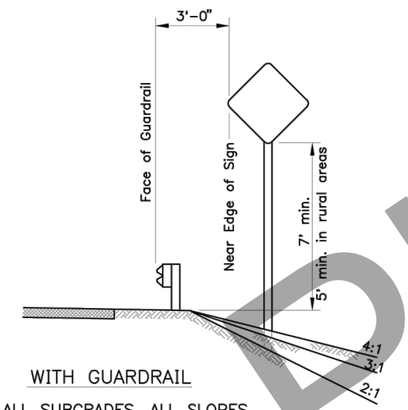

WITH GUARDRAIL

ALL SUBGRADES, ALL SLOPES

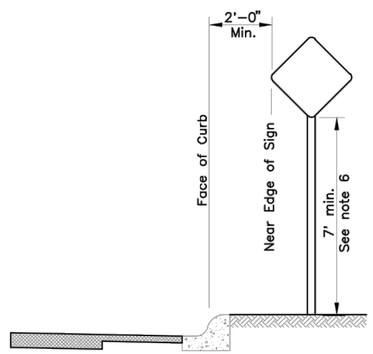

CURB WITHOUT SIDEWALK

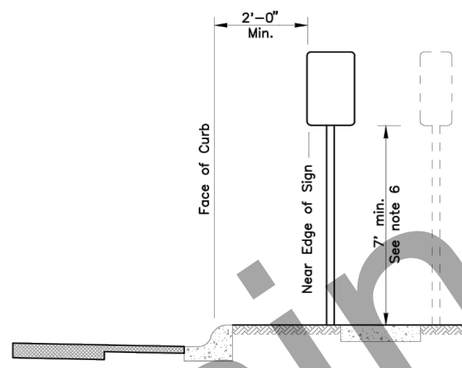

CURB WITH PARKWAY AND SIDEWALK

(If R/W width permits, signs should be placed behind sidewalk.)

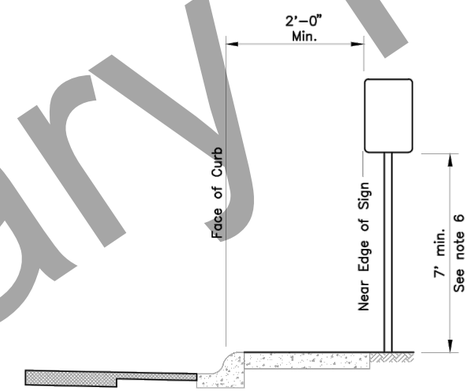

CURB WITH SIDEWALK WITHOUT PARKWAY

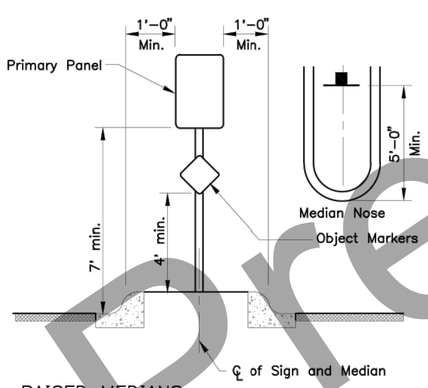

RAISED MEDIANS

Minimum 4' Width for Signing

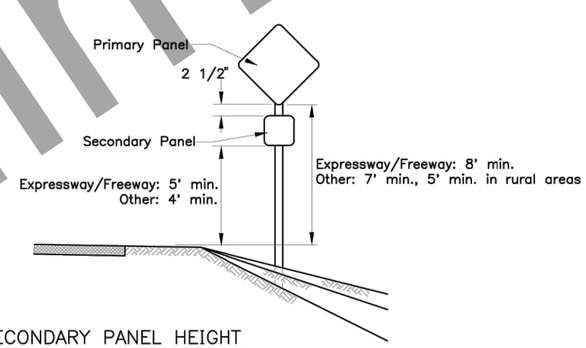

SECONDARY PANEL HEIGHT

ALL TWO PANEL MOUNTING

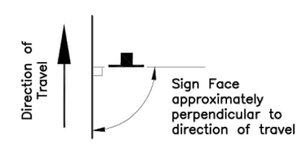

SIGN POSITIONING

GENERAL NOTES

1. Unless shown otherwise on the plans, the standard sign offset is 12'. The minimum is 6' where shoulder width is 6' or greater.
2. Add 6" to mounting height on unpaved roads.
3. If signs extend over bike paths, the minimum vertical clearance is 8' 0".
4. When signs are placed 30' or more from the edge of traveled way, mount them with the bottom of the sign at least 5' above the road surface at the near edge of the road.
5. When multiple hinged sign supports are used, mount hinges at least 7' above the ground.
6. Minimum mounting height is 7'-0" where parking or pedestrian movements are likely to occur, or where sings extend over sidewalks.
7. For construction signs in rural areas, mounting height shall be 7' minimum.

State of Alaska DOT&PF
ALASKA STANDARD PLAN

POST MOUNTED SIGN
OFFSET AND HEIGHT

Adopted as an Alaska Standard Plan by: Carolyn Morehouse
Carolyn Morehouse, P.E.
Chief Engineer

Adoption Date: 7/17/2020

Last Code and Stds. Review
By: KLK Date: 7/8/2020

Next Code and Standards Review Date: 7/8/2030

S-05.02

STANDARD PLAN
S-05.02

PRELIMINARY
NOVEMBER
2021

Preliminary Plans

PLANS DEVELOPED BY: STATE OF ALASKA DEPARTMENT OF TRANSPORTATION & PUBLIC FACILITIES, NORTHERN REGION, 2301 PEGER ROAD, FAIRBANKS, AK 99709 (907)451-2200
C:\pw_workdir\den001\ch2mhill_jc065526\d1602216\61597_V14_DETAILS-V14 Mon, Nov/08/21 11:57am

NO.	DATE	REVISION

STATE	PROJECT DESIGNATION	YEAR	SHEET NO.	TOTAL SHEETS
ALASKA	0A24033/Z607340000	2021	V15	V16

S-30.05

SHEET 1 of 1

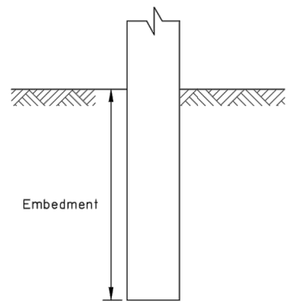

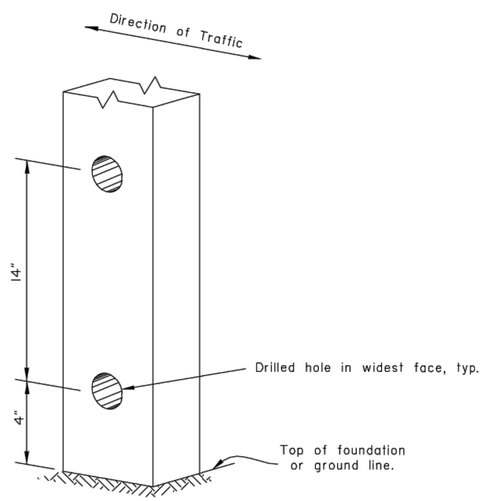

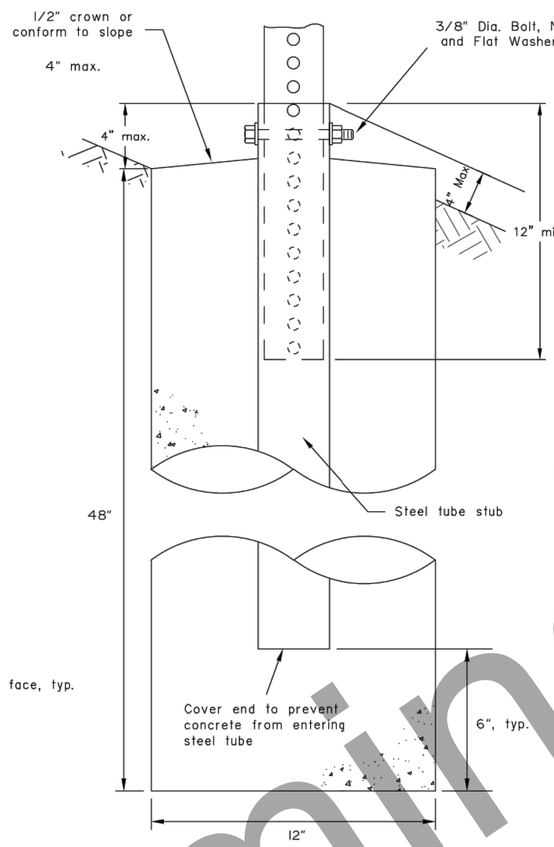

SLEEVE TYPE
CONCRETE FOUNDATION

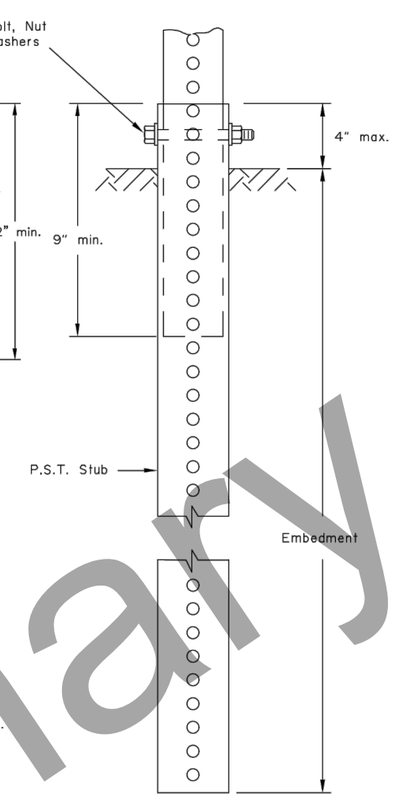

SLEEVE TYPE*
SOIL EMBEDMENT

GENERAL NOTES:

1. Sign shall be placed symmetrically around posts and refer to Standard Plan S-00 for sign framing details.
2. See plans for type of post, size and embedment type.
3. To maintain crashworthiness, install no more than the number of P.S.T.s or wood posts specified in the tables within 7' of each other.
4. Concrete shall be class B.
5. Do not use the supports on this drawing for multiple support signs if supports are separated by more than 7 feet.
6. Treat all field cuts and field drilled holes in wood posts in accordance with Section 730-2.04 of the Standard Specifications.

SIGN POST SPACING NOTES:

1. Install sign support in accordance with the table below, unless otherwise required by plans or specifications.
2. Exceptions:
   a. Use one post for all E5-1 gore signs, regardless of width.
   b. Use one 2.5" P.S.T. for all STOP signs, with or without street name signs.
3. Supports placed within 7' of each other must be acceptable for that use. See tables below for the sizes of wood posts and P.S.T.s that may be used within 7'. See Manufacturer's documentation for breakaway couplings and tubes that may be used within 7'.
4. See Standard Plan S-31 for frangible couplings, hinges, and foundations for tube and W-shape sign supports.

WOOD SIGN POSTS			
SIZE	HOLE DIA.	EMBEDMENT*	NO. OF POSTS WITHIN 7 Ft. PATH
4"x4"	NONE	4'-1"	2
4"x6"	1 1/2"	5'-3"	2
6"x6"	1 1/2"	4'-9"	1
6"x8"	3"	4'-9"	1

* Embedment depth applies in both strong and weak soil.

WOOD POSTS

PERFORATED STEEL TUBES (P.S.T.)		
POST SIZE	Embedment Depth	No. of P.S.T.s permitted within 7 ft path
1 1/2" x 1 1/2"	4'-8"	2
1 3/4" x 1 3/4"	4'-6"	2
2" x 2"	4'-3"	2
2 1/4" x 2 1/4"	5'-0"	1
2 1/2" x 2 1/2"	4'-6"	1

* Use 3"x3"x3/16" Stub for 2 1/2"x2 1/2" PST Applications.

PERFORATED STEEL TUBE (PST) POSTS

TUBE SIGN POST SPACING								
Sign Width (feet)	No. of Posts	Distance Between Posts	Sign Overhang	Post Type				Notes
				P.S.T.	Wood	Steel Tube	W-Shape	
0.5 to 4.0	1	-	0.5W	X	X	X		See Note 2.
4.5 to 10.0	2	0.6W	0.2W	X	X	X		See Note 3.
10.5 to 11.0	2	6	Varies	X	X	X		See Note 3.
11.5 to 13.0	2	8	Varies				X	
13.5 to 20.0	2	0.6W	0.2W				X	
20.5 to 22.5	3	8	Varies				X	
23.0 to 29.5	3	0.35W	0.15W				X	
30.0 to 31.5	4	8	Varies				X	
32.0 to 40.0	4	0.25W	0.125W				X	

TUBE SIGN POST SPACING

Note: Drawing not to scale

State of Alaska DOT&PF
ALASKA STANDARD PLAN

LIGHT SIGN STRUCTURE
POST EMBEDMENT

Adopted as an Alaska Standard Plan by: Carolyn Morehouse
Carolyn Morehouse, P.E.
Chief Engineer

Adoption Date: 7/17/2020

Last Code and Stds. Review
By: WTH Date: 7/8/2020

Next Code and Standards Review date: 7/8/2030

S-30.05

STANDARD PLAN
S-30.05

PRELIMINARY
NOVEMBER
2021

Preliminary Plans

PLANS DEVELOPED BY: STATE OF ALASKA DEPARTMENT OF TRANSPORTATION & PUBLIC FACILITIES, NORTHERN REGION, 2301 PEGER ROAD, FAIRBANKS, AK 99709 (907)451-2200
C:\pw_workdir\den001\ch2mhill_jc065526\d1602216\61597_V15_DETAILS-V15 Mon, Nov/08/21 11:57am

NO.	DATE	REVISION

STATE	PROJECT DESIGNATION	YEAR	SHEET NO.	TOTAL SHEETS
ALASKA	0A24033/Z607340000	2021	V16	V16

S-31.02

SHEET 1 of 1

NOTE:
Install hinges when more than one post is used to support a sign. Do not install hinges on single post installations.

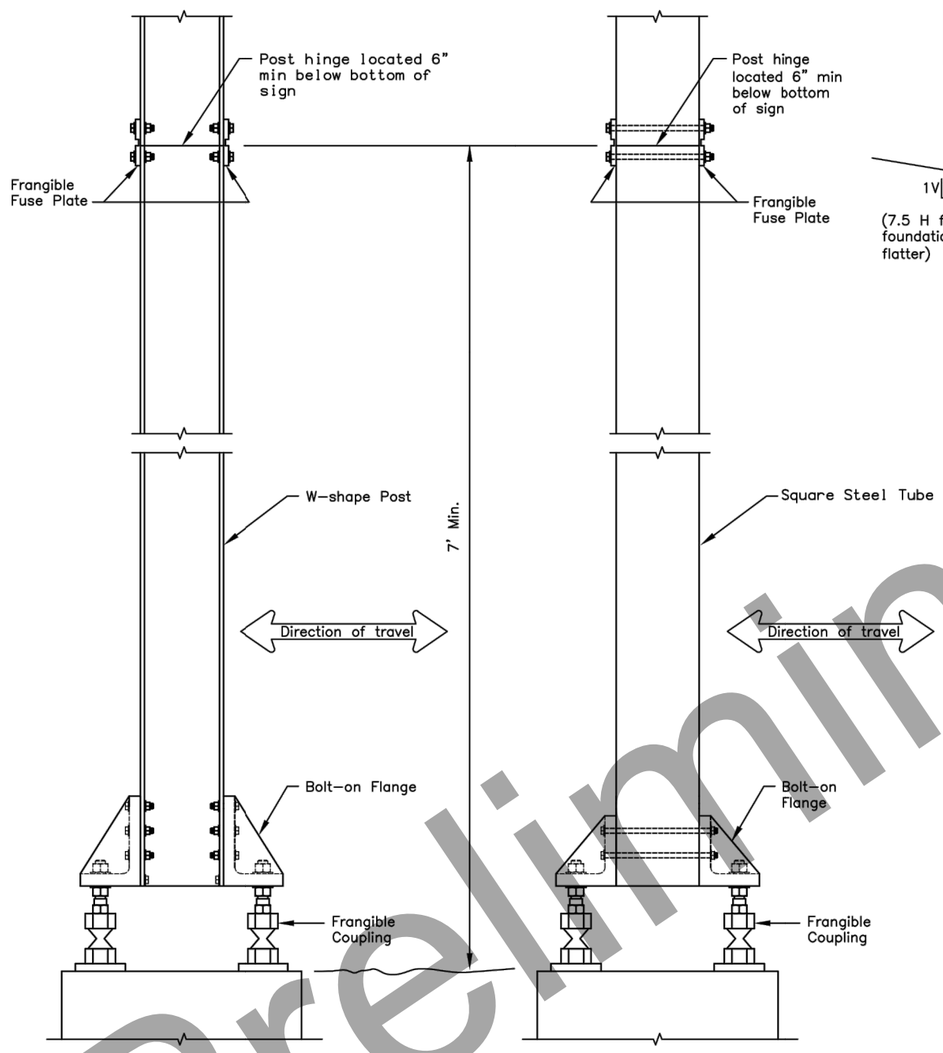

FRANGIBLE COUPLING SYSTEM FOR W-SHAPE POST

FRANGIBLE COUPLING SYSTEM FOR SQUARE STEEL TUBES

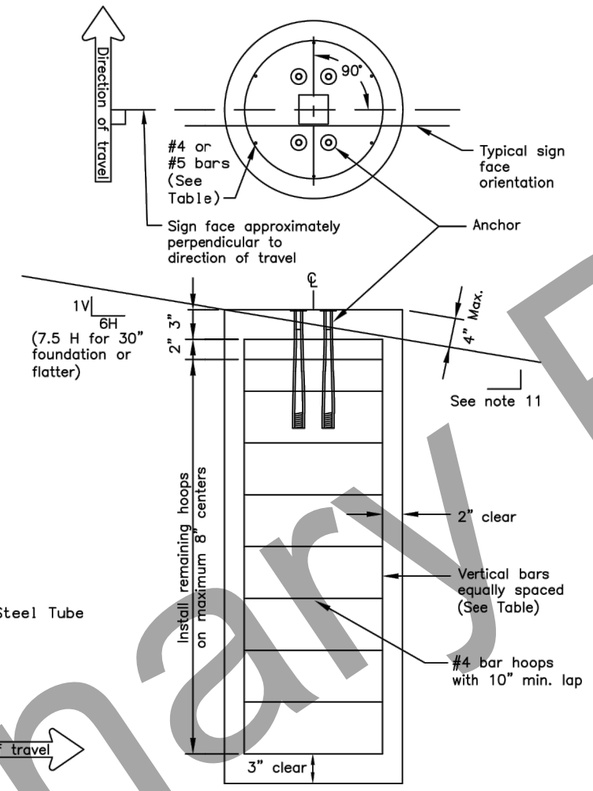

SIGN POST FOUNDATION

See Table for depth and diameter

POST SIZE & TYPE	FOUNDATION *			REINFORCEMENT					
	DIA.	MIN. DEPTH	CY^3 CONC.	VERTICAL BARS			HOOPS		
				QTY.	SIZE	LGTH.	QTY.	SIZE	DIA.
2 1/2" TUBE	1'-6"	6'-0"	0.39	7	#5	5'-6"	10	#4	1'-2"
3" TUBE	1'-6"	6'-0"	0.39	7	#5	5'-6"	10	#4	1'-2"
3 1/2" TUBE	1'-6"	6'-0"	0.39	7	#5	5'-6"	10	#4	1'-2"
4" TUBE	2'-6"	6'-0"	1.09	8	#8	5'-6"	10	#4	2'-2"
4 1/2" TUBE	2'-6"	6'-0"	1.09	8	#8	5'-6"	10	#4	2'-2"
5" TUBE	2'-6"	6'-0"	1.09	8	#8	5'-6"	10	#4	2'-2"
W6 x 9	2'-6"	6'-0"	1.09	8	#8	5'-6"	10	#4	2'-2"
W6 x 12	2'-6"	6'-0"	1.09	8	#8	5'-6"	10	#4	2'-2"
W6 x 15	3'-0"	6'-6"	1.70	8	#11	6'-0"	12	#4	2'-8"
W6 x 30	3'-0"	7'-6"	1.96	8	#11	7'-0"	13	#4	2'-8"

FOUNDATION TABLE

* Foundations sized for use where there are no loose, high moisture, or fine grained soils.

GENERAL NOTES

1. Furnish sign posts with NCHRP 350 compliant frangible couplings designed to break away safely when struck from any direction. There is no MASH compliant device at this time. See SPDR report for more info.
2. Furnish frangible coupling systems with bolt-on flanges.
3. Details on this sheet illustrate only the general components of a frangible coupling system, and are not intended to specify a particular product.
4. Install frangible fuse plates as specified by the manufacturer and hinged joints when multiple posts are used to support a sign. Do not use round pipes.
5. Install the components of the breakaway system, including hinges, in accordance with the written instructions of the system manufacturer.
6. Use Class A, B or W concrete conforming to Sections 501 or 550 of the Standard Specifications. Furnish ASTM A615 grade 60 steel bars for concrete reinforcement conforming to AASHTO M31.
7. Spiral reinforcing steel may be substituted for hoops in concrete foundation. Spiral option shall consist of #3 plain spiral with 6" pitch with three flat turns at the top and one flat turn at the bottom.
8. Install the concrete anchors using a rigid template. Locate the anchors on centers and within tolerances specified by the manufacturer.
9. Install the anchors in fresh concrete as recommended by the manufacturer. Adjust the template's final position until it is level. Remove and replace all foundations that need more than 2 shims under any 1 coupling or more than a total of 3 shims under any pair of couplings to plumb the post.
10. Drill the holes for attaching brackets before the sign posts are hot dip galvanized. Test fit templates in the holes to ensure the brackets can be installed square to the posts.
11. Special grading detail and/or shielding may be required to maintain 4" maximum clear distance.

State of Alaska DOT&PF
ALASKA STANDARD PLAN

SIGN POST BASE AND FOUNDATION

Adopted as an Alaska Standard Plan by: Carolyn Morehouse
Carolyn Morehouse, P.E.
Chief Engineer

Adoption Date: 7/17/2020

Last Code and Stds. Review
By: KLK, MJM Date: 7/8/2020

Next Code and Standards Review Date: 7/8/2030

S-31.02

PRELIMINARY
NOVEMBER
2021

STANDARD PLAN
S-31.02

Preliminary Plans

PLANS DEVELOPED BY: STATE OF ALASKA DEPARTMENT OF TRANSPORTATION & PUBLIC FACILITIES, NORTHERN REGION, 2301 PEGER ROAD, FAIRBANKS, AK 99709 (907)451-2200
C:\pw_workdir\den001\ch2mhill_jc065526\d1602216\61597_V16_DETAILS-V16 Mon, Nov/08/21 11:57am