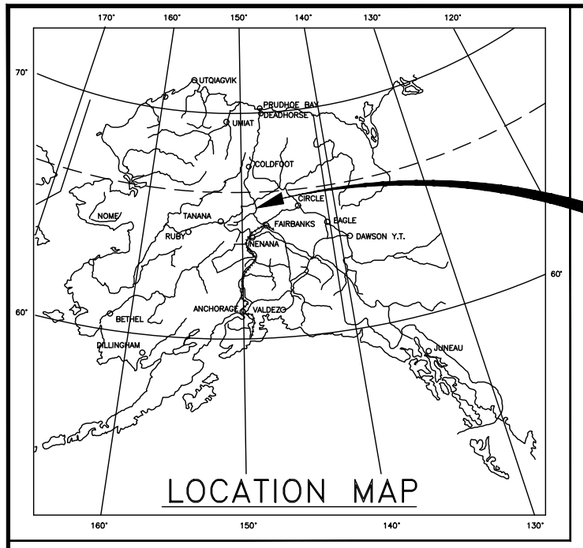

PROJECT LOCATION

NO.	DATE	REVISION

STATE	PROJECT DESIGNATION	YEAR	SHEET NO.	TOTAL SHEETS
ALASKA	0652017/Z607350000	2022	A1	181

CDS ROUTE: 150000 MILEPOINT: 17.86 TO 37.50

STATE OF ALASKA
DEPARTMENT OF TRANSPORTATION
&
PUBLIC FACILITIES

PROPOSED HIGHWAY PROJECT

0652017/Z607350000

DALTON HIGHWAY MP 18–37 RECONSTRUCTION

GRADING, DRAINAGE, BRIDGE & SIGNING

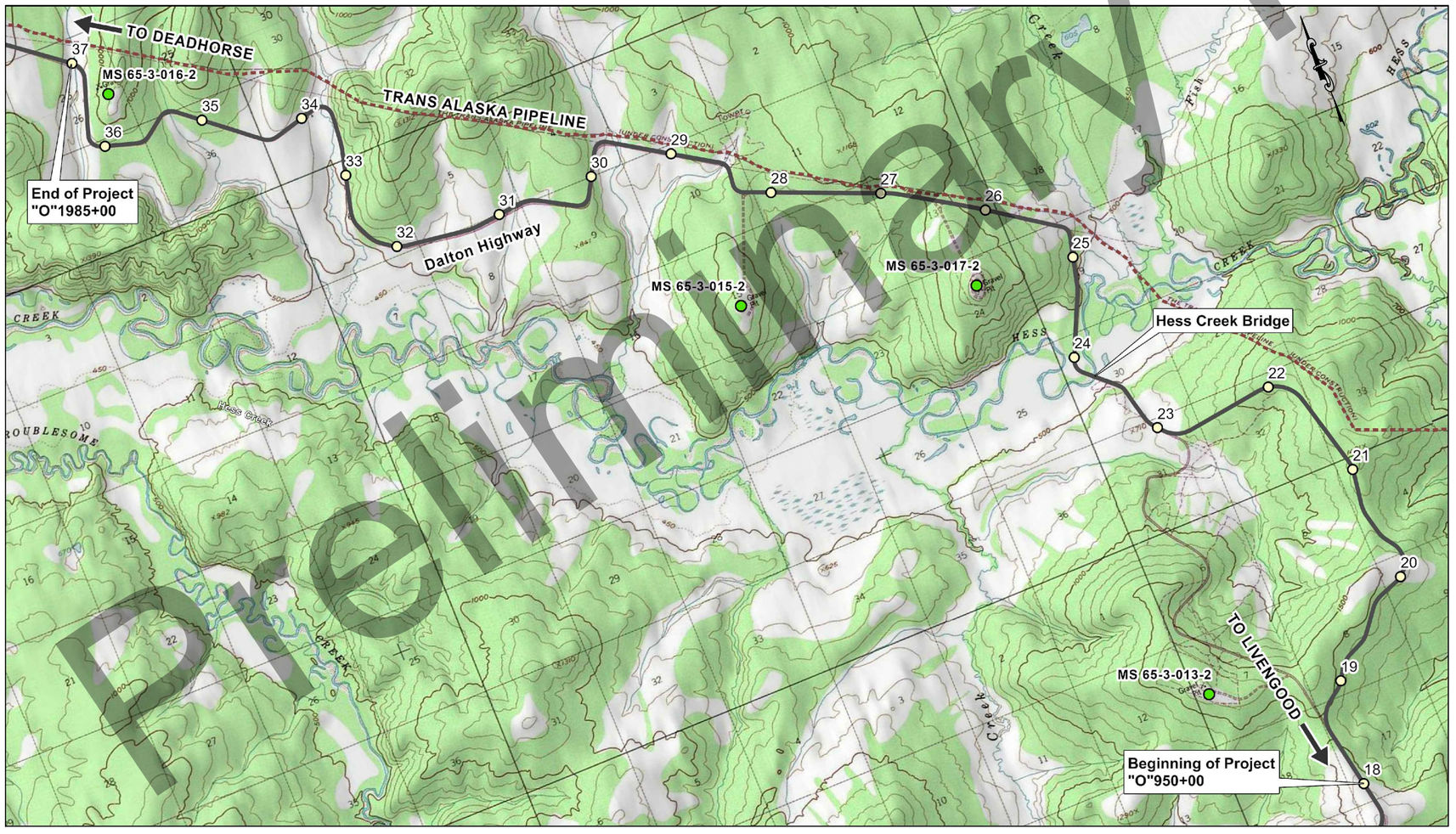

Preliminary Plans

INDEX OF SHEETS

SHEET NO.	DESCRIPTION
A1	TITLE SHEET
A2	LEGEND
A3–A4	PROJECT LAYOUT
A5	SURVEY CONTROL
B1–B8	TYPICAL SECTIONS
C1–C2	ESTIMATE OF QUANTITIES & GENERAL NOTES
D1	SUPERELEVATION SUMMARY
D2	CULVERT REMOVAL SUMMARY
E1–E7	CULVERT/DRAINAGE DETAILS & SUMMARY
E8–E9	CHANNEL REALIGNMENT DETAILS/LAYOUT
E10	GUARDRAIL DETAILS, SUMMARY, & NOTES
E10–E23	LARGE CULVERT DETAILS & SUMMARY
F1–F35	PLAN & PROFILE (DALTON HWY)
F36–F37	PLAN & PROFILE (HESS CREEK DETOUR)
F38–F47	PLAN & PROFILE (CULVERT DIVERSIONS)
G1–G2	APPROACH SUMMARY & DETAILS
G3–G5	APPROACH LAYOUT SHEETS
H1–H18	SIGNING PLANS
H19–H25	SIGNING SUMMARY & DETAILS
N1–N25	HESS CREEK BRIDGE PLANS
Q1–Q18	EROSION SEDIMENT CONTROL PLANS
T1	TRAFFIC CONTROL DEVICES
T2	TEMPORARY ROADWAY DIVERSION DETAILS
V1–V19	STANDARD PLANS

DESIGN DESIGNATIONS

ADT (2019)	250
ADT (2045)	370
DHV (%)	16.5%
PERCENT TRUCKS (T)	60.0%
DIRECTIONAL SPLIT (D)	40/60
DESIGN SPEED (V)	50 MPH
DESIGN EAL'S (15 YEARS)	1,184,565

PROJECT SUMMARY

WIDTH OF SURFACE	36 FEET
LENGTH OF GRADING	19.24 MILES
LENGTH OF PROJECT	19.41 MILES

CARL F. HEIM, P.E., PROJECT MANAGER
DAVID D. JENSEN, P.E., DESIGN ENGINEER

STATE OF ALASKA
DEPARTMENT OF TRANSPORTATION
&
PUBLIC FACILITIES

APPROVED BY:

_____ DATE _____

Sarah E. Schacher, P.E.
Preconstruction Engineer, Northern Region

ACCEPTED FOR CONSTRUCTION:

_____ DATE _____

Ryan F. Anderson, P.E.
Regional Director, Northern Region

HWYS TITLE SHEET
C:\Users\ddjensen\Desktop\60735_Dalton_18_37\6 Design\4 C3D\2 Drawings\(3) Plan Production\60735_A_TITLE_LEGEND_LAYOUT-A1 Tue, May/17/22 02:46pm

NO.	DATE	REVISION

STATE	PROJECT DESIGNATION	YEAR	SHEET NO.	TOTAL SHEETS
ALASKA	0652017/Z607350000	2022	A2	A5

	RECOVERED	SET
BLM MONUMENT	✠	
GLO MONUMENT	✠	
USC&GS MONUMENT	▲	
PRIMARY MONUMENT	✠	✠
CENTERLINE MONUMENT IN CASING	⊕	⊕
PRIMARY R.O.W. MONUMENT	⊕	◒
BEARING OBJECT	✳	
MISCELLANEOUS MONUMENT	⊗	
LINE OF SIGHT MONUMENT		◍
CONCRETE R.O.W. MONUMENT	■	
BENCHMARK		(BM)
REBAR AND CAP	⊙	◎
REBAR	⊕	●
IRON PIPE	✺	
PK NAIL		▽
SPIKE		✳
HUB AND TACK		⊡

CONSTRUCTION CENTERLINE	5+00
MISCELLANEOUS CENTERLINE	10+00
STATION EQUATION	"L"48+97.23 POT BK= / "O"48+97.23 PC AHD
PROJECT RIGHT-OF-WAY LINE	R/W
EXISTING RIGHT-OF-WAY LINE	
EXISTING PROPERTY LINE	
CONTROLLED ACCESS LINE	C/A
UTILITY EASEMENT LINE	PUE
TEMPORARY EASEMENT LINE (TCP OR TCE)	TCP
ACCESS OR SECTION LINE EASEMENT	ACCESS EASEMENT
PROPOSED CUT SLOPE LIMIT	
PROPOSED FILL SLOPE LIMIT	
SECTION LINE	
1/4 SECTION LINE	
1/16 SECTION LINE	
TOWNSHIP & RANGE LINE	T. 2 N. / T. 1 N. ; T. 1 E. | T. 2 E.

	EXISTING	PROPOSED
FUEL LINE	—→—→—O—	→→→O—
GAS LINE	—→—→—G—	→→→G—
FIBER OPTIC LINE	———FO———	
AT&T FIBER OPTIC LINE	——————ATT—	
GCI FIBER OPTIC LINE	——————GCI—	
DIRECT BURIAL TELEPHONE CABLE	———T———	———T———
DIRECT BURIAL ELECTRIC CABLE	———E———	———E———
TELEPHONE DUCT	═══T═══	═══T═══
TELEPHONE PEDESTAL	⚠	⚠
BURIED CABLE MARKER	▯	▮
PIPELINE MARKER OR VALVE		
ROADWAY/PAVEMENT EDGE		
FENCE	--X---X---X---X--	—X——X——X——X—
GUARDRAIL		
CULVERT PIPE		
SIGN		
TREE LINE		
WATER BOUNDARY		
ORDINARY HIGH WATER LINE		
FLOW CENTERLINE		
FLOW DIRECTION		
WETLANDS		
EXISTING BUILDINGS	H	
POST OR BOLLARD		
WELL OR MONITORING WELL	(W)	
GATE		
TEST HOLE	(TH)	
CONIFER TREE		
DECIDUOUS TREE		
GRAVE		

H = HOUSE
G = GARAGE
M = MERCHANT/STORE
B = BARN
S = SHED
P = PRIVY
SS = SERVICE STATION
W = WAREHOUSE

LIST OF ABBREVIATIONS/SYMBOLS

ADT	AVERAGE DAILY TRAFFIC
AHD	AHEAD
ASDS	ALASKA SIGN DESIGN SPECIFICATIONS
ASTM	AMERICAN SOCIETY FOR TESTING AND MATERIALS
&	AND
BK	BACK
BMP	BEST MANAGEMENT PRACTICE
B.O.P.	BEGINNING OF PROJECT
BS	BACKSLOPE
C	CROSS
CF	CUBIC FOOT
CGP	CONSTRUCTION GENERAL PERMIT
COMM	COMMUNICATIONS
C/L	CENTERLINE
CSP	CORRUGATED STEEL PIPE
CY	CUBIC YARD
DEG	DEGREES
DIA.	DIAMETER
E	EAST
E.O.P	END OF PROJECT
EOTW	EDGE OF TRAVELED WAY
ESCP	EROSION & SEDIMENT CONTROL PLAN
FS	FORESLOPE
FT	FEET
GALV	GALVANIZED
GR	GUARDRAIL
IN	INCH
LBS	POUNDS
LF	LINEAR FEET
LOC.	LOCATION
LT	LEFT
LVC	LENGTH OF VERTICAL CURVE
MAX	MAXIMUM
MIN	MINIMUM
MPH	MILES PER HOUR
MTG.	MOUNTING
N	NORTH
N/A	NOT APPLICABLE
NO.	NUMBER
NTS	NOT TO SCALE
OHW	ORDINARY HIGH WATER
PC	POINT OF CURVATURE
PI	POINT OF INTERSECTION
P.O.C	POINT ON CURVE
P.O.T.	POINT ON TANGENT
PT	POINT OF TANGENCY
R	RADIUS
RT	RIGHT
R/W	RIGHT OF WAY
S	SOUTH
SF	SQUARE FEET
SPP	STRUCTURAL PLATE PIPE
SPPA	STRUCTURAL PLATE PIPE ARCH
SWPPP	STORM WATER POLLUTION PREVENTION PLAN
SY	SQUARE YARD
TAPS	TRANS ALASKA PIPELINE SYSTEM
TYP	TYPICAL
USGS	UNITED STATES GEOLOGICAL SURVEY
V	VERTICAL
VPC	POINT OF VERTICAL CURVATURE
VPD	VEHICLES PER DAY
VPI	POINT OF VERTICAL INTERSECTION
VPT	POINT OF VERTICAL TANGENCY
W/	WITH
W/O	WITHOUT

STATE OF ALASKA 49TH
DAVID D. JENSEN
(95% PLANS)
REGISTERED PROFESSIONAL ENGINEER

LEGEND

Preliminary Plans

PLANS DEVELOPED BY: STATE OF ALASKA DEPARTMENT OF TRANSPORTATION & PUBLIC FACILITIES, NORTHERN REGION, 2301 PEGER ROAD, FAIRBANKS, AK 99709 (907)451-2200
C:\Users\ddjensen\Desktop\60735_Dalton_18_37\6 Design\4 C3D\2 Drawings\(3) Plan Production\60735_A_TITLE_LEGEND_LAYOUT-A2 Tue, May/17/22 02:46pm

NO.	DATE	REVISION

STATE	PROJECT DESIGNATION	YEAR	SHEET NO.	TOTAL SHEETS
ALASKA	0652017/Z607350000	2022	A3	A5

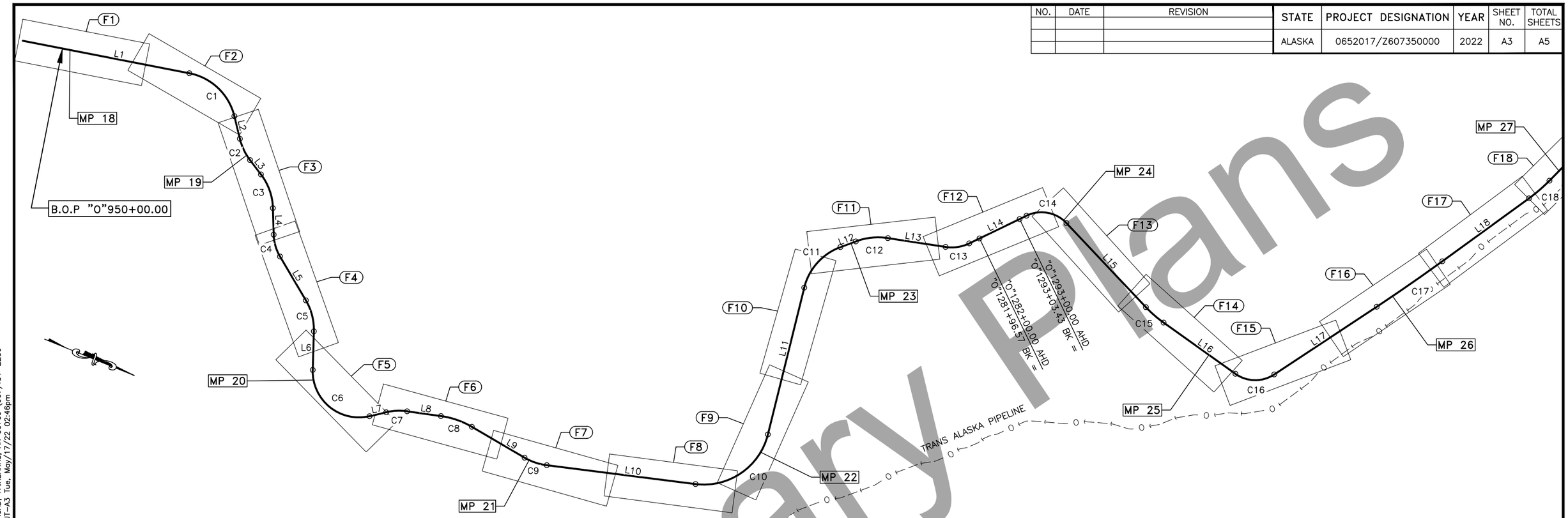

"O" ALIGNMENT LINE TABLE

LINE	BEGIN STA.	NORTHING	EASTING	BEARING	DISTANCE	END STA.	NORTHING	EASTING
L1	"O"938+68.24	247078.0207	838625.6771	N 10°58'45" W	4338.95'	"O"982+07.20	251337.5563	837799.3167
L2	"O"998+36.08	252770.9654	838368.3783	N 54°17'07" E	575.86'	"O"1004+11.93	253107.1218	838835.9340
L3	"O"1010+01.36	253538.7807	839231.1569	N 30°40'07" E	446.36'	"O"1014+47.72	253922.7122	839458.8351
L4	"O"1023+48.12	254510.2820	840121.9838	N 66°14'51" E	659.12'	"O"1030+07.24	254775.7655	840725.2685
L5	"O"1035+74.16	255122.1148	841166.5836	N 37°30'07" E	1265.29'	"O"1048+39.45	256125.9071	841936.8778
L6	"O"1056+40.16	256595.5137	842572.5154	N 69°35'03" E	959.52'	"O"1065+99.68	256930.2213	843471.7605
L7	"O"1086+96.32	258665.4580	844006.4657	N 35°19'53" W	424.41'	"O"1091+20.73	259011.7021	843761.0265
L8	"O"1096+42.62	259483.2831	843544.6012	N 13°58'22" W	845.76'	"O"1104+88.38	260304.0177	843340.3832
L9	"O"1113+04.78	261114.2997	843300.2509	N 8°18'07" E	1515.57'	"O"1128+20.35	262613.9889	843519.0807
L10	"O"1134+05.01	263193.7561	843486.1666	N 14°48'01" W	3717.43'	"O"1171+22.43	266787.8445	842536.5437
L11	"O"1194+99.97	267988.8015	840724.9389	S 81°52'59" W	3749.63'	"O"1232+49.60	267459.3780	837012.8685
L12	"O"1246+51.15	267914.8651	835745.3456	N 42°21'04" W	406.05'	"O"1250+57.20	268214.9470	835471.8027
L13	"O"1258+66.75	268923.0829	835097.5590	N 13°21'40" W	1446.73'	"O"1273+13.48	270330.6518	834763.2398
L14	"O"1279+14.25	270840.1671	834462.2507	N 47°46'58" W	1577.17'	"O"1294+91.41	271899.9344	833294.1987
L15	"O"1305+65.36	272883.3983	833092.5525	N 24°36'30" E	2869.80'	"O"1334+35.16	275492.5465	834287.5778
L16	"O"1340+17.97	276042.5974	834477.4372	N 13°28'39" E	2185.56'	"O"1362+03.53	278167.9740	834986.8139
L17	"O"1372+26.48	279066.3818	834641.9637	N 55°28'33" W	3044.45'	"O"1402+70.93	280791.8411	832133.6812
L18	"O"1422+49.05	281876.5744	830479.6957	N 58°00'29" W	2656.43'	"O"1449+05.47	283283.9455	828226.7189

"O" ALIGNMENT CURVE TABLE

CURVE	P.I.	P.C.	DELTA	D	T	L	R	P.T.
C1	"O"991+22.85	"O"982+07.20	65°15'51"	4°00'24"	915.65'	1628.88'	1430.00'	"O"998+36.08
C2	"O"1007+10.89	"O"1004+11.93	23°36'59"	4°00'24"	298.96'	589.42'	1430.00'	"O"1010+01.36
C3	"O"1019+12.97	"O"1014+47.72	35°34'44"	3°57'05"	465.25'	900.40'	1450.00'	"O"1023+48.12
C4	"O"1032+96.80	"O"1030+07.24	28°44'43"	5°04'14"	289.56'	566.92'	1130.00'	"O"1035+74.16
C5	"O"1052+50.61	"O"1048+39.45	32°04'56"	4°00'24"	411.16'	800.71'	1430.00'	"O"1056+40.16
C6	"O"1080+89.60	"O"1065+99.68	104°54'56"	5°00'14"	1489.92'	2096.64'	1145.00'	"O"1086+96.32
C7	"O"1093+84.74	"O"1091+20.73	21°21'31"	4°05'33"	264.01'	521.89'	1400.00'	"O"1096+42.62
C8	"O"1109+01.80	"O"1104+88.38	22°16'29"	2°43'42"	413.42'	816.41'	2100.00'	"O"1113+04.78
C9	"O"1131+16.71	"O"1128+20.35	23°06'08"	3°57'05"	296.35'	584.65'	1450.00'	"O"1134+05.01
C10	"O"1185+77.03	"O"1171+22.43	83°19'00"	3°30'16"	1454.60'	2377.53'	1635.00'	"O"1194+99.97
C11	"O"1240+11.49	"O"1232+49.60	55°45'57"	3°58'44"	761.89'	1401.55'	1440.00'	"O"1246+51.15
C12	"O"1254+70.84	"O"1250+57.20	28°59'24"	3°34'52"	413.64'	809.55'	1600.00'	"O"1258+66.75
C13	"O"1276+23.24	"O"1273+13.48	34°25'18"	5°43'46"	309.76'	600.77'	1000.00'	"O"1279+14.25
C14	"O"1301+13.42	"O"1294+91.41	72°23'28"	6°44'26"	622.00'	1073.94'	850.00'	"O"1305+65.36
C15	"O"1337+27.48	"O"1334+35.16	11°07'51"	1°54'35"	292.33'	582.81'	3000.00'	"O"1340+17.97
C16	"O"1367+87.21	"O"1362+03.53	68°57'12"	6°44'26"	583.68'	1022.94'	850.00'	"O"1372+26.48
C17	"O"1412+60.15	"O"1402+70.93	2°31'57"	0°07'41"	989.22'	1978.12'	44755.00'	"O"1422+49.05
C18	"O"1452+41.86	"O"1449+05.47	9°36'51"	1°25'57"	336.39'	671.19'	4000.00'	"O"1455+76.66

PROJECT LAYOUT NOTES:

1. FOR SURVEY CONTROL INFORMATION, SEE SURVEY CONTROL DRAWING ON SHEET A5.

PROJECT LAYOUT
1 OF 2

STATE OF ALASKA 49TH
DAVID D. JENSEN
(95% PLANS)
REGISTERED PROFESSIONAL ENGINEER

Preliminary Plans

PLANS DEVELOPED BY: STATE OF ALASKA DEPARTMENT OF TRANSPORTATION & PUBLIC FACILITIES, NORTHERN REGION, 2301 PEGER ROAD, FAIRBANKS, AK 99709 (907)451-2200
C:\Users\ddjensen\Desktop\60735_Dalton_18_37\6 Design\4 C3D\2 Drawings\(3) Plan Production\60735_A_TITLE_LEGEND_LAYOUT-A3 Tue, May/17/22 02:46pm

NO.	DATE	REVISION

STATE	PROJECT DESIGNATION	YEAR	SHEET NO.	TOTAL SHEETS
ALASKA	0652017/Z607350000	2022	A4	A5

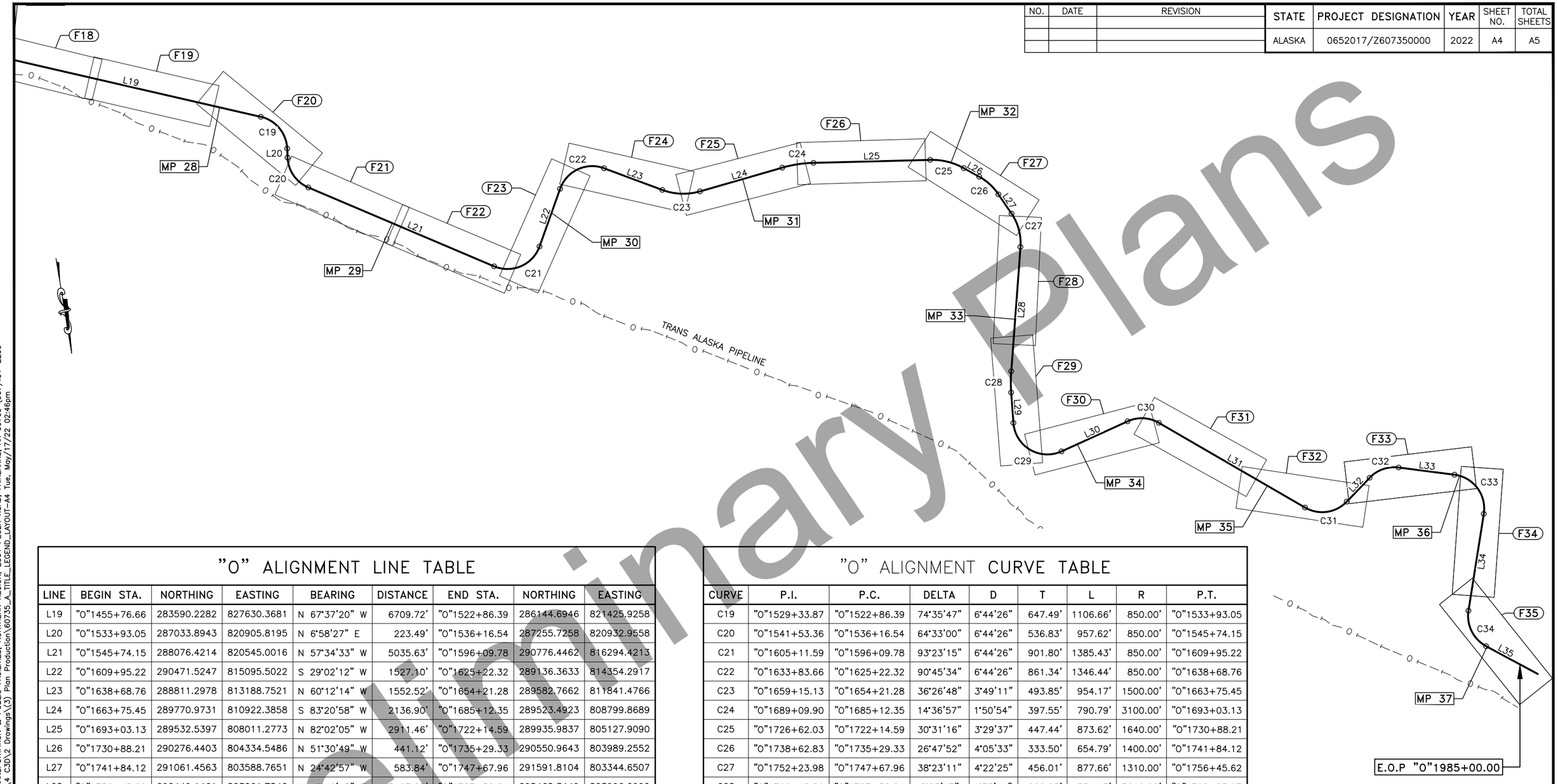

"O" ALIGNMENT LINE TABLE

LINE	BEGIN STA.	NORTHING	EASTING	BEARING	DISTANCE	END STA.	NORTHING	EASTING
L19	"O"1455+76.66	283590.2282	827630.3681	N 67°37'20" W	6709.72'	"O"1522+86.39	286144.6946	821425.9258
L20	"O"1533+93.05	287033.8943	820905.8195	N 6°58'27" E	223.49'	"O"1536+16.54	287255.7258	820932.9558
L21	"O"1545+74.15	288076.4214	820545.0016	N 57°34'33" W	5035.63'	"O"1596+09.78	290776.4462	816294.4213
L22	"O"1609+95.22	290471.5247	815095.5022	S 29°02'12" W	1527.10'	"O"1625+22.32	289136.3633	814354.2917
L23	"O"1638+68.76	288811.2978	813188.7521	N 60°12'14" W	1552.52'	"O"1654+21.28	289582.7662	811841.4766
L24	"O"1663+75.45	289770.9731	810922.3858	S 83°20'58" W	2136.90'	"O"1685+12.35	289523.4923	808799.8689
L25	"O"1693+03.13	289532.5397	808011.2773	N 82°02'05" W	2911.46'	"O"1722+14.59	289935.9837	805127.9090
L26	"O"1730+88.21	290276.4403	804334.5486	N 51°30'49" W	441.12'	"O"1735+29.33	290550.9643	803989.2552
L27	"O"1741+84.12	291061.4563	803588.7651	N 24°42'57" W	583.84'	"O"1747+67.96	291591.8104	803344.6507
L28	"O"1756+45.62	292449.1461	803261.7542	N 13°40'13" E	3107.22'	"O"1787+52.84	295468.3449	803996.0990
L29	"O"1792+83.97	295991.7866	804083.2745	N 5°14'26" E	759.22'	"O"1800+43.19	296747.8295	804152.6192
L30	"O"1816+80.10	297646.1224	803084.7602	S 74°54'04" W	1811.73'	"O"1834+91.83	297174.1944	801335.5744
L31	"O"1843+02.01	297339.0873	800573.3535	N 50°29'15" W	4217.15'	"O"1885+19.16	300022.2340	797319.8769
L32	"O"1896+51.15	300047.1725	796270.0051	S 53°12'32" W	827.28'	"O"1904+78.43	299551.7175	795607.4991
L33	"O"1912+72.33	299418.3709	794853.8444	N 73°16'35" W	1404.22'	"O"1926+76.55	299822.4434	793509.0145
L34	"O"1940+36.54	300904.7319	792947.0413	N 18°23'44" E	2445.77'	"O"1964+82.30	303225.5227	793718.8689
L35	"O"1975+37.12	304171.7499	793430.5274	N 52°17'26" W	3482.05'	"O"2010+19.17	306301.5729	790675.8053

"O" ALIGNMENT CURVE TABLE

CURVE	P.I.	P.C.	DELTA	D	T	L	R	P.T.
C19	"O"1529+33.87	"O"1522+86.39	74°35'47"	6°44'26"	647.49'	1106.66'	850.00'	"O"1533+93.05
C20	"O"1541+53.36	"O"1536+16.54	64°33'00"	6°44'26"	536.83'	957.62'	850.00'	"O"1545+74.15
C21	"O"1605+11.59	"O"1596+09.78	93°23'15"	6°44'26"	901.80'	1385.43'	850.00'	"O"1609+95.22
C22	"O"1633+83.66	"O"1625+22.32	90°45'34"	6°44'26"	861.34'	1346.44'	850.00'	"O"1638+68.76
C23	"O"1659+15.13	"O"1654+21.28	36°26'48"	3°49'11"	493.85'	954.17'	1500.00'	"O"1663+75.45
C24	"O"1689+09.90	"O"1685+12.35	14°36'57"	1°50'54"	397.55'	790.79'	3100.00'	"O"1693+03.13
C25	"O"1726+62.03	"O"1722+14.59	30°31'16"	3°29'37"	447.44'	873.62'	1640.00'	"O"1730+88.21
C26	"O"1738+62.83	"O"1735+29.33	26°47'52"	4°05'33"	333.50'	654.79'	1400.00'	"O"1741+84.12
C27	"O"1752+23.98	"O"1747+67.96	38°23'11"	4°22'25"	456.01'	877.66'	1310.00'	"O"1756+45.62
C28	"O"1790+18.89	"O"1787+52.84	8°25'47"	1°35'14"	266.05'	531.13'	3610.00'	"O"1792+83.97
C29	"O"1812+64.80	"O"1800+43.19	110°20'22"	6°44'26"	1221.61'	1636.92'	850.00'	"O"1816+80.10
C30	"O"1839+30.66	"O"1834+91.83	54°36'41"	6°44'26"	438.82'	810.17'	850.00'	"O"1843+02.01
C31	"O"1891+86.89	"O"1885+19.16	76°18'12"	6°44'26"	667.72'	1131.98'	850.00'	"O"1896+51.15
C32	"O"1909+07.00	"O"1904+78.43	53°30'53"	6°44'26"	428.57'	793.90'	850.00'	"O"1912+72.33
C33	"O"1935+51.73	"O"1926+76.55	91°40'19"	6°44'26"	875.17'	1359.98'	850.00'	"O"1940+36.54
C34	"O"1970+88.64	"O"1964+82.30	70°41'10"	6°42'05"	606.34'	1054.82'	855.00'	"O"1975+37.12

PROJECT LAYOUT NOTES:

1. FOR SURVEY CONTROL INFORMATION, SEE SURVEY CONTROL DRAWING ON SHEET A5.

PROJECT LAYOUT
2 OF 2

STATE OF ALASKA 49TH
DAVID D. JENSEN
(95% PLANS)
REGISTERED PROFESSIONAL ENGINEER

Preliminary Plans

PLANS DEVELOPED BY: STATE OF ALASKA DEPARTMENT OF TRANSPORTATION & PUBLIC FACILITIES, NORTHERN REGION, 2301 PEGER ROAD, FAIRBANKS, AK 99709 (907)451-2200
C:\Users\ddjensen\Desktop\60735_Dalton_18_37\6 Design\4 C3D\2 Drawings\(3) Plan Production\60735_A_TITLE_LEGEND_LAYOUT-A4 Tue, May/17/22 02:46pm

NO.	DATE	REVISION

STATE	PROJECT DESIGNATION	YEAR	SHEET NO.	TOTAL SHEETS
ALASKA	0652017/Z607350000	2022	A5	A5

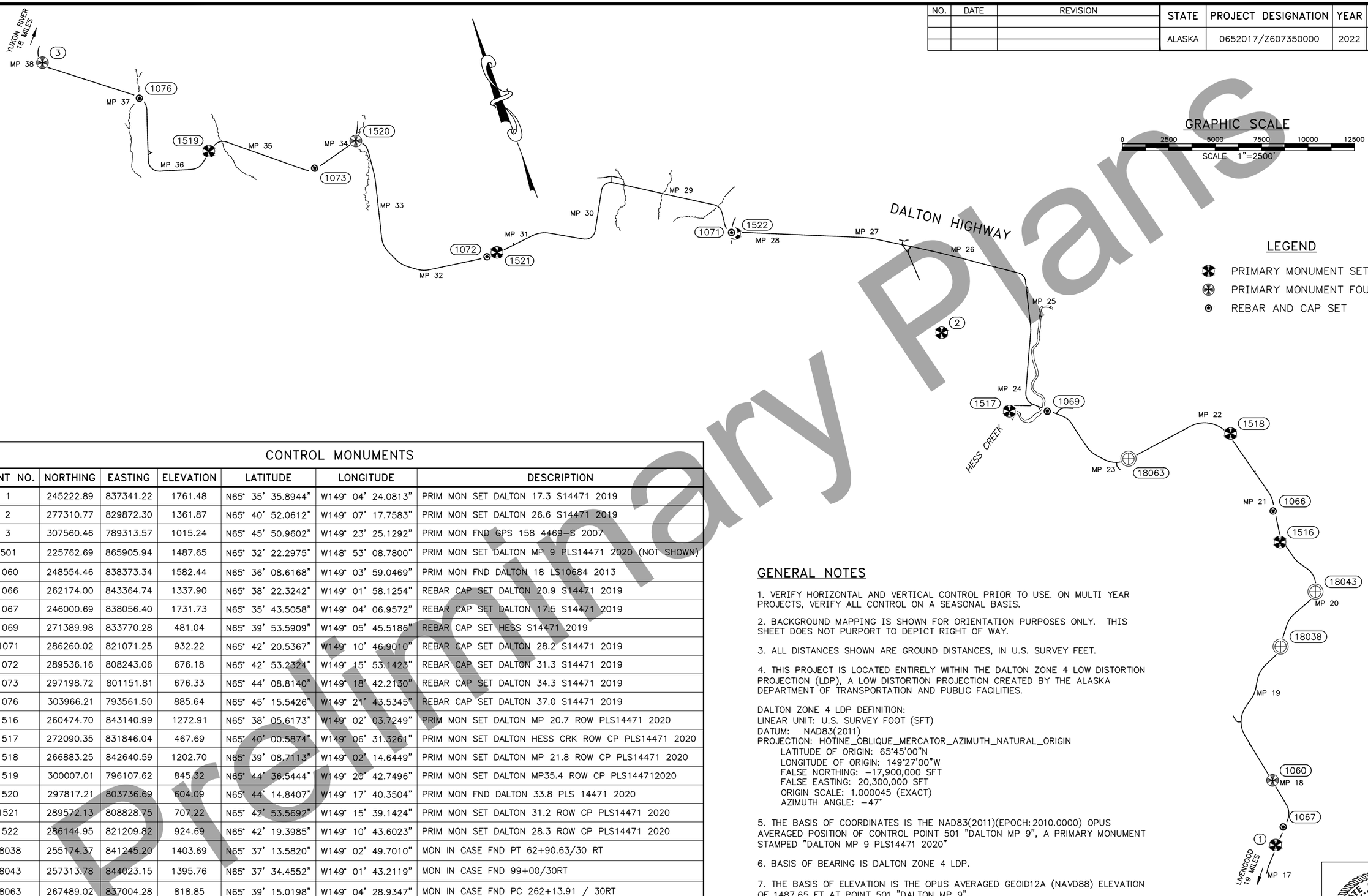

GRAPHIC SCALE

0 2500 5000 7500 10000 12500

SCALE 1"=2500'

LEGEND

- PRIMARY MONUMENT SET
- PRIMARY MONUMENT FOUND
- REBAR AND CAP SET

CONTROL MONUMENTS

POINT NO.	NORTHING	EASTING	ELEVATION	LATITUDE	LONGITUDE	DESCRIPTION
1	245222.89	837341.22	1761.48	N65° 35' 35.8944"	W149° 04' 24.0813"	PRIM MON SET DALTON 17.3 S14471 2019
2	277310.77	829872.30	1361.87	N65° 40' 52.0612"	W149° 07' 17.7583"	PRIM MON SET DALTON 26.6 S14471 2019
3	307560.46	789313.57	1015.24	N65° 45' 50.9602"	W149° 23' 25.1292"	PRIM MON FND GPS 158 4469-S 2007
501	225762.69	865905.94	1487.65	N65° 32' 22.2975"	W148° 53' 08.7800"	PRIM MON SET DALTON MP 9 PLS14471 2020 (NOT SHOWN)
1060	248554.46	838373.34	1582.44	N65° 36' 08.6168"	W149° 03' 59.0469"	PRIM MON FND DALTON 18 LS10684 2013
1066	262174.00	843364.74	1337.90	N65° 38' 22.3242"	W149° 01' 58.1254"	REBAR CAP SET DALTON 20.9 S14471 2019
1067	246000.69	838056.40	1731.73	N65° 35' 43.5058"	W149° 04' 06.9572"	REBAR CAP SET DALTON 17.5 S14471 2019
1069	271389.98	833770.28	481.04	N65° 39' 53.5909"	W149° 05' 45.5186"	REBAR CAP SET HESS S14471 2019
1071	286260.02	821071.25	932.22	N65° 42' 20.5367"	W149° 10' 46.9010"	REBAR CAP SET DALTON 28.2 S14471 2019
1072	289536.16	808243.06	676.18	N65° 42' 53.2324"	W149° 15' 53.1423"	REBAR CAP SET DALTON 31.3 S14471 2019
1073	297198.72	801151.81	676.33	N65° 44' 08.8140"	W149° 18' 42.2130"	REBAR CAP SET DALTON 34.3 S14471 2019
1076	303966.21	793561.50	885.64	N65° 45' 15.5426"	W149° 21' 43.5345"	REBAR CAP SET DALTON 37.0 S14471 2019
1516	260474.70	843140.99	1272.91	N65° 38' 05.6173"	W149° 02' 03.7249"	PRIM MON SET DALTON MP 20.7 ROW PLS14471 2020
1517	272090.35	831846.04	467.69	N65° 40' 00.5874"	W149° 06' 31.3261"	PRIM MON SET DALTON HESS CRK ROW CP PLS14471 2020
1518	266883.25	842640.59	1202.70	N65° 39' 08.7113"	W149° 02' 14.6449"	PRIM MON SET DALTON MP 21.8 ROW CP PLS14471 2020
1519	300007.01	796107.62	845.32	N65° 44' 36.5444"	W149° 20' 42.7496"	PRIM MON SET DALTON MP35.4 ROW CP PLS144712020
1520	297817.21	803736.69	604.09	N65° 44' 14.8407"	W149° 17' 40.3504"	PRIM MON FND DALTON 33.8 PLS 14471 2020
1521	289572.13	808828.75	707.22	N65° 42' 53.5692"	W149° 15' 39.1424"	PRIM MON SET DALTON 31.2 ROW CP PLS14471 2020
1522	286144.95	821209.82	924.69	N65° 42' 19.3985"	W149° 10' 43.6023"	PRIM MON SET DALTON 28.3 ROW CP PLS14471 2020
18038	255174.37	841245.20	1403.69	N65° 37' 13.5820"	W149° 02' 49.7010"	MON IN CASE FND PT 62+90.63/30 RT
18043	257313.78	844023.15	1395.76	N65° 37' 34.4552"	W149° 01' 43.2119"	MON IN CASE FND 99+00/30RT
18063	267489.02	837004.28	818.85	N65° 39' 15.0198"	W149° 04' 28.9347"	MON IN CASE FND PC 262+13.91 / 30RT

GENERAL NOTES

1. VERIFY HORIZONTAL AND VERTICAL CONTROL PRIOR TO USE. ON MULTI YEAR PROJECTS, VERIFY ALL CONTROL ON A SEASONAL BASIS.

2. BACKGROUND MAPPING IS SHOWN FOR ORIENTATION PURPOSES ONLY. THIS SHEET DOES NOT PURPORT TO DEPICT RIGHT OF WAY.

3. ALL DISTANCES SHOWN ARE GROUND DISTANCES, IN U.S. SURVEY FEET.

4. THIS PROJECT IS LOCATED ENTIRELY WITHIN THE DALTON ZONE 4 LOW DISTORTION PROJECTION (LDP), A LOW DISTORTION PROJECTION CREATED BY THE ALASKA DEPARTMENT OF TRANSPORTATION AND PUBLIC FACILITIES.

DALTON ZONE 4 LDP DEFINITION:
LINEAR UNIT: U.S. SURVEY FOOT (SFT)
DATUM: NAD83(2011)
PROJECTION: HOTINE_OBLIQUE_MERCATOR_AZIMUTH_NATURAL_ORIGIN
- LATITUDE OF ORIGIN: 65°45'00"N
- LONGITUDE OF ORIGIN: 149°27'00"W
- FALSE NORTHING: -17,900,000 SFT
- FALSE EASTING: 20,300,000 SFT
- ORIGIN SCALE: 1.000045 (EXACT)
- AZIMUTH ANGLE: -47°

5. THE BASIS OF COORDINATES IS THE NAD83(2011)(EPOCH:2010.0000) OPUS AVERAGED POSITION OF CONTROL POINT 501 "DALTON MP 9", A PRIMARY MONUMENT STAMPED "DALTON MP 9 PLS14471 2020"

6. BASIS OF BEARING IS DALTON ZONE 4 LDP.

7. THE BASIS OF ELEVATION IS THE OPUS AVERAGED GEOID12A (NAVD88) ELEVATION OF 1487.65 FT AT POINT 501 "DALTON MP 9".

Preliminary Plans

SURVEY CONTROL

STATE OF ALASKA 49TH
TROY M. HICKS
May 17, 2022
LS-14471
REGISTERED PROFESSIONAL LAND SURVEYOR

PLANS DEVELOPED BY: STATE OF ALASKA DEPARTMENT OF TRANSPORTATION & PUBLIC FACILITIES, NORTHERN REGION, 2301 PEGER ROAD, FAIRBANKS, AK 99709 (907)451-2200
C:\Users\ddjensen\Desktop\60735_Dalton_18_37\6 Design\4 C3D\2 Drawings\(3) Plan Production\60735_A5_SURVEY_CONTROL-A5 Tue, May/17/22 02:46pm

NO.	DATE	REVISION

STATE	PROJECT DESIGNATION	YEAR	SHEET NO.	TOTAL SHEETS
ALASKA	0652017/Z607350000	2022	B1	B8

TYPICAL SECTION SUMMARY

TYPICAL SECTION	BEGIN STATION	END STATION	LT DETAIL NO.	RT DETAIL NO.
	"0"950+00.00	"0"961+00		6
	"0"961+00	"0"965+00		
1	"0"965+00	"0"966+00		6
	"0"966+00	"0"985+00		
	"0"985+00	"0"1027+00		6
2	"0"1027+00	"0"1036+00		
1	"0"1036+00	"0"1085+00		
	"0"1085+00	"0"1103+20		6
3	"0"1103+20	"0"1118+00		
	"0"1118+00	"0"1133+70		
	"0"1133+70	"0"1144+00	3	
	"0"1144+00	"0"1147+00		
1	"0"1147+00	"0"1154+42	4	
	"0"1154+42	"0"1170+00		
	"0"1170+00	"0"1188+50	3	
	"0"1188+50	"0"1256+00		
4	"0"1256+00	"0"1262+10		
	"0"1262+10	"0"1275+24		3
	"0"1275+24	"0"1288+98.5		
	"0"1288+98.5	"0"1290+00	5	5
	"0"1291+35	"0"1292+33.5	5	5
	"0"1292+33.5	"0"1297+00		
	"0"1297+00	"0"1304+00	1	
	"0"1304+00	"0"1329+00		
	"0"1329+00	"0"1339+97	2	
	"0"1339+97	"0"1364+90		5
	"0"1364+00	"0"1364+90		1, 5
	"0"1364+90	"0"1370+00		1
	"0"1370+00	"0"1385+00		
	"0"1385+00	"0"1393+00		3
	"0"1393+00	"0"1403+47		
	"0"1403+47	"0"1407+49		3
	"0"1407+49	"0"1524+00		
	"0"1524+00	"0"1532+00	1	
	"0"1532+00	"0"1538+00		
	"0"1538+00	"0"1541+00		1
	"0"1539+00	"0"1547+00	3	
1	"0"1547+00	"0"1555+00		
	"0"1555+00	"0"1557+00	3	
	"0"1557+00	"0"1597+00		
	"0"1597+00	"0"1608+00		1
	"0"1608+00	"0"1627+00		
	"0"1627+00	"0"1638+00	1	
	"0"1638+00	"0"1737+00		
	"0"1737+00	"0"1757+00	3	
	"0"1757+00	"0"1768+47		
	"0"1768+47	"0"1772+00	3	
	"0"1772+00	"0"1784+57		
	"0"1784+57	"0"1786+47	3	
	"0"1786+47	"0"1787+96.5		
	"0"1787+96.5	"0"1802+50	5	
	"0"1802+50	"0"1804+96	5	1
	"0"1804+96	"0"1815+00		1
	"0"1815+00	"0"1887+00		
	"0"1887+00	"0"1893+00		1
	"0"1893+00	"0"1928+00		
	"0"1928+00	"0"1938+50	1	
	"0"1938+50	"0"1966+00		

TYPICAL SECTION SLOPE/DITCH EXCEPTIONS TABLE (LT)

BEGIN STATION	END STATION	CUT			FILL
		FS (FT)	DITCH (FT)	BK SLOPE	FS (H:V)
"0"950+00	"0"956+50		8	1.5:1	4:1
"0"956+50	"0"986+30	26	0	2:1	4:1
"0"997+11	"0"998+20				2:1
"0"1001+70	"0"1003+00				2.5:1
"0"1006+00	"0"1012+00				4:1
"0"1012+00	"0"1027+00			1.5:1, 2:1	
"0"1036+00	"0"1071+25			1.5:1, 2:1	
"0"1071+25	"0"1087+54	25	8	1.5:1	4:1
"0"1118+00	"0"1133+70		8	1.5:1	4:1
"0"1147+00	"0"1154+42				6:1
"0"1188+50	"0"1212+00				4:1
"0"1262+10	"0"1277+00			1.5:1	4:1
"0"1277+00	"0"1288+98.5				
"0"1340+00	"0"1428+47			1.5:1, 2:1	
"0"1469+49	"0"1470+67				2.5:1
"0"1477+00	"0"1480+50				2.5:1
"0"1489+25	"0"1490+25				2.5:1
"0"1505+50	"0"1507+00				2.5:1
"0"1572+00	"0"1573+50				2.5:1
"0"1592+25	"0"1594+75				2.5:1
"0"1754+80	"0"1756+50				1.5:1
"0"1804+96	"0"1805+27				2.5:1
"0"1844+00	"0"1886+00				4:1

TYPICAL SECTION SLOPE/DITCH EXCEPTIONS TABLE (RT)

BEGIN STATION	END STATION	CUT			FILL
		FS (FT)	DITCH (FT)	BK SLOPE	FS (H:V)
"0"950+00	"0"961+00	18			
"0"961+00	"0"965+00				4:1
"0"966+00	"0"985+00				4:1
"0"985+00	"0"1027+00	18			
"0"1036+00	"0"1068+40			1.5:1	2.5:1
"0"1068+40	"0"1085+00		14R	1.5:1	2.5:1
"0"1085+00	"0"1103+20				FS16
"0"1118+00	"0"1136+00	13		1.5:1	4:1
"0"1188+00	"0"1211+00				4:1
"0"1339+67	"0"1339+97				2.5:1
"0"1364+90	"0"1365+20				2.5:1
"0"1434+46	"0"1523+00	20			
"0"1675+00	"0"1710+37	18			
"0"1762+80	"0"1764+00		8	1.25:1	
"0"1786+00	"0"1798+00	13		1.5:1	
"0"1798+00	"0"1802+00	13		1.25:1	
"0"1815+00	"0"1886+00	18			

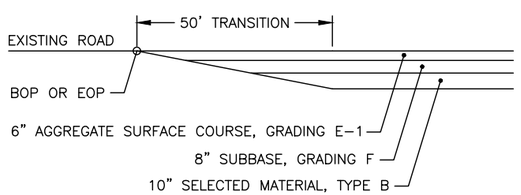

BOP/EOP TRANSITION DETAIL

TYPICAL SECTION NOTES:

1. REMOVE AND PROCESS ALL EXISTING PATCHES OF ASPHALT WITHIN THE PROJECT LIMITS AND REINCORPORATE INTO AGGREGATE SURFACE COURSE, GRADING E-1. EXISTING ASPHALT THICKNESS VARIES THROUGHOUT THE PROJECT. THIS WORK WILL BE PAID FOR AS 203.0003.0000 UNCLASSIFIED EXCAVATION AND 301.0003.00E1 AGGREGATE SURFACE COURSE, GRADING E-1.
2. NORMAL CROSS-SLOPE IS 3% AWAY FROM CROWN.
3. SEE SUPERELEVATION SUMMARY ON SHEET D1 FOR CROSS SLOPE VALUES AT HORIZONTAL CURVES.
4. SEED ALL SLOPES AND AREAS DISTURBED BY CONSTRUCTION ACTIVITIES. THE ONLY EXCEPTION IS ROCK SLOPES.
5. THE CONTRACTOR SHALL NOT PLACE USABLE UNCLASSIFIED EXCAVATION IN WASTE BERMS, UNLESS DIRECTED BY THE ENGINEER. THE INTENT IS TO CONSTRUCT WASTE BERMS WITH UNUSABLE EXCAVATION.
6. ON THE "0" ALIGNMENT, FROM BOP TO EOP, BETWEEN THE EDGES OF TRAVELED WAY, APPLY CALCIUM CHLORIDE TO TOP SURFACE OF AGGREGATE SURFACE COURSE, GRADING E-1. DO NOT APPLY CALCIUM CHLORIDE TO TURNOUTS OR APPROACHES.
7. CLEAR AND GRUB AS SHOWN IN THE TYPICAL SECTIONS, EXCEPT WHERE NOTED IN THE CLEARING AND GRUBBING EXCEPTIONS TABLE ON THIS SHEET.
8. TYPICAL SECTION NOTES ON THIS SHEET APPLY TO ALL TYPICAL SECTION SHEETS.

GEOTEXTILE SUMMARY

PROJECT LEFT			PROJECT RIGHT		
BEGIN STA.	END STA.	TYPE	BEGIN STA.	END STA.	TYPE
"0"1027+00	"0"1036+00	STABILIZATION, CLASS I	"0"1027+00	"0"1036+00	STABILIZATION, CLASS I
"0"1103+20	"0"1118+00	REINFORCEMENT, TYPE 2	"0"1103+20	"0"1118+00	REINFORCEMENT, TYPE 2
"0"1256+00	"0"1262+10	REINFORCEMENT, TYPE 2	"0"1256+00	"0"1262+10	REINFORCEMENT, TYPE 2
"0"1297+00	"0"1304+00	STABILIZATION, CLASS I	"0"1297+00	"0"1304+00	STABILIZATION, CLASS I
"0"1365+00	"0"1369+00	STABILIZATION, CLASS I	"0"1365+00	"0"1369+00	STABILIZATION, CLASS I
"0"1370+00	"0"1381+00	REINFORCEMENT, TYPE 2	"0"1370+00	"0"1381+00	REINFORCEMENT, TYPE 2
"0"1411+00	"0"1415+00	REINFORCEMENT, TYPE 2	"0"1411+00	"0"1415+00	REINFORCEMENT, TYPE 2
"0"1524+00	"0"1532+00	REINFORCEMENT, TYPE 2	"0"1524+00	"0"1532+00	REINFORCEMENT, TYPE 2
"0"1535+00	"0"1546+00	STABILIZATION, CLASS I	"0"1535+00	"0"1546+00	STABILIZATION, CLASS I
"0"1597+00	"0"1607+00	STABILIZATION, CLASS I	"0"1597+00	"0"1607+00	STABILIZATION, CLASS I
"0"1627+00	"0"1637+00	REINFORCEMENT, TYPE 2	"0"1627+00	"0"1637+00	REINFORCEMENT, TYPE 2
"0"1803+00	"0"1815+00	STABILIZATION, CLASS I	"0"1803+00	"0"1815+00	STABILIZATION, CLASS I
"0"1886+00	"0"1895+00	STABILIZATION, CLASS I	"0"1886+00	"0"1895+00	STABILIZATION, CLASS I
"0"1928+00	"0"1939+00	STABILIZATION, CLASS I	"0"1928+00	"0"1939+00	STABILIZATION, CLASS I

SUBEXCAVATION SUMMARY

BEGIN STA.	END STA.	DEPTH (FT)	REMARKS
"0"1298+00	"0"1305+00	4	
"0"1370+00	"0"1380+00	4	
"0"1523+00	"0"1539+00	4	
"0"1811+50	"0"1815+00	4	
"0"1895+00	"0"1897+00	4	
"0"1928+00	"0"1939+00	4	

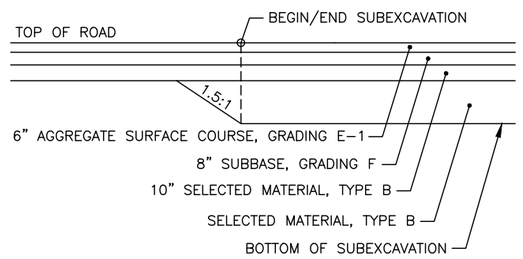

SUBEXCAVATION TRANSITION DETAIL

CLEARING AND GRUBBING EXCEPTIONS

BEGIN STA.	END STA.	CLEARING ONLY
"0"1027+00	"0"1036+00	X
"0"1046+00	"0"1071+00	X
"0"1083+00	"0"1103+00	X
"0"1129+00	"0"1144+00	X
"0"1244+00	"0"1278+00	X
"0"1385+00	"0"1416+00	X
"0"1538+00	"0"1547+00	X
"0"1596+00	"0"1611+00	X
"0"1659+00	"0"1749+00	X
"0"1800+00	"0"1817+00	X
"0"1885+00	"0"1903+00	X

NOTES:

1. CLEARING AND GRUBBING EXCEPTIONS APPLY ONLY TO FILL CONDITIONS. CLEAR AND GRUB WITHIN ALL EXCAVATION LIMITS.

STATE OF ALASKA 49TH
DAVID D. JENSEN
(95% PLANS)
REGISTERED PROFESSIONAL ENGINEER

TYPICAL SECTIONS
1 OF 6

Preliminary Plans

PLANS DEVELOPED BY: STATE OF ALASKA DEPARTMENT OF TRANSPORTATION & PUBLIC FACILITIES, NORTHERN REGION, 2301 PEGER ROAD, FAIRBANKS, AK 99709 (907)451-2200
C:\Users\ddjensen\Desktop\60735_Dalton_18_37\6 Design\4 C3D\2 Drawings\(3) Plan Production\60735_B_TYP-B1 Tue, May/17/22 09:25am

NO.	DATE	REVISION

STATE	PROJECT DESIGNATION	YEAR	SHEET NO.	TOTAL SHEETS
ALASKA	0652017/Z607350000	2022	B2	B8

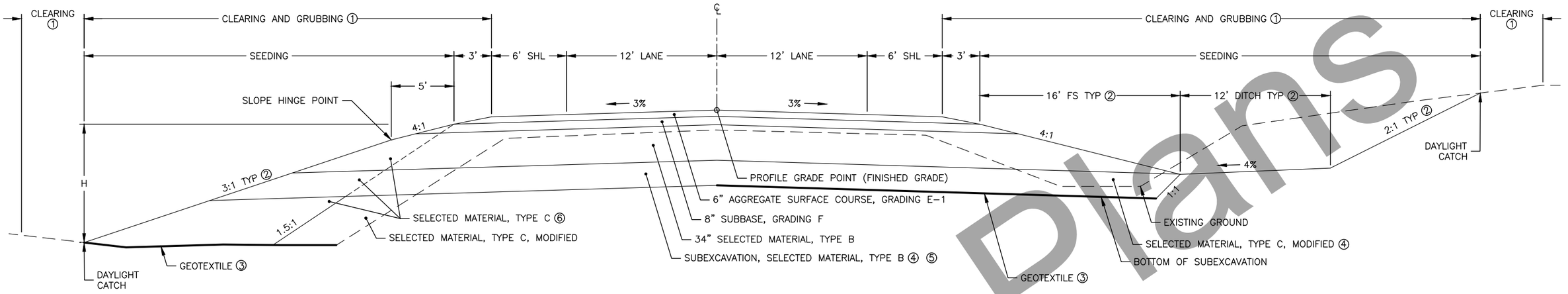

TYP FILL

TYP CUT

TYPICAL SECTION 1 – RECONSTRUCT/WIDEN ROADWAY

"O"950+00 TO "O"1027+00
"O"1036+00 TO "O"1103+20
"O"1118+00 TO "O"1256+00
"O"1262+10 TO "O"1966+00

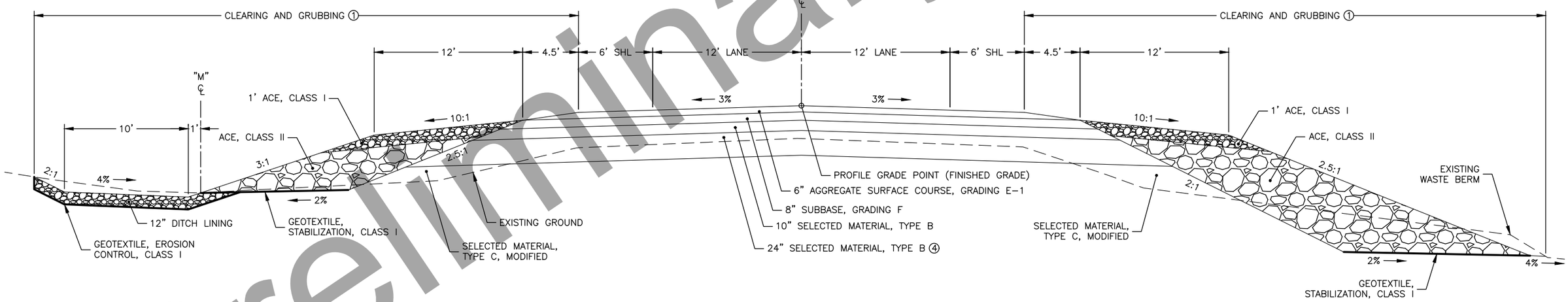

TYPICAL SECTION 2 – ACE SHOULDERS

"O"1027+00 TO "O"1036+00
"M"10+00 TO "M"19+00

NOTES:

① CLEAR 10' BEYOND DAYLIGHT CATCH, OR TO ROW, WHICHEVER IS LESS.

② SEE SLOPE/DITCH EXCEPTIONS TABLE ON SHEET B1. IF H IS 4' OR LESS, USE 4:1 FORESLOPE.

③ SEE GEOTEXTILE SUMMARY TABLE ON SHEET B1 FOR GEOTEXTILE TYPE AND EXTENTS.

④ EXISTING EMBANKMENT MATERIAL MAY BE USED IF IT MEETS SPECIFICATIONS FOR SELECTED MATERIAL, TYPE C.

⑤ SEE SUBEXCAVATION SUMMARY TABLE AND TRANSITION DETAIL ON SHEET B1.

⑥ USE SELECTED MATERIAL, TYPE C, MODIFIED OR EXISTING EMBANKMENT MATERIAL, IF FORSLOPE IS STEEPER THAN 3:1.

7. SEE DETAILS ON SHEETS B5, B6, AND B7.

8. FROM "O"1368+10 TO "O"1385+90 LT, AND FROM "O"1368+90 TO "O"1380+10 RT, INSTALL 18" DITCH LINING AS SHOWN IN TYPICAL SECTION 4 ON SHEET B3.

STATE OF ALASKA 49TH
DAVID D. JENSEN
(95% PLANS)
REGISTERED PROFESSIONAL ENGINEER

TYPICAL SECTIONS
2 OF 6

Preliminary Plans

PLANS DEVELOPED BY: STATE OF ALASKA DEPARTMENT OF TRANSPORTATION & PUBLIC FACILITIES, NORTHERN REGION, 2301 PEGER ROAD, FAIRBANKS, AK 99709 (907)451-2200
C:\Users\djjensen\Desktop\60735_Dalton_18_37\6 Design\4 C3D\2 Drawings\(3) Plan Production\60735_B_TYP-B2 Tue, May/17/22 09:25am

NO.	DATE	REVISION

STATE	PROJECT DESIGNATION	YEAR	SHEET NO.	TOTAL SHEETS
ALASKA	0652017/Z607350000	2022	B3	B8

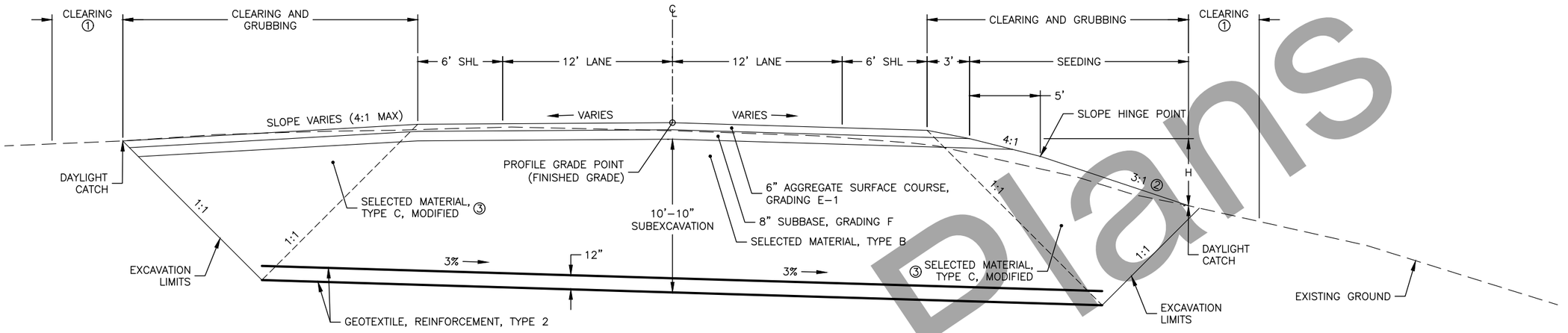

TYPICAL SECTION 3 – SUBEXCAVATION FOR UNSTABLE EMBANKMENT AREA
"0"1103+20 TO "0"1118+00

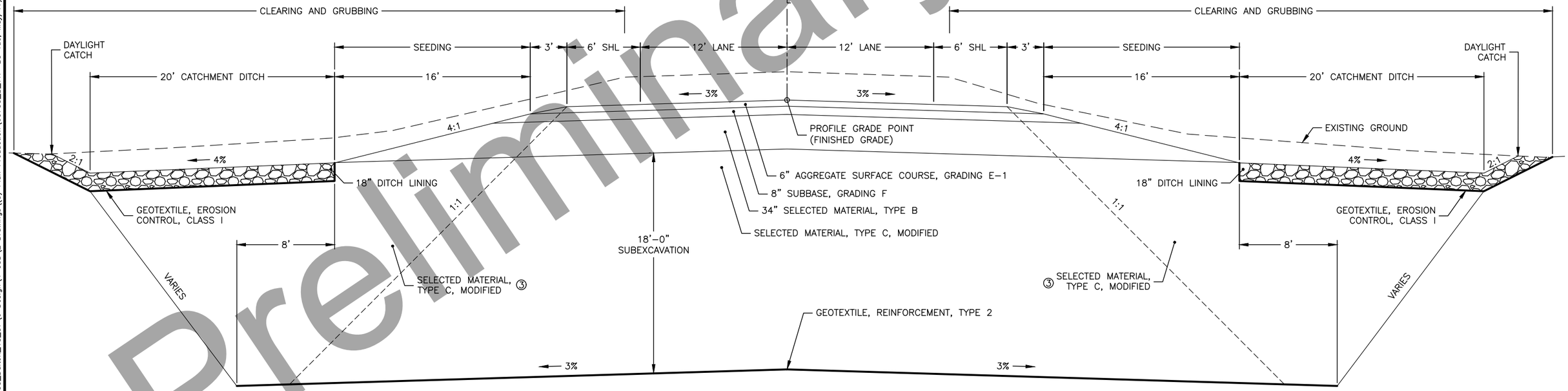

TYPICAL SECTION 4 – CUT IN ICE-RICH PERMAFROST
"0"1256+00 TO "0"1262+10

NOTES:

① CLEAR 10' BEYOND DAYLIGHT CATCH, OR TO ROW, WHICHEVER IS LESS.

② SEE SLOPE/DITCH EXCEPTIONS TABLE ON SHEET B1. IF H IS 4' OR LESS, USE 4:1 FORESLOPE.

③ EXISTING EMBANKMENT MATERIAL MAY BE USED IF IT MEETS SPECIFICATIONS FOR SELECTED MATERIAL, TYPE C.

4. SEE SUBEXCAVATION TRANSITION DETAIL ON SHEET B1.

STATE OF ALASKA 49TH
DAVID D. JENSEN
(95% PLANS)
REGISTERED PROFESSIONAL ENGINEER

TYPICAL SECTIONS
3 OF 6

Preliminary Plans

PLANS DEVELOPED BY: STATE OF ALASKA DEPARTMENT OF TRANSPORTATION & PUBLIC FACILITIES, NORTHERN REGION, 2301 PEGER ROAD, FAIRBANKS, AK 99709 (907)451-2200
C:\Users\djjensen\Desktop\60735_Dalton_18_37\6 Design\4 C3D\2 Drawings\(3) Plan Production\60735_B_TYP-B3 Tue, May/17/22 09:25am

NO.	DATE	REVISION

STATE	PROJECT DESIGNATION	YEAR	SHEET NO.	TOTAL SHEETS
ALASKA	0652017/Z607350000	2022	B4	B8

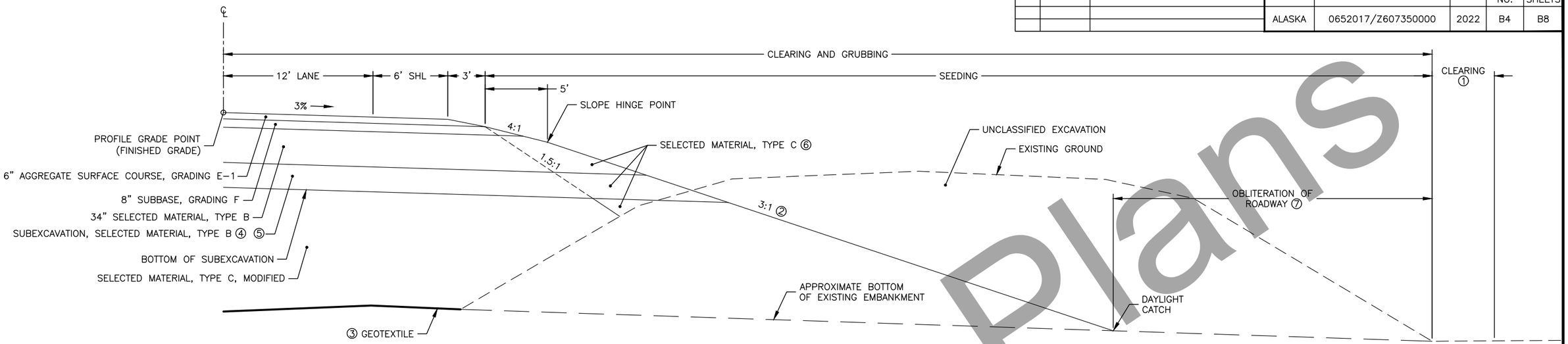

DETAIL 1 – OBLITERATION OF ROADWAY

"O"1297+00 TO "O"1304+00, LT
"O"1524+00 TO "O"1532+00, LT
"O"1597+00 TO "O"1608+00, RT
"O"1802+50 TO "O"1815+00, RT
"O"1928+00 TO "O"1938+50, LT
"O"1364+00 TO "O"1370+00, RT
"O"1538+00 TO "O"1541+00, RT
"O"1627+00 TO "O"1638+00, LT
"O"1887+00 TO "O"1893+00, RT

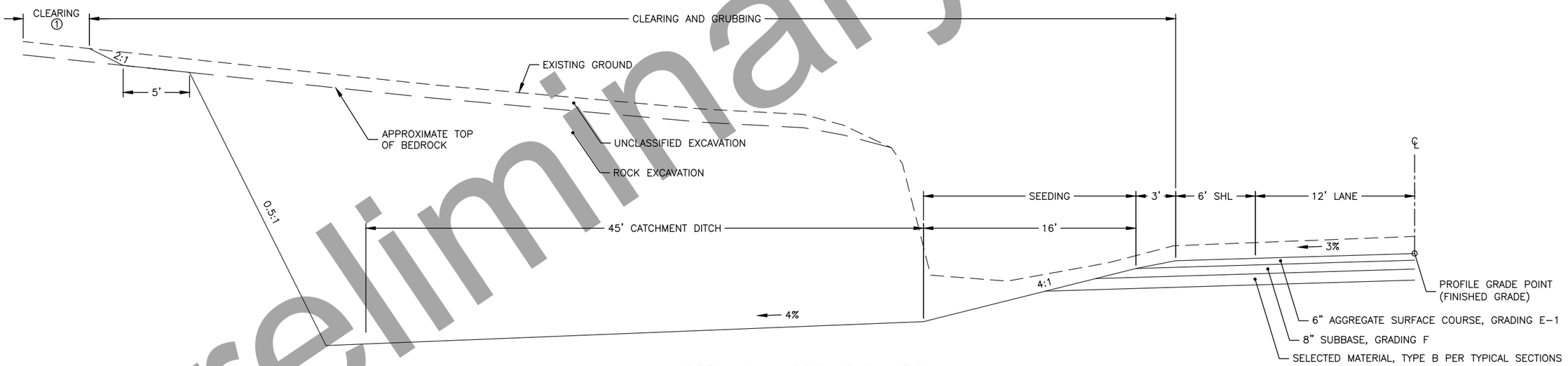

DETAIL 2 – ROCK EXCAVATION

"O"1329+00 TO "O"1339+97, LT

NOTES:

① CLEAR 10' BEYOND DAYLIGHT CATCH, OR TO ROW, WHICHEVER IS LESS.

② SEE SLOPE/DITCH EXCEPTIONS TABLE ON SHEET B1.

③ SEE GEOTEXTILE SUMMARY TABLE ON SHEET B1 FOR GEOTEXTILE TYPE AND EXTENTS.

④ EXISTING EMBANKMENT MATERIAL MAY BE USED IF IT MEETS SPECIFICATIONS FOR SELECTED MATERIAL, TYPE C.

⑤ SEE SUBEXCAVATION SUMMARY TABLE AND TRANSITION DETAIL ON SHEET B1.

⑥ USE SELECTED MATERIAL, TYPE C, MODIFIED, OR EXISTING EMBANKMENT MATERIAL, IF FORSLOPE IS STEEPER THAN 3:1.

⑦ REMOVAL OF EXISTING EMBANKMENT WILL BE PAID FOR AS 203.0003.0000 UNCLASSIFIED EXCAVATION, REGRADING BEYOND DAYLIGHT CATCH WILL BE PAID FOR AS 203.0009.0000 OBLITERATION OF ROADWAY.

TYPICAL SECTIONS
4 OF 6

STATE OF ALASKA 49TH
DAVID D. JENSEN
(95% PLANS)
REGISTERED PROFESSIONAL ENGINEER

Preliminary Plans

PLANS DEVELOPED BY: STATE OF ALASKA DEPARTMENT OF TRANSPORTATION & PUBLIC FACILITIES, NORTHERN REGION, 2301 PEGER ROAD, FAIRBANKS, AK 99709 (907)451-2200
C:\Users\ddjensen\Desktop\60735_Dalton_18_37\6 Design\4 C3D\2 Drawings\(3) Plan Production\60735_B_TYP-B4 Tue, May/17/22 09:25am

NO.	DATE	REVISION

STATE	PROJECT DESIGNATION	YEAR	SHEET NO.	TOTAL SHEETS
ALASKA	0652017/Z607350000	2022	B5	B8

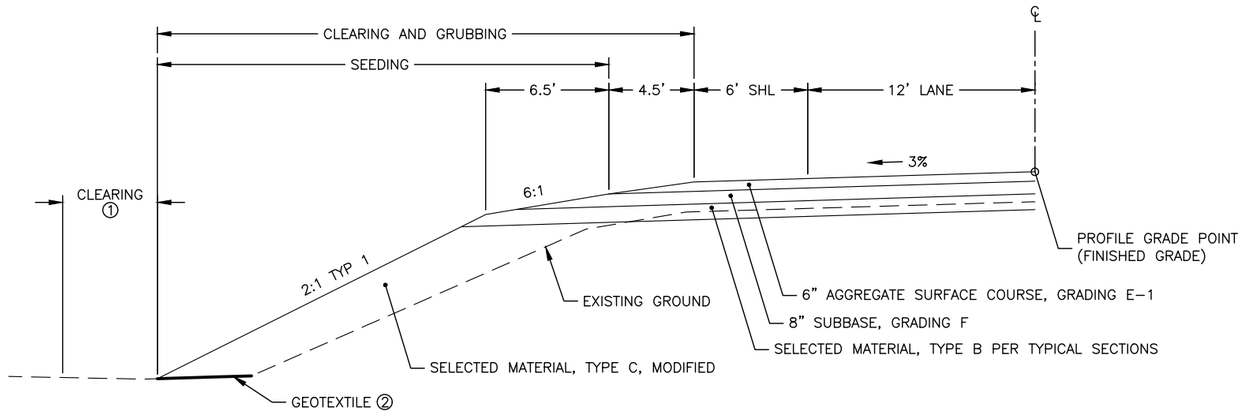

DETAIL 3 – STEEP EMBANKMENT FILL

"O"1133+70 TO "O"1144+00, LT
"O"1170+00 TO "O"1188+50, LT
"O"1262+10 TO "O"1275+24, RT
"O"1385+00 TO "O"1393+00, RT
"O"1403+47 TO "O"1407+49, RT
"O"1539+00 TO "O"1547+00, LT
"O"1555+00 TO "O"1557+00, LT
"O"1737+00 TO "O"1757+00, LT
"O"1768+47 TO "O"1772+00, LT
"O"1784+57 TO "O"1786+47, LT

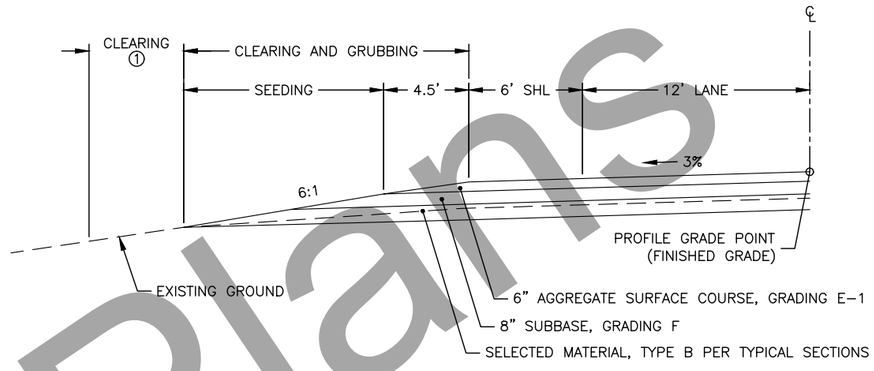

DETAIL 4 – FLAT EMBANKMENT FILL

"O"1147+00 TO "O"1154+42, LT

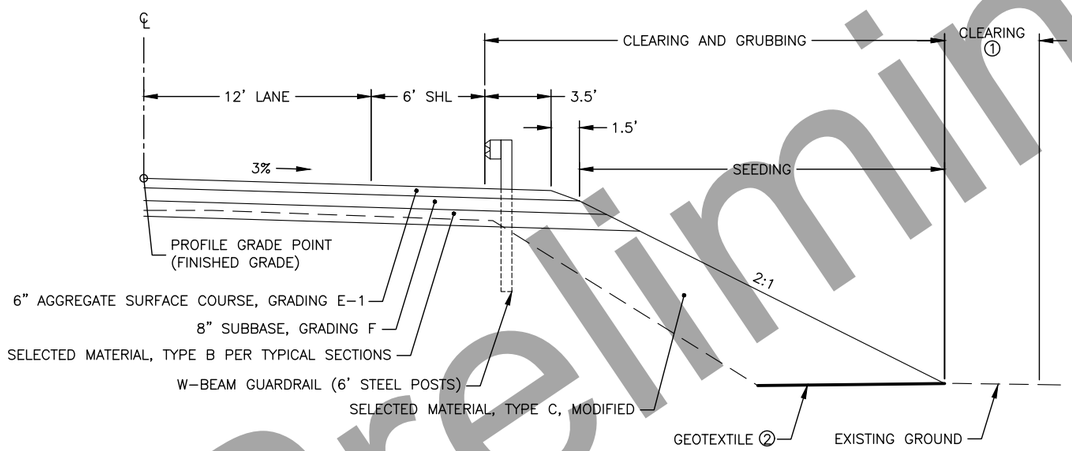

DETAIL 5 – GUARDRAIL WIDENING

"O"1288+98.5 TO "O"1290+00, LT, RT
"O"1291+35 TO "O"1292+33.5, LT, RT
"O"1339+97 TO "O"1364+90, RT
"O"1787+96.5 TO "O"1804+96, LT

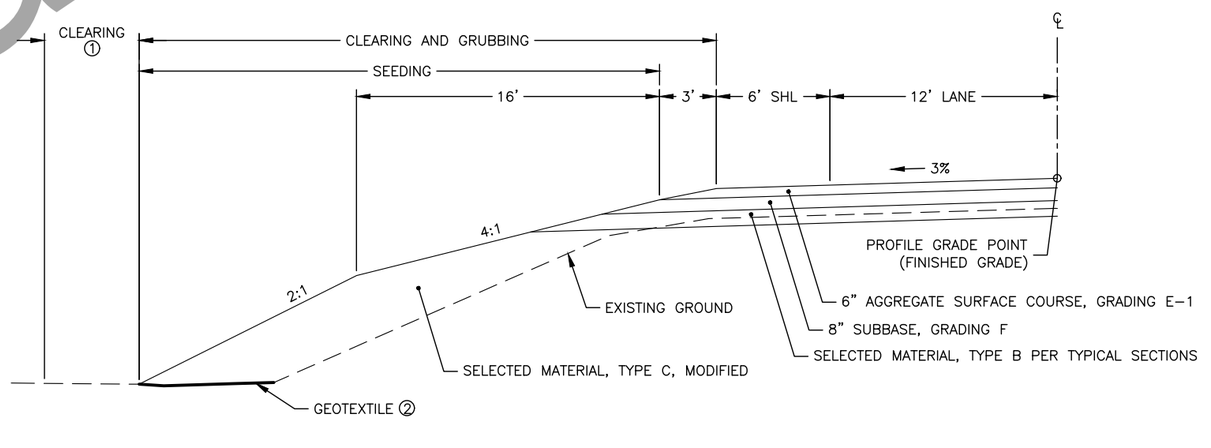

DETAIL 6 – ALT STEEP EMBANKMENT FILL

"O"950+00 TO "O"961+00, RT
"O"965+00 TO "O"966+00, RT
"O"985+00 TO "O"1027+00, RT
"O"1085+00 TO "O"1103+20, RT
"O"1403+47 TO "O"1405+47, RT

NOTES:

① CLEARING ONLY BEYOND TOE OF EXISTING EMBANKMENT.

② SEE GEOTEXTILE SUMMARY TABLE ON SHEET B1 FOR GEOTEXTILE TYPE AND EXTENTS.

3. GUARDRAIL WIDENING DETAIL DOES NOT REPRESENT WIDENING FOR END TERMINALS. CONSTRUCT END TERMINAL WIDENINGS PER STANDARD DRAWING G-20.12 ON SHEET VXXX.

TYPICAL SECTIONS
5 OF 6

STATE OF ALASKA 49TH
DAVID D. JENSEN
(95% PLANS)
REGISTERED PROFESSIONAL ENGINEER

Preliminary Plans

PLANS DEVELOPED BY: STATE OF ALASKA DEPARTMENT OF TRANSPORTATION & PUBLIC FACILITIES, NORTHERN REGION, 2301 PEGER ROAD, FAIRBANKS, AK 99709 (907)451-2200
C:\Users\djjensen\Desktop\60735_Dalton_18_37\6 Design\4 C3D\2 Drawings\(3) Plan Production\60735_B_TYP-B5 Tue, May/17/22 09:25am

NO.	DATE	REVISION

STATE	PROJECT DESIGNATION	YEAR	SHEET NO.	TOTAL SHEETS
ALASKA	0652017/Z607350000	2022	B6	B8

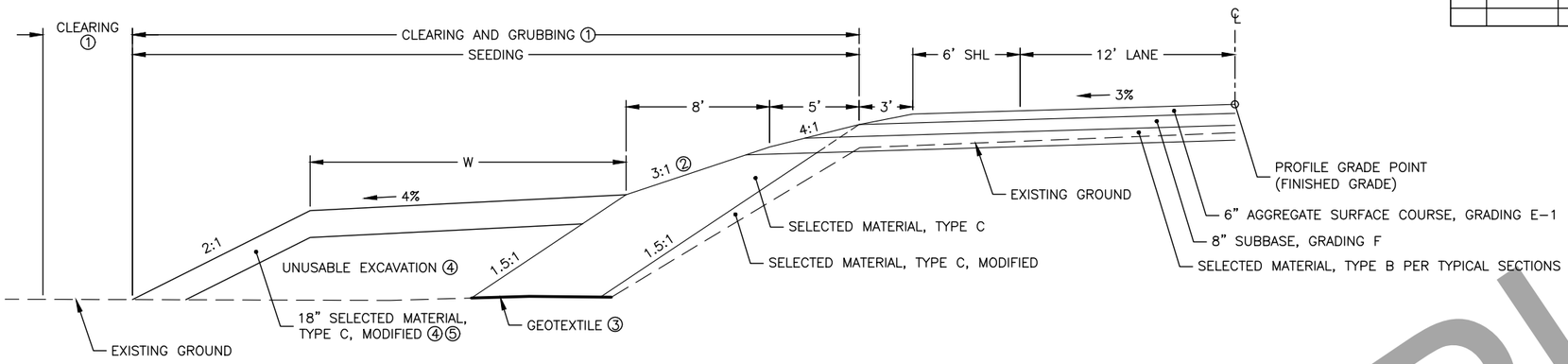

DETAIL 7 – STABILIZATION BERM

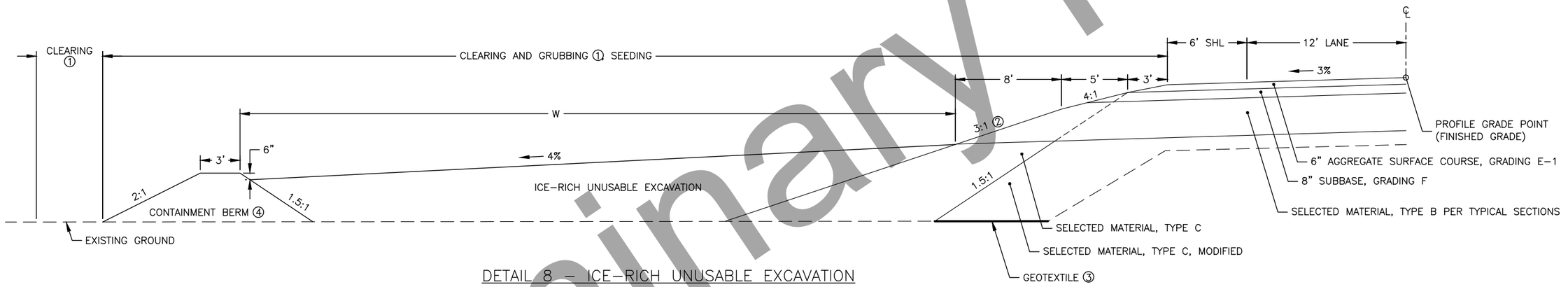

DETAIL 8 – ICE-RICH UNUSABLE EXCAVATION

DETAIL SUMMARY					
BEGIN STA.	END STA.	OFFSET	DETAIL NO.	W (FT)	REMARKS
"O"1214+00	"O"1239+00	LT	8	191	
"O"1214+00	"O"1237+00	RT	8	80	
"O"1450+00	"O"1457+00	LT	8	187	
"O"1606+00	"O"1613+50	LT	7	216	
"O"1756+00	"O"1768+50	LT	7	208	

NOTES:

① CLEARING ONLY BEYOND TOE OF DALTON HIGHWAY EMBANKMENT. CLEAR 10' BEYOND TOE OF BERM OR TO ROW, WHICHEVER IS LESS.

② SEE SLOPE/DITCH EXCEPTIONS TABLE ON SHEET B1.

③ SEE GEOTEXTILE SUMMARY TABLE ON SHEET B1 FOR GEOTEXTILE TYPE AND EXTENTS.

④ USABLE OR ICE-RICH UNCLASSIFIED EXCAVATION SHALL NOT BE USED IN THE CONSTRUCTION OF THE STABILIZATION BERMS OR CONTAINMENT BERMS UNLESS DIRECTED BY THE ENGINEER. THE INTENT IS TO USE ALL NON ICE-RICH UNUSABLE EXCAVATION FOR THE CONSTRUCTION OF STABILIZATION BERMS OR CONTAINMENT BERMS BEFORE USEABLE EXCAVATION IS USED IN THE BERMS.

5. THE 18" SELECTED MATERIAL, TYPE C, MODIFIED LAYER SHALL BE PLACED CONCURRENTLY WITH THE UNUSABLE EXCAVATION AS THE BERM IS CONSTRUCTED.

6. STABILIZATION BERM LOCATIONS AND DIMENSIONS MAY BE ADJUSTED IN THE FIELD, AS DIRECTED BY THE ENGINEER.

TYPICAL SECTIONS
6 OF 6

STATE OF ALASKA 49TH
DAVID D. JENSEN
(95% PLANS)
REGISTERED PROFESSIONAL ENGINEER

Preliminary Plans

PLANS DEVELOPED BY: STATE OF ALASKA DEPARTMENT OF TRANSPORTATION & PUBLIC FACILITIES, NORTHERN REGION, 2301 PEGER ROAD, FAIRBANKS, AK 99709 (907)451-2200
C:\Users\djjensen\Desktop\60735_Dalton_18_37\6 Design\4 C3D\2 Drawings\(3) Plan Production\60735_B_TYP-B6 Tue, May/17/22 09:25am

NO.	DATE	REVISION

STATE	PROJECT DESIGNATION	YEAR	SHEET NO.	TOTAL SHEETS
ALASKA	0652017/Z607350000	2022	B7	B8

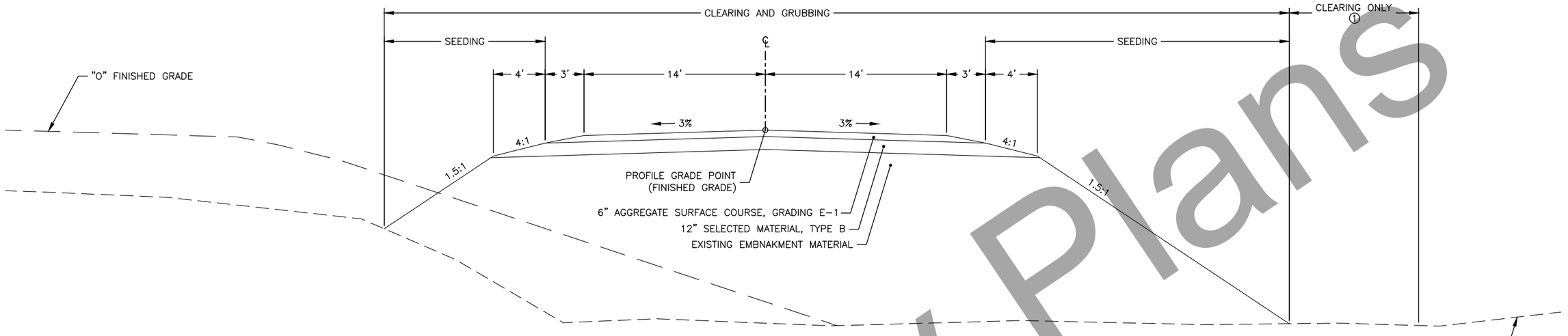

DETOUR TYPICAL SECTION
"D"10+00 TO "D"17+22
"D"20+96 TO "D"30+00

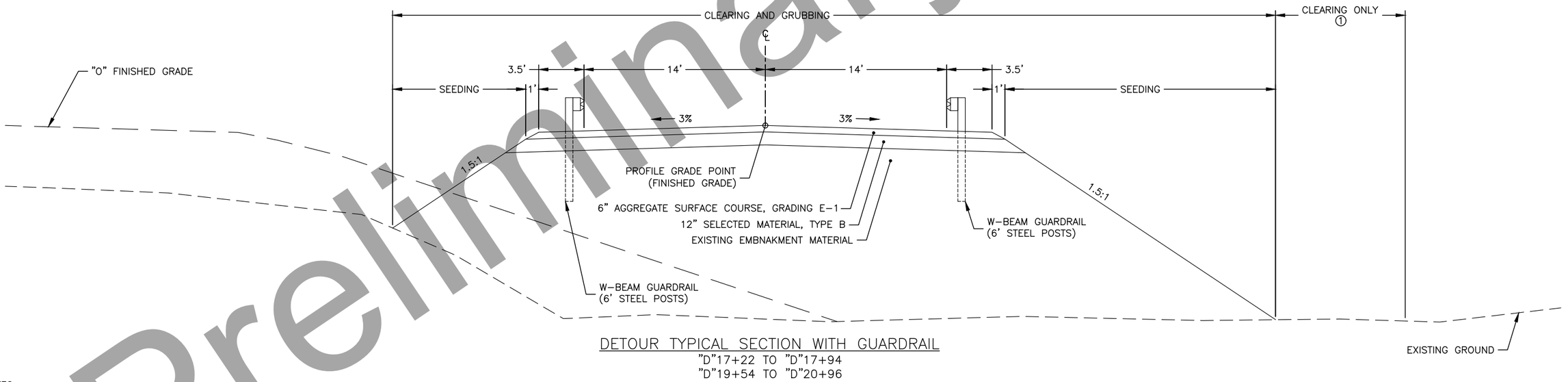

DETOUR TYPICAL SECTION WITH GUARDRAIL
"D"17+22 TO "D"17+94
"D"19+54 TO "D"20+96

NOTES:

① CLEAR 10-FT BEYOND TOE OF SLOPE OR TO ROW LIMITS, WHICHEVER IS LESS.

2. TYPICAL SECTION WITH GUARDRAIL DOES NOT REPRESENT WIDENING FOR END TERMINALS. CONSTRUCT END TERMINAL WIDENINGS PER STANDARD DRAWING G-20.12 ON SHEET V11.

3. UPON REMOVAL OF TEMPORARY CROSSING, REMOVE ALL DETOUR FILL BEYOND "0" FINISHED GRADE SLOPE LIMITS AND REINCORPORATE INTO NEW EMBANKMENT. THIS WORK WILL NOT BE MEASURED FOR PAYMENT AND IS SUBSIDIARY TO PAY ITEM 520.0001.0000.

4. STOCKPILE GRUBBING MATERIAL WITHIN THE PROJECT LIMITS, BUT NOT IN WETLAND AREAS. UPON REMOVAL OF TEMPORARY CROSSING AND DETOUR FILL, SPREAD GRUBBING MATERIAL OVER DISTURBED GROUND BEYOND TOE OF "0" FINISHED GRADE AND SEED PER SECTION 618. STOCKPILING AND SPREADING OF GRUBBING MATERIAL WILL NOT BE MEASURED FOR PAYMENT AND IS SUBSIDIARY TO PAY ITEM 520.0001.0000.

HESS CREEK DETOUR TYPICAL SECTIONS

STATE OF ALASKA 49TH
DAVID D. JENSEN
(95% PLANS)
REGISTERED PROFESSIONAL ENGINEER

Preliminary Plans

PLANS DEVELOPED BY: STATE OF ALASKA DEPARTMENT OF TRANSPORTATION & PUBLIC FACILITIES, NORTHERN REGION, 2301 PEGER ROAD, FAIRBANKS, AK 99709 (907)451-2200
C:\Users\djjensen\Desktop\60735_Dalton_18_37\6 Design\4 C3D\2 Drawings\(3) Plan Production\60735_B_TYP-B7 Tue, May/17/22 09:25am

NO.	DATE	REVISION

STATE	PROJECT DESIGNATION	YEAR	SHEET NO.	TOTAL SHEETS
ALASKA	0652017/Z607350000	2022	B8	B8

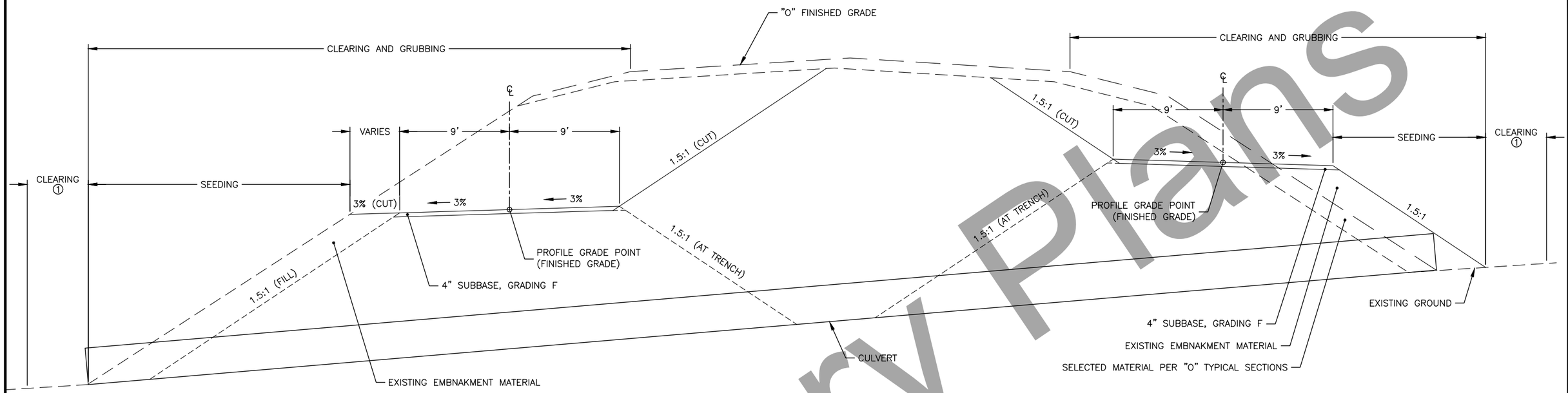

DOWNSTREAM CULVERT DIVERSION TYPICAL SECTION

"OR"999+00 TO "OR"1006+00
"OR"1023+50 TO "OR"1037+00
"OR"1059+00 TO "OR"1065+50
"OR"1084+00 TO "OR"1099+00
"OL"1134+00 TO "OL"1144+00
"OL"1161+00 TO "OL"1190+00

UPSTREAM CULVERT DIVERSION TYPICAL SECTION

"OL"999+00 TO "OL"1006+00
"OL"1023+50 TO "OL"1037+00
"OL"1059+00 TO "OL"1065+50
"OL"1084+00 TO "OL"1099+00
"OR"1134+00 TO "OR"1144+00
"OR"1161+00 TO "OR"1190+00

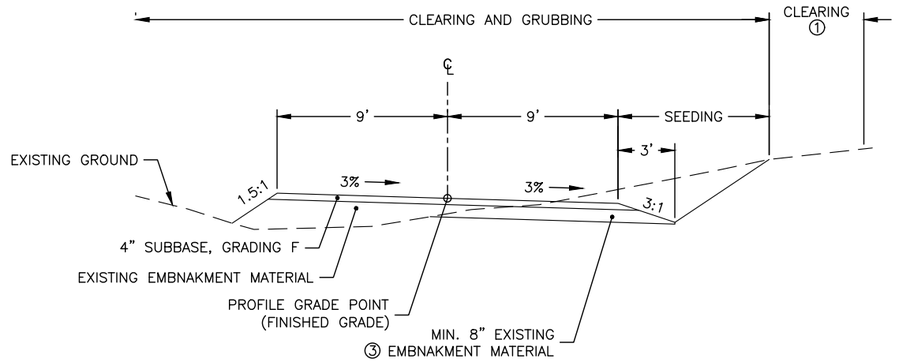

DOWNSTREAM/UPSTREAM CULVERT DIVERSION W/ DITCH DETAIL

NOTES:

① CLEAR 10-FT BEYOND TOE OF SLOPE OR TO ROW LIMITS, WHICHEVER IS LESS.

2. ALL EARTHWORK REQUIRED TO CONSTRUCT CULVERT DIVERSIONS AS SHOWN ON THIS SHEET WILL NOT BE MEASURED FOR PAYMENT AND IS SUBSIDIARY TO THE 603 PAY ITEMS. SUBBASE, GRADING F WILL BE PAID FOR AS 304.0001.000F.

③ WHEN CONSTRUCTING CULVERT DIVERSIONS OVER UNDISTURBED GROUND, EXCAVATE AS NECESSARY TO PROVIDE A MINIMUM 8" THICKNESS OF EXISTING EMBANKMENT MATERIAL BENEATH SUBBASE, GRADING F.

4. UPON COMPLETION OF CULVERT INSTALLATION, REMOVE ALL DIVERSION FILL BEYOND "O" FINISHED GRADE SLOPE LIMITS AND REINCORPORATE INTO NEW EMBANKMENT. THIS WORK WILL NOT BE MEASURED FOR PAYMENT AND IS SUBSIDIARY TO THE 603 PAY ITEMS.

5. STOCKPILE GRUBBING MATERIAL WITHIN THE PROJECT LIMITS, BUT NOT IN WETLANDS. UPON COMPLETION OF CULVERT INSTALLATION AND REMOVAL OF DIVERSION FILL, SPREAD GRUBBING MATERIAL OVER DISTURBED GROUND BEYOND TOE OF "O" FINISHED GRADE AND SEED PER SECTION 618. STOCKPILING AND SPREADING OF GRUBBING MATERIAL WILL NOT BE MEASURED FOR PAYMENT AND IS SUBSIDIARY TO PAY ITEM 201.0009.0000.

Preliminary Plans

CULVERT DIVERSION TYPICAL SECTIONS

STATE OF ALASKA 49TH
DAVID D. JENSEN
(95% PLANS)
REGISTERED PROFESSIONAL ENGINEER

PLANS DEVELOPED BY: STATE OF ALASKA DEPARTMENT OF TRANSPORTATION & PUBLIC FACILITIES, NORTHERN REGION, 2301 PEGER ROAD, FAIRBANKS, AK 99709 (907)451-2200
C:\Users\djensen\Desktop\60735_Dalton_18_37\6 Design\4 C3D\2 Drawings\(3) Plan Production\60735_B_TYP-B8 Tue, May/17/22 09:25am

NO.	DATE	REVISION

STATE	PROJECT DESIGNATION	YEAR	SHEET NO.	TOTAL SHEETS
ALASKA	0652017/Z607350000	2022	C1	C2

ESTIMATE OF QUANTITIES

ITEM NO.	DESCRIPTION	PAY UNIT	QUANTITY
201.0009.0000	CLEARING AND GRUBBING	LUMP SUM	ALL REQUIRED
202.0001.0000	REMOVAL OF STRUCTURES AND OBSTRUCTIONS	LUMP SUM	ALL REQUIRED
202.0017.0000	REMOVAL OF CULVERT PIPE	EACH	129
202.0023.0000	REMOVAL OF BRIDGE NO. 1213	LUMP SUM	ALL REQUIRED
203.0002.0000	ROCK EXCAVATION	CUBIC YARD	68,420
203.0003.0000	UNCLASSIFIED EXCAVATION	CUBIC YARD	1,057,990
203.0004.0000	MUCK EXCAVATION	CUBIC YARD	6,440
203.0006.0000	BORROW	TON	1,834,234
203.0009.0000	OBLITERATION OF ROADWAY	SQUARE YARD	40,116
203.0010.0000	CONTROLLED BLASTING	LINEAR FOOT	35,615
203.2001.0000	AIR CONVECTION EMBANKMENT (ACE) FILL	TON	65,000
205.0006.0000	STRUCTURAL FILL	CUBIC YARD	2,150
301.0003.00E1	AGGREGATE SURFACE COURSE, GRADING E–1	TON	159,000
304.0001.000F	SUBBASE, GRADING F	TON	277,550
305.0001.30E1	STOCKPILED MATERIAL SECTION 301, GRADING E–1	CUBIC YARD	15,000
501.0001.0000	CLASS A CONCRETE	LUMP SUM	ALL REQUIRED
501.0007.0000	PRECAST CONCRETE MEMBER, 148'–0" DECKED BULB–TEE	EACH	7
501.0007.0000	PRECAST CONCRETE MEMBER, LAGGING	EACH	170
503.0001.0000	REINFORCING STEEL	LUMP SUM	ALL REQUIRED
503.0002.0000	EPOXY–COATED REINFORCING STEEL	LUMP SUM	ALL REQUIRED
505.0005.1417	FURNISH STRUCTURAL STEEL H–PILES, HP 14x117	LINEAR FOOT	3,182
505.0006.1417	DRIVE STRUCTUREAL STEEL H–PILES, HP 14x117	EACH	50
507.0001.0002	STEEL BRIDGE RAILING, 2–TUBE	LINEAR FOOT	380
507.0006.0000	CABLE SAFETY RAILING	LINEAR FOOT	251
520.0001.0000	TEMPORARY CROSSINGS	LUMP SUM	ALL REQUIRED
602.0001.0156	STRUCTURAL PLATE PIPE 156" DIAMETER, 12 GAUGE	LINEAR FOOT	170
602.2009.0000	DEADMAN	EACH	12
603.0001.0024	24 INCH CSP	LINEAR FOOT	153
603.0001.0036	36 INCH CSP	LINEAR FOOT	14,187
603.0001.0048	48 INCH CSP	LINEAR FOOT	4,881
603.0001.0060	60 INCH CSP	LINEAR FOOT	122
603.0001.0072	72 INCH CSP	LINEAR FOOT	199
603.0001.0096	96 INCH CSP	LINEAR FOOT	179
606.0001.0000	W–BEAM GUARDRAIL	LINEAR FOOT	3,988
606.0006.0000	REMOVING AND DISPOSING OF GUARDRAIL	LINEAR FOOT	984
606.0013.0000	PARALLEL GUARDRAIL TERMINAL	EACH	8
606.0016.0000	TRANSITION RAIL	EACH	4
610.0001.0000	DITCH LINING	CUBIC YARD	18,580
611.0001.0001	RIPRAP, CLASS I	CUBIC YARD	2,500
611.0001.0003	RIPRAP, CLASS III	CUBIC YARD	6,000
613.0002.0000	CULVERT MARKER POST	EACH	256
615.0001.0000	STANDARD SIGN	SQUARE FOOT	443
615.0002.0000	REMOVE AND RELOCATE SIGN	EACH	1
616.0001.0075	THAW PIPE 3/4 INCH DIAMETER	LINEAR FOOT	2,700
616.0002.0050	THAW PIPE 1/2 INCH DIAMETER	EACH	112
618.0002.0000	SEEDING	POUND	14,800
619.0002.0000	MATTING	SQUARE YARD	21,200
624.0001.0000	CALCIUM CHLORIDE	TON	255
630.0002.0001	GEOTEXTILE, STABILIZATION, CLASS 1	SQUARE YARD	65,300
630.0003.0002	GEOTEXTILE, REINFORCEMENT, TYPE 2	SQUARE YARD	53,000
631.0002.0001	GEOTEXTILE, EROSION CONTROL, CLASS 1	SQUARE YARD	53,500
639.0001.0000	DRIVEWAY	EACH	26
640.0001.0000	MOBILIZATION AND DEMOBILIZAION	LUMP SUM	ALL REQUIRED
640.2004.0000	CONTRACTOR CAMP	LUMP SUM	ALL REQUIRED
641.0001.0000	EROSION, SEDIMENT, AND POLLUTION CONTROL ADMINISTRATION	LUMP SUM	ALL REQUIRED
641.0003.0000	TEMPORARY EROSION, SEDIMENT, AND POLLUTION CONTROL	LUMP SUM	ALL REQUIRED
641.0005.0000	TEMPORARY EROSION, SEDIMENT, AND POLLUTION CONTROL BY DIRECTIVE	CONTINGENT SUM	ALL REQUIRED
641.0006.0000	WITHHOLDING	CONTINGENT SUM	ALL REQUIRED
641.0007.0000	SWPPP MANAGER	LUMP SUM	ALL REQUIRED
642.0001.0000	CONSTRUCTION SURVEYING	LUMP SUM	ALL REQUIRED
642.0013.0000	THREE PERSON SURVEY PARTY	CONTINGENT SUM	ALL REQUIRED
643.0002.0000	TRAFFIC MAINTENANCE	LUMP SUM	ALL REQUIRED
643.0003.0000	PERMANENT CONSTRUCTION SIGNS	LUMP SUM	ALL REQUIRED
643.0023.0000	TRAFFIC PRICE ADJUSTMENT	CONTINGENT SUM	ALL REQUIRED
643.0025.0000	TRAFFIC CONTROL	CONTINGENT SUM	ALL REQUIRED
643.2005.0000	PUBLIC INFORMATION PROGRAM	LUMP SUM	ALL REQUIRED
644.0001.0000	FIELD OFFICE	LUMP SUM	ALL REQUIRED
644.0002.0000	FIELD LABORATORY	LUMP SUM	ALL REQUIRED
644.0006.0000	VEHICLES	LUMP SUM	ALL REQUIRED
644.0015.0000	NUCLEAR TESTING EQUIPMENT STORAGE SHED	LUMP SUM	ALL REQUIRED
644.2002.0000	FIELD COMMUNICATIONS	CONTINGENT SUM	ALL REQUIRED
645.0001.0000	TRAINING PROGRAM, 3 TRAINEES/APPRENTICES	LABOR HOUR	5,000
646.0001.0000	CPM SCHEDULING	LUMP SUM	ALL REQUIRED
652.0001.0000	INTERIM WORK PRICE ADJUSTMENT	CONTINGENT SUM	ALL REQUIRED
654.2006.0000	CHANNEL REALIGNMENT	LUMP SUM	ALL REQUIRED
690.2001.0000	WATERWAY BED FILL	LINEAR FOOT	850
690.2004.0000	WATERWAY RESTORATION – STREAM REALIGNMENT, ETC.	LINEAR FOOT	310

ESTIMATE OF LUMP SUM QUANTITIES

ITEM NO.	DESCRIPTION	ESTIMATING UNIT	QUANTITY
201.0009.0000	CLEARING AND GRUBBING		
	CLEARING	ACRES	
	GRUBBING	ACRES	
202.0001.0000	REMOVAL OF STRUCTURES AND OBSTRUCTIONS	EACH	USGS STREAM GAGE
520.0001.0000	TEMPORARY CROSSINGS		
	BORROW	TON	18,000
	W–BEAM GUARDRAIL	LINEAR FOOT	
	PARALLEL GUARDRAIL TERMINAL	EACH	4
	TRANSITION RAIL	EACH	4
	SEEDING	POUND	
	TEMPORARY BRIDGE	EACH	1
643.0003.0000	PERMANENT CONSTRUCTION SIGNS	EACH	4

ESTIMATING FACTORS

ITEM NO.	DESCRIPTION	FACTOR
203.0006.0000	BORROW, ALL SELECTED MATERIAL TYPES	2 TON/CY
203.2001.0000	AIR CONVECTION EMBANKMENT (ACE) FILL	1.5 TON/CY
301.0003.00E1	AGGREGATE SURFACE COURSE, GRADING E–1	2 TON/CY
304.0001.000F	SUBBASE, GRADING F	2 TON/CY
610.0001.0000	DITCH LINING	1.8 TON/CY
618.0002.0000	SEEDING	70 LB/ACRE
624.0001.0000	CALCIUM CHLORIDE	1.25 LB/SY

Preliminary Plans

ESTIMATE OF QUANTITIES

STATE OF ALASKA 49TH
DAVID D. JENSEN
(95% PLANS)
REGISTERED PROFESSIONAL ENGINEER

PLANS DEVELOPED BY: STATE OF ALASKA DEPARTMENT OF TRANSPORTATION & PUBLIC FACILITIES, NORTHERN REGION, 2301 PEGER ROAD, FAIRBANKS, AK 99709 (907)451–2200
C:\Users\ddjensen\Desktop\60735_Dalton_18_37\6 Design\4 C3D\2 Drawings\(3) Plan Production\60735_C_QUANTITIES–C1 Tue, May/17/22 03:23pm

NO.	DATE	REVISION

STATE	PROJECT DESIGNATION	YEAR	SHEET NO.	TOTAL SHEETS
ALASKA	0652017/Z607350000	2022	C2	C2

GENERAL NOTES:

1. CLEARING LIMITS SHALL EXTEND 10–FT BEYOND THE CATCH LIMITS OR TO RIGHT OF WAY, WHICHEVER IS LESS.
2. PRIOR TO GROUND DISTURBING ACTIVITIES AND CONSTRUCTION RELATED FIELD WORK, THE CONTRACTOR SHALL CONTACT AND COORDINATE WORK ACTIVITIES WITH ALYESKA PIPELINE SERVICE COMPANY AT LEAST TWO WEEKS IN ADVANCE.
3. THE ALIGNMENT AND PROFILE ARE SUBJECT TO MINOR REVISIONS AT THE ENGINEER'S DISCRETION.
4. COMPLY WITH THE MIGRATORY BIRD ACT, IN PARTICULAR WHEN DEVELOPING THE TIMING FOR CLEARING. SEE APPENDIX C FOR ADDITIONAL INFORMATION.
5. FUEL STORAGE WILL NOT BE ALLOWED WITHIN 100–FT OF WATER BODIES AND MUST HAVE SECONDARY CONTAINMENT.
6. PROTECT ALL EXISTING CULVERTS WITHIN THE PROJECT LIMITS THAT ARE NOT SCHEDULED FOR REMOVAL. IF CULVERTS ARE DAMAGED DUE TO CONTRACTOR'S ACTIONS, THEN THE CONTRACTOR IS RESPONSIBLE FOR REPLACEMENT.
7. ALL UNUSEABLE MATERIAL IS TO BE DISPOSED OF AT DESIGNATED AREAS SPECIFICALLY SHOWN IN THE PLANS OR AS DIRECTED BY THE ENGINEER.
8. ALL CONSTRUCTION SHALL BE CONTAINED WITHIN THE RIGHT–OF–WAY OR TEMPORARY CONSTRUCTION PERMITS.
9. SEED ALL DISTURBED GROUND NOT COVERED BY DITCH LINING, RIPRAP, SURFACE COURSE, OR CONCRETE.
10. SEEDING MAY REQUIRE SEVERAL MOBILIZATIONS. ALL MOBILIZATIONS REQUIRED ARE SUBSIDIARY TO PAY ITEM 618.0002.0000.
11. REMOVE AND DISPOSE OF THE EXISTING USGS STREAM GAGE SHELTER, FOUNDATION, AND ALL ASSOCIATED HARDWARE NEAR HESS CREEK BRIDGE. SALVAGE STREAM GAGE SENSOR FROM EXISTING BRIDGE PRIOR TO REMOVAL AND DELIVER TO USGS DEPARTMENT IN FAIRBANKS, ALASKA. THIS WORK WILL BE PAID FOR AS 202.0001.0000 REMOVAL OF STRUCTURES AND OBSTRUCTIONS.
12. INSTALL MATTING ON PERMANENT FILL SLOPES STEEPER THAN 2:1, OR AS DIRECTED BY THE ENGINEER.

MATERIAL SOURCE NOTES:

1. MATERIAL SITES LOCATED AT APPROXIMATELY MP 19, 26, 28 AND 36 ARE AVAILABLE MATERIAL SOURCES (SEE 106–1.02), AND ARE SUBJECT TO THE REQUIREMENTS OF A CONTRACTOR–PROVIDED SITE DEVELOPMENT AND RECLAMATION PLAN APPROVED BY THE ENGINEER. SUBMIT A SITE DEVELOPMENT AND RECLAMATION PLAN AT LEAST TWO WEEKS PRIOR TO PERFORMING ANY WORK IN THESE MATERIAL SITES; WORK MAY NOT COMMENCE IN THESE SITES UNTIL THE PLAN HAS BEEN REVIEWED AND APPROVED BY THE ENGINEER.
2. THE MATERIAL SITES LOCATED AT MP 28 AND MP 36 ARE JOINT USE MATERIAL SITES BETWEEN THE STATE OF ALASKA AND ALYESKA PIPELINE SERVICE COMPANY AND WILL REQUIRE COORDINATION PRIOR TO AND DURING USE.

UTILITY NOTES:

1. BURIED UTILITIES EXIST THROUGHT THE PROEJCT. UTILITIES SHOWN IN THESE PLANS ARE BASED ON AVAILABLE INFORMATION FROM AS–BUILT DRAWINGS AND FIELD MEASUREMENTS AND ARE FOR VISUAL PURPOSES ONLY. SOME EXISTING UTILITIES MAY NOT APPEAR IN THESE PLANS OR THEY MAY NOT BE PRECISELY WHERE SHOWN.
2. PRIOR TO BEGINNING ANY GROUND DISTURBING WORK OR CLEARING, LOCATE ALL EXISTING UTILITIES AND SERVICE CONNECTIONS WITHIN THE PROJECT AREA. PROTECT UTILITIES AND SERVICES FROM CONSTRUCTION DAMAGE FOR THE DURATION OF THE PROJECT. THE CONTRACTOR IS RESPONSIBLE FOR CONTACTING UTILITY COMPANIES AND VERIFYING THE PRESENCE AND LOCATION OF UTILITES IN THE FIELD.
3. UNDERGROUND UTILITY MARKERS (E.G. CARSONITE DELINEATORS) MAY BE PRESENT WITHIN THE PROJECT AREA. RECORD THE LOCATION OF THESE MARKERS PRIOR TO DISTURBING THEM AND PROVIDE THESE LOCATIONS TO THE ENGINEER. TEMPORARILY REMOVE MARKERS WHERE THEY OBSTRUCT PROJECT WORK, AND THEN REINSTALL THEM AT THEIR ORIGINAL LOCATIONS, OR WHERE DIRECTED BY THE ENGINEER, AFTER WORK HAS BEEN COMPLETED. RECORNING THE LOCATIONS OF THESE MARKERS IS SUBSIDIARY TO PAY ITEM 642.0001.0000. REMOVING AND REINSTALLING UTILITY MARKERS IS SUBSIDIARY TO PAY ITEM 202.0001.0000.
4. BURIED UTILITIES MAY BE PRESENT NEAR, ABOVE, OR BELOW THE ENDS OF CULVERTS THROUGHOUT THE PROJECT. COORDINATION WITH UTILITY COMPANIES DURING CULVERT REMOVAL AND INSTALLATION AT THESE LOCATIONS WIL BE REQUIRED. EXTRA WORK REQUIRED TO AVOID DAMAGING UTILITIES WILL NOT BE MEASURED FOR PAYMENT AND IS SUBSIDIARY TO THE 202, 602, AND 603 PAY ITEMS.

AS–BUILT SUMMARY

PROJECT NUMBER	PROJECT NAME	YEAR COMPLETED
N/A	LIVENGOOD TO YUKON RIVER ROAD	1971
BRF–065–2(1)	HESS CREEK BRIDGE	1981
STP–065–2(5)/65771	DALTON HIGHWAY 21 MILE HILL GRADING & DRAINAGE	1993
STP–000S(216)/67022	DALTON HIGHWAY SIGNAGE MP 0 TO 415.97	1997
NH–065–2(11)/61212	DALTON HIGHWAY MP 18–22 SURFACING	2005
STP–065–2(6)/66321	DALTON HIGHWAY MP 37–49 RECONSTRUCTION	2007
NH–065–2(12)/62196	DALTON HIGHWAY MP 11–18 RECONSTRUCTION	2013

Preliminary Plans

GENERAL NOTES

STATE OF ALASKA 49TH
DAVID D. JENSEN
(95% PLANS)
REGISTERED PROFESSIONAL ENGINEER

PLANS DEVELOPED BY: STATE OF ALASKA DEPARTMENT OF TRANSPORTATION & PUBLIC FACILITIES, NORTHERN REGION, 2301 PEGER ROAD, FAIRBANKS, AK 99709 (907)451–2200
C:\Users\ddjensen\Desktop\60735_Dalton_18_37\6 Design\4 C3D\2 Drawings\(3) Plan Production\60735_C_QUANTITIES–C2 Tue, May/17/22 03:23pm

NO.	DATE	REVISION

STATE	PROJECT DESIGNATION	YEAR	SHEET NO.	TOTAL SHEETS
ALASKA	0652017/Z607350000	2022	D1	D2

SUPERELEVATION SUMMARY

CURVE NO.	CURVE P.I.	RADIUS (FT)	BEGIN TRANSITION	TRANSITION LENGTH (FT)	REVERSE CROWN	CURVE P.C.	BEGIN FULL SUPERELEVATION	SUPERELEVATION RATE (%)	END FULL SUPERELEVATION	CURVE P.T.	REVERSE CROWN	TRANSITION LENGTH (FT)	END TRANSITION	REMARKS
C1	"O"991+22.85	1,430.0	"O"980+45	200	"O"981+95	"O"982+07.20	"O"982+45	5.2	"O"998+00	"O"998+36.08	"O"998+50	200	"O"1000+00	
C2	"O"1007+10.89	1,430.0	"O"1002+50	200	"O"1004+00	"O"1004+11.93	"O"1004+50	5.2	"O"1009+65	"O"1010+01.36	"O"1010+15	200	"O"1011+65	
C3	"O"1019+12.97	1,450.0	"O"1012+85	200	"O"1014+35	"O"1014+47.72	"O"1014+85	5.2	"O"1023+10	"O"1023+48.12	"O"1023+60	200	"O"1025+10	
C4	"O"1032+96.80	1,130.0	"O"1028+35	215	"O"1029+85	"O"1030+07.24	"O"1030+50	5.8	"O"1035+30	"O"1035+74.16	"O"1035+95	215	"O"1037+45	
C5	"O"1052+50.61	1,430.0	"O"1046+75	200	"O"1048+25	"O"1048+39.45	"O"1048+75	5.2	"O"1056+05	"O"1056+40.16	"O"1056+55	200	"O"1058+05	
C6	"O"1080+89.60	1,145.0	"O"1064+25	215	"O"1065+75	"O"1065+99.68	"O"1066+40	5.8	"O"1086+55	"O"1086+96.32	"O"1087+20	215	"O"1088+70	
C7	"O"1093+84.74	1,400.0	"O"1089+60	200	"O"1091+10	"O"1091+20.73	"O"1091+60	5.2	"O"1096+05	"O"1096+42.62	"O"1096+55	200	"O"1098+05	
C8	"O"1109+01.80	2,100.0	"O"1103+35	185	"O"1104+85	"O"1104+88.38	"O"1105+20	4.4	"O"1112+70	"O"1113+04.78	"O"1113+05	185	"O"1114+55	
C9	"O"1131+16.71	1,450.0	"O"1126+60	200	"O"1128+10	"O"1128+20.35	"O"1128+60	5.2	"O"1133+70	"O"1134+05.01	"O"1134+20	200	"O"1135+70	
C10	"O"1185+77.03	1,635.0	"O"1169+65	195	"O"1171+15	"O"1171+22.43	"O"1171+60	5.0	"O"1194+65	"O"1194+99.97	"O"1195+10	195	"O"1196+60	
C11	"O"1240+11.49	1,440.0	"O"1230+85	200	"O"1232+35	"O"1232+49.60	"O"1232+85	5.2	"O"1246+15	"O"1246+51.15	"O"1246+65	200	"O"1248+15	
C12	"O"1254+70.84	1,600.0	"O"1249+00	195	"O"1250+50	"O"1250+57.20	"O"1250+95	5.0	"O"1258+30	"O"1258+66.75	"O"1258+75	195	"O"1260+25	
C13	"O"1276+23.24	1,000.0	"O"1271+35	220	"O"1272+85	"O"1273+13.48	"O"1273+55	6.0	"O"1278+70	"O"1279+14.25	"O"1279+40	220	"O"1280+90	
C14	"O"1301+13.42	850.0	"O"1293+15	220	"O"1294+65	"O"1294+91.41	"O"1295+35	6.0	"O"1305+20	"O"1305+65.36	"O"1305+90	220	"O"1307+40	
C15	"O"1337+27.48	3,000.0	"O"1333+00	160	"O"1334+50	"O"1334+35.16	"O"1334+60	3.4	"O"1339+90	"O"1340+17.97	"O"1340+00	160	"O"1341+50	
C16	"O"1367+87.21	850.0	"O"1360+25	220	"O"1361+75	"O"1362+03.53	"O"1362+45	6.0	"O"1371+85	"O"1372+26.48	"O"1372+55	220	"O"1374+05	
C17	"O"1412+60.15	44,755.0	–	–	–	"O"1402+70.93	–	–	–	"O"1422+49.05	–	–	–	NO SUPERELEVATION
C18	"O"1452+41.86	4,000.0	"O"1447+80	150	"O"1449+30	"O"1449+05.47	"O"1449+30	3.0	"O"1455+55	"O"1455+76.66	"O"1455+55	150	"O"1457+05	
C19	"O"1529+33.87	850.0	"O"1521+10	220	"O"1522+60	"O"1522+86.39	"O"1523+30	6.0	"O"1533+50	"O"1533+93.05	"O"1534+28	155	"O"1535+05	SEE NOTE 4
C20	"O"1541+53.36	850.0	"O"1535+05	155	"O"1535+83	"O"1536+16.54	"O"1536+60	6.0	"O"1545+30	"O"1545+74.15	"O"1546+00	220	"O"1547+50	SEE NOTE 4
C21	"O"1605+11.59	850.0	"O"1594+35	220	"O"1595+85	"O"1596+09.78	"O"1596+55	6.0	"O"1609+50	"O"1609+95.22	"O"1610+20	220	"O"1611+70	
C22	"O"1633+83.66	850.0	"O"1623+45	220	"O"1624+95	"O"1625+22.32	"O"1625+65	6.0	"O"1638+25	"O"1638+68.76	"O"1638+95	220	"O"1640+45	
C23	"O"1659+15.13	1,500.0	"O"1652+60	200	"O"1654+10	"O"1654+21.28	"O"1654+60	5.2	"O"1663+40	"O"1663+75.45	"O"1663+90	200	"O"1665+40	
C24	"O"1689+09.90	3,100.0	"O"1683+80	160	"O"1685+30	"O"1685+12.35	"O"1685+40	3.4	"O"1692+80	"O"1693+03.13	"O"1692+90	160	"O"1694+40	
C25	"O"1726+62.03	1,640.0	"O"1720+55	195	"O"1722+05	"O"1722+14.59	"O"1722+50	4.8	"O"1730+50	"O"1730+88.21	"O"1730+95	195	"O"1732+45	
C26	"O"1738+62.83	1,400.0	"O"1733+65	200	"O"1735+15	"O"1735+29.33	"O"1735+65	5.2	"O"1741+45	"O"1741+84.12	"O"1741+95	200	"O"1743+45	
C27	"O"1752+23.98	1,310.0	"O"1746+00	205	"O"1747+50	"O"1747+67.96	"O"1748+05	5.4	"O"1756+05	"O"1756+45.62	"O"1756+60	205	"O"1758+10	
C28	"O"1790+18.89	3,610.0	"O"1786+25	150	"O"1787+75	"O"1787+52.84	"O"1787+75	3.0	"O"1792+60	"O"1792+83.97	"O"1792+60	150	"O"1794+10	
C29	"O"1812+64.80	850.0	"O"1798+65	220	"O"1800+15	"O"1800+43.19	"O"1800+85	6.0	"O"1816+35	"O"1816+80.10	"O"1817+05	220	"O"1818+55	
C30	"O"1839+30.66	850.0	"O"1833+15	220	"O"1834+65	"O"1834+91.83	"O"1835+35	6.0	"O"1842+60	"O"1843+02.01	"O"1843+30	220	"O"1844+80	
C31	"O"1891+86.89	850.0	"O"1883+45	220	"O"1884+95	"O"1885+19.16	"O"1885+65	6.0	"O"1896+10	"O"1896+51.15	"O"1896+80	220	"O"1898+30	
C32	"O"1909+07.00	850.0	"O"1903+00	220	"O"1904+50	"O"1904+78.43	"O"1905+20	6.0	"O"1912+30	"O"1912+72.33	"O"1913+00	220	"O"1914+50	
C33	"O"1935+51.73	850.0	"O"1925+00	220	"O"1926+50	"O"1926+76.55	"O"1927+20	6.0	"O"1939+95	"O"1940+36.54	"O"1940+65	220	"O"1942+15	
C34	"O"1970+88.64	855.0	"O"1963+05	220	"O"1964+55	"O"1964+82.30	"O"1965+25	6.0	"O"1974+95	"O"1975+37.12	"O"1975+65	220	"O"1977+15	

Preliminary Plans

SUPERELEVATION NOTES:

1. THE SUPERELEVATION ROTATION POINT IS CENTERLINE AT PROFILE GRADE.
2. SUPERELEVATION SHALL BE BUILT INTO THE SUBGRADE AND CARRIED THROUGH THE FULL WIDTH.
3. SEE STANDARD DRAWING 1–81.00 (SHEET V13) FOR THE SUPERELEVATION TRANSITION DETAILS. THE SUPERELEVATION LIMITS SHOWN ON THE PLAN AND PROFILE SHEETS ARE THE TRANSITION LENGTHS ONLY AND DO NOT INCLUDE THE 1/2 V.C. LENGTHS AT THE END OF THE TRANSITION.
4. BETWEEN THESE CLOSELY SPACED REVERSE CURVES, P.I. STATIONS "O"1529+33.87 AND "O"1541+53.36, CONTINUOUSLY ROTATE THE ROADWAY ABOUT CENTERLINE AS A PLANE SECTION. DO NOT TRANSITION TO A NORMAL CROWN SECTION. THE ROADWAY CROSS SLOPE WILL BE FLAT AT STATION "O"1535+05.

SUPERELEVATION SUMMARY

STATE OF ALASKA 49TH
DAVID D. JENSEN
(95% PLANS)
REGISTERED PROFESSIONAL ENGINEER

PLANS DEVELOPED BY: STATE OF ALASKA DEPARTMENT OF TRANSPORTATION & PUBLIC FACILITIES, NORTHERN REGION, 2301 PEGER ROAD, FAIRBANKS, AK 99709 (907)451-2200
C:\Users\ddjensen\Desktop\60735_Dalton_18_37\6 Design\4 C3D\2 Drawings\(3) Plan Production\60735_D_SUMMARIES-D1 Mon, May/16/22 03:57pm

NO.	DATE	REVISION

STATE	PROJECT DESIGNATION	YEAR	SHEET NO.	TOTAL SHEETS
ALASKA	0652017/Z607350000	2022	D2	D2

202.0017.0000 – REMOVAL OF CULVERT PIPE

NO.	STATION	DIA. (IN)	LENGTH (LF)	EACH	REMARKS
R–1	"O"951+06	36	141	1	
R–2	"O"956+78	36	121	1	
R–3	"O"965+47	36	120	1	
R–4	"O"976+63	24	28	1	APPROACH CULVERT LT
R–5	"O"978+71	24	101	1	
R–6	"O"987+74	36	184	1	
R–7	"O"992+72	36	219	1	
R–8	"O"997+74	36	221	1	
R–9	"O"1002+63	36	252	1	
R–10	"O"1012+93	24	65	1	
R–11	"O"1015+20	24	101	1	
R–12	"O"1018+41	24	131	1	
R–13	"O"1019+45	24	137	1	
R–14	"O"1021+89	36	178	1	
R–15	"O"1027+67	42	279	1	
R–16	"O"1029+45	42	297	1	
R–17	"O"1031+16	36	298	1	
R–18	"O"1033+33	36	325	1	
R–19	"O"1048+53	24	82	1	
R–20	"O"1051+52	24	105	1	
R–21	"O"1053+44	36	153	1	
R–22	"O"1056+94	36	244	1	
R–23	"O"1059+90	36	197	1	
R–24	"O"1062+29	36	212	1	
R–25	"O"1088+09	42	214	1	
R–26	"O"1090+34	36	223	1	
R–27	"O"1091+79	36	214	1	
R–28	"O"1095+11	42	241	1	
R–29	"O"1100+59	36	193	1	
R–30	"O"1108+74	24	114	1	BURIED LT
R–31	"O"1137+00	42	311	1	
R–32	"O"1140+82	36	213	1	
R–33	"O"1147+72	24	40	1	APPROACH CULVERT RT
R–34	"O"1161+02	24	101	1	
R–35	"O"1165+22	36	285	1	
R–36	"O"1167+59	36	255	1	
R–37	"O"1170+31	42	297	1	
R–38	"O"1172+91	36	219	1	
R–39	"O"1178+80	36	251	1	
R–40	"O"1181+05	42	252	1	
R–41	"O"1183+28	42	310	1	
R–42	"O"1185+40	36	252	1	
R–43	"O"1186+96	36	202	1	
		SUBTOTAL:	8,378	43	

202.0017.0000 – REMOVAL OF CULVERT PIPE

NO.	STATION	DIA. (IN)	LENGTH (LF)	EACH	REMARKS
R–44	"O"1194+35	36	65	1	
R–45	"O"1197+42	36	67	1	
R–46	"O"1253+67	24	103	1	
R–47	"O"1262+81	30	74	1	
R–48	"O"1265+72	24	76	1	
R–49	"O"1276+10	24	76	1	
R–50	"O"1278+02	24	80	1	
R–51	"O"1302+64	24	73	1	
R–52	"O"1310+59	48	120	1	
R–53	"O"1325+75	24	68	1	
R–54	"O"1343+16	24	85	1	
R–55	"O"1365+03	36	123	1	
R–56	"O"1381+20	24	81	1	
R–57	"O"1386+14	24	101	1	
R–58	"O"1388+83	24	59	1	
R–59	"O"1392+19	36	115	1	
R–60	"O"1399+88	24	69	1	
R–61	"O"1404+82	36	142	1	
R–62	"O"1410+79	24	101	1	
R–63	"O"1414+91	24	101	1	
R–64	"O"1444+30	24	77	1	
R–65	"O"1447+83	24	103	1	
R–66	"O"1457+48	24	82	1	
R–67	"O"1462+75	24	82	1	
R–68	"O"1466+14	24	84	1	
R–69	"O"1469+51	36	142	1	
R–70	"O"1477+10	24	81	1	
R–71	"O"1479+66	24	82	1	
R–72	"O"1484+89	24	81	1	
R–73	"O"1486+66	24	81	1	
R–74	"O"1489+70	24	82	1	
R–75	"O"1491+88	24	82	1	
R–76	"O"1497+65	36	101	1	
R–77	"O"1499+25	24	103	1	
R–78	"O"1501+25	24	82	1	
R–79	"O"1506+19	36	92	1	
R–80	"O"1510+63	24	82	1	
R–81	"O"1512+75	24	83	1	
R–82	"O"1519+44	24	82	1	
R–83	"O"1536+04	36	112	1	
R–84	"O"1542+30	36	123	1	
R–85	"O"1555+46	24	103	1	
R–86	"O"1572+12	36	83	1	
		SUBTOTAL:	3,884	43	

202.0017.0000 – REMOVAL OF CULVERT PIPE

NO.	STATION	DIA. (IN)	LENGTH (LF)	EACH	REMARKS
R–87	"O"1585+68	36	112	1	
R–88	"O"1593+55	60	102	1	
R–89	"O"1594+29	24	72	1	
R–90	"O"1594+41	24	77	1	
R–91	"O"1600+29	24	53	1	APPROACH CULVERT RT
R–92	"O"1606+30	24	71	1	
R–93	"O"1640+91	24	65	1	
R–94	"O"1651+54	24	62	1	
R–95	"O"1667+42	24	62	1	
R–96	"O"1690+88	24	63	1	
R–97	"O"1710+56	36	82	1	
R–98	"O"1717+66	24	76	1	
R–99	"O"1731+44	24	62	1	
R–100	"O"1734+12	24	74	1	
R–101	"O"1736+14	24	88	1	
R–102	"O"1743+85	24	101	1	
R–103	"O"1749+72	24	61	1	
R–104	"O"1764+18	24	62	1	
R–105	"O"1769+09	24	99	1	
R–106	"O"1770+86	24	123	1	
R–107	"O"1776+62	24	95	1	
R–108	"O"1780+48	24	90	1	
R–109	"O"1781+29	24	82	1	
R–110	"O"1785+53	36	105	1	
R–111	"O"1791+85	24	80	1	
R–112	"O"1795+75	24	60	1	
R–113	"O"1803+03	24	82	1	
R–114	"O"1809+23	72	91	1	
R–115	"O"1811+24	30	96	1	APPROACH CULVERT RT
R–116	"O"1825+56	24	75	1	
R–117	"O"1845+09	24	63	1	
R–118	"O"1850+95	24	61	1	
R–119	"O"1873+20	24	76	1	
R–120	"O"1874+62	24	84	1	
R–121	"O"1889+55	48	73	1	
R–122	"O"1909+51	24	64	1	
R–123	"O"1916+61	24	60	1	
R–124	"O"1923+75	24	59	1	
R–125	"O"1936+63	24	73	1	
R–126	"O"1940+97	24	75	1	APPROACH CULVERT RT
R–127	"O"1943+02	24	60	1	APPROACH CULVERT RT
R–128	"O"1947+24	24	65	1	
R–129	"O"1955+58	24	62	1	
		SUBTOTAL:	3,298	43	
		TOTAL:	15,560	129	

Preliminary Plans

PLANS DEVELOPED BY: STATE OF ALASKA DEPARTMENT OF TRANSPORTATION & PUBLIC FACILITIES, NORTHERN REGION, 2301 PEGER ROAD, FAIRBANKS, AK 99709 (907)451-2200
C:\Users\ddjensen\Desktop\60735_Dalton_18_37\6 Design\4 C3D\2 Drawings\(3) Plan Production\60735_D_SUMMARIES-D2 Mon, May/16/22 03:57pm

CULVERT REMOVAL NOTES:

1. FOR CROSSING CULVERTS, THE STATION IS THE APPROXIMATE LOCATION WHERE THE CULVERT INTERSECTS THE CENTERLINE. FOR APPROACH CULVERTS, THE STATION IS THE APPROXIMATE LOCATION OF THE CULVERT MIDPOINT.

CULVERT REMOVAL SUMMARY

STATE OF ALASKA 49TH
DAVID D. JENSEN
(95% PLANS)
REGISTERED PROFESSIONAL ENGINEER

NO.	DATE	REVISION

STATE	PROJECT DESIGNATION	YEAR	SHEET NO.	TOTAL SHEETS
ALASKA	0652017/Z607350000	2022	E1	E23

CULVERT SUMAMRY

CENTERLINE STATION	CULVERT LENGTH (LF)				INLET INVERT			OUTLET INVERT			SLOPE (%)	NEW CULVERT TYPE	RIPRAP OUTFALL	CULVERT MARKER POSTS	THAW PIPE	REMARKS	AS-BUILT CENTERLINE LOCATION		
	24"	36"	48"	OTHER	STATION	OFFSET	ELEV.	STATION	OFFSET	ELEV.							STATION	LATITUDE	LONGITUDE
"O"951+06		141			"O"950+85.5	54.7, LT	1590.8	"O"951+33.8	76.3, RT	1575.8	10.8	C X		2	1				
"O"956+78		126			"O"956+60.2	48.3, LT	1562.4	"O"957+04.4	68.5, RT	1548.3	11.3	C X		2	1				
"O"965+47		152			"O"965+36.9	61.5, LT	1536.8	"O"965+60.2	87.6, RT	1518.8	11.9	C X		2	1				
"O"976+63	60				"O"976+33.2	47, LT	1509.7	"O"976+93.2	47, LT	1509.5	0.5	C A				APPROACH LT			
"O"978+71		127			"O"978+58.4	42.2, LT	1505.6	"O"978+94.6	78.9, RT	1495.5	8.0	C X	1	2	1				
"O"987+74		194			"O"987+74.4	68.3, LT	1483.8	"O"987+74.4	124.1, RT	1464.4	10.1	C X		2					
"O"992+72		230			"O"992+67.0	64.3, LT	1477.9	"O"992+86.8	161.8, RT	1444.9	14.6	C X		2					
"O"997+74			214		"O"997+70.4	60.2, LT	1463.2	"O"997+85.5	151.8, RT	1438.0	11.8	C X	1	2		USE 10 GAGE			
"O"1002+63		252			"O"1002+41.2	65.5, LT	1446.9	"O"1003+20.1	171.1, RT	1411.7	14.1	C X		2	1				
"O"1012+93		65			"O"1012+91.5	32.7, LT	1420.8	"O"1012+93.7	32.1, RT	1420.4	0.6	C X	1	2	1				
"O"1015+20		101			"O"1015+10.0	33.1, LT	1412.6	"O"1015+39.1	62.1, RT	1400.9	11.7	C X		2	1				
"O"1018+41		126			"O"1018+26.4	52.2, LT	1391.0	"O"1018+61.8	67.5, RT	1378.5	10.0	C X	1	2	1				
"O"1019+47		141			"O"1019+30.8	56.2, LT	1385.2	"O"1019+71.9	77.4, RT	1369.0	11.6	C X		2	1				
"O"1021+89		189			"O"1021+79.4	66.6, LT	1370.3	"O"1022+08.0	118.4, RT	1345.4	13.3	C X		2	1				
"O"1027+67			259		"O"1027+61.2	76.3, LT	1357.6	"O"1027+79.5	177.5, RT	1314.5	16.9	C X	1	2	2	USE 10 GAGE, DITCH DIKE			
"O"1029+45			300		"O"1029+68.2	100.7, LT	1351.9	"O"1029+02.5	188.2, RT	1310.0	14.1	C X	1	2	2	USE 10 GAGE			
"O"1031+16			292		"O"1031+20.7	104.5, LT	1354.1	"O"1031+09.4	184.8, RT	1317.1	12.8	C X	1	2	2	USE 10 GAGE			
"O"1033+33			296		"O"1033+38.5	114.3, LT	1360.0	"O"1033+25.9	179.7, RT	1330.2	10.1	C X	1	2	2	USE 10 GAGE, DITCH DIKE			
"O"1048+53		86			"O"1048+56.0	32, LT	1422.4	"O"1048+48.2	53.2, RT	1415.5	8.1	C X	1	2	1				
"O"1051+52		105			"O"1051+42.7	37.5, LT	1417.0	"O"1051+68.1	63, RT	1405.3	11.3	C X		2					
"O"1053+44		163			"O"1053+30.7	54.6, LT	1410.8	"O"1053+73.2	101.5, RT	1390.5	12.6	C X		2					
"O"1056+94		244			"O"1056+65.0	64, LT	1396.9	"O"1057+66.1	155.7, RT	1372.5	10.1	C X	1	2	1				
"O"1059+90		192			"O"1059+80.7	56, LT	1390.0	"O"1060+11.5	132, RT	1372.0	9.5	C X	1	2	1				
"O"1062+29		214			"O"1062+28.2	60.4, LT	1387.1	"O"1062+32.	151.2, RT	1359.5	13.0	C X	1	2	1				
"O"1088+09			219		"O"1087+99.4	61.9, LT	1321.9	"O"1088+33.2	148.5, RT	1273.0	22.9	C X	1	2	2				
"O"1090+34		219			"O"1090+46.5	65.1, LT	1311.8	"O"1090+06.3	147, RT	1278.8	15.3	C X	1	2	1				
"O"1091+79		216			"O"1091+67.3	68.5, LT	1307.6	"O"1092+06.9	140.4, RT	1274.3	15.7	C X	1	2	1				
"O"1095+11			251		"O"1095+00.7	80.4, LT	1293.7	"O"1095+37.0	164.4, RT	1253.2	16.4	C X		2	2	USE 10 GAGE			
"O"1100+59		194			"O"1100+62.6	42.4, LT	1288.6	"O"1100+46.2	148, RT	1257.6	16.2	C X		2	1				
"O"1137+00			312		"O"1136+91.5	93.1, RT	1299.3	"O"1137+18.2	213.8, LT	1253.1	15.0	C X		2	2	USE 10 GAGE			
"O"1140+82		216			"O"1140+76.0	54.3, RT	1311.5	"O"1140+98.7	157, LT	1273.4	17.9	C X		2	1				
"O"1147+72	40				"O"1147+51.9	47, RT	1308.6	"O"1147+91.7	46.1, RT	1306.5	5.5	C A				APPROACH RT			
"O"1161+02		98			"O"1160+84.7	33.5, RT	1245.9	"O"1161+29.4	52.2, LT	1236.8	9.4	C X		2	1	DITCH DIKE			
"O"1165+11		307			"O"1164+67.0	75, RT	1211.4	"O"1166+21.2	185.3, LT	1161.0	16.7	C X		2	1				
"O"1167+59		262			"O"1167+41.1	83.5, RT	1196.2	"O"1167+95.7	170.2, LT	1162.5	13.0	C X	1	2	1				
"O"1170+31			319		"O"1169+88.3	106.9, RT	1177.6	"O"1171+03.8	185.6, LT	1129.6	15.3	C X	1	2	2	USE 10 GAGE			
"O"1172+91		226			"O"1173+07.4	75.4, RT	1176.5	"O"1172+54.0	141.8, LT	1143.5	14.8	C X		2	1				
"O"1178+80		266			"O"1178+80.4	89.5, RT	1147.8	"O"1178+79.1	174, LT	1112.0	13.6	C X		2	1				
"O"1181+05			269		"O"1180+82.5	89.8, RT	1138.3	"O"1181+53.2	167.3, LT	1100.0	14.4	C X		2	2	USE 10 GAGE			
"O"1183+28			337		"O"1182+93.8	99.4, RT	1125.3	"O"1184+18.6	210.7, LT	1074.9	15.2	C X		2	2	USE 10 GAGE			
"O"1185+40		266			"O"1185+40.3	83.7, RT	1119.0	"O"1185+38.3	178.3, LT	1076.0	16.4	C X		2	1				
"O"1186+96		214			"O"1186+80.3	63.2, RT	1118.8	"O"1187+35.7	140.9, LT	1084.0	16.5	C X		2	1				
"O"1194+35		83			"O"1194+33.6	42.1, RT	1084.8	"O"1194+36.7	40.2, LT	1082.9	2.3	C X		2	1	DITCH DIKE			
"O"1197+42			72		"O"1197+43.6	33.9, RT	1066.0	"O"1197+39.2	37.5, LT	1065.5	0.7	C X		2	2	DITCH DIKE			
"O"1253+67		189			"O"1253+83.0	83.5, RT	691.0	"O"1253+49.7	101.7, LT	688.6	1.3	C X		2	1				
"O"1262+81		91			"O"1262+80.2	32.1, LT	654.2	"O"1262+83.0	57.3, RT	642.6	12.9	C X		2					
"O"1265+72		104			"O"1265+53.8	50.8, LT	630.6	"O"1265+88.1	46.7, RT	626.9	3.6	C X		2		DITCH DIKE			
"O"1276+10		118			"O"1276+13.2	31.6, LT	560.3	"O"1276+01.1	84.4, RT	546.0	12.2	C X		2	1				
"O"1302+65			88		"O"1302+72.0	37.4, RT	469.0	"O"1302+56.6	48.6, LT	468.0	1.1	C X		2	2				
SUBTOTALS:	100'	5,917'	3,228'											94'	52'				

NEW CULVERT TYPE LEGEND

C = CORRUGATED STEEL
X = CROSS CULVERT
A = APPROACH CULVERT
F = FISH PASSAGE
G = GALVANIZED
S = STRUCTURAL PLATE PIPE

Preliminary Plans

PLANS DEVELOPED BY: STATE OF ALASKA DEPARTMENT OF TRANSPORTATION & PUBLIC FACILITIES, NORTHERN REGION, 2301 PEGER ROAD, FAIRBANKS, AK 99709 (907)451-2200
C:\Users\ddjensen\Desktop\60735_Dalton_18_37\6 Design\4 C3D\2 Drawings\(3) Plan Production\60735_E_DETAILS-E1 Mon, May/16/22 05:56pm

STATE OF ALASKA
49 TH
DAVID D. JENSEN
(95% PLANS)
REGISTERED PROFESSIONAL ENGINEER

CULVERT SUMMARY
1 OF 3

NO.	DATE	REVISION

STATE	PROJECT DESIGNATION	YEAR	SHEET NO.	TOTAL SHEETS
ALASKA	0652017/Z607350000	2022	E2	E23

CULVERT SUMAMRY

CENTERLINE STATION	CULVERT LENGTH (LF)				INLET INVERT			OUTLET INVERT			SLOPE (%)	NEW CULVERT TYPE	RIPRAP OUTFALL	CULVERT MARKER POSTS	THAW PIPE	REMARKS	AS-BUILT CENTERLINE LOCATION		
	24"	36"	48"	OTHER	STATION	OFFSET	ELEV.	STATION	OFFSET	ELEV.							STATION	LATITUDE	LONGITUDE
"O"1310+80				199	"O"1310+03.1	54.6, RT	466.0	"O"1311+64.7	60.8, LT	463.9	1.0	C X	2	2	2	72" DIA., SEE SHEET E10			
"O"1325+75			98		"O"1325+65.0	45.7, RT	469.5	"O"1325+85.9	49.7, LT	468.7	0.8	C X		2	2				
"O"1343+16			154		"O"1343+16.9	61.4, LT	507.1	"O"1343+14.4	90.5, RT	487.6	12.8	C X		2	2				
"O"1355+67		197			"O"1355+76.5	67.2, LT	572.3	"O"1355+50.9	123.8, RT	536.0	18.8	C X	1	2	1				
"O"1365+16			184		"O"1365+41.7	54.2, LT	643.3	"O"1364+72.7	111.9, RT	611.5	17.6	C X		2					
"O"1381+20			86		"O"1381+39.4	38.8, LT	761.3	"O"1381+01.2	38, RT	758.1	3.7	C X	1	2	2				
"O"1386+14		129			"O"1386+27.3	50.8, LT	791.0	"O"1385+95.7	72.9, RT	776.0	11.8	C X		2	1				
"O"1388+83		133			"O"1389+17.2	51.9, LT	811.1	"O"1388+45.3	58.8, RT	800.6	7.9	C X		2	1				
"O"1391+76		199			"O"1392+33.6	75.1, LT	825.7	"O"1391+13.6	80.5, RT	800.0	13.1	C X		2	1				
"O"1393+22		189			"O"1393+92.5	80.9, LT	831.3	"O"1392+68.7	61.6, RT	828.6	1.4	C X		2	1				
"O"1399+88		83			"O"1400+03.7	32.1, LT	892.1	"O"1399+68.1	42.2, RT	885.6	7.9	C X		2	1				
"O"1404+82			177		"O"1405+25.5	67, LT	900.0	"O"1404+30.9	79.9, RT	878.7	12.2	C X		2	2				
"O"1407+47		140			"O"1407+86.9	39.2, LT	924.7	"O"1406+87.6	58.1, RT	909.1	11.2	C X		2	1				
"O"1410+79		120			"O"1411+14.1	40.5, LT	949.0	"O"1410+35.7	49.3, RT	938.8	8.6	C X		2	1				
"O"1414+91		90			"O"1415+08.4	32.3, LT	976.4	"O"1414+66.6	46.9, RT	968.4	8.9	C X		2	1				
"O"1444+35		110			"O"1444+49.4	36.3, RT	1005.5	"O"1444+08.3	65.2, LT	996.5	8.2	C X		2	1				
"O"1447+89		159			"O"1447+51.3	49, RT	995.6	"O"1448+47.1	77.2, LT	984.3	7.1	C X		2					
"O"1457+61			119		"O"1457+71.10	49.8, RT	962.8	"O"1457+47.2	66.5, LT	958.1	3.9	C X		2	2				
"O"1462+68		125			"O"1462+66.6	44.6, RT	958.7	"O"1462+69.1	78.9, LT	947.3	9.2	C X		2					
"O"1466+43		132			"O"1466+63.5	46.1, RT	956.8	"O"1466+11.1	74.3, LT	947.2	7.3	C X		2	1				
"O"1469+51		174			"O"1469+06.2	55.8, RT	956.2	"O"1470+14.1	80, LT	946.3	5.7	C X		2	1				
"O"1477+23		133			"O"1476+98.1	45.8, RT	958.1	"O"1477+61.4	69.6, LT	945.6	9.6	C X		2	1				
"O"1479+68		128			"O"1479+58.4	56, RT	947.4	"O"1479+79.3	69.5, LT	939.8	6.0	C X		2					
"O"1484+89		102			"O"1484+88.3	39.9, RT	947.0	"O"1484+90.9	61.7, LT	939.6	7.3	C X		2					
"O"1486+65		106			"O"1486+55.0	36.9, RT	946.6	"O"1486+82.8	64.3, LT	936.9	9.2	C X		2					
"O"1489+60		119			"O"1489+53.6	46.5, RT	940.7	"O"1489+69.7	70.1, LT	930.1	9.0	C X		2					
"O"1491+92		126			"O"1491+96.2	47.7, RT	937.8	"O"1491+86.1	76.6, LT	925.5	9.8	C X		2					
"O"1497+65		132			"O"1497+27.8	46.6, RT	921.2	"O"1498+08.9	56.2, LT	913.9	5.6	C X		2					
"O"1499+21		135			"O"1499+00.5	49, RT	913.2	"O"1499+52.7	74, LT	902.5	8.0	C X		2					
"O"1501+25		126			"O"1501+21.2	51.2, RT	906.6	"O"1501+30.9	73.7, LT	898.8	6.2	C X		2					
"O"1506+36		139			"O"1506+30.0	57.7, RT	899.2	"O"1506+45.1	79.3, LT	888.7	7.6	C X		2	1				
"O"1510+62		104			"O"1510+54.1	43.3, RT	899.9	"O"1510+73.7	58.7, LT	894.5	5.2	C X		2					
"O"1512+82		107			"O"1512+86.4	46.6, RT	897.9	"O"1512+75.9	59.5, LT	893.6	4.1	C X		2					
"O"1519+45		121			"O"1519+57.9	53.6, RT	900.8	"O"1519+29.7	63.5, LT	897.2	3.0	C X		2					
"O"1535+99			151		"O"1535+72.5	52.9, RT	879.2	"O"1536+41.5	79.6, LT	855.8	15.7	C X		2					
"O"1542+02			228		"O"1542+00.3	117.6, RT	820.5	"O"1542+04.9	109.1, LT	808.3	5.4	C X	2	2	2	SEE SHEET E11			
"O"1552+26		165			"O"1551+84.0	42.6, RT	825.4	"O"1552+99.5	73.6, LT	813.6	7.2	C X	1	2	1				
"O"1555+35		155			"O"1555+12.9	55.3, RT	816.8	"O"1555+69.0	87.4, LT	797.5	12.6	C X	1	2	1				
"O"1572+40		145			"O"1572+32.7	65.2, RT	736.5	"O"1572+49.3	78, LT	729.5	4.9	C X		2	1				
"O"1572+47			149		"O"1572+39.1	66.7, RT	735.6	"O"1572+56.1	80.3, LT	728.3	4.9	C X		2	2				
"O"1585+68			130		"O"1585+24.8	40, RT	736.0	"O"1586+20.3	47.4, LT	729.9	4.7	C X		2	2				
"O"1593+56		152			"O"1593+70.1	69.7, RT	689.8	"O"1593+40.7	78.5, LT	687.9	1.3	C X	2	2	1	OVERFLOW, SEE SHEET E12			
"O"1593+65				179	"O"1593+82.6	88.9, RT	683.0	"O"1593+47.8	86.4, LT	680.8	1.3	C X	2	2	2	96" DIA., SEE SHEET E12			
"O"1593+74		147			"O"1593+87.2	68.6, RT	689.8	"O"1593+58.7	75.5, LT	687.8	1.3	C X	2	2	1	OVERFLOW, SEE SHEET E12			
"O"1600+29	53				"O"1600+49.7	172.2, RT	706.0	"O"1600+07.9	154.8, RT	704.1	3.5	C A				APPROACH RT			
"O"1605+79		176			"O"1606+27.6	45.8, RT	732.3	"O"1604+91.6	65.9, LT	716.3	9.2	C X		2	1				
"O"1640+91		75			"O"1640+91.2	31.8, RT	807.4	"O"1640+90.5	43, LT	803.6	5.1	C X		2	1				
"O"1651+54		76			"O"1651+57.6	32.1, RT	771.4	"O"1651+49.2	43.1, LT	767.8	4.8	C X		2	1				
"O"1667+16		119			"O"1667+06.9	51.2, RT	708.4	"O"1667+26.7	65.9, LT	703.7	4.0	C X		2	1				
SUBTOTAL:	53'	4,768'	1,476'											96'	43'				

NEW CULVERT TYPE LEGEND

C = CORRUGATED STEEL
X = CROSS CULVERT
A = APPROACH CULVERT
F = FISH PASSAGE
G = GALVANIZED
S = STRUCTURAL PLATE PIPE

Preliminary Plans

CULVERT SUMMARY
2 OF 3

STATE OF ALASKA 49TH
DAVID D. JENSEN
(95% PLANS)
REGISTERED PROFESSIONAL ENGINEER

PLANS DEVELOPED BY: STATE OF ALASKA DEPARTMENT OF TRANSPORTATION & PUBLIC FACILITIES, NORTHERN REGION, 2301 PEGER ROAD, FAIRBANKS, AK 99709 (907)451-2200
C:\Users\ddjensen\Desktop\60735_Dalton_18_37\6 Design\4 C3D\2 Drawings\(3) Plan Production\60735_E_DETAILS-E2 Mon, May/16/22 05:56pm

NO.	DATE	REVISION

STATE	PROJECT DESIGNATION	YEAR	SHEET NO.	TOTAL SHEETS
ALASKA	0652017/Z607350000	2022	E3	E23

CULVERT SUMAMRY

CENTERLINE STATION	CULVERT LENGTH (LF)				INLET INVERT			OUTLET INVERT			SLOPE (%)	NEW CULVERT TYPE	RIPRAP OUTFALL	CULVERT MARKER POSTS	THAW PIPE	REMARKS	AS-BUILT CENTERLINE LOCATION		
	24"	36"	48"	OTHER	STATION	OFFSET	ELEV.	STATION	OFFSET	ELEV.							STATION	LATITUDE	LONGITUDE
"0"1690+88		82			"0"1690+84.7	31.8, RT	675.8	"0"1690+92.1	49.8, LT	671.4	5.4	C X		2	1				
"0"1710+69				122	"0"1710+59.2	51.9, RT	580.2	"0"1710+81.6	67.6, LT	575.0	4.2	C X		2	2	60" DIA., SEE SHEET E13			
"0"1717+61		103			"0"1717+60.9	38.7, RT	600.9	"0"1717+60.0	63.4, LT	592.8	8.0	C X		2	1				
"0"1731+64		130			"0"1731+42.3	41.1, RT	587.5	"0"1732+01.6	73.1, LT	575.5	9.3	C X		2					
"0"1734+10		102			"0"1734+11.3	35.4, RT	584.3	"0"1734+06.4	65.1, LT	574.7	9.6	C X	1	2					
"0"1736+21		126			"0"1736+17.2	39, RT	582.8	"0"1736+28.1	85.5, LT	569.4	10.7	C X		2					
"0"1743+85		134			"0"1743+90.1	42.6, RT	585.0	"0"1743+73.2	88, LT	562.2	17.3	C X		2					
"0"1749+72		86			"0"1749+73.1	31.1, RT	578.4	"0"1749+70.2	53.9, LT	571.0	8.7	C X		2					
"0"1764+18		69			"0"1764+17.9	30.9, RT	570.9	"0"1764+18.7	37.8, LT	569.9	1.5	C X		2					
"0"1769+11		127			"0"1769+07.3	48.2, RT	582.3	"0"1769+17.2	76.7, LT	567.0	12.2	C X		2	1				
"0"1770+96		181			"0"1771+41.4	57.6, RT	594.4	"0"1770+31.1	83.3, LT	570.9	13.2	C X		2					
"0"1776+62		161			"0"1776+87.3	38.7, RT	616.3	"0"1775+98.9	93.9, LT	598.7	11.1	C X		2					
"0"1780+48		124			"0"1780+57.6	41.7, RT	619.5	"0"1780+29.3	77.8, LT	607.5	9.7	C X		2					
"0"1781+29		122			"0"1781+47.4	34.8, RT	623.4	"0"1780+90.9	71.7, LT	610.8	10.5	C X		2					
"0"1785+53		119			"0"1785+56.1	33.9, RT	633.9	"0"1785+45.8	81.5, LT	610.4	20.3	C X		2	1				
"0"1791+85		101			"0"1791+89.0	30.8, RT	626.2	"0"1791+74.9	67.1, LT	608.1	18.3	C X		2	1				
"0"1795+54		74			"0"1795+56.4	32.2, RT	614.0	"0"1795+50.6	40.9, LT	607.9	8.3	C X		2					
"0"1803+03		117			"0"1802+91.8	38.6, RT	603.9	"0"1803+25.5	71.2, LT	582.8	18.4	C X		2					
"0"1809+32		129			"0"1809+28.7	66.2, RT	592.7	"0"1809+36.1	61.8, LT	591.8	0.7	C X	2	2	1	OVERFLOW, SEE SHEET E14			
"0"1809+43				170	"0"1809+37.8	85.7, RT	580.7	"0"1809+49.8	82.9, LT	579.5	0.7	S X F	2	2	2	156" DIA., SEE SHEET E14			
"0"1809+54		132			"0"1809+49.1	67.4, RT	592.6	"0"1809+60.0	63.3, LT	591.7	0.7	C X	2	2	1	OVERFLOW, SEE SHEET E14			
"0"1811+24		96			"0"1811+62.5	204.2, RT	598.5	"0"1810+86.2	209.9, RT	595.9	2.8	C A				APPROACH RT			
"0"1825+56		104			"0"1825+69.6	39.9, RT	674.5	"0"1825+36.7	58.3, LT	667.3	7.0	C X		2	1				
"0"1845+55		80			"0"1845+55.7	34.9, RT	667.8	"0"1845+54.7	44.4, LT	665.8	2.5	C X		2	1				
"0"1850+95		76			"0"1850+96.8	34.2, RT	674.9	"0"1850+92.7	40.9, LT	673.7	1.6	C X		2					
"0"1873+20		134			"0"1873+46.6	44.6, RT	757.0	"0"1872+77.4	69.4, LT	748.6	6.3	C X		2					
"0"1874+62		131			"0"1874+78.5	48.5, RT	762.4	"0"1874+37.5	75.1, LT	755.1	5.6	C X		2					
"0"1889+26			177		"0"1889+42.2	82, RT	783.9	"0"1889+04.7	90.2, LT	777.7	3.5	C X	2	2	2	SEE SHEET E15			
"0"1909+51		104			"0"1909+55.1	41.6, RT	849.7	"0"1909+46.1	61.6, LT	845.3	4.2	C X		2					
"0"1916+59		76			"0"1916+60.3	30.8, RT	869.5	"0"1916+56.4	44.8, LT	864.8	6.2	C X		2					
"0"1923+80		82			"0"1923+72.6	32.2, RT	867.5	"0"1923+90.7	47.1, LT	862.6	6.1	C X		2					
"0"1936+30		89			"0"1936+15.8	32.2, RT	875.5	"0"1936+50.3	49.2, LT	871.9	4.1	C X		2	1				
"0"1940+97		75			"0"1941+34.4	24.4, RT	880.8	"0"1940+59.8	27.6, RT	879.9	1.2	C A				APPROACH RT			
"0"1943+02		60			"0"1943+31.8	22.9, RT	885.3	"0"1942+72.0	22.5, RT	884.9	0.7	C A				APPROACH RT			
"0"1947+24		79			"0"1947+27.9	32.2, RT	893.8	"0"1947+18.8	45.3, LT	889.0	6.2	C X		2					
"0"1955+58		97			"0"1955+67.1	35.4, RT	898.8	"0"1955+44.1	58.2, LT	890.8	8.3	C X		2	1				
"0"1973+94													1			SEE SHEET E16			
SUBTOTAL:		3,502'	177'											66'	17'				
TOTAL:	153'	14,187'	4,881'											256	111				

NEW CULVERT TYPE LEGEND

C = CORRUGATED STEEL
X = CROSS CULVERT
A = APPROACH CULVERT
F = FISH PASSAGE
G = GALVANIZED
S = STRUCTURAL PLATE PIPE

Preliminary Plans

CULVERT SUMMARY
3 OF 3

STATE OF ALASKA 49TH
DAVID D. JENSEN
(95% PLANS)
REGISTERED PROFESSIONAL ENGINEER

PLANS DEVELOPED BY: STATE OF ALASKA DEPARTMENT OF TRANSPORTATION & PUBLIC FACILITIES, NORTHERN REGION, 2301 PEGER ROAD, FAIRBANKS, AK 99709 (907)451-2200
C:\Users\ddjensen\Desktop\60735_Dalton_18_37\6 Design\4 C3D\2 Drawings\(3) Plan Production\60735_E_DETAILS-E3 Mon, May/16/22 05:56pm

NO.	DATE	REVISION
2	4/30/20	ADDENDUM NO. 2

STATE	PROJECT DESIGNATION	YEAR	SHEET NO.	TOTAL SHEETS
ALASKA	0652017/Z607350000	2022	E4	E23

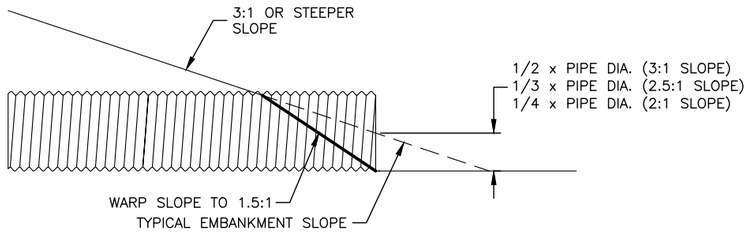

NOTE: FOR SLOPES STEEPER THAN 2:1, CULVERT ENDS AT TOE OF TYPICAL EMBANKMENT SLOPE.

CULVERT SLOPE WARPING DETAIL
3:1 OR STEEPER FORESLOPES

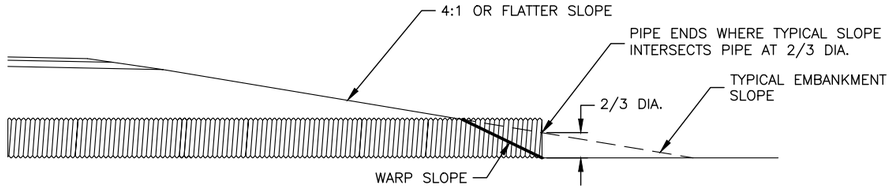

CULVERT SLOPE WARPING DETAIL
4:1 OR FLATTER FORESLOPES

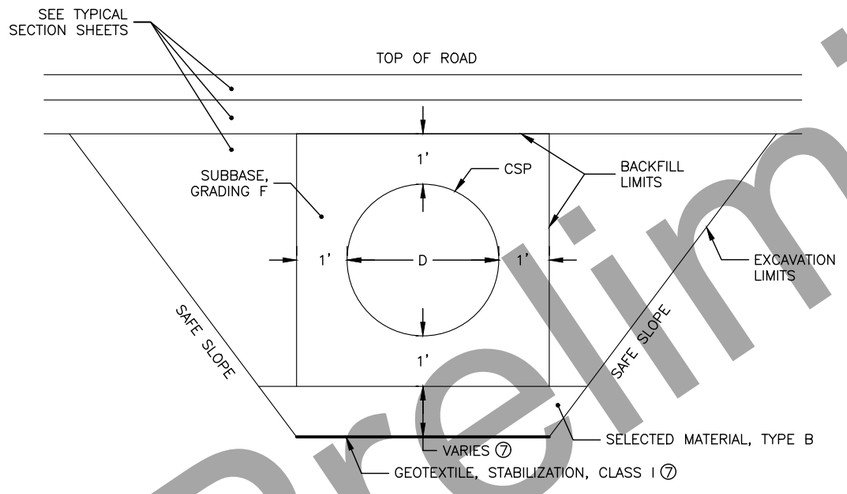

TYPICAL CULVERT FOUNDATION DETAIL

CULVERT FOUNDATION NOTES:

1. ALL BACKFILL AND BEDDING MATERIAL MUST BE SUBBASE, GRADING F. BACKFILL MATERIAL PLACEMENT LIMITS ARE DEFINED BY THE TOP OF FOUNDATION RIP RAP, PARALLEL VERTICAL PLANES LOCATED 12 INCHES OUTSIDE THE HORIZONTAL PROJECTION OF THE OUTERMOST PIPES OUTSIDE DIAMETER AND THE HORIZONTAL PLANE 12 INCHES ABOVE THE HIGHEST PIPE'S OUTSIDE DIAMETER.
2. EXCAVATION REQUIRED TO BED THE CULVERTS ACCORDING TO THE CULVERT FOUNDATION DETAILS IS SUBSIDIARY TO THE 603 PAY ITEMS.

CULVERT NOTES:

1. FOLLOW MANUFACTURERS INSTALLATION SPECIFICATIONS IN ALL CULVERT INSTALLATIONS.
2. STATIONS SHOWN FOR CROSSING CULVERTS REFER TO THE POINT WHERE THE CULVERT CROSSES THE CENTERLINE. STATIONS AND OFFSETS SHOWN FOR APPROACH CULVERTS REFER TO THE CULVERT MIDPOINT, PERPENDICULAR TO THE ROADWAY CENTERLINE.
3. CULVERT LENGTHS, AND INLET/OUTLET INVERT STATIONS, OFFSETS, AND ELEVATIONS ARE APPROXIMATE AND SUBJECT TO MINOR REVISIONS BY THE ENGINEER.
4. FIELD VERIFY CULVERT LENGTHS, AND INLET/OUTLET INVERT STATIONS, OFFSETS, AND ELEVATIONS, AND STAKE TO FIT FIELD CONDITIONS AND AS DIRECTED BY THE ENGINEER.
5. WHEN INSTALLING SKEWED CULVERTS, ENSURE THE FINAL LENGTH IS DETERMINED FROM THE NEAREST EDGE TO THE CENTERLINE.
6. ALL CULVERTS SHALL BE INSTALLED IN EXCAVATIONS ABSENT OF STANDING WATER.
7. IN AREAS OF POOR FOUNDATION, SUBEXCAVATE 1 FOOT TO 3 FEET, OR GREATER AND INSTALL GEOTEXTILE, STABILIZATION, CLASS I TO PROVIDE ADEQUATE FOUNDATION, AS DIRECTED BY THE ENGINEER. THIS WORK WILL BE PAID FOR AS 203.0004.0000 MUCK EXCAVATION.
8. CULVERT BEDDING AND BACKFILL SHALL BE IN ACCORDANCE WITH SECTION 204 OF THE SPECIFICATIONS.
9. NO CULVERT SHALL BE PLACED UNTIL THE BED HAS BEEN APPROVED BY THE ENGINEER. CULVERT BEDDING AND BACKFILL, AS SHOWN IN THE CULVERT FOUNDATION DETAIL ON THIS SHEET, SHALL BE PAID FOR AS 304.0001.000F SUBBASE, GRADING F.
10. MINIMUM ALLOWABLE CULVERT CROSS SLOPE IS 0.5%, UNLESS NOTED OTHERWISE ON THE PLANS.
11. FOR CULVERT INSTALLATIONS, UNLESS OTHEWISE INDICATED ON THE PLANS, WARP THE EMBANKMENT SLOPE AS SHOWN IN THE CULVERT SLOPE WARPING DETAILS ON THIS SHEET. THIS WORK IS SUBSIDIARY TO THE 602 AND 603 PAY ITEMS.
12. EXISTING CULVERTS, MARKER POSTS, AND THAW PIPES DESIGNATED FOR REMOVAL BECOME THE PROPERTY OF THE CONTRACTOR AND SHALL BE REMOVED FROM THE PROJECT AND DISPOSED OF AT NO ADDITIONAL COST TO THE DEPARTMENT, UNLESS NOTED OTHERWISE.
13. INSTALL THAW PIPES AT LOCATIONS SHOWN IN THE SUMMARY ACCORDING TO DETAILS ON SHEET E6.
14. NEW CULVERT MARKER POSTS MUST BE INSTALLED ON CULVERTS AS SHOWN IN THE SUMMARY ACCORDING TO DETAILS ON SHEET E5. REMOVAL OF EXISTING CULVERT MARKER POSTS AND HARDWARE WILL NOT BE MEASURED OR PAID FOR DIRECTLY, BUT IS SUBSIDIARY TO PAY ITEM 613.0002.0000.
15. THE CONTRACTOR SHALL ENTER AS-BUILT LOCATIONS FOR ALL CULVERTS IN THE CULVERT SUMMARY TABLE. COORDINATES SHALL BE LOCATED AT THE INTERSECTION OF THE CULVERT AND ROAD CENTERLINE. USE NAD 83 COORDINATE SYSTEM FORMATTED TO DECIMAL DEGREES TO A PRECISION OF 5 DECIMAL PLACES (000.00000°). THIS WORK IS SUBSIDIARY TO THE 602 AND 603 PAY ITEMS.
16. USE 12 GAGE STEEL FOR ALL 24", 36", AND 48" CULVERTS, EXCEPT WHERE NOTED OTHERWISE ON THE PLANS.

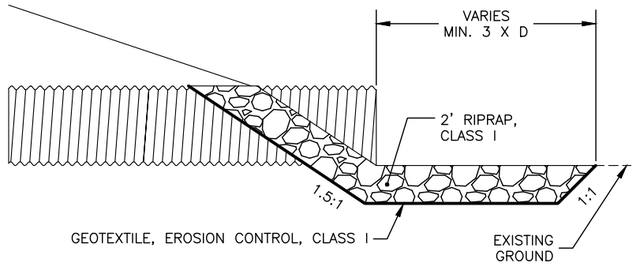

SECTION A-A

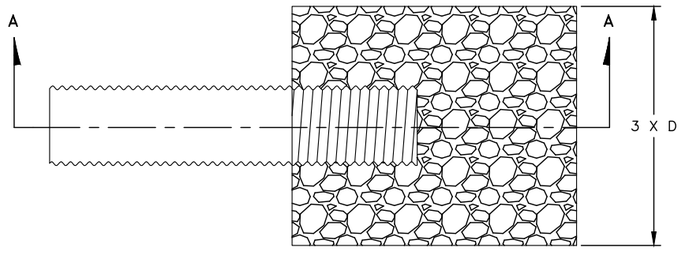

CULVERT RIPRAP DETAIL (PLAN)

Preliminary Plans

CULVERT DETAILS
1 OF 2

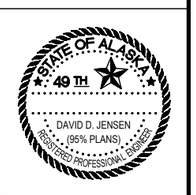

PLANS DEVELOPED BY: STATE OF ALASKA DEPARTMENT OF TRANSPORTATION & PUBLIC FACILITIES, NORTHERN REGION, 2301 PEGER ROAD, FAIRBANKS, AK 99709 (907)451-2200
C:\Users\ddjensen\Desktop\60735_Dalton_18_37\6 Design\4 C3D\2 Drawings\(3) Plan Production\60735_E_DETAILS-E4 Mon, May/16/22 05:56pm

NO.	DATE	REVISION
2	4/30/20	ADDENDUM NO. 2

STATE	PROJECT DESIGNATION	YEAR	SHEET NO.	TOTAL SHEETS
ALASKA	0652017/Z607350000	2022	E5	E23

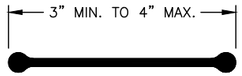

POST DETAIL

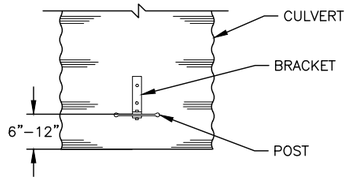

TOP VIEW

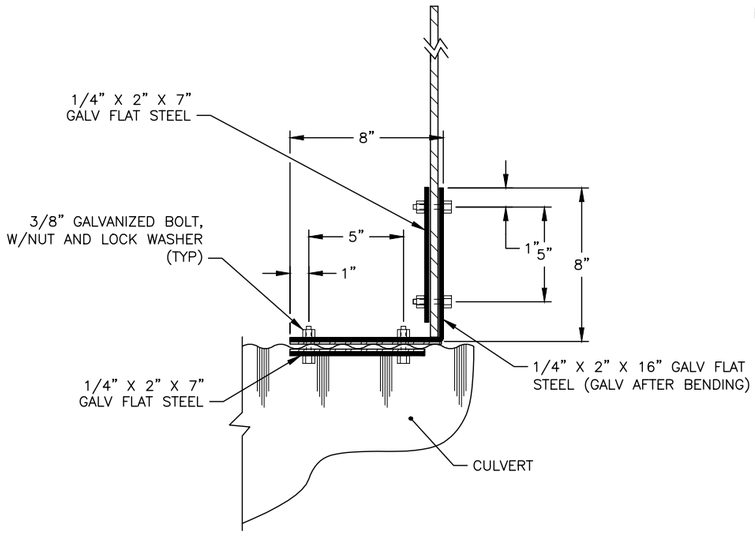

BRACKET DETAIL

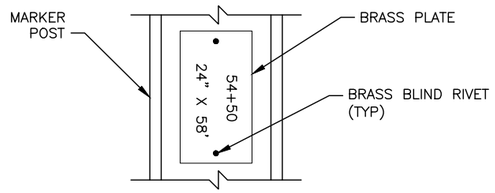

STAMP STATION AND PIPE SIZE, USING 3/8" HIGH MINIMUM LETTERS INTO A 2" X 4" X 0.064" THICK BRASS PLATE. FASTEN PLATE TO THE SIDE FACING THE ROADWAY WITH TWO 1/8" BRASS BLIND RIVETS.

BRASS PLATE DETAIL

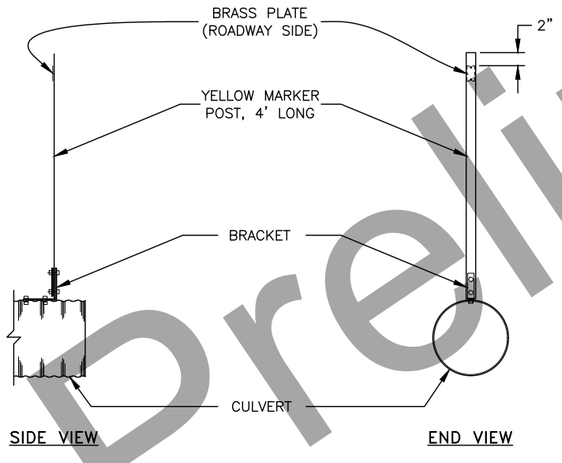

CULVERT MARKER POST DETAIL

CULVERT MARKER POSTS NOTES:

1. MARKER POSTS ARE TO BE INSTALLED ON CROSSING CULVERTS ONLY, UNLESS OTHERWISE LISTED IN THE CULVERT SUMMARY.
2. DRILL ALL BOLT HOLES. COAT HOLES WITH BRUSH APPLIED ZINC RICH PAINT. FLAME CUTTING SHALL NOT BE PERMITTED.
3. GASKET MATERIAL SHALL BE PLACED BETWEEN DISSIMILAR METALS. GASKET MATERIAL SHALL BE APPROVED PRIOR TO INSTALLATION.
4. STATION STAMPS ON BRASS PLATES TO BE PER INSTALLED LOCATION AND NOT NECESSARILY THE LOCATION INDICATED ON THE PLANS.

Preliminary Plans

CULVERT DETAILS
2 OF 2

STATE OF ALASKA 49TH
DAVID D. JENSEN
(95% PLANS)
REGISTERED PROFESSIONAL ENGINEER

PLANS DEVELOPED BY: STATE OF ALASKA DEPARTMENT OF TRANSPORTATION & PUBLIC FACILITIES, NORTHERN REGION, 2301 PEGER ROAD, FAIRBANKS, AK 99709 (907)451-2200
C:\Users\ddjensen\Desktop\60735_Dalton_18_37\6 Design\4 C3D\2 Drawings\(3) Plan Production\60735_E_DETAILS-E5 Mon, May/16/22 05:56pm

NO.	DATE	REVISION

STATE	PROJECT DESIGNATION	YEAR	SHEET NO.	TOTAL SHEETS
ALASKA	0652017/Z607350000	2022	E6	E23

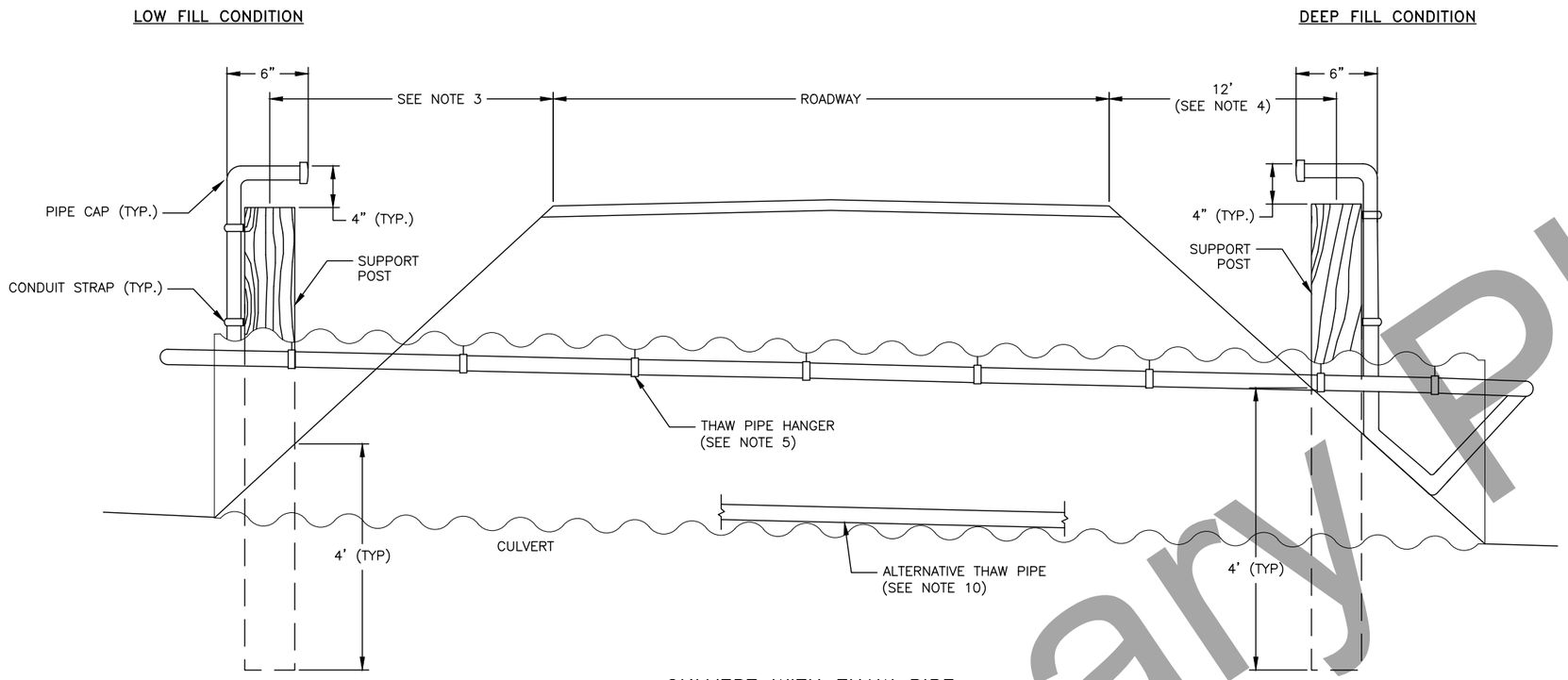

CULVERT WITH THAW PIPE

GENERAL NOTES:

1. THESE THAW PIPES ARE INTENDED FOR USE IN STEAM THAWING.
2. USE 1/2" I.D. ASTM A53 GALVANIZED PIPE AND FITTINGS TO MATCH.
3. WHEN THE HEIGHT OF FILL IS LESS THAN 5' TO TOP OF PIPE, LOCATE SUPPORT POST AT THE TOE OF SLOPE.
4. WHEN THE HEIGHT OF FILL EXCEEDS 5' TO TOP OF PIPE, LOCATE THE SUPPORT POST ON THE SIDE SLOPE 12' FROM THE SHOULDER.
5. FASTEN THE THAW PIPE TO THE TOP OF THE CULVERT WITH THAW PIPE HANGERS ON 10' CENTERS MAX. THE MAXIMUM DISTANCE FROM END OF CULVERT TO FIRST PIPE HANGER IS 12 INCHES.
6. WHEN TWO THAW PIPES ARE CALLED FOR IN THE PLANS, INSTALL AT 10 O'CLOCK AND 2 O'CLOCK.
7. USE PRESSURE TREATED SUPPORT POSTS OF HEM–FIR, NO. 2 OR BETTER. USE AMMONIACAL COPPER ZINC ARSENATE (ACZA) OR CHROMATED COPPER ARSENATE (CCA) PRESERVATIVES ON SUPPORT POSTS. PRESSURE TREAT IN ACCORDANCE WITH AASHTO M133.
8. ALIGN THE TOP OF THE SUPPORT POST WITH THE EDGE OF SHOULDER, OR TO A MAXIMUM HEIGHT OF 5'.
9. FASTEN THAW PIPE TO SUPPORT POSTS WITH GALVANIZED RIGID CONDUIT STRAPS AND MINIMUM 2" LONG GALVANIZED LAG SCREWS AT MAX. 12" CENTERS, IF MORE THAN ONE IS REQUIRED.
10. FILL THAW PIPE WITH A MINUS 50° FAHRENHEIT MIX OF RV ANTIFREEZE AND WATER, THEN CAP. THIS WORK IS SUBSIDIARY TO PAY ITEM 616.0002.0050.
11. FOR 24" AND 36" CULVERTS, PLACE THAW PIPES IN THE BOTTOM OF THE CULVERT, OR AS DIRECTED BY THE ENGINEER. ATTACH PIPES TO POSTS AS SHOWN.
12. COLD BEND ALL PIPE CORNERS WITH AN EMT RIGID CONDUIT BENDER. DO NOT USE ANY COUPLINGS OR CONNECTION HARDWARE WITHIN 2' OF A CORNER.

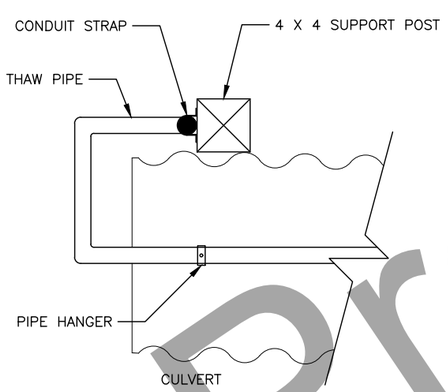

LOW FILL CONDITION
TOP VIEW

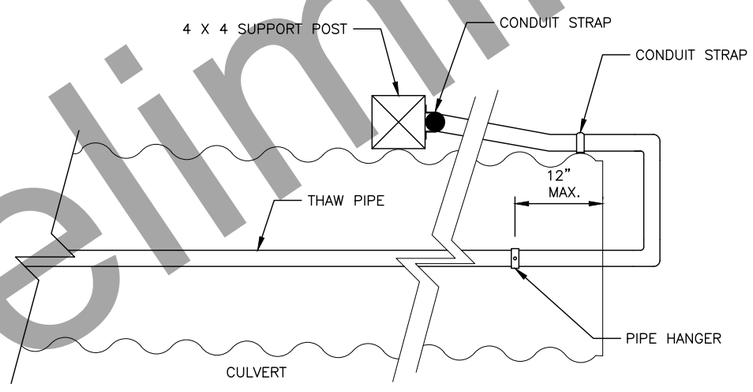

DEEP FILL CONDITION
TOP VIEW

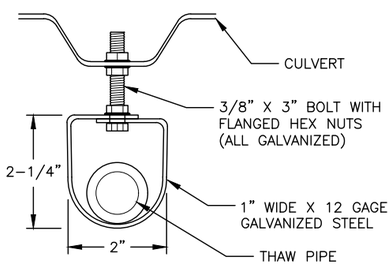

THAW PIPE HANGER DETAIL

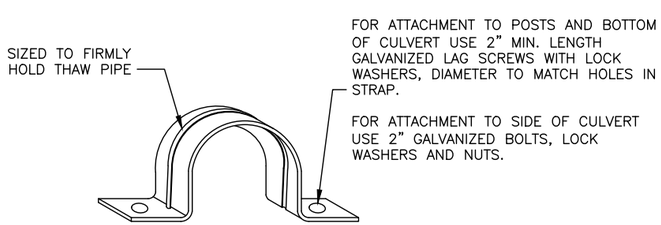

GALVANIZED RIGID CONDUIT
STRAP DETAIL

THAW PIPE DETAILS

STATE OF ALASKA 49TH
DAVID D. JENSEN
(95% PLANS)
REGISTERED PROFESSIONAL ENGINEER

Preliminary Plans

PLANS DEVELOPED BY: STATE OF ALASKA DEPARTMENT OF TRANSPORTATION & PUBLIC FACILITIES, NORTHERN REGION, 2301 PEGER ROAD, FAIRBANKS, AK 99709 (907)451-2200
C:\Users\ddjensen\Desktop\60735_Dalton_18_37\6 Design\4 C3D\2 Drawings\(3) Plan Production\60735_E_DETAILS-E6 Mon, May/16/22 05:56pm

NO.	DATE	REVISION
2	4/30/20	ADDENDUM NO. 2

STATE	PROJECT DESIGNATION	YEAR	SHEET NO.	TOTAL SHEETS
ALASKA	0652017/Z607350000	2022	E7	E23

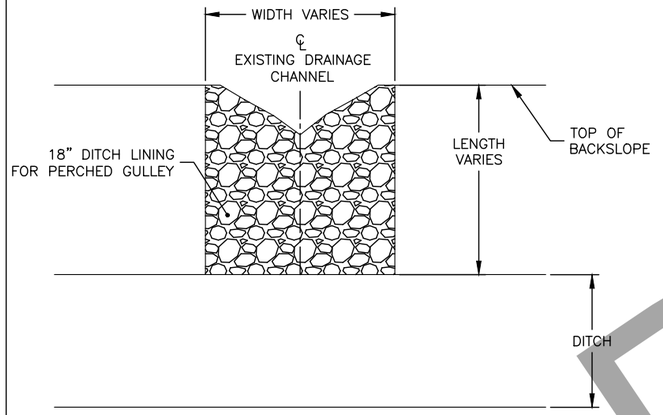

PERCHED GULLEY PLAN VIEW

DITCH LINING/PERCHED GULLEY SUMMARY

BEGIN STA.	END STA.	OFFSET	WIDTH (FT)	REMARKS
"O"1012+20	"O"1018+30	LT	14	
"O"1012+80		LT	10	PERCHED GULLEY
"O"1015+00		LT	10	PERCHED GULLEY
"O"1027+00	"O"1036+00	LT	13	
"O"1045+45		LT	10	PERCHED GULLEY
"O"1048+50		LT	10	PERCHED GULLEY
"O"1067+40		LT	10	PERCHED GULLEY
"O"1118+80	"O"1212+00	LT	14	
"O"1189+50	"O"1212+00	RT	14	
"O"1255+70	"O"1264+00	LT	VARIES	SEE TYPICAL SECTION 4 ON SHEET B3
"O"1256+50	"O"1262+20	RT	VARIES	
"O"1264+00	"O"1277+10	LT	14	
"O"1328+20	"O"1329+00	LT	14	
"O"1343+10	"O"1368+10	LT	12	
"O"1368+10	"O"1385+90	LT	VARIES	SEE TYPICAL SECTION 1 ON SHEET B2
"O"1368+90	"O"1380+10	RT	VARIES	
"O"1393+90	"O"1400+10	LT	14	
"O"1405+20	"O"1416+00	LT	14	
"O"1530+00	"O"1535+80	RT	14	
"O"1585+80	"O"1591+10	RT	14	
"O"1617+40	"O"1623+00	RT	14	
"O"1645+00	"O"1651+60	RT	14	
"O"1769+00	"O"1772+00	RT	12	
"O"1811+40	"O"1815+00	LT	14	
"O"1815+20	"O"1825+70	RT	14	
"O"1874+80	"O"1876+80	RT	12	

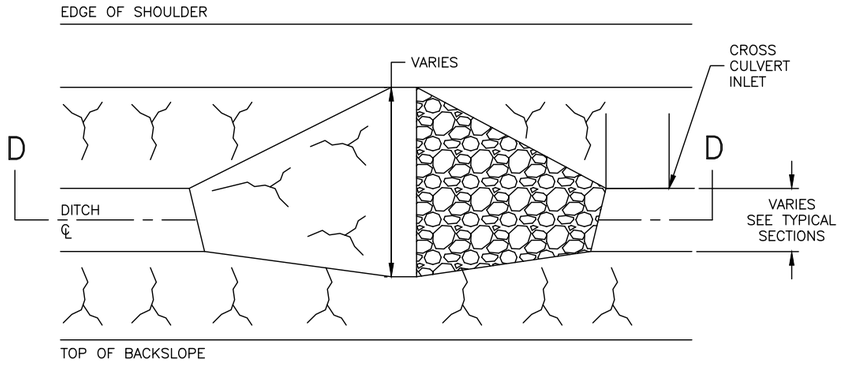

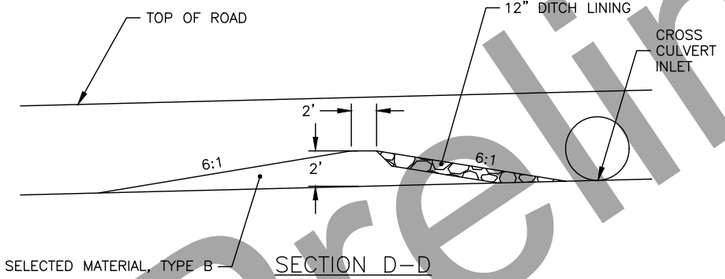

SECTION D–D

DITCH DIKE DETAIL

NOTE: CONSTRUCTION OF DITCH DIKES WILL NOT BE MEASURED FOR PAYMENT AND IS SUBSIDIARY TO THE 603 PAY ITEMS. MATERIALS REQUIRED FOR DITCH DIKES WILL BE PAID FOR UNDER THE RESPECTIVE PAY ITEMS.

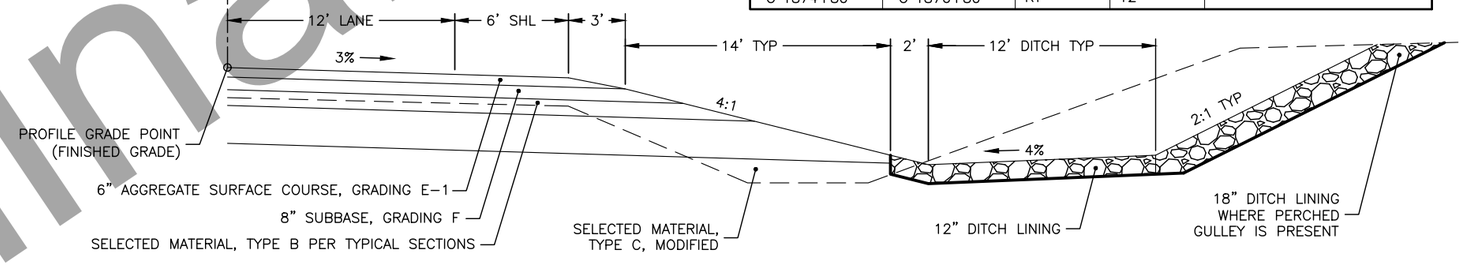

DITCH LINING DETAIL – CUT CONDITION

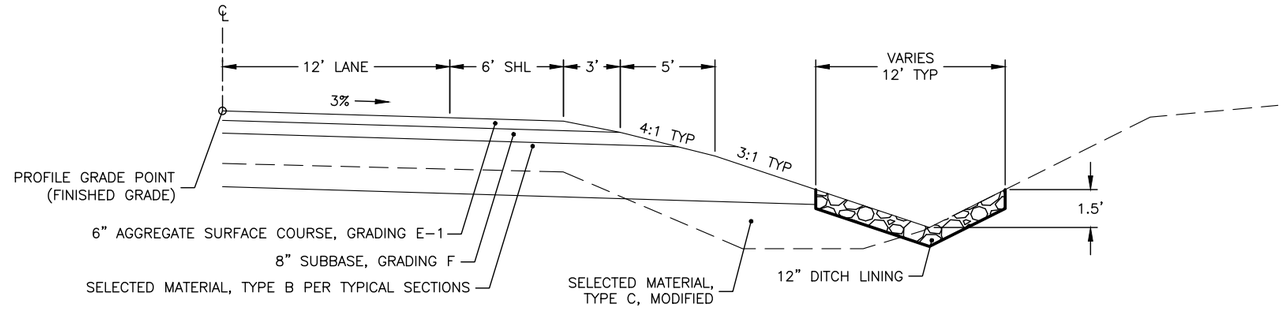

DITCH LINING DETAIL – FILL CONDITION

DRAINAGE DETAILS

STATE OF ALASKA 49TH
DAVID D. JENSEN
(95% PLANS)
REGISTERED PROFESSIONAL ENGINEER

Preliminary Plans

PLANS DEVELOPED BY: STATE OF ALASKA DEPARTMENT OF TRANSPORTATION & PUBLIC FACILITIES, NORTHERN REGION, 2301 PEGER ROAD, FAIRBANKS, AK 99709 (907)451-2200
C:\Users\ddjensen\Desktop\60735_Dalton_18_37\6 Design\4 C3D\2 Drawings\(3) Plan Production\60735_E_DETAILS-E7 Mon, May/16/22 05:56pm

NO.	DATE	REVISION

STATE	PROJECT DESIGNATION	YEAR	SHEET NO.	TOTAL SHEETS
ALASKA	0652017/Z607350000	2022	E8	E23

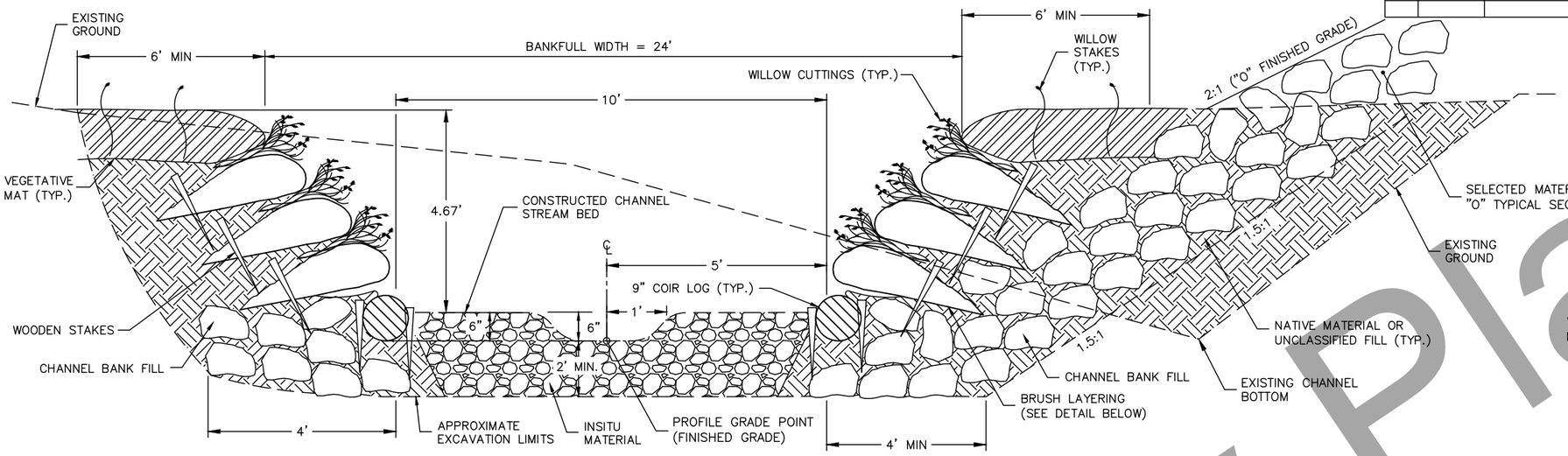

CONSTRUCTED CHANNEL AT HOT CAT CREEK
"C"10+00 TO "C"10+88
NTS

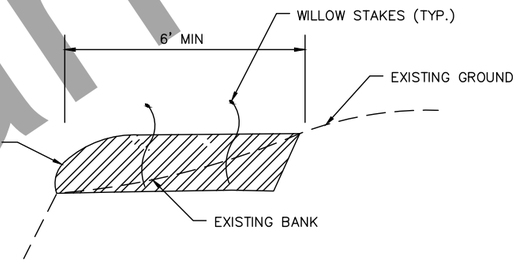

EXISTING BANK REVEGETATION AT HOT CAT CREEK
NTS

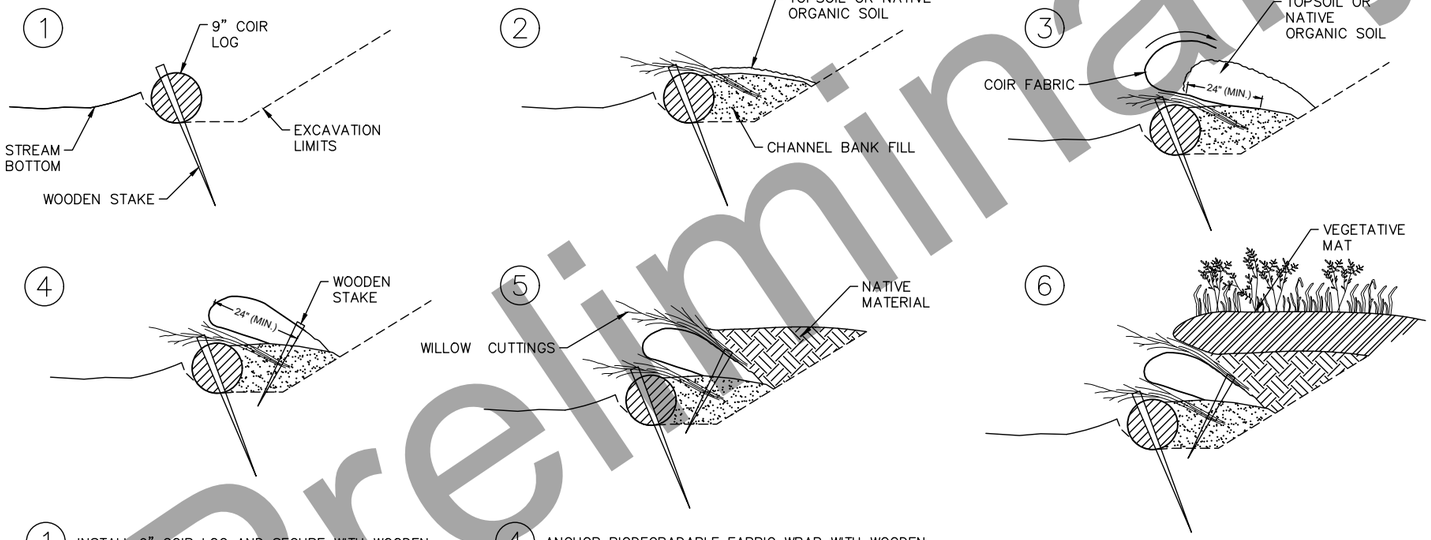

1. INSTALL 9" COIR LOG AND SECURE WITH WOODEN STAKES.
2. BACKFILL COIR LOG WITH CHANNEL BANK FILL. CRISSCROSS LAYERS OF 15 DORMANT CUTTINGS PER FOOT OR 10 ROOTED CUTTINGS PER FOOT. DEPOSIT TOPSOIL OVER CUTTINGS AND WATER LIBERALLY. COMPRESS SOIL TO 2–4 INCHES.
3. PLACE COIR FABRIC WRAP. EMBED FABRIC WRAP 24" (MIN.). PLACE TOPSOIL TO A MINIMUM DEPTH OF 12". WRAP COIR FABRIC OVER PLACED TOPSOIL.
4. ANCHOR BIODEGRADABLE FABRIC WRAP WITH WOODEN STAKES.
5. CRISSCROSS LAYERS OF 15 DORMANT CUTTINGS PER FOOT OR 10 ROOTED CUTTINGS PER FOOT. DEPOSIT NATIVE MATERIAL OVER CUTTINGS AND WATER LIBERALLY.
6. INSTALL VEGETATIVE MAT ON TOP OF NATIVE MATERIAL.

BRUSH LAYERING INSTALLATION
NTS

CHANNEL REALIGNMENT NOTES:

1. EXCAVATE INSITU MATERIAL AS NECESSARY TO INSTALL CHANNEL BANK FILL. BACKFILL WITH INSITU MATERIAL TO FINAL CHANNEL ELEVATIONS.
2. CONSTRUCT STREAMBED AND BANKS LEAVING A NON–UNIFORM ROUGH SURFACE.
3. CHANNEL BANK FILL: PROVIDE WIDTH OF 4' ON THE LEFT BANK AND MINIMUM WIDTH OF 4' OF RIGHT BANK.
4. WHEN "O" FINISHED GRADE IS WITHIN 10' OF RIGHT BANK, EXTEND BANK FILL 4' UP FORSLOPE.
5. CONSTRUCT BANKS USING CLASS II RIPRAP. FILL VOIDS WITH CHANNEL BED FILL.
6. SELECT LARGER FRACTION (>12" DIAMETER) OF CLASS II RIPRAP FOR FOOTER ROCKS (ROCKS WITHIN 3' OF THE BOTTOM OF EXCAVATION).
7. SALVAGE AND REUSE EXISTING VEGETATIVE MAT WITH LIVING WILLOWS ADJACENT TO EXISTING CHANNEL.
8. VEGETATIVE MAT TO HAVE MINIMUM THICKNESS OF 12 INCHES.
9. OMIT WILLOW STAKES IF VEGETATIVE MAT INCLUDES LIVE WILLOWS AS DIRECTED BY THE ENGINEER.
10. REFER TO SECTION 647 CHANNEL REALIGNMENT OF PROJECT SPECIFICATIONS.

CHANNEL REALIGNMENT DETAILS

STATE OF ALASKA 49TH
DAVID D. JENSEN
(95% PLANS)
REGISTERED PROFESSIONAL ENGINEER

Preliminary Plans

PLANS DEVELOPED BY: STATE OF ALASKA DEPARTMENT OF TRANSPORTATION & PUBLIC FACILITIES, NORTHERN REGION, 2301 PEGER ROAD, FAIRBANKS, AK 99709 (907)451-2200
C:\Users\ddjensen\Desktop\60735_Dalton_18_37\6 Design\4 C3D\2 Drawings\(3) Plan Production\60735_E_DETAILS-E8 Mon, May/16/22 05:56pm

NO.	DATE	REVISION

STATE	PROJECT DESIGNATION	YEAR	SHEET NO.	TOTAL SHEETS
ALASKA	0652017/Z607350000	2022	E9	E23

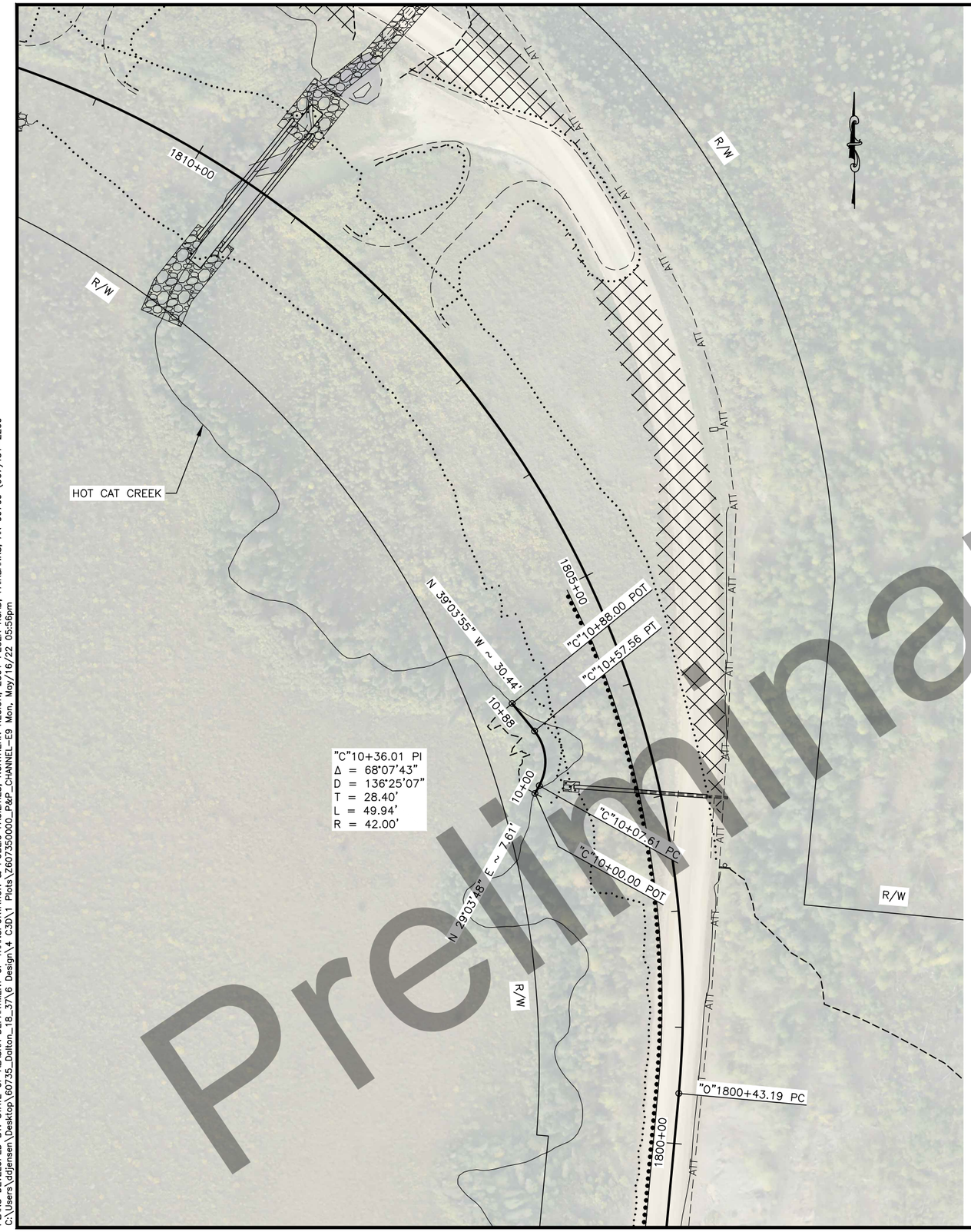

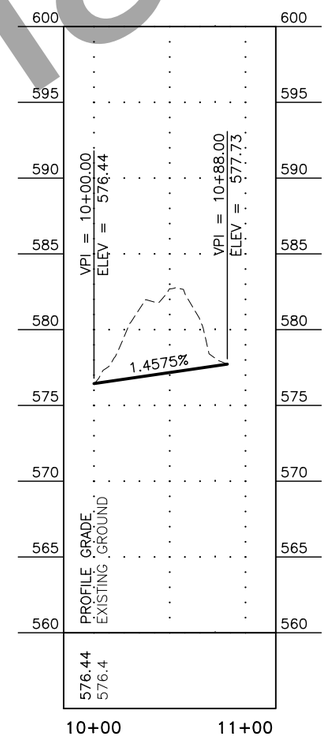

CHANNEL REALIGNMENT LAYOUT

STATE OF ALASKA 49TH
DAVID D. JENSEN
(95% PLANS)
REGISTERED PROFESSIONAL ENGINEER

Preliminary Plans

PLANS DEVELOPED BY: STATE OF ALASKA DEPARTMENT OF TRANSPORTATION & PUBLIC FACILITIES, NORTHERN REGION, 2301 PEGER ROAD, FAIRBANKS, AK 99709 (907)451-2200
C:\Users\ddjensen\Desktop\60735_Dalton_18_37\6 Design\4 C3D\1 Plots\Z607350000_P&P_CHANNEL-E9 Mon, May/16/22 05:56pm

NO.	DATE	REVISION

STATE	PROJECT DESIGNATION	YEAR	SHEET NO.	TOTAL SHEETS
ALASKA	0652017/Z607350000	2022	E10	E23

GUARDRAIL SUMMARY

SHEET NO.	BEGIN STATION	END STATION	RT/LT	606.0013.0000 PARALLEL GUARDRAIL TERMINAL (EACH)	606.0001.0000 W-BEAM GUARDRAIL (LF)	606.0016.0000 TRANSITION RAIL (EACH)	507.0001.0002 STEEL BRIDGE RAILING (LF)	606.0006.0000 REMOVING AND DISPOSING OF GUARDRAIL (LF)
F12	"0"1288+98.5	"0"1289+48.5	LT	1				
	"0"1289+48.5	"0"1289+71.0	LT			1		
	"0"1289+71.0	"0"1291+61.0	LT				190	117
	"0"1291+61.0	"0"1291+83.5	LT			1		
	"0"1291+83.5	"0"1292+33.5	LT	1				
	"0"1288+98.5	"0"1289+48.5	RT	1				
	"0"1289+48.5	"0"1289+71.0	RT			1		
	"0"1289+71.0	"0"1291+61.0	RT				190	117
	"0"1291+61.0	"0"1291+83.5	RT			1		
	"0"1291+83.5	"0"1292+33.5	RT	1				
F14 F15	"0"1339+96.6	"0"1340+46.4	RT	1				
	"0"1340+46.4	"0"1364+41.4	RT		2,400.0			750
	"0"1364+41.4	"0"1364+90.4	RT	1				
F29	"0"1787+96.5	"0"1788+46.8	LT	1				
	"0"1788+46.8	"0"1804+44.9	LT		1,587.5			
	"0"1804+44.9	"0"1804+96.0	LT	1				
			TOTALS:	8	3,987.5	4	380	984

GUARDRAIL NOTES:

1. FOR PARALLEL GUARDRAIL TERMINALS, CONSTRUCT THE GUARDRAIL TERMINAL WIDENING IN ACCORDANCE WITH THE "STANDARD DETAIL" ON STANDARD DRAWING G-20.12 (SEE SHEET V12). THE END OFFSET (X) SHALL BE 2 FEET. USE 50' PARALLEL GUARDRAIL TERMINALS.
2. SEE STANDARD DRAWING G-00.04 FOR STANDARD GUARDRAIL HARDWARE DETAILS (SHEETS V5-V9).
3. PER SUBSECTION 606-3.01, INSTALL SIDE-MOUNTED GUARDRAIL REFLECTORS "STARTING WITH THE FIRST STANDARD POST". DO NOT INSTALL THESE REFLECTORS WITHIN THE LIMITS OF THE PARALLEL GUARDRAIL TERMINALS.
4. DO NOT INSTALL TOP MOUNTED GUARDRAIL REFLECTORS.
5. ALL W-BEAM GUARDRAIL SEGMENTS SHALL BE 12.5'.
6. SEE STANDARD DRAWING G-05.11S FOR STEEL POST W31 GUARDRAIL DETAILS (SHEET V10).
7. SEE STANDARD DRAWING G-10.20 FOR GUARDRAIL POST INSTALLATION DETAILS (SHEET V11).
8. REMOVING AND DISPOSING OF GUARDRAIL INCLUDES GUARDRAIL/BRIDGE RAIL TRANSITIONS.

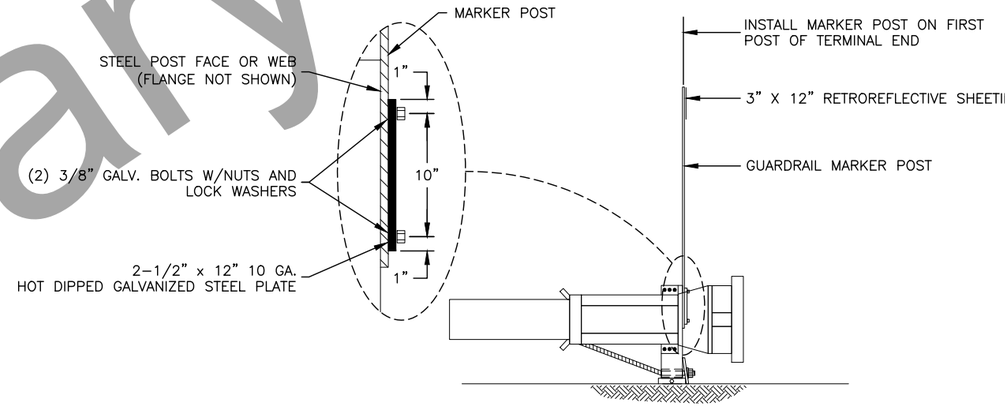

GUARDRAIL MARKER POST ATTACHMENT DETAIL
PARALLEL GUARDRAIL TERMINAL

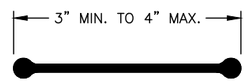

POST DETAIL
CROSS-SECTIONAL VIEW

GUARDRAIL MARKER NOTES:

1. GUARDRAIL MARKER POSTS SHALL BE YELLOW AND AT LEAST 72" LONG. POSTS SHALL MEET THE REQUIREMENTS OF SECTION 730-2.05 FLEXIBLE DELINEATOR POSTS.
2. RETROREFLECTIVE SHEETING SHALL MEET ASTM D4956 REQUIREMENTS FOR TYPE VIII, IX, OR XI. COLOR OF RETROREFLECTIVE SHEETING SHALL MATCH COLOR OF ADJACENT EDGE LINE STRIPE. PLACE RETROREFLECTIVE SHEETING ON SIDE OF MARKER POST FACING TRAFFIC IN ADJACENT LANE.
3. DRILL ALL BOLT HOLES. COAT HOLES WITH BRUSH APPLIED ZINC RICH PAINT. FLAME CUTTING SHALL NOT BE PERMITTED.
4. ALL WORK AND MATERIAL REQUIRED TO INSTALL GUARDRAIL MARKER POSTS IS SUBSIDIARY TO 606 PAY ITEMS.

Preliminary Plans

GUARDRAIL DETAILS, SUMMARY, AND NOTES

STATE OF ALASKA 49TH
DAVID D. JENSEN
(95% PLANS)
REGISTERED PROFESSIONAL ENGINEER

PLANS DEVELOPED BY: STATE OF ALASKA DEPARTMENT OF TRANSPORTATION & PUBLIC FACILITIES, NORTHERN REGION, 2301 PEGER ROAD, FAIRBANKS, AK 99709 (907)451-2200
C:\Users\ddjensen\Desktop\60735_Dalton_18_37\6 Design\4 C3D\2 Drawings\(3) Plan Production\60735_E_DETAILS-E10 Mon, May/16/22 05:56pm

NO.	DATE	REVISION

STATE	PROJECT DESIGNATION	YEAR	SHEET NO.	TOTAL SHEETS
ALASKA	STP-0652017/Z607350000	2022	E9	E21

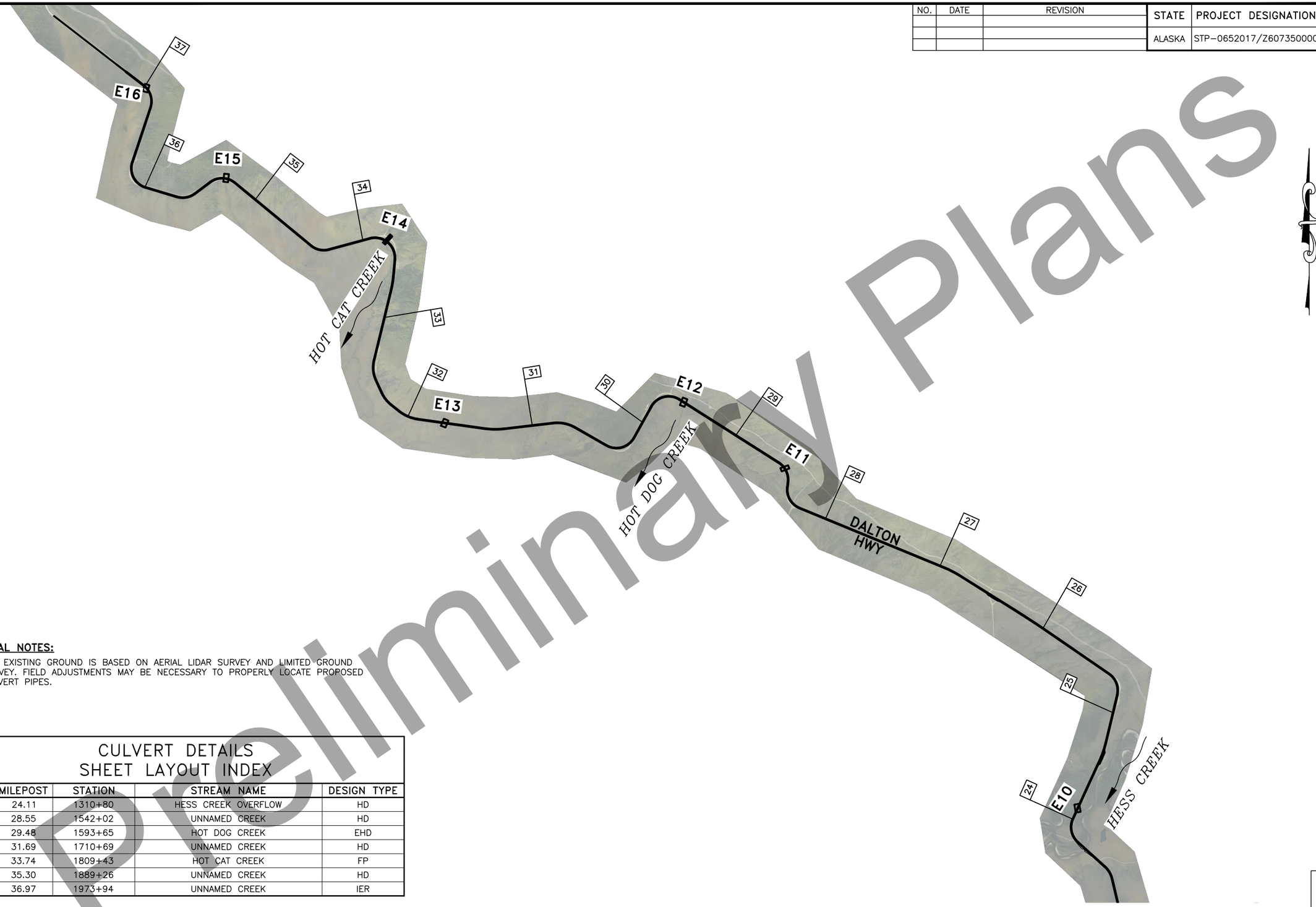

Preliminary Plans

GENERAL NOTES:

1. THE EXISTING GROUND IS BASED ON AERIAL LIDAR SURVEY AND LIMITED GROUND SURVEY. FIELD ADJUSTMENTS MAY BE NECESSARY TO PROPERLY LOCATE PROPOSED CULVERT PIPES.

CULVERT DETAILS SHEET LAYOUT INDEX

SHEET	MILEPOST	STATION	STREAM NAME	DESIGN TYPE
E10	24.11	1310+80	HESS CREEK OVERFLOW	HD
E11	28.55	1542+02	UNNAMED CREEK	HD
E12	29.48	1593+65	HOT DOG CREEK	EHD
E13	31.69	1710+69	UNNAMED CREEK	HD
E14	33.74	1809+43	HOT CAT CREEK	FP
E15	35.30	1889+26	UNNAMED CREEK	HD
E16	36.97	1973+94	UNNAMED CREEK	IER

DESIGN TYPE KEY

HD = HYDRAULIC DESIGN
EHD = ENHANCED HYDRAULIC DESIGN
FP = FISH PASSAGE DESIGN
IER = INLET EMBANKMENT RIPRAP

PS&E REVIEW – APRIL 2022

CULVERT DETAIL KEY MAP

STATE OF ALASKA 49TH ### ### REGISTERED PROFESSIONAL ENGINEER

PLANS DEVELOPED BY: R&M CONSULTANTS, INC.; CERT. OF AUTHORIZATION NO.: AECC111, 9101 VANGUARD DRIVE, ANCHORAGE, AK, 99507, (907) 522-1707
Z:\project\2328.01 DOT_N Dalton Hwy MP 18-37\Civil\ACAD\60735_E-Culvert P&Ps E1-E9 Fri, Mar/18/22 1:49 PM

NO.	DATE	REVISION

STATE	PROJECT DESIGNATION	YEAR	SHEET NO.	TOTAL SHEETS
ALASKA	STP-0652017/Z607350000	2022	E10	E21

HYDROLOGIC & HYDRAULIC SUMMARY

DALTON HWY MILE 24.11 – STATION 1310+80 HESS CREEK OVERFLOW

BASIN AREA (SQ MI)	Qfish (CFS)	Q2 (CFS)	Q5 (CFS)	Q50 (CFS)	Q100 (CFS)
N/A*	N/A*	N/A*	N/A*	N/A*	N/A*

*THE CULVERT DISCHARGE IS CONTROLLED BY OVERBANK FLOWS FROM ICE JAM FLOODS ON HESS CREEK

HW/D @ 1.0 = 162 CFS

CULVERT PURPOSE: CROSS DRAINAGE/FLOODPLAIN EQUALIZATION

PIPE SUMMARY

PIPE NAME	SIZE	TYPE	INLET			OUTLET			SLOPE (%)	LENGTH (LF)	THAW PIPE (EA)	DEADMAN (EA)	REMARKS
			STATION	OFFSET	INVERT	STATION	OFFSET	INVERT					
P24.11	72"	CMP	1310+03.07	54.61 RT	465.97	1311+64.67	60.75 LT	463.93	1.02	198.57	2	2	MAIN CHANNEL

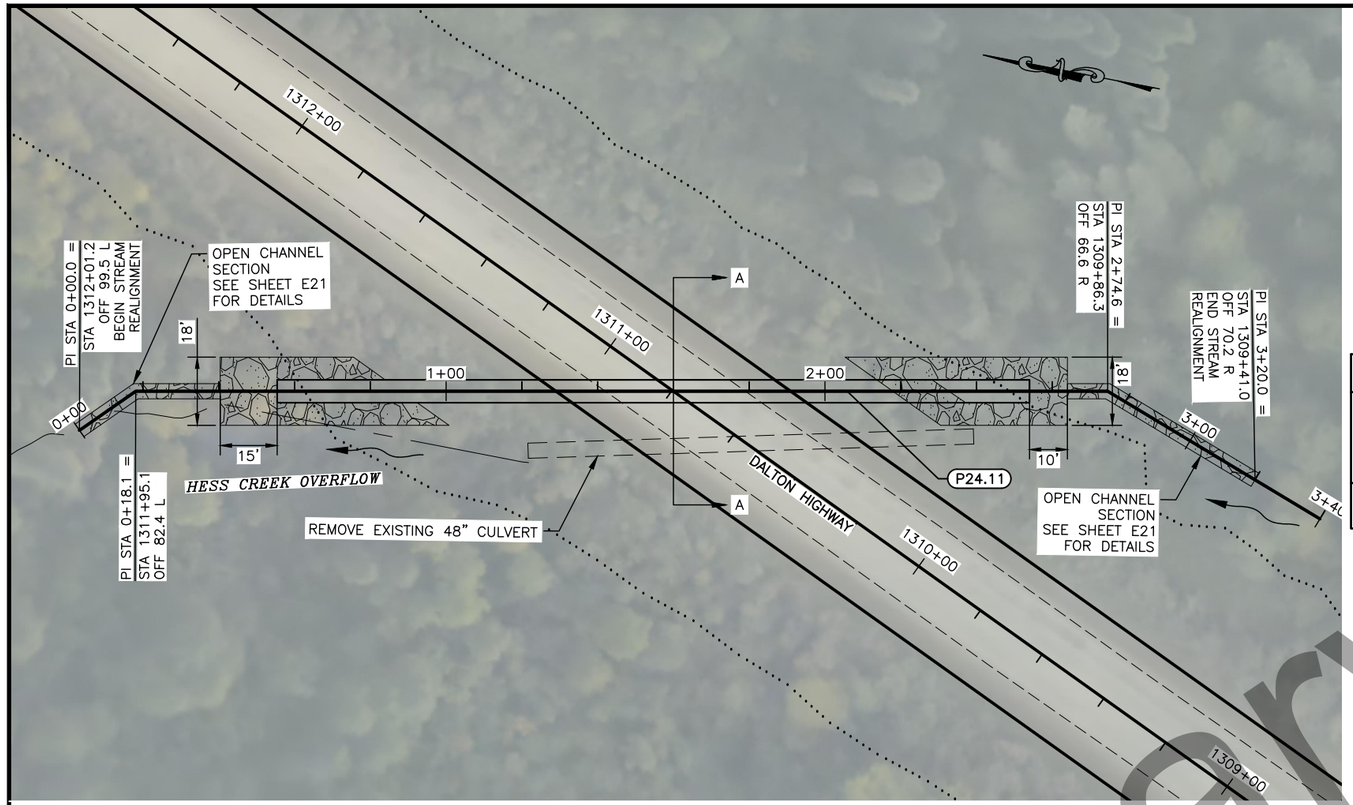

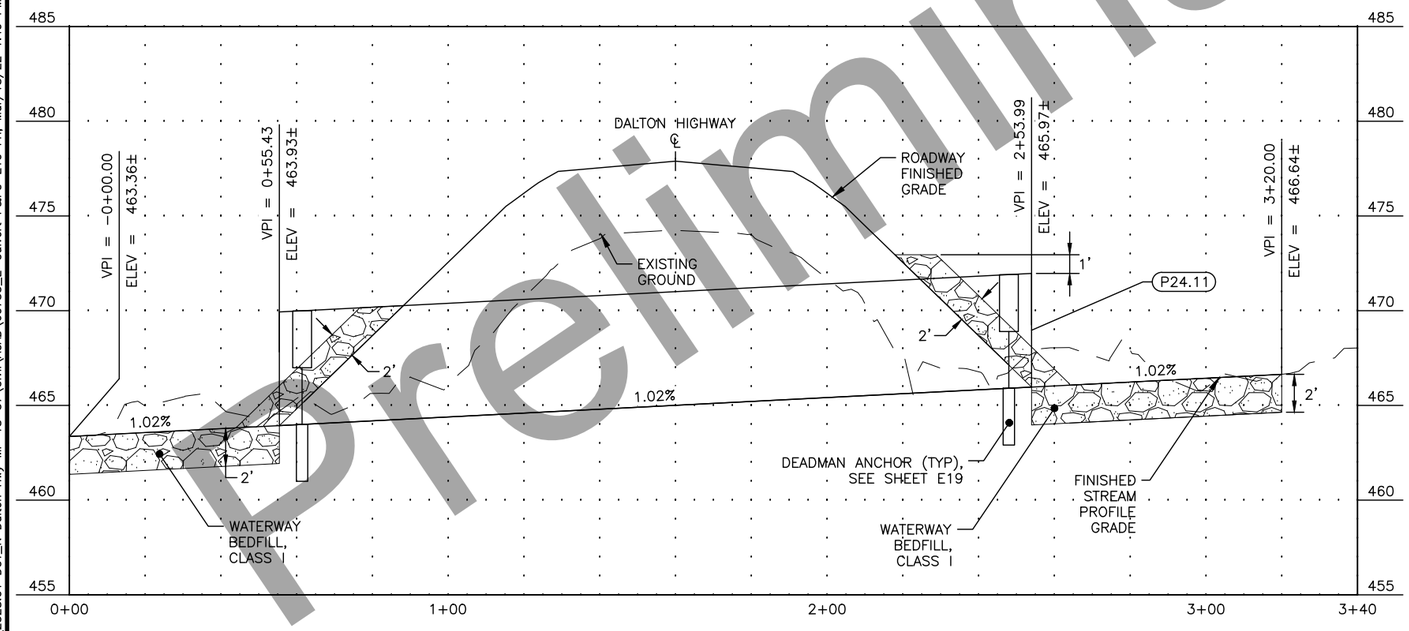

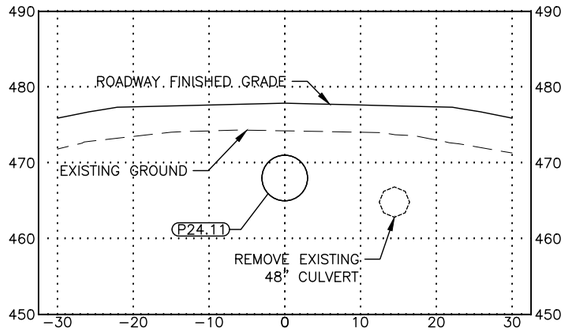

SECTION A–A AT ROADWAY CENTERLINE

PS&E REVIEW – APRIL 2022

MP 24.11 CULVERT DETAILS

STATE OF ALASKA 49TH REGISTERED PROFESSIONAL ENGINEER

Preliminary Plans

PLANS DEVELOPED BY: R&M CONSULTANTS, INC.; CERT. OF AUTHORIZATION NO.: AECC111, 9101 VANGUARD DRIVE, ANCHORAGE, AK, 99507, (907) 522-1707
Z:\project\2328.01 DOT_N Dalton Hwy MP 18-37\Civil\ACAD\60735_E-Culvert P&Ps-E10 Fri, Mar/18/22 1:49 PM

NO.	DATE	REVISION

STATE	PROJECT DESIGNATION	YEAR	SHEET NO.	TOTAL SHEETS
ALASKA	STP–0652017/Z607350000	2022	E11	E21

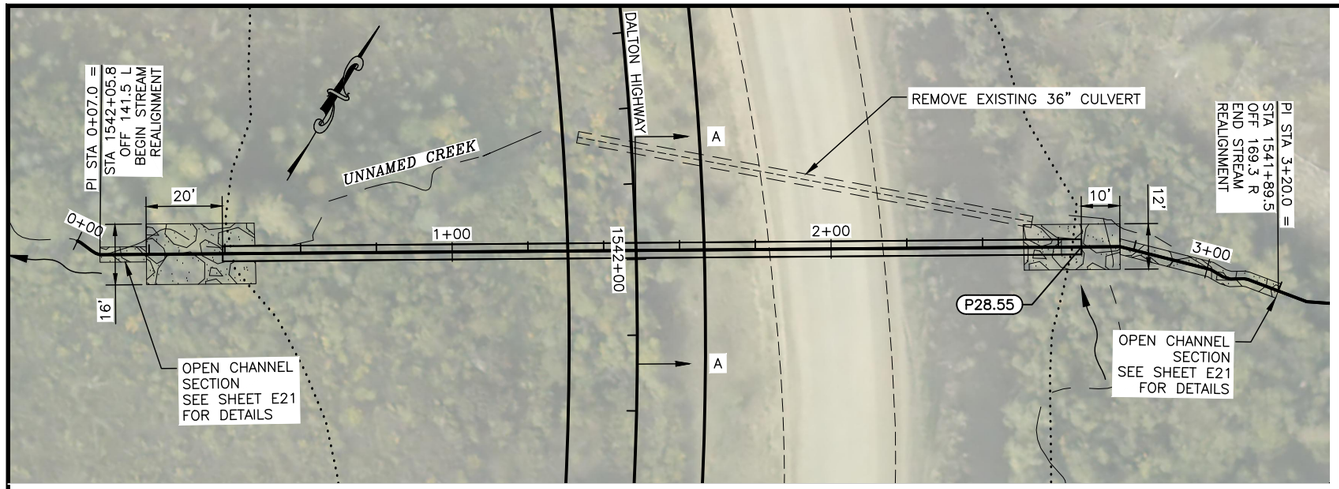

HYDROLOGIC & HYDRAULIC SUMMARY

DALTON HWY MILE 28.55 – STATION 1542+02 – UNNAMED CREEK

BASIN AREA (SQ MI)	Qfish (CFS)	Q2 (CFS)	Q5 (CFS)	Q50 (CFS)	Q100 (CFS)
0.7	N/A	10	20	50	70

HEADWATER ELEVATION @ Q50 IS 823.8 FT, @ HEADWATER ELEVATION Q100 IS 824.7 FT

ROAD OVERTOPS AT APPROXIMATELY 268 CFS, HW/D @ 1.0 = 66 CFS

CULVERT PURPOSE: CROSS DRAINAGE

PIPE SUMMARY

PIPE NAME	SIZE	TYPE	INLET			OUTLET			SLOPE (%)	LENGTH (LF)	THAW PIPE (EA)	DEADMAN (EA)	REMARKS
			STATION	OFFSET	INVERT	STATION	OFFSET	INVERT					
P28.55	48"	CMP	1542+00.30	117.57	820.52	1542+04.90	109.10 LT	808.31	5.39	227.05	2	2	MAIN CHANNEL

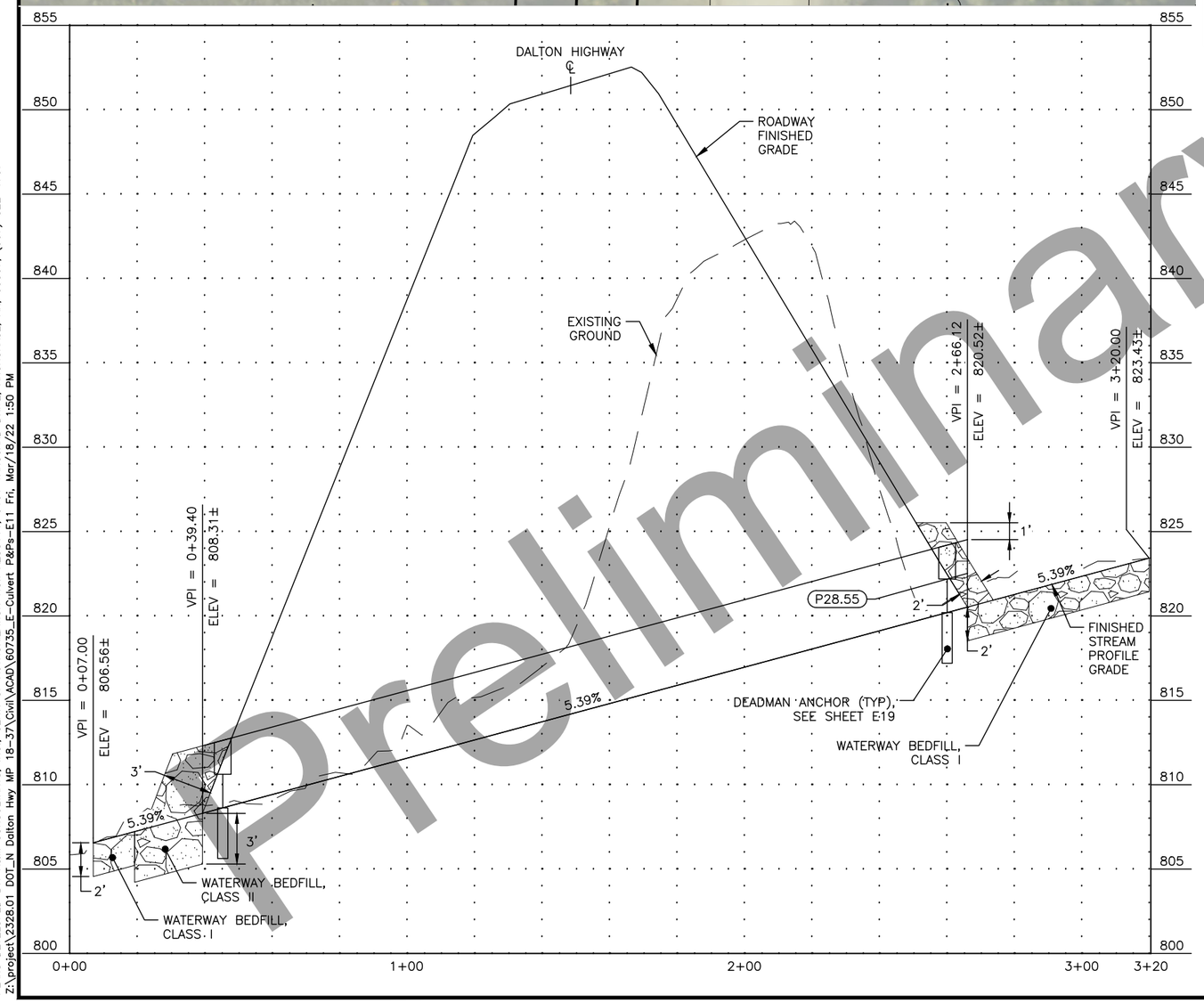

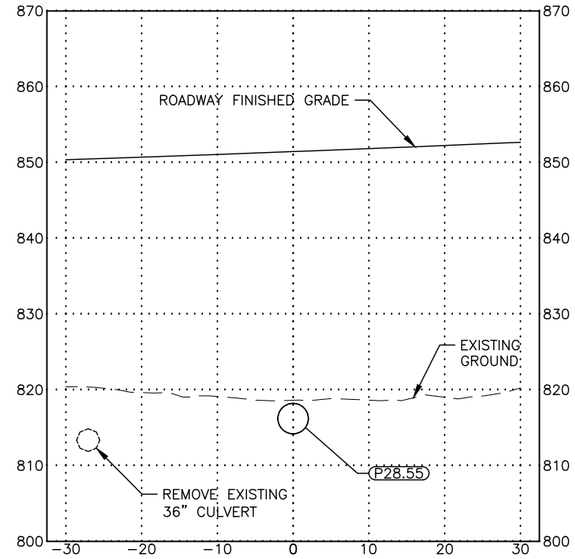

SECTION A–A AT
ROADWAY CENTERLINE

Preliminary Plans

PS&E REVIEW – APRIL 2022

MP 28.55 CULVERT DETAILS

STATE OF ALASKA 49TH
####
####
REGISTERED PROFESSIONAL ENGINEER

PLANS DEVELOPED BY: R&M CONSULTANTS, INC., CERT. OF AUTHORIZATION NO.: AECC111, 9101 VANGUARD DRIVE, ANCHORAGE, AK, 99507, (907) 522-1707
Z:\project\2328.01 DOT_N Dalton Hwy MP 18-37\Civil\ACAD\60735_E-Culvert P&Ps-E11 Fri, Mar/18/22 1:50 PM

NO.	DATE	REVISION

STATE	PROJECT DESIGNATION	YEAR	SHEET NO.	TOTAL SHEETS
ALASKA	STP–0652017/Z607350000	2022	E12	E21

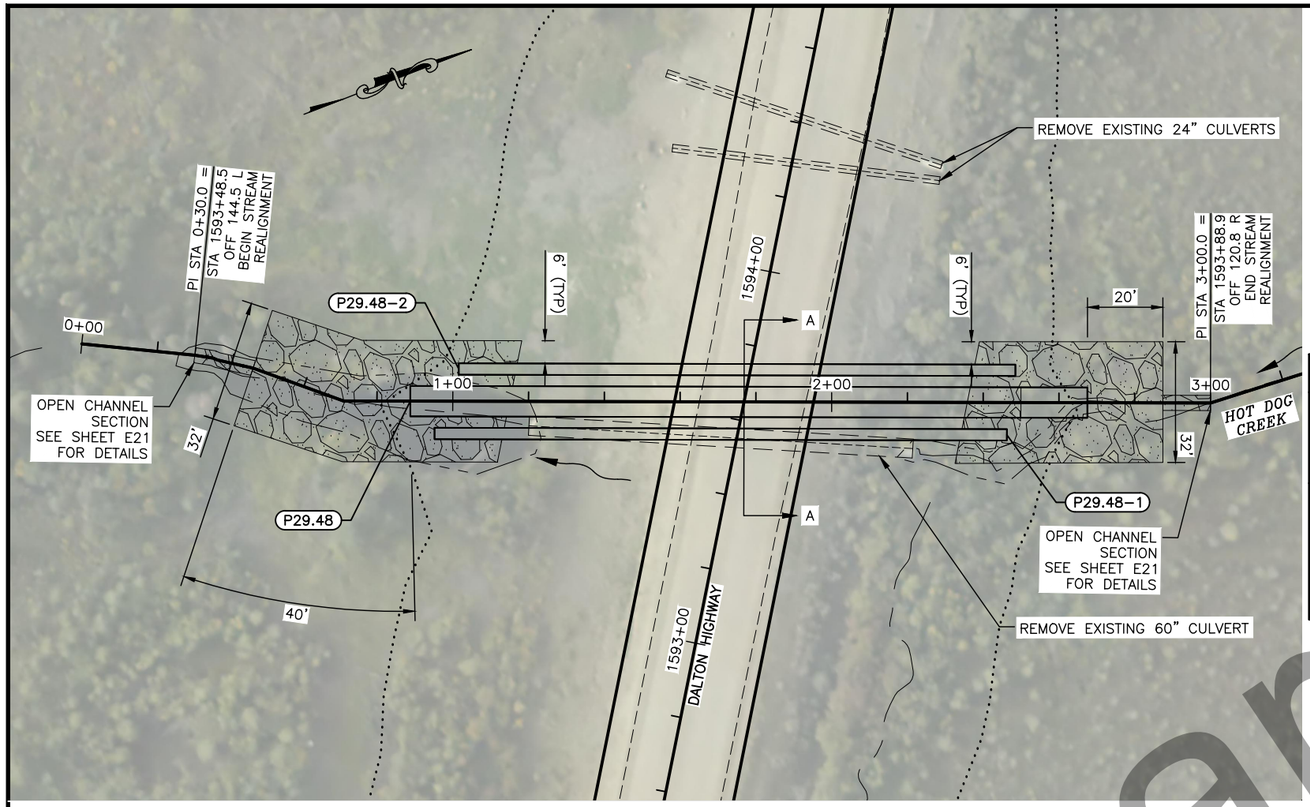

HYDROLOGIC & HYDRAULIC SUMMARY

DALTON HWY MILE 29.48 – STATION 1593+65 (UNNAMED) HOT DOG CREEK

BASIN AREA (SQ MI)	Qfish (CFS)	Q2 (CFS)	Q5 (CFS)	Q50 (CFS)	Q100 (CFS)
5.1	40	60	110	260	320

HEADWATER ELEVATION @ Q50 IS 690.4 FT, HEADWATER ELEVATION @ Q100 IS 691.2 FT

ROAD OVERTOPS AT APPROXIMATELY 935 CFS, HW/D @ 1.0 = 306 CFS

CULVERT PURPOSE: ENHANCED HYDRAULIC DESIGN

PIPE SUMMARY

PIPE NAME	SIZE	TYPE	INLET			OUTLET			SLOPE (%)	LENGTH (LF)	THAW PIPE (EA)	DEADMAN (EA)	REMARKS
			STATION	OFFSET	INVERT	STATION	OFFSET	INVERT					
P29.48	96"	CMP	1593+82.56	88.88 RT	683.01	1593+47.81	86.41 LT	680.78	1.25	178.82	2	2	MAIN CHANNEL
P29.48–1	36"	CMP	1593+70.08	69.72 RT	689.75	1593+40.70	78.47 LT	687.86	1.25	151.09	1	–	OVERFLOW
P29.48–2	36"	CMP	1593+87.22	68.58 RT	689.78	1593+58.65	75.53 LT	687.84	1.25	146.92	1	–	OVERFLOW

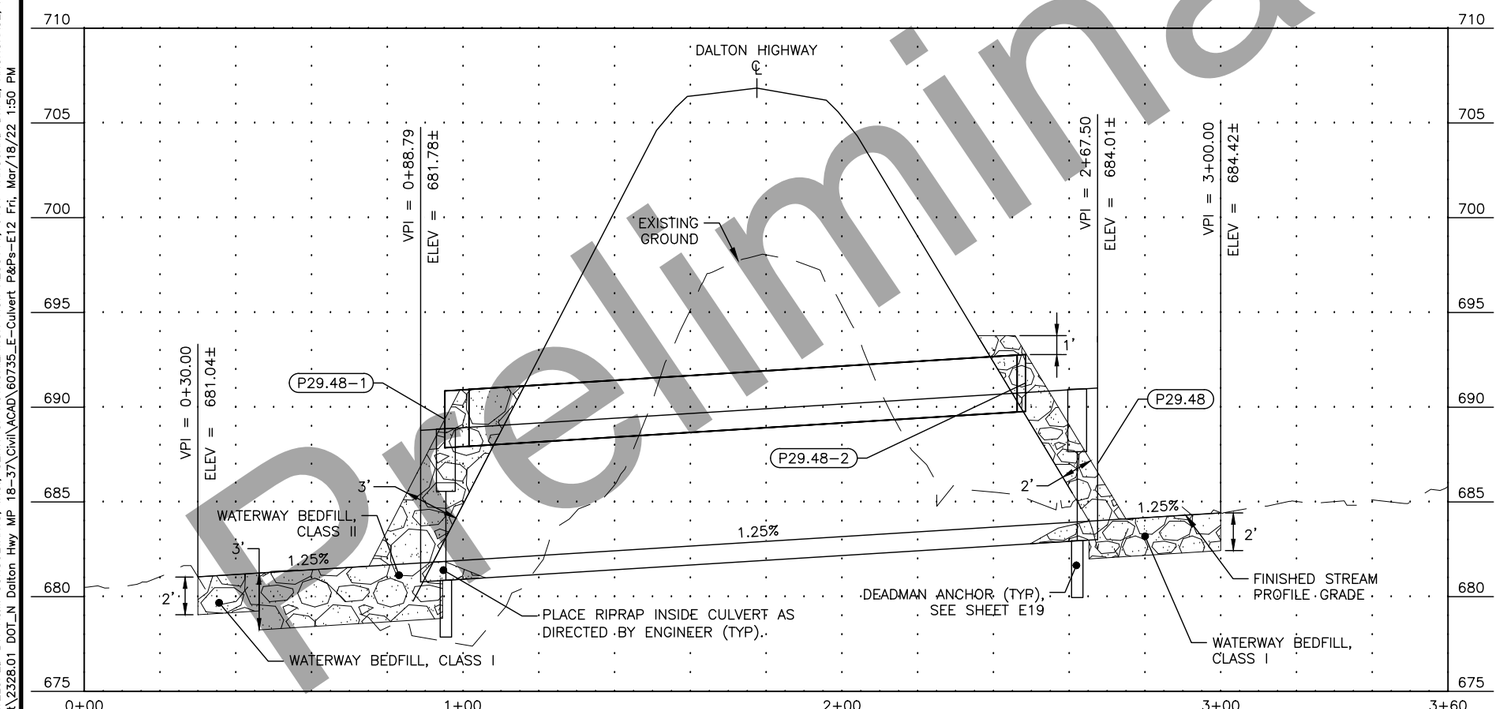

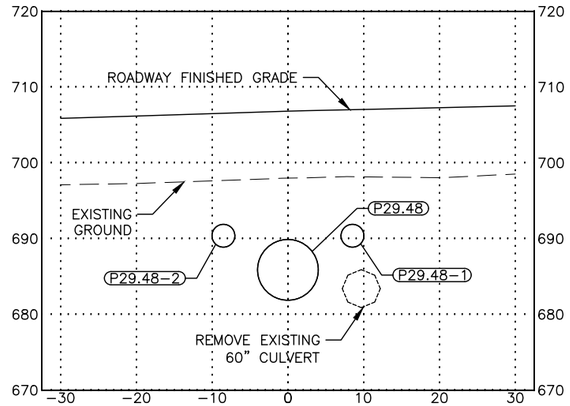

SECTION A–A AT ROADWAY CENTERLINE

PS&E REVIEW – APRIL 2022

MP 29.48 CULVERT DETAILS

Preliminary Plans

PLANS DEVELOPED BY: R&M CONSULTANTS, INC., CERT. OF AUTHORIZATION NO.: AECC111, 9101 VANGUARD DRIVE, ANCHORAGE, AK, 99507, (907) 522-1707
Z:\project\2328.01 DOT_N Dalton Hwy MP 18-37\Civil\ACAD\60735_E-Culvert P&Ps-E12 Fri, Mar/18/22 1:50 PM

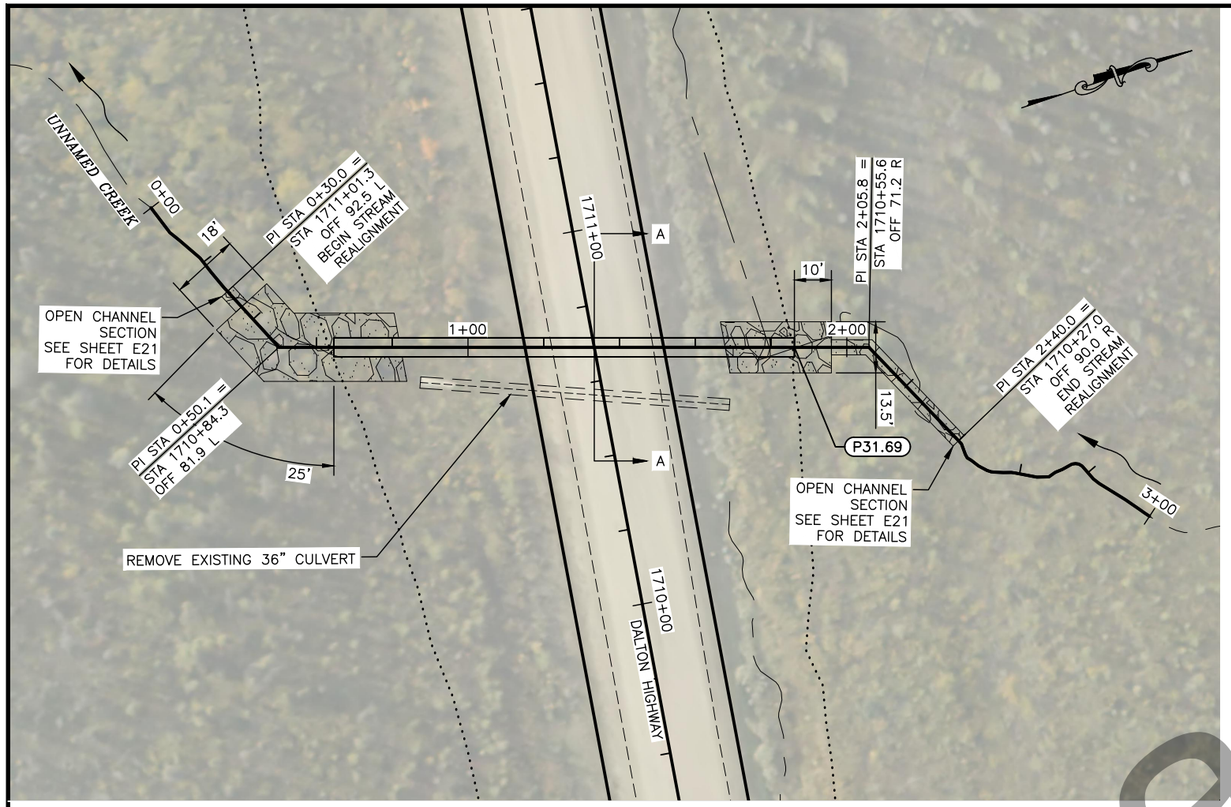

NO.	DATE	REVISION

STATE	PROJECT DESIGNATION	YEAR	SHEET NO.	TOTAL SHEETS
ALASKA	STP–0652017/Z607350000	2022	E13	E21

HYDROLOGIC & HYDRAULIC SUMMARY

DALTON HWY MILE 31.69 – STATION 1710+69 – UNNAMED CREEK

BASIN AREA (SQ MI)	Qfish (CFS)	Q2 (CFS)	Q5 (CFS)	Q50 (CFS)	Q100 (CFS)
1.1	N/A	15	30	80	100

HEADWATER ELEVATION @ Q50 IS 584.0 FT, HEADWATER ELEVATION @ Q100 IS 584.7 FT

ROADWAY OVERTOPS AT APPROXIMATELY 240 CFS, HW/D @ 1.0 = 114 CFS

CULVERT PURPOSE: CROSS DRAINAGE

PIPE SUMMARY

PIPE NAME	SIZE	TYPE	INLET			OUTLET			SLOPE (%)	LENGTH (LF)	THAW PIPE (EA)	DEADMAN (EA)	REMARKS
			STATION	OFFSET	INVERT	STATION	OFFSET	INVERT					
P31.69	60"	CMP	1710+59.22	51.92 RT	580.15	1710+81.58	67.57 LT	575.03	4.21	121.68	2	2	MAIN CHANNEL

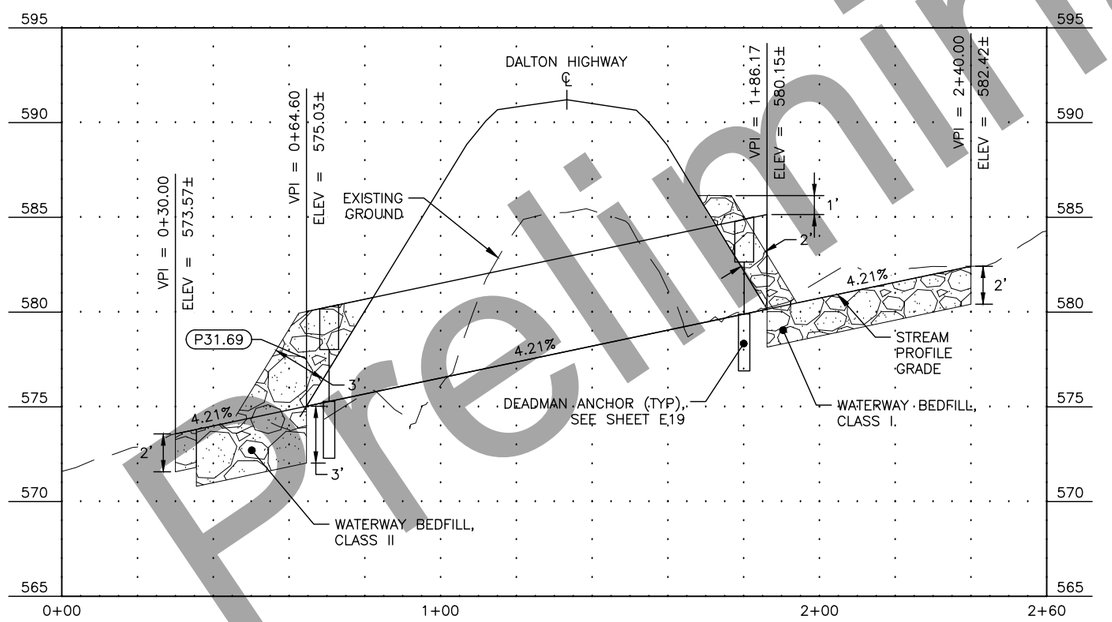

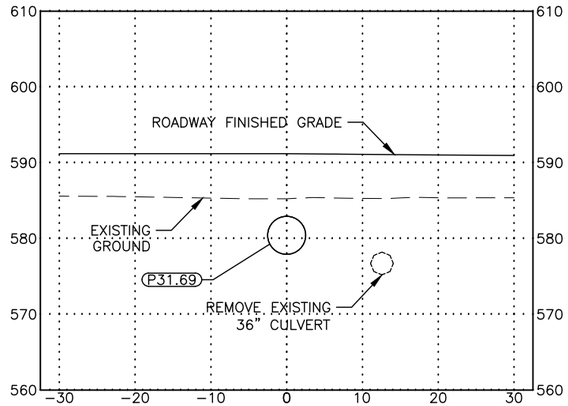

SECTION A–A AT ROADWAY CENTERLINE

Preliminary Plans

PS&E REVIEW – APRIL 2022

MP 31.69 CULVERT DETAILS

PLANS DEVELOPED BY: R&M CONSULTANTS, INC., CERT. OF AUTHORIZATION NO.: AECC111, 9101 VANGUARD DRIVE, ANCHORAGE, AK, 99507, (907) 522-1707
Z:\project\2328.01 DOT_N Dalton Hwy MP 18-37\Civil\ACAD\60735_E-Culvert P&Ps-E13 Fri, Mar/18/22 1:50 PM

NO.	DATE	REVISION

STATE	PROJECT DESIGNATION	YEAR	SHEET NO.	TOTAL SHEETS
ALASKA	STP-0652017/Z607350000	2022	E14	E21

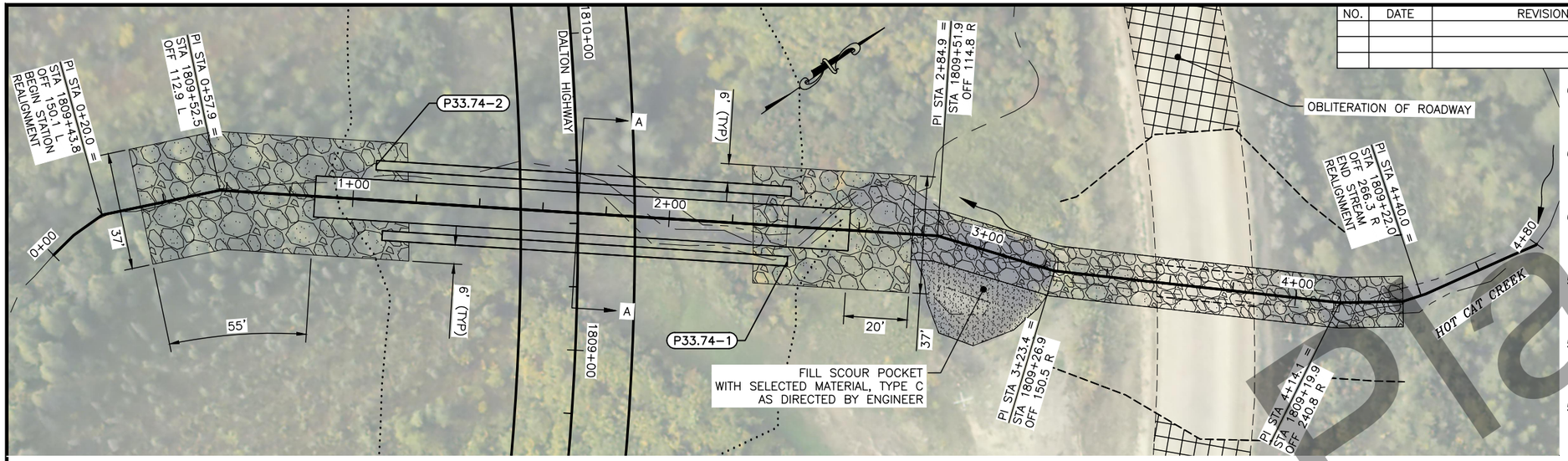

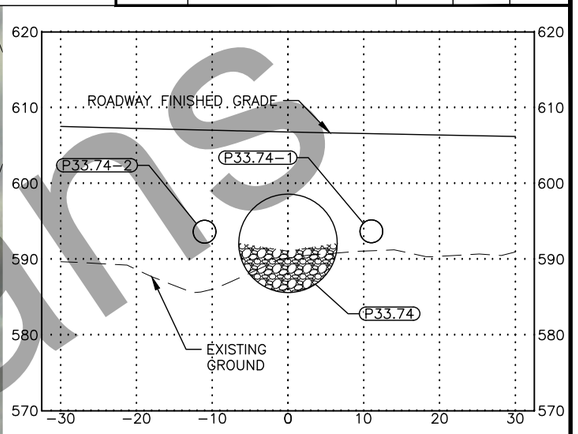

SECTION A–A AT ROADWAY CENTERLINE

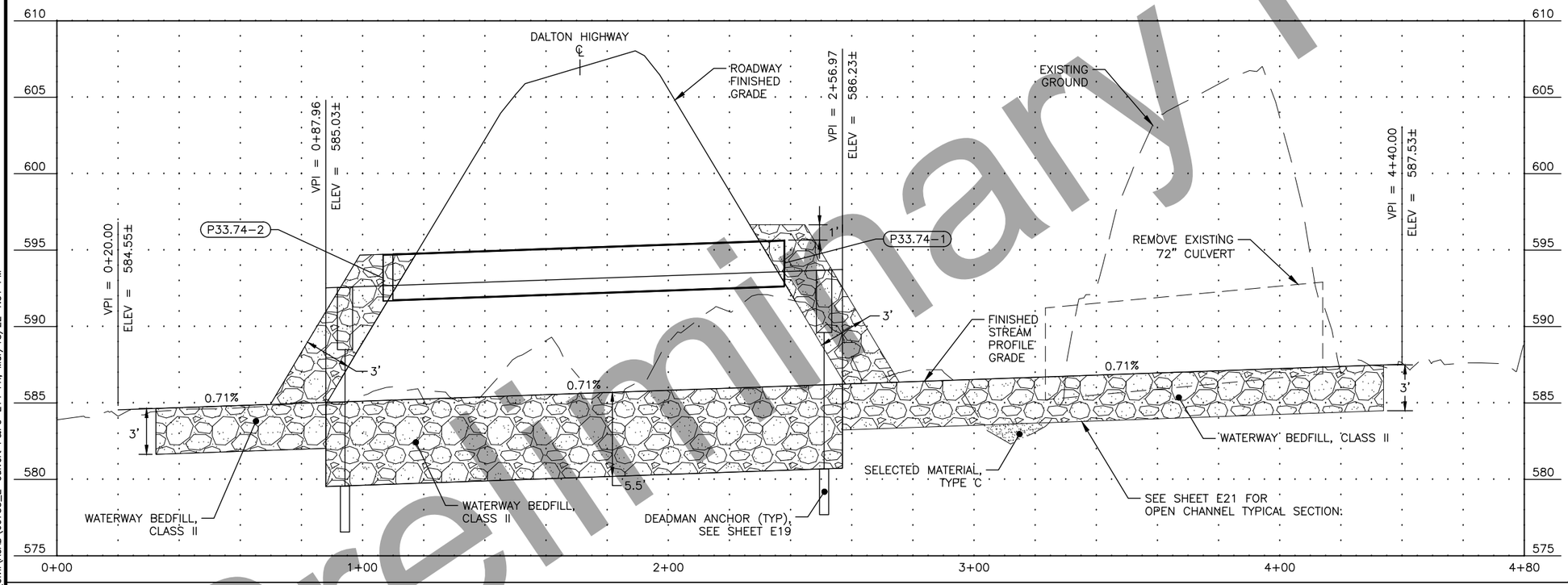

PIPE SUMMARY

PIPE NAME	SIZE	TYPE	INLET STATION	INLET OFFSET	INLET INVERT	OUTLET STATION	OUTLET OFFSET	OUTLET INVERT	SLOPE (%)	LENGTH (LF)	THAW PIPE (EA)	DEADMAN (EA)	REMARKS
P33.74	156"	CMP	1809+37.80	85.66 RT	580.74	1809+49.76	82.92 LT	579.54	0.71	169.01	2	2	MAIN CHANNEL
P33.74-1	36"	CMP	1809+28.73	66.18 RT	592.66	1809+36.08	61.76 LT	591.75	0.71	128.15	1	–	OVERFLOW
P33.74-2	36"	CMP	1809+49.10	67.43 RT	592.60	1809+60.04	63.32 LT	591.67	0.71	131.21	1	–	OVERFLOW

HYDROLOGIC & HYDRAULIC SUMMARY

DALTON HWY MILE 33.74 – STATION 1809+43 – UNNAMED (HOT CAT) CREEK

BASIN AREA (SQ MI)	Qfish (CFS)	Q2 (CFS)	Q5 (CFS)	Q50 (CFS)	Q100 (CFS)
11.1	80	120	215	500	590

HEADWATER ELEVATION @ Q50 IS 593.0 FT, HEADWATER ELEVATION @ Q100 IS 593.8 FT

ROAD OVERTOPS AT APPROXIMATELY 1,520 CFS, HW/D @ 1.0 = 578 CFS

CULVERT PURPOSE: FISH PASSAGE

PS&E REVIEW – APRIL 2022

MP 33.74 CULVERT DETAILS

STATE OF ALASKA 49TH ### ### REGISTERED PROFESSIONAL ENGINEER

Preliminary Plans

PLANS DEVELOPED BY: R&M CONSULTANTS, INC.; CERT. OF AUTHORIZATION NO.: AECC111, 9101 VANGUARD DRIVE, ANCHORAGE, AK, 99507, (907) 522-1707
Z:\project\2328.01 DOT_N Dalton Hwy MP 18-37\Civil\ACAD\60735_E-Culvert P&Ps-E14 Fri, Mar/18/22 1:51 PM

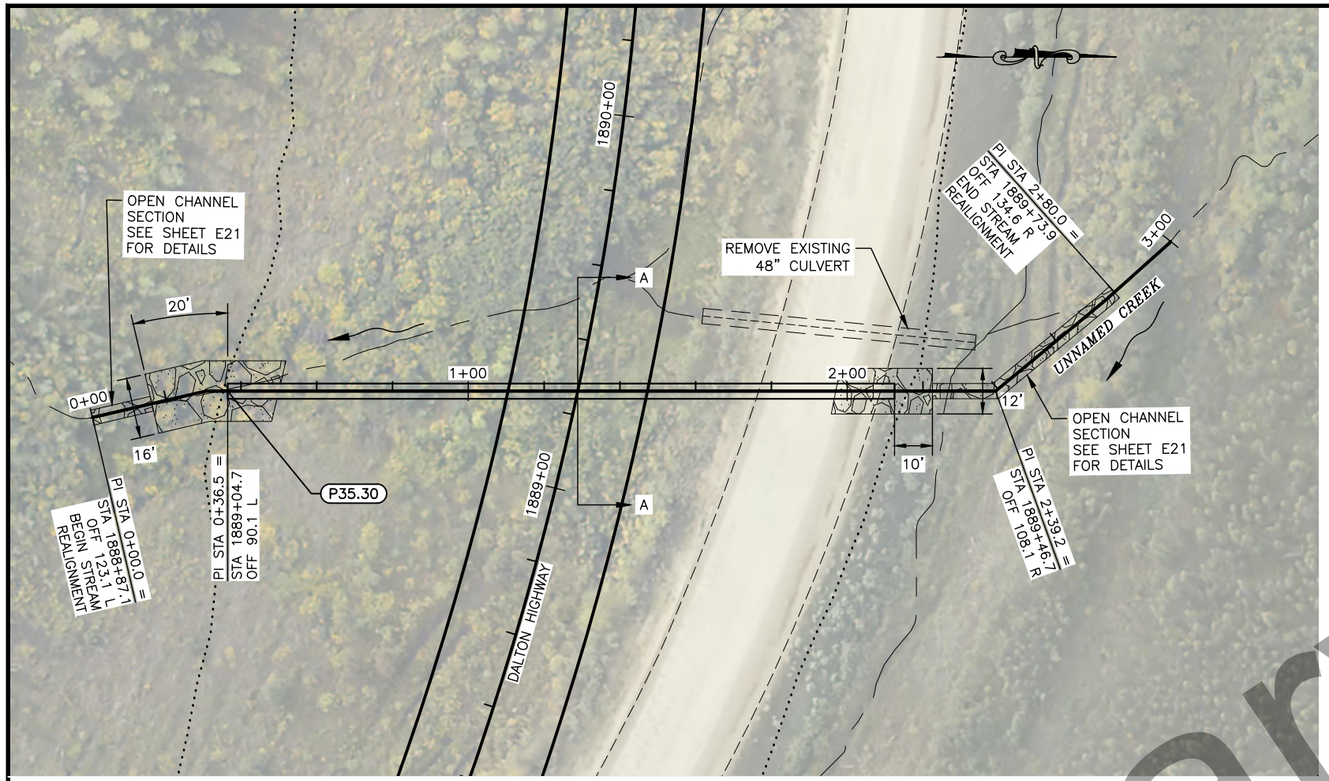

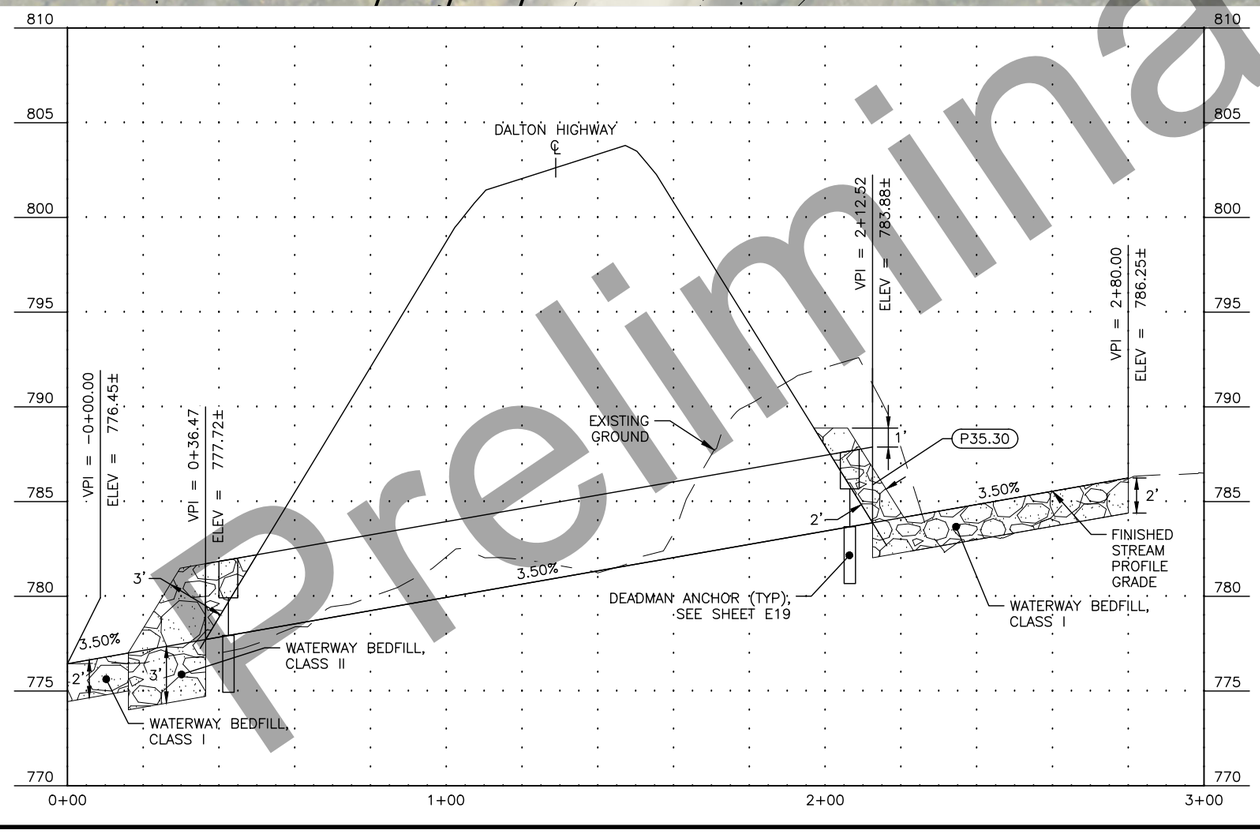

NO.	DATE	REVISION

STATE	PROJECT DESIGNATION	YEAR	SHEET NO.	TOTAL SHEETS
ALASKA	STP-0652017/Z607350000	2022	E15	E21

HYDROLOGIC & HYDRAULIC SUMMARY

DALTON HWY MILE 35.30 – STATION 1889+26 – UNNAMED CREEK

BASIN AREA (SQ MI)	Qfish (CFS)	Q2 (CFS)	Q5 (CFS)	Q50 (CFS)	Q100 (CFS)
0.9	N/A	10	25	60	80

HEADWATER ELEVATION @ Q50 IS 787.6 FT, HEADWATER ELEVATION @ Q100 IS 788.6 FT

ROAD OVERTOPS AT APPROXIMATELY 215 CFS, HW/D @ 1.0 = 65 CFS

CULVERT PURPOSE: CROSS DRAINAGE

PIPE SUMMARY

PIPE NAME	SIZE	TYPE	INLET			OUTLET			SLOPE (%)	LENGTH (LF)	THAW PIPE (EA)	DEADMAN (EA)	REMARKS
			STATION	OFFSET	INVERT	STATION	OFFSET	INVERT					
P35.30	48"	CMP	1889+42.20	81.95 RT	783.88	1889+04.73	90.15 LT	777.72	3.50	176.16	2	2	MAIN CHANNEL

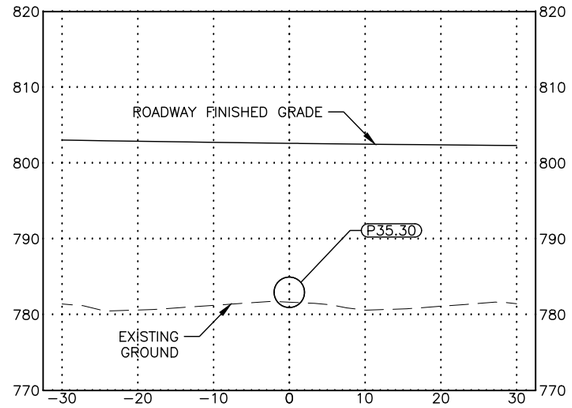

SECTION A–A AT ROADWAY CENTERLINE

PS&E REVIEW – APRIL 2022

MP 35.30 CULVERT DETAILS

STATE OF ALASKA 49TH ### ### REGISTERED PROFESSIONAL ENGINEER

Preliminary Plans

PLANS DEVELOPED BY: R&M CONSULTANTS, INC., CERT. OF AUTHORIZATION NO.: AECC111, 9101 VANGUARD DRIVE, ANCHORAGE, AK, 99507, (907) 522-1707
Z:\project\2328.01 DOT_N Dalton Hwy MP 18-37\Civil\ACAD\60735_E-Culvert P&Ps-E15 Fri, Mar/18/22 1:51 PM

NO.	DATE	REVISION

STATE	PROJECT DESIGNATION	YEAR	SHEET NO.	TOTAL SHEETS
ALASKA	STP-0652017/Z607350000	2022	E16	E21

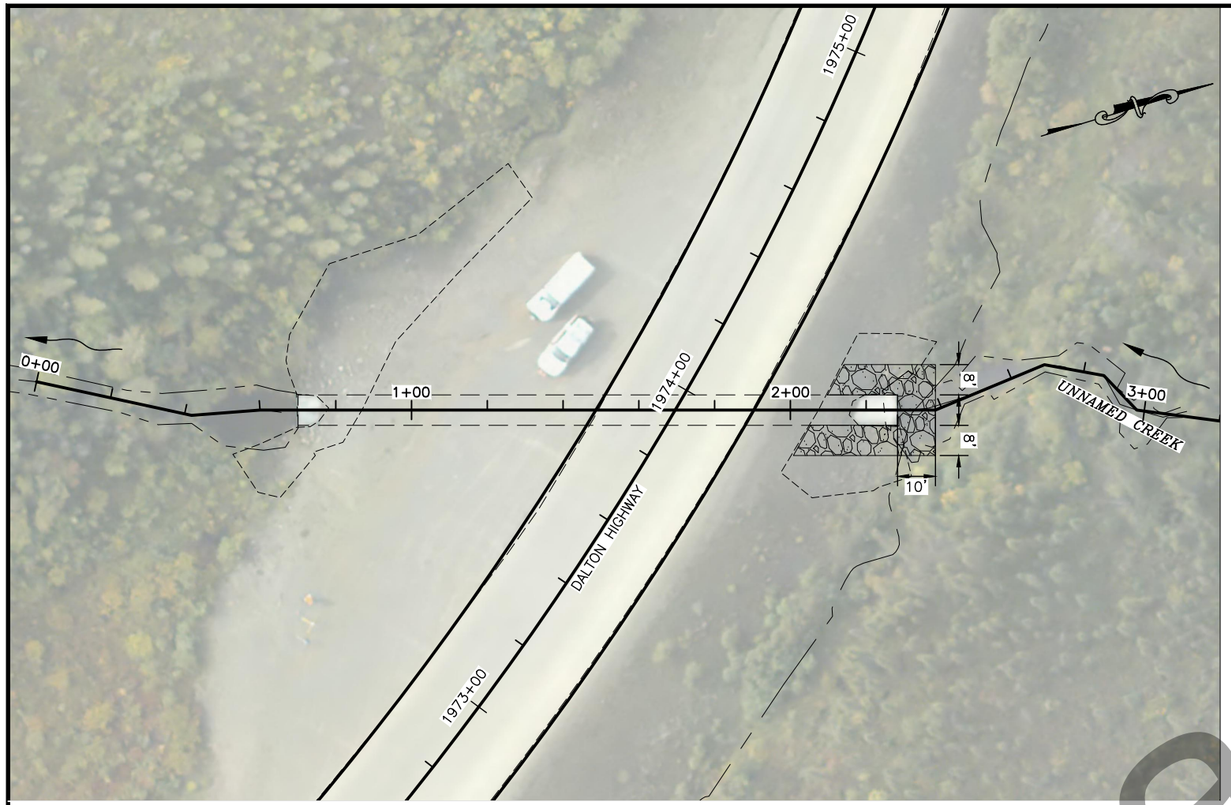

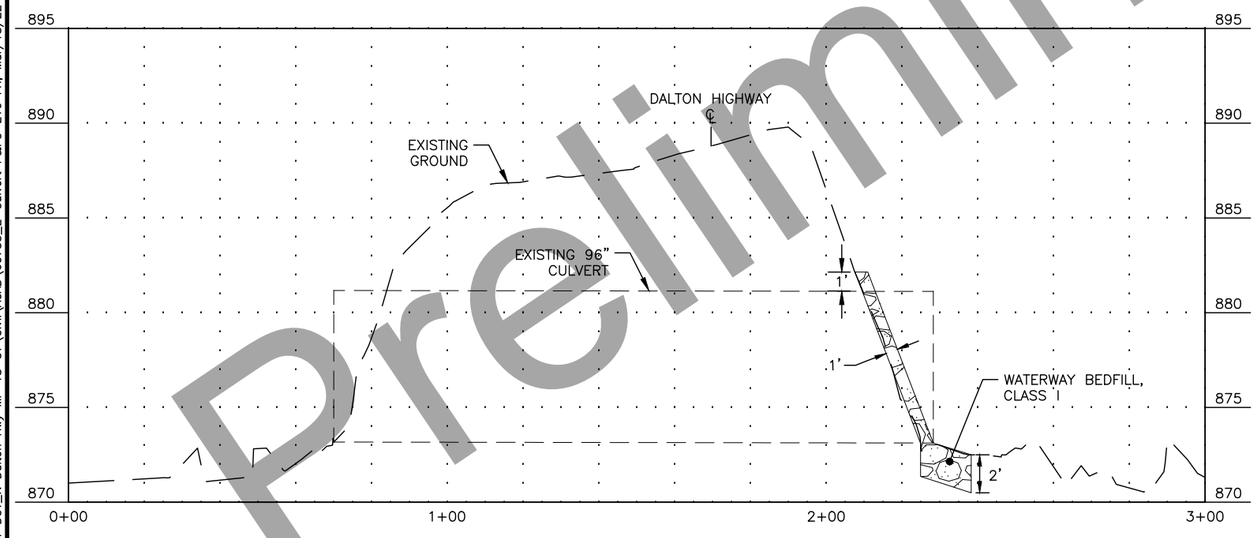

Preliminary Plans

PS&E REVIEW – APRIL 2022

MP 36.97 CULVERT DETAILS

STATE OF ALASKA 49TH ### ### REGISTERED PROFESSIONAL ENGINEER

PLANS DEVELOPED BY: R&M CONSULTANTS, INC., CERT. OF AUTHORIZATION NO.: AECC111, 9101 VANGUARD DRIVE, ANCHORAGE, AK, 99507, (907) 522-1707
Z:\project\2328.01 DOT_N Dalton Hwy MP 18-37\Civil\ACAD\60735_E-Culvert P&Ps-E16 Fri, Mar/18/22 1:51 PM

NO.	DATE	REVISION

STATE	PROJECT DESIGNATION	YEAR	SHEET NO.	TOTAL SHEETS
ALASKA	STP-0652017/Z607350000	2022	E17	E21

GENERAL CULVERT NOTES:

1. FOLLOW MANUFACTURERS INSTALLATION SPECIFICATIONS IN ALL CULVERT INSTALLATIONS.
2. ALL CULVERTS SHALL BE INSTALLED IN EXCAVATIONS ABSENT OF STANDING WATER.
3. CULVERT BEDDING AND BACKFILL SHALL BE IN ACCORDANCE WITH SECTION 204 OF THE SPECIFICATIONS.
4. STATIONING, SKEW, AND GRADE FOR CULVERTS ARE APPROXIMATE. STAKE CULVERTS TO FIT FIELD CONDITIONS AND AS DIRECTED BY THE ENGINEER.
5. CULVERT LENGTHS ARE APPROXIMATE AND SHALL BE FIELD VERIFIED BY THE CONTRACTOR. WHEN INSTALLING SKEWED CULVERTS, ENSURE THE FINAL LENGTH IS DETERMINED OFF THE NEAR EDGE, NOT THE CENTERLINE OF THE CULVERT.
6. REMOVAL OF EXISTING CULVERTS, MARKER POSTS, AND THAW PIPES BECOME THE PROPERTY OF THE CONTRACTOR AND SHALL BE REMOVED FROM THE PROJECT AND DISPOSED OF AT NO ADDITIONAL COST TO THE DEPARTMENT, UNLESS NOTED OTHERWISE.
7. IN AREAS OF POOR FOUNDATION, SUBEXCAVATE BENEATH CULVERTS 1 FOOT TO 3 FEET, OR GREATER TO PROVIDE ADEQUATE FOUNDATION, AS DIRECTED BY THE ENGINEER.
8. INSTALL CULVERTS IN ACCORDANCE WITH THE CULVERT BEDDING DETAIL "TYPE A" ON ALASKA STANDARD PLAN D-01.02 TO A MINIMUM OF 1 FOOT BELOW INVERT.
9. MINIMUM ALLOWABLE CULVERT CROSS SLOPE IS 0.5%, UNLESS NOTED OTHERWISE ON THE PLANS.
10. ALL CULVERTS SHALL HAVE A MINIMUM CAMBER EQUAL TO 1% OF THE LENGTH OF THE PIPE, UNLESS THE PROJECT ENGINEER DIRECTS OTHERWISE.
11. NO CULVERT SHALL BE PLACED UNTIL THE BED HAS BEEN APPROVED BY THE ENGINEER.
12. WHERE APRONS ARE NOT SPECIFIED, MINIMIZE DISTURBANCE TO THE VEGETATIVE MAT AROUND CULVERT ENDS, BUT CLEAR AND GRADE AS NEEDED TO ENSURE PROPER DRAINAGE. THIS WORK IS SUBSIDIARY TO 603 SERIES PAY ITEMS.
13. ESTABLISH RIPRAP APRONS AND FORESLOPES AS SOON AS POSSIBLE AS PERMANENT EROSION CONTROL.
14. EROSION CONTROL STRUCTURES ARE APPROXIMATE AND MAY BE FIELD ADJUSTED BY THE ENGINEER TO TAKE ADVANTAGE OF EXISTING BANKS AND OTHER CHANNEL FEATURES WITHIN THE PERMITTED CONSTRUCTION AREA.
15. ALL WORK FOR CULVERT ARMORING AND CULVERT RIPRAP APRONS, INCLUDING EXCAVATION AND CLEARING AND GRUBBING, IS SUBSIDIARY TO 611 PAY ITEMS.
16. THE CONTRACTOR SHALL ENTER AS-BUILT LOCATIONS FOR ALL CULVERTS IN THE CULVERT SUMMARY TABLE. COORDINATES SHALL BE LOCATED AT THE INTERSECTION OF THE CULVERT AND ROAD CENTERLINE. USE NAD 83 DATUM FORMATTED TO DEGREES, MINUTES, SECONDS TO A PRECISION OF 2 DECIMAL PLACES (DDD° MM' SS.SS"). THIS WORK IS SUBSIDIARY TO 603 SERIES PAY ITEMS.
17. WARP EMBANKMENT SIDE SLOPES FROM VALUE SHOWN IN THE PROJECT SIDE SLOPE TABLE TO THOSE SHOWN IN THE CULVERT PLANS OVER 100 FEET AS MEASURED FROM THE EDGE OF RIPRAP LAYOUT OR AS DIRECTED BY THE ENGINEER.
18. BLEND WATERWAY BEDFILL INTO STREAM CHANNEL TO MATCH EXISTING CHANNEL SHAPE ALONG CREEK BANK OR AS DIRECTED BY ENGINEER.
19. SHAPE APRON INLET AND OUTLET CHANNELS TO MATCH EXISTING CREEK CHANNEL CROSS SECTION, OR AS SPECIFIED ON THE PLANS. IT MAY BE NECESSARY TO CREATE A V-SHAPED, LOW-FLOW CHANNEL IN THE INLET AND OUTLET APRONS.

FISH PASSAGE CULVERT NOTES:

1. BACKFILL ALONG THE ENTIRE CULVERT INVERT WITH WATERWAY BEDFILL TO THE CHANNEL ELEVATION PER SPECIAL PROVISION 628.
2. CONDUCT AN AS-BUILT SURVEY TO ENSURE THAT FISH PASSAGE CULVERTS WERE CONSTRUCTED PER DESIGN. INCLUDE ELEVATIONS OF CULVERT INVERTS AND TOP OF WATERWAY BEDFILL ELEVATIONS WITHIN CULVERT AND APRON LOCATIONS. COLLECT APPROPRIATE DATA AT CORRESPONDING PHASE OF INSTALLATION. EG: SURVEY TOP OF BEDDING PRIOR TO PLACING CULVERT.
3. ADDITIONAL REQUIREMENTS FOR FISH PASSAGE CULVERTS MAY BE CONTAINED IN THE ADF&G HABITAT PERMITS.

Preliminary Plans

PS&E REVIEW – APRIL 2022

CULVERT NOTES

STATE OF ALASKA 49TH ### ### REGISTERED PROFESSIONAL ENGINEER

PLANS DEVELOPED BY: R&M CONSULTANTS, INC.; CERT. OF AUTHORIZATION NO.: AECC111, 9101 VANGUARD DRIVE, ANCHORAGE, AK, 99507, (907) 522-1707
Z:\project\2328.01 DOT_N Dalton Hwy MP 18-37\Civil\ACAD\60735_E-Details-E17 Fri, Mar/18/22 1:51 PM

NO.	DATE	REVISION

STATE	PROJECT DESIGNATION	YEAR	SHEET NO.	TOTAL SHEETS
ALASKA	STP-0652017/Z607350000	2022	E18	E21

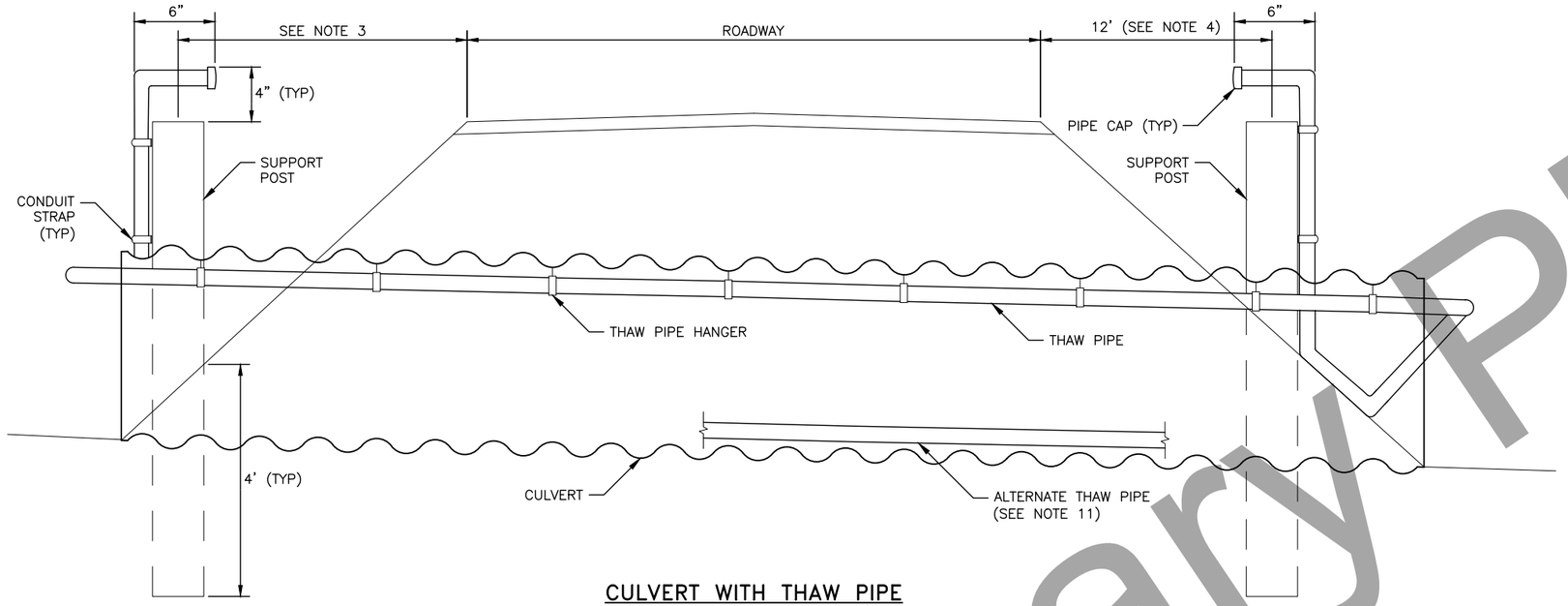

CULVERT WITH THAW PIPE

NOTES:

1. THESE THAW PIPES ARE INTENDED FOR USE IN STEAM THAWING.
2. USE 1/2" ID SCHEDULE 40 BLACK IRON PIPE AND FITTINGS TO MATCH.
3. WHEN THE HEIGHT OF FILL IS LESS THAN 5', LOCATE SUPPORT POST AT THE TOE OF SLOPE.
4. WHEN THE HEIGHT OF FILL EXCEEDS 5' LOCATE THE SUPPORT POST ON THE SIDE SLOPE 12' FROM THE SHOULDER.
5. FASTEN THE THAW PIPE TO THE TOP OF THE CULVERT WITH THAW PIPE HANGERS ON 10' CENTERS MAX. THE MAXIMUM DISTANCE FROM END OF CULVERT TO FIRST PIPE HANGER IS 12".
6. WHEN 2 THAW PIPES ARE CALLED FOR IN THE PLANS, INSTALL AT 10 O'CLOCK AND 2 O'CLOCK.
7. USE PRESSURE TREATED SUPPORT POSTS OF HEM-FIR, NO. 2 OR BETTER. USE AMMONIACAL COPPER ZINC ARSENATE (ACZA) OR CHROMATED COPPER ARSENATE (CCA) PRESERVATIVES ON SUPPORT POSTS. PRESSURE TREAT IN ACCORDANCE WITH AASHTO M133.
8. ALIGN THE TOP OF THE SUPPORT POST WITH THE EDGE OF SHOULDER, OR TO A MAXIMUM HEIGHT OF 5'.
9. FASTEN THAW PIPE TO SUPPORT POSTS WITH GALVANIZED RIGID CONDUIT STRAPS AND 3" LONG GALVANIZED LAG SCREWS AT MAX. 12" CENTERS, IF MORE THAN ONE IS REQUIRED.
10. FILL THAW PIPE WITH A MINUS 50° FAHRENHEIT MIX OF RV ANTIFREEZE AND WATER, THEN CAP.
11. PLACE THAW PIPES IN THE BOTTOM OF THE CULVERT, IF DIRECTED BY THE ENGINEER. ATTACH WITH GALVANIZED RIGID CONDUIT STRAPS USING SAME SPACING AS WITH HANGERS. ATTACH PIPES TO POSTS AS SHOWN.
12. COLD BEND ALL PIPE CORNERS WITH AN EMT RIGID CONDUIT BENDER. DO NOT USE ANY COUPLINGS OR CONNECTION HARDWARE WITHIN 2' OF A CORNER.

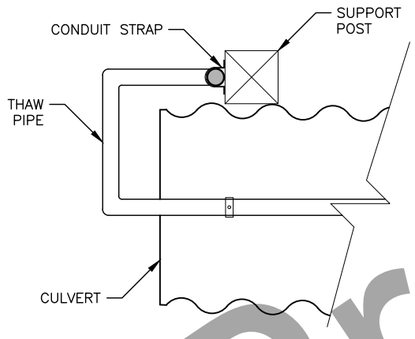

LOW FILL CONDITION
TOP VIEW

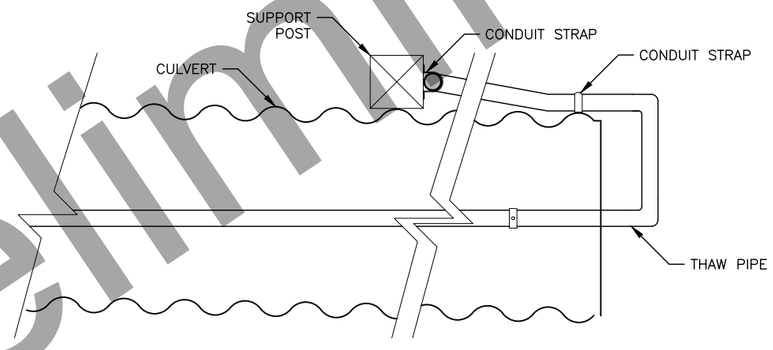

DEEP FILL CONDITION
TOP VIEW

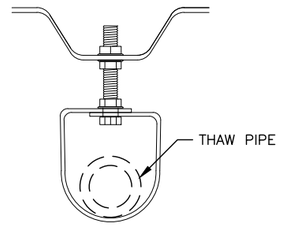

THAW PIPE HANGER DETAIL

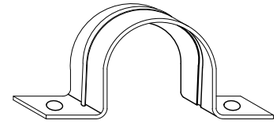

GALVANIZED RIGID CONDUIT STRAP DETAIL

Preliminary Plans

PS&E REVIEW – APRIL 2022

THAW PIPE DETAILS

STATE OF ALASKA 49TH ### ### REGISTERED PROFESSIONAL ENGINEER

PLANS DEVELOPED BY: R&M CONSULTANTS, INC.; CERT. OF AUTHORIZATION NO.: AECC111, 9101 VANGUARD DRIVE, ANCHORAGE, AK, 99507, (907) 522-1707
Z:\project\2328.01 DOT_N Dalton Hwy MP 18-37\Civil\ACAD\60735_E-Details-E18 Fri, Mar/18/22 1:51 PM

NO.	DATE	REVISION

STATE	PROJECT DESIGNATION	YEAR	SHEET NO.	TOTAL SHEETS
ALASKA	STP-0652017/Z607350000	2022	E19	E21

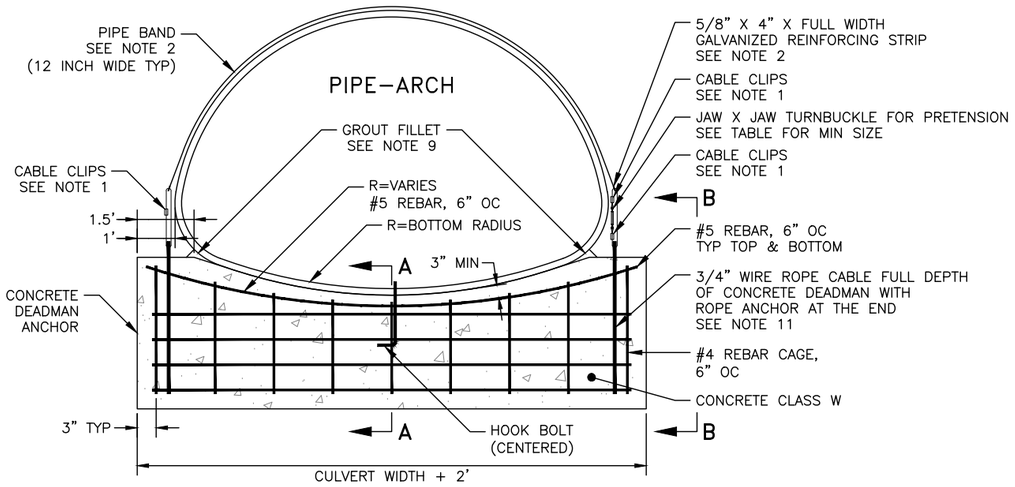

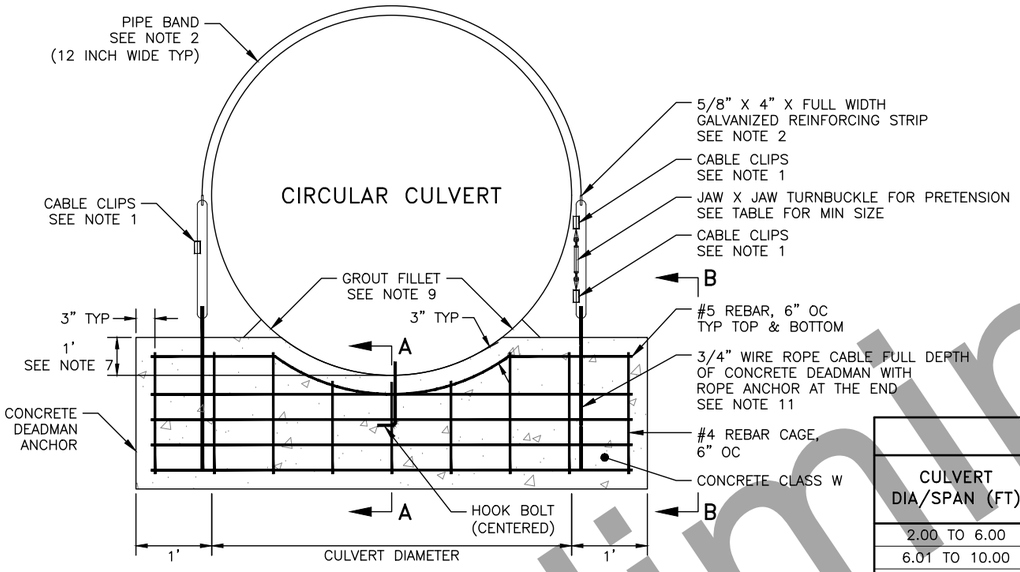

DEADMAN DETAIL

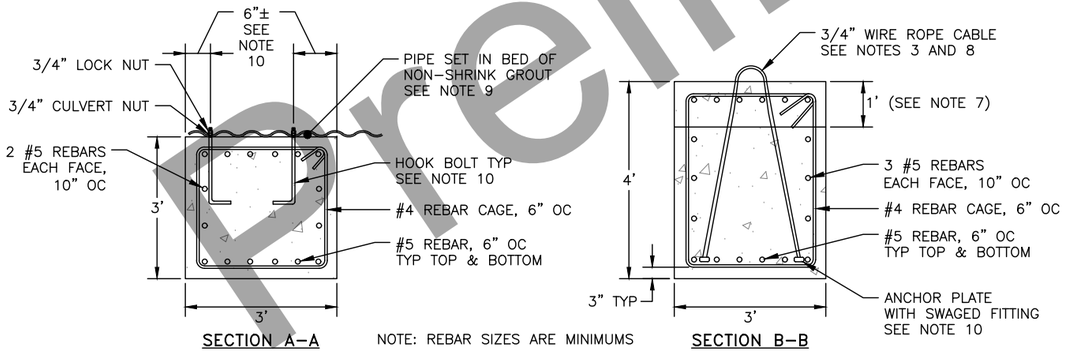

CONCRETE DEADMAN ANCHOR DETAILS

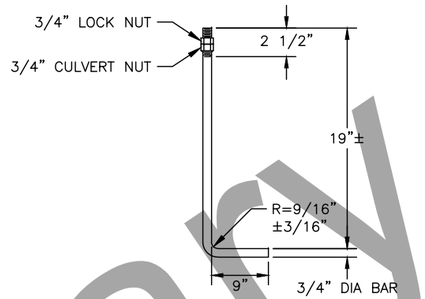

HOOK BOLT
SEE NOTE 4

TABLE 1: MINIMUM HARDWARE SIZE				
CULVERT DIA/SPAN (FT)	WIRE ROPE DIA. (IN)	TURNBUCKLE DIA. (IN)	MINIMUM WIRE ROPE TURNBACK/SPLICE (IN)	U-BOLT NUT TORQUE (FT-LB)
2.00 TO 6.00	5/16	7/8	5 1/2	30
6.01 TO 10.00	3/8	1	6 1/4	45
10.01 TO 16.00	7/16	1 1/4	7	65
16.01 TO 19.99	1/2	1 1/2	11	65

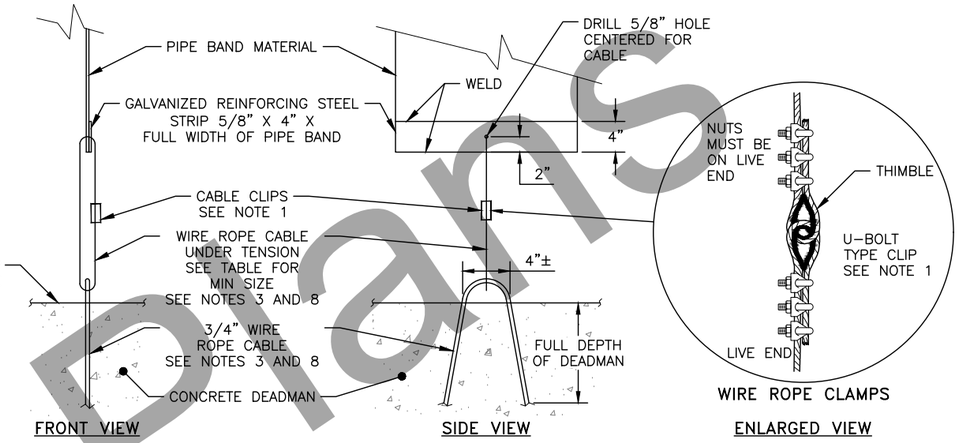

PIPE BAND DETAILS

NOTES:

1. IF DROP FORGED U-BOLT TYPE CLIPS ARE USED, THEY SHOULD BE INSTALLED USING THE FOLLOWING:

   AMOUNT OF WIRE ROPE TO TURN BACK OR SPLICE: SEE TABLE.
   TORQUE REQUIRED TO REACH HOLDING POWER: SEE TABLE.
   SPACING: DIAMETER OF THE ROPE (INCHES) TIMES 6.
   THE BASE OF THE CLAMPS AND NUTS MUST BE ON THE LIVE END OF THE WIRE INSTALL THIMBLE.

2. THE LENGTH OF THE PIPE BANDS SHALL BE A MINIMUM OF HALF THE CIRCUMFERENCE OF THE ROUND CULVERT OR SHALL EXTEND TO WITHIN 6" OF THE SPRINGLINE ON PIPE ARCH CULVERT. THE PIPE BANDS SHALL BE A MINIMUM THICKNESS OF 1/16" GALVANIZED ASTM A1011 SS GRADE 36 OR MINIMUM THICKNESS 0.109" GALVANIZED AASHTO M218. THE REINFORCING STRIP SHALL BE GALVANIZED ASTM A36.
3. WIRE ROPE SHALL BE 6X19 IWRC, EIPS & GALVANIZED AND MEET AASHTO M30 TYPE II REQUIREMENTS OR APPROVED EQUAL.
4. ALL HARDWARE SHALL BE GALVANIZED TO MEET AASHTO M232
5. CLASS W CONCRETE SHALL BE USED TO CONSTRUCT THE CONCRETE DEADMAN ANCHOR. REINFORCEMENT SHALL BE ASTM A615 GRADE 40.
6. CONCRETE DEADMAN SHALL BE CAST TO CONFORM TO THE OUTER RADIUS OF THE CULVERT.
7. USE A SPREADER BEAM/BAR WHEN LIFTING DEADMAN TO AVOID BENDING OF TIE-DOWN/LIFTING LOOP.
8. THE PIPE SHALL BE SET IN A BED OF NON-SHRINK GROUT OF SUFFICIENT THICKNESS TO FULLY FILL THE CORRUGATIONS AFTER TENSIONING OF THE ANCHOR BOLTS AND TIE-DOWN BAND. THE DEADMAN SURFACE SHALL BE PROPERLY PREPARED FOR BEST BONDING WITH GROUT – CLEAN, DUST FREE, SATURATED SURFACE DRY (SSD) CONDITION. BOTTOM OF PIPE SHALL BE AS CLEAN AND DUST FREE AS PRACTICABLE. GROUT SHALL BE FILLETED/CROWNED ALONG SIDES OF PIPE AT THE DEADMAN/PIPE SEAM IN ORDER TO REDUCE WATER INFILTRATION INTO THE GROUTED AREA.
9. PENETRATE CULVERT INVERT HOOK BOLTS IN A CORRUGATION VALLEY TO PROTECT NUT. ANCHOR BOLT HOLES SHALL BE DRILLED, NOT CUT WITH A TORCH, AND COATED WITH APPROPRIATE ZINC RICH PAINT PRIOR TO INSTALLATION. AFTER INSTLLATION AND ANCHOR BOLT NUTS HAVE BEEN TIGHTENED, COAT THE ANCHOR BOLT AND SURROUNDING AREA WITH ZINC RICH PAINT.
10. SEE STANDARD PLAN G-00.05 SHEET 4 FOR ROPE ANCHOR DETAILS.

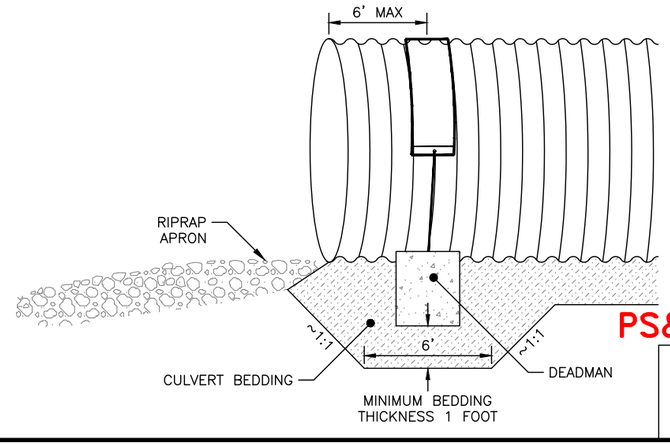

PS&E REVIEW – APRIL 2022

DEADMAN DETAILS

STATE OF ALASKA 49TH ### ### REGISTERED PROFESSIONAL ENGINEER

Preliminary Plans

PLANS DEVELOPED BY: R&M CONSULTANTS, INC., CERT. OF AUTHORIZATION NO.: AECC111, 9101 VANGUARD DRIVE, ANCHORAGE, AK, 99507, (907) 522-1707
Z:\project\2328.01 DOT_N Dalton Hwy MP 18-37\Civil\ACAD\60735_E-Details-E19 Fri, Mar/18/22 1:51 PM

NO.	DATE	REVISION

STATE	PROJECT DESIGNATION	YEAR	SHEET NO.	TOTAL SHEETS
ALASKA	STP–0652017/Z607350000	2022	E20	E21

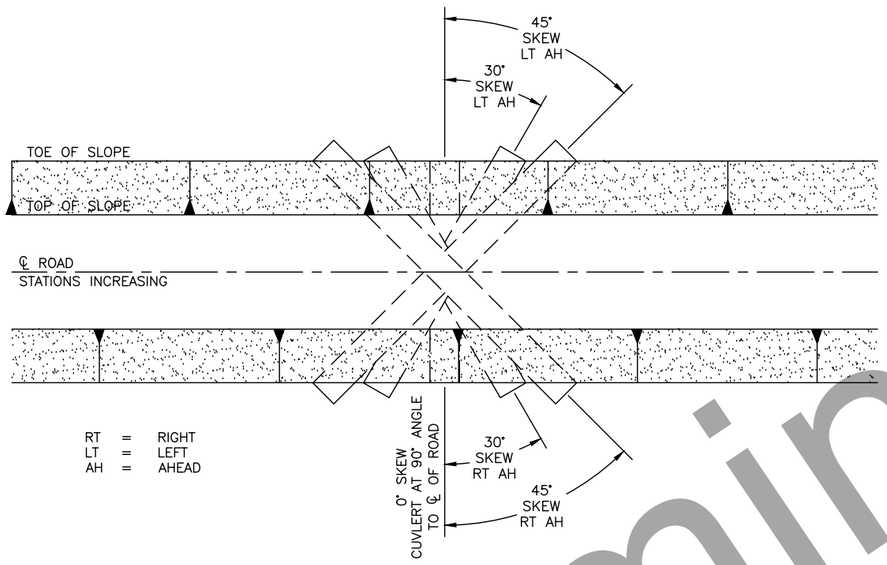

CULVERT SKEW

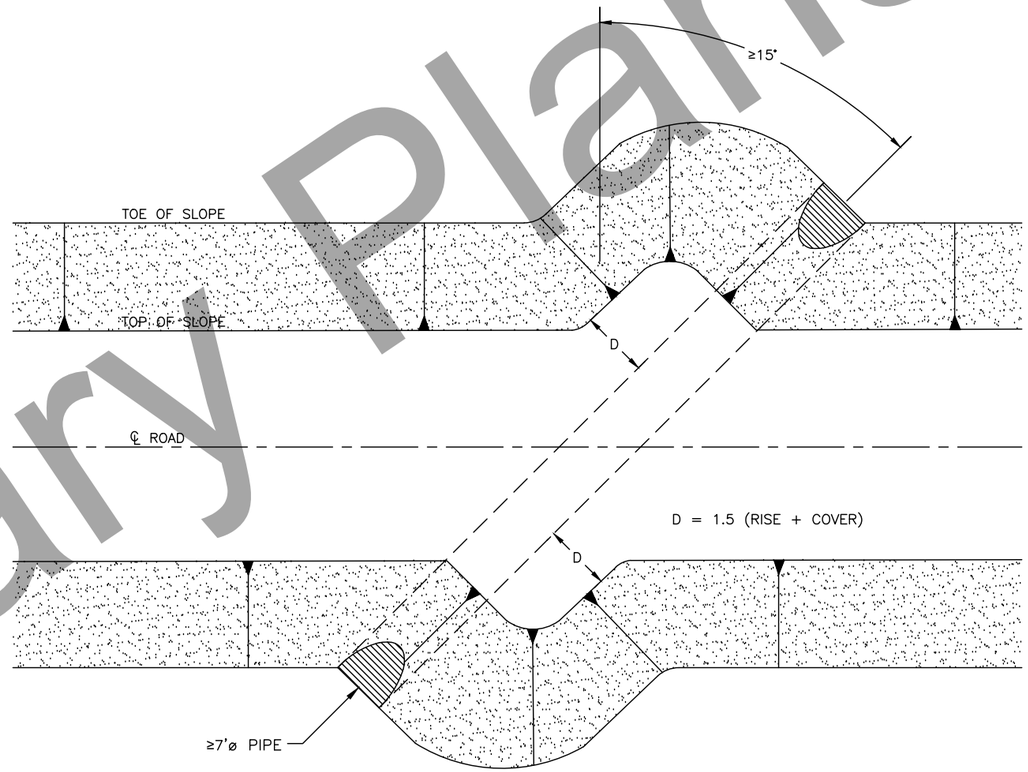

EMBANKMENT WIDENING FOR SKEWED CULVERTS PLAN

NOTES:

1. CULVERTS 7' AND LARGER, WITH SKEWS GREATER THAN 15 DEGREES, SHALL HAVE FORESLOPES WIDENED ON THE OUTSIDE TO PROVIDE BALANCED FILL PRESSURE ON BOTH SIDES OF THE CULVERT ENDS. EXTENT OF WIDENING CAN BE LIMITED TO A FILL HEIGHT 3' ABOVE TOP OF CULVERT AND EXTENDING TO THE LIMIT OF FORESLOPE RIPRAP BEYOND THE OUTER SIDE OF THE CULVERT.

Preliminary Plans

PS&E REVIEW – APRIL 2022

CULVERT SKEW DETAILS

STATE OF ALASKA 49TH
###
###
REGISTERED PROFESSIONAL ENGINEER

PLANS DEVELOPED BY: R&M CONSULTANTS, INC., CERT. OF AUTHORIZATION NO.: AECC111, 9101 VANGUARD DRIVE, ANCHORAGE, AK, 99507, (907) 522-1707
Z:\project\2328.01 DOT_N Dalton Hwy MP 18-37\Civil\ACAD\60735_E-Details-E20 Fri, Mar/18/22 1:51 PM

NO.	DATE	REVISION

STATE	PROJECT DESIGNATION	YEAR	SHEET NO.	TOTAL SHEETS
ALASKA	STP-0652017/Z607350000	2022	E21	E21

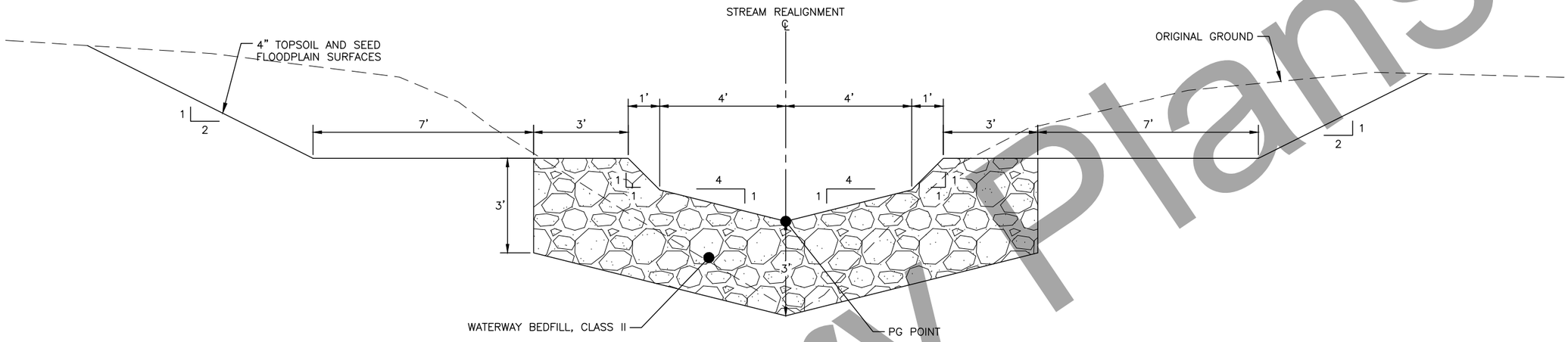

OPEN CHANNEL TYPICAL SECTION

MP 33.74 HOT CAT CREEK

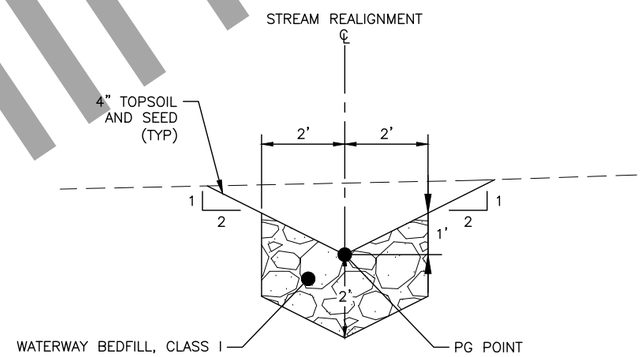

OPEN CHANNEL TYPICAL SECTION

MP 24.11 HESS CREEK OVERFLOW
MP 28.55 UNNAMED CREEK
MP 29.48 HOT DOG CREEK
MP 31.69 UNNAMED CREEK
MP 35.30 UNNAMED CREEK
MP 36.97 UNNAMED CREEK

Preliminary Plans

PS&E REVIEW – APRIL 2022

RIPRAP DETAILS

STATE OF ALASKA 49TH REGISTERED PROFESSIONAL ENGINEER ### ###

PLANS DEVELOPED BY: R&M CONSULTANTS, INC., CERT. OF AUTHORIZATION NO.: AECC111, 9101 VANGUARD DRIVE, ANCHORAGE, AK, 99507, (907) 522-1707
Z:\project\2328.01 DOT_N Dalton Hwy MP 18-37\Civil\ACAD\60735_E-Details-E21 Fri, Mar/18/22 1:51 PM

NO.	DATE	REVISION

STATE	PROJECT DESIGNATION	YEAR	SHEET NO.	TOTAL SHEETS
ALASKA	0652017/Z607350000	2022	F1	F47

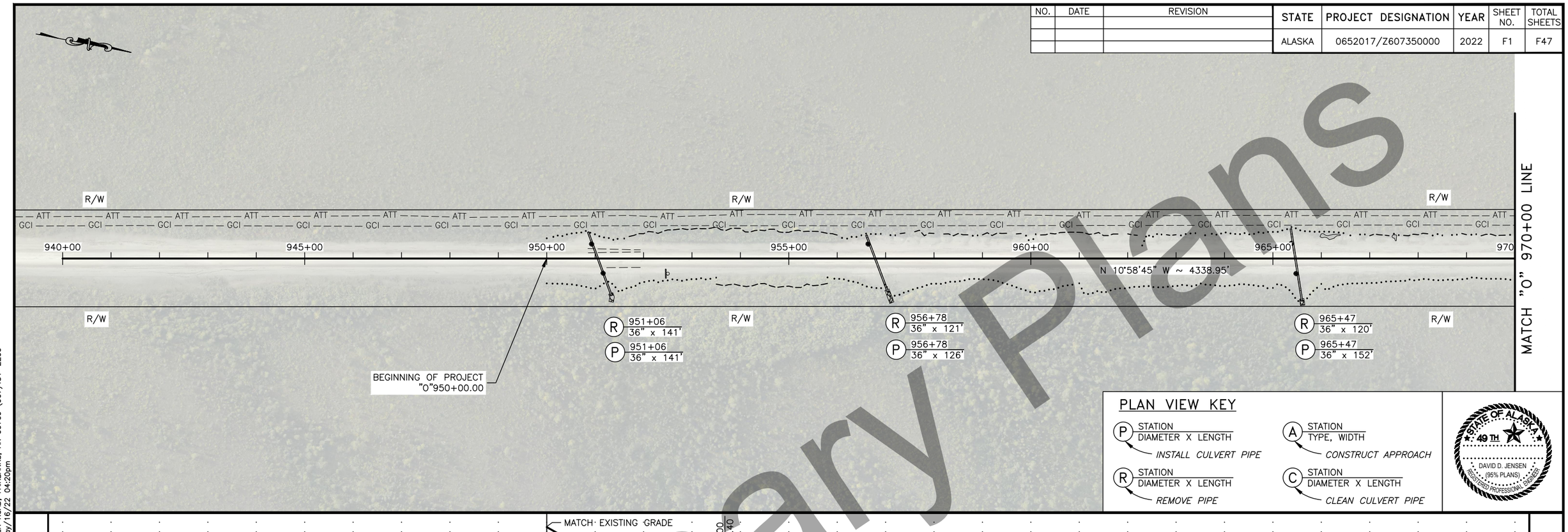

PLAN VIEW KEY

- (P) STATION / DIAMETER X LENGTH — *INSTALL CULVERT PIPE*
- (A) STATION / TYPE, WIDTH — *CONSTRUCT APPROACH*
- (R) STATION / DIAMETER X LENGTH — *REMOVE PIPE*
- (C) STATION / DIAMETER X LENGTH — *CLEAN CULVERT PIPE*

STATE OF ALASKA 49TH
DAVID D. JENSEN
(95% PLANS)
REGISTERED PROFESSIONAL ENGINEER

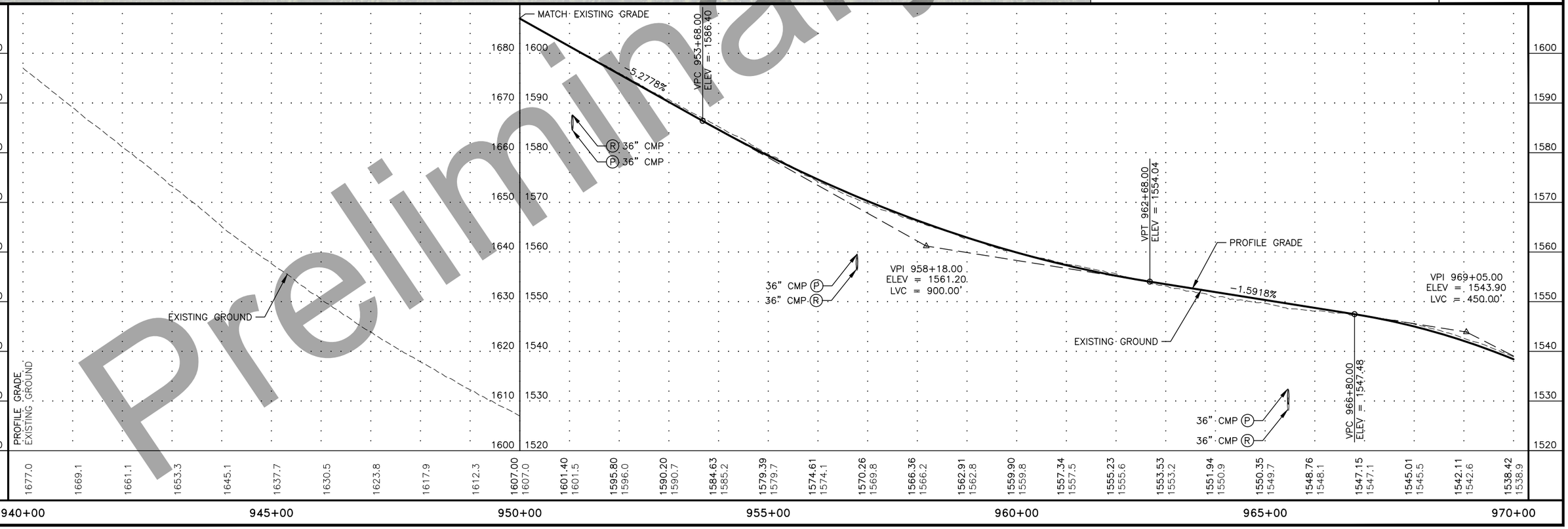

Preliminary Plans

PLANS DEVELOPED BY: STATE OF ALASKA DEPARTMENT OF TRANSPORTATION & PUBLIC FACILITIES, NORTHERN REGION, 2301 PEGER ROAD, FAIRBANKS, AK 99709 (907)451-2200
C:\Users\ddjensen\Desktop\60735_Dalton_18_37\6 Design\4 C3D\1 Plots\Z607350000_P&P-940+00.00-970+00.00 Mon, May/16/22 04:20pm

NO.	DATE	REVISION

STATE	PROJECT DESIGNATION	YEAR	SHEET NO.	TOTAL SHEETS
ALASKA	0652017/Z607350000	2022	F2	F47

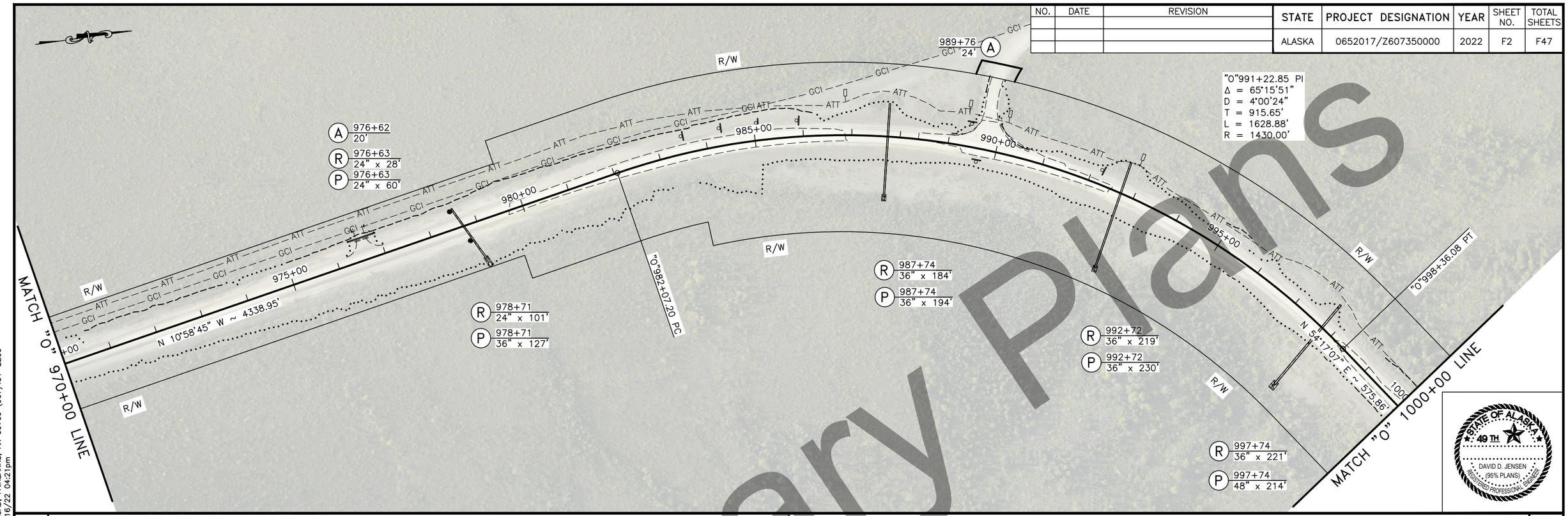

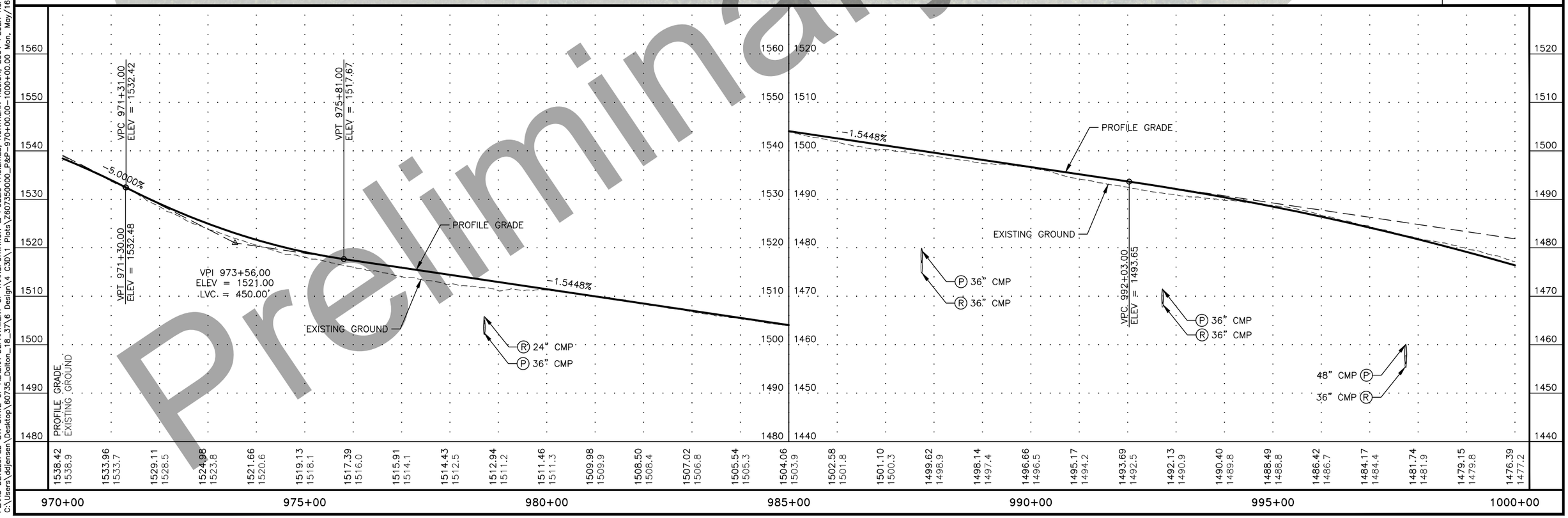

Preliminary Plans

STATE OF ALASKA 49TH
DAVID D. JENSEN
(95% PLANS)
REGISTERED PROFESSIONAL ENGINEER

PLANS DEVELOPED BY: STATE OF ALASKA DEPARTMENT OF TRANSPORTATION & PUBLIC FACILITIES, NORTHERN REGION, 2301 PEGER ROAD, FAIRBANKS, AK 99709 (907)451-2200
C:\Users\ddjensen\Desktop\60735_Dalton_18_37\6 Design\4 C3D\1 Plots\Z607350000_P&P-970+00.00-1000+00.00 Mon, May/16/22 04:21pm

NO.	DATE	REVISION

STATE	PROJECT DESIGNATION	YEAR	SHEET NO.	TOTAL SHEETS
ALASKA	0652017/Z607350000	2022	F3	F47

"O"1019+12.97 PI
Δ = 35°34'44"
D = 3°57'05"
T = 465.25'
L = 900.40'
R = 1450.00'

MATCH "O" 1000+00 LINE

MATCH "O" 1030+00 LINE

N 54°17'07" E ~ 575.86'

N 30°40'07" E ~ 446.36'

N 66°14'51" E ~ 659.12'

"O"1004+11.93 PC

"O"1010+01.36 PT

"O"1014+47.72 PC

"O"1023+48.12 PT

"O"1007+10.89 PI
Δ = 23°36'59"
D = 4°00'24"
T = 298.96'
L = 589.42'
R = 1430.00'

1002+63 (R) 36" x 252'
1002+63 (P) 36" x 252'

1012+93 (R) 24" x 65'
1012+93 (P) 36" x 65'

1015+20 (R) 24" x 101'
1015+20 (P) 36" x 101'

1018+41 (R) 24" x 131'
1018+41 (P) 36" x 126'

1019+45 (R) 24" x 137'
1019+47 (P) 36" x 141'

1021+89 (R) 36" x 178'
1021+89 (P) 36" x 189'

1027+67 (R) 42" x 279'
1027+67 (P) 48" x 259'

1029+45 (R) 42" x 297'
1029+45 (P) 48" x 300'

ACE FILL

ACE FILL

R/W

ATT

1000+00 1005+00 1010+00 1015+00 1020+00 1025+00 1030+00

VPI 1000+91.00
ELEV = 1480.50
LVC = 1776.00'

PROFILE GRADE
EXISTING GROUND

VPT 1009+79.00
ELEV = 1440.23

-4.5703%

36" CMP (P)
36" CMP (R)

36" CMP (P)
24" CMP (R)

VPI 1027+70.00
ELEV = 1359.00
LVC = 1200.00'

VPC 1021+70.00
ELEV = 1386.21

48" CMP (P)
42" CMP (R)

1000+00	1005+00	1010+00	1015+00	1020+00	1025+00	1030+00
1476.39 / 1477.2	1473.45 / 1473.9	1470.34 / 1470.7	1467.06 / 1467.5	1463.60 / 1464.2	1459.98 / 1460.8	1456.18 / 1456.9
1452.21 / 1452.6	1448.07 / 1448.2	1443.76 / 1443.3	1439.27 / 1438.4	1434.74 / 1433.6	1430.20 / 1428.7	1425.67 / 1424.3
1421.13 / 1420.0	1416.60 / 1415.9	1412.06 / 1411.5	1407.53 / 1406.9	1402.99 / 1401.1	1398.46 / 1396.0	1393.92 / 1391.9
1389.39 / 1388.4	1384.89 / 1384.3	1381.01 / 1379.7	1377.95 / 1376.7	1375.71 / 1375.0	1374.30 / 1373.8	1373.70 / 1372.4
1373.92 / 1372.5	1374.97 / 1373.9	1376.83 / 1373.6				

STATE OF ALASKA 49TH
DAVID D. JENSEN
(95% PLANS)
REGISTERED PROFESSIONAL ENGINEER

Preliminary Plans

PLANS DEVELOPED BY: STATE OF ALASKA DEPARTMENT OF TRANSPORTATION & PUBLIC FACILITIES, NORTHERN REGION, 2301 PEGER ROAD, FAIRBANKS, AK 99709 (907)451-2200
C:\Users\ddjensen\Desktop\60735_Dalton_18_37\6 Design\4 C3D\1 Plots\Z607350000_P&P-1000+00.00-1030+00.00 Mon, May/16/22 04:21pm

NO.	DATE	REVISION

STATE	PROJECT DESIGNATION	YEAR	SHEET NO.	TOTAL SHEETS
ALASKA	0652017/Z607350000	2022	F4	F47

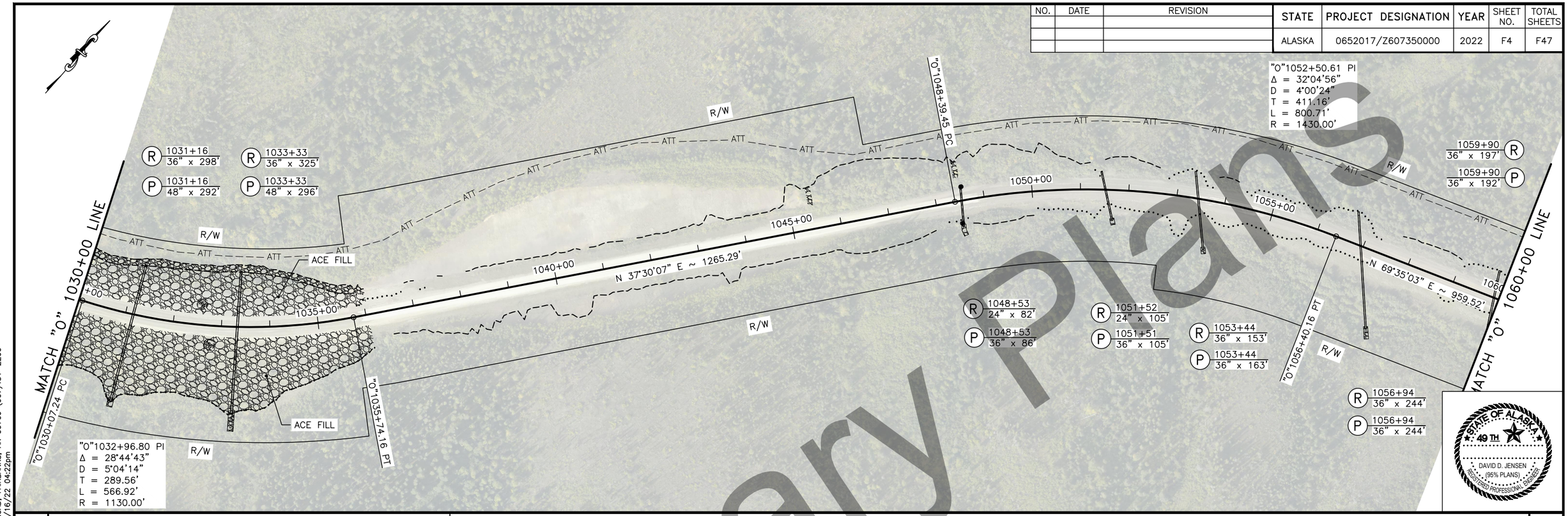

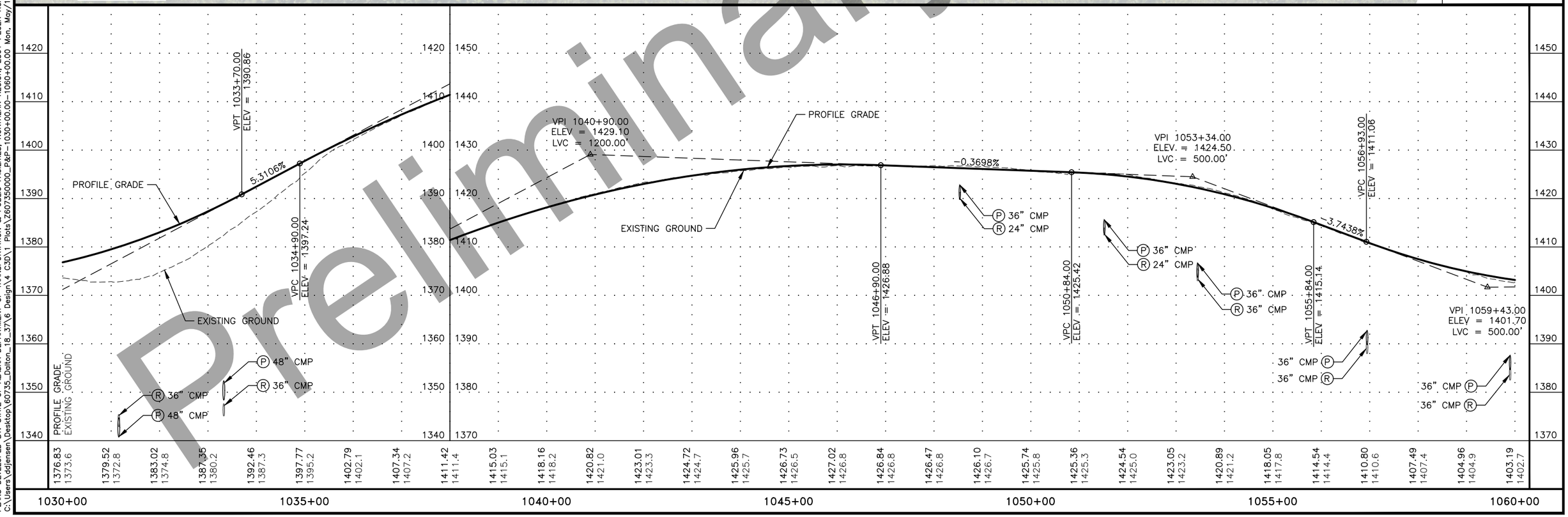

Preliminary Plans

STATE OF ALASKA 49TH
DAVID D. JENSEN
(95% PLANS)
REGISTERED PROFESSIONAL ENGINEER

PLANS DEVELOPED BY: STATE OF ALASKA DEPARTMENT OF TRANSPORTATION & PUBLIC FACILITIES, NORTHERN REGION, 2301 PEGER ROAD, FAIRBANKS, AK 99709 (907)451-2200
C:\Users\ddjensen\Desktop\60735_Dalton_18_37\6 Design\4 C3D\1 Plots\Z607350000_P&P-1030+00.00-1060+00.00 Mon, May/16/22 04:22pm

NO.	DATE	REVISION

STATE	PROJECT DESIGNATION	YEAR	SHEET NO.	TOTAL SHEETS
ALASKA	0652017/Z607350000	2022	F5	F47

Preliminary Plans

MATCH "O" 1060+00 LINE

1060+00

N 69°35'03" E ~ 959.52'

R 1062+29 36" x 212'

P 1062+29 36" x 214'

R/W

ATT

1065+00

"O"1065+99.68 PC

"O"1080+89.60 PI
Δ = 104°54'56"
D = 5°00'14"
T = 1489.92'
L = 2096.64'
R = 1145.00'

1070+00

1075+00

1080+00

1085+00

1090+00 LINE

N 35°19'53" W ~ 424.41'

R 1088+09 42" x 214'

P 1088+09 48" x 219'

"O"1086+96.32 PT



VPT 1061+93.00
ELEV = 1401.96

PROFILE GRADE

VPI 1074+02.00
ELEV = 1403.20
LVC = 1510.00'

0.1028%

EXISTING GROUND

VPC 1066+47.00
ELEV = 1402.42

P 36" CMP
R 36" CMP

VPT 1081+57.00
ELEV = 1367.91

-4.6742%

VPC 1087+48.00
ELEV = 1340.29

VPI 1089+98.00
ELEV = 1328.60
LVC = 500.00'

48" CMP P
42" CMP R

PROFILE GRADE
EXISTING GROUND

| | | |

NO.	DATE	REVISION

STATE	PROJECT DESIGNATION	YEAR	SHEET NO.	TOTAL SHEETS
ALASKA	0652017/Z607350000	2022	F6	F47

LAYOUT SCHEDULE

NO.	STATION	OFFSET	REMARKS
1	"0"1103+19.1	18.0 LT	BEGIN PARKING AREA TAPER
2	"0"1104+54.1	116.0 LT	END PARKING AREA TAPER
3	"0"1106+44.7	116.0 LT	BEGIN PARKING AREA TAPER
4	"0"1107+79.7	18.0 LT	END PARKING AREA TAPER

"0"1093+84.74 PI
Δ = 21°21'31"
D = 4°05'33"
T = 264.01'
L = 521.89'
R = 1400.00'

"0"1109+01.80 PI
Δ = 22°16'29"
D = 2°43'42"
T = 413.42'
L = 816.41'
R = 2100.00'

R 1090+34 36" x 223'
P 1090+34 36" x 219'
R 1091+79 36" x 214'
P 1091+79 36" x 216'
R 1095+11 42" x 241'
P 1095+11 48" x 251'
R 1100+59 36" x 193'
P 1100+59 36" x 194'
R 1108+74 24" x 114'

MATCH "0" 1090+00 LINE
MATCH "0" 1120+00 LINE
N 13°58'22" W ~ 845.76'
N 8°18'07" E ~ 1515.57'
"0"1091+20.73 PC
"0"1096+42.62 PT
"0"1104+88.38 PC
"0"1113+04.78 PT
R/W
ATT

Preliminary Plans

STATE OF ALASKA 49TH
DAVID D. JENSEN
(95% PLANS)
REGISTERED PROFESSIONAL ENGINEER

VPT 1092+48.00
ELEV = 1321.34
VPC 1103+32.50
ELEV = 1289.83
VPT 1115+73.50
ELEV = 1293.53
VPC 1118+95.00
ELEV = 1304.78
VPI 1109+53.00
ELEV = 1271.80
LVC = 1241.00'
2.9054%
3.5015%
PROFILE GRADE
EXISTING GROUND
SUBEXCAVATION LIMITS
P 36" CMP
R 36" CMP
P 48" CMP
R 42" CMP

PROFILE GRADE
EXISTING GROUND

1340 1330 1320 1310 1300 1290 1280 1270 1260

1329.63 1327.8 | 1326.02 1324.6 | 1322.77 1323.1 | 1319.83 1320.0 | 1316.92 1316.9 | 1314.02 1314.9 | 1311.11 1311.5 | 1308.20 1307.7 | 1305.30 1303.8 | 1302.39 1300.7 | 1299.49 1298.8 | 1296.58 1296.0 | 1293.68 1292.5 | 1290.77 1289.9 | 1287.98 1288.4 | 1285.69 1286.5 | 1283.90 1284.1 | 1282.64 1282.4 | 1281.89 1281.7 | 1281.65 1281.1 | 1281.94 1281.0 | 1282.73 1282.2 | 1284.05 1282.2 | 1285.88 1283.4 | 1288.23 1285.3 | 1291.09 1288.3 | 1294.45 1292.6 | 1297.96 1297.2 | 1301.46 1301.2 | 1304.96 1304.8 | 1308.31 1308.2

1090+00 1095+00 1100+00 1105+00 1110+00 1115+00 1120+00

PLANS DEVELOPED BY: STATE OF ALASKA DEPARTMENT OF TRANSPORTATION & PUBLIC FACILITIES, NORTHERN REGION, 2301 PEGER ROAD, FAIRBANKS, AK 99709 (907)451-2200
C:\Users\ddjensen\Desktop\60735_Dalton_18_37\6 Design\4 C3D\1 Plots\Z607350000_P&P-1090+00.00-1120+00.00 Mon, May/16/22 04:24pm

NO.	DATE	REVISION

STATE	PROJECT DESIGNATION	YEAR	SHEET NO.	TOTAL SHEETS
ALASKA	0652017/Z607350000	2022	F7	F47

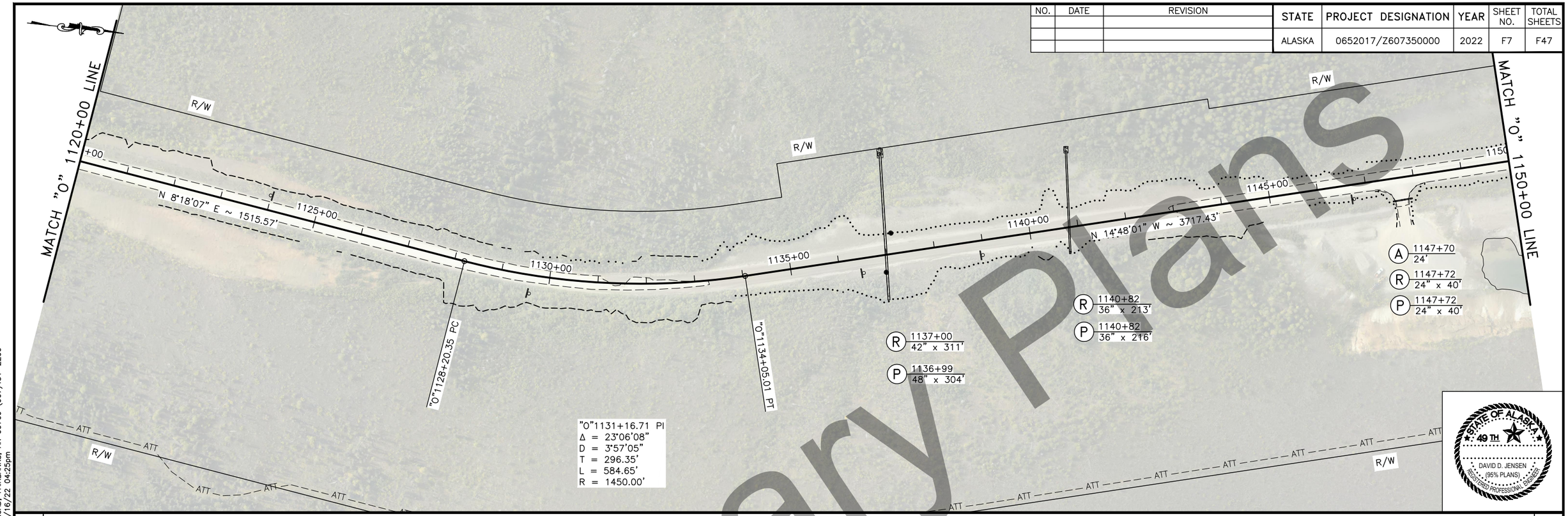

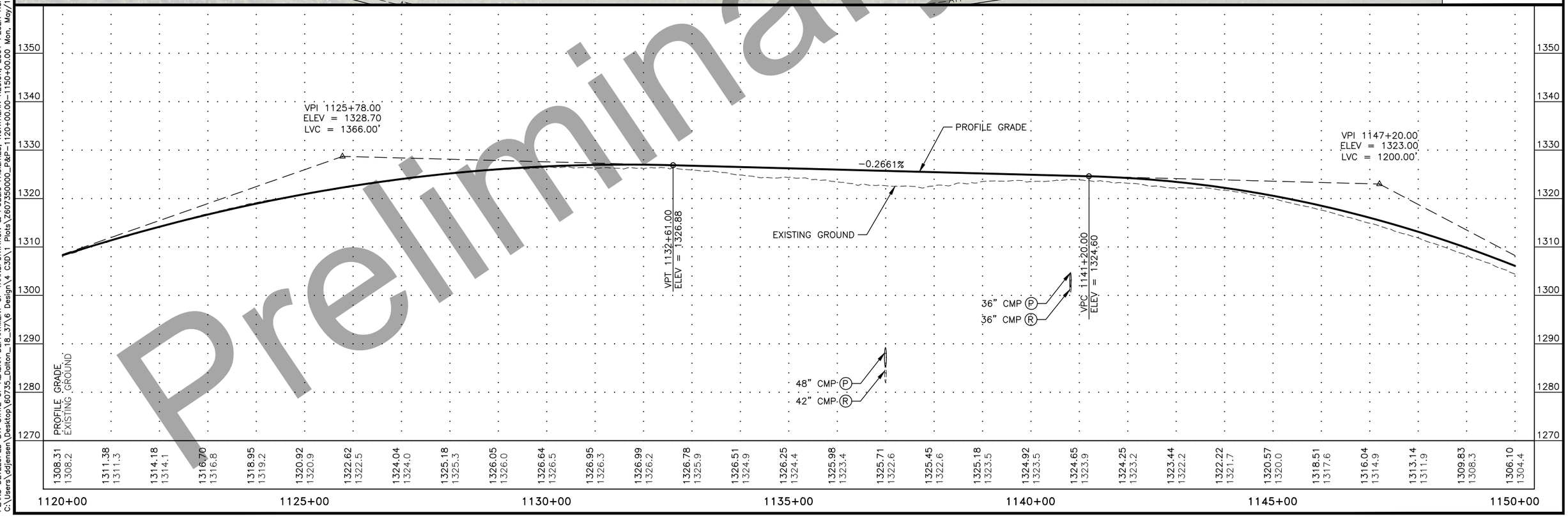

Preliminary Plans

PLANS DEVELOPED BY: STATE OF ALASKA DEPARTMENT OF TRANSPORTATION & PUBLIC FACILITIES, NORTHERN REGION, 2301 PEGER ROAD, FAIRBANKS, AK 99709 (907)451-2200
C:\Users\ddjensen\Desktop\60735_Dalton_18_37\6 Design\4 C3D\1 Plots\Z607350000_P&P-1120+00.00-1150+00.00 Mon, May/16/22 04:25pm

NO.	DATE	REVISION

STATE	PROJECT DESIGNATION	YEAR	SHEET NO.	TOTAL SHEETS
ALASKA	0652017/Z607350000	2022	F8	F47

LAYOUT SCHEDULE

NO.	STATION	OFFSET	REMARKS
1	"0"1154+42.4	18.0 LT	BEGIN TRUCK TURNOUT TAPER
2	"0"1156+02.4	116.0 LT	END TRUCK TURNOUT TAPER
3	"0"1158+02.1	116.0 LT	BEGIN TRUCK TURNOUT TAPER
4	"0"1159+52.1	18.0 LT	END TRUCK TURNOUT TAPER

MATCH "O" 1150+00 LINE

MATCH "O" 1180+00 LINE

R/W

ATT

N 14°48'01" W ~ 3717.43'

1155+00

1160+00

1165+00

1170+00

1175+00

(R) 1161+02 24" x 101'
(P) 1161+02 36" x 98'

(R) 1165+22 36" x 285'
(P) 1165+11 36" x 307'

(R) 1167+59 36" x 255'
(P) 1167+59 36" x 262'

(R) 1170+31 42" x 297'
(P) 1170+31 48" x 319'

(A) 1171+79 24'

"0"1171+22.43 PC

(R) 1172+91 36" x 219'
(P) 1172+91 36" x 226'

(R) 1178+80 36" x 251'
(P) 1178+80 36" x 266'

"0"1185+77.03 PI
Δ = 83°19'00"
D = 3°30'16"
T = 1454.60'
L = 2377.53'
R = 1635.00'

STATE OF ALASKA
49 TH
DAVID D. JENSEN
(95% PLANS)
REGISTERED PROFESSIONAL ENGINEER

PROFILE GRADE
EXISTING GROUND

VPT 1153+20.00
ELEV = 1291.37

-5.2722%

VPC 1163+20.00
ELEV = 1238.64

-5.2722%

VPT 1167+20.00
ELEV = 1219.72

VPI 1165+20.00
ELEV = 1228.10
LVC = 400.00'

-4.1918%

-4.1918%

(P) 36" CMP
(R) 24" CMP

(P) 36" CMP
(R) 36" CMP

(P) 48" CMP
(R) 42" CMP

(P) 36" CMP
(R) 36" CMP

VPC 1177+60.00
ELEV = 1176.12

(P) 36" CMP
(R) 36" CMP

(P) 36" CMP
(R) 36" CMP

1310 1300 1290 1280 1270 1260 1250 1240 1230

1260 1250 1240 1230 1220 1210 1200 1190 1180

1210 1200 1190 1180 1170 1160 1150 1140 1130

1306.10 1304.4 | 1301.96 1300.4 | 1297.39 1295.9 | 1292.41 1291.1 | 1287.15 1286.0 | 1281.88 1280.8 | 1276.60 1275.5 | 1271.33 1270.3 | 1266.06 1265.2 | 1260.79 1260.0 | 1255.52 1254.7 | 1250.24 1249.2 | 1244.97 1244.0 | 1239.70 1238.2 | 1234.51 1232.8 | 1229.59 1227.7 | 1224.94 1223.1 | 1220.56 1218.7 | 1216.36 1214.5 | 1212.17 1209.6 | 1207.98 1204.5 | 1203.79 1200.7 | 1199.60 1198.4 | 1195.40 1194.4 | 1191.21 1190.4 | 1187.02 1187.1 | 1182.83 1182.9 | 1178.64 1177.9 | 1174.44 1173.5 | 1170.15 1168.9 | 1165.75 1164.3

1150+00 1155+00 1160+00 1165+00 1170+00 1175+00 1180+00

Preliminary Plans

PLANS DEVELOPED BY: STATE OF ALASKA DEPARTMENT OF TRANSPORTATION & PUBLIC FACILITIES, NORTHERN REGION, 2301 PEGER ROAD, FAIRBANKS, AK 99709 (907)451-2200
C:\Users\ddjensen\Desktop\60735_Dalton_18_37\6 Design\4 C3D\1 Plots\Z607350000_P&P-1150+00.00-1180+00.00 Mon, May/16/22 04:26pm

NO.	DATE	REVISION

STATE	PROJECT DESIGNATION	YEAR	SHEET NO.	TOTAL SHEETS
ALASKA	0652017/Z607350000	2022	F9	F47

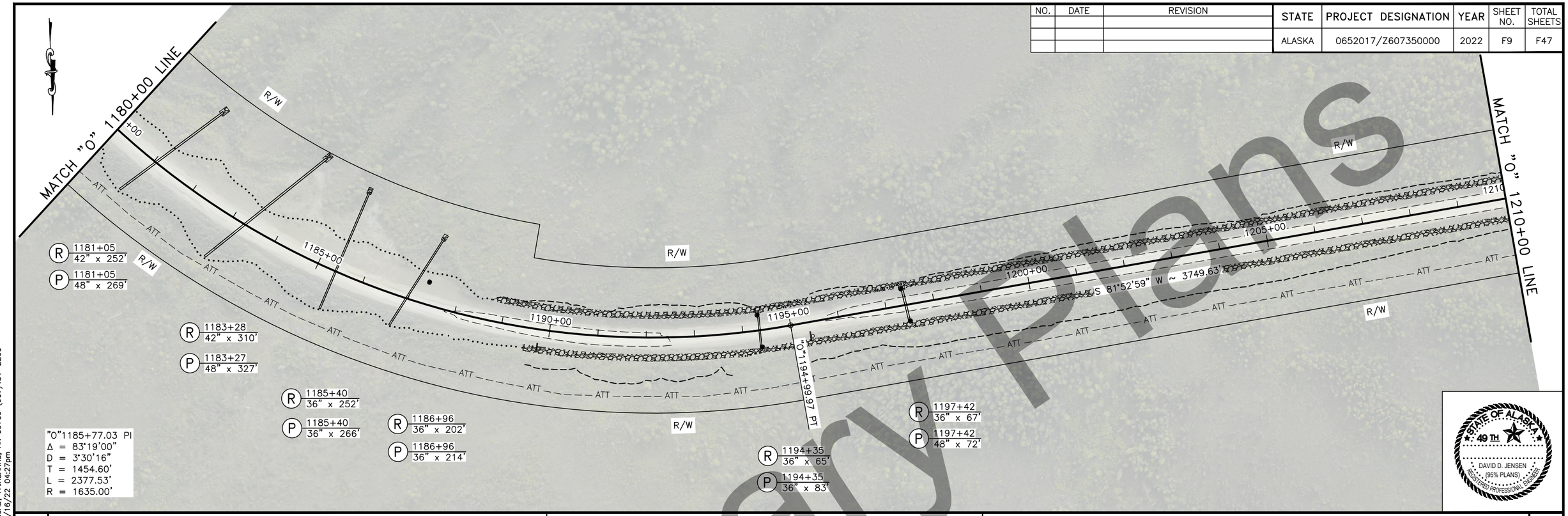

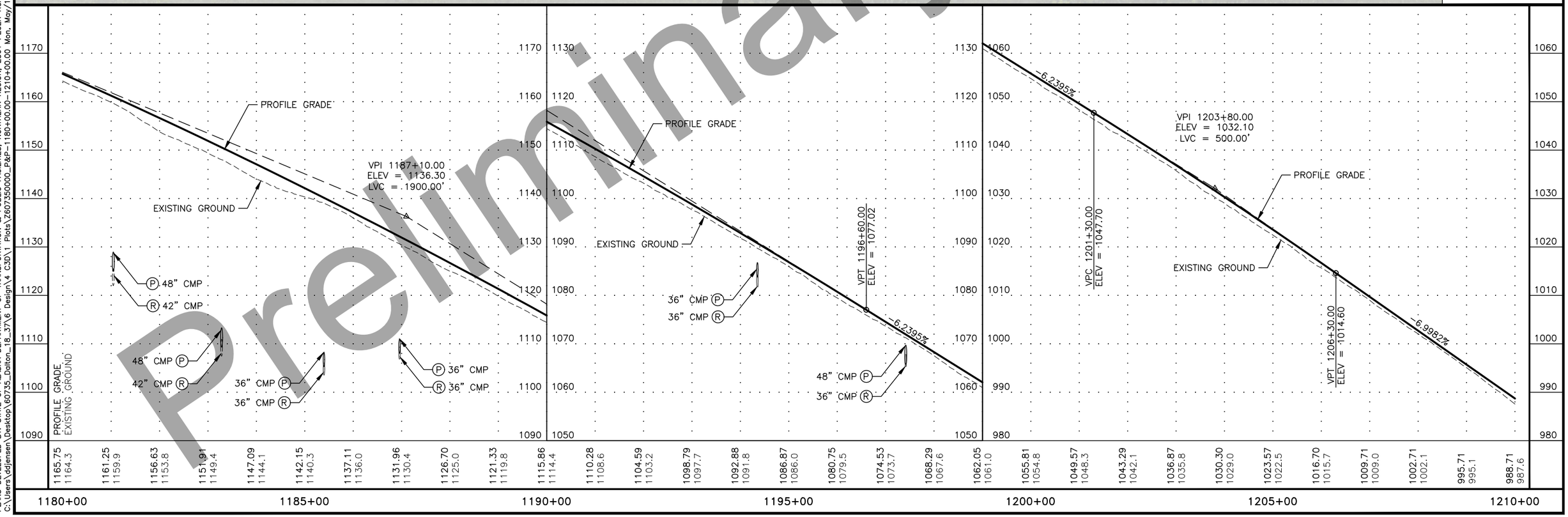

Preliminary Plans

PLANS DEVELOPED BY: STATE OF ALASKA DEPARTMENT OF TRANSPORTATION & PUBLIC FACILITIES, NORTHERN REGION, 2301 PEGER ROAD, FAIRBANKS, AK 99709 (907)451-2200
C:\Users\ddjensen\Desktop\60735_Dalton_18_37\6 Design\4 C3D\1 Plots\Z607350000_P&P-1180+00.00-1210+00.00 Mon, May/16/22 04:27pm

NO.	DATE	REVISION

STATE	PROJECT DESIGNATION	YEAR	SHEET NO.	TOTAL SHEETS
ALASKA	0652017/Z607350000	2022	F10	F47

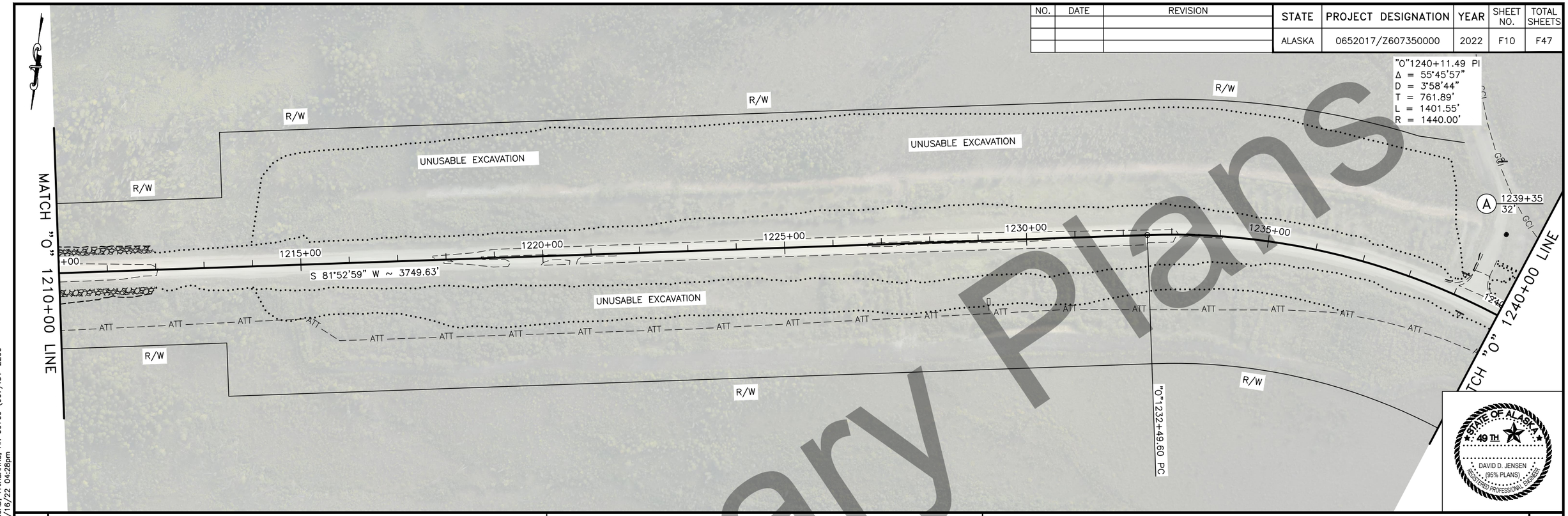

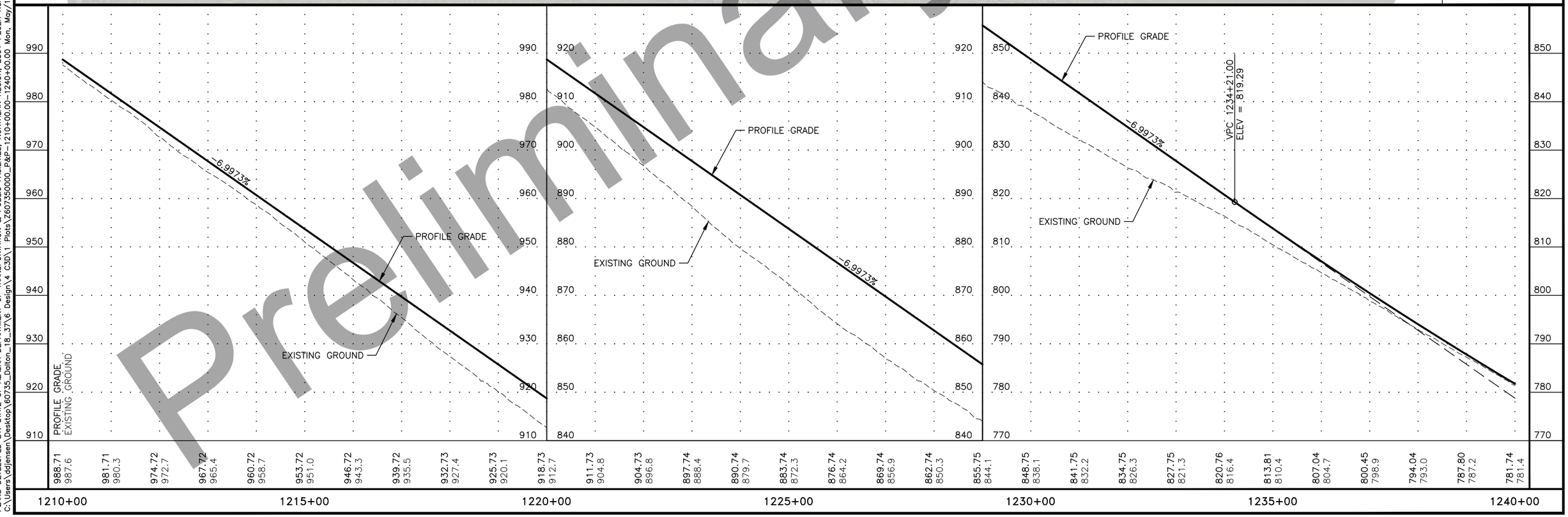

Preliminary Plans

STATE OF ALASKA
49 TH
DAVID D. JENSEN
(95% PLANS)
REGISTERED PROFESSIONAL ENGINEER

PLANS DEVELOPED BY: STATE OF ALASKA DEPARTMENT OF TRANSPORTATION & PUBLIC FACILITIES, NORTHERN REGION, 2301 PEGER ROAD, FAIRBANKS, AK 99709 (907)451-2200
C:\Users\ddjensen\Desktop\60735_Dalton_18_37\6 Design\4 C3D\1 Plots\Z607350000_P&P-1210+00.00-1240+00.00 Mon, May/16/22 04:28pm

NO.	DATE	REVISION

STATE	PROJECT DESIGNATION	YEAR	SHEET NO.	TOTAL SHEETS
ALASKA	0652017/Z607350000	2022	F11	F47

"O"1240+11.49 PI
Δ = 55°45'57"
D = 3°58'44"
T = 761.89'
L = 1401.55'
R = 1440.00'

"O"1254+70.84 PI
Δ = 28°59'24"
D = 3°34'52"
T = 413.64'
L = 809.55'
R = 1600.00'

MATCH "O" 1240+00 LINE

MATCH "O" 1270+00 LINE

N 42°21'04" W ~ 406.05'

"O"1246+51.15 PT

"O"1250+57.20 PC

"O"1258+66.75 PT

R 1253+67 24" x 103'
P 1253+67 36" x 189'

R 1262+81 30" x 74'
P 1262+81 36" x 91'

R 1265+72 24" x 76'
P 1265+72 36" x 104'

1245+00 1250+00 1255+00 1260+00 1265+00

R/W

GCI

ATT

STATE OF ALASKA
49 TH
DAVID D. JENSEN
(95% PLANS)
REGISTERED PROFESSIONAL ENGINEER

PROFILE GRADE
EXISTING GROUND

VPI 1241+71.00
ELEV = 766.80
LVC = 1500.00'

VPT 1249+21.00
ELEV = 734.24

-4.3410%

VPI 1256+90.00
ELEV = 700.86
LVC = 500.00'

VPC 1254+40.00
ELEV = 711.71

VPT 1259+40.00
ELEV = 683.37

-6.9961%

36" CMP (P)
24" CMP (R)

SUBEXCAVATION LIMITS

48" CMP (P)
30" CMP (R)

36" CMP (P)
24" CMP (R)

781.74 781.4 | 775.85 775.3 | 770.15 769.0 | 764.62 763.3 | 759.26 758.1 | 754.09 753.0 | 749.09 748.8 | 744.27 743.6 | 739.63 739.6 | 735.16 734.0 | 730.81 726.4 | 726.47 719.2 | 722.13 714.8 | 717.79 711.2 | 713.45 708.0 | 709.01 706.5 | 704.09 705.8 | 698.63 704.1 | 692.64 699.9 | 686.13 693.5 | 679.17 687.4 | 672.18 679.3 | 665.18 668.6 | 658.18 657.2 | 651.19 646.6 | 644.19 637.0 | 637.20 629.0 | 630.20 622.6 | 623.20 617.0 | 616.21 611.2 | 609.21 606.6

1240+00 1245+00 1250+00 1255+00 1260+00 1265+00 1270+00

Preliminary Plans

PLANS DEVELOPED BY: STATE OF ALASKA DEPARTMENT OF TRANSPORTATION & PUBLIC FACILITIES, NORTHERN REGION, 2301 PEGER ROAD, FAIRBANKS, AK 99709 (907)451-2200
C:\Users\ddjensen\Desktop\60735_Dalton_18_37\6 Design\4 C3D\1 Plots\Z607350000_P&P-1240+00.00-1270+00.00 Mon, May/16/22 04:29pm

NO.	DATE	REVISION

STATE	PROJECT DESIGNATION	YEAR	SHEET NO.	TOTAL SHEETS
ALASKA	0652017/Z607350000	2022	F12	F47

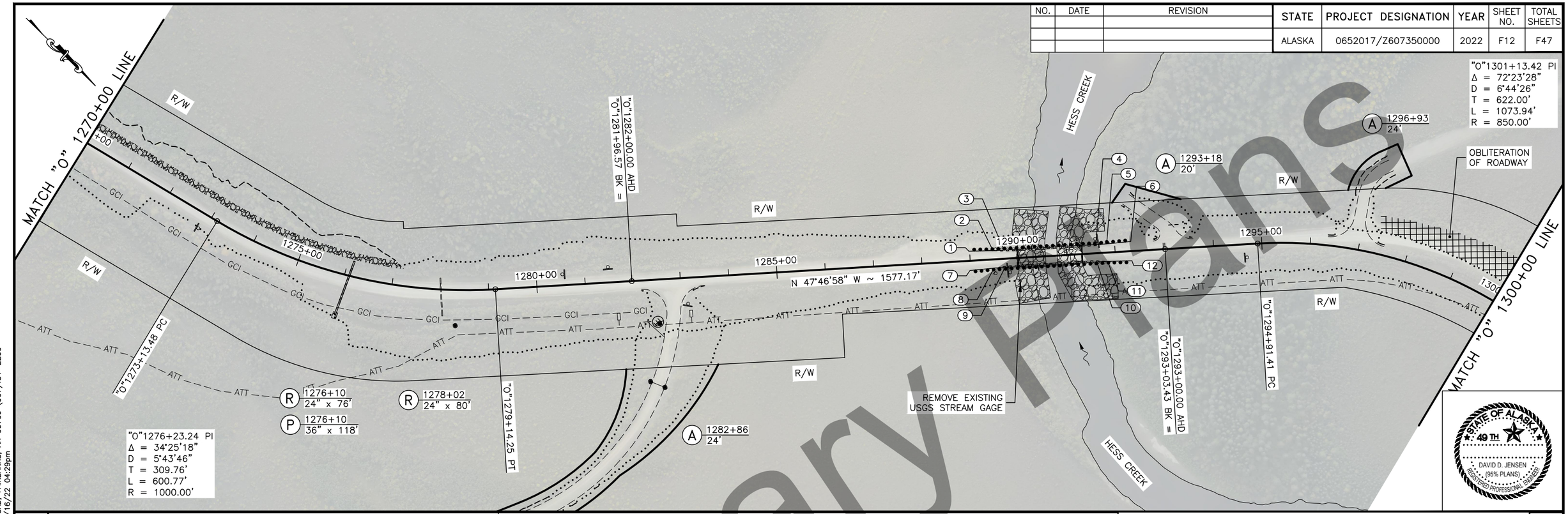

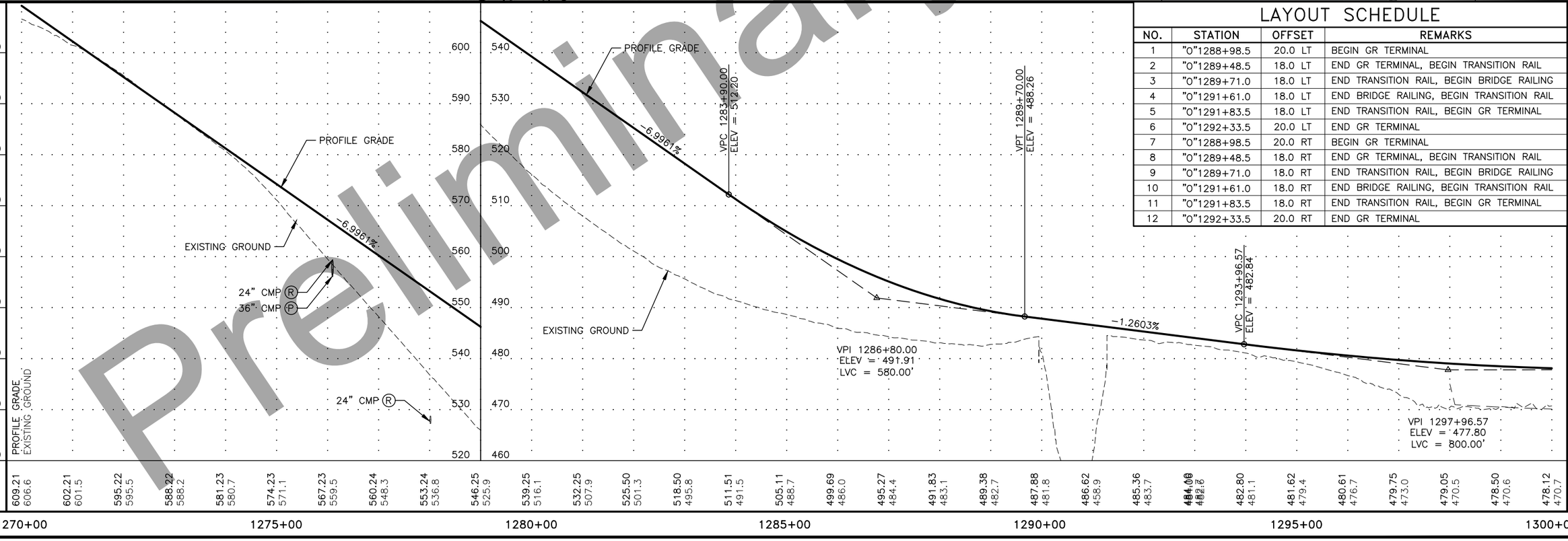

LAYOUT SCHEDULE

NO.	STATION	OFFSET	REMARKS
1	"O"1288+98.5	20.0 LT	BEGIN GR TERMINAL
2	"O"1289+48.5	18.0 LT	END GR TERMINAL, BEGIN TRANSITION RAIL
3	"O"1289+71.0	18.0 LT	END TRANSITION RAIL, BEGIN BRIDGE RAILING
4	"O"1291+61.0	18.0 LT	END BRIDGE RAILING, BEGIN TRANSITION RAIL
5	"O"1291+83.5	18.0 LT	END TRANSITION RAIL, BEGIN GR TERMINAL
6	"O"1292+33.5	20.0 LT	END GR TERMINAL
7	"O"1288+98.5	20.0 RT	BEGIN GR TERMINAL
8	"O"1289+48.5	18.0 RT	END GR TERMINAL, BEGIN TRANSITION RAIL
9	"O"1289+71.0	18.0 RT	END TRANSITION RAIL, BEGIN BRIDGE RAILING
10	"O"1291+61.0	18.0 RT	END BRIDGE RAILING, BEGIN TRANSITION RAIL
11	"O"1291+83.5	18.0 RT	END TRANSITION RAIL, BEGIN GR TERMINAL
12	"O"1292+33.5	20.0 RT	END GR TERMINAL

STATE OF ALASKA 49TH
DAVID D. JENSEN (95% PLANS)
REGISTERED PROFESSIONAL ENGINEER

Preliminary Plans

PLANS DEVELOPED BY: STATE OF ALASKA DEPARTMENT OF TRANSPORTATION & PUBLIC FACILITIES, NORTHERN REGION, 2301 PEGER ROAD, FAIRBANKS, AK 99709 (907)451-2200
C:\Users\ddjensen\Desktop\60735_Dalton_18_37\6 Design\4 C3D\1 Plots\Z607350000_P&P-1270+00.00-1300+00.00 Mon, May/16/22 04:29pm

NO.	DATE	REVISION

STATE	PROJECT DESIGNATION	YEAR	SHEET NO.	TOTAL SHEETS
ALASKA	0652017/Z607350000	2022	F13	F47

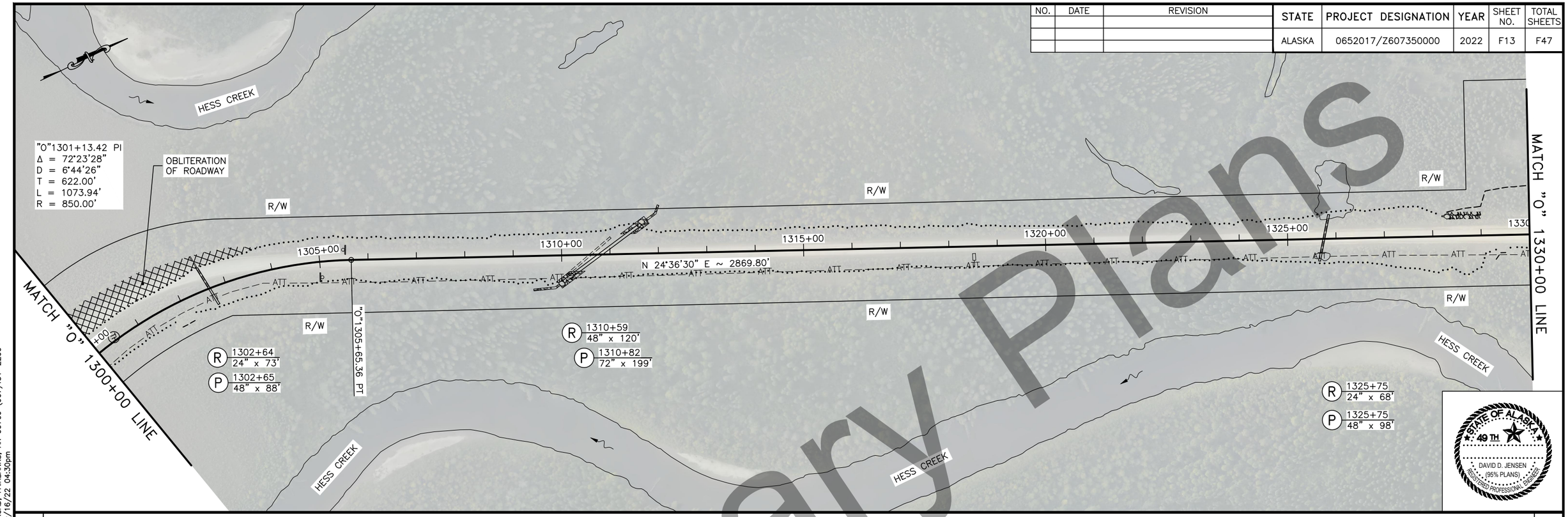

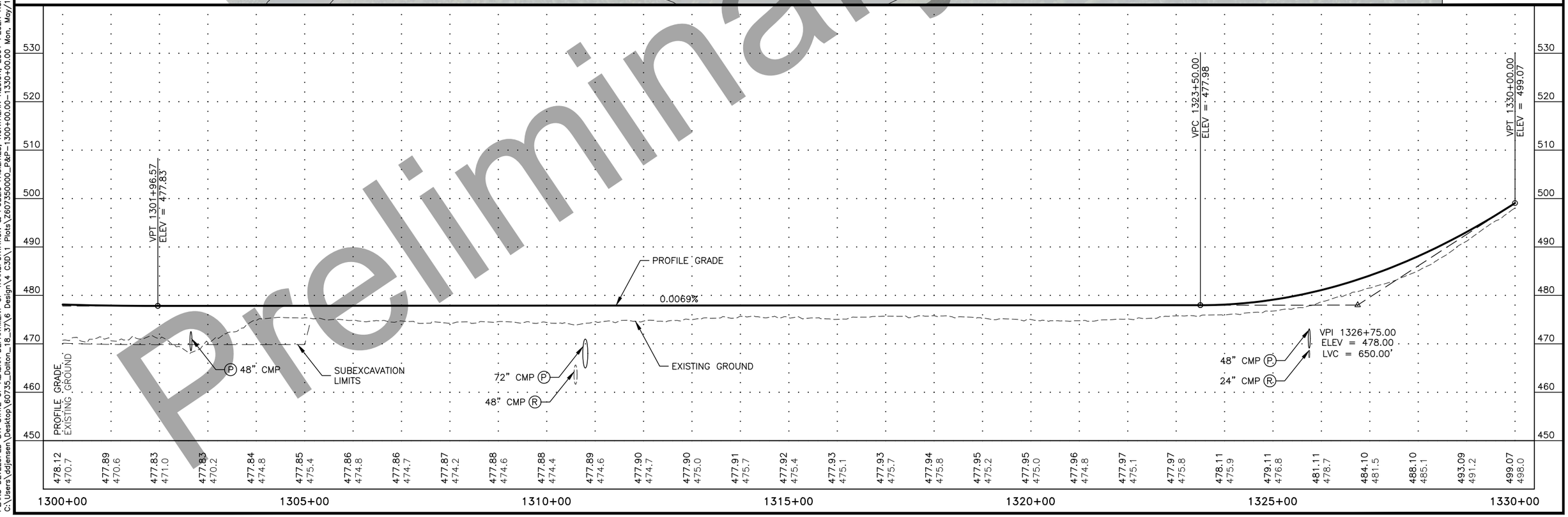

STATE OF ALASKA 49TH
DAVID D. JENSEN
(95% PLANS)
REGISTERED PROFESSIONAL ENGINEER

Preliminary Plans

PLANS DEVELOPED BY: STATE OF ALASKA DEPARTMENT OF TRANSPORTATION & PUBLIC FACILITIES, NORTHERN REGION, 2301 PEGER ROAD, FAIRBANKS, AK 99709 (907)451-2200
C:\Users\ddjensen\Desktop\60735_Dalton_18_37\6 Design\4 C3D\1 Plots\Z607350000_P&P-1300+00.00-1330+00.00 Mon, May/16/22 04:30pm

NO.	DATE	REVISION

STATE	PROJECT DESIGNATION	YEAR	SHEET NO.	TOTAL SHEETS
ALASKA	0652017/Z607350000	2022	F14	F47

LAYOUT SCHEDULE

NO.	STATION	OFFSET	REMARKS
1	"O"1330+96.6	18.0 RT	BEGIN TRUCK TURNOUT TAPER
2	"O"1331+96.6	65.0 RT	END TRUCK TURNOUT TAPER
3	"O"1336+96.6	65.0 RT	BEGIN TRUCK TURNOUT TAPER
4	"O"1337+96.6	18.0 RT	END TRUCK TURNOUT TAPER
5	"O"1339+96.6	20.0 RT	BEGIN GR TERMINAL
6	"O"1340+46.4	18.0 RT	END GR TERMINAL, BEGIN GR

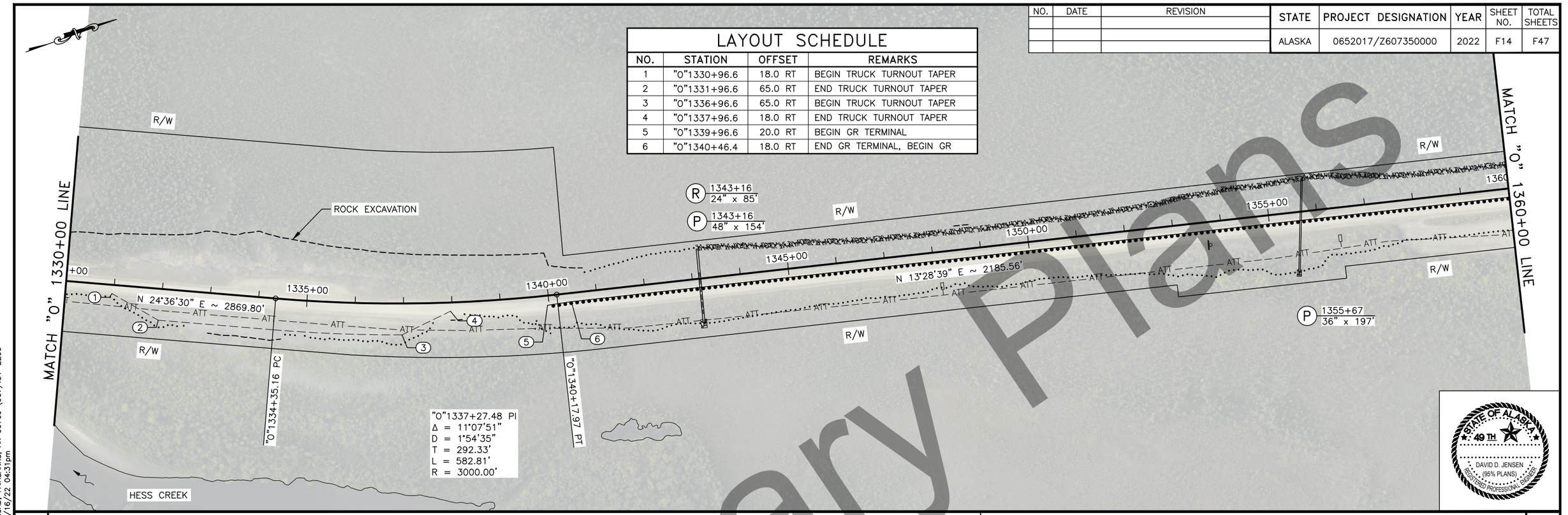

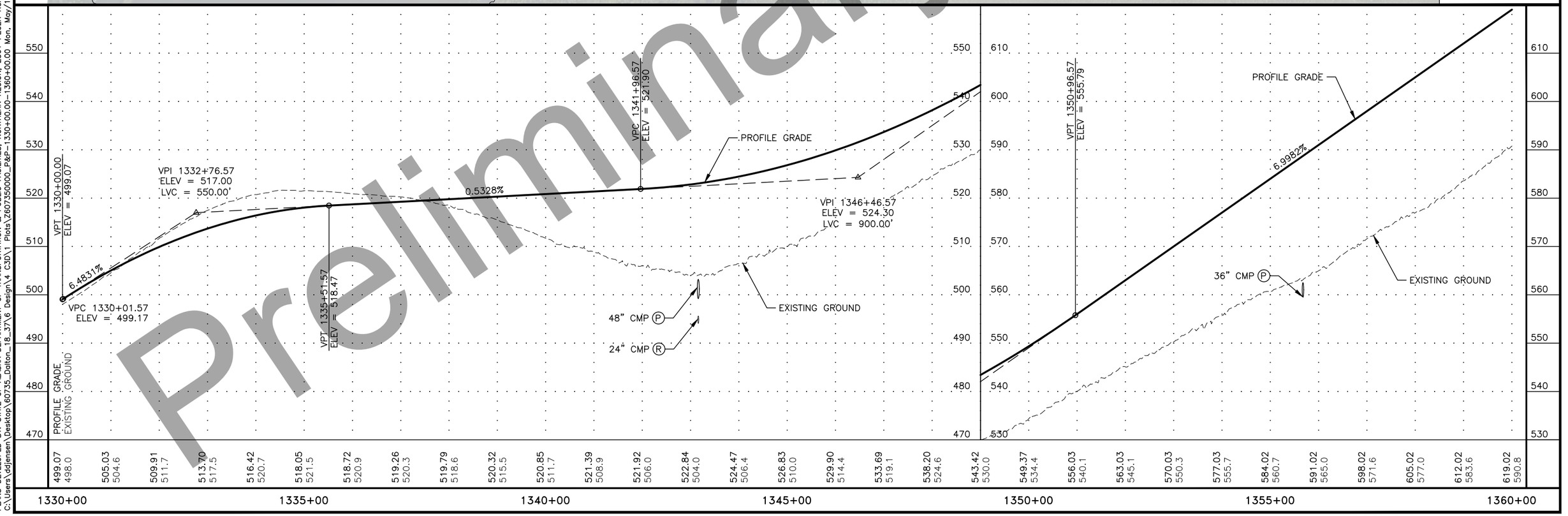

Preliminary Plans

PLANS DEVELOPED BY: STATE OF ALASKA DEPARTMENT OF TRANSPORTATION & PUBLIC FACILITIES, NORTHERN REGION, 2301 PEGER ROAD, FAIRBANKS, AK 99709 (907)451-2200
C:\Users\ddjensen\Desktop\60735_Dalton_18_37\6 Design\4 C3D\1 Plots\Z607350000_P&P-1330+00.00-1360+00.00 Mon, May/16/22 04:31pm

NO.	DATE	REVISION

STATE	PROJECT DESIGNATION	YEAR	SHEET NO.	TOTAL SHEETS
ALASKA	0652017/Z607350000	2022	F15	F47

LAYOUT SCHEDULE

NO.	STATION	OFFSET	REMARKS
1	"O"1364+41.4	18.0 RT	END GR, BEGIN GR TERMINAL
2	"O"1364+90.4	20.0 RT	END GR TERMINAL

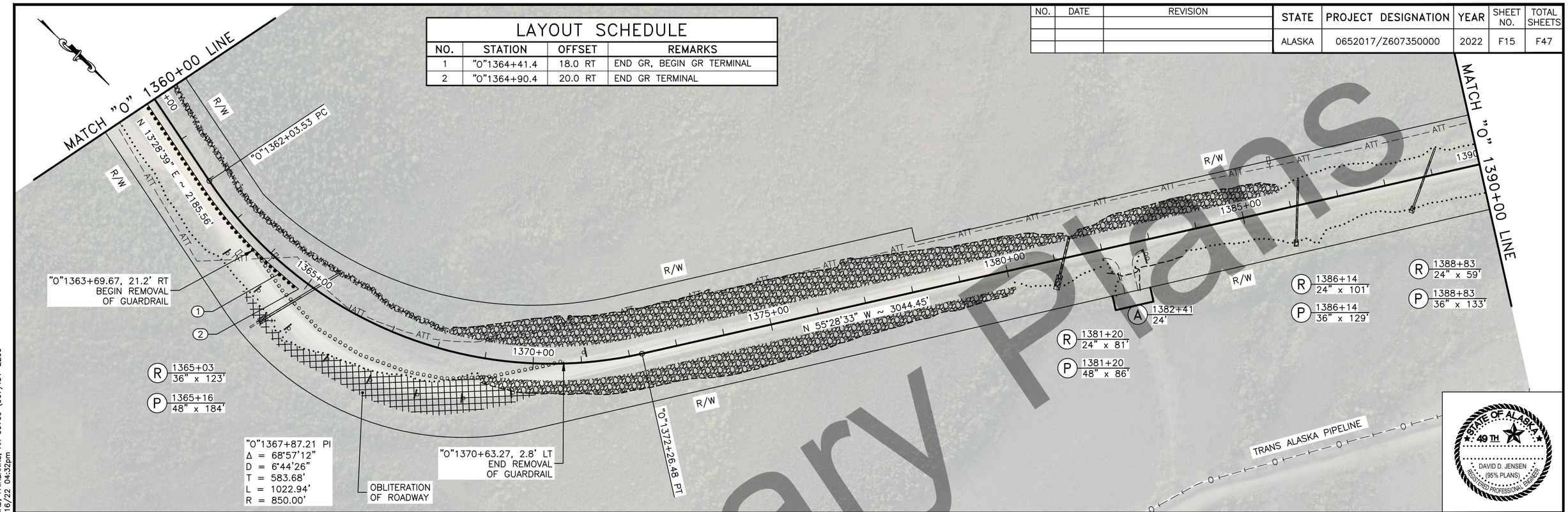

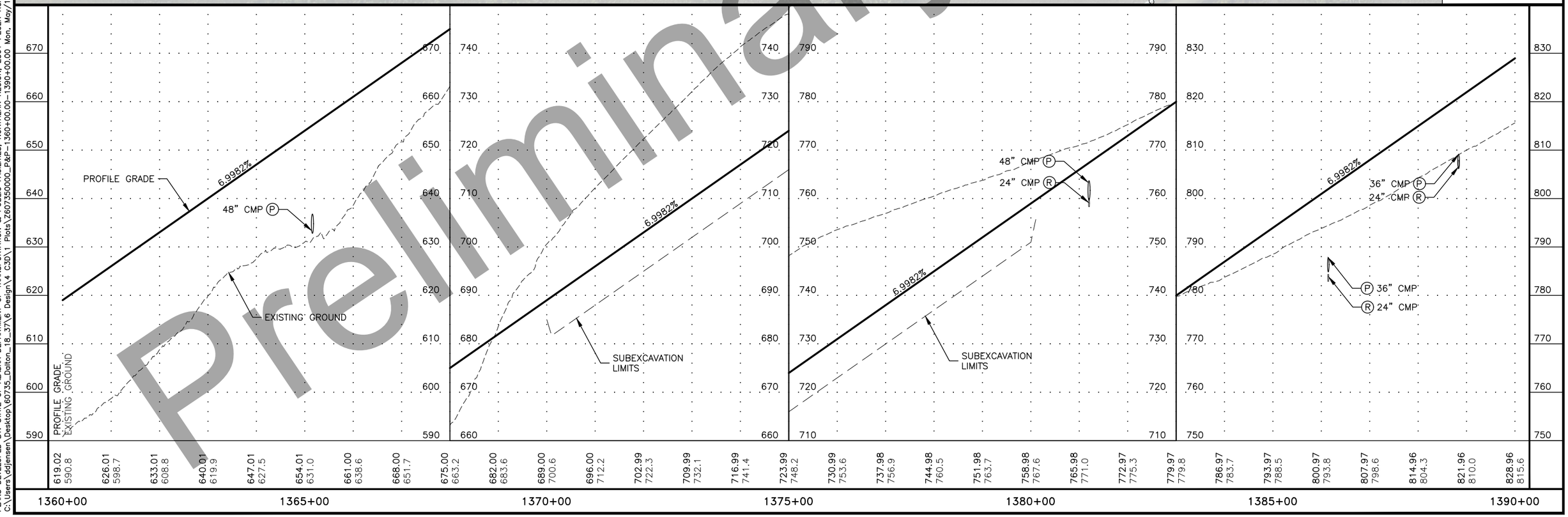

Preliminary Plans

STATE OF ALASKA
49TH
DAVID D. JENSEN
(95% PLANS)
REGISTERED PROFESSIONAL ENGINEER

PLANS DEVELOPED BY: STATE OF ALASKA DEPARTMENT OF TRANSPORTATION & PUBLIC FACILITIES, NORTHERN REGION, 2301 PEGER ROAD, FAIRBANKS, AK 99709 (907)451-2200
C:\Users\ddjensen\Desktop\60735_Dalton_18_37\6 Design\4 C3D\1 Plots\Z607350000_P&P-1360+00.00-1390+00.00 Mon, May/16/22 04:32pm

NO.	DATE	REVISION

STATE	PROJECT DESIGNATION	YEAR	SHEET NO.	TOTAL SHEETS
ALASKA	0652017/Z607350000	2022	F16	F47

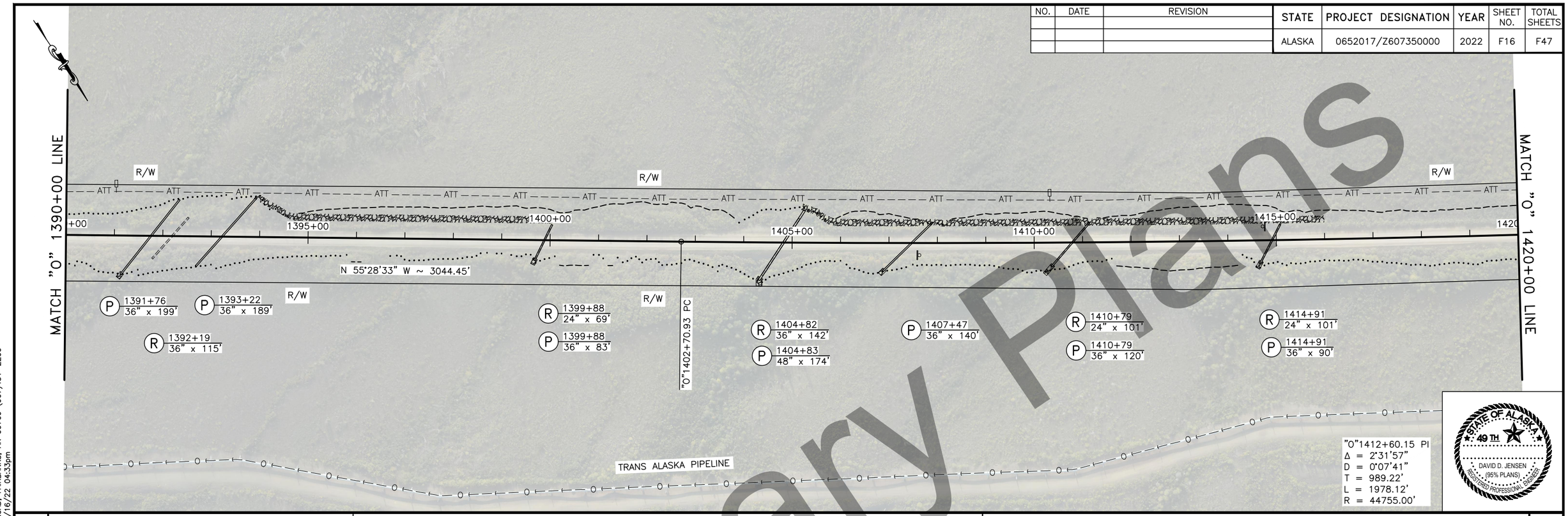

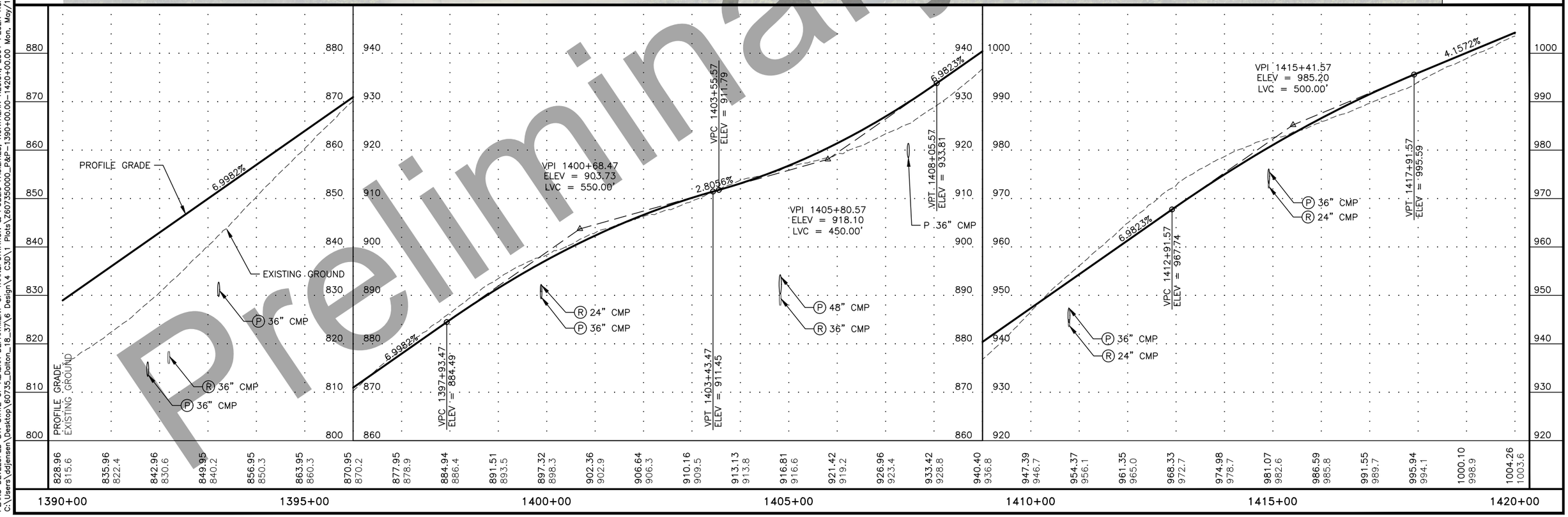

Preliminary Plans

PLANS DEVELOPED BY: STATE OF ALASKA DEPARTMENT OF TRANSPORTATION & PUBLIC FACILITIES, NORTHERN REGION, 2301 PEGER ROAD, FAIRBANKS, AK 99709 (907)451-2200
C:\Users\ddjensen\Desktop\60735_Dalton_18_37\6 Design\4 C3D\1 Plots\Z607350000_P&P-1390+00.00-1420+00.00 Mon, May/16/22 04:33pm

LAYOUT SCHEDULE

NO.	STATION	OFFSET	REMARKS
1	"O"1428+40.3	18.0 LT	BEGIN TRUCK TURNOUT TAPER
2	"O"1429+40.3	52.0 LT	END TRUCK TURNOUT TAPER
3	"O"1433+99.5	52.0 LT	BEGIN TRUCK TURNOUT TAPER
4	"O"1434+99.6	18.0 LT	END TRUCK TURNOUT TAPER

NO.	DATE	REVISION

STATE	PROJECT DESIGNATION	YEAR	SHEET NO.	TOTAL SHEETS
ALASKA	0652017/Z607350000	2022	F17	F47

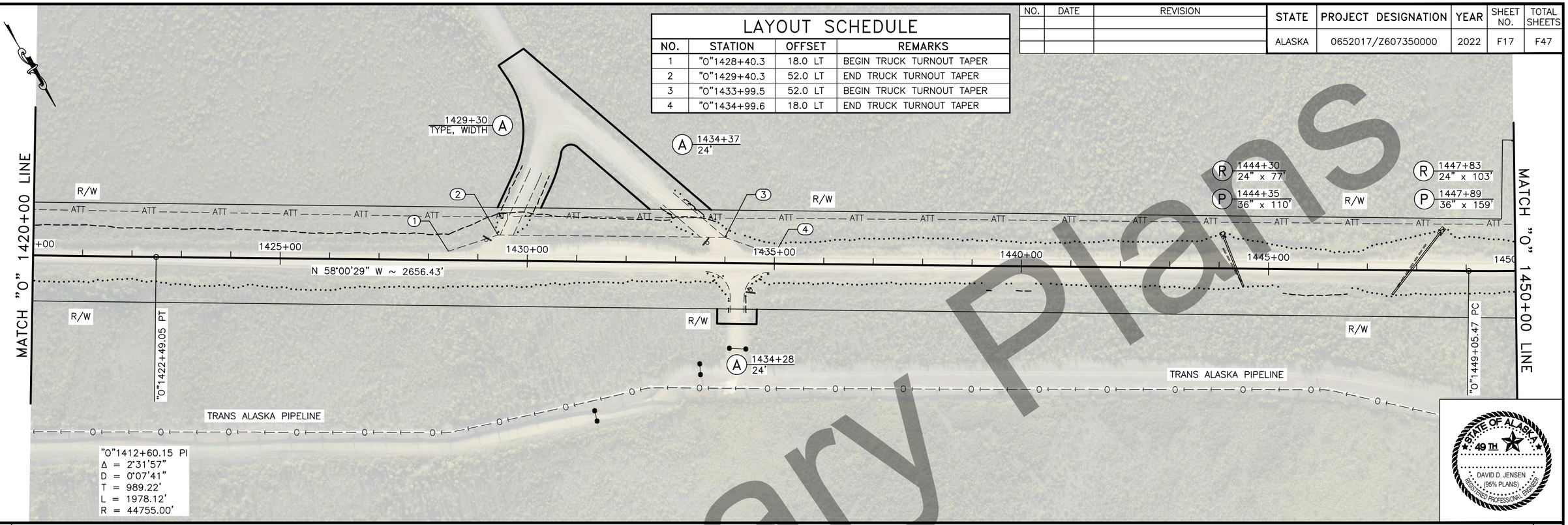

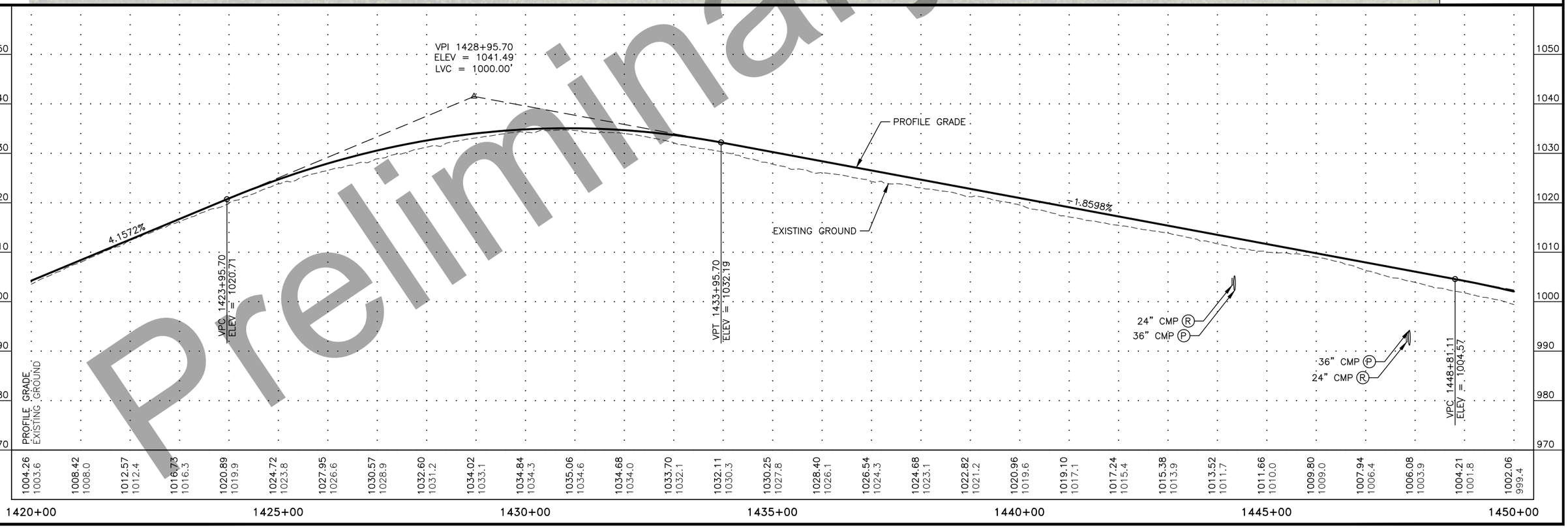

Preliminary Plans

STATE OF ALASKA 49TH
DAVID D. JENSEN
(95% PLANS)
REGISTERED PROFESSIONAL ENGINEER

PLANS DEVELOPED BY: STATE OF ALASKA DEPARTMENT OF TRANSPORTATION & PUBLIC FACILITIES, NORTHERN REGION, 2301 PEGER ROAD, FAIRBANKS, AK 99709 (907)451-2200
C:\Users\ddjensen\Desktop\60735_Dalton_18_37\6 Design\4 C3D\1 Plots\Z607350000_P&P-1420+00.00-1450+00.00 Mon, May/16/22 04:34pm

NO.	DATE	REVISION

STATE	PROJECT DESIGNATION	YEAR	SHEET NO.	TOTAL SHEETS
ALASKA	0652017/Z607350000	2022	F18	F47

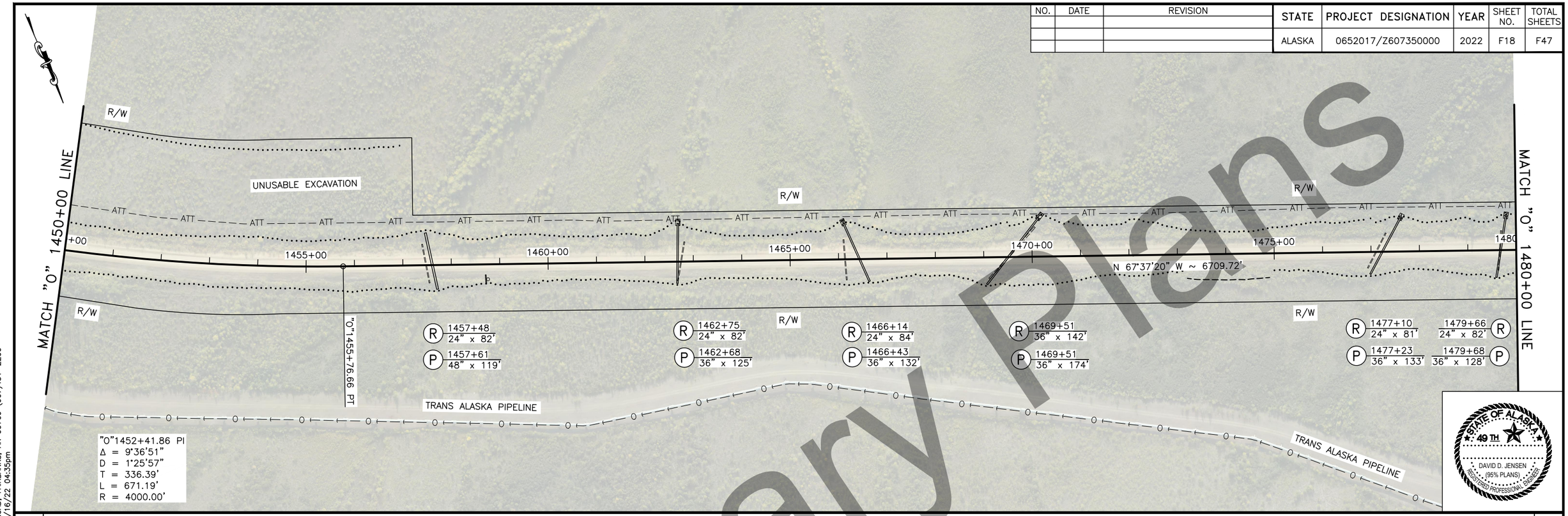

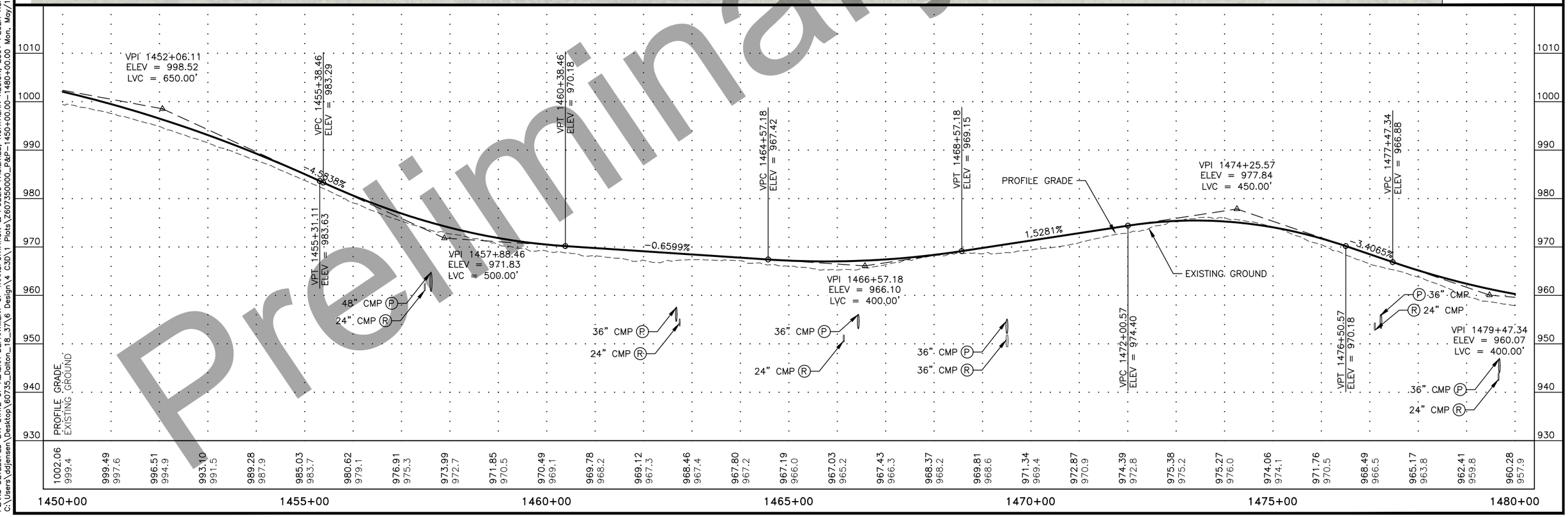

Preliminary Plans

PLANS DEVELOPED BY: STATE OF ALASKA DEPARTMENT OF TRANSPORTATION & PUBLIC FACILITIES, NORTHERN REGION, 2301 PEGER ROAD, FAIRBANKS, AK 99709 (907)451-2200
C:\Users\ddjensen\Desktop\60735_Dalton_18_37\6 Design\4 C3D\1 Plots\Z607350000_P&P-1450+00.00-1480+00.00 Mon, May/16/22 04:35pm

NO.	DATE	REVISION

STATE	PROJECT DESIGNATION	YEAR	SHEET NO.	TOTAL SHEETS
ALASKA	0652017/Z607350000	2022	F19	F47

MATCH "O" 1480+00 LINE

MATCH "O" 1510+00 LINE

R/W

ATT

+00 1485+00 1490+00 1495+00 1500+00 1505+00 1510

N 67°37'20" W ~ 6709.72'

R	1484+89 24" x 81'	R	1486+66 24" x 81'	R	1489+70 24" x 82'	R	1491+88 24" x 82'	R	1497+65 36" x 101'
P	1484+89 36" x 102'	P	1486+65 36" x 106'	P	1489+60 36" x 119'	P	1491+92 36" x 126'	P	1497+65 36" x 132'

R	1499+25 24" x 103'	R	1501+25 24" x 82'	R	1506+19 36" x 92'
P	1499+21 36" x 135'	P	1501+25 36" x 126'	P	1506+36 36" x 139'

STATE OF ALASKA 49 TH

DAVID D. JENSEN (95% PLANS)
REGISTERED PROFESSIONAL ENGINEER

VPT 1481+47.34
ELEV = 958.29

PROFILE GRADE

-0.8856%

EXISTING GROUND

36" CMP (P)
24" CMP (R)

VPC 1491+27.53
ELEV = 949.61

VPI 1494+27.53
ELEV = 946.96
LVC = 600.00'

VPT 1497+27.53
ELEV = 931.60

VPC 1497+30.33
ELEV = 931.46

-5.193%

VPI 1499+55.33
ELEV = 919.94
LVC = 450.00'

VPT 1501+80.33
ELEV = 917.76

-0.9656%

970 960 950 940 930 920 910 900 890

PROFILE GRADE
EXISTING GROUND

960.28	958.78	957.83	956.94	956.06	955.17	954.29	953.40	952.51	951.63	950.74	949.86	948.79	947.04	944.58	941.42	937.55	932.98	928.11	924.10	921.01	918.84	917.57	916.61	915.64	914.68	913.71	912.75	911.78	910.82	909.85
957.9	956.9	956.7	956.3	956.0	955.1	954.4	953.4	952.3	950.4	949.0	948.2	946.6	945.2	943.4	940.4	936.5	931.1	926.1	922.6	919.7	918.1	917.0	915.8	913.8	912.6	911.1	909.7	909.9	909.6	908.8

1480+00 1485+00 1490+00 1495+00 1500+00 1505+00 1510+00

Preliminary Plans

PLANS DEVELOPED BY: STATE OF ALASKA DEPARTMENT OF TRANSPORTATION & PUBLIC FACILITIES, NORTHERN REGION, 2301 PEGER ROAD, FAIRBANKS, AK 99709 (907)451-2200
C:\Users\ddjensen\Desktop\60735_Dalton_18_37\6 Design\4 C3D\1 Plots\Z607350000_P&P-1480+00.00-1510+00.00 Mon, May/16/22 04:36pm

NO.	DATE	REVISION

STATE	PROJECT DESIGNATION	YEAR	SHEET NO.	TOTAL SHEETS
ALASKA	0652017/Z607350000	2022	F20	F47

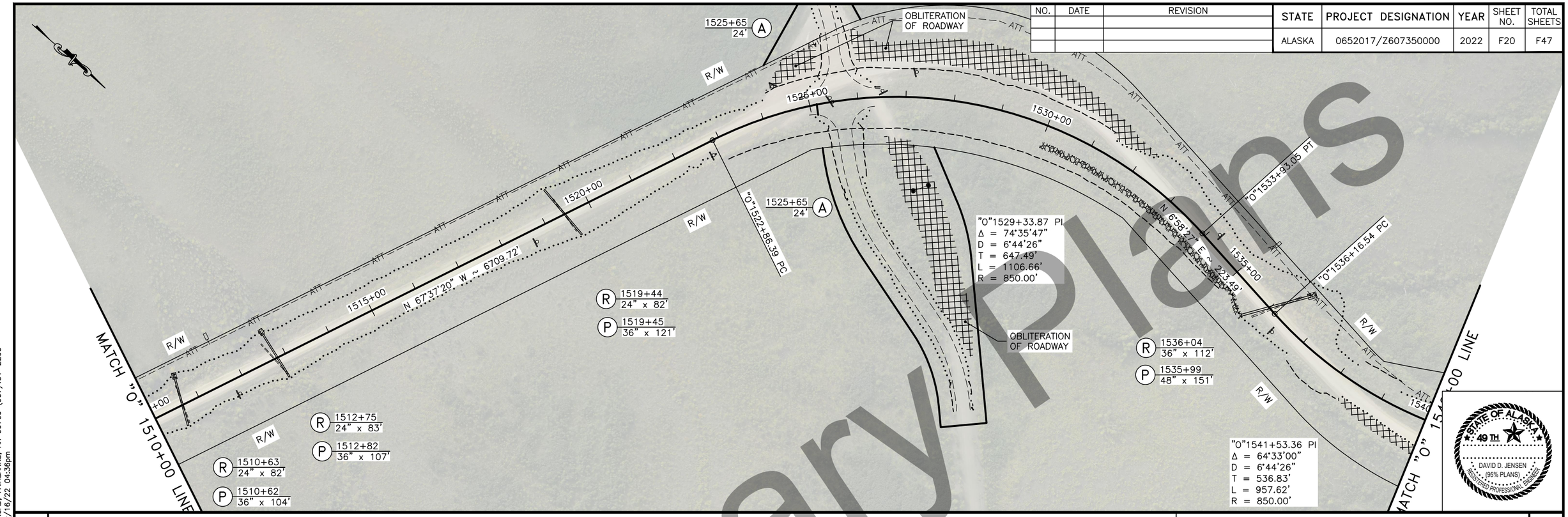

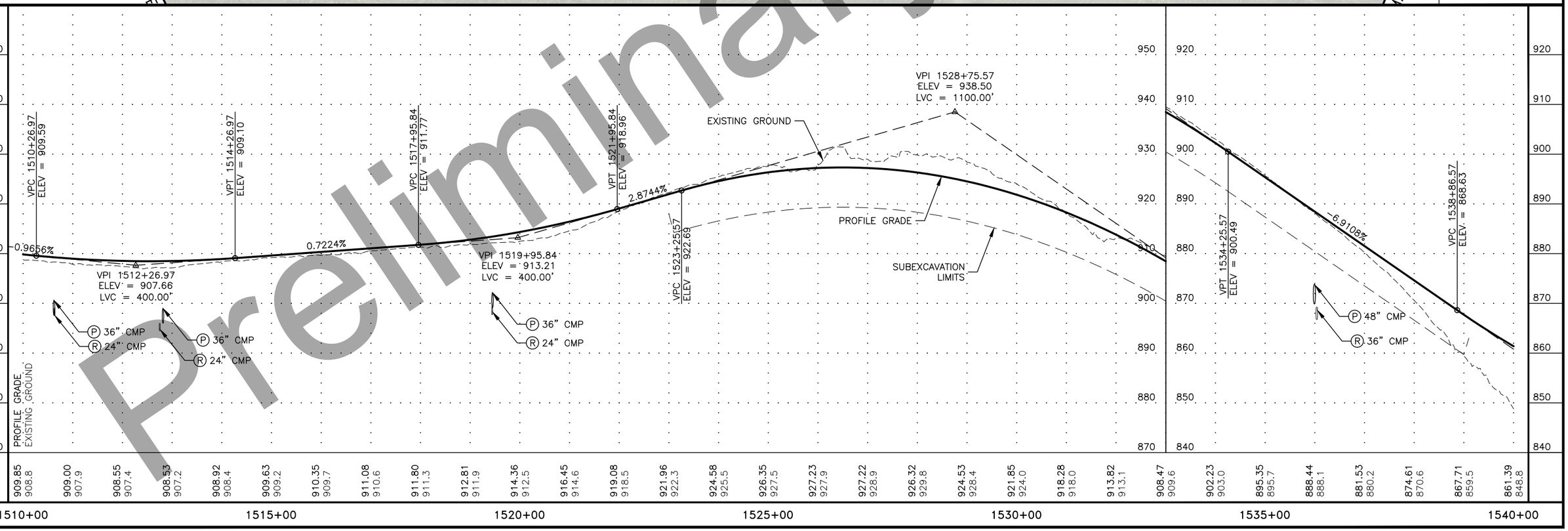

Preliminary Plans

STATE OF ALASKA
49 TH
DAVID D. JENSEN
(95% PLANS)
REGISTERED PROFESSIONAL ENGINEER

PLANS DEVELOPED BY: STATE OF ALASKA DEPARTMENT OF TRANSPORTATION & PUBLIC FACILITIES, NORTHERN REGION, 2301 PEGER ROAD, FAIRBANKS, AK 99709 (907)451-2200
C:\Users\ddjensen\Desktop\60735_Dalton_18_37\6 Design\4 C3D\1 Plots\Z607350000_P&P-1510+00.00-1540+00.00 Mon, May/16/22 04:36pm

NO.	DATE	REVISION

STATE	PROJECT DESIGNATION	YEAR	SHEET NO.	TOTAL SHEETS
ALASKA	0652017/Z607350000	2022	F21	F47

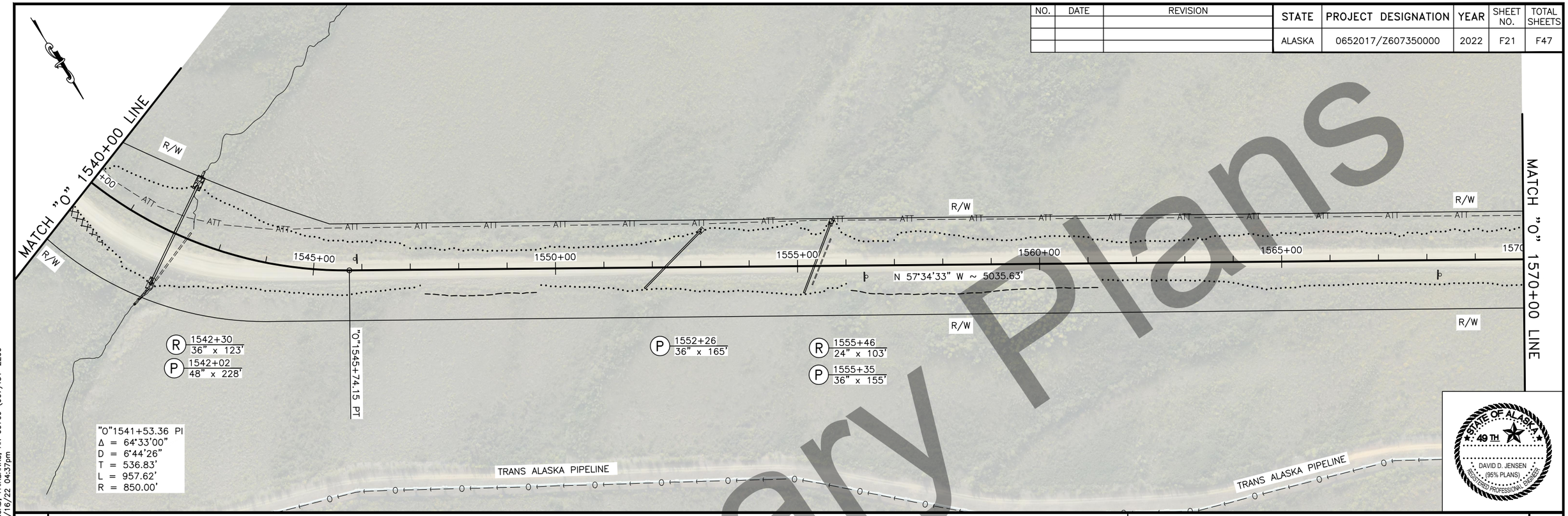

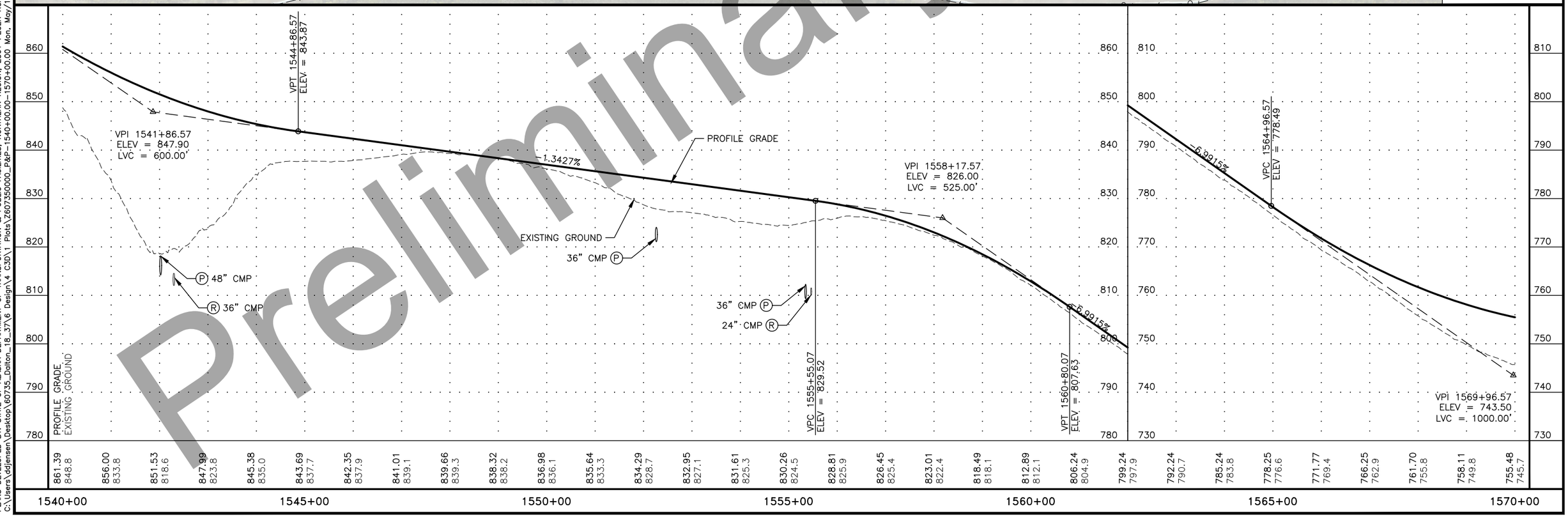

Preliminary Plans

PLANS DEVELOPED BY: STATE OF ALASKA DEPARTMENT OF TRANSPORTATION & PUBLIC FACILITIES, NORTHERN REGION, 2301 PEGER ROAD, FAIRBANKS, AK 99709 (907)451-2200
C:\Users\ddjensen\Desktop\60735_Dalton_18_37\6 Design\4 C3D\1 Plots\Z607350000_P&P-1540+00.00-1570+00.00 Mon, May/16/22 04:37pm

NO.	DATE	REVISION

STATE	PROJECT DESIGNATION	YEAR	SHEET NO.	TOTAL SHEETS
ALASKA	0652017/Z607350000	2022	F22	F47

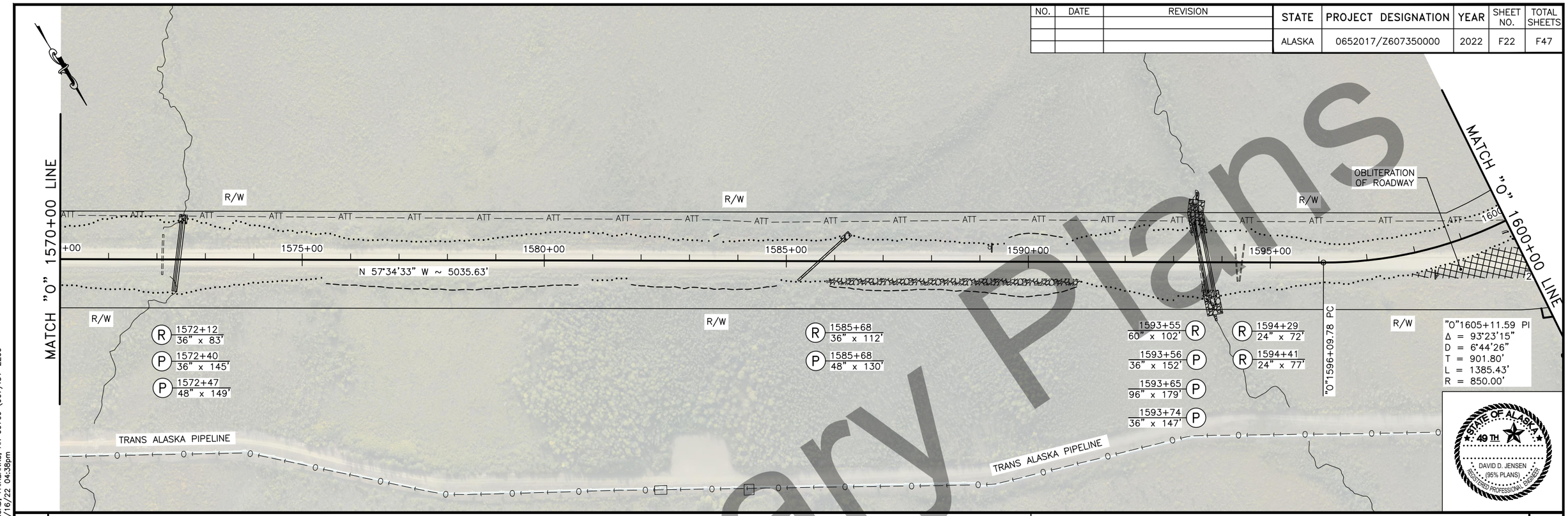

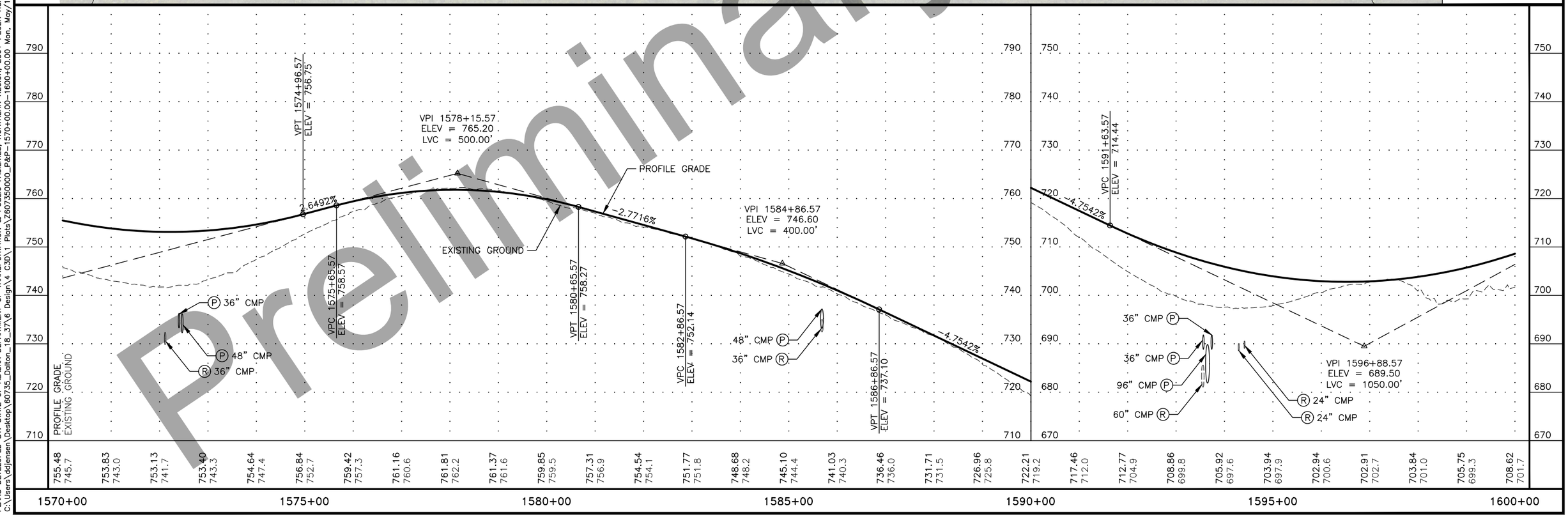

Preliminary Plans

PLANS DEVELOPED BY: STATE OF ALASKA DEPARTMENT OF TRANSPORTATION & PUBLIC FACILITIES, NORTHERN REGION, 2301 PEGER ROAD, FAIRBANKS, AK 99709 (907)451-2200
C:\Users\ddjensen\Desktop\60735_Dalton_18_37\6 Design\4 C3D\1 Plots\Z607350000_P&P-1570+00.00-1600+00.00 Mon, May/16/22 04:38pm

NO.	DATE	REVISION

STATE	PROJECT DESIGNATION	YEAR	SHEET NO.	TOTAL SHEETS
ALASKA	0652017/Z607350000	2022	F23	F47

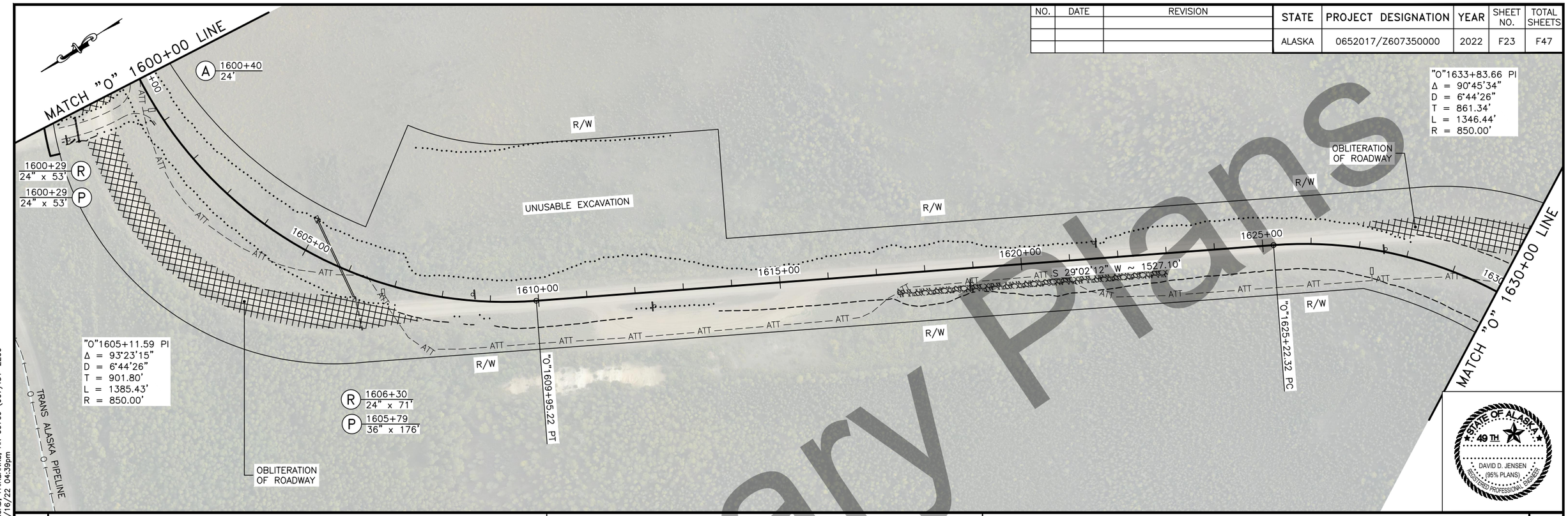

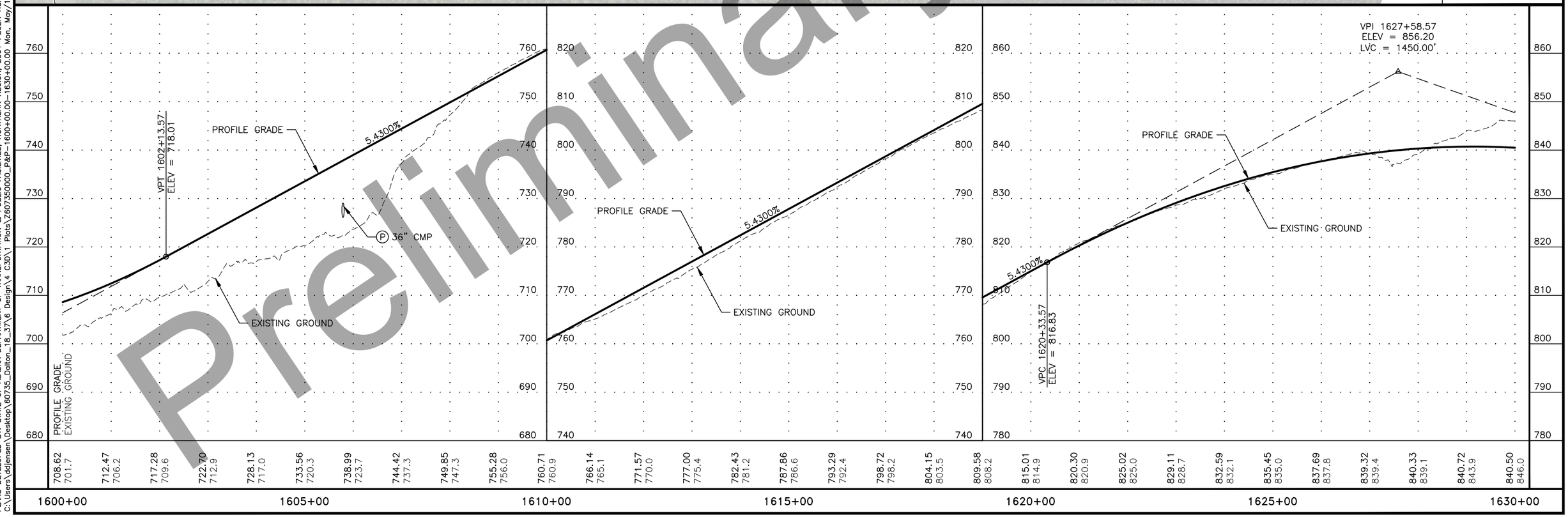

Preliminary Plans

PLANS DEVELOPED BY: STATE OF ALASKA DEPARTMENT OF TRANSPORTATION & PUBLIC FACILITIES, NORTHERN REGION, 2301 PEGER ROAD, FAIRBANKS, AK 99709 (907)451-2200
C:\Users\ddjensen\Desktop\60735_Dalton_18_37\6 Design\4 C3D\1 Plots\Z607350000_P&P-1600+00.00-1630+00.00 Mon, May/16/22 04:39pm

NO.	DATE	REVISION

STATE	PROJECT DESIGNATION	YEAR	SHEET NO.	TOTAL SHEETS
ALASKA	0652017/Z607350000	2022	F24	F47

"O"1633+83.66 PI
Δ = 90°45'34"
D = 6°44'26"
T = 861.34'
L = 1346.44'
R = 850.00'

OBLITERATION OF ROADWAY

MATCH "O" 1630+00 LINE

MATCH "O" 1660+00 LINE

R/W

ATT

1635+00

1640+00

1645+00

1650+00

1655+00

"O"1638+68.76 PT

N 60°12'14" W ~ 1552.52'

R 1640+91 24" x 65'

P 1640+91 36" x 75'

R 1651+54 24" x 62'

P 1651+54 36" x 76'

"O"1654+21.28 PC

"O"1659+15.13 PI
Δ = 36°26'48"
D = 3°49'11"
T = 493.85'
L = 954.17'
R = 1500.00'

STATE OF ALASKA 49TH
DAVID D. JENSEN
(95% PLANS)
REGISTERED PROFESSIONAL ENGINEER

PROFILE GRADE
EXISTING GROUND

VPT 1634+83.57
ELEV. = 830.70

-3.5167%

VPC 1637+83.57
ELEV = 820.15

PROFILE GRADE

EXISTING GROUND

VPI 1639+83.57
ELEV = 813.12
LVC = 400.00'

P 36" CMP
R 24" CMP

VPI 1641+83.57
ELEV = 811.95

-0.5828%

VPC 1643+37.57
ELEV = 811.06

VPI 1645+87.57
ELEV = 809.60
LVC = 500.00'

-6.3808%

VPT 1648+37.57
ELEV = 793.65

VPC 1648+99.57
ELEV = 789.69

VPI 1650+99.57
ELEV = 776.93
LVC = 400.00'

P 36" CMP
R 24" CMP

-2.3424%

VPC 1653+40.85
ELEV = 771.28

VPT 1652+99.57
ELEV = 772.25

VPI 1655+40.85
ELEV = 766.60
LVC = 400.00'

-6.3086%

VPT 1657+40.85
ELEV = 753.98

VPC 1659+56.87
ELEV = 740.35

840.50 846.0 | 839.65 846.4 | 838.20 844.6 | 836.12 840.7 | 833.43 836.0 | 830.13 830.5 | 826.61 824.9 | 823.09 824.3 | 819.59 820.4 | 816.56 816.2 | 814.26 813.7 | 812.70 812.2 | 811.86 811.3 | 811.28 810.6 | 810.47 810.0 | 808.58 808.6 | 805.53 805.5 | 801.33 801.1 | 795.97 795.4 | 789.67 789.8 | 783.80 784.0 | 778.93 778.3 | 775.08 774.9 | 772.24 772.4 | 769.72 769.6 | 766.30 765.4 | 761.88 760.6 | 756.48 755.2 | 750.25 749.4 | 743.94 743.0 | 737.72 736.1

Preliminary Plans

PLANS DEVELOPED BY: STATE OF ALASKA DEPARTMENT OF TRANSPORTATION & PUBLIC FACILITIES, NORTHERN REGION, 2301 PEGER ROAD, FAIRBANKS, AK 99709 (907)451-2200
C:\Users\ddjensen\Desktop\60735_Dalton_18_37\6 Design\4 C3D\1 Plots\Z607350000_P&P-1630+00.00-1660+00.00 Mon, May/16/22 04:40pm

NO.	DATE	REVISION

STATE	PROJECT DESIGNATION	YEAR	SHEET NO.	TOTAL SHEETS
ALASKA	0652017/Z607350000	2022	F25	F47

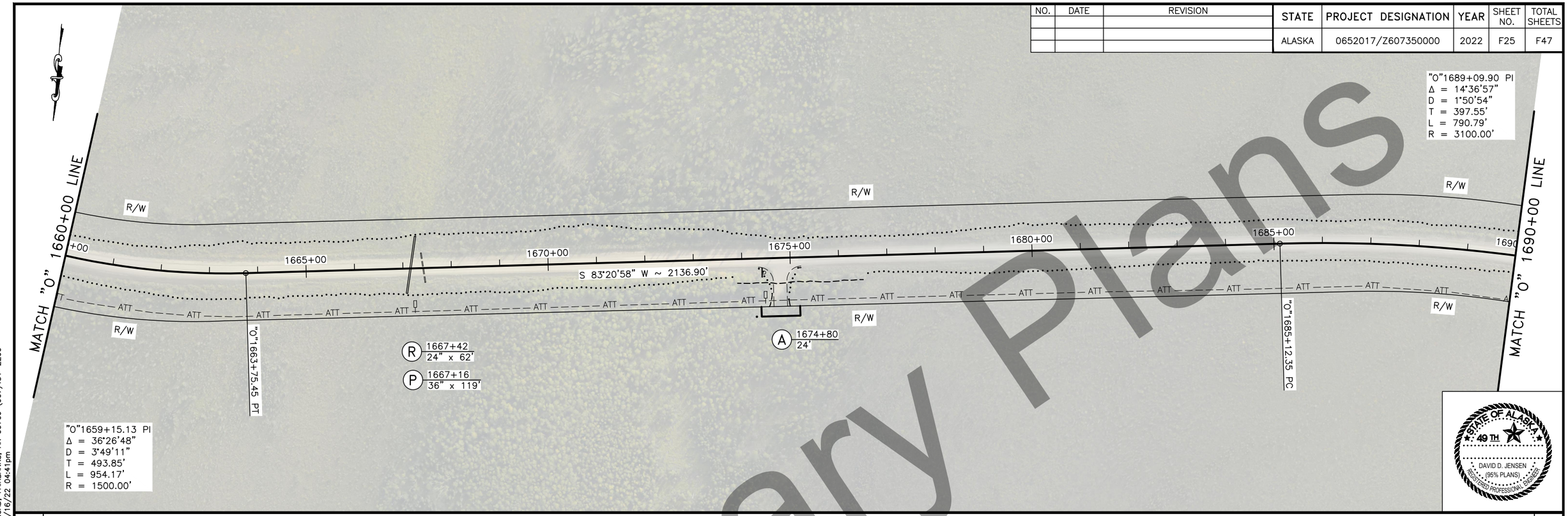

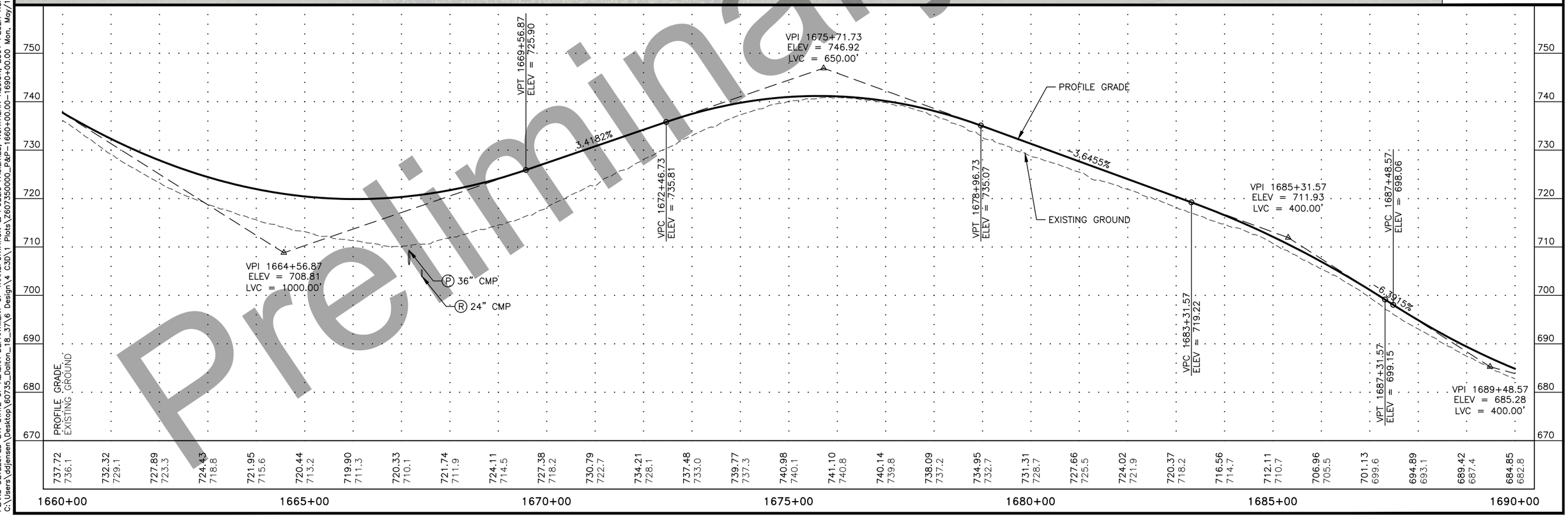

Preliminary Plans

PLANS DEVELOPED BY: STATE OF ALASKA DEPARTMENT OF TRANSPORTATION & PUBLIC FACILITIES, NORTHERN REGION, 2301 PEGER ROAD, FAIRBANKS, AK 99709 (907)451-2200
C:\Users\ddjensen\Desktop\60735_Dalton_18_37\6 Design\4 C3D\1 Plots\Z607350000_P&P-1660+00.00-1690+00.00 Mon, May/16/22 04:41pm

NO.	DATE	REVISION

STATE	PROJECT DESIGNATION	YEAR	SHEET NO.	TOTAL SHEETS
ALASKA	0652017/Z607350000	2022	F26	F47

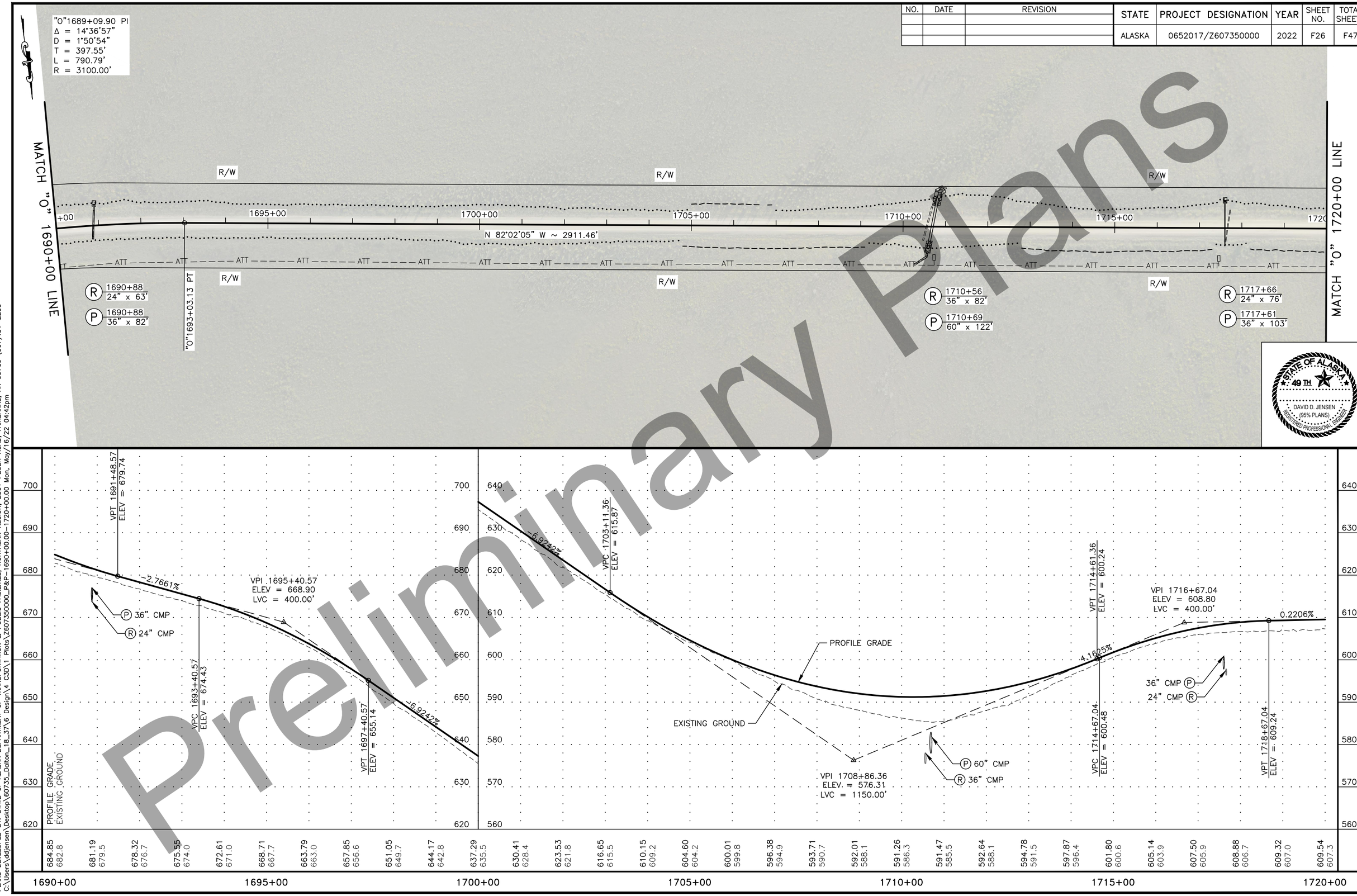

Preliminary Plans

PLANS DEVELOPED BY: STATE OF ALASKA DEPARTMENT OF TRANSPORTATION & PUBLIC FACILITIES, NORTHERN REGION, 2301 PEGER ROAD, FAIRBANKS, AK 99709 (907)451-2200
C:\Users\ddjensen\Desktop\60735_Dalton_18_37\6 Design\4 C3D\1 Plots\Z607350000_P&P-1690+00.00-1720+00.00 Mon, May/16/22 04:42pm

NO.	DATE	REVISION

STATE	PROJECT DESIGNATION	YEAR	SHEET NO.	TOTAL SHEETS
ALASKA	0652017/Z607350000	2022	F27	F47

"O"1726+62.03 PI
Δ = 30°31'16"
D = 3°29'37"
T = 447.44'
L = 873.62'
R = 1640.00'

"O"1738+62.83 PI
Δ = 26°47'52"
D = 4°05'33"
T = 333.50'
L = 654.79'
R = 1400.00'

"O"1752+23.98 PI
Δ = 38°23'11"
D = 4°22'25"
T = 456.01'
L = 877.66'
R = 1310.00'

"O"1722+14.59 PC
"O"1730+88.21 PT
"O"1735+29.33 PC
"O"1741+84.12 PT
"O"1747+67.96 PC

MATCH "O" 1720+00 LINE
MATCH "O" 1750+00 LINE

N 82°02'05" W ~ 2911.46'
N 51°30'49" W ~ 441.12'
N 24°42'57" W ~ 583.84'

R/W

ATT

1731+44 / 24" x 62' (R)
1731+64 / 36" x 130' (P)
1734+12 / 24" x 74' (R)
1734+10 / 36" x 102' (P)
1736+14 / 24" x 88' (R)
1736+21 / 36" x 126' (P)
1743+85 / 24" x 101' (R)
1743+85 / 36" x 133' (P)
1749+72 / 24" x 61' (R)
1749+72 / 36" x 86' (P)

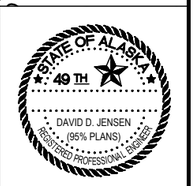

Preliminary Plans

PLANS DEVELOPED BY: STATE OF ALASKA DEPARTMENT OF TRANSPORTATION & PUBLIC FACILITIES, NORTHERN REGION, 2301 PEGER ROAD, FAIRBANKS, AK 99709 (907)451-2200
C:\Users\ddjensen\Desktop\60735_Dalton_18_37\6 Design\4 C3D\1 Plots\Z607350000_P&P-1720+00.00-1750+00.00 Mon, May/16/22 04:43pm

VPI 1724+62.22
ELEV = 610.56
LVC = 500.00'
0.2206%
VPC 1722+12.22
ELEV = 610.01
VPT 1727+12.22
ELEV = 605.19
-2.1477%
VPC 1732+53.58
ELEV = 593.56
VPT 1737+53.58
ELEV = 593.10
1.9612%
VPI 1740+86.02
ELEV = 599.62
LVC = 450.00'
-1.7874%
VPC 1747+55.40
ELEV = 587.65
PROFILE GRADE
EXISTING GROUND
36" CMP (P)
24" CMP (R)
VPI 1735+03.58
ELEV = 588.19
LVC = 500.00'
VPC 1738+61.02
ELEV = 595.20
VPT 1743+11.02
ELEV = 595.59

| | | |

NO.	DATE	REVISION

STATE	PROJECT DESIGNATION	YEAR	SHEET NO.	TOTAL SHEETS
ALASKA	0652017/Z607350000	2022	F28	F47

"O"1752+23.98 PI
Δ = 38°23'11"
D = 4°22'25"
T = 456.01'
L = 877.66'
R = 1310.00'

MATCH "O" 1750+00 LINE

MATCH "O" 1780+00 LINE

"O"1756+45.62 PT

UNUSABLE UXCAVATION

N 13°40'13" E ~ 3107.22'

R/W

ATT

R	1764+18	24" x 62'
P	1764+18	36" x 69'
R	1769+09	24" x 99'
P	1769+11	36" x 127'
R	1770+86	24" x 123'
P	1770+96	36" x 181'
R	1776+62	24" x 95'
P	1776+62	36" x 161'

VPT 1753+05.40
ELEV = 581.20

VPI 1750+30.40
ELEV = 582.74
LVC = 550.00'

VPC 1762+56.57
ELEV = 575.89

VPI 1766+31.57
ELEV = 573.80
LVC = 750.00'

VPT 1770+06.57
ELEV = 599.57

VPC 1770+45.40
ELEV = 602.24

VPI 1773+45.40
ELEV = 622.86
LVC = 600.00'

VPT 1776+45.40
ELEV = 624.65

VPC 1778+56.57
ELEV = 625.91

-0.5581%

6.6721%

0.5969%

PROFILE GRADE

EXISTING GROUND

36" CMP (P)

24" CMP (R)

| | | |

NO.	DATE	REVISION

STATE	PROJECT DESIGNATION	YEAR	SHEET NO.	TOTAL SHEETS
ALASKA	0652017/Z607350000	2022	F29	F47

LAYOUT SCHEDULE

NO.	STATION	OFFSET	REMARKS
1	"O"1787+96.5	20.0 LT	BEGIN GR TERMINAL
2	"O"1788+46.8	18.0 LT	END GR TERMINAL, BEGIN GR
3	"O"1804+44.9	18.0 LT	END GR, BEGIN GR TERMINAL
4	"O"1804+96.0	20.0 LT	END GR TERMINAL

MATCH "O" 1780+00 LINE

"O" 1810+00 LINE

N 13°40'13" E ~ 3107.22'

N 5°14'26" E ~ 759.22'

R/W

ATT

R 1780+48 24" x 90'
P 1780+48 36" x 124'

R 1781+29 24" x 82'
P 1781+29 36" x 122'

R 1785+53 36" x 105'
P 1785+53 36" x 119'

"O"1787+52.84 PC

"O"1790+18.89 PI
Δ = 8°25'47"
D = 1°35'14"
T = 266.05'
L = 531.13'
R = 3610.00'

"O"1792+83.97 PT

R 1791+85 24" x 80'
P 1791+85 36" x 101'

R 1795+75 24" x 60'
P 1795+54 36" x 74'

"O"1800+43.19 PC

R 1803+03 24" x 82'
P 1803+03 36" x 117'

OBLITERATION OF ROADWAY

P 1809+32 36" x 129'
P 1809+43 156" x 170'
P 1809+54 36" x 132'
A 1808+00 24'
R 1809+23 72" x 91'

"O"1812+64.80 PI
Δ = 110°20'22"
D = 6°44'26"
T = 1221.61'
L = 1636.92'
R = 850.00'

STATE OF ALASKA 49TH
DAVID D. JENSEN
(95% PLANS)
REGISTERED PROFESSIONAL ENGINEER

VPI 1780+56.57
ELEV = 627.10
LVC = 400.00'
3.2759%

VPT 1782+56.57
ELEV = 633.65

VPC 1782+61.57
ELEV = 633.82

VPI 1786+36.57
ELEV = 646.10
LVC = 750.00'

VPT 1790+11.57
ELEV = 634.81

-3.0104%

VPC 1792+71.57
ELEV = 626.98

VPI 1795+96.57
ELEV = 617.20
LVC = 650.00'

VPT 1799+21.57
ELEV = 613.66

-1.0892%

PROFILE GRADE

EXISTING GROUND

VPC 1806+55.67
ELEV = 605.66

VPI 1809+80.67
ELEV = 602.12
LVC = 650.00'

R 24" CMP
P 36" CMP
P 36" CMP
R 24" CMP
P 36" CMP
R 24" CMP
P 36" CMP
R 24" CMP
P 36" CMP
P 36" CMP
R 24" CMP
P 36" CMP
P 36" CMP
156" CMP P

PROFILE GRADE
EXISTING GROUND

627.45 625.2 | 629.34 627.2 | 631.91 630.0 | 635.01 633.3 | 637.55 636.5 | 639.24 637.1 | 640.10 637.5 | 640.12 638.4 | 639.30 637.7 | 637.65 636.3 | 635.15 633.9 | 632.15 630.1 | 629.14 626.5 | 626.14 624.2 | 623.36 621.0 | 620.88 617.6 | 618.69 615.8 | 616.80 614.0 | 615.20 612.2 | 613.90 611.3 | 612.81 610.6 | 611.72 609.1 | 610.63 607.6 | 609.54 602.0 | 608.45 597.7 | 607.36 594.7 | 606.27 593.2 | 605.28 595.6 | 605.10 596.4 | 605.88 594.1 | 607.64 590.9

660 650 640 630 620 610 600 590 580

1780+00 1785+00 1790+00 1795+00 1800+00 1805+00 1810+00

Preliminary Plans

PLANS DEVELOPED BY: STATE OF ALASKA DEPARTMENT OF TRANSPORTATION & PUBLIC FACILITIES, NORTHERN REGION, 2301 PEGER ROAD, FAIRBANKS, AK 99709 (907)451-2200
C:\Users\ddjensen\Desktop\60735_Dalton_18_37\6 Design\4 C3D\1 Plots\Z607350000_P&P-1780+00.00-1810+00.00 Mon, May/16/22 04:45pm

NO.	DATE	REVISION

STATE	PROJECT DESIGNATION	YEAR	SHEET NO.	TOTAL SHEETS
ALASKA	0652017/Z607350000	2022	F30	F47

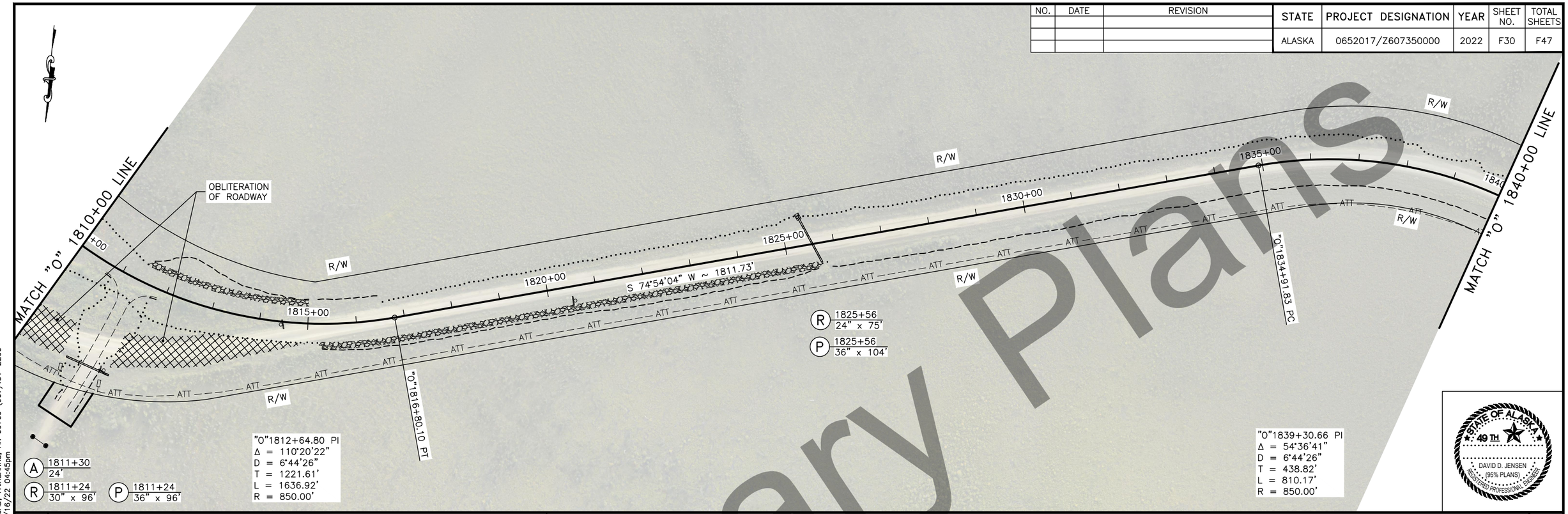

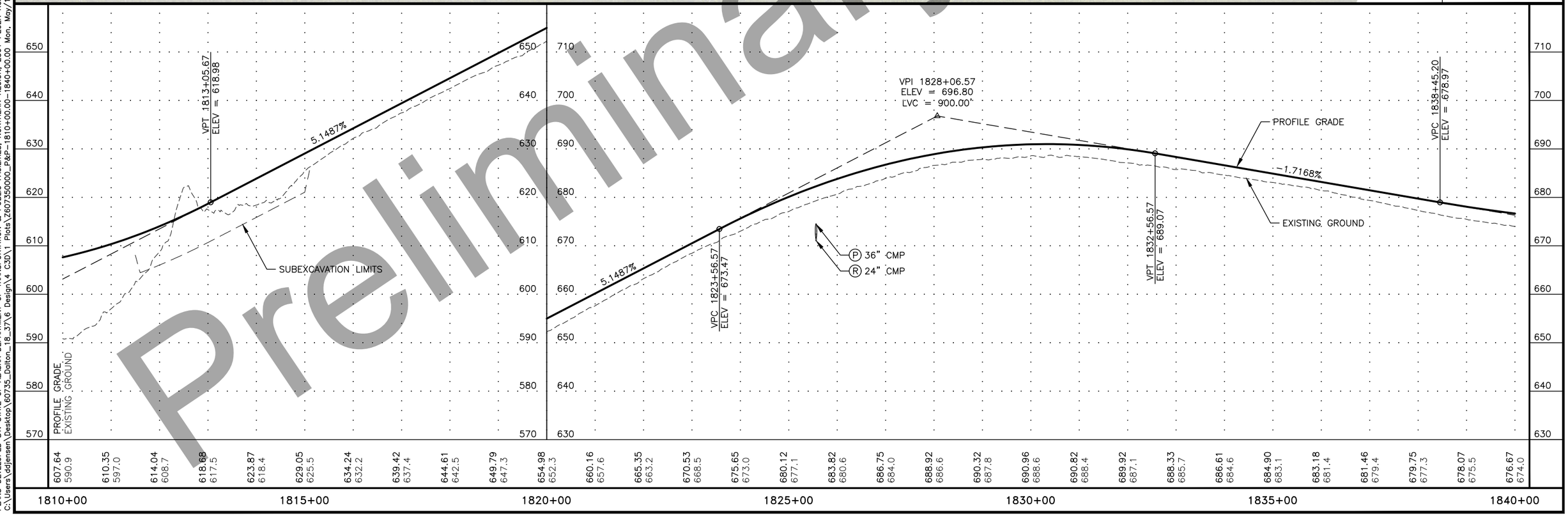

Preliminary Plans

PLANS DEVELOPED BY: STATE OF ALASKA DEPARTMENT OF TRANSPORTATION & PUBLIC FACILITIES, NORTHERN REGION, 2301 PEGER ROAD, FAIRBANKS, AK 99709 (907)451-2200
C:\Users\ddjensen\Desktop\60735_Dalton_18_37\6 Design\4 C3D\1 Plots\Z607350000_P&P-1810+00.00-1840+00.00 Mon, May/16/22 04:45pm

NO.	DATE	REVISION

STATE	PROJECT DESIGNATION	YEAR	SHEET NO.	TOTAL SHEETS
ALASKA	0652017/Z607350000	2022	F31	F47

"O"1839+30.66 PI
Δ = 54°36'41"
D = 6°44'26"
T = 438.82'
L = 810.17'
R = 850.00'

MATCH "O" 1840+00 LINE

MATCH "O" 1870+00 LINE

"O"1843+02.01 PT

N 50°29'15" W ~ 4217.15'

R/W

ATT

1845+00

1850+00

1855+00

1860+00

1865+00

1870

R 1845+09
24" x 63'

P 1845+55
36" x 80'

R 1850+95
24" x 61'

P 1850+95
36" x 76'

Preliminary Plans

STATE OF ALASKA
49 TH
DAVID D. JENSEN
(95% PLANS)
REGISTERED PROFESSIONAL ENGINEER

PROFILE GRADE
EXISTING GROUND

720 710 700 690 680 670 660 650 640

760 750 740 730 720 710 700 690 680

VPT 1856+28.20
ELEV = 695.97

3.623%

PROFILE GRADE

EXISTING GROUND

VPC 1861+04.57
ELEV = 713.23

VPI 1868+54.57
ELEV = 740.40
LVC = 1500.00'

36" CMP (P)

24" CMP (R)

VPI 1847+36.70
ELEV = 663.66
LVC = 1783.00'

(P) 36" CMP

(R) 24" CMP

| | | |

NO.	DATE	REVISION

STATE	PROJECT DESIGNATION	YEAR	SHEET NO.	TOTAL SHEETS
ALASKA	0652017/Z607350000	2022	F32	F47

Preliminary Plans

MATCH "O" 1870+00 LINE

1900+00 LINE

R/W

ATT

1873+20 (R) 24" x 76'

1873+20 (P) 36" x 134'

1874+62 (R) 24" x 84'

1874+62 (P) 36" x 131'

1875+00

1880+00

N 50°29'15" W ~ 4217.15'

1885+00

"O" 1885+19.16 PC

1889+55 (R) 48" x 73'

1889+26 (P) 48" x 177'

1890+00

1895+00

S 53°12'32" W ~ 827.28'

"O" 1896+51.15 PT

"O" 1891+86.89 PI
Δ = 76°18'12"
D = 6°44'26"
T = 667.72'
L = 1131.98'
R = 850.00'

STATE OF ALASKA 49TH
DAVID D. JENSEN
(95% PLANS)
REGISTERED PROFESSIONAL ENGINEER

VPI 1876+04.57
ELEV = 780.03

VPC 1877+16.57
ELEV = 785.95

VPI 1880+16.57
ELEV = 801.80
LVC = 600.00'

VPT 1883+16.57
ELEV = 799.95

VPC 1885+11.57
ELEV = 798.75

VPI 1888+11.57
ELEV = 796.90
LVC = 600.00'

VPT 1891+11.57
ELEV = 808.46

5.2840%

-0.6164%

3.8704%

PROFILE GRADE

EXISTING GROUND

(P) 36" CMP

(R) 24" CMP

(P) 36" CMP

(R) 24" CMP

(P) 48" CMP

SUBEXCAVATION LIMITS

| | | |

NO.	DATE	REVISION

STATE	PROJECT DESIGNATION	YEAR	SHEET NO.	TOTAL SHEETS
ALASKA	0652017/Z607350000	2022	F33	F47

"O"1909+07 PI
Δ = 53°30'53"
D = 6°44'26"
T = 428.57'
L = 793.90'
R = 850.00'

"O"1935+51.73 PI
Δ = 91°40'19"
D = 6°44'26"
T = 875.17'
L = 1359.98'
R = 850.00'

MATCH "O" 1900+00 LINE

MATCH "O" 1930+00 LINE

S 53°12'32" W ~ 827.28'

"O"1904+78.43 PC

"O"1912+72.33 PT

N 73°16'35" W ~ 1404.22'

"O"1926+76.55 PC

OBLITERATION OF ROADWAY

R/W

ATT

1905+00

1910+00

1915+00

1920+00

1925+00

R 1909+51 24" x 64'

P 1909+51 36" x 104'

R 1916+61 24" x 60'

P 1916+59 36" x 76'

R 1923+75 24" x 59'

P 1923+80 36" x 82'



Preliminary Plans

PROFILE GRADE
EXISTING GROUND

EXISTING GROUND

PROFILE GRADE

VPI 1905+00.16
ELEV = 861.94
LVC = 450.00'

VPC 1902+75.16
ELEV = 853.28

VPT 1907+25.16
ELEV = 860.06

VPC 1908+16.79
ELEV = 859.29

VPI 1910+41.79
ELEV = 857.41
LVC = 450.00'

VPT 1912+66.79
ELEV = 865.41

VPC 1913+06.57
ELEV = 866.83

VPI 1916+06.57
ELEV = 877.50
LVC = 600.00'

VPT 1919+06.57
ELEV = 875.00

VPC 1921+86.57
ELEV = 872.67

VPI 1924+46.57
ELEV = 870.50
LVC = 520.00'

VPT 1927+06.57
ELEV = 881.77

VPC 1927+16.57
ELEV = 882.20

3.8520%

-0.8377%

3.9576%

-0.8333%

4.3333%

36" CMP P
24" CMP R

SUBEXCAVATION LIMITS

| | | |

NO.	DATE	REVISION

STATE	PROJECT DESIGNATION	YEAR	SHEET NO.	TOTAL SHEETS
ALASKA	0652017/Z607350000	2022	F34	F47

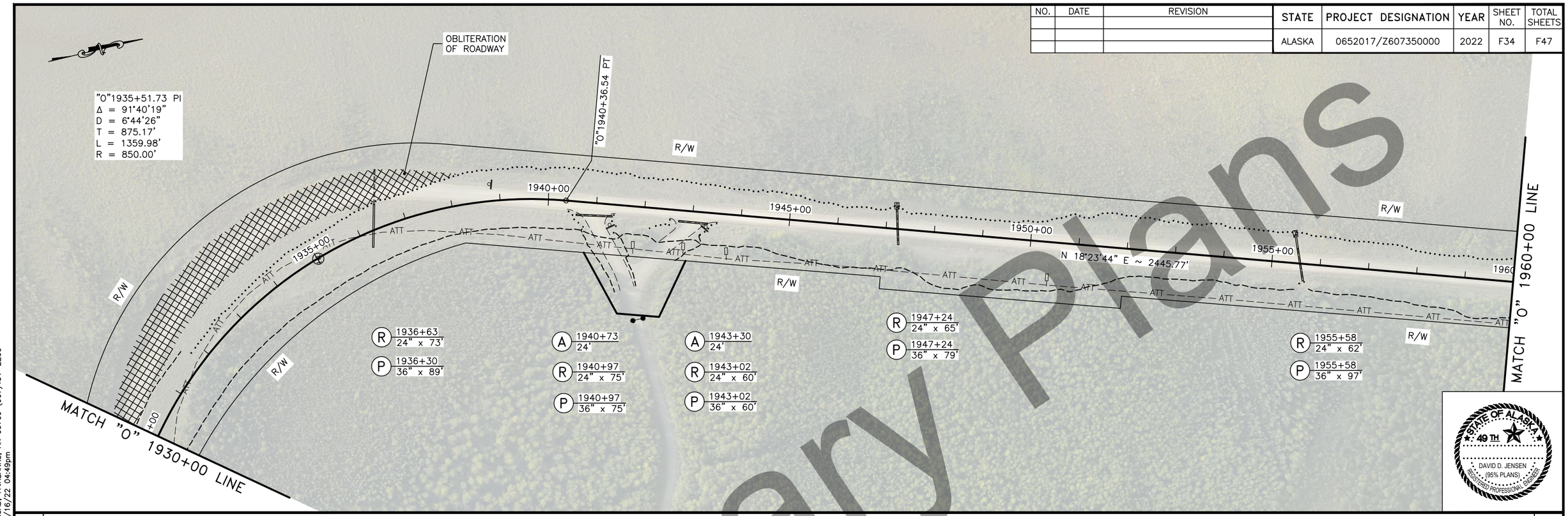

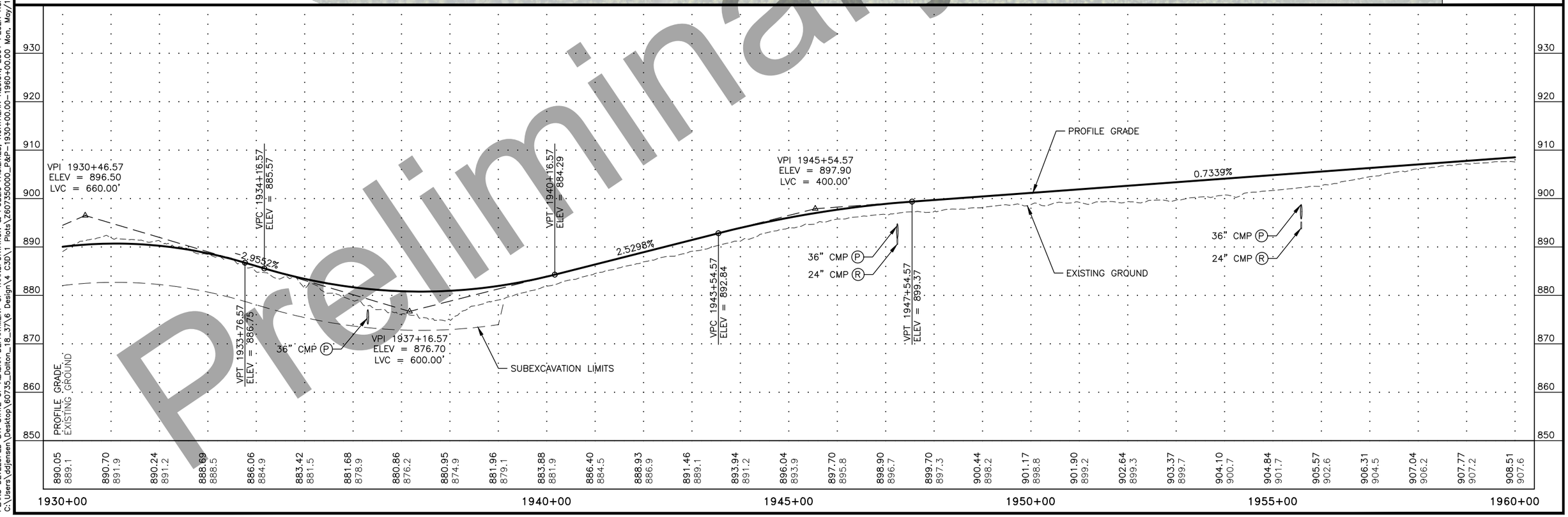

Preliminary Plans

PLANS DEVELOPED BY: STATE OF ALASKA DEPARTMENT OF TRANSPORTATION & PUBLIC FACILITIES, NORTHERN REGION, 2301 PEGER ROAD, FAIRBANKS, AK 99709 (907)451-2200
C:\Users\ddjensen\Desktop\60735_Dalton_18_37\6 Design\4 C3D\1 Plots\Z607350000_P&P-1930+00.00-1960+00.00 Mon, May/16/22 04:49pm

NO.	DATE	REVISION

STATE	PROJECT DESIGNATION	YEAR	SHEET NO.	TOTAL SHEETS
ALASKA	0652017/Z607350000	2022	F35	F47

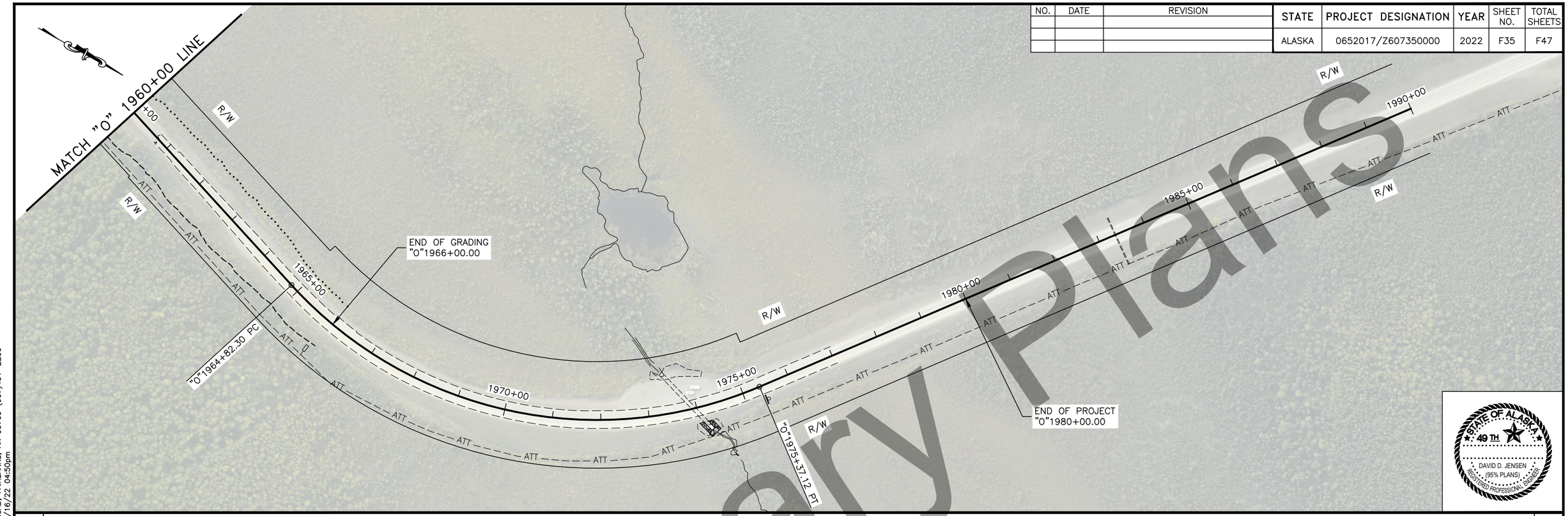

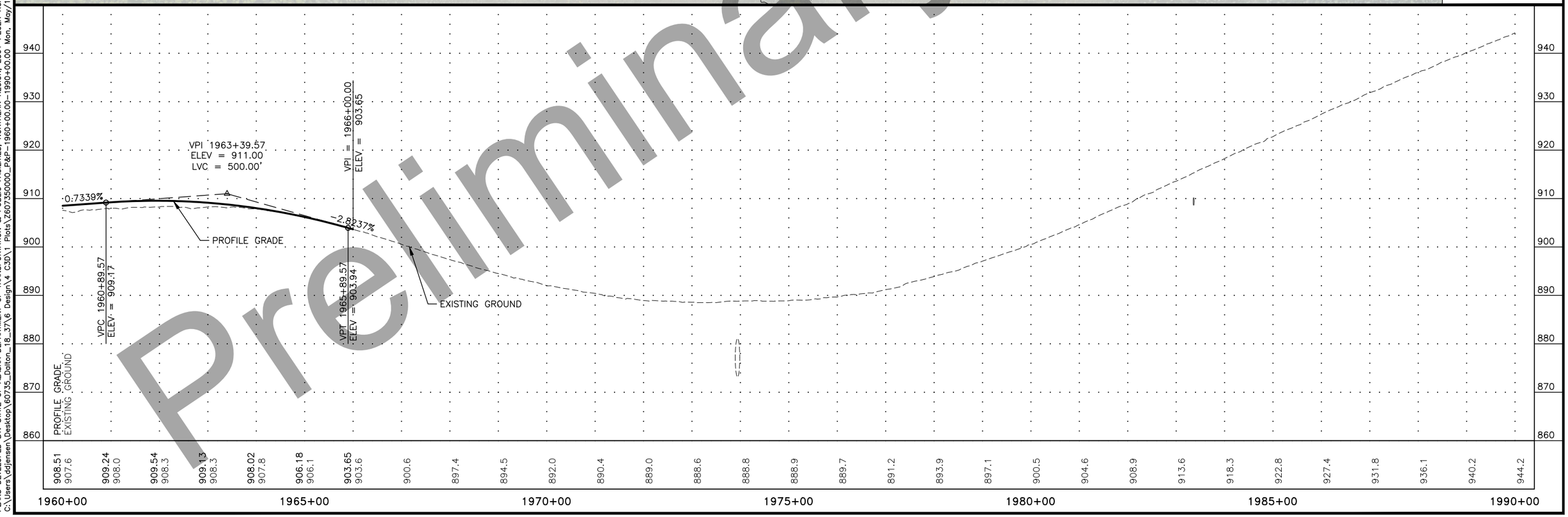

STATE OF ALASKA 49TH
DAVID D. JENSEN
(95% PLANS)
REGISTERED PROFESSIONAL ENGINEER

Preliminary Plans

PLANS DEVELOPED BY: STATE OF ALASKA DEPARTMENT OF TRANSPORTATION & PUBLIC FACILITIES, NORTHERN REGION, 2301 PEGER ROAD, FAIRBANKS, AK 99709 (907)451-2200
C:\Users\ddjensen\Desktop\60735_Dalton_18_37\6 Design\4 C3D\1 Plots\Z607350000_P&P-1960+00.00-1990+00.00 Mon, May/16/22 04:50pm

NO.	DATE	REVISION

STATE	PROJECT DESIGNATION	YEAR	SHEET NO.	TOTAL SHEETS
ALASKA	0652017/Z607350000	2022	F36	F47

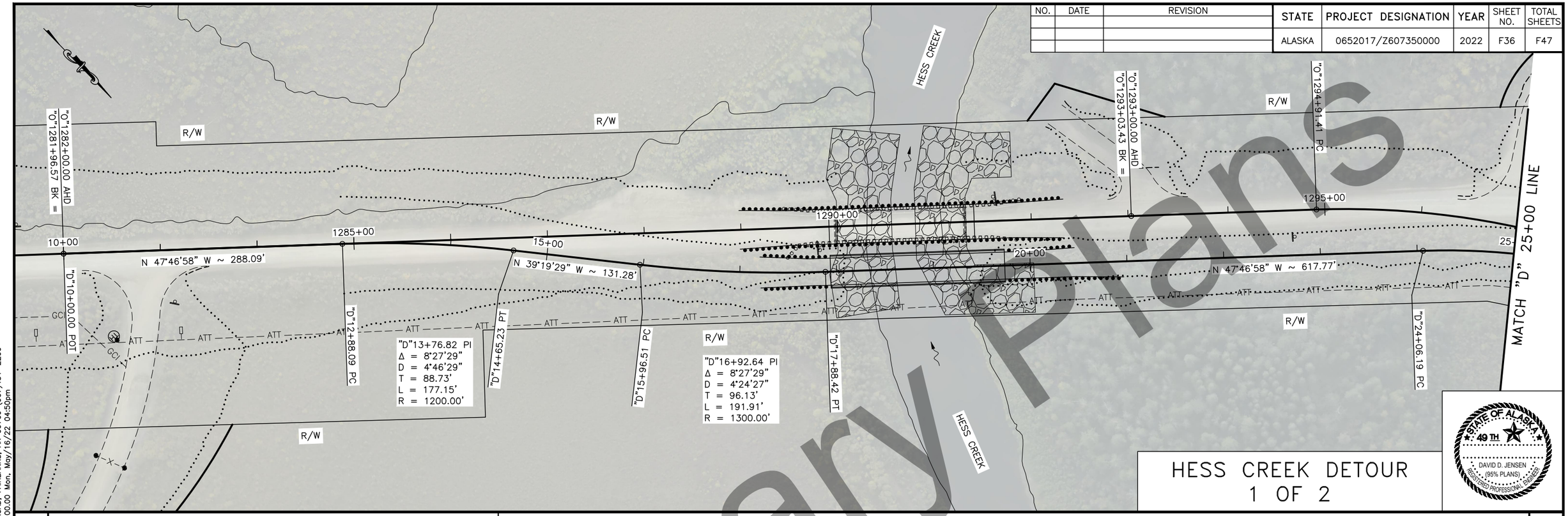

Preliminary Plans

PLANS DEVELOPED BY: STATE OF ALASKA DEPARTMENT OF TRANSPORTATION & PUBLIC FACILITIES, NORTHERN REGION, 2301 PEGER ROAD, FAIRBANKS, AK 99709 (907)451-2200
C:\Users\ddjensen\Desktop\60735_Dalton_18_37\6 Design\4 C3D\1 Plots\Z607350000_P&P_BRIDGE_DETOUR_UP-10+00.00-25+00.00 Mon, May/16/22 04:50pm

NO.	DATE	REVISION

STATE	PROJECT DESIGNATION	YEAR	SHEET NO.	TOTAL SHEETS
ALASKA	0652017/Z607350000	2022	F37	F47

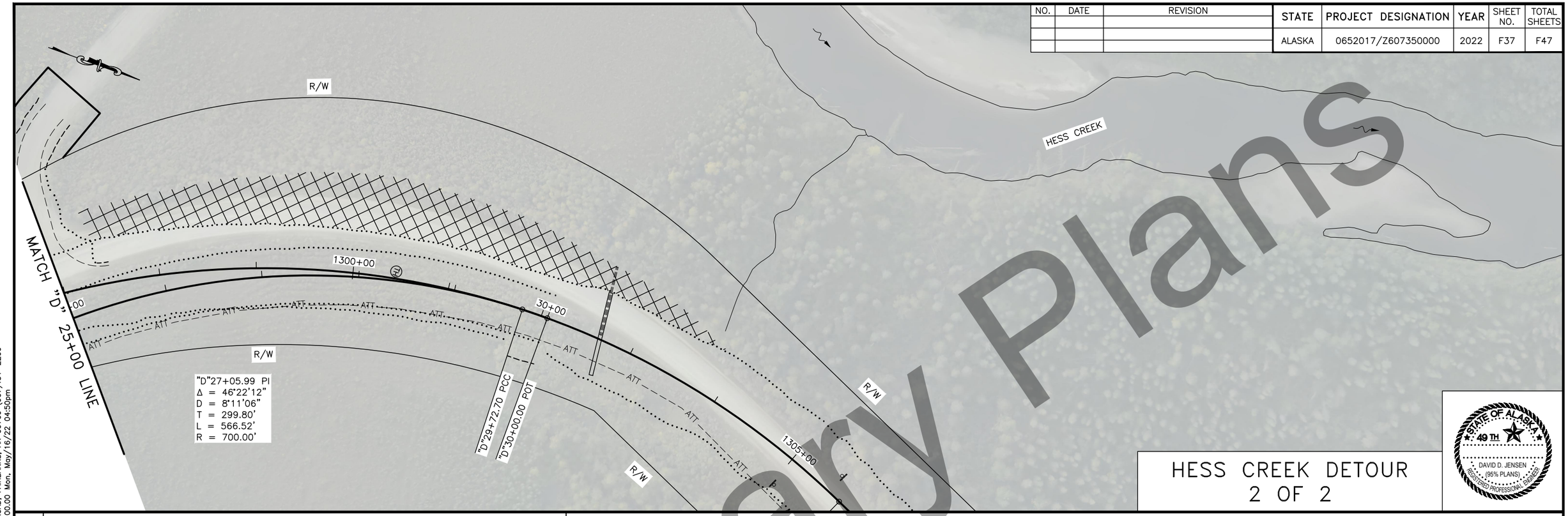

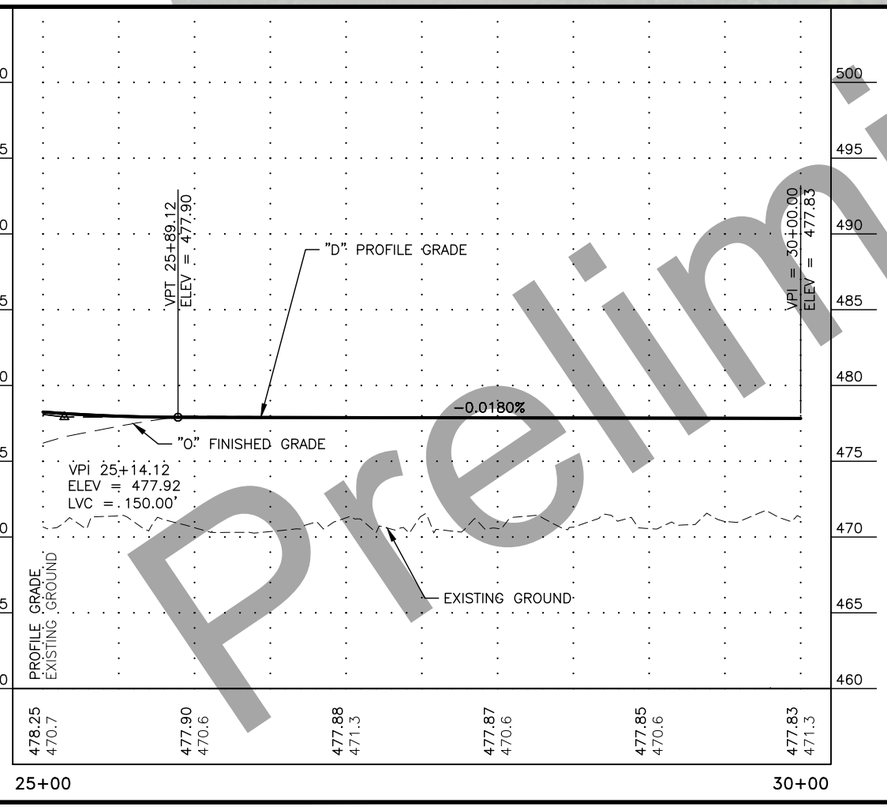

HESS CREEK DETOUR
2 OF 2

STATE OF ALASKA 49TH
DAVID D. JENSEN
(95% PLANS)
REGISTERED PROFESSIONAL ENGINEER

Preliminary Plans

PLANS DEVELOPED BY: STATE OF ALASKA DEPARTMENT OF TRANSPORTATION & PUBLIC FACILITIES, NORTHERN REGION, 2301 PEGER ROAD, FAIRBANKS, AK 99709 (907)451-2200
C:\Users\djensen\Desktop\60735_Dalton_18_37\6 Design\4 C3D\1 Plots\Z607350000_P&P_BRIDGE_DETOUR_UP-25+00.00-30+00.00 Mon, May/16/22 04:50pm

NO.	DATE	REVISION

STATE	PROJECT DESIGNATION	YEAR	SHEET NO.	TOTAL SHEETS
ALASKA	0652017/Z607350000	2022	F38	F47

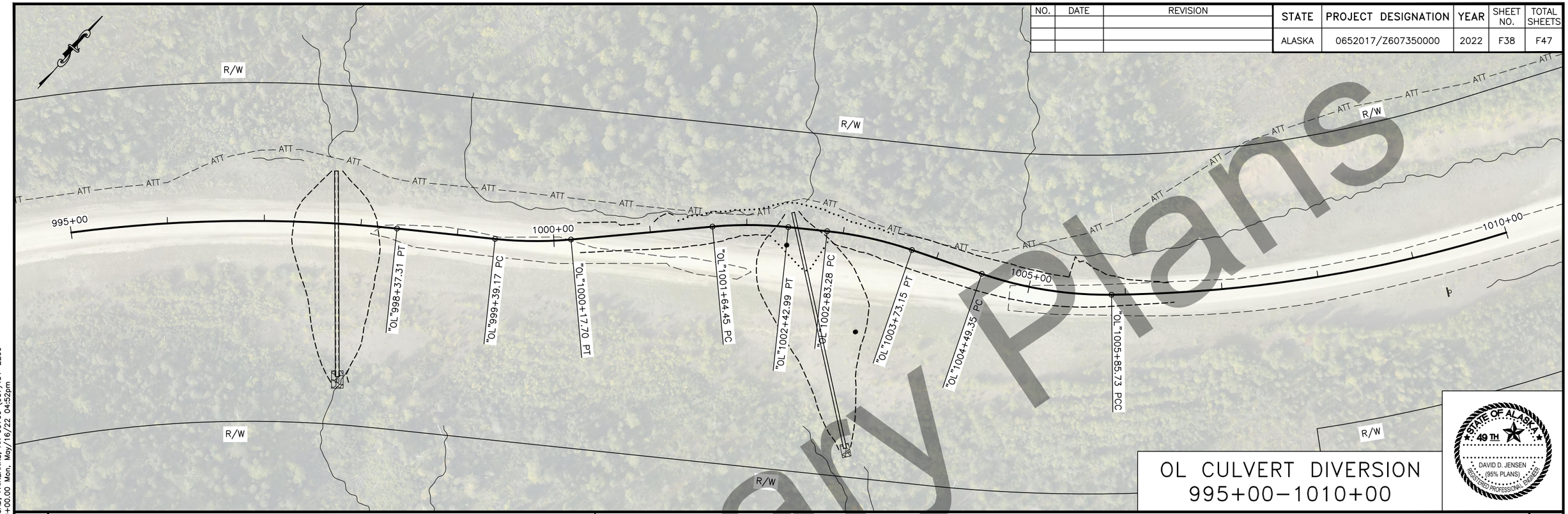

OL CULVERT DIVERSION
995+00–1010+00

STATE OF ALASKA
49 TH
DAVID D. JENSEN
(95% PLANS)
REGISTERED PROFESSIONAL ENGINEER

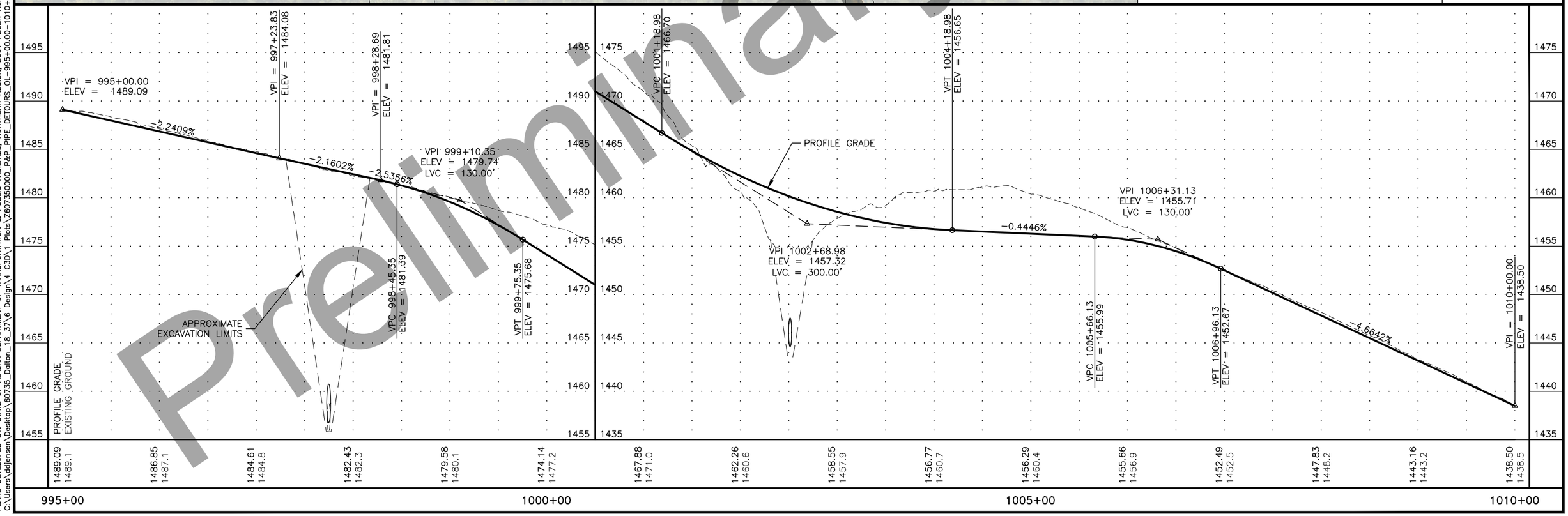

Preliminary Plans

PLANS DEVELOPED BY: STATE OF ALASKA DEPARTMENT OF TRANSPORTATION & PUBLIC FACILITIES, NORTHERN REGION, 2301 PEGER ROAD, FAIRBANKS, AK 99709 (907)451-2200
C:\Users\ddjensen\Desktop\60735_Dalton_18_37\6 Design\4 C3D\1 Plots\Z607350000_P&P_PIPE_DETOURS_OL-995+00.00-1010+00.00 Mon, May/16/22 04:52pm

NO.	DATE	REVISION

STATE	PROJECT DESIGNATION	YEAR	SHEET NO.	TOTAL SHEETS
ALASKA	0652017/Z607350000	2022	F39	F47

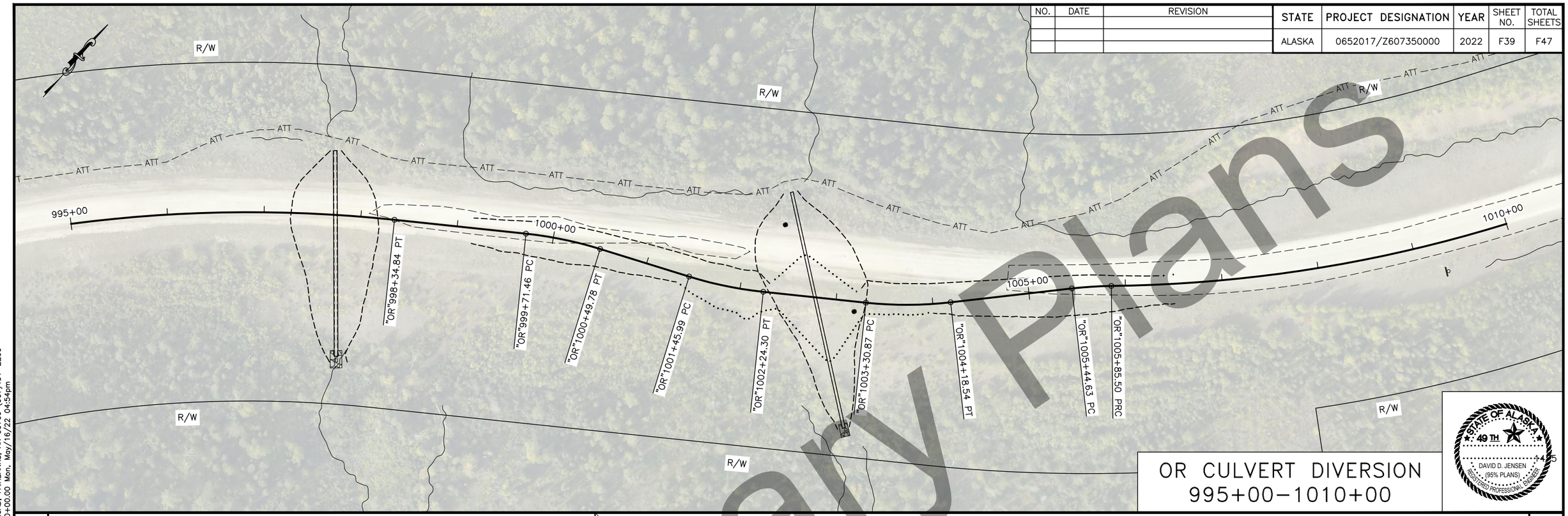

OR CULVERT DIVERSION
995+00–1010+00

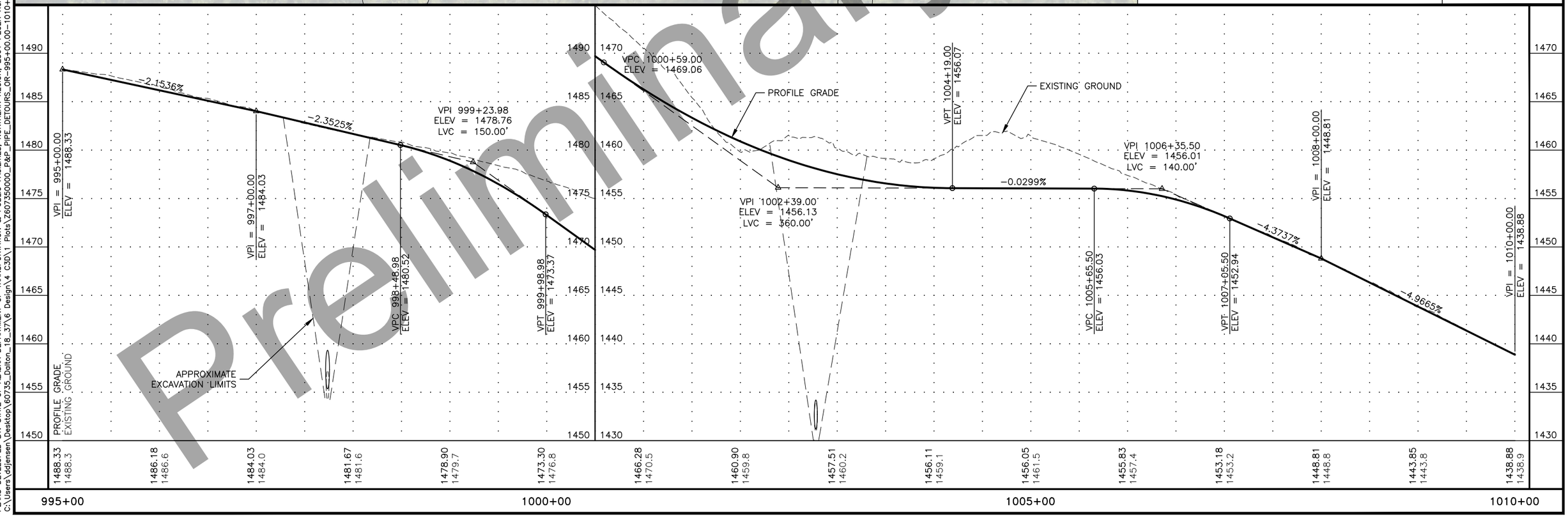

Preliminary Plans

PLANS DEVELOPED BY: STATE OF ALASKA DEPARTMENT OF TRANSPORTATION & PUBLIC FACILITIES, NORTHERN REGION, 2301 PEGER ROAD, FAIRBANKS, AK 99709 (907)451-2200
C:\Users\ddjensen\Desktop\60735_Dalton_18_37\6 Design\4 C3D\1 Plots\Z607350000_P&P_PIPE_DETOURS_OR-995+00.00-1010+00.00 Mon, May/16/22 04:54pm

NO.	DATE	REVISION

STATE	PROJECT DESIGNATION	YEAR	SHEET NO.	TOTAL SHEETS
ALASKA	0652017/Z607350000	2022	F40	F47

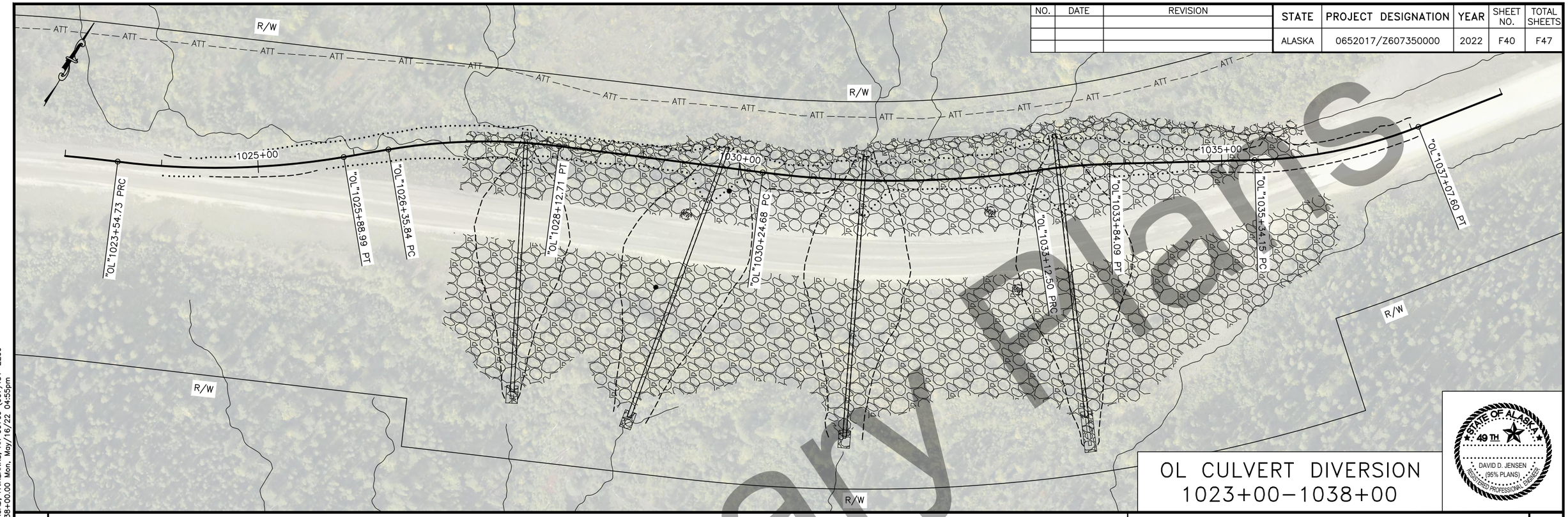

OL CULVERT DIVERSION
1023+00–1038+00

STATE OF ALASKA
49 TH
DAVID D. JENSEN
(95% PLANS)
REGISTERED PROFESSIONAL ENGINEER

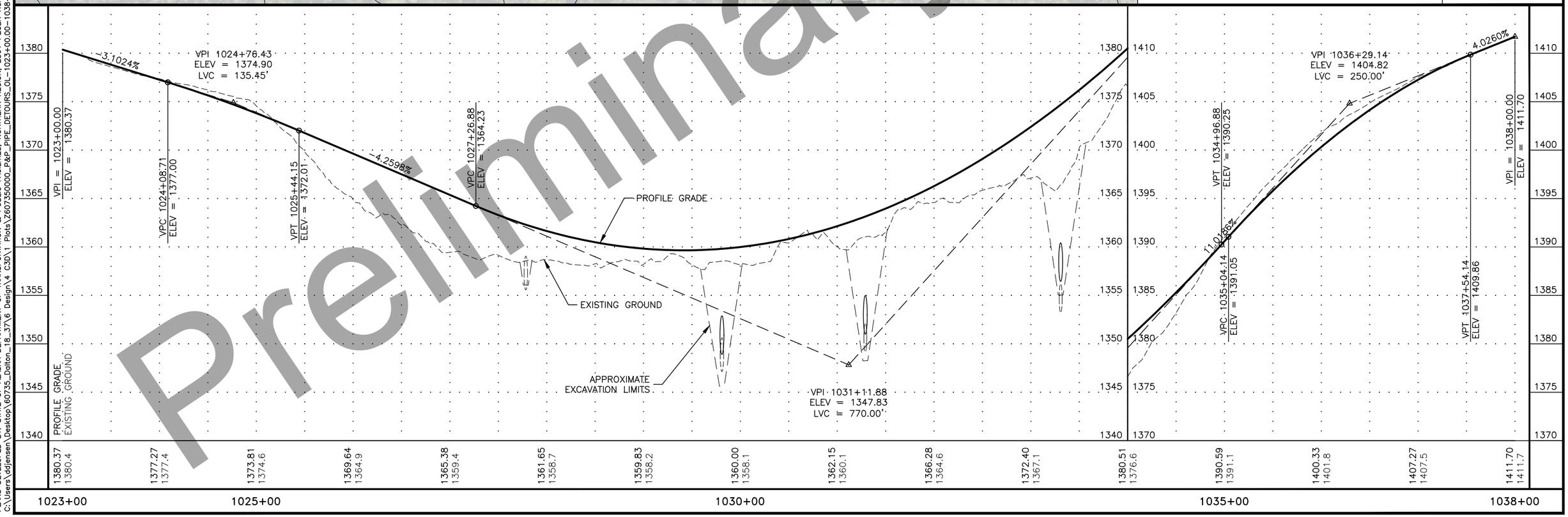

Preliminary Plans

PLANS DEVELOPED BY: STATE OF ALASKA DEPARTMENT OF TRANSPORTATION & PUBLIC FACILITIES, NORTHERN REGION, 2301 PEGER ROAD, FAIRBANKS, AK 99709 (907)451-2200
C:\Users\ddjensen\Desktop\60735_Dalton_18_37\6 Design\4 C3D\1 Plots\Z607350000_P&P_PIPE_DETOURS_OL_1023+00.00-1038+00.00 Mon, May/16/22 04:55pm

NO.	DATE	REVISION

STATE	PROJECT DESIGNATION	YEAR	SHEET NO.	TOTAL SHEETS
ALASKA	0652017/Z607350000	2022	F41	F47

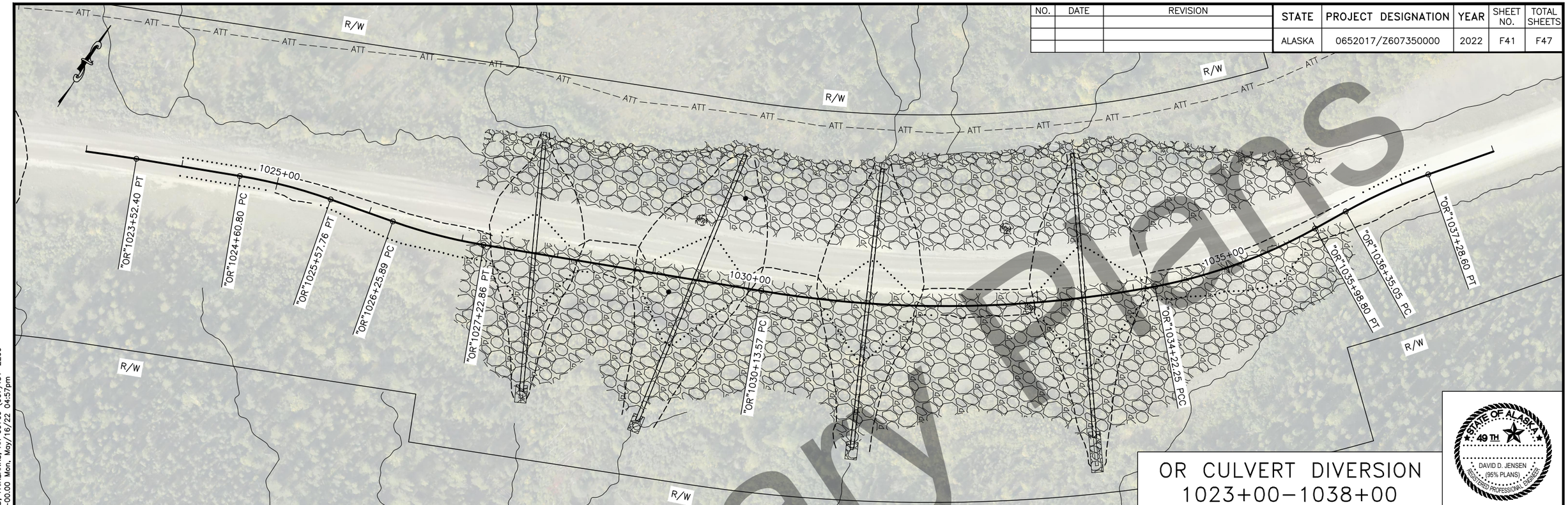

OR CULVERT DIVERSION
1023+00–1038+00

STATE OF ALASKA 49TH
DAVID D. JENSEN
(95% PLANS)
REGISTERED PROFESSIONAL ENGINEER

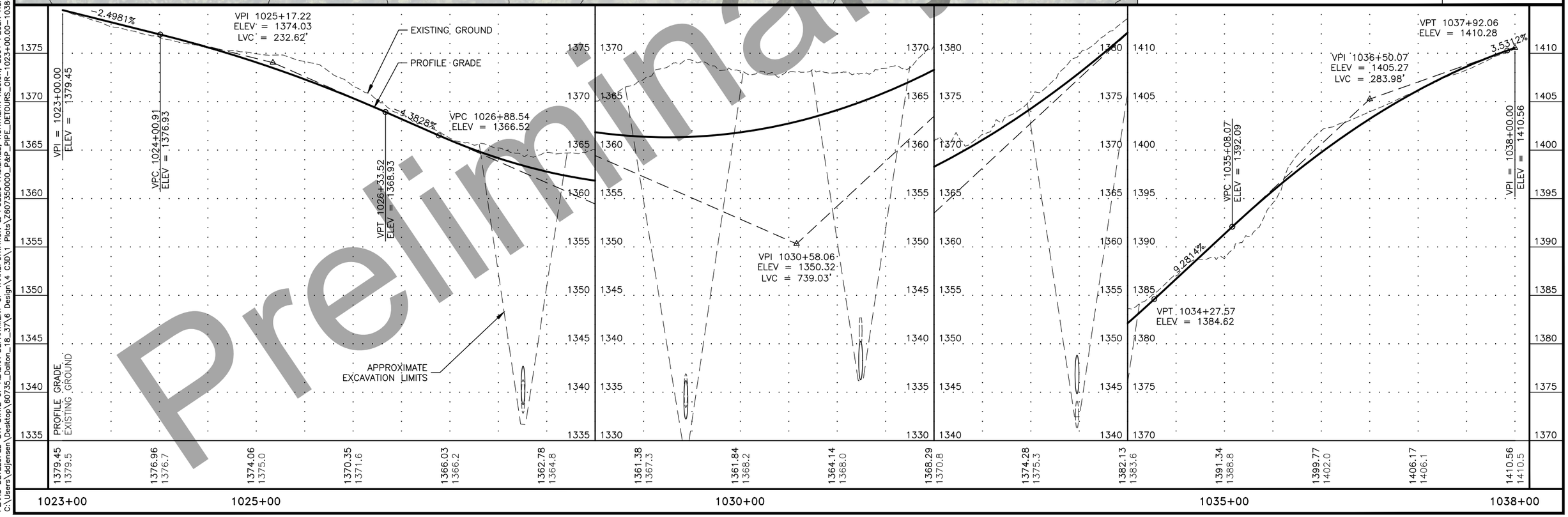

Preliminary Plans

PLANS DEVELOPED BY: STATE OF ALASKA DEPARTMENT OF TRANSPORTATION & PUBLIC FACILITIES, NORTHERN REGION, 2301 PEGER ROAD, FAIRBANKS, AK 99709 (907)451-2200
C:\Users\ddjensen\Desktop\60735_Dalton_18_37\6 Design\4 C3D\1 Plots\Z607350000_P&P_PIPE_DETOURS_OR-1023+00.00-1038+00.00 Mon, May/16/22 04:57pm

NO.	DATE	REVISION

STATE	PROJECT DESIGNATION	YEAR	SHEET NO.	TOTAL SHEETS
ALASKA	0652017/Z607350000	2022	F42	F47

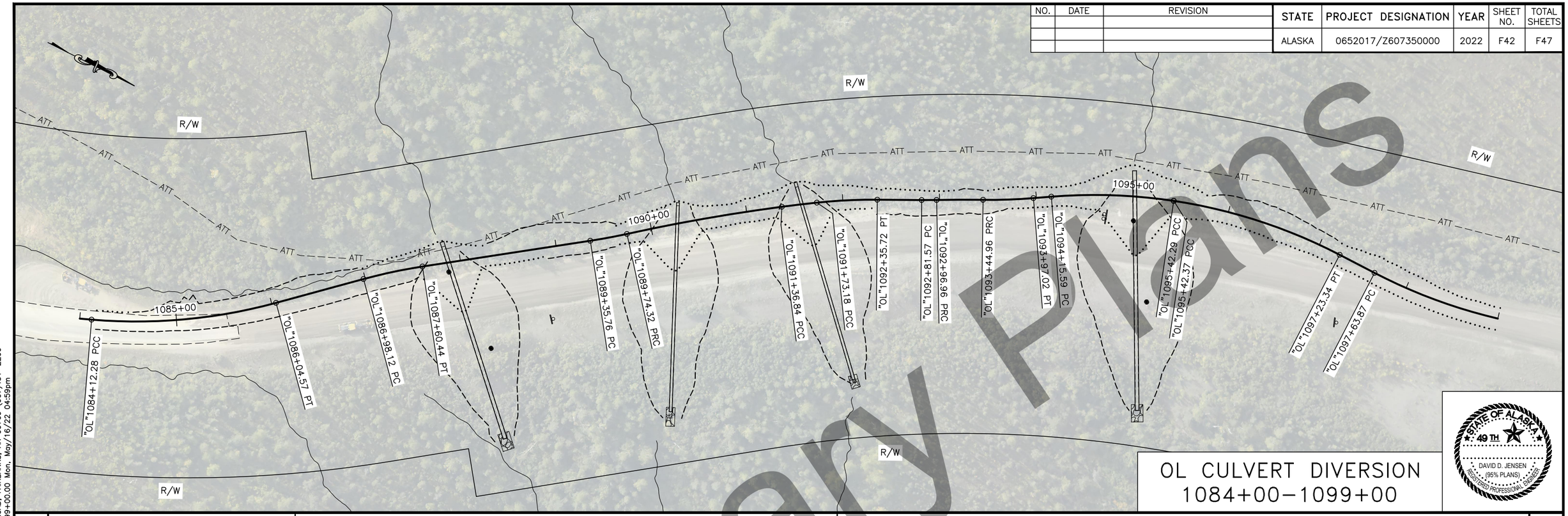

OL CULVERT DIVERSION
1084+00–1099+00

STATE OF ALASKA 49TH
DAVID D. JENSEN
(95% PLANS)
REGISTERED PROFESSIONAL ENGINEER

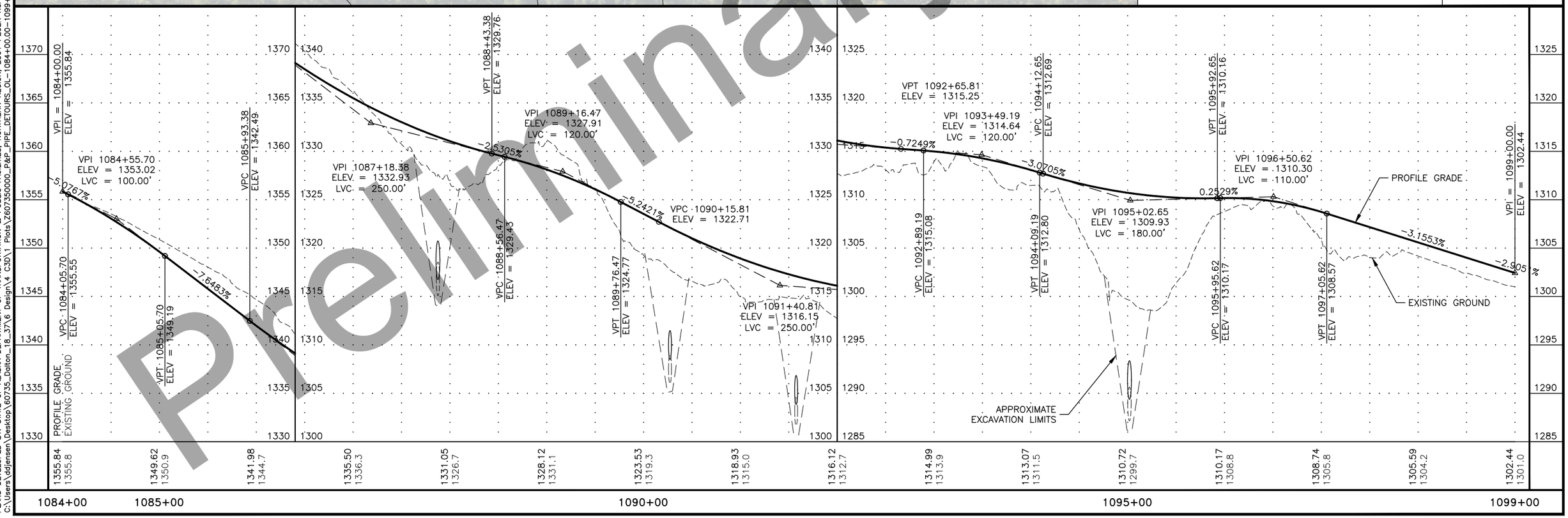

Preliminary Plans

PLANS DEVELOPED BY: STATE OF ALASKA DEPARTMENT OF TRANSPORTATION & PUBLIC FACILITIES, NORTHERN REGION, 2301 PEGER ROAD, FAIRBANKS, AK 99709 (907)451-2200
C:\Users\ddjensen\Desktop\60735_Dalton_18_37\6 Design\4 C3D\1 Plots\Z607350000_P&P_PIPE_DETOURS_OL-1084+00.00-1099+00.00 Mon, May/16/22 04:59pm

NO.	DATE	REVISION

STATE	PROJECT DESIGNATION	YEAR	SHEET NO.	TOTAL SHEETS
ALASKA	0652017/Z607350000	2022	F43	F47

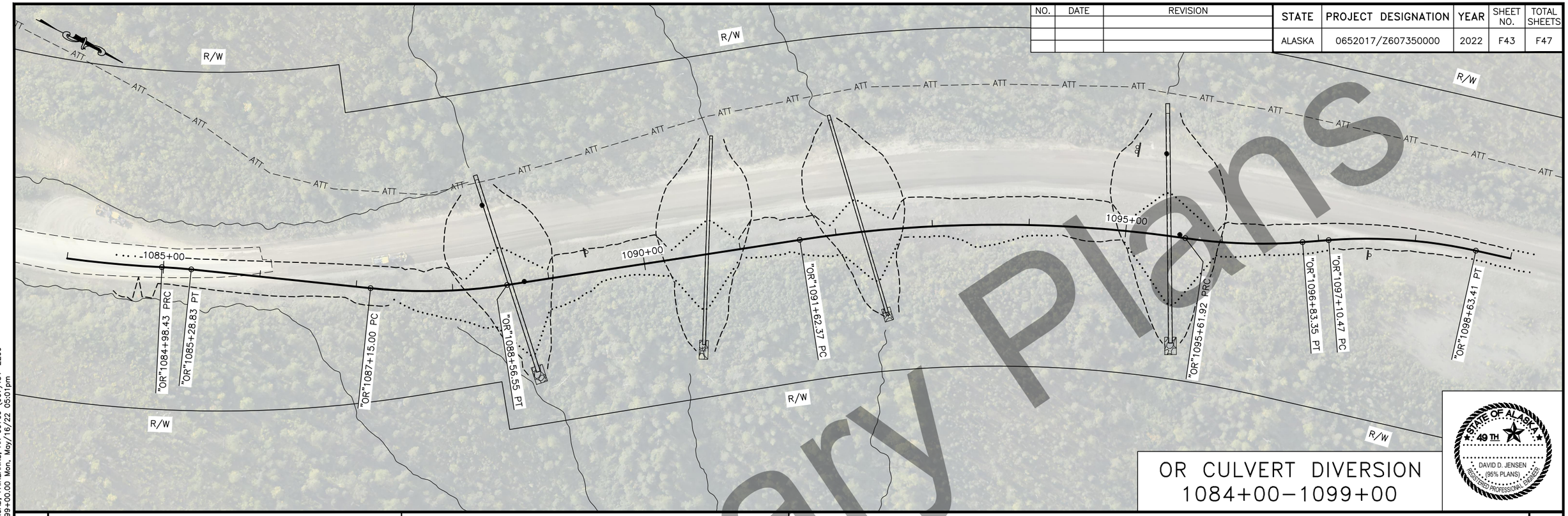

OR CULVERT DIVERSION
1084+00–1099+00

STATE OF ALASKA
49 TH
DAVID D. JENSEN
(95% PLANS)
REGISTERED PROFESSIONAL ENGINEER

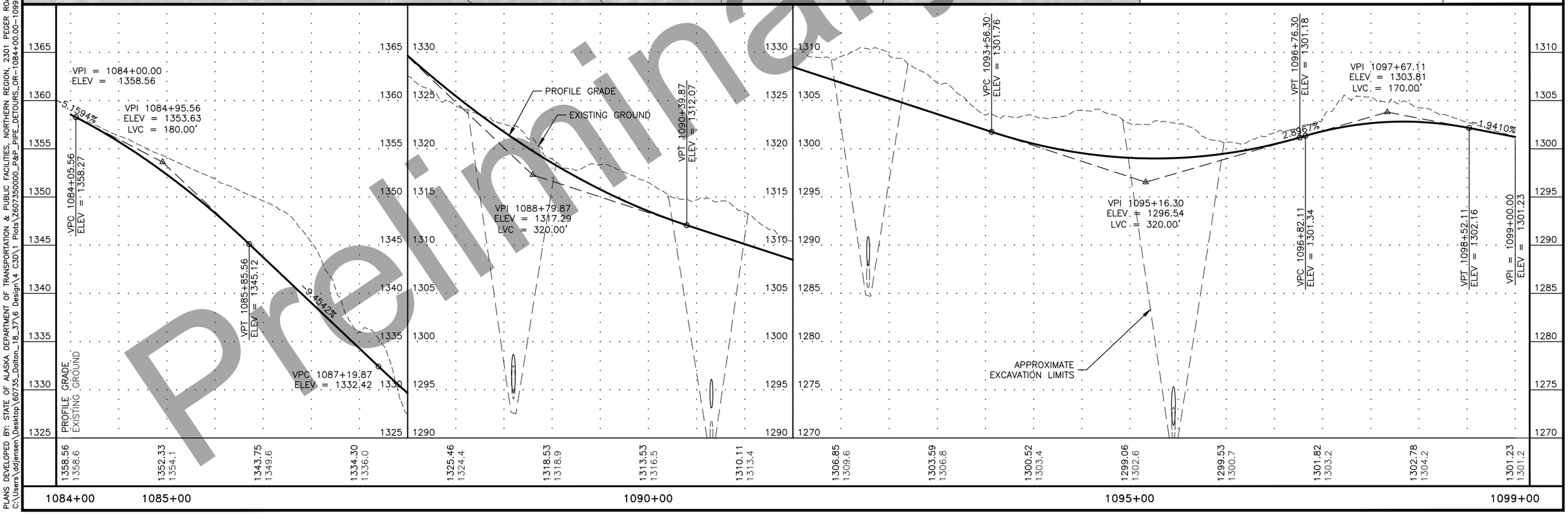

Preliminary Plans

PLANS DEVELOPED BY: STATE OF ALASKA DEPARTMENT OF TRANSPORTATION & PUBLIC FACILITIES, NORTHERN REGION, 2301 PEGER ROAD, FAIRBANKS, AK 99709 (907)451-2200
C:\Users\djensen\Desktop\60735_Dalton_18_37\6 Design\4 C3D\1 Plots\Z607350000_P&P_PIPE_DETOURS_OR-1084+00.00-1099+00.00 Mon, May/16/22 05:01pm

NO.	DATE	REVISION

STATE	PROJECT DESIGNATION	YEAR	SHEET NO.	TOTAL SHEETS
ALASKA	0652017/Z607350000	2022	F44	F47

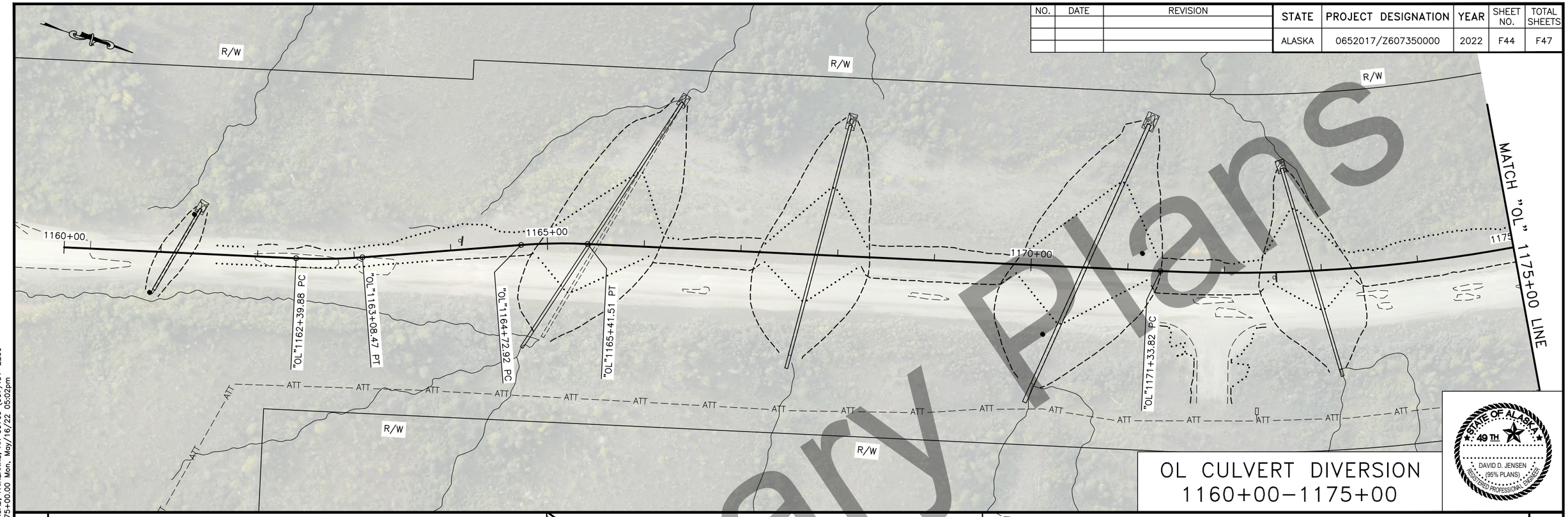

OL CULVERT DIVERSION
1160+00–1175+00

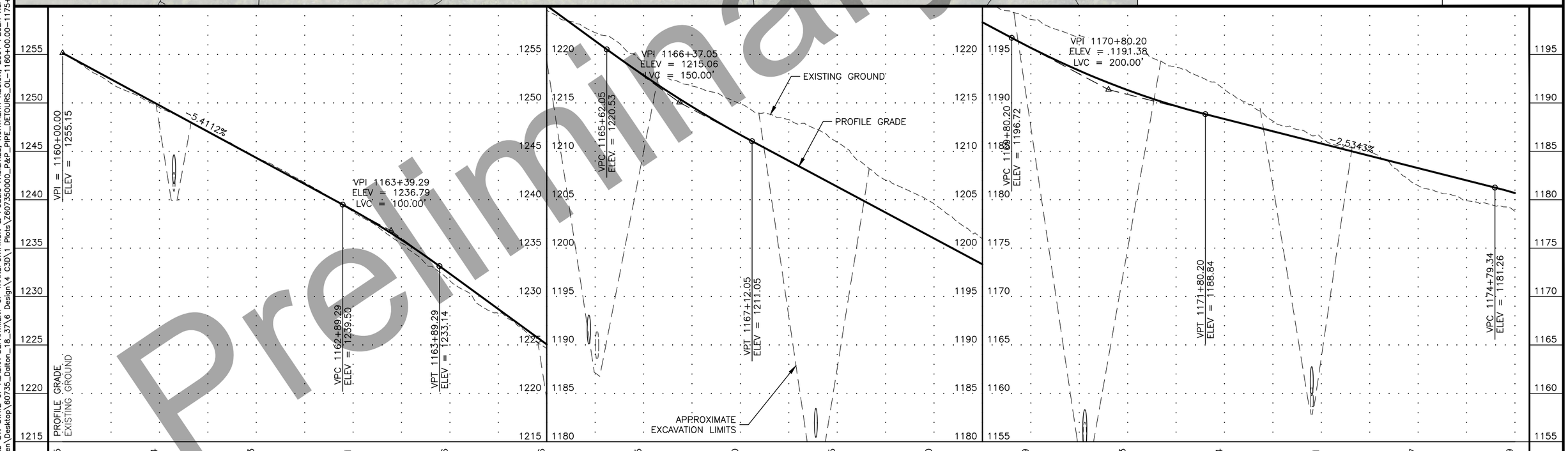

Preliminary Plans

STATE OF ALASKA
49 TH
DAVID D. JENSEN
(95% PLANS)
REGISTERED PROFESSIONAL ENGINEER

PLANS DEVELOPED BY: STATE OF ALASKA DEPARTMENT OF TRANSPORTATION & PUBLIC FACILITIES, NORTHERN REGION, 2301 PEGER ROAD, FAIRBANKS, AK 99709 (907)451-2200
C:\Users\ddjensen\Desktop\60735_Dalton_18_37\6 Design\4 C3D\1 Plots\Z607350000_P&P_PIPE_DETOURS_OL-1160+00.00-1175+00.00 Mon, May/16/22 05:02pm

NO.	DATE	REVISION

STATE	PROJECT DESIGNATION	YEAR	SHEET NO.	TOTAL SHEETS
ALASKA	0652017/Z607350000	2022	F45	F47

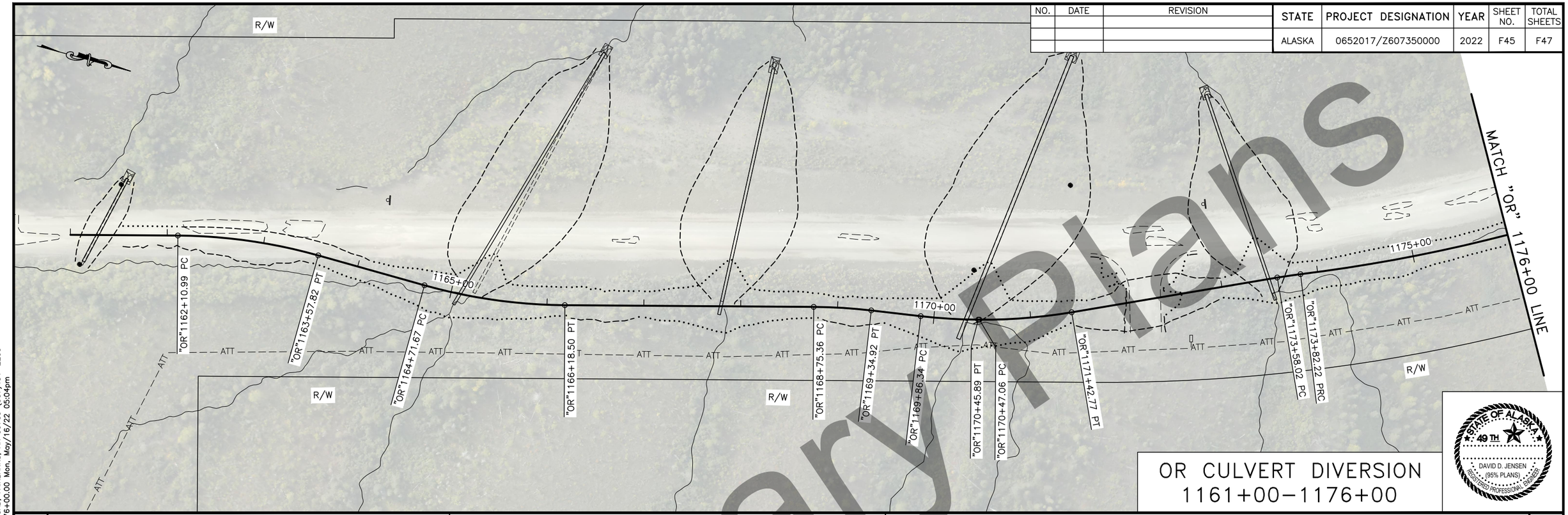

OR CULVERT DIVERSION
1161+00–1176+00

STATE OF ALASKA 49TH
DAVID D. JENSEN
(95% PLANS)
REGISTERED PROFESSIONAL ENGINEER

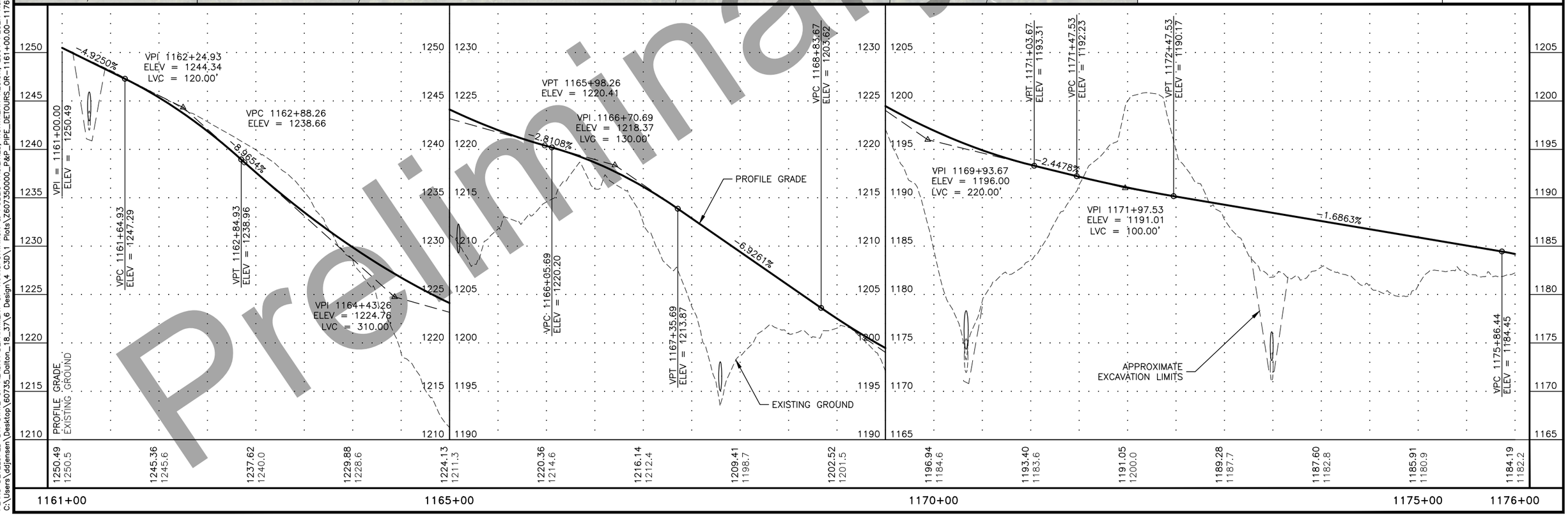

Preliminary Plans

PLANS DEVELOPED BY: STATE OF ALASKA DEPARTMENT OF TRANSPORTATION & PUBLIC FACILITIES, NORTHERN REGION, 2301 PEGER ROAD, FAIRBANKS, AK 99709 (907)451-2200
C:\Users\ddjensen\Desktop\60735_Dalton_18_37\6 Design\4 C3D\1 Plots\Z607350000_P&P_PIPE_DETOURS_OR-1161+00.00-1176+00.00 Mon, May/16/22 05:04pm

NO.	DATE	REVISION

STATE	PROJECT DESIGNATION	YEAR	SHEET NO.	TOTAL SHEETS
ALASKA	0652017/Z607350000	2022	F46	F47

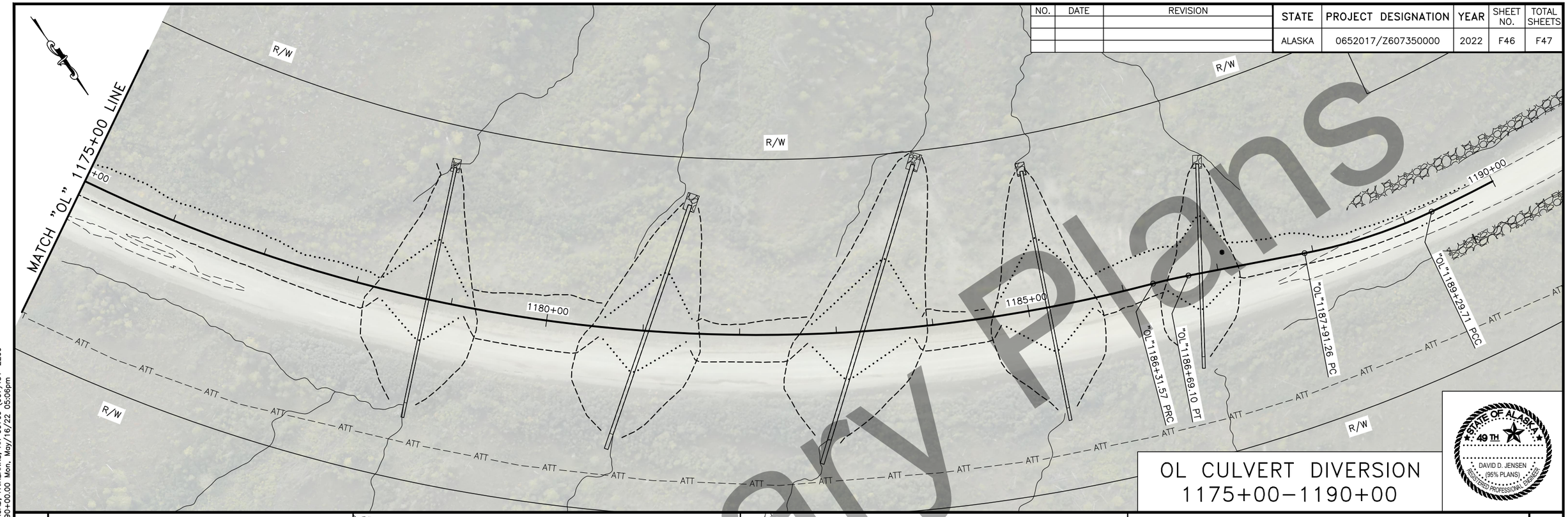

OL CULVERT DIVERSION
1175+00–1190+00

STATE OF ALASKA
49 TH
DAVID D. JENSEN
(95% PLANS)
REGISTERED PROFESSIONAL ENGINEER

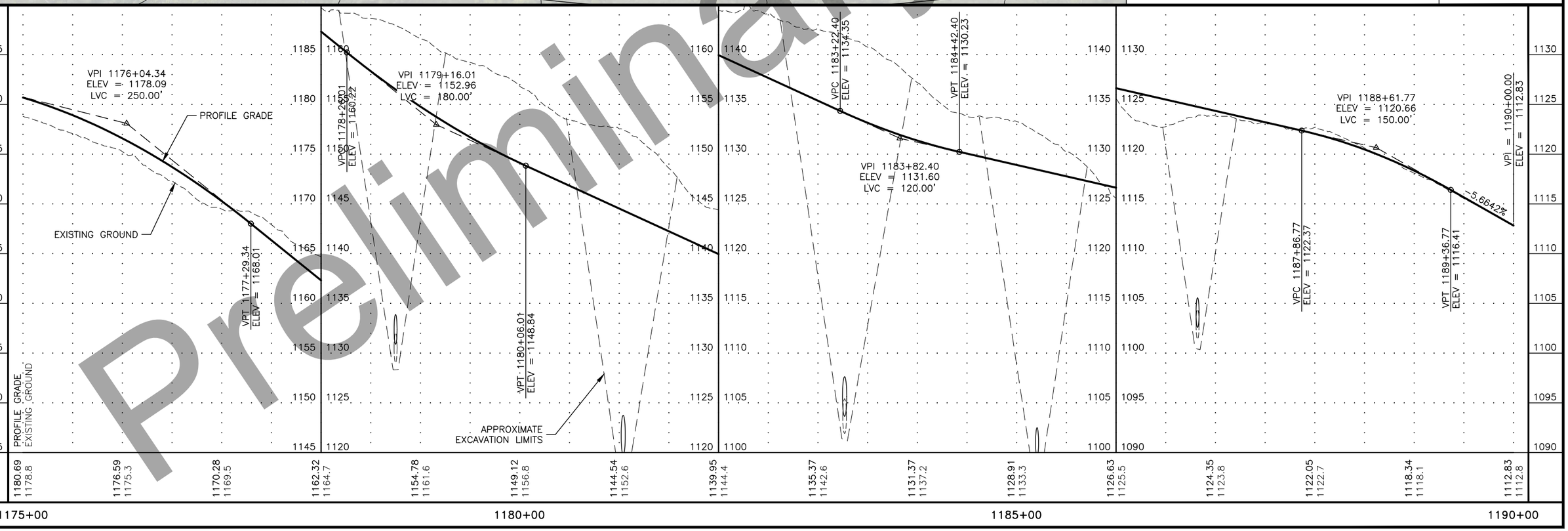

Preliminary Plans

PLANS DEVELOPED BY: STATE OF ALASKA DEPARTMENT OF TRANSPORTATION & PUBLIC FACILITIES, NORTHERN REGION, 2301 PEGER ROAD, FAIRBANKS, AK 99709 (907)451-2200
C:\Users\ddjensen\Desktop\60735_Dalton_18_37\6 Design\4 C3D\1 Plots\Z607350000_P&P_PIPE_DETOURS_OL-1175+00.00-1190+00.00 Mon, May/16/22 05:06pm

NO.	DATE	REVISION

STATE	PROJECT DESIGNATION	YEAR	SHEET NO.	TOTAL SHEETS
ALASKA	0652017/Z607350000	2022	F47	F47

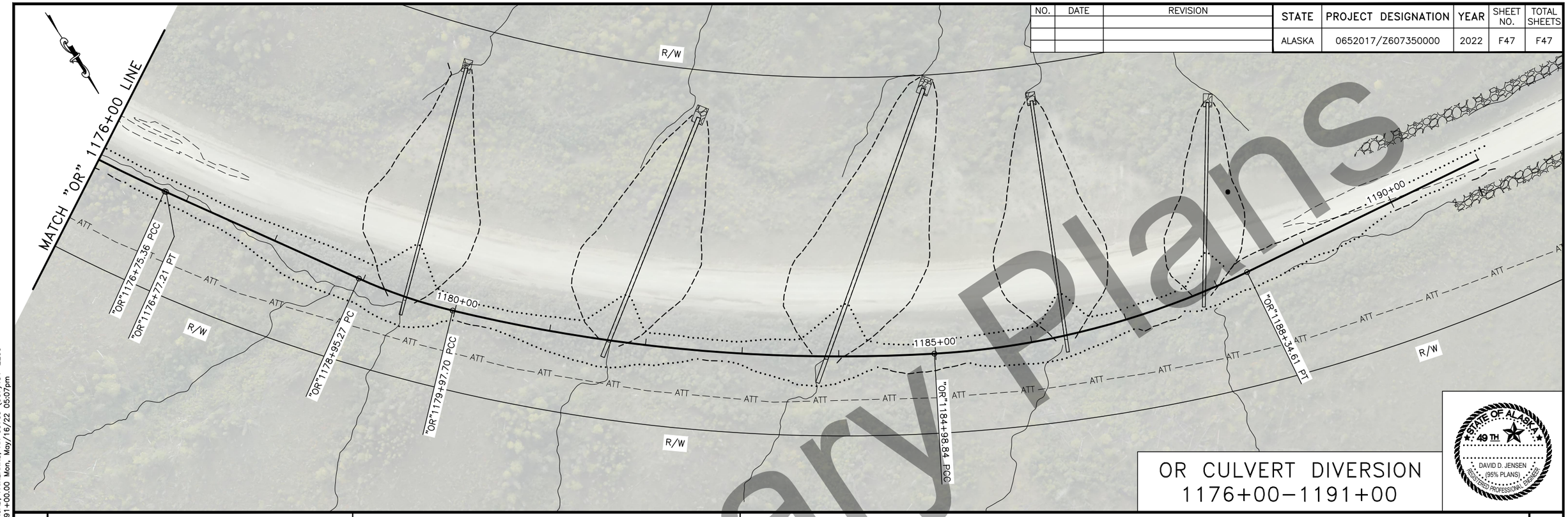

OR CULVERT DIVERSION
1176+00–1191+00

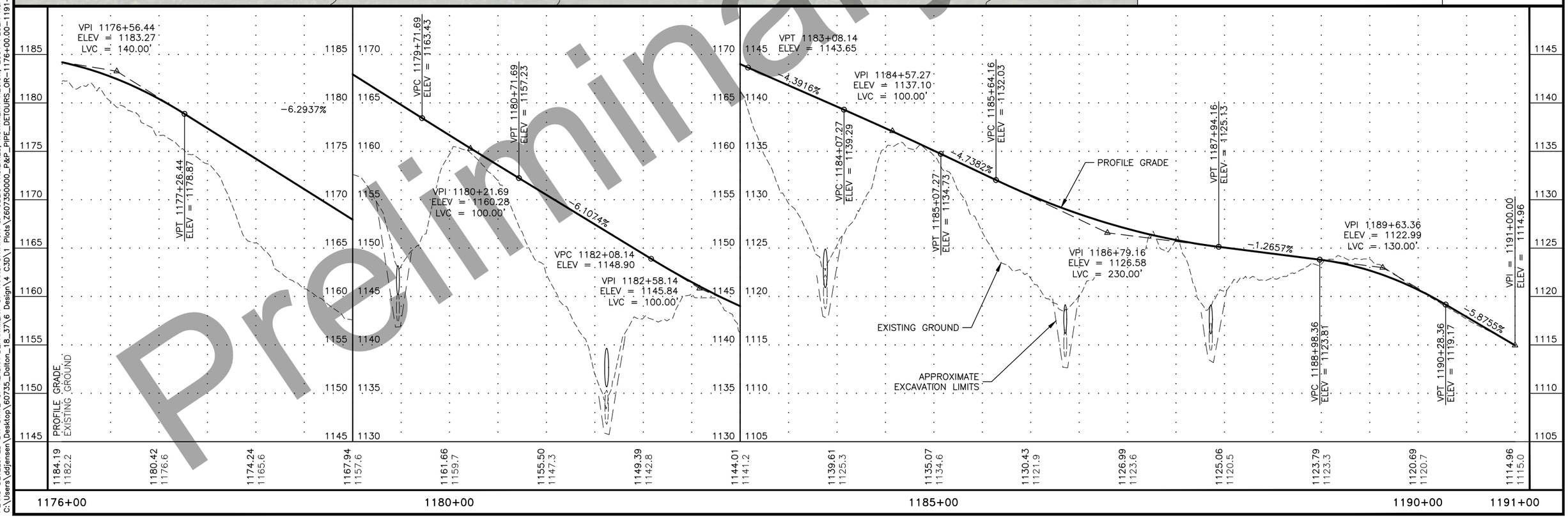

STATE OF ALASKA 49TH
DAVID D. JENSEN
(95% PLANS)
REGISTERED PROFESSIONAL ENGINEER

Preliminary Plans

PLANS DEVELOPED BY: STATE OF ALASKA DEPARTMENT OF TRANSPORTATION & PUBLIC FACILITIES, NORTHERN REGION, 2301 PEGER ROAD, FAIRBANKS, AK 99709 (907)451-2200
C:\Users\ddjensen\Desktop\60735_Dalton_18_37\6 Design\4 C3D\1 Plots\Z607350000_P&P_PIPE_DETOURS_OR-1176+00.00-1191+00.00 Mon, May/16/22 05:07pm

NO.	DATE	REVISION

STATE	PROJECT DESIGNATION	YEAR	SHEET NO.	TOTAL SHEETS
ALASKA	0652017/Z607350000	2022	G1	G5

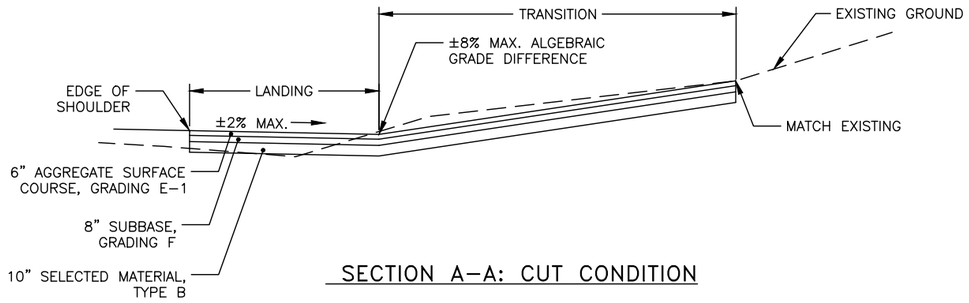

SECTION A–A: CUT CONDITION

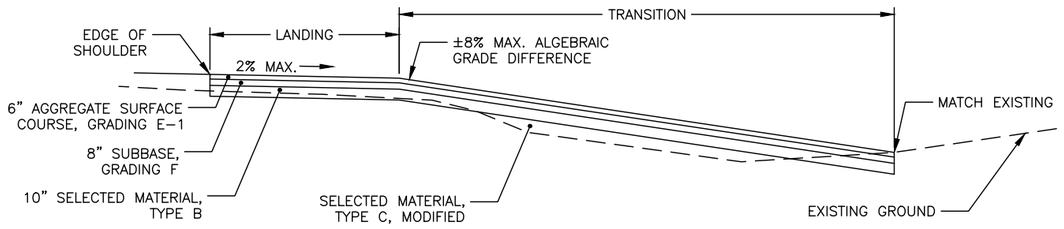

SECTION A–A: FILL CONDITION

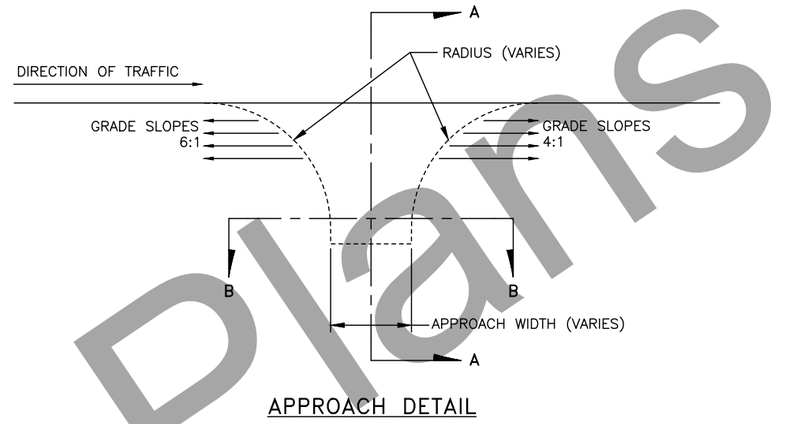

APPROACH DETAIL

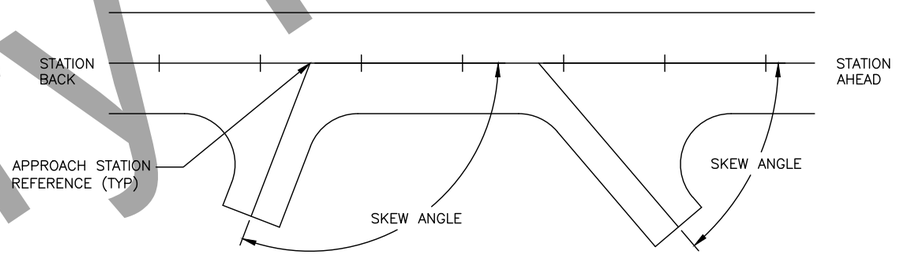

STATION REFERENCE DETAIL

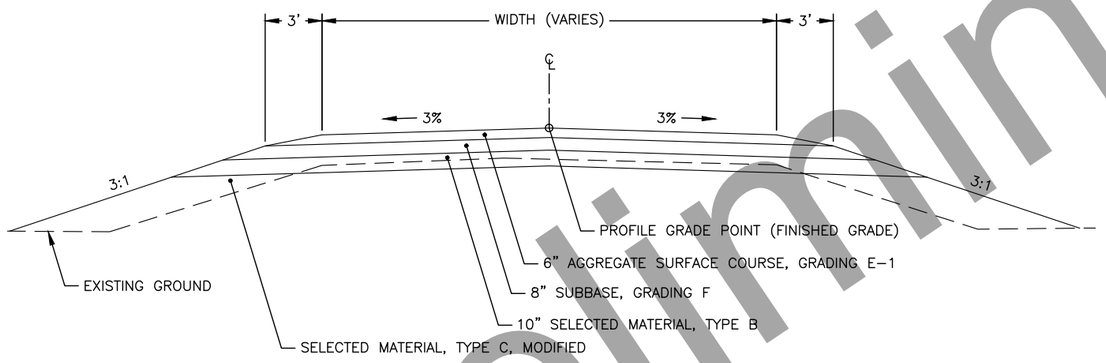

SECTION B–B: FILL CONDITION

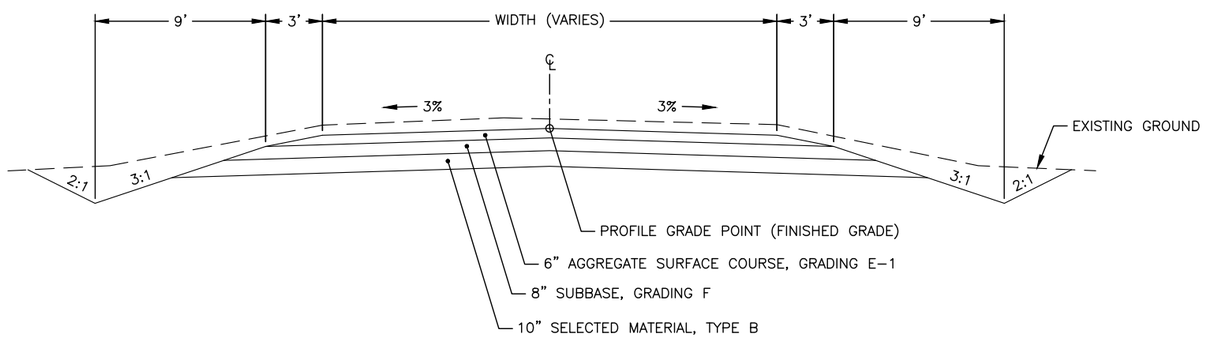

SECTION B–B: CUT CONDITION

APPROACH NOTES:

1. CONSTRUCT APPROACHES IN THE LOCATION AND TO THE DIMENSIONS SHOWN IN THE APPROACH SUMMARY TABLE AND DETAILS.
2. APPROACH TRANSITIONS, DIMENSIONS, AND LOCATIONS MAY BE FIELD ADJUSTED BY THE ENGINEER.
3. RE–GRADING DRIVEWAY SLOPES IS SUBSIDIARY TO PAY ITEM 639.2000.0000
4. GRADE ALL APPROACH SLOPES WITHIN 14–FT OF THE EDGE OF TRAVELED WAY ON THE DALTON HIGHWAY AT 6:1 AND 4:1 AS SHOWN IN THE DETAILS ON THIS SHEET.
5. ENSURE POSITIVE DRAINAGE AWAY FROM THE ROADWAY AND APPROACH EMBANKMENTS.

Preliminary Plans

APPROACH SUMMARY AND DETAILS

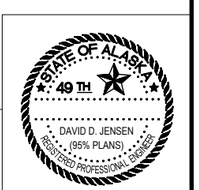

PLANS DEVELOPED BY: STATE OF ALASKA DEPARTMENT OF TRANSPORTATION & PUBLIC FACILITIES, NORTHERN REGION, 2301 PEGER ROAD, FAIRBANKS, AK 99709 (907)451-2200
C:\Users\djjensen\Desktop\60735_Dalton_18_37\6 Design\4 C3D\2 Drawings\(3) Plan Production\60735_6_APPROACH_SUMM_DETAIL-G1 Mon, May/16/22 04:06pm

NO.	DATE	REVISION

STATE	PROJECT DESIGNATION	YEAR	SHEET NO.	TOTAL SHEETS
ALASKA	0652017/Z607350000	2022	G2	G5

APPROACH SUMMARY

SHEET NO.	CENTERLINE STATION	RT/LT	WIDTH (FT)	RADIUS (FT)		LANDING LENGTH (FT)	LANDING GRADE (%)	TRANSITION LENGTH (FT)	TRANSITION GRADE (%)	REMARKS
				BK STA	AHD STA					
F1	"O"976+62	LT	20	20	20	30	−2.0	22	−8.48	UNDERGROUND UTILITY ACCESS
	"O"989+76	LT	24	60	90	30	2.0	102	−0.26	MP 19 PIT / OLD DALTON HWY
F7	"O"1147+70	RT	24	40	40	30	−2.0	52	−3.88	M&O ACCESS
F8	"O"1171+79	RT	24	30	30	30	−1.0	52	−0.11	UNDERGROUND UTILITY ACCESS
F10	"O"1239+35	LT	32	50	50	20	−2.0	62	−9.52	OLD DALTON HWY
F12	"O"1282+86	RT	24	40	50	30	−2.0	602	VARIES	TAPS ACCESS, GATED APPROACH, SEE NOTE 1 SEE SHEET G3 FOR P&P
	"O"1293+18	LT	20	15	40	30	−2.0	102	−13.26	HESS CREEK ACCESS, SEE SHEET G3 FOR P&P
	"O"1296+93	LT	24	50	50	30	−2.0	152	VARIES	MATERIAL SITE ACCESS, SEE SHEET G3 FOR P&P
F15	"O"1382+41	RT	24	30	30	30	−2.0	52	1.44	TAPS ACCESS
F17	"O"1429+30	LT	24	NA	NA	43	5.4	100	6.41	MP 26 PIT, SKEW 65°45'58", LT AHD BEGIN LANDING AT BACK EDGE OF TURNOUT
	"O"1434+28	RT	24	50	50	30	−2.0	52	−2.99	TAPS ACCESS
	"O"1434+37	LT	24	NA	NA	67	4.2	52	3.00	MP 26 PIT, SKEW 139°56'42", LT BK BEGIN LANDING AT BACK EDGE OF TURNOUT
F20	"O"1525+65	LT	24	80	80	30	2.0	202	VARIES	MP 28 PIT, SEE SHEET G4 FOR P&P
	"O"1525+65	RT	24	40	40	30	−2.0	652	VARIES	TAPS ACCESS, GATED APPROACH, SEE NOTE 1 SEE SHEET G4 FOR P&P
F23	"O"1600+40	RT	24	50	50	30	−2.0	252	VARIES	TAPS ACCESS, SEE SHEET G5 FOR P&P
F25	"O"1674+80	RT	24	20	20	30	−2.0	52	−1.71	UNDERGROUND UTILITY ACCESS
F29	"O"1808+00	RT	24	50	50	30	−2.0	VARIES	VARIES	M&O WATER ACCESS, SEE SHEET G5 FOR P&P
F30	"O"1811+30	RT	24	50	50	30	−2.0	252	VARIES	TAPS ACCESS, SEE SHEET G5 FOR P&P
F34	"O"1940+73	RT	24	50	20	30	3.0	123	VARIES	MP 36 PIT, SKEW 56°33'23", RT AHD TRANSITION 30' @ 11.0% THEN 93' @ 15.6%
	"O"1943+30	RT	24	14	50	30	−0.5	58	7.71	MP 36 PIT, SKEW 137°4'21", RT BK

APPROACH NOTES:

1. REMOVING AND REPLACING EXISTING GATES IS SUBSIDIARY TO PAY ITEM 639.2000.0000.
2. TRANSITION GRADES ARE APPROXIMATE.
3. ALL APPROACHES SHALL BE CONSTRUCTED PERPENDICULAR TO HIGHWAY CENTERLINE, UNLESS OTHERWISE NOTED.

Preliminary Plans

PLANS DEVELOPED BY: STATE OF ALASKA DEPARTMENT OF TRANSPORTATION & PUBLIC FACILITIES, NORTHERN REGION, 2301 PEGER ROAD, FAIRBANKS, AK 99709 (907)451-2200
C:\Users\djjensen\Desktop\60735_Dalton_18_37\6 Design\4 C3D\2 Drawings\(3) Plan Production\60735_G_APPROACH_SUMM_DETAIL_G2 Mon, May/16/22 04:06pm

STATE OF ALASKA
49 TH
DAVID D. JENSEN
(95% PLANS)
REGISTERED PROFESSIONAL ENGINEER

APPROACH SUMMARY AND DETAILS 2

NO.	DATE	REVISION

STATE	PROJECT DESIGNATION	YEAR	SHEET NO.	TOTAL SHEETS
ALASKA	0652017/Z607350000	2022	G3	G5

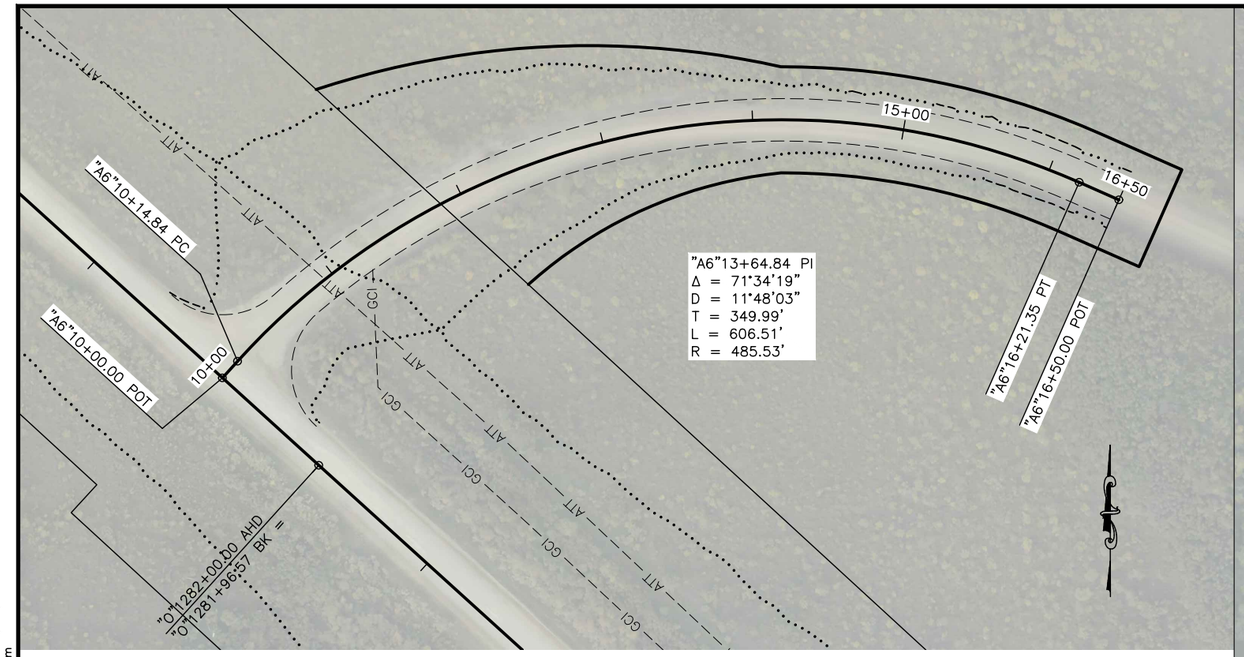

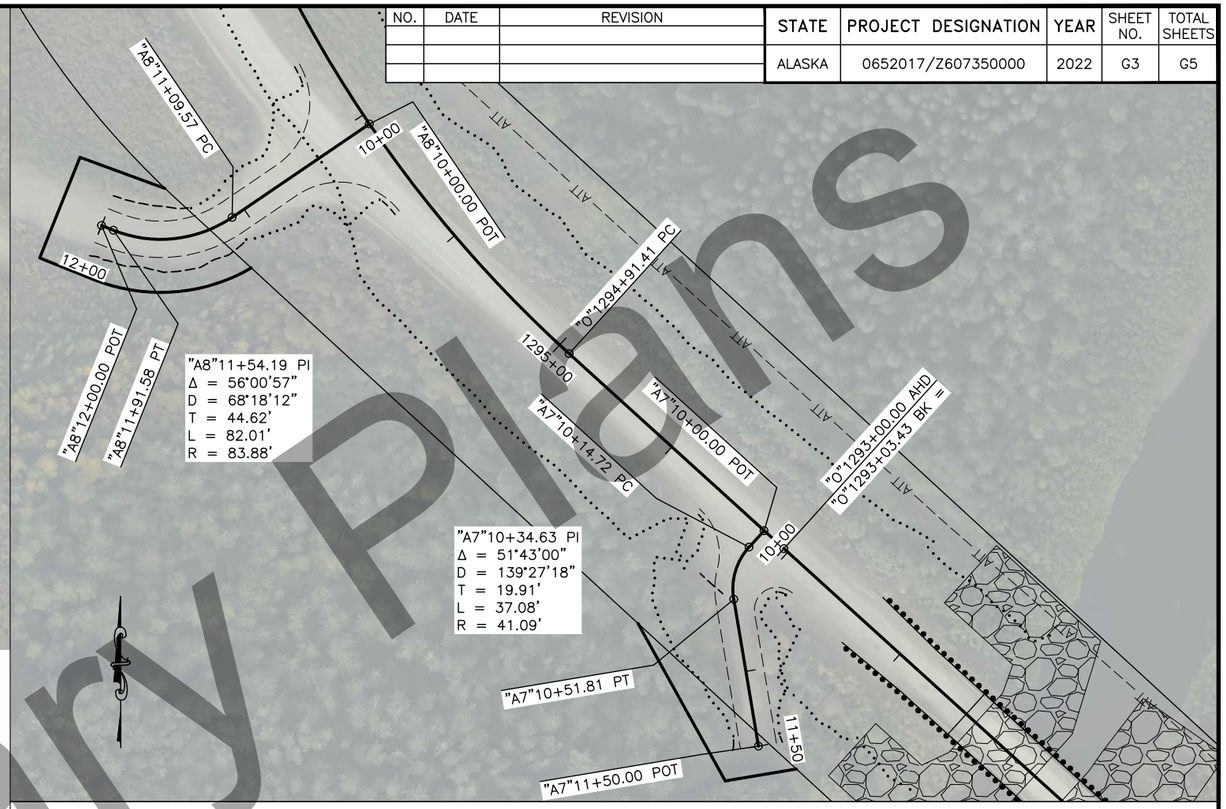

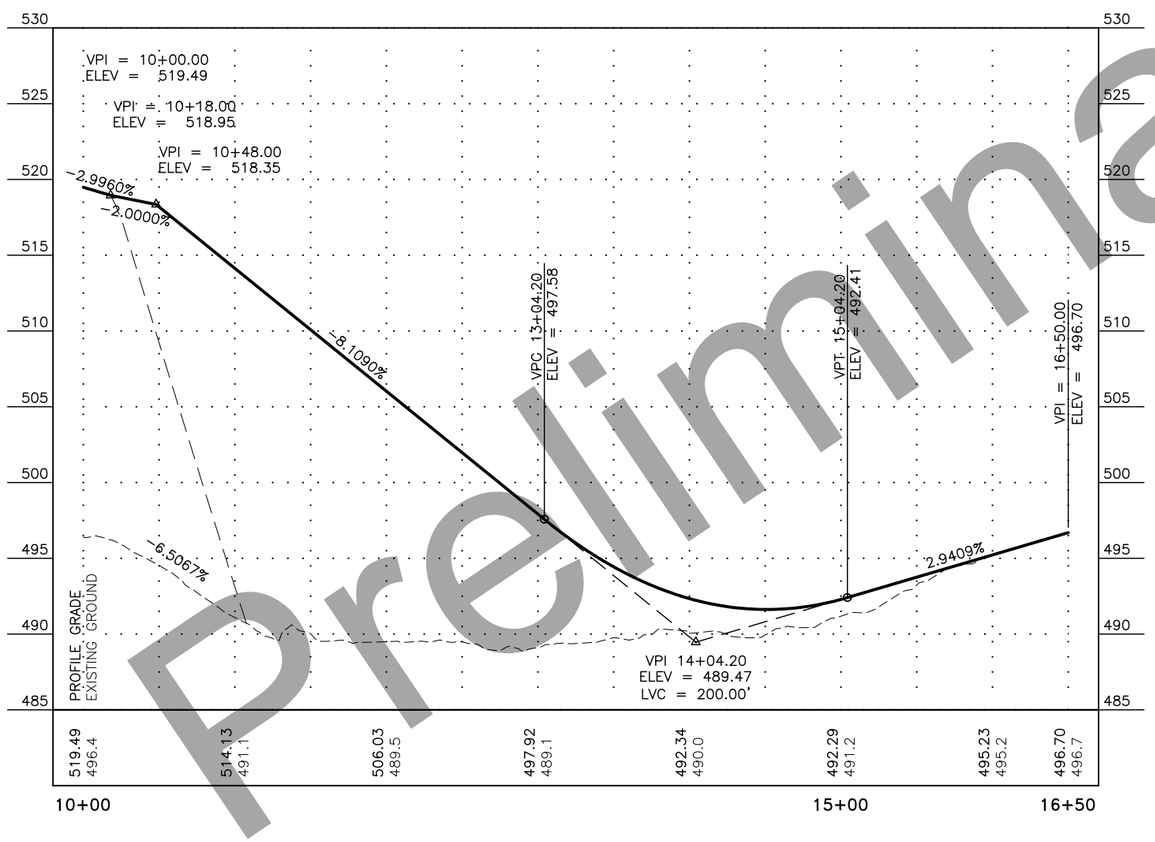

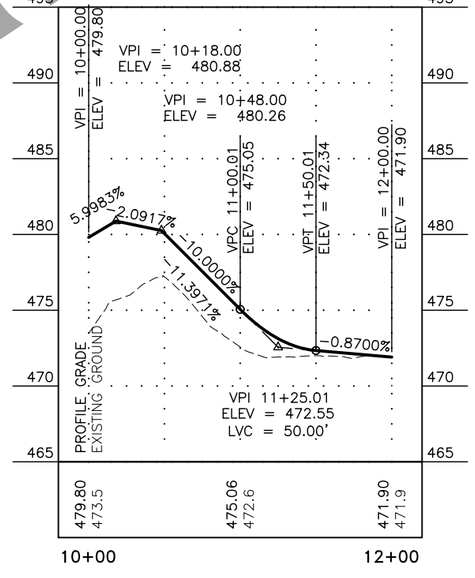

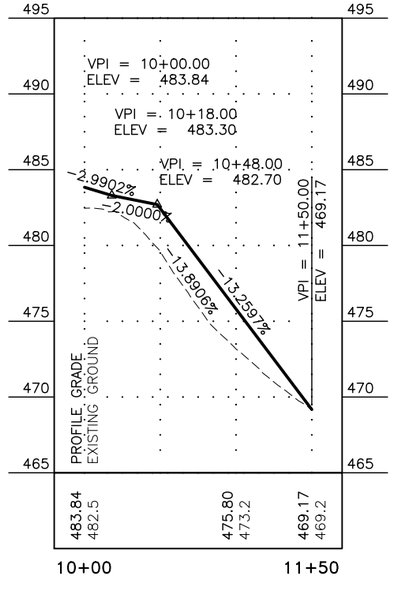

APPROACH LAYOUT SHEETS
1 OF 3

STATE OF ALASKA 49TH
DAVID D. JENSEN
(95% PLANS)
REGISTERED PROFESSIONAL ENGINEER

Preliminary Plans

PLANS DEVELOPED BY: STATE OF ALASKA DEPARTMENT OF TRANSPORTATION & PUBLIC FACILITIES, NORTHERN REGION, 2301 PEGER ROAD, FAIRBANKS, AK 99709 (907)451-2200
C:\Users\ddjensen\Desktop\60735_Dalton_18_37\6 Design\4 C3D\2 Drawings\(3) Plan Production\60735_G_APPROACH_P&P-03 Mon, May/16/22 04:06pm

NO.	DATE	REVISION

STATE	PROJECT DESIGNATION	YEAR	SHEET NO.	TOTAL SHEETS
ALASKA	0652017/Z607350000	2022	G4	G5

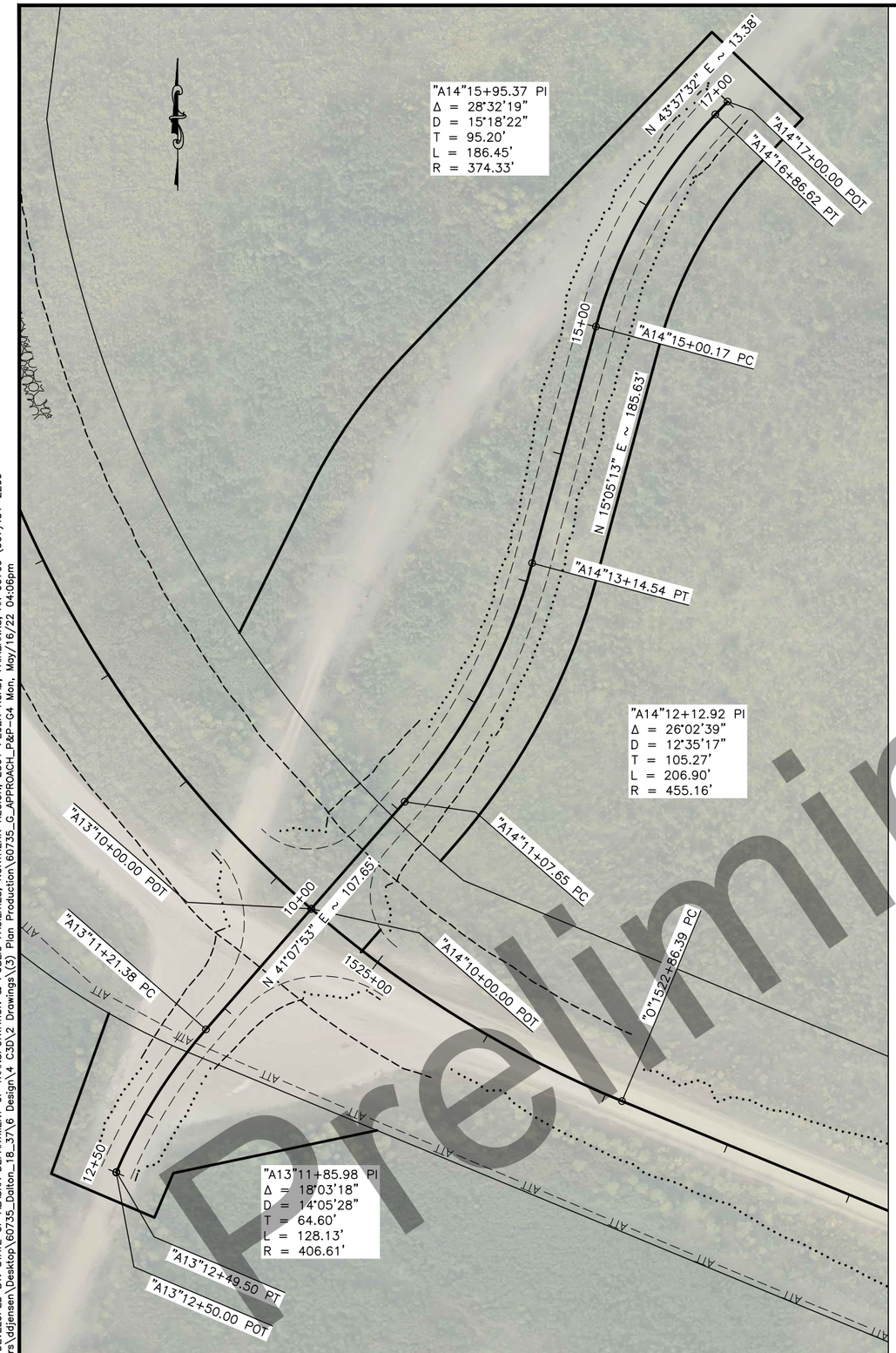

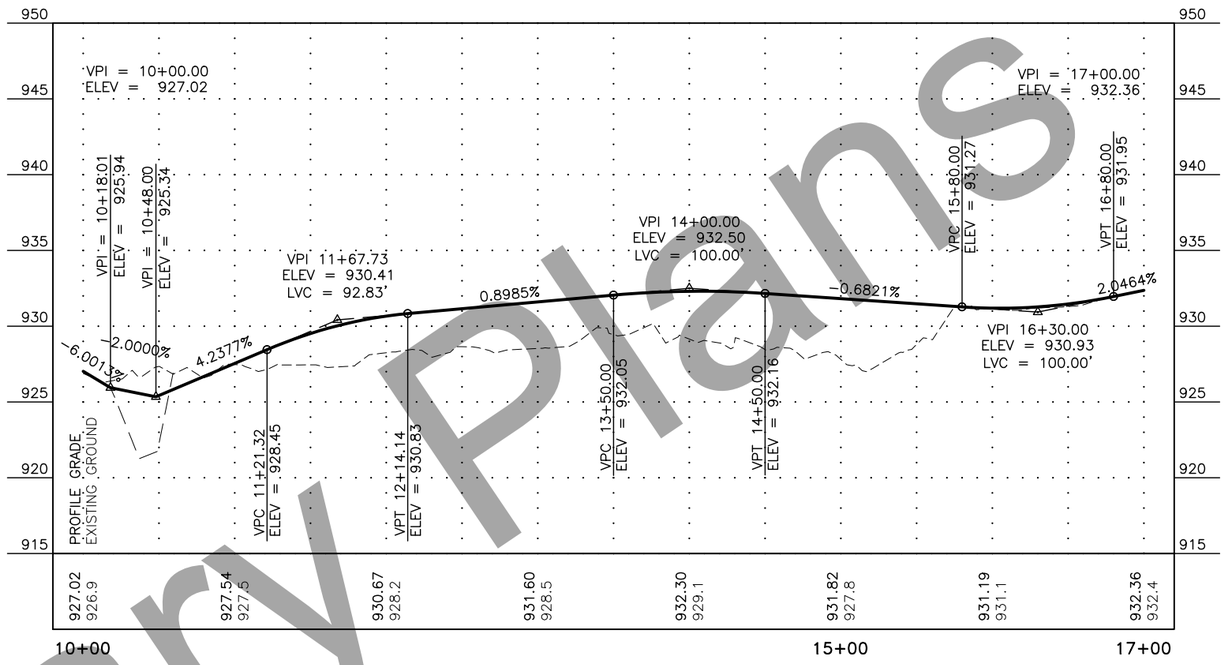

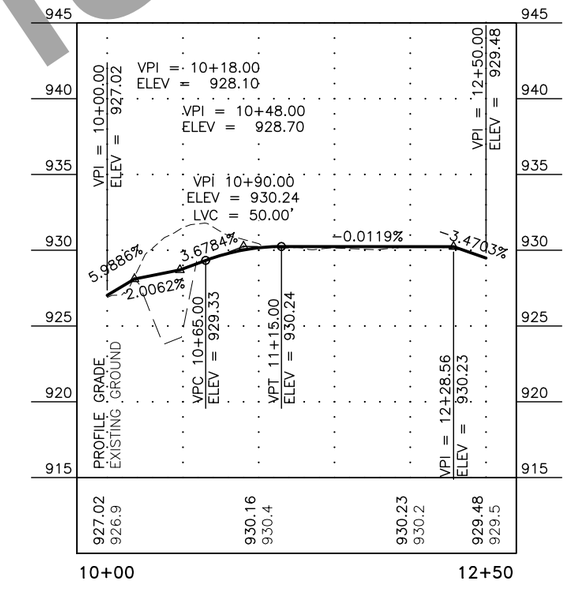

Preliminary Plans

APPROACH LAYOUT SHEETS
2 OF 3

STATE OF ALASKA 49TH
DAVID D. JENSEN
(95% PLANS)
REGISTERED PROFESSIONAL ENGINEER

PLANS DEVELOPED BY: STATE OF ALASKA DEPARTMENT OF TRANSPORTATION & PUBLIC FACILITIES, NORTHERN REGION, 2301 PEGER ROAD, FAIRBANKS, AK 99709 (907)451-2200
C:\Users\ddjensen\Desktop\60735_Dalton_18_37\6 Design\4 C3D\2 Drawings\(3) Plan Production\60735_G_APPROACH_P&P-G4 Mon, May/16/22 04:06pm

NO.	DATE	REVISION

STATE	PROJECT DESIGNATION	YEAR	SHEET NO.	TOTAL SHEETS
ALASKA	0652017/Z607350000	2022	G5	G5

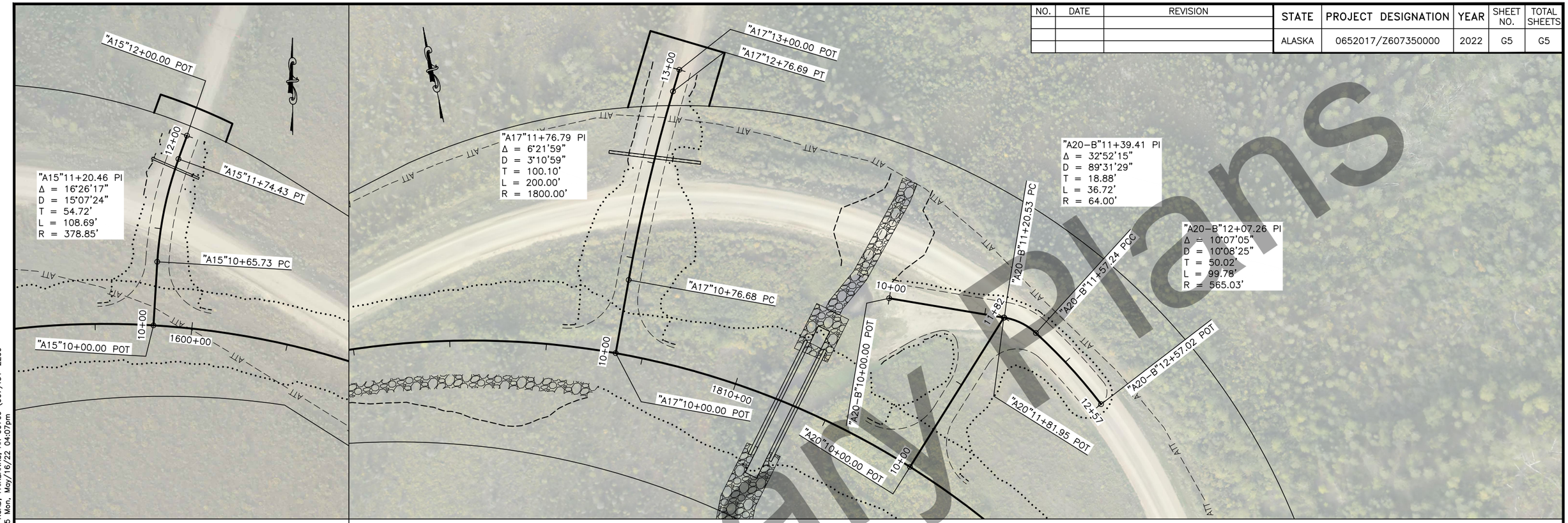

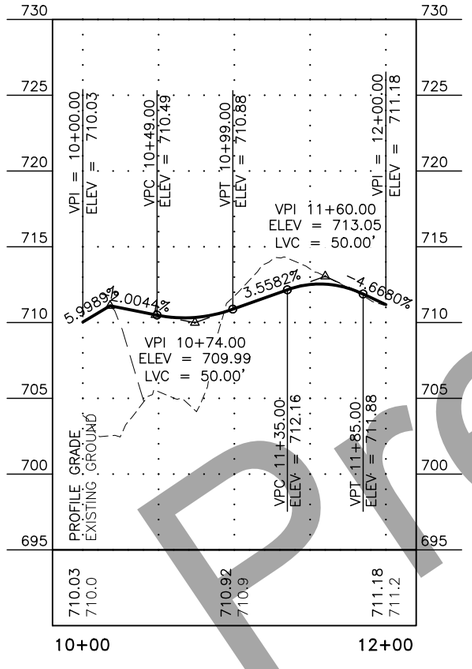

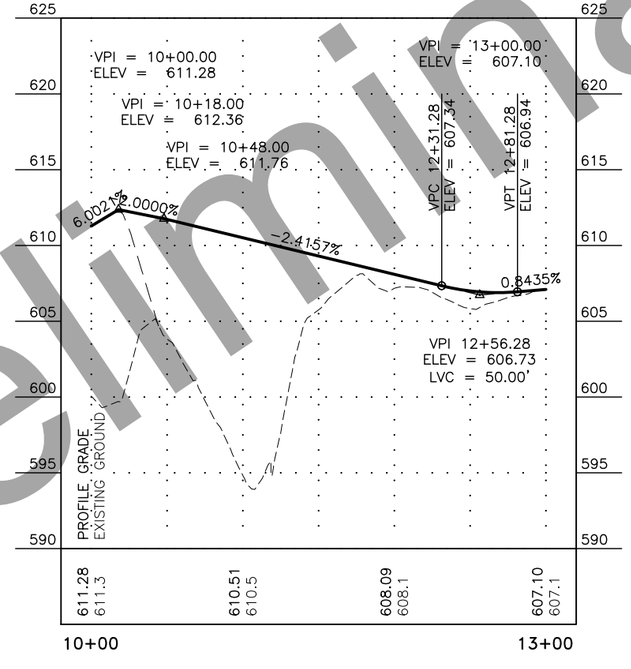

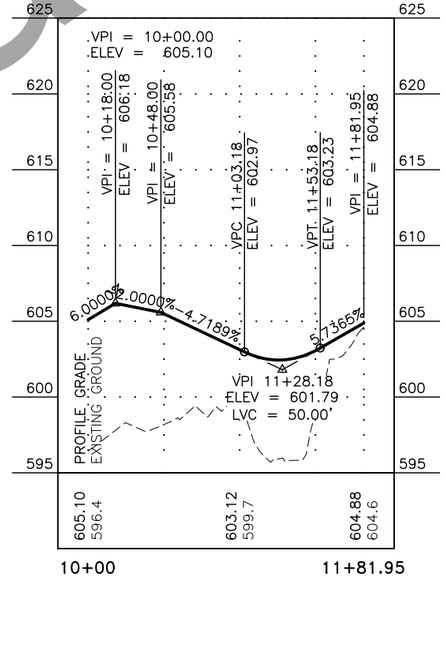

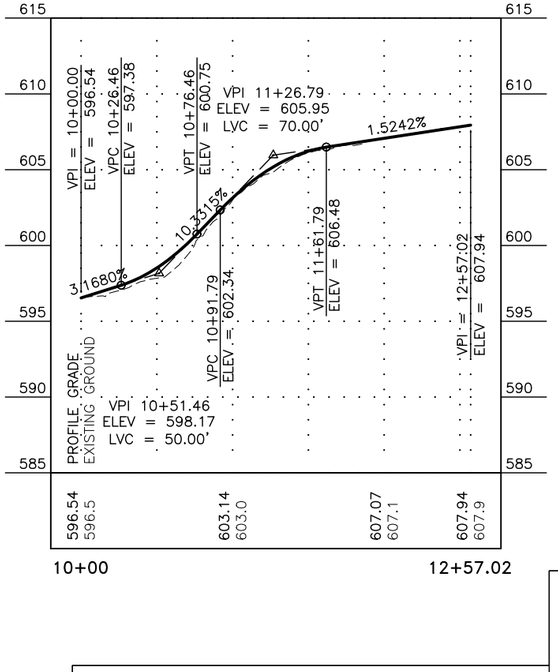

Preliminary Plans

PLANS DEVELOPED BY: STATE OF ALASKA DEPARTMENT OF TRANSPORTATION & PUBLIC FACILITIES, NORTHERN REGION, 2301 PEGER ROAD, FAIRBANKS, AK 99709 (907)451-2200
C:\Users\ddjensen\Desktop\60735_Dalton_18_37\6 Design\4 C3D\2 Drawings\(3) Plan Production\60735_G_APPROACH_P&P-05 Mon, May/16/22 04:07pm P&P-G5

APPROACH LAYOUT SHEETS
3 OF 3

STATE OF ALASKA 49TH
DAVID D. JENSEN
(95% PLANS)
REGISTERED PROFESSIONAL ENGINEER

NO.	DATE	REVISION

STATE	PROJECT DESIGNATION	YEAR	SHEET NO.	TOTAL SHEETS
ALASKA	0652017/Z607350000	2022	H1	H25

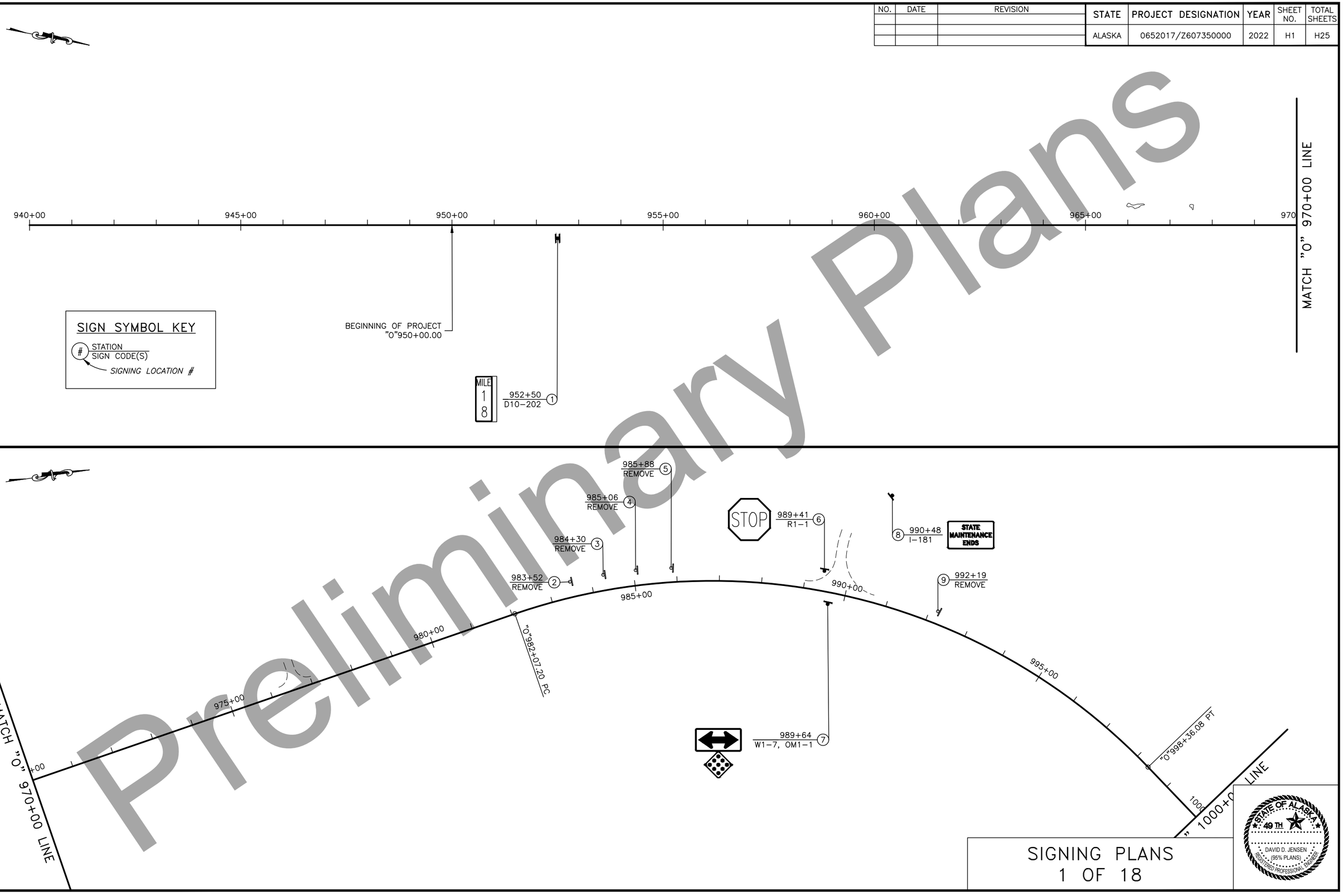

SIGNING PLANS
1 OF 18

DAVID D. JENSEN
(95% PLANS)
REGISTERED PROFESSIONAL ENGINEER

PLANS DEVELOPED BY: STATE OF ALASKA DEPARTMENT OF TRANSPORTATION & PUBLIC FACILITIES, NORTHERN REGION, 2301 PEGER ROAD, FAIRBANKS, AK 99709 (907)451-2200
C:\Users\ddjensen\Desktop\60735_Dalton_18_37\6 Design\4 C3D\2 Drawings\(3) Plan Production\60735_H_SIGNING-940+00.00-1000+00.00 Sun, May/15/22 06:06pm

Preliminary Plans

NO.	DATE	REVISION

STATE	PROJECT DESIGNATION	YEAR	SHEET NO.	TOTAL SHEETS
ALASKA	0652017/Z607350000	2022	H2	H25

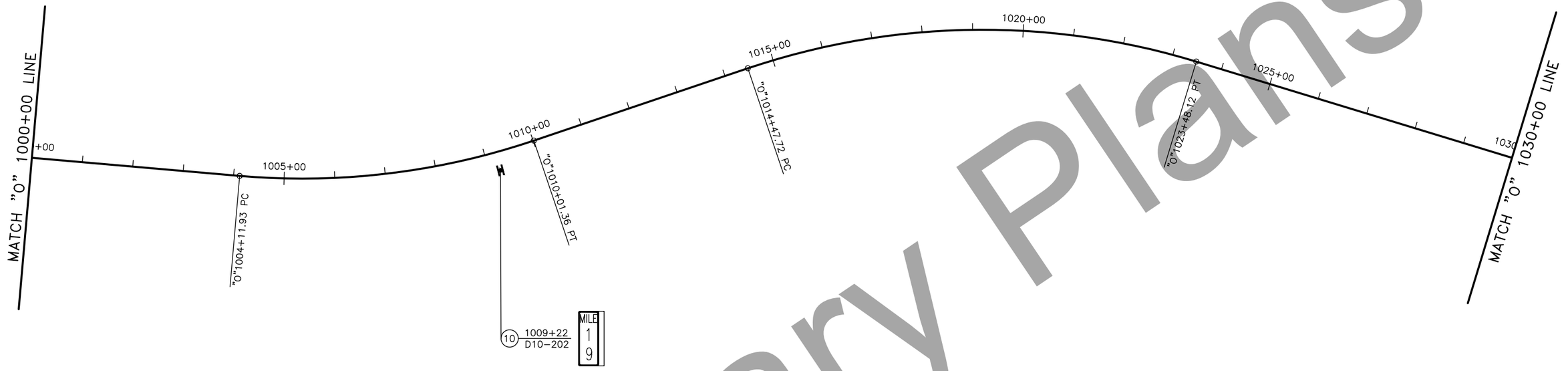

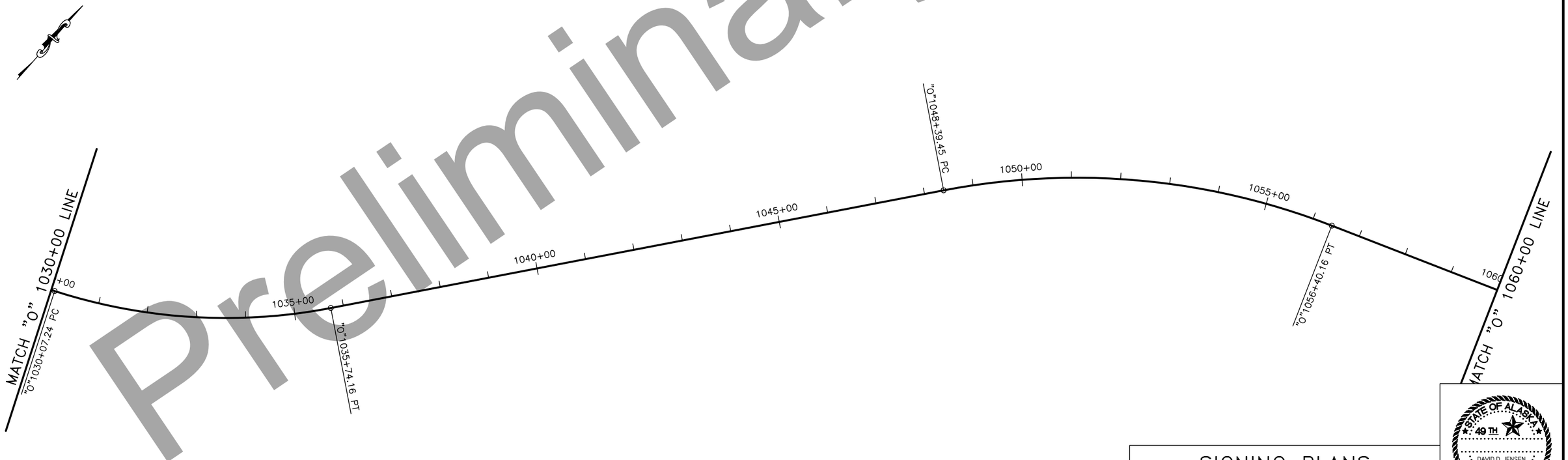

Preliminary Plans

SIGNING PLANS
2 OF 18

STATE OF ALASKA
49TH
DAVID D. JENSEN
(95% PLANS)
REGISTERED PROFESSIONAL ENGINEER

PLANS DEVELOPED BY: STATE OF ALASKA DEPARTMENT OF TRANSPORTATION & PUBLIC FACILITIES, NORTHERN REGION, 2301 PEGER ROAD, FAIRBANKS, AK 99709 (907)451-2200
C:\Users\ddjensen\Desktop\60735_Dalton_18_37\6 Design\4 C3D\2 Drawings\(3) Plan Production\60735_H_SIGNING-1000+00.00-1060+00.00 Sun, May/15/22 06:06pm

NO.	DATE	REVISION

STATE	PROJECT DESIGNATION	YEAR	SHEET NO.	TOTAL SHEETS
ALASKA	0652017/Z607350000	2022	H3	H25

MATCH "O" 1060+00 LINE

1060+00

1065+00

"O"1065+99.68 PC

1070+00

MILE 20

1069+08 (11) D10–202

1075+00

1080+00

1085+00

"O"1086+96.32 PT

1090+00 LINE

(12) 1089+01 D9–105, D9–308

P 1500 FT

Livengood 24
Fox 88
Fairbanks 98

1094+75 (13) D2–3

1095+00

1100+00

"O"1096+42.62 PT

1105+00

"O"1104+88.38 PC

1106+37 (15) DO NOT DISTURB

(16) 1106+48 DO NOT DISTURB

1110+00

"O"1113+04.78 PT

(17) 1113+98 D9–105, D9–301

P

1115+00

1120

MATCH "O" 1090+00 LINE

1060+00

"O"1091+20.73 PC

(14) 1097+31 D9–105, D9–301

P

ATCH "O" 1120+00 LINE

STATE OF ALASKA 49TH

DAVID D. JENSEN (95% PLANS) REGISTERED PROFESSIONAL ENGINEER

SIGNING PLANS
3 OF 18

Preliminary Plans

PLANS DEVELOPED BY: STATE OF ALASKA DEPARTMENT OF TRANSPORTATION & PUBLIC FACILITIES, NORTHERN REGION, 2301 PEGER ROAD, FAIRBANKS, AK 99709 (907)451-2200
C:\Users\ddjensen\Desktop\60735_Dalton_18_37\6 Design\4 C3D\2 Drawings\(3) Plan Production\60735_H_SIGNING-1060+00.00-1120+00.00 Sun, May/15/22 06:06pm

NO.	DATE	REVISION

STATE	PROJECT DESIGNATION	YEAR	SHEET NO.	TOTAL SHEETS
ALASKA	0652017/Z607350000	2022	H4	H25

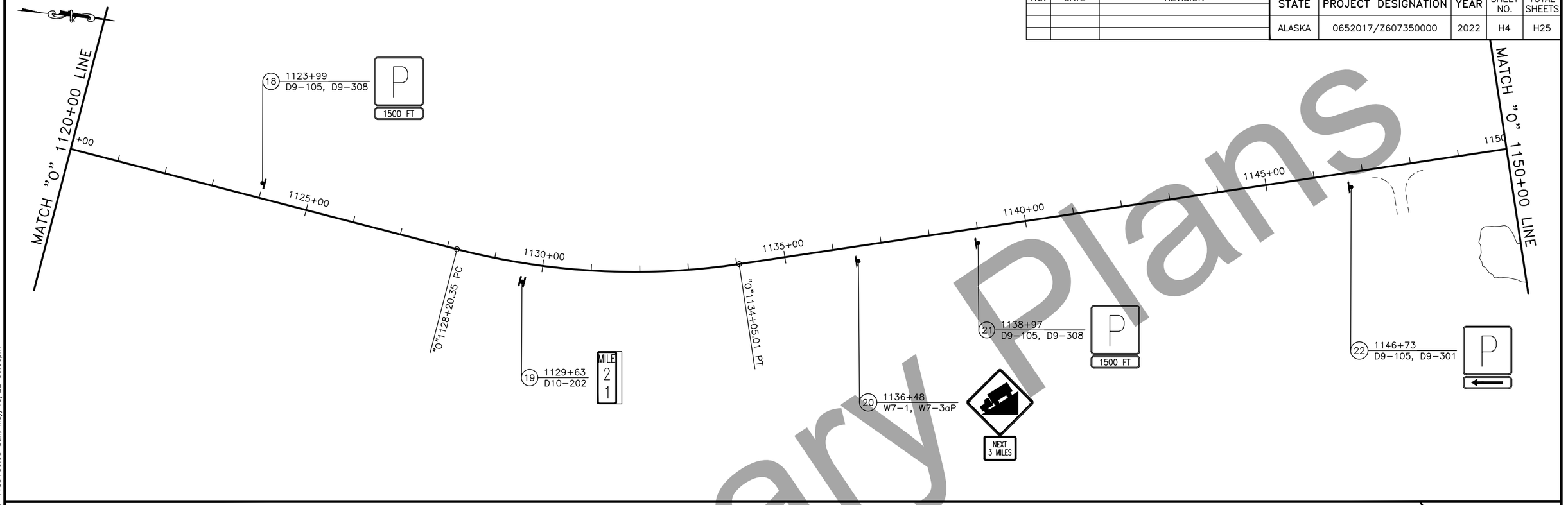

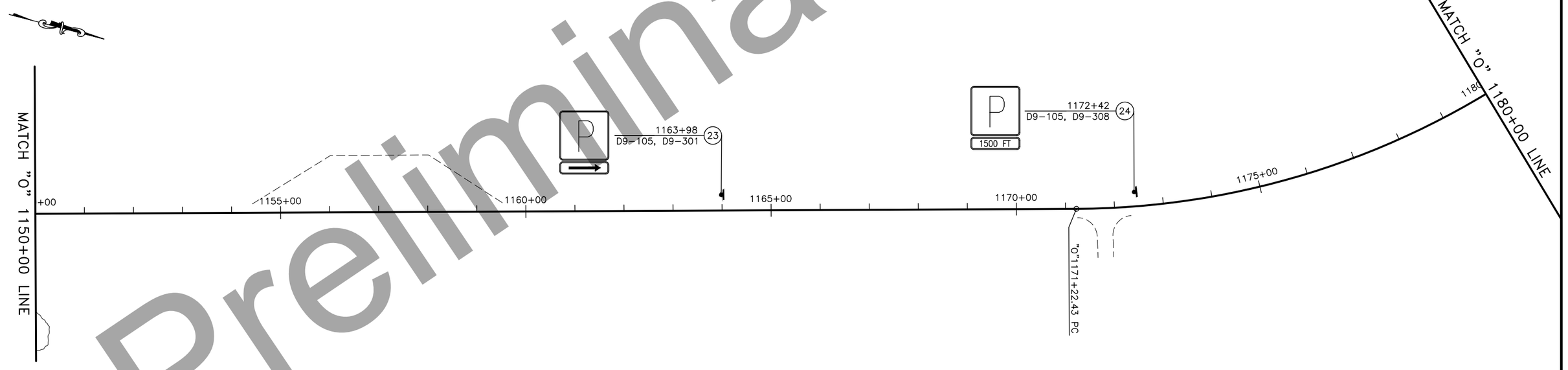

Preliminary Plans

SIGNING PLANS
4 OF 18

STATE OF ALASKA
49TH
DAVID D. JENSEN
(95% PLANS)
REGISTERED PROFESSIONAL ENGINEER

PLANS DEVELOPED BY: STATE OF ALASKA DEPARTMENT OF TRANSPORTATION & PUBLIC FACILITIES, NORTHERN REGION, 2301 PEGER ROAD, FAIRBANKS, AK 99709 (907)451-2200
C:\Users\ddjensen\Desktop\60735_Dalton_18_37\6 Design\4 C3D\2 Drawings\(3) Plan Production\60735_H_SIGNING-1120+00.00-1180+00.00 Sun, May/15/22 06:06pm

NO.	DATE	REVISION

STATE	PROJECT DESIGNATION	YEAR	SHEET NO.	TOTAL SHEETS
ALASKA	0652017/Z607350000	2022	H5	H25

Preliminary Plans

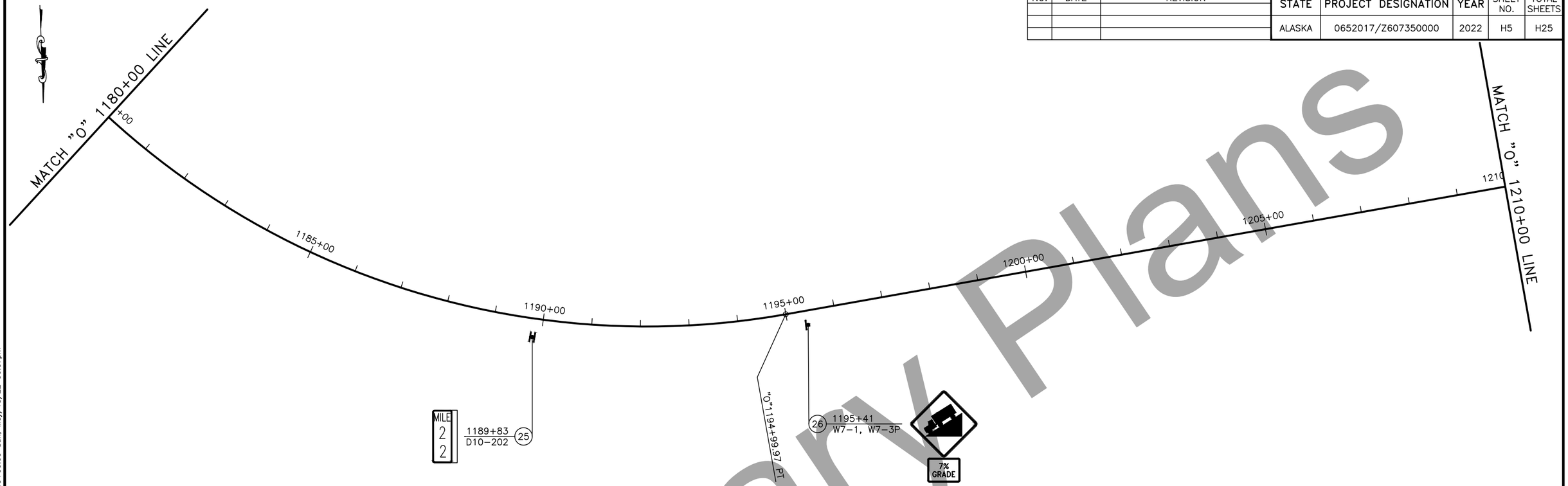

SIGNING PLANS
5 OF 18

STATE OF ALASKA
49 TH
DAVID D. JENSEN
(95% PLANS)
REGISTERED PROFESSIONAL ENGINEER

PLANS DEVELOPED BY: STATE OF ALASKA DEPARTMENT OF TRANSPORTATION & PUBLIC FACILITIES, NORTHERN REGION, 2301 PEGER ROAD, FAIRBANKS, AK 99709 (907)451-2200
C:\Users\ddjensen\Desktop\60735_Dalton_18_37\6 Design\4 C3D\2 Drawings\(3) Plan Production\60735_H_SIGNING-1180+00.00-1240+00.00 Sun, May/15/22 06:07pm

NO.	DATE	REVISION

STATE	PROJECT DESIGNATION	YEAR	SHEET NO.	TOTAL SHEETS
ALASKA	0652017/Z607350000	2022	H6	H25

Preliminary Plans

MATCH "O" 1240+00 LINE

1245+00

"O"1246+51.15 PT

1250+00

"O"1250+57.20 PC

1255+00

"O"1258+66.75 PT

1260+00

1265+00

1270

MATCH "O" 1270+00 LINE

30 1245+48 REMOVE

31 1249+78 D10-202

MILE 2 3

7% GRADE

32 1257+19 W7-1, W7-3P

MATCH "O" 1270+00 LINE

"O"1273+13.48 PC

1275+00

1280+00

1280+54 REMOVE 34

35 1281+49 MEMORIAL SIGN

1285+00

1290+00

1295+00

1300

MATCH "O" 1300+00 LINE

33 1272+88 REMOVE

"O"1279+14.25 PT

"O"1282+00.00 AHD

"O"1281+96.57 BK =

36 1283+13 R1-1, TAPS

STOP

HESS CREEK

Hess Creek

37 1289+61 I-3

38 1291+71 I-3

Hess Creek

HESS CREEK

"O"1293+00.00 AHD

"O"1293+03.43 BK =

"O"1294+91.41 PC

39 1294+68 REMOVE

SIGNING PLANS
6 OF 18

STATE OF ALASKA 49TH

DAVID D. JENSEN
(95% PLANS)
REGISTERED PROFESSIONAL ENGINEER

PLANS DEVELOPED BY: STATE OF ALASKA DEPARTMENT OF TRANSPORTATION & PUBLIC FACILITIES, NORTHERN REGION, 2301 PEGER ROAD, FAIRBANKS, AK 99709 (907)451-2200
C:\Users\ddjensen\Desktop\60735_Dalton_18_37\6 Design\4 C3D\2 Drawings\(3) Plan Production\60735_H_SIGNING-1240+00.00-1300+00.00 Sun, May/15/22 06:07pm

NO.	DATE	REVISION

STATE	PROJECT DESIGNATION	YEAR	SHEET NO.	TOTAL SHEETS
ALASKA	0652017/Z607350000	2022	H7	H25

Preliminary Plans

HESS CREEK

41 1305+49
REMOVE

MATCH "O" 1300+00 LINE

+00

1305+00

1310+00

1315+00

1320+00

1325+00

1330

MATCH "O" 1330+00 LINE

"O" 1305+65.36 PT

MILE 24

40 1305+03
D10-202

P
1500 FT

42 1316+00
D9-105, D9-308

HESS CREEK

HESS CREEK

P

43 1325+00
D9-105, D9-301

HESS CREEK

44 1344+00
D9-105, D9-301

P

45 1353+00
D9-105, D9-308

P
1500 FT

MATCH "O" 1330+00 LINE

+00

1335+00

1340+00

1345+00

1350+00

1355+00

1360

MATCH "O" 1360+00 LINE

"O" 1334+35.16 PC

"O" 1340+17.97 PT

46 1353+74
D10-202

MILE 25

HESS CREEK

SIGNING PLANS
7 OF 18

STATE OF ALASKA
49TH
DAVID D. JENSEN
(95% PLANS)
REGISTERED PROFESSIONAL ENGINEER

PLANS DEVELOPED BY: STATE OF ALASKA DEPARTMENT OF TRANSPORTATION & PUBLIC FACILITIES, NORTHERN REGION, 2301 PEGER ROAD, FAIRBANKS, AK 99709 (907)451-2200
C:\Users\ddjensen\Desktop\60735_Dalton_18_37\6 Design\4 C3D\2 Drawings\(3) Plan Production\60735_H_SIGNING-1300+00.00-1360+00.00 Sun, May/15/22 06:07pm

NO.	DATE	REVISION

STATE	PROJECT DESIGNATION	YEAR	SHEET NO.	TOTAL SHEETS
ALASKA	0652017/Z607350000	2022	H8	H25

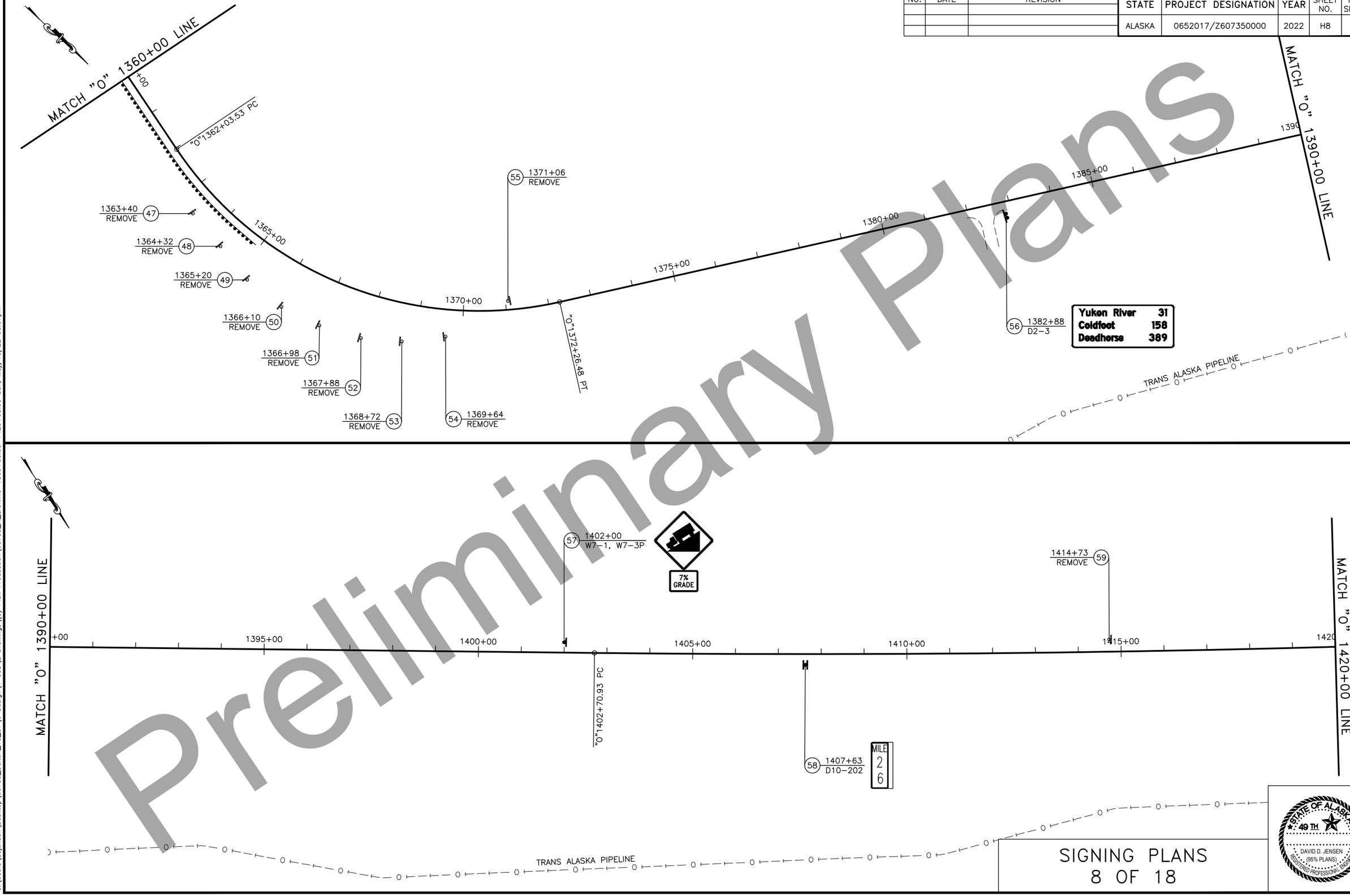

Preliminary Plans

PLANS DEVELOPED BY: STATE OF ALASKA DEPARTMENT OF TRANSPORTATION & PUBLIC FACILITIES, NORTHERN REGION, 2301 PEGER ROAD, FAIRBANKS, AK 99709 (907)451-2200
C:\Users\ddjensen\Desktop\60735_Dalton_18_37\6 Design\4 C3D\2 Drawings\(3) Plan Production\60735_H_SIGNING-1360+00.00-1420+00.00 Sun, May/15/22 06:07pm

SIGNING PLANS
8 OF 18

STATE OF ALASKA 49TH
DAVID D. JENSEN
(95% PLANS)
REGISTERED PROFESSIONAL ENGINEER

NO.	DATE	REVISION

STATE	PROJECT DESIGNATION	YEAR	SHEET NO.	TOTAL SHEETS
ALASKA	0652017/Z607350000	2022	H9	H25

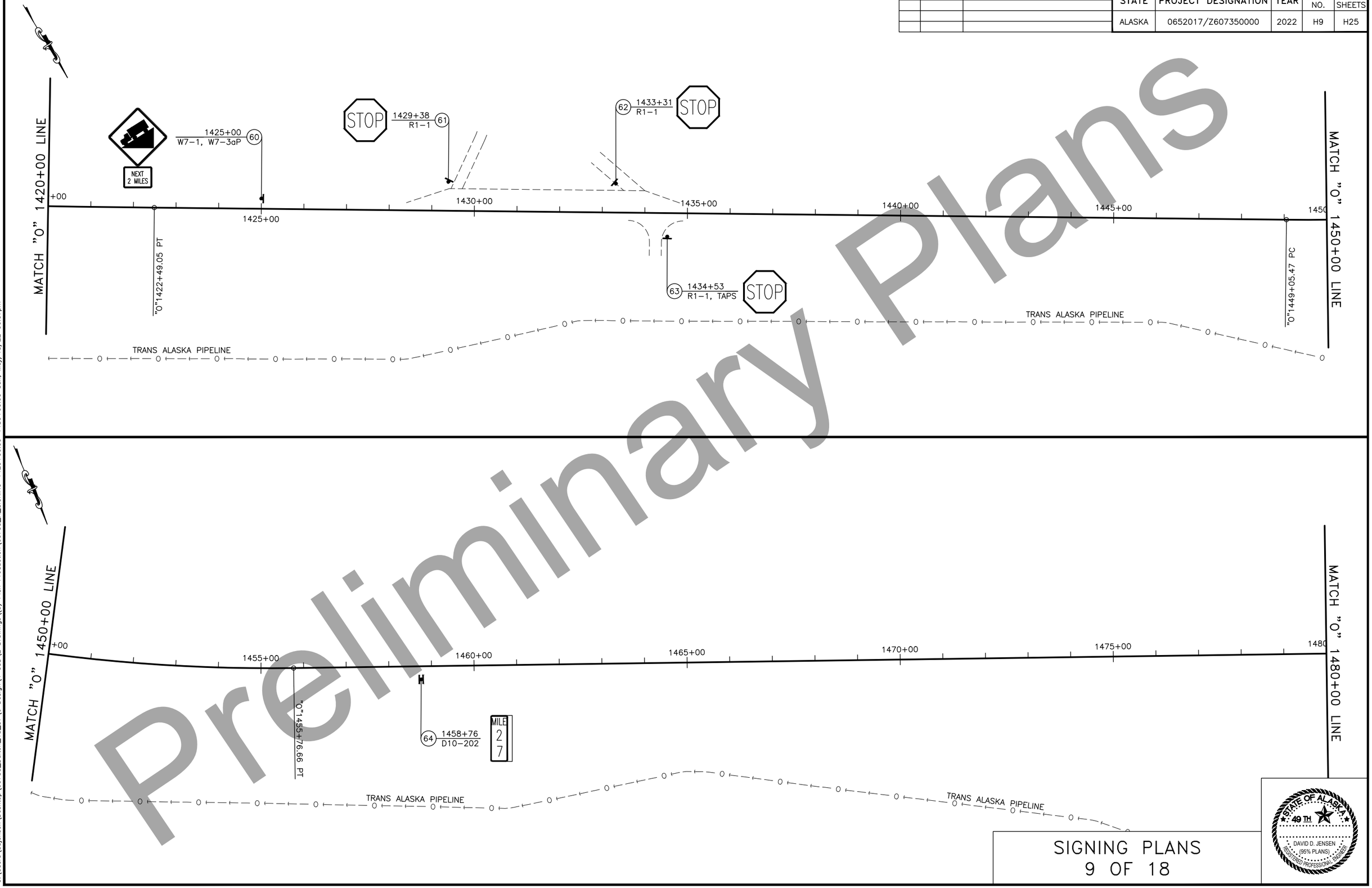

Preliminary Plans

SIGNING PLANS
9 OF 18

STATE OF ALASKA 49TH
DAVID D. JENSEN
(95% PLANS)
REGISTERED PROFESSIONAL ENGINEER

PLANS DEVELOPED BY: STATE OF ALASKA DEPARTMENT OF TRANSPORTATION & PUBLIC FACILITIES, NORTHERN REGION, 2301 PEGER ROAD, FAIRBANKS, AK 99709 (907)451-2200
C:\Users\ddjensen\Desktop\60735_Dalton_18_37\6 Design\4 C3D\2 Drawings\(3) Plan Production\60735_H_SIGNING-1420+00.00-1480+00.00 Sun, May/15/22 06:07pm

NO.	DATE	REVISION

STATE	PROJECT DESIGNATION	YEAR	SHEET NO.	TOTAL SHEETS
ALASKA	0652017/Z607350000	2022	H10	H25

Preliminary Plans

MATCH "O" 1480+00 LINE

+00 1485+00 1490+00 1495+00 1500+00 1505+00 1510

MATCH "O" 1510+00 LINE

MATCH "O" 1510+00 LINE

+00 1515+00 1520+00 1525+00 1530+00 1535+00 1540

"O" 1540+00 LINE

"O" 1522+86.39 PC

"O" 1533+93.05 PT

"O" 1536+16.54 PC

65 1511+80 D10-202

MILE 28

66 1518+69 SPECIAL 1

67 1522+75 REMOVE

68 1524+74 SPECIAL 2

69 1525+33 R1-1, TAPS

STOP

70 1526+00 R1-1

STOP

71 1527+01 W7-1

CAUTION
SNOW REMOVAL EQUIPMENT MAY BE IN YOUR LANE

STATE MAINTENANCE MONITORS CB CH 19

72 1534+19 REMOVE

73 1536+40 REMOVE

SIGNING PLANS
10 OF 18

STATE OF ALASKA 49TH
DAVID D. JENSEN
(95% PLANS)
REGISTERED PROFESSIONAL ENGINEER

PLANS DEVELOPED BY: STATE OF ALASKA DEPARTMENT OF TRANSPORTATION & PUBLIC FACILITIES, NORTHERN REGION, 2301 PEGER ROAD, FAIRBANKS, AK 99709 (907)451-2200
C:\Users\ddjensen\Desktop\60735_Dalton_18_37\6 Design\4 C3D\2 Drawings\(3) Plan Production\60735_H_SIGNING-1480+00.00-1540+00.00 Sun, May/15/22 06:07pm

NO.	DATE	REVISION

STATE	PROJECT DESIGNATION	YEAR	SHEET NO.	TOTAL SHEETS
ALASKA	0652017/Z607350000	2022	H11	H25

Preliminary Plans

MATCH "O" 1540+00 LINE

+00

74 1545+86
REMOVE

1545+00

1550+00

1555+00

1560+00

1565+00

1570

MATCH "O" 1570+00 LINE

"O" 1545+74.15 PT

HEADLIGHTS ON AT ALL TIMES

1556+42
R16-110
75

MILE 29

1568+27
D10-202
76

TRANS ALASKA PIPELINE

TRANS ALASKA PIPELINE

MATCH "O" 1570+00 LINE

+00

1575+00

1580+00

1585+00

1590+00

1595+00

1600

MATCH "O" 1600+00 LINE

SPEED LIMIT 50

1589+20
R2-1
77

"O" 1596+09.78 PC

1598+33
REMOVE
78

TRANS ALASKA PIPELINE

TRANS ALASKA PIPELINE

STATE OF ALASKA
49TH
DAVID D. JENSEN
(95% PLANS)
REGISTERED PROFESSIONAL ENGINEER

SIGNING PLANS
11 OF 18

PLANS DEVELOPED BY: STATE OF ALASKA DEPARTMENT OF TRANSPORTATION & PUBLIC FACILITIES, NORTHERN REGION, 2301 PEGER ROAD, FAIRBANKS, AK 99709 (907)451-2200
C:\Users\ddjensen\Desktop\60735_Dalton_18_37\6 Design\4 C3D\2 Drawings\(3) Plan Production\60735_H_SIGNING-1540+00.00-1600+00.00 Sun, May/15/22 06:07pm

NO.	DATE	REVISION

STATE	PROJECT DESIGNATION	YEAR	SHEET NO.	TOTAL SHEETS
ALASKA	0652017/Z607350000	2022	H12	H25

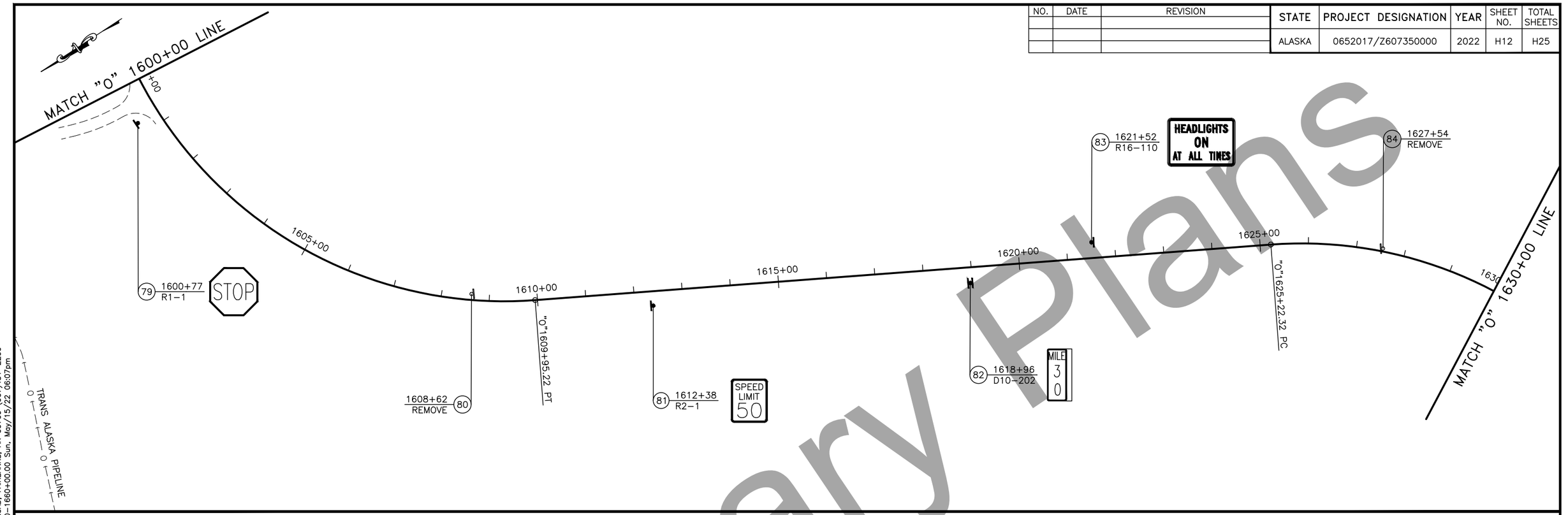

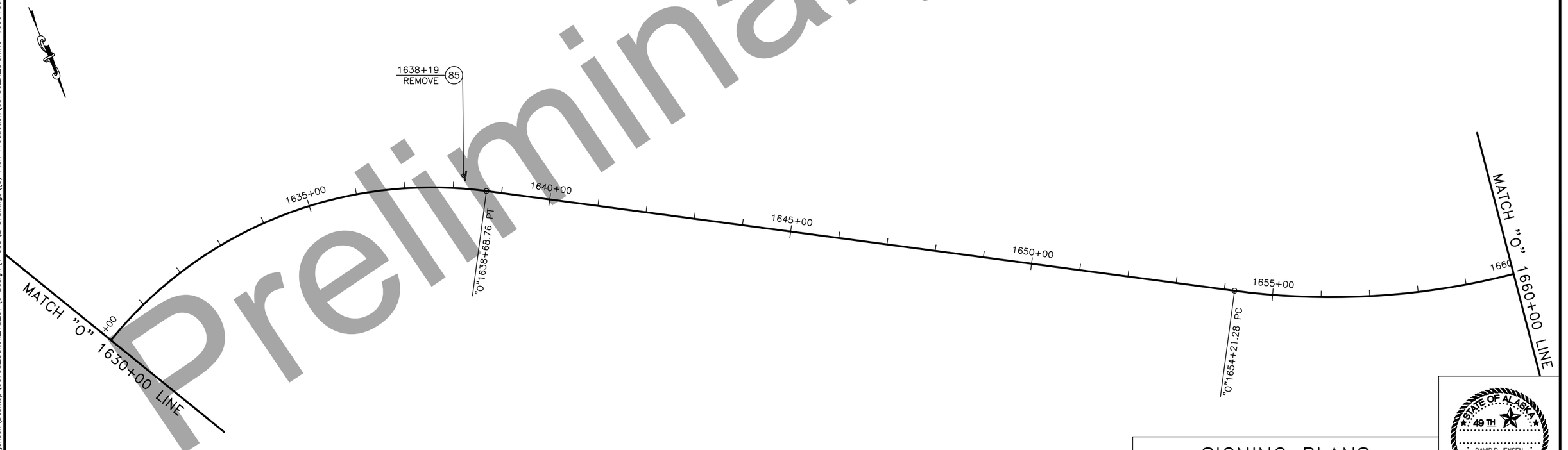

Preliminary Plans

SIGNING PLANS
12 OF 18

STATE OF ALASKA
49TH
DAVID D. JENSEN
(95% PLANS)
REGISTERED PROFESSIONAL ENGINEER

PLANS DEVELOPED BY: STATE OF ALASKA DEPARTMENT OF TRANSPORTATION & PUBLIC FACILITIES, NORTHERN REGION, 2301 PEGER ROAD, FAIRBANKS, AK 99709 (907)451-2200
C:\Users\ddjensen\Desktop\60735_Dalton_18_37\6 Design\4 C3D\2 Drawings\(3) Plan Production\60735_H_SIGNING-1600+00.00-1660+00.00 Sun, May/15/22 06:07pm

NO.	DATE	REVISION

STATE	PROJECT DESIGNATION	YEAR	SHEET NO.	TOTAL SHEETS
ALASKA	0652017/Z607350000	2022	H13	H25

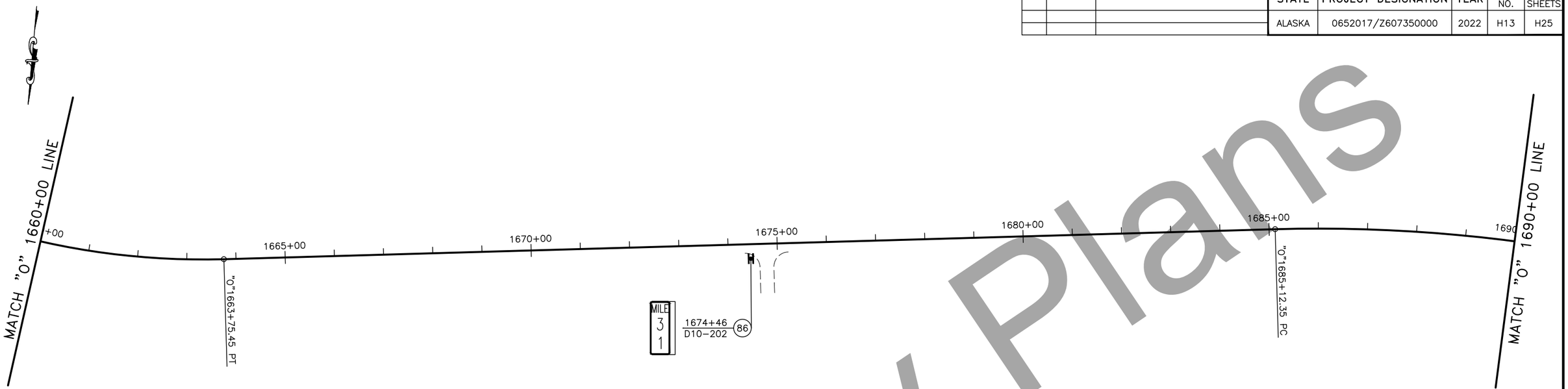

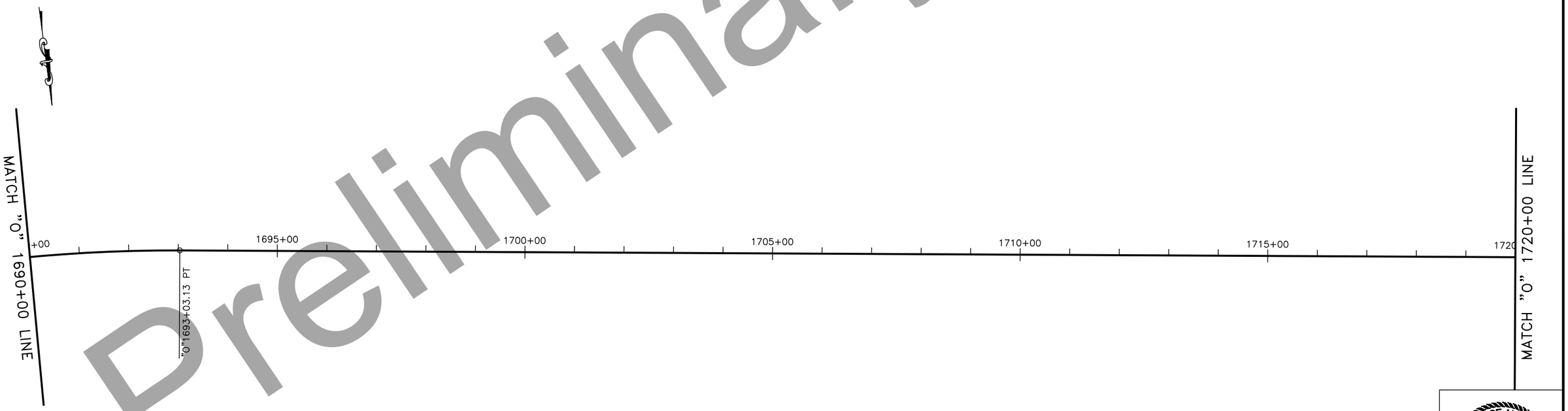

Preliminary Plans

SIGNING PLANS
13 OF 18

STATE OF ALASKA
49 TH
DAVID D. JENSEN
(95% PLANS)
REGISTERED PROFESSIONAL ENGINEER

PLANS DEVELOPED BY: STATE OF ALASKA DEPARTMENT OF TRANSPORTATION & PUBLIC FACILITIES, NORTHERN REGION, 2301 PEGER ROAD, FAIRBANKS, AK 99709 (907)451-2200
C:\Users\ddjensen\Desktop\60735_Dalton_18_37\6 Design\4 C3D\2 Drawings\(3) Plan Production\60735_H_SIGNING-1660+00.00-1720+00.00 Sun, May/15/22 06:07pm

NO.	DATE	REVISION

STATE	PROJECT DESIGNATION	YEAR	SHEET NO.	TOTAL SHEETS
ALASKA	0652017/Z607350000	2022	H14	H25



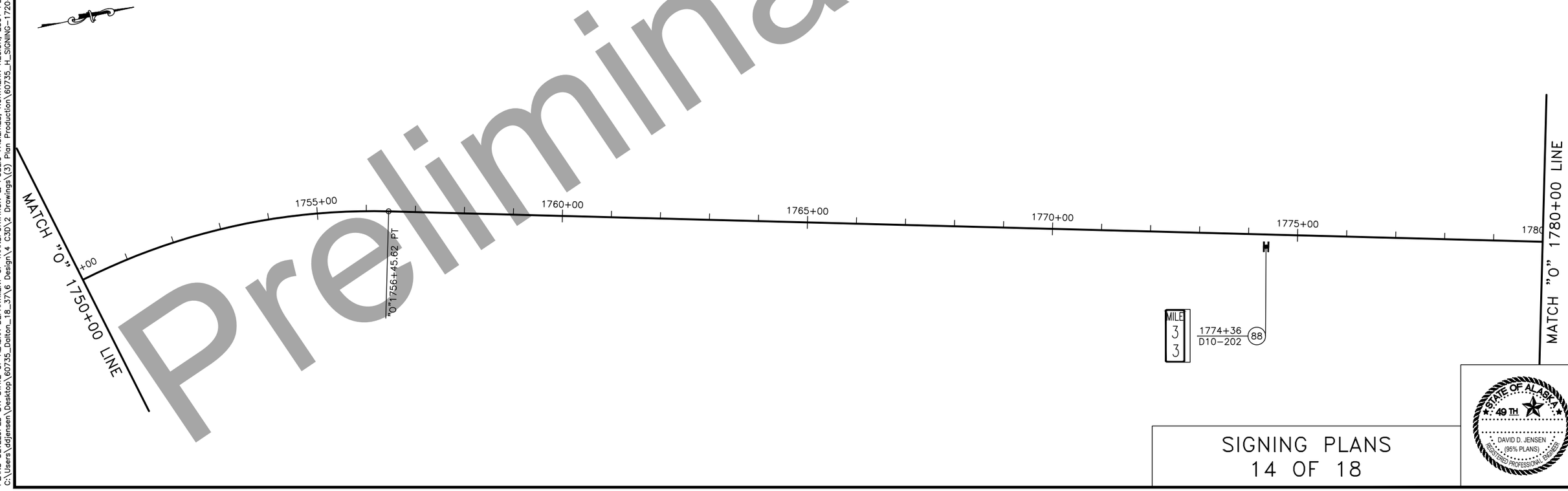

Preliminary Plans

SIGNING PLANS
14 OF 18

STATE OF ALASKA
49TH
DAVID D. JENSEN
(95% PLANS)
REGISTERED PROFESSIONAL ENGINEER

PLANS DEVELOPED BY: STATE OF ALASKA DEPARTMENT OF TRANSPORTATION & PUBLIC FACILITIES, NORTHERN REGION, 2301 PEGER ROAD, FAIRBANKS, AK 99709 (907)451-2200
C:\Users\ddjensen\Desktop\60735_Dalton_18_37\6 Design\4 C3D\2 Drawings\(3) Plan Production\60735_H_SIGNING-1720+00.00-1780+00.00 Sun, May/15/22 06:07pm

NO.	DATE	REVISION

STATE	PROJECT DESIGNATION	YEAR	SHEET NO.	TOTAL SHEETS
ALASKA	0652017/Z607350000	2022	H15	H25

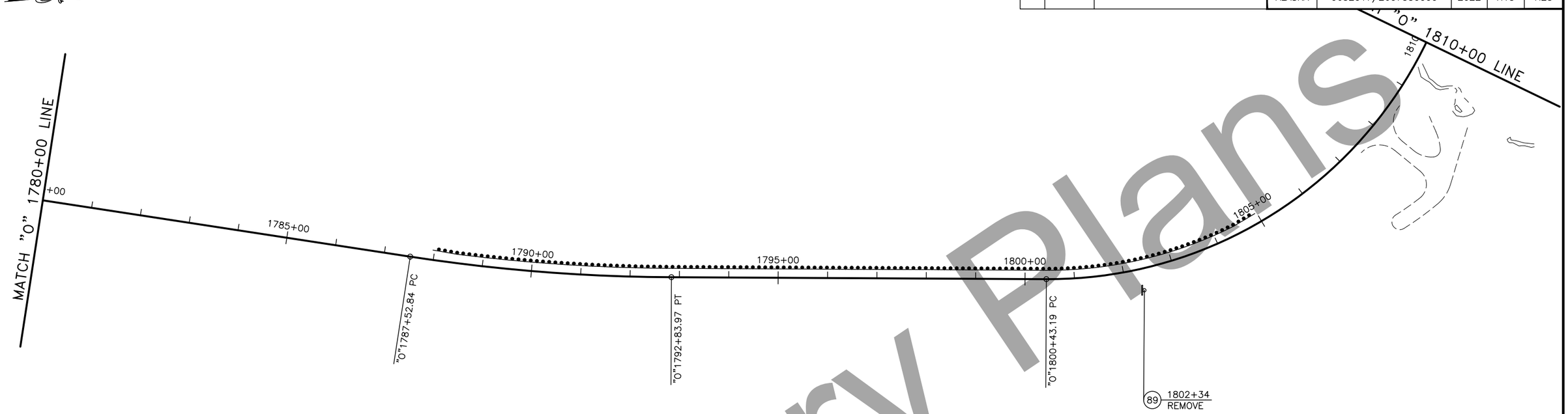

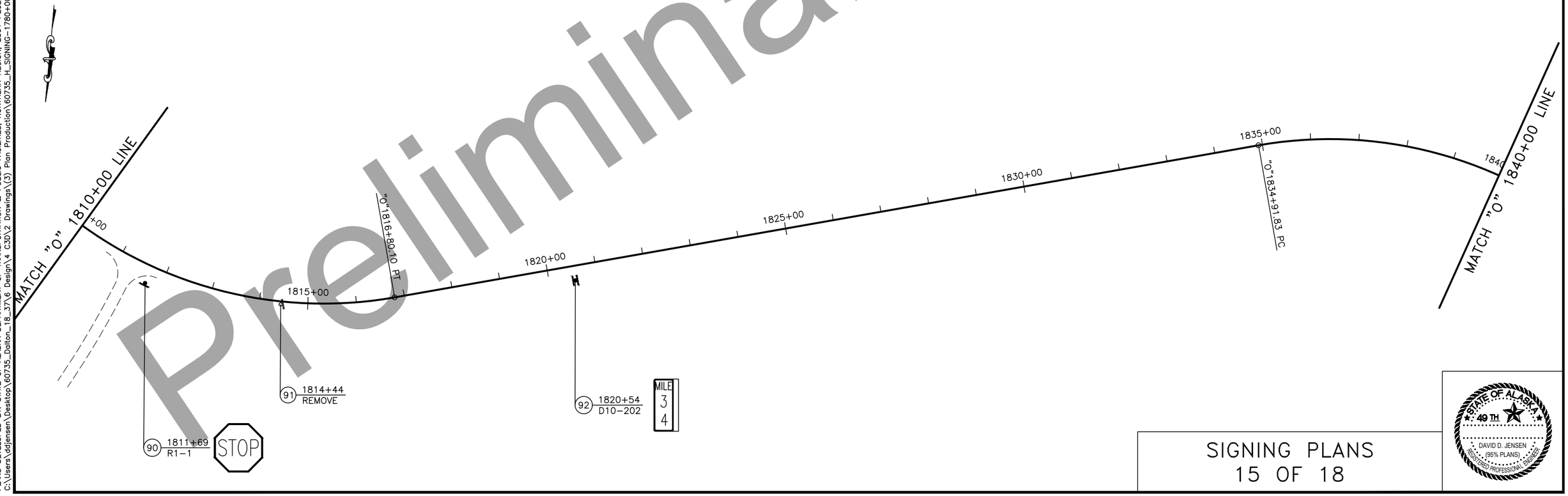

Preliminary Plans

SIGNING PLANS
15 OF 18

STATE OF ALASKA 49TH
DAVID D. JENSEN
(95% PLANS)
REGISTERED PROFESSIONAL ENGINEER

PLANS DEVELOPED BY: STATE OF ALASKA DEPARTMENT OF TRANSPORTATION & PUBLIC FACILITIES, NORTHERN REGION, 2301 PEGER ROAD, FAIRBANKS, AK 99709 (907)451-2200
C:\Users\ddjensen\Desktop\60735_Dalton_18_37\6 Design\4 C3D\2 Drawings\(3) Plan Production\60735_H_SIGNING-1780+00.00-1840+00.00 Sun, May/15/22 06:07pm

NO.	DATE	REVISION

STATE	PROJECT DESIGNATION	YEAR	SHEET NO.	TOTAL SHEETS
ALASKA	0652017/Z607350000	2022	H16	H25

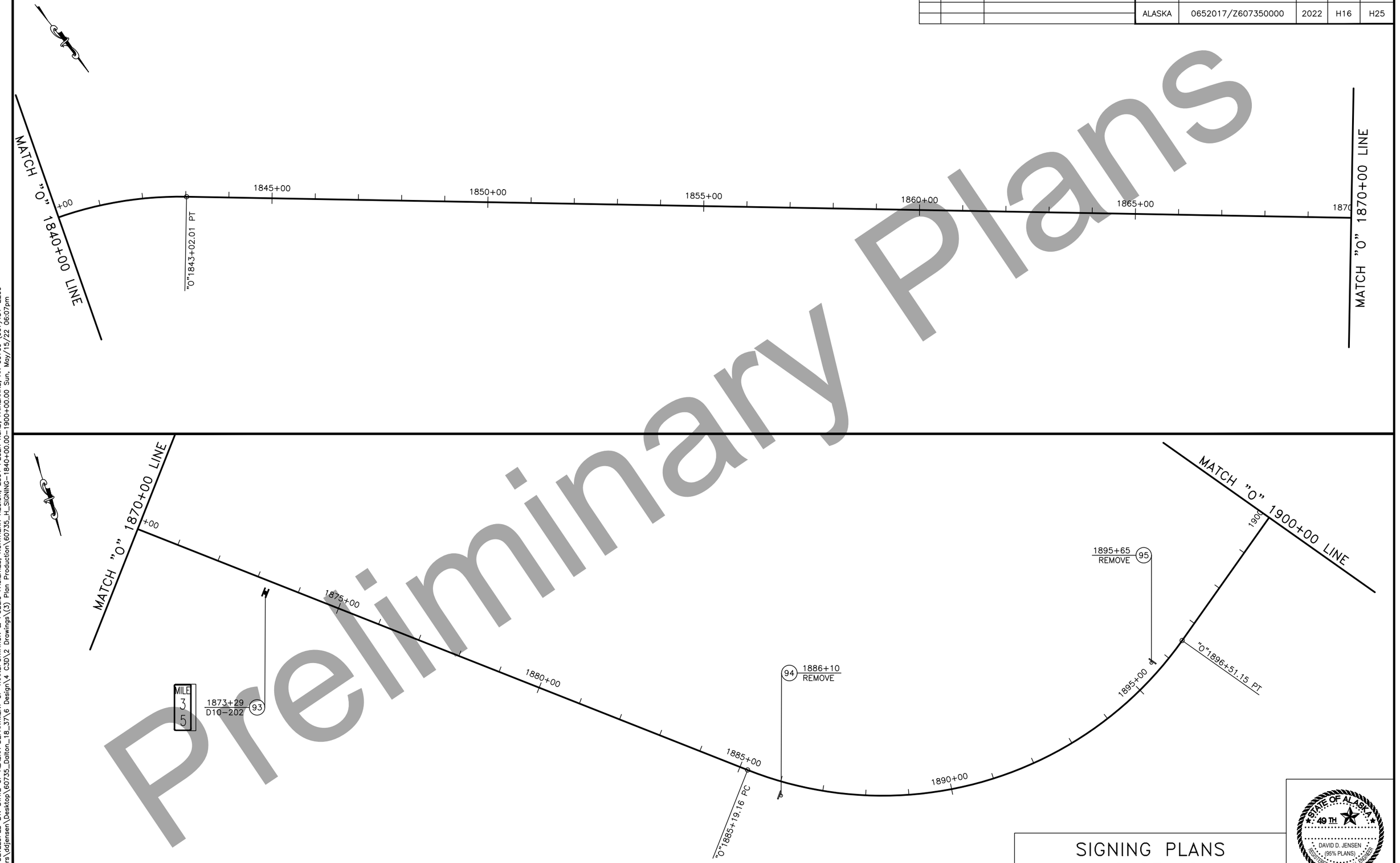

Preliminary Plans

SIGNING PLANS
16 OF 18

STATE OF ALASKA
49 TH
DAVID D. JENSEN
(95% PLANS)
REGISTERED PROFESSIONAL ENGINEER

PLANS DEVELOPED BY: STATE OF ALASKA DEPARTMENT OF TRANSPORTATION & PUBLIC FACILITIES, NORTHERN REGION, 2301 PEGER ROAD, FAIRBANKS, AK 99709 (907)451-2200
C:\Users\ddjensen\Desktop\60735_Dalton_18_37\6 Design\4 C3D\2 Drawings\(3) Plan Production\60735_H_SIGNING-1840+00.00-1900+00.00 Sun, May/15/22 06:07pm

NO.	DATE	REVISION

STATE	PROJECT DESIGNATION	YEAR	SHEET NO.	TOTAL SHEETS
ALASKA	0652017/Z607350000	2022	H17	H25

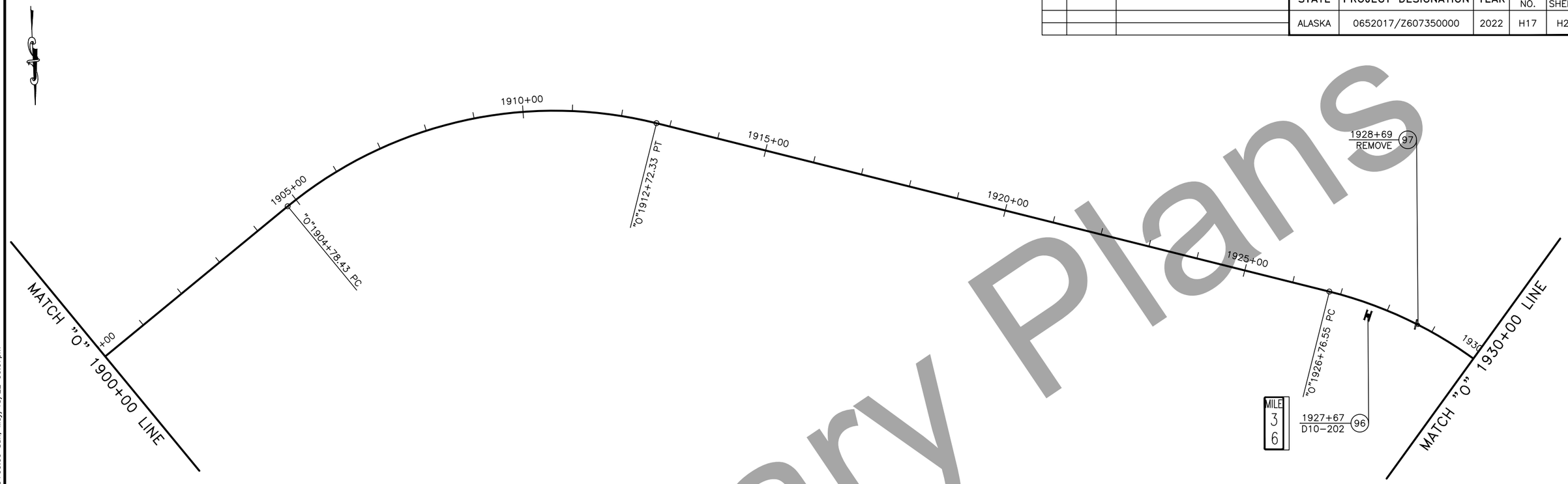

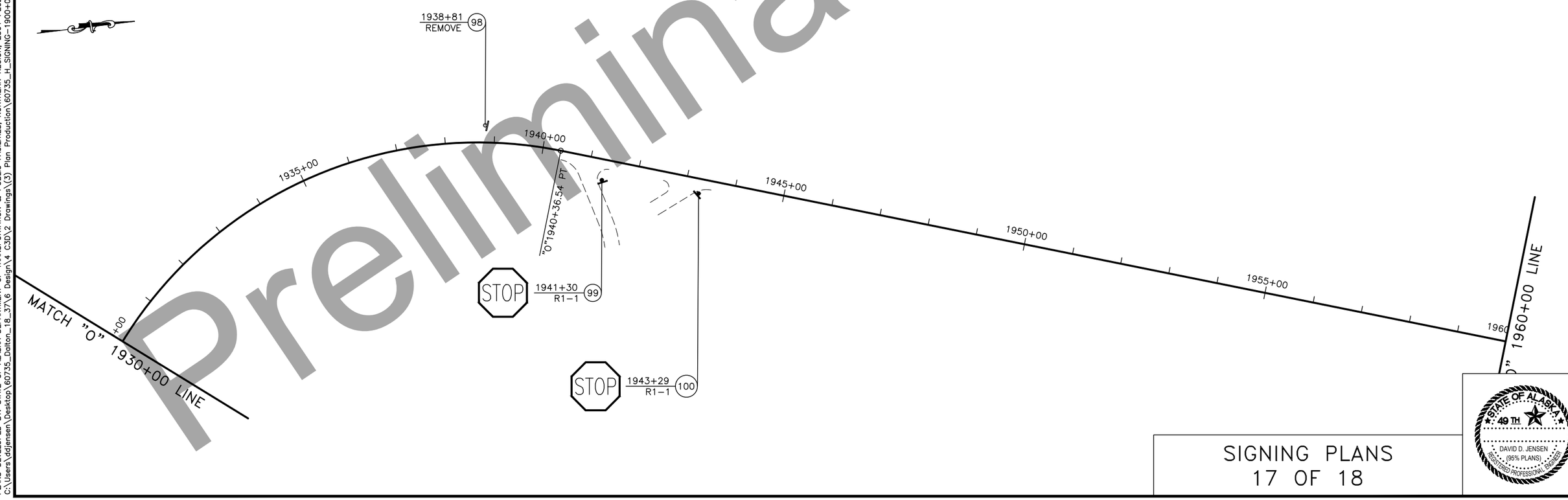

Preliminary Plans

SIGNING PLANS
17 OF 18

STATE OF ALASKA
49TH
DAVID D. JENSEN
(95% PLANS)
REGISTERED PROFESSIONAL ENGINEER

PLANS DEVELOPED BY: STATE OF ALASKA DEPARTMENT OF TRANSPORTATION & PUBLIC FACILITIES, NORTHERN REGION, 2301 PEGER ROAD, FAIRBANKS, AK 99709 (907)451-2200
C:\Users\ddjensen\Desktop\60735_Dalton_18_37\6 Design\4 C3D\2 Drawings\(3) Plan Production\60735_H_SIGNING-1900+00.00-1960+00.00 Sun, May/15/22 06:07pm

NO.	DATE	REVISION

STATE	PROJECT DESIGNATION	YEAR	SHEET NO.	TOTAL SHEETS
ALASKA	0652017/Z607350000	2022	H18	H25

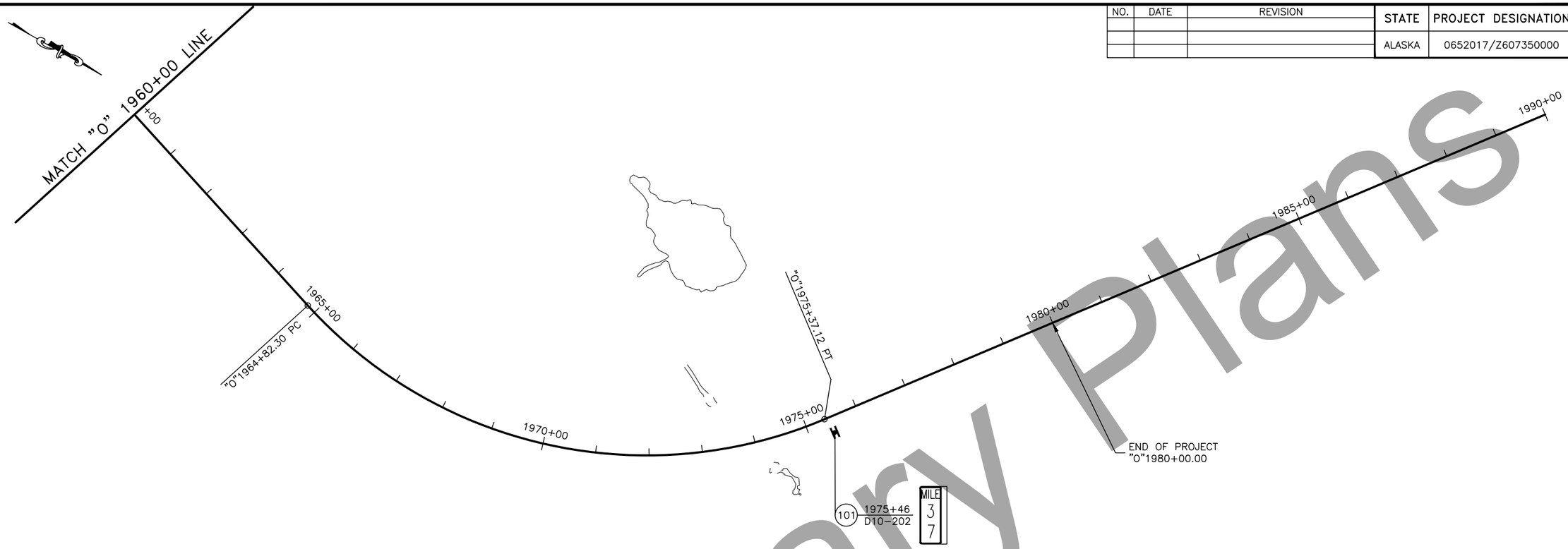

Preliminary Plans

SIGNING PLANS
18 OF 18

STATE OF ALASKA
49TH
DAVID D. JENSEN
(95% PLANS)
REGISTERED PROFESSIONAL ENGINEER

PLANS DEVELOPED BY: STATE OF ALASKA DEPARTMENT OF TRANSPORTATION & PUBLIC FACILITIES, NORTHERN REGION, 2301 PEGER ROAD, FAIRBANKS, AK 99709 (907)451-2200
C:\Users\ddjensen\Desktop\60735_Dalton_18_37\6 Design\4 C3D\2 Drawings\(3) Plan Production\60735_H_SIGNING-1960+00.00-1990+00.00 Sun, May/15/22 06:07pm

NO.	DATE	REVISION

STATE	PROJECT DESIGNATION	YEAR	SHEET NO.	TOTAL SHEETS
ALASKA	0652017/Z607350000	2022	H19	H25

SIGNING SUMMARY

LOC. NO.	STATION	LOCATION LT.	LOCATION RT.	ASDS CODE	LEGEND	SIZE H X V (INCHES)	BRACING/ FRAMING BRACED	BRACING/ FRAMING FRAMED	AREA (SQ.FT.)	MTG. HGT. (FT.)	DIR.	POST TYPE	POST SIZE (INCHES)	POST NO.	REMARKS
1	"0"952+50		X	D10-202	MILE 18	16 X 36			4.00		N/S	PST	2.5	1	MESSAGE ON BOTH SIDES
2	"0"983+52	X			> (Symbol)										REMOVE
3	"0"984+30	X			> (Symbol)										REMOVE
4	"0"985+06	X			> (Symbol)										REMOVE
5	"0"985+88	X			> (Symbol)										REMOVE
6	"0"989+41	X		R1-1	STOP	30 X 30	X		6.25		W	PST	2.5	1	
7	"0"989+64		X	W1-7	<---> (Symbol)	48 X 24	X		8.00		W	PST	2.5	1	
				OM1-1	9Button Object Marker	18 18			2.25		W				
8	"0"990+48	X		I-181	STATE MAINTENANCE ENDS	30 X 18	X		3.75		S	PST	2.5	1	
9	"0"992+19		X		ROAD NARROWS (Symbol)										REMOVE
10	"0"1009+22		X	D10-202	MILE 19	16 X 36			4.00		N/S	PST	2.5	1	MESSAGE ON BOTH SIDES
11	"0"1069+08		X	D10-202	MILE 20	16 X 36			4.00		E/W	PST	2.5	1	MESSAGE ON BOTH SIDES
12	"0"1089+01		X	D9-105	PARKING (Symbol)	24 X 24	X		4.00		S	PST	2.5	1	
				D9-308	1500 FT	24 X 6	X		1.00						
13	"0"1094+75	X		D2-3	Livengood 24 Fox 88 Fairbanks 98	90 X 48		X	30.00		N	TS	3	2	
14	"0"1097+31		X	D9-105	PARKING (Symbol)	24 X 24	X		4.00		S	PST	2.5	1	
				D9-301	<--- (Symbol)	24 X 6	X		1.00						
15	"0"1106+37	X			Interpretive Kiosk										DO NOT DISTURB
16	"0"1106+48	X			Interpretive Kiosk										DO NOT DISTURB
17	"0"1113+98	X		D9-105	PARKING (Symbol)	24 X 24	X		4.00		N	PST	2.5	1	
				D9-301	---> (Symbol)	24 X 6	X		1.00						
18	"0"1123+99	X		D9-105	PARKING (Symbol)	24 X 24	X		4.00		N	PST	2.5	1	
				D9-308	1500 FT	24 X 6	X		1.00						
19	"0"1129+63		X	D10-202	MILE 21	16 X 36			4.00		N/S	PST	2.5	1	MESSAGE ON BOTH SIDES
SUBTOTAL = 86.25															

SIGNING SUMMARY

LOC. NO.	STATION	LOCATION LT.	LOCATION RT.	ASDS CODE	LEGEND	SIZE H X V (INCHES)	BRACING/ FRAMING BRACED	BRACING/ FRAMING FRAMED	AREA (SQ.FT.)	MTG. HGT. (FT.)	DIR.	POST TYPE	POST SIZE (INCHES)	POST NO.	REMARKS
20	"0"1136+48		X	W7-1	HILL SIGN (Symbol)	36 X 36	X		9.00		S	PST	2.5	1	
				W7-3aP	NEXT 3 MILES	24 X 18	X		3.00						
21	"0"1138+97		X	D9-105	PARKING (Symbol)	24 X 24	X		4.00		S	PST	2.5	1	
				D9-308	1500 FT	24 X 6	X		1.00						
22	"0"1146+73		X	D9-105	PARKING (Symbol)	24 X 24	X		4.00		S	PST	2.5	1	
				D9-301	<--- (Symbol)	24 X 6	X		1.00						
23	"0"1163+98	X		D9-105	PARKING (Symbol)	24 X 24	X		4.00		N	PST	2.5	1	
				D9-301	---> (Symbol)	24 X 6	X		1.00						
24	"0"1172+42	X		D9-105	PARKING (Symbol)	24 X 24	X		4.00		N	PST	2.5	1	
				D9-308	1500 FT	24 X 6	X		1.00						
25	"0"1189+83		X	D10-202	MILE 22	16 X 36			4.00		E/W	PST	2.5	1	MESSAGE ON BOTH SIDES
26	"0"1195+41		X	W7-1	HILL SIGN (Symbol)	36 X 36	X		9.00		E	PST	2.5	1	
				W7-3P	7% GRADE	24 X 18	X		3.00						
27	"0"1238+83	X		I-181	STATE MAINTENANCE ENDS	30 X 18	X		3.75		N	PST	2.5	1	
28	"0"1239+05	X		R1-1	STOP	30 X 30	X		6.25		S	PST	2.5	1	
29	"0"1239+27		X	W1-7	<---> (Symbol)	48 X 24	X		8.00		S	PST	2.5	1	
				OM1-1	9Button Object Marker	18 X 18			2.25						
30	"0"1245+48		X		ROAD NARROWS (Symbol)										REMOVE
31	"0"1249+78		X	D10-202	MILE 23	16 X 36			4.00		N/S	PST	2.5	1	MESSAGE ON BOTH SIDES
32	"0"1257+19		X	W7-1	HILL SIGN (Symbol)	36 X 36	X		9.00		S	PST	2.5	1	
				W7-3P	7% GRADE	24 X 18	X		3.00						
SUBTOTAL = 84.25															

POST TYPE LEGEND:

PST = PERFORATED STEEL TUBE
TS = TUBE STEEL (SQUARE STRUCTURAL STEEL TUBING)
W_X_ = WIDE FLANGE

Preliminary Plans

PLANS DEVELOPED BY: STATE OF ALASKA DEPARTMENT OF TRANSPORTATION & PUBLIC FACILITIES, NORTHERN REGION, 2301 PEGER ROAD, FAIRBANKS, AK 99709 (907)451-2200
C:\Users\ddjensen\Desktop\60735_Dalton_18_37\6 Design\4 C3D\2 Drawings\(3) Plan Production\60735_H_SIGNING_SUMMARY_DETAILS-H19 Sun, May/15/22 06:07pm

SIGNING SUMMARY
1 OF 4

STATE OF ALASKA 49TH
DAVID D. JENSEN
(95% PLANS)
REGISTERED PROFESSIONAL ENGINEER

NO.	DATE	REVISION

STATE	PROJECT DESIGNATION	YEAR	SHEET NO.	TOTAL SHEETS
ALASKA	0652017/Z607350000	2022	H20	H25

SIGNING SUMMARY

LOC. NO.	STATION	LOCATION LT.	LOCATION RT.	ASDS CODE	LEGEND	SIZE H X V (INCHES)	BRACING/FRAMING BRACED	BRACING/FRAMING FRAMED	AREA (SQ.FT.)	MTG. HGT. (FT.)	DIR.	POST TYPE	POST SIZE (INCHES)	POST NO.	REMARKS
33	"0"1272+88		X		LEFT CURVE (Symbol)										REMOVE
34	"0"1280+54	X			RIGHT CURVE (Symbol)										REMOVE
35	"0"1281+49	X			MEMORIAL SIGN						E	PST	2.5	1	REMOVE AND RELOCATE EXISTING SIGN
36	"0"1283+13		X	R1-1	STOP	30 X 30	X		6.25		E	PST	2.5	1	
					(TAPS SIGNS) 73 APL 1 PLMP 379.1 DHMP 23.7										REUSE EXISTING SIGN PANELS AND MOUNTING HARDWARE
					CKV 63 N										
					OMS 73-1R										
					BLOCK POINT N										
37	"0"1289+61		X	I-3	HESS CREEK	24 X 18	X		3.00		S	PST	2.5	2	
38	"0"1291+71	X		I-3	HESS CREEK	24 X 18	X		3.00		N	PST	2.5	2	
39	"0"1294+68		X		RIGHT CURVE (Symbol)										REMOVE
					45 MPH										
40	"0"1305+03		X	D10-202	MILE 24	16 X 36			4.00		N/S	PST	2.5	1	MESSAGE ON BOTH SIDES
41	"0"1305+49	X			LEFT CURVE (Symbol)										REMOVE
					45 MPH										
42			X	D9-105	PARKING (Symbol)	24 X 24	X		4.00		S	PST	2.5	1	
				D9-308	1500 FT	24 X 6	X		1.00						
43			X	D9-105	PARKING (Symbol)	24 X 24	X		4.00		S	PST	2.5	1	
				D9-301	---> (Symbol)	24 X 6	X		1.00						
44		X		D9-105	PARKING (Symbol)	24 X 24	X		4.00		N	PST	2.5	1	
				D9-301	<--- (Symbol)	24 X 6	X		1.00						
45		X		D9-105	PARKING (Symbol)	24 X 24	X		4.00		N	PST	2.5	1	
				D9-308	1500 FT	24 X 6	X		1.00						
46	"0"1353+74		X	D10-202	MILE 25	16 X 36			4.00		N/S	PST	2.5	1	MESSAGE ON BOTH SIDES
					SUBTOTAL = 40.25										

SIGNING SUMMARY

LOC. NO.	STATION	LOCATION LT.	LOCATION RT.	ASDS CODE	LEGEND	SIZE H X V (INCHES)	BRACING/FRAMING BRACED	BRACING/FRAMING FRAMED	AREA (SQ.FT.)	MTG. HGT. (FT.)	DIR.	POST TYPE	POST SIZE (INCHES)	POST NO.	REMARKS
47	"0"1363+40		X		LEFT CURVE (Symbol)										REMOVE
					40 MPH										
48	"0"1364+32		X		< (Symbol)										REMOVE
49	"0"1365+20		X		< (Symbol)										REMOVE
50	"0"1366+10		X		< (Symbol)										REMOVE
51	"0"1366+98		X		< (Symbol)										REMOVE
52	"0"1367+88		X		< (Symbol)										REMOVE
53	"0"1368+72		X		< (Symbol)										REMOVE
54	"0"1369+64		X		< (Symbol)										REMOVE
55	"0"1371+06	X			RIGHT CURVE (Symbol)										REMOVE
					40 MPH										
56	"0"1382+88		X	D2-3	Yukon River 31 Coldfoot 158 Deadhorse 389	114 X 48		X	38.00		SE	TS	3	2	
57	"0"1402+00	X		W7-1	HILL SIGN (Symbol)	36 X 36	X		9.00		NW	PST	2.5	1	
				W7-3P	7% GRADE	24 X 18	X		3.00						
58	"0"1407+63		X	D10-202	MILE 26	16 X 36			4.00		E/W	PST	2.5	1	MESSAGE ON BOTH SIDES
59	"0"1414+73	X			HILL SIGN (Symbol)										REMOVE
					NEXT 1 MILE										
60	"0"1425+00	X		W7-1	HILL SIGN (Symbol)	36 X 36	X		9.00		NW	PST	2.5	1	
				W7-3aP	NEXT 2 MILES	24 X 18	X		3.00						
					SUBTOTAL = 66.00										

POST TYPE LEGEND:

PST = PERFORATED STEEL TUBE
TS = TUBE STEEL (SQUARE STRUCTURAL STEEL TUBING)
W_X_ = WIDE FLANGE

SIGNING SUMMARY
2 OF 4

STATE OF ALASKA 49TH
DAVID D. JENSEN
(95% PLANS)
REGISTERED PROFESSIONAL ENGINEER

PLANS DEVELOPED BY: STATE OF ALASKA DEPARTMENT OF TRANSPORTATION & PUBLIC FACILITIES, NORTHERN REGION, 2301 PEGER ROAD, FAIRBANKS, AK 99709 (907)451-2200
C:\Users\ddjensen\Desktop\60735_Dalton_18_37\6 Design\4 C3D\2 Drawings\(3) Plan Production\60735_H_SIGNING_SUMMARY_DETAILS-H20 Sun, May/15/22 06:07pm

Preliminary Plans

NO.	DATE	REVISION

STATE	PROJECT DESIGNATION	YEAR	SHEET NO.	TOTAL SHEETS
ALASKA	0652017/Z607350000	2022	H21	H25

SIGNING SUMMARY

LOC. NO.	STATION	LOCATION LT.	LOCATION RT.	ASDS CODE	LEGEND	SIZE H X V (INCHES)	BRACING/FRAMING BRACED	BRACING/FRAMING FRAMED	AREA (SQ.FT.)	MTG. HGT. (FT.)	DIR.	POST TYPE	POST SIZE (INCHES)	POST NO.	REMARKS
61	"0"1429+38	X		R1-1	STOP	30 X 30	X		6.25		SE	PST	2.5	1	
62	"0"1433+31	X		R1-1	STOP	30 X 30	X		6.25		S	PST	2.5	1	
63	"0"1434+53		X	R1-1	STOP (TAPS SIGNS) 74 APL 2 PLMP 376.3 DHMP 26.6 RGV 62 S BLOCK POINT S	30 X 30	X		6.25		NE	PST	2.5	1	REUSE EXISTING SIGN PANELS AND MOUNTING HARDWARE
64	"0"1458+76		X	D10-202	MILE 27	16 X 36			4.00		E/W	PST	2.5	1	MESSAGE ON BOTH SIDES
65	"0"1511+80		X	D10-202	MILE 28	16 X 36			4.00		E/W	PST	2.5	1	MESSAGE ON BOTH SIDES
66	"0"1518+69		X	SPL 1	STATE MAINTENANCE MONITORS CB CH 19	30 X 24	X		5.00		SE	PST	2.5	1	SEE DETAILS ON SHEET H23
67	"0"1522+75		X		RIGHT CURVE (Symbol) 35 MPH										REMOVE
68	"0"1524+74		X	SPL 2	CAUTION SNOW REMOVAL EQUIPMENT MAY BE IN YOUR LANE	72 X 48		X	24.00		SE	TS	3	2	EXISTING SIGN LOCATED AT "0"1525+45 SEE DETAILS ON SHEET H23
69	"0"1525+33	X		R1-1	STOP (TAPS SIGN) OMS 74-2HR	30 X 30	X		6.25		SW	PST	2.5	1	EXISTING SIGN LOCATED AT "0"1524+37 REUSE EXISTING SIGN PANELS AND MOUNTING HARDWARE
70	"0"1526+00		X	R1-1	STOP	30 X 30	X		6.25		NE	PST	2.5	1	EXISTING SIGN LOCATED AT "0"1526+52
71	"0"1527+01		X	W7-1	HILL SIGN (Symbol)	36 X 36	X		9.00		SE	PST	2.5	1	EXISTING SIGN LOCATED AT "0"1527+20
72	"0"1534+19	X			LEFT CURVE (Symbol) 35 MPH										REMOVE
73	"0"1536+40		X		LEFT CURVE (Symbol) 40 MPH										REMOVE
74	"0"1545+86	X			RIGHT CURVE (Symbol) 40 MPH										REMOVE
					SUBTOTAL = 77.25										

SIGNING SUMMARY

LOC. NO.	STATION	LOCATION LT.	LOCATION RT.	ASDS CODE	LEGEND	SIZE H X V (INCHES)	BRACING/FRAMING BRACED	BRACING/FRAMING FRAMED	AREA (SQ.FT.)	MTG. HGT. (FT.)	DIR.	POST TYPE	POST SIZE (INCHES)	POST NO.	REMARKS
75	"0"1556+42		X	R16-110	HEADLIGHTS ON AT ALL TIMES	42 X 30	X		8.75		SE	PST	2.5	1	
76	"0"1568+27		X	D10-202	MILE 29	16 X 36			4.00		E/W	PST	2.5	1	MESSAGE ON BOTH SIDES
77	"0"1589+20	X		R2-1	SPEED LIMIT 50	24 X 30	X		5.00		NW	PST	2.5	1	
78	"0"1598+33		X		LEFT CURVE (Symbol) 35 MPH										REMOVE
79	"0"1600+77		X	R1-1	STOP (TAPS SIGNS) 74 APL 5 PLMP 373.2 DHMP 29.9 CKV 61 S MGV 61A S BLOCK POINT N	30 X 30	X		6.25		N	PST	2.5	1	REUSE EXISTING SIGN PANELS AND MOUNTING HARDWARE
80	"0"1608+62	X			RIGHT CURVE (Symbol) 35 MPH										REMOVE
81	"0"1612+38		X	R2-1	SPEED LIMIT 50	24 X 30	X		5.00		NE	PST	2.5	1	
82	"0"1618+96		X	D10-202	MILE 30	16 X 36			4.00		N/S	PST	2.5	1	MESSAGE ON BOTH SIDES
83	"0"1621+52	X		R16-110	HEADLIGHTS ON AT ALL TIMES	42 X 30	X		8.75		SW	PST	2.5	1	
84	"0"1627+54		X		RIGHT CURVE (Symbol) 40 MPH										REMOVE
85	"0"1638+19	X			LEFT CURVE (Symbol) 40 MPH										REMOVE
86	"0"1674+46		X	D10-202	MILE 31	16 X 36			4.00		E/W	PST	2.5	1	MESSAGE ON BOTH SIDES
					SUBTOTAL = 45.75										

POST TYPE LEGEND:

PST = PERFORATED STEEL TUBE
TS = TUBE STEEL (SQUARE STRUCTURAL STEEL TUBING)
W_X_ = WIDE FLANGE

SIGNING SUMMARY
3 OF 4

STATE OF ALASKA 49TH
DAVID D. JENSEN
(95% PLANS)
REGISTERED PROFESSIONAL ENGINEER

Preliminary Plans

PLANS DEVELOPED BY: STATE OF ALASKA DEPARTMENT OF TRANSPORTATION & PUBLIC FACILITIES, NORTHERN REGION, 2301 PEGER ROAD, FAIRBANKS, AK 99709 (907)451-2200
C:\Users\ddjensen\Desktop\60735_Dalton_18_37\6 Design\4 C3D\2 Drawings\(3) Plan Production\60735_H_SIGNING_SUMMARY_DETAILS-H21 Sun, May/15/22 06:08pm

NO.	DATE	REVISION

STATE	PROJECT DESIGNATION	YEAR	SHEET NO.	TOTAL SHEETS
ALASKA	0652017/Z607350000	2022	H22	H25

SIGNING SUMMARY

LOC. NO.	STATION	LOCATION LT.	LOCATION RT.	ASDS CODE	LEGEND	SIZE H X V (INCHES)	BRACING/ FRAMING BRACED	BRACING/ FRAMING FRAMED	AREA (SQ.FT.)	MTG. HGT. (FT.)	DIR.	POST TYPE	POST SIZE (INCHES)	POST NO.	REMARKS
87	"0"1726+59		X	D10-202	MILE 32	16 X 36			4.00		E/W	PST	2.5	1	MESSAGE ON BOTH SIDES
88	"0"1774+36		X	D10-202	MILE 33	16 X 36			4.00		N/S	PST	2.5	1	MESSAGE ON BOTH SIDES
89	"0"1802+34		X		LEFT CURVE (Symbol) 40 MPH										REMOVE
90	"0"1811+69		X	R1-1	STOP (TAPS SIGNS) 74 APL 2 PLMP 370.4 DHMP 33.8 BLOCK POINT S	30 X 30	X		6.25		N	PST	2.5	1	REUSE EXISTING SIGN PANELS AND MOUNTING HARDWARE
91	"0"1814+44	X			RIGHT CURVE (Symbol) 40 MPH										REMOVE
92	"0"1820+54		X	D10-202	MILE 34	16 X 36			4.00		E/W	PST	2.5	1	MESSAGE ON BOTH SIDES
93	"0"1873+29		X	D10-202	MILE 35	16 X 36			4.00		N/S	PST	2.5	1	MESSAGE ON BOTH SIDES
94	"0"1886+10		X		LEFT CURVE (Symbol) 45 MPH										REMOVE
95	"0"1895+65	X			RIGHT CURVE (Symbol) 45 MPH										REMOVE
96	"0"1927+67		X	D10-202	MILE 36	16 X 36			4.00		E/W	PST	2.5	1	MESSAGE ON BOTH SIDES
97	"0"1928+69		X		RIGHT CURVE (Symbol) 40 MPH										REMOVE
98	"0"1938+81	X			LEFT CURVE (Symbol) 40 MPH										REMOVE
99	"0"1941+30		X	R1-1	STOP (TAPS SIGNS) 75 APL 3 PLMP 368.6 DHMP 36.6 OMS 75-1R	30 X 30	X		6.25		E	PST	2.5	1	REUSE EXISTING SIGN PANELS AND MOUNTING HARDWARE
100	"0"1943+29		X	R1-1	STOP	30 X 30	X		6.25		SE	PST	2.5	1	
101	"0"1975+46		X	D10-202	MILE 37	16 X 36			4.00		N/S	PST	2.5	1	MESSAGE ON BOTH SIDES
								SUBTOTAL =	42.75						

ESTIMATE OF QUANTITIES

ITEM NO.	PAY ITEM	PAY UNIT	QUANTITY
615.0001.0000	STANDARD SIGN	SQUARE FOOT	442.50
615.0002.0000	REMOVE AND RELOCATE EXISTING SIGN	EACH	1

POST TYPE LEGEND:

PST = PERFORATED STEEL TUBE
TS = TUBE STEEL (SQUARE STRUCTURAL STEEL TUBING)
W_X_ = WIDE FLANGE

SIGNING SUMMARY
4 OF 4

STATE OF ALASKA 49TH
DAVID D. JENSEN
(95% PLANS)
REGISTERED PROFESSIONAL ENGINEER

Preliminary Plans

PLANS DEVELOPED BY: STATE OF ALASKA DEPARTMENT OF TRANSPORTATION & PUBLIC FACILITIES, NORTHERN REGION, 2301 PEGER ROAD, FAIRBANKS, AK 99709 (907)451-2200
C:\Users\ddjensen\Desktop\60735_Dalton_18_37\6 Design\4 C3D\2 Drawings\(3) Plan Production\60735_H_SIGNING_SUMMARY_DETAILS-H22 Sun, May/15/22 06:08pm

NO.	DATE	REVISION

STATE	PROJECT DESIGNATION	YEAR	SHEET NO.	TOTAL SHEETS
ALASKA	0652017/Z607350000	2022	H23	H25



BORDER
RADIUS=2.25"
WIDTH=1.25"

SPECIAL 1

COLORS
BORDER & LEGEND: BLACK
BACKGROUND: ORANGE

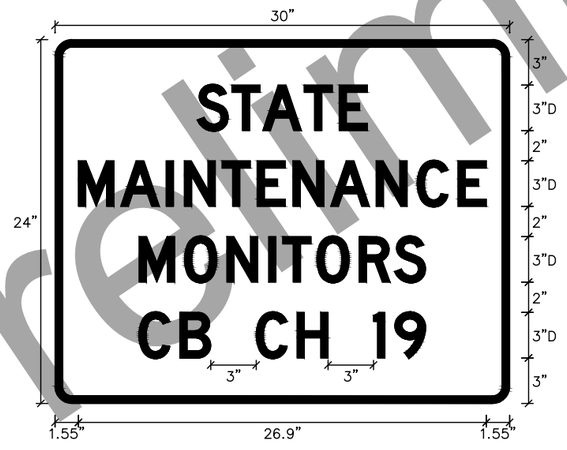

BORDER
RADIUS=1.125"
WIDTH=0.5"
INSET=0"

SPECIAL 2

COLORS
BORDER & LEGEND: WHITE
BACKGROUND: BLUE

HIGHWAY SIGNING NOTES:

1. REMOVE AND DISPOSE OF ALL EXISTING SIGNS AND SIGN FOUNDATIONS WITHIN THE PROJECT LIMITS, EXCEPT THOSE DESIGNATED FOR REINSTALLATION, SALVAGE OR OTHERWISE NOTED.
2. INSTALL MILEPOST SIGNS (D10 SERIES) IN ACCORDANCE WITH THE DETAIL ON SHEET H24. REFER TO STANDARD DRAWING S–05.02 FOR OFFSET BEHIND GUARDRAIL.
3. MOUNTING HEIGHTS ARE PER STANDARD DRAWING S–05.02 UNLESS OTHERWISE NOTED.
4. DETERMINE POST LENGTHS IN THE FIELD. DO NOT EXTEND POSTS ABOVE TOP OF SIGN.
5. INSTALL PST SIGN POSTS WITH SLEEVE TYPE SOIL EMBEDMENT PER STANDARD DRAWING S–30.05. EMBED PST IN SLEEVE 12". ATTACH THE SIGN POST TO THE SLEEVE USING GALVANIZED 3/8" BOLT, NUT, SPLIT LOCK WASHER AND TWO FLAT WASHERS.
6. INSTALL GALVANIZED SPLIT LOCK WASHERS ON ALL 3/8" BOLTS. STAINLESS STEEL FASTENER HARDWARE MAY BE USED INSTEAD OF GALVANIZED. 1/4" X 1 1/2" ALUMINUM ALLOY 6061–T6 BAR MAY ALSO BE USED TO FABRICATE SIGN BRACES.
7. ATTACH ALL SIGNS TO THEIR SUPPORTS WITH 3/8" BOLTS, EXCEPT ATTACH UNFRAMED SIGNS TO PST POSTS WITH ALUMINUM DRIVE RIVETS. WIND WASHERS ARE NOT REQUIRED WITH DRIVE RIVETS. INCLUDE SPLIT LOCK WASHERS WHEN BOLTS ARE USED.
8. ALL FASTENER HARDWARE SHALL MEET THE REQUIREMENTS OF THE "FASTENER SPECIFICATION TABLE" ON SHEET H24.
9. STOP (R1–1) AND YIELD (R1–2) SIGN LOCATIONS, ESPECIALLY THOSE AT LARGE RADIUS INTERSECTIONS, MAY NEED ADJUSTMENT IN THE FIELD. THE ENGINEER WILL APPROVE FINAL LOCATIONS.
10. MAINTAIN EXISTING SIGNS UNTIL NEW SIGNS ARE INSTALLED. DO NOT LEAVE DUPLICATE OR CONFLICTING SIGNING UP AT ANY TIME.
11. ALL SIGNS NOTED FOR REMOVAL AND RELOCATION SHALL BE REPLACED AT THE CONTRACTOR'S EXPENSE IF THEY ARE DAMAGED DURING THE RELOCATION EFFORT.
12. LOCATE AND PROTECT ALL NEW AND EXISTING UNDERGROUND UTILITIES, INCLUDING BUT NOT LIMITED TO: PIPELINES, AND TELEPHONE AND ELECTRICAL CABLES, PRIOR TO INSTALLING SIGN POSTS. NOT ALL EXISTING UTILITIES MAY BE SHOWN ON THE PLANS.
13. CLEARING, AS DIRECTED BY THE ENGINEER, MAY BE REQUIRED TO ENSURE ADEQUATE VISIBILITY OF SIGNS. THIS WORK IS SUBSIDIARY TO PAY ITEM 615.0001.0000
14. INSTALL WEATHER TIGHT CAPS ON ALL TS POSTS.
15. INSTALL FRANGIBLE COUPLING SYSTEMS IN ACCORDANCE WITH STANDARD DRAWING S–31.02.
16. HINGED JOINTS WITH FRANGIBLE FUSE PLATES ARE REQUIRED ON ALL MULTIPLE POST SIGNS WITH FRANGIBLE COUPLING SYSTEMS. THE HINGE LOCATION ON ALL POSTS SHALL BE THE SAME DISTANCE BELOW THE SIGN, INSTEAD OF THE 6" MINIMUM SHOWN ON STANDARD DRAWING S–31.02. SEE MANUFACTURER'S SPECIFICATION FOR HINGE LOCATION BELOW SIGN.
17. INSTALL TS SIGN POST BASES AND FOUNDATIONS BEHIND BARRIER IN ACCORDANCE WITH STANDARD DRAWING S–32.02. PLACE SIGNS TO MEET 3' MINIMUM TO EDGE OF SIGN AND 5' MINIMUM TO SIGN POST FROM FACE OF GUARDRAIL.
18. THE 4" MOUNTING AREA ON MILEPOST SIGNS (D10–200 SERIES) SHALL BE BARE ALUMINUM. THIS ELIMINATES THE OPTION OF INSTALLING GREEN REFLECTIVE SHEETING IN THIS AREA AS NOTED IN THE ASDS.
19. ADHESIVE TAPE IS NOT PERMITTED. THIS MODIFIES STANDARD PLAN S–00.12.

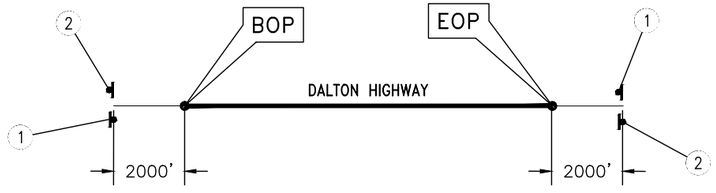

PERMANENT CONSTRUCTION SIGNS

SIGN LEGEND

G20–1
1 ROAD WORK NEXT 19 MILES
60" X 24"

G20–2
2 END ROAD WORK
48" X 24"

NOTE:
INSTALL ALL PERMANENT CONSTRUCTION SIGNS ON WOOD POSTS.

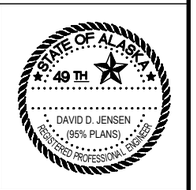

SIGNING DETAILS AND NOTES 1 OF 3

Preliminary Plans

PLANS DEVELOPED BY: STATE OF ALASKA DEPARTMENT OF TRANSPORTATION & PUBLIC FACILITIES, NORTHERN REGION, 2301 PEGER ROAD, FAIRBANKS, AK 99709 (907)451–2200
C:\Users\ddjensen\Desktop\60735_Dalton_18_37\6 Design\4 C3D\2 Drawings\(3) Plan Production\60735_H_SIGNING_SUMMARY_DETAILS–H23 Sun, May/15/22 06:08pm

NO.	DATE	REVISION

STATE	PROJECT DESIGNATION	YEAR	SHEET NO.	TOTAL SHEETS
ALASKA	0652017/Z607350000	2022	H24	H25

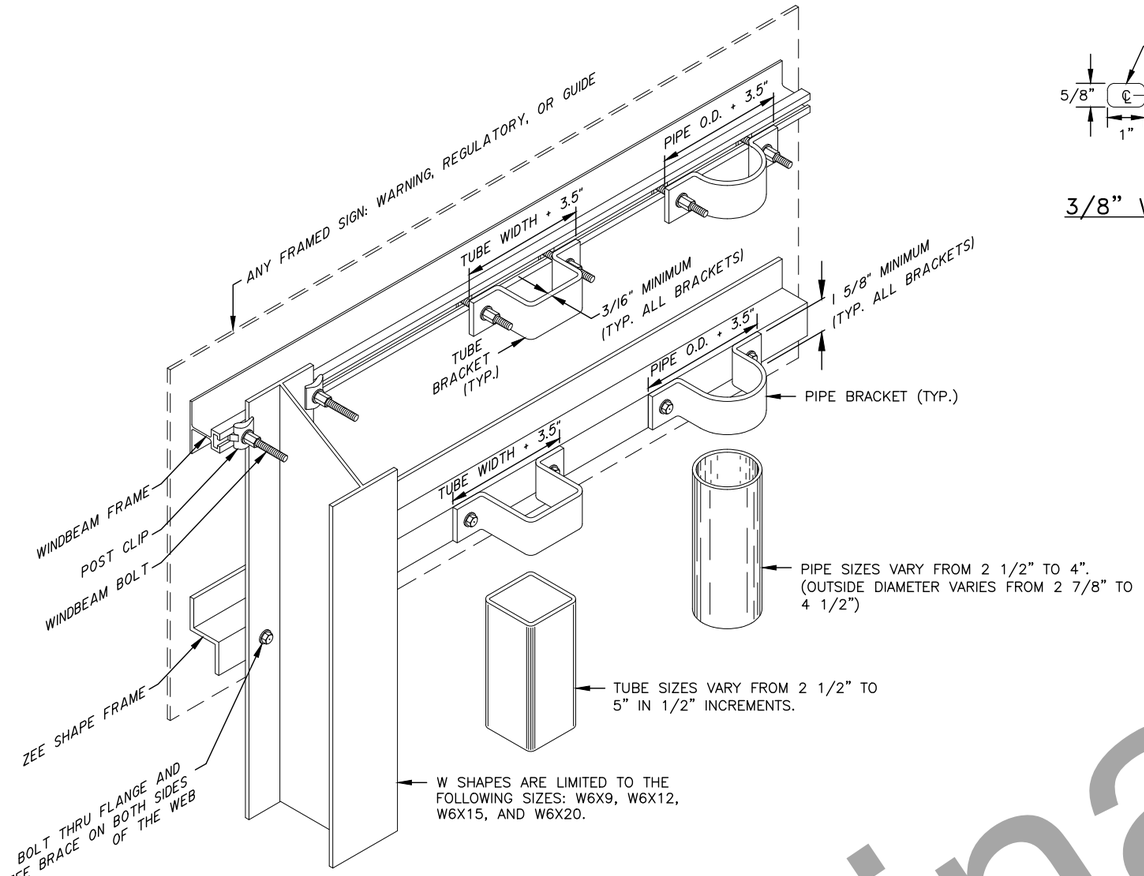

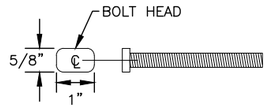

3/8" WINDBEAM BOLT

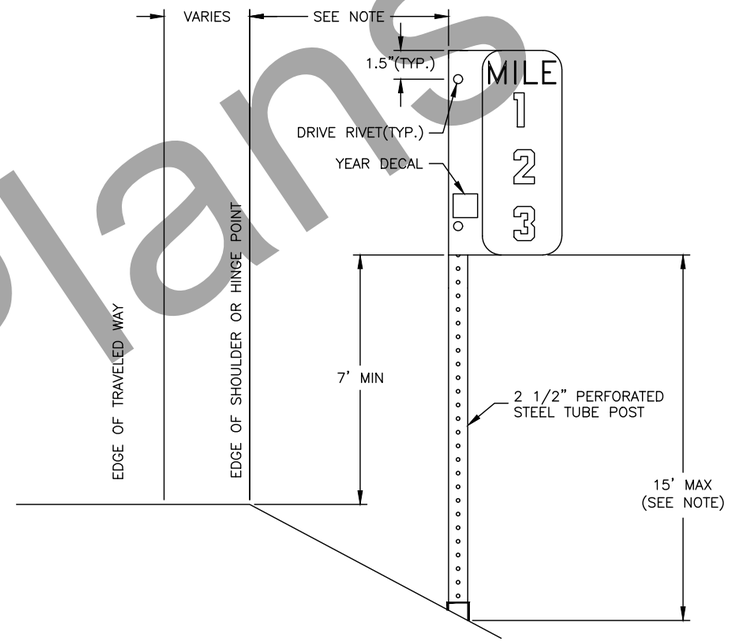

MILEPOST DETAIL

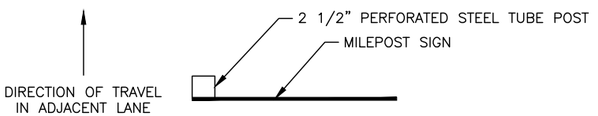

MILEPOST MOUNTING DETAIL

NOTE:

INSTALL MILEPOST SIGNS (D10 SERIES) WITH A 15 TO 30 FOOT OFFSET. REDUCE THE OFFSET AS NECESSARY SO THE BOTTOM OF THE SIGN IS NO MORE THAN 15 FEET ABOVE THE GROUND. THE SIGN OFFSET SHALL NOT BE LESS THAN THE OFFSETS SHOWN ON STANDARD PLAN S-05.02.

FRAMED SIGN ATTACHMENT BRACKETS

NOTES:

1. ATTACH FRAMED SIGNS TO POSTS WHEREVER THE FRAMES CROSS THE POSTS. AT EACH CROSSING, ATTACH THE SIGN USING TWO POST CLIPS ON W-SHAPE POSTS, A U-SHAPED BRACKET ON PIPES OR A BRACKET WITH SQUARE CORNERS ON TUBES.
2. THE TUBE BRACKETS USED ON EVEN INCH SIZE TUBES MAY ALSO BE USED ON TUBES 1/2" SMALLER IN SIZE.
3. THE BRACKET DETAILS SHOWN INDICATE GENERAL DESIGNS ONLY. DESIGNS MAY VARY BY MANUFACTURER.
4. ALUMINUM ALLOY 6061-T6 SHALL BE USED FOR ZEE SHAPE FRAMING AND RIVETS.

FASTENER SPECIFICATION TABLE		
FASTENERS	STEEL	STAINLESS STEEL
BOLTS	ASTM A 307	ASTM F 593
NUTS	ASTM A 563	ASTM F 594
WASHERS	ASTM F 844	ASTM A 480

THESE SPECIFICATIONS APPLY TO ALL SIGN FASTENER HARDWARE ON THE PROJECT.

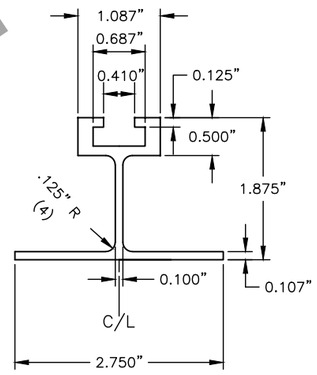

EXTRUDED ALUMINUM WINDBEAM

NOTES:

1. ALUMINUM ALLOY 6061-T6 SHALL BE USED FOR EXTRUDED WINDBEAM AND RIVETS.
2. ATTACH SIGNS TO WINDBEAM WITH 3/6" RIVETS AT 4" STAGGERED SPACING.

Preliminary Plans

SIGNING DETAILS AND NOTES 2 OF 3

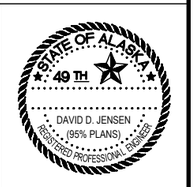

PLANS DEVELOPED BY: STATE OF ALASKA DEPARTMENT OF TRANSPORTATION & PUBLIC FACILITIES, NORTHERN REGION, 2301 PEGER ROAD, FAIRBANKS, AK 99709 (907)451-2200
C:\Users\djjensen\Desktop\60735_Dalton_18_37\6 Design\4 C3D\2 Drawings\(3) Plan Production\60735_H_SIGNING_SUMMARY_DETAILS-H24 Sun, May/15/22 06:08pm

NO.	DATE	REVISION

STATE	PROJECT DESIGNATION	YEAR	SHEET NO.	TOTAL SHEETS
ALASKA	0652017/Z607350000	2022	H25	H25

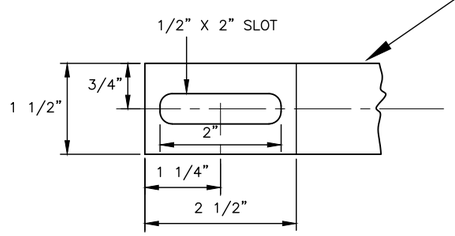

BRACE SLOT DETAIL
ELEVATION VIEW

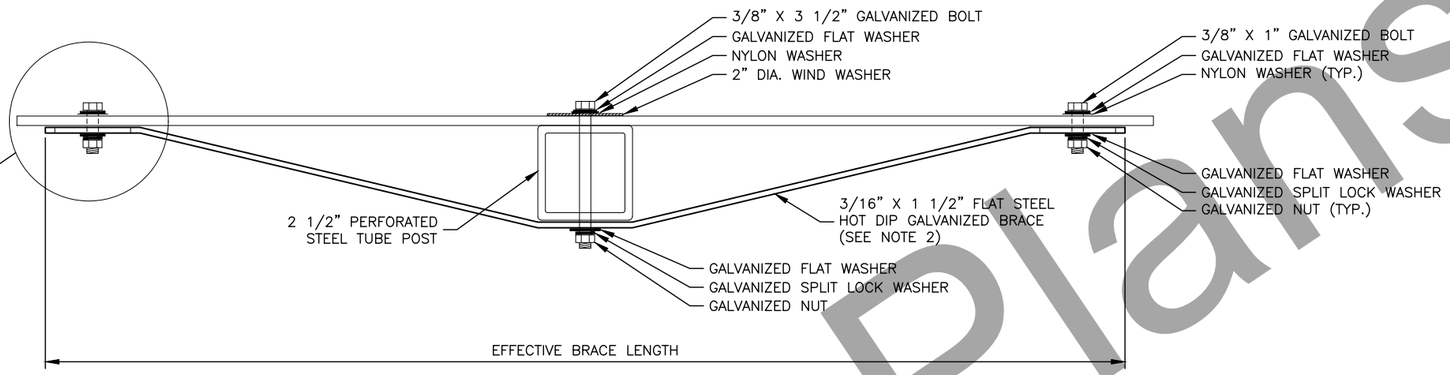

PERFORATED STEEL TUBE POST SIGN BRACING
PLAN VIEW

SIGN WIDTH(W)	EFFECTIVE BRACE LENGTH		
	WARNING	YIELD	OTHER
24"	30"	18"	18"
30"	36"	24"	24"
36"	42"	30"	30"
42"	48"	–	36"
48"	54"*	36"	42"

* OR FRAME 48" WARNING SIGNS WITH THREE WIND FRAMING MEMBERS AS SHOWN ON STANDARD DRAWING S-00.12.

NOTES:

1. ALL FASTENER HARDWARE SHALL MEET THE REQUIREMENTS OF THE "FASTENER SPECIFICATION TABLE" ON SHEET H24. STAINLESS STEEL FASTENER HARDWARE MAY BE USED INSTEAD OF GALVANIZED.
2. 1/4" X 1 1/2" ALUMINUM ALLOY 6061-T6 BAR MAY ALSO BE USED TO FABRICATE SIGN BRACES.
3. ADJUST LOCATION OF BRACING SO BOLTS AND WASHERS WILL MISS THE LEGEND.

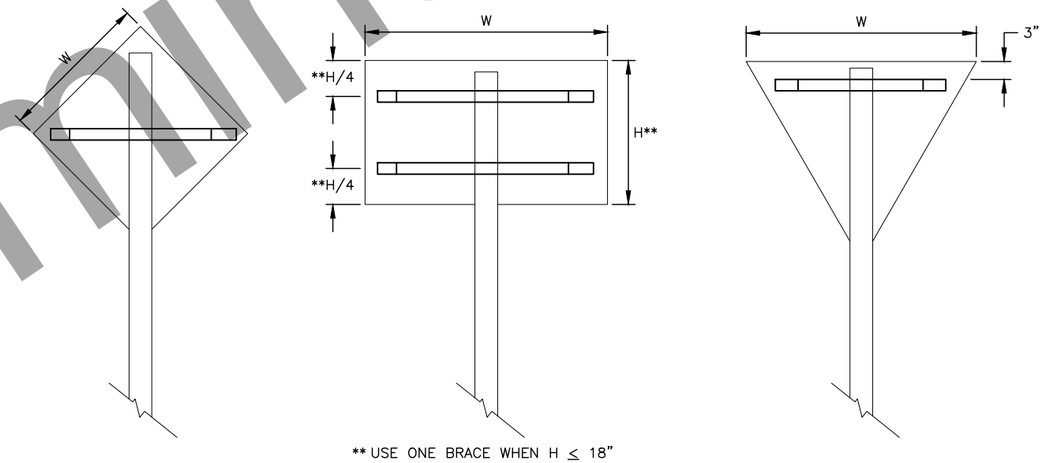

** USE ONE BRACE WHEN H ≤ 18"
USE TWO BRACES WHEN 18" < H < 48"
USE THREE BRACES WHEN H ≥ 48"

SIGN BRACING PLACEMENT

Preliminary Plans

SIGNING DETAILS AND NOTES 3 OF 3



PLANS DEVELOPED BY: STATE OF ALASKA DEPARTMENT OF TRANSPORTATION & PUBLIC FACILITIES, NORTHERN REGION, 2301 PEGER ROAD, FAIRBANKS, AK 99709 (907)451-2200
C:\Users\ddjensen\Desktop\60735_Dalton_18_37\6 Design\4 C3D\2 Drawings\(3) Plan Production\60735_H_SIGNING_SUMMARY_DETAILS-H25 Sun, May/15/22 06:08pm

STATE	PROJECT DESIGNATION	YEAR	SHEET NO.	TOTAL SHEETS
ALASKA	0652017/Z607350000	2022	NI	N25

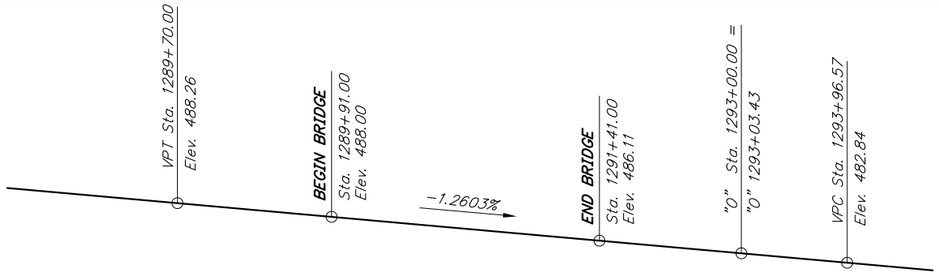

PROFILE GRADE DATA
No Scale

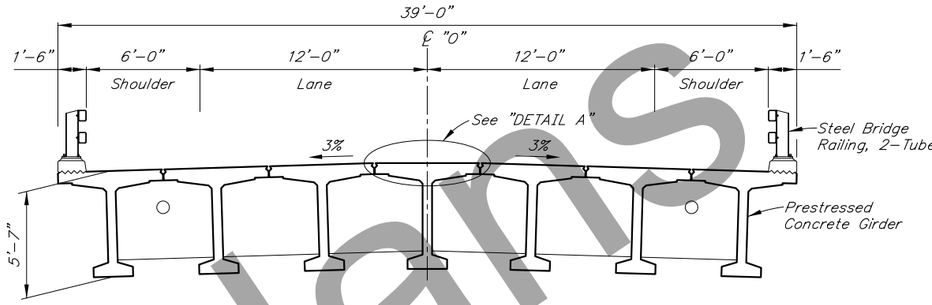

TYPICAL SECTION

12 0 4 8
In. Feet

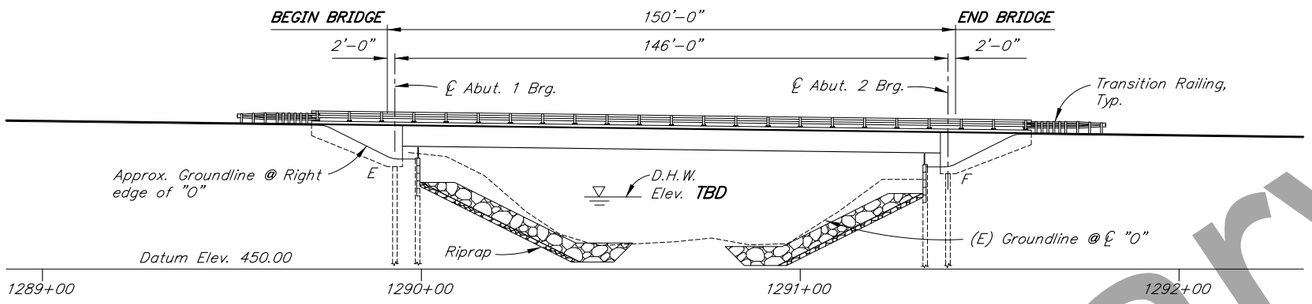

ELEVATION

10 0 20 40
Feet

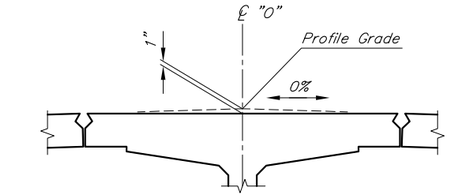

DETAIL A

12 6 0 1 2 3
In. Feet

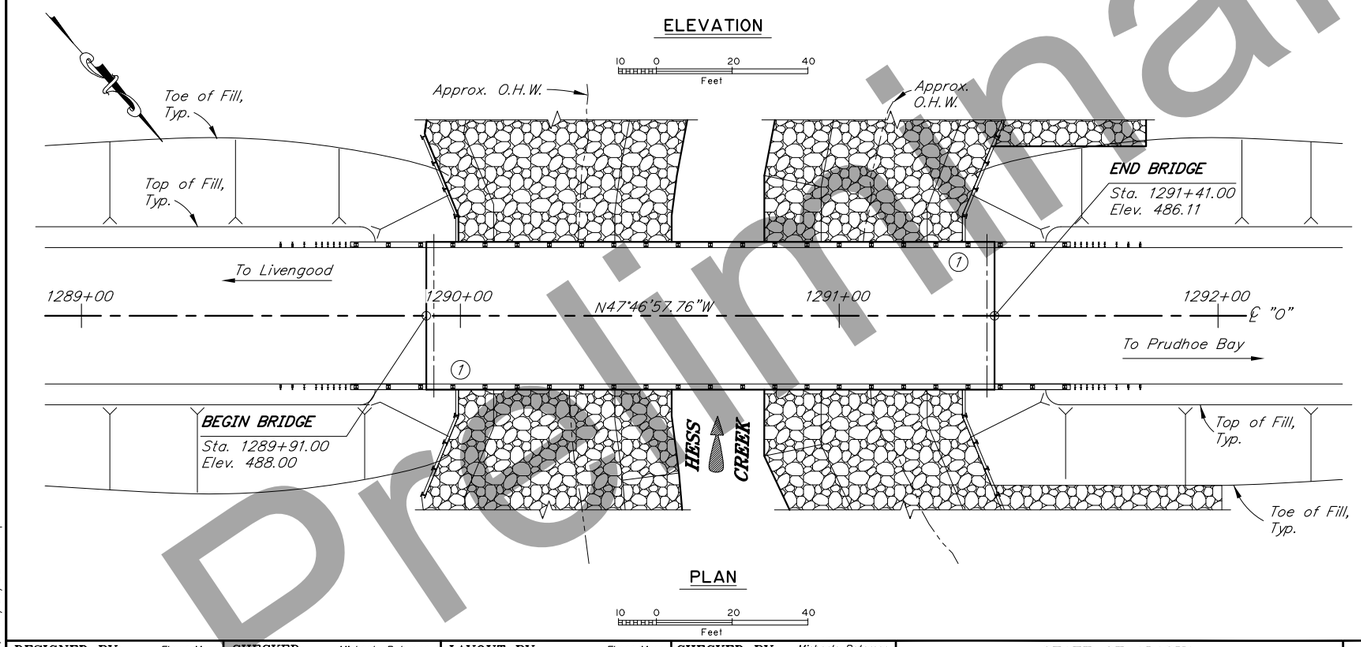

PLAN

10 0 20 40
Feet

BRIDGE DRAWING INDEX

TITLE	DWG. NO.
GENERAL LAYOUT	1
SITE PLAN	2
RIPRAP LAYOUT	3
RIPRAP DETAILS	4
ABUTMENT 1 RETAINING WALL LAYOUT	5
ABUTMENT 2 RETAINING WALL LAYOUT	6
RETAINING WALL DETAILS	7
ABUTMENT 1	8
ABUTMENT 2	9
ABUTMENT DETAILS	10
WINGWALLS	11
FRAMING PLAN AND TYPICAL SECTION	12
GIRDERS	13
GIRDER DETAILS	14
STEEL BRIDGE RAILING, 2-TUBE	15
LOG OF TEST BORINGS	16-25

NOTE:

(1) *Approx. location of Bridge Number Plate*

DESIGNED BY: *Elmer Marx*	CHECKED: *Michaela Petersen*	LAYOUT BY: *Elmer Marx*	CHECKED BY: *Michaela Petersen*	
DRAWN BY: *Sam Sollie*	CHECKED: *Elmer Marx*	SPECIFICATIONS BY: *Elmer Marx*	P S & E COMPARED: *Michaela Petersen*	
QUANTITIES BY: *Elmer Marx*	CHECKED: *Michaela Petersen*	APPROVAL RECOMMENDED BY: *Rich Pratt*		

STATE OF ALASKA
DEPARTMENT OF TRANSPORTATION AND PUBLIC FACILITIES
BRIDGE SECTION
3132 Channel Drive
Juneau, Alaska 99801
907-465-2975

HESS CREEK BRIDGE
DALTON HIGHWAY
GENERAL LAYOUT

BRIDGE NO. 1213
DWG. NO. 1

R:\cad\1213\1213-1 Fri, Feb/25/22 02:10pm

Preliminary Plans

STATE	PROJECT DESIGNATION	YEAR	SHEET NO.	TOTAL SHEETS
ALASKA	0652017/Z607350000	2022	N2	N25

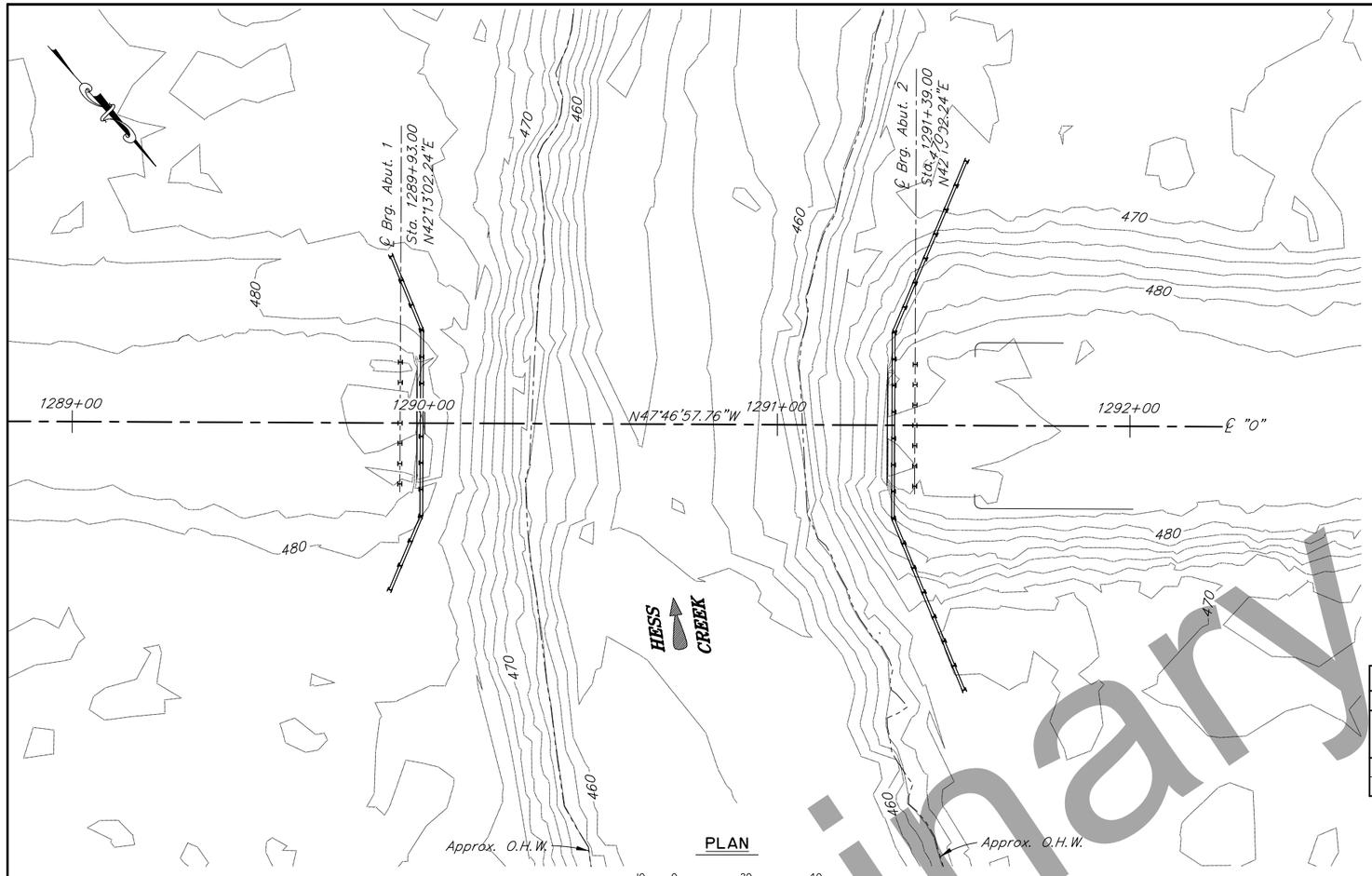

PLAN

ESTIMATE OF QUANTITIES

ITEM NO.	ITEM	PAY UNIT	ESTIMATING UNIT	SUBST.	SUPERST.	TOTAL QUANTITY
202.0023.0000	Removal of Bridge, No. 1213	LS	LS	All Req'd	All Req'd	All Req'd
205.0006.0000	Structural Fill	CY	CY	2,150	---	2,150
501.0001.0000	Class A Concrete	LS	CY	92.3	66.0	158.3
501.0007.0000	Precast Concrete Member, 148'-0" Decked Bulb-Tee	EA	EA	---	7	7
501.0007.0000	Precast Concrete Member, Lagging	EA	EA	170	---	170
503.0001.0000	Reinforcing Steel	LS	LBS	16,150	---	16,150
503.0002.0000	Epoxy-Coated Reinforcing Steel	LS	LBS	---	4,060	4,060
505.0005.0001	Furnish Structural Steel H-Piles, HP 14x117	LF	LF	3,182	---	3,182
505.0006.0001	Drive Structural Steel H-Piles, HP 14x117	EA	EA	50	---	50
507.0001.0002	Steel Bridge Railing, 2-Tube	LF	LF	---	380.0	380.0
507.0006.0000	Cable Safety Railing	LF	LF	251	---	251
520.0001.0000	Temporary Crossings	LS	LS	All Req'd	All Req'd	All Req'd
606.0016.0000	Transition Rail	EA	EA	---	4	4
611.0001.0001	Riprap, Class I	CY	CY	1,000	---	1,000
611.0001.0003	Riprap, Class III	CY	CY	6,000	---	6,000
630.0002.0001	Geotextile, Stabilization, Class 1	SY	SY	340	---	340
631.0002.0001	Geotextile, Erosion Control, Class 1	SY	SY	6,000	---	6,000

Item numbers are for reference only. Quantities shown are not necessarily the pay quantities nor the total quantity of the particular item.

GENERAL NOTES

DESIGN:..... AASHTO LRFD Bridge Design Specifications, 2020 Edition, with latest interim specifications.

Seismic design per AASHTO Guide Specifications for LRFD Seismic Bridge Design, 2011 with latest interim revisions.

LIVE LOAD:..... HL-93

DEAD LOAD:..... Includes 50 psf for all wearing surfaces.

SEISMIC PARAMETERS:..... PGA = 0.25
Ss = 0.60
S1 = 0.18
Site Class = D
Liquefaction Potential = Low
AASHTO 7% probability of exceedance in 75 years.

REINFORCEMENT:..... ASTM A706, Grade 60, Fy = 60,000 psi
ASTM A970 Headed bars, Class HA.
Space reinforcement evenly unless otherwise noted.

PRESTRESSED CONCRETE:.....See "GIRDERS" Dwgs.

CONCRETE:.....Class A Concrete unless otherwise noted, f'c = 4,000 psi

STRUCTURAL STEEL:.....ASTM A709, Grade 36T3, Fy = 36,000 psi
Galvanize structural steel in accordance with AASHTO M111 unless noted otherwise.

STRUCTURAL STEEL PILING:..... ASTM A709, GR50T3, Fy = 50,000 psi.
Pile tip reinforcing is required.

PILE DATA TABLE

LOCATION	PILE TYPE	DRIVING CRITERIA: MINIMUM PENETRATION (ft)	DRIVING CRITERIA: ESTIMATED PILE TIP ELEVATION (ft)	DRIVING CRITERIA: DRIVING RESISTANCE (K)	DESIGN DATA: STRENGTH I FACTORED LOAD (K)	DESIGN DATA: NOMINAL RESISTANCE (K)	DESIGN DATA: RESISTANCE FACTOR, ϕ
Abutment 1	HP 14x117	60	350	530	345	530	0.65
Abutment 2	HP 14x117	60	350	530	345	530	0.65

Difficult driving conditions are expected. Pilot bore hole (1'-4"ø maximum diameter) required for each pile to elevation 417 ft.

ABBREVIATIONS:

℄	= centerline	e.f.	= each face	max.	= maximum
℗	= plate	e.w.	= each way	min.	= minimum
&	= and	Ext.	= exterior	n.f.	= near face
@	= at	F	= fixed	No.	= number
ø	= diameter	f.f.	= front/air face	o.c.	= on center
±	= approximate	f'c	= specified concrete compressive strength	O.H.W.	= ordinary high water
Abut.	= abutment			pcf	= pounds per cubic foot
Approx.	= approximate	f'ci	= specified concrete compressive strength at release	psf	= pounds per square foot
b.f.	= back/dirt face			psi	= pounds per square inch
bot.	= bottom			R	= radius
Br.	= bridge	Ft.	= feet	R.O.W.	= right of way
btwn.	= between	Fy	= yield stress	RT.	= right
Brg.	= bearings	Galv.	= galvanize	Rd.	= road
C.G.	= center of gravity	H.S.	= high strength	spcs.	= space, spaces
C.I.P.	= cast in place	Hwy.	= highway	Sta.	= station
CJP	= complete joint penetration	ID	= internal diameter	SF	= square feet
Clr.	= clear, clearance	Int.	= interior	SY	= square yard
CMP	= corrugated metal pipe	Jt.	= joint	Std.	= standard
CY	= cubic yard	K	= kips	Symm.	= symmetric
Dia.	= diameter	ksf	= 1000 pounds per square foot	Typ.	= typical
Dwg.	= drawing	ksi	= 1000 pounds per square inch	UT	= ultrasonic testing
E	= expansion	LBS or lb	= pounds	VPC	= point of vertical curve
(E)	= existing	LF	= linear foot	VPI	= point of vertical intersection
EA	= each	LS	= lump sum	VPT	= point of vertical tangent
Elev.	= elevation	LT.	= left	w/	= with

Preliminary Plans

DESIGNED BY: Elmer Marx	CHECKED: Michaela Petersen	FOUNDATIONS REVIEWED BY: Dave Hemstreet	
DRAWN BY: Sam Sollie	CHECKED: Elmer Marx		
QUANTITIES BY: Elmer Marx	CHECKED: Michaela Petersen		

STATE OF ALASKA
DEPARTMENT OF TRANSPORTATION AND PUBLIC FACILITIES
BRIDGE SECTION
3132 Channel Drive
Juneau, Alaska 99801
907-465-2975

HESS CREEK BRIDGE

DALTON HIGHWAY

SITE PLAN

BRIDGE NO. 1213

DWG. NO. 2

R:\cad\1213\1213-2 Fri, Feb/25/22 02:10pm

STATE	PROJECT DESIGNATION	YEAR	SHEET NO.	TOTAL SHEETS
ALASKA	0652017/Z607350000	2022	N3	N25

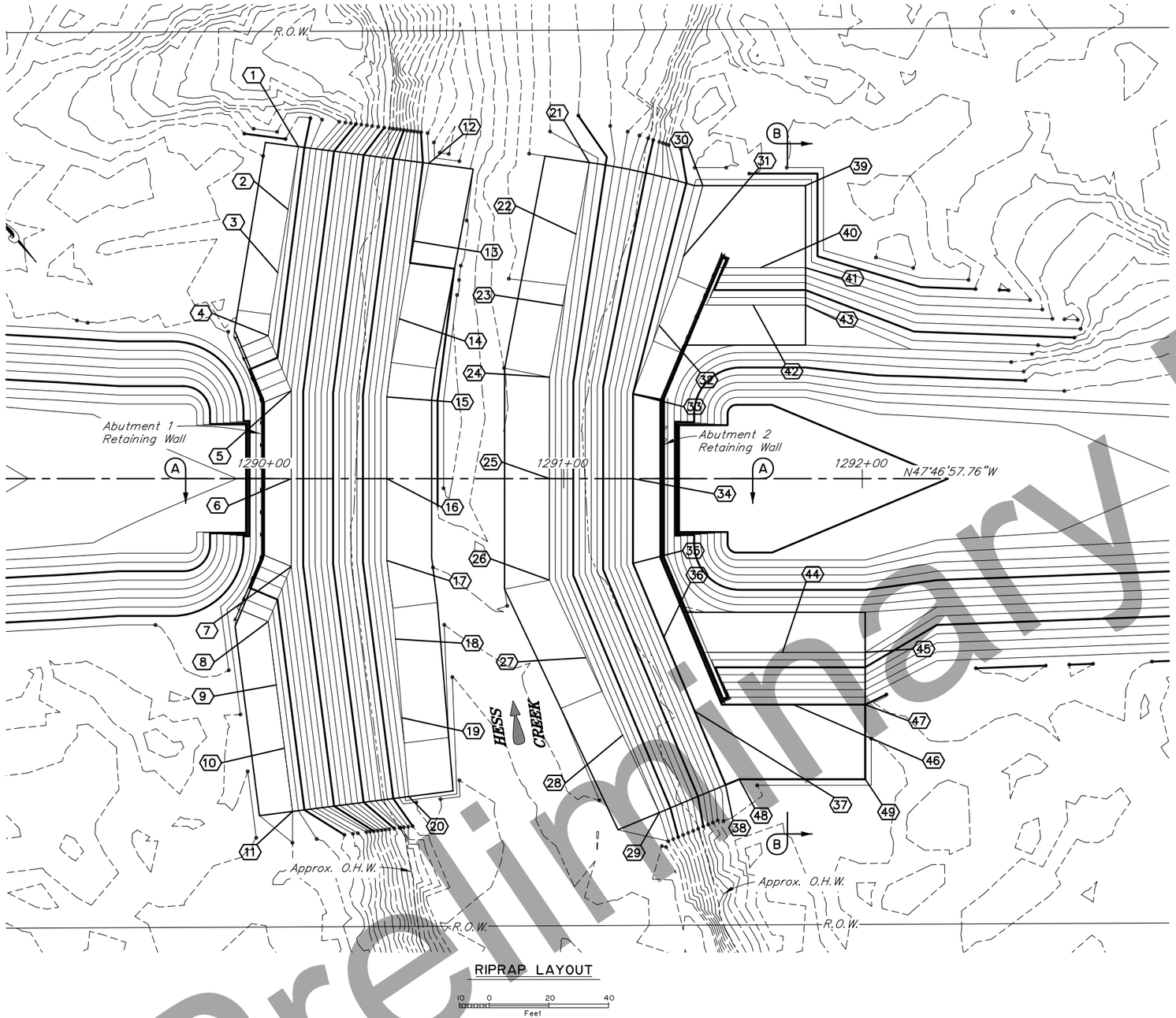

RIPRAP LAYOUT

10 0 20 40
Feet

RIPRAP TABLE

POINT	STATION	OFFSET	ELEVATION	POINT	STATION	OFFSET	ELEVATION
1	1290+11.2	111.2' Left	476.0'	26	1290+95.2	34.0' Right	456.0'
2	1290+07.7	90.1' Left	476.4'	27	1291+07.5	60.0' Right	456.7'
3	1290+04.3	69.0' Left	476.7'	28	1291+19.8	85.9' Right	457.4'
4	1290+01.1	47.9' Left	477.0'	29	1291+32.0	111.8' Right	458.0'
5	1290+08.8	29.4' Left	472.0'	30	1291+46.6	98.2' Left	472.0'
6	1290+08.8	0.0' Left	472.0'	31	1291+40.1	74.5' Left	472.0'
7	1290+08.8	29.4' Right	472.0'	32	1291+32.0	51.3' Left	471.2'
8	1290+01.1	47.9' Right	477.0'	33	1291+23.2	28.4' Left	470.0'
9	1290+03.8	69.1' Right	477.0'	34	1291+23.2	0.0' Left	470.0'
10	1290+06.5	90.3' Right	477.0'	35	1291+23.2	28.4' Right	470.0'
11	1290+09.2	111.5' Right	477.0'	36	1291+33.5	53.1' Right	470.0'
12	1290+54.8	105.6' Left	454.0'	37	1291+43.9	77.9' Right	470.0'
13	1290+49.9	79.6' Left	454.8'	38	1291+54.2	102.6' Right	470.0'
14	1290+45.0	53.5' Left	455.6'	39	1291+81.0	98.2' Left	472.0'
15	1290+40.8	27.4' Left	456.0'	40	1291+66.0	70.7' Left	472.0'
16	1290+40.8	0.0' Left	456.0'	41	1291+81.0	70.7' Left	472.0'
17	1290+40.8	27.4' Right	456.0'	42	1291+63.4	58.2' Left	477.0'
18	1290+43.7	53.7' Right	456.2'	43	1291+81.0	58.2' Left	477.0'
19	1290+45.9	80.1' Right	456.8'	44	1291+73.3	58.2' Right	477.0'
20	1290+48.1	106.5' Right	457.4'	45	1292+01.0	58.2' Right	477.0'
21	1291+08.6	105.9' Left	458.0'	46	1291+76.9	75.7' Right	470.0'
22	1291+04.1	81.9' Left	457.4'	47	1292+01.0	75.7' Right	470.0'
23	1290+99.7	58.0' Left	456.8'	48	1291+58.8	100.7' Right	470.0'
24	1290+95.2	34.0' Left	456.0'	49	1292+01.0	100.7' Right	470.0'
25	1290+95.2	0.0' Left	456.0'	50			

HYDRAULIC & HYDROLOGIC SUMMARY

Flood Frequency (Yr.)	50	100	500
Exceedance Probability (%)	2	1	0.2
Discharge (cfs)	XX	XX	XX
Water Surface Elevation (ft)	XX	XX	XX
Anticipated Add'l Backwater (ft)	XX	XX	XX
Contraction Scour (ft)	XX	XX	XX
Abutment Scour (ft)	XX	XX	XX
Pier Scour (ft)			
Long-Term Degradation (ft)		XX	

Drainage Area for this crossing: ..... XX square miles

Hydraulic Capacity: ..... Exceeds 500 year storm event discharge

TBD

NOTE:

1. See "RIPRAP SECTIONS" drawing for "SECTION A-A", "SECTION B-B".

Preliminary Plans

R:\cad\1213\1213-3 Fri, Feb/25/22 02:10pm

DESIGNED BY: Michael Knapp	CHECKED: Luke Boles		
DRAWN BY: Sam Sollie	CHECKED: Michael Knapp		
QUANTITIES BY: Michael Knapp	CHECKED: Luke Boles		

STATE OF ALASKA
DEPARTMENT OF TRANSPORTATION AND PUBLIC FACILITIES
BRIDGE SECTION
3132 Channel Drive
Juneau, Alaska 99801
907-465-2975

HESS CREEK BRIDGE

DALTON HIGHWAY

RIPRAP LAYOUT

BRIDGE NO. 1213

DWG. NO. 3

STATE	PROJECT DESIGNATION	YEAR	SHEET NO.	TOTAL SHEETS
ALASKA	0652017/Z607350000	2022	N4	N25

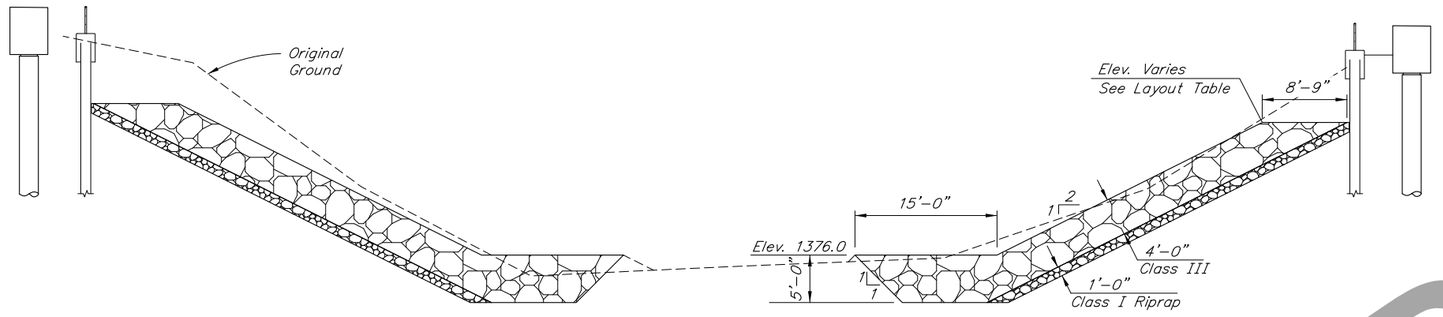

SECTION A-A

0 4 8 12
In. Feet

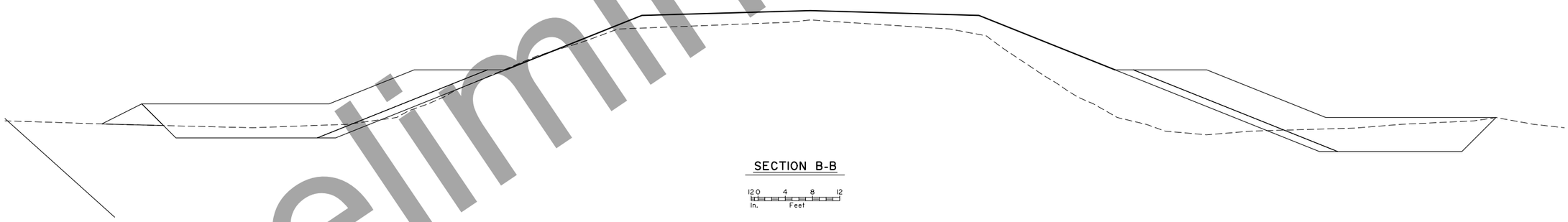

SECTION B-B

0 4 8 12
In. Feet

TBD

Preliminary Plans

R:\cad\1213\1213-4 Fri. Feb/25/22 02:11pm

DESIGNED BY: *Michael Knapp*	CHECKED: *Luke Boles*		
DRAWN BY: *Sam Sollie*	CHECKED: *Michael Knapp*		
QUANTITIES BY: *Michael Knapp*	CHECKED: *Luke Boles*		

STATE OF ALASKA
DEPARTMENT OF TRANSPORTATION AND PUBLIC FACILITIES
BRIDGE SECTION
3132 Channel Drive
Juneau, Alaska 99801
907-465-2975

HESS CREEK BRIDGE

DALTON HIGHWAY

RIPRAP DETAILS

BRIDGE NO. 1213

DWG. NO. 4

STATE	PROJECT DESIGNATION	YEAR	SHEET NO.	TOTAL SHEETS
ALASKA	0652017/Z607350000	2022	N5	N25

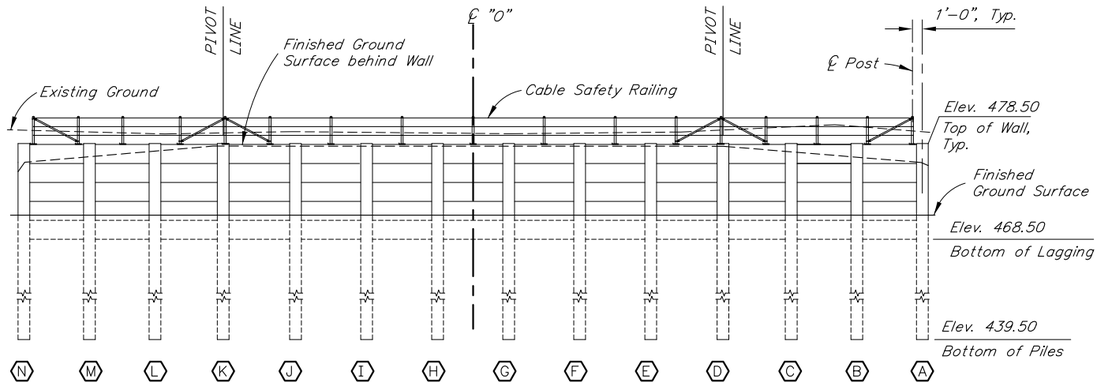

SECTION G-G - DEVELOPED ELEVATION

(Looking back on Station)

12 0 4 8 12
In. Feet

CENTERLINE TOP OF PILE SUMMARY TABLE		
POINT	"O" STATION	OFFSET
A	1289+90.27	47.31' LT.
B	1289+93.16	40.39' LT.
C	1289+96.05	33.47' LT.
D	1289+98.93	26.38' LT.
E	1289+99.00	18.75' LT.
F	1289+99.00	11.25' LT.
G	1289+99.00	3.75' LT.
H	1289+99.00	3.75' RT.
I	1289+99.00	11.25' RT.
J	1289+99.00	18.75' RT.
K	1289+98.93	26.38' LT.
L	1289+96.05	33.47' LT.
M	1289+93.16	40.39' LT.
N	1289+90.27	47.31' LT.

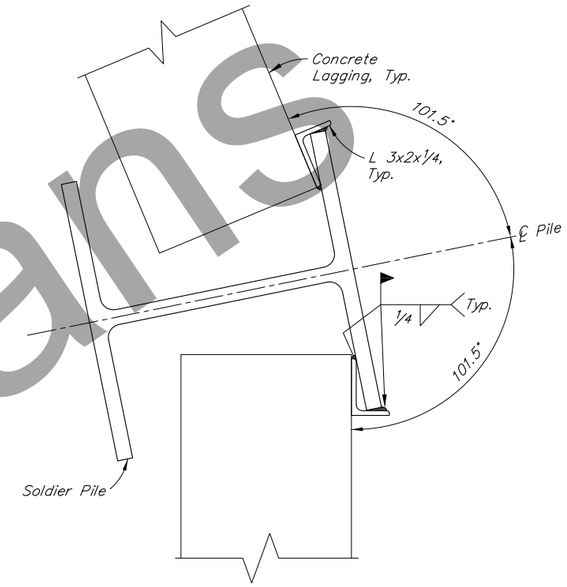

ANGLE DETAIL

No Scale

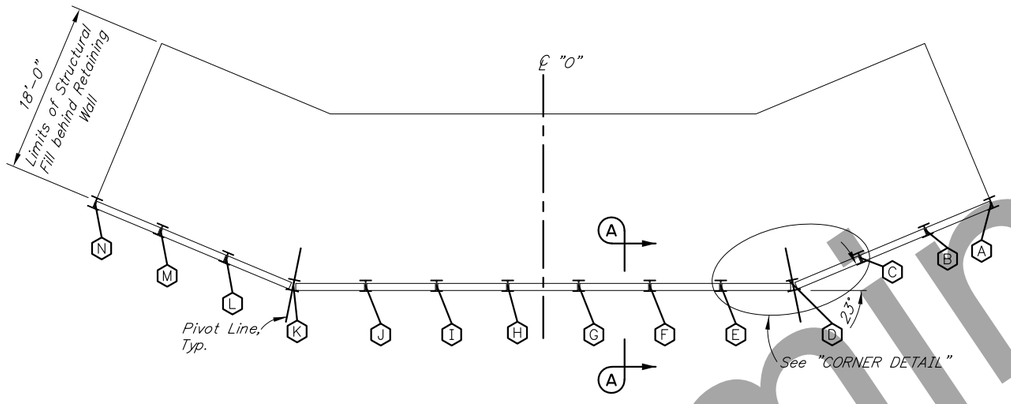

PLAN VIEW

12 0 4 8 12
In. Feet

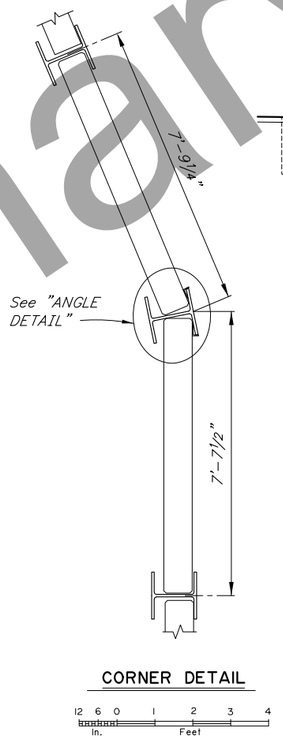

CORNER DETAIL

12 6 0 1 2 3 4
In. Feet

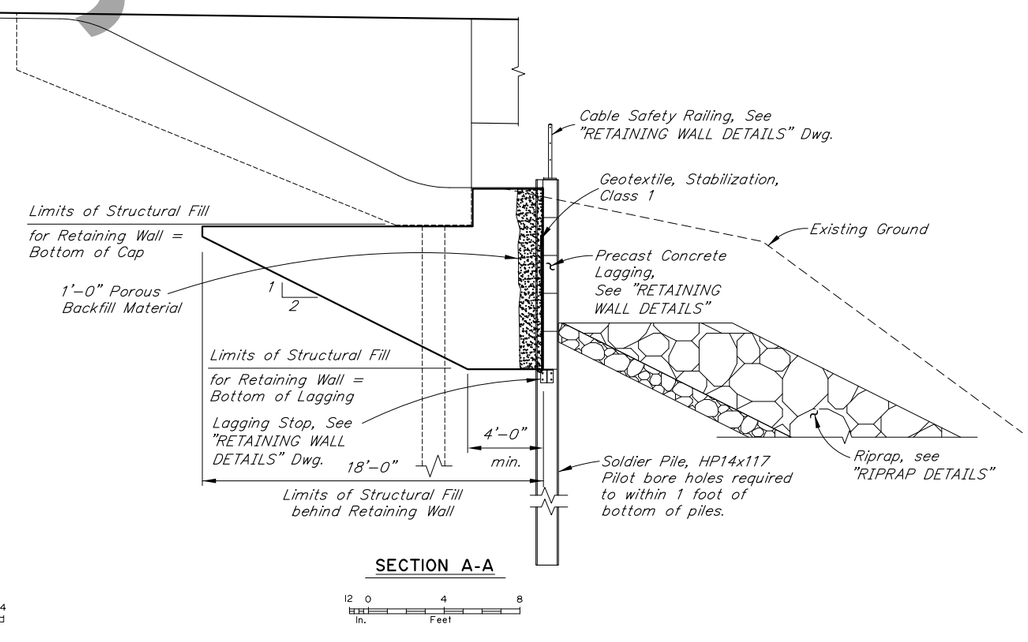

SECTION A-A

12 0 4 8
In. Feet

Preliminary Plans

DESIGNED BY:	Elmer Marx	CHECKED:	Michaela Petersen
DRAWN BY:	Sam Sollie	CHECKED:	Elmer Marx
QUANTITIES BY:	Elmer Marx	CHECKED:	Michaela Petersen

STATE OF ALASKA
DEPARTMENT OF TRANSPORTATION AND PUBLIC FACILITIES
BRIDGE SECTION
3132 Channel Drive
Juneau, Alaska 99801
907-465-2975

HESS CREEK BRIDGE

DALTON HIGHWAY

ABUTMENT 1 RETAINING WALL LAYOUT

BRIDGE NO. 1213

DWG. NO. 5

R:\cad\1213\1213-5 Fri, Feb/25/22 02:11pm

STATE	PROJECT DESIGNATION	YEAR	SHEET NO.	TOTAL SHEETS
ALASKA	0652017/Z607350000	2022	N6	N25

CENTERLINE TOP OF PILE SUMMARY TABLE

POINT	"O" STATION	OFFSET
A	1291+53.29	75.00' LT.
B	1291+50.40	68.08' LT.
C	1291+47.51	61.16' LT.
D	1291+44.62	54.23' LT.
E	1291+41.73	47.31' LT.
F	1291+38.84	40.39' LT.
G	1291+35.95	33.47' LT.
H	1291+33.07	26.38' LT.
I	1291+33.00	18.75' LT.
J	1291+33.00	11.25' LT.
K	1291+33.00	3.75' LT.
L	1291+33.00	3.75' RT.
M	1291+33.00	11.25' RT.
N	1291+33.00	18.75' RT.
O	1291+33.07	26.38' RT.
P	1291+35.95	33.47' RT.
Q	1291+38.84	40.39' RT.
R	1291+41.73	47.31' RT.
S	1291+44.62	54.23' RT.
T	1291+47.51	61.16' RT.
U	1291+50.40	68.08' RT.
V	1291+53.29	75.00' RT.

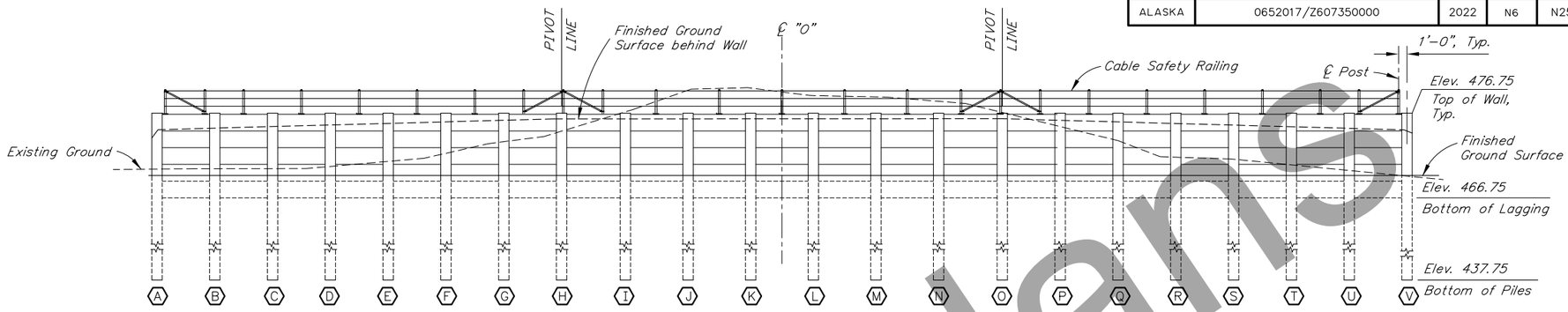

SECTION H-H - DEVELOPED ELEVATION

12 0 4 8 12 In. Feet

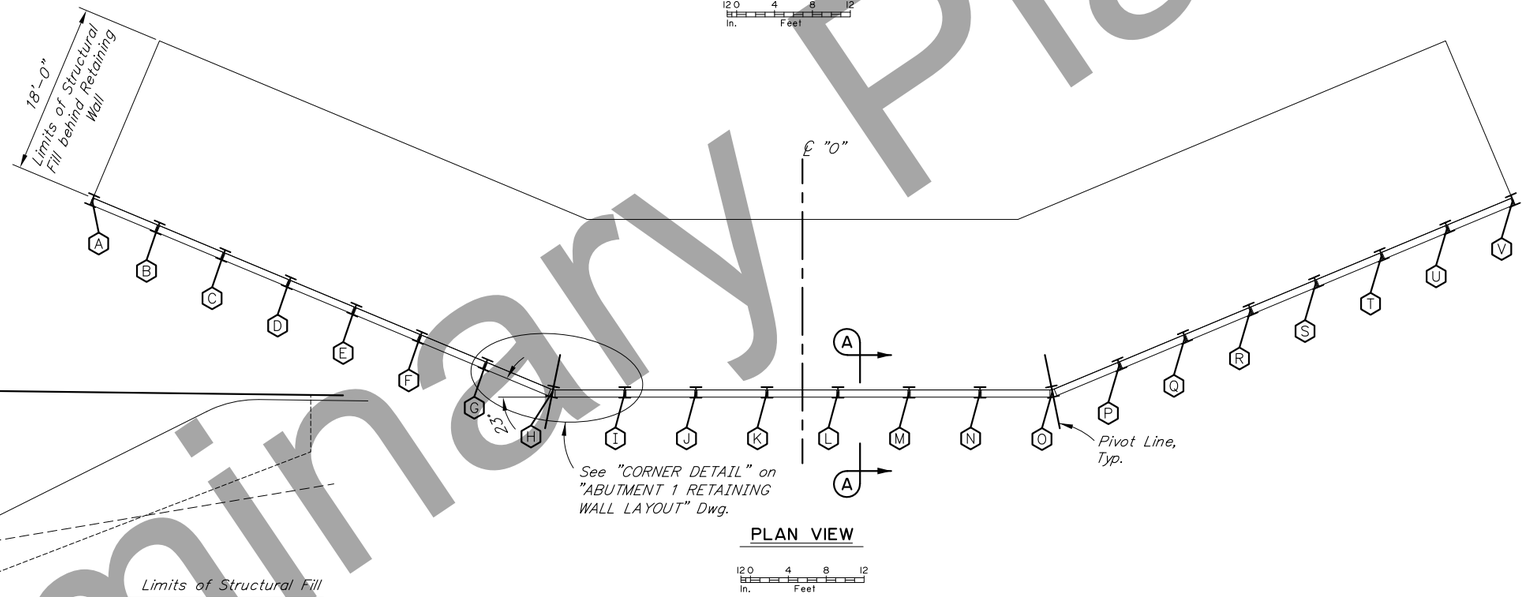

PLAN VIEW

12 0 4 8 12 In. Feet

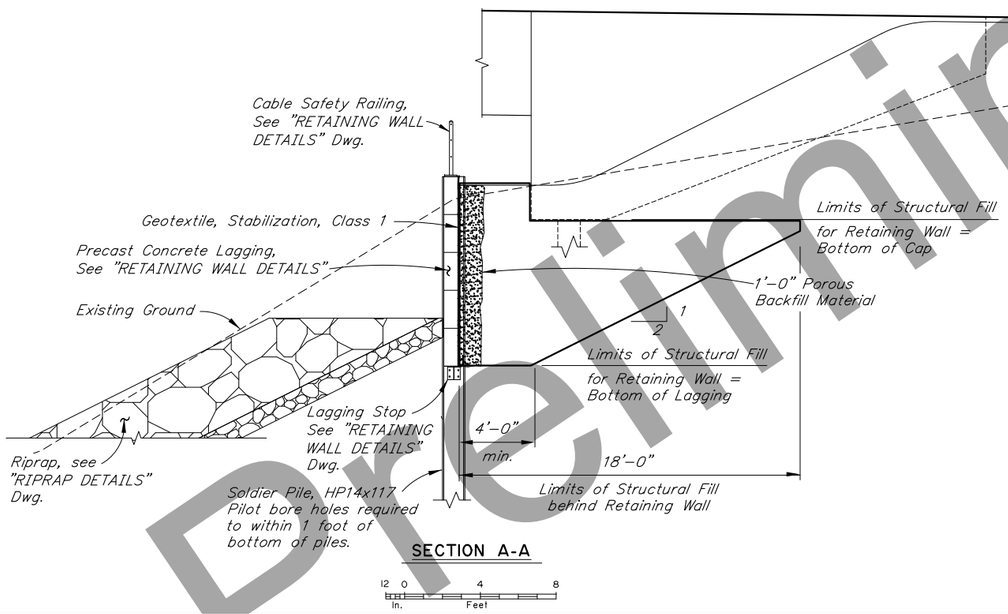

SECTION A-A

12 0 4 8 In. Feet

Preliminary Plans

R:\cad\1213\1213-6 Fri, Feb/25/22 02:11pm

DESIGNED BY: Elmer Marx	CHECKED: Michaela Petersen		
DRAWN BY: Sam Sollie	CHECKED: Elmer Marx		
QUANTITIES BY: Elmer Marx	CHECKED: Michaela Petersen		

STATE OF ALASKA
DEPARTMENT OF TRANSPORTATION AND PUBLIC FACILITIES
BRIDGE SECTION
3132 Channel Drive
Juneau, Alaska 99801
907-465-2975

HESS CREEK BRIDGE

DALTON HIGHWAY

ABUTMENT 2 RETAINING WALL LAYOUT

BRIDGE NO. 1213

DWG. NO. 6

STATE	PROJECT DESIGNATION	YEAR	SHEET NO.	TOTAL SHEETS
ALASKA	0652017/Z607350000	2022	N7	N25

REINFORCING STEEL - LAGGING

MARK	NOTE	SIZE	NO.	LENGTH	TYPE	BENDING DIAGRAM
L401	E,U	4	8	8'-0"	BENT	
L402	E,U	4	8	4'-9"	STIRRUP	

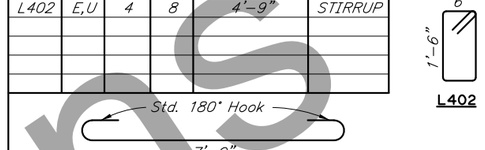

E – Epoxy-Coating
U – Per precast unit

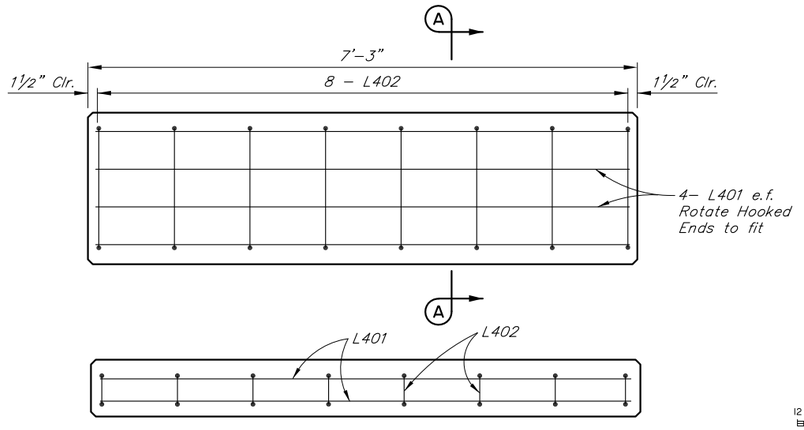

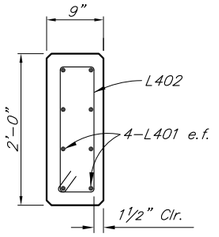

SECTION A-A



PRECAST CONCRETE LAGGING



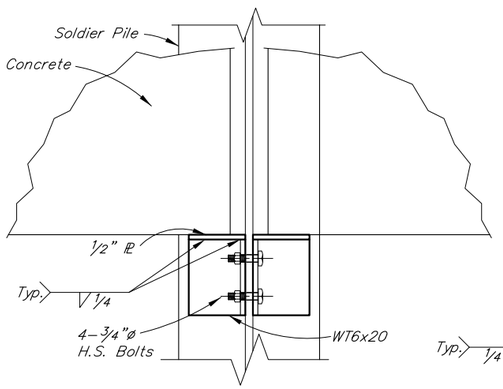

SECTION

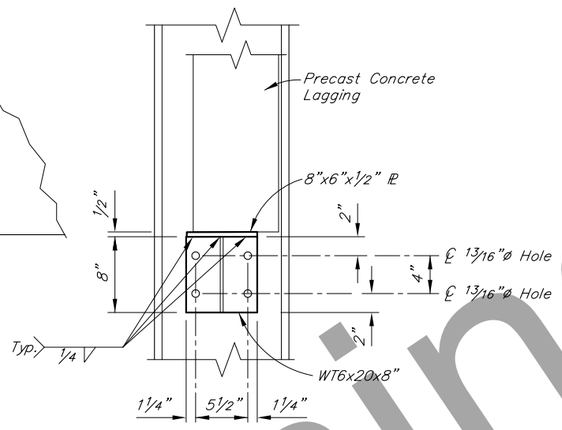

ELEVATION

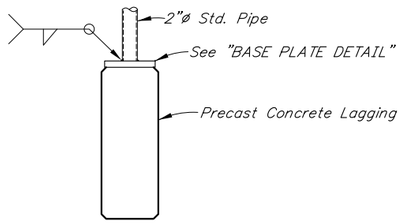

POST CONNECTION
No Scale

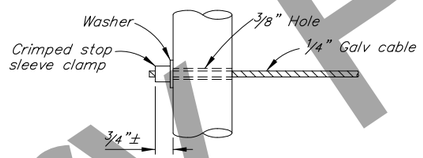

ALTERNATIVE DEAD END ANCHORAGE
No Scale

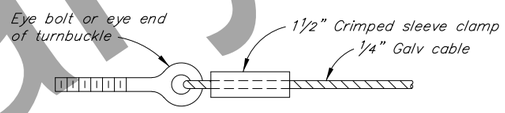

ALTERNATIVE CABLE CONNECTION
No Scale

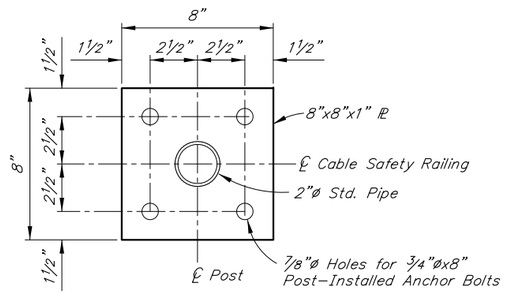

BASE PLATE DETAIL



LAGGING STOP DETAILS

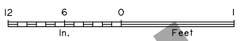

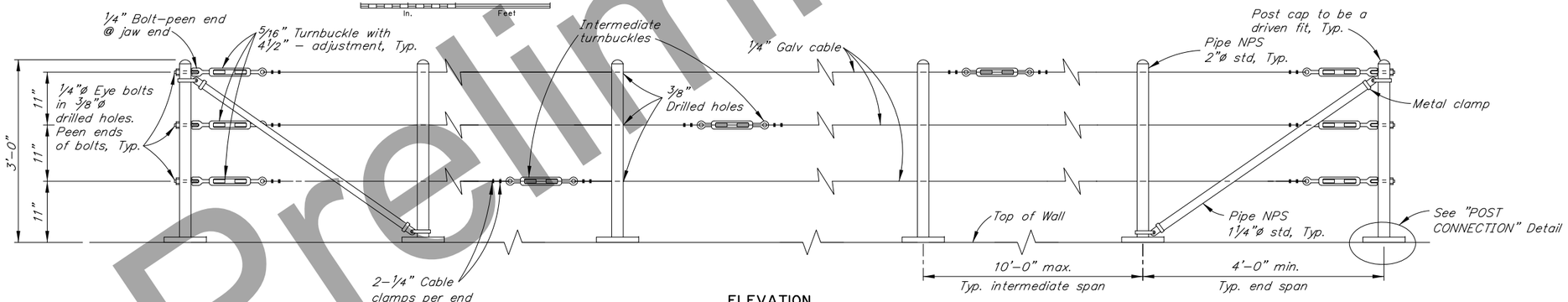

ELEVATION
No Scale

NOTES:

1. Place intermediate turnbuckles in adjacent spans.
2. Do not splice cable between intermediate turnbuckles and end posts.
3. Galvanize all posts, cable and hardware.
4. Install posts plumb.
5. Brace line posts horizontally and truss diagonally in both directions, at each end.
6. Center post in top of lagging.
7. Provide thimbles at all cable loops.
8. Use epoxy–coated reinforcing steel in coping.

Preliminary Plans

DESIGNED BY: Elmer Marx	CHECKED: Michaela Petersen		
DRAWN BY: Sam Sollie	CHECKED: Elmer Marx		
QUANTITIES BY: Elmer Marx	CHECKED: Michaela Petersen		

STATE OF ALASKA
DEPARTMENT OF TRANSPORTATION AND PUBLIC FACILITIES
BRIDGE SECTION
3132 Channel Drive
Juneau, Alaska 99801
907–465–2975

HESS CREEK BRIDGE

DALTON HIGHWAY

RETAINING WALL DETAILS

BRIDGE NO. 1213

DWG. NO. 7

R:\cad\1213\1213–7 Fri, Feb/25/22 02:11pm

STATE	PROJECT DESIGNATION	YEAR	SHEET NO.	TOTAL SHEETS
ALASKA	0652017/Z607350000	2022	N8	N25

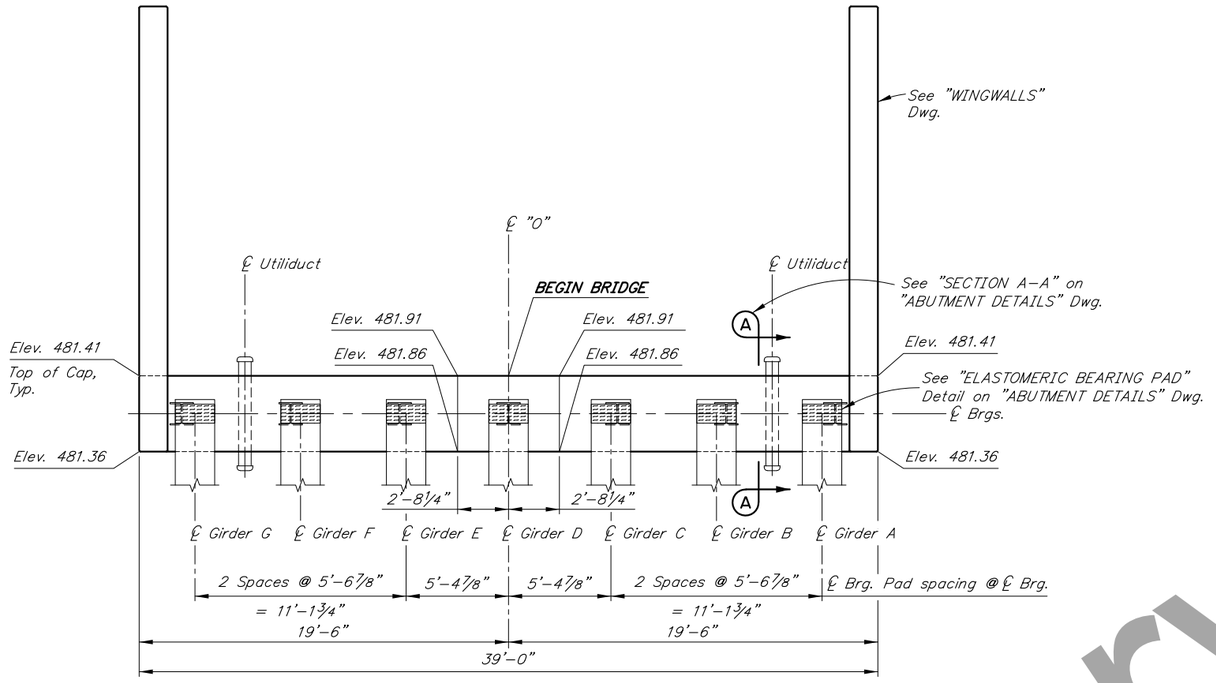

PLAN

12 0 4 8
In. Feet

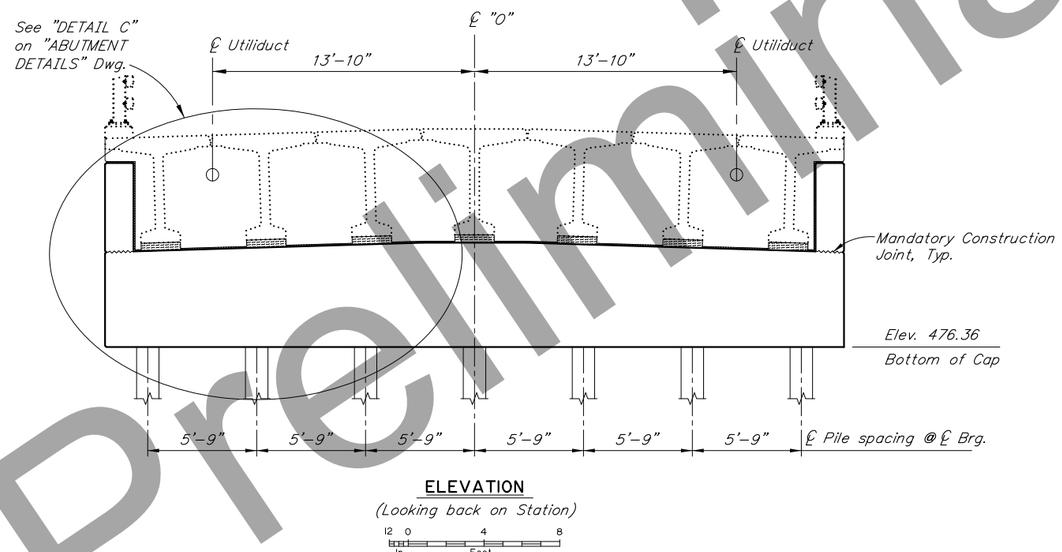

ELEVATION

(Looking back on Station)

12 0 4 8
In. Feet

REINFORCING STEEL - ABUTMENT I

MARK	NOTE	SIZE	NO.	LENGTH	TYPE	BENDING DIAGRAM
A401		4	124	VARIES	STIRRUP	
A501	E	5	36	18'–9"	STIRRUP	
A601	E	6	10	35'–6"	---	
A602	E,M	6	7	38'–8"	---	
A701	E	7	8	3'–0"	BENT	
A801		8	10	38'–8"	---	
A1001	H,M	10	14	38'–8"	HEADED	

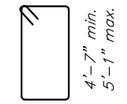

A401

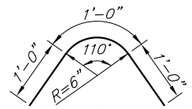

A701

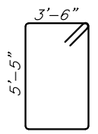

A501

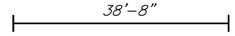

A1001

E – Epoxy-Coated
H – Headed reinforcing steel
M – Field adjust to match cross slope

Preliminary Plans

DESIGNED BY: Elmer Marx	CHECKED: Michaela Petersen		
DRAWN BY: Sam Sollie	CHECKED: Elmer Marx		
QUANTITIES BY: Elmer Marx	CHECKED: Michaela Petersen		

STATE OF ALASKA
DEPARTMENT OF TRANSPORTATION AND PUBLIC FACILITIES
BRIDGE SECTION
3132 Channel Drive
Juneau, Alaska 99801
907-465-2975

HESS CREEK BRIDGE

DALTON HIGHWAY

ABUTMENT 1

BRIDGE NO. 1213

DWG. NO. 8

R:\cad\1213\1213-1-8 Fri, Feb/25/22 02:29pm

STATE	PROJECT DESIGNATION	YEAR	SHEET NO.	TOTAL SHEETS
ALASKA	0652017/Z607350000	2022	N9	N25

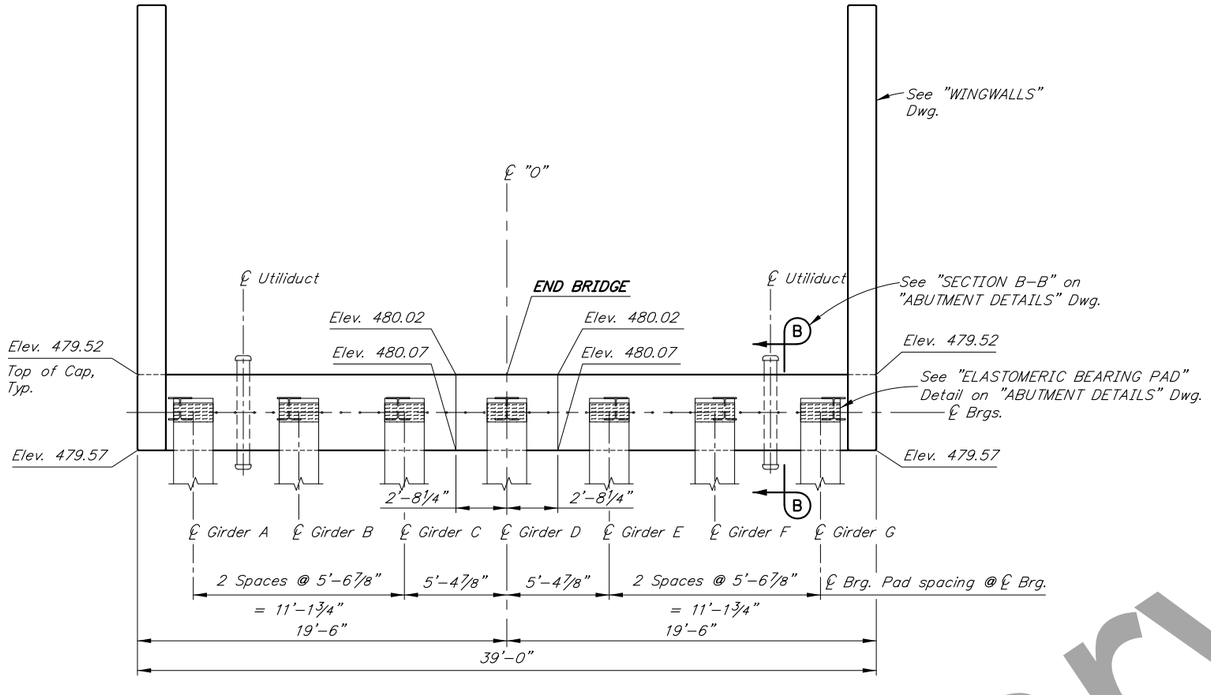

PLAN

12 0 4 8
In. Feet

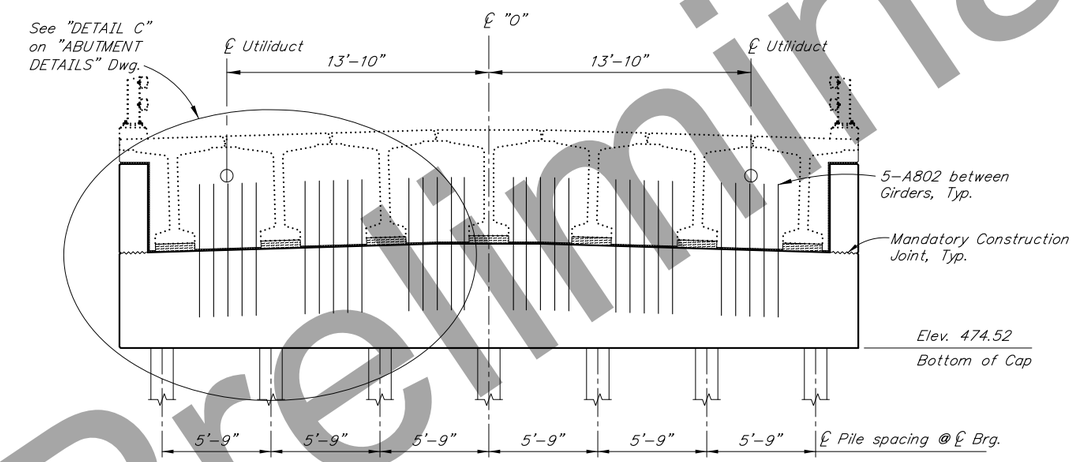

ELEVATION

12 0 4 8
In. Feet

REINFORCING STEEL - ABUTMENT 2

MARK	NOTE	SIZE	NO.	LENGTH	TYPE	BENDING DIAGRAM
A401		4	124	VARIES	STIRRUP	
A501	E	5	36	18'–9"	STIRRUP	
A601	E	6	10	35'–6"	---	
A602	E,M	6	7	38'–8"	---	
A701	E	7	8	3'–0"	BENT	
A801		8	10	38'–8"	---	
A802		8	30	7'–0"	---	
A1001	H,M	10	14	38'–8"	HEADED	

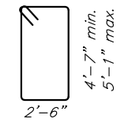

A401

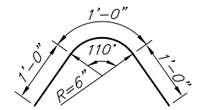

A701

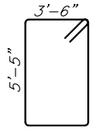

A501

38'–8"

A1001

E – Epoxy–Coated
H – Headed reinforcing steel
M – Field adjust to match cross slope

Preliminary Plans

DESIGNED BY: Elmer Marx	CHECKED: Michaela Petersen		
DRAWN BY: Sam Sollie	CHECKED: Elmer Marx		
QUANTITIES BY: Elmer Marx	CHECKED: Michaela Petersen		

STATE OF ALASKA
DEPARTMENT OF TRANSPORTATION AND PUBLIC FACILITIES
BRIDGE SECTION
3132 Channel Drive
Juneau, Alaska 99801
907–465–2975

HESS CREEK BRIDGE

DALTON HIGHWAY

ABUTMENT 2

BRIDGE NO. 1213

DWG. NO. 9

R:\cad\1213\1213–1–9 Fri, Feb/25/22 02:29pm

STATE	PROJECT DESIGNATION	YEAR	SHEET NO.	TOTAL SHEETS
ALASKA	0652017/Z607350000	2022	N10	N25

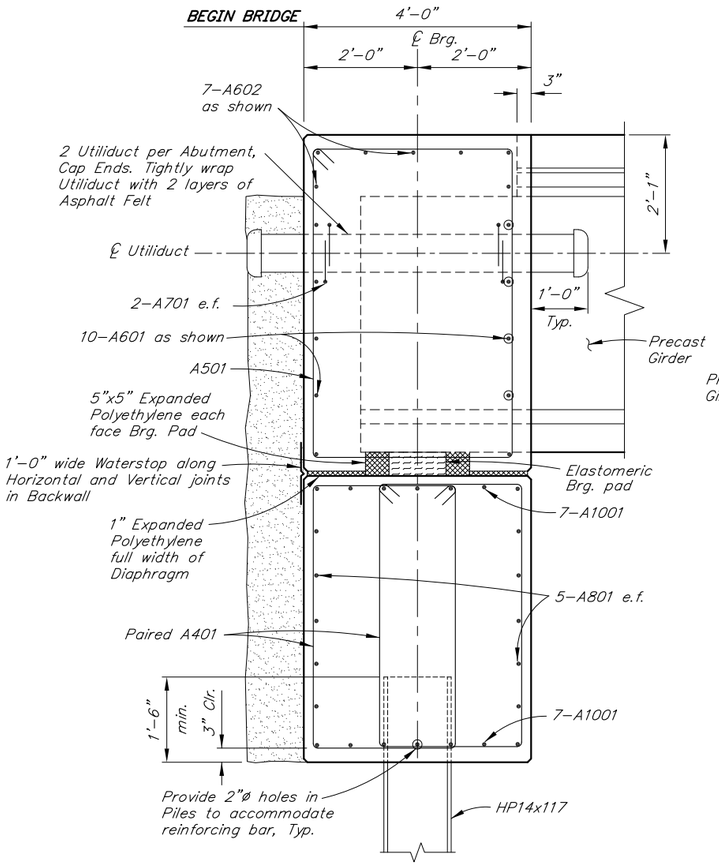

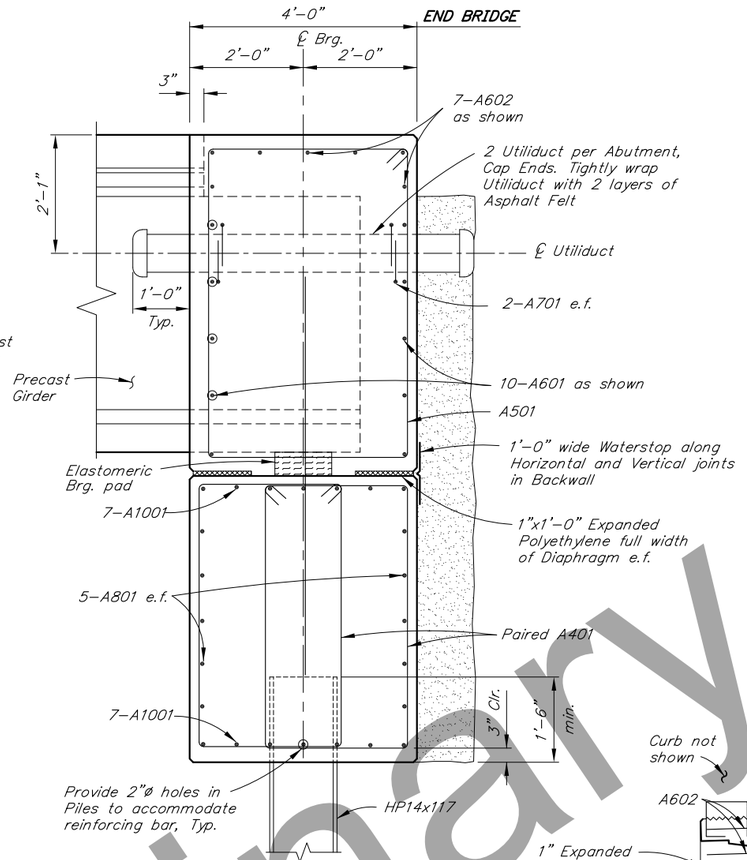

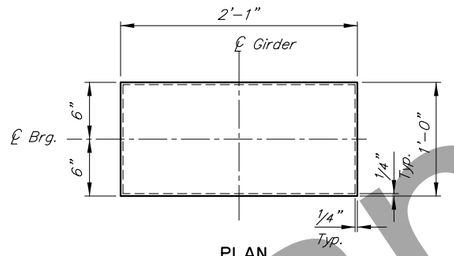

ELASTOMERIC BEARING PAD

Grade 5
Max. Dead Load = 118 k
Max. Live Load = 78 k
Shear Modulus = 115 psi

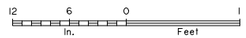

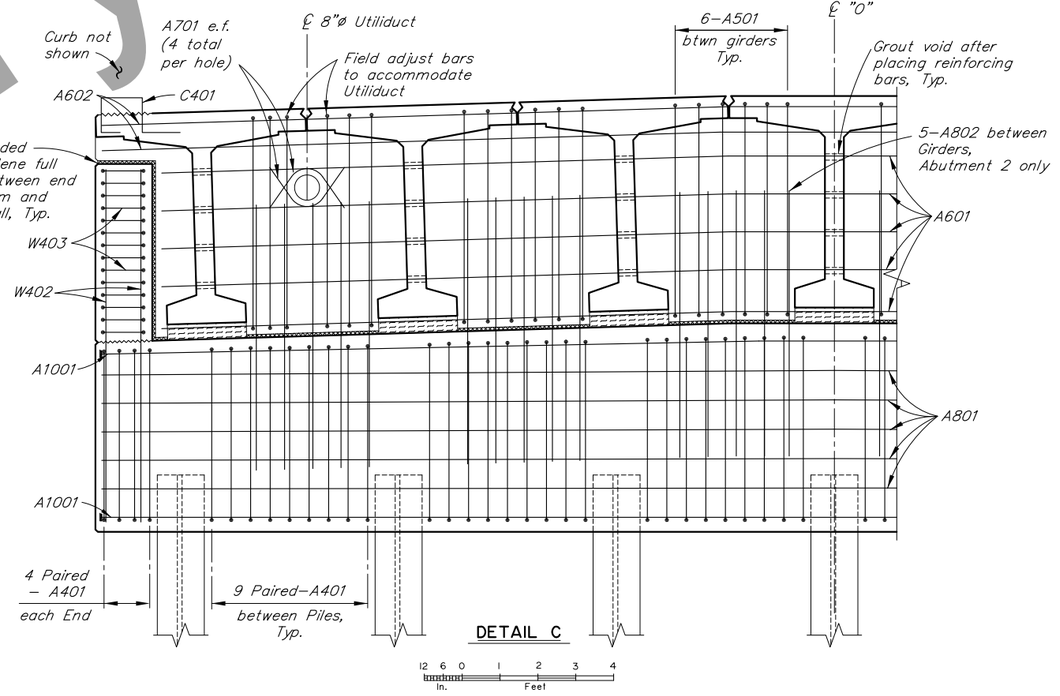



SECTION A-A

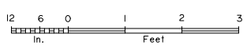

SECTION B-B

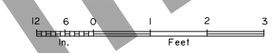

Preliminary Plans

DESIGNED BY: Elmer Marx	CHECKED: Michaela Petersen		
DRAWN BY: Sam Sollie	CHECKED: Elmer Marx		
QUANTITIES BY: Elmer Marx	CHECKED: Michaela Petersen		

STATE OF ALASKA
DEPARTMENT OF TRANSPORTATION AND PUBLIC FACILITIES
BRIDGE SECTION
3132 Channel Drive
Juneau, Alaska 99801
907-465-2975

HESS CREEK BRIDGE

DALTON HIGHWAY

ABUTMENT DETAILS

BRIDGE NO. 1213

DWG. NO. 10

R:\cad\1213\1213-1-10 Fri, Feb/25/22 02:29pm

STATE	PROJECT DESIGNATION	YEAR	SHEET NO.	TOTAL SHEETS
ALASKA	0652017/Z607350000	2022	N11	N25

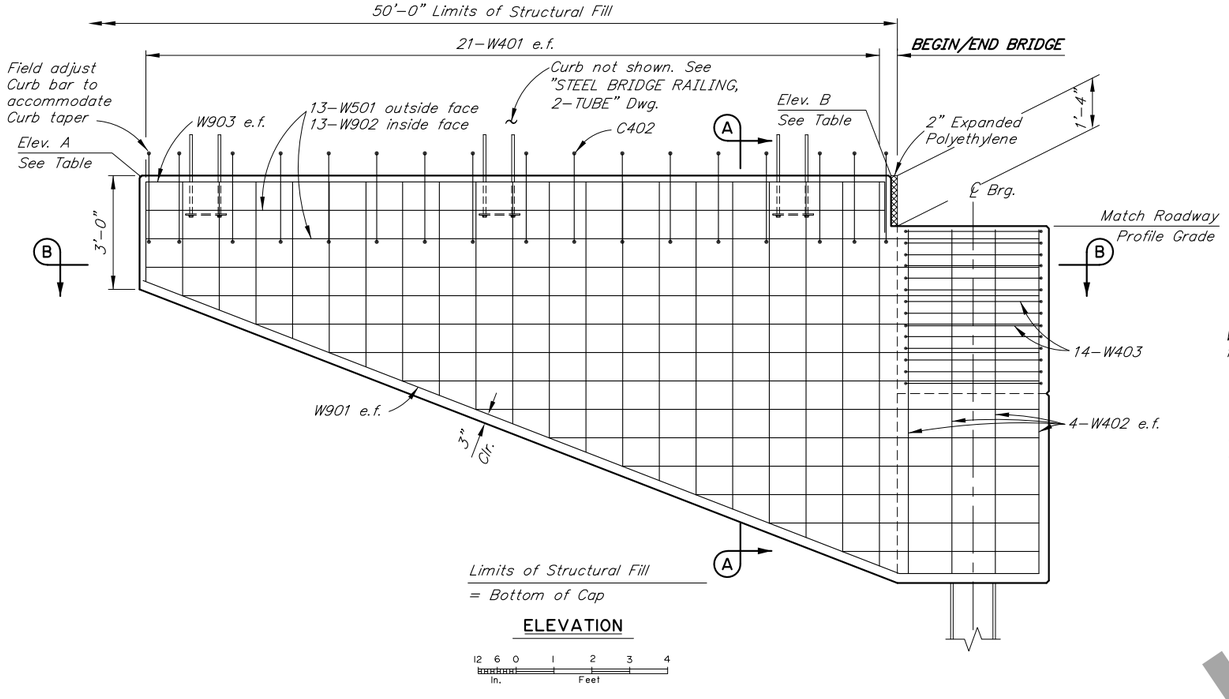

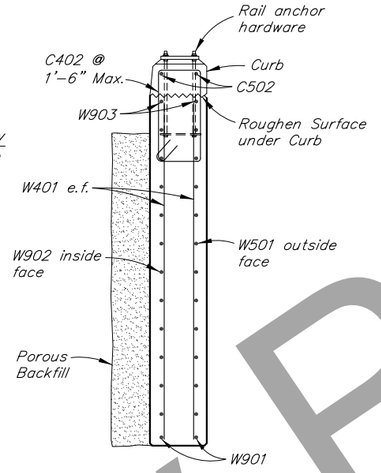

REINFORCING STEEL - ONE ABUTMENT

MARK	NOTE	SIZE	NO.	LENGTH	TYPE	BENDING DIAGRAM
W401		4	84	VARIES	---	
W402		4	16	9'-3"	---	
W403		4	28	10'-5"	STIRRUP	
W501		5	26	VARIES	---	
W901		9	4	25'-2"	BENT	
W902		9	26	VARIES	---	
W903		9	4	21'-6"	BENT	
C402	E	4	34	7'-7"	STIRRUP	
C502	E	5	4	19'-6"	---	

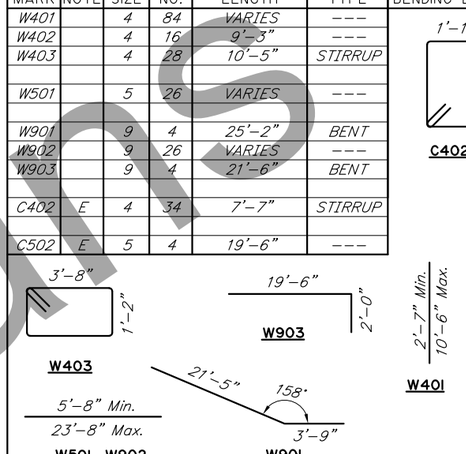

E = Epoxy-Coated

TOP OF WINGWALL ELEVATION TABLE (FT)		
LOCATION	A	B
ABUTMENT 1	487.71	487.46
ABUTMENT 2	485.31	485.56

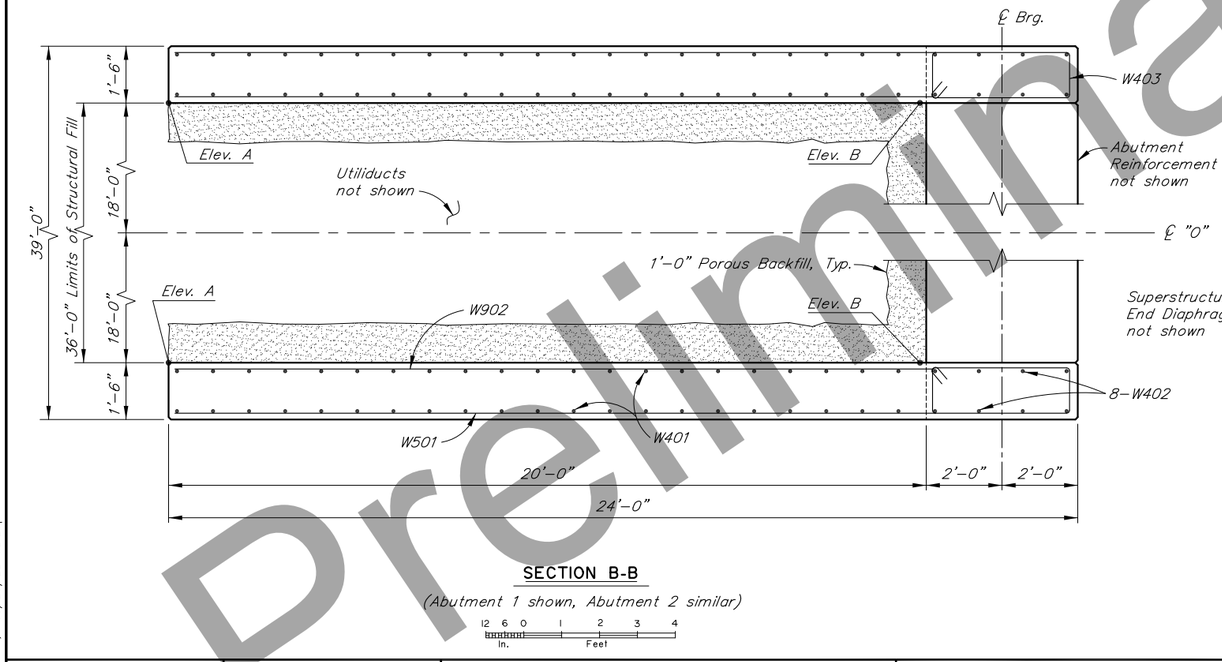

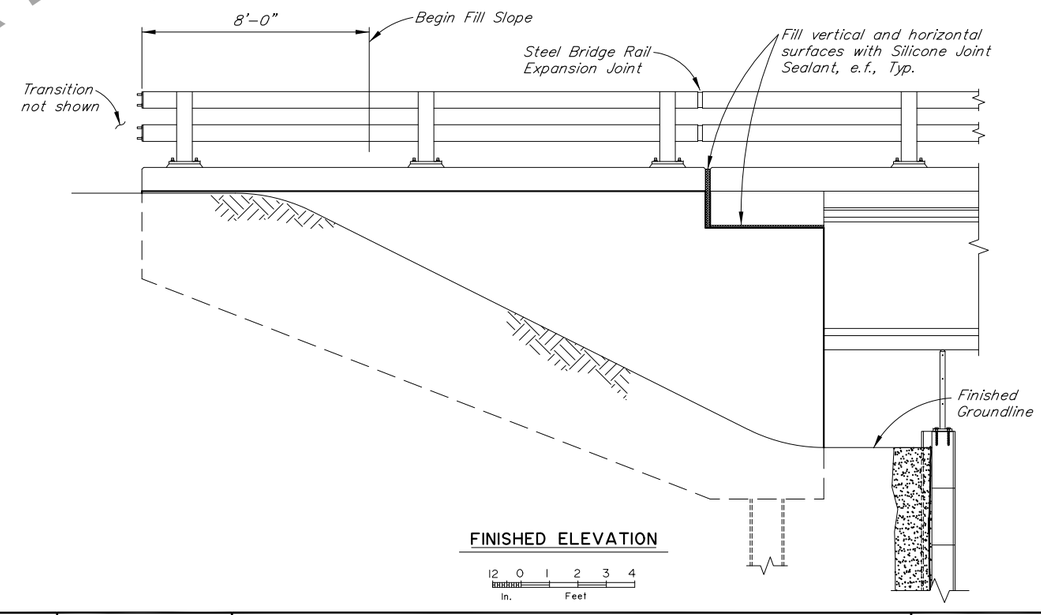

DESIGNED BY:	Elmer Marx	CHECKED:	Michaela Petersen
DRAWN BY:	Sam Sollie	CHECKED:	Elmer Marx
QUANTITIES BY:	Elmer Marx	CHECKED:	Michaela Petersen

STATE OF ALASKA
DEPARTMENT OF TRANSPORTATION AND PUBLIC FACILITIES
BRIDGE SECTION
3132 Channel Drive
Juneau, Alaska 99801
907-465-2975

HESS CREEK BRIDGE

DALTON HIGHWAY

WINGWALLS

BRIDGE NO. 1213

DWG. NO. 11

R:\cad\1213\1213-1-11 Fri, Feb/25/22 02:29pm

Preliminary Plans

STATE	PROJECT DESIGNATION	YEAR	SHEET NO.	TOTAL SHEETS
ALASKA	0652017/Z607350000	2022	N12	N25

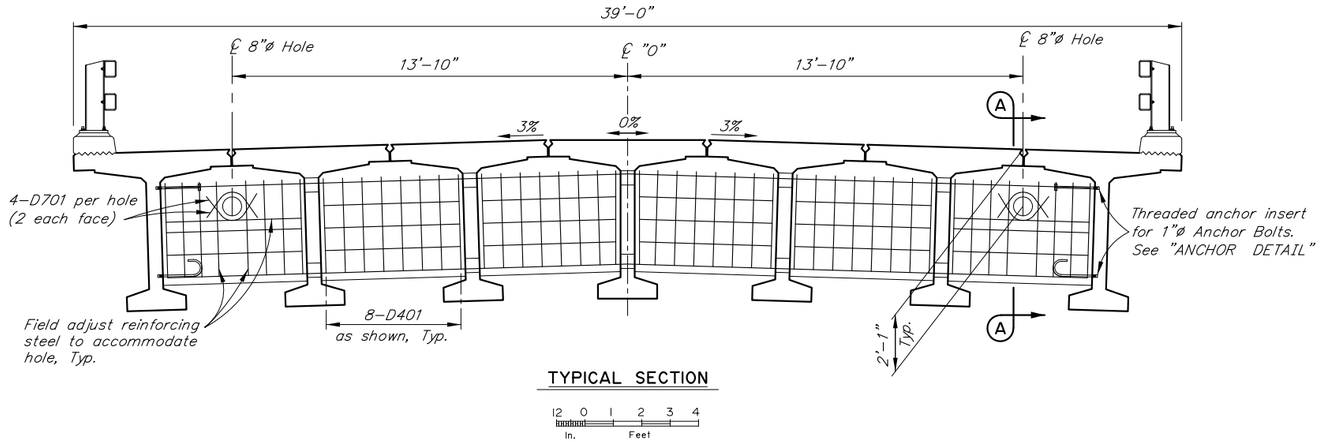

TYPICAL SECTION

12 0 1 2 3 4
In. Feet

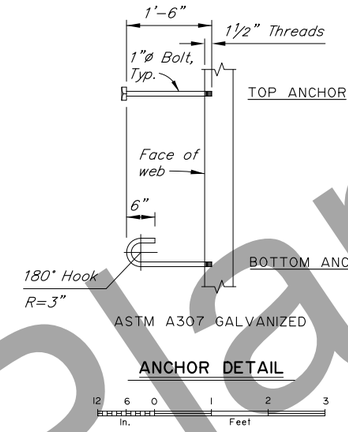

ANCHOR DETAIL

12 6 0 1 2 3
In. Feet

REINFORCING STEEL

MARK	NOTE	SIZE	NO.	LENGTH	TYPE
D401	E	4	48	8'-1"	STIRRUP
D501	E	5	36	4'-7"	---
D601	E,M	6	4	32'-6"	---
D701	E	7	8	3'-0"	BENT

BENDING DIAGRAM

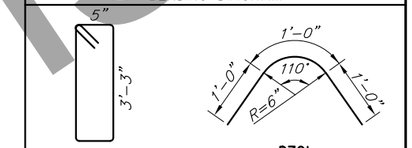

E – Epoxy-Coated
M – Field adjust to match cross slope

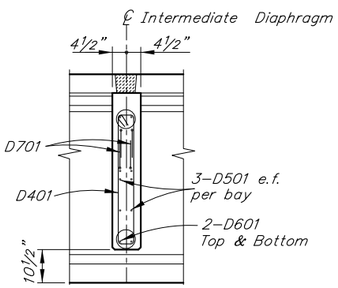

SECTION A-A

12 6 0 1 2 3 4
In. Feet

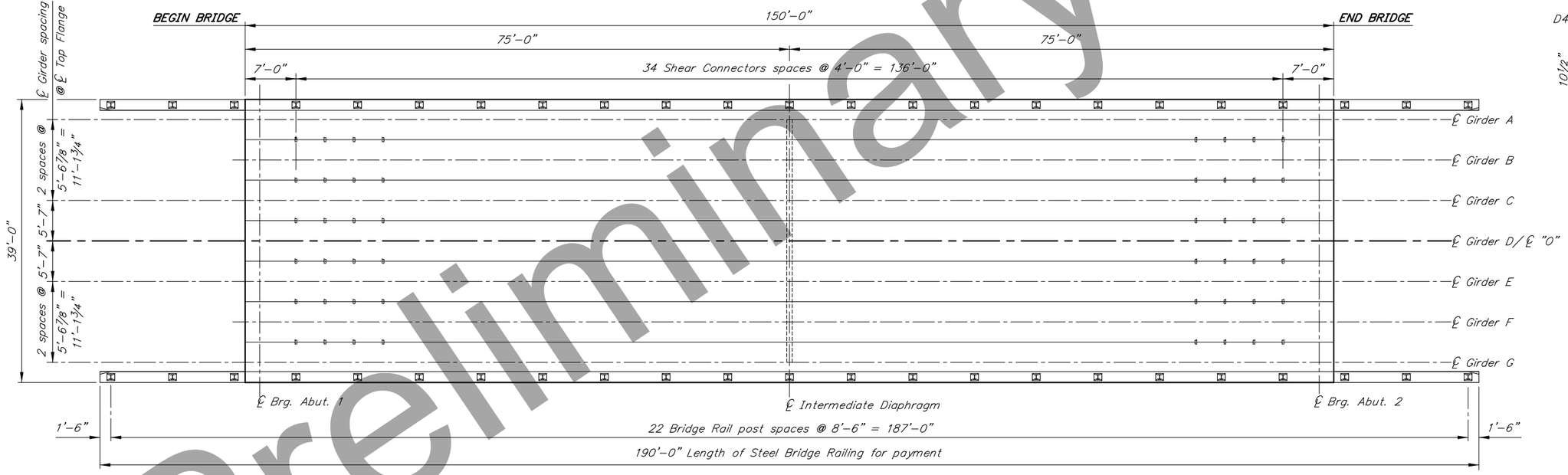

FRAMING PLAN

12 0 4 8 12
In. Feet

DESIGNED BY: Elmer Marx	CHECKED: Michaela Petersen		
DRAWN BY: Sam Sollie	CHECKED: Elmer Marx		
QUANTITIES BY: Elmer Marx	CHECKED: Michaela Petersen		

STATE OF ALASKA
DEPARTMENT OF TRANSPORTATION AND PUBLIC FACILITIES
BRIDGE SECTION
3132 Channel Drive
Juneau, Alaska 99801
907-465-2975

HESS CREEK BRIDGE

DALTON HIGHWAY

FRAMING PLAN AND TYPICAL SECTION

BRIDGE NO. 1213
DWG. NO. 12

Preliminary Plans

R:\cad\1213\1213-1-12 Fri, Feb/25/22 02:30pm

STATE	PROJECT DESIGNATION	YEAR	SHEET NO.	TOTAL SHEETS
ALASKA	0652017/Z607350000	2022	N13	N25

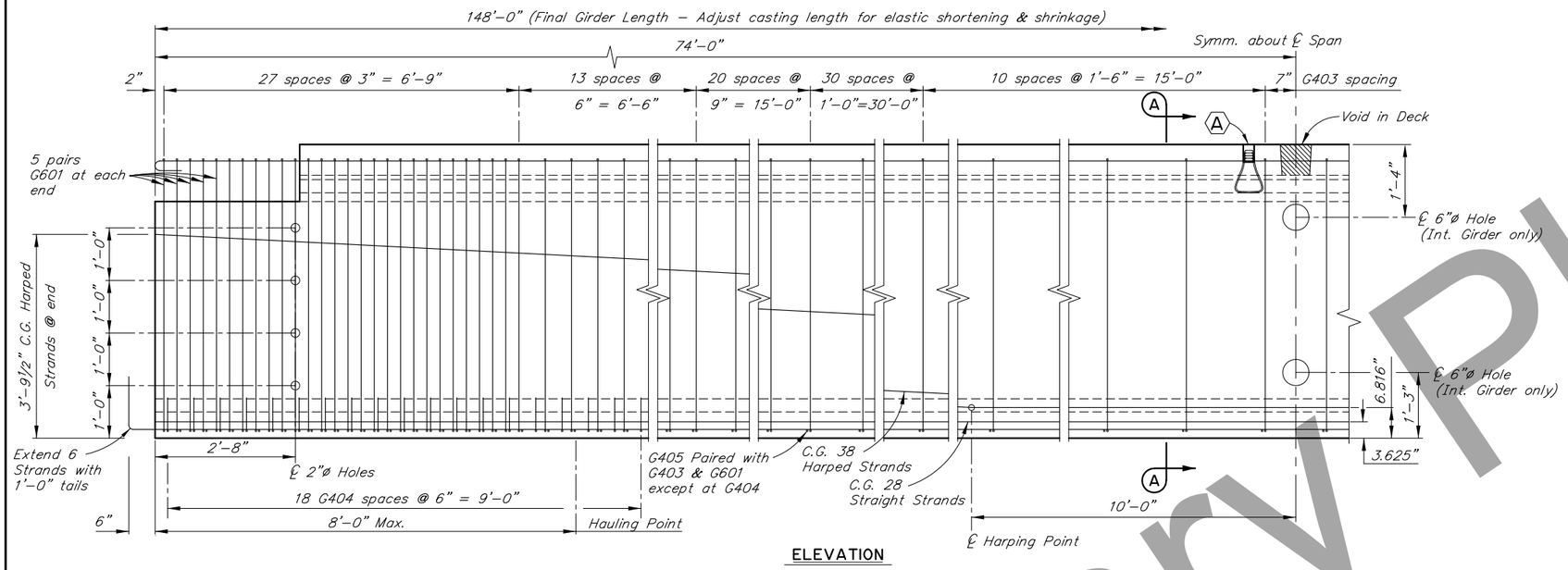

ELEVATION

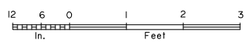

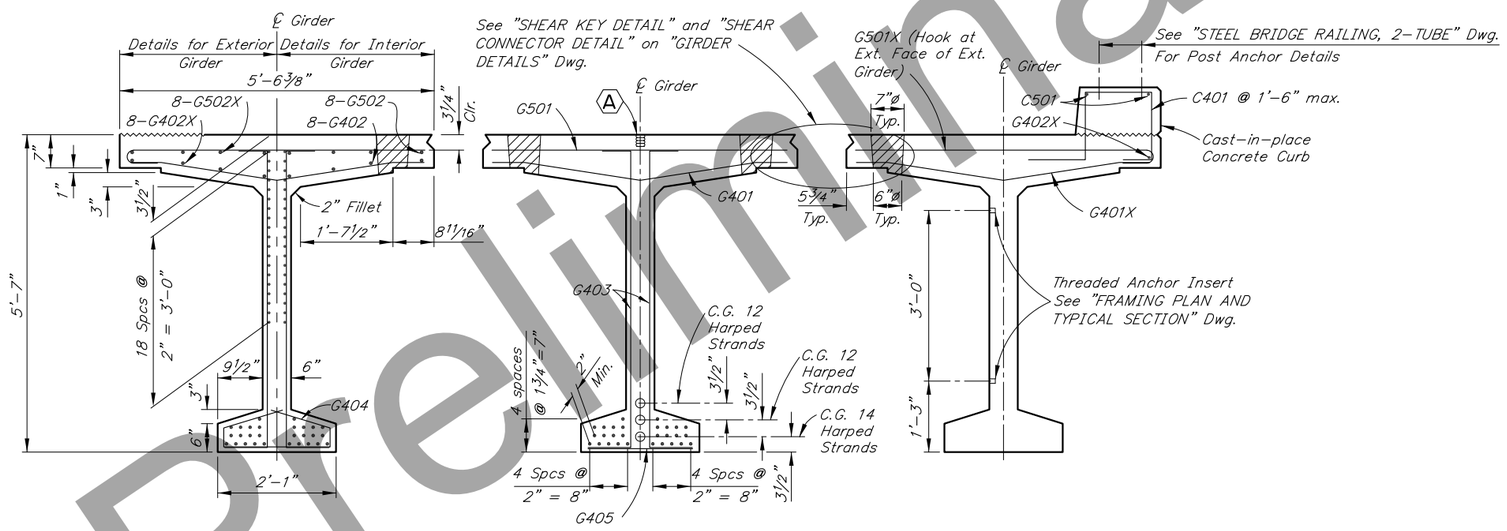

END VIEW

SECTION A-A

EXTERIOR GIRDER NEAR MID SPAN
(Unrelated Reinforcement not shown)

REINFORCING STEEL - ONE GIRDER

MARK	NOTE	SIZE	NO.	LENGTH	TYPE	BENDING DIAGRAM
G401	E	4	214	5'-3"	BENT	
G401X	E,X	4	245	5'-3"	BENT	
G402	E,S	4	8	142'-4"	---	
G402X	E,S,X	4	8	142'-4"	---	
G403	E	4	384	6'-8"	BENT	
G404	E	4	38	4'-7½"	BENT	
G405	E	4	164	1'-10"	---	
G501	E	5	214	5'-1"	---	
G501X	E,X	5	245	5'-9"	BENT	
G502	E,S	5	8	149'-2"	BENT	
G502X	E,S,X	5	8	149'-2"	BENT	
G601	E	6	20	6'-8"	BENT	
C401	E,L,X	4	101	4'-5"	BENT	
C501	E,S,X	5	2	149'-8"	---	

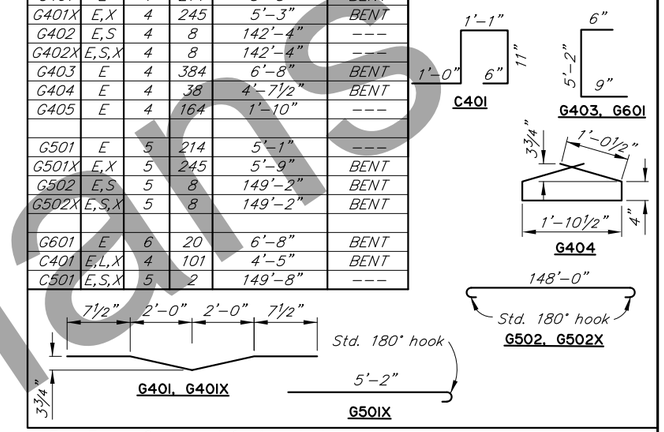

E – Epoxy-Coated reinforcing steel
L – Ship 8 loose per exterior girder
S – Splices permitted. Length does not include splices. Minimum lap splice length for splices shall be 2'-0" for #4 bars and 2'-6" for #5 bars
X – Exterior girders only

GIRDER NOTES:

Class P Concrete: at Stress Transfer.....f'ci = 6,750 psi
at 28 Days.....f'c = 8,000 psi

½"ø low-relaxation prestressing strands with an ultimate strength of 270 ksi and a cross sectional area of 0.153 in².

Steel stresses: Pretensioning – Jacking Stress 189 ksi
After initial losses 170 ksi
After all losses 141 ksi

One inch clear cover on reinforcing steel unless otherwise noted.

See "FRAMING PLAN AND TYPICAL SECTION" Dwg. for Shear Connector spacing.

Deflect forms to compensate for camber and roadway profile grade.

Galvanize structural steel embedded in girders except for shear connectors.

(A) 1"X1'-0" Coil Anchor Insert for vertical adjustment of girders. Recess 2". Prevent concrete from filling hole.

Omit Shear Key, Shear Key Connector and Deck Void in exterior face of exterior girders.

Cast ends of girders plumb with respect to roadway grade. Install web holes and web anchor inserts parallel to ℄ bearing.

Finish top flange with heavy broom finish. Roughen the surface under the Curb.

Preliminary Plans

DESIGNED BY: Elmer Marx	CHECKED: Michaela Petersen		
DRAWN BY: Sam Sollie	CHECKED: Elmer Marx		
QUANTITIES BY: Elmer Marx	CHECKED: Michaela Petersen		

STATE OF ALASKA
DEPARTMENT OF TRANSPORTATION AND PUBLIC FACILITIES
BRIDGE SECTION
3132 Channel Drive
Juneau, Alaska 99801
907-465-2975

HESS CREEK BRIDGE

DALTON HIGHWAY

GIRDERS

BRIDGE NO. 1213

DWG. NO. 13

R:\cad\1213\1213-1-13 Fri, Feb/25/22 02:30pm

STATE	PROJECT DESIGNATION	YEAR	SHEET NO.	TOTAL SHEETS
ALASKA	0652017/Z607350000	2022	N14	N25

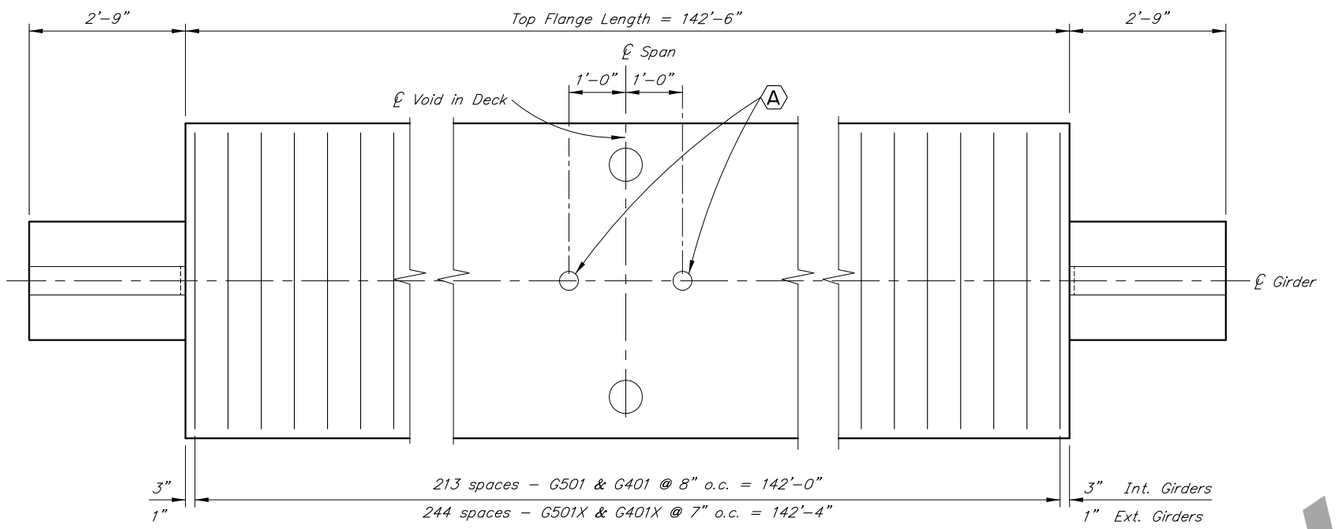

PLAN
No Scale

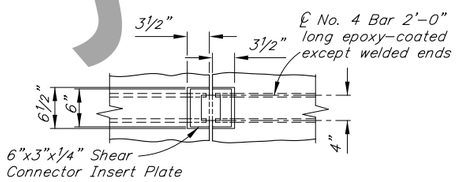

VIEW A-A



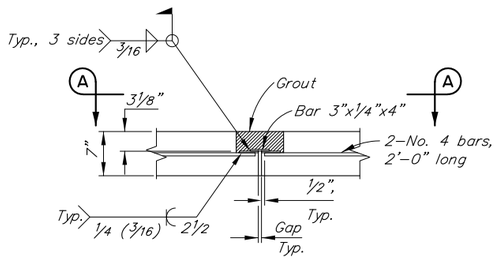

SHEAR CONNECTOR DETAIL



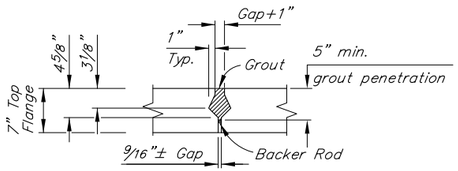

SHEAR KEY DETAIL



Preliminary Plans

DESIGNED BY: Elmer Marx	CHECKED: Michaela Petersen		
DRAWN BY: Sam Sollie	CHECKED: Elmer Marx		
QUANTITIES BY: Elmer Marx	CHECKED: Michaela Petersen		

STATE OF ALASKA
DEPARTMENT OF TRANSPORTATION AND PUBLIC FACILITIES
BRIDGE SECTION
3132 Channel Drive
Juneau, Alaska 99801
907-465-2975

HESS CREEK BRIDGE

DALTON HIGHWAY

GIRDER DETAILS

BRIDGE NO. 1213

DWG. NO. 14

R:\cad\1213\1213-1-14 Fri, Feb/25/22 02:30pm

STATE	PROJECT DESIGNATION	YEAR	SHEET NO.	TOTAL SHEETS
ALASKA	0652017/Z607350000	2022	N15	N25

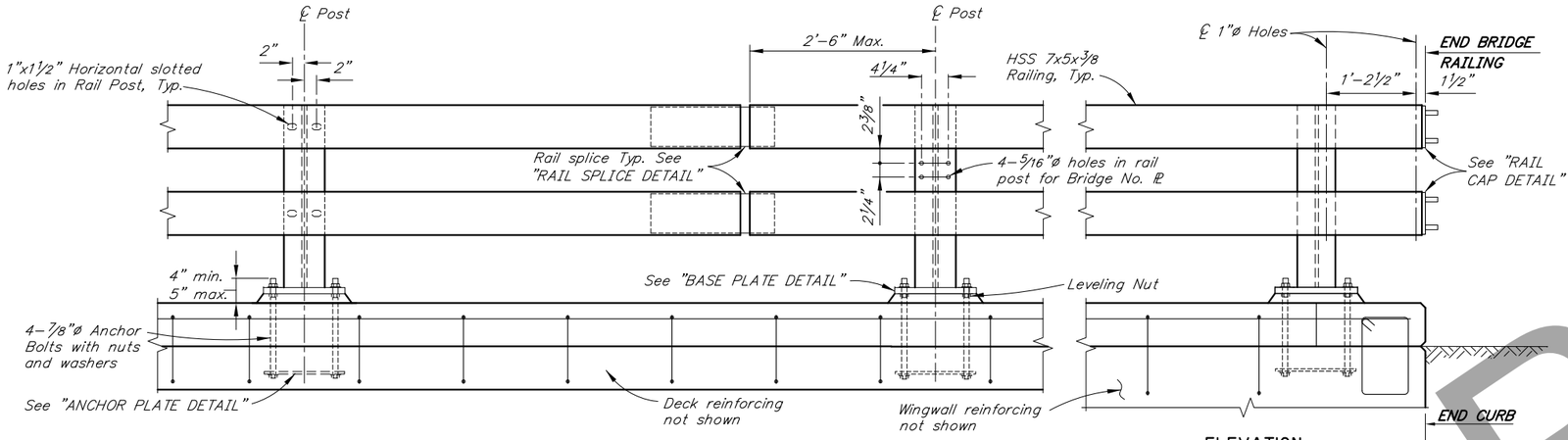

ELEVATION

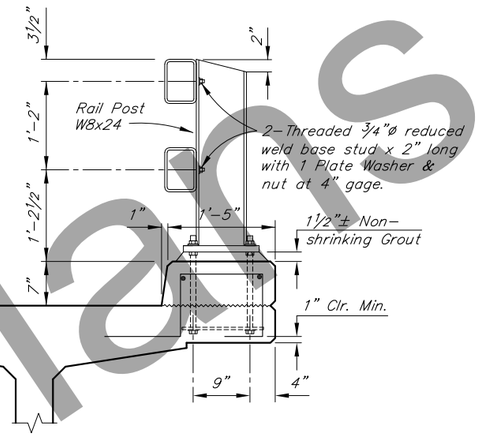

TYPICAL SECTION

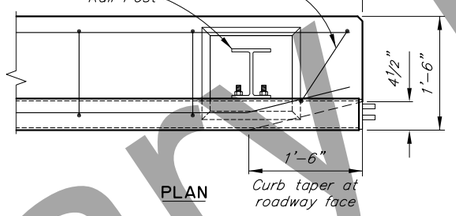

PLAN

TYPICAL POST ELEVATION



EXPANSION JOINT



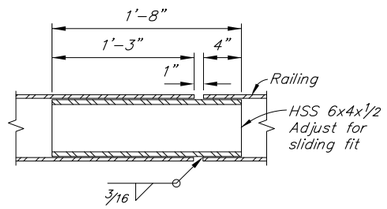

RAIL SPLICE DETAIL



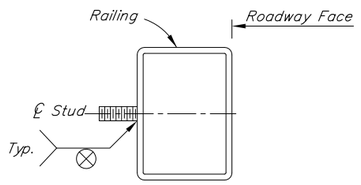

RAILING STUD DETAIL



END POST DETAIL



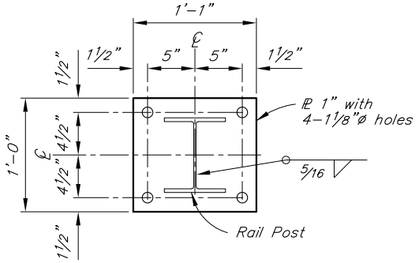

BASE PLATE DETAIL

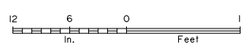

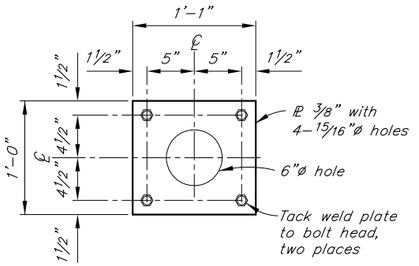

ANCHOR PLATE DETAIL

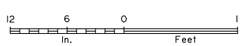

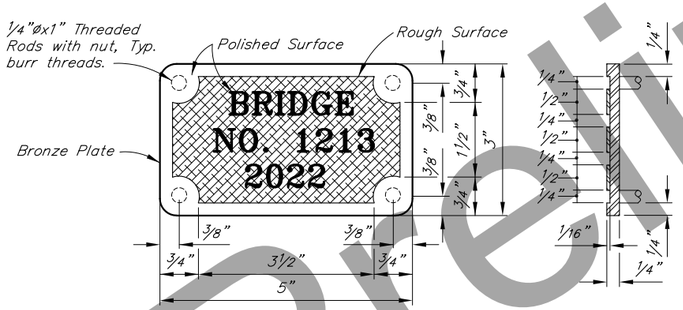

BRONZE BRIDGE NO. PLATE

No Scale

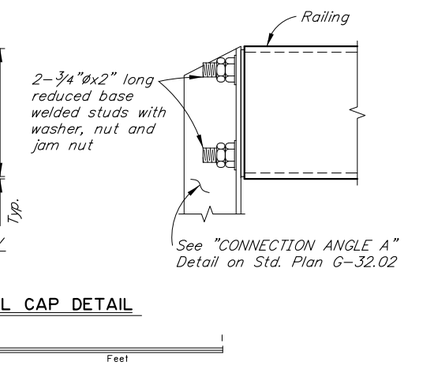

RAIL CAP DETAIL

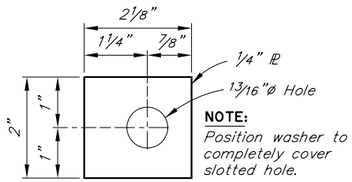

NOTE: Position washer to completely cover slotted hole.

PLATE WASHER

No Scale

NOTES

1. Locate bridge number plates on right hand side of approaching traffic near each end as shown on "GENERAL LAYOUT" Dwg. (2 total).
2. Furnish bridge number plates. Use "Century" type style lettering. Use studs and nuts that conform to UNS C65100 or C65500. Braze ¼"ø threaded rod to back of plate with nut – 4 required. Use tamper proof nuts.
3. Provide railing expansion joints at 50'-0" maximum intervals. Railing shall be continuous over 2 posts minimum. Railing expansion joints are required in rail panels that span bridge expansion joints.
4. Install grout in a single placement.
5. See "FRAMING PLAN AND TYPICAL SECTION" Dwg. for rail post spacing.
6. Install bridge rail posts plumb.
7. Adjust reinforcing to accommodate curb taper.
8. See Std. Plan G-32.02 for "MASH BRIDGE RAIL THRIE BEAM TRANSITION" Dwg.

Preliminary Plans

DESIGNED BY: Elmer Marx	CHECKED: Michaela Petersen		
DRAWN BY: Sam Sollie	CHECKED: Elmer Marx		
QUANTITIES BY: Elmer Marx	CHECKED: Michaela Petersen		

STATE OF ALASKA
DEPARTMENT OF TRANSPORTATION AND PUBLIC FACILITIES
BRIDGE SECTION
3132 Channel Drive
Juneau, Alaska 99801
907-465-2975

HESS CREEK BRIDGE

DALTON HIGHWAY

STEEL BRIDGE RAILING, 2-TUBE

BRIDGE NO. 1213

DWG. NO. 15

R:\cad\1213\1213-1-15 Fri, Feb/25/22 02:30pm

STATE	PROJECT DESIGNATION	YEAR	SHEET NO.	TOTAL SHEETS
ALASKA	Z607350000	2021	N16	N25

LEGEND

- TEST HOLE
- PENETROMETER

R.O.W. R.O.W. R.O.W.

460 470 480

℄ Brg. Abut. 1 Sta. 1289+93.00 N42°13'02.24"E

℄ Brg. Abut. 2 Sta. 1291+39.00 N42°13'02.24"E

1288+00 1289+00 1290+00 1291+00 1292+00 ℄ Dalton Highway

N47°46'57.76"W

TH 1 TH 2 PEN 3 TH 4 TH 5 PEN 6 TH 7 TH 8

HESS CREEK

Approx. O.H.W. Approx. O.H.W.

0 20 40 feet

TEST HOLE AND PENETROMETER LOCATIONS				
TEST HOLE / PENETROMETER	STATION	OFFSET	DEPTH	LOCATION
TH 1	1289+39	50' Rt	75'	NEW APPROACH 1
TH 2	1289+83.5	7' Lt	132.5'	EXISTING ABUTMENT 1
PEN 3	1289+83.5	7' Rt	64.5'	EXISTING ABUTMENT 1
TH 4	1290+00	57' Rt	149.3'	NEW ABUTMENT 1
TH 5	1291+43	8.1' Lt	149'	EXISTING ABUTMENT 2
PEN 6	1291+43	8.5' Rt	68.7'	EXISTING ABUTMENT 2
TH 7	1291+52	60' Rt	139.5'	NEW ABUTMENT 2
TH 8	1292+10	60' Rt	75'	NEW ABUTMENT 2

Preliminary Plans

DESIGNED BY: D.Hemstreet	CHECKED: Engineer		
DRAWN BY: R.Angell	CHECKED: D.Hemstreet		
QUANTITIES BY: Engineer	CHECKED: Engineer		

STATE OF ALASKA
DEPARTMENT OF TRANSPORTATION AND PUBLIC FACILITIES
STATEWIDE MATERIALS

STATE OF ALASKA 49TH — David A. Hemstreet No. CE 9800 — REGISTERED PROFESSIONAL ENGINEER

HESS CREEK

DALTON HWY MP 18-37 RECONSTRUCTION

TEST HOLE & PENETROMETER LOCATION

BRIDGE NO. 1213

DWG. NO. 16

H:\Projects\Dalton_Hwy\60735_Dalton_18_37\7 Eng Support\5 Bridge\Drafting\1213_GEO_-1 LOC Aug 25, 2021 - 9:54am

STATE	PROJECT DESIGNATION	YEAR	SHEET NO.	TOTAL SHEETS
ALASKA	Z607350000	2021	N17	N25

TYPICAL TEST HOLE LOG

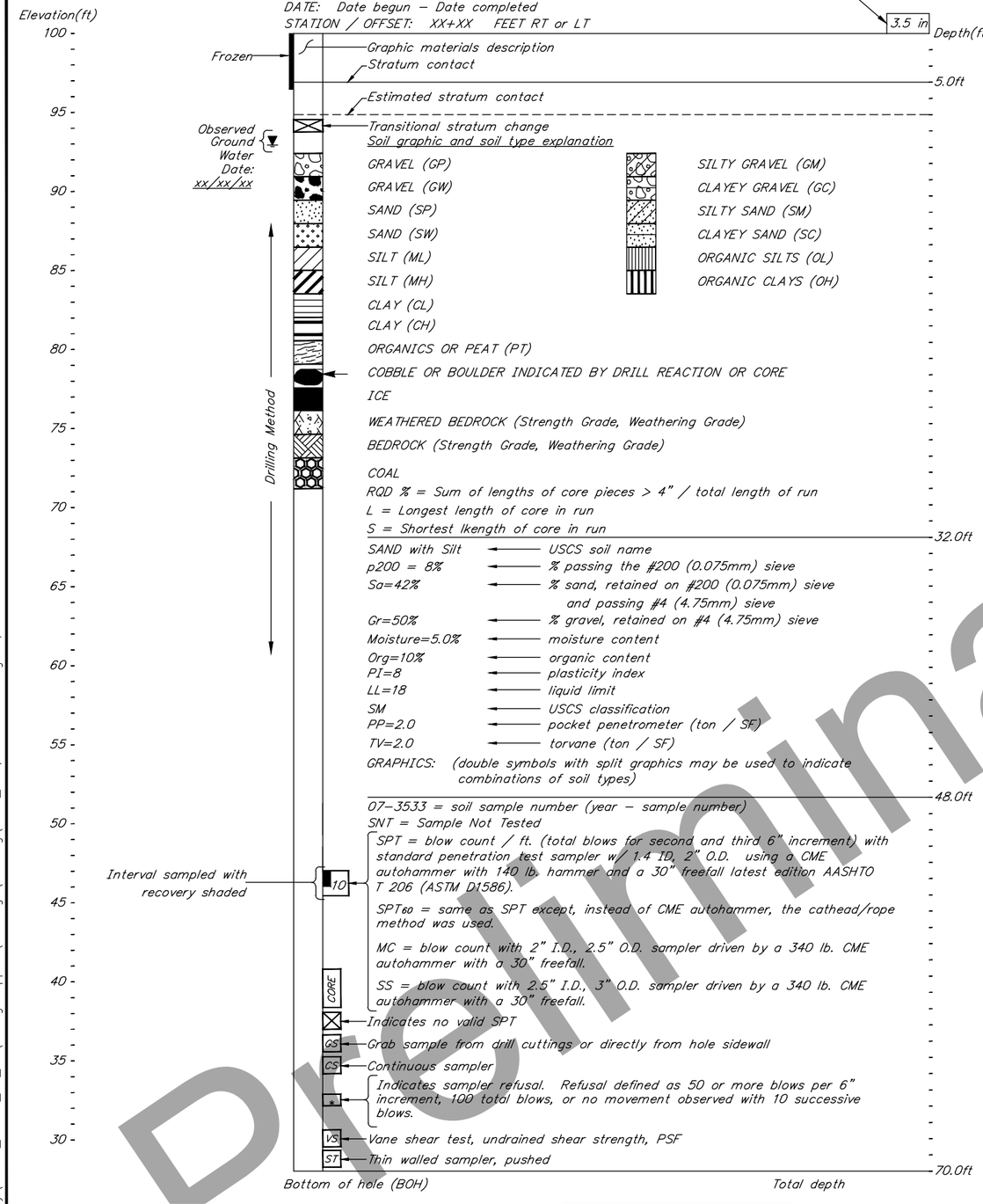

NOTES:

1) The test hole logs depicted graphically in these drawings are distillations of the original field logs, based on post-field investigation review and analysis. These drafted logs include changes made to field descriptions based upon laboratory test data, review and analysis. Detailed field observations of rock and soil sampled during the drilling program are not reproduced in the drafted logs.
2) Description of soils follows Alaska Geotechnical Procedures manual. Classification of soils follows Unified Soil Classification System (ASTM D2487).
3) The test hole logs from these sheets are an integral part of the Foundation Geology Report. See Construction Contract Bid Documents – invitation to bid/notice to bidders. Important information about the test hole logs and the foundation investigation is contained in the report. The test hole logs are not severable from and cannot be completely and correctly interpreted without reference to the Foundation Geology Report.

TYPICAL PENETROMETER TEST LOG

DATE: Date begun – Date completed
STATION / OFFSET: XX+XX / RT or LT (feet)

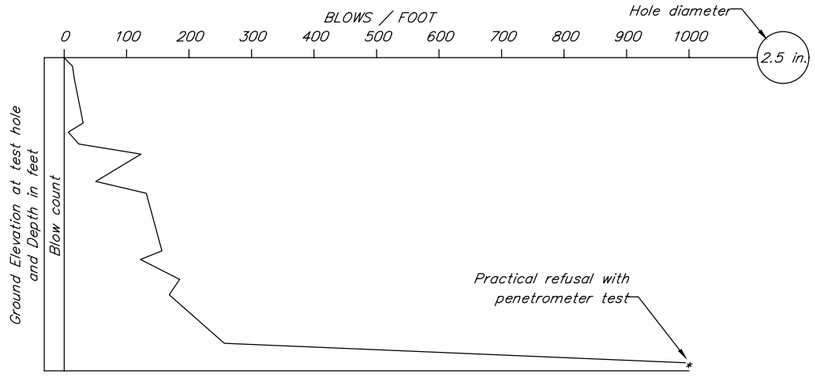

Bottom of hole (BOH)

NOTES:
Penetrometer W/2.5" O.D., with a CME AUTOMATIC Hammer using a 340 lb. weight and a 30" freefall

DESIGNED BY: D.Hemstreet	CHECKED: Engineer		
DRAWN BY: R.Angell	CHECKED: D.Hemstreet		
QUANTITIES BY: Engineer	CHECKED: Engineer		

STATE OF ALASKA
DEPARTMENT OF TRANSPORTATION AND PUBLIC FACILITIES
STATEWIDE MATERIALS

STATE OF ALASKA 49TH
David A. Hemstreet
No. CE 9800
REGISTERED PROFESSIONAL ENGINEER

HESS CREEK

DALTON HWY MP 18-37 RECONSTRUCTION

TEST HOLE & PENETROMETER LEGEND

BRIDGE NO. 1213
DWG. NO. 17

H:\Projects\Dalton_Hwy\60735_Dalton_18_37\7 Eng Support\5 Bridge\Drafting\1213_GEO_-2 TYP Aug 25, 2021 - 9:54am

Preliminary Plans

STATE	PROJECT DESIGNATION	YEAR	SHEET NO.	TOTAL SHEETS
ALASKA	Z607350000	2021	N18	N25

TH I

Date: 2/24/21 – 2/24/21
Station: 1289+39 Offset: 50RT

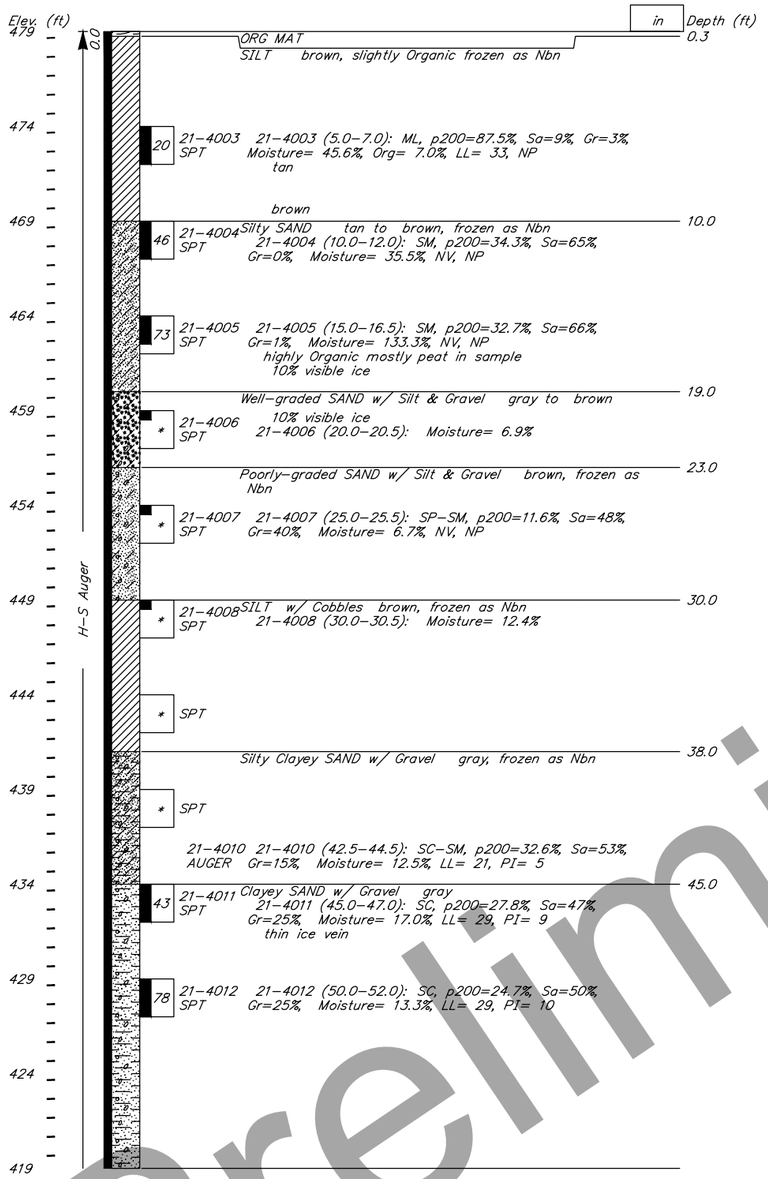

TH I (cont.)

Date: 2/24/21 – 2/24/21
Station: 1289+39 Offset: 50RT

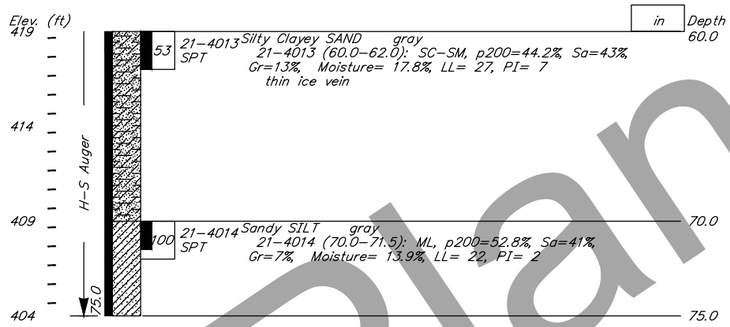

BOH: 75 ft.
Hammer: CME Auto Hammer 140 lb hammer
Equipment: CME 850
Drilling Method: 6.5" Hollow Auger
Geologist: J. SIMPSON
Field Crew: P. Lanigan, M. Sousa
Latitude: 65.66536 Longitude: -149.09616

Preliminary Plans

DESIGNED BY: D.Hemstreet	CHECKED: Engineer	
DRAWN BY: R.Angell	CHECKED: D.Hemstreet	
QUANTITIES BY: Engineer	CHECKED: Engineer	

STATE OF ALASKA
DEPARTMENT OF TRANSPORTATION AND PUBLIC FACILITIES
STATEWIDE MATERIALS

STATE OF ALASKA 49TH
David A. Hemstreet
No. CE 9800
REGISTERED PROFESSIONAL ENGINEER

HESS CREEK

DALTON HWY MP 18-37 RECONSTRUCTION

TEST HOLE & PENETROMETER LOGS

BRIDGE NO. 1213
DWG. NO. 18

Aug. 25, 2021 - 9:54am
H:\Projects\Dalton_Hwy\60735_Dalton_18_37\7 Eng Support\5 Bridge\Drafting\1213_GEO_-3 TH-1

STATE	PROJECT DESIGNATION	YEAR	SHEET NO.	TOTAL SHEETS
ALASKA	Z607350000	2021	N19	N25

TH 2

Date: 2/23/21 – 3/4/21
Station: 1289+83.5 Offset: 7LT

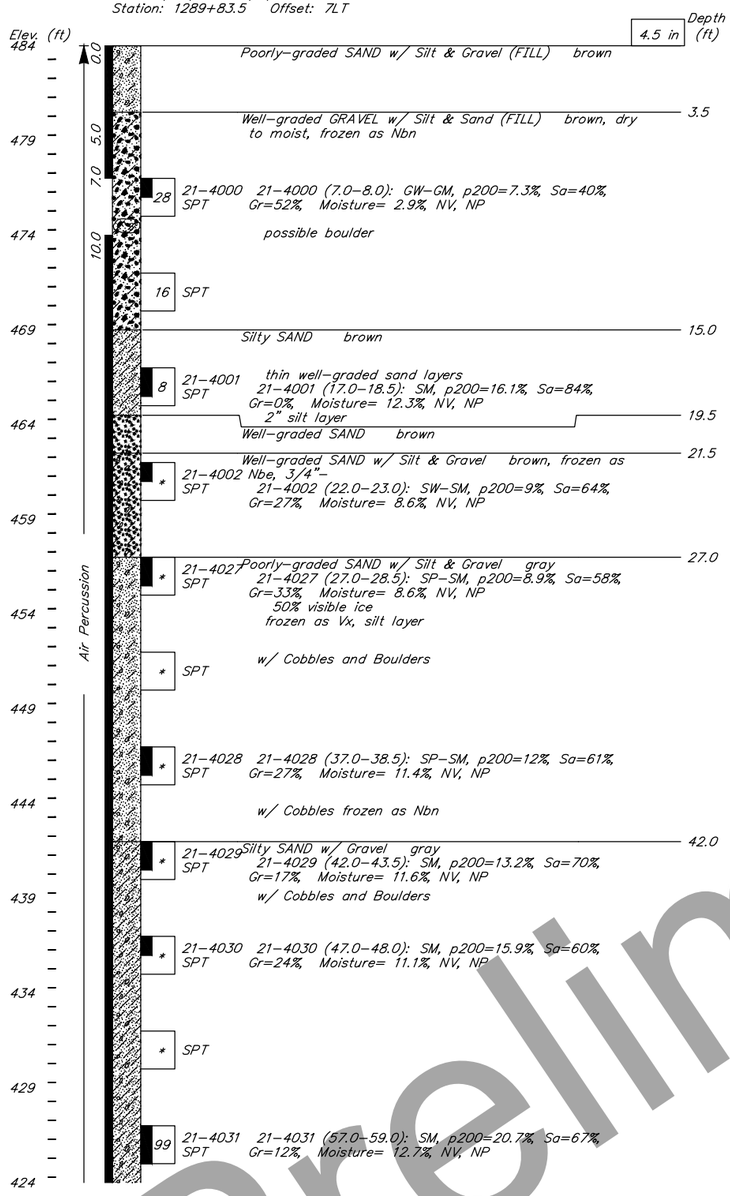

TH 2 (cont.)

Date: 2/23/21 – 3/4/21
Station: 1289+83.5 Offset: 7LT

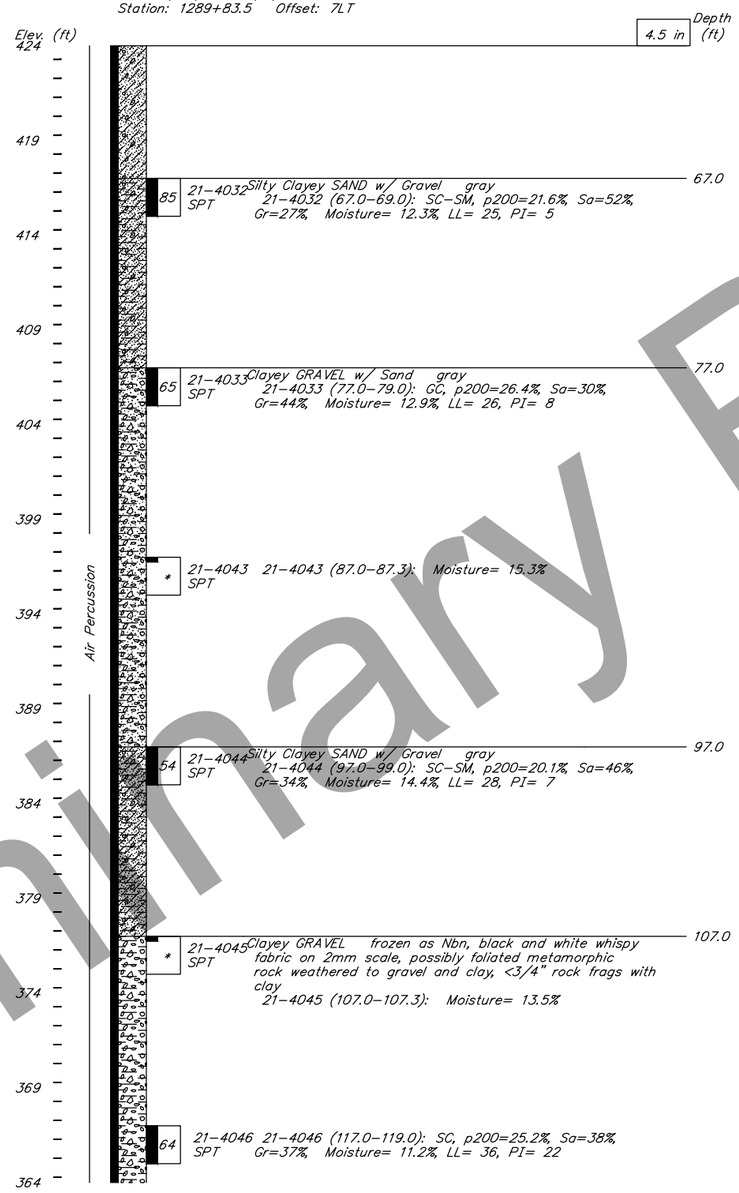

TH 2 (cont.)

Date: 2/23/21 – 3/4/21
Station: 1289+83.5 Offset: 7LT

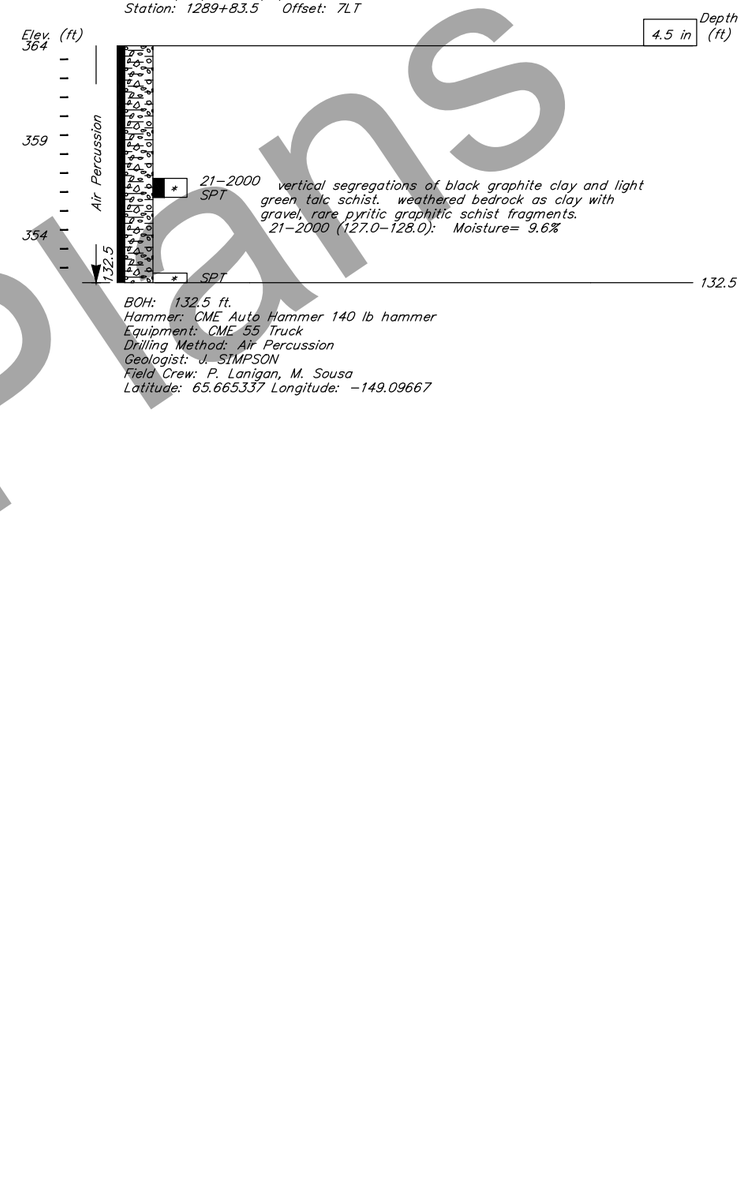

BOH: 132.5 ft.
Hammer: CME Auto Hammer 140 lb hammer
Equipment: CME 55 Truck
Drilling Method: Air Percussion
Geologist: J. SIMPSON
Field Crew: P. Lanigan, M. Sousa
Latitude: 65.665337 Longitude: -149.09667

Preliminary Plans

DESIGNED BY: D.Hemstreet	CHECKED: Engineer		
DRAWN BY: R.Angell	CHECKED: D.Hemstreet		
QUANTITIES BY: Engineer	CHECKED: Engineer		

STATE OF ALASKA
DEPARTMENT OF TRANSPORTATION AND PUBLIC FACILITIES
STATEWIDE MATERIALS

STATE OF ALASKA 49TH
David A. Hemstreet
No. CE 9800
REGISTERED PROFESSIONAL ENGINEER

HESS CREEK

DALTON HWY MP 18-37 RECONSTRUCTION

TEST HOLE & PENETROMETER LOGS

BRIDGE NO. 1213
DWG. NO. 19

Aug. 25, 2021 - 9:54am
H:\Projects\Dalton_Hwy\60735_Dalton_18_37\7 Eng Support\5 Bridge\Drafting\1213_GEO_-4 TH-2

STATE	PROJECT DESIGNATION	YEAR	SHEET NO.	TOTAL SHEETS
ALASKA	Z607350000	2021	N20	N25

PEN 3

Date: 2/12/21 – 2/14/21
Station: 1289+83.5 Offset: 7RT

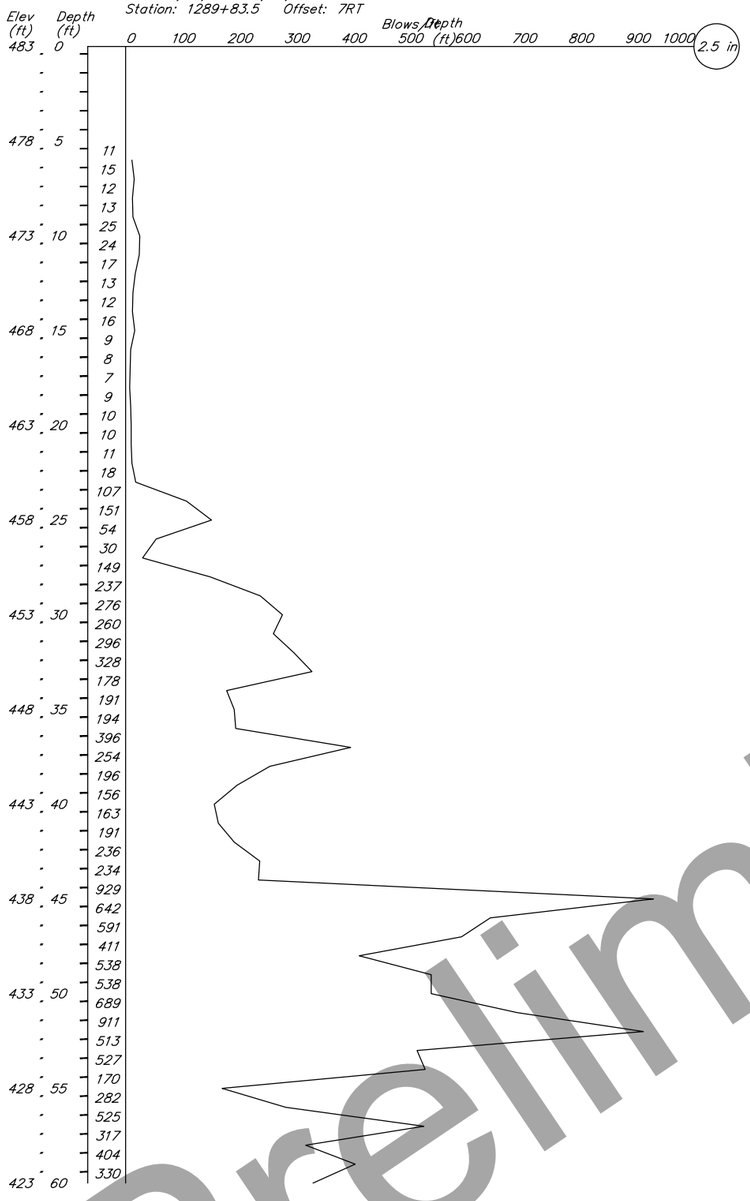

PEN 3 (cont.)

Date: 2/12/21 – 2/14/21
Station: 1289+83.5 Offset: 7RT

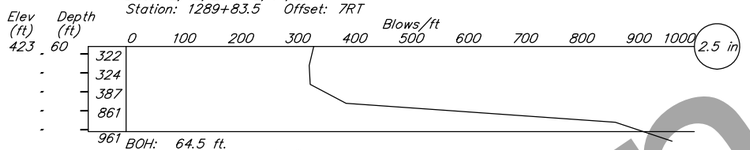

BOH: 64.5 ft.
Notes: Refusal at 64' 6"
Hammer: CME Auto Hammer 340 lb hammer
Equipment: CME 55 Truck
Drilling Method: Penetrometer
Geologist: J. SIMPSON
Field Crew: G. Nelson, T. Hartford
Latitude: 65.66536 Longitude: –149.09658

Preliminary Plans

DESIGNED BY: D.Hemstreet	CHECKED: Engineer		
DRAWN BY: R.Angell	CHECKED: D.Hemstreet		
QUANTITIES BY: Engineer	CHECKED: Engineer		

STATE OF ALASKA
DEPARTMENT OF TRANSPORTATION AND PUBLIC FACILITIES
STATEWIDE MATERIALS

STATE OF ALASKA 49TH
David A. Hemstreet No. CE 9800
REGISTERED PROFESSIONAL ENGINEER

HESS CREEK

DALTON HWY MP 18–37 RECONSTRUCTION

TEST HOLE & PENETROMETER LOGS

BRIDGE NO. 1213
DWG. NO. 20

H:\Projects\Dalton_Hwy\60735_Dalton_18_37\7 Eng Support\5 Bridge\Drafting\1213_GEO_-5 PEN-3 Aug 25, 2021 - 9:54am

STATE	PROJECT DESIGNATION	YEAR	SHEET NO.	TOTAL SHEETS
ALASKA	Z607350000	2021	N21	N25

TH 4

Date: 4/17/21 – 4/19/21
Station: 1290+00 Offset: 57RT

Elev. (ft)					in	Depth (ft)	
479	0.0			ORG MAT		0.3	
				Sandy SILT w/ Gravel brown		1.5	
				SILT brown, frozen as Nbe trace gravel			
474		47	21–4052 SPT	trace Organics 21–4052 (3.5–5.5): ML, p200=95.4%, Sa=5%, Gr=0%, Moisture= 30.1%, Org= 4.4%, LL= 28, PI= 3			
				tan to brown, slightly Organic			
469		35	21–4053 SPT	6" organic layer 21–4053 (8.5–10.5): ML, p200=64.1%, Sa=36%, Gr=0%, Moisture= 60.1%, Org= 10.3%, NV, NP			
				thin gray sandy layers			
				sandier with organic layers			
464		46	21–4054 SPT	Silty SAND gray to brown, slightly Organic 21–4054 (13.5–15.5): SM, p200=19.6%, Sa=79%, Gr=1%, Moisture= 35.8%, Org= 4.7%, NV, NP		13.5	
				6" organic layer trace gravel in cuttings			
				Well–graded GRAVEL w/ Sand brown to gray, 3/4"–, subrnd–subang		17.5	
459		*	SPT				
				Well–graded GRAVEL w/ Silt & Sand brown, 1"–, subang		22.0	
454		*	SPT				
						28.5	
449		*	21–4055 MC	Well–graded SAND w/ Silt & Gravel brown, 2.5"– 21–4055 (28.5–29.0): SW–SM, p200=10.4%, Sa=47%, Gr=43%, Moisture= 8.3%, NV, NP			
				less silt in cuttings			
						33.5	
444		*	21–4056 MC	Silty SAND w/ Gravel brown to gray, 2"– 21–4056 (33.5–34.3): SM, p200=15.6%, Sa=43%, Gr=41%, Moisture= 9.2%, NV, NP			
439		32	21–4057 MC	21–4057 (38.5–40.5): SM, p200=28.4%, Sa=54%, Gr=17%, Moisture= 20.4%, NV, NP			
434		*	21–4058 MC	21–4058 (43.5–44.3): SM, p200=19.3%, Sa=48%, Gr=33%, Moisture= 11.6%, NV, NP green sandy layer			
429		50	21–4059 MC	green sandy layers 21–4059 (48.5–50.5): SM, p200=39.2%, Sa=36%, Gr=25%, Moisture= 17.7%, NV, NP			
424							
419		23		Clayey SAND w/ Gravel green to gray, thin ice lenses, <10% ice		58.5	

Tri–cone & Casing 30.5
38.5
40.5
58.5

TH 4 (cont.)

Date: 4/17/21 – 4/19/21
Station: 1290+00 Offset: 57RT

Elev. (ft)					in	Depth (ft)
419	60.5					
			21–4060 MC	21–4060 (58.5–60.0): SC, p200=38.1%, Sa=36%, Gr=26%, Moisture= 16.2%, LL= 31, PI= 12		
414	68.5					
		90	21–4061 MC	Silty Clayey SAND w/ Gravel green to gray 21–4061 (68.5–70.0): SC–SM, p200=22.8%, Sa=48%, Gr=30%, Moisture= 12.8%, LL= 26, PI= 7		68.5
409						
404				Clayey SAND w/ Gravel brown, slightly Organic pebble sized to 2"		76.0
		47	21–4062 MC	21–4062 (78.5–80.0): SC, p200=46%, Sa=34%, Gr=20%, Moisture= 20.3%, Org= 7.4%, LL= 30, PI= 10		
399				water color changing from brown to gray/green in intervals throughout		
394						
		*	21–4063 MC	Silty Clayey SAND w/ Gravel gray to green 21–4063 (89.0–89.5): SC–SM, p200=30.7%, Sa=40%, Gr=29%, Moisture= 16.2%, LL= 27, PI= 6		88.5
389						
384						
		79	21–4064 MC	Clayey SAND w/ Gravel gray to green 21–4064 (99.0–100.5): SC, p200=25.7%, Sa=46%, Gr=28%, Moisture= 13.1%, LL= 27, PI= 9		99.0
379						
				Soft BEDROCK gray to black, highly to completely weathered bedrock, weathered to clayey sand, graphitic with clusters of sulfides, possibly phyllite or slate		104.0
374						
369		*	21–4065 MC	sulfides and white colored gouge 21–4065 (109.0–109.5): SC, p200=34.8%, Sa=46%, Gr=19%, Moisture= 13.8%, LL= 28, PI= 13		
364						
359		98	21–4066	black to gray, more graphitic, sulfides, vertically layered intact pieces		

Tri–cone & Casing 68.5

TH 4 (cont.)

Date: 4/17/21 – 4/19/21
Station: 1290+00 Offset: 57RT

Elev. (ft)				in	Depth (ft)
359		MC	21–4066 (118.5–119.5): SC, p200=47.3%, Sa=39%, Gr=14%, Moisture= 14.6%, LL= 28, PI= 9		
354	Tri–cone & Casing				
349			RQD=0		
344	Coring		RQD=0		
339					
334	Tri–cone & Casing	*	MC layers of intact rock wth clayey soil		149.3

BOH: 149.33 ft.
Notes: Due to large size gravel and low recovery in SPTs, switched to large SS at 28.5 ft
Hammer: CME Auto Hammer both 140 & 340 lb hammer
Equipment: CME 850
Drilling Method: Tricone
Geologist: J. SIMPSON
Field Crew: S. Parker, M. Sousa, G. Nelson
Latitude: 65.66549 Longitude: –149.09642

Preliminary Plans

DESIGNED BY: D.Hemstreet	CHECKED: Engineer		
DRAWN BY: R.Angell	CHECKED: D.Hemstreet		
QUANTITIES BY: Engineer	CHECKED: Engineer		

STATE OF ALASKA
DEPARTMENT OF TRANSPORTATION AND PUBLIC FACILITIES
STATEWIDE MATERIALS

STATE OF ALASKA 49TH
David A. Hemstreet
No. CE 9800
REGISTERED PROFESSIONAL ENGINEER

HESS CREEK

DALTON HWY MP 18–37 RECONSTRUCTION

TEST HOLE & PENETROMETER LOGS

BRIDGE NO. 1213
DWG. NO. 21

H:\Projects\Dalton_Hwy\60735_Dalton_18_37\7 Eng Support\5 Bridge\Drafting\1213_GEO_-6 TH-4
Aug 25, 2021 – 9:55am
TH-4

STATE	PROJECT DESIGNATION	YEAR	SHEET NO.	TOTAL SHEETS
ALASKA	Z607350000	2021	N22	N25

TH 5

Date: 3/6/21 – 3/12/21
Station: 1291+43 Offset: 8.1LT

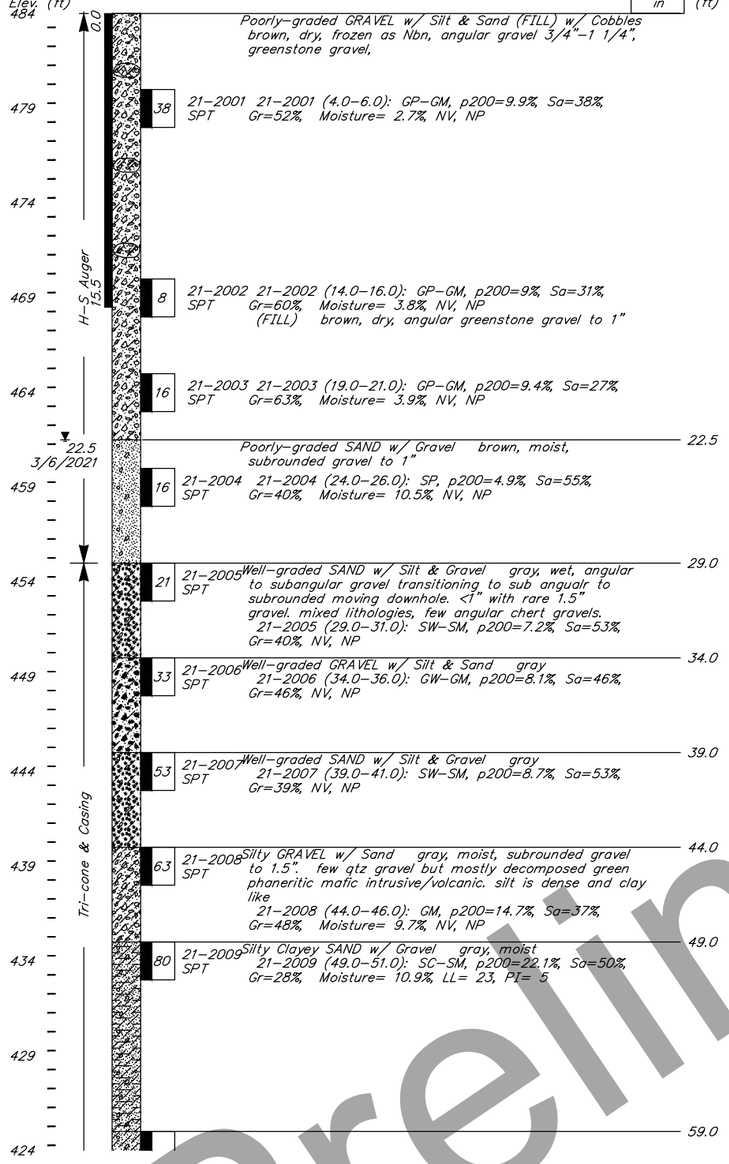

TH 5 (cont.)

Date: 3/6/21 – 3/12/21
Station: 1291+43 Offset: 8.1LT

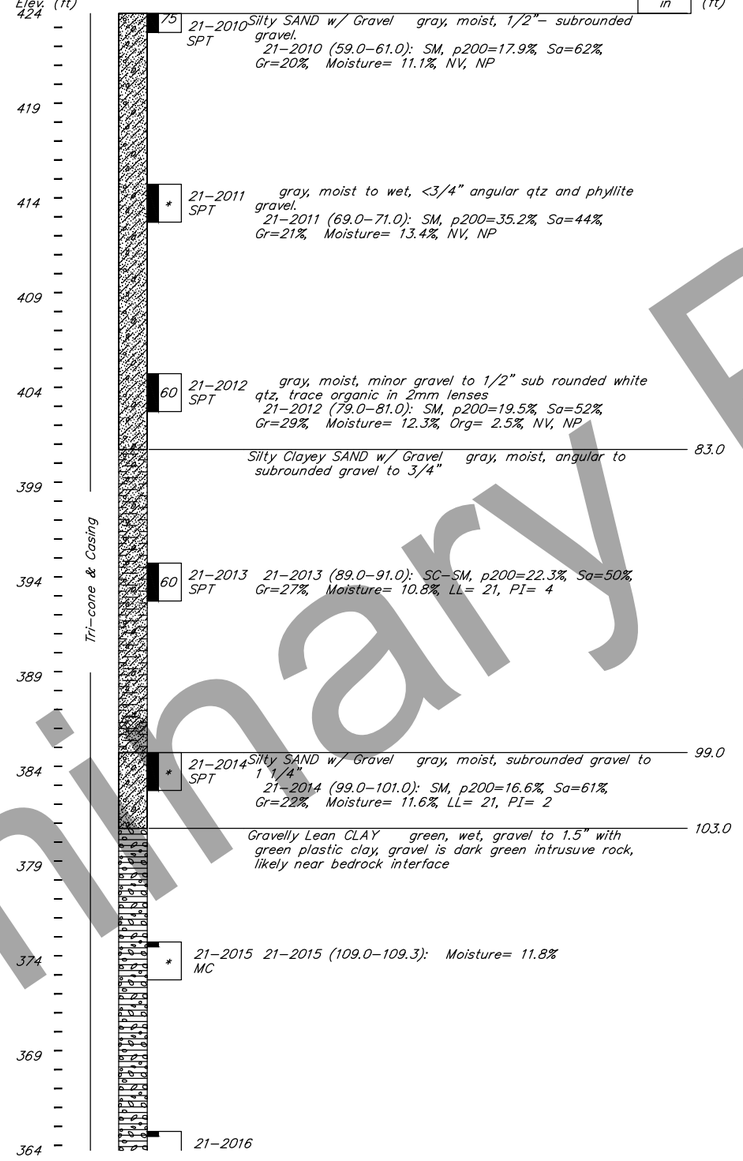

TH 5 (cont.)

Date: 3/6/21 – 3/12/21
Station: 1291+43 Offset: 8.1LT

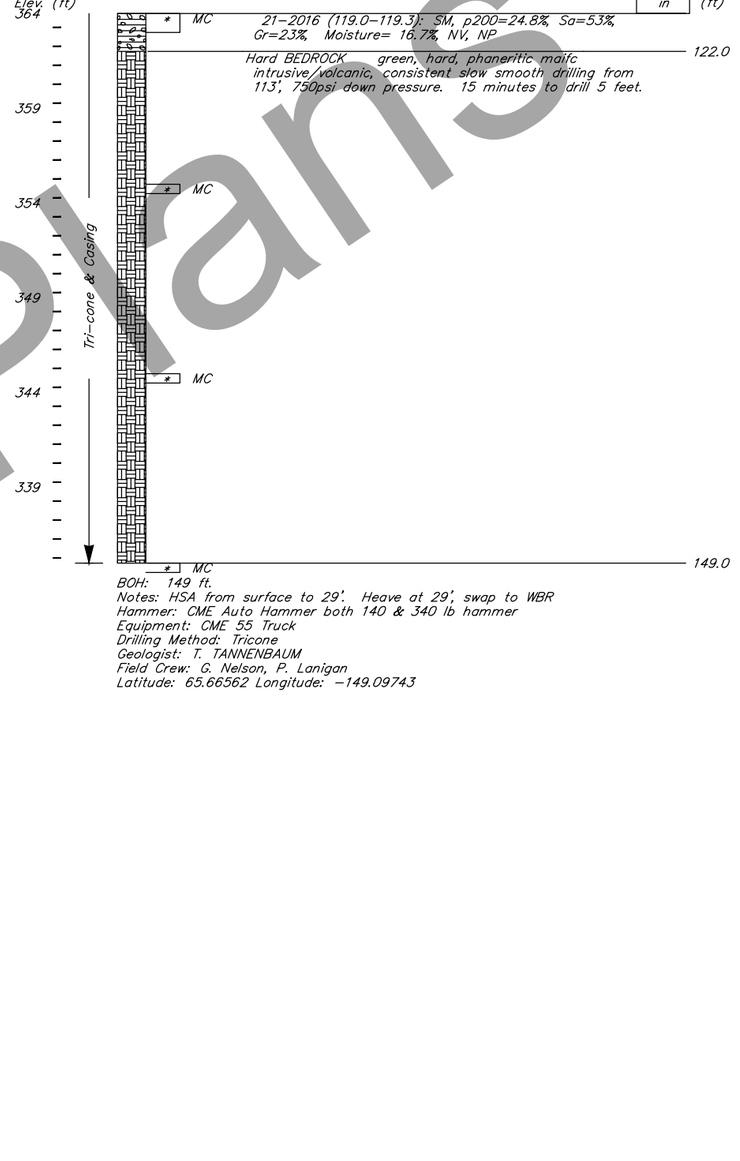

BOH: 149 ft.
Notes: HSA from surface to 29'. Heave at 29', swap to WBR
Hammer: CME Auto Hammer both 140 & 340 lb hammer
Equipment: CME 55 Truck
Drilling Method: Tricone
Geologist: T. TANNENBAUM
Field Crew: G. Nelson, P. Lanigan
Latitude: 65.66562 Longitude: -149.09743

Preliminary Plans

DESIGNED BY: D.Hemstreet	CHECKED: Engineer		
DRAWN BY: R.Angell	CHECKED: D.Hemstreet		
QUANTITIES BY: Engineer	CHECKED: Engineer		

STATE OF ALASKA
DEPARTMENT OF TRANSPORTATION AND PUBLIC FACILITIES
STATEWIDE MATERIALS

STATE OF ALASKA 49TH
David A. Hemstreet
No. CE 9800
REGISTERED PROFESSIONAL ENGINEER

HESS CREEK

DALTON HWY MP 18-37 RECONSTRUCTION

TEST HOLE & PENETROMETER LOGS

BRIDGE NO. 1213
DWG. NO. 22

H:\Projects\Dalton_Hwy\60735_Dalton_18_37\7 Eng Support\5 Bridge\Drafting\1213_GEO_-7 TH-5 Aug. 25, 2021 - 9:55am

STATE	PROJECT DESIGNATION	YEAR	SHEET NO.	TOTAL SHEETS
ALASKA	Z607350000	2021	N23	N25

PEN 6

Date: 2/18/21 – 2/22/21
Station: 1291+43 Offset: 8.5RT

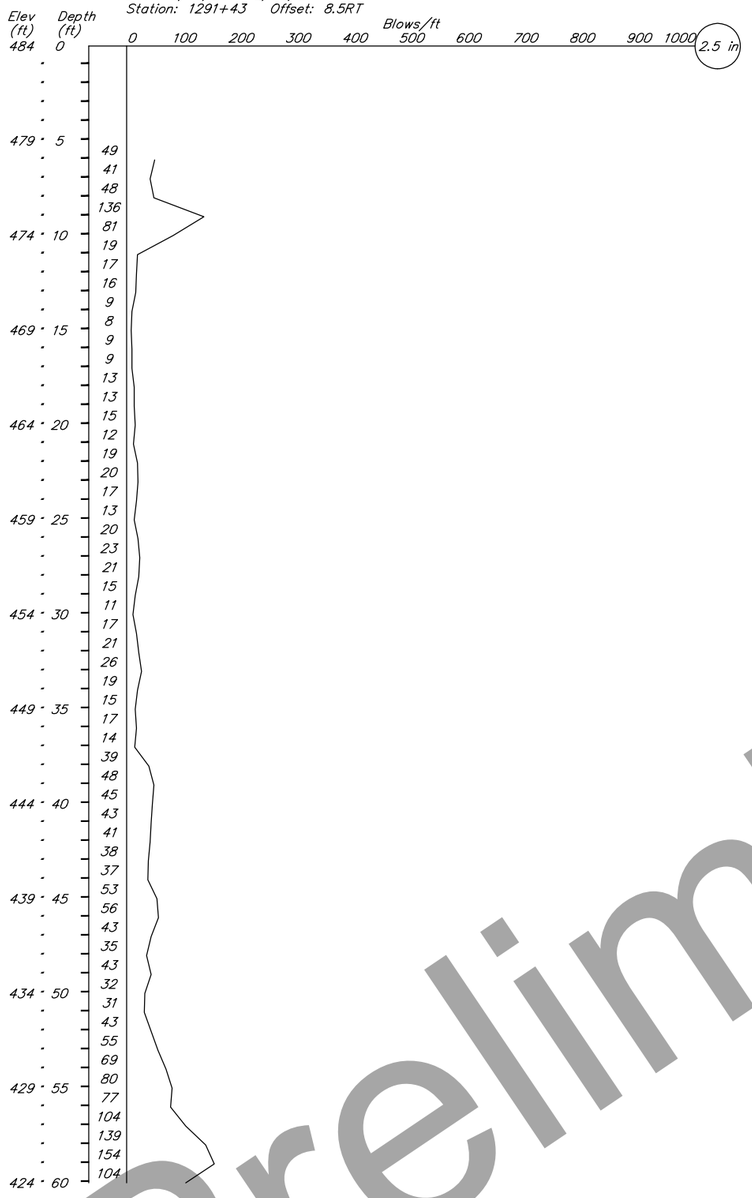

PEN 6 (cont.)

Date: 2/18/21 – 2/22/21
Station: 1291+43 Offset: 8.5RT

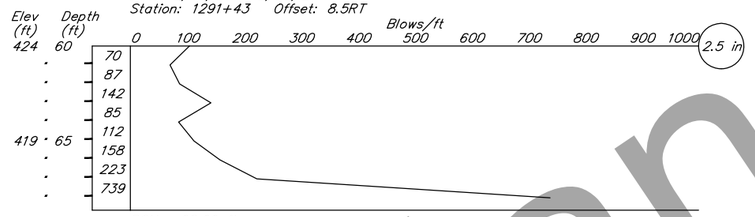

BOH: 68.66 ft.
Notes: Refusal at 68' 8"
Hammer: CME Auto Hammer 340 lb hammer
Equipment: CME 55 Truck
Drilling Method: Penetrometer
Geologist: J. SIMPSON
Field Crew: T. Hartford, M. Sousa
Latitude: 65.66565 Longitude: -149.09736

Preliminary Plans

H:\Projects\Dalton_Hwy\60735_Dalton_18_37\7 Eng Support\5 Bridge\Drafting\1213_GEO_-8 PEN-6 Aug 25, 2021 - 9:55am

DESIGNED BY: D.Hemstreet	CHECKED: Engineer	
DRAWN BY: R.Angell	CHECKED: D.Hemstreet	
QUANTITIES BY: Engineer	CHECKED: Engineer	

STATE OF ALASKA
DEPARTMENT OF TRANSPORTATION AND PUBLIC FACILITIES
STATEWIDE MATERIALS

STATE OF ALASKA 49TH
David A. Hemstreet
No. CE 9800
REGISTERED PROFESSIONAL ENGINEER

HESS CREEK

DALTON HWY MP 18-37 RECONSTRUCTION

TEST HOLE & PENETROMETER LOGS

BRIDGE NO. 1213
DWG. NO. 23

STATE	PROJECT DESIGNATION	YEAR	SHEET NO.	TOTAL SHEETS
ALASKA	Z607350000	2021	N24	N25

TH 7

Date: 2/27/21 – 4/16/21
Station: 1291+52 Offset: 60RT

Elev. (ft)			in	Depth (ft)	
466	0.0			0.2	ORG MAT SILT brown
461	5.3	21-4034 SPT 20		5.3	Poorly-graded GRAVEL w/ Sand brown, wet, 1"-subang to subrnd 21-4034 (5.3-6.0): GP, p200=4.7%, Sa=47%, Gr=49%, Moisture= 7.2%, NV, NP
	6.0				
456	H-S Auger	21-4035 SPT 20		10.0	Well-graded SAND w/ Silt & Gravel brown, moist, 1"- 21-4035 (10.0-11.0): SW-SM, p200=5.7%, Sa=48%, Gr=46%, Moisture= 7.8%, NV, NP
451		21-4036 SPT 17		15.0	Well-graded GRAVEL w/ Silt & Sand brown, moist, 1"- 21-4036 (15.0-15.5): GW-GM, p200=7.5%, Sa=44%, Gr=49%, Moisture= 6.4%, NV, NP
446		21-4037 SPT 35		20.0	Well-graded SAND w/ Silt & Gravel brown, moist, 1"- 21-4037 (20.0-21.0): SW-SM, p200=6.4%, Sa=51%, Gr=42%, Moisture= 5.2%, NV, NP
441		21-4038 SPT 53		25.0	Silty SAND w/ Gravel brown to gray 21-4038 (25.0-26.0): SM, p200=15.3%, Sa=44%, Gr=41%, Moisture= 7.5%, NV, NP
436		21-4039 SPT 90		30.0	Silty GRAVEL w/ Sand brown to gray 21-4039 (30.0-31.0): GM, p200=12.5%, Sa=38%, Gr=49%, Moisture= 3.6%, NV, NP
431		21-4040 SPT 29		35.0	Silty SAND w/ Gravel gray to green, moist to wet 21-4040 (35.0-36.0): SM, p200=26.8%, Sa=51%, Gr=23%, Moisture= 10.0%, NV, NP
426		21-4041 SPT 47			trace Organics 21-4041 (40.0-41.5): SM, p200=30.3%, Sa=46%, Gr=24%, Moisture= 16.3%, Org= 4.8%, LL= 23, NP
421		21-4042 SPT 38			21-4042 (46.0-46.8): SM, p200=27.7%, Sa=45%, Gr=27%, Moisture= 11.2%, NV, NP
416		21-4047 SPT 66			21-4047 (48.5-50.0): SM, p200=22.7%, Sa=44%, Gr=34%, Moisture= 11.4%, LL= 20, PI= 1
411	Tri-cone & Casing				casing slow to go in, overage 55 blows/inch decrease in gravel
406		21-4048 SPT 56		58.0	Silty Clayey SAND w/ Gravel gray to green, moist to wet

TH 7 (cont.)

Date: 2/27/21 – 4/16/21
Station: 1291+52 Offset: 60RT

Elev. (ft)			in	Depth (ft)	
406					21-4048 (58.0-59.5): SC-SM, p200=27.9%, Sa=36%, Gr=36%, Moisture= 14.3%, Org= 3.5%, LL= 24, PI= 5 thin organic layers 2" brown sandy/silty layer start predrilling for casing brown sandy/silty layers
401					loose/very loose BODR gravelly
		21-4049 SPT *		68.0	Silty SAND w/ Gravel gray to green 21-4049 (68.0-69.5): SM, p200=21.5%, Sa=45%, Gr=33%, Moisture= 10.6%, LL= 19, PI= 2
396					1' gravelly layer
391					quiet, loose BODR gravelly layer
		21-4050 SPT *			21-4050 (78.0-79.5): SM, p200=32.8%, Sa=47%, Gr=21%, Moisture= 13.9%, LL= 24, PI= 3
386					
381	Tri-cone & Casing				
		21-4051 SPT 58		88.0	Soft BEDROCK green to gray, soft, completely weathered bedrock weathered to clayey sandy soil, highly degraded veins/thin infilled fractures with small cluster of sulfides 21-4051 (88.0-89.5): SC, p200=26.9%, Sa=61%, Gr=12%, Moisture= 13.0%, LL= 29, PI= 9 smooth, regular drilling at 300 psi with water changing color (white) every several feet
376					
371					
		SPT *			white clayey/pasty cuttings on drill bit (gouge?) gray to black, highly weathered to clayey soil with small black angular rock pieces
366					
361					smooth drilling at 400 psi
		SPT *			gray, 2 small rock pieces, fine grained (volcanic?) with small clusters of sulfides
356					500-600 psi, 10 minutes to drill 5 feet
					800 psi, 15 minutes to drill 5 feet
351					
346					gray to green, RQD=0, highly weathered, very close fracture spacing, fine-medium grained, quartz veining,

TH 7 (cont.)

Date: 2/27/21 – 4/16/21
Station: 1291+52 Offset: 60RT

Elev. (ft)		in	Depth (ft)	
346				minor sulfides, weathered portions are clay like soil, meta-volcanic? RQD=0
341				RQD=0, higly oxidized
336	Coring			green to gray, RQD=0, larger grain sized, much greener in color
331				RQD=0
			139.5	

BOH: 139.5 ft.
Hammer: CME Auto Hammer 140 lb hammer
Equipment: CME 850
Drilling Method: Tricone
Geologist: J. SIMPSON
Field Crew: G. Nelson, M.Sousa, S. Parker
Latitude: 65.66578 Longitude: -149.09718

Preliminary Plans

DESIGNED BY: D.Hemstreet	CHECKED: Engineer		
DRAWN BY: R.Angell	CHECKED: D.Hemstreet		
QUANTITIES BY: Engineer	CHECKED: Engineer		

STATE OF ALASKA
DEPARTMENT OF TRANSPORTATION AND PUBLIC FACILITIES
STATEWIDE MATERIALS

STATE OF ALASKA 49TH
David A. Hemstreet No. CE 9800
REGISTERED PROFESSIONAL ENGINEER

HESS CREEK

DALTON HWY MP 18-37 RECONSTRUCTION

TEST HOLE & PENETROMETER LOGS

BRIDGE NO. 1213
DWG. NO. 24

Aug 25, 2021 - 9:55am H:\Projects\Dalton_Hwy\60735_Dalton_18_37\7 Eng Support\5 Bridge\Drafting\1213_GEO_-9 TH-7

STATE	PROJECT DESIGNATION	YEAR	SHEET NO.	TOTAL SHEETS
ALASKA	Z607350000	2021	N25	N25

TH 8

Date: 2/25/21 – 2/25/21
Station: 1292+10 Offset: 60RT

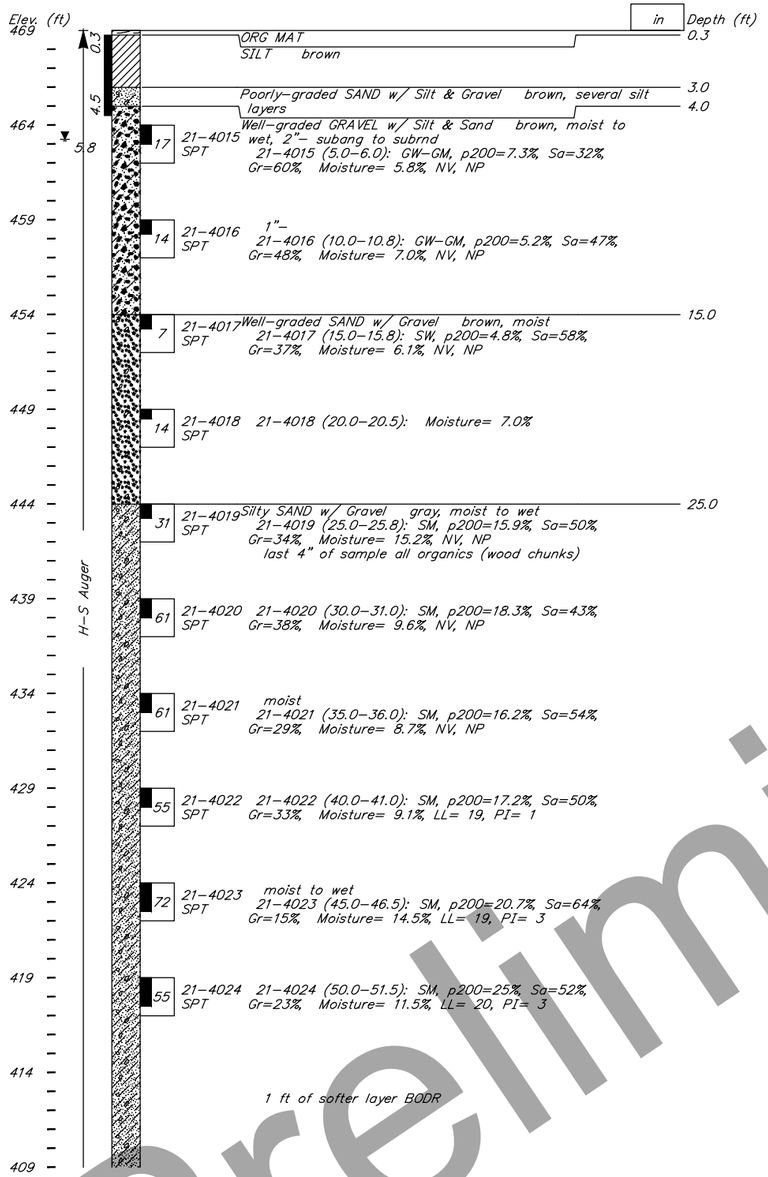

TH 8 (cont.)

Date: 2/25/21 – 2/25/21
Station: 1292+10 Offset: 60RT

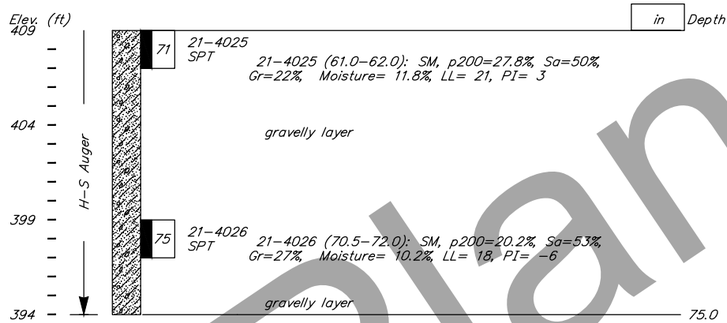

BOH: 75 ft.
Notes: Experienced heave in all SPTs beyond 10 ft bgs
Hammer: CME Auto Hammer 140 lb hammer
Equipment: CME 850
Drilling Method: 6.5" Hollow Auger
Geologist: J. SIMPSON
Field Crew: G. Nelson, T. Hartford
Latitude: 65.66589 Longitude: -149.09745

Preliminary Plans

DESIGNED BY: D.Hemstreet	CHECKED: Engineer		
DRAWN BY: R.Angell	CHECKED: D.Hemstreet		
QUANTITIES BY: Engineer	CHECKED: Engineer		

STATE OF ALASKA
DEPARTMENT OF TRANSPORTATION AND PUBLIC FACILITIES
STATEWIDE MATERIALS

STATE OF ALASKA 49TH
David A. Hemstreet
No. CE 9800
REGISTERED PROFESSIONAL ENGINEER

HESS CREEK

DALTON HWY MP 18-37 RECONSTRUCTION

TEST HOLE & PENETROMETER LOGS

BRIDGE NO. 1213
DWG. NO. 25

H:\Projects\Dalton_Hwy\60735_Dalton_18_37\7 Eng Support\5 Bridge\Drafting\1213_GEO_10 TH-8 Aug 25, 2021 - 9:55am

NO.	DATE	REVISION

STATE	PROJECT DESIGNATION	YEAR	SHEET NO.	TOTAL SHEETS
ALASKA	0652017/Z607350000	2022	Q1	Q18

KEY:

- PERIMETER CONTROL
- INLET PROTECTION
- OUTLET PROTECTION
- SURFACE FLOW DIRECTION
- EXISTING CULVERT
- NEW CULVERT
- FILL SLOPE
- CUT SLOPE
- CONSTRUCTION ENTRANCE/EXIT
- WETLANDS
- RIPRAP
- OBLITERATION OF ROADWAY

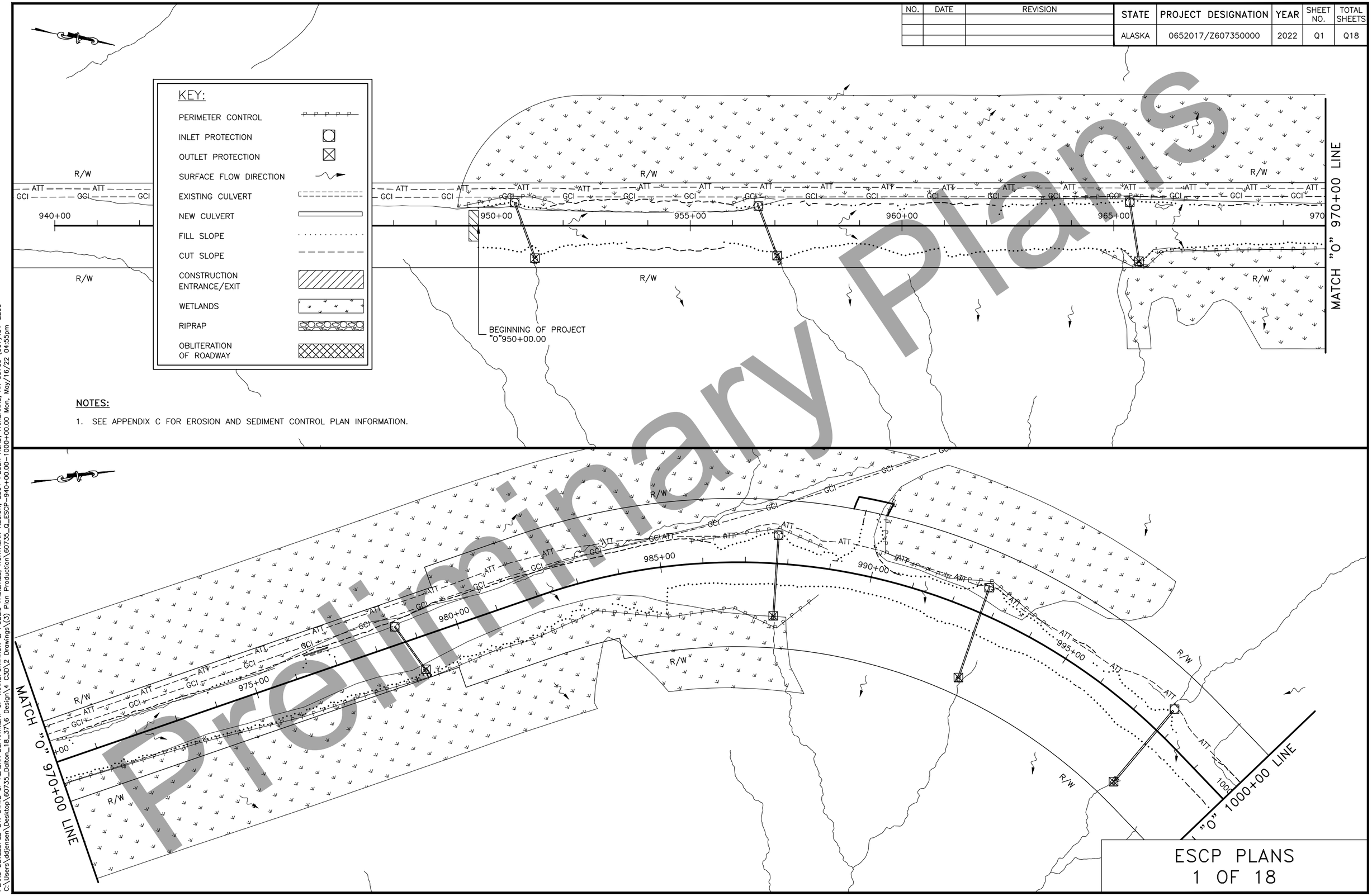

NOTES:

1. SEE APPENDIX C FOR EROSION AND SEDIMENT CONTROL PLAN INFORMATION.

Preliminary Plans

ESCP PLANS
1 OF 18

PLANS DEVELOPED BY: STATE OF ALASKA DEPARTMENT OF TRANSPORTATION & PUBLIC FACILITIES, NORTHERN REGION, 2301 PEGER ROAD, FAIRBANKS, AK 99709 (907)451-2200
C:\Users\ddjensen\Desktop\60735_Dalton_18_37\6 Design\4 C3D\2 Drawings\(3) Plan Production\60735_0_ESCP-940+00.00-1000+00.00 Mon, May/16/22 04:55pm

NO.	DATE	REVISION

STATE	PROJECT DESIGNATION	YEAR	SHEET NO.	TOTAL SHEETS
ALASKA	0652017/Z607350000	2022	Q2	Q18

MATCH "O" 1000+00 LINE

MATCH "O" 1030+00 LINE

MATCH "O" 1030+00 LINE

MATCH "O" 1060+00 LINE

Preliminary Plans

ESCP PLANS
2 OF 18

PLANS DEVELOPED BY: STATE OF ALASKA DEPARTMENT OF TRANSPORTATION & PUBLIC FACILITIES, NORTHERN REGION, 2301 PEGER ROAD, FAIRBANKS, AK 99709 (907)451-2200
C:\Users\ddjensen\Desktop\60735_Dalton_18_37\6 Design\4 C3D\2 Drawings\(3) Plan Production\60735_0_ESCP-1000+00.00-1060+00.00 Mon, May/16/22 04:55pm

NO.	DATE	REVISION

STATE	PROJECT DESIGNATION	YEAR	SHEET NO.	TOTAL SHEETS
ALASKA	0652017/Z607350000	2022	Q3	Q18

MATCH "O" 1060+00 LINE

1060+00

1065+00

1070+00

1075+00

1080+00

1085+00

1090+00 LINE

MATCH "O" 1090+00 LINE

1095+00

1100+00

1105+00

1110+00

1115+00

MATCH "O" 1120+00 LINE

ATT

R/W

Preliminary Plans

ESCP PLANS
3 OF 18

PLANS DEVELOPED BY: STATE OF ALASKA DEPARTMENT OF TRANSPORTATION & PUBLIC FACILITIES, NORTHERN REGION, 2301 PEGER ROAD, FAIRBANKS, AK 99709 (907)451-2200
C:\Users\ddjensen\Desktop\60735_Dalton_18_37\6 Design\4 C3D\2 Drawings\(3) Plan Production\60735_Q_ESCP_1060+00.00-1120+00.00 Mon, May/16/22 04:56pm

NO.	DATE	REVISION

STATE	PROJECT DESIGNATION	YEAR	SHEET NO.	TOTAL SHEETS
ALASKA	0652017/Z607350000	2022	Q4	Q18

Preliminary Plans

PLANS DEVELOPED BY: STATE OF ALASKA DEPARTMENT OF TRANSPORTATION & PUBLIC FACILITIES, NORTHERN REGION, 2301 PEGER ROAD, FAIRBANKS, AK 99709 (907)451-2200
C:\Users\ddjensen\Desktop\60735_Dalton_18_37\6 Design\4 C3D\2 Drawings\3) Plan Production\60735_Q_ESCP-1120+00.00-1180+00.00 Mon, May/16/22 04:56pm

MATCH "O" 1120+00 LINE

MATCH "O" 1150+00 LINE

MATCH "O" 1150+00 LINE

MATCH "O" 1180+00 LINE

R/W

ATT

1125+00

1130+00

1135+00

1140+00

1145+00

1155+00

1160+00

1165+00

1170+00

1175+00

ESCP PLANS
4 OF 18

NO.	DATE	REVISION

STATE	PROJECT DESIGNATION	YEAR	SHEET NO.	TOTAL SHEETS
ALASKA	0652017/Z607350000	2022	Q5	Q18

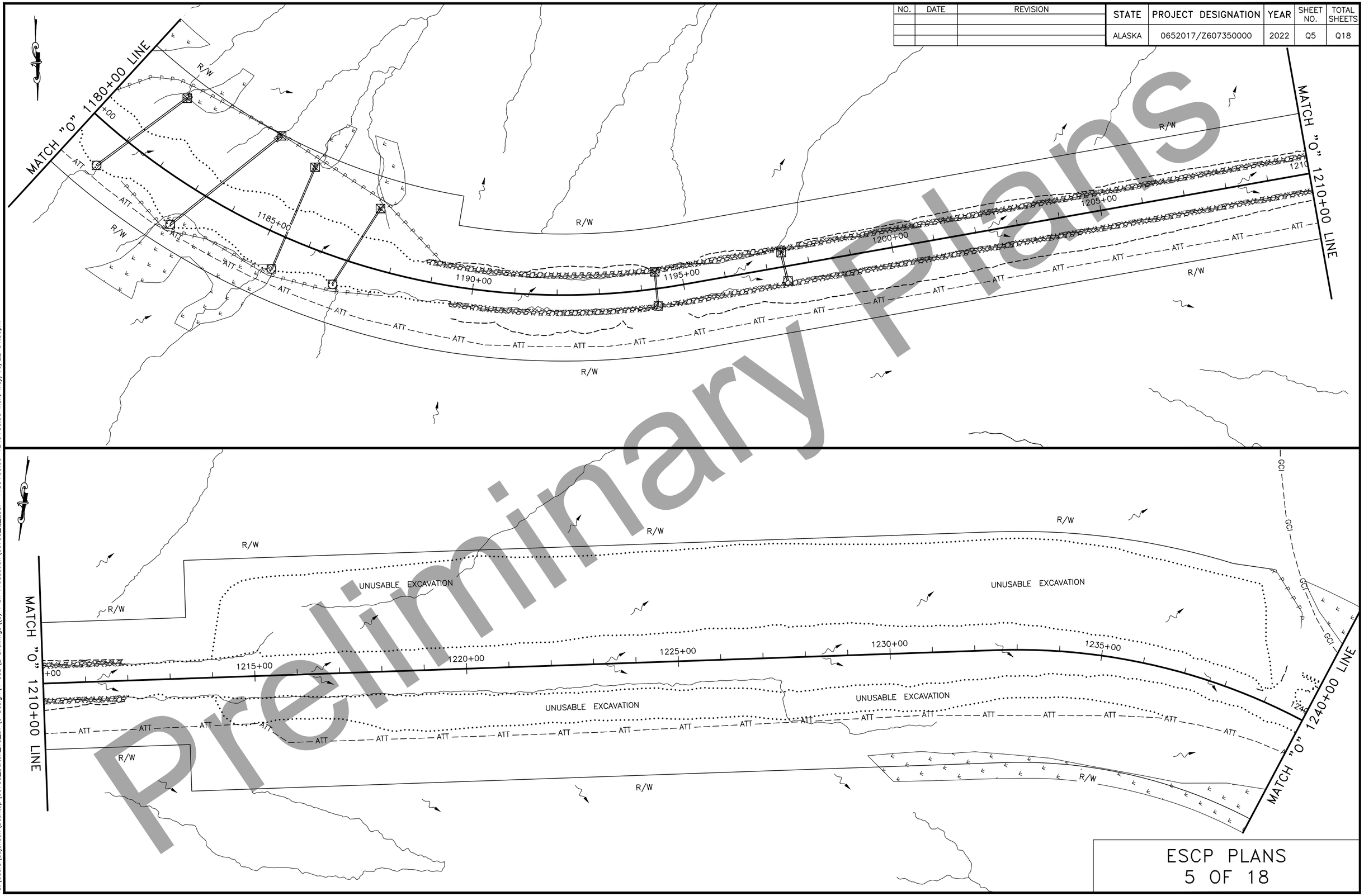

Preliminary Plans

ESCP PLANS
5 OF 18

PLANS DEVELOPED BY: STATE OF ALASKA DEPARTMENT OF TRANSPORTATION & PUBLIC FACILITIES, NORTHERN REGION, 2301 PEGER ROAD, FAIRBANKS, AK 99709 (907)451-2200
C:\Users\ddjensen\Desktop\60735_Dalton_18_37\6 Design\4 C3D\2 Drawings\(3) Plan Production\60735_0_ESCP-1180+00.00-1240+00.00 Mon, May/16/22 04:56pm

NO.	DATE	REVISION

STATE	PROJECT DESIGNATION	YEAR	SHEET NO.	TOTAL SHEETS
ALASKA	0652017/Z607350000	2022	Q6	Q18

Preliminary Plans

PLANS DEVELOPED BY: STATE OF ALASKA DEPARTMENT OF TRANSPORTATION & PUBLIC FACILITIES, NORTHERN REGION, 2301 PEGER ROAD, FAIRBANKS, AK 99709 (907)451-2200
C:\Users\ddjensen\Desktop\60735_Dalton_18_37\6 Design\4 C3D\2 Drawings\(3) Plan Production\60735_0_ESCP-1240+00.00-1300+00.00 Mon, May/16/22 04:57pm

MATCH "O" 1240+00 LINE

MATCH "O" 1270+00 LINE

MATCH "O" 1300+00 LINE

"O"1281+96.57 BK = "O"1282+00.00 AHD

"O"1293+03.43 BK = "O"1293+00.00 AHD

HESS CREEK

HESS CREEK

ESCP PLANS
6 OF 18

NO.	DATE	REVISION

STATE	PROJECT DESIGNATION	YEAR	SHEET NO.	TOTAL SHEETS
ALASKA	0652017/Z607350000	2022	Q7	Q18

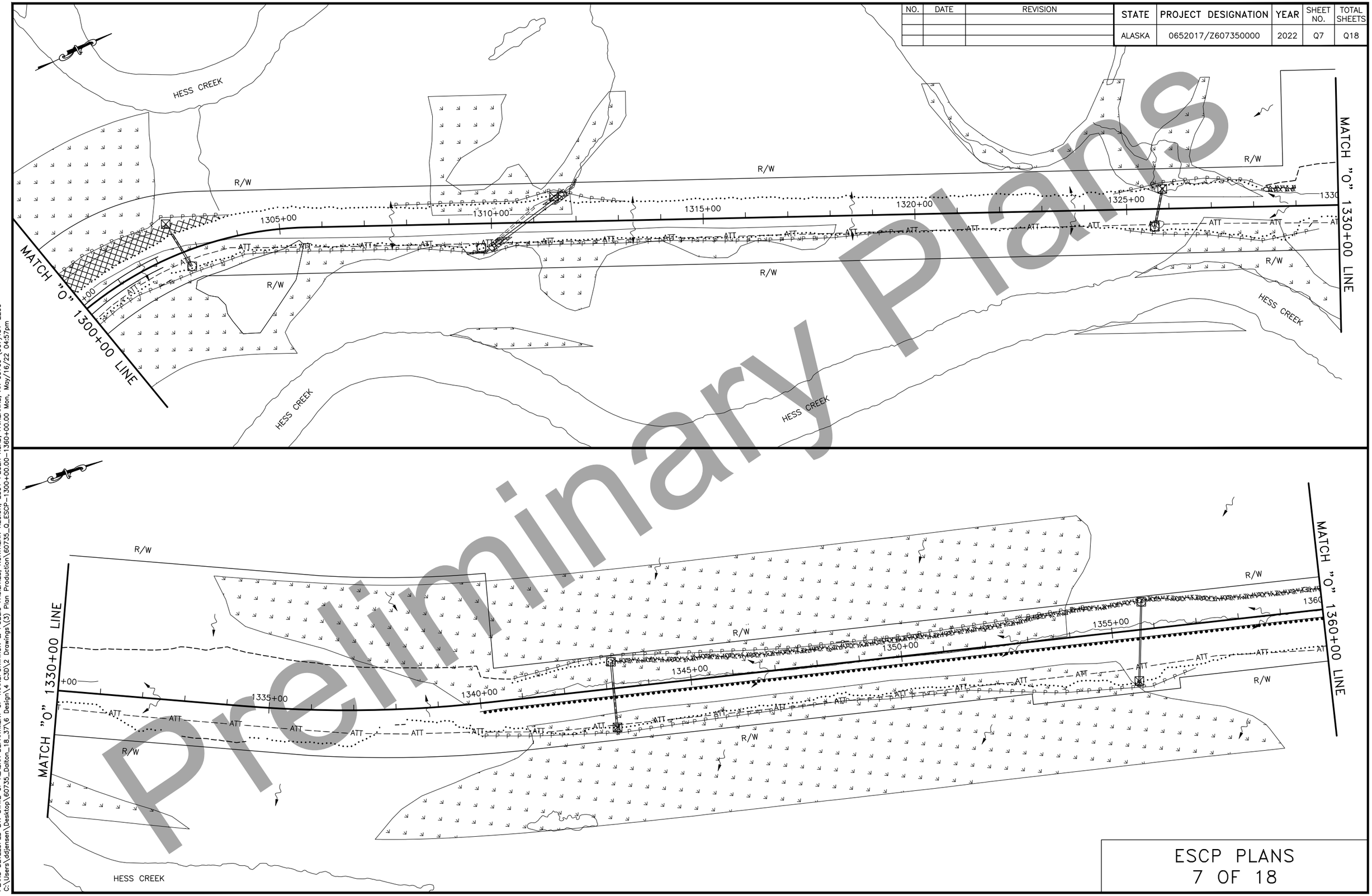

Preliminary Plans

ESCP PLANS
7 OF 18

PLANS DEVELOPED BY: STATE OF ALASKA DEPARTMENT OF TRANSPORTATION & PUBLIC FACILITIES, NORTHERN REGION, 2301 PEGER ROAD, FAIRBANKS, AK 99709 (907)451-2200
C:\Users\ddjensen\Desktop\60735_Dalton_18_37\6 Design\4 C3D\2 Drawings\(3) Plan Production\60735_0_ESCP-1300+00.00-1360+00.00 Mon, May/16/22 04:57pm

NO.	DATE	REVISION

STATE	PROJECT DESIGNATION	YEAR	SHEET NO.	TOTAL SHEETS
ALASKA	0652017/Z607350000	2022	Q8	Q18

MATCH "O" 1360+00 LINE

MATCH "O" 1390+00 LINE

MATCH "O" 1390+00 LINE

MATCH "O" 1420+00 LINE

R/W

ATT

TRANS ALASKA PIPELINE

1360+00

1365+00

1370+00

1375+00

1380+00

1385+00

1390+00

1395+00

1400+00

1405+00

1410+00

1415+00

1420+00

Preliminary Plans

ESCP PLANS
8 OF 18

PLANS DEVELOPED BY: STATE OF ALASKA DEPARTMENT OF TRANSPORTATION & PUBLIC FACILITIES, NORTHERN REGION, 2301 PEGER ROAD, FAIRBANKS, AK 99709 (907)451-2200
C:\Users\ddjensen\Desktop\60735_Dalton_18_37\6 Design\4 C3D\2 Drawings\(3) Plan Production\60735_0_ESCP-1360+00.00-1420+00.00 Mon, May/16/22 04:57pm

NO.	DATE	REVISION

STATE	PROJECT DESIGNATION	YEAR	SHEET NO.	TOTAL SHEETS
ALASKA	0652017/Z607350000	2022	Q9	Q18

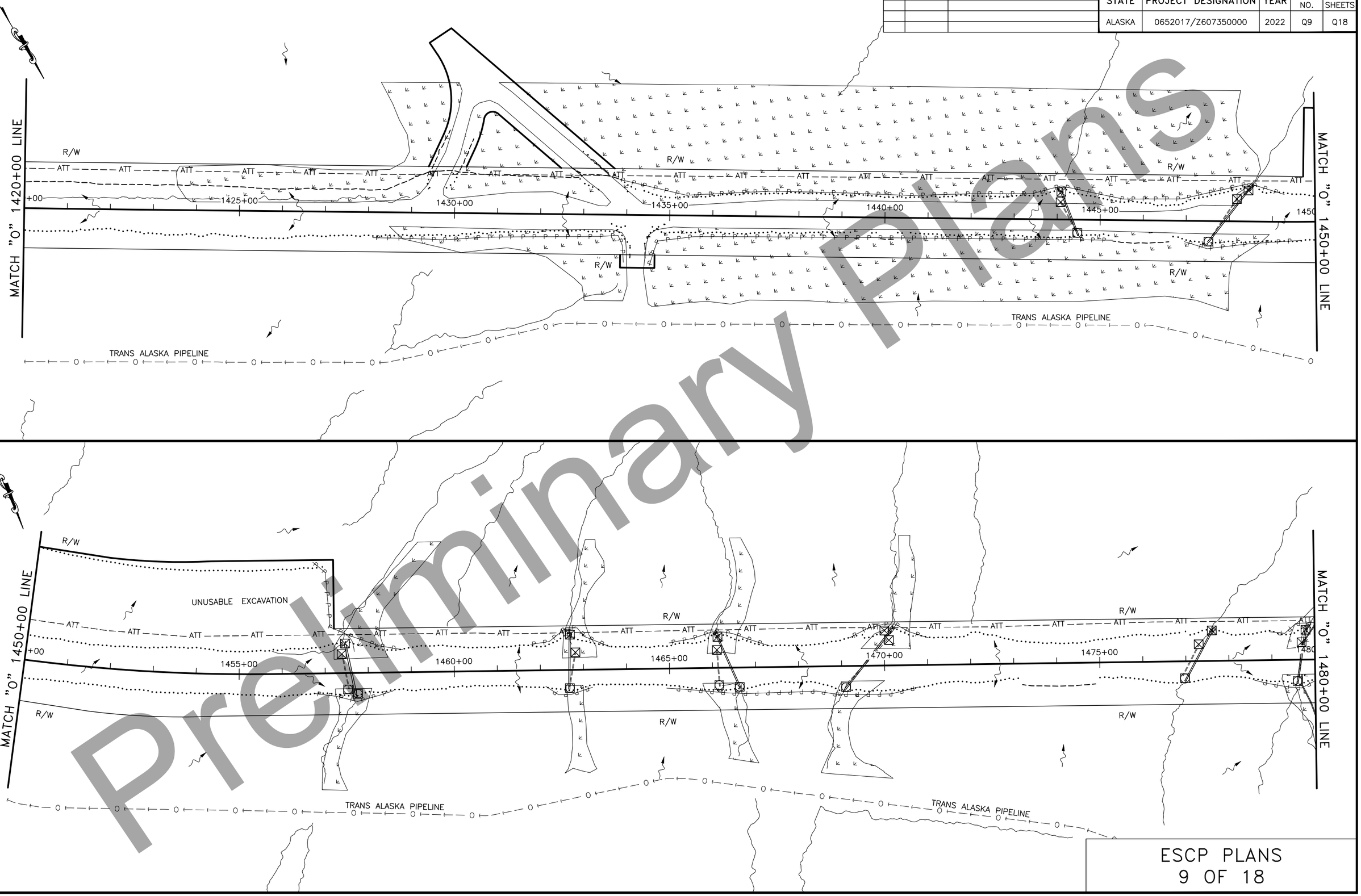

Preliminary

ESCP PLANS
9 OF 18

PLANS DEVELOPED BY: STATE OF ALASKA DEPARTMENT OF TRANSPORTATION & PUBLIC FACILITIES, NORTHERN REGION, 2301 PEGER ROAD, FAIRBANKS, AK 99709 (907)451-2200
C:\Users\ddjensen\Desktop\60735_Dalton_18_37\6 Design\4 C3D\2 Drawings\(3) Plan Production\60735_0_ESCP-1420+00.00-1480+00.00 Mon, May/16/22 04:58pm

NO.	DATE	REVISION

STATE	PROJECT DESIGNATION	YEAR	SHEET NO.	TOTAL SHEETS
ALASKA	0652017/Z607350000	2022	Q10	Q18

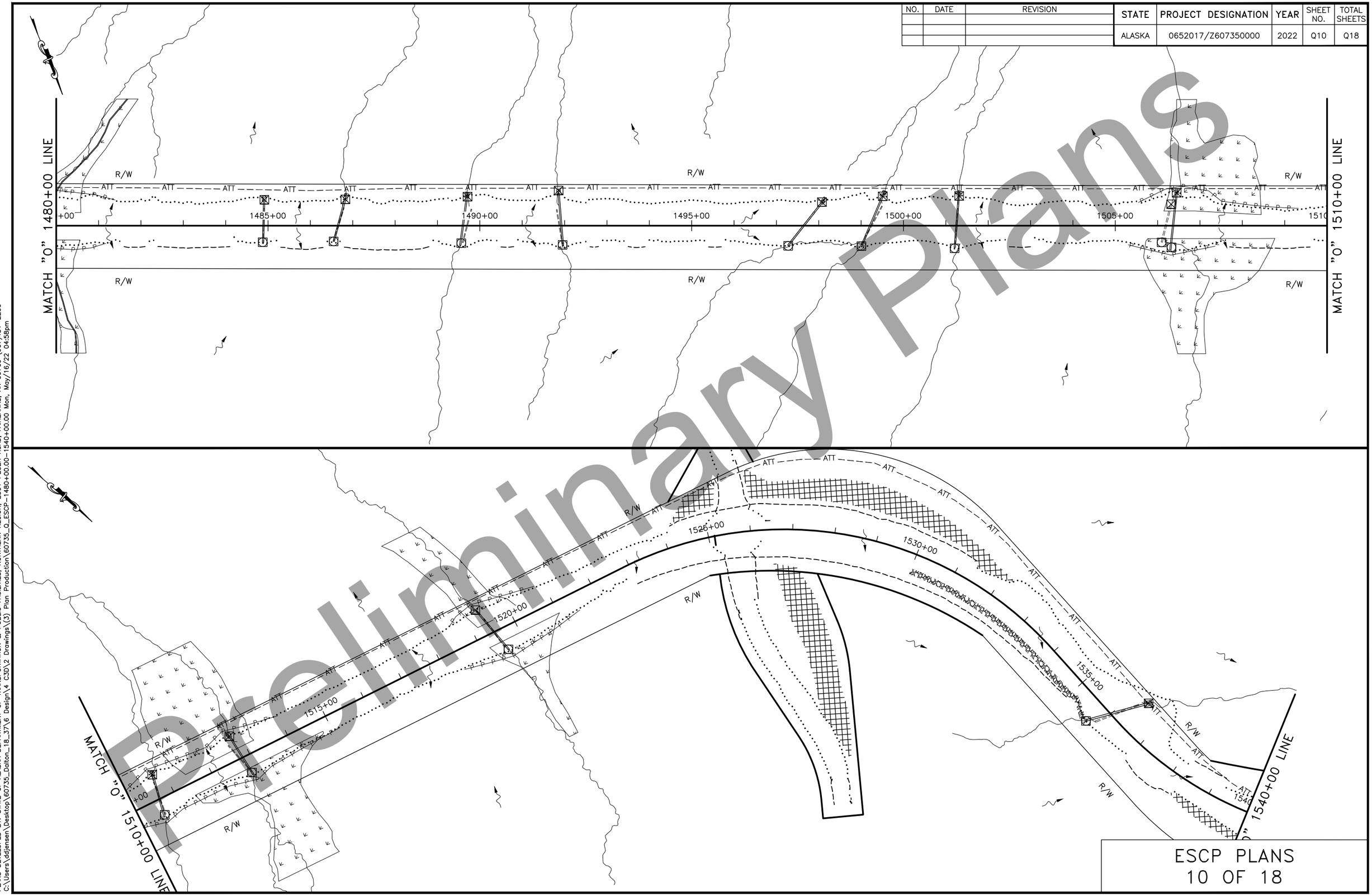

Preliminary

ESCP PLANS
10 OF 18

PLANS DEVELOPED BY: STATE OF ALASKA DEPARTMENT OF TRANSPORTATION & PUBLIC FACILITIES, NORTHERN REGION, 2301 PEGER ROAD, FAIRBANKS, AK 99709 (907)451-2200
C:\Users\ddjensen\Desktop\60735_Dalton_18_37\6 Design\4 C3D\2 Drawings\(3) Plan Production\60735_0_ESCP-1480+00.00-1540+00.00 Mon, May/16/22 04:58pm

NO.	DATE	REVISION

STATE	PROJECT DESIGNATION	YEAR	SHEET NO.	TOTAL SHEETS
ALASKA	0652017/Z607350000	2022	Q11	Q18

Preliminary Plans

MATCH "O" 1540+00 LINE

MATCH "O" 1570+00 LINE

MATCH "O" 1600+00 LINE

R/W

ATT

TRANS ALASKA PIPELINE

1545+00

1550+00

1555+00

1560+00

1565+00

1570+00

1575+00

1580+00

1585+00

1590+00

1595+00

1600+00

ESCP PLANS
11 OF 18

PLANS DEVELOPED BY: STATE OF ALASKA DEPARTMENT OF TRANSPORTATION & PUBLIC FACILITIES, NORTHERN REGION, 2301 PEGER ROAD, FAIRBANKS, AK 99709 (907)451-2200
C:\Users\ddjensen\Desktop\60735_Dalton_18_37\6 Design\4 C3D\2 Drawings\3) Plan Production\60735_Q_ESCP_1540+00.00-1600+00.00 Mon, May/16/22 04:58pm

NO.	DATE	REVISION

STATE	PROJECT DESIGNATION	YEAR	SHEET NO.	TOTAL SHEETS
ALASKA	0652017/Z607350000	2022	Q12	Q18

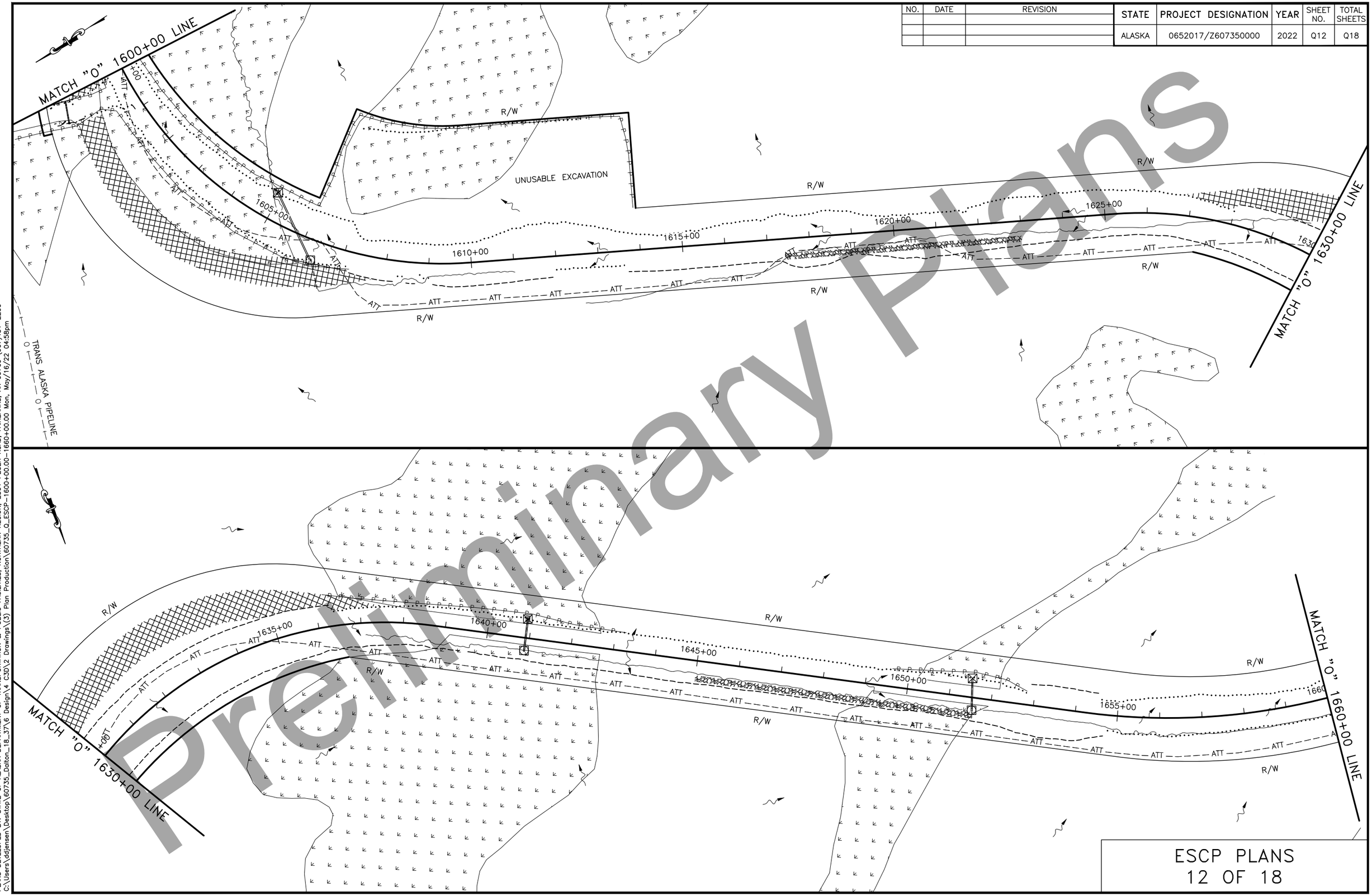

Preliminary Plans

ESCP PLANS
12 OF 18

PLANS DEVELOPED BY: STATE OF ALASKA DEPARTMENT OF TRANSPORTATION & PUBLIC FACILITIES, NORTHERN REGION, 2301 PEGER ROAD, FAIRBANKS, AK 99709 (907)451-2200
C:\Users\djensen\Desktop\60735_Dalton_18_37\6 Design\4 C3D\2 Drawings\(3) Plan Production\60735_0_ESCP_1600+00.00-1660+00.00 Mon, May/16/22 04:58pm

NO.	DATE	REVISION

STATE	PROJECT DESIGNATION	YEAR	SHEET NO.	TOTAL SHEETS
ALASKA	0652017/Z607350000	2022	Q13	Q18

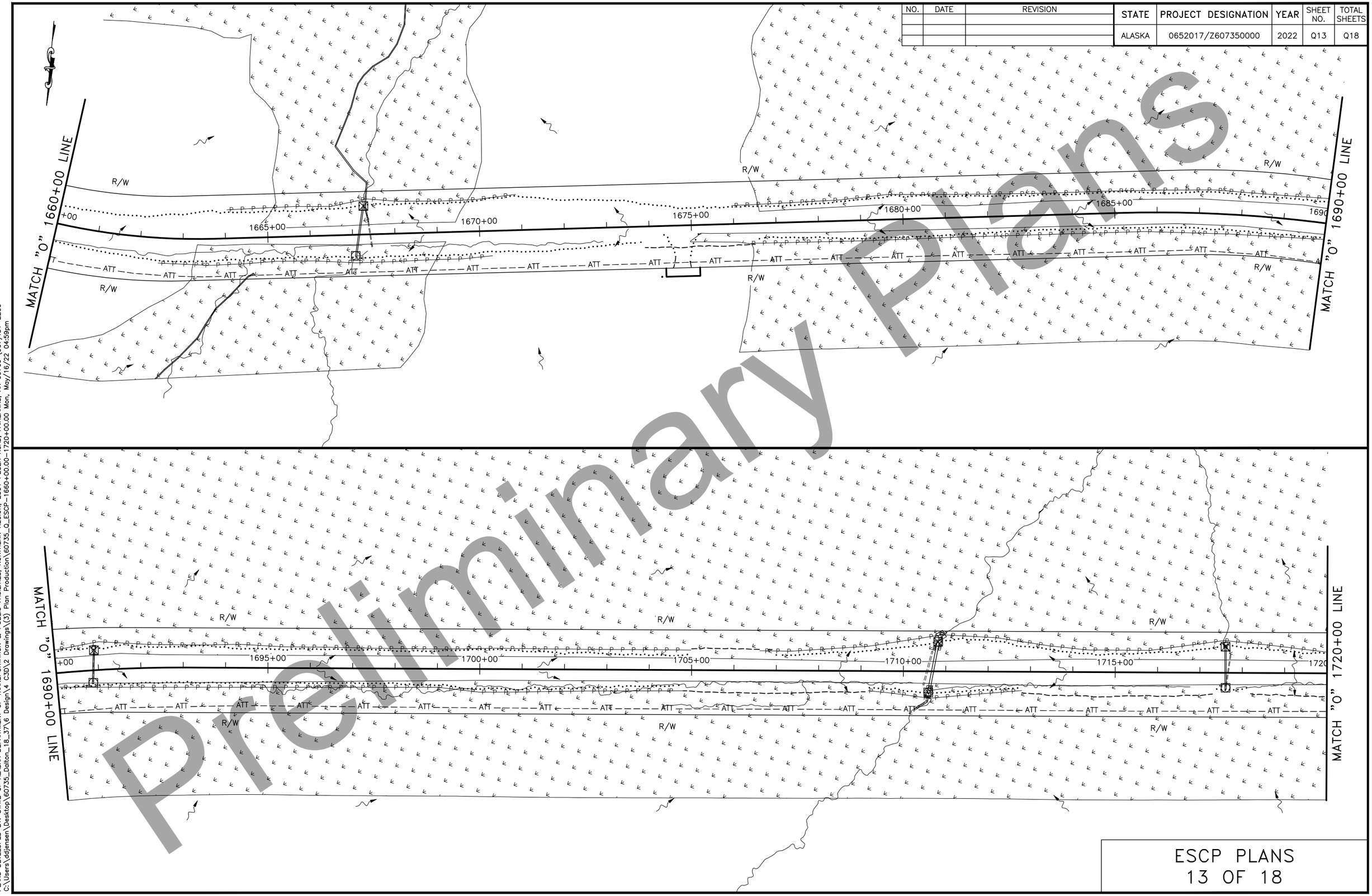

Preliminary Plans

ESCP PLANS
13 OF 18

PLANS DEVELOPED BY: STATE OF ALASKA DEPARTMENT OF TRANSPORTATION & PUBLIC FACILITIES, NORTHERN REGION, 2301 PEGER ROAD, FAIRBANKS, AK 99709 (907)451-2200
C:\Users\ddjensen\Desktop\60735_Dalton_18_37\6 Design\4 C3D\2 Drawings\(3) Plan Production\60735_0_ESCP_1660+00.00-1720+00.00 Mon, May/16/22 04:59pm

NO.	DATE	REVISION

STATE	PROJECT DESIGNATION	YEAR	SHEET NO.	TOTAL SHEETS
ALASKA	0652017/Z607350000	2022	Q14	Q18

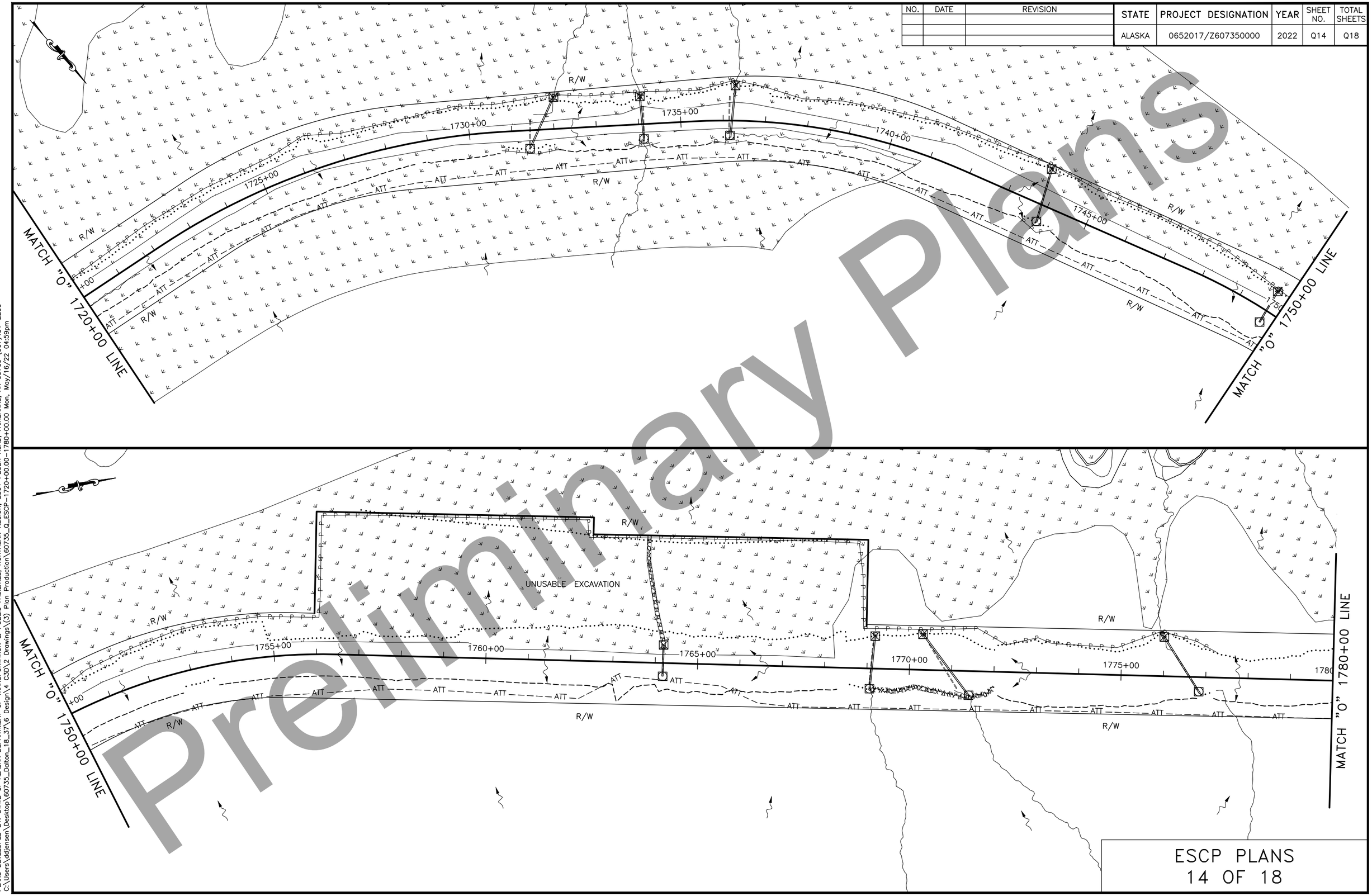

Preliminary Plans

ESCP PLANS
14 OF 18

PLANS DEVELOPED BY: STATE OF ALASKA DEPARTMENT OF TRANSPORTATION & PUBLIC FACILITIES, NORTHERN REGION, 2301 PEGER ROAD, FAIRBANKS, AK 99709 (907)451-2200
C:\Users\ddjensen\Desktop\60735_Dalton_18_37\6 Design\4 C3D\2 Drawings\(3) Plan Production\60735_0_ESCP-1720+00.00-1780+00.00 Mon, May/16/22 04:59pm

NO.	DATE	REVISION

STATE	PROJECT DESIGNATION	YEAR	SHEET NO.	TOTAL SHEETS
ALASKA	0652017/Z607350000	2022	Q15	Q18

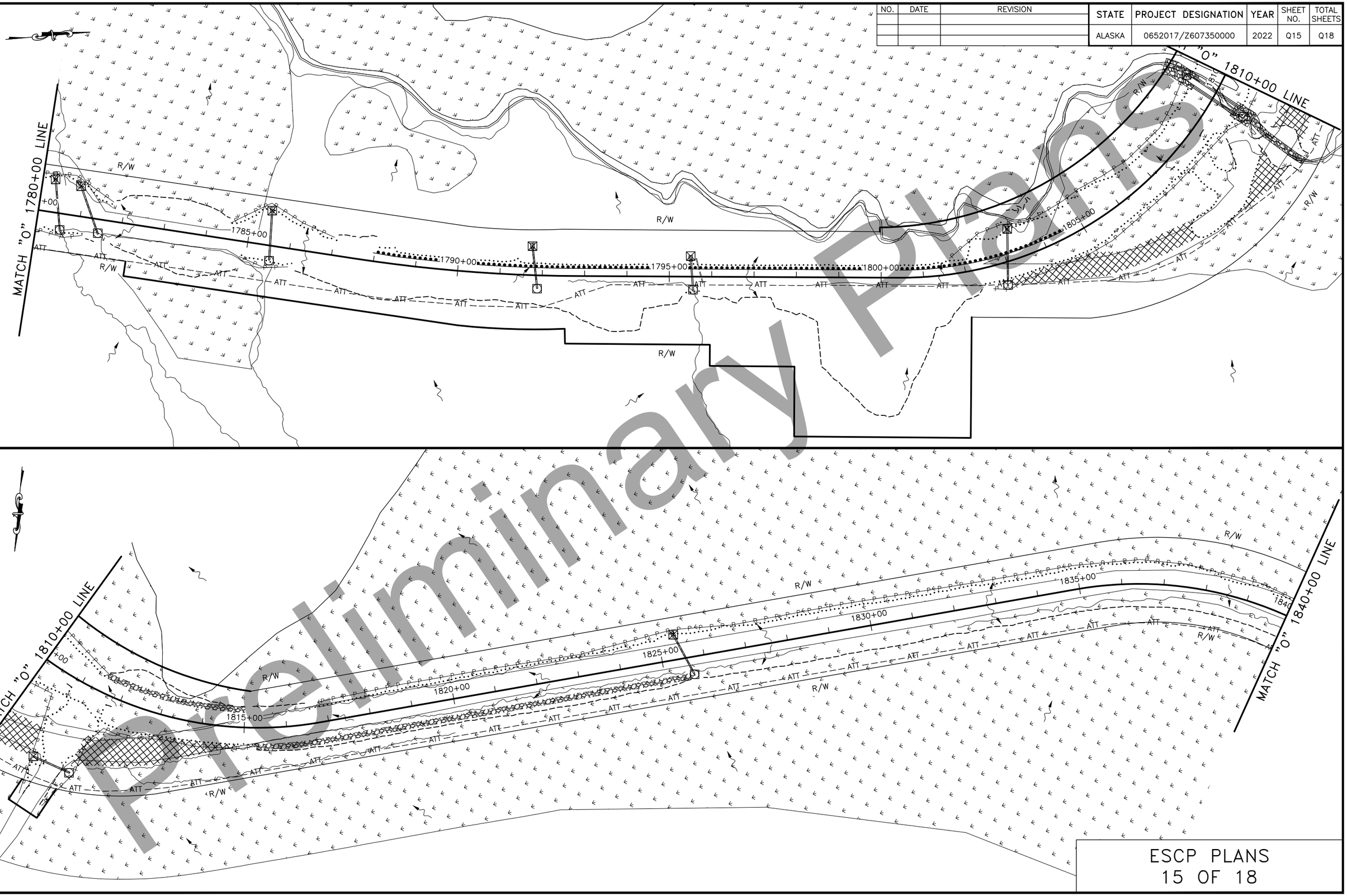

Preliminary Plans

PLANS DEVELOPED BY: STATE OF ALASKA DEPARTMENT OF TRANSPORTATION & PUBLIC FACILITIES, NORTHERN REGION, 2301 PEGER ROAD, FAIRBANKS, AK 99709 (907)451-2200
C:\Users\ddjensen\Desktop\60735_Dalton_18_37\6 Design\4 C3D\2 Drawings\(3) Plan Production\60735_0_ESCP-1780+00.00-1840+00.00 Mon, May/16/22 04:59pm

ESCP PLANS
15 OF 18

NO.	DATE	REVISION

STATE	PROJECT DESIGNATION	YEAR	SHEET NO.	TOTAL SHEETS
ALASKA	0652017/Z607350000	2022	Q16	Q18

MATCH "O" 1840+00 LINE

1845+00

1850+00

1855+00

1860+00

1865+00

1870

MATCH "O" 1870+00 LINE

1875+00

1880+00

1885+00

1890+00

1895+00

1900

MATCH "O" 1900+00 LINE

R/W

ATT

Preliminary Plans

ESCP PLANS
16 OF 18

PLANS DEVELOPED BY: STATE OF ALASKA DEPARTMENT OF TRANSPORTATION & PUBLIC FACILITIES, NORTHERN REGION, 2301 PEGER ROAD, FAIRBANKS, AK 99709 (907)451-2200
C:\Users\djensen\Desktop\60735_Dalton_18_37\6 Design\4 C3D\2 Drawings\(3) Plan Production\60735_0_ESCP-1840+00.00-1900+00.00 Mon, May/16/22 04:59pm

NO.	DATE	REVISION

STATE	PROJECT DESIGNATION	YEAR	SHEET NO.	TOTAL SHEETS
ALASKA	0652017/Z607350000	2022	Q17	Q18

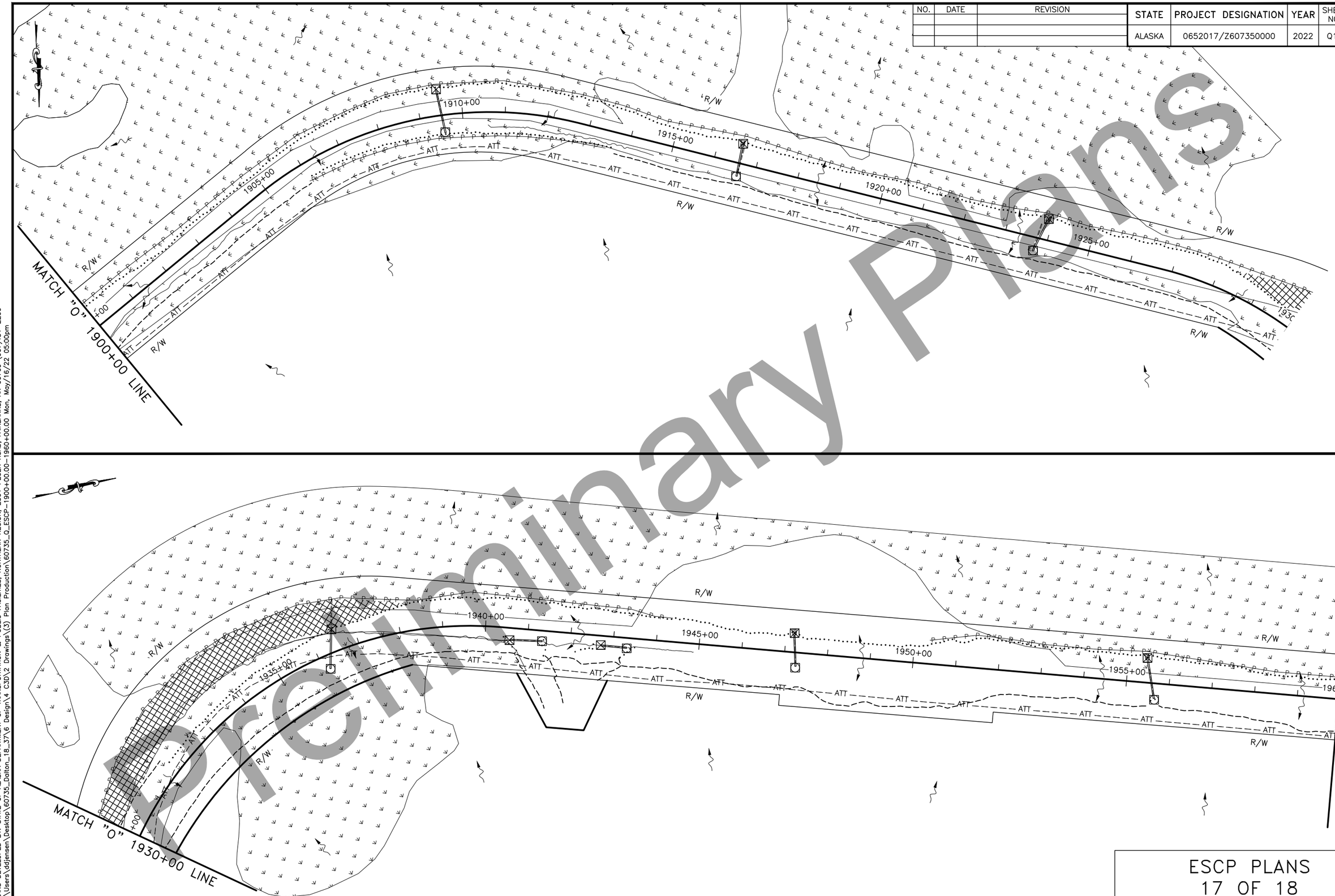

Preliminary Plans

PLANS DEVELOPED BY: STATE OF ALASKA DEPARTMENT OF TRANSPORTATION & PUBLIC FACILITIES, NORTHERN REGION, 2301 PEGER ROAD, FAIRBANKS, AK 99709 (907)451-2200
C:\Users\djdjensen\Desktop\60735_Dalton_18_37\6 Design\4 C3D\2 Drawings\(3) Plan Production\60735_0_ESCP-1900+00.00-1960+00.00 Mon, May/16/22 05:00pm

ESCP PLANS
17 OF 18

NO.	DATE	REVISION

STATE	PROJECT DESIGNATION	YEAR	SHEET NO.	TOTAL SHEETS
ALASKA	0652017/Z607350000	2022	Q18	Q18

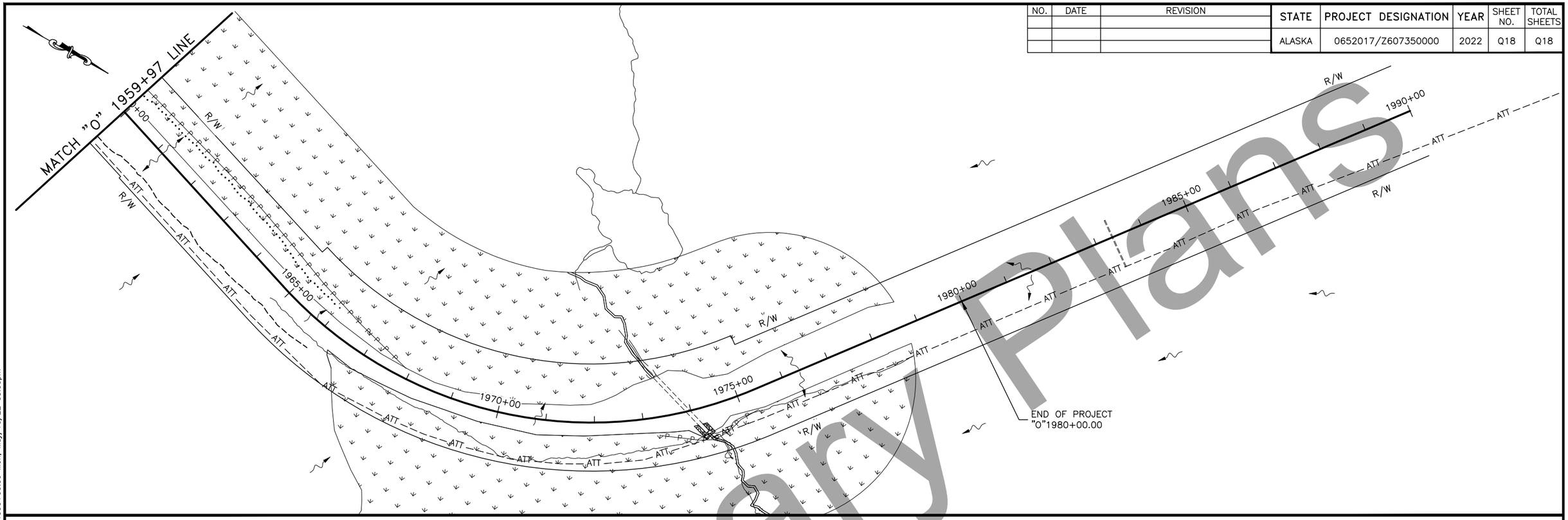

Preliminary Plans

ESCP PLANS
18 OF 18

PLANS DEVELOPED BY: STATE OF ALASKA DEPARTMENT OF TRANSPORTATION & PUBLIC FACILITIES, NORTHERN REGION, 2301 PEGER ROAD, FAIRBANKS, AK 99709 (907)451-2200
C:\Users\ddjensen\Desktop\60735_Dalton_18_37\6 Design\4 C3D\2 Drawings\(3) Plan Production\60735_Q_ESCP-1960+00.00-1990+00.00 Mon, May/16/22 05:00pm

NO.	DATE	REVISION

STATE	PROJECT DESIGNATION	YEAR	SHEET NO.	TOTAL SHEETS
ALASKA	0652017/Z607350000	2022	T1	T2

VERTICAL DROP–OFFS

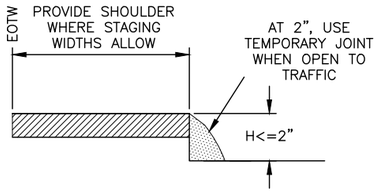

CASE A

DROP–OFFS ≤2 INCHES
(PAVED SURFACES ONLY)

1. USE "UNEVEN LANES" (CW8–11) SIGNS FOR ALL DROP–OFFS IN BETWEEN TRAFFIC LANES.
2. LEAVE NO DROP–OFFS > 1.5" IN THE TRAFFIC LANE OR ACTIVE WHEEL TRACK.

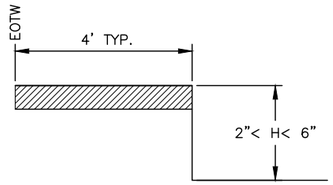

CASE B

2"< DROP–OFFS < 6"
(ALL ROADWAY SURFACES)

1. PLACE CONES OR CANDLES FOR DROP–OFFS ≥ 4 FEET AND ≤ 30 FEET FROM THE EOTW.
2. USE DRUMS OR TYPE II BARRICADES FOR DROP–OFFS < 4 FEET FROM THE EOTW.

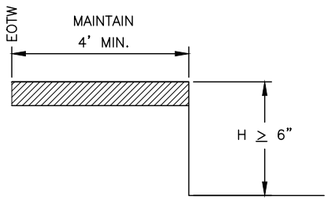

CASE C

DROP–OFFS ≥6"
(ALL ROADWAY SURFACES AND ROADSIDE SLOPES)

1. PLACE DRUMS OR TYPE II BARRICADES FOR DROP–OFFS ≤ 24" WITHIN THE CLEAR AREA.
2. PROVIDE PORTABLE CONCRETE BARRIER FOR DROP–OFFS >24" WITHIN 15 FEET OF THE EOTW. USE DRUMS OR TYPE II BARRICADES IF BEYOND 15 FEET.

FILL SLOPES

STEEPER THAN OR EQUAL TO 3:1 | BETWEEN 4:1 AND 3:1 | FLATTER THAN OR EQUAL TO 4:1

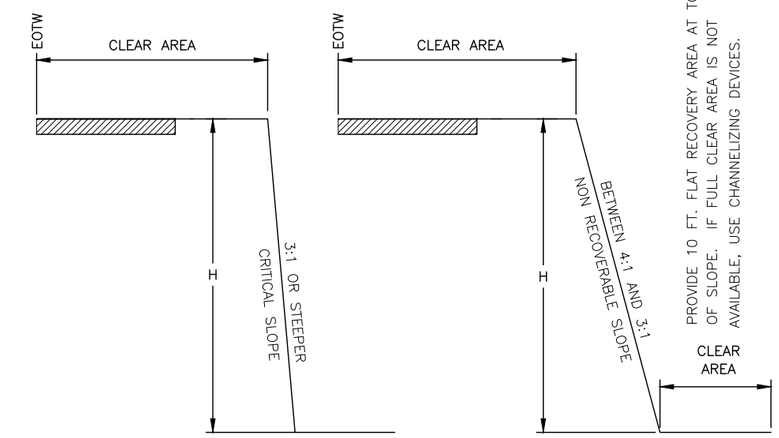

CUT SLOPES

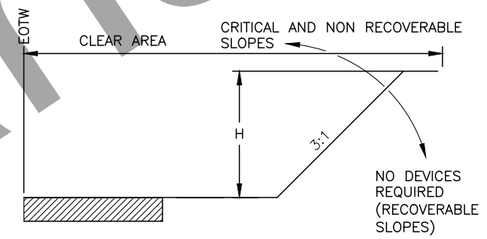

EOTW = EDGE OF TRAVELED WAY

CLEAR AREA REQUIREMENTS

	LOW SPEED < = 35 MPH	INTERMEDIATE SPEED 40 MPH TO 45 MPH	HIGH SPEED ≥ = 50 MPH
RURAL	15'	24'	30'
URBAN	10' DITCH SECTIONS, OR 2' BEHIND CURB	15' DITCH CONDITIONS, OR 2' BEHIND CURB	15' DITCH CONDITIONS, OR 2' BEHIND CURB

CHANNELIZING DEVICE REQUIREMENTS FOR SLOPES 3:1 OR STEEPER WITHIN THE CLEAR AREA

	H <= 15'	H > 15'
< 2000 VPD LOW VOLUME	CANDLES OR CONES	TYPE II BARRICADES OR DRUMS
> 2000 VPD	TYPE II BARRICADE OR DRUMS	PORTABLE CONCRETE BARRIER OR TEMPORARY GUARDRAIL

TRAFFIC CONTROL NOTES:

1. USE THE EXISTING CROSS–SECTION (PRIOR TO CONSTRUCTION) AS A BASIS FOR DETERMINING WHEN CHANNELIZING DEVICES ARE NEEDED.
2. INSTALL CHANNELIZING DEVICES WHEN THE HORIZONTAL OR VERTICAL CURVATURE IS MADE MORE SEVERE.
3. INSTALL FLEXIBLE DELINEATORS WHEN ALL VEGETATION OVER 4 FEET HIGH IS CLEARED FROM FILL SLOPES THAT ARE 3:1 OR STEEPER IN THE CLEAR AREA.
4. USE PORTABLE CONCRETE BARRIER FOR WARRANTING CONDITIONS WHICH LAST LONGER THAN 3 DAYS. FOR CONDITIONS LASTING LESS THAN 3 DAYS, OTHER CHANNELIZING DEVICES MAY BE INSTALLED.
5. TERMINATE RUNS OF PORTABLE CONCRETE BARRIER USING THE FOLLOWING METHODS:
   - A) CONNECT TO A PORTABLE CRASH CUSHION, OR
   - B) PROVIDE A CONCRETE BARRIER WITH THRIE BEAM TRANSITION TO W–BEAM GUARDRAIL, TREATED WITH A PARALLEL TERMINAL (SEE SECTION 710).
   - C) FLARE THE ENDS OF THE PORTABLE CONCRETE BARRIER AWAY FROM THE ROADWAY AT A RATE OF 7:1 ON A COMPACTED SLOPE OF 6:1 OR FLATTER, OUTSIDE OF THE CLEAR AREA. INSTALL A SLOPING PORTABLE CONCRETE BARRIER END TREATMENT, OR
   - D) BURY IN THE BACKSLOPE.
6. TERMINATE THE RUNS OF TEMPORARY W–BEAM GUARDRAIL USING THE FOLLOWING METHODS:
   - A) PROVIDE A PARALLEL TERMINAL (SEE SECTION 710)
   - B) FLARE THE ENDS OF THE TEMPORARY GUARDRAIL AWAY FROM THE ROADWAY AT A RATE OF 6:1 ON A COMPACTED SLOPE OF 6:1 OR FLATTER OUTSIDE OF THE CLEAR AREA, TERMINATE WITH A STANDARD W–BEAM END SECTION, OR
   - C) BURY IN THE BACKSLOPE.

EQUIPMENT NOTES:

1. WHEN THERE IS ACTIVE, NONMOBILE CONSTRUCTION EQUIPMENT WITHIN THE CLEAR AREA, DELINEATE THE ROADSIDE WITH TRAFFIC CONES.
2. SEPARATE PROCEDURES ARE REQUIRED FOR MOBILE WORK ZONE OPERATIONS AND SHORT DURATION WORK OF LESS THAN 12 HOURS.

WINTER SHUTDOWN NOTES:

1. WHEN REQUIRED, USE CHANNELIZING DEVICES WHICH CAN BE MAINTAINED OVER WINTER.
2. NO CHANNELIZING DEVICES ARE REQUIRED IF:
   - A) CONSTRUCTION SLOPES ARE RECOVERABLE, AND
   - B) SLOPES ARE SMOOTH AND COMPACTED, AND
   - C) REQUIRED CLEAR AREA IS PROVIDED

Preliminary Plans

TRAFFIC CONTROL DEVICES

STATE OF ALASKA 49TH
DAVID D. JENSEN (95% PLANS)
REGISTERED PROFESSIONAL ENGINEER

PLANS DEVELOPED BY: STATE OF ALASKA DEPARTMENT OF TRANSPORTATION & PUBLIC FACILITIES, NORTHERN REGION, 2301 PEGER ROAD, FAIRBANKS, AK 99709 (907)451–2200
C:\Users\ddjensen\Desktop\60735_Dalton_18_37\6 Design\4 C3D\2 Drawings\(3) Plan Production\60735_T_TRAFFIC_DEVICES–T1 Mon, May/16/22 06:02pm

NO.	DATE	REVISION

STATE	PROJECT DESIGNATION	YEAR	SHEET NO.	TOTAL SHEETS
ALASKA	0652017/Z607350000	2022	T2	T2

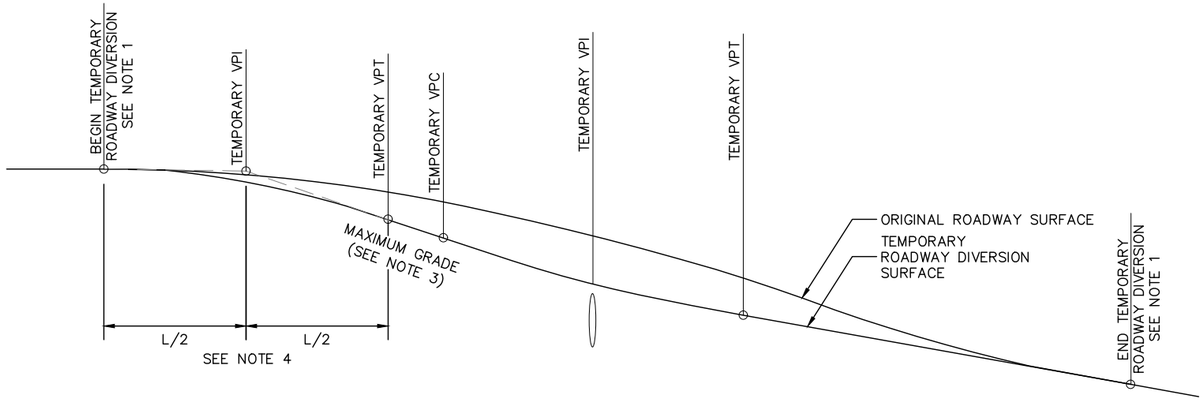

PARTIAL WIDTH CONSTRUCTION VERTICAL PROFILE DETAIL

N.T.S. (VERTICAL SCALE EXAGGERATED)

PARTIAL WIDTH CONSTRUCTION HORZONTAL ALIGNMENT AND VERTICAL PROFILE NOTES:

1. FOR CULVERTS WITH MORE THAN 10' OF COVER, THE CONTRACTOR IS RESPONSIBLE FOR DEVELOPING AND SUBMITTING THE EXCAVATION PROFILE AND HORIZONTAL ALIGNMENT TO THE ENGINEER FOR APPROVAL PRIOR TO BEGINNING CULVERT EXCAVATION WORK.
2. UNLESS OTHERWISE APPROVED BY THE ENGINEER, THE MINIMUM HORIZONTAL CURVE RADIUS FOR PARTIOAL WIDTH CONSTRUCTION IS 355–FT.
3. THE MAXIMUM ALLOWABLE VERTICAL GRADE IS 10%.
4. THE MINIMUM ALLOWABLE LENGTH OF VERTICAL CURVE, L, FOR PARTIAL WIDTH CONSTRUCTION SHALL BE DETERMINED BY MULTIPLYING THE ALGEBRAIC DIFFERENCE (K) IN GRADES BY THE APPLICABLE RATE OF VERTICAL CURVATURE GIVEN BELOW.
   - 4.1. FOR CREST VERTICAL CURVES K=19
   - 4.2. FOR SAG VERTICAL CURVES K=37
5. MAINTAIN 2' OR GREATER OF COVER OVER THE TOP OF CULVERTS WITHIN PARTIAL WIDTH CONSTRUCTION.
6. OBTAIN THE ENGINEER'S APPROVAL ON ALL TRAFFIC CONTROL PLANS PRIOR TO EXCAVATING FOR NEW CULVERTS.

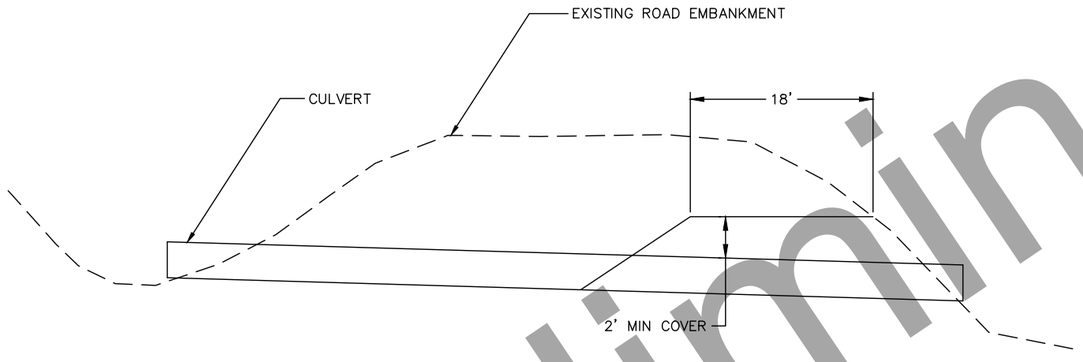

TYPICAL SECTION: PARTIAL WIDTH CONSTRUCTION

N.T.S.

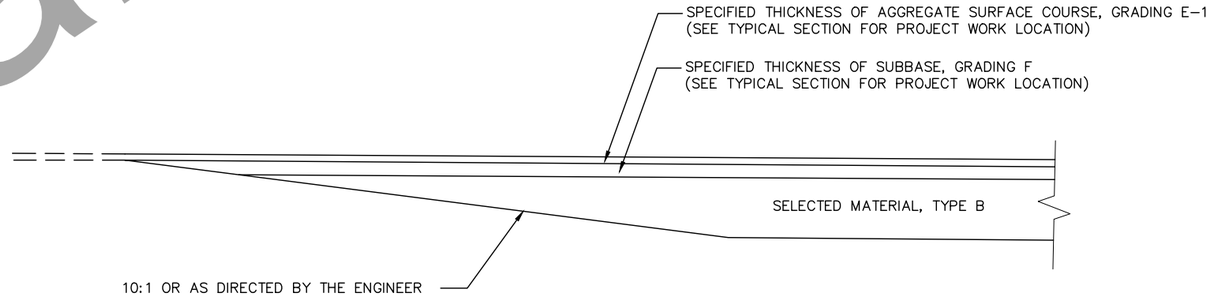

STRUCTURAL SECTION TRANSITION DETAIL

USE WHEN TRANSITIONING BETWEEN TYPICAL SECTIONS AND AREAS WHERE PARTIAL WIDTH CONSTRUCTION IMPACT THE EXISTING ROADWAY.

Preliminary Plans

TEMPORARY ROADWAY DIVERSION DETAILS

STATE OF ALASKA 49TH
DAVID D. JENSEN
(95% PLANS)
REGISTERED PROFESSIONAL ENGINEER

PLANS DEVELOPED BY: STATE OF ALASKA DEPARTMENT OF TRANSPORTATION & PUBLIC FACILITIES, NORTHERN REGION, 2301 PEGER ROAD, FAIRBANKS, AK 99709 (907)451-2200
C:\Users\ddjensen\Desktop\60735_Dalton_18_37\6 Design\4 C3D\2 Drawings\(3) Plan Production\60735_T_TRAFFIC_DEVICES-T2 Mon, May/16/22 06:02pm

D-06.10

SHEET 1 of 3

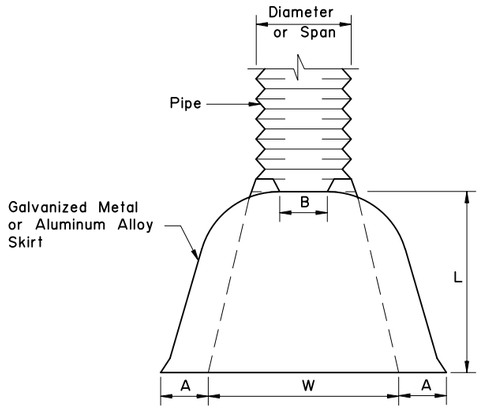

PLAN

ROUND AND PIPE ARCH

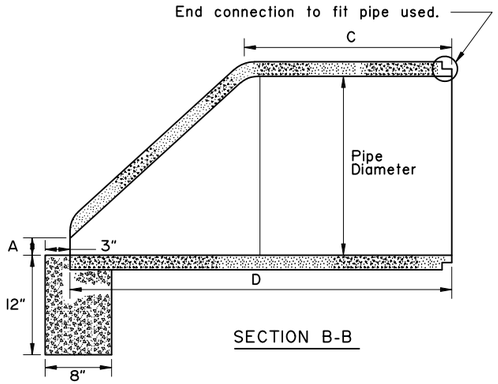

SECTION B-B

MINIMUM DIMENSIONS					
Pipe Diameter	A	B	C	D	E
12"	4"	1 3/4"	24"	46"	24"
18"	9"	2"	25"	50"	36"
24"	9 1/2"	2 1/2"	30"	72"	48"
30"	12"	3"	20"	73"	60"
36"	15"	3 3/8"	35"	97"	72"
42"	21"	3 3/4"	35"	98"	78"
48"	24"	4 1/4"	26"	98"	84"
54"	27"	4 5/8"	33"	99"	82"

ROUND PIPE									
Pipe Diam. Inches	Thickness For Aluminum	Thk. for Galv. Metal	Dimension Inches A 1" Tol.	B Max.	H 1" Tol.	L 1 1/2" Tol.	W 2" Tol.	T 2" Tol.	Skirt	Approx. Slope
12"	0.060	0.064	6"	6"	6"	21"	24"	34"	1 Pc.	2 1/2
15"	0.060	0.064	7"	8"	6"	26"	30"	40"	1 Pc.	2 1/2
18"	0.060	0.064	8"	10"	6"	31"	36"	46"	1 Pc.	2 1/2
21"	0.060	0.064	9"	12"	6"	36"	42"	52"	1 Pc.	2 1/2
24"	0.075	0.064	10"	13"	6"	41"	48"	58"	1 Pc.	2 1/2
30"	0.075	0.079	12"	16"	8"	51"	60"	70"	1 Pc.	2 1/2
36"	0.105	0.079	14"	19"	9"	60"	72"	94"	2 Pc.	2 1/2
42"	0.105	0.109	16"	22"	11"	69"	84"	106"	2 Pc.	2 1/2
48"	0.105	0.109	18"	27"	12"	78"	90"	112"	2 Pc.	2 1/4
54"	0.105	0.109	18"	30"	12"	84"	102"	122"	2 Pc.	2 1/4
60"	0.135	0.109	18"	33"	12"	87"	114"	134"	3 Pc.	2 1/4
66"	0.135	0.109	18"	36"	12"	87"	120"	142"	3 Pc.	2 1/4
72"	0.135	0.109	18"	39"	12"	87"	126"	146"	3 Pc.	2 1/4
78"	— —	0.109	18"	42"	12"	87"	132"	152"	3 Pc.	1 1/4
84"	— —	0.109	18"	45"	12"	87"	138"	158"	3 Pc.	1 1/6

PIPE-ARCH										
Pipe-Arch Dimension Inches Span	Rise	Thickness for Aluminum	Thk. for Galv. Metal	Dimension Inches A 1" Tol.	B Max.	H 1" Tol.	L 1 1/2" Tol.	W 2" Tol.	T 2" Tol.	Skirt	Approx. Slope
17"	13"	0.060	0.064	7"	9"	6"	19"	30"	40"	1 Pc.	2 1/2
21"	15"	0.060	0.064	7"	10"	6"	23"	36"	46"	1 Pc.	2 1/2
24"	18"	0.060	0.064	8"	12"	6"	28"	42"	52"	1 Pc.	2 1/2
28"	20"	0.075	0.064	9"	14"	6"	32"	48"	58"	1 Pc.	2 1/2
35"	24"	0.075	0.079	10"	16"	6"	39"	60"	70"	1 Pc.	2 1/2
42"	29"	0.105	0.079	12"	18"	8"	46"	75"	85"	1 Pc.	2 1/2
49"	33"	0.105	0.109	13"	21"	9"	53"	85"	103"	2 Pc.	2 1/2
57"	38"	0.105	0.109	18"	26"	12"	63"	90"	114"	2 Pc.	2 1/2
64"	43"	0.105	0.109	18"	30"	12"	70"	102"	130"	2 Pc.	2 1/4
71"	47"	0.135	0.109	18"	33"	12"	77"	114"	144"	3 Pc.	2 1/4
77"	52"	0.135	0.109	18"	36"	12"	84"	120"	158"	3 Pc.	2 1/4
83"	57"	0.135	0.109	18"	39"	12"	90"	126"	170"	3 Pc.	2 1/4

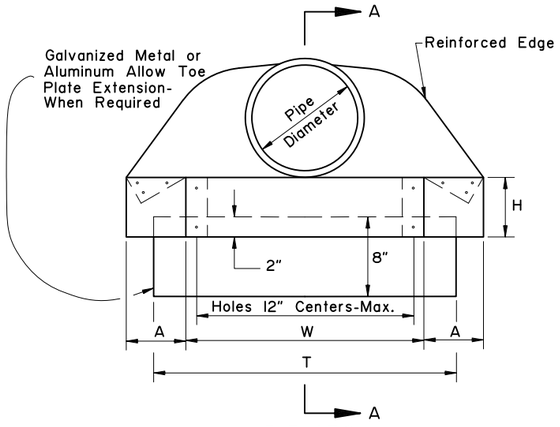

ELEVATION

ROUND PIPE

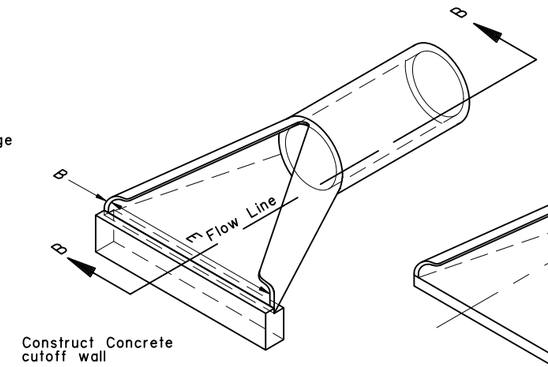

PRECAST CONCRETE END SECTION

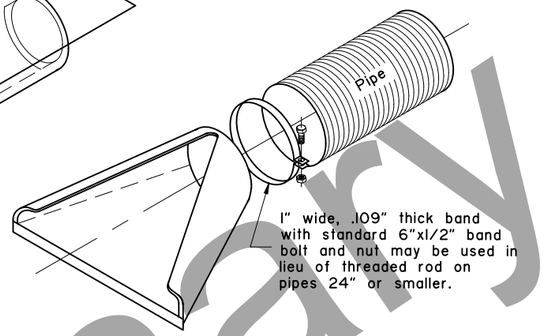

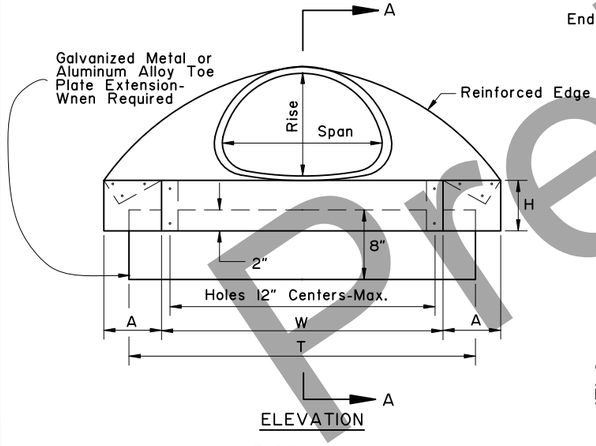

ELEVATION

PIPE ARCH

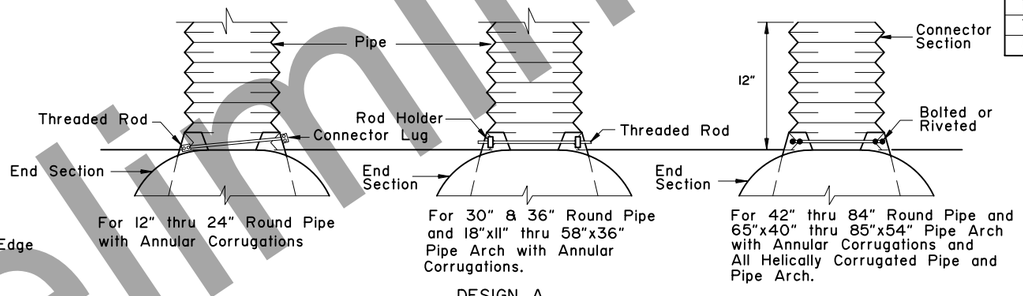

For 12" thru 24" Round Pipe with Annular Corrugations

For 30" & 36" Round Pipe and 18"x11" thru 58"x36" Pipe Arch with Annular Corrugations.

For 42" thru 84" Round Pipe and 65"x40" thru 85"x54" Pipe Arch with Annular Corrugations and All Helically Corrugated Pipe and Pipe Arch.

DESIGN A

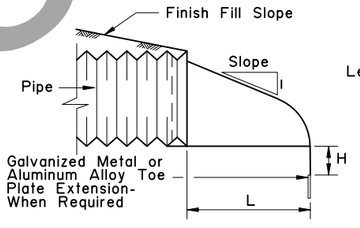

SECTION A-A

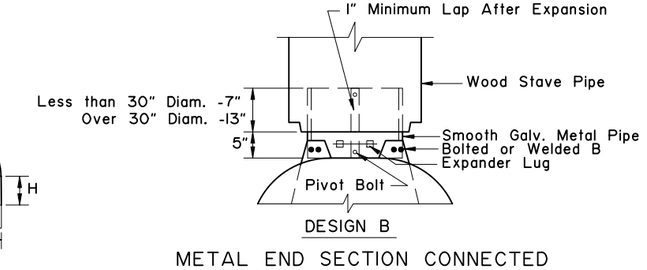

DESIGN B

METAL END SECTION CONNECTED TO WOOD STAVE PIPE

GENERAL NOTES:

1. Toe plate extensions will be required only when provided for on the plans. When required, the toe plate extensions shall be punched with holes to match those in lip of skirt and fastened with 3/8 inch or larger galvanized nuts and bolts and shall be the same gage as the end section.
2. Galvanized Metal or Aluminum Alloy End Sections may be used on Wood Stave and Plastic Pipe.
3. All 3 piece bodies shall have 12 gage sides and 10 gage center panels. Multiple panel bodies shall have lap seams which are to be tightly joined by 3/8" galvanized rivets or bolts.

State of Alaska DOT&PF
ALASKA STANDARD PLAN

CULVERT END SECTIONS

Adopted as an Alaska Standard Plan by: Kenneth J. Fisher, P.E. Chief Engineer

Adoption Date: 02/08/2019

Last Code and Stds. Review By: Date:

Next Code and Standards Review date: 02/08/2029

D-06.10

Preliminary Plans

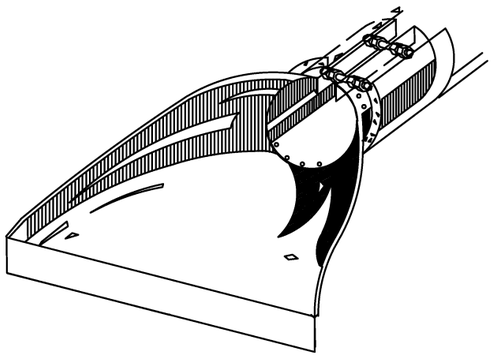

FOR CONNECTING CONCRETE PIPE OR CORRUGATED POLYETHYLENE PIPE TO METAL END SECTION.

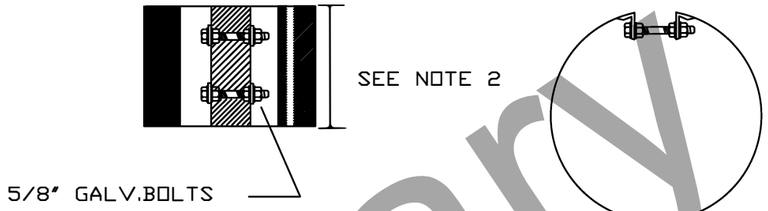

METAL INSERTS FOR USE WITH CORRUGATED PLASTIC PIPE AND METAL END SECTIONS

GENERAL NOTES

1. See general notes on sheet 1 of 3.
2. See sheet 1 of 3 for metal end section dimensions.
3. Insert bolts, washers and rivets shall be galvanized. Insert thickness is the same as the end section.
4. Use culvert inserts only at inlet.

Preliminary Plans

State of Alaska DOT&PF
ALASKA STANDARD PLAN

CULVERT END SECTIONS

Adopted as an Alaska Standard Plan by:
Kenneth J. Fisher, P.E.
Chief Engineer

Adoption Date: 02/08/2019

Last Code and Stds. Review
By: Date:

Next Code and Standards Review date: 02/08/2029

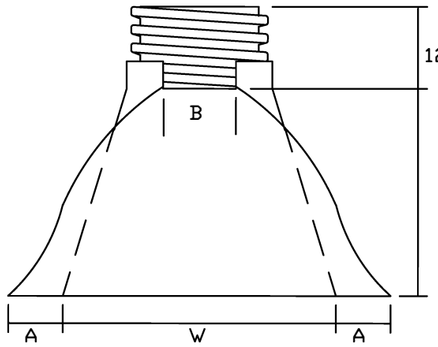

TOP VIEW

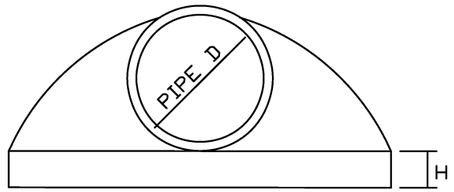

END VIEW

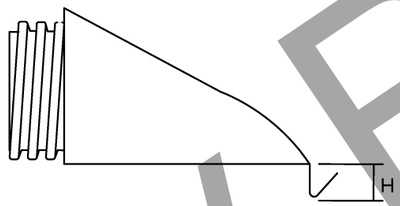

SIDE VIEW

PIPE DIAMETER	DIMENSIONS IN MILLIMETERS				
	A(1"±)	B MAX	H(1"±)	L(1/2"±)	W(2"±)
12" and 15"	6 1/2"	10"	6 1/2"	25"	29"
18"	7 1/2"	15"	6 1/2"	32"	35"
24"	7 1/2"	18"	6 1/2"	36"	45"
30"	10 1/2"	N/A	7"	53"	68"
36"	10 1/2"	N/A	7"	53"	68"

PLASTIC END SECTION FOR CORRUGATED PLASTIC PIPE

GENERAL NOTES

1. Plastic flared end sections may be used with HDPE corrugated culvert pipes where noted in project plans or approved by project engineer.
2. Consult manufacturer's recommendations for proper sizing and coupling devices. Recommended fasteners may include connecting bands or cinch ties. Fittings across dimension B may include threaded rods with wing nuts or bolts and washers. plastic welds may be recommended.
3. Align coupling to accomodate pipe corrugations.
4. Metal components e.g. bolts or washers must be galvanized.
5. Attachment of end section should preserve culvert alignment and not impair pipe function. Use end sections only on culvert inlet.
6. Toe plate extensions will be required only when designated on the plans.
7. End sections will not be used on HDPE culvert pipes larger than 36" unless indicated by project plans or approved by the Engineer.

State of Alaska DOT&PF
ALASKA STANDARD PLAN

CULVERT END SECTIONS

Adopted as an Alaska Standard Plan by: Kenneth J. Fisher, P.E.
Chief Engineer

Adoption Date: 02/08/2019

Last Code and Stds. Review
By: Date:

Next Code and Standards Review date: 02/08/2029

D-06.10

Preliminary Plans

G-00.05 SHEET 1 of 5

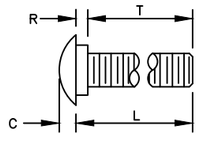

B	C	D	L (Length)	R	T (Thread Length)
15/16"	5/16"	1 5/16" or 1 7/16"	As Required	7/32"	As Required

5/8" BUTTONHEAD BOLT
(FBB01-05)

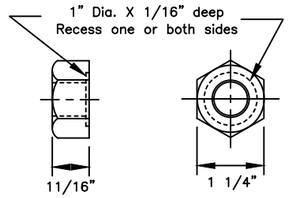

5/8" Dia. RECESSED HEX NUT
(FBB01-05)

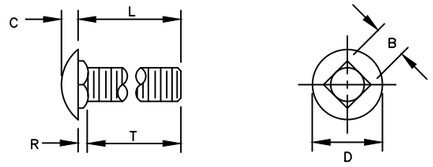

B	C	D	L (Length)	R	T (Thread Length)
5/8"	5/16"	1 5/16"	As Required	3/16"	As Required

5/8" Dia. CARRIAGE BOLT
(FBC10-20)

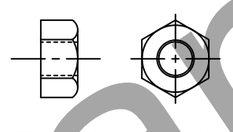

STANDARD HEX NUT

GENERAL NOTES:

1. All covered hardware shall comply with the Task Force 13 (TF13) Guide to Standardized Roadside Safety Hardware online publication. Designators given when possible in parentheses.

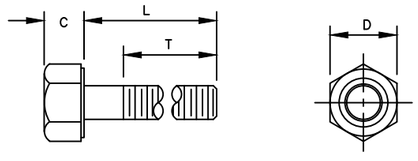

Bolt Size	C	D	L (Length)	T (Thread Length)
5/16"	——	——	1 1/2"	7/8"
5/16"	——	——	1"	1"
3/8"	——	——	7 1/2"	1 1/2"
1/2"	——	——	1 1/2"	1 1/2"
1/2"	——	——	1 1/4"	1 1/4"
5/8" H.S.	5/16"	7/8"	8"	1 1/2"
5/8"-11	——	——	1 1/2"	1 1/2"
3/4"	——	——	1 1/2"	1 1/2"
3/4"	——	——	As Required	2"
3/4" H.S.	15/32"	1 1/4"	2"	1 1/2"

STANDARD HEX BOLTS

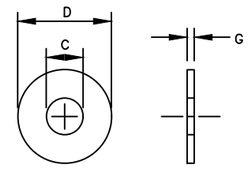

For Bolt ø	C	D	G
3/8"	7/16"	1"	5/64"
1/2"	17/32"	1 1/16"	3/32"
1/2" H.S.	17/32"	1 1/16"	3/32"
5/8"	11/16"	1 3/4"	9/64"
3/4"	13/16"	1 15/32"	9/64"
3/4" H.S.	13/16"	2"	5/32"
1"	1 1/16"	2"	9/64"

STANDARD STEEL WASHERS

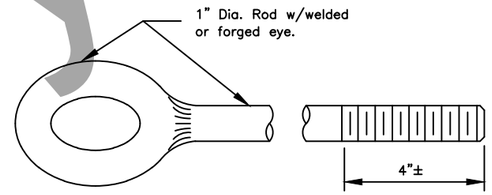

EYE BOLT

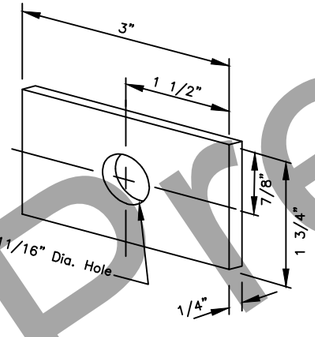

FLAT PLATE WASHER

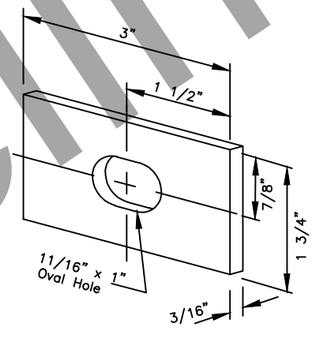

RECTANGULAR POST BOLT WASHER
(FWR03)

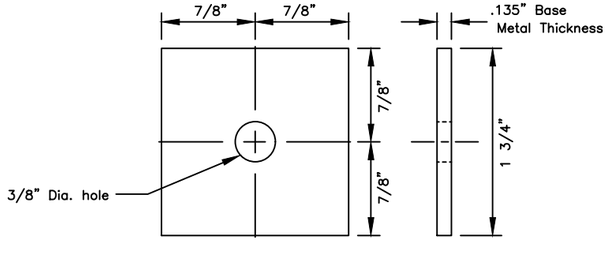

SQUARE STEEL WASHER
(FWR01)

State of Alaska DOT&PF
ALASKA STANDARD PLAN

STANDARD GUARDRAIL HARDWARE
(NUTS, BOLTS & WASHERS)

Adopted as an Alaska Standard Plan by: Carolyn Morehouse
Carolyn Morehouse, P.E.
Chief Engineer

Adoption Date: 7/17/2020

Last Code and Stds. Review
By: KLK Date: 7/8/2020

Next Code and Standards Review Date: 7/8/2030

G-00.05

Preliminary Plans

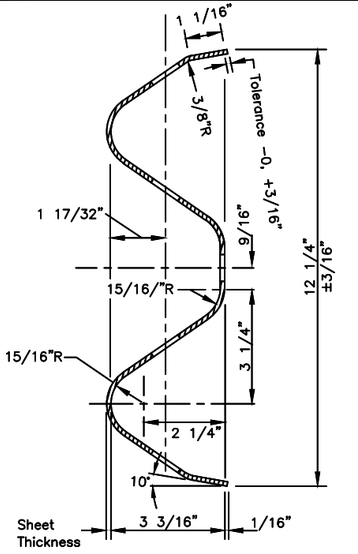

SECTION A–A
(cross section same as RWM02a–b)

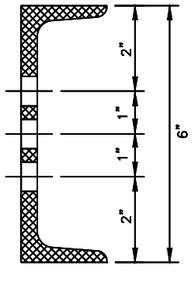

SECTION B–B

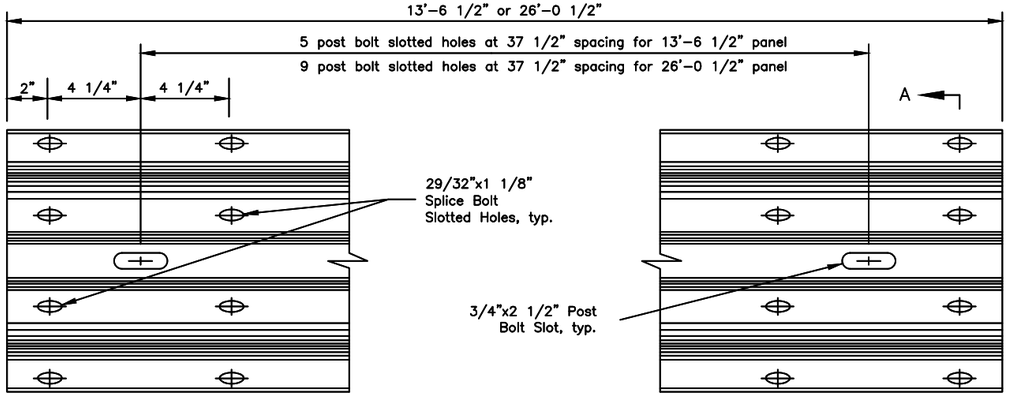

STANDARD W–BEAM PANEL (RWM04a–b)

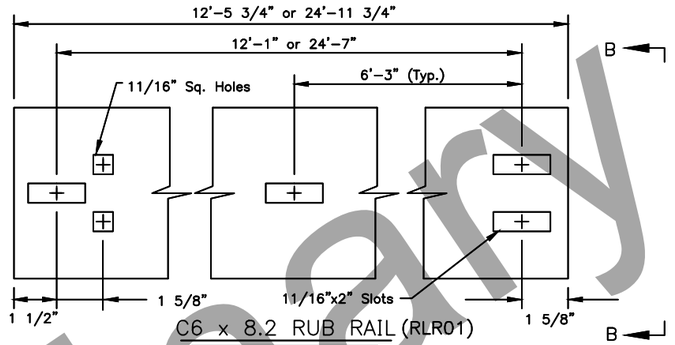

C6 x 8.2 RUB RAIL (RLR01)
ASTM A36 STEEL

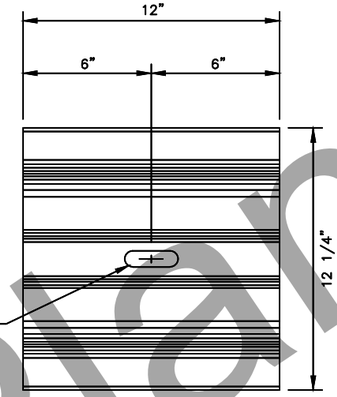

W–BEAM BACKUP PLATE
(RWB01a–b)

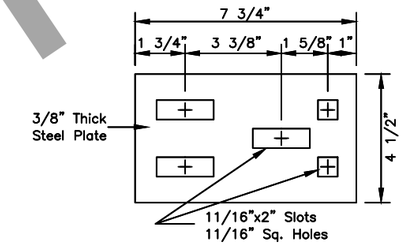

SPLICE PLATE (RLR01)
ASTM A36 STEEL

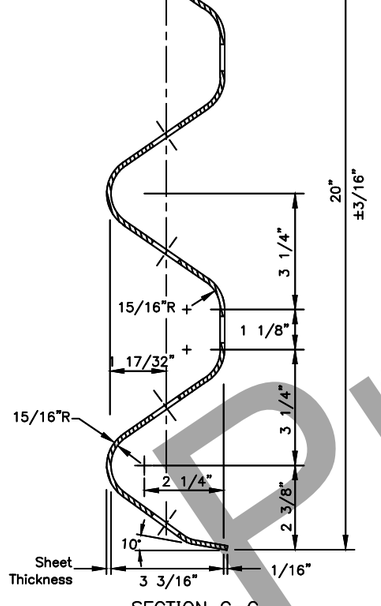

SECTION C–C
(RTM01a–02b)

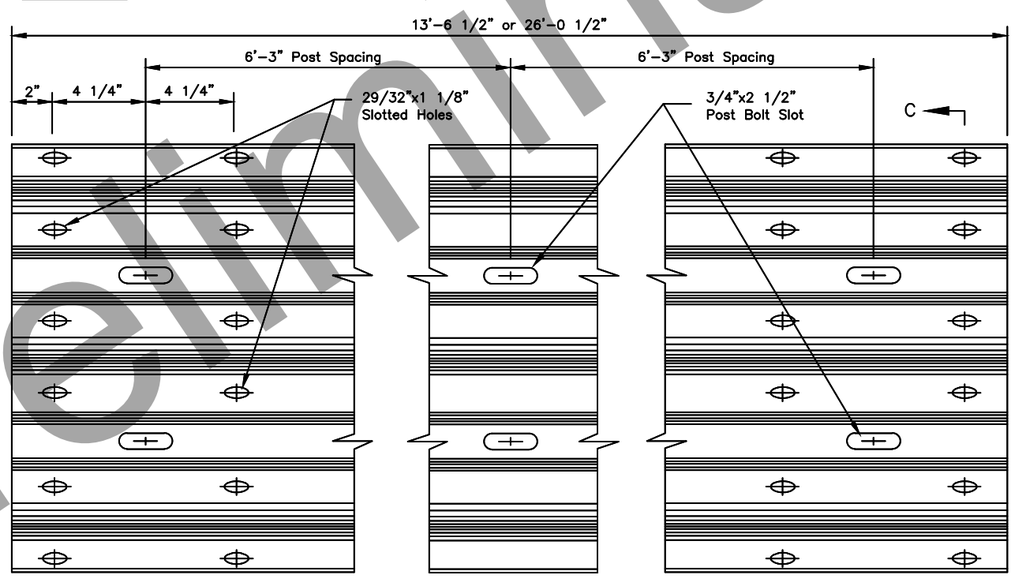

STANDARD THRIE BEAM PANEL (RTM01a–02b)

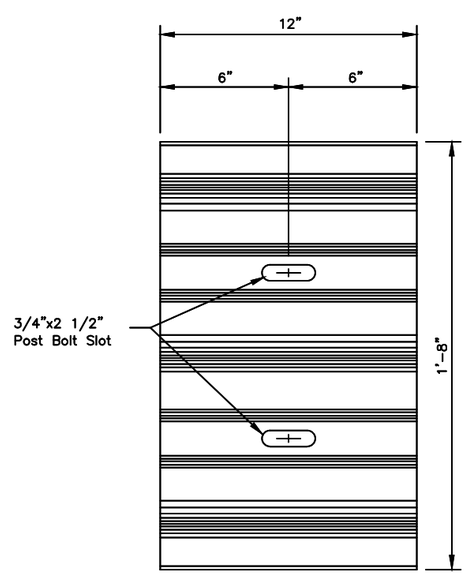

THRIE BEAM BACKUP PLATE
(RTB01a–02b)

GENERAL NOTES:

1. All covered hardware shall comply with the Task Force 13 (TF13) Guide to Standardized Roadside Safety Hardware online publication. Designators given when possible in parentheses.
2. Install back–up plates between blockouts and w–beam or thrie–beam rail at intermediate (non–splice) posts when steel blockouts are used but not with wood, rubber, plastic, or other approved blockouts.

State of Alaska DOT&PF
ALASKA STANDARD PLAN

STANDARD GUARDRAIL HARDWARE (RAILS AND SPLICES)

Adopted as an Alaska Standard Plan by: Carolyn Morehouse
Carolyn Morehouse, P.E.
Chief Engineer

Adoption Date: 7/17/2020

Last Code and Stds. Review
By: KLK Date: 7/8/2020

Next Code and Standards Review Date: 7/8/2030

G–00.05

Preliminary Plans

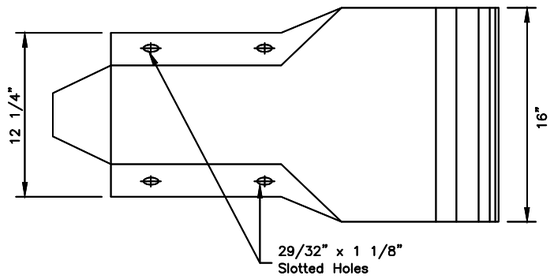

PROFILE

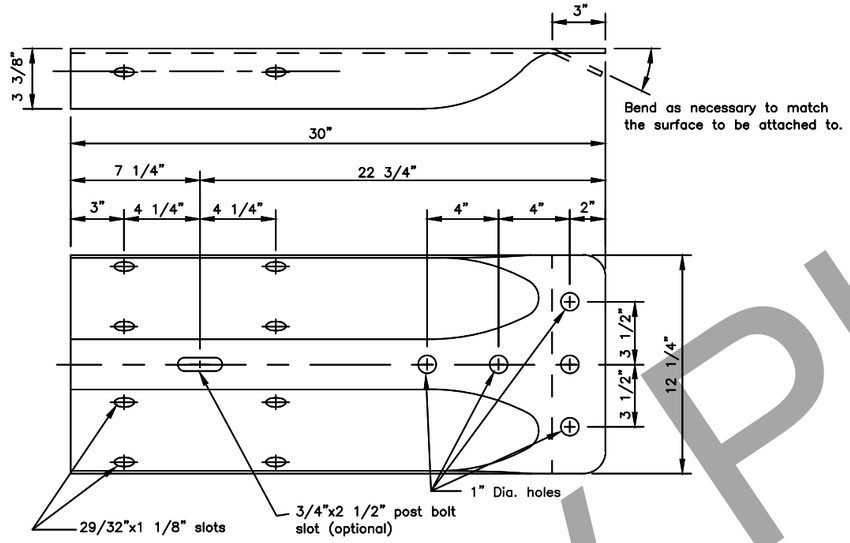

STANDARD W-BEAM TERMINAL CONNECTOR
(RWE02)

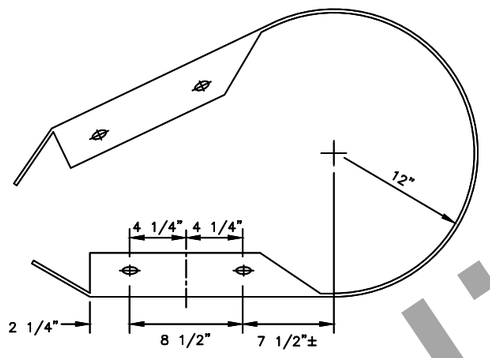

W-BEAM PLAN VIEW
*Radius to be specified on the plans

STANDARD W-BEAM END SECTION
(RWE06)

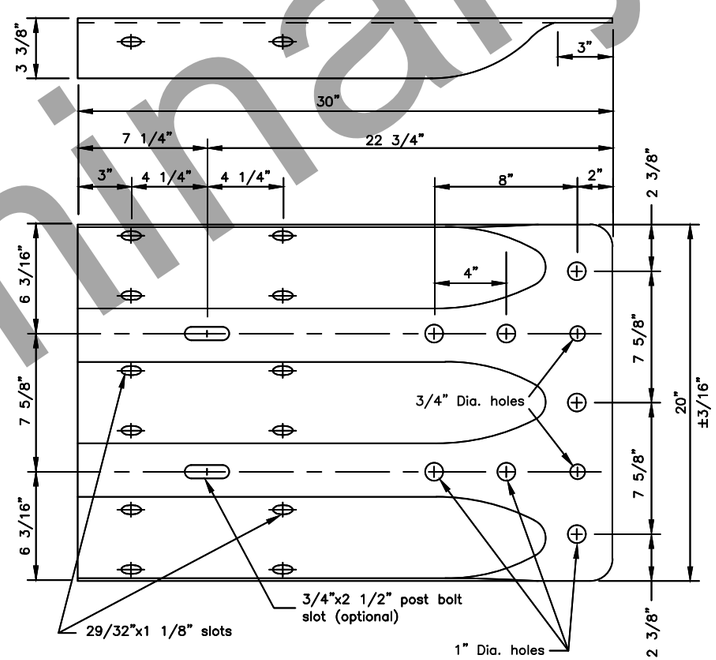

STANDARD THRIE BEAM TERMINAL CONNECTOR
(RTE01b)

GENERAL NOTES:

1. W-Beam and Thrie Beam Terminal Connectors shall conform to AASHTO M 180, Class B, Type II.
2. W-Beam end sections shall conform to AASHTO M 180, Class A, Type II.
3. All covered hardware shall comply with the Task Force 13 (TF13) Guide to Standardized Roadside Safety Hardware online publication. Designators given when possible in parentheses.

State of Alaska DOT&PF
ALASKA STANDARD PLAN

STANDARD GUARDRAIL HARDWARE (TERMINAL CONNECTORS)

Adopted as an Alaska Standard Plan by: Carolyn Morehouse
Carolyn Morehouse, P.E.
Chief Engineer

Adoption Date: 7/17/2020

Last Code and Stds. Review
By: KLK Date: 7/8/2020

Next Code and Standards Review Date: 7/8/2030

G-00.05

Preliminary Plans

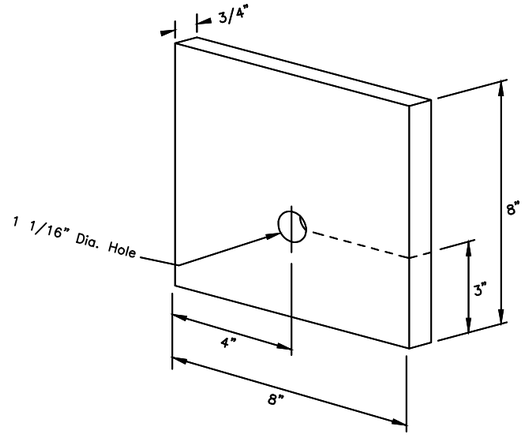

BEARING PLATE for CRT TERMINAL ANCHOR
(FPB01)

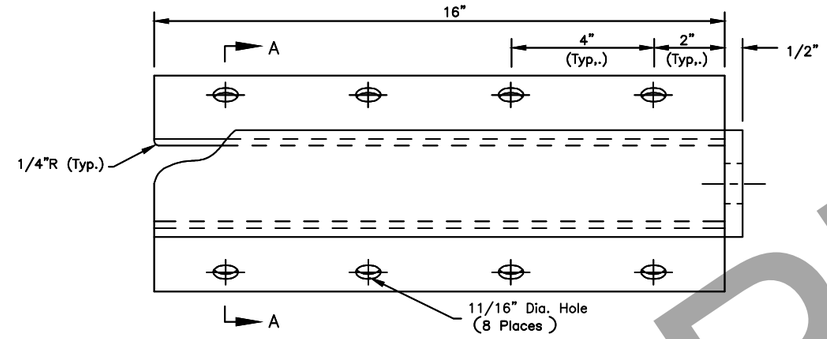

CABLE ANCHOR PLATE
(FPA01)

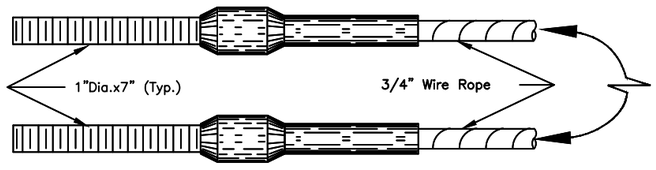

SWAGED FITTING DETAIL
(FCA01–02)

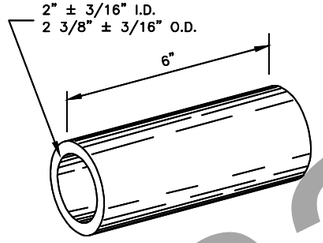

SLEEVE DETAIL
(FMM02)

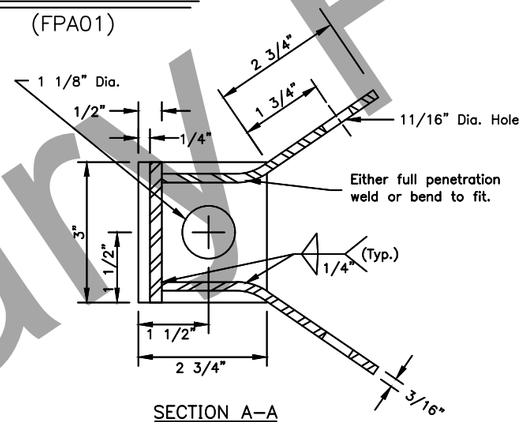

SECTION A–A

CONTROLLED RELEASE TERMINAL HARDWARE DETAILS

GENERAL NOTES:

1. Cable Anchor Plate may be formed in single unit or welded fabrication.
2. Anchor Cable Assembly must conform to AASHTO M 30 with Type II Wire Rope.
3. Provide Sleeve for Wood Posts meeting the requirements of ASTM A53 and made of 2–inch galvanized standard pipe. Sleeve shall be a tight, pressed fit in post.
4. Attach radius ID plates to all shop–bent guardrail sections. Bolt the ID plates to the back side of the guardrail panel with the lower splice bolt nearest the P.C. of the radius.
5. Show the Rail bend radius, in feet, as "XX" on the radius ID plate. Digits shall be etched or stamped and have a min. height of 1 1/2" and a max. width of 3/4". Galvanize the plate after the digits are marked.
6. All covered hardware shall comply with the Task Force 13 (TF13) Guide to Standardized Roadside Safety Hardware online publication. Designators given when possible in parentheses.

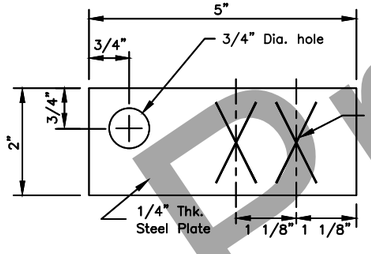

RADIUS I.D. PLATE

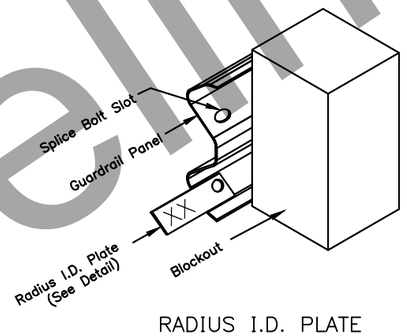

RADIUS I.D. PLATE MOUNTING DETAIL

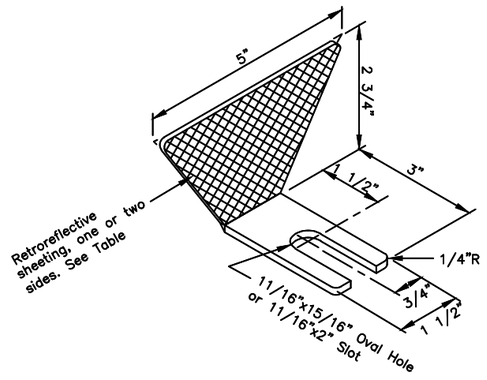

GUARDRAIL REFLECTOR

Guardrail Reflector Table

Type	Color	Reflectorized
A	White	Front & Rear
B	White	Front
C	Yellow	Front
D	Yellow	Front & Rear

State of Alaska DOT&PF
ALASKA STANDARD PLAN

STANDARD GUARDRAIL HARDWARE (MISCELLANEOUS)

Adopted as an Alaska Standard Plan by: Carolyn Morehouse
Carolyn Morehouse, P.E.
Chief Engineer

Adoption Date: 7/17/2020

Last Code and Stds. Review
By: KLK Date: 7/8/2020

Next Code and Standards Review Date: 7/8/2030

G–00.05

Preliminary Plans

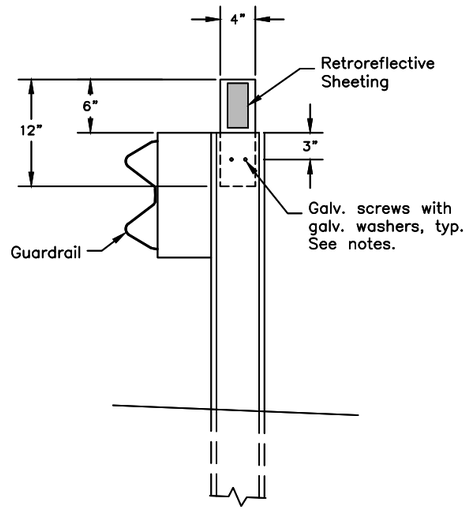

GUARDRAIL FLEXIBLE DELINEATOR DETAIL

(Steel post shown – similar for wood post)

CONSTRUCTION NOTES

1. Install guardrail flexible delineators where shown on the plans.
2. Install guardrail flexible delineators at 50 foot spacing, unless otherwise noted on the plans. Install not less than 2 delineators per guardrail run.
3. Use 3" x 5" white/yellow/red retroreflective sheeting as required per Standard Plan T–05. Install retroreflective sheeting on both sides of delineator on two–way roads.
4. Attach 4" x 12" flexible delineators to the top of new guardrail posts, on the trailing side of the posts relative to the adjacent lane's direction of travel.
5. Use 2 each 1/4" dia. x 1–1/2" long galvanized lag screws for attaching to wood posts and 2 each 1/4" dia. x 3/4" long galvanized self–drilling fasteners for steel posts. Install a galvanized washer between the fastener head and the flexible delineator.

Preliminary Plans

State of Alaska DOT&PF
ALASKA STANDARD PLAN

STANDARD GUARDRAIL HARDWARE (FLEXIBLE DELINEATORS)

Adopted as an Alaska Standard Plan by: Carolyn Morehouse

Carolyn Morehouse, P.E.
Chief Engineer

Adoption Date: 7/17/2020

Last Code and Stds. Review
By: KLK Date: 7/8/2020

Next Code and Standards Review Date: 7/8/2030

G-05.11S

SHEET | of |

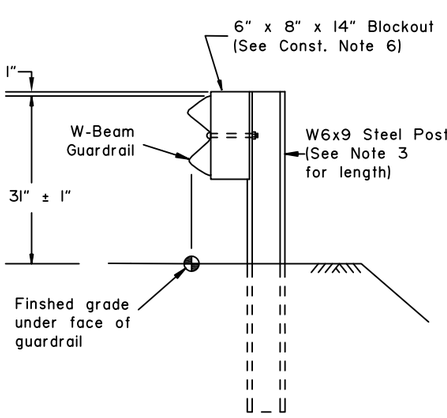

TYPE I POST INSTALLATION

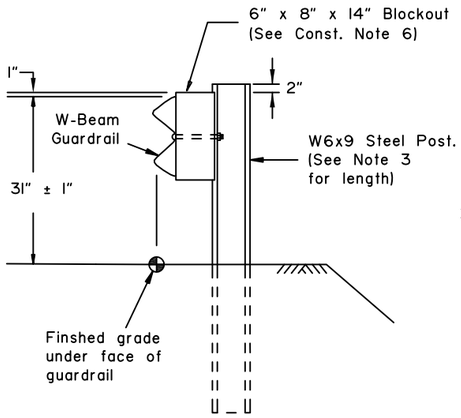

TYPE II POST INSTALLATION

(Facilitates raising rail for future overlays.)

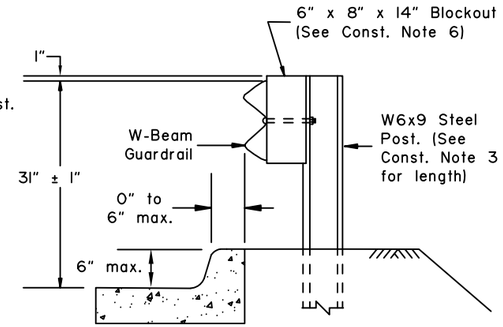

TYPE III POST INSTALLATION

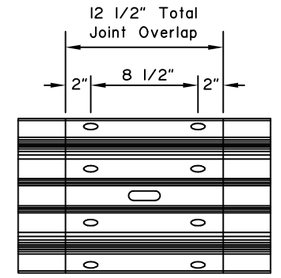

SPLICE DETAIL

(At mid span between posts only. Bolts not shown for clarity)

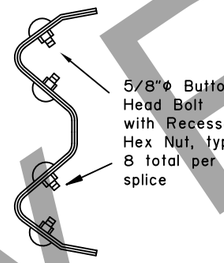

SPLICE
CROSS-SECTION

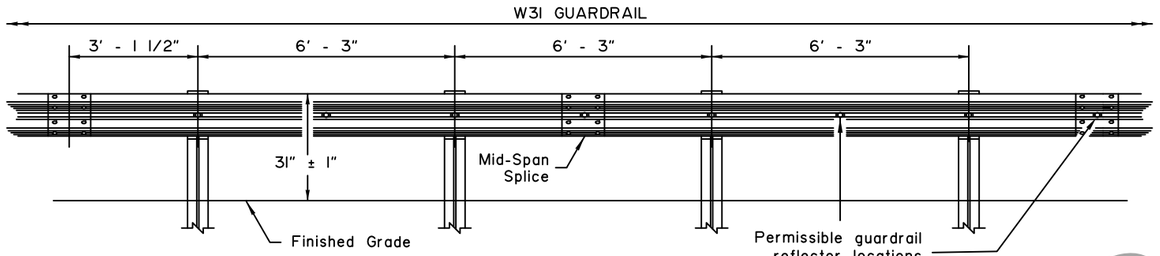

TYPICAL ELEVATION

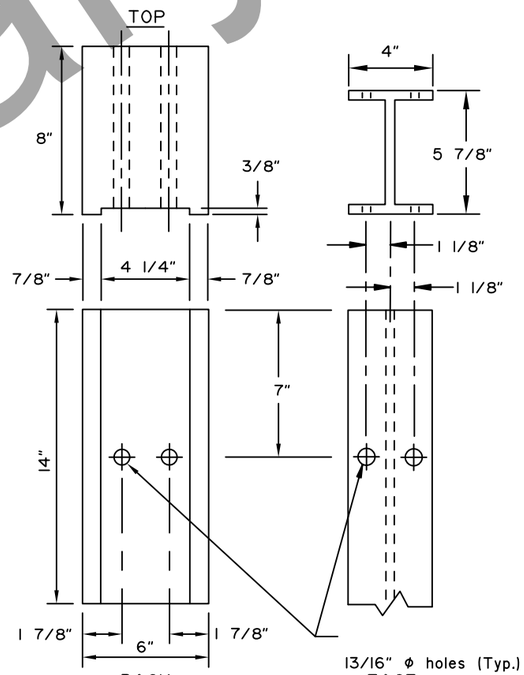

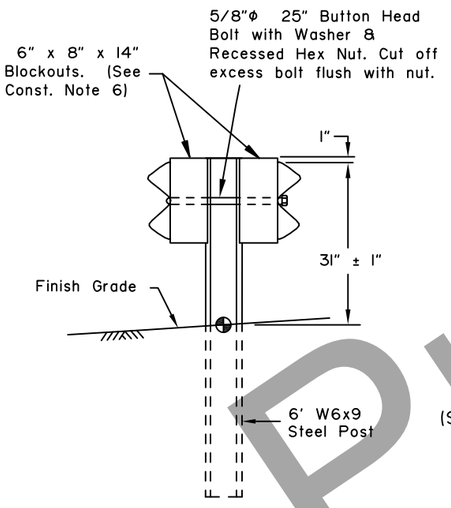

TYPE IV DOUBLE SIDED INSTALLATION



GUARDRAIL
REFLECTOR

(See Const. Note 5)

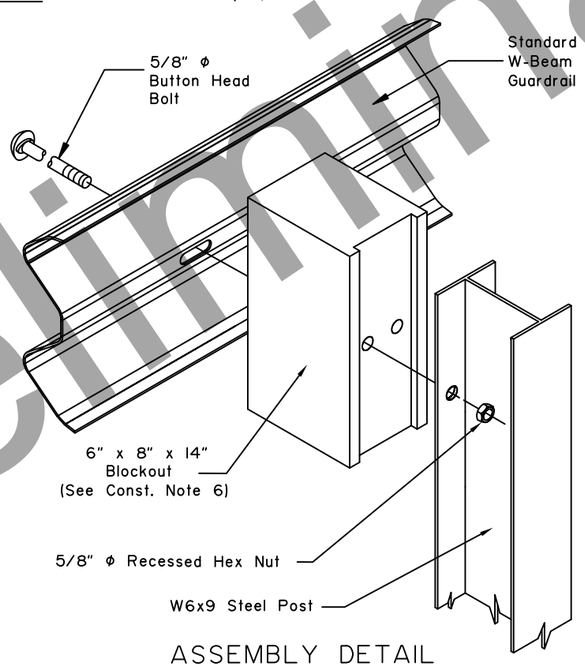

ASSEMBLY DETAIL

(Type I post shown)

CONSTRUCTION NOTES:

1. Provide hardware compliant with the Task Force 13 (TF13) Guide to Standardized Roadside Safety Hardware.
2. See Standard Plan G-00 for hardware details not shown on this drawing.
3. See Standard Plan G-10 for post lengths corresponding to different combinations of slope and behind-post embankment width.
4. Typical post spacing is 6'-3" center to center.
5. Attach guardrail reflector to guardrail using a 5/8" button head bolt with 5/8" recessed head hex nut and steel washer at location shown in the Typical Elevation. Install reflectors every 25' on tangents and every 12.5' on curves starting 100' before the P.C. and ending 100' after the P.T.
6. Use wood or synthetic blockouts designed, tested, and passed per MASH for use with steel posts. Either bolt hole on the blockout may be used for attachment.
7. Use a 25 linear foot transition to match differing height of existing or new rail elements and end treatments - see Standard Plan G-11.
8. W6x8.5 steel post may be substituted for W6x9 steel post.
9. Install flexible delineators on guardrail posts when called for in the contract. See Standard Plan G-00 for guardrail flexible delineator details.

DESIGN NOTES:

1. No fixed objects allowed within 36" of the back side of guardrail post.
2. This barrier is acceptable under MASH Tests 3-10 and 3-11.

State of Alaska DOT&PF
ALASKA STANDARD PLAN

STEEL POST W31 GUARDRAIL

Adopted as an Alaska Standard Plan by: Carolyn Morehouse

Carolyn Morehouse, P.E.
Chief Engineer

Adoption Date: 05/15/2019

Last Code and Stds. Review
By: LRG Date: 5/15/2019

Next Code and Standards Review date: 5/15/2029

G-05.11S

Preliminary Plans

G-10.20 SHEET 1 of 1

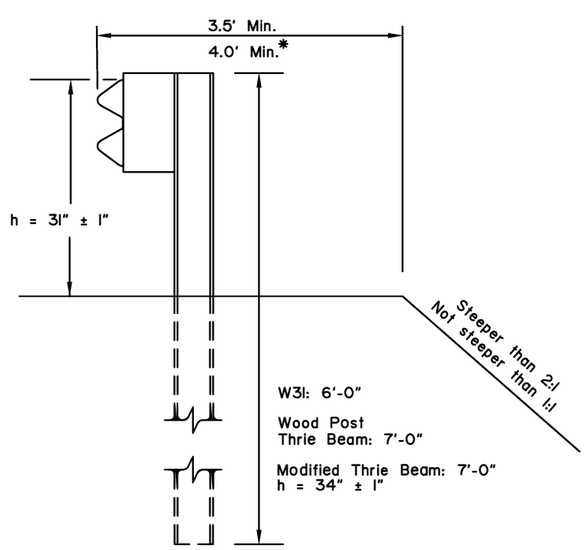

* with Modified Thrie Beam

CASE 1

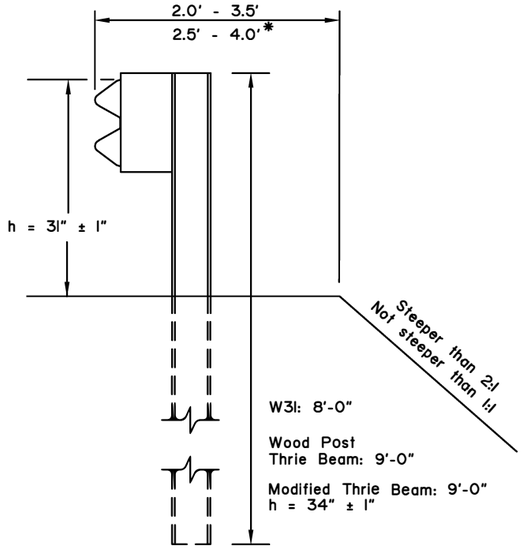

* with Modified Thrie Beam

CASE 2

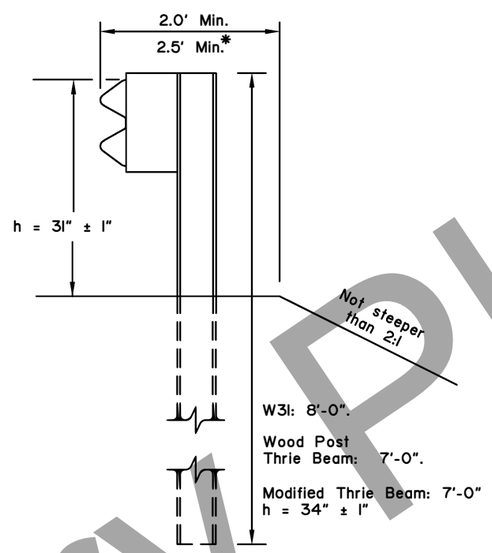

CASE 3

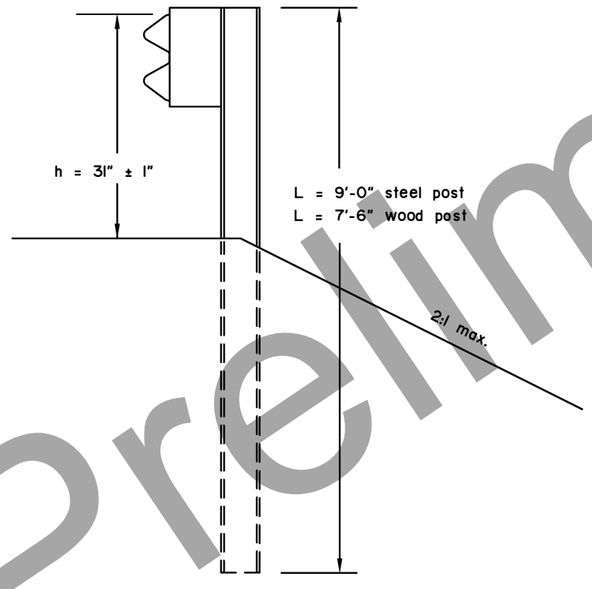

CASE 4
(See Note 5)

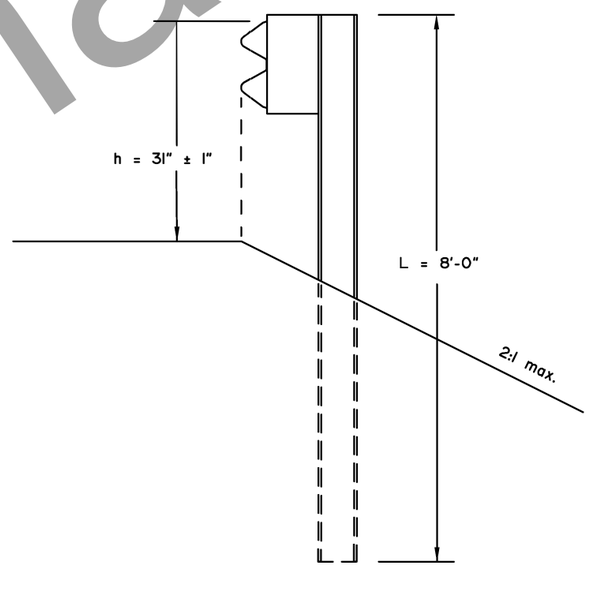

CASE 5
(See Note 5)

CONSTRUCTION NOTES:

1. This drawings is to be used for post length determination only. See Plans for slopes and behind-post embankment widths.
2. To determine post length, identify the case that matches site conditions and read the length corresponding to the pertinent guardrail type.
3. These dimensions apply to both curbed and uncurbed section.
4. Case 1, 2 and 3 are shown with steel posts. Wood posts may be substituted when allowed by specifications. Wood Post Thrie Beam installations must use wood posts only.
5. Case 4 and 5 apply to W31 guardrail only.

DESIGN NOTES:

1. No fixed objects allowed within 36" of the back of post for Cases 1, 2 & 3.
2. No fixed objects allowed within 48" of the back of post for Cases 4 & 5.

State of Alaska DOT&PF
ALASKA STANDARD PLAN

GUARDRAIL POST INSTALLATION

Adopted as an Alaska Standard Plan by: Kenneth J. Fisher, P.E.
Chief Engineer

Adoption Date: 02/08/2019

Last Code and Stds. Review By: Date:

Next Code and Standards Review date: 02/08/2029

G-10.20

Preliminary Plans

G-20.12

SHEET 1 of 1

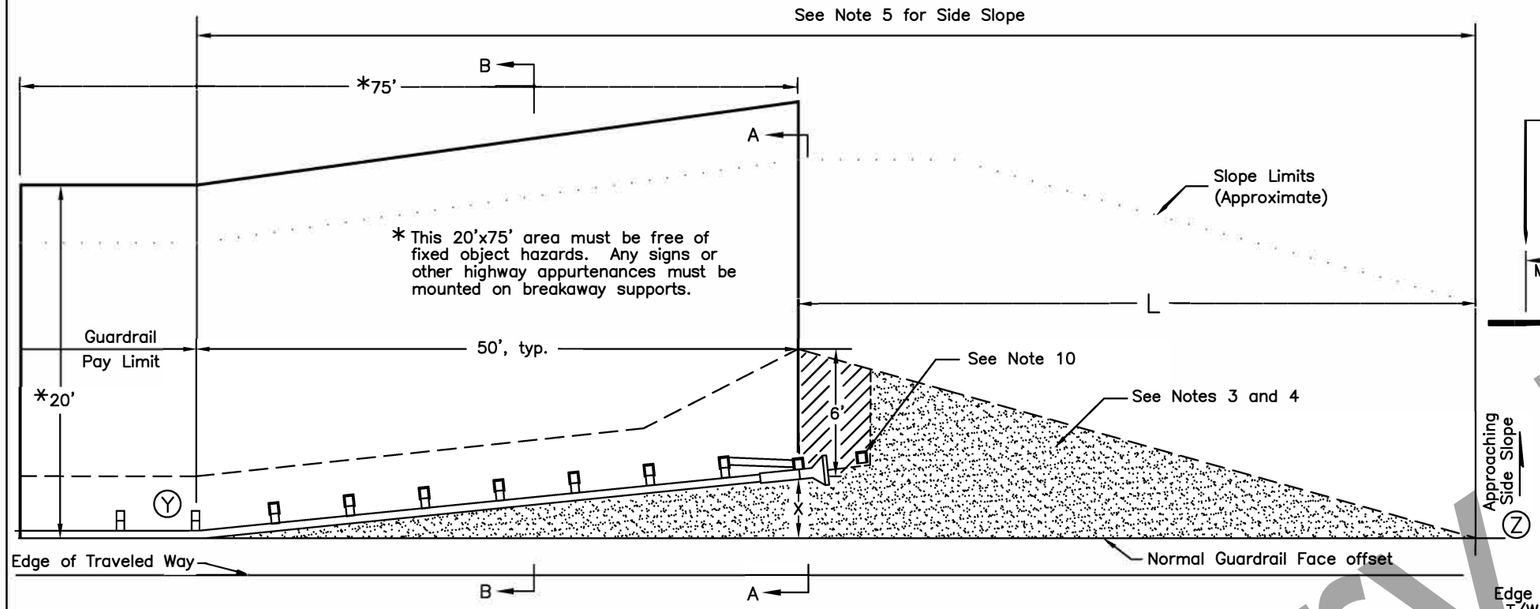

STANDARD GUARDRAIL TERMINAL WIDENING DETAIL

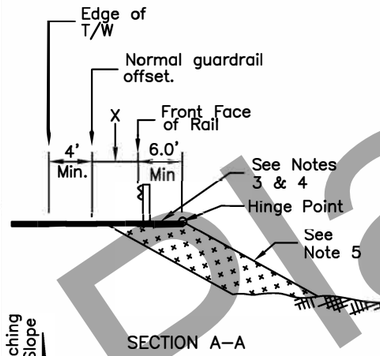

SECTION A–A

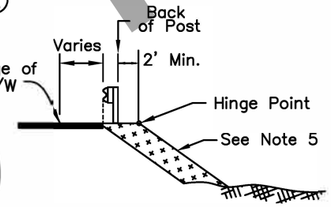

SECTION B–B
(Applies to both details)

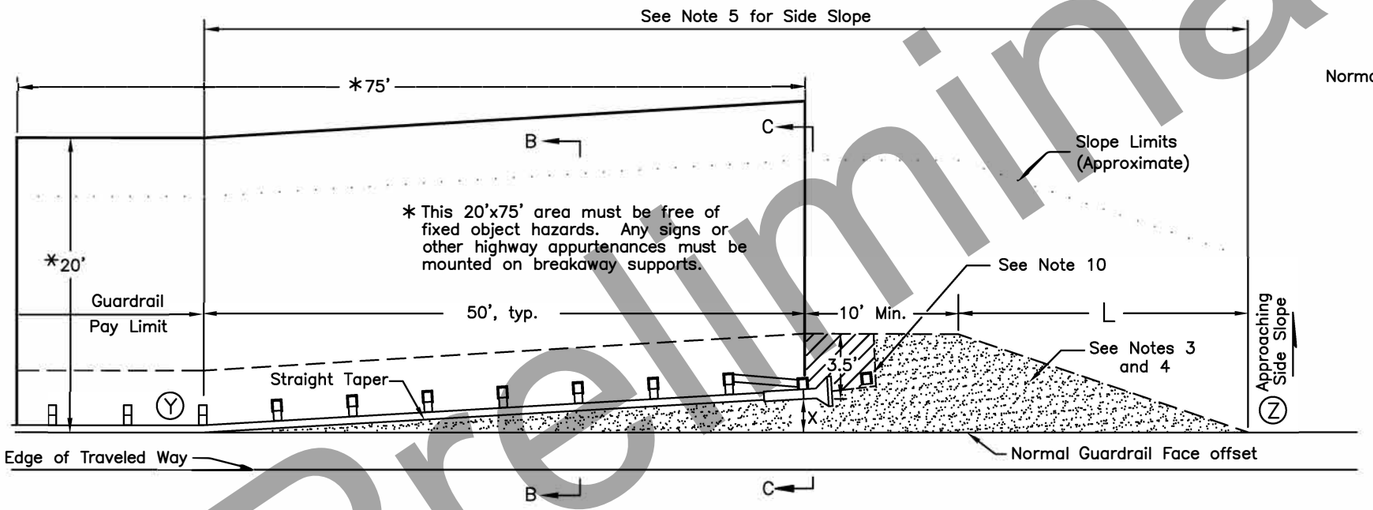

ALTERNATE GUARDRAIL TERMINAL WIDENING DETAIL

(USE ONLY WHEN LIMITED RIGHT–OF–WAY OR LIMITING SITE CONDITIONS MAKE THE STANDARD DETAIL INFEASIBLE)

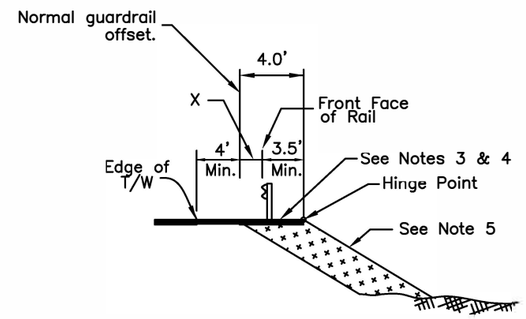

SECTION C–C

X= End offset. See manufacturer's information for the range of acceptable end offsets for each MASH compliant terminal.

Taper Lengths (L) for Common End Offsets (X)		
End Offset	Standard Detail	Alternate Detail
0'	24.0'	13.0'
1'	26.0'	17.0'
1.5'	28.0'	19.0'
2'	30.0'	21.0'
2.5'	32.0'	22.0'
4'	37.0'	28.0'
Interpolate if the end offset falls between table values		

GENERAL NOTES

1. This Std. Dwg. applies to all MASH approved guardrail end terminals (GETs). The alternate detail may only be used with parallel or tangent GETs. The terminal details shown are for illustration only – see manufacturer's drawings for actual post, rail, strut, etc. configuration and layout.
2. Use this Std. Widening Detail for all GETs except when limited right–of–way or limiting site conditions make the use of the Std. Widening Detail infeasible. In that case, the alternate detail is permissable.
3. Construct the shaded areas to match the slope of the adjacent shoulder. The slope may be increased to 10:1 if identified in the plans or when approved by the engineer. Match the slope when the shoulder slopes toward the road as well as away from the road.
4. On paved roads, the shaded areas shall be paved. On gravel roads, surface the shaded areas with the same materials used to surface the travel lanes.
5. From point Ⓨ to point Ⓩ make the side slope match the approaching side slope except where it is flatter than 4:1. In that case, the slope may be steepened to 4:1.
6. Attach a flexible marker at the beginning of each GET.
7. The max. allowable height for foundation tubes or other steel components of terminal post breakaway systems is 4" above the surrounding grade.
8. The details on this sheet do not apply to W31 Downstream End Anchors (Std Dwg G–14).
9. The details on this sheet apply to GETs on both the approach and downstream ends on two–way undivided roads and to any downstream MASH compliant GETs.
10. Some MASH GET systems have an additional post/anchor at the approximate location shown. If this post/anchor is present do not pave the diagonally hatched area. If not present, pave the diagonally hatched area also.

State of Alaska DOT&PF
ALASKA STANDARD PLAN

WIDENING FOR GUARDRAIL END TERMINALS

Adopted as an Alaska Standard Plan by: Kenneth J. Fisher, P.E. Chief Engineer

Adoption Date: 02/08/2019

Last Code and Stds. Review By: Date:

Next Code and Standards Review date:02/08/2029

G–20.12

Preliminary Plans

G-32.02

SHEET | of |

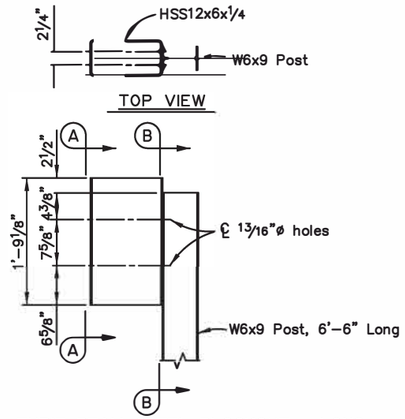

THRIE BEAM STEEL BLOCKOUT - LONG

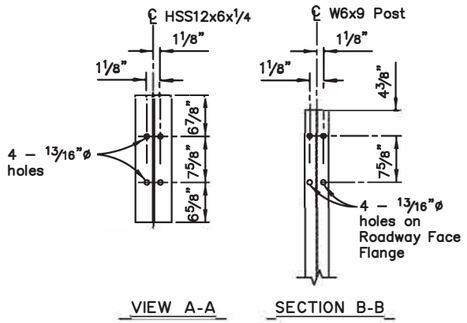

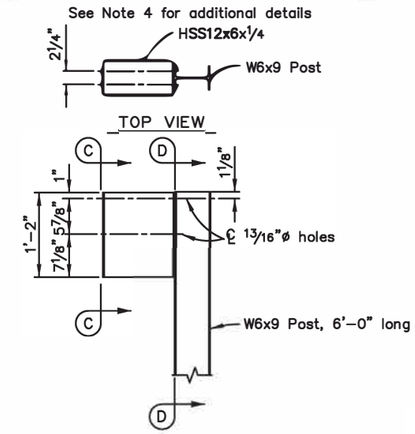

THRIE BEAM STEEL BLOCKOUT - SHORT

See Note 4 for additional details

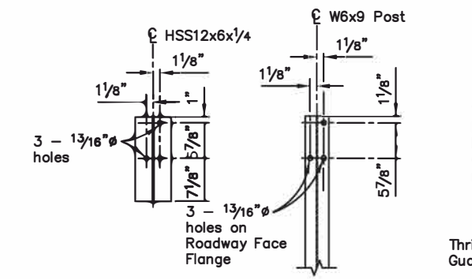

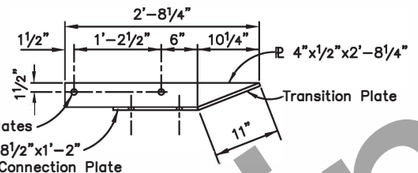

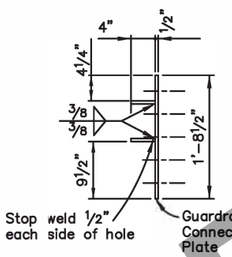

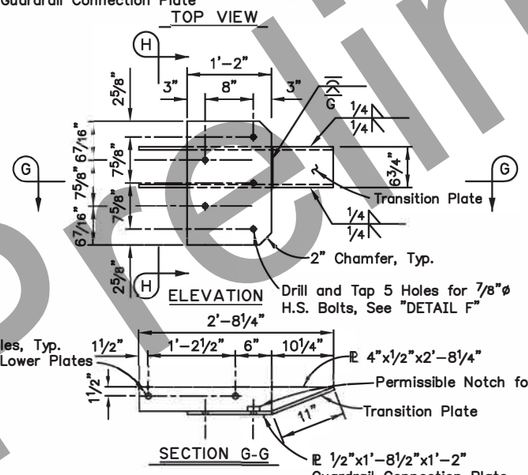

GUARDRAIL CONNECTION PLATE DETAILS

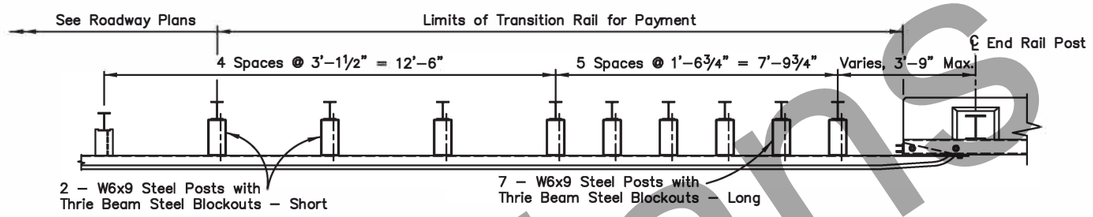

PLAN

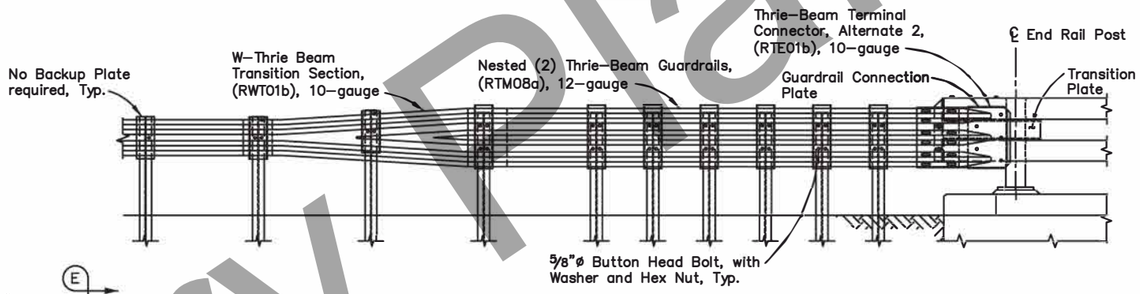

ELEVATION

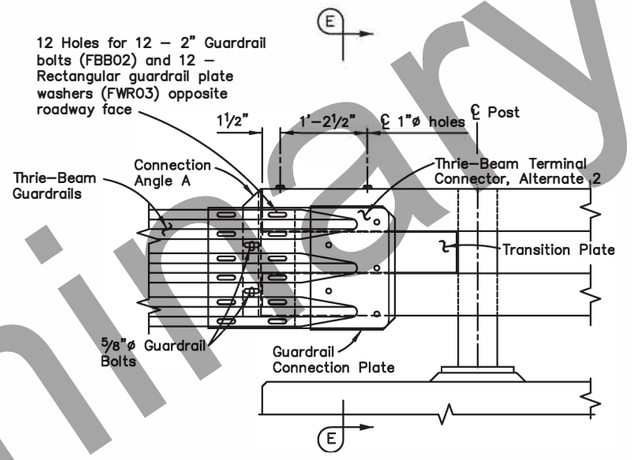

TRANSITION CONNECTION - ELEVATION

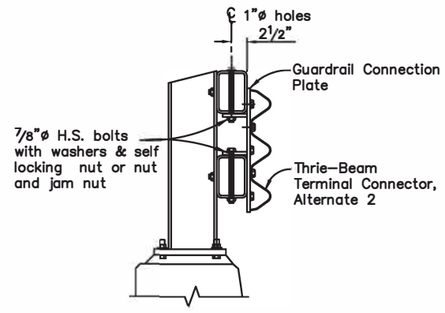

SECTION E-E

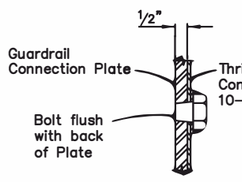

DETAIL F

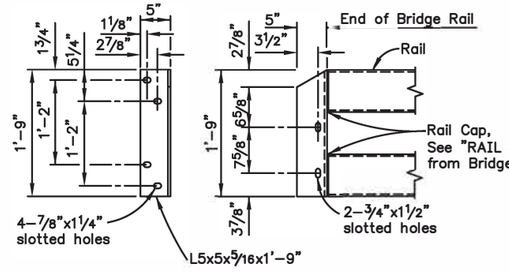

CONNECTION ANGLE A

NOTES:

1. Use AASHTO M 180 for all guardrail, transition rail, and hardware. Use H.S. Bolts conforming to ASTM F3125 Grade A325. All other steel conforms to ASTM A709 Grade 50.
2. Permissible 3" horizontal slots in Thrie–Beam Guardrails. Adjust guardrail bolts for sliding fit.
3. Conform to G–00, G–05, and G–10 of the Standard Plans for all Thrie Beam Transition details not shown.
4. Thrie Beam Transition part numbers are listed in parentheses () and referenced in the "Task Force 13 Guide to Standardize Roadside Hardware."

No Scale

State of Alaska DOT&PF
ALASKA STANDARD PLAN

MASH BRIDGE RAIL THRIE BEAM TRANSITION

Adopted as an Alaska Standard Plan by: Carolyn Morehouse
Carolyn Morehouse, P.E.
Chief Engineer

Adoption Date: 07/30/2021

Last Code and Stds. Review By: SEM Date: 07/17/2020

Next Code and Standards Review Date: 07/17/2030

G-32.02

Preliminary Plans

I-81.00 | SHEET 1 of 1

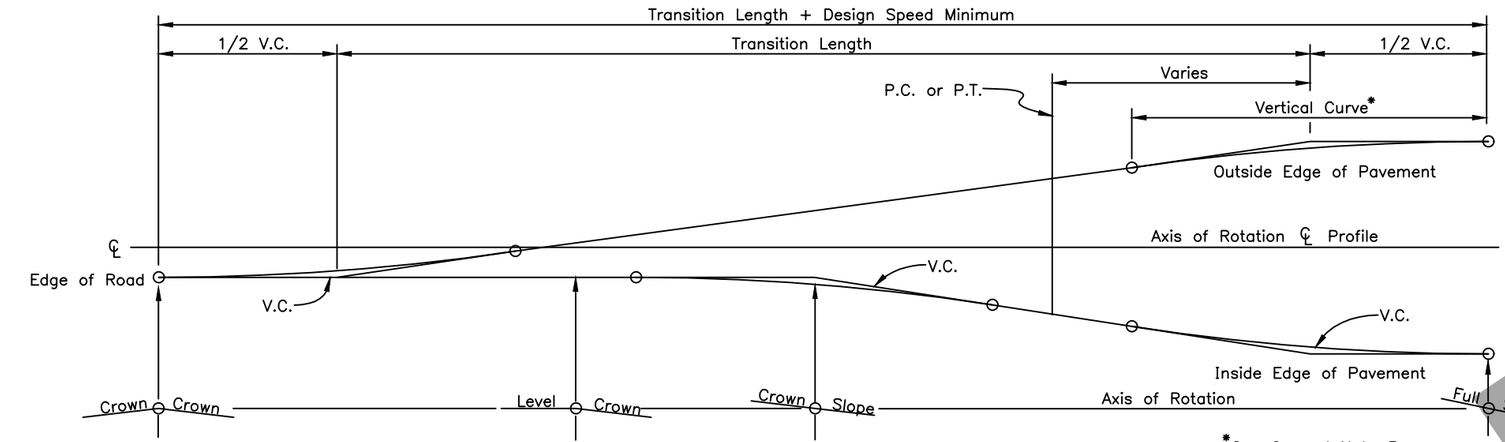

*See General Note 3

CASE I
PAVEMENT REVOLVED ABOUT CENTERLINE

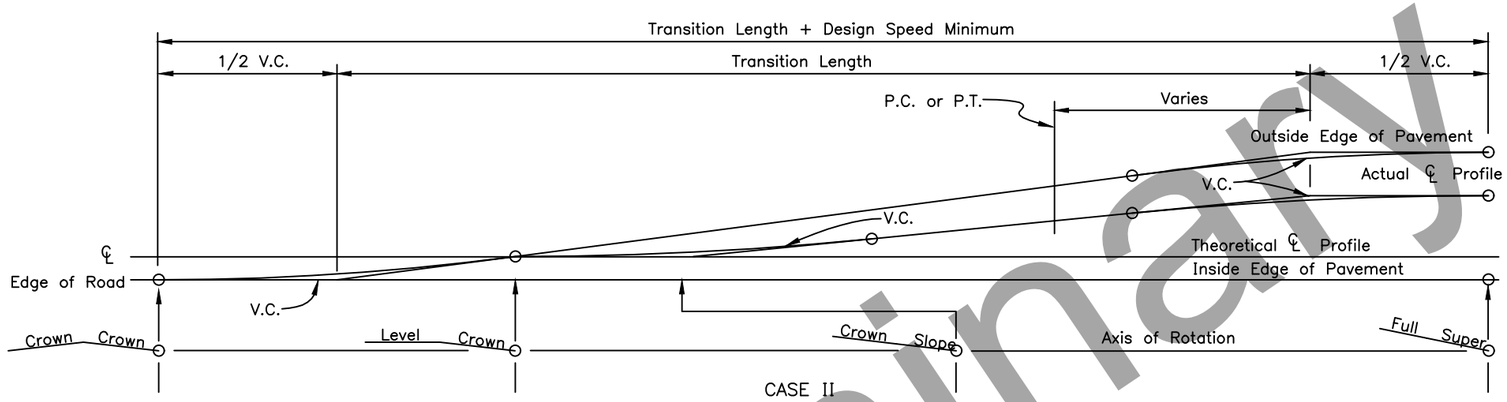

CASE II
PAVEMENT REVOLVED ABOUT INSIDE EDGE
TO BE USED WHERE DRAINAGE IS THE GOVERNING CONSIDERATION

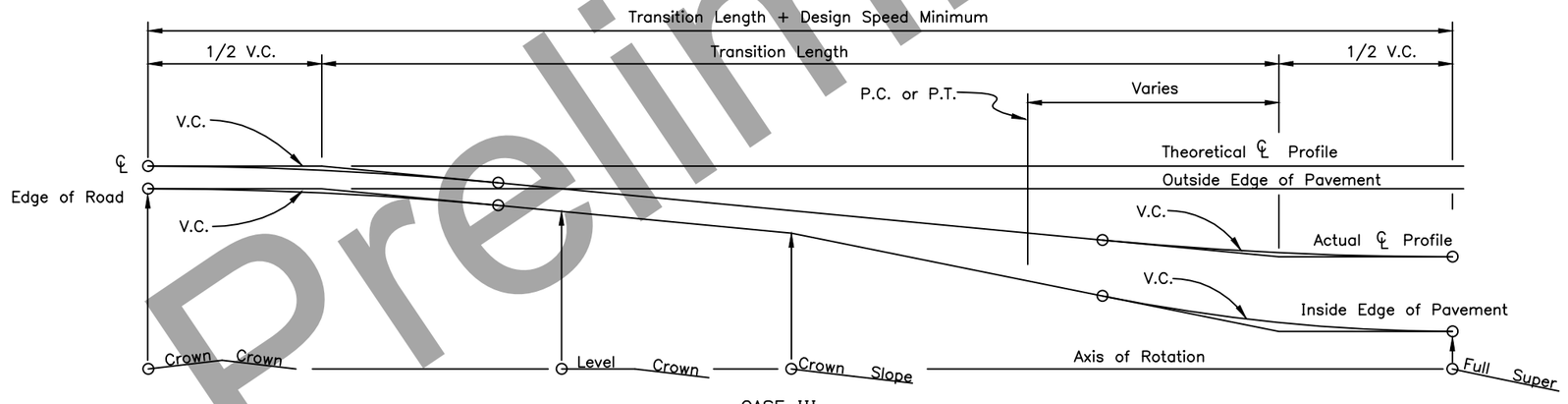

CASE III
PAVEMENT REVOLVED ABOUT OUTSIDE EDGE TO BE
USED WHERE OVERALL APPEARANCE IS THE MAIN CONTROL

GENERAL NOTES:

1. Location of transition length relative to horizontal curves will be shown on the plans or as directed by the Engineer.
2. Widening for guardrail or curvature will not change the location of the axis of rotation.
3. Minimum vertical curve length in feet shall be the numerical value of the design speed in M.P.H.
4. Superelevation shall be built into the subgrade and carried through the shoulders.

State of Alaska DOT&PF
ALASKA STANDARD PLAN

SUPERELEVATION TRANSITION

Adopted as an Alaska Standard Plan by: Carolyn Morehouse
Carolyn Morehouse, P.E.
Chief Engineer

Adoption Date: 7/17/2020

Last Code and Stds. Review
By: KLK Date: 7/8/2020

Next Code and Standards Review Date: 7/8/2030

I-81.00

Preliminary Plans

S-00.12 SHEET 1 of 1

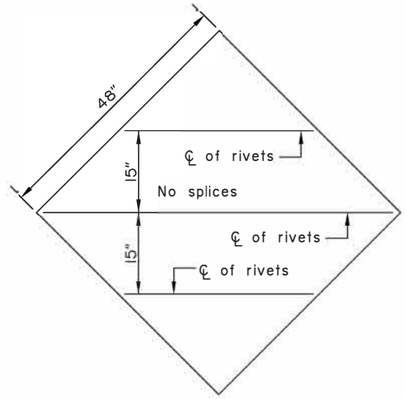

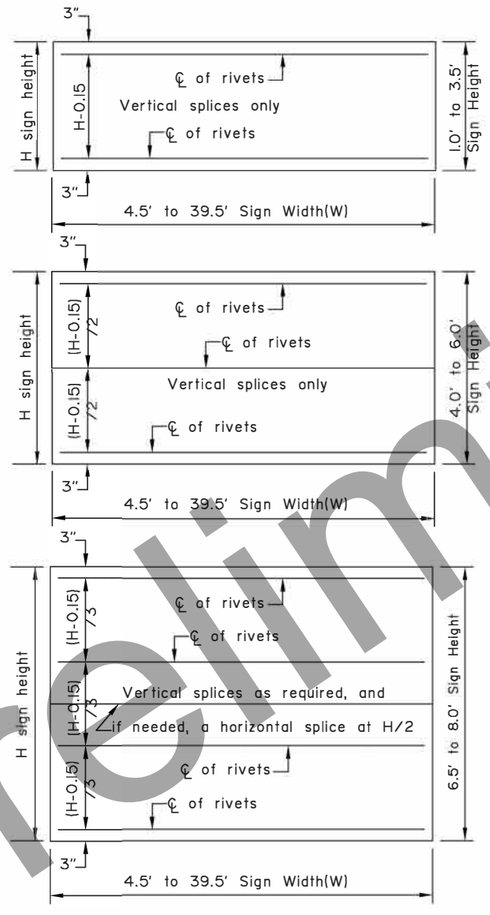

WIND FRAMING LOCATIONS

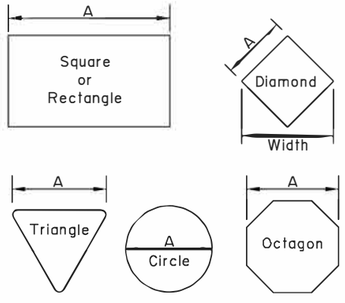

Maximum size unframed signs using 0.125" thick aluminum sheeting.	
Sign Shape	A
Squares, Shields, and Route Markers	48"
Rectangles	48"
Diamonds	48"
Triangles	48"
Rounds and Octagons	48"

Install wind framing on all signs that exceed the dimensions listed.

LIGHT SIGNS

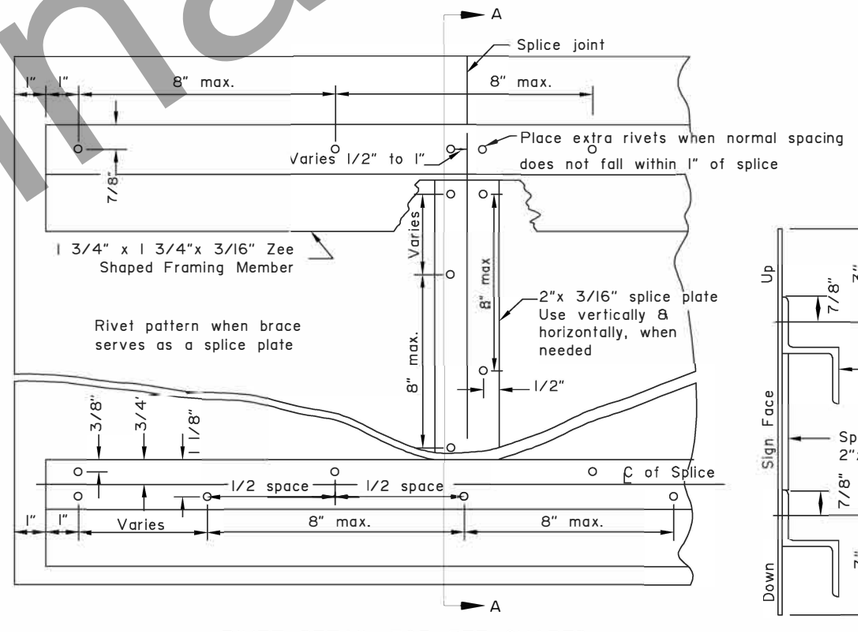

RIVET DETAIL FOR ZEE SHAPED WIND FRAMING & SPLICE PLATE

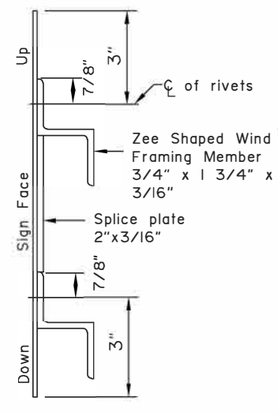

SECTION A-A

GENERAL NOTES

1. See the standard specifications for the aluminum alloys that you may use for sign sheeting and wind framing members.
2. Fabricate all signs from 0.125" thick aluminum sheeting.
3. Sign fabricators may use alternates to the zee shaped framing member with approval of the engineer, if the frame manufacturer certifies their design equals or exceeds the strength of the zee shaped design.
4. Install one piece wind framing members on all signs up to 23.5' wide. Use one splice in each wind frame on all signs wider than 23.5'. Locate splices at least 18" from all posts and panel edges. Stagger splices in adjacent framing members at least 8.0' apart.
5. Attach wind framing members with rivets or with an engineer approved, double sided, high strength, adhesive tape. Clean and handle sheeting and framing members and apply tape in accordance with the tape manufacturer's written instructions. Install two rivets in both ends of each framing member.
6. Use 3/16" diameter rivets conforming to aluminum alloy 6061-T6 for cold driven rivets, or aluminum alloy 6061-T43 for hot driven rivets.
7. Sign fabricators may use sign panels extruded with integral framing with approval of the engineer, if the manufacturer certifies their design equals or exceeds the strength of the 0.125" thick panel with framing attached to it.
8. Frame all signs taller than 8.0' with five wind framing members located (H-0.15)/4 spaces. If needed, make a horizontal splice at the middle wind frame.
9. Do not use round pipes for sign supports.

Note: Drawing not to scale

State of Alaska DOT&PF
ALASKA STANDARD PLAN

SIGN FRAMING

Adopted as an Alaska Standard Plan by: Carolyn Morehouse
Carolyn Morehouse, P.E.
Chief Engineer

Adoption Date: 7/17/2020

Last Code and Stds. Review By: WTH Date: 7/8/2020

Next Code and Standards Review date: 7/8/2030

S-00.12

Preliminary Plans

S-05.02 | SHEET 1 of 1

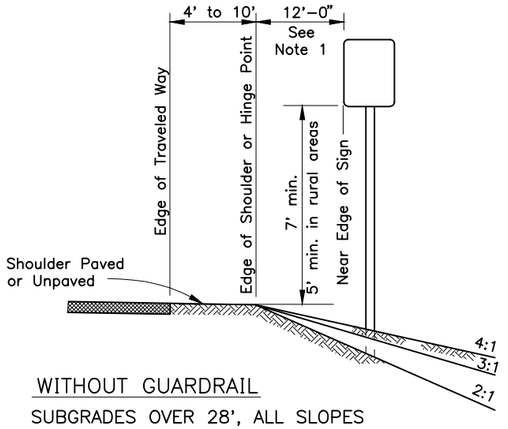

WITHOUT GUARDRAIL
SUBGRADES OVER 28', ALL SLOPES

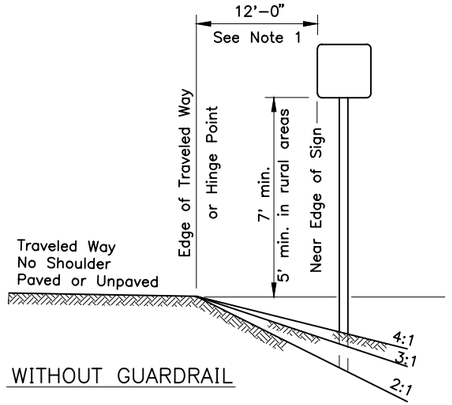

WITHOUT GUARDRAIL
SUBGRADES 24' TO 28', ALL SLOPES

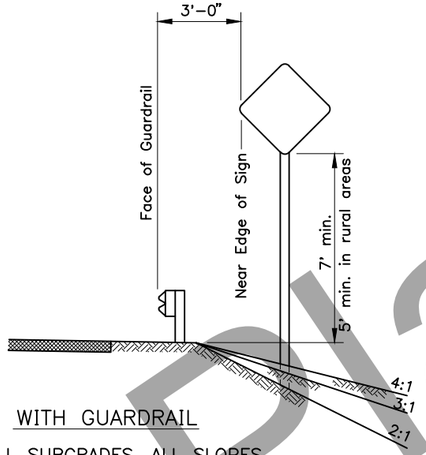

WITH GUARDRAIL
ALL SUBGRADES, ALL SLOPES

GENERAL NOTES

1. Unless shown otherwise on the plans, the standard sign offset is 12'. The minimum is 6' where shoulder width is 6' or greater.
2. Add 6" to mounting height on unpaved roads.
3. If signs extend over bike paths, the minimum vertical clearance is 8' 0".
4. When signs are placed 30' or more from the edge of traveled way, mount them with the bottom of the sign at least 5' above the road surface at the near edge of the road.
5. When multiple hinged sign supports are used, mount hinges at least 7' above the ground.
6. Minimum mounting height is 7'-0" where parking or pedestrian movements are likely to occur, or where sings extend over sidewalks.
7. For construction signs in rural areas, mounting height shall be 7' minimum.

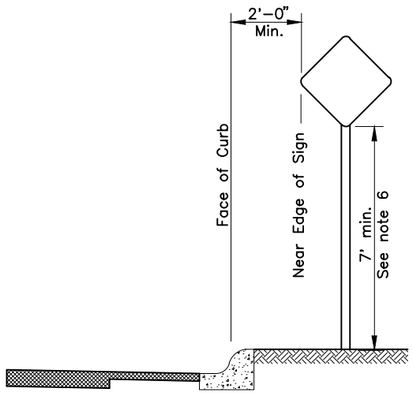

CURB WITHOUT SIDEWALK

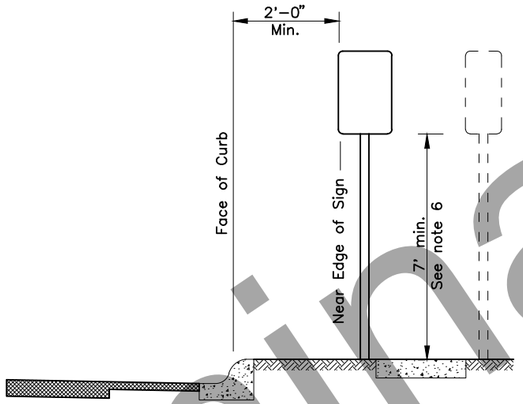

CURB WITH PARKWAY AND SIDEWALK
(If R/W width permits, signs should be placed behind sidewalk.)

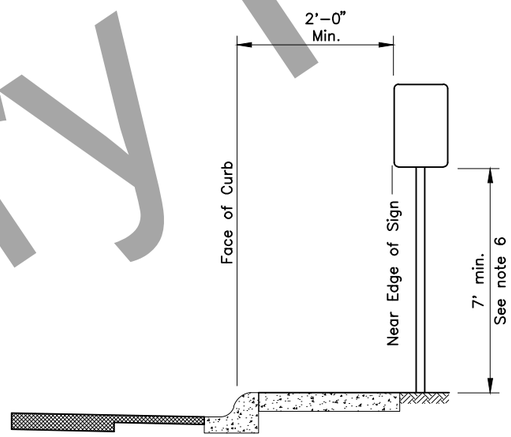

CURB WITH SIDEWALK WITHOUT PARKWAY

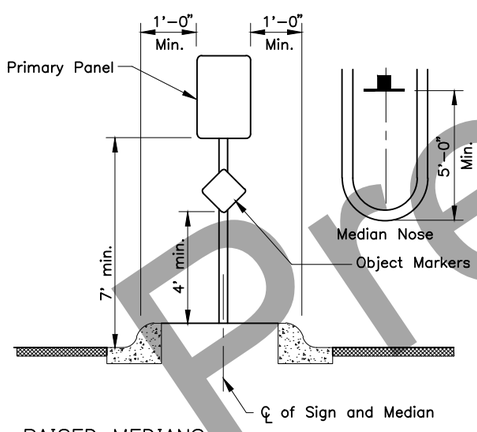

RAISED MEDIANS
Minimum 4' Width for Signing

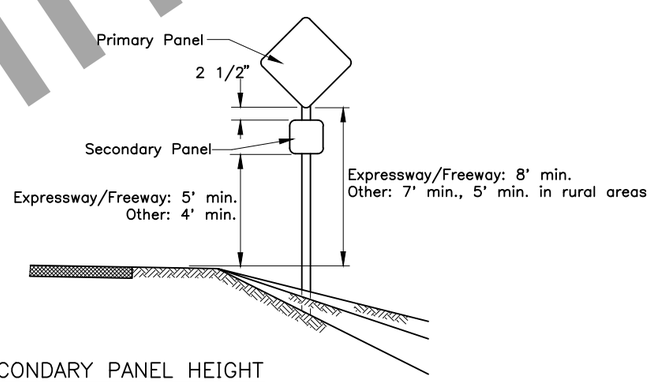

SECONDARY PANEL HEIGHT
ALL TWO PANEL MOUNTING

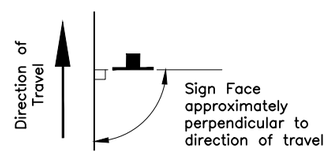

SIGN POSITIONING

State of Alaska DOT&PF
ALASKA STANDARD PLAN

POST MOUNTED SIGN
OFFSET AND HEIGHT

Adopted as an Alaska Standard Plan by: Carolyn Morehouse
Carolyn Morehouse, P.E.
Chief Engineer

Adoption Date: 7/17/2020

Last Code and Stds. Review
By: KLK Date: 7/8/2020

Next Code and Standards Review Date: 7/8/2030

S-05.02

Preliminary Plans

S-30.05 | SHEET | of |

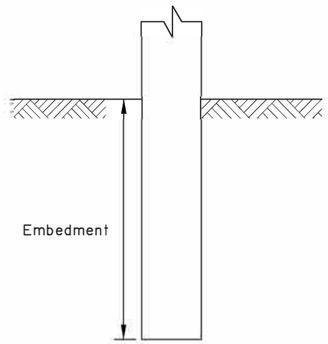

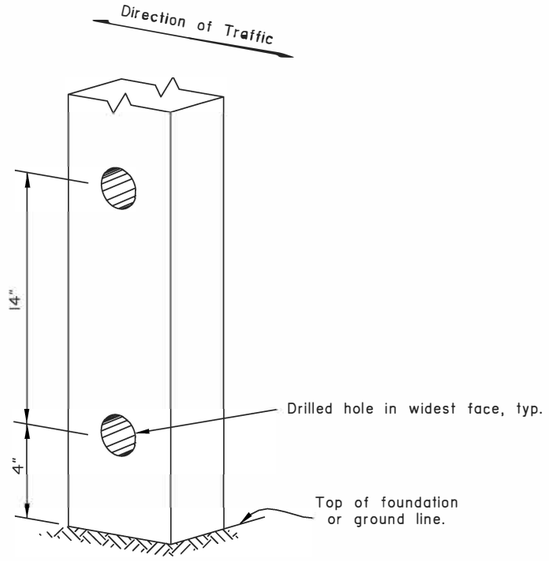

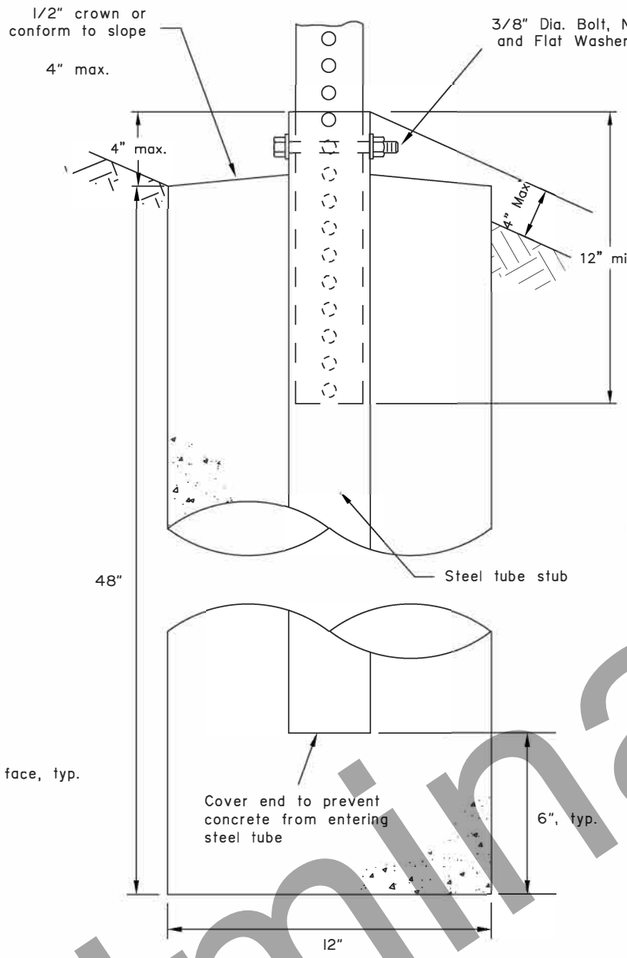

SLEEVE TYPE
CONCRETE FOUNDATION

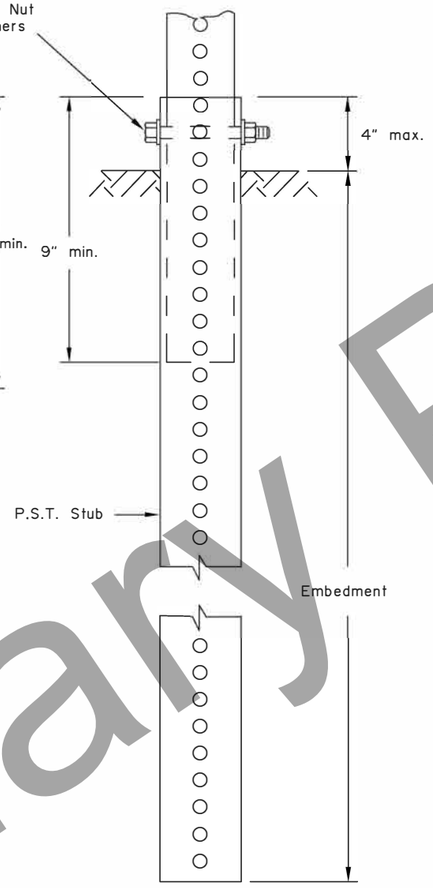

SLEEVE TYPE*
SOIL EMBEDMENT

GENERAL NOTES:

1. Sign shall be placed symmetrically around posts and refer to Standard Plan S-00 for sign framing details.
2. See plans for type of post, size and embedment type.
3. To maintain crashworthiness, install no more than the number of P.S.T.s or wood posts specified in the tables within 7' of each other.
4. Concrete shall be class B.
5. Do not use the supports on this drawing for multiple support signs if supports are separated by more than 7 feet.
6. Treat all field cuts and field drilled holes in wood posts in accordance with Section 730-2.04 of the Standard Specifications.

SIGN POST SPACING NOTES:

1. Install sign support in accordance with the table below, unless otherwise required by plans or specifications.
2. Exceptions:
   a. Use one post for all E5-1 gore signs, regardless of width.
   b. Use one 2.5" P.S.T. for all STOP signs, with or without street name signs.
3. Supports placed within 7' of each other must be acceptable for that use. See tables below for the sizes of wood posts and P.S.T.s that may be used within 7'. See Manufacturer's documentation for breakaway couplings and tubes that may be used within 7'.
4. See Standard Plan S-31 for frangible couplings, hinges, and foundations for tube and W-shape sign supports.

WOOD SIGN POSTS			
SIZE	HOLE DIA.	EMBEDMENT*	NO. OF POSTS WITHIN 7 Ft. PATH
4"x4"	NONE	4'-1"	2
4"x6"	1 1/2"	5'-3"	2
6"x6"	1 1/2"	4'-9"	1
6"x8"	3"	4'-9"	1

* Embedment depth applies in both strong and weak soil.

WOOD POSTS

PERFORATED STEEL TUBES (P.S.T.)		
POST SIZE	Embedment Depth	No. of P.S.T.s permitted within 7 ft path
1 1/2" x 1 1/2"	4'-8"	2
1 3/4" x 1 3/4"	4'-6"	2
2" x 2"	4'-3"	2
2 1/4" x 2 1/4"	5'-0"	1
2 1/2" x 2 1/2"	4'-6"	1

* Use 3"x3"x3/16" Stub for 2 1/2"x2 1/2" PST Applications.

PERFORATED STEEL TUBE (PST) POSTS

TUBE SIGN POST SPACING								
Sign Width (feet)	No. of Posts	Distance Between Posts	Sign Overhang	Post Type				Notes
				P.S.T.	Wood	Steel Tube	W-Shape	
0.5 to 4.0	1	-	0.5W	X	X	X		See Note 2.
4.5 to 10.0	2	0.6W	0.2W	X	X	X		See Note 3.
10.5 to 11.0	2	6	Varies	X	X	X		See Note 3.
11.5 to 13.0	2	8	Varies				X	
13.5 to 20.0	2	0.6W	0.2W				X	
20.5 to 22.5	3	8	Varies				X	
23.0 to 29.5	3	0.35W	0.15W				X	
30.0 to 31.5	4	8	Varies				X	
32.0 to 40.0	4	0.25W	0.125W				X	

TUBE SIGN POST SPACING

Note: Drawing not to scale

State of Alaska DOT&PF
ALASKA STANDARD PLAN

LIGHT SIGN STRUCTURE
POST EMBEDMENT

Adopted as an Alaska Standard Plan by: Carolyn Morehouse
Carolyn Morehouse, P.E.
Chief Engineer

Adoption Date: 7/17/2020

Last Code and Stds. Review
By: WTH Date: 7/8/2020

Next Code and Standards Review date: 7/8/2030

S-30.05

Preliminary Plans

S-31.02 SHEET 1 of 1

NOTE:
Install hinges when more than one post is used to support a sign. Do not install hinges on single post installations.

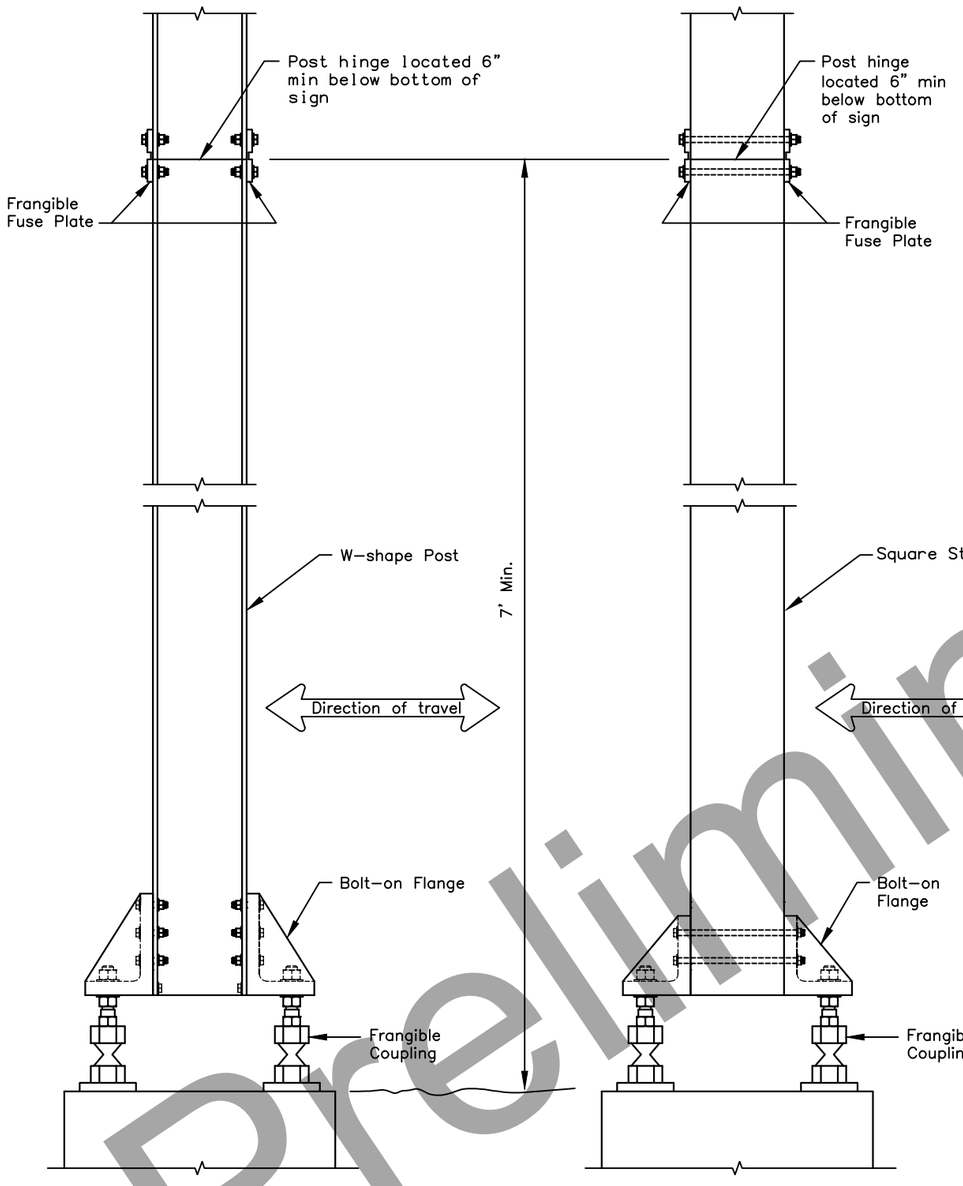

FRANGIBLE COUPLING SYSTEM FOR W–SHAPE POST

FRANGIBLE COUPLING SYSTEM FOR SQUARE STEEL TUBES

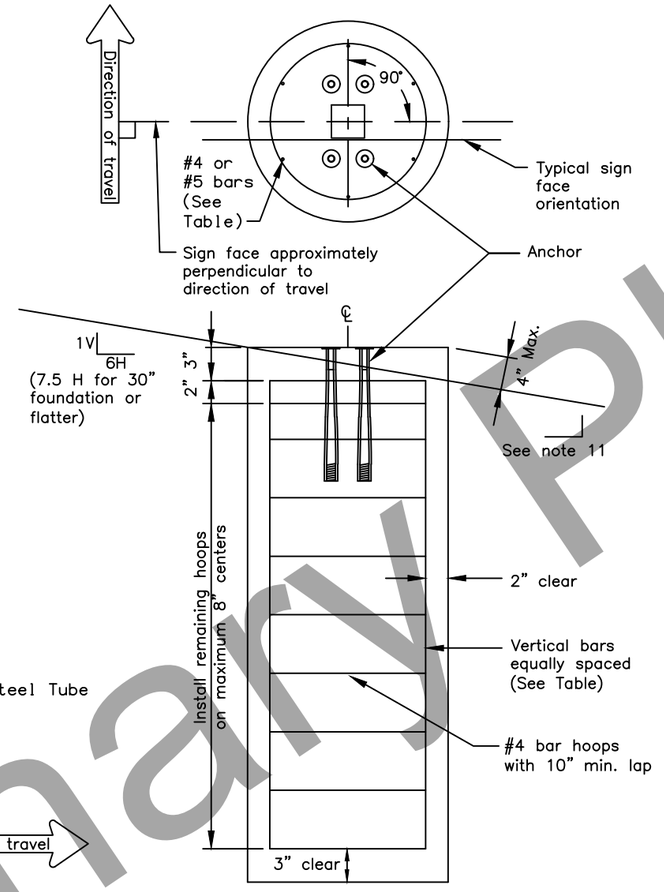

SIGN POST FOUNDATION
See Table for depth and diameter

POST SIZE & TYPE	FOUNDATION *			REINFORCEMENT					
	DIA.	MIN. DEPTH	CY^3 CONC.	VERTICAL BARS			HOOPS		
				QTY.	SIZE	LGTH.	QTY.	SIZE	DIA.
2 1/2" TUBE	1'–6"	6'–0"	0.39	7	#5	5'–6"	10	#4	1'–2"
3" TUBE	1'–6"	6'–0"	0.39	7	#5	5'–6"	10	#4	1'–2"
3 1/2" TUBE	1'–6"	6'–0"	0.39	7	#5	5'–6"	10	#4	1'–2"
4" TUBE	2'–6"	6'–0"	1.09	8	#8	5'–6"	10	#4	2'–2"
4 1/2" TUBE	2'–6"	6'–0"	1.09	8	#8	5'–6"	10	#4	2'–2"
5" TUBE	2'–6"	6'–0"	1.09	8	#8	5'–6"	10	#4	2'–2"
W6 x 9	2'–6"	6'–0"	1.09	8	#8	5'–6"	10	#4	2'–2"
W6 x 12	2'–6"	6'–0"	1.09	8	#8	5'–6"	10	#4	2'–2"
W6 x 15	3'–0"	6'–6"	1.70	8	#11	6'–0"	12	#4	2'–8"
W6 x 30	3'–0"	7'–6"	1.96	8	#11	7'–0"	13	#4	2'–8"

FOUNDATION TABLE

* Foundations sized for use where there are no loose, high moisture, or fine grained soils.

GENERAL NOTES

1. Furnish sign posts with NCHRP 350 compliant frangible couplings designed to break away safely when struck from any direction. There is no MASH compliant device at this time. See SPDR report for more info.
2. Furnish frangible coupling systems with bolt–on flanges.
3. Details on this sheet illustrate only the general components of a frangible coupling system, and are not intended to specify a particular product.
4. Install frangible fuse plates as specified by the manufacturer and hinged joints when multiple posts are used to support a sign. Do not use round pipes.
5. Install the components of the breakaway system, including hinges, in accordance with the written instructions of the system manufacturer.
6. Use Class A, B or W concrete conforming to Sections 501 or 550 of the Standard Specifications. Furnish ASTM A615 grade 60 steel bars for concrete reinforcement conforming to AASHTO M31.
7. Spiral reinforcing steel may be substituted for hoops in concrete foundation. Spiral option shall consist of #3 plain spiral with 6" pitch with three flat turns at the top and one flat turn at the bottom.
8. Install the concrete anchors using a rigid template. Locate the anchors on centers and within tolerances specified by the manufacturer.
9. Install the anchors in fresh concrete as recommended by the manufacturer. Adjust the template's final position until it is level. Remove and replace all foundations that need more than 2 shims under any 1 coupling or more than a total of 3 shims under any pair of couplings to plumb the post.
10. Drill the holes for attaching brackets before the sign posts are hot dip galvanized. Test fit templates in the holes to ensure the brackets can be installed square to the posts.
11. Special grading detail and/or shielding may be required to maintain 4" maximum clear distance.

State of Alaska DOT&PF
ALASKA STANDARD PLAN

SIGN POST BASE AND FOUNDATION

Adopted as an Alaska Standard Plan by: *Carolyn Morehouse*
Carolyn Morehouse, P.E.
Chief Engineer

Adoption Date: 7/17/2020

Last Code and Stds. Review
By: KLK, MJM Date: 7/8/2020

Next Code and Standards Review Date: 7/8/2030

S-31.02

Preliminary Plans

S-32.02 SHEET 1 of 1

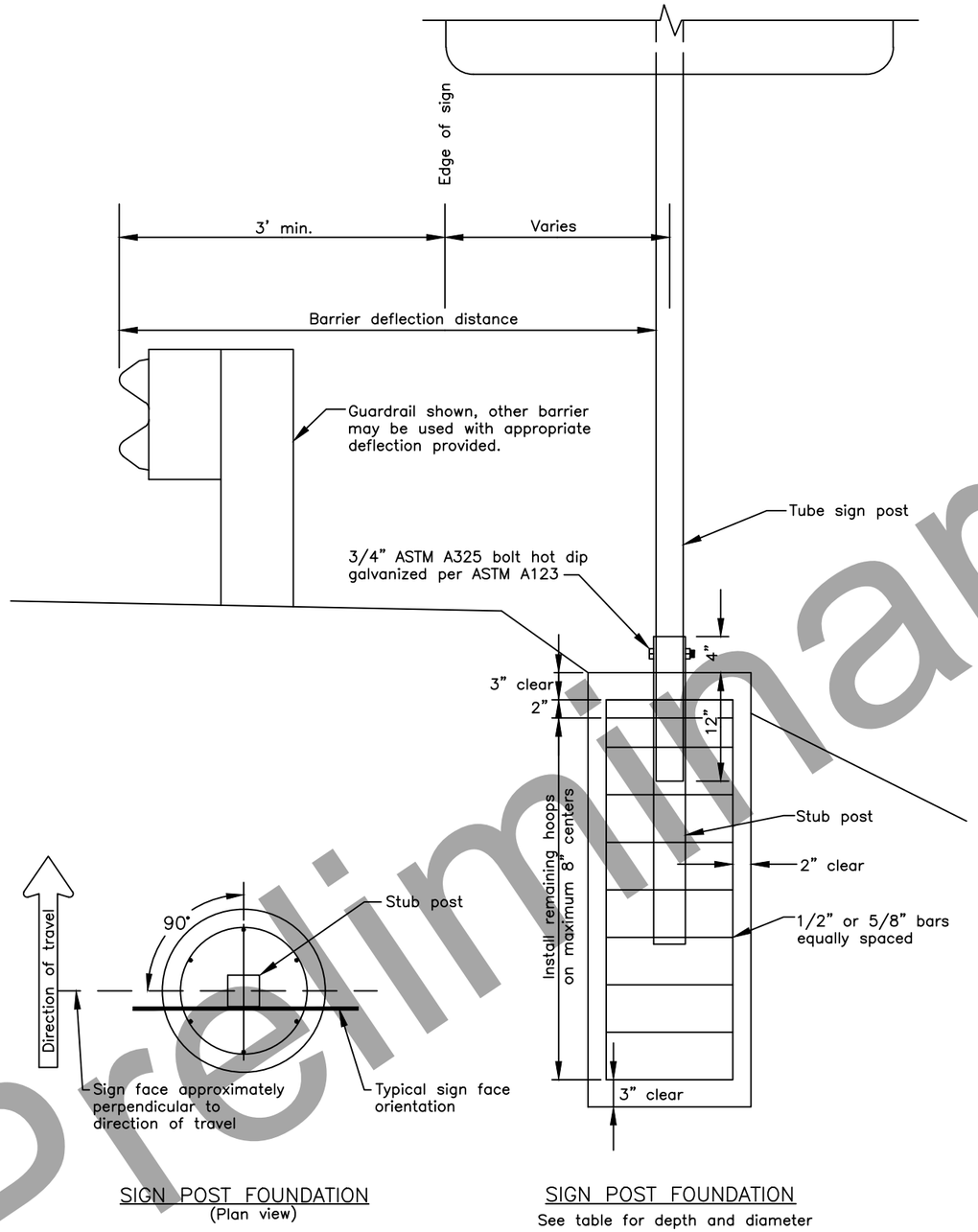

SIGN POST FOUNDATION
(Plan view)

SIGN POST FOUNDATION
See table for depth and diameter

GENERAL NOTES

1. This is a non–crashworthy sign support. It may only be used at locations shielded by a guardrail, barrier, or wall. It may not be used if the sign post is within 20' of the rail and is closer than 75' from the guardrail end post (measured along the rail). For this case use a breakaway sign support. See Standard Plan G–20.
2. Furnish steel tube sign post and stub post that conform to ASTM A500, grade B, and meet ASTM A123 for hot dip galvanizing.
3. Install tubes and stub post with a 0.1875" wall thickness.
4. For Perforated Tubes use Standard Plan S–30.
5. Spiral reinforcing steel may be substituted for hoops in concrete foundation. Spiral option shall consist of No. 3 plain spiral with 6" pitch with three flat turns at the top and one flat turn at the bottom.
6. Use Class A, B or W concrete.

POST SIZE & TYPE	FOUNDATION *			REINFORCEMENT					STUB POST	
	DIA.	MIN. DEPTH	C.Y. CONC.	VERTICAL BARS QTY.	VERTICAL BARS SIZE	VERTICAL BARS LGTH.	HOOPS SIZE	HOOPS DIA.	SLEEVE SIZE	SLEEVE LGTH.
2 1/2" TUBE	1'–0"	4'–6"	0.13	6	#4	4'–0"	#4	8"	3"	3'
3" TUBE	1'–6"	4'–0"	0.25	7	#5	3'–6"	#4	1'–2"	3 1/2"	3'
3 1/2" TUBE	1'–6"	4'–6"	0.27	7	#5	4'–0"	#4	1'–2"	4"	3'
4" TUBE	2'–6"	4'–0"	0.69	8	#8	3'–6"	#4	2'–2"	4 1/2"	3'
4 1/2" TUBE	2'–6"	4'–6"	0.78	8	#8	4'–0"	#4	2'–2"	5"	3'

* Foundation sized for use where there are no loose, high moisture, or fine grained soil.

State of Alaska DOT&PF
ALASKA STANDARD PLAN

SIGN POST BASE AND FOUNDATION BEHIND BARRIER

Adopted as an Alaska Standard Plan by: Carolyn Morehouse
Carolyn Morehouse, P.E.
Chief Engineer

Adoption Date: 7/17/2020

Last Code and Stds. Review
By: KLK Date: 7/8/2020

Next Code and Standards Review Date: 7/8/2030

S-32.02

Preliminary Plans