STATE OF ALASKA

DEPARTMENT OF TRANSPORTATION & PUBLIC FACILITIES

NO.	DATE	REVISIONS	STATE	PROJECT DESIGNATION	YEAR	SHEET NO.	TOTAL SHEETS
			ALASKA	TA18010/SFHWY00259	2023	A1	36
			CDS ROUTE: N/A		MILEPOINT: N/A		
			LATITUDE: 58°22'56"N		LONGITUDE: 134°35'59"W		

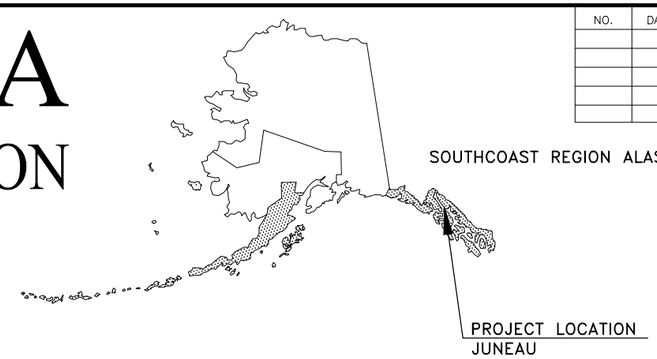

PROJECT SUMMARY	
WIDTH OF PAVEMENT	8' TO 10'
LENGTH OF PAVING	1.40 MILE
LENGTH OF PROJECT	1.40 MILE

PROPOSED HIGHWAY PROJECT

JNU KAXDIGOOWU HEEN DEI IMP (BROTHERHOOD BRIDGE TRAIL IMP) PROJECT NO. TA18010/SFHWY00259

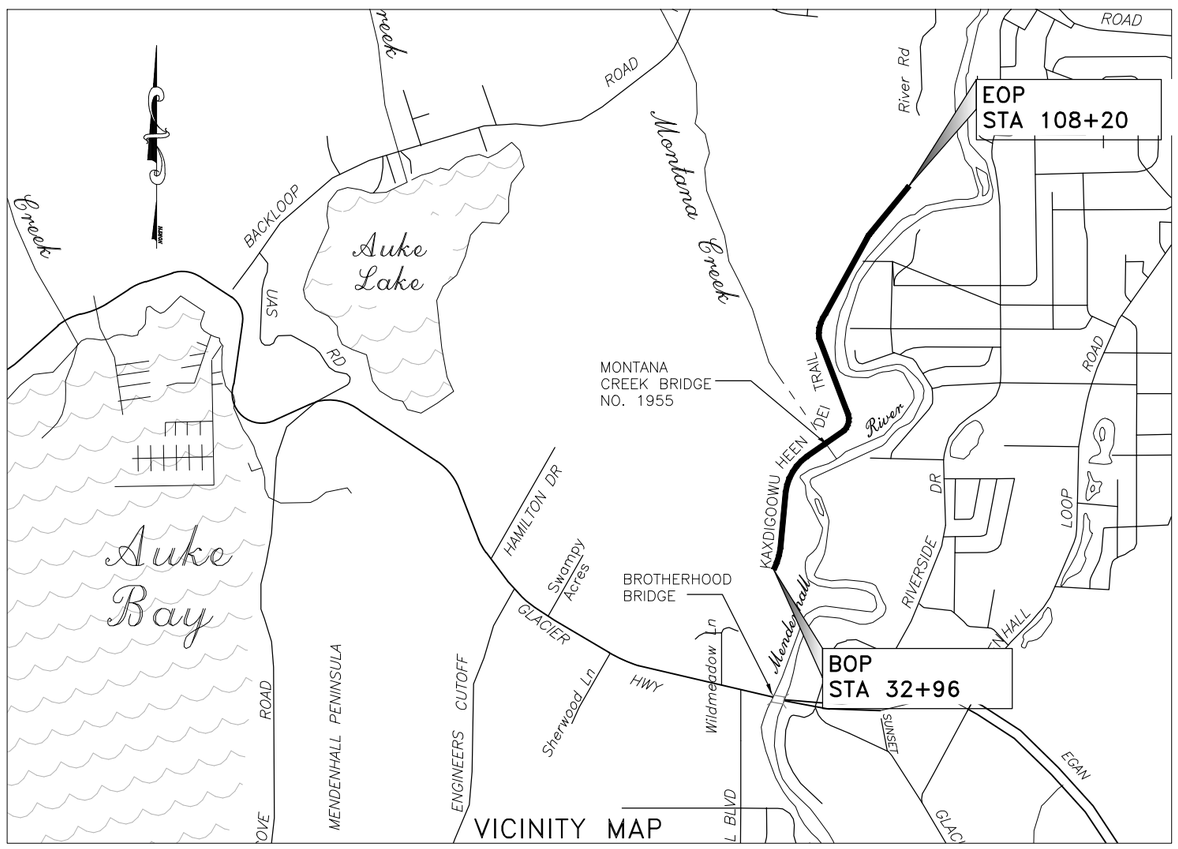

VICINITY MAP

USE THESE PLANS IN CONJUNCTION WITH THE STATE OF ALASKA STANDARD SPECIFICATIONS FOR HIGHWAY CONSTRUCTION, 2020 EDITION AND THE PROJECT SPECIAL PROVISIONS.

STATE OF ALASKA
DEPARTMENT OF TRANSPORTATION & PUBLIC FACILITIES
6860 GLACIER HIGHWAY, JUNEAU, AK 99801
(907) 465-1763

APPROVED:

REGIONAL PRECONSTRUCTION ENGINEER — DATE
KIRK D. MILLER, P.E.

CONCUR:

REGIONAL DIRECTOR — DATE
D. LANCE MEARIG, P.E.

FILE Q:\Jnu\SFHWY00259\Planset\00259_A1.dwg | DATE 12/13/2022 14:37 | LAYOUT A1 | DESIGNED | CHECKED | DRAFTED

NO.	DATE	REVISION

STATE	PROJECT DESIGNATION	YEAR	SHEET NO.	TOTAL SHEETS
ALASKA	TA18010/SFHWY00259	2023	A2	36

INDEX OF SHEETS

SHEET NO.	DESCRIPTION
A1	TITLE SHEET
A2	LAYOUT
A3	LEGEND
A4–A6	SURVEY CONTROL
B1–B2	TYPICAL SECTIONS
C1	ESTIMATE OF QUANTITIES
F1–F6	PLAN & PROFILE
G1	GRADING POINTS
N1–N12	BRIDGE DETAILS
Q1–Q3	ESCP
S1–S4	PHASING
T1	TRAFFIC CONTROL

ABBREVIATIONS:

ABUT = ABUTMENT
BOP = BEGINNING OF PROJECT
CBJ = CITY AND BOROUGH OF JUNEAU
E = EAST
EOP = END OF PROJECT
EP = EDGE OF PAVEMENT
FT = FOOT
IMP = IMPROVEMENT
IN = INCH
JNU = JUNEAU
MAX = MAXIMUM
MIN = MINIMUM
MTE = MATCH TO EXISTING
N = NORTH
PT = POINT OF TANGENCY
PC = POINT OF CURVATURE
PI = POINT OF INTERSECTION
PT = POINT OF TANGENCY
RD = ROAD
S = SOUTH
STA = STATION
TYP = TYPICAL
VPI = VERTICAL POINT OF INTERSECTION
W = WEST

LEGEND & ABBREVIATIONS

TRAIL	
HAUL ROUTE	
CONTRACTOR STAGING AREA	
BEGINNING OF PROJECT	BOP
END OF PROJECT	EOP

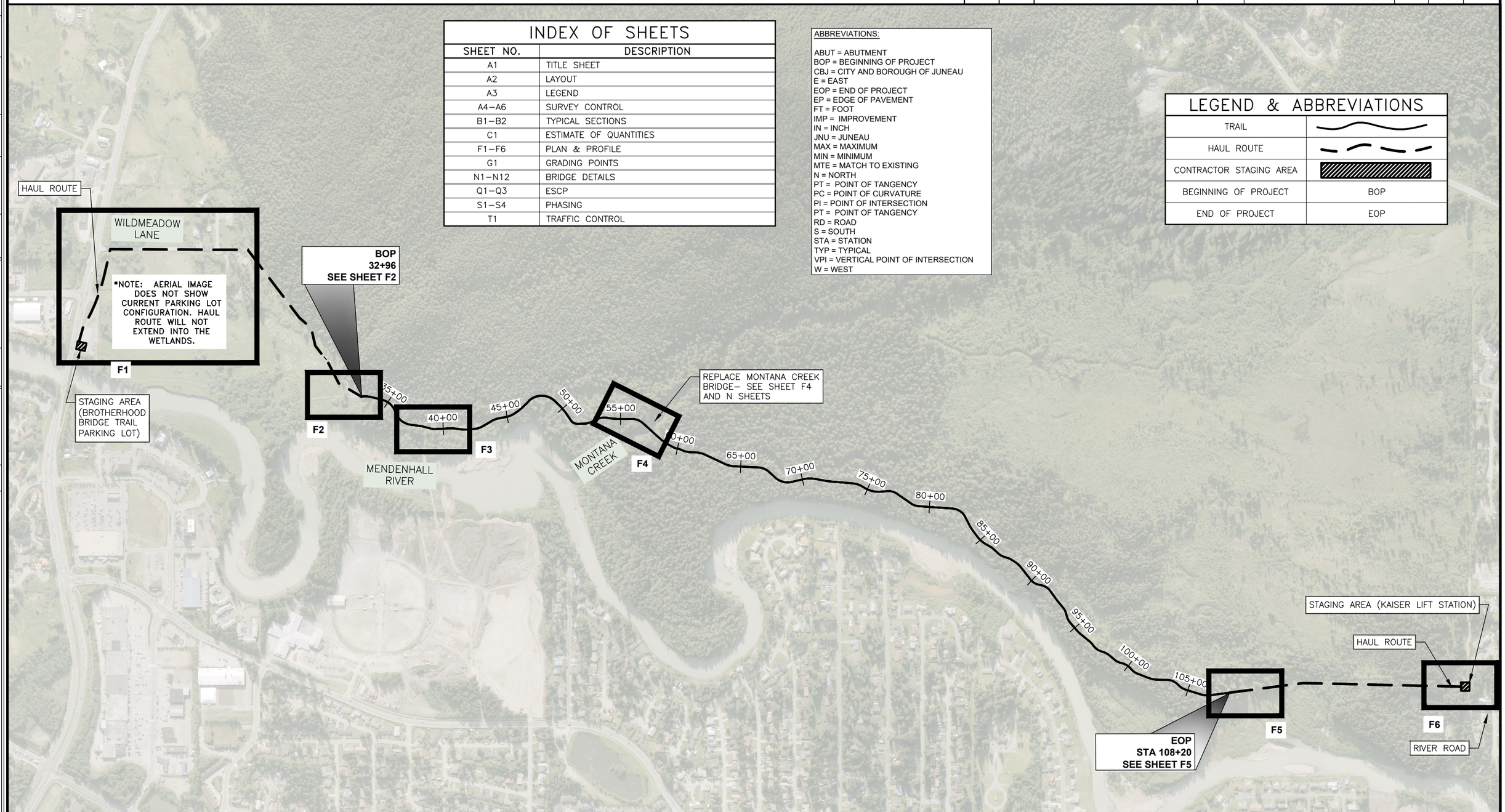

GENERAL NOTES:

1. CONTAIN ALL CONSTRUCTION WITHIN THE RIGHT–OF–WAY. DO NOT DISPOSE OF EXCESS MATERIAL WITHIN THE RIGHT–OF–WAY, UNLESS SPECIFICALLY CALLED FOR IN THE PLANS.
2. MAKE ALL PAVEMENT CUTS CLEAN, VERTICAL, AND TRUE TO THE REMOVAL LIMITS SHOWN ON THE PLANS.

STATE OF ALASKA DEPARTMENT OF TRANSPORTATION AND PUBLIC FACILITIES
6860 GLACIER HIGHWAY, JUNEAU, AK 99801
(907) 465–1763

JNU KAXDIGOOWU HEEN DEI IMP
(BROTHERHOOD BRIDGE TRAIL IMP)

LAYOUT

FILE Q:\jnu\SFHWY00259\Planset\00259_A2.dwg | DATE 12/13/2022 14:37 | LAYOUT A2 | DESIGNED WMC | CHECKED ##### | DRAFTED WMC

NO.	DATE	REVISION	STATE	PROJECT DESIGNATION	YEAR	SHEET NO.	TOTAL SHEETS
			ALASKA	TA18010/SFHWY00259	2023	A3	36

RECOVERED	SET
BLM MONUMENT	
GLO MONUMENT	
USC&GS MONUMENT	
PRIMARY MONUMENT	
CENTERLINE MONUMENT IN CASING	
PRIMARY R.O.W. MONUMENT	
BEARING OBJECT	
MISCELLANEOUS MONUMENT	
LINE OF SIGHT MONUMENT	
CONCRETE R.O.W. MONUMENT	
BENCHMARK	BM
REBAR AND CAP	
REBAR	
IRON PIPE	
PK NAIL	
SPIKE	
HUB AND TACK	
CONSTRUCTION CENTERLINE	5+00
MICELLANEOUS CENTERLINE	10+00
STATION EQUATION	"L"48+97.23 POT BK= / "O"48+97.23 PC AHD
PROJECT RIGHT-OF-WAY LINE	ROW
EXISTING RIGHT-OF-WAY LINE	ROW
EXISTING PROPERTY LINE	
CONTROLLED ACCESS LINE	C/A
EXISTING EASEMENT LINE	
PROPOSED EASEMENT LINE	
PROPOSED CUT SLOPE LIMIT	
PROPOSED FILL SLOPE LIMIT	
SECTION LINE	
1/4 SECTION LINE	
1/16 SECTION LINE	
TOWNSHIP & RANGE LINE	T. 2 N. / T. 1 N. / T. 1 E. / T. 2 E.
MEANDER LINE	M1 M2 M3

	EXISTING	PROPOSED
SANITARY SEWER (FLOW DIRECTION ⟶)	SS	SS
FUEL LINE	O	O
GAS LINE	G	G
METER, VALVE, FIRE HYDRANT	W	W
PROPOSED STORM DRAIN	S-10, SD, P-10, S-11, MH, P-11	
FIBER OPTIC LINE	FO	
DIRECT BURIAL TELEPHONE CABLE	T	T
DIRECT BURIAL ELECTRIC CABLE	E	E
ELECTRIC LINE (OVERHEAD)		
POWER POLE LINE		
JOINT USE POWER & TELEPHONE		
TELEPHONE POLE LINE		
POLE ANCHOR		
STUB POLE (POWER OR TELEPHONE)		
TELEPHONE DUCT	T	T
TELEPHONE PEDESTAL		
BURIED CABLE MARKER		
PIPELINE MARKER OR VALVE		
CATCH BASIN OR DROP INLET		
MANHOLE	MH	MH
SANITARY SEWER CLEAN OUT		
RIPRAP		
SPECIAL DITCH CENTERLINE		
HIGH TIDE LINE	HTL	HTL

	EXISTING	PROPOSED
ROADWAY/PAVEMENT EDGE		
FENCE	X	X
CURB AND GUTTER		
DETECTABLE WARNINGS		
GUARDRAIL		
CULVERT PIPE		
SIGN		
MAILBOX	MB	MB
RAILROAD TRACKS		
RAILROAD DEVICES	CROSS-BUCK, FLASHING LIGHT	CANTILEVER, SWITCH
TREE LINE		
WATER BOUNDARY		
ORDINARY HIGH WATER LINE		
FLOW CENTERLINE		
FLOW DIRECTION		
WETLANDS		
EXISTING BUILDINGS	H	H = HOUSE G = GARAGE M = MERCHANT/STORE B = BARN S = SHED P = PRIVY SS= SERVICE STATION W = WAREHOUSE
POST OR BOLLARD		
WELL OR MONITORING WELL	W, MW	
SEPTIC PIPE	S	
FUEL TANK FILL PIPE/VENT	P	
SATELLITE DISH	SAT. DISH	
TEST HOLE	TH	
CONIFER TREE		
DECIDUOUS TREE		
GRAVE		
THERMOSIPHON		
PARKING METER		
VEHICLE PLUG-IN		
DELINEATOR/GUIDE MARKER		

	EXISTING	PROPOSED
JUNCTION BOX, TYPE IA		5
JUNCTION BOX, TYPE II		6
JUNCTION BOX, TYPE III		3
SIGNAL FACE, VEHICULAR	42	42
SIGNAL FACE, BACKPLATE	42	42
SIGNAL FACE, LEFT TURN, BACKPLATE	43	43
SIGNAL FACE, PEDESTRIAN	40	40
LOOP DETECTOR	33	73
VIDEO DETECTOR	2	2
RADAR DETECTOR	4	4A
OPTICOM DETECTOR	1	1
PEDESTRIAN PUSH BUTTON	1	1
SIGNAL POST W/O MAST ARM		1
SIGNAL POLE W/MAST ARM		4
SIGNAL CONTROLLER		
LOAD CENTER		
LUMINAIRE		2
RIGID METAL CONDUIT		

ABBREVIATIONS:

WATER LINE EXISTING	W
SANITARY SEWER LINE EXISTING	SS SS
STORM DRAIN LINE EXISTING	
STORM DRAIN LINE PROPOSED	P-1

STATE OF ALASKA DEPARTMENT OF TRANSPORTATION AND PUBLIC FACILITIES
6860 GLACIER HIGHWAY, JUNEAU, AK 99801
(907) 465-1763

JNU KAXDIGOOWU HEEN DEI IMP
(BROTHERHOOD BRIDGE TRAIL IMP)

LEGEND

FILE Q:\Jnu\SFHWY00259\Planset\00259_A3.dwg | DATE 12/13/2022 14:38 | LAYOUT A3 | DESIGNED WMC | CHECKED ##### | DRAFTED WMC

NO.	DATE	REVISION

STATE	PROJECT DESIGNATION	YEAR	SHEET NO.	TOTAL SHEETS
ALASKA	SFHWY00259/TA18080	2022	A4	36

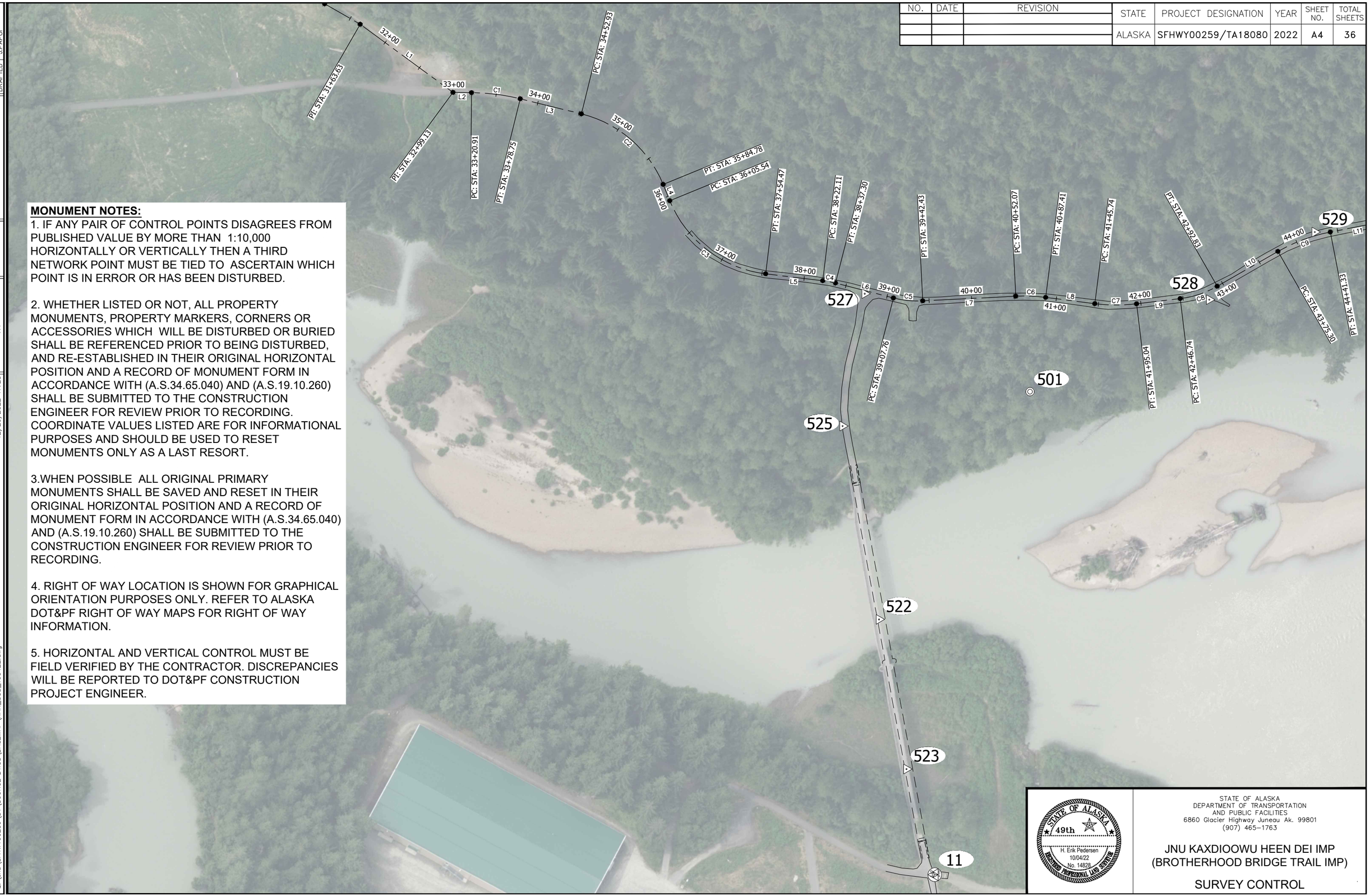

MONUMENT NOTES:

1. IF ANY PAIR OF CONTROL POINTS DISAGREES FROM PUBLISHED VALUE BY MORE THAN 1:10,000 HORIZONTALLY OR VERTICALLY THEN A THIRD NETWORK POINT MUST BE TIED TO ASCERTAIN WHICH POINT IS IN ERROR OR HAS BEEN DISTURBED.

2. WHETHER LISTED OR NOT, ALL PROPERTY MONUMENTS, PROPERTY MARKERS, CORNERS OR ACCESSORIES WHICH WILL BE DISTURBED OR BURIED SHALL BE REFERENCED PRIOR TO BEING DISTURBED, AND RE-ESTABLISHED IN THEIR ORIGINAL HORIZONTAL POSITION AND A RECORD OF MONUMENT FORM IN ACCORDANCE WITH (A.S.34.65.040) AND (A.S.19.10.260) SHALL BE SUBMITTED TO THE CONSTRUCTION ENGINEER FOR REVIEW PRIOR TO RECORDING. COORDINATE VALUES LISTED ARE FOR INFORMATIONAL PURPOSES AND SHOULD BE USED TO RESET MONUMENTS ONLY AS A LAST RESORT.

3.WHEN POSSIBLE ALL ORIGINAL PRIMARY MONUMENTS SHALL BE SAVED AND RESET IN THEIR ORIGINAL HORIZONTAL POSITION AND A RECORD OF MONUMENT FORM IN ACCORDANCE WITH (A.S.34.65.040) AND (A.S.19.10.260) SHALL BE SUBMITTED TO THE CONSTRUCTION ENGINEER FOR REVIEW PRIOR TO RECORDING.

4. RIGHT OF WAY LOCATION IS SHOWN FOR GRAPHICAL ORIENTATION PURPOSES ONLY. REFER TO ALASKA DOT&PF RIGHT OF WAY MAPS FOR RIGHT OF WAY INFORMATION.

5. HORIZONTAL AND VERTICAL CONTROL MUST BE FIELD VERIFIED BY THE CONTRACTOR. DISCREPANCIES WILL BE REPORTED TO DOT&PF CONSTRUCTION PROJECT ENGINEER.

STATE OF ALASKA
49th
H. Erik Pedersen
10/04/22
No. 14828
REGISTERED PROFESSIONAL LAND SURVEYOR

STATE OF ALASKA
DEPARTMENT OF TRANSPORTATION
AND PUBLIC FACILITIES
6860 Glacier Highway Juneau Ak. 99801
(907) 465-1763

JNU KAXDIOOWU HEEN DEI IMP
(BROTHERHOOD BRIDGE TRAIL IMP)

SURVEY CONTROL

DESIGNED J.PAPOI
CHECKED E.PEDERSEN
DRAFTED J.PAPOI

XREFS

SCALE

LAYOUT A4

DATE TIME 12/20/2022 17:28

DRAWING LOCATION
Q:\Jnu\SFHWY00259\SVA\SOURCE DWGS\BASEMAP\KAX_SCS_100422.dwg

NO.	DATE	REVISION

STATE	PROJECT DESIGNATION	YEAR	SHEET NO.	TOTAL SHEETS
ALASKA	SFHWY00259/TA18080	2022	A5	36

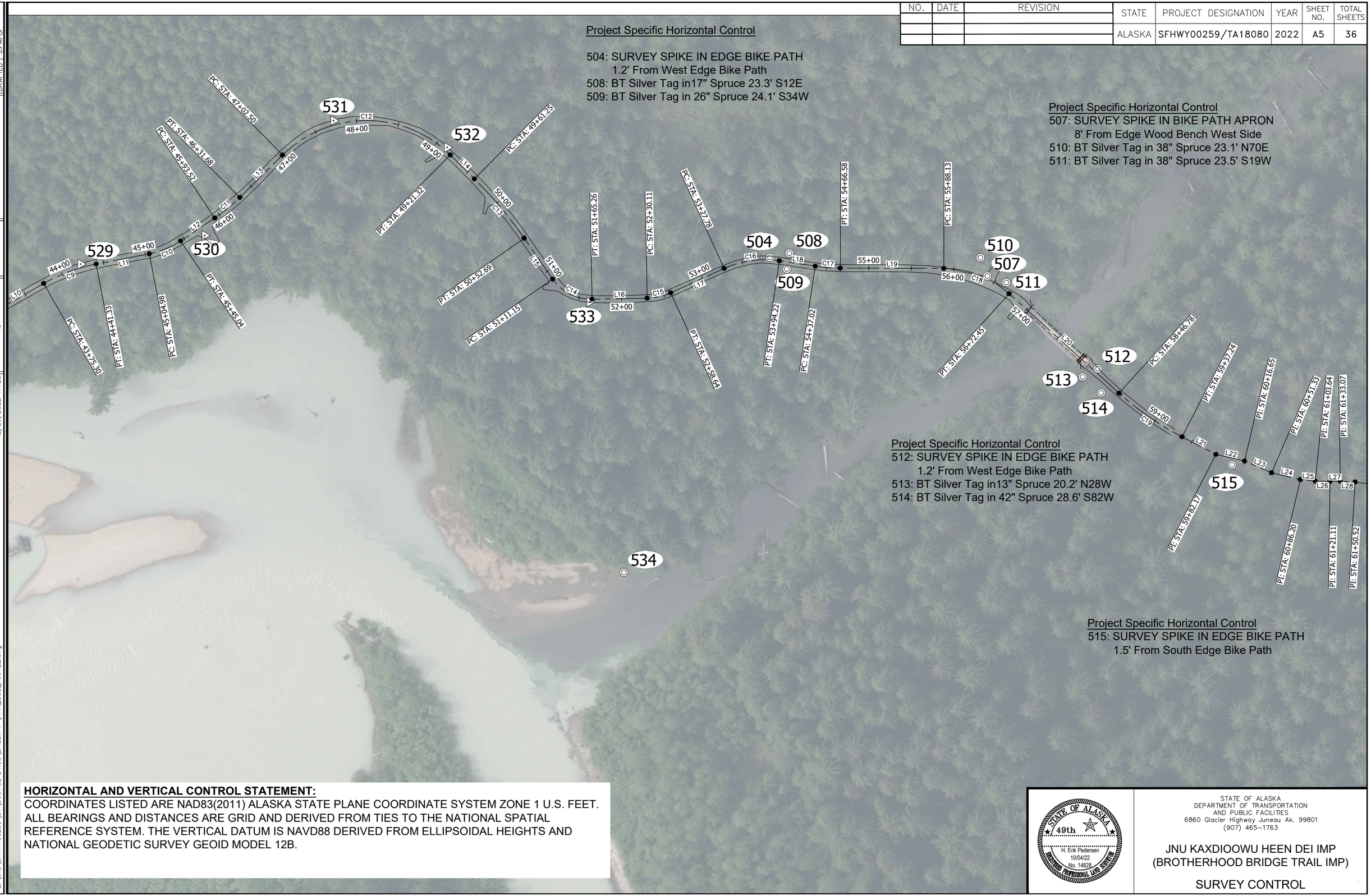

HORIZONTAL AND VERTICAL CONTROL STATEMENT:
COORDINATES LISTED ARE NAD83(2011) ALASKA STATE PLANE COORDINATE SYSTEM ZONE 1 U.S. FEET. ALL BEARINGS AND DISTANCES ARE GRID AND DERIVED FROM TIES TO THE NATIONAL SPATIAL REFERENCE SYSTEM. THE VERTICAL DATUM IS NAVD88 DERIVED FROM ELLIPSOIDAL HEIGHTS AND NATIONAL GEODETIC SURVEY GEOID MODEL 12B.

STATE OF ALASKA
49th
H. Erik Pedersen
10/04/22
No. 14828
REGISTERED PROFESSIONAL LAND SURVEYOR

STATE OF ALASKA
DEPARTMENT OF TRANSPORTATION
AND PUBLIC FACILITIES
6860 Glacier Highway Juneau Ak. 99801
(907) 465-1763

JNU KAXDIOOWU HEEN DEI IMP
(BROTHERHOOD BRIDGE TRAIL IMP)

SURVEY CONTROL

DESIGNED J.PAPOI
CHECKED E.PEDERSEN
DRAFTED J.PAPOI

XREFS

SCALE

LAYOUT A5

DATE TIME 12/20/2022 17:28

DRAWING LOCATION Q:\Jnu\SFHWY00259\SV\SOURCE DWGS\BASEMAP\KAX_SCS_100422.dwg

NO.	DATE	REVISION

STATE	PROJECT DESIGNATION	YEAR	SHEET NO.	TOTAL SHEETS
ALASKA	SFHWY00259/TA18080	2022	A6	36

KAX TRAIL DESIGN ALIGNMENT

SEGMENT	STATION	NORTHING	EASTING	DISTANCE	BEARING	STATION	RADIUS	LENGTH	DELTA
L1	31+63.63	2390809.83	2506548.17	135.50	N36° 18' 42"E	32+99.13			
L2	32+99.13	2390919.02	2506628.41	21.79	N0° 34' 37"E	33+20.91			
C1	33+20.91	2390940.80	2506628.63			33+78.75	250.00	57.84	13°15'18"
L3	33+78.75	2390998.05	2506635.87	74.18	N13° 49' 55"E	34+52.93			
C2	34+52.93	2391070.09	2506653.61			35+84.78	140.00	131.85	53°57'34"
L4	35+84.78	2391166.23	2506736.63	20.75	N67° 47' 29"E	36+05.54			
C3	36+05.54	2391174.07	2506755.84			37+54.47	140.00	148.94	60°57'14"
L5	37+54.47	2391287.02	2506841.93	67.64	N6° 50' 15"E	38+22.11			
C4	38+22.11	2391354.18	2506849.98			38+37.30	115.00	15.18	7°33'54"
L6	38+37.30	2391369.09	2506852.78	70.46	N14° 24' 09"E	39+07.76			
C5	39+07.76	2391437.34	2506870.31			39+42.43	115.00	34.67	17°16'21"
L7	39+42.43	2391471.70	2506873.78	109.64	N2° 52' 12"W	40+52.07			
C6	40+52.07	2391581.21	2506868.29			40+87.41	200.00	35.34	10°07'28"
L8	40+87.41	2391616.48	2506869.64	58.33	N7° 15' 16"E	41+45.74			
C7	41+45.74	2391674.34	2506877.00			41+95.04	200.00	49.30	14°07'21"
L9	41+95.04	2391723.51	2506877.17	51.70	N6° 52' 05"W	42+46.74			
C8	42+46.74	2391774.84	2506870.98			42+92.83	115.00	46.09	22°57'48"
L10	42+92.83	2391818.29	2506856.57	82.47	N29° 49' 54"W	43+75.30			
C9	43+75.30	2391889.83	2506815.55			44+41.33	200.00	66.03	18°55'02"
L11	44+41.33	2391951.46	2506792.66	63.65	N10° 54' 51"W	45+04.98			
C10	45+04.98	2392013.96	2506780.61			45+45.04	100.00	40.05	22°56'59"
L12	45+45.04	2392050.74	2506765.46	48.48	N33° 51' 50"W	45+93.52			
C11	45+93.52	2392091.00	2506738.44			46+31.68	200.00	38.16	10°55'57"
L13	46+31.68	2392120.48	2506714.29	70.82	N44° 47' 47"W	47+02.50			

KAX TRAIL DESIGN ALIGNMENT

SEGMENT	STATION	NORTHING	EASTING	DISTANCE	BEARING	STATION	RADIUS	LENGTH	DELTA
C12	47+02.50	2392170.73	2506664.39			49+21.32	140.00	218.82	89°33'11"
L14	49+21.32	2392367.95	2506664.32	39.93	N44° 45' 23"E	49+61.25			
C13	49+61.25	2392396.30	2506692.44			50+52.69	500.00	91.44	10°28'43"
L15	50+52.69	2392455.00	2506762.39	58.46	N55° 14' 07"E	51+11.15			
C14	51+11.15	2392488.34	2506810.41			51+65.26	55.00	54.11	56°22'06"
L16	51+65.26	2392534.61	2506834.04	64.85	N1° 08' 00"W	52+30.11			
C15	52+30.11	2392599.44	2506832.76			52+58.64	70.00	28.53	23°21'02"
L17	52+58.64	2392627.07	2506826.48	69.14	N24° 29' 02"W	53+27.78			
C16	53+27.78	2392689.99	2506797.83			53+94.22	115.00	66.44	33°06'13"
L18	53+94.22	2392754.89	2506788.78	42.80	N8° 37' 11"E	54+37.02			
C17	54+37.02	2392797.20	2506795.20			54+66.58	200.00	29.57	8°28'14"
L19	54+66.58	2392826.65	2506797.46	121.55	N0° 08' 57"E	55+88.13			
C18	55+88.13	2392948.20	2506797.77			56+72.45	115.00	84.31	42°00'22"
L20	56+72.45	2393025.09	2506827.52	174.34	N42° 09' 19"E	58+46.78			
C19	58+46.78	2393154.33	2506944.53			59+37.24	350.00	90.45	14°48'25"
L21	59+37.24	2393228.44	2506995.94	44.94	N27° 20' 53"E	59+82.17			
L22	59+82.17	2393268.35	2507016.58	34.48	N13° 08' 52"E	60+16.65			
L23	60+16.65	2393301.93	2507024.43	34.68	N23° 20' 56"E	60+51.33			
L24	60+51.33	2393333.77	2507038.17	34.86	N13° 21' 36"E	60+86.20			
L25	60+86.20	2393367.69	2507046.23	17.45	N5° 51' 36"E	61+03.64			
L26	61+03.64	2393385.05	2507048.01	17.47	N0° 51' 27"E	61+21.11			
L27	61+21.11	2393402.51	2507048.27	11.96	N0° 45' 31"W	61+33.07			
L28	61+33.07	2393414.47	2507048.11	17.45	N3° 19' 05"E	61+50.52			

Survey Control Table

Point #	Northing	Easting	Elevation	Description	Station	Offset
11	2391485.88	2507549.13	36.09	GPS_PLASCAP	39+39.57	675.47R
501	2391598.03	2506980.60	29.72	2.5"ALCAP	40+77.62	112.30R
504	2392743.80	2506784.94	31.09	SURVSPIKE	53+82.93	2.71L
507	2392999.46	2506806.80	33.84	SURVSPIKE	56+39.90	2.85L
508	2392766.57	2506779.96	35.60	BT	54+04.45	10.48L
509	2392763.67	2506798.55	36.13	BT	54+04.37	8.34R
510	2392991.38	2506785.14	38.70	BT	56+25.59	19.83L
511	2393021.72	2506814.39	40.12	BT	56+61.86	7.99L
512	2393129.36	2506915.77	33.43	SURVSPIKE	58+08.97	4.56L
513	2393111.52	2506925.30	38.69	BT	58+02.15	14.48R
514	2393133.23	2506944.10	40.36	BT	58+30.86	13.84R
515	2393287.28	2507028.93	34.83	SURVSPIKE	60+03.41	7.72R

Survey Control Table

Point #	Northing	Easting	Elevation	Description	Station	Offset
522	2391420.32	2507248.65	39.72	MAG	39+25.98	376.85R
523	2391452.65	2507424.80	38.34	MAG	39+34.37	551.01R
525	2391377.40	2507021.05	33.66	MAG	38+87.20	160.91R
527	2391403.50	2506865.31	32.66	MAG	38+73.74	3.57R
528	2391809.00	2506872.31	36.36	MAG	42+78.17	10.05R
529	2391933.11	2506792.71	43.68	MAG	44+23.66	4.22L
530	2392079.08	2506758.99	47.64	MAG	45+72.17	10.41R
531	2392230.63	2506623.91	45.42	MAG	47+74.12	5.09L
532	2392364.32	2506655.40	37.53	MAG	49+12.70	4.06L
533	2392531.86	2506837.30	29.87	MAG	51+62.61	3.28R
534	2392572.09	2507155.36	19.02	2.5"ALCAP	51+96.38	322.00R

ALL SURVEY CONTROL MONUMENTS IN THIS TABLE ARE PROVIDED STRICTLY FOR SURVEY CONTROL. SHOULD ANY OF THEM BE DESTROYED DURING CONSTRUCTION THEY SHALL NOT BE REPLACED.

STATE OF ALASKA
49th
H. Erik Pedersen
10/04/22
No. 14828
REGISTERED PROFESSIONAL LAND SURVEYOR

STATE OF ALASKA
DEPARTMENT OF TRANSPORTATION
AND PUBLIC FACILITIES
6860 Glacier Highway Juneau Ak. 99801
(907) 465-1763

JNU KAXDIOOWU HEEN DEI IMP
(BROTHERHOOD BRIDGE TRAIL IMP)

SURVEY CONTROL

DESIGNED J.PAPOI
CHECKED E.PEDERSEN
DRAFTED J.PAPOI

XREFS

SCALE

LAYOUT A6

DATE TIME 12/20/2022 17:28

DRAWING LOCATION
Q:\Jnu\SFHWY00259\SV\SOURCE DWGS\BASEMAP\KAX_SCS_100422.dwg

NO.	DATE	REVISION	STATE	PROJECT DESIGNATION	YEAR	SHEET NO.	TOTAL SHEETS
			ALASKA	SFHWY00259/TA18080	2023	B1	36

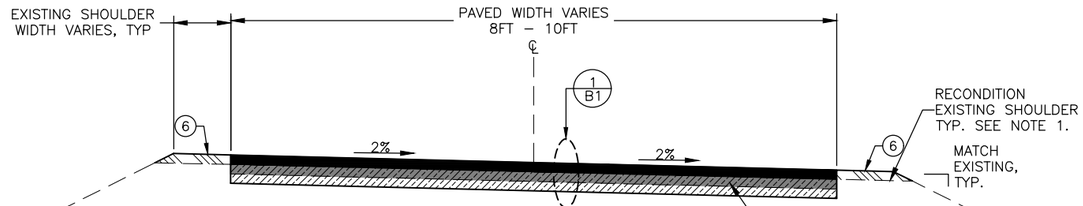

TRAIL RESURFACING

NOT TO SCALE
STA 32+96 TO 35+40
STA 42+80 TO 45+60
STA 52+20 TO 53+70
STA 58+30 TO 108+20

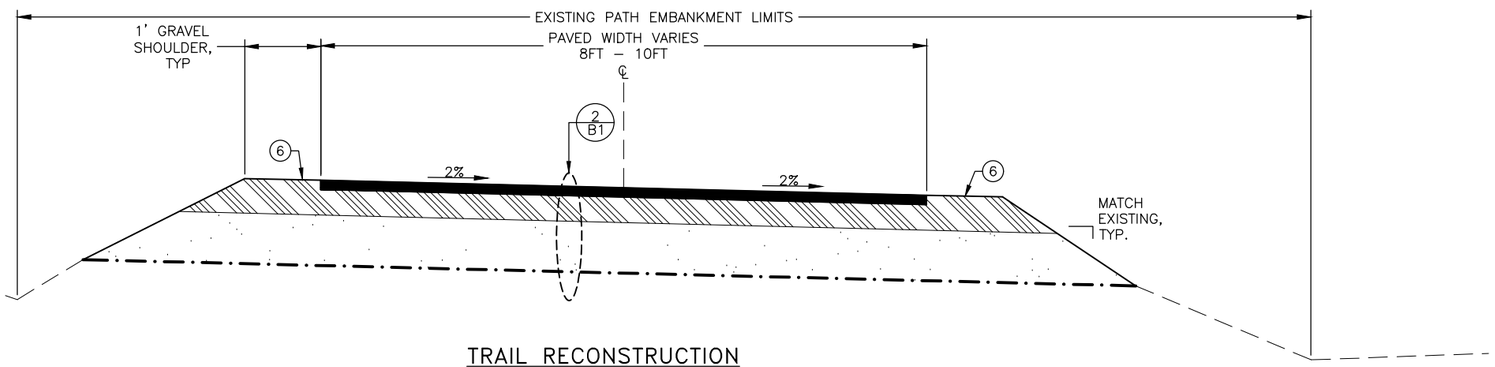

TRAIL RECONSTRUCTION

NOT TO SCALE
STA 35+40 TO 42+80
STA 45+60 TO 52+20
STA 53+70 TO 56+84
STA 58+19 TO 58+30

NOTES:

1. PRIOR TO CONSTRUCTING THE CRUSHED ASPHALT BASE COURSE, RECONDITION THE EXISTING PATH SHOULDER BY REMOVING AND DISPOSING OF WEEDS, SOD, GRASS, ROOTS OR OTHER OBJECTIONABLE MATERIAL.
2. SURVEY CENTERLINE ELEVATIONS & NOTE PATH WIDTHS TO RE–ESTABLISH GRADES. CONSTRUCT A CRUSHED ASPHALT BASE COURSE WITHIN THE EXISTING PAVED PATH LIMITS BY PULVERIZING THE EXISTING HOT MIX ASPHALT SURFACE AND BLENDING WITH THE EXISTING BASE COURSE TO DEPTH OF 3" BELOW EXISTING GRADE.
3. SHAPE THE CRUSHED ASPHALT BASE COURSE MATERIAL AND EXISTING SHOULDER MATERIAL TO REMOVE HIGH AND LOW SPOTS. DO NOT PLACE AGGREGATE BASE COURSE, GRADING D–1 UNTIL AFTER THE USABLE CRUSHED ASPHALT BASE COURSE MATERIAL HAS BEEN PLACED AND AS APPROVED BY THE ENGINEER.
4. IN SECTION DESIGNATED FOR RECONSTRUCTION, EXCAVATE THE EXISTING BASE COURSE AND EMBANKMENT TO A DEPTH OF 8" BELOW THE BOTTOM OF PAVEMENT AND PLACE GEOTEXTILE, STABILIZATION, CLASS I. CONSTRUCT THE PAVEMENT STRUCTURAL SECTION IN 2/B1.

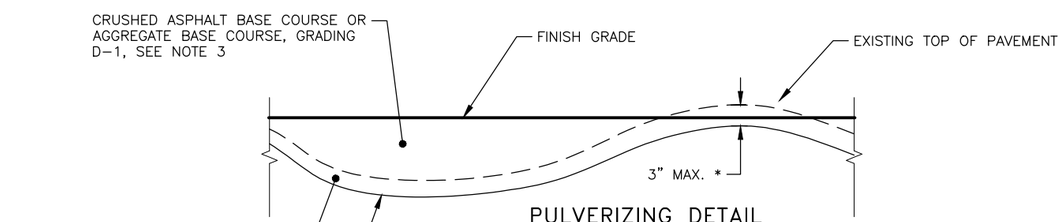

PULVERIZING DETAIL

NOT TO SCALE
STA 32+96 TO 35+40
STA 42+80 TO 45+60
STA 52+20 TO 53+70
STA 58+30 TO 108+20

* HIGH SPOTS ON ROADWAY MAY BE REGRADED DOWN A MAXIMUM OF 3"

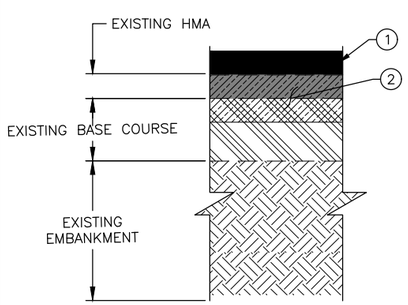

1/B1 PAVEMENT STRUCTURAL SECTION NO. 1
SCALE: NOT TO SCALE

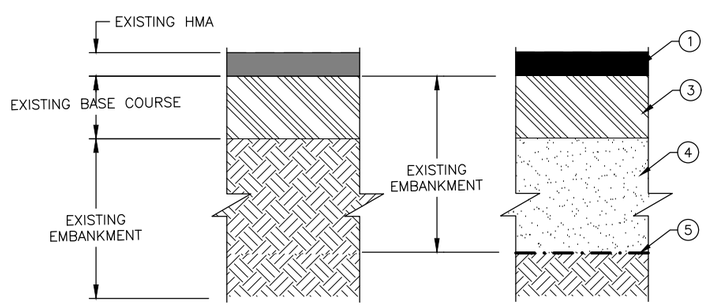

2/B1 PAVEMENT STRUCTURAL SECTION NO. 2
SCALE: NOT TO SCALE

LEGEND

1. 1.5" HOT MIX ASPHALT, TYPE II; CLASS B,
2. 3" CRUSHED ASPHALT BASE COURSE
3. 4" AGGREGATE BASE COURSE, GRADING D–1
4. 8" BORROW, TYPE A
5. GEOTEXTILE STABILIZATION
6. LINEAR GRADING

STATE OF ALASKA
DEPARTMENT OF TRANSPORTATION
AND PUBLIC FACILITIES

JNU KAXDIGOOWU HEEN DEI IMP
(BROTHERHOOD BRIDGE TRAIL IMP)

TYPICAL SECTIONS

FILE Q:\Jnu\SFHWY00259\Planset\00259_B1.dwg | DATE 12/15/2022 15:10 | LAYOUT B1 | DESIGNED TE | CHECKED | DRAFTED WMC

NO.	DATE	REVISION	STATE	PROJECT DESIGNATION	YEAR	SHEET NO.	TOTAL SHEETS
			ALASKA	SFHWY00259/TA18080	2023	B2	36

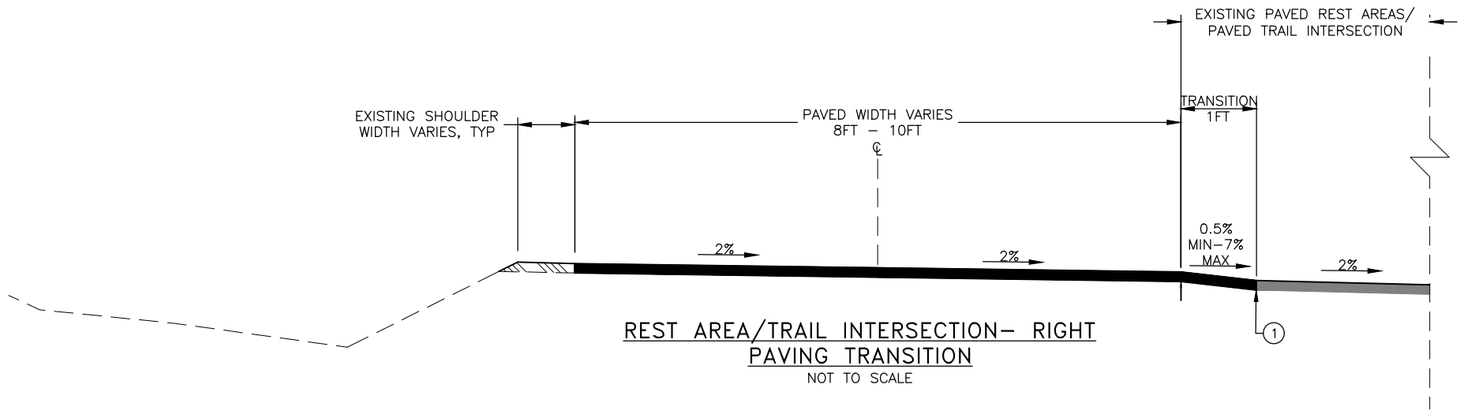

REST AREA/TRAIL INTERSECTION– RIGHT
PAVING TRANSITION
NOT TO SCALE

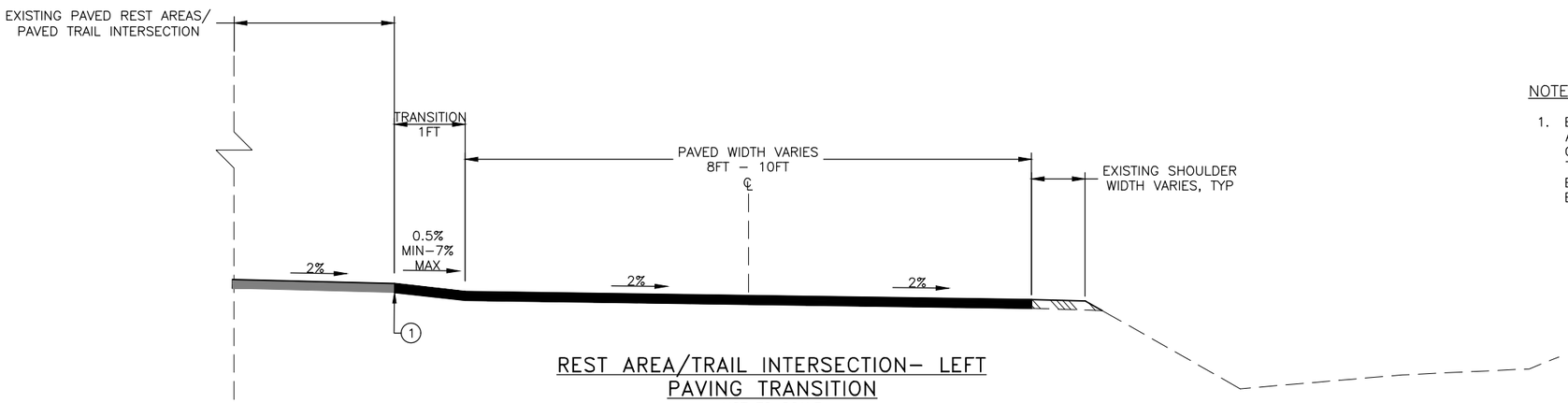

REST AREA/TRAIL INTERSECTION– LEFT
PAVING TRANSITION
NOT TO SCALE

NOTES:

1. ENSURE THAT MINIMUM TRANSITION GRADE CAN BE MET BEFORE PAVING; ADDITIONAL BASE COURSE MAY BE NEEDED. IF MAXIMUM TRANSITION GRADE CANNOT BE MET, INCREASE TRANSITION WIDTH AS DIRECTED BY THE ENGINEER. AT INTERVALS OF 10 FT BEFORE AND 10 FT AFTER EXISTING PAVED REST AREAS/TRAIL INTERSECTIONS, GRADE AS DIRECTED BY THE ENGINEER.

LEGEND

1 TACK COAT

STATE OF ALASKA
DEPARTMENT OF TRANSPORTATION
AND PUBLIC FACILITIES

JNU KAXDIGOOWU HEEN DEI IMP
(BROTHERHOOD BRIDGE TRAIL IMP)

TYPICAL SECTIONS

FILE Q:\Jnu\SFHWY00259\Planset\00259_B1.dwg | DATE 12/16/2022 11:11 | LAYOUT B2 | DESIGNED TE | CHECKED | DRAFTED WMC

NO.	DATE	REVISION	STATE	PROJECT DESIGNATION	YEAR	SHEET NO.	TOTAL SHEETS
			ALASKA	TA18010/SFHWY00259	2023	C1	36

ESTIMATE OF QUANTITIES

ITEM NO	PAY ITEM	PAY UNIT	QUANTITY
201.0009.0000	CLEARING AND GRUBBING	LUMP SUM	ALL REQUIRED
202.0002.0000	REMOVAL OF PAVEMENT	SQUARE YARD	6,569
202.0023.0000	REMOVAL OF BRIDGE NO. 1955	LUMP SUM	ALL REQUIRED
203.0003.0000	UNCLASSIFIED EXCAVATION	CUBIC YARD	720
203.0006.000A	BORROW, TYPE A	TON	2,182
205.0006.0000	STRUCTURAL FILL	CUBIC YARD	80
301.0001.00D1	AGGREGATE BASE COURSE, GRADING D-1	TON	1,364
303.2001.0001	LINEAR GRADING	LINEAR FOOT	14,780
308.0001.0000	CRUSHED ASPHALT BASE COURSE	SQUARE YARD	1,535
401.0001.002A	HMA, TYPE II; CLASS A	TON	580
401.0004.5828	ASPHALT BINDER, GRADE PG 58-28	TON	35
501.0001.0000	CLASS A CONCRETE	LUMP SUM	ALL REQUIRED
503.0001.0000	REINFORCING STEEL	LUMP SUM	ALL REQUIRED
505.0005.0000	FURNISH STRUCTURAL STEEL PIP PILES, 2'-0" DIA. X 1/2"	LINEAR FOOT	304
505.0006.0000	DRIVE STRUCTURAL STEEL PIPE PILES, 2'-0" DIA. X 1/2"	EACH	4
506.0001.0000	BOARDWALK TIMBER PEDESTRIAN BRIDGE	LUMP SUM	ALL REQUIRED
507.0002.0000	PEDESTRIAN RAILING TIMBER BRIDGE RAILING	LINEAR FOOT	42
611.0001.0000	RIPRAP, CLASS II	CUBIC YARD	1,000
630.0002.0001	GEOTEXTILE, STABILIZATION, CLASS 1	SQUARE YARD	6,294
631.0002.0001	GEOTEXTILE, EROSION CONTROL, CLASS 1	SQUARE YARD	1,000
640.0001.0000	MOBILZATION AND DEMOBILZATION	LUMP SUM	ALL REQUIRED
641.0001.0000	EROSION, SEDIMENT AND POLLUTION CONTROL ADMINISTRATION	LUMP SUM	ALL REQUIRED
641.0003.0000	TEMPORY EROSION, SEDIMENT AND POLLUTON CONTROL	LUMP SUM	ALL REQUIRED
641.0005.0000	TEMPORY EROSION, SEDIMENT AND POLLUTON CONTROL BY DIRECTIVE	CONTINGENT SUM	ALL REQUIRED
641.0006.0000	WITHHOLDING	CONTINGENT SUM	ALL REQUIRED
642.0001.0000	CONSTRUCTION SURVEYING	LUMP SUM	ALL REQUIRED
642.0003.0000	THREE PERSON SURVEY	HOUR	10
643.0025.0000	TRAFFIC CONTROL	CONTINGENT SUM	ALL REQUIRED
644.0001.0000	FIELD OFFICE	LUMP SUM	ALL REQUIRED
644.2004.0000	ENGINEERING COMMUNICATIONS	CONTINGENT SUM	ALL REQUIRED

BASIS OF ESTIMATE

ITEM NO.	ITEM	ESTIMATING FACTOR
301.0001.00D1	AGGREGATE BASE COURSE, GRADING D-1	1.95 TONS/CY
401.0001.002A	HMA, TYPE II; CLASS A	117 LBS/SY/IN
401.0004.5828	ASPHALT BINDER, GRADE PG-58-28	6.0% OF ITEM 401(1)

STATE OF ALASKA
DEPARTMENT OF TRANSPORTATION
AND PUBLIC FACILITIES

JNU KAXDIGOOWU HEEN DEI IMP
(BROTHERHOOD BRIDGE TRAIL IMP)

ESTIMATE OF QUANTITIES

FILE Q:\Jnu\SFHWY00259\Planset\00259_C1.dwg | DATE 12/19/2022 8:21 | LAYOUT C1 | DESIGNED WMC | CHECKED STAFF | DRAFTED WMC

NO.	DATE	REVISION	STATE	PROJECT DESIGNATION	YEAR	SHEET NO.	TOTAL SHEETS
			ALASKA	TA18010/SFHWY00259	2023	F1	36

HAUL ROUTE & STAGING AREA
BROTHERHOOD BRIDGE TRAIL PARKING LOT

HAUL ROUTE ENTRANCE AT WILDMEADOW LANE

NOTE:

APPROXIMATE BOP AND EOP LOCATIONS PROVIDED, THE ENGINEER WILL ESTABLISH THE BOP AND EOP LOCATIONS IN THE FIELD.

LEGEND & ABBREVIATIONS	
HAUL ROUTE	
TRAIL	
CONTRACTOR STAGING AREA	
BEGINNING OF PROJECT	BOP
END OF PROJECT	EOP

STATE OF ALASKA
DEPARTMENT OF TRANSPORTATION
AND PUBLIC FACILITIES

JNU KAXDIGOOWU HEEN DEI
IMP (BROTHERHOOD BRIDGE
TRAIL IMP)

PLAN– STAGING AREA

FILE Q:\Jnu\SFHWY00259\Planset\00259_F1.dwg | DATE 12/13/2022 14:38 | LAYOUT F1 | DESIGNED BC | CHECKED -- | DRAFTED BC

NO.	DATE	REVISION

STATE	PROJECT DESIGNATION	YEAR	SHEET NO.	TOTAL SHEETS
ALASKA	TA18010/SFHWY00259	2023	F2	36

NOTE:

APPROXIMATE BOP AND EOP LOCATIONS PROVIDED, THE ENGINEER WILL ESTABLISH THE BOP AND EOP LOCATIONS IN THE FIELD.

BOP
STATION 32+96

LEGEND & ABBREVIATIONS	
HAUL ROUTE	
TRAIL	
CONTRACTOR STAGING AREA	
BEGINNING OF PROJECT	BOP
END OF PROJECT	EOP

STATE OF ALASKA
DEPARTMENT OF TRANSPORTATION
AND PUBLIC FACILITIES

JNU KAXDIGOOWU HEEN DEI IMP (BROTHERHOOD BRIDGE TRAIL IMP)

PLAN– BOP

FILE Q:\Jnu\SFHWY00259\Planset\00259_F1.dwg | DATE 12/13/2022 14:38 | LAYOUT F2 | DESIGNED BC | CHECKED -- | DRAFTED BC

NO.	DATE	REVISION

STATE	PROJECT DESIGNATION	YEAR	SHEET NO.	TOTAL SHEETS
ALASKA	TA18010/SFHWY00259	2023	F3	36

BROTHERHOOD BRIDGE TRAIL &
MENDENHALL BRIDGE INTERSECTION
STATION 38+70

LEGEND & ABBREVIATIONS	
HAUL ROUTE	
TRAIL	
CONTRACTOR STAGING AREA	
BEGINNING OF PROJECT	BOP
END OF PROJECT	EOP

STATE OF ALASKA
DEPARTMENT OF TRANSPORTATION
AND PUBLIC FACILITIES

JNU KAXDIGOOWU HEEN DEI
IMP (BROTHERHOOD BRIDGE
TRAIL IMP)

PLAN –TRAIL INTERSECTION

FILE	DATE	LAYOUT	DESIGNED	CHECKED	DRAFTED
Q:\Jnu\SFHWY00259\Planset\00259_F1.dwg	12/13/2022 14:38	F3	BC	--	BC

NO.	DATE	REVISION

STATE	PROJECT DESIGNATION	YEAR	SHEET NO.	TOTAL SHEETS
ALASKA	TA18010/SFHWY00259	2023	F4	36

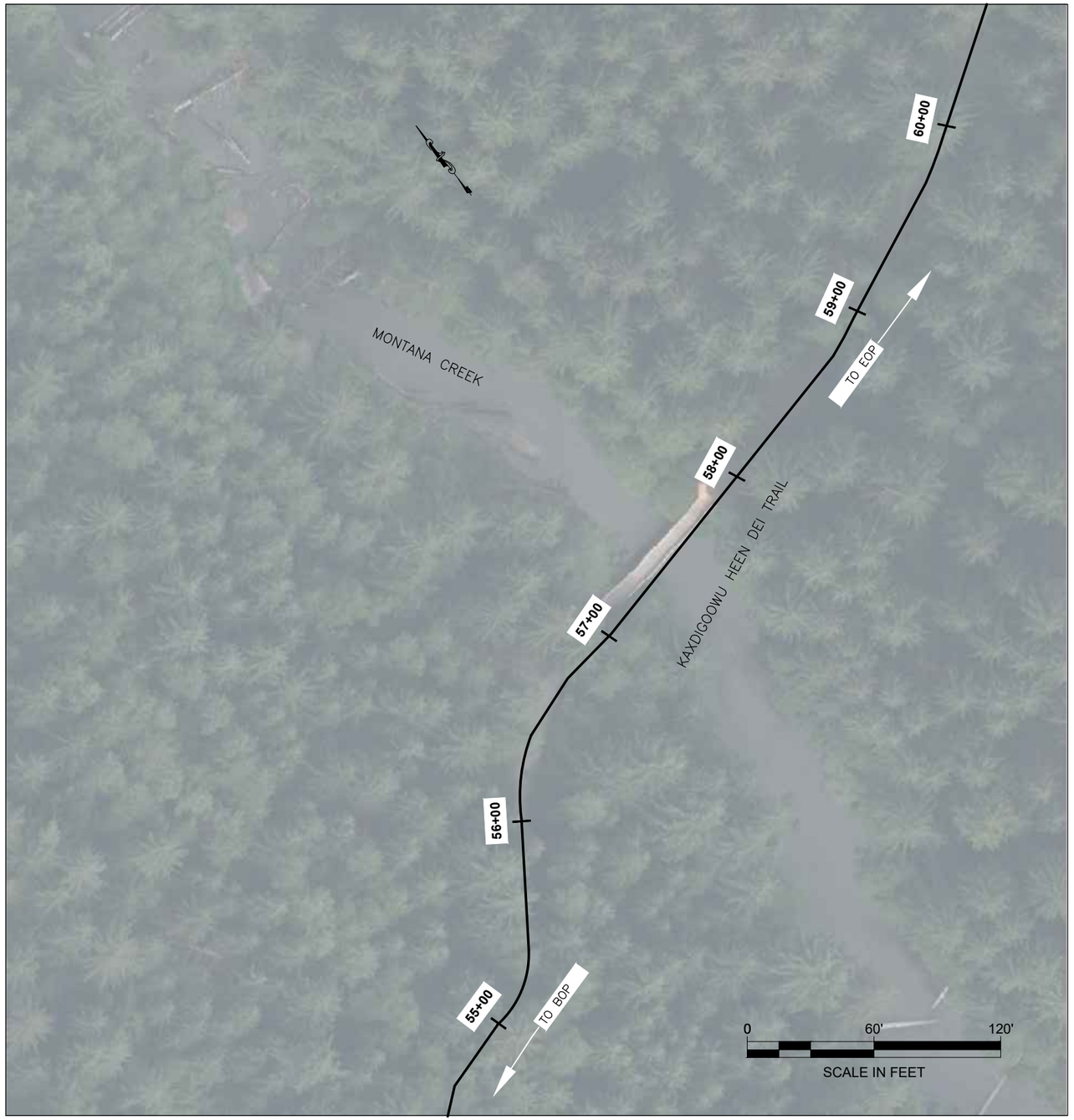

MONTANA CREEK BRIDGE
STATION 57+00

LEGEND & ABBREVIATIONS	
HAUL ROUTE	
TRAIL	
CONTRACTOR STAGING AREA	
BEGINNING OF PROJECT	BOP
END OF PROJECT	EOP

STATE OF ALASKA
DEPARTMENT OF TRANSPORTATION
AND PUBLIC FACILITIES

JNU KAXDIGOOWU HEEN DEI
IMP (BROTHERHOOD BRIDGE
TRAIL IMP)

PLAN– MONTANA CREEK BRIDGE

FILE | G:\Jnu\SFHWY00259\Planset\00259_F1.dwg
DATE | 12/13/2022 14:38
LAYOUT | F4
DESIGNED | BC
CHECKED | --
DRAFTED | BC

NO.	DATE	REVISION

STATE	PROJECT DESIGNATION	YEAR	SHEET NO.	TOTAL SHEETS
ALASKA	TA18010/SFHWY00259	2023	F5	36

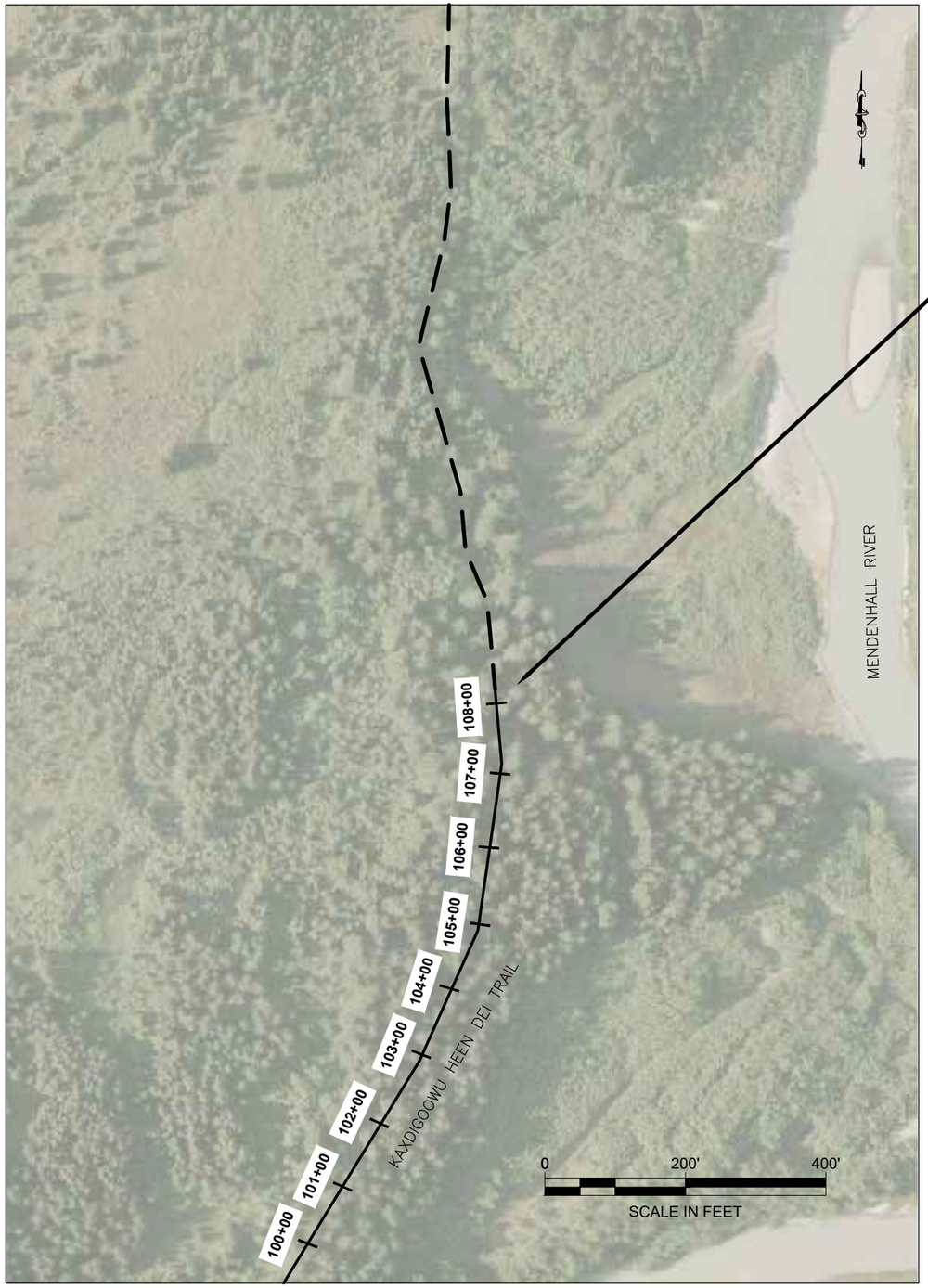

EOP
STATION 108+20

NOTE:

APPROXIMATE BOP AND EOP LOCATIONS PROVIDED, THE ENGINEER WILL ESTABLISH THE BOP AND EOP LOCATIONS IN THE FIELD.

LEGEND & ABBREVIATIONS	
HAUL ROUTE	
TRAIL	
CONTRACTOR STAGING AREA	
BEGINNING OF PROJECT	BOP
END OF PROJECT	EOP

STATE OF ALASKA
DEPARTMENT OF TRANSPORTATION
AND PUBLIC FACILITIES

JNU KAXDIGOOWU HEEN DEI
IMP (BROTHERHOOD BRIDGE
TRAIL IMP)

PLAN– EOP

FILE	Q:\Jnu\SFHWY00259\Planset\00259_F1.dwg	DATE	12/13/2022 14:38	LAYOUT	F5	DESIGNED	BC	CHECKED	--	DRAFTED	BC

NO.	DATE	REVISION

STATE	PROJECT DESIGNATION	YEAR	SHEET NO.	TOTAL SHEETS
ALASKA	TA18010/SFHWY00259	2023	F6	36

HAUL ROUTE & STAGING AREA
KAISER LIFT STATION

LEGEND & ABBREVIATIONS	
HAUL ROUTE	
TRAIL	
CONTRACTOR STAGING AREA	
END OF PROJECT	EOP

STATE OF ALASKA
DEPARTMENT OF TRANSPORTATION
AND PUBLIC FACILITIES

JNU KAXDIGOOWU HEEN DEI IMP (BROTHERHOOD BRIDGE TRAIL IMP)

PLAN– STAGING AREA

FILE	Q:\Jnu\SFHWY00259\Planset\00259_F1.dwg	DATE	12/13/2022 14:38	LAYOUT	F6	DESIGNED	BC	CHECKED	--	DRAFTED	BC

NO.	DATE	REVISION	STATE	PROJECT DESIGNATION	YEAR	SHEET NO.	TOTAL SHEETS
			ALASKA	TA18010/SFHWY00259	2023	G1	36

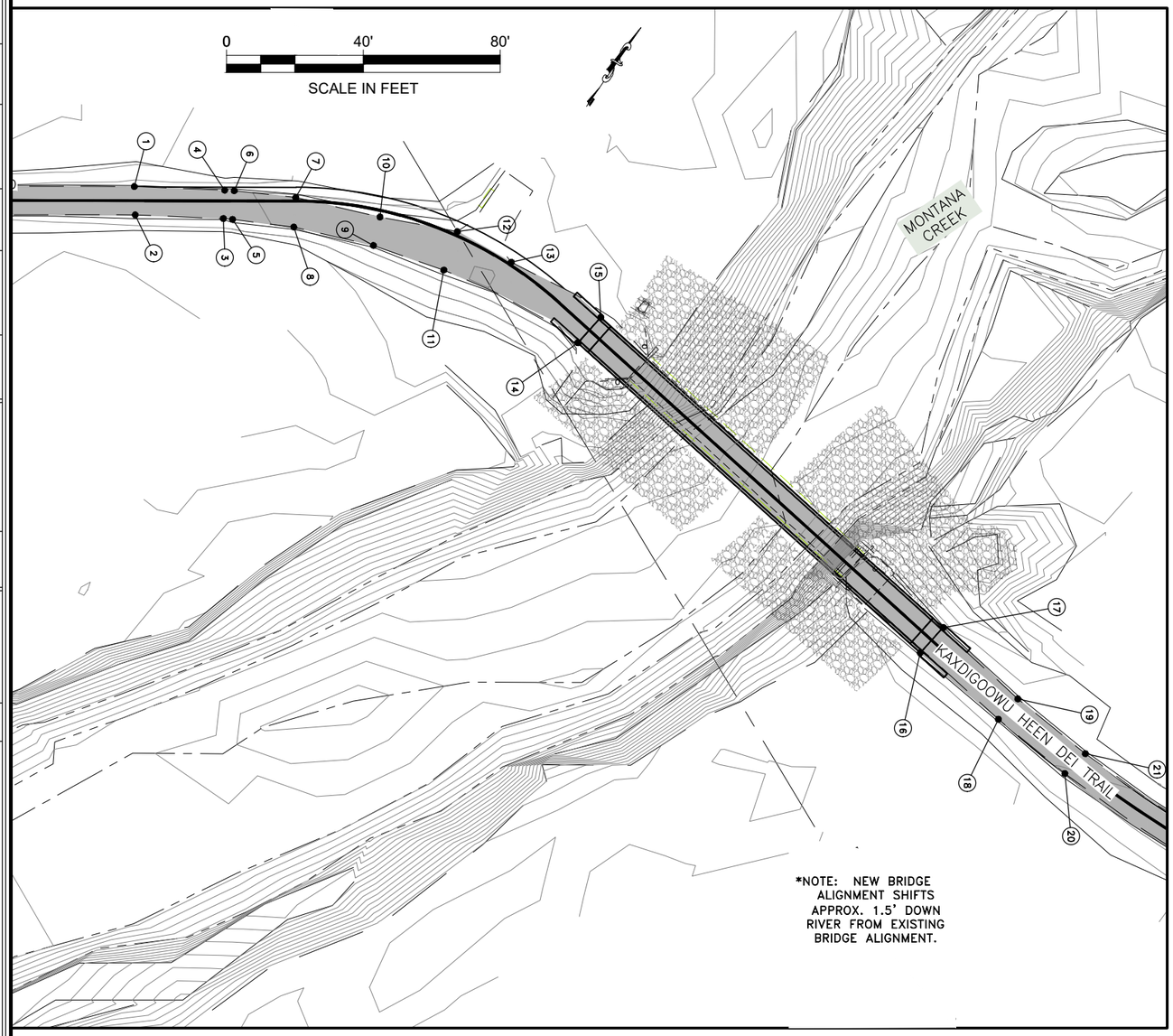

NO.	STATION	OFFSET	ELEVATION	DESCRIPTION
1	55+40.76'	4.14' LT	MTE	EP
2	55+41.04'	4.13' RT	MTE	EP
3	55+66.75'	5.12' RT	32.89'	EP
4	55+67.18'	3.12' LT	32.94'	EP
5	55+69.49'	5.38' RT	32.85'	EP
6	55+69.99'	3.02' LT	32.93'	EP
7	55+88.08'	1.06' LT	33.17'	EP
8	55+87.45'	7.56' RT	33.09'	EP
9	55+13.11'	10.44' RT	33.55'	EP
10	56+13.20'	1.90' RT	33.85'	EP
11	56+37.19'	10.70' RT	33.70'	EP
12	56+36.09'	1.24' LT	33.88'	EP
13	56+54.10'	0.81' LT	33.95'	EP
14	56+84.14'	5.00' RT	34.00'	EP; BRIDGE
15	56+84.15'	5.00' LT	34.00'	EP; BRIDGE
16	58+19.26'	5.00' RT	34.00'	EP; BRIDGE
17	58+19.26'	5.00' LT	34.00'	EP; BRIDGE
18	58+49.20'	4.07' RT	33.75'	EP
19	58+49.48'	4.19' LT	33.93'	EP
20	58+74.00'	3.86' RT	MTE	EP
21	58+75.18'	4.43' LT	MTE	EP

LAYOUT POINT DESCRIPTIONS:
EP = EDGE OF PAVEMENT
PC = POINT OF CURVATURE
PI = POINT OF INTERSECTION
PT = POINT OF TANGENCY
VPI = VERTICAL POINT OF INTERSECTION
MTE= MATCH TO EXISITING

STATE OF ALASKA DEPARTMENT OF TRANSPORTATION
AND PUBLIC FACILITIES
6860 GLACIER HIGHWAY, JUNEAU, AK 99801
(907) 465-1763

JNU KAXDIGOOWU HEEN DEI IMP
(BROTHERHOOD BRIDGE TRAIL IMP)

GRADING POINTS

FILE Q:\Jnu\SFHWY00259\Planset\00259_G1.dwg
DATE 12/16/2022 11:16 LAYOUT G1 DESIGNED WMC CHECKED ##### DRAFTED WMC

STATE	PROJECT DESIGNATION	YEAR	SHEET NO.	TOTAL SHEETS
ALASKA	SFHWY00259/TA18010	2022	N1	N12

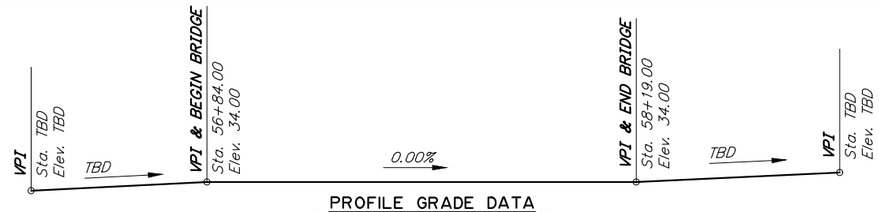

PROFILE GRADE DATA

No Scale, See Note 1

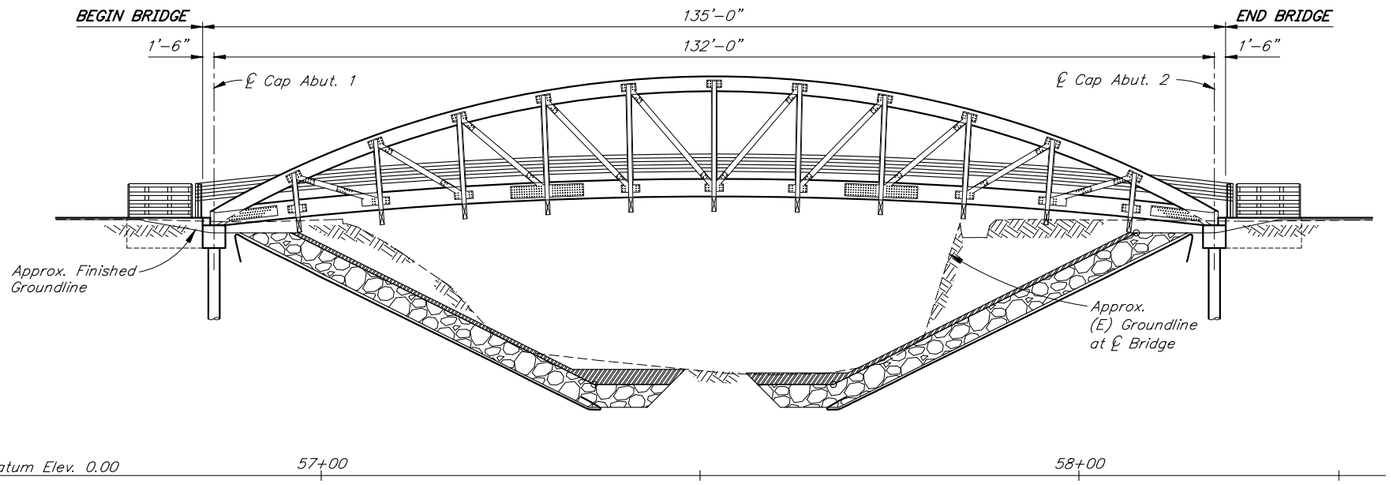

ELEVATION

10 5 0 10 20
Feet

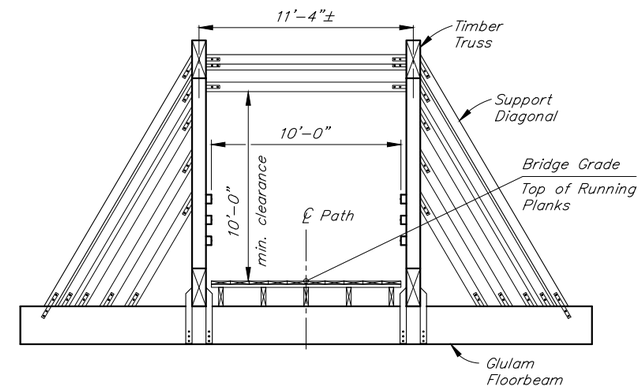

TYPICAL SECTION

12 0 4 8
In. Feet

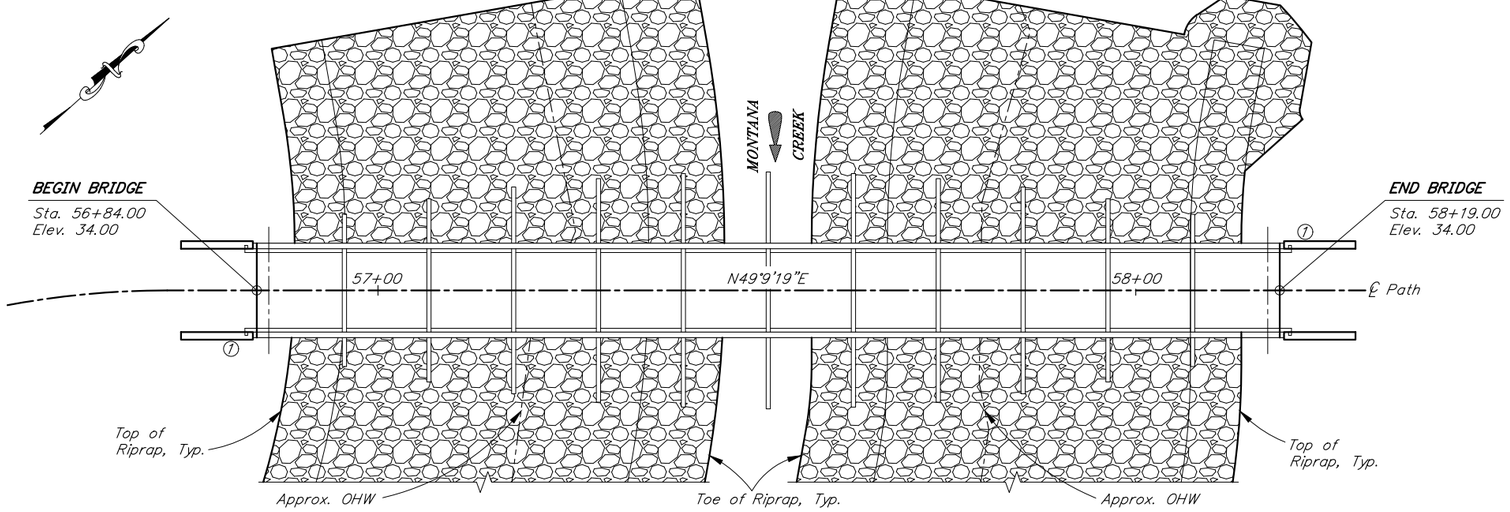

PLAN

10 5 0 10 20
Feet

BRIDGE DRAWING INDEX

TITLE	DWG. NO.
GENERAL LAYOUT	1
SITE PLAN	2
RIPRAP LAYOUT	3
ABUTMENTS	4
WINGWALLS	5
APPROACH RAILS	6
TEST BORING & PENETROMETER LOCATION	7
TEST BORING & PENETROMETER LEGEND	8
TEST BORING & PENETROMETER LOGS	9-12

NOTES:

1. Provide camber in addition to grade shown. Minimum camber of 24 inches and maximum camber of 48 inches is required.

(7) Approximate location of Bridge Number plate

DESIGNED BY: Leslie Daugherty	CHECKED: Douglas Gelineau	LAYOUT BY: Leslie Daugherty	CHECKED BY: Douglas Gelineau
DRAWN BY: Javier De Leon	CHECKED: Leslie Daugherty	SPECIFICATIONS BY: Leslie Daugherty	P S & E COMPARED: Douglas Gelineau
QUANTITIES BY: Leslie Daugherty	CHECKED: Douglas Gelineau	APPROVAL RECOMMENDED BY: Richard Pratt	

STATE OF ALASKA
DEPARTMENT OF TRANSPORTATION AND PUBLIC FACILITIES
BRIDGE SECTION
3132 Channel Drive
Juneau, Alaska 99801
907-465-2975

MONTANA CREEK PEDESTRIAN BRIDGE

KAXDEGOOWU HEEN DEI (BROTHERHOOD BRIDGE) TRAIL

GENERAL LAYOUT

BRIDGE NO. 1955

DWG. NO. 1

C:\Users\jadeleon\AppData\Local\Temp\AcPublish_12980\1955-GENERAL LAYOUT Fri, Sep/02/22 09:28am

STATE	PROJECT DESIGNATION	YEAR	SHEET NO.	TOTAL SHEETS
ALASKA	SFHWY00259/TA18010	2022	N2	N12

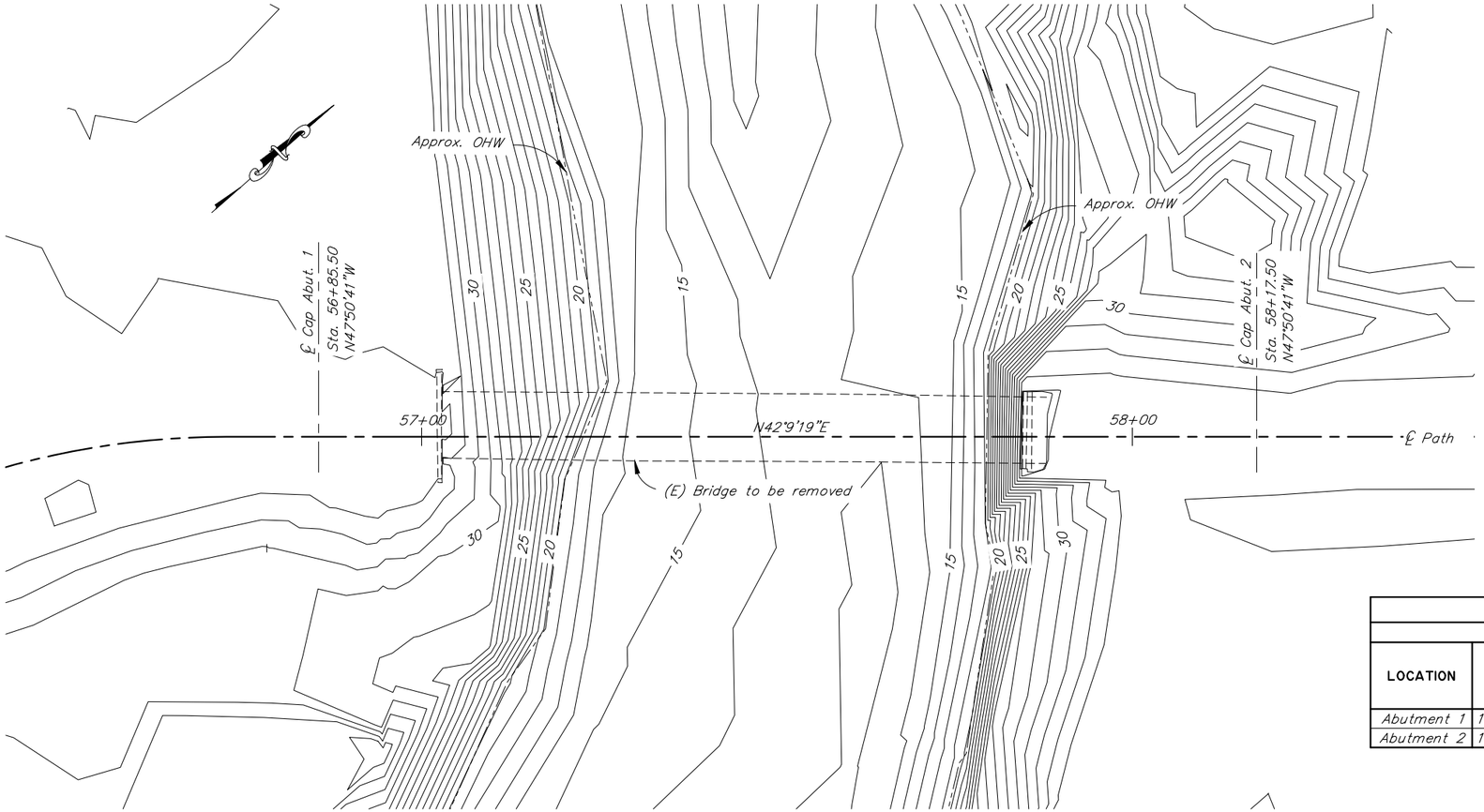

SITE PLAN

10 5 0 10 20
Feet

GENERAL NOTES

DESIGN:..... AASHTO LRFD Bridge Design Specifications, 2021 Edition, with latest interim specifications.

AASHTO LRFD Guide Specifications for Design of Pedestrian Bridges, 2nd Edition with latest interim revisions.

LIVE LOAD:..... 90 psf pedestrian or H10 service vehicles whichever produces maximum effect.

DEAD LOAD:..... Includes 70 psf for snow loads.

SEISMIC PARAMETERS:..... PGA = 0.17
Ss = 0.39
S1 = 0.21
Site Class = C
Liquefaction Potential = High
AASHTO 7% probability of exceedance in 75 years.

REINFORCEMENT:..... ASTM A706, Grade 60, Fy = 60,000 psi
Space reinforcement evenly unless otherwise noted.

CONCRETE:..... Class A Concrete unless otherwise noted, f'c = 4,000 psi

STRUCTURAL STEEL:..... ASTM A709, Grade 36T3, Fy = 36,000 psi
Galvanize structural steel in accordance with AASHTO M111 unless noted otherwise.

STRUCTURAL STEEL PILING:..... API 5L X52 PSL2, Fy = 52,000 psi.
or ASTM A709 Grade, 50T3, Fy = 50,000 psi.
Closed tip reinforcing is required.

PILE DATA TABLE

		DRIVING CRITERIA			DESIGN DATA		
LOCATION	PILE TYPE	MINIMUM PENETRATION ELEVATION (ft)	ESTIMATED PILE TIP ELEVATION (ft)	DRIVING RESISTANCE (K)	STRENGTH I FACTORED LOAD (K)	NOMINAL RESISTANCE (K)	RESISTANCE FACTOR, ϕ
Abutment 1	1'-6"øx½" Pipe	-15.2	-46.2	170	110	170	0.65
Abutment 2	1'-6"øx½" Pipe	-15.2	-46.2	170	110	170	0.65

BRIDGE BASIS OF ESTIMATE

ITEM NO.	ITEM	PAY UNIT	EST UNIT	SUBST.	SUPERST.	TOTAL
202.0023.0000	Removal of Bridge No. 1955	LS	LS	All Req'd	All Req'd	All Req'd
202.0003.0000	Unclassified Excavation	CY	CY	720	---	720
205.0006.0000	Structrual Fill	CY	CY	80	---	80
501.0001.0000	Class A Concrete	LS	CY	14.2	---	14.2
503.0001.0000	Reinforcing Steel	LS	LBS	4,910	---	4,910
505.0005.0005	Furnish Structural Steel Piles, 1'-6" Dia. x ½"	LF	LF	304	---	304
505.0006.0006	Drive Structual Steel Piles, 1'-6" Dia. x ½"	EA	EA	4	---	4
506.0001.0000	Treated Timber, Prefabricated Pedestrian Bridge	LS	LS	---	All Req'd	All Req'd
507.0002.0000	Pedestrian Bridge Railing, Timber	LF	LF	---	42	42
611.0001.000_	Riprap, Class _	CY	CY			

Item numbers are for reference only. Quantities shown are not necessarily the pay quantities nor the total quantity of the particular item.

ABBREVIATIONS:

℄	= centerline	EA	= each	max.	= maximum
℗	= plate	Elev.	= elevation	min.	= minimum
&	= and	e.a.	= each face	n.f.	= near face
@	= at	e.w.	= each way	No.	= number
ø	= diameter	Ext.	= exterior	o.c.	= on center
±	= approximate	F	= fixed	O.H.W.	= ordinary high water
Abut.	= abutment	f.f.	= front/air face	pcf	= pounds per cubic foot
Approx.	= approximate	f'c	= specified concrete compressive strength	psf	= pounds per square foot
b.f.	= back/dirt face			psi	= pounds per square inch
bot.	= bottom	Ft.	= feet	R	= radius
Br.	= bridge	Fy	= yield stress	R.O.W.	= right of way
btwn.	= between	Glav.	= galvanize	RT.	= right
Brg.	= bearings	H.S.	= high strength	spcs.	= space, spaces
C.A.	= center of gravity	ID	= internal diameter	Sta.	= station
C.I.P.	= cast in place	Int.	= interior	SF	= square feet
CJP	= complete joint penetration	Jt.	= joint	SY	= square yard
Clr.	= clear, clearance	K	= kips	Std.	= standard
CMP	= corrugated metal pipe	ksf	= 1000 pounds per square foot	Symm.	= symmetric
CY	= cubic yard	ksi	= 1000 pounds per square inch	Typ.	= typical
Dia.	= diameter	LBS or lb	= pounds	UT	= ultrasonic testing
Dwg.	= drawing	LF	= linear foot	V.P.C.	= point of vertical curve
E	= expansion	LS	= lump sum	V.P.I.	= point of vertical intersection
(E)	= existing	LT.	= left	V.P.T.	= point of vertical tangent
				w/	= with

DESIGNED BY: Leslie Daugherty	CHECKED: Douglas Gelineau	FOUNDATIONS REVIEWED BY: Dave Hemstreet	STATE OF ALASKA DEPARTMENT OF TRANSPORTATION AND PUBLIC FACILITIES BRIDGE SECTION 3132 Channel Drive Juneau, Alaska 99801 907-465-2975
DRAWN BY: Javier De Leon	CHECKED: Leslie Daugherty		
QUANTITIES BY: Leslie Daugherty	CHECKED: Douglas Gelineau		

MONTANA CREEK PEDESTRIAN BRIDGE

KAXDEGOOWU HEEN DEI (BROTHERHOOD BRIDGE) TRAIL

SITE PLAN

BRIDGE NO. 1955

DWG. NO. 2

C:\Users\jadeleon\AppData\Local\Temp\AcPublish_12980\1955-SITE PLAN Fri, Sep/02/22 09:28am

STATE	PROJECT DESIGNATION	YEAR	SHEET NO.	TOTAL SHEETS
ALASKA	SFHWY00259/TA18010	2022	N3	N12

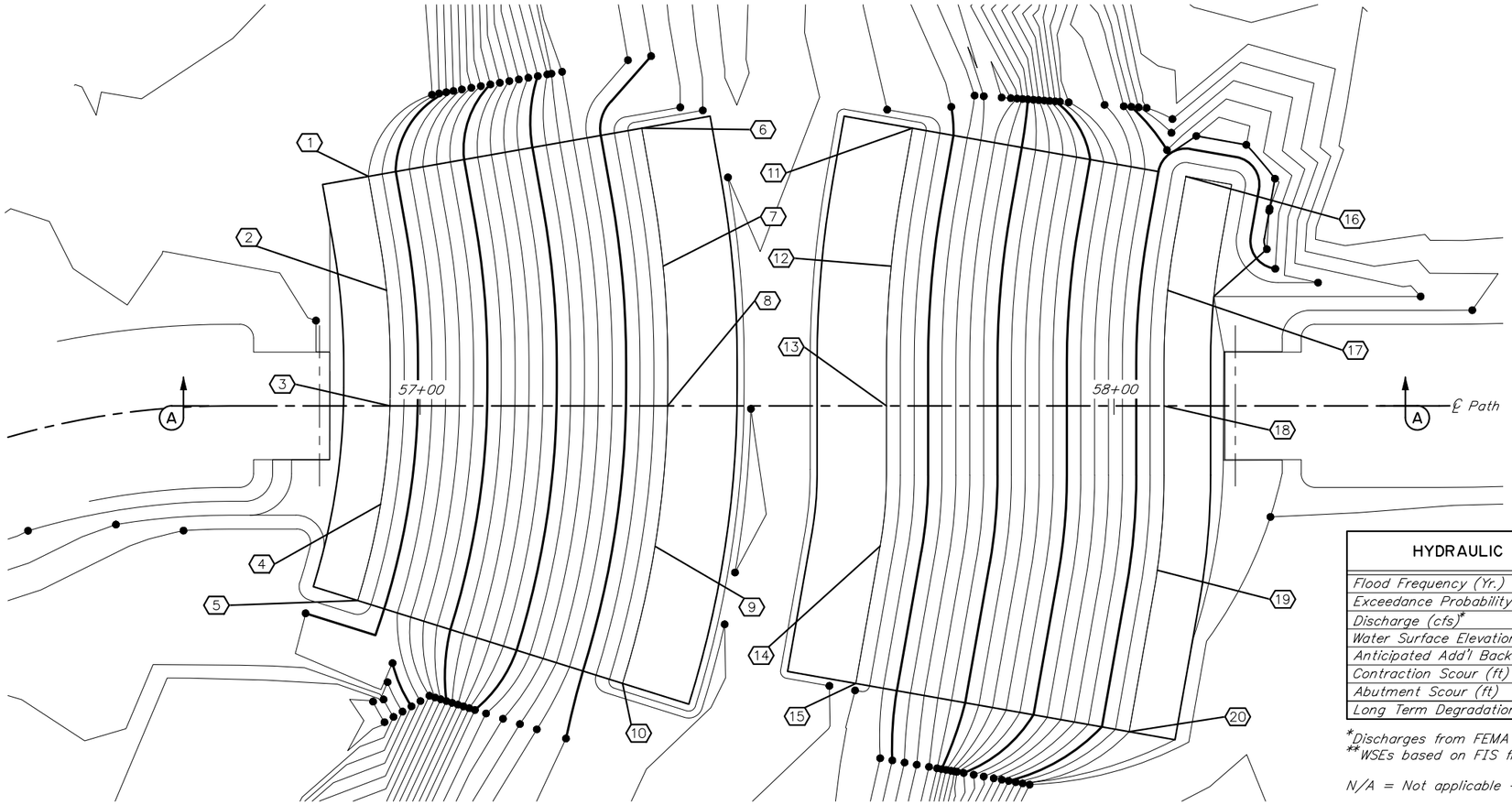

RIPRAP LAYOUT

10 5 0 10 20
Feet

RIPRAP TABLE			
POINT	STATION	OFFSET	ELEVATION
1	56+92.6	33.1 Left	32.0
2	56+95.2	16.6 Left	32.0
3	56+95.7	0.0 Left	32.0
4	56+94.3	14.2 Right	32.0
5	56+91.0	28.1 Right	32.0
6	57+32.0	40.0 Left	12.0
7	57+35.0	20.1 Left	12.0
8	57+35.7	0.0 Left	12.0
9	57+33.9	20.2 Right	12.0
10	57+29.2	40.0 Right	12.0
11	57+71.0	40.0 Left	12.0
12	57+67.9	20.1 Left	12.0
13	57+67.2	0.0 Left	12.0
14	57+66.3	20.2 Right	12.0
15	57+62.8	40.0 Right	12.0
16	58+10.4	33.1 Left	32.0
17	58+07.7	16.6 Left	32.0
18	58+07.2	0.0 Left	32.0
19	58+06.2	23.7 Right	32.0
20	58+02.2	46.9 Right	32.0

HYDRAULIC & HYDROLOGIC SUMMARY		
Flood Frequency (Yr.)	*100*	*500*
Exceedance Probability (%)	*1*	*0.2*
*Discharge (cfs)**	*3,500*	*4,900*
*Water Surface Elevation (ft)***	*29.4*	*30.5*
Anticipated Add'l Backwater (ft)	*0*	
Contraction Scour (ft)	*2.8*	*3.1*
Abutment Scour (ft)	*N/A*	*N/A*
Long Term Degradation (ft)	*3*	*3*

**Discharges from FEMA City and Borough of Juneau Flood Information Study dated 9/18/2020*
***WSEs based on FIS flood profiles with Mendenhall River backwater.*

N/A = Not applicable – Abutments protected with riprap coutermeasures.

Drainage Area for this crossing: .....16.2 square miles

Hydraulic Capacity:.....13,300 cfs at low chord elevation 33ft in ice free/no Mendenhall River backwater condition which has an exceedance probability of less than 0.2%

Total Scour = Contraction Scour + Local (Pier/Abutment) Scour + Long Term Degredation

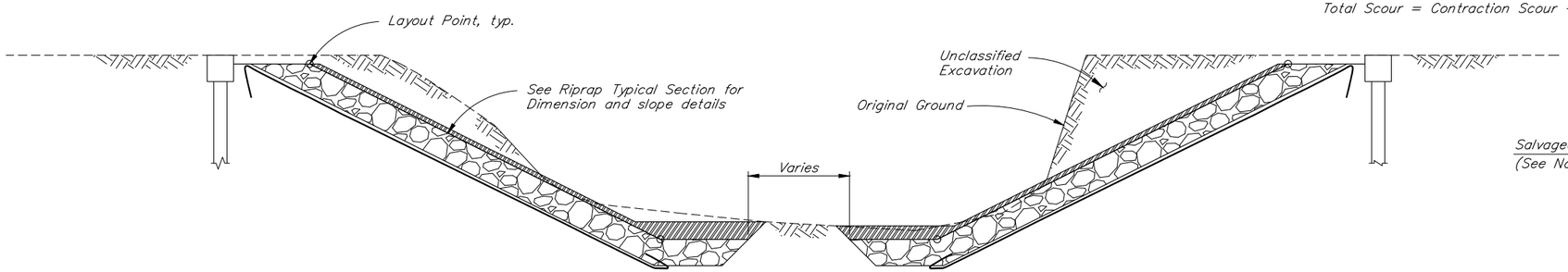

SECTION A-A

12 0 4 8 12
In. Feet

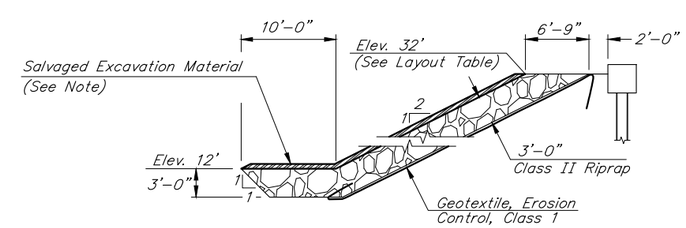

RIPRAP TYPICAL SECTION

12 0 4 8 12
In. Feet

DESIGNED BY: *Michael Knapp*	CHECKED: *Luke Boles*	
DRAWN BY: *Javier De Leon*	CHECKED: *Luke Boles*	
QUANTITIES BY: *Michael Knapp*	CHECKED: *Luke Boles*	

STATE OF ALASKA
DEPARTMENT OF TRANSPORTATION AND PUBLIC FACILITIES
BRIDGE SECTION
3132 Channel Drive
Juneau, Alaska 99801
907-465-2975

MONTANA CREEK PEDESTRIAN BRIDGE

KAXDEGOOWU HEEN DEI (BROTHERHOOD BRIDGE) TRAIL

RIPRAP LAYOUT

BRIDGE NO. 1955
DWG. NO. 3

C:\Users\jadeleon\AppData\Local\Temp\AcPublish_12980\1955-RIP Fri, Sep/02/22 09:28am

STATE	PROJECT DESIGNATION	YEAR	SHEET NO.	TOTAL SHEETS
ALASKA	SFHWY00259/TA18010	2022	N4	N12

REINFORCING STEEL - ONE ABUTMENT

MARK	NOTE	SIZE	NO.	LENGTH	TYPE
A401		4	4	107'–2½"	SPIRAL
A402		4	23	11'–1"	STIRRUP
A403		4	14	4'–5"	HOOP
A404		4	8	3'–8"	BENT
A405		4	22	9'–3"	STIRRUP
A406		4	6	15'–2"	---
A601		6	16	15'–4"	---
A901	H	9	12	15'–2"	---

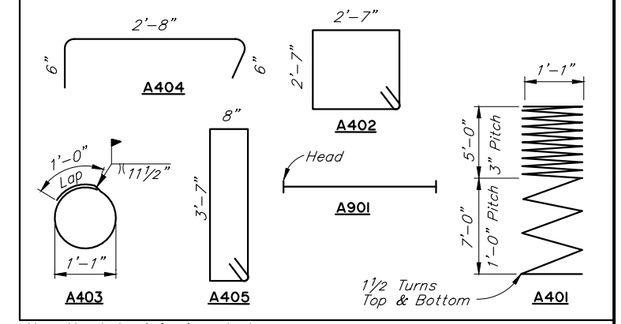

H – Headed reinforcing steel

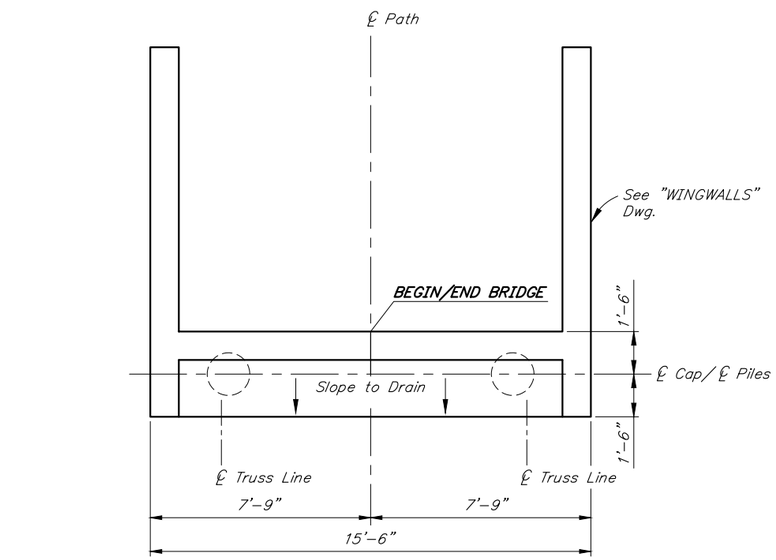

PLAN

(Abutment 1 shown, Abutment 2 similar)

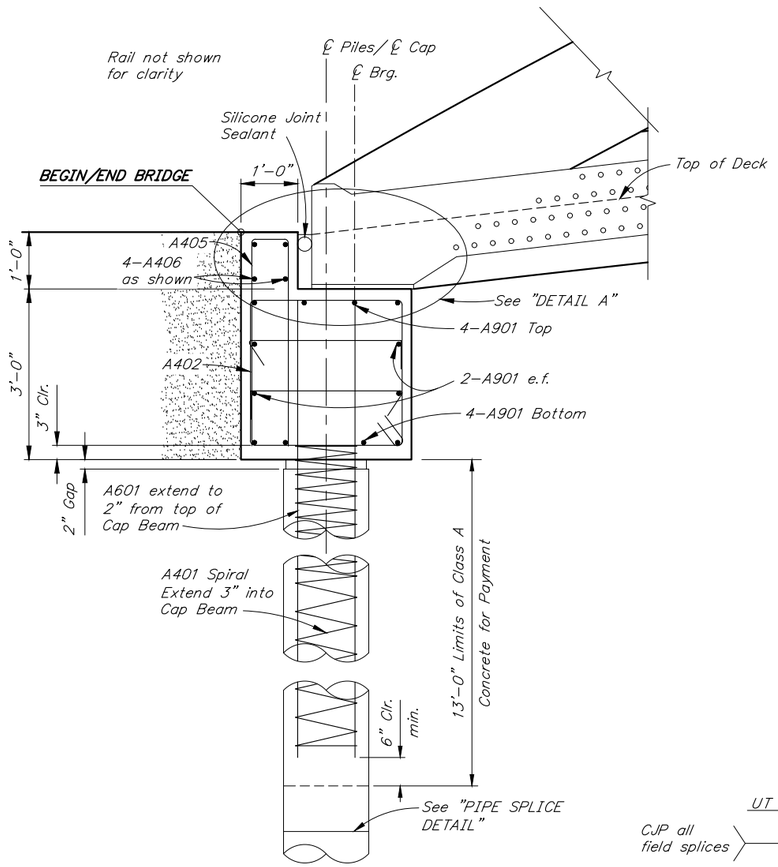

SECTION A-A

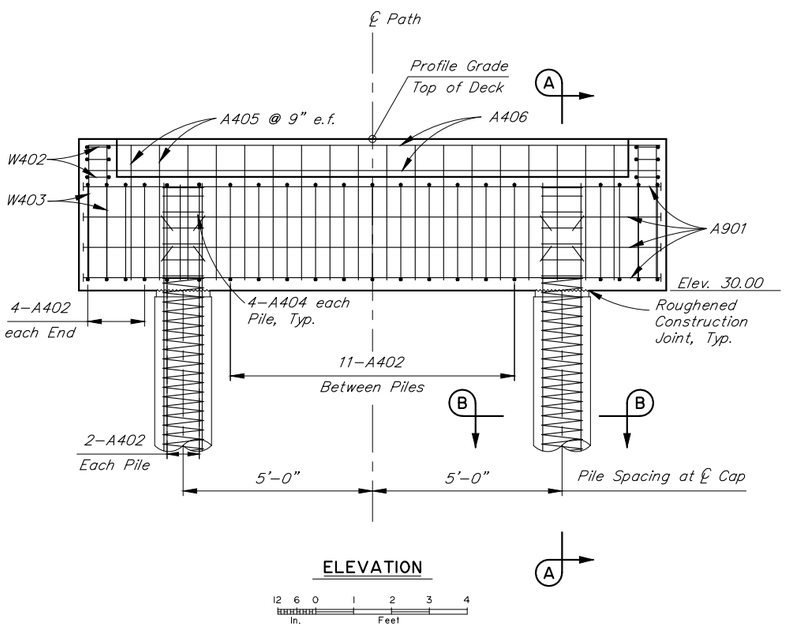

ELEVATION

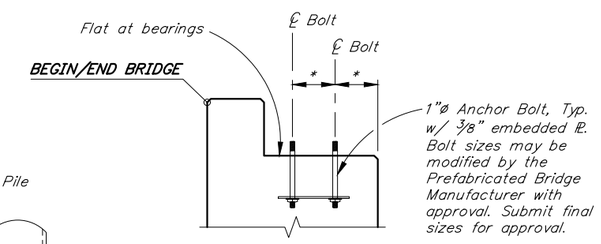

DETAIL A

* To be determined by Prefabricated Bridge Manufacturer. Submit dimensions for approval.

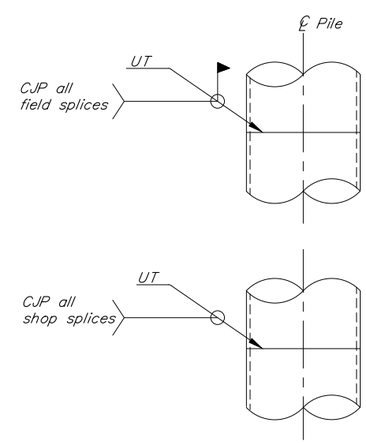

PIPE SPLICE DETAIL

No Scale

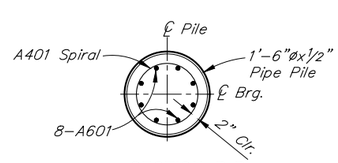

SECTION B-B

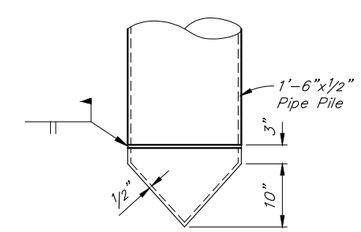

PILE TIP DRIVING POINT - 1'-6" DIA. PILES

DESIGNED BY: Leslie Daugherty	CHECKED: Douglas Gelineau
DRAWN BY: Javier De Leon	CHECKED: Leslie Daugherty
QUANTITIES BY: Leslie Daugherty	CHECKED: Douglas Gelineau

STATE OF ALASKA
DEPARTMENT OF TRANSPORTATION AND PUBLIC FACILITIES
BRIDGE SECTION
3132 Channel Drive
Juneau, Alaska 99801
907-465-2975

MONTANA CREEK PEDESTRIAN BRIDGE

KAXDEGOOWU HEEN DEI (BROTHERHOOD BRIDGE) TRAIL

ABUTMENTS

BRIDGE NO. 1955

DWG. NO. 4

C:\Users\jadeleon\AppData\Local\Temp\AcPublish_12980\1955-ABUT Fri, Sep/02/22 09:28am

STATE	PROJECT DESIGNATION	YEAR	SHEET NO.	TOTAL SHEETS
ALASKA	SFHWY00259/TA18010	2022	N5	N12

REINFORCING STEEL - ONE ABUTMENT

MARK	NOTE	SIZE	NO.	LENGTH	TYPE	BENDING DIAGRAM
W401		4	56	3'-7"	---	
W402		4	6	7'-5"	HOOP	
W501		5	8	12'-8"	---	
W901		9	12	12'-8"	BENT	
W902		9	4	14'-8"	---	

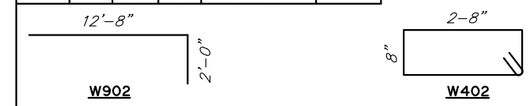

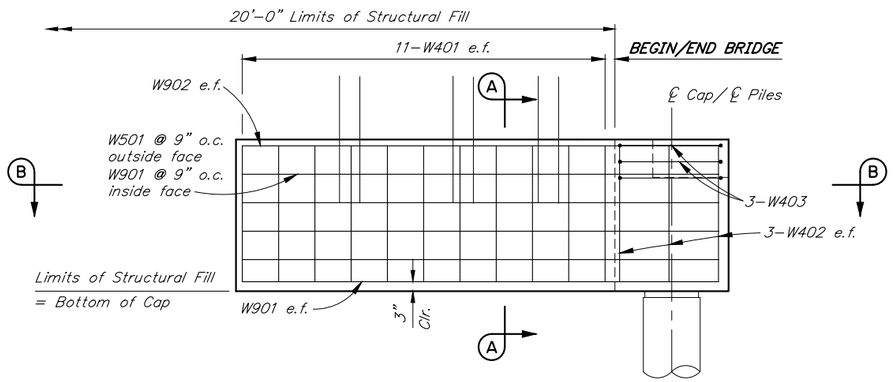

ELEVATION

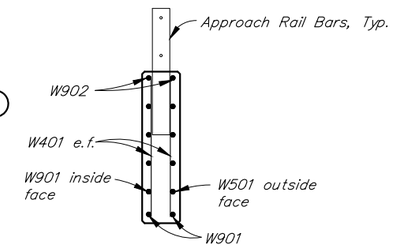

SECTION A-A

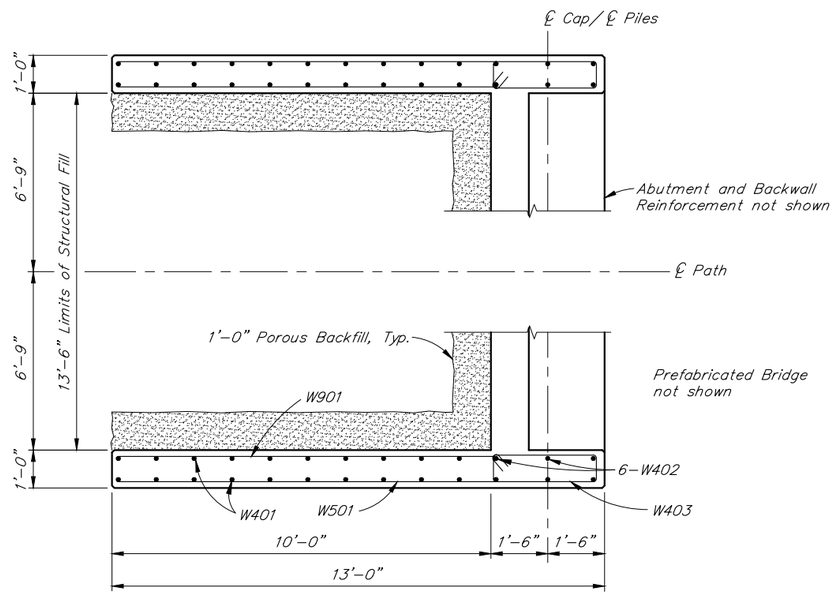

SECTION B-B

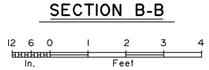

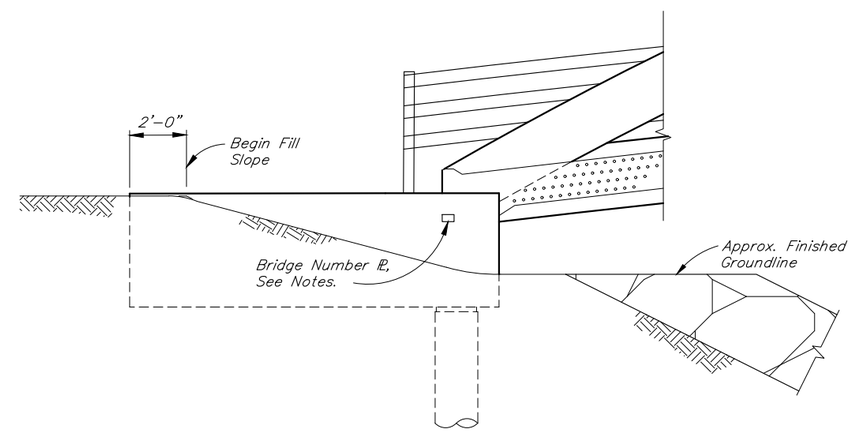

FINISHED ELEVATION

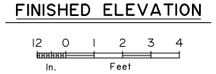

NOTES:

1. Locate bridge number plates on right-hand side of approaching traffic near each end as shown (2 total).
2. Furnish bridge number plates. Use "Century" type style lettering. Epoxy bond rods into 3/8"ø holes in wingwall blockout. Use epoxy suitable for exterior application and compatible with materials to be bonded. Follow epoxy manufacturer's instructions. Mount plate such that face of plate is flush with the face of wingwall.
3. See "BRONZE BRIDGE NO. PLATE DETAIL" on "APPROACH RAIL" Dwg.

DESIGNED BY: Leslie Daugherty	CHECKED: Douglas Gelineau	
DRAWN BY: Javier De Leon	CHECKED: Leslie Daugherty	
QUANTITIES BY: Leslie Daugherty	CHECKED: Douglas Gelineau	

STATE OF ALASKA
DEPARTMENT OF TRANSPORTATION AND PUBLIC FACILITIES
BRIDGE SECTION
3132 Channel Drive
Juneau, Alaska 99801
907-465-2975

MONTANA CREEK PEDESTRIAN BRIDGE

KAXDEGOOWU HEEN DEI (BROTHERHOOD BRIDGE) TRAIL

WINGWALLS

BRIDGE NO. 1955

DWG. NO. 5

C:\Users\jadeleon\AppData\Local\Temp\AcPublish_12980\1955-WINGWALL Fri, Sep/02/22 09:28am

STATE	PROJECT DESIGNATION	YEAR	SHEET NO.	TOTAL SHEETS
ALASKA	SFHWY00259/TA18010	2022	N6	N12

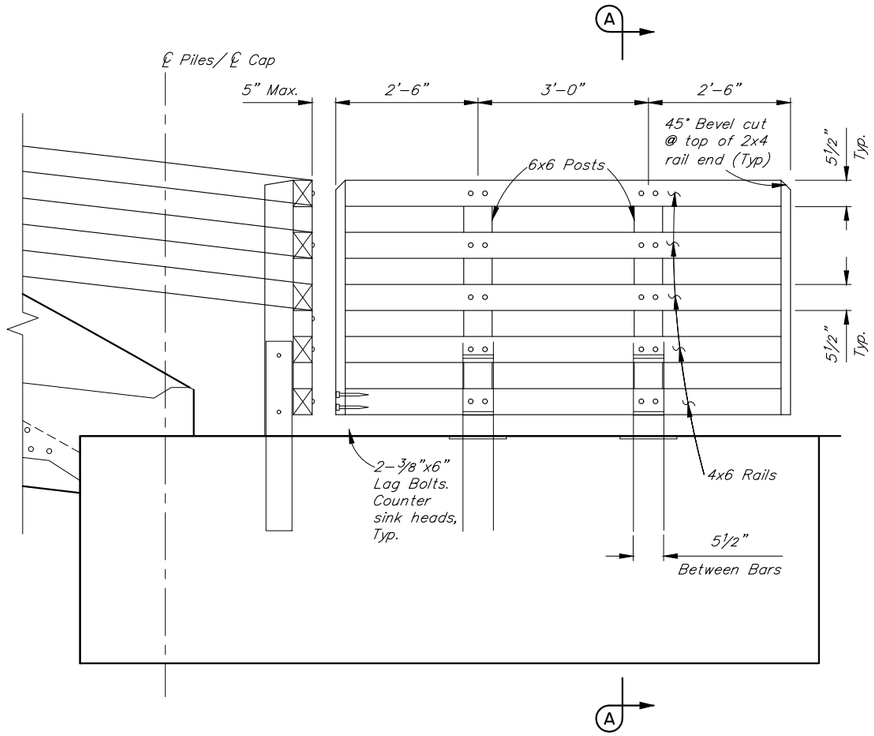

ELEVATION

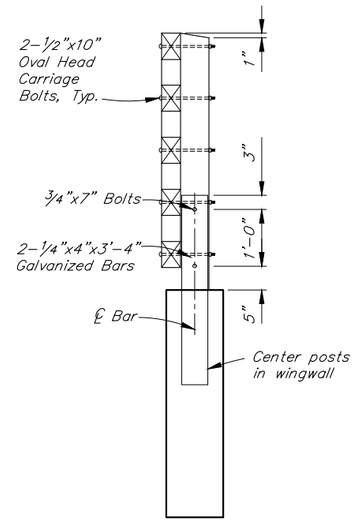

SECTION A-A

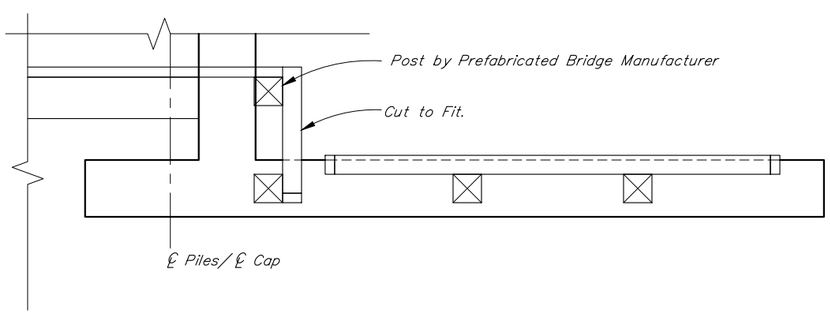

PLAN

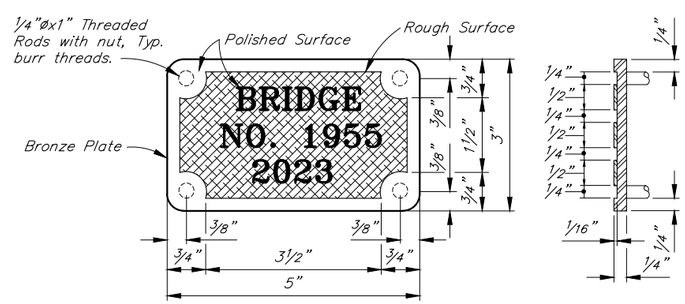

BRONZE BRIDGE NO. PLATE

No Scale

DESIGNED BY: Leslie Daugherty	CHECKED: Douglas Gelineau	
DRAWN BY: Javier De Leon	CHECKED: Leslie Daugherty	
QUANTITIES BY: Leslie Daugherty	CHECKED: Douglas Gelineau	

STATE OF ALASKA
DEPARTMENT OF TRANSPORTATION AND PUBLIC FACILITIES
BRIDGE SECTION
3132 Channel Drive
Juneau, Alaska 99801
907-465-2975

MONTANA CREEK PEDESTRIAN BRIDGE

KAXDEGOOWU HEEN DEI (BROTHERHOOD BRIDGE) TRAIL

APPROACH RAIL

BRIDGE NO. 1955

DWG. NO. 6

C:\Users\jadeleon\AppData\Local\Temp\AcPublish_12980\1955-RAIL Fri, Sep/02/22 09:28am

STATE	PROJECT DESIGNATION	YEAR	SHEET NO.	TOTAL SHEETS
ALASKA	SFHWY00259/TA18010	2022	N7	N12

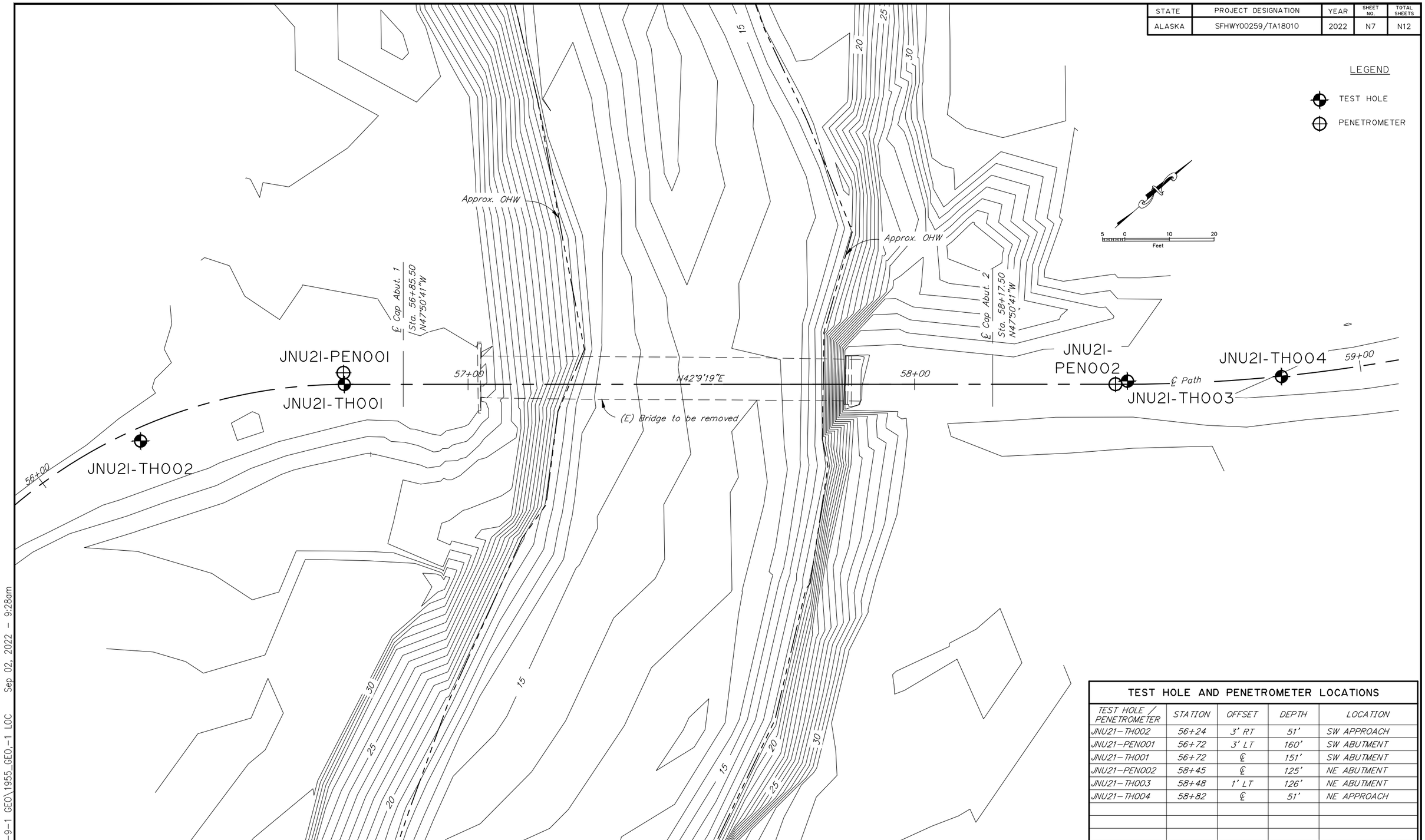

TEST HOLE AND PENETROMETER LOCATIONS

TEST HOLE / PENETROMETER	STATION	OFFSET	DEPTH	LOCATION
JNU21-TH002	56+24	3' RT	51'	SW APPROACH
JNU21-PEN001	56+72	3' LT	160'	SW ABUTMENT
JNU21-TH001	56+72	℄	151'	SW ABUTMENT
JNU21-PEN002	58+45	℄	125'	NE ABUTMENT
JNU21-TH003	58+48	1' LT	126'	NE ABUTMENT
JNU21-TH004	58+82	℄	51'	NE APPROACH

DESIGNED BY: D. Hemstreet	CHECKED: Engineer		
DRAWN BY: R. Angell	CHECKED: D. Hemstreet		
QUANTITIES BY: Engineer	CHECKED: Engineer		

STATE OF ALASKA
DEPARTMENT OF TRANSPORTATION AND PUBLIC FACILITIES
STATEWIDE MATERIALS

STATE OF ALASKA 49TH David A. Hemstreet No. CE 9800 REGISTERED PROFESSIONAL ENGINEER

MONTANA CREEK PEDESTRIAN BRIDGE

KAXDEGOOWU HEEN DEI (BROTHERHOOD BRIDGE) TRAIL

TEST HOLE & PENETROMETER LOCATION

BRIDGE NO. 1955

DWG. NO. 7

R:\cad\1955\DWG\22-9-1 GEO\1955_GEO,-1 LOC Sep 02, 2022 - 9:28am

STATE	PROJECT DESIGNATION	YEAR	SHEET NO.	TOTAL SHEETS
ALASKA	SFHWY00259/TA18010	2022	N8	N12

TYPICAL TEST HOLE LOG

DATE: Date begun – Date completed
STATION / OFFSET: XX+XX FEET RT or LT

Hole diameter 3.5 in

Elevation(ft) 100 95 90 85 80 75 70 65 60 55 50 45 40 35 30

Depth(ft)

Frozen

Graphic materials description
Stratum contact — 5.0ft
Estimated stratum contact

Observed Ground Water Date: xx/xx/xx

Transitional stratum change

Soil graphic and soil type explanation

GRAVEL (GP)	SILTY GRAVEL (GM)
GRAVEL (GW)	CLAYEY GRAVEL (GC)
SAND (SP)	SILTY SAND (SM)
SAND (SW)	CLAYEY SAND (SC)
SILT (ML)	ORGANIC SILTS (OL)
SILT (MH)	ORGANIC CLAYS (OH)
CLAY (CL)	
CLAY (CH)	
ORGANICS OR PEAT (PT)	

COBBLE OR BOULDER INDICATED BY DRILL REACTION OR CORE

ICE

WEATHERED BEDROCK (Strength Grade, Weathering Grade)

BEDROCK (Strength Grade, Weathering Grade)

COAL

Drilling Method

RQD % = Sum of lengths of core pieces > 4" / total length of run
L = Longest length of core in run
S = Shortest lkength of core in run — 32.0ft

SAND with Silt	USCS soil name
p200 = 8%	% passing the #200 (0.075mm) sieve
Sa=42%	% sand, retained on #200 (0.075mm) sieve and passing #4 (4.75mm) sieve
Gr=50%	% gravel, retained on #4 (4.75mm) sieve
Moisture=5.0%	moisture content
Org=10%	organic content
PI=8	plasticity index
LL=18	liquid limit
SM	USCS classification
PP=2.0	pocket penetrometer (ton / SF)
TV=2.0	torvane (ton / SF)

GRAPHICS: (double symbols with split graphics may be used to indicate combinations of soil types)

48.0ft

07-3533 = soil sample number (year – sample number)
SNT = Sample Not Tested

Interval sampled with recovery shaded — 10

SPT = blow count / ft. (total blows for second and third 6" increment) with standard penetration test sampler w/ 1.4 ID, 2" O.D. using a CME autohammer with 140 lb. hammer and a 30" freefall latest edition AASHTO T 206 (ASTM D1586).

SPT_{60} = same as SPT except, instead of CME autohammer, the cathead/rope method was used.

MC = blow count with 2" I.D., 2.5" O.D. sampler driven by a 340 lb. CME autohammer with a 30" freefall.

CORE — SS = blow count with 2.5" I.D., 3" O.D. sampler driven by a 340 lb. CME autohammer with a 30" freefall.

Indicates no valid SPT

GS — Grab sample from drill cuttings or directly from hole sidewall

CS — Continuous sampler

* — Indicates sampler refusal. Refusal defined as 50 or more blows per 6" increment, 100 total blows, or no movement observed with 10 successive blows.

VS — Vane shear test, undrained shear strength, PSF

ST — Thin walled sampler, pushed

Bottom of hole (BOH) — Total depth — 70.0ft

NOTES:

1) The test hole logs depicted graphically in these drawings are distillations of the original field logs, based on post-field investigation review and analysis. These drafted logs include changes made to field descriptions based upon laboratory test data, review and analysis. Detailed field observations of rock and soil sampled during the drilling program are not reproduced in the drafted logs.
2) Description of soils follows Alaska Geotechnical Procedures manual. Classification of soils follows Unified Soil Classification System (ASTM D2487).
3) The test hole logs from these sheets are an integral part of the Foundation Geology Report. See Construction Contract Bid Documents – invitation to bid/notice to bidders. Important information about the test hole logs and the foundation investigation is contained in the report. The test hole logs are not severable from and cannot be completely and correctly interpreted without reference to the Foundation Geology Report.

TYPICAL PENETROMETER TEST LOG

DATE: Date begun – Date completed
STATION / OFFSET: XX+XX / RT or LT (feet)

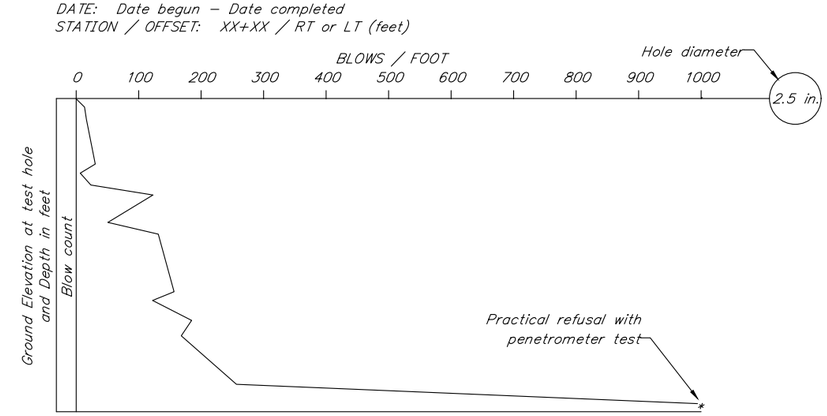

Bottom of hole (BOH)

NOTES:
Penetrometer W/2.5" O.D., with a CME AUTOMATIC Hammer using a 340 lb. weight and a 30" freefall

DESIGNED BY: D. Hemstreet	CHECKED: Engineer		
DRAWN BY: R. Angell	CHECKED: D. Hemstreet		
QUANTITIES BY: Engineer	CHECKED: Engineer		

STATE OF ALASKA
DEPARTMENT OF TRANSPORTATION AND PUBLIC FACILITIES
STATEWIDE MATERIALS

STATE OF ALASKA 49TH — David A. Hemstreet No. CE 9800 — REGISTERED PROFESSIONAL ENGINEER

MONTANA CREEK PEDESTRIAN BRIDGE

KAXDEGOOWU HEEN DEI (BROTHERHOOD BRIDGE) TRAIL

TEST HOLE & PENETROMETER LEGEND

BRIDGE NO. 1955
DWG. NO. 8

R:\cad\1955\DWG\22-9-1 GEO\1955_GEO,-2 TYP Sep 02, 2022 - 9:28am

STATE	PROJECT DESIGNATION	YEAR	SHEET NO.	TOTAL SHEETS
ALASKA	SFHWY00259/TA18010	2022	N9	N12

JNU21-TH002

Date: 6/13/21 – 6/14/21
Station: SW Approach, 56+24 Offset: 3' Rt

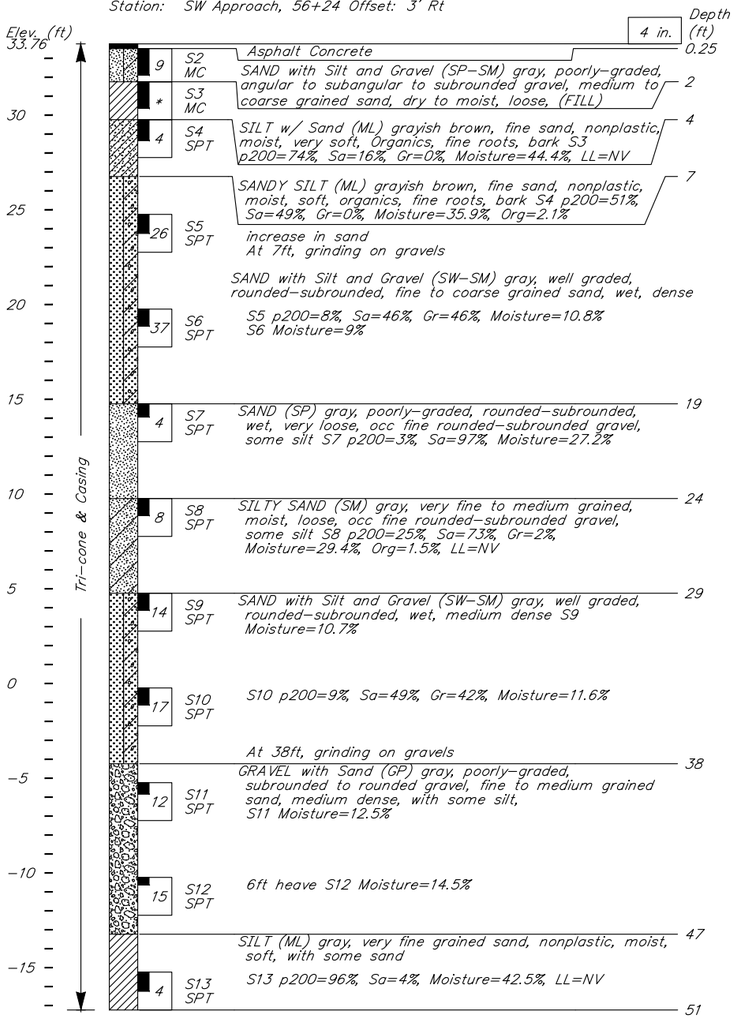

BOH: 51 ft.
Hammer: CME Auto Hammer 140 lb hammer
Equipment: CME 45
Drilling Method: Casing Size HW
Geologist: M. Larsen
Field Crew: D. Coke and T. Babin

JNU21-PEN001

Date: 6/7/21 – 6/7/21
Station: SW Abutment, Sta 56+72 Offset: 3' Lt

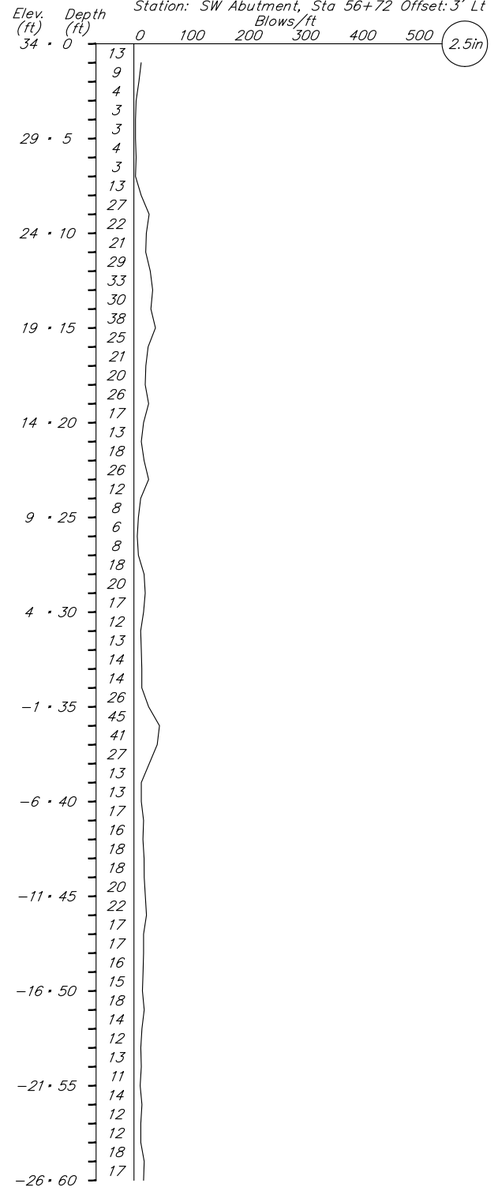

JNU21-PEN001 (cont.)

Date: 6/7/21 – 6/7/21
Station: SW Abutment, Sta 56+72 Offset: 3' Lt

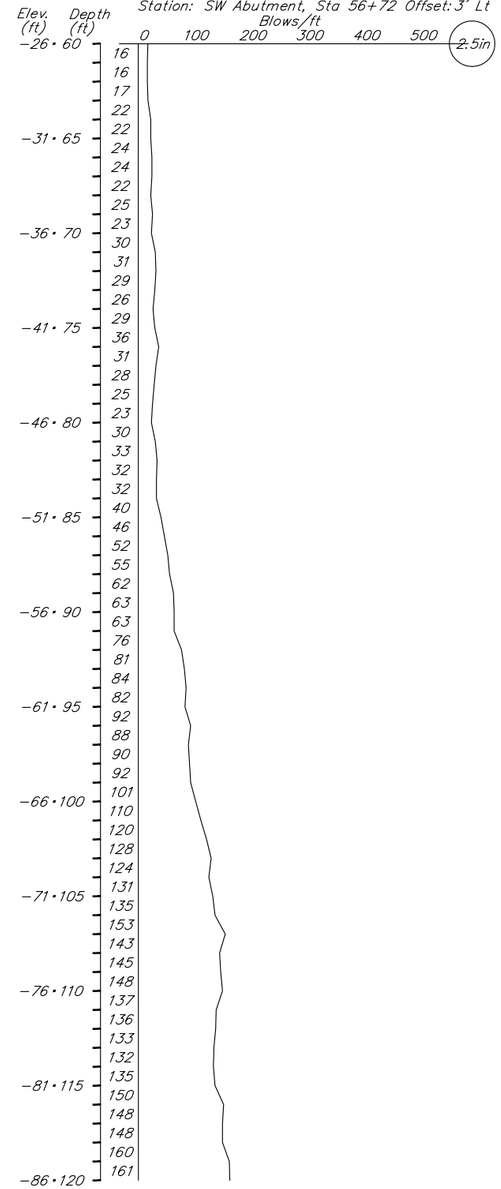

JNU21-PEN001 (cont.)

Date: 6/7/21 – 6/7/21
Station: SW Abutment, Sta 56+72 Offset: 3' Lt

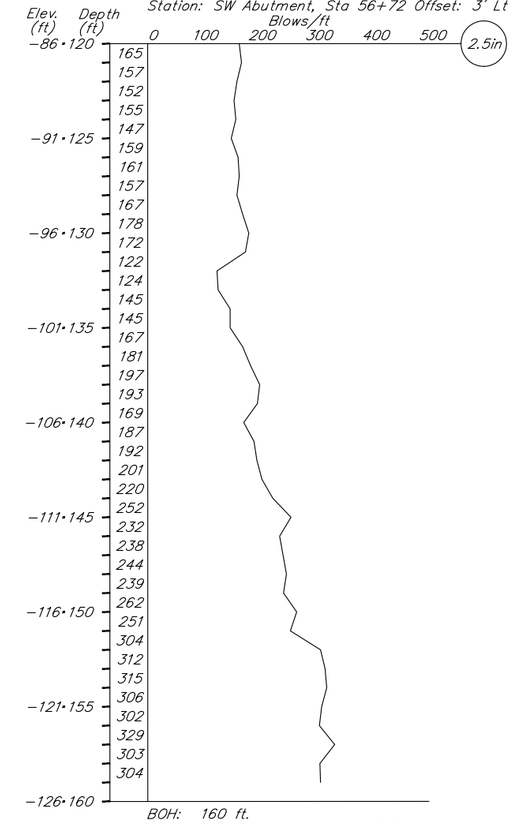

BOH: 160 ft.
Hammer: CME Auto Hammer 340–lb
Equipment: CME 45
Geologist: M. Larsen
Field Crew: D. Coke and T. Babin

DESIGNED BY: D. Hemstreet	CHECKED: Engineer		
DRAWN BY: R. Angell	CHECKED: D. Hemstreet		
QUANTITIES BY: Engineer	CHECKED: Engineer		

STATE OF ALASKA
DEPARTMENT OF TRANSPORTATION AND PUBLIC FACILITIES
STATEWIDE MATERIALS

STATE OF ALASKA 49TH David A. Hemstreet No. CE 9800 REGISTERED PROFESSIONAL ENGINEER

MONTANA CREEK PEDESTRIAN BRIDGE

KAXDEGOOWU HEEN DEI (BROTHERHOOD BRIDGE) TRAIL

TEST HOLE & PENETROMETER LOGS

BRIDGE NO. 1955
DWG. NO. 9

R:\cad\1955\DWG\22-9-1 GEO\1955_GEO,-3 TH002&PEN001 Sep 02, 2022 – 9:28am

STATE	PROJECT DESIGNATION	YEAR	SHEET NO.	TOTAL SHEETS
ALASKA	SFHWY00259/TA18010	2022	N10	N12

JNU21-TH001

Date: 6/9/18 – 6/12/21

Station: SW Abutment, 56+72 Offset: ℄

Elev. (ft) | 4 in. | Depth (ft)

33.72

- 0.25 — Asphalt Concrete
- 2 — S2 MC, S3 MC, S4 MC, S5 SPT (17, *, *, 5): SILTY SAND with Gravel (SM) gray, angular to subangular to subrounded gravel, medium to coarse grained sand, dry to moist, medium dense, (FILL) S2 p200=43%, Sa=32%, Gr=25%, Moisture=2.9%; GRAVEL with Silt and Sand (GP–GM) dark gray, poorly–graded, angular to subangular to subrounded gravel, fine to medium grained sand, moist, loose S3 p200=6%, Sa=37%, Gr=57%, Moisture=1.6%
- 3 — SILT with Sand (ML) grayish brown, fine sand, nonplastic, moist, soft, organics, fine roots, bark S5 Moisture=33.6%, LL=NV
- 9 — S6 SPT (55): GRAVEL with Silt and Sand (GP–GM) gray, poorly–graded, rounded–subrounded, fine to coarse grained sand, wet, medium dense S6 p200=5%, Sa=31%, Gr=64%, Moisture=6.4%
- 14 — S7 SPT (30): SAND with Silt and Gravel (SW–SM) gray, well–graded, subrounded to rounded gravel, fine to medium grained sand, wet, medium dense, 1' heaving sand
- S8 SPT (16): S8 p200=7%, Sa=50%, Gr=43%, Moisture=11.7%
- 24 — S9 SPT (6): SILTY SAND with Gravel (SM) gray, rounded–subrounded, fine to medium grained sand, wet, loose
- 29 — S10 SPT (14): GRAVEL with Sand (GP) dark gray to dark brown, poorly–graded, subrounded to rounded gravel, fine to medium grained sand, wet, medium dense
- S11 SPT (46): S11 Moisture=9.6%
- S12 SPT (14)
- 44 — S13 SPT (12): SAND with Silt and Gravel (SP–SM) dark gray, poorly–graded, subrounded to rounded gravel, fine to coarse grained sand, wet, medium dense S13 p200=6%, Sa=84%, Gr=10%, Moisture=18.6%
- S14 SPT (16)
- 54 — S15 SPT (*), S16 ST (X): SILT (ML) black to dark gray, very fine grained sand, low plasticity, moist, soft, with very fine black sand lense, less than 0.10" thick S15 p200=97%, Sa=3%, Gr=0%, Moisture=42.5%, Org=1.4%, LL=NV; S16 Moisture=36.9%
- S17 Moisture=36.3%

▼15.9 6/12/2021

Tri-cone & Casing

JNU21-TH001 (cont.)

Date: 6/9/18 – 6/12/21

Station: SW Abutment, 56+72 Offset: ℄

Elev. (ft) | 4 in. | Depth (ft)

- 6 SPT
- S18 SPT (6): S18 p200=92%, Sa=8%, Gr=0%, Moisture=87.1%
- S19 SPT (5): 0.5–1" thick, very fine black sand lense
- S20 SPT (4): S20 Moisture=27.5%
- 79 — S21 SPT (6): SILT with Sand (ML) dark gray to black, nonplastic, moist, firm, some fine organics, shell fragments, occ fine rounded–subrounded gravel S21 p200=78%, Sa=19%, Gr=3%, Moisture=33.5%
- 84 — S22 SPT (7): SANDY SILT to SILTY SAND (ML–SM) black to dark gray, very fine grained sand, nonplastic, moist to wet, firm– stiff, (varies between ML to SM) some fine organics, non–plastic silt layers S22 p200=50%, Sa=50%, Gr=0%, Moisture=28.1%
- S23 SPT (11)
- S24 SPT (11): S24 Moisture=28.9%
- 99 — S25 SPT (9): SILT with Sand (ML) dark gray, very fine grained sand, nonplastic, moist, firm–stiff, with very fine black sand S25 p200=83%, Sa=17%, Gr=0%, Moisture=32.9%, LL=NV
- S26 SPT (10): S26 Moisture=31.7%
- S27 SPT (12): S27 p200=89%, Sa=11%, Gr=0%, Moisture=32%; shell fragments
- S28 SPT (7)
- S29: S29 p200=78%, Sa=22%, Gr=0%, Moisture=31.1%

Tri-cone & Casing

Tricone– no casing

JNU21-TH001 (cont.)

Date: 6/9/18 – 6/12/21

Station: SW Abutment, 56+72 Offset: ℄

Elev. (ft) | 4 in. | Depth (ft)

- 10 SPT
- S30 SPT (7): S30 Moisture=26.7%
- S31 SPT (8)
- S32 SPT (8): S32 p200=86%, Sa=14%, Gr=0%, Moisture=33.8%, LL=NV
- S33 SPT (8): no to low plasticity S33 Moisture=33.8%
- S34 SPT (8): S34 p200=94%, Sa=6%, Gr=0%, Moisture=31%; no to low plasticity
- S35 SPT (8): S35 Moisture=26.2%
- 151

Tricone– no casing

BOH: 151 ft.
Hammer: CME Auto Hammer 140 lb hammer
Equipment: CME 45
Drilling Method: Casing Size HW
Geologist: M. Larsen
Field Crew: D. Coke and T. Babin

R:\cad\1955\DWG\22-9-1 GEO\1955_GEO_-4 TH001 Sep 02, 2022 – 9:28am

DESIGNED BY: D. Hemstreet	CHECKED: Engineer		
DRAWN BY: R. Angell	CHECKED: D. Hemstreet		
QUANTITIES BY: Engineer	CHECKED: Engineer		

STATE OF ALASKA
DEPARTMENT OF TRANSPORTATION AND PUBLIC FACILITIES
STATEWIDE MATERIALS

STATE OF ALASKA 49TH — David A. Hemstreet No. CE 9800 — REGISTERED PROFESSIONAL ENGINEER

MONTANA CREEK PEDESTRIAN BRIDGE

KAXDEGOOWU HEEN DEI (BROTHERHOOD BRIDGE) TRAIL

TEST HOLE & PENETROMETER LOGS

BRIDGE NO. 1955

DWG. NO. 10

STATE	PROJECT DESIGNATION	YEAR	SHEET NO.	TOTAL SHEETS
ALASKA	SFHWY00259/TA18010	2022	N11	N12

JNU21-PEN002

Date: 6/15/21 – 6/15/21

Station: NE Abutment, Sta 58+45 Offset: ℄

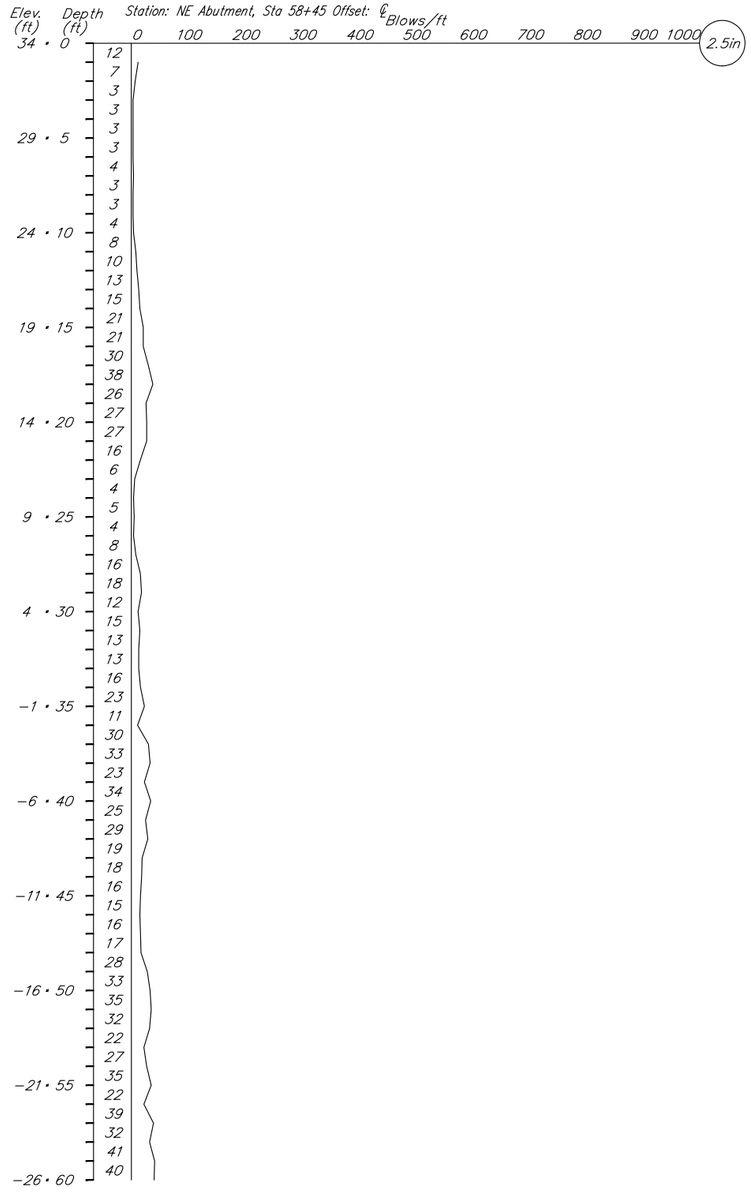

JNU21-PEN002 (cont.)

Date: 6/15/21 – 6/15/21

Station: NE Abutment, Sta 58+45 Offset: ℄

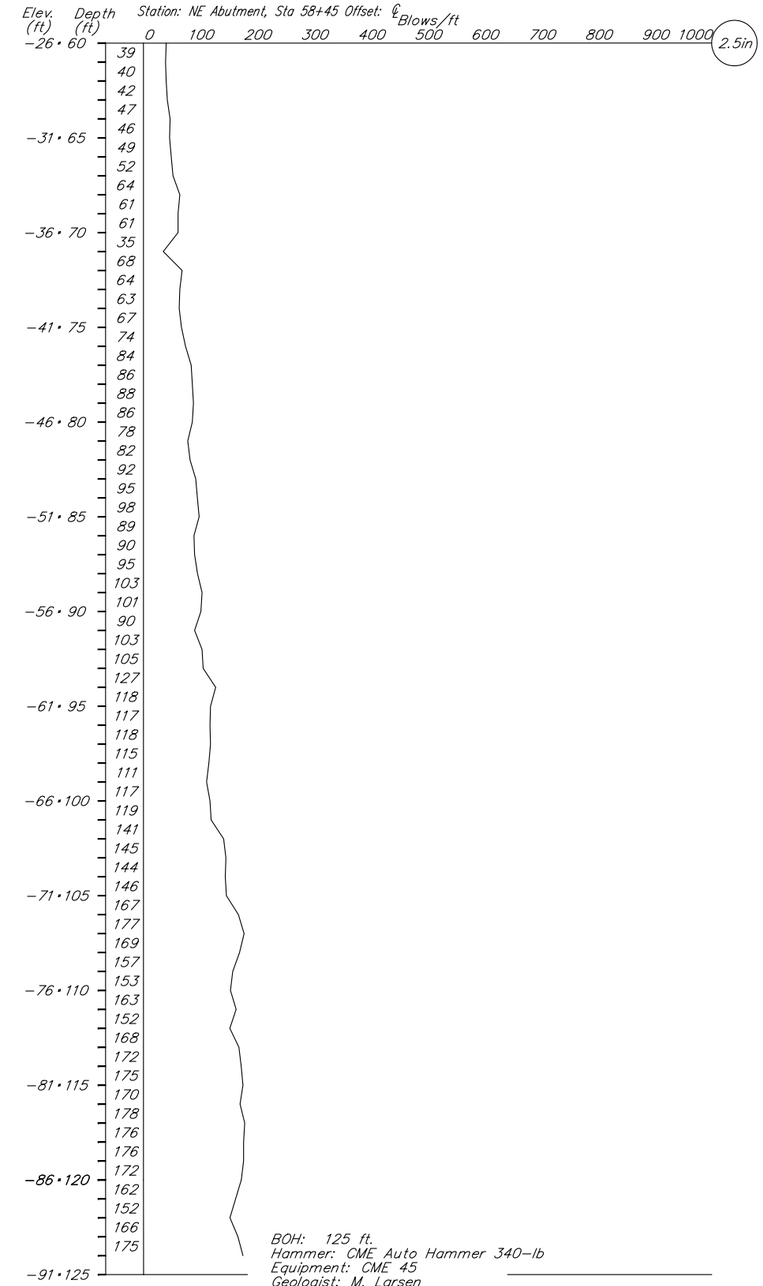

BOH: 125 ft.
Hammer: CME Auto Hammer 340-lb
Equipment: CME 45
Geologist: M. Larsen
Field Crew: D. Coke and T. Babin

R:\cad\1955\DWG\22-9-1 GEO\1955_GEO,-5 PEN002 Sep 02, 2022 – 9:28am

DESIGNED BY: D. Hemstreet	CHECKED: Engineer	
DRAWN BY: R. Angell	CHECKED: D. Hemstreet	
QUANTITIES BY: Engineer	CHECKED: Engineer	

STATE OF ALASKA
DEPARTMENT OF TRANSPORTATION AND PUBLIC FACILITIES
STATEWIDE MATERIALS

STATE OF ALASKA 49TH David A. Hemstreet No. CE 9800 REGISTERED PROFESSIONAL ENGINEER

MONTANA CREEK PEDESTRIAN BRIDGE

KAXDEGOOWU HEEN DEI (BROTHERHOOD BRIDGE) TRAIL

TEST HOLE & PENETROMETER LOGS

BRIDGE NO. 1955
DWG. NO. 11

STATE	PROJECT DESIGNATION	YEAR	SHEET NO.	TOTAL SHEETS
ALASKA	SFHWY00259/TA18010	2022	N12	N12

JNU21-TH003

Date: 6/16/21 – 6/17/21
Station: NE Abutment, 58+48 Offset: 1' Lt

Elev. (ft) | 4 in. | Depth (ft)

33.68

- 0.25 — Asphalt Concrete
- 2 — S2 MC, S3 SPT (10, 9): SAND with Silt and Gravel (SP–SM) gray, poorly–graded, angular to subangular to subrounded gravel, medium to coarse grained sand, dry to moist, loose, (FILL) S2 p200=8%, Sa=51%, Gr=41%, Moisture=3.1%
- 4 — S4 SPT (4): SILTY SAND (SM) grayish brown, fine sand, moist, loose, organics, fine roots, bark S3 p200=43%, Sa=57%, Gr=0%, Moisture=17.8%, Org=1.9%
- SILTY SAND (SM) grayish brown, fine to coarse grained sand, moist, very loose S4 Moisture=27.9%
- 9 — S5 SPT (7): SILTY SAND with Gravel (SM) grayish brown, rounded–subrounded, fine to coarse grained gravel, wet, loose, organics, fine roots S5 p200=21%, Sa=47%, Gr=32%, Moisture=29.2%
- 14 — S6 SPT (28): SAND with Gravel (SP) gray, poorly–graded, rounded–subrounded, fine to medium grained sand, wet, medium dense to dense, fine rounded–subrounded gravel S6 p200=6%, Sa=46%, Gr=48%, Moisture=9.4%
- S7 SPT (22)
- 24 — S8 SPT (4): SILTY SAND with Gravel (SM) gray, fine to coarse grained, wet, very loose to loose, fine rounded–subrounded gravel S8 p200=35%, Sa=58%, Gr=7%, Moisture=29%
- S9 SPT (9): S9 Moisture=13.6%
- 34 — S10 SPT (12): SAND with Silt and Gravel (SP–SM) gray, poorly–graded, subrounded to rounded gravel, fine to medium grained sand, wet, medium dense S10 p200=6%, Sa=51%, Gr=43%, Moisture=10.8%
- S11 SPT (22): S11 p200=7%, Sa=61%, Gr=32%, Moisture=11.7%
- 6ft heave
- 44 — S12 SPT (8): SILT (ML) dark gray, nonplastic, moist, firm, with very fine black sand lense S12 p200=84%, Sa=16%, Gr=0%, Moisture=32.7%
- 49 — S13 SPT (9): SAND with Silt (SP–SM) gray, poorly–graded, fine to medium grained sand, wet, loose S13 p200=8%, Sa=90%, Gr=2%, Moisture=18.9%
- S14 SPT (10): S14 p200=12%, Sa=88%, Gr=0%, Moisture=24.3%
- S15: S15 p200=12%, Sa=87%, Gr=1%, Moisture=24.8%

Elev. (ft): 33.68, 30, 25, 20, 15, 10, 5, 0, −5, −10, −15, −20, −25

▼ 9.1 6/17/2021

Tri–cone & Casing

JNU21-TH003 (cont.)

Date: 6/16/21 – 6/17/21
Station: NE Abutment, 58+48 Offset: 1' Lt

Elev. (ft) | 4 in. | Depth (ft)

- S SPT (8)
- 64 — S16 SPT (6): SILTY SAND (SM) gray, fine to medium grained sand, wet, loose S16 p200=46%, Sa=54%, Gr=0%, Moisture=28.2%
- S17 SPT (9)
- 74 — S18 SPT (7): SANDY SILT (ML) gray, nonplastic, moist, firm to stiff, with very fine black sand lense, S18 p200=60%, Sa=40%, Gr=0%, Moisture=31.2%, LL=NV
- S19 SPT (10)
- S20 SPT (7)
- S21 SPT (14)
- 94 — S22 SPT (15): SILTY SAND (SM) gray, very fine to fine grained sand, wet, medium dense S22 p200=49%, Sa=51%, Gr=0%, Moisture=29.8%, LL=NV
- S23 SPT (10)
- S24 SPT (18): S24 p200=48%, Sa=52%, Gr=0%, Moisture=28.8%
- S25 SPT (16)
- 114 — S26 SPT (11): SILT with Sand (ML) dark gray, nonplastic, moist, firm to stiff, occ very fine black sand lense S26 p200=82%, Sa=18%, Gr=0%, Moisture=30%
- S27 SPT (8): S27 p200=87%, Sa=13%, Gr=0%, Moisture=36.4%
- S28 SPT (8)

BOH: 126 ft.
Hammer: CME Auto Hammer 140 lb hammer
Equipment: CME 45
Drilling Method: Casing Size HW
Geologist: M. Larsen
Field Crew: D. Coke and T. Babin — 126

Elev. (ft): −30, −35, −40, −45, −50, −55, −60, −65, −70, −75, −80, −85, −90

Tri–cone & Casing

Tricone– no casing

JNU21-TH004

Date: 6/18/21 – 6/19/21
Station: NE Approach, 58+82 Offset: ℄

Elev. (ft) | 4 in. | Depth (ft)

34.02

- 0.25 — Asphalt Concrete
- 1 — S2 MC, S3 SPT (*, *): SAND with Silt and Gravel (SP–SM) gray, poorly–graded, angular to subangular to subrounded gravel, medium to coarse grained sand, moist, medium dense, (FILL)
- S4 SPT (5), S5 SPT (7): SILTY SAND with Gravel (SM) grayish brown, medium to coarse grained sand, moist, loose S4 Moisture=18.3% S5 Moisture=25.2%
- 9 — S6 SPT (18): SANDY SILT (ML) gray, very fine grained sand, nonplastic, moist, very stiff, with gravel S6 p200=59.0%, Sa=28%, Gr=13%, Moisture=8.1%
- 14 — S7 SPT (16): SAND with Gravel (SP) dark gray, poorly–graded, subrounded to rounded gravel, fine to medium grained sand, wet, medium dense, some silt S7 p200=4.0%, Sa=56%, Gr=40%, Moisture=10.6%, SP
- 19 — S8 SPT (5): SILT with Sand (ML) gray, very fine grained sand, nonplastic, wet, firm, few organics, fine roots, occ fine rounded gravel S8 p200=74.0%, Sa=24%, Gr=2%, Moisture=139.6%
- S9 SPT (8): S9 Moisture=70.3%
- 25.5 — S10 SPT (*): SAND with Silt and Gravel (SP–SM) gray, poorly–graded, subrounded to rounded gravel, fine to medium grained sand, wet, medium dense S10 p200=9.0%, Sa=70%, Gr=21%, Moisture=19%
- S11 SPT (19): S11 Moisture=8.2%
- S12 SPT (8): S12 p200=5.0%, Sa=50%, Gr=45%, Moisture=14.2%
- S13 SPT (23): S13 p200=5.0%, Sa=64%, Gr=31%, Moisture=11.5%
- 44 — S14 SPT (5): SILT (ML) dark gray, nonplastic, moist, firm, with very fine black sand lense, non–plastic silt S14 Moisture=30.7%
- 49 — S15 SPT (23): SAND with Silt (SP–SM) gray, poorly–graded, fine to medium grained sand, wet, medium dense S15 p200=5.0%, Sa=94%, Gr=1%, Moisture=20.6% — 51

BOH: 51 ft.
Hammer: CME Auto Hammer 140 lb hammer
Equipment: CME 45
Drilling Method: Casing Size HW
Geologist: M. Larsen
Field Crew: D. Coke and T. Babin

Elev. (ft): 34.02, 30, 25, 20, 15, 10, 5, 0, −5, −10, −15

▼ 13.15 6/19/2021

Tri–cone & Casing

DESIGNED BY: D. Hemstreet	CHECKED: Engineer		
DRAWN BY: R. Angell	CHECKED: D. Hemstreet		
QUANTITIES BY: Engineer	CHECKED: Engineer		

STATE OF ALASKA
DEPARTMENT OF TRANSPORTATION AND PUBLIC FACILITIES
STATEWIDE MATERIALS

STATE OF ALASKA 49TH — David A. Hemstreet No. CE 9800 — REGISTERED PROFESSIONAL ENGINEER

MONTANA CREEK PEDESTRIAN BRIDGE

KAXDEGOOWU HEEN DEI (BROTHERHOOD BRIDGE) TRAIL

TEST HOLE & PENETROMETER LOGS

BRIDGE NO. 1955
DWG. NO. 12

R:\cad\1955\DWG\22-9-1 GEO\1955_GEO_-6 TH003&TH004 Sep 02, 2022 – 9:28am

NO.	DATE	REVISION

STATE	PROJECT DESIGNATION	YEAR	SHEET NO.	TOTAL SHEETS
ALASKA	TA18010/SFHWY00259	2023	Q1	36

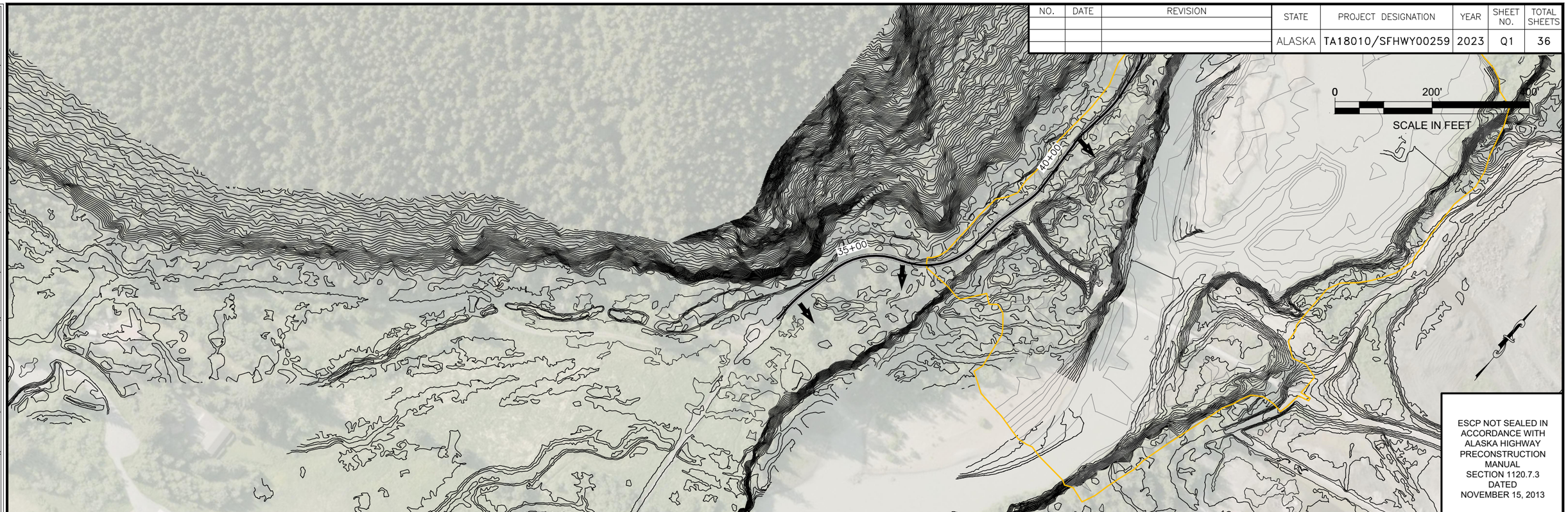

ESCP NOT SEALED IN ACCORDANCE WITH ALASKA HIGHWAY PRECONSTRUCTION MANUAL SECTION 1120.7.3 DATED NOVEMBER 15, 2013

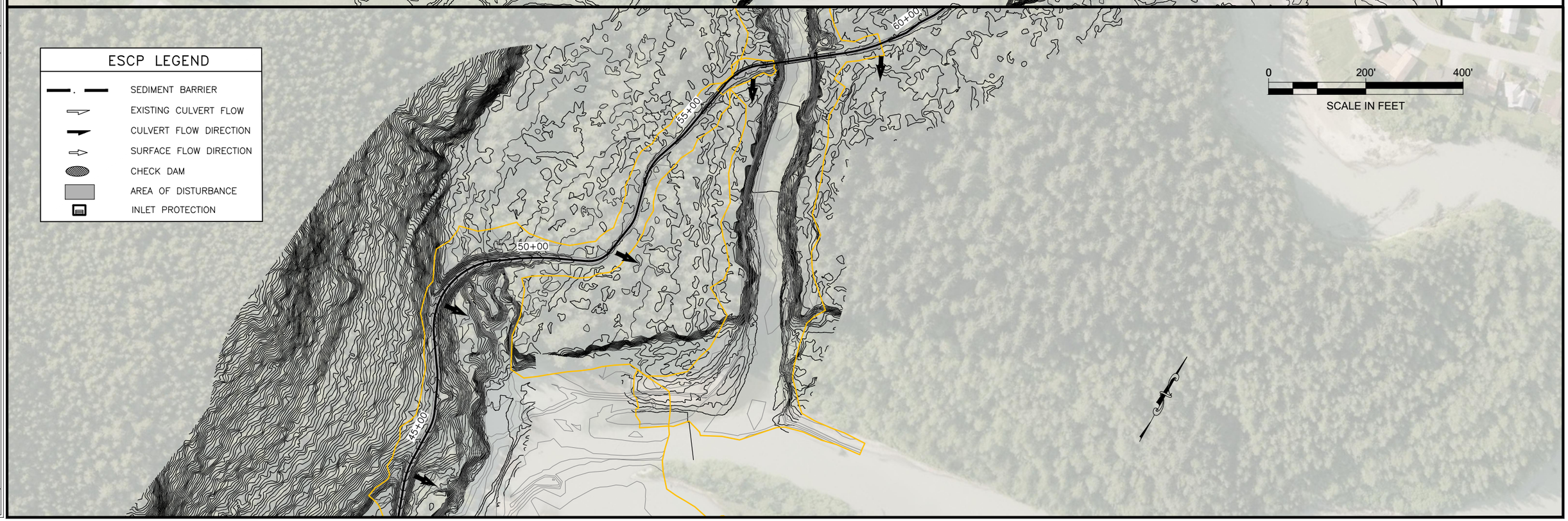

FIRM	STATE OF ALASKA DEPARTMENT OF TRANSPORTATION & PUBLIC FACILITIES	PHONE	(907) 465-1763	CERTIFICATE OF AUTH #:	
FILE	Q:\Jnu\SFHWY00259\Planset\00259_Q1.dwg	DESIGNED	WMC	CHECKED	##
		DATE	12/13/2022 11:47	LAYOUT	Q1
		ADDRESS	6860 GLACIER HWY, JUNEAU, AK 99811	DRAFTED	WMC

NO.	DATE	REVISION

STATE	PROJECT DESIGNATION	YEAR	SHEET NO.	TOTAL SHEETS
ALASKA	TA18010/SFHWY00259	2023	Q2	36

FIRM	STATE OF ALASKA DEPARTMENT OF TRANSPORTATION & PUBLIC FACILITIES					ADDRESS	6860 GLACIER HWY, JUNEAU, AK 99811
FILE	Q:\Jnu\SFHWY00259\Planset\00259_01.dwg					DATE	12/13/2022 11:47 LAYOUT Q2
						DESIGNED	WMC
						CHECKED	##
						DRAFTED	WMC

PHONE (907) 465-1763

CERTIFICATE OF AUTH #:

NO.	DATE	REVISION

STATE	PROJECT DESIGNATION	YEAR	SHEET NO.	TOTAL SHEETS
ALASKA	TA18010/SFHWY00259	2023	Q3	36

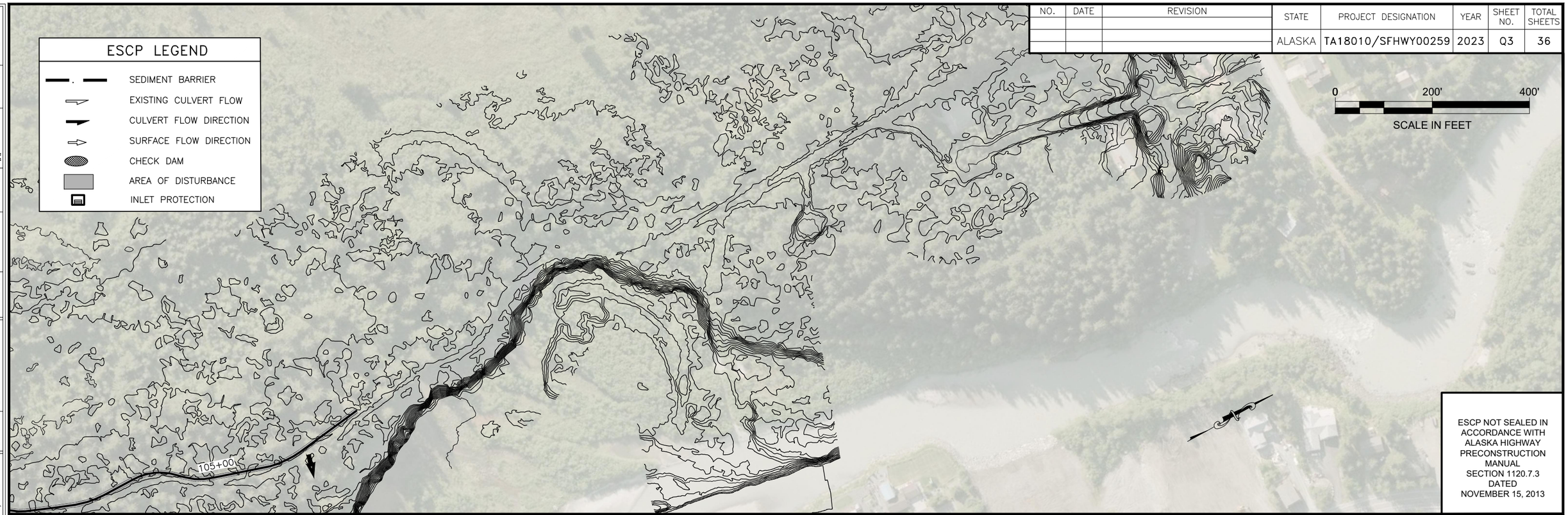

ESCP NOT SEALED IN ACCORDANCE WITH ALASKA HIGHWAY PRECONSTRUCTION MANUAL SECTION 1120.7.3 DATED NOVEMBER 15, 2013

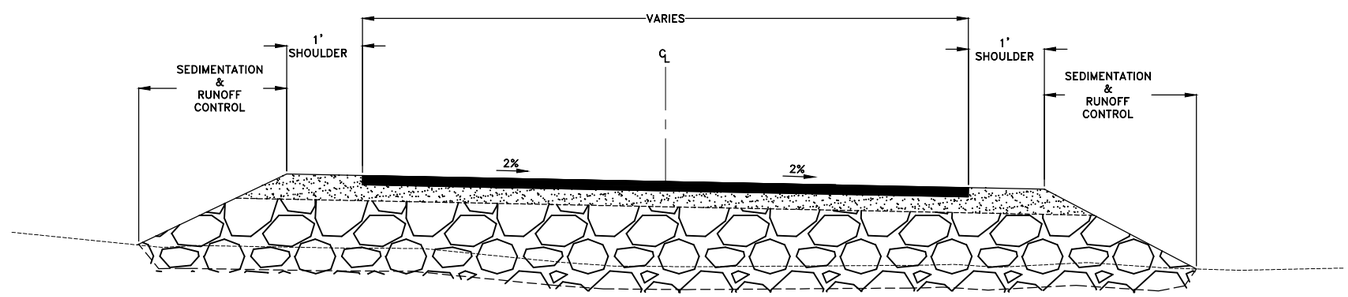

1 / Q3 TYPICAL TRAIL SECTION SEDIMENTATION & RUNOFF CONTROL

SCALE: NOT TO SCALE

FIRM	STATE OF ALASKA DEPARTMENT OF TRANSPORTATION & PUBLIC FACILITIES			PHONE	(907) 465-1763	CERTIFICATE OF AUTH #:	
				DESIGNED	WMC	CHECKED	##
FILE	Q:\Jnu\SFHWY00259\Planset\00259_01.dwg			LAYOUT	Q3	DRAFTED	WMC
		ADDRESS	6860 GLACIER HWY, JUNEAU, AK 99811				
		DATE	12/13/2022 11:47				

NO.	DATE	REVISION

STATE	PROJECT DESIGNATION	YEAR	SHEET NO.	TOTAL SHEETS
ALASKA	TA18010/SFHWY00259	2023	S1	36

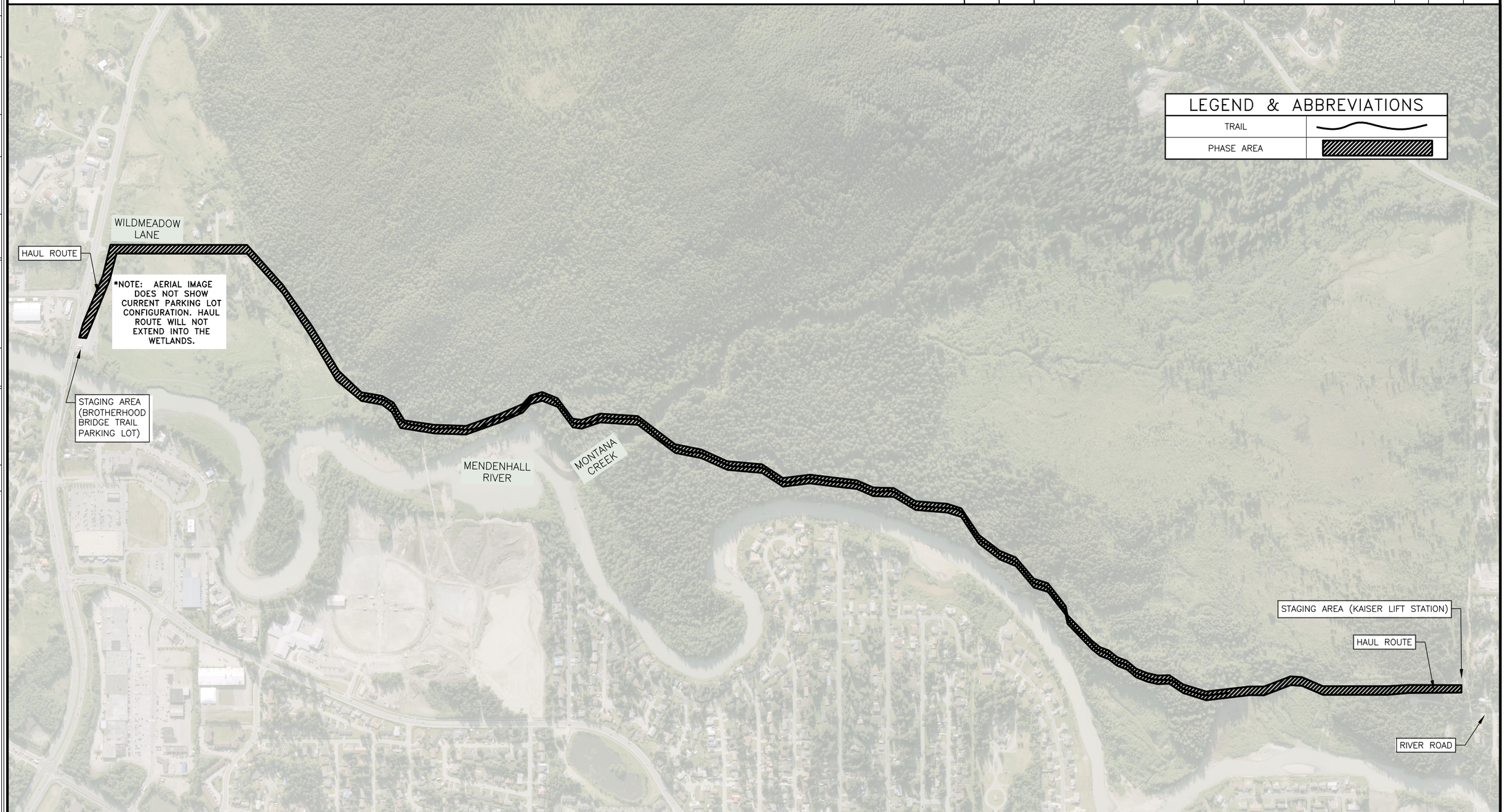

PHASING ACTIVITIES:
- CLEARING
- PILE DRIVING
- BRIDGE REMOVAL
- HAUL
- RIPRAP PLACEMENT

STATE OF ALASKA DEPARTMENT OF TRANSPORTATION AND PUBLIC FACILITIES
6860 GLACIER HIGHWAY, JUNEAU, AK 99801
(907) 465-1763

JNU KAXDIGOOWU HEEN DEI IMP
(BROTHERHOOD BRIDGE TRAIL IMP)

PHASING- PHASE 1 HAUL

FILE | Q:\Jnu\SFHWY00259\Planset\00259_S1.dwg
DATE | 12/13/2022 11:47
LAYOUT | S1
DESIGNED | WMC
CHECKED | #####
DRAFTED | WMC

NO.	DATE	REVISION

STATE	PROJECT DESIGNATION	YEAR	SHEET NO.	TOTAL SHEETS
ALASKA	TA18010/SFHWY00259	2023	S2	36

PHASING ACTIVITIES:
– BRIDGE CONSTRUCTION

STATE OF ALASKA DEPARTMENT OF TRANSPORTATION AND PUBLIC FACILITIES
6860 GLACIER HIGHWAY, JUNEAU, AK 99801
(907) 465–1763

JNU KAXDIGOOWU HEEN DEI IMP
(BROTHERHOOD BRIDGE TRAIL IMP)

PHASING– PHASE 2 BRIDGE WORK

FILE Q:\Jnu\SFHWY00259\Planset\00259_S1.dwg | DATE 12/13/2022 11:47 | LAYOUT S2 | DESIGNED WMC | CHECKED ##### | DRAFTED WMC

NO.	DATE	REVISION

STATE	PROJECT DESIGNATION	YEAR	SHEET NO.	TOTAL SHEETS
ALASKA	TA18010/SFHWY00259	2023	S3	36

PHASING ACTIVITIES:
– NORTH SIDE PAVING

STATE OF ALASKA DEPARTMENT OF TRANSPORTATION AND PUBLIC FACILITIES
6860 GLACIER HIGHWAY, JUNEAU, AK 99801
(907) 465–1763

JNU KAXDIGOOWU HEEN DEI IMP
(BROTHERHOOD BRIDGE TRAIL IMP)

PHASING– PHASE 3 NORTH SIDE PAVING

FILE Q:\jnu\SFHWY00259\Planset\00259_S1.dwg | DATE 12/13/2022 11:47 | LAYOUT S3 | DESIGNED WMC | CHECKED ##### | DRAFTED WMC

NO.	DATE	REVISION

STATE	PROJECT DESIGNATION	YEAR	SHEET NO.	TOTAL SHEETS
ALASKA	TA18010/SFHWY00259	2023	S4	36

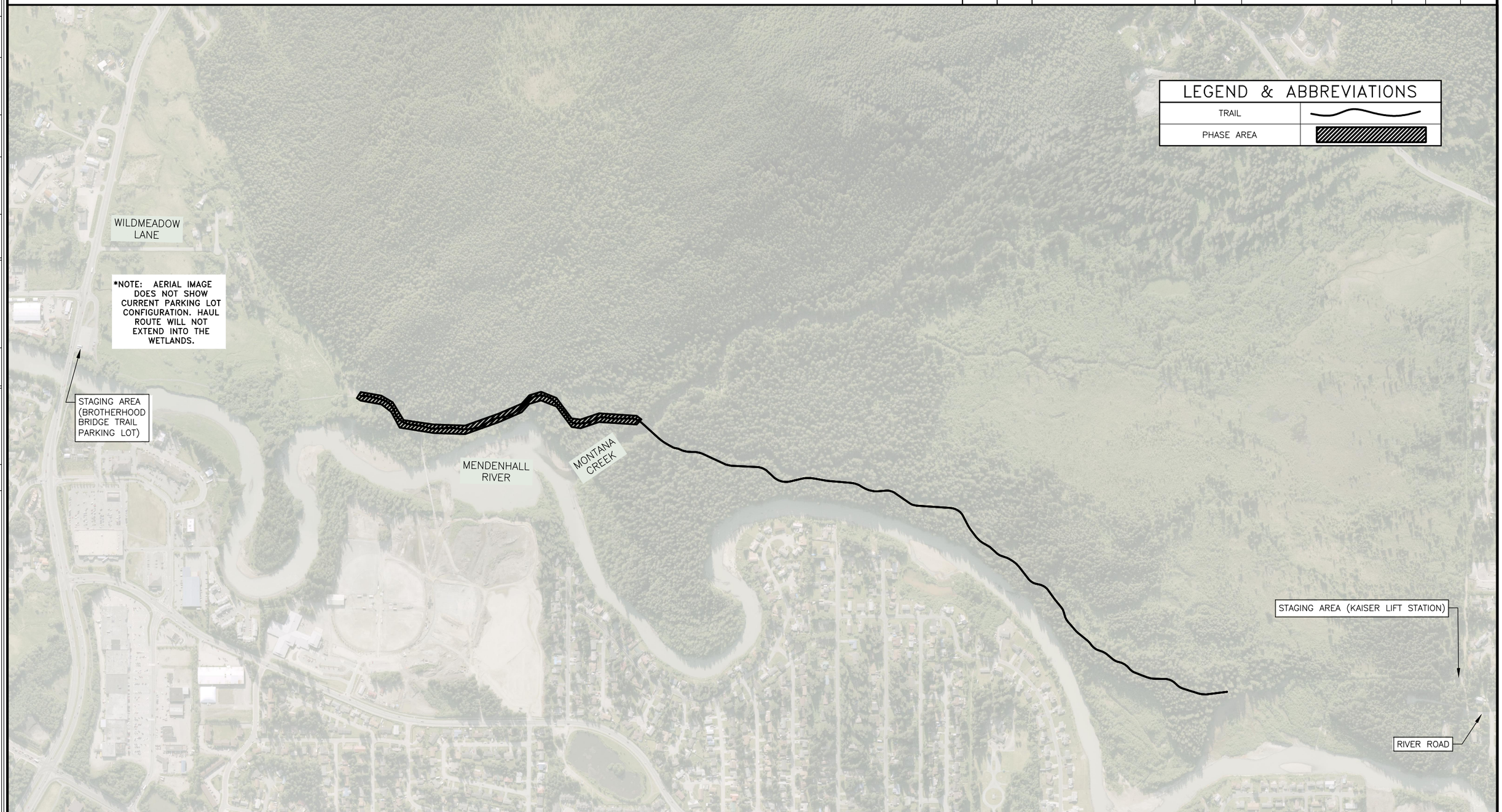

PHASING ACTIVITIES:
– SOUTH SIDE PAVING

STATE OF ALASKA DEPARTMENT OF TRANSPORTATION AND PUBLIC FACILITIES
6860 GLACIER HIGHWAY, JUNEAU, AK 99801
(907) 465–1763

JNU KAXDIGOOWU HEEN DEI IMP
(BROTHERHOOD BRIDGE TRAIL IMP)

PHASING– PHASE 4 SOUTH SIDE PAVING

FILE | Q:\Jnu\SFHWY00259\Planset\00259_S1.dwg
DATE | 12/13/2022 11:47
LAYOUT | S4
DESIGNED | WMC
CHECKED | #####
DRAFTED | WMC

NO.	DATE	REVISION

STATE	PROJECT DESIGNATION	YEAR	SHEET NO.	TOTAL SHEETS
ALASKA	TA18010/SFHWY00259	2023	T1	36

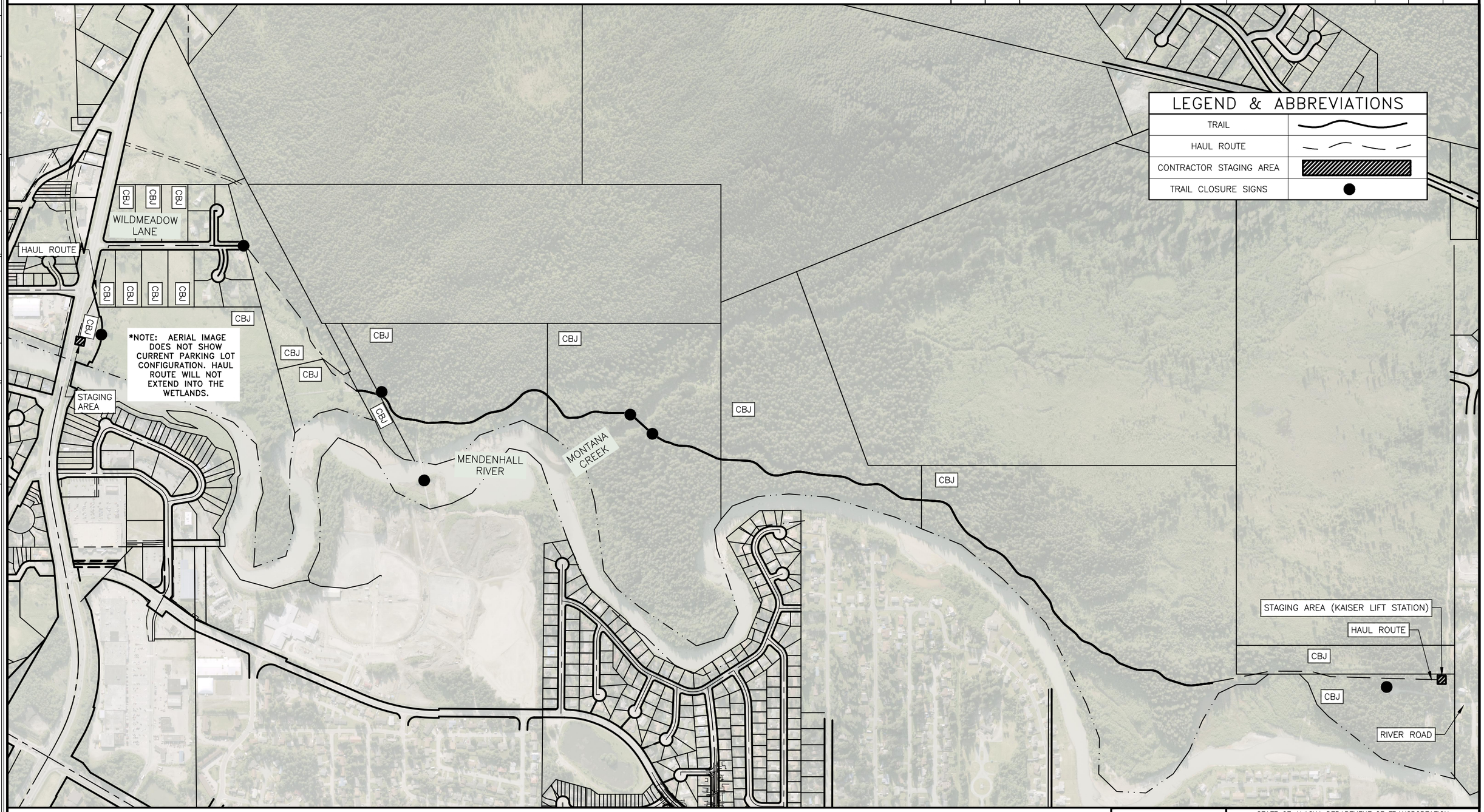

GENERAL NOTES:

1. CLOSE TRAIL & PLACE ADVANCED WARNING SIGNS AT ALL TRAIL INTERSECTIONS.
2. CLOSE TRAIL AND USE SIGNS & DEVICES ACCORDING TO THE MUTCD & ALASKA TRAFFIC MANUAL.
3. RELEVANT CBJ PARCELS ARE SHOWN & LABELED.

STATE OF ALASKA DEPARTMENT OF TRANSPORTATION AND PUBLIC FACILITIES
6860 GLACIER HIGHWAY, JUNEAU, AK 99801
(907) 465-1763

JNU KAXDIGOOWU HEEN DEI IMP
(BROTHERHOOD BRIDGE TRAIL IMP)

TRAFFIC CONTROL

FILE Q:\jnu\SFHWY00259\Planset\00259_T1.dwg
DATE 12/13/2022 11:47
LAYOUT T1
DESIGNED WMC
CHECKED #####
DRAFTED WMC