NO.	DATE	REVISION

STATE	PROJECT DESIGNATION	YEAR	SHEET NO.	TOTAL SHEETS
ALASKA	PENDING / NFHWY00834	2023	A1	80
CDS ROUTE: 190000	MILEPOINT: 101.34 TO 117.44			

STATE OF ALASKA
DEPARTMENT OF TRANSPORTATION
&
PUBLIC FACILITIES

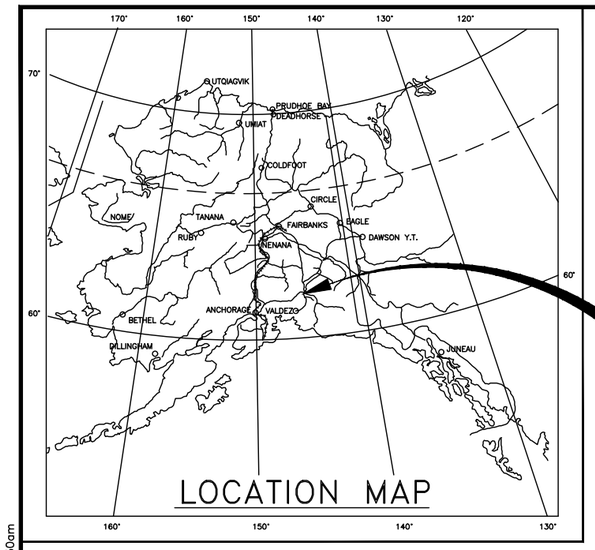

PROJECT LOCATION

PROPOSED HIGHWAY PROJECT

PENDING / NFHWY00834

RICHARDSON HIGHWAY MP 106.5 –115 RESURFACING

GRADING, DRAINAGE, PAVING, GUARDRAIL, & SIGNING

INDEX OF SHEETS

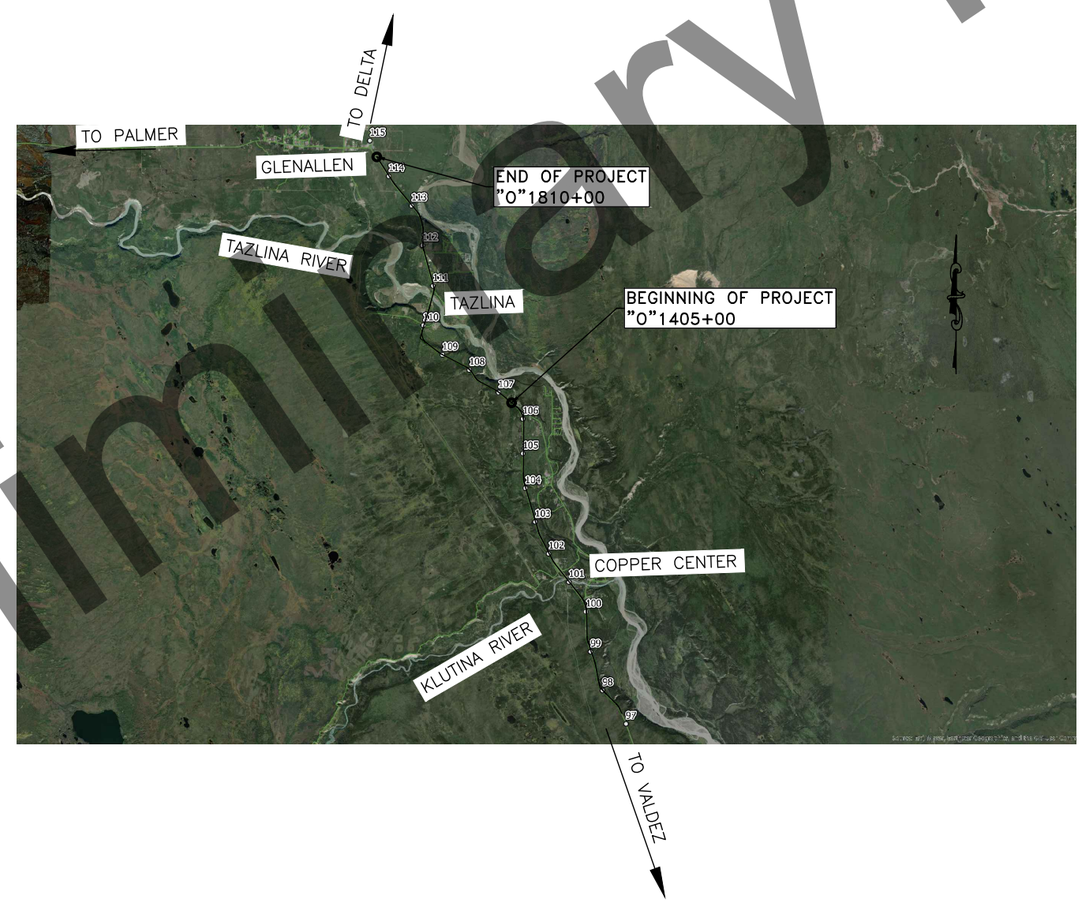

THE FOLLOWING STANDARD PLANS APPLY TO THIS PROJECT:
C–04.12, C–06.00
G–00.05, G–05.11S, G–20.12
I–81.00
S–00.12, S–01.02, S–05.02, S–30.05, S–31.02
T–20.04, T–21.04, T–22.04, T–25.10

PROJECT SUMMARY

WIDTH OF PAVEMENT	36 FT
LENGTH OF GRADING	39,150 FT
LENGTH OF PAVING	39,150 FT
LENGTH OF PROJECT	40,500 FT

RUSSEL JOHNSON, P.E., PROJECT MANAGER
ANDREW PLUMLEE, DESIGNER

STATE OF ALASKA
DEPARTMENT OF TRANSPORTATION
&
PUBLIC FACILITIES

APPROVED BY:

_____ DATE _____

Lauren Little, P.E.
Preconstruction Engineer, Northern Region

ACCEPTED FOR CONSTRUCTION:

_____ DATE _____

Joseph P. Kemp, P.E.
Acting Regional Director, Northern Region

HWYS TITLE SHEET
H:\Projects\Rich_Hwy\NFHWY00218_Rich_82_115 Resurface\05 Design\11 C3D\01_00218 97-115\MP 106.5-115 (00834)\NFHWY00834_A_TITLE-Title Tue, Sep/05/23 09:50am

NO.	DATE	REVISION

STATE	PROJECT DESIGNATION	YEAR	SHEET NO.	TOTAL SHEETS
ALASKA	PENDING / NFHWY00834	2023	A2	A4

	RECOVERED	SET
BLM MONUMENT		
GLO MONUMENT		
USC&GS MONUMENT		
PRIMARY MONUMENT		
CENTERLINE MONUMENT IN CASING		
PRIMARY R.O.W. MONUMENT		
BEARING OBJECT		
MISCELLANEOUS MONUMENT		
LINE OF SIGHT MONUMENT		
CONCRETE R.O.W. MONUMENT		
BENCHMARK		BM
REBAR AND CAP		
REBAR		
IRON PIPE		
PK NAIL		
SPIKE		
HUB AND TACK		
CONSTRUCTION CENTERLINE	5+00	
MISCELLANEOUS CENTERLINE	10+00	
STATION EQUATION	"L"48+97.23 POT BK= "O"48+97.23 PC AHD	
PROJECT RIGHT-OF-WAY LINE	R/W	
EXISTING RIGHT-OF-WAY LINE		
EXISTING PROPERTY LINE		
CONTROLLED ACCESS LINE	C/A	
UTILITY EASEMENT LINE	PUE	
TEMPORARY EASEMENT LINE (TCP OR TCE)	TCP	
ACCESS OR SECTION LINE EASEMENT	ACCESS EASEMENT	
PROPOSED CUT SLOPE LIMIT		
PROPOSED FILL SLOPE LIMIT		
SECTION LINE		
1/4 SECTION LINE		
1/16 SECTION LINE		
TOWNSHIP & RANGE LINE	T. 2 N. / T. 1 N. / T. 1 E. / T. 2 E.	

	EXISTING	PROPOSED
SANITARY SEWER (FLOW DIRECTION →)	SS	SS
FUEL LINE	O	O
GAS LINE	G	G
WATER LINE	W	W
METER, VALVE, FIRE HYDRANT	W	W
EXISTING STORM DRAIN (FLOW DIRECTION →)	SD	
PROPOSED STORM DRAIN	S-10, S-11, P-11, P-10, MH	
FIBER OPTIC LINE	FO	
DIRECT BURIAL TELEPHONE CABLE	T	T
DIRECT BURIAL ELECTRIC CABLE	E	E
ELECTRIC LINE (OVERHEAD)		
POWER POLE LINE		
JOINT USE POWER & TELEPHONE		
TELEPHONE POLE LINE		
POLE ANCHOR		
STUB POLE (POWER OR TELEPHONE)		
TELEPHONE DUCT	T	T
TELEPHONE PEDESTAL		
BURIED CABLE MARKER		
PIPELINE MARKER OR VALVE		
CATCH BASIN OR DROP INLET		
MANHOLE	MH	MH
SANITARY SEWER CLEAN OUT		

	EXISTING	PROPOSED
ROADWAY/PAVEMENT EDGE		
FENCE	X	X
CURB AND GUTTER		
DETECTABLE WARNINGS		
GUARDRAIL		
CULVERT PIPE		
SIGN		
MAILBOX	MB	MB
RAILROAD TRACKS		
RAILROAD DEVICES	CROSS-BUCK, FLASHING LIGHT, CANTILEVER, SWITCH	
TREE LINE		
WATER BOUNDARY		
ORDINARY HIGH WATER LINE		
FLOW CENTERLINE		
FLOW DIRECTION		
WETLANDS		
EXISTING BUILDINGS	H	
POST OR BOLLARD		
WELL OR MONITORING WELL	W, MW	
SEPTIC PIPE	S	
FUEL TANK FILL PIPE/VENT	P	
SATELLITE DISH	SAT. DISH	
TEST HOLE	TH	
CONIFER TREE		
DECIDUOUS TREE		
GRAVE		
THERMOSIPHON		
PARKING METER		
VEHICLE PLUG-IN		
DELINEATOR/GUIDE MARKER		

H = HOUSE
G = GARAGE
M = MERCHANT/STORE
B = BARN
S = SHED
P = PRIVY
SS= SERVICE STATION
W = WAREHOUSE

	EXISTING	PROPOSED
JUNCTION BOX, TYPE IA		5
JUNCTION BOX, TYPE II		6
JUNCTION BOX, TYPE III		3
SIGNAL FACE, VEHICULAR	42	42
SIGNAL FACE, BACKPLATE	42	42
SIGNAL FACE, LEFT TURN, BACKPLATE	43	43
SIGNAL FACE, PEDESTRIAN	41	41
LOOP DETECTOR	33	73
VIDEO DETECTOR	2	2
RADAR DETECTOR	4	4A
OPTICOM DETECTOR	1	1
PEDESTRIAN PUSH BUTTON	1	1
SIGNAL POST W/O MAST ARM		1
SIGNAL POLE W/MAST ARM		4
SIGNAL CONTROLLER		
LOAD CENTER		
LUMINAIRE		22
RIGID METAL CONDUIT		

ABBREVIATIONS:

APPROX	APPROXIMATLY
℄	CENTERLINE
CY	CUBIC YARD
E	EAST, EASTING
ELE, ELEV	ELEVATION
FT. '	FOOT, FEET
H	HORIZONTAL
HW/D	HEADWATER TO DIAMETER RATIO
IE	INVERT ELEVATION
IN, "	INCH, INCHES
L	LENGTH OF CURVE
L.C.L	LEFT OF CENTERLINE
LT	LEFT
LVC	LENGTH OF VERTICAL CURVE
MAX	MAXIMUM
MIN	MINIMUM
N	NORTH, NORTHING
NO.	NUMBER
NTS	NOT TO SCALE
O.C.	ON CENTER
PC	POINT OF CURVATURE
POT	POINT ON TANGENT
PST	PERFORATED STEEL TUBE
PT	POINT OF TANGENCY
PVI	POINT OF VERTICAL INTERSECTION
R	RADIUS
R.C.L	RIGHT OF CENTERLINE
RT	RIGHT
S	SOUTH
SQ. FT.	SQUARE FOOT
STA	STATION
T	TANGENT
TCE	TEMPORARY CONSTRUCTION EASEMENT
TS	TUBE STEEL
TYP	TYPICAL
V	VERTICAL
VPC	VERTICAL POINT OF CURVATURE
VPI	VERTICAL POINT OF INTERSECTION
VPT	VERTICAL POINT OF TANGENCY
W	WEST
WWR	WELDED WIRE REINFORCEMENT
Ø	DIAMETER

STATE OF ALASKA 49TH
RUSSELL M. JOHNSON
C.E. 9963
REGISTERED PROFESSIONAL ENGINEER

LEGEND

PLANS DEVELOPED BY: STATE OF ALASKA DEPARTMENT OF TRANSPORTATION & PUBLIC FACILITIES, NORTHERN REGION, 2301 PEGER ROAD, FAIRBANKS, AK 99709 (907)451-2200
H:\Projects\Rich_Hwy\NFHWY00218_Rich_82_115 Resurface\05 Design\11 C3D\01_00218 97-115\MP 106.5-115 (00834)\NFHWY00834_A_LEGEND-Legend Tue, Sep/05/23 09:50am

NO.	DATE	REVISION

STATE	PROJECT DESIGNATION	YEAR	SHEET NO.	TOTAL SHEETS
ALASKA	PENDING / NFHWY00834	2023	A3	A4

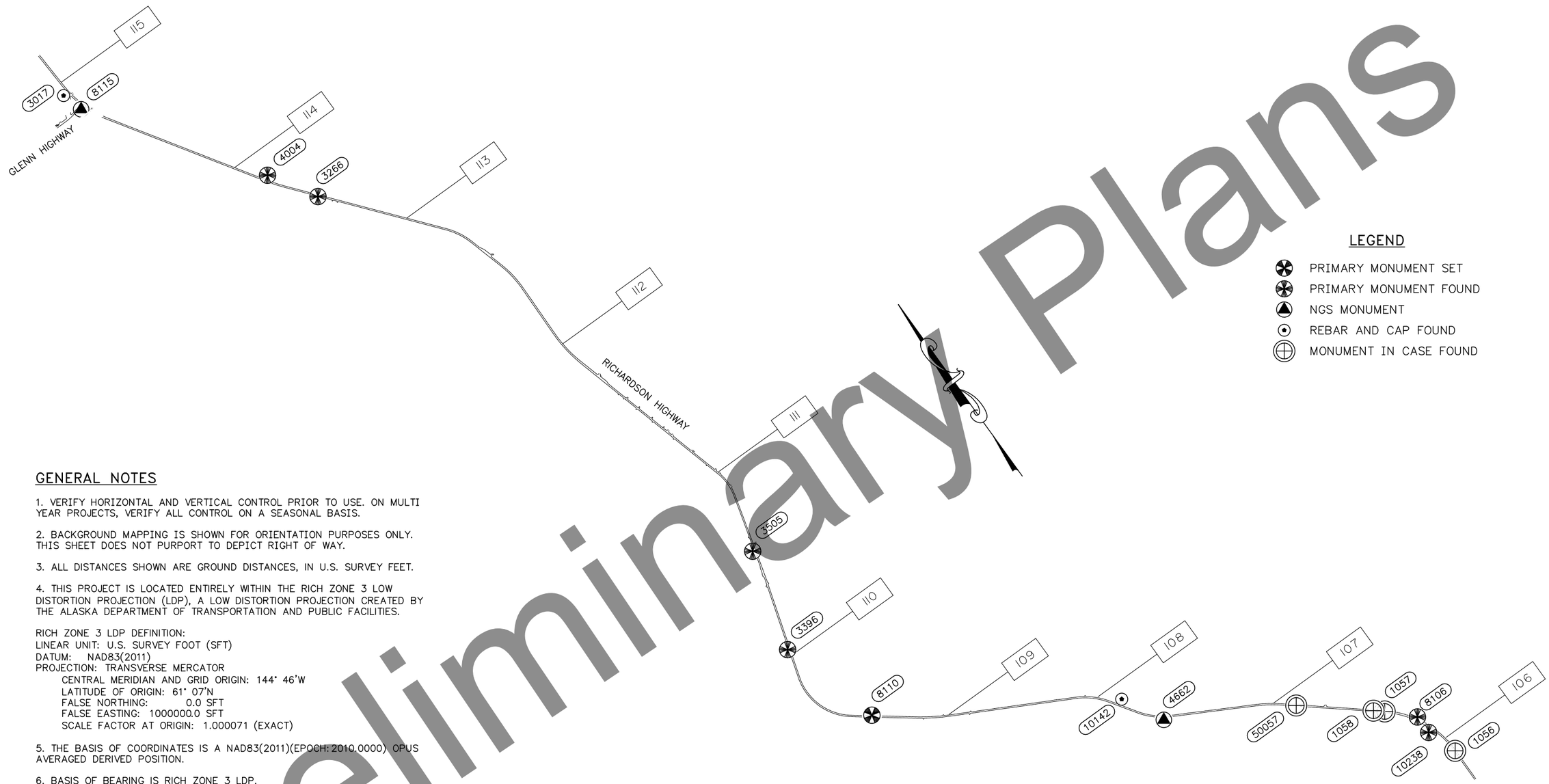

GENERAL NOTES

1. VERIFY HORIZONTAL AND VERTICAL CONTROL PRIOR TO USE. ON MULTI YEAR PROJECTS, VERIFY ALL CONTROL ON A SEASONAL BASIS.

2. BACKGROUND MAPPING IS SHOWN FOR ORIENTATION PURPOSES ONLY. THIS SHEET DOES NOT PURPORT TO DEPICT RIGHT OF WAY.

3. ALL DISTANCES SHOWN ARE GROUND DISTANCES, IN U.S. SURVEY FEET.

4. THIS PROJECT IS LOCATED ENTIRELY WITHIN THE RICH ZONE 3 LOW DISTORTION PROJECTION (LDP), A LOW DISTORTION PROJECTION CREATED BY THE ALASKA DEPARTMENT OF TRANSPORTATION AND PUBLIC FACILITIES.

RICH ZONE 3 LDP DEFINITION:
LINEAR UNIT: U.S. SURVEY FOOT (SFT)
DATUM: NAD83(2011)
PROJECTION: TRANSVERSE MERCATOR
CENTRAL MERIDIAN AND GRID ORIGIN: 144° 46'W
LATITUDE OF ORIGIN: 61° 07'N
FALSE NORTHING: 0.0 SFT
FALSE EASTING: 1000000.0 SFT
SCALE FACTOR AT ORIGIN: 1.000071 (EXACT)

5. THE BASIS OF COORDINATES IS A NAD83(2011)(EPOCH:2010.0000) OPUS AVERAGED DERIVED POSITION.

6. BASIS OF BEARING IS RICH ZONE 3 LDP.

7. BASIS OF VERTICAL IS NAVD88, GEOID 12A.

8. MONUMENTS IN CASES CAN BE USED FOR CONTROL IF NECESSARY. IF THEY ARE IN THE NEWLY CONSTRUCTED ROADWAY THEY ARE TO BE REMOVED DURING CONSTRUCTION AND NOT RESET.

9. PK NAILS AND SPIKES LISTED IN THE COORDINATE TABLE ARE NOT SHOWN FOR CLARITY AT THIS SCALE.

10. THIS DRAWING ALSO PROVIDES CONTROL FOR PAVING IMPROVEMENTS AT THE WRANGELL-ST ELIAS NATIONAL PARK VISITORS CENTER LOCATED AT MILEPOST 106.5 ON THE EAST SIDE OF THE RICHARDSON HIGHWAY.

GRAPHIC SCALE

0 1400 2800 4200 5600 7000

SCALE 1"=1400

SURVEY CONTROL

STATE OF ALASKA 49TH
TROY M. HICKS
Aug 30, 2023
LS-14471
REGISTERED PROFESSIONAL LAND SURVEYOR

PLANS DEVELOPED BY: STATE OF ALASKA DEPARTMENT OF TRANSPORTATION & PUBLIC FACILITIES, NORTHERN REGION, 2301 PEGER ROAD, FAIRBANKS, AK 99709 (907)451-2200
K:\20_Projects\Rich 65-115\5-CAD Drawings\2-Control\NFHWY00834_Control-A3 Wed, Aug/30/23 01:39pm

NO.	DATE	REVISION

STATE	PROJECT DESIGNATION	YEAR	SHEET NO.	TOTAL SHEETS
ALASKA	PENDING / NFHWY00834	2023	A4	A4

CONTROL MONUMENTS

POINT NO.	NORTHING	EASTING	ELEVATION	LATITUDE	LONGITUDE	DESCRIPTION
353	327286.02	898433.33	1259.01	N62° 00' 37.8500"	W145° 21' 27.5312"	PK SET PHOTO POINT
354	329479.29	897145.00	1301.25	N62° 00' 59.3256"	W145° 21' 54.9403"	PK SET PHOTO POINT
355	330305.39	896111.70	1308.44	N62° 01' 07.3639"	W145° 22' 16.7491"	PK SET PHOTO POINT
356	332484.85	892695.43	1344.59	N62° 01' 28.5013"	W145° 23' 28.7641"	PK SET PHOTO POINT
357	333513.83	891769.89	1346.30	N62° 01' 38.5430"	W145° 23' 48.3686"	PK SET PHOTO POINT
358	335300.11	889167.00	1359.66	N62° 01' 55.8762"	W145° 24' 43.2902"	PK SET PHOTO POINT
359	336972.57	886425.63	1353.91	N62° 02' 12.0690"	W145° 25' 41.1081"	PK SET PHOTO POINT
360	339362.58	885306.49	1211.09	N62° 02' 35.4844"	W145° 26' 05.0853"	PK SET PHOTO POINT
361	342131.40	886124.60	1134.65	N62° 03' 02.8247"	W145° 25' 48.5250"	PK SET PHOTO POINT
362	344958.04	886694.27	1174.46	N62° 03' 30.7087"	W145° 25' 37.1808"	PK SET PHOTO POINT
363	348291.17	885755.11	1197.78	N62° 04' 03.4270"	W145° 25' 57.6010"	PK SET PHOTO POINT
364	354169.28	884856.15	1450.66	N62° 05' 01.2024"	W145° 26' 17.7431"	PK SET PHOTO POINT
365	358233.94	881573.73	1498.11	N62° 05' 40.8768"	W145° 27' 27.5698"	PK SET PHOTO POINT
366	360779.42	879946.71	1506.59	N62° 06' 05.7634"	W145° 28' 02.3204"	PK SET PHOTO POINT
367	364808.32	878407.76	1529.72	N62° 06' 45.2603"	W145° 28' 35.5776"	PK SET PHOTO POINT
420	352104.05	885351.40	1393.45	N62° 04' 40.9217"	W145° 26' 06.8978"	PK SET PHOTO POINT
421	352434.69	885301.82	1412.81	N62° 04' 44.1716"	W145° 26' 08.0102"	PK SET PHOTO POINT
422	353001.67	885215.09	1436.57	N62° 04' 49.7444"	W145° 26' 09.9537"	PK SET PHOTO POINT
423	353438.82	885057.33	1446.65	N62° 04' 54.0319"	W145° 26' 13.3606"	PK SET PHOTO POINT
424	353733.00	885009.54	1447.95	N62° 04' 56.9230"	W145° 26' 14.4278"	PK SET PHOTO POINT
425	353962.56	884908.84	1448.47	N62° 04' 59.1726"	W145° 26' 16.5919"	PK SET PHOTO POINT
426	354270.02	884809.39	1451.95	N62° 05' 02.1893"	W145° 26' 18.7468"	PK SET PHOTO POINT
427	354636.60	884511.82	1456.36	N62° 05' 05.7676"	W145° 26' 25.0746"	PK SET PHOTO POINT
508	328653.13	898078.10	1293.67	N62° 00' 51.2767"	W145° 21' 35.2337"	PK
509	337175.43	886209.74	1341.59	N62° 02' 14.0443"	W145° 25' 45.6773"	PK SET
510	363002.61	878396.78	1523.68	N62° 06' 27.4832"	W145° 28' 35.3929"	SPIKE FND
549	330568.11	895842.37	1310.65	N62° 01' 09.9256"	W145° 22' 22.4434"	PK
550	332104.22	893399.52	1345.28	N62° 01' 24.8206"	W145° 23' 13.9334"	PK SET
551	332022.58	893549.55	1345.56	N62° 01' 24.0310"	W145° 23' 10.7732"	PK SET
552	340104.39	885539.03	1202.41	N62° 02' 42.8107"	W145° 26' 00.3692"	PK SET
553	340677.59	885715.76	1185.24	N62° 02' 48.4714"	W145° 25' 56.7866"	PK SET
554	343076.97	886415.64	1144.02	N62° 03' 12.1626"	W145° 25' 42.6233"	PK SET
555	345093.98	886662.36	1176.81	N62° 03' 32.0437"	W145° 25' 37.8792"	PK SET
556	346530.74	886267.59	1187.53	N62° 03' 46.1482"	W145° 25' 46.4691"	PK SET
557	346947.27	886154.13	1189.84	N62° 03' 50.2373"	W145° 25' 48.9391"	PK SET
558	348671.82	885698.27	1199.05	N62° 04' 07.1685"	W145° 25' 58.8759"	PK SET
559	348832.43	885657.61	1201.11	N62° 04' 08.7455"	W145° 25' 59.7638"	PK SET
560	355625.33	883744.03	1478.54	N62° 05' 15.4223"	W145° 26' 41.4128"	PK
561	355741.58	883649.02	1481.50	N62° 05' 16.5569"	W145° 26' 43.4335"	PK
562	357226.10	882434.52	1497.27	N62° 05' 31.0452"	W145° 27' 09.2662"	PK

CONTROL MONUMENTS

POINT NO.	NORTHING	EASTING	ELEVATION	LATITUDE	LONGITUDE	DESCRIPTION
563	357132.63	882505.89	1497.57	N62° 05' 30.1325"	W145° 27' 07.7466"	PK
564	363094.27	878598.30	1521.88	N62° 06' 28.4072"	W145° 28' 31.1795"	PK
566	342640.53	886303.32	1139.49	N62° 03' 07.8548"	W145° 25' 44.8857"	PK SET
567	344484.38	886763.77	1160.62	N62° 03' 26.0527"	W145° 25' 35.6216"	PK SET
568	344432.72	886820.12	1159.61	N62° 03' 25.5498"	W145° 25' 34.4285"	PK SET
570	353617.09	885056.10	1446.82	N62° 04' 55.7867"	W145° 26' 13.4251"	PK SET
571	330416.82	896447.22	1304.72	N62° 01' 08.4917"	W145° 22' 09.7412"	PK SET WRANGELL VISITORS CNTR
1056	327167.08	898448.33	1259.59	N62° 00' 36.6804"	W145° 21' 27.1944"	MON IN CASE FND
1057	329144.28	897528.75	1300.34	N62° 00' 56.0624"	W145° 21' 46.8362"	MON IN CASE FND
1058	329338.28	897295.37	1300.09	N62° 00' 57.9510"	W145° 21' 51.7629"	MON IN CASE FND
3017	363548.47	878324.88	1519.05	N62° 06' 32.8491"	W145° 28' 37.0294"	REBAR CAP FND PC/ROW 4469-S 2015
3266	357310.69	882301.39	1495.31	N62° 05' 31.8641"	W145° 27' 12.0809"	PRIM MON FND no description available
3396	339949.54	885422.34	1206.00	N62° 02' 41.2745"	W145° 26' 02.7826"	PRIM MON FND CP16206 2016
3505	342657.94	886215.09	1132.73	N62° 03' 08.0173"	W145° 25' 46.7399"	PRIM MON FND RICH 110.6 PLS11297 2012
4004	358574.87	881534.18	1492.70	N62° 05' 44.2289"	W145° 27' 28.4766"	PRIM MON FND ASLS 2004-43 ROW/TR A 2234-S 2005
4662	332456.73	892556.46	1343.42	N62° 01' 28.2112"	W145° 23' 31.6706"	USCG MON no description
8106	328504.61	898156.17	1289.36	N62° 00' 49.8217"	W145° 21' 33.5699"	PRIM MON FND CP16203 2016
8110	337178.84	886231.39	1339.96	N62° 02' 14.0801"	W145° 25' 45.2242"	PRIM MON SET CP 110
8115	362970.97	878491.90	1517.78	N62° 06' 27.1820"	W145° 28' 33.3869"	USCG MON N26 1944
9208	363002.63	878396.79	1523.70	N62° 06' 27.4834"	W145° 28' 35.3927"	PK FND
10142	333575.23	891959.71	1342.50	N62° 01' 39.1656"	W145° 23' 44.4029"	REBAR CAP FND ASLS 2006-61 L19/ROW 7834-S 2008
10238	327989.17	898159.50	1274.44	N62° 00' 44.7476"	W145° 21' 33.4014"	PRIM MON FND RM 144.90 -> C1/4 S26 6709-S 19?3
50057	330674.43	895682.82	1312.29	N62° 01' 10.9576"	W145° 22' 25.8070"	MON IN CASE FND

SURVEY CONTROL

STATE OF ALASKA 49TH
TROY M. HICKS
Aug 30, 2023
LS-14471
REGISTERED PROFESSIONAL LAND SURVEYOR

PLANS DEVELOPED BY: STATE OF ALASKA DEPARTMENT OF TRANSPORTATION & PUBLIC FACILITIES, NORTHERN REGION, 2301 PEGER ROAD, FAIRBANKS, AK 99709 (907)451-2200
K:\20_Projects\Rich 65-115\5-CAD Drawings\2-Control\NFHWY00834_Control-A4 Wed, Aug/30/23 01:42pm

NO.	DATE	REVISION

STATE	PROJECT DESIGNATION	YEAR	SHEET NO.	TOTAL SHEETS
ALASKA	PENDING / NFHWY00834	2023	B1	B1

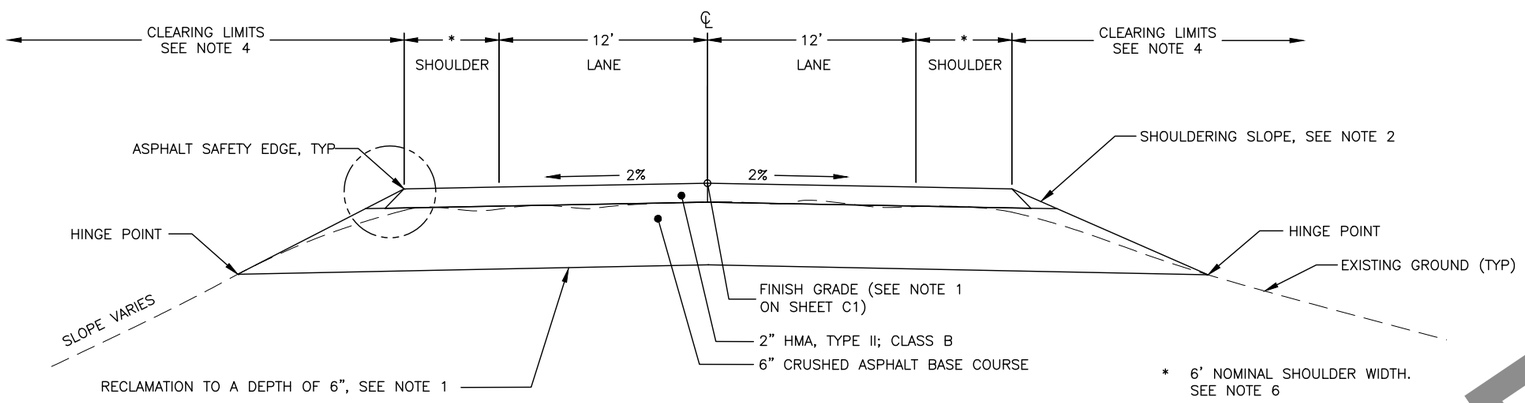

TYPICAL SECTION
1405+00 TO 1601+50
1615+00 TO 1810+00

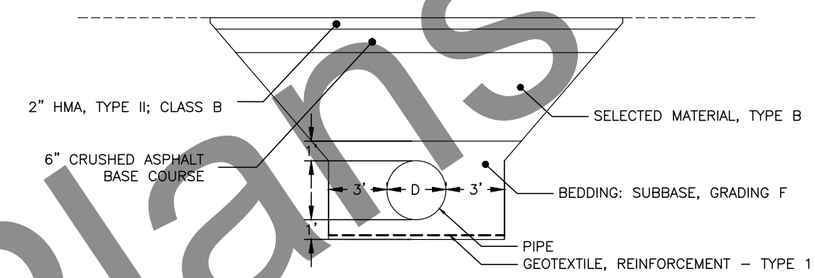

CULVERT REPLACEMENT SECTION

NOTES:

1. MULTIPLE ASPHALT AND BASE COURSE LAYERS EXIST WITHIN THE ROAD EMBANKMENT. SEE THE RICHARDSON HWY MP 82–115 RESURFACING NFHWY00218 FINAL GEOTECHNICAL MEMORANDUM (INCLUDED AS SUPPLEMENTAL INFORMATION) AND SPECIFICATION SECTION 308.
2. SHOULDERING SLOPE SHALL BE BLENDED TO CATCH THE EXISTING EMBANKMENT SLOPE AT THE HINGE POINT.
3. NO MORE THAN FIVE MILES OF ROAD MAY BE WITHOUT AN ASPHALT SURFACE AT ANY GIVEN TIME.
4. CLEAR FROM SHOULDER TO 30 FEET BEYOND TOE OF THE ROAD EMBANKMENT.
5. SEED ALL DISTURBED AREAS AND AS DIRECTED BY THE ENGINEER.
6. SHOULDER WIDTH VARIES THROUGHOUT PROJECT LENGTH. ROAD SURFACE WIDTH SHALL BE REESTABLISHED TO MATCH EXISTING; SEE SPECIFICATION SUBSECTION 642–3.01.
7. NO ROAD–DISTURBING WORK SHALL BE PERFORMED IN THE PAVEMENT EXCEPTION AREA BETWEEN STATION 1601+50 AND STATION 1615+00.
8. TRANSITION PROFILE AT A RATE OF 50:1 TO TIE INTO THE EXISTING ASPHALT SURFACE AT BEGINNING/END OF PROJECT AND AT PAVEMENT EXCEPTION AREA.

CULVERT REPLACEMENT SECTION NOTES:

A. STOCKPILING AND DOUBLE HANDLING OF CRUSHED ASPHALT IS TO BE EXPECTED FOR CULVERT REPLACEMENT SECTIONS.

B. CAP EACH CULVERT REPLACEMENT SECTION WITH CRUSHED ASPHALT BASE COURSE MATERIAL, AS SHOWN IN THE CULVERT REPLACEMENT SECTION DRAWING, WITHIN 3 DAYS OF BEDDING THE CULVERT IN THAT CULVERT REPLACEMENT SECTION. THIS LAYER SHALL BE USED AND MAINTAINED AS A TEMPORARY SURFACE UNTIL INSTALLATION OF THE PERMANENT ASPHALT SURFACE.

C. IN ORDER TO SUCCESSFULLY GRADE THE CRUSHED ASPHALT BASE COURSE LAYER TO THE STANDARDS OF SUBSECTION 308–3.05 PRIOR TO ASPHALT PAVING, EXPECT TO REPROCESS CRUSHED ASPHALT BASE COURSE AFTER IT HAS BEEN USED AS A TEMPORARY SURFACE IN COMPLETED CULVERT REPLACEMENT AREAS. CRUSHED ASPHALT BASE COURSE SHALL BE MEASURED ONLY ONE TIME FOR PAYMENT. ANY NECESSARY REPROCESSING OF CRUSHED ASPHALT BASE COURSE SHALL BE CONSIDERED SUBSIDIARY TO 643 TRAFFIC MAINTENANCE.

D. CULVERT REPLACEMENTS SHALL BE COMPLETED PRIOR TO PULVERIZING THE ASPHALT PAVEMENT FOR THE REMAINDER OF THE PROJECT LENGTH.

SUPERELEVATION SUMMARY

CURVE PI	BEGIN TRANSITION	TRANSITION LENGTH	BEGIN FULL SUPERELEVATION	SUPERELEVATION RATE (%)	END FULL SUPERELEVATION	TRANSITION LENGTH	END TRANSITION
1427+96.54	1423+00.00'	175.00	1424+75.00'	4.20%	1431+20.00'	175.00	1432+95.00'
1459+31.59	1452+85.00'	225.00	1455+10.00'	6.00%	1463+40.00'	225.00	1465+65.00'
1476+63.40	1470+05.00'	220.00	1472+25.00'	6.00%	1480+85.00'	225.00	1483+10.00'
1520+06.29	1514+50.00'	110.00	1515+60.00'	2.40%	1524+55.00'	110.00	1525+65.00'
1590+21.18	1540+60.00'	195.00	1542+55.00'	5.60%	1560+45.00'	195.00	1562+40.00'
1616+82.07	1611+45.00'	200.00	1613+45.00'	5.80%	1620+05.00'	200.00	1622+05.00'
1673+69.24	1667+25.00'	140.00	1668+65.00'	3.40%	1678+70.00'	140.00	1680+10.00'
1698+13.65	1692+85.00'	155.00	1694+40.00'	4.20%	1701+85.00'	160.00	1703+45.00'
1716+46.11	1711+10.00'	180.00	1712+90.00'	5.00%	1720+00.00'	175.00	1721+75.00'
1768+10.21	1763+65.00'	110.00	1764+75.00'	2.20%	1771+50.00'	110.00	1772+60.00'

SUPERELEVATION NOTES:

1. SUPERELEVATION ROTATION SHALL BE PER STANDARD PLAN I–81.00, CASE 1, PAVEMENT ROTATED ABOUT THE CENTERLINE.

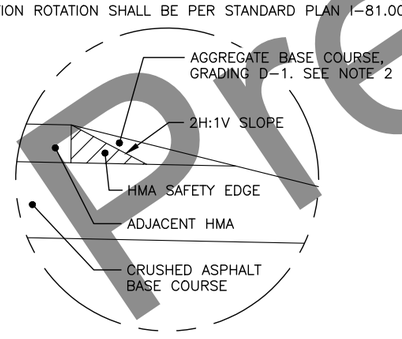

ASPHALT SAFETY EDGE DETAIL

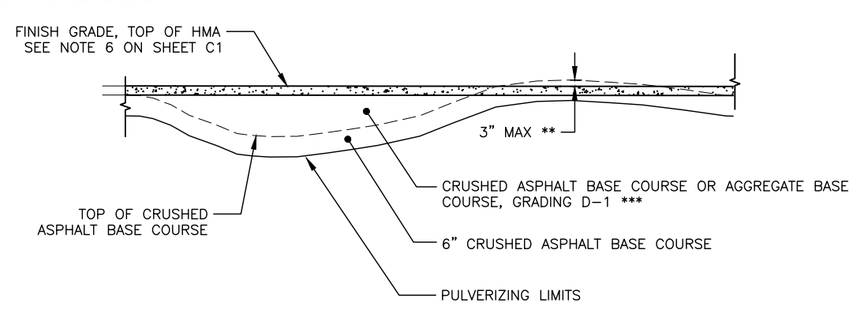

PULVERIZING DETAIL

** RE–GRADE HIGH SPOTS ON PULVERIZED ASPHALT DOWN A MAXIMUM OF (NO MORE THAN) 3"

*** DO NOT PLACE AGGREGATE BASE COURSE, GRADING D–1 UNTIL AFTER THE USABLE CRUSHED ASPHALT BASE COURSE HAS BEEN PLACED IN THE FILL

TYPICAL SECTIONS

STATE OF ALASKA 49TH
RUSSELL M. JOHNSON
C.E. 9963
REGISTERED PROFESSIONAL ENGINEER

PLANS DEVELOPED BY: STATE OF ALASKA DEPARTMENT OF TRANSPORTATION & PUBLIC FACILITIES, NORTHERN REGION, 2301 PEGER ROAD, FAIRBANKS, AK 99709 (907)451–2200
H:\Projects\Rich_Hwy\NFHWY00218_Rich_82_115 Resurface\05 Design\11 C3D\01_00218 97–115\MP 106.5–115 (00834)\NFHWY00834_B_TYP_v2–TYPICAL SECTION Tue, Sep/05/23 09:50am

NO.	DATE	REVISION

STATE	PROJECT DESIGNATION	YEAR	SHEET NO.	TOTAL SHEETS
ALASKA	PENDING / NFHWY00834	2023	C1	C1

ESTIMATE OF QUANTITIES

ITEM NO.	PAY ITEM	PAY UNIT	QUANTITY
201.0009.0000	CLEARING AND GRUBBING	LUMP SUM	ALL REQUIRED
202.0017.0000	REMOVAL OF CULVERT PIPE	EACH	18.00
203.2041.0000	UNCLASSIFIED EXCAVATION – SUBEXCAVATION	CONTINGENT SUM	ALL REQUIRED
301.0001.00D1	AGGREGATE BASE COURSE, GRADING D–1	TON	4,900.00
304.0001.000F	SUBBASE, GRADING F	TON	3,400.00
305.2000.0000	STOCKPILED MATERIAL, B CHIPS	CONTINGENT SUM	ALL REQUIRED
305.2000.0000	STOCKPILED MATERIAL, C CHIPS	CONTINGENT SUM	ALL REQUIRED
305.2000.0000	STOCKPILED MATERIAL, D–1 MODIFIED	CONTINGENT SUM	ALL REQUIRED
308.0004.0000	CRUSHED ASPHALT BASE COURSE	LUMP SUM	ALL REQUIRED
401.0001.002B	HMA, TYPE II; CLASS B	TON	19,100.00
401.0004.0000	ASPHALT BINDER, GRADE PG 52E–40	TON	1,060.00
401.0008.002B	HMA PRICE ADJUSTMENT, TYPE II; CLASS B	CONTINGENT SUM	ALL REQUIRED
401.0009.0000	LONGITUDINAL JOINT DENSITY PRICE ADJUSTMENT	CONTINGENT SUM	ALL REQUIRED
401.0010.0001	PAVEMENT SMOOTHNESS PRICE ADJUSTMENT, METHOD 1	CONTINGENT SUM	ALL REQUIRED
401.0012.002B	HMA, DRIVEWAY, TYPE II; CLASS B	TON	990.00
401.0013.0000	JOB MIX DESIGN	EACH	2.00
401.0015.0000	ASPHALT MATERIAL PRICE ADJUSTMENT	CONTINGENT SUM	ALL REQUIRED
406.0005.0000	RUMBLE STRIPS, SHOULDERS	LUMP SUM	ALL REQUIRED
603.0001.0024	CSP 24 INCH	LINEAR FOOT	270.00
603.0001.0036	CSP 36 INCH	LINEAR FOOT	252.00
603.0009.0036	CORRUGATED ALUMINUM PIPE 36 INCH	LINEAR FOOT	592.00
603.2018.0000	CLEAN AND REPAIR PIPE	EACH	27.00
606.0001.0000	W–BEAM GUARDRAIL	LINEAR FOOT	4,850.00
606.0013.0000	PARALLEL GUARDRAIL TERMINAL	EACH	4.00
606.0017.0000	REMOVING AND DISPOSING OF GUARDRAIL	LUMP SUM	ALL REQUIRED
606.2012.0000	BATTER BOARD	LINEAR FOOT	3,306.00
611.0001.0001	RIPRAP, CLASS I	CUBIC YARD	20.00
613.0002.0000	CULVERT MARKER POST	EACH	92.00
615.0001.0000	STANDARD SIGN	SQUARE FOOT	502.12
616.0002.0050	THAW PIPE 1/2 INCH DIAMETER	EACH	5.00
618.0002.0000	SEEDING	POUND	451.00
630.0003.0001	GEOTEXTILE, REINFORCEMENT – TYPE 1	SQUARE YARD	1,100.00
634.2000.0000	GEOCELL CELLULAR CONFINEMENT SYSTEM	SQUARE YARD	24.00
639.2000.0000	APPROACH	EACH	46.00
640.0001.0000	MOBILIZATION AND DEMOBILIZATION	LUMP SUM	ALL REQUIRED
640.0004.0000	WORKER MEALS AND LODGING, OR PER DIEM	LUMP SUM	ALL REQUIRED
641.0001.0000	EROSION, SEDIMENT AND POLLUTION CONTROL ADMINISTRATION	LUMP SUM	ALL REQUIRED
641.0003.0000	TEMPORARY EROSION, SEDIMENT AND POLLUTION CONTROL	LUMP SUM	ALL REQUIRED
641.0004.0000	TEMPORARY EROSION, SEDIMENT AND POLLUTION CONTROL ADDITIVES	CONTINGENT SUM	ALL REQUIRED
641.0006.0000	WITHHOLDING	CONTINGENT SUM	ALL REQUIRED
641.0007.0000	SWPPP MANAGER	LUMP SUM	ALL REQUIRED
641.0008.0000	SWPPPTRACK	CONTINGENT SUM	ALL REQUIRED
642.0001.0000	CONSTRUCTION SURVEYING	LUMP SUM	ALL REQUIRED
642.0013.0000	THREE PERSON SURVEY PARTY	CONTINGENT SUM	ALL REQUIRED
643.0002.0000	TRAFFIC MAINTENANCE	LUMP SUM	ALL REQUIRED
643.0003.0000	PERMANENT CONSTRUCTION SIGNS	LUMP SUM	ALL REQUIRED
643.0023.0000	TRAFFIC PRICE ADJUSTMENT	CONTINGENT SUM	ALL REQUIRED
643.0025.0000	TRAFFIC CONTROL	CONTINGENT SUM	ALL REQUIRED
644.0001.0000	FIELD OFFICE	LUMP SUM	ALL REQUIRED
644.0002.0000	FIELD LABORATORY	LUMP SUM	ALL REQUIRED
644.0006.0000	VEHICLE	LUMP SUM	ALL REQUIRED
644.2002.0000	FIELD COMMUNICATIONS	CONTINGENT SUM	ALL REQUIRED
645.0001.0000	TRAINING PROGRAM, 2 TRAINEES / APPRENTICES	LABOR HOUR	1,000.00
670.0001.0000	PAINTED TRAFFIC MARKINGS	LUMP SUM	ALL REQUIRED

TABLE OF ESTIMATING FACTORS

ITEM NO.	DESCRIPTION	ESTIMATING FACTOR
301.0001.00D1	AGGREGATE BASE COURSE, GRADING D–1	2 TON/CY
304.0001.000F	SUBBASE, GRADING F	2 TON/CY
401.0001.002B	HMA, TYPE II; CLASS B	115 LB/SY/INCH
401.0004.0000	ASPHALT BINDER, GRADE PG 52E–40	5.5% OF HMA TOTAL
611.0001.0001	RIPRAP, CLASS I	1.6 TON/CY

LUMP SUM PAY ITEMS

ITEM NO.	DESCRIPTION	QUANTITY
201.0009.0000	CLEARING / GRUBBING	90 ACRES / 5 ACRES
308.0004.0000	CRUSHED ASPHALT BASE COURSE	169,500 SQUARE YARDS
406.0005.0000	RUMBLE STRIPS, SHOULDERS	392 STATIONS
606.0017.0000	REMOVING AND DISPOSING OF GUARDRAIL	5,017 LINEAR FEET
670.0001.0000	PAINTED TRAFFIC MARKINGS	SEE STRIPING SUMMARY

GENERAL NOTES:

1. THIS PROJECT HAS NO DESIGN CENTERLINE OR DESIGN PROFILE. THE CENTERLINE ALIGNMENT SHOWN ON THE PLANS IS SOLELY FOR PROVIDING GEOGRAPHICAL REFERENCES FOR EXISTING IMPROVEMENTS AND ITEMS OF WORK. THE INTENT OF THIS CONTRACT IS TO MAINTAIN THE EXISTING EMBANKMENT, RE–PAVE, AND THEN RE–STRIPE THE ROAD ON ITS EXISTING ALIGNMENT. SEE SUBSECTION 642–3.01.
2. MATERIAL SITE MS 71–3–015–5 (SOUTH HOGAN HILL QUARRY), LOCATED AT APPROXIMATELY MP 155 ON THE RICHARDSON HIGHWAY, IS AN AVAILABLE MATERIAL SOURCE. SEE PERMIT NUMBER AA–86391 FOR SITE SPECIFIC STIPULATIONS. BEFORE USE OF THIS SITE, A MINING PLAN WILL NEED TO BE APPROVED BY THE BUREAU OF LAND MANAGEMENT (BLM). ALLOW 30 DAYS FOR REVIEW OF MINING PLAN BY DOT&PF, PRIOR TO SUBMITTING TO BLM. REVIEW BY BLM MAY TAKE IN EXCESS OF THREE MONTHS.
3. MATERIAL SITE MS 71–2–005–5 (TAZLINA M&O PIT), LOCATED AT APPROXIMATELY MP 110 ON THE RICHARDSON HIGHWAY IS AN AVAILABLE MATERIAL SOURCE. A MINING PLAN WILL NEED TO BE APPROVED BY DOT&PF AND DEPARTMENT OF NATURAL RESOURCES (DNR) PRIOR TO USE OF THIS SITE. ALLOW 30 DAYS FOR REVIEW OF MINING PLAN BY DOT&PF PRIOR TO SUBMITTING FOR APPROVAL THROUGH DNR. SITE ACCESS WILL BE COORDINATED WITH TAZLINA M&O DISTRICT SUPERINTENDENT. REVIEW BY DNR MAY TAKE IN EXCESS OF THREE MONTHS.
4. MATERIAL SITE MS 71–1–006–5 (BURMA QUARRY), LOCATED AT APPROXIMATELY MP 74.5 ON THE RICHARDSON HIGHWAY IS AN AVAILABLE MATERIAL SOURCE. SUBMIT A SITE DEVELOPMENT AND RECLAMATION PLAN FOR APPROVAL BY THE ENGINEER AT LEAST 30 DAYS PRIOR TO PERFORMING ANY WORK IN THIS MATERIAL SITE. WORK MAY NOT COMMENCE IN THIS SITE UNTIL THE PLAN HAS BEEN REVIEWED AND APPROVED BY THE ENGINEER.
5. MATERIAL SOURCE 71–2–020–5 (RINGLING PIT), LOCATED BETWEEN MP 126 & 127 ON THE SOUTH SIDE OF THE RICHARDSON HIGHWAY IS AN EXCLUDED MATERIAL SOURCE. IN NO WAY WILL THIS MATERIAL SOURCE BE CONSIDERED FOR USE ON THIS PROJECT.
6. THE CONTRACTOR IS RESPONSIBLE FOR OBTAINING WASTE DISPOSAL SITES
7. ALL EXISTING UTILITIES, OVERHEAD AND SUBSURFACE, SHALL REMAIN IN–PLACE AND IN–SERVICE DURING CONSTRUCTION. EXISTING UNDERGROUND UTILITIES ARE NOT SHOWN ON PLANS. IT IS THE CONTRACTOR'S RESPONSIBILITY TO LOCATE ALL UTILITIES WITHIN THE PROJECT AREA PRIOR TO GROUND DISTURBING ACTIVITIES. UTILITIES IN THE AREA MAY INCLUDE BUT ARE NOT LIMITED TO: GCI, CVEA, CVTC, AND ALYESKA.
8. DO NOT DISTURB EXISTING MAILBOXES; THEY ARE TO REMAIN AS–IS.
9. ALL CONSTRUCTION ACTIVITIES ARE TO OCCUR WITHIN EXISTING RIGHT OF WAY.
10. REFERENCE STANDARD PLAN C–06.00 ROADSIDE SAFETY TREATMENT FOR WORK ZONES.
11. REMOVE ALL EXISTING RICHARDSON HIGHWAY CENTERLINE MONUMENTS IN CASES SHOWN ON SHEET A3. SEE NOTE 8 ON SURVEY CONTROL PLAN SHEET A3.

STATE OF ALASKA 49TH
RUSSELL M. JOHNSON
C.E. 9963
REGISTERED PROFESSIONAL ENGINEER

ESTIMATE OF QUANTITIES

PLANS DEVELOPED BY: STATE OF ALASKA DEPARTMENT OF TRANSPORTATION & PUBLIC FACILITIES, NORTHERN REGION, 2301 PEGER ROAD, FAIRBANKS, AK 99709 (907)451–2200
H:\Projects\Rich_Hwy\NFHWY00218_Rich_82_115 Resurface\05 Design\11 C3D\01_00218 97–115\MP 106.5–115 (00834)\NFHWY00834_C_ESTIMATE–ESTIMATE OF QUANTITIES Thu, Sep/07/23 12:45pm

NO.	DATE	REVISION

STATE	PROJECT DESIGNATION	YEAR	SHEET NO.	TOTAL SHEETS
ALASKA	PENDING / NFHWY00834	2023	D1	D3

GUARDRAIL SUMMARY

APPROX. BEGIN STATION*	APPROX. END STATION*	OFFSET	REMOVING & DISPOSING OF GUARDRAIL 606.0017.0000 (LUMP SUM)	W-BEAM GUARDRAIL 606.0001.0000 (LF)	PARALLEL GUARDRAIL TERMINAL 606.0013.0000 (EACH)	BATTER BOARD 606.2012.0000 (LF)	REMARKS
1663+27	1692+77	RT	2925	2850	2	2706	REPLACE EXISTING BATTER BOARD AND EXTEND TO 1692+27. THREE EXISTING METAL FLUMES TO REMAIN.
1665+57	1686+57	LT	2092	2000	2	600	BEGIN BATTER BOARD AT SLOPE DRAIN AT 1680+10; SEE SLOPE DRAIN SUMMARY & DETAILS, SHEET D3.
	COLUMN TOTALS		5,017	4,850	4	3,306	

GENERAL GUARDRAIL NOTES:

1. INSTALLATION OF EACH CONTINUOUS SECTION OF GUARDRAIL MUST BE COMPLETED WITHIN 30 DAYS OF THE START OF REMOVAL OF THE EXISTING GUARDRAIL IN THAT SECTION.

* 2. BEGIN AND END STATIONS INCLUDE END TREATMENTS.

3. SEE STANDARD PLAN G-05.11S (W-31) 31" HIGH GUARDRAIL.

4. SHOULDER WIDTH IN FRONT OF GUARDRAIL WILL BE FOUR FEET. SHOULDER WIDENING IS NOT ALLOWABLE EXCEPT AT END TERMINAL LOCATIONS OR AS DIRECTED BY THE ENGINEER.

5. FOR PARALLEL GUARDRAIL TERMINALS, CONSTRUCT THE GUARDRAIL TERMINAL WIDENING IN ACCORDANCE WITH THE "STANDARD DETAIL" ON STANDARD PLAN G-20.12. THE END OFFSET (X) SHALL BE 2 FEET. DO NOT USE THE "ALTERNATE DETAIL" ON THIS PROJECT.

6. FILL MATERIAL TO IMPROVE WIDENINGS SHALL BE SUBBASE, GRADING F, AND PAID FOR UNDER 304.0001.000F.

7. DO NOT INSTALL GUARDRAIL REFLECTORS WITHIN THE LIMITS OF PARALLEL GUARDRAIL TERMINALS OR AT POST LOCATIONS.

8. IN ADDITION TO THE GUARDRAIL REFLECTORS, INSTALL GUARDRAIL FLEXIBLE DELINEATORS AS SHOWN ON STANDARD PLAN G-00.05.

9. COORDINATE GUARDRAIL POST INSTALLATIONS WITH CULVERT LOCATIONS. ADJUST LOCATIONS AS NEEDED TO ENSURE POSTS DO NOT PIERCE CULVERTS.

10. STAKE EXISTING END TERMINAL LOCATIONS BEFORE REMOVING GUARDRAIL.

11. FILL AND COMPACT HOLES CREATED BY THE REMOVAL OF OLD GUARDRAIL POSTS.

12. GUARDRAIL OFFSET SHALL BE STAKED IN THE FIELD AND APPROVED BY THE ENGINEER PRIOR TO GUARDRAIL POST INSTALLATION.

13. GUARDRAIL STATIONING AND LENGTHS ARE APPROXIMATE AND MAY BE ADJUSTED IN THE FIELD BY THE ENGINEER.

GUARDRAIL SUMMARY

STATE OF ALASKA 49TH
RUSSELL M. JOHNSON
C.E. 9963
REGISTERED PROFESSIONAL ENGINEER

PLANS DEVELOPED BY: STATE OF ALASKA DEPARTMENT OF TRANSPORTATION & PUBLIC FACILITIES, NORTHERN REGION, 2301 PEGER ROAD, FAIRBANKS, AK 99709 (907)451-2200
H:\Projects\Rich_Hwy\NFHWY00218_Rich_82_115 Resurface\05 Design\11 C3D\01_00218 97-115\MP 106.5-115 (00834)\NFHWY00834_D_GUARDRAIL SUMMARY-GUARDRAIL SUMMARY Tue, Sep/05/23 09:50am

NO.	DATE	REVISION

STATE	PROJECT DESIGNATION	YEAR	SHEET NO.	TOTAL SHEETS
ALASKA	PENDING / NFHWY00834	2023	D2	D3

BATTER BOARD NOTES:

1. USE TREATED HEMLOCK, DOUGLAS FIR, WESTERN PINE OR ENGINEER–APPROVED TIMBER. SECTION 714 OF STANDARD SPECIFICATIONS SPECIFIES TIMBER PRESERVATIVES. TREAT FIELD CUT END WITH APPROVED PRESERVATIVE.
2. USE ONE BOLT FASTENER AT POSTS WITHOUT TIMBER JOINTS AND TWO FASTENERS AT POSTS WITH JOINTS.
3. BATTER BOARD TO BE CONTINUOUS ALONG THE GUARDRAIL.
4. DO NOT INSTALL BATTER BOARD ON END TERMINAL FLARE.
5. DO NOT INSTALL BATTER BOARD ACROSS FLUME OR SLOPE DRAIN LOCATIONS.
6. SECURE EXISTING METAL FLUME HARDWARE TO NEW BATTER BOARD

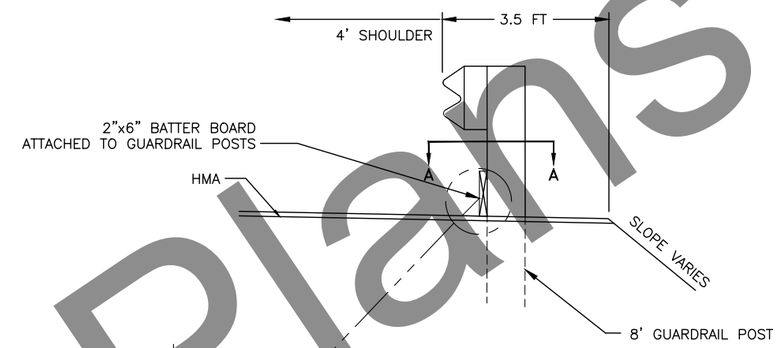

GUARDRAIL WIDENING DETAIL
APPLIES TO ALL W–BEAM GUARDRAIL

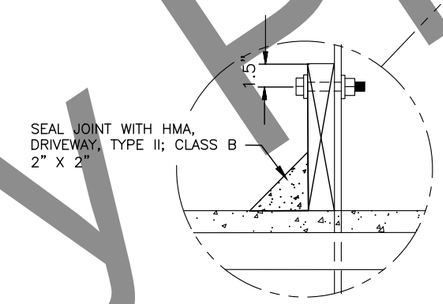

GUARDRAIL MOUNTED BATTER BOARD DETAIL

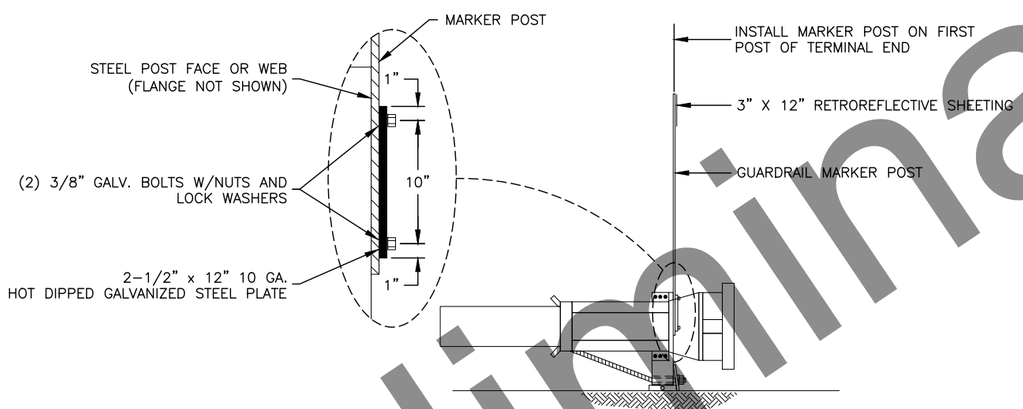

GUARDRAIL MARKER POST ATTACHMENT DETAIL
PARALLEL GUARDRAIL TERMINAL

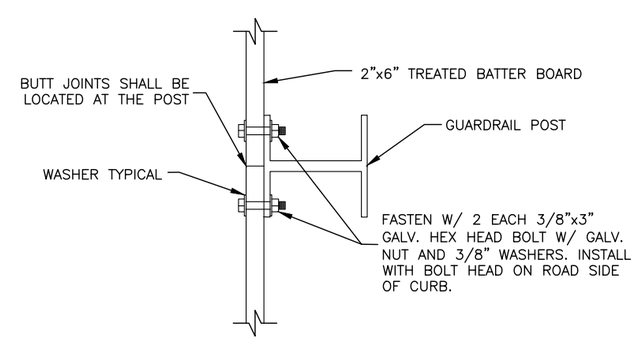

SECTION A–A

INSTALLATION DETAIL NOTES:

1. GUARDRAIL MARKER POSTS SHALL BE YELLOW AND AT LEAST 72" LONG. POSTS SHALL MEET THE REQUIREMENTS OF SECTION 730–2.05 FLEXIBLE DELINEATOR POSTS.
2. RETROREFLECTIVE SHEETING SHALL MEET ASTM D4956 REQUIREMENTS FOR TYPE VIII, IX, OR XI. COLOR OF RETROREFLECTIVE SHEETING SHALL MATCH COLOR OF ADJACENT EDGE LINE STRIPE. PLACE RETROREFLECTIVE SHEETING ON SIDE OF MARKER POST FACING TRAFFIC IN ADJACENT LANE.
3. DRILL ALL BOLT HOLES. COAT HOLES WITH ZINC RICH PAINT. FLAME CUTTING SHALL NOT BE PERMITTED.

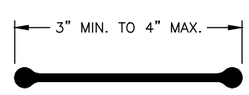

POST DETAIL
CROSS–SECTIONAL VIEW

GUARDRAIL DETAILS

STATE OF ALASKA
49TH
RUSSELL M. JOHNSON
C.E. 9963
REGISTERED PROFESSIONAL ENGINEER

PLANS DEVELOPED BY: STATE OF ALASKA DEPARTMENT OF TRANSPORTATION & PUBLIC FACILITIES, NORTHERN REGION, 2301 PEGER ROAD, FAIRBANKS, AK 99709 (907)451–2200
H:\Projects\Rich_Hwy\NFHWY00218_Rich_82_115 Resurface\05 Design\11 C3D\01_00218 97–115\MP 106.5–115 (00834)\NFHWY00834_D_DETAILS–Guardrail Details Tue, Sep/05/23 09:50am

NO.	DATE	REVISION

STATE	PROJECT DESIGNATION	YEAR	SHEET NO.	TOTAL SHEETS
ALASKA	PENDING / NFHWY00834	2023	D3	D3

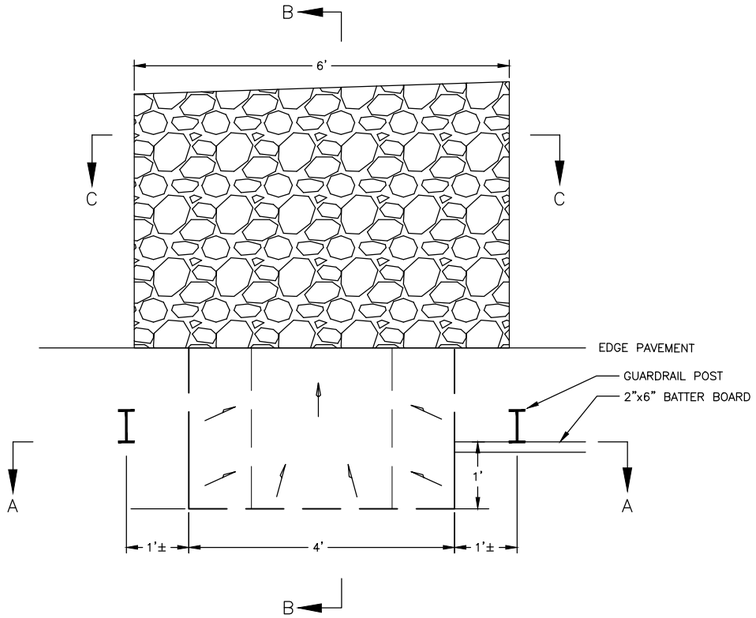

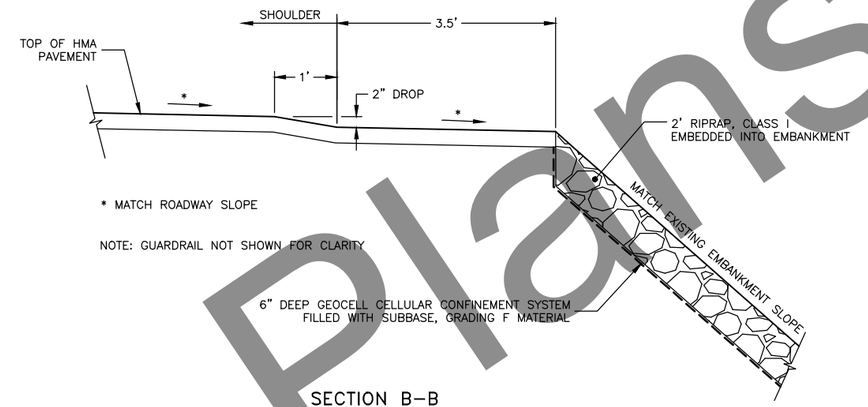

SECTION B–B

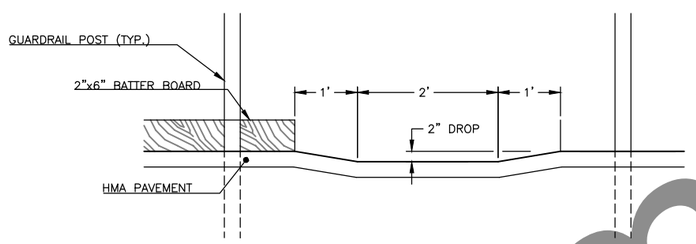

SECTION A–A

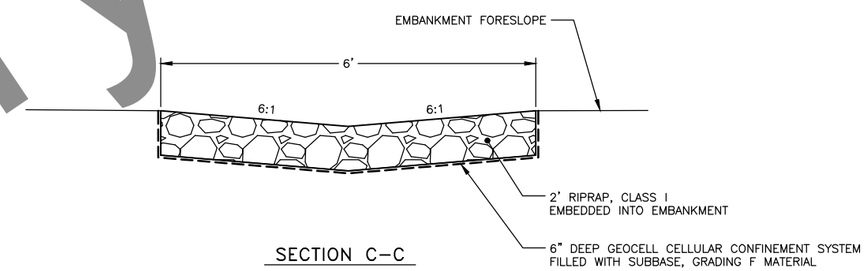

SECTION C–C

SLOPE DRAIN SUMMARY		
STATION	LT/RT	QUANTITY
1680+10	LT	1

SHEET NOTES:

1. SLOPE DRAIN RIPRAP SHALL EXTEND FROM THE EDGE OF ASPHALT PAVEMENT TO THE EMBANKMENT TOE.
2. GEOCELL PANELS SHALL BE CONNECTED WITH KEYS AT EACH INTERLEAF AND END TO END CONNECTION.
3. SECURELY ANCHOR GEOCELL SYSTEM AT TOP OF SLOPE AND WITH 24 J–HOOKS PER PANEL, SPACED EQUALLY. J–HOOKS SHALL BE GALVANIZED AND NOT LESS THAN 18" IN LENGTH.
4. FILL GEOCELL PANELS WITH SUBBASE, GRADING F, MATERIAL. LIMIT THE FALL OF SUBBASE MATERIAL TO AVOID DISTORTING OR DAMAGING GEOCELLS. ANY DAMAGED GEOCELLS PANELS SHALL BE REPLACED.
5. SEE SHEET D2 FOR GUARDRAIL BATTER BOARD DETAILS.

SLOPE DRAIN DETAIL

STATE OF ALASKA 49TH
Brandon Irvine
C.E. 105211
REGISTERED PROFESSIONAL ENGINEER

PLANS DEVELOPED BY: STATE OF ALASKA DEPARTMENT OF TRANSPORTATION & PUBLIC FACILITIES, NORTHERN REGION, 2301 PEGER ROAD, FAIRBANKS, AK 99709 (907)451–2200
H:\Projects\Rich_Hwy\NFHWY00218_Rich_82_115 Resurface\05 Design\11 C3D\01_00218 97–115\MP 106.5–115 (00834)\NFHWY00834_D_ROCK OUTFALL–SLOPE DRAIN DETAIL Thu, Sep/07/23 01:55pm

NO.	DATE	REVISION

STATE	PROJECT DESIGNATION	YEAR	SHEET NO.	TOTAL SHEETS
ALASKA	PENDING / NFHWY00834	2023	E1	E4

CULVERT SUMMARY

PROJECT CENTERLINE		PROPOSED CULVERT LENGTH (LF)			REMOVAL OF CULVERT PIPE (EACH)	THAW PIPE (EACH)	CULVERT MARKER POST (EACH)	CLEAN AND REPAIR PIPE (EACH)	REMARKS	AS-BUILT LOCATIONS	
STATION	EXISTING SIZE	24" CSP	36" CSP	36" CAP						LATITUDE	LONGITUDE
		603.0001.0024	603.0001.0036	603.0009.0036	202.0017.0000	616.0002.0050	613.0002.0000	603.2018.0000			
1412+62	24" X 55'						2	1	APPROACH RT. CLEAN PIPE. GRADE INLET/OUTLET DRAINAGES.		
1453+99	24" X 99'			99	1		2		PONDING AT OUTLET.		
1468+57	36" X 101'			120	1	1	2		SKEW OUTLET 30FT DOWNSTATION TO ALIGN WITH NATURAL FLOW PATH INTO WOODS.		
1469+31	24" X 83'						2	1	APPROACH RT. CLEAN PIPE. GRADE INLET/OUTLET DRAINAGES.		
1478+60	18" X 57'						2	1	APPROACH RT. CLEAN PIPE. RESHAPE OUTLET.		
1510+10	18" X 44'						2	1	APPROACH LT. GRADE INLET/OUTLET DRAINAGES.		
1511+40	36" X 148'						2	1	CLEAN PIPE. GRADE INLET/OUTLET DRAINAGES.		
1517+27	18" X 40'						2	1	APPROACH RT. CLEAN PIPE. GRADE INLET/OUTLET DRAINAGES. RESHAPE OUTLET.		
1520+52	24" X 20'						2	1	APPROACH RT. CLEAN PIPE. GRADE INLET/OUTLET DRAINAGES.		
1527+10	24" X 49'						2	1	APPROACH LT. GRADE INLET/OUTLET DRAINAGES.		
1555+05	48" X 138'						2	1	GRADE INLET/OUTLET DRAINAGES.		
1561+26	36" X 101'		101		1	1	2		GRADE INLET/OUTLET DRAINAGES.		
1568+11	24" X 84'		84		1		2		APPROACH RT		
1586+99	36" X 58'						2	1	APPROACH LT. GRADE INLET/OUTLET DRAINAGES. RESHAPE OUTLET.		
1590+10	24" X 107'						2	1	APPROACH LT. CLEAN PIPE. GRADE INLET/OUTLET DRAINAGES.		
1597+57	18" X 48'						2		APPROACH LT.		
1615+68	18" X 67'		67		1	1	2		APPROACH RT		
1616+00	24" X 32'						2	1	BIKE PATH RT. CLEAN PIPE. GRADE INLET/OUTLET DRAINAGES.		
1620+11	18" X 45'	45			1	1	2		APPROACH RT.		
1621+71	18" X 47'	47			1	1	2		APPROACH RT.		
1624+30	24" X 27'	27			1		2		APPROACH LT.		
1634+64	24" X 83'						2	1	GRADE INLET/OUTLET DRAINAGES.		
1634+64	24" X 26'						2	1	BIKE PATH RT. CLEAN PIPE. GRADE INLET/OUTLET DRAINAGES. RESHAPE OUTLET.		
1635+80	24" X 34'	34			1		2		APPROACH LT.		
1636+67	18" X 52'						2	1	APPROACH RT. GRADE INLET/OUTLET DRAINAGES.		
1638+37	24" X 64'						2	1	APPROACH RT. CLEAN PIPE. GRADE INLET/OUTLET DRAINAGES. RESHAPE INLET/OUTLET.		
1642+26	24" X 20'						2	1	BIKE PATH RT. GRADE INLET/OUTLET DRAINAGES. RESHAPE INLET/OUTLET.		
1643+11	18" X 27'	27			1		2		APPROACH LT		
1646+58	24" X 87'						2	1	CLEAN PIPE. GRADE INLET/OUTLET DRAINAGES.		
1647+20	24" X 31'						2	1	BIKE PATH RT. CLEAN PIPE. GRADE INLET/OUTLET DRAINAGES.		
1648+39	24" X 36'						2	1	APPROACH RT. CLEAN PIPE. GRADE INLET/OUTLET DRAINAGES.		
1648+72	18" X 44'	44			1		2		APPROACH LT		
1652+45	18" X 39'						2	1	APPROACH RT. CLEAN PIPE. GRADE INLET/OUTLET DRAINAGES. RESHAPE INLET.		
1653+09	18" X 32'				1						
1654+93	18" X 33'				1						
1659+14	24" X 26'						2	1	BIKE PATH RT. CLEAN PIPE. GRADE INLET/OUTLET DRAINAGES.		
1664+29	24" X 156'						2	1	CLEAN PIPE. GRADE INLET/OUTLET DRAINAGES.		
1669+26	24" X 207'						2	1	CLEAN PIPE. GRADE INLET DRAINAGE.		
1679+27	30" X 111'						2				
1706+31	24" X 51'						2	1	APPROACH RT. CLEAN PIPE. GRADE INLET/OUTLET DRAINAGES. RESHAPE INLET/OUTLET.		
1726+42	24" X 79'						2	1	CLEAN PIPE. GRADE INLET/OUTLET DRAINAGES. RESHAPE INLET/OUTLET. ADD FILL OVER ATV PATH NEAR INLET.		
1735+58	24" X 75'						2	1	CLEAN PIPE. GRADE INLET/OUTLET DRAINAGES. RESHAPE INLET.		
1761+15	24" X 87'			87	1		2				
1764+99	24" X 10'						2		OFF HIGHWAY LT, OVER UTILITY.		
1767+77	24" X 46'	46			1		2		APPROACH RT		
1768+24	24" X 101'			101	1		2				
1786+75	24" X 94'			94	1		2				
1803+92	24" X 91'			91	1		2				
	TOTALS:	270	252	592	18	5	92	27			

CULVERT SUMMARY

STATE OF ALASKA 49TH
RUSSELL M. JOHNSON
C.E. 9963
REGISTERED PROFESSIONAL ENGINEER

PLANS DEVELOPED BY: STATE OF ALASKA DEPARTMENT OF TRANSPORTATION & PUBLIC FACILITIES, NORTHERN REGION, 2301 PEGER ROAD, FAIRBANKS, AK 99709 (907)451-2200
H:\Projects\Rich_Hwy\NFHWY00218_Rich_82_115 Resurface\05 Design\11 C3D\01_00218 97-115\MP 106.5-115 (00834)\NFHWY00834_E_DETAILS-Culvert Summary Tue, Sep/05/23 09:50am

NO.	DATE	REVISION

STATE	PROJECT DESIGNATION	YEAR	SHEET NO.	TOTAL SHEETS
ALASKA	PENDING / NFHWY00834	2023	E2	E4

CULVERT NOTES:

1. THE CONTRACTOR SHALL ENTER AS-BUILT LOCATIONS FOR ALL CULVERTS IN THE CULVERT SUMMARY TABLE. COORDINATES SHALL BE LOCATED AT THE INTERSECTION OF THE CULVERT AND ROAD CENTERLINE. USE NAD83 DATUM FORMATTED TO DECIMAL DEGREES TO A PRECISION OF 5 DECIMAL PLACES (DD°.DDDDD). THIS WORK IS SUBSIDIARY TO 642 SERIES PAY ITEMS.
2. ALL 24" & 36" CULVERTS SHALL BE 12 GAUGE STEEL.
3. ALL CORRUGATED STEEL PIPE CULVERTS INSTALLED SHALL HAVE ZINC-COATED STEEL, PER SUBSECTION 707-2.01.
4. STATIONING AND SKEW FOR CULVERTS ARE APPROXIMATE. STAKE CULVERTS TO FIT FIELD CONDITIONS AND SUBMIT TO ENGINEER FOR REVIEW. DO NOT EXCAVATE FOR CULVERT REMOVAL/INSTALLATION UNTIL STAKED LOCATION HAS BEEN APPROVED BY THE ENGINEER.
5. MINIMUM ALLOWABLE CULVERT SLOPE IS 0.5%, UNLESS NOTED OTHERWISE ON THE PLANS.
6. ESTABLISH PERMANENT FORESLOPES AS SOON AS POSSIBLE AS PERMANENT EROSION CONTROL.
7. GEOTEXTILE, EROSION CONTROL SHALL BE PLACED SO THAT IT IS NOT VISIBLE UPON PROJECT COMPLETION.
8. FOLLOW MANUFACTURER'S INSTALLATION SPECIFICATIONS IN ALL CULVERT INSTALLATIONS.
9. CULVERTS SHALL NOT BE INSTALLED IN WATER.
10. CULVERT LENGTHS ARE APPROXIMATE AND SHALL BE FIELD VERIFIED AND ADJUSTED BY THE CONTRACTOR.
11. IN AREAS OF POOR FOUNDATION, SUBEXCAVATE BENEATH CULVERTS AS DIRECTED BY THE ENGINEER TO PROVIDE ADEQUATE FOUNDATION.
12. CULVERTS SHALL NOT BE INSTALLED IN FREEZING CONDITIONS.
13. NO CULVERT SHALL BE PLACED UNTIL THE BED IT WILL LAY UPON HAS BEEN APPROVED BY THE ENGINEER.

CULVERT NOTES

STATE OF ALASKA 49TH
RUSSELL M. JOHNSON
C.E. 9963
REGISTERED PROFESSIONAL ENGINEER

PLANS DEVELOPED BY: STATE OF ALASKA DEPARTMENT OF TRANSPORTATION & PUBLIC FACILITIES, NORTHERN REGION, 2301 PEGER ROAD, FAIRBANKS, AK 99709 (907)451-2200
H:\Projects\Rich_Hwy\NFHWY00218_Rich_82_115 Resurface\05 Design\11 C3D\01_00218 97-115\MP 106.5-115 (00834)\NFHWY00834_E_DETAILS-Culvert Notes Tue, Sep/05/23 09:50am

NO.	DATE	REVISION

STATE	PROJECT DESIGNATION	YEAR	SHEET NO.	TOTAL SHEETS
ALASKA	PENDING / NFHWY00834	2023	E3	E4

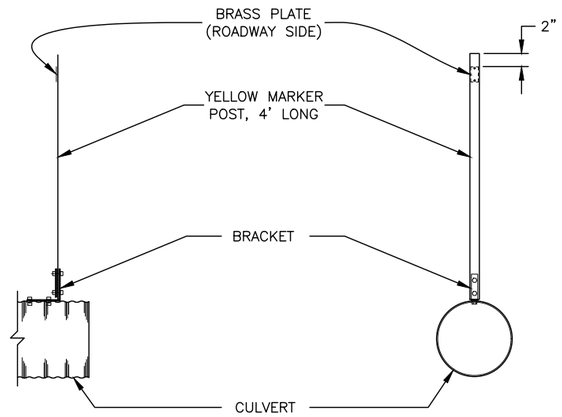

SIDE VIEW END VIEW

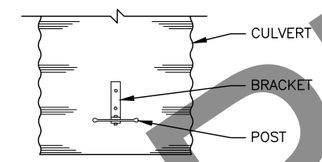

TOP VIEW

CULVERT MARKER POST DETAIL

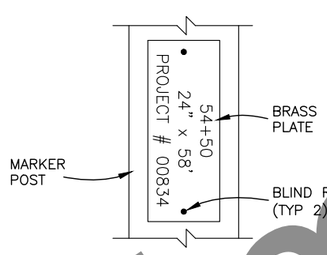

STATION AND SIZE OF PIPE, AND PROJECT NUMBER TO BE STAMPED USING LETTERS A MINIMUM OF 1/4" HIGH INTO A 2" x 6" x .064" THICK BRASS PLATE. FASTEN PLATE TO THE SIDE FACING THE ROADWAY WITH TWO 1/8" DIA. BLIND RIVETS.

BRASS PLATE DETAIL

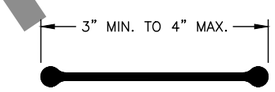

POST DETAIL

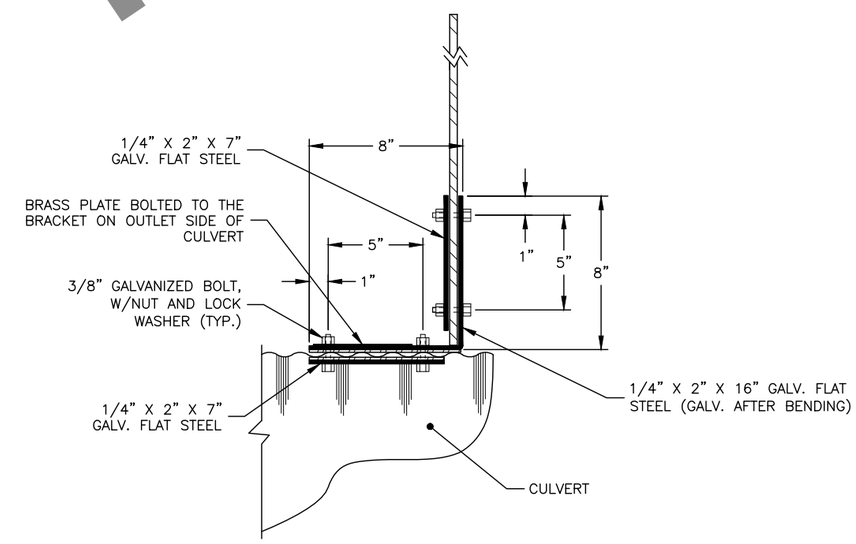

BRACKET DETAIL

CULVERT MARKER POST DETAILS

CULVERT MARKER NOTES:

1. DRILL ALL BOLT HOLES. COAT HOLES IN PIPE WITH ZINC RICH PAINT. FLAME CUTTING SHALL NOT BE PERMITTED.
2. MARKER POST ENDS SHALL BE SQUARE.
3. GASKET MATERIAL SHALL BE PLACED BETWEEN DISSIMILAR METALS. GASKET MATERIAL SHALL BE APPROVED PRIOR TO INSTALLATION.
4. WHEN MORE THAN TWO PIPES ARE LOCATED TOGETHER. ONLY THE FIRST AND LAST PIPE SHALL HAVE A MARKER.
5. INSTALL CULVERT MARKER POST AT INLET AND OUTLET ENDS OF ALL NEW CULVERTS, AND ALL EXISTING CULVERTS THAT CROSS THE MAIN ROADWAY. EXCLUDE APPROACH CULVERTS.

STATE OF ALASKA 49TH RUSSELL M. JOHNSON C.E. 9963 REGISTERED PROFESSIONAL ENGINEER

CULVERT MARKER POST

PLANS DEVELOPED BY: STATE OF ALASKA DEPARTMENT OF TRANSPORTATION & PUBLIC FACILITIES, NORTHERN REGION, 2301 PEGER ROAD, FAIRBANKS, AK 99709 (907)451-2200
H:\Projects\Rich_Hwy\NFHWY00218_Rich_82_115 Resurface\05 Design\11 C3D\01_00218 97-115\MP 106.5-115 (00834)\NFHWY00834_E_DETAILS-Culvert Marker Post Tue, Sep/05/23 09:50am

NO.	DATE	REVISION

STATE	PROJECT DESIGNATION	YEAR	SHEET NO.	TOTAL SHEETS
ALASKA	PENDING / NFHWY00834	2023	E4	E4

THAW PIPE NOTES:

1. INSTALL 1/2 INCH THAW PIPE ALONG THE BOTTOM OF THE CULVERT. THAW PIPES SHALL LAY FREELY WITH NO PIPE HANGERS OR ATTACHMENTS. SEE CULVERT SUMMARY FOR THAW PIPE LOCATIONS.
2. THAW PIPES SHALL BE WATER TIGHT AND ABLE TO HOLD ANTIFREEZE. SEAL ALL THAW PIPE JOINTS, EXCEPT THE END CAP, WITH AN APPROVED SEALING COMPOUND.
3. THAW PIPE ENDS SHALL BE ORIENTED TO FACE THE CENTERLINE OF THE ADJACENT ROADWAY.
4. ALL THAW PIPES SHALL RUN THE ENTIRE LENGTH OF THE CULVERT AND HAVE NO JOINTS OR COUPLINGS WITHIN 30" OF INSIDE OF CULVERT ENDS.
5. FIELD BEND ALL CORNERS, WITHOUT KINKS 180' AROUND CULVERT ENDS FROM INSIDE TO OUTSIDE OF THE CULVERT WITH NO GREATER THAN A 6" BEND RADIUS. THE THAW PIPE SHALL NOT PROTRUDE MORE THAN 12" BEYOND THE END OF THE CULVERT. DO NOT LOCATE THAW PIPE JOINTS OR COUPLINGS WITHIN 6" OF THE BEND OUTSIDE OF CULVERT END.
6. NEATLY RUN THAW PIPES ALONG CULVERT OR EMBANKMENT TO TERMINATION BY SECURELY MOUNTING 5' ABOVE THE GROUND ON PRESSURE TREATED SUPPORT POSTS OF HEM-FIR, NO. 2 OR BETTER. EMBED EACH TREATED POST A MINIMUM OF 4'.
7. FASTEN THAW PIPE TO SUPPORT POSTS WITH GALVANIZED RIGID CONDUIT STRAPS AND 2" LONG GALVANIZED LAG SCREWS WITH LOCK WASHERS AT MAX. 12" CENTERS. USE LAG SCREWS HAVING A DIAMETER SIZED TO MATCH THE HOLES IN THE STRAP. STRAPS SHALL BE SIZED TO FIRMLY HOLD THE THAW PIPE TO THE POST.
8. SUPPORT POSTS SHALL BE LOCATED BETWEEN 1' TO 2' FROM NEAREST SIDE OF CULVERT AT APPROXIMATELY 18' FROM THE EDGE OF PAVEMENT.
9. INSTALL STAND PIPE ON INLET AND OUTLET END.
10. CHARGE/FILL THE THAW PIPE WITH NON-TOXIC BIODEGRADABLE ANTIFREEZE RATED TO -60 DEGREES FAHRENHEIT.

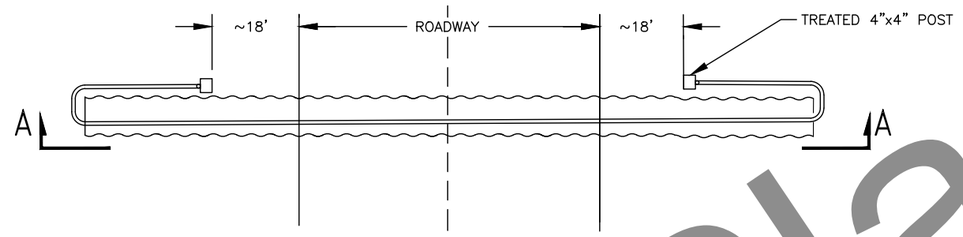

PLAN

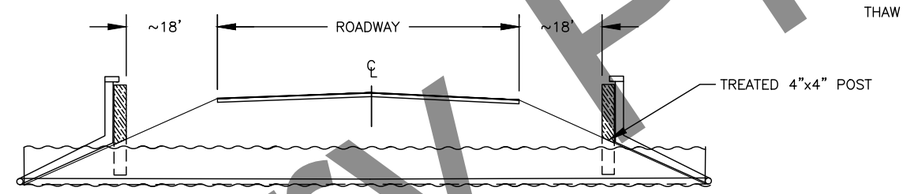

SECTION A-A

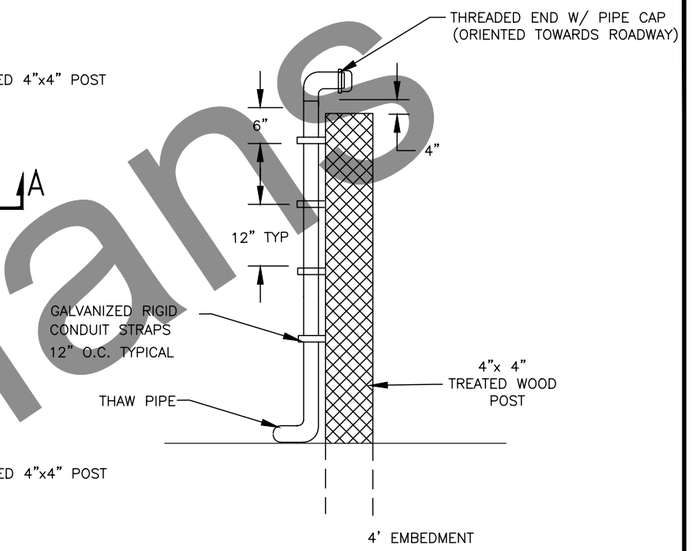

STAND PIPE

CULVERT THAW PIPE DETAIL

STATE OF ALASKA 49TH
RUSSELL M. JOHNSON
C.E. 9963
REGISTERED PROFESSIONAL ENGINEER

PLANS DEVELOPED BY: STATE OF ALASKA DEPARTMENT OF TRANSPORTATION & PUBLIC FACILITIES, NORTHERN REGION, 2301 PEGER ROAD, FAIRBANKS, AK 99709 (907)451-2200
H:\Projects\Rich_Hwy\NFHWY00218_Rich_82_115 Resurface\05 Design\11 C3D\01_00218 97-115\MP 106.5-115 (00834)\NFHWY00834_E_THAW PIPE-Culvert Thaw Pipe Detail Tue, Sep/05/23 09:50am

NO.	DATE	REVISION

STATE	PROJECT DESIGNATION	YEAR	SHEET NO.	TOTAL SHEETS
ALASKA	PENDING / NFHWY00834	2023	F1	F15

PLAN VIEW KEY

- (P) STATION / DIAMETER X LENGTH — *INSTALL CULVERT PIPE*
- (R) STATION / DIAMETER X LENGTH — *REMOVE PIPE*
- (A#) CONSTRUCT/REMOVE APPROACH
- (T#) *CONSTRUCT TURNOUT*

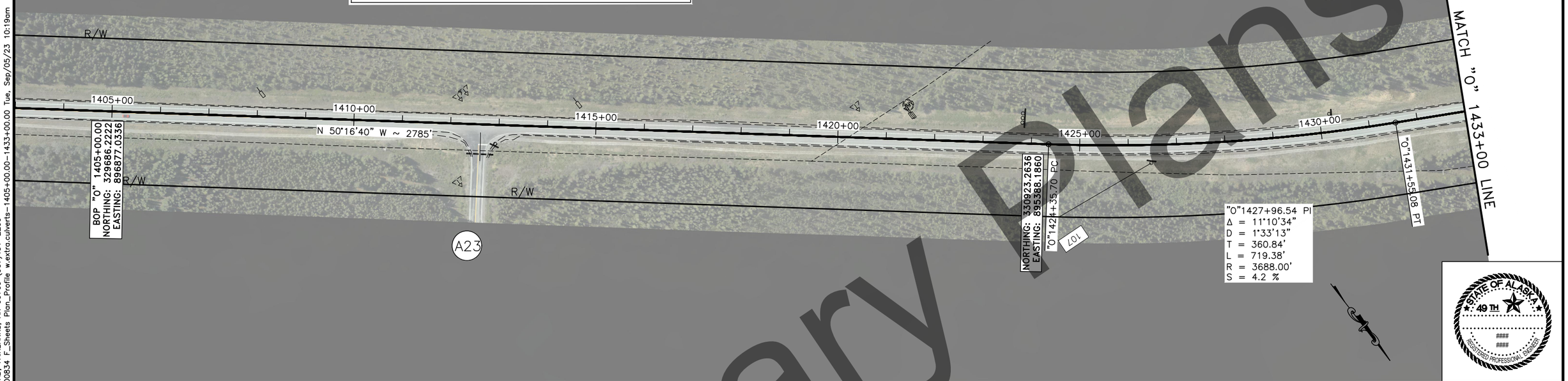

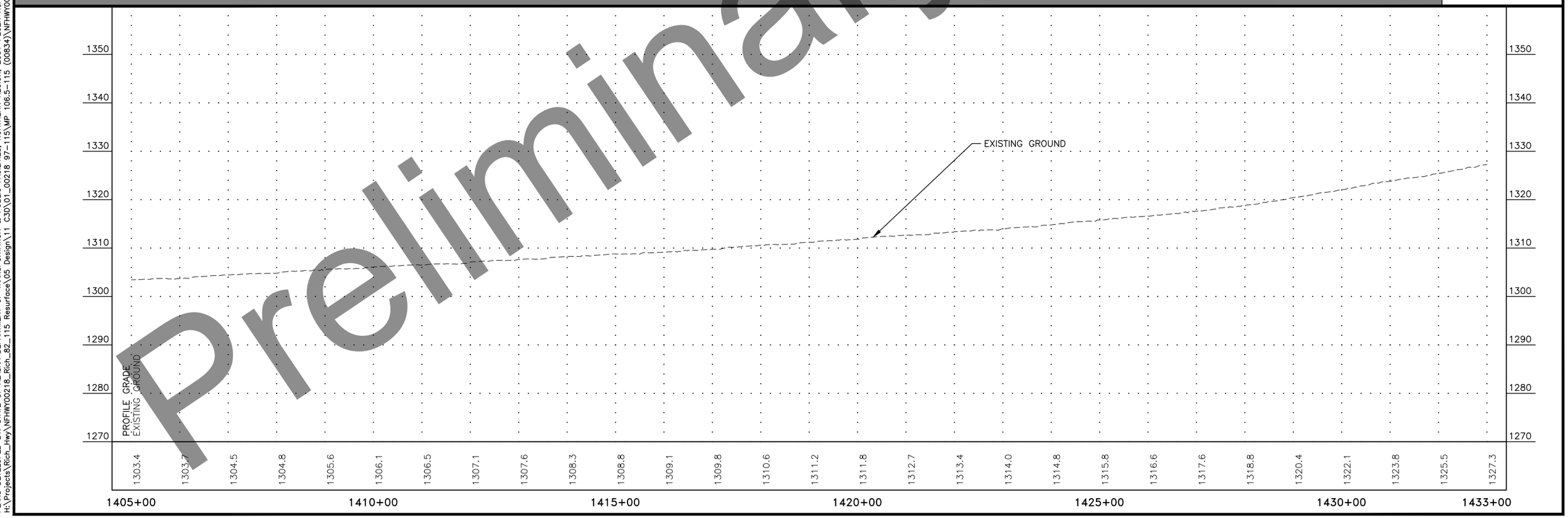

NO.	DATE	REVISION

STATE	PROJECT DESIGNATION	YEAR	SHEET NO.	TOTAL SHEETS
ALASKA	PENDING / NFHWY00834	2023	F2	F15

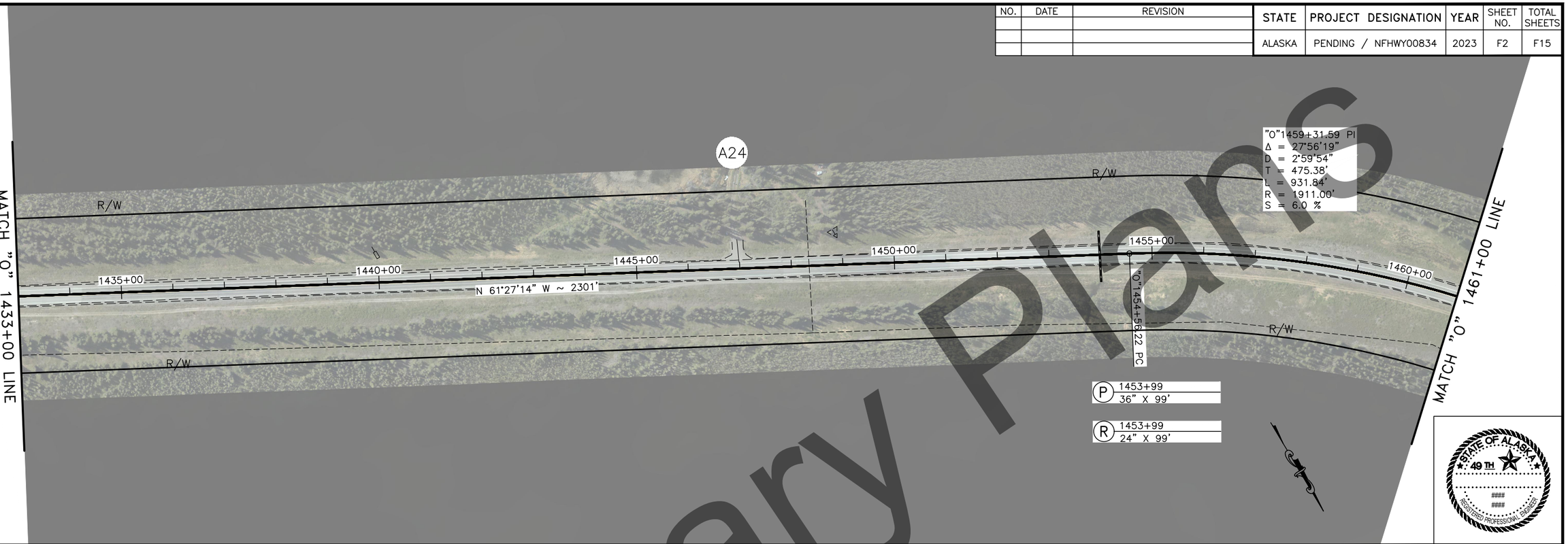

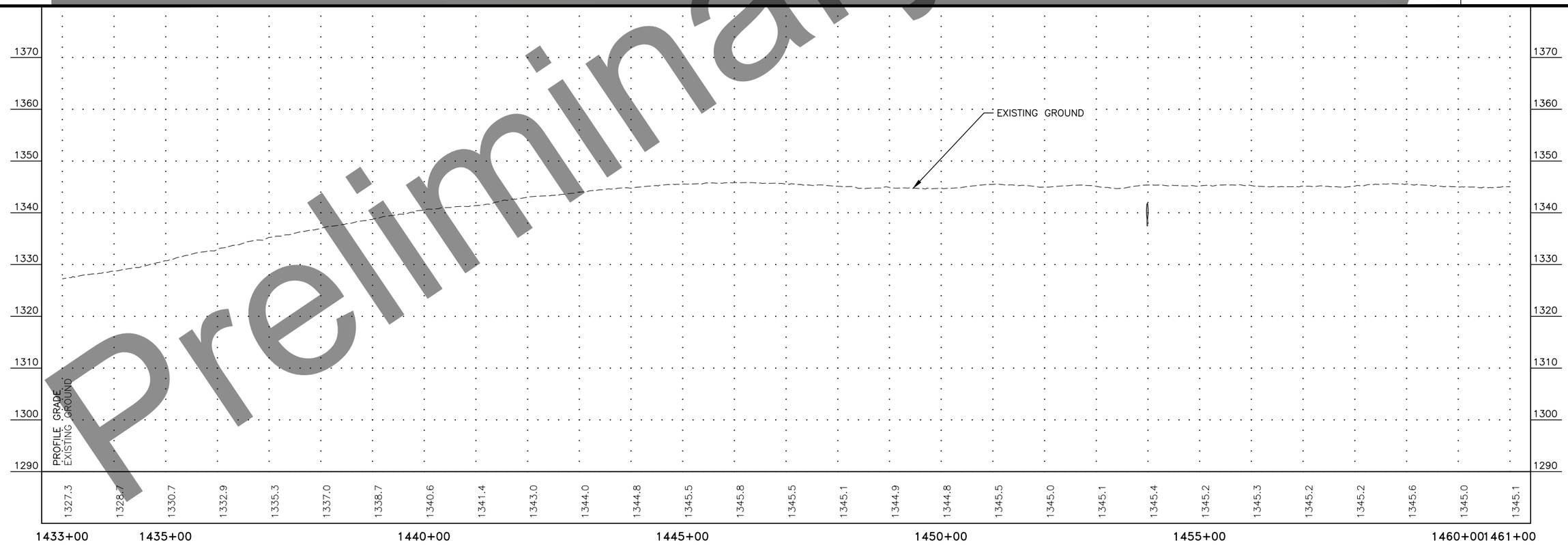

PLANS DEVELOPED BY: STATE OF ALASKA DEPARTMENT OF TRANSPORTATION & PUBLIC FACILITIES, NORTHERN REGION, 2301 PEGER ROAD, FAIRBANKS, AK 99709 (907)451-2200
H:\Projects\Rich_Hwy\NFHWY00218_Rich_82_115 Resurface\05 Design\11 C3D\01_00218 97-115\MP 106.5-115 (00834)\NFHWY00834 F_Sheets Plan_Profile w.extra.culverts-1433+00.00-1461+00.00 Tue, Sep/05/23 10:26am

NO.	DATE	REVISION

STATE	PROJECT DESIGNATION	YEAR	SHEET NO.	TOTAL SHEETS
ALASKA	PENDING / NFHWY00834	2023	F3	F15

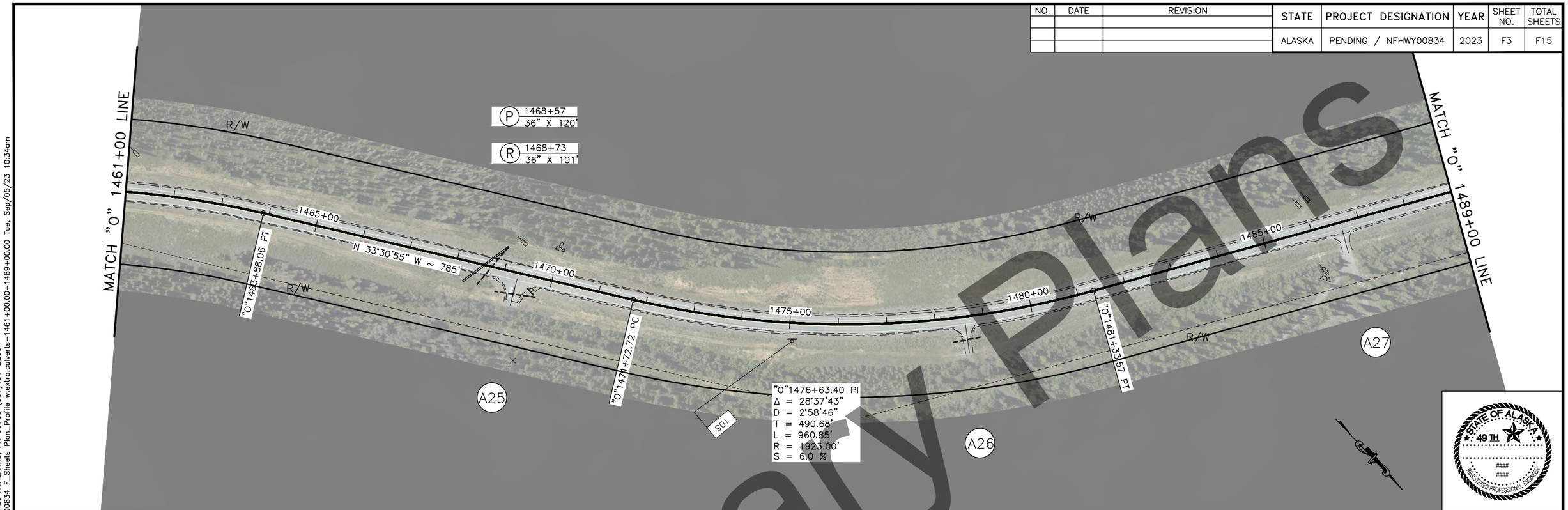

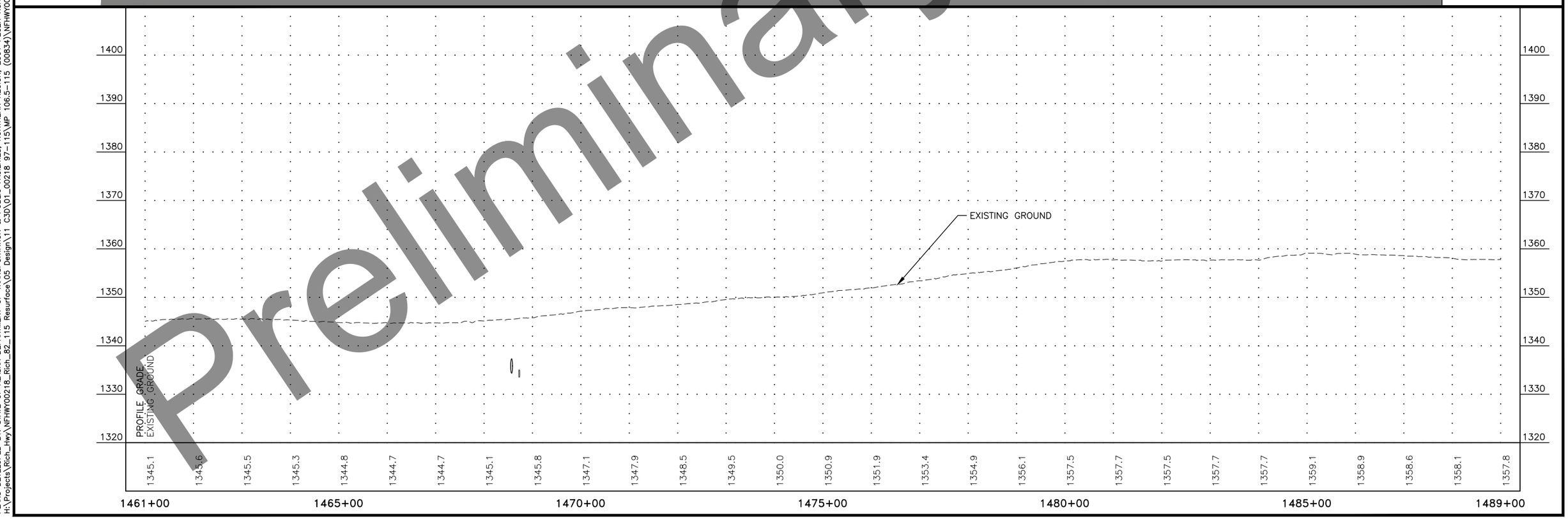

PLANS DEVELOPED BY: STATE OF ALASKA DEPARTMENT OF TRANSPORTATION & PUBLIC FACILITIES, NORTHERN REGION, 2301 PEGER ROAD, FAIRBANKS, AK 99709 (907)451-2200
H:\Projects\Rich_Hwy\NFHWY00218_Rich_82_115 Resurface\05 Design\11 C3D\01_00218 97-115\MP 106.5-115 (00834)\NFHWY00834 F_Sheets Plan_Profile w.extra.culverts-1461+00.00-1489+00.00 Tue, Sep/05/23 10:34am

NO.	DATE	REVISION

STATE	PROJECT DESIGNATION	YEAR	SHEET NO.	TOTAL SHEETS
ALASKA	PENDING / NFHWY00834	2023	F4	F15

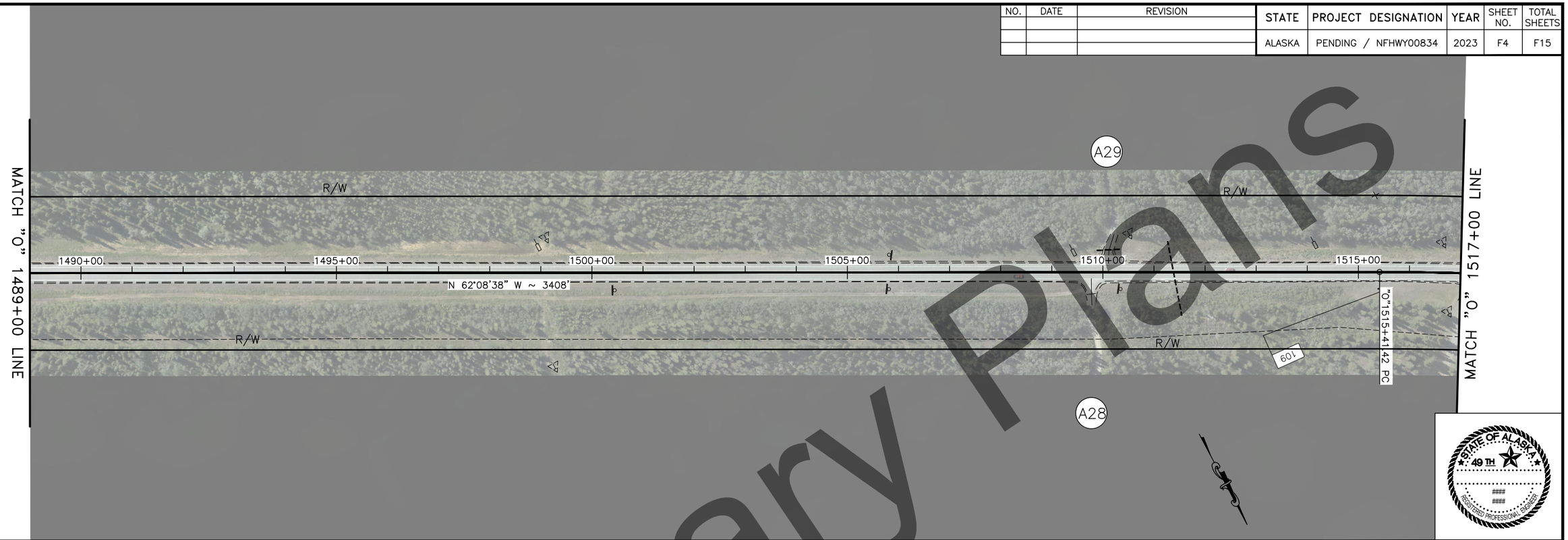

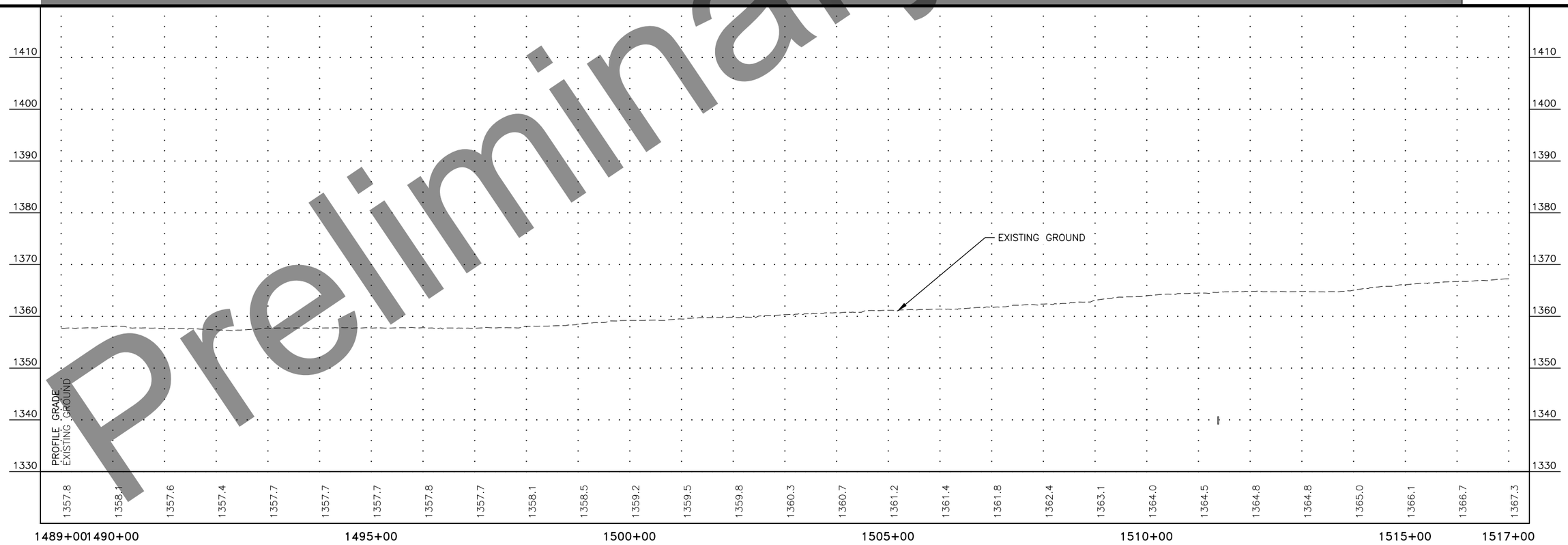

NO.	DATE	REVISION

STATE	PROJECT DESIGNATION	YEAR	SHEET NO.	TOTAL SHEETS
ALASKA	PENDING / NFHWY00834	2023	F5	F15

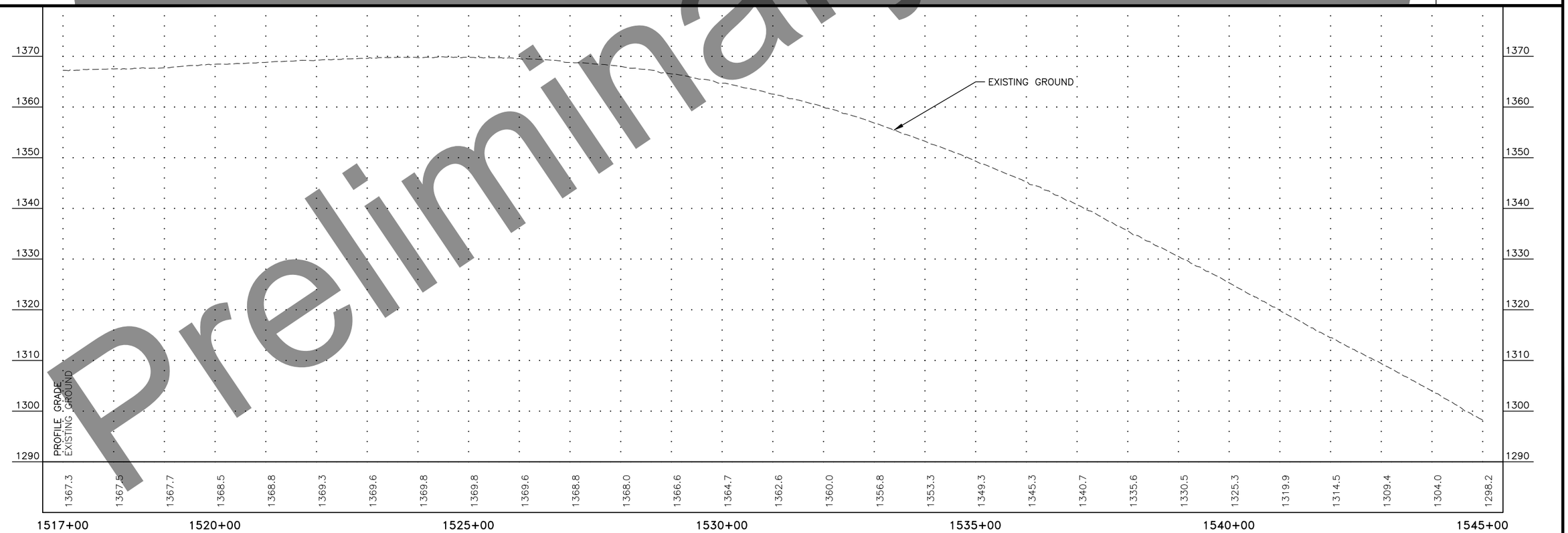

PLANS DEVELOPED BY: STATE OF ALASKA DEPARTMENT OF TRANSPORTATION & PUBLIC FACILITIES, NORTHERN REGION, 2301 PEGER ROAD, FAIRBANKS, AK 99709 (907)451-2200
H:\Projects\Rich_Hwy\NFHWY00218_Rich_82_115 Resurface\05 Design\11 C3D\01_00218 97-115\MP 106.5-115 (00834)\NFHWY00834 F_Sheets Plan_Profile w.extra.culverts-1517+00.00-1545+00.00 Tue, Sep/05/23 10:48am

NO.	DATE	REVISION

STATE	PROJECT DESIGNATION	YEAR	SHEET NO.	TOTAL SHEETS
ALASKA	PENDING / NFHWY00834	2023	F6	F15

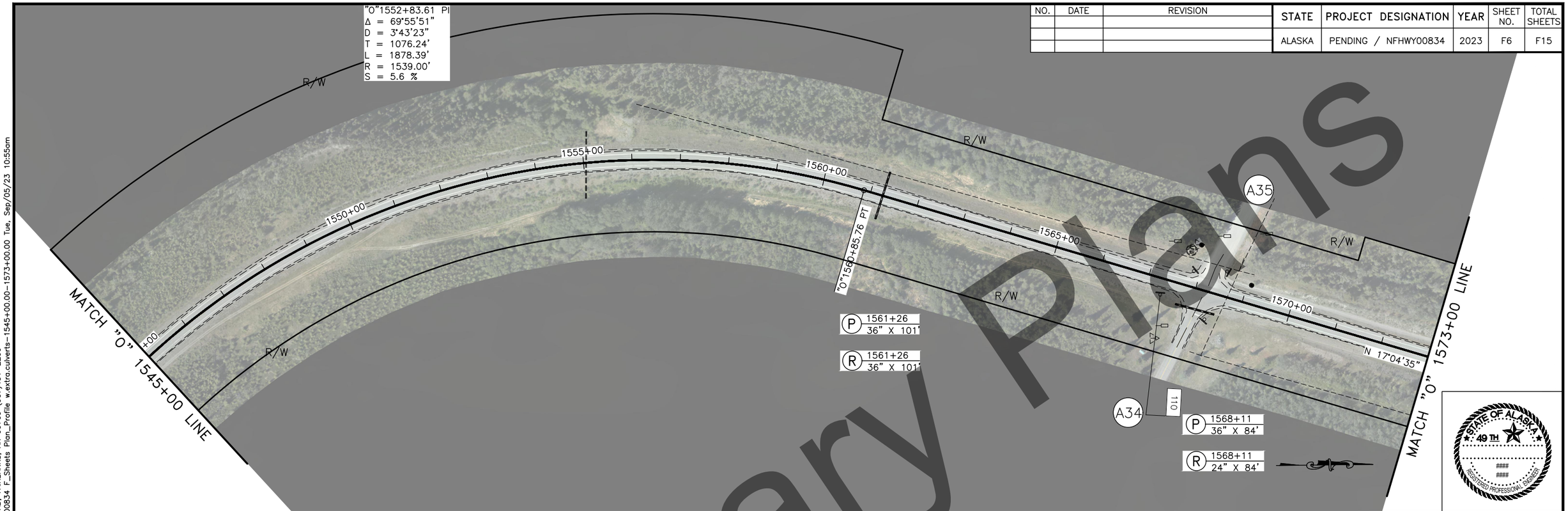

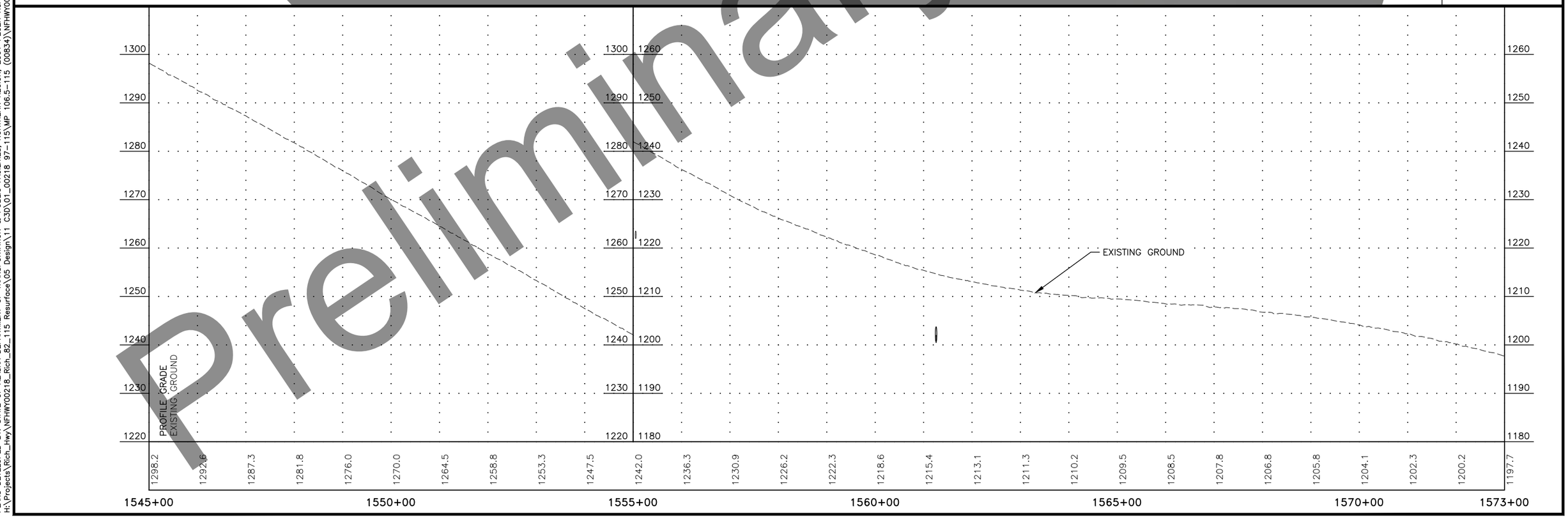

PLANS DEVELOPED BY: STATE OF ALASKA DEPARTMENT OF TRANSPORTATION & PUBLIC FACILITIES, NORTHERN REGION, 2301 PEGER ROAD, FAIRBANKS, AK 99709 (907)451-2200
H:\Projects\Rich_Hwy\NFHWY00218_Rich_82_115 Resurface\05 Design\11 C3D\01_00218 97-115\MP 106.5-115 (00834)\NFHWY00834 F_Sheets Plan_Profile w.extra.culverts-1545+00.00-1573+00.00 Tue, Sep/05/23 10:55am

NO.	DATE	REVISION

STATE	PROJECT DESIGNATION	YEAR	SHEET NO.	TOTAL SHEETS
ALASKA	PENDING / NFHWY00834	2023	F7	F15

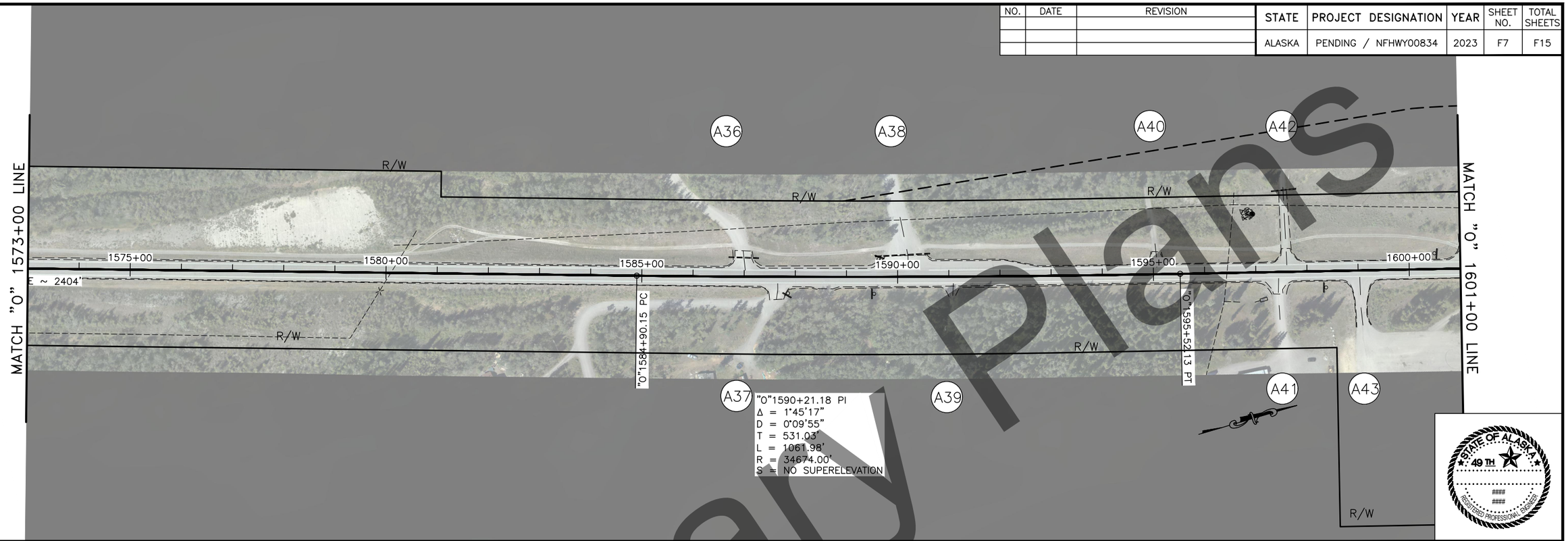

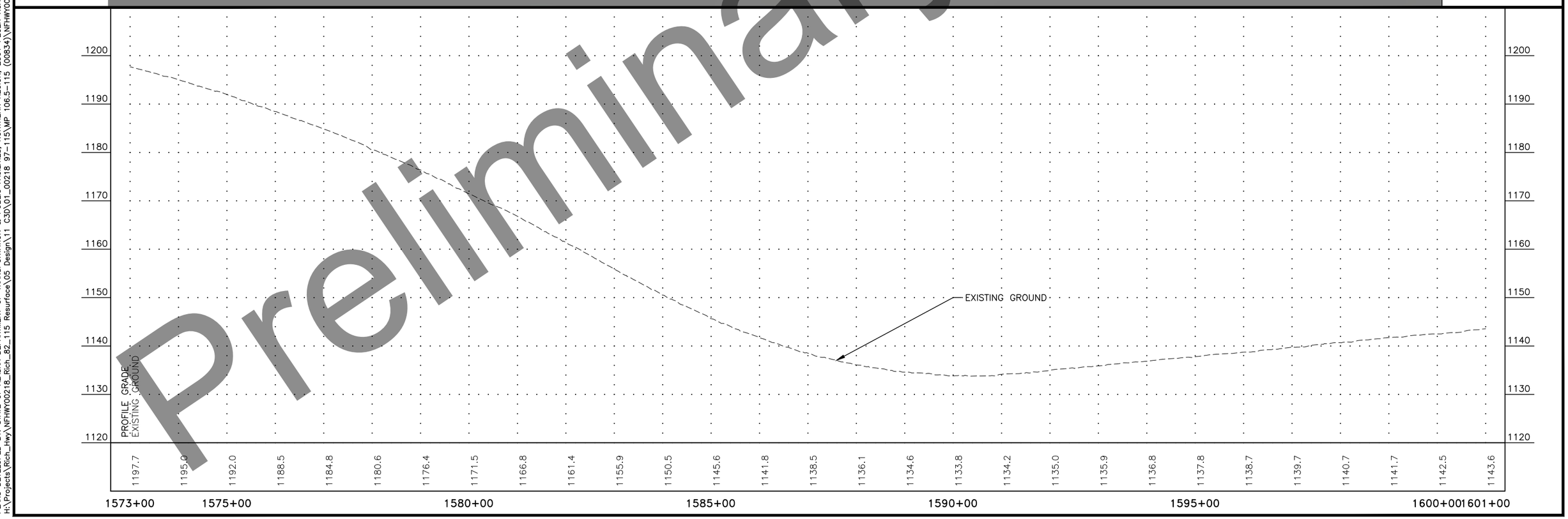

PLANS DEVELOPED BY: STATE OF ALASKA DEPARTMENT OF TRANSPORTATION & PUBLIC FACILITIES, NORTHERN REGION, 2301 PEGER ROAD, FAIRBANKS, AK 99709 (907)451-2200
H:\Projects\Rich_Hwy\NFHWY00218_Rich_82_115 Resurface\05 Design\11 C3D\01_00218 97-115\MP 106.5-115 (00834)\NFHWY00834 F_Sheets Plan_Profile w.extra.culverts-1573+00.00-1601+00.00 Tue, Sep/05/23 11:01am

NO.	DATE	REVISION

STATE	PROJECT DESIGNATION	YEAR	SHEET NO.	TOTAL SHEETS
ALASKA	PENDING / NFHWY00834	2023	F8	F15

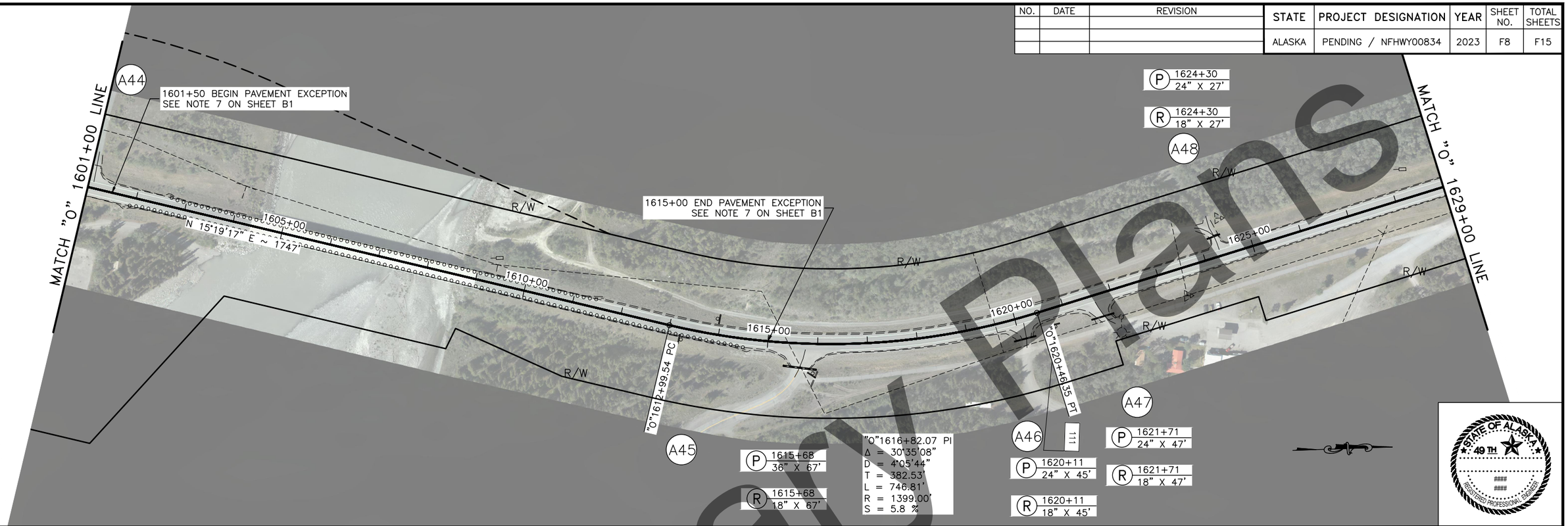

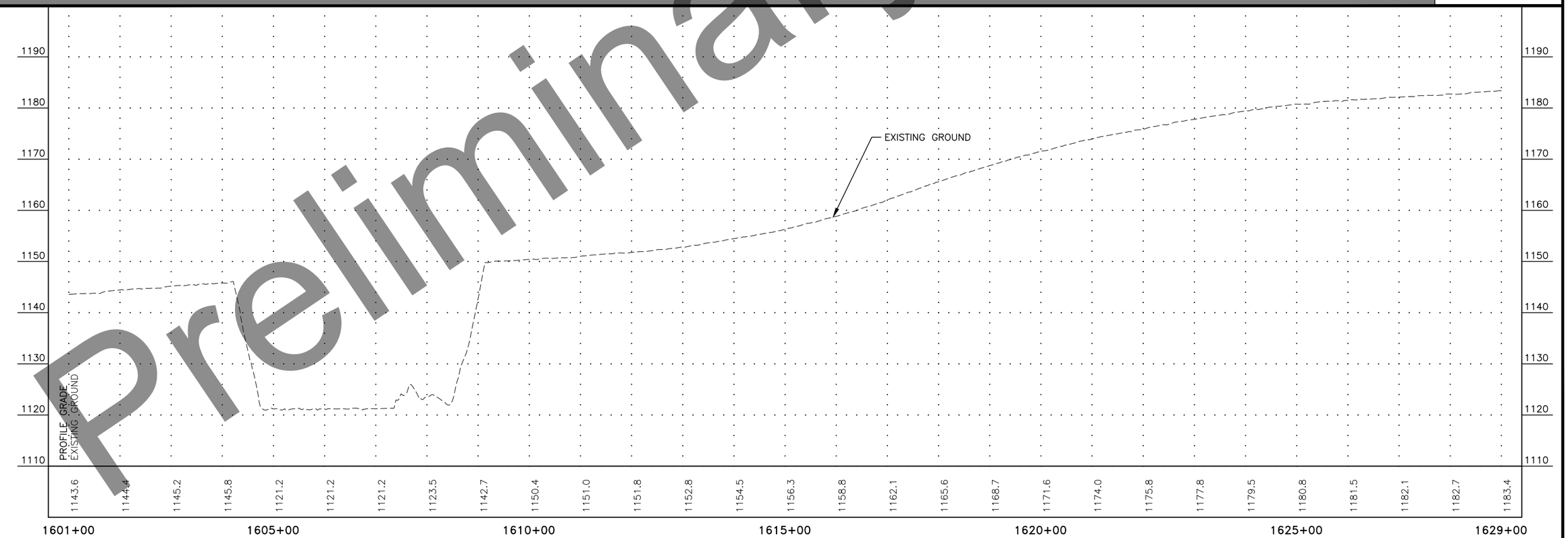

PLANS DEVELOPED BY: STATE OF ALASKA DEPARTMENT OF TRANSPORTATION & PUBLIC FACILITIES, NORTHERN REGION, 2301 PEGER ROAD, FAIRBANKS, AK 99709 (907)451-2200
H:\Projects\Rich_Hwy\NFHWY00218_Rich_82_115 Resurface\05 Design\11 C3D\01_00218 97-115\MP 106.5-115 (00834)\NFHWY00834 F_Sheets Plan_Profile w.extra.culverts-1601+00.00-1629+00.00 Tue, Sep/05/23 11:08am

NO.	DATE	REVISION

STATE	PROJECT DESIGNATION	YEAR	SHEET NO.	TOTAL SHEETS
ALASKA	PENDING / NFHWY00834	2023	F9	F15

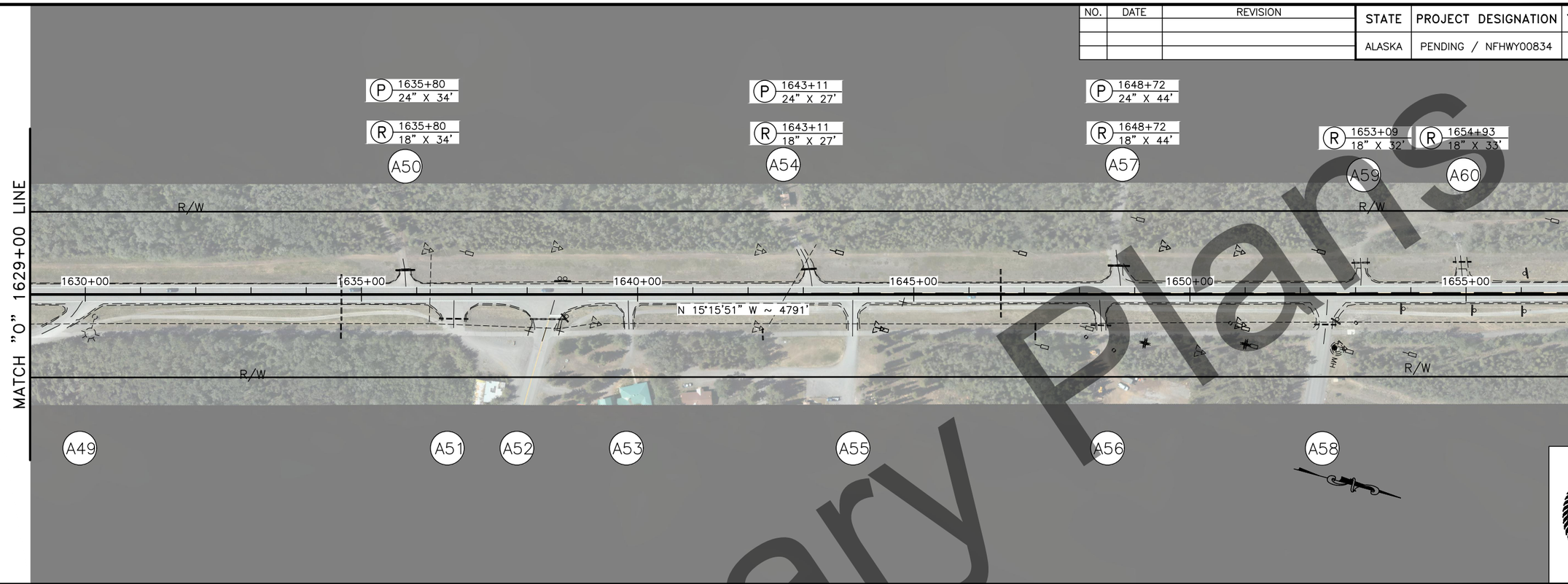

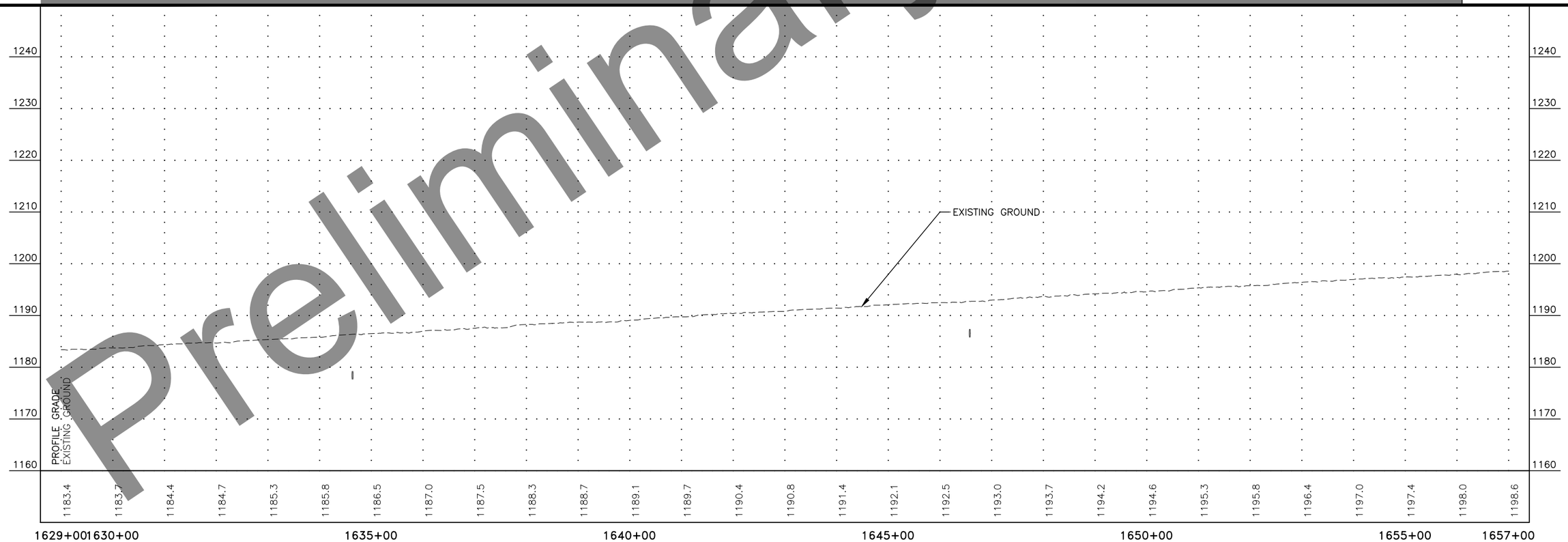

STATE OF ALASKA 49TH REGISTERED PROFESSIONAL ENGINEER

PLANS DEVELOPED BY: STATE OF ALASKA DEPARTMENT OF TRANSPORTATION & PUBLIC FACILITIES, NORTHERN REGION, 2301 PEGER ROAD, FAIRBANKS, AK 99709 (907)451-2200
H:\Projects\Rich_Hwy\NFHWY00218_Rich_82_115 Resurface\05 Design\11 C3D\01_00218 97-115\MP 106.5-115 (00834)\NFHWY00834 F_Sheets Plan_Profile w.extra.culverts-1629+00.00-1657+00.00 Tue, Sep/05/23 11:16am

NO.	DATE	REVISION

STATE	PROJECT DESIGNATION	YEAR	SHEET NO.	TOTAL SHEETS
ALASKA	PENDING / NFHWY00834	2023	F10	F15

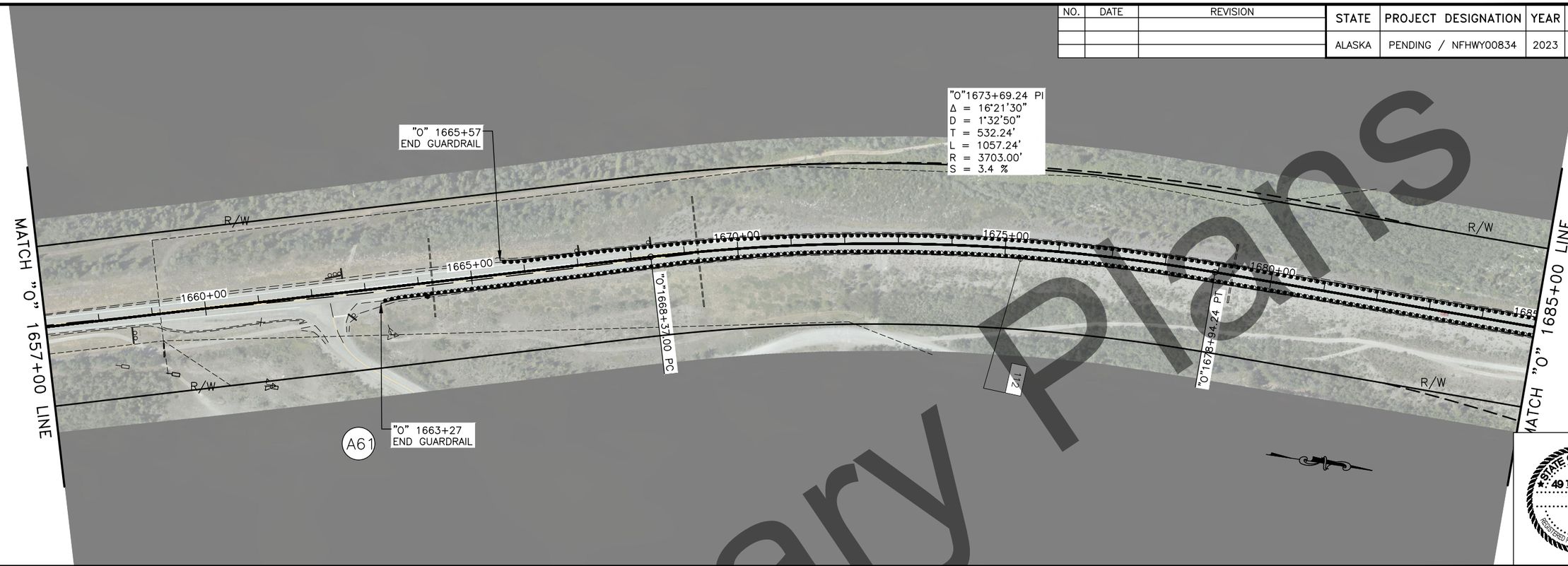

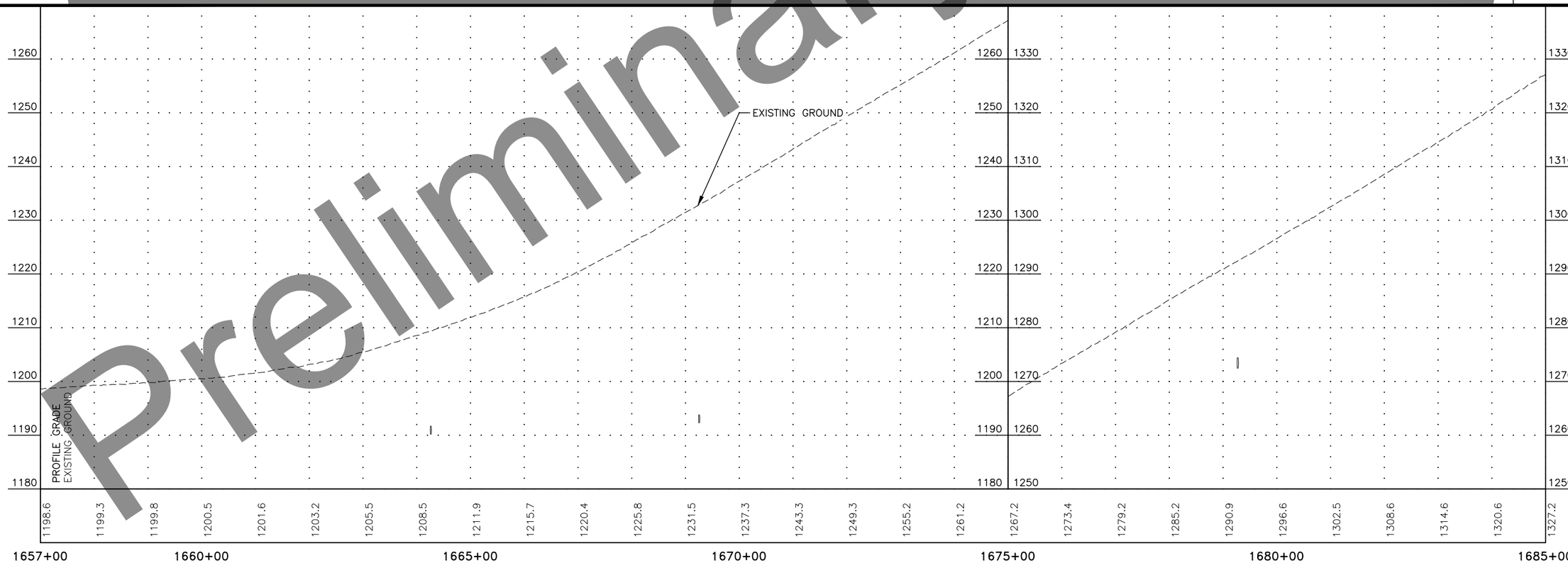

PLANS DEVELOPED BY: STATE OF ALASKA DEPARTMENT OF TRANSPORTATION & PUBLIC FACILITIES, NORTHERN REGION, 2301 PEGER ROAD, FAIRBANKS, AK 99709 (907)451-2200
H:\Projects\Rich_Hwy\NFHWY00218_Rich_82_115 Resurface\05 Design\11 C3D\01_00218 97-115\MP 106.5-115 (00834)\NFHWY00834 F_Sheets Plan_Profile w.extra.culverts-1657+00.00-1685+00.00 Tue, Sep/05/23 11:23am

NO.	DATE	REVISION

STATE	PROJECT DESIGNATION	YEAR	SHEET NO.	TOTAL SHEETS
ALASKA	PENDING / NFHWY00834	2023	F11	F15

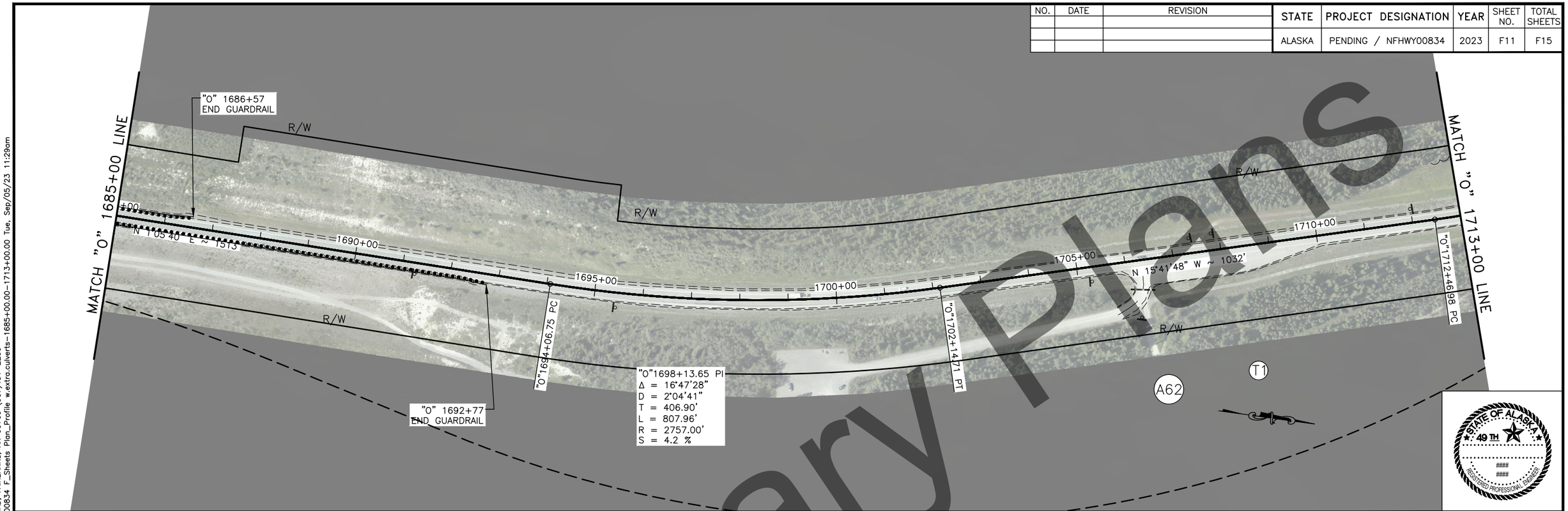

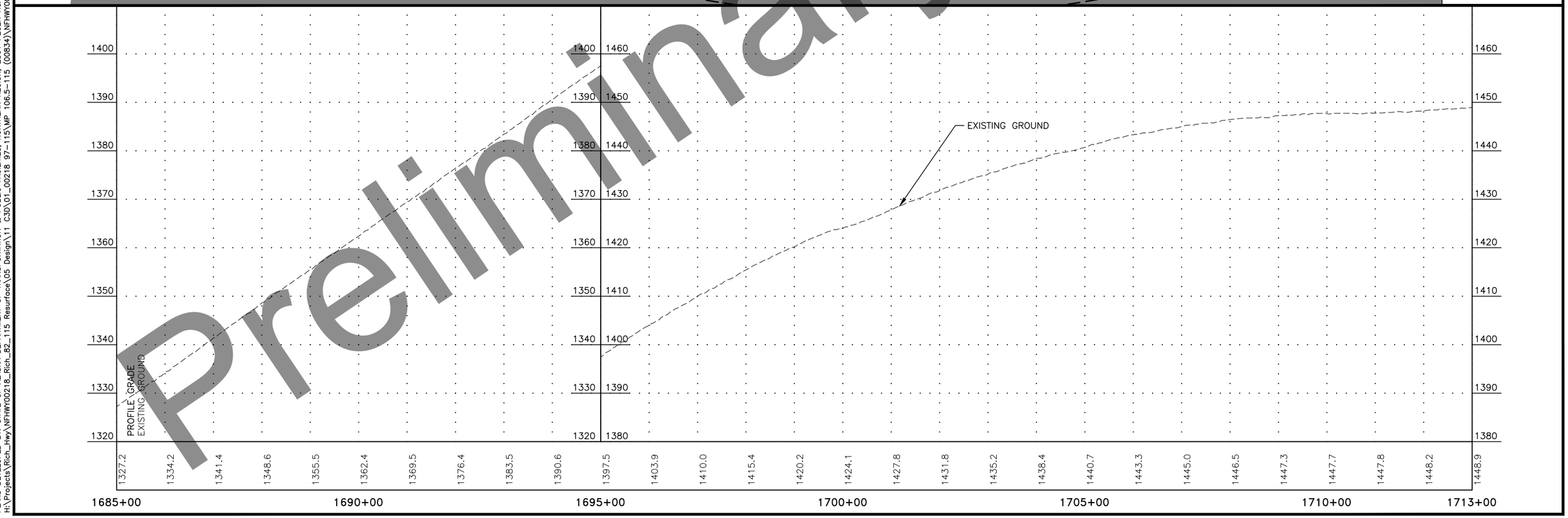

NO.	DATE	REVISION

STATE	PROJECT DESIGNATION	YEAR	SHEET NO.	TOTAL SHEETS
ALASKA	PENDING / NFHWY00834	2023	F12	F15

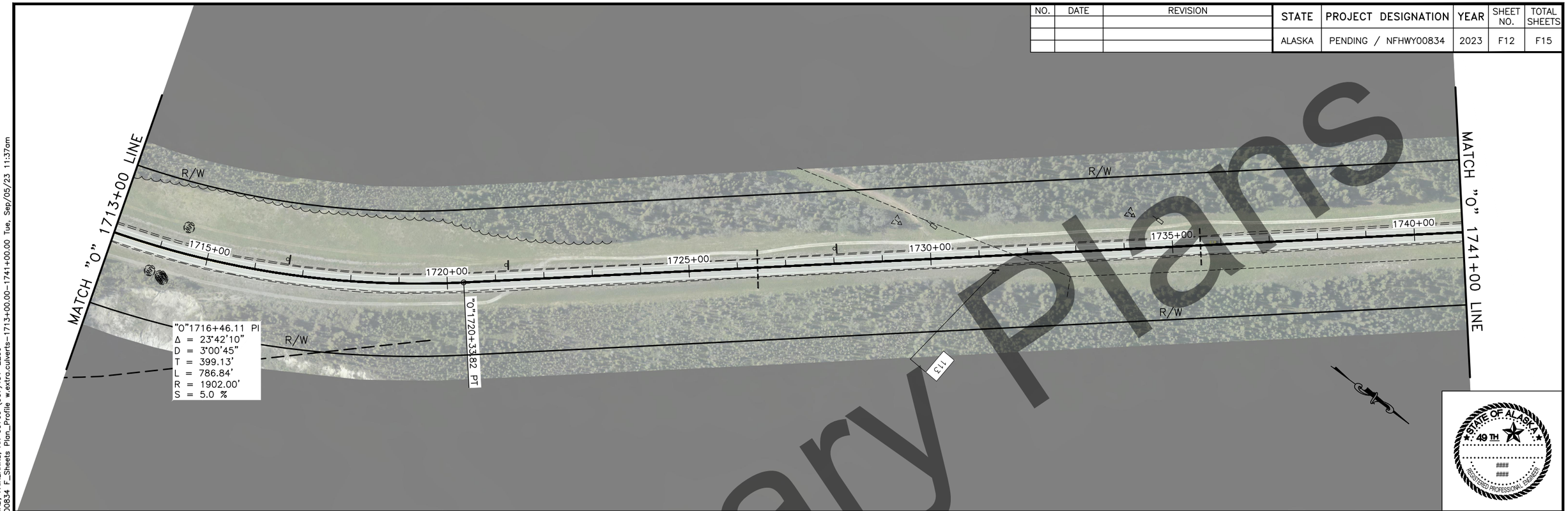

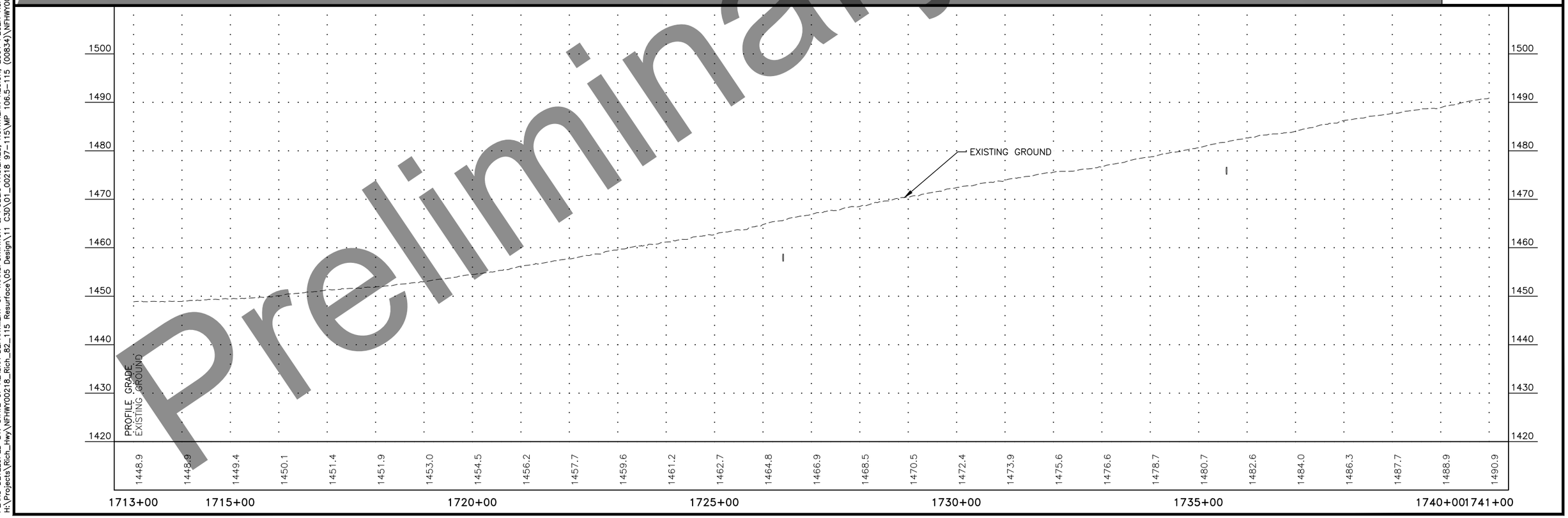

STATE OF ALASKA 49TH REGISTERED PROFESSIONAL ENGINEER

PLANS DEVELOPED BY: STATE OF ALASKA DEPARTMENT OF TRANSPORTATION & PUBLIC FACILITIES, NORTHERN REGION, 2301 PEGER ROAD, FAIRBANKS, AK 99709 (907)451-2200
H:\Projects\Rich_Hwy\NFHWY00218_Rich_82_115 Resurface\05 Design\11 C3D\01_00218 97-115\MP 106.5-115 (00834)\NFHWY00834 F_Sheets Plan_Profile w.extra.culverts-1713+00.00-1741+00.00 Tue, Sep/05/23 11:37am

NO.	DATE	REVISION

STATE	PROJECT DESIGNATION	YEAR	SHEET NO.	TOTAL SHEETS
ALASKA	PENDING / NFHWY00834	2023	F13	F15

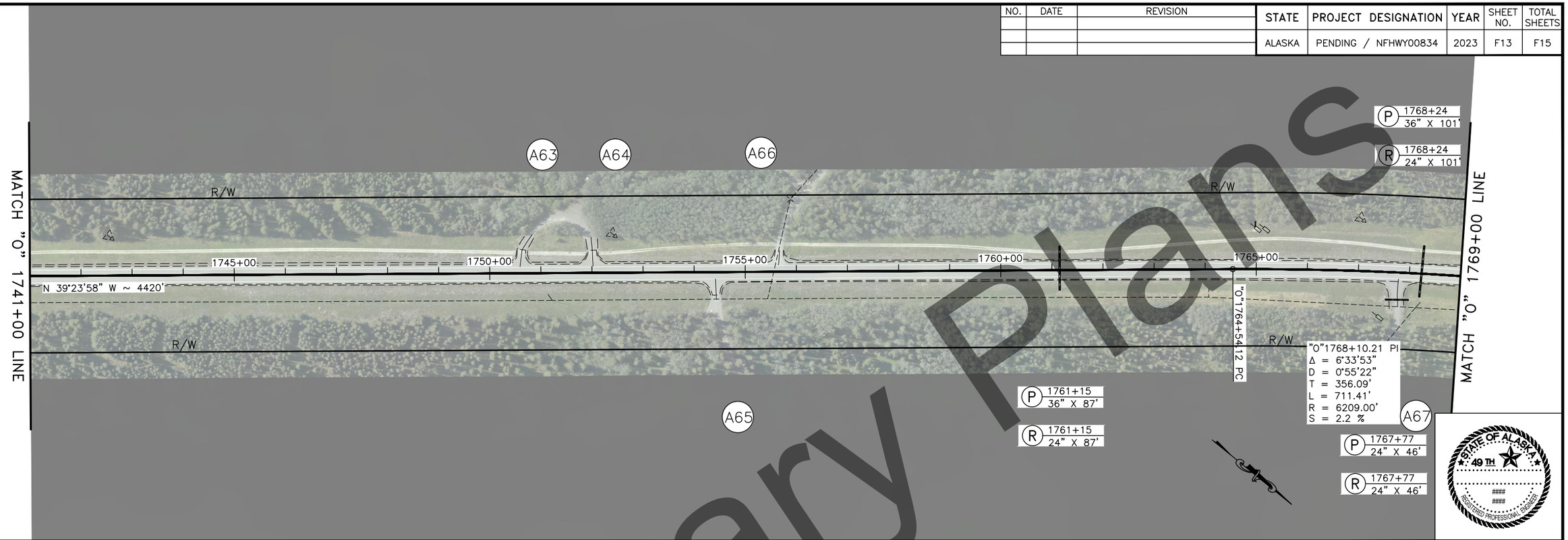

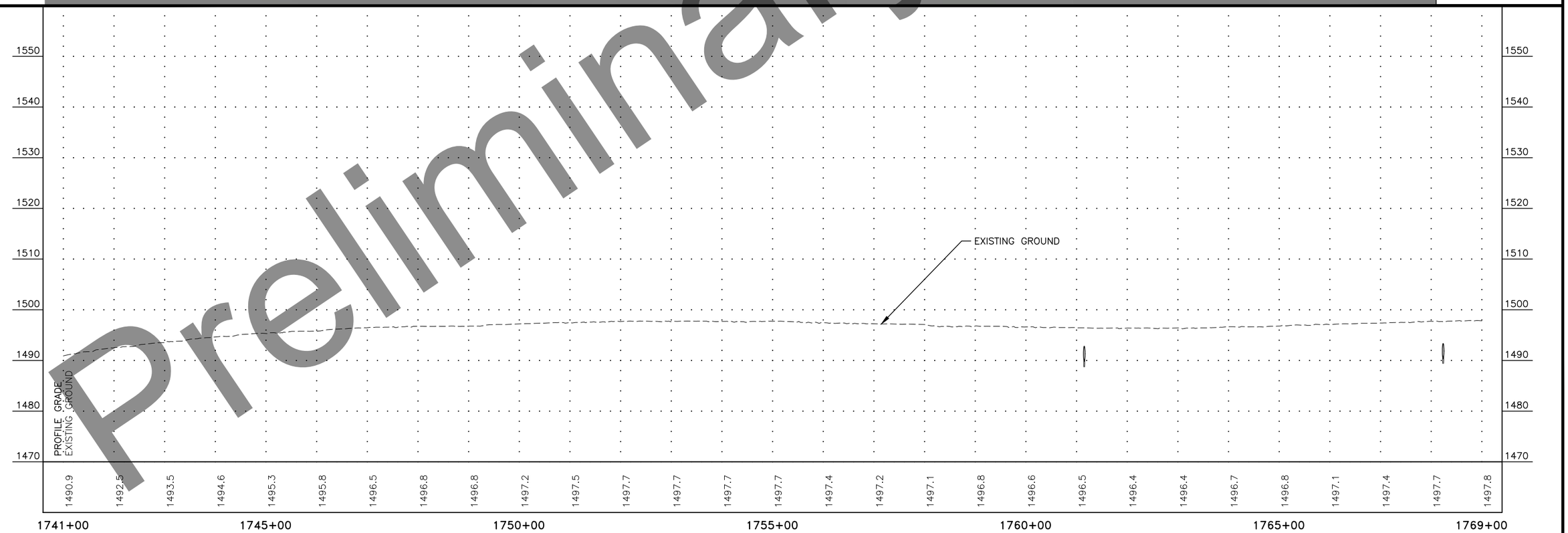

NO.	DATE	REVISION

STATE	PROJECT DESIGNATION	YEAR	SHEET NO.	TOTAL SHEETS
ALASKA	PENDING / NFHWY00834	2023	F14	F15

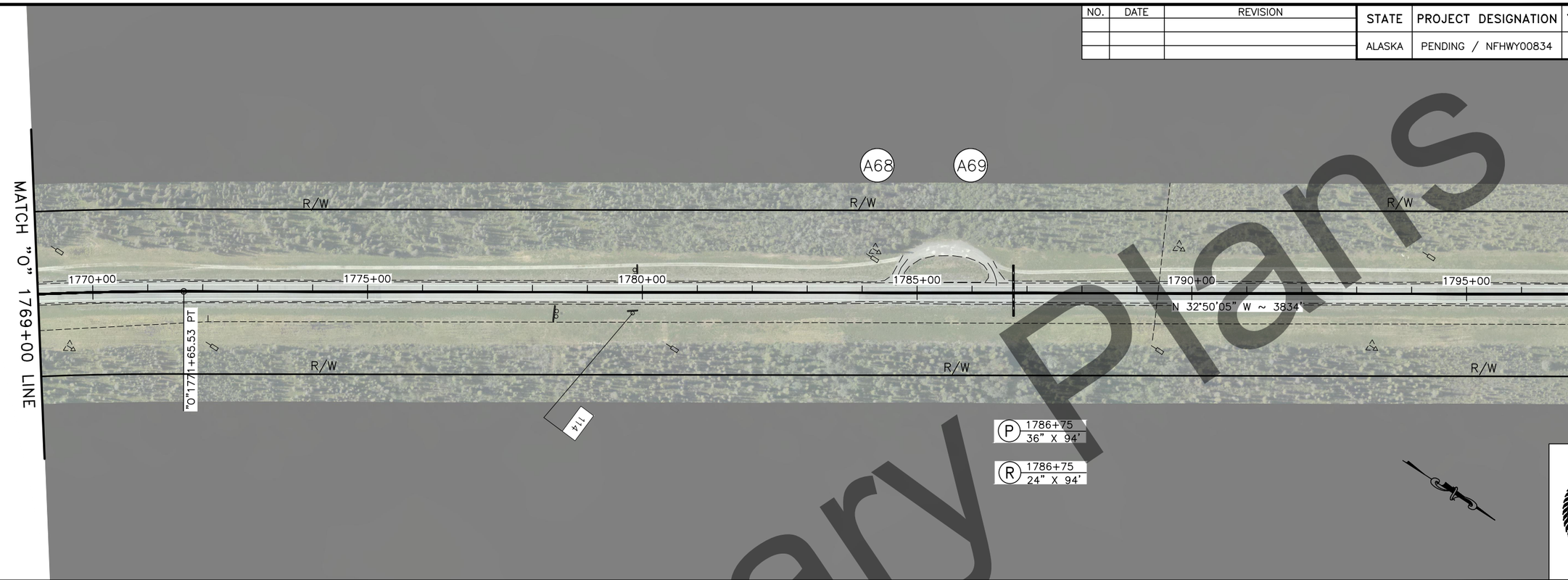

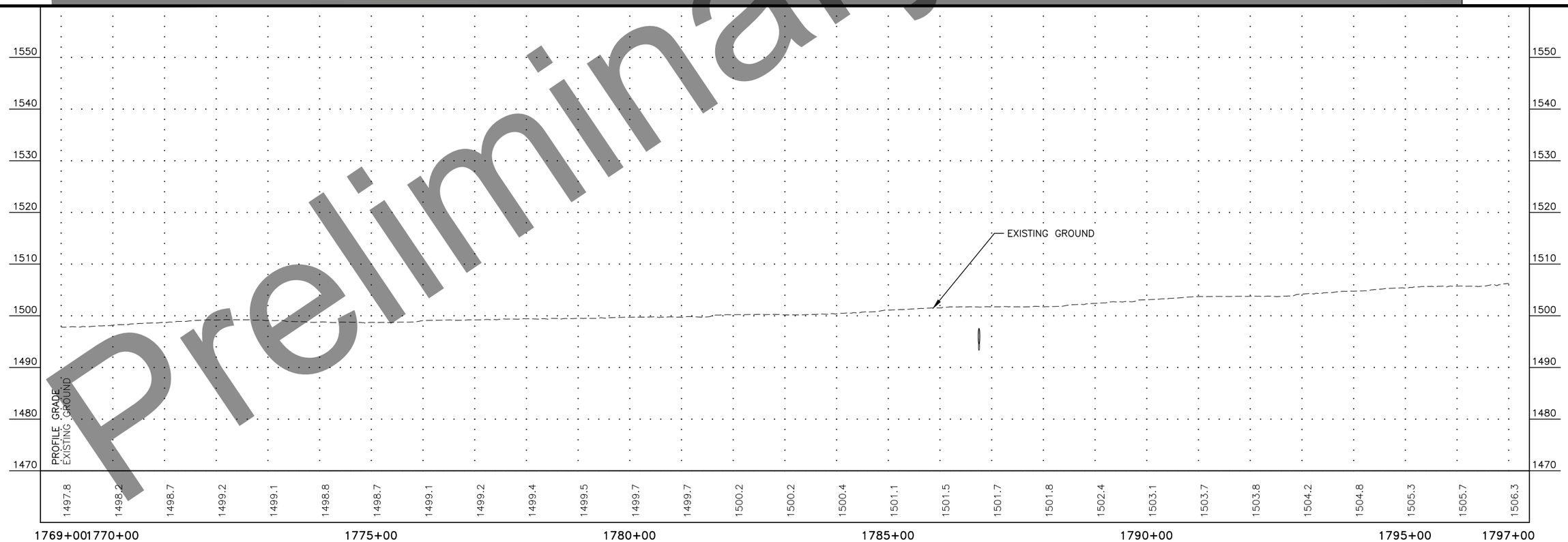

PLANS DEVELOPED BY: STATE OF ALASKA DEPARTMENT OF TRANSPORTATION & PUBLIC FACILITIES, NORTHERN REGION, 2301 PEGER ROAD, FAIRBANKS, AK 99709 (907)451-2200
H:\Projects\Rich_Hwy\NFHWY00218_Rich_82_115 Resurface\05 Design\11 C3D\01_00218 97-115\MP 106.5-115 (00834)\NFHWY00834 F_Sheets Plan_Profile w.extra.culverts-1769+00.00-1797+00.00 Tue, Sep/05/23 11:51am

NO.	DATE	REVISION

STATE	PROJECT DESIGNATION	YEAR	SHEET NO.	TOTAL SHEETS
ALASKA	PENDING / NFHWY00834	2023	F15	F15

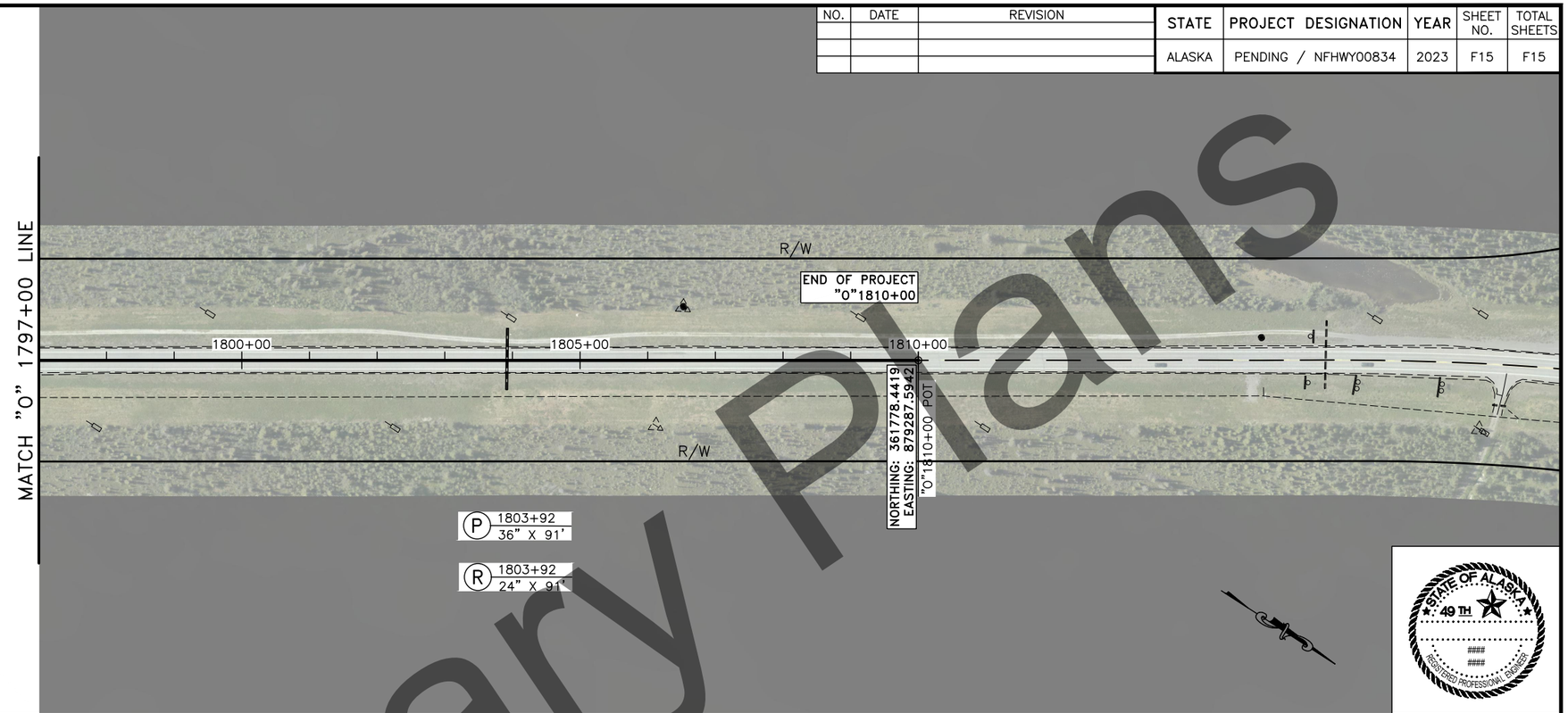

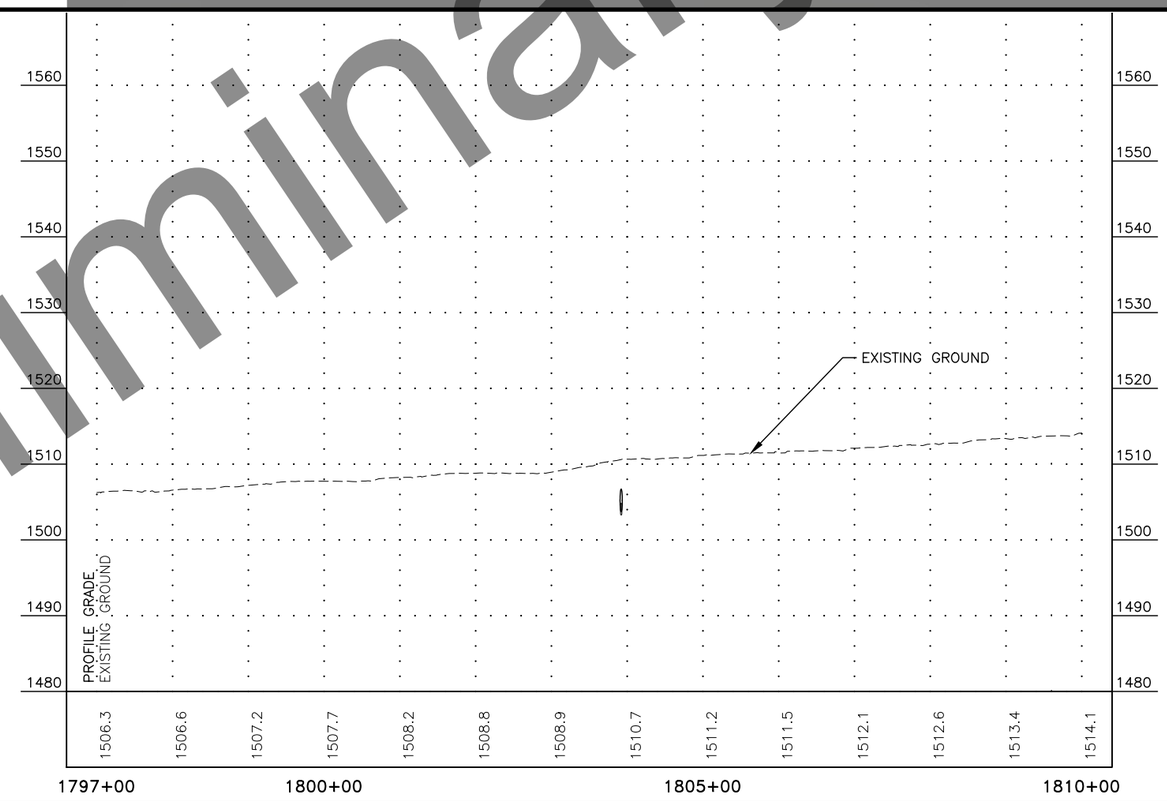

PLANS DEVELOPED BY: STATE OF ALASKA DEPARTMENT OF TRANSPORTATION & PUBLIC FACILITIES, NORTHERN REGION, 2301 PEGER ROAD, FAIRBANKS, AK 99709 (907)451-2200
H:\Projects\Rich_Hwy\NFHWY00218_Rich_82_115 Resurface\05 Design\11 C3D\01_00218 97-115\MP 106.5-115 (00834)\NFHWY00834 F_Sheets Plan_Profile w.extra.culverts-1797+00.00-1810+00.00 Tue, Sep/05/23 11:58am

NO.	DATE	REVISION

STATE	PROJECT DESIGNATION	YEAR	SHEET NO.	TOTAL SHEETS
ALASKA	PENDING / NFHWY00834	2023	G1	G2

APPROACH SUMMARY

APPROACH NUMBER	CENTERLINE STATION	LT/RT	RADIUS (FT) LEFT *SEE DETAIL	RADIUS (FT) RIGHT *SEE DETAIL	WIDTH (FT)	LENGTH (FT)	AREA (SF)	REMARKS
A23	1412+62	RT	62	58	28	70	3787	WRANGELL–ST. ELIAS VISITOR CENTER
A24	1446+99	LT	22	23	18	20	688	
A25	1469+29	RT	45	38	22	40	1807	
A26	1478+61	RT	20	24	32	15	746	
A27	1486+62	RT	21	22	14	20	592	
A28	1509+77	RT	22	26	14	20	629	
A29	1510+10	LT	26	26	14	24	754	
A30	1517+25	RT	25	28	17	24	835	
A31	1520+57	RT	30	24	14	20	668	
A32	1522+63	LT	20	20	14	24	628	
A33	1527+14	LT	23	24	16	20	662	
A34	1568+18	RT	65	43	24	70	3239	55 LUEBKE RD
A35	1568+24	LT	33	27	28	30	1378	
A36	1587+02	LT	24	27	28	32	1318	
A37	1587+66	RT	19	19	26	26	947	
A38	1590+21	LT	50	43	30	20	1186	
A39	1591+09	RT	26	23	14	20	636	
A40	1595+07	LT	25	25	14	30	828	
A41	1597+44	RT	30	30	14	20	706	
A42	1597+61	LT	26	30	14	26	835	
A43	1599+03	RT	22	24	22	30	1019	
A44	1601+10	LT	24	29	14	28	838	
A45	1615+76	RT	68	32	30	70	3552	OLD SCHOOL RD
A46	1620+15	RT	36	26	20	55	1687	
A47	1621+64	RT	23	45	28	64	2516	
A48	1624+33	LT	16	20	14	26	617	
A49	1629+95	RT	80	10	25	104	4215	
A50	1635+80	LT	28	27	15	25	830	
A51	1636+68	RT	32	34	40	64	3200	
A52	1638+49	RT	62	44	24	70	3172	TAZLINA TERRACE
A53	1639+83	RT	23	26	16	60	1357	
A54	1643+16	LT	21	28	16	24	768	
A55	1643+89	RT	26	26	16	60	1394	

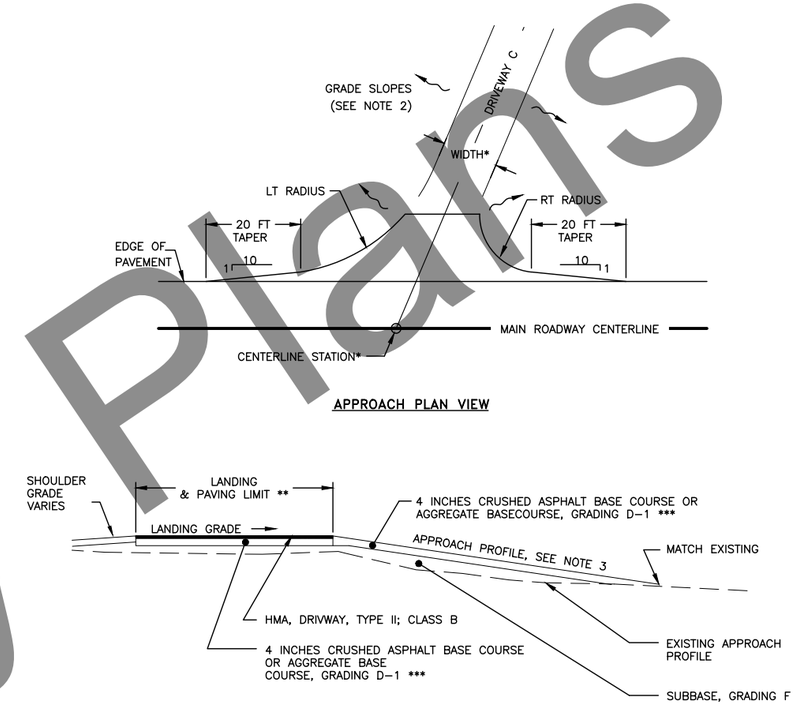

APPROACH PLAN VIEW

APPROACH PROFILE CROSS–SECTION TYPICAL

APPROACH DETAILS

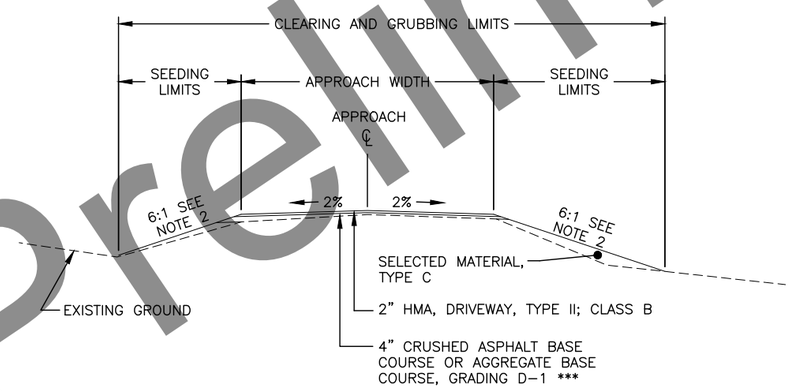

APPROACH TYPICAL SECTION

APPROACH DETAIL NOTES:

1. REMOVAL OF EXISTING APPROACH EMBANKMENT WILL NOT BE MEASURED FOR PAYMENT. SEE SPECIFICATION SECTION 639.
2. APPROACH FILL SLOPES SHALL BE 6H:1V BETWEEN THE ROAD SHOULDER AND LANDING. BEYOND THE LANDING, WARP APPROACH EMBANKMENT SLOPES FROM 6:1 (H:V) TO MATCH EXISTING OVER 50 FT OR AS APPROVED BY THE ENGINEER. GRADING OF SLOPES IS SUBSIDIARY TO EMBANKMENT CONSTRUCTION.
3. GRADE APPROACH PROFILE TO CREATE A SMOOTH TRANSITION BETWEEN THE LANDING AND THE EXISTING APPROACH PROFILE.
4. APPROACH RADIUS BEGINS AT THE END OF THE TAPER.
5. GRADE SURROUNDING AREA TO DRAIN AS NEEDED TO ENSURE POSITIVE DRAINAGE AWAY FROM THE ROADWAY AND APPROACH EMBANKMENTS.
6. DRIVEWAY AND APPROACH TERMS ARE USED INTERCHANGEABLY.

** PAVING LENGTH MAY EXTEND BEYOND THE LIMITS OF THE INDICATED LANDING AREA. LENGTHS DETAILED IN APPROACH SUMMARY REFER TO PAVED LENGTHS. DESIGN INTENT IS TO REPLACE EXISTING SURFACES WITH SAME.

*** DO NOT PLACE AGGREGATE BASE COURSE, GRADING D–1 UNTIL AFTER AVAILABLE CRUSHED ASPHALT BASE COURSE HAS BEEN USED.

APPROACH SUMMARY (1 OF 2) & DETAILS

STATE OF ALASKA 49TH
RUSSELL M. JOHNSON
C.E. 9963
REGISTERED PROFESSIONAL ENGINEER

PLANS DEVELOPED BY: STATE OF ALASKA DEPARTMENT OF TRANSPORTATION & PUBLIC FACILITIES, NORTHERN REGION, 2301 PEGER ROAD, FAIRBANKS, AK 99709 (907)451–2200
H:\Projects\Rich_Hwy\NFHWY00218_Rich_82_115 Resurface\05 Design\11 C3D\01_00218 97–115\MP 106.5–115 (00834)\NFHWY00834_G_APPROACHES–Approach Summary (1 of 2) & Details Tue, Sep/05/23 11:58am

NO.	DATE	REVISION

STATE	PROJECT DESIGNATION	YEAR	SHEET NO.	TOTAL SHEETS
ALASKA	PENDING / NFHWY00834	2023	G2	G2

APPROACH SUMMARY (CONTINUED)

APPROACH NUMBER	CENTERLINE STATION	LT/RT	RADIUS (FT) LEFT *SEE DETAIL SHEET G1	RADIUS (FT) RIGHT *SEE DETAIL SHEET G1	WIDTH (FT)	LENGTH (FT)	AREA (SF)	REMARKS
A56	1648+36	RT	22	28	16	60	1372	
A57	1648+74	LT	27	27	20	20	790	
A58	1652+49	RT	43	31	24	60	2231	
A59	1653+09	LT	25	30	16	24		REMOVE
A60	1654+94	LT	22	23	16	24		REMOVE
A61	1662+33	RT	46	69	26	70	3565	COPPERVILLE RD
A62	1706+34	RT	0	32	24	55	1644	
A63	1750+59	LT	24	21	15	30	798	
A64	1752+02	LT	26	28	16	24	821	
A65	1754+42	RT	21	29	14	26	767	
A66	1755+65	LT	21	16	16	24	648	
A67	1767+79	RT	27	27	16	20	710	
A68	1784+61	LT	34	16	16	30	906	
A69	1786+44	LT	16	44	14	30	944	
						Total:	119,741	

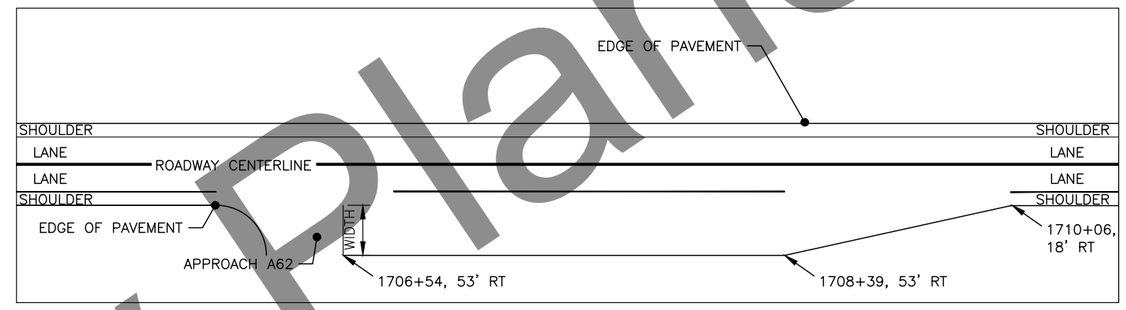

TURNOUT DETAIL

TURNOUT SUMMARY

TURNOUT NUMBER	LT	RT	WIDTH (FT)	BEGIN TRANSITION STATION	BEGIN FULL WIDTH STATION	END FULL WIDTH STATION	END TRANSITION STATION	AREA (SF)	REMARKS
T1		X	35	N/A	1706+54	1708+39	1710+06	9398	SOUTH END OF TURNOUT IS CONJOINED WITH APPROACH A62.
							TOTAL:	9,398	

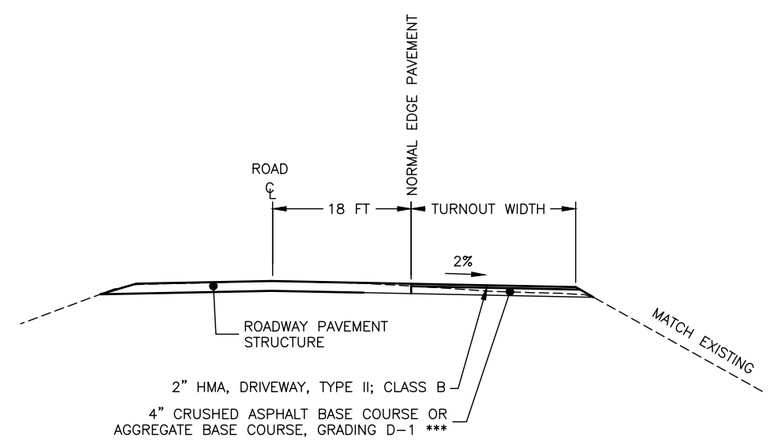

TURNOUT CROSS SECTION

TURNOUT NOTES:

1. TURNOUT WIDTH MEASURED PERPENDICULAR TO THE ROAD CENTERLINE.
2. SEE SPECIFICATION SECTION 639 FOR BASIS OF PAYMENT INFORMATION.
3. USE SUBBASE, GRADING F, TO FILL ANY DEPRESSIONS GREATER THAN 4 INCHES.
4. GRADE SIDE SLOPES & DITCHES USING SMOOTH TRANSITION TO MATCH EXISTING GROUND AND PROVIDE POSITIVE DRAINAGE.
5. GRADE SO AS TO CREATE A SMOOTH TRANSITION BETWEEN THE TURNOUT AND ADJACENT APPROACH.

*** DO NOT PLACE AGGREGATE BASE COURSE, GRADING D-1 UNTIL AFTER AVAILABLE CRUSHED ASPHALT BASE COURSE HAS BEEN USED.

STATE OF ALASKA 49TH RUSSELL M. JOHNSON C.E. 9963 REGISTERED PROFESSIONAL ENGINEER

APPROACH SUMMARY (2 OF 2) & TURNOUTS

PLANS DEVELOPED BY: STATE OF ALASKA DEPARTMENT OF TRANSPORTATION & PUBLIC FACILITIES, NORTHERN REGION, 2301 PEGER ROAD, FAIRBANKS, AK 99709 (907)451-2200
H:\Projects\Rich_Hwy\NFHWY00218_Rich_82_115 Resurface\05 Design\11 C3D\01_00218 97-115\MP 106.5-115 (00834)\NFHWY00834_G_APPROACHES-Approach Summary (2 of 2) & Turnouts Tue, Sep/05/23 11:58am

NO.	DATE	REVISION

STATE	PROJECT DESIGNATION	YEAR	SHEET NO.	TOTAL SHEETS
ALASKA	PENDING / NFHWY00834	2023	H1	H14

SIGNING NOTES

1. REMOVE AND DISPOSE OF ALL EXISTING SIGN FOUNDATIONS WITHIN THE PROJECT LIMITS, EXCEPT THOSE DESIGNATED FOR REINSTALLATION, SALVAGE OR OTHERWISE NOTED. ALL SALVAGED SIGN PANELS REMOVED AND NOT DESIGNATED FOR REINSTALLATION, SHALL BE DELIVERED TO TAZLINA MAINTENANCE STATION LOCATED AT MP 110 ON THE RICHARDSON HIGHWAY.
2. MOUNTING HEIGHTS ARE PER STANDARD PLAN S-05.02 UNLESS OTHERWISE NOTED.
3. DETERMINE POST LENGTHS IN THE FIELD. DO NOT EXTEND POSTS ABOVE TOP OF SIGN.
4. INSTALL PST SIGN POSTS WITH SLEEVE TYPE CONCRETE FOUNDATION PER STANDARD PLAN S-30.05. ATTACH THE SIGN POST TO THE SLEEVE USING GALVANIZED 3/8" BOLT, NUT, SPLIT LOCK WASHER AND TWO FLAT WASHERS.
5. 1/4" X 1 1/2" ALUMINUM ALLOY 6061-T6 BAR MAY ALSO BE USED TO FABRICATE SIGN BRACES AS SHOWN ON STANDARD PLAN S-01.02.
6. INSTALL 48" DIAMOND WARNING SIGNS ON A SINGLE POST WITH A BRACE HAVING EFFECTIVE BRACE LENGTH OF 54" OR WITH THREE WIND FRAMING MEMBERS AS SHOWN ON STANDARD PLAN S-00.12. THIS MODIFIES STANDARD PLAN S-01.02.
7. ATTACH ALL SIGNS TO THEIR SUPPORTS WITH 3/8" BOLTS, EXCEPT ATTACH UNFRAMED SIGNS TO PST POSTS WITH ALUMINUM DRIVE RIVETS. WIND WASHERS ARE NOT REQUIRED WITH DRIVE RIVETS. INCLUDE SPLIT LOCK WASHERS WHEN BOLTS ARE USED.
8. ALL FASTENER HARDWARE SHALL MEET THE REQUIREMENTS OF THE "FASTENER SPECIFICATION TABLE" UNDER SUBSECTION 730-2.07.
9. MAINTAIN EXISTING SIGNS UNTIL NEW SIGNS ARE INSTALLED. DO NOT LEAVE DUPLICATE OR CONFLICTING SIGNING UP AT ANY TIME.
10. ALL SIGNS NOTED FOR REMOVAL AND REINSTALLATION SHALL BE REPLACED AT THE CONTRACTOR'S EXPENSE IF THEY ARE DAMAGED DURING THE RELOCATION EFFORT.
11. ALYESKA APPROACH SIGNS ARE PRIVATELY OWNED AND MAINTAINED. SOME OR ALL OF THESE SIGNS MAY NEED TO BE RELOCATED DUE TO MODIFICATIONS TO THE APPROACHES. REUSE THE EXISTING SIGNS AND POSTS. NEW SLEEVE TYPE CONCRETE FOUNDATIONS ARE REQUIRED. THIS WORK IS SUBSIDIARY TO 615 PAY ITEMS. ANY SIGNS DAMAGED BY THE CONTRACTOR WILL BE REPLACED AT THE CONTRACTOR'S EXPENSE.
12. LOCATE AND PROTECT ALL NEW AND EXISTING UNDERGROUND UTILITIES, INCLUDING BUT NOT LIMITED TO: PIPELINES, INTERCONNECT CABLES, SIGNAL SYSTEMS, LIGHTING SYSTEMS, STORM AND SANITARY SEWERS, WATER SYSTEMS, AND TELEPHONE AND ELECTRICAL CABLES, PRIOR TO INSTALLING SIGN POSTS. NOT ALL EXISTING UTILITIES MAY BE SHOWN ON THE PLANS.
13. INSTALL WEATHER TIGHT CAPS ON ALL TS POSTS.
14. INSTALL FRANGIBLE COUPLING SYSTEMS IN ACCORDANCE WITH STANDARD PLAN S-31.02.
15. HINGED JOINTS WITH FRANGIBLE FUSE PLATES ARE REQUIRED ON ALL MULTIPLE POST SIGNS WITH FRANGIBLE COUPLING SYSTEMS. THE HINGE LOCATION ON ALL POSTS SHALL BE THE SAME DISTANCE BELOW THE SIGN, INSTEAD OF THE 6" MINIMUM SHOWN ON STANDARD PLAN S-31.02. SEE MANUFACTURER'S SPECIFICATION FOR HINGE LOCATION BELOW SIGN.
16. THE 4" MOUNTING AREA ON MILEPOST SIGNS (D10-200 SERIES) SHALL BE BARE ALUMINUM. THIS ELIMINATES THE OPTION OF INSTALLING GREEN REFLECTIVE SHEETING IN THIS AREA AS NOTED IN THE ASDS.
17. CLEARING, AS DIRECTED BY THE ENGINEER, MAY BE REQUIRED TO ENSURE ADEQUATE VISIBILITY OF SIGNS. THIS WORK IS SUBSIDIARY TO PAY ITEM 615.0001.0000.
18. INSTALL MILEPOST SIGNS (D10 SERIES) IN ACCORDANCE WITH STANDARD PLAN S-05.02, EXCEPT WITH A 15 TO 30 FOOT OFFSET. REDUCE THE OFFSET AS NECESSARY SO THE BOTTOM OF THE SIGN IS NO MORE THAN 15 FEET ABOVE THE GROUND. THE SIGN OFFSET SHALL NOT BE LESS THAN THE OFFSETS SHOWN IN S-05.02.
19. STOP (R1-1) AND YIELD (R1-2) SIGN LOCATIONS, ESPECIALLY THOSE AT LARGE RADIUS INTERSECTIONS, MAY NEED ADJUSTMENT IN THE FIELD. THE ENGINEER WILL APPROVE FINAL LOCATIONS.
20. INSTALL D3-100 SIGNS ABOVE THEIR RESPECTIVE STOP SIGNS. WHEN TWO D3-100 SERIES SIGNS ARE TO BE LOCATED ON THE SAME POST, INSTALL THE CROSS-STREET PANEL IN THE LOWER POSITION.
21. D3-100 SERIES SIGNS REQUIRE TWO SEPARATE SINGLE SIDED PANELS. END-BRACE PANELS PER SMALL STREET NAME SIGN BRACING DETAILS IN STANDARD PLAN S-01.02.
22. USE SERIES C LETTERS FOR D3-100 SERIES SIGNS UNLESS OTHERWISE NOTED. USE 4.5" FOR DIMENSION "E" FOR 12" D3-100 SIGNS. THE LETTERING INDICATING THE TYPE OF STREET (SUCH AS St, Ave, OR Rd) WILL BE UPPER CASE AND LOWER CASE. THIS MODIFIES THE ASDS.
23. USE A 3" HORIZONTAL SPACING BETWEEN WORDS, BETWEEN CARDINAL DIRECTIONS AND WORDS, AND BETWEEN WORDS AND NUMBERS ON D3-100 AND D3-100A SIGNS UNLESS OTHERWISE NOTED.
24. ADHESIVE TAPE IS NOT PERMITTED. THIS MODIFIES STANDARD PLAN S-00.12.
25. INSTALL OBJECT MARKER (TYPE 3) SIGN POSTS WITH SLEEVE TYPE SOIL EMBEDMENT. THESE SIGN POSTS SHALL BE SPACED EQUALLY BETWEEN THE FIRST AND SECOND POST OF THE THRIE-BEAM GUARDRAIL SECTION AND POSITIONED SUCH THAT THE POST IS NO FARTHER FROM THE BACK OF THE RAIL THAN THE OUTERMOST EDGE OF THE GUARDRAIL POST.

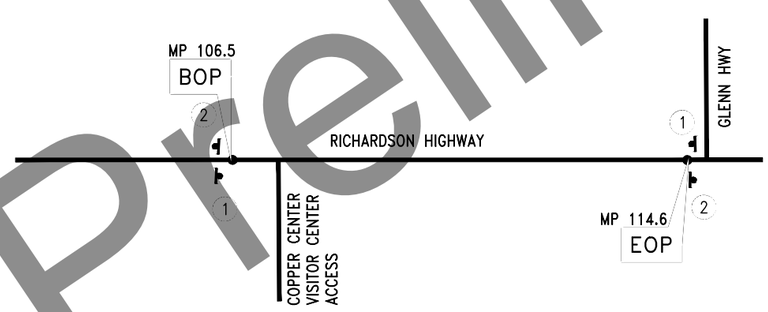

PERMANENT CONSTRUCTION SIGNS

NOTE: INSTALL ALL PERMANENT CONSTRUCTION SIGNS ON WOOD POSTS.

SIGN LEGEND

1 — G20-1
ROAD WORK
NEXT 8 MILES
60" X 24"

2 — G20-2
END
ROAD WORK
48" X 24"

SIGN NOTES

STATE OF ALASKA 49TH
RUSSELL M. JOHNSON
C.E. 9963
REGISTERED PROFESSIONAL ENGINEER

PLANS DEVELOPED BY: STATE OF ALASKA DEPARTMENT OF TRANSPORTATION & PUBLIC FACILITIES, NORTHERN REGION, 2301 PEGER ROAD, FAIRBANKS, AK 99709 (907)451-2200
H:\Projects\Rich_Hwy\NFHWY00218_Rich_82_115 Resurface\05 Design\11 C3D\01_00218 97-115\MP 106.5-115 (00834)\NFHWY00834_H_SIGNING-SIGN NOTES Tue, Sep/05/23 11:58am

NO.	DATE	REVISION

STATE	PROJECT DESIGNATION	YEAR	SHEET NO.	TOTAL SHEETS
ALASKA	PENDING / NFHWY00834	2023	H2	H14

SIGN SUMMARY

LOCATION NUMBER	STATION	LOCATION LT	LOCATION RT	ASDS CODE	LEGEND	SIZE (IN) H	SIZE (IN) X	SIZE (IN) V	BRACING/FRAMING BRACED	BRACING/FRAMING FRAMED	AREA (SF)	DIRECTION	POST TYPE	POST SIZE (IN)	POST NUMBER	REMARKS
66	1412+93		X	R1-1	STOP	36	X	36	X		9.00	E	PST	2.5	1	
67	1423+80	X			WRANGELL - ST ELIAS											EXISTING TO REMAIN; DO NOT DISTURB
					< NATIONAL PARK											
68	1426+47		X	D10-203	MILE 107	14	X	36			3.50	N/S	PST	2.5	1	MESSAGE ON BOTH SIDES
69	1430+21	X			ADOPT											REMOVE
					A											
					HIGHWAY											
					PARK											
					RANGERS											
70	1469+63		X	D3-100	Richardson Hwy	42	X	8	X		2.33	E	PST	2.5	1	4C/3C LETTERING
				D3-100	Richardson Hwy	42	X	8	X		2.33	W				
				D3-100	Ravine Rd	36	X	12	X		3.00	N				6C/4.5C LETTERING
				D3-100	Ravine Rd	36		12	X		3.00	S				
				R1-1	STOP	36	X	36	X		9.00	E				
71	1475+06		X	D10-203	MILE 108	14	X	36			3.50	N/S	PST	2.5	1	MESSAGE ON BOTH SIDES
72	1500+44		X	W3-5	SPEED REDUCTION 55 MPH	36	X	36	X		9.00	S	PST	2.5	1	
73	1505+81		X	R2-1	SPEED LIMIT 55	30	X	36	X		7.50	S	PST	2.5	1	
74	1505+82	X		R2-1	SPEED LIMIT 65	30	X	36	X		7.50	W	PST	2.5	1	
75	1510+34		X		SCHOOL BUS STOP AHEAD											REMOVE
76	1515+48		X	D10-203	MILE 109	14	X	36			3.50	N/S	PST	2.5	1	MESSAGE ON BOTH SIDES
77	1517+68		X		ADOPT											REMOVE
					A											
					HIGHWAY											
					ASSN. TAZLINA											
					RESIDENTS											
78	1522+45		X	W7-1	HILL	36	X	36	X		9.00	S	PST	2.5	1	
79	1527+75	X			SCHOOL BUS STOP AHEAD											REMOVE
80	1549+99		X	SPECIAL 5	SCHOOL BUS STOPS AHEAD	36	X	36	X		9.00	S	PST	2.5	1	SPECIAL 5
				W7-3aP	NEXT 1 MILE	24	X	18	X		3.00	S				
81	1567+33		X	D10-203	MILE 110	14	X	36			3.50	N/S	PST	2.5	1	MESSAGE ON BOTH SIDES
82	1567+86	X			20 APL 1							N	PST	2.5	1	REUSE EXISTING SIGN PANELS AND MOUNTING HARDWARE
				R1-1	STOP	36	X	36	X		9.00	W				

SIGN SUMMARY 1 OF 4

STATE OF ALASKA 49TH RUSSELL M. JOHNSON C.E. 9963 REGISTERED PROFESSIONAL ENGINEER

PLANS DEVELOPED BY: STATE OF ALASKA DEPARTMENT OF TRANSPORTATION & PUBLIC FACILITIES, NORTHERN REGION, 2301 PEGER ROAD, FAIRBANKS, AK 99709 (907)451-2200
H:\Projects\Rich_Hwy\NFHWY00218_Rich_82_115 Resurface\05 Design\11 C3D\01_00218 97-115\MP 106.5-115 (00834)\NFHWY00834_H_SIGNING-Sign Summary 1 of 4 Tue, Sep/05/23 11:58am

NO.	DATE	REVISION

STATE	PROJECT DESIGNATION	YEAR	SHEET NO.	TOTAL SHEETS
ALASKA	PENDING / NFHWY00834	2023	H3	H14

SIGN SUMMARY

LOCATION NUMBER	STATION	LOCATION LT	LOCATION RT	ASDS CODE	LEGEND	SIZE (IN) H	SIZE (IN) X	SIZE (IN) V	BRACING/FRAMING BRACED	BRACING/FRAMING FRAMED	AREA (SF)	DIRECTION	POST TYPE	POST SIZE (IN)	POST NUMBER	REMARKS
83	1568+35		X	D3-100	Richardson Hwy	42	X	8	X		2.33	E	PST	2.5	1	4C/3C LETTERING
				D3-100	Richardson Hwy	42	X	8	X		2.33	W				
				D3-100	55 Luebke Ln	48	X	12	X		4.00	N				6C/4.5C LETTERING
				D3-100	55 Luebke Ln	48	X	12	X		4.00	S				
				R1-1	STOP	36	X	36	X		9.00	E				
84	1568+52	X			BROWN PIPELINE SIGN											EXISTING TO REMAIN; DO NOT DISTURB
					BROWN PIPELINE SIGN											
					BROWN PIPELINE SIGN											
85	1568+77		X		TAZLINA M&O STATION											EXISTING TO REMAIN; DO NOT DISTURB
86	1585+82		X	D5-1	REST AREA	78	X	36		X	19.50	S	TS	3	2	SEE NOTE 13
					1/4 MILE											
87	1587+86		X	D3-100	Richardson Hwy	42	X	8	X		2.33	E	PST	2.5	1	4C/3C LETTERING
				D3-100	Richardson Hwy	42	X	8	X		2.33	W				
				D3-100	Cheshnina Rd	48	X	12	X		4.00	N				6C/4.5C LETTERING
				D3-100	Cheshnina Rd	48		12	X		4.00	S				
				R1-1	STOP	36	X	36	X		9.00	E				
88	1589+54		X		REST AREA											REMOVE
					1000FT											
					WHEELCHAIR SYMBOL											
89	1589+63	X		D3-100	Richardson Hwy	42	X	8	X		2.33	E	PST	2.5	1	4C/3C LETTERING
				D3-100	Richardson Hwy	42	X	8	X		2.33	W				
				D3-100	Trailer Court Rd	48	X	12	X		4.00	N				6B / 4.5B LETTERING
				D3-100	Trailer Court Rd	48	X	12	X		4.00	S				
				R1-1	STOP	36	X	36	X		9.00	N				
90	1598+37		X	D5-5	REST	42	X	48	X		14.00	S	PST	2.5	1	
					AREA											
					>											
91	1599+27		X	R1-1	STOP	36	X	36	X		9.00	E	PST	2.5	1	
92	1600+50	X		D5-5	REST	42	X	48	X		14.00	N	PST	2.5	1	
					AREA											
					<											
93	1602+50	X		SPECIAL 5	SCHOOL BUS STOPS AHEAD	36	X	36	X		9.00	N	PST	2.5	1	SPECIAL 5
				W7-3aP	NEXT 1 MILE	24	X	18	X		3.00					
94	1604+11		X	I-3	Tazlina	30	X	18	X		3.75	S	PST	2.5	1	
					River											
95	*SEE NOTE #26	X		OM3-L	OBJECT MARKER (TYPE 3)	12	X	36			3.00	S	PST	2.5	1	SEE NOTE 25
96	*SEE NOTE #26		X	OM3-R	OBJECT MARKER (TYPE 3)	12	X	36			3.00	S	PST	2.5	1	SEE NOTE 25

STATE OF ALASKA 49TH
RUSSELL M. JOHNSON
C.E. 9963
REGISTERED PROFESSIONAL ENGINEER

SIGN SUMMARY 2 OF 4

PLANS DEVELOPED BY: STATE OF ALASKA DEPARTMENT OF TRANSPORTATION & PUBLIC FACILITIES, NORTHERN REGION, 2301 PEGER ROAD, FAIRBANKS, AK 99709 (907)451-2200
H:\Projects\Rich_Hwy\NFHWY00218_Rich_82_115 Resurface\05 Design\11 C3D\01_00218 97-115\MP 106.5-115 (00834)\NFHWY00834_H_SIGNING-Sign Summary 2 of 4 Tue, Sep/05/23 11:58am

NO.	DATE	REVISION

STATE	PROJECT DESIGNATION	YEAR	SHEET NO.	TOTAL SHEETS
ALASKA	PENDING / NFHWY00834	2023	H4	H14

SIGN SUMMARY

LOCATION NUMBER	STATION	LOCATION		ASDS CODE	LEGEND	SIZE (IN)			BRACING/FRAMING		AREA (SF)	DIRECTION	POST			REMARKS
		LT	RT			H	X	V	BRACED	FRAMED			TYPE	SIZE (IN)	NUMBER	
97	*SEE NOTE #26		X	OM3-L	OBJECT MARKER (TYPE 3)	12	X	36			3.00	N	PST	2.5	1	SEE NOTE 25
98	*SEE NOTE #26	X		OM3-R	OBJECT MARKER (TYPE 3)	12	X	36			3.00	N	PST	2.5	1	SEE NOTE 25
99	1609+24	X		I-3	Tazlina	30	X	18	X		3.75	N	PST	2.5	1	
					River											
100	1613+28		X		SCHOOL BUS STOP AHEAD											REMOVE
101	1613+93	X		D5-1	REST AREA	78	X	36		X	19.50	S	TS	3	2	SEE NOTE 13
					1/4 MILE											
102	1615+92		X	D3-100	Richardson Hwy	42	X	8	X		2.33	E	PST	2.5	1	4C/3C LETTERING
				D3-100	Richardson Hwy	42	X	8	X		2.33	W				
				D3-100	School Rd	36	X	12	X		3.00	N				6C/4.5C LETTERING
				D3-100	School Rd	36	X	12	X		3.00	S				
				R1-1	STOP	36	X	36	X		9.00	E				
103	1620+74		X	D10-203	MILE 111	14	X	36			3.50	N/S	PST	2.5	1	MESSAGE ON BOTH SIDES
104	1638+59	X		W1-7	TWO-DIRECTIONAL LARGE ARROW	48	X	24	X		8.00	E	PST	2.5	1	
				OM1-1	OBJECT MARKER	18	X	18			2.25					
105	1638+71		X	D3-100	Richardson Hwy	42	X	8	X		2.33	E	PST	2.5	1	4C/3C LETTERING
				D3-100	Richardson Hwy	42	X	8	X		2.33	W				
				D3-100	Tazlina Ter	42	X	12	X		3.50	N				6C/4.5C LETTERING
				D3-100	Tazlina Ter	42	X	12	X		3.50	S				
				R1-1	STOP	36	X	36	X		9.00	E				
106	1650+34		X		DAY MEDICAL CLINIC >											EXISTING TO REMAIN; DO NOT DISTURB
107	1652+67		X	R1-1	STOP	36	X	36	X		9.00	E	PST	2.5	1	
108	1653+87		X	W2-2R	SIDE ROAD	30	X	30	X		6.25	S	PST	2.5	1	
109	1654+59	X			< DAY MEDICAL CLINIC											EXISTING TO REMAIN; DO NOT DISTURB
110	1655+15		X	W11-8	EMERGENCY VEHICLE (SYM)	30	X	30	X		6.25	S	PST	2.5	1	
111	1656+06		X	R2-1	SPEED LIMIT 55	30	X	36	X		7.50	S	PST	2.5	1	
112	1656+06	X		R2-1	SPEED LIMIT 55	30	X	36	X		7.50	N	PST	2.5	1	
113	1658+64		X	D3-200R	Copperville Rd >	108	X	24		X	18.00	S	TS	3	2	SEE NOTE 13
114	1662+38	X		W1-7	TWO-DIRECTIONAL LARGE ARROW	48	X	24	X		8.00	E	PST	2.5	1	
				OM1-1	OBJECT MARKER	18	X	18			2.25					
115	1662+56	X		R3-108B	LANE CONTROL (SYM)	30	X	30	X		6.25	N	PST	2.5	1	

SIGN SUMMARY 3 OF 4

STATE OF ALASKA 49TH RUSSELL M. JOHNSON C.E. 9963 REGISTERED PROFESSIONAL ENGINEER

PLANS DEVELOPED BY: STATE OF ALASKA DEPARTMENT OF TRANSPORTATION & PUBLIC FACILITIES, NORTHERN REGION, 2301 PEGER ROAD, FAIRBANKS, AK 99709 (907)451-2200
H:\Projects\Rich_Hwy\NFHWY00218_Rich_82_115 Resurface\05 Design\11 C3D\01_00218 97-115\MP 106.5-115 (00834)\NFHWY00834_H_SIGNING-Sign Summary 3 of 4 Tue, Sep/05/23 11:58am

NO.	DATE	REVISION

STATE	PROJECT DESIGNATION	YEAR	SHEET NO.	TOTAL SHEETS
ALASKA	PENDING / NFHWY00834	2023	H5	H14

SIGN SUMMARY

LOCATION NUMBER	STATION	LOCATION LT	LOCATION RT	ASDS CODE	LEGEND	SIZE (IN) H	SIZE (IN) X	SIZE (IN) V	BRACING/FRAMING BRACED	BRACING/FRAMING FRAMED	AREA (SF)	DIRECTION	POST TYPE	POST SIZE (IN)	POST NUMBER	REMARKS
116	1662+73		X	D3-100	Richardson Hwy	42	X	8	X		2.33	E	PST	2.5	1	4C/3C LETTERING
				D3-100	Richardson Hwy	42	X	8	X		2.33	W				
				D3-100	Copperville Rd	48	X	12	X		4.00	N				6C/4.5C LETTERING
				D3-100	Copperville Rd	48	X	12	X		4.00	S				
				R1-1	STOP	36	X	36	X		9.00	E				
117	1667+00	X		W11-8	EMERGENCY VEHICLE (SYM)	30	X	30	X		6.25	N	PST	2.5	1	
118	1668+35	X		R3-108B	LANE CONTROL (SYM)	30	X	30	X		6.25	N	PST	2.5	1	
119	1673+71	X		W2-2L	SIDE ROAD	30	X	30	X		6.25	S	PST	2.5	1	
120	1675+30		X	D10-203	MILE 112	14	X	36			3.50	N/S	PST	2.5	1	MESSAGE ON BOTH SIDES
121	1691+27		X	D9-102	SCENIC VIEWPOINT (SYM)											REMOVE
				D9-308	1500 FT											
122	1695+45		X		GOLDRUSH CENTENNIAL											REMOVE
					1000 FT											
					RIGHT ARROW (SYM)											
123	1705+28		X	D9-102	SCENIC VIEWPOINT (SYM)											REMOVE
				D9-301	RIGHT ARROW (SYM)											
124	1706+20		X	D9-102	SCENIC VIEWPOINT (SYM)											REMOVE
				D9-301	RIGHT ARROW (SYM)											
125	1707+37	X		D9-102	SCENIC VIEWPOINT (SYMBOL)											REMOVE
				D9-301	LEFT ARROW (SYM)											
126	1707+84	X		W7-1	HILL (SYM)	36	X	36	X		9.00	N	PST	2.5	1	
127	1711+99	X			ADOPT											REMOVE
					A											
					HIGHWAY											
					ASSN. TAZLINA											
					RESIDENTS											
128	1716+65	X			GOLDRUSH CENTENNIAL											REMOVE
					1000 FT											
					LEFT ARROW (SYM)											
129	1721+23	X		D9-102	SCENIC VIEWPOINT (SYMBOL)											REMOVE
				D9-308	1500 FT											
130	1728+02	X		R16-118	BUCKLE UP IT'S THE LAW	48	X	30	X		10.00	N	PST	2.5	1	
131	1731+29		X	D10-203	MILE 113	14	X	36			3.50	N/S	PST	2.5	1	MESSAGE ON BOTH SIDES
132	1778+44		X	SPECIAL 4	TOURIST INFO	90	X	48		X	30.00	S	TS	3	2	SEE NOTE 13; SPECIAL 4
					CENTER											
					1 MILE											
133	1779+82		X	D10-203	MILE 114	14	X	36			3.50	N/S	PST	2.5	1	MESSAGE ON BOTH SIDES
134	1779+86	X		I-221	TAZLINA	48	X	24	X		8.00	N	PST	2.5	1	
										TOTAL	502.12					

SIGN SUMMARY 4 OF 4

STATE OF ALASKA 49TH
RUSSELL M. JOHNSON
C.E. 9963
REGISTERED PROFESSIONAL ENGINEER

PLANS DEVELOPED BY: STATE OF ALASKA DEPARTMENT OF TRANSPORTATION & PUBLIC FACILITIES, NORTHERN REGION, 2301 PEGER ROAD, FAIRBANKS, AK 99709 (907)451-2200
H:\Projects\Rich_Hwy\NFHWY00218_Rich_82_115 Resurface\05 Design\11 C3D\01_00218 97-115\MP 106.5-115 (008341)\NFHWY00834_H_SIGNING-Sign Summary 4 of 4 Tue, Sep/05/23 11:59am

NO.	DATE	REVISION

STATE	PROJECT DESIGNATION	YEAR	SHEET NO.	TOTAL SHEETS
ALASKA	PENDING / NFHWY00834	2023	H6	H14

BORDER
RADIUS=3"
WIDTH=1"
INSET=N/A

SPECIAL 4

COLORS
BORDER & LEGEND: WHITE
BACKGROUND: BLUE

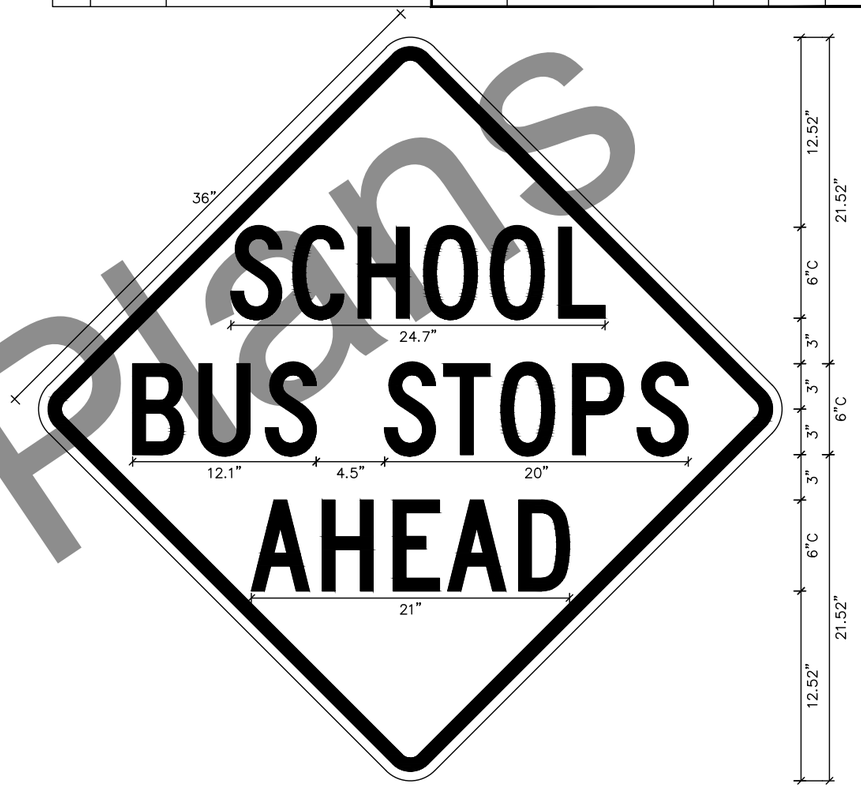

SPECIAL 5

BORDER
RADIUS=1.625"
WIDTH=0.875"
INSET=0.625"

COLORS
BORDER & LEGEND: BLACK
BACKGROUND: FLUORESCENT YELLOW GREEN

SPECIAL SIGNS

STATE OF ALASKA 49TH
RUSSELL M. JOHNSON
C.E. 9963
REGISTERED PROFESSIONAL ENGINEER

PLANS DEVELOPED BY: STATE OF ALASKA DEPARTMENT OF TRANSPORTATION & PUBLIC FACILITIES, NORTHERN REGION, 2301 PEGER ROAD, FAIRBANKS, AK 99709 (907)451-2200
H:\Projects\Rich_Hwy\NFHWY00218_Rich_82_115 Resurface\05 Design\11 C3D\01_00218 97-115\MP 106.5-115 (00834)\NFHWY00834_H_SPECIAL SIGNS-Special Signs Tue, Sep/05/23 11:59am

NO.	DATE	REVISION

STATE	PROJECT DESIGNATION	YEAR	SHEET NO.	TOTAL SHEETS
ALASKA	PENDING / NFHWY00834	2023	H7	H14

PAINTED TRAFFIC MARKINGS SUMMARY

DESCRIPTION	QUANTITY	UNITS	REMARKS
4" WHITE	79,000	LF	
8" WHITE	730	LF	
24" WHITE	300	SF	STOP BARS
4" YELLOW	72,900	LF	YELLOW IS ESTIMATED AS 1.8x THE PROJECT LENGTH
18" YELLOW	340	SF	STD / GORING
LEFT/RIGHT TURN ARROW	7	EACH	

APPROACH MARKING SUMMARY

APPROACH NO.	ESTIMATED LENGTH (FT) OF 24" WHITE STOP BAR	REMARKS
A-23	28	
A-34	28	
A-45	30	
A-52	27	
A-61	36	

TRAFFIC MARKING NOTES:

1. IF NEW AND EXISTING LONGITUDINAL MARKINGS ARE NOT ALIGNED AT THE MATCH LINE, TRANSITION BETWEEN THE TWO USING A 100:1 TAPER.
2. THE PASS ZONE STRIPE/SKIP RATIO FOR THIS PROJECT WILL BE 10 FT/30 FT. THE PASS/NO-PASS ZONES WILL BE DETERMINED IN THE FIELD BY THE CONTRACTOR ACCORDING TO SECTION 670. THIS WORK IS SUBSIDIARY TO PAY ITEM 670.0001.0000 PAINTED TRAFFIC MARKINGS.
3. PAVEMENT MARKINGS WILL BE PLACED IN ACCORDANCE WITH STANDARD PLANS T-20.04, T-21.04, T-22.04, SECTION 670, AND THESE H-SERIES PLAN SHEETS.
4. NO ADJUSTMENT WILL BE MADE TO THE 670.0001.0000 PAY ITEM FOR DIFFERENCES IN QUANTITY OF YELLOW STRIPE INSTALLED ACCORDING TO 670-3.05, PRELIMINARY SPOTTING.
5. MILLED RUMBLE STRIPS SHALL BE INSTALLED ON SHOULDERS. SEE STANDARD PLAN T-25.10 FOR ADDITIONAL INFORMATION.

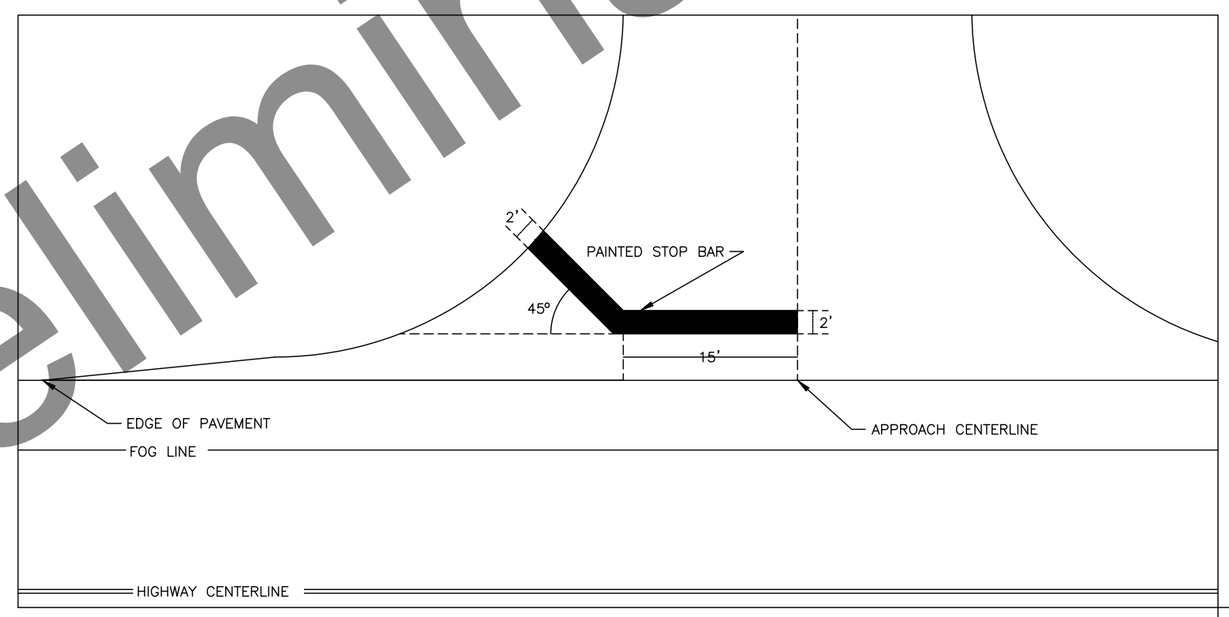

APPROACH PAINTED MARKING DETAIL

APPROACH MARKING NOTES:

1. APPROACHES TO RECEIVE STOP BARS ARE INDICATED IN APPROACH MARKING SUMMARY AND DEPICTED ON H-SHEETS.
2. CONTINUE STOP BAR STRIPING AT 45 DEGREE ANGLE UNTIL REACHING THE EDGE OF THE APPROACH OR THE FOG LINE IN CASES WHERE THE APPROACH IS THAT OF A STREET WITH PAINTED FOG LINE MARKINGS.

STRIPING SUMMARY & DETAILS

STATE OF ALASKA 49TH
RUSSELL M. JOHNSON
C.E. 9963
REGISTERED PROFESSIONAL ENGINEER

PLANS DEVELOPED BY: STATE OF ALASKA DEPARTMENT OF TRANSPORTATION & PUBLIC FACILITIES, NORTHERN REGION, 2301 PEGER ROAD, FAIRBANKS, AK 99709 (907)451-2200
H:\Projects\Rich_Hwy\NFHWY00218_Rich_82_115 Resurface\05 Design\11 C3D\01_00218 97-115\MP 106.5-115 (00834)\NFHWY00834_H_STRIPING NOTES-Striping Summary & Details Tue, Sep/05/23 11:59am

NO.	DATE	REVISION

STATE	PROJECT DESIGNATION	YEAR	SHEET NO.	TOTAL SHEETS
ALASKA	PENDING / NFHWY00834	2023	H8	H14

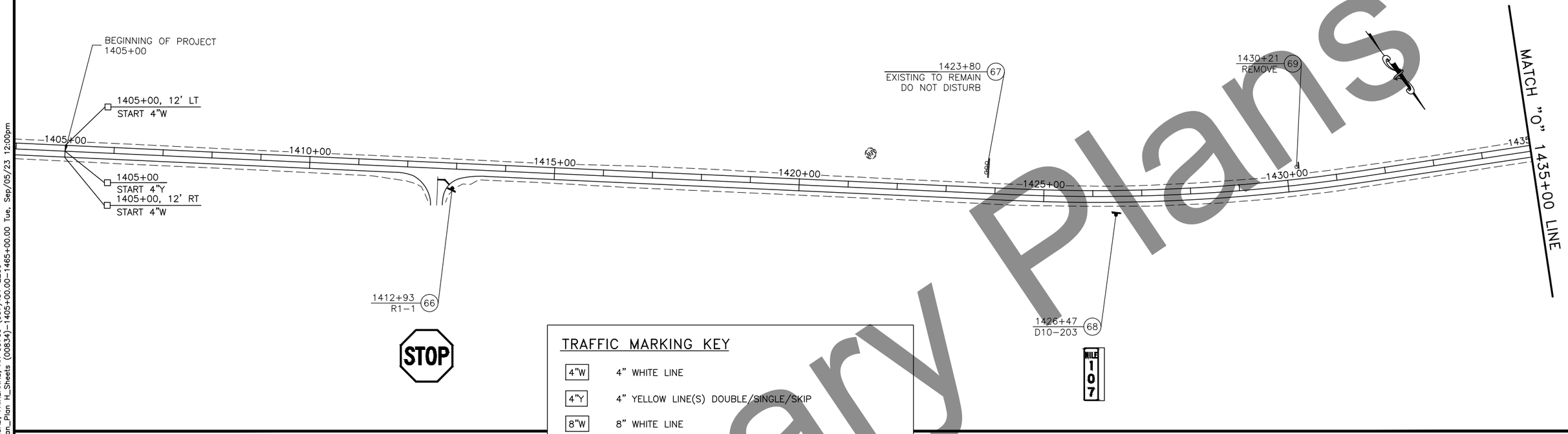

TRAFFIC MARKING KEY

4"W	4" WHITE LINE
4"Y	4" YELLOW LINE(S) DOUBLE/SINGLE/SKIP
8"W	8" WHITE LINE
4"WD-1	4" WHITE WIDE DOTTED LINE (2' STRIPE/6' SKIP PATTERN)
24"W	24" WHITE LINE
STD	SEE STANDARD DRAWING

NOTE:
DIMENSIONS ARE TO CENTER OF STRIPE OR STRIPE GROUP.

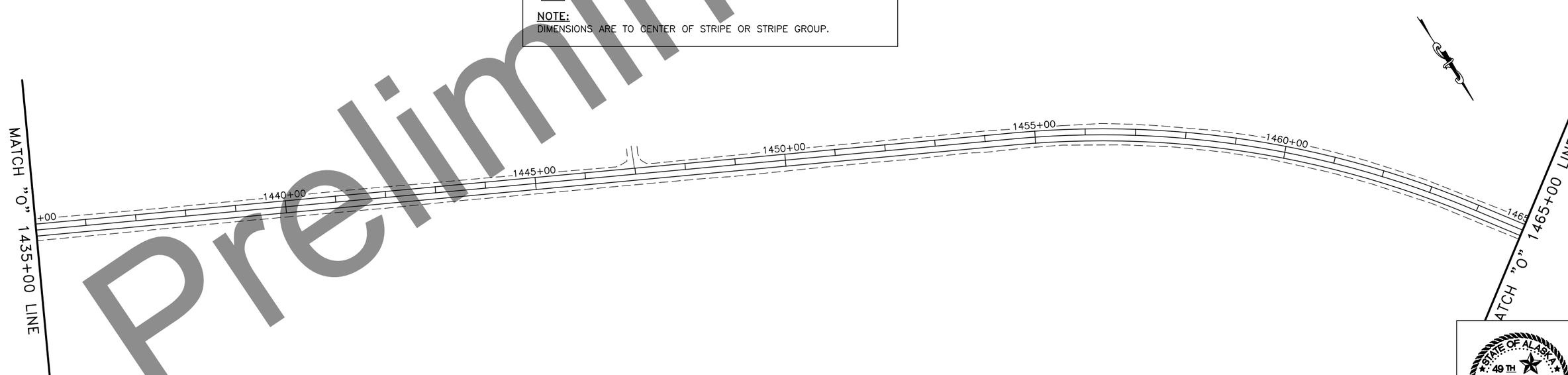

SIGNING & STRIPING 1 OF 7

STATE OF ALASKA 49TH REGISTERED PROFESSIONAL ENGINEER

PLANS DEVELOPED BY: STATE OF ALASKA DEPARTMENT OF TRANSPORTATION & PUBLIC FACILITIES, NORTHERN REGION, 2301 PEGER ROAD, FAIRBANKS, AK 99709 (907)451-2200
H:\Projects\Rich_Hwy\NFHWY00218_Rich_82_115 Resurface\05 Design\11 C3D\01_00218 97-115\MP 106.5-115 (00834)\00 Plan_Plan H_Sheets (00834)-1405+00.00-1465+00.00 Tue, Sep/05/23 12:00pm

NO.	DATE	REVISION

STATE	PROJECT DESIGNATION	YEAR	SHEET NO.	TOTAL SHEETS
ALASKA	PENDING / NFHWY00834	2023	H9	H14

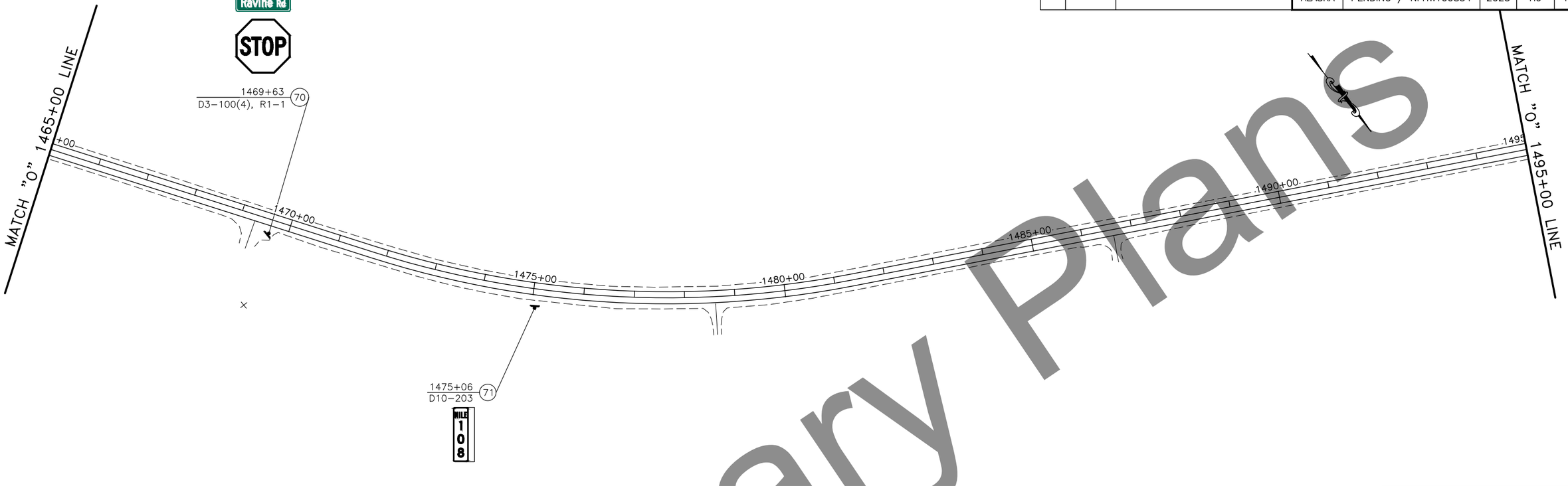

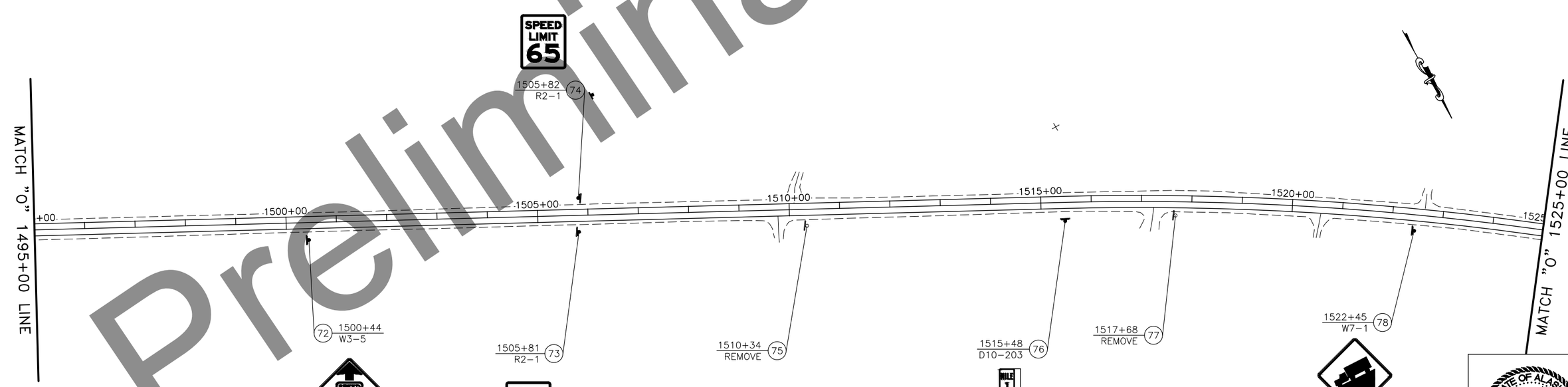

SIGNING & STRIPING 2 OF 7

STATE OF ALASKA 49TH
###
###
REGISTERED PROFESSIONAL ENGINEER

PLANS DEVELOPED BY: STATE OF ALASKA DEPARTMENT OF TRANSPORTATION & PUBLIC FACILITIES, NORTHERN REGION, 2301 PEGER ROAD, FAIRBANKS, AK 99709 (907)451-2200
H:\Projects\Rich_Hwy\NFHWY00218_Rich_82_115 Resurface\05 Design\11 C3D\01_00218 97-115\MP 106.5-115 (00834)\00 Plan_Plan H_Sheets (00834)-1465+00.00-1525+00.00 Tue, Sep/05/23 12:00pm

NO.	DATE	REVISION

STATE	PROJECT DESIGNATION	YEAR	SHEET NO.	TOTAL SHEETS
ALASKA	PENDING / NFHWY00834	2023	H10	H14

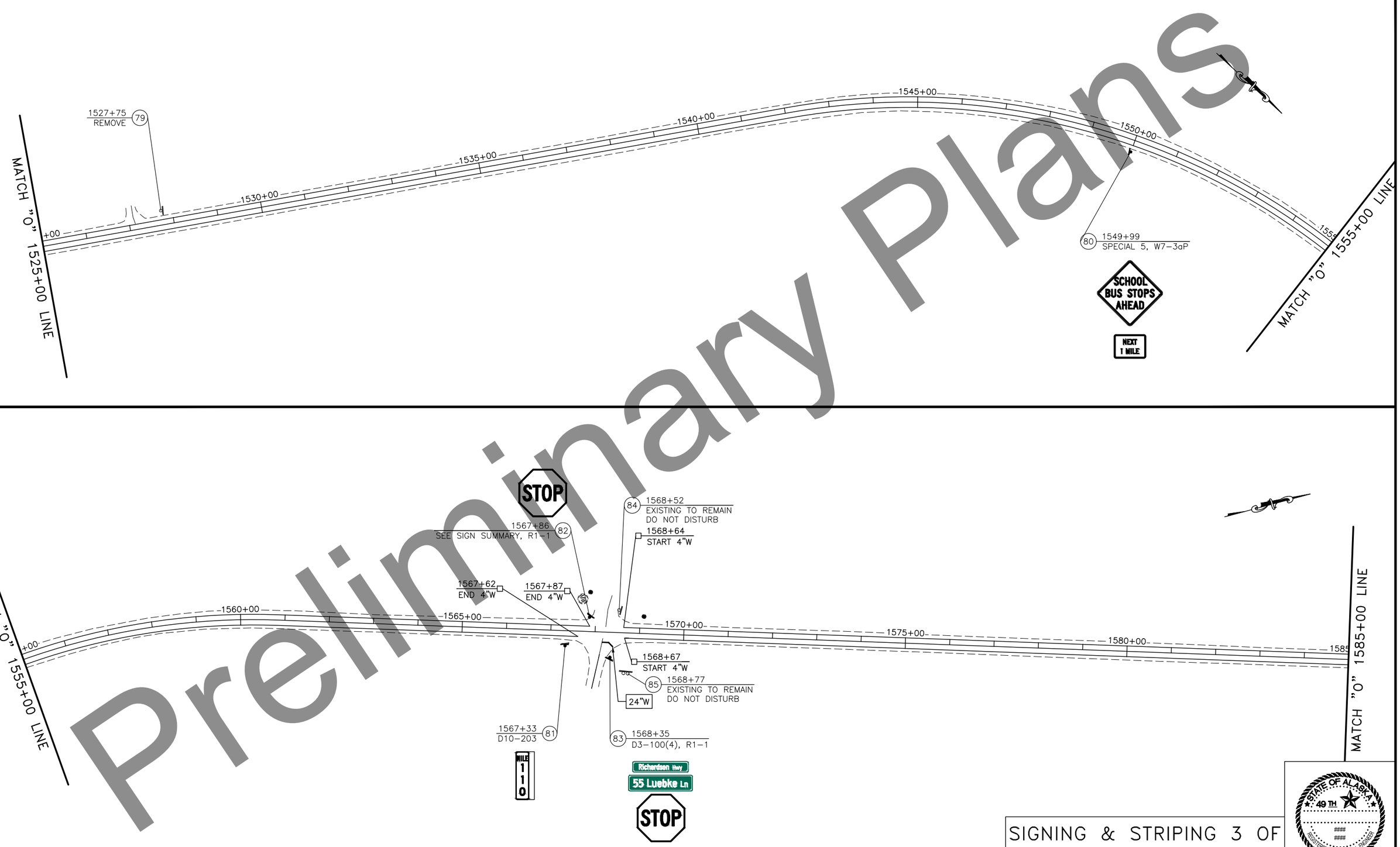

SIGNING & STRIPING 3 OF 7

STATE OF ALASKA 49TH
###
###
REGISTERED PROFESSIONAL ENGINEER

PLANS DEVELOPED BY: STATE OF ALASKA DEPARTMENT OF TRANSPORTATION & PUBLIC FACILITIES, NORTHERN REGION, 2301 PEGER ROAD, FAIRBANKS, AK 99709 (907)451-2200
H:\Projects\Rich_Hwy\NFHWY00218_Rich_82_115 Resurface\05 Design\11 C3D\01_00218 97-115\MP 106.5-115 (00834)\00 Plan_Plan H_Sheets (00834)-1525+00.00-1585+00.00 Tue, Sep/05/23 12:01pm

NO.	DATE	REVISION

STATE	PROJECT DESIGNATION	YEAR	SHEET NO.	TOTAL SHEETS
ALASKA	PENDING / NFHWY00834	2023	H11	H14

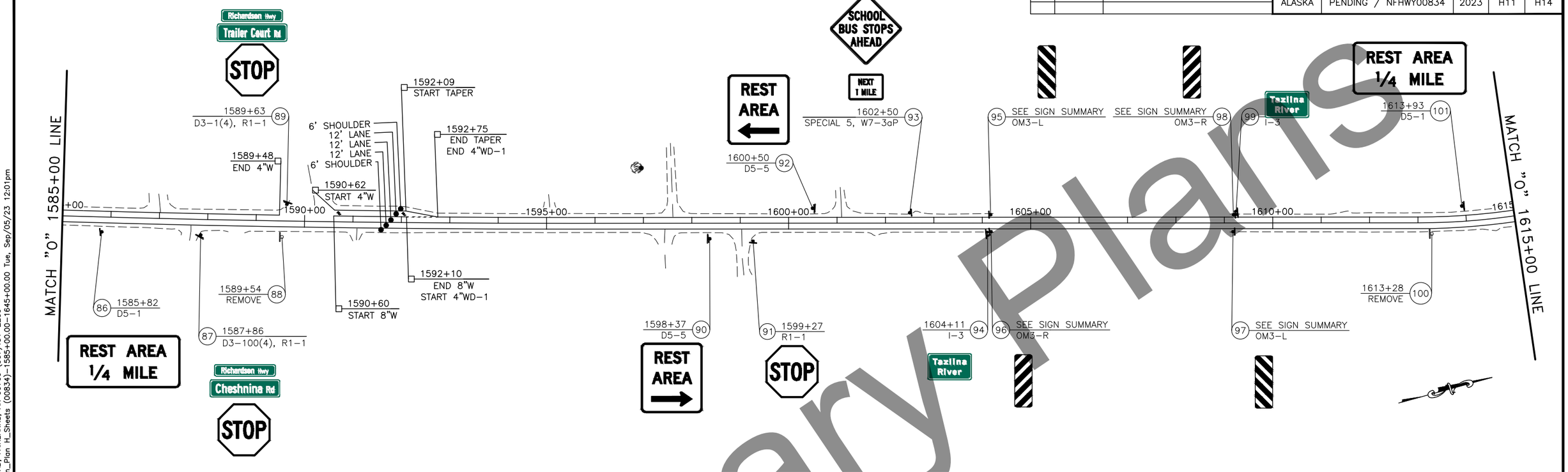

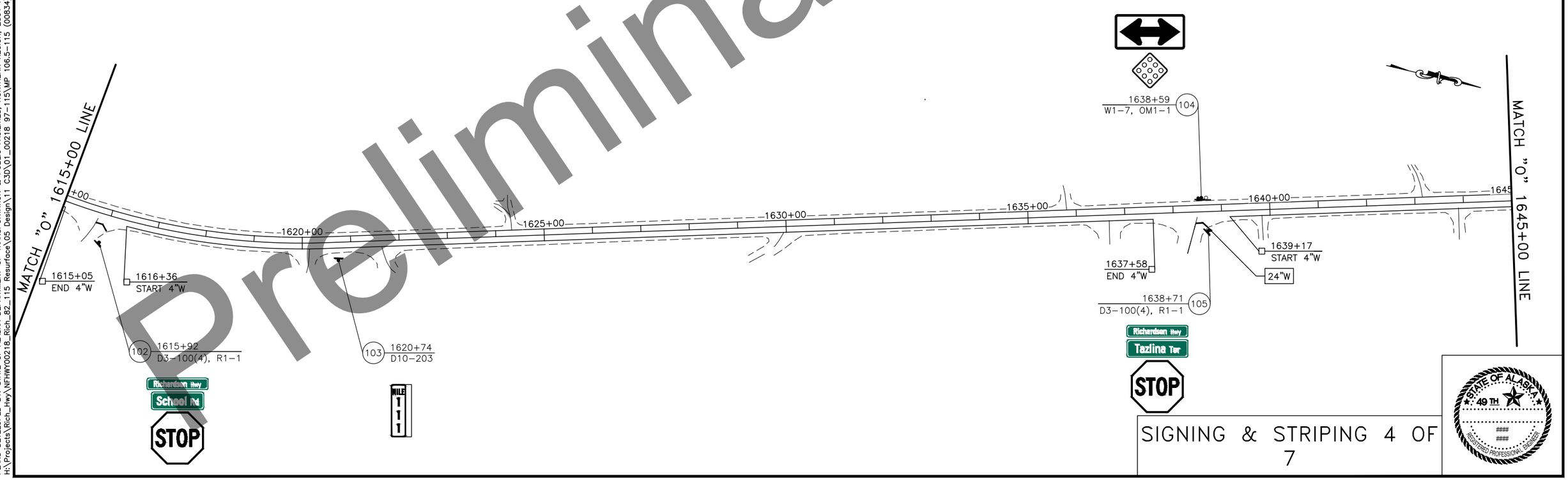

SIGNING & STRIPING 4 OF 7

STATE OF ALASKA 49TH
###
###
REGISTERED PROFESSIONAL ENGINEER

PLANS DEVELOPED BY: STATE OF ALASKA DEPARTMENT OF TRANSPORTATION & PUBLIC FACILITIES, NORTHERN REGION, 2301 PEGER ROAD, FAIRBANKS, AK 99709 (907)451-2200
H:\Projects\Rich_Hwy\NFHWY00218_Rich_82_115 Resurface\05 Design\11 C3D\01_00218 97-115\MP 106.5-115 (00834)\00 Plan_Plan H_Sheets (00834)-1585+00.00-1645+00.00 Tue, Sep/05/23 12:01pm

NO.	DATE	REVISION

STATE	PROJECT DESIGNATION	YEAR	SHEET NO.	TOTAL SHEETS
ALASKA	PENDING / NFHWY00834	2023	H12	H14

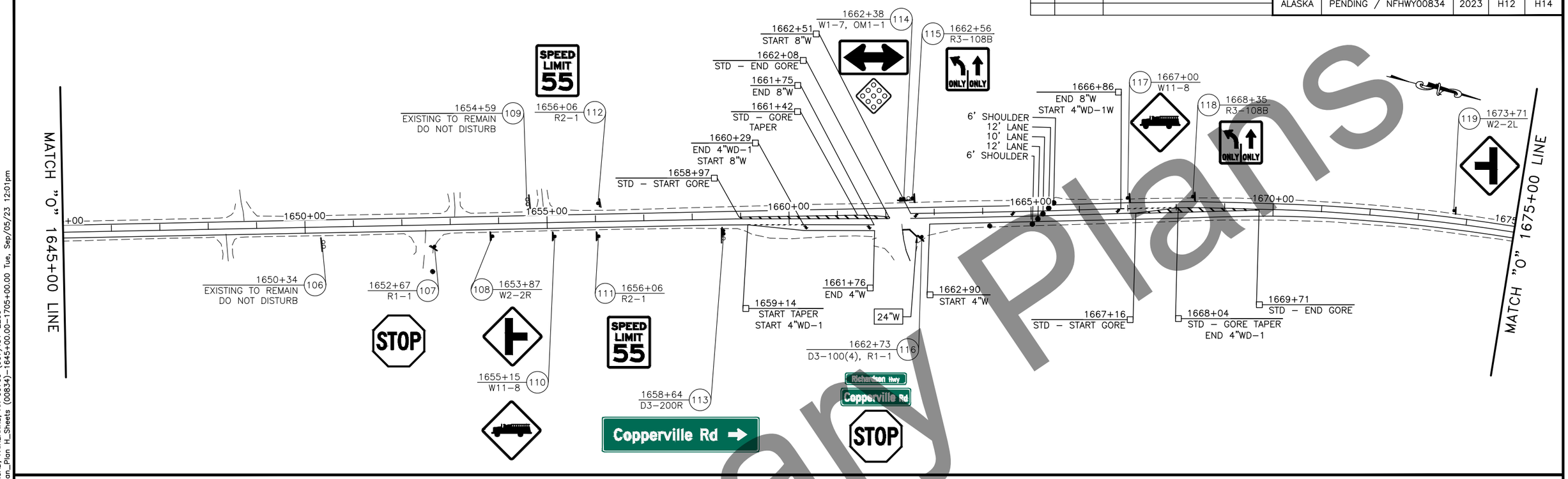

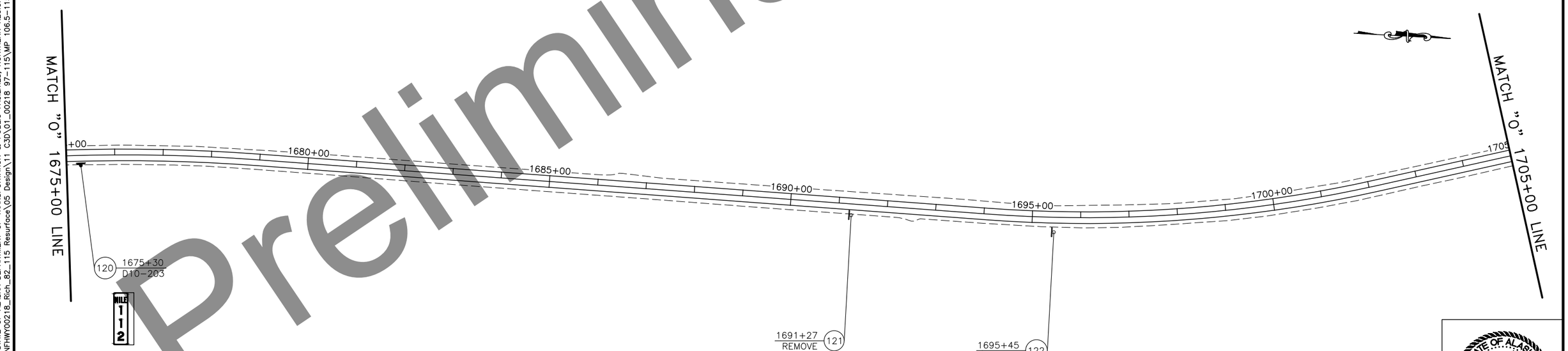

SIGNING & STRIPING 5 OF 7

STATE OF ALASKA 49TH REGISTERED PROFESSIONAL ENGINEER

PLANS DEVELOPED BY: STATE OF ALASKA DEPARTMENT OF TRANSPORTATION & PUBLIC FACILITIES, NORTHERN REGION, 2301 PEGER ROAD, FAIRBANKS, AK 99709 (907)451-2200
H:\Projects\Rich_Hwy\NFHWY00218_Rich_82_115 Resurface\05 Design\11 C3D\01_00218 97-115\MP 106.5-115 (00834)\00 Plan_Plan H_Sheets (00834)-1645+00.00-1705+00.00 Tue, Sep/05/23 12:01pm

NO.	DATE	REVISION

STATE	PROJECT DESIGNATION	YEAR	SHEET NO.	TOTAL SHEETS
ALASKA	PENDING / NFHWY00834	2023	H13	H14

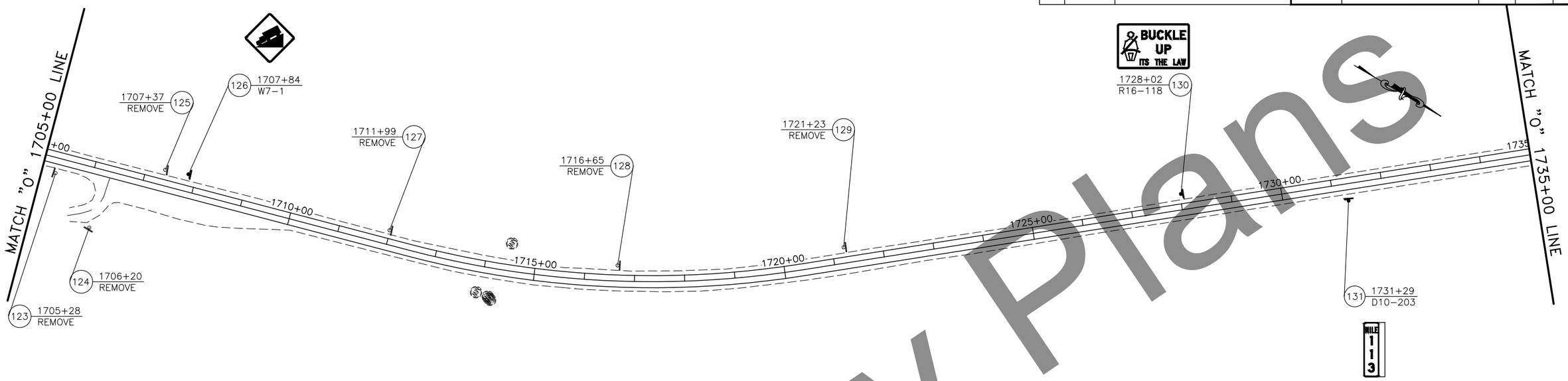

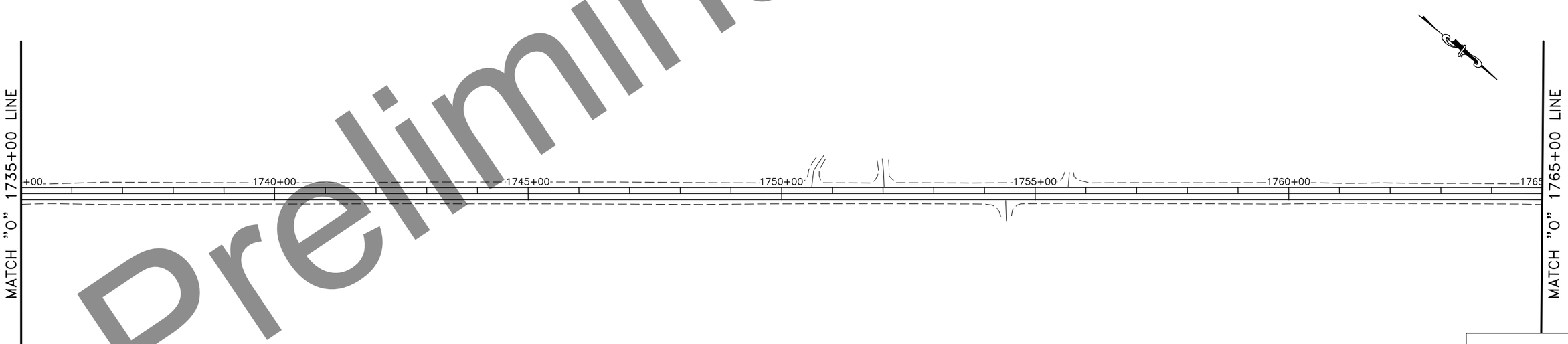

SIGNING & STRIPING 6 OF 7

STATE OF ALASKA 49TH REGISTERED PROFESSIONAL ENGINEER ### ###

PLANS DEVELOPED BY: STATE OF ALASKA DEPARTMENT OF TRANSPORTATION & PUBLIC FACILITIES, NORTHERN REGION, 2301 PEGER ROAD, FAIRBANKS, AK 99709 (907)451-2200
H:\Projects\Rich_Hwy\NFHWY00218_Rich_82_115 Resurface\05 Design\11 C3D\01_00218 97-115\MP 106.5-115 (00834)\00 Plan_Plan H_Sheets (00834)-1705+00.00-1765+00.00 Tue, Sep/05/23 12:02pm

NO.	DATE	REVISION

STATE	PROJECT DESIGNATION	YEAR	SHEET NO.	TOTAL SHEETS
ALASKA	PENDING / NFHWY00834	2023	H14	H14

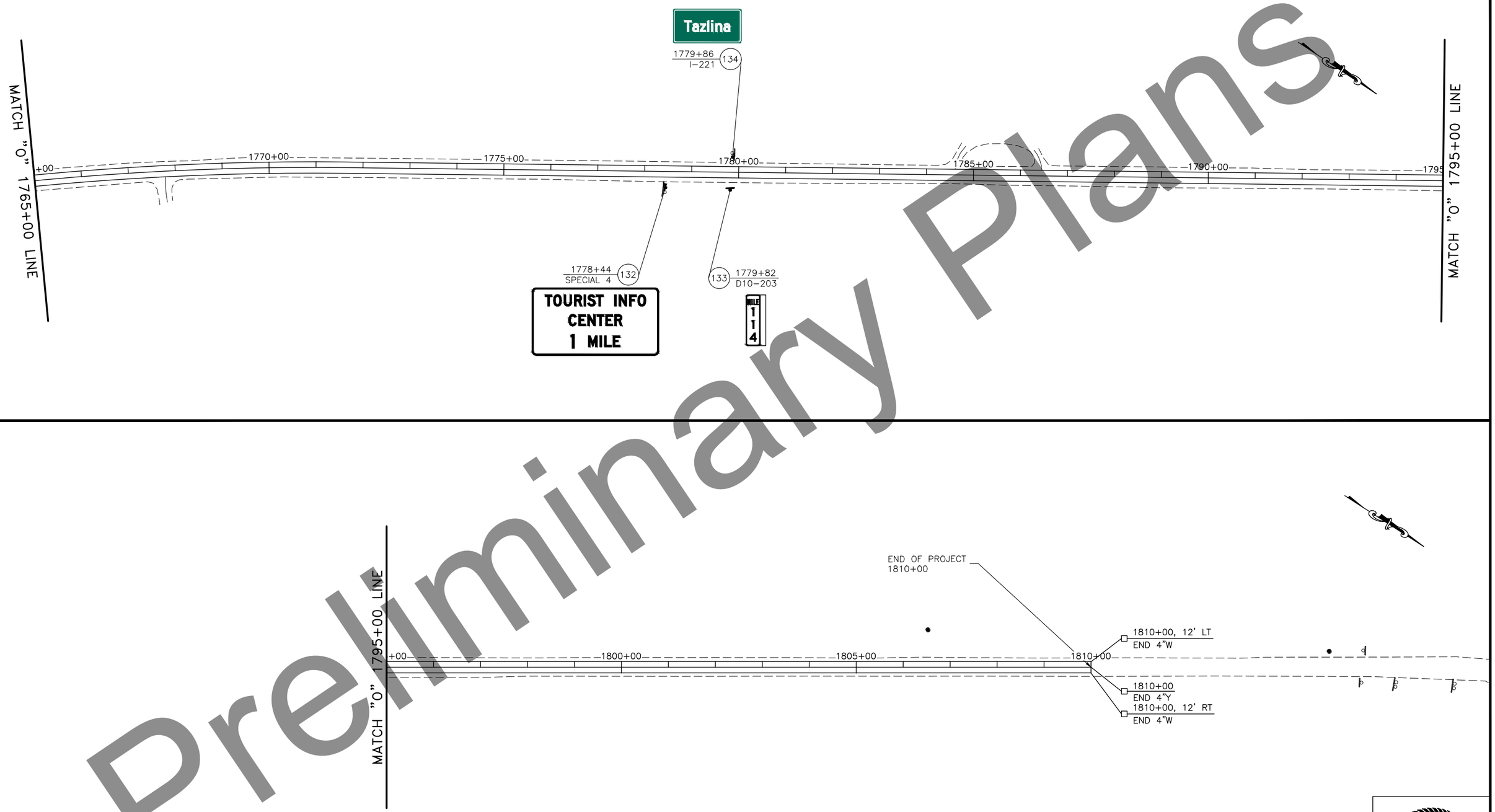

SIGNING & STRIPING 7 OF 7

STATE OF ALASKA 49TH REGISTERED PROFESSIONAL ENGINEER

PLANS DEVELOPED BY: STATE OF ALASKA DEPARTMENT OF TRANSPORTATION & PUBLIC FACILITIES, NORTHERN REGION, 2301 PEGER ROAD, FAIRBANKS, AK 99709 (907)451-2200
H:\Projects\Rich_Hwy\NFHWY00218_Rich_82_115 Resurface\05 Design\11 C3D\01_00218 97-115\MP 106.5-115 (00834)\00 Plan_Plan H_Sheets (00834)-1765+00.00-1810+00.00 Tue, Sep/05/23 12:02pm

NO.	DATE	REVISION

STATE	PROJECT DESIGNATION	YEAR	SHEET NO.	TOTAL SHEETS
ALASKA	PENDING / NFHWY00834	2023	Q1	Q9

ESCP GENERAL NOTES:

1. THIS ESCP IS A GENERAL PLAN FOR GUIDING THE DEVELOPMENT OF THE CONTRACTOR'S SWPPP. THE CONTRACTOR IS EXPECTED TO PROVIDE ADDITIONAL DETAILS AND BMPS BASED ON THE CONTRACTORS ACTUAL SCHEDULE AND CONSTRUCTION METHODS, AS REQUIRED TO COMPLY WITH THE CONSTRUCTION GENERAL PERMIT AND SECTION 641 OF THE PROJECT SPECIFICATIONS.

2. CONSTRUCTION ENTRANCE/EXIT MUST BE ESTABLISHED TO MINIMIZE OFF-SITE IMPACTS.

3. INSTALL PERIMETER CONTROL BMP WHEN WORKING WITHIN 25 FEET OF SURFACE WATERS AND ALONG WETLANDS WHERE A 25 FOOT VEGETATIVE BUFFER IS NOT RETAINED.

4. IF EXCAVATION DE-WATERING WILL OCCUR WITHIN 1,500 FT OF AN ADEC IDENTIFIED CONTAMINATED SITE, THE PROJECT MUST COMPLY WITH THE ADEC EXCAVATION DE-WATERING GENERAL PERMIT.

5. ALL IN-WATER WORK MUST BE ISOLATED FROM WATERS OF THE U.S. USING APPROPRIATE BMPS. ISOLATION METHODS MAY INCLUDE:
   - 5.1. SILT CURTAINS
   - 5.2. COFFERDAMS
   - 5.3. DIVERSIONS
   - 5.4. OTHER METHODS APPROVED BY THE ENGINEER

6. INLET / OUTLET PROTECTION REQUIRED FOR ALL CULVERTS, CROSSING CULVERT PROTECTION IS SHOWN ON THE ESCP SHEETS, DRIVEWAY CULVERTS ARE NOT SHOWN FOR VISUAL CLARIFICATION.

7. AREAS OF DISTURBANCE, TEMPORARY AND PERMANENT STABILIZATION, WILL BE MARKED AS WORK PROCEEDS AND ADDED TO THE LEGEND.

8. REFER TO APPENDIX A OF THE SPECIFICATIONS FOR ENVIRONMENTAL PERMIT INFORMATION.

9. REFER TO APPENDIX C OF THE SPECIFICATIONS FOR THE ESCP TEMPLATE.

ESCP NOTES

STATE OF ALASKA 49TH
RUSSELL M. JOHNSON
C.E. 9963
REGISTERED PROFESSIONAL ENGINEER

PLANS DEVELOPED BY: STATE OF ALASKA DEPARTMENT OF TRANSPORTATION & PUBLIC FACILITIES, NORTHERN REGION, 2301 PEGER ROAD, FAIRBANKS, AK 99709 (907)451-2200
H:\Projects\Rich_Hwy\NFHWY00218_Rich_82_115 Resurface\05 Design\11 C3D\01_00218 97-115\MP 106.5-115 (00834)\NFHWY00834_Q_ESCP_NOTES-ESCP Notes Tue, Sep/05/23 12:02pm

NO.	DATE	REVISION

STATE	PROJECT DESIGNATION	YEAR	SHEET NO.	TOTAL SHEETS
ALASKA	PENDING / NFHWY00834	2023	Q2	Q9

ESCP LEGEND

- INLET PROTECTION
- OUTLET PROTECTION
- FLOW ARROWS
- PERIMETER CONTROL
- CONSTRUCTION ENTRANCE/EXIT
- WETLANDS

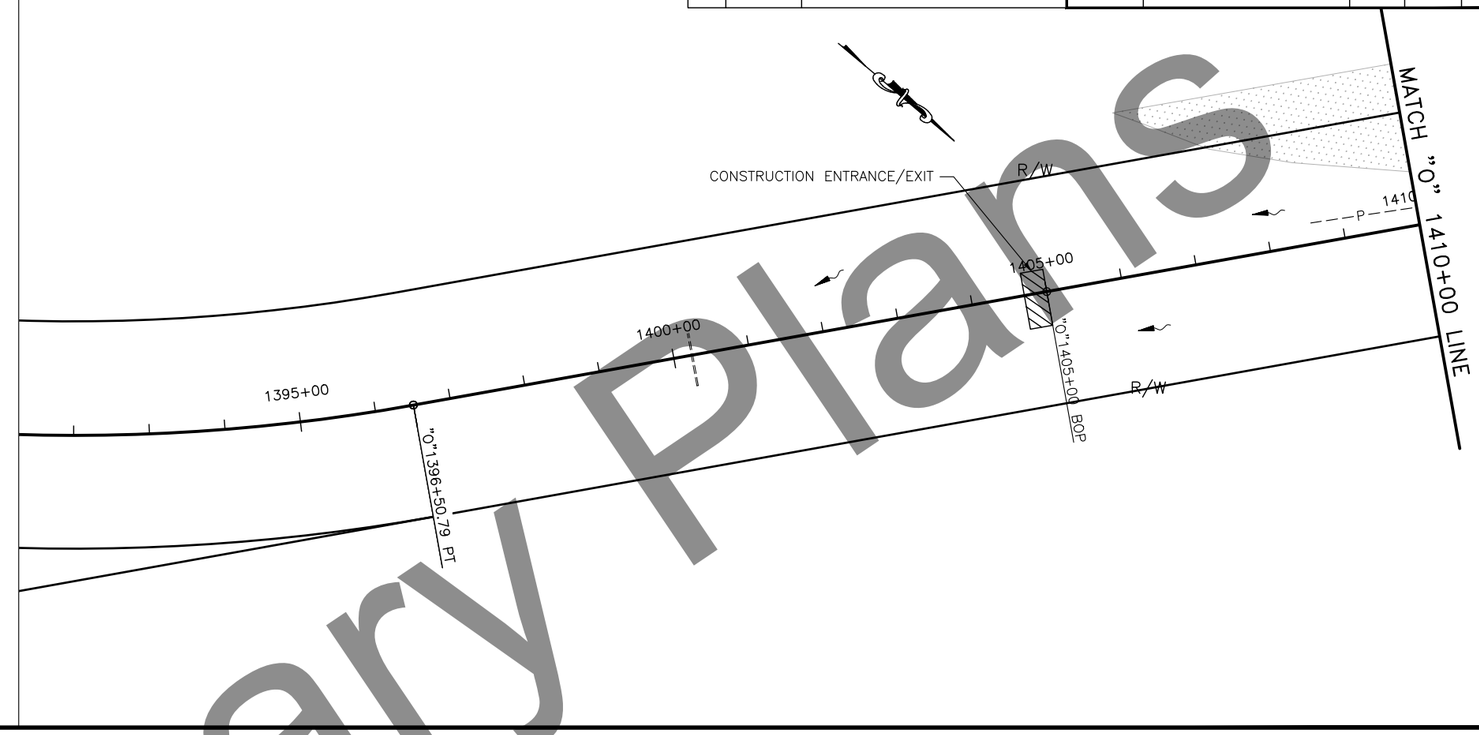

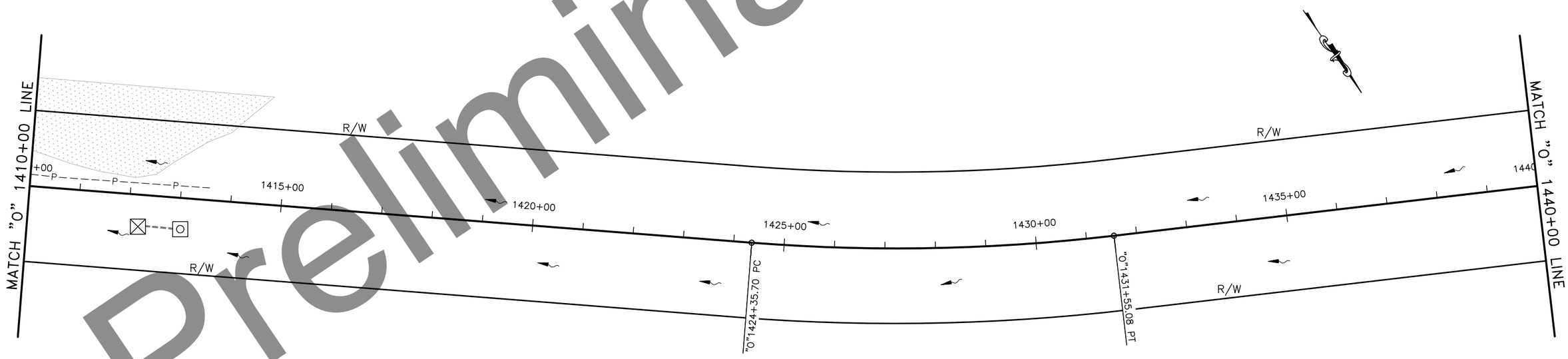

ESCP 1 OF 8

PLANS DEVELOPED BY: STATE OF ALASKA DEPARTMENT OF TRANSPORTATION & PUBLIC FACILITIES, NORTHERN REGION, 2301 PEGER ROAD, FAIRBANKS, AK 99709 (907)451-2200
H:\Projects\Rich_Hwy\NFHWY00218_Rich_82_115 Resurface\05 Design\11 C3D\01_00218 97-115\MP 106.5-115 (00834)\00 Plan_Plan Q_Sheets (00834)-ESCP 1 OF 8 Tue, Sep/05/23 12:03pm

NO.	DATE	REVISION

STATE	PROJECT DESIGNATION	YEAR	SHEET NO.	TOTAL SHEETS
ALASKA	PENDING / NFHWY00834	2023	Q3	Q9

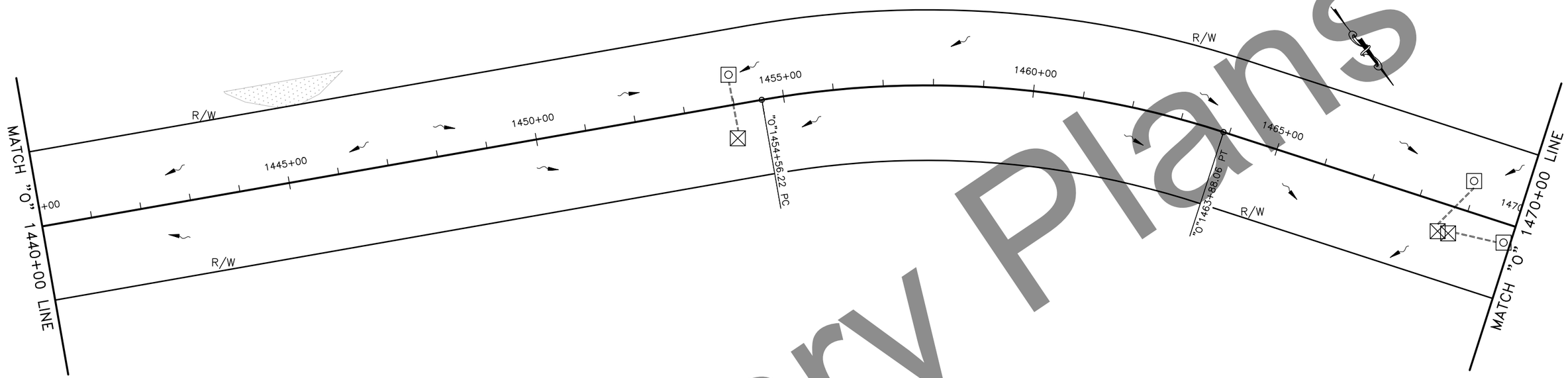

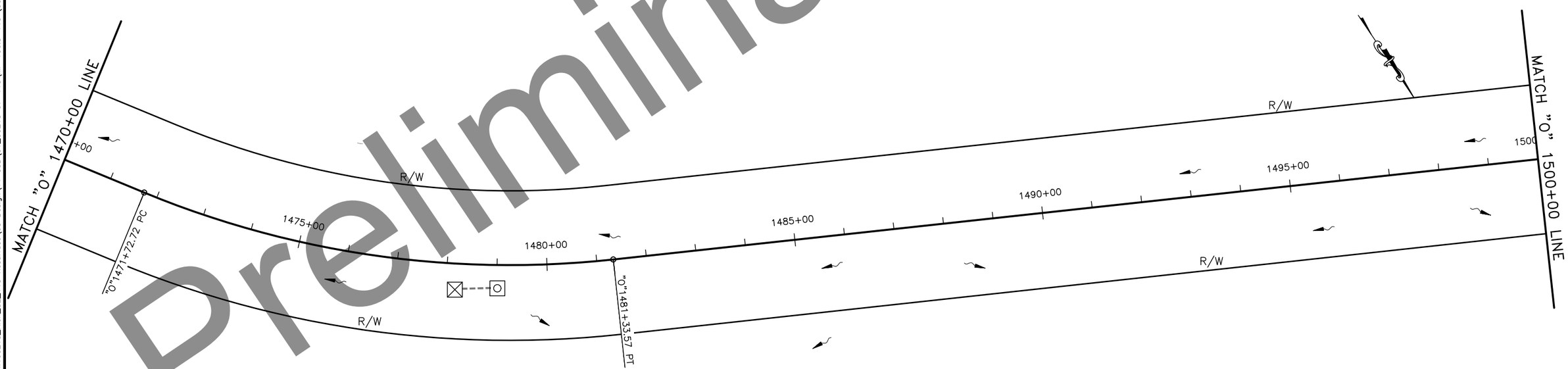

ESCP 2 OF 8

PLANS DEVELOPED BY: STATE OF ALASKA DEPARTMENT OF TRANSPORTATION & PUBLIC FACILITIES, NORTHERN REGION, 2301 PEGER ROAD, FAIRBANKS, AK 99709 (907)451-2200
H:\Projects\Rich_Hwy\NFHWY00218_Rich_82_115 Resurface\05 Design\11 C3D\01_00218 97-115\MP 106.5-115 (00834)\00 Plan_Plan Q_Sheets (00834)-ESCP 2 OF 8 Tue, Sep/05/23 12:03pm

NO.	DATE	REVISION

STATE	PROJECT DESIGNATION	YEAR	SHEET NO.	TOTAL SHEETS
ALASKA	PENDING / NFHWY00834	2023	Q4	Q9

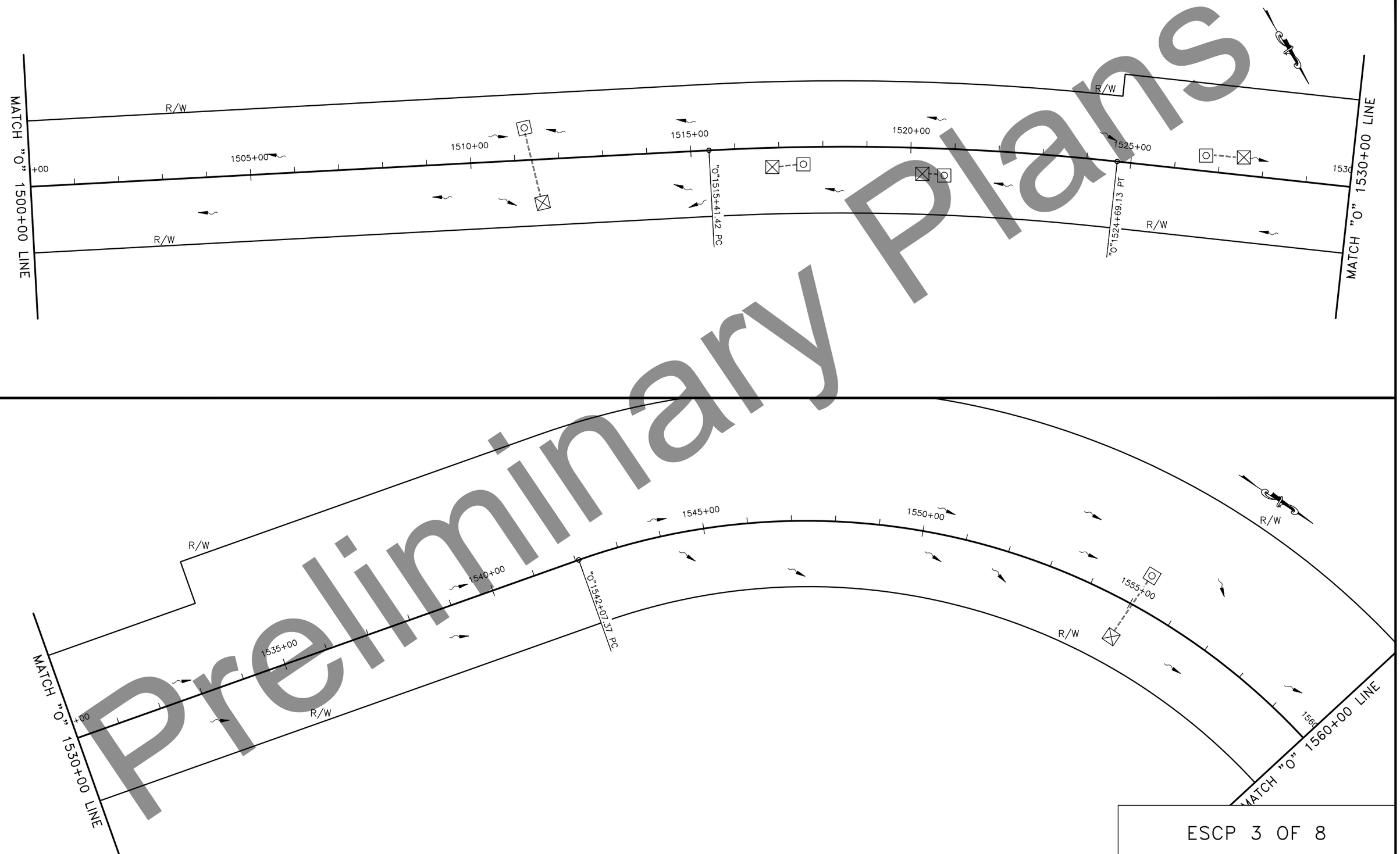

ESCP 3 OF 8

PLANS DEVELOPED BY: STATE OF ALASKA DEPARTMENT OF TRANSPORTATION & PUBLIC FACILITIES, NORTHERN REGION, 2301 PEGER ROAD, FAIRBANKS, AK 99709 (907)451-2200
H:\Projects\Rich_Hwy\NFHWY00218_Rich_82_115 Resurface\05 Design\11 C3D\01_00218 97-115\MP 106.5-115 (00834)\00 Plan_Plan Q_Sheets (00834)-ESCP 3 OF 8 Tue, Sep/05/23 12:03pm

NO.	DATE	REVISION

STATE	PROJECT DESIGNATION	YEAR	SHEET NO.	TOTAL SHEETS
ALASKA	PENDING / NFHWY00834	2023	Q5	Q9

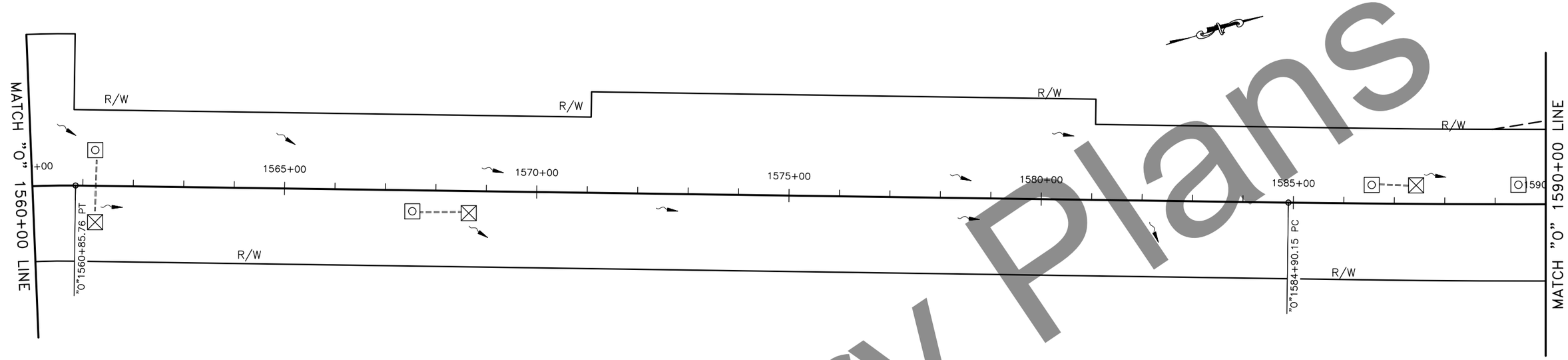

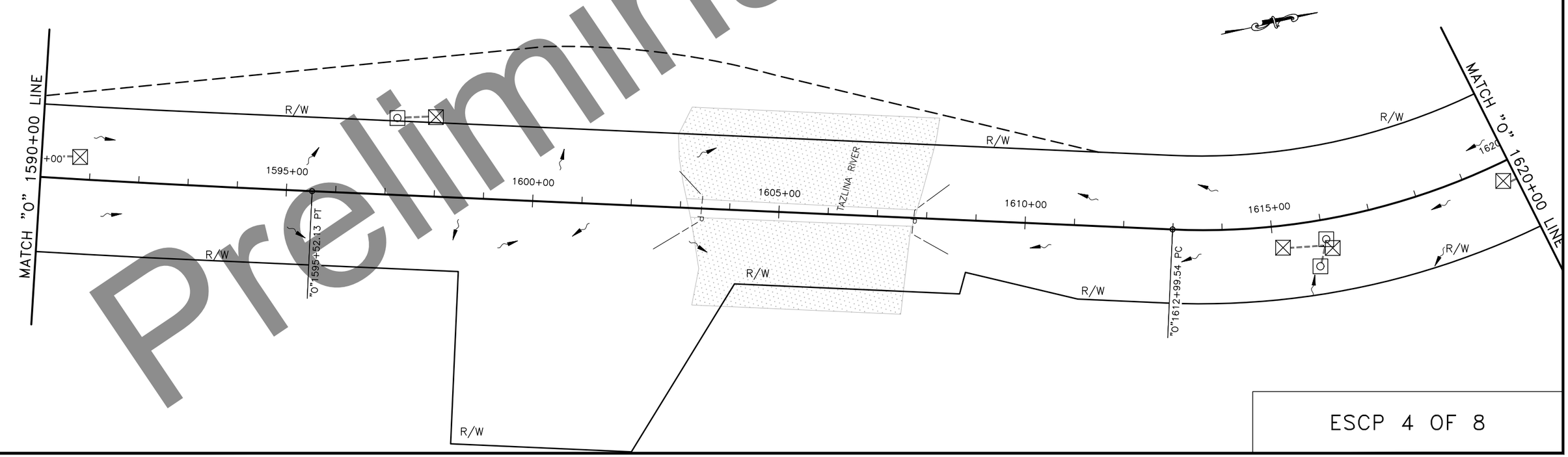

ESCP 4 OF 8

PLANS DEVELOPED BY: STATE OF ALASKA DEPARTMENT OF TRANSPORTATION & PUBLIC FACILITIES, NORTHERN REGION, 2301 PEGER ROAD, FAIRBANKS, AK 99709 (907)451-2200
H:\Projects\Rich_Hwy\NFHWY00218_Rich_82_115 Resurface\05 Design\11 C3D\01_00218 97-115\MP 106.5-115 (00834)\00 Plan_Plan Q_Sheets (00834)-ESCP 4 OF 8 Tue, Sep/05/23 12:03pm

NO.	DATE	REVISION

STATE	PROJECT DESIGNATION	YEAR	SHEET NO.	TOTAL SHEETS
ALASKA	PENDING / NFHWY00834	2023	Q6	Q9

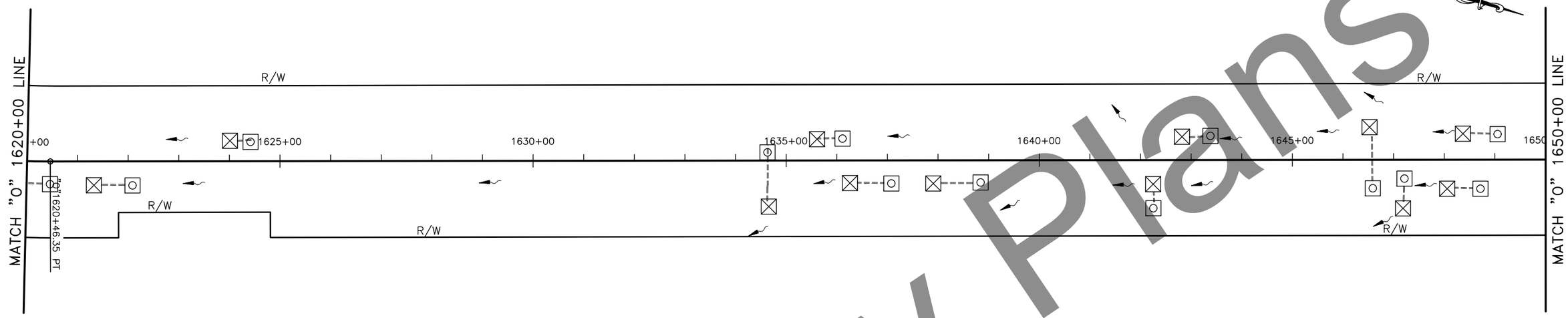

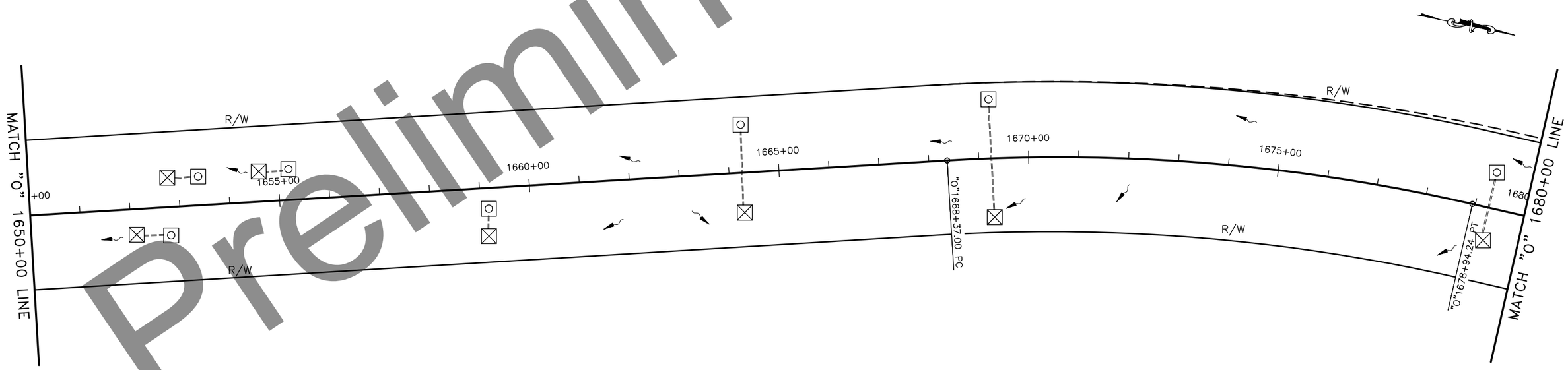

ESCP 5 OF 8

PLANS DEVELOPED BY: STATE OF ALASKA DEPARTMENT OF TRANSPORTATION & PUBLIC FACILITIES, NORTHERN REGION, 2301 PEGER ROAD, FAIRBANKS, AK 99709 (907)451-2200
H:\Projects\Rich_Hwy\NFHWY00218_Rich_82_115 Resurface\05 Design\11 C3D\01_00218 97-115\MP 106.5-115 (00834)\00 Plan_Plan Q_Sheets (00834)-ESCP 5 OF 8 Tue, Sep/05/23 12:04pm

NO.	DATE	REVISION

STATE	PROJECT DESIGNATION	YEAR	SHEET NO.	TOTAL SHEETS
ALASKA	PENDING / NFHWY00834	2023	Q7	Q9

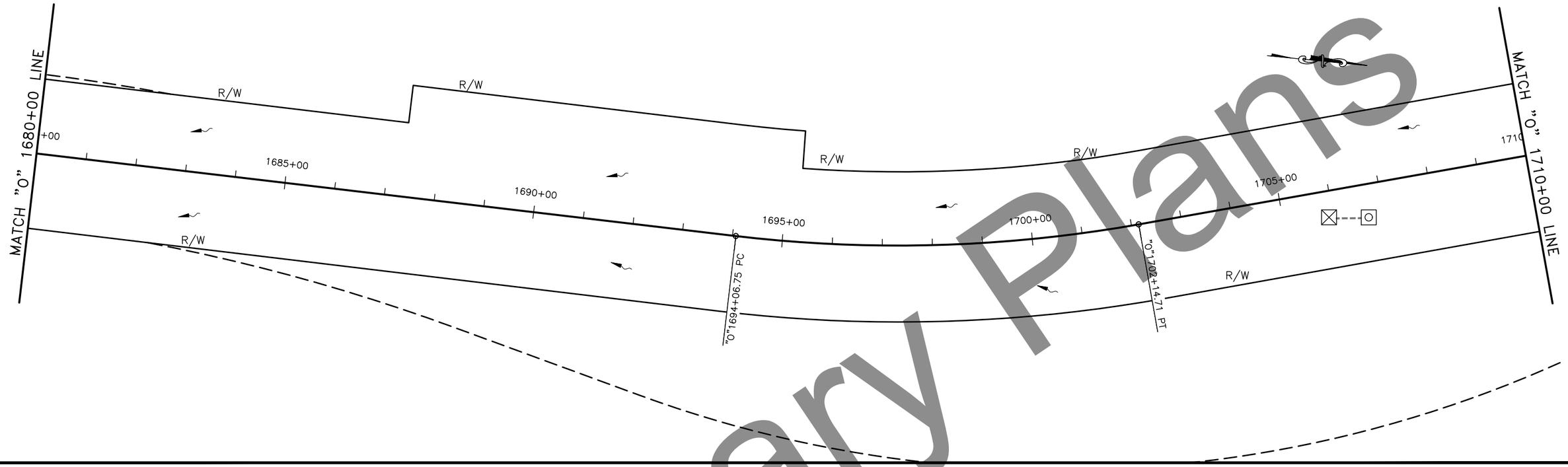

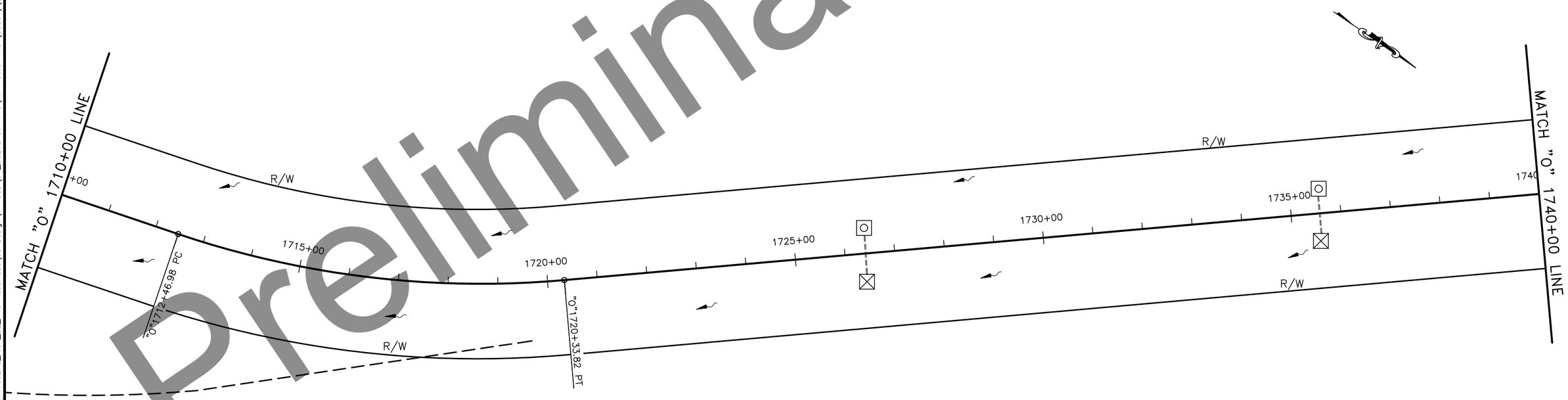

ESCP 6 OF 8

PLANS DEVELOPED BY: STATE OF ALASKA DEPARTMENT OF TRANSPORTATION & PUBLIC FACILITIES, NORTHERN REGION, 2301 PEGER ROAD, FAIRBANKS, AK 99709 (907)451-2200
H:\Projects\Rich_Hwy\NFHWY00218_Rich_82_115 Resurface\05 Design\11 C3D\01_00218 97-115\MP 106.5-115 (00834)\00 Plan_Plan Q_Sheets (00834)-ESCP 6 OF 8 Tue, Sep/05/23 12:04pm

NO.	DATE	REVISION

STATE	PROJECT DESIGNATION	YEAR	SHEET NO.	TOTAL SHEETS
ALASKA	PENDING / NFHWY00834	2023	Q8	Q9

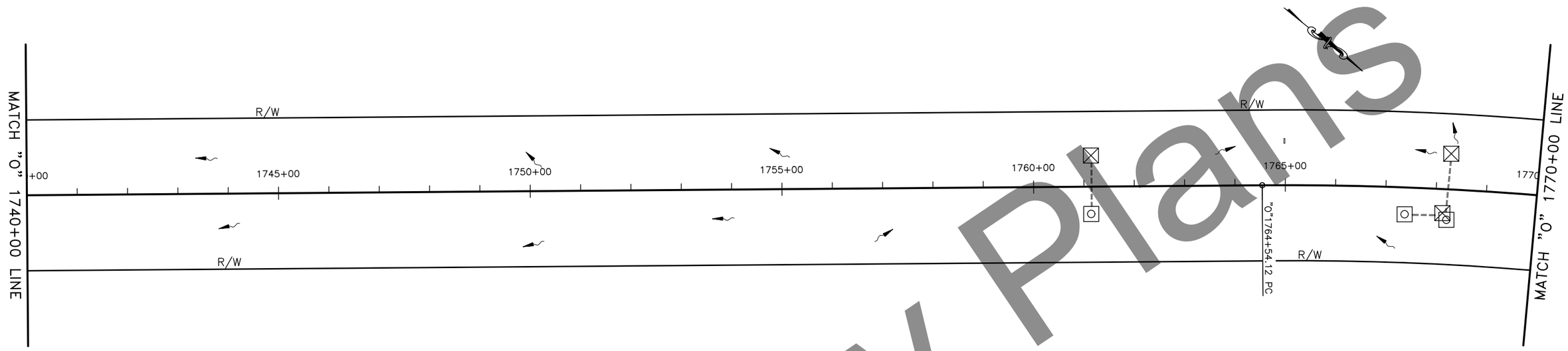

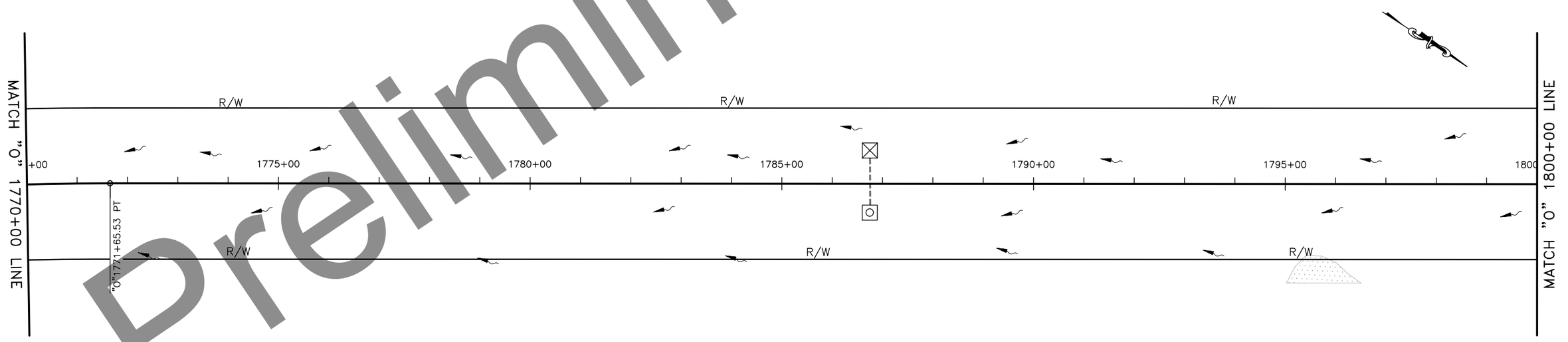

ESCP 7 OF 8

PLANS DEVELOPED BY: STATE OF ALASKA DEPARTMENT OF TRANSPORTATION & PUBLIC FACILITIES, NORTHERN REGION, 2301 PEGER ROAD, FAIRBANKS, AK 99709 (907)451-2200
H:\Projects\Rich_Hwy\NFHWY00218_Rich_82_115 Resurface\05 Design\11 C3D\01_00218 97-115\MP 106.5-115 (00834)\00 Plan_Plan Q_Sheets (00834)-ESCP 7 OF 8 Tue, Sep/05/23 12:04pm

NO.	DATE	REVISION

STATE	PROJECT DESIGNATION	YEAR	SHEET NO.	TOTAL SHEETS
ALASKA	PENDING / NFHWY00834	2023	Q9	Q9

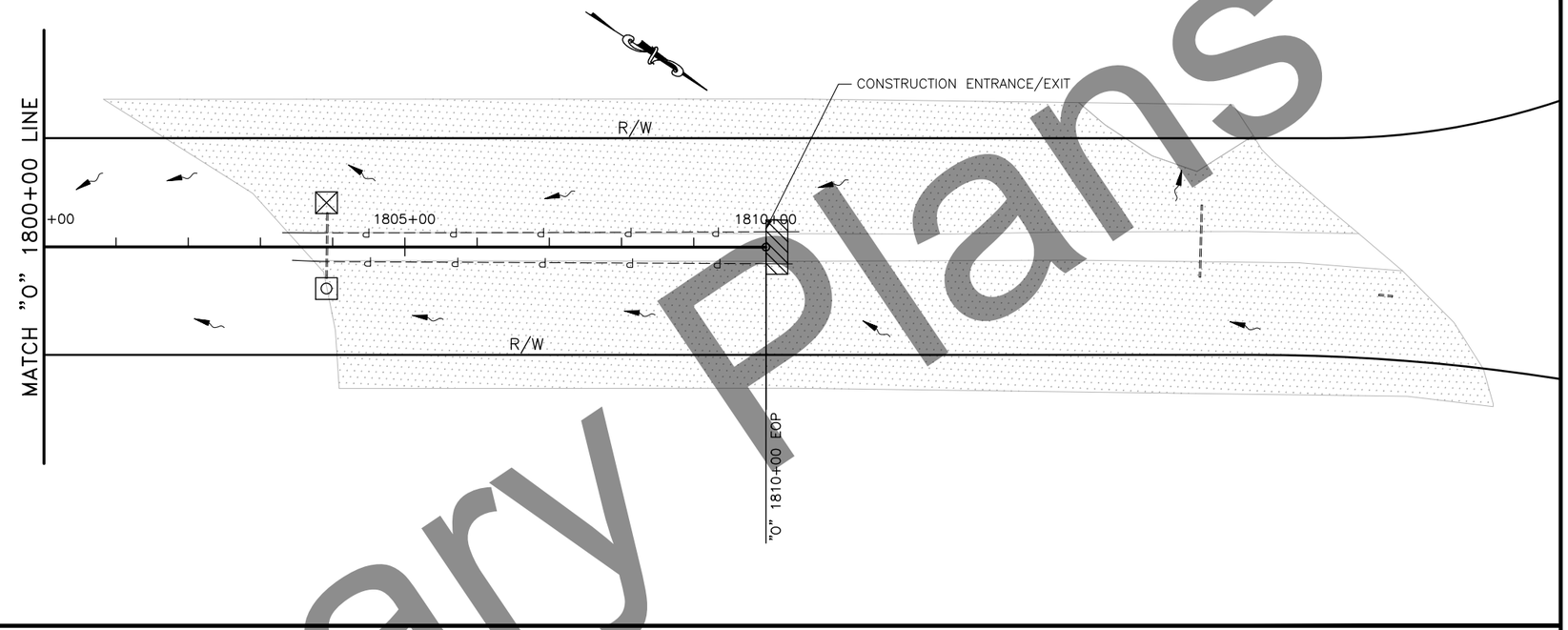

ESCP 8 OF 8

PLANS DEVELOPED BY: STATE OF ALASKA DEPARTMENT OF TRANSPORTATION & PUBLIC FACILITIES, NORTHERN REGION, 2301 PEGER ROAD, FAIRBANKS, AK 99709 (907)451-2200
H:\Projects\Rich_Hwy\NFHWY00218_Rich_82_115 Resurface\05 Design\11 C3D\01_00218 97-115\MP 106.5-115 (00834)\00 Plan_Plan Q_Sheets (00834)-ESCP 8 OF 8 Tue, Sep/05/23 12:04pm

NO.	DATE	REVISION

STATE	PROJECT DESIGNATION	YEAR	SHEET NO.	TOTAL SHEETS
ALASKA	PENDING / NFHWY00834	2023	T1	T2

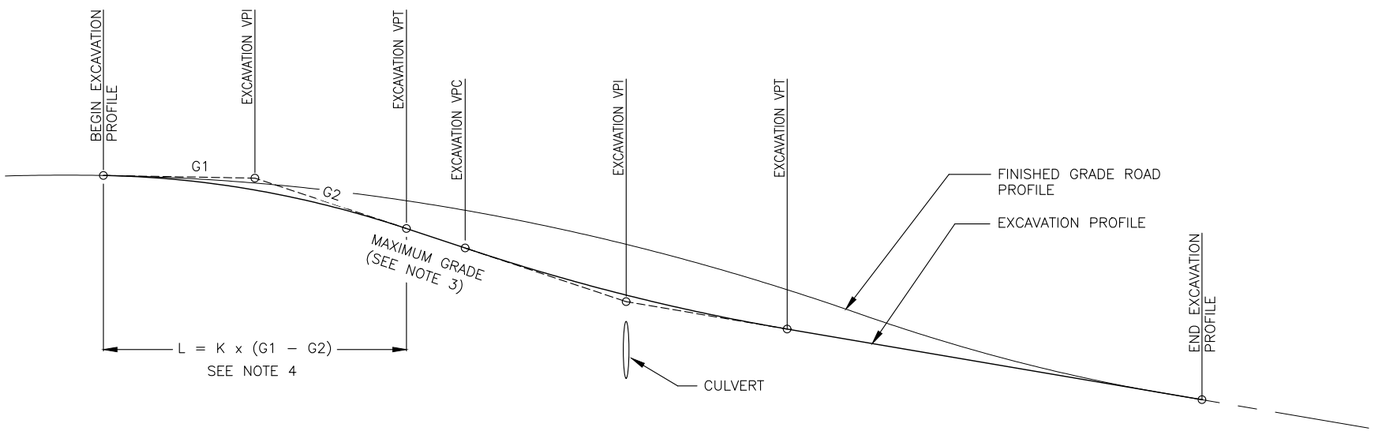

CULVERT EXCAVATION PROFILE

CULVERT EXCAVATION NOTES:

1. THE CONTRACTOR IS RESPONSIBLE FOR DEVELOPING AND SUBMITTING THE EXCAVATION PROFILE AND HORIZONTAL ALIGNMENT TO THE ENGINEER FOR APPROVAL PRIOR TO BEGINNING CULVERT EXCAVATION WORK.
2. HORIZONTAL AND VERTICAL GEOMETRY MAY BE ADJUSTED IN THE FIELD BY THE ENGINEER TO ADJUST FOR EXISTING CONDITIONS
3. THE MAXIMUM ALLOWABLE VERTICAL GRADE IS 10%
4. DETERMINE THE MINIMUM ALLOWABLE LENGTH OF VERTICAL CURVE (L) BY MULTIPLYING THE ALGEBRAIC DIFFERENCE IN GRADES (G1–G2) BY THE APPLICABLE RATE OF VERTICAL CURVATURE RATE (K) GIVEN BELOW:
   - 4.1. FOR CREST VERTICAL CURVES K = 19
   - 4.2. FOR SAG VERTICAL CURVES K = 37
5. MAINTAIN 2 FEET OR GREATER OF COVER OVER THE TOP OF CULVERTS
6. OBTAIN THE ENGINEER'S APPROVAL ON ALL TRAFFIC CONTROL PLANS PRIOR TO EXCAVATING FOR NEW CULVERTS
7. ALL WORK AND RESOURCES REQUIRED TO DEVELOP EXCAVATION PROFILES AND HORIZONTAL ALIGNMENTS ARE SUBSIDIARY TO SERIES 602 AND 603 SERIES PAY ITEMS
8. AGGREGATE BASE COURSE, GRADING D–1 REQUIRED FOR CULVERT REPLACEMENTS IS SUBSIDIARY TO 602 AND 603 SERIES PAY ITEMS.

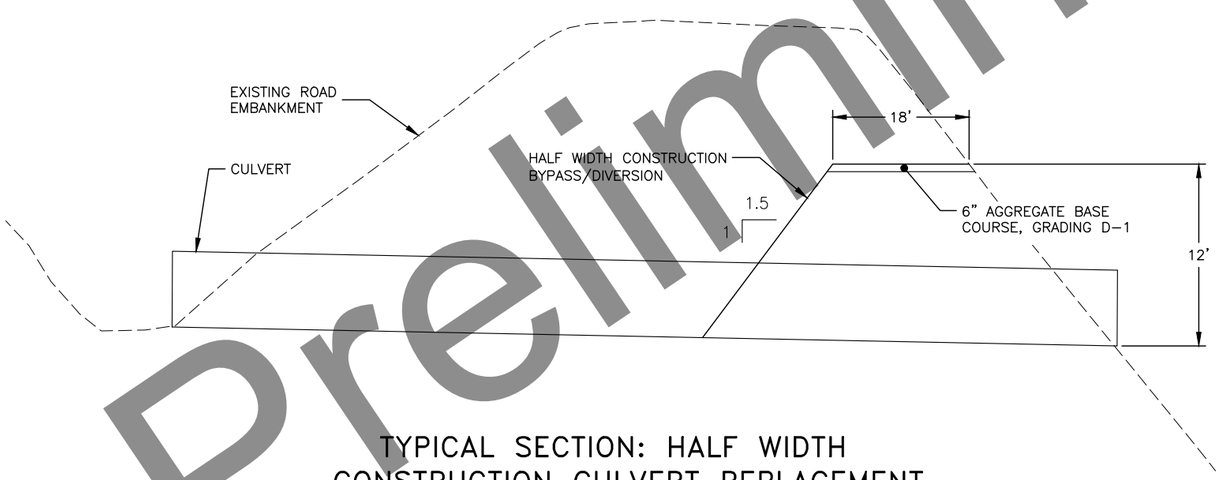

TYPICAL SECTION: HALF WIDTH CONSTRUCTION CULVERT REPLACEMENT

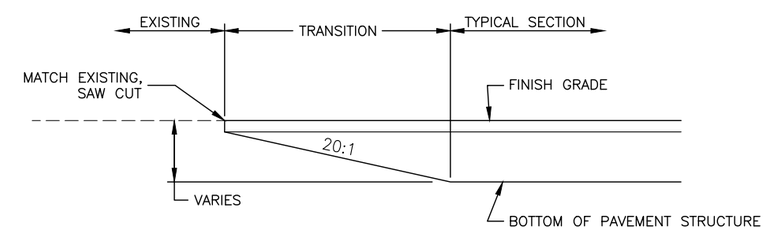

TYPICAL TRANSITION TO EXISTING PAVEMENT DETAIL

PARTIAL WIDTH CONSTRUCTION DETAIL

STATE OF ALASKA 49TH RUSSELL M. JOHNSON C.E. 9963 REGISTERED PROFESSIONAL ENGINEER

PLANS DEVELOPED BY: STATE OF ALASKA DEPARTMENT OF TRANSPORTATION & PUBLIC FACILITIES, NORTHERN REGION, 2301 PEGER ROAD, FAIRBANKS, AK 99709 (907)451-2200
H:\Projects\Rich_Hwy\NFHWY00218_Rich_82_115 Resurface\05 Design\11 C3D\01_00218 97-115\MP 106.5-115 (008341)\NFHWY00834_T_PARTIAL WIDTH CONSTRUCTION-Partial Width Construction Detail Tue, Sep/05/23 12:05pm

NO.	DATE	REVISION

STATE	PROJECT DESIGNATION	YEAR	SHEET NO.	TOTAL SHEETS
ALASKA	PENDING / NFHWY00834	2023	T2	T2

NOTES:

1. THIS TCP IS SCHEMATIC AND MAY VARY DEPENDING ON ACTUAL FIELD CONDITIONS. MODIFY AND ADJUST DISTANCES SHOWN ACCORDING TO SITE CONDITIONS. THIS TCP IS USED FOR ONE LANE ROAD DIVERSIONS.
2. MAINTAIN A MINIMUM OF 16' OF TRAVELED WAY OPEN TO THE PUBLIC, UNLESS DIRECTED BY THE ENGINEER. PROVIDE EMERGENCY VEHICLES WITH ACCESS THROUGH THE PROJECT AT ALL TIMES. PROVIDE ACCESS FOR PERMITTED OVERSIZE VEHICLES. SEE SECTION 643.
3. MOUNT CONSTRUCTION SIGNS AT 7' HEIGHT ON 4" X 4" WOOD POST IN ACCORDANCE WITH STANDARD PLANS S-05.02 AND S-30.05 UNLESS OTHERWISE DIRECTED BY THE ENGINEER.
4. ALL TEMPORARY TRAFFIC CONTROL SIGNS SHALL HAVE HIGH LEVEL WARNING DEVICES.
5. USE WARNING LIGHTS TO MARK BARRICADES AND OTHER CHANNELIZING DEVICES AT NIGHT. EQUIP THE FIRST DEVICE, FACING THE DIRECTION OF TRAFFIC WITH TYPE A FLASHING WARNING LIGHTS; EQUIP ALL OTHERS WITH STEADY-BURN WARNING LIGHTS.
6. FOR LANE CLOSURES ANTICIPATED TO BE LESS THAN FOUR DAYS, USE FLAGGERS AND THE OTHER TRAFFIC CONTROL DEVICES SHOWN.
7. FOR LANE CLOSURES ANTICIPATED TO BE FOUR DAYS OR LONGER, USE A PILOT CAR IN ADDITION TO THE OTHER TRAFFIC CONTROL DEVICES SHOWN.

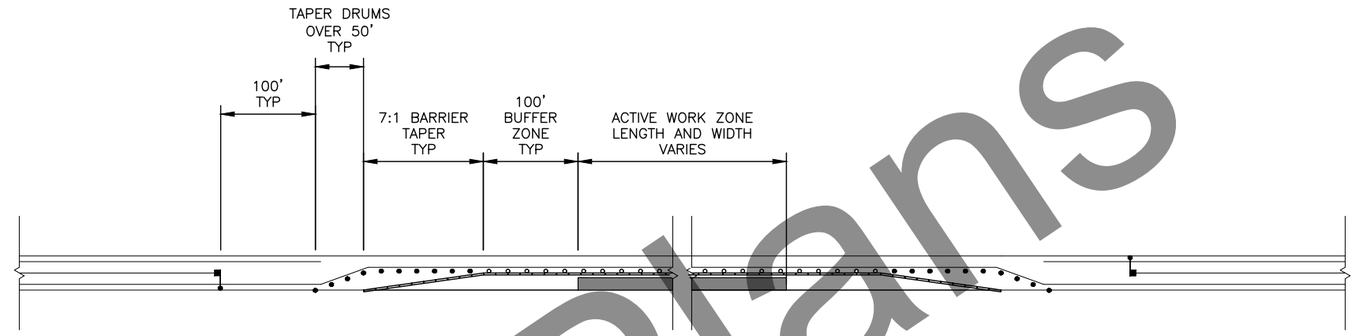

DETAIL A

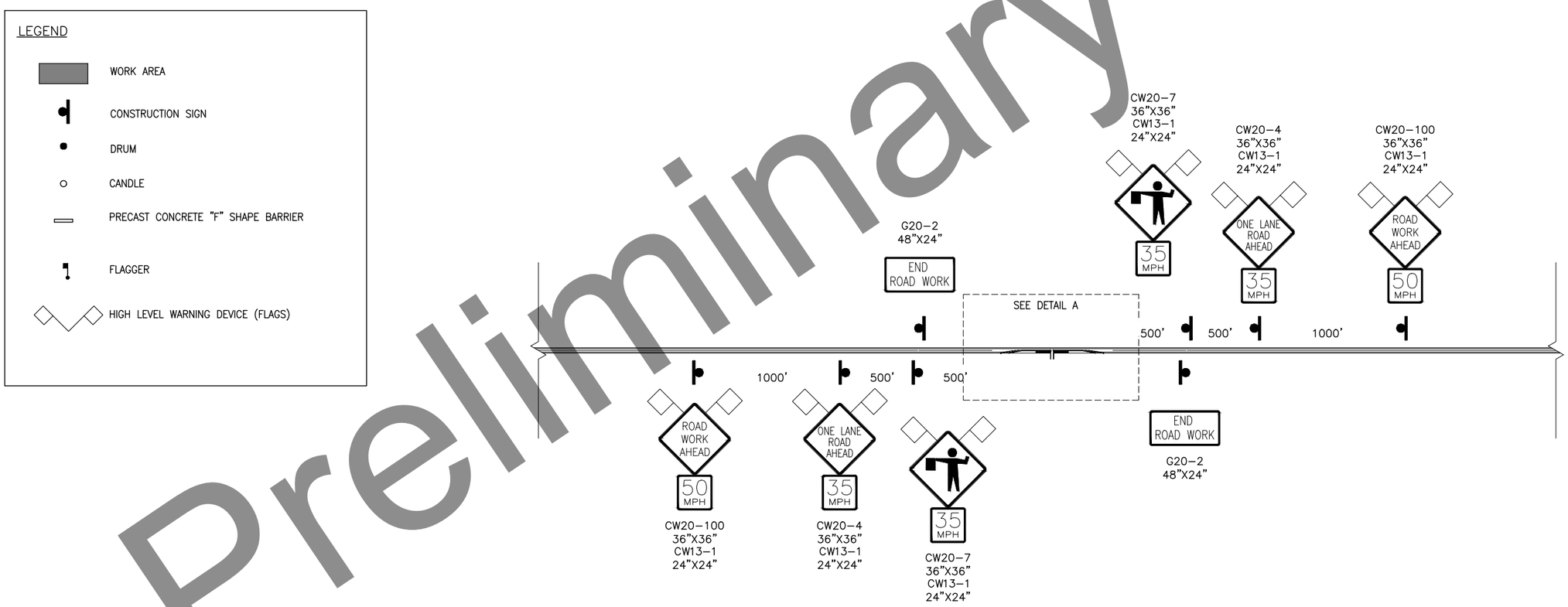

ONE LANE TRAFFIC CONTROL PLAN

PLANS DEVELOPED BY: STATE OF ALASKA DEPARTMENT OF TRANSPORTATION & PUBLIC FACILITIES, NORTHERN REGION, 2301 PEGER ROAD, FAIRBANKS, AK 99709 (907)451-2200
H:\Projects\Rich_Hwy\NFHWY00218_Rich_82_115 Resurface\05 Design\11 C3D\01_00218 97-115\MP 106.5-115 (00834)\NFHWY00834_T_ONE LANE PLAN-ONE LANE TRAFFIC CONTROL PLAN Tue, Sep/05/23 12:05pm

C-04.12 SHEET 1 of 1

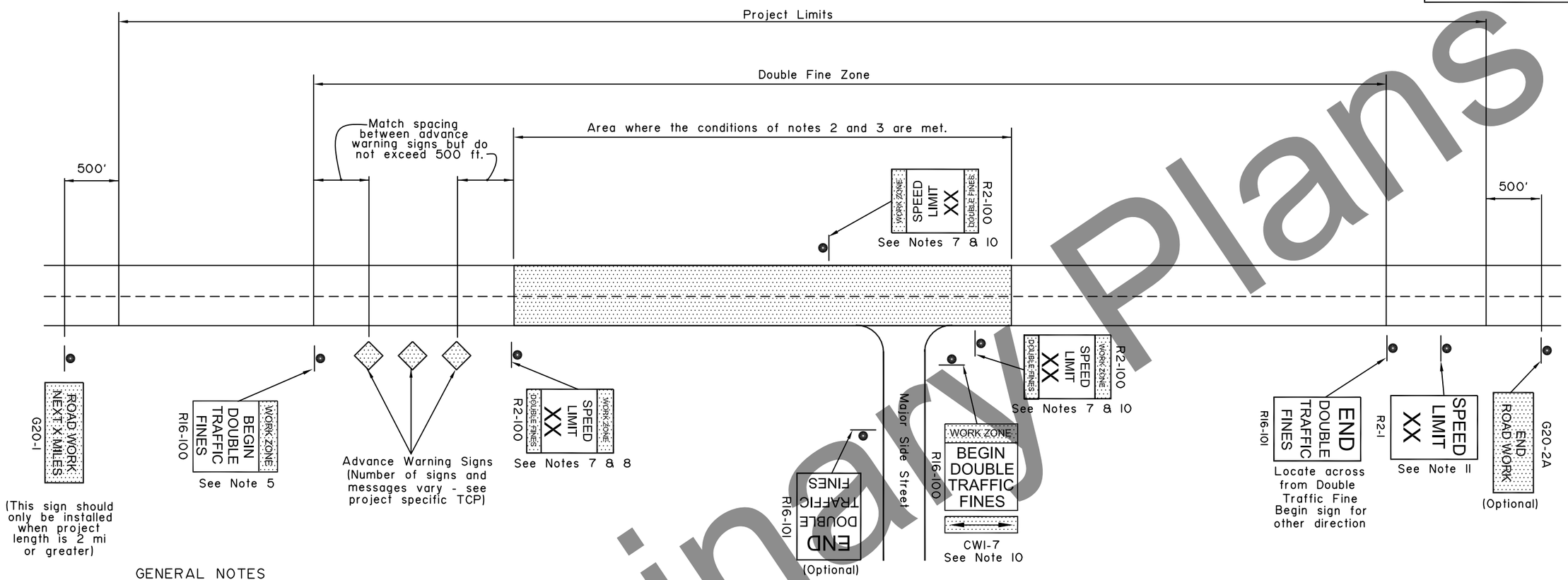

GENERAL NOTES

1. Signs are shown for one direction only (with one exception). Signs for the other direction mirror those shown.

2. Double fine signs shall be used only where one or more of the following conditions exist:
   a. Active work areas (where road workers and/or machines are presently working on or adjacent to a road)
   b. Detours on new temporary roads built for that purpose (this does not include detours on existing streets)
   c. Sections of paved roads where pavement has been removed.
   d. Roads being paved where unmatched asphalt lifts result in a vertical lip between lanes.

3. Double fine signs shall be confined to the areas where the above conditions exist, with the following exceptions:
   a. If the project is 2 miles or shorter in length, the entire project may be posted for double fines when the above conditions exist on any part of the project.
   b. When the above conditions exist at multiple locations separated by less than 2 miles, the locations and the intervening segments may be posted as a single double fine zone.

4. Double fine signs shall be removed or covered when work activity ceases for more than two days and conditions b, c, or d of note 2 are not met.

5. The R16-100 "BEGIN" sign may be used in place of the first advance warning sign. However, when this is done, the appropriate advance warning sign must be reinstalled when the double fine sign is taken down or covered.

6. When a double fine zone is longer than 2 miles, work zone speed limit signs shall be posted at spacings not greater than 2 miles within the double fine zone.

7. "Work zone speed limit signs", as used here, refer either to 1) R2-100 signs or 2) standard R2-1 regulatory speed limit signs with CW20-102 "DOUBLE FINES" plates mounted below.

8. The limit shown on work zone speed limit signs shall be either the existing limit before construction or, if a work zone speed limit order has been approved in accordance with ADOT&PF Procedure 05.05.020 PDR, a reduced limit.

9. All existing regulatory speed limit signs within double fine zones shall either be replaced with R2-100 signs or supplemented with CW20-102 plates.

10. Signs shall be installed at major intersections within the double fine zone to warn entering drivers of double fines. This may be done with a R16-100 sign with a CWI-7 arrow panel on the side street or with two work zone speed limit signs on the main street on either side of the intersection. Use of R16-100 signs on side streets eliminates the need for "Road Work Ahead" signs on those streets. If the speed limit has been reduced, the two work zone speed limit signs are mandatory.

11. At the end of each double fine zone, install an R2-1 sign showing the speed limit for the road beyond the double fine zone.

State of Alaska DOT&PF
ALASKA STANDARD PLAN

LOCATION OF DOUBLE TRAFFIC FINE SIGNS

Adopted as an Alaska Standard Plan by: Kenneth J. Fisher, P.E.
Chief Engineer

Adoption Date: 02/08/2019

Last Code and Stds. Review
By: Date:

Next Code and Standards Review date: 02/08/2029

C-04.12

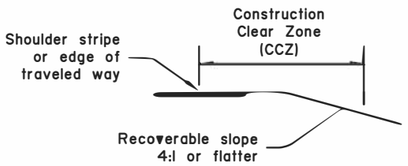

FIGURE 1

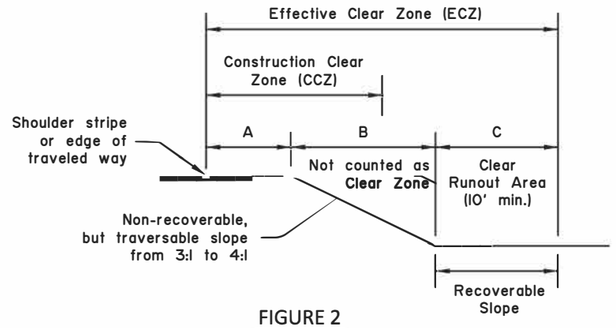

FIGURE 2

Table 1 - Width of Construction Clear Zone (feet)

Hazard	AADT	Posted Speed Limit (MPH)							
		<=30 MPH		35 to 40 MPH		45 to 55 MPH		>=60 MPH	
		6:1 or flatter	5:1 to 4:1	6:1 or flatter	5:1 to 4:1	6:1 or flatter	5:1 to 4:1	6:1 or flatter	5:1 to 4:1
Fill (Fore) & Cut (Back) Slopes	Under 750	5'	5'	6'	8'	8'	12'	12'	16'
	750 - 6,000	6'	10'	8'	12'	14'	18'	20'	26'
	Over 6,000	10'	10'	12'	14'	16'	20'	22'	28'
Fixed Objects	All	15'		30'					

Table 2 - Treatment for Hazards Within Construction Clear Zone

Roadside Condition to be Treated	Category	Treatment
Fill (Fore) Slopes, including trenches	Steeper than 3:1 or water 3 ft. or deeper	Use Table 5 to select from the following two options: 1. Install rigid barrier or guardrail if the condition warrants barrier, or 2. Use drums or Type II barricades if the condition does not warrant barrier.
	3 : 1 to 4 : 1	1. Use drums or Type II barricades if 10 ft. of runout at the bottom of the slope is not clear of obstructions. 2. No traffic control devices are required if 10 ft. of runout at the bottom of the slope is clear of obstructions. 3. If water 3 ft. or deeper is at bottom of slope, use Table 5.
	Flatter than 4 : 1	No traffic control devices are required, except when water 3 ft. or deeper is in construction clear zone use Table 5.
Fixed Objects	All	Install rigid barrier or guardrail if called for by the plans or specifications. Otherwise use SSHC Section 643-3.04.3 - Fixed Objects.

GENERAL NOTES:

1. The "Construction Clear Zone" (CCZ) may be called "Work Zone Clear Zone" or "Clear Zone in Work Zones" in other publications.
2. In the case of conflicts, this Standard Plan has lesser precedence than Section 643 (Traffic Maintenance) of the Standard Specifications for Highway Construction (SSHC).
3. During seasonal shutdown or if construction activiy is scheduled for suspension for 45 days or more, treat hazards within a 30 foot CCZ width or within the permanent design clear zone (CZ) width.
4. These guidelines are not comprehensive and are not intended to limit the use of safety measures.
5. During pilot car operations, keep fixed objects and other hazards, 2 feet or farther, away from the edge of traveled way and delineate with channelizing devices as required by the Engineer.

INSTRUCTIONS FOR USING TABLES 1 THROUGH 5:

Use The following tables to determine how to treat roadside fixed object or slopes (including trenches, berms and material stockpiles) in construction clear zones.

TABLE 1: Use to determine whether the hazard in withing the CCZ

TABLE 2: Use to determine the appropriate treatment for hazards within the CCZ. No treatment is required for fixed objects or slopes outside the CCZ.

TABLES 3a and 3b: Use to determine appropriate treatment for pavement edge dropoffs.

TABLE 4: Use to determine barrier flare rates.

TABLE 5: Use to determine whether drums or Type II barricades, or temporary barrier or guardrail, are required on fill slopes or for water hazards.

TABLE 1 NOTES:

1. Measure CCZ from the shoulder stripe. If there is no shoulder stripe, measure from the edge of the traveled way. See Figure 1.
2. If CCZ include or ends on a slope of 3:1 to 4:1, use the Effective Clear Zone (ECZ) that extends beyond the bottom of the slope to proved a clear runout area of 10 foot minimum width. The ECZ width must equal or greater than the CCZ width from Table 1. See Figure 2 and verify that A+C ≥ CCA and C ≥ 10 feet.
3. If a CCZ includes or ends on a slope steeper than 3:1, the top of slope must be delineated by channelizing devices or protected by barrier.
4. The term "fixed objects" is defined in Section 643-1.02 of the SSHC.
5. AADT stands for Average Annual Daily Traffic. Use the higher of the as listed in the plans or the average of June/July/August ADT's, unless otherwise specified by the Engineer.

TABLE 2 NOTES:

1. Eliminate non-traversable slopes (those steeper than 3:1) and fixed objects (as defined in Section 643-1.02 of the SSHC) within the CCZ when practicable. They should only be left in place and treated as treated as shown in this table when elimination is not practicable.
2. Maintain a 2-foot minimum wide lateral buffer space between the edge of traveled way and work areas. This provides an area to install barriers or other delineation by channelizing devices.
3. If necessary to treat multiple hazards on the same road segment (slopes and fixed objects), choose treatments from Table 2 that satisfy the requirements for the most significant of the multiple hazards.

State of Alaska DOT&PF
ALASKA STANDARD PLAN

ROADSIDE SAFETY TREATMENT FOR WORK ZONES

Adopted as an Alaska Standard Plan by: Carolyn H Morehouse
Carolyn Morehouse, P.E.
Chief Engineer

Adoption Date: 09/15/2022

Last Code and Stds. Review
By: LRG Date: 09/15/2022

Next Code and Standards Review date: 09/15/2032

C-06.00

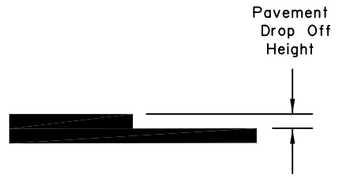

FIGURE 3
Pavement Drop-off Detail

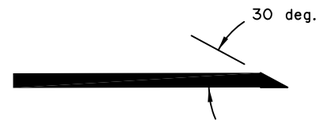

FIGURE 4
Safety Edge Detail

Table 3a - Treatment for Pavement Edge Drop-offs for Posted Speeds > 30 MPH

Nominal Lift Thickness / Height of Pavement Edge Drop-off	Between Active Lanes of traffic moving in same direction	Between Active Lanes of traffic moving in opposing directions	Outside Pavement Edge (if within 3' of traveled way)	Outside Pavement Edge if more than 3' from traveled way and within the CCZ	Across Active Lane, and Entrance and Exit Ramps
0 to 1.0"	No Edge Treatment or Signage Required				
More than 1.0" to 2.0"	**UNEVEN LANE** Signs		**LOW SHOULDER** Signs		Taper Drop-off at slope of 15H:1V or flatter Use BUMP Sign
More than 2.0" to 3.0"	**UNEVEN LANES** Signs - Use Channelizing Devices or Safety Edge	**UNEVEN LANES** Signs - Use Channelizing Devices	**LOW SHOULDER** Signs - Use Channelizing Devices - Consider Safety Edge	**LOW SHOULDER** Signs	
More than 3.0" to 6.0"	**UNEVEN LANES** Signs - Use Channelizing Devices and Use Safety Edge	**UNEVEN LANES** Signs - Use Channelizing Devices	**SHOULDER DROP OFF** Signs - Use Channelizing Devices and Safety Edge; or Use Barrier	**SHOULDER DROP OFF** Signs - Use Channelizing Devices or Barrier	
More than 6"	**Prohibited**		**Barrier** - Installed on traffic side of drop-off	**Channelizing Devices** or **Barrier** according to Table 5	

Table 3b - Sign Numbers

Legend	Number	ATM * Ref.
UNEVEN LANES	W8-11	6F.45
LOW SHOULDER	W8-9	6F.44
SHOULDER DROP OFF (Symbol)	W8-17	6F.44
SHOULDER DROP OFF (Plaque)	W8-17P	6F.44
BUMP	W8-1	2C.28

* ATM = Alaska Traffic Manual

Table 4 - Barrier Flare Rates

Speed (mph)	Flare Rate	
	Rigid	Semi-Rigid
70	20:1	15:1
60	18:1	14:1
55	16:1	12:1
50	14:1	11:1
45	12:1	10:1
40	10:1	8:1
30	8:1	7:1

TABLE 3 NOTES:

1. This table applies to pavement edge drop-offs that are adjacent to traffic and left after the pavement shift ends and for posted speeds > 30 mph. Use engineering judgment for edge treatment for posted speeds ≤30 mph.
2. Use interim pavement markings and signs as required according to Standard Plan C-05 (for all conditions).
3. A Safety Edge is a formed pavement edge taper sloped at approximately 30°, but not more than 35° from horizontal.
4. Use a Safety Edge for longitudinal or diagonal pavement edge drop-offs more than 2 inches within a traveled lane. See Figure 3. Use a Safety Edge on longitudinal joints between lanes as required by Table 3a.
5. The "Across Active Lane, and Entrance and Exit Ramps" column applies to any location where motorists will cross pavement drop-offs (includes transverse construction joints) at an acute angle (45° or more). Taper may be reduced to 6:1 at posted speeds of 30 mph or less.
6. Signage applies to all posted speed for edge drop-offs as shown in Table 3a. For information on signs and locations, see SSHC Section 643-3.04 and the Alaska Traffic Manual (ATM). Signs should be place at the beginning and end points of each paved segment, and in locations between as specified. Also, see Table 3b.
7. "Channelizing Devices" means drums with steady-burn lights, candle, or cones.
8. Treatment for pavement edge drop-offs are in addition to Treatment for Hazards within Construction Clear Zones (CCZs) (i.e. fixed obstacle or slope protection may also be required).

BARRIER TERMINATION AND TABLE 4 NOTES:

1. Terminate portable rigid barrier (concrete or metal) with one of the following methods:
   a) An NCHRP 350 or MASH TL-3 approved end treatment or crash cushion.
   b) An NCHRP 350 or MASH TL-3 approved buried-in-backslope treatment
   c) A Thrie-Beam transition according to Std. Plan G-32 (except attached to a rigid barrier instead of a bridge rail) and terminated with a MASH TL-3 end treatment.
   d) Terminate outside the CCZ by flaring barriers away from the roadway at the rate shown in Table 4 for rigid barriers (maximum 10:1 cross slope in front of the barrier).
   e) Sloped ends may be used to terminate barriers within the CZ when the regulatory (black on white sign) speed limit is 30 mph or below. For speeds more than 30 mph, the Engineer may approve sloped ends if they determine NCHRP 350 or MASH compliant end treatments are impracticable. See Std. Plan G-46 for concrete barrier sloped ends.
2. Terminate temporary W-Beam guardrail with one of the following methods:
   a. With a MASH TL-3 approved end treatment
   b. By burying it in a backslope according to Std. Plan G-16
   c. By flaring the guardrail away from the road at the rate shown in Table 4 for semi-rigid barriers (maximum 10:1 cross slope in from of the guardrail).
   d. Terminate outside the CZ.

State of Alaska DOT&PF
ALASKA STANDARD PLAN

ROADSIDE SAFETY TREATMENT FOR WORK ZONES

Adopted as an Alaska Standard Plan by: Carolyn H Morehouse
Carolyn Morehouse, P.E.
Chief Engineer

Adoption Date: 09/15/2022

Last Code and Stds. Review
By: LRG Date: 09/15/2022

Next Code and Standards Review date: 09/15/2032

C-06.00

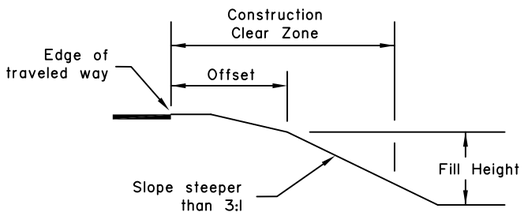

FIGURE 5

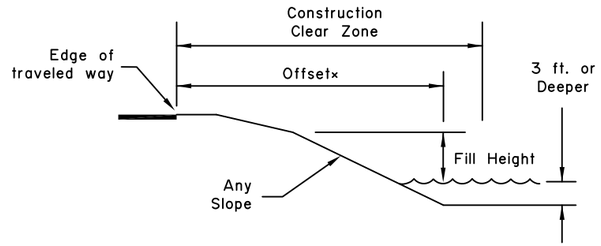

FIGURE 6

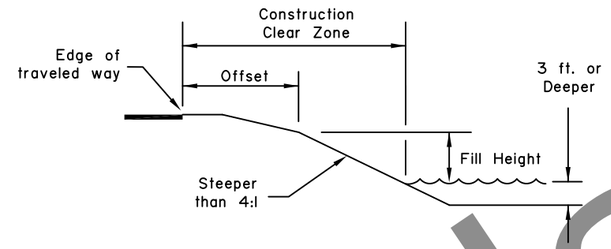

FIGURE 7

Table 5 - Minimum Fill Height at which Temporary Barrier Is Waranted

Posted WZ Speed Limit	Duration (# days)	Offset (ft)	Seasonal Traffic Volume - ADT: 0-750	751-1500			1501-6000				6001-15000				15001+			
			All Slopes/ Water Condition	slope		Water	slope			Water	slope			Water	slope			Water
				2.9:1 to 1.1:1	1:1 to Vert.		2.9:1 to 2.1:1	2:1-1.1:1	1:1-Vert.		2.9:1 to 2.1:1	2:1-1.1:1	1:1-Vert.		2.9:1 to 2.1:1	2:1-1.1:1	1:1-Vert.	
30 MPH and lower	4-30	5-10																
		3-5											11'	11'			11'	11'
		0-3																
	31-100	5-10																
		3-5							11'	11'			11'	11'		35'	11'	11'
		0-3										35'				31'		
	101+	5-10														35'		
		3-5							11'	11'		35'	11'	11'		29'	11'	11'
		0-3			11'	11'						31'				17'	8'	8'
35 to 45 MPH	4-30	6-12																
		3-6															10'	10'
		0-3											10'	10'		29'		
	31-100	6-12																
		3-6							10'	10'			10'	10'		29'	10'	10'
		0-3										29'				19'	9'	9'
	101+	6-12										29'	10'	10'		27'	10'	10'
		3-6							10'	10'		28'				12'	7'	7'
		0-3			10'	10'		29'				18'	9'	9'		7'	6'	6'
45 to 55 MPH	4-30	9-18																
		3-9											8'	8'		13'	8'	8'
		0-3																
	31-100	9-18														13'	8'	8'
		3-9							8'	8'		13'	8'	8'			7'	7'
		0-3						13'								7'	6'	6'
	101+	9-18										13'	8'	8'		13'	7'	7'
		3-9			8'	8'		13'	8'	8'		12'	7'	7'	37'	6'	5'	5'
		0-3										7'	6'	6'	23'	5'	3'	3'
60 MPH and above	4-30	13-26																
		3-13											6'	6'		10'	6'	6'
		0-3										10'						
	31-100	13-26														10'	6'	6'
		3-13							6'	6'		10'	6'	6'				
		0-3						10'							40'	6'	5'	5'
	101+	13-26														10'	6'	6'
		3-13							6'	6'		10'	6'	6'	30'	6'	4'	4'
		0-3			6'	6'		10'			34'	6'	5'	5'	10'	3'	1'	1'

TABLE 5 NOTES:

1. Use this table for fill slopes steeper than 3:1 or water hazards that start within the Construction Clear Zone (CCZ). See Figures 5, 6, and 7.
2. Near Lane AADT, as used in this table, means the higher of the AADT listed in the plans or the seasonal Average Daily Traffic (ADT) for June, July, and August in the lane nearest the slope or water hazard during the planned construction period. Assume an even distribution of traffic across lanes - i.e. if there is 6000 one-way AADT on three lanes, use 2000 AADT in each lane.
3. Duration is the estimated number of days traffic will be exposed to the fill (fore) slope or water hazard.
4. To use Table 5, fine the cell that corresponds to the speed limit, duration, offset, traffic volume, and the presence of a slope or water hazard.
   a. If the cell is unshaded, a Temporary Barrier is required when the fill height equals or exceeds the height (in feet) shown in the cell.
   b. If the cell is shaded or fill height is less than the height shown in the cell, use drums or Type II barricades.
5. A water hazard is defined as:
   a. Water 3 feet or deeper within the CCZ, or
   b. Where a slope steeper than 4:1 starts within the CCZ and leads to water 3 feet or deeper.
6. Consider water depth to be the highest level anticipated during the duration period.
7. If both a water hazard and a slope steeper than 3:1 are present, install Temporary Barrier if warranted for either condition.
8. Temporary Barrier is rigid barrier (concrete or metal) or guardrail meeting NCHRP or MASH TL-3, or higher.

State of Alaska DOT&PF
ALASKA STANDARD PLAN

ROADSIDE SAFETY TREATMENT FOR WORK ZONES

Adopted as an Alaska Standard Plan by: Carolyn H Morehouse
Carolyn Morehouse, P.E.
Chief Engineer

Adoption Date: 09/15/2022

Last Code and Stds. Review
By: LRG Date: 09/15/2022

Next Code and Standards Review date: 09/15/2032

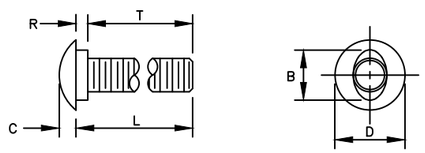

B	C	D	L (Length)	R	T (Thread Length)
15/16"	5/16"	1 5/16" or 1 7/16"	As Required	7/32"	As Required

5/8" BUTTONHEAD BOLT
(FBB01–05)

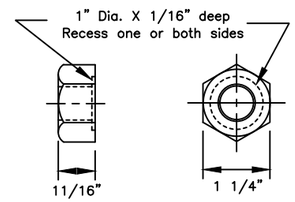

5/8" Dia. RECESSED HEX NUT
(FBB01–05)

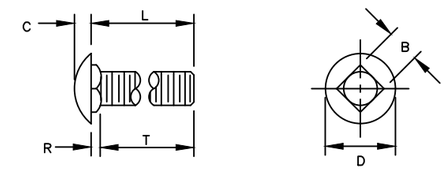

B	C	D	L (Length)	R	T (Thread Length)
5/8"	5/16"	1 5/16"	As Required	3/16"	As Required

5/8" Dia. CARRIAGE BOLT
(FBC10–20)

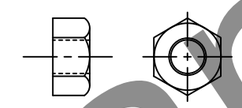

STANDARD HEX NUT

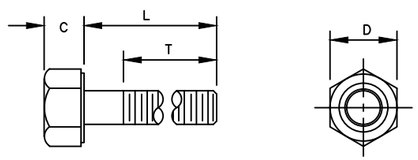

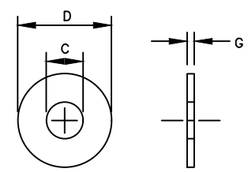

Bolt Size	C	D	L (Length)	T (Thread Length)
5/16"	——	——	1 1/2"	7/8"
5/16"	——	——	1"	1"
3/8"	——	——	7 1/2"	1 1/2"
1/2"	——	——	1 1/2"	1 1/2"
1/2"	——	——	1 1/4"	1 1/4"
5/8" H.S.	5/16"	7/8"	8"	1 1/2"
5/8"–11	——	——	1 1/2"	1 1/2"
3/4"	——	——	1 1/2"	1 1/2"
3/4"	——	——	As Required	2"
3/4" H.S.	15/32"	1 1/4"	2"	1 1/2"

STANDARD HEX BOLTS

For Bolt ø	C	D	G
3/8"	7/16"	1"	5/64"
1/2"	17/32"	1 1/16"	3/32"
1/2" H.S.	17/32"	1 1/16"	3/32"
5/8"	11/16"	1 3/4"	9/64"
3/4"	13/16"	1 15/32"	9/64"
3/4" H.S.	13/16"	2"	5/32"
1"	1 1/16"	2"	9/64"

STANDARD STEEL WASHERS

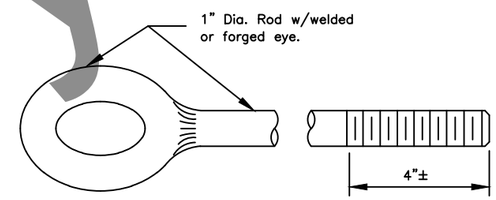

EYE BOLT

GENERAL NOTES:

1. All covered hardware shall comply with the Task Force 13 (TF13) Guide to Standardized Roadside Safety Hardware online publication. Designators given when possible in parentheses.

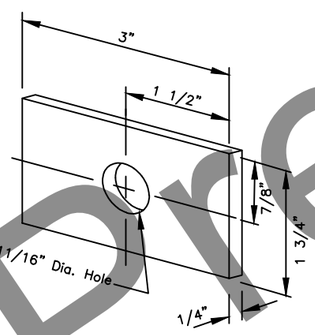

FLAT PLATE WASHER

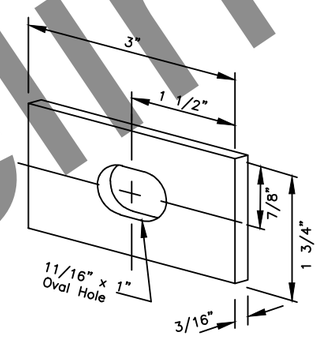

RECTANGULAR POST BOLT WASHER
(FWR03)

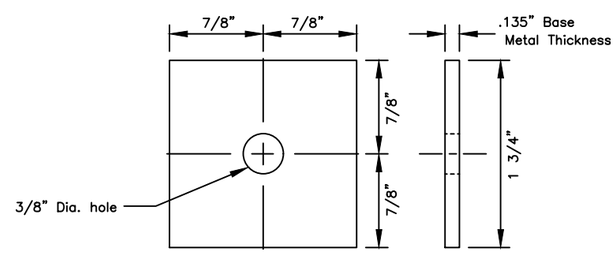

SQUARE STEEL WASHER
(FWR01)

State of Alaska DOT&PF
ALASKA STANDARD PLAN

STANDARD GUARDRAIL HARDWARE
(NUTS, BOLTS & WASHERS)

Adopted as an Alaska Standard Plan by: Carolyn Morehouse
Carolyn Morehouse, P.E.
Chief Engineer

Adoption Date: 7/17/2020

Last Code and Stds. Review
By: KLK Date: 7/8/2020

Next Code and Standards Review Date: 7/8/2030

G–00.05

G-00.05 SHEET 2 of 5

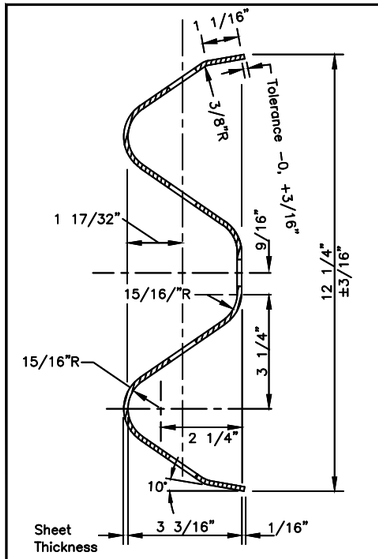

SECTION A–A
(cross section same as RWM02a–b)

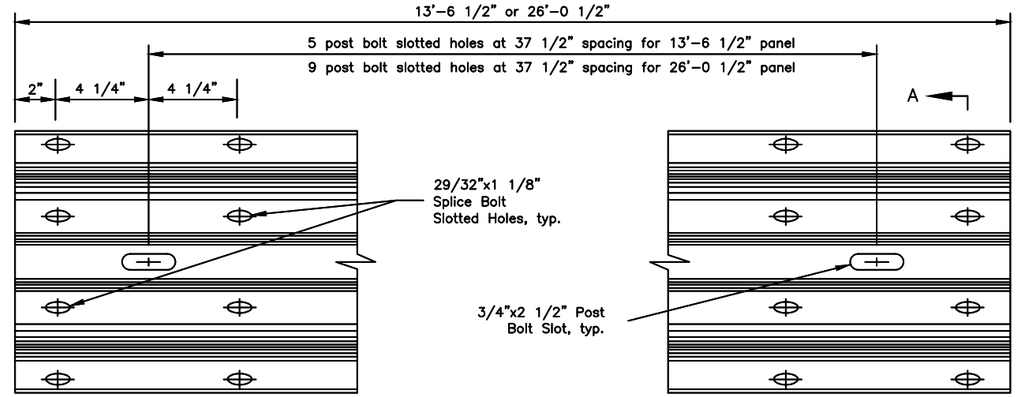

STANDARD W–BEAM PANEL (RWM04a–b)

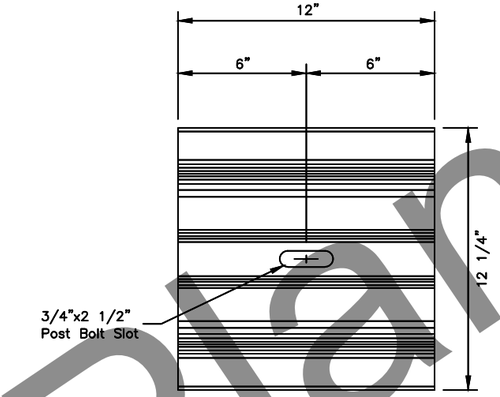

W–BEAM BACKUP PLATE
(RWB01a–b)

GENERAL NOTES:

1. All covered hardware shall comply with the Task Force 13 (TF13) Guide to Standardized Roadside Safety Hardware online publication. Designators given when possible in parentheses.
2. Install back–up plates between blockouts and w–beam or thrie–beam rail at intermediate (non–splice) posts when steel blockouts are used but not with wood, rubber, plastic, or other approved blockouts.

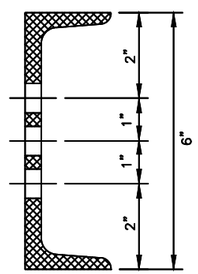

SECTION B–B

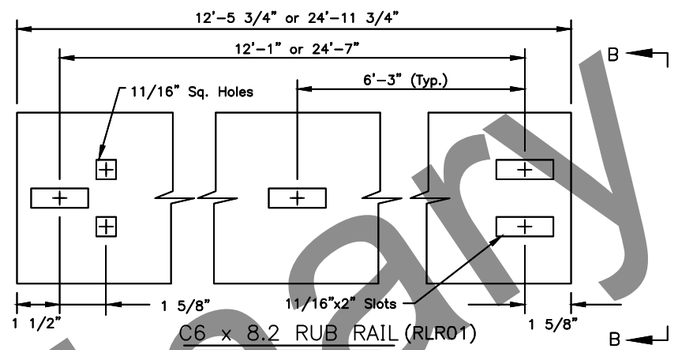

C6 x 8.2 RUB RAIL (RLR01)
ASTM A36 STEEL

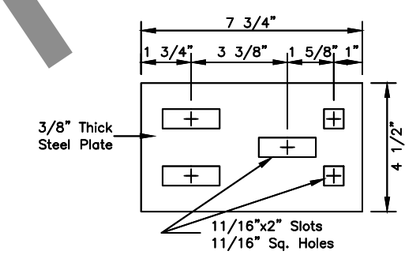

SPLICE PLATE (RLR01)
ASTM A36 STEEL

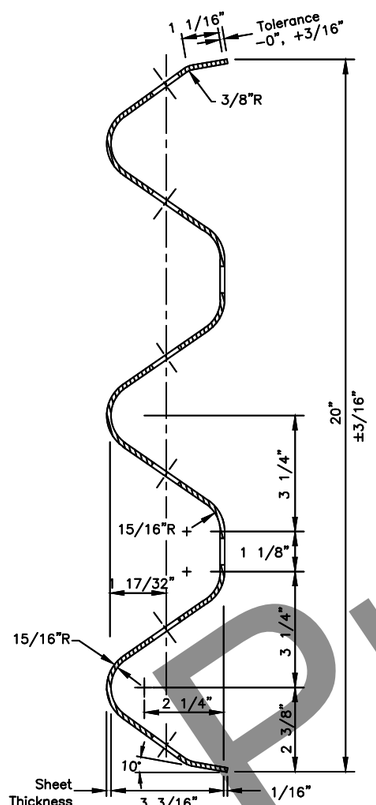

SECTION C–C
(RTM01a–02b)

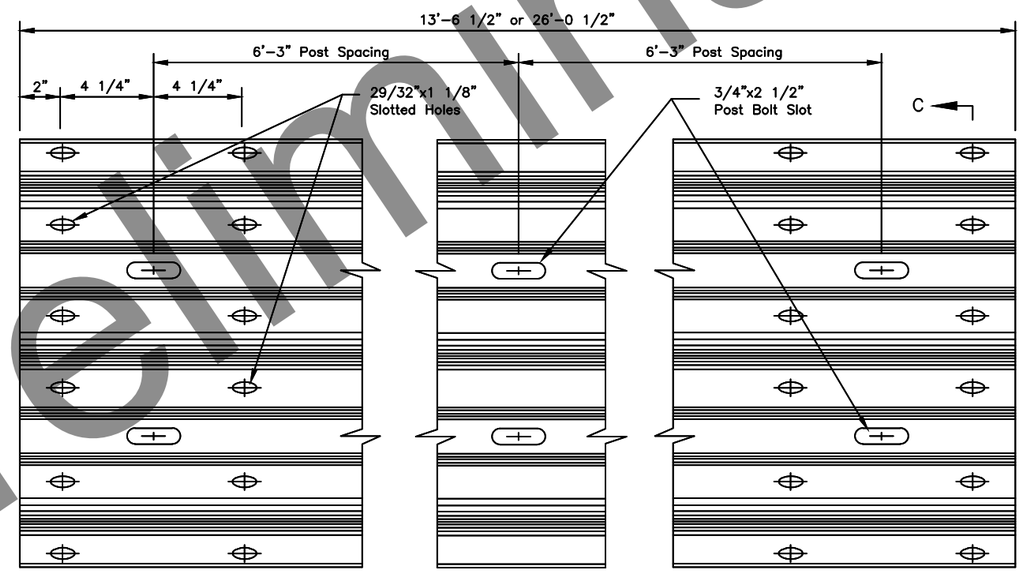

STANDARD THRIE BEAM PANEL (RTM01a–02b)

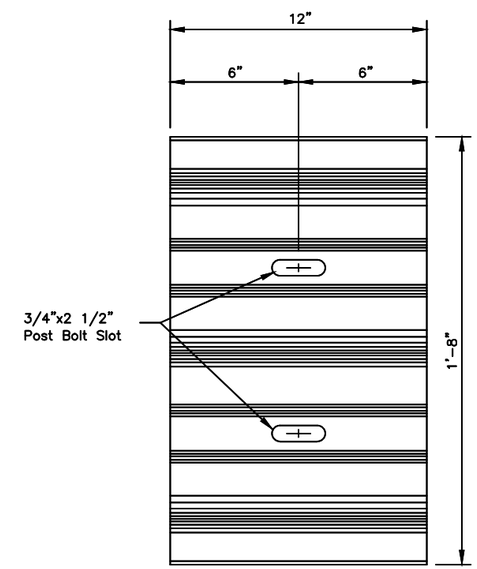

THRIE BEAM BACKUP PLATE
(RTB01a–02b)

State of Alaska DOT&PF
ALASKA STANDARD PLAN

STANDARD GUARDRAIL HARDWARE (RAILS AND SPLICES)

Adopted as an Alaska Standard Plan by: Carolyn Morehouse
Carolyn Morehouse, P.E.
Chief Engineer

Adoption Date: 7/17/2020

Last Code and Stds. Review
By: KLK Date: 7/8/2020

Next Code and Standards Review Date: 7/8/2030

G–00.05

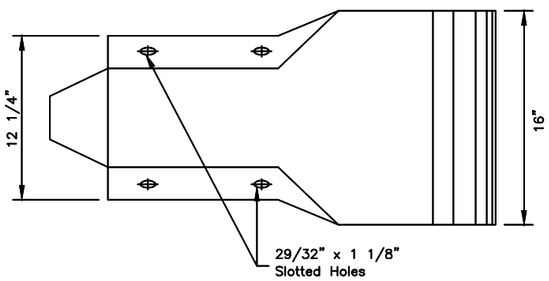

PROFILE

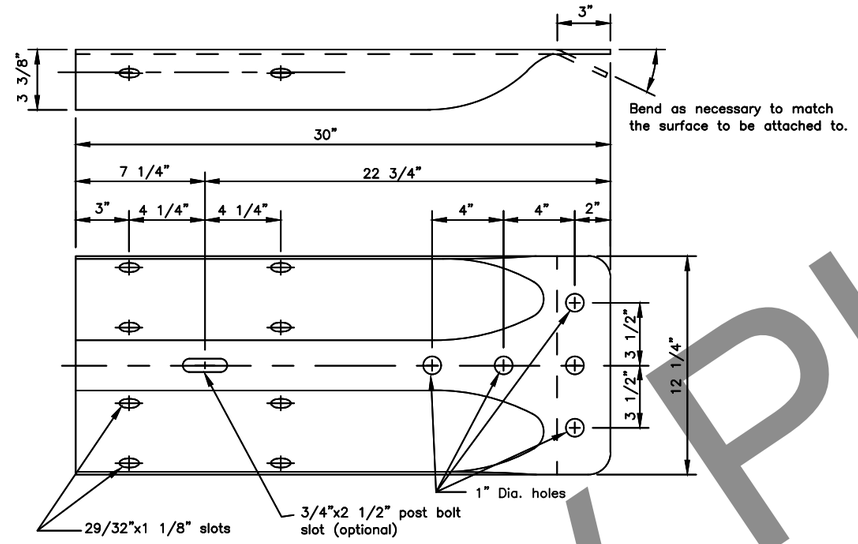

STANDARD W-BEAM TERMINAL CONNECTOR

(RWE02)

GENERAL NOTES:

1. W-Beam and Thrie Beam Terminal Connectors shall conform to AASHTO M 180, Class B, Type II.
2. W-Beam end sections shall conform to AASHTO M 180, Class A, Type II.
3. All covered hardware shall comply with the Task Force 13 (TF13) Guide to Standardized Roadside Safety Hardware online publication. Designators given when possible in parentheses.

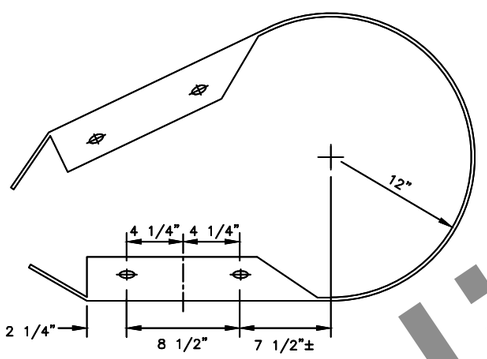

W-BEAM PLAN VIEW

*Radius to be specified on the plans

STANDARD W-BEAM END SECTION

(RWE06)

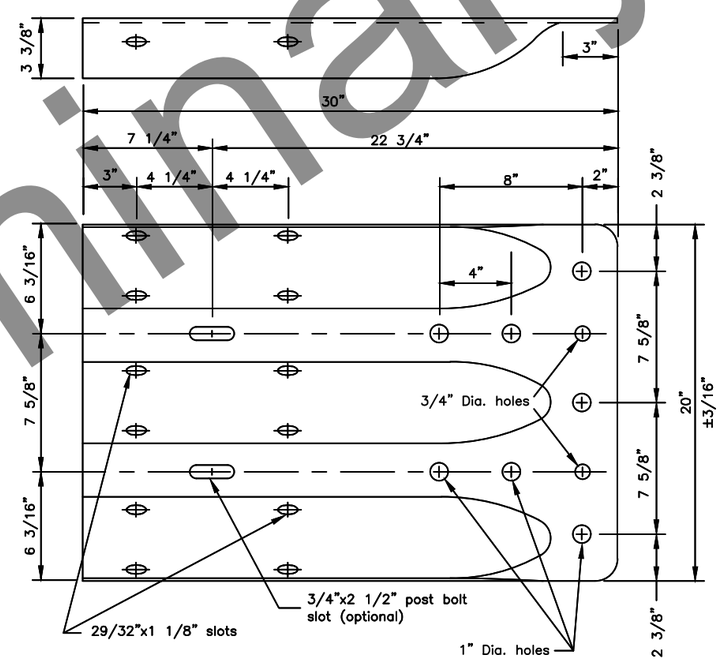

STANDARD THRIE BEAM TERMINAL CONNECTOR

(RTE01b)

State of Alaska DOT&PF
ALASKA STANDARD PLAN

STANDARD GUARDRAIL HARDWARE (TERMINAL CONNECTORS)

Adopted as an Alaska Standard Plan by: Carolyn Morehouse
Carolyn Morehouse, P.E.
Chief Engineer

Adoption Date: 7/17/2020

Last Code and Stds. Review
By: KLK Date: 7/8/2020

Next Code and Standards Review Date: 7/8/2030

G-00.05

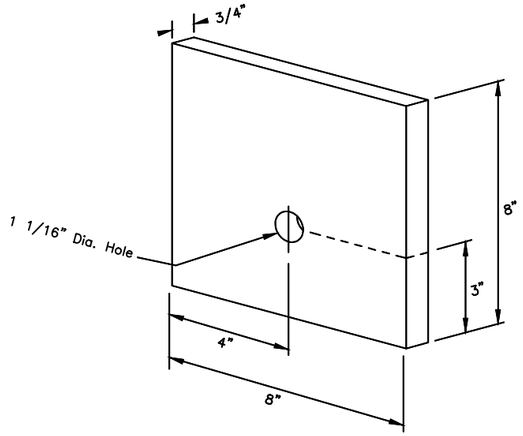

BEARING PLATE for CRT TERMINAL ANCHOR
(FPB01)

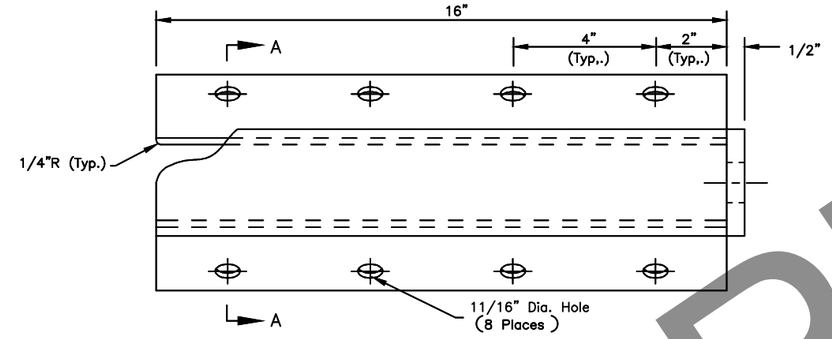

CABLE ANCHOR PLATE
(FPA01)

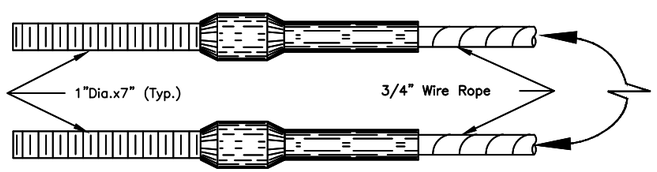

SWAGED FITTING DETAIL
(FCA01–02)

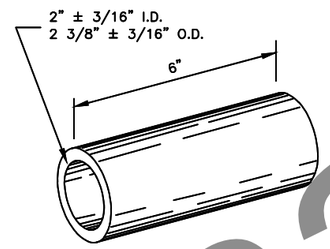

SLEEVE DETAIL
(FMM02)

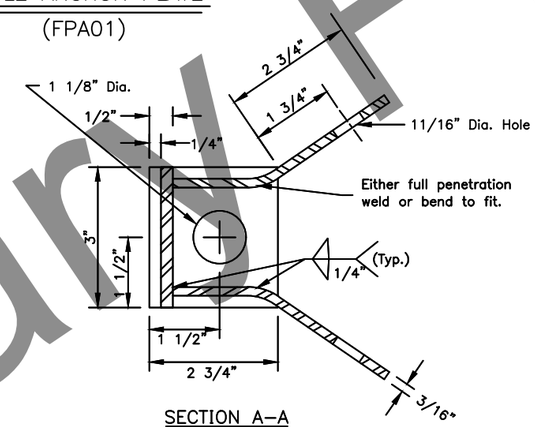

SECTION A–A

CONTROLLED RELEASE TERMINAL HARDWARE DETAILS

GENERAL NOTES:

1. Cable Anchor Plate may be formed in single unit or welded fabrication.
2. Anchor Cable Assembly must conform to AASHTO M 30 with Type II Wire Rope.
3. Provide Sleeve for Wood Posts meeting the requirements of ASTM A53 and made of 2–inch galvanized standard pipe. Sleeve shall be a tight, pressed fit in post.
4. Attach radius ID plates to all shop–bent guardrail sections. Bolt the ID plates to the back side of the guardrail panel with the lower splice bolt nearest the P.C. of the radius.
5. Show the Rail bend radius, in feet, as "XX" on the radius ID plate. Digits shall be etched or stamped and have a min. height of 1 1/2" and a max. width of 3/4". Galvanize the plate after the digits are marked.
6. All covered hardware shall comply with the Task Force 13 (TF13) Guide to Standardized Roadside Safety Hardware online publication. Designators given when possible in parentheses.

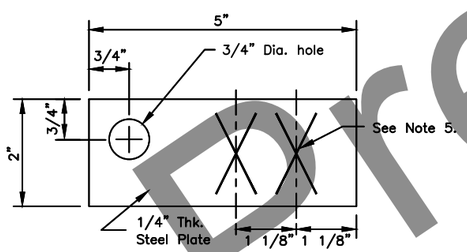

RADIUS I.D. PLATE

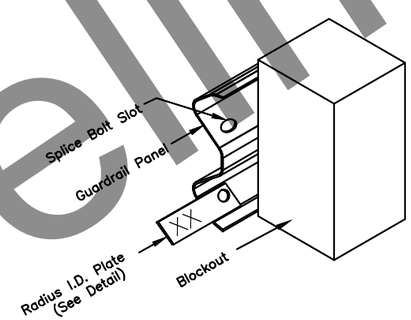

RADIUS I.D. PLATE MOUNTING DETAIL

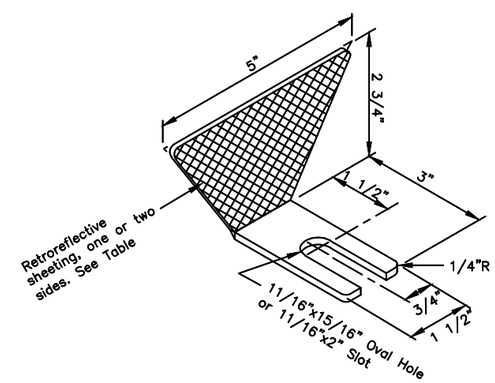

GUARDRAIL REFLECTOR

Guardrail Reflector Table

Type	Color	Reflectorized
A	White	Front & Rear
B	White	Front
C	Yellow	Front
D	Yellow	Front & Rear

State of Alaska DOT&PF
ALASKA STANDARD PLAN

STANDARD GUARDRAIL HARDWARE (MISCELLANEOUS)

Adopted as an Alaska Standard Plan by: Carolyn Morehouse
Carolyn Morehouse, P.E.
Chief Engineer

Adoption Date: 7/17/2020

Last Code and Stds. Review
By: KLK Date: 7/8/2020

Next Code and Standards Review Date: 7/8/2030

G–00.05

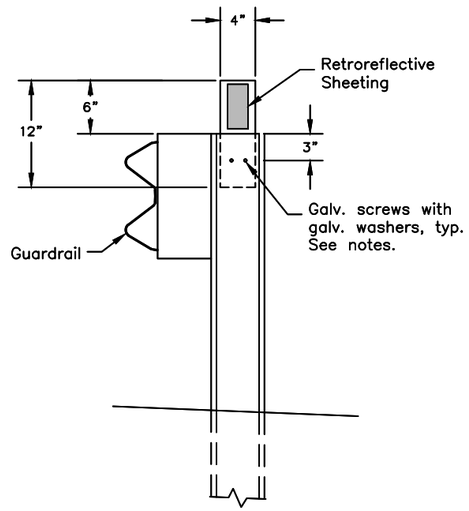

GUARDRAIL FLEXIBLE DELINEATOR DETAIL

(Steel post shown – similar for wood post)

CONSTRUCTION NOTES

1. Install guardrail flexible delineators where shown on the plans.
2. Install guardrail flexible delineators at 50 foot spacing, unless otherwise noted on the plans. Install not less than 2 delineators per guardrail run.
3. Use 3" x 5" white/yellow/red retroreflective sheeting as required per Standard Plan T–05. Install retroreflective sheeting on both sides of delineator on two–way roads.
4. Attach 4" x 12" flexible delineators to the top of new guardrail posts, on the trailing side of the posts relative to the adjacent lane's direction of travel.
5. Use 2 each 1/4" dia. x 1–1/2" long galvanized lag screws for attaching to wood posts and 2 each 1/4" dia. x 3/4" long galvanized self–drilling fasteners for steel posts. Install a galvanized washer between the fastener head and the flexible delineator.

State of Alaska DOT&PF
ALASKA STANDARD PLAN

STANDARD GUARDRAIL HARDWARE (FLEXIBLE DELINEATORS)

Adopted as an Alaska Standard Plan by: Carolyn Morehouse
Carolyn Morehouse, P.E.
Chief Engineer

Adoption Date: 7/17/2020

Last Code and Stds. Review
By: KLK Date: 7/8/2020

Next Code and Standards Review Date: 7/8/2030

G-05.11S

SHEET 1 of 1

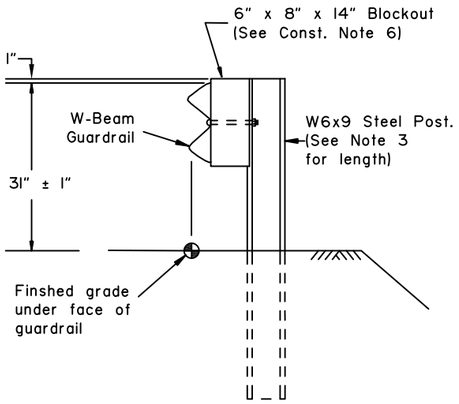

TYPE I POST INSTALLATION

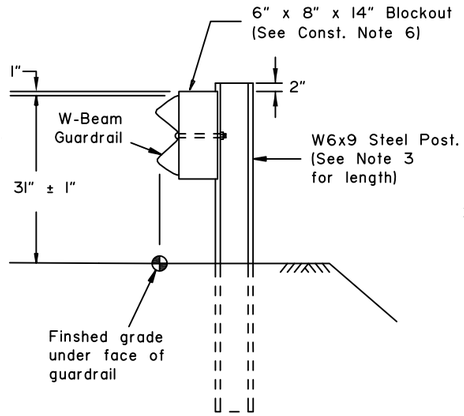

TYPE II POST INSTALLATION

(Facilitates raising rail for future overlays.)

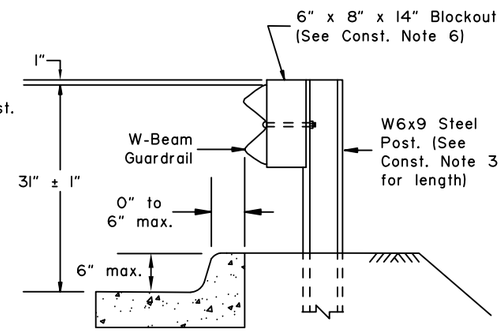

TYPE III POST INSTALLATION

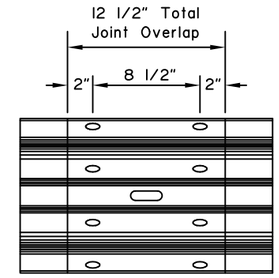

SPLICE DETAIL

(At mid span between posts only. Bolts not shown for clarity)

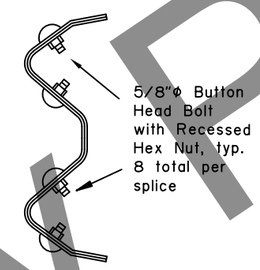

SPLICE CROSS-SECTION

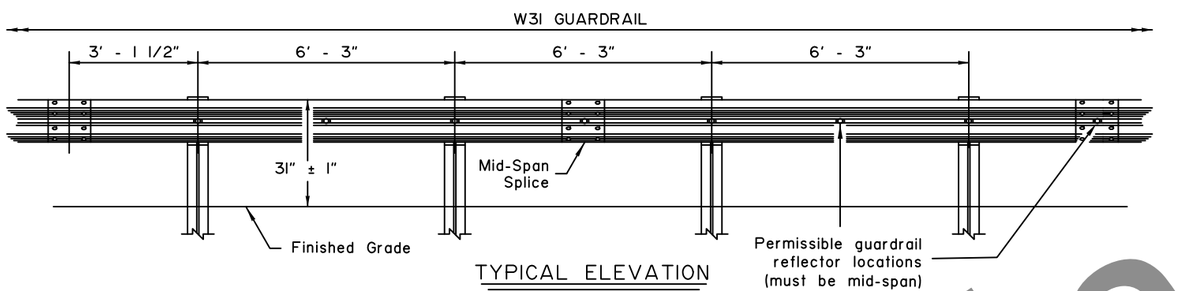

TYPICAL ELEVATION

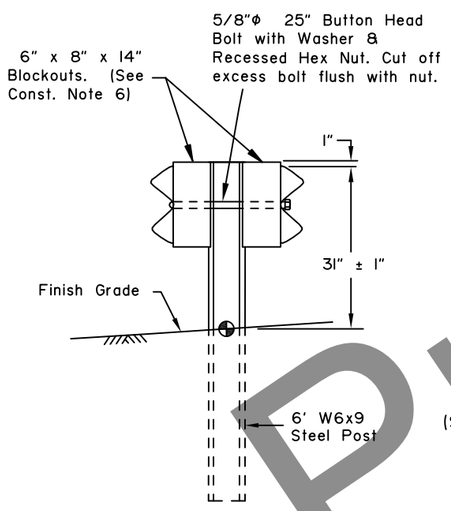

TYPE IV DOUBLE SIDED INSTALLATION

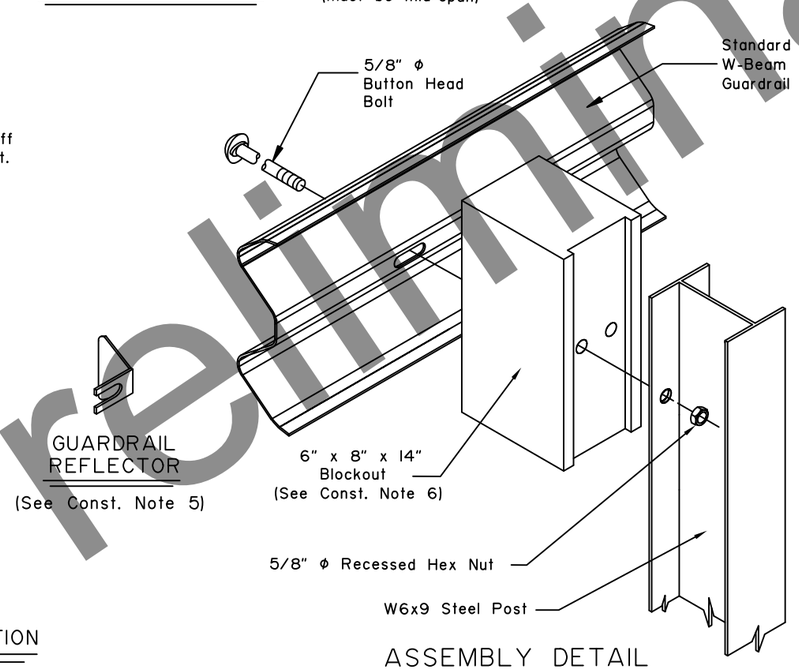

ASSEMBLY DETAIL

(Type I post shown)

GUARDRAIL REFLECTOR

(See Const. Note 5)

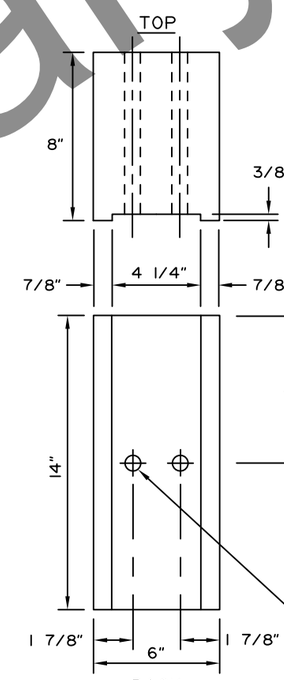

BACK

6" x 8"
BLOCKOUT

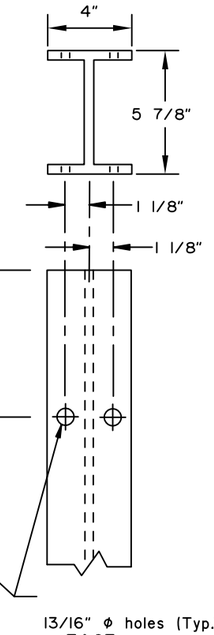

FACE

W6x9
STEEL POST

CONSTRUCTION NOTES:

1. Provide hardware compliant with the Task Force 13 (TF13) Guide to Standardized Roadside Safety Hardware.
2. See Standard Plan G-00 for hardware details not shown on this drawing.
3. See Standard Plan G-10 for post lengths corresponding to different combinations of slope and behind-post embankment width.
4. Typical post spacing is 6'-3" center to center.
5. Attach guardrail reflector to guardrail using a 5/8" button head bolt with 5/8" recessed head hex nut and steel washer at location shown in the Typical Elevation. Install reflectors every 25' on tangents and every 12.5' on curves starting 100' before the P.C. and ending 100' after the P.T.
6. Use wood or synthetic blockouts designed, tested, and passed per MASH for use with steel posts. Either bolt hole on the blockout may be used for attachment.
7. Use a 25 linear foot transition to match differing height of existing or new rail elements and end treatments - see Standard Plan G-11.
8. W6x8.5 steel post may be substituted for W6x9 steel post.
9. Install flexible delineators on guardrail posts when called for in the contract. See Standard Plan G-00 for guardrail flexible delineator details.

DESIGN NOTES:

1. No fixed objects allowed within 36" of the back side of guardrail post.
2. This barrier is acceptable under MASH Tests 3-10 and 3-11.

State of Alaska DOT&PF
ALASKA STANDARD PLAN

STEEL POST W31 GUARDRAIL

Adopted as an Alaska Standard Plan by: Carolyn Morehouse

Carolyn Morehouse, P.E.
Chief Engineer

Adoption Date: 05/15/2019

Last Code and Stds. Review
By: LRG Date: 5/15/2019

Next Code and Standards Review date: 5/15/2029

G-05.11S

G-20.12

SHEET 1 of 1

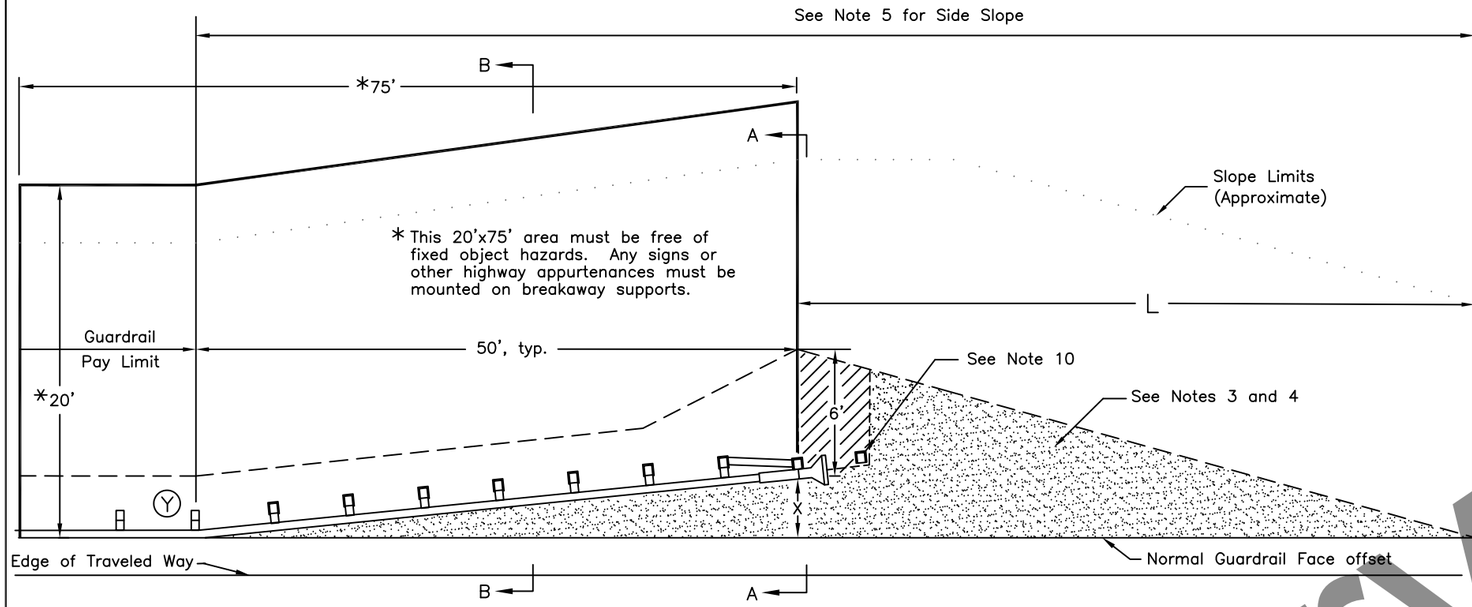

STANDARD GUARDRAIL TERMINAL WIDENING DETAIL

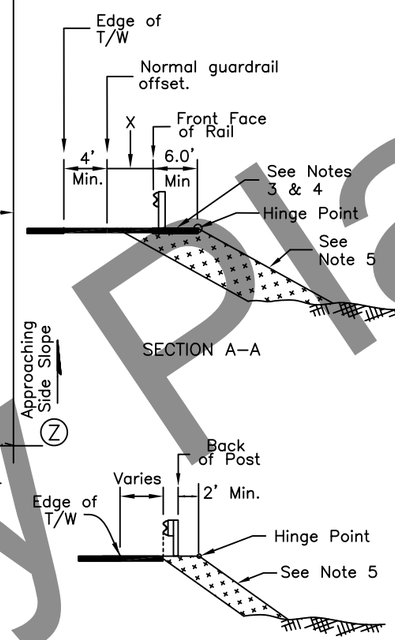

SECTION B–B
(Applies to both details)

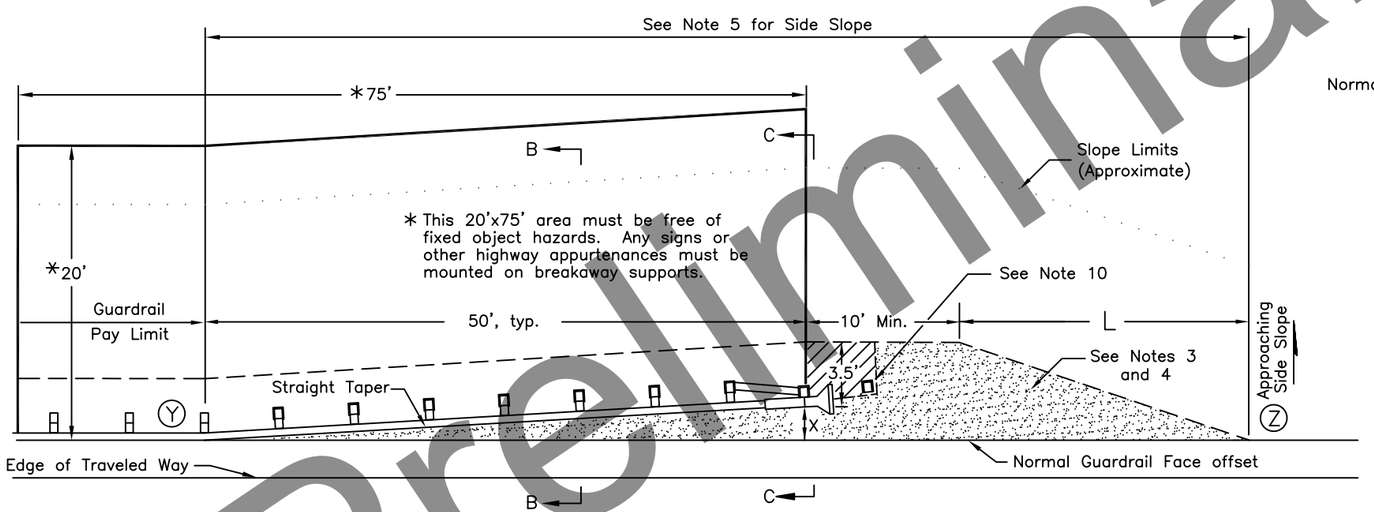

ALTERNATE GUARDRAIL TERMINAL WIDENING DETAIL

(USE ONLY WHEN LIMITED RIGHT–OF–WAY OR LIMITING SITE CONDITIONS MAKE THE STANDARD DETAIL INFEASIBLE)

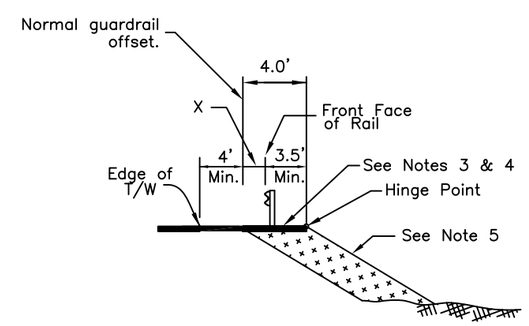

SECTION C–C

X= End offset. See manufacturer's information for the range of acceptable end offsets for each MASH compliant terminal.

Taper Lengths (L) for Common End Offsets (X)		
End Offset	Standard Detail	Alternate Detail
0'	24.0'	13.0'
1'	26.0'	17.0'
1.5'	28.0'	19.0'
2'	30.0'	21.0'
2.5'	32.0'	22.0'
4'	37.0'	28.0'
Interpolate if the end offset falls between table values		

GENERAL NOTES

1. This Std. Dwg. applies to all MASH approved guardrail end terminals (GETs). The alternate detail may only be used with parallel or tangent GETs. The terminal details shown are for illustration only – see manufacturer's drawings for actual post, rail, strut, etc. configuration and layout.
2. Use this Std. Widening Detail for all GETs except when limited right–of–way or limiting site conditions make the use of the Std. Widening Detail infeasible. In that case, the alternate detail is permissable.
3. Construct the shaded areas to match the slope of the adjacent shoulder. The slope may be increased to 10:1 if identified in the plans or when approved by the engineer. Match the slope when the shoulder slopes toward the road as well as away from the road.
4. On paved roads, the shaded areas shall be paved. On gravel roads, surface the shaded areas with the same materials used to surface the travel lanes.
5. From point Ⓨ to point Ⓩ make the side slope match the approaching side slope except where it is flatter than 4:1. In that case, the slope may be steepened to 4:1.
6. Attach a flexible marker at the beginning of each GET.
7. The max. allowable height for foundation tubes or other steel components of terminal post breakaway systems is 4" above the surrounding grade.
8. The details on this sheet do not apply to W31 Downstream End Anchors (Std Dwg G–14).
9. The details on this sheet apply to GETs on both the approach and downstream ends on two–way undivided roads and to any downstream MASH compliant GETs.
10. Some MASH GET systems have an additional post/anchor at the approximate location shown. If this post/anchor is present do not pave the diagonally hatched area. If not present, pave the diagonally hatched area also.

State of Alaska DOT&PF
ALASKA STANDARD PLAN

WIDENING FOR GUARDRAIL END TERMINALS

Adopted as an Alaska Standard Plan by: Kenneth J. Fisher, P.E.
Chief Engineer

Adoption Date: 02/08/2019

Last Code and Stds. Review
By: Date:

Next Code and Standards Review date:02/08/2029

G–20.12

I-81.00

SHEET 1 of 1

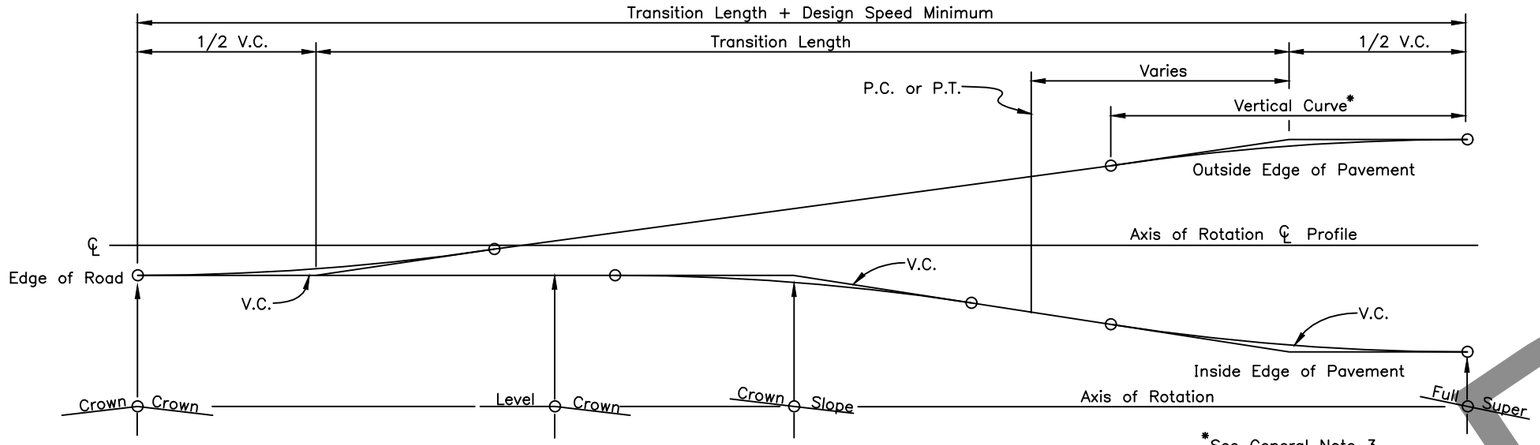

*See General Note 3

CASE I
PAVEMENT REVOLVED ABOUT CENTERLINE

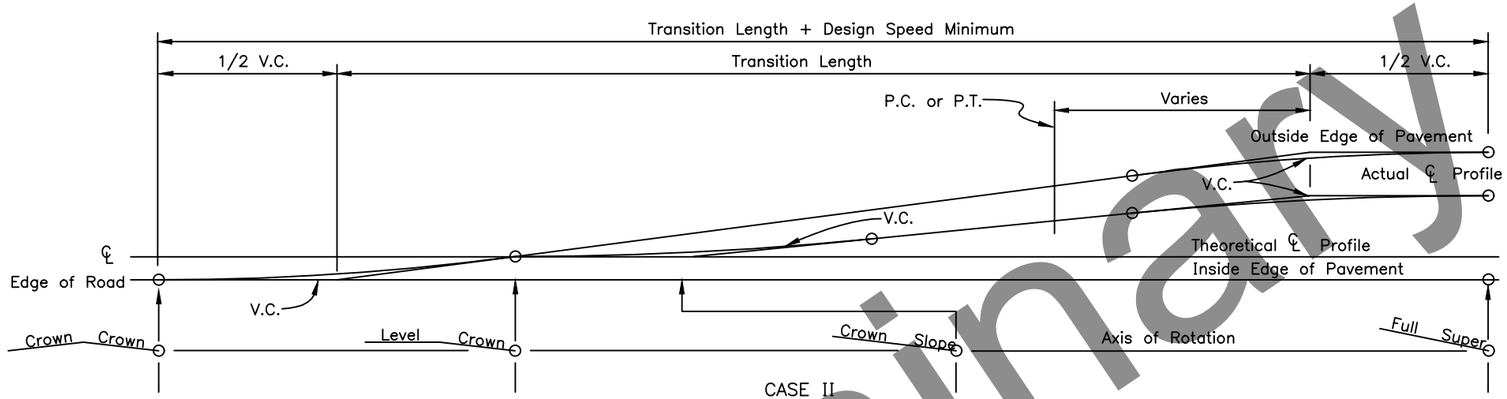

CASE II
PAVEMENT REVOLVED ABOUT INSIDE EDGE
TO BE USED WHERE DRAINAGE IS THE GOVERNING CONSIDERATION

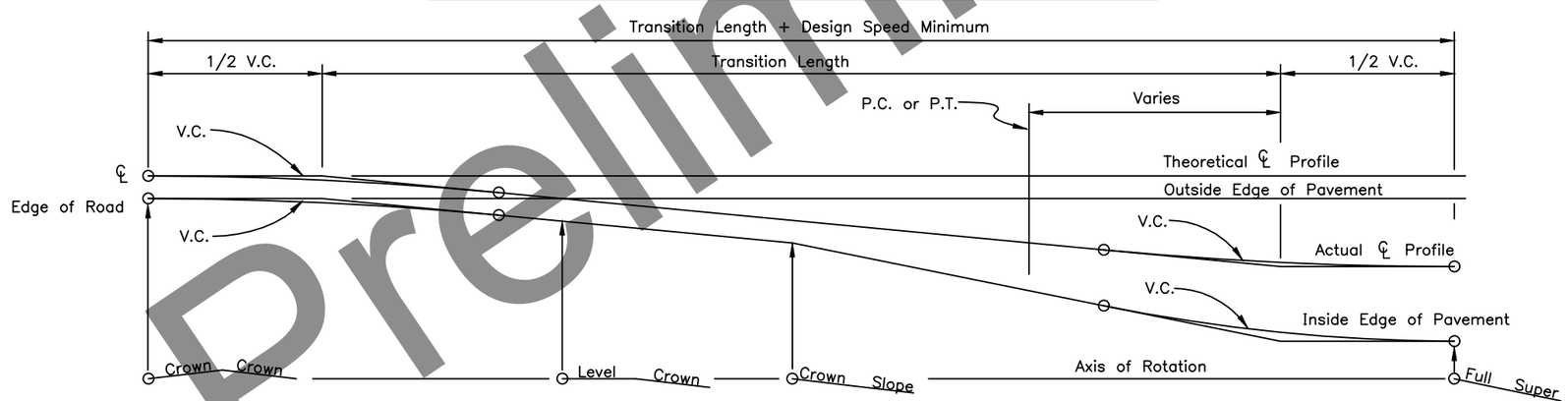

CASE III
PAVEMENT REVOLVED ABOUT OUTSIDE EDGE TO BE
USED WHERE OVERALL APPEARANCE IS THE MAIN CONTROL

GENERAL NOTES:

1. Location of transition length relative to horizontal curves will be shown on the plans or as directed by the Engineer.
2. Widening for guardrail or curvature will not change the location of the axis of rotation.
3. Minimum vertical curve length in feet shall be the numerical value of the design speed in M.P.H.
4. Superelevation shall be built into the subgrade and carried through the shoulders.

State of Alaska DOT&PF
ALASKA STANDARD PLAN

SUPERELEVATION TRANSITION

Adopted as an Alaska Standard Plan by: Carolyn Morehouse
Carolyn Morehouse, P.E.
Chief Engineer

Adoption Date: 7/17/2020

Last Code and Stds. Review
By: KLK Date: 7/8/2020

Next Code and Standards Review Date: 7/8/2030

I-81.00

S-00.12 SHEET | of |

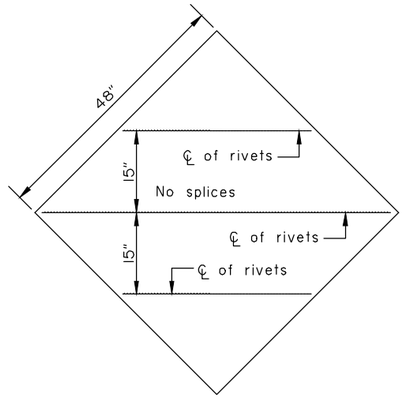

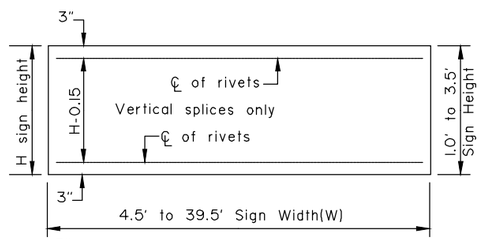

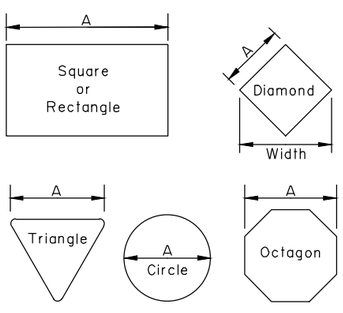

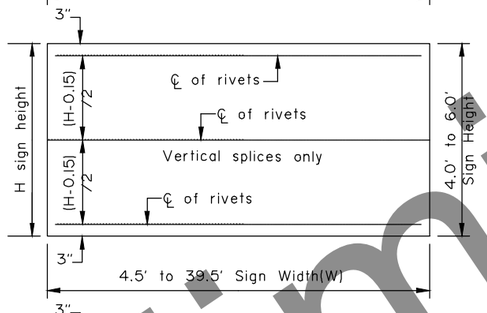

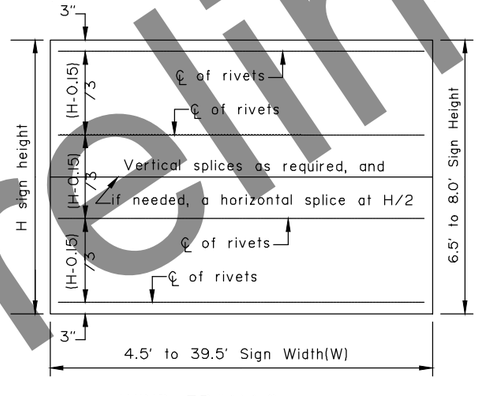

Maximum size unframed signs using 0.125" thick aluminum sheeting.	
Sign Shape	A
Squares, Shields, and Route Markers	48"
Rectangles	48"
Diamonds	48"
Triangles	48"
Rounds and Octagons	48"

Install wind framing on all signs that exceed the dimensions listed.

LIGHT SIGNS

WIND FRAMING LOCATIONS

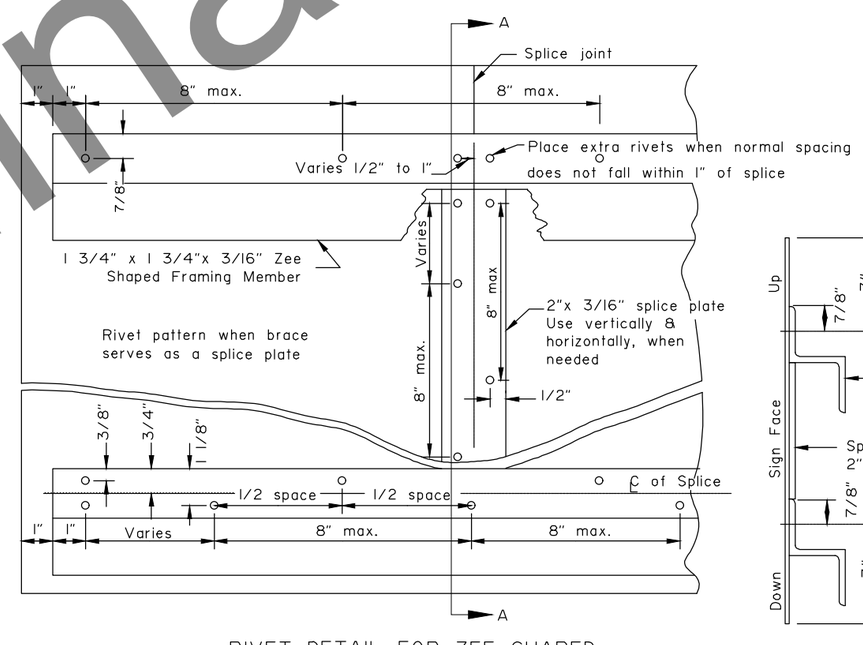

RIVET DETAIL FOR ZEE SHAPED WIND FRAMING & SPLICE PLATE

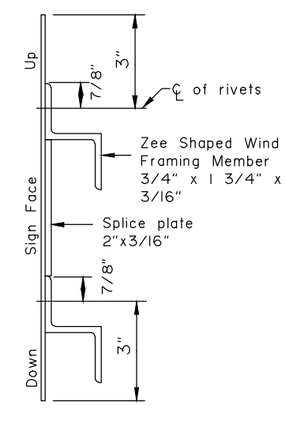

SECTION A-A

Note: Drawing not to scale

GENERAL NOTES

1. See the standard specifications for the aluminum alloys that you may use for sign sheeting and wind framing members.
2. Fabricate all signs from 0.125" thick aluminum sheeting.
3. Sign fabricators may use alternates to the zee shaped framing member with approval of the engineer, if the frame manufacturer certifies their design equals or exceeds the strength of the zee shaped design.
4. Install one piece wind framing members on all signs up to 23.5' wide. Use one splice in each wind frame on all signs wider than 23.5'. Locate splices at least 18" from all posts and panel edges. Stagger splices in adjacent framing members at least 8.0' apart.
5. Attach wind framing members with rivets or with an engineer approved, double sided, high strength, adhesive tape. Clean and handle sheeting and framing members and apply tape in accordance with the tape manufacturer's written instructions. Install two rivets in both ends of each framing member.
6. Use 3/16" diameter rivets conforming to aluminum alloy 6061-T6 for cold driven rivets, or aluminum alloy 6061-T43 for hot driven rivets.
7. Sign fabricators may use sign panels extruded with integral framing with approval of the engineer, if the manufacturer certifies their design equals or exceeds the strength of the 0.125" thick panel with framing attached to it.
8. Frame all signs taller than 8.0' with five wind framing members located (H-0.15)/4 spaces. If needed, make a horizontal splice at the middle wind frame.
9. Do not use round pipes for sign supports.

State of Alaska DOT&PF
ALASKA STANDARD PLAN

SIGN FRAMING

Adopted as an Alaska Standard Plan by: Carolyn Morehouse
Carolyn Morehouse, P.E.
Chief Engineer

Adoption Date: 7/17/2020

Last Code and Stds. Review
By: WTH Date: 7/8/2020

Next Code and Standards Review date: 7/8/2030

S-00.12

S-01.02 SHEET | of |

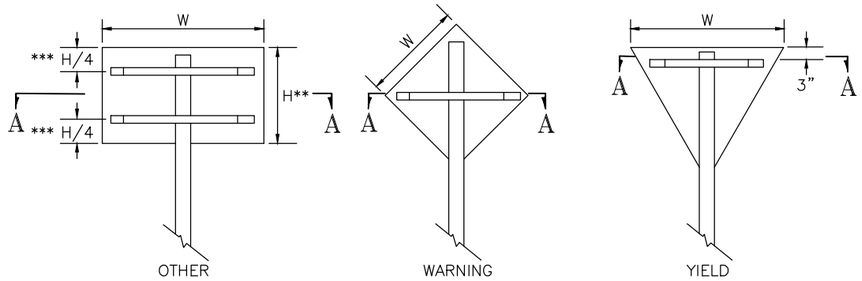

*** Use one brace when H ≤ 18"
Use two braces when 18"< H < 48"
Use three braces when H ≥ 48"

** Position of brace may be varied to match Predrilled mounting holes in panel

SIGN BRACING PLACEMENT

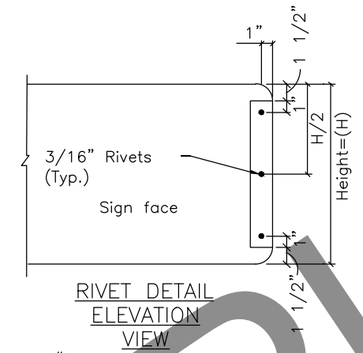

RIVET DETAIL ELEVATION VIEW

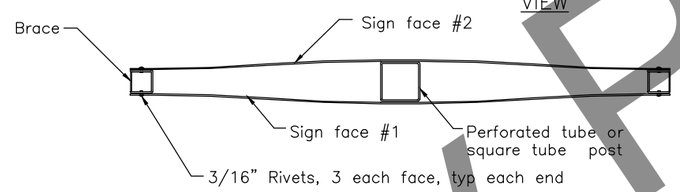

PLAN VIEW

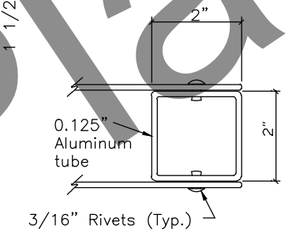

END BRACE DETAIL

SMALL STREET NAME SIGN (D3-1, D3-1A, D3-1D) BRACING DETAILS

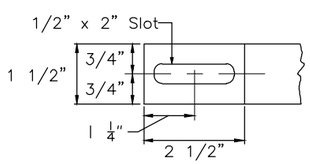

DETAIL OF BRACE SLOT
Elevation view

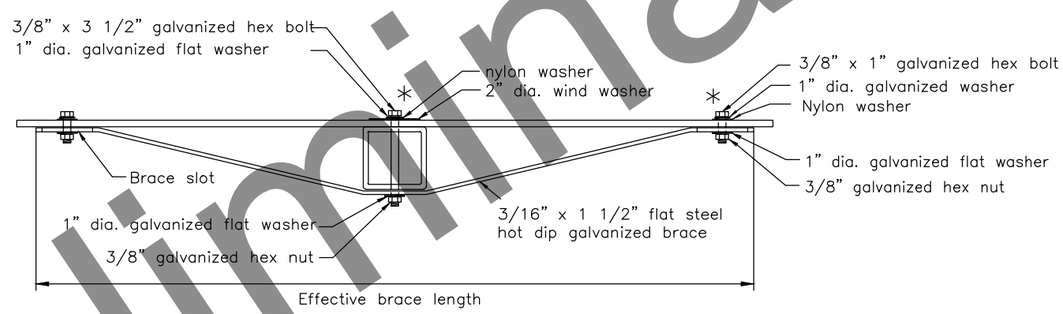

TUBE POST SIGN BRACING SECTION A-A
Plan view

* Adjust location of bracing so that bolts and washers will miss the sign legend

Sign Width(W)	Effective Brace Length		
	Warning	Yield	Other
30"	36"	24"	24"
36"	42"	30"	30"
42"	48"	–	36"
48"	Two posts	36"	42"

< 30" No bracing required and use square tube

Note: Drawing not to scale

State of Alaska DOT&PF
ALASKA STANDARD PLAN

BRACING FOR SIGNS MOUNTED ON SINGLE POST

Adopted as an Alaska Standard Plan by: Carolyn Morehouse
Carolyn Morehouse, P.E.
Chief Engineer

Adoption Date: 7/17/2020

Last Code and Stds. Review
By: WTH Date: 7/8/2020

Next Code and Standards Review date: 7/8/2030

S-01.02

S-05.02 SHEET 1 of 1

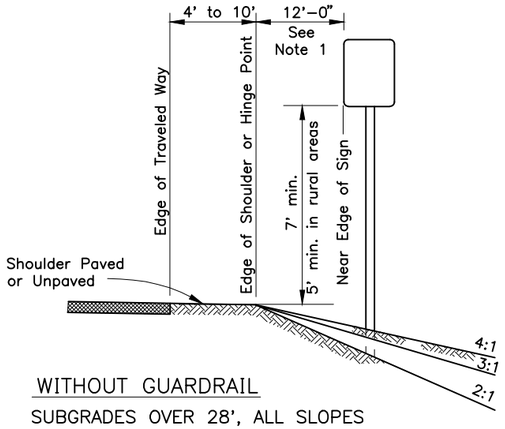

WITHOUT GUARDRAIL
SUBGRADES OVER 28', ALL SLOPES

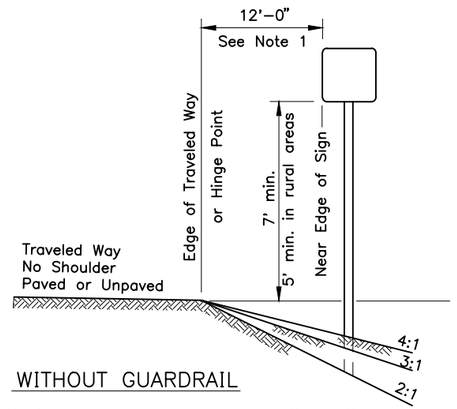

WITHOUT GUARDRAIL
SUBGRADES 24' TO 28', ALL SLOPES

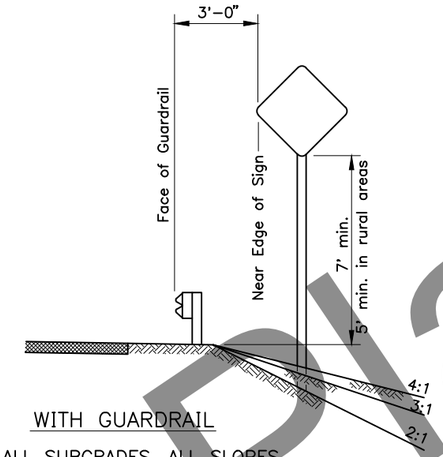

WITH GUARDRAIL
ALL SUBGRADES, ALL SLOPES

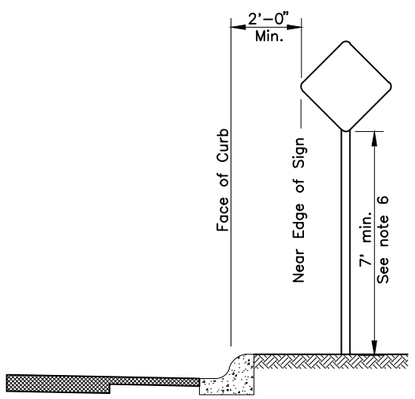

CURB WITHOUT SIDEWALK

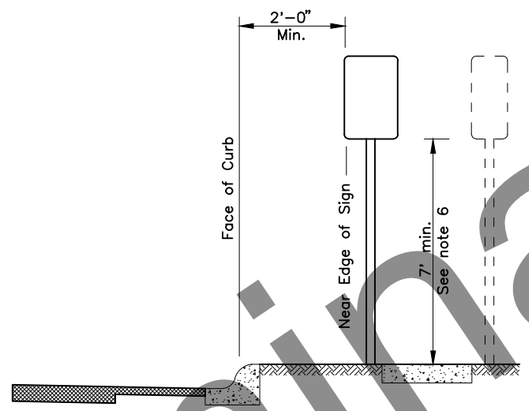

CURB WITH PARKWAY AND SIDEWALK
(If R/W width permits, signs should be placed behind sidewalk.)

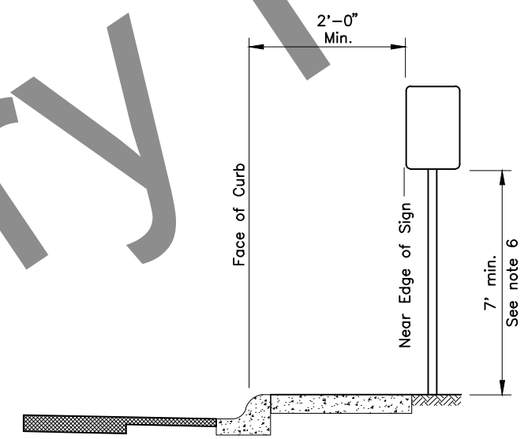

CURB WITH SIDEWALK WITHOUT PARKWAY

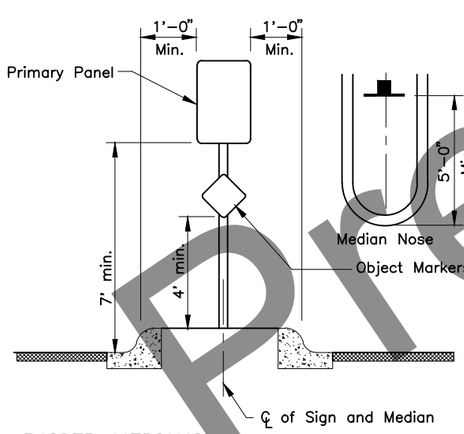

RAISED MEDIANS
Minimum 4' Width for Signing

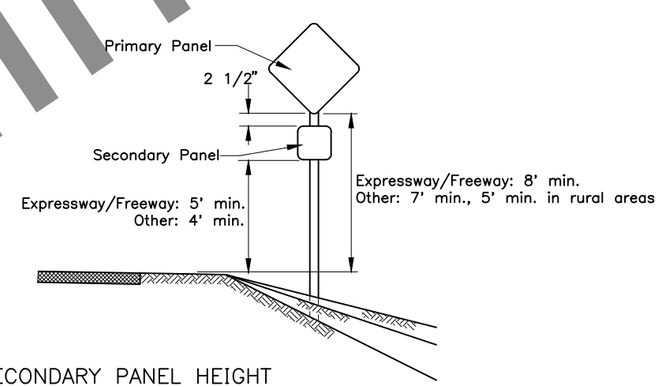

SECONDARY PANEL HEIGHT
ALL TWO PANEL MOUNTING

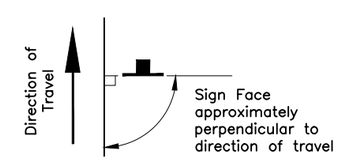

SIGN POSITIONING

GENERAL NOTES

1. Unless shown otherwise on the plans, the standard sign offset is 12'. The minimum is 6' where shoulder width is 6' or greater.
2. Add 6" to mounting height on unpaved roads.
3. If signs extend over bike paths, the minimum vertical clearance is 8' 0".
4. When signs are placed 30' or more from the edge of traveled way, mount them with the bottom of the sign at least 5' above the road surface at the near edge of the road.
5. When multiple hinged sign supports are used, mount hinges at least 7' above the ground.
6. Minimum mounting height is 7'-0" where parking or pedestrian movements are likely to occur, or where sings extend over sidewalks.
7. For construction signs in rural areas, mounting height shall be 7' minimum.

State of Alaska DOT&PF
ALASKA STANDARD PLAN

POST MOUNTED SIGN
OFFSET AND HEIGHT

Adopted as an Alaska Standard Plan by: Carolyn Morehouse
Carolyn Morehouse, P.E.
Chief Engineer

Adoption Date: 7/17/2020

Last Code and Stds. Review
By: KLK Date: 7/8/2020

Next Code and Standards Review Date: 7/8/2030

S-05.02

S-30.05 SHEET | of |

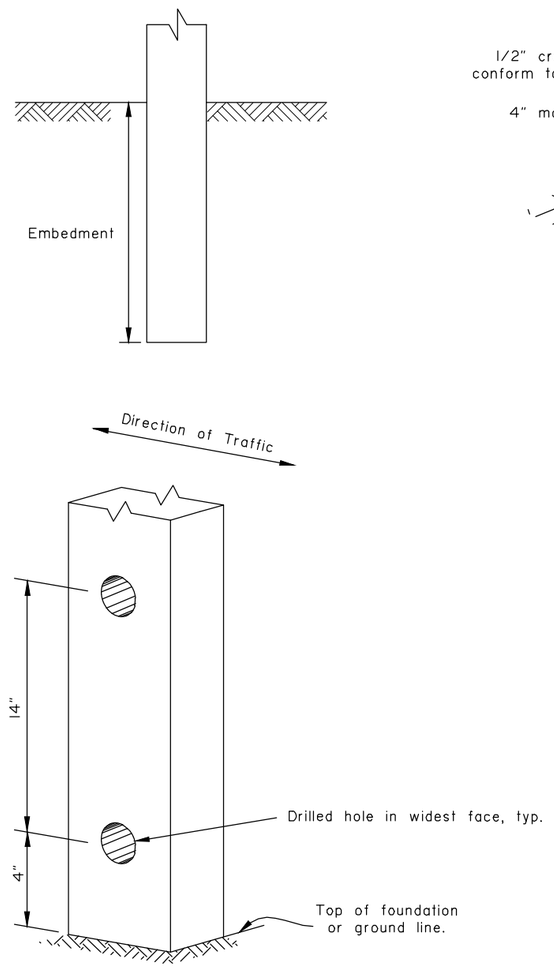

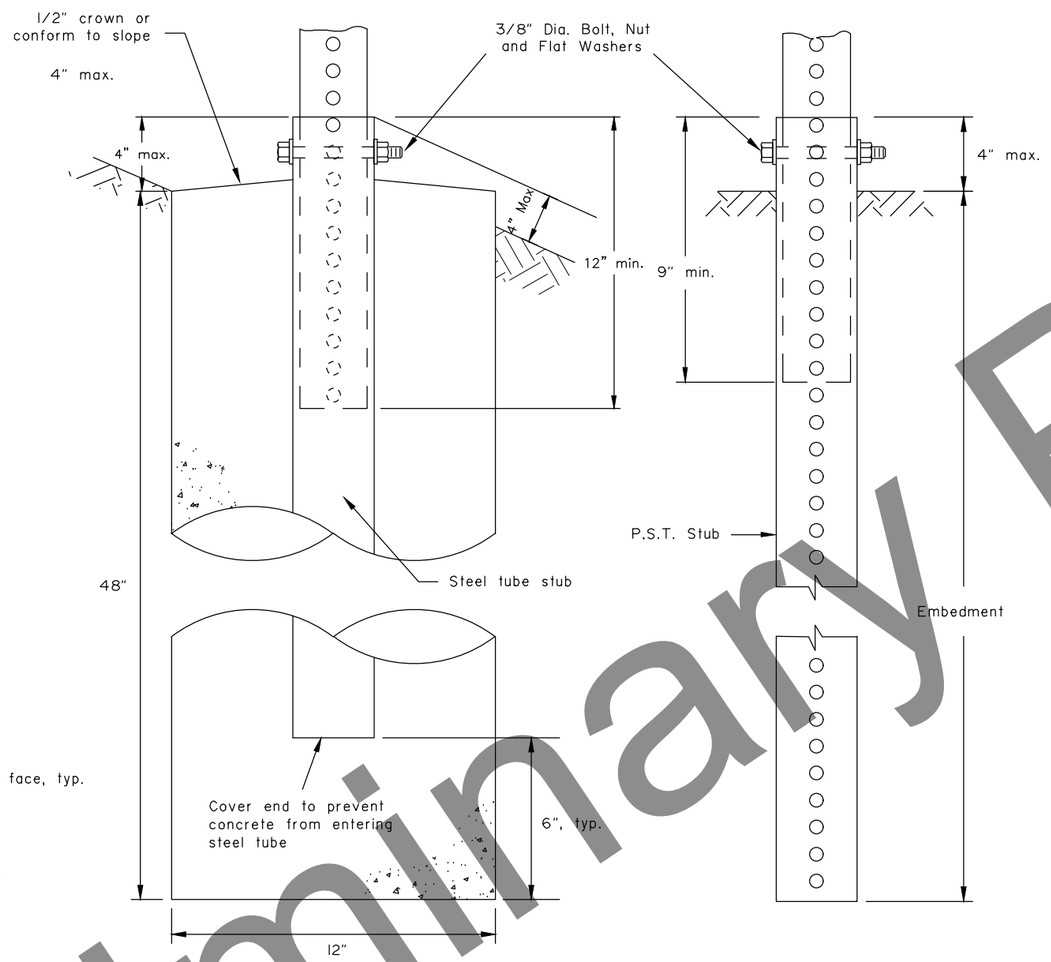

SLEEVE TYPE
CONCRETE FOUNDATION

SLEEVE TYPE*
SOIL EMBEDMENT

GENERAL NOTES:

1. Sign shall be placed symmetrically around posts and refer to Standard Plan S-00 for sign framing details.
2. See plans for type of post, size and embedment type.
3. To maintain crashworthiness, install no more than the number of P.S.T.s or wood posts specified in the tables within 7' of each other.
4. Concrete shall be class B.
5. Do not use the supports on this drawing for multiple support signs if supports are separated by more than 7 feet.
6. Treat all field cuts and field drilled holes in wood posts in accordance with Section 730-2.04 of the Standard Specifications.

SIGN POST SPACING NOTES:

1. Install sign support in accordance with the table below, unless otherwise required by plans or specifications.
2. Exceptions:
   a. Use one post for all E5-1 gore signs, regardless of width.
   b. Use one 2.5" P.S.T. for all STOP signs, with or without street name signs.
3. Supports placed within 7' of each other must be acceptable for that use. See tables below for the sizes of wood posts and P.S.T.s that may be used within 7'. See Manufacturer's documentation for breakaway couplings and tubes that may be used within 7'.
4. See Standard Plan S-31 for frangible couplings, hinges, and foundations for tube and W-shape sign supports.

WOOD SIGN POSTS			
SIZE	HOLE DIA.	EMBEDMENT*	NO. OF POSTS WITHIN 7 Ft. PATH
4"x4"	NONE	4'-1"	2
4"x6"	1 1/2"	5'-3"	2
6"x6"	1 1/2"	4'-9"	1
6"x8"	3"	4'-9"	1

* Embedment depth applies in both strong and weak soil.

WOOD POSTS

PERFORATED STEEL TUBES (P.S.T.)		
POST SIZE	Embedment Depth	No. of P.S.T.s permitted within 7 ft path
1 1/2" x 1 1/2"	4'-8"	2
1 3/4" x 1 3/4"	4'-6"	2
2" x 2"	4'-3"	2
2 1/4" x 2 1/4"	5'-0"	1
2 1/2" x 2 1/2"	4'-6"	1

* Use 3"x3"x3/16" Stub for 2 1/2"x2 1/2" PST Applications.

PERFORATED STEEL TUBE (PST) POSTS

TUBE SIGN POST SPACING								
Sign Width (feet)	No. of Posts	Distance Between Posts	Sign Overhang	Post Type				Notes
				P.S.T.	Wood	Steel Tube	W-Shape	
0.5 to 4.0	1	-	0.5W	X	X	X		See Note 2.
4.5 to 10.0	2	0.6W	0.2W	X	X	X		See Note 3.
10.5 to 11.0	2	6	Varies	X	X	X		See Note 3.
11.5 to 13.0	2	8	Varies				X	
13.5 to 20.0	2	0.6W	0.2W				X	
20.5 to 22.5	3	8	Varies				X	
23.0 to 29.5	3	0.35W	0.15W				X	
30.0 to 31.5	4	8	Varies				X	
32.0 to 40.0	4	0.25W	0.125W				X	

TUBE SIGN POST SPACING

Note: Drawing not to scale

State of Alaska DOT&PF
ALASKA STANDARD PLAN

LIGHT SIGN STRUCTURE
POST EMBEDMENT

Adopted as an Alaska Standard Plan by: Carolyn Morehouse
Carolyn Morehouse, P.E.
Chief Engineer

Adoption Date: 7/17/2020

Last Code and Stds. Review
By: WTH Date: 7/8/2020

Next Code and Standards Review date: 7/8/2030

S-30.05

S-31.02 SHEET 1 of 1

NOTE:
Install hinges when more than one post is used to support a sign. Do not install hinges on single post installations.

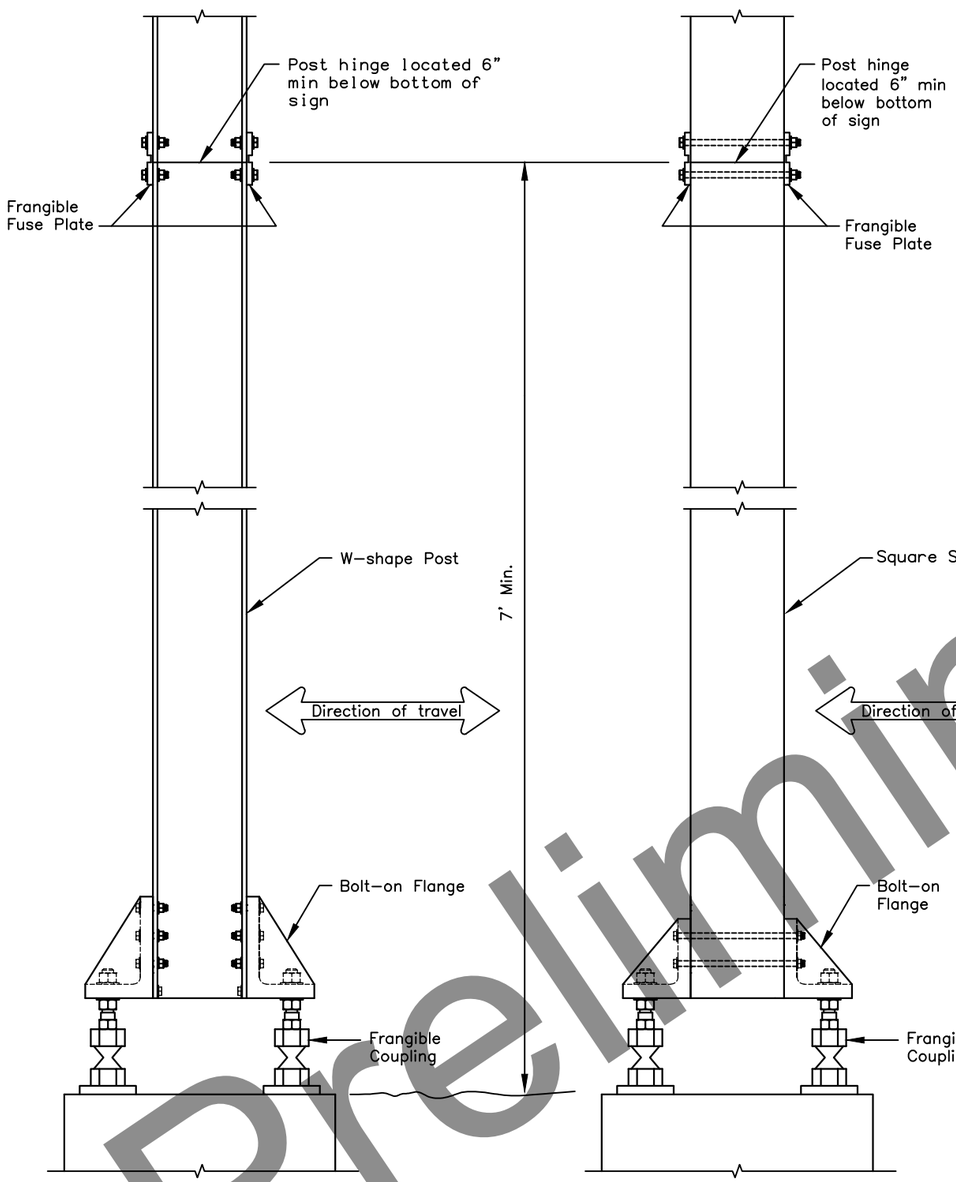

FRANGIBLE COUPLING SYSTEM FOR W-SHAPE POST

FRANGIBLE COUPLING SYSTEM FOR SQUARE STEEL TUBES

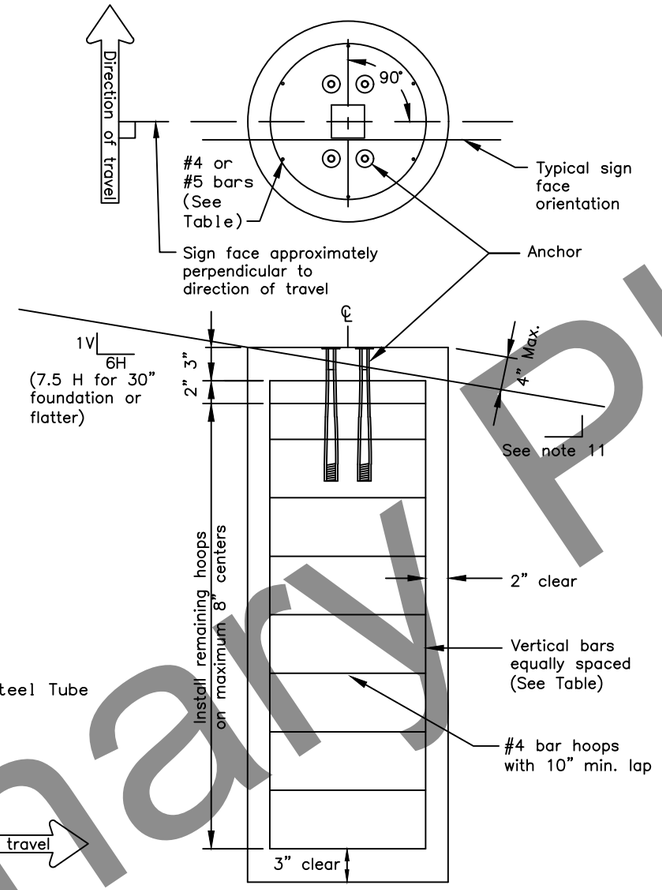

SIGN POST FOUNDATION
See Table for depth and diameter

POST SIZE & TYPE	FOUNDATION *			REINFORCEMENT					
	DIA.	MIN. DEPTH	CY^3 CONC.	VERTICAL BARS			HOOPS		
				QTY.	SIZE	LGTH.	QTY.	SIZE	DIA.
2 1/2" TUBE	1'-6"	6'-0"	0.39	7	#5	5'-6"	10	#4	1'-2"
3" TUBE	1'-6"	6'-0"	0.39	7	#5	5'-6"	10	#4	1'-2"
3 1/2" TUBE	1'-6"	6'-0"	0.39	7	#5	5'-6"	10	#4	1'-2"
4" TUBE	2'-6"	6'-0"	1.09	8	#8	5'-6"	10	#4	2'-2"
4 1/2" TUBE	2'-6"	6'-0"	1.09	8	#8	5'-6"	10	#4	2'-2"
5" TUBE	2'-6"	6'-0"	1.09	8	#8	5'-6"	10	#4	2'-2"
W6 x 9	2'-6"	6'-0"	1.09	8	#8	5'-6"	10	#4	2'-2"
W6 x 12	2'-6"	6'-0"	1.09	8	#8	5'-6"	10	#4	2'-2"
W6 x 15	3'-0"	6'-6"	1.70	8	#11	6'-0"	12	#4	2'-8"
W6 x 30	3'-0"	7'-6"	1.96	8	#11	7'-0"	13	#4	2'-8"

FOUNDATION TABLE

* Foundations sized for use where there are no loose, high moisture, or fine grained soils.

GENERAL NOTES

1. Furnish sign posts with NCHRP 350 compliant frangible couplings designed to break away safely when struck from any direction. There is no MASH compliant device at this time. See SPDR report for more info.
2. Furnish frangible coupling systems with bolt-on flanges.
3. Details on this sheet illustrate only the general components of a frangible coupling system, and are not intended to specify a particular product.
4. Install frangible fuse plates as specified by the manufacturer and hinged joints when multiple posts are used to support a sign. Do not use round pipes.
5. Install the components of the breakaway system, including hinges, in accordance with the written instructions of the system manufacturer.
6. Use Class A, B or W concrete conforming to Sections 501 or 550 of the Standard Specifications. Furnish ASTM A615 grade 60 steel bars for concrete reinforcement conforming to AASHTO M31.
7. Spiral reinforcing steel may be substituted for hoops in concrete foundation. Spiral option shall consist of #3 plain spiral with 6" pitch with three flat turns at the top and one flat turn at the bottom.
8. Install the concrete anchors using a rigid template. Locate the anchors on centers and within tolerances specified by the manufacturer.
9. Install the anchors in fresh concrete as recommended by the manufacturer. Adjust the template's final position until it is level. Remove and replace all foundations that need more than 2 shims under any 1 coupling or more than a total of 3 shims under any pair of couplings to plumb the post.
10. Drill the holes for attaching brackets before the sign posts are hot dip galvanized. Test fit templates in the holes to ensure the brackets can be installed square to the posts.
11. Special grading detail and/or shielding may be required to maintain 4" maximum clear distance.

State of Alaska DOT&PF
ALASKA STANDARD PLAN

SIGN POST BASE AND FOUNDATION

Adopted as an Alaska Standard Plan by: Carolyn Morehouse
Carolyn Morehouse, P.E.
Chief Engineer

Adoption Date: 7/17/2020

Last Code and Stds. Review
By: KLK, MJM Date: 7/8/2020

Next Code and Standards Review Date: 7/8/2030

S-31.02

T-20.04 SHEET | of |

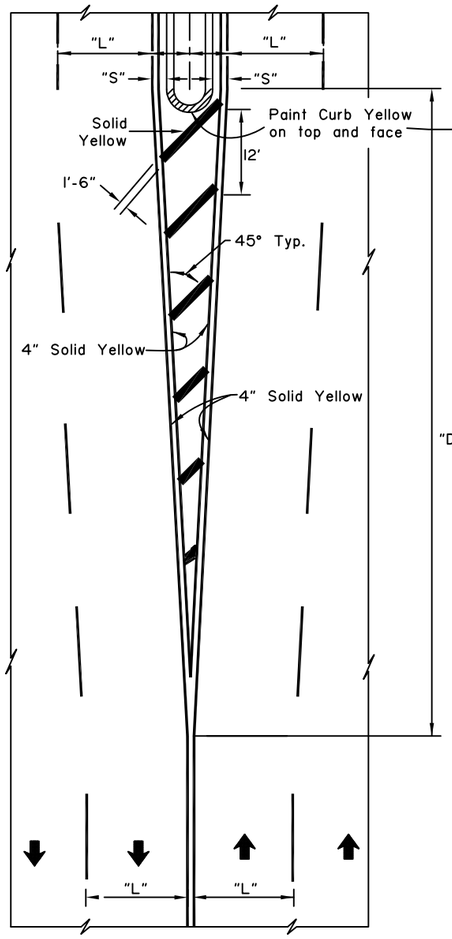

FOUR OR MORE LANES
DRIVE TO RIGHT

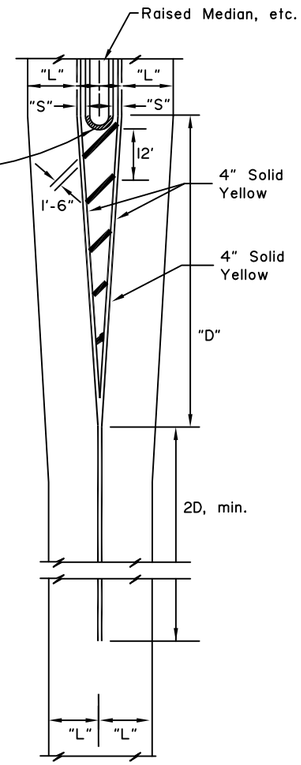

TWO LANES
DRIVE TO RIGHT

White longitudinal and diagonal markers identical to Four Lane Arrangement.

NOTES: "D" = Speed limit (mph) X "S" (offset width in feet) or as indicated on the plans. Minimum "D" = 100 feet urban, 200 feet rural.

APPROACH TO OBSTRUCTIONS

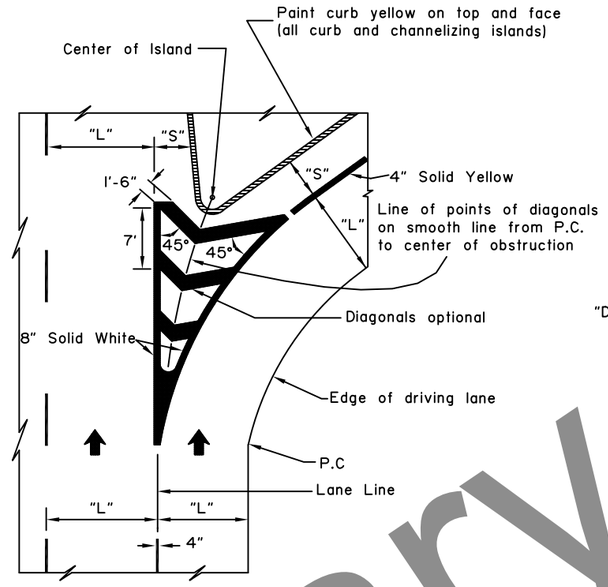

CHANNELIZING ISLAND

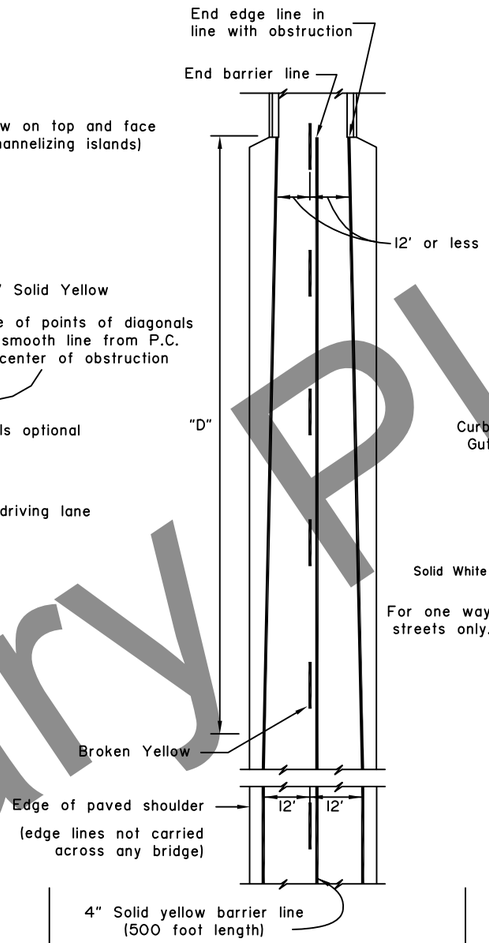

Note: On bridges over 24' wide use standard pavement markings. Barrier lines not used unless otherwise required.

EDGE LINE TRANSITION TO NARROW BRIDGE AND APPROACH BARRIER LINE

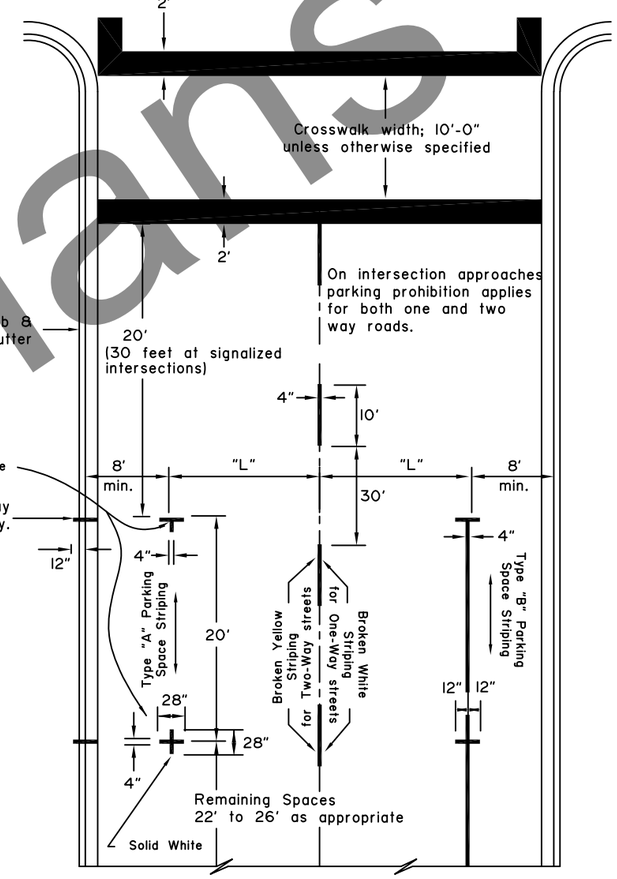

CENTERLINES FOR TWO LANE TWO WAY URBAN ROADS-PARKING LIMIT LINES

RAILROAD CROSSING NOTES:

1. All markings solid while unless indicated otherwise.
2. On 4-lane roadways place railroad crossing approach markings in each lane of the approach.
3. Locate Stop Bar 15' from railroad track or 8' from gate, if present.
4. Place edge lines and lane lines on a uni-directional approach in a normal manner except that the lane line(s) shall be solid 4" white in lieu of broken for a distance of (D+60') in advance of the stop bands.

POSTED LIMIT	D
30 M.P.H.	225'
40	350'
50	475'
60	625'

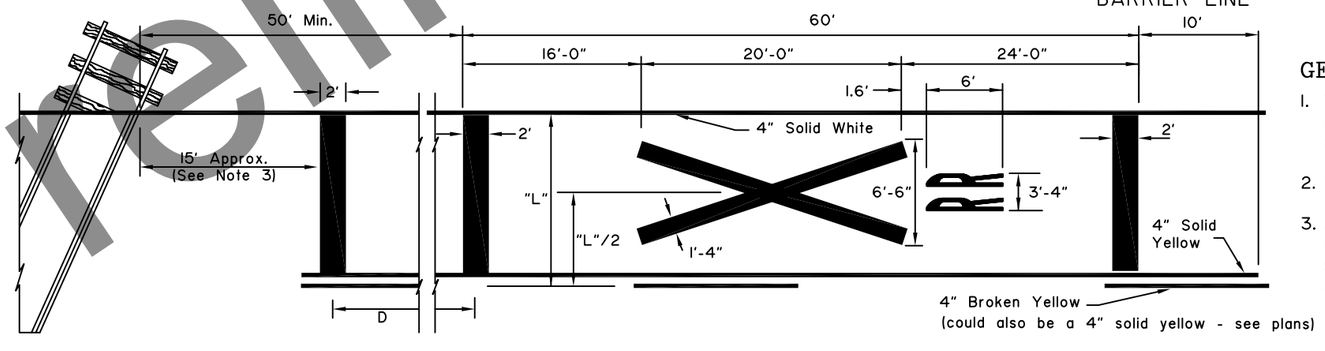

APPROACH TO RAILROAD CROSSING ON 2 LANE 2 WAY HIGHWAY

GENERAL NOTES:

1. "S"= offset distance as shown on the plans, otherwise 1 to 2 feet.
2. "L"= driving lane width.
3. See the Alaska Traffic Manual for additional guidance and/or restrictions on the use of traffic control devices.

NOT TO SCALE

State of Alaska DOT&PF
ALASKA STANDARD PLAN

PAVEMENT MAKING APPLICATIONS

Adopted as an Alaska Standard Plan by: Kenneth J. Fisher, P.E.
Chief Engineer

Adoption Date: 02/08/2019

Last Code and Stds. Review
By: Date:

Next Code and Standards Review date: 02/08/2029

T-20.04

T-21.04

SHEET 1 of 1

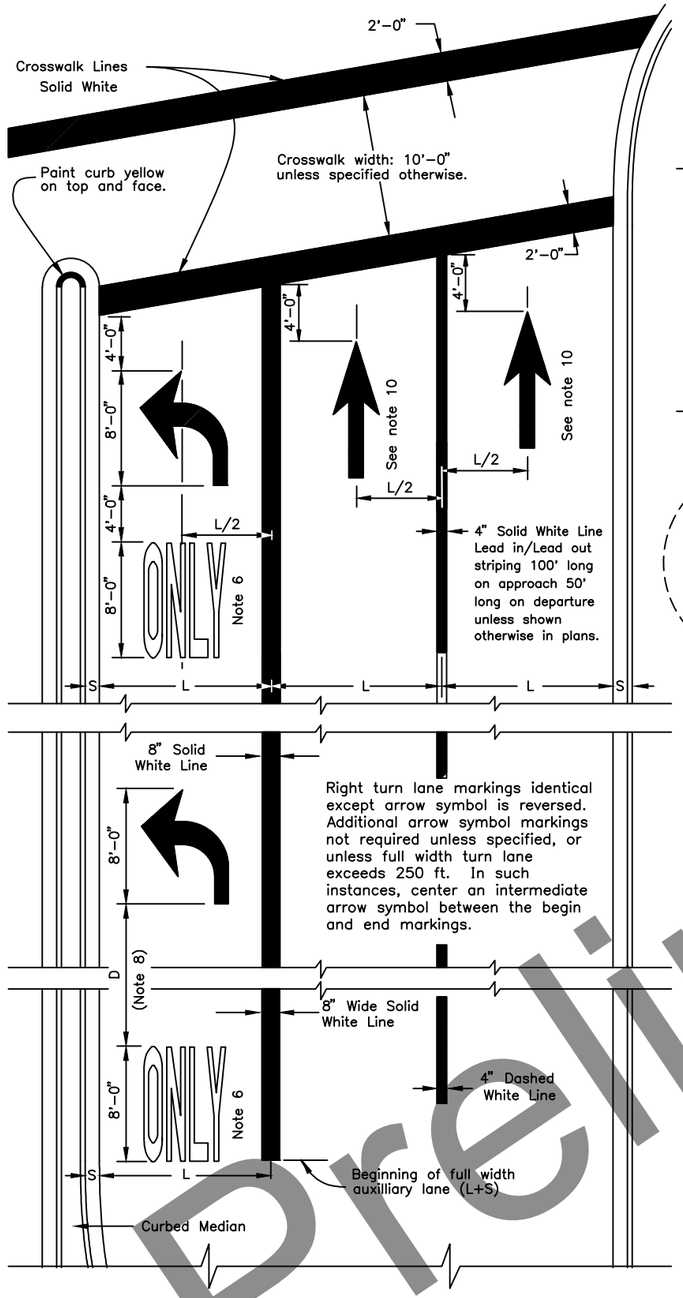

APPROACH TO INTERSECTION

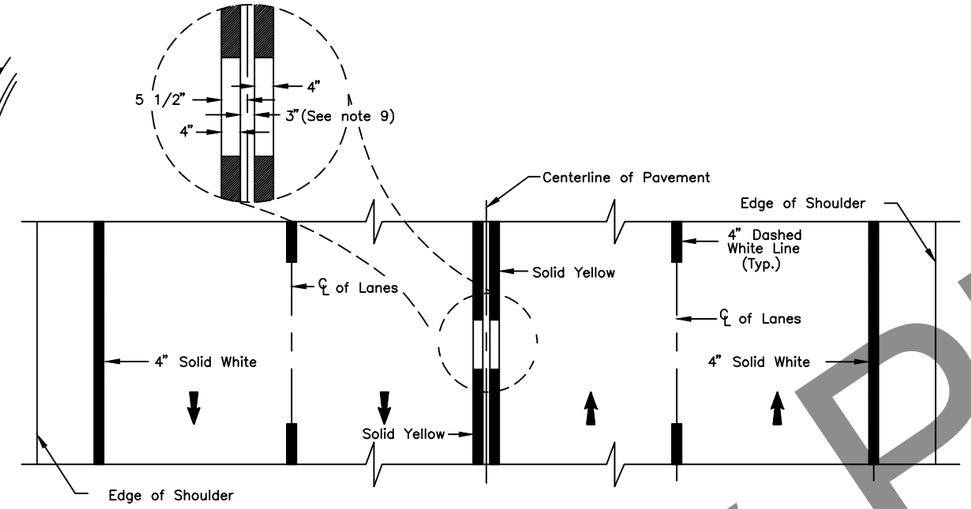

FOUR LANE TWO WAY

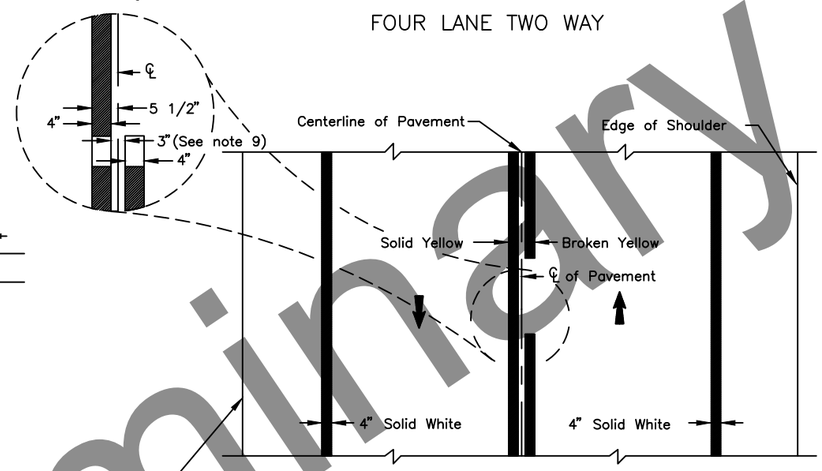

TWO LANE TWO WAY

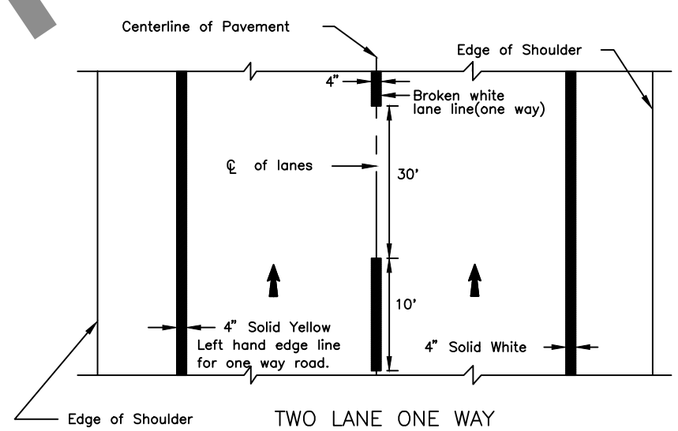

TWO LANE ONE WAY

GENERAL NOTES:

1. All markings white unless indicated otherwise.
2. Lengths of stripe and gap for lane and center lines identical.
3. Lane lines for auxiliary lanes are unbroken solid lines.
4. "L" = driving lane width.
5. "S" = shy distance as shown on plans, otherwise 1 to 2 feet.
6. ONLY markings are required where through lanes change to turn lanes. In other cases, apply ONLY markings as indicated on plans.
7. See ALASKA TRAFFIC MANUAL for additional instruction on the use of TRAFFIC CONTROL DEVICES.
8. Adjust distance D between ONLY and Turn Arrow based on SPEED vs. D table. Table may be used for spacing between pairs of TWLT markings.
9. Adjust centerline spacing from 3" up to 5" where recessed pavement markers are required.
10. Arrows and symbols are used for through lanes only when the lane layout deviates from the normal intersection rules, and shall only be used where indicated in the plans.

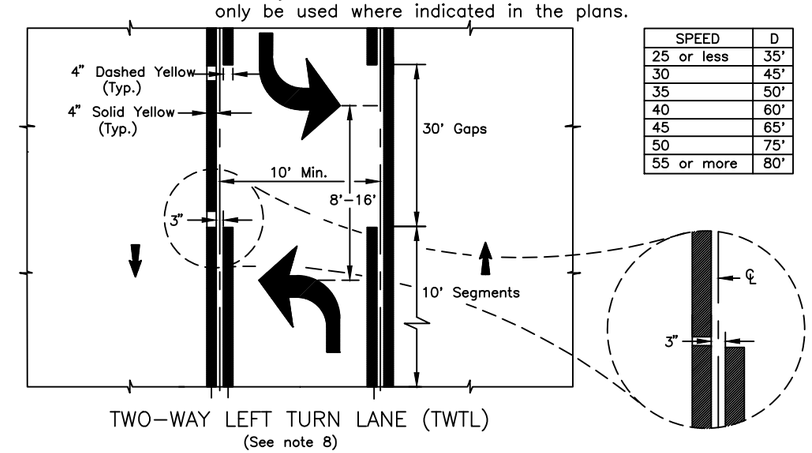

TWO-WAY LEFT TURN LANE (TWTL)
(See note 8)

SPEED	D
25 or less	35'
30	45'
35	50'
40	60'
45	65'
50	75'
55 or more	80'

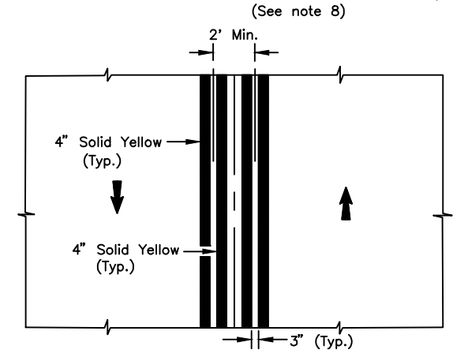

STRIPED MEDIAN

State of Alaska DOT&PF
ALASKA STANDARD PLAN

PAVEMENT MARKING APPLICATIONS

Adopted as an Alaska Standard Plan by: Carolyn Morehouse
Carolyn Morehouse, P.E.
Chief Engineer

Adoption Date: 7/17/2020

Last Code and Stds. Review
By: KLK Date: 7/8/2020

Next Code and Standards Review Date: 7/8/2030

T-21.04

T-22.04 SHEET | of |

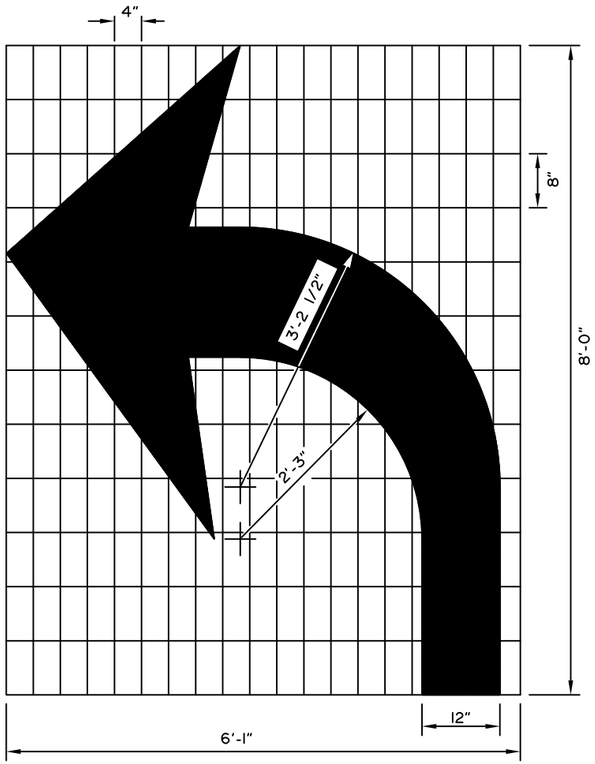

Right turn auxilliary lane usage markings identical except arrow symbol is reversed.

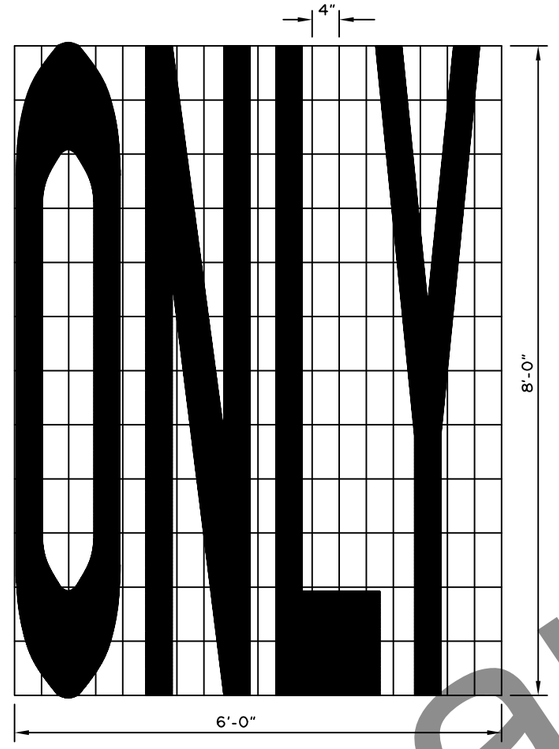

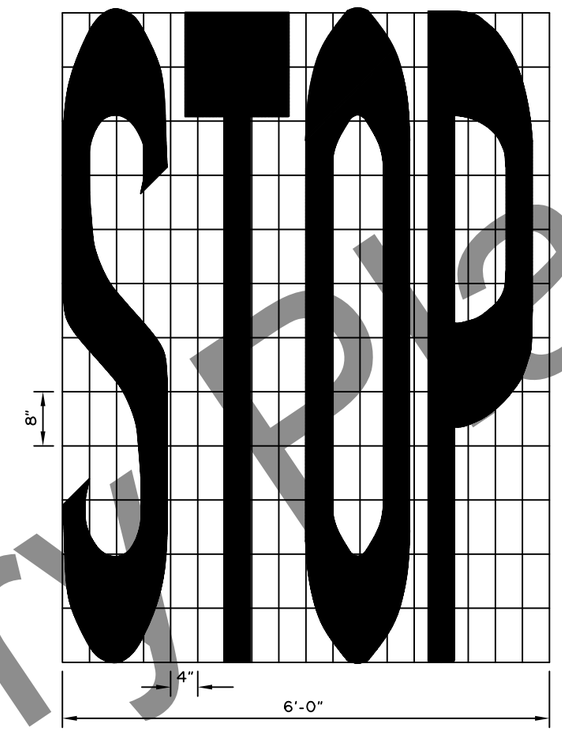

LAYOUT TEMPLATES FOR STENCILS

GENERAL NOTES:

1. All symbols shown shall be white and reflectorized in accordance with the Special Provisions.
2. See the Alaska Sign Design Specifications (ASDS) for lettering and symbols for pavement marking details not provided on this drawing.

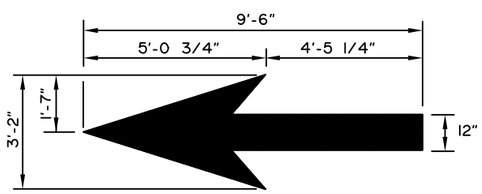

STRAIGHT AHEAD ARROW

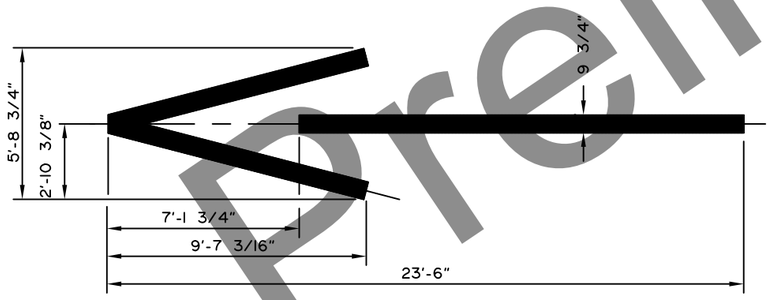

WRONG WAY ARROW

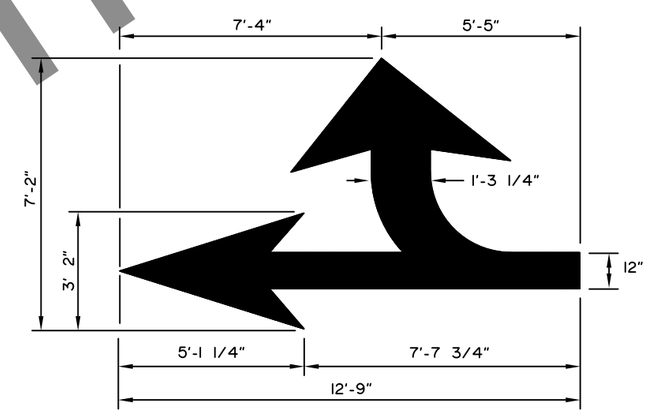

COMBINATION ARROW

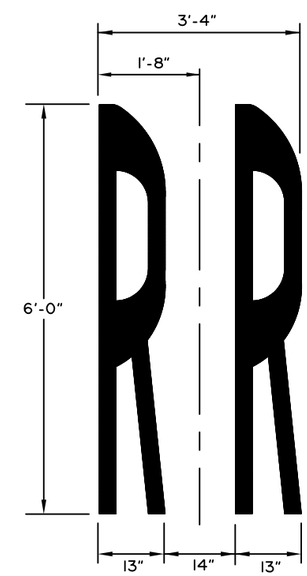

RAILROAD SYMBOL

State of Alaska DOT&PF
ALASKA STANDARD PLAN

PAVEMENT MARKING SYMBOL DIMENSIONS

Adopted as an Alaska Standard Plan by: Kenneth J. Fisher, P.E. Chief Engineer

Adoption Date: 02/08/2019

Last Code and Stds. Review
By: Date:

Next Code and Standards Review date: 02/08/2029

T-22.04

T-25.10 SHEET 1 of 5

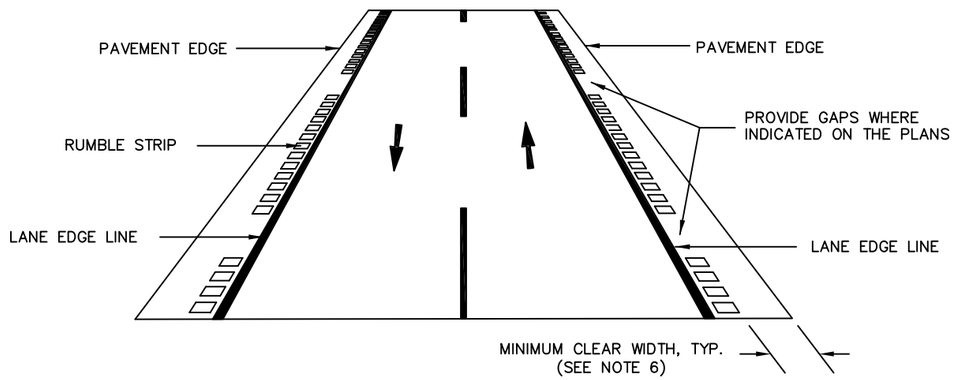

TYPICAL SHOULDER INSTALLATION – TWO-WAY

PERSPECTIVE VIEW

APPLIES TO TWO-WAY OPERATION WHERE BICYCLES ARE ALLOWED

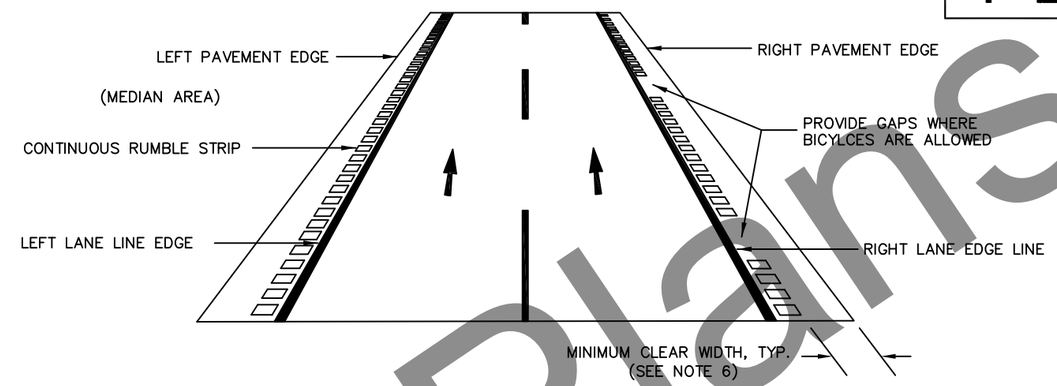

TYPICAL SHOULDER INSTALLATION – ONE-WAY DIVIDED

PERSPECTIVE VIEW

APPLIES TO ONE-WAY DIVIDED HIGHWAYS WHERE BICYCLES ARE ALLOWED

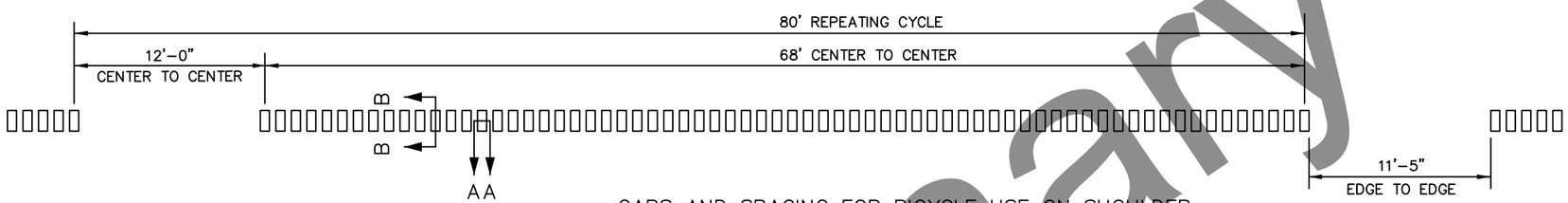

GAPS AND SPACING FOR BICYCLE USE ON SHOULDER

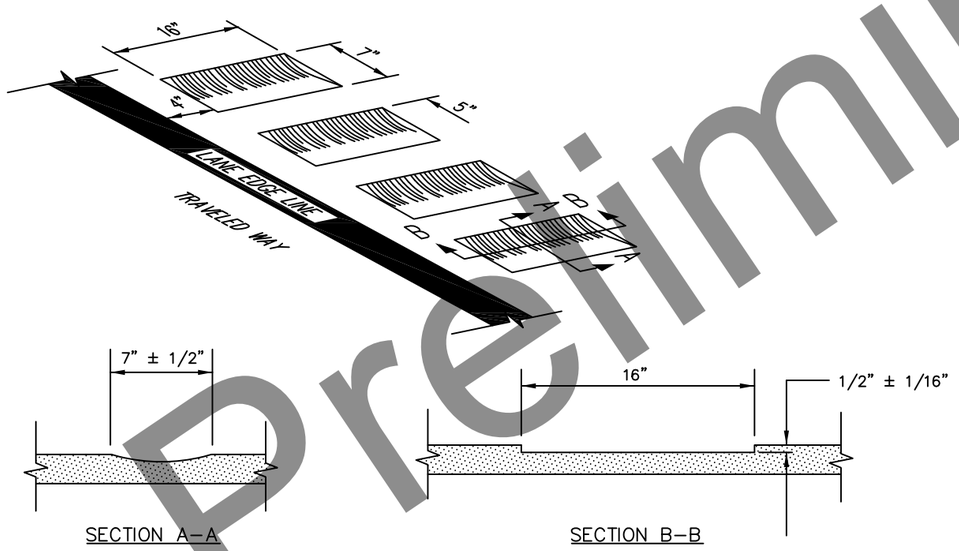

TYPICAL SHOULDER INSTALLATION DETAIL

SHOULDER RUMBLE STRIP NOTES:

1. PERFORM ALL STAKING AS NECESSARY TO INSTALL RUMBLE STRIPS IN ACCORDANCE WITH THE PLANS, THESE DETAILS, AND THE FOLLOWING NOTES:
2. DO NOT INSTALL RUMBLE STRIPS IN THE FOLLOWING INSTANCES:
   - A. BRIDGE DECKS
   - B. BRIDGE APPROACH SLABS
   - C. PAVEMENT LESS THAN 2 INCHES THICK
   - D. PAVEMENT THAT HAS ALLIGATORING, FATIGUE, CRACKING, OR IN POOR CONDITION
   - E. PAVEMENT JOINTS
   - F. INTO LANE EDGE LINE STRIPING
3. USE CENTERLINE OR LANE LINE DIVIDING LINES, RATHER THAN LANE EDGE LINES, FOR RUMBLE STRIP ALIGNMENT CONTROL WHENEVER POSSIBLE.
4. WHERE BICYCLES ARE ALLOWED ON THE FACILITY, SHOULDER RUMBLE STRIP GAPS (68' RUMBLE STRIP, 12' GAP CENTER TO CENTER, 11'–5" GAP, EDGE TO EDGE) SHOULD BE CONTINUOUS.
5. ON DIVIDED HIGHWAYS, PROVIDE CONTINUOUS RUMBLE STRIP ON THE INSIDE (LEFT) SHOULDER.
6. MINIMUM REQUIRED CLEAR WIDTHS AFTER INSTALLATION ARE AS FOLLOWS:
   - A. AT LEAST 4' WHERE NO GUARDRAIL IS PRESENT (6.0' INITIAL SHOULDER WIDTH).
   - B. AT LEAST 5' (TO FACE OF GUARDRAIL) WHERE GUARDRAIL IS PRESENT (≥ 7.0' AT INITIAL SHOULDER WIDTH).
   - C. NO MINIMUM WHERE BICYCLES ARE PROHIBITED.

Note: Drawing not to scale

State of Alaska DOT&PF
ALASKA STANDARD PLAN

MILLED RUMBLE STRIPS SHOULDER DETAILS

Adopted as an Alaska Standard Plan by: Carolyn Morehouse
Carolyn Morehouse, P.E.
Chief Engineer

Adoption Date: 07/17/2020

Last Code and Stds. Review
By: LRG Date: 07/17/2020

Next Code and Standards Review date: 07/17/2030

T-25.10 SHEET 2 of 5

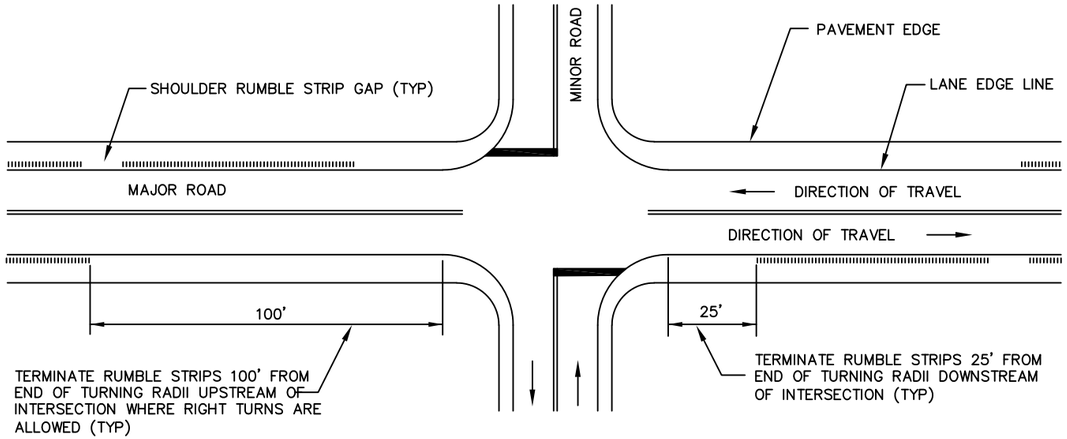

RUMBLE STRIP LAYOUT AT INTERSECTIONS

APPLIES TO ALL SIDE ROAD INTERSECTIONS, PUBLIC TURNOUTS, COMMERCIAL ROAD APPROACHES, AND GANG MAILBOX TURNOUTS (WHERE BICYCLES ARE ALLOWED)

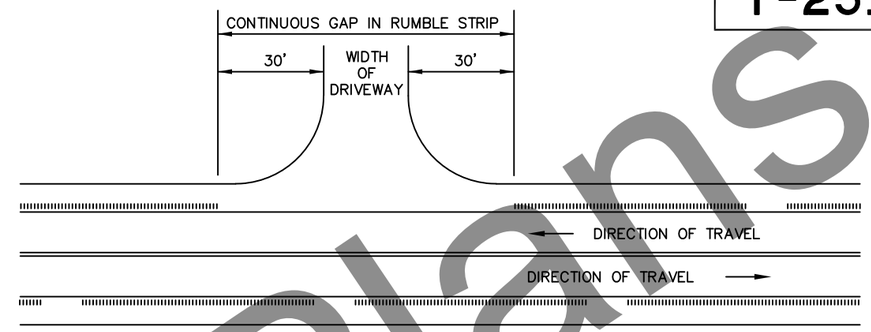

RUMBLE STRIP LAYOUT AT RESIDENTIAL DRIVEWAYS

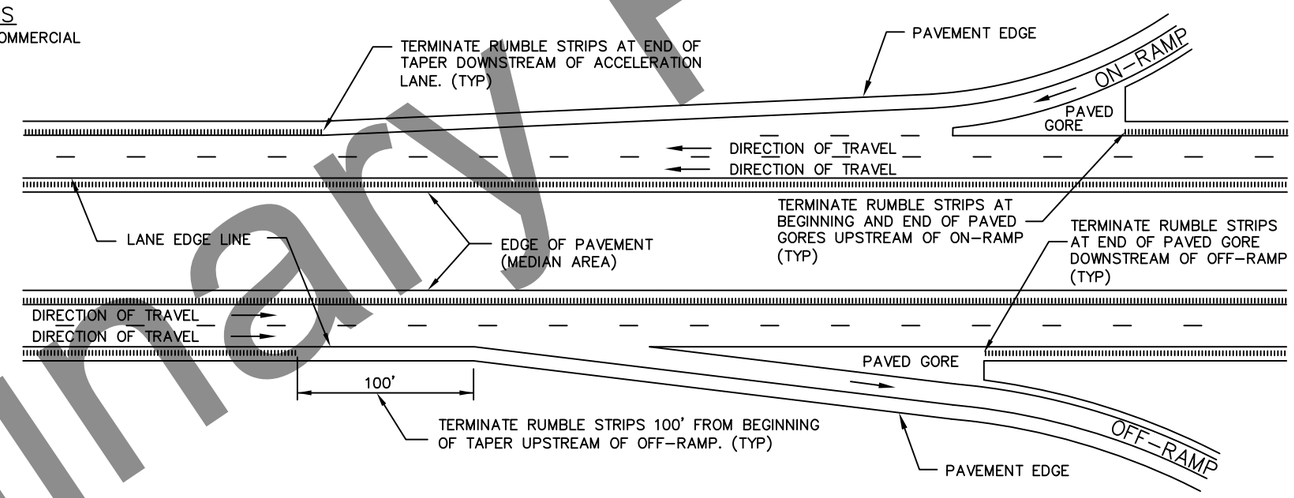

RUMBLE STRIP LAYOUT AT FREEWAY ON- AND OFF-RAMPS

THIS DRAWING APPLIES TO BOTH PARALLEL AND TAPERED LANES (WHERE BICYCLES ARE ALLOWED)

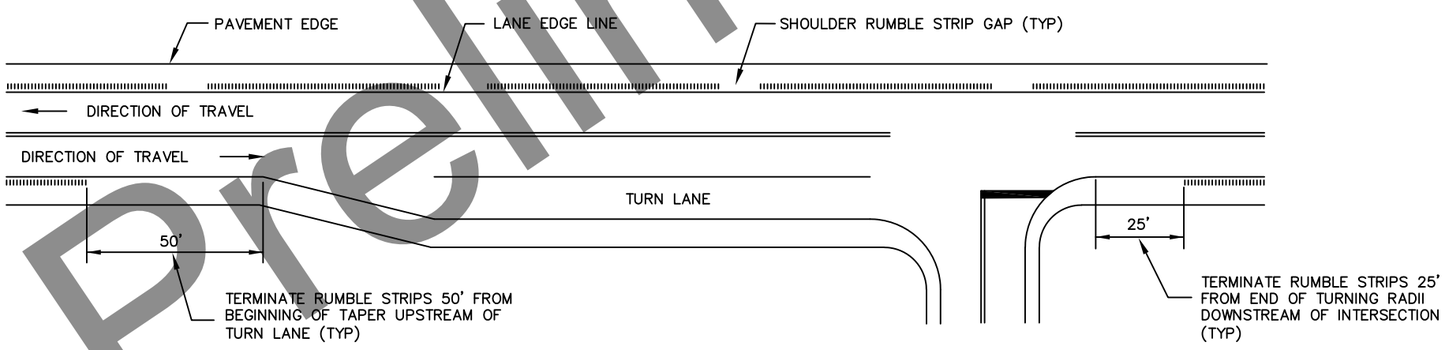

RUMBLE STRIP LAYOUT AT RIGHT TURN LANES

(WHERE BICYCLES ALLOWED)

Note: Drawing not to scale

State of Alaska DOT&PF
ALASKA STANDARD PLAN

MILLED RUMBLE STRIPS SHOULDER DETAILS

Adopted as an Alaska Standard Plan by: Carolyn Morehouse
Carolyn Morehouse, P.E.
Chief Engineer

Adoption Date: 07/17/2020

Last Code and Stds. Review
By: LRG Date: 07/17/2020

Next Code and Standards Review date: 07/17/2030

T-25.10 SHEET 3 of 5

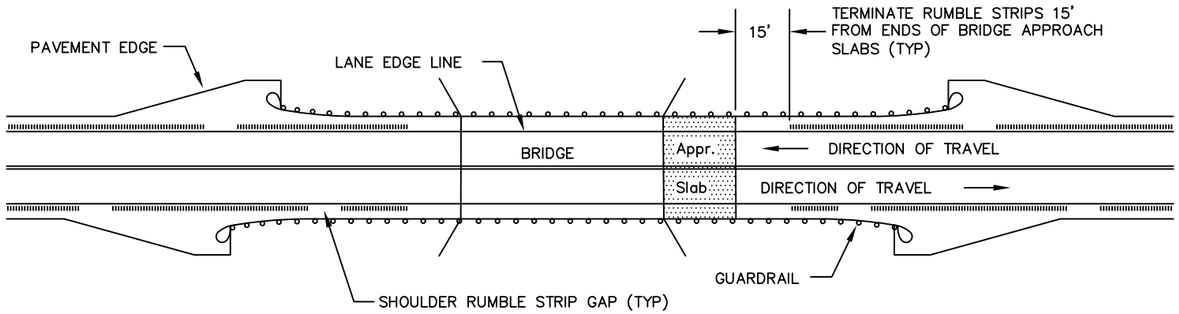

RUMBLE STRIP LAYOUT AT BRIDGES WITH ADEQUATE SHOULDER
(WHERE BICYCLES ARE ALLOWED)

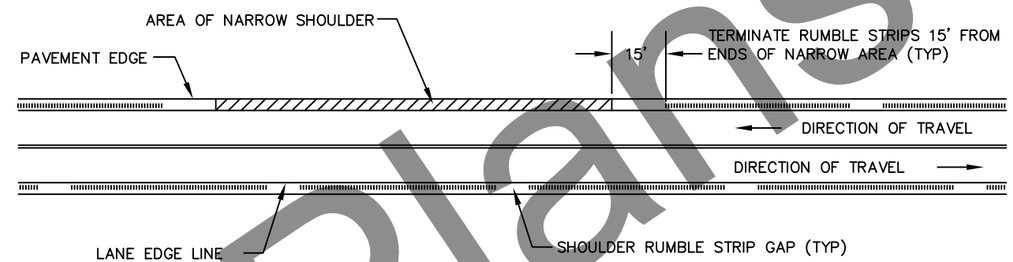

RUMBLE STRIP LAYOUT IN AREAS WITH NARROW SHOULDER
(WHERE BICYCLES ARE ALLOWED)
(SEE NARROW SHOULDER WIDTH NOTE THIS SHEET FOR DEFINITIONS AND TOLERANCES)

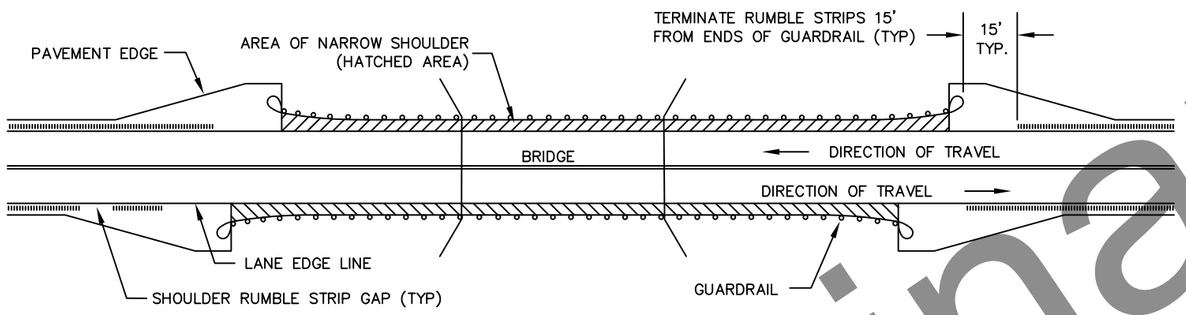

RUMBLE STRIP LAYOUT AT BRIDGES WITH NARROW SHOULDER
(WHERE BICYCLES ARE ALLOWED)
(SEE NARROW SHOULDER WIDTH NOTES THIS SHEET)

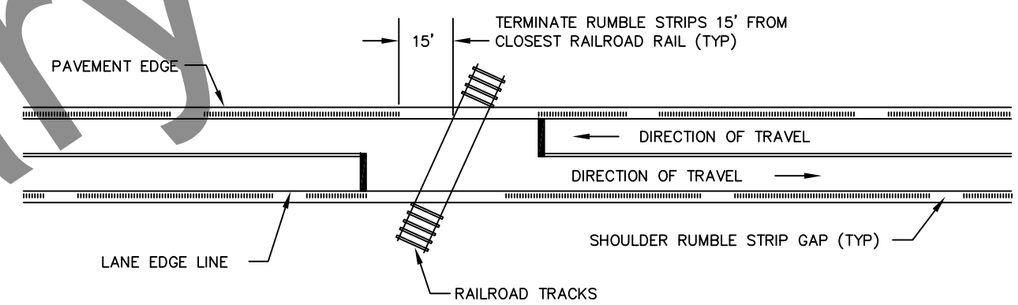

RUMBLE STRIP LAYOUT AT RAILROAD CROSSINGS
(WHERE BICYCLES ARE ALLOWED)

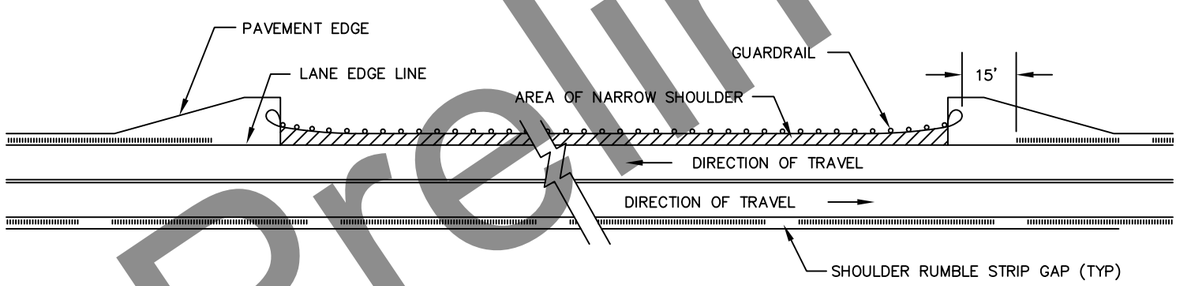

RUMBLE STRIP LAYOUT IN AREAS WITH GUARDRAIL AND NARROW SHOULDER
(WHERE BICYCLES ARE ALLOWED)
(SEE NARROW SHOULDER WIDTH NOTES THIS SHEET)

NARROW SHOULDER WIDTH NOTES:

A SIX INCH TOLERANCE IS ALLOWED (FOR DISTANCES OF 100 FT. OR LESS) FOR THE FOLLOWING MINIMUM REQUIRED CLEAR WIDTHS:

a. AT LEAST 4' WHERE NO GUARDRAIL IS PRESENT.

b. AT LEAST 5' (TO FACE OF GUARDRAIL) WHERE GUARDRAIL IS PRESENT.

c. NO MINIMUM WHERE BICYCLES ARE PROHIBITED.

Note: Drawing not to scale

State of Alaska DOT&PF
ALASKA STANDARD PLAN

MILLED RUMBLE STRIPS SHOULDER DETAILS

Adopted as an Alaska Standard Plan by: Carolyn Morehouse
Carolyn Morehouse, P.E.
Chief Engineer

Adoption Date: 07/17/2020

Last Code and Stds. Review
By: LRG Date: 07/17/2020

Next Code and Standards Review date: 07/17/2030

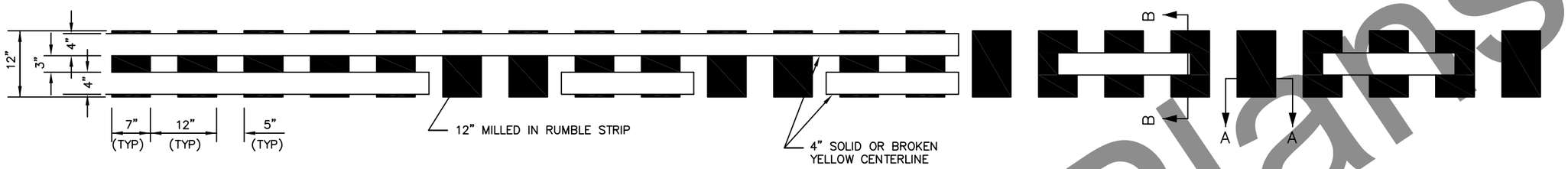

CENTERLINE RUMBLE STRIP PLAN VIEW

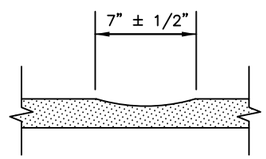

SECTION A–A

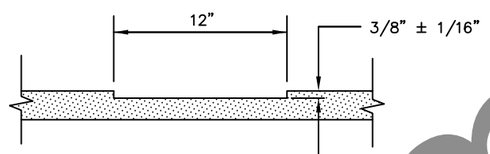

SECTION B–B

CENTERLINE RUMBLE STRIP NOTES:

1. PERFORM ALL STAKING AS NECESSARY TO INSTALL RUMBLE STRIPS IN ACCORDANCE WITH THE PLANS, THESE DETAILS, AND THE FOLLOWING NOTES.
2. DO NOT INSTALL RUMBLE STRIPS IN THE FOLLOWING INSTANCES:
   A. BRIDGE DECKS
   B. BRIDGE APPROACH SLABS
   C. PAVEMENT LESS THAN 2 INCHES THICK
   D. PAVEMENT THAT HAS ALLIGATORING, FATIGUE, CRACKING, OR IN POOR CONDITION
   E. PAVEMENT JOINTS
   F. INTO LANE EDGE LINE STRIPING
3. WHERE INSTALLED, CENTERLINE RUMBLE STRIPS SHALL BE CONTINUOUS REGARDLESS OF CENTERLINE STRIPING CONFIGURATION. BOTH PASSING AND NO–PASSING PORTIONS OF ROADWAY WITHIN THE LIMITS OF THE CENTERLINE RUMBLE STRIP INSTALLATION SHALL BE MILLED.
4. CENTERLINE RUMBLES MAY BE EXTENDED INTO PAINTED MEDIANS WHERE A DOUBLE YELLOW STRIPE SEPARATES OPPOSING TRAFFIC. WHERE CENTERLINES SPLIT TO CREATE A LEFT TURN LANE ALONG A RURAL HIGHWAY, THE RUMBLES SHOULD BE PLACED ALONG BOTH PORTIONS OF THE CENTERLINE.
5. DO NOT INSTALL CENTERLINE RUMBLE STRIPS IN A TWO–WAY LEFT TURN LANE.
6. DO NOT INSTALL CENTERLINE RUMBLES WHEN THE COMBINED LANE AND SHOULDER WIDTH IN EACH DIRECTION IS LESS THAN 14'.
7. BREAK CENTERLINE RUMBLES FOR ALL SIDE STREET AND COMMERCIAL ROAD INTERSECTIONS WHERE THERE ARE LEFT TURN LANES.
8. CENTERLINE STRIPING SHALL BE RE–ESTABLISHED FOLLOWING MILLING OPERATIONS IN ACCORDANCE WITH SECTION 670, "TRAFFIC MARKINGS". 60 MIL SURFACE APPLIED METHYL METHACRYLATE PAVEMENT MARKINGS SHALL BE INSTALLED ON ALL AREAS FOLLOWING CENTERLINE RUMBLE STRIP INSTALLATION WHERE CENTERLINE RUMBLE STRIPS ARE APPLIED.

Note: Drawing not to scale

State of Alaska DOT&PF
ALASKA STANDARD PLAN

MILLED RUMBLE STRIPS CENTERLINE DETAILS

Adopted as an Alaska Standard Plan by: Carolyn Morehouse
Carolyn Morehouse, P.E.
Chief Engineer

Adoption Date: 07/17/2020

Last Code and Stds. Review
By: LRG Date: 07/17/2020

Next Code and Standards Review date: 07/17/2030

T-25.10 SHEET 5 of 5

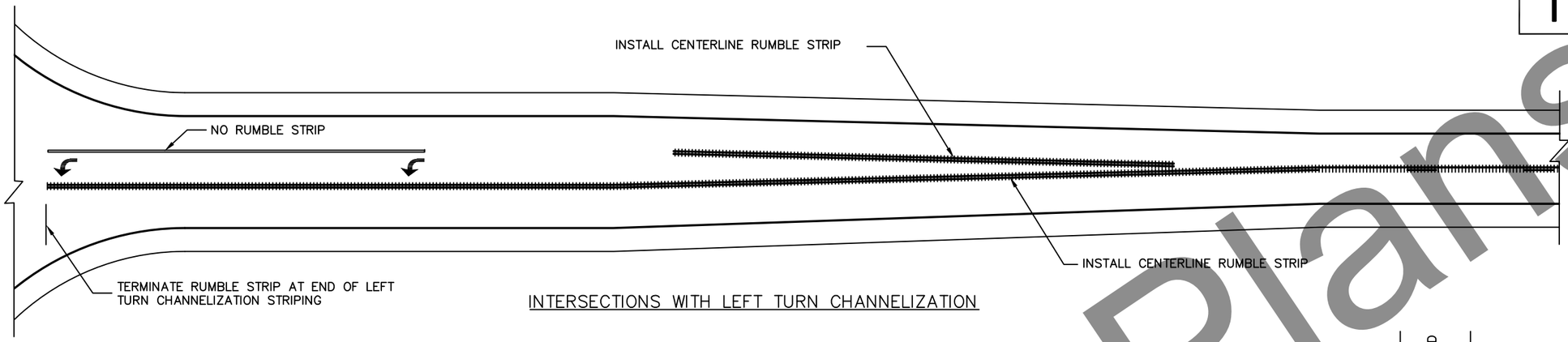

INTERSECTIONS WITH LEFT TURN CHANNELIZATION

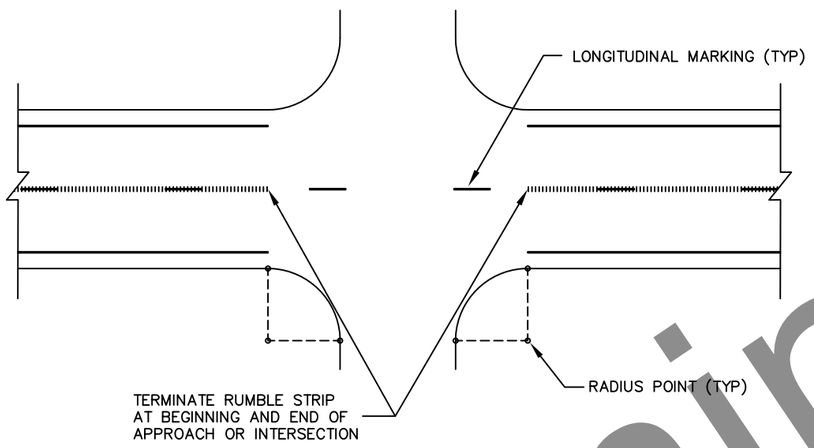

HIGHER VOLUME INTERSECTONS AND COMMERCIAL APPROACHES

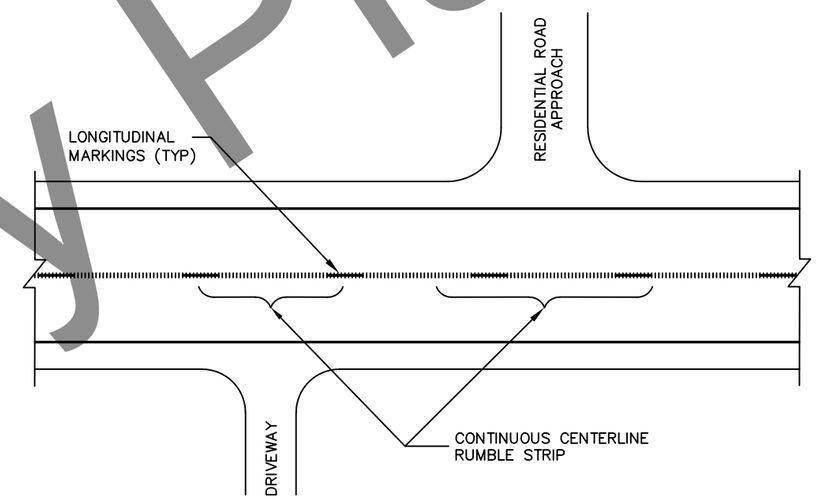

NON-COMMERCIAL ROAD AND DRIVEWAY APPROACHES

(DO NOT BREAK FOR THESE ACCESS POINTS)

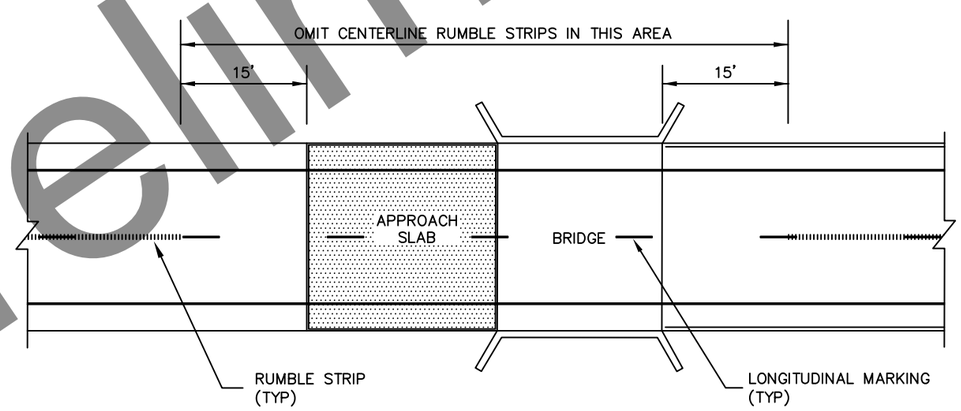

BRIDGE

Note: Drawing not to scale

State of Alaska DOT&PF
ALASKA STANDARD PLAN

MILLED RUMBLE STRIPS CENTERLINE DETAILS

Adopted as an Alaska Standard Plan by: Carolyn Morehouse

Carolyn Morehouse, P.E.
Chief Engineer

Adoption Date: 07/17/2020

Last Code and Stds. Review
By: LRG Date: 07/17/2020

Next Code and Standards Review date: 07/17/2030