NO.	DATE	REVISION

STATE	PROJECT DESIGNATION	YEAR	SHEET NO.	TOTAL SHEETS
ALASKA	PENDING/NFHWY00265	2021	A1	92
CDS ROUTE: 190000	MILEPOINT: 131.25 TO 140.44			

STATE OF ALASKA
DEPARTMENT OF TRANSPORTATION
&
PUBLIC FACILITIES

PROPOSED HIGHWAY PROJECT

RICHARDSON HIGHWAY MP 128–138 REHABILITATION

PENDING / NFHWY00265

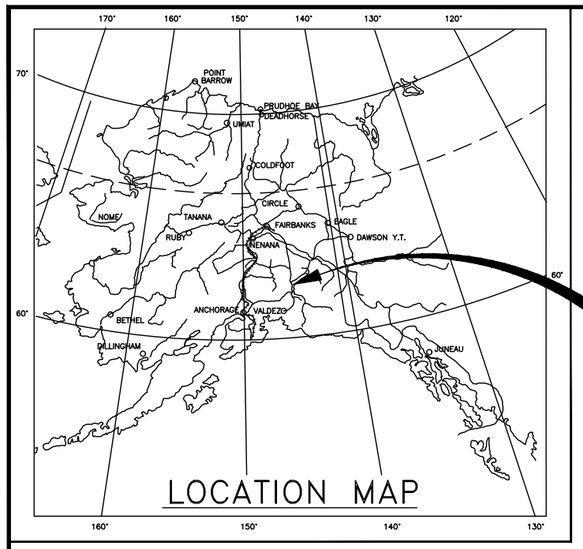

PROJECT LOCATION

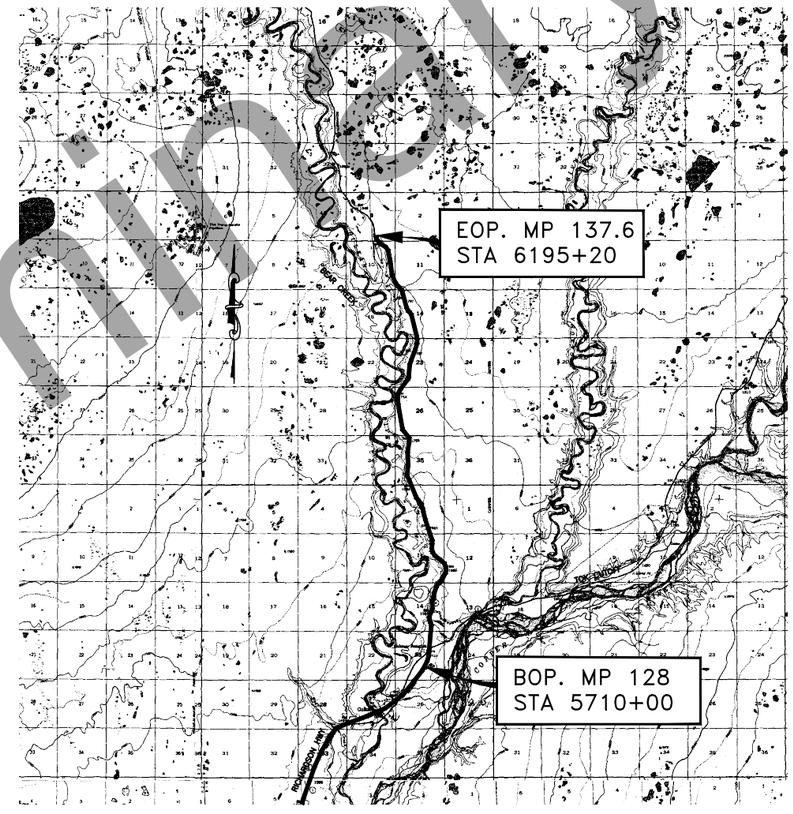

INDEX OF SHEETS

SHEET NO.	DESCRIPTION
A1	TITLE SHEET
A2	LEGEND
B1–B2	TYPICAL SECTIONS
B3–B5	SLOPE TABLES
C1–C2	ESTIMATE OF QUANTITIES & GENERAL NOTES
D1–D3	SUMMARIES
E1–E9	CULVERT/DRAINAGE DETAILS & SUMMARY
E10–E11	DEADMAN ANCHOR
F1–F18	PLAN & PROFILE
G1	APPROACH SUMMARY & DETAILS
G2	TURNOUT SUMMARY & DETAILS
H1–H6	SIGNING & STRIPING
H7	VMS–ELECTRONIC INFORMATION SIGN
H8–H10	LIGHTING
Q1–Q11	EROSION SEDIMENT CONTROL PLANS
T1–T2	TRAFFIC CONTROL PLANS
V1–V28	STANDARD PLANS

THE FOLLOWING STANDARD PLANS APPLY TO THIS PROJECT:
C–04.12
G–00.05, G–05.11S, G–20.12
I–81.00
L–03.11, L–23.02, L–24.10, L–25.01, L–26.10, L–30.11
S–00.12, S–01.02, S–05.02, S–20.11, S–30.05, S–31.02
T–20.04, T–21.04, T–25.10

DESIGN DESIGNATIONS

ADT (2014)	915
ADT (2035)	1130
DHV (17.6%)	220
PERCENT TRUCKS (T)	23%
DIRECTIONAL SPLIT (D)	60 / 40
DESIGN SPEED (V)	65 MPH
DESIGN EAL'S 15 YEARS)	617,734

PROJECT SUMMARY

WIDTH OF PAVEMENT	36 FEET
LENGTH OF GRADING	48,520 FEET
LENGTH OF PAVING	38,420 FEET
LENGTH OF PROJECT	48,520 FEET

RUSSELL JOHNSON, P.E., PROJECT MANAGER
THORWALD BERGSTROM DESIGNER
ANDREW PLUMLEE DESIGNER
JEFF GREEN, APEX ENGINEERING

STATE OF ALASKA
DEPARTMENT OF TRANSPORTATION
&
PUBLIC FACILITIES

APPROVED BY:

_____ DATE _____

Sarah E. Schacher, P.E.
Preconstruction Engineer, Northern Region

ACCEPTED FOR CONSTRUCTION:

_____ DATE _____

Joseph P. Kemp, P.E.
Acting Regional Director, Northern Region

Preliminary Plans

H:\Projects\Rich_Hwy\60638_Rich_115_148\06 Design\05 Civil 3D\05_00265 128-138\03_Drafting\00265_A1-A1 TITLE Thu, Apr/28/22 12:01pm

NO.	DATE	REVISION

STATE	PROJECT DESIGNATION	YEAR	SHEET NO.	TOTAL SHEETS
ALASKA	PENDING/NFHWY00265	2021	A2	A2

	RECOVERED	SET
BLM MONUMENT		
GLO MONUMENT		
USC&GS MONUMENT		
PRIMARY MONUMENT		
CENTERLINE MONUMENT IN CASING		
PRIMARY R.O.W. MONUMENT		
BEARING OBJECT		
MISCELLANEOUS MONUMENT		
LINE OF SIGHT MONUMENT		
CONCRETE R.O.W. MONUMENT		
BENCHMARK		BM
REBAR AND CAP		
REBAR		
IRON PIPE		
PK NAIL		
SPIKE		
HUB AND TACK		

CONSTRUCTION CENTERLINE	5+00
MISCELLANEOUS CENTERLINE	10+00
STATION EQUATION	"L"48+97.23 POT BK= "O"48+97.23 PC AHD
PROJECT RIGHT-OF-WAY LINE	R/W
EXISTING RIGHT-OF-WAY LINE	
EXISTING PROPERTY LINE	
CONTROLLED ACCESS LINE	C/A
UTILITY EASEMENT LINE	PUE
TEMPORARY EASEMENT LINE (TCP OR TCE)	TCP
ACCESS OR SECTION LINE EASEMENT	ACCESS EASEMENT
PROPOSED CUT SLOPE LIMIT	
PROPOSED FILL SLOPE LIMIT	
SECTION LINE	
1/4 SECTION LINE	
1/16 SECTION LINE	
TOWNSHIP & RANGE LINE	T. 2 N. / T. 1 N. — T. 1 E. / T. 2 E.

	EXISTING	PROPOSED
SANITARY SEWER (FLOW DIRECTION →)	SS	SS
FUEL LINE	O	O
GAS LINE	G	G
WATER LINE	W	W
METER, VALVE, FIRE HYDRANT	W	W
EXISTING STORM DRAIN (FLOW DIRECTION →)	SD	
PROPOSED STORM DRAIN		S-10, S-11, P-11, P-10, MH
FIBER OPTIC LINE	FO	
DIRECT BURIAL TELEPHONE CABLE	T	T
DIRECT BURIAL ELECTRIC CABLE	E	E
ELECTRIC LINE (OVERHEAD)		
POWER POLE LINE		
JOINT USE POWER & TELEPHONE		
TELEPHONE POLE LINE		
POLE ANCHOR		
STUB POLE (POWER OR TELEPHONE)		
TELEPHONE DUCT	T	T
TELEPHONE PEDESTAL		
BURIED CABLE MARKER		
PIPELINE MARKER OR VALVE		
CATCH BASIN OR DROP INLET		
MANHOLE	MH	MH
SANITARY SEWER CLEAN OUT		

	EXISTING	PROPOSED
ROADWAY/PAVEMENT EDGE		
FENCE	X	X
CURB AND GUTTER		
DETECTABLE WARNINGS		
GUARDRAIL		
CULVERT PIPE		
SIGN		
MAILBOX	MB	MB
RAILROAD TRACKS		
RAILROAD DEVICES	CROSS-BUCK, FLASHING LIGHT, CANTILEVER, SWITCH	
TREE LINE		
WATER BOUNDARY		
ORDINARY HIGH WATER LINE		
FLOW CENTERLINE		
FLOW DIRECTION		
WETLANDS		
EXISTING BUILDINGS	H	
POST OR BOLLARD		
WELL OR MONITORING WELL	W	
SEPTIC PIPE	S, MW	
FUEL TANK FILL PIPE/VENT	P	
SATELLITE DISH	SAT. DISH	
TEST HOLE	TH	
CONIFER TREE		
DECIDUOUS TREE		
GRAVE		
THERMOSIPHON		
PARKING METER		
VEHICLE PLUG-IN		
DELINEATOR/GUIDE MARKER		

H = HOUSE
G = GARAGE
M = MERCHANT/STORE
B = BARN
S = SHED
P = PRIVY
SS= SERVICE STATION
W = WAREHOUSE

	EXISTING	PROPOSED
JUNCTION BOX, TYPE IA		5
JUNCTION BOX, TYPE II		6
JUNCTION BOX, TYPE III		3
LOAD CENTER		
LUMINAIRE		2
RIGID METAL CONDUIT		

LEGEND

STATE OF ALASKA 49TH
Russell M. Johnson
C.E. 9963
REGISTERED PROFESSIONAL ENGINEER

Preliminary Plans

PLANS DEVELOPED BY: STATE OF ALASKA DEPARTMENT OF TRANSPORTATION & PUBLIC FACILITIES, NORTHERN REGION, 2301 PEGER ROAD, FAIRBANKS, AK 99709 (907)451-2200
H:\Projects\Rich_Hwy\60638_Rich_115_148\06 Design\05 Civil 3D\05_00265 128-138\03_Drafting\00265_A1-LEDGEND Thu, Apr/28/22 11:44am

NO.	DATE	REVISION

STATE	PROJECT DESIGNATION	YEAR	SHEET NO.	TOTAL SHEETS
ALASKA	PENDING/NFHWY00265	2021	B1	B5

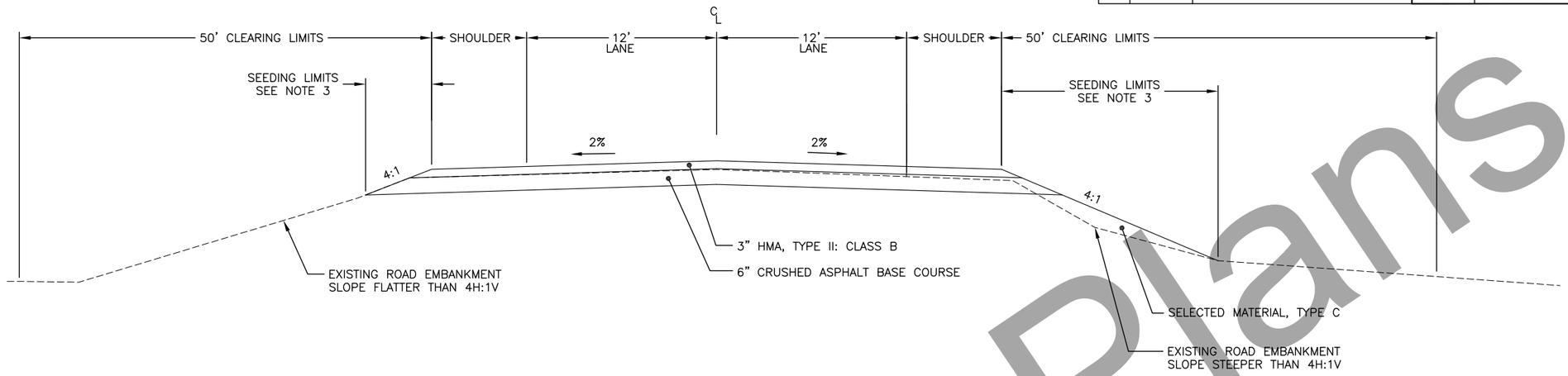

TYPICAL SECTION I

STA 5710+00 TO 5758+00
STA 5771+00 TO 5787+00
STA 5788+20 TO 5793+15
STA 5794+15 TO 5807+90
STA 5836+00 TO 5848+75
STA 5854+00 TO 5856+40
STA 5859+00 TO 5862+40
STA 5863+40 TO 5868+00
STA 5872+40 TO 5876+80
STA 5880+60 TO 5884+00
STA 5888+00 TO 5893+00
STA 5906+00 TO 5920+90
STA 5925+40 TO 5949+50
STA 5950+50 TO 5990+00
STA 6091+00 TO 6101+30
STA 6102+30 TO 6108+50
STA 6110+50 TO 6114+70
STA 6115+70 TO 6124+70
STA 6128+30 TO 6189+50
STA 6190+50 TO 6195+20

8' SHOULDER WIDTH STA 5710+00 TO STA 5734+00
6' SHOULDER WIDTH STA 5734+50 TO STA 6195+20

TYPICAL SECTION NOTES:

1. PAVEMENT EXCEPTION (NO PAVEMENT WORK), STATION 5990+00 TO 6091+00
2. ALL WORK MUST STAY WITHIN THE EXISTING RIGHT-OF-WAY LIMITS
3. SEED ALL DISTURBED AREAS OR AS DIRECTED BY THE ENGINEER

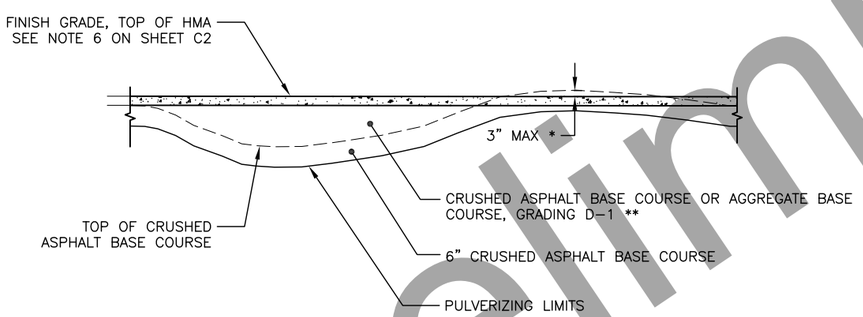

PULVERIZING DETAIL

* RE-GRADE HIGH SPOTS ON PULVERIZED ASPHALT DOWN A MAXIMUM OF (NO MORE THAN) 3"

** DO NOT PLACE AGGREGATE BASE COURSE, GRADING D-1 UNTIL AFTER THE USABLE CRUSHED ASPHALT BASE COURSE HAS BEEN PLACED IN THE FILL

Preliminary Plans

TYPICAL SECTION I

STATE OF ALASKA 49TH
Russell M. Johnson
C.E. 9963
REGISTERED PROFESSIONAL ENGINEER

PLANS DEVELOPED BY: STATE OF ALASKA DEPARTMENT OF TRANSPORTATION & PUBLIC FACILITIES, NORTHERN REGION, 2301 PEGER ROAD, FAIRBANKS, AK 99709 (907)451-2200
H:\Projects\Rich_Hwy\60638_Rich_115_148\06 Design\05 Civil 3D\05_00265 128-138\03_Drafting\00265_B1-Typical II Mon, May/02/22 04:11pm

NO.	DATE	REVISION

STATE	PROJECT DESIGNATION	YEAR	SHEET NO.	TOTAL SHEETS
ALASKA	PENDING/NFHWY00265	2021	B2	B5

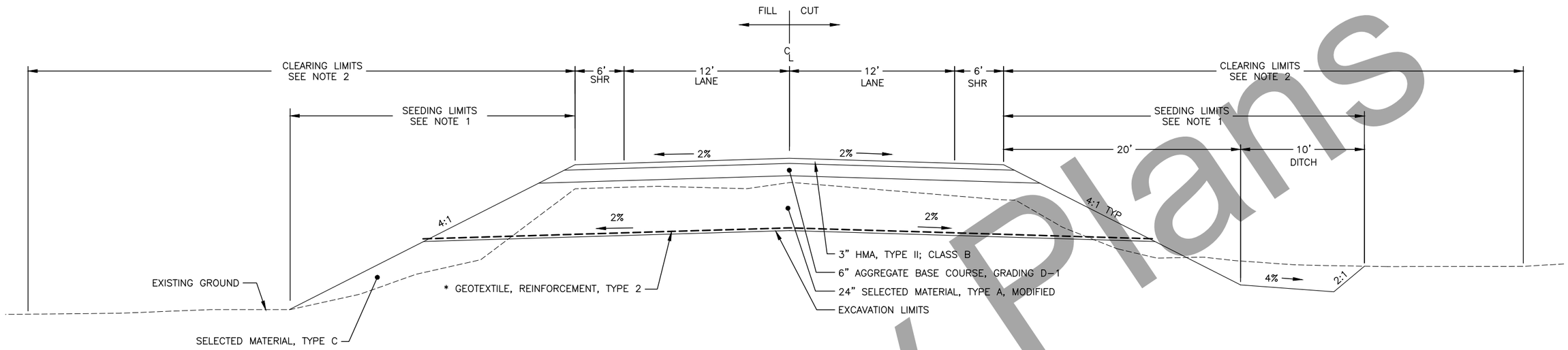

TYPICAL SECTION II

* STA 5758+70 TO 5769+00
STA 5891+00 TO 5906+00

STA 5758+00 TO 5771+00
STA 5787+00 TO 5788+20
STA 5793+15 TO 5794+15
STA 5807+90 TO 5836+00
STA 5848+75 TO 5854+00
STA 5856+40 TO 5859+00
STA 5862+40 TO 5863+40
STA 5868+00 TO 5872+40
STA 5876+80 TO 5880+60
STA 5884+00 TO 5888+00
STA 5893+00 TO 5906+00
STA 5920+90 TO 5925+40
STA 5949+50 TO 5950+50
STA 6101+30 TO 6102+30
STA 6108+50 TO 6110+50
STA 6114+70 TO 6115+70
STA 6124+70 TO 6128+30
STA 6189+50 TO 6190+50

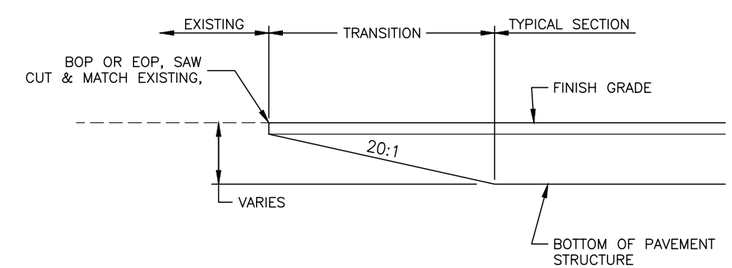

TYPICAL TRANSITION TO EXISTING PAVEMENT DETAIL

TYPICAL SECTION 2 NOTES:

1. STATION LIMITS MAY VARY AS NEEDED AND APPROVED BY THE ENGINEER TO ACCOMMODATE CULVERT INSTALLATIONS.
2. SEED ALL DISTURBED AREAS OR AS DIRECTED BY THE ENGINEER
3. CLEAR TO 50 FEET FROM THE EDGE OF PAVEMENT OR TO THE R/W BOUNDARY; WHICH EVER IS LESS.
4. INSTALL CULVERTS BEFORE INSTALLING GEOTEXTILE AND/OR CONSTRUCTING THE PAVEMENT STRUCTURE.
5. CONSTRUCT SUPERELEVATIONS AS SHOWN ON PLAN SHEET D3.
6. THE EXISTING PAVEMENT IN THE TYPICAL II AREAS WILL GET PROCESSED AS CRUSHED ASPHALT BASE COURSE.

TYPICAL SECTION II

STATE OF ALASKA 49TH
Russell M. Johnson
C.E. 9963
REGISTERED PROFESSIONAL ENGINEER

Preliminary Plans

PLANS DEVELOPED BY: STATE OF ALASKA DEPARTMENT OF TRANSPORTATION & PUBLIC FACILITIES, NORTHERN REGION, 2301 PEGER ROAD, FAIRBANKS, AK 99709 (907)451-2200
H:\Projects\Rich_Hwy\60638_Rich_115_148\06 Design\05 Civil 3D\05_00265 128-138\03_Drafting\00265_B2-Hwy-Gen Thu, Apr/28/22 11:44am

NO.	DATE	REVISION

STATE	PROJECT DESIGNATION	YEAR	SHEET NO.	TOTAL SHEETS
ALASKA	PENDING/NFHWY00265	2021	B3	B5

TYPICAL SECTION SLOPE TABLE NOTES:

1. UNLESS OTHERWISE SPECIFIED BY THIS TABLE OR OTHER NOTES ON THE PLAN AND PROFILE SHEETS, USE THE FOLLOWING VALUES:

   1.1. BACKSLOPE = 2:1 (H:V)

   1.2. DITCH WIDTH = 8 FT

   1.3. DITCH SLOPE = 4%

   1.4. FORESLOPE = 4:1 (H:V)

   EXCEPT AS FOLLOWS, TRANSITION FROM THE END STATION OF A PREVIOUS STATION RANGE TO BEGIN STATION OF A SUBSEQUENT STATION RANGE. WHERE THE NEXT BEGIN STATION IS GREATER THAN 50 FT FROM THE PREVIOUS END STATION, TRANSITION OVER 50 FT TO THE DEFAULT VALUES SPECIFIED ABOVE; SIMILARLY TRANSITION FROM THE DEFAULT VALUES SPECIFIED ABOVE TO THE NEXT BEGIN STATION OVER 50 FT.

2. A POSITIVE DITCH SLOPE INDICATES THE DITCH FLOW LINE IS ALONG THE INSIDE OF THE DITCH AT THE TOE OF THE FORESLOPE AS SHOWN IN THE TYPICAL SECTION; A NEGATIVE DITCH SLOPE INDICATES THE DITCH FLOW LINE IS EITHER ALONG THE OUTSIDE OF THE DITCH AT THE TOE OF THE BACKSLOPE OR THAT THE OUTSIDE OF THE DITCH WILL DAYLIGHT AND DIRECT FLOW AWAY FROM THE ROADWAY EMBANKMENT.

3. EXCEPTIONS TO TYPICAL SECTION DIMENSIONS FOR FORESLOPE WIDTH TO DITCH IN A CUT SECTION ARE NOTED IN THE TYPICAL SECTION SLOPE TABLE FORESLOPE COLUMNS HAVING BOTH SLOPE AND HORIZONTAL WIDTH VALUES (E.G., 4:1, 44 FT).

4. THE ENGINEER MAY ADJUST SLOPE AND DITCH VALUES IN THE FIELD TO TAKE ADVANTAGE OF EXISTING FEATURES OR FOR DISPOSAL OF EXCESS USABLE EXCAVATION.

TYPICAL SECTION SLOPE TABLE

		LEFT SIDE						RIGHT SIDE				
BEGIN STATION	END STATION	BACKSLOPE (H:V)	DITCH WIDTH (FT)	DITCH SLOPE (%)	FORESLOPE (H:V)	BEGIN STATION	END STATION	FORESLOPE (H:V)	DITCH SLOPE (%)	DITCH WIDTH (FT)	BACKSLOPE (H:V)	REMARKS
5710+00	5758+00	N/A	N/A	N/A	N/A	5710+00	5758+00	N/A	N/A	N/A	N/A	MATCH EXISTING, CLEAR DITCHES AS DIRECTED BY THE ENGINEER
5758+00	5759+00	2:1	8	−4	4:1	5758+00	5758+00	4:1	−4	8	2:1	
5760+00		N/A	N/A	N/A	4:1		5759+00	4:1	N/A	N/A	N/A	
5761+00	5767+00	N/A	N/A	N/A	2:1	5760+00	5767+00	2:1	N/A	N/A	N/A	
5767+00	5771+00	N/A	N/A	N/A	4:1	5767+00	5771+00	4:1	N/A	N/A	N/A	
5787+00		N/A	N/A	N/A	4:1	5787+00		4:1	N/A	N/A	N/A	N/A
5787+67.73	5788+00	N/A	N/A	N/A	3:1	5787+67.73	5789+00	4:1	N/A	N/A	N/A	
5788+50	5789+00	N/A	N/A	N/A	4:1	5793+00	5803+00	4:1	N/A	N/A	N/A	
5793+50	5795+00	N/A	N/A	N/A	4:1	5808+00	5812+00	4:1	N/A	N/A	N/A	
5796+00	5807+00	N/A	N/A	N/A	4:1							
5808+00		N/A	N/A	N/A	3:1							
5809+00	5812+00	N/A	N/A	N/A	4:1							
5812+50		N/A	N/A	N/A	3:1	5812+50		3:1	N/A	N/A	N/A	
5813+00	5815+00	N/A	N/A	N/A	4:1	5813+00	5817+50	4:1	N/A	N/A	N/A	
5815+50	5817+00	N/A	N/A	N/A	3:1	5818+00	5819+00	3:1	N/A	N/A	N/A	
5817+50		N/A	N/A	N/A	4:1	5819+50	5822+50	4:1	N/A	N/A	N/A	
5818+00	5819+00	N/A	N/A	N/A	3:1	5823+00	5824+00	3:1	N/A	N/A	N/A	
5819+50	5822+00	N/A	N/A	N/A	4:1	5824+50	5827+00	4:1	N/A	N/A	N/A	
5822+50	5824+00	N/A	N/A	N/A	3:1							

Preliminary Plans

SLOPE TABLE

STATE OF ALASKA 49TH
Russell M. Johnson
C.E. 9963
REGISTERED PROFESSIONAL ENGINEER

PLANS DEVELOPED BY: STATE OF ALASKA DEPARTMENT OF TRANSPORTATION & PUBLIC FACILITIES, NORTHERN REGION, 2301 PEGER ROAD, FAIRBANKS, AK 99709 (907)451-2200
H:\Projects\Rich_Hwy\60638_Rich_115_148\06 Design\05 Civil 3D\05_00265 128-138\03_Drafting\00265_B3 SLOPE-B3 SLOPE TABLE Thu, Apr/28/22 11:44am

NO.	DATE	REVISION

STATE	PROJECT DESIGNATION	YEAR	SHEET NO.	TOTAL SHEETS
ALASKA	PENDING/NFHWY00265	2021	B4	B5

TYPICAL SECTION SLOPE TABLE

BEGIN STATION	END STATION	LEFT SIDE BACKSLOPE (H:V)	LEFT SIDE DITCH WIDTH (FT)	LEFT SIDE DITCH SLOPE (%)	LEFT SIDE FORESLOPE (H:V)	BEGIN STATION	END STATION	RIGHT SIDE FORESLOPE (H:V)	RIGHT SIDE DITCH SLOPE (%)	RIGHT SIDE DITCH WIDTH (FT)	RIGHT SIDE BACKSLOPE (H:V)	REMARKS
5824+50	5827+00	N/A	N/A	N/A	4:1							
5827+50	5830+00	N/A	N/A	N/A	3:1	5827+50	5828+50	3:1	N/A	N/A	N/A	
5830+50	5836+00	N/A	N/A	N/A	4:1	5829+00	5830+00	4:1	N/A	N/A	N/A	
						5830+50		3:1	N/A	N/A	N/A	
						5831+00	5834+00	4:1	N/A	N/A	N/A	
						5835+00		3:1	N/A	N/A	N/A	
						5836+00		4:1	N/A	N/A	N/A	
5849+00	5850+50	N/A	N/A	N/A	4:1	5849+00	5851+00	4:1	N/A	N/A	N/A	
5851+00	5854+00	N/A	N/A	N/A	UP TO 2:1	5852+00	5854+00	3:1	N/A	N/A	N/A	STATION LEFT MATCH EXISTING TO STAY INSIDE ROW
5857+00	5858+00	N/A	N/A	N/A	2:1, MATCH EXISTING	5857+00	5858+00	3:1	N/A	N/A	N/A	
5858+50	5859+00	N/A	N/A	N/A	4:1	5858+50	5859+00	3:1	N/A	N/A	N/A	
5862+50	5863+00	N/A	N/A	N/A	3:1	5862+50	5863+000	4:1	N/A	N/A	N/A	
5869+00	5870+00	N/A	N/A	N/A	4:1	5869+00	5871+00	3:1	N/A	N/A	N/A	
5871+00	5876+00	N/A	N/A	N/A	3:1	5872+00	5876+00	4:1	N/A	N/A	N/A	
5877+00	5878+00	N/A	N/A	N/A	4:1	5877+00	5880+00	3:1	N/A	N/A	N/A	
5879+00	5884+00	N/A	N/A	N/A	3:1	5881+00	5884+00	4:1	N/A	N/A	N/A	
5885+00	5888+00	N/A	N/A	N/A	4:1	5885+00	5888+00	3:1	N/A	N/A	N/A	
5893+00	5895+00	N/A	N/A	N/A	2:1	5893+00	5895+00	4:1	N/A	N/A	N/A	
5895+50	5897+00	N/A	N/A	N/A	2:1, MATCH EXISTING	5895+50	5896+00	2:1, MATCH EXISTING	N/A	N/A	N/A	
5897+50	5899+00	N/A	N/A	N/A	4:1	5897+00	5900+00	4:1	N/A	N/A	N/A	
5899+50	5904+00	N/A	N/A	N/A	2:1	5901+00	5903+00	2:1	N/A	N/A	N/A	
5905+00	5906+00	N/A	N/A	N/A	4:1	5904+00	5955+00	4:1	N/A	N/A	N/A	
5921+00	5925+00	N/A	N/A	N/A	3:1	5921+00	5925+00	3:1	N/A	N/A	N/A	
5950+00	5952+00	N/A	N/A	N/A	4:1	5950+00	5955+00	4:1	N/A	N/A	N/A	

Preliminary Plans

SLOPE TABLE

STATE OF ALASKA 49TH
Russell M. Johnson
C.E. 9963
REGISTERED PROFESSIONAL ENGINEER

PLANS DEVELOPED BY: STATE OF ALASKA DEPARTMENT OF TRANSPORTATION & PUBLIC FACILITIES, NORTHERN REGION, 2301 PEGER ROAD, FAIRBANKS, AK 99709 (907)451-2200
H:\Projects\Rich_Hwy\60638_Rich_115_148\06 Design\05 Civil 3D\05_00265 128-138\03_Drafting\00265_B3 SLOPE-B4 SLOPE TABLE Thu, Apr/28/22 11:44am

NO.	DATE	REVISION

STATE	PROJECT DESIGNATION	YEAR	SHEET NO.	TOTAL SHEETS
ALASKA	PENDING/NFHWY00265	2021	B5	B5

TYPICAL SECTION SLOPE TABLE

BEGIN STATION	END STATION	LEFT SIDE BACKSLOPE (H:V)	LEFT SIDE DITCH WIDTH (FT)	LEFT SIDE DITCH SLOPE (%)	LEFT SIDE FORESLOPE (H:V)	BEGIN STATION	END STATION	RIGHT SIDE FORESLOPE (H:V)	RIGHT SIDE DITCH SLOPE (%)	RIGHT SIDE DITCH WIDTH (FT)	RIGHT SIDE BACKSLOPE (H:V)	REMARKS
5960+00	5962+00	N/A	N/A	N/A	4:1	5960+00	5962+00	4:1	N/A	N/A	N/A	
6101+00	6101+50	N/A	N/A	N/A	4:1	6101+50	6103+00	4:1	N/A	N/A	N/A	
6102+00		N/A	N/A	N/A	3:1							
6103+00		N/A	N/A	N/A	4:1							
6106+00	6107+00	N/A	N/A	N/A	4:1							
6110+00		N/A	N/A	N/A	3:1	6110+00		4:1	N/A	N/A	N/A	
6111+00	6111+50	N/A	N/A	N/A	4:1	6110+00	6114+00	4:1	N/A	N/A	N/A	
6113+00	6114+50	N/A	N/A	N/A	4:1	6115+00	6115+50	3	N/A	N/A	N/A	
6115+00		N/A	N/A	N/A	3:1	6116+00	6128+00	4:1	N/A	N/A	N/A	
6115+50	6125+50	N/A	N/A	N/A	4:1							
6126+00		N/A	N/A	N/A	3:1							
6126+50	6128+00	N/A	N/A	N/A	4:1							
6153+00	6156+00	N/A	N/A	N/A	4:1							
6159+00	6163+00	N/A	N/A	N/A	4:1							
6182+00	6188+00	N/A	N/A	N/A	4:1	6177+00	6185+00	4:1	N/A	N/A	N/A	
6190+00		N/A	N/A	N/A	3:1	6190+00		4:1	N/A	N/A	N/A	
6194+00	6195+20	N/A	N/A	N/A	4:1							

Preliminary Plans

SLOPE TABLE

STATE OF ALASKA 49TH
Russell M. Johnson
C.E. 9963
REGISTERED PROFESSIONAL ENGINEER

PLANS DEVELOPED BY: STATE OF ALASKA DEPARTMENT OF TRANSPORTATION & PUBLIC FACILITIES, NORTHERN REGION, 2301 PEGER ROAD, FAIRBANKS, AK 99709 (907)451-2200
H:\Projects\Rich_Hwy\60638_Rich_115_148\06 Design\05 Civil 3D\05_00265 128-138\03_Drafting\00265_B3 SLOPE-B5 SLOPE TABLE Thu, Apr/28/22 11:45am

NO.	DATE	REVISION

STATE	PROJECT DESIGNATION	YEAR	SHEET NO.	TOTAL SHEETS
ALASKA	PENDING/NFHWY00265	2021	C1	C2

ESTIMATE OF QUANTITIES

ITEM NO.	PAY ITEM	PAY UNIT	QUANTITY
201.0007.0000	CLEARING	LUMP SUM	ALL REQUIRED
201.0008.0000	GRUBBING	LUMP SUM	ALL REQUIRED
202.0017.0000	REMOVAL OF CULVERT PIPE	EACH	30
203.0003.0000	UNCLASSIFIED EXCAVATION	CUBIC YARD	43,405
203.0006.0000	BORROW	TON	34,420
203.0006.0000	BORROW, SHOT ROCK	TON	150,000
301.0001.00D1	AGGREGATE BASE COURSE, GRADING D-1	TON	22,180
304.0001.000F	SUBBASE, GRADING F	TON	13,218
308.0001.0000	CRUSHED ASPHALT BASE COURSE	SQUARE YARD	197,770
401.0001.002B	HMA, TYPE II; CLASS B	TON	28,271
401.0004.0000	ASPHALT BINDER, GRADE PG 52E-40	TON	1,555
401.0008.002B	HMA PRICE ADJUSTMENT, TYPE II; CLASS B	CONTINGENT SUM	ALL REQUIRED
401.0009.0000	LONGITUDINAL JOINT DENSITY PRICE ADJUSTMENT	CONTINGENT SUM	ALL REQUIRED
401.0010.0001	PAVEMENT SMOOTHNESS PRICE ADJUSTMENT, METHOD 1	CONTINGENT SUM	ALL REQUIRED
401.0012.0000	HMA, DRIVEWAY, TYPE II; CLASS B	TON	638
401.0013.002B	JOB MIX DESIGN	EACH	1
401.0015.0000	ASPHALT MATERIAL PRICE ADJUSTMENT	CONTINGENT SUM	ALL REQUIRED
406.0001.0000	RUMBLE STRIPS	LUMP SUM	ALL REQUIRED
602.0001.0060	STRUCTURAL PLATE PIPE 60" DIAMETER, 10 GAGE	LINEAR FOOT	593
602.0001.0072	STRUCTURAL PLATE PIPE 72" DIAMETER, 10 GAGE	LINEAR FOOT	173
602.2009.0000	DEADMAN	EACH	7
603.0001.0024	CSP 24 INCH	LINEAR FOOT	114
603.0001.0036	CSP 36 INCH	LINEAR FOOT	2,636
603.0001.0048	CSP 48 INCH	LINEAR FOOT	280
603.0017.0036	PIPE 36 INCH, 1/2" WALL	LINEAR FOOT	323
606.0001.0000	W-BEAM GUARDRAIL	LINEAR FOOT	3,450
606.0006.0000	REMOVING AND DISPOSING OF GUARDRAIL	LINEAR FOOT	1,850
606.0013.0000	PARALLEL GUARDRAIL TERMINAL	EACH	8
606.2012.0000	BATTER BOARD	LINEAR FOOT	2,500
611.0002.0001	RIPRAP, CLASS I	TON	1,850
613.0002.0000	CULVERT MARKER POST	EACH	70
615.0001.0000	STANDARD SIGN	SQUARE FOOT	261.10
616.0002.0050	1/2 INCH DIAMETER THAW PIPE	EACH	17
618.0001.0000	SEEDING	ACRE	24
630.0003.0002	GEOTEXTILE, REINFORCEMENT, TYPE 2	SQUARE YARD	124,210
631.0002.0001	GEOTEXTILE, EROSION CONTROL, CLASS I	SQUARE YARD	2,940
639.2000.0000	APPROACH	EACH	29
640.0001.0000	MOBILIZATION AND DEMOBILIZATION	LUMP SUM	ALL REQUIRED
640.0004.0000	WORKER MEALS AND LODGING, OR PER DIEM	LUMP SUM	ALL REQUIRED
641.0001.0000	EROSION, SEDIMENT AND POLLUTION CONTROL ADMINISTRATION	LUMP SUM	ALL REQUIRED
641.0003.0000	TEMPORARY EROSION, SEDIMENT AND POLLUTION CONTROL	LUMP SUM	ALL REQUIRED
641.0004.0000	TEMPORARY EROSION, SEDIMENT AND POLLUTION CONTROL ADDITIVES	CONTINGENT SUM	ALL REQUIRED
641.0006.0000	WITHHOLDING	CONTINGENT SUM	ALL REQUIRED
641.0007.0000	SWPPP MANAGER	LUMP SUM	ALL REQUIRED
642.0001.0000	CONSTRUCTION SURVEYING	LUMP SUM	ALL REQUIRED
642.0013.0000	THREE PERSON SURVEY PARTY	CONTINGENT SUM	ALL REQUIRED
643.0002.0000	TRAFFIC MAINTENANCE	LUMP SUM	ALL REQUIRED
643.0003.0000	PERMANENT CONSTRUCTION SIGNS	LUMP SUM	ALL REQUIRED
643.0023.0000	TRAFFIC PRICE ADJUSTMENT	CONTINGENT SUM	ALL REQUIRED
643.0025.0000	TRAFFIC CONTROL	CONTINGENT SUM	ALL REQUIRED
644.0001.0000	FIELD OFFICE	LUMP SUM	ALL REQUIRED
644.0002.0000	FIELD LABORATORY	LUMP SUM	ALL REQUIRED
644.0006.0000	VEHICLES	LUMP SUM	ALL REQUIRED
644.2002.0000	FIELD COMMUNICATIONS	CONTINGENT SUM	ALL REQUIRED
646.0001.0000	CPM SCHEDULING	LUMP SUM	ALL REQUIRED
645.0001.0000	TRAINING PROGRAM, 3 TRAINEES/APPRENTICES	LABOR HOUR	1,500
660.0003.0000	HIGHWAY LIGHTING SYSTEM COMPLETE	LUMP SUM	ALL REQUIRED
660.2014.0000	VMS-ELECTRONIC INFORMATION SIGN	EACH	2
670.0001.0000	PAINTED TRAFFIC MARKINGS	LUMP SUM	ALL REQUIRED

ESTIMATE LUMP SUM ITEMS

ITEM NO.	DESCRIPTION	VALUE
201.0007.0000	CLEARING	111 ACRES
201.0008.0000	GRUBBING	24 ACRES
406.0001.0000	RUMBLE STRIPS	384 STA

ESTIMATING FACTORS

ITEM NO.	DESCRIPTION	VALUE
203.0006.0000	BORROW, ALL TYPES	2 TONS/CUBIC YARD
301.0003.00D1	AGGREGATE BASE COURSE, GRADING D-1	2 TONS/CUBIC YARD
304.0001.000F	SUBBASE, GRADING F	2 TONS/CUBIC YARD
401.0001.002B	ASPHALT CONCRETE, TYPE II; CLASS B	115 POUNDS/SQUARE YARD/INCH
401.0004.0000	ASPHALT BINDER, GRADE PG 52E-40	0.055 OF TOTAL MIX
401.0012.0000	HMA, DRIVEWAY, TYPE II; CLASS B	115 POUNDS/SQUARE YARD/INCH
610.0002.0000	DITCH LINING	2 TONS/CUBIC YARD
611.0002.0001	RIPRAP, CLASS I	1.6 TONS/CUBIC YARD

Preliminary Plans

ESTIMATE OF QUANTITIES

STATE OF ALASKA 49TH
Russell M. Johnson
C.E. 9963
REGISTERED PROFESSIONAL ENGINEER

PLANS DEVELOPED BY: STATE OF ALASKA DEPARTMENT OF TRANSPORTATION & PUBLIC FACILITIES, NORTHERN REGION, 2301 PEGER ROAD, FAIRBANKS, AK 99709 (907)451-2200
H:\Projects\Rich_Hwy\60638_Rich_115_148\06 Design\05 Civil 3D\05_00265 128-138\03_Drafting\00265_C1-C1 ESTIMATE OF QUANTITIES Tue, May/03/22 01:08pm

NO.	DATE	REVISION

STATE	PROJECT DESIGNATION	YEAR	SHEET NO.	TOTAL SHEETS
ALASKA	PENDING/NFHWY00265	2021	C2	C2

GENERAL NOTES:

1. PRIOR TO ANY GROUND DISTURBING WORK, THE CONTRACTOR SHALL FIELD LOCATE ALL UTILITIES WITHIN THE PROJECT LIMITS AND PROTECT THEM FROM DAMAGE FOR THE DURATION OF THE WORK. WHEN PROPOSED CULVERT OR RIPRAP IMPROVEMENTS ARE OVER OR WITHIN OR 2' HORIZONTALLY FROM UNDERGROUND UTILITIES, HAND EXCAVATE (POT HOLE) AND EXPOSE UNDERGROUND UTILITIES TO VERIFY THE HORIZONTAL AND VERTICAL LOCATION.

2. MATERIAL SITE MS 71-3-015-5 (SOUTH HOGAN HILL QUARRY), LOCATED AT APPROXIMATELY MP 155 ON THE RICHARDSON HIGHWAY, IS AN AVAILABLE MATERIAL SOURCE. SEE PERMIT NUMBER AA-86391 FOR SITE SPECIFIC STIPULATIONS.

   THE DEPARTMENT HAS OTHER CONSTRUCTION PROJECTS WHERE OTHER CONTRACTORS MAY CHOOSE TO USE MS 71-3-015-5. THE CONTRACTOR MUST COORDINATE AND COOPERATE WITH OTHER CONTRACTORS ACCORDING TO SPECIFICATION SECTION 105-1.07.

3. MATERIAL SITE MS 71-3-002-5 (POPLAR GROVE PIT), LOCATED AT APPROXIMATELY MP 136.5 ON THE RICHARDSON HIGHWAY, IS NOT AN AVAILABLE MATERIAL SOURCE. IN NO WAY WILL THIS MATERIAL SOURCE BE CONSIDERED FOR USE ON THIS PROJECT.

4. MATERIAL SITE MS 71-2-006-5 & MS-71-2-020-5 (RINGLING PIT), LOCATED BETWEEN MP 126 AND 127 ON THE RICHARDSON HIGHWAY, ARE EXCLUDED MATERIAL SOURCES. IN NO WAY WILL THESE MATERIAL SOURCES BE CONSIDERED FOR USE ON THIS PROJECT.

5. FOR BASIS OF HORIZONTAL AND VERTICAL CONTROL, SEE RECORD OF SURVEY DATE 03/01/16 RICHARDSON HIGHWAY MP 115 – 148 REHABILITATION PROGRAM NO. Z606380000, PLATT #2017-9 CHITINA RECORDING DISTRICT.

6. THIS PROJECT HAS NO DESIGN PROFILE. ~~SHAPE AND GRADE THE CRUSHED ASPHALT BASE COURSE~~ ACCORDING TO SPECIFICATION 308-3.03. SEE SPECIAL PROVISION 642-3.01

LIST OF ABBREVIATIONS

AH = AHEAD
AST = ASPHALT SURFACE TREATMENT
ATM = ALASKA TRAFFIC MANUAL
AT&T = AT&T ALASCOM

BFS = BEGIN FULL SUPERELEVATION
BK = BACK
BNC = BEGIN NORMAL CROWN
BOL = BEGINNING OF LINE
BOP = BEGINNING OF PROJECT

CABC = CRUSHED ASPHALT BASE COURSE
CF = CUBIC FEET
CFS = CUBIC FEET PER SECOND
CGP = CONSTRUCTION GENERAL PERMIT
CL OR ℄ = CENTERLINE
CLR = CLEAR DISTANCE
CMP = CORRUGATED METAL PIPE
COM = COMMERCIAL
CSP = CORRUGATED STEEL PIPE
CVEA = COPPER VALLEY ELECTRIC ASSOCIATION
CVTC = COPPER VALLEY TELEPHONE COOPERATIVE
CY = CUBIC YARD

D = DEGREE OF CURVE
DD = DOWN DRAIN
DIA OR ø = DIAMETER
DWG = DRAWING

EA = EACH
EFS = END FULL SUPERELEVATION
EG = EXISTING GROUND
ELEV = ELEVATION
ENC = END NORMAL CROWN
EOL = END OF LINE
EOP = END OF PROJECT
EOTW = EDGE OF TRAVELED WAY
EP = EDGE PAVEMENT
EPAV = EDGE OF PAVEMENT

FBB = FRONT OF BATTER BOARD
FO = FIBER OPTIC CABLE
FT OR ' = FOOT, FEET

GA = GAUGE
GAL = GALLON
GALV = GALVANIZED
GP = GRADE POINT
GPR = GROUND PENETRATING RADAR

HMA = HOT MIX ASPHALT
HT = HEIGHT
HW/D = HIGH WATER/DIAMETER OF PIPE
HWY = HIGHWAY

IE = INVERT ELEVATION
IN OR " = INCH, INCH

L = LENGTH OF CURVE
LB = POUND
LC = LEVEL CROWN
LF = LINEAR FEET
LT = LEFT
LVC = LENGTH OF VERTICAL CURVE

MAX = MAXIMUM
MIN = MINIMUM
MP = MILEPOST

NC = NORMAL CROWN
NIC = NOT IN CONTRACT
NO. OR # = NUMBER

NTS = NOT TO SCALE
N/A = NOT APPLICABLE

PC = POINT OF CURVATURE
PCC = POINT OF COMPOUND CURVE
PI = POINT OF INTERSECTION
POC = POINT ON CURVE
POT = POINT ON TANGENT
PRC = POINT OF REVERSE CURVATURE
PST = PERFORATED STEEL TUBE
PT = POINT OF TANGENCY
PVMT = PAVEMENT

Q2 = 2 YEAR FLOOD
Q5 = 5 YEAR FLOOD
Q50 = 50 YEAR FLOOD
Q100 = 100 YEAR FLOOD

R/W = RIGHT-OF-WAY
R = RADIUS
RAP = RECLAIMED ASPHALT PAVEMENT
RC = REVERSE CROWN
RD = ROAD
REQ = REQUIRED
RP = RADIUS POINT
RT = RIGHT

S = SUPERELEVATION
SD = SLOPE DRAIN
SHR = SHOULDER
SHT = SHEET
SIM = SIMILAR
SPP = STRUCTURAL PLATE PIPE
SQ.IN.=OR IN^2 = SQUARE INCHES
SQ.FT. OR FT^2 OR SF = SQUARE FEET
STA = STATION
STD = STANDARD
SY = SQUARE YARD
SYM = SYMBOL

T = TANGENT LENGTH
TBM = TEMPORARY BENCH MARK
TCE = TEMPORARY CONSTRUCTION EASEMENT
TCP = TEMPORARY CONSTRUCTION PERMIT
TRANS = TRANSITION
TYP = TYPICAL

VC = VERTICAL CURVE
VPC = VERTICAL POINT OF CURVATURE
VPI = VERTICAL POINT OF INTERSECTION
VPT = VERTICAL POINT OF TANGENCY
VOL = VOLUME

W/ = WITH
W/O = WITHOUT

@ = AT
& = AND
DDD.DDDDD° = DECIMAL DEGREES (TO FIVE DECIMAL PLACES)
DD°MM'SS" = DEGREES, MINUTES, SECONDS
Δ = DELTA ANGLE

Preliminary Plans

GENERAL NOTES

STATE OF ALASKA 49TH
Russell M. Johnson
C.E. 9963
REGISTERED PROFESSIONAL ENGINEER

PLANS DEVELOPED BY: STATE OF ALASKA DEPARTMENT OF TRANSPORTATION & PUBLIC FACILITIES, NORTHERN REGION, 2301 PEGER ROAD, FAIRBANKS, AK 99709 (907)451-2200
H:\Projects\Rich_Hwy\60638_Rich_115_148\06 Design\05 Civil 3D\05_00265 128-138\03_Drafting\00265_C2-Hwy-Gen Tue, May/03/22 01:14pm

NO.	DATE	REVISION

STATE	PROJECT DESIGNATION	YEAR	SHEET NO.	TOTAL SHEETS
ALASKA	PENDING/NFHWY00265	2021	D1	D3

GUARDRAIL SUMMARY

BEGIN STATION	END STATION	LT/RT	606.0001.0000 W-BEAM GUARDRAIL (FEET)	606.0013.0000 PARALLEL GUARDRAIL TERMINAL (EACH)	606.2012.0000 BATTER BOARD (LINEAR FOOT)	REMARKS
"0"5758+95	"0"5759+45	RT		1		
"0"5759+45	"0"5767+70	RT	825		825	
"0"5767+70	"0"5768+20	RT		1		
"0"5759+50	"0"5760+00	LT		1		
"0"5760+00	"0"5768+25	LT	825		825	
"0"5768+25	"0"5768+75	LT		1		
"0"5894+01	"0"5894+51	RT		1		
"0"5894+51	"0"5904+01	RT	950			
"0"5904+01	"0"5904+51	RT		1		
"0"5895+00	"0"5895+50	LT		1		
"0"5895+50	"0"5904+00	LT	850		850	
"0"5904+00	"0"5904+50	LT		1		
		TOTAL	3,450	8	2,500	

GUARDRAIL REMOVAL SUMMARY

BEGIN STATION	ENDING STATION	LT/RT	LENGTH (ft)
"0"5758+95	"0"5768+20	RT	925
"0"5759+50	"0"5768+75	LT	925
		TOTAL	1,850

Preliminary Plans

GUARDRAIL SUMMARY

STATE OF ALASKA 49TH
Russell M. Johnson
C.E.9963
REGISTERED PROFESSIONAL ENGINEER

PLANS DEVELOPED BY: STATE OF ALASKA DEPARTMENT OF TRANSPORTATION & PUBLIC FACILITIES, NORTHERN REGION, 2301 PEGER ROAD, FAIRBANKS, AK 99709 (907)451-2200
H:\Projects\Rich_Hwy\60638_Rich_115_148\06 Design\05 Civil 3D\05_00265 128-138\03_Drafting\00265_D1-D1 GUARDRAIL SUMMARY & DETAILS Thu, Apr/28/22 11:45am

NO.	DATE	REVISION

STATE	PROJECT DESIGNATION	YEAR	SHEET NO.	TOTAL SHEETS
ALASKA	PENDING/NFHWY00265	2021	D2	D3

GENERAL GUARDRAIL NOTES:

1. FOR PARALLEL GUARDRAIL TERMINALS, CONSTRUCT THE GUARDRAIL TERMINAL WIDENING IN ACCORDANCE WITH THE "STANDARD DETAIL" ON STANDARD PLAN G-20.12. THE END OFFSET (X) SHALL BE 2 FEET. DO NOT USE THE "ALTERNATE DETAIL" ON THIS PROJECT.
2. IN ADDITION TO THE GUARDRAIL REFLECTORS, INSTALL GUARDRAIL FLEXIBLE DELINEATORS AS SHOWN ON STANDARD PLAN G-00.05 SHEET.
3. SEE STANDARD PLAN G-05.11S (W-31) 31" HIGH GUARDRAIL.
4. GUARDRAIL LENGTHS ARE APPROXIMATE AND MAY BE ADJUSTED IN THE FIELD BY THE ENGINEER.
5. USE 6 FOOT LONG STEEL GUARDRAIL POSTS.

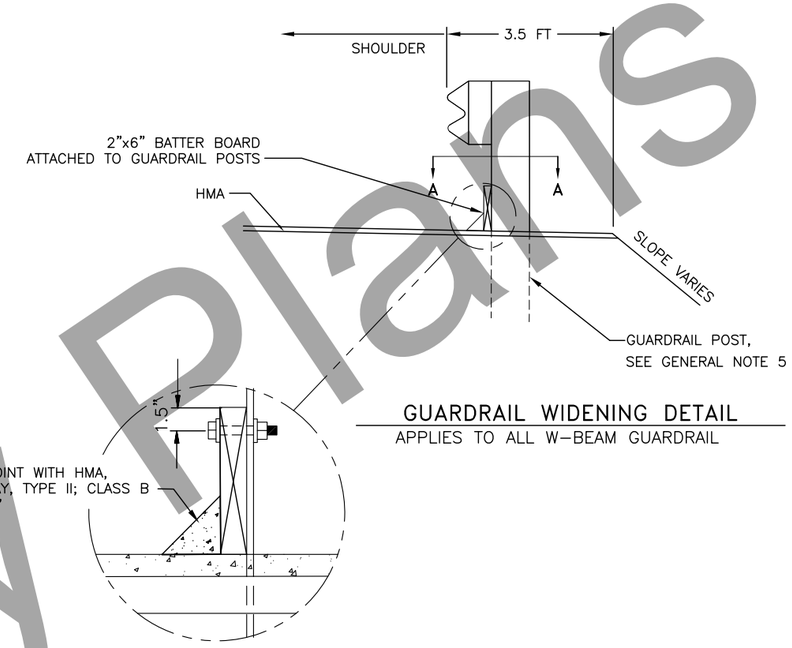

GUARDRAIL WIDENING DETAIL
APPLIES TO ALL W-BEAM GUARDRAIL

GUARDRAIL MOUNTED BATTER BOARD DETAIL

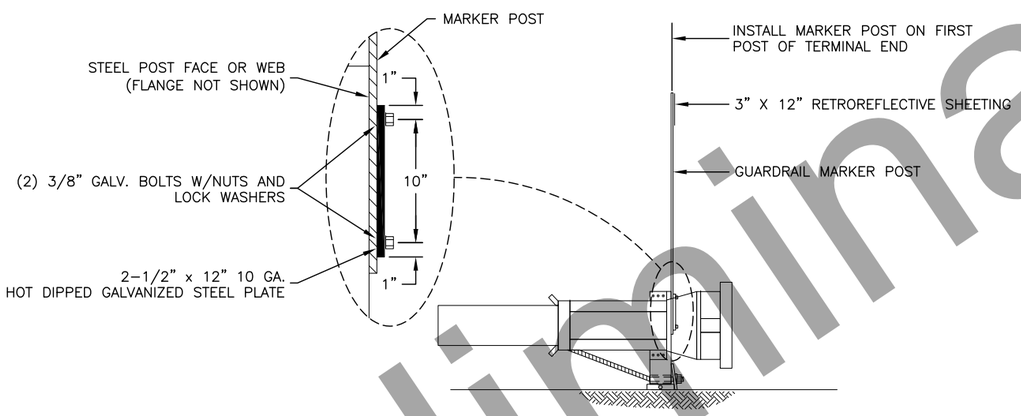

GUARDRAIL MARKER POST ATTACHMENT DETAIL 2
PARALLEL GUARDRAIL TERMINAL

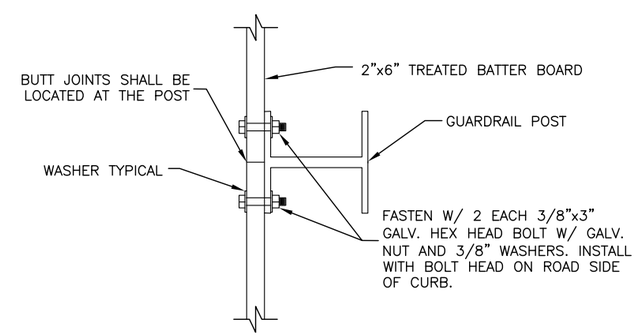

SECTION A-A

INSTALLATION DETAIL NOTES:

1. GUARDRAIL MARKER POSTS SHALL BE YELLOW AND AT LEAST 72" LONG.
2. THE COLOR OF RETROREFLECTIVE SHEETING SHALL MATCH THE COLOR OF THE ADJACENT EDGE LINE STRIPE ON SIDE OF MARKER FACING TRAFFIC IN ADJACENT LANE.

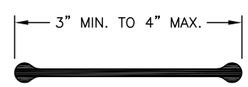

POST DETAIL
CROSS-SECTIONAL VIEW

BATTER BOARD NOTES:

1. USE TREATED HEMLOCK, DOUGLAS FIR, WESTERN PINE OR ENGINEER-APPROVED TIMBER. SECTION 714 OF STANDARD SPECIFICATIONS SPECIFIES TIMBER PRESERVATIVES. TREAT FIELD CUT END WITH APPROVED PRESERVATIVE.
2. USE ONE BOLT FASTENER AT POSTS WITHOUT TIMBER JOINTS AND TWO FASTENERS AT POSTS WITH JOINTS.
3. BATTER BOARD TO BE CONTINUOUS ALONG THE GUARDRAIL.
4. DO NOT INSTALL BATTER BOARD ON END TERMINAL FLARE.

STATE OF ALASKA 49TH
Russell M. Johnson
C.E. 9963
REGISTERED PROFESSIONAL ENGINEER

GUARDRAIL DETAILS

Preliminary Plans

PLANS DEVELOPED BY: STATE OF ALASKA DEPARTMENT OF TRANSPORTATION & PUBLIC FACILITIES, NORTHERN REGION, 2301 PEGER ROAD, FAIRBANKS, AK 99709 (907)451-2200
H:\Projects\Rich_Hwy\60638_Rich_115_148\06 Design\05 Civil 3D\05_00265 128-138\03_Drafting\00265_D2-Hwy-Gen Tue, May/03/22 01:23pm

NO.	DATE	REVISION

STATE	PROJECT DESIGNATION	YEAR	SHEET NO.	TOTAL SHEETS
ALASKA	PENDING/NFHWY00265	2021	D3	D3

SUPERELEVATION SUMMARY

CURVE P.I.	RADIUS (FEET)	BEGIN TRANSITION	TRANSITION LENGTH(FEET)	CURVE P.C.	BEGIN FULL SUPERELEVATION	SUPERELEVATION RATE (%)	END FULL SUPERELEVATION	CURVE P.T.	TRANSITION LENGTH(FEET)	END TRANSITION	REMARKS
5722+16.27	2,082.11	5711+90	215	5713+55.07	5714+05	5.8	5729+45	5729+88.24	215	5731+60	
5740+06.08	22,918.31			5734+96.84		NORMAL CROWN		5745+15.16			
5789+56.98	2,888.00	5781+65	195	5783+14.58	5783+60	5.0	5795+40	5795+78.80	195	5797+35	
5823+89.40	1,660.00	5808+95	220	5810+66.53	5811+15	6.0	5832+50	5833+00.40	220	5834+70	
5844+97.78	1,660.00	5836+50	220	5838+20.85	5838+70	6.0	5850+55	5851+06.36	220	5852+75	
5860+56.31	2,865.00	5855+90	195	5857+44.20	5857+85	5.0	5863+25	5863+92.61	195	5865+20	
5896+31.91	2,111.00	5890+90	220	5892+61.69	5893+10	5.8	5899+45	5899+94.67	220	5901+65	
5908+16.13	2,291.83	5903+40	210	5905+05.79	5905+50	5.6	5910+80	5911+22.71	210	5912+90	
5931+42.99	2,864.79	5924+00	195	5925+52.35	5925+95	5.0	5936+75	5937+17.30	195	5938+70	
5968+82.42	1,909.86	5961+50	220	5963+24.58	5963+70	6.0	5973+65	5974+10.07	220	5975+85	
5983+71.65	2,291.83	5977+85	210	5979+47.48	5979+95	5.6	5987+40	5987+86.33	210	5989+50	
6020+59.49	1,470.00	6012+70	220	6014+36.44	6014+90	6.0	6025+70	6026+15.06	220	6027+90	
6041+88.74	1,400.00	6036+25	220	6037+90.90	6038+45	6.0	6045+20	6045+66.14	220	6047+40	
6055+03.12	1,650.00	6051+40	220	6053+08.16	6053+60	6.0	6056+50	6056+96.28	220	6058+70	
6083+55.53	2,083.48	6075+25	220	6076+93.86	6077+45	5.8	6089+25	6089+75.22	220	6091+45	
6098+71.36	11,459.00	6094+50	115	6095+45.24	6095+65	2.0	6101+80	6101+97.30	115	6102+95	
6114+73.96	1,909.86	6109+75	220	6111+45.35	6111+95	6.0	6117+45	6117+96.20	220	6119+65	
6126+24.46	2,083.48	6121+10	215	6122+75.89	6123+25	5.8	6129+20	6129+66.64	215	6131+35	
6142+77.42	1,909.86	6135+85	220	6137+56.27	6138+05	6.0	6147+25	6147+73.80	220	6149+45	
6158+74.03	1,909.86	6150+80	220	6152+50.89	6153+00	6.0	6164+00	6164+55.57	220	6166+20	

NOTE: SUPERELEVATION ROTATION SHALL BE PER STANDARD PLAN I-81.00, CASE 1, PAVEMENT ROTATED ABOUT THE CENTERLINE

Preliminary Plans

SUPERELEVATION SUMMARY

STATE OF ALASKA 49TH Russell M. Johnson C.E. 9963 REGISTERED PROFESSIONAL ENGINEER

PLANS DEVELOPED BY: STATE OF ALASKA DEPARTMENT OF TRANSPORTATION & PUBLIC FACILITIES, NORTHERN REGION, 2301 PEGER ROAD, FAIRBANKS, AK 99709 (907)451-2200
H:\Projects\Rich_Hwy\60638_Rich_115_148\06 Design\05 Civil 3D\05_00265 128-138\03_Drafting\00265_D3 SUPERS-D3 SUPERELEVATION SUMMARY Thu, Apr/28/22 11:45am

NO.	DATE	REVISION

STATE	PROJECT DESIGNATION	YEAR	SHEET NO.	TOTAL SHEETS
ALASKA	PENDING/NFHWY00265	2021	E1	E11

202.0017.0000 REMOVAL OF CULVERT PIPE

STATION	MP	24" CMP (FEET)	36" CMP (FEET)	48" CMP (FEET)	REMARKS
5725+78	128.6	63			
5735+67	128.7	36			
5763+16	129.2		211		
5764+61	129.2		193		
5787+61	129.7	89			
5793+64	129.8	96			
5808+37	130.1	74			
5812+44	130.2	85			
5818+64	130.3	97			
5823+29	130.4	100			
5828+12	130.5		119		
5830+40	130.5		128		
5834+89	130.6	88			
5849+16	130.8	77			
5851+68	130.9	108			
5857+63	131	91			
5862+81	131.1	90			
5869+66	131.2		117		
5878+40	131.3		127		
5885+88	131.6		107		
5896+82	131.8		188		
5900+96	131.9			159	
5901+08	131.9			166	
5923+11	132.4		110		
5949+94	132.8	86			
6101+77	135.8	83			
6109+70	135.9		95		
6115+17	135.9	86			
6126+23	136.1		200		
6190+25	137.4	81			
SUB-TOTAL		1430	1595	325	

Preliminary Plans

REMOVAL SUMMARY

STATE OF ALASKA 49TH
Russell M. Johnson
C.E. 9963
REGISTERED PROFESSIONAL ENGINEER

PLANS DEVELOPED BY: STATE OF ALASKA DEPARTMENT OF TRANSPORTATION & PUBLIC FACILITIES, NORTHERN REGION, 2301 PEGER ROAD, FAIRBANKS, AK 99709 (907)451-2200
H:\Projects\Rich_Hwy\60638_Rich_115_148\06 Design\05 Civil 3D\05_00265 128-138\03_Drafting\00265_Culverts-E1 REMOVAL SUMMARY Thu, Apr/28/22 11:45am

NO.	DATE	REVISION

STATE	PROJECT DESIGNATION	YEAR	SHEET NO.	TOTAL SHEETS
ALASKA	PENDING/NFHWY00265	2021	E2	E11

CULVERT SUMMARY

STATION	MP	SKEW	NEW CULVERT 602(1)–60 60" SPP (FEET)	NEW CULVERT 602(1)–72 72" SPP (FEET)	NEW CULVERT 603(1)–24 24" CSP (FEET)	NEW CULVERT 603(1)–36 36" CSP (FEET)	NEW CULVERT 603(1)–48 48" CSP (FEET)	DEADMAN EACH	611(1) RIPRAP CLASS I (CU. YRD)	613(2) MARKER POST (EACH)	616(2) ½" THAW PIPE (EACH)	REMARKS	AS–BUILT CENTERLINE LOCATION (SEE NOTE 1) STATION	LATITUDE	LONGITUDE
5710+24										2		EXISTING 24" X 123' CSP TO REMAIN			
5725+78					63				20.8						
5729+30												EXISTING 24" X 52' CSP TO REMAIN, RT APPROACH			
5732+64										2		EXISTING 24" X 87' CSP TO REMAIN, RT, TOK CUTOFF, CLEAN INLET & OUTLET			
5733+35										2		EXISTING 24" X 89' CSP TO REMAIN, WARP SLOPE			
5735+66	128.7	15° RT AH			51				20.8						
5737+00												EXISTING 24" X 37' CSP TO REMAIN, LT APPROACH			
5741+11												EXISTING 24" X 54' CSP TO REMAIN, RT APPROACH			
5747+00												EXISTING 24" X 39' CSP TO REMAIN, LT APPROACH			
5750+21												EXISTING 24" X 40' CSP TO REMAIN, RT APPROACH			
5763+19	129.2	40° LT AH	209					1	100.8	2	1				
5764+63	129.2	15° RT AH	184					1	100.8	2	1				
5771+80												EXISTING 24" X 43' CSP TO REMAIN, RT APPROACH			
5787+64	129.7						107	1	67.2	2					
5793+67	129.8						96	1	67.2	2					
5808+40	130.1						77	1	67.2	2	1				
5812+46	130.2					93			41.6	2					
5818+66	130.3					144			41.6	2	1				
5823+32	130.4					137			41.6	2	1				
5828+15	130.5	5° LT AH				145			41.6	2					
5830+41	130.5	15° RT AH				141			41.6	2	1				
5834+91	130.6					97			41.6	2					
5849+24	130.8					84			41.6	2	1				
5851+71	130.9					118			41.6	2					
5857+69	131					104			41.6	2					
5862+83	131.1					91			41.6	2					
5869+69	131.2					142			41.6	2	1				
5878+45		32° RT AH				146			41.6	2					
5883+17										2		EXISTING 24" X 96' CSP TO REMAIN			
5885+88	131.6					141			41.6	2	1				
5889+15												EXISTING 24" X 52' CSP TO REMAIN, LT APPROACH			
5896+88	131.8		200					1	100.8	2	1				
5900+91	131.9	28° RT AH		173				1	140.8	2	1				
5901+08	131.9	28° RT AH				159			14.4			FLANKER PIPE, INVERT AT CROWN ELEVATION OF MAIN PIPE			
5901+90												EXISTING 24" X 48' CSP TO REMAIN, RT APPROACH			
5903+24												EXISTING 24" X 48' CSP TO REMAIN, LT APPROACH			
5923+13	132.4					155			41.6	2					
5949+97	132.8					94			41.6	2					
5969+09												EXISTING 24" X 54' CSP TO REMAIN, RT APPROACH			
6003+78	133.8											EXISTING 36" X 89' CSP TO REMAIN			
6008+13	133.9											EXISTING 36" X 97' CSP TO REMAIN			
6011+52	134											EXISTING 36" X 86' CSP TO REMAIN			
6018+05															
6031+91	134.4											EXISTING 36" X 120' CSP TO REMAIN			
6042+40												EXISTING 36" X 264' CSP TO REMAIN			
6048+55	134.6	29° RT AH										EXISTING 36" X 124' CSP TO REMAIN			
SUB-TOTAL			593	173	114	1991	280	7	1324.8	52	11				

CULVERT NOTES:

1. THE CONTRACTOR SHALL ENTER AS–BUILT LOCATIONS FOR ALL CULVERTS IN THE CULVERT SUMMARY TABLE. COORDINATES SHALL BE LOCATED AT THE INTERSECTION OF THE CULVERT AND ROAD CENTERLINE. USE WGS84 DATUM FORMATTED TO DEGREES, MINUTES, SECONDS TO A PRECISION OF 2 DECIMAL PLACES (DDD° MM' SS.SS"). THIS WORK IS SUBSIDIARY TO 642.0001.0000 PAY ITEM.
2. ALL CSP CULVERTS SHALL BE 10 GAGE.
3. ALL CSP CULVERTS INSTALLED SHALL HAVE ALUMINIZED STEEL TYPE 2 COATING.
4. ALL STRUCTURAL PLATE PIPES SHALL BE GALVANIZED STEEL.
5. SEE ADDITIONAL CULVERT NOTES ON THE HYDROLOGIC & HYDRAULIC SUMMARY PLAN SHEET.

Preliminary Plans

CULVERT SUMMARY

STATE OF ALASKA 49TH Russell M. Johnson C.E. 9963 REGISTERED PROFESSIONAL ENGINEER

PLANS DEVELOPED BY: STATE OF ALASKA DEPARTMENT OF TRANSPORTATION & PUBLIC FACILITIES, NORTHERN REGION, 2301 PEGER ROAD, FAIRBANKS, AK 99709 (907)451-2200
H:\Projects\Rich_Hwy\60638_Rich_115_148\06 Design\05 Civil 3D\05_00265 128-138\03_Drafting\00265_Culverts-E2 CULVERT SUMMARY Thu, Apr/28/22 11:45am

NO.	DATE	REVISION

STATE	PROJECT DESIGNATION	YEAR	SHEET NO.	TOTAL SHEETS
ALASKA	PENDING/NFHWY00265	2021	E3	E11

CULVERT SUMMARY

STATION	MP	SKEW	NEW CULVERT 602(1)-60 60" SPP (FEET)	NEW CULVERT 602(1)-72 72" SPP (FEET)	NEW CULVERT 603(1)-24 24" CSP (FEET)	NEW CULVERT 603(1)-36 36" CSP (FEET)	NEW CULVERT 603(1)-48 48" CSP (FEET)	NEW CULVERT 603(17) 36" PIPE (FEET)	DEADMAN EACH	611(1) RIPRAP CLASS I (CU. YRD)	613(2) MARKER POST (EACH)	616(2) ½" THAW PIPE (EACH)	REMARKS	AS-BUILT CENTERLINE LOCATION (SEE NOTE 1) STATION	LATITUDE	LONGITUDE
6052+00	134.7												EXISTING 36" X 130' CSP TO REMAIN			
6059+15													EXISTING 36" X 144' CSP TO REMAIN			
6066+05													EXISTING 36" X 110' CSP TO REMAIN			
6076+49													EXISTING 36" X 133' CSP TO REMAIN			
6079+26	135.3	15° RT AH											EXISTING 36" X 232' CSP TO REMAIN			
6090+30													EXISTING 36" X 112' CSP TO REMAIN			
6101+74	135.7					94				41.6	2					
6108+84													EXISTING 24" X 64' CSP TO REMAIN			
6109+73	135.8					129				41.6	2	1				
6115+21	135.9					108				41.6	2					
6126+33	136.1	25° RT AH				200				41.6	2	1				
6130+80													EXISTING 24" X 45' CSP TO REMAIN, LT APPROACH			
6137+20											2	1	EXISTING 36" X 116' CSP TO REMAIN			
6141+28													COLEMAN CREEK, EXISTING 120" X 125' CSP TO REMAIN			
6144+75													EXISTING 24" X 40' CSP TO REMAIN, LT APPROACH			
6190+27	137.4					114				41.6	2					
"R"1017+01	133.6							108		41.6	2	1	SMOOTH WALL PIPE, SEE SHEET F18			
"R"1057+02	134.6							105		41.6	2	1	SMOOTH WALL PIPE, SEE SHEET F18			
"R"1102+01	135.4							110		41.6	2	1	SMOOTH WALL PIPE, SEE SHEET F18			
SUB-TOTAL						645	0	323	0	332.8	18	6				
TOTAL			593	173	114	2636	280	323	7	1657.6	70	17				

Preliminary Plans

CULVERT SUMMARY

STATE OF ALASKA 49TH
Russell M. Johnson
C.E. 9963
REGISTERED PROFESSIONAL ENGINEER

PLANS DEVELOPED BY: STATE OF ALASKA DEPARTMENT OF TRANSPORTATION & PUBLIC FACILITIES, NORTHERN REGION, 2301 PEGER ROAD, FAIRBANKS, AK 99709 (907)451-2200
H:\Projects\Rich_Hwy\60638_Rich_115_148\06 Design\05 Civil 3D\05_00265 128-138\03_Drafting\00265_Culverts-E3 CULVERT SUMMARY Thu, Apr/28/22 11:45am

NO.	DATE	REVISION

STATE	PROJECT DESIGNATION	YEAR	SHEET NO.	TOTAL SHEETS
ALASKA	PENDING/NFHWY00265	2021	E4	E11

THAW PIPE NOTES:

1. INSTALL 1/2 INCH THAW PIPE ALONG THE BOTTOM OF THE CULVERT. THAW PIPES SHALL LAY FREELY WITH NO PIPE HANGERS OR ATTACHMENTS. SEE CULVERT SUMMARY FOR THAW PIPE LOCATIONS.
2. ALL THAW PIPES SHALL RUN THE ENTIRE LENGTH OF THE CULVERT AND HAVE NO JOINTS OR COUPLINGS WITHIN 30" OF INSIDE OF CULVERT ENDS.
3. FIELD BEND ALL CORNERS, WITHOUT KINKS 180' AROUND CULVERT ENDS FROM INSIDE TO OUTSIDE OF THE CULVERT WITH NO GREATER THAN 1' RADIUS. FITTINGS MAY BEGIN ON OUTSIDE OF THE CULVERT AFTER COMING BACK AT LEAST 6" PAST CULVERT ENDS.
4. THAW PIPES SHALL BE WATER TIGHT AND ABLE TO HOLD ANTIFREEZE. USE THREAD SEALANT ON FITTINGS AND CAP THAW PIPE ENDS.
5. NEATLY RUN THAW PIPES ALONG CULVERT OR EMBANKMENT TO TERMINATION BY SECURELY MOUNTING 5' ABOVE THE GROUND ON PRESSURE TREATED SUPPORT POSTS OF HEM-FIR, NO. 2 OR BETTER.
6. FASTEN THAW PIPE TO SUPPORT POSTS WITH GALVANIZED RIGID CONDUIT STRAPS AND 2" LONG GALVANIZED LAG SCREWS AT MAX. 12" CENTERS.
7. SUPPORT POSTS SHALL BE LOCATED AS DIRECTED BY THE ENGINEER AT MINIMUM 18' FROM THE EDGE OF PAVEMENT.
8. INSTALL STAND PIPE ON INLET AND OUTLET END.
9. CHARGE/FILL THE THAW PIPE WITH NON-TOXIC BIODEGRADABLE ANTIFREEZE RATED TO -60 DEGREES FAHRENHEIT.

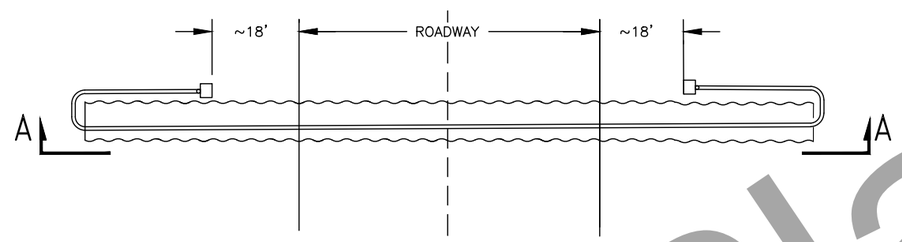

PLAN

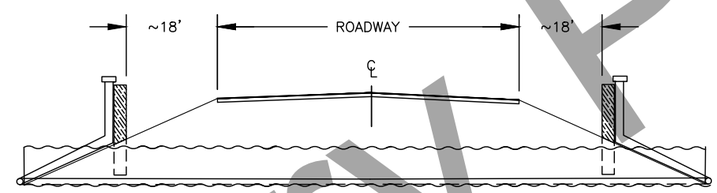

SECTION A-A

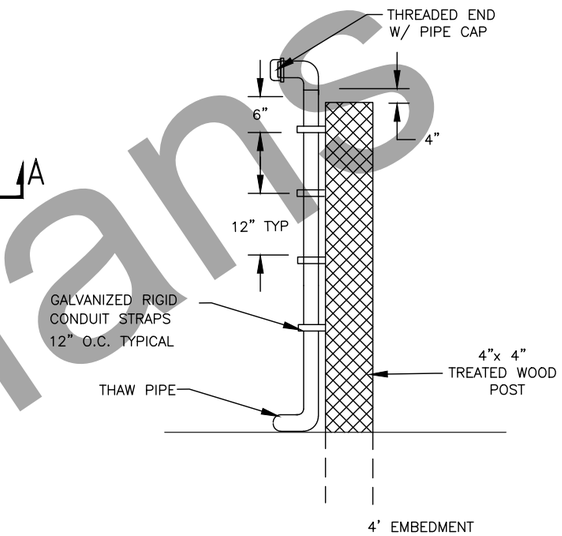

STAND PIPE

Preliminary Plans

CULVERT THAW PIPE DETAILS

STATE OF ALASKA 49TH
Russell M. Johnson
C.E. 9963
REGISTERED PROFESSIONAL ENGINEER

PLANS DEVELOPED BY: STATE OF ALASKA DEPARTMENT OF TRANSPORTATION & PUBLIC FACILITIES, NORTHERN REGION, 2301 PEGER ROAD, FAIRBANKS, AK 99709 (907)451-2200
H:\Projects\Rich_Hwy\60638_Rich_115_148\06 Design\05 Civil 3D\05_00265 128-138\03_Drafting\00265_Culverts-E4 CULVERT THAW PIPE DETAILS Thu, Apr/28/22 11:45am

NO.	DATE	REVISION

STATE	PROJECT DESIGNATION	YEAR	SHEET NO.	TOTAL SHEETS
ALASKA	PENDING/NFHWY00265	2021	E5	E11

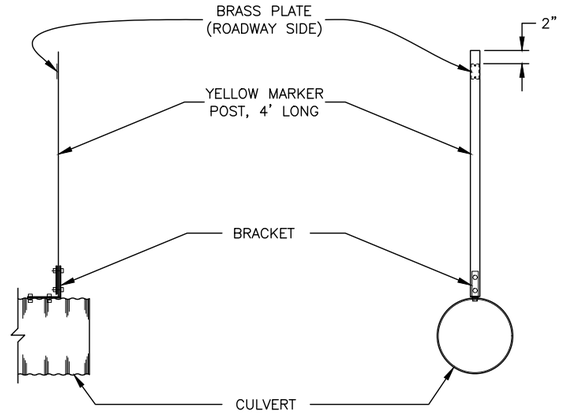

SIDE VIEW END VIEW

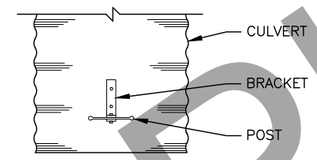

TOP VIEW

CULVERT MARKER POST DETAIL

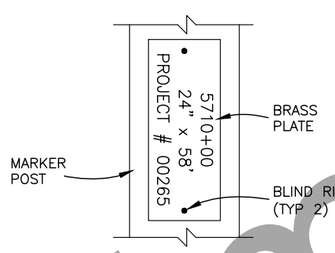

STATION AND SIZE OF PIPE, AND PROJECT NUMBER TO BE STAMPED USING LETTERS A MINIMUM OF 1/4" HIGH INTO A 2" x 6" x .064" THICK BRASS PLATE. FASTEN PLATE TO THE SIDE FACING THE ROADWAY WITH TWO 1/8" DIA. BLIND RIVETS.

BRASS PLATE DETAIL

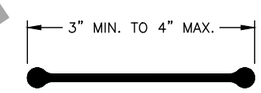

POST DETAIL

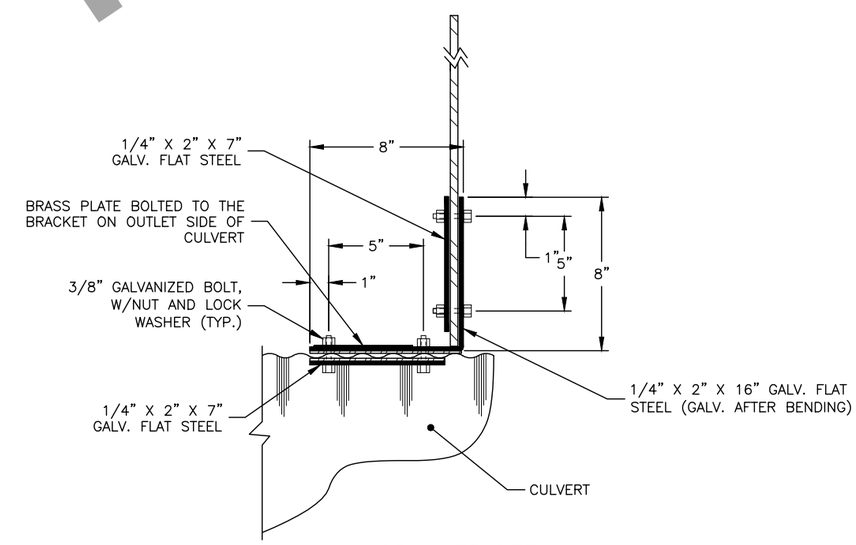

BRACKET DETAIL

CULVERT MARKER POST DETAILS

CULVERT MARKER NOTES:

1. DRILL ALL BOLT HOLES. COAT HOLES IN PIPE WITH ZINC RICH PAINT. FLAME CUTTING SHALL NOT BE PERMITTED.
2. MARKER POST ENDS SHALL BE SQUARE.
3. GASKET MATERIAL SHALL BE PLACED BETWEEN DISSIMILAR METALS. GASKET MATERIAL SHALL BE APPROVED PRIOR TO INSTALLATION.
4. WHEN MORE THAN TWO PIPES ARE LOCATED TOGETHER. ONLY THE FIRST AND LAST PIPE SHALL HAVE A MARKER.

Preliminary Plans

STATE OF ALASKA 49TH
Russell M. Johnson
C.E. 9963
REGISTERED PROFESSIONAL ENGINEER

CULVERT MARKER POST DETAILS

PLANS DEVELOPED BY: STATE OF ALASKA DEPARTMENT OF TRANSPORTATION & PUBLIC FACILITIES, NORTHERN REGION, 2301 PEGER ROAD, FAIRBANKS, AK 99709 (907)451-2200
H:\Projects\Rich_Hwy\60638_Rich_115_148\06 Design\05 Civil 3D\05_00265 128-138\03_Drafting\00265_Culverts-E5 CULVERT MARKER POST DETAILS Thu, Apr/28/22 11:46am

NO.	DATE	REVISION

STATE	PROJECT DESIGNATION	YEAR	SHEET NO.	TOTAL SHEETS
ALASKA	PENDING/NFHWY00265	2021	E6	E11

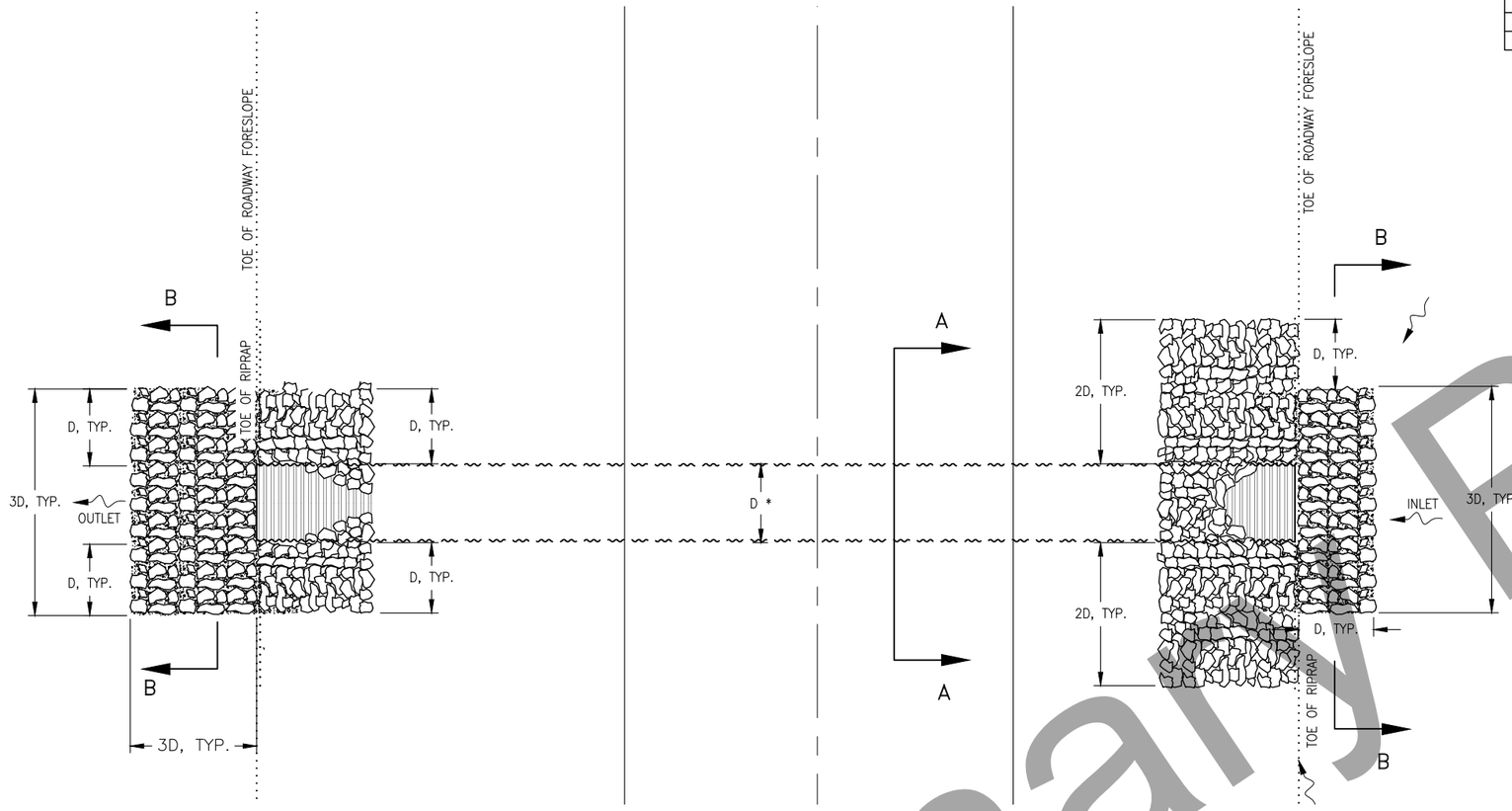

CULVERT RIPRAP APRON – TYPICAL PLAN VIEW

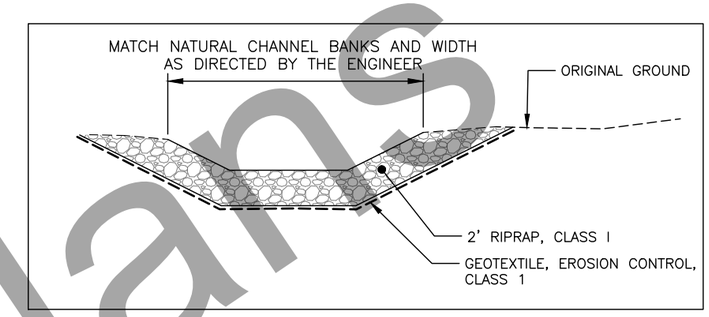

SECTION B–B

EMBANKMENT WARP AND CULVERT APRON NOTES:

1. EROSION CONTROL STRUCTURES MAY BE FIELD ADJUSTED BY THE ENGINEER TO TAKE ADVANTAGE OF EXISTING CHANNEL TOPOGRAPHY.
2. CULVERT RIPRAP APRON DETAILS SHOWN ON THIS SHEET ARE SCHEMATIC AND NOT TO SCALE.
3. COUNTERSINK RIPRAP BY EXCAVATING BELOW THE EXISTING GROUND SURFACE AND EMBANKMENT FINISH GRADE WHERE RIPRAP IS REQUIRED. BACKFILL WITH SPECIFIED DEPTH AND CLASS OF RIPRAP AS SHOWN. THE TOP OF RIPRAP SHALL BE FLUSH WITH THE ADJACENT DITCH CHANNEL AND/OR EXISTING GROUND.

* D = CULVERT DIAMETER

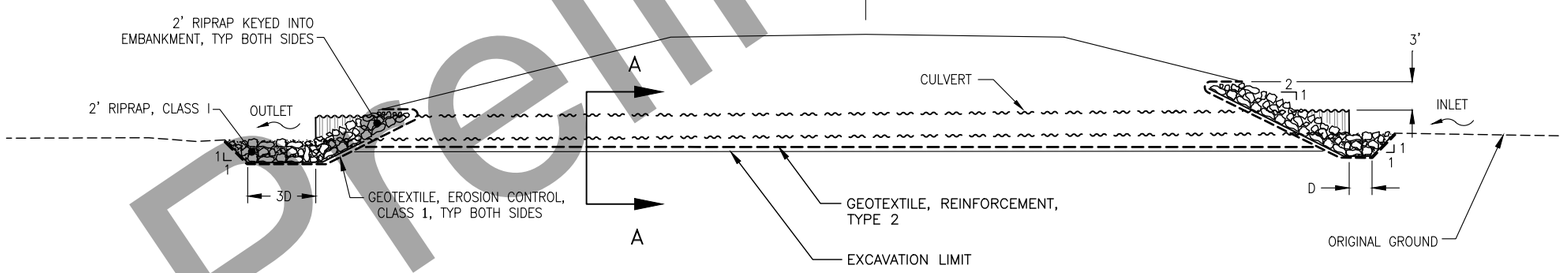

CULVERT RIPRAP APRON – ELEVATION VIEW

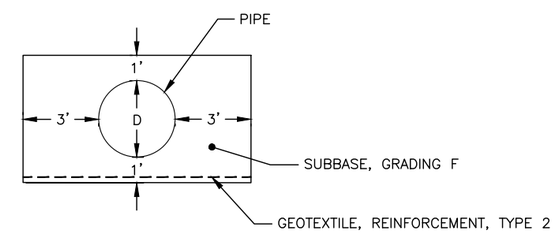

SECTION A–A

SECTION A–A NOTES:

CULVERT EXCAVATION LIMITS ARE NOT SHOWN. THE CONTRACTOR IS RESPONSIBLE FOR THE MEANS, METHODS, TECHNIQUES, SEQUENCE AND PROCEDURES OF CONSTRUCTION, SAFETY AND QUALITY CONTROL.

STATE OF ALASKA 49TH
Russell M. Johnson
C.E. 9963
REGISTERED PROFESSIONAL ENGINEER

CULVERT AND RIPRAP APRON DETAILS

Preliminary Plans

PLANS DEVELOPED BY: STATE OF ALASKA DEPARTMENT OF TRANSPORTATION & PUBLIC FACILITIES, NORTHERN REGION, 2301 PEGER ROAD, FAIRBANKS, AK 99709 (907)451-2200
H:\Projects\Rich_Hwy\60638_Rich_115_148\06 Design\05 Civil 3D\05_00265 128-138\03_Drafting\00265_Appron Details-EMBANKMENT WARP & CULVERT APRON DETAILS Thu, Apr/28/22 11:46am

NO.	DATE	REVISION

STATE	PROJECT DESIGNATION	YEAR	SHEET NO.	TOTAL SHEETS
ALASKA	PENDING/NFHWY00265	2021	E7	E11

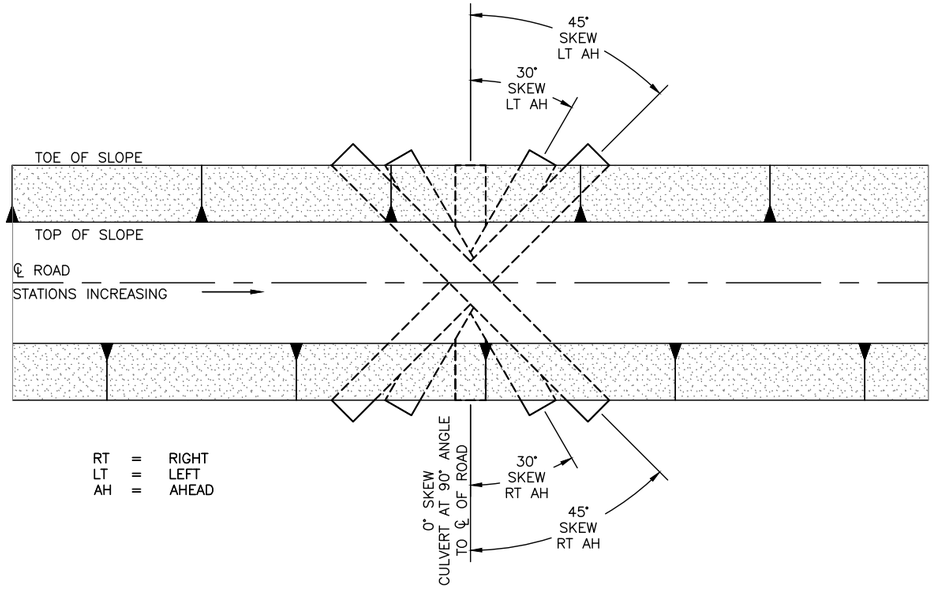

CULVERT SKEW

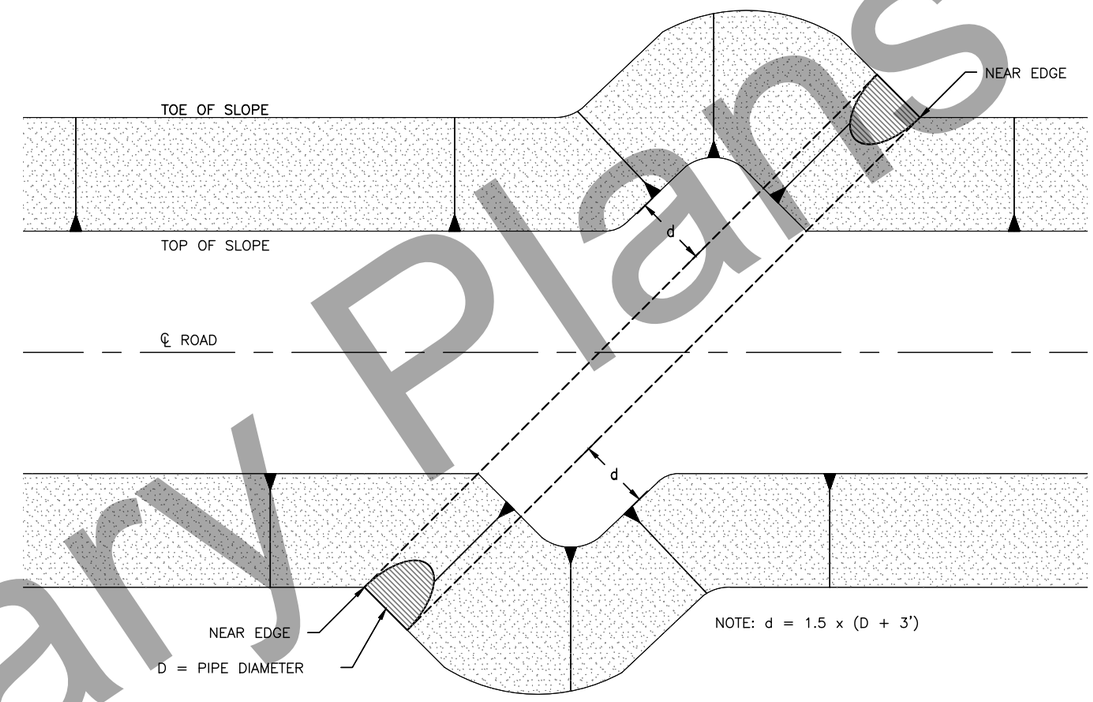

EMBANKMENT WIDENING FOR SKEWED CULVERTS PLAN

THIS DETAIL ONLY APPLIES TO 60" SPP CULVERTS AT STATIONS 5763+19 AND 5764+63 AND 72" CULVERT AT STATION 5900+91.

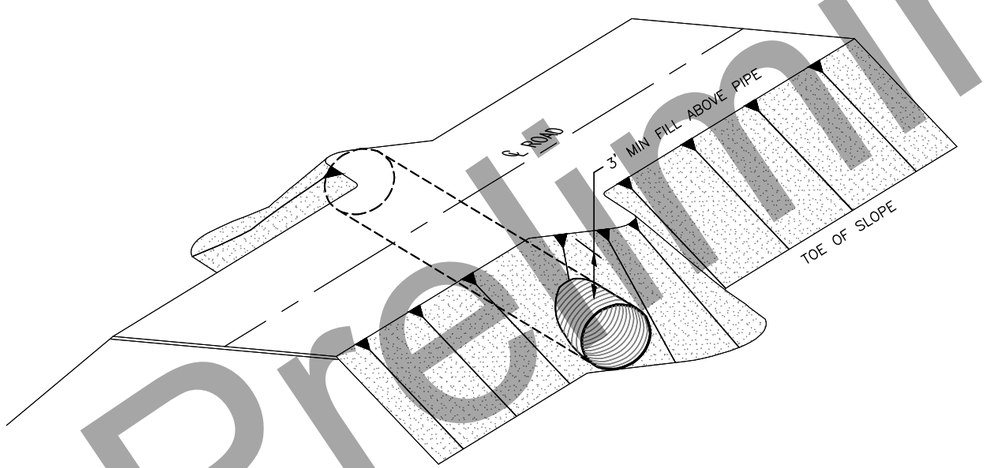

EMBANKMENT WIDENING FOR SKEWED CULVERTS OBLIQUE

NOTES:

1. CONSTRUCT CULVERT EMBANKMENT WIDENING FOR THE THREE SKEWED SPP CULVERTS.
2. WHEN INSTALLING NEW, OR EXTENDING EXISTING, SKEWED CULVERTS, ENSURE THE FINAL LENGTH IS DETERMINED OFF THE NEAR EDGE, NOT THE CENTERLINE OF THE CULVERT.
3. TO PREVENT UNBALANCED SOIL LOADS ON THE SKEWED CULVERT, THE EMBANKMENT SHALL BE SHAPED OR WARPED, TO BALANCE LOADS AND ENSURE SIDE SUPPORT.
4. CONSTRUCT LIFTS ON EACH SIDE OF THE CULVERT CONCURRENTLY TO MINIMIZE UNBALANCED LOADING DURING INSTALLATION.

Preliminary Plans

CULVERT SKEW DETAILS

STATE OF ALASKA 49TH
Russell M. Johnson
C.E. 9963
REGISTERED PROFESSIONAL ENGINEER

PLANS DEVELOPED BY: STATE OF ALASKA DEPARTMENT OF TRANSPORTATION & PUBLIC FACILITIES, NORTHERN REGION, 2301 PEGER ROAD, FAIRBANKS, AK 99709 (907)451-2200
H:\Projects\Rich_Hwy\60638_Rich_115_148\06 Design\05 Civil 3D\05_00265 128-138\03_Drafting\00265_Culvert Skew-Hwy-Gen Thu, Apr/28/22 11:46am

NO.	DATE	REVISION

STATE	PROJECT DESIGNATION	YEAR	SHEET NO.	TOTAL SHEETS
ALASKA	PENDING/NFHWY00265	2021	E8	E11

HYDROLOGIC & HYDRAULIC SUMMARY

RICHARDSON HIGHWAY MILE 129.2 – STATION 5763+19 – 60" DIA. SPP

BASIN AREA (SQ. MI)	QFISH (CFS)	Q2 (CFS)	Q5 (CFS)	Q50 (CFS)	Q100 (CFS)
1.01	N/A	12	24	63	78

HEADWATER ELEVATION @Q50 IS 1780.0 FT, @Q100 IS 1780.5 FT

HW/D @ 1= 102 CFS, ROAD OVERTOPS AT APPROXIMATELY 367 CFS

CULVERT PURPOSE: CROSS DRAINAGE

HYDROLOGIC & HYDRAULIC SUMMARY

RICHARDSON HIGHWAY MILE 129.2 – STATION 5764+63 – 60" DIA. SPP

BASIN AREA (SQ. MI)	QFISH (CFS)	Q2 (CFS)	Q5 (CFS)	Q50 (CFS)	Q100 (CFS)
0.93	N/A	10	20	54	67

HEADWATER ELEVATION @Q50 IS 1816.4 FT, @Q100 IS 1817.0 FT

HW/D @ 1= 65 CFS, ROAD OVERTOPS AT APPROXIMATELY 202 CFS

CULVERT PURPOSE: CROSS DRAINAGE

HYDROLOGIC & HYDRAULIC SUMMARY

RICHARDSON HIGHWAY MILE 131.8 – STATION 5896+88 – 60" DIA. SPP

BASIN AREA (SQ. MI)	QFISH (CFS)	Q2 (CFS)	Q5 (CFS)	Q50 (CFS)	Q100 (CFS)
1.36	N/A	12	24	62	76

HEADWATER ELEVATION @Q50 IS 1801.3 FT, @Q100 IS 1802.0 FT

HW/D @ 1= 66 CFS, ROAD OVERTOPS AT APPROXIMATELY 209 CFS

CULVERT PURPOSE: CROSS DRAINAGE

HYDROLOGIC & HYDRAULIC SUMMARY

RICHARDSON HIGHWAY MILE 131.9 – STATION 5900+91 – 72" DIA. SPP

BASIN AREA (SQ. MI)	QFISH (CFS)	Q2 (CFS)	Q5 (CFS)	Q50 (CFS)	Q100 (CFS)
1.01	N/A	12	24	63	78

HEADWATER ELEVATION @Q50 IS 1780.0 FT, @Q100 IS 1780.5 FT

HW/D @ 1= 102 CFS, ROAD OVERTOPS AT APPROXIMATELY 367 CFS

CULVERT PURPOSE: CROSS DRAINAGE

GENERAL CULVERT NOTES

1. 48" CULVERTS ARE SIZED FOR ICING AND DO NOT REQUIRE HYDROLOGIC & HYDRAULIC SUMMARY.
2. FOLLOW MANUFACTURERS INSTALLATION SPECIFICATIONS IN ALL CULVERT INSTALLATIONS.
3. ALL CULVERTS SHALL BE INSTALLED ON DRY GROUND.
4. CULVERT BEDDING AND BACKFILL SHALL BE IN ACCORDANCE WITH SECTION 204 OF THE SPECIFICATIONS.
5. STATIONING AND SKEW FOR CULVERTS ARE APPROXIMATE. STAKE CULVERTS TO FIT FIELD CONDITIONS AND AS DIRECTED BY THE ENGINEER.
6. CULVERT LENGTHS ARE APPROXIMATE AND SHALL BE FIELD VERIFIED BY THE CONTRACTOR. WHEN INSTALLING SKEWED CULVERTS, ENSURE THE FINAL LENGTH IS DETERMINED OFF THE NEAR EDGE, NOT THE CENTERLINE OF THE CULVERT.
7. REMOVAL OF EXISTING CULVERTS, MARKER POSTS, AND THAW PIPES BECOME THE PROPERTY OF THE CONTRACTOR AND SHALL BE REMOVED FROM THE PROJECT AND DISPOSED OF AT NO ADDITIONAL COST TO THE DEPARTMENT, UNLESS NOTED OTHERWISE.
8. IN AREAS OF POOR FOUNDATION, SUBEXCAVATE BENEATH CULVERTS 1 FOOT TO 3 FEET, OR GREATER TO PROVIDE ADEQUATE FOUNDATION, AS DIRECTED BY THE ENGINEER. CONTACT THE MATERIALS SECTION FOR SPECIFIC RECOMMENDATIONS.
9. CULVERTS SHALL NOT BE INSTALLED IN FREEZING CONDITIONS.
10. MINIMUM ALLOWABLE CULVERT CROSS SLOPE IS 0.5%, UNLESS NOTED OTHERWISE ON THE PLANS.
11. ALL CULVERTS SHALL HAVE A MINIMUM CAMBER EQUAL TO 1% OF THE LENGTH OF THE PIPE, UNLESS THE PROJECT ENGINEER DIRECTS OTHERWISE.
12. NO CULVERT SHALL BE PLACED UNTIL THE BED HAS BEEN APPROVED BY THE ENGINEER.
13. WHERE APRONS ARE NOT SPECIFIED, MINIMIZE DISTURBANCE TO THE VEGETATIVE MAT AROUND CULVERT ENDS, BUT CLEAR AND GRADE AS NEEDED TO ENSURE PROPER DRAINAGE. THIS WORK IS SUBSIDIARY TO 603 SERIES PAY ITEMS.
14. ESTABLISH RIPRAP APRONS AND FORESLOPES AS SOON AS POSSIBLE AS PERMANENT EROSION CONTROL.
15. EROSION CONTROL STRUCTURES ARE APPROXIMATE AND MAY BE FIELD ADJUSTED BY THE ENGINEER TO TAKE ADVANTAGE OF EXISTING BANKS AND OTHER CHANNEL FEATURES WITHIN THE PERMITTED CONSTRUCTION AREA.
16. PLACE GEOTEXTILE, EROSION CONTROL, CLASS I (NON–WOVEN), UNDER ALL RIPRAP. GEOTEXTILE SHALL BE TRIMMED SO THAT IT IS NOT VISIBLE UPON PROJECT COMPLETION.
17. ALL WORK FOR CULVERT ARMORING AND CULVERT RIPRAP APRONS, INCLUDING EXCAVATION AND CLEARING AND GRUBBING, IS SUBSIDIARY TO 611 PAY ITEMS.

Preliminary Plans

HYDROLOGIC & HYDRAULIC SUMMARY

STATE OF ALASKA 49TH
Russell M. Johnson
C.E. 9963
REGISTERED PROFESSIONAL ENGINEER

PLANS DEVELOPED BY: STATE OF ALASKA DEPARTMENT OF TRANSPORTATION & PUBLIC FACILITIES, NORTHERN REGION, 2301 PEGER ROAD, FAIRBANKS, AK 99709 (907)451-2200
H:\Projects\Rich_Hwy\60638_Rich_115_148\06_Design\05_Civil 3D\05_00265 128-138\03_Drafting\00265_HYDRL SUM-E8 HYDROLOGIC & HYDRAULIC SUMMARY Thu, Apr/28/22 11:46am

NO.	DATE	REVISION

STATE	PROJECT DESIGNATION	YEAR	SHEET NO.	TOTAL SHEETS
ALASKA	PENDING/NFHWY00265	2021	E9	E11

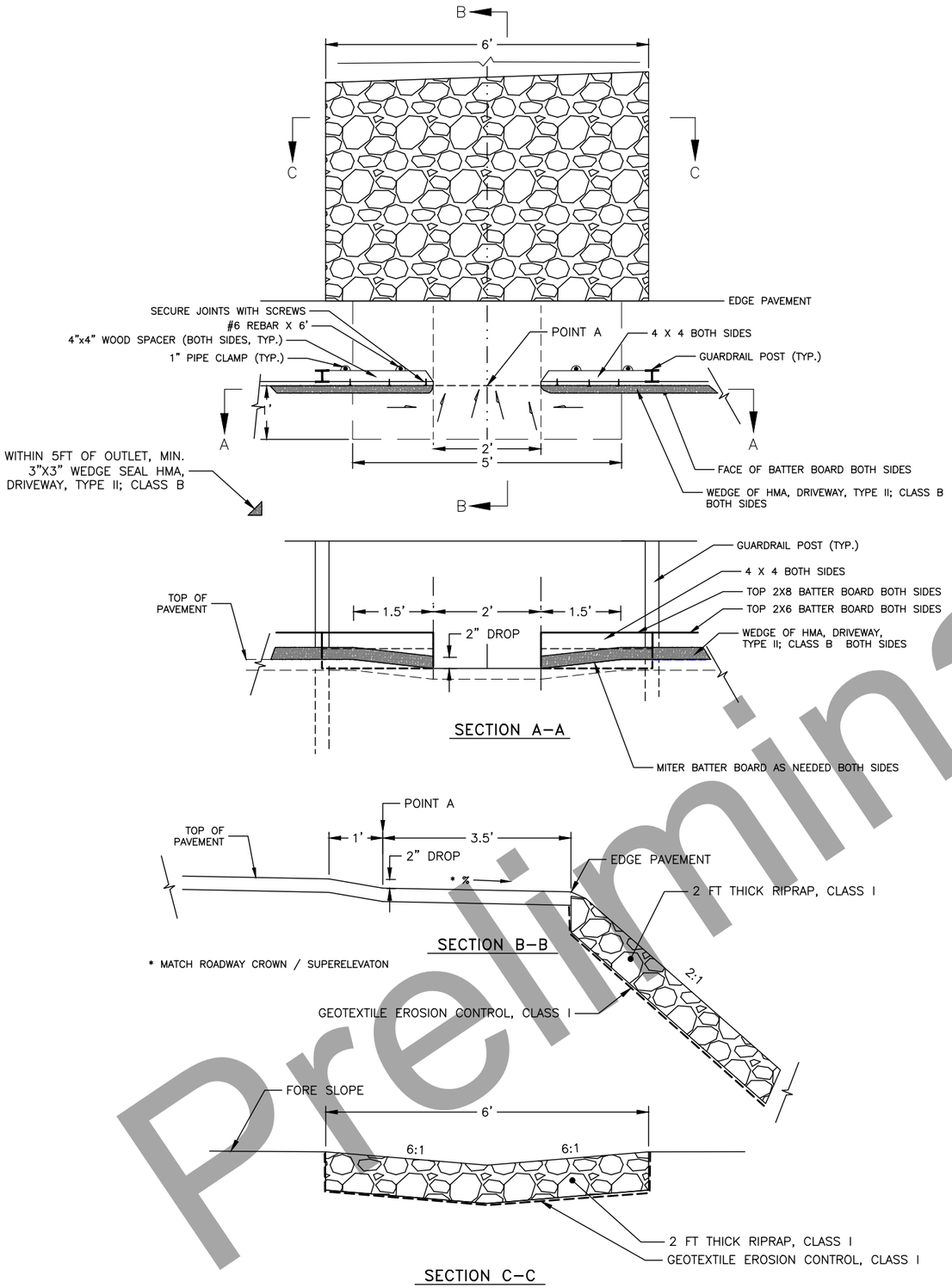

SLOPE DRAIN DRAIN SUMMARY

STATION	LT/RT	QUANTITY EACH	LENGTH RIPRAP (FT)*	RIPRAP APRON	RIPRAP (CY)	RIPRAP (TON)
"O"5764+34	LT	1	76	N/A	33.8	54
"O"5764+34	RT	1	41	6 X 9	21.6	34
"O"5764+80	RT	1	47	N/A	20.9	33
"O"5764+80	LT	1	39	6 X 9	20.7	33
"O"5904+35	LT	1	36	6 X 9	19.3	31
	TOTAL	5	1,850		TOTAL	185

* RIPRAP, CLASS I FOR DOWN DRAIN 6 FOOT WIDE

NOTES:

1. BATTER BOARD AND SLOPE DRAIN (SD) SHALL BE ADJUSTED AS NEEDED BY THE ENGINEER.
2. RIPRAP, CLASS 1 FOR SLOPE DRAIN SHALL EXTEND FROM BACK OF ASPHALT TO THE TOE OF DITCH OR TERMINATE IN TO CULVERT RIPRAP APRON AS APPROVED BY THE ENGINEER.
3. RIPRAP SHALL BE PLACED NO HIGHER THAN 1" BELOW THE PAVEMENT EDGE.
4. THE BATTER BOARD AND SLOPE DRAIN RIPRAP, CLASS I GEOMETRY MAY VARY BASED ON ACTUAL FIELD CONDITIONS AND MAY BE ADJUSTED AS APPROVED BY THE ENGINEER.
5. SEE SHEETS F3 AND F8 FOR LOCATIONS. SEE SHEET D2 FOR MORE BATTER BOARD DETAILS.

Preliminary Plans

SLOPE DRAIN DETAIL

STATE OF ALASKA 49TH
Russell M. Johnson
C.E. 9963
REGISTERED PROFESSIONAL ENGINEER

PLANS DEVELOPED BY: STATE OF ALASKA DEPARTMENT OF TRANSPORTATION & PUBLIC FACILITIES, NORTHERN REGION, 2301 PEGER ROAD, FAIRBANKS, AK 99709 (907)451-2200
H:\Projects\Rich_Hwy\60638_Rich_115_148\06 Design\05 Civil 3D\05_00265 128-138\03_Drafting\DOWN DRAIN-E9 SLOPE DRAIN DETAIL Thu, Apr/28/22 11:46am

NO.	DATE	REVISION

STATE	PROJECT DESIGNATION	YEAR	SHEET NO.	TOTAL SHEETS
ALASKA	PENDING/NFHWY00265	2021	E10	E11

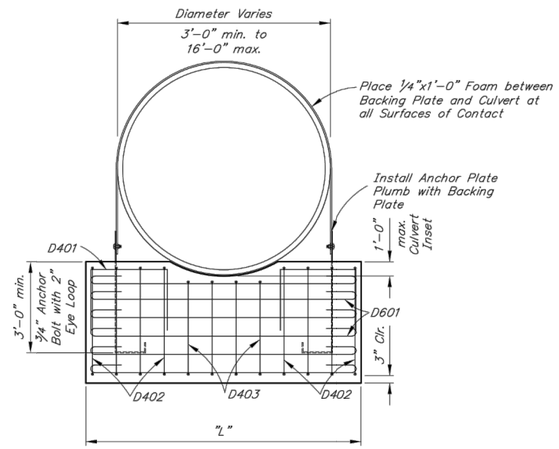

CULVERT ELEVATION

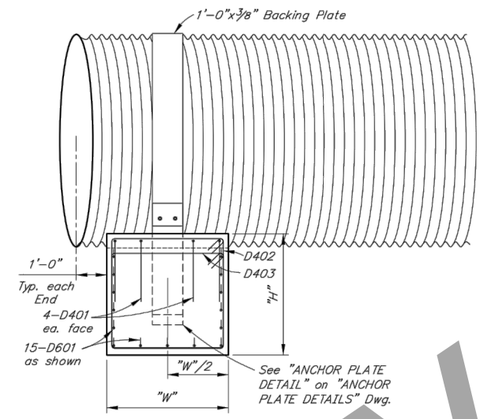

TYPICAL SECTION

CULVERT DIAMETER TABLE - "D" (FT.)			
LOCATION	3'-0" to 8'-0"	8'-1" to 12'-0"	12'-1" to 16'-0"
"L"	D+2'-0"	D+4'-0"	D+6'-0"
"H"	4'-0"	4'-6"	5'-0"
"W"	4'-0"	4'-6"	5'-0"

"D" – Maximum Culvert Diameter (Ft.)

STATE	PROJECT DESIGNATION	YEAR	SHEET NO.	TOTAL SHEETS
ALASKA	Z622610000	2022	N1	N2

REINFORCING STEEL - ONE DEADMAN

MARK	NOTE	SIZE	NO.	D<8'-1"	D<12'-1"	D<16'-1"	TYPE
D401	E	4	8	4'-9"	8'-4"	10'-9"	BENT
D402	E	4	VARIES	15'-3"	17'-3"	19'-3"	STIRRUP
D403	E	4	VARIES	13'-3"	15'-3"	17'-3"	STIRRUP
D601	E	6	15	See BENDING DIAGRAM			BENT

BENDING DIAGRAM

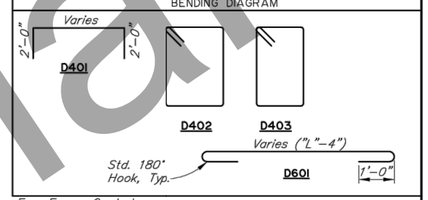

E – Epoxy-Coated

GENERAL NOTES:

REINFORCEMENT:.....ASTM A706, Grade 60, Fy = 60,000 psi
Provide 2" of clear cover unless otherwise noted.

CONCRETE:.....Class B-B Concrete.

STRUCTURAL STEEL:.....ASTM A709, Grade 50T3, Fy = 50,000 psi
Galvanize structural steel in accordance with AASHTO M111 unless noted otherwise.

HIGH STRENGTH BOLTS:..F3125, A325, Fy = 120 ksi
"Exclude threads from shear plane. Do not use punched holes".

REINFORCEMENT NOTES:

1. Quantity of D402 and D403 bars varies according to deadman size. Provide sufficient bar quantity so that bars do not exceed 8" spacing.
2. For bending D402 and D403 bars total length assume minimum 2" of clear cover unless noted on drawing.

TRANSPORT NOTES:

1. Utilize all 15/16"ø anchor plate holes to lift deadman if lifting by anchor plates.

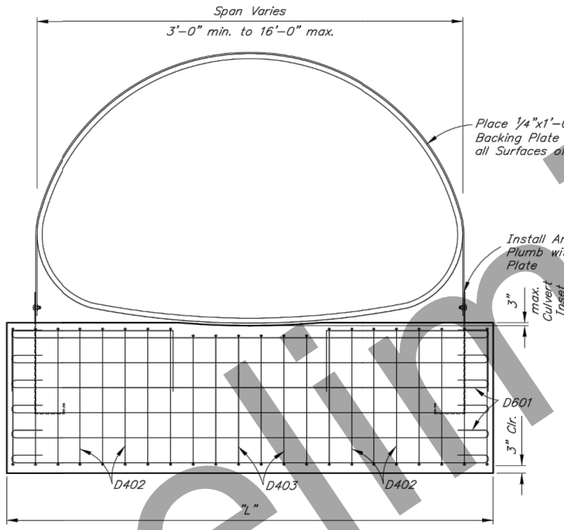

PIPE ARCH ELEVATION

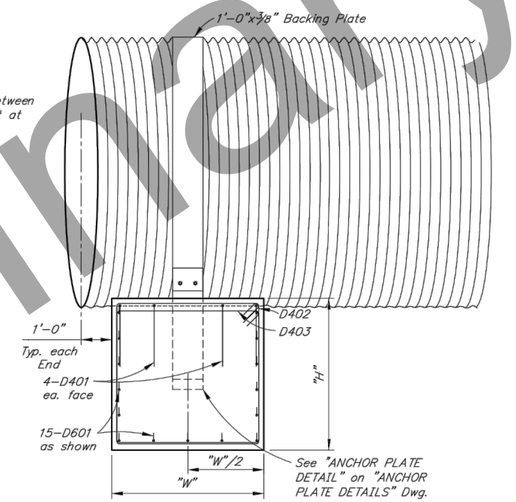

TYPICAL SECTION

DESIGNED BY: Ben Fetterhoff	CHECKED: Checker	STATE OF ALASKA DEPARTMENT OF TRANSPORTATION AND PUBLIC FACILITIES BRIDGE SECTION 3132 Channel Drive Juneau, Alaska 99801 907-465-2975	DEADMAN ANCHOR
DRAWN BY: Sam Sollie	CHECKED: Ben Fetterhoff		
QUANTITIES BY: Ben Fetterhoff	CHECKED: Checker		DWG. NO. 1

STATE OF ALASKA 49TH Russell M. Johnson C.E. 9963 REGISTERED PROFESSIONAL ENGINEER

DEADMAN END RESTRAINT DETAILS

Preliminary Plans

PLANS DEVELOPED BY: STATE OF ALASKA DEPARTMENT OF TRANSPORTATION & PUBLIC FACILITIES, NORTHERN REGION, 2301 PEGER ROAD, FAIRBANKS, AK 99709 (907)451-2200
H:\Projects\Rich_Hwy\60638_Rich_115_148\06 Design\05 Civil 3D\05_00265 128-138\03_Drafting\00265_DEADMAN-E10 DEADMAN ANCHOR Thu, Apr/28/22 01:32pm
Record\MISC\Deadman NBP-Layout1 Mon, Apr/04/22 01:47pm

NO.	DATE	REVISION

STATE	PROJECT DESIGNATION	YEAR	SHEET NO.	TOTAL SHEETS
ALASKA	PENDING/NFHWY00265	2021	E11	E11

STATE	PROJECT DESIGNATION	YEAR	SHEET NO.	TOTAL SHEETS
ALASKA	Z622610000	2022	N2	N2

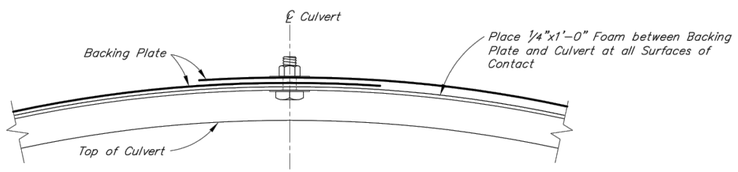

OPTIONAL BACKING PLATE SPLICE - ELEVATION

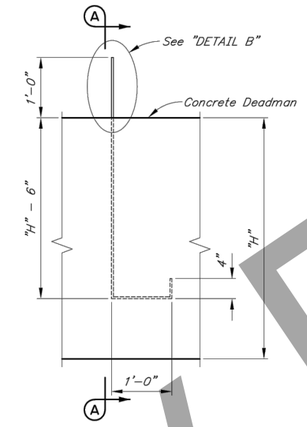

ANCHOR PLATE DETAIL

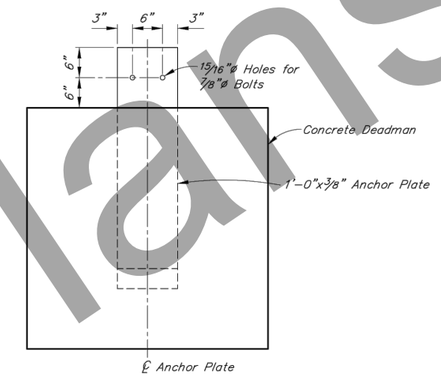

SECTION A-A

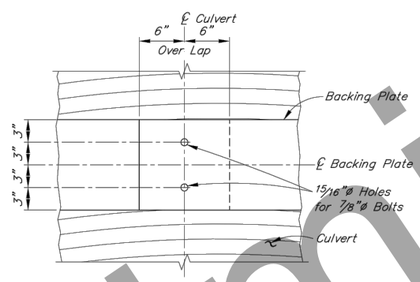

OPTIONAL BACKING PLATE SPLICE - PLAN

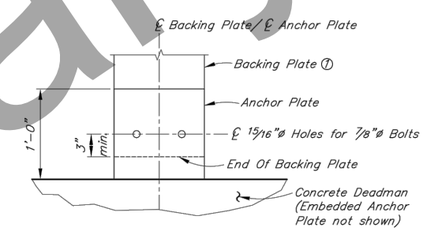

DETAIL B

DESIGNED BY: Ben Fetterhoff	CHECKED: Checker	STATE OF ALASKA **DEPARTMENT OF TRANSPORTATION AND PUBLIC FACILITIES** BRIDGE SECTION 3132 Channel Drive Juneau, Alaska 99801 907-465-2975		**DEADMAN ANCHOR DETAILS**	DWG. NO. 2
DRAWN BY: Sam Sollie	CHECKED: Ben Fetterhoff				
QUANTITIES BY: Ben Fetterhoff	CHECKED: Checker				

R:\cad\MISC\Deadman NR-Layout1 (2) Mon, Apr/04/22 01:33pm

PLANS DEVELOPED BY: STATE OF ALASKA DEPARTMENT OF TRANSPORTATION & PUBLIC FACILITIES, NORTHERN REGION, 2301 PEGER ROAD, FAIRBANKS, AK 99709 (907)451-2200
H:\Projects\Rich_Hwy\60638_Rich_115_148\06 Design\05 Civil 3D\05_00265 128-138\03_Drafting\00265_DEADMAN-E11 DEADMAN ANCHOR Thu, Apr/28/22 01:40pm

Preliminary Plans

DEADMAN END RESTRAINT DETAILS

STATE OF ALASKA 49TH
Russell M. Johnson
C.E. 9963
REGISTERED PROFESSIONAL ENGINEER

NO.	DATE	REVISION

STATE	PROJECT DESIGNATION	YEAR	SHEET NO.	TOTAL SHEETS
ALASKA	PENDING/NFHWY00265	2021	F1	F18

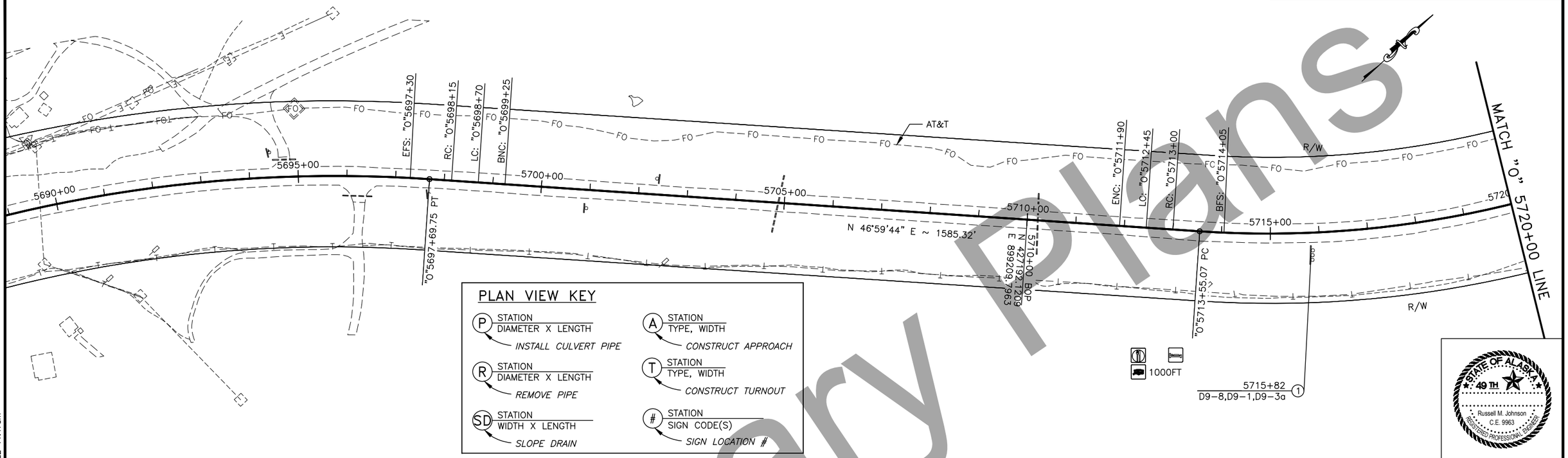

PLAN VIEW KEY

- (P) STATION / DIAMETER X LENGTH — *INSTALL CULVERT PIPE*
- (R) STATION / DIAMETER X LENGTH — *REMOVE PIPE*
- (SD) STATION / WIDTH X LENGTH — *SLOPE DRAIN*
- (A) STATION / TYPE, WIDTH — *CONSTRUCT APPROACH*
- (T) STATION / TYPE, WIDTH — *CONSTRUCT TURNOUT*
- (#) STATION / SIGN CODE(S) — *SIGN LOCATION #*

STATE OF ALASKA 49TH
Russell M. Johnson
C.E. 9963
REGISTERED PROFESSIONAL ENGINEER

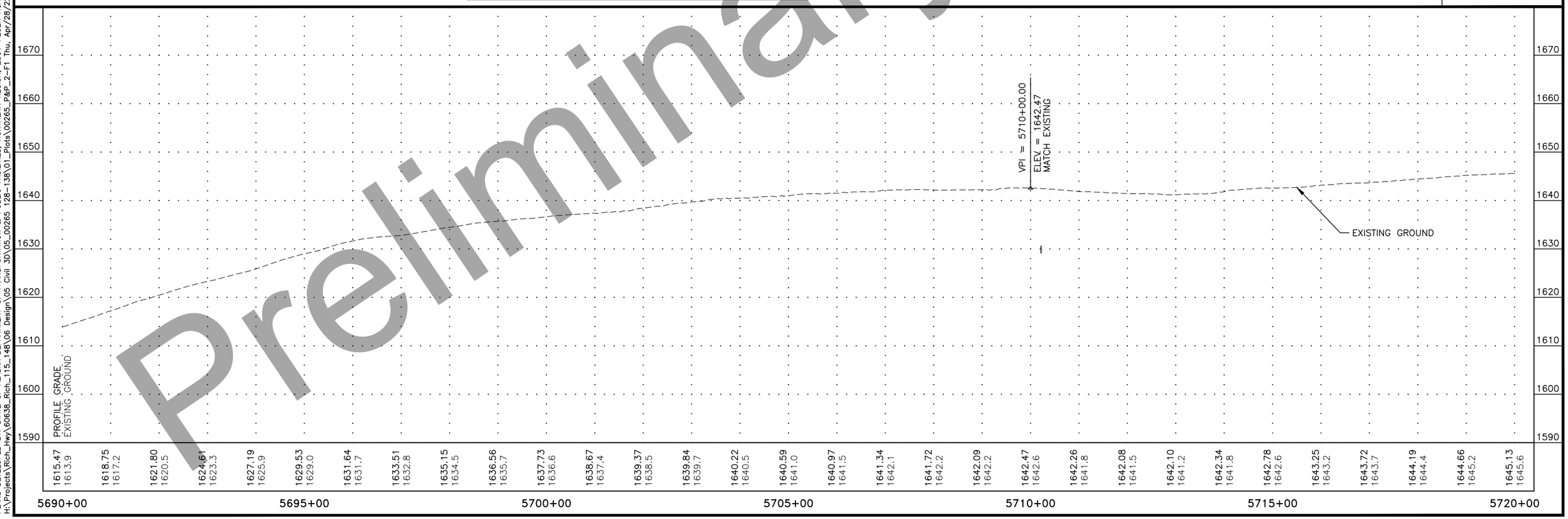

Preliminary Plans

PLANS DEVELOPED BY: STATE OF ALASKA DEPARTMENT OF TRANSPORTATION & PUBLIC FACILITIES, NORTHERN REGION, 2301 PEGER ROAD, FAIRBANKS, AK 99709 (907)451-2200
H:\Projects\Rich_Hwy\60638_Rich_115_148\06 Design\05 Civil 3D\05_00265 128-138\01_Plots\00265_P&P_2-F1 Thu, Apr/28/22 11:47am

NO.	DATE	REVISION

STATE	PROJECT DESIGNATION	YEAR	SHEET NO.	TOTAL SHEETS
ALASKA	PENDING/NFHWY00265	2021	F2	F18

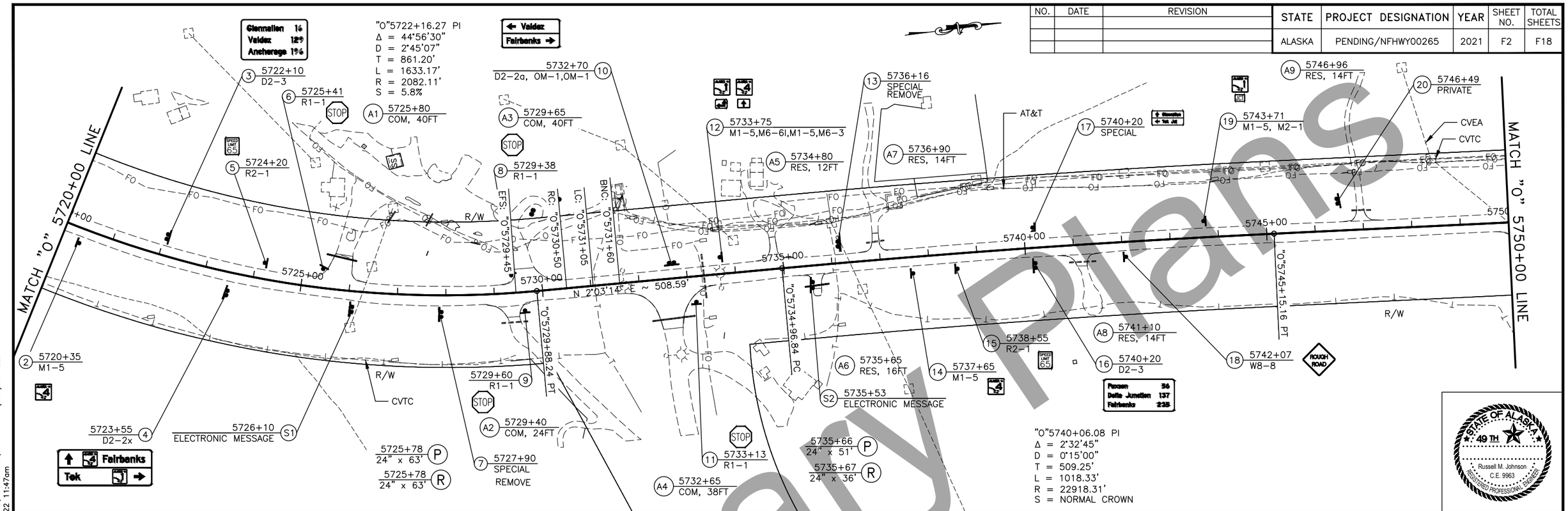

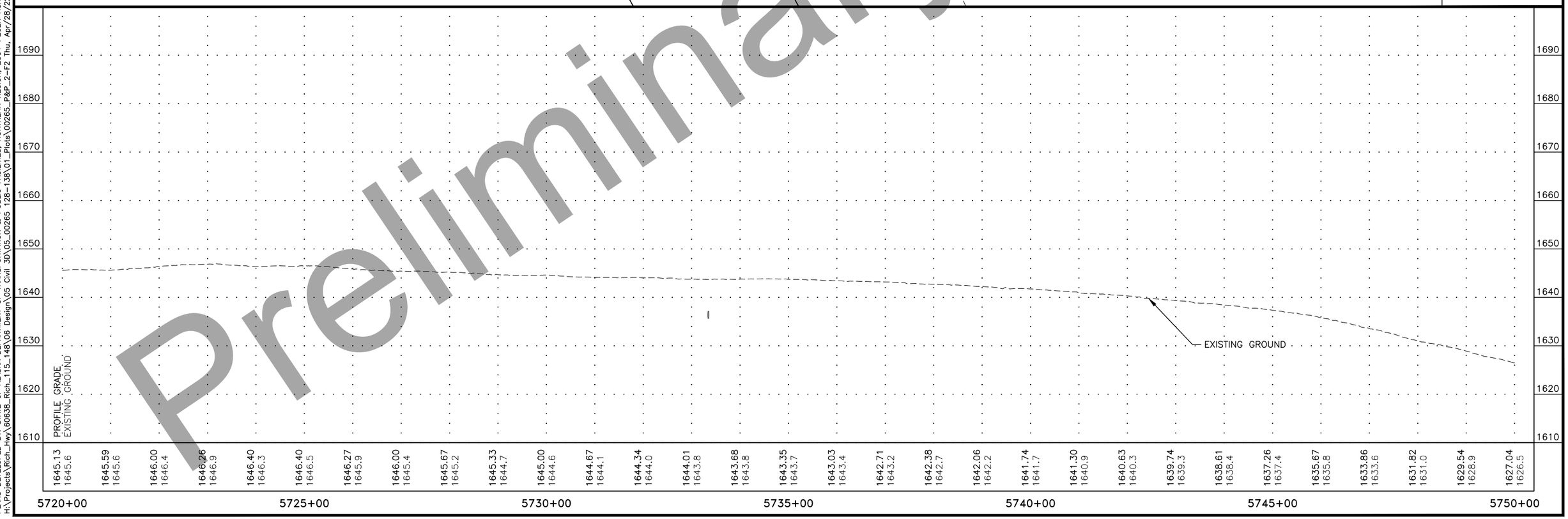

Preliminary Plans

PLANS DEVELOPED BY: STATE OF ALASKA DEPARTMENT OF TRANSPORTATION & PUBLIC FACILITIES, NORTHERN REGION, 2301 PEGER ROAD, FAIRBANKS, AK 99709 (907)451-2200
H:\Projects\Rich_Hwy\60638_Rich_115_148\06 Design\05 Civil 3D\05_00265 128-138\01_Plots\00265_P&P_2-F2 Thu, Apr/28/22 11:47am

NO.	DATE	REVISION

STATE	PROJECT DESIGNATION	YEAR	SHEET NO.	TOTAL SHEETS
ALASKA	PENDING/NFHWY00265	2021	F3	F18

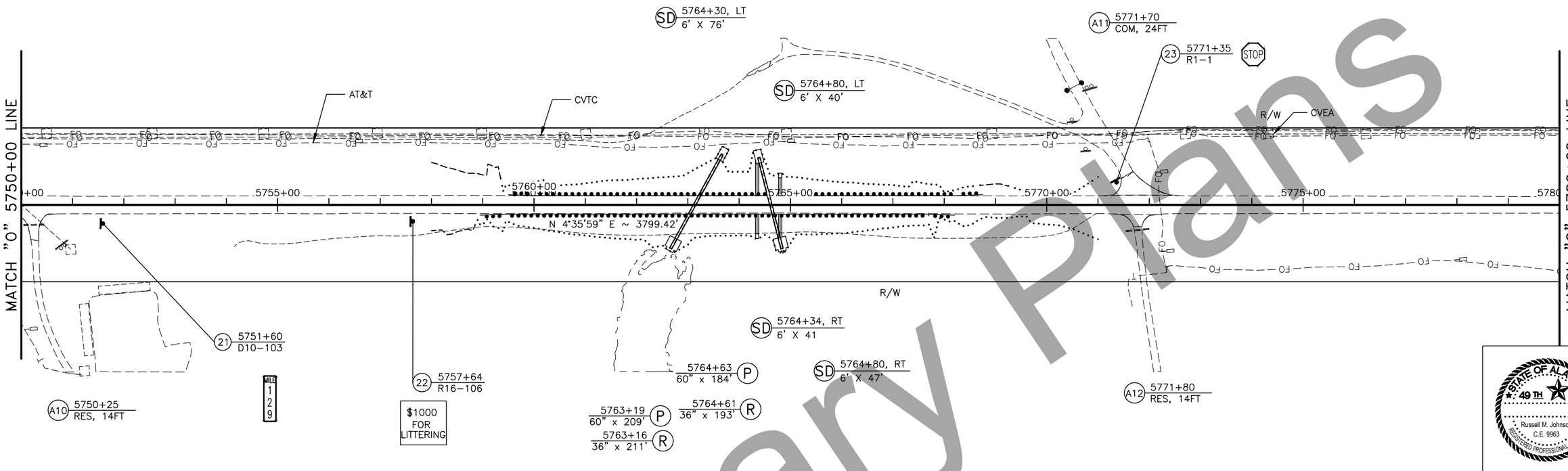

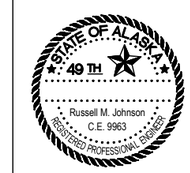

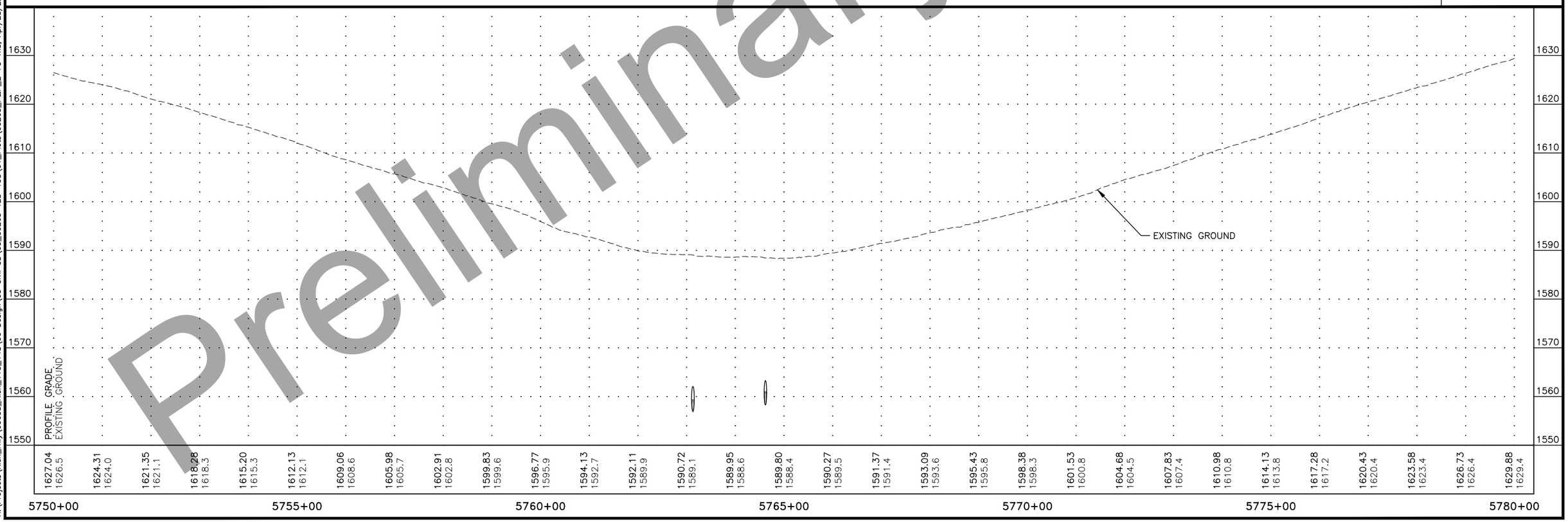

Preliminary Plans

PLANS DEVELOPED BY: STATE OF ALASKA DEPARTMENT OF TRANSPORTATION & PUBLIC FACILITIES, NORTHERN REGION, 2301 PEGER ROAD, FAIRBANKS, AK 99709 (907)451-2200
H:\Projects\Rich_Hwy\60638_Rich_115_148\06 Design\05 Civil 3D\05_00265 128-138\01_Plots\00265_P&P_2-F3 Thu, Apr/28/22 11:47am

NO.	DATE	REVISION

STATE	PROJECT DESIGNATION	YEAR	SHEET NO.	TOTAL SHEETS
ALASKA	PENDING/NFHWY00265	2021	F4	F18

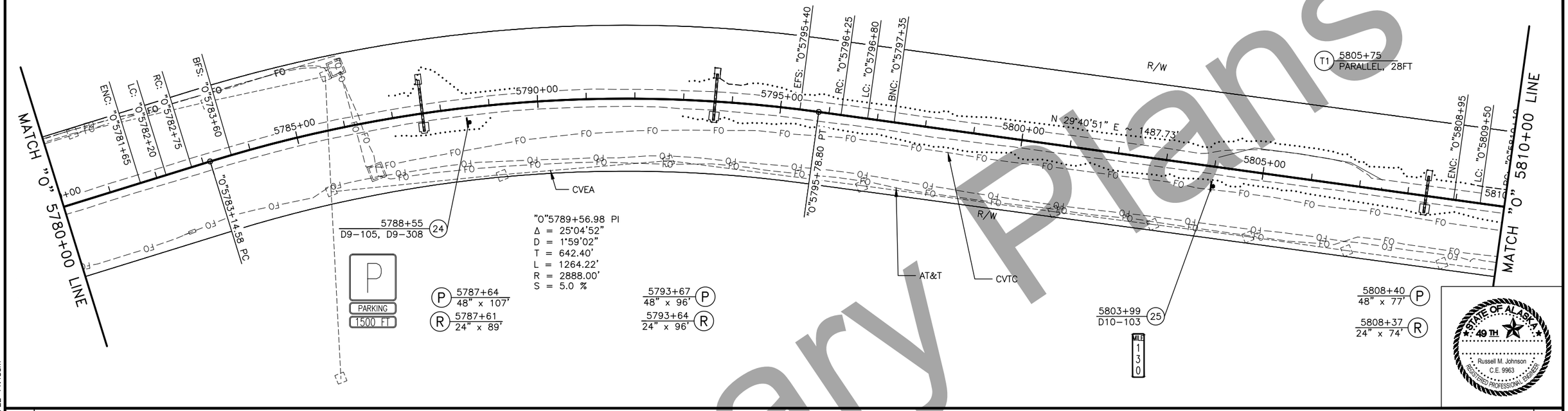

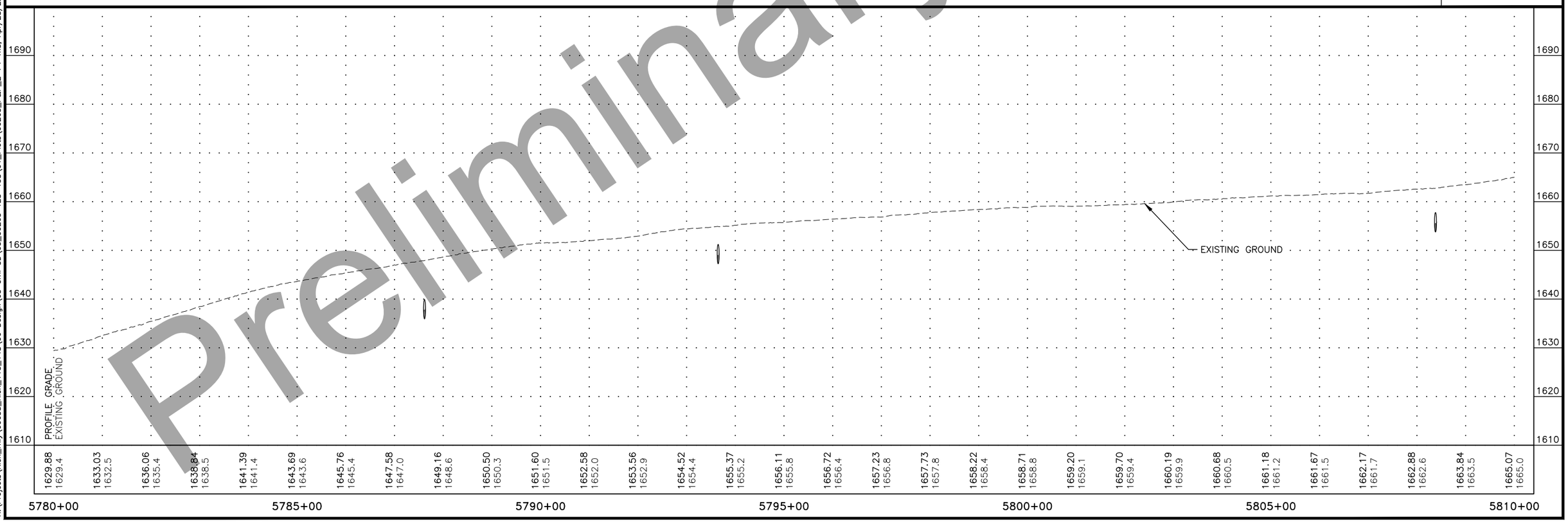

Preliminary Plans

PLANS DEVELOPED BY: STATE OF ALASKA DEPARTMENT OF TRANSPORTATION & PUBLIC FACILITIES, NORTHERN REGION, 2301 PEGER ROAD, FAIRBANKS, AK 99709 (907)451-2200
H:\Projects\Rich_Hwy\60638_Rich_115_148\06 Design\05 Civil 3D\05_00265 128-138\01_Plots\00265_P&P_2-F4 Thu, Apr/28/22 11:48am

NO.	DATE	REVISION

STATE	PROJECT DESIGNATION	YEAR	SHEET NO.	TOTAL SHEETS
ALASKA	PENDING/NFHWY00265	2021	F5	F18

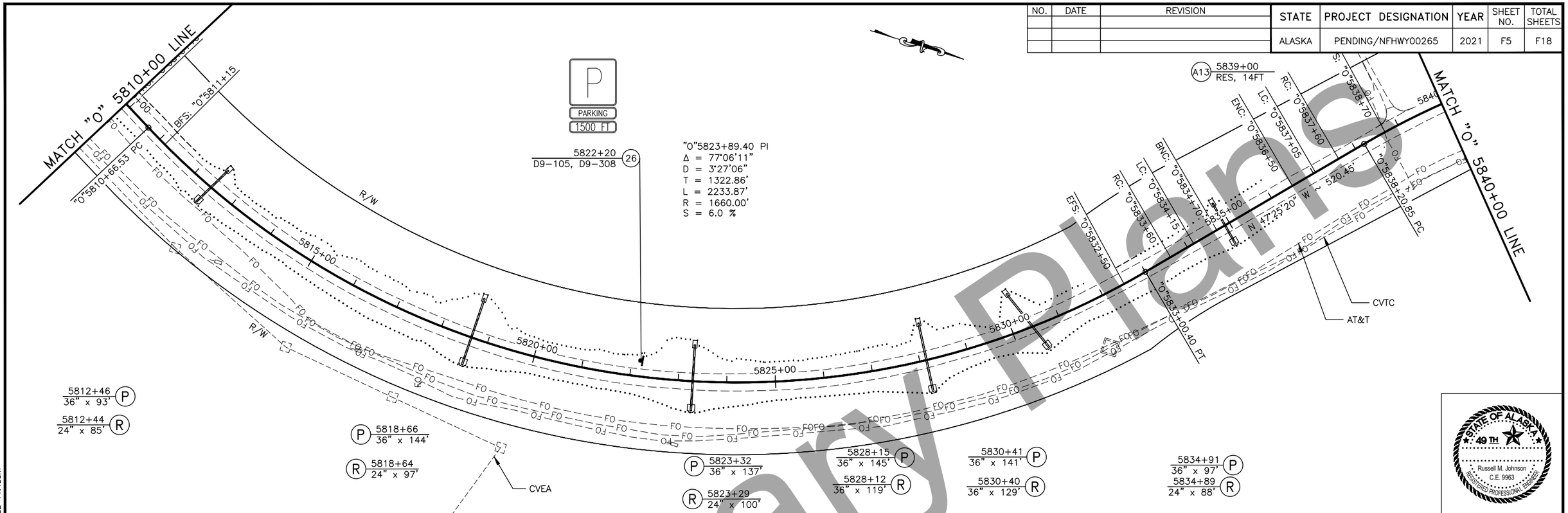

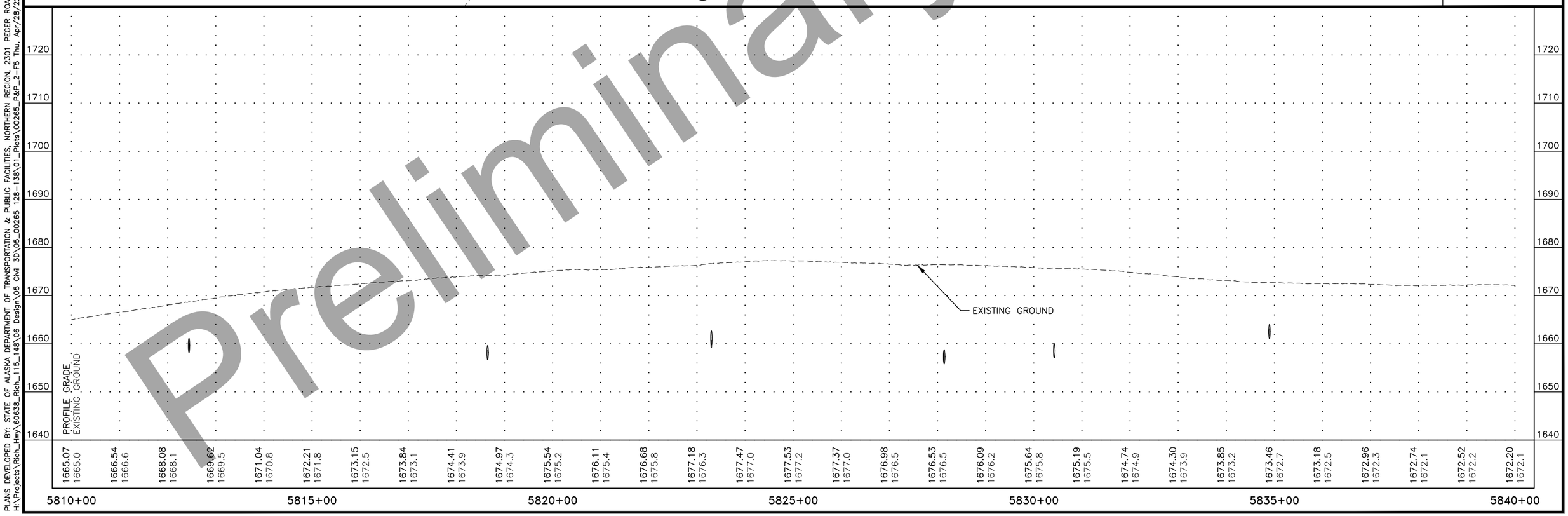

Preliminary Plans

PLANS DEVELOPED BY: STATE OF ALASKA DEPARTMENT OF TRANSPORTATION & PUBLIC FACILITIES, NORTHERN REGION, 2301 PEGER ROAD, FAIRBANKS, AK 99709 (907)451-2200
H:\Projects\Rich_Hwy\60638_Rich_115_148\06 Design\05 Civil 3D\05_00265 128-138\01_Plots\00265_P&P_2-F5 Thu, Apr/28/22 11:48am

NO.	DATE	REVISION

STATE	PROJECT DESIGNATION	YEAR	SHEET NO.	TOTAL SHEETS
ALASKA	PENDING/NFHWY00265	2021	F6	F18

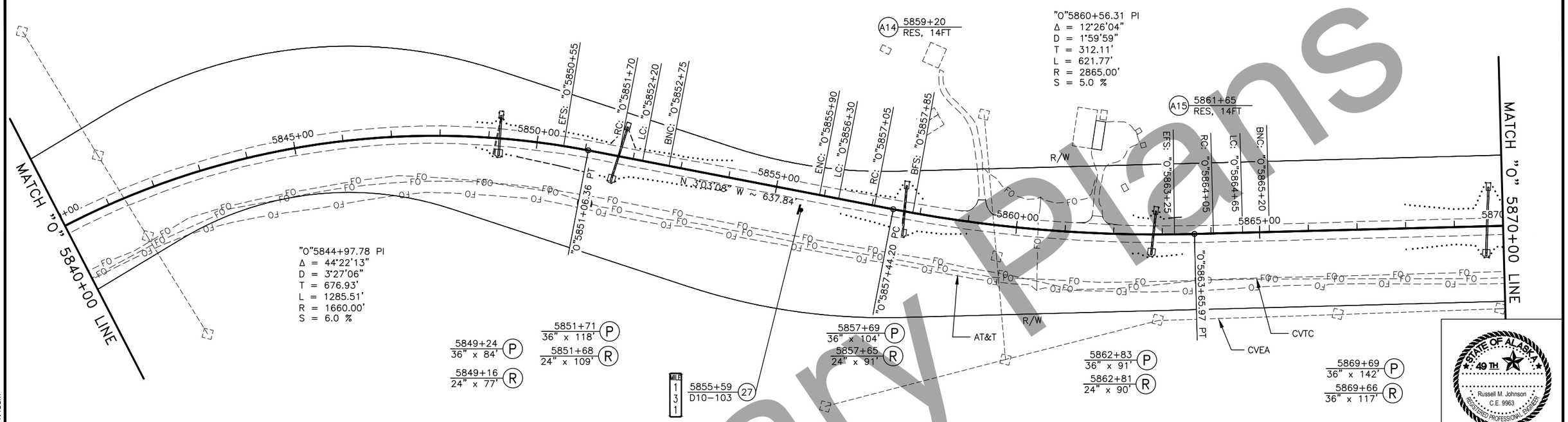

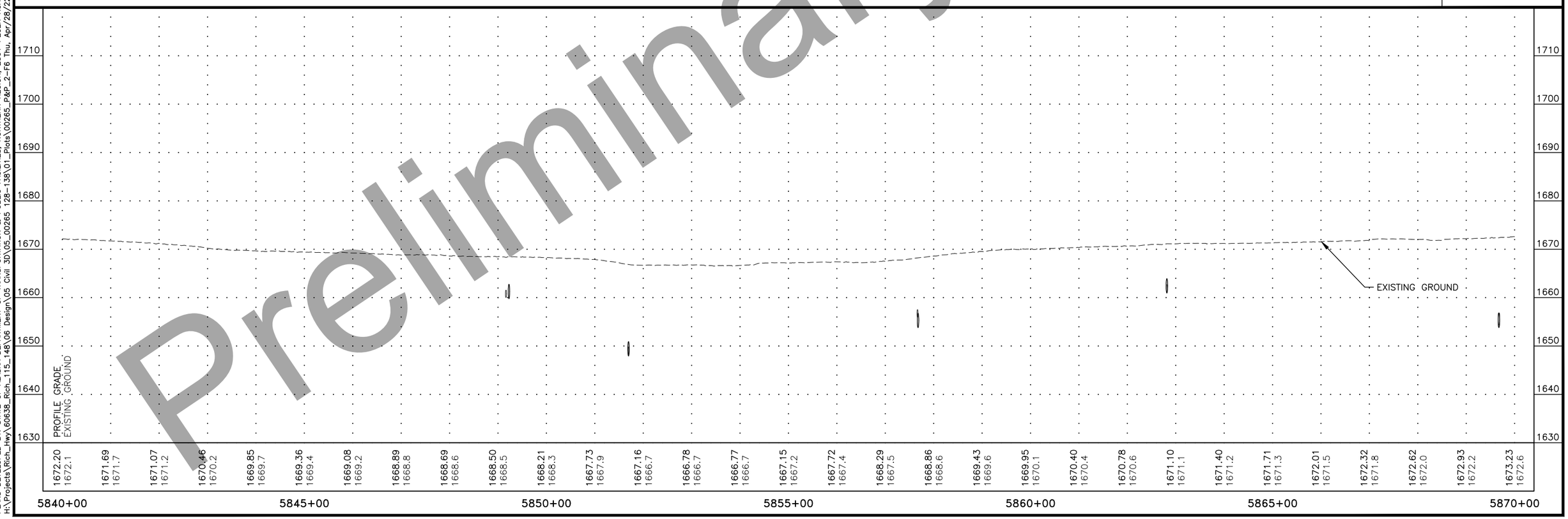

Preliminary Plans

PLANS DEVELOPED BY: STATE OF ALASKA DEPARTMENT OF TRANSPORTATION & PUBLIC FACILITIES, NORTHERN REGION, 2301 PEGER ROAD, FAIRBANKS, AK 99709 (907)451-2200
H:\Projects\Rich_Hwy\60638_Rich_115_148\06 Design\05 Civil 3D\05_00265 128-138\01_Plots\00265_P&P_2-F6 Thu, Apr/28/22 11:48am

NO.	DATE	REVISION

STATE	PROJECT DESIGNATION	YEAR	SHEET NO.	TOTAL SHEETS
ALASKA	PENDING/NFHWY00265	2021	F7	F18

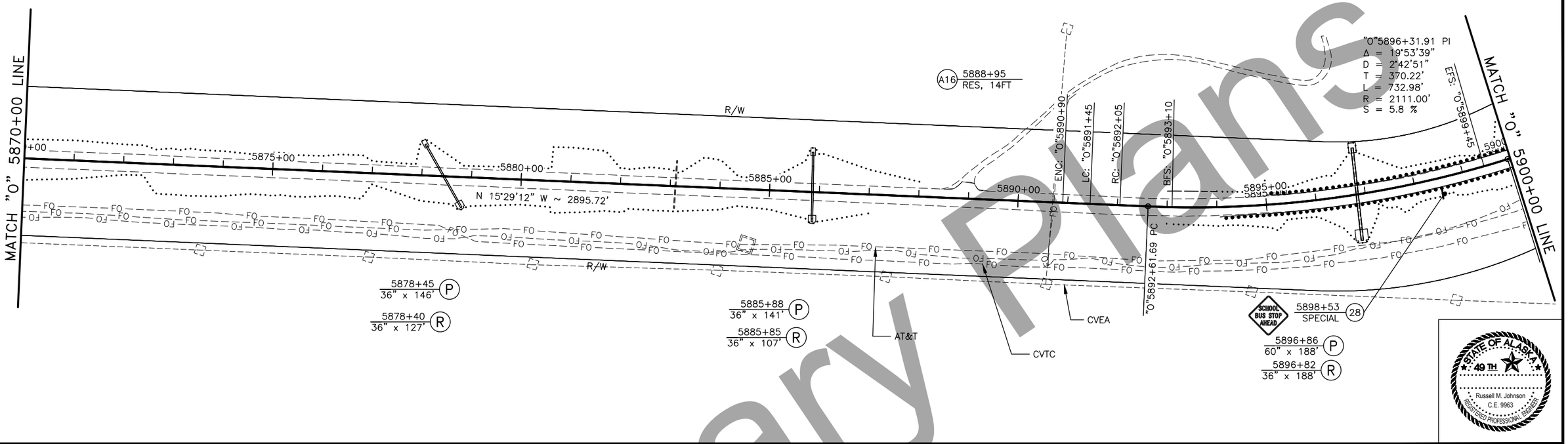

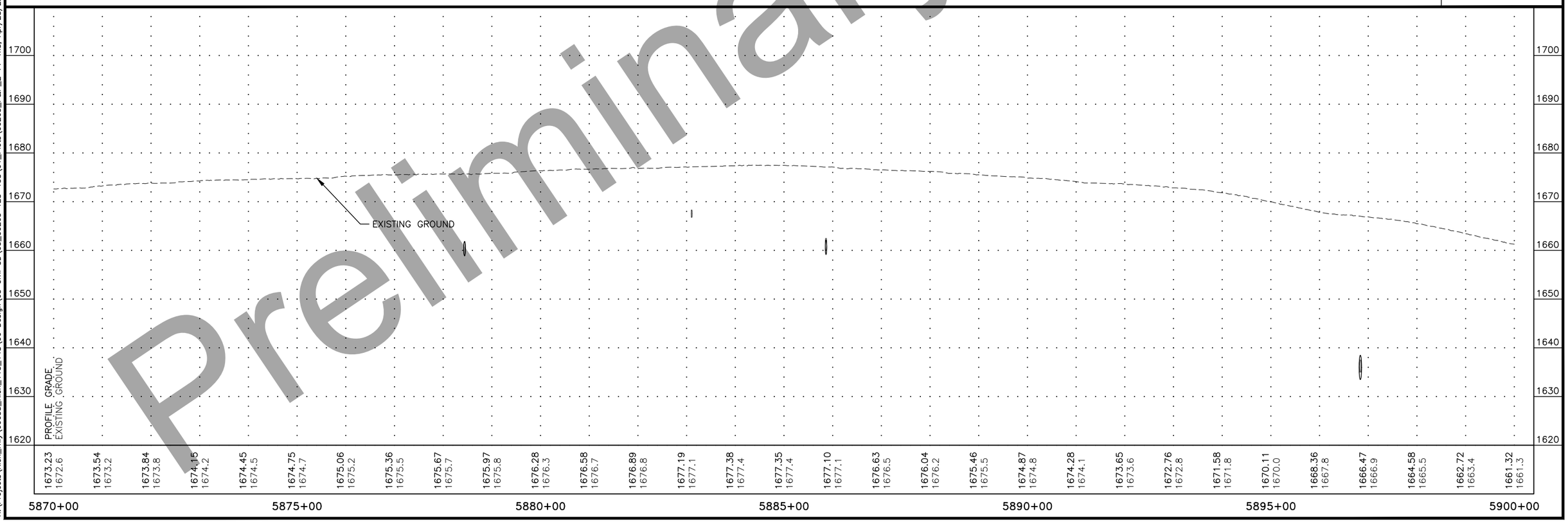

Preliminary Plans

PLANS DEVELOPED BY: STATE OF ALASKA DEPARTMENT OF TRANSPORTATION & PUBLIC FACILITIES, NORTHERN REGION, 2301 PEGER ROAD, FAIRBANKS, AK 99709 (907)451-2200
H:\Projects\Rich_Hwy\60638_Rich_115_148\06 Design\05 Civil 3D\05_00265 128-138\01_Plots\00265_P&P_2-F7 Thu, Apr/28/22 11:48am

NO.	DATE	REVISION

STATE	PROJECT DESIGNATION	YEAR	SHEET NO.	TOTAL SHEETS
ALASKA	PENDING/NFHWY00265	2021	F8	F18

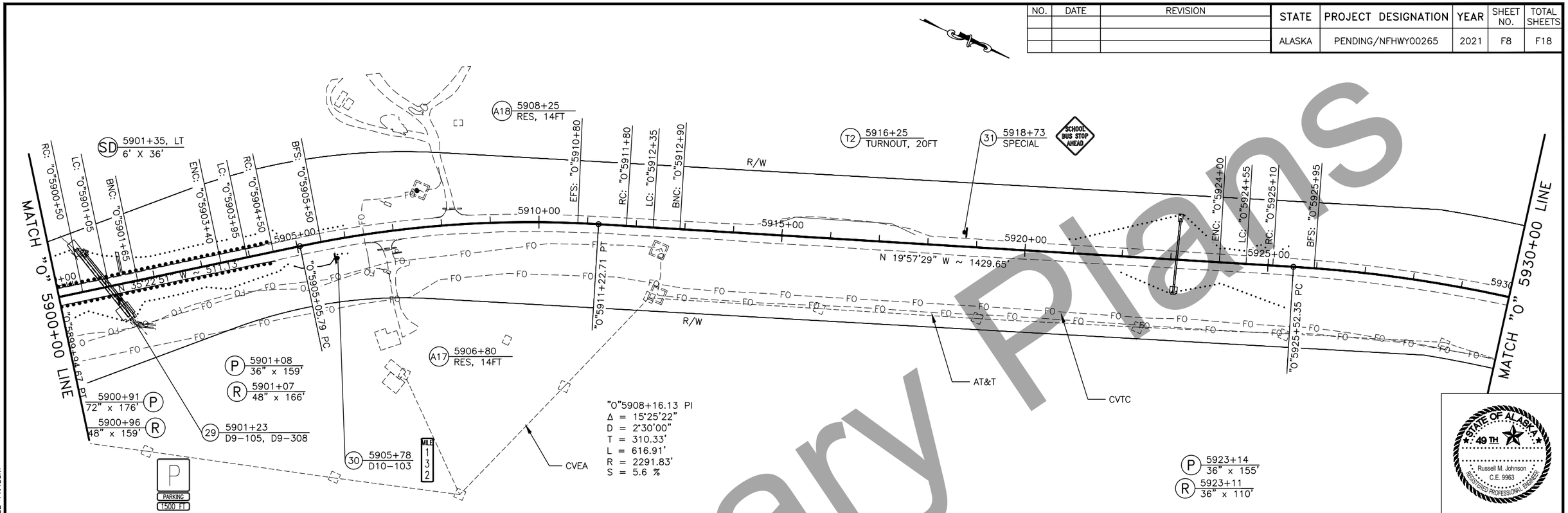

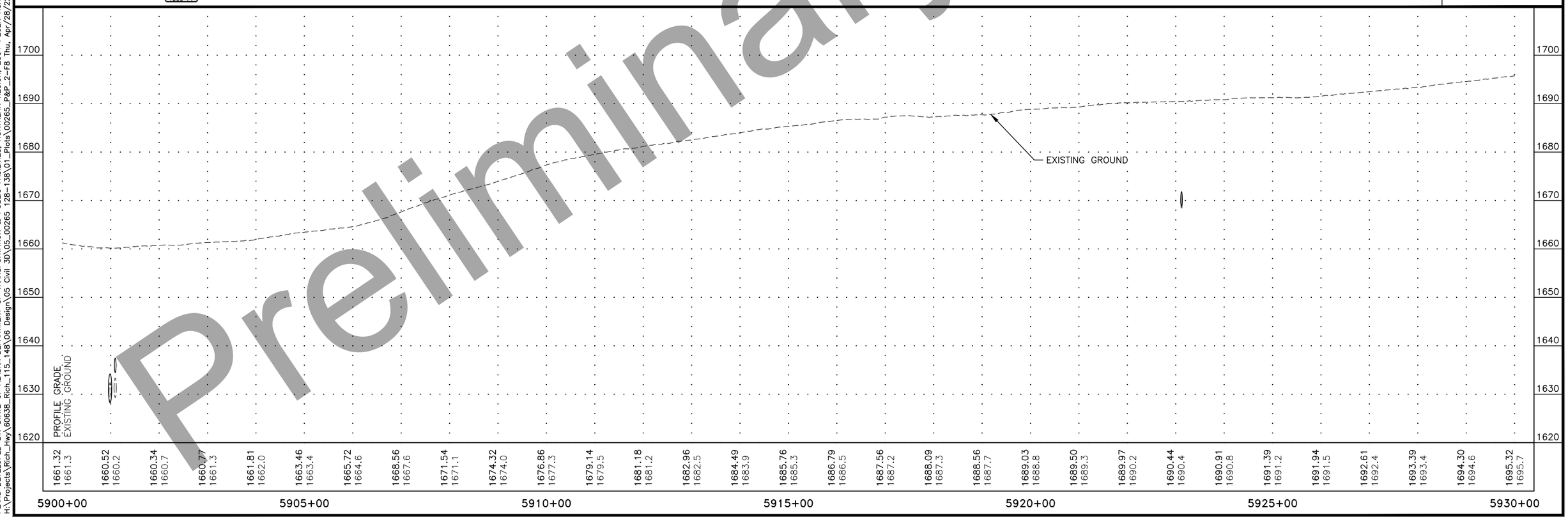

Preliminary Plans

PLANS DEVELOPED BY: STATE OF ALASKA DEPARTMENT OF TRANSPORTATION & PUBLIC FACILITIES, NORTHERN REGION, 2301 PEGER ROAD, FAIRBANKS, AK 99709 (907)451-2200
H:\Projects\Rich_Hwy\60638_Rich_115_148\06 Design\05 Civil 3D\05_00265 128-138\01_Plots\00265_P&P_2-F8 Thu, Apr/28/22 11:48am

NO.	DATE	REVISION

STATE	PROJECT DESIGNATION	YEAR	SHEET NO.	TOTAL SHEETS
ALASKA	PENDING/NFHWY00265	2021	F9	F18

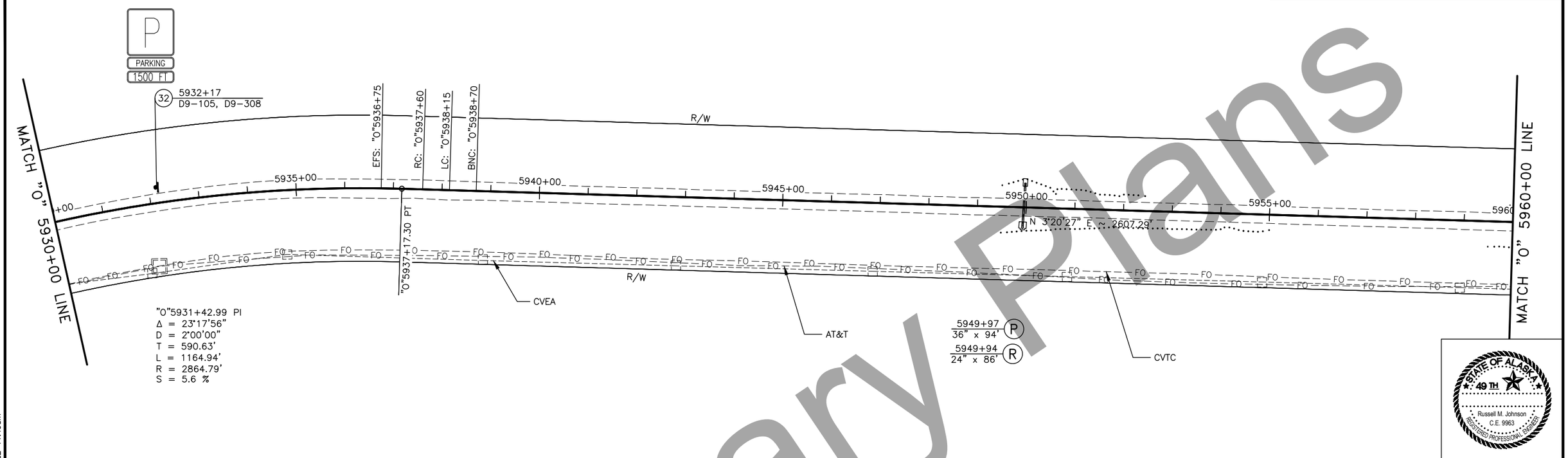

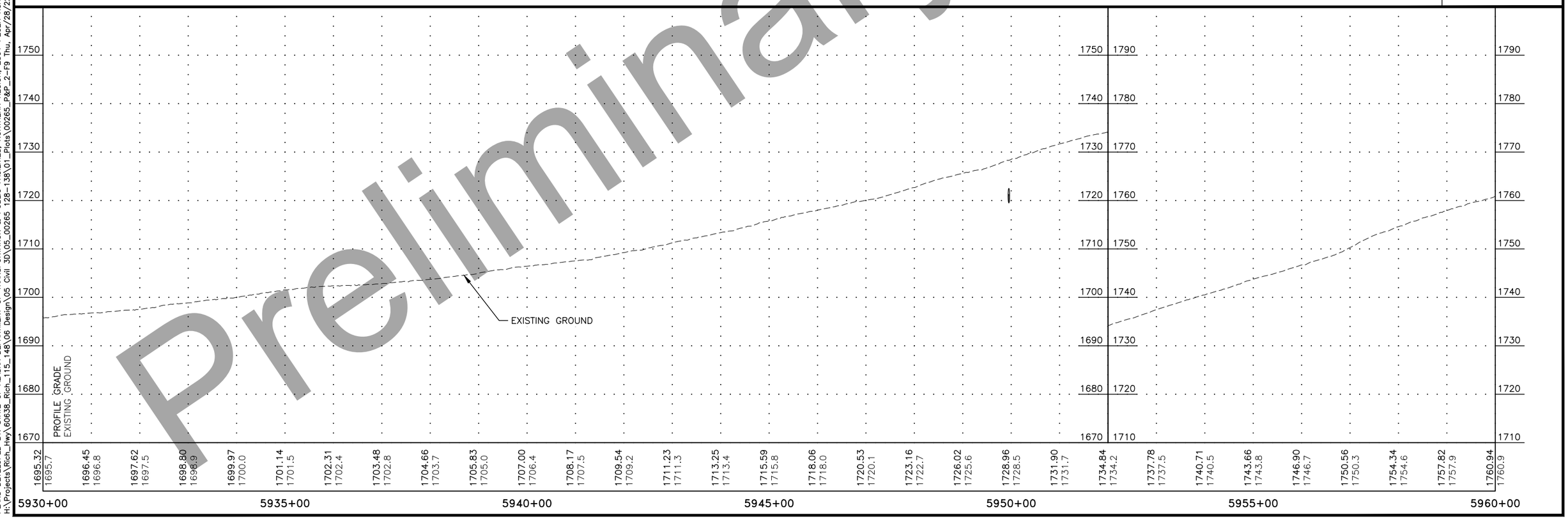

STATE OF ALASKA
49TH
Russell M. Johnson
C.E. 9963
REGISTERED PROFESSIONAL ENGINEER

Preliminary Plans

PLANS DEVELOPED BY: STATE OF ALASKA DEPARTMENT OF TRANSPORTATION & PUBLIC FACILITIES, NORTHERN REGION, 2301 PEGER ROAD, FAIRBANKS, AK 99709 (907)451-2200
H:\Projects\Rich_Hwy\60638_Rich_115_148\06 Design\05 Civil 3D\05_00265 128-138\01_Plots\00265_P&P_2-F9 Thu, Apr/28/22 11:49am

NO.	DATE	REVISION

STATE	PROJECT DESIGNATION	YEAR	SHEET NO.	TOTAL SHEETS
ALASKA	PENDING/NFHWY00265	2021	F10	F18

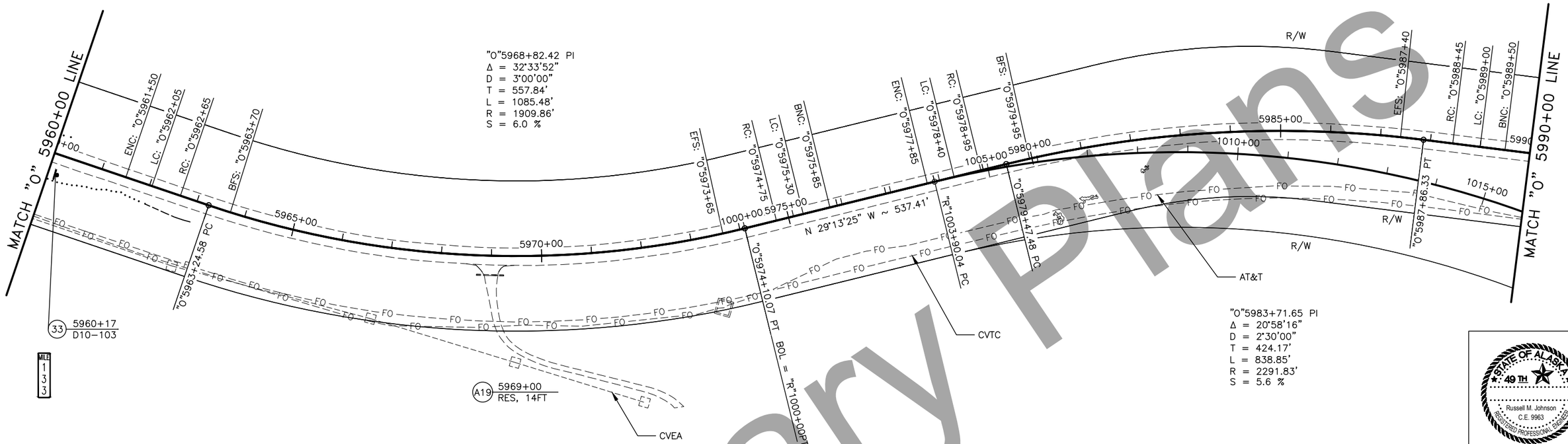

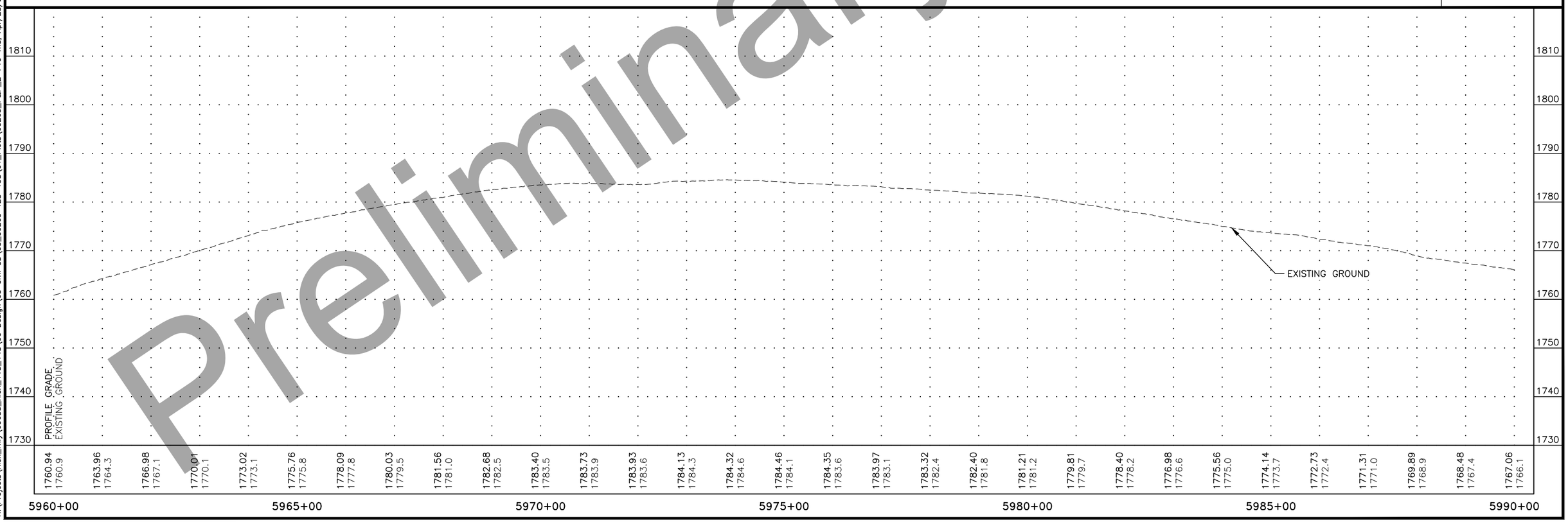

STATE OF ALASKA 49TH
Russell M. Johnson
C.E. 9963
REGISTERED PROFESSIONAL ENGINEER

Preliminary Plans

PLANS DEVELOPED BY: STATE OF ALASKA DEPARTMENT OF TRANSPORTATION & PUBLIC FACILITIES, NORTHERN REGION, 2301 PEGER ROAD, FAIRBANKS, AK 99709 (907)451-2200
H:\Projects\Rich_Hwy\60638_Rich_115_148\06 Design\05 Civil 3D\05_00265 128-138\01_Plots\00265_P&P_2-F10 Thu, Apr/28/22 11:49am

NO.	DATE	REVISION

STATE	PROJECT DESIGNATION	YEAR	SHEET NO.	TOTAL SHEETS
ALASKA	PENDING/NFHWY00265	2021	F11	F18

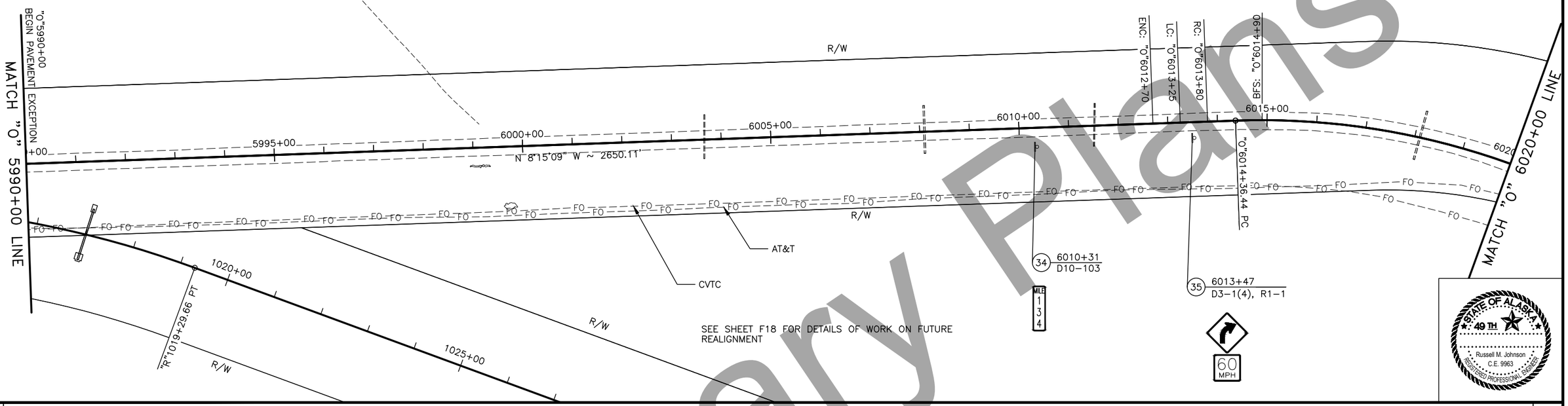

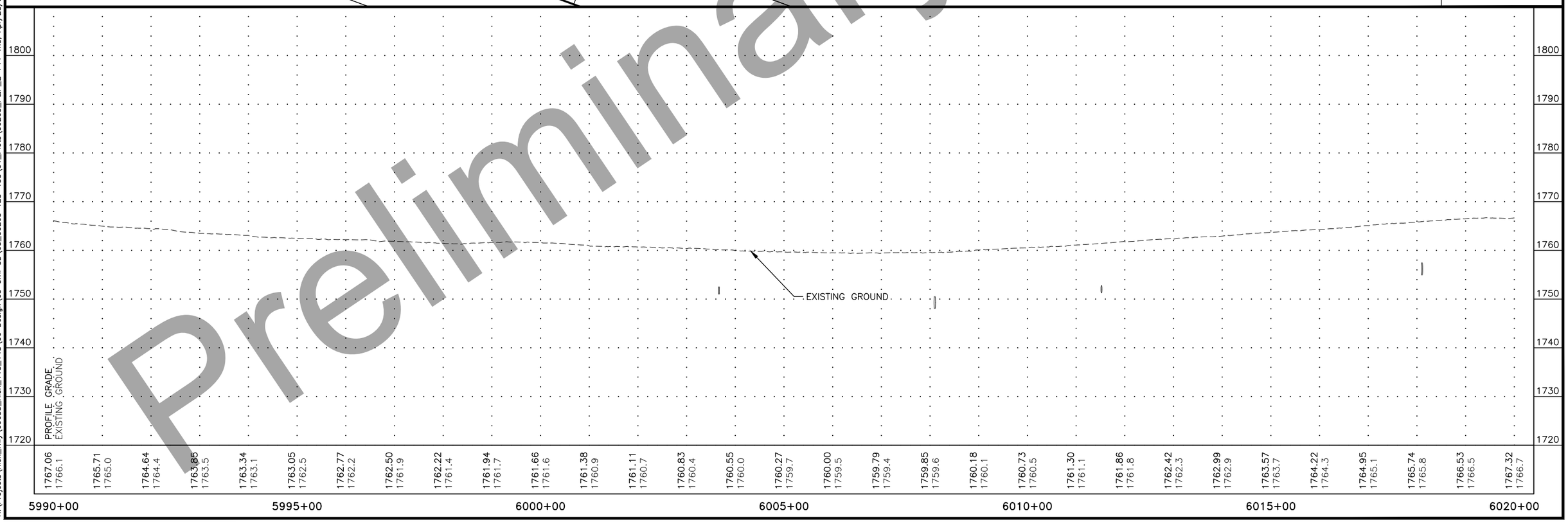

Preliminary Plans

PLANS DEVELOPED BY: STATE OF ALASKA DEPARTMENT OF TRANSPORTATION & PUBLIC FACILITIES, NORTHERN REGION, 2301 PEGER ROAD, FAIRBANKS, AK 99709 (907)451-2200
H:\Projects\Rich_Hwy\60638_Rich_115_148\06 Design\05 Civil 3D\05_00265 128-138\01_Plots\00265_P&P_2-F11 Thu, Apr/28/22 11:49am

NO.	DATE	REVISION

STATE	PROJECT DESIGNATION	YEAR	SHEET NO.	TOTAL SHEETS
ALASKA	PENDING/NFHWY00265	2021	F12	F18

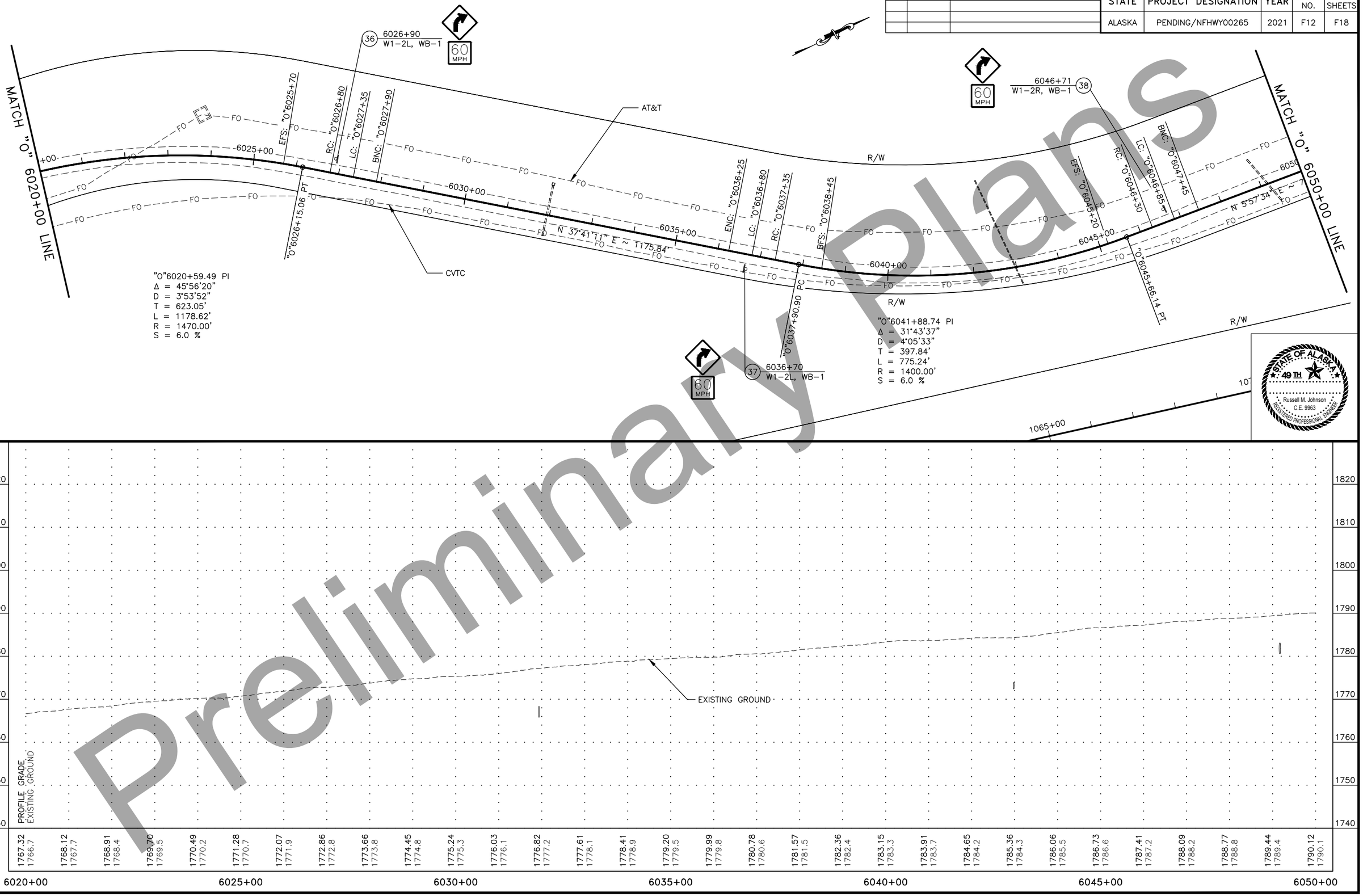

Preliminary Plans

PLANS DEVELOPED BY: STATE OF ALASKA DEPARTMENT OF TRANSPORTATION & PUBLIC FACILITIES, NORTHERN REGION, 2301 PEGER ROAD, FAIRBANKS, AK 99709 (907)451-2200
H:\Projects\Rich_Hwy\60638_Rich_115_148\06 Design\05 Civil 3D\05_00265 128-138\01_Plots\00265_P&P_2-F12 Thu, Apr/28/22 11:49am

NO.	DATE	REVISION

STATE	PROJECT DESIGNATION	YEAR	SHEET NO.	TOTAL SHEETS
ALASKA	PENDING/NFHWY00265	2021	F13	F18

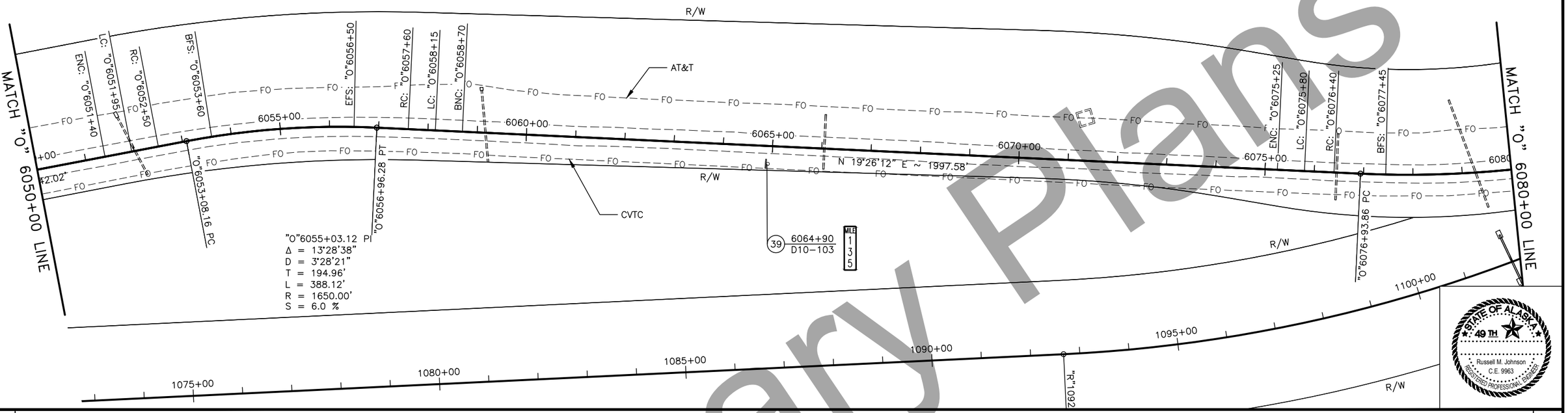

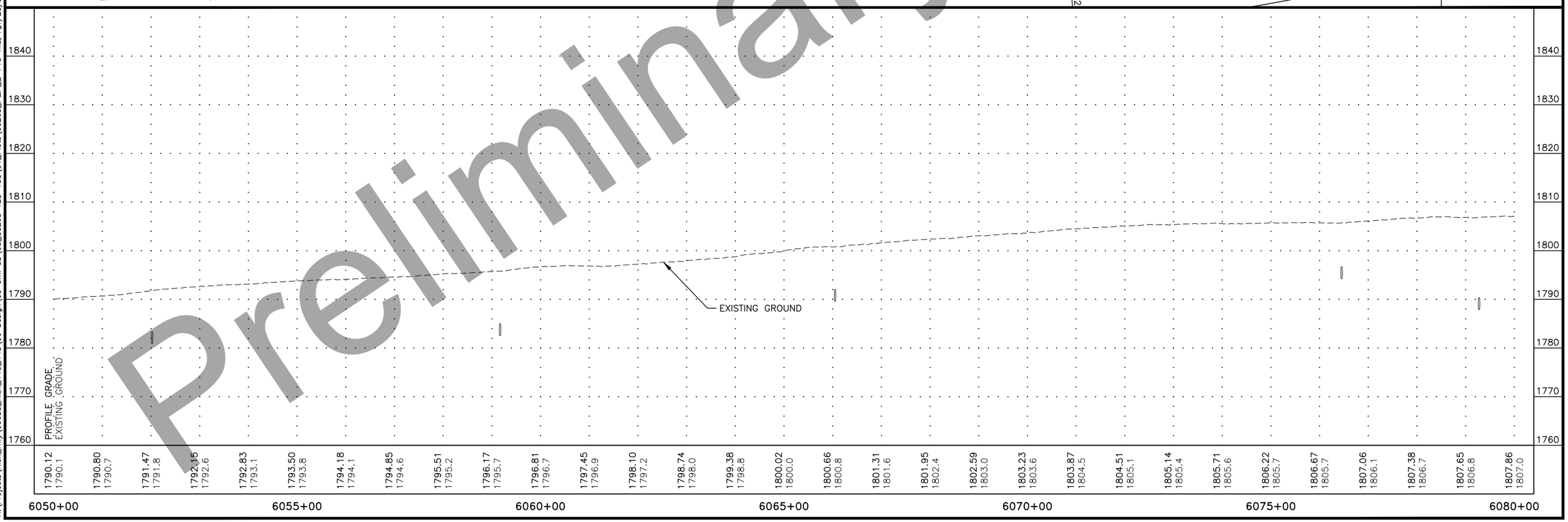

STATE OF ALASKA 49TH
Russell M. Johnson
C.E. 9963
REGISTERED PROFESSIONAL ENGINEER

Preliminary Plans

PLANS DEVELOPED BY: STATE OF ALASKA DEPARTMENT OF TRANSPORTATION & PUBLIC FACILITIES, NORTHERN REGION, 2301 PEGER ROAD, FAIRBANKS, AK 99709 (907)451-2200
H:\Projects\Rich_Hwy\60638_Rich_115_148\06 Design\05 Civil 3D\05_00265 128-138\01_Plots\00265_P&P_2-F13 Thu, Apr/28/22 11:49am

NO.	DATE	REVISION

STATE	PROJECT DESIGNATION	YEAR	SHEET NO.	TOTAL SHEETS
ALASKA	PENDING/NFHWY00265	2021	F14	F18

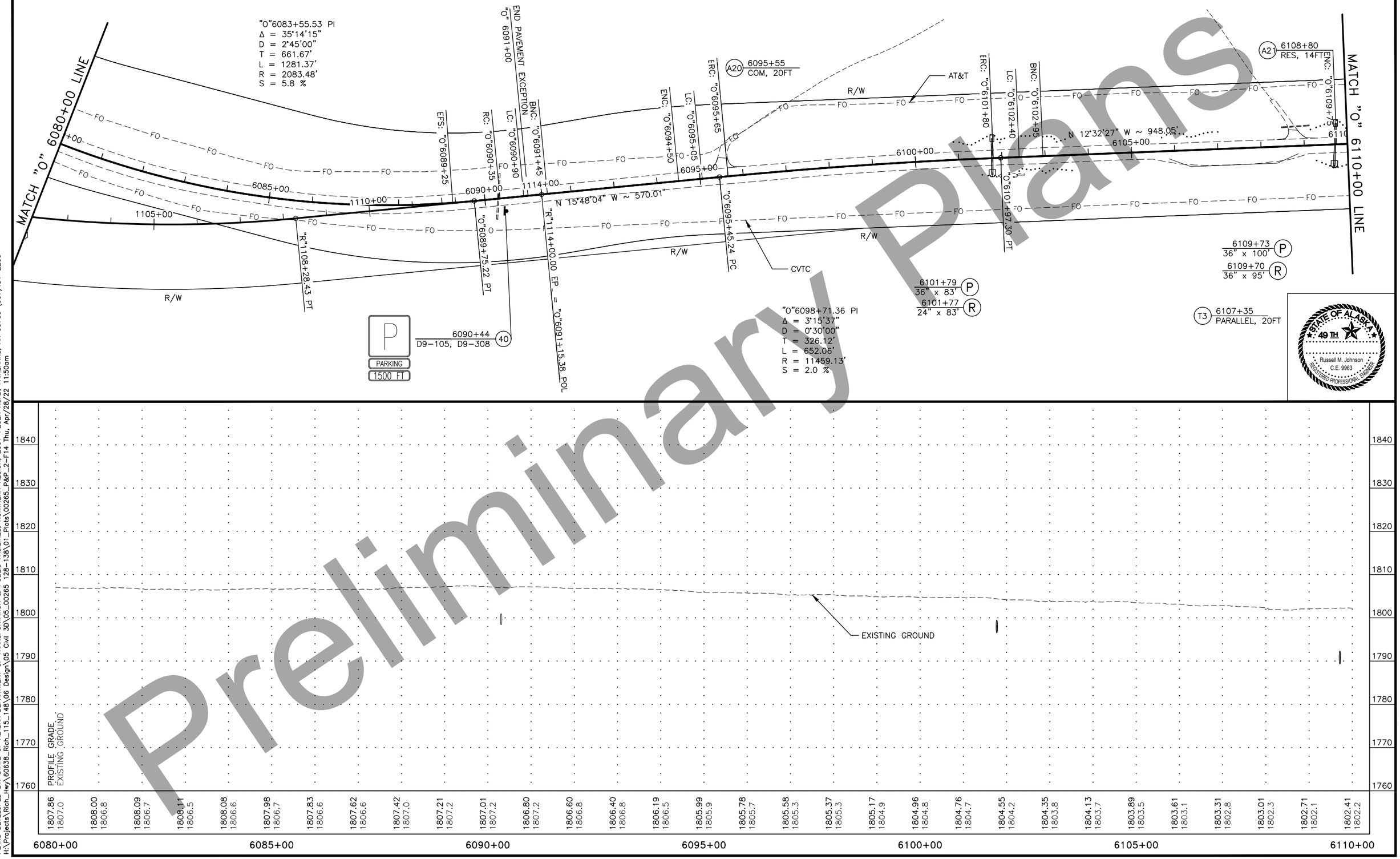

Preliminary Plans

PLANS DEVELOPED BY: STATE OF ALASKA DEPARTMENT OF TRANSPORTATION & PUBLIC FACILITIES, NORTHERN REGION, 2301 PEGER ROAD, FAIRBANKS, AK 99709 (907)451-2200
H:\Projects\Rich_Hwy\60638_Rich_115_148\06 Design\05 Civil 3D\05_00265 128-138\01_Plots\00265_P&P_2-F14 Thu, Apr/28/22 11:50am

NO.	DATE	REVISION

STATE	PROJECT DESIGNATION	YEAR	SHEET NO.	TOTAL SHEETS
ALASKA	PENDING/NFHWY00265	2021	F15	F18

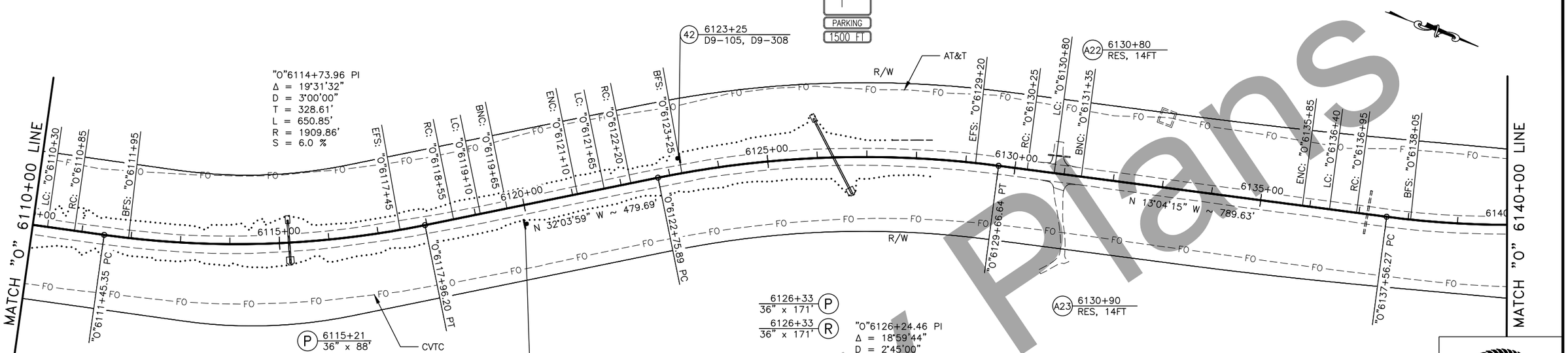

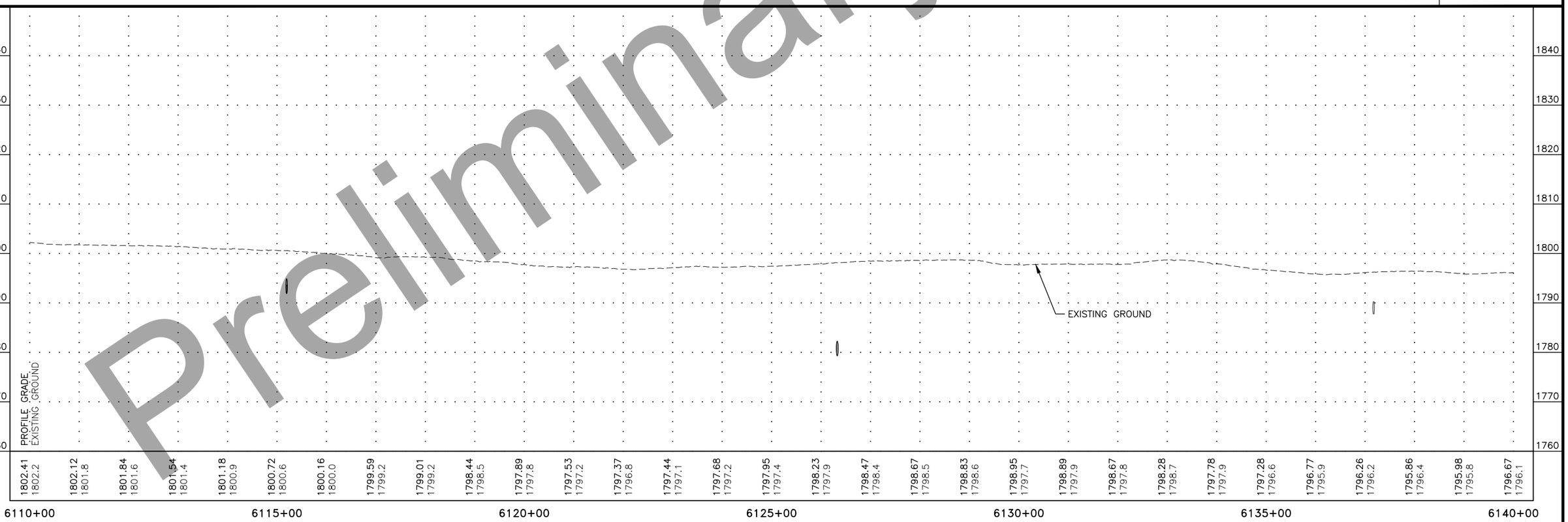

Preliminary Plans

PLANS DEVELOPED BY: STATE OF ALASKA DEPARTMENT OF TRANSPORTATION & PUBLIC FACILITIES, NORTHERN REGION, 2301 PEGER ROAD, FAIRBANKS, AK 99709 (907)451-2200
H:\Projects\Rich_Hwy\60638_Rich_115_148\06 Design\05 Civil 3D\05_00265 128-138\01_Plots\00265_P&P_2-F15 Thu, Apr/28/22 11:50am

NO.	DATE	REVISION

STATE	PROJECT DESIGNATION	YEAR	SHEET NO.	TOTAL SHEETS
ALASKA	PENDING/NFHWY00265	2021	F16	F18

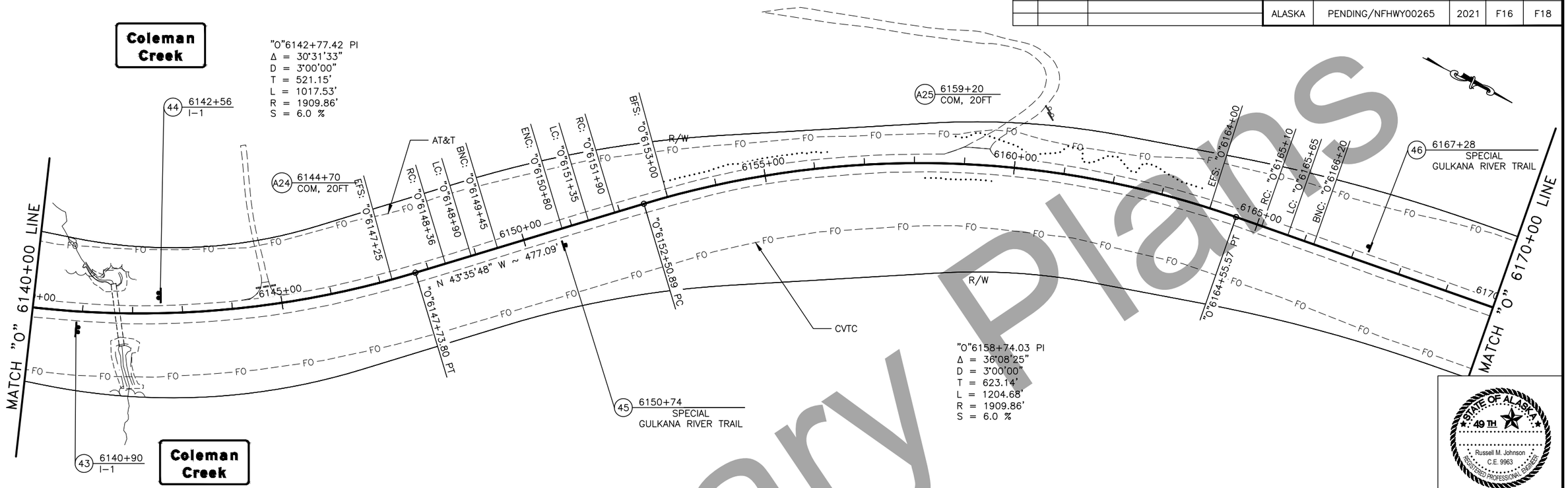

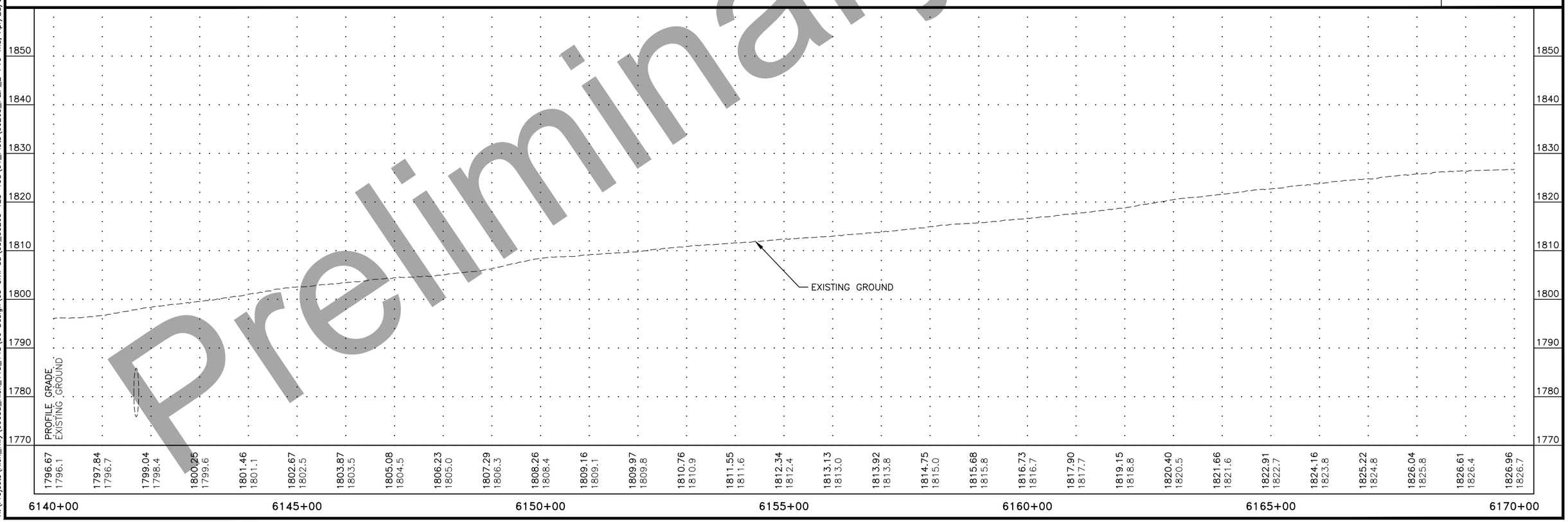

Preliminary Plans

PLANS DEVELOPED BY: STATE OF ALASKA DEPARTMENT OF TRANSPORTATION & PUBLIC FACILITIES, NORTHERN REGION, 2301 PEGER ROAD, FAIRBANKS, AK 99709 (907)451-2200
H:\Projects\Rich_Hwy\60638_Rich_115_148\06 Design\05 Civil 3D\05_00265 128-138\01_Plots\00265_P&P_2-F16 Thu, Apr/28/22 11:50am

NO.	DATE	REVISION

STATE	PROJECT DESIGNATION	YEAR	SHEET NO.	TOTAL SHEETS
ALASKA	PENDING/NFHWY00265	2021	F17	F18

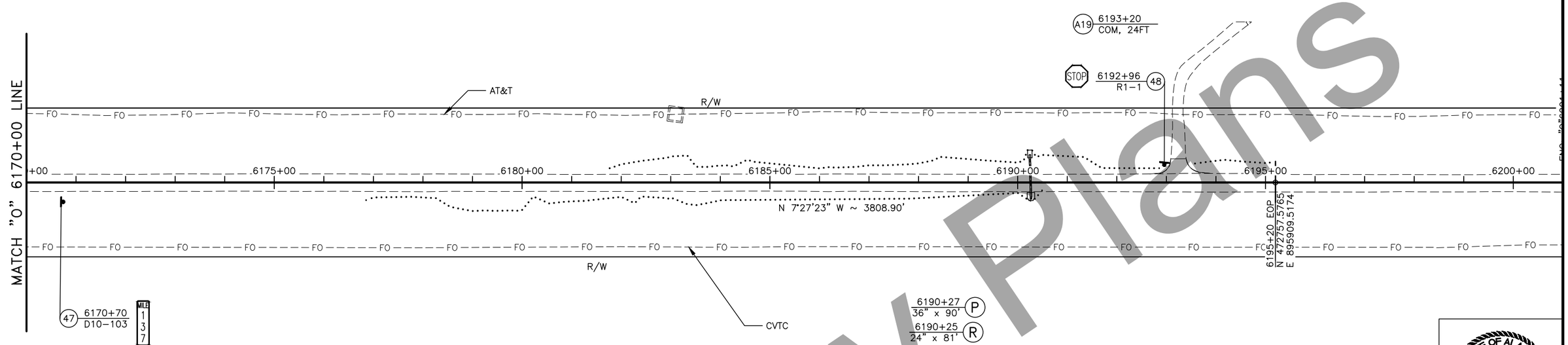

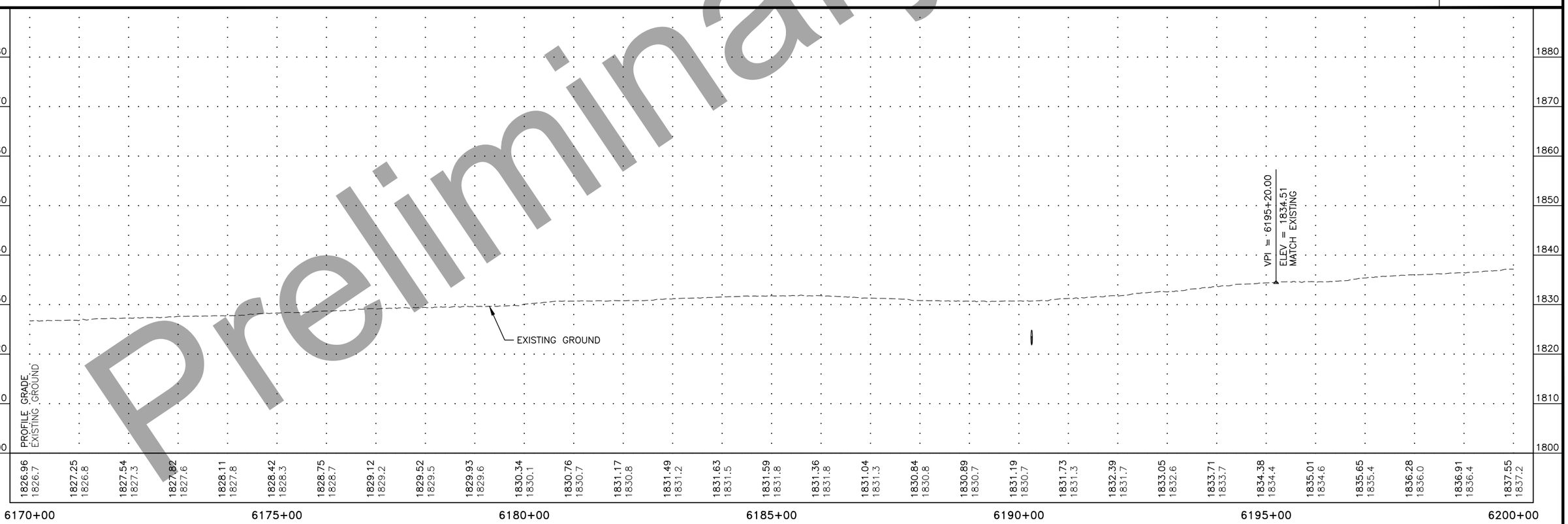

STATE OF ALASKA
49TH
Russell M. Johnson
C.E. 9963
REGISTERED PROFESSIONAL ENGINEER

Preliminary Plans

PLANS DEVELOPED BY: STATE OF ALASKA DEPARTMENT OF TRANSPORTATION & PUBLIC FACILITIES, NORTHERN REGION, 2301 PEGER ROAD, FAIRBANKS, AK 99709 (907)451-2200
H:\Projects\Rich_Hwy\60638_Rich_115_148\06 Design\05 Civil 3D\05_00265 128-138\01_Plots\00265_P&P_2-F17 Thu, Apr/28/22 11:50am

NO.	DATE	REVISION

STATE	PROJECT DESIGNATION	YEAR	SHEET NO.	TOTAL SHEETS
ALASKA	PENDING/NFHWY00265	2021	F18	F18

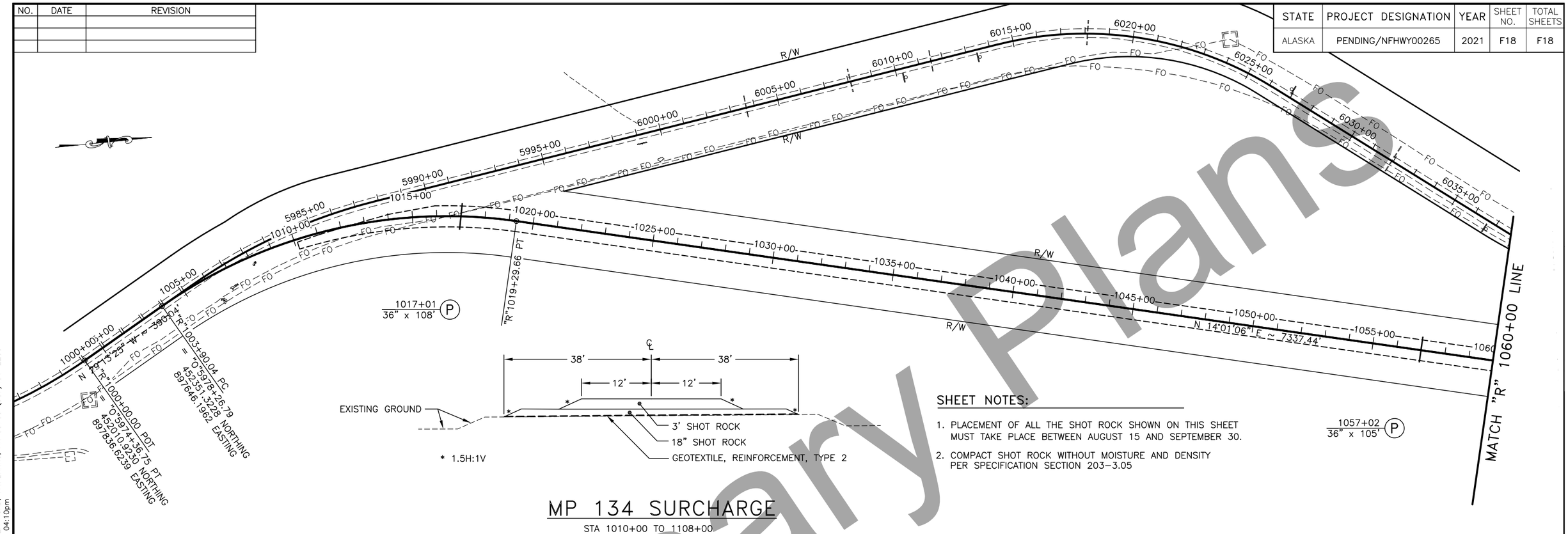

SHEET NOTES:

1. PLACEMENT OF ALL THE SHOT ROCK SHOWN ON THIS SHEET MUST TAKE PLACE BETWEEN AUGUST 15 AND SEPTEMBER 30.
2. COMPACT SHOT ROCK WITHOUT MOISTURE AND DENSITY PER SPECIFICATION SECTION 203-3.05

MP 134 SURCHARGE

STA 1010+00 TO 1108+00

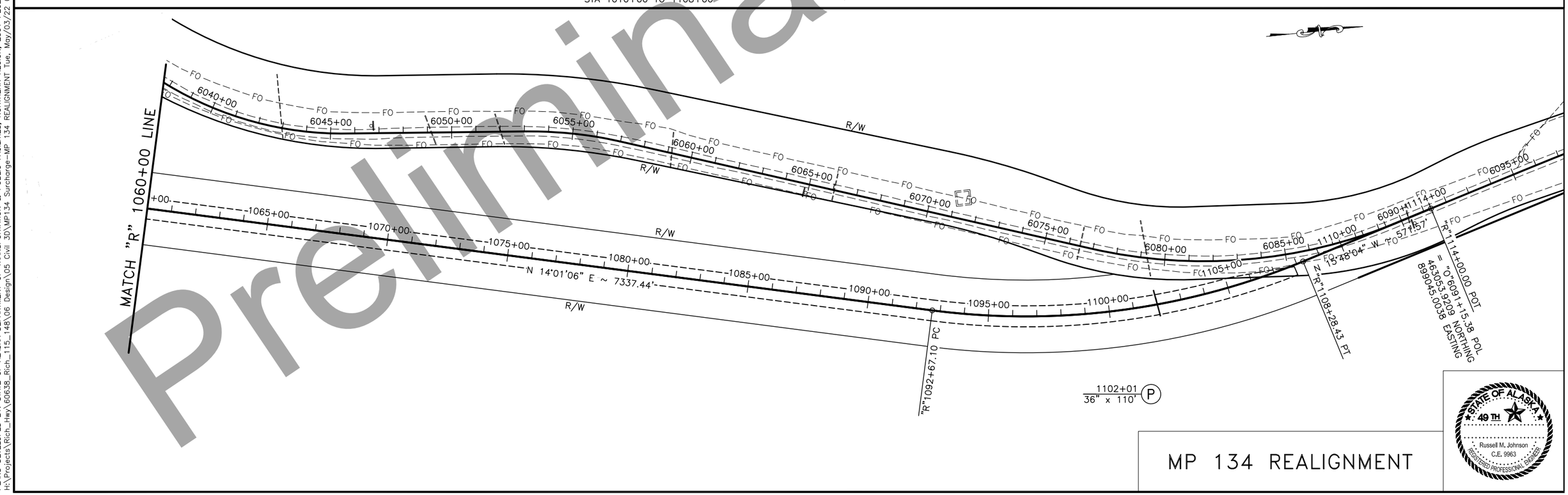

MP 134 REALIGNMENT

STATE OF ALASKA 49TH
Russell M. Johnson
C.E. 9963
REGISTERED PROFESSIONAL ENGINEER

Preliminary Plans

PLANS DEVELOPED BY: STATE OF ALASKA DEPARTMENT OF TRANSPORTATION & PUBLIC FACILITIES, NORTHERN REGION, 2301 PEGER ROAD, FAIRBANKS, AK 99709 (907)451-2200
H:\Projects\Rich_Hwy\60638_Rich_115_148\06 Design\05 Civil 3D\MP134 Surcharge-MP 134 REALIGNMENT Tue, May/03/22 04:10pm

NO.	DATE	REVISION	STATE	PROJECT DESIGNATION	YEAR	SHEET NO.	TOTAL SHEETS
			ALASKA	PENDING/NFHWY00265	2021	G1	G2

APPROACH SUMMARY

	CENTERLINE STATION	LT/RT	ANGLE (DEG)	WIDTH (FEET)	RADIUS LT (FEET)	RADIUS RT (FEET)	LANDING LENGTH (FEET)	TYPE	PAVED AREA (SY)	REMARKS
A1	5725+80	LT	90	40	46	23	30	COMMERCIAL	300	
A2	5729+40	RT	90	24	33	50	30	COMMERCIAL	152	
A3	5729+65	LT	90	40	23	67	30	COMMERCIAL	203	
A4	5732+65	RT	90	38	85	69	30	COMMERCIAL	660	TOK CUTOFF
A5	5734+80	LT	90	12	35	22	10	RESIDENTIAL	100	
A6	5736+65	RT	90	16	27	19	30	COMMERCIAL	75	
A7	5736+90	LT	90	14	18	18	10	RESIDENTIAL	80	
A8	5741+10	RT	90	14	26	30	10	RESIDENTIAL	85	
A9	5765+96	LT	90	14	26	24	10	RESIDENTIAL	67	
A10	5750+25	RT	90	14	38	36	30	COMMERCIAL	16.5	
A11	5771+70	LT	60	24	33	158	30	RESIDENTIAL	272	
A12	5771+80	RT	90	14	36	41	10	COMMERCIAL	82	
A13	5839+00	LT	90	14	32	34	10	RESIDENTIAL	74	
A14	5859+20	LT	90	14	31	40	10	RESIDENTIAL	93	
A15	5861+65	LT	90	14	18	27	10	RESIDENTIAL	61	
A16	5888+95	LT	70	14	60	34	10	RESIDENTIAL	68	
A17	5906+80	RT	90	14	17	28	10	RESIDENTIAL	64	
A18	5908+25	LT	90	14	21	36	10	RESIDENTIAL	53	
A19	5969+00	RT	90	20	68	22	30	COMMERCIAL	102	
A20	6095+55	LT	80	18	40	20	10	RESIDENTIAL	95	
A21	6108+75	LT	85	14	20	55	10	RESIDENTIAL	79	
A22	6130+80	LT	90	14	27	31	10	RESIDENTIAL	57	
A23	6130+90	RT	90	14	19	17	10	RESIDENTIAL	49	
A24	6144+70	LT	90	14	40	26	10	RESIDENTIAL	100	
A25	6159+20	LT	64	20	530	25	30	COMMERCIAL	132	
A26	6193+20	LT	90	24	30	30	30	COMMERCIAL	159	
								TOTAL AREA	3279	

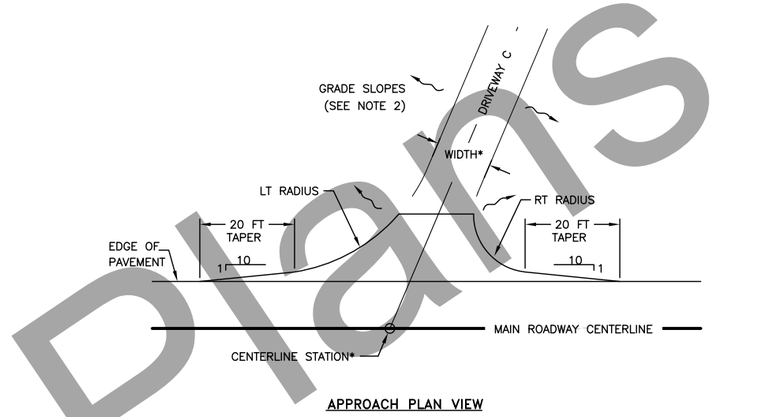

APPROACH PLAN VIEW

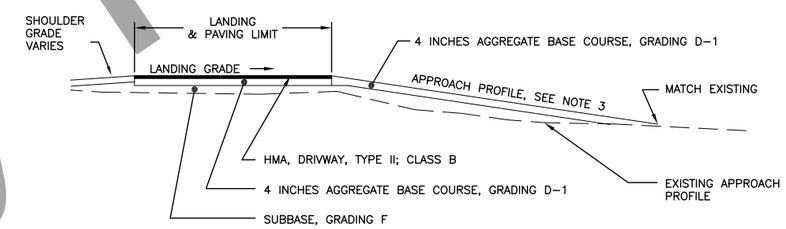

APPROACH PROFILE CROSS-SECTION TYPICAL

APPROACH DETAILS

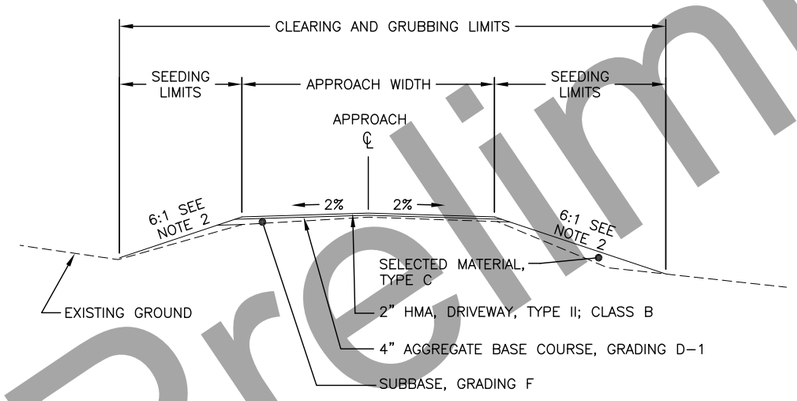

APPROACH TYPICAL SECTION

APPROACH DETAIL NOTES:

1. REMOVAL OF EXISTING APPROACH EMBANKMENT WILL NOT BE MEASURED FOR PAYMENT SEE SPECIFICATION SECTION 639
2. APPROACH FILL SLOPES SHALL BE 6H:1V BETWEEN THE ROAD SHOULDER AND LANDING. BEYOND THE LANDING, WARP APPROACH EMBANKMENT SLOPES FROM 6:1 (H:V) TO MATCH EXISTING OVER 50 FT OR AS APPROVED BY THE ENGINEER. GRADING OF SLOPES IS SUBSIDIARY TO EMBANKMENT CONSTRUCTION
3. GRADE APPROACH PROFILE TO CREATE A SMOOTH TRANSITION BETWEEN THE LANDING AND THE EXISTING APPROACH PROFILE
4. APPROACH RADIUS BEGINS AT THE END OF THE TAPER
5. GRADE SURROUNDING AREA TO DRAIN AS NEEDED TO ENSURE POSITIVE DRAINAGE AWAY FROM THE ROADWAY AND APPROACH EMBANKMENTS
6. DRIVEWAY AND APPROACH TERMS ARE USED INTERCHANGEABLE

APPROACH SUMMARY & DETAILS

STATE OF ALASKA 49TH
Russell M. Johnson
C.E. 9963
REGISTERED PROFESSIONAL ENGINEER

Preliminary Plans

PLANS DEVELOPED BY: STATE OF ALASKA DEPARTMENT OF TRANSPORTATION & PUBLIC FACILITIES, NORTHERN REGION, 2301 PEGER ROAD, FAIRBANKS, AK 99709 (907)451-2200
H:\Projects\Rich_Hwy\60638_Rich_115_148\06 Design\05 Civil 3D\05_00265 128-138\03_Drafting\00265_G1-G1 Wed, May/04/22 09:53am

NO.	DATE	REVISION	STATE	PROJECT DESIGNATION	YEAR	SHEET NO.	TOTAL SHEETS
			ALASKA	PENDING/NFHWY00265	2021	G2	G2

PARALLEL TURNOUT SUMMARY

ITEM NUMBER	LT	RT	WIDTH (FT)	LENGTH (FT)	STATION BEGIN TAPER	STATION BEGIN FULL WIDTH	STATION END FULL WIDTH	STATION END TAPER	REMARKS
T1	X		28	200	5804+05	5804+75	5806+75	5807+45	PARALLEL TURNOUT
T2	X		20	200	5914+75	5915+25	5917+25	5917+75	PARALLEL TURNOUT
T3		X	20	200	6105+85	6106+35	6108+35	6108+85	PARALLEL TURNOUT

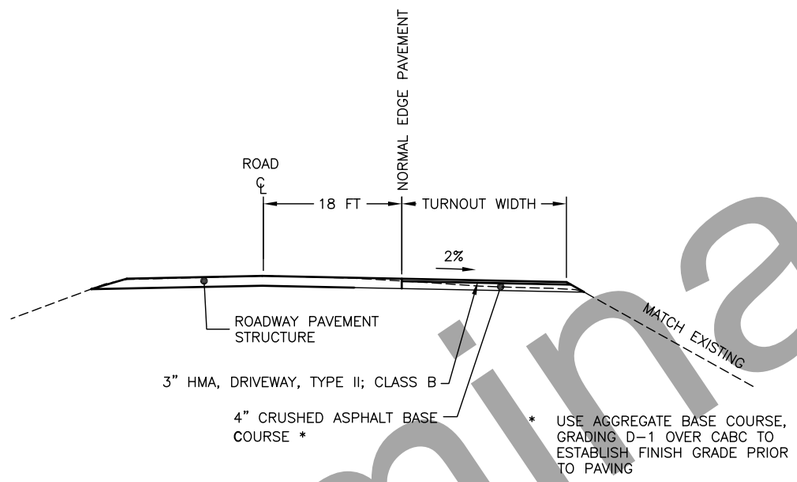

PARALLEL TURNOUT CROSS SECTION

TURNOUT NOTES:

1. TURNOUT WIDTH SHALL BE PARALLEL TO THE ROAD CENTERLINE
2. SEE SPECIAL PROVISION 639
3. GRADE SIDE SLOPES & DITCHES USING SMOOTH TRANSITION TO MATCH EXISTING GROUND AND PROVIDE POSITIVE DRAINAGE

Preliminary Plans

TURNOUT SUMMARY & DETAILS

STATE OF ALASKA 49TH Russell M. Johnson C.E. 9963 REGISTERED PROFESSIONAL ENGINEER

PLANS DEVELOPED BY: STATE OF ALASKA DEPARTMENT OF TRANSPORTATION & PUBLIC FACILITIES, NORTHERN REGION, 2301 PEGER ROAD, FAIRBANKS, AK 99709 (907)451-2200
H:\Projects\Rich_Hwy\60638_Rich_115_148\06 Design\05 Civil 3D\05_00265 128-138\03_Drafting\00265_G1-G2 Wed, May/04/22 09:44am

NO.	DATE	REVISION

STATE	PROJECT DESIGNATION	YEAR	SHEET NO.	TOTAL SHEETS
ALASKA	PENDING/NFHWY00265	2021	H1	H10

SIGNING SUMMARY

LOC. NO.	STATION	LOCATION LT.	LOCATION RT.	ASDS CODE	LEGEND	SIZE H X V (INCHES)	BRACING/ FRAMING BRACED	BRACING/ FRAMING FRAMED	AREA (SQ.FT.)	MTG. HGT. (FT.)	DIR.	POST TYPE	POST SIZE (INCHES)	POST NO.	REMARKS
1	5715+82		X	SPECIAL	PLATE (ICON), PHONE (ICON), BED (ICON), CAMPER (ICON), 1000FT						S	PST	2.5	3	REMOVE
2	5720+35		X	M1-5	HWY #4	24 X 24			4.00		S	PST	2.5	1	
3	5722+10	X		D2-3	Glennallen 16 Valdez 129 Anchorage 196	72 X 42		X	21.00		N	TS	4	2	SEE NOTE 14
4	5723+55		X	D2-2x	ARROW HWY 4 Fairbanks Tok HWY 1 ->	78 X 30	X		16.25		S	TS	4	2	SEE NOTE 14
5	5724+20	X		R2-1	SPEED LIMIT 65						N	PST	2.5	1	RE-USE PANEL
6	5725+41	X		R1-1	STOP	30 X 30			6.25		W	PST	2.5	1	SALVAGE
S1	5726+10		X		VMS-ELECTRONIC INFORMATION SIGN										SEE NOTE 17
7	5727+90		X	SPECIAL	GAKONA LODGE						S	PST	2.5	2	REMOVE
8	5729+38	X		R1-1	STOP	30 X 30			6.25		E	PST	2.5	1	
9	5729+60		X	R1-1	STOP	30 X 30			6.25		W	PST	2.5	1	
10	5732+70		X	D2-2a	<- Valdez Fairbanks ->	60 X 30	X		12.50		E	TS	4	2	SEE NOTE 14
				OM-1	OBJECT MARKER	18 X 18			2.25						
				OM-1	OBJECT MARKER	18 X 18			2.25						
11	5733+11		X	R1-1	STOP	48 X 48			16.00		E	PST	2.5	1	SALVAGE
12	5733+75	X		M1-5	HWY #1	24 X 24			4.00		S	PST	2.5	1	
				M6-6L	ARROWS (SYM)	21 X 15			2.19						
				M1-5	HWY #4	24 X 24			4.00						
				M6-3	ARROW (SYM)	21 X 15			2.19						
S2	5735+53		X		VMS-ELECTRONIC INFORMATION SIGN										SEE NOTE 17
13	5736+16	X		SPECIAL	GAKONA LODGE						S	PST	2.5	2	REMOVE
14	5737+65		X	M1-5	HWY #4	24 X 24			4.00		S	PST	2.5	1	
15	5738+55		X	R2-1	SPEED LIMIT 65						N	PST	2.5	1	RE-USE PANEL
16	5740+20		X	D2-3	Paxson 56 Delta 137 Fairbanks 235	91 X 42		X	26.54		S	TS	4	2	SEE NOTE 14
17	5740+20	X		SPECIAL	ARROW (SYM) Glennallen <- Tok Jct	66 X 30	X		13.75		S	TS	4	2	SEE NOTE 14
18	5741+07		X	W8-8	ROUGH ROAD						S	PST	2.5	1	REMOVE
19	5743+71	X		M1-5	HWY 1	24 X 24			4.00		N	PST	2.5	1	
				M2-1	JNC	21 X 15			2.19						
20	5746+49	X		PRIVATE	Gulkana River Ranch										REMOVE, SALVAGE TO OWNER
								SUBTOTAL =	155.85						

SIGNING NOTES

1. REMOVE AND DISPOSE OF ALL EXISTING SIGNS AND SIGN FOUNDATIONS WITHIN THE PROJECT LIMITS, EXCEPT THOSE DESIGNATED FOR REINSTALLATION, SALVAGE OR OTHERWISE NOTED.
2. REUSE ALL ALYESKA SIGN PANELS.
3. MOUNTING HEIGHTS ARE PER STANDARD PLAN S-05.02 UNLESS OTHERWISE NOTED.
4. DETERMINE POST LENGTHS IN THE FIELD. DO NOT EXTEND POSTS ABOVE TOP OF SIGN.
5. INSTALL PST SIGN POSTS WITH SLEEVE TYPE SOIL EMBEDMENT PER STANDARD PLAN S-30.05. ATTACH THE SIGN POST TO THE SLEEVE USING GALVANIZED 3/8" BOLT, NUT, SPLIT LOCK WASHER AND TWO FLAT WASHERS.
6. INSTALL "TUBE POST SIGN BRACING" AS SHOWN ON STANDARD PLAN S-01.02 ON ALL SIGNS, EXCEPT D3-1 SERIES SIGNS, MOUNTED ON A SINGLE PST POST AND HAVING A HORIZONTAL DIMENSION OF 30 INCHES OR GREATER. INSTEAD OF THE 5/8" GALVANIZED BOLTS AND NYLON LOCKING NUTS SHOWN ON STANDARD PLAN S-01.02, USE GALVANIZED 3/8" BOLTS, SPLIT LOCK WASHERS AND NUTS. STAINLESS STEEL FASTENER HARDWARE MAY BE USED INSTEAD OF GALVANIZED. 1/4" X 1 1/2" ALUMINUM ALLOY 6061-T6 BAR MAY ALSO BE USED TO FABRICATE SIGN BRACES.
7. ATTACH ALL SIGNS TO THEIR SUPPORTS WITH 3/8" BOLTS, EXCEPT ATTACH UNFRAMED SIGNS TO PST POSTS WITH ALUMINUM DRIVE RIVETS. WIND WASHERS ARE NOT REQUIRED WITH DRIVE RIVETS. INCLUDE SPLIT LOCK WASHERS WHEN BOLTS ARE USED.
8. ALL FASTENER HARDWARE SHALL MEET THE REQUIREMENTS OF THE "FASTENER SPECIFICATION TABLE" SEE SPECIAL PROVISION 615.
9. MAINTAIN EXISTING SIGNS UNTIL NEW SIGNS ARE INSTALLED. DO NOT LEAVE DUPLICATE OR CONFLICTING SIGNING UP AT ANY TIME.
10. ALL SIGNS NOTED FOR REMOVAL AND REINSTALLATION SHALL BE REPLACED AT THE CONTRACTOR'S EXPENSE IF THEY ARE DAMAGED DURING THE RELOCATION EFFORT.
11. LOCATE AND PROTECT ALL NEW AND EXISTING UNDERGROUND UTILITIES, INCLUDING BUT NOT LIMITED TO: PIPELINES, INTERCONNECT CABLES, SIGNAL SYSTEMS, LIGHTING SYSTEMS, STORM AND SANITARY SEWERS, WATER SYSTEMS, AND TELEPHONE AND ELECTRICAL CABLES, PRIOR TO INSTALLING SIGN POSTS. NOT ALL EXISTING UTILITIES MAY BE SHOWN ON THE PLANS.
12. DELIVER ALL SALVAGED STOP SIGNS TO THE M&O TAZLINA MAINTENANCE CAMP LOCATED AT MP110 ON THE RICHARDSON HIGHWAY.
13. INSTALL WEATHER TIGHT CAPS ON ALL PIPE AND TUBE POSTS, EXCEPT PERFORATED STEEL TUBE.
14. INSTALL FRANGIBLE COUPLING SYSTEMS IN ACCORDANCE WITH STANDARD PLAN S-31.02.
15. THE 4" MOUNTING AREA ON MILEPOST SIGNS (D12-103 SERIES) SHALL BE BARE ALUMINUM.
16. ALYESKA APPROACH SIGNS ARE PRIVATELY OWNED AND MAINTAINED. IF THESE SIGNS WILL NEED TO BE RELOCATED DUE TO MODIFICATIONS TO THE APPROACHES. REUSE THE EXISTING SIGNS AND POSTS. NEW SOIL EMBEDMENT SLEEVES ARE REQUIRED. THIS WORK IS SUBSIDIARY TO 615 PAY ITEMS. ANY SIGNS DAMAGED BY THE CONTRACTOR WILL BE REPLACED AT THE CONTRACTOR'S EXPENSE.
17. SEE THE VMS-ELECTRONIC INFORMATION SIGN DETAIL SHEET H7. THIS IS A SEPARATE PAY ITEM 660.2014.0000.
18. SEE STANDARD PLAN S-00.12 FOR FRAMING DETAILS.

POST TYPE LEGEND:

PST = PERFORATED STEEL TUBE
TS = TUBE STEEL

SIGN SUMMARY

STATE OF ALASKA 49TH
Russell M. Johnson
C.E. 9963
REGISTERED PROFESSIONAL ENGINEER

Preliminary Plans

PLANS DEVELOPED BY: STATE OF ALASKA DEPARTMENT OF TRANSPORTATION & PUBLIC FACILITIES, NORTHERN REGION, 2301 PEGER ROAD, FAIRBANKS, AK 99709 (907)451-2200
H:\Projects\Rich_Hwy\60638_Rich_115_148\06 Design\05 Civil 3D\05_00265 128-138\03_Drafting\00265_H1_H3-H1 SIGN SUMMARY Thu, Apr/28/22 11:51am

NO.	DATE	REVISION

STATE	PROJECT DESIGNATION	YEAR	SHEET NO.	TOTAL SHEETS
ALASKA	PENDING/NFHWY00265	2021	H2	H10

SIGNING SUMMARY

LOC. NO.	STATION	LOCATION LT.	LOCATION RT.	ASDS CODE	LEGEND	SIZE H X V (INCHES)	BRACING/ FRAMING BRACED	BRACING/ FRAMING FRAMED	AREA (SQ.FT.)	MTG. HGT. (FT.)	DIR.	POST TYPE	POST SIZE (INCHES)	POST NO.	REMARKS
21	5751+60		X	D10-103	MILE 128	10 X 36			2.50		S/N	PST	2.5	1	
22	5757+64		X		$1000 FOR LITTERING	42 X 42	X		12.25		S	PST	2.5	1	
23	5771+33	X		R1-1	STOP	30 X 30			6.25		W	PST	2.5	1	
24	5788+55	X		D9-105	P	24 X 24			4.00		S	PST	2.5	1	
				D9-105	PARKING	24 X 6			1.00						
				D9-308	1500 FT	24 X 6			1.00						
25	5803+99		X	D10-103	MILE 130	10 X 36			2.50		S/N	PST	2.5	1	
26	5822+20		X	D9-105	P	24 X 24			4.00		N	PST	2.5	1	
				D9-105	PARKING	24 X 6			1.00						
				D9-308	1500 FT	24 X 6			1.00						
27	5855+59		X	D10-103	MILE 131	10 X 36			2.50		S/N	PST	2.5	1	
28	5898+53		X	SPECIAL	SCHOOL BUS STOP AHEAD	36 X 36	X		9.00		S	PST	2.5	1	
29	5901+23		X	D9-105	P	24 X 24			4.00		S	PST	2.5	1	
				D9-105	PARKING	24 X 6			1.00						
				D9-308	1500 FT	24 X 6			1.00						
30	5905+78		X	D10-103	MILE 132	10 X 36			2.50		S/N	PST	2.5	1	
31	5918+73	X		SPECIAL	SCHOOL BUS STOP AHEAD	36 X 36	X		9.00		N	PST	2.5	1	
32	5932+17	X		D9-105	P	24 X 24			4.00		S	PST	2.5	1	
				D9-105	PARKING	24 X 6			1.00						
				D9-308	1500 FT	24 X 6			1.00						
33	5960+17		X	D10-103	MILE 133	10 X 36			2.50		S/N	PST	2.5	1	
34	6010+31		X	D10-103	MILE 134	X					S/N				REMAINS INPLACE
35	6013+47		X	W1-2R	RIGHT CURVE (SYM)	X					N				REMAINS INPLACE
				WB-1	60 MPH	X									
36	6026+90		X	W1-2L	LEFT CURVE (SYM)	X					N				REMAINS INPLACE
				WB-1	60 MPH	X									
37	6036+70		X	W1-2R	RIGHT CURVE (SYM)	X					S				REMAINS INPLACE
				WB-1	60 MPH	X									
38	6046+71		X	W1-2R	RIGHT CURVE (SYM)	X					S				REMAINS INPLACE
				WB-1	60 MPH	X									
39	6064+90		X	D10-103	MILE 135	X					S/N				REMAINS INPLACE
40	6090+44		X	D9-105	P	24 X 24			4.00		S	PST	2.5	1	
				D9-105	PARKING	24 X 6			1.00						
				D9-308	1500 FT	24 X 6			1.00						
								SUBTOTAL =	79.00						

POST TYPE LEGEND:

PST = PERFORATED STEEL TUBE
TS = TUBE STEEL

Preliminary Plans

SIGN SUMMARY

STATE OF ALASKA 49TH
Russell M. Johnson
C.E. 9963
REGISTERED PROFESSIONAL ENGINEER

PLANS DEVELOPED BY: STATE OF ALASKA DEPARTMENT OF TRANSPORTATION & PUBLIC FACILITIES, NORTHERN REGION, 2301 PEGER ROAD, FAIRBANKS, AK 99709 (907)451-2200
H:\Projects\Rich_Hwy\60638_Rich_115_148\06 Design\05 Civil 3D\05_00265 128-138\03_Drafting\00265_H1_H3-H2 SIGN SUMMARY Thu, Apr/28/22 11:51am

NO.	DATE	REVISION

STATE	PROJECT DESIGNATION	YEAR	SHEET NO.	TOTAL SHEETS
ALASKA	PENDING/NFHWY00265	2021	H3	H10

SIGNING SUMMARY

LOC. NO.	STATION	LOCATION LT.	LOCATION RT.	ASDS CODE	LEGEND	SIZE H X V (INCHES)	BRACING/ FRAMING BRACED	BRACING/ FRAMING FRAMED	AREA (SQ.FT.)	MTG. HGT. (FT.)	DIR.	POST TYPE	POST SIZE (INCHES)	POST NO.	REMARKS
41	6119+95		X	D10-103	MILE 136	10 X 36			2.50		S/N	PST	2.5	1	
42	6123+25	X		D9-105	P	24 X 24			4.00		N	PST	2.5	1	
				D9-105	PARKING	24 X 6			1.00						
				D9-308	1500 FT	24 X 6			1.00						
43	6140+90		X	I-3	Coleman Creek	36 X 18			4.50		S	PST	2.5	1	
44	6142+57	X		I-3	Coleman Creek	36 X 18			4.50		N	PST	2.5	1	
45	6150+74		X	SPECIAL	Gulkana River Trail						S	PST	2.5	1	REUSE PANEL
46	6167+28	X		SPECIAL	Gulkana River Trail						N	PST	2.5	1	REUSE PANEL
47	6170+70		X	D10-103	MILE 132	10 X 36			2.50		S/N	PST	2.5	1	
48	6192+96		X	R1-1	STOP	30 X 30			6.25		W	PST	2.5	1	SALVAGE
								SUBTOTAL =	26.25						
								TOTAL =	261.10						

POST TYPE LEGEND:

PST = PERFORATED STEEL TUBE
TS = TUBE STEEL

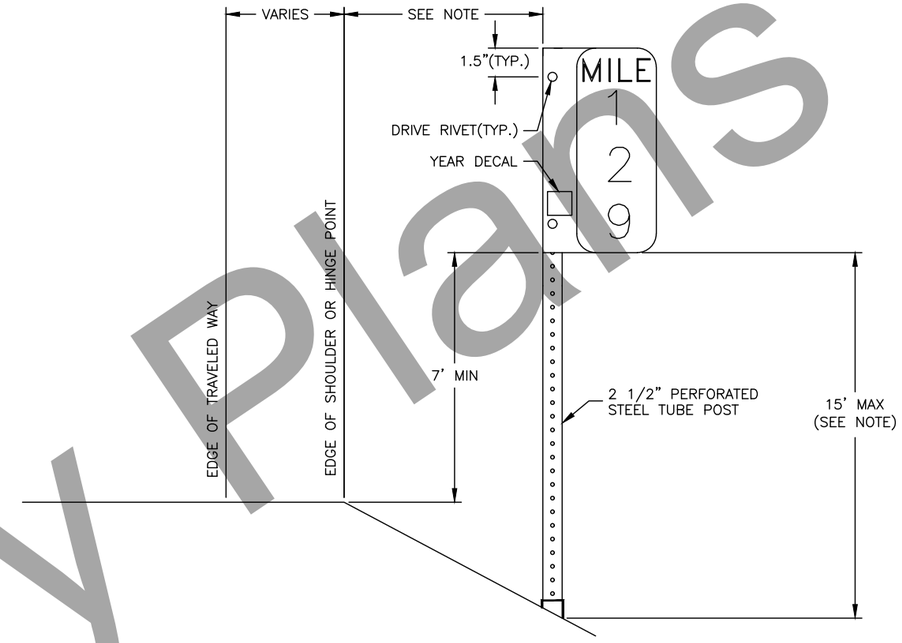

MILEPOST DETAIL

ALL ROADS EXCEPT DIVIDED ROADWAYS
(D10-201, D10-202, D10-203)

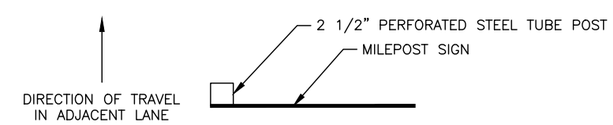

MILEPOST MOUNTING DETAIL

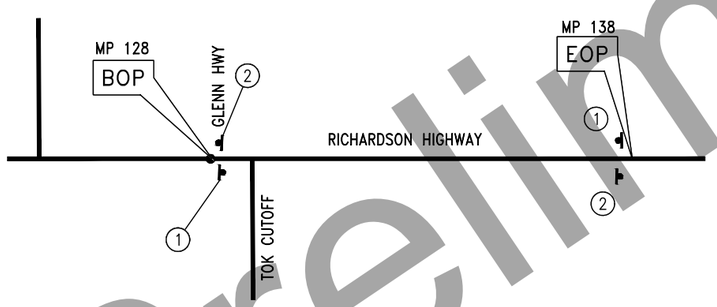

SIGN LEGEND

1. G20-1 — ROAD WORK NEXT 10 MILES — 60" X 24"
2. G20-2 — END ROAD WORK — 48" X 24"

PERMANENT CONSTRUCTION SIGNS

NOTES:

1. INSTALL ALL PERMANENT CONSTRUCTION SIGNS ON WOOD POSTS.
2. SEE STANDARD PLAN C-04.12 FOR ADDITIONAL INFORMATION.

NOTE:

INSTALL MILEPOST SIGNS (D10 SERIES) WITH A 15 TO 30 FOOT OFFSET. REDUCE THE OFFSET AS NECESSARY SO THE BOTTOM OF THE SIGN IS NO MORE THAN 15 FEET ABOVE THE GROUND. THE SIGN OFFSET SHALL NOT BE LESS THAN THE OFFSETS SHOWN ON STANDARD PLAN S-05.02

STATE OF ALASKA 49TH
Russell M. Johnson
C.E. 9963
REGISTERED PROFESSIONAL ENGINEER

SIGN SUMMARY

Preliminary Plans

PLANS DEVELOPED BY: STATE OF ALASKA DEPARTMENT OF TRANSPORTATION & PUBLIC FACILITIES, NORTHERN REGION, 2301 PEGER ROAD, FAIRBANKS, AK 99709 (907)451-2200
H:\Projects\Rich_Hwy\60638_Rich_115_148\06 Design\05 Civil 3D\05_00265 128-138\03_Drafting\00265_H1_H3-H3 SIGN SUMMARY Thu, Apr/28/22 11:51am

NO.	DATE	REVISION

STATE	PROJECT DESIGNATION	YEAR	SHEET NO.	TOTAL SHEETS
ALASKA	PENDING/NFHWY00265	2021	H4	H10

SIGN #3

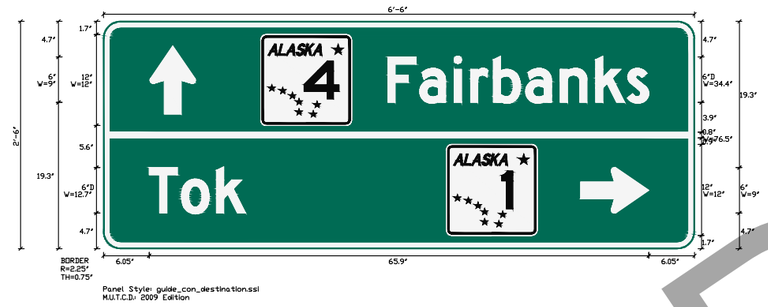

SIGN #4

SIGN #10

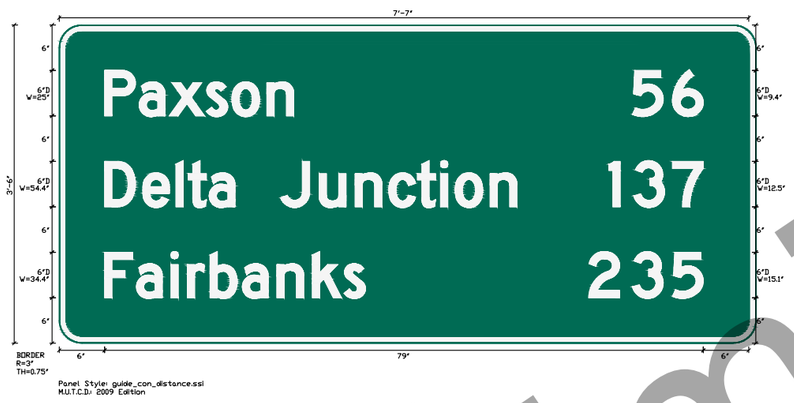

SIGN #16

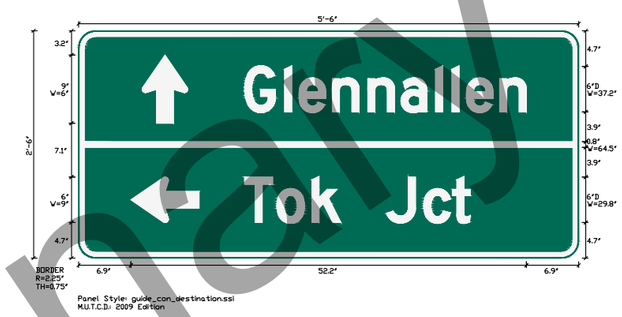

SIGN #17

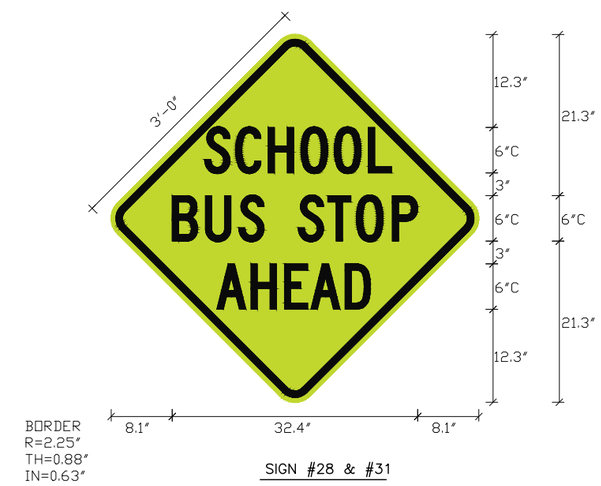

SIGN #28 & #31

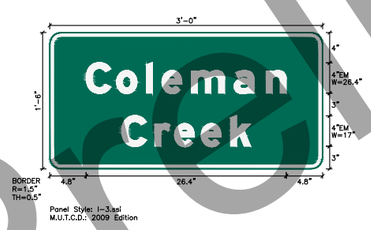

SIGN #43 & #44

Preliminary Plans

SIGN DETAIL (1 OF 2)

STATE OF ALASKA 49TH
Ethan E. Graetz
CE 116455
REGISTERED PROFESSIONAL ENGINEER

PLANS DEVELOPED BY: STATE OF ALASKA DEPARTMENT OF TRANSPORTATION & PUBLIC FACILITIES, NORTHERN REGION, 2301 PEGER ROAD, FAIRBANKS, AK 99709 (907)451-2200
H:\Projects\Rich_Hwy\60638_Rich_115_148\06 Design\05 Civil 3D\05_00265 128-138\03_Drafting\00265_SIGN DETAILS-H4 SIGN DETAIL (1 OF 2) Thu, Apr/28/22 11:51am

NO.	DATE	REVISION

STATE	PROJECT DESIGNATION	YEAR	SHEET NO.	TOTAL SHEETS
ALASKA	PENDING/NFHWY00265	2021	H5	H10

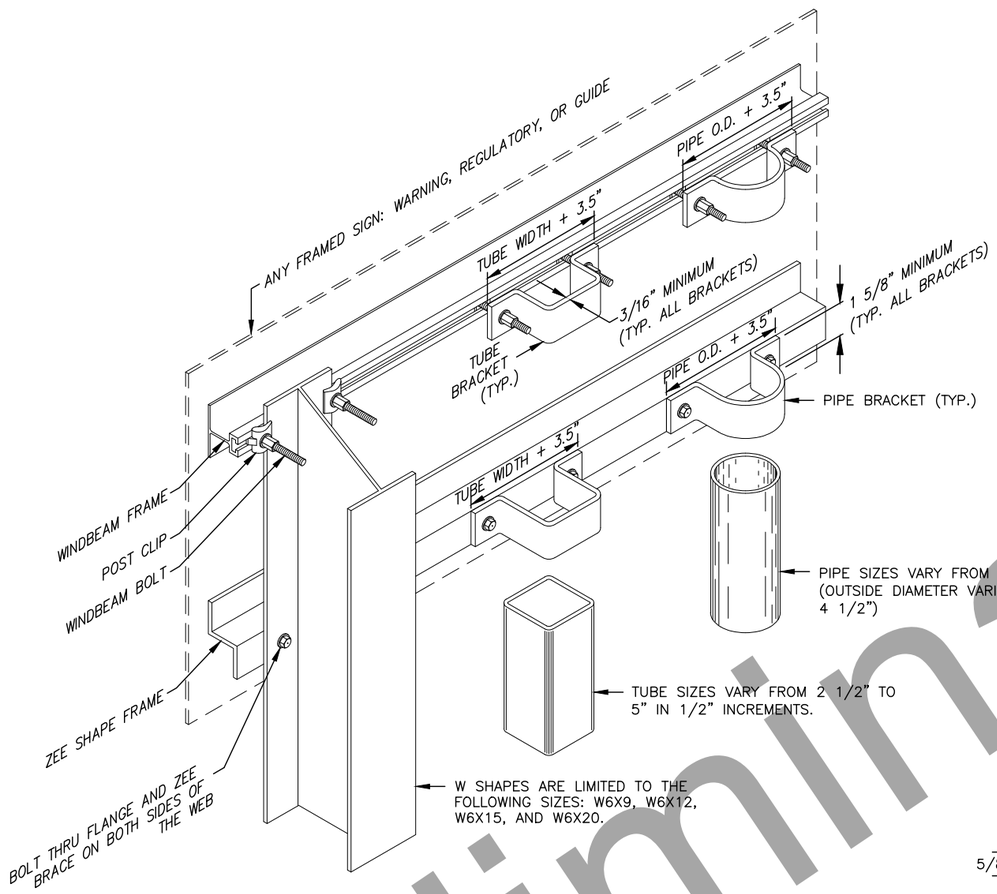

FRAMED SIGN ATTACHMENT BRACKETS

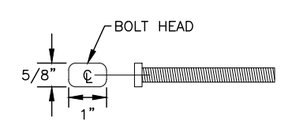

3/8" WINDBEAM BOLT

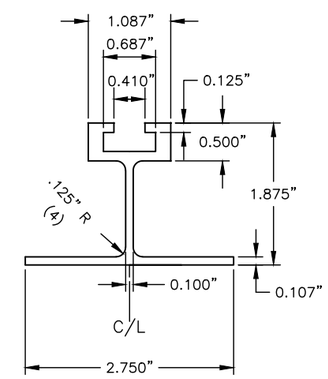

EXTRUDED ALUMINUM WINDBEAM

NOTES:

1. ALUMINUM ALLOY 6061-T6 SHALL BE USED FOR EXTRUDED WINDBEAM AND RIVETS.
2. ATTACH SIGNS TO WINDBEAM WITH 3/6" RIVETS AT 4" STAGGERED SPACING.

NOTES:

1. ATTACH FRAMED SIGNS TO POSTS WHEREVER THE FRAMES CROSS THE POSTS. AT EACH CROSSING, ATTACH THE SIGN USING TWO POST CLIPS ON W-SHAPE POSTS, A U-SHAPED BRACKET ON PIPES OR A BRACKET WITH SQUARE CORNERS ON TUBES.
2. THE TUBE BRACKETS USED ON EVEN INCH SIZE TUBES MAY ALSO BE USED ON TUBES 1/2" SMALLER IN SIZE.
3. THE BRACKET DETAILS SHOWN INDICATE GENERAL DESIGNS ONLY. DESIGNS MAY VARY BY MANUFACTURER.
4. ALUMINUM ALLOY 6061-T6 SHALL BE USED FOR ZEE SHAPE FRAMING AND RIVETS.

Preliminary Plans

SIGN DETAIL (2 OF 2)

STATE OF ALASKA 49TH
Ethan E. Graetz
CE 116455
REGISTERED PROFESSIONAL ENGINEER

PLANS DEVELOPED BY: STATE OF ALASKA DEPARTMENT OF TRANSPORTATION & PUBLIC FACILITIES, NORTHERN REGION, 2301 PEGER ROAD, FAIRBANKS, AK 99709 (907)451-2200
H:\Projects\Rich_Hwy\60638_Rich_115_148\06 Design\05 Civil 3D\05_00265 128-138\03_Drafting\00265_SIGN DETAILS-SIGN DETAIL (2 Thu, Apr/28/22 11:51am

NO.	DATE	REVISION

STATE	PROJECT DESIGNATION	YEAR	SHEET NO.	TOTAL SHEETS
ALASKA	PENDING/NFHWY00265	2021	H6	H10

PAINTED TRAFFIC MARKINGS SUMMARY

DESCRIPTION	LENGTH (FT)	REMARKS
4" WHITE	97,000	
8" WHITE	600	SEE TURNOUT STRIPING DETAIL
4" DOUBLE YELLOW	87,300	

TRAFFIC MARKING NOTES:

1. IF NEW AND EXISTING LONGITUDINAL MARKINGS ARE NOT ALIGNED AT THE MATCH LINE, TRANSITION BETWEEN THE TWO USING A 100:1 TAPER.
2. THE STRIPE/SKIP RATIO FOR THIS PROJECT WILL BE 10 FT/30 FT. THE PASS/NO-PASS ZONES WILL BE DETERMINED IN THE FIELD BY THE CONTRACTOR ACCORDING TO SECTION 670. THIS WORK IS SUBSIDIARY TO PAY ITEM 670.0001.0000 PAINTED TRAFFIC MARKINGS.
3. PAVEMENT MARKINGS WILL BE PLACED IN ACCORDANCE WITH STANDARD PLANS T-20.04 AND T-21.04 AND SECTION 670.
4. LENGTH OF 4" DOUBLE YELLOW IS BASED ON A CONTINUOUS 4" DOUBLE YELLOW STRIPE THROUGH THE LENGTH OF THE PROJECT. NO ADJUSTMENT WILL BE MADE TO THE 670.0001.0000 PAY ITEM FOR DIFFERENCES IN QUANTITY OF YELLOW STRIPE INSTALLED ACCORDING TO 670-3.05, PRELIMINARY SPOTTING.
5. SEE STANDARD PLAN T-25.10 FOR ADDITIONAL INFORMATION.

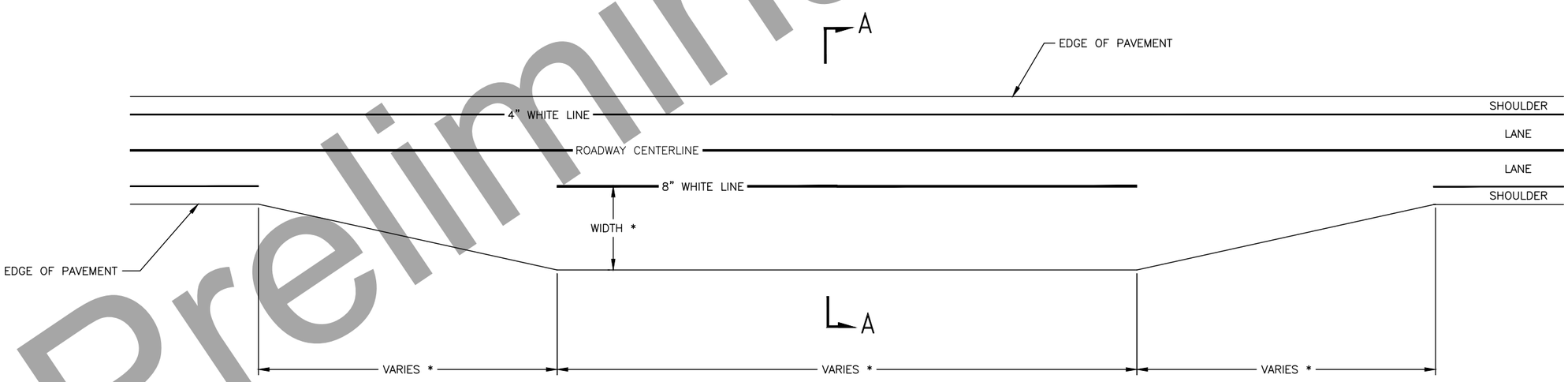

PARALLEL TURNOUT STRIPING DETAIL

* SEE PARALLEL TURNOUT SUMMARY

STATE OF ALASKA 49TH
Russell M. Johnson
C.E. 9963
REGISTERED PROFESSIONAL ENGINEER

STRIPING SUMMARY & DETAILS

Preliminary Plans

PLANS DEVELOPED BY: STATE OF ALASKA DEPARTMENT OF TRANSPORTATION & PUBLIC FACILITIES, NORTHERN REGION, 2301 PEGER ROAD, FAIRBANKS, AK 99709 (907)451-2200
H:\Projects\Rich_Hwy\60638_Rich_115_148\06 Design\05 Civil 3D\05_00265 128-138\03_Drafting\00265_STRIPING-STRIPING SUMMARY & DETAILS Thu, Apr/28/22 11:51am

NO.	DATE	REVISION

STATE	PROJECT DESIGNATION	YEAR	SHEET NO.	TOTAL SHEETS
ALASKA	PENDING/NFHWY00265	2021	H7	H10

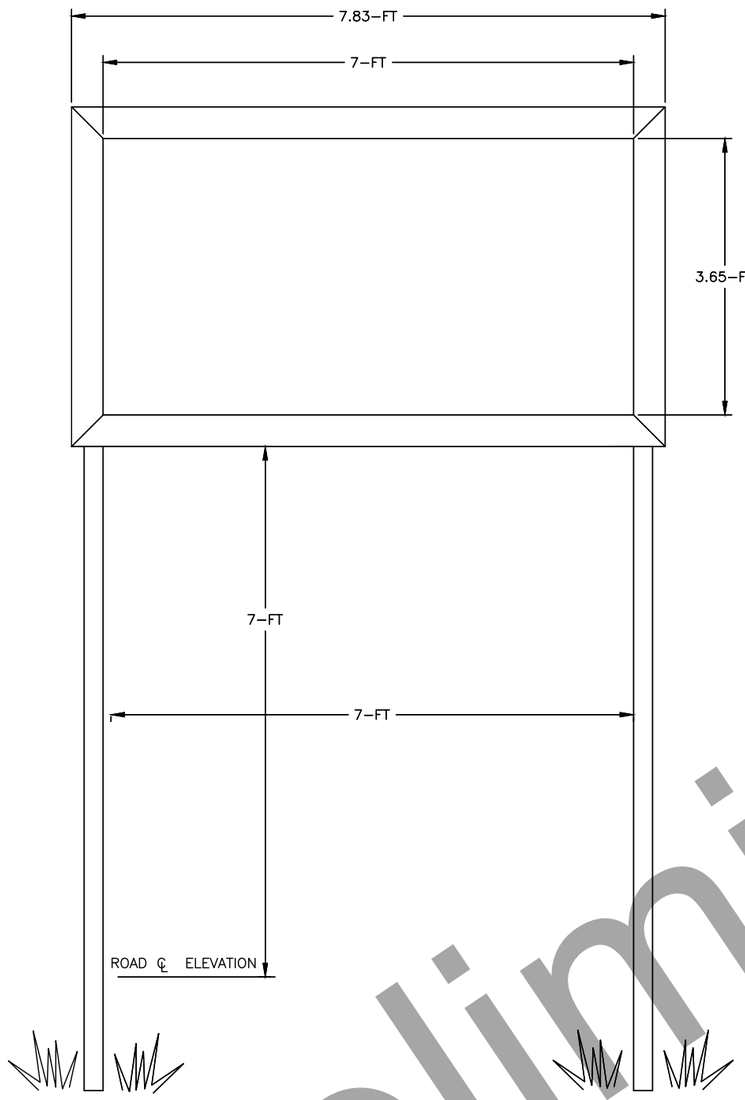

SIGN HOUSING DETAILS
FRONT VIEW

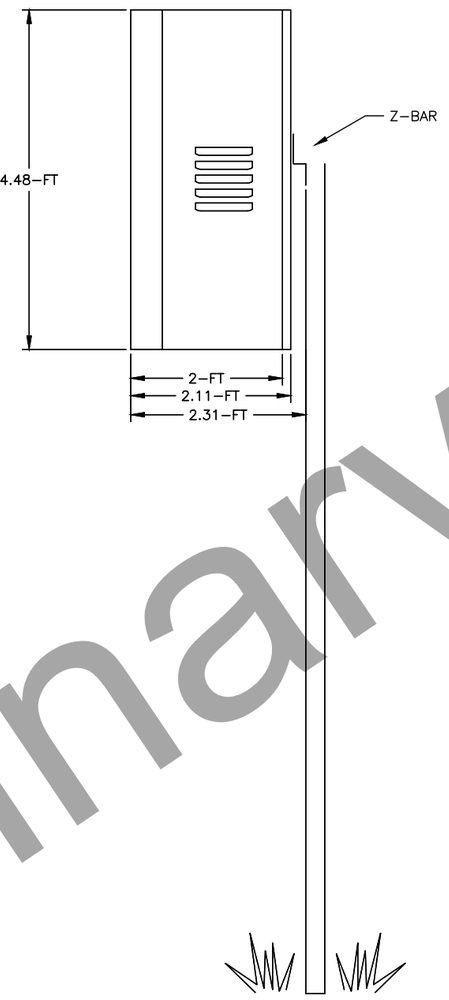

SIGN HOUSING DETAILS
SIDE VIEW

ELECTRONIC MESSAGE SIGN NOTES:

1. ITEM 660.2014.000 VMS–ELECTRONIC INFORMATION SIGN; EACH; CONSISTS OF ALL LABOR, EQUIPMENT AND MATERIALS NECESSARY FOR THEIR PROPER INSTALLATION INCLUDING BUT NOT LIMITED TO SIGNS, SIGN HOUSINGS, POSTS, CONDUIT, BREAKERS SWITCHES, REMOTE OPERATORS, CONTROL PANELS, J–BOXES, WIRING AND SYSTEM CHECKS, REMOVAL AND DISPOSAL OF EXISTING SIGNS, AND OTHER ITEMS AS STATED IN SECTION 660.
2. ELECTRONIC MESSAGE SIGN DETAILS: SIGN SHALL HAVE 3 LINES WITH A MINIMUM OF 8 CHARACTERS PER LINE. TEXT CHARACTERS SHALL RESEMBLE SERIES E CHARACTERS. SIGNS SHALL BE MCCAIN CALTRANS MODEL CMS 520 OR APPROVED EQUIVALENT.
3. THE CONTRACTOR SHALL SUBMIT FOR APPROVAL TO THE ENGINEER A SIGN AND SIGN HOUSING SYSTEM DESIGN THAT MEETS THE REQUIREMENTS OF THESE PLANS PRIOR TO PLACING AN ORDER FROM THE MANUFACTURER. THE SIGN SHALL BE OPERATIONAL BETWEEN TEMPERATURES OF –34 to +160 DEGREES FAHRENHEIT. THE ENCLOSURE SHALL INCLUDE 110 VAC STRIP HEATERS AND THERMOSTATS AND INSULATION ON THE INSIDE TOP. SIGNS SHALL BE LEGIBLE FOR 700 FEET DURING THE DAY AND NIGHT.
4. THE SIGN HOUSING DIMENSIONS SHOWN ARE APPROXIMATE. SIGN HOUSINGS ARE GENERALLY CUSTOM MADE TO FIT THESE TYPES OF SIGNS. CUSTOMIZE THE HOUSING FRAME SO IT CAN BE SECURELY FASTENED TO THE SIGN MOUNTING POSTS. PLACE 1/2 INCH DIA. SCREENED WEEP HOLES IN THE BOTTOM OF THE SIGN HOUSING. THE ENTIRE HOUSING ASSEMBLY SHALL BE ACID ETCHED AND PAINTED WITH TWO COATS OF ZINC–CHROMATE PRIMER, INTERIOR OF HOUSING SHALL BE PAINTED WITH TWO COATS OF HIGH QUALITY FLAT BLACK ENAMEL. THE EXTERIOR OF THE HOUSING SHALL BE PAINTED WITH TWO COATS OF HIGH QUALITY SEMI–GLOSS BLACK ENAMEL.
5. A WALL MOUNTED CONTROL PANEL FOR THE ELECTRONIC MESSAGE SIGNS SHALL BE INSTALLED INSIDE THE DOT MAINTENANCE STATION. THE PANEL WILL INDICATE THAT THE POWER IS ON OR OFF FOR EACH SIGN. A REMOTE OPERATOR SYSTEM (WIRELESS) SHALL BE INSTALLED THAT HAS THE ABILITY TO TOGGLE THE MESSAGE INDEPENDENTLY FOR EACH SIGN. IT IS PREFERRED THAT THE CONTROL PANEL AND THE WIRELESS OPERATOR BE ON ONE SYSTEM. THE WIRELESS SYSTEM SHALL BE INSTALLED SO THAT IT WORKS FROM THE DOT MAINTENANCE BUILDING FOR OUTSIDE TEMPERATURES RANGING FROM –34 TO +160 DEGREES FAHRENHEIT.
6. THE SIGN MOUNT SHALL CONSIST OF A TWO–POST SYSTEM. INSTALLATION PER STANDARD DRAWING S–31.02 WITH A FRANGIBLE COUPLING SYSTEM FOR W–SHAPE POST. USE W6 X 12 POST SIZE. THE BOTTOM EDGE OF THE SIGN HOUSING HALL BE INSTALLED 7–FEET ABOVE THE ADJACENT ROADWAY CENTERLINE ELEVATION. THE SIGN POST SPACING SHALL BE 7–FEET.
7. PROTECTION OF WIRES BETWEEN THE LAST J–BOX AND THE SIGN SHALL CONSIST OF RMC STUBBED UP UNDER THE SIGN 6–INCHES ABOVE GROUND, ADJACENT TO THE POST FOUNDATION FURTHEST FROM TRAFFIC, INTO A CONDUIT BOX RATED FOR WET LOCATION. WIRES BETWEEN THE BOX AND THE SIGN SHALL RUN IN A 1–INCH LIQUIDTIGHT FLEXIBLE METALLIC CONDUIT (LFMC). FINAL CONNECTIONS SHALL BE FIELD FIT AND CODE COMPLIANT.
8. THE CONTRACTOR SHALL BE RESPONSIBLE FOR FIELD LOCATES OF OTHER BURIED UTILITIES PRIOR TO DIGGING AND SHALL BE RESPONSIBLE FOR THEIR REPAIR IF DAMAGED. CONTACT LOCAL UTILITY COMPANIES, SOME UTILITIES MAY NOT BE SHOWN IN THE PLANS.
9. PROVIDE AND INSTALL ANY NECESSARY SOFTWARE ON DOT MAINTENANCE COMPUTERS OR DEVICES TO PROPERLY OPERATE ELECTRONIC MESSAGE SIGNS.
10. PLACE CLOSEST SIGN COMPONENT AT LEAST 42 FEET FROM ROAD CENTERLINE.

Preliminary Plans

VMS–ELECTRONIC INFORMATION SIGN DETAIL

STATE OF ALASKA 49TH
Russell M. Johnson
C.E. 9963
REGISTERED PROFESSIONAL ENGINEER

PLANS DEVELOPED BY: STATE OF ALASKA DEPARTMENT OF TRANSPORTATION & PUBLIC FACILITIES, NORTHERN REGION, 2301 PEGER ROAD, FAIRBANKS, AK 99709 (907)451–2200
H:\Projects\Rich_Hwy\60638_Rich_115_148\06 Design\05 Civil 3D\05_00265 128–138\03_Drafting\00265_ELEC_MESS_SIGN–H7 VMS–ELECTRONIC INFORMATION SIGN DETAIL Thu, Apr/28/22 11:51am

NO.	DATE	REVISION

STATE	PROJECT DESIGNATION	YEAR	SHEET NO.	TOTAL SHEETS
ALASKA	PENDING/NFHWY00265	2021	H8	H10

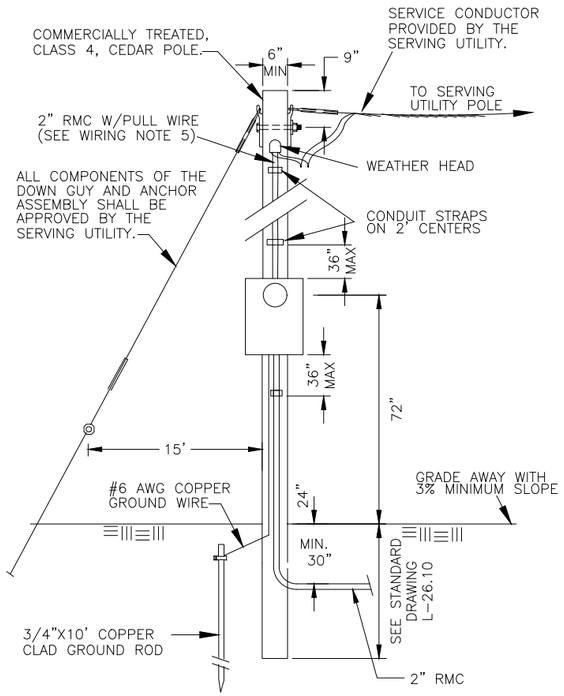

TYPE 3 LOAD CENTER

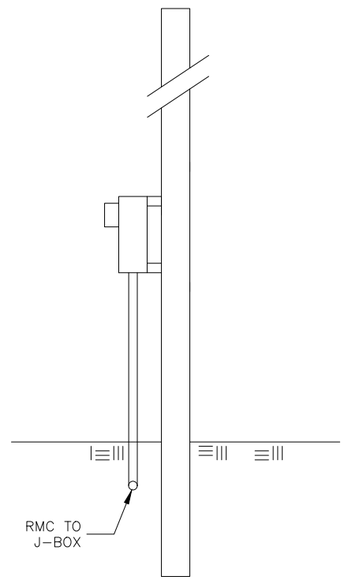

TYPE 3 LOAD CENTER PROFILE VIEW

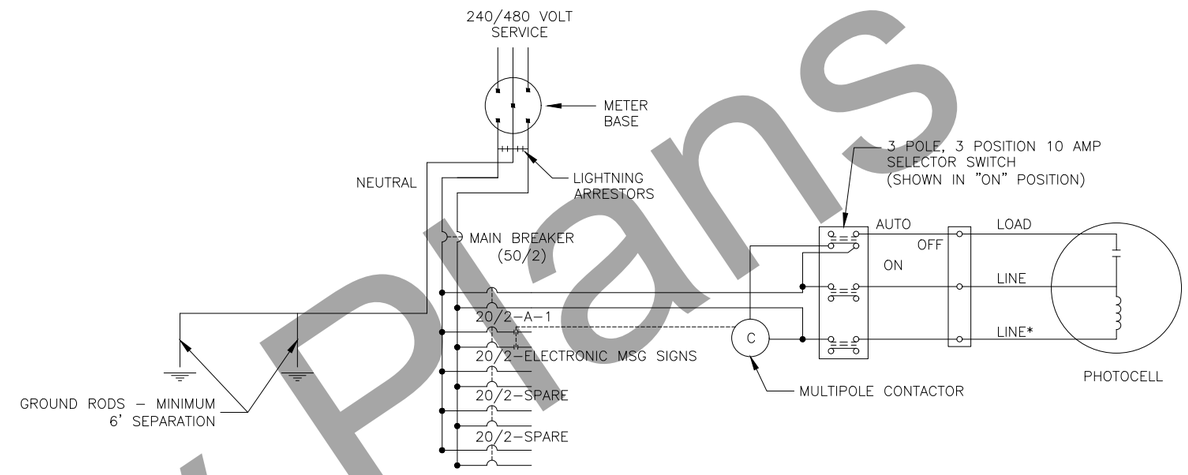

ONE LINE DIAGRAM

REVISES STANDARD DRAWING L-26.10

TYPE 3 LOAD CENTER - USED FOR LIGHTING EQUIPMENT

*GROUNDED NEUTRAL IF SERVICE IS 240/480 VOLT SINGLE PHASE OR 277/480 VOLT THREE-PHASE; AND UNDERGROUND LINE, IF SERVICE IS 120/240 VOLT SINGLE PHASE.

XXX A MINIMUM BUS AMPACITY

WIRING NOTES:

1. FURNISH ALL EQUIPMENT NOTED IN THE LOAD CENTER SUMMARY, PLUS TWO 20-AMP 2-POLE SPARE CONDUIT BREAKERS, AND SPACE FOR A MINIMUM OF TWO ADDITIONAL TWO-POLE CIRCUIT BREAKERS, IN EACH LOAD PANEL. SEE SUMMARIES FOR LOAD PANEL VOLTAGES, CURRENT RANKINGS, SHORT CIRCUIT INTERRUPTING RATINGS, AND THE NAME OF THE SERVING UTILITY.
2. SIZE THE TYPE 3 LOAD CENTER CABINETS TO HOLD THE EQUIPMENT SHOWN IN THE WIRING DIAGRAM AND DETAILED IN EACH LOAD CENTER SUMMARY, ALLOWING SPACE FOR WIRING PER THE NATIONAL ELECTRICAL CODE. INSTALLING A METER BASE AND MAIN BREAKER IN A SEPARATE ENCLOSURE IS ALLOWED. HOWEVER IN THIS CASE, FURNISH A BREAKER PANEL WITH A MAIN BREAKER.
3. LABEL ALL CIRCUIT BREAKERS AS TO FUNCTION AND POSITION.
4. STORE A CIRCUIT DIRECTORY AND A MATERIALS LIST THAT INCLUDES THE MANUFACTURER'S NAME AND PART/CATALOG NUMBERS, ALL LAMINATED IN PLASTIC, IN A METAL POCKET ATTACHED TO THE INSIDE OF THE LOAD CENTER. INSTALL THE POCKET ON THE LOAD CENTER DOOR, PROVIDING DRAIN HOLES TO PREVENT WATER ACCUMULATION.
5. THE LENGTH AND TYPE OF SERVICE ENTRANCE CONDUIT INSTALLED BY THE CONTRACTOR VARIES BY UTILITY. REGARDLESS OF ITS LENGTH, INSTALL A PULL ROPE IN THE SERVICE CONDUIT AND A CAP ON THE BURIED END; MARK THE BURIED END WITH A 2"x6" STAKE.

LIGHTING LOAD CENTER SUMMARY

STA "O" 5734+01, 67' LT
240/480V SINGLE PHASE SERVICE
UTILITY: GOLDEN VALLEY ELECTRIC ASSOCIATION
50 AMP MAIN CIRCUIT BREAKER
TOTAL CONNECTED LOAD: xxx KVA = A @ V
10 KAIC RATING
FEEDER:

SHORT CIRCUIT CALCULATION - LOAD CENTER

AVAILABLE UTILITY FAULT CURRENT = INFINITE ASSUMED

ANTICIPATED UTILITY TRANSFORMER RATING	=	15 KVA
VOLTAGE	=	240/480 V
TYPE	=	SINGLE PHASE
TRANSFORMER IMPEDANCE	=	%
%Z TOLERANCE	=	%
LINE-LINE SCC AT TRANSFORMER	=	A
LINE-NEUTRAL SCC AT TRANSFORMER	=	A
LENGTH TO FAULT	=	FT
SERVICE CONDUCTOR SIZE	=	AWG / COPPER
UTILITY CONDUIT	=	MAGNETIC
"C" CONSTANT	=	
LINE-LINE SCC AT SERVICE	=	A
LINE-NEUTRAL SCC AT TRANSFORMER	=	A

SHORT CIRCUIT CALCULATION NOTE

CONTRACTOR SHALL VERIFY ACTUAL UTILITY TRANSFORMER AND SERVICE LATERAL CHARACTERISTICS. CONTRACTOR SHALL NOTIFY THE ENGINEER IN THE EVENT THAT ACTUAL VALUES DIFFER FROM THOSE SHOWN ABOVE. PROVIDE EQUIPMENT WITH SHORT CIRCUIT RATINGS BASED ON REVISED ENGINEER CALCULATIONS AS NECESSARY.

LIGHTING - LOAD CENTER DETAILS

STATE OF ALASKA 49TH REGISTERED PROFESSIONAL ENGINEER

Preliminary Plans

PLANS DEVELOPED BY: STATE OF ALASKA DEPARTMENT OF TRANSPORTATION & PUBLIC FACILITIES, NORTHERN REGION, 2301 PEGER ROAD, FAIRBANKS, AK 99709 (907)451-2200
H:\Projects\Rich_Hwy\60638_Rich_115_148\07 Eng Support\7 Traffic\Lighting\Lighting-Load Center Details Thu, Apr/28/22 11:52am

NO.	DATE	REVISION

STATE	PROJECT DESIGNATION	YEAR	SHEET NO.	TOTAL SHEETS
ALASKA	PENDING/NFHWY00265	2021	H9	H10

LIGHTING SYSTEM POLE AND J-BOX WIRING DETAILS

NOTES:

1. LABEL ALL CABLES AND CONDUCTORS IN POLE BASE AND J-BOX.
2. LEAVE ENOUGH SLACK ABOVE THE CONDUCTOR ATTACHMENT BRACKET TO ALLOW THE QUICK DISCONNECT TO BE PULLED 6" OUTSIDE OF HANDHOLE.
3. NOT ALL GROUNDING CONDUCTORS, AS REQUIRED BY SECTION 660-3.06, ARE SHOWN IN THESE DETAILS.

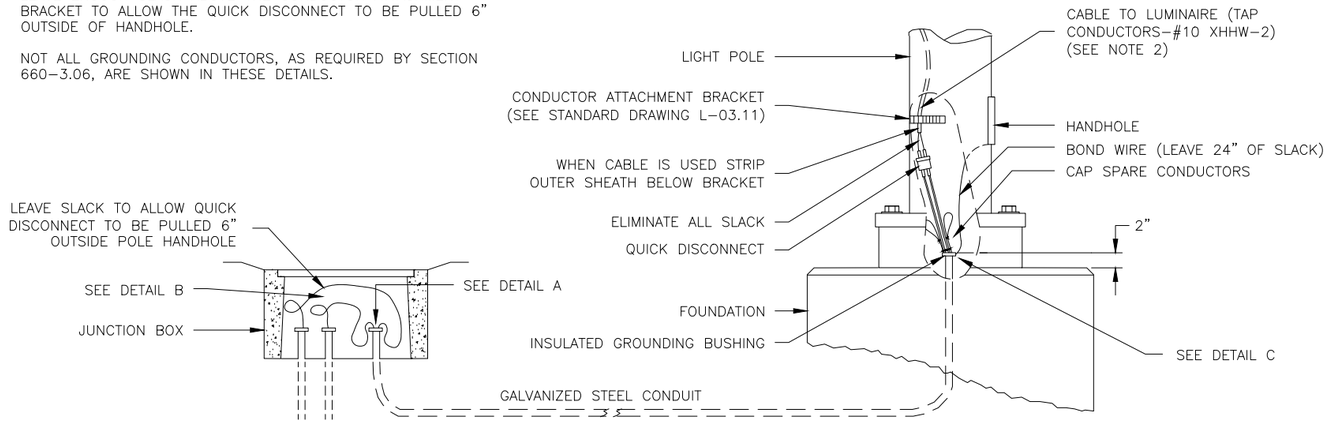

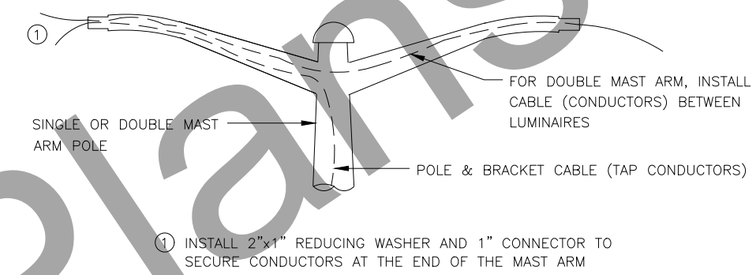

LIGHT STANDARD MAST ARM WIRING DETAIL

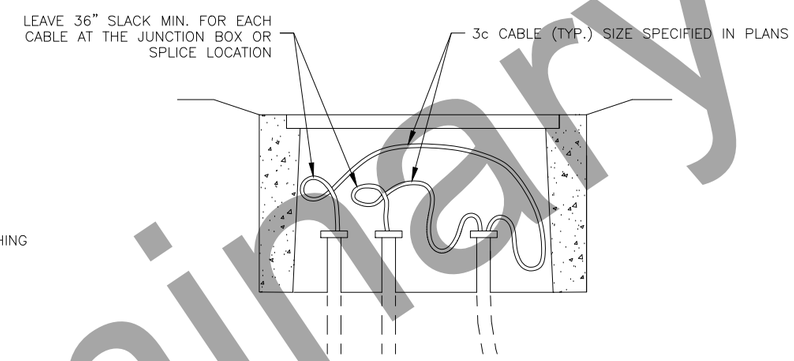

DETAIL B

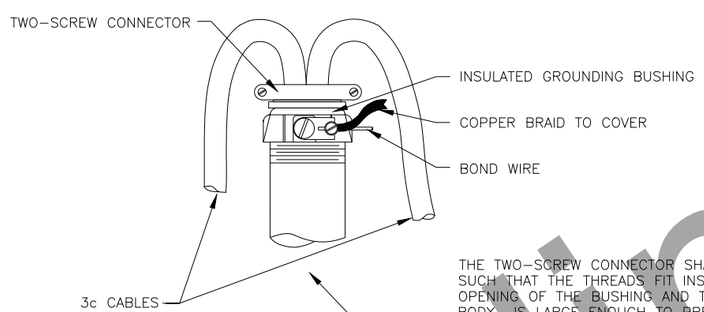

THE TWO-SCREW CONNECTOR SHALL BE SIZED SUCH THAT THE THREADS FIT INSIDE THE OPENING OF THE BUSHING AND THE CONNECTOR BODY IS LARGE ENOUGH TO PREVENT IT FROM SLIPPING THROUGH THE OPENING.

ELIMINATE ALL SLACK BETWEEN TWO-SCREW CONNECTOR AND CONDUCTOR ATTACHMENT BRACKET IN LIGHT POLE

DETAIL A

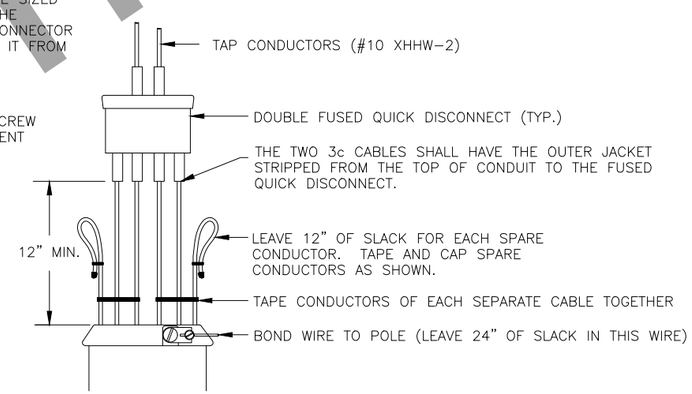

DETAIL C

LIGHT POLE BASE FLANGE DETAIL

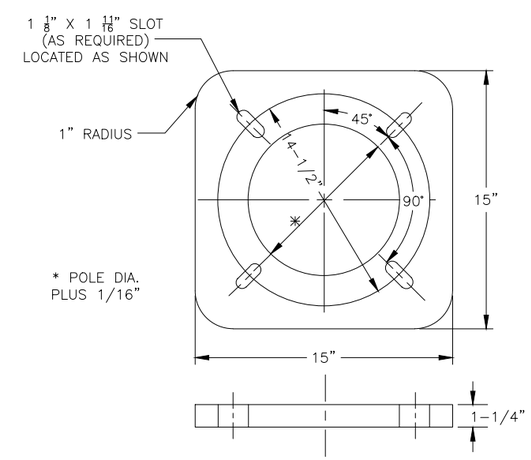

* POLE DIA. PLUS 1/16"

THESE DETAILS MODIFY STANDARD DRAWING L-03.11

STATE OF ALASKA 49TH
Ethan E. Graetz
CE 116455
REGISTERED PROFESSIONAL ENGINEER

LIGHTING – LIGHTING DETAILS

Preliminary Plans

PLANS DEVELOPED BY: STATE OF ALASKA DEPARTMENT OF TRANSPORTATION & PUBLIC FACILITIES, NORTHERN REGION, 2301 PEGER ROAD, FAIRBANKS, AK 99709 (907)451-2200
H:\Projects\Rich_Hwy\60638_Rich_115_148\07 Eng Support\7 Traffic\Lighting\Lighting-Lighting Details Thu, Apr/28/22 11:52am

NO.	DATE	REVISION

STATE	PROJECT DESIGNATION	YEAR	SHEET NO.	TOTAL SHEETS
ALASKA	PENDING/NFHWY00265	2021	H10	H10

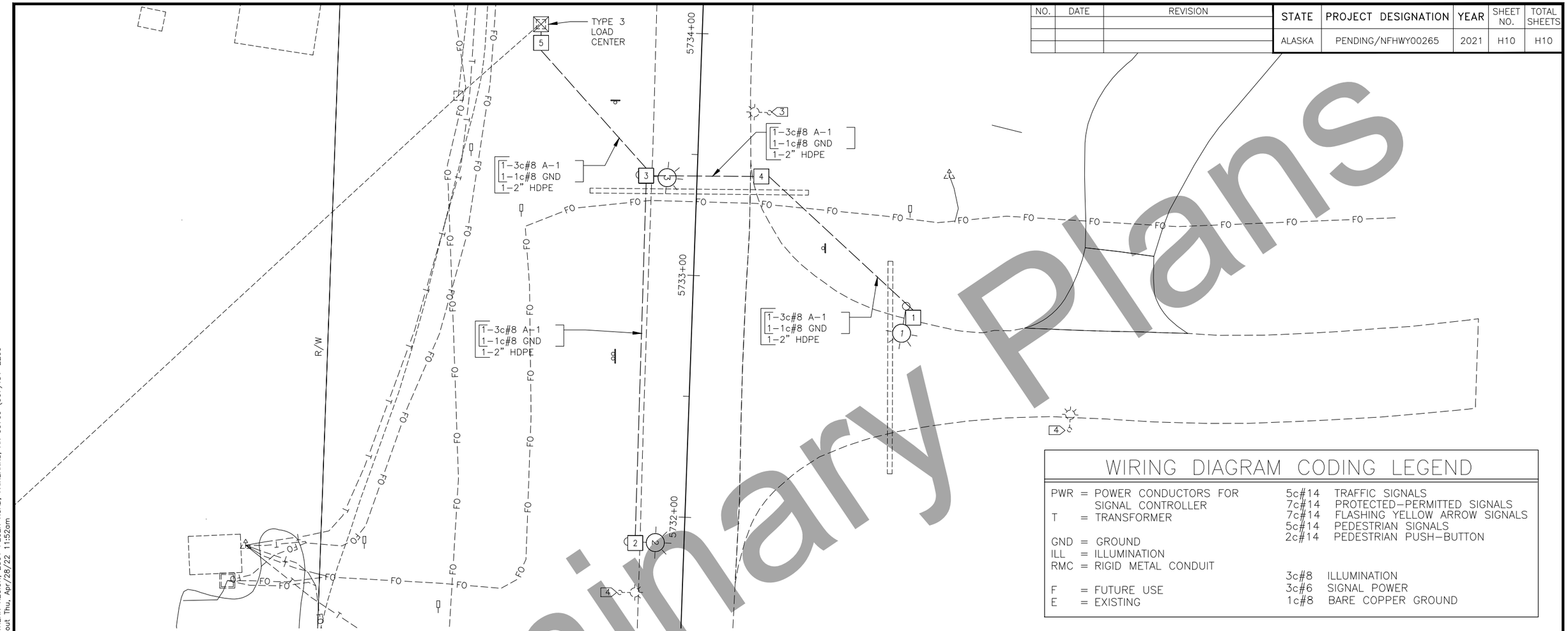

WIRING DIAGRAM CODING LEGEND

PWR = POWER CONDUCTORS FOR SIGNAL CONTROLLER
T = TRANSFORMER

GND = GROUND
ILL = ILLUMINATION
RMC = RIGID METAL CONDUIT

F = FUTURE USE
E = EXISTING

5c#14 TRAFFIC SIGNALS
7c#14 PROTECTED–PERMITTED SIGNALS
7c#14 FLASHING YELLOW ARROW SIGNALS
5c#14 PEDESTRIAN SIGNALS
2c#14 PEDESTRIAN PUSH–BUTTON

3c#8 ILLUMINATION
3c#6 SIGNAL POWER
1c#8 BARE COPPER GROUND

LIGHT POLE AND LUMINAIRE SUMMARY

NO.	STATION	LOCATION		LUMENS	TYPE	LOAD	CIRCUIT	LUMINAIRE ARM LENGTH (FT)	MOUNTING HEIGHT (FT)	REMARKS
		LT	RT							
1	"O" 5732+90		88'	~25K	TYPE III	~214W	A–1	15.25	40	REINSTALL EXISTING LED.
2	"O" 5731+89	23'		~25K	TYPE III	~214W	A–1	12.25	40	REINSTALL EXISTING LED.
3	"O" 5733+41	24'		~25K	TYPE III	~214W	A–1	12.25	40	REINSTALL EXISTING LED.

LIGHTING NOTES:

1. REFER TO STANDARD DRAWING L–30.11 FOR FOUNDATION DESIGN. USE 9' FOUNDATION DEPTH FOR ALL ELECTROLIERS.
2. USE LUMINAIRES WITH A 7–PIN RECEPTACLE WITH SHORTING CAP.

3. REMOVE EXISTING LUMINAIRE.

4. SALVAGE EXISTING LED LUMINAIRE AND INSTALL ON LIGHT #2.

J–BOX LOCATION

J–BOX	STATION	LOCATION		CIRCUIT	TYPE	REMARKS
		LT	RT			
1	"O" 5732+90		85'	A–1	1A	
2	"O" 5731+89	20'		A–1	1A	
3	"O" 5733+41	21'		A–1	1A	
4	"O" 5733+42		22'	A–1	1A	
5	"O" 5733+95	67'		A–1	1A	

LIGHTING LEVEL SUMMARY

	ILLUMINANCE (fc)	E_{avg}/E_{min}
TARGET	1.8	3.0
DESIGN	1.96	1.78

LIGHTING – LIGHTING LAYOUT

STATE OF ALASKA 49TH
Ethan E. Graetz
CE 116455
REGISTERED PROFESSIONAL ENGINEER

Preliminary Plans

PLANS DEVELOPED BY: STATE OF ALASKA DEPARTMENT OF TRANSPORTATION & PUBLIC FACILITIES, NORTHERN REGION, 2301 PEGER ROAD, FAIRBANKS, AK 99709 (907)451-2200
H:\Projects\Rich_Hwy\60638_Rich_115_148\07 Eng Support\7 Traffic\Lighting\Lighting-Lighting Layout Thu, Apr/28/22 11:52am

STATE	PROJECT DESIGNATION	YEAR	SHEET NO.	TOTAL SHEETS
ALASKA	NFHWY00265/Z902650000	2018	Q1	Q11

ESCP GENERAL NOTES:

GENERAL:

1. READ AND COMPLY WITH THE CONSTRUCTION GENERAL PERMIT (CGP) AND SECTION 641 OF THE PROJECT SPECIFICATIONS.
2. INITATE EROSION AND SEDIMENT CONTROLS PRIOR TO ANY EARTH DISTURBING ACTIVITIES.
3. ALL DISTURBED GROUND CAPABLE OF SUPPORTING VEGETATION SHALL BE RE-VEGETATED FOR FINAL STABILIZATION. FINAL STABILIZED AREAS NOT RE-VEGETATED SHALL BE 100% COVERED BY ROCK OR OTHER PERMANENT LOW-ERODIBLE MATERIAL. ATTAINMENT OF FINAL STABILIZATION SHALL BE AS APPROVED IN THE FIELD BY THE ENGINEER.
4. STOCKPILE AND STAGING LOCATIONS SHALL BE RECLAIMED TO THEIR ORIGINAL CONDITION AS APPROVED BY THE ENGINEER.
5. TEMPORARY BMP'S REQUIRED BY THIS ESCP WILL NOT BE MEASURED FOR PAYMENT AND ARE SUBSIDIARY TO PAY ITEM 641.0003.0000.

CULVERTS:

6. PROVIDE TEMPORARY INLET AND OUTLET PROTECTION FOR ALL CULVERTS (EXISTING AND PROPOSED) IN THE AREA OF DISTURBANCE PRIOR TO MAKING THEM OPERATIONAL OR BEGINNING EARTH DISTURBING ACTIVITIES.
7. PERMANENT CULVERT INLET AND OUTLET PROTECTION SHALL BE CULVERT RIPRAP APRONS. SEE THE CULVERT SUMMARY FOR RIPRAP CLASS. SEE SHEETS E1-E7 FOR CULVERT AND CULVERT RIPRAP APRON INSTALLATION DETAILS.

DITCH PROTECTION AND CONCENTRATED FLOWS:

8. DURING CONSTRUCTION, PROTECT DITCHES TO LIMIT RELEASE OF SEDIMENT. IF DITCH LINING PER THE PLANS IS NOT CONSTRUCTED SIMULTANEOUSLY WITH EMBANKMENT CONSTRUCTION, PROVIDE TEMPORARY DITCH PROTECTION IN THE FORM OF VELOCITY CONTROLS OR TEMPORARY NON-ERODIBLE LINING.
9. EXPOSED MATERIAL OF NEW DITCHES CAPABLE OF SUPPORTING VEGETATION SHALL BE SEEDED OR DITCH LINED PER THE PLANS FOR FINAL STABILIZATION.
10. WHEN POSSIBLE, AVOID CONDITIONS WHICH PROMOTE CONCENTRATED FLOWS. OTHERWISE, INSTALL VELOCITY CONTROL BMPS (I.E. WATTLE CHECK DAMS OR ROCK CHECK DAMS) OR NON-ERODIBLE CHANNEL LINING (I.E. DITCH LINING).

PERIMETER CONTROL:

11. VEGETATIVE BUFFER IS THE PREFERRED PERIMETER PROTECTION FOR THIS PROJECT EXCEPT AT ADJACENT WETLANDS AND WHERE VEGETATIVE BUFFER WIDTH IS NOT 24 FEET.

HAULING:

12. ENSURE LOADS ARE STABLE OR COVERED SO THAT NO MATERIAL ESCAPEMENT OCCURS DURING HAULING ACTIVITIES.

STOCKPILE PROTECTION:

13. ALL ERODIBLE STOCKPILES MUST BE PROTECTED BY EROSION AND SEDIMENT CONTROL DEVICES.
14. EROSION AND SEDIMENT CONTROL BMPS MAY HAVE TO BE REMOVED AND RE-INSTALLED EACH SHIFT.
15. COVER MUST BE USED ON STOCKPILES IN ACCORDANCE WITH SUBSECTION 641-3.01.5 TO PROVIDE ADDITIONAL EROSION PROTECTION.

IN WATER WORK

16. ALL IN WATER WORK WILL BE ISOLATED FROM FLOWING WATER.

TIMING OF BMP INSTALLATION:

17. INSTALL EROSION AND SEDIMENT CONTROL BMP'S PRIOR TO THE START OF CONSTRUCTION, AS NECESSARY TO MINIMIZE EROSION FROM DISTURBED SURFACES AND CAPTURE SEDIMENT ONSITE.
18. INSTALL TEMPORARY PERIMETER CONTROL BMP'S BEFORE ANY UP-GRADIENT SOIL DISTURBANCE OCCURS.
19. START PLACEMENT OF DITCH LINING OR OTHER DISSIPATION MEASURES WITHIN 24 HOURS OF PLACEMENT OF THE CULVERT AND COMPLETED IN ON CONTINUOUS OPERATION.

WINTER SHUTDOWN:

20. IF FINAL STABILIZATION IS NOT ACHIEVED BEFORE WINTER SHUTDOWN, EXPOSED GROUND, INCLUDING BUT NOT LIMITED TO EMBANKMENT SLOPES AND STOCKPILES, SHALL BE TEMPORARILY STABILIZED FOR SPRING BREAK-UP AND UNTIL PERMANENT STABILIZATION IS ACHIEVED THE NEXT SEASON. ALL STABILIZATION AND OTHER EROSION CONTROL MEASURES NECESSARY FOR WINTER SHUTDOWN ARE SUBSIDIARY TO PAY ITEM 641.0003.0000.

WETLANDS IN MATERIAL SITES:

21. AVOID IMPACTS OF WETLANDS WITHIN MATERIAL SITES MADE AVAILABLE WITHIN THESE PLANS. IF WETLANDS ARE UNAVOIDABLE, NOTIFY THE ENGINEER AT LEAST 60 DAYS PRIOR TO ANY EARTH DISTURBING ACTIVITY WITHIN THE MATERIAL SITES, AND IDENTIFY ALL POTENTIAL IMPACTS TO WETLANDS WITHIN THE SITE; IDENTIFY WHETHER THESE IMPACTS ARE TEMPORARY OR PERMANENT, AND PROVIDE DETAILED DRAWINGS DELINEATING THE PROPOSED IMPACT AREAS.
22. GRADE MATERIAL SITE FLOOR(S) TO RETAIN ALL WATER WITHIN EACH SITE AND TO AVOID ANY STORM WATER DISCHARGE FROM THE SITES DURNING AND AFTER CONSTRUCTION.

ENVIRONMENTAL INFORMATION

- RECEIVING WATER BODIES: GULKANA RIVER, SOURDOUGH CREEK, POPLAR GROVE CREEK AN ADJACENT WETLANDS.
- IMPAIRED WATER BODIES: NONE
- TOTAL MAXIMUM DAILY LOAD (TMDL) WATERS: NONE
- THREATENED AND ENDANGERED SPECIES: THIS PROJECT AND ITS SUPPORT AREAS DO NOT CONTAIN ANY KNOWN ESA SPECIES OR HABITAT.
- HISTORIC PLACES: NO HISTORIC PROPERTIES HAVE BEEN IDENTIFIED IN THE PROJECT AREA.
- MIGRATORY BIRD TREATY: ALL CONSTRUCTION ACTIVITIES SHALL COMPLY WITH THE MIGRATORY BIRD TREATY ACT TO PREVENT THE KILLING OR TAKING OF MIGRATORY BIRDS OR ANY PART, NEST, OR EGG OF ANY SUCH BIRDS.
- WETLANDS: SHOWN ON SUBSEQUENT Q SHEETS
- REFER TO APPENDIX A FOR PROJECT SPECIFIC PERMITS AND ENVIRONMENTAL COMMITMENTS

GENERAL SITE INFORMATION

- SITE FUNCTION: ROAD
- CLIMATE: AVERAGE ANNUAL TOTAL PRECIPITATION = 15.91 INCHES (SOURCE: WESTERN REGIONAL CLIMATE CENTER WEBSITE FOR SOURDOUGH 1N (508625), AK), 2-YEAR 24-HOUR PRECIPITATION = 1.08 INCHES (SOURCE: http://hdsc.nws.noaa.gov/hdsc/pfds/pfds_map_ak.html)
- MATERIAL SITES: (PENDING) OR M.S.71-3-015-5 (HOGAN HILL SOUTH QUARRY).
- STAGING AREAS: M.S.71-3-016-5

THREATENED AND ENDANGERED SPECIES

ACCORDING TO THE LIST PUBLISHED AT:
HTTP://WWW.FAKR.NOAA.GOV/PROTECTEDRESOURCES/ESA/AK_SPECIESLST051110.PDF,
THERE ARE NO THREATENED AND ENDANGERED SPECIES LISTED FOR THIS AREA.

IF EAGLE NEST(S) ARE IDENTIFIED BY DOT&PF OR THE CONTRACTOR STAFF WITHIN 1/2 MILE OF THE CONSTRUCTION ACTIVITY, THE PROJECT ENGINEER SHALL BE INFORMED AND THE ENGINEER SHALL CONSULT THE USFWS FOR MEASURES TO PROTECT THE NEST FROM DISTURBANCES.

WILDLIFE & WATERFOWL REFUGES:

ALL PROJECT WORK WILL TAKE PLACE INSIDE THE EXISTING DOT&PF RIGHT-OF-WAY (ROW)' THE WRANGELL-ST. ELIAS NATIONAL PARK & PRESERVE IS LOCATED SOUTH OF THE PROJECT CORRIDOR. ITS NORTHERN MOST BOUNDARY IS THE COPPER RIVER WHICH DOES NOT ABUT THE EXISTING DOT&PF RIGHT-OF-WAY. THE WRANGELL-ST. ELIAS NATIONAL PARK & PRESERVE IS A SECTION 4(f) PROTECTED RESOURCE AND NO IMPACTS WILL OCCUR.

PROJECT AREA	397 ACRES
DISTURBED AREA	85 ACRES
PRE-CONSTRUCTION IMPERVIOUS AREA	200,000 SY
POST-CONSTRUCTION IMPERVIOUS AREA	201,000 SY
PRE-CONSTRUCTION RUNOFF COEFFICIENT	0.7
POST-CONSTRUCTION RUNOFF COEFFICIENT	0.7

NOTE: PROJECT AREA AND DISTURBED AREA CALCULATIONS DO NOT INCLUDE MATERIALS SITES OR ACCESS ROADS TO THOSE SITES.

Preliminary Plans

ESCP

STATE OF ALASKA 49TH
Russell M. Johnson
C.E. 9963
REGISTERED PROFESSIONAL ENGINEER

PLANS DEVELOPED BY: STATE OF ALASKA DEPARTMENT OF TRANSPORTATION & PUBLIC FACILITIES, NORTHERN REGION, 2301 PEGER ROAD, FAIRBANKS, AK 99709 (907)451-2200
H:\Projects\Rich_Hwy\60638_Rich_115_148\06 Design\05 Civil 3D\05_00265 128-138\03_Drafting\00265_Erosion Control-Q1 ESCP Thu, Apr/28/22 11:52am

NO.	DATE	REVISION

STATE	PROJECT DESIGNATION	YEAR	SHEET NO.	TOTAL SHEETS
ALASKA	PENDING/NFHWY00265	2021	Q2	Q11

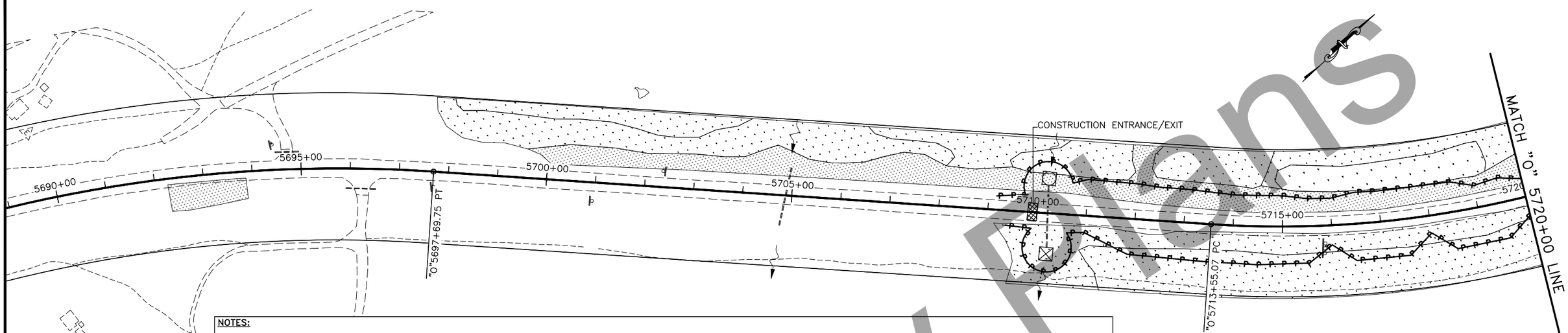

NOTES:

1. VELOCITY CONTROLS INCLUDE WATTLE CHECK DAMS OR ROCK CHECK DAMS OR OTHER METHOD AS APPROVED BY THE ENGINEER. VELOCITY CONTROLS ARE REQUIRED AT LOCATIONS OF HIGH VELOCITY FLOW.
2. INSTALL PERIMETER PROTECTION WHEN WORKING WITHIN 25 FEET OF SURFACE WATER. IF PERIMETER VEGETATIVE BUFFER WIDTH IS INSUFFICIENT, USE TEMPORARY DEVICES AND METHODS DESCRIBED BELOW.
3. ALL IN WATER WORK MUST BE ISOLATED FROM FLOWING WATER. ISOLATION METHODS INCLUDE:
   - SILT CURTAINS
   - COFFERDAMS
   - OTHER METHODS APPROVED BY THE ENGINEER
5. EXPECT TO ENCOUNTER PERMAFROST AND FROZEN SOILS DURING EXCAVATION ACTIVITIES. BMPs MUST BE IMPLEMENTED TO CONTAIN AND TREAT RUNOFF FROM THAWING OF EXPOSED PERMAFROST AND FROZEN SOILS.
6. EXPECT THE DISTRIBUTION OF FROZEN SOILS TO VARY.
7. EXPECT WATER TABLE ELEVATIONS TO FLUCTUATE IN RESPONSE TO CHANGING RIVER LEVELS AND PRECIPITATION.

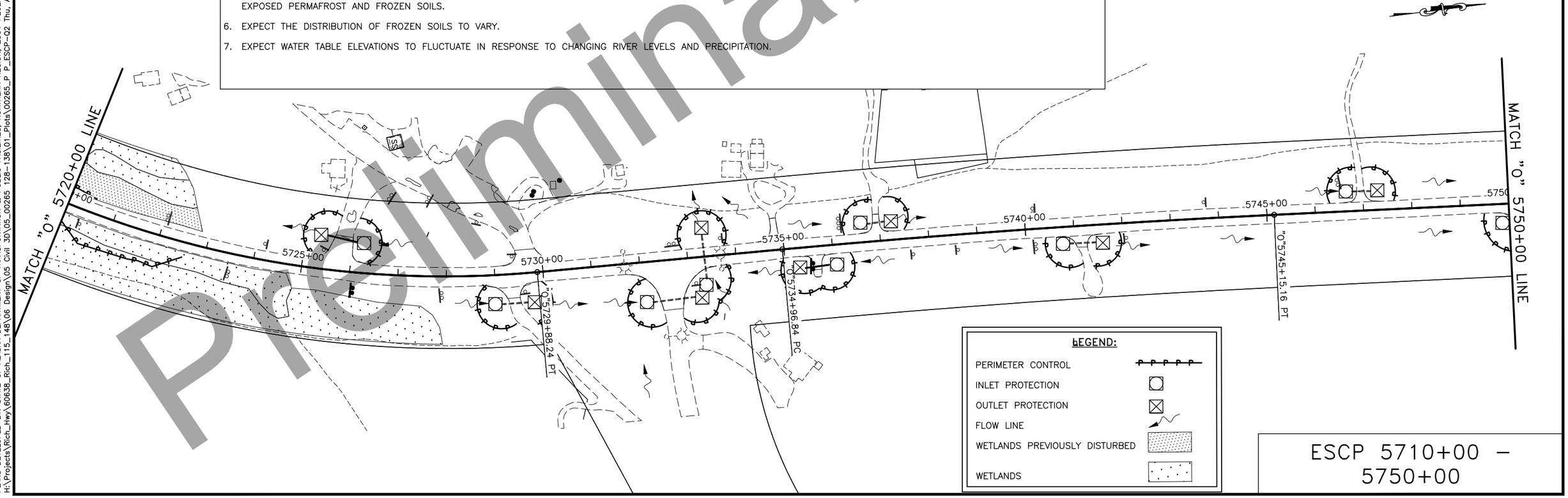

ESCP 5710+00 – 5750+00

Preliminary Plans

PLANS DEVELOPED BY: STATE OF ALASKA DEPARTMENT OF TRANSPORTATION & PUBLIC FACILITIES, NORTHERN REGION, 2301 PEGER ROAD, FAIRBANKS, AK 99709 (907)451-2200
H:\Projects\Rich_Hwy\60638_Rich_115_148\06 Design\05 Civil 3D\05_00265 128-138\01_Plots\00265_P P_ESCP-Q2 Thu, Apr/28/22 11:53am

NO.	DATE	REVISION

STATE	PROJECT DESIGNATION	YEAR	SHEET NO.	TOTAL SHEETS
ALASKA	PENDING/NFHWY00265	2021	Q3	Q11

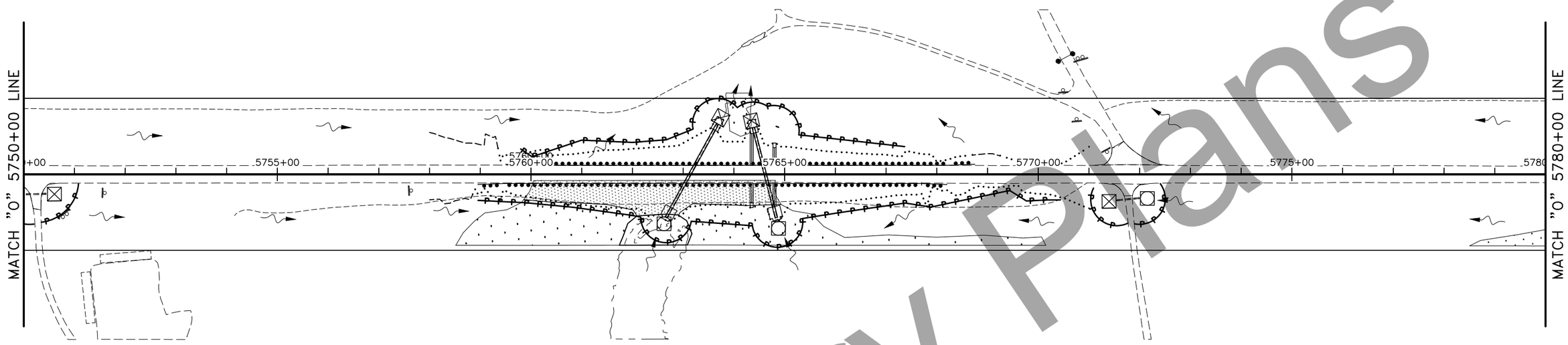

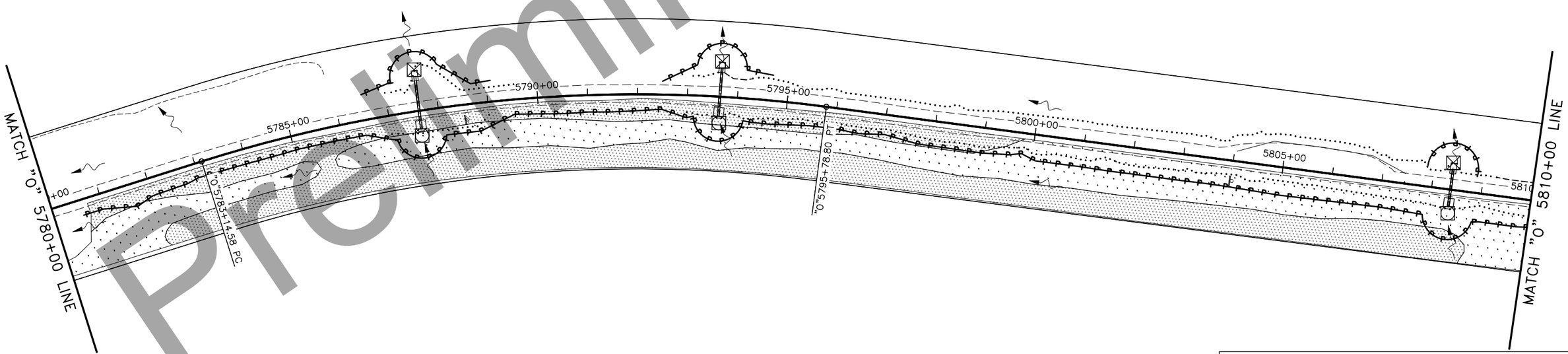

ESCP 5750+00 – 5810+00

Preliminary Plans

PLANS DEVELOPED BY: STATE OF ALASKA DEPARTMENT OF TRANSPORTATION & PUBLIC FACILITIES, NORTHERN REGION, 2301 PEGER ROAD, FAIRBANKS, AK 99709 (907)451-2200
H:\Projects\Rich_Hwy\60638_Rich_115_148\06 Design\05 Civil 3D\05_00265 128-138\01_Plots\00265_P P_ESCP-Q3 Thu, Apr/28/22 11:53am

NO.	DATE	REVISION

STATE	PROJECT DESIGNATION	YEAR	SHEET NO.	TOTAL SHEETS
ALASKA	PENDING/NFHWY00265	2021	Q4	Q11

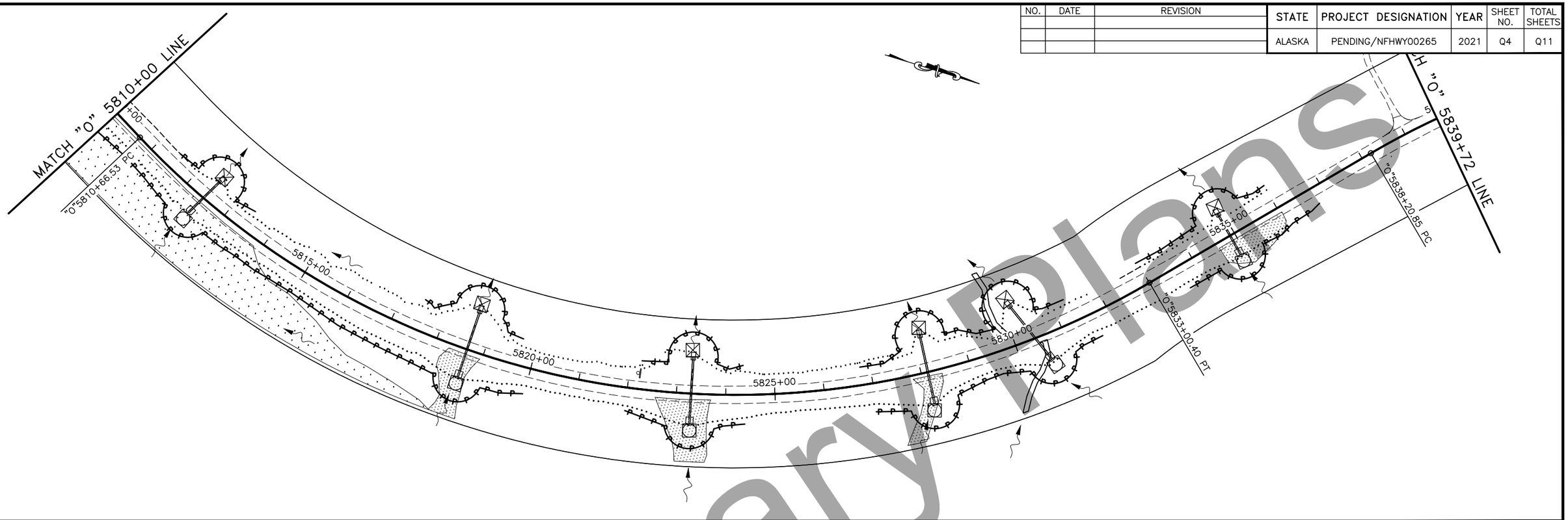

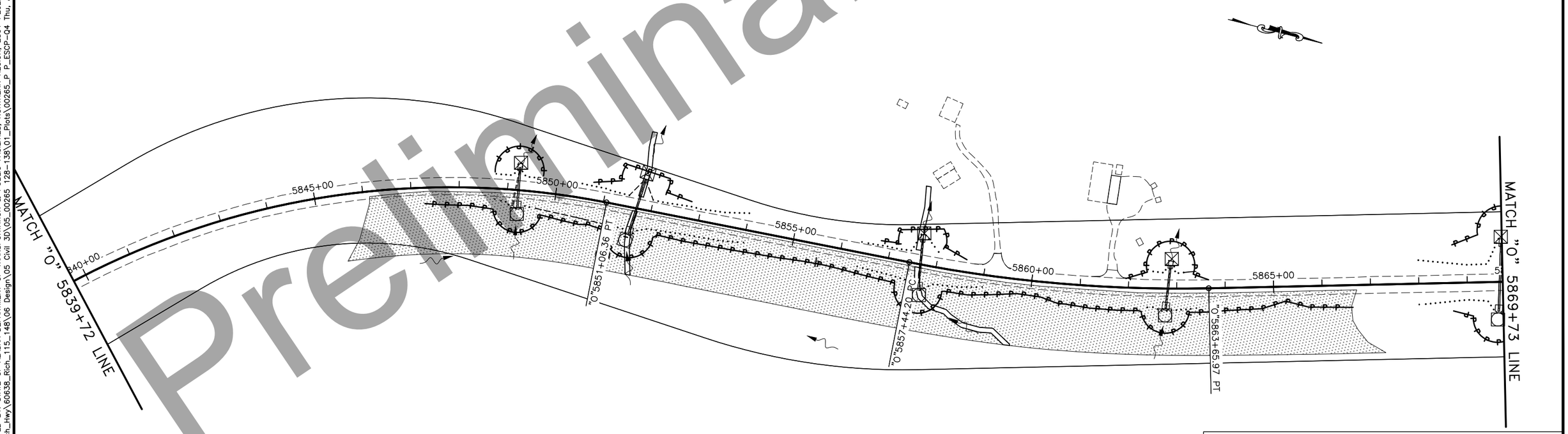

ESCP 5810+00 – 5870+00

Preliminary Plans

PLANS DEVELOPED BY: STATE OF ALASKA DEPARTMENT OF TRANSPORTATION & PUBLIC FACILITIES, NORTHERN REGION, 2301 PEGER ROAD, FAIRBANKS, AK 99709 (907)451-2200
H:\Projects\Rich_Hwy\60638_Rich_115_148\06 Design\05 Civil 3D\05_00265 128-138\01_Plots\00265_P P_ESCP-Q4 Thu, Apr/28/22 11:54am

NO.	DATE	REVISION

STATE	PROJECT DESIGNATION	YEAR	SHEET NO.	TOTAL SHEETS
ALASKA	PENDING/NFHWY00265	2021	Q5	Q11

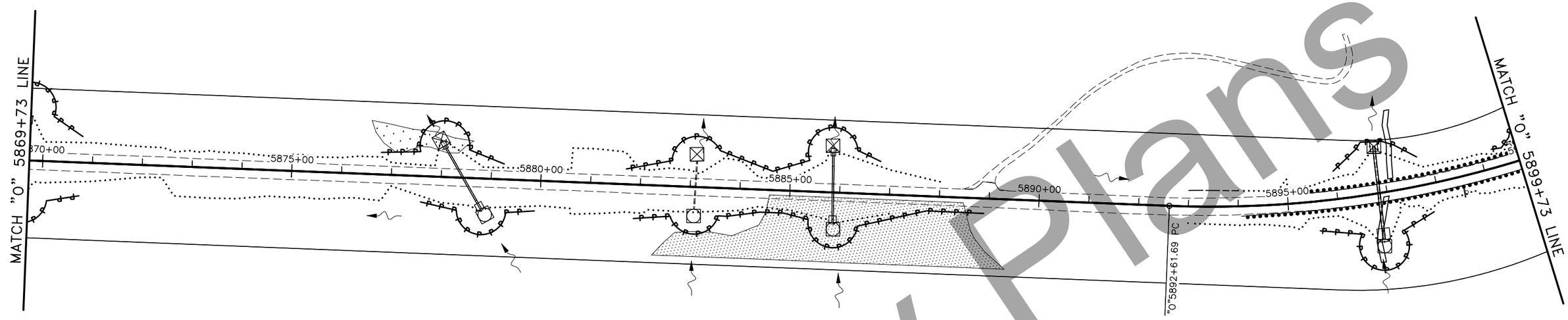

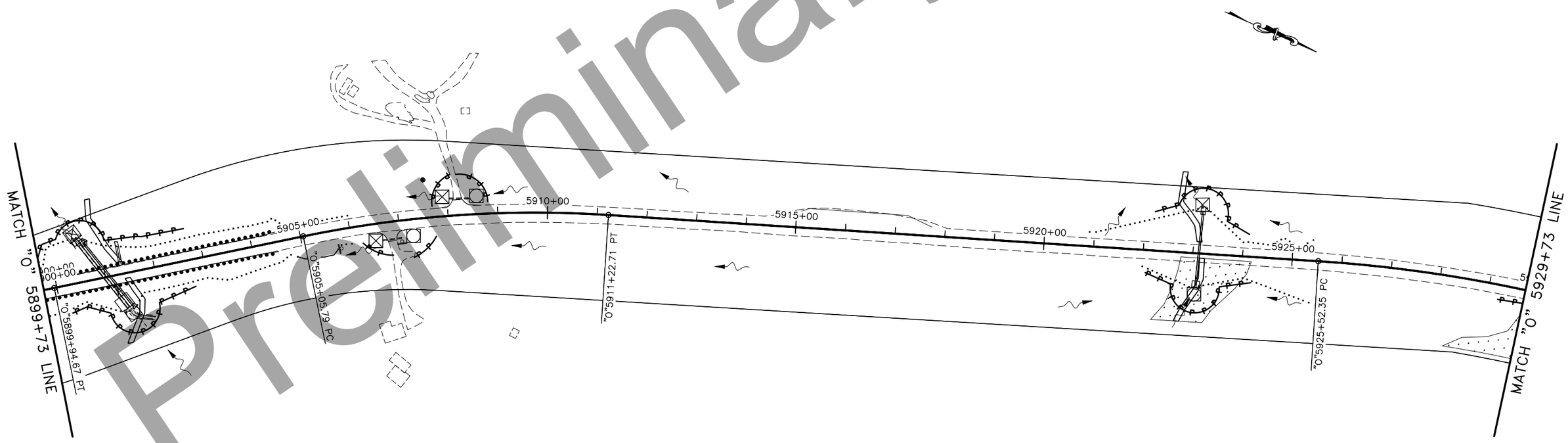

ESCP 5870+00 – 5930+00

Preliminary Plans

PLANS DEVELOPED BY: STATE OF ALASKA DEPARTMENT OF TRANSPORTATION & PUBLIC FACILITIES, NORTHERN REGION, 2301 PEGER ROAD, FAIRBANKS, AK 99709 (907)451-2200
H:\Projects\Rich_Hwy\60638_Rich_115_148\06 Design\05 Civil 3D\05_00265 128-138\01_Plots\00265_P P_ESCP-Q5 Thu, Apr/28/22 11:54am

NO.	DATE	REVISION

STATE	PROJECT DESIGNATION	YEAR	SHEET NO.	TOTAL SHEETS
ALASKA	PENDING/NFHWY00265	2021	Q6	Q11

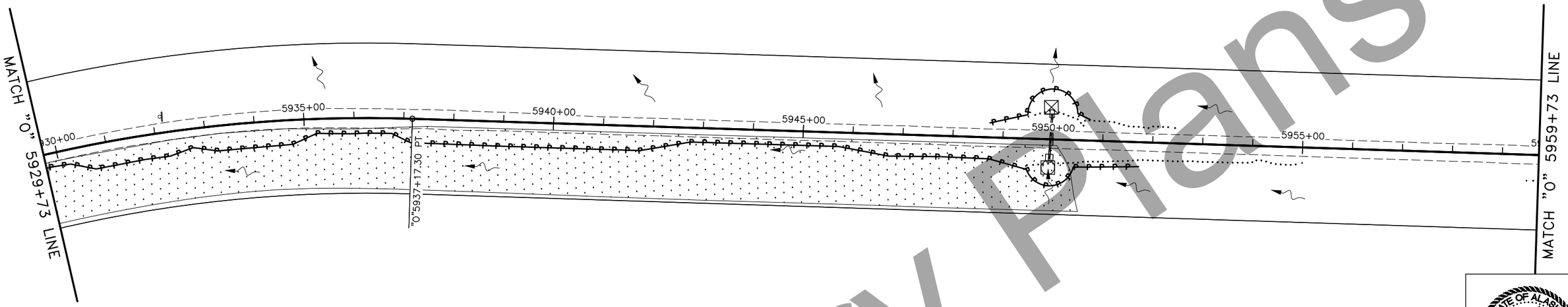

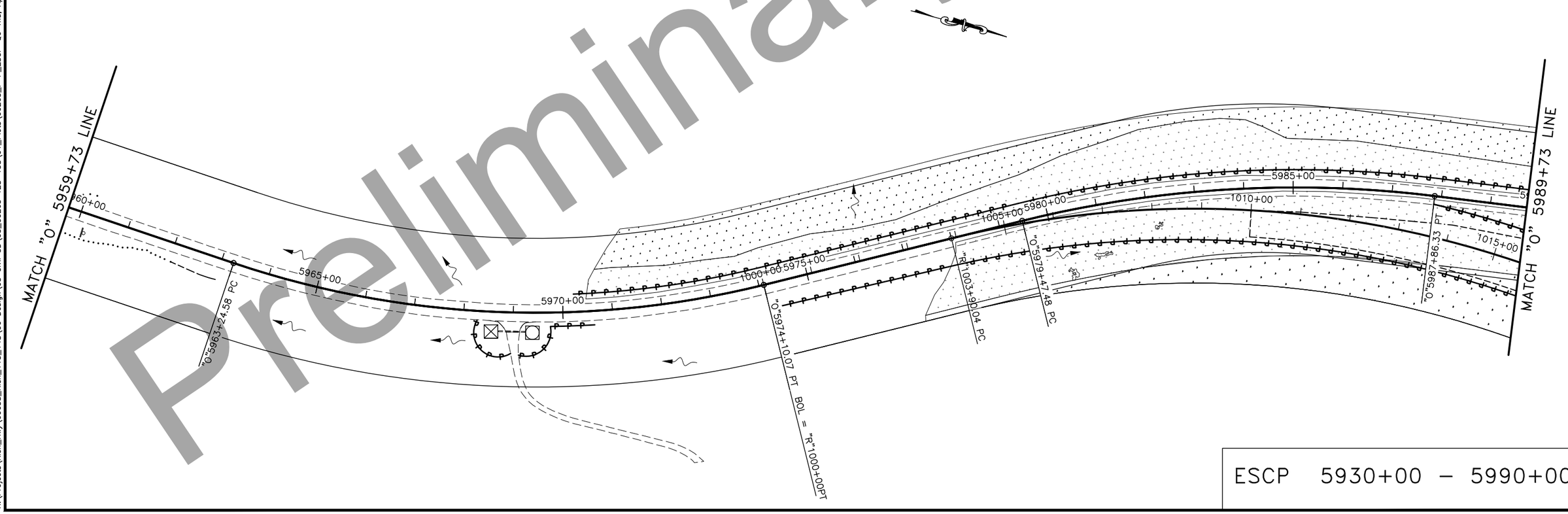

STATE OF ALASKA
49 TH
Russell M. Johnson
C.E. 9963
REGISTERED PROFESSIONAL ENGINEER

ESCP 5930+00 – 5990+00

Preliminary Plans

PLANS DEVELOPED BY: STATE OF ALASKA DEPARTMENT OF TRANSPORTATION & PUBLIC FACILITIES, NORTHERN REGION, 2301 PEGER ROAD, FAIRBANKS, AK 99709 (907)451-2200
H:\Projects\Rich_Hwy\60638_Rich_115_148\06 Design\05 Civil 3D\05_00265 128-138\01_Plots\00265_P P_ESCP-Q6 Thu, Apr/28/22 11:54am

NO.	DATE	REVISION

STATE	PROJECT DESIGNATION	YEAR	SHEET NO.	TOTAL SHEETS
ALASKA	PENDING/NFHWY00265	2021	Q7	Q11

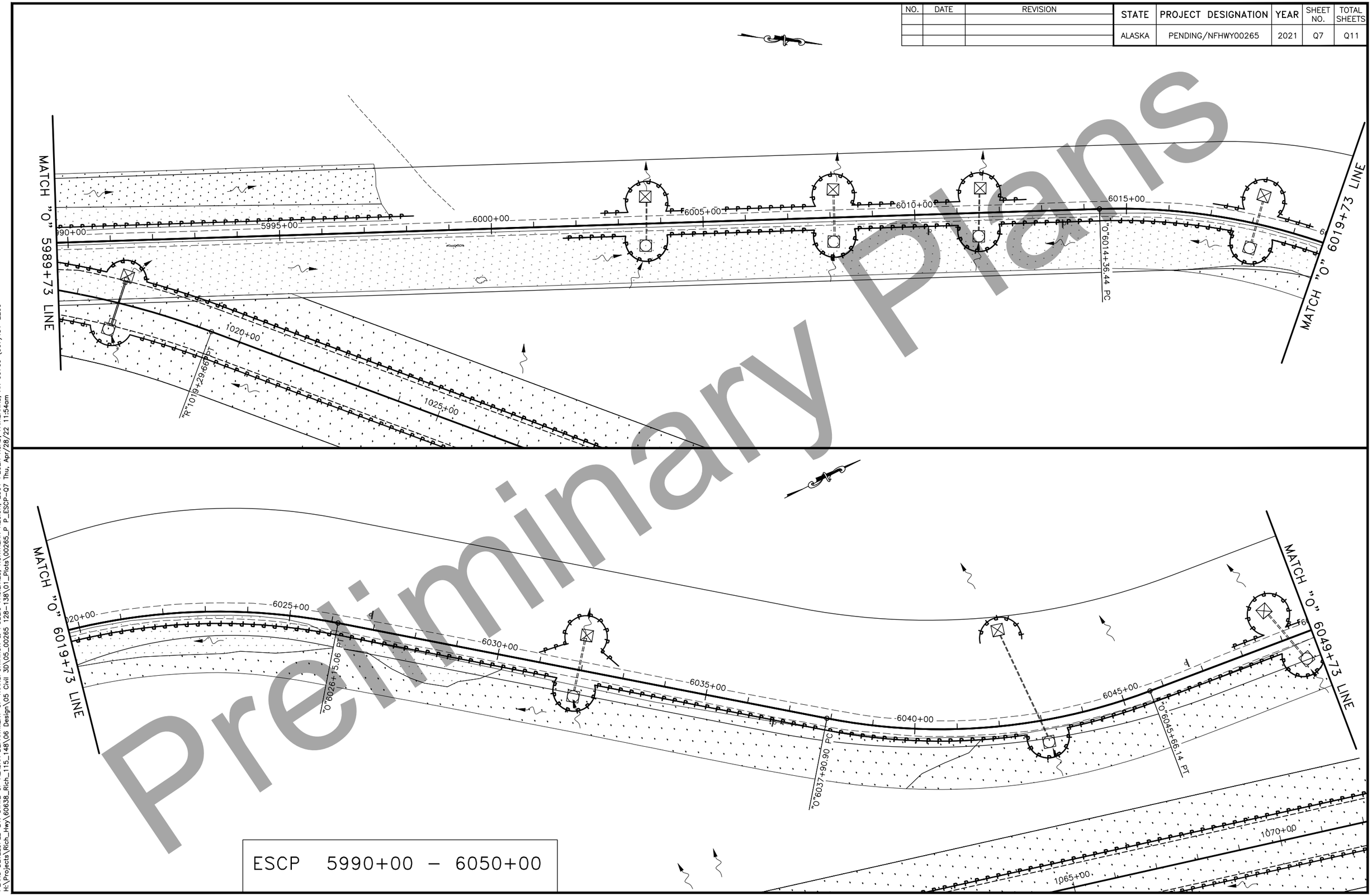

ESCP 5990+00 – 6050+00

Preliminary Plans

PLANS DEVELOPED BY: STATE OF ALASKA DEPARTMENT OF TRANSPORTATION & PUBLIC FACILITIES, NORTHERN REGION, 2301 PEGER ROAD, FAIRBANKS, AK 99709 (907)451-2200
H:\Projects\Rich_Hwy\60638_Rich_115_148\06 Design\05 Civil 3D\05_00265 128-138\01_Plots\00265_P P_ESCP-Q7 Thu, Apr/28/22 11:54am

NO.	DATE	REVISION

STATE	PROJECT DESIGNATION	YEAR	SHEET NO.	TOTAL SHEETS
ALASKA	PENDING/NFHWY00265	2021	Q8	Q11

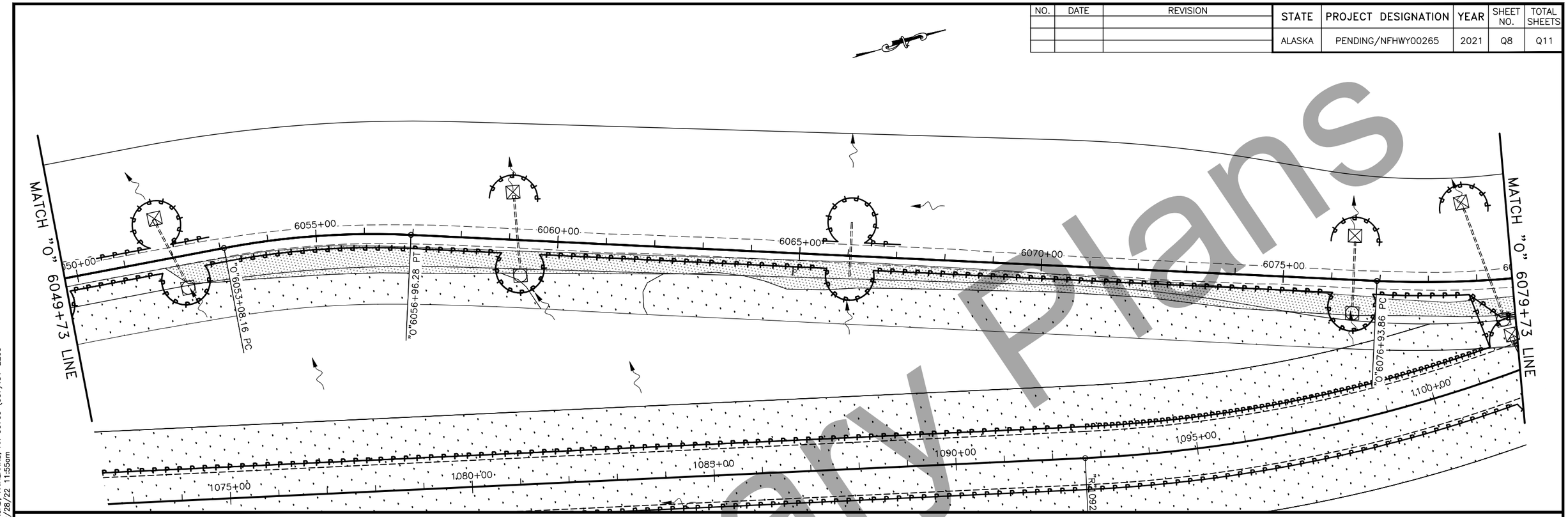

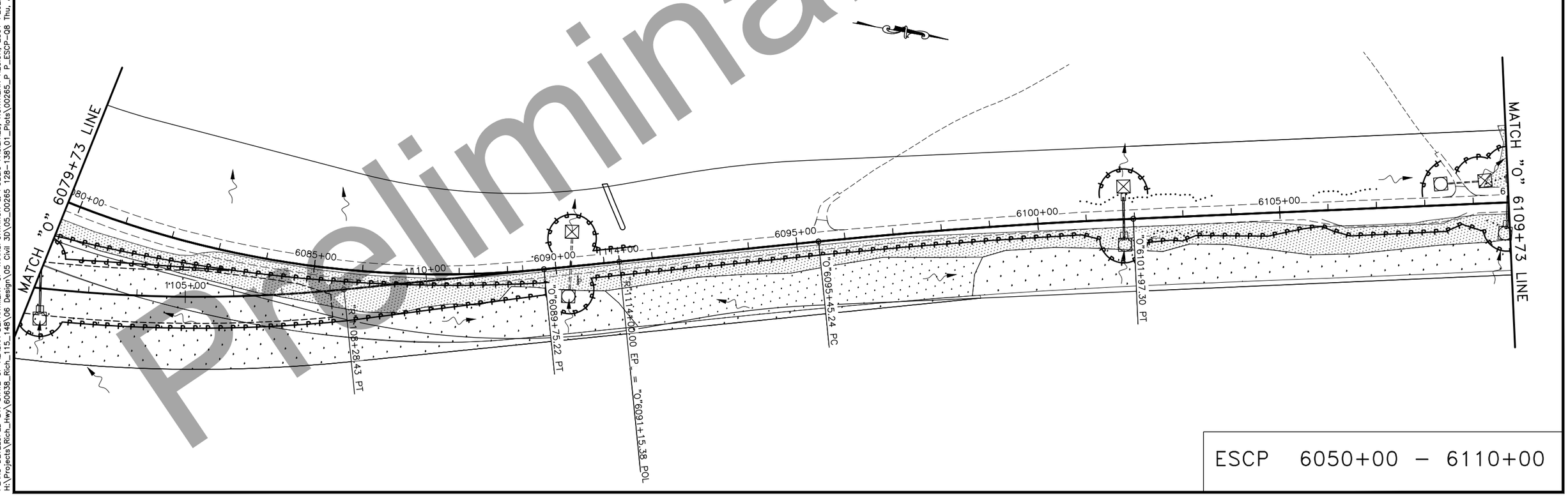

ESCP 6050+00 – 6110+00

Preliminary Plans

PLANS DEVELOPED BY: STATE OF ALASKA DEPARTMENT OF TRANSPORTATION & PUBLIC FACILITIES, NORTHERN REGION, 2301 PEGER ROAD, FAIRBANKS, AK 99709 (907)451-2200
H:\Projects\Rich_Hwy\60638_Rich_115_148\06 Design\05 Civil 3D\05_00265 128-138\01_Plots\00265_P P_ESCP-Q8 Thu, Apr/28/22 11:55am

NO.	DATE	REVISION

STATE	PROJECT DESIGNATION	YEAR	SHEET NO.	TOTAL SHEETS
ALASKA	PENDING/NFHWY00265	2021	Q9	Q11

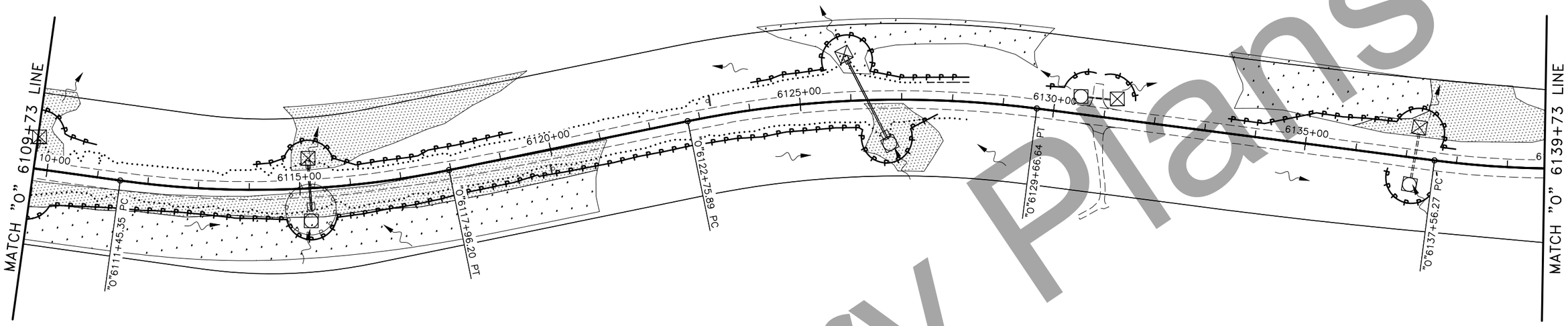

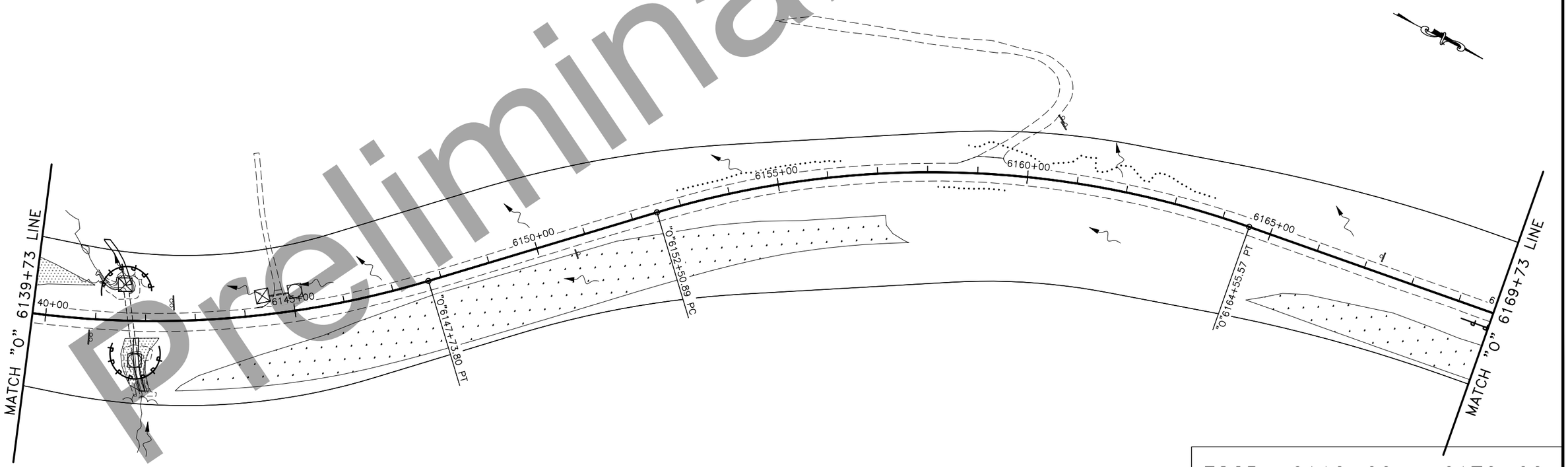

ESCP 6110+00 – 6170+00

Preliminary Plans

PLANS DEVELOPED BY: STATE OF ALASKA DEPARTMENT OF TRANSPORTATION & PUBLIC FACILITIES, NORTHERN REGION, 2301 PEGER ROAD, FAIRBANKS, AK 99709 (907)451-2200
H:\Projects\Rich_Hwy\60638_Rich_115_148\06 Design\05 Civil 3D\05_00265 128-138\01_Plots\00265_P P_ESCP-Q9 Thu, Apr/28/22 11:55am

NO.	DATE	REVISION

STATE	PROJECT DESIGNATION	YEAR	SHEET NO.	TOTAL SHEETS
ALASKA	PENDING/NFHWY00265	2021	Q10	Q11

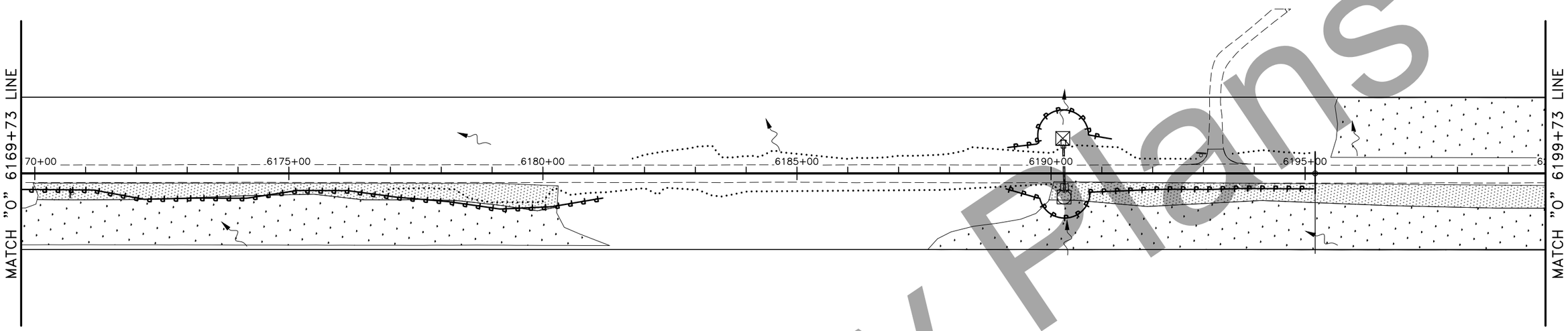

ESCP 6170+00 – 6195+00

Preliminary Plans

PLANS DEVELOPED BY: STATE OF ALASKA DEPARTMENT OF TRANSPORTATION & PUBLIC FACILITIES, NORTHERN REGION, 2301 PEGER ROAD, FAIRBANKS, AK 99709 (907)451-2200
H:\Projects\Rich_Hwy\60638_Rich_115_148\06 Design\05 Civil 3D\05_00265 128-138\01_Plots\00265_P P_ESCP-Q10 Thu, Apr/28/22 11:55am

NO.	DATE	REVISION

STATE	PROJECT DESIGNATION	YEAR	SHEET NO.	TOTAL SHEETS
ALASKA	PENDING/NFHWY00265	2021	Q11	Q11

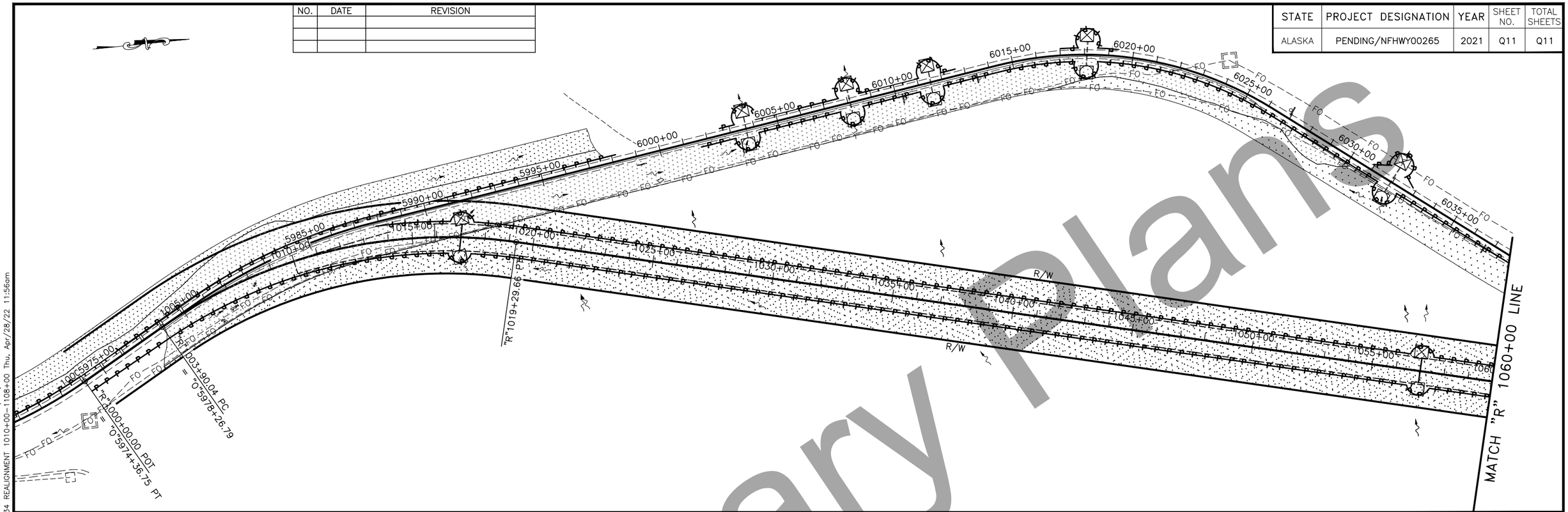

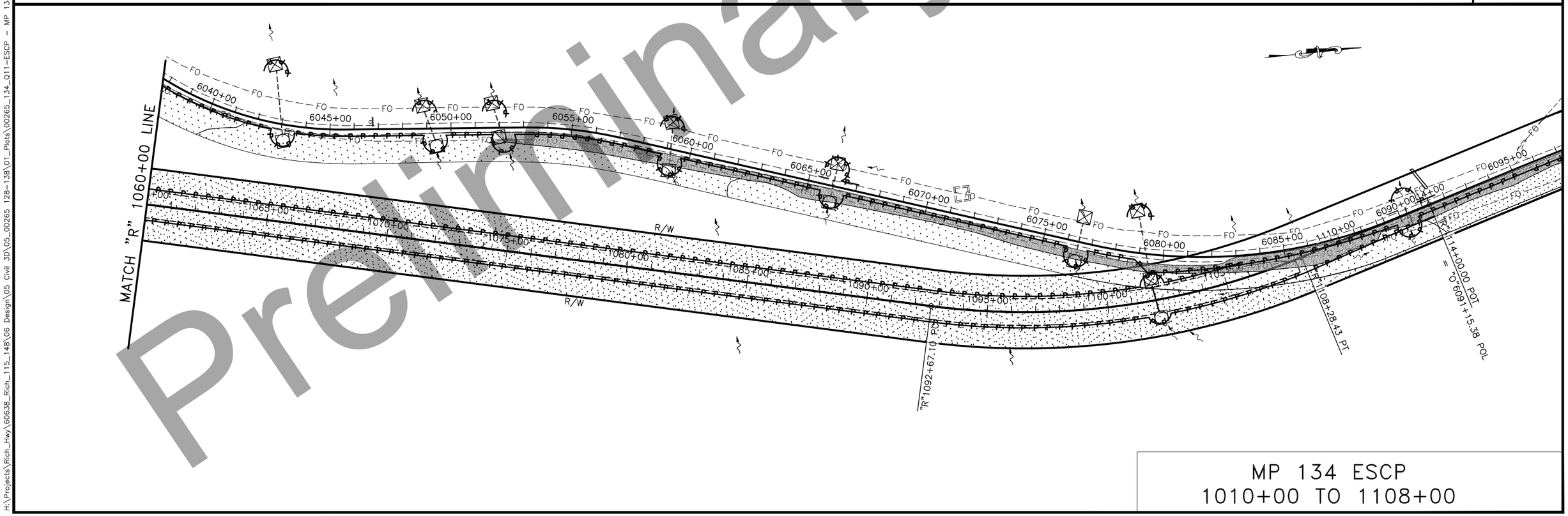

MP 134 ESCP
1010+00 TO 1108+00

Preliminary Plans

PLANS DEVELOPED BY: STATE OF ALASKA DEPARTMENT OF TRANSPORTATION & PUBLIC FACILITIES, NORTHERN REGION, 2301 PEGER ROAD, FAIRBANKS, AK 99709 (907)451-2200
H:\Projects\Rich_Hwy\60638_Rich_115_148\06 Design\05 Civil 3D\05_00265 128-138\01_Plots\00265_134_Q11-ESCP - MP 134 REALIGNMENT 1010+00-1108+00 Thu, Apr/28/22 11:56am

NO.	DATE	REVISION

STATE	PROJECT DESIGNATION	YEAR	SHEET NO.	TOTAL SHEETS
ALASKA	PENDING/NFHWY00265	2021	T1	T2

VERTICAL DROP-OFFS

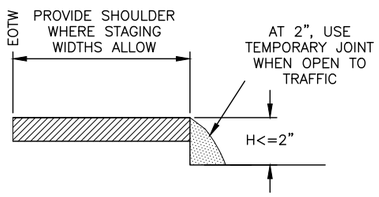

CASE A

DROP-OFFS ≤2 INCHES
(PAVED SURFACES ONLY)

1. USE "UNEVEN LANES" (CW8-11) SIGNS FOR ALL DROP-OFFS IN BETWEEN TRAFFIC LANES.
2. LEAVE NO DROP-OFFS > 1.5" IN THE TRAFFIC LANE OR ACTIVE WHEEL TRACK.

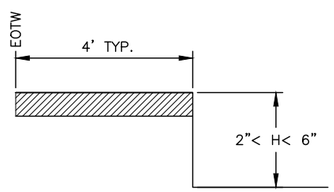

CASE B

2"< DROP-OFFS < 6"
(ALL ROADWAY SURFACES)

1. PLACE CONES OR CANDLES FOR DROP-OFFS ≥ 4 FEET AND ≤ 30 FEET FROM THE EOTW.
2. USE DRUMS OR TYPE II BARRICADES FOR DROP-OFFS < 4 FEET FROM THE EOTW.

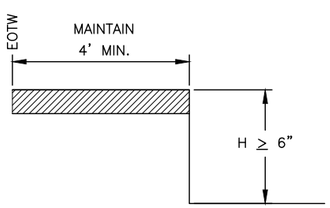

CASE C

DROP-OFFS ≥6"
(ALL ROADWAY SURFACES AND ROADSIDE SLOPES)

1. PLACE DRUMS OR TYPE II BARRICADES FOR DROP-OFFS ≤ 24" WITHIN THE CLEAR AREA.
2. PROVIDE PORTABLE CONCRETE BARRIER FOR DROP-OFFS >24" WITHIN 15 FEET OF THE EOTW. USE DRUMS OR TYPE II BARRICADES IF BEYOND 15 FEET.

FILL SLOPES

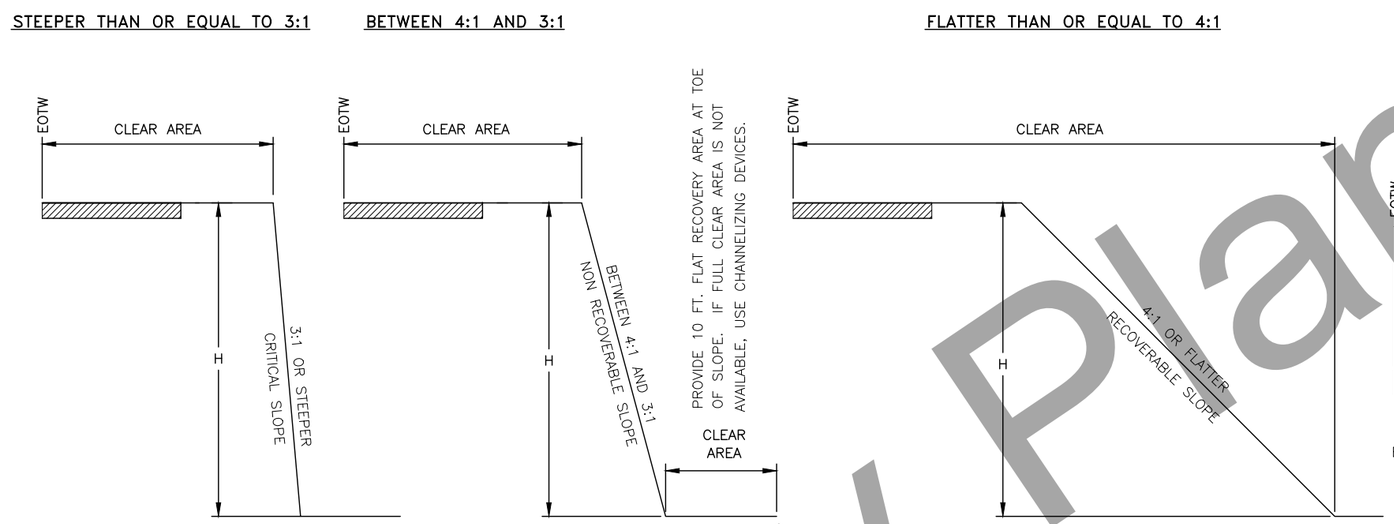

CUT SLOPES

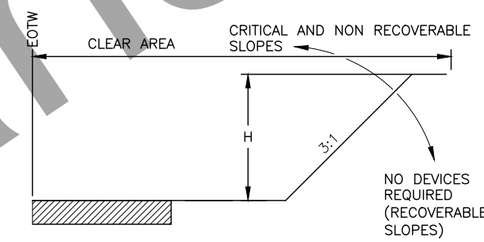

EOTW = EDGE OF TRAVELED WAY

CLEAR AREA REQUIREMENTS

	LOW SPEED < = 35 MPH	INTERMEDIATE SPEED 40 MPH TO 45 MPH	HIGH SPEED ≥ = 50 MPH
RURAL	15'	24'	30'
URBAN	10' DITCH SECTIONS, OR 2' BEHIND CURB	15' DITCH CONDITIONS, OR 2' BEHIND CURB	15' DITCH CONDITIONS, OR 2' BEHIND CURB

CHANNELIZING DEVICE REQUIREMENTS FOR SLOPES 3:1 OR STEEPER WITHIN THE CLEAR AREA

	H <= 15'	H > 15'
< 2000 VPD LOW VOLUME	CANDLES OR CONES	TYPE II BARRICADES OR DRUMS
> 2000 VPD	TYPE II BARRICADE OR DRUMS	PORTABLE CONCRETE BARRIER OR TEMPORARY GUARDRAIL

TRAFFIC CONTROL NOTES:

1. USE THE EXISTING CROSS-SECTION (PRIOR TO CONSTRUCTION) AS A BASIS FOR DETERMINING WHEN CHANNELIZING DEVICES ARE NEEDED.
2. INSTALL CHANNELIZING DEVICES WHEN THE HORIZONTAL OR VERTICAL CURVATURE IS MADE MORE SEVERE.
3. INSTALL FLEXIBLE DELINEATORS WHEN ALL VEGETATION OVER 4 FEET HIGH IS CLEARED FROM FILL SLOPES THAT ARE 3:1 OR STEEPER IN THE CLEAR AREA.
4. USE PORTABLE CONCRETE BARRIER FOR WARRANTING CONDITIONS WHICH LAST LONGER THAN 3 DAYS. FOR CONDITIONS LASTING LESS THAN 3 DAYS, OTHER CHANNELIZING DEVICES MAY BE INSTALLED.
5. TERMINATE RUNS OF PORTABLE CONCRETE BARRIER USING THE FOLLOWING METHODS:
   - A) CONNECT TO A PORTABLE CRASH CUSHION, OR
   - B) PROVIDE A CONCRETE BARRIER WITH THRIE BEAM TRANSITION TO W-BEAM GUARDRAIL, TREATED WITH A PARALLEL TERMINAL (SEE SECTION 710).
   - C) FLARE THE ENDS OF THE PORTABLE CONCRETE BARRIER AWAY FROM THE ROADWAY AT A RATE OF 7:1 ON A COMPACTED SLOPE OF 6:1 OR FLATTER, OUTSIDE OF THE CLEAR AREA. INSTALL A SLOPING PORTABLE CONCRETE BARRIER END TREATMENT, OR
   - D) BURY IN THE BACKSLOPE.
6. TERMINATE THE RUNS OF TEMPORARY W-BEAM GUARDRAIL USING THE FOLLOWING METHODS:
   - A) PROVIDE A PARALLEL TERMINAL (SEE SECTION 710)
   - B) FLARE THE ENDS OF THE TEMPORARY GUARDRAIL AWAY FROM THE ROADWAY AT A RATE OF 6:1 ON A COMPACTED SLOPE OF 6:1 OR FLATTER OUTSIDE OF THE CLEAR AREA, TERMINATE WITH A STANDARD W-BEAM END SECTION, OR
   - C) BURY IN THE BACKSLOPE.

EQUIPMENT NOTES:

1. WHEN THERE IS ACTIVE, NONMOBILE CONSTRUCTION EQUIPMENT WITHIN THE CLEAR AREA, DELINEATE THE ROADSIDE WITH TRAFFIC CONES.
2. SEPARATE PROCEDURES ARE REQUIRED FOR MOBILE WORK ZONE OPERATIONS AND SHORT DURATION WORK OF LESS THAN 12 HOURS.

WINTER SHUTDOWN NOTES:

1. WHEN REQUIRED, USE CHANNELIZING DEVICES WHICH CAN BE MAINTAINED OVER WINTER.
2. NO CHANNELIZING DEVICES ARE REQUIRED IF:
   - A) CONSTRUCTION SLOPES ARE RECOVERABLE, AND
   - B) SLOPES ARE SMOOTH AND COMPACTED, AND
   - C) REQUIRED CLEAR AREA IS PROVIDED

Preliminary Plans

STATE OF ALASKA 49TH
Russell M. Johnson
C.E. 9963
REGISTERED PROFESSIONAL ENGINEER

TRAFFIC CONTROL

PLANS DEVELOPED BY: STATE OF ALASKA DEPARTMENT OF TRANSPORTATION & PUBLIC FACILITIES, NORTHERN REGION, 2301 PEGER ROAD, FAIRBANKS, AK 99709 (907)451-2200
H:\Projects\Rich_Hwy\60638_Rich_115_148\06 Design\05 Civil 3D\05_00265 128-138\03_Drafting\00265_T1-TRAFFIC CONTROL Thu, Apr/28/22 11:56am

NO.	DATE	REVISION

STATE	PROJECT DESIGNATION	YEAR	SHEET NO.	TOTAL SHEETS
ALASKA	PENDING/NFHWY00265	2021	T2	T2

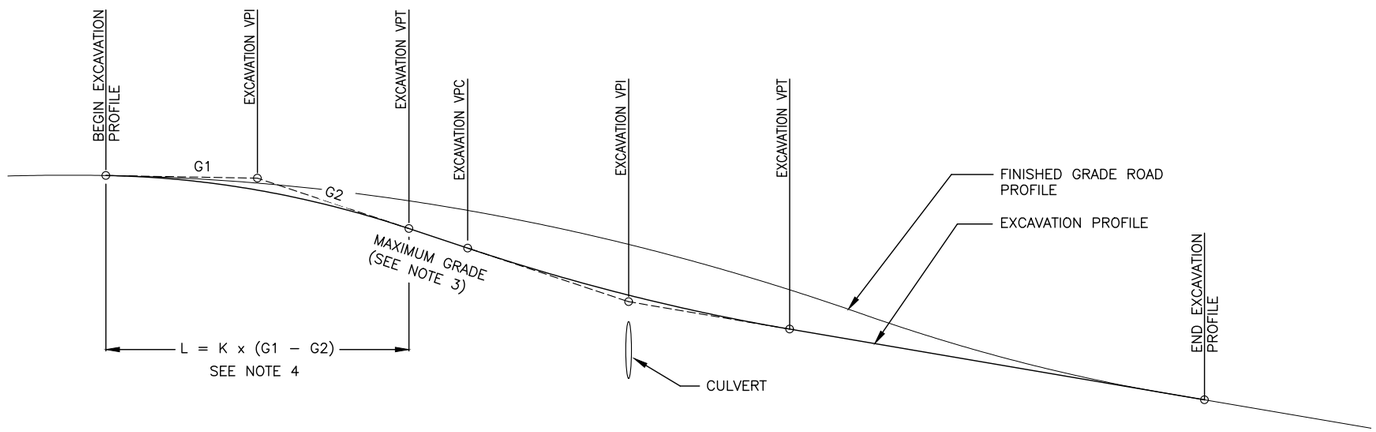

CULVERT EXCAVATION PROFILE

CULVERT EXCAVATION NOTES:

1. THE CONTRACTOR IS RESPONSIBLE FOR DEVELOPING AND SUBMITTING THE EXCAVATION PROFILE AND HORIZONTAL ALIGNMENT TO THE ENGINEER FOR APPROVAL PRIOR TO BEGINNING CULVERT EXCAVATION WORK.
2. HORIZONTAL AND VERTICAL GEOMETRY MAY BE ADJUSTED IN THE FIELD BY THE ENGINEER TO ADJUST FOR EXISTING CONDITIONS
3. THE MAXIMUM ALLOWABLE VERTICAL GRADE IS 8%
4. DETERMINE THE MINIMUM ALLOWABLE LENGTH OF VERTICAL CURVE (L) BY MULTIPLYING THE ALGEBRAIC DIFFERENCE IN GRADES (G1–G2) BY THE APPLICABLE RATE OF VERTICAL CURVATURE RATE (K) GIVEN BELOW:
   - 4.1. FOR CREST VERTICAL CURVES K = 19
   - 4.2. FOR SAG VERTICAL CURVES K = 37
5. MAINTAIN 2 FEET OR GREATER OF COVER OVER THE TOP OF CULVERTS
6. OBTAIN THE ENGINEER'S APPROVAL ON ALL TRAFFIC CONTROL PLANS PRIOR TO EXCAVATING FOR NEW CULVERTS
7. ALL WORK AND RESOURCES REQUIRED TO DEVELOP EXCAVATION PROFILES AND HORIZONTAL ALIGNMENTS ARE SUBSIDIARY TO SERIES 602 AND 603 SERIES PAY ITEMS

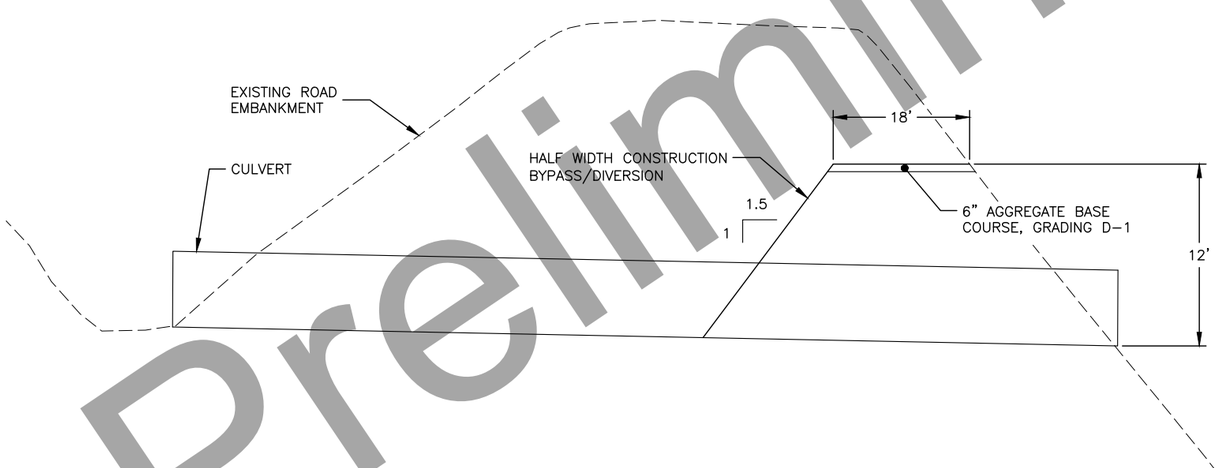

CONSTRUCTION CULVERT REPLACEMENT

TYPICAL SECTION: HALF WIDTH

Preliminary Plans

TRAFFIC CONTROL
CULVERT EXCAVATION

STATE OF ALASKA 49TH
Russell M. Johnson
C.E. 9963
REGISTERED PROFESSIONAL ENGINEER

PLANS DEVELOPED BY: STATE OF ALASKA DEPARTMENT OF TRANSPORTATION & PUBLIC FACILITIES, NORTHERN REGION, 2301 PEGER ROAD, FAIRBANKS, AK 99709 (907)451-2200
H:\Projects\Rich_Hwy\60638_Rich_115_148\06 Design\05 Civil 3D\05_00265 128-138\03_Drafting\00265_MSCL-Details-TRAFFIC CONTROL ROL CULVERT EXCAVATION Thu, Apr/28/22 11:56am

C-04.12 SHEET 1 of 1

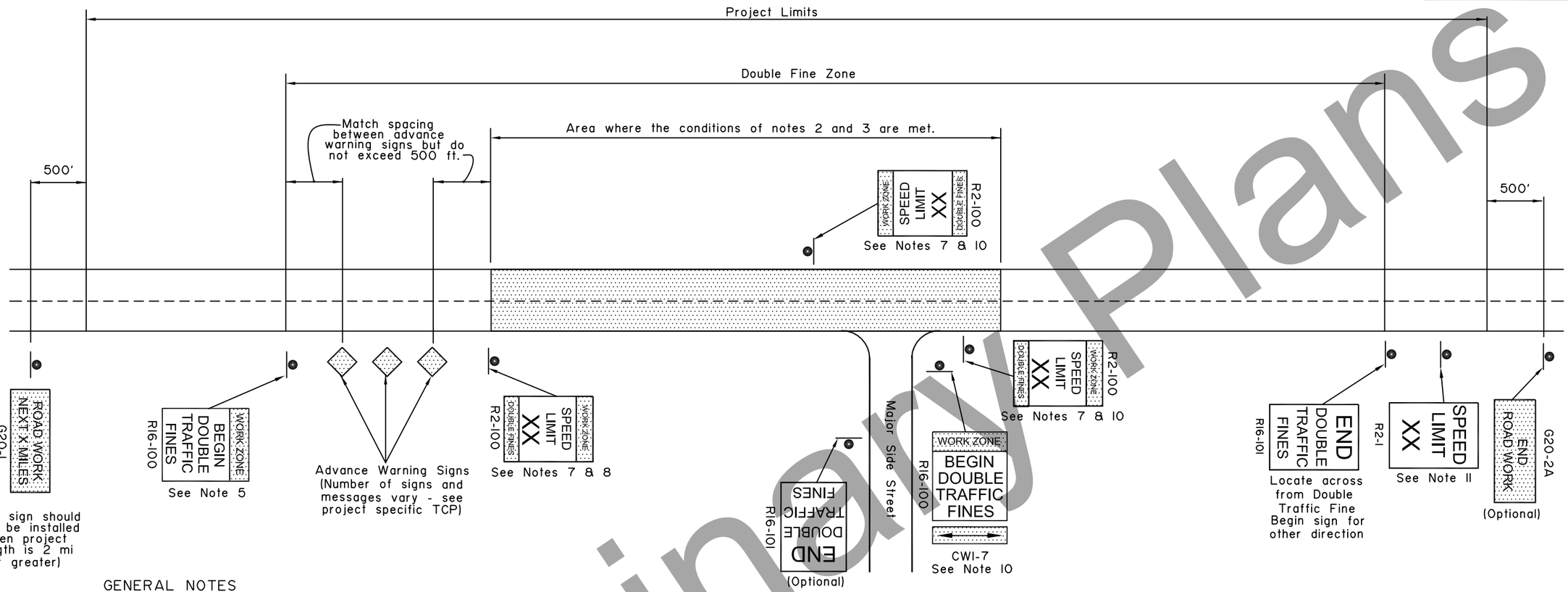

GENERAL NOTES

1. Signs are shown for one direction only (with one exception). Signs for the other direction mirror those shown.

2. Double fine signs shall be used only where one or more of the following conditions exist:
   a. Active work areas (where road workers and/or machines are presently working on or adjacent to a road)
   b. Detours on new temporary roads built for that purpose (this does not include detours on existing streets)
   c. Sections of paved roads where pavement has been removed.
   d. Roads being paved where unmatched asphalt lifts result in a vertical lip between lanes.

3. Double fine signs shall be confined to the areas where the above conditions exist, with the following exceptions:
   a. If the project is 2 miles or shorter in length, the entire project may be posted for double fines when the above conditions exist on any part of the project.
   b. When the above conditions exist at multiple locations separated by less than 2 miles, the locations and the intervening segments may be posted as a single double fine zone.

4. Double fine signs shall be removed or covered when work activity ceases for more than two days and conditions b, c, or d of note 2 are not met.

5. The R16-100 "BEGIN" sign may be used in place of the first advance warning sign. However, when this is done, the appropriate advance warning sign must be reinstalled when the double fine sign is taken down or covered.

6. When a double fine zone is longer than 2 miles, work zone speed limit signs shall be posted at spacings not greater than 2 miles within the double fine zone.

7. "Work zone speed limit signs", as used here, refer either to 1) R2-100 signs or 2) standard R2-1 regulatory speed limit signs with CW20-102 "DOUBLE FINES" plates mounted below.

8. The limit shown on work zone speed limit signs shall be either the existing limit before construction or, if a work zone speed limit order has been approved in accordance with ADOT&PF Procedure 05.05.020 PDR, a reduced limit.

9. All existing regulatory speed limit signs within double fine zones shall either be replaced with R2-100 signs or supplemented with CW20-102 plates.

10. Signs shall be installed at major intersections within the double fine zone to warn entering drivers of double fines. This may be done with a R16-100 sign with a CWI-7 arrow panel on the side street or with two work zone speed limit signs on the main street on either side of the intersection. Use of R16-100 signs on side streets eliminates the need for "Road Work Ahead" signs on those streets. If the speed limit has been reduced, the two work zone speed limit signs are mandatory.

11. At the end of each double fine zone, install an R2-1 sign showing the speed limit for the road beyond the double fine zone.

State of Alaska DOT&PF
ALASKA STANDARD PLAN

LOCATION OF DOUBLE TRAFFIC FINE SIGNS

Adopted as an Alaska Standard Plan by: Kenneth J. Fisher, P.E.
Chief Engineer

Adoption Date: 02/08/2019

Last Code and Stds. Review
By: Date:

Next Code and Standards Review date: 02/08/2029

C-04.12

Preliminary Plans

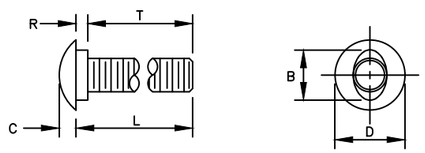

B	C	D	L (Length)	R	T (Thread Length)
15/16"	5/16"	1 5/16" or 1 7/16"	As Required	7/32"	As Required

5/8" BUTTONHEAD BOLT
(FBB01–05)

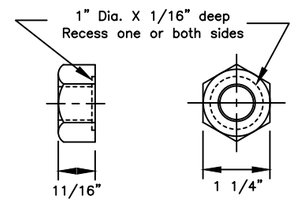

5/8" Dia. RECESSED HEX NUT
(FBB01–05)

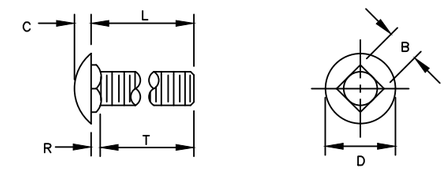

B	C	D	L (Length)	R	T (Thread Length)
5/8"	5/16"	1 5/16"	As Required	3/16"	As Required

5/8" Dia. CARRIAGE BOLT
(FBC10–20)

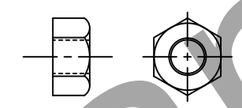

STANDARD HEX NUT

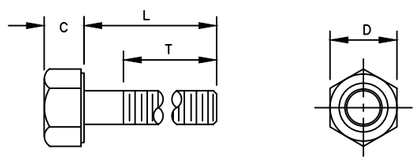

Bolt Size	C	D	L (Length)	T (Thread Length)
5/16"	——	——	1 1/2"	7/8"
5/16"	——	——	1"	1"
3/8"	——	——	7 1/2"	1 1/2"
1/2"	——	——	1 1/2"	1 1/2"
1/2"	——	——	1 1/4"	1 1/4"
5/8" H.S.	5/16"	7/8"	8"	1 1/2"
5/8"–11	——	——	1 1/2"	1 1/2"
3/4"	——	——	1 1/2"	1 1/2"
3/4"	——	——	As Required	2"
3/4" H.S.	15/32"	1 1/4"	2"	1 1/2"

STANDARD HEX BOLTS

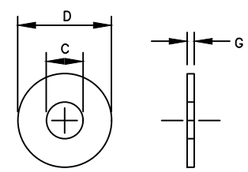

For Bolt ø	C	D	G
3/8"	7/16"	1"	5/64"
1/2"	17/32"	1 1/16"	3/32"
1/2" H.S.	17/32"	1 1/16"	3/32"
5/8"	11/16"	1 3/4"	9/64"
3/4"	13/16"	1 15/32"	9/64"
3/4" H.S.	13/16"	2"	5/32"
1"	1 1/16"	2"	9/64"

STANDARD STEEL WASHERS

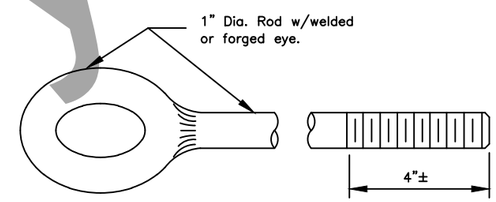

EYE BOLT

GENERAL NOTES:

1. All covered hardware shall comply with the Task Force 13 (TF13) Guide to Standardized Roadside Safety Hardware online publication. Designators given when possible in parentheses.

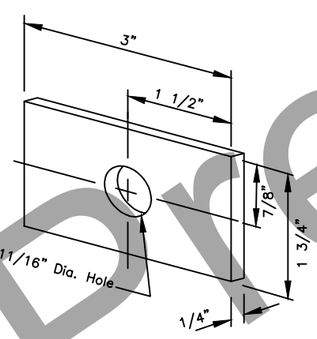

FLAT PLATE WASHER

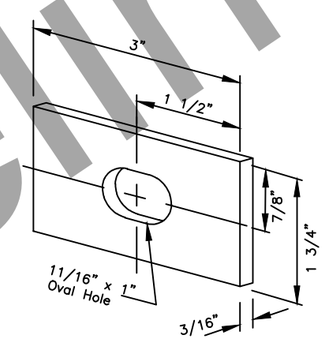

RECTANGULAR POST BOLT WASHER
(FWR03)

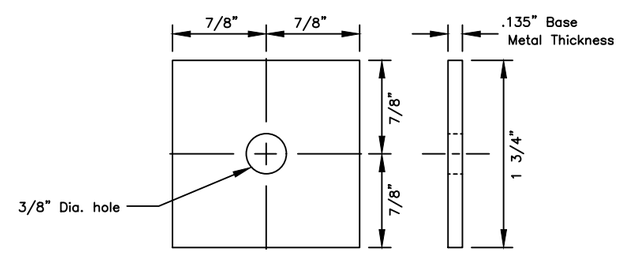

SQUARE STEEL WASHER
(FWR01)

State of Alaska DOT&PF
ALASKA STANDARD PLAN

STANDARD GUARDRAIL HARDWARE
(NUTS, BOLTS & WASHERS)

Adopted as an Alaska Standard Plan by: Carolyn Morehouse
Carolyn Morehouse, P.E.
Chief Engineer

Adoption Date: 7/17/2020

Last Code and Stds. Review
By: KLK Date: 7/8/2020

Next Code and Standards Review Date: 7/8/2030

G–00.05

Preliminary Plans

G-00.05

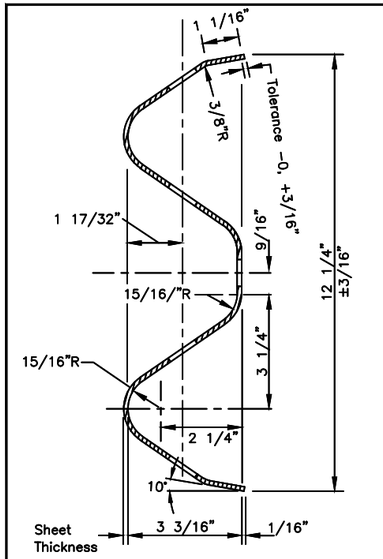

SECTION A–A
(cross section same as RWM02a–b)

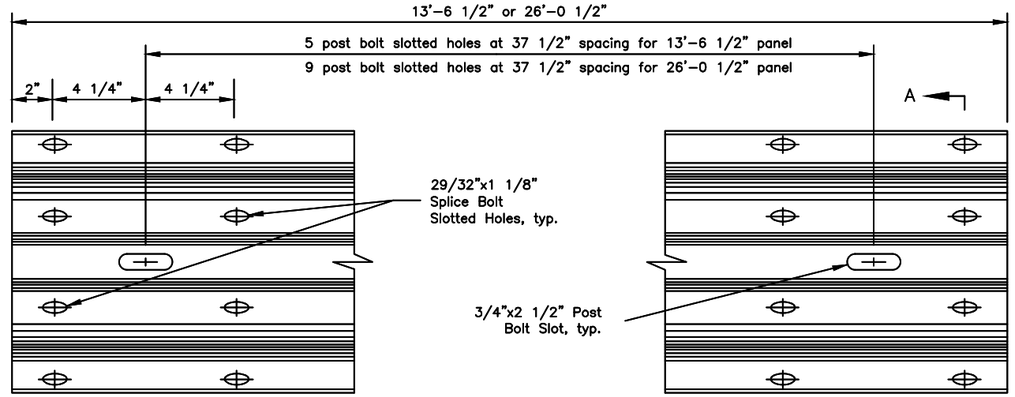

STANDARD W–BEAM PANEL (RWM04a–b)

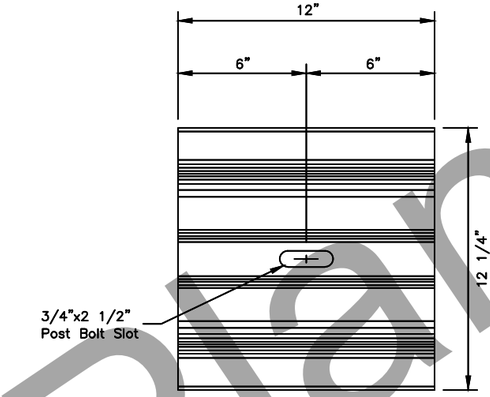

W–BEAM BACKUP PLATE
(RWB01a–b)

GENERAL NOTES:

1. All covered hardware shall comply with the Task Force 13 (TF13) Guide to Standardized Roadside Safety Hardware online publication. Designators given when possible in parentheses.
2. Install back–up plates between blockouts and w–beam or thrie–beam rail at intermediate (non–splice) posts when steel blockouts are used but not with wood, rubber, plastic, or other approved blockouts.

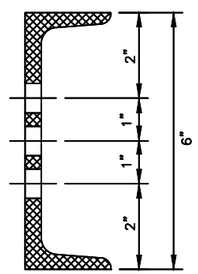

SECTION B–B

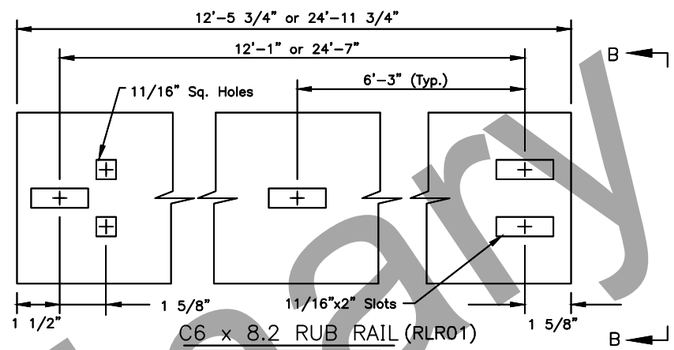

C6 x 8.2 RUB RAIL (RLR01)
ASTM A36 STEEL

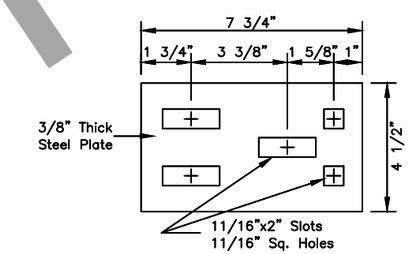

SPLICE PLATE (RLR01)
ASTM A36 STEEL

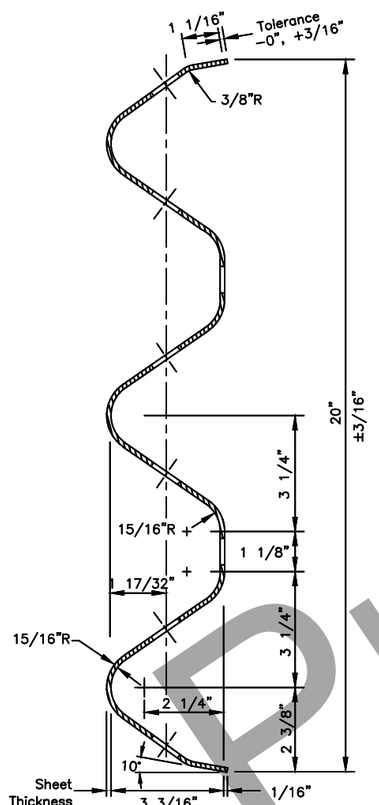

SECTION C–C
(RTM01a–02b)

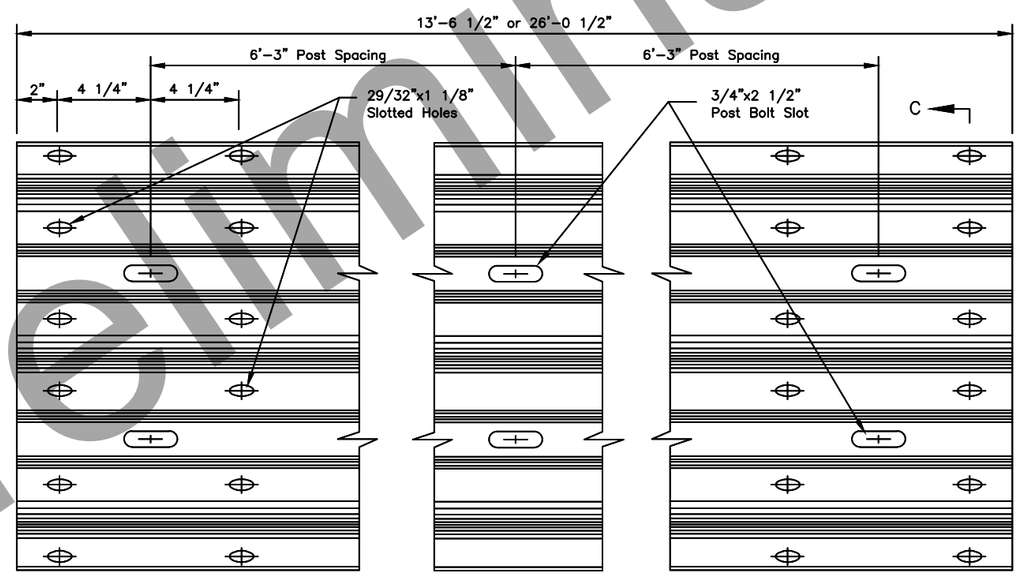

STANDARD THRIE BEAM PANEL (RTM01a–02b)

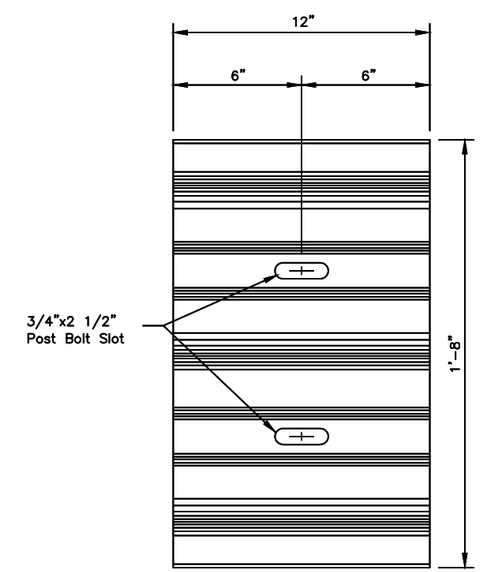

THRIE BEAM BACKUP PLATE
(RTB01a–02b)

State of Alaska DOT&PF
ALASKA STANDARD PLAN

STANDARD GUARDRAIL HARDWARE (RAILS AND SPLICES)

Adopted as an Alaska Standard Plan by: Carolyn Morehouse
Carolyn Morehouse, P.E.
Chief Engineer

Adoption Date: 7/17/2020

Last Code and Stds. Review
By: KLK Date: 7/8/2020

Next Code and Standards Review Date: 7/8/2030

Preliminary Plans

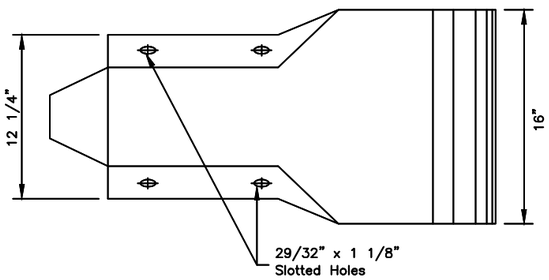

PROFILE

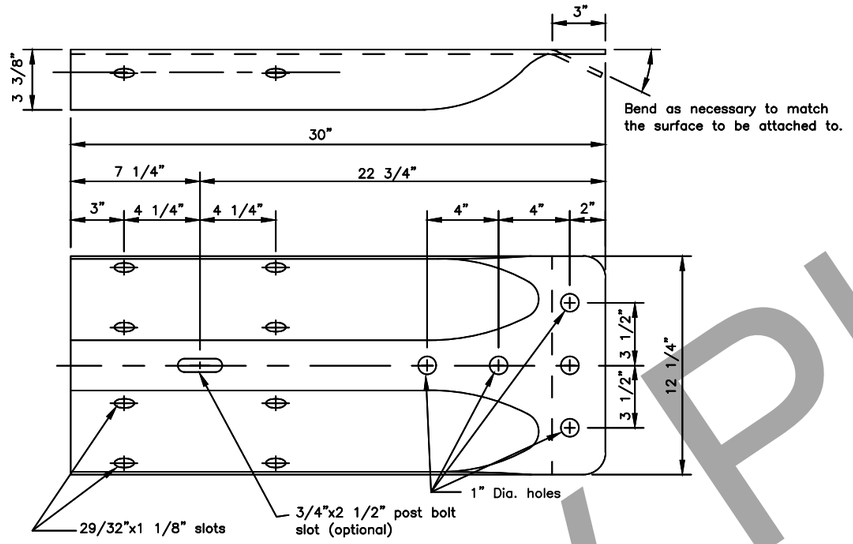

STANDARD W-BEAM TERMINAL CONNECTOR

(RWE02)

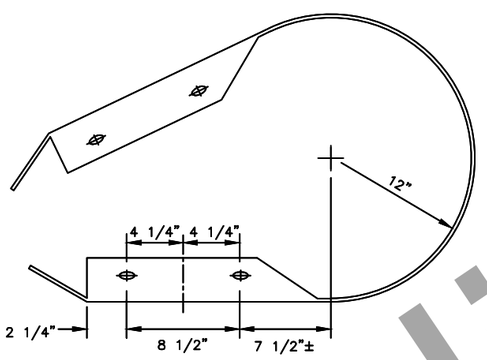

W-BEAM PLAN VIEW

*Radius to be specified on the plans

STANDARD W-BEAM END SECTION

(RWE06)

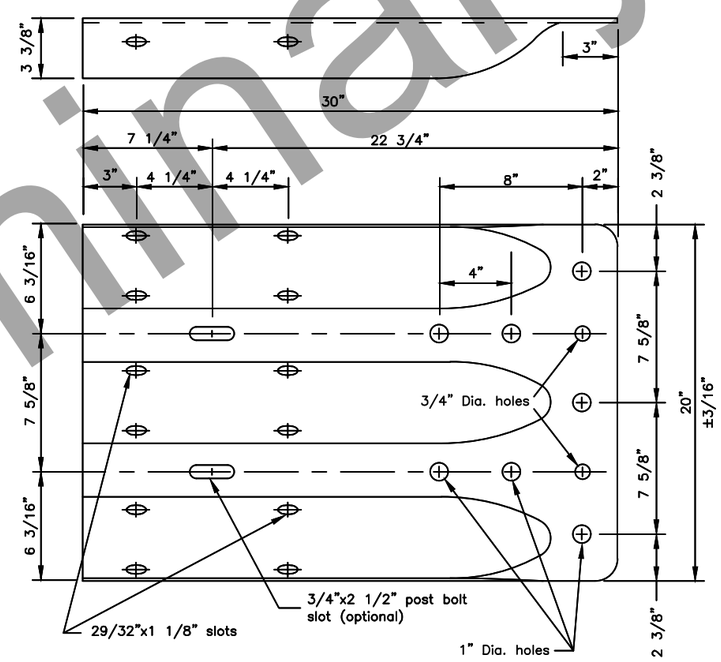

STANDARD THRIE BEAM TERMINAL CONNECTOR

(RTE01b)

GENERAL NOTES:

1. W-Beam and Thrie Beam Terminal Connectors shall conform to AASHTO M 180, Class B, Type II.
2. W-Beam end sections shall conform to AASHTO M 180, Class A, Type II.
3. All covered hardware shall comply with the Task Force 13 (TF13) Guide to Standardized Roadside Safety Hardware online publication. Designators given when possible in parentheses.

State of Alaska DOT&PF
ALASKA STANDARD PLAN

STANDARD GUARDRAIL HARDWARE (TERMINAL CONNECTORS)

Adopted as an Alaska Standard Plan by: Carolyn Morehouse
Carolyn Morehouse, P.E.
Chief Engineer

Adoption Date: 7/17/2020

Last Code and Stds. Review
By: KLK Date: 7/8/2020

Next Code and Standards Review Date: 7/8/2030

G-00.05

Preliminary Plans

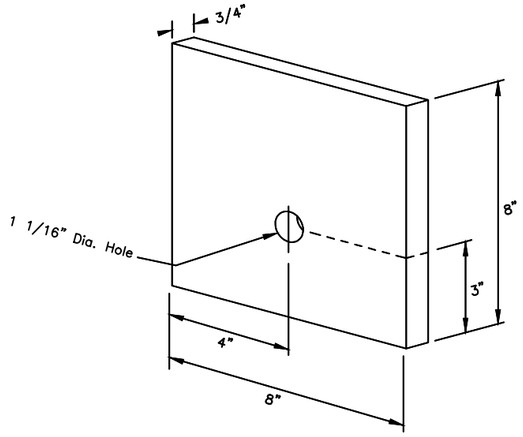

BEARING PLATE for CRT TERMINAL ANCHOR
(FPB01)

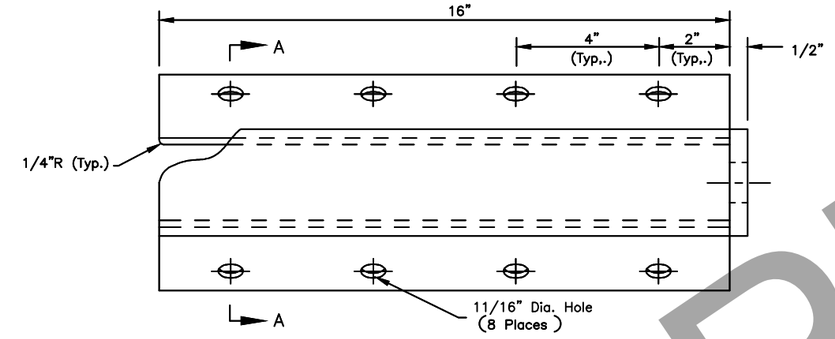

CABLE ANCHOR PLATE
(FPA01)

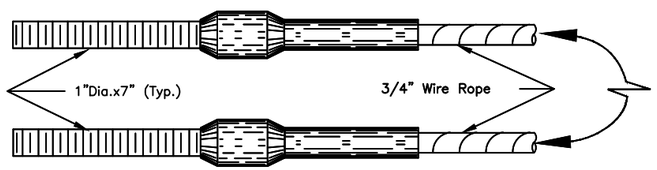

SWAGED FITTING DETAIL
(FCA01–02)

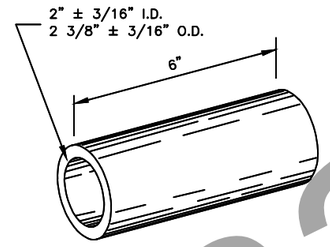

SLEEVE DETAIL
(FMM02)

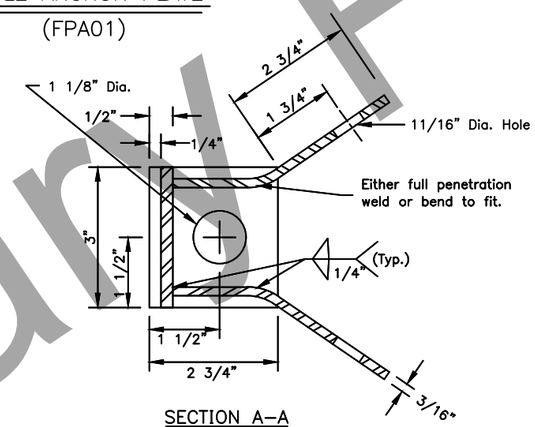

SECTION A–A

CONTROLLED RELEASE TERMINAL HARDWARE DETAILS

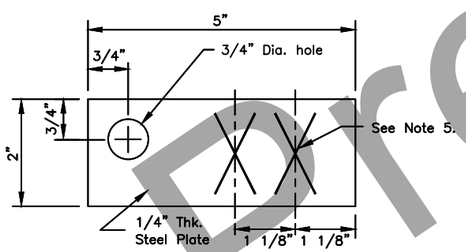

RADIUS I.D. PLATE

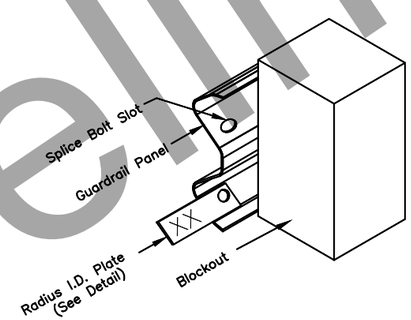

RADIUS I.D. PLATE
MOUNTING DETAIL

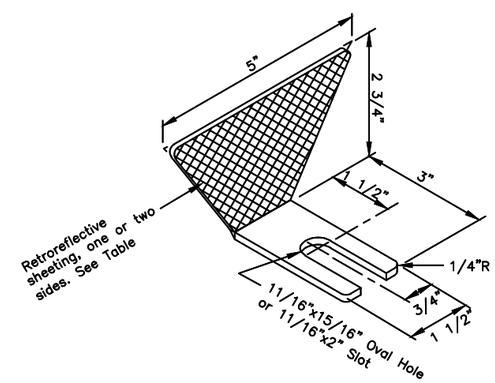

GUARDRAIL REFLECTOR

Guardrail Reflector Table

Type	Color	Reflectorized
A	White	Front & Rear
B	White	Front
C	Yellow	Front
D	Yellow	Front & Rear

GENERAL NOTES:

1. Cable Anchor Plate may be formed in single unit or welded fabrication.
2. Anchor Cable Assembly must conform to AASHTO M 30 with Type II Wire Rope.
3. Provide Sleeve for Wood Posts meeting the requirements of ASTM A53 and made of 2–inch galvanized standard pipe. Sleeve shall be a tight, pressed fit in post.
4. Attach radius ID plates to all shop–bent guardrail sections. Bolt the ID plates to the back side of the guardrail panel with the lower splice bolt nearest the P.C. of the radius.
5. Show the Rail bend radius, in feet, as "XX" on the radius ID plate. Digits shall be etched or stamped and have a min. height of 1 1/2" and a max. width of 3/4". Galvanize the plate after the digits are marked.
6. All covered hardware shall comply with the Task Force 13 (TF13) Guide to Standardized Roadside Safety Hardware online publication. Designators given when possible in parentheses.

State of Alaska DOT&PF
ALASKA STANDARD PLAN

STANDARD GUARDRAIL HARDWARE (MISCELLANEOUS)

Adopted as an Alaska Standard Plan by: Carolyn Morehouse
Carolyn Morehouse, P.E.
Chief Engineer

Adoption Date: 7/17/2020

Last Code and Stds. Review
By: KLK Date: 7/8/2020

Next Code and Standards Review Date: 7/8/2030

G–00.05

Preliminary Plans

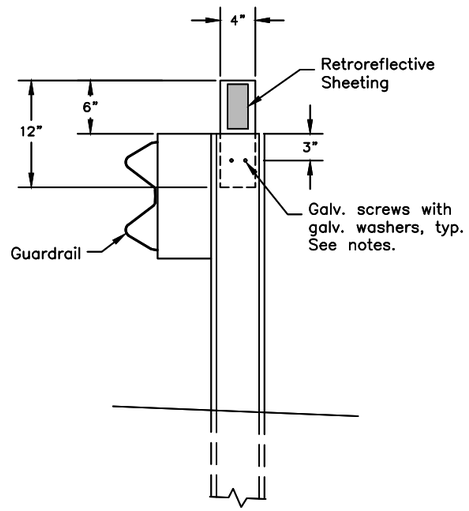

GUARDRAIL FLEXIBLE DELINEATOR DETAIL

(Steel post shown – similar for wood post)

CONSTRUCTION NOTES

1. Install guardrail flexible delineators where shown on the plans.
2. Install guardrail flexible delineators at 50 foot spacing, unless otherwise noted on the plans. Install not less than 2 delineators per guardrail run.
3. Use 3" x 5" white/yellow/red retroreflective sheeting as required per Standard Plan T–05. Install retroreflective sheeting on both sides of delineator on two–way roads.
4. Attach 4" x 12" flexible delineators to the top of new guardrail posts, on the trailing side of the posts relative to the adjacent lane's direction of travel.
5. Use 2 each 1/4" dia. x 1–1/2" long galvanized lag screws for attaching to wood posts and 2 each 1/4" dia. x 3/4" long galvanized self–drilling fasteners for steel posts. Install a galvanized washer between the fastener head and the flexible delineator.

Preliminary Plans

State of Alaska DOT&PF
ALASKA STANDARD PLAN

STANDARD GUARDRAIL HARDWARE (FLEXIBLE DELINEATORS)

Adopted as an Alaska Standard Plan by: Carolyn Morehouse
Carolyn Morehouse, P.E.
Chief Engineer

Adoption Date: 7/17/2020

Last Code and Stds. Review
By: KLK Date: 7/8/2020

Next Code and Standards Review Date: 7/8/2030

G-05.11S

SHEET | of |

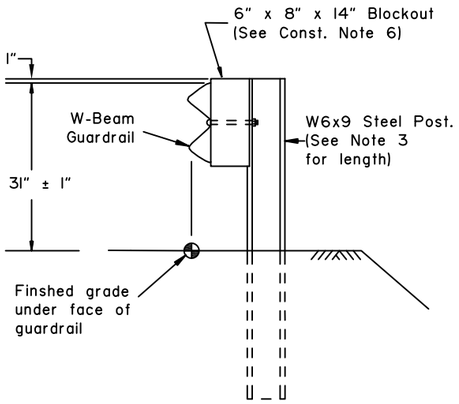

TYPE I POST INSTALLATION

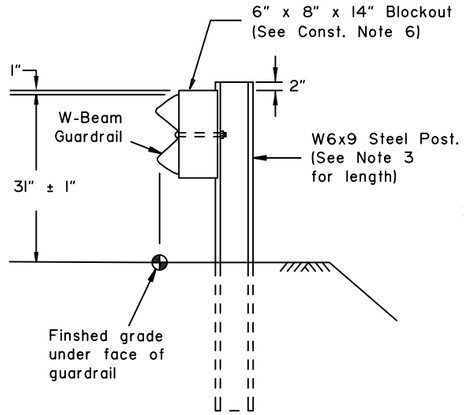

TYPE II POST INSTALLATION

(Facilitates raising rail for future overlays.)

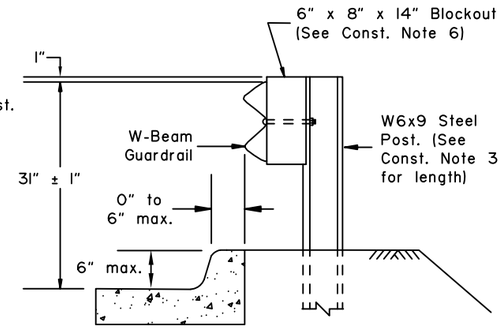

TYPE III POST INSTALLATION

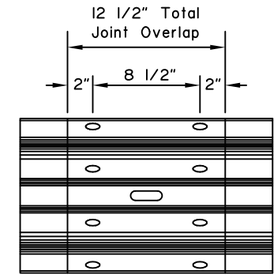

SPLICE DETAIL

(At mid span between posts only. Bolts not shown for clarity)

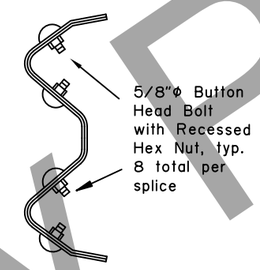

SPLICE CROSS-SECTION

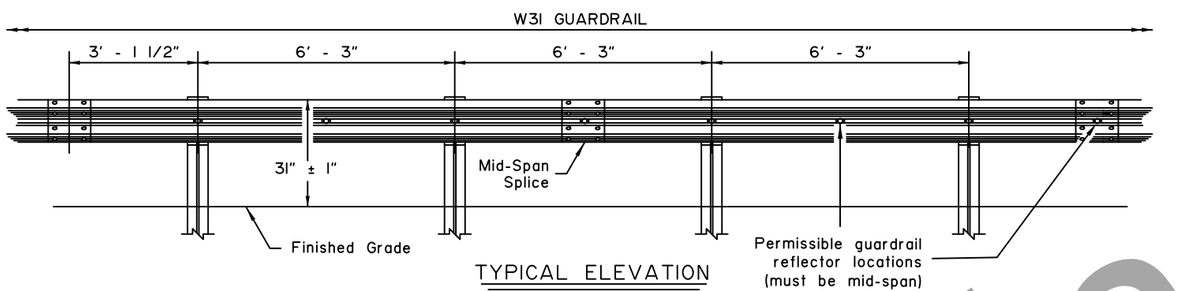

TYPICAL ELEVATION

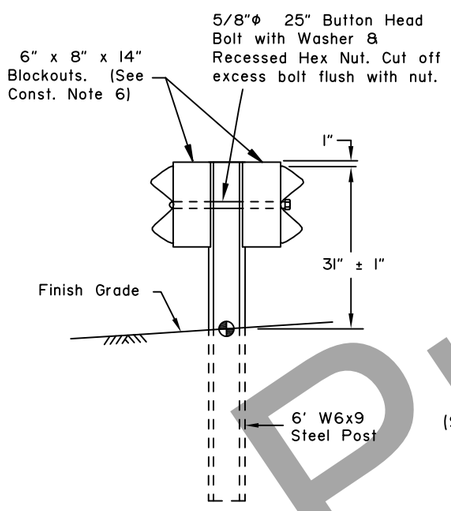

TYPE IV DOUBLE SIDED INSTALLATION

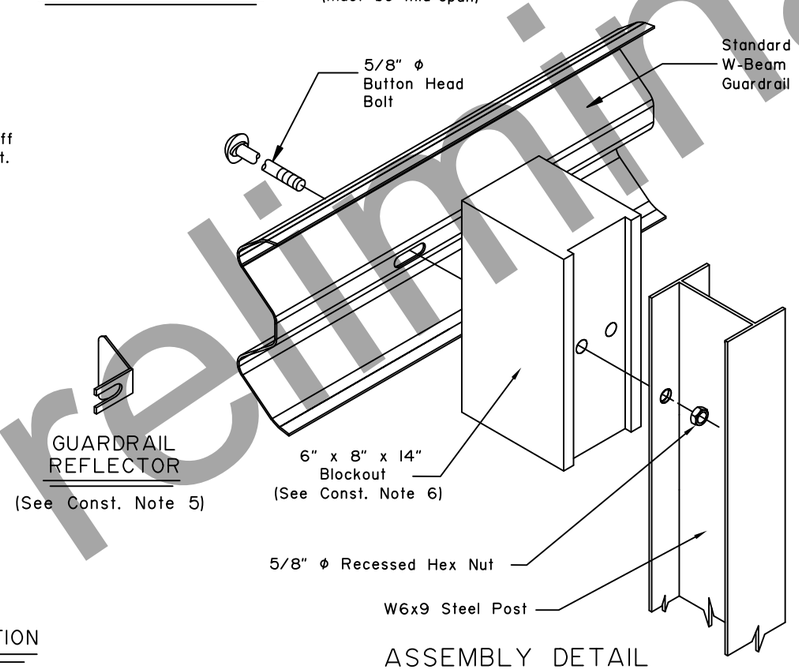

GUARDRAIL REFLECTOR

(See Const. Note 5)

ASSEMBLY DETAIL

(Type I post shown)

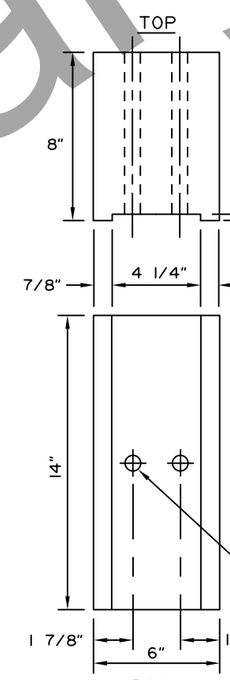

BACK

6" x 8"
BLOCKOUT

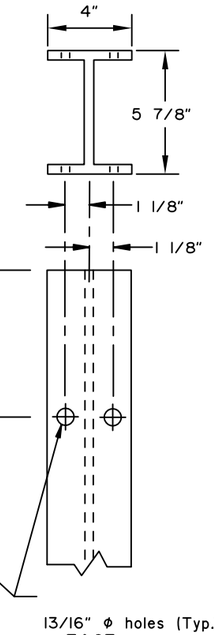

FACE

W6x9
STEEL POST

CONSTRUCTION NOTES:

1. Provide hardware compliant with the Task Force 13 (TF13) Guide to Standardized Roadside Safety Hardware.
2. See Standard Plan G-00 for hardware details not shown on this drawing.
3. See Standard Plan G-10 for post lengths corresponding to different combinations of slope and behind-post embankment width.
4. Typical post spacing is 6'-3" center to center.
5. Attach guardrail reflector to guardrail using a 5/8" button head bolt with 5/8" recessed head hex nut and steel washer at location shown in the Typical Elevation. Install reflectors every 25' on tangents and every 12.5' on curves starting 100' before the P.C. and ending 100' after the P.T.
6. Use wood or synthetic blockouts designed, tested, and passed per MASH for use with steel posts. Either bolt hole on the blockout may be used for attachment.
7. Use a 25 linear foot transition to match differing height of existing or new rail elements and end treatments - see Standard Plan G-11.
8. W6x8.5 steel post may be substituted for W6x9 steel post.
9. Install flexible delineators on guardrail posts when called for in the contract. See Standard Plan G-00 for guardrail flexible delineator details.

DESIGN NOTES:

1. No fixed objects allowed within 36" of the back side of guardrail post.
2. This barrier is acceptable under MASH Tests 3-10 and 3-11.

State of Alaska DOT&PF
ALASKA STANDARD PLAN

STEEL POST W31 GUARDRAIL

Adopted as an Alaska Standard Plan by: Carolyn Morehouse

Carolyn Morehouse, P.E.
Chief Engineer

Adoption Date: 05/15/2019

Last Code and Stds. Review
By: LRG Date: 5/15/2019

Next Code and Standards Review date: 5/15/2029

G-05.11S

Preliminary Plans

G-20.12

SHEET 1 of 1

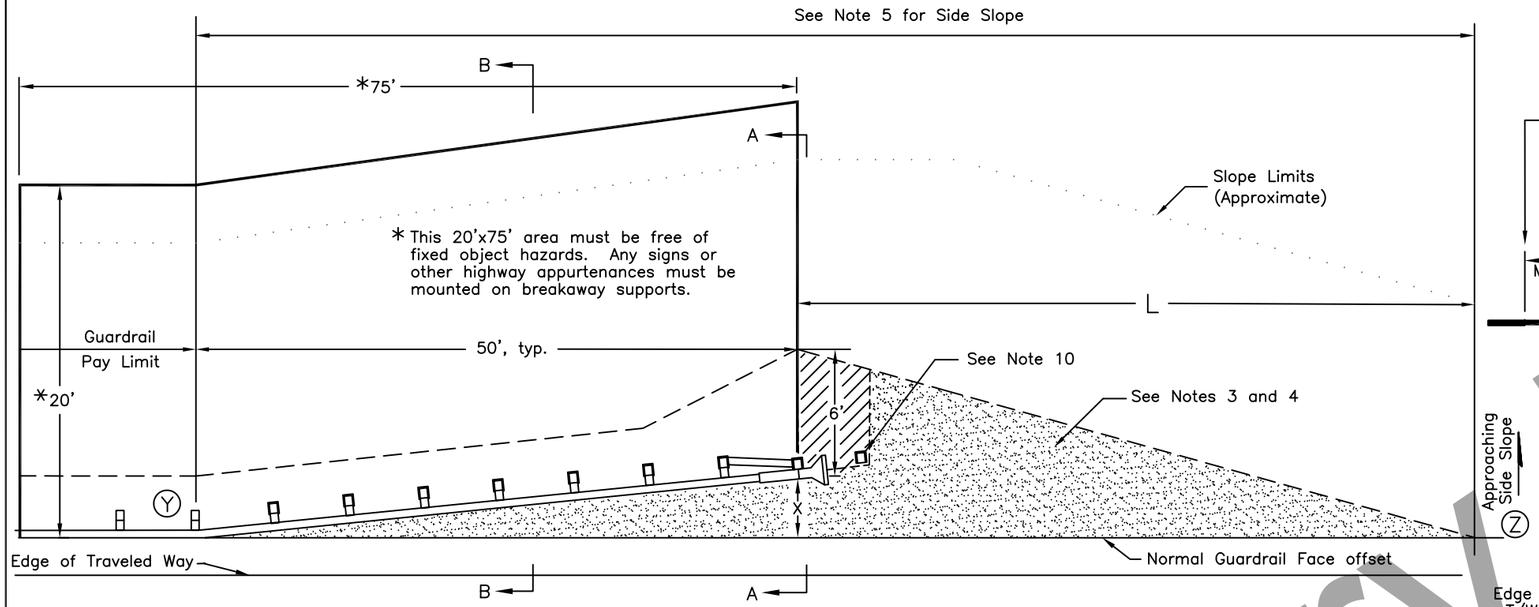

STANDARD GUARDRAIL TERMINAL WIDENING DETAIL

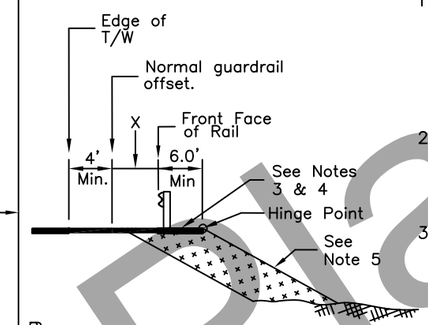

SECTION A–A

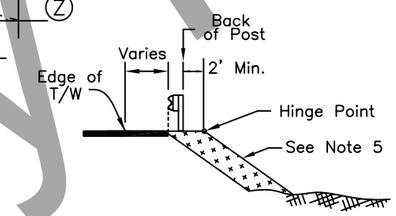

SECTION B–B
(Applies to both details)

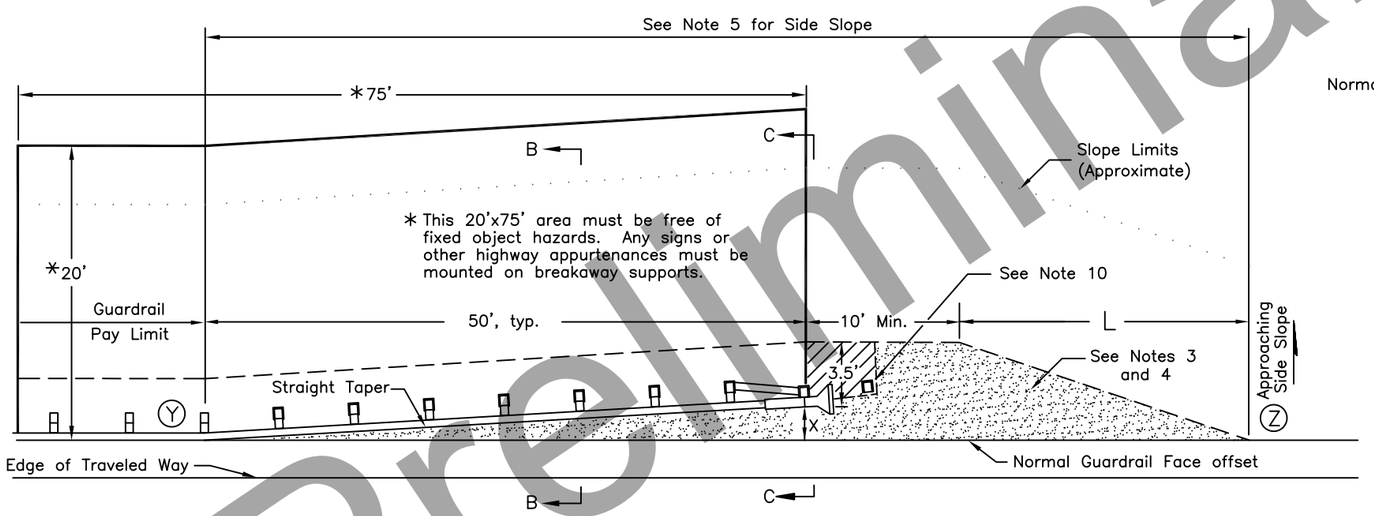

ALTERNATE GUARDRAIL TERMINAL WIDENING DETAIL

(USE ONLY WHEN LIMITED RIGHT–OF–WAY OR LIMITING SITE CONDITIONS MAKE THE STANDARD DETAIL INFEASIBLE)

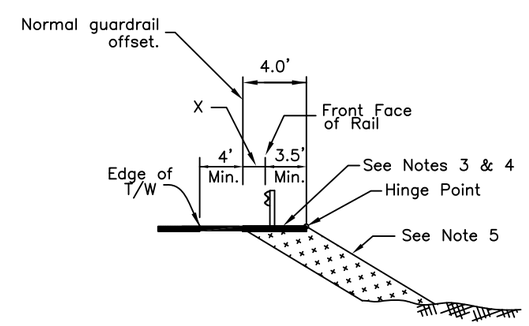

SECTION C–C

X= End offset. See manufacturer's information for the range of acceptable end offsets for each MASH compliant terminal.

Taper Lengths (L) for Common End Offsets (X)		
End Offset	Standard Detail	Alternate Detail
0'	24.0'	13.0'
1'	26.0'	17.0'
1.5'	28.0'	19.0'
2'	30.0'	21.0'
2.5'	32.0'	22.0'
4'	37.0'	28.0'
Interpolate if the end offset falls between table values		

GENERAL NOTES

1. This Std. Dwg. applies to all MASH approved guardrail end terminals (GETs). The alternate detail may only be used with parallel or tangent GETs. The terminal details shown are for illustration only – see manufacturer's drawings for actual post, rail, strut, etc. configuration and layout.
2. Use this Std. Widening Detail for all GETs except when limited right–of–way or limiting site conditions make the use of the Std. Widening Detail infeasible. In that case, the alternate detail is permissable.
3. Construct the shaded areas to match the slope of the adjacent shoulder. The slope may be increased to 10:1 if identified in the plans or when approved by the engineer. Match the slope when the shoulder slopes toward the road as well as away from the road.
4. On paved roads, the shaded areas shall be paved. On gravel roads, surface the shaded areas with the same materials used to surface the travel lanes.
5. From point Ⓨ to point Ⓩ make the side slope match the approaching side slope except where it is flatter than 4:1. In that case, the slope may be steepened to 4:1.
6. Attach a flexible marker at the beginning of each GET.
7. The max. allowable height for foundation tubes or other steel components of terminal post breakaway systems is 4" above the surrounding grade.
8. The details on this sheet do not apply to W31 Downstream End Anchors (Std Dwg G–14).
9. The details on this sheet apply to GETs on both the approach and downstream ends on two–way undivided roads and to any downstream MASH compliant GETs.
10. Some MASH GET systems have an additional post/anchor at the approximate location shown. If this post/anchor is present do not pave the diagonally hatched area. If not present, pave the diagonally hatched area also.

State of Alaska DOT&PF
ALASKA STANDARD PLAN

WIDENING FOR GUARDRAIL END TERMINALS

Adopted as an Alaska Standard Plan by: Kenneth J. Fisher, P.E.
Chief Engineer

Adoption Date: 02/08/2019

Last Code and Stds. Review
By: Date:

Next Code and Standards Review date:02/08/2029

G–20.12

Preliminary Plans

I-81.00

SHEET 1 of 1

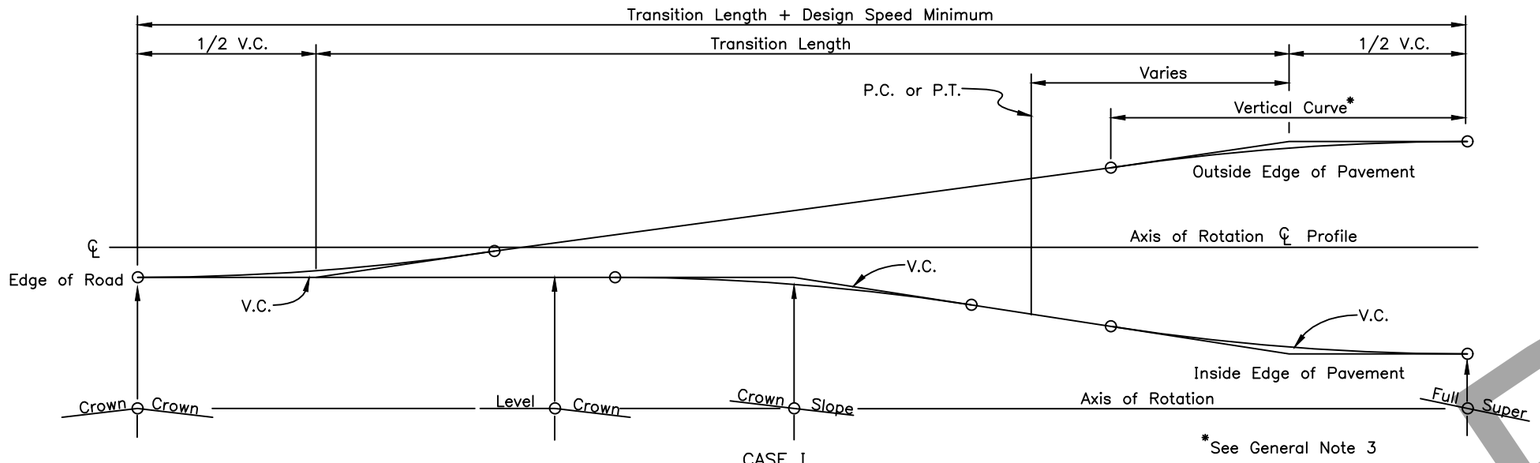

CASE I
PAVEMENT REVOLVED ABOUT CENTERLINE

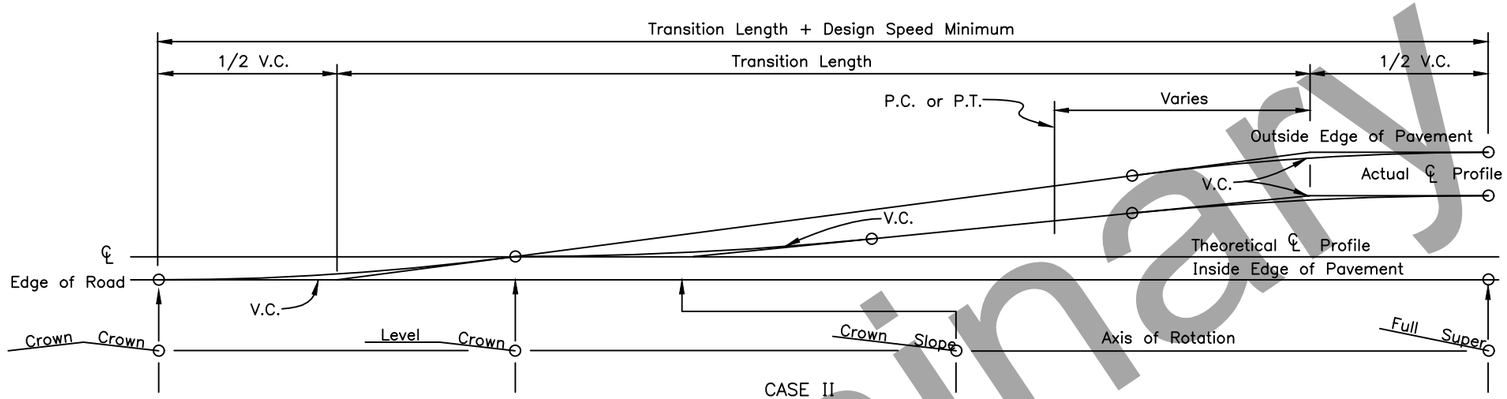

CASE II
PAVEMENT REVOLVED ABOUT INSIDE EDGE
TO BE USED WHERE DRAINAGE IS THE GOVERNING CONSIDERATION

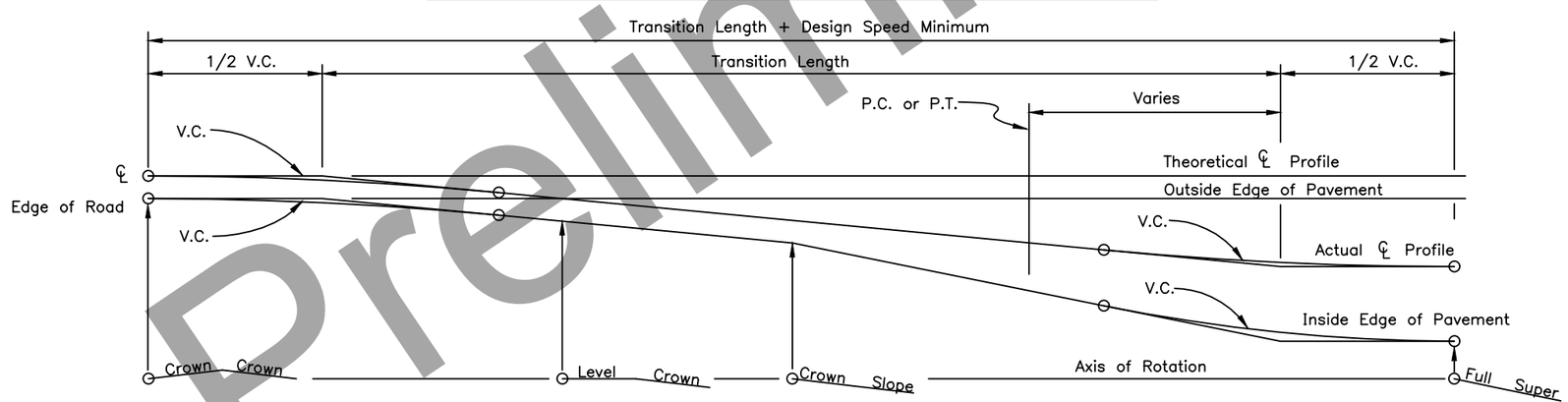

CASE III
PAVEMENT REVOLVED ABOUT OUTSIDE EDGE TO BE
USED WHERE OVERALL APPEARANCE IS THE MAIN CONTROL

GENERAL NOTES:

1. Location of transition length relative to horizontal curves will be shown on the plans or as directed by the Engineer.
2. Widening for guardrail or curvature will not change the location of the axis of rotation.
3. Minimum vertical curve length in feet shall be the numerical value of the design speed in M.P.H.
4. Superelevation shall be built into the subgrade and carried through the shoulders.

State of Alaska DOT&PF
ALASKA STANDARD PLAN

SUPERELEVATION TRANSITION

Adopted as an Alaska Standard Plan by: Carolyn Morehouse
Carolyn Morehouse, P.E.
Chief Engineer

Adoption Date: 7/17/2020

Last Code and Stds. Review
By: KLK Date: 7/8/2020

Next Code and Standards Review Date: 7/8/2030

I-81.00

Preliminary Plans

L-03.11

SHEET 1 of 1

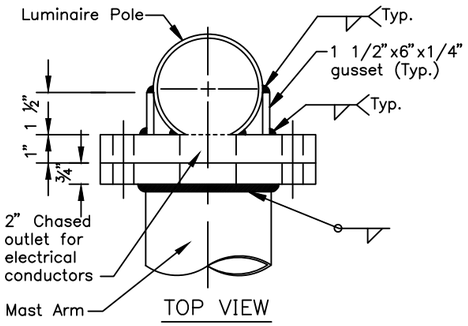

TOP VIEW

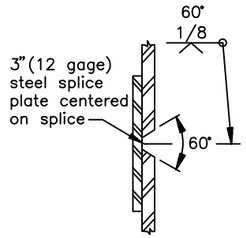

SPLICE DETAILS

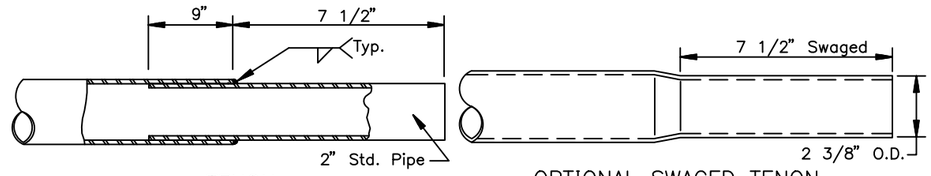

TENON

OPTIONAL SWAGED TENON

END OF MAST ARM DETAIL

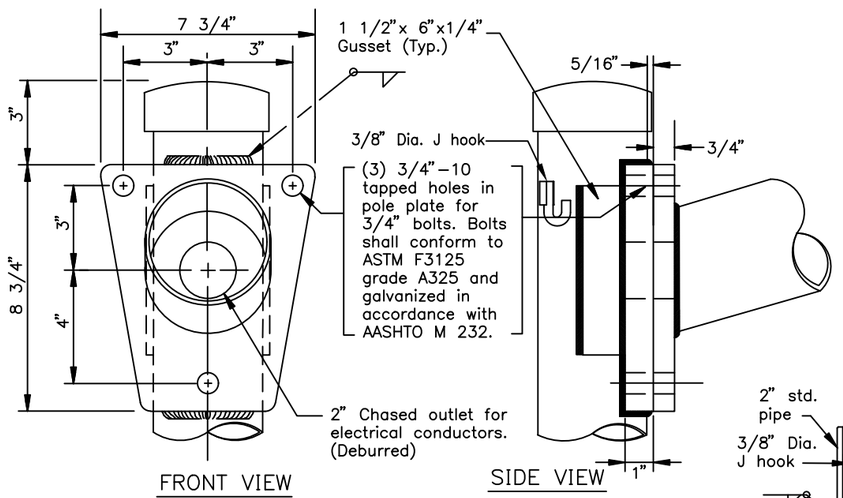

FRONT VIEW

SIDE VIEW

MAST ARM CONNECTION DETAIL

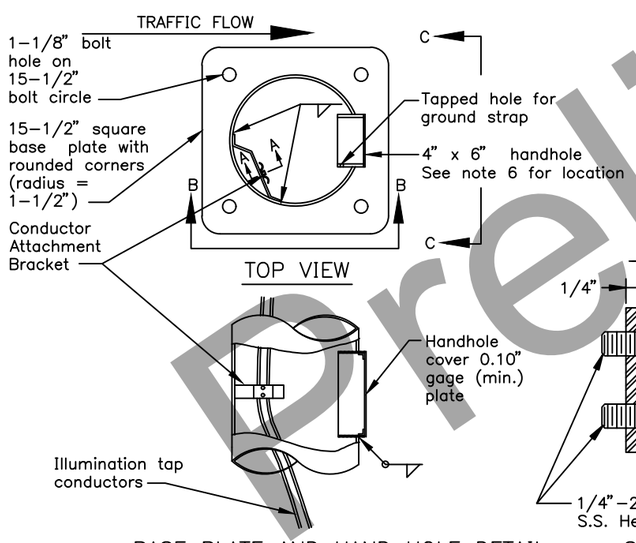

TOP VIEW

BASE PLATE AND HAND HOLE DETAIL

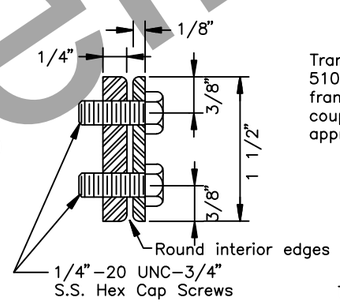

SECTION A–A

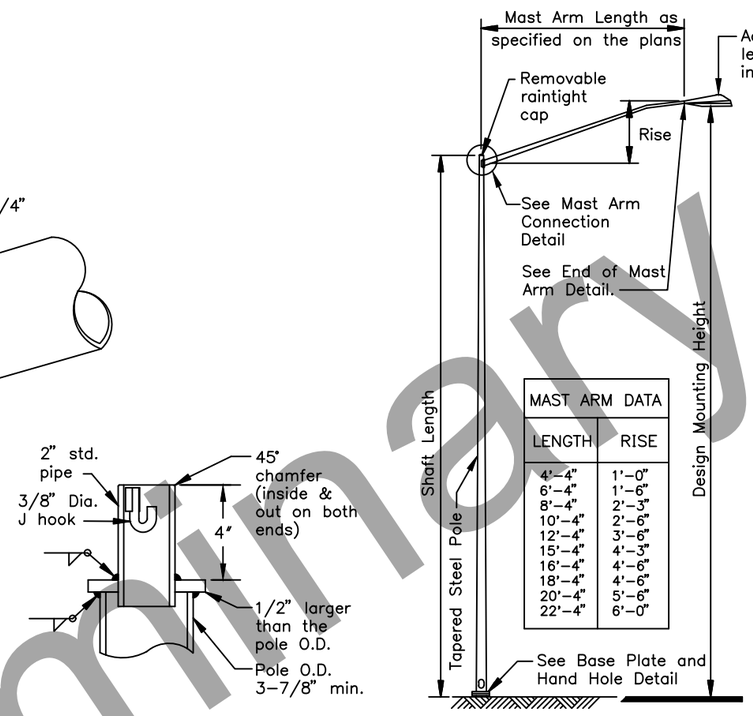

MAST ARM DATA	
LENGTH	RISE
4'–4"	1'–0"
6'–4"	1'–6"
8'–4"	2'–3"
10'–4"	2'–6"
12'–4"	3'–6"
15'–4"	4'–3"
16'–4"	4'–6"
18'–4"	4'–6"
20'–4"	5'–6"
22'–4"	6'–0"

OFFSET LIGHTING STANDARD POLE TOP DETAIL
(CUTAWAY FOR CLARITY)

ELECTROLIER ELEVATION
COBRA HEAD

ELECTROLIER ELEVATION
OFFSET

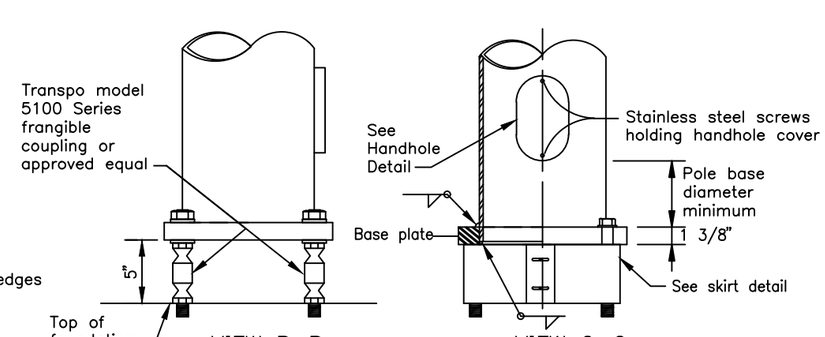

VIEW B–B

VIEW C–C

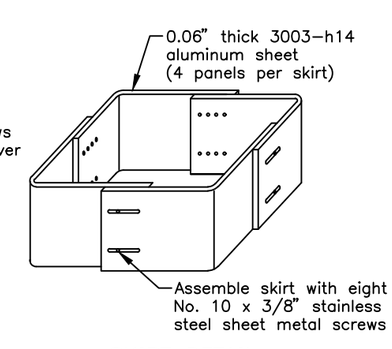

SKIRT DETAIL

GENERAL NOTES

1. Design and fabricate all shafts to support a mast arm 22' long with luminaire. Assume each offset fixture weighs 60 lbs. and has an effective projected area of 2.8 SF. Assume each Cobra head weighs 55 lbs. and has an effective projected area of 1.2 square feet. With this dead load, limit the angular rotation of the pole top to 1° 40' maximum.
2. Weld size to be determined by manufacturer.
3. Mounting height, if specified in the plans, refers to the height of luminaire above the finished roadway surface. Adjust each pole's shaft length to maintain this difference in elevation whenever slope and/or offset varies.
4. Minimum outside diameter at the top of pole equals 3–7/8". Pole diameter shall taper uniformly from the top of pole to the base plate, with a maximum taper rate of 0.15" per foot.
5. Mast arm rise may vary ±0.5ft from the values listed in the table.
6. Locate the handhole at 90 degrees to the mast arm on the side of pole downstream from traffic flow.
7. Furnish all poles with a j–hook to support the illumination tap conductors. Furnish all mast arm poles with a removable raintight cap.
8. Frangible couplings shall be NCHRP 350, Test Level 3 compliant and installed in accordance with the manufacturers written instructions. A MASH compliant device does not exist at this time. See SPDR for more info.
9. Frangible couplings shall be installed into flush mounted female anchors so that no fixed hardware extends above the foundation top.
10. Install all components of the breakaway support system in accordance with the manufacturer's written instructions.
11. Fabricate the skirt from four pieces of 0.06" thick 3003 h–14 aluminum sheet. Bend each plate to provide corners with a 3/4" radius. Assemble the skirt with □10 x 3/8" self tapping stainless screws or pop rivets. The assembled skirt measures about 12–7/8" square.

State of Alaska DOT&PF
ALASKA STANDARD PLAN

LIGHTING STANDARDS

Adopted as an Alaska Standard Plan by: Carolyn Morehouse
Carolyn Morehouse, P.E.
Chief Engineer

Adoption Date: 7/17/2020

Last Code and Stds. Review
By: KLK,MJM Date: 7/8/2020

Next Code and Standards Review Date: 7/8/2030

L–03.11

Preliminary Plans

L-23.02

SHEET | of |

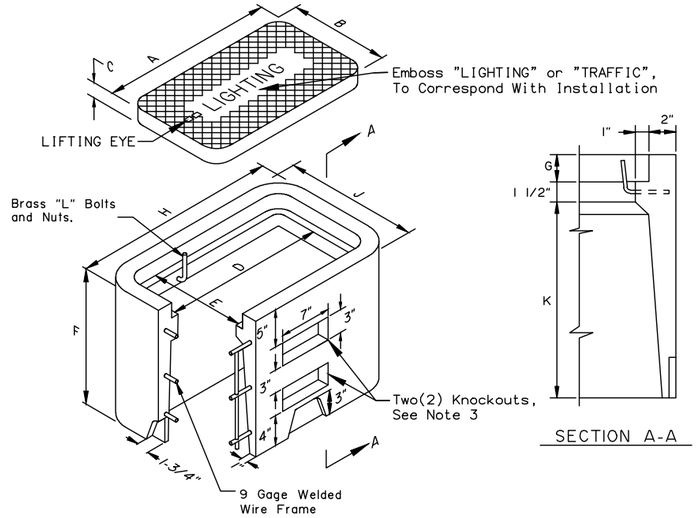

ISOMETRIC

SECTION A-A

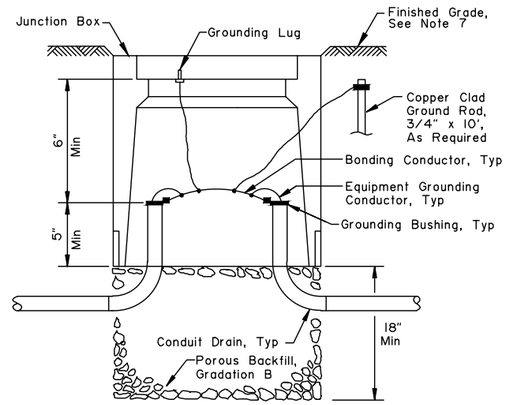

ELEVATION

TYPE I & IA JUNCTION BOX

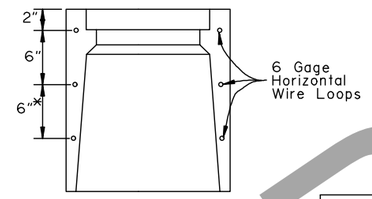

ALTERNATE REINFORCING

*Type IA Only

	DIMENSIONS (IN)	
	TYPE I	TYPE IA
A	15	22 3/4
B	10	13 1/4
C	1 3/4	2
D	13 1/2	21 1/4
E	8 1/2	11 3/4
F	12	18
G	1 3/4	2
H	19 1/2	27 1/4
J	14 1/2	17 3/4
K	8 3/4	14 1/2

	DIMENSIONS (IN)		
	TYPE II	TYPE III	TYPE IV
A (Max)	30	30	30
B (Max)	30	30	36
C (Min)	22	22	30
D (Min)	22	22	24
E (Min)	24	24	30

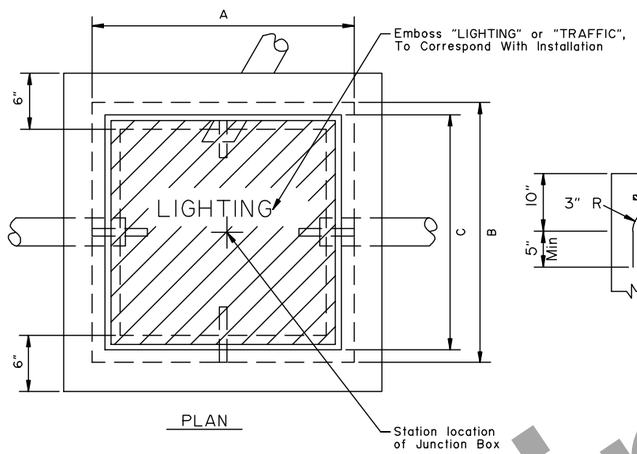

PLAN

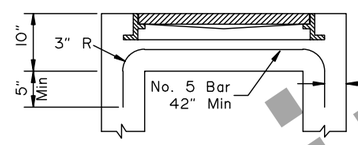

SECTION B-B

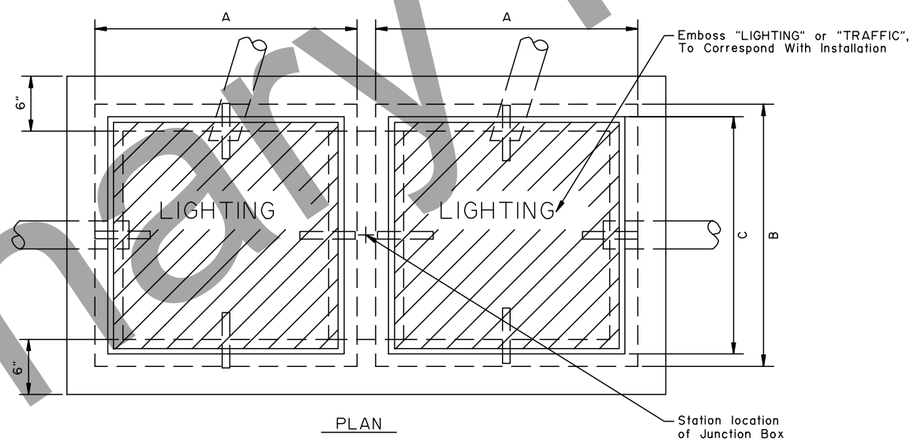

PLAN

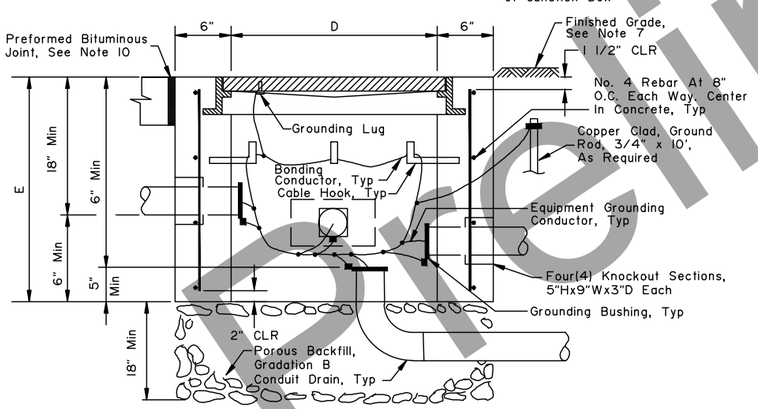

ELEVATION

TYPE II JUNCTION BOX

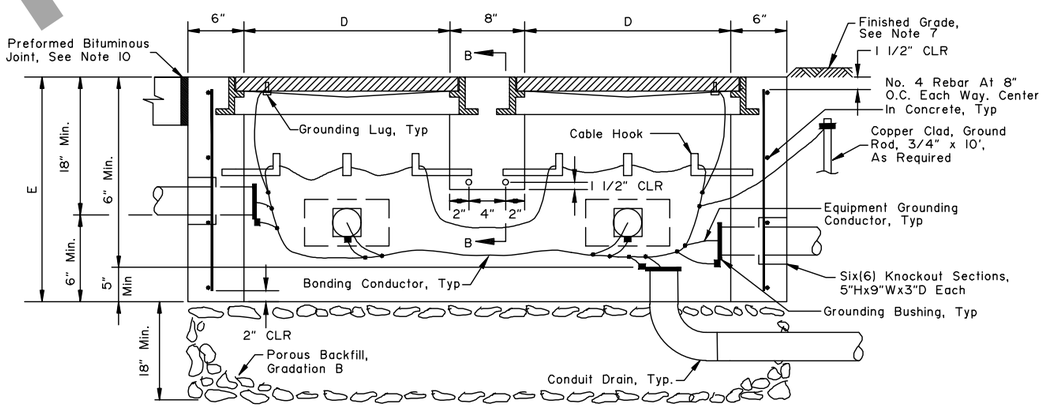

ELEVATION

TYPE III & IV JUNCTION BOX

GENERAL NOTES:

1. See Alaska DOT&PF Standard Specifications for Highway Construction and Standard Plan Development Report (SPDR) for additional requirements.
2. Construct junction boxes using grade 60 reinforcing steel conforming to ASTM A615 and Class A concrete conforming to section 501 of the specifications.
3. Provide knockouts indicated in Type IA junction box when installed for loop detection. Conduit for loop detectors to enter junction box through knockouts.
4. Covers for junction boxes shall be cast iron. Type I & IA shall be secured to junction box with a minimum of two bolts and be rated ANSI/SCTE 77, Tier 8, minimum. Type II, Type III & Type IV cover shall weigh over 100 pounds and be ANSI/SCTE77, AASHTO H-20 traffic rated.
5. The minimum required bearing capacity for Type I shall be 6,800psf, for Type IA shall be 5,100psf, for Type II shall be 3,500psf, for Type III shall be 2,300psf, and for Type IV shall be 2,000psf.
6. See section 703-2.10 of the specifications for stone drain material requirements.
7. See section 660-3.04 of the specifications for top of junction box placement to finished grade requirements.
8. Provide conduits as required, size and quantity indicated in plans.
9. Provide grout around conduits in knockouts and for unused knockouts.
10. Provide a 1/2" thick preformed bituminous joint material around junction boxes installed in concrete walkways.
11. Metal conduits and junction box covers shall be bonded together to be electrically continuous using No. 8 AWG minimum copper bonding conductor. Cover shall be bonded using a tinned copper braided bonding jumper.

State of Alaska DOT&PF
ALASKA STANDARD PLAN

JUNCTION BOXES FOR ELECTROLIER & TRAFFIC SIGNALS

Adopted as an Alaska Standard Plan by: Carolyn Morehouse
Carolyn Morehouse, P.E.
Chief Engineer

Adoption Date: 7/17/2020

Last Code and Stds. Review
By: CNH Date: 7/15/2020

Next Code and Standards Review date: 7/15/2030

L-23.02

Preliminary Plans

L-26.10

SHEET | of |

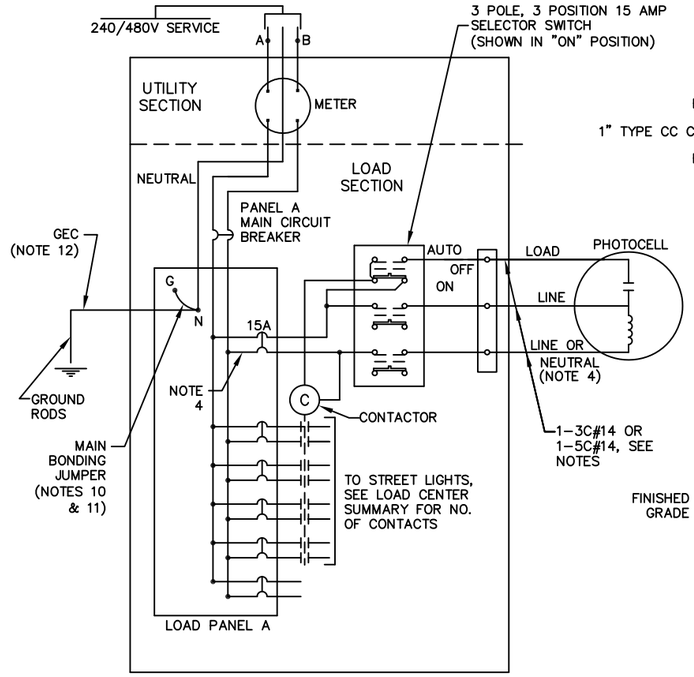

LOAD CENTER ONE LINE DIAGRAM AND SELECTOR SWITCH WIRING

TYPICAL PHOTO CELL INSTALLATION

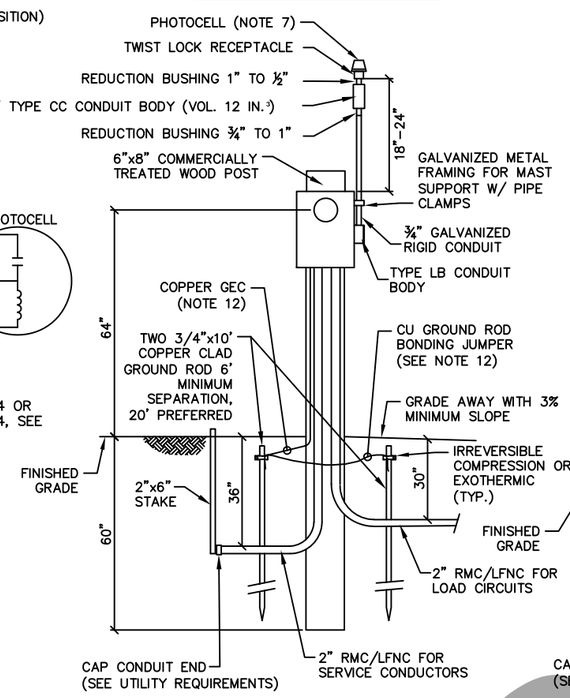

TYPE 2 LOAD CENTER
SINGLE POST – STANDARD

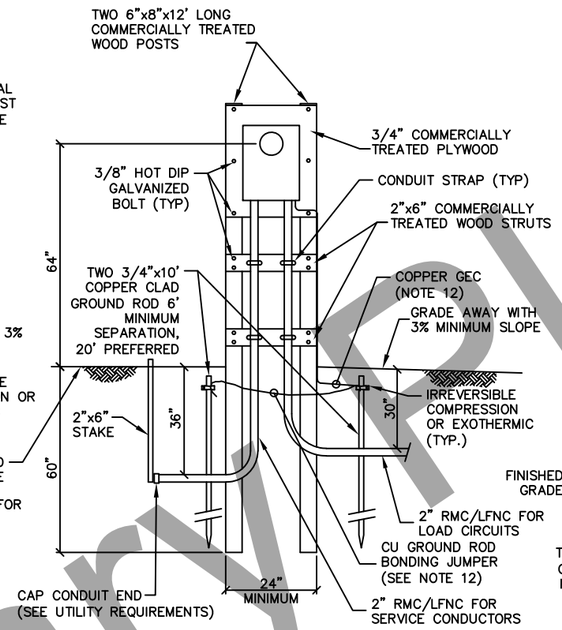

TYPE 2 LOAD CENTER
DUAL POST – ALTERNATE

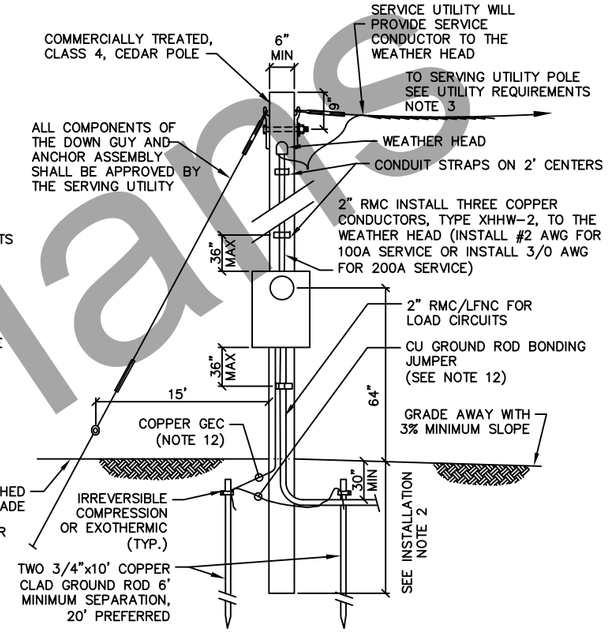

TYPE 3 LOAD CENTER

WIRING NOTES:

1. FURNISH ALL EQUIPMENT NOTED IN THE LOAD CENTER SUMMARY, PLUS TWO 20-AMP 2-POLE SPARE CIRCUIT BREAKERS, AND SPACE FOR A MINIMUM OF TWO ADDITIONAL TWO-POLE CIRCUIT BREAKERS, IN EACH LOAD PANEL. SEE SUMMARIES FOR LOAD PANEL VOLTAGES, CURRENT RATINGS, SHORT CIRCUIT INTERRUPTING RATINGS, AND THE NAME OF THE SERVING UTILITY.
2. SIZE THE TYPE 2 AND 3 LOAD CENTER CABINETS TO HOLD THE EQUIPMENT SHOWN IN THE WIRING DIAGRAM AND DETAILED IN EACH LOAD CENTER SUMMARY, ALLOWING SPACE FOR WIRING PER THE NATIONAL ELECTRICAL CODE. INSTALLING A METER BASE AND MAIN BREAKER IN A SEPARATE ENCLOSURE IS ALLOWABLE. HOWEVER IN THIS CASE, FURNISH A BREAKER PANEL WITH A MAIN BREAKER.
3. LABEL THE SELECTOR SWITCH "LIGHTING" AND ITS POSITIONS "ON-OFF-AUTO".
4. THE VOLTAGE FOR THE PHOTOELECTRIC CONTROL EQUIPMENT SHALL BE 240-VOLT, DERIVED FROM THE SERVICE VOLTAGE, OR FROM A CONTROL TRANSFORMER. PROVIDE 1-POLE CIRCUIT BREAKER ON 240/480V LOAD CENTER AND 2-POLE CIRCUIT BREAKER ON 120/240V LOAD CENTERS.
5. INSTALL GROUNDING HUBS THIRD PARTY CERTIFIED FOR WET LOCATIONS WHEN ATTACHING CONDUITS TO THE LOAD CENTER ENCLOSURE.
6. LABEL ALL CIRCUIT BREAKERS AS TO FUNCTION AND POSITION.
7. INSTALL THE PHOTOELECTRIC CONTROL UNIT ON A 3/4" OR LARGER CONDUIT. LOCATE THE UNIT 18"-24" ABOVE THE TOP OF THE LOAD CENTER. ORIENT THE CONTROL WINDOW FACING NORTH AND/OR AWAY FROM ARTIFICIAL LIGHT SOURCES THAT MAY INTERFERE WITH AMBIENT LIGHT CONTROL. INSTALL A 3C#14 CABLE FROM THE LOAD CENTER TO THE TYPE CC CONDUIT BODY WHERE THE SPLICE TO THE PHOTOCELL RECEPTACLE CABLE SHALL BE MADE. IF PLANS CALL TO MOUNT PHOTOCELL AWAY FROM LOAD CENTER USE A 5C#14 CABLE FROM LOAD CENTER TO RECEPTACLE. PHOTOCELL MUST BE ENCLOSED IN A METALLIC ENCLOSURE.
8. STORE A SCHEMATIC DIAGRAM, A CIRCUIT DIRECTORY, AND A MATERIALS LIST INCLUDING THE MANUFACTURERS' NAMES AND PART/CATALOG NUMBERS, ALL LAMINATED IN PLASTIC, IN A METAL POCKET ATTACHED TO THE INSIDE OF THE LOAD CENTER. INSTALL THE POCKET ON THE LOAD CENTER DOOR, PROVIDING DRAIN HOLES TO PREVENT WATER ACCUMULATION.
9. WHEN METAL HALIDE OR MERCURY VAPOR LAMPED FIXTURES ARE USED, PROVIDE A REMOTE BULB THERMOSTAT, SO THAT THE CONTACT CLOSES AND THE LIGHTS TURN ON WHEN THE TEMPERATURE DROPS TO 15°F. WIRE THERMOSTAT SO THAT ITS CONTACT IS PARALLEL THE CONTACT IN THE PHOTOELECTRIC CELL.
10. INSTALL #6 AWG COPPER MAIN BONDING JUMPER, OR SIZE PER NEC TABLE 250.102 (C)(1), WHICHEVER IS LARGER.
11. INSTALLATION MUST COMPLY WITH NEC 250.24(C) AND 250.24 (C) EXCEPTION WHEN MORE THAN ONE PANELBOARD IS PRESENT.
12. INSTALL #6 AWG COPPER GROUNDING ELECTRODE CONDUCTOR (GEC), OR SIZE PER NEC TABLE 250.66, WHICHEVER IS LARGER. USE THE SAME METHOD TO SIZE GROUND ROD BONDING JUMPER.
13. MAXIMUM METER HEIGHT SHALL NOT EXCEED 64" FROM FINISHED GRADE TO CENTER OF THE METER SOCKET COVER.
14. WHEN SHOWN ON THE PLANS, INSTALL ENCLOSURE HEATER WITH INTEGRAL THERMOSTAT, SET TO ENERGIZE THE HEATER AT TEMPERATURES AT OR BELOW 32-DEG F. SCHNEIDER ELECTRIC CAT. NO. NSYCRP1W230VTVC, NVENT-HOFFMAN CAT. NO. DAH4002B, OR APPROVED EQUAL.
15. BOND SERVICE CONDUIT GROUNDING BUSHING TO SUPPLY-SIDE BONDING JUMPER. BOND LOAD CONDUIT GROUNDING BUSHINGS TO ASSOCIATED EQUIPMENT GROUNDING CONDUCTORS (EGC'S).

INSTALLATION NOTES:

1. INSTALL TYPE 3 LOAD CENTER POLES OF SUFFICIENT LENGTH TO PROVIDE THE FOLLOWING MINIMUM GROUND TO SERVICE CONDUCTOR CLEARANCE:
   A. 18.5 FEET, IF THE SERVICE CONDUCTORS ARE LOCATED ABOVE ROADWAYS OR PARKING AREAS.
   B. 26.5 FEET, IF THE SERVICE CONDUCTORS ARE LOCATED WITHIN 20 FEET OF A RAILROAD TRACK.
   C. 18.5 FEET IN ALL OTHER CIRCUMSTANCES.
2. SET THE BUTT END OF TYPE 3 LOAD CENTER POLES TO THE FOLLOWING MINIMUM DEPTH:
   A. 10 PERCENT OF ITS LENGTH PLUS 24 INCHES, OR 60 INCHES, WHICHEVER IS GREATER, IF IT IS INSTALLED IN EARTH OTHER THAN SOLID ROCK OR MUSKEG.
   B. 10 PERCENT OF ITS LENGTH, OR 48 INCHES, WHICHEVER IS GREATER, IF IT IS INSTALLED IN SOLID ROCK.
   C. CONSIDER MUSKEG TO BE AIR, AND SET THE BUTT ENDS TO THE DEPTH GIVEN IN A OR B, WHICHEVER APPLIES, IN THE UNDERLYING EARTH OR ROCK.

   WHENEVER MORE THAN 24 INCHES OF EARTH OVERLAYS ROCK, OR THE DIAMETER OF THE DRILLED HOLE IN ROCK EXCEEDS TWICE THE DIAMETER OF THE POLE AT THE GROUND LINE, CONSIDER THE INSTALLATION AS EARTH.
3. ATTACH ALL CONDUITS TO THE POSTS AND POLES USING TWO HOLE RIGID METAL CONDUIT STRAPS LOCATED ON 24 INCHES MAXIMUM CENTERS.
4. ATTACH ALL GROUND CONDUCTORS TO THE POSTS AND POLES USING CABLE STAPLES LOCATED ON 12 INCH CENTERS. MAKE ALL GROUNDING CONDUCTORS CONTINUOUS. USE #6 AWG CU GEC FOR 100A SERVICE AND #4 AWG CU GEC FOR 200 AMP SERVICE.
5. ALL POSTS, POLES, AND STRUTS SHALL BE COMMERCIALLY TREATED AND SHALL MEET THE REQUIREMENTS SET FORTH IN ALASKA DOT&PF SSHC SECTIONS 713 & 714.
6. ALL ELECTRICAL ENCLOSURES SHALL FEATURE MEANS FOR SEALING AND LOCKING ALL DOORS AND ACCESS COVERS THAT MAY CONTAIN EXPOSED ENERGIZED ELECTRICAL PARTS.

UTILITY REQUIREMENTS:

1. USE THE SINGLE-POST TYPE 2 "STANDARD" LOAD CENTER IN ALL LOCATIONS EXCEPT WHERE THE SERVING UTILITY REQUIRES THE TWO-POST TYPE 2 "ALTERNATIVE" LOAD CENTER. REFER TO THE LOAD CENTER SUMMARY FOR WHICH TO INSTALL.
2. THE LENGTH AND TYPE OF SERVICE ENTRANCE CONDUIT INSTALLED BY THE CONTRACTOR VARIES BY UTILITY. REGARDLESS OF ITS LENGTH, INSTALL A PULL ROPE IN THE SERVICE CONDUIT AND A CAP ON THE BURIED END: MARK THE BURIED END WITH A 2"x6" WOOD STAKE. SEE THE LOAD CENTER SUMMARIES FOR THE FOLLOWING INFORMATION.
   A. STATION AND OFFSET OF THE LOAD CENTER AND POWER SOURCE.
   B. WHERE THE CONTRACTOR TERMINATES THE SERVICE ENTRANCE CONDUIT.
   C. THE TYPE OF SERVICE ENTRANCE CONDUIT (SUCH AS RIGID METAL CONDUIT OR LIQUID-TIGHT FLEXIBLE METAL CONDUIT).
   D. THE MAXIMUM AND MINIMUM DISTANCES ALLOWED BETWEEN THE TYPE-3 LOAD CENTER POLE AND UTILITY POLE TO WHICH THE AERIAL DROP IS CONNECTED.
3. VERTICAL CLEARANCE FOR SERVICE-DROP CONDUCTORS IN ACCORDANCE WITH NEC 230.24(B).

State of Alaska DOT&PF
ALASKA STANDARD PLAN

TYPE 2 AND 3
LOAD CENTERS

Adopted as an Alaska Standard Plan by: Carolyn Morehouse
Carolyn Morehouse, P.E.
Chief Engineer

Adoption Date: 07/17/2020

Last Code and Stds. Review
By: JC Date: 07/17/2020

Next Code and Standards Review date: 07/17/2030

Preliminary Plans

L-30.11

SHEET 1 of 1

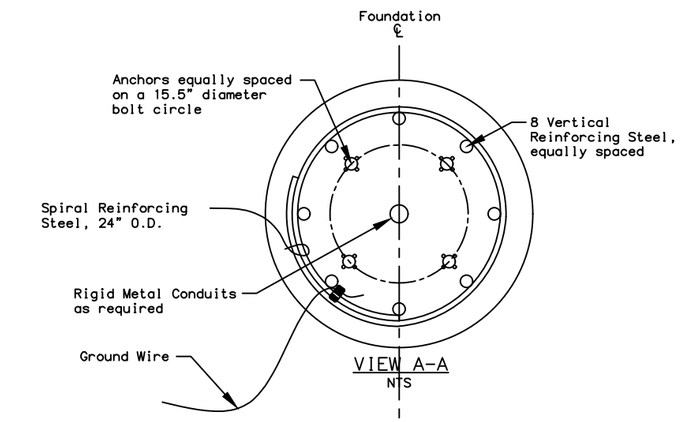

VIEW A-A
NTS

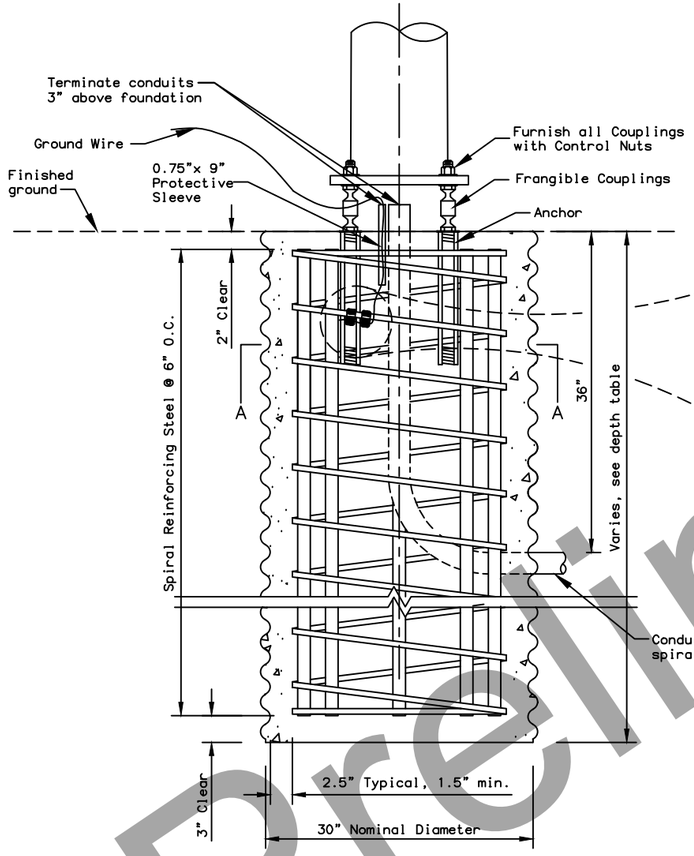

FOUNDATION DETAILS
(Skirt omitted for clarity)

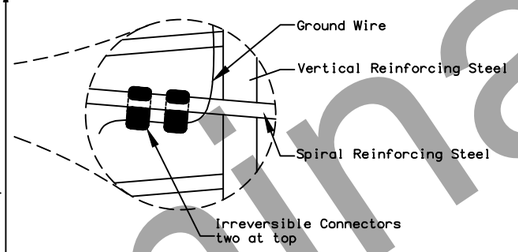

MATERIAL REQUIREMENTS		
Concrete	Class A	f'c = 4000 psi
CMP	AASHTO M218	14 ga.
Vertical Reinforcing Steel	AASHTO M31 #11	GR 60
Spiral Reinforcing Steel	AASHTO M31 #5	GR 60
Ground Wire		#4 AWG
Frangible Coupling and anchor	NCHRP 350 TL3 (See note 11)	Vu = 5.5 kips Tu = 43.2 kips
Conduit	Sch 40	RMC
Protective Sleeve	Sch 40	PVC

DEPTH TABLE		
GRADE	FOUNDATION DEPTH BY APPLICATION (ft.)	
	ELECTROLIER * SEE NOTE 9	BREAKAWAY TRAFFIC SIGNAL
Flat to 6:1	8	6.5
>=6:1 to 3:1	9	7
>=3:1 to 1.5:1	10	8

CONTROLLED LOW STRENGTH MATERIAL MIX DESIGN		
ITEM	BATCHING QUANTITIES PER CYD BATCH (lbs.)	APPLICABLE SPECS.
Portland Cement Concrete	188	701-2.01
Water (52.1 gal.)	435	712-2.01
Fine Aggregate SSD	3041	703-2.01
Admixture: MasterAir AE2000	2.0 oz.	711-2.02
Total	3664	

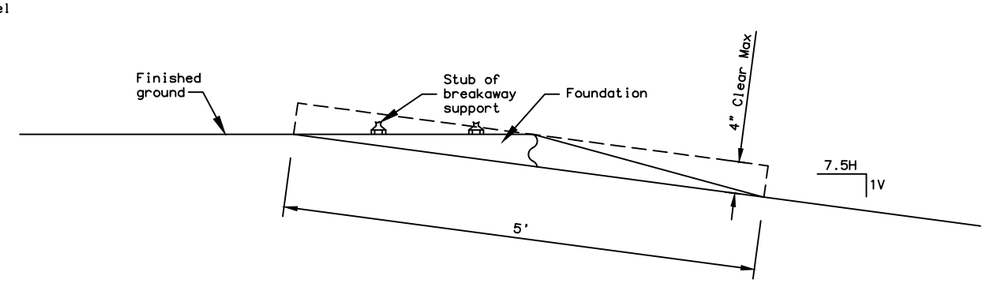

CLEARANCE DETAIL
(See note 12)

DESIGN NOTES:

Design Standard: 2013 Standard Specifications for Structural Supports for Highway Signs, Luminaires and Traffic Signals with 2019 interim.

Design Load: 1,000 lbs axial, 2,000 lbs shear, 50,000 ft-lbs moment.

NOTES:

1. This foundation is approved for electrolier and breakaway traffic signal applications in cohesionless soils with an N1-60 value of 10 or greater per AASHTO T-206, "Standard Penetration Test" (SPT). This foundation shall not be used if any of the following are encountered; water table above the bottom of foundation, very loose soils, organic soils, cohesive soils (clay), or soils susceptible to frost jacking. If any of these conditions are encountered, stop foundation work and contact the Engineer.
2. Place foundation in drilled or excavated hole with centerline of foundation located at the station, offset, and elevation specified in plans. Set foundation to satisfy the conditions depicted in clearance detail.
3. Form the foundation in corrugated metal pipe conforming to Subsection 707-2.01 of the Specifications.
4. Provide 1.5 extra turns at each end of the spiral reinforcing steel. Reinforcing steel shall not be spliced. Tie vertical reinforcing steel to each intersection of the spiral reinforcing steel.
5. Connect ground wire near the top of spiral reinforcing steel with two irreversible connectors as shown. Fasten connectors according to the manufacturers' recommendations including the use of manufacturer specified tools. The ground wire may be bare solid, stranded, or braided copper. Protect ground wire with protective sleeve as shown and fill with silicon sealant.
6. Complete all concrete work in conformance with Sections 501, 503, and 660 of the Specifications. Use a tube or tremie with a hopper head or other approved device when dropping concrete more than 5 feet per Subsection 501-3.05. Vibrate concrete during placement by mechanical vibration per Subsection 501-3.06. Ensure anchor threads are protected from contact with concrete during pour.
7. Backfill and compact according to Section 205, and Subsections 203-3.04 and 660-3.01 of the Specifications. Use select material, Type A or controlled low strength material as backfill material. Ensure area below foundation meets compaction requirements and is free of loose material and debris prior to concrete work.
8. Install all anchors according to the manufacturer's written installation instructions. Anchors shall be installed plumb. Anchors greater than 1:40 out-of-plumb will result in foundation rejection.
9. When used for electrolier reduce the foundation depth 1 foot when there is no luminaire arm or the luminaire arm is less than or equal to 12 feet.
10. Grade in depth table refers to fill slopes. If foundation is in a cut slope assume flat grade in table. To determine grade in fill slopes, use the most severe grade found within an 8 foot radius of the center of the foundation.
11. The frangible coupling referenced in this ASP is NCHRP 350 compliant. There is no MASH compliant device available at this time. See SPDR report for more info.
12. Special grading detail and/or shielding may be required to maintain 4" maximum clear distance.

State of Alaska DOT&PF
ALASKA STANDARD PLAN

CONCRETE STREET LIGHT POLE FOUNDATION

Adopted as an Alaska Standard Plan by: Carolyn Morehouse
Carolyn Morehouse, P.E.
Chief Engineer

Adoption Date: 7/17/2020

Last Code and Stds. Review
By: KLK,MJM Date: 7/8/2020

Next Code and Standards Review Date: 7/8/2030

Preliminary Plans

S-00.12 SHEET | of |

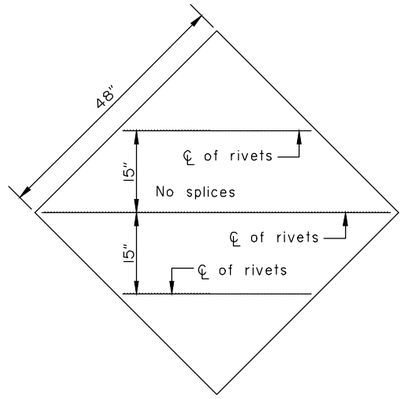

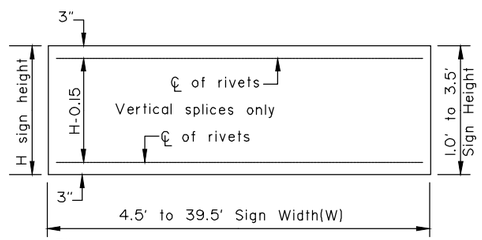

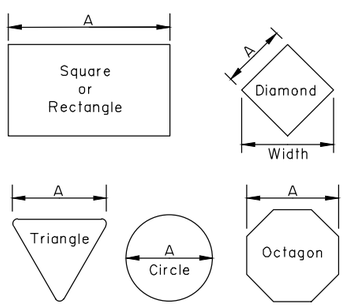

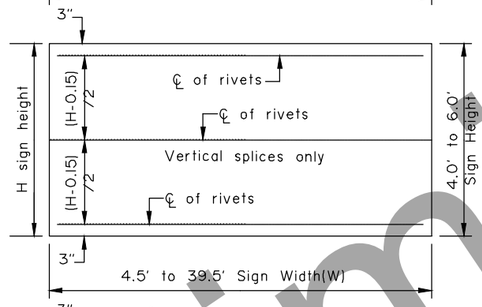

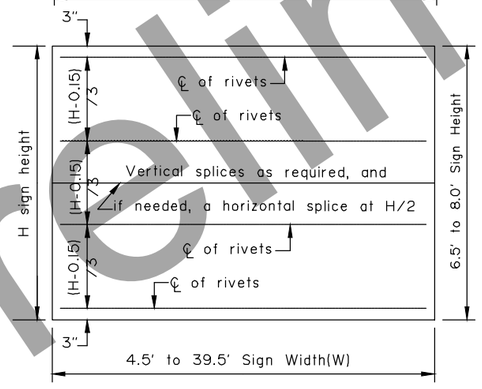

Maximum size unframed signs using 0.125" thick aluminum sheeting.	
Sign Shape	A
Squares, Shields, and Route Markers	48"
Rectangles	48"
Diamonds	48"
Triangles	48"
Rounds and Octagons	48"

Install wind framing on all signs that exceed the dimensions listed.

LIGHT SIGNS

WIND FRAMING LOCATIONS

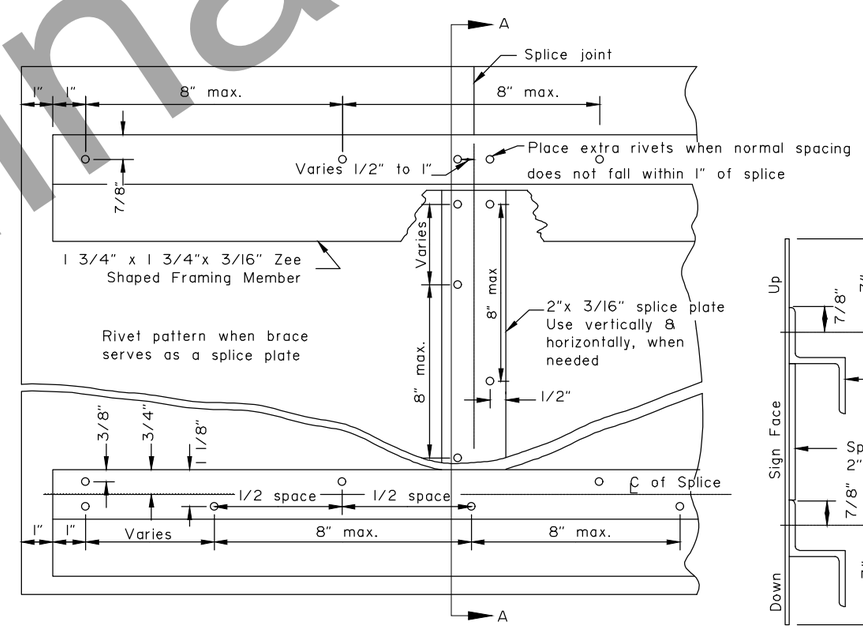

RIVET DETAIL FOR ZEE SHAPED WIND FRAMING & SPLICE PLATE

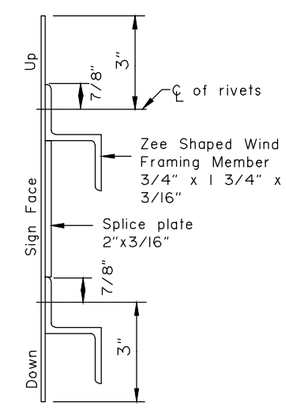

SECTION A-A

Note: Drawing not to scale

GENERAL NOTES

1. See the standard specifications for the aluminum alloys that you may use for sign sheeting and wind framing members.
2. Fabricate all signs from 0.125" thick aluminum sheeting.
3. Sign fabricators may use alternates to the zee shaped framing member with approval of the engineer, if the frame manufacturer certifies their design equals or exceeds the strength of the zee shaped design.
4. Install one piece wind framing members on all signs up to 23.5' wide. Use one splice in each wind frame on all signs wider than 23.5'. Locate splices at least 18" from all posts and panel edges. Stagger splices in adjacent framing members at least 8.0' apart.
5. Attach wind framing members with rivets or with an engineer approved, double sided, high strength, adhesive tape. Clean and handle sheeting and framing members and apply tape in accordance with the tape manufacturer's written instructions. Install two rivets in both ends of each framing member.
6. Use 3/16" diameter rivets conforming to aluminum alloy 6061-T6 for cold driven rivets, or aluminum alloy 6061-T43 for hot driven rivets.
7. Sign fabricators may use sign panels extruded with integral framing with approval of the engineer, if the manufacturer certifies their design equals or exceeds the strength of the 0.125" thick panel with framing attached to it.
8. Frame all signs taller than 8.0' with five wind framing members located (H-0.15)/4 spaces. If needed, make a horizontal splice at the middle wind frame.
9. Do not use round pipes for sign supports.

State of Alaska DOT&PF
ALASKA STANDARD PLAN

SIGN FRAMING

Adopted as an Alaska Standard Plan by: Carolyn Morehouse
Carolyn Morehouse, P.E.
Chief Engineer

Adoption Date: 7/17/2020

Last Code and Stds. Review
By: WTH Date: 7/8/2020

Next Code and Standards Review date: 7/8/2030

S-00.12

Preliminary Plans

S-01.02 SHEET | of |

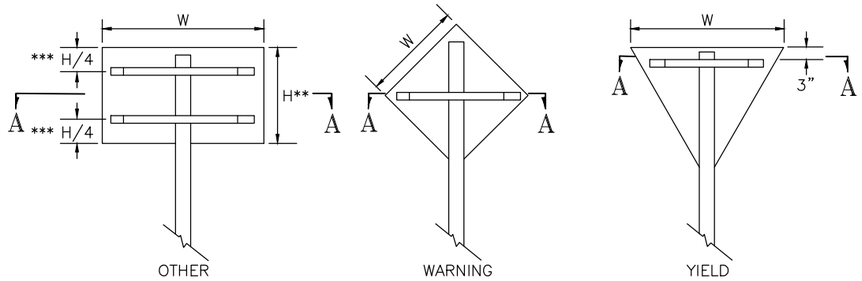

*** Use one brace when H ≤ 18"
Use two braces when 18"< H < 48"
Use three braces when H ≥ 48"

** Position of brace may be varied to match Predrilled mounting holes in panel

SIGN BRACING PLACEMENT

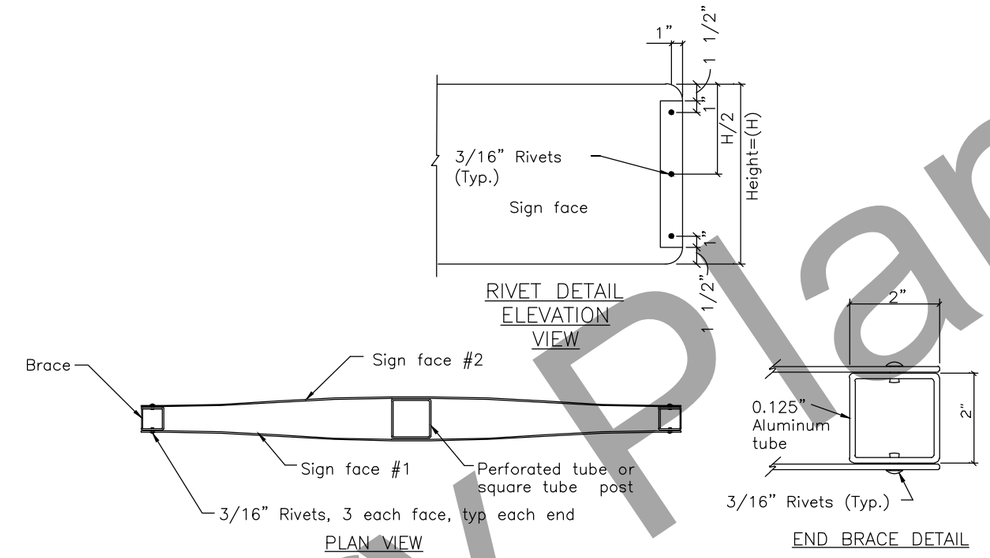

SMALL STREET NAME SIGN (D3-1, D3-1A, D3-1D) BRACING DETAILS

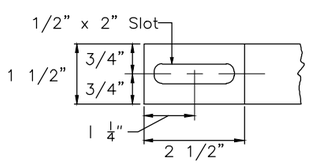

DETAIL OF BRACE SLOT
Elevation view

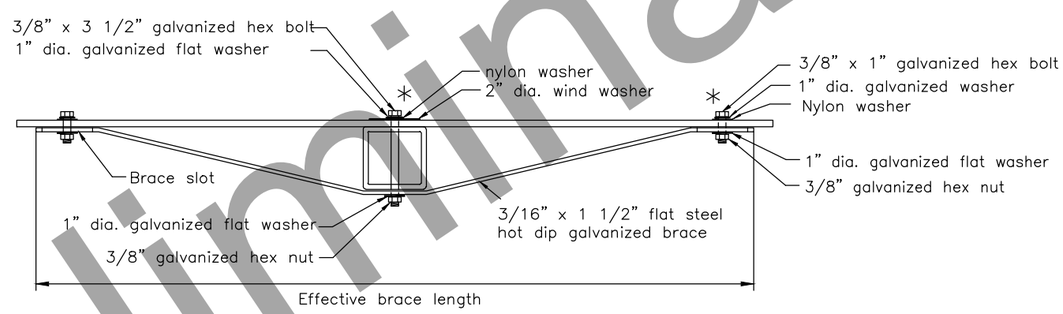

TUBE POST SIGN BRACING SECTION A-A
Plan view

* Adjust location of bracing so that bolts and washers will miss the sign legend

Sign Width(W)	Effective Brace Length		
	Warning	Yield	Other
30"	36"	24"	24"
36"	42"	30"	30"
42"	48"	–	36"
48"	Two posts	36"	42"

< 30" No bracing required and use square tube

Note: Drawing not to scale

State of Alaska DOT&PF
ALASKA STANDARD PLAN

BRACING FOR SIGNS MOUNTED ON SINGLE POST

Adopted as an Alaska Standard Plan by: Carolyn Morehouse
Carolyn Morehouse, P.E.
Chief Engineer

Adoption Date: 7/17/2020

Last Code and Stds. Review
By: WTH Date: 7/8/2020

Next Code and Standards Review date: 7/8/2030

S-01.02

Preliminary Plans

S-05.02

SHEET 1 of 1

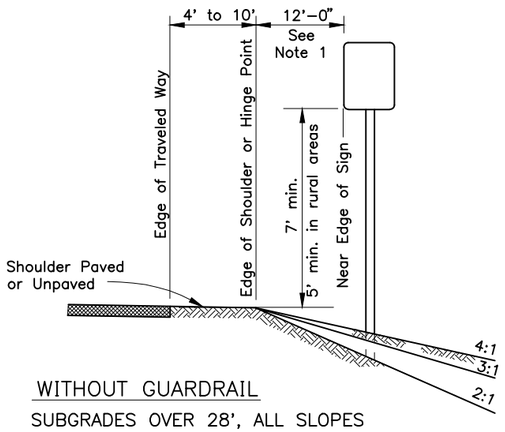

WITHOUT GUARDRAIL

SUBGRADES OVER 28', ALL SLOPES

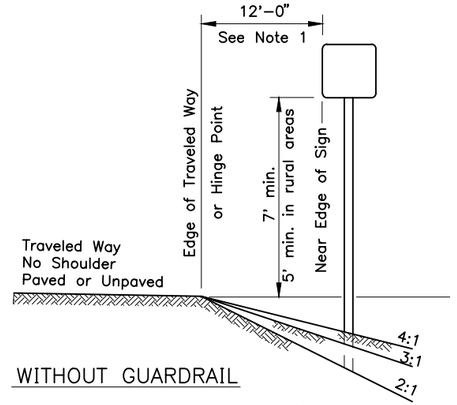

WITHOUT GUARDRAIL

SUBGRADES 24' TO 28', ALL SLOPES

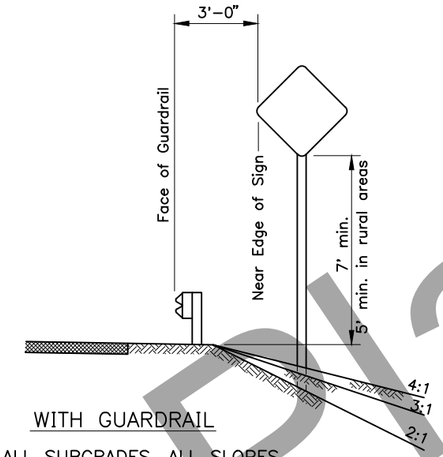

WITH GUARDRAIL

ALL SUBGRADES, ALL SLOPES

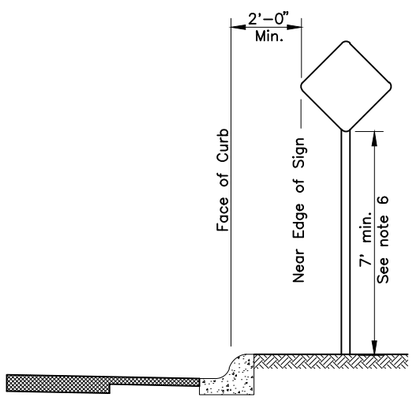

CURB WITHOUT SIDEWALK

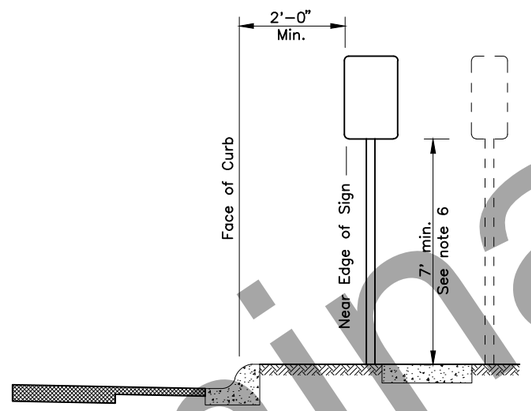

CURB WITH PARKWAY AND SIDEWALK

(If R/W width permits, signs should be placed behind sidewalk.)

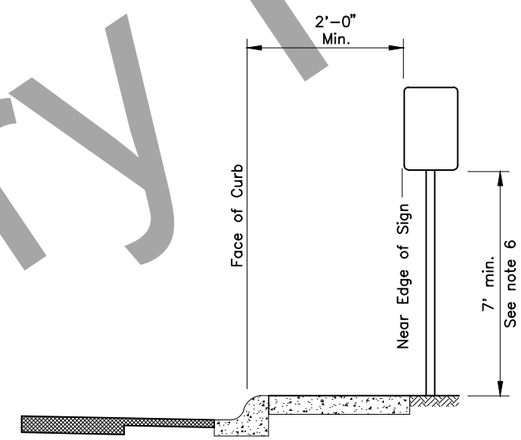

CURB WITH SIDEWALK WITHOUT PARKWAY

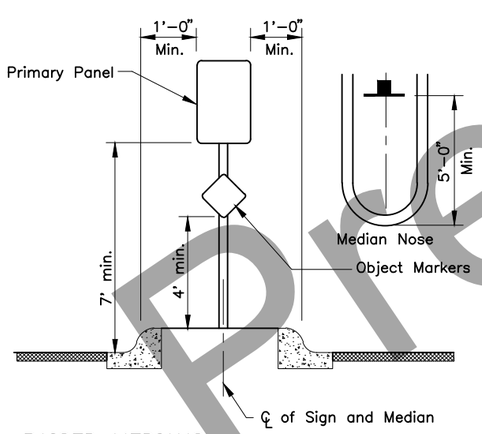

RAISED MEDIANS

Minimum 4' Width for Signing

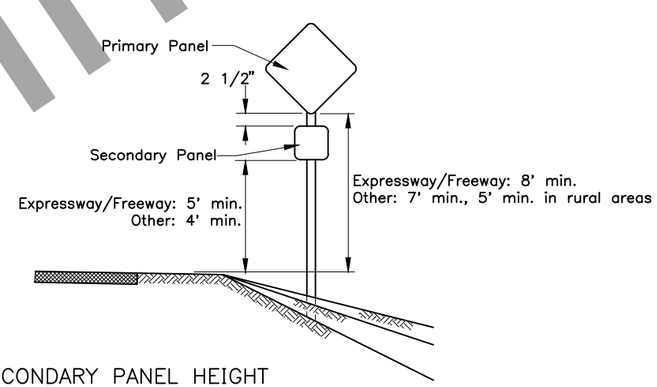

SECONDARY PANEL HEIGHT

ALL TWO PANEL MOUNTING

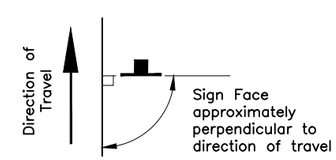

SIGN POSITIONING

GENERAL NOTES

1. Unless shown otherwise on the plans, the standard sign offset is 12'. The minimum is 6' where shoulder width is 6' or greater.
2. Add 6" to mounting height on unpaved roads.
3. If signs extend over bike paths, the minimum vertical clearance is 8' 0".
4. When signs are placed 30' or more from the edge of traveled way, mount them with the bottom of the sign at least 5' above the road surface at the near edge of the road.
5. When multiple hinged sign supports are used, mount hinges at least 7' above the ground.
6. Minimum mounting height is 7'-0" where parking or pedestrian movements are likely to occur, or where sings extend over sidewalks.
7. For construction signs in rural areas, mounting height shall be 7' minimum.

State of Alaska DOT&PF
ALASKA STANDARD PLAN

POST MOUNTED SIGN
OFFSET AND HEIGHT

Adopted as an Alaska Standard Plan by: Carolyn Morehouse
Carolyn Morehouse, P.E.
Chief Engineer

Adoption Date: 7/17/2020

Last Code and Stds. Review
By: KLK Date: 7/8/2020

Next Code and Standards Review Date: 7/8/2030

S-05.02

Preliminary Plans

S-20.11	SHEET | of |

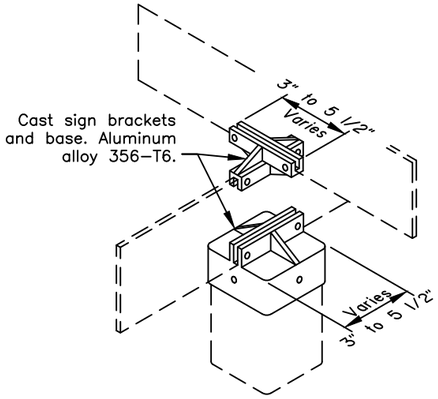

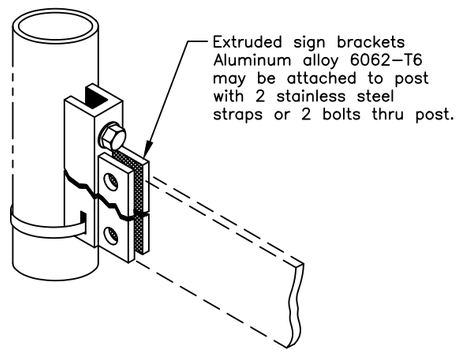

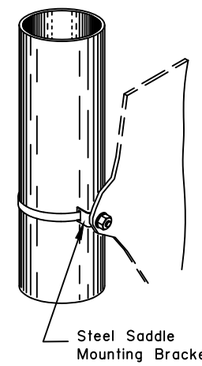

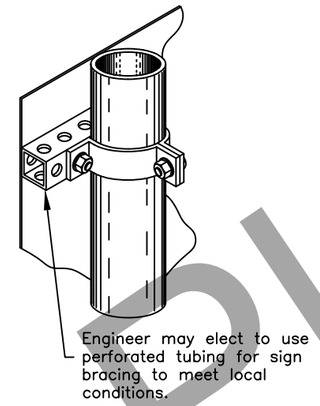

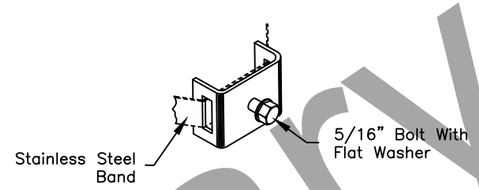

MOUNTING BRACKET DETAIL

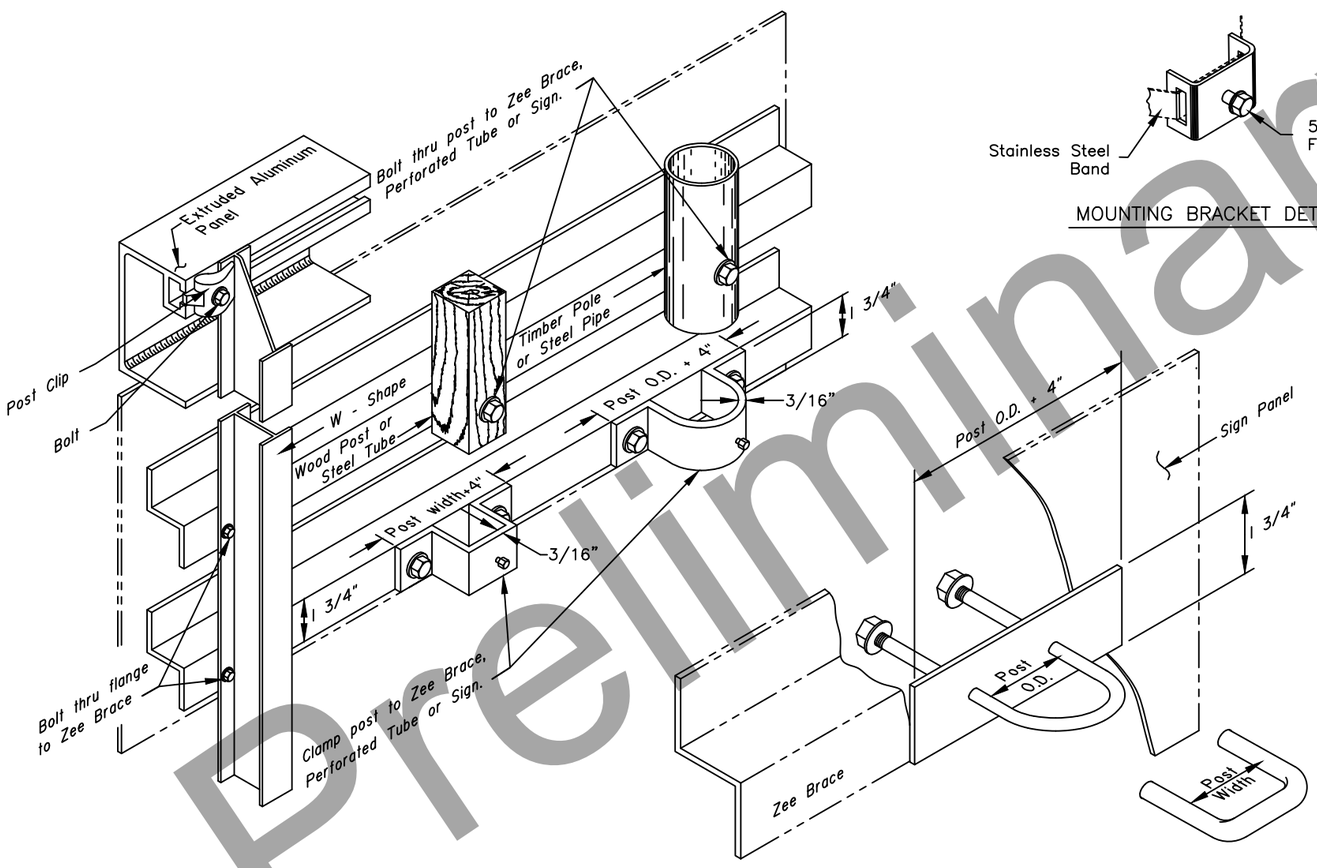

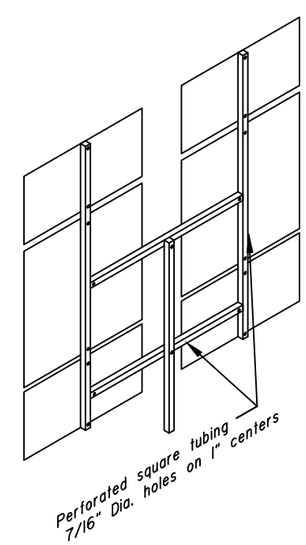

CONSTRUCTION NOTES

1. Details shown indicate general design only. Dimensions and design may vary among manufacturers.
2. Install weather tight caps on all pipe and tube post (except perforated tubing).
3. Protect driven sign posts with drive caps during installation.
4. Bolt braces to posts at each point where they cross posts.
5. Install signs with top of post, mounting brackets, etc. with a minimum of 3" below top of sign.
6. Paint all sign mounting fasteners on sign face a color closely matching the sign face.
7. Attach all signs, zees and braces mounted to the posts with 5/16" bolts, nuts and washers.
8. Furnish all aluminum nuts, bolts and washers with anodized finish.

FASTENER SPECIFICATION TABLE
(ALL REFERENCES ARE TO ASTM)

FASTENERS		ALUMINUM	STEEL	STAINLESS STEEL
BOLTS	MACHINE	F468 2024-T4	A307	F593
	CARRIAGE "U"	F468 2024-T4	A307	A276 TYPE 304
NUTS	REGULAR	F467 6061-T6	A563	F594
	LOCKING	F467 2017-T4		
WASHERS		F468 2024-T4	F844	A480
POST CLIP		A356-T6	N/A	N/A

State of Alaska DOT&PF
ALASKA STANDARD PLAN

SIGN TO SIGN POST CONNECTION

Adopted as an Alaska Standard Plan by: Carolyn Morehouse
Carolyn Morehouse, P.E.
Chief Engineer

Adoption Date: 07/30/2021

Last Code and Stds. Review
By: LRG Date: 07/30/2021

Next Code and Standards Review date: 07/30/2031

S–20.11

Preliminary Plans

S-30.05

SHEET | of |

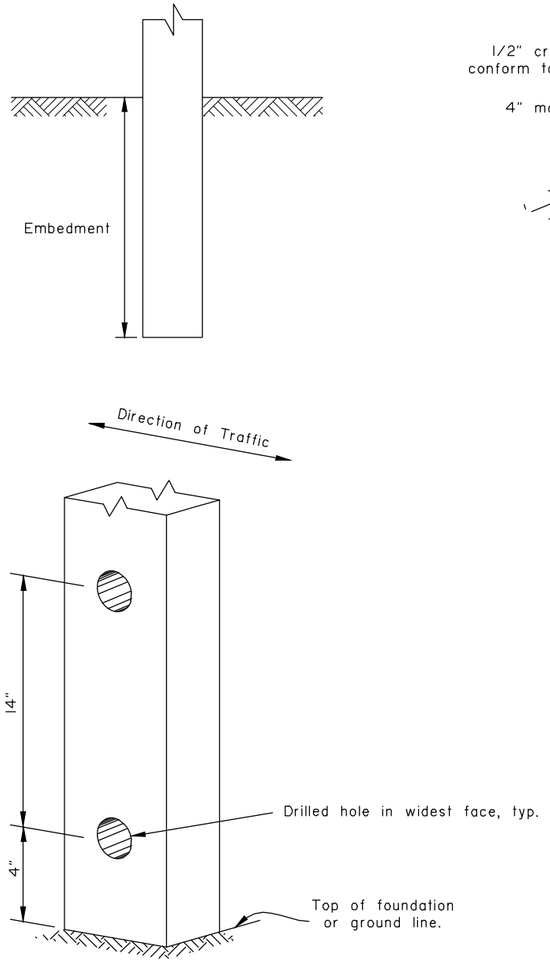

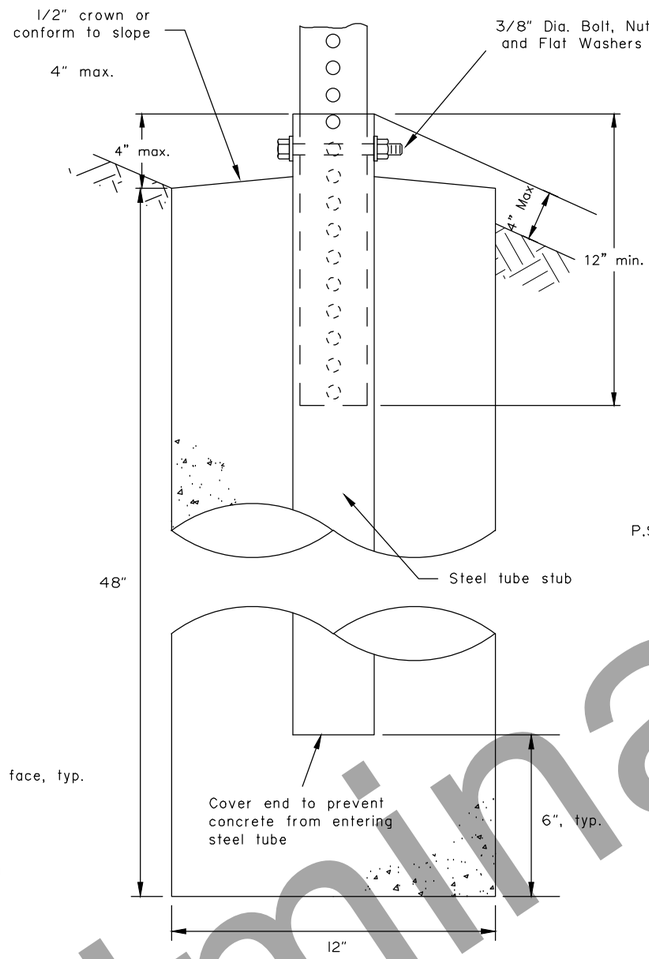

SLEEVE TYPE
CONCRETE FOUNDATION

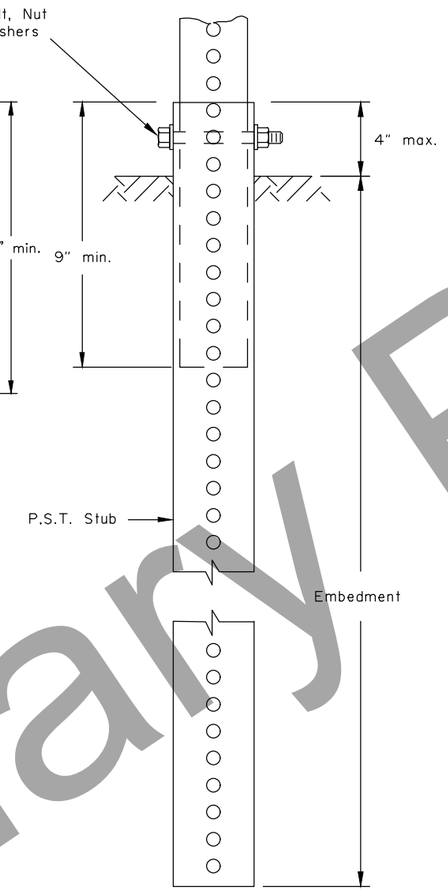

SLEEVE TYPE*
SOIL EMBEDMENT

GENERAL NOTES:

1. Sign shall be placed symmetrically around posts and refer to Standard Plan S-00 for sign framing details.
2. See plans for type of post, size and embedment type.
3. To maintain crashworthiness, install no more than the number of P.S.T.s or wood posts specified in the tables within 7' of each other.
4. Concrete shall be class B.
5. Do not use the supports on this drawing for multiple support signs if supports are separated by more than 7 feet.
6. Treat all field cuts and field drilled holes in wood posts in accordance with Section 730-2.04 of the Standard Specifications.

SIGN POST SPACING NOTES:

1. Install sign support in accordance with the table below, unless otherwise required by plans or specifications.
2. Exceptions:
   a. Use one post for all E5-1 gore signs, regardless of width.
   b. Use one 2.5" P.S.T. for all STOP signs, with or without street name signs.
3. Supports placed within 7' of each other must be acceptable for that use. See tables below for the sizes of wood posts and P.S.T.s that may be used within 7'. See Manufacturer's documentation for breakaway couplings and tubes that may be used within 7'.
4. See Standard Plan S-31 for frangible couplings, hinges, and foundations for tube and W-shape sign supports.

WOOD SIGN POSTS			
SIZE	HOLE DIA.	EMBEDMENT*	NO. OF POSTS WITHIN 7 Ft. PATH
4"x4"	NONE	4'-1"	2
4"x6"	1 1/2"	5'-3"	2
6"x6"	1 1/2"	4'-9"	1
6"x8"	3"	4'-9"	1

* Embedment depth applies in both strong and weak soil.

WOOD POSTS

PERFORATED STEEL TUBES (P.S.T.)		
POST SIZE	Embedment Depth	No. of P.S.T.s permitted within 7 ft path
1 1/2" x 1 1/2"	4'-8"	2
1 3/4" x 1 3/4"	4'-6"	2
2" x 2"	4'-3"	2
2 1/4" x 2 1/4"	5'-0"	1
2 1/2" x 2 1/2"	4'-6"	1

* Use 3"x3"x3/16" Stub for 2 1/2"x2 1/2" PST Applications.

PERFORATED STEEL TUBE (PST) POSTS

TUBE SIGN POST SPACING								
Sign Width (feet)	No. of Posts	Distance Between Posts	Sign Overhang	Post Type				Notes
				P.S.T.	Wood	Steel Tube	W-Shape	
0.5 to 4.0	1	-	0.5W	X	X	X		See Note 2.
4.5 to 10.0	2	0.6W	0.2W	X	X	X		See Note 3.
10.5 to 11.0	2	6	Varies	X	X	X		See Note 3.
11.5 to 13.0	2	8	Varies				X	
13.5 to 20.0	2	0.6W	0.2W				X	
20.5 to 22.5	3	8	Varies				X	
23.0 to 29.5	3	0.35W	0.15W				X	
30.0 to 31.5	4	8	Varies				X	
32.0 to 40.0	4	0.25W	0.125W				X	

TUBE SIGN POST SPACING

Note: Drawing not to scale

State of Alaska DOT&PF
ALASKA STANDARD PLAN

LIGHT SIGN STRUCTURE
POST EMBEDMENT

Adopted as an Alaska Standard Plan by: Carolyn Morehouse
Carolyn Morehouse, P.E.
Chief Engineer

Adoption Date: 7/17/2020

Last Code and Stds. Review
By: WTH Date: 7/8/2020

Next Code and Standards Review date: 7/8/2030

S-30.05

Preliminary Plans

S-31.02

SHEET 1 of 1

NOTE:
Install hinges when more than one post is used to support a sign. Do not install hinges on single post installations.

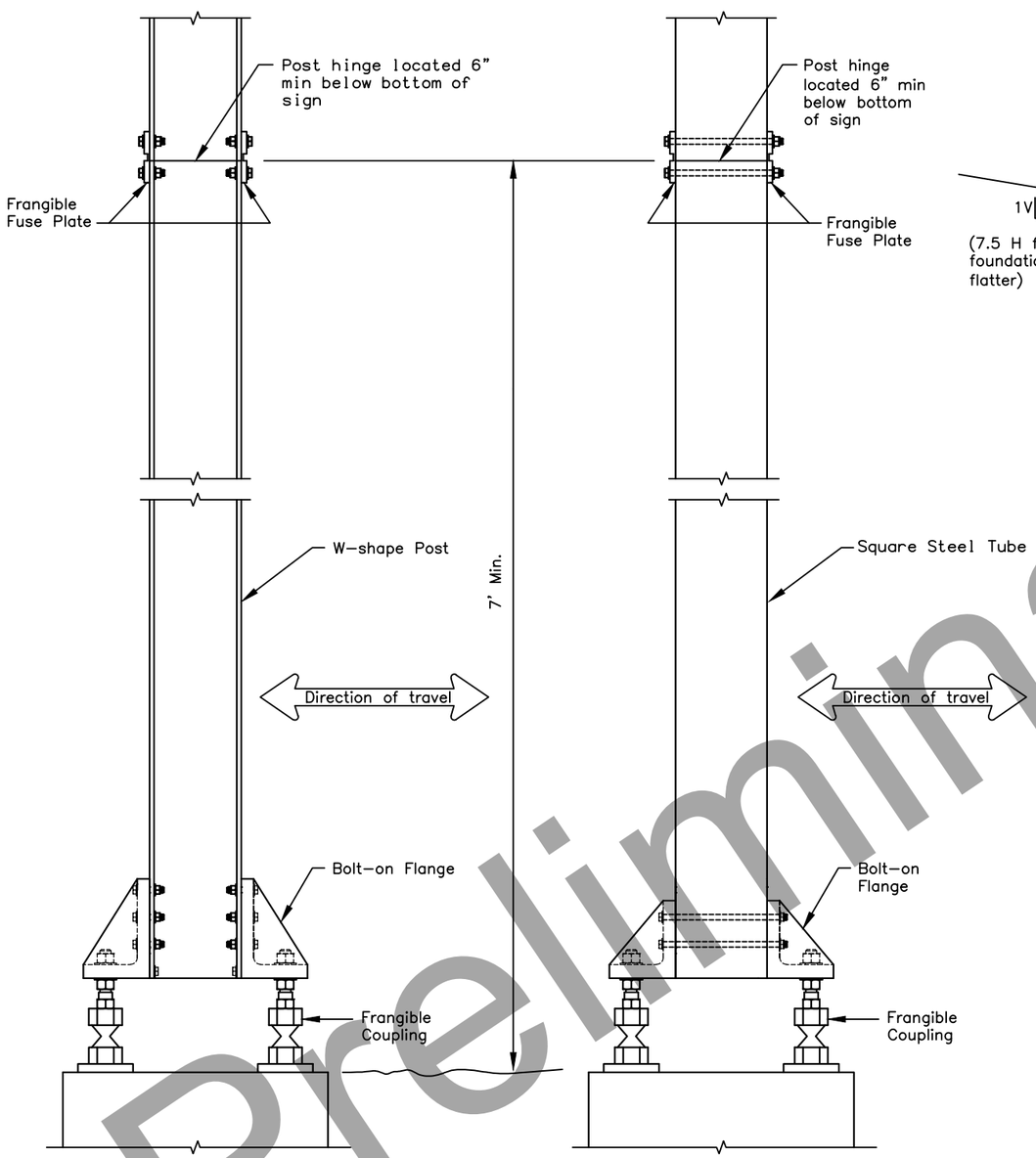

FRANGIBLE COUPLING SYSTEM FOR W-SHAPE POST

FRANGIBLE COUPLING SYSTEM FOR SQUARE STEEL TUBES

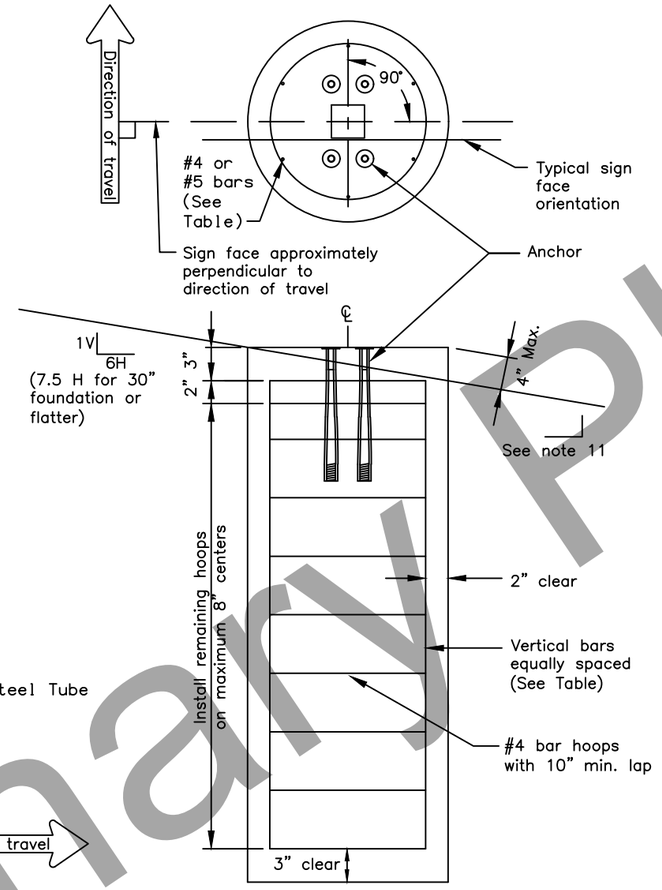

SIGN POST FOUNDATION
See Table for depth and diameter

POST SIZE & TYPE	FOUNDATION *			REINFORCEMENT					
	DIA.	MIN. DEPTH	CY^3 CONC.	VERTICAL BARS			HOOPS		
				QTY.	SIZE	LGTH.	QTY.	SIZE	DIA.
2 1/2" TUBE	1'-6"	6'-0"	0.39	7	#5	5'-6"	10	#4	1'-2"
3" TUBE	1'-6"	6'-0"	0.39	7	#5	5'-6"	10	#4	1'-2"
3 1/2" TUBE	1'-6"	6'-0"	0.39	7	#5	5'-6"	10	#4	1'-2"
4" TUBE	2'-6"	6'-0"	1.09	8	#8	5'-6"	10	#4	2'-2"
4 1/2" TUBE	2'-6"	6'-0"	1.09	8	#8	5'-6"	10	#4	2'-2"
5" TUBE	2'-6"	6'-0"	1.09	8	#8	5'-6"	10	#4	2'-2"
W6 x 9	2'-6"	6'-0"	1.09	8	#8	5'-6"	10	#4	2'-2"
W6 x 12	2'-6"	6'-0"	1.09	8	#8	5'-6"	10	#4	2'-2"
W6 x 15	3'-0"	6'-6"	1.70	8	#11	6'-0"	12	#4	2'-8"
W6 x 30	3'-0"	7'-6"	1.96	8	#11	7'-0"	13	#4	2'-8"

FOUNDATION TABLE

* Foundations sized for use where there are no loose, high moisture, or fine grained soils.

GENERAL NOTES

1. Furnish sign posts with NCHRP 350 compliant frangible couplings designed to break away safely when struck from any direction. There is no MASH compliant device at this time. See SPDR report for more info.
2. Furnish frangible coupling systems with bolt-on flanges.
3. Details on this sheet illustrate only the general components of a frangible coupling system, and are not intended to specify a particular product.
4. Install frangible fuse plates as specified by the manufacturer and hinged joints when multiple posts are used to support a sign. Do not use round pipes.
5. Install the components of the breakaway system, including hinges, in accordance with the written instructions of the system manufacturer.
6. Use Class A, B or W concrete conforming to Sections 501 or 550 of the Standard Specifications. Furnish ASTM A615 grade 60 steel bars for concrete reinforcement conforming to AASHTO M31.
7. Spiral reinforcing steel may be substituted for hoops in concrete foundation. Spiral option shall consist of #3 plain spiral with 6" pitch with three flat turns at the top and one flat turn at the bottom.
8. Install the concrete anchors using a rigid template. Locate the anchors on centers and within tolerances specified by the manufacturer.
9. Install the anchors in fresh concrete as recommended by the manufacturer. Adjust the template's final position until it is level. Remove and replace all foundations that need more than 2 shims under any 1 coupling or more than a total of 3 shims under any pair of couplings to plumb the post.
10. Drill the holes for attaching brackets before the sign posts are hot dip galvanized. Test fit templates in the holes to ensure the brackets can be installed square to the posts.
11. Special grading detail and/or shielding may be required to maintain 4" maximum clear distance.

State of Alaska DOT&PF
ALASKA STANDARD PLAN

SIGN POST BASE AND FOUNDATION

Adopted as an Alaska Standard Plan by: Carolyn Morehouse
Carolyn Morehouse, P.E.
Chief Engineer

Adoption Date: 7/17/2020

Last Code and Stds. Review
By: KLK, MJM Date: 7/8/2020

Next Code and Standards Review Date: 7/8/2030

S-31.02

Preliminary Plans

T-20.04

SHEET | of |

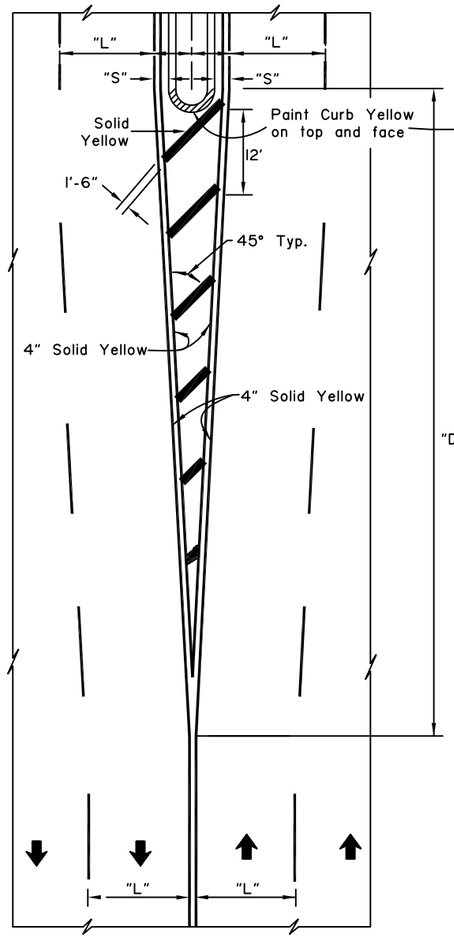

FOUR OR MORE LANES
DRIVE TO RIGHT

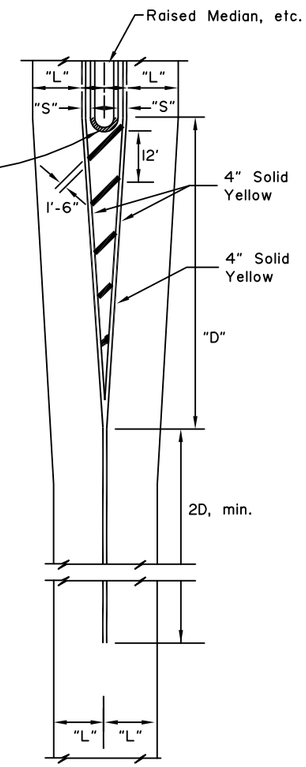

TWO LANES
DRIVE TO RIGHT

White longitudinal and diagonal markers identical to Four Lane Arrangement.

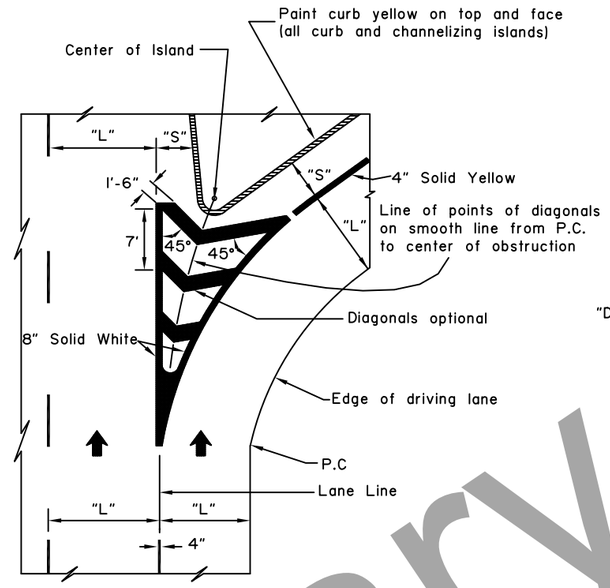

CHANNELIZING ISLAND

NOTES: "D" = Speed limit (mph) X "S" (offset width in feet) or as indicated on the plans. Minimum "D" = 100 feet urban, 200 feet rural.

APPROACH TO OBSTRUCTIONS

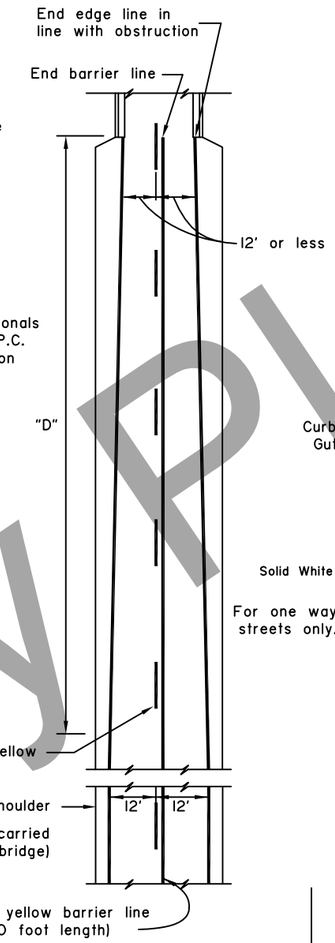

Note: On bridges over 24' wide use standard pavement markings. Barrier lines not used unless otherwise required.

EDGE LINE TRANSITION TO NARROW BRIDGE AND APPROACH BARRIER LINE

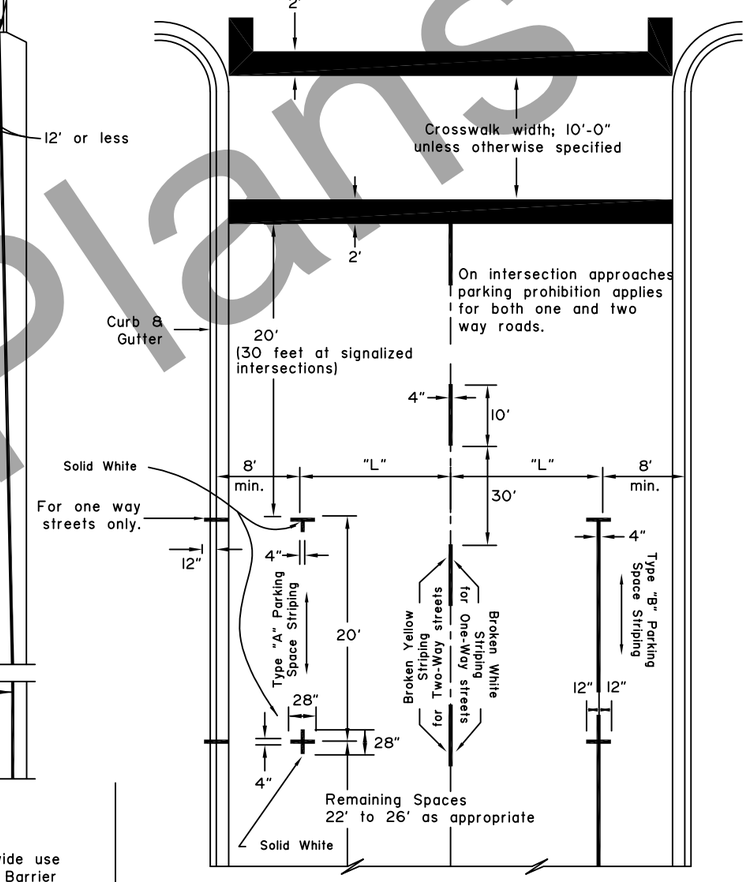

CENTERLINES FOR TWO LANE TWO WAY URBAN ROADS-PARKING LIMIT LINES

RAILROAD CROSSING NOTES:

1. All markings solid while unless indicated otherwise.
2. On 4-lane roadways place railroad crossing approach markings in each lane of the approach.
3. Locate Stop Bar 15' from railroad track or 8' from gate, if present.
4. Place edge lines and lane lines on a uni-directional approach in a normal manner except that the lane line(s) shall be solid 4" white in lieu of broken for a distance of (D+60') in advance of the stop bands.

POSTED LIMIT	D
30 M.P.H.	225'
40	350'
50	475'
60	625'

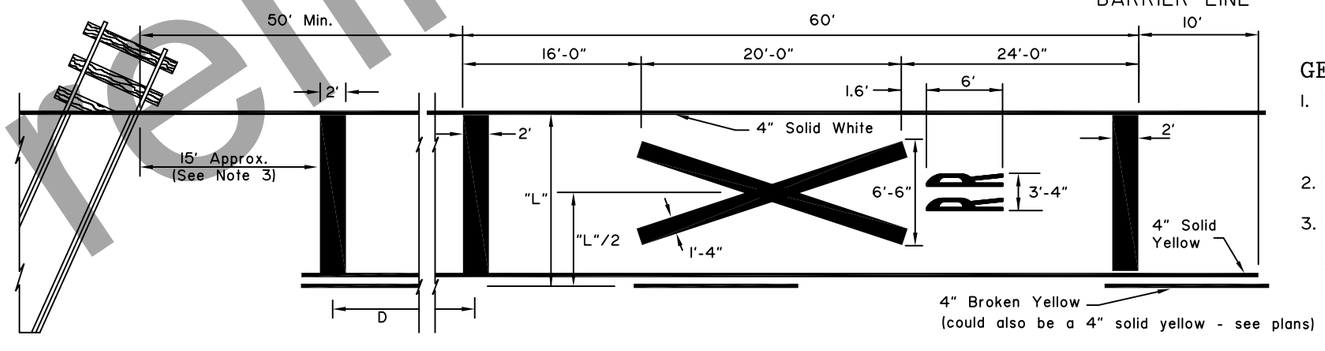

APPROACH TO RAILROAD CROSSING ON 2 LANE 2 WAY HIGHWAY

GENERAL NOTES:

1. "S"= offset distance as shown on the plans, otherwise 1 to 2 feet.
2. "L"= driving lane width.
3. See the Alaska Traffic Manual for additional guidance and/or restrictions on the use of traffic control devices.

NOT TO SCALE

State of Alaska DOT&PF
ALASKA STANDARD PLAN

PAVEMENT MAKING APPLICATIONS

Adopted as an Alaska Standard Plan by: Kenneth J. Fisher, P.E.
Chief Engineer

Adoption Date: 02/08/2019

Last Code and Stds. Review
By: Date:

Next Code and Standards Review date: 02/08/2029

T-20.04

Preliminary Plans

T-21.04

SHEET 1 of 1

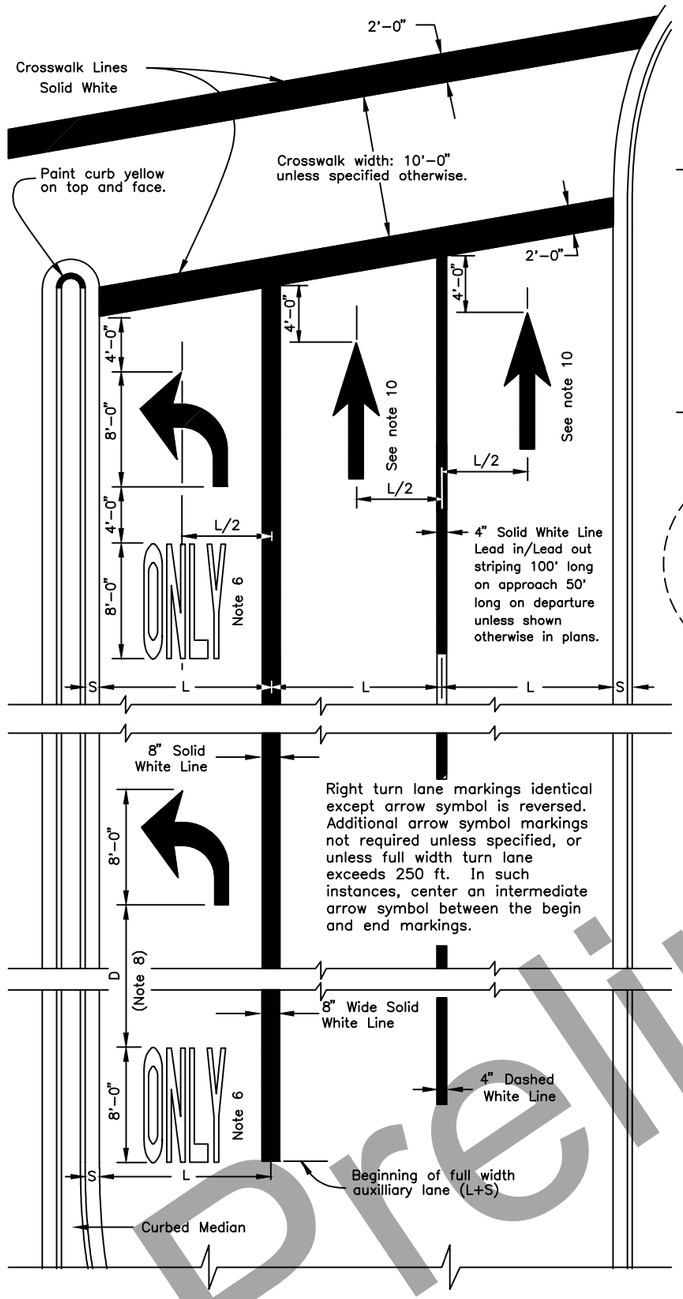

APPROACH TO INTERSECTION

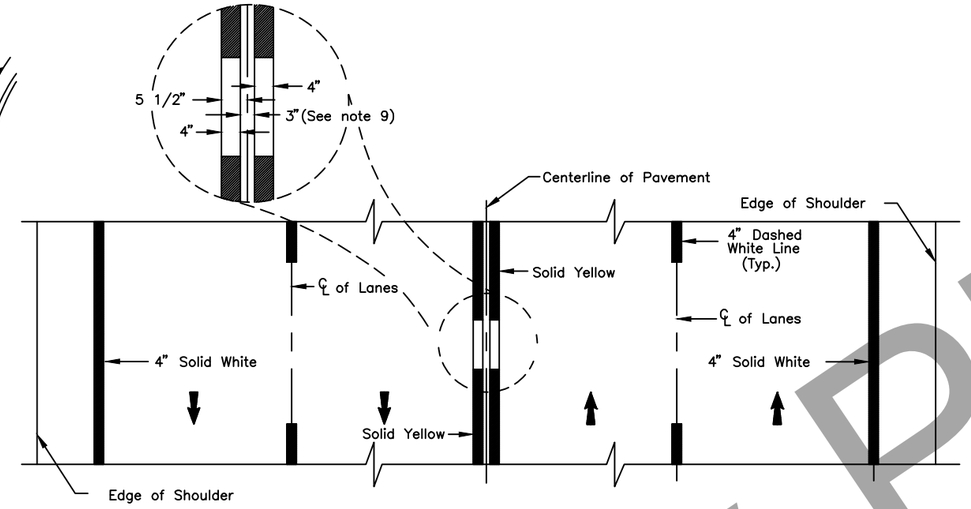

FOUR LANE TWO WAY

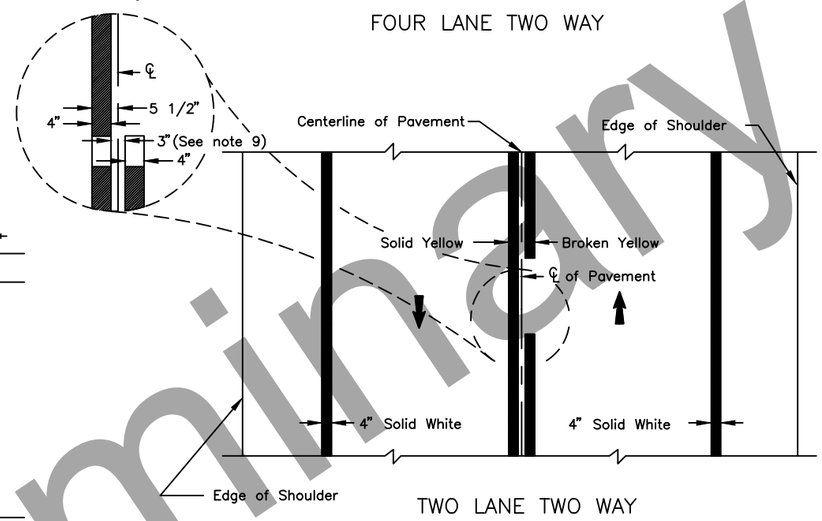

TWO LANE TWO WAY

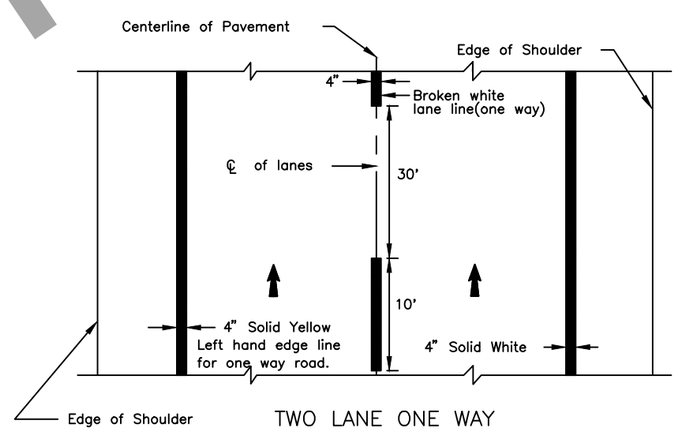

TWO LANE ONE WAY

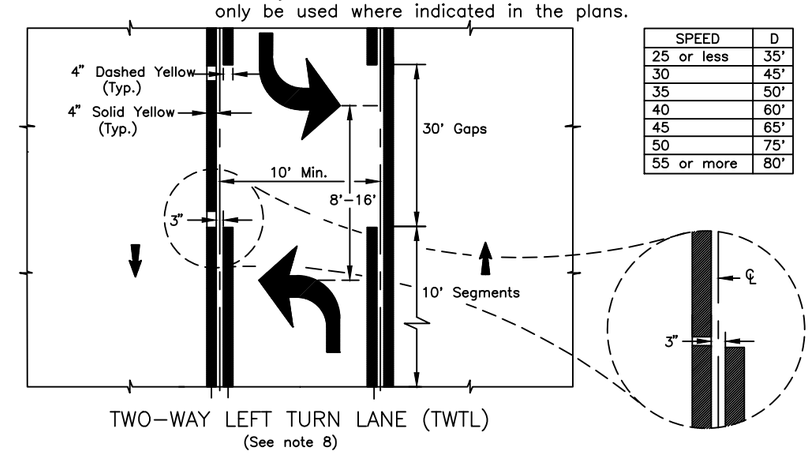

TWO-WAY LEFT TURN LANE (TWTL)
(See note 8)

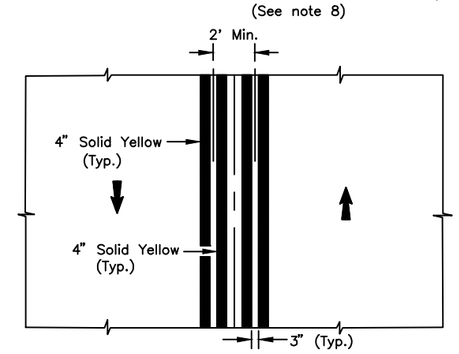

STRIPED MEDIAN

GENERAL NOTES:

1. All markings white unless indicated otherwise.
2. Lengths of stripe and gap for lane and center lines identical.
3. Lane lines for auxiliary lanes are unbroken solid lines.
4. "L" = driving lane width.
5. "S" = shy distance as shown on plans, otherwise 1 to 2 feet.
6. ONLY markings are required where through lanes change to turn lanes. In other cases, apply ONLY markings as indicated on plans.
7. See ALASKA TRAFFIC MANUAL for additional instruction on the use of TRAFFIC CONTROL DEVICES.
8. Adjust distance D between ONLY and Turn Arrow based on SPEED vs. D table. Table may be used for spacing between pairs of TWLT markings.
9. Adjust centerline spacing from 3" up to 5" where recessed pavement markers are required.
10. Arrows and symbols are used for through lanes only when the lane layout deviates from the normal intersection rules, and shall only be used where indicated in the plans.

SPEED	D
25 or less	35'
30	45'
35	50'
40	60'
45	65'
50	75'
55 or more	80'

State of Alaska DOT&PF
ALASKA STANDARD PLAN

PAVEMENT MARKING APPLICATIONS

Adopted as an Alaska Standard Plan by: Carolyn Morehouse
Carolyn Morehouse, P.E.
Chief Engineer

Adoption Date: 7/17/2020

Last Code and Stds. Review
By: KLK Date: 7/8/2020

Next Code and Standards Review Date: 7/8/2030

T-21.04

Preliminary Plans

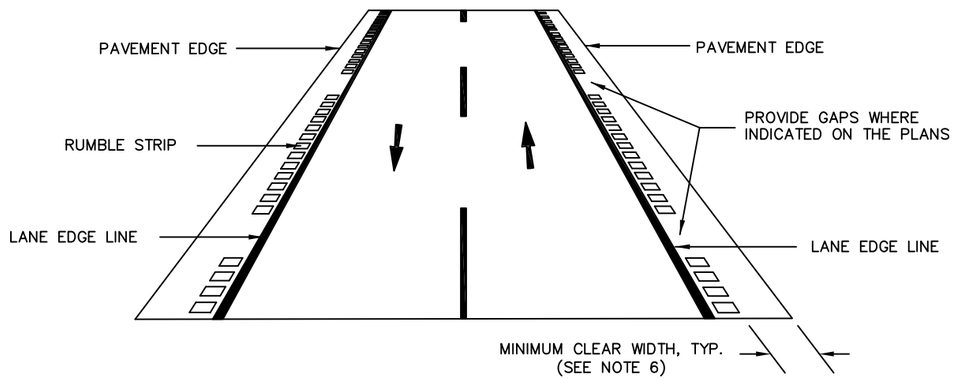

TYPICAL SHOULDER INSTALLATION – TWO-WAY

PERSPECTIVE VIEW

APPLIES TO TWO-WAY OPERATION WHERE BICYCLES ARE ALLOWED

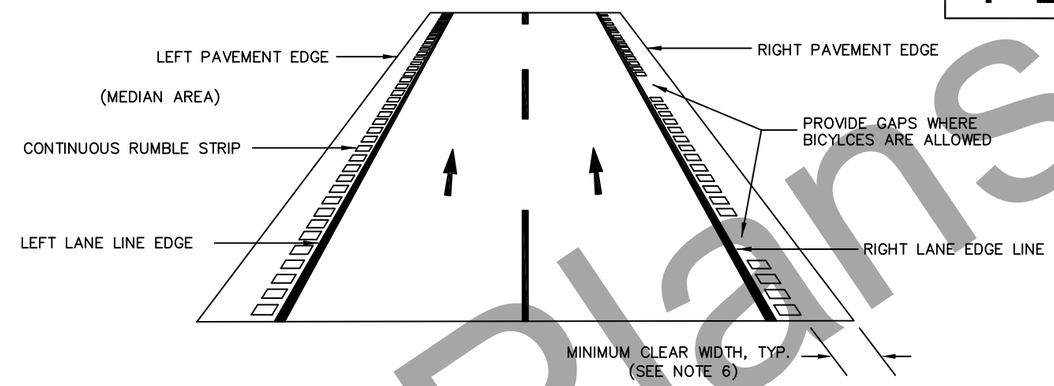

TYPICAL SHOULDER INSTALLATION – ONE-WAY DIVIDED

PERSPECTIVE VIEW

APPLIES TO ONE-WAY DIVIDED HIGHWAYS WHERE BICYCLES ARE ALLOWED

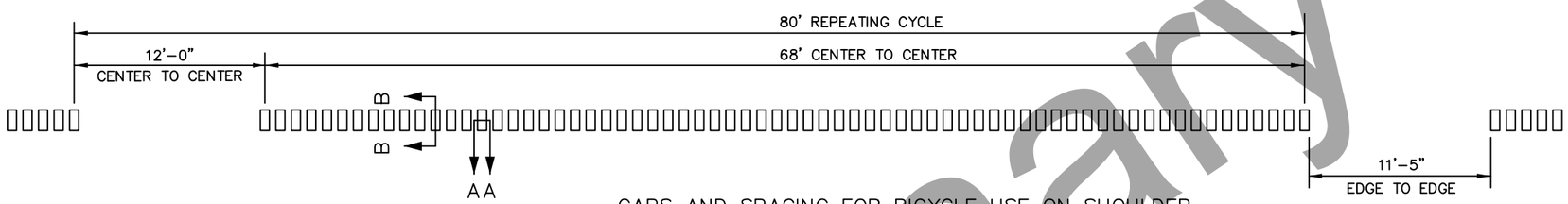

GAPS AND SPACING FOR BICYCLE USE ON SHOULDER

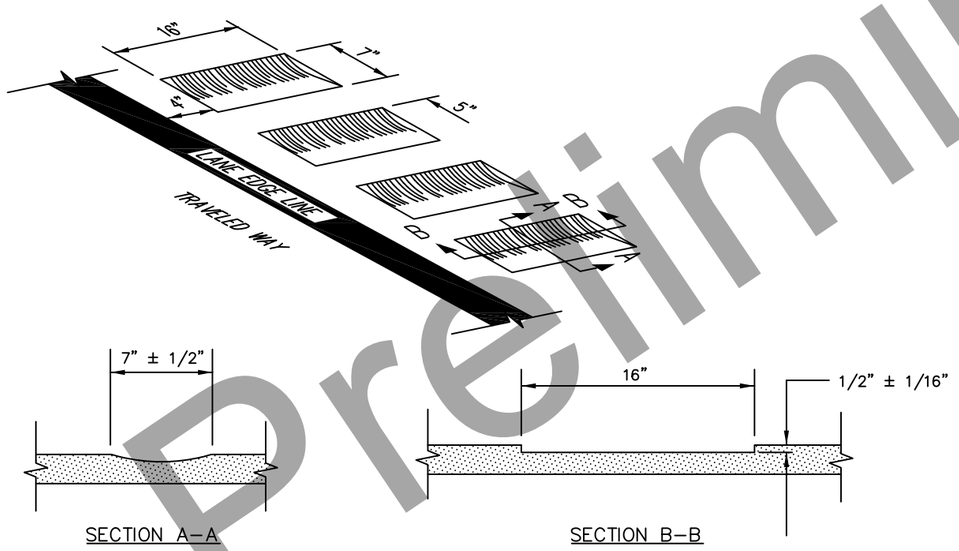

TYPICAL SHOULDER INSTALLATION DETAIL

SHOULDER RUMBLE STRIP NOTES:

1. PERFORM ALL STAKING AS NECESSARY TO INSTALL RUMBLE STRIPS IN ACCORDANCE WITH THE PLANS, THESE DETAILS, AND THE FOLLOWING NOTES:
2. DO NOT INSTALL RUMBLE STRIPS IN THE FOLLOWING INSTANCES:
   - A. BRIDGE DECKS
   - B. BRIDGE APPROACH SLABS
   - C. PAVEMENT LESS THAN 2 INCHES THICK
   - D. PAVEMENT THAT HAS ALLIGATORING, FATIGUE, CRACKING, OR IN POOR CONDITION
   - E. PAVEMENT JOINTS
   - F. INTO LANE EDGE LINE STRIPING
3. USE CENTERLINE OR LANE LINE DIVIDING LINES, RATHER THAN LANE EDGE LINES, FOR RUMBLE STRIP ALIGNMENT CONTROL WHENEVER POSSIBLE.
4. WHERE BICYCLES ARE ALLOWED ON THE FACILITY, SHOULDER RUMBLE STRIP GAPS (68' RUMBLE STRIP, 12' GAP CENTER TO CENTER, 11'-5" GAP, EDGE TO EDGE) SHOULD BE CONTINUOUS.
5. ON DIVIDED HIGHWAYS, PROVIDE CONTINUOUS RUMBLE STRIP ON THE INSIDE (LEFT) SHOULDER.
6. MINIMUM REQUIRED CLEAR WIDTHS AFTER INSTALLATION ARE AS FOLLOWS:
   - A. AT LEAST 4' WHERE NO GUARDRAIL IS PRESENT (6.0' INITIAL SHOULDER WIDTH).
   - B. AT LEAST 5' (TO FACE OF GUARDRAIL) WHERE GUARDRAIL IS PRESENT (≥ 7.0' AT INITIAL SHOULDER WIDTH).
   - C. NO MINIMUM WHERE BICYCLES ARE PROHIBITED.

Note: Drawing not to scale

State of Alaska DOT&PF
ALASKA STANDARD PLAN

MILLED RUMBLE STRIPS SHOULDER DETAILS

Adopted as an Alaska Standard Plan by: Carolyn Morehouse
Carolyn Morehouse, P.E.
Chief Engineer

Adoption Date: 07/17/2020

Last Code and Stds. Review
By: LRG Date: 07/17/2020

Next Code and Standards Review date: 07/17/2030

Preliminary Plans

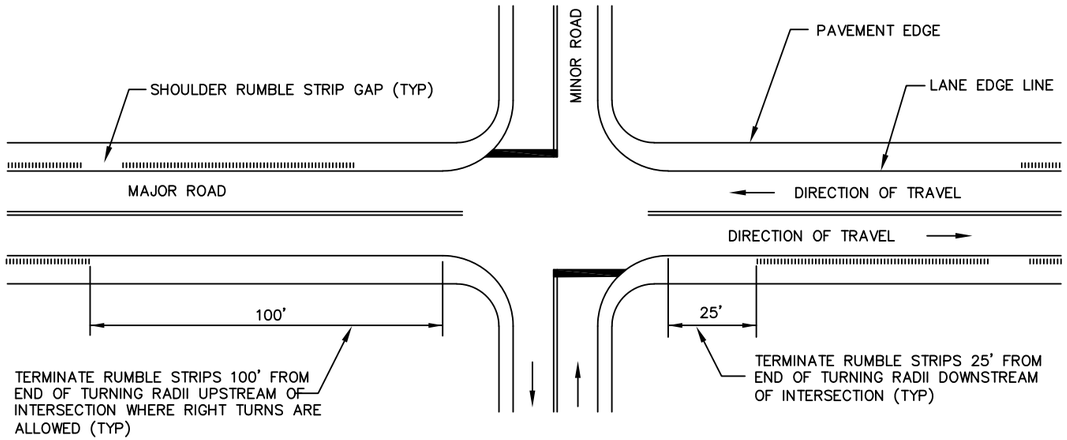

RUMBLE STRIP LAYOUT AT INTERSECTIONS

APPLIES TO ALL SIDE ROAD INTERSECTIONS, PUBLIC TURNOUTS, COMMERCIAL ROAD APPROACHES, AND GANG MAILBOX TURNOUTS (WHERE BICYCLES ARE ALLOWED)

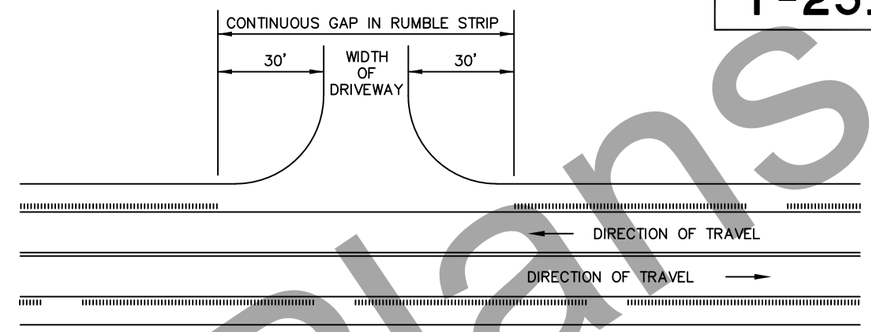

RUMBLE STRIP LAYOUT AT RESIDENTIAL DRIVEWAYS

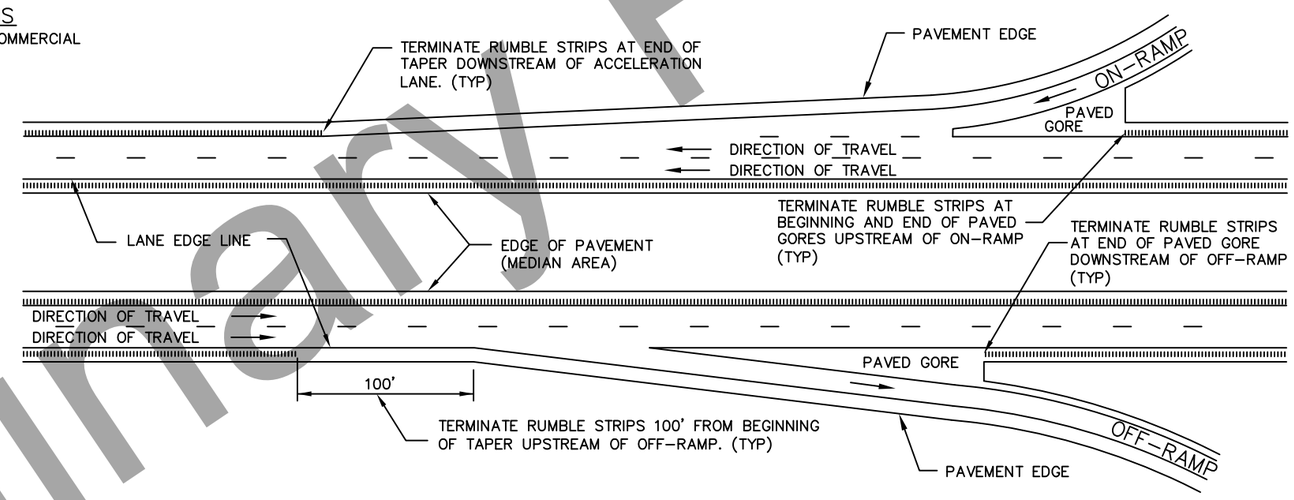

RUMBLE STRIP LAYOUT AT FREEWAY ON- AND OFF-RAMPS

THIS DRAWING APPLIES TO BOTH PARALLEL AND TAPERED LANES (WHERE BICYCLES ARE ALLOWED)

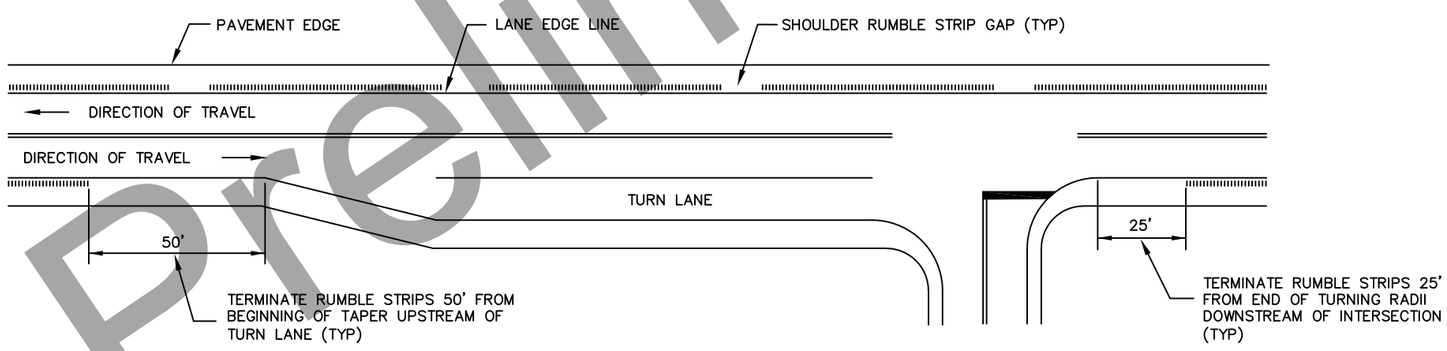

RUMBLE STRIP LAYOUT AT RIGHT TURN LANES

(WHERE BICYCLES ALLOWED)

Note: Drawing not to scale

State of Alaska DOT&PF
ALASKA STANDARD PLAN

MILLED RUMBLE STRIPS SHOULDER DETAILS

Adopted as an Alaska Standard Plan by: Carolyn Morehouse
Carolyn Morehouse, P.E.
Chief Engineer

Adoption Date: 07/17/2020

Last Code and Stds. Review
By: LRG Date: 07/17/2020

Next Code and Standards Review date: 07/17/2030

Preliminary Plans

T-25.10

SHEET 3 of 5

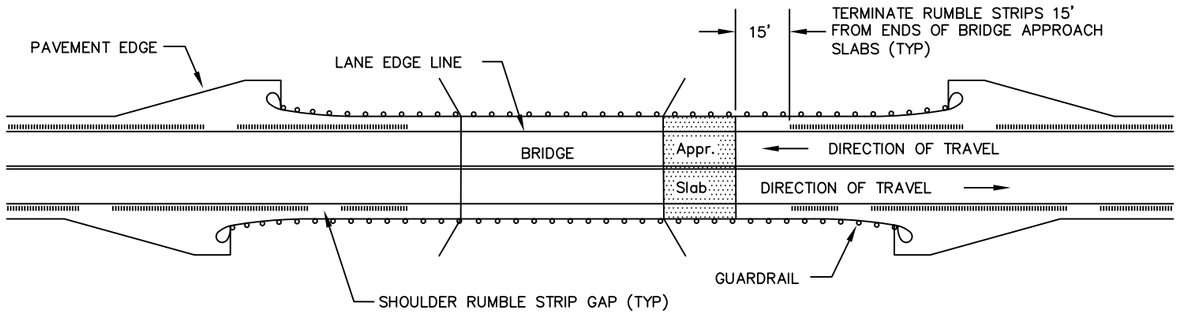

RUMBLE STRIP LAYOUT AT BRIDGES WITH ADEQUATE SHOULDER
(WHERE BICYCLES ARE ALLOWED)

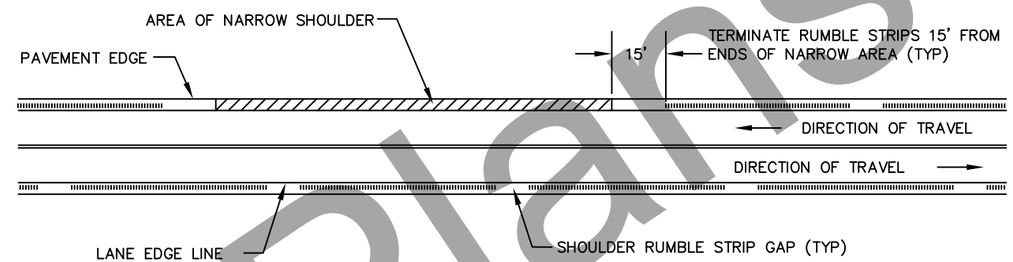

RUMBLE STRIP LAYOUT IN AREAS WITH NARROW SHOULDER
(WHERE BICYCLES ARE ALLOWED)
(SEE NARROW SHOULDER WIDTH NOTE THIS SHEET FOR DEFINITIONS AND TOLERANCES)

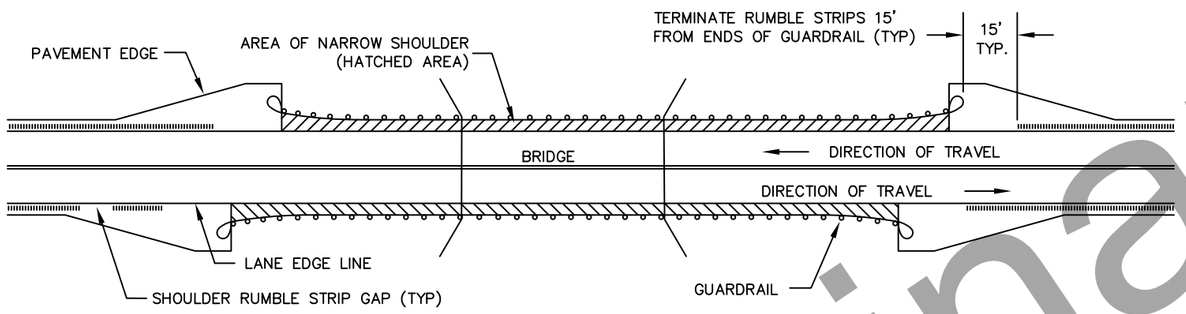

RUMBLE STRIP LAYOUT AT BRIDGES WITH NARROW SHOULDER
(WHERE BICYCLES ARE ALLOWED)
(SEE NARROW SHOULDER WIDTH NOTES THIS SHEET)

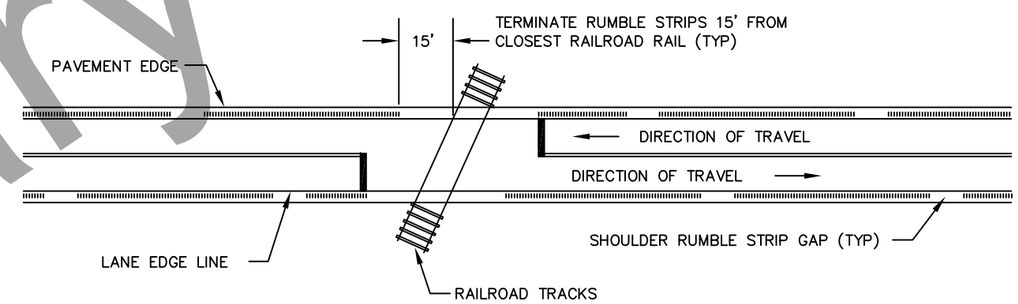

RUMBLE STRIP LAYOUT AT RAILROAD CROSSINGS
(WHERE BICYCLES ARE ALLOWED)

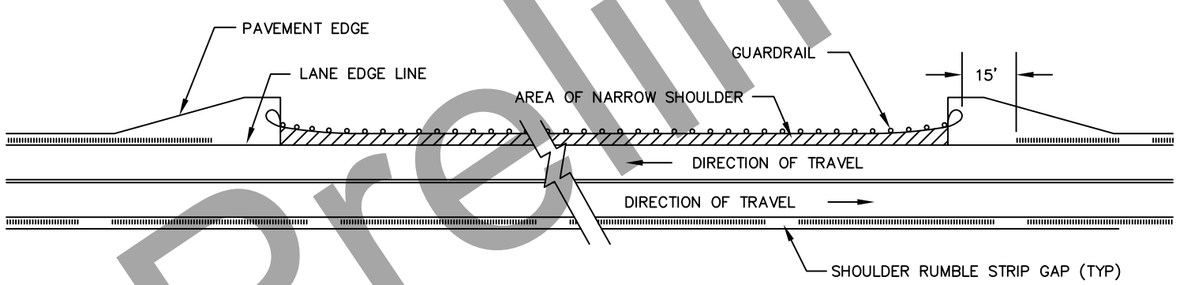

RUMBLE STRIP LAYOUT IN AREAS WITH GUARDRAIL AND NARROW SHOULDER
(WHERE BICYCLES ARE ALLOWED)
(SEE NARROW SHOULDER WIDTH NOTES THIS SHEET)

NARROW SHOULDER WIDTH NOTES:

A SIX INCH TOLERANCE IS ALLOWED (FOR DISTANCES OF 100 FT. OR LESS) FOR THE FOLLOWING MINIMUM REQUIRED CLEAR WIDTHS:

a. AT LEAST 4' WHERE NO GUARDRAIL IS PRESENT.

b. AT LEAST 5' (TO FACE OF GUARDRAIL) WHERE GUARDRAIL IS PRESENT.

c. NO MINIMUM WHERE BICYCLES ARE PROHIBITED.

Note: Drawing not to scale

State of Alaska DOT&PF
ALASKA STANDARD PLAN

MILLED RUMBLE STRIPS
SHOULDER DETAILS

Adopted as an Alaska Standard Plan by: Carolyn Morehouse
Carolyn Morehouse, P.E.
Chief Engineer

Adoption Date: 07/17/2020

Last Code and Stds. Review
By: LRG Date: 07/17/2020

Next Code and Standards Review date: 07/17/2030

Preliminary Plans

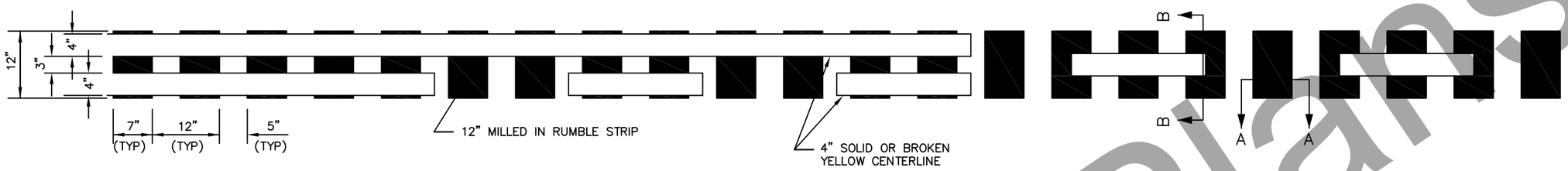

CENTERLINE RUMBLE STRIP PLAN VIEW

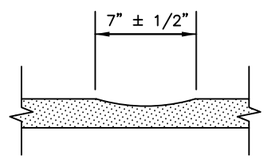

SECTION A–A

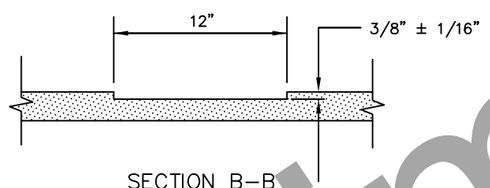

SECTION B–B

CENTERLINE RUMBLE STRIP NOTES:

1. PERFORM ALL STAKING AS NECESSARY TO INSTALL RUMBLE STRIPS IN ACCORDANCE WITH THE PLANS, THESE DETAILS, AND THE FOLLOWING NOTES.
2. DO NOT INSTALL RUMBLE STRIPS IN THE FOLLOWING INSTANCES:
   A. BRIDGE DECKS
   B. BRIDGE APPROACH SLABS
   C. PAVEMENT LESS THAN 2 INCHES THICK
   D. PAVEMENT THAT HAS ALLIGATORING, FATIGUE, CRACKING, OR IN POOR CONDITION
   E. PAVEMENT JOINTS
   F. INTO LANE EDGE LINE STRIPING
3. WHERE INSTALLED, CENTERLINE RUMBLE STRIPS SHALL BE CONTINUOUS REGARDLESS OF CENTERLINE STRIPING CONFIGURATION. BOTH PASSING AND NO–PASSING PORTIONS OF ROADWAY WITHIN THE LIMITS OF THE CENTERLINE RUMBLE STRIP INSTALLATION SHALL BE MILLED.
4. CENTERLINE RUMBLES MAY BE EXTENDED INTO PAINTED MEDIANS WHERE A DOUBLE YELLOW STRIPE SEPARATES OPPOSING TRAFFIC. WHERE CENTERLINES SPLIT TO CREATE A LEFT TURN LANE ALONG A RURAL HIGHWAY, THE RUMBLES SHOULD BE PLACED ALONG BOTH PORTIONS OF THE CENTERLINE.
5. DO NOT INSTALL CENTERLINE RUMBLE STRIPS IN A TWO–WAY LEFT TURN LANE.
6. DO NOT INSTALL CENTERLINE RUMBLES WHEN THE COMBINED LANE AND SHOULDER WIDTH IN EACH DIRECTION IS LESS THAN 14'.
7. BREAK CENTERLINE RUMBLES FOR ALL SIDE STREET AND COMMERCIAL ROAD INTERSECTIONS WHERE THERE ARE LEFT TURN LANES.
8. CENTERLINE STRIPING SHALL BE RE–ESTABLISHED FOLLOWING MILLING OPERATIONS IN ACCORDANCE WITH SECTION 670, "TRAFFIC MARKINGS". 60 MIL SURFACE APPLIED METHYL METHACRYLATE PAVEMENT MARKINGS SHALL BE INSTALLED ON ALL AREAS FOLLOWING CENTERLINE RUMBLE STRIP INSTALLATION WHERE CENTERLINE RUMBLE STRIPS ARE APPLIED.

Note: Drawing not to scale

State of Alaska DOT&PF
ALASKA STANDARD PLAN

MILLED RUMBLE STRIPS CENTERLINE DETAILS

Adopted as an Alaska Standard Plan by: Carolyn Morehouse
Carolyn Morehouse, P.E.
Chief Engineer

Adoption Date: 07/17/2020

Last Code and Stds. Review
By: LRG Date: 07/17/2020

Next Code and Standards Review date: 07/17/2030

Preliminary Plans

T-25.10

SHEET 5 of 5

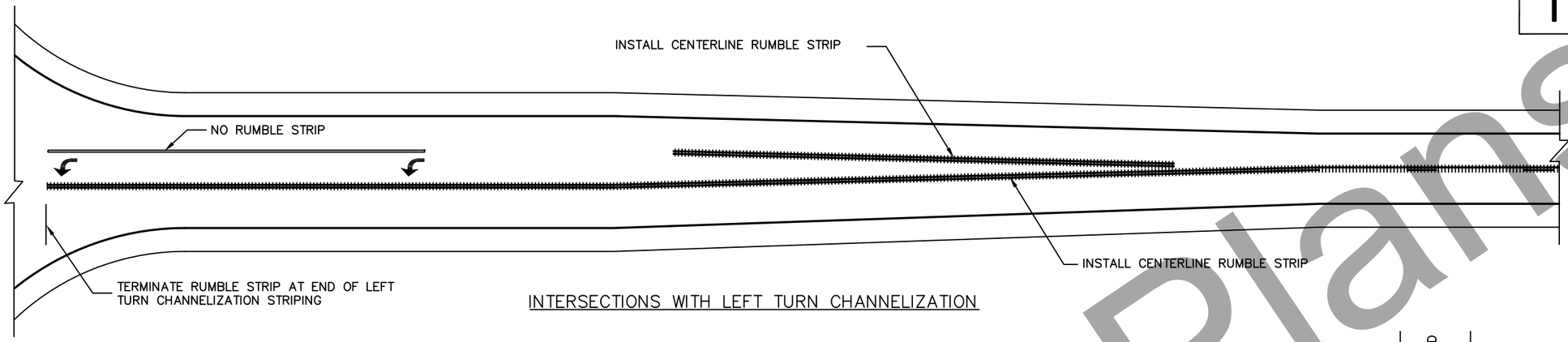

INTERSECTIONS WITH LEFT TURN CHANNELIZATION

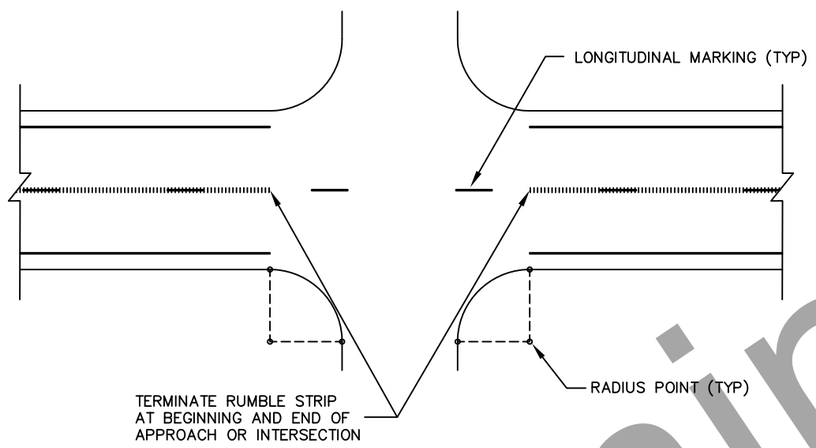

HIGHER VOLUME INTERSECTONS AND COMMERCIAL APPROACHES

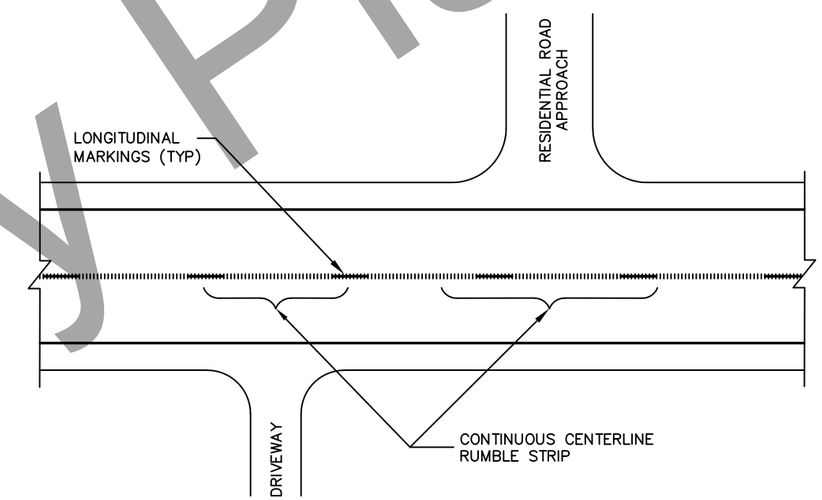

NON-COMMERCIAL ROAD AND DRIVEWAY APPROACHES

(DO NOT BREAK FOR THESE ACCESS POINTS)

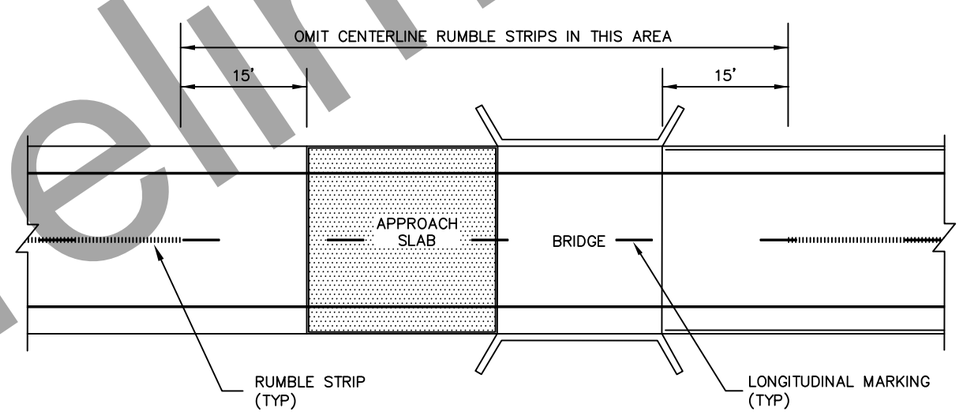

BRIDGE

Note: Drawing not to scale

State of Alaska DOT&PF
ALASKA STANDARD PLAN

MILLED RUMBLE STRIPS CENTERLINE DETAILS

Adopted as an Alaska Standard Plan by: Carolyn Morehouse

Carolyn Morehouse, P.E.
Chief Engineer

Adoption Date: 07/17/2020

Last Code and Stds. Review
By: LRG Date: 07/17/2020

Next Code and Standards Review date: 07/17/2030

Preliminary Plans