STATE	PROJECT DESIGNATION	YEAR	SHEET NO.	TOTAL SHEETS
ALASKA	0629001/NFHWY00124	2022	A1	78
CDS ROUTE: 150125	MILEPOINT: 0.108 TO 0.226			

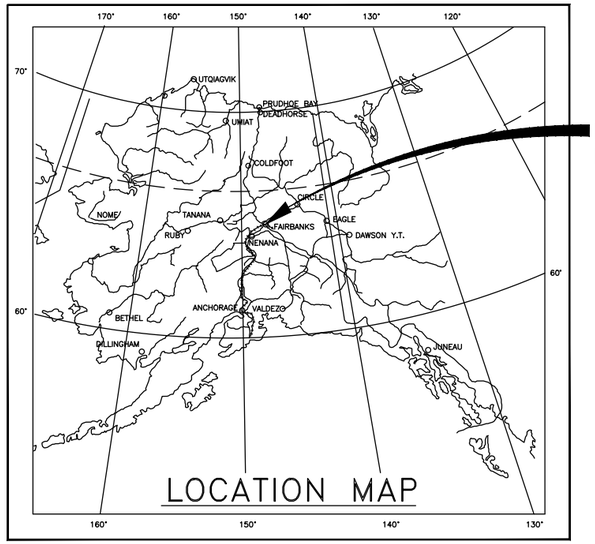

PROJECT LOCATION

STATE OF ALASKA
DEPARTMENT OF TRANSPORTATION
&
PUBLIC FACILITIES

PROPOSED HIGHWAY PROJECT

0629001/NFHWY00124

AURORA DRIVE NOYES SLOUGH BRIDGE NO. 209 REPLACEMENT

GRADING, DRAINAGE, PAVING, BRIDGE & UTILITIES

INDEX OF SHEETS

SHEET NO.	DESCRIPTION
A1	TITLE SHEET
A2	LEGEND
A3	ABBREVIATIONS
A4–A6	SURVEY CONTROL
A7	ALIGNMENT CONTROL PLAN
B1	TYPICAL SECTIONS
C1–C2	QUANTITIES
D1–D2	SUMMARY TABLES
E1–E6	DETAILS
F1–F2	PLAN & PROFILE
G1–G5	APPROACHES & GRADING
H1–H2	SIGNING AND STRIPING SUMMARY & NOTES
H3–H4	SIGNING & STRIPING PLANS
H5	SIGN DETAILS
N1–N24	BRIDGE PLANS
Q1	EROSION & SEDIMENT CONTROL NOTES
Q2	EROSION & SEDIMENT CONTROL PLAN
U1–U4	WATER & SEWER PLANS & PROFILE
V1–V18	STANDARD PLANS

THE FOLLOWING STANDARD PLANS APPLY TO THIS PROJECT:

G–00.05, G–05.11S, G–10.20, G–20.12
I–20.20, I–21.12, I–81.00
S–00.12, S–01.02, S–05.02, S–20.11, S–31.02
T–20.04, T–22.04

DESIGN DESIGNATIONS

ADT (2017)	3,500
ADT (2040)	4,110
DHV (11.6%)	480
PERCENT TRUCKS (T)	(3.85%)
DIRECTIONAL SPLIT (D)	45%SB–55%NB
DESIGN SPEED (V)	35 MPH
DESIGN ESAL'S (20 YEARS)	311,938

PROJECT SUMMARY

WIDTH OF PAVEMENT	12' LANES
LENGTH OF PAVING	625'
LENGTH OF PROJECT	625'

BARBARA TANNER, P.E. PROJECT MANAGER

STATE OF ALASKA
DEPARTMENT OF TRANSPORTATION
&
PUBLIC FACILITIES

APPROVED BY:

_____ DATE _____

Sarah Schacher, P.E.
Preconstruction Engineer, Northern Region

ACCEPTED FOR CONSTRUCTION:

_____ DATE _____

Joseph P. Kemp, P.E.
Acting Regional Director, Northern Region

Preliminary Plans

PLANS DEVELOPED BY: STATE OF ALASKA DEPARTMENT OF TRANSPORTATION & PUBLIC FACILITIES, NORTHERN REGION, 2301 PEGER ROAD, FAIRBANKS, AK 99709 (907) 451–2200
P:\2018\18185FB–AuroraDr_Noyes\C\c0001cnst18185FB–Title Fri, Feb/04/22 06:50pm

NO.	DATE	REVISION

STATE	PROJECT DESIGNATION	YEAR	SHEET NO.	TOTAL SHEETS
ALASKA	0629001/NFHWY00124	2022	A2	A7

	RECOVERED	SET
BLM MONUMENT		
GLO MONUMENT		
USC&GS MONUMENT		
PRIMARY MONUMENT		
CENTERLINE MONUMENT IN CASING		
PRIMARY R.O.W. MONUMENT		
BEARING OBJECT		
MISCELLANEOUS MONUMENT		
LINE OF SIGHT MONUMENT		
CONCRETE R.O.W. MONUMENT		
BENCHMARK		BM
REBAR AND CAP		
REBAR		
IRON PIPE		
PK NAIL		
SPIKE		
HUB AND TACK		
CONSTRUCTION CENTERLINE	5+00	
MISCELLANEOUS CENTERLINE	10+00	
STATION EQUATION	"L"48+97.23 POT BK= "O"48+97.23 PC AHD	
PROJECT RIGHT-OF-WAY LINE	R/W	
EXISTING RIGHT-OF-WAY LINE		
EXISTING PROPERTY LINE		
CONTROLLED ACCESS LINE	C/A	
UTILITY EASEMENT LINE	PUE	
TEMPORARY EASEMENT LINE (TCP OR TCE)	TCP	
ACCESS OR SECTION LINE EASEMENT	ACCESS EASEMENT	
PROPOSED CUT SLOPE LIMIT		
PROPOSED FILL SLOPE LIMIT		
SECTION LINE		
1/4 SECTION LINE		
1/16 SECTION LINE		
TOWNSHIP & RANGE LINE	T. 2 N. / T. 1 N. / T. 1 E. / T. 2 E.	

	EXISTING	PROPOSED
SANITARY SEWER (FLOW DIRECTION →)	SS	SS
FUEL LINE	O	O
GAS LINE	G	G
WATER LINE	W	W
METER, VALVE, FIRE HYDRANT	W	W
EXISTING STORM DRAIN (FLOW DIRECTION →)	SD	
PROPOSED STORM DRAIN		S-10, S-11, P-11, P-10, MH
FIBER OPTIC LINE	FO	
DIRECT BURIAL TELEPHONE CABLE	T	T
DIRECT BURIAL ELECTRIC CABLE	E	E
ELECTRIC LINE (OVERHEAD)		
POWER POLE LINE		
JOINT USE POWER & TELEPHONE		
TELEPHONE POLE LINE		
POLE ANCHOR		
STUB POLE (POWER OR TELEPHONE)		
TELEPHONE DUCT	T	T
TELEPHONE PEDESTAL		
BURIED CABLE MARKER		
PIPELINE MARKER OR VALVE		
CATCH BASIN OR DROP INLET		
MANHOLE	MH STORM DRAIN	MH
	SANITARY SEWER	MH
SANITARY SEWER CLEAN OUT		

	EXISTING	PROPOSED
ROADWAY/PAVEMENT EDGE		
FENCE	X X X X	X X X X
CURB AND GUTTER		
DETECTABLE WARNINGS		
GUARDRAIL		
CULVERT PIPE		
SIGN		
MAILBOX	MB	MB
RAILROAD TRACKS		
RAILROAD DEVICES	CROSS-BUCK, FLASHING LIGHT	CANTILEVER, SWITCH
TREE LINE		
WATER BOUNDARY		
ORDINARY HIGH WATER LINE		
FLOW CENTERLINE		
FLOW DIRECTION		
WETLANDS		
EXISTING BUILDINGS	H	H = HOUSE G = GARAGE M = MERCHANT/STORE B = BARN S = SHED P = PRIVY SS= SERVICE STATION W = WAREHOUSE
POST OR BOLLARD		
WELL OR MONITORING WELL	W	
SEPTIC PIPE	S, WW	
FUEL TANK FILL PIPE/VENT	P	
SATELLITE DISH	SAT. DISH	
TEST HOLE	TH	
CONIFER TREE		
DECIDUOUS TREE		
GRAVE		
THERMOSIPHON		
PARKING METER		
VEHICLE PLUG-IN		
DELINEATOR/GUIDE MARKER		

	EXISTING	PROPOSED
JUNCTION BOX, TYPE IA		5
JUNCTION BOX, TYPE II		6
JUNCTION BOX, TYPE III		3
SIGNAL FACE, VEHICULAR	42	42
SIGNAL FACE, BACKPLATE	42	42
SIGNAL FACE, LEFT TURN, BACKPLATE	43	43
SIGNAL FACE, PEDESTRIAN	9	9
LOOP DETECTOR	33	73
VIDEO DETECTOR	2	2
RADAR DETECTOR	4	4A
OPTICOM DETECTOR	1	1
PEDESTRIAN PUSH BUTTON	1	1
SIGNAL POST W/O MAST ARM		1
SIGNAL POLE W/MAST ARM		4
SIGNAL CONTROLLER		
LOAD CENTER		
LUMINAIRE		2
RIGID METAL CONDUIT		

LEGEND

STATE OF ALASKA 49TH
Brandon E. Irvine
2/4/2022
CE-105211
REGISTERED PROFESSIONAL ENGINEER

Preliminary Plans

PLANS DEVELOPED BY: RESPEC COMPANY, LLC, CERT. OF AUTHORIZATION NO.: AECC163270, 1028 AURORA DRIVE, FAIRBANKS, AK 99709, (907)452-1414
P:\2018\18185FB-AuroraDr_Noyes\C\c1001cnst18185FB-HWYS Legend Fri, Feb/04/22 11:46am

NO.	DATE	REVISION

STATE	PROJECT DESIGNATION	YEAR	SHEET NO.	TOTAL SHEETS
ALASKA	0629001/NFHWY00124	2022	A3	A7

ABBREVIATIONS

ADA	AMERICAN WITH DISABILITIES ACT
ADT	AVERAGE DAILY TRAFFIC
AVE	AVENUE
BOP	BEGINNING OF PROJECT
BP	BEGIN POINT
℄, CL	CENTERLINE
C&G	CURB AND GUTTER
C	CENTER
CB	CATCH BASIN
CGP	CONSTRUTION GENERAL PERMIT
CIPP	CURED IN PLACE PIPE
CLR	CLEARANCE
CMP	CORRUGATED METAL PIPE
COM	COMMERCIAL
COMM	COMMUNICATIONS
CON	CONCRETE
CPM	CRITICAL PATH METHOD
CPP	CORRUGATED POLYETHYLENE PIPE
CSP	CORRUGATED STEEL PIPE
D	DEGREE OF CURVATURE, DISTRIBUTION OF TRAFFIC, DIAMETER
Δ	DELTA ANGLE
DEMO	DEMOLITION
DESC.	DESCRIPTION
DHV	DAILY HOURLY VOLUME
DIA.	DIAMETER
DNR	DEPARTMENT OF NATURAL RESOURCES
DR	DRIVE
DRWY	DRIVEWAY
DWT	DETECTABLE WARNING TILE
E	EASTING, EAST
EA	EACH
EG	EXISTING GROUND
ELEV, EL	ELEVATION
EOP	END OF PROJECT
EP	END POINT, END OF PAVEMENT
ESAL	EQUIVALENT SINGLE AXLE LOAD
EXP	EXPANSION JOINT
EX	EXISTING
FG	FINISHED GRADE
FL	FLOW LINE
FT	FEET, FOOT
GALV	GALVANIZE
GB	GRADE BREAK
GDRL	GUARDRAIL
HD	HIGH DENSITY
HDPE	HIGH DENSITY POLYETHYLENE
HMA	HOT MIX ASPHALT
INT	INTERSECTION
INV	INVERT
L	LENGTH
LF	LINEAR FOOT
LHF	LEFT HAND FORWARD
LN	LANE
LOC	LIP OF CURB
LP	LOW POINT
LT	LEFT
LVC	LENGTH OF VERTICAL CURVE
MAX	MAXIMUM
MH	MANHOLE
MIN	MINIMUM
MMA	METHYL METHACRYLATE
NO./#	NUMBER
N	NORTHING, NORTH
NFL	NORMAL FLOW LINE
NIC	NOT IN CONTRACT
NTS	NOT TO SCALE
OH	OVERHEAD
PC	POINT OF CURVATURE
PCC	PORTLAND CEMENT CONCRETE / POINT OF COMPOUND CURVE
PRC	POINT OF REVERSE CURVE
PI	POINT OF INTERSECTION
PT	POINT OF TANGENCY
PT#	POINT NUMBER
PUE	PUBLIC UTILITY EASEMENT
QTY	QUANTITY
R	RADIUS
RES	RESIDENTIAL
REHAB	REHABILITATION
RHF	RIGHT HAND FORWARD
RD	ROAD
ROW, R/W, R.O.W.	RIGHT OF WAY
RP	RADIAL POINT
RT	RIGHT
S	SOUTH
S&S	SIGNING AND STRIPING
SC	STRUCTURE CENTER
SD	STORM DRAIN
SDWK	SIDEWALK
SF	SQUARE FOOT
SS	SANITARY SEWER, STAINLESS STEEL
ST	STREET
STD	STANDARD
STA	STATION
SW	SIDEWALK
SWR	SANITARY SEWER
SWPPP	STORM WATER POLLUTION PREVENTION PLAN
SY	SQUARE YARD
T	TANGENT
TBC	TOP BACK OF CURB
TCE	TEMPORARY CONSTRUCTION EASEMENT
TCP	TEMPORARY CONSTRUCTION PERMIT
THK	THICK
TOC	TOP OF CASTING
TYP	TYPICAL
V	DESIGN SPEED
VPC	VERTICAL POINT OF CURVATURE
VPI	VERTICAL POINT OF INTERSECTION
VPT	VERTICAL POINT OF TANGENCY
W	WEST
W/	WITH
W, WTR	WATER
WWM	WELDED WIRE MESH
+−	PLUS OR MINUS

GENERAL NOTES

1. EXCESS MATERIAL MUST BE DISPOSED OF OUTSIDE PROJECT LIMITS. THIS WORK WILL BE SUBSIDIARY TO 203.0003.0000.
2. SAW CUT TRANSITION MATCH POINTS. APPLY STE−1 TACK COAT TO ALL SAW CUT FACES PRIOR TO PAVING. SAW CUTTING AND STE−1 TACK COAT WILL NOT BE MEASURED OR PAID FOR DIRECTLY BUT IS SUBSIDIARY TO OTHER 401 PAY ITEMS.
3. LOCATE AND PROTECT EXISTING UTILITIES PRIOR TO BEGINNING GROUND DISTURBING WORK. DAMAGE TO UTILITIES AS A RESULT OF CONSTRUCTION ACTIVITIES MUST BE REPAIRED OR REPLACED AT THE CONTRACTOR'S EXPENSE.
4. SEEDING MAY REQUIRE SEVERAL MOBILIZATIONS. ALL MOBILIZATIONS REQUIRED ARE SUBSIDIARY TO PAY ITEM 618.0002.0000.
5. TO MITIGATE POTENTIAL FOR CONSTRUCTION NOISE IMPACTS RESULTING FROM PILE/SHEET PILE DRIVING−NO PILE DRIVING WILL OCCUR FROM 11:00 PM TO 7:00 AM, PILE DRIVING NOISE LEVELS WILL BE MONITORED.
6. NOISE DAMPING DEVICES WILL BE INSTALLED ON CONSTRUCTION EQUIPMENT AND/OR HEARING PROTECTION PROVIDED TO NEARBY RESIDENTS FOR THE DURATION OF PILE DRIVING WORK.

Preliminary Plans

ABBREVIATIONS

STATE OF ALASKA 49TH
Brandon E. Irvine
2/4/2022
CE-105211
REGISTERED PROFESSIONAL ENGINEER

PLANS DEVELOPED BY: RESPEC COMPANY, LLC, CERT. OF AUTHORIZATION NO.: AECC163270, 1028 AURORA DRIVE, FAIRBANKS, AK 99709, (907)452−1414
P:\2018\18185FB−AuroraDr_Noyes\C\c1001cnst18185FB−Abbreviations Fri, Feb/04/22 11:46am

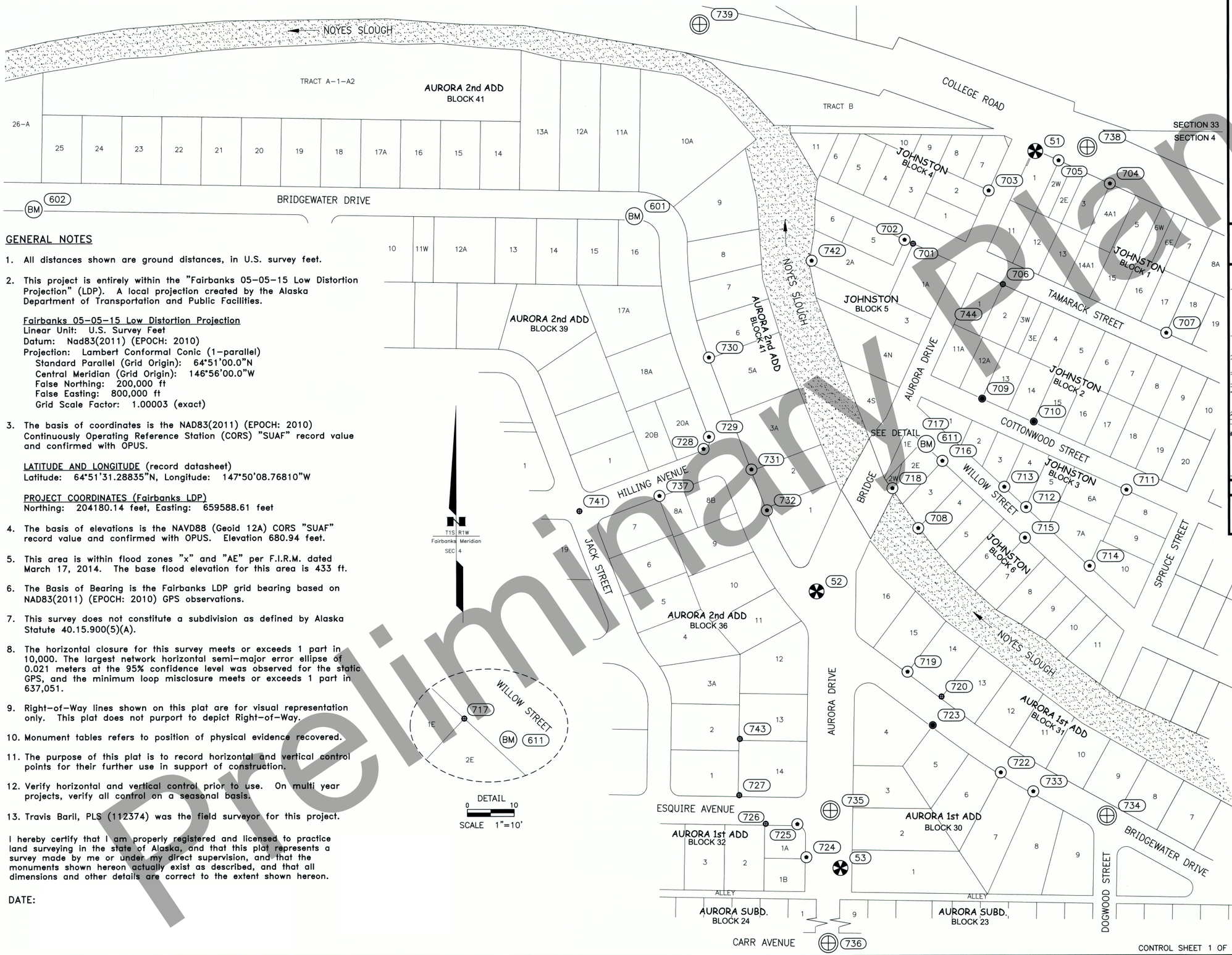

GENERAL NOTES

1. All distances shown are ground distances, in U.S. survey feet.
2. This project is entirely within the "Fairbanks 05-05-15 Low Distortion Projection" (LDP). A local projection created by the Alaska Department of Transportation and Public Facilities.

   Fairbanks 05-05-15 Low Distortion Projection
   Linear Unit: U.S. Survey Feet
   Datum: Nad83(2011) (EPOCH: 2010)
   Projection: Lambert Conformal Conic (1-parallel)
   Standard Parallel (Grid Origin): 64°51'00.0"N
   Central Meridian (Grid Origin): 146°56'00.0"W
   False Northing: 200,000 ft
   False Easting: 800,000 ft
   Grid Scale Factor: 1.00003 (exact)
3. The basis of coordinates is the NAD83(2011) (EPOCH: 2010) Continuously Operating Reference Station (CORS) "SUAF" record value and confirmed with OPUS.

   LATITUDE AND LONGITUDE (record datasheet)
   Latitude: 64°51'31.28835"N, Longitude: 147°50'08.76810"W

   PROJECT COORDINATES (Fairbanks LDP)
   Northing: 204180.14 feet, Easting: 659588.61 feet
4. The basis of elevations is the NAVD88 (Geoid 12A) CORS "SUAF" record value and confirmed with OPUS. Elevation 680.94 feet.
5. This area is within flood zones "x" and "AE" per F.I.R.M. dated March 17, 2014. The base flood elevation for this area is 433 ft.
6. The Basis of Bearing is the Fairbanks LDP grid bearing based on NAD83(2011) (EPOCH: 2010) GPS observations.
7. This survey does not constitute a subdivision as defined by Alaska Statute 40.15.900(5)(A).
8. The horizontal closure for this survey meets or exceeds 1 part in 10,000. The largest network horizontal semi-major error ellipse of 0.021 meters at the 95% confidence level was observed for the static GPS, and the minimum loop misclosure meets or exceeds 1 part in 637,051.
9. Right-of-Way lines shown on this plat are for visual representation only. This plat does not purport to depict Right-of-Way.
10. Monument tables refers to position of physical evidence recovered.
11. The purpose of this plat is to record horizontal and vertical control points for their further use in support of construction.
12. Verify horizontal and vertical control prior to use. On multi year projects, verify all control on a seasonal basis.
13. Travis Baril, PLS (112374) was the field surveyor for this project.

I hereby certify that I am properly registered and licensed to practice land surveying in the state of Alaska, and that this plat represents a survey made by me or under my direct supervision, and that the monuments shown hereon actually exist as described, and that all dimensions and other details are correct to the extent shown hereon.

DATE:

Preliminary Plans

PLANS DEVELOPED BY: McCLINTOCK LAND ASSOCIATES, 16942 NORTH EAGLE RIVER LOOP, EAGLE RIVER, AK 99577 (907)694-4499
c:\Users\tbaril\Desktop\Misc upload\16-181 ROS 2018-05-29-ROS Cover 500 Wed, May/30/18 07:34am

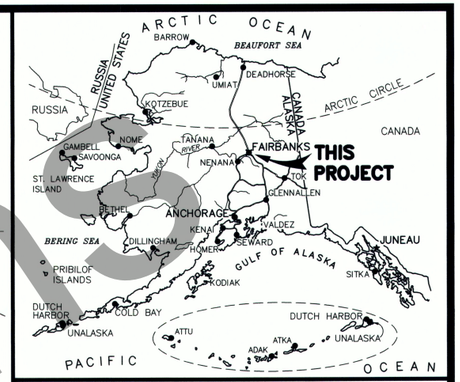

LOCATION MAP

NOT TO SCALE

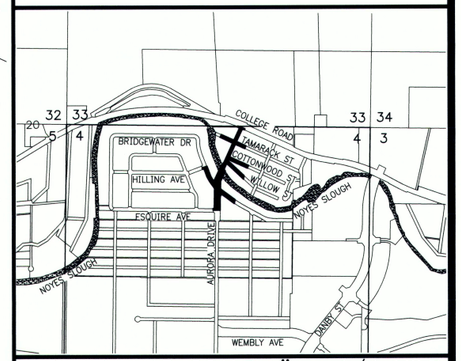

VICINITY MAP SCALE: 1" = 1/4 MILE

SECTIONS: 3, 4, 5, 32, 33, & 34
TOWNSHIPS: T1S R1W & T1N R1W
FAIRBANKS MERIDIAN
SOURCE: FNSB BASE MAP

LEGEND

- PRIMARY MONUMENT SET
- CENTERLINE MONUMENT IN CASING
- REBAR AND CAP FOUND
- REBAR FOUND
- IRON PIPE FOUND
- TEMPORARY BENCHMARK FOUND (BM)

0 100 200 300 400 500
SCALE 1"=100'

STATE BUSINESS – NO CHARGE DATE: 5/29/18

DATE OF SURVEY	NAME AND ADDRESS:
Beginning: 10/10/16 Ending: 10/20/16	Department of Transportation and Public Facilities (DOT&PF) 2301 Peger Road Fairbanks, Alaska 99709

RECORD OF SURVEY

SURVEY CONTROL DIAGRAM
AURORA DRIVE
NFHWY00124 / 0629001
within
SECTIONS 04
T 1 S, R 1 W
FAIRBANKS MERIDIAN, ALASKA
FAIRBANKS RECORDING DISTRICT

DRAWN BY:	SCALE:	CHECKED BY:	FILE NO.:
TB	1"=100'	MM	

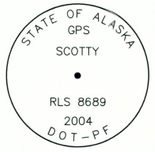

1

Recovered 3 1/4 in. alum. cap on a 2 1/2 in. alum. post, flush with ground. Orange carsonite post 1 ft. north of monument. Good condition.

2

Recovered 3 1/4 in. alum. cap on a 2 1/2 in. alum. post, flush with ground. Orange carsonite post 1 ft. north of monument. Good condition.

51

Set 2 in. brass tablet marked as shown, in concrete curb.

52

Set 2 in. brass tablet marked as shown, in concrete curb.

53

Set 2 in. brass tablet marked as shown, flush in concrete sidewalk.

601

Found Chiseled "x" on northeast bolt of fire hydrant.

602

Found Chiseled "x" on northeast bolt of fire hydrant.

611

Found Chiseled "x" on southeast bolt of fire hydrant.

701

Recovered 5/8 in. rebar, 5 in. above ground. Slightly bent at top but has solid base. Ok condition.

702

Recovered 1 1/2 in. alum. cap on a 5/8 in. rebar, 4 in. above ground. Excellent condition.

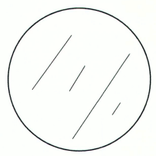

703

Recovered 1 1/2 in. alum. cap with no visible markings on a 5/8 in. rebar, flush with ground. Good condition.

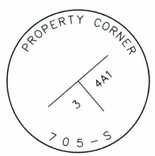

704

Recovered 1 1/2 in. alum. cap on a 5/8 in. rebar, 1 in. above ground. Excellent condition.

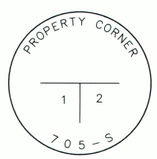

705

Recovered 1 1/2 in. alum. cap on a 5/8 in. rebar, flush in asphalt. Excellent condition.

706

Recovered 5/8 in. rebar, 3 in. below ground. Top 6 in. bent northerly with solid vertical base. Ok condition.

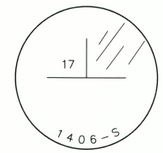

707

Recovered 1 1/2 in. alum. cap on a 5/8 in. rebar, 3 in. below ground. Excellent condition.

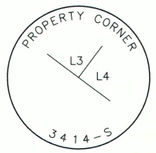

708

Recovered 1 1/2 in. alum. cap on a 5/8 in. rebar, 3 in. above ground. Excellent condition.

709

Recovered 3/4 in. iron pipe with threaded nut on top, approximately 4 ft. long with 3 in. above ground. Top slightly smashed. Good condition.

710

Recovered 3/4 in. iron pipe with flagging, 3 in. above ground. Great condition.

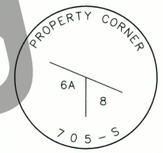

711

Recovered 1 1/2 in. alum. cap on a 5/8 in. rebar, 5 in. above ground. Excellent condition.

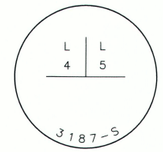

712

Recovered 1 1/2 in. alum. cap on a 5/8 in. rebar, 1 in. below ground. Excellent condition.

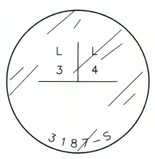

713

Recovered 1 1/2 in. alum. cap on a 5/8 in. rebar, 3 in. below ground. Excellent condition.

714

Recovered 1 1/2 in. alum. cap on a 5/8 in. rebar, 1 in. above ground. Excellent condition.

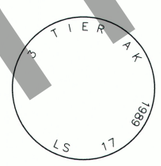

715

Recovered 1 1/2 in. alum. cap very worn on a 5/8 in. rebar, 1 in. above ground. Excellent condition.

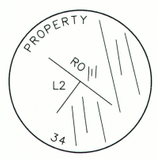

716

Recovered 1 1/2 in. alum. cap on a 5/8 in. rebar, 1 in. above ground. Good condition.

717

Recovered 5/8 in. rebar, 3 in. below ground. Excellent condition.

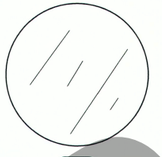

718

Recovered 1 1/2 in. alum. cap with no visible markings on a 5/8 in. rebar, flush with ground. Excellent condition.

719

Recovered 1 1/2 in. alum. cap on a 5/8 in. rebar, 1 in. above ground. Excellent condition.

720

Recovered 5/8 in. rebar, 1 in. below ground. Top 5 in. bent northerly with solid vertical base. Ok condition.

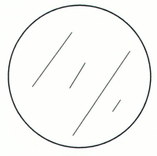

722

Recovered 1 1/2 in. alum. cap with no visible markings on a 5/8 in. rebar, 8 in. below ground. Excellent condition.

723

Recovered 1 1/2 in. iron pipe with flagging, 6 in. below ground. Great condition.

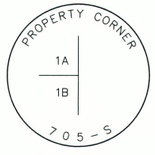

724

Recovered 1 1/2 in. alum. cap on a 5/8 in. rebar, 4 in. below ground. Excellent condition.

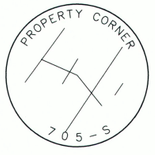

725

Recovered 1 1/2 in. alum. cap on a 5/8 in. rebar, 4 in. below ground. Excellent condition.

726

Recovered 5/8 in. rebar with flagging, flush with ground. Excellent condition.

Preliminary Plans

DATE: 5/29/18

DATE OF SURVEY	NAME AND ADDRESS:
Beginning: 10/10/16 Ending: 10/20/16	Department of Transportation and Public Facilities (DOT&PF) 2301 Peger Road Fairbanks, Alaska 99709

RECORD OF SURVEY

SURVEY CONTROL DIAGRAM
AURORA DRIVE
NFHWY00124 / 0629001
within
SECTIONS 04
T 1 S, R 1 W
FAIRBANKS MERIDIAN, ALASKA
FAIRBANKS RECORDING DISTRICT

DRAWN BY:	SCALE:	CHECKED BY:	FILE NO.:
TB	NA	MM	

CONTROL SHEET 2 OF 3

C:\Users\tbarri\Desktop\Misc. upload\16-181 ROS 2018-05-29-ROS 2 Monuments Wed, May/30/18 07:39am
PLANS DEVELOPED BY: McCLINTOCK LAND ASSOCIATES, 16942 NORTH EAGLE RIVER LOOP, EAGLE RIVER, AK 99577 (907)694-4499

727

Recovered 5/8 in. rebar with flagging, 2 in. above ground. Top 2 in. bent with solid vertical base. Good condition.

728

Recovered 1 in. alum. cap with no visible markings on a 5/8 in. rebar, flush with ground. Excellent condition.

729

SURV 1408-S

Recovered 1 1/2 in. alum. cap on a 5/8 in. rebar, flush with ground. Excellent condition.

730

Recovered 1 in. alum. cap with no visible markings on a 5/8 in. rebar, flush with ground. Excellent condition.

731

Recovered 1 in. alum. cap with no visible markings on a 5/8 in. rebar, flush with ground. Excellent condition.

732

Recovered 1 in. alum. cap with no visible markings on a 5/8 in. rebar, 2 in. below ground. Excellent condition.

733

Recovered 1 1/2 in. alum. cap with no visible markings on a 5/8 in. rebar, flush with ground. Good condition.

734

Recovered 5/8 in. rebar in standard monument box (set flush), 5 in. below road. Excellent condition.

Intersection of Bridgewater and Dogwood Street

735

2016
7621-S

Recovered 2 in. alum. cap on 2 in. alum. post in standard monument box (set flush), 3 in. below road. Excellent condition.

Intersection of Aurora and Esquire Street

736

2016
7621-S

Recovered 2 in. alum. cap on 2 in. alum. post in standard monument box (set flush), 3 in. below road. Excellent condition.

Intersection of Aurora and Carr Street

737

Recovered 2 in. alum. cap on 2 in. alum. post, flush with ground. Excellent condition.

738

STATE OF ALASKA
103+01.07 ℄
LS 10686
2015
DOT-PF

Recovered 2 in. alum. cap on a 2 in. alum. post in standard monument box (set flush), 4 in. below road. Excellent condition.

Intersection of Aurora and College Road.

739

STATE OF ALASKA
94+31.71/03 LT
LS 10686
2015
DOT-PF

Recovered 2 in. alum. cap on a 2 in. alum. post in standard monument box (set flush), 4 in. below road. Excellent condition.

College Road.

741

Recovered 5/8 in. rebar with flagging, 9 in. below ground. Top 3 in. bent northerly with solid vertical base. Good condition.

742

PROPERTY CORNER
2A
705-S

Recovered 1 1/2 in. alum. cap on a 5/8 in. rebar, 5 in. above ground. Excellent condition.

743

Recovered 5/8 in. rebar, 5 in. above ground. Excellent condition.

744

Recovered 5/8 in. grounding rod, 1.5 ft. above ground. Top 10 in. bent with vertical base. OK condition.

No current use for grounding rod in area and seems to be deliberately set to mark corner position.

MONUMENTS

POINT NO.	NORTHING	EASTING	ELEVATION	DESCRIPTION
1	191649.17	667982.02	441.64	FOUND PRIMARY MON
2	203871.87	684295.15	449.50	FOUND PRIMARY MON
51	205713.52	671545.90	441.02	SET BRASS TABLET
52	204776.68	671076.98	439.58	SET BRASS TABLET
53	204187.38	671126.45	437.79	SET BRASS TABLET
701	205516.54	671284.48	435.02	FOUND REBAR
702	205524.87	671266.43	436.38	FOUND ALUMINUM CAP ON REBAR
703	205629.43	671446.24	438.41	FOUND ALUMINUM CAP ON REBAR
704	205643.93	671704.69	442.00	FOUND ALUMINUM CAP ON REBAR
705	205693.55	671595.45	441.74	FOUND ALUMINUM CAP ON REBAR
706	205429.87	671476.08	435.13	FOUND REBAR
707	205325.88	671824.43	436.48	FOUND ALUMINUM CAP ON REBAR
708	204910.64	671294.33	432.74	FOUND ALUMINUM CAP ON REBAR
709	205186.16	671431.25	435.39	FOUND IRON PIPE
710	205137.40	671541.35	0.00	FOUND IRON PIPE
711	204991.76	671738.64	436.59	FOUND ALUMINUM CAP ON REBAR
712	204955.16	671524.45	436.32	FOUND ALUMINUM CAP ON REBAR
713	204998.41	671478.13	435.45	FOUND ALUMINUM CAP ON REBAR
714	204829.65	671659.69	436.28	FOUND ALUMINUM CAP ON REBAR
715	204889.86	671521.80	435.43	FOUND ALUMINUM CAP ON REBAR
716	205054.00	671346.20	433.83	FOUND ALUMINUM CAP ON REBAR
717	205094.67	671302.43	433.38	FOUND REBAR
718	204996.00	671239.36	432.88	FOUND ALUMINUM CAP ON REBAR
719	204604.77	671270.64	438.44	FOUND ALUMINUM CAP ON REBAR
720	204551.76	671343.13	437.90	FOUND REBAR
722	204390.06	671469.14	437.37	FOUND ALUMINUM CAP ON REBAR
723	204491.06	671324.30	437.20	FOUND IRON PIPE

MONUMENTS

POINT NO.	NORTHING	EASTING	ELEVATION	DESCRIPTION
724	204210.54	671053.77	439.35	FOUND ALUMINUM CAP ON REBAR
725	204280.91	671034.73	438.18	FOUND ALUMINUM CAP ON REBAR
726	204281.79	670967.26	437.39	FOUND REBAR
727	204342.70	670911.04	436.73	FOUND REBAR
728	205080.42	670836.53	437.24	FOUND ALUMINUM CAP ON REBAR
729	205106.30	670848.22	437.18	FOUND ALUMINUM CAP ON REBAR
730	205275.10	670848.62	438.16	FOUND ALUMINUM CAP ON REBAR
731	205036.46	670938.65	437.68	FOUND ALUMINUM CAP ON REBAR
732	204949.48	670971.46	437.89	FOUND ALUMINUM CAP ON REBAR
733	204349.63	671538.34	438.18	FOUND ALUMINUM CAP ON REBAR
734	204297.56	671695.21	438.74	FOUND REBAR
735	204309.90	671105.29	436.90	FOUND PRIMARY MON
736	203966.87	671100.53	436.78	FOUND PRIMARY MON
737	204980.51	670742.10	436.98	FOUND ALUMINUM CAP ON REBAR
738	205721.80	671656.70	440.98	FOUND ALUMINUM CAP ON REBAR
739	205984.74	670830.22	439.92	FOUND ALUMINUM CAP ON REBAR
741	204948.12	670571.31	435.19	FOUND REBAR
742	205481.09	671067.99	0.00	FOUND ALUMINUM CAP ON REBAR
743	204462.79	670912.65	436.89	FOUND REBAR
744	205344.80	671371.18	434.91	FOUND GROUND ROD

TBMs

POINT NO.	NORTHING	EASTING	ELEVATION	DESCRIPTION
601	205577	670690	440.29	NE BOLT TOP RING HYDRANT
602	205593	669408	435.85	NE BOLT TOP RING HYDRANT
611	205090	671312	436.39	SE BOLT TOP RING HYDRANT

CONTROL SHEET 3 OF 3

DATE: 5/29/18

DATE OF SURVEY
Beginning: 10/10/16
Ending: 10/20/16

NAME AND ADDRESS:
Department of Transportation and Public Facilities (DOT&PF)
2301 Peger Road
Fairbanks, Alaska 99709

RECORD OF SURVEY

SURVEY CONTROL DIAGRAM
AURORA DRIVE
NFHWY00124 / 0629001
within
SECTIONS 04
T 1 S, R 1 W
FAIRBANKS MERIDIAN, ALASKA
FAIRBANKS RECORDING DISTRICT

DRAWN BY:	SCALE:	CHECKED BY:	FILE NO.:
TB	NA	MM	

Preliminary Plans

C:\Users\tbarl\Desktop\Misc upload\16-181 ROS 2018-05-29-ROS 3 Monuments Wed, May/30/18 07:42am
PLANS DEVELOPED BY: McCLINTOCK LAND ASSOCIATES, 16942 NORTH EAGLE RIVER LOOP, EAGLE RIVER, AK 99577 (907)694-4499

NO.	DATE	REVISION	STATE	PROJECT DESIGNATION	YEAR	SHEET NO.	TOTAL SHEETS
			ALASKA	0629001/NFHWY00124	2022	A7	A7

PROJECT CONTROL NOTES:

1. SURVEY CONTROL FOR THIS PROJECT IS AS LISTED ON THE SURVEY CONTROL DIAGRAM FOR PROJECT 0629001 / NFHWY00124 AURORA DRIVE, SIGNED 5/30/18 AND RECORDED AS PLAT 2018-94, FAIRBANKS RECORDING DISTRICT.

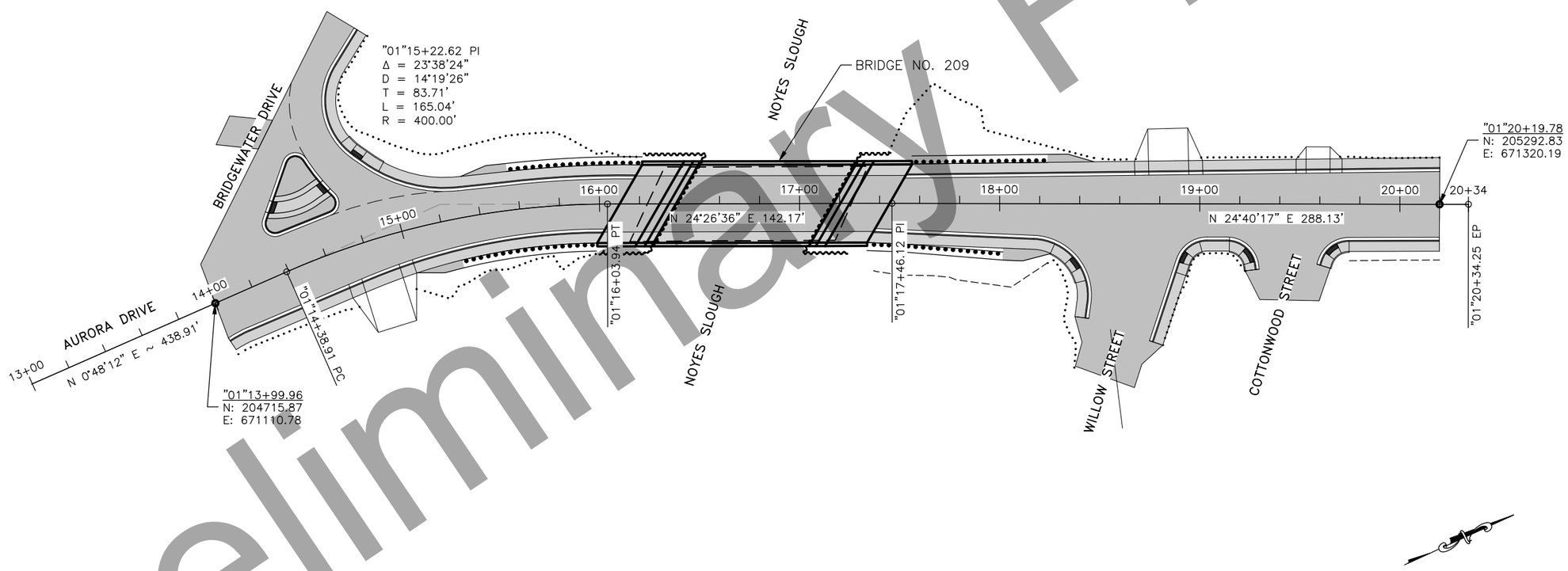

Preliminary Plans

ALIGNMENT
CONTROL PLAN

STATE OF ALASKA
49TH
Brandon E. Irvine
2/4/2022
CE-105211
REGISTERED PROFESSIONAL ENGINEER

PLANS DEVELOPED BY: RESPEC COMPANY, LLC, CERT. OF AUTHORIZATION NO.: AECC163270, 1028 AURORA DRIVE, FAIRBANKS, AK 99709, (907)452-1414
P:\2018\18185FB-AuroraDr_Noyes\C\c3001cnst18185fb-A7 Fri, Feb/04/22 11:46am

NO.	DATE	REVISION	STATE	PROJECT DESIGNATION	YEAR	SHEET NO.	TOTAL SHEETS
			ALASKA	0629001/NFHWY00124	2022	B1	B1

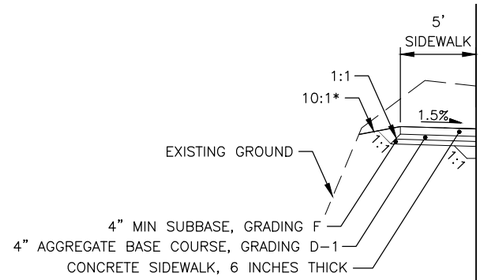

NO GUARDRAIL

"01" 18+02 RT AND 18+24 LT TO "01" 20+20 RT AND LT

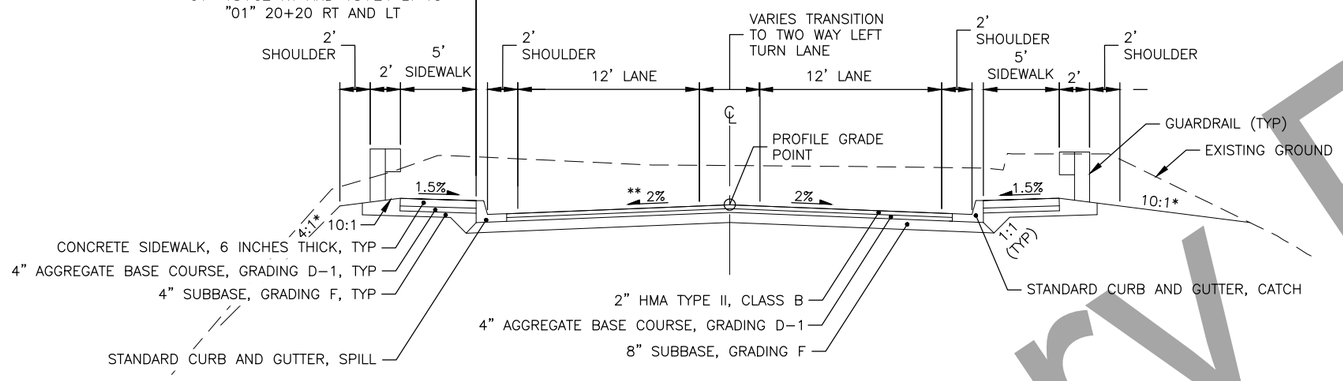

AURORA DRIVE NORMAL CROWN TYPICAL SECTION

"01" 17+45 TO "01" 20+20

*WARP SLOPE TO CATCH WITHIN ROW. DO NOT FILL WITHIN THE SLOUGH.

**REFER TO SHEET D2 FOR SUPERELEVATION TRANSITION.

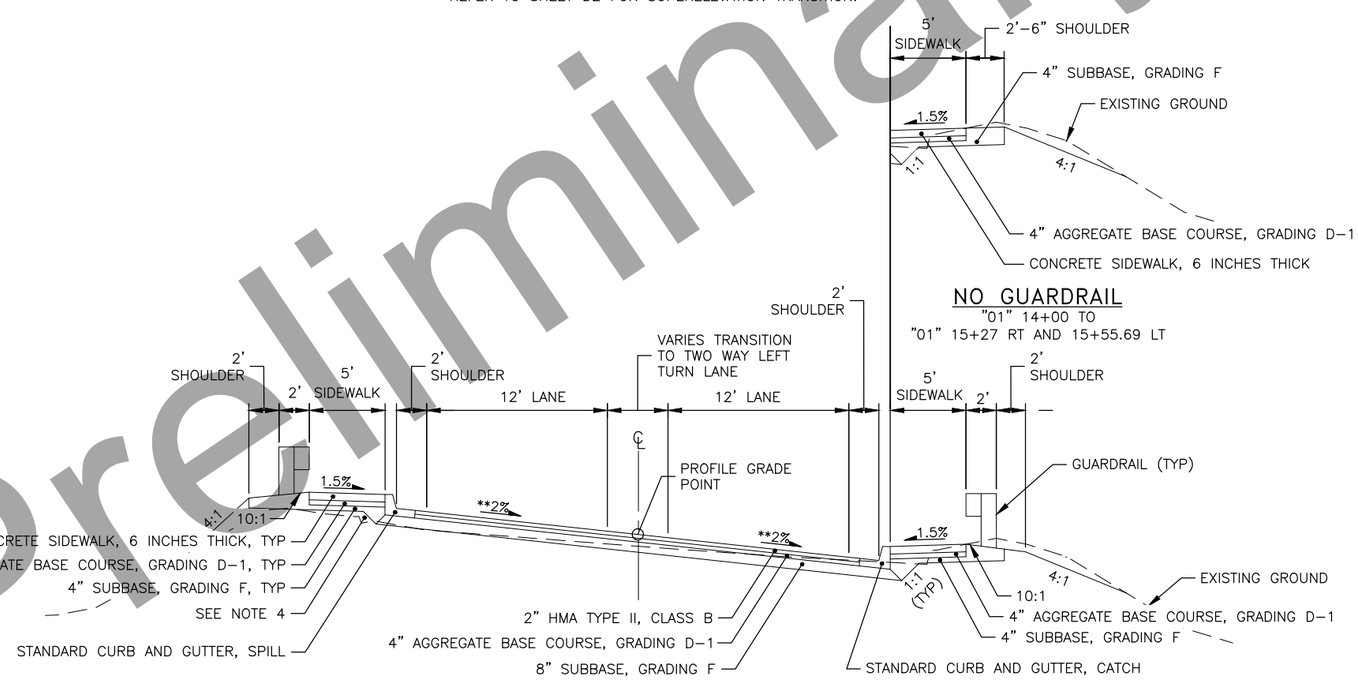

NO GUARDRAIL

"01" 14+00 TO "01" 15+27 RT AND 15+55.69 LT

AURORA DRIVE SUPERELEVATION TYPICAL SECTION

"01" 14+00 TO "01" 16+10

**REFER TO SHEET D2 FOR SUPERELEVATION TABLE. SEE NOTE 5.

NOTES:

1. SEE GRADING SHEETS G1–G2 FOR LAYOUT FROM "01" 14+00 LT TO "01" 15+22 LT AND "01" 18+17.03 RT TO 19+74.80 RT.
2. CENTER TWO-WAY LEFT TURN LANE WIDTH VARIES BUT, CROWN POINT IS ALWAYS ON THE PROFILE POINT.
3. REFER TO SHEET D2 FOR CURB AND GUTTER TYPE.
4. MATERIAL EXCAVATED FROM THE EMBANKMENT MAY BE USED AS FILL MATERIAL BELOW THE SUBBASE, GRADING F LAYER, AS APPROVED BY THE ENGINEER.
5. 2% CROSS SLOPE ACROSS BOTH LANES IS MAINTAINED FROM STATION 16+17.85 TO 17+37.09.

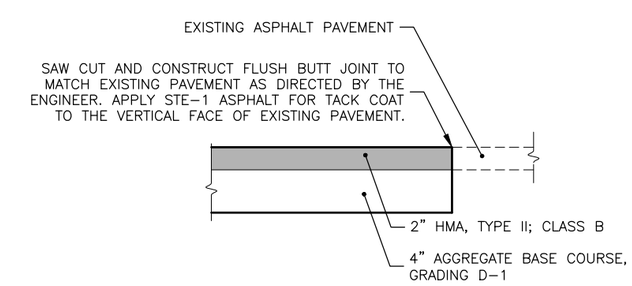

MATCH EXISTING PAVEMENT DETAIL

AURORA DRIVE BOP AND EOP, WILLOW ST, COTTONWOOD ST, BRIDGEWATER DR AND AT PAVED APPROACHES.

TYPICAL SECTIONS

STATE OF ALASKA 49TH
Brandon E. Irvine
2/4/2022
CE-105211
REGISTERED PROFESSIONAL ENGINEER

Preliminary Plans

PLANS DEVELOPED BY: RESPEC COMPANY, LLC, CERT. OF AUTHORIZATION NO.: AECC163270, 1028 AURORA DRIVE, FAIRBANKS, AK 99709, (907)452-1414
P:\2018\18185FB-AuroraDr_Noyes\C\c4001cnst18185FB-B1 Fri, Feb/04/22 11:46am

NO.	DATE	REVISION

STATE	PROJECT DESIGNATION	YEAR	SHEET NO.	TOTAL SHEETS
ALASKA	0629001/NFHWY00124	2022	C1	C2

ESTIMATE OF QUANTITIES

ITEM NO	DESCRIPTION	PAY UNIT	QUANTITIY
201.0009.0000	CLEARING AND GRUBBING	LUMP SUM	ALL REQUIRED
202.0002.0000	REMOVAL OF PAVEMENT	SQUARE YARD	3,000
202.0003.0000	REMOVAL OF SIDEWALK	SQUARE YARD	600
202.0009.0000	REMOVAL OF CURB AND GUTTER	LINEAR FOOT	1,100
202.0023.0000	REMOVAL OF BRIDGE, NO. 209	LUMP SUM	ALL REQUIRED
202.2022.0000	REMOVAL OF FENCE	LINEAR FOOT	104
203.0003.0000	UNCLASSIFIED EXCAVATION	CUBIC YARD	1,900
203.0006.0000	BORROW	TON	300
204.0001.0000	STRUCTURE EXCAVATION	CUBIC YARD	650
205.0006.0000	STRUCTURAL FILL	CUBIC YARD	1,010
301.0001.00D1	AGGREGATE BASE COURSE, GRADING D-1	TON	750
304.0001.000F	SUBBASE, GRADING F	TON	1,700
401.0001.002B	HMA, TYPE II; CLASS B	TON	350
501.0001.0000	CLASS A CONCRETE	LUMP SUM	ALL REQUIRED
501.0007.0000	PRECAST CONCRETE MEMBER, 92'-0" DECKED BULB-TEE	EACH	7
503.0001.0000	REINFORCING STEEL	LUMP SUM	ALL REQUIRED
503.0002.0000	EPOXY-COATED REINFORCING STEEL	LUMP SUM	ALL REQUIRED
505.0005.0000	FURNISH STRUCTURAL PIPE PILES, 2'-0" DIA. X 1/2"	LINEAR FOOT	1,290
505.0006.0000	DRIVE STRUCTURAL PIPE PILES, 2'-0" DIA. X 1/2"	EACH	12
505.0009.0000	STRUCTURAL STEEL SHEET PILES	SQUARE FOOT	6,335
507.0001.0003	STEEL BRIDGE RAILING, 3-TUBE	LINEAR FOOT	270
507.0006.0000	CABLE SAFETY RAILING	LINEAR FOOT	215
525.2001.0000	POLYESTER CONCRETE OVERLAY	LUMP SUM	ALL REQUIRED
603.0021.0018	CORRUGATED POLYETHYLENE PIPE 18 INCH	LINEAR FOOT	24
604.0004.0000	ADJUST EXISTING MANHOLE	EACH	5
604.0016.0000	ADJUST INLET FRAME AND GRATE	EACH	4
606.0006.0000	REMOVING AND DISPOSING OF GUARDRAIL	LINEAR FOOT	319
606.0013.0000	PARALLEL GUARDRAIL TERMINAL	EACH	4
606.0016.0000	TRANSITION RAIL	EACH	4
608.0001.0006	CONCRETE SIDEWALK, 6 INCHES THICK	SQUARE YARD	730
608.0006.0000	CURB RAMP	EACH	7
609.0002.0001	CURB AND GUTTER, TYPE 1	LINEAR FOOT	1,100
611.0001.0002	RIPRAP, CLASS II	CUBIC YARD	130
615.0001.0000	STANDARD SIGN	SQUARE FOOT	85
615.0002.0000	REMOVE AND RELOCATE SIGN	EACH	8

ESTIMATE OF QUANTITIES

ITEM NO	DESCRIPTION	PAY UNIT	QUANTITIY
618.0002.0000	SEEDING	POUND	20
620.0001.0000	TOPSOIL	SQUARE YARD	1,200
626.0001.0012	SANITARY SEWER CONDUIT, 12 INCH	LINEAR FOOT	254
626.2002.0000	SANITARY SEWER LIFT STATION	LUMP SUM	ALL REQUIRED
626.2010.0000	SANITARY SEWER LIFT STATION BYPASS	LUMP SUM	ALL REQUIRED
627.0001.0004	DUCTILE IRON WATER CONDUIT, 4 INCHES, CLASS 350	LINEAR FOOT	60
627.0001.0012	DUCTILE IRON WATER CONDUIT, 12 INCHES, CLASS 350	LINEAR FOOT	780
627.2012.0014	HDPE WATER CONDUIT, 14- INCH, SDR 11, CLASS 350	LINEAR FOOT	340
627.0009.0004	GATE VALVE, 4 INCH	EACH	1
627.0009.0010	GATE VALVE, 10 INCH	EACH	1
627.0009.0012	GATE VALVE, 12 INCH	EACH	5
627.2000.0000	WATER MAIN RELOCATION	LUMP SUM	ALL REQUIRED
631.0002.0001	GEOTEXTILE, EROSION CONTROL, CLASS 1	SQUARE YARDS	230
639.2000.0000	APPROACH	EACH	3
640.0001.0000	MOBILIZATION AND DEMOBILIZATION	LUMP SUM	ALL REQUIRED
641.0001.0000	EROSION, SEDIMENT AND POLLUTION CONTROL ADMINISTRATION	LUMP SUM	ALL REQUIRED
641.0003.0000	TEMPORARY EROSION, SEDIMENT AND POLLUTION CONTROL	LUMP SUM	ALL REQUIRED
641.0004.0000	TEMPORARY EROSION, SEDIMENT AND POLLUTION CONTROL ADDITIVES	CONTINGENT SUM	ALL REQUIRED
641.0006.0000	WITHHOLDING	CONTINGENT SUM	ALL REQUIRED
641.0007.0000	SWPPP MANAGER	LUMP SUM	ALL REQUIRED
642.0001.0000	CONSTRUCTION SURVEYING	LUMP SUM	ALL REQUIRED
642.0008.0000	ADJUST EXISTING MONUMENT	EACH	2
642.0013.0000	THREE PERSON SURVEY PARTY	CONTINGENT SUM	ALL REQUIRED
643.0002.0000	TRAFFIC MAINTENANCE	LUMP SUM	ALL REQUIRED
643.0023.0000	TRAFFIC PRICE ADJUSTMENT	CONTINGENT SUM	ALL REQUIRED
643.0025.0000	TRAFFIC CONTROL	CONTINGENT SUM	ALL REQUIRED
643.0033.0000	DETOUR	LUMP SUM	ALL REQUIRED
643.2005.0000	PUBLIC INFORMATION PROGRAM	LUMP SUM	ALL REQUIRED
643.2016.0000	ROAD CLOSURE	LUMP SUM	ALL REQUIRED
643.2023.0000	SHUTTLE	DAY	120
644.0001.0000	FIELD OFFICE	LUMP SUM	ALL REQUIRED
644.0006.0000	VEHICLE	LUMP SUM	ALL REQUIRED
645.0001.0000	TRAINING PROGRAM, 1 TRAINEES/ APPRENTICES	LABOR HOUR	500
646.0001.0000	CPM SCHEDULING	LUMP SUM	ALL REQUIRED
670.0001.0000	PAINTED TRAFFIC MARKINGS	LUMP SUM	ALL REQUIRED

Preliminary Plans

ESTIMATE OF QUANTITIES
(1 OF 2)

STATE OF ALASKA 49TH
Brandon E. Irvine
2/4/2022
CE-105211
REGISTERED PROFESSIONAL ENGINEER

PLANS DEVELOPED BY: RESPEC COMPANY, LLC, CERT. OF AUTHORIZATION NO.: AECC163270, 1028 AURORA DRIVE, FAIRBANKS, AK 99709, (907)452-1414
P:\2018\18185FB-AuroraDr_Noyes\C\c5001cnst18185FB-C1 Fri, Feb/04/22 06:04pm

NO.	DATE	REVISION

STATE	PROJECT DESIGNATION	YEAR	SHEET NO.	TOTAL SHEETS
ALASKA	0629001/NFHWY00124	2022	C2	C2

ESTIMATED LUMP SUM QUANTITIES

ITEM NO	DESCRIPTION	FACTOR
201.0009.0000	CLEARING AND GRUBBING	0.3 ACRES
501.0001.0000	CLASS A CONCRETE	329 CUBIC YARDS
503.0001.0000	REINFORCING STEEL	26,930 POUNDS
503.0002.0000	EPOXY-COATED REINFORCING STEEL	22,300 POUNDS
670.0001.0000	PAINTED TRAFFIC MARKINGS	SEE H2 FOR STRIPING QTY BREAKDOWN

ESTIMATING FACTORS

ITEM NO	DESCRIPTION	FACTOR
203.0006.0000	BORROW	2.00 TONS/CUBIC YARD
301.0001.00D1	AGGREGATE BASE COURSE, GRADING D-1	1.96 TONS/CUBIC YARD
304.0001.000F	SUBBASE, GRADING F	2.00 TONS/CUBIC YARD
401.0001.002B	HMA, TYPE II; CLASS B	1.96 TONS/CUBIC YARD
618.0002.0000	SEEDING	1.5 LBS/1,000 SQUARE FEET

Preliminary Plans

ESTIMATE OF QUANTITIES
(2 OF 2)

PLANS DEVELOPED BY: RESPEC COMPANY, LLC, CERT. OF AUTHORIZATION NO.: AECC163270, 1028 AURORA DRIVE, FAIRBANKS, AK 99709, (907)452-1414
P:\2018\18185FB-AuroraDr_Noyes\C\c5001cnst18185fb-C2 Fri, Feb/04/22 11:46am

NO.	DATE	REVISION

STATE	PROJECT DESIGNATION	YEAR	SHEET NO.	TOTAL SHEETS
ALASKA	0629001/NFHWY00124	2022	D1	D2

REMOVAL OF CURB & GUTTER SUMMARY

BEGIN	END	OFFSET	LENGTH (LF)	REMARKS
"01" 13+99	"01" 16+02	RT	196	
"01" 14+39	"01" 14+73	LT	114	MEDIAN ISLAND
"01" 14+91	"01" 16+18	LT	217	
"01" 17+37	"01" 18+43	RT	135	
"01" 17+53	"01" 20+20	LT	267	
"01" 18+76	"01" 19+28	RT	94	
"01" 19+60	"01" 20+20	RT	66	
		TOTAL:	1,089	
		ROUNDED TOTAL:	1,100	

REMOVAL OF SIDEWALK SUMMARY

BEGIN	END	OFFSET	AREA (SY)	REMARKS
"01" 14+00	"01" 18+38	RT	202	
"01" 14+46	"01" 14+69	LT	22	MEDIAN ISLAND ADA PATH
"01" 14+95	"01" 20+20	LT	281	
"01" 18+81	"01" 19+23	RT	47	
"01" 19+66	"01" 20+20	RT	33	
		TOTAL:	586	
		ROUNDED TOTAL:	600	

REMOVAL OF PAVEMENT SUMMARY

BEGIN	END	OFFSET	AREA (SY)	REMARKS
"01" 14+00	"01" 15+60	LT/RT	983	
"01" 14+36	"01" 14+75	LT	50	MEDIAN ISLAND
"01" 15+60	"01" 20+20	LT/RT	1,937	
		TOTAL:	2,970	
		ROUNDED TOTAL:	3,000	

REMOVAL OF FENCE

BEGIN	END	OFFSET	QUANTITY	UNIT	REMARKS
"01" 15+89	"01" 16+17	RT	26	LF	FENCE
"01" 16+06	"01" 16+32	LT	26	LF	FENCE
"01" 17+16	"01" 17+42	RT	26	LF	FENCE
"01 17+32	"01" 17+58	LT	26	LF	FENCE
		TOTAL	104		

CLEARING & GRUBBING SUMMARY

ALIGNMENT	BEGIN STATION	END STATION	AREA		REMARKS
			SF	ACRE	
"01"	14+00	15+60	2633	0.06	
"01"	15+60	20+25	8116	0.19	
		TOTAL:	10,749	0.25	
		ROUNDED TOTAL:	–	0.30	

NOTES:

1. REMOVE EXISTING CURB & GUTTER AND SIDEWALK AS NOTED IN THE PLANS.

Preliminary Plans

STATE OF ALASKA 49TH
Brandon E. Irvine
2/4/2022
CE-105211
REGISTERED PROFESSIONAL ENGINEER

SUMMARY TABLES

PLANS DEVELOPED BY: RESPEC COMPANY, LLC, CERT. OF AUTHORIZATION NO.: AECC163270, 1028 AURORA DRIVE, FAIRBANKS, AK 99709, (907)452-1414
P:\2018\18185FB-AuroraDr_Noyes\C\c6001cnst18185FB-D1 Fri, Feb/04/22 11:46am

NO.	DATE	REVISION

STATE	PROJECT DESIGNATION	YEAR	SHEET NO.	TOTAL SHEETS
ALASKA	0629001/NFHWY00124	2022	D2	D2

GUARDRAIL SUMMARY

BEGIN STATION	END STATION	RT/LT	PARALLEL GUARDRAIL TERMINAL (EACH)	TRANSITION RAIL (EACH)	REMOVING AND DISPOSING OF GUARDRAIL (LINEAR FOOT)	REMARKS
15+27	15+98	RT	1	1		END OFFSET (X) SHALL BE 0 FT
15+56	16+21	LT	1	1		END OFFSET (X) SHALL BE 0 FT
17+34	18+02	RT	1	1		END OFFSET (X) SHALL BE 2 FT
17+56	18+24	LT	1	1		END OFFSET (X) SHALL BE 0 FT
15+23	16+15	RT			89	APPROXIMATE LENGTH AND STATIONING
15+57	16+32	LT			77	APPROXIMATE LENGTH AND STATIONING
17+16	17+92	RT			76	APPROXIMATE LENGTH AND STATIONING
17+32	18+08	LT			77	APPROXIMATE LENGTH AND STATIONING
	PAY ITEMS TOTALS:		4	4	319	

SUPERELEVATION TABLE

ALIGNMENT	SUPERELEVATION RATE (%)	RADIUS OF CURVE (FT)	BEGIN TRANSITION	BEGIN FULL SUPERELEVATION	END FULL SUPERELEVATION	END TRANSITION	REMARKS
"01"	3%	400'	13+23 SEE NOTE 2	14+78	15+65	18+13 SEE NOTE 3	

CONCRETE SUMMARY

BEGIN	END	OFFSET	CONCRETE SIDEWALK, 6 INCHES THICK (SY)	REMARKS
"01" 14+00	"01" 18+38	RT	264	
"01" 14+40	"01" 14+72	LT	35	MEDIAN ISLAND ADA PATH
"01" 15+06	"01" 20+20	LT	348	
"01" 18+82	"01" 19+23	RT	48	
"01" 19+65	"01" 20+20	RT	34	
		TOTAL:	729	
		ROUNDED TOTAL:	730	

SUPERELEVATION NOTES:

1. SEE STANDARD PLAN I-81.00 FOR THE SUPERELEVATION TRANSITION DETAILS. ROTATION TYPE SHALL BE CASE I. PAVEMENT REVOLVED ABOUT CENTERLINE.
2. STATION PROVIDED FOR REFERENCE ONLY. SEE PLAN FOR BEGIN WORK STATION.
3. 2% CROSS SLOPE ACROSS BOTH LANES FROM STATION 16+17.85 THROUGH STATION 17+37.09, SEE SHEET F2.

CURB & GUTTER SUMMARY

BEGIN	END	OFFSET	LENGTH (LF)	SHAPE	STYLE	REMARKS
"01" 13+99	"01" 16+02	RT	196	STANDARD	CATCH	
"01" 14+39	"01" 14+73	LT	114	STANDARD	SPILL	MEDIAN ISLAND
"01" 15+04	"01" 16+18	LT	217	STANDARD	CATCH	
"01" 17+37	"01" 18+43	RT	135	STANDARD	CATCH	
"01" 17+53	"01" 20+20	LT	267	STANDARD	CATCH	
"01" 18+76	"01" 19+28	RT	94	STANDARD	CATCH	
"01" 19+60	"01" 20+20	RT	66	STANDARD	CATCH	
		TOTAL:	1,089			
		ROUNDED TOTAL:	1,100			

ADJUST EXISTING INLET FRAME AND GRATE

NAME	STATION	OFFSET		QTY (EA)	REMARKS
CB-S148	"01" 14+85	80.5	LT	1	
CB-S143	"01" 19+13	17.3	RT	1	
CB-S141	"01" 19+76	17.6	RT	1	
CB-S138	"01" 19+76	16.7	LT	1	
TOTAL:				4	

ADJUST EXISTING MANHOLE

NAME	STATION	OFFSET		QTY (EA)	REMARKS
MH-S132	"01" 14+89	93.8	LT	1	SS MH
MH-S152	"01" 18+73	5.8	RT	1	SD MH
MH-S121	"01" 18+84	15.9	RT	1	SS MH
MH-S137	"01" 19+50	5.3	RT	1	SD MH
–	"01" 18+55	63	RT	1	WILLOW- SD MH
TOTAL:				5	

Preliminary Plans

SUMMARY TABLES

STATE OF ALASKA 49TH
Brandon E. Irvine
2/4/2022
CE-105211
REGISTERED PROFESSIONAL ENGINEER

PLANS DEVELOPED BY: RESPEC COMPANY, LLC, CERT. OF AUTHORIZATION NO.: AECC163270, 1028 AURORA DRIVE, FAIRBANKS, AK 99709, (907)452-1414
P:\2018\18185FB-AuroraDr_Noyes\C\c6001cnst18185FB-D2 Fri, Feb/04/22 11:46am

NO.	DATE	REVISION	STATE	PROJECT DESIGNATION	YEAR	SHEET NO.	TOTAL SHEETS
			ALASKA	0629001/NFHWY00124	2022	E1	E6

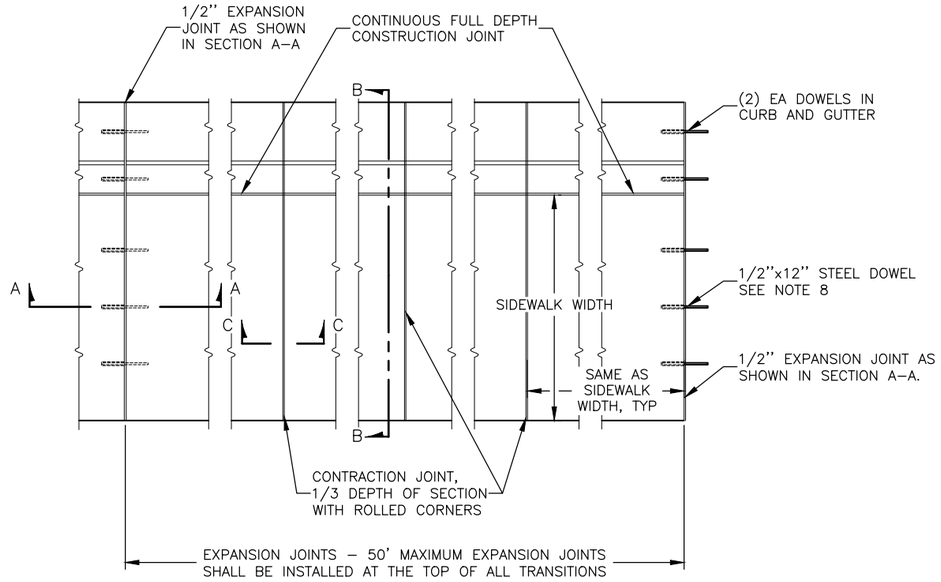

PLAN VIEW

NTS

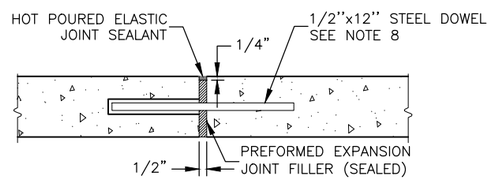

PARTIAL SECTION VIEW A – A

NTS

SIDEWALK & CURB AND GUTTER EXPANSION JOINT DETAIL

EXPANSION JOINT NOTES:

1. INSTALL CONTINUOUS FULL DEPTH 1/8" CONSTRUCTION JOINT AT ALL LOCATIONS WHERE SIDEWALK AND CURB (ANY TYPE) MEET.
2. PROTECT CONCRETE DURING CURE.
3. SEAL ALL EXPANSION JOINTS WITH JOINT SEALANT.

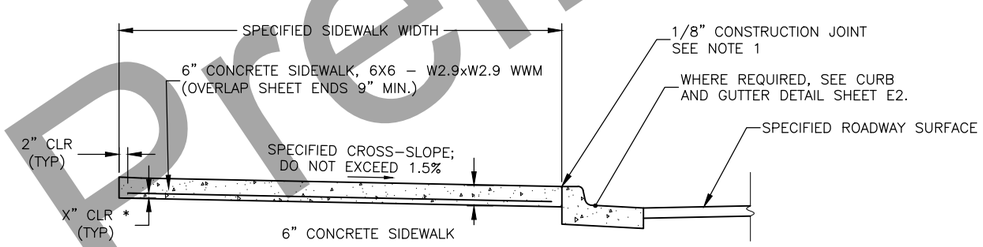

* 6" CONCRETE SIDEWALK, X= 1 1/2"

CONCRETE SIDEWALK REINFORCEMENT DETAIL

SECTION B–B

CONCRETE SIDEWALK NOTES:

1. CONSTRUCT CONCRETE SIDEWALK IN ACCORDANCE WITH THE TYPICAL SECTIONS AND OTHER DETAILS IN THESE PLANS, DETAILS ON THIS SHEET, AND THE REQUIREMENTS IN SECTION 608.
2. CONCRETE SIDEWALKS SHALL RECEIVE A BROOM FINISH (MEDIUM) RUNNING PERPENDICULAR TO THE SIDEWALK CENTERLINE.
3. LIQUID CURING MEMBRANE TO BE INSTALLED PER MANUFACTURERS INSTRUCTIONS. SEE SPECIFICATION SECTIONS 550–3.05 & 550–3.06 FOR CONCRETE FINISHING AND CURING REQUIREMENTS TO ALL EXPOSED CONCRETE.
4. SIDEWALK REINFORCEMENT SHALL BE SET ON SPACERS AND PULLED UP WHILE PLACING CONCRETE TO POSITION IT THE REQUIRED CLEAR DISTANCE FROM THE BOTTOM OF SIDEWALK.
5. EXPANSION AND CONTRACTION JOINTS IN THE SIDEWALK SHALL LINE UP WITH EXPANSION AND CONTRACTION JOINTS IN THE CURB.
6. CONTRACTION JOINT SPACING FROM EXPANSION JOINTS OR OTHER CONTRACTION JOINTS SHALL BE THE SPECIFIED WIDTH (W) OF THE CONCRETE SIDEWALK.
7. UNLESS OTHERWISE NOTED, EXPANSION AND CONTRACTION JOINTS SHALL BE PERPENDICULAR TO THE CONCRETE SIDEWALK CENTERLINE.
8. WHERE EXPANSION JOINTS ARE SPECIFIED AT THE MATCH LIMITS FOR NEW CONCRETE SIDEWALK AGAINST EXISTING CONCRETE SIDEWALK, SAW CUT THE EXISTING SIDEWALK TO FULL DEPTH PRIOR TO REMOVAL. DRILL INTO THE CONCRETE, GREASE THE DOWEL, AND INSERT IT DIRECTLY INTO THE HOLE.
9. EXPANSION JOINTS SHALL BE INSTALLED AT THE TOP OF ALL TRANSITIONS TO PEDESTRIAN CURB RAMPS.
10. APPLY STE–1 TACK COAT BETWEEN CONCRETE AND ADJOINING ASPHALT. STE–1 TACK COAT IS SUBSIDIARY TO PAY ITEM 401.0001.002B.

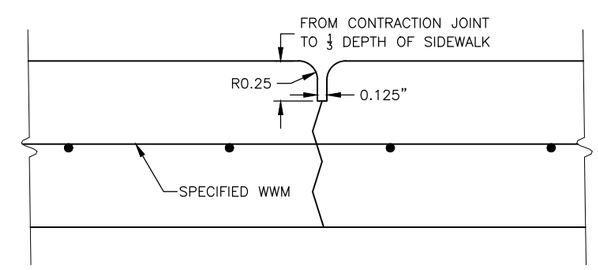

CONCRETE SIDEWALK CONTRACTION JOINT DETAIL

(ALSO KNOWN AS A CRACK CONTROL JOINT OR DUMMY JOINT)

SECTION C–C

SIDEWALK DETAILS

STATE OF ALASKA 49TH Brandon E. Irvine 2/4/2022 CE-105211 REGISTERED PROFESSIONAL ENGINEER

Preliminary Plans

PLANS DEVELOPED BY: RESPEC COMPANY, LLC, CERT. OF AUTHORIZATION NO.: AECC163270, 1028 AURORA DRIVE, FAIRBANKS, AK 99709, (907)452-1414
P:\2018\18185FB-AuroraDr_Noyes\C\c7001cnst18185FB-E1 Fri, Feb/04/22 11:46am

NO.	DATE	REVISION	STATE	PROJECT DESIGNATION	YEAR	SHEET NO.	TOTAL SHEETS
			ALASKA	0629001/NFHWY00124	2022	E2	E6

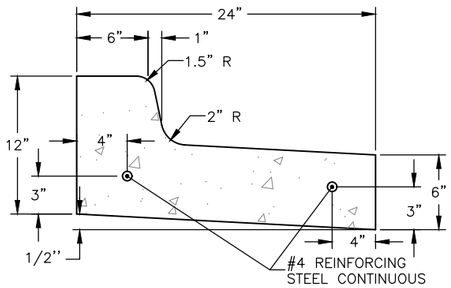

STANDARD CURB AND GUTTER
SPILL

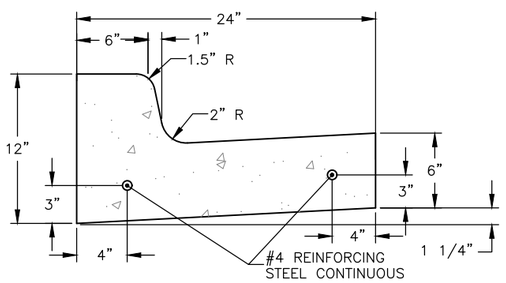

STANDARD CURB AND GUTTER
CATCH

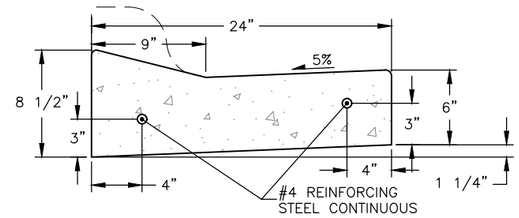

DEPRESSED CURB AND GUTTER

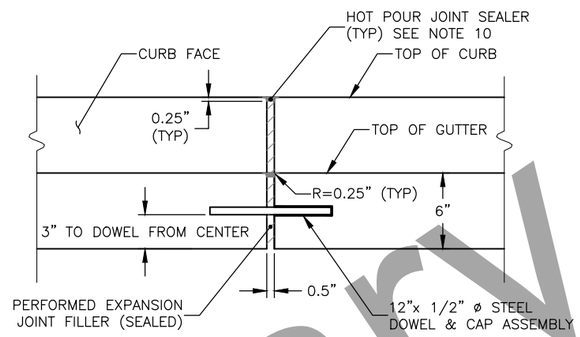

CURB & GUTTER EXPANSION JOINT DETAIL
ELEVATION VIEW

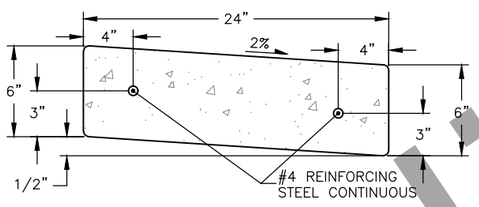

CURB RAMP CURB AND GUTTER
SPILL

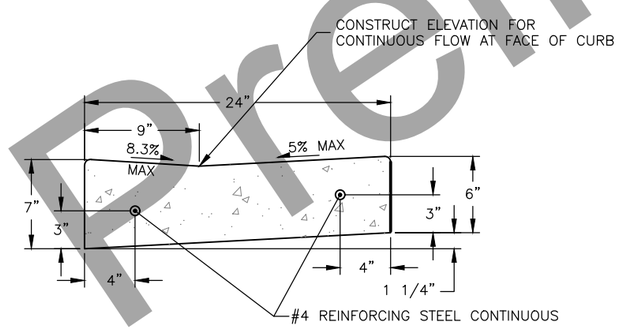

CURB RAMP CURB AND GUTTER
CATCH

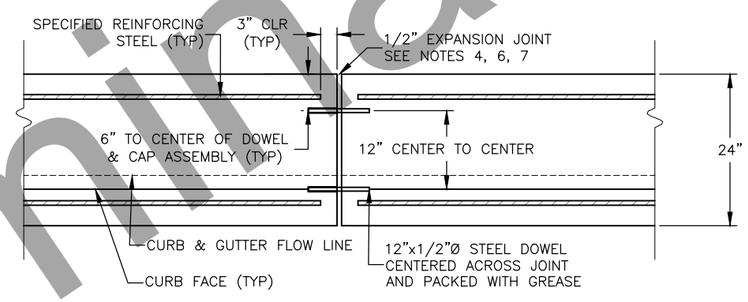

CURB & GUTTER EXPANSION JOINT DETAIL
PLAN VIEW NOT TO SCALE

CONCRETE CURB AND GUTTER NOTES:

1. CONSTRUCT CONCRETE CURB & GUTTER IN ACCORDANCE WITH THE DETAILS IN THESE PLANS AND THE REQUIREMENTS OF SECTION 609.
2. INSTALL CONTINUOUS FULL DEPTH 1/8" CONSTRUCTION JOINT AT ALL LOCATIONS WHERE SIDEWALK AND CURB (ANY TYPE) MEET. USE CONTINUOUS BOND BREAKER BETWEEN THE SIDEWALK AND THE CURB.
3. PROTECT CONCRETE FROM DAMAGE DURING CURE. REPLACE ANY CONCRETE DAMAGED DURING CURE.
4. EXPANSION AND CONTRACTION JOINTS IN THE CURB & GUTTER SHALL LINE UP WITH EXPANSION AND CONTRACTION JOINTS IN ADJACENT SIDEWALK., MAXIMUM SPACING BETWEEN EXPANSION JOINTS IS 50 FT. THE ENGINEER MAY ADJUST THE LOCATION OF EXPANSION OR CONTRACTION JOINTS.
5. CONTRACTION JOINT SPACING FROM EXPANSION JOINTS OR OTHER CONTRACTION JOINTS SHALL BE THE SPECIFIED WIDTH OF THE ADJACENT CONCRETE SIDEWALK. IF NO SIDEWALK IS ADJACENT TO THE CURB & GUTTER, USE THE SAME SPACING CONSISTENT WITH THE CURB & GUTTER ADJACENT TO SIDEWALK ELSEWHERE ON THE PROJECT OR AS OTHERWISE APPROVED BY THE ENGINEER.
6. UNLESS OTHERWISE NOTED, EXPANSION AND CONTRACTION JOINTS SHALL BE PERPENDICULAR TO THE CONCRETE CURB FACE.
7. INSTALL EXPANSION JOINTS AT THE TOP OF ALL TRANSITIONS TO PEDESTRIAN CURB RAMPS.
8. PLACE AND SPLICE ANY CURB & GUTTER REINFORCING STEEL IN ACCORDANCE WITH SECTION 503.
9. SEE SECTION 609-2.01 FOR CURB & GUTTER REINFORCING STEEL REQUIREMENTS.
10. APPLY JOINT SEALER EVENLY TO COMPLETELY SEAL ALL EXPANSION JOINTS.
11. APPLY STE-1 TACK COAT BETWEEN CONCRETE SURFACES AND ADJOINING ASPHALT. STE-1 TACK COAT IS SUBSIDIARY TO PAY ITEM 401.0001.002B.
12. LIQUID CURING MEMBRANE TO BE INSTALLED PER MANUFACTURERS INSTRUCTIONS. SEE SPECIFICATION SECTIONS 550-3.05 & 550-3.06 FOR CONCRETE FINISHING AND CURING REQUIREMENTS TO ALL EXPOSED CONCRETE.

Preliminary Plans

CURB & GUTTER DETAILS

STATE OF ALASKA 49TH
Brandon E. Irvine
2/4/2022
CE-105211
REGISTERED PROFESSIONAL ENGINEER

PLANS DEVELOPED BY: RESPEC COMPANY, LLC, CERT. OF AUTHORIZATION NO.: AECC163270, 1028 AURORA DRIVE, FAIRBANKS, AK 99709, (907)452-1414
P:\2018\18185FB-AuroraDr_Noyes\C\c7001cnst18185FB-E2 Fri, Feb/04/22 11:46am

NO.	DATE	REVISION	STATE	PROJECT DESIGNATION	YEAR	SHEET NO.	TOTAL SHEETS
			ALASKA	0629001/NFHWY00124	2022	E3	E6

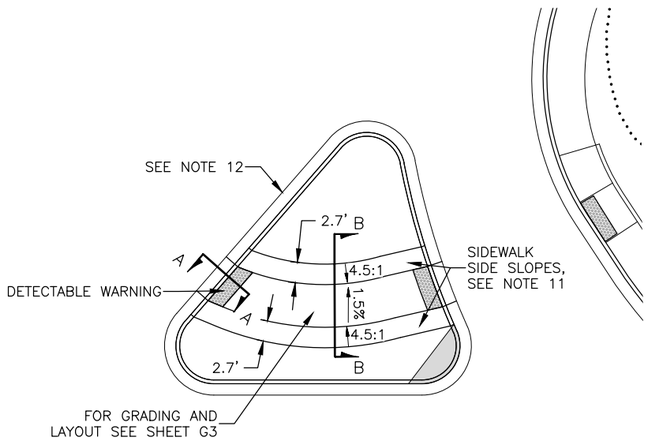

MEDIAN ISLAND PLAN VIEW
NTS

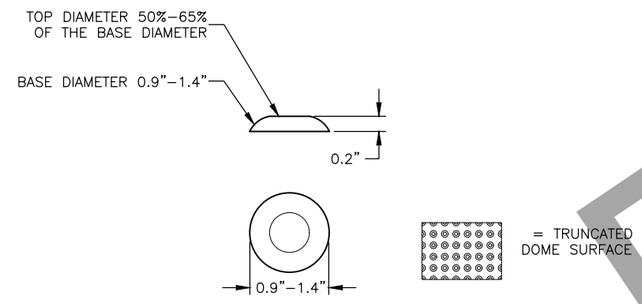

TRUNCATED DOME DETAILS

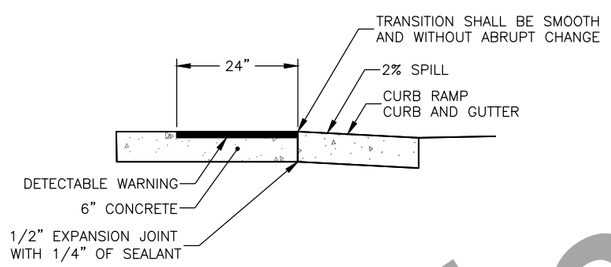

SECTION A–A
NTS

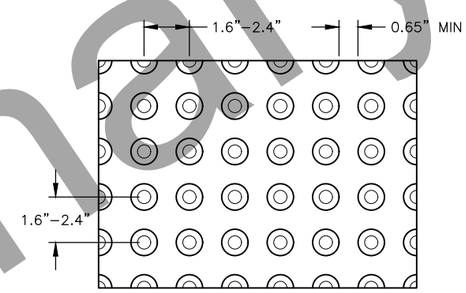

TRUNCATED PATTERN DETAIL

DETECTABLE WARNING NOTES:

1. ALL DETECTABLE WARNING WIDTHS PRESENTED IN THE CURB RAMP SUMMARY TABLE ARE MEASURED FROM TOP BACK OF CURB.

CURB RAMP NOTES:

1. CONSTRUCT 6 INCH THICK RAMP AND LANDING OF CONCRETE.
2. CONCRETE SHALL RECEIVE A COARSE BROOMED FINISH RUNNING PERPENDICULAR TO THE CURB ON RAMP RUNS AND UPPER LANDINGS AND PARALLEL TO THE DIRECTION OF TRAVEL ON LOWER LANDINGS.
3. INSTALL FEDERAL YELLOW CAST IRON DETECTABLE WARNINGS AT THE BACK OF THE CURB RAMP CURB AND GUTTER.
4. SEE CURB RAMP SUMMARY FOR INSTALLATION LOCATIONS.
5. CONSTRUCT RAMP SLOPES AT A NOMINAL 7.7% GRADE, OR FLATTER. RAMP SLOPES MAY BE INCREASED TO A MAXIMUM OF 8.3% WHEN SITE CONDITIONS WARRANT IT. RAMP LENGTHS SHOULD BE INCREASED TO KEEP GRADES UNDER 8.3% MAXIMUM, BUT ARE NOT REQUIRED TO EXCEED 15.0 FEET. THE RESULTING RAMP GRADE AT A 15.0 FOOT RAMP LENGTH IS ACCEPTABLE EVEN IF IT EXCEEDS 8.3%.
6. CONSTRUCT LANDING AND SIDEWALK CROSS SLOPE AT NOMINAL 1.5% (1% MIN., 2% MAX) DO NOT CONSTRUCT LANDING AND SIDEWALK CROSS SLOPES STEEPER THAN 2%.
7. WWM STEEL REINFORCEMENT FOR SIDEWALKS, PEDESTRIAN RAMPS, AND CURB CUTS SHALL BE 6"x6"–W2.9 WWM.
8. WWM REINFORCEMENT STEEL FOR SIDEWALK REINFORCEMENT TO BE SET ON SPACERS AND PULLED UP AS REQUIRED TO POSITION STEEL 1 1/2" UP FROM BOTTOM OF SIDEWALK.
9. ALL CURB RAMP LAYOUTS AND DIMENSIONS IN THIS PLAN SET ARE APPROXIMATE AND NEED TO BE FIELD FIT AND SHALL MEET 2006 ADA STANDARDS FOR MAXIMUM SLOPES. FINAL LAYOUT TO BE APPROVED BY THE ENGINEER PRIOR TO CONCRETE POUR.
10. SEE SHEET E2 FOR EXPANSION SIDEWALK AND CURB AND GUTTER JOINT DETAIL.
11. SIDEWALK SIDE SLOPES SHALL BE 2.7' WIDE AND INSTALLED AT 4.5:1 SLOPES.
12. MEDIAN ISLAND IS STANDARD CURB AND GUTTER SPILL ALONG THE PERIMETER CURB LINE, AND TRANSITIONS TO CURB RAMP CURB AND GUTTER SPILL AS SHOWN IN THE MEDIAN ISLAND CURB RAMP DETAIL SECTION A–A.

CURB RAMP SUMMARY

NO.	OFFSET	WIDTH (FT)	RADII	QTY (EA)	REMARKS
"01" 14+43	LT	6'–0"	–	1	MEDIAN ISLAND ADA ACCESS
"01" 14+72	LT	5'–8"	104.6'	1	MEDIAN ISLAND ADA ACCESS
"01" 14+87	LT	6'–4"	33.0'	1	PARALLEL
"01" 18+40	RT	6'–8"	28.0'	1	PARALLEL
"01" 18+89	RT	6'–3"	14.0'	1	PARALLEL
"01" 19+24	RT	8'–6"	14.0'	1	PARALLEL
"01" 19+64	RT	7'–4"	14.0'	1	PARALLEL
			TOTAL:	7	

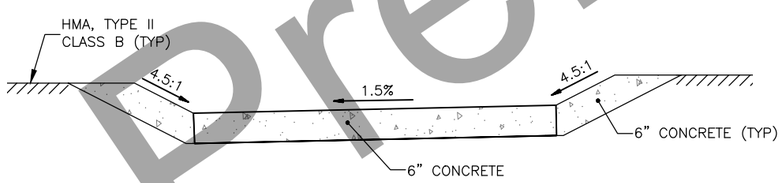

SECTION B–B
NTS

MEDIAN ISLAND CURB RAMP DETAILS

RAMP & CURB DETAILS

STATE OF ALASKA 49TH
Brandon E. Irvine
2/4/2022
CE-10521
REGISTERED PROFESSIONAL ENGINEER

Preliminary Plans

PLANS DEVELOPED BY: RESPEC COMPANY, LLC, CERT. OF AUTHORIZATION NO.: AECC163270, 1028 AURORA DRIVE, FAIRBANKS, AK 99709, (907)452-1414
P:\2018\18185FB-AuroraDr_Noyes\C\c7001cnst18185FB-E3 Fri, Feb/04/22 11:46am

NO.	DATE	REVISION

STATE	PROJECT DESIGNATION	YEAR	SHEET NO.	TOTAL SHEETS
ALASKA	0629001/NFHWY00124	2022	E4	E6

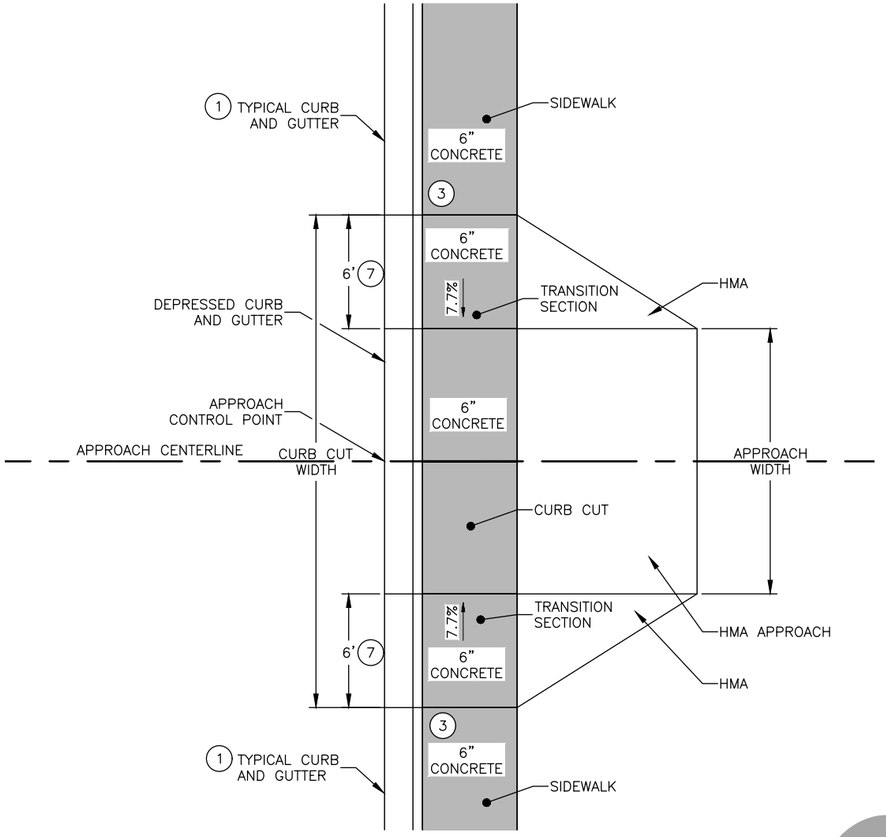

APPROACH PLAN PLAN DETAIL

NTS

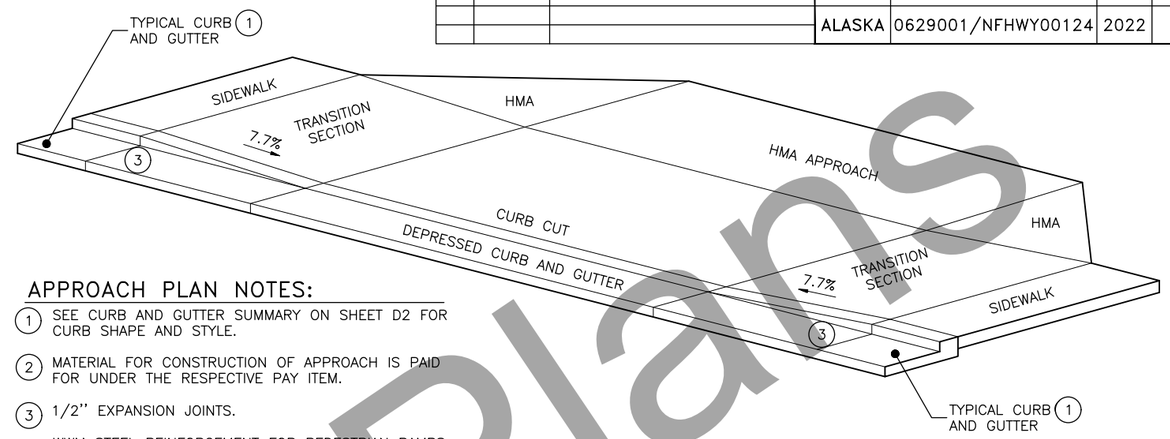

APPROACH PLAN DETAIL

NTS

APPROACH PLAN NOTES:

1. SEE CURB AND GUTTER SUMMARY ON SHEET D2 FOR CURB SHAPE AND STYLE.
2. MATERIAL FOR CONSTRUCTION OF APPROACH IS PAID FOR UNDER THE RESPECTIVE PAY ITEM.
3. 1/2" EXPANSION JOINTS.
4. WWM STEEL REINFORCEMENT FOR PEDESTRIAN RAMPS AND CURB CUTS SHALL BE 6"X6"–W2.9XW2.9. ALL STEEL SHALL BE SET ON SPACERS AND PULLED UP AS REQUIRED TO POSITION STEEL 1–1/2" UP FROM BOTTOM OF SIDEWALK.
5. FOR SIDEWALK REINFORCEMENT, POSITION STEEL 1–1/2" UP FROM BOTTOM OF SIDEWALK.
6. SEE SHEET E2 FOR EXPANSION SIDEWALK & CURB AND GUTTER JOINT DETAIL.
7. TRANSITION SECTION LENGTHS SHOWN IN PLANS ARE APPROXIMATE. CONSTRUCT TRANSITIONS AT A NOMINAL 7.7% GRADE OR FLATTER. SLOPES MAY BE INCREASED TO A MAXIMUM OF 8.3% WHERE SITE CONDITIONS WARRANT.

APPROACH SUMMARY

STA	OFFSET	SKEW ANGLE (90° TYP.)	WIDTH (FT)	LENGTH (FT)	LANDING LENGTH (FT)	QTY (EA)	REMARKS
14+84	16.4 RT	90°	20	22	10	1	
18+85	14.5 LT	90°	20	16	10	1	
19+59	15.5 LT	90°	12	6	––	1	APPROACH LENGTH TIES INTO EXISTING CONDTION PRIOR TO FULL LANDING LENGTH
					TOTAL:	3	

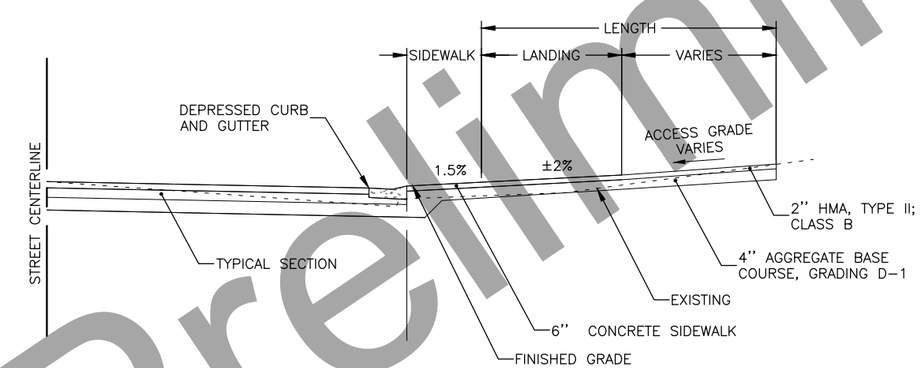

APPROACH PLAN SECTION DETAIL

NTS

APPROACH SECTION NOTES:

1. MAX RESIDENTIAL ACCESS GRADE 15%.
2. MATERIAL FOR CONSTRUCTION OF APPROACH IS PAID FOR UNDER THE RESPECTIVE PAY ITEM.

Preliminary Plans

APPROACH DETAILS

STATE OF ALASKA 49TH
Brandon E. Irvine
2/4/2022
CE-105211
REGISTERED PROFESSIONAL ENGINEER

PLANS DEVELOPED BY: RESPEC COMPANY, LLC, CERT. OF AUTHORIZATION NO.: AECC163270, 1028 AURORA DRIVE, FAIRBANKS, AK 99709, (907)452–1414
P:\2018\18185FB–AuroraDr_Noyes\C\c7001cnst18185FB–E4 Fri, Feb/04/22 05:10pm

NO.	DATE	REVISION	STATE	PROJECT DESIGNATION	YEAR	SHEET NO.	TOTAL SHEETS
			ALASKA	0629001/NFHWY00124	2022	E5	E6

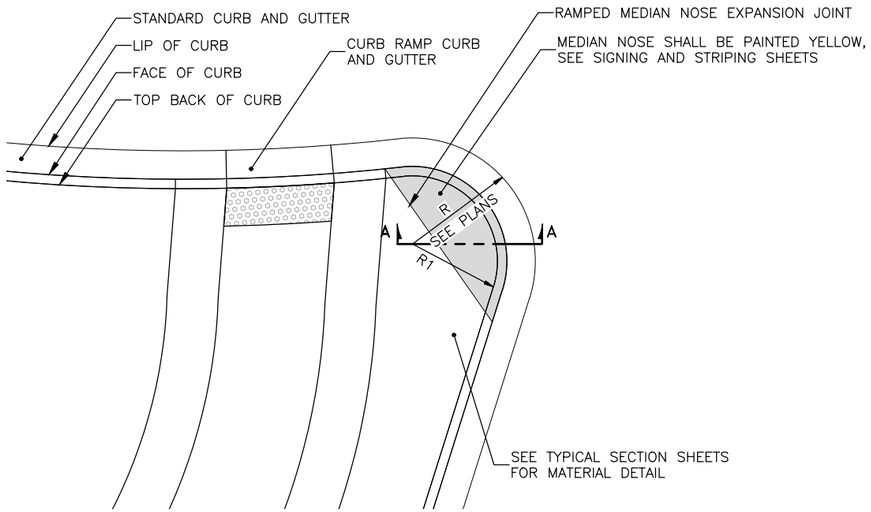

RAMPED MEDIAN NOSE DETAIL

NTS

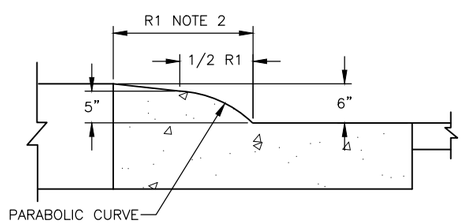

SECTION A – A

NTS

RAMPED MEDIAN NOSE NOTES:

1. CONSTRUCT RAMP MEDIAN NOSE TO RADIUS POINT "R1" OR 3 FEET WHICHEVER IS GREATER.
2. RAMPED MEDIAN NOSE SHALL BE 6" PORTLAND CEMENT CONCRETE POURED INTEGRAL WITH CURB AND GUTTER AND IS SUBSIDIARY TO PAY ITEM 609.0002.0001 CURB AND GUTTER TYPE 1.
3. RAMPED MEDIAN NOSE PAINTING IS SUBSIDIARY TO RESPECTIVE STRIPING PAY ITEMS, FOR MORE DETAILS AND INFORMATION ON PAINTING REFER TO SIGNING AND STRIPING PLAN SHEETS AND SPECS.

Preliminary Plans

MEDIAN NOSE DETAILS

STATE OF ALASKA 49TH
Brandon E. Irvine
2/4/2022
CE-105211
REGISTERED PROFESSIONAL ENGINEER

PLANS DEVELOPED BY: RESPEC COMPANY, LLC, CERT. OF AUTHORIZATION NO.: AECC163270, 1028 AURORA DRIVE, FAIRBANKS, AK 99709, (907)452-1414
P:\2018\18185FB-AuroraDr_Noyes\C\c7001cnst18185FB-E5 Fri, Feb/04/22 11:47am

NO.	DATE	REVISION

STATE	PROJECT DESIGNATION	YEAR	SHEET NO.	TOTAL SHEETS
ALASKA	0629001/NFHWY00124	2022	E6	E6

VERTICAL DROP-OFFS

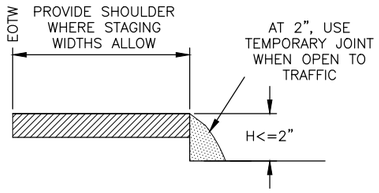

CASE A

DROP-OFFS ≤2 INCHES
(PAVED SURFACES ONLY)

1. USE "UNEVEN LANES" (W8-11) SIGNS FOR ALL DROP-OFFS IN BETWEEN TRAFFIC LANES
2. LEAVE NO DROP-OFFS > 1.5" IN THE TRAFFIC LANE OR ACTIVE WHEEL TRACK

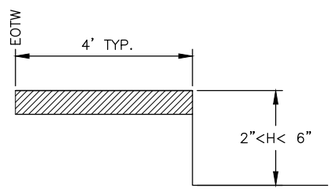

CASE B

2"< DROP-OFFS < 6"
(ALL ROADWAY SURFACES)

1. PLACE CONES OR CANDLES FOR DROP-OFFS ≥ 4 FEET AND ≤ 30 FEET FROM EOTW.
2. USE DRUMS OR TYPE II BARRICADES FOR DROP-OFFS < 4 FEET FROM THE EOTW.

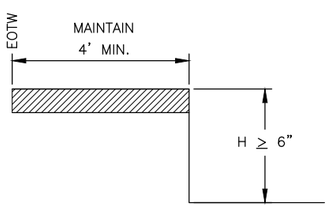

CASE C

DROP-OFFS ≥6"
(ALL ROADWAY SURFACES AND ROADSIDE SLOPES)

1. PLACE DRUMS OR TYPE II BARRICADES FOR DROP-OFFS ≤ 24" WITHIN THE CLEAR AREA.
2. PROVIDE PORTABLE CONCRETE BARRIERS FOR DROP-OFFS > 24" WITHIN 15 FEET OF THE EOTW. USE DRUMS OR TYPE II BARRICADES IF BEYOND 15 FEET.

FILL SLOPES

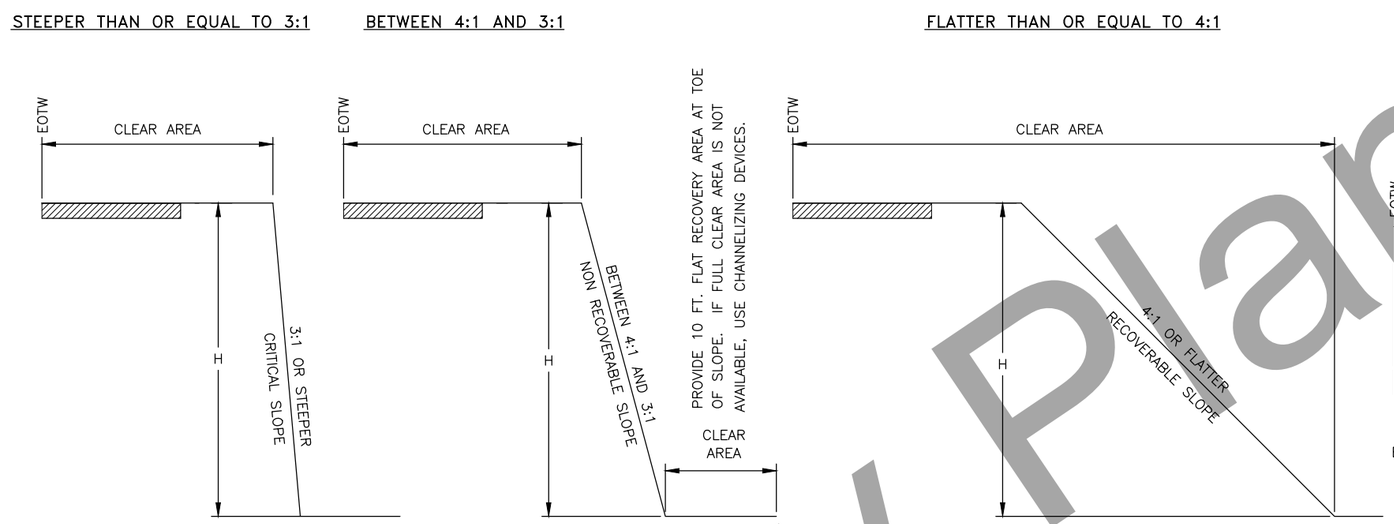

CUT SLOPES

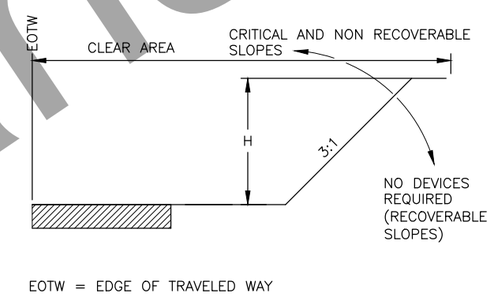

EOTW = EDGE OF TRAVELED WAY

CLEAR AREA REQUIREMENTS

	LOW SPEED < = 35 MPH	INTERMEDIATE SPEED 40 MPH TO 45 MPH	HIGH SPEED ≥ = 50 MPH
RURAL	15'	24'	30'
URBAN	10' DITCH SECTIONS, OR 2' BEHIND CURB	15' DITCH CONDITIONS, OR 2' BEHIND CURB	15' DITCH CONDITIONS, OR 2' BEHIND CURB

CHANNELIZING DEVICE REQUIREMENTS FOR SLOPES 3:1 OR STEEPER WITHIN THE CLEAR AREA

	H <= 15'	H > 15'
< 2000 VPD LOW VOLUME	CANDLES OR CONES	TYPE II BARRICADES OR DRUMS
> 2000 VPD	TYPE II BARRICADE OR DRUMS	PORTABLE CONCRETE BARRIER OR TEMPORARY GUARDRAIL

TRAFFIC CONTROL NOTES:

1. USE THE EXISTING CROSS-SECTION (PRIOR TO CONSTRUCTION) AS A BASIS FOR DETERMINING WHEN CHANNELIZING DEVICES ARE NEEDED.
2. INSTALL CHANNELIZING DEVICES WHEN THE HORIZONTAL OR VERTICAL CURVATURE IS MADE MORE SEVERE.
3. INSTALL FLEXIBLE DELINEATORS WHEN ALL VEGETATION OVER 4 FEET HIGH IS CLEARED FROM FILL SLOPES THAT ARE 3:1 OR STEEPER IN THE CLEAR AREA.
4. USE PORTABLE CONCRETE BARRIER FOR WARRANTING CONDITIONS WHICH LAST LONGER THAN 3 DAYS. FOR CONDITIONS LASTING LESS THAN 3 DAYS, OTHER CHANNELIZING DEVICES MAY BE INSTALLED.
5. TERMINATE RUNS OF PORTABLE CONCRETE BARRIER USING THE FOLLOWING METHODS:
   - A) CONNECT TO A PORTABLE CRASH CUSHION, OR
   - B) PROVIDE A CONCRETE BARRIER WITH THRIE BEAM TRANSITION TO W-BEAM GUARDRAIL, TREATED WITH A PARALLEL TERMINAL (SEE SECTION 710).
   - C) FLARE THE ENDS OF THE PORTABLE CONCRETE BARRIER AWAY FROM THE ROADWAY AT A RATE OF 7:1 ON A COMPACTED SLOPE OF 6:1 OR FLATTER, OUTSIDE OF THE CLEAR AREA. INSTALL A SLOPING PORTABLE CONCRETE BARRIER END TREATMENT, OR
   - D) BURY IN THE BACKSLOPE.
6. TERMINATE THE RUNS OF TEMPORARY W-BEAM GUARDRAIL USING THE FOLLOWING METHODS:
   - A) PROVIDE A PARALLEL TERMINAL (SEE SECTION 710)
   - B) FLARE THE ENDS OF THE TEMPORARY GUARDRAIL AWAY FROM THE ROADWAY AT A RATE OF 6:1 ON A COMPACTED SLOPE OF 6:1 OR FLATTER OUTSIDE OF THE CLEAR AREA, TERMINATE WITH A STANDARD W-BEAM END SECTION, OR
   - C) BURY IN THE BACKSLOPE.

EQUIPMENT NOTES:

1. WHEN THERE IS ACTIVE, NONMOBILE CONSTRUCTION EQUIPMENT WITHIN THE CLEAR AREA, DELINEATE THE ROADSIDE WITH TRAFFIC CONES.
2. SEPARATE PROCEDURES ARE REQUIRED FOR MOBILE WORK ZONE OPERATIONS AND SHORT DURATION WORK OF LESS THAN 12 HOURS.

WINTER SHUTDOWN NOTES:

1. WHEN REQUIRED, USE CHANNELIZING DEVICES WHICH CAN BE MAINTAINED OVER WINTER.
2. NO CHANNELIZING DEVICES ARE REQUIRED IF:
   - A) CONSTRUCTION SLOPES ARE RECOVERABLE, AND
   - B) SLOPES ARE SMOOTH AND COMPACTED, AND
   - C) REQUIRED CLEAR AREA IS PROVIDED

REVISIONS

DESCRIPTION	BY	DATE
CREATED	GG	11/20/03
CLARIFIED DETAILS	CA	01/31/06
UPDATED ET-PLUS NOMENCLATURE	CFJ	02/02/10
UPDATED 6A	CMA	07/18/11
NATIONAL CAD STDS	SP	02/13/15
NOTE TO DESIGNERS & MINOR CHANGES	SP	12/05/18

STATE OF ALASKA 49TH
Brandon E. Irvine
2/4/2022
CE-10521
REGISTERED PROFESSIONAL ENGINEER

TRAFFIC CONTROL DEVICES & DETAILS

Preliminary Plans

PLANS DEVELOPED BY: RESPEC COMPANY, LLC, CERT. OF AUTHORIZATION NO.: AECC163270, 1028 AURORA DRIVE, FAIRBANKS, AK 99709, (907)452-1414
P:\2018\18185FB-AuroraDr_Noyes\C\c7001cnst18185FB-E6 Fri, Feb/04/22 11:47am

NO.	DATE	REVISION

STATE	PROJECT DESIGNATION	YEAR	SHEET NO.	TOTAL SHEETS
ALASKA	0629001/NFHWY00124	2022	F1	F2

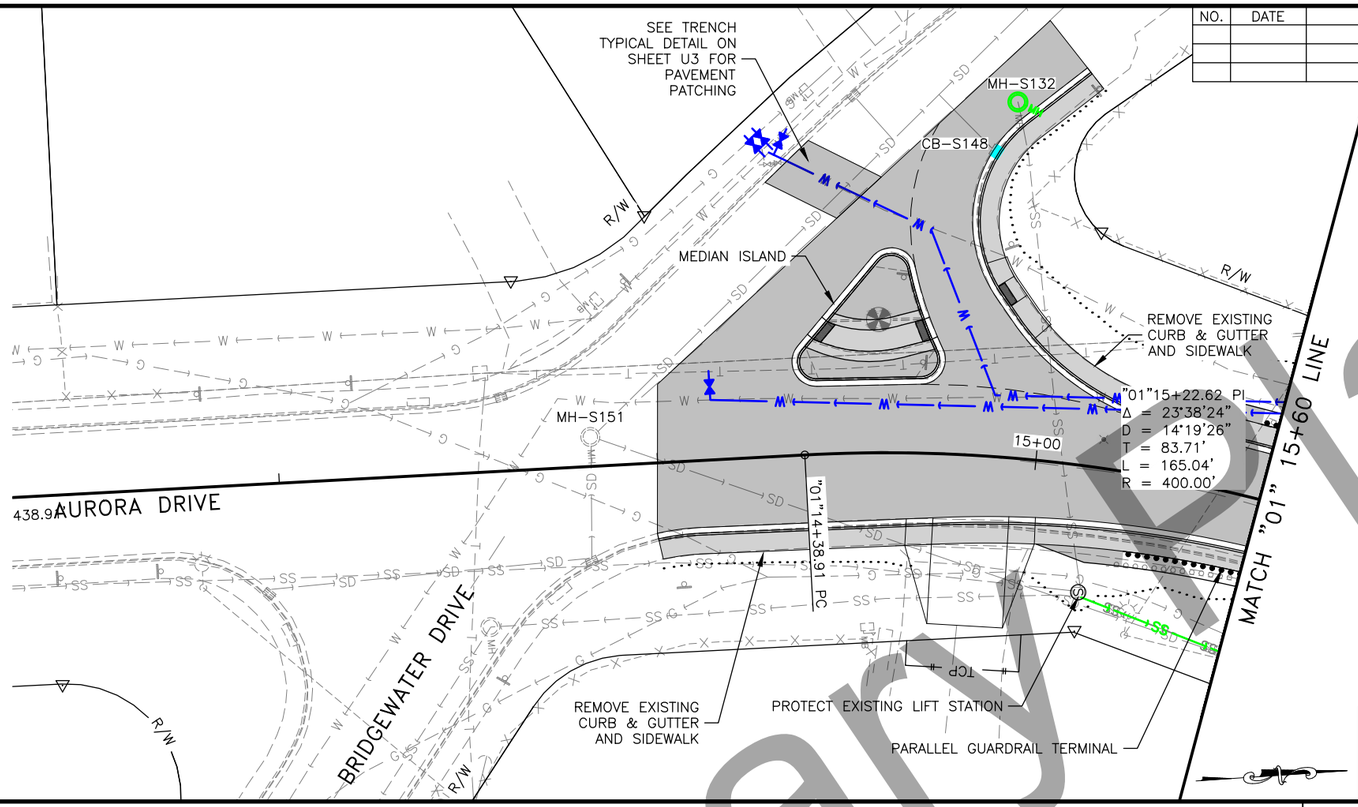

NOTES:

1. FOR PARALLEL GUARDRAIL TERMINALS, CONSTRUCT THE GUARDRAIL TERMINAL WIDENING IN ACCORDANCE WITH THE "ALTERNATE DETAIL" ON STANDARD PLAN G-20.12. SEE REMARKS COLUMN IN GUARDRAIL SUMMARY TABLE ON SHEET D2 FOR END OFFSET (X).
2. SEE APPROACH DETAILS ON SHEET E4.
3. REMOVE ALL EXISTING GUARDRAIL. SEE GUARDRAIL SUMMARY TABLE ON SHEET D2.
4. SAWCUT AND MATCH EXISTING AT AURORA DR, BRIDGEWATER DR, WILLOW ST, COTTONWOOD ST, AND ALL APPROACHES. SEE DETAIL ON SHEET B1.
5. ADJUST THE EXISTING SANITARY SEWER MH FRAMES, CATCH BASIN INLET FRAMES, EXISTING STORM DRAIN MANHOLE RIMS, AND WATER VALVE BOX ELEVATIONS AS LISTED IN THE SUMMARY TABLE ON SHEET D2.

PLAN AND PROFILE (1 OF 2)

STATE OF ALASKA 49TH
Brandon E. Irvine
2/4/2022
CE-105211
REGISTERED PROFESSIONAL ENGINEER

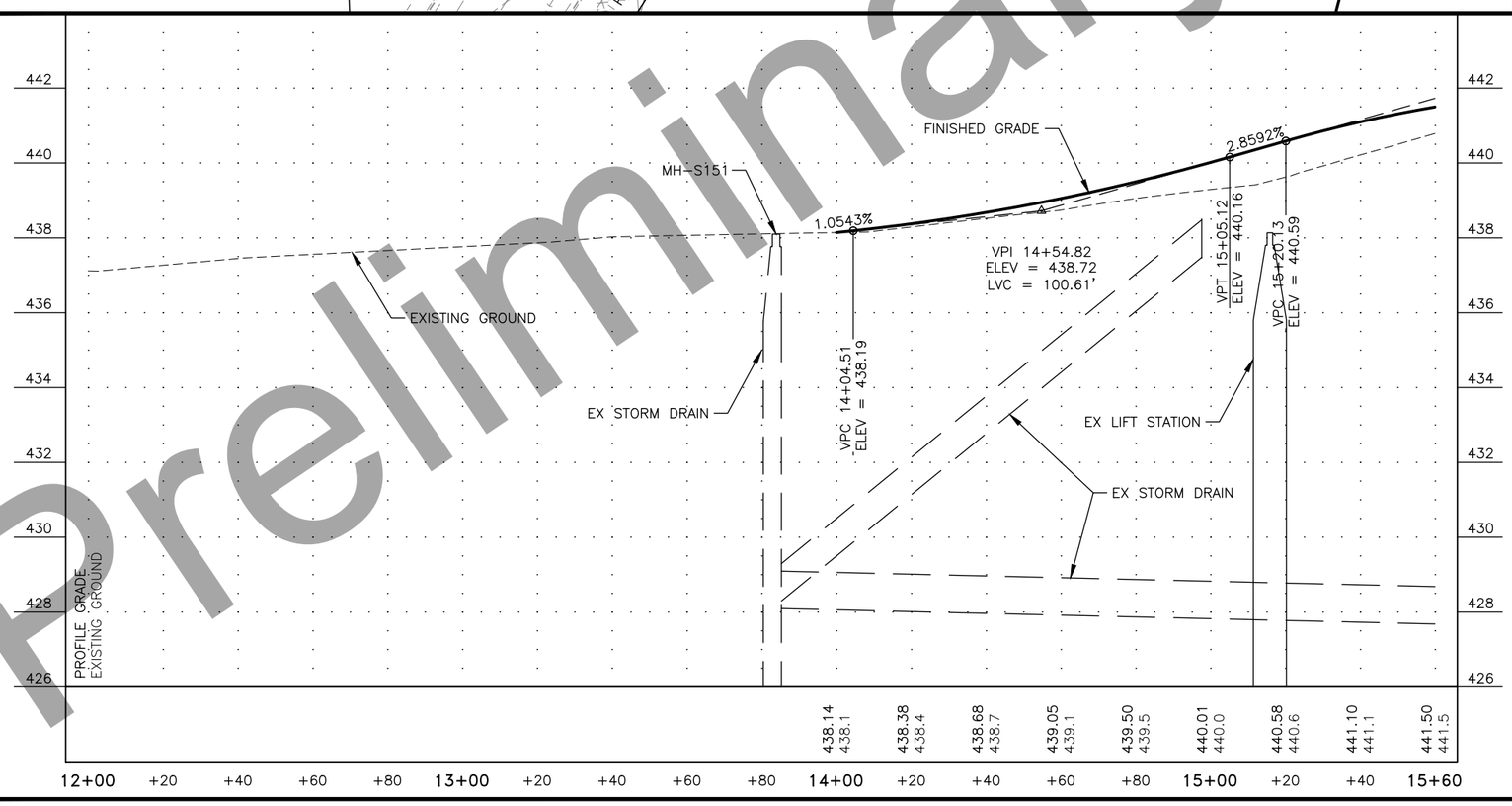

Preliminary Plans

PLANS DEVELOPED BY: RESPEC COMPANY, LLC, CERT. OF AUTHORIZATION NO.: AECC163270, 1028 AURORA DRIVE, FAIRBANKS, AK 99709, (907)452-1414
P:\2018\18185FB-AuroraDr_Noyes\C\C2001cnst18185FB-10+00.00-16+00.00 Fri, Feb/04/22 05:59pm

NO.	DATE	REVISION

STATE	PROJECT DESIGNATION	YEAR	SHEET NO.	TOTAL SHEETS
ALASKA	0629001/NFHWY00124	2022	F2	F2

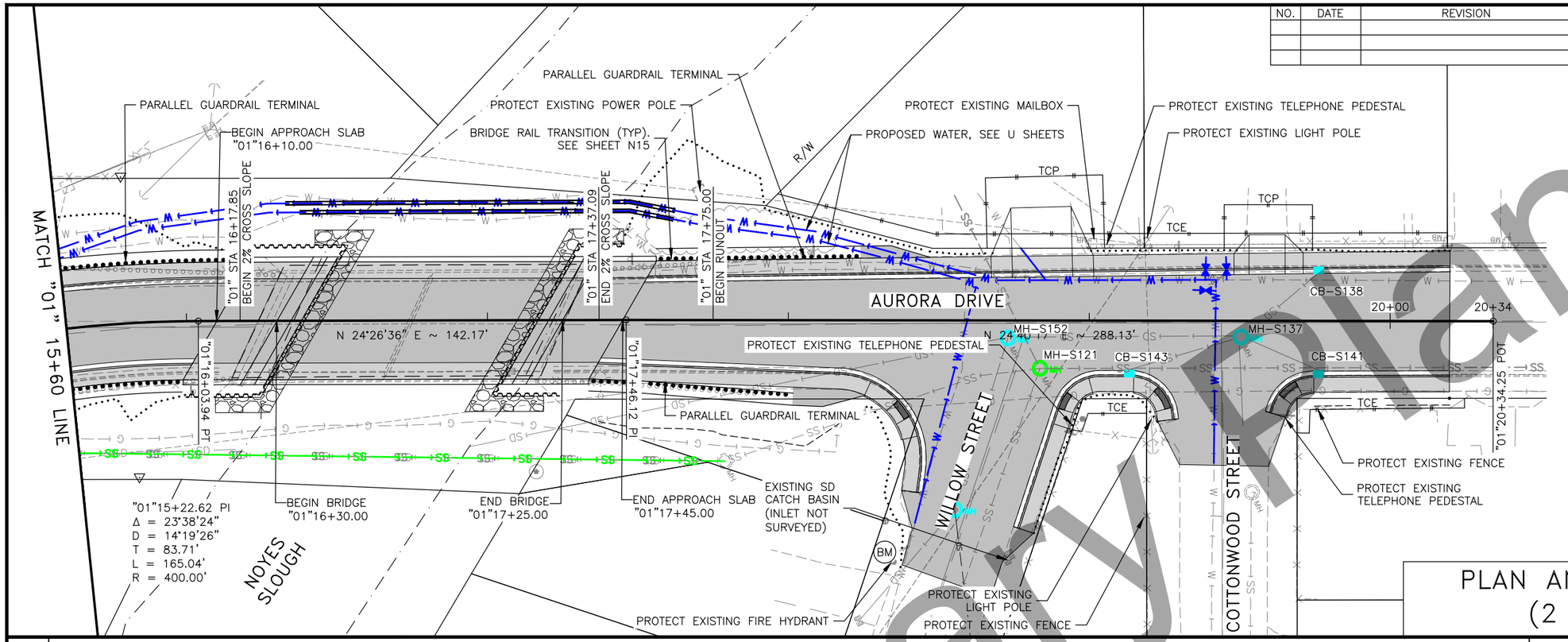

NOTES:

1. FOR PARALLEL GUARDRAIL TERMINALS, CONSTRUCT THE GUARDRAIL TERMINAL WIDENING IN ACCORDANCE WITH THE "ALTERNATE DETAIL" ON STANDARD PLAN G-20.12. THE END OFFSET (X) SHALL BE 0 FEET, EXCEPT GUARDRAIL TERMINAL 17+34 TO 18+02 RT THE END OFFSET (X) SHALL BE 2 FT. SEE REMARKS SECTION IN SUMMARY TABLE ON D2 FOR MORE INFORMATION.
2. SEE APPROACH DETAILS ON SHEET E4.
3. REMOVE ALL EXISTING GUARDRAIL. SEE GUARDRAIL SUMMARY TABLE ON SHEET D2.
4. SAWCUT AND MATCH EXISTING PAVEMENT AT AURORA DR, BRIDGEWATER DR, WILLOW ST, COTTONWOOD ST, AND ALL APPROACHES, SEE DETAIL ON SHEET B1.
5. ADJUST THE EXISTING SANITARY SEWER MH FRAMES, CATCH BASIN INLET FRAMES, EXISTING STORM DRAIN MANHOLE RIMS, AND WATER VALVE BOX ELEVATIONS AS LISTED IN THE SUMMARY TABLE ON SHEET D2.
6. PLACE ADDITIONAL SUBBASE GRADING F, TAPER DEPTH AT 10:1 AWAY FROM BRIDGE. PLACE UNDER FULL WIDTH OF ROADWAY AND SIDEWALKS.

PLAN AND PROFILE (2 OF 2)

STATE OF ALASKA 49TH
Brandon E. Irvine
2/4/2022
CE-105211
REGISTERED PROFESSIONAL ENGINEER

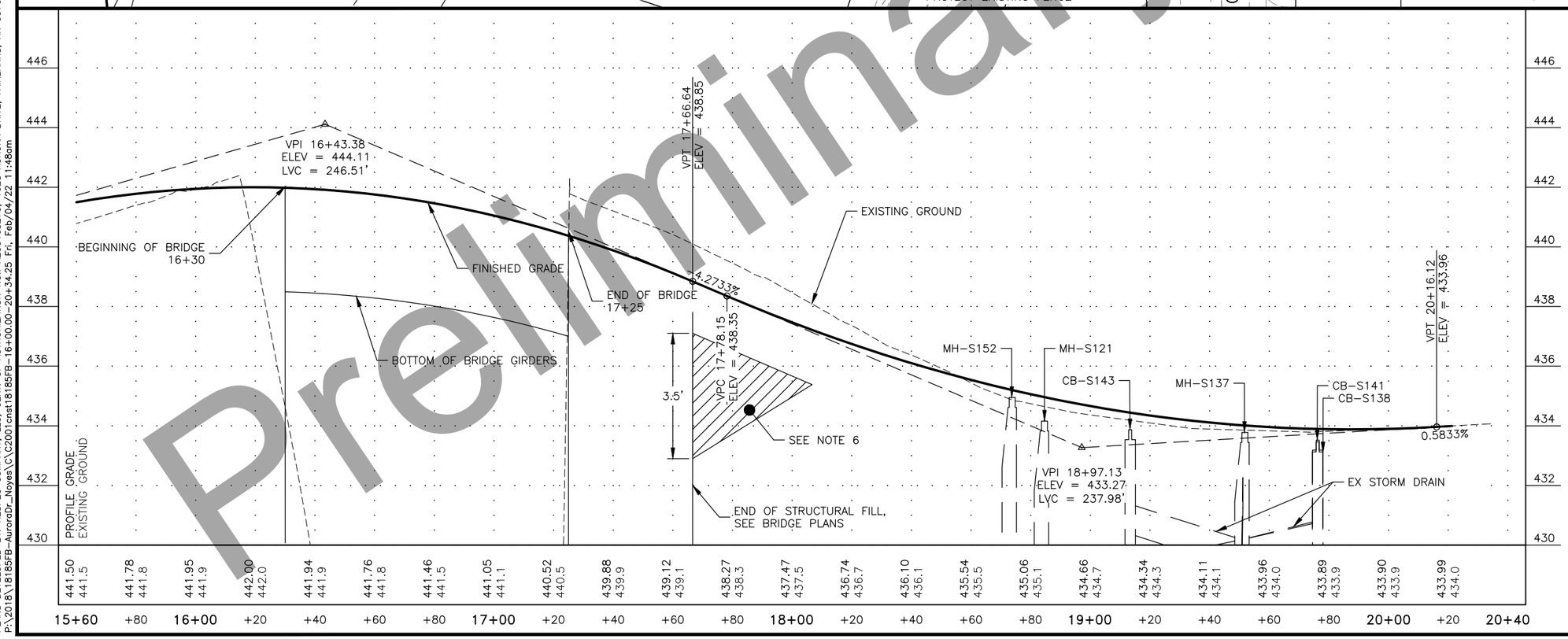

Preliminary Plans

PLANS DEVELOPED BY: RESPEC COMPANY, LLC, CERT. OF AUTHORIZATION NO.: AECC163270, 1028 AURORA DRIVE, FAIRBANKS, AK 99709, (907)452-1414
P:\2018\18185FB-AuroraDr_Noyes\C\C2001cnst18185FB-16+00.00-20+34.25 Fri, Feb/04/22 11:48am

NO.	DATE	REVISION

STATE	PROJECT DESIGNATION	YEAR	SHEET NO.	TOTAL SHEETS
ALASKA	0629001/NFHWY00124	2022	G1	G5

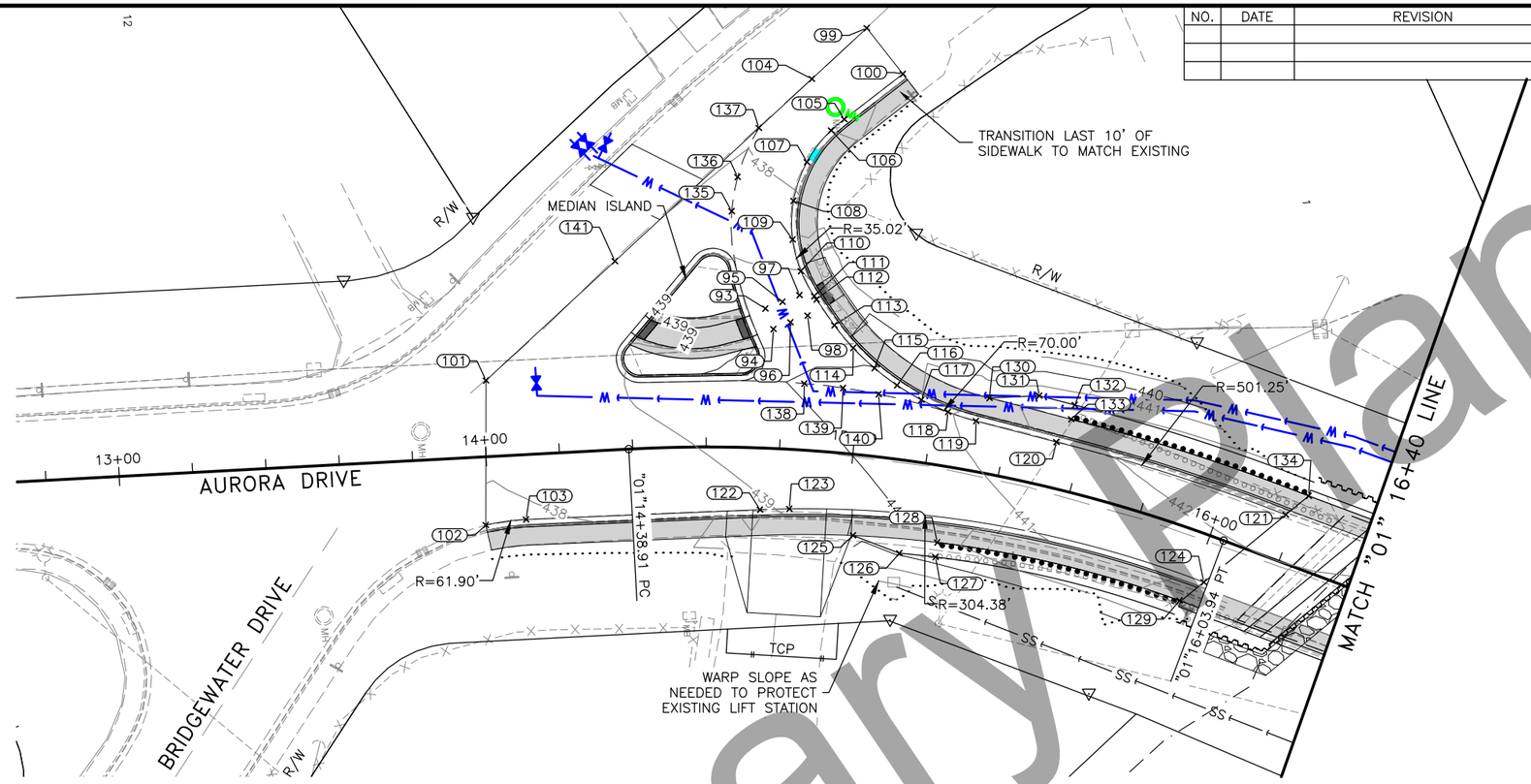

CONTROL POINT TABLE					
PT#	DESC.	NORTHING	EASTING	ELEV.	REMARKS
93	GB	204794.51	671075.65	439.25	
94	GB	204796.33	671081.37	439.37	
95	GB	204799.27	671074.13	439.22	
96	GB	204801.10	671079.85	439.34	
97	GB	204804.03	671072.61	439.18	
98	GB	204805.86	671078.33	439.29	
99	EP	204827.23	671001.30		
100	LOC	204836.19	671014.43		
101	EP	204717.30	671090.05		
102	LOC	204714.60	671129.33		
103	PT-LOC	204725.63	671128.56	437.88	
104	EP	204811.38	671014.10		
105	EP-PC	204819.44	671025.68	437.52	
106	LOC	204815.66	671028.44	437.61	
107	LOC	204808.51	671036.62	437.60	
108	LOC	204804.15	671046.89	438.13	
109	LOC	204803.19	671057.40	438.52	
110	LOC	204804.84	671066.13	439.02	
111	PT-LOC	204808.02	671073.16	439.16	
112	RAMP-LOC	204808.58	671074.10	439.18	
113	PC-LOC	204812.95	671081.46	439.33	
114	LOC	204817.67	671087.97	439.74	

CONTROL POINT TABLE					
PT#	DESC.	NORTHING	EASTING	ELEV.	REMARKS
115	LOC	204823.04	671093.83	440.14	
116	LOC	204828.86	671098.92	440.52	
117	LOC	204835.22	671103.33	440.79	
118	LOC	204842.23	671107.11	441.10	
119	PT-LOC	204849.68	671110.09	441.30	
120	PC-LOC	204871.11	671117.26	441.74	
121	PT-LOC	204932.08	671141.26	442.25	
122	PC-LOC	204789.37	671130.20	438.89	
123	APPROACH	204797.33	671130.52	439.10	
124	PT-LOC	204908.56	671158.07	441.68	
125	SW	204814.16	671138.93	440.13	
126	EP	204826.42	671144.61	440.15	SEE NOTE 4
127	EP	204836.14	671146.30	440.46	SEE NOTE 4
128	GDRL	204836.89	671142.37	440.82	
129	GDRL	204901.65	671162.63	442.11	
130	SW	204853.72	671104.08	441.93	SEE NOTE 4
131	EP	204867.32	671104.39	441.81	SEE NOTE 4
132	EP	204876.79	671107.54	441.97	
133	GDRL	204875.54	671111.34	442.27	
134	GDRL	204938.64	671136.57	442.75	
135	FG	204787.16	671048.57	438.53	
136	FG	204789.39	671039.38	438.25	

CONTROL POINT TABLE					
PT#	DESC.	NORTHING	EASTING	ELEV.	REMARKS
137	EP	204796.09	671026.44		
138	FG	204803.72	671096.75	440.12	
139	FG	204814.16	671098.67	440.38	
140	FG	204823.70	671101.03	440.62	
141	EP	204754.52	671060.00		

NOTES:

1. POINTS WITH BLANK ELEVATIONS ARE INTENDED TO MATCH EXISTING ELEVATIONS.
2. SEE SHEET D2 TYPICAL ON CLARIFICATION FOR STANDARD CURB AND GUTTER INSTALLED AS CATCH OR SPILL.
3. SEE SHEET G3 FOR THE MEDIAN ISLAND GRADING AND ADDITIONAL INFORMATION.
4. PAVEMENT WIDENING FOR GUARDRAIL TERMINAL. SEE STANDARD PLAN G-20.12.

STATE OF ALASKA 49TH
Brandon E. Irvine
2/4/2022
CE-105211
REGISTERED PROFESSIONAL ENGINEER

APPROACHES & GRADING

Preliminary Plans

PLANS DEVELOPED BY: RESPEC COMPANY, LLC, CERT. OF AUTHORIZATION NO.: AECC163270, 1028 AURORA DRIVE, FAIRBANKS, AK 99709, (907)452-1414
P:\2018\18185FB-AuroraDr_Noyes\C\C8001cnst18185FB-G1 Fri, Feb/04/22 05:21pm

NO.	DATE	REVISION

STATE	PROJECT DESIGNATION	YEAR	SHEET NO.	TOTAL SHEETS
ALASKA	0629001/NFHWY00124	2022	G2	G5

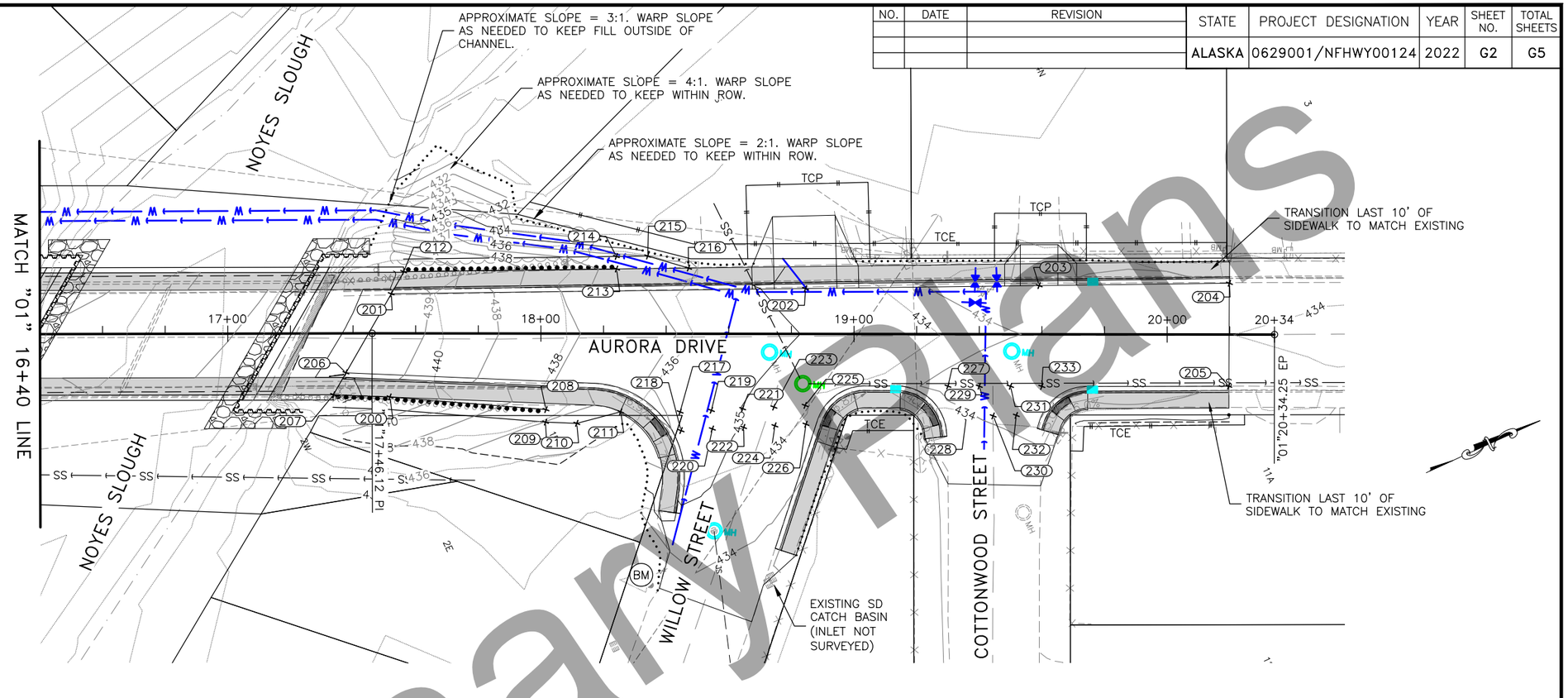

CONTROL POINT TABLE					
PT#	DESC.	NORTHING	EASTING	ELEV.	REMARKS
200	GDRL	205040.86	671226.80	439.64	
201	LOC	205054.96	671197.01	439.56	
202	APPROACH	205175.93	671250.56	434.69	
203	APPROACH	205244.17	671280.76	433.67	
204	LOC	205299.73	671305.35		
205	LOC	205285.89	671335.13		
206	LOC	205031.30	671213.93	439.71	
207	GDRL	205024.77	671218.64	440.29	
208	GDRL	205084.51	671251.19	437.37	
209	EP	205082.70	671254.76	437.01	SEE NOTE 3
210	EP	205091.61	671259.29	436.74	SEE NOTE 3
211	SW	205105.90	671261.77	436.79	
212	GDRL	205061.48	671192.24	439.88	
213	GDRL	205123.66	671219.76	436.80	
214	EP	205125.27	671216.11	436.44	SEE NOTE 3
215	EP	205134.42	671220.15	436.12	SEE NOTE 3
216	SW	205144.69	671229.08	436.12	
217	GB	205123.14	671269.70	435.80	
218	GB	205120.93	671275.23	435.85	
219	GB	205132.43	671273.38	435.42	

CONTROL POINT TABLE					
PT#	DESC.	NORTHING	EASTING	ELEV.	REMARKS
220	GB	205130.23	671278.93	435.35	
221	GB	205141.73	671277.07	434.98	
222	GB	205139.52	671282.62	434.92	
223	GB	205151.03	671280.75	434.72	
224	GB	205148.81	671286.32	434.60	
225	GB	205160.32	671284.43	434.46	
226	GB	205158.04	671289.99	434.34	
227	GB	205204.33	671297.79	433.89	
228	GB	205205.66	671309.06	434.02	
229	GB	205213.41	671301.98	433.78	
230	GB	205213.50	671312.45	433.89	
231	GB	205222.49	671306.17	433.69	
232	GB	205220.30	671315.39	433.77	
233	GB	205231.57	671310.36	433.62	

NOTES:

1. POINTS WITH BLANK ELEVATIONS ARE INTENDED TO MATCH EXISTING ELEVATIONS.
2. SEE SHEET D2 ON CLARIFICATION FOR STANDARD CURB AND GUTTER INSTALLED AS CATCH OR SPILL.
3. PAVEMENT WIDENING FOR GUARDRAIL TERMINAL. SEE STANDARD PLAN G-20.12.

STATE OF ALASKA 49TH
Brandon E. Irvine
2/4/2022
CE-105211
REGISTERED PROFESSIONAL ENGINEER

APPROACHES & GRADING

Preliminary Plans

PLANS DEVELOPED BY: RESPEC COMPANY, LLC, CERT. OF AUTHORIZATION NO.: AECC163270, 1028 AURORA DRIVE, FAIRBANKS, AK 99709, (907)452-1414
P:\2018\18185FB-AuroraDr_Noyes\C\C8001cnst18185FB-G2 Fri, Feb/04/22 11:48am

NO.	DATE	REVISION	STATE	PROJECT DESIGNATION	YEAR	SHEET NO.	TOTAL SHEETS
			ALASKA	0629001/NFHWY00124	2022	G3	G5

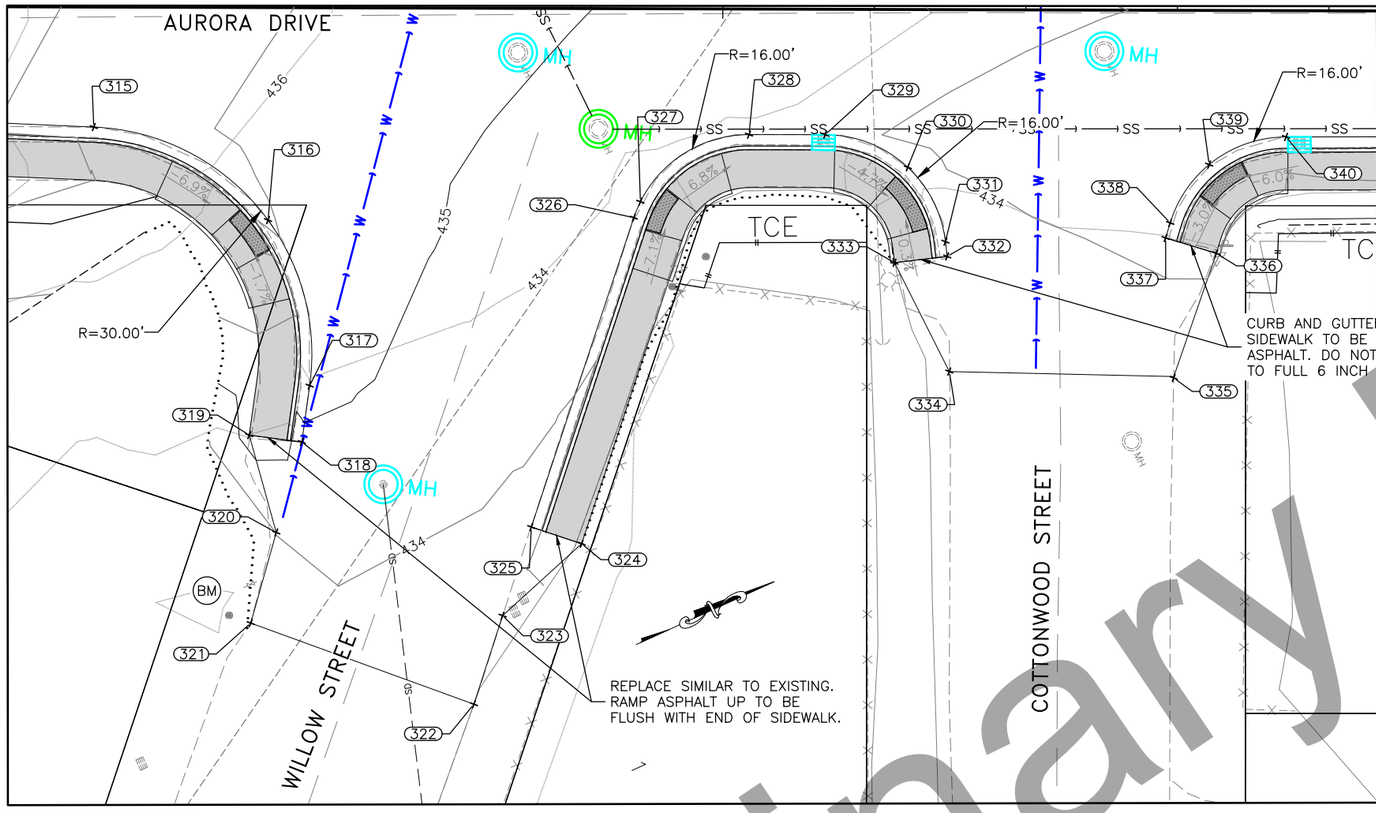

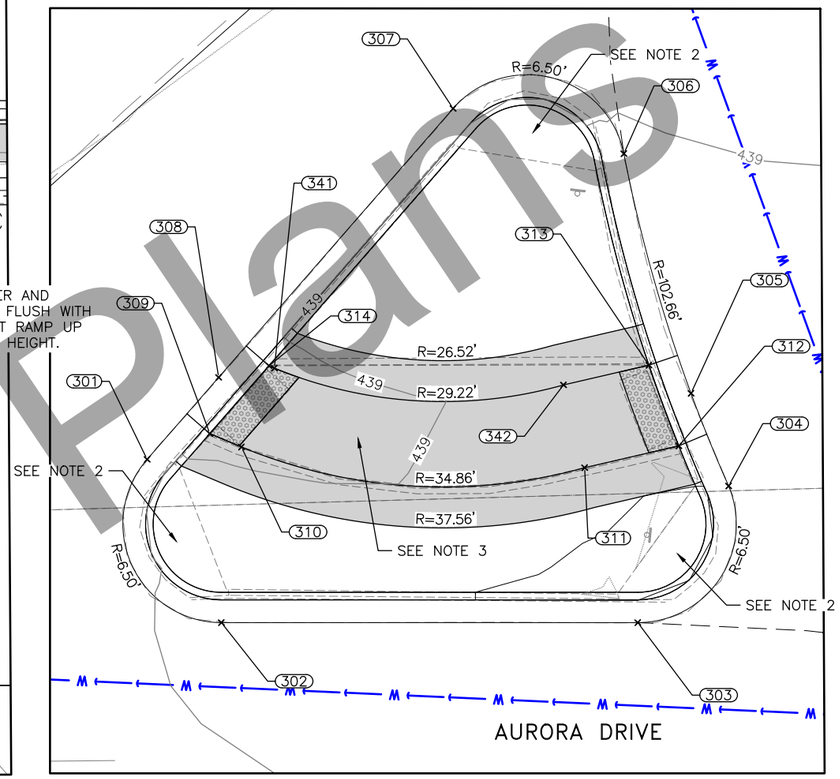

CONTROL POINT TABLE					
PT#	DESC.	NORTHING	EASTING	ELEV.	REMARKS
301	PC–LOC	204754.89	671082.49	438.62	
302	PT–LOC	204759.28	671093.48	439.20	
303	PC–LOC	204786.73	671094.76	439.70	
304	PRC–LOC	204793.14	671086.04	439.55	
305	RAMP–LOC	204790.95	671079.82	439.30	
306	PRC–LOC	204787.26	671063.81	439.15	
307	PT–LOC	204776.15	671060.31	438.55	
308	RAMP–LOC	204759.86	671077.30	438.57	
309	TBC	204759.10	671080.99	438.64	
310	PC–SW	204761.15	671081.96	438.69	
311	PT–SW	204783.71	671084.39	439.36	
312	TBC	204789.98	671083.24	439.38	
313	TBC	204788.26	671077.83	439.30	
314	TBC	204763.21	671076.69	438.60	
315	PC–LOC	205101.98	671249.97	436.53	
316	RAMP–LOC	205117.82	671270.67	436.02	
317	PT–LOC	205113.76	671292.83	435.09	
318	LOC	205109.73	671299.17	434.87	
319	EP	205103.79	671295.46	435.34	
320	EP	205101.71	671308.65	433.91	

CONTROL POINT TABLE					
PT#	DESC.	NORTHING	EASTING	ELEV.	REMARKS
321	EP	205093.69	671318.12		
322	EP	205116.05	671340.08		
323	EP	205124.35	671331.01	433.61	
324	EP	205137.77	671326.70	434.23	
325	LOC	205132.64	671321.94	433.76	
326	PC–LOC	205161.88	671290.40	434.24	
327	RAMP–LOC	205163.54	671288.84	434.26	
328	PT–LOC	205180.26	671286.72	434.27	
329	PC–LOC	205189.40	671290.90	434.11	
330	RAMP–LOC	205197.54	671299.33	434.12	
331	PT–LOC	205197.99	671310.33	434.18	
332	LOC	205197.40	671312.20	434.20	
333	EP	205190.73	671310.06	434.27	
334	EP	205191.36	671326.14		
335	EP	205217.96	671339.19		
336	EP	205229.89	671326.56	433.88	
337	LOC	205224.64	671321.93	433.81	
338	PC–LOC	205226.02	671320.37	433.74	
339	RAMP–LOC	205233.88	671315.50	433.62	
340	PT–LOC	205244.63	671316.39	433.56	

CONTROL POINT TABLE					
PT#	DESC.	NORTHING	EASTING	ELEV.	REMARKS
341	PC–SW	204763.56	671076.87	438.60	
342	PT–SW	204782.57	671078.87	439.25	

NOTES:

1. POINTS WITH BLANK ELEVATIONS ARE INTENDED TO MATCH EXISTING ELEVATIONS.
2. SEE RAMPED MEDIAN NOSE DETAIL ON SHEET E5
3. SEE SHEET E3 FOR THE MEDIAN ISLAND CURB RAMP DETAILS FOR LAYOUT DIMENSIONS AND GRADES.
4. SEE SHEET D2 TYPICAL ON CLARIFICATION FOR STANDARD CURB AND GUTTER INSTALLED AS CATCH OR SPILL.
5. THE MEDIAN ISLAND IS STANDARD CURB AND GUTTER SPILL ALONG THE PERIMETER CURB LINE, AND TRANSITIONS TO CURB RAMP CURB AND GUTTER SPILL AS SHOWN ON SHEET E3 IN THE MEDIAN ISLAND CURB RAMP DETAIL SECTION A–A.

APPROACHES & GRADING

STATE OF ALASKA 49TH
Brandon E. Irvine
2/4/2022
CE-10521
REGISTERED PROFESSIONAL ENGINEER

Preliminary Plans

PLANS DEVELOPED BY: RESPEC COMPANY, LLC, CERT. OF AUTHORIZATION NO.: AECC163270, 1028 AURORA DRIVE, FAIRBANKS, AK 99709, (907)452–1414
P:\2018\18185FB–AuroraDr_Noyes\C\C8001cnst18185FB–G3 Fri, Feb/04/22 05:23pm

NO.	DATE	REVISION

STATE	PROJECT DESIGNATION	YEAR	SHEET NO.	TOTAL SHEETS
ALASKA	0629001/NFHWY00124	2022	G4	G5

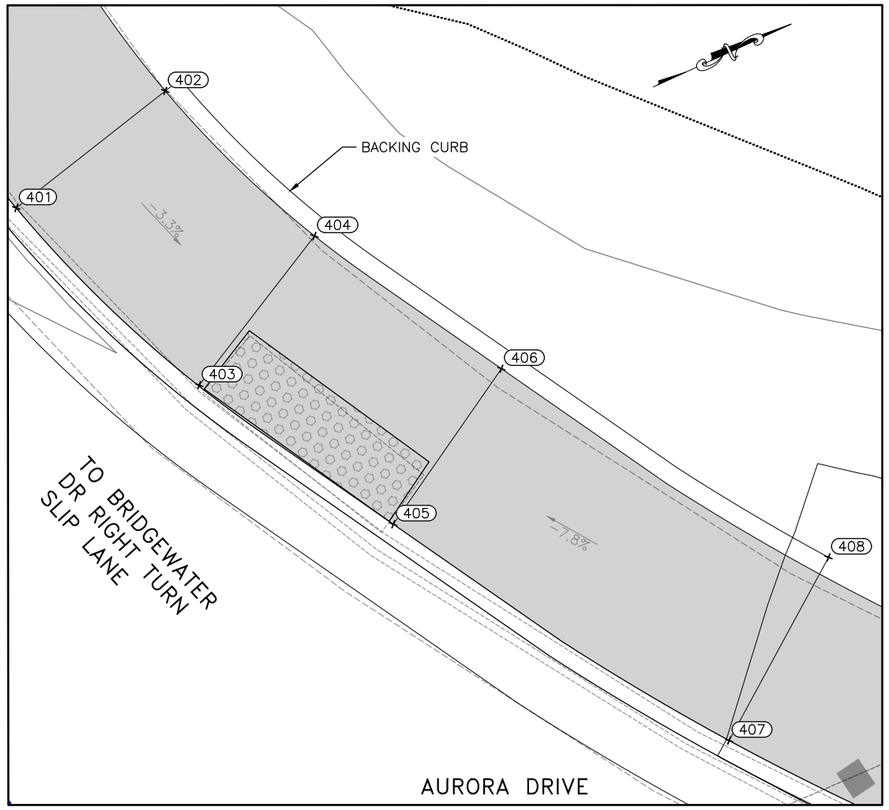

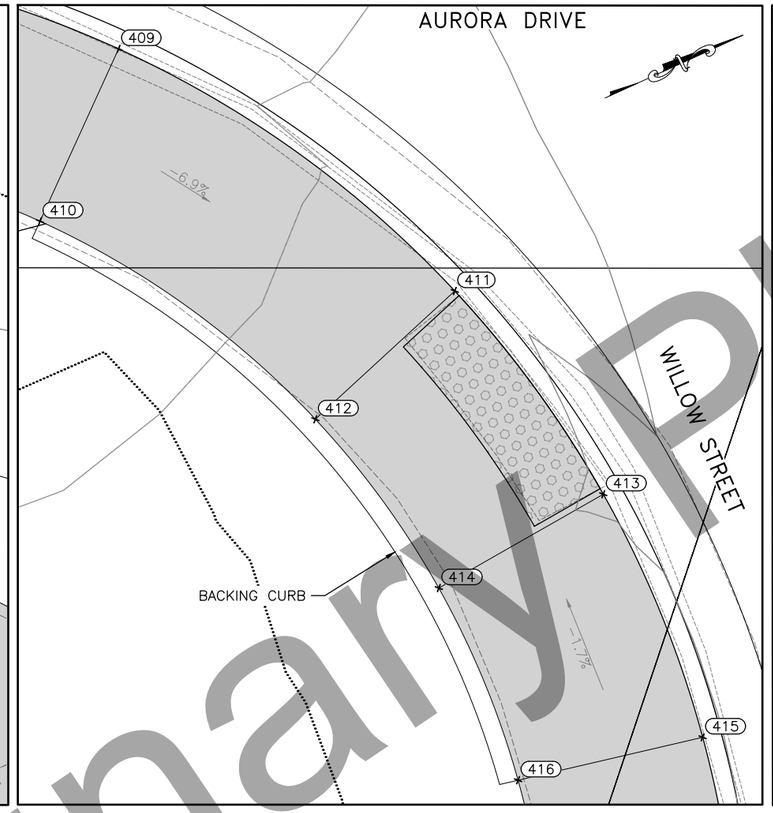

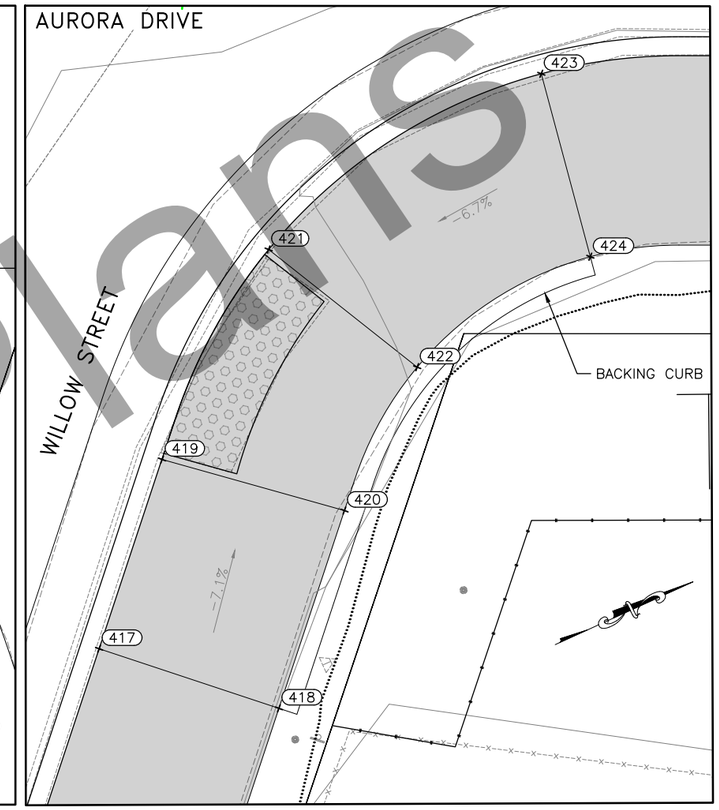

CONTROL POINT TABLE					
PT#	DESC.	NORTHING	EASTING	ELEV.	REMARKS
401	RAMP TOP	204806.31	671064.06	439.33	
402	RAMP TOP	204811.17	671062.88	439.40	
403	RAMP BOTTOM	204808.76	671070.31	439.13	
404	RAMP BOTTOM	204813.16	671067.99	439.20	
405	RAMP BOTTOM	204811.90	671075.78	439.23	
406	RAMP BOTTOM	204816.20	671073.23	439.30	
407	RAMP TOP	204817.60	671084.65	440.01	
408	RAMP TOP	204821.99	671081.34	440.06	
409	RAMP TOP	205109.57	671258.37	436.73	
410	RAMP TOP	205105.79	671261.65	436.80	
411	RAMP BOTTOM	205114.99	671267.86	436.09	
412	RAMP BOTTOM	205110.24	671269.41	436.16	
413	RAMP BOTTOM	205116.34	671274.37	435.99	
414	RAMP BOTTOM	205111.36	671274.82	436.06	
415	RAMP TOP	205116.06	671281.29	436.10	
416	RAMP TOP	205111.16	671280.30	436.18	
417	RAMP TOP	205159.01	671296.44	434.62	
418	RAMP TOP	205162.67	671299.84	434.69	
419	RAMP BOTTOM	205162.59	671292.58	434.24	
420	RAMP BOTTOM	205166.41	671295.80	434.32	

CONTROL POINT TABLE					
PT#	DESC.	NORTHING	EASTING	ELEV.	REMARKS
421	RAMP BOTTOM	205167.45	671288.70	434.26	
422	RAMP BOTTOM	205169.73	671293.15	434.33	
423	RAMP TOP	205175.92	671287.47	434.69	
424	RAMP TOP	205175.10	671292.40	434.76	

NOTES:

1. SEE SHEET D2 TYPICAL ON CLARIFICATION FOR STANDARD CURB AND GUTTER INSTALLED AS CATCH OR SPILL.
2. CONSTRUCT RAMP SLOPES AT A NOMINAL 7.7% GRADE, OR FLATTER. RAMP SLOPES MAY BE INCREASED TO A MAXIMUM OF 8.3% WHEN SITE CONDITIONS WARRANT IT. RAMP LENGTHS SHOULD BE INCREASED TO KEEP GRADES UNDER 8.3% MAXIMUM, BUT ARE NOT REQUIRED TO EXCEED 15.0 FEET. THE RESULTING RAMP GRADE AT A 15.0 FOOT RAMP LENGTH IS ACCEPTABLE EVEN IF IT EXCEEDS 8.3%.
3. CONSTRUCT LANDING AND SIDEWALK CROSS SLOPE AT NOMINAL 1.5% (1% MIN., 2% MAX) DO NOT CONSTRUCT LANDING AND SIDEWALK CROSS SLOPES STEEPER THAN 2%.

APPROACHES & GRADING

STATE OF ALASKA 49TH
Brandon E. Irvine
2/4/2022
CE-105211
REGISTERED PROFESSIONAL ENGINEER

Preliminary Plans

PLANS DEVELOPED BY: RESPEC COMPANY, LLC, CERT. OF AUTHORIZATION NO.: AECC163270, 1028 AURORA DRIVE, FAIRBANKS, AK 99709, (907)452-1414
P:\2018\18185FB-AuroraDr_Noyes\C\C8001cnst18185FB-G4 Fri, Feb/04/22 05:34pm

NO.	DATE	REVISION

STATE	PROJECT DESIGNATION	YEAR	SHEET NO.	TOTAL SHEETS
ALASKA	0629001/NFHWY00124	2022	G5	G5

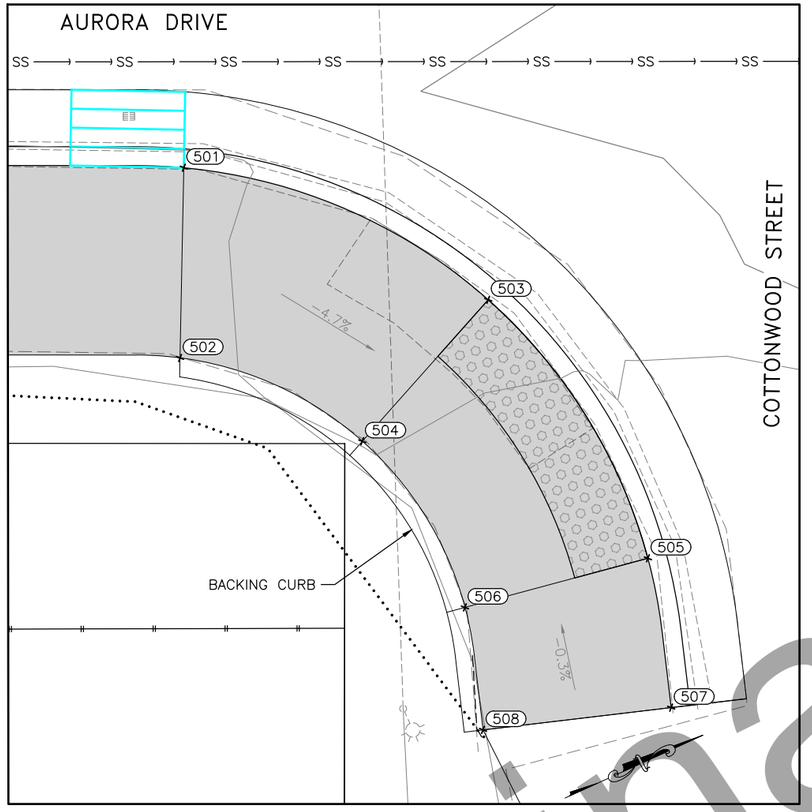

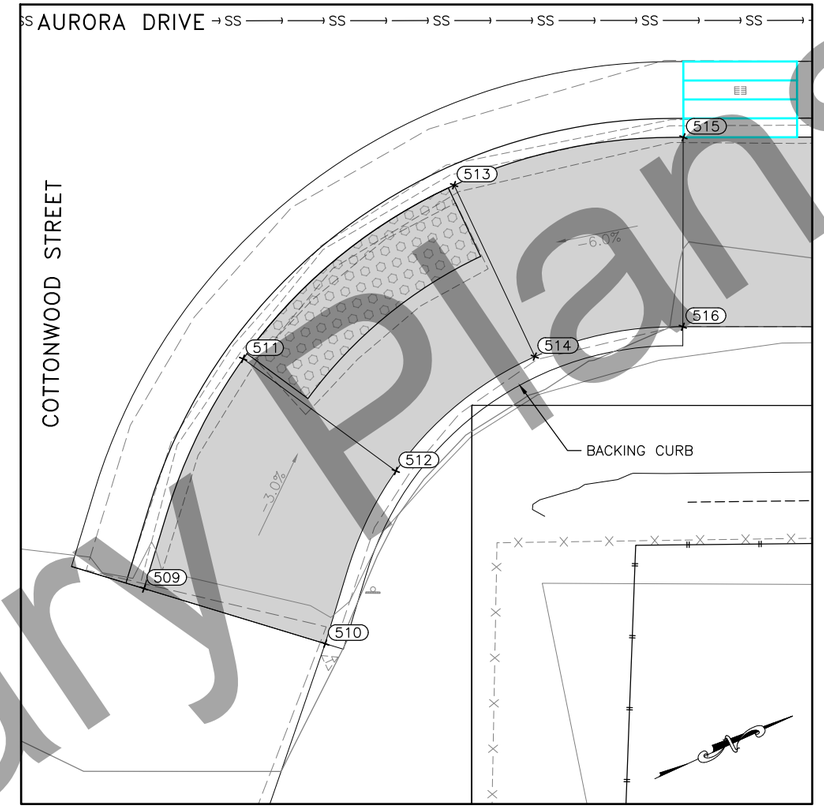

CONTROL POINT TABLE					
PT#	DESC.	NORTHING	EASTING	ELEV.	REMARKS
501	RAMP TOP	205189.69	671293.29	434.51	
502	RAMP TOP	205187.52	671297.82	434.58	
503	RAMP BOTTOM	205195.56	671299.79	434.15	
504	RAMP BOTTOM	205190.99	671301.81	434.22	
505	RAMP BOTTOM	205196.57	671307.75	434.18	
506	RAMP BOTTOM	205191.63	671306.93	434.26	
507	RAMP TOP	205195.49	671311.59	434.20	
508	RAMP TOP	205190.73	671310.06	434.27	
509	RAMP TOP	205226.14	671323.25	433.81	
510	RAMP TOP	205229.89	671326.56	433.88	
511	RAMP BOTTOM	205231.04	671318.82	433.64	
512	RAMP BOTTOM	205233.48	671323.18	433.71	
513	RAMP BOTTOM	205238.01	671316.96	433.60	
514	RAMP BOTTOM	205238.07	671321.96	433.67	
515	RAMP TOP	205244.04	671318.32	433.96	
516	RAMP TOP	205241.95	671322.86	434.03	

NOTES:

1. SEE SHEET D2 TYPICAL ON CLARIFICATION FOR STANDARD CURB AND GUTTER INSTALLED AS CATCH OR SPILL.
2. CONSTRUCT RAMP SLOPES AT A NOMINAL 7.7% GRADE, OR FLATTER. RAMP SLOPES MAY BE INCREASED TO A MAXIMUM OF 8.3% WHEN SITE CONDITIONS WARRANT IT. RAMP LENGTHS SHOULD BE INCREASED TO KEEP GRADES UNDER 8.3% MAXIMUM, BUT ARE NOT REQUIRED TO EXCEED 15.0 FEET. THE RESULTING RAMP GRADE AT A 15.0 FOOT RAMP LENGTH IS ACCEPTABLE EVEN IF IT EXCEEDS 8.3%.
3. CONSTRUCT LANDING AND SIDEWALK CROSS SLOPE AT NOMINAL 1.5% (1% MIN., 2% MAX) DO NOT CONSTRUCT LANDING AND SIDEWALK CROSS SLOPES STEEPER THAN 2%.

STATE OF ALASKA 49TH
Brandon E. Irvine
2/4/2022
CE-105211
REGISTERED PROFESSIONAL ENGINEER

APPROACHES & GRADING

Preliminary Plans

PLANS DEVELOPED BY: RESPEC COMPANY, LLC, CERT. OF AUTHORIZATION NO.: AECC163270, 1028 AURORA DRIVE, FAIRBANKS, AK 99709, (907)452-1414
P:\2018\18185FB-AuroraDr_Noyes\C\C8001cnst18185FB-G5 Fri, Feb/04/22 11:49am

NO.	DATE	REVISION	STATE	PROJECT DESIGNATION	YEAR	SHEET NO.	TOTAL SHEETS
			ALASKA	0629001/NFHWY00124	2022	H1	H5

SIGN SUMMARY

LOC. NO	STATION	OFFSET (FT)	LOCATION		ASDS CODE	LEGEND	SIZE HXV (INCHES)	BRACING/FRAMING		AREA (SQFT.)	MTG. HGT. (FT.)	DIR.	POST			REMARKS
			LT.	RT.				BRACED	FRAMED				TYPE	SIZE (INCHES)	NO.	
1	14+65	46.4	X		R5-1	DO NOT ENTER	30X30	X		6.25		S	P(ST)	2.5	1	
2	14+70	21.9	X		W12-1	DOUBLE ARROW	36X36	X		9.00		N	P(ST)	2.5	1	
					OM1-1	OBJECT MARKER 1	18X18			2.25		N				
3	14+89	56.0	X		R1-2	YIELD	48X48X48	X	X	16.00		E	P(ST)	2.5	1	
					R5-1	DO NOT ENTER	30X30			6.25		W				
4	15+95	22.5		X	I-3	NOYES SLOUGH	30x18	X		3.75		N	P(ST)	2.5	2	SEE NOTE 24 ON SHEET H2
					I-152	ADOPT A STREAM	30x24	X		5.00		N				
					I-152	TVWA	30x12	X		2.50		N				
5	17+60	22.8	X		I-3	NOYES SLOUGH	30x18	X		3.75		S	P(ST)	2.5	2	SEE NOTE 24 ON SHEET H2
					I-152	ADOPT A STREAM	30x24	X		5.00		S				
					I-152	TVWA	30x12	X		2.50		S				
6	18+58	21.3	X		R3-9dP	END	30X12	X		2.50		N	P(ST)	2.5	1	
					R3-9b	TWO-WAY LEFT TURN ONLY	24X36			6.00		N				
7	18+94	35.3		X	D3-100	1800 AURORA DR 200	42X8	X	X	–		E/W	P(ST)	2.5	1	REMOVE AND RELOCATE EXISTING SIGN. SEE NOTE 3.
					D3-100	WILLOW ST 1700	36X8	X		–		N/S				REMOVE AND RELOCATE EXISTING SIGN. SEE NOTE 3.
					R1-1	STOP	30X30			6.25		E				
8	19+67	29.0		X	D3-100	225 AURORA DR 232	48X8	X	X	–		E/W	P(ST)	2.5	1	REMOVE AND RELOCATE EXISTING SIGN. SEE NOTE 3.
					D3-100	COTTONWOOD ST 1700	48X8	X	X	–		N/S				REMOVE AND RELOCATE EXISTING SIGN. SEE NOTE 3.
					R1-1	STOP	30X30			6.25		E				
									SUBTOTAL	83.25					10	
									ROUNDED TOTAL	85.00					10	

NOTES:

1. POST TYPE CODING– P(ST): PERFORATED STEEL TUBE POST
2. REMOVE AND RELOCATE ADOPT A WATERWAY SIGNS SHALL BE SUBSIDIARY TO 615.0001.0000
3. SEE SMALL STREET NAME SIGN BRACING DETAILS ON H5.

Preliminary Plans

STATE OF ALASKA 49TH
Brandon E. Irvine
2/4/2022
CE-105211
REGISTERED PROFESSIONAL ENGINEER

SIGNING & STRIPING SUMMARY AND NOTES

PLANS DEVELOPED BY: RESPEC COMPANY, LLC, CERT. OF AUTHORIZATION NO.: AECC163270, 1028 AURORA DRIVE, FAIRBANKS, AK 99709, (907)452-1414
P:\2018\18185FB-AuroraDr_Noyes\C\c9001cnst18185FB-H1 Fri, Feb/04/22 05:45pm

NO.	DATE	REVISION

STATE	PROJECT DESIGNATION	YEAR	SHEET NO.	TOTAL SHEETS
ALASKA	0629001/NFHWY00124	2022	H2	H5

SIGNING NOTES:

1. REMOVE AND DISPOSE OF ALL EXISTING SIGNS AND FOUNDATIONS WITHIN THE PROJECT LIMITS, EXCEPT THOSE DESIGNATED FOR REINSTALLATION, SALVAGE OR OTHERWISE NOTED.
2. OFFSET DISTANCES LISTED ARE FROM DESIGN CENTERLINE TO NEAR EDGE OF SIGN.
3. SIGN LOCATED IN SIDEWALK TO BE INSTALLED USING P(ST) SIGN POSTS WITH SIDEWALK MOUNTING STUB PER DETAIL ON SHEET H5. OTHERWISE INSTALL P(ST) POSTS WITH SLEEVE TYPE CONCRETE FOUNDATION PER DETAIL ON SHEET H5.
4. MOUNT SIGNS THAT PROJECT OVER OR WITHIN 2 FEET OF THE SIDEWALK WITH A MOUNTING HEIGHT OF 8 FEET.
5. MOUNTING HEIGHTS ARE PER STANDARD PLANS S-05.02. UNLESS OTHERWISE NOTED.
6. DETERMINE POST LENGTHS IN THE FIELD. DO NOT EXTEND POSTS ABOVE TOP OF SIGN.
7. INSTALL PST POSTS WITH SLEEVE TYPE CONCRETE FOUNDATION PER DETAIL ON SHEET H5 ATTACH THE SIGN POST SLEEVE USING 3/8 " GALVANIZED BOLT, NUT, SPLIT LOCK WASHER AND TWO FLAT WASHERS.
8. INSTALL "TUBE POST SIGN BRACING" AS SHOWN ON STANDARD PLANS S-01.02 ON ALL SIGNS, EXCEPT D3-100 SERIES AND SPECIAL 1 SIGNS, MOUNTED ON A SINGLE PST POST AND HAVING A HORIZONTAL DIMENSION OF 30 INCHES OR GREATER. USE GALVANIZED 3/8" BOLTS, SPLIT LOCK WASHERS AND NUTS. STAINLESS STEEL FASTENER HARDWARE MAY BE USED INSTEAD OF GALVANIZED. ¼"X1-1/2" ALUMINUM ALLOY 6061-T6 BAR MAY ALSO BE USED TO FABRICATE SIGN BRACES AS SHOWN ON STANDARD PLANS S-01.02.
9. STOP (R1-1) SIGN LOCATIONS, ESPECIALLY THOSE AT LARGE RADIUS INTERSECTIONS, MAY NEED ADJUSTMENT IN THE FIELD. THE ENGINEER WILL APPROVE FINAL LOCATIONS.
10. INSTALL D3-100, SIGNS ABOVE THEIR RESPECTIVE STOP SIGNS. WHEN TWO D3-100 SERIES SIGNS ARE TO BE LOCATED ON THE SAME POST, INSTALL THE CROSS-STREET PANEL IN THE LOWER POSITION.
11. INSTALL D3-100 SERIES SIGNS PER DETAILS IN STANDARD PLANS S-20.11
12. D3-100 SERIES SIGNS REQUIRE TWO SEPARATE SINGLE SIDED PANELS. END-BRACE PANELS PER SMALL STREET NAMING SIGN BRACING DETAILS SHOWN IN STANDARD PLAN S-01.02 AND ON SHEET H5.
13. STOP (R1-1) AND YIELD (R2-1) SIGN LOCATIONS, ESPECIALLY THOSE AT LARGE RADIUS INTERSECTIONS, MAY NEED ADJUSTMENT IN THE FIELD. THE ENGINEER WILL APPROVE FINAL LOCATIONS.
14. MAINTAIN EXISTING SIGNS UNTIL NEW SIGNS ARE INSTALLED. DO NOT LEAVE DUPLICATE OR CONFLICTING SIGNING UP AT ANY TIME.
15. USE SERIES C LETTERS FOR D3-100 SERIES SIGNS UNLESS OTHERWISE NOTED. USE 4.5" FOR DIMENSIONS "E" FOR 12" D3-100 SIGNS. THE LETTERING INDICATING THE TYPE OF STREET (SUCH AS St, Ave, or Rd) WILL BE UPPER CASE AND LOWER CASE. THIS MODIFIES THE ASDS.
16. USE A 3" HORIZONTAL SPACING BETWEEN WORDS, BETWEEN CARDINAL DIRECTIONS AND WORDS, AND BETWEEN WORDS AND NUMBERS ON D3-100 AND D3-100A SIGNS UNLESS OTHERWISE NOTED.
17. LOCATE AND PROTECT ALL NEW AND EXISTING UNDERGROUND UTILITIES, INCLUDING BUT NOT LIMITED TO: PIPELINES, INTERCONNECT CABLES, SIGNAL SYSTEMS, LIGHTING SYSTEMS, STORM AND SANITARY SEWERS, WATER SYSTEMS, AND TELEPHONE AND ELECTRICAL CABLES, PRIOR TO INSTALLING SIGN POSTS. NOT ALL EXISTING UTILITIES MAY BE SHOWN ON THE PLANS.
18. INSTALL 48" DIAMOND WARNING SIGNS ON A SINGLE POST WITH A BRACE HAVING EFFECTIVE BRACE LENGTH OF 54" OR WITH THREE WIND FRAMING MEMBERS AS SHOWN ON STANDARD PLAN S-00.12. THIS MODIFIES STANDARD PLAN S-01.02.
19. ATTACH ALL SIGNS TO THEIR SUPPORTS WITH 3/8" BOLTS, EXCEPT ATTACH UNFRAMED SIGNS TO PST POSTS WITH ALUMINUM DRIVE RIVETS. WIND WASHERS ARE NOT REQUIRED WITH DRIVE RIVETS. INCLUDE SPLIT LOCK WASHERS WHEN BOLTS ARE USED.
20. ALL SIGNS NOTED FOR REMOVAL AND REINSTALLATION SHALL BE REPLACED AT THE CONTRACTOR'S EXPENSE IF THEY ARE DAMAGED DURING THE RELOCATION EFFORT.
21. ALL FASTENER HARDWARE SHALL MEET THE REQUIREMENTS OF THE FASTENER SPECIFICATION TABLE ON STANDARD PLAN SHEET S-20.11.
22. DELIVER ALL SALVAGED SIGN PANELS, NOT IDENTIFIED FOR REUSE IN THE SIGNING SUMMARY, TO THE DOT&PF FAIRBANKS MAINTENANCE YARD LOCATED AT 2301 PEGER ROAD. CONTACT DANIEL SCHACHER (907) 451-5276 TO ARRANGE DELIVERY. SALVAGED SIGNS ARE SUBSIDIARY TO THE 615.0001.0000 STANDARD SIGN PAY ITEM.
23. CLEARING, AS DIRECTED BY THE ENGINEER, MAY BE REQUIRED TO ENSURE ADEQUATE VISIBILITY OF SIGNS. THIS WORK IS SUBSIDIARY TO PAY ITEM 615.0001.0000.
24. INSTALL FRANGIBLE COUPLING SYSTEMS IN ACCORDANCE WITH STANDARD PLANS S-31.02.
25. HINGED JOINTS WITH FRANGIBLE FUSE PLATES ARE REQUIRED ON ALL MULTIPLE POST SIGNS WITH FRANGIBLE COUPLING SYSTEMS. THE HINGE LOCATION ON ALL POSTS SHALL BE THE SAME DISTANCE BELOW THE SIGN, INSTEAD OF THE 6" MINIMUM SHOWN ON STANDARD PLAN S-31.02. SEE MANUFACTURER'S SPECIFICATION FOR HINGE LOCATION BELOW SIGN.

670.0001.0000 PAINTED TRAFFIC MARKINGS

DESCRIPTION	QTY	UNIT	REMARKS
4"DY	556	LF	
4"Y TWLTL	253	LF	
8"W	117	LF	
8"WD-1	46	LF	
LENGTH TOTAL	972	LF	
LEFT ARROWS	45	SF	
24" WHITE	156	SF	
WHITE CHEVRONS	35	SF	
MEDIAN NOSE PAINT	82	SF	
AREA TOTAL	318	SF	

STRIPING NOTES:

1. ALL PROPOSED PAVEMENT MARKINGS SHALL BE SURFACE APPLIED PAINTED TRAFFIC MARKINGS.
2. DIMENSIONS REFER TO THE CENTER OF STRIPE OR STRIPE GROUP, EDGE OF PAVEMENT OR LIP OF CURB WHEN PRESENT.
3. TRANSITION NEW PAVEMENT MARKINGS TO MATCH EXISTING MARKINGS AT A 100:1 TAPER ON THE NEW ASPHALT.
4. STATION PROVIDED FOR TURN ARROWS IS THE LEADING EDGE OF THE ARROW.
5. COAT THE TOP AND FACE OF ALL RAMPED MEDIAN ISLAND NOSES WITH YELLOW TRAFFIC PAINT UP TO THE RAMPED NOSE EXPANSION JOINT. THIS WORK IS SUBSIDIARY TO THE 670 PAY ITEM.

STATE OF ALASKA 49TH
Brandon E. Irvine
2/4/2022
CE-105211
REGISTERED PROFESSIONAL ENGINEER

STRIPING & STRIPING SUMMARY AND NOTES

Preliminary Plans

PLANS DEVELOPED BY: RESPEC COMPANY, LLC, CERT. OF AUTHORIZATION NO.: AECC163270, 1028 AURORA DRIVE, FAIRBANKS, AK 99709, (907)452-1414
P:\2018\18185FB-AuroraDr_Noyes\C\c1201cnst18185FB-H2 Fri, Feb/04/22 11:49am

NO.	DATE	REVISION

STATE	PROJECT DESIGNATION	YEAR	SHEET NO.	TOTAL SHEETS
ALASKA	0629001/NFHWY00124	2022	H3	H5

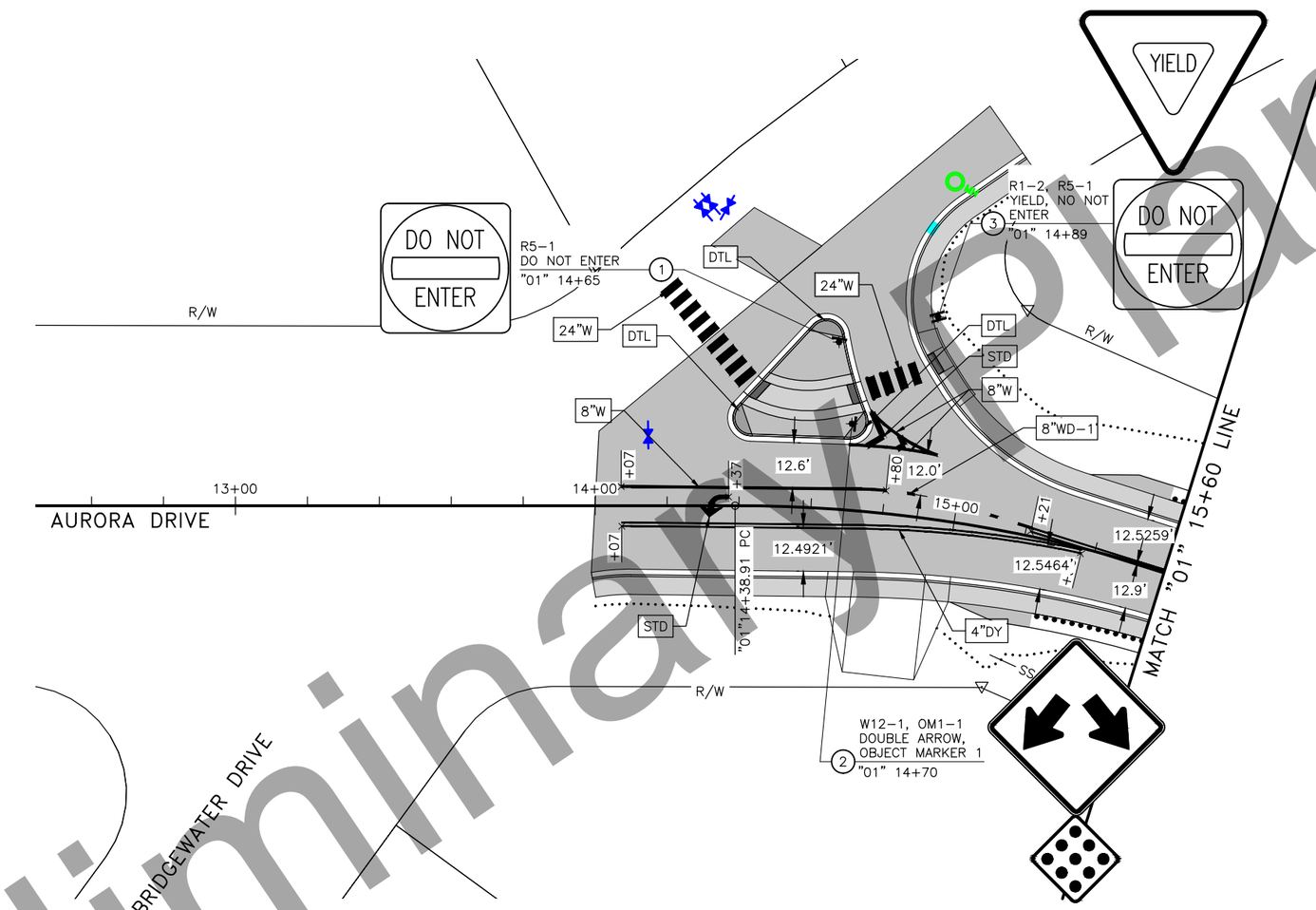

Preliminary Plans

TRAFFIC MARKING KEY:

4"DY	4" DOUBLE YELLOW LINE
4"Y TWLTL	4" YELLOW TWO-WAY LEFT-TURN STANDARD
8"W	8" WHITE LINE
8"WD-1	8" WHITE WIDE DOTTED LINE (2' STRIPE / 4' SKIP PATTERN)
24"W	24" WHITE LINE
STD	STANDARD DRAWING
DTL	SEE DETAILS

SIGN SYMBOL KEY:

(#) SIGN CODE(S)
STATION

SIGNING LOCATION #

SIGNING & STRIPING PLAN (1 OF 2)

STATE OF ALASKA 49TH
Brandon E. Irvine
2/4/2022
CE-105211
REGISTERED PROFESSIONAL ENGINEER

PLANS DEVELOPED BY: RESPEC COMPANY, LLC, CERT. OF AUTHORIZATION NO.: AECC163270, 1028 AURORA DRIVE, FAIRBANKS, AK 99709, (907)452-1414
P:\2018\18185FB-AuroraDr_Noyes\C\c1101cnst18185FB-H3 Fri, Feb/04/22 11:50am

NO.	DATE	REVISION	STATE	PROJECT DESIGNATION	YEAR	SHEET NO.	TOTAL SHEETS
			ALASKA	0629001/NFHWY00124	2022	H4	H5

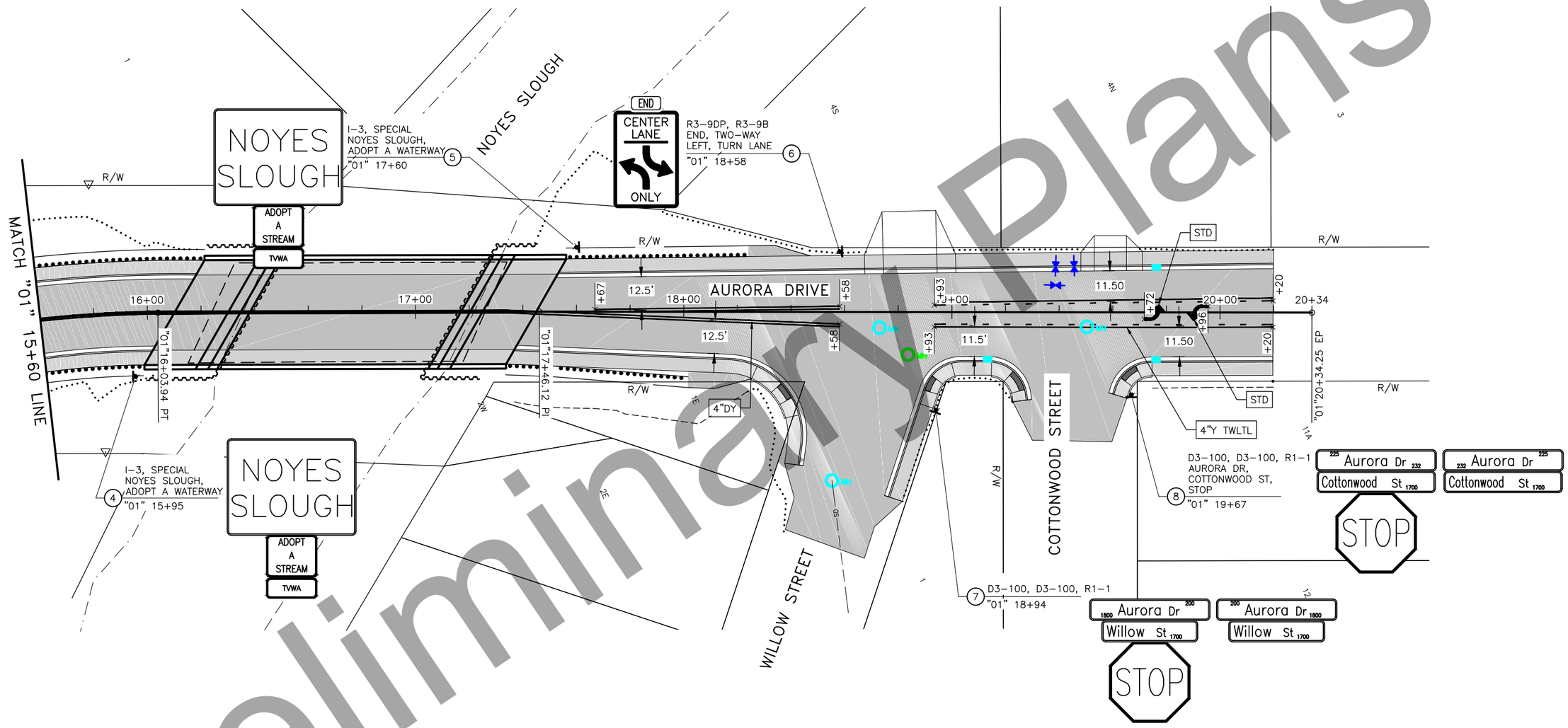

Preliminary Plans

TRAFFIC MARKING KEY:

4"DY	4" DOUBLE YELLOW LINE
4"Y TWLTL	4" YELLOW TWO-WAY LEFT-TURN STANDARD
8"W	8" WHITE LINE
8"WD-1	8" WHITE WIDE DOTTED LINE (2' STRIPE / 4' SKIP PATTERN)
24"W	24" WHITE LINE
STD	STANDARD DRAWING
DTL	SEE DETAILS

SIGN SYMBOL KEY:

(#) SIGN CODE(S)
STATION

SIGNING LOCATION #

SIGNING & STRIPING PLAN (2 OF 2)

STATE OF ALASKA 49TH
Brandon E. Irvine
2/4/2022
CE-105211
REGISTERED PROFESSIONAL ENGINEER

PLANS DEVELOPED BY: RESPEC COMPANY, LLC, CERT. OF AUTHORIZATION NO.: AECC163270, 1028 AURORA DRIVE, FAIRBANKS, AK 99709, (907)452-1414
P:\2018\18185FB-AuroraDr_Noyes\C\c1101cnst18185FB-H4 Fri, Feb/04/22 04:24pm

NO.	DATE	REVISION	STATE	PROJECT DESIGNATION	YEAR	SHEET NO.	TOTAL SHEETS
			ALASKA	0629001/NFHWY00124	2022	H5	H5

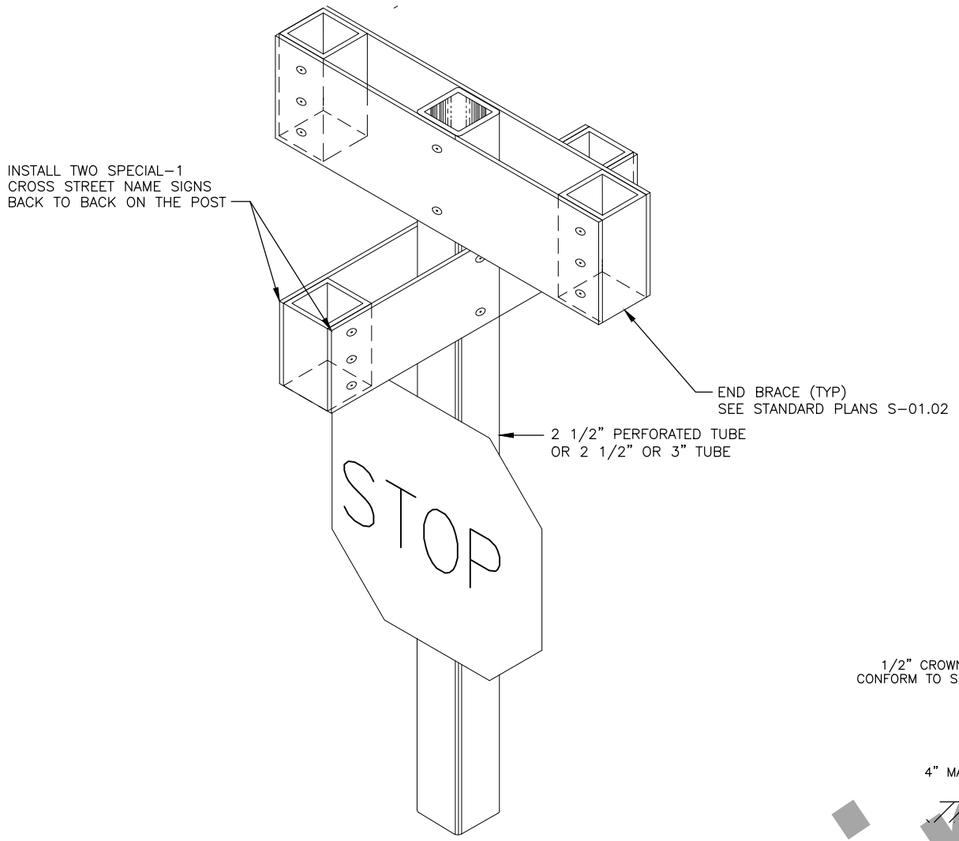

STREET NAME SIGN

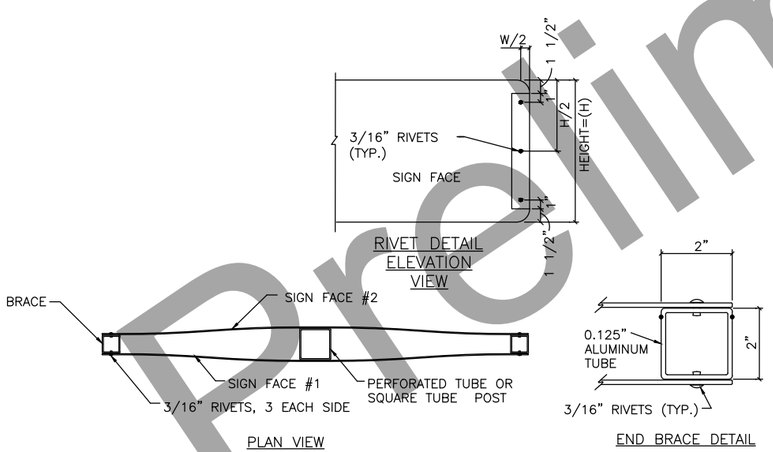

SMALL STREET NAME SIGN
(D3-1, D3-100A, D3-100) BRACING DETAILS

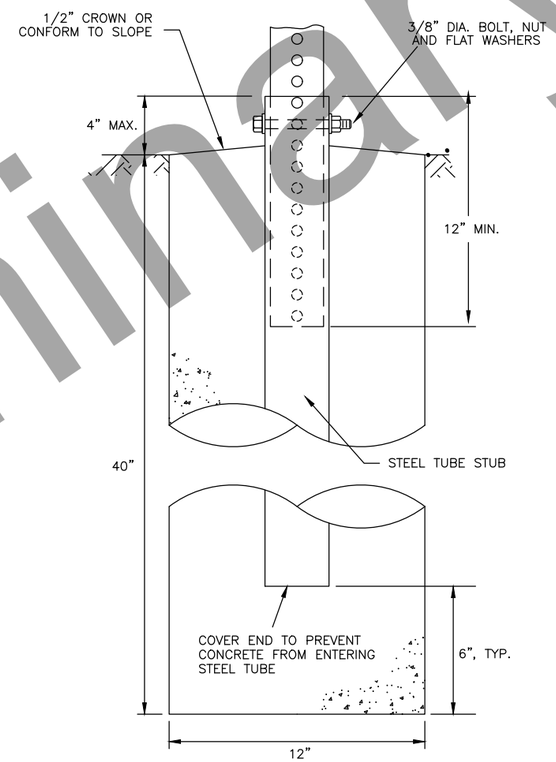

SLEEVE TYPE CONCRETE
FOUNDATION

SIGN DETAILS

STATE OF ALASKA 49TH
Brandon E. Irvine
2/4/2022
CE-105211
REGISTERED PROFESSIONAL ENGINEER

Preliminary Plans

PLANS DEVELOPED BY: RESPEC COMPANY, LLC, CERT. OF AUTHORIZATION NO.: AECC163270, 1028 AURORA DRIVE, FAIRBANKS, AK 99709, (907)452-1414
P:\2018\18185FB-AuroraDr_Noyes\C\c1201cnst18185FB-H5 Fri, Feb/04/22 11:50am

STATE	PROJECT DESIGNATION	YEAR	SHEET NO.	TOTAL SHEETS
ALASKA	0629001/NFHWY00124	2022	N1	N24

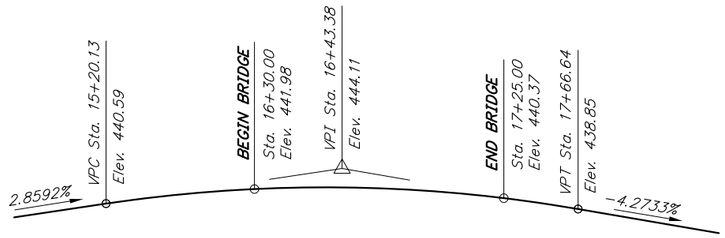

PROFILE GRADE DATA

No Scale

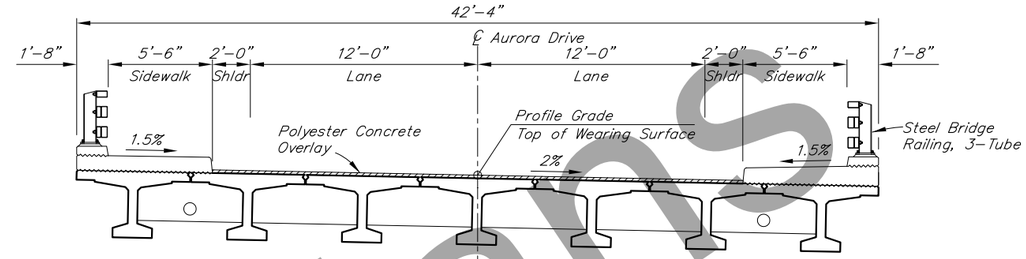

TYPICAL SECTION

12 0 4 8
In. Feet

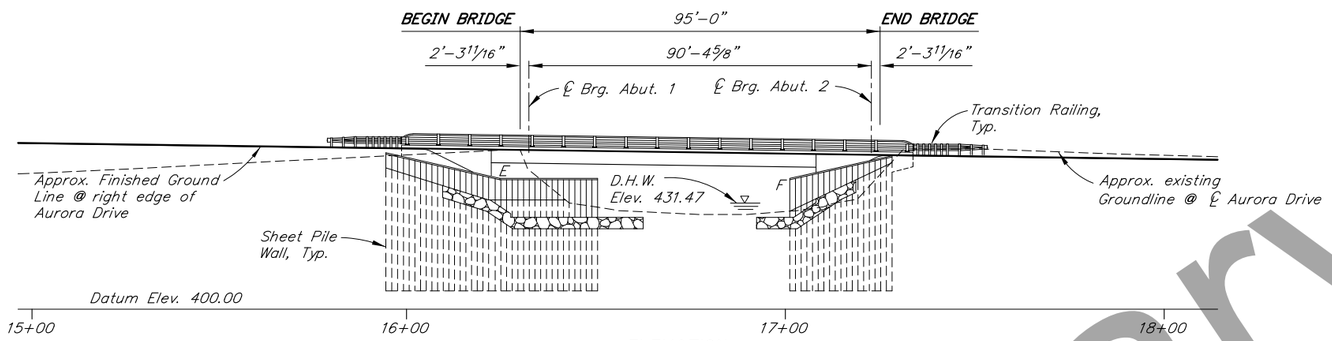

ELEVATION

10 0 20 40
Feet

CURVE DATA

PI = 15+22.62
N = 204799.57'
E = 671111.95'
Δ = 23°38'24"
R = 400.00
T = 83.71'
L = 165.03'
S = Varies

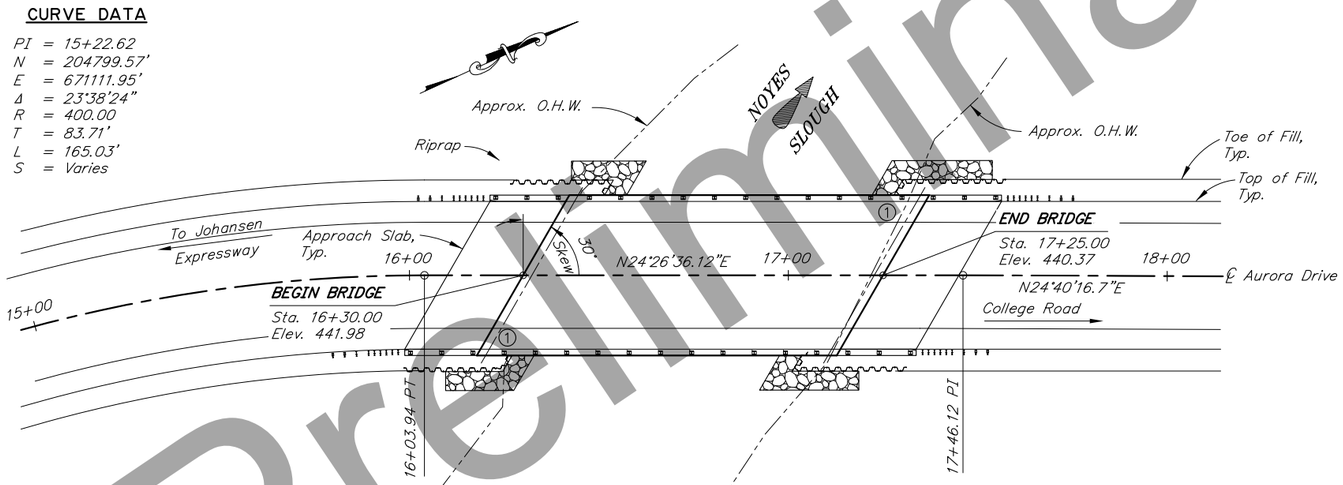

PLAN

10 0 20 40
Feet

BRIDGE DRAWING INDEX

TITLE	DWG. NO.
GENERAL LAYOUT	1
SITE PLAN	2
RIPRAP DETAILS	3
SHEET PILE WALLS	4
CABLE SAFETY RAILING	5
ABUTMENT 1	6
ABUTMENT 2	7
ABUTMENT DETAILS	8
WINGWALLS	9
FRAMING PLAN AND TYPICAL SECTION	10
GIRDERS	11
GIRDER DETAILS	12
APPROACH SLABS	13
SIDEWALK DETAILS	14
STEEL BRIDGE RAILING, 3-TUBE	15
TRANSITION RAIL, 3-TUBE	16
TEST HOLE LOGS AND LOCATIONS	17-24

① Denotes location of Bridge No. Plate.

Preliminary Plans

R:\cad\209\209-1 Wed, Feb/09/22 02:23pm

DESIGNED BY: Andrew Wells	CHECKED: Jesse Escamilla III	LAYOUT BY: Andrew Wells	CHECKED BY: Jesse Escamilla III
DRAWN BY: Sam Sollie	CHECKED: Andrew Wells	SPECIFICATIONS BY: Andrew Wells	P S & E COMPARED: Jesse Escamilla III
QUANTITIES BY: Andrew Wells	CHECKED: Jesse Escamilla III	APPROVAL RECOMMENDED BY: RIch Pratt	

STATE OF ALASKA
DEPARTMENT OF TRANSPORTATION AND PUBLIC FACILITIES
BRIDGE SECTION
3132 Channel Drive
Juneau, Alaska 99801
907-465-2975

NOYES SLOUGH BRIDGE

AURORA DRIVE

GENERAL LAYOUT

BRIDGE NO. 209

DWG. NO. 1

STATE	PROJECT DESIGNATION	YEAR	SHEET NO.	TOTAL SHEETS
ALASKA	0629001/NFHWY00124	2022	N2	N24

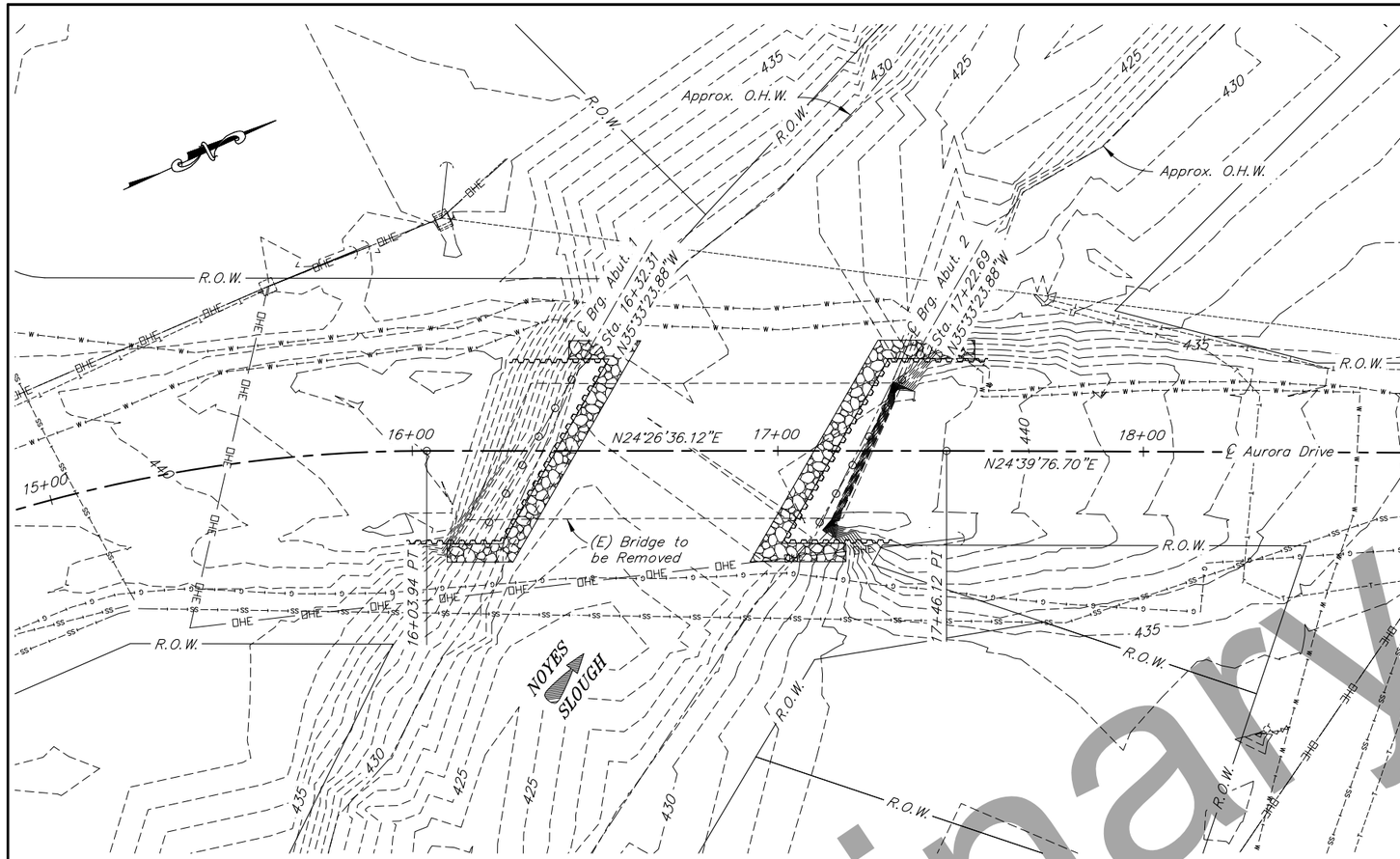

SITE PLAN

10 0 20 40
Feet

GENERAL NOTES

DESIGN:..... AASHTO LRFD Bridge Design Specifications, 2020 Edition, with latest interim specifications.

Seismic design per AASHTO Guide Specifications for LRFD Seismic Bridge Design, 2011 with latest interim revisions.

LIVE LOAD:..... HL-93

DEAD LOAD:..... Includes 50 psf for all wearing surfaces.

SEISMIC PARAMETERS:..... PGA = 0.28
Ss = 0.65
S1 = 0.20
Site Class = D
Liquefaction Potential = High
AASHTO 7% probability of exceedance in 75 years.

REINFORCEMENT:..... ASTM A706, Grade 60, Fy = 60,000 psi
ASTM A970 Headed bars, Class HA.
Space reinforcement evenly unless otherwise noted.

PRESTRESSED CONCRETE:..... See "GIRDERS" Dwg.

CONCRETE:..... Class A Concrete unless otherwise noted, f'c = 4,000 psi

STRUCTURAL STEEL:..... ASTM A709, Grade 36T3, Fy = 36,000 psi
Galvanize structural steel in accordance with AASHTO M111 unless shown otherwise.

STRUCTURAL STEEL PILING:..... API 5L X52 PSL2, Fy = 52,000 psi.
or ASTM A709, GR50T3, Fy = 50,000 psi.

STRUCTURAL STEEL SHEET PILE:... ASTM A572, Grade 50, Fy = 50,000 psi.
Galvanize all Sheet Piles in accordance with AASHTO M111.

PILE DATA TABLE

LOCATION	PILE TYPE	DRIVING CRITERIA: MINIMUM PENETRATION (ft)	DRIVING CRITERIA: ESTIMATED PILE TIP ELEVATION	DRIVING CRITERIA: DRIVING RESISTANCE (K)	DESIGN DATA: STRENGTH I FACTORED LOAD (K)	DESIGN DATA: NOMINAL RESISTANCE (K)	DESIGN DATA: RESISTANCE FACTOR, Φ
Abutment 1	2'-0"øx1/2"	70	337	560	365	560	0.65
Abutment 2	2'-0"øx1/2"	70	315	560	365	560	0.65

ESTIMATE OF QUANTITIES

ITEM NO.	ITEM	PAY UNIT	ESTIMATING UNIT	SUBST.	SUPERST.	TOTAL QUANTITY
202.0023.0000	Removal of Bridge, No. 209	LS	LS	All Req'd	All Req'd	All Req'd
205.0006.0000	Structural Fill	CY	CY	1,010	---	1,010
501.0001.0000	Class A Concrete	LS	CY	175.2	153.8	329.0
501.0007.0000	Precast Concrete Member, 92'-0" Decked Bulb-Tee	EA	EA	---	7	7
503.0001.0000	Reinforcing Steel	LS	LBS	26,930	---	26,930
503.0002.0000	Epoxy-Coated Reinforcing Steel	LS	LBS	220	22,080	22,300
505.0005.0000	Furnish Structural Steel Pipe Piles, 2'-0" Dia. x 1/2"	LF	LF	1,290	---	1,290
505.0006.0000	Drive Structural Steel Pipe Piles, 2'-0" Dia. x 1/2"	EA	EA	12	---	12
505.0009.0000	Structural Steel Sheet Piles	SF	SF	6,335	---	6,335
507.0001.0003	Steel Bridge Railing, 3-Tube	LF	LF	---	270	270
507.0006.0000	Cable Safety Railing	LF	LF	---	215	215
525.2001.0000	Polyester Concrete Overlay	LS	LS	---	All Req'd	All Req'd
606.0016.0000	Transition Rail	EA	EA	---	4	4
611.0001.0002	Riprap, Class II	CY	CY	130	---	130
631.0002.0001	Geotextile, Erosion Control, Class 1	SY	SY	230	---	230

Item numbers are for reference only. Quantities shown are not necessarily the pay quantities nor the total quantity of the particular item.

ABBREVIATIONS:

℄	= centerline	Hwy.	= highway
ℙ	= plate	ksf	= 1000 pounds per square foot
&	= and	LB	= pound
@	= at	LF	= linear foot
ø	= diameter	LS	= lump sum
±	= approximate	Lt.	= left
Abut.	= abutment	max.	= maximum
Approx.	= approximate	min.	= minimum
b.f.	= back/dirt face	n.f.	= near face
bot.	= bottom	No.	= number
Br.	= bridge	o.c.	= on center
btwn.	= between	O.H.W.	= ordinary high water
Brg.	= bearings	——— OHE ———	= overhead lines
C.I.P.	= cast in place	---T------T---	= phone line underground
Clr.	= clear, clearance	pcf	= pounds per cubic foot
CY	= cubic yard	psf	= pounds per square foot
dia.	= diameter	psi	= pounds per square inch
Dwg.	= drawing	R.O.W.	= right of way
E	= expansion	Rt.	= right
(E)	= existing	Rd.	= road
EA	= each	spc.	= space, spaces
Elev.	= elevation	Sta.	= station
e.a.	= each face	-SS-----SS-----	= storm sewer line
e.w.	= each way	SF	= square feet
F	= fixed	Symm.	= symmetric
f.f.	= front/air face	Typ.	= typical
f'c	= specified concrete compressive strength	VPC	= point of vertical curve
		VPI	= point of vertical intersection
Fy	= yield stress	VPT	= point of vertical tangent
Galv.	= galvanize	-W-----W-----	= water line
-G-----G-----	= gas line	w/	= with

Preliminary Plans

DESIGNED BY: Andrew Wells	CHECKED: Jesse Escamilla III	FOUNDATIONS REVIEWED BY: David Hemstreet
DRAWN BY: Sam Sollie	CHECKED: Andrew Wells	
QUANTITIES BY: Andrew Wells	CHECKED: Jesse Escamilla III	

STATE OF ALASKA
DEPARTMENT OF TRANSPORTATION AND PUBLIC FACILITIES
BRIDGE SECTION
3132 Channel Drive
Juneau, Alaska 99801
907-465-2975

NOYES SLOUGH BRIDGE

AURORA DRIVE

SITE PLAN

BRIDGE NO. 209
DWG. NO. 2

R:\cad\209\209-2 Wed, Feb/09/22 02:23pm

STATE	PROJECT DESIGNATION	YEAR	SHEET NO.	TOTAL SHEETS
ALASKA	0629001/NFHWY00124	2022	N3	N24

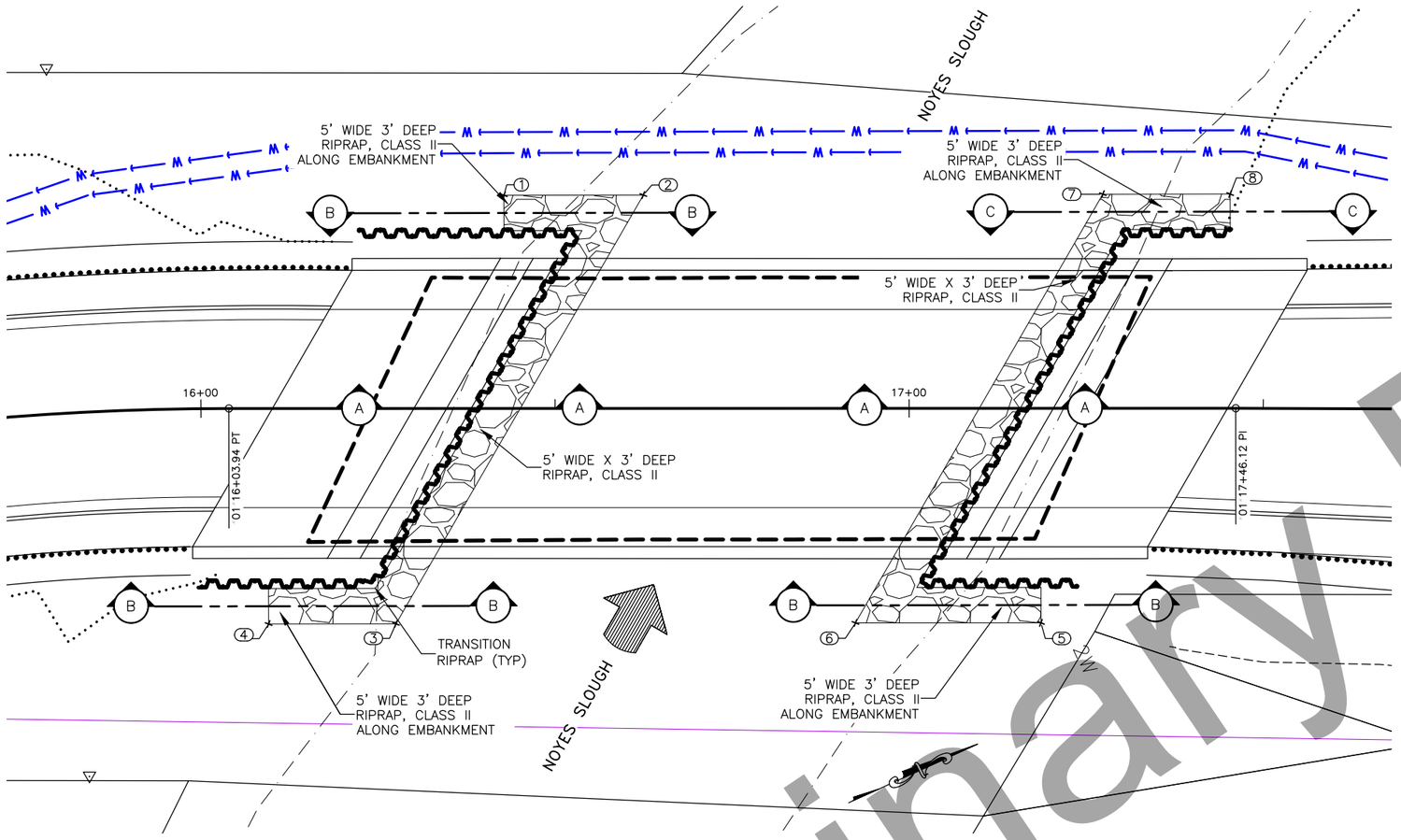

RIPRAP PLAN LAYOUT

HYDRAULIC & HYDROLOGIC SUMMARY, BRIDGE NO. 209

Flood Frequency (Yr.)	100	500
Exceeding Probability (%)	1	0.2
Design Discharge (cfs)	700	1,022
Design High Water (ft, NAVD88)	431.47	432.88
Anticipated Additional Backwater (ft)	0.0	0.0
Contraction Scour (ft)	0.61	0.71
Abutment Scour (ft)	2.42	3.76
Pier Scour (ft)	n.a.	n.a.
Long-term Bed Elevation Changes (ft)	0	0
Total Scour (ft)	3.03	4.47

NOTES:

1. ALL ELEVATIONS ARE BASED ON NAVD88..
2. SECTION VIEWS ARE SCALED 1H:5V.
3. END RIPRAP AT ELEVATION 433.47 IN ALL BRIDGE QUADRANTS.
4. EXCAVATED MATERIAL WILL BE PLACED BACK IN ORIGINAL LOCATION. ALLOW NO NET RISE IN CHANNEL BOTTOM GRADE.

RIPRAP LAYOUT

CONTROL POINT TABLE

POINT NO.	NORTHING	EASTING	ELEVATION	DESCRIPTION
1	204962.54	671135.79	433.47	RIPRAP TOP
2	204980.48	671143.92	421.21	RIPRAP BOTTOM
3	204923.61	671184.58	421.21	RIPRAP BOTTOM
4	204907.23	671177.16	433.47	RIPRAP TOP
5	205006.57	671222.16	433.47	RIPRAP TOP
6	204982.73	671211.32	421.21	RIPRAP BOTTOM
7	205039.59	671170.67	421.21	RIPRAP BOTTOM
8	205055.97	671178.09	433.47	RIPRAP TOP

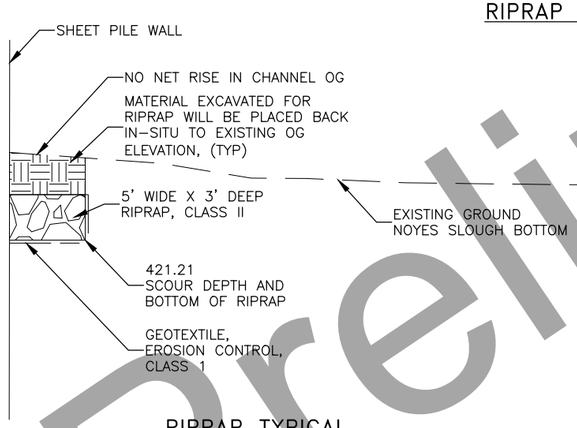

RIPRAP TYPICAL SECTION A-A
NTS

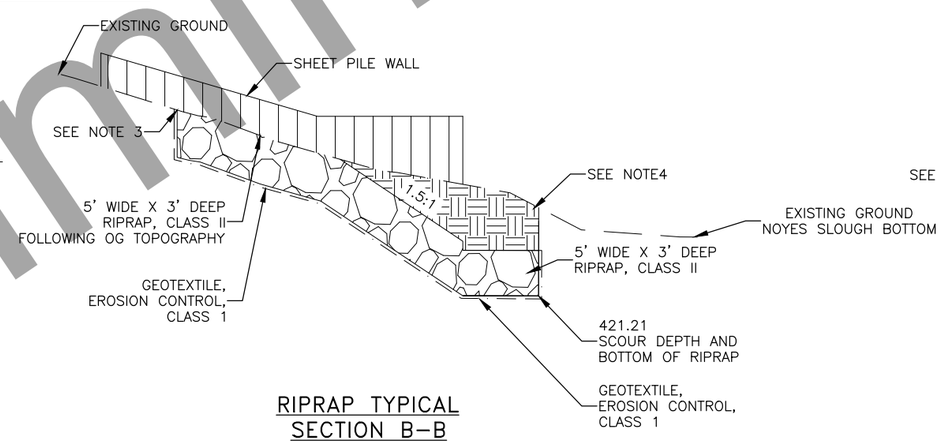

RIPRAP TYPICAL SECTION B-B
NTS

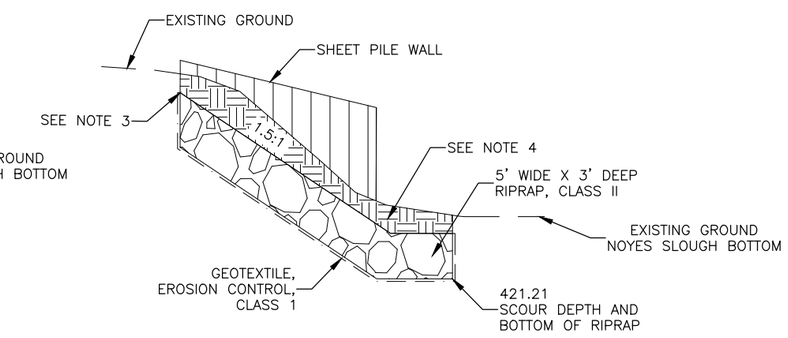

RIPRAP TYPICAL SECTION C-C
NTS

Preliminary Plans

DESIGNED BY: Heather Benton	CHECKED: Heather Estabrook		
DRAWN BY: Heather Benton	CHECKED: Heather Benton		
QUANTITIES BY: Heather Benton	CHECKED: Heather Estabrook		

STATE OF ALASKA
DEPARTMENT OF TRANSPORTATION AND PUBLIC FACILITIES
BRIDGE SECTION
3132 Channel Drive
Juneau, Alaska 99801
907-465-2975

NOYES SLOUGH BRIDGE
AURORA DRIVE
RIPRAP DETAILS

BRIDGE NO. 209
DWG. NO. 3

P:\2018\18185FB-AuroraDr_Noyes\C\c7001cnst18185FB-3 Fri, Feb/04/22 11:47am

STATE	PROJECT DESIGNATION	YEAR	SHEET NO.	TOTAL SHEETS
ALASKA	0629001/NFHWY00124	2022	N4	N24

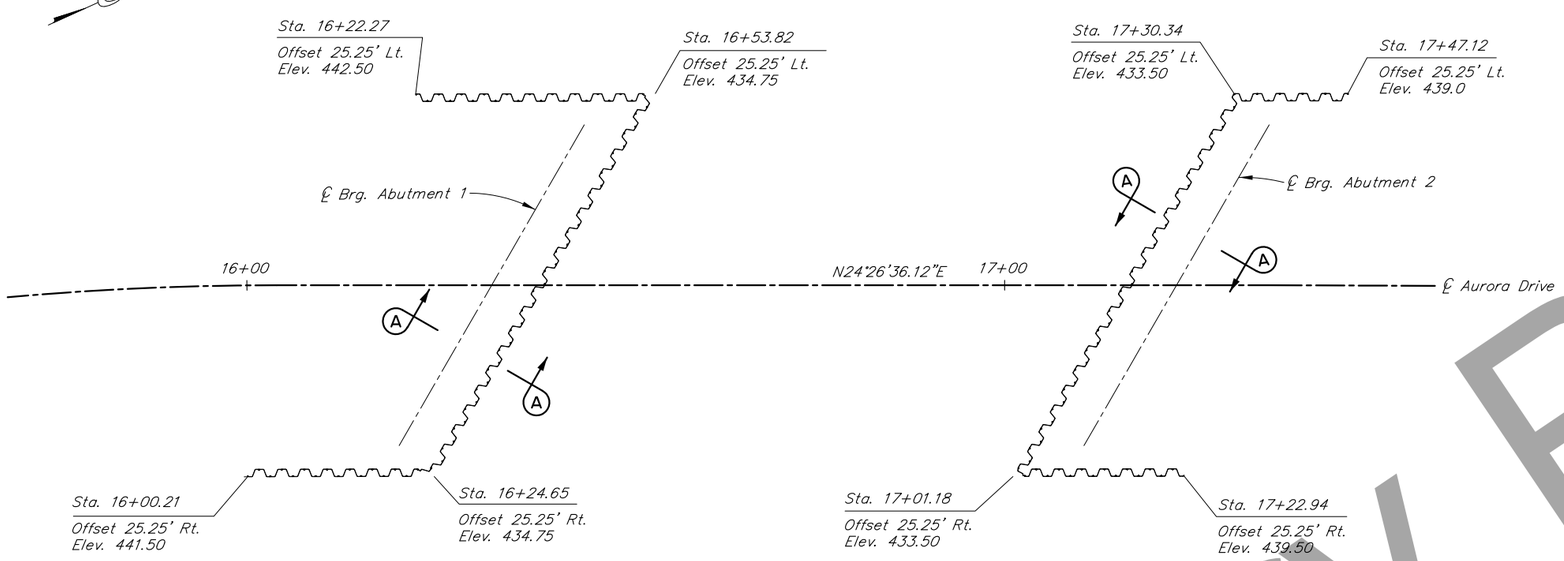

WALL LAYOUT

10 5 0 10 20
Feet

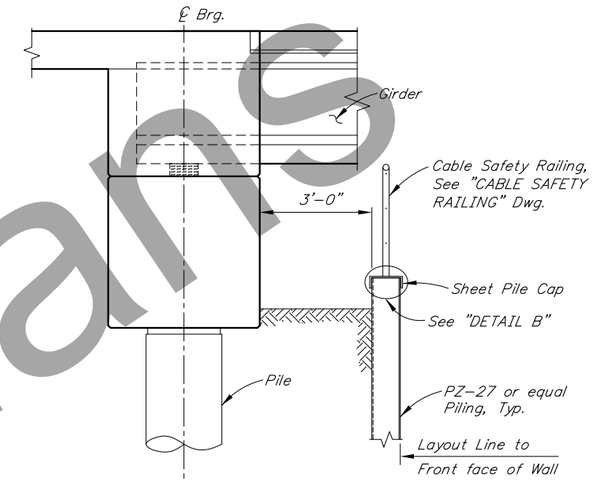

SECTION A-A

12 6 0 1 2 3 4
In. Feet

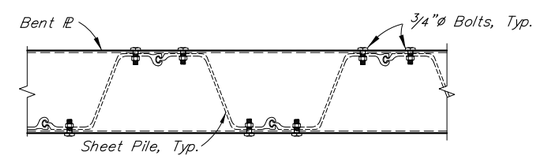

PLAN

12 6 0 1 2
In. Feet

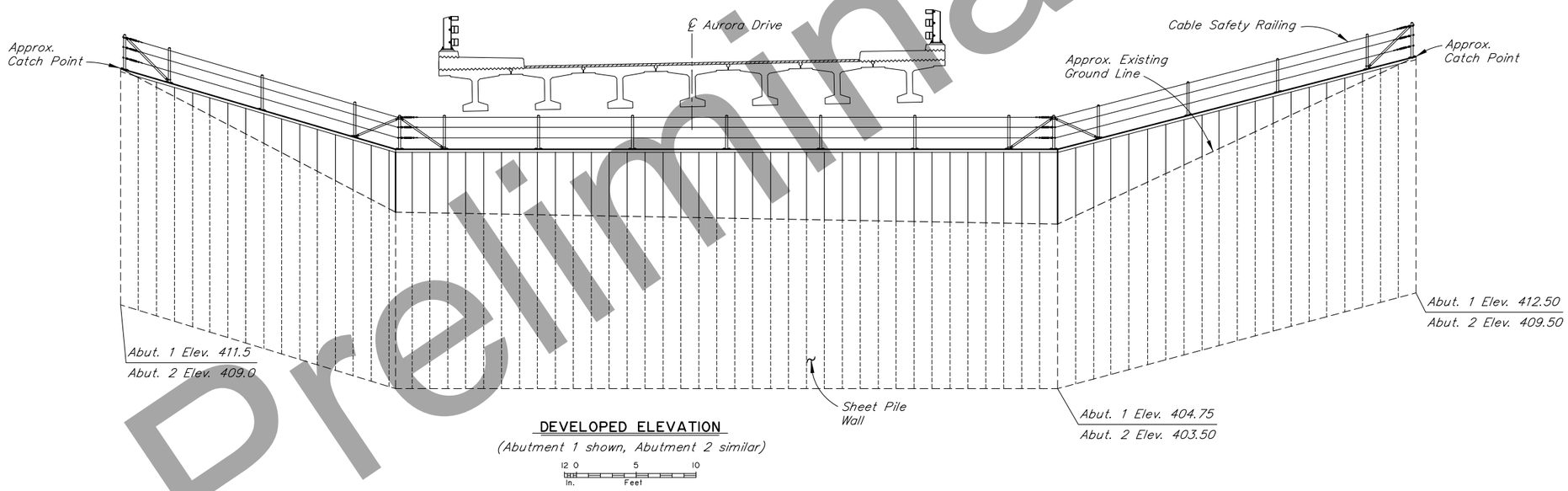

DEVELOPED ELEVATION

(Abutment 1 shown, Abutment 2 similar)

12 0 5 10
In. Feet

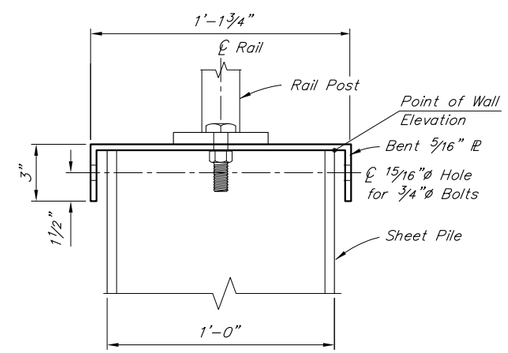

DETAIL B

6 3 0 1
In. Feet

Preliminary Plans

R:\cad\209\209-4 Wed, Feb/09/22 02:23pm

DESIGNED BY: Andrew Wells	CHECKED: Jesse Escamilla III	STATE OF ALASKA **DEPARTMENT OF TRANSPORTATION AND PUBLIC FACILITIES** BRIDGE SECTION 3132 Channel Drive Juneau, Alaska 99801 907-465-2975	**NOYES SLOUGH BRIDGE** AURORA DRIVE **SHEET PILE WALLS**
DRAWN BY: Sam Sollie	CHECKED: Andrew Wells		BRIDGE NO. 209
QUANTITIES BY: Andrew Wells	CHECKED: Jesse Escamilla III		DWG. NO. 4

STATE	PROJECT DESIGNATION	YEAR	SHEET NO.	TOTAL SHEETS
ALASKA	0629001/NFHWY00124	2022	N5	N24

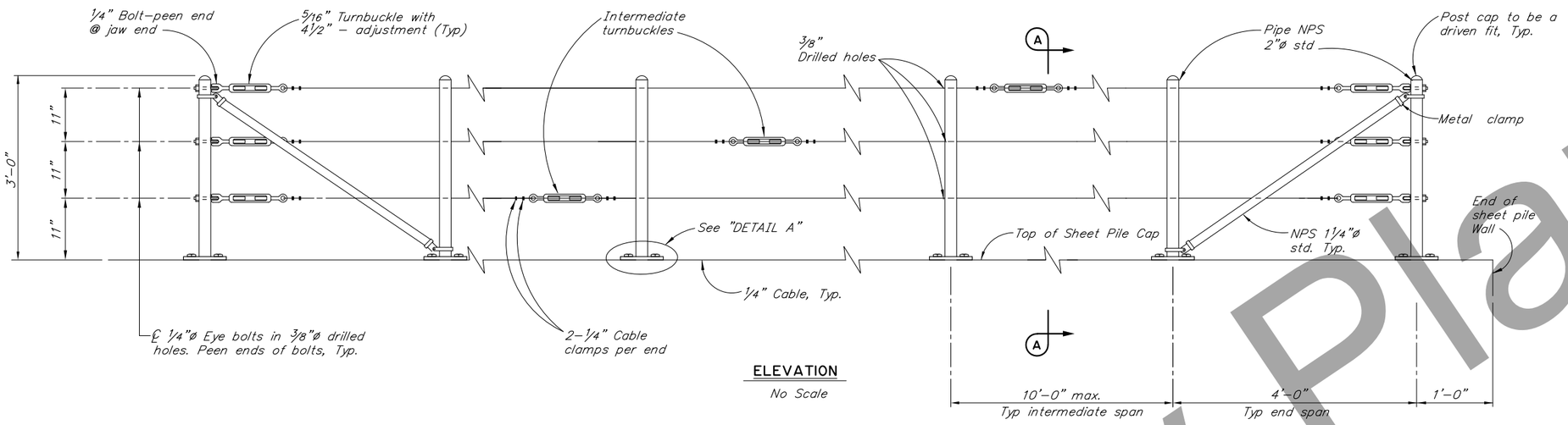

ELEVATION

No Scale

NOTES:

1. Place intermediate turnbuckles in adjacent spans.
2. Do not splice cable between intermediate turnbuckles and end posts.
3. Galvanize all posts, cable and hardware.
4. Install all posts plumb.
5. Alignment of holes in posts may vary to conform to slope of top of sheet pile wall.
6. Brace posts with diagonal braces at each end, each change in direction and at each change in slope.
7. Provide thimbles at all cable loops.

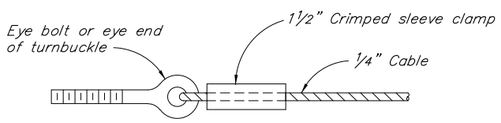

ALTERNATIVE CABLE CONNECTION

No Scale

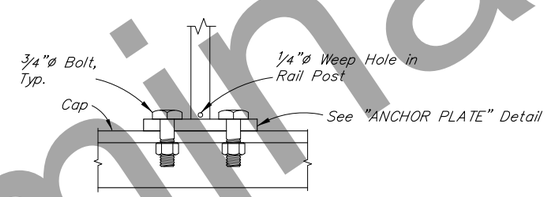

DETAIL A

No Scale

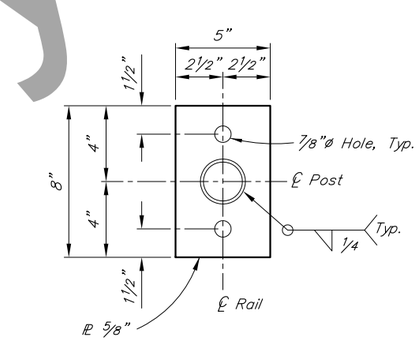

ANCHOR PLATE

No Scale

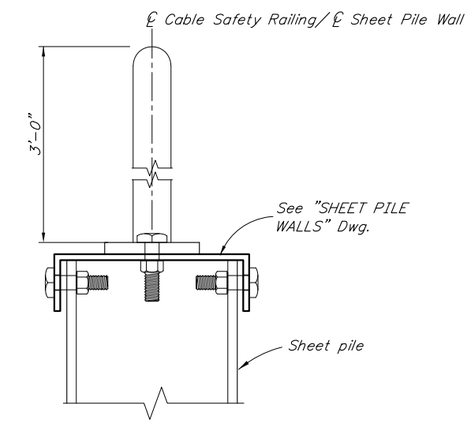

SECTION A-A

No Scale

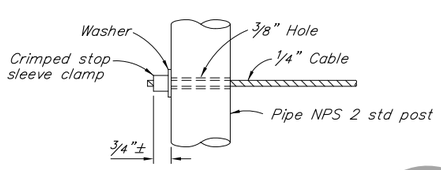

ALTERNATIVE DEAD END ANCHORAGE

No Scale

Preliminary Plans

R:\cad\209\209-5 Wed, Feb/09/22 02:23pm

DESIGNED BY: Andrew Wells	CHECKED: Jesse Escamilla III	
DRAWN BY: Sam Sollie	CHECKED: Andrew Wells	
QUANTITIES BY: Andrew Wells	CHECKED: Jesse Escamilla III	

STATE OF ALASKA
DEPARTMENT OF TRANSPORTATION AND PUBLIC FACILITIES
BRIDGE SECTION
3132 Channel Drive
Juneau, Alaska 99801
907-465-2975

NOYES SLOUGH BRIDGE

AURORA DRIVE

CABLE SAFETY RAILING

BRIDGE NO. 209

DWG. NO. 5

STATE	PROJECT DESIGNATION	YEAR	SHEET NO.	TOTAL SHEETS
ALASKA	0629001/NFHWY00124	2022	N6	N24

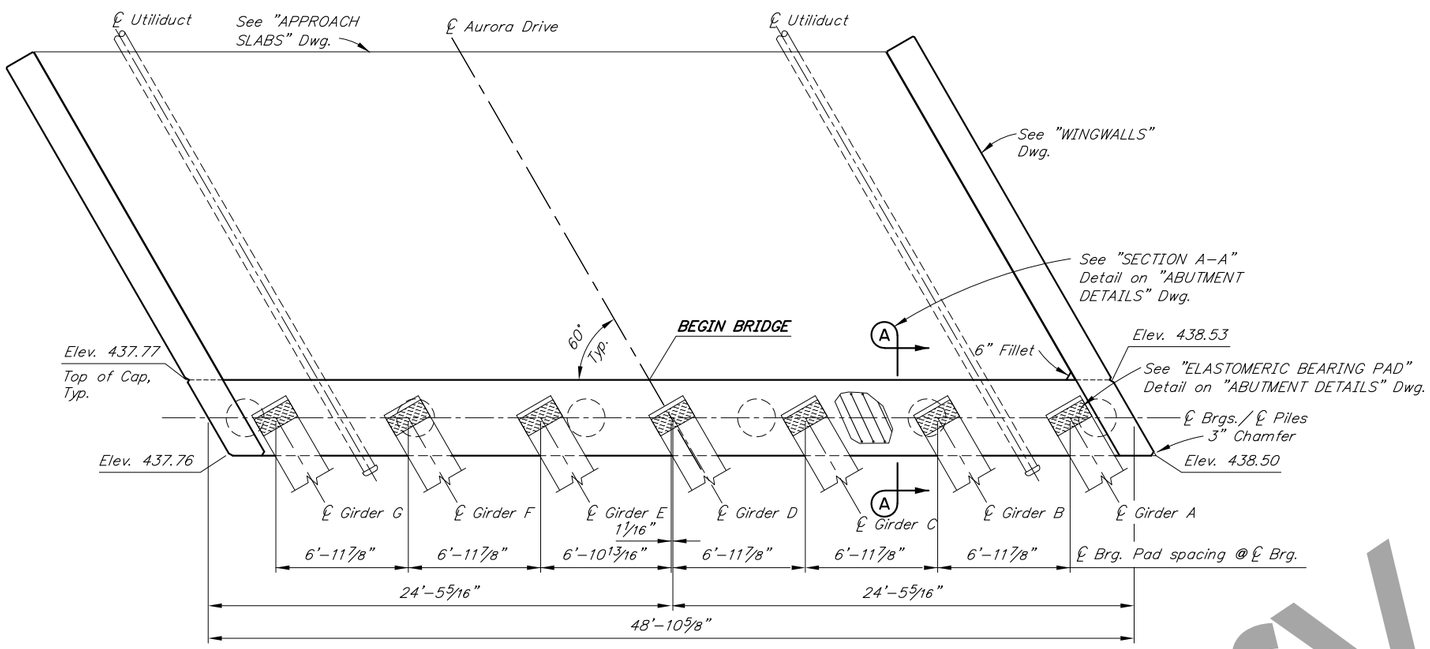

PLAN

12 0 4 8
In. Feet

REINFORCING STEEL - ABUTMENT I

MARK	NOTE	SIZE	NO.	LENGTH	TYPE
A401	S	4	6	266'–9"	SPIRAL
A402		4	132	VARIES	STIRRUP
A403		4	30	6'–0"	HOOP
A404	S	4	10	48'–6"	---
A405		4	60	5'–3"	BENT
A501	E	5	52	15'–5"	STIRRUP
A601	E,S	6	5	48'–6"	---
A602	E,S	6	5	44'–8"	---
A603	E	6	6	4'–2"	---
A604	E	6	24	6'–0"	---
A701	E	7	8	3'–0"	BENT
A801	S	8	48	40'–0"	---
A1001	H,S	10	14	48'–6"	HEADED

BENDING DIAGRAM

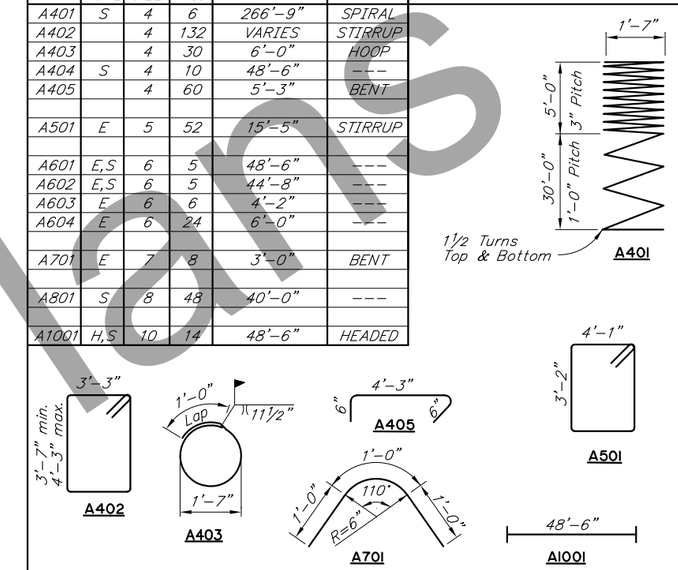

E – Epoxy–Coated
H – Headed reinforcing steel
S – Splices not included

ELEVATION

(Looking Back on Station)

12 0 4 8
In. Feet

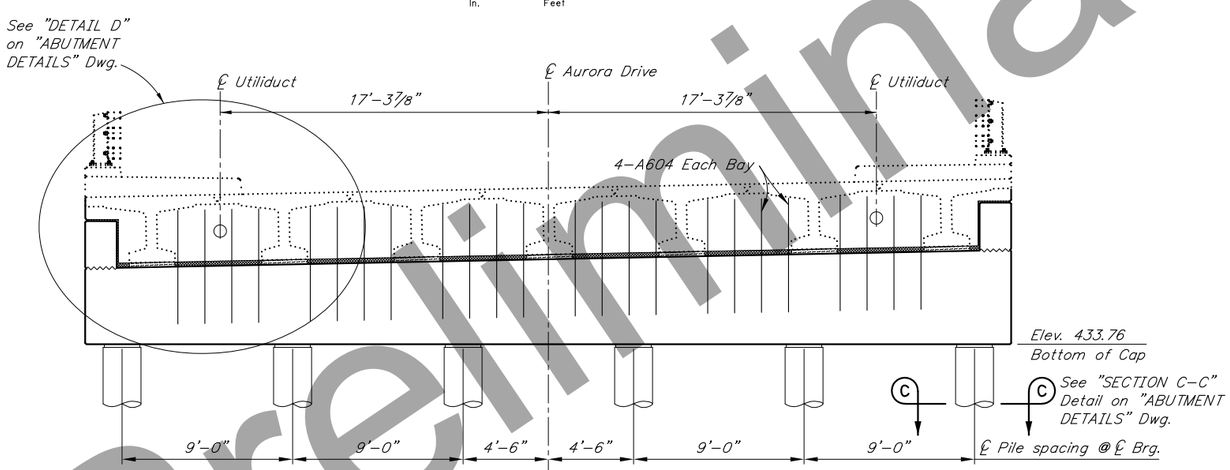

Preliminary Plans

DESIGNED BY: Andrew Wells	CHECKED: Jesse Escamilla III	STATE OF ALASKA DEPARTMENT OF TRANSPORTATION AND PUBLIC FACILITIES BRIDGE SECTION	NOYES SLOUGH BRIDGE AURORA DRIVE ABUTMENT 1
DRAWN BY: Sam Sollie	CHECKED: Andrew Wells		BRIDGE NO. 209
QUANTITIES BY: Andrew Wells	CHECKED: Jesse Escamilla III		DWG. NO. 6

STATE	PROJECT DESIGNATION	YEAR	SHEET NO.	TOTAL SHEETS
ALASKA	0629001/NFHWY00124	2022	N7	N24

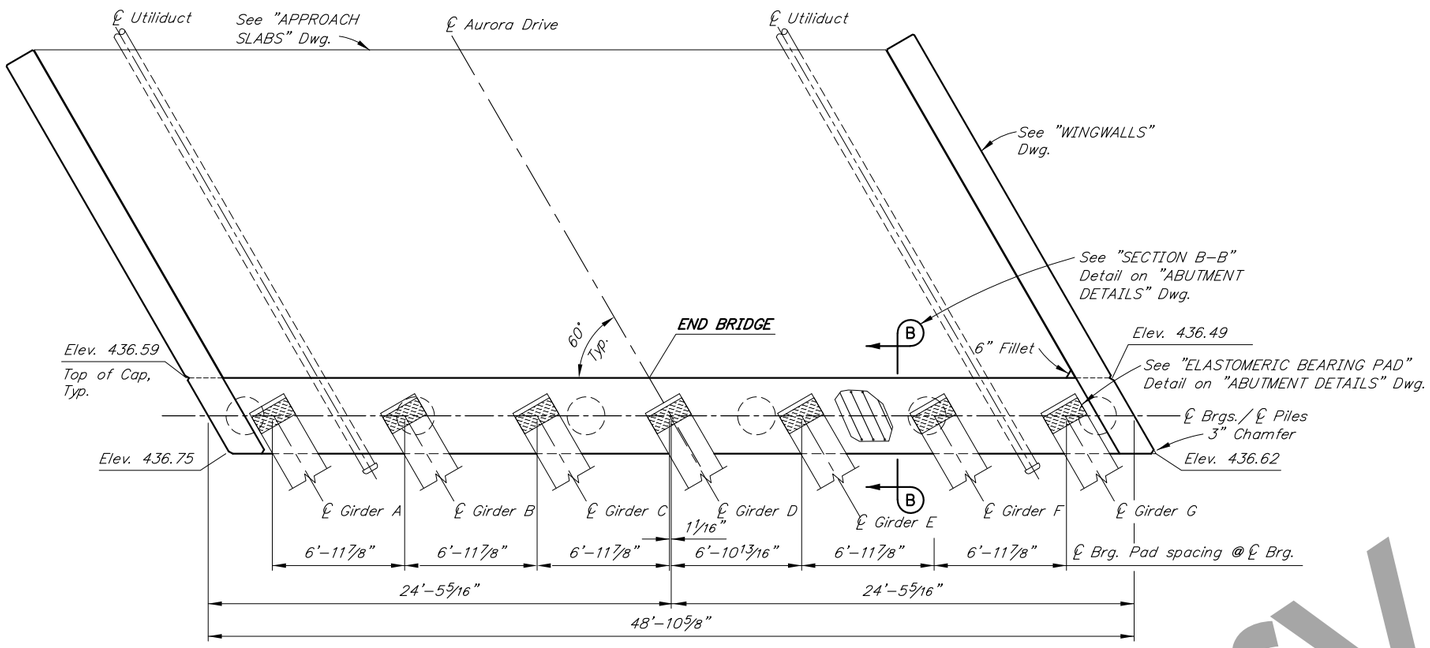

PLAN

12 0 4 8
In. Feet

REINFORCING STEEL - ABUTMENT 2

MARK	NOTE	SIZE	NO.	LENGTH	TYPE
A401	S	4	6	266'–9"	SPIRAL
A402		4	132	VARIES	STIRRUP
A403		4	30	6'–0"	HOOP
A404	S	4	10	48'–6"	---
A405		4	60	5'–3"	BENT
A501	E	5	52	15'–5"	STIRRUP
A601	E,S	6	5	48'–6"	---
A602	E,S	6	5	44'–8"	---
A603	E	6	6	4'–2"	---
A701	E	7	8	3'–0"	BENT
A801	S	8	48	40'–0"	---
A1001	H,S	10	14	48'–6"	HEADED

BENDING DIAGRAM

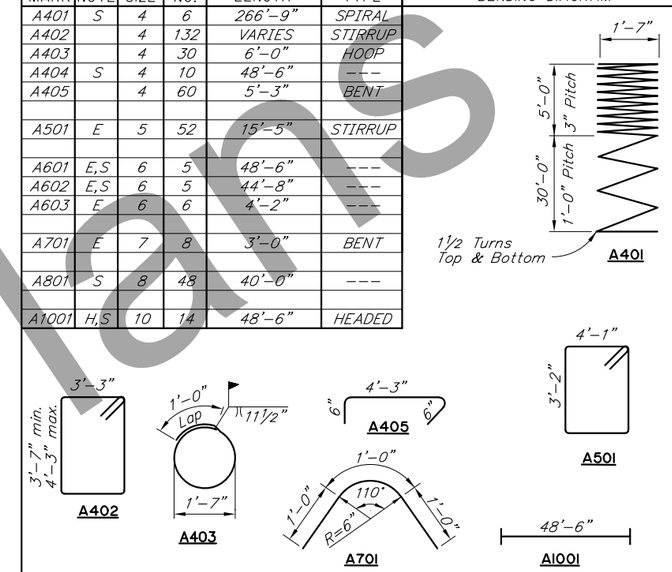

E – Epoxy–Coated
H – Headed reinforcing steel
S – Splices not included

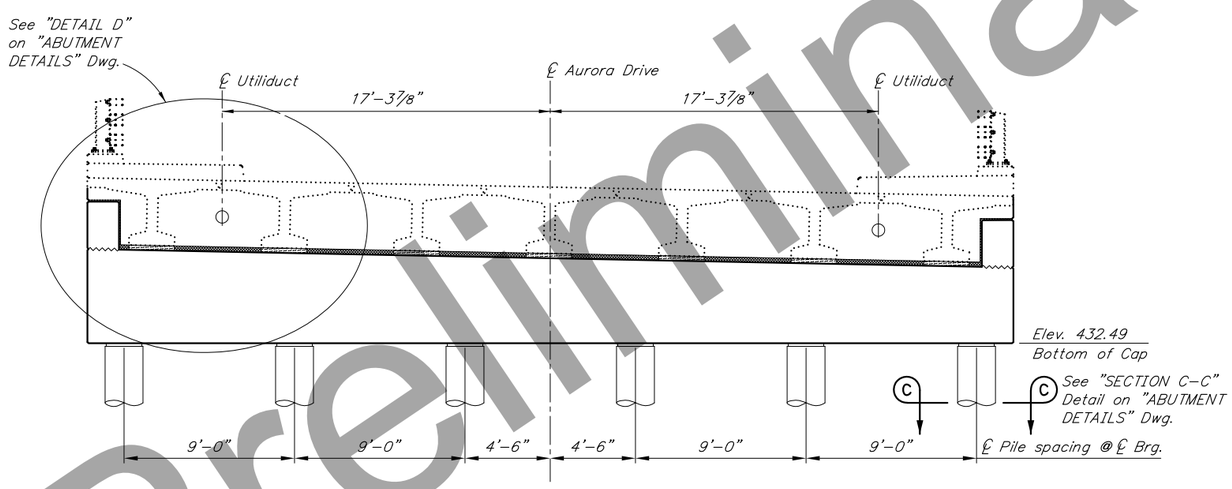

ELEVATION

12 0 4 8
In. Feet

Preliminary Plans

DESIGNED BY: Andrew Wells	CHECKED: Jesse Escamilla III	STATE OF ALASKA DEPARTMENT OF TRANSPORTATION AND PUBLIC FACILITIES BRIDGE SECTION	NOYES SLOUGH BRIDGE AURORA DRIVE ABUTMENT 2
DRAWN BY: Sam Sollie	CHECKED: Andrew Wells		BRIDGE NO. 209
QUANTITIES BY: Andrew Wells	CHECKED: Jesse Escamilla III		DWG. NO. 7

STATE	PROJECT DESIGNATION	YEAR	SHEET NO.	TOTAL SHEETS
ALASKA	0629001/NFHWY00124	2022	N8	N24

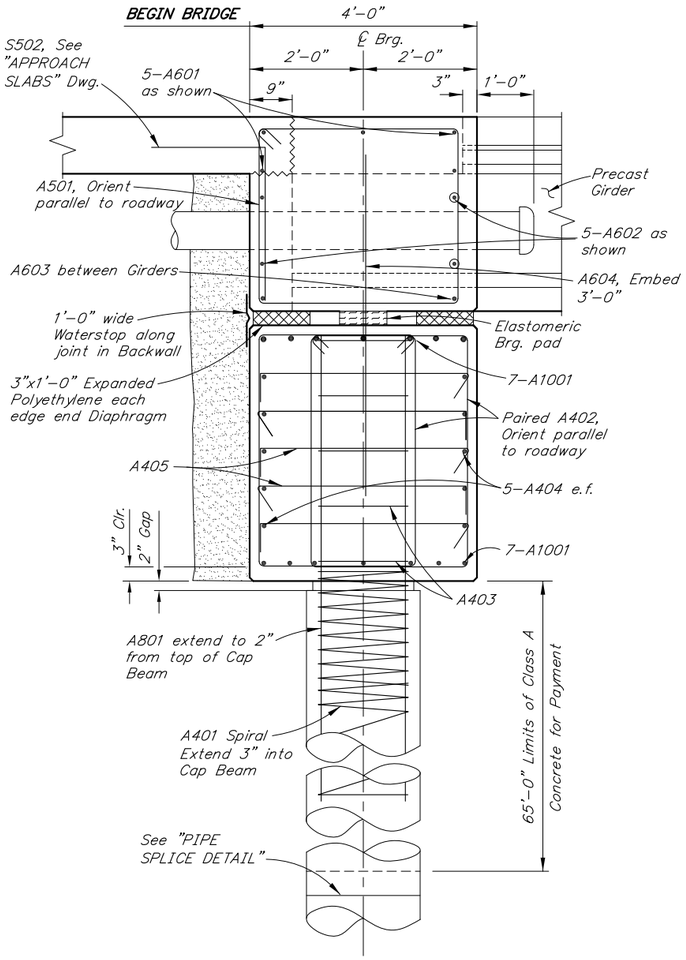

SECTION A-A

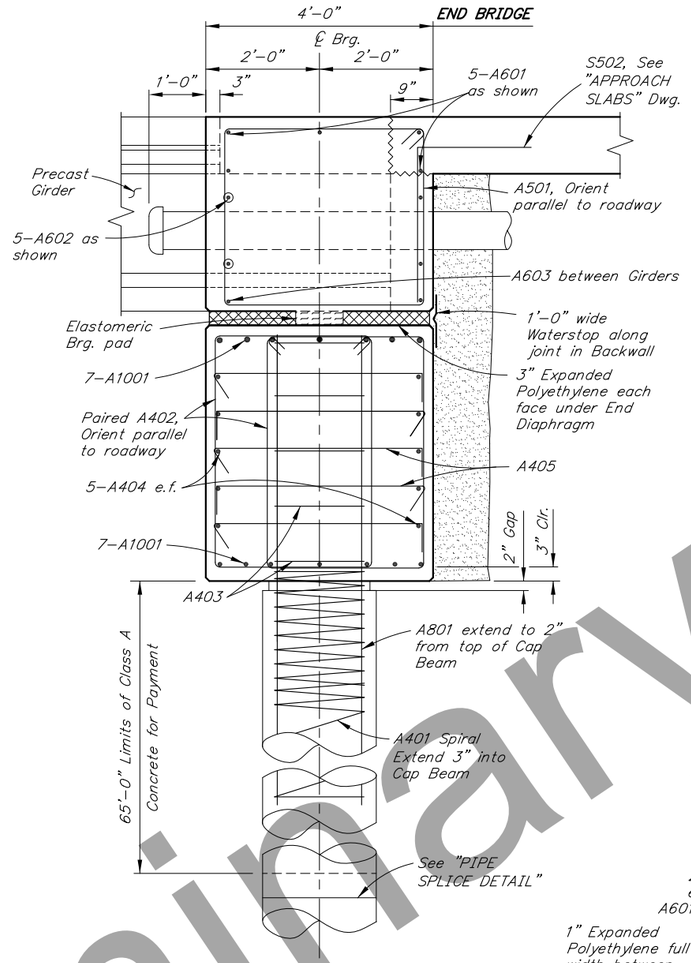

SECTION B-B

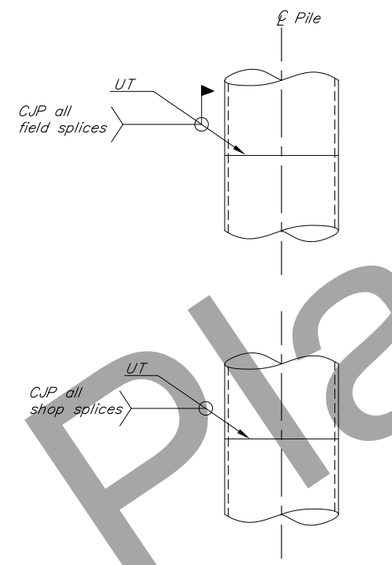

PIPE SPLICE DETAIL

No Scale

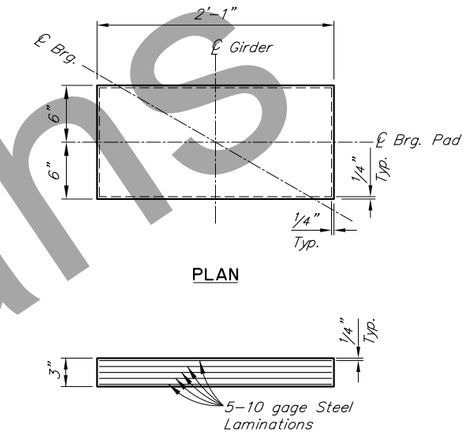

PLAN

ELEVATION

ELASTOMERIC BEARING PAD

Grade 5
Shear Modulus = 0.115 ksi
Dead Load = 63 k
Live Load = 77 k

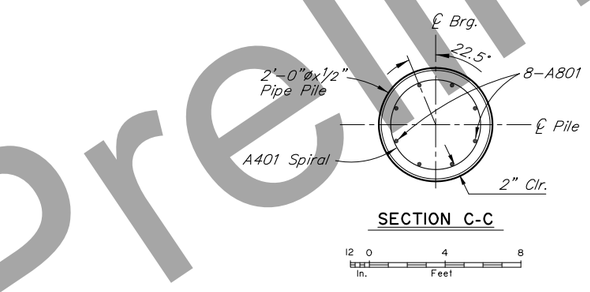

SECTION C-C

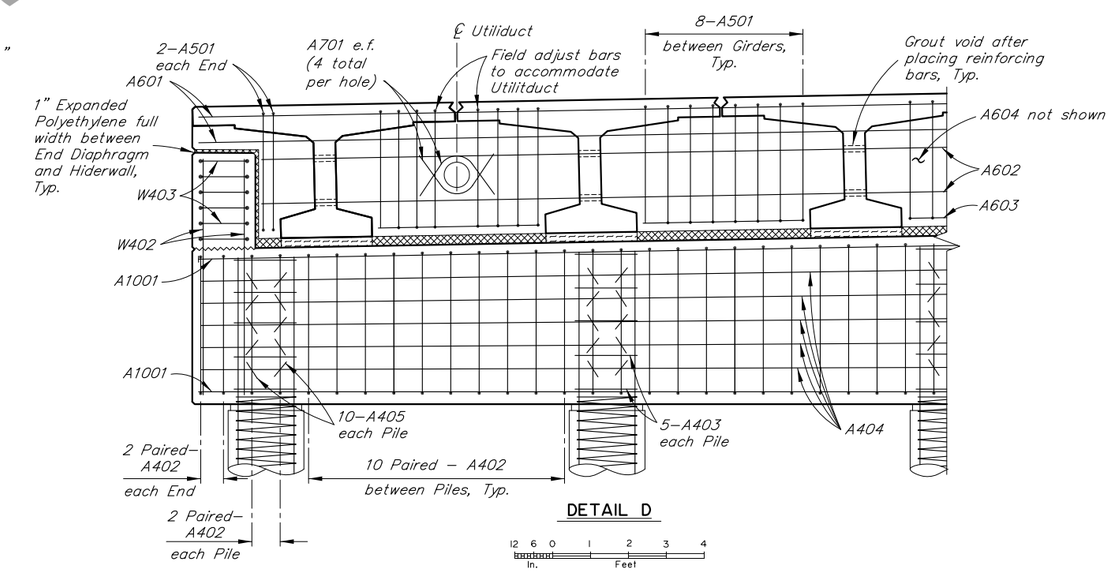

DETAIL D

Preliminary Plans

DESIGNED BY: Andrew Wells	CHECKED: Jesse Escamilla III	
DRAWN BY: Sam Sollie	CHECKED: Andrew Wells	
QUANTITIES BY: Andrew Wells	CHECKED: Jesse Escamilla III	

STATE OF ALASKA
DEPARTMENT OF TRANSPORTATION AND PUBLIC FACILITIES
BRIDGE SECTION

NOYES SLOUGH BRIDGE

AURORA DRIVE

ABUTMENT DETAILS

BRIDGE NO. 209
DWG. NO. 8

STATE	PROJECT DESIGNATION	YEAR	SHEET NO.	TOTAL SHEETS
ALASKA	0629001/NFHWY00124	2022	N9	N24

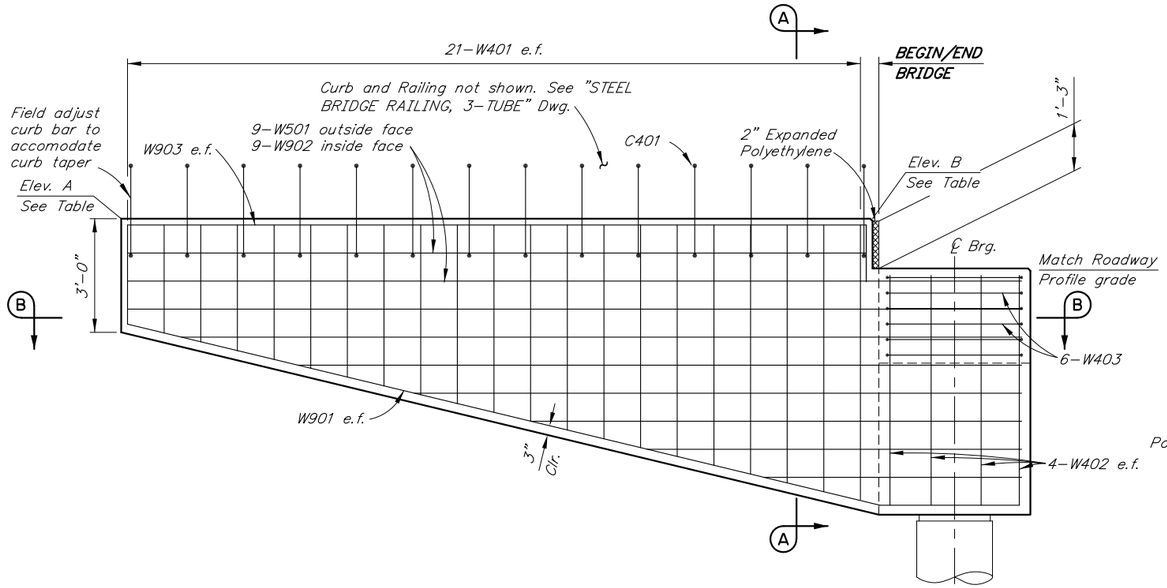

ELEVATION

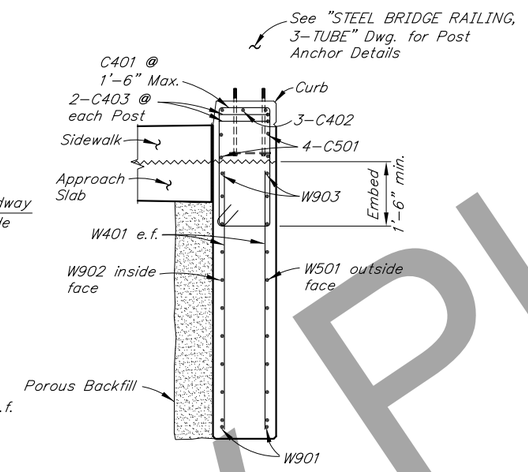

SECTION A-A

REINFORCING STEEL - ONE ABUTMENT

MARK	NOTE	SIZE	NO.	LENGTH	TYPE
W401		4	84	VARIES	---
W402		4	16	VARIES	---
W403		4	12	12'–3"	BENT
W501		5	18	VARIES	---
W901		9	4	VARIES	BENT
W902		9	18	VARIES	---
W903		9	4	VARIES	BENT
C401	E	4	28	9'–1"	STIRRUP
C402	E	4	6	VARIES	---
C403	E	4	12	3'–10"	BENT
C501	E	5	8	VARIES	---

BENDING DIAGRAM

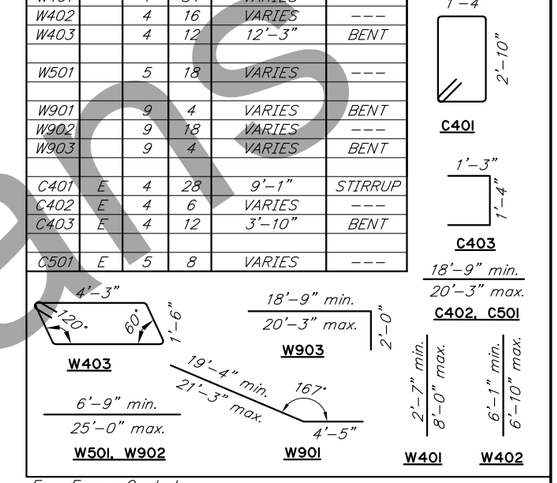

E – Epoxy–Coated

TOP OF WINGWALL ELEVATION TABLE (FT)

LOCATION	A (UPSTREAM)	B (UPSTREAM)	C (DOWNSTREAM)	D (DOWNSTREAM)
ABUTMENT 1	441.42	441.55	442.33	442.26
ABUTMENT 2	439.65	440.25	439.41	440.34

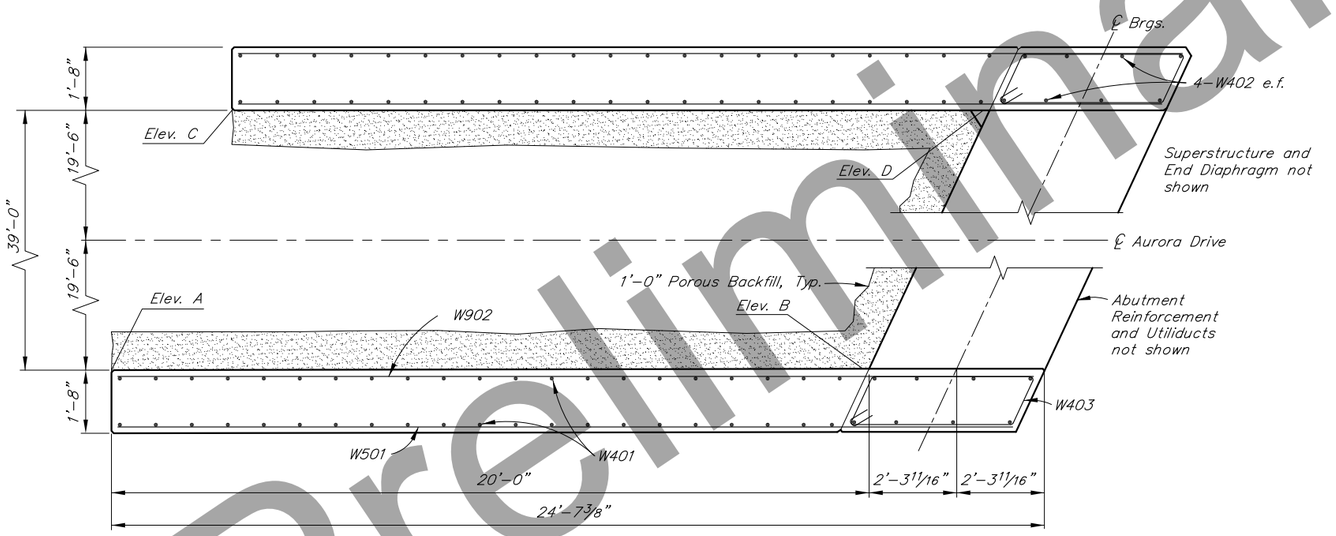

SECTION B-B

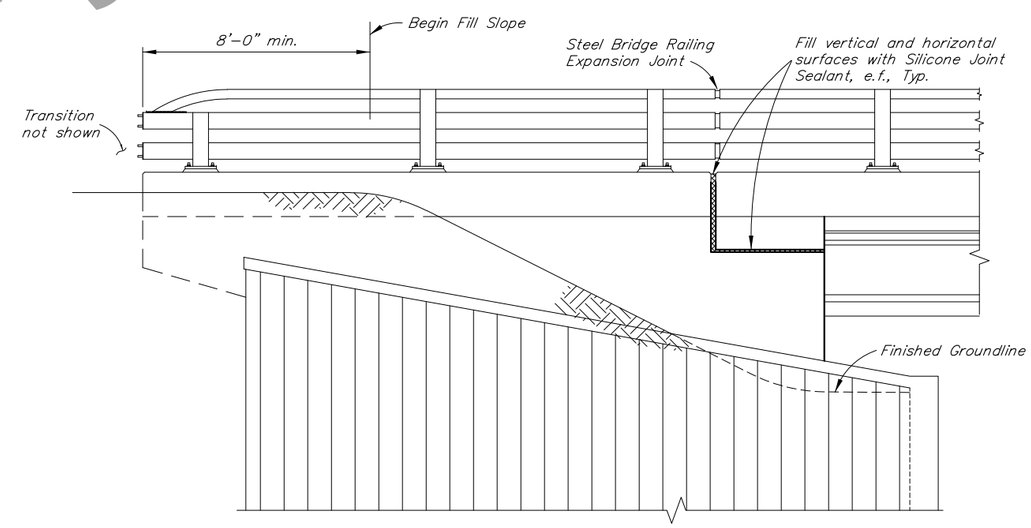

FINISHED ELEVATION

Preliminary Plans

DESIGNED BY: Andrew Wells	CHECKED: Jesse Escamilla III	
DRAWN BY: Sam Sollie	CHECKED: Andrew Wells	
QUANTITIES BY: Andrew Wells	CHECKED: Jesse Escamilla III	

STATE OF ALASKA
DEPARTMENT OF TRANSPORTATION AND PUBLIC FACILITIES
BRIDGE SECTION

NOYES SLOUGH BRIDGE
AURORA DRIVE
WINGWALLS

BRIDGE NO. 209
DWG. NO. 9

STATE	PROJECT DESIGNATION	YEAR	SHEET NO.	TOTAL SHEETS
ALASKA	0629001/NFHWY00124	2022	N10	N24

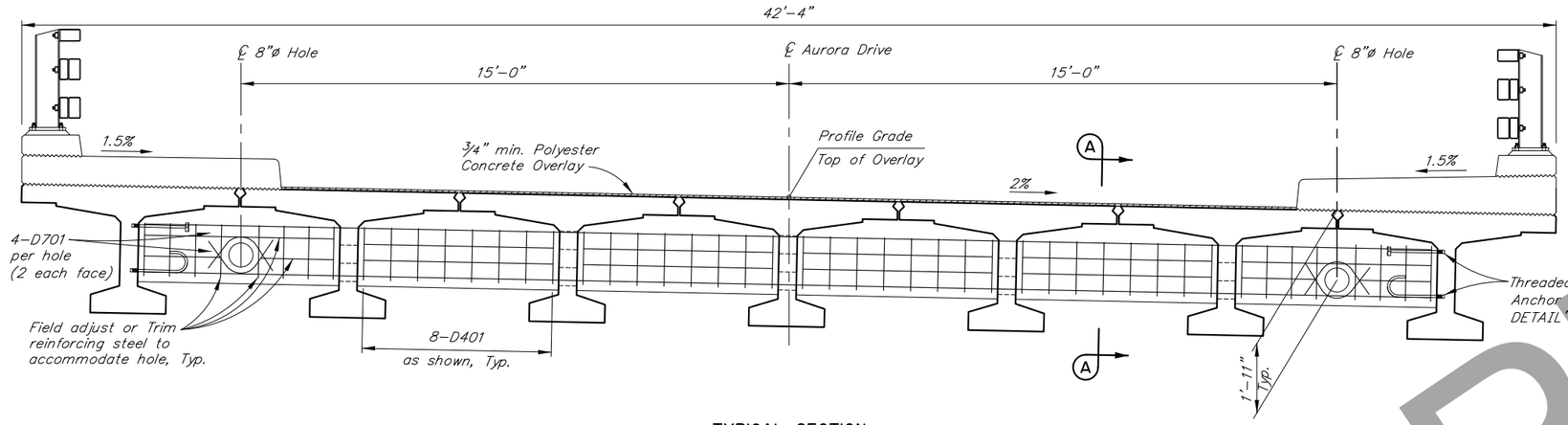

TYPICAL SECTION

12 6 0 1 2 3 4
In. Feet

REINFORCING STEEL - ONE DIAPHRAGM

MARK	NOTE	SIZE	NO.	LENGTH	TYPE
D401	E	4	48	4'-3"	STIRRUP
D501	E	5	24	6'-0"	---
D601	E,S	6	4	41'-0"	---
D701	E	7	8	3'-0"	BENT

BENDING DIAGRAM

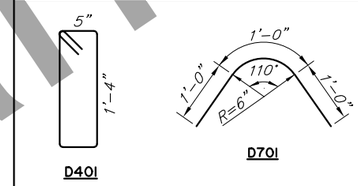

E - Epoxy-Coated
S - Splices not included

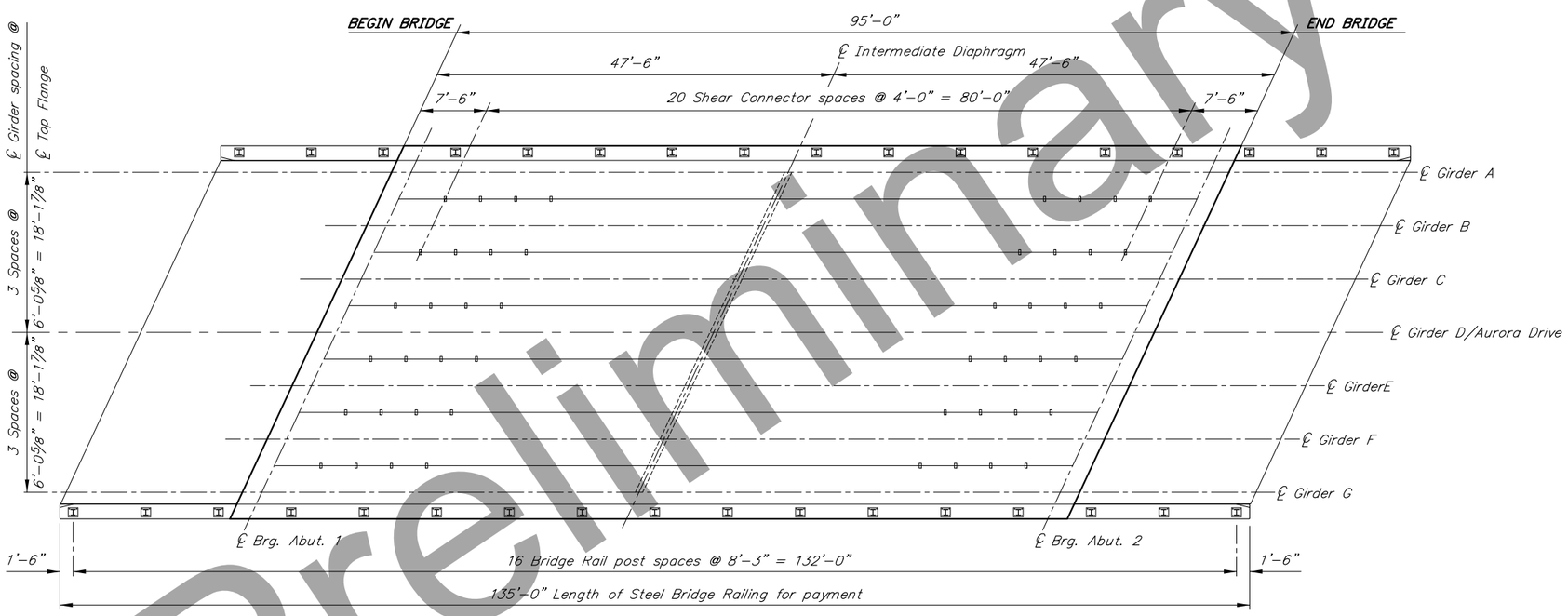

FRAMING PLAN

12 0 4 8 12
In. Feet

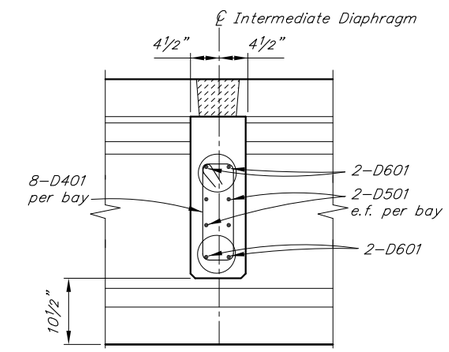

SECTION A-A

12 6 0 1 2
In. Feet

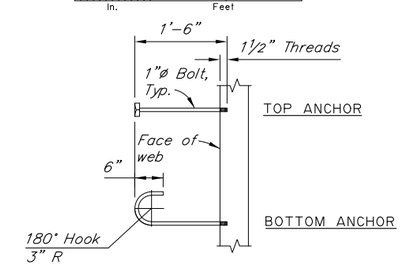

ASTM A307 GALVANIZED

ANCHOR DETAIL

12 6 0 1 2 3
In. Feet

DESIGNED BY: Andrew Wells	CHECKED: Jesse Escamilla III	STATE OF ALASKA DEPARTMENT OF TRANSPORTATION AND PUBLIC FACILITIES BRIDGE SECTION	NOYES SLOUGH BRIDGE AURORA DRIVE FRAMING PLAN AND TYPICAL SECTION
DRAWN BY: Sam Sollie	CHECKED: Andrew Wells		BRIDGE NO. 209
QUANTITIES BY: Andrew Wells	CHECKED: Jesse Escamilla III		DWG. NO. 10

Preliminary Plans

STATE	PROJECT DESIGNATION	YEAR	SHEET NO.	TOTAL SHEETS
ALASKA	0629001/NFHWY00124	2022	N11	N24

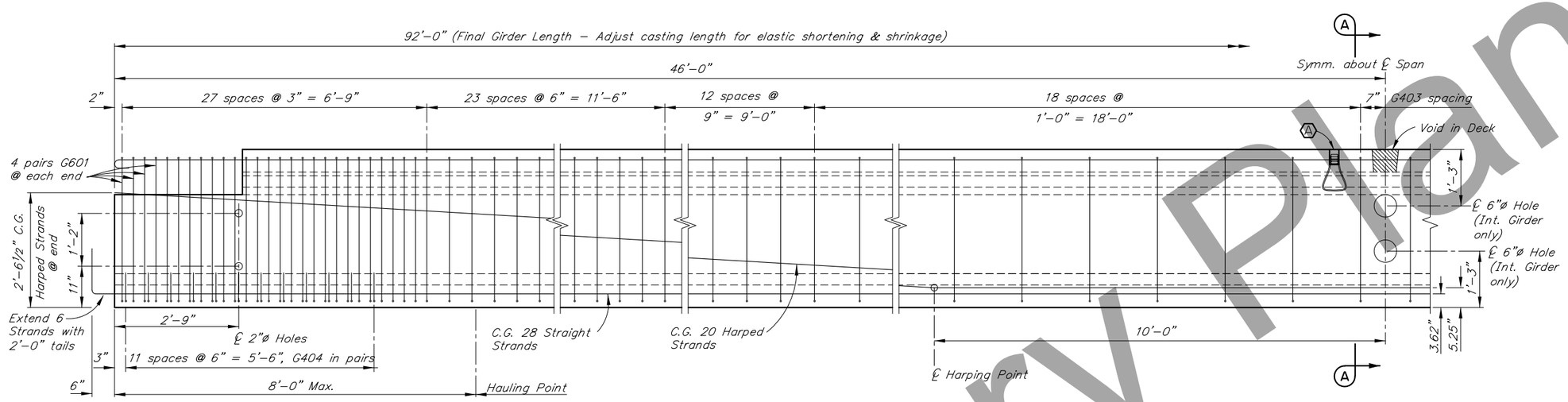

ELEVATION

12 6 0 1 2 3 In. Feet

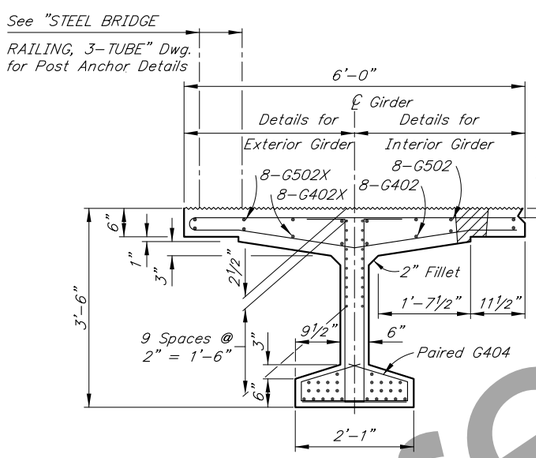

END VIEW

12 6 0 1 2 3 In. Feet

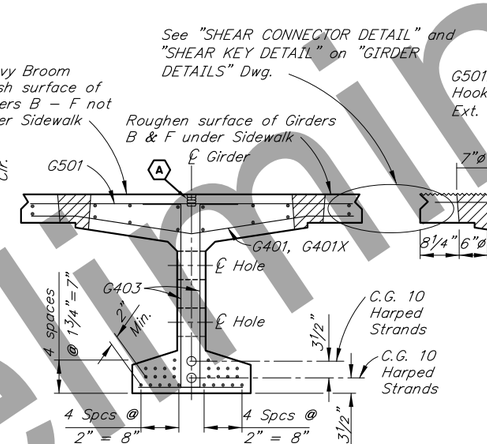

SECTION A-A

12 6 0 1 2 3 In. Feet

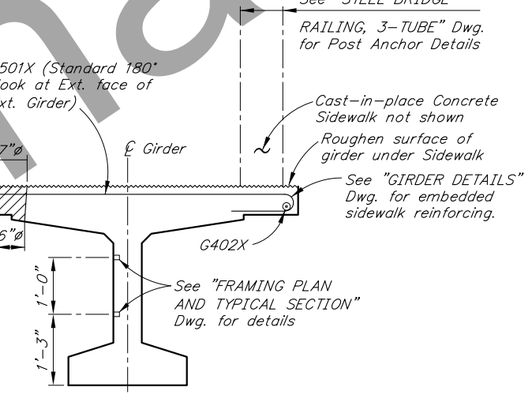

EXTERIOR GIRDER NEAR MID SPAN

(Unrelated Reinforcement not shown)

12 6 0 1 2 3 In. Feet

REINFORCING STEEL-ONE GIRDER

MARK	NOTE	SIZE	NO.	LENGTH	TYPE
G401	E	4	135	5'-9"	BENT
G401X	E	4	154	5'-9"	BENT
G402	E,S	4	8	86'-1"	---
G402X	E	4	8	86'-1"	---
G403	E	4	302	4'-8"	BENT
G404	E	4	48	3'-3"	BENT
G405	E,L	4	64	5'-5"	BENT
G406	E,LL	4	128	1'-10"	BENT
G407	E,L	4	4	5'-11"	BENT
G501	E	5	135	5'-7"	---
G501X	E	5	154	6'-3"	BENT
G502	E,S	5	8	9'3"-8"	BENT
G502X	E,S	5	8	9'3"-8"	BENT
G601	E	6	16	4'-8"	BENT

BENDING DIAGRAM

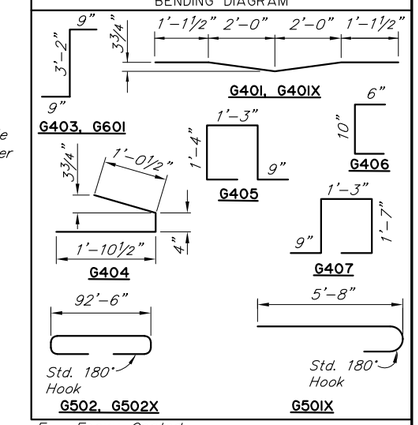

E – Epoxy-Coated
L – Ship 8 loose for diaphragm
LL – Ship 16 loose
S – Length does not include splices. Minimum lap splice length for splice: 2'-0" for #4 bars, 2'-6" for #5 bars.
X – Exterior Girders only

GIRDER NOTES

Use Class P Concrete having the following strengths:
At Stress Transfer f'ci = 7,000 psi
At 28 days f'c = 8,000 psi

Use ½"ø low relaxation strands with an ultimate strength of 270 ksi and a cross section area of 0.153 in².

Design is based on the following steel stresses:
Pretensioning – Jacking Stress 189 ksi
After initial losses – 170 ksi
After all losses – 141 ksi

Deflect forms to compensate for camber and roadway grade.

Galvanize structural steel embedded in girders except for shear connectors.

1" clear on all reinforcing except as noted.

Finish top flange surface with heavy broom finish.

Omit Shear Key, Shear Connector, and Deck Voids on outside of exterior girders.

Cast Girder ends plumb with respect to roadway grade.

(A) 1"x1'-0" Coil Anchor Insert for vertical adjustment of girders. Recess 2". Prevent concrete from filling hole.

See "FRAMING PLAN AND TYPICAL SECTION" Dwg. for shear connector spacing and rail post spacing.

Preliminary Plans

DESIGNED BY: Andrew Wells	CHECKED: Jesse Escamilla III	STATE OF ALASKA DEPARTMENT OF TRANSPORTATION AND PUBLIC FACILITIES BRIDGE SECTION	NOYES SLOUGH BRIDGE AURORA DRIVE GIRDERS
DRAWN BY: Sam Sollie	CHECKED: Andrew Wells		BRIDGE NO. 209
QUANTITIES BY: Andrew Wells	CHECKED: Jesse Escamilla III		DWG. NO. 11

STATE	PROJECT DESIGNATION	YEAR	SHEET NO.	TOTAL SHEETS
ALASKA	0629001/NFHWY00124	2022	N12	N24

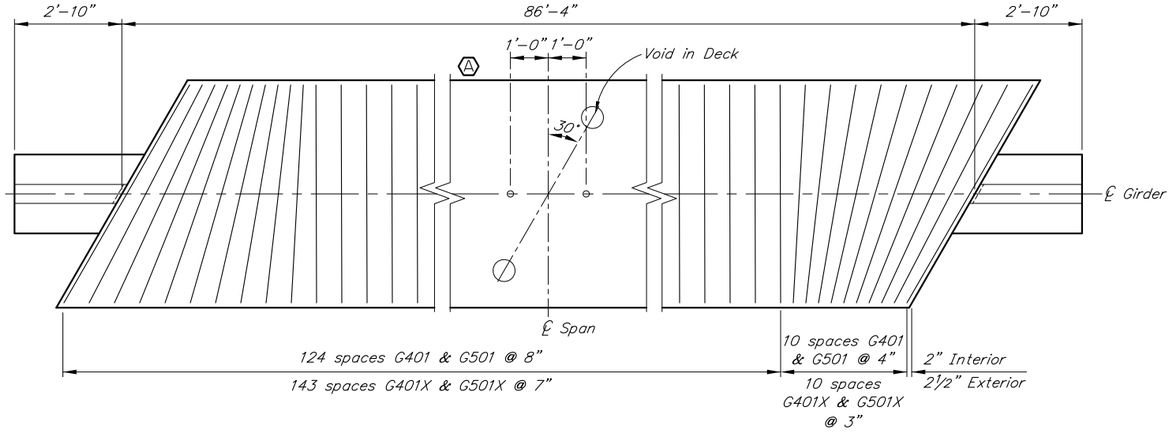

PLAN

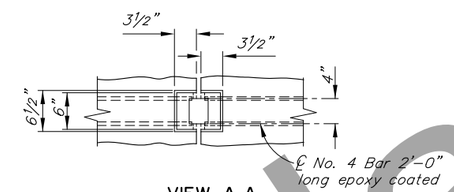

VIEW A-A

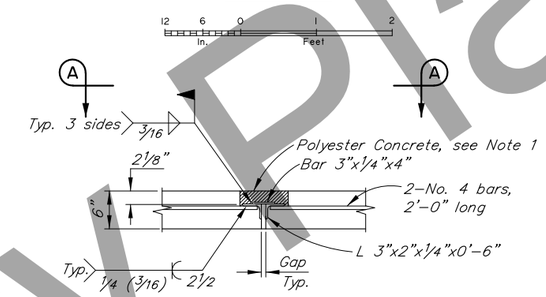

SHEAR CONNECTOR DETAIL

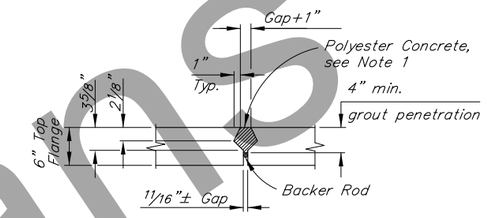

SHEAR KEY DETAIL

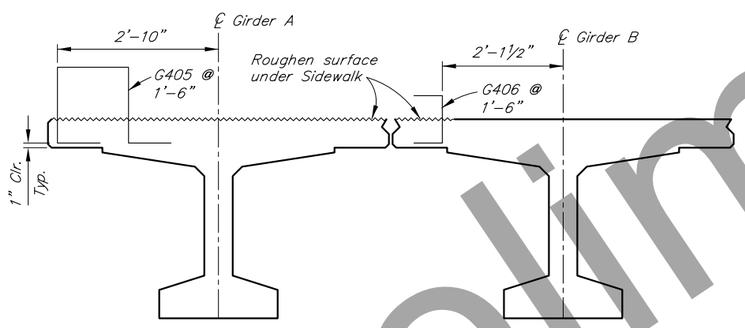

LEFT SIDEWALK DETAILS

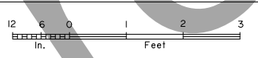

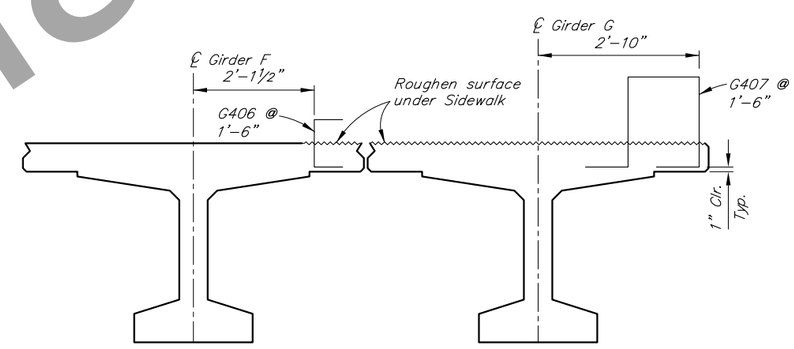

RIGHT SIDEWALK DETAILS

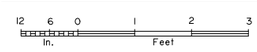

NOTES:

1. Grout may be substituted for polyester concrete in keyways under sidewalk.

Preliminary Plans

DESIGNED BY: Andrew Wells	CHECKED: Jesse Escamilla III	STATE OF ALASKA DEPARTMENT OF TRANSPORTATION AND PUBLIC FACILITIES BRIDGE SECTION	NOYES SLOUGH BRIDGE AURORA DRIVE GIRDER DETAILS
DRAWN BY: Sam Sollie	CHECKED: Andrew Wells		BRIDGE NO. 209
QUANTITIES BY: Andrew Wells	CHECKED: Jesse Escamilla III		DWG. NO. 12

STATE	PROJECT DESIGNATION	YEAR	SHEET NO.	TOTAL SHEETS
ALASKA	0629001/NFHWY00124	2022	N13	N24

TOP OF APPROACH SLAB ELEVATION TABLE (FT)

LOCATION	A (UPSTREAM)	B (UPSTREAM)	C (CENTERLINE)	D (CENTERLINE)	E (DOWNSTREAM)	F (DOWNSTREAM)
ABUTMENT 1	441.42	441.55	441.93	441.92	442.33	442.26
ABUTMENT 2	439.65	440.25	439.64	440.31	439.41	440.34

REINFORCING STEEL - ONE APPROACH SLAB

MARK	NOTE	SIZE	NO.	LENGTH	TYPE
S401	E,S	4	62	44'-6"	---
S402	E	4	14	VARIES	BENT
S403	E	4	28	2'-2"	BENT
S404	E	4	14	2'-5"	BENT
S501	E	5	78	20'-5"	---
S502	E	5	39	5'-0"	BENT
S801	E	8	78	20'-5"	---

BENDING DIAGRAM

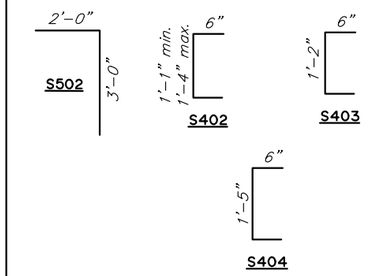

E – Epoxy-Coated
S – Length does not include splices

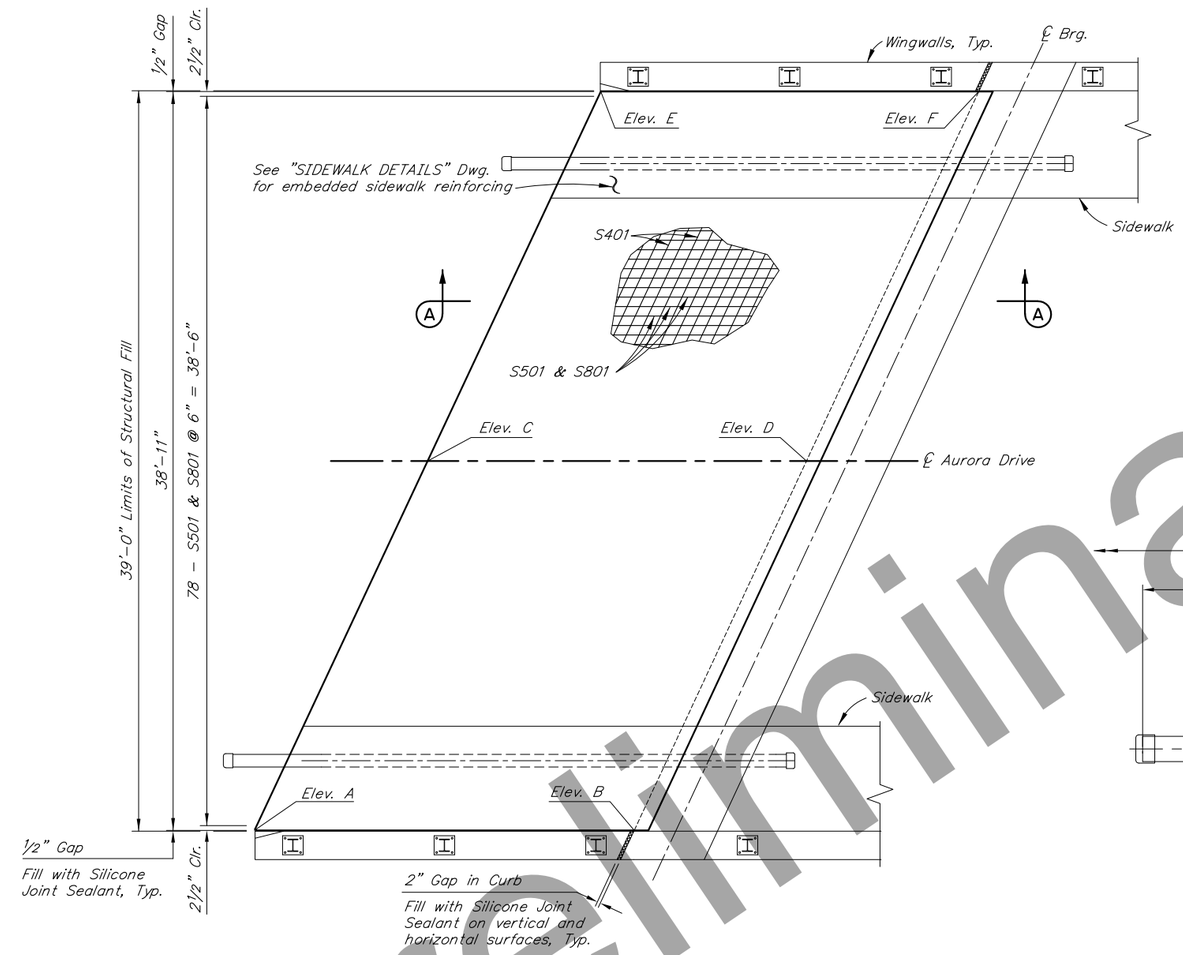

PLAN

(Abutment 1 shown, Abutment 2 similar)

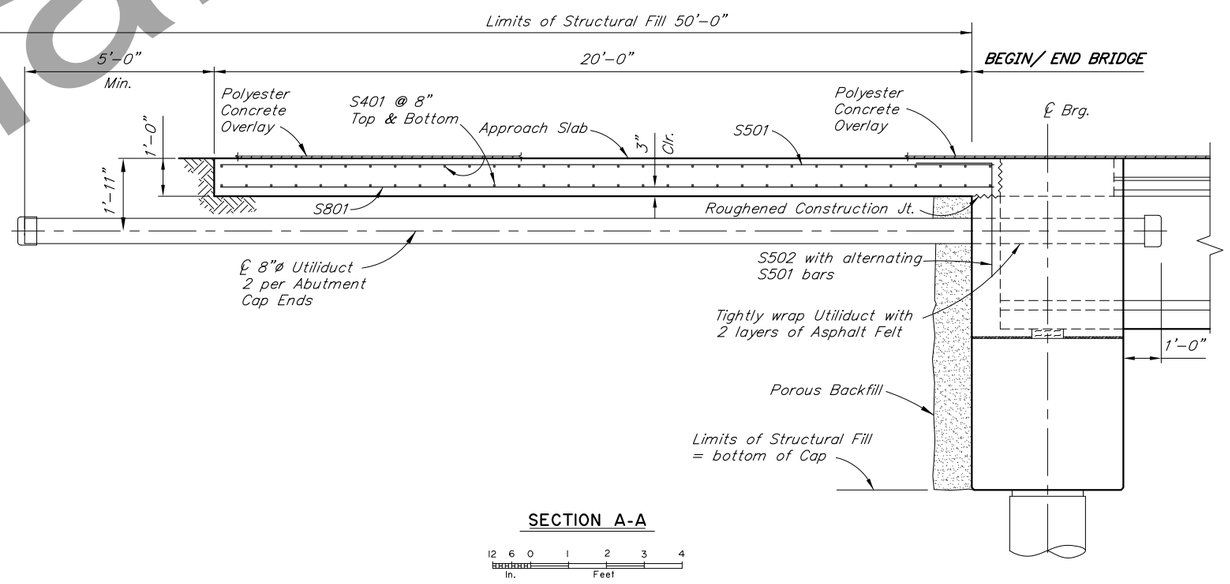

SECTION A-A

Preliminary Plans

DESIGNED BY: Andrew Wells	CHECKED: Jesse Escamilla III	STATE OF ALASKA DEPARTMENT OF TRANSPORTATION AND PUBLIC FACILITIES BRIDGE SECTION	NOYES SLOUGH BRIDGE AURORA DRIVE APPROACH SLABS
DRAWN BY: Sam Sollie	CHECKED: Andrew Wells		BRIDGE NO. 209
QUANTITIES BY: Andrew Wells	CHECKED: Jesse Escamilla III		DWG. NO. 13

STATE	PROJECT DESIGNATION	YEAR	SHEET NO.	TOTAL SHEETS
ALASKA	0629001/NFHWY00124	2022	N14	N24

REINFORCING STEEL - BOTH SIDEWALKS

MARK	NOTE	SIZE	NO.	LENGTH	TYPE
C404	E	4	44	3'-10"	BENT
C405	E,S	4	6	94'-8"	---
R401	E	4	128	8'-0"	---
R402	E	4	56	5'-9"	---
R403	E,S	4	8	134'-8"	---
R404	E,S	4	4	94'-8"	---

BENDING DIAGRAM

E - Epoxy-Coated
S - Length does not include splices.

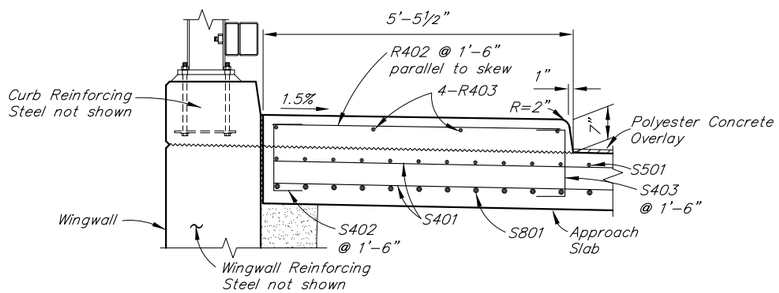

DOWNSTREAM APPROACH SLAB SIDEWALK DETAIL

12 6 0 1 2 3
In. Feet

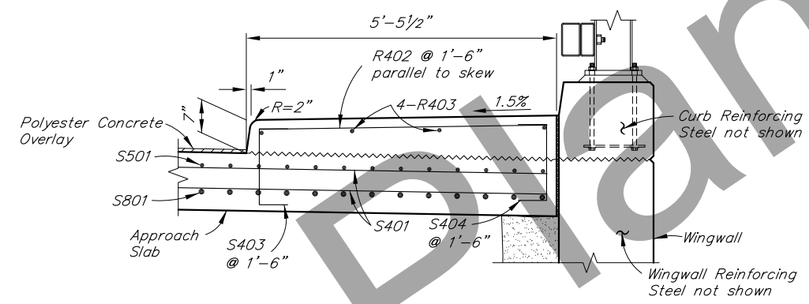

UPSTREAM APPROACH SLAB SIDEWALK DETAIL

12 6 0 1 2 3
In. Feet

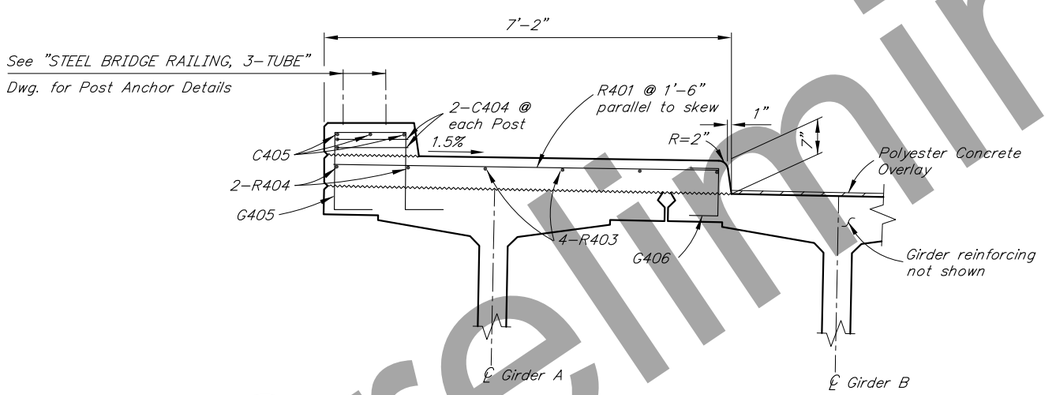

DOWNSTREAM BRIDGE SIDEWALK DETAIL

12 6 0 1 2 3
In. Feet

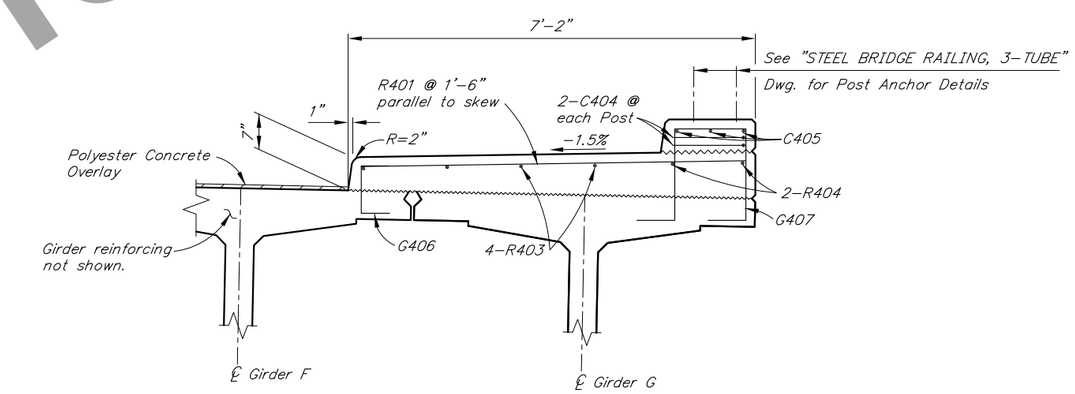

UPSTREAM BRIDGE SIDEWALK DETAIL

12 6 0 1 2 3
In. Feet

NOTE:
Match approach sidewalk at approach slab

DESIGNED BY: Andrew Wells	CHECKED: Jesse Escamilla III	STATE OF ALASKA DEPARTMENT OF TRANSPORTATION AND PUBLIC FACILITIES BRIDGE SECTION	NOYES SLOUGH BRIDGE AURORA DRIVE SIDEWALK DETAILS
DRAWN BY: Sam Sollie	CHECKED: Andrew Wells		BRIDGE NO. 209
QUANTITIES BY: Andrew Wells	CHECKED: Jesse Escamilla III		DWG. NO. 14

Preliminary Plans

STATE	PROJECT DESIGNATION	YEAR	SHEET NO.	TOTAL SHEETS
ALASKA	0629001/NFHWY00124	2022	N15	N24

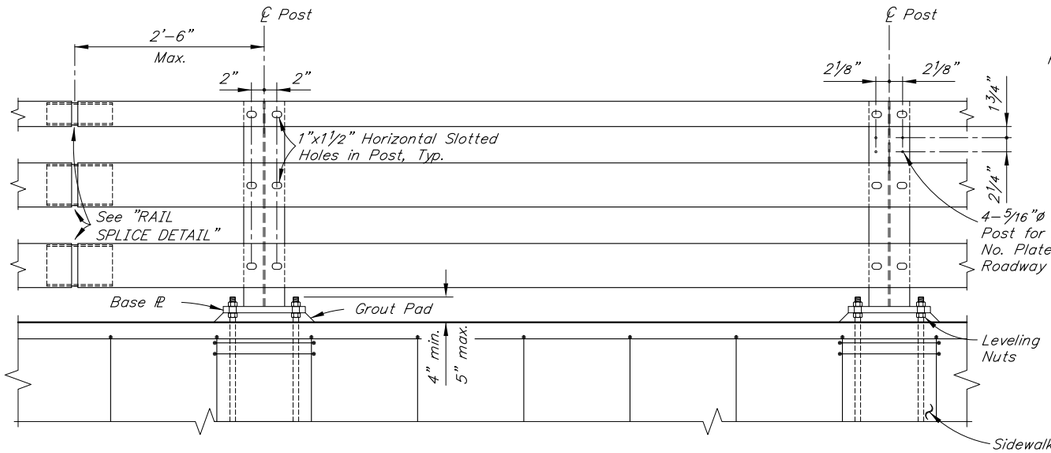

EXPANSION JOINT

TYPICAL POST ELEVATION

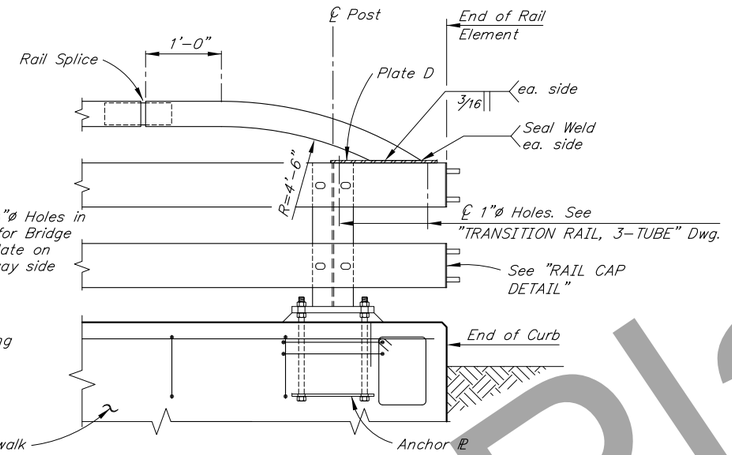

END POST - ELEVATION

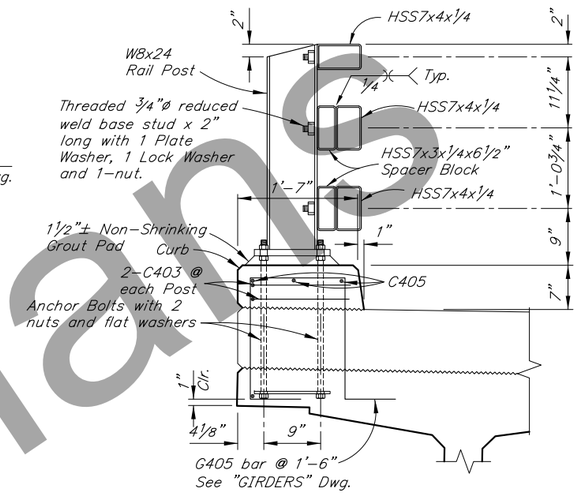

TYPICAL SECTION

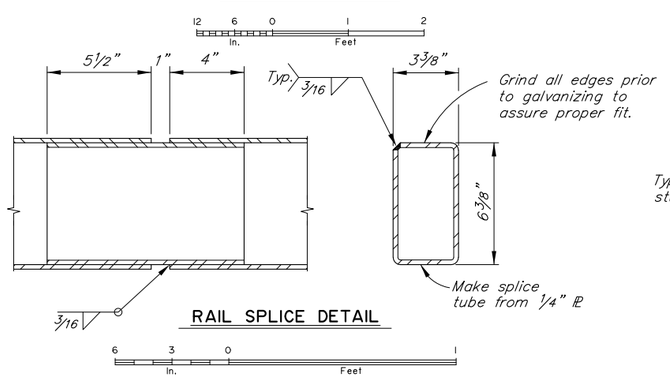

RAIL SPLICE DETAIL

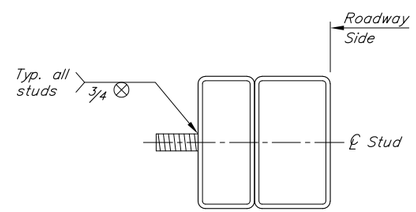

RAILING STUD DETAIL

(Lower rail shown, upper rail similar)
No Scale

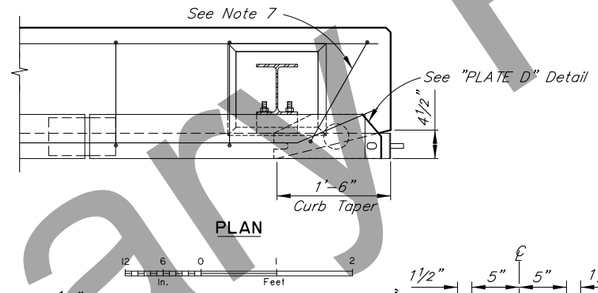

PLAN

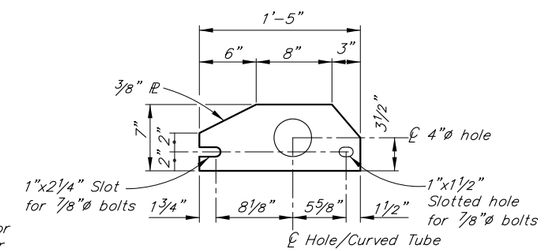

PLATE D

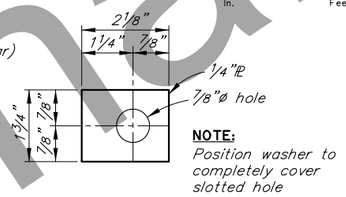

NOTE:
Position washer to completely cover slotted hole

PLATE WASHER

No Scale

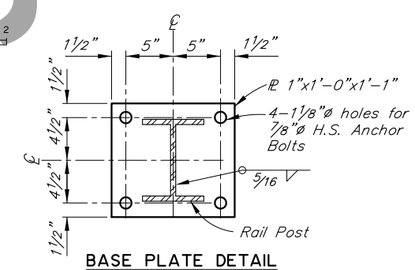

BASE PLATE DETAIL

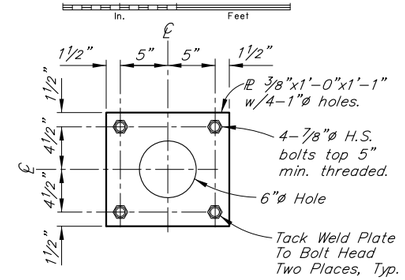

ANCHOR PLATE DETAIL

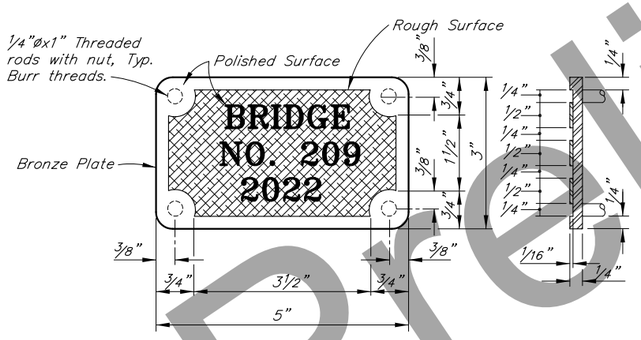

BRONZE BRIDGE NO. PLATE

No Scale

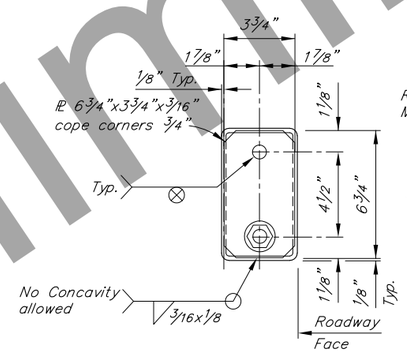

RAIL CAP DETAIL

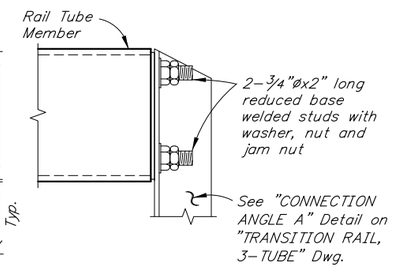

NOTES:

1. Locate bridge number plates on right hand side of approaching traffic near each end as shown on "GENERAL LAYOUT" Dwg. (2 total).
2. Furnish bridge number plates. Use "Century" type style lettering. Use studs and nuts that conform to UNS C65100 or C65500. Braze ¼"ø threaded rod to back of plate with nut – 4 required. Use tamper proof nuts.
3. Provide railing expansion joints at 50'-0" maximum intervals. Railing shall be continuous over 2 posts minimum. Railing expansion joints are required in rail panels that span bridge expansion joints.
4. Install grout in a single placement.
5. See "FRAMING PLAN AND TYPICAL SECTION" Dwg. for rail post spacing.
6. Install bridge rail posts plumb.
7. Adjust reinforcing to accommodate curb taper.

Preliminary Plans

DESIGNED BY: Andrew Wells	CHECKED: Jesse Escamilla III	STATE OF ALASKA DEPARTMENT OF TRANSPORTATION AND PUBLIC FACILITIES BRIDGE SECTION	NOYES SLOUGH BRIDGE AURORA DRIVE STEEL BRIDGE RAILING, 3-TUBE
DRAWN BY: Sam Sollie	CHECKED: Andrew Wells		BRIDGE NO. 209
QUANTITIES BY: Andrew Wells	CHECKED: Jesse Escamilla III		DWG. NO. 15

STATE	PROJECT DESIGNATION	YEAR	SHEET NO.	TOTAL SHEETS
ALASKA	0629001/NFHWY00124	2022	N16	N24

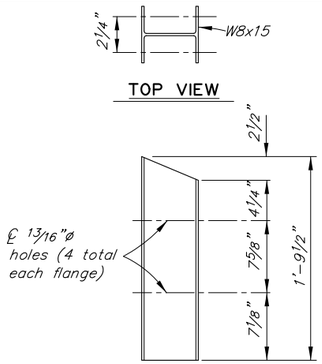

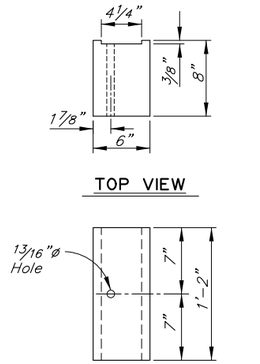

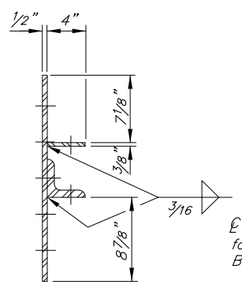

SECTION A-A

12 6 0 1
In. Feet

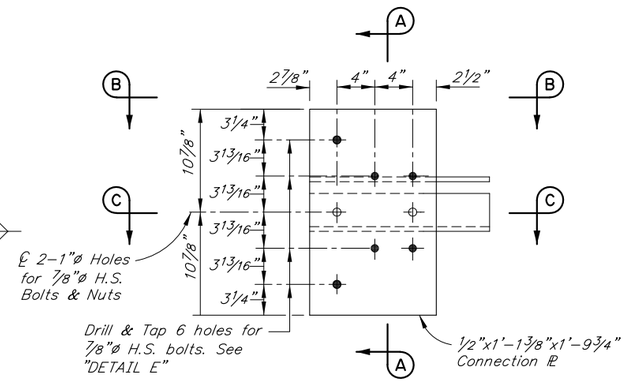

GUARDRAIL CONNECTION PLATE DETAILS

12 6 0 1
In. Feet

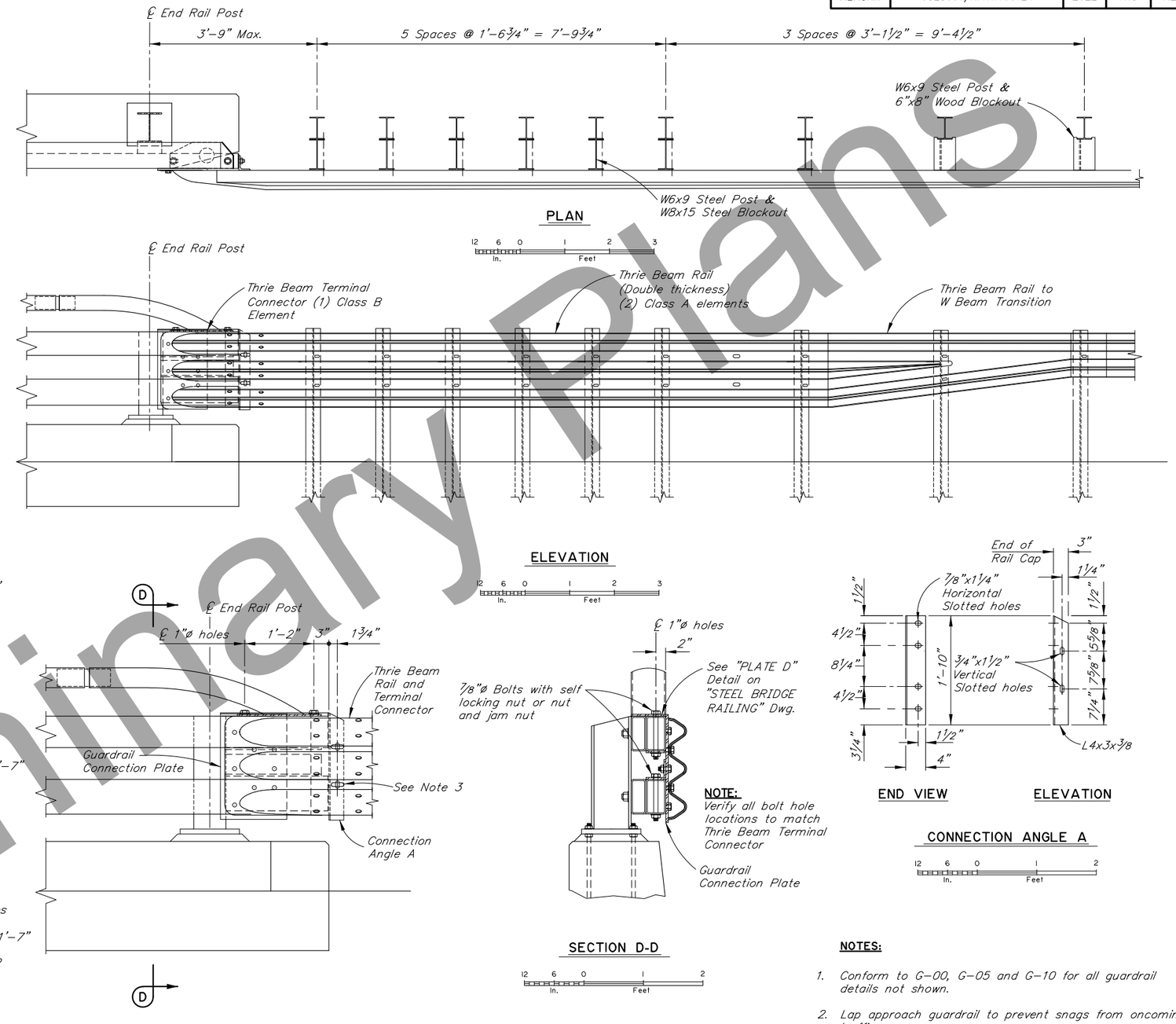

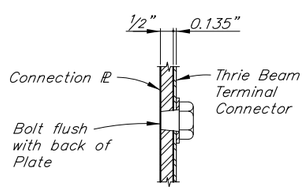

DETAIL E

No Scale

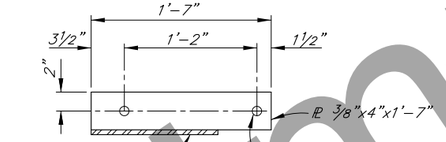

VIEW B-B

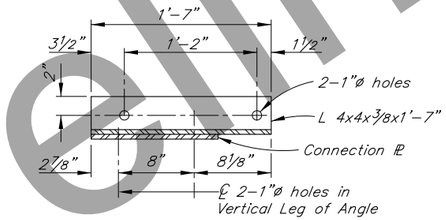

SECTION C-C

12 6 0 1
In. Feet

NOTES:

1. Conform to G-00, G-05 and G-10 for all guardrail details not shown.
2. Lap approach guardrail to prevent snags from oncoming traffic.
3. Provide 4½" horizontal slots in approach guardrail. Adjust guardrail bolts for sliding fit.

NOTE:
Verify all bolt hole locations to match Thrie Beam Terminal Connector

Preliminary Plans

DESIGNED BY: Andrew Wells	CHECKED: Jesse Escamilla III	STATE OF ALASKA DEPARTMENT OF TRANSPORTATION AND PUBLIC FACILITIES BRIDGE SECTION	NOYES SLOUGH BRIDGE AURORA DRIVE TRANSITION RAIL, 3-TUBE
DRAWN BY: Sam Sollie	CHECKED: Andrew Wells		BRIDGE NO. 209
QUANTITIES BY: Andrew Wells	CHECKED: Jesse Escamilla III		DWG. NO. 16

STATE	PROJECT DESIGNATION	YEAR	SHEET NO.	TOTAL SHEETS
ALASKA	NFHWY00124	2020	N17	N24

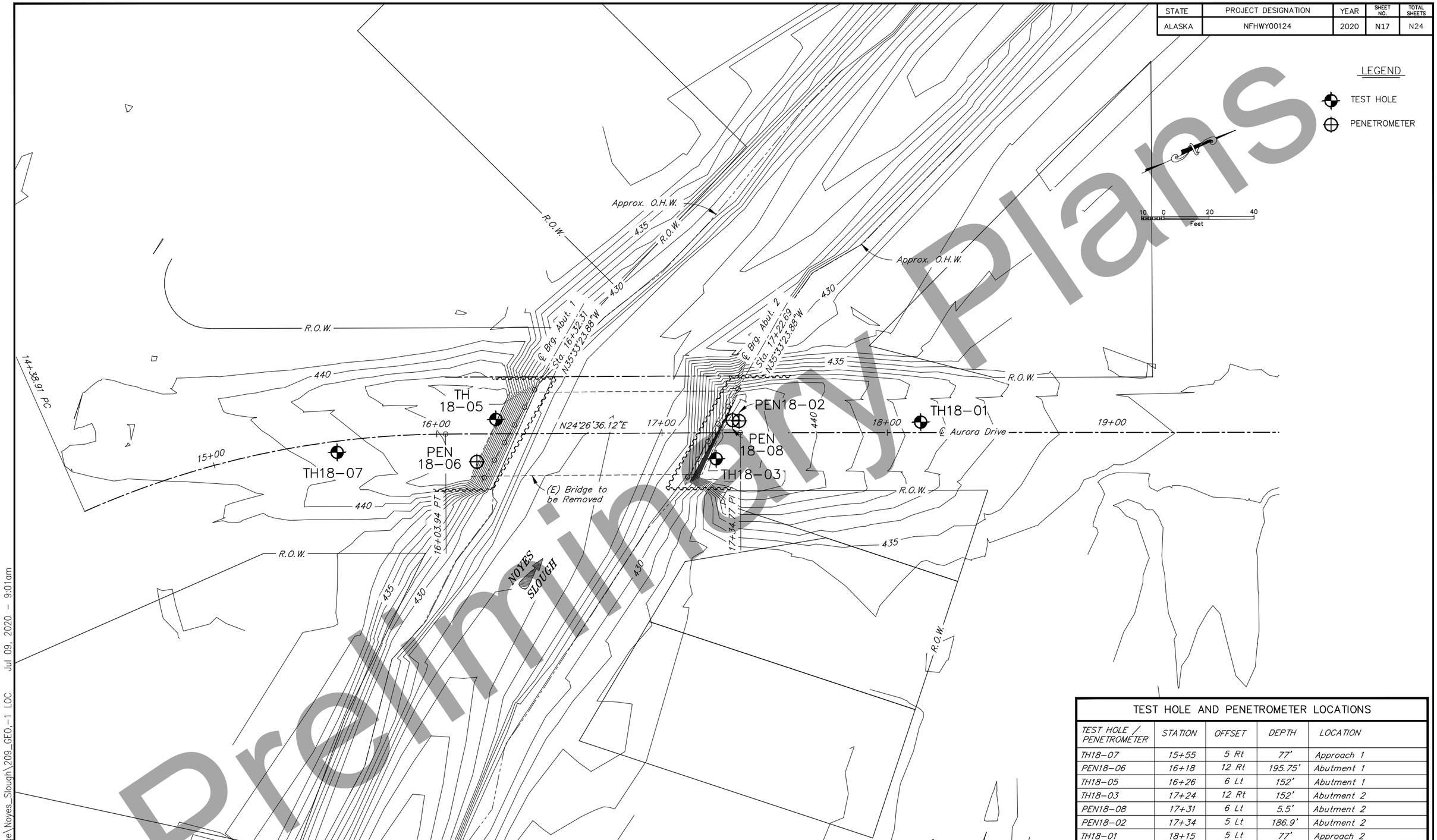

Preliminary Plans

TEST HOLE AND PENETROMETER LOCATIONS

TEST HOLE / PENETROMETER	STATION	OFFSET	DEPTH	LOCATION
TH18-07	15+55	5 Rt	77'	Approach 1
PEN18-06	16+18	12 Rt	195.75'	Abutment 1
TH18-05	16+26	6 Lt	152'	Abutment 1
TH18-03	17+24	12 Rt	152'	Abutment 2
PEN18-08	17+31	6 Lt	5.5'	Abutment 2
PEN18-02	17+34	5 Lt	186.9'	Abutment 2
TH18-01	18+15	5 Lt	77'	Approach 2

DESIGNED BY: D. Hemstreet	CHECKED: Engineer		
DRAWN BY: R. Angell	CHECKED: J. Nicolazzo		
QUANTITIES BY: Engineer	CHECKED: Engineer		

STATE OF ALASKA
DEPARTMENT OF TRANSPORTATION AND PUBLIC FACILITIES
STATEWIDE MATERIALS

STATE OF ALASKA 49TH
David A. Hemstreet
No. CE 9800
REGISTERED PROFESSIONAL ENGINEER

NOYES SLOUGH BRIDGE

AURORA DRIVE

TEST HOLE & PENETROMETER LOCATION

BRIDGE NO. 0209
DWG. NO. 17

C:\Home Work\NR Bridge\Noyes_Slough\209_GEO_-1 LOC Jul 09, 2020 - 9:01am

STATE	PROJECT DESIGNATION	YEAR	SHEET NO.	TOTAL SHEETS
ALASKA	NFHWY00124	2020	N18	N24

TYPICAL TEST HOLE LOG

DATE: Date begun – Date completed
STATION / OFFSET: XX+XX FEET RT or LT

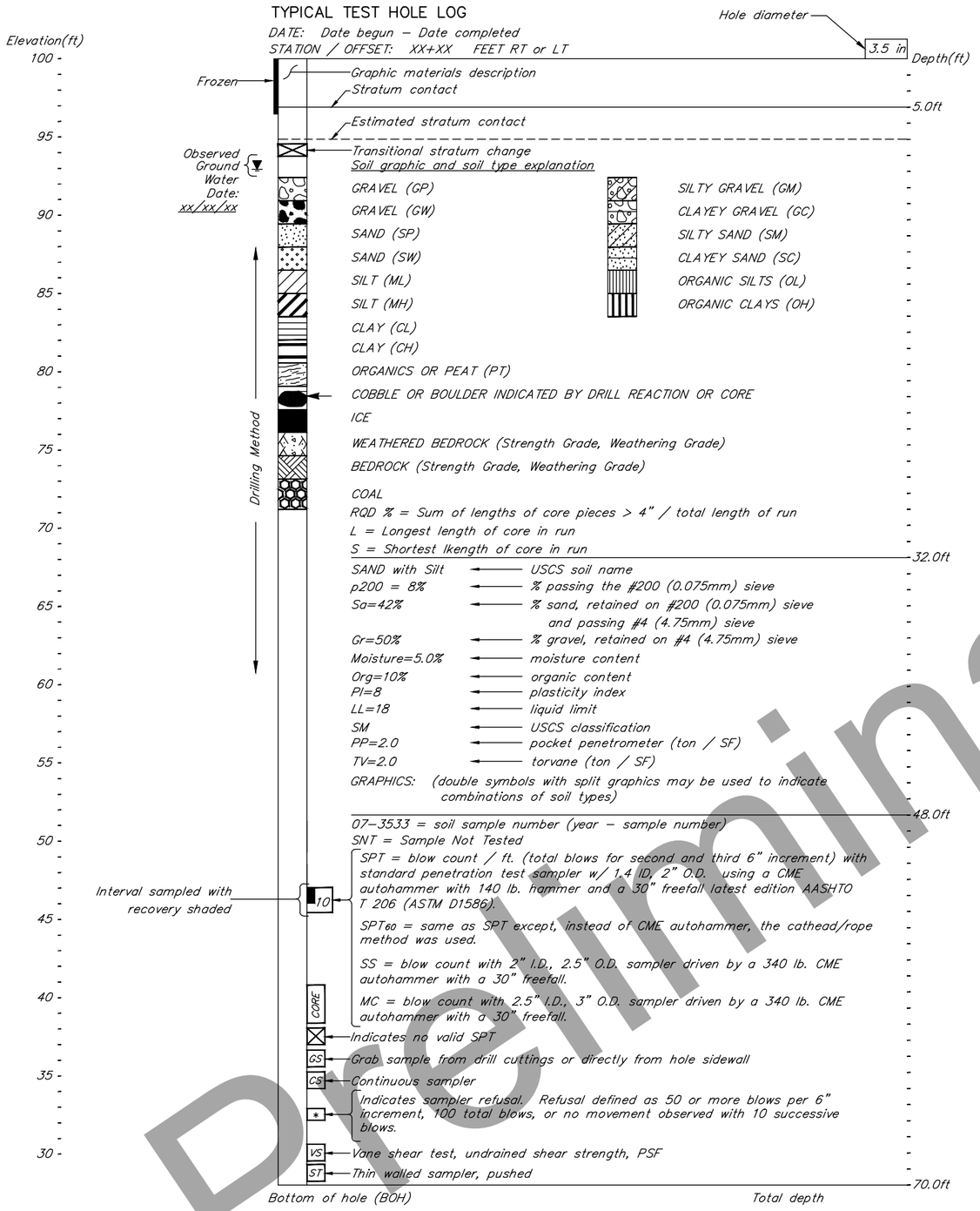

NOTES:

1) The test hole logs depicted graphically in these drawings are distillations of the original field logs, based on post–field investigation review and analysis. These drafted logs include changes made to field descriptions based upon laboratory test data, review and analysis. Detailed field observations of rock and soil sampled during the drilling program are not reproduced in the drafted logs.
2) Description of soils follows Alaska Geotechnical Procedures manual. Classification of soils follows Unified Soil Classification System (ASTM D2487).
3) The test hole logs from these sheets are an integral part of the Foundation Geology Report. See Construction Contract Bid Documents – invitation to bid/notice to bidders. Important information about the test hole logs and the foundation investigation is contained in the report. The test hole logs are not severable from and cannot be completely and correctly interpreted without reference to the Foundation Geology Report.

TYPICAL PENETROMETER TEST LOG

DATE: Date begun – Date completed
STATION / OFFSET: XX+XX / RT or LT (feet)

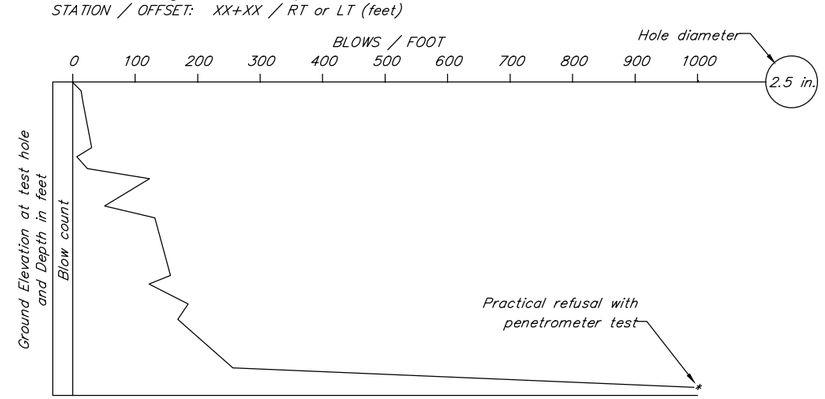

Bottom of hole (BOH)

NOTES:
Penetrometer W/2.5" O.D., with a CME AUTOMATIC Hammer using a 340 lb. weight and a 30" freefall

Preliminary Plans

DESIGNED BY: D. Hemstreet	CHECKED: Engineer		
DRAWN BY: R. Angell	CHECKED: J. Nicolazzo		
QUANTITIES BY: Engineer	CHECKED: Engineer		

STATE OF ALASKA
DEPARTMENT OF TRANSPORTATION AND PUBLIC FACILITIES
STATEWIDE MATERIALS

STATE OF ALASKA 49TH — David A. Hemstreet No. CE 9800 — REGISTERED PROFESSIONAL ENGINEER

NOYES SLOUGH BRIDGE

AURORA DRIVE

TEST HOLE AND PENETROMETER LEGEND

BRIDGE NO. 0209
DWG. NO. 18

C:\Home Work\MR Bridge\Noyes_Slough\209_GEO_-2 TYP Jul 09, 2020 – 9:02am

STATE	PROJECT DESIGNATION	YEAR	SHEET NO.	TOTAL SHEETS
ALASKA	NFHWY00124	2020	N19	N24

TH18-07

Date: 11/9/18 – 11/13/18
Station: 15+55 Offset: 5 Rt

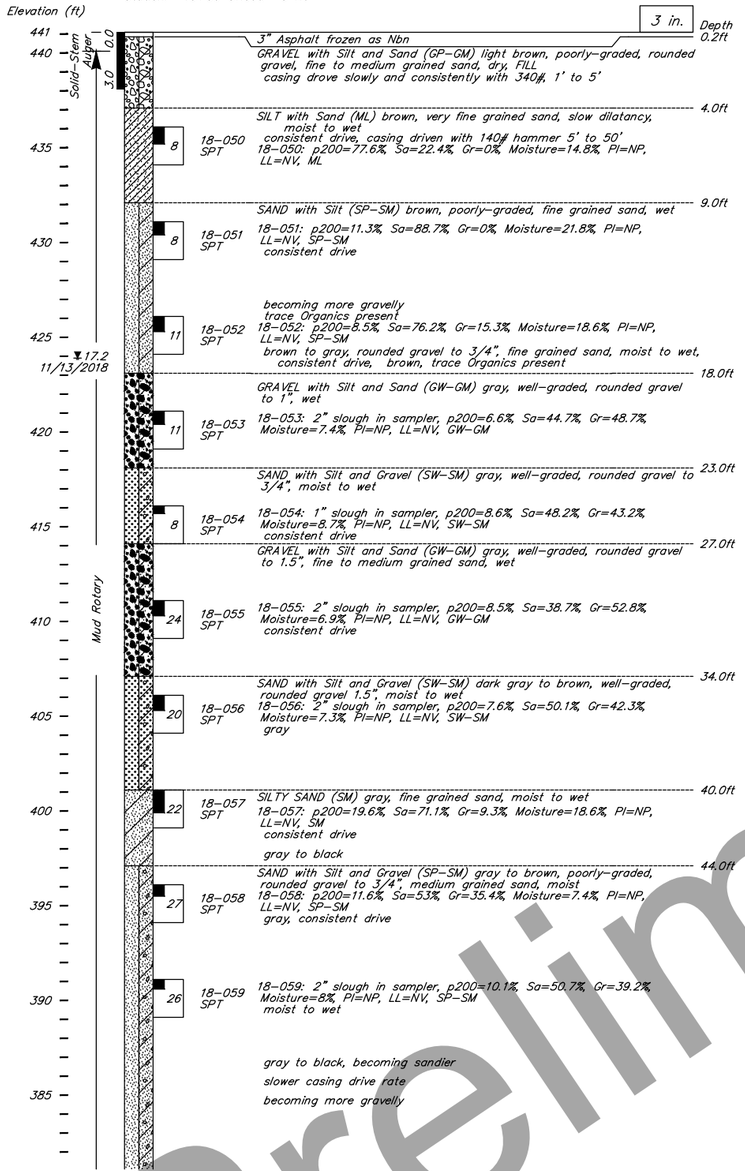

TH18-07 (cont)

Date: 11/9/18 – 11/13/18
Station: 15+55 Offset: 5 Rt

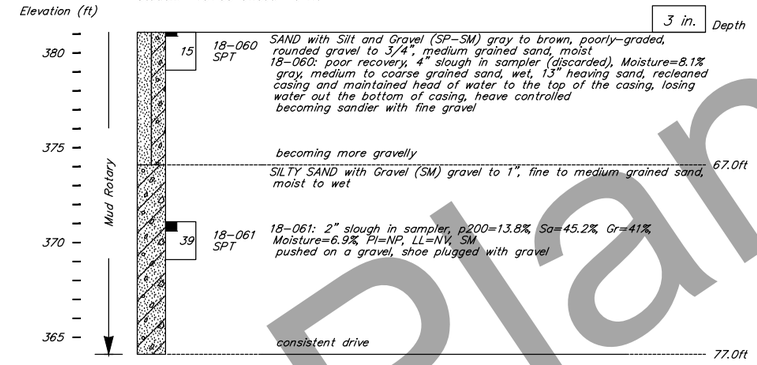

B.O.H. 77 ft.
Notes: 3" mud rotary Swing ties; SE bridge corner 59.71' and SW bridge corner 79.68'
Hammer: CME Auto Hammer, 140 lb hammer
Equipment: CME 55
Drilling Method: Casing Size NW
Geologist: C. Bohart

Preliminary Plans

DESIGNED BY: D. Hemstreet	CHECKED: Engineer		
DRAWN BY: R. Angell	CHECKED: J. Nicolazzo		
QUANTITIES BY: Engineer	CHECKED: Engineer		

STATE OF ALASKA
DEPARTMENT OF TRANSPORTATION AND PUBLIC FACILITIES
STATEWIDE MATERIALS

STATE OF ALASKA 49TH David A. Hemstreet No. CE 9800 REGISTERED PROFESSIONAL ENGINEER

NOYES SLOUGH BRIDGE

AURORA DRIVE

TEST HOLE & PENETROMETER LOGS

BRIDGE NO. 0209
DWG. NO. 19

C:\Home Work\NR Bridge\Noyes_Slough\209_GEO,-3 TH18-07 Jul 09, 2020 - 9:02am

STATE	PROJECT DESIGNATION	YEAR	SHEET NO.	TOTAL SHEETS
ALASKA	NFHWY00124	2020	N20	N24

PEN18-06

Date: 10/25/18 – 10/29/18
Station: 16+18 Offset: 12 Rt

Elev. (ft)	Depth (ft)	Blow Count
443	0	19
		18
		13
		8
		3
438	5	2
		3
		4
		7
		9
433	10	7
		5
		4
		4
		7
428	15	8
		8
		14
		18
		14
423	20	19
		38
		33
		25
		19
418	25	16
		21
		20
		16
		15
413	30	18
		22
		22
		19
		25
408	35	21
		18
		17
		21
		23
403	40	29
		38
		32
		27
		16
398	45	20
		27
		53
		83
		74
393	50	64
		58
		59
		53
		58
388	55	64
		62
		64
		52
383	60	42

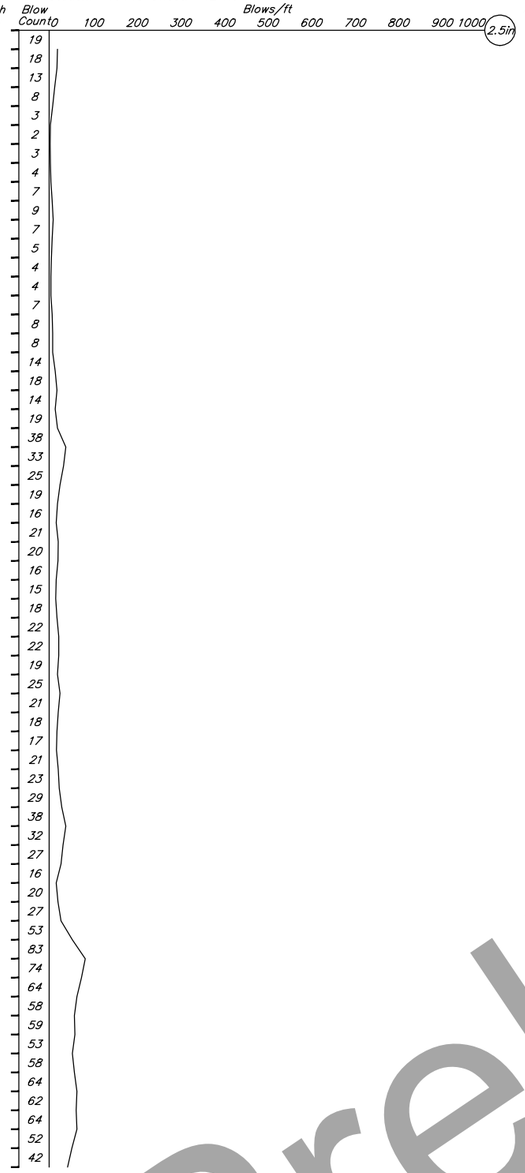

PEN18-06 (cont)

Date: 10/25/18 – 10/29/18
Station: 16+18 Offset: 12 Rt

Elev. (ft)	Depth (ft)	Blow Count
383	60	40
		38
		43
		39
		33
378	65	41
		35
		34
		39
		64
373	70	47
		37
		41
		55
		41
368	75	38
		37
		68
		68
		35
363	80	35
		38
		56
		40
		46
358	85	37
		34
		37
		37
		38
353	90	39
		36
		57
		73
		85
348	95	57
		48
		38
		33
		47
343	100	56
		51
		56
		81
		92
338	105	99
		87
		99
		85
		93
333	110	92
		111
		126
		146
		117
328	115	115
		131
		137
		120
323	120	114

PEN18-06 (cont)

Date: 10/25/18 – 10/29/18
Station: 16+18 Offset: 12 Rt

Elev. (ft)	Depth (ft)	Blow Count
323	120	113
		121
		128
		128
		124
318	125	107
		112
		110
		123
		119
313	130	129
		140
		124
		140
		154
308	135	164
		175
		153
		157
		165
303	140	150
		155
		165
		148
		150
298	145	156
		171
		164
		161
		164
293	150	164
		164
		163
		155
		180
288	155	157
		168
		160
		163
		165
283	160	160
		159
		161
		145
		158
278	165	151
		161
		158
		153
		195
273	170	195
		193
		187
		234
		217
268	175	183
		195
		200
		181
263	180	235

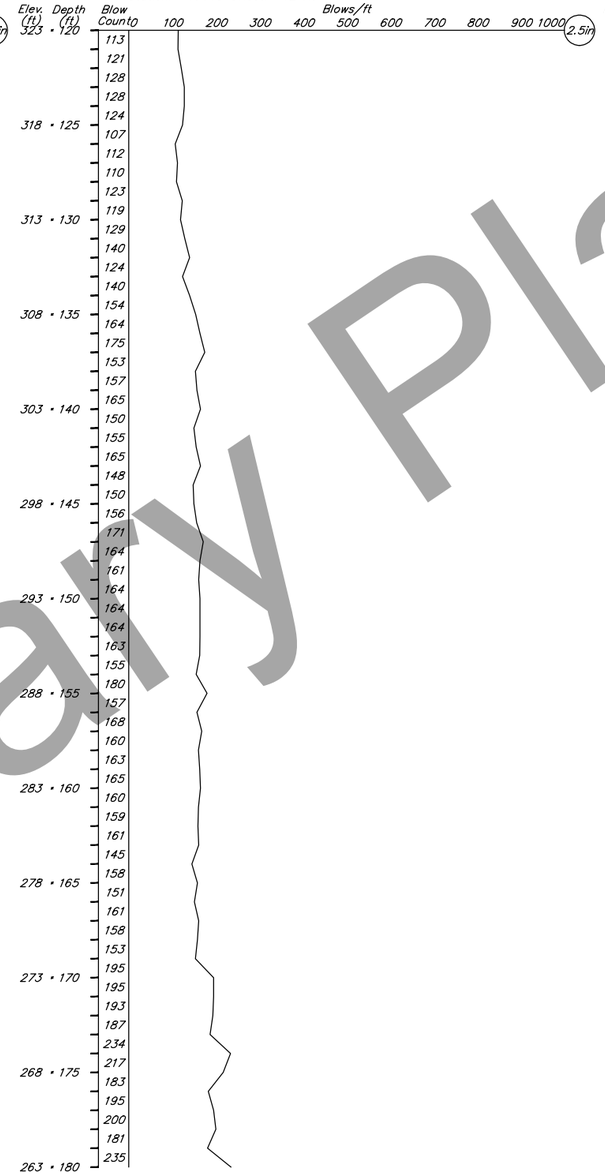

PEN18-06 (cont)

Date: 10/25/18 – 10/29/18
Station: 16+18 Offset: 12 Rt

Elev. (ft)	Depth (ft)	Blow Count
263	180	261
		223
		221
		249
		245
258	185	229
		226
		256
		292
		295
253	190	381
		453
		507
		613
		591
248	195	1309

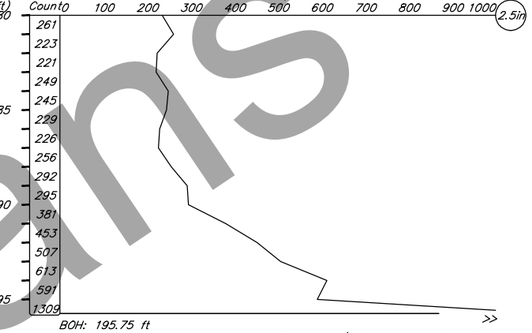

BOH: 195.75 ft
Notes: Continued next day at 69 feet. Finished 10/29 from 195.2 to 195.75.
10.3' S of bridge deck. Swing ties; SW bridge corner 32.00' and SE bridge corner 8.93'
Hammer: CME Auto Hammer, 340 lb hammer
Equipment: CME 55
Drilling Method: Penetrometer
Geologist: C. Bohart

Preliminary Plans

DESIGNED BY: D. Hemstreet	CHECKED: Engineer		
DRAWN BY: R. Angell	CHECKED: J. Nicolazzo		
QUANTITIES BY: Engineer	CHECKED: Engineer		

STATE OF ALASKA
DEPARTMENT OF TRANSPORTATION AND PUBLIC FACILITIES
STATEWIDE MATERIALS

STATE OF ALASKA 49TH David A. Hemstreet No. CE 9800 REGISTERED PROFESSIONAL ENGINEER

NOYES SLOUGH BRIDGE

AURORA DRIVE

TEST HOLE & PENETROMETER LOGS

BRIDGE NO. 0209
DWG. NO. 20

C:\Home Work\NR Bridge\Noyes_Slough\209_GEO,-4 PEN18-06 Jul 09, 2020 - 9:02am

STATE	PROJECT DESIGNATION	YEAR	SHEET NO.	TOTAL SHEETS
ALASKA	NFHWY00124	2020	N21	N24

TH18-05

Date: 11/2/18 – 11/6/18
Station: 16+26 Offset: 6 Lt

Hollow-Stem Auger

Elevation (ft)	Depth (3 in.)	Description
443		12" Asphalt
	1.0ft	SILTY SAND with Gravel (SM) gray to brown, dry, FILL
440		SILTY SAND with Gravel (SM) gray to brown, very fine to fine grained sand, dry
	12	18-018 SPT — 18-018: p200=42.0%, Sa=47.7%, Gr=10.3%, Moisture=16.9%, PI=NP, LL=NV, SM
435		black, trace Organics present
	5	18-019 SPT — 18-019: p200=18.2%, Sa=43.8%, Gr=38%, Moisture=14.1%, PI=NP, LL=NV, SM; gray, fine grained sand, moist to wet, consistent drive
430		black, trace Organics present
	14.0ft	SAND with Silt (SP-SM) gray, poorly-graded, fine grained sand
15.0 11/5/2018	8	18-020 SPT — 18-020: p200=10%, Sa=83.1%, Gr=6.9%, Moisture=20.9%, PI=NP, LL=NV, SP-SM; consistent drive
425 18.1 11/7/2018		black, trace Organics present
	20.0ft	GRAVEL with Silt and Sand (GP-GM) gray, poorly-graded, gravel to 1", fine grained sand
	13	18-021 SPT — 18-021: p200=6.2%, Sa=45.5%, Gr=48.3%, Moisture=9.4%, PI=NP, LL=NV, GP-GM; consistent drive
420	24.0ft	SAND with Silt and Gravel (SP-SM) gray, poorly-graded, gravel to 1", fine to medium grained sand
	37	18-022 SPT — 18-022: p200=10.5%, Sa=49.1%, Gr=40.4%, Moisture=7.5%, PI=NP, LL=NV, SP-SM; consistent drive
415	28.0ft	GRAVEL with Silt and Sand (GP-GM) gray, poorly-graded, gravel to 1", fine to coarse grained sand, moist to wet; becoming more gravelly
	9	18-023 SPT — 18-023: 1" slough in sampler, p200=7.5%, Sa=34.4%, Gr=58.1%, Moisture=8.7%, PI=NP, LL=NV, GW-GM; well-graded, gravel plugged shoe, consistent drive
410		
	17	18-024 SPT — 18-024: 1" slough in sampler, p200=10.8%, Sa=41.5%, Gr=47.7%, Moisture=8.3%, PI=NP, LL=NV, GP-GM; poorly-graded, driving cobble ahead of sampler
405		
	20	18-025 SPT — consistent drive; 18-025: p200=4.8%, Sa=44.7%, Gr=50.5%, Moisture=20%, PI=NP, LL=NV, GP
400	44.0ft	SAND with Silt and Gravel (SW-SM) gray, well-graded, gravel to 3/4", wet
	17	18-026 SPT — 18-026: p200=10.2%, Sa=48.3%, Gr=41.5%, Moisture=7.7%, PI=NP, LL=NV, SW-SM; consistent drive
395	48.0ft	SILTY SAND (SM) black, very fine to fine grained sand, trace Organics present
	17	18-027 MC — 18-027: p200=20.8%, Sa=69.1%, Gr=10.1%, Moisture=8.4%, PI=NP, LL=NV, SM
390		
385	59.0ft	

TH18-05 (cont)

Date: 11/2/18 – 11/6/18
Station: 16+26 Offset: 6 Lt

Elevation (ft)	Depth (3 in.)	Description
	14	18-028 MC — GRAVEL with Sand (GP) gray, poorly-graded, gravel to 1.5", fine grained sand, wet; 18-028: p200=4.1%, Sa=43.2%, Gr=52.7%, Moisture=8.5%, PI=NP, LL=NV, GP; consistent drive with 340# hammer
320		
315		
	15	18-029 MC — well-graded; 18-029: p200=4%, Sa=36.8%, Gr=59.2%, Moisture=7.1%, PI=NP, LL=NV, GW
310	77.0ft	SAND with Gravel (SP) dark gray, poorly-graded, gravel to 1", moist to wet
305		
	17	18-030 MC — 18-030: p200=4.2%, Sa=53.6%, Gr=42.2%, Moisture=9.9%, PI=NP, LL=NV, SP; 1" heaving sand, Last 18 inches had consistent drive
300		becoming sandier, casing drove easier from 80' to 90'
		becoming more gravelly
295	17	18-031 SPT — 18-031: p200=7.6%, Sa=55.4%, Gr=37%, Moisture=10%, PI=NP, LL=NV, SP-SM; gray, gravel to 3/4", wet, consistent drive, becoming finer grained, siltier
	36	18-032 SPT — SILTY SAND (SM) very fine to fine grained sand, moist, 1-2" gray sand beds interbedded with 1" brown silt beds; 18-032: 1/2" slough in sampler, p200=39.7%, Sa=55.5%, Gr=4.7%, Moisture=19.9%, PI=NP, LL=NV, SM; consistent drive
345	100.0ft	black, trace Organics present; consistent casing drive 100' to 104', 10 minutes 50.5 bpm
340		
335		gray to black, coarse grained sand
		60" heaving sand; 67" heaving sand, kept casing full of water to limit heave
	9	SPT
330		no recovery, gravel plugged sampler shoe
		gray to black, fine grained sand, trace fine gravel
325		

TH18-05 (cont)

Date: 11/2/18 – 11/6/18
Station: 16+26 Offset: 6 Lt

Elevation (ft)	Depth (3 in.)	Description
	46	18-033 SPT — SILTY SAND (SM) very fine to fine grained sand, moist, 1-2" gray sand beds interbedded with 1" brown silt beds; 18-033: 1" slough in sampler, p200=20.8%, Sa=77.5%, Gr=1.7%, Moisture=15.6%, PI=NP, LL=NV, SM; gray, very fine to fine grained sand, moist to wet, consistent drive
		trace fine gravel
	14	18-034 / 18-035 MC — 18-034: p200=30.5%, Sa=68.6%, Gr=0.9%, Moisture=16.3%, PI=NP, LL=NV, SM
130.5ft		SILT with Sand (ML) very fine grained sand, moist to wet, Alternating 1/4" brown silt and gray sand beds, consistenet drive; 18-035: p200=72%, Sa=28%, Gr=0%, Moisture=39.1%, PI=NP, LL=NV, ML
133.0ft		SILTY SAND (SM) gray, very fine to fine grained sand, moist to wet; black, trace Organics present
		black, trace Organics present
	34	18-036 SPT — 18-036: p200=20.6%, Sa=79.4%, Gr=0%, Moisture=20.1%, Org=1.1%, PI=NP, LL=NV, SM; consistent drive
		brown, Organics present
		black, trace Organics present
	44	18-037 SPT — 18-037: p200=20.8%, Sa=79.2%, Gr=0%, Moisture=18.3%, PI=NP, LL=NV, SM; gray, 2" heaving sand, consistent drive
152.0ft		

B.O.H. 152 ft.
Notes: 3" mud rotary, 20' of casing broke off and left in the hole,
Swing ties; SE bridge corner 29.68' and SW bridge corner 11.47'
Hammer: CME Auto Hammer, both 140 and 340
Equipment: CME 55
Drilling Method: Casing Size NW
Geologist: C. Bohart

Preliminary Plans

DESIGNED BY: D. Hemstreet	CHECKED: Engineer		
DRAWN BY: R. Angell	CHECKED: J. Nicolazzo		
QUANTITIES BY: Engineer	CHECKED: Engineer		

STATE OF ALASKA
DEPARTMENT OF TRANSPORTATION AND PUBLIC FACILITIES
STATEWIDE MATERIALS

STATE OF ALASKA 49TH — David A. Hemstreet No. CE 9800 — REGISTERED PROFESSIONAL ENGINEER

NOYES SLOUGH BRIDGE

AURORA DRIVE

TEST HOLE & PENETROMETER LOGS

BRIDGE NO. 0209
DWG. NO. 21

C:\Home Work\MR Bridge\Noyes_Slough\209_GEO,-5 TH18-05 Jul 09, 2020 - 9:02am

STATE	PROJECT DESIGNATION	YEAR	SHEET NO.	TOTAL SHEETS
ALASKA	NFHWY00124	2020	N22	N24

TH18-03

Date: 10/29/18 – 11/1/18
Station: 17+24 Offset: 12 Rt

Elevation (ft) | Depth

3 in.

Solid Stem Auger

- 0.3ft — Asphalt Concrete
- SAND with Gravel (SP) brown to gray, poorly-graded, rounded gravel, medium to coarse grained sand, dry, FILL
- 2.3ft — GRAVEL with Silt and Sand (GP-GM) brown to gray, poorly-graded, rounded gravel to 1.5", dry, FILL
- 37 — 18-001 SPT — 18-001: p200=9.1%, Sa=45.3%, Gr=45.6%, Moisture=3.6%, PI=NP, LL=NV, GP-GM
- 6.7 10/30/2018
- 10.0ft — 12 — 18-002 SPT — SILTY SAND with Gravel (SM) brown, gravel to 1", fine grained sand, moist; 18-002: p200=46.4%, Sa=28.6%, Gr=25%, Moisture=16%, PI=NP, LL=NV, SM
- 13.0ft — GRAVEL with Silt and Sand (GP-GM) gray, poorly-graded, subrounded to rounded gravel to 1.5", fine to medium grained sand, moist to wet
- 8 — SPT — shoe pushed on a gravel
- 18.3 11/1/2018
- trace Organics present in cuttings as wood
- 41 — 18-003 SPT — 18-003: p200=8.9%, Sa=44.2%, Gr=46.9%, Moisture=6.6%, PI=NP, LL=NV, GP-GM; moist to wet, shoe plugged with gravel, good consistent drive, no slough or heave
- 24.0ft — SILTY SAND with Gravel (SM) gray, gravel to 1", fine to medium grained sand, dry to moist
- 40 — 18-004 SPT — sampler pushed on a gravel the first 6"; 18-004: p200=16%, Sa=44.1%, Gr=39.9%, Moisture=7.9%, PI=NP, LL=NV, SM
- casing is driving consistently with the 140# hammer 420 blows / 5'
- 33 — 18-005 SPT — moist; 18-005: 1" slough in sampler
- Mud Rotary
- 28 — 18-006 SPT — wet; 18-006: p200=16%, Sa=80%, Gr=4%, Moisture=19.6%, PI=NP, LL=NV, SM; consistent casing drive
- consistent casing drive
- 26 — 18-007 SPT — 18-007: p200=13.7%, Sa=55.4%, Gr=30.9%, Moisture=10.3%, PI=NP, LL=NV, SM
- 43.0ft — GRAVEL with Silt and Sand (GP-GM) gray, poorly-graded, gravel to 1.5", fine to medium grained sand, wet
- 40 — 18-008 SPT — 18-008: p200=11.2%, Sa=43.6%, Gr=45.2%, Moisture=7.3%, PI=NP, LL=NV, GP-GM
- 47.0ft — SAND with Silt and Gravel (SP-SM) gray, poorly-graded, gravel to 1.5", fine to medium grained sand, wet, interbedded sand and gravel layers
- 55 — 18-009 SPT — 18-009: p200=10.8%, Sa=51.8%, Gr=37.4%, Moisture=7.4%, PI=NP, LL=NV, SP-SM; pushed on a gravel, gravel in shoe
- consistent casing drive w/ 340# hammer

TH18-03 (cont)

Date: 10/29/18 – 11/1/18
Station: 17+24 Offset: 12 Rt

Elevation (ft) | Depth

3 in.

- 21 — 18-010 SPT — SAND with Silt and Gravel (SP-SM) gray, poorly-graded, gravel to 1.5", fine to medium grained sand, wet, interbedded sand and gravel layers; pushed on a gravel the first 18 blows, gravel in shoe; 18-010: Moisture=6.2%
- 6 — SPT — pushed on a gravel; no recovery
- 73.0ft — SILTY SAND with Gravel (SM) gray, gravel to 1", medium grained sand, wet
- consistent casing drive w/ 340# hammer
- black, trace Organics present
- 51 — 18-011 SPT — pushed on a gravel; 18-011: p200=14.8%, Sa=48.2%, Gr=37%, Moisture=9.6%, PI=NP, LL=NV, SM
- consistent casing drive 80 to 89 then faster 89 to 90, w/ 340# hammer
- becoming sandier
- Mud Rotary
- 89.0ft — SAND with Silt and Gravel (SW-SM) gray, well-graded, gravel to 1/2", medium grained sand, wet, loose easy drilling; 5" heaving sand
- 50 — 18-012 SPT — 18-012: p200=9.9%, Sa=71.1%, Gr=19%, Moisture=8.5%, PI=NP, LL=NV, SW-SM; driving cobble ahead of sampler
- 97.0ft — SILTY SAND (SM) brown, gravel to 3/4", fine to medium grained sand, moist to wet, trace Organics present; consistent casing drive w/ 340# hammer
- 20 — SPT — gravel plugged shoe
- gray to brown
- becoming more gravelly
- 58 — 18-013 SPT — 18-013: p200=14.4%, Sa=73.7%, Gr=11.9%, Moisture=11.4%, PI=NP, LL=NV, SM

TH18-03 (cont)

Date: 10/29/18 – 11/1/18
Station: 17+24 Offset: 12 Rt

Elevation (ft) | Depth

3 in.

- 70 — 18-014 SPT — SILTY SAND (SM) brown, gravel to 3/4", fine to medium grained sand, moist to wet, trace Organics present; 18-014: p200=19.6%, Sa=78.3%, Gr=2.1%, Moisture=14.8%, PI=NP, LL=NV, SM
- gray to black, fine grained sand, becoming sandier
- becoming denser, casing drive time almost double the last foot, (3 min versus 5.5 min)
- 60 — 18-015 SPT — 18-015: p200=34.3%, Sa=56%, Gr=9.6%, Moisture=15.8%, Org=2.2%, PI=NP, LL=NV, SM
- gray, medium grained sand, trace Organics present
- Mud Rotary
- 51 — 18-016 SPT — 18-016: p200=24.8%, Sa=74.9%, Gr=0.3%, Moisture=16.2%, PI=NP, LL=NV, SM; consistent drive
- fine grained sand, consistent casing drive w/ 340# hammer
- 48 — 18-017 SPT — 18-017: p200=27%, Sa=73%, Gr=0%, Moisture=16.1%, PI=NP, LL=NV, SM
- 152.0ft

B.O.H. 152 ft.
Notes: 3" mud rotary, Swing ties; NW bridge corner 29.75' and NE bridge corner 11.32'
Hammer: CME Auto Hammer, 140 lb hammer
Equipment: CME 55
Drilling Method: Casing Size NW
Geologist: C. Bohart & T. Weiss

Preliminary Plans

DESIGNED BY: D. Hemstreet	CHECKED: Engineer	STATE OF ALASKA DEPARTMENT OF TRANSPORTATION AND PUBLIC FACILITIES STATEWIDE MATERIALS	NOYES SLOUGH BRIDGE AURORA DRIVE TEST HOLE & PENETROMETER LOGS
DRAWN BY: R. Angell	CHECKED: J. Nicolazzo	STATE OF ALASKA 49TH David A. Hemstreet No. CE 9800 REGISTERED PROFESSIONAL ENGINEER	BRIDGE NO. 0209
QUANTITIES BY: Engineer	CHECKED: Engineer		DWG. NO. 22

C:\Home Work\NR Bridge\Noyes_Slough\209_GEO,-6 TH18-03 Jul 09, 2020 - 9:02am

STATE	PROJECT DESIGNATION	YEAR	SHEET NO.	TOTAL SHEETS
ALASKA	NFHWY00124	2020	N23	N24

PEN18-02

Date: 10/24/18 – 10/25/18
Station: 17+34 Offset: 5 Lt

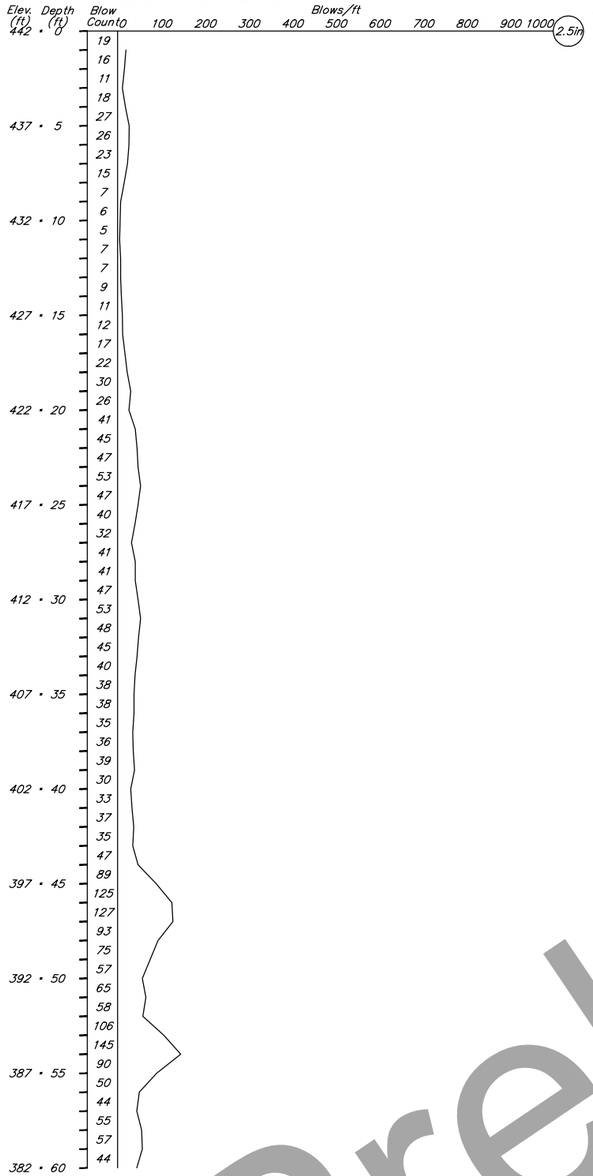

PEN18-02 (cont)

Date: 10/24/18 – 10/25/18
Station: 17+34 Offset: 5 Lt

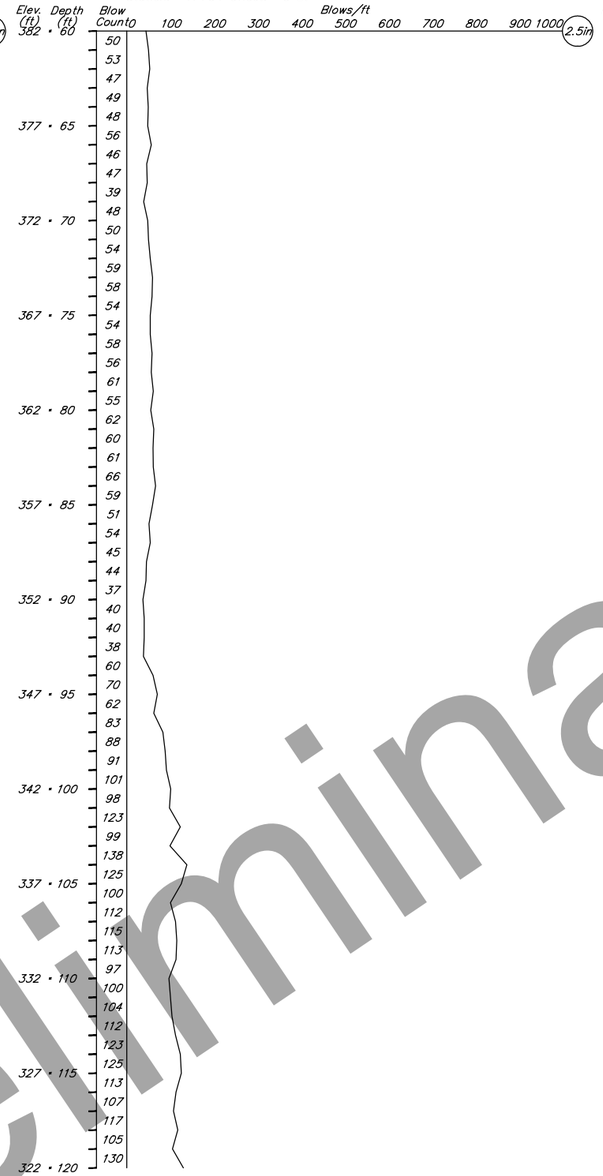

PEN18-02 (cont)

Date: 10/24/18 – 10/25/18
Station: 17+34 Offset: 5 Lt

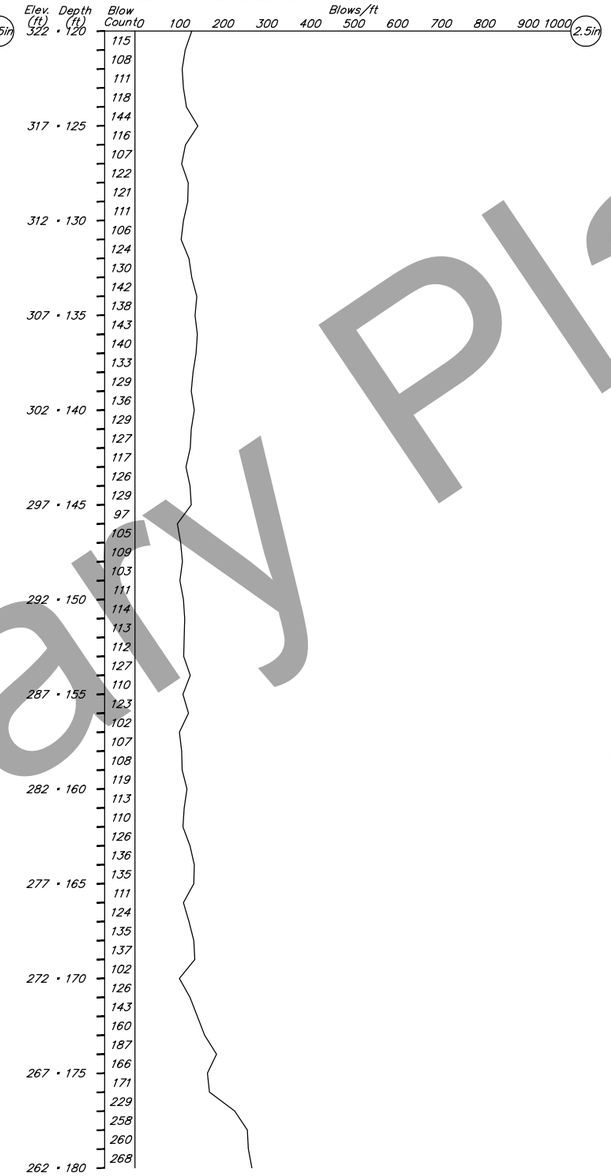

PEN18-02 (cont)

Date: 10/24/18 – 10/25/18
Station: 17+34 Offset: 5 Lt

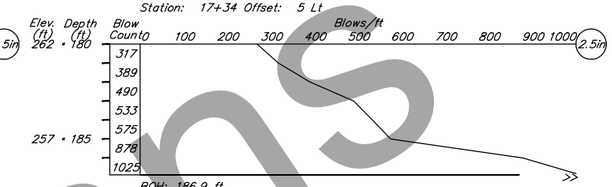

BOH: 186.9 ft
Notes: Continued next day at 145-feet 10.3' N of bridge deck. Swing ties; NW bridge corner 11.63' and NE bridge corner 30.87'
Hammer: CME Auto Hammer, 340 lb hammer
Equipment: CME 55
Drilling Method: Penetrometer
Geologist: C. Bohart

PEN18-08

Date: 10/24/18 – 10/24/18
Station: 17+31 Offset: 6 Lt

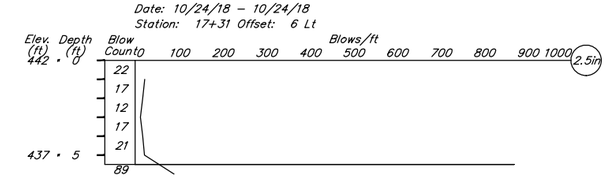

BOH: 5.5 ft
Notes: Drove rod to 5.5 feet and met bouncing "refusal". The blunt drive shoe was marked across the face. The drillers found a buried piece of trashed iron, most likely rebar. 8.1' N of bridge deck. Swing ties; NW bridge corner 11.35' and NE bridge corner 29.65'
Hammer: CME Auto Hammer, 340 lb hammer
Equipment: CME 55
Drilling Method: Penetrometer
Geologist: C. Bohart

Preliminary Plans

DESIGNED BY: D. Hemstreet	CHECKED: Engineer	STATE OF ALASKA DEPARTMENT OF TRANSPORTATION AND PUBLIC FACILITIES STATEWIDE MATERIALS	NOYES SLOUGH BRIDGE AURORA DRIVE TEST HOLE & PENETROMETER LOGS
DRAWN BY: R. Angell	CHECKED: J. Nicolazzo	STATE OF ALASKA 49TH David A. Hemstreet No. CE 9800 REGISTERED PROFESSIONAL ENGINEER	BRIDGE NO. 0209
QUANTITIES BY: Engineer	CHECKED: Engineer		DWG. NO. 23

C:\Home Work\NR Bridge\Noyes_Slough\209_GEO,-7 PEN18-02&08 Jul 09, 2020 – 9:02am

STATE	PROJECT DESIGNATION	YEAR	SHEET NO.	TOTAL SHEETS
ALASKA	NFHWY00124	2020	N24	N24

TH18-01

Date: 11/7/18 – 11/8/18
Station: 18+15 Offset: 5 Lt

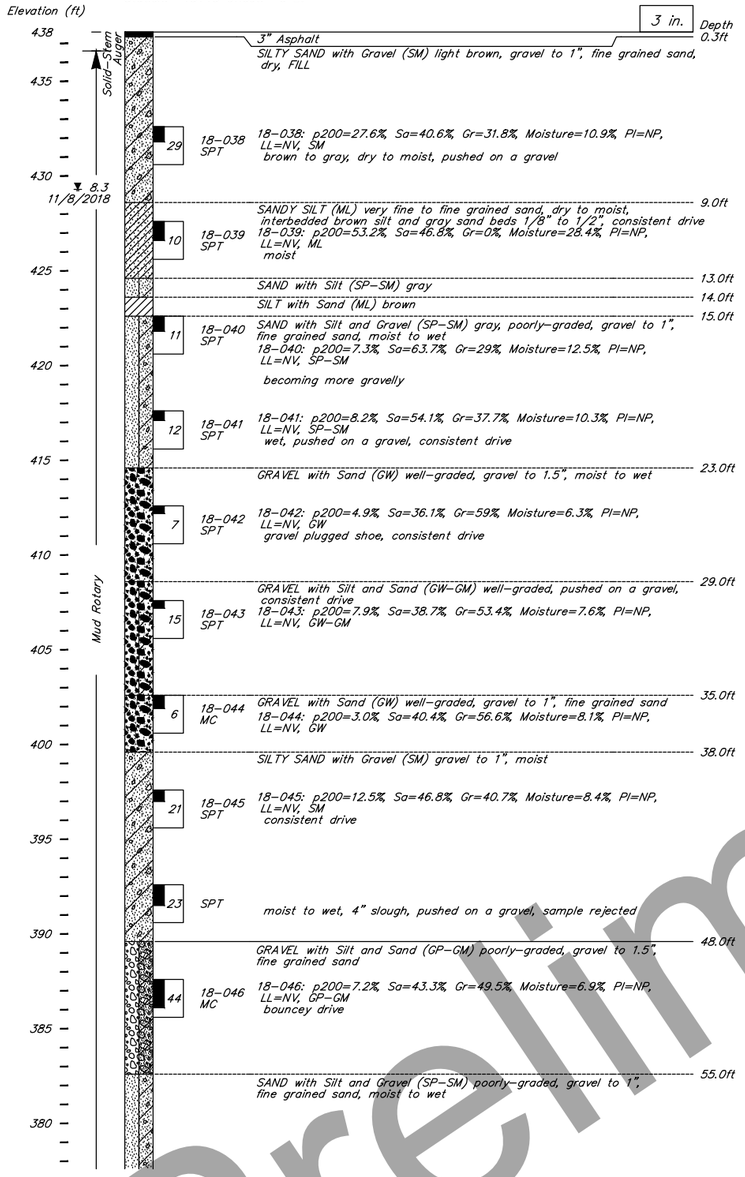

TH18-01 (cont)

Date: 11/7/18 – 11/8/18
Station: 18+15 Offset: 5 Lt

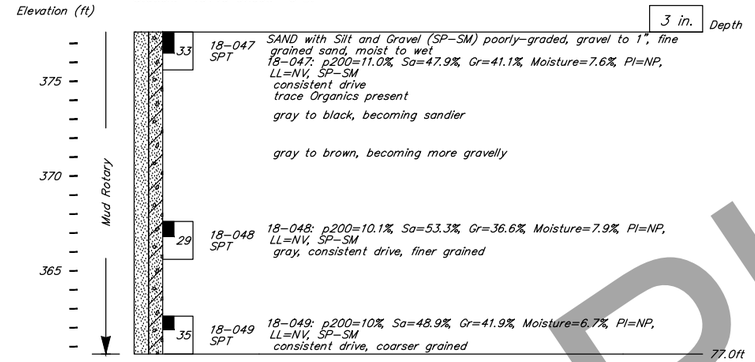

B.O.H. 77 ft.
Notes: 3" mud rotary, Swing ties; NW bridge corner 82.55' and NE bridge corner 101.42'
Hammer: CME Auto Hammer, both 140 and 340
Equipment: CME 55
Drilling Method: Casing Size NW
Geologist: C. Bohart

Preliminary Plans

DESIGNED BY: D. Hemstreet	CHECKED: Engineer		
DRAWN BY: R. Angell	CHECKED: J. Nicolazzo		
QUANTITIES BY: Engineer	CHECKED: Engineer		

STATE OF ALASKA
DEPARTMENT OF TRANSPORTATION AND PUBLIC FACILITIES
STATEWIDE MATERIALS

STATE OF ALASKA 49TH David A. Hemstreet No. CE 9800 REGISTERED PROFESSIONAL ENGINEER

NOYES SLOUGH BRIDGE

AURORA DRIVE

TEST HOLE & PENETROMETER LOGS

BRIDGE NO. 0209
DWG. NO. 24

C:\Home Work\MR Bridge\Noyes_Slough\209_GEO_-8 TH18-01 Jul 09, 2020 - 9:02am

NO.	DATE	REVISION	STATE	PROJECT DESIGNATION	YEAR	SHEET NO.	TOTAL SHEETS
			ALASKA	0629001/NFHWY00124	2022	Q1	Q2

GENERAL NOTES:

1. THIS ESCP IS A GENERAL PLAN FOR GUIDING THE DEVELOPMENT OF THE CONTRACTORS SWPPP. THE CONTRACTOR IS EXPECTED TO PROVIDE ADDITIONAL DETAILS AND BMP'S BASED ON THE CONTRACTORS ACTUAL SCHEDULE AND CONSTRUCTION METHODS, AS REQUIRED TO COMPLY WITH THE CONSTRUCTION GENERAL PERMIT AKR1000000.
2. EROSION AND SEDIMENT CONTROL FEATURES MUST BE BASED ON THE DOT&PF MANUAL ALASKA STORM WATER POLLUTION PREVENTION PLAN GUIDE (OCTOBER 2016 OR LATEST VERSION) AND LATEST BMPs.
3. INITIATE EROSION AND SEDIMENT CONTROLS PRIOR TO ANY EARTH DISTURBING ACTIVITIES.
4. DEVICES MAY NEED TO BE REMOVED AND REINSTALLED TO ALLOW CONSTRUCTION ACTIVITIES TO PROCEED. MAINTAIN ALL DEVICES DAILY INCLUDING, BUT NOT LIMITED TO REMOVAL AND DISPOSAL OF ACCUMULATED SOILS, CLEANING DEVICES AND REPLACEMENT OF DAMAGED DEVICES.
5. STOCKPILE AND STAGING LOCATIONS MUST BE RECLAIMED TO THEIR ORIGINAL CONDITION. STOCKPILES AND/OR STAGING AREAS ARE NOT ALLOWED IN WETLANDS.
6. ENSURE LOADS ARE STABLE OR COVERED SO THAT NO MATERIAL ESCAPES DURING HAULING ACTIVITIES.
7. PROVIDE CONCRETE WASHOUT FACILITIES.
8. PROVIDE VEHICLE CLEANING EQUIPMENT OR OTHER APPROVED CONTROLS TO PREVENT TRACKING OF DIRT AND GRAVEL ONTO PAVED SURFACES.
9. PROVIDE INLET PROTECTION AT ALL INLETS IN AND ADJACENT TO WORK AREAS (SEE BMP 25.00 – 29.00 DOT&PF SWPPP GUIDE).
10. AVOID UNNECESSARY GROUND DISTURBANCE AND MAINTAIN NATIVE VEGETATION WHERE PRACTICABLE THROUGH THE USE OF BMPs AND DOT&PF REVIEW OF PROPOSED SWPPP.
11. VEGETATIVE BUFFER IS THE PREFERRED METHOD OF PERIMETER CONTROL FOR THIS PROJECT. WHERE VEGETATION IS NOT WIDE ENOUGH PER BMP 38.00 DOT&PF SWPPP GUIDE, A BMP MUST BE INSTALLED FOR PERIMETER CONTROL.
12. IF EXCAVATION DEWATERING WILL OCCUR ON THE PROJECT, THE CONTRACTOR MUST COMPLY WITH THE EXCAVATION DEWATERING GENERAL PERMIT AKG0020000 AND SUBMIT A NOI AND A CERTIFIED BMP PLAN TO ADEC FOR APPROVAL BEFORE DEWATERING CAN BEGIN.
13. CONTRACTOR SHALL COMPLY WITH SPECIFICATION SECTION 641. ALL IN–WATER WORK MUST BE ISOLATED FROM FLOWING WATER, REFER TO APPENDIX A OF THE CONTRACT FOR ENVIRONMENTAL PERMIT INFORMATION. SUPPORT ACTIVITIES ARE CONTRACTOR FURNISHED. REFER TO APPENDIX C OF THE CONTRACT FOR THE ESCP TEMPLATE.

ESCP LEGEND:

- PARCEL BOUNDARY
- SURFACE WATER FLOW DIRECTION
- INLET PROTECTION (SEE BMP 08.00 DOT&PF SWPPP GUIDE)
- VELOCITY DISSIPATOR (RIPRAP CLASS II OR FUNCTIONAL EQUIVALENT)
- WETLANDS
- UPLANDS
- DITCH LINE
- APPROXIMATE LIMITS OF EARTH DISTURBANCE
- PERIMETER CONTROL
- VEHICLE TRACKING ENTRANCE/EXIT

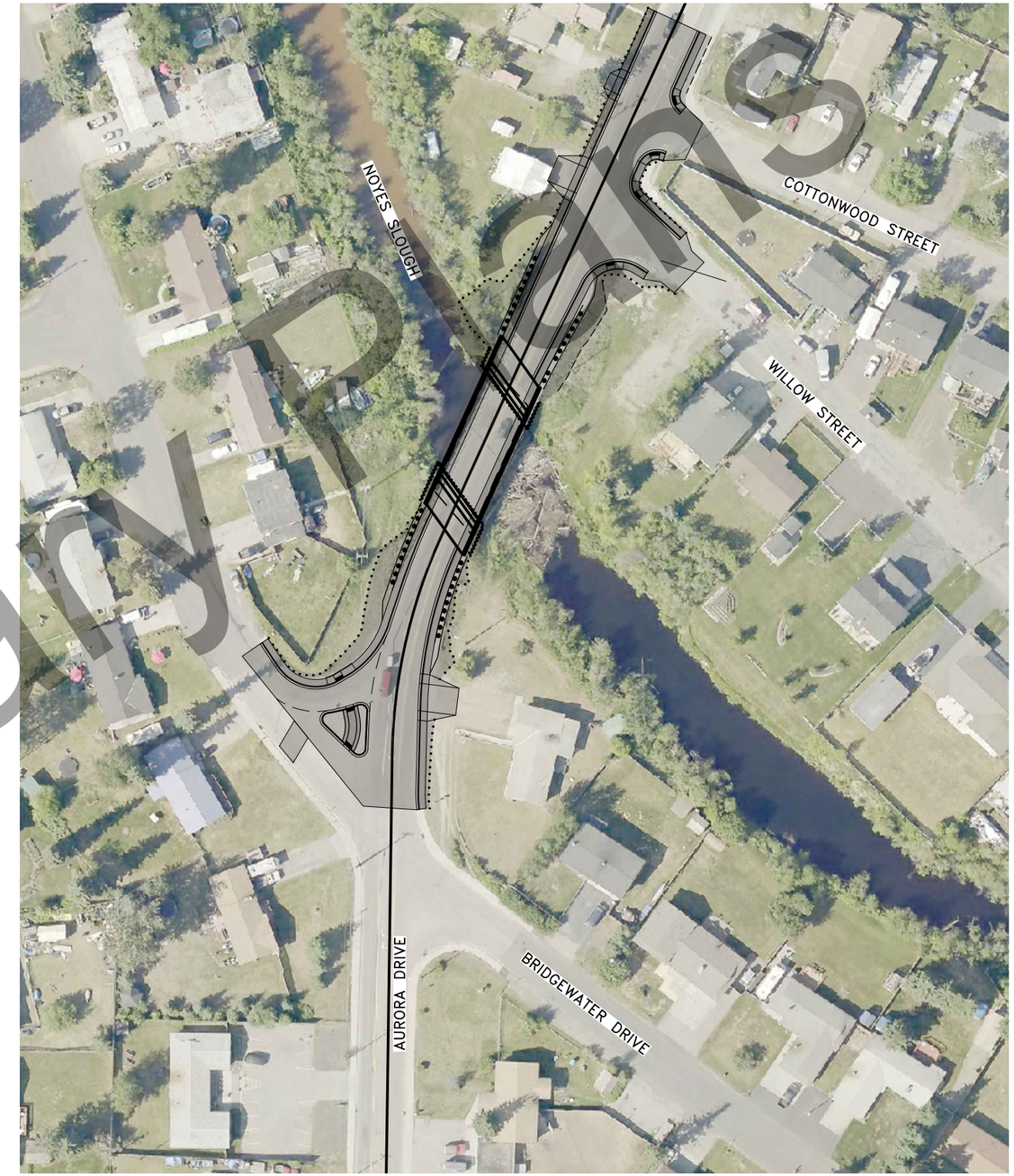

PROJECT LOCATION

EROSION AND SEDIMENT CONTROL NOTES

Preliminary Plans

PLANS DEVELOPED BY: RESPEC COMPANY, LLC, CERT. OF AUTHORIZATION NO.: AECC163270, 1028 AURORA DRIVE, FAIRBANKS, AK 99709, (907)452–1414
P:\2018\18185FB–AuroraDr_Noyes\C\c1301cnst18185fb–Q1 Fri, Feb/04/22 11:50am

NO.	DATE	REVISION

STATE	PROJECT DESIGNATION	YEAR	SHEET NO.	TOTAL SHEETS
ALASKA	0629001/NFHWY00124	2022	Q2	Q2

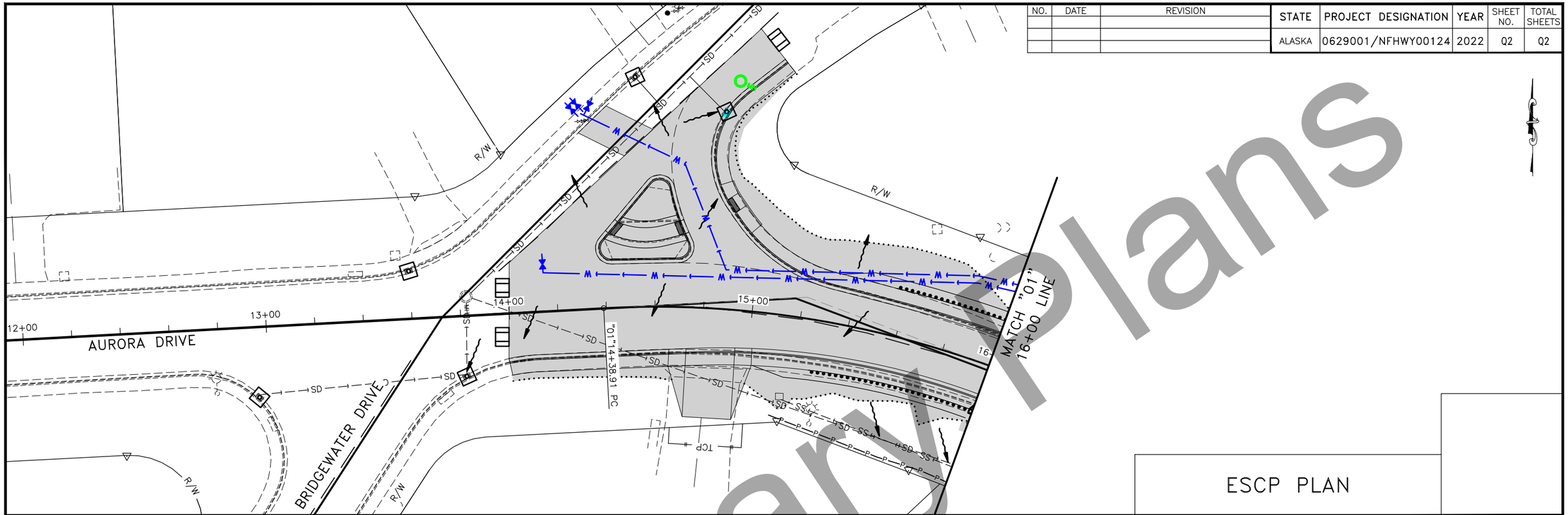

ESCP PLAN

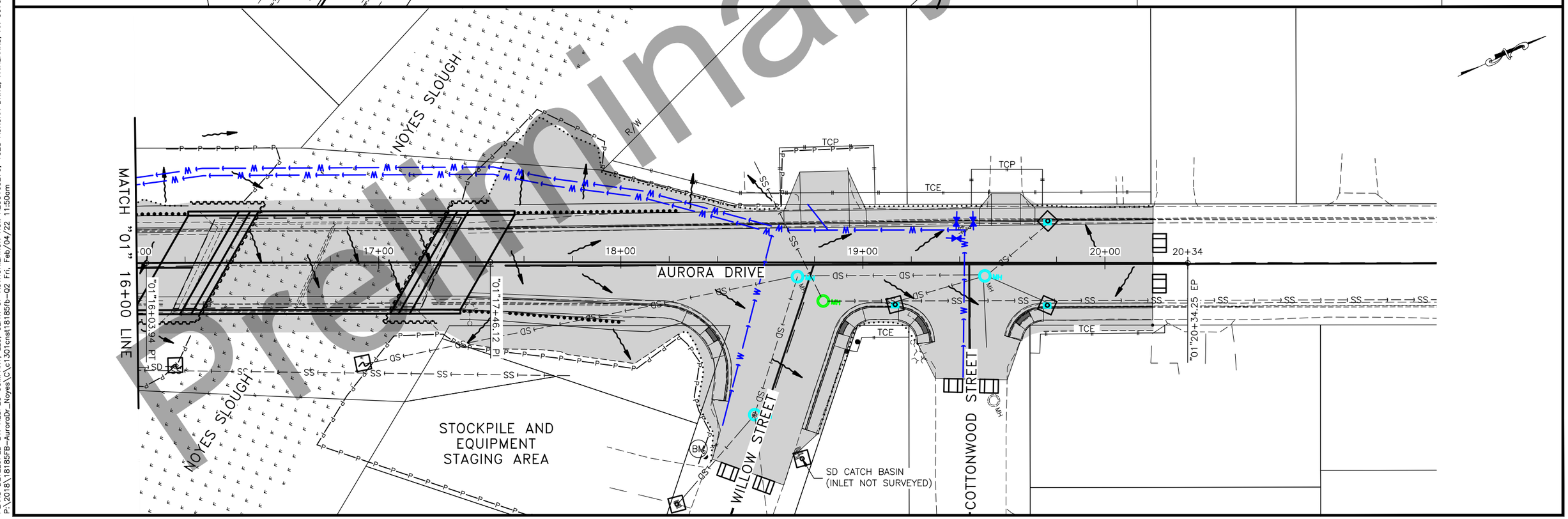

Preliminary Plans

PLANS DEVELOPED BY: RESPEC COMPANY, LLC, CERT. OF AUTHORIZATION NO.: AECC163270, 1028 AURORA DRIVE, FAIRBANKS, AK 99709, (907)452-1414
P:\2018\18185FB-AuroraDr_Noyes\C\c1301cnst18185fb-Q2 Fri, Feb/04/22 11:50am

NO.	DATE	REVISION

STATE	PROJECT DESIGNATION	YEAR	SHEET NO.	TOTAL SHEETS
ALASKA	0629001/NFHWY00124	2022	U1	U4

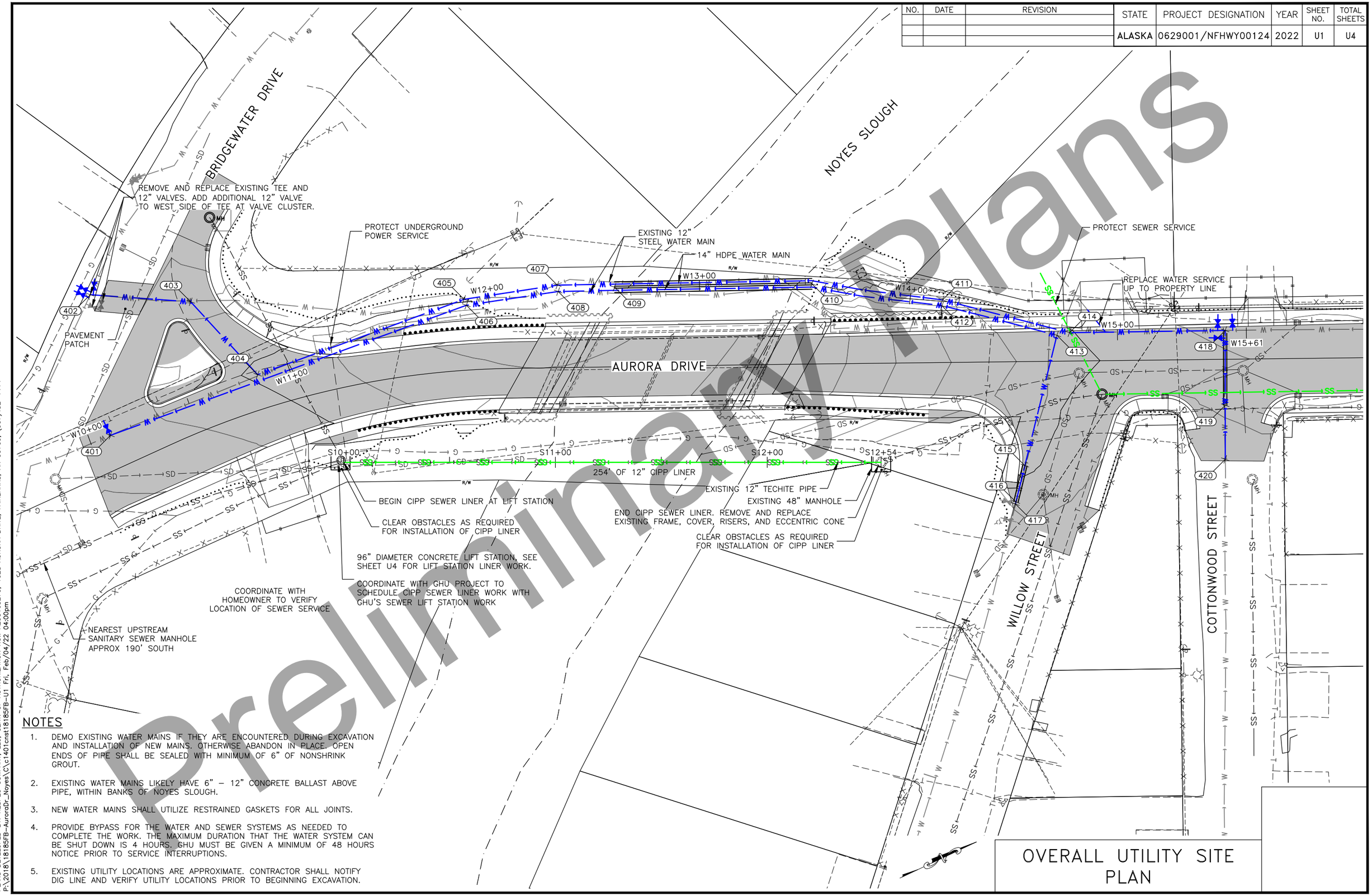

NOTES

1. DEMO EXISTING WATER MAINS IF THEY ARE ENCOUNTERED DURING EXCAVATION AND INSTALLATION OF NEW MAINS. OTHERWISE ABANDON IN PLACE. OPEN ENDS OF PIPE SHALL BE SEALED WITH MINIMUM OF 6" OF NONSHRINK GROUT.
2. EXISTING WATER MAINS LIKELY HAVE 6" – 12" CONCRETE BALLAST ABOVE PIPE, WITHIN BANKS OF NOYES SLOUGH.
3. NEW WATER MAINS SHALL UTILIZE RESTRAINED GASKETS FOR ALL JOINTS.
4. PROVIDE BYPASS FOR THE WATER AND SEWER SYSTEMS AS NEEDED TO COMPLETE THE WORK. THE MAXIMUM DURATION THAT THE WATER SYSTEM CAN BE SHUT DOWN IS 4 HOURS. GHU MUST BE GIVEN A MINIMUM OF 48 HOURS NOTICE PRIOR TO SERVICE INTERRUPTIONS.
5. EXISTING UTILITY LOCATIONS ARE APPROXIMATE. CONTRACTOR SHALL NOTIFY DIG LINE AND VERIFY UTILITY LOCATIONS PRIOR TO BEGINNING EXCAVATION.

OVERALL UTILITY SITE PLAN

PLANS DEVELOPED BY: RESPEC COMPANY, LLC, CERT. OF AUTHORIZATION NO.: AECC163270, 1028 AURORA DRIVE, FAIRBANKS, AK 99709, (907)452-1414
P:\2018\18185FB-AuroraDr_Noyes\C\c1401cnst18185FB-U1 Fri, Feb/04/22 04:00pm

NO.	DATE	REVISION

STATE	PROJECT DESIGNATION	YEAR	SHEET NO.	TOTAL SHEETS
ALASKA	0629001/NFHWY00124	2022	U2	U4

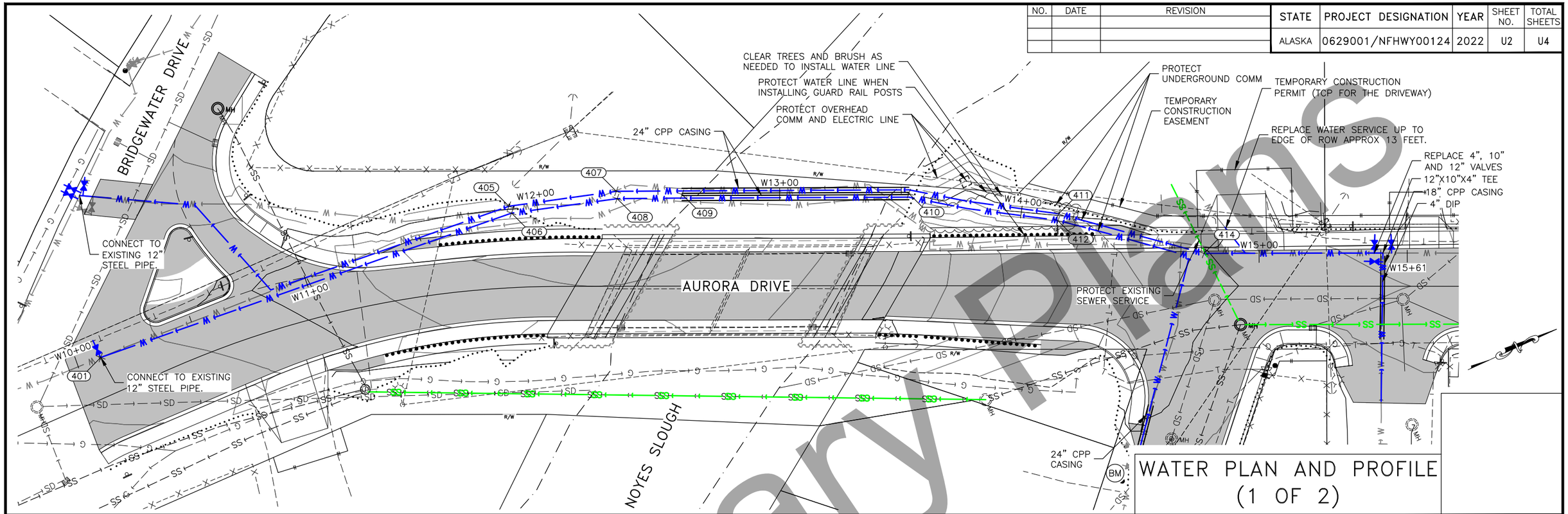

WATER PLAN AND PROFILE (1 OF 2)

NOTES

1. GROUND WATER LEVEL OF 429.0' SHOWN IS BASED ON MEASUREMENTS TAKEN AT NOYES SLOUGH ON JULY 16, 2020. WATER LEVEL IS EXPECTED TO BE SIGNIFICANTLY LOWER IN THE EARLY SPRING. SEE SLOUGH CROSSING DETAIL ON SHEET U4.
2. DEPTH AND LOCATION OF EXISTING UTILITIES ARE SKETCHED FROM ASBUILTS AND LIMITED SURVEY AND ARE APPROXIMATE IN NATURE. VERIFY UTILITY CONFLICTS PRIOR TO BEGINNING EXCAVATION.
3. CONTRACTOR MAY OMIT 45° BENDS IF A SUITABLE PLAN FOR BENDING HDPE PIPE IS PROVIDED.

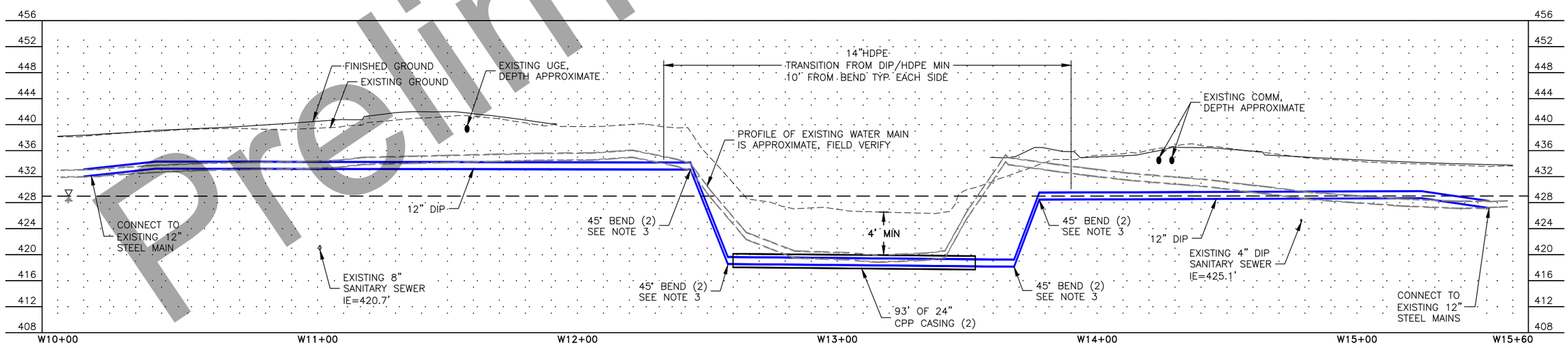

Preliminary Plans

PLANS DEVELOPED BY: RESPEC COMPANY, LLC, CERT. OF AUTHORIZATION NO.: AECC163270, 1028 AURORA DRIVE, FAIRBANKS, AK 99709, (907)452-1414
P:\2018\18185FB-AuroraDr_Noyes\C\c1401cnst18185FB-U2 Fri, Feb/04/22 04:00pm

NO.	DATE	REVISION

STATE	PROJECT DESIGNATION	YEAR	SHEET NO.	TOTAL SHEETS
ALASKA	0629001/NFHWY00124	2022	U3	U4

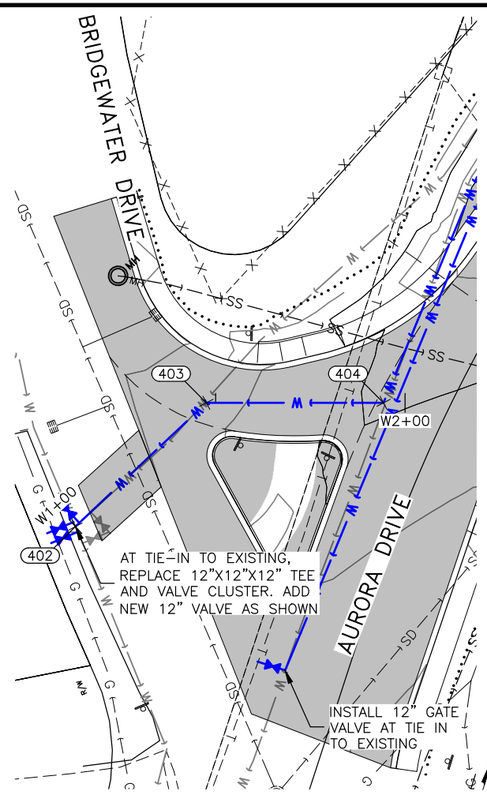

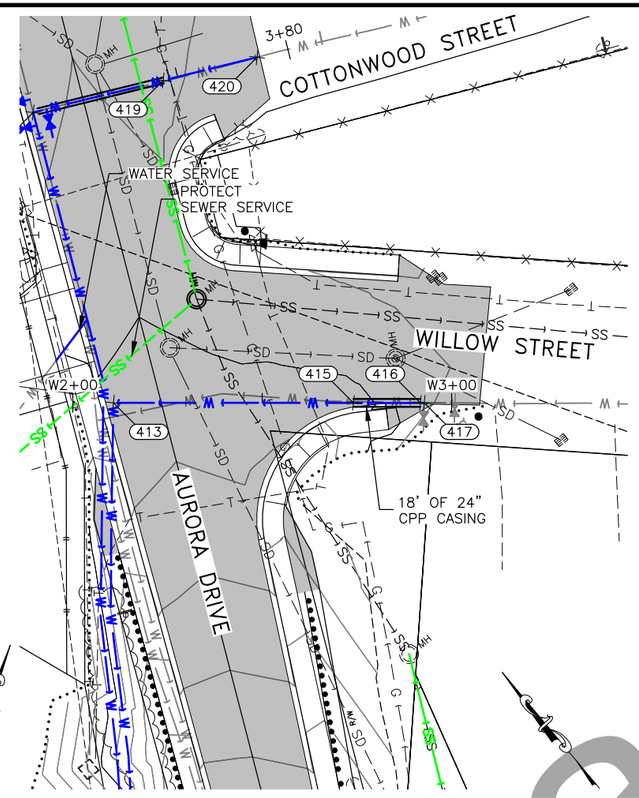

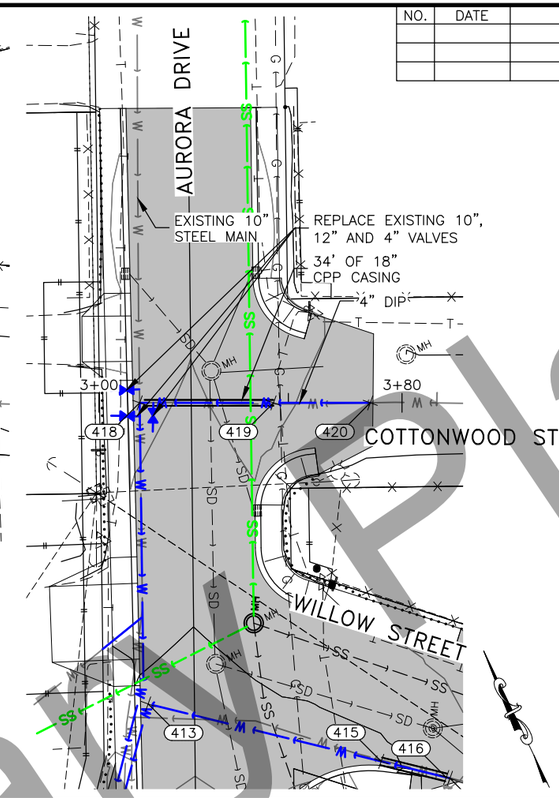

WATER PLAN AND PROFILE (2 OF 2)

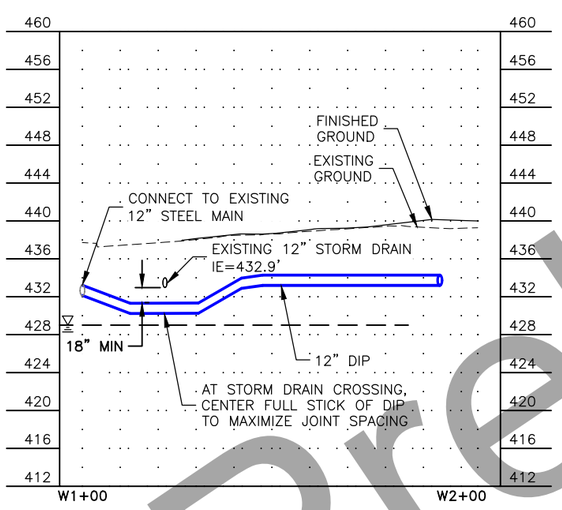

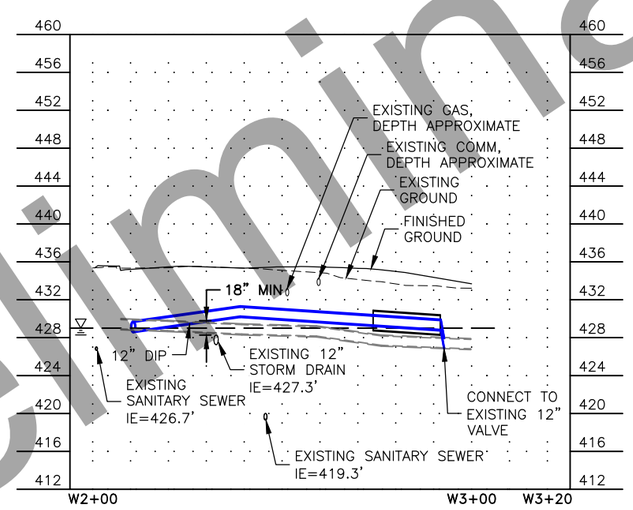

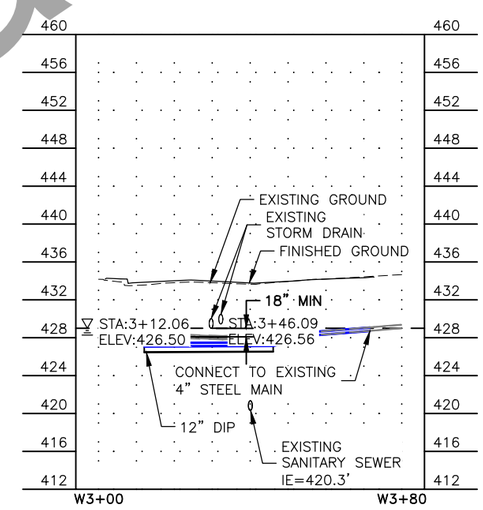

WATER MAIN CONTROL

POINT NO.	STATION	NORTHING	EASTING	ELEVATION	DESCRIPTION
401	W10+09.99	204730.97	671095.16		CONNECT TO EX, NEW 12" GV
402	W1+00.00	204750.73	671031.04		CONNECT TO EX
403	W1+47.56	204792.16	671054.35		45° BEND
404	W1+94.32	204806.03	671099.01		67.5° BEND
405	W11+88.86	204909.36	671108.49		11.25° BEND
406	W11+89.21	204909.14	671111.48		11.25° BEND
407	W12+33.07	204952.04	671121.26		11.25° BEND
408	W12+33.23	204951.09	671124.15		11.25° BEND
409	W12+59.90	204976.04	671133.68	418.09	END OF CASING
410	W13+53.11	205060.96	671172.12	417.74	END OF CASING
411	W14+15.14	205113.46	671205.31		11.25° BEND
412	W14+15.56	205112.03	671207.77		11.25° BEND
413	W2+10.71	205155.12	671243.52		90° BEND
414	W14+77.34	205161.00	671244.94		11.25° BEND
415	W2+74.08	205115.14	671292.68	428.81	END OF CASING
416	W2+91.75	205103.98	671306.39	428.33	END OF CASING
417	W2+92.75	205103.36	671307.16		CONNECT TO EX
418	W3+10.76	205227.93	671275.43	426.50	12"X10"X4" TEE, VALVE CLUSTER, END OF CAS
419	W3+46.09	205212.84	671307.38	426.56	END OF CASING
420	W3+71.61	205201.95	671330.45		CONNECT TO EX

Preliminary Plans

PLANS DEVELOPED BY: RESPEC COMPANY, LLC, CERT. OF AUTHORIZATION NO.: AECC163270, 1028 AURORA DRIVE, FAIRBANKS, AK 99709, (907)452-1414
P:\2018\18185FB-AuroraDr_Noyes\C\c1401cnst18185FB-U3 Fri, Feb/04/22 04:01pm

NO.	DATE	REVISION

STATE	PROJECT DESIGNATION	YEAR	SHEET NO.	TOTAL SHEETS
ALASKA	0629001/NFHWY00124	2022	U4	U4

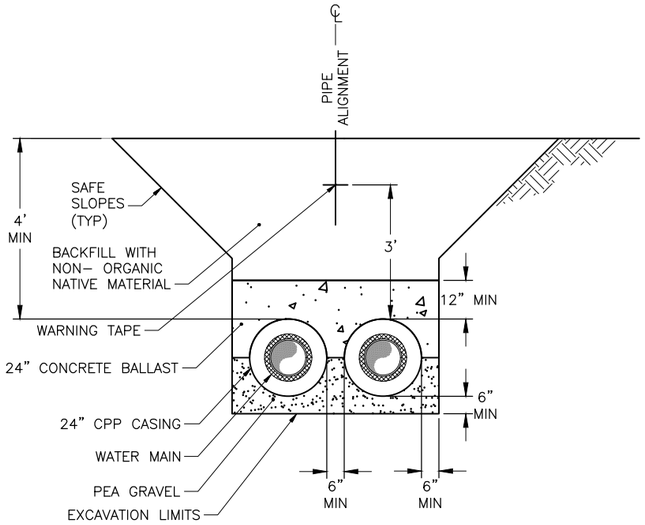

STA: 12+59 – 13+53
NTS

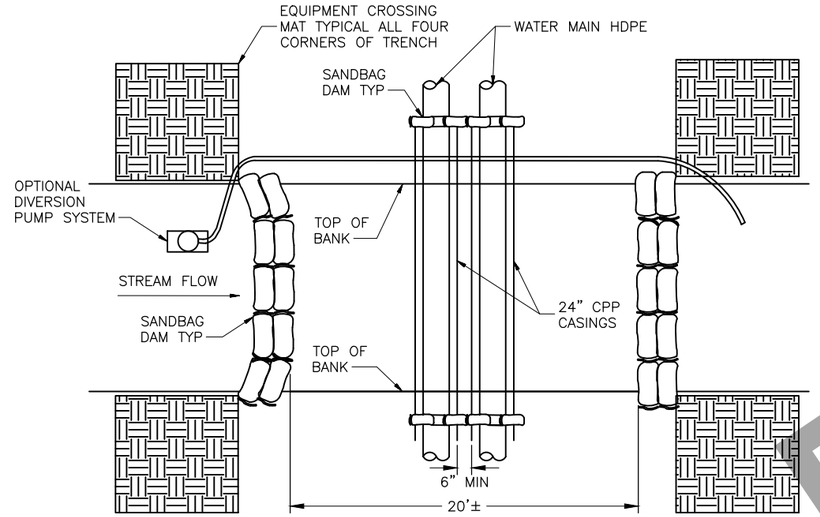

NOTES:

1. TRENCHING ACROSS NOYES SLOUGH SHALL BE COMPLETED WHILE FROZEN, PRIOR TO SPRING BREAKUP.

C SLOUGH CROSSING
NTS

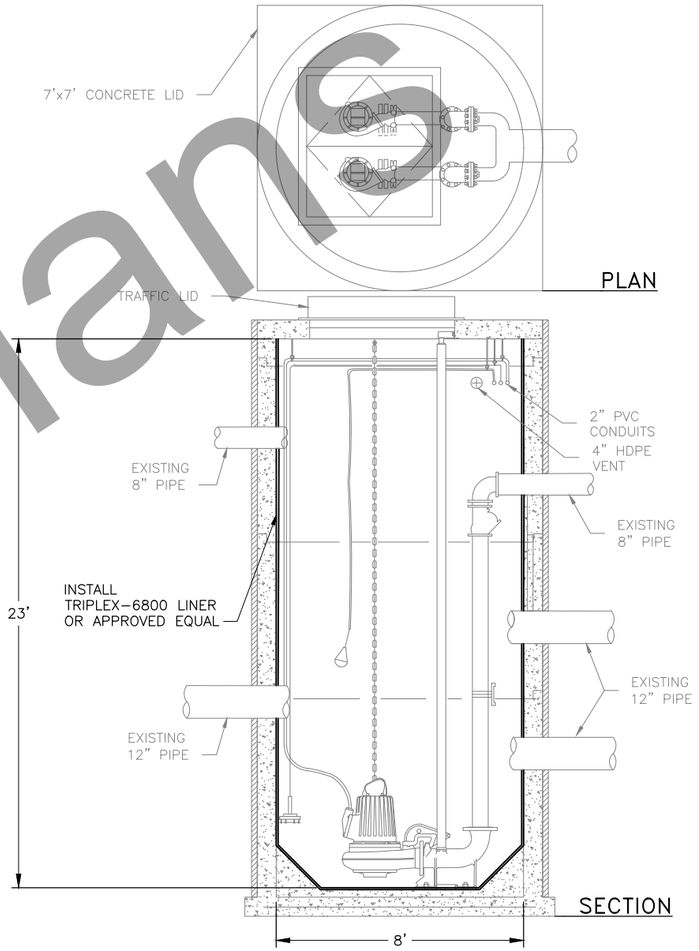

E LIFT STATION DETAILS
NTS

NOTES

1. REMOVE ALL PUMPS, PIPES, SWITCHES, CONTROLS AND BRACKETING.
2. STRIP EXISTING LINER, SEAL CRACKS, CLEAN AND PREPARE SURFACE AS NEEDED PER LINER MANUFACTURER'S RECOMMENDATIONS.
3. CUT OFF ALL PIPES TO WITHIN 2" OF WALL TO PREPARE FOR LINING.
4. IF INSULATION OR WATER PROOFING IS DISTURBED DURING CLEANING AND RELINING WORK, REPLACE WITH 2" INSULATION AND 3 LAYERS OF 6 MIL POLYETHYLENE SHEETING ALL AROUND (TYP).
5. ALL LIFT STATION PIPING, PUMPS, CONTROLS AND BRACKETING IS TO BE DESIGNED AND INSTALLED BY OTHERS.

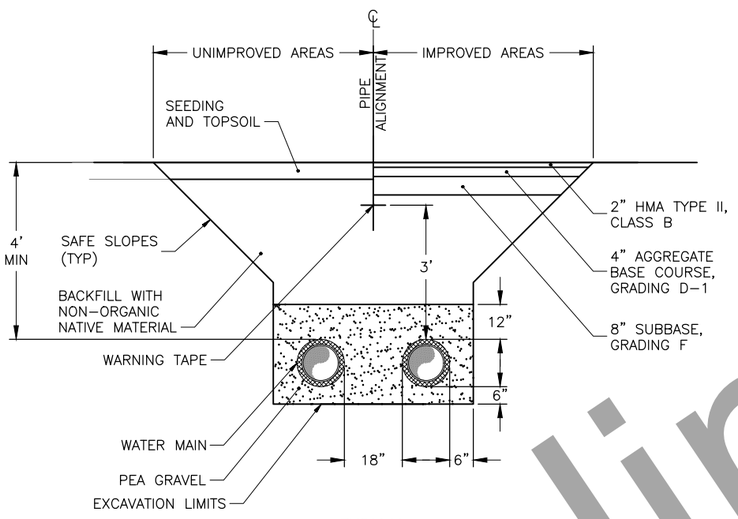

TYPICAL
NTS

A TYPICAL TRENCH SECTION
NTS

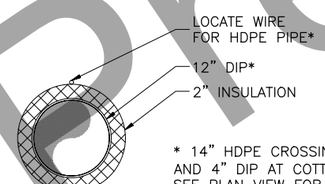

* 14" HDPE CROSSING NOYES SLOUGH, AND 4" DIP AT COTTONWOOD STREET SEE PLAN VIEW FOR EXTENTS.

B WATER PIPE MAIN
NTS

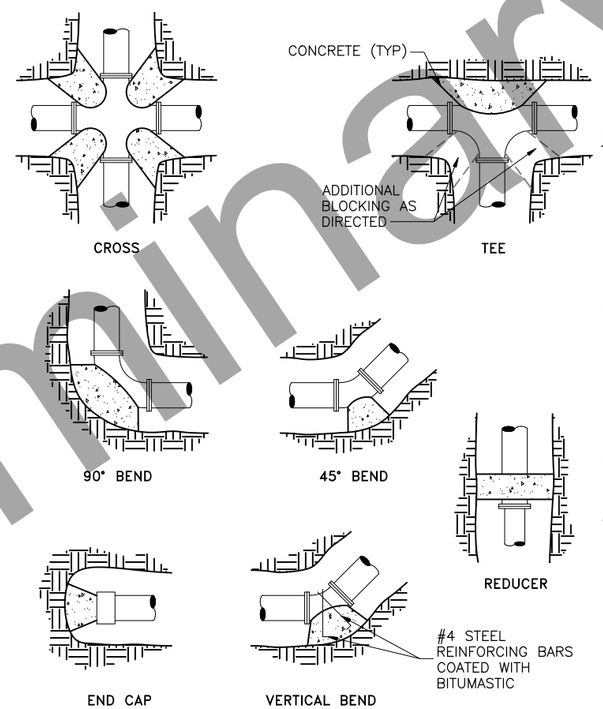

PIPE ø	HORIZONTAL TO END MINIMUM BEARING AREA, SF						VERTICAL BEND MIN VOL, CY		
	DEAD END TEE	90°	45°	22 1/2°	END CAP	CROSS EACH WAY	90°	45°	22 1/2°
12"	18	26	14	7	18	7	9.6	5.2	2.6

D THRUST BLOCK DETAILS
NTS

NOTES

1. BASED ON PRESSURE OF 200 psi, MIN COVER OF 3' AND SOIL BEARING OF 1500 psf.
2. FOR SOIL BEARING
   = 3000 psf, USE 0.5 AREA SHOWN
   = 1000 psf, USE 1.5 AREA SHOWN
   = 500 psf, USE 3.0 AREA SHOWN
3. ALL ANCHORS AND THRUST BLOCKS SHALL BE PLACED AGAINST UNDISTURBED SOIL OR COMPACTED BEDDING.
4. THRUST BLOCKS ON CROSSED SHALL BE USED WHENEVER PIPE DIAMETERS DIFFER OR WHEN ONE OR MORE OPENINGS ARE PLUGGED.
5. FORM THRUST BLOCKS SO THAT BOLTS ARE NOT COVERED WITH CONCRETE AND ARE READILY ACCESSIBLE.
6. ALL THRUST BLOCKS SHALL CONSIST OF A MINIMUM OF 0.5 CY CONCRETE.
7. WRAP PIPE AND JOINTS WITH 6 mil POLYETHYLENE SHEETING.

UTILITY DETAILS

Preliminary Plans

PLANS DEVELOPED BY: RESPEC COMPANY, LLC, CERT. OF AUTHORIZATION NO.: AECC163270, 1028 AURORA DRIVE, FAIRBANKS, AK 99709, (907)452-1414
P:\2018\18185FB-AuroraDr_Noyes\C\c1401cnst18185FB-U4 Fri, Feb/04/22 04:01pm

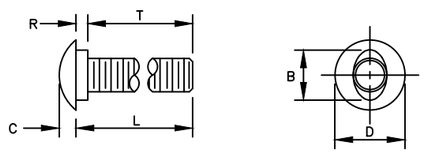

B	C	D	L (Length)	R	T (Thread Length)
15/16"	5/16"	1 5/16" or 1 7/16"	As Required	7/32"	As Required

5/8" BUTTONHEAD BOLT
(FBB01–05)

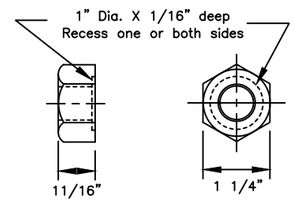

5/8" Dia. RECESSED HEX NUT
(FBB01–05)

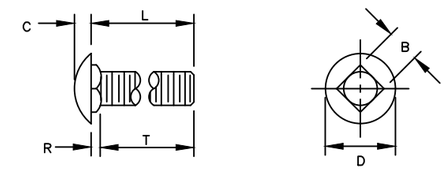

B	C	D	L (Length)	R	T (Thread Length)
5/8"	5/16"	1 5/16"	As Required	3/16"	As Required

5/8" Dia. CARRIAGE BOLT
(FBC10–20)

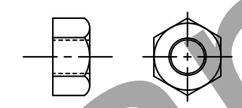

STANDARD HEX NUT

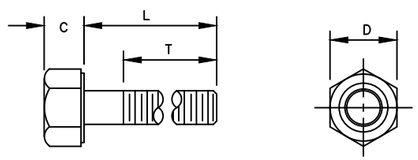

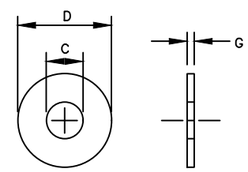

Bolt Size	C	D	L (Length)	T (Thread Length)
5/16"	—	—	1 1/2"	7/8"
5/16"	—	—	1"	1"
3/8"	—	—	7 1/2"	1 1/2"
1/2"	—	—	1 1/2"	1 1/2"
1/2"	—	—	1 1/4"	1 1/4"
5/8" H.S.	5/16"	7/8"	8"	1 1/2"
5/8"–11	—	—	1 1/2"	1 1/2"
3/4"	—	—	1 1/2"	1 1/2"
3/4"	—	—	As Required	2"
3/4" H.S.	15/32"	1 1/4"	2"	1 1/2"

STANDARD HEX BOLTS

For Bolt ø	C	D	G
3/8"	7/16"	1"	5/64"
1/2"	17/32"	1 1/16"	3/32"
1/2" H.S.	17/32"	1 1/16"	3/32"
5/8"	11/16"	1 3/4"	9/64"
3/4"	13/16"	1 15/32"	9/64"
3/4" H.S.	13/16"	2"	5/32"
1"	1 1/16"	2"	9/64"

STANDARD STEEL WASHERS

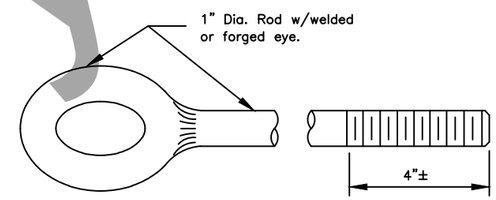

EYE BOLT

GENERAL NOTES:

1. All covered hardware shall comply with the Task Force 13 (TF13) Guide to Standardized Roadside Safety Hardware online publication. Designators given when possible in parentheses.

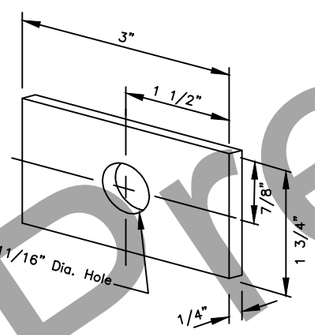

FLAT PLATE WASHER

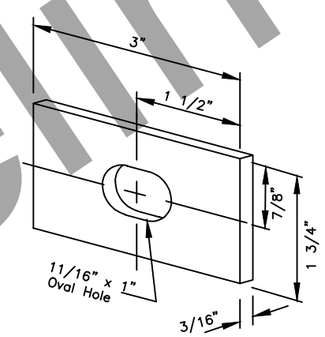

RECTANGULAR POST BOLT WASHER
(FWR03)

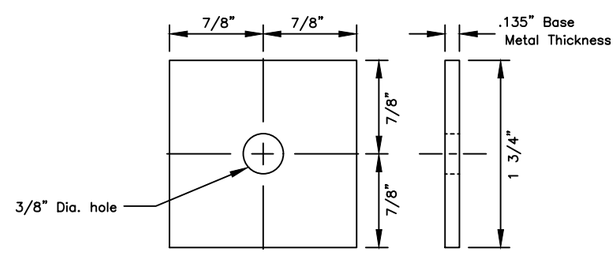

SQUARE STEEL WASHER
(FWR01)

State of Alaska DOT&PF
ALASKA STANDARD PLAN

STANDARD GUARDRAIL HARDWARE
(NUTS, BOLTS & WASHERS)

Adopted as an Alaska Standard Plan by: Carolyn Morehouse
Carolyn Morehouse, P.E.
Chief Engineer

Adoption Date: 7/17/2020

Last Code and Stds. Review
By: KLK Date: 7/8/2020

Next Code and Standards Review Date: 7/8/2030

G–00.05

Preliminary Plans

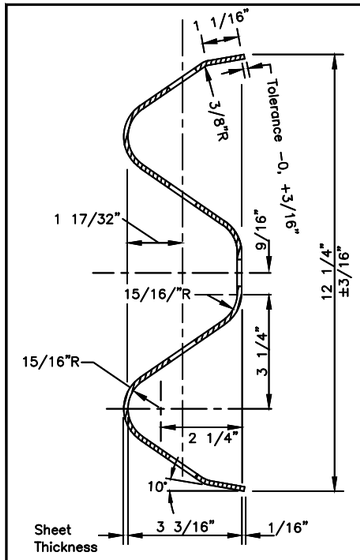

SECTION A–A
(cross section same as RWM02a–b)

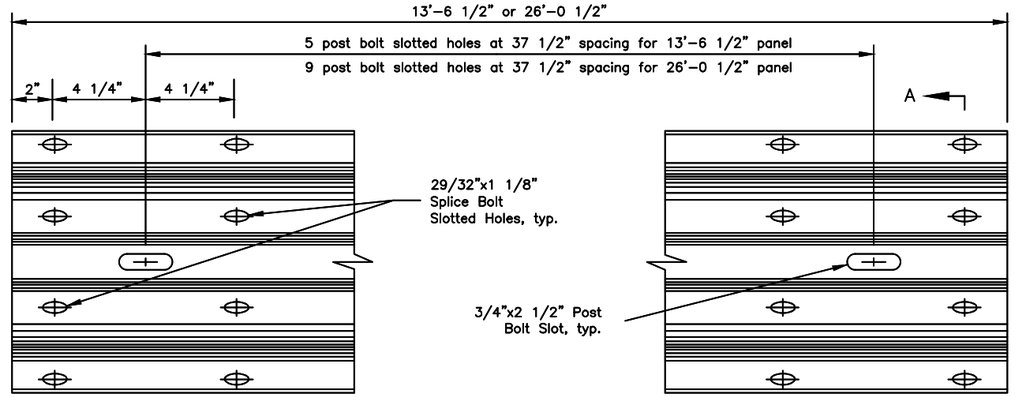

STANDARD W–BEAM PANEL (RWM04a–b)

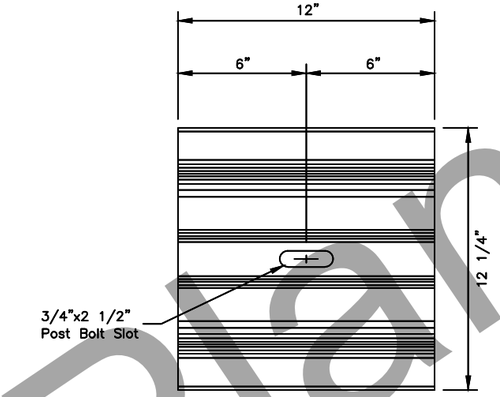

W–BEAM BACKUP PLATE
(RWB01a–b)

GENERAL NOTES:

1. All covered hardware shall comply with the Task Force 13 (TF13) Guide to Standardized Roadside Safety Hardware online publication. Designators given when possible in parentheses.
2. Install back–up plates between blockouts and w–beam or thrie–beam rail at intermediate (non–splice) posts when steel blockouts are used but not with wood, rubber, plastic, or other approved blockouts.

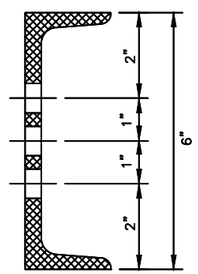

SECTION B–B

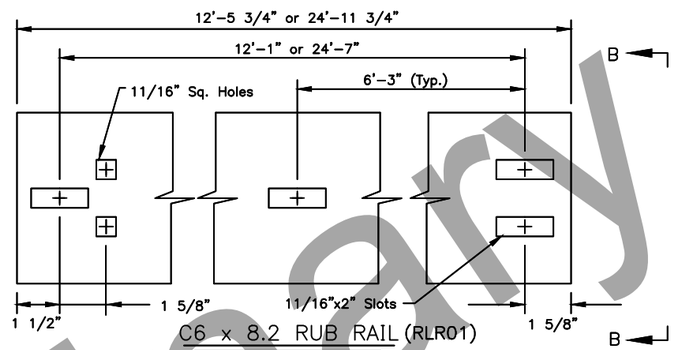

C6 x 8.2 RUB RAIL (RLR01)
ASTM A36 STEEL

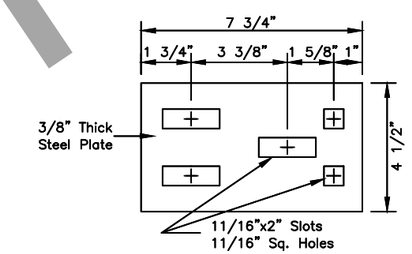

SPLICE PLATE (RLR01)
ASTM A36 STEEL

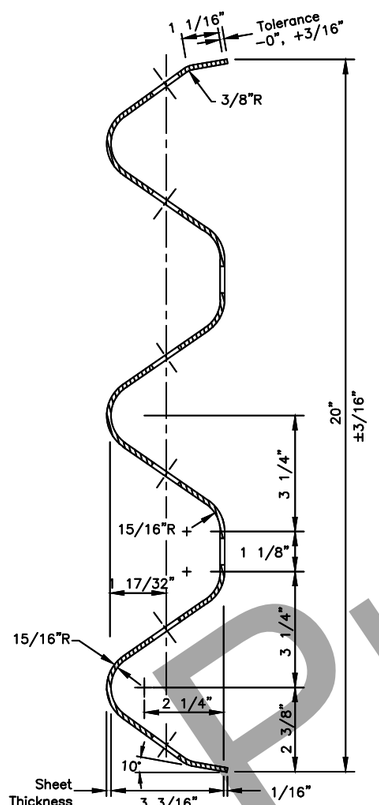

SECTION C–C
(RTM01a–02b)

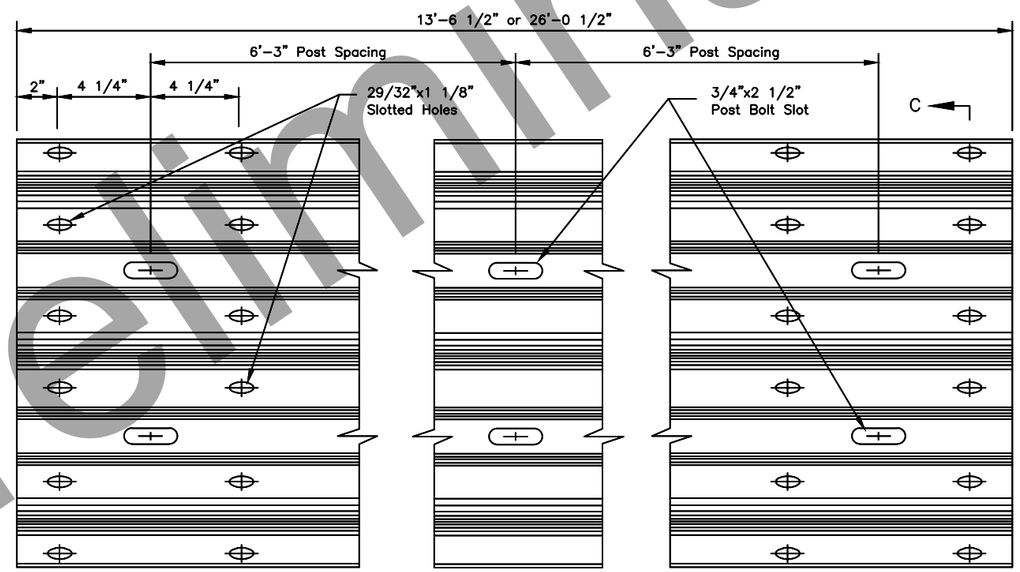

STANDARD THRIE BEAM PANEL (RTM01a–02b)

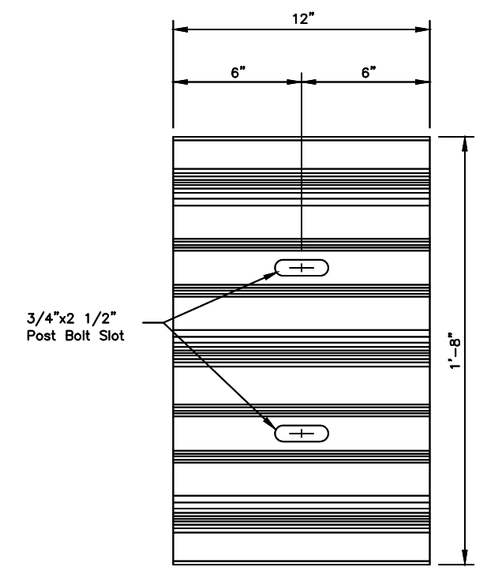

THRIE BEAM BACKUP PLATE
(RTB01a–02b)

State of Alaska DOT&PF
ALASKA STANDARD PLAN

STANDARD GUARDRAIL HARDWARE (RAILS AND SPLICES)

Adopted as an Alaska Standard Plan by: Carolyn Morehouse
Carolyn Morehouse, P.E.
Chief Engineer

Adoption Date: 7/17/2020

Last Code and Stds. Review
By: KLK Date: 7/8/2020

Next Code and Standards Review Date: 7/8/2030

Preliminary Plans

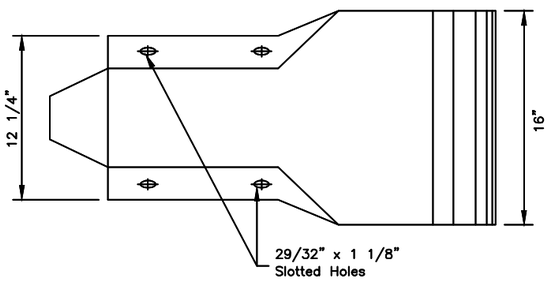

PROFILE

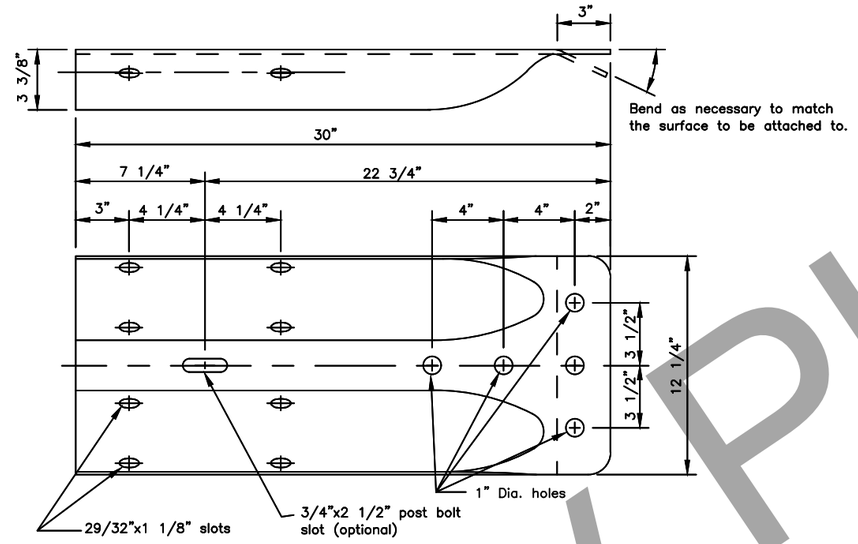

STANDARD W-BEAM TERMINAL CONNECTOR

(RWE02)

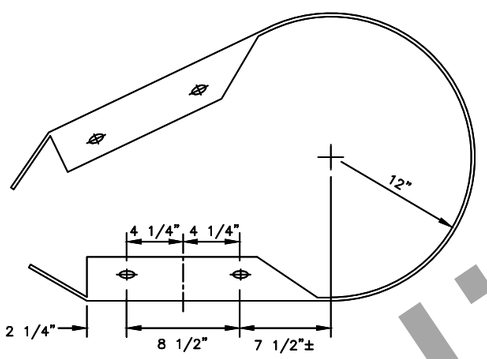

W-BEAM PLAN VIEW

*Radius to be specified on the plans

STANDARD W-BEAM END SECTION

(RWE06)

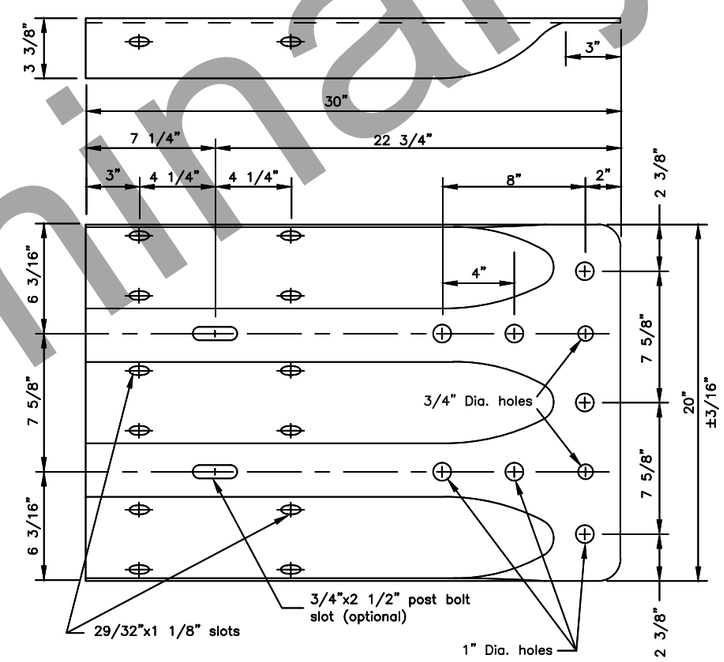

STANDARD THRIE BEAM TERMINAL CONNECTOR

(RTE01b)

GENERAL NOTES:

1. W-Beam and Thrie Beam Terminal Connectors shall conform to AASHTO M 180, Class B, Type II.
2. W-Beam end sections shall conform to AASHTO M 180, Class A, Type II.
3. All covered hardware shall comply with the Task Force 13 (TF13) Guide to Standardized Roadside Safety Hardware online publication. Designators given when possible in parentheses.

State of Alaska DOT&PF
ALASKA STANDARD PLAN

STANDARD GUARDRAIL HARDWARE (TERMINAL CONNECTORS)

Adopted as an Alaska Standard Plan by: Carolyn Morehouse
Carolyn Morehouse, P.E.
Chief Engineer

Adoption Date: 7/17/2020

Last Code and Stds. Review
By: KLK Date: 7/8/2020

Next Code and Standards Review Date: 7/8/2030

Preliminary Plans

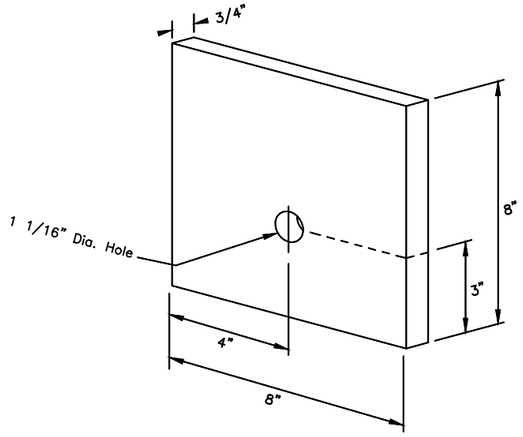

BEARING PLATE for CRT TERMINAL ANCHOR
(FPB01)

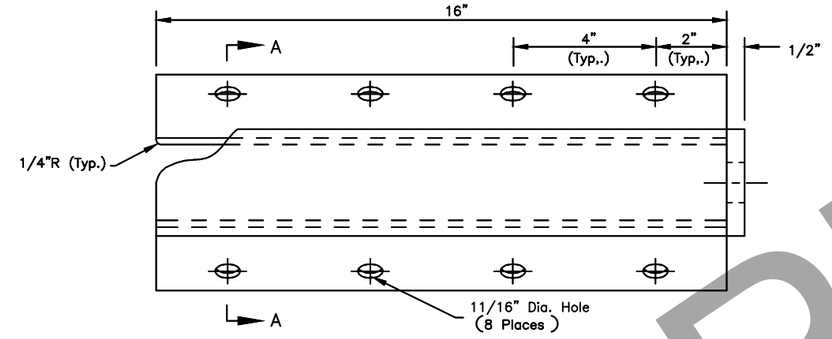

CABLE ANCHOR PLATE
(FPA01)

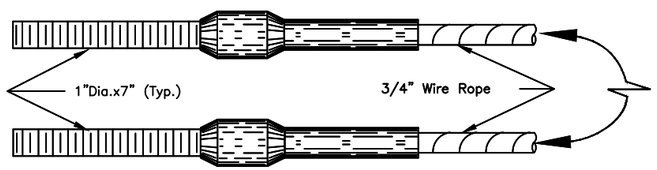

SWAGED FITTING DETAIL
(FCA01–02)

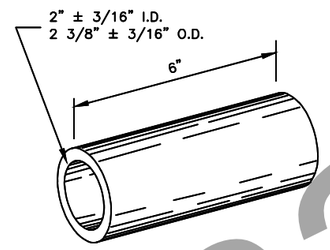

SLEEVE DETAIL
(FMM02)

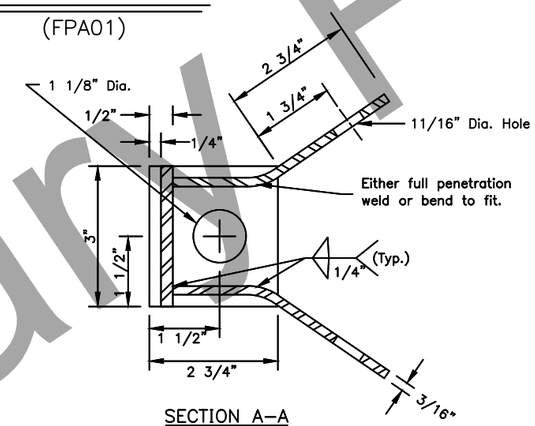

SECTION A–A

CONTROLLED RELEASE TERMINAL HARDWARE DETAILS

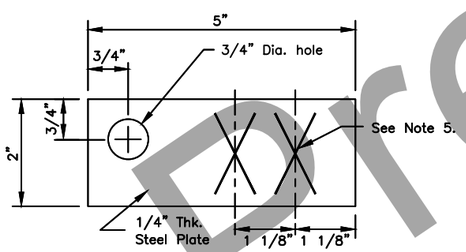

RADIUS I.D. PLATE

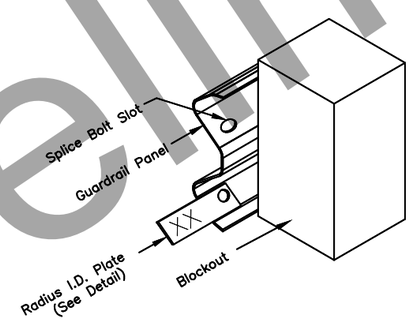

RADIUS I.D. PLATE
MOUNTING DETAIL

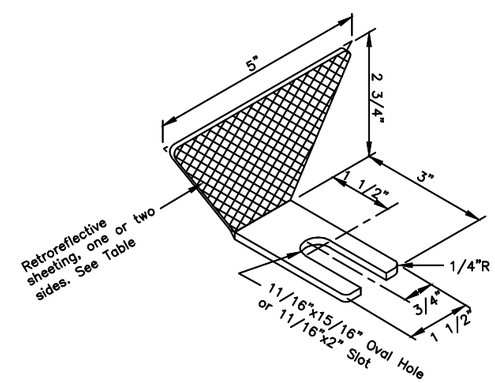

GUARDRAIL REFLECTOR

Guardrail Reflector Table

Type	Color	Reflectorized
A	White	Front & Rear
B	White	Front
C	Yellow	Front
D	Yellow	Front & Rear

GENERAL NOTES:

1. Cable Anchor Plate may be formed in single unit or welded fabrication.
2. Anchor Cable Assembly must conform to AASHTO M 30 with Type II Wire Rope.
3. Provide Sleeve for Wood Posts meeting the requirements of ASTM A53 and made of 2–inch galvanized standard pipe. Sleeve shall be a tight, pressed fit in post.
4. Attach radius ID plates to all shop–bent guardrail sections. Bolt the ID plates to the back side of the guardrail panel with the lower splice bolt nearest the P.C. of the radius.
5. Show the Rail bend radius, in feet, as "XX" on the radius ID plate. Digits shall be etched or stamped and have a min. height of 1 1/2" and a max. width of 3/4". Galvanize the plate after the digits are marked.
6. All covered hardware shall comply with the Task Force 13 (TF13) Guide to Standardized Roadside Safety Hardware online publication. Designators given when possible in parentheses.

State of Alaska DOT&PF
ALASKA STANDARD PLAN

STANDARD GUARDRAIL HARDWARE (MISCELLANEOUS)

Adopted as an Alaska Standard Plan by: Carolyn Morehouse
Carolyn Morehouse, P.E.
Chief Engineer

Adoption Date: 7/17/2020

Last Code and Stds. Review
By: KLK Date: 7/8/2020

Next Code and Standards Review Date: 7/8/2030

G–00.05

Preliminary Plans

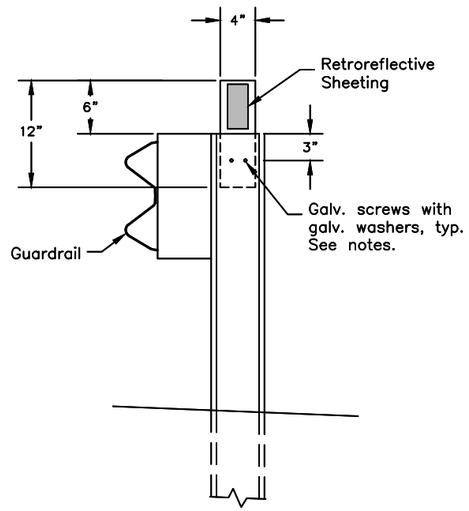

GUARDRAIL FLEXIBLE DELINEATOR DETAIL

(Steel post shown – similar for wood post)

CONSTRUCTION NOTES

1. Install guardrail flexible delineators where shown on the plans.
2. Install guardrail flexible delineators at 50 foot spacing, unless otherwise noted on the plans. Install not less than 2 delineators per guardrail run.
3. Use 3" x 5" white/yellow/red retroreflective sheeting as required per Standard Plan T–05. Install retroreflective sheeting on both sides of delineator on two–way roads.
4. Attach 4" x 12" flexible delineators to the top of new guardrail posts, on the trailing side of the posts relative to the adjacent lane's direction of travel.
5. Use 2 each 1/4" dia. x 1–1/2" long galvanized lag screws for attaching to wood posts and 2 each 1/4" dia. x 3/4" long galvanized self–drilling fasteners for steel posts. Install a galvanized washer between the fastener head and the flexible delineator.

Preliminary Plans

State of Alaska DOT&PF
ALASKA STANDARD PLAN

STANDARD GUARDRAIL HARDWARE (FLEXIBLE DELINEATORS)

Adopted as an Alaska Standard Plan by: Carolyn Morehouse
Carolyn Morehouse, P.E.
Chief Engineer

Adoption Date: 7/17/2020

Last Code and Stds. Review
By: KLK Date: 7/8/2020

Next Code and Standards Review Date: 7/8/2030

G-05.11S

SHEET | of |

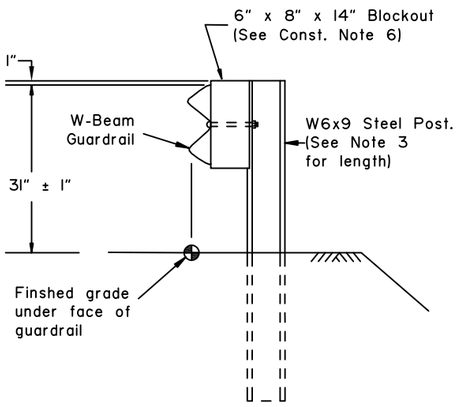

TYPE I POST INSTALLATION

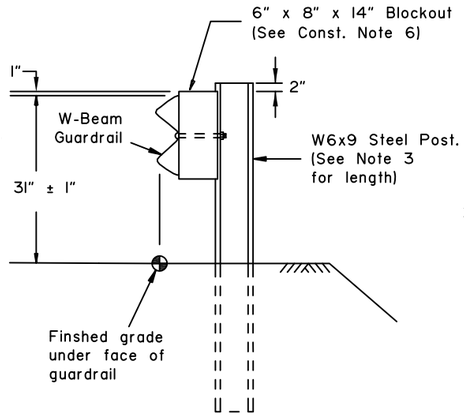

TYPE II POST INSTALLATION

(Facilitates raising rail for future overlays.)

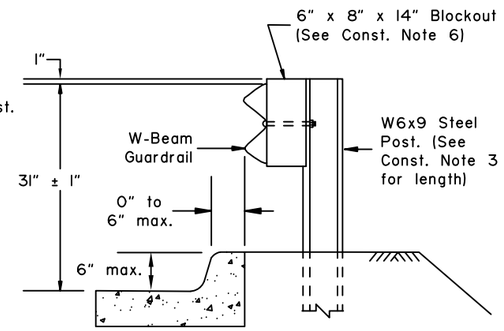

TYPE III POST INSTALLATION

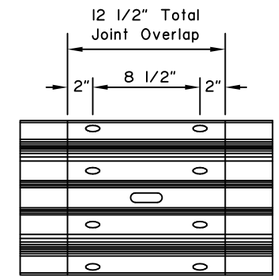

SPLICE DETAIL

(At mid span between posts only. Bolts not shown for clarity)

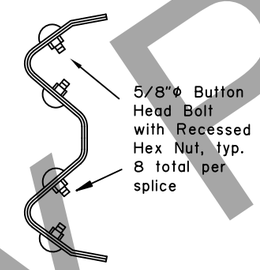

SPLICE CROSS-SECTION

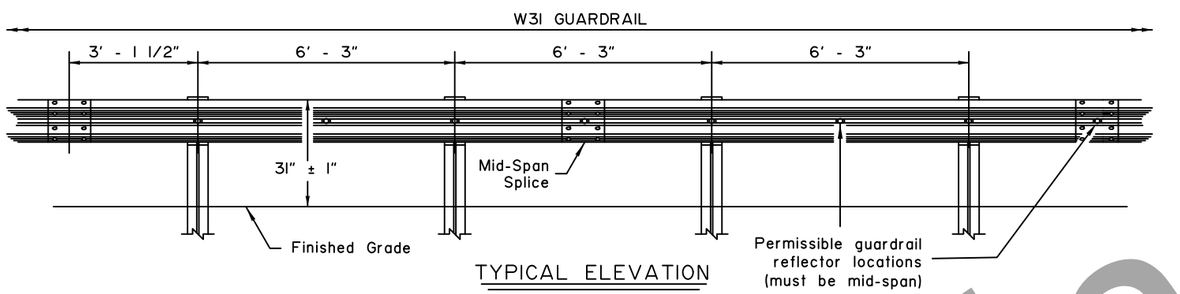

TYPICAL ELEVATION

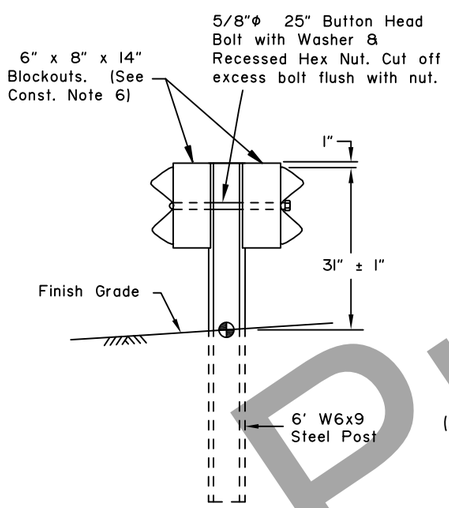

TYPE IV DOUBLE SIDED INSTALLATION

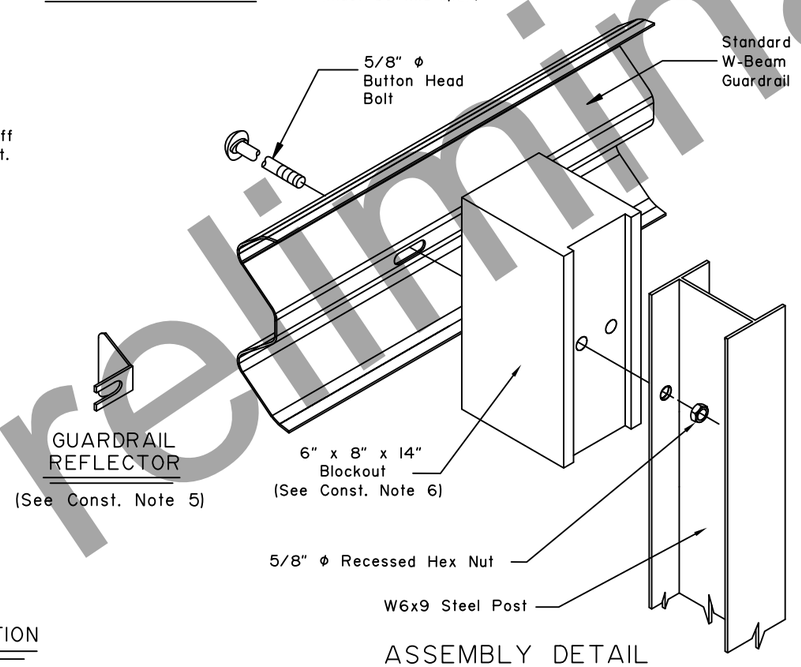

ASSEMBLY DETAIL

(Type I post shown)

GUARDRAIL REFLECTOR

(See Const. Note 5)

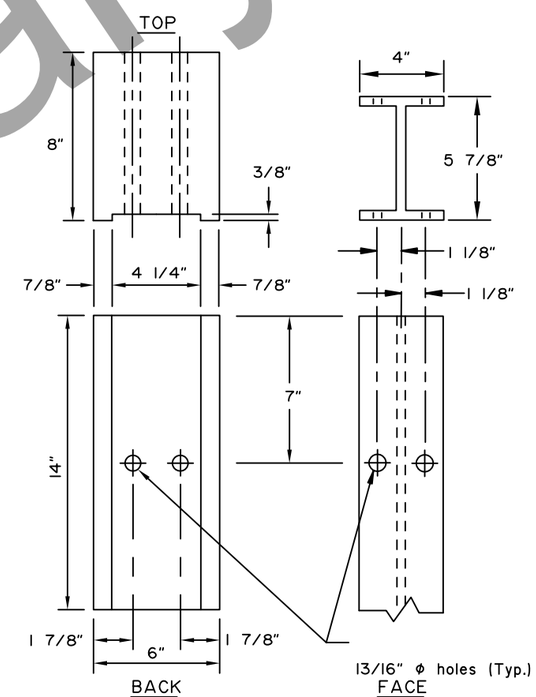

6" x 8" BLOCKOUT

W6x9 STEEL POST

CONSTRUCTION NOTES:

1. Provide hardware compliant with the Task Force 13 (TF13) Guide to Standardized Roadside Safety Hardware.
2. See Standard Plan G-00 for hardware details not shown on this drawing.
3. See Standard Plan G-10 for post lengths corresponding to different combinations of slope and behind-post embankment width.
4. Typical post spacing is 6'-3" center to center.
5. Attach guardrail reflector to guardrail using a 5/8" button head bolt with 5/8" recessed head hex nut and steel washer at location shown in the Typical Elevation. Install reflectors every 25' on tangents and every 12.5' on curves starting 100' before the P.C. and ending 100' after the P.T.
6. Use wood or synthetic blockouts designed, tested, and passed per MASH for use with steel posts. Either bolt hole on the blockout may be used for attachment.
7. Use a 25 linear foot transition to match differing height of existing or new rail elements and end treatments - see Standard Plan G-11.
8. W6x8.5 steel post may be substituted for W6x9 steel post.
9. Install flexible delineators on guardrail posts when called for in the contract. See Standard Plan G-00 for guardrail flexible delineator details.

DESIGN NOTES:

1. No fixed objects allowed within 36" of the back side of guardrail post.
2. This barrier is acceptable under MASH Tests 3-10 and 3-11.

State of Alaska DOT&PF
ALASKA STANDARD PLAN

STEEL POST W31 GUARDRAIL

Adopted as an Alaska Standard Plan by: Carolyn Morehouse

Carolyn Morehouse, P.E.
Chief Engineer

Adoption Date: 05/15/2019

Last Code and Stds. Review
By: LRG Date: 5/15/2019

Next Code and Standards Review date: 5/15/2029

G-05.11S

Preliminary Plans

G-10.20	SHEET 1 of 1

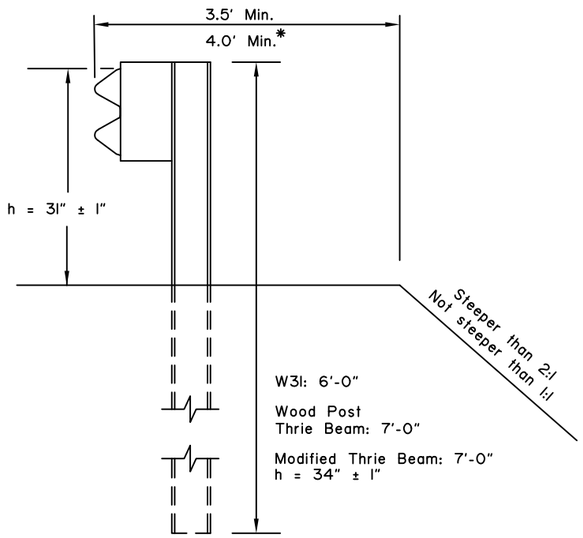

* with Modified Thrie Beam

CASE 1

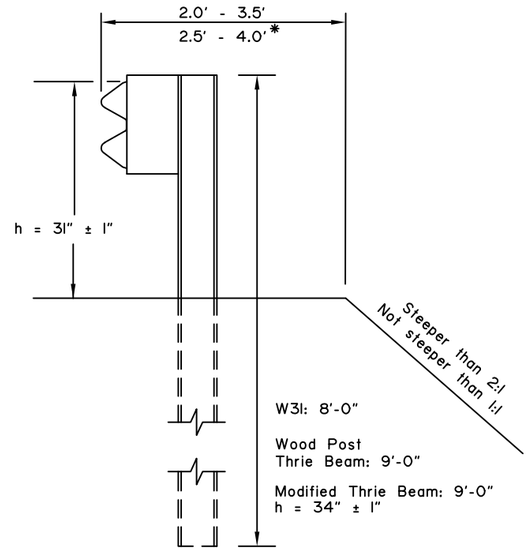

* with Modified Thrie Beam

CASE 2

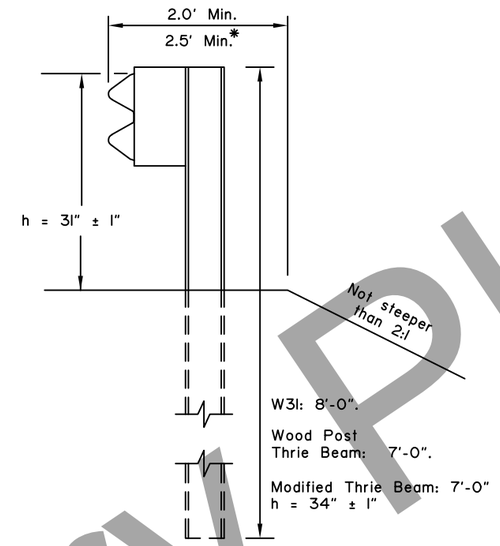

CASE 3

CONSTRUCTION NOTES:

1. This drawings is to be used for post length determination only. See Plans for slopes and behind-post embankment widths.
2. To determine post length, identify the case that matches site conditions and read the length corresponding to the pertinent guardrail type.
3. These dimensions apply to both curbed and uncurbed section.
4. Case 1, 2 and 3 are shown with steel posts. Wood posts may be substituted when allowed by specifications. Wood Post Thrie Beam installations must use wood posts only.
5. Case 4 and 5 apply to W31 guardrail only.

DESIGN NOTES:

1. No fixed objects allowed within 36" of the back of post for Cases 1, 2 & 3.
2. No fixed objects allowed within 48" of the back of post for Cases 4 & 5.

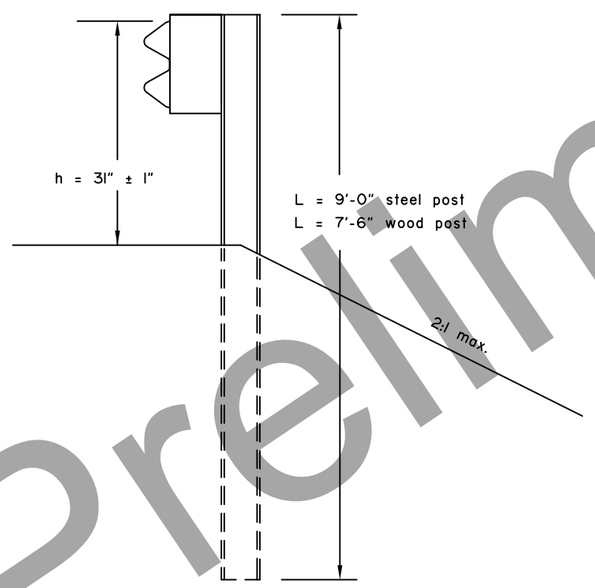

CASE 4

(See Note 5)

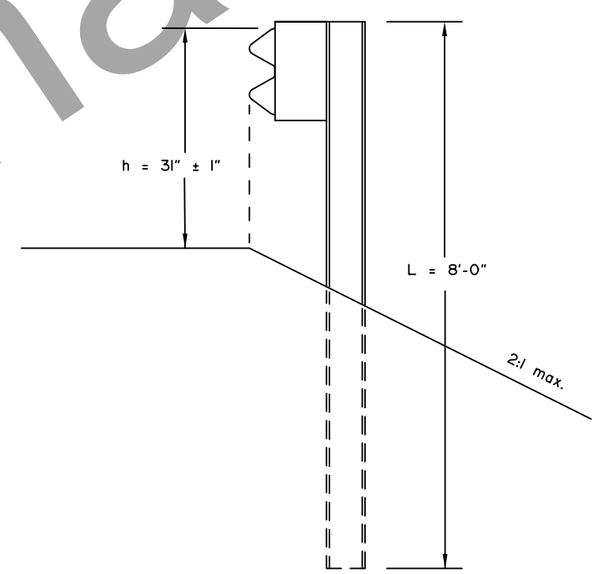

CASE 5

(See Note 5)

State of Alaska DOT&PF
ALASKA STANDARD PLAN

GUARDRAIL POST INSTALLATION

Adopted as an Alaska Standard Plan by: Kenneth J. Fisher, P.E.
Chief Engineer

Adoption Date: 02/08/2019

Last Code and Stds. Review
By: Date:

Next Code and Standards Review date: 02/08/2029

G-10.20

Preliminary Plans

G-20.12

SHEET 1 of 1

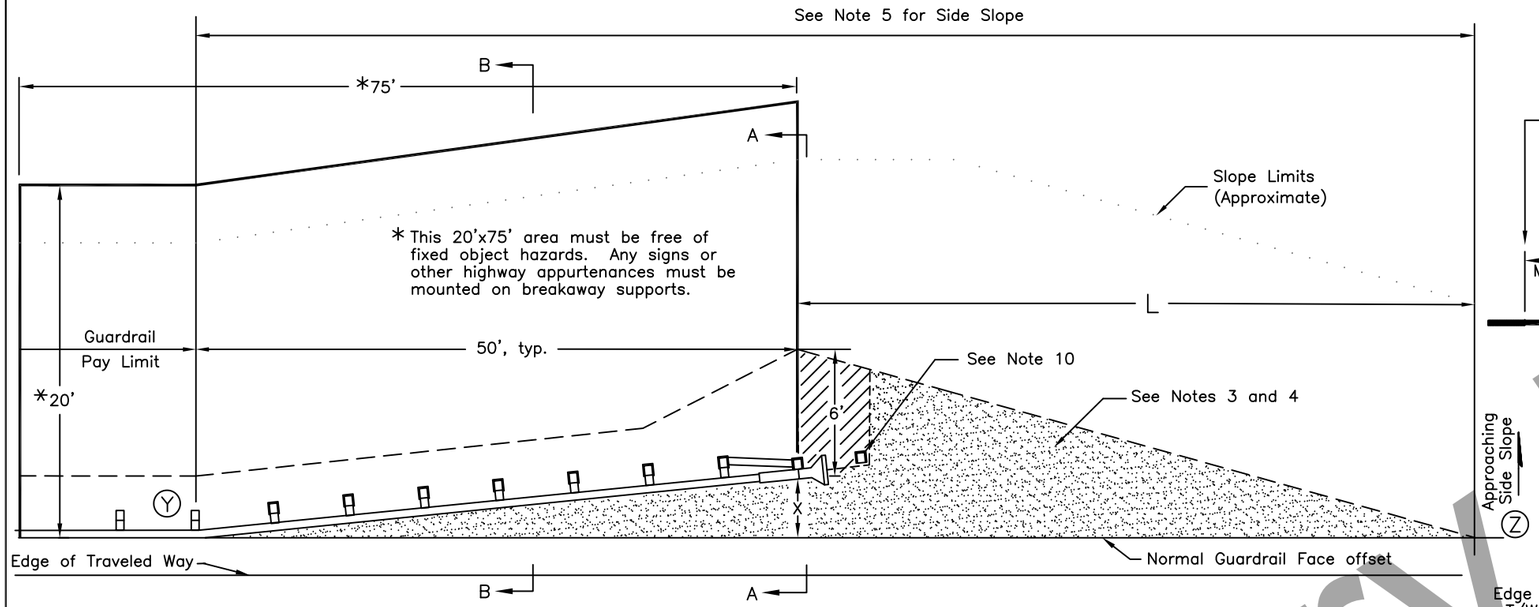

STANDARD GUARDRAIL TERMINAL WIDENING DETAIL

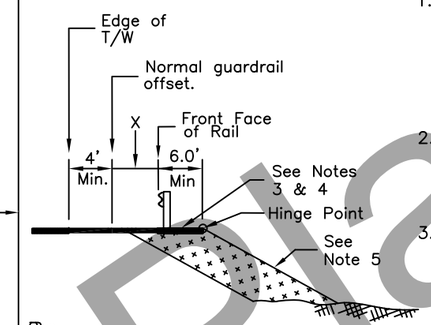

SECTION A–A

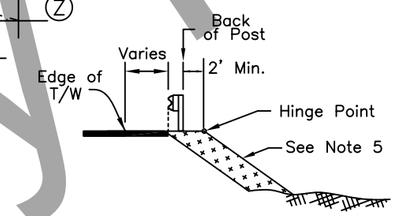

SECTION B–B
(Applies to both details)

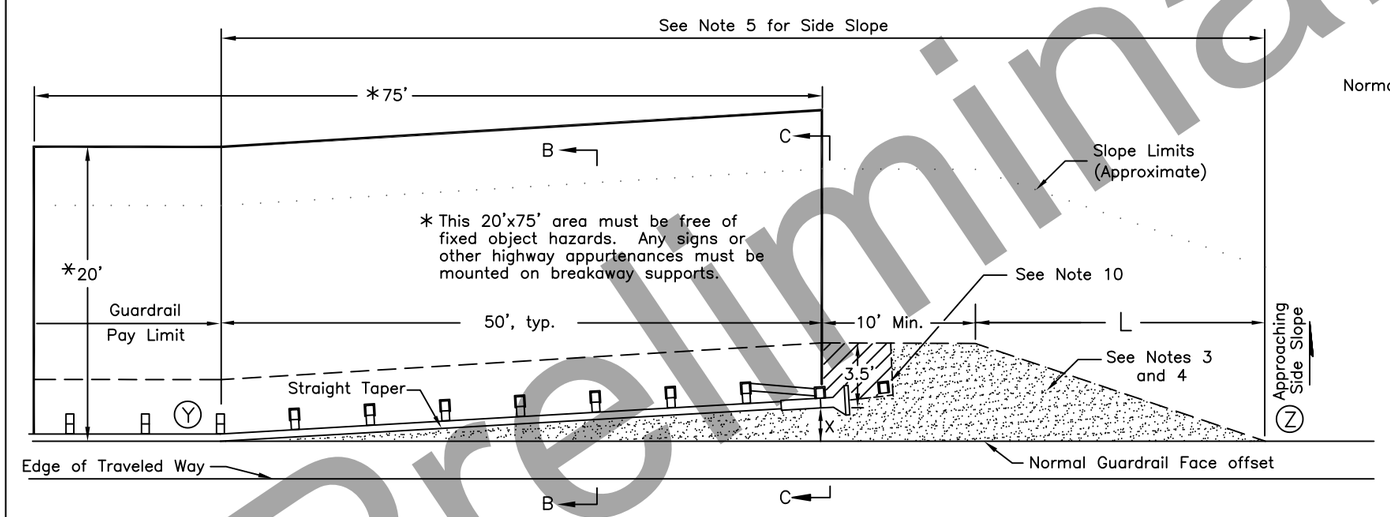

ALTERNATE GUARDRAIL TERMINAL WIDENING DETAIL

(USE ONLY WHEN LIMITED RIGHT–OF–WAY OR LIMITING SITE CONDITIONS MAKE THE STANDARD DETAIL INFEASIBLE)

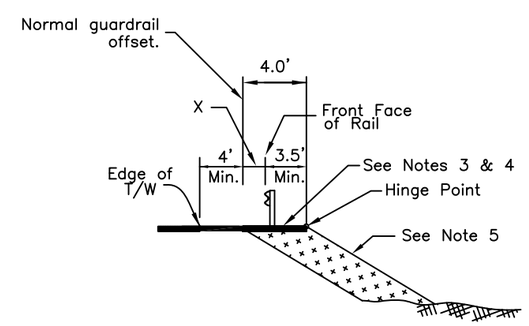

SECTION C–C

X= End offset. See manufacturer's information for the range of acceptable end offsets for each MASH compliant terminal.

Taper Lengths (L) for Common End Offsets (X)		
End Offset	Standard Detail	Alternate Detail
0'	24.0'	13.0'
1'	26.0'	17.0'
1.5'	28.0'	19.0'
2'	30.0'	21.0'
2.5'	32.0'	22.0'
4'	37.0'	28.0'
Interpolate if the end offset falls between table values		

GENERAL NOTES

1. This Std. Dwg. applies to all MASH approved guardrail end terminals (GETs). The alternate detail may only be used with parallel or tangent GETs. The terminal details shown are for illustration only – see manufacturer's drawings for actual post, rail, strut, etc. configuration and layout.
2. Use this Std. Widening Detail for all GETs except when limited right–of–way or limiting site conditions make the use of the Std. Widening Detail infeasible. In that case, the alternate detail is permissable.
3. Construct the shaded areas to match the slope of the adjacent shoulder. The slope may be increased to 10:1 if identified in the plans or when approved by the engineer. Match the slope when the shoulder slopes toward the road as well as away from the road.
4. On paved roads, the shaded areas shall be paved. On gravel roads, surface the shaded areas with the same materials used to surface the travel lanes.
5. From point Ⓨ to point Ⓩ make the side slope match the approaching side slope except where it is flatter than 4:1. In that case, the slope may be steepened to 4:1.
6. Attach a flexible marker at the beginning of each GET.
7. The max. allowable height for foundation tubes or other steel components of terminal post breakaway systems is 4" above the surrounding grade.
8. The details on this sheet do not apply to W31 Downstream End Anchors (Std Dwg G–14).
9. The details on this sheet apply to GETs on both the approach and downstream ends on two–way undivided roads and to any downstream MASH compliant GETs.
10. Some MASH GET systems have an additional post/anchor at the approximate location shown. If this post/anchor is present do not pave the diagonally hatched area. If not present, pave the diagonally hatched area also.

State of Alaska DOT&PF
ALASKA STANDARD PLAN

WIDENING FOR GUARDRAIL END TERMINALS

Adopted as an Alaska Standard Plan by: Kenneth J. Fisher, P.E.
Chief Engineer

Adoption Date: 02/08/2019

Last Code and Stds. Review
By: Date:

Next Code and Standards Review date:02/08/2029

G–20.12

Preliminary Plans

I-20.20

SHEET | of |

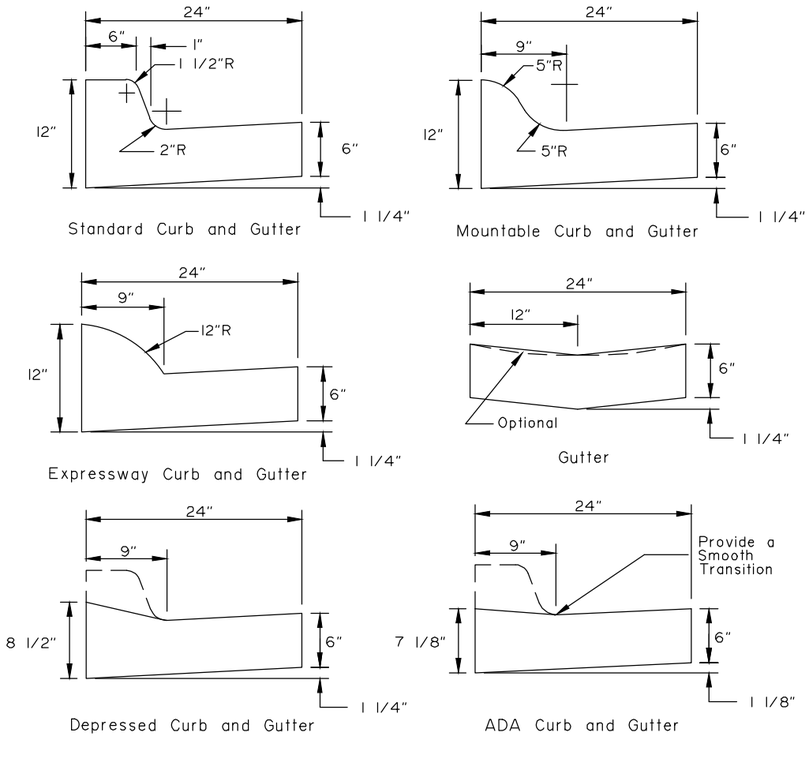

CURB and GUTTER DETAILS

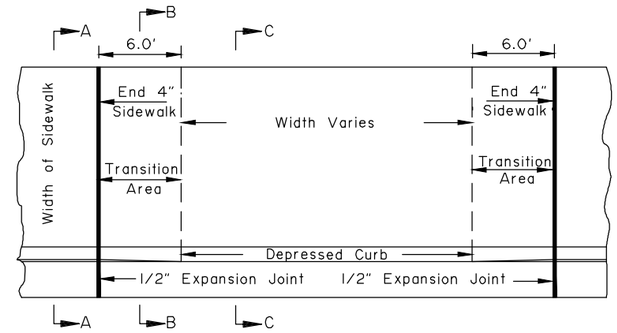

DRIVEWAY CURB CUT DETAILS

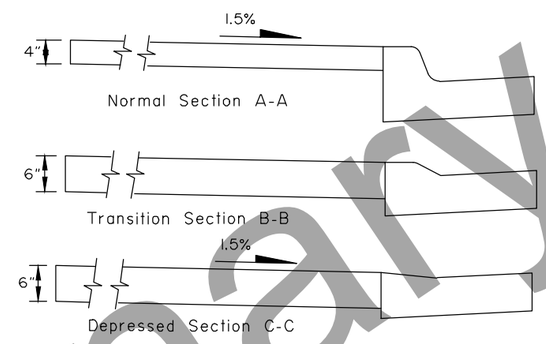

CONSTRUCTION NOTES:

1. Use the type of curb and gutter shown on the plans.
2. Construct ramp runs and landings of concrete, regardless of whether the sidewalk is asphalt or concrete.
3. Construct ramp slopes at a 7.7% nominal grade, or flatter. Ramp slopes may be increased to a maximum of 8.3% when site conditions warrant it. Ramp lengths should be increased to keep grades under the 8.3% maximum, but are not required to exceed 15.0 feet. The resulting ramp grade at a 15.0 foot ramp length is acceptable even if it exceeds 8.3%.
4. Construct flare slopes at 8.3% (measured paralllel to the curb line) or flatter, sidewalk cross slopes at 1.5% nominal (1.0% min. and 2.0% max), and ADA Curb and Gutter gutter pan slopes at 4.7% nominal. Construct grade breaks perpendicular to ramp runs.
5. Do not construct flare slopes steeper than 10.0%, sidewalk cross slopes steeper than 2.0% and ADA Curb and Gutter gutter pan slopes steeper than 5.0%. These are the steepest slopes allowed under the 2006 ADA Standards for Transportation Facilities.
6. Provide a coarse broomed finish on ramp runs perpendicular to the ramp slope.
7. When approved by the Engineer, curb returns may be replaced with flares at locations where access to the side of a ramp run is free of poles, utility boxes, other obstructions, or non-accessible surfaces such as a dirt planter strips. See Standard Plan I-22 for flare details.
8. Install 24" wide detectable warning tiles for the full width of the ramp. Provide tiles with truncated domes meeting Section 705.1 of the 2006 ADA Standards for Transportation Facilities. Align truncated dome pattern in the predominant direction of wheelchair travel to permit wheels to roll between domes.
9. Maximum cross slope on upper landings, measured in any direction, is 2.0%. Maximum cross slope on ramps is 2.0% measured perpendicular to the ramp run.

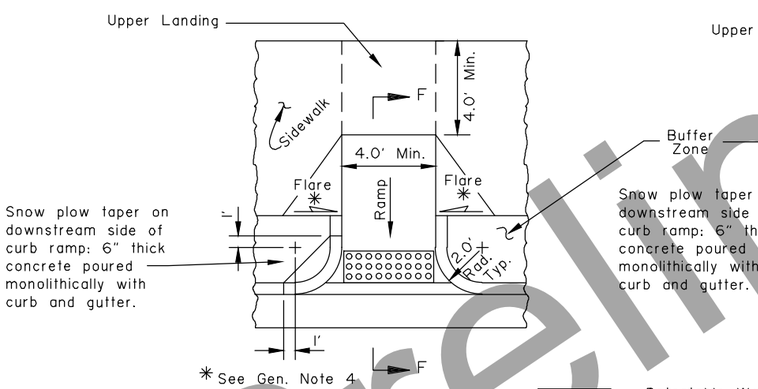

PLAN

= Detectable Warning Tile (see Note 8)

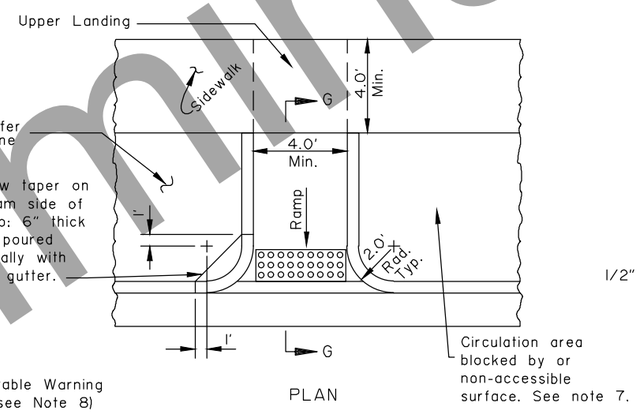

PLAN

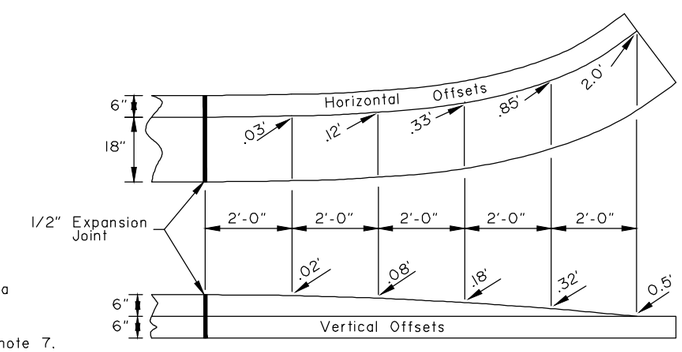

CURB and GUTTER TERMINATION TRANSITIONS

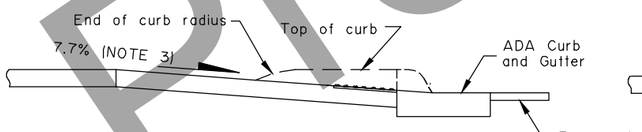

SECTION F-F
Returned Curb Ramp with Sidewalk for Pedestrians

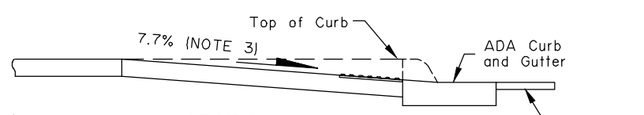

SECTION G-G
Returned Curb Ramp for Pedestrians

Note: Drawing not to scale

State of Alaska DOT&PF
ALASKA STANDARD PLAN

CURB CUT
CURB & GUTTER
AND CURB RAMP DETAILS

Adopted as an Alaska Standard Plan by: Carolyn Morehouse
Carolyn Morehouse, P.E.
Chief Engineer

Adoption Date: 7/17/2020

Last Code and Stds. Review
By: KLH Date: 7/8/2020

Next Code and Standards Review date: 7/8/2030

I-20.20

Preliminary Plans

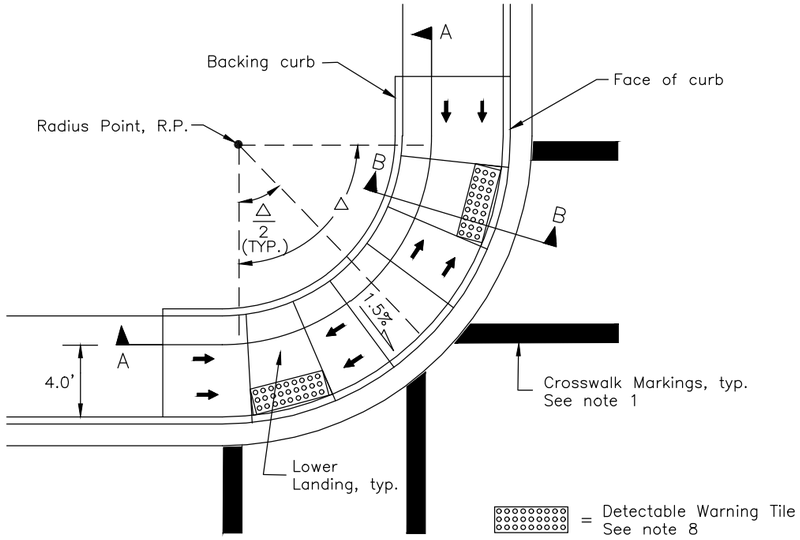

TWO CROSSING DIRECTIONS

At corner

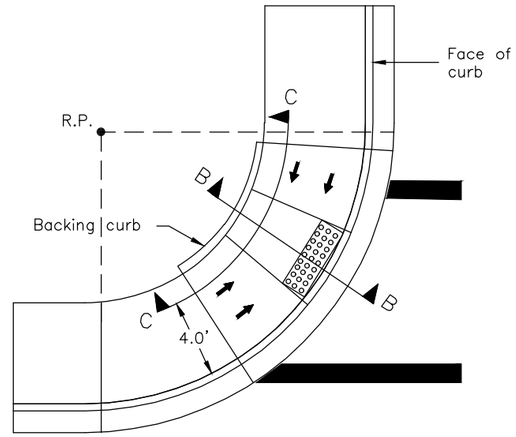

ONE CROSSING DIRECTION

At corner – generic location shown

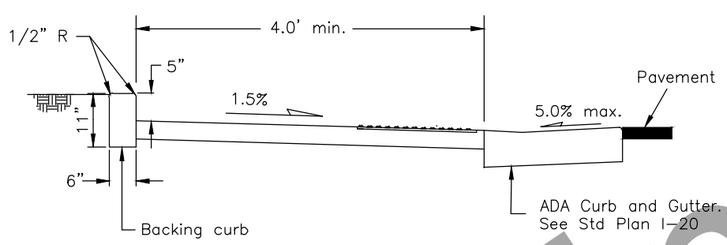

SECTION B–B

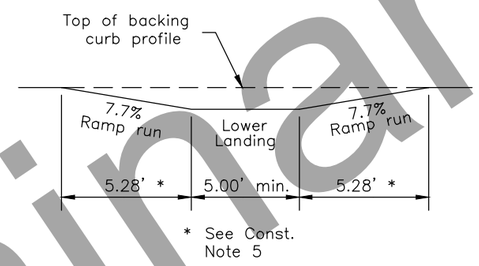

PROFILE C–C

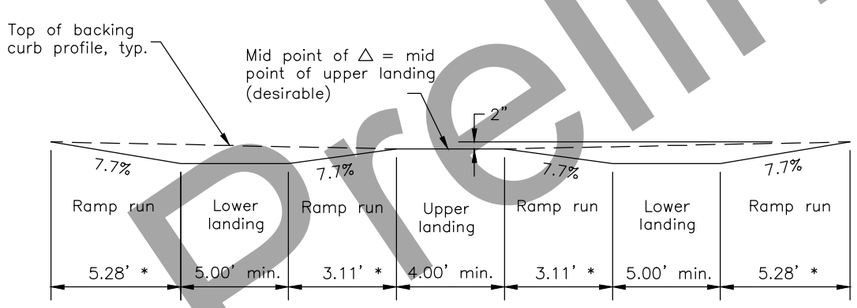

PROFILE A–A

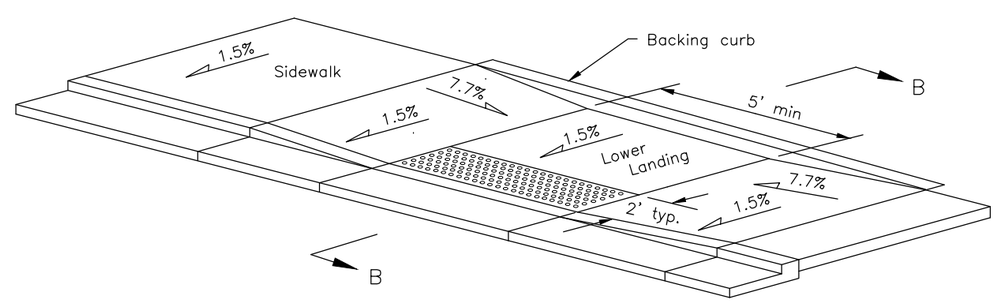

MID–BLOCK

Note: Drawing not to scale

CONSTRUCTION NOTES:

1. See plans for ramp type at specific locations. See striping plans for crosswalk layouts.
2. Construct ramp runs and landings of concrete, regardless of whether the sidewalk is asphalt or concrete.
3. When one parallel curb ramp will serve two directions, use the One Crossing Direction detail and refer to the striping plans for crosswalk layouts.
4. Ramp run lengths are shown for a flat sidewalk grade. For other sidewalk grades, increase or decrease ramp and flare lengths to maintain the slopes shown.
5. Construct ramp slopes at a nominal 7.7% grade, or flatter. Ramp slopes may be increased to a maximum of 8.3% when site conditions warrant it. Ramp lengths should be increased to keep grades under the 8.3% maximum, but are not required to exceed 15.0 feet. The resulting ramp grade at a 15.0 foot ramp length is acceptable even if it exceeds 8.3%.
6. Construct sidewalk cross slopes at 1.5% nominal (1.0% min. and 2.0% max).
7. Provide a coarse broomed finish running perpendicular to the curb on ramp runs and upper landings and parallel to the curb on lower landings.
8. Install 24" detectable warning tiles meeting Section 705.1 of the 2006 ADA Standards for Transportation Facilities for the full width of the ramp.
9. Maximum cross slope on lower landings is 2.0% as measured in any direction. Maximum cross slope on ramps is 2.0% measured perpendicular to the ramp run.
10. Provide 4" minimum thick concrete on ramps and landings.

Preliminary Plans

State of Alaska DOT&PF
ALASKA STANDARD PLAN

PARALLEL CURB RAMP

Adopted as an Alaska Standard Plan by: Carolyn Morehouse
Carolyn Morehouse, P.E.
Chief Engineer

Adoption Date: 7/17/2020

Last Code and Stds. Review
By: KLH Date: 7/8/2020

Next Code and Standards Review date: 7/8/2030

I-81.00

SHEET 1 of 1

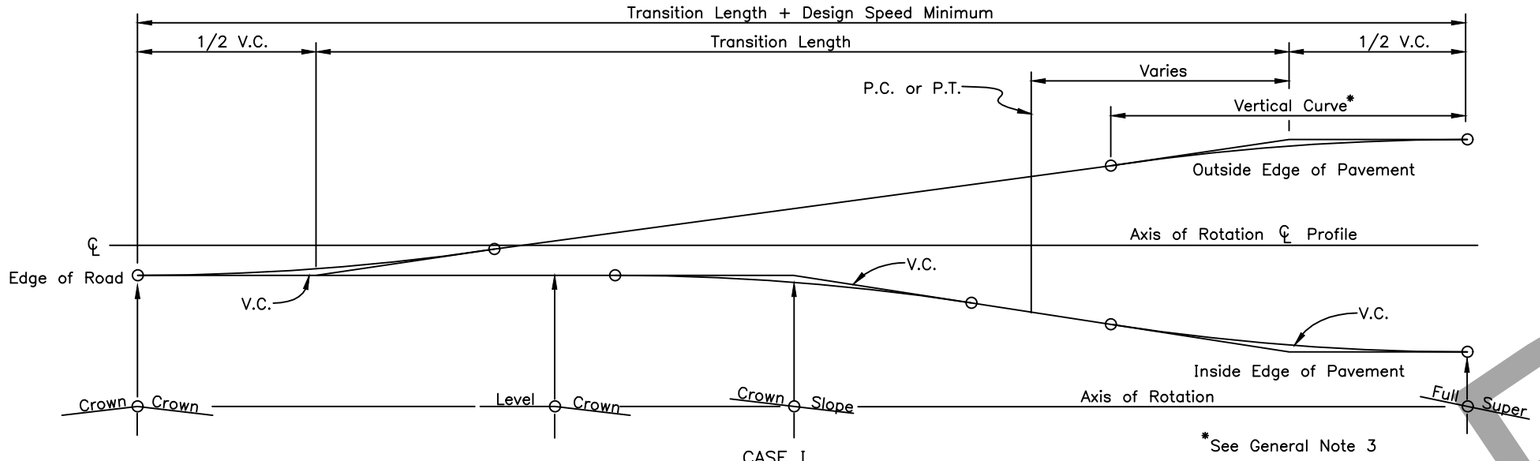

CASE I
PAVEMENT REVOLVED ABOUT CENTERLINE

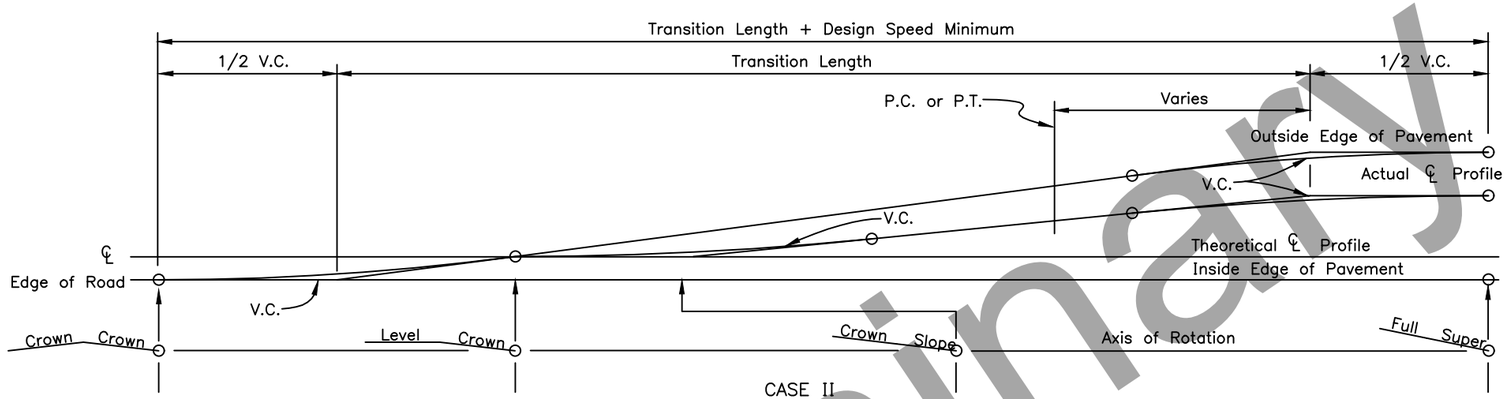

CASE II
PAVEMENT REVOLVED ABOUT INSIDE EDGE
TO BE USED WHERE DRAINAGE IS THE GOVERNING CONSIDERATION

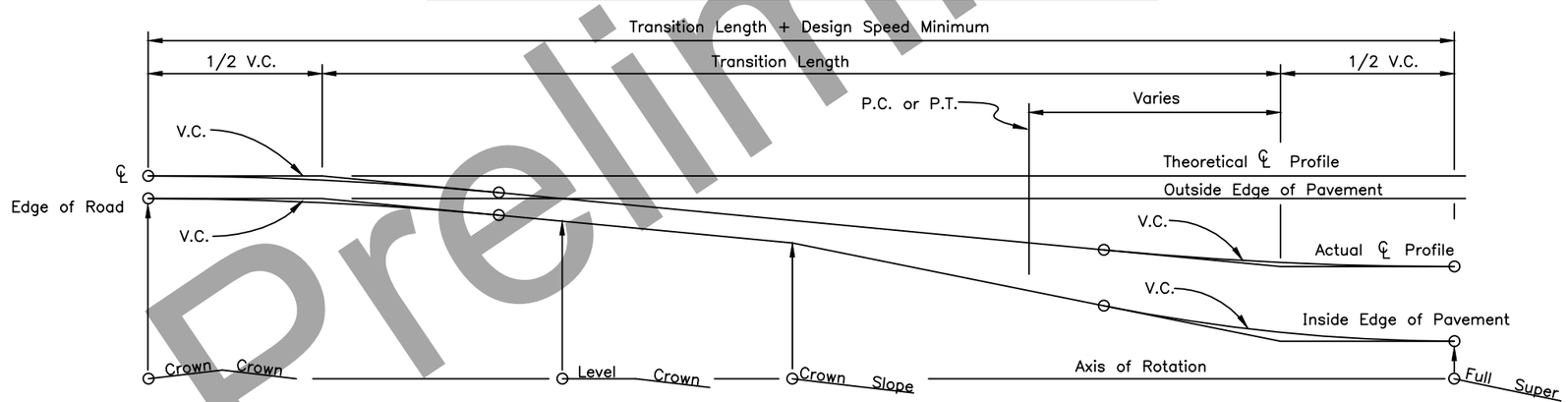

CASE III
PAVEMENT REVOLVED ABOUT OUTSIDE EDGE TO BE
USED WHERE OVERALL APPEARANCE IS THE MAIN CONTROL

GENERAL NOTES:

1. Location of transition length relative to horizontal curves will be shown on the plans or as directed by the Engineer.
2. Widening for guardrail or curvature will not change the location of the axis of rotation.
3. Minimum vertical curve length in feet shall be the numerical value of the design speed in M.P.H.
4. Superelevation shall be built into the subgrade and carried through the shoulders.

State of Alaska DOT&PF
ALASKA STANDARD PLAN

SUPERELEVATION TRANSITION

Adopted as an Alaska Standard Plan by: Carolyn Morehouse
Carolyn Morehouse, P.E.
Chief Engineer

Adoption Date: 7/17/2020

Last Code and Stds. Review
By: KLK Date: 7/8/2020

Next Code and Standards Review Date: 7/8/2030

I-81.00

Preliminary Plans

S-00.12 SHEET 1 of 1

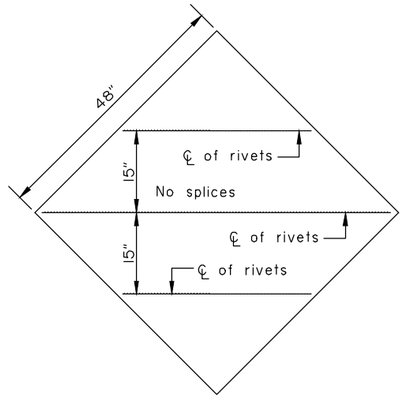

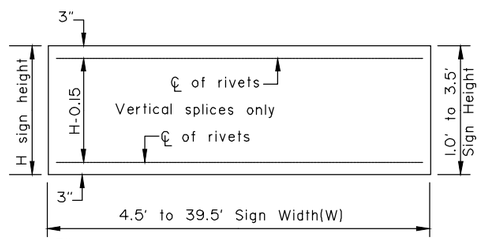

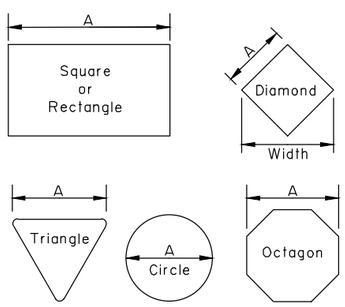

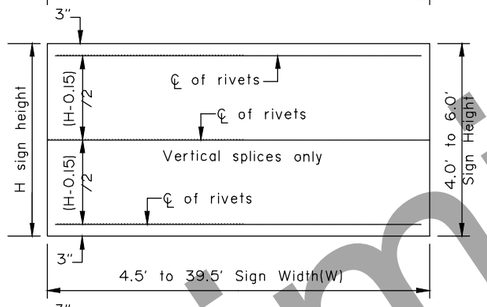

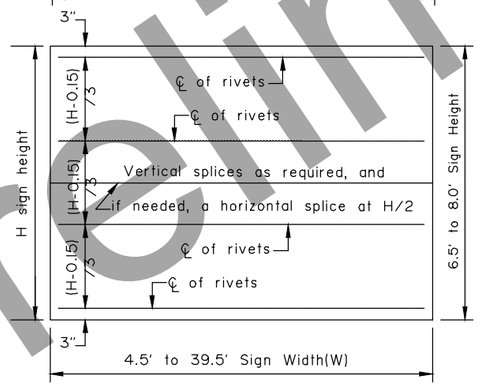

Maximum size unframed signs using 0.125" thick aluminum sheeting.	
Sign Shape	A
Squares, Shields, and Route Markers	48"
Rectangles	48"
Diamonds	48"
Triangles	48"
Rounds and Octagons	48"

Install wind framing on all signs that exceed the dimensions listed.

LIGHT SIGNS

WIND FRAMING LOCATIONS

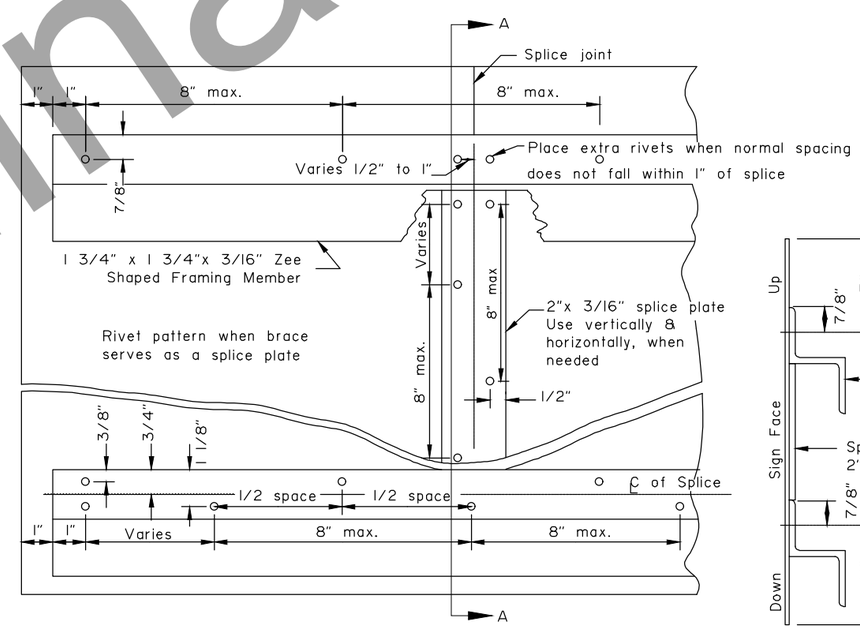

RIVET DETAIL FOR ZEE SHAPED WIND FRAMING & SPLICE PLATE

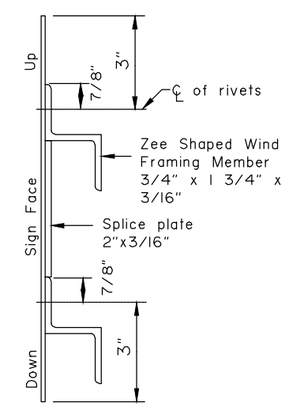

SECTION A-A

Note: Drawing not to scale

GENERAL NOTES

1. See the standard specifications for the aluminum alloys that you may use for sign sheeting and wind framing members.
2. Fabricate all signs from 0.125" thick aluminum sheeting.
3. Sign fabricators may use alternates to the zee shaped framing member with approval of the engineer, if the frame manufacturer certifies their design equals or exceeds the strength of the zee shaped design.
4. Install one piece wind framing members on all signs up to 23.5' wide. Use one splice in each wind frame on all signs wider than 23.5'. Locate splices at least 18" from all posts and panel edges. Stagger splices in adjacent framing members at least 8.0' apart.
5. Attach wind framing members with rivets or with an engineer approved, double sided, high strength, adhesive tape. Clean and handle sheeting and framing members and apply tape in accordance with the tape manufacturer's written instructions. Install two rivets in both ends of each framing member.
6. Use 3/16" diameter rivets conforming to aluminum alloy 6061-T6 for cold driven rivets, or aluminum alloy 6061-T43 for hot driven rivets.
7. Sign fabricators may use sign panels extruded with integral framing with approval of the engineer, if the manufacturer certifies their design equals or exceeds the strength of the 0.125" thick panel with framing attached to it.
8. Frame all signs taller than 8.0' with five wind framing members located (H-0.15)/4 spaces. If needed, make a horizontal splice at the middle wind frame.
9. Do not use round pipes for sign supports.

State of Alaska DOT&PF
ALASKA STANDARD PLAN

SIGN FRAMING

Adopted as an Alaska Standard Plan by: Carolyn Morehouse
Carolyn Morehouse, P.E.
Chief Engineer

Adoption Date: 7/17/2020

Last Code and Stds. Review
By: WTH Date: 7/8/2020

Next Code and Standards Review date: 7/8/2030

S-00.12

Preliminary Plans

S-01.02 SHEET | of |

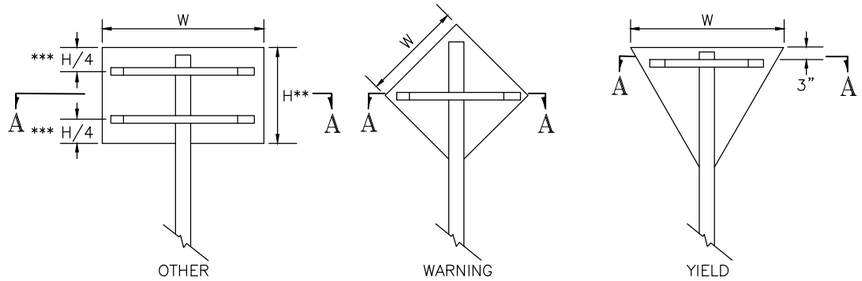

*** Use one brace when H ≤ 18"
Use two braces when 18"< H < 48"
Use three braces when H ≥ 48"

** Position of brace may be varied to match Predrilled mounting holes in panel

SIGN BRACING PLACEMENT

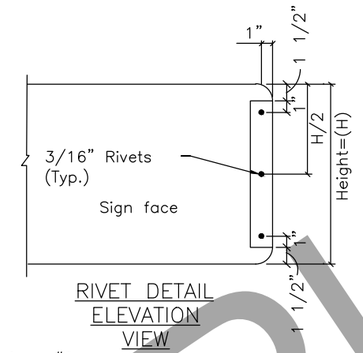

RIVET DETAIL ELEVATION VIEW

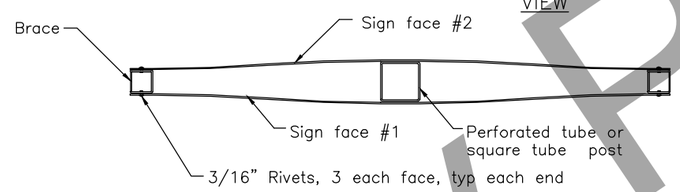

PLAN VIEW

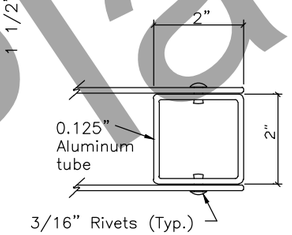

END BRACE DETAIL

SMALL STREET NAME SIGN (D3-1, D3-1A, D3-1D) BRACING DETAILS

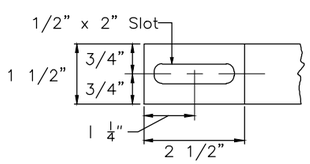

DETAIL OF BRACE SLOT
Elevation view

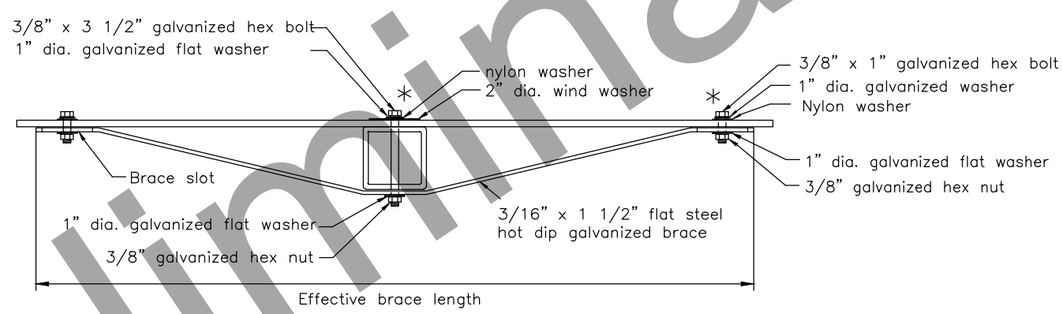

TUBE POST SIGN BRACING SECTION A-A
Plan view

* Adjust location of bracing so that bolts and washers will miss the sign legend

Sign Width(W)	Effective Brace Length		
	Warning	Yield	Other
30"	36"	24"	24"
36"	42"	30"	30"
42"	48"	–	36"
48"	Two posts	36"	42"

< 30" No bracing required and use square tube

Note: Drawing not to scale

State of Alaska DOT&PF
ALASKA STANDARD PLAN

BRACING FOR SIGNS MOUNTED ON SINGLE POST

Adopted as an Alaska Standard Plan by: Carolyn Morehouse
Carolyn Morehouse, P.E.
Chief Engineer

Adoption Date: 7/17/2020

Last Code and Stds. Review
By: WTH Date: 7/8/2020

Next Code and Standards Review date: 7/8/2030

S-01.02

Preliminary Plans

S-05.02

SHEET 1 of 1

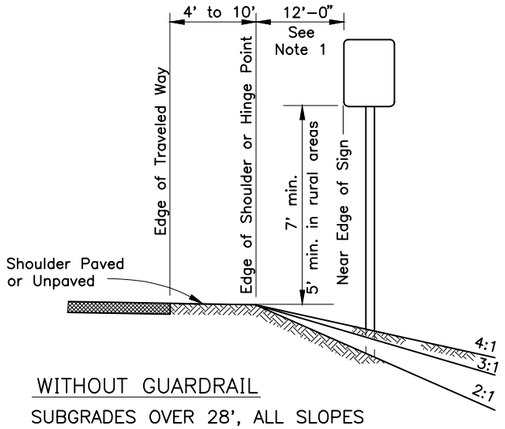

WITHOUT GUARDRAIL

SUBGRADES OVER 28', ALL SLOPES

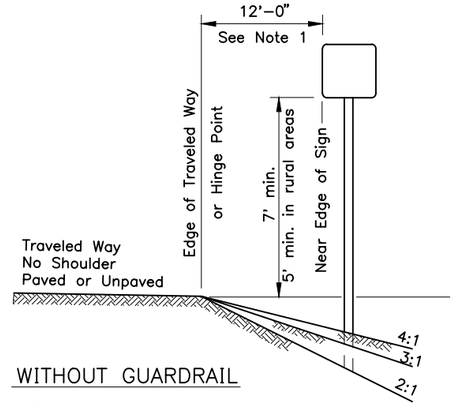

WITHOUT GUARDRAIL

SUBGRADES 24' TO 28', ALL SLOPES

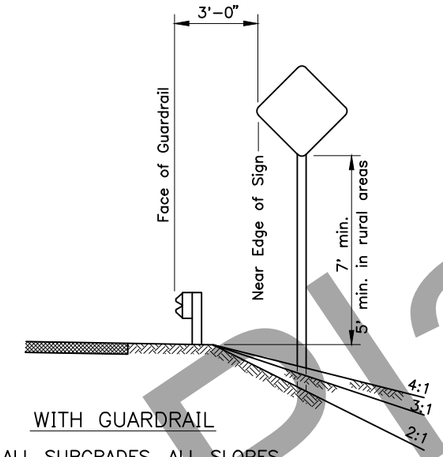

WITH GUARDRAIL

ALL SUBGRADES, ALL SLOPES

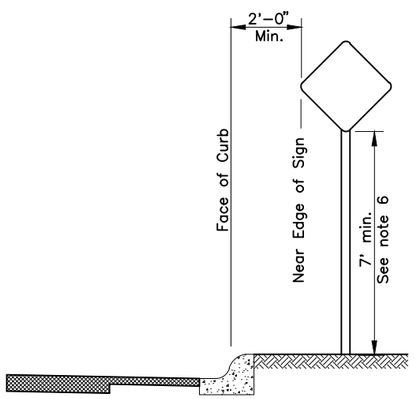

CURB WITHOUT SIDEWALK

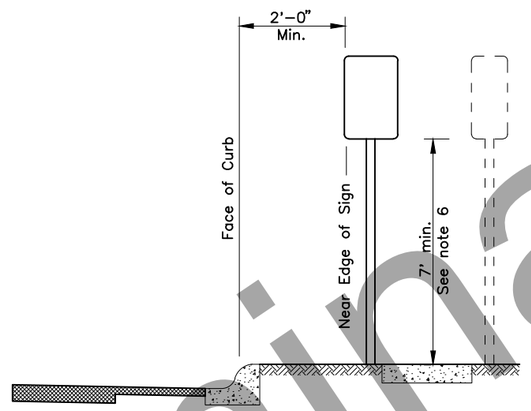

CURB WITH PARKWAY AND SIDEWALK

(If R/W width permits, signs should be placed behind sidewalk.)

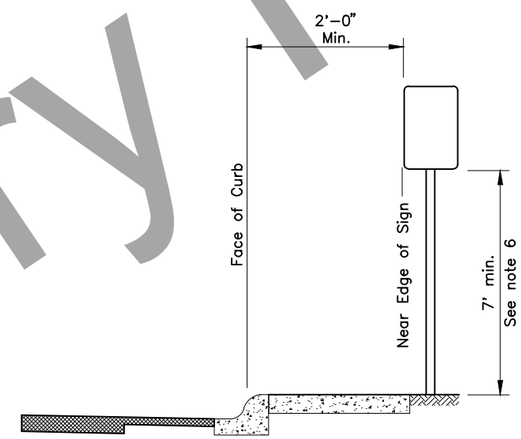

CURB WITH SIDEWALK WITHOUT PARKWAY

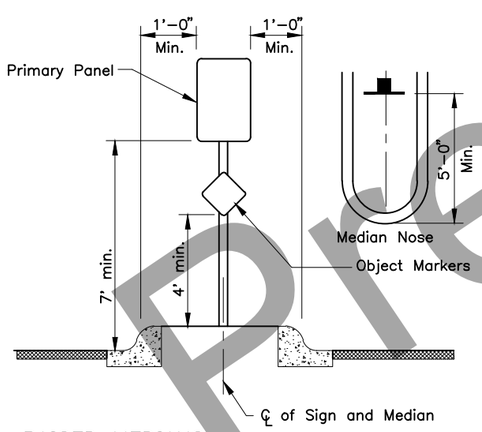

RAISED MEDIANS

Minimum 4' Width for Signing

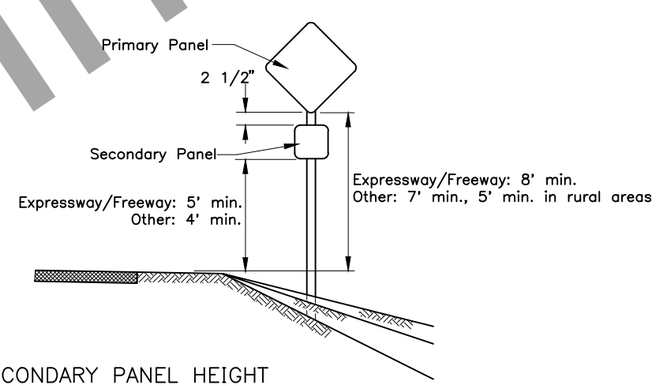

SECONDARY PANEL HEIGHT

ALL TWO PANEL MOUNTING

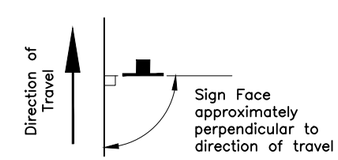

SIGN POSITIONING

GENERAL NOTES

1. Unless shown otherwise on the plans, the standard sign offset is 12'. The minimum is 6' where shoulder width is 6' or greater.
2. Add 6" to mounting height on unpaved roads.
3. If signs extend over bike paths, the minimum vertical clearance is 8' 0".
4. When signs are placed 30' or more from the edge of traveled way, mount them with the bottom of the sign at least 5' above the road surface at the near edge of the road.
5. When multiple hinged sign supports are used, mount hinges at least 7' above the ground.
6. Minimum mounting height is 7'-0" where parking or pedestrian movements are likely to occur, or where sings extend over sidewalks.
7. For construction signs in rural areas, mounting height shall be 7' minimum.

State of Alaska DOT&PF
ALASKA STANDARD PLAN

POST MOUNTED SIGN
OFFSET AND HEIGHT

Adopted as an Alaska Standard Plan by: Carolyn Morehouse
Carolyn Morehouse, P.E.
Chief Engineer

Adoption Date: 7/17/2020

Last Code and Stds. Review
By: KLK Date: 7/8/2020

Next Code and Standards Review Date: 7/8/2030

S-05.02

Preliminary Plans

S-20.11 SHEET | of |

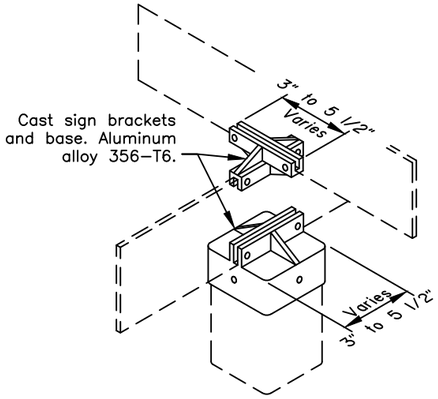

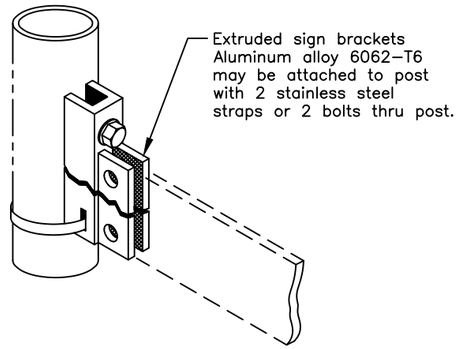

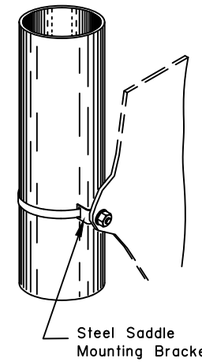

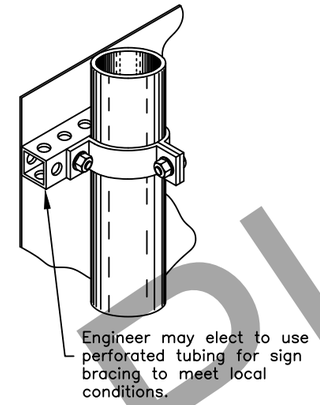

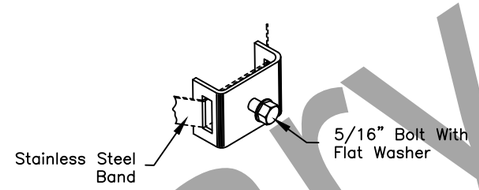

MOUNTING BRACKET DETAIL

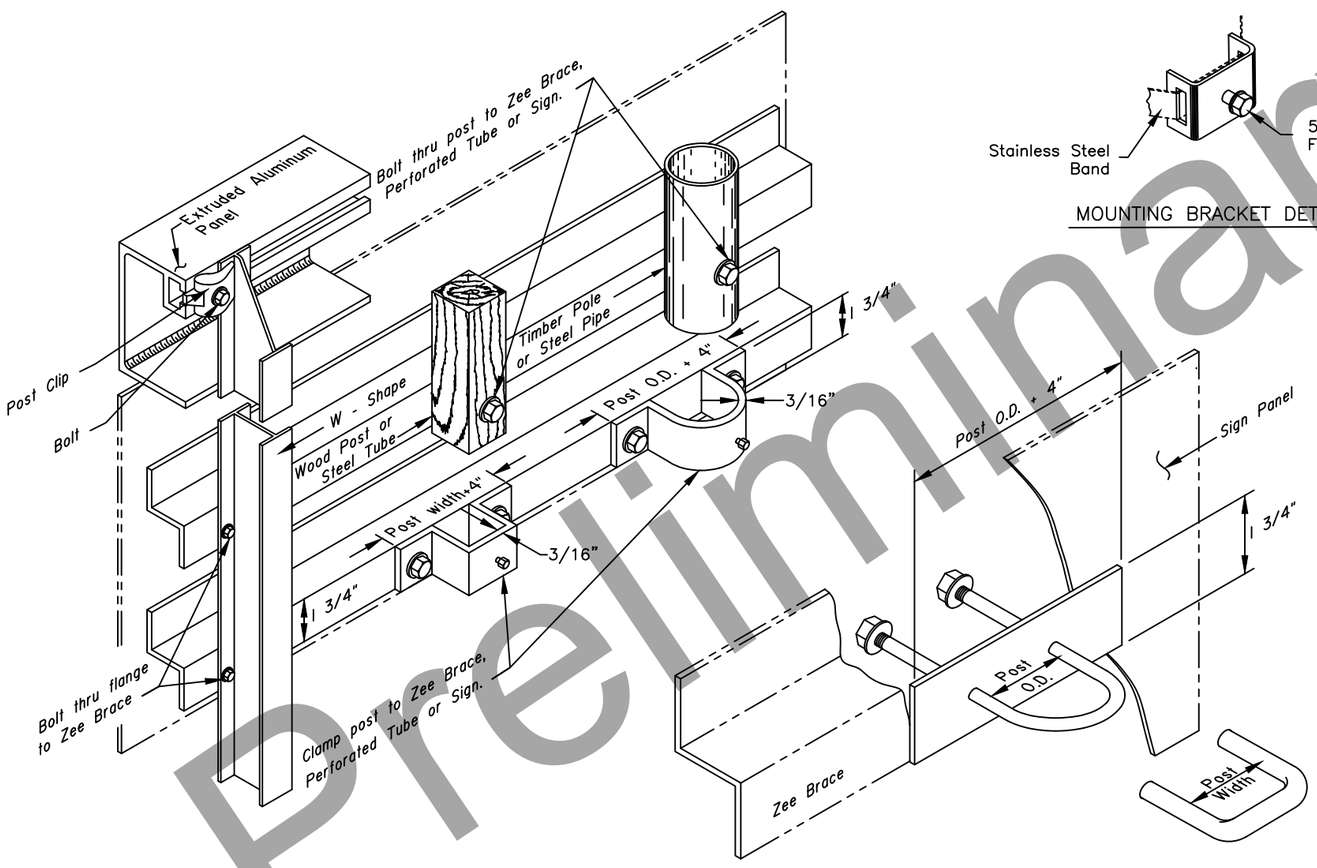

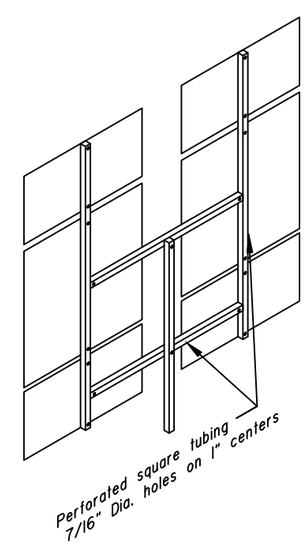

CONSTRUCTION NOTES

1. Details shown indicate general design only. Dimensions and design may vary among manufacturers.
2. Install weather tight caps on all pipe and tube post (except perforated tubing).
3. Protect driven sign posts with drive caps during installation.
4. Bolt braces to posts at each point where they cross posts.
5. Install signs with top of post, mounting brackets, etc. with a minimum of 3" below top of sign.
6. Paint all sign mounting fasteners on sign face a color closely matching the sign face.
7. Attach all signs, zees and braces mounted to the posts with 5/16" bolts, nuts and washers.
8. Furnish all aluminum nuts, bolts and washers with anodized finish.

FASTENER SPECIFICATION TABLE
(ALL REFERENCES ARE TO ASTM)

FASTENERS		ALUMINUM	STEEL	STAINLESS STEEL
BOLTS	MACHINE	F468 2024-T4	A307	F593
	CARRIAGE "U"	F468 2024-T4	A307	A276 TYPE 304
NUTS	REGULAR	F467 6061-T6	A563	F594
	LOCKING	F467 2017-T4		
WASHERS		F468 2024-T4	F844	A480
POST CLIP		A356-T6	N/A	N/A

State of Alaska DOT&PF
ALASKA STANDARD PLAN

SIGN TO SIGN POST CONNECTION

Adopted as an Alaska Standard Plan by: Carolyn Morehouse
Carolyn Morehouse, P.E.
Chief Engineer

Adoption Date: 07/30/2021

Last Code and Stds. Review
By: LRG Date: 07/30/2021

Next Code and Standards Review date: 07/30/2031

S-20.11

Preliminary Plans

S-31.02 SHEET 1 of 1

NOTE:
Install hinges when more than one post is used to support a sign. Do not install hinges on single post installations.

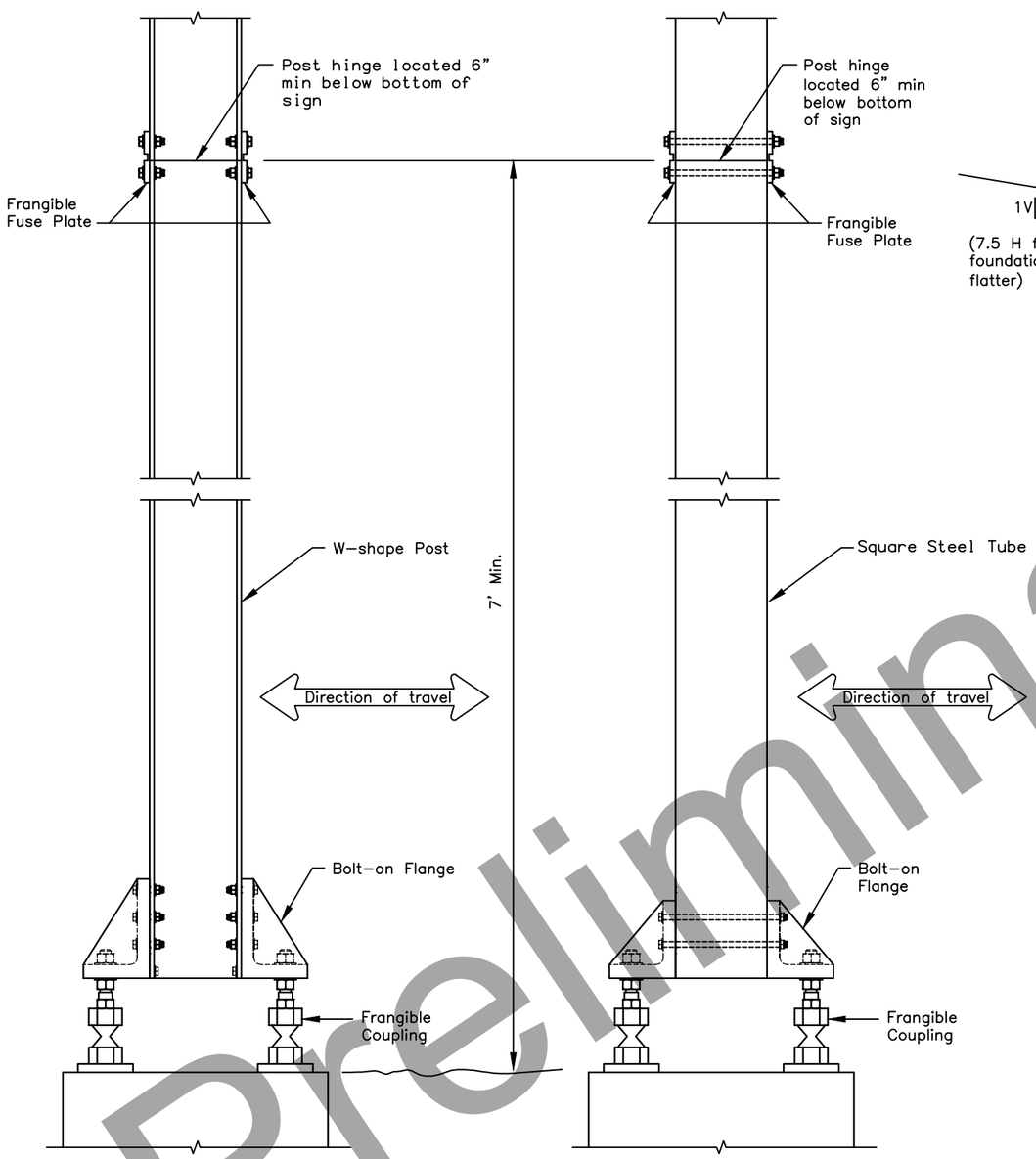

FRANGIBLE COUPLING SYSTEM FOR W-SHAPE POST

FRANGIBLE COUPLING SYSTEM FOR SQUARE STEEL TUBES

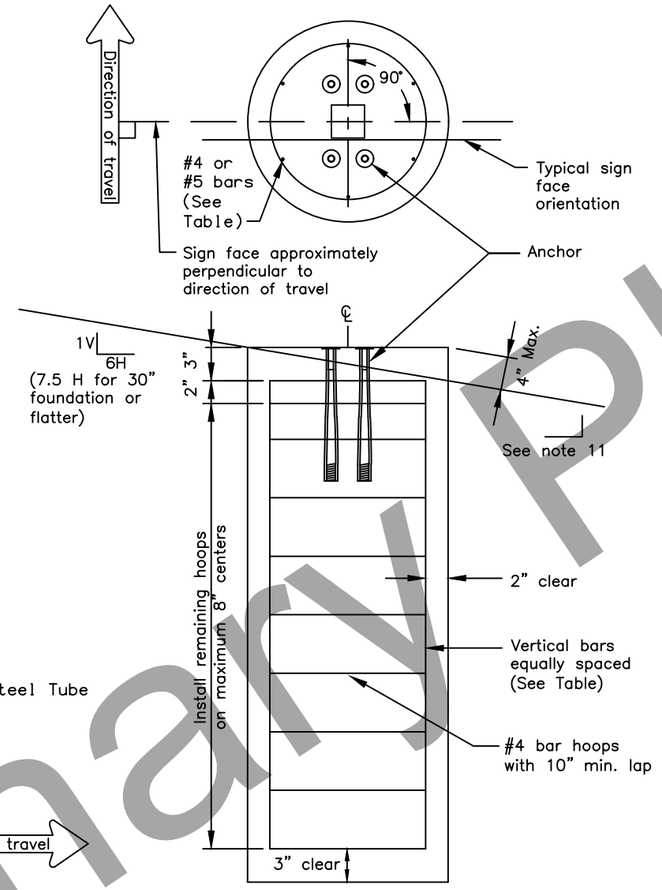

SIGN POST FOUNDATION
See Table for depth and diameter

POST SIZE & TYPE	FOUNDATION *			REINFORCEMENT					
	DIA.	MIN. DEPTH	CY^3 CONC.	VERTICAL BARS			HOOPS		
				QTY.	SIZE	LGTH.	QTY.	SIZE	DIA.
2 1/2" TUBE	1'-6"	6'-0"	0.39	7	#5	5'-6"	10	#4	1'-2"
3" TUBE	1'-6"	6'-0"	0.39	7	#5	5'-6"	10	#4	1'-2"
3 1/2" TUBE	1'-6"	6'-0"	0.39	7	#5	5'-6"	10	#4	1'-2"
4" TUBE	2'-6"	6'-0"	1.09	8	#8	5'-6"	10	#4	2'-2"
4 1/2" TUBE	2'-6"	6'-0"	1.09	8	#8	5'-6"	10	#4	2'-2"
5" TUBE	2'-6"	6'-0"	1.09	8	#8	5'-6"	10	#4	2'-2"
W6 x 9	2'-6"	6'-0"	1.09	8	#8	5'-6"	10	#4	2'-2"
W6 x 12	2'-6"	6'-0"	1.09	8	#8	5'-6"	10	#4	2'-2"
W6 x 15	3'-0"	6'-6"	1.70	8	#11	6'-0"	12	#4	2'-8"
W6 x 30	3'-0"	7'-6"	1.96	8	#11	7'-0"	13	#4	2'-8"

FOUNDATION TABLE

* Foundations sized for use where there are no loose, high moisture, or fine grained soils.

GENERAL NOTES

1. Furnish sign posts with NCHRP 350 compliant frangible couplings designed to break away safely when struck from any direction. There is no MASH compliant device at this time. See SPDR report for more info.
2. Furnish frangible coupling systems with bolt-on flanges.
3. Details on this sheet illustrate only the general components of a frangible coupling system, and are not intended to specify a particular product.
4. Install frangible fuse plates as specified by the manufacturer and hinged joints when multiple posts are used to support a sign. Do not use round pipes.
5. Install the components of the breakaway system, including hinges, in accordance with the written instructions of the system manufacturer.
6. Use Class A, B or W concrete conforming to Sections 501 or 550 of the Standard Specifications. Furnish ASTM A615 grade 60 steel bars for concrete reinforcement conforming to AASHTO M31.
7. Spiral reinforcing steel may be substituted for hoops in concrete foundation. Spiral option shall consist of #3 plain spiral with 6" pitch with three flat turns at the top and one flat turn at the bottom.
8. Install the concrete anchors using a rigid template. Locate the anchors on centers and within tolerances specified by the manufacturer.
9. Install the anchors in fresh concrete as recommended by the manufacturer. Adjust the template's final position until it is level. Remove and replace all foundations that need more than 2 shims under any 1 coupling or more than a total of 3 shims under any pair of couplings to plumb the post.
10. Drill the holes for attaching brackets before the sign posts are hot dip galvanized. Test fit templates in the holes to ensure the brackets can be installed square to the posts.
11. Special grading detail and/or shielding may be required to maintain 4" maximum clear distance.

State of Alaska DOT&PF
ALASKA STANDARD PLAN

SIGN POST BASE AND FOUNDATION

Adopted as an Alaska Standard Plan by: Carolyn Morehouse
Carolyn Morehouse, P.E.
Chief Engineer

Adoption Date: 7/17/2020

Last Code and Stds. Review
By: KLK, MJM Date: 7/8/2020

Next Code and Standards Review Date: 7/8/2030

S-31.02

Preliminary Plans

T-20.04

SHEET | of |

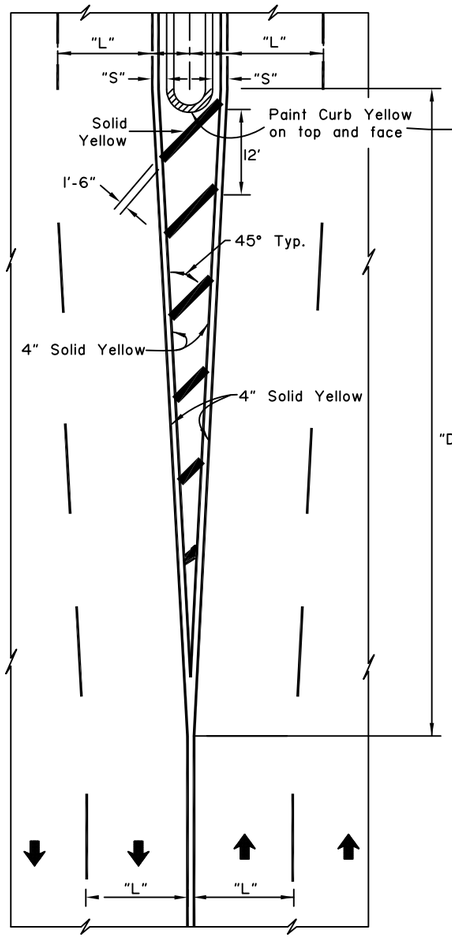

FOUR OR MORE LANES
DRIVE TO RIGHT

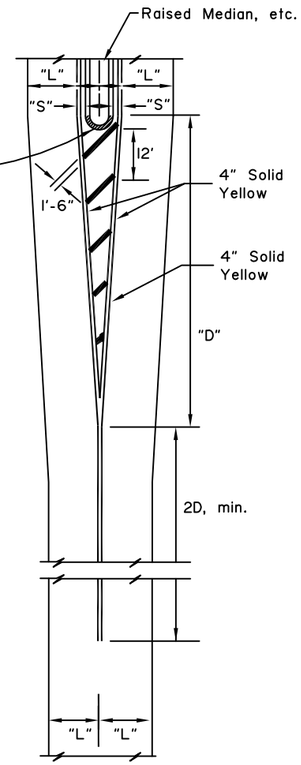

TWO LANES
DRIVE TO RIGHT

White longitudinal and diagonal markers identical to Four Lane Arrangement.

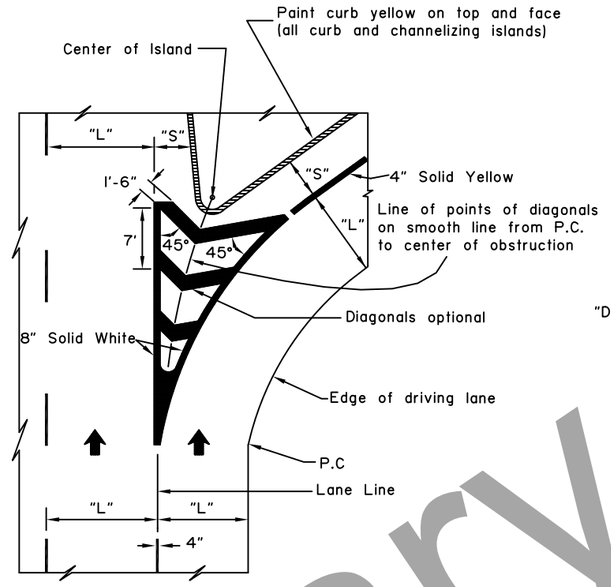

CHANNELIZING ISLAND

NOTES: "D" = Speed limit (mph) X "S" (offset width in feet) or as indicated on the plans. Minimum "D" = 100 feet urban, 200 feet rural.

APPROACH TO OBSTRUCTIONS

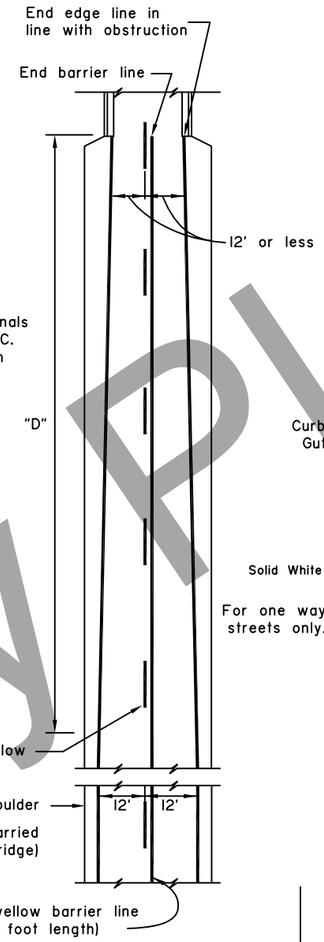

Note: On bridges over 24' wide use standard pavement markings. Barrier lines not used unless otherwise required.

EDGE LINE TRANSITION TO NARROW BRIDGE AND APPROACH BARRIER LINE

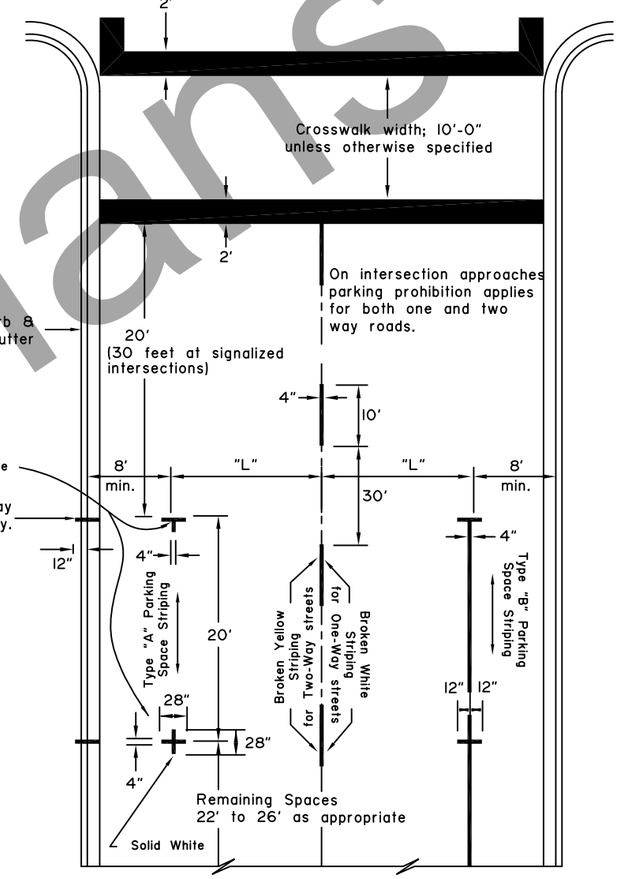

CENTERLINES FOR TWO LANE TWO WAY URBAN ROADS-PARKING LIMIT LINES

RAILROAD CROSSING NOTES:

1. All markings solid while unless indicated otherwise.
2. On 4-lane roadways place railroad crossing approach markings in each lane of the approach.
3. Locate Stop Bar 15' from railroad track or 8' from gate, if present.
4. Place edge lines and lane lines on a uni-directional approach in a normal manner except that the lane line(s) shall be solid 4" white in lieu of broken for a distance of (D+60') in advance of the stop bands.

POSTED LIMIT	D
30 M.P.H.	225'
40	350'
50	475'
60	625'

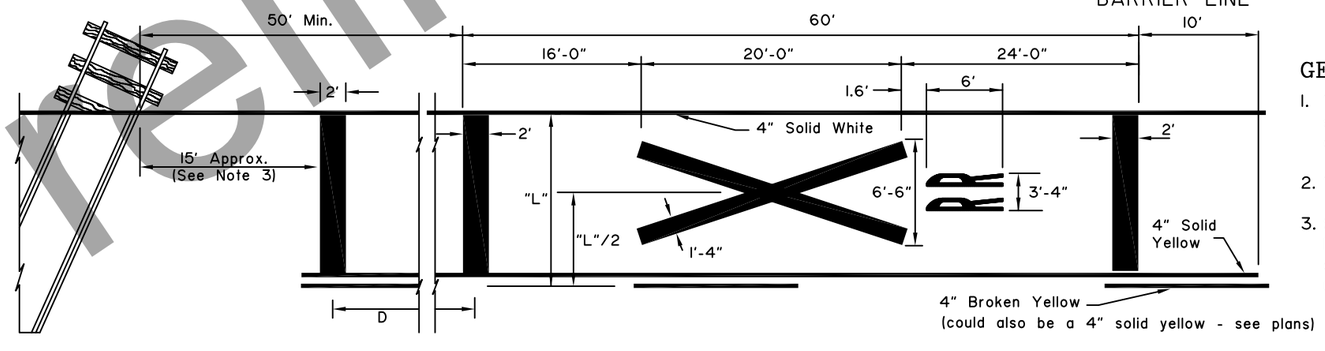

APPROACH TO RAILROAD CROSSING ON 2 LANE 2 WAY HIGHWAY

GENERAL NOTES:

1. "S"= offset distance as shown on the plans, otherwise 1 to 2 feet.
2. "L"= driving lane width.
3. See the Alaska Traffic Manual for additional guidance and/or restrictions on the use of traffic control devices.

NOT TO SCALE

State of Alaska DOT&PF
ALASKA STANDARD PLAN

PAVEMENT MAKING APPLICATIONS

Adopted as an Alaska Standard Plan by: Kenneth J. Fisher, P.E.
Chief Engineer

Adoption Date: 02/08/2019

Last Code and Stds. Review
By: Date:

Next Code and Standards Review date: 02/08/2029

T-20.04

Preliminary Plans

T-22.04	SHEET | of |

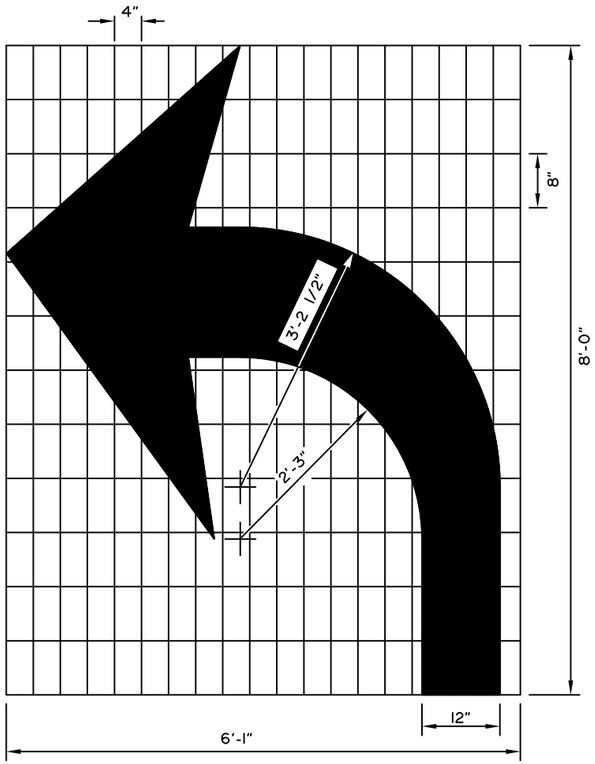

Right turn auxilliary lane usage markings identical except arrow symbol is reversed.

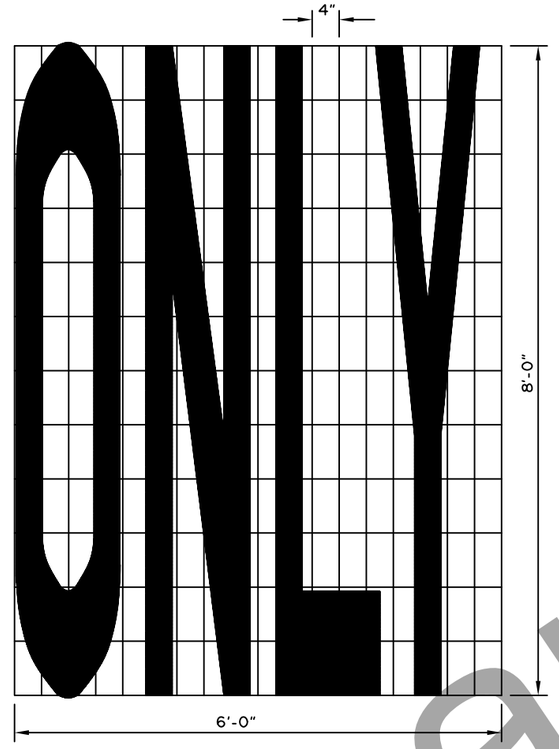

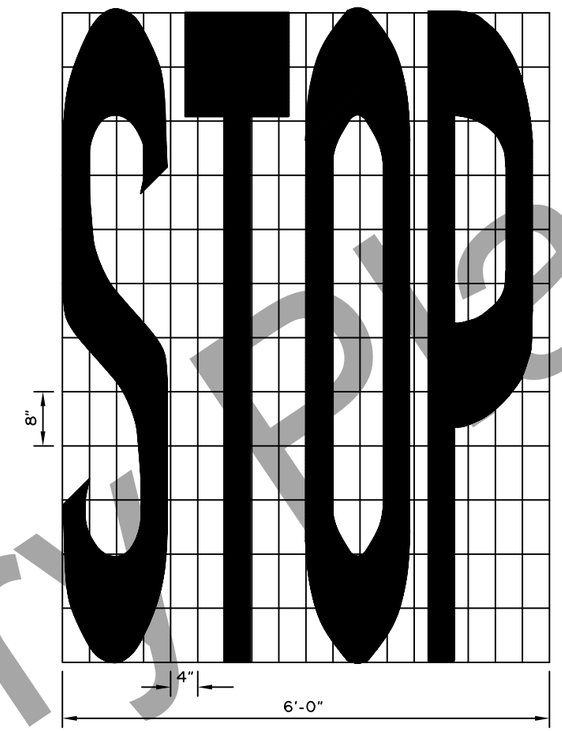

LAYOUT TEMPLATES FOR STENCILS

GENERAL NOTES:

1. All symbols shown shall be white and reflectorized in accordance with the Special Provisions.
2. See the Alaska Sign Design Specifications (ASDS) for lettering and symbols for pavement marking details not provided on this drawing.

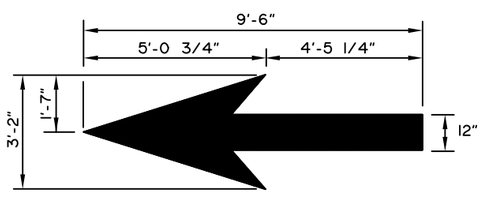

STRAIGHT AHEAD ARROW

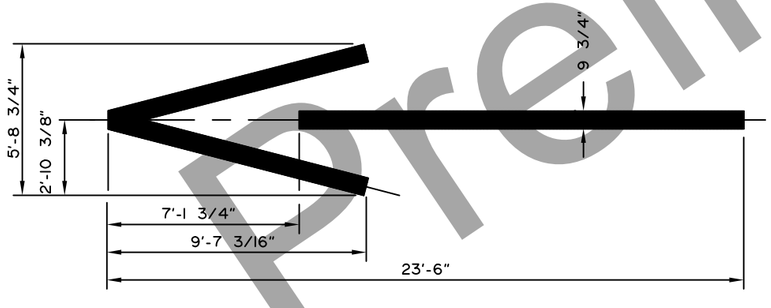

WRONG WAY ARROW

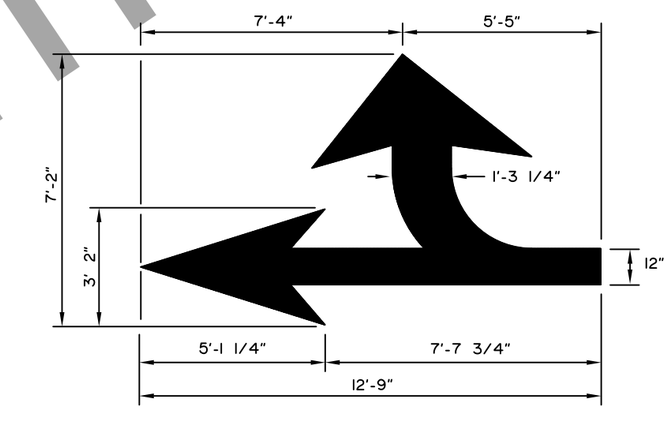

COMBINATION ARROW

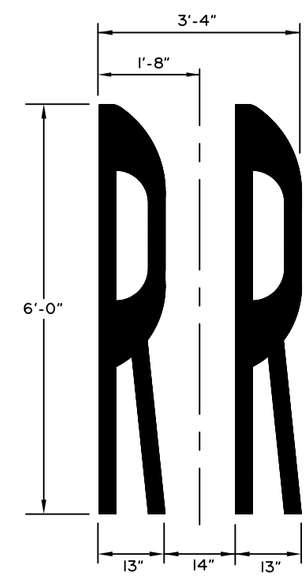

RAILROAD SYMBOL

State of Alaska DOT&PF
ALASKA STANDARD PLAN

PAVEMENT MARKING SYMBOL DIMENSIONS

Adopted as an Alaska Standard Plan by: Kenneth J. Fisher, P.E.
Chief Engineer

Adoption Date: 02/08/2019

Last Code and Stds. Review
By: Date:

Next Code and Standards Review date: 02/08/2029

T-22.04

Preliminary Plans