NO.	DATE	REVISION

STATE	PROJECT DESIGNATION	YEAR	SHEET NO.	TOTAL SHEETS
ALASKA	NFHWY00435	2021	B1	B4

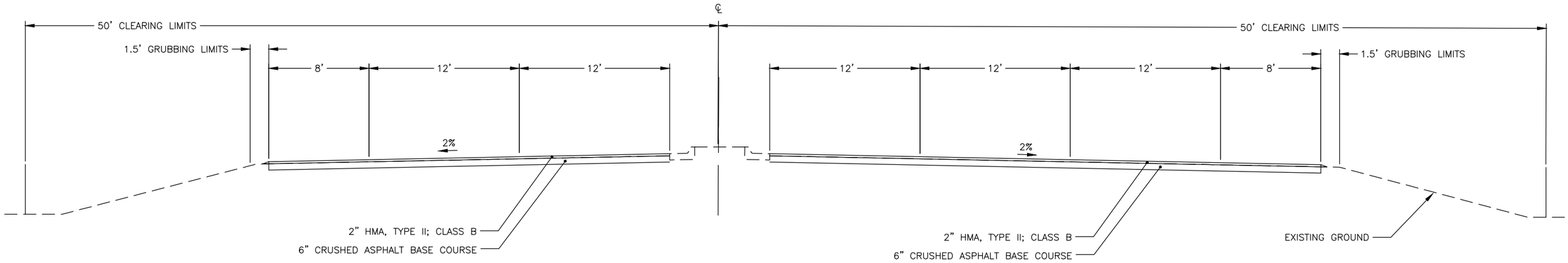

OLD RICHARDSON TYPICAL SECTION 1

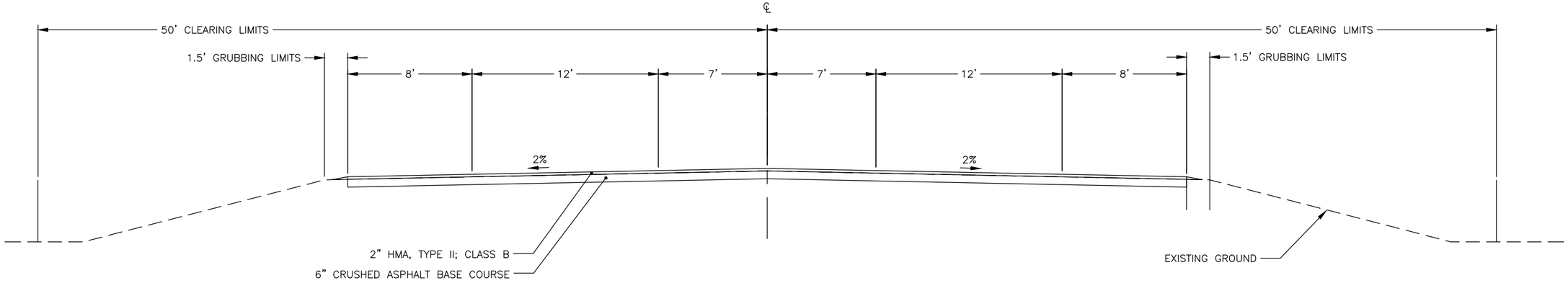

OLD RICHARDSON TYPICAL SECTION 2

NOTES:

1. ROAD CROSS SLOPES VARY DUE TO SUPPER ELEVATION.

TYPICAL SECTION

STATE OF ALASKA 49TH
JOHN JARO NETARDUS
CE 124494
REGISTERED PROFESSIONAL ENGINEER

PLANS DEVELOPED BY: STATE OF ALASKA DEPARTMENT OF TRANSPORTATION & PUBLIC FACILITIES, NORTHERN REGION, 2301 PEGER ROAD, FAIRBANKS, AK 99709 (907)451-2200
R:\Projects\Fbks_NP\NFHWY00435 South Fairbanks Industrial Roads Resurfacing\7 Drafting\PS&E drawings\B1-TYPICAL B1 Tue, Sep/22/20 04:17pm

NO.	DATE	REVISION

STATE	PROJECT DESIGNATION	YEAR	SHEET NO.	TOTAL SHEETS
ALASKA	NFHWY00435	2021	B2	B4

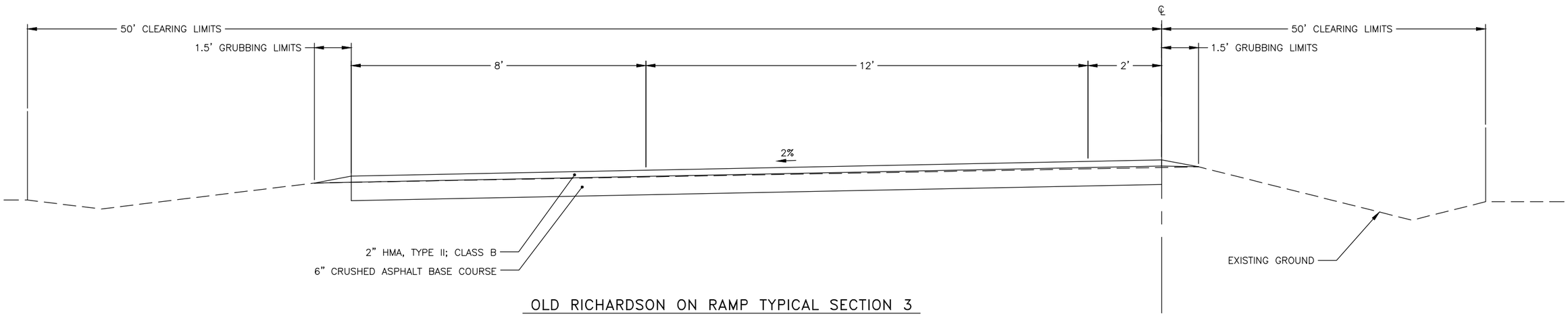

OLD RICHARDSON ON RAMP TYPICAL SECTION 3

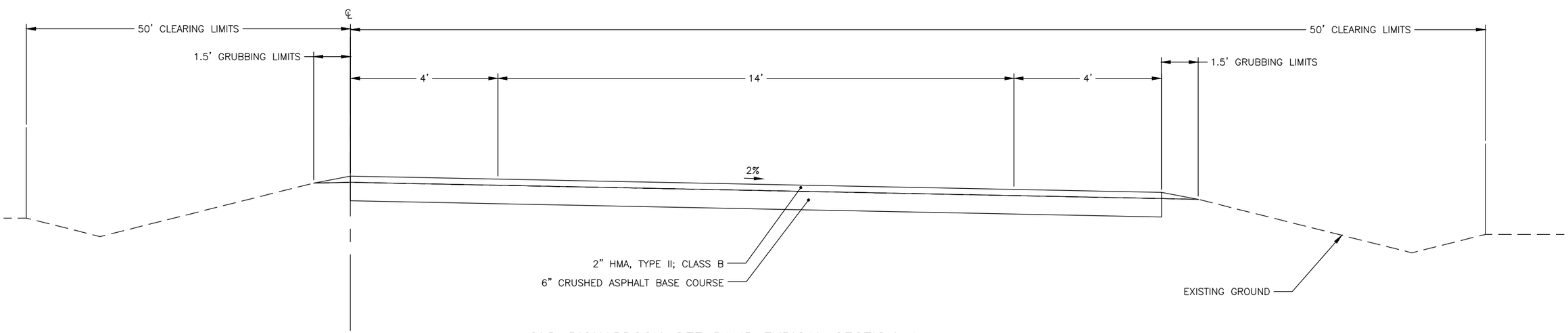

OLD RICHARDSON OFF RAMP TYPICAL SECTION 4

TYPICAL SECTION

STATE OF ALASKA
49 TH
JOHN JARO NETARDUS
CE 124494
REGISTERED PROFESSIONAL ENGINEER

PLANS DEVELOPED BY: STATE OF ALASKA DEPARTMENT OF TRANSPORTATION & PUBLIC FACILITIES, NORTHERN REGION, 2301 PEGER ROAD, FAIRBANKS, AK 99709 (907)451-2200
R:\Projects\Fbks_NP\NFHWY00435 South Fairbanks Industrial Roads Resurfacing\7 Drafting\PS&E drawings\B1-TYPICAL B2 Tue, Sep/22/20 04:18pm

NO.	DATE	REVISION

STATE	PROJECT DESIGNATION	YEAR	SHEET NO.	TOTAL SHEETS
ALASKA	NFHWY00435	2021	B3	B4

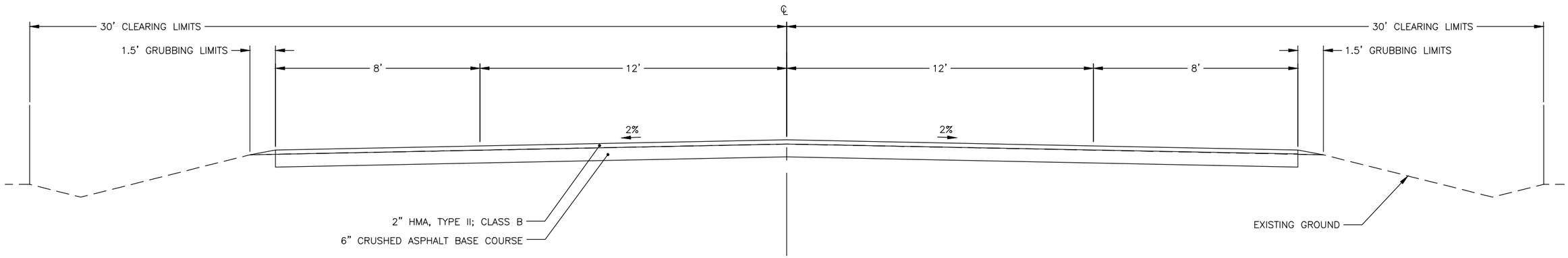

EASY ST. TYPICAL SECTION 1

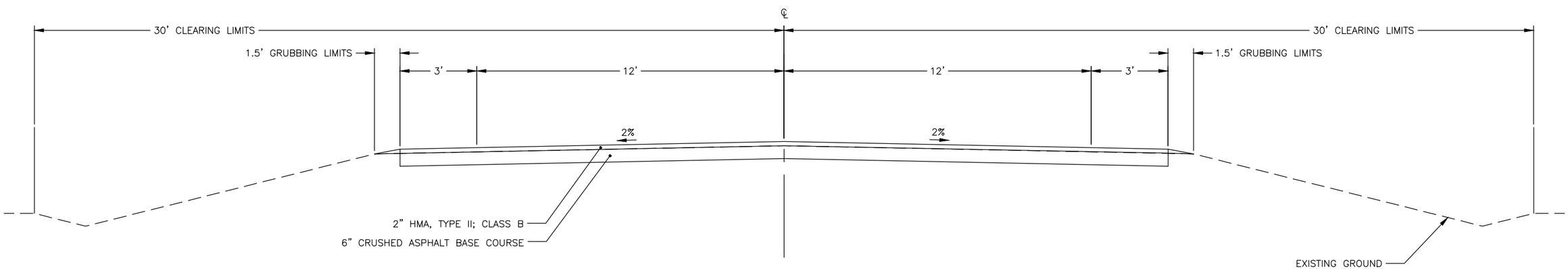

EASY ST. TYPICAL SECTION 2

TYPICAL SECTION

STATE OF ALASKA
49 TH
JOHN JARO NETARDUS
CE 124494
REGISTERED PROFESSIONAL ENGINEER

PLANS DEVELOPED BY: STATE OF ALASKA DEPARTMENT OF TRANSPORTATION & PUBLIC FACILITIES, NORTHERN REGION, 2301 PEGER ROAD, FAIRBANKS, AK 99709 (907)451-2200
R:\Projects\Fbks_NP\NFHWY00435 South Fairbanks Industrial Roads Resurfacing\7 Drafting\PS&E drawings\B1-TYPICAL B3 Tue, Sep/22/20 04:19pm

NO.	DATE	REVISION

STATE	PROJECT DESIGNATION	YEAR	SHEET NO.	TOTAL SHEETS
ALASKA	NFHWY00435	2021	B4	B4

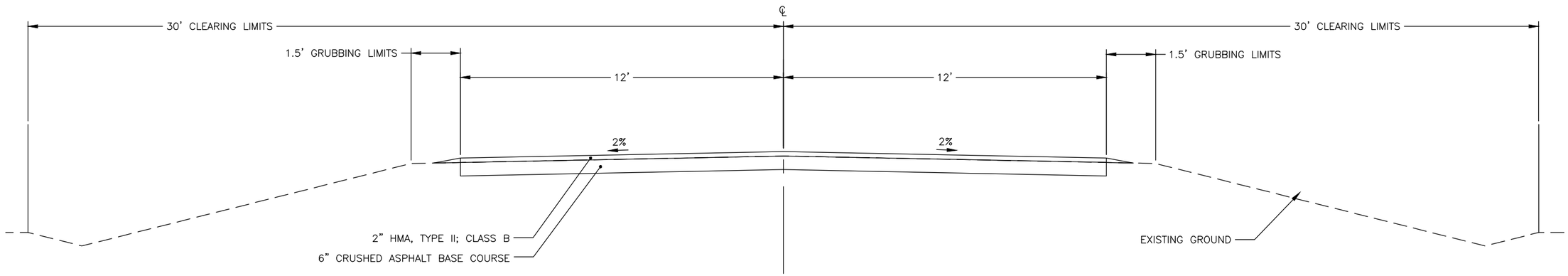

PEGER ROAD TYPICAL SECTION 1

TYPICAL SECTION

STATE OF ALASKA
49TH
JOHN JARO NETARDUS
CE 124494
REGISTERED PROFESSIONAL ENGINEER

PLANS DEVELOPED BY: STATE OF ALASKA DEPARTMENT OF TRANSPORTATION & PUBLIC FACILITIES, NORTHERN REGION, 2301 PEGER ROAD, FAIRBANKS, AK 99709 (907)451-2200
R:\Projects\Fbks_NP\NFHWY00435 South Fairbanks Industrial Roads Resurfacing\7 Drafting\PS&E drawings\B1-TYPICAL B4 Tue, Sep/22/20 04:19pm