NO.	DATE	REVISION

STATE	PROJECT DESIGNATION	YEAR	SHEET NO.	TOTAL SHEETS
ALASKA	0654015/NFHWY00570	2025	A1	91

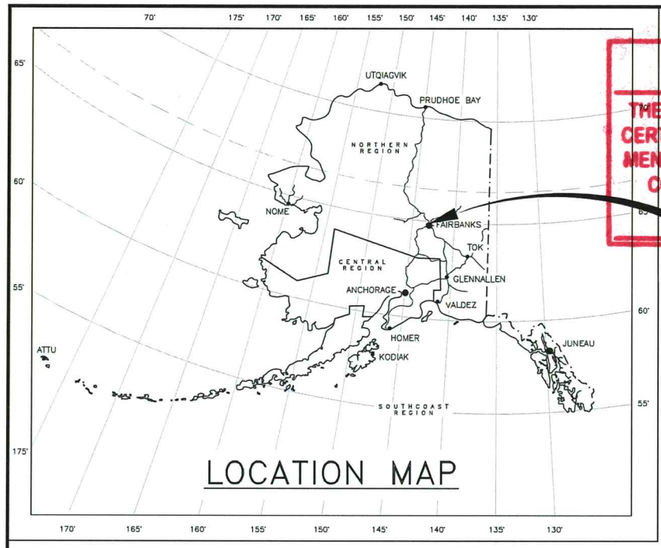

CONFORMED COPY
THE UNDERSIGNED HEREBY CERTIFIES THAT THIS INSTRUMENT IS AN EXACT AND TRUE COPY OF THE ORIGINAL
Kerdi Jorge

PROJECT LOCATION

STATE OF ALASKA
DEPARTMENT OF TRANSPORTATION
&
PUBLIC FACILITIES

PROPOSED HIGHWAY PROJECT

0654015/NFHWY00570

CHENA RIDGE ROAD AND CHENA PUMP ROAD RESURFACING

GRADING, DRAINAGE, PAVING

LOCATIONS INDEX

ROUTE NAME	CDS ROUTE #	MILEPOINTS
CHENA PUMP ROAD	175510	0.000–3.608, 3.811–4.600
GEIST ROAD	175800	1.126–1.735
CHENA RIDGE ROAD	175500	0.000–8.115
CHENA RIDGE SPUR ROAD	175502	0.439–0.539
PARKS NB ON RAMP (GEIST)	175508	0.000–0.323
PARKS SB OFF–RAMP (GEIST)	175506	0.000–0.387
PARKS SB ON–RAMP (GEIST)	175509	0.000–0.321
PARKS NB OFF–RAMP (GEIST)	175507	0.000–0.441
PARKS SB SLIP RAMP (GEIST)	175504	0.000–0.036
PARKS NB SLIP RAMP (CHENA RIDGE)	175511	0.000–0.057
PARKS NB SLIP RAMP (GEIST)	175503	0.000–0.090

INDEX OF SHEETS

THE FOLLOWING STANDARD PLANS APPLY TO THIS PROJECT:
C–04.12, C–05.20, C–06.00
G–00.05, G–05.11S, G–10.21, G–20.12
I–81.00
M–23.13, M–25.00
S–00.12, S–01.02, S–05.02, S–23.00, S–30.05, S–31.02, S–32.02
T–20.04, T–21.04, T–22.04, T–23.01

PROJECT SUMMARY

WIDTH OF PAVEMENT	VARIES
LENGTH OF GRADING	0.13 MILES
LENGTH OF PAVING	12.94 MILES
LENGTH OF PROJECT	14.47 MILES

JOHN JARO NETARDUS, P.E., PROJECT MANAGER
ETHAN MAHONEY, DESIGNER

STATE OF ALASKA
DEPARTMENT OF TRANSPORTATION
&
PUBLIC FACILITIES

APPROVED BY: Albert Beck DATE 4/9/2025
Albert Beck, P.E.
Preconstruction Engineer, Northern Region

ACCEPTED FOR CONSTRUCTION: KATHERINE KEITH DATE 4/9/2025
Katherine Keith
Deputy Commissioner, Acting Northern Region Director

NO.	DATE	REVISION

STATE	PROJECT DESIGNATION	YEAR	SHEET NO.	TOTAL SHEETS
ALASKA	0654015/NFHWY00570	2025	A2	A5

	RECOVERED	SET
BLM MONUMENT		
GLO MONUMENT		
USC&GS MONUMENT		
PRIMARY MONUMENT		
CENTERLINE MONUMENT IN CASING		
PRIMARY R.O.W. MONUMENT		
BEARING OBJECT		
MISCELLANEOUS MONUMENT		
LINE OF SIGHT MONUMENT		
CONCRETE R.O.W. MONUMENT		
BENCHMARK		BM
REBAR AND CAP		
REBAR		
IRON PIPE		
PK NAIL		
SPIKE		
HUB AND TACK		
CONSTRUCTION CENTERLINE	5+00	
MISCELLANEOUS CENTERLINE	10+00	
STATION EQUATION	"L"48+97.23 POT BK= "O"48+97.23 PC AHD	
PROJECT RIGHT-OF-WAY LINE	R/W	
EXISTING RIGHT-OF-WAY LINE		
EXISTING PROPERTY LINE		
CONTROLLED ACCESS LINE	C/A	
UTILITY EASEMENT LINE	PUE	
TEMPORARY EASEMENT LINE (TCP OR TCE)	TCP	
ACCESS OR SECTION LINE EASEMENT	ACCESS EASEMENT	
PROPOSED CUT SLOPE LIMIT		
PROPOSED FILL SLOPE LIMIT		
SECTION LINE		
1/4 SECTION LINE		
1/16 SECTION LINE		
TOWNSHIP & RANGE LINE	T. 2 N. / T. 1 N. / T. 1 E. / T. 2 E.	

	EXISTING	PROPOSED
SANITARY SEWER (FLOW DIRECTION →)	SS	SS
FUEL LINE	O	O
GAS LINE	G	G
WATER LINE	W	W
METER, VALVE, FIRE HYDRANT	W	W
EXISTING STORM DRAIN (FLOW DIRECTION →)	SD	
PROPOSED STORM DRAIN		S-10, S-11, P-11, P-10, MH
FIBER OPTIC LINE	FO	
DIRECT BURIAL TELEPHONE CABLE	T	T
DIRECT BURIAL ELECTRIC CABLE	E	E
ELECTRIC LINE (OVERHEAD)		
POWER POLE LINE		
JOINT USE POWER & TELEPHONE		
TELEPHONE POLE LINE		
POLE ANCHOR		
STUB POLE (POWER OR TELEPHONE)		
TELEPHONE DUCT	T	T
TELEPHONE PEDESTAL		
BURIED CABLE MARKER		
PIPELINE MARKER OR VALVE		
CATCH BASIN OR DROP INLET		
MANHOLE	MH	MH
SANITARY SEWER CLEAN OUT		

	EXISTING	PROPOSED
ROADWAY/PAVEMENT EDGE		
FENCE	X	X
CURB AND GUTTER		
DETECTABLE WARNINGS		
GUARDRAIL		
CULVERT PIPE		
SIGN		
MAILBOX	MB	MB
RAILROAD TRACKS		
RAILROAD DEVICES	CROSS-BUCK, FLASHING LIGHT	CANTILEVER, SWITCH
TREE LINE		
WATER BOUNDARY		
ORDINARY HIGH WATER LINE		
FLOW CENTERLINE		
FLOW DIRECTION		
WETLANDS		
EXISTING BUILDINGS	H	H = HOUSE G = GARAGE M = MERCHANT/STORE B = BARN S = SHED P = PRIVY SS= SERVICE STATION W = WAREHOUSE
POST OR BOLLARD		
WELL OR MONITORING WELL	W	
SEPTIC PIPE	S, MW	
FUEL TANK FILL PIPE/VENT	P	
SATELLITE DISH	SAT. DISH	
TEST HOLE	TH	
CONIFER TREE		
DECIDUOUS TREE		
GRAVE		
THERMOSIPHON		
PARKING METER		
VEHICLE PLUG-IN		
DELINEATOR/GUIDE MARKER		

	EXISTING	PROPOSED
JUNCTION BOX, TYPE IA		5
JUNCTION BOX, TYPE II		6
JUNCTION BOX, TYPE III		3
SIGNAL FACE, VEHICULAR	42	42
SIGNAL FACE, BACKPLATE	42	42
SIGNAL FACE, LEFT TURN, BACKPLATE	43	43
SIGNAL FACE, PEDESTRIAN	84	84
LOOP DETECTOR	33	73
VIDEO DETECTOR	2	2
RADAR DETECTOR	4	4A
OPTICOM DETECTOR	1	1
PEDESTRIAN PUSH BUTTON	1	1
SIGNAL POST W/O MAST ARM		1
SIGNAL POLE W/MAST ARM		4
SIGNAL CONTROLLER		
LOAD CENTER		
LUMINAIRE		122
RIGID METAL CONDUIT		

ABBREVIATIONS:

APPROX	APPROXIMATLY
CABC	CRUSHED ASPHALT BASE COURSE
℄	CENTERLINE
CY	CUBIC YARD
E	EAST, EASTING
ELE, ELEV	ELEVATION
FT. '	FOOT, FEET
H	HORIZONTAL
HW/D	HEADWATER TO DIAMETER RATIO
IE	INVERT ELEVATION
IN, "	INCH, INCHES
L	LENGTH OF CURVE
L.C.L	LEFT OF CENTERLINE
LT	LEFT
LVC	LENGTH OF VERTICAL CURVE
MAX	MAXIMUM
MIN	MINIMUM
N	NORTH, NORTHING
NO.	NUMBER
NTS	NOT TO SCALE
O.C.	ON CENTER
PC	POINT OF CURVATURE
POT	POINT ON TANGENT
PST	PERFORATED STEEL TUBE
PT	POINT OF TANGENCY
PVI	POINT OF VERTICAL INTERSECTION
R	RADIUS
R.C.L	RIGHT OF CENTERLINE
RT	RIGHT
S	SOUTH
SQ. FT.	SQUARE FOOT
STA	STATION
T	TANGENT
TCE	TEMPORARY CONSTRUCTION EASEMENT
TS	TUBE STEEL
TYP	TYPICAL
V	VERTICAL
VPC	VERTICAL POINT OF CURVATURE
VPI	VERTICAL POINT OF INTERSECTION
VPT	VERTICAL POINT OF TANGENCY
W	WEST
WWR	WELDED WIRE REINFORCEMENT
Ø	DIAMETER

LEGEND

STATE OF ALASKA 49TH JOHN JARO NETARDUS NO. CE 124494 REGISTERED PROFESSIONAL ENGINEER
4/7/25

PLANS DEVELOPED BY: STATE OF ALASKA DEPARTMENT OF TRANSPORTATION & PUBLIC FACILITIES, NORTHERN REGION, 2301 PEGER ROAD, FAIRBANKS, AK 99709 (907)451-2200
H:\Projects\Fbks_NP\nfhwy00570 chena ridge and pump resurfacing\6 Design\5 civil 3d\3 Drawings\00570_A_Sheets-A2 LEGEND Fri, Apr/04/25 04:24pm

NO.	DATE	REVISION	STATE	PROJECT DESIGNATION	YEAR	SHEET NO.	TOTAL SHEETS
			ALASKA	NFWHY00570	2025	A3	A5

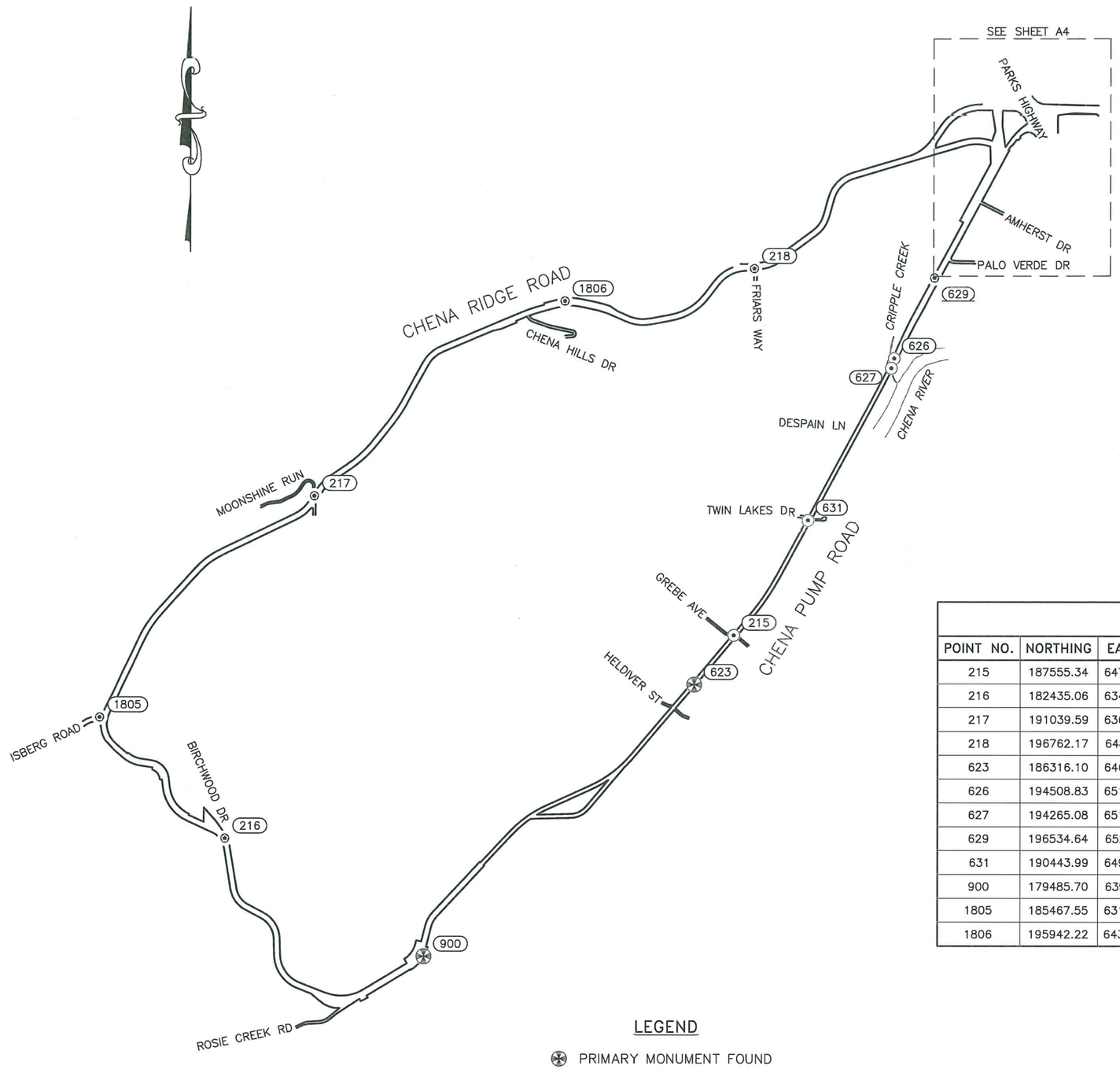

LEGEND

- PRIMARY MONUMENT FOUND
- REBAR AND CAP SET
- REBAR AND CAP FOUND

GENERAL NOTES

1. VERIFY HORIZONTAL AND VERTICAL CONTROL PRIOR TO USE. ON MULTI YEAR PROJECTS, VERIFY ALL CONTROL ON A SEASONAL BASIS.

2. BACKGROUND MAPPING IS SHOWN FOR ORIENTATION PURPOSES ONLY. THIS SHEET DOES NOT PURPORT TO DEPICT RIGHT OF WAY.

3. ALL DISTANCES SHOWN ARE GROUND DISTANCES, IN U.S. SURVEY FEET.

4. THIS PROJECT IS LOCATED ENTIRELY WITHIN THE FAIRBANKS LOW DISTORTION PROJECTION (LDP), A LOW DISTORTION PROJECTION CREATED BY THE ALASKA DEPARTMENT OF TRANSPORTATION AND PUBLIC FACILITIES.

FAIRBANKS LDP DEFINITION:
LINEAR UNIT: U.S. SURVEY FOOT (SFT)
DATUM: NAD83(2011)
PROJECTION: LAMBERT CONFORMAL CONIC, (SINGLE PARALLEL)
STANDARD PARALLEL AND GRID ORIGIN: 64°51'00"N
CENTRAL MERIDIAN (GRID ORIGIN): 146°56'00"W
FALSE NORTHING: 200,000 SFT
FALSE EASTING: 800,000 SFT

5. BASIS OF BEARING IS FAIRBANKS LDP.

CONTROL POINTS

POINT NO.	NORTHING	EASTING	ELEVATION	LATITUDE	LONGITUDE	DESCRIPTION
215	187555.34	647555.08	432.31	N64° 48' 45.9313"	W147° 54' 41.2076"	REBAR CAP FND GREBE LS-14471 2016
216	182435.06	634768.95	952.16	N64° 47' 53.5201"	W147° 59' 34.5117"	REBAR CAP SET BRCHWD 14471-S 2021
217	191039.59	636999.40	1131.87	N64° 49' 18.5568"	W147° 58' 46.3122"	REBAR CAP SET MOONSHINE 14471-S 2021
218	196762.17	648054.41	823.62	N64° 50' 16.6071"	W147° 54' 32.9541"	REBAR CAP SET FRIARS FRIARS 14471-S 2021
623	186316.10	646556.69	431.34	N64° 48' 33.5843"	W147° 55' 03.8198"	PRIM MON FND PUMP2.8 LS-14471 2016
626	194508.83	651574.98	435.86	N64° 49' 54.9610"	W147° 53' 10.7873"	REBAR CAP FND CRIPPLE CRK4 LS-14471 2016
627	194265.08	651503.88	436.34	N64° 49' 52.5518"	W147° 53' 12.3457"	REBAR CAP FND CRIPPLE CRK1 LS-14471 2016
629	196534.64	652590.01	452.17	N64° 50' 15.0460"	W147° 52' 48.0290"	REBAR CAP SET CFG1 14471-S 2024
631	190443.99	649408.79	436.28	N64° 49' 14.6374"	W147° 53' 59.4156"	REBAR CAP FND TWIN LS-14471 2016
900	179485.70	639769.41	573.48	N64° 47' 25.3084"	W147° 57' 37.9873"	PRIM MON FND ROSIE LS 11649 2017
1805	185467.55	631596.66	1131.58	N64° 48' 22.8330"	W148° 00' 48.9278"	REBAR CAP SET IS 1 14471-S 2022
1806	195942.22	643297.64	947.02	N64° 50' 07.8055"	W147° 56' 22.6101"	REBAR CAP SET KOPONEN 14471-S 2022

SURVEY CONTROL

STATE OF ALASKA 49TH
Troy M. Hicks
TROY M. HICKS
Apr 04, 2025
LS-14471
REGISTERED PROFESSIONAL LAND SURVEYOR

NO.	DATE	REVISION

STATE	PROJECT DESIGNATION	YEAR	SHEET NO.	TOTAL SHEETS
ALASKA	NFWHY00570	2025	A4	A5

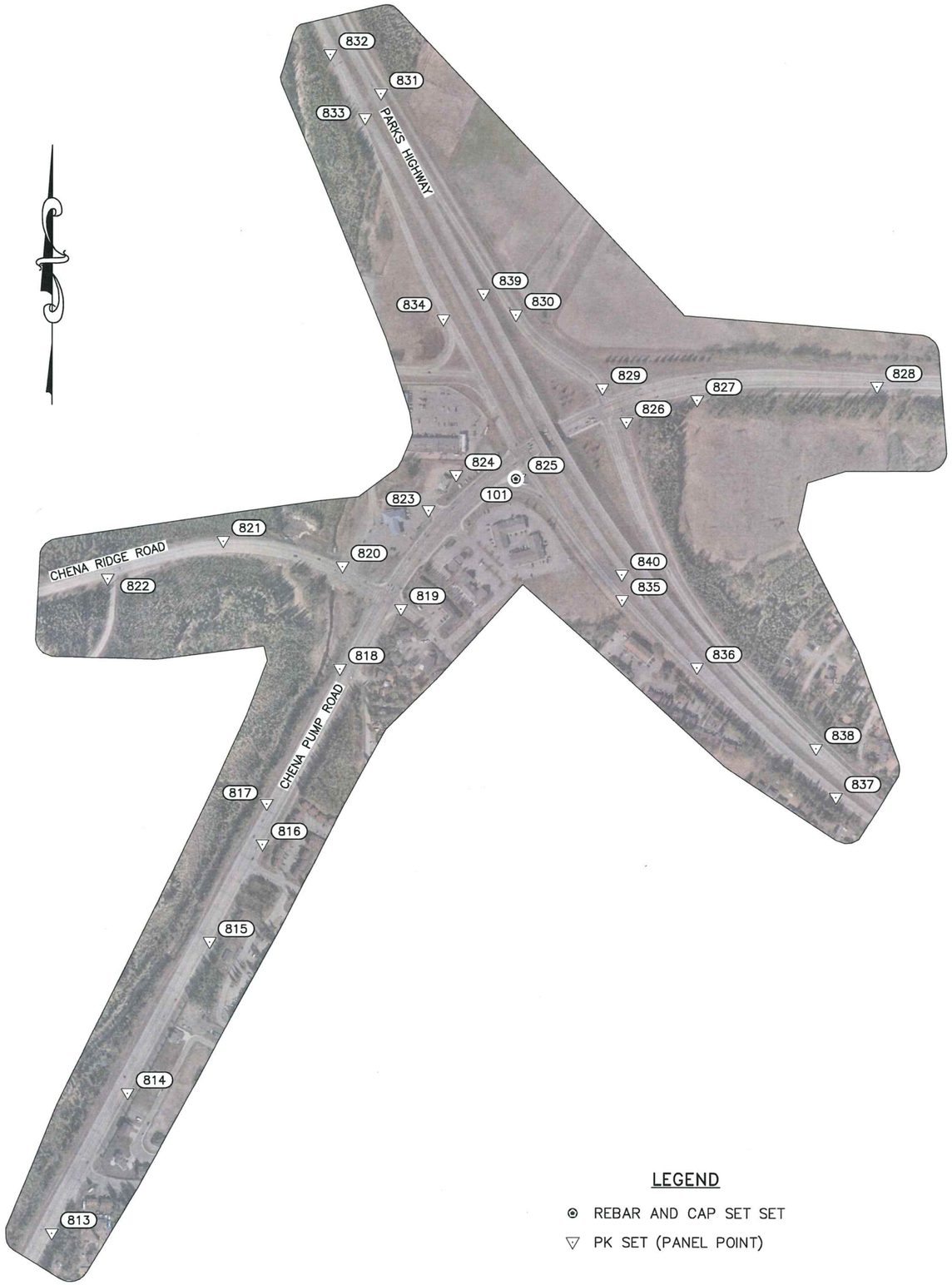

CONTROL POINTS

POINT NO.	NORTHING	EASTING	ELEVATION	LATITUDE	LONGITUDE	DESCRIPTION
101	200286.00	654972.61	455.68	N64° 50' 52.3094"	W147° 51' 54.2294"	REBAR CAP SET GUMP2 14471-S 2024
813	196702.71	652774.84	453.74	N64° 50' 16.7270"	W147° 52' 43.8144"	PK SET PHOTP
814	197366.96	653133.11	455.70	N64° 50' 23.3163"	W147° 52' 35.7615"	PK SET PHOTP
815	198084.93	653521.14	457.68	N64° 50' 30.4383"	W147° 52' 27.0378"	PK SET PHOTP
816	198547.76	653772.05	459.19	N64° 50' 35.0295"	W147° 52' 21.3955"	PK SET PHOTP
817	198740.14	653791.86	459.48	N64° 50' 36.9256"	W147° 52' 21.0035"	PK SET PHOTP
818	199382.49	654137.58	458.83	N64° 50' 43.2970"	W147° 52' 13.2299"	PK SET PHOTP
819	199666.78	654428.07	457.51	N64° 50' 46.1369"	W147° 52' 06.6101"	PK SET PHOTP
820	199867.60	654148.56	462.73	N64° 50' 48.0724"	W147° 52' 13.1422"	PK SET PHOTP
821	199986.68	653582.04	470.34	N64° 50' 49.1615"	W147° 52' 26.2832"	PK SET PHOTP
822	199806.94	653031.68	476.55	N64° 50' 47.3122"	W147° 52' 38.9479"	PK SET PHOTP
823	200134.71	654558.42	459.86	N64° 50' 50.7606"	W147° 52' 03.7557"	PK SET PHOTP
824	200301.64	654688.76	459.35	N64° 50' 52.4222"	W147° 52' 00.7987"	PK SET PHOTP
825	200287.01	654989.12	455.50	N64° 50' 52.3218"	W147° 51' 53.8480"	PK SET PHOTP
826	200555.46	655497.53	453.46	N64° 50' 55.0370"	W147° 51' 42.1821"	PK SET PHOTP
827	200660.68	655833.66	452.02	N64° 50' 56.1208"	W147° 51' 34.4444"	PK SET PHOTP
828	200726.09	656688.01	450.46	N64° 50' 56.8872"	W147° 51' 14.7088"	PK SET PHOTP
829	200714.55	655383.41	457.76	N64° 50' 56.5861"	W147° 51' 44.8750"	PK SET PHOTP
830	201063.03	654971.42	462.73	N64° 50' 59.9557"	W147° 51' 54.5214"	PK SET PHOTP
831	202108.82	654327.58	469.50	N64° 51' 10.1534"	W147° 52' 09.7691"	PK SET PHOTP
832	202294.13	654085.34	471.19	N64° 51' 11.9417"	W147° 52' 15.4353"	PK SET PHOTP
833	201991.15	654253.28	469.25	N64° 51' 08.9847"	W147° 52' 11.4472"	PK SET PHOTP
834	201041.23	654627.03	463.51	N64° 50' 59.6912"	W147° 52' 02.4786"	PK SET PHOTP
835	199711.80	655479.24	466.18	N64° 50' 46.7322"	W147° 51' 42.3187"	PK SET PHOTP
836	199391.83	655836.01	459.52	N64° 50' 43.6350"	W147° 51' 33.9607"	PK SET PHOTP
837	198776.85	656497.21	439.33	N64° 50' 37.6782"	W147° 51' 18.4648"	PK SET PHOTP
838	199008.78	656402.84	440.72	N64° 50' 39.9470"	W147° 51' 20.7249"	PK SET PHOTP
839	201161.03	654816.81	474.55	N64° 51' 00.8977"	W147° 51' 58.1304"	PK SET PHOTP
840	199831.77	655477.70	472.65	N64° 50' 47.9126"	W147° 51' 42.3952"	PK SET PHOTP

LEGEND

⊙ REBAR AND CAP SET SET

▽ PK SET (PANEL POINT)

GRAPHIC SCALE

0 300 600 900 1200 1500

SCALE 1"=300'

SURVEY CONTROL

STATE OF ALASKA 49TH
Troy M. Hicks
TROY M. HICKS
Apr 04, 2025
LS-14471
REGISTERED PROFESSIONAL LAND SURVEYOR

H:\ROWE\Location\24_Projects\Chena Pump_Ridge Resurf NFHWY00570\5-CAD Drawings\2-Control\NFHWY00570_Control-A4 Fri, Apr/04/25 10:17am

NO.	DATE	REVISION

STATE	PROJECT DESIGNATION	YEAR	SHEET NO.	TOTAL SHEETS
ALASKA	0654015/NFHWY00570	2025	A5	A5

ALIGNMENT INDEX

STATE OF ALASKA
49TH
JOHN JARO NETARDUS
NO. CE 124494
REGISTERED PROFESSIONAL ENGINEER
4/7/25

PLANS DEVELOPED BY: STATE OF ALASKA DEPARTMENT OF TRANSPORTATION & PUBLIC FACILITIES, NORTHERN REGION, 2301 PEGER ROAD, FAIRBANKS, AK 99709 (907)451-2200
H:\Projects\Fbks_NP\nfhwy00570 chena ridge and pump resurfacing\6 Design\5 civil 3d\3 Drawings\00570_A_Sheets2-A5 ALIGNMENT INDEX Fri, Apr/04/25 04:26pm

ADDENDUM NO. 1, ATTACHMENT NO. 3

NO.	DATE	REVISION
1	06/10/25	ADDENDUM #1

STATE	PROJECT DESIGNATION	YEAR	SHEET NO.	TOTAL SHEETS
ALASKA	0654015/NFHWY00570	2025	B1	B10

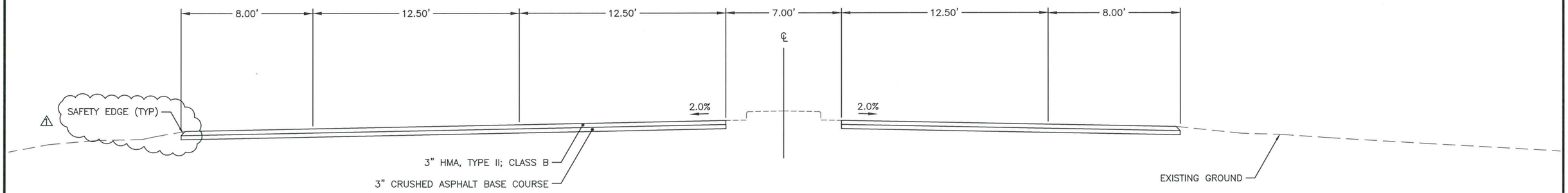

CHENA RIDGE SECTION 1

"O" STATION 10+69 TO STATION 11+75

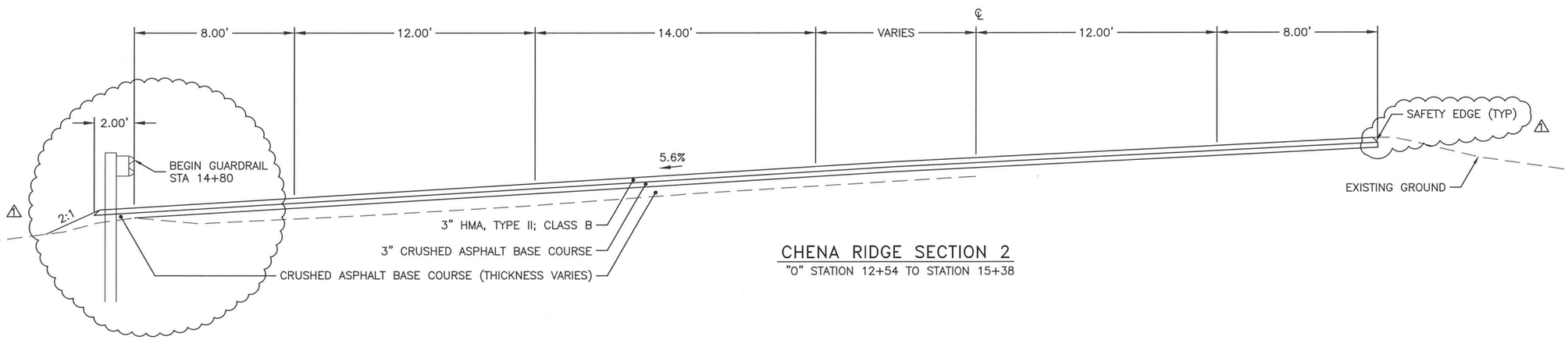

CHENA RIDGE SECTION 2

"O" STATION 12+54 TO STATION 15+38

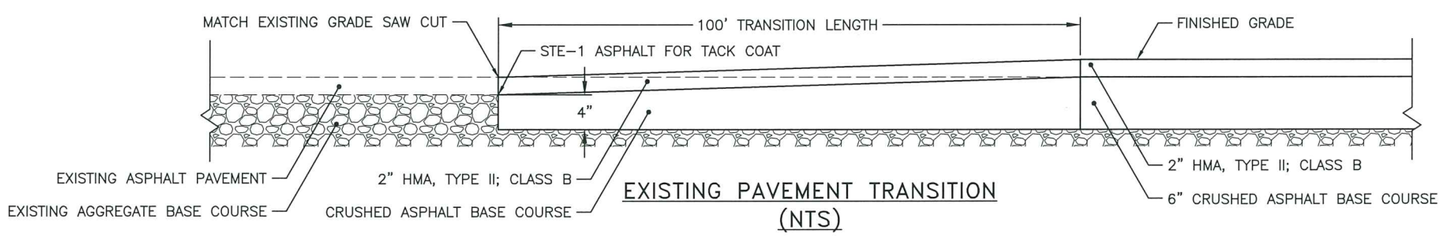

EXISTING PAVEMENT TRANSITION (NTS)

NOTES:

1. RECLAIM PAVEMENT TO 6" DEPTH FROM EXISTING ROADWAY IN ALL LOCATIONS.
2. USE CABC FOR SHOULDERING ON ALL PAVED EDGES THAT DO NOT ABUT EXISTING CURB & GUTTER.
3. USE EXISTING PAVEMENT TRANSITION DETAIL TO TRANSITION BETWEEN EXISTING GROUND AND FINISHED GRADE AT BEGINNING OF PAVING LOCATED AT STATION "O"87+00 AND END OF PAVING LOCATED AT STATION "O"562+00
4. CLEARING LIMITS AS SHOWN ON TYPICAL SECTIONS EXTEND TO 36' FROM CENTERLINE OR TO TOE OF SLOPE, WHICHEVER IS CLOSER. CLEARING INCLUDES REMOVAL OF TREES AND/OR BRUSH THAT EXISTS WITHIN THE PREVIOUSLY DESCRIBED LIMITS.
5. STE-1 ASPHALT FOR TACK COAT SHOWN ON CHENA RIDGE SECTION 4 / CHENA PUMP SECTION 1 IS TO BE USED FOR THE FOLLOWING STATION RANGES: "O" STA. 120+00 TO STA. 130+00, "O" STA. 185+00 TO STA. 200+00, AND "O" STA. 320+00 TO STA. 450+00,

STATE OF ALASKA 49TH JOHN JARO NETARDUS NO. CE 124494 REGISTERED PROFESSIONAL ENGINEER

6/10/25

TYPICAL SECTION (1 OF 10)

PLANS DEVELOPED BY: STATE OF ALASKA DEPARTMENT OF TRANSPORTATION & PUBLIC FACILITIES, NORTHERN REGION, 2301 PEGER ROAD, FAIRBANKS, AK 99709 (907)451-2200
H:\Projects\Fbks_NP\NFHWY00570 Chena Ridge and Pump Resurfacing\6 Design\5 Civil 3D\3 Drawings\00570_B TYPICAL SECTION-B1 TYPICAL SECTION (1 OF 10) Tue, Jun/10/25 02:32pm

ADDENDUM NO. 1, ATTACHMENT NO. 4

NO.	DATE	REVISION
1	06/10/25	ADDENDUM #1

STATE	PROJECT DESIGNATION	YEAR	SHEET NO.	TOTAL SHEETS
ALASKA	0654015/NFHWY00570	2025	B2	B10

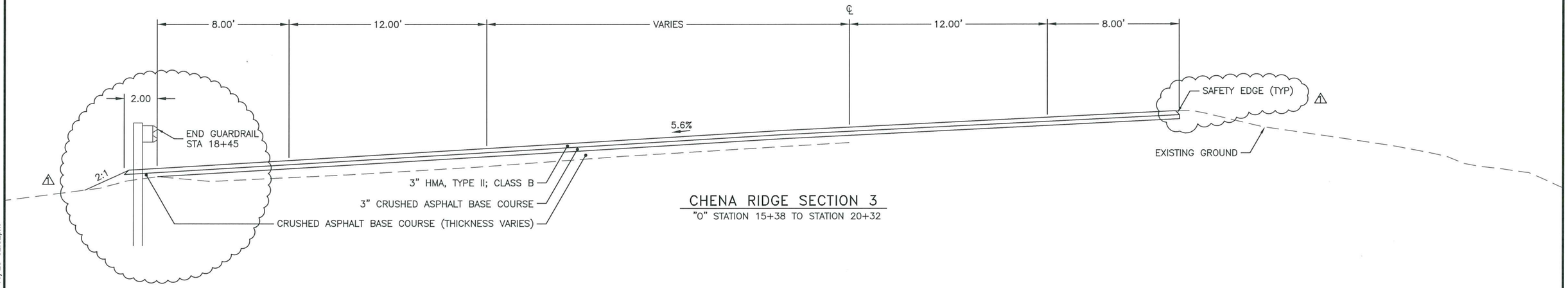

CHENA RIDGE SECTION 3

"0" STATION 15+38 TO STATION 20+32

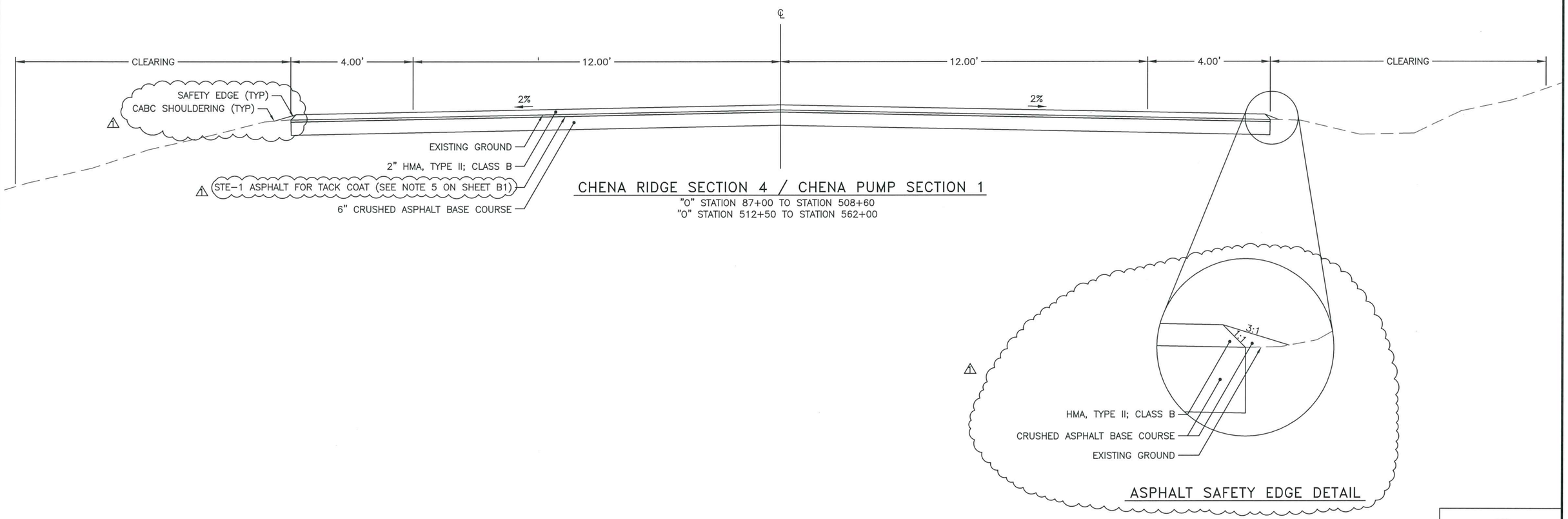

CHENA RIDGE SECTION 4 / CHENA PUMP SECTION 1

"0" STATION 87+00 TO STATION 508+60

"0" STATION 512+50 TO STATION 562+00

ASPHALT SAFETY EDGE DETAIL

TYPICAL SECTION (2 OF 10)

STATE OF ALASKA 49TH JOHN JARO NETARDUS NO. CE 124494 REGISTERED PROFESSIONAL ENGINEER 6/10/25

PLANS DEVELOPED BY: STATE OF ALASKA DEPARTMENT OF TRANSPORTATION & PUBLIC FACILITIES, NORTHERN REGION, 2301 PEGER ROAD, FAIRBANKS, AK 99709 (907)451-2200
H:\Projects\Fbks_NP\NFHWY00570 Chena Ridge and Pump Resurfacing\6 Design\5 Civil 3D\3 Drawings\00570_B TYPICAL SECTION-TYPICAL SECTION (2 OF 10) Tue, Jun/10/25 02:32pm

ADDENDUM NO. 1, ATTACHMENT NO. 5

NO.	DATE	REVISION
1	06/10/25	ADDENDUM #1

STATE	PROJECT DESIGNATION	YEAR	SHEET NO.	TOTAL SHEETS
ALASKA	0654015/NFHWY00570	2025	B3	B10

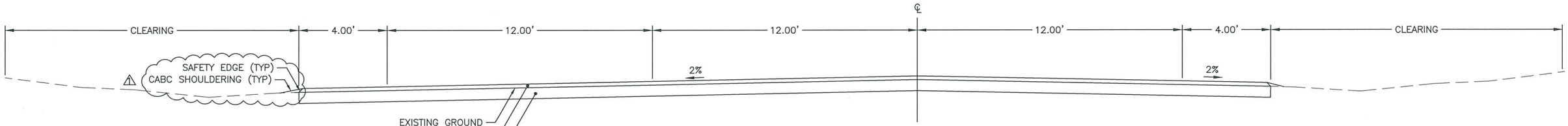

CHENA PUMP SECTION 2

"O" STATION 508+60 TO STATION 512+50

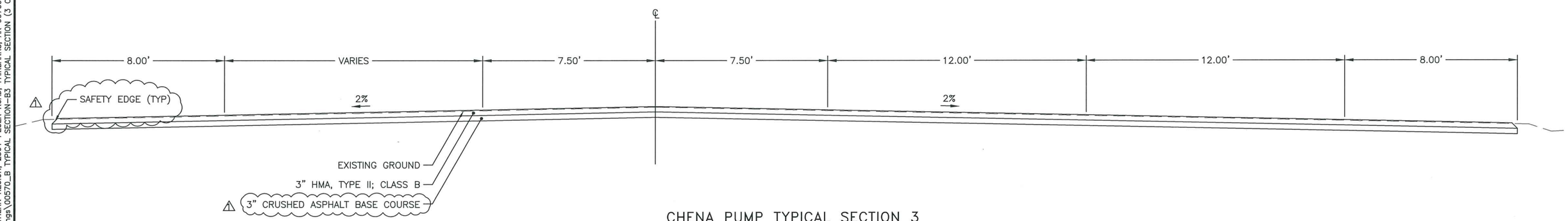

CHENA PUMP TYPICAL SECTION 3

"O" STATION 640+00 TO STATION 646+52

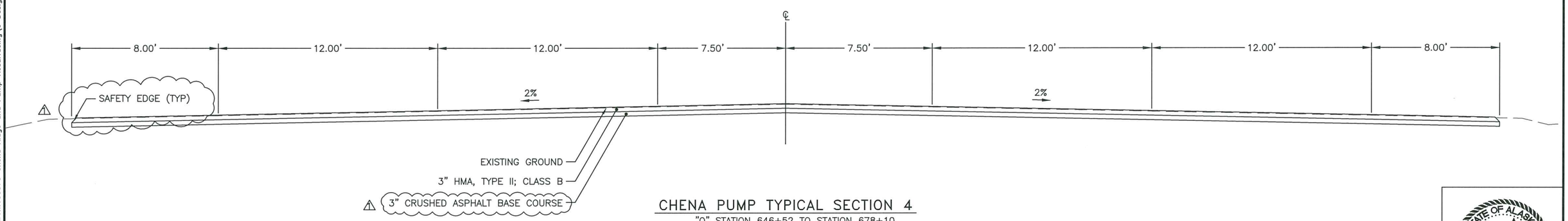

CHENA PUMP TYPICAL SECTION 4

"O" STATION 646+52 TO STATION 678+10

TYPICAL SECTION (3 OF 10)

STATE OF ALASKA 49TH
JOHN JARO NETARDUS
NO. CE 124494
REGISTERED PROFESSIONAL ENGINEER
6/10/25

PLANS DEVELOPED BY: STATE OF ALASKA DEPARTMENT OF TRANSPORTATION & PUBLIC FACILITIES, NORTHERN REGION, 2301 PEGER ROAD, FAIRBANKS, AK 99709 (907)451-2200
H:\Projects\Pbks_NP\NFHWY00570 Chena Ridge and Pump Resurfacing\6 Design\5 Civil 3D\3 Drawings\00570_B TYPICAL SECTION-B3 TYPICAL SECTION (3 OF 10) Tue, Jun/10/25 02:32pm

ADDENDUM NO. 1, ATTACHMENT NO. 6

NO.	DATE	REVISION
1	06/10/25	ADDENDUM #1

STATE	PROJECT DESIGNATION	YEAR	SHEET NO.	TOTAL SHEETS
ALASKA	0654015/NFHWY00570	2025	B4	B10

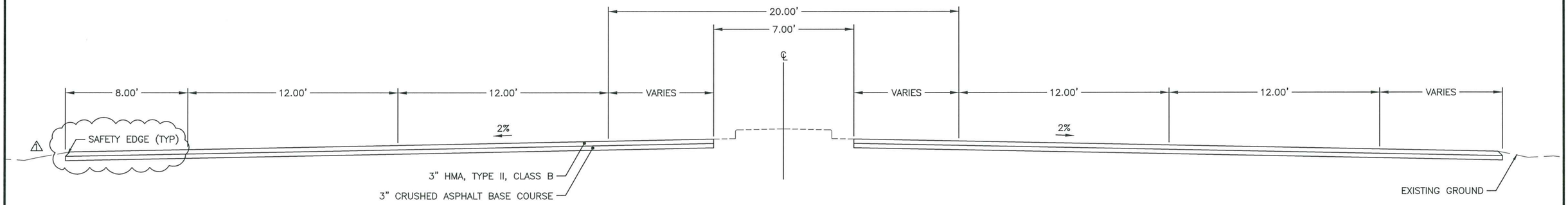

CHENA PUMP TYPICAL SECTION 5

"O" STATION 678+10 TO STATION 681+06

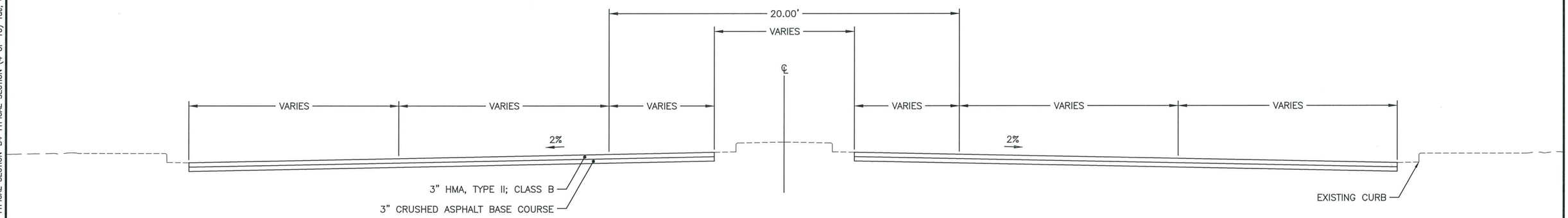

CHENA PUMP TYPICAL SECTION 6

"O" STATION 682+06 TO STATION 683+65

"O" STATION 688+83 TO STATION 694+77

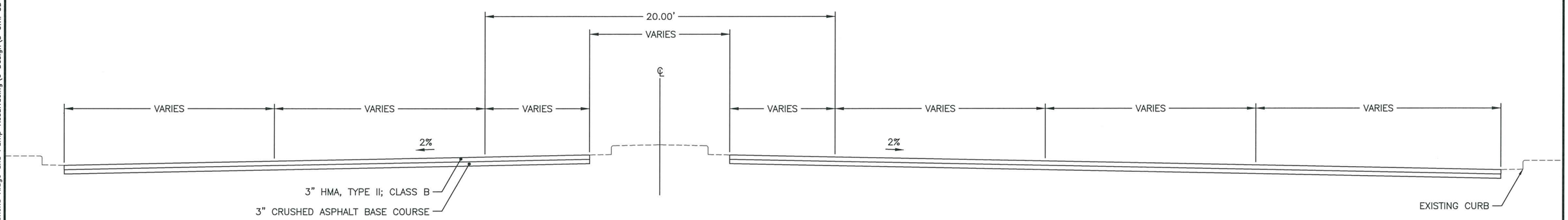

CHENA PUMP TYPICAL SECTION 7

"O" STATION 683+65 TO STATION 688+83

TYPICAL SECTION (4 OF 10)

STATE OF ALASKA 49TH JOHN JARO NETARDUS NO. CE 124494 REGISTERED PROFESSIONAL ENGINEER 6/10/25

PLANS DEVELOPED BY: STATE OF ALASKA DEPARTMENT OF TRANSPORTATION & PUBLIC FACILITIES, NORTHERN REGION, 2301 PEGER ROAD, FAIRBANKS, AK 99709 (907)451-2200
H:\Projects\Fbks_NP\NFHWY00570 Chena Ridge and Pump Resurfacing\6 Design\5 Civil 3D\3 Drawings\00570_B TYPICAL SECTION-B4 TYPICAL SECTION (4 OF 10) Tue, Jun/10/25 02:32pm

ADDENDUM NO. 1, ATTACHMENT NO. 7

NO.	DATE	REVISION
1	06/10/25	ADDENDUM #1

STATE	PROJECT DESIGNATION	YEAR	SHEET NO.	TOTAL SHEETS
ALASKA	0654015/NFHWY00570	2025	B5	B10

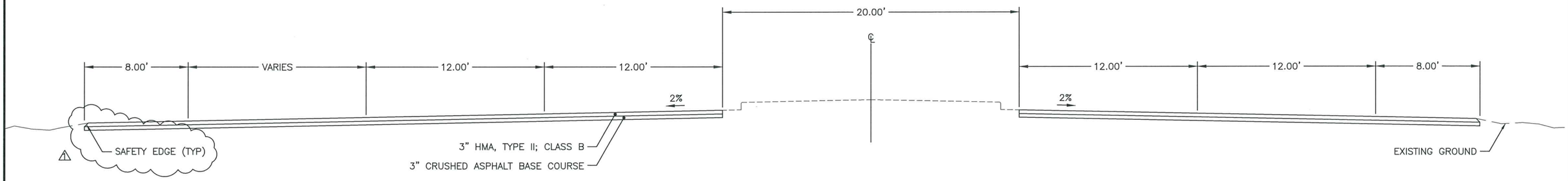

GEIST TYPICAL SECTION 1

"O" STATION 695+80 TO STATION 704+32

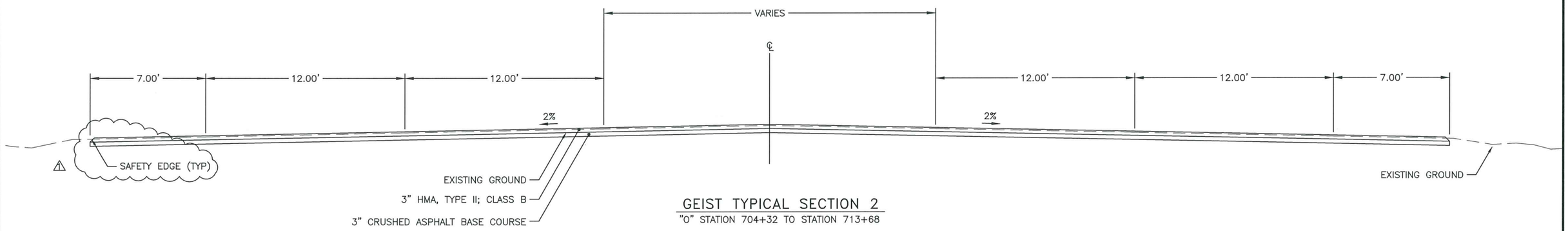

GEIST TYPICAL SECTION 2

"O" STATION 704+32 TO STATION 713+68

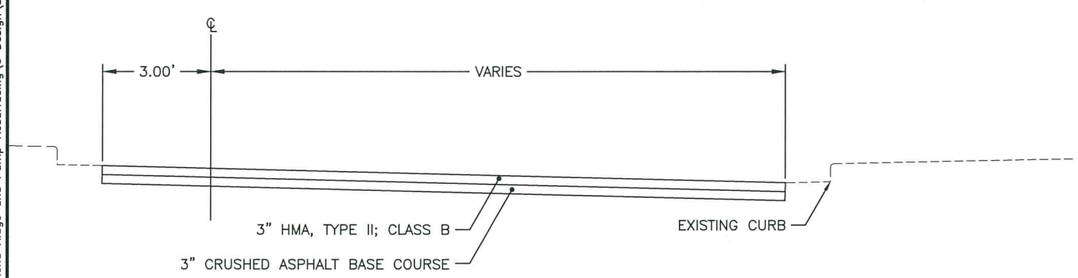

PARKS SLIP RAMP (GEIST) SECTION 1

"T" STATION 10+82 TO STATION 11+40

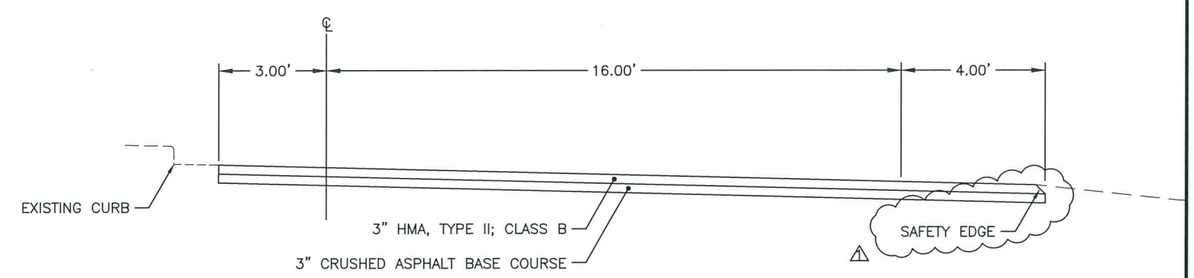

PARKS SLIP RAMP (GEIST) SECTION 2

"T" STATION 11+40 TO STATION 14+25

TYPICAL SECTION (5 OF 10)

STATE OF ALASKA 49TH
JOHN JARO NETARDUS
NO. CE 124494
REGISTERED PROFESSIONAL ENGINEER
6/10/25

PLANS DEVELOPED BY: STATE OF ALASKA DEPARTMENT OF TRANSPORTATION & PUBLIC FACILITIES, NORTHERN REGION, 2301 PEGER ROAD, FAIRBANKS, AK 99709 (907)451-2200
H:\Projects\Fbks_NP\NFHWY00570 Chena Ridge and Pump Resurfacing\6 Design\5 Civil 3D\3 Drawings\00570_B TYPICAL SECTION-B5 TYPICAL SECTION (5 OF 10) Tue, Jun/10/25 02:32pm

ADDENDUM NO. 1, ATTACHMENT NO. 8

NO.	DATE	REVISION
1	06/10/25	ADDENDUM #1

STATE	PROJECT DESIGNATION	YEAR	SHEET NO.	TOTAL SHEETS
ALASKA	0654015/NFHWY00570	2025	B6	B10

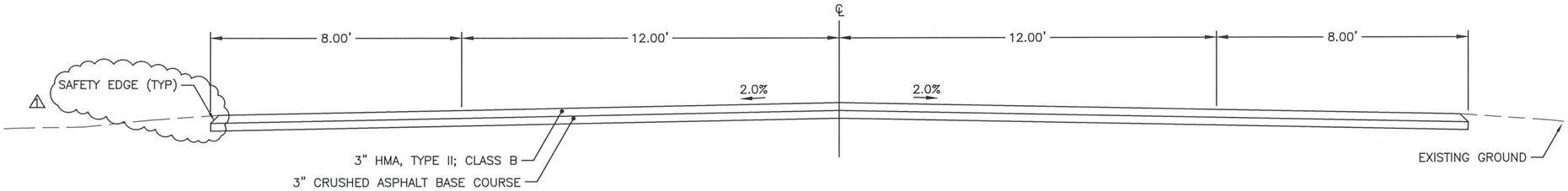

CHENA RIDGE SPUR SECTION 1

"P" STATION 33+64 TO STATION 35+78

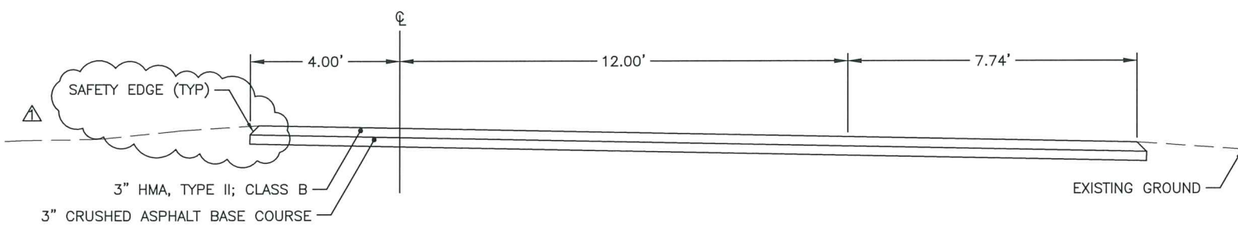

CHENA RIDGE SPUR SECTION 2

"P" STATION 35+78 TO STATION 38+25

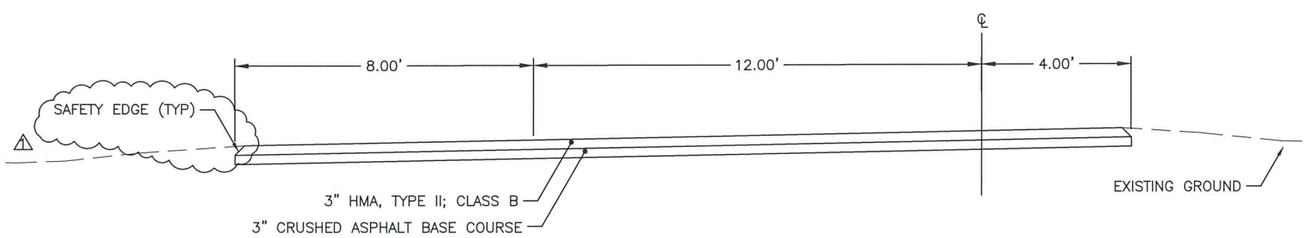

PARKS SLIP RAMP (CHENA RIDGE SPUR)

"S" STATION 10+00 TO STATION 13+09

TYPICAL SECTION (6 OF 10)

STATE OF ALASKA 49TH
JOHN JARO NETARDUS
NO. CE 124494
REGISTERED PROFESSIONAL ENGINEER
6/10/25

PLANS DEVELOPED BY: STATE OF ALASKA DEPARTMENT OF TRANSPORTATION & PUBLIC FACILITIES, NORTHERN REGION, 2301 PEGER ROAD, FAIRBANKS, AK 99709 (907)451-2200
H:\Projects\Pbks_NP\NFHWY00570 Chena Ridge and Pump Resurfacing\6 Design\5 Civil 3D\3 Drawings\00570_B TYPICAL SECTION-B6 TYPICAL SECTION (6 OF 10) Tue, Jun/10/25 02:32pm

ADDENDUM NO. 1, ATTACHMENT NO. 9

NO.	DATE	REVISION
1	06/10/25	ADDENDUM #1

STATE	PROJECT DESIGNATION	YEAR	SHEET NO.	TOTAL SHEETS
ALASKA	0654015/NFHWY00570	2025	B7	B10

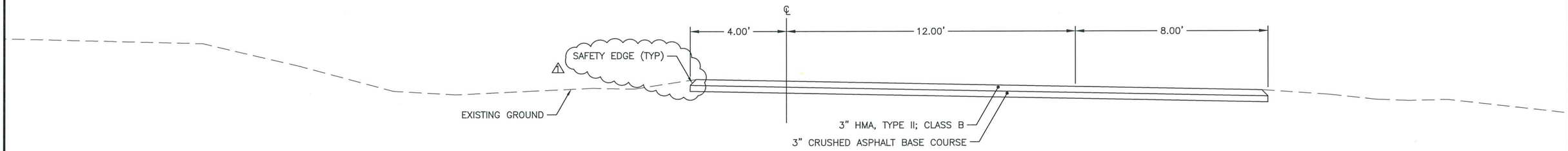

PARKS HWY OFF RAMP WEST SECTION 1

"Q" STATION 12+50 TO STATION 16+50

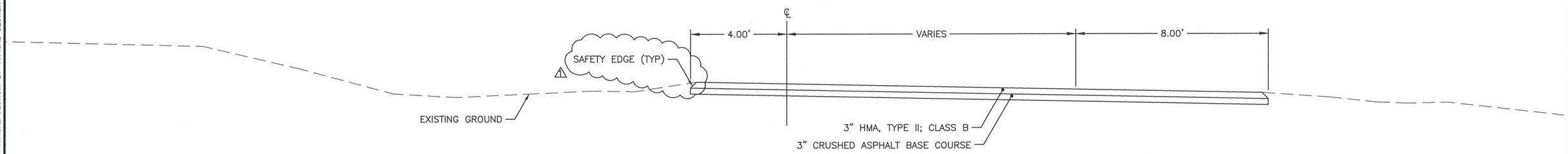

PARKS HWY OFF RAMP WEST SECTION 2

"Q" STATION 16+50 TO STATION 19+50

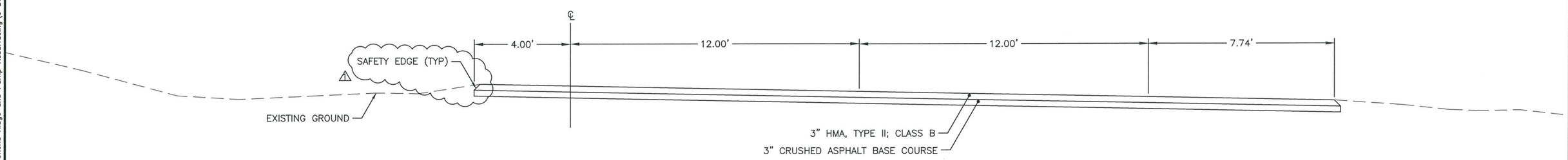

PARKS HWY OFF RAMP WEST SECTION 3

"Q" STATION 19+50 TO STATION 23+16

TYPICAL SECTION (7 OF 10)

STATE OF ALASKA 49TH
JOHN JARO NETARDUS
NO. CE 124494
REGISTERED PROFESSIONAL ENGINEER
6/10/25

PLANS DEVELOPED BY: STATE OF ALASKA DEPARTMENT OF TRANSPORTATION & PUBLIC FACILITIES, NORTHERN REGION, 2301 PEGER ROAD, FAIRBANKS, AK 99709 (907)451-2200
H:\Projects\Fbks_NP\NFHWY00570 Chena Ridge and Pump Resurfacing\6 Design\5 Civil 3D\3 Drawings\00570_B TYPICAL SECTION-B7 TYPICAL SECTION (7 OF 10) Tue, Jun/10/25 02:32pm

ADDENDUM NO. 1, ATTACHMENT NO. 10

NO.	DATE	REVISION
1	06/10/25	Addendum #1

STATE	PROJECT DESIGNATION	YEAR	SHEET NO.	TOTAL SHEETS
ALASKA	0654015/NFHWY00570	2025	B8	B10

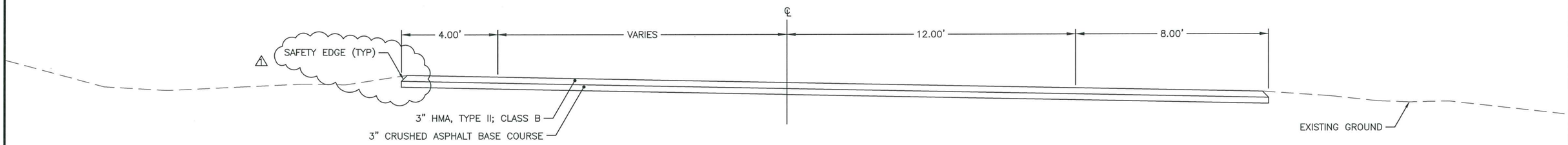

PARKS HWY OFF RAMP WEST SECTION 4

"Q" STATION 23+50 TO STATION 25+24

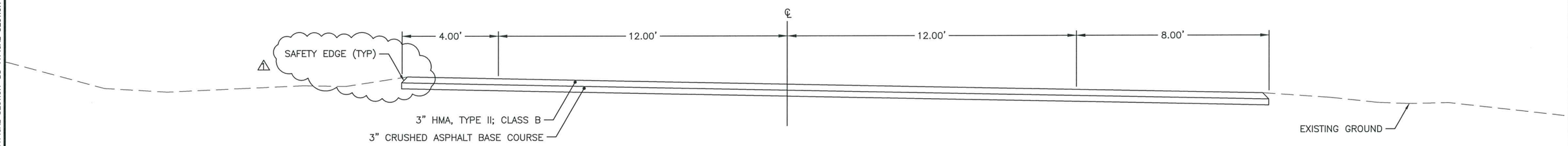

PARKS HWY OFF RAMP WEST SECTION 5

"Q" STATION 25+24 TO STATION 27+15

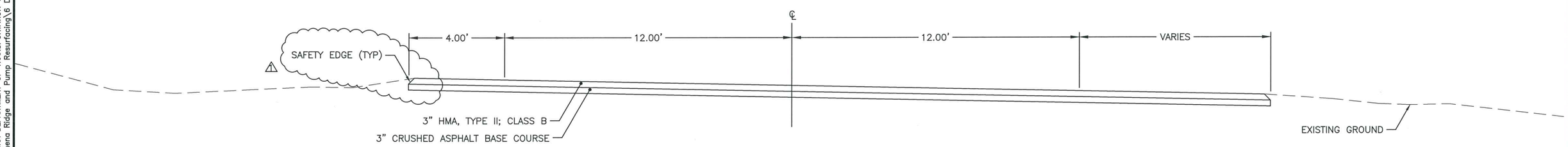

PARKS HWY OFF RAMP WEST SECTION 6

"Q" STATION 27+15 TO STATION 29+75

TYPICAL SECTION (8 OF 10)

STATE OF ALASKA 49TH JOHN JARO NETARDUS NO. CE 124494 REGISTERED PROFESSIONAL ENGINEER 6/10/25

PLANS DEVELOPED BY: STATE OF ALASKA DEPARTMENT OF TRANSPORTATION & PUBLIC FACILITIES, NORTHERN REGION, 2301 PEGER ROAD, FAIRBANKS, AK 99709 (907)451-2200
H:\Projects\Fbks_NP\NFHWY00570 Chena Ridge and Pump Resurfacing\6 Design\5 Civil 3D\3 Drawings\00570_B TYPICAL SECTION-B8 TYPICAL SECTION (8 OF 10) Tue, Jun/10/25 02:32pm

ADDENDUM NO. 1, ATTACHMENT NO. 11

NO.	DATE	REVISION
1	06/10/25	ADDENDUM #1

STATE	PROJECT DESIGNATION	YEAR	SHEET NO.	TOTAL SHEETS
ALASKA	0654015/NFHWY00570	2025	B9	B10

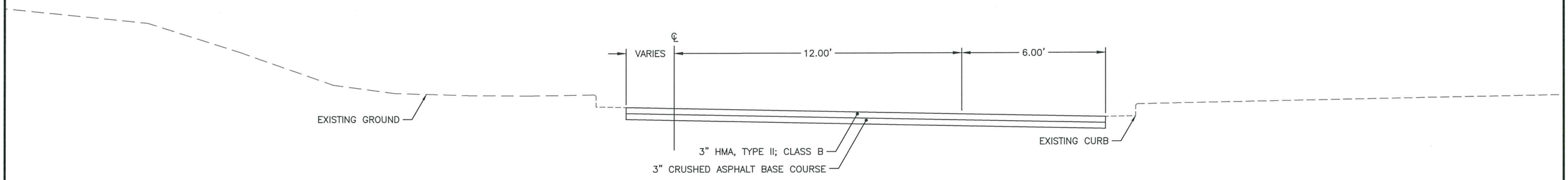

PARKS HWY ON RAMP WEST SECTION 1

"Q" STATION 30+55 TO STATION 30+96

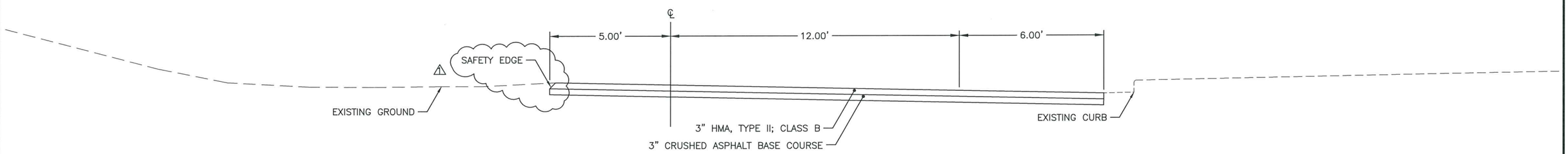

PARKS HWY ON RAMP WEST SECTION 2

"Q" STATION 30+96 TO STATION 32+50

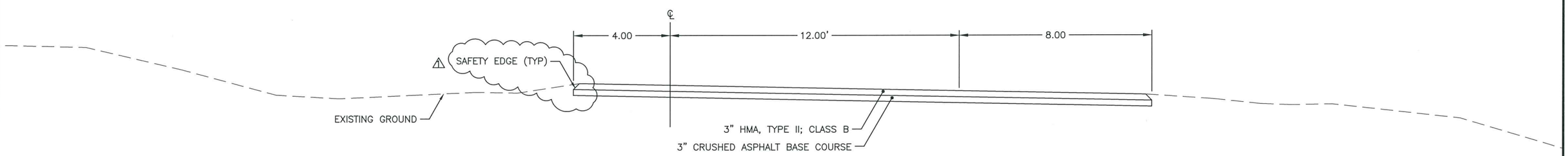

PARKS HWY ON RAMP WEST SECTION 3

"Q" STATION 32+50 TO STATION 36+00

TYPICAL SECTION (9 OF 10)

STATE OF ALASKA 49TH JOHN JARO NETARDUS NO. CE 124494 REGISTERED PROFESSIONAL ENGINEER 6/10/25

PLANS DEVELOPED BY: STATE OF ALASKA DEPARTMENT OF TRANSPORTATION & PUBLIC FACILITIES, NORTHERN REGION, 2301 PEGER ROAD, FAIRBANKS, AK 99709 (907)451-2200
H:\Projects\Fbks_NP\NFHWY00570 Chena Ridge and Pump Resurfacing\6 Design\5 Civil 3D\3 Drawings\00570_B TYPICAL SECTION-B9 TYPICAL SECTION (9 OF 10) Tue, Jun/10/25 02:32pm

ADDENDUM NO. 1, ATTACHMENT NO. 12

NO.	DATE	REVISION
1	06/10/25	ADDENDUM #1

STATE	PROJECT DESIGNATION	YEAR	SHEET NO.	TOTAL SHEETS
ALASKA	0654015/NFHWY00570	2025	B10	B10

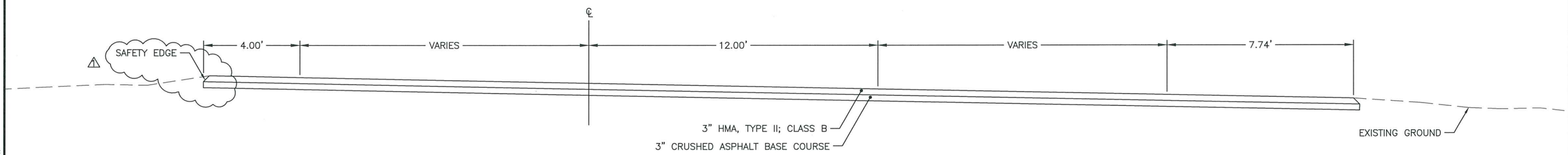

PARKS HWY OFF RAMP EAST SECTION 1

"Q" STATION 24+98 TO STATION 27+92

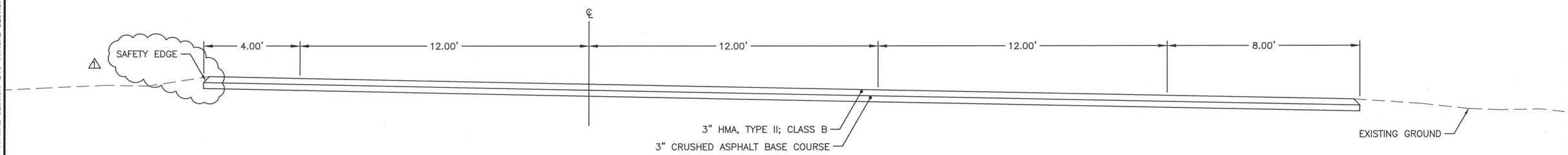

PARKS HWY OFF RAMP EAST SECTION 2

"R" STATION 27+92 TO STATION 32+53

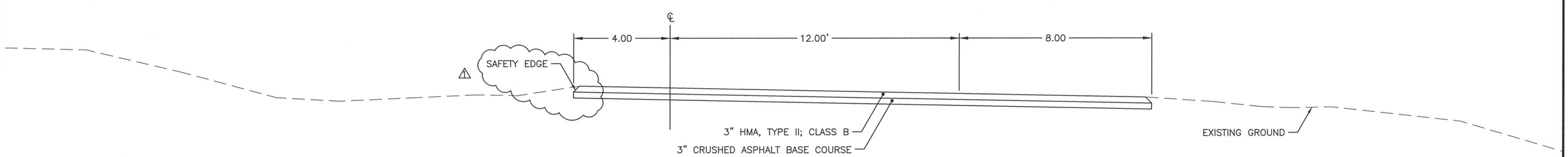

PARKS HWY ON RAMP EAST SECTION 3

"R" STATION 34+00 TO STATION 46+80

TYPICAL SECTION (10 OF 10)

STATE OF ALASKA 49TH
JOHN JARO NETARDUS
NO. CE 124494
REGISTERED PROFESSIONAL ENGINEER
6/10/25

PLANS DEVELOPED BY: STATE OF ALASKA DEPARTMENT OF TRANSPORTATION & PUBLIC FACILITIES, NORTHERN REGION, 2301 PEGER ROAD, FAIRBANKS, AK 99709 (907)451-2200
H:\Projects\Fbks_NP\NFHWY00570 Chena Ridge and Pump Resurfacing\6 Design\5 Civil 3D\3 Drawings\00570_B TYPICAL SECTION-B10 TYPICAL SECTION (10 OF 10) Tue, Jun/10/25 02:32pm

NO.	DATE	REVISION
1	06/10/25	ADDENDUM #1

STATE	PROJECT DESIGNATION	YEAR	SHEET NO.	TOTAL SHEETS
ALASKA	0654015/NFHWY00570	2025	C1	C1

ESTIMATE OF QUANTITIES

PAY ITEM	DESCRIPTION	UNIT	QUANTITY
201.0001.0000	CLEARING	ACRE	43.6
202.0002.0000	REMOVAL OF PAVEMENT	SY	9,324
202.0010.0000	SINGLE MAIL BOX INSTALLATION	EACH	50
202.0012.0000	DOUBLE MAIL BOX INSTALLATION	EACH	90
202.0013.0000	REMOVAL OF STRUCTURES AND OBSTRUCTIONS	CS	ALL REQUIRED
301.0001.00D1	AGGREGATE BASE COURSE, GRADING D-1	TON	280
308.0001.0000	CRUSHED ASPHALT BASE COURSE	SY	249,897
401.0001.002B	HMA, TYPE II; CLASS B	TON	33,147
401.0004.0000	ASPHALT BINDER, GRADE PG 52E-40	TON	1,856
401.0008.002B	HMA PRICE ADJUSTMENT, TYPE II; CLASS B	CS	ALL REQ'D
401.0009.0000	LONGITUDINAL JOINT DENSITY PRICE ADJUSTMENT	CS	ALL REQ'D
401.0010.0001	PAVEMENT SMOOTHNESS PRICE ADJUSTMENT, METHOD 1	CS	ALL REQ'D
401.0012.002B	HMA, DRIVEWAY, TYPE II; CLASS B	TON	1,400
401.0013.0000	JOB MIX DESIGN	EACH	1
401.0015.0000	ASPHALT MATERIAL PRICE ADJUSTMENT	CS	ALL REQ'D
402.0001.STE1	STE-1 ASPHALT FOR TACK COAT	TON	9
606.0001.0000	W-BEAM GUARDRAIL	LF	9,818.75
606.0006.0000	REMOVING AND DISPOSING OF GUARDRAIL	LF	11,403
606.0013.0000	PARALLEL GUARDRAIL TERMINAL	EACH	29
615.0001.0000	STANDARD SIGN	SF	1,765.16
639.0001.0000	DRIVEWAY	EACH	140
640.0001.0000	MOBILIZATION AND DEMOBILIZATION	LS	ALL REQ'D
642.0001.0000	CONSTRUCTION SURVEYING	LS	ALL REQ'D
642.0013.0000	THREE PERSON SURVEY PARTY	CS	ALL REQ'D
643.0002.0000	TRAFFIC MAINTENANCE	LS	ALL REQ'D
643.0003.0000	PERMANENT CONSTRUCTIONS SIGNS	LS	ALL REQ'D
643.0023.0000	TRAFFIC PRICE ADJUSTMENT	CS	ALL REQ'D
643.0025.0000	TRAFFIC CONTROL	CS	ALL REQ'D
643.2005.0000	PUBLIC INFORMATION PROGRAM	LS	ALL REQ'D
644.0001.0000	FIELD OFFICE	LS	ALL REQ'D
644.0006.0000	VEHICLE	LS	ALL REQ'D
645.0001.0000	TRAINING PROGRAM, 2 TRAINEES / APPRENTICES	LH	1,000
646.0001.0000	CPM SCHEDULING	LS	ALL REQ'D
652.0001.0000	INTERIM WORK PRICE ADJUSTMENT	CS	ALL REQ'D
658.0001.0000	EROSION, SEDIMENT, AND POLLUTION CONTROL WITHOUT GCP COVERAGE	LS	ALL REQ'D
658.0002.0000	ESCP CHANGES BY DIRECTIVE	CS	ALL REQ'D
670.0001.0000	PAINTED TRAFFIC MARKINGS	LS	ALL REQ'D
670.2002.0000	MMA PAVEMENT MARKINGS, INLAID	LS	ALL REQ'D
670.2007.0000	MMA PAVEMENT MARKINGS, SYMBOLS AND ARROW(S) INLAID	EACH	72
670.2014.0000	MMA PAVEMENT MARKINGS, INLAID	CS	ALL REQ'D

ESTIMATING FACTORS

ITEM NO.	DESCRIPTION	VALUE
301.0001.00D1	AGGREGATE BASE COURSE, GRADING D-1	2 TON/CY
401.0001.002B	HMA, TYPE II, CLASS B	151 PCF @ 95% DENSITY
401.0004.0000	ASPHALT BINDER, GRADE PG 52E-40	5.6% OF TOTAL WEIGHT OF 401.0001.002B

LUMP SUM STRIPING SUMMARY

PAY ITEM	DESCRIPTION	TOTAL LENGTH (FT)
670.2002.0000	4" WHITE LINE (MMA)	19,552
670.2002.0000	8" WHITE LINE (MMA)	4,848
670.2002.0000	24" WHITE LINE (MMA)	1,503
670.2002.0000	4" YELLOW LINE (MMA)	6,580
670.2002.0000	4" DOUBLE YELLOW LINE (MMA)	3,568
670.2002.0000	4" DOUBLE YELLOW SOLID LINE AND SKIP LINE (MMA)	4,790
670.2002.0000	4" WHITE SKIP LINE (MMA)	12,083
670.2002.0000	4" WHITE DOTTED LINE (MMA)	1,033
670.2002.0000	8" WHITE DOTTED LINE (MMA)	98
670.2002.0000	18" WHITE	147
670.2002.0000	18" YELLOW	2,550
670.0001.0000	4" WHITE LINE	92,981
670.0001.0000	4" WHITE DOTTED LINE	184
670.0001.0000	8" WHITE LINE	288
670.0001.0000	4" DOUBLE YELLOW LINE	25,611
670.0001.0000	4" YELLOW SKIP LINE	5,899
670.0001.0000	4" DOUBLE YELLOW SOLID LINE AND SKIP LINE	15,866
670.0001.0000	RIGHT TURN ARROW	2 (EA)

GENERAL NOTES:

1. RESURFACE THE DESIGNATED ROADS WHILE MAINTAINING THE EXISTING HORIZONTAL AND VERTICAL GEOMETRY, DIMENSIONS, LINE, GRADE, AND SUPERELEVATIONS IN A MANNER THAT WILL PROMOTE POSITIVE DRAINAGE. ALL LOCATIONS, DIMENSIONS, AND QUANTITIES ARE APPROXIMATE AND MAY BE ADJUSTED BY THE ENGINEER.

2. MATCH THE EXISTING PROFILE ELEVATION BY REMOVING 3" OF RECLAIMED MATERIAL FOR SMOOTHING AND SHOULDERING, AND DELIVER EXCESS MATERIAL TO M&O STOCKPILE PER SUBSECTION 308-3.06. THIS NOTE DOES NOT APPLY FROM STATION 87+00 TO STATION 628+50, WHERE A 2" GRADE RAISE IS EXPECTED.

3. PRIOR TO CONSTRUCTION, SURVEY EXISTING CENTERLINE AND PAVEMENT EDGES. SUBMIT DIGITAL SURFACE DATA IN A FORMAT APPROVED BY THE ENGINEER. THIS WORK IS SUBSIDIARY TO 642.0001.0000 CONSTRUCTION SURVEYING.

4. USE INLAID MMA PAY ITEMS (670.2002.0000, 670.2007.0000, 670.2014.0000) IN PHASES 1 AND 2. USE SURFACE APPLIED PAY ITEMS (670.0001.0000 AND 670.2004.0000) FOR PHASE 3. SEE SHEET T1 FOR CONSTRUCTION PHASING DIAGRAM.

5. SAW CUT ALL MATCH LINES WHERE NEW CONSTRUCTION ABUTS EXISTING ASPHALT, APPLY STE-1 ASPHALT FOR TACK COAT ON THE VERTICAL FACE OF ALL SAW CUTS PRIOR TO PAVING. SAW CUTTING AND TACK COATS WILL NOT BE MEASURED OR PAID FOR DIRECTLY, BUT ARE SUBSIDIARY TO 401.0001.002B.

6. MECHANIZED LAND VEGETATION CLEARING AND GRUBBING IS PROHIBITED DURING THE MIGRATORY BIRD NESTING SEASON (MAY 1 – JULY 15).

7. VERIFY UTILITY LOCATIONS PRIOR TO BEGINNING ANY GROUND DISTURBING WORK, LOCATE ALL EXISTING UTILITIES WITHIN THE PROJECT BOUNDARIES. PROTECT UTILITIES FROM CONSTRUCTION DAMAGE FOR THE DURATION OF THE PROJECT.

8. TWO ADJACENT PROJECTS WILL BEGIN CONSTRUCTION ON CHENA PUMP ROAD IN 2026: NFHWY00699 HSIP: CHENA SMALL TRACTS ROUNDABOUT AND NFHWY01053 CHENA PUMP ROAD RESURFACING – CRIPPLE CREEK. COORDINATE WITH THE CONTRACTOR OF THESE PROJECTS PER SUBSECTION 105-1.07.

ESTIMATE OF QUANTITIES

STATE OF ALASKA 49TH JOHN JARO NETARDUS NO. CE 124494 REGISTERED PROFESSIONAL ENGINEER 6/10/25

PLANS DEVELOPED BY: STATE OF ALASKA DEPARTMENT OF TRANSPORTATION & PUBLIC FACILITIES, NORTHERN REGION, 2301 PEGER ROAD, FAIRBANKS, AK 99709 (907)451-2200
H:\Projects\Fbks_NP\NFHWY00570 Chena Ridge and Pump Resurfacing\6 Design\5 Civil 3D\3 Drawings\00570_ESTIMATE_OF_QUANTITIES-C1 ESTIMATE OF QUANTITIES Tue, Jun/10/25 06:11pm

NO.	DATE	REVISION

STATE	PROJECT DESIGNATION	YEAR	SHEET NO.	TOTAL SHEETS
ALASKA	0654015/NFHWY00570	2025	D1	D4

SUPERELEVATION SUMMARY

CURVE PI	RADIUS (FT)	BEGIN TRANSITION	TRANSITION LENGTH (FT)	CURVE PC	BEGIN FULL SUPERELEVATION	SUPERELEVATION RATE (%)	END FULL SUPERELEVATION	CURVE PT	TRANSITION LENGTH (FT)	END TRANSITION	REMARKS
"0"16+71.32	1145.91	"0"10+50.67	150.00	"0"11+70.67	"0"12+00.67	5.6	"0"20+84.69	"0"21+14.69	150	"0"23+34.69	PAVING ENDS IN FULL SUPERELEVATION
"0"92+82.52	954.93	"0"87+05.76	205.00	"0"88+69.76	"0"89+10.76	6.0	"0"96+07.96	"0"96+48.96	205	"0"98+12.96	
"0"106+35.22	1432.39	"0"99+59.16	160.00	"0"100+87.16	"0"101+19.16	4.0	"0"111+02.06	"0"111+34.06	160	"0"112+62.06	
"0"119+81.14	954.93	"0"115+20.96	205	"0"116+84.96	"0"117+25.96	6.0	"0"122+18.36	"0"122+59.36	205	"0"124+23.36	
"0"128+70.25	2083.48	"0"125+52.16	130	"0"126+56.16	"0"126+82.16	3.0	"0"130+56.86	"0"130+82.86	130	"0"131+86.86	
"0"137+81.15	1273.24	"0"133+48.06	160	"0"134+76.06	"0"135+08.06	4.0	"0"140+42.96	"0"140+74.96	160	"0"142+02.96	
"0"147+67.78	3819.72	"0"143+88.86	130	"0"144+92.86	"0"145+18.86	3.0	"0"150+15.76	"0"150+41.76	130	"0"151+45.76	
"0"175+06.03	818.51	"0"170+58.16	205	"0"172+22.16	"0"172+63.16	6.0	"0"177+27.66	"0"177+68.66	205	"0"179+32.66	
"0"191+92.62	3274.04	"0"188+10.56	130	"0"189+14.56	"0"189+40.56	3.0	"0"194+43.36	"0"194+69.36	130	"0"195+73.36	
"0"205+75.93	2,864.79	"0"213+90.26	130	"0"201+37.56	"0"201+63.56	3	"0"209+81.56	"0"210+07.56	130	"0"211+11.56	
"0"217+63.08	1,145.92	"0"213+90.26	180	"0"215+34.26	"0"215+70.26	5.0	"0"219+49.96	"0"219+85.96	180	"0"221+29.96	
"0"226+27.64	954.93	"0"221+99.66	205	"0"223+63.66	"0"224+04.66	6.0	"0"228+37.76	"0"228+78.76	205	"0"230+42.76	
"0"253+46.01	1,909.86	"0"248+50.06	160	"0"249+78.06	"0"250+10.06	4.0	"0"256+73.06	"0"257+05.06	160	"0"258+33.06	
"0"275+40.05	2,864.79	"0"270+10.06	130	"0"271+14.06	"0"271+40.06	3.0	"0"279+33.86	"0"279+59.86	130	"0"280+63.86	
"0"305+55.14	716.20	"0"298+34.96	205	"0"299+98.96	"0"300+39.96	6.0	"0"309+03.76	"0"309+44.76	205	"0"311+08.76	
"0"315+36.58	763.94	"0"311+38.96	230	"0"313+22.96	"0"313+68.96	7.0	"0"316+93.56	"0"317+39.56	204.35	"0"318+97.91	PLANAR TRANSITION OUT*
"0"323+28.69	409.26	"0"318+97.91	157.35	"0"320+16.26	"0"320+55.26	5.0	"0"325+10.96	"0"325+49.96	152.00	"0"326+62.96	PLANAR TRANSITION IN/OUT*
"0"333+14.43	954.93	"0"326+62.95	167.00	"0"327+75.95	"0"328+29.96	5.0	"0"337+02.56	"0"337+56.56	180	"0"338+82.56	PLANAR TRANSITION IN*
"0"347+97.36	572.96	"0"343+65.56	180	"0"344+91.56	"0"345+45.56	5.0	"0"349+99.36	"0"350+53.36	180	"0"351+79.36	
"0"364+26.43	636.62	"0"359+66.46	180	"0"361+10.46	"0"361+46.46	5.0	"0"366+61.06	"0"366+97.06	180	"0"368+41.06	
"0"375+43.57	674.07	"0"370+03.66	180	"0"371+47.66	"0"371+83.66	5.0	"0"378+27.61	"0"378+63.61	180	"0"380+07.61	
"0"388+29.68	848.83	"0"381+19.96	180	"0"382+63.96	"0"382+99.96	5.0	"0"392+25.96	"0"392+61.96	180	"0"394+05.96	
"0"405+18.56	1,145.92	"0"398+11.76	180	"0"399+55.76	"0"399+91.76	5.0	"0"409+66.06	"0"410+02.06	180	"0"411+46.06	
"0"426+28.02	818.51	"0"421+46.66	180	"0"422+90.66	"0"423+26.66	5.0	"0"428+94.66	"0"429+30.66	180	"0"430+74.66	
"0"436+17.18	636.62	"0"433+09.36	180	"0"434+53.36	"0"434+89.36	5.0	"0"437+38.06	"0"437+74.06	180	"0"439+18.06	
"0"471+37.57	2,865.04	"0"464+68.26	130	"0"465+72.26	"0"465+98.26	3.0	"0"476+62.55	"0"476+88.55	130	"0"477+92.55	

*SEE PLANAR SUPERELEVATION TRANSITION DETAIL ON SHEET D2

SUPERELEVATION SUMMARY (1 OF 2)

STATE OF ALASKA 49TH JOHN JARO NETARDUS NO. CE 124494 REGISTERED PROFESSIONAL ENGINEER 4/7/25

PLANS DEVELOPED BY: STATE OF ALASKA DEPARTMENT OF TRANSPORTATION & PUBLIC FACILITIES, NORTHERN REGION, 2301 PEGER ROAD, FAIRBANKS, AK 99709 (907)451-2200
H:\Projects\Fbks_NP\nfhwy00570 chena ridge and pump resurfacing\6 Design\5 civil 3d\3 Drawings\00570_SUMMARIES-D1 SUPERELEVATION SUMMARY (1 OF 2) Fri, Apr/04/25 07:42pm

NO.	DATE	REVISION

STATE	PROJECT DESIGNATION	YEAR	SHEET NO.	TOTAL SHEETS
ALASKA	0654015/NFHWY00570	2025	D2	D4

SUPERELEVATION SUMMARY

CURVE PI	RADIUS (FT)	BEGIN TRANSITION	TRANSITION LENGTH (FT)	CURVE PC	BEGIN FULL SUPERELEVATION	SUPERELEVATION RATE (%)	END FULL SUPERELEVATION	CURVE PT	TRANSITION LENGTH (FT)	END TRANSITION	REMARKS
"O"495+78.25	2,864.78	"O"488+34.92	130.00	"O"489+38.92	"O"489+64.92	3%	"O"501+70.97	"O"501+96.97	130.00	"O"503+00.97	
"O"554+29.76	5,729.58	"O"547+29.47	130.00	"O"548+33.47	"O"548+59.47	3%	"O"559+95.77	"O"560+21.77	130.00	"O"561+25.77	
"O"616+06.64	22,918.31	"O"611+38.17	130.00	"O"612+42.17	"O"612+68.17	3%	"O"619+45.04	"O"619+71.04	130.00	"O"620+75.04	
"O"625+42.50	14,769.24	"O"622+00.03	130.00	"O"623+04.03	"O"623+30.03	3%	"O"627+54.91	"O"627+80.91	130.00	"O"628+84.91	
"O"685+46.98	2100.1	"O"678+87.61	255.00	"O"680+91.61	"O"681+42.61	4.7	"O"689+37.46	"O"689+88.46	255.00	"O"691+92.46	
"O"697+35.07	2133.5	"O"687+84.46	255.00	"O"689+88.46	"O"690+39.46	4.7	"O"703+73.84	"O"704+24.84	255.00	"O"706+28.84	
"Q"20+08.39	1637.02	"Q"18+50.85	125.00	"Q"19+50.85	"Q"19+75.85	3.8	"Q"20+40.89	"Q"20+65.89	125.00	"Q"21+65.89	
"Q"37+97.57	4044.41	"Q"32+51.98	130.00	"Q"33+55.98	"Q"33+81.98	2.5	"Q"42+09.67	"Q"42+35.67	130.00	"Q"43+39.67	PAVING ENDS IN FULL SUPERELEVATION
"R"24+33.45	2500.00	"R"17+44.34	140.00	"R"18+56.34	"R"18+84.34	3.5	"R"29+62.69	"R"29+90.69	140.00	"R" 31+02.69	PAVING BEGINS IN FULL SUPERELEVATION
"R"34+05.18	190.00	"R"32+52.53	110.00	"R"33+40.53	"R"33+62.53	3.5	"R"34+43.15	"R"34+05.18	110.00	"R"35+53.15	
"R"37+81.60	619.34	"R"35+51.82	125.00	"R"36+51.82	"R"36+76.82	5.8	"R"38+82.67	"R"39+07.67	125.00	"R"40+07.67	
"S"12+50.00	150.00	"S"09+52.00	60.00	"S"10+00.00	"S"10+12.00	5.8	"S"12+97.11	"S"13+09.11	60.00	"S"13+57.11	
"T"12+85.43	250.00			"T"10+00.00		VARIES		"T"14+25.73			SURVEY AND MATCH EXISTING
"U"10+67.24	110.00			"U"10+00.00		NORMAL CROWN		"U"11+20.71			SURVEY AND MATCH EXISTING

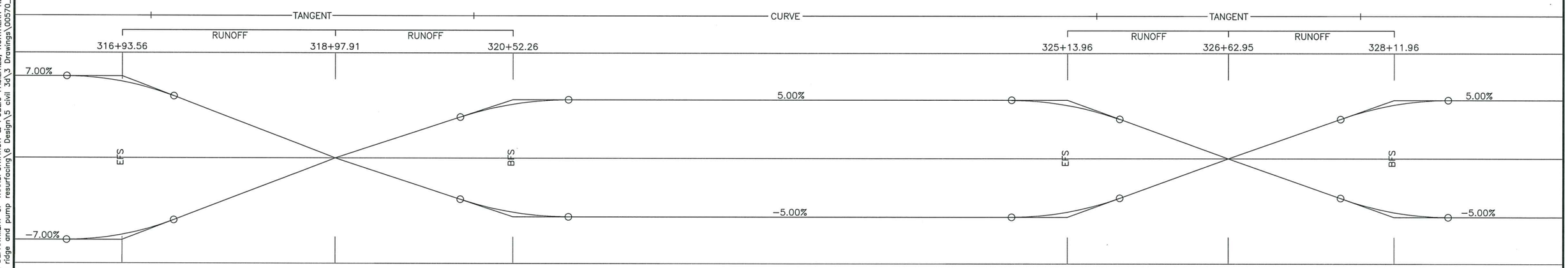

PLANAR SUPEREELEVATION TRANSITION DETAIL

PAVEMENT ROTATED ABOUT CENTERLINE

SUPERELEVATION NOTES:

1. ALL SUPERELEVATIONS ARE REVOLVED ABOUT CENTERLINE.
2. SUPERELEVATION VALUES MAY BE FIELD FIT BY THE ENGINEER TO BETTER MATCH EXISTING CONDITIONS.

SUPERELEVATION SUMMARY (2 OF 2)

STATE OF ALASKA 49TH JOHN JARO NETARDUS NO. CE 124494 REGISTERED PROFESSIONAL ENGINEER 4/7/25

NO.	DATE	REVISION
1	06/10/25	ADDENDUM #1

STATE	PROJECT DESIGNATION	YEAR	SHEET NO.	TOTAL SHEETS
ALASKA	0654015/NFHWY00570	2025	D3	D4

PROPOSED GUARDRAIL SUMMARY

BEGIN STATION	END STATION	LT	RT	606.0001.000 W-BEAM GUARDRAIL (LINEAR FOOT)	606.0013.0000 PARALLEL GUARDRAIL TERMINAL (EA.)	POST LENGTH (FT)	REMARKS
"0"14+82.28	"0"18+44.55	X		250.00	2	8	
"0"118+37.32	"0"125+49.41		X	606.25	2	8	
"0"158+64.36	"0"170+08.06		X	1,043.75	2	8	
"0"309+02.85	"0"320+93.12	X		1,137.50	1	8	TIE INTO EXISTING
"0"323+75.62	"0"331+49.58	X		675.00	2	8	
"0"332+21.59	"0"337+01.35	X		375.00	2	8	
"0"336+19.35	"0"347+84.45	X		981.25	2	8	
"0"348+65.90	"0"352+52.44	X		312.50	2	8	
"0"402+90.15	"0"409+31.36		X	550.00	2	8	
"0"408+75.90	"0"413+45.00		X	387.50	2	8	
"0"413+94.56	"0"418+20.07		X	325.00	2	8	
"0"419+90.40	"0"424+26.29		X	337.50	2	8	
"0"420+59.27	"0"425+65.28	X		400.00	2	8	
"0"424+90.60	"0"447+49.52		X	2,225.00	2	8	
"0"445+08.10	"0"448+20.56	X		212.50	2	8	

GUARDRAIL SUMMARY NOTES:

1. USE 50' PARALLEL END TREATMENT.
2. FOR PARALLEL GUARDRAIL TERMINALS, CONSTRUCT THE GUARDRAIL TERMINAL WIDENING IN ACCORDANCE WITH THE "STANDARD DETAIL" ON STANDARD PLAN G-20.12. THE END OFFSET (X) SHALL BE 2 FEET.
3. INSTALL PARALLEL GUARDRAIL TERMINALS AT A HEIGHT OF 31" TO TOP OF THE RAIL, POST LENGTHS ARE TO BE PER MANUFACTURER RECOMMENDATIONS.
4. PER SUBSECTION 606-3.01, INSTALL SIDE-MOUNTED GUARDRAIL REFLECTORS "STARTING WITH THE FIRST STANDARD POST". DO NOT INSTALL THESE REFLECTORS WITHIN THE LIMITS OF PARALLEL GUARDRAIL TERMINALS.
5. UPON REMOVAL OF THE OLD POSTS, HOLES CREATED BY THE OLD POST REMOVAL SHALL BE FILLED AND COMPACTED IN ACCORANCE WITH SECTION 606-3.07. THIS WORK AND MATERIAL IS SUBSIDIARY TO 606.00.
6. IN ADDITION TO THE GUARDRAIL REFLECTORS, INSTALL GUARDRAIL FLEXIBLE DELINEATORS AS SHOWN ON STANDARD PLAN G-00.05, SHEET 5 OF 5.
7. USE CRUSHED ASPHALT BASE COURSE OR AGGREGATE BASE COURSE, GRADING D-1, FROM THE FRONT FACE OF THE POST TO THE HINGE POINT BEHIND THE POST; COMPACT AND GRADE TO MATCH THE TOP SURFACE AND CROSS-SLOPE OF SHOULDER UNLESS OTHERWISE STATED BY CASE TYPE IN STANDARD PLAN G-10.21.

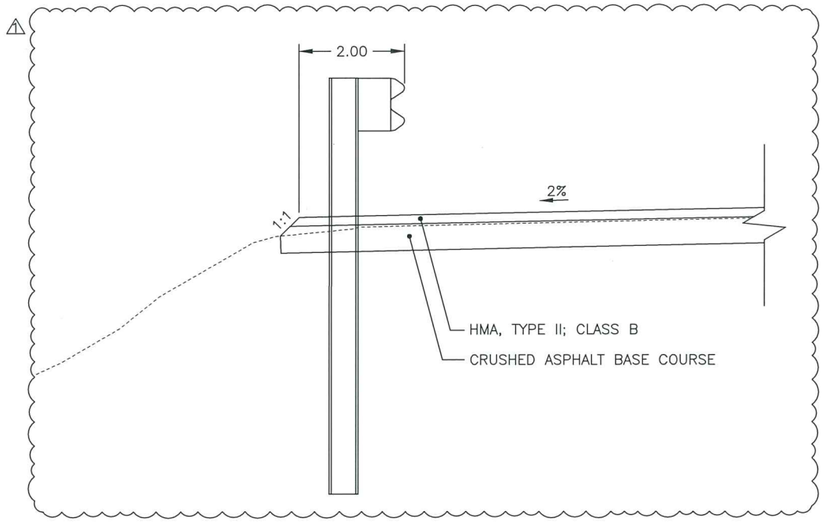

GUARDRAIL POST DETAIL

GUARDRAIL SUMMARY (1 OF 2)

STATE OF ALASKA 49TH
JOHN JARO NETARDUS
NO. CE 124494
REGISTERED PROFESSIONAL ENGINEER
6/10/25

NO.	DATE	REVISION
1	06/10/25	ADDENDUM #1

STATE	PROJECT DESIGNATION	YEAR	SHEET NO.	TOTAL SHEETS
ALASKA	0654015/NFHWY00570	2025	D4	D4

EXISTING GUARDRAIL SUMMARY

BEGIN STATION	END STATION	LT	RT	606.006.0000 REMOVING AND DISPOSING OF GUARDRAIL (LINEAR FOOT)		REMARKS
"0"14+79.85	"0"18+44.54	X		353		
"0"118+37.35	"0"125+55.98		X	712.5		
"0"158+70.64	"0"170+08.13		X	1137.5		
"0"309+03.03	"0"320+93.16	X		1187.0		TIE INTO PROPOSED
"0"323+76.40	"0"331+50.08	X		775.0		
"0"332+11.54	"0"337+03.21	X		487.5		
"0"337+19.35	"0"347+83.16	X		1100.0		
"0"348+65.90	"0"352+65.82	X		412.5		
"0"402+87.96	"0"409+30.19		X	655.4		
"0"408+76.19	"0"413+45.70		X	491.8		
"0"413+94.24	"0"418+18.88		X	425.0		
"0"419+90.90	"0"424+25.39		X	437.5		
"0"420+058.32	"0"425+66.55	X		503.0		
"0"424+90.61	"0"447+65.05		X	2375.0		
"0"444+94.90	"0"448+22.26	X		350.0		

1

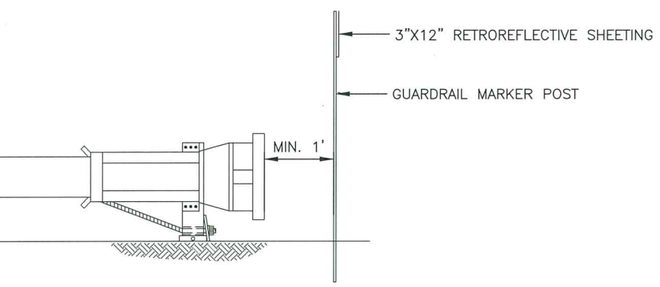

GUARDRAIL MARKER POST ATTACHMENT DETAIL
PARALLEL GUARDRAIL TERMINAL

1

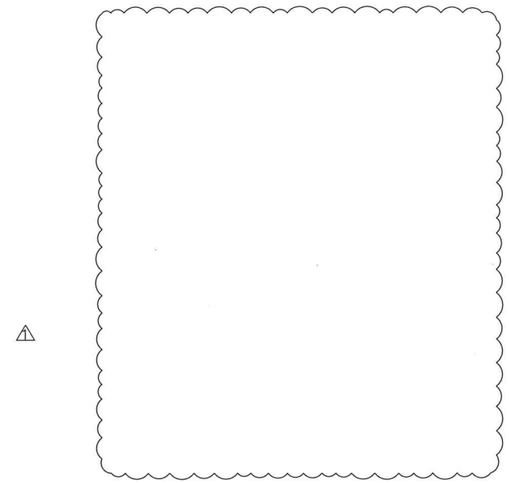

POST DETAIL
CROSS-SECTIONAL VIEW

GUARDRAIL MARKER NOTES:

1. GUARDRAIL MARKER POSTS SHALL BE YELLOW AND AT LEAST 72" LONG. POSTS SHALL MEET THE REQUIREMENTS OF SECTION 730-2.05 FLEXIBLE DELINEATOR POSTS.
2. RETROREFLECTIVE SHEETING SHALL MEET ASTM D4956 REQUIREMENTS FOR TYPE VIII, IX, OR XI. COLOR OF RETROREFLECTIVE SHEETING SHALL MATCH COLOR OF ADJACENT EDGE LINE STRIPE. PLACE RETROREFLECTIVE SHEETING ON SIDE OF MARKER POST FACING TRAFFIC IN ADJACENT LANE.
3. ALL WORK AND MATERIAL REQUIRED TO INSTALL GUARDRAIL MARKER POSTS IS SUBSIDIARY TO 606 PAY ITEMS.

1

GUARDRAIL SUMMARY (2 OF 2)

PLANS DEVELOPED BY: STATE OF ALASKA DEPARTMENT OF TRANSPORTATION & PUBLIC FACILITIES, NORTHERN REGION, 2301 PEGER ROAD, FAIRBANKS, AK 99709 (907)451-2200
H:\Projects\Pbks_NP\NFHWY00570 Chena Ridge and Pump Resurfacing\6 Design\5 Civil 3D\3 Drawings\00570_SUMMARIES-D4 GUARDRAIL SUMMARY (2 OF 2) Tue, Jun/10/25 03:46pm

NO.	DATE	REVISION

STATE	PROJECT DESIGNATION	YEAR	SHEET NO.	TOTAL SHEETS
ALASKA	0654015/NFHWY00570	2025	F1	F14

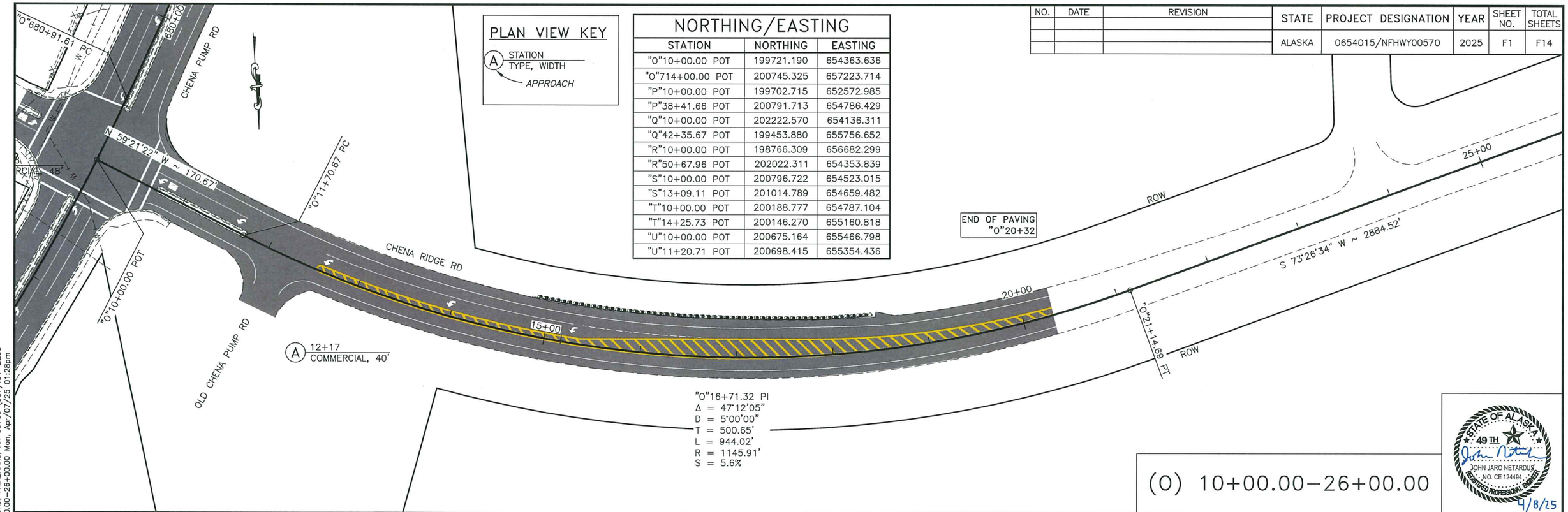

PLAN VIEW KEY

(A) STATION
TYPE, WIDTH
APPROACH

NORTHING/EASTING

STATION	NORTHING	EASTING
"O"10+00.00 POT	199721.190	654363.636
"O"714+00.00 POT	200745.325	657223.714
"P"10+00.00 POT	199702.715	652572.985
"P"38+41.66 POT	200791.713	654786.429
"Q"10+00.00 POT	202222.570	654136.311
"Q"42+35.67 POT	199453.880	655756.652
"R"10+00.00 POT	198766.309	656682.299
"R"50+67.96 POT	202022.311	654353.839
"S"10+00.00 POT	200796.722	654523.015
"S"13+09.11 POT	201014.789	654659.482
"T"10+00.00 POT	200188.777	654787.104
"T"14+25.73 POT	200146.270	655160.818
"U"10+00.00 POT	200675.164	655466.798
"U"11+20.71 POT	200698.415	655354.436

(O) 10+00.00–26+00.00

STATE OF ALASKA 49TH
JOHN JARO NETARDUS
NO. CE 124494
REGISTERED PROFESSIONAL ENGINEER
4/8/25

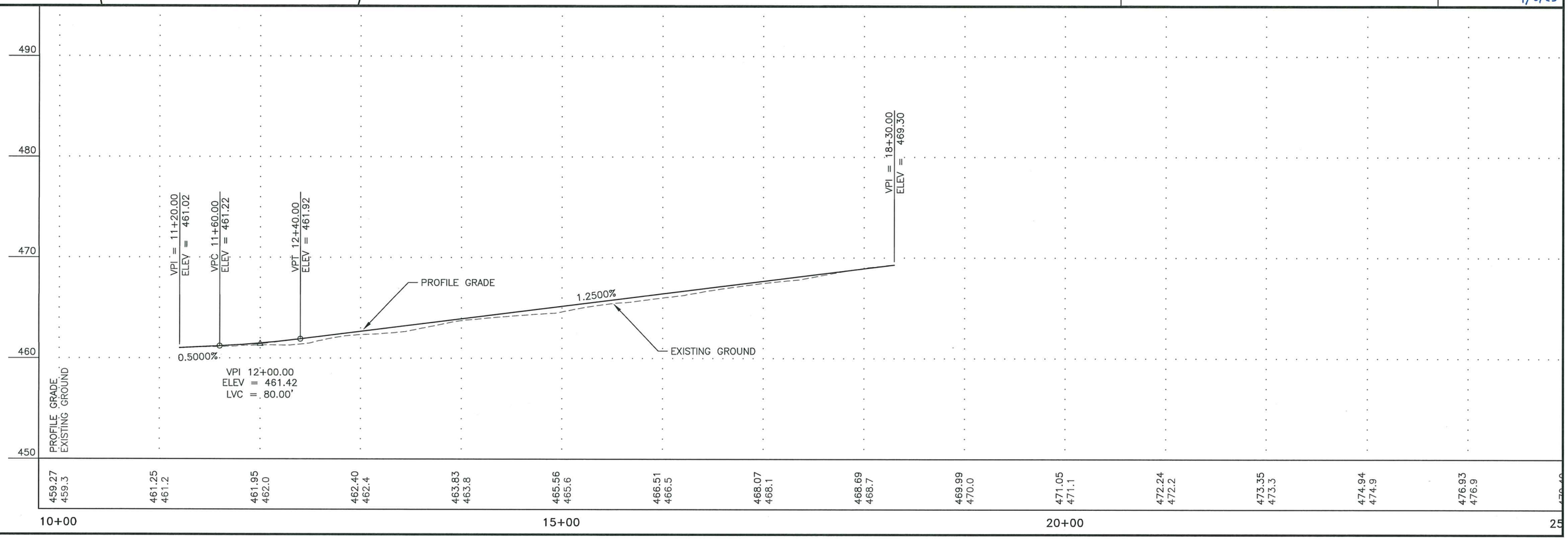

PLANS DEVELOPED BY: STATE OF ALASKA DEPARTMENT OF TRANSPORTATION & PUBLIC FACILITIES, NORTHERN REGION, 2301 PEGER ROAD, FAIRBANKS, AK 99709 (907)451-2200
H:\Projects\Fbks_NP\NFHWY00570 Chena Ridge and Pump Resurfacing\6 Design\5 Civil 3D\3 Drawings\00570_P&P-F1 (O) 10+00.00-26+00.00 Mon, Apr/07/25 01:28pm

NO.	DATE	REVISION

STATE	PROJECT DESIGNATION	YEAR	SHEET NO.	TOTAL SHEETS
ALASKA	0654015/NFHWY00570	2025	F2	F14

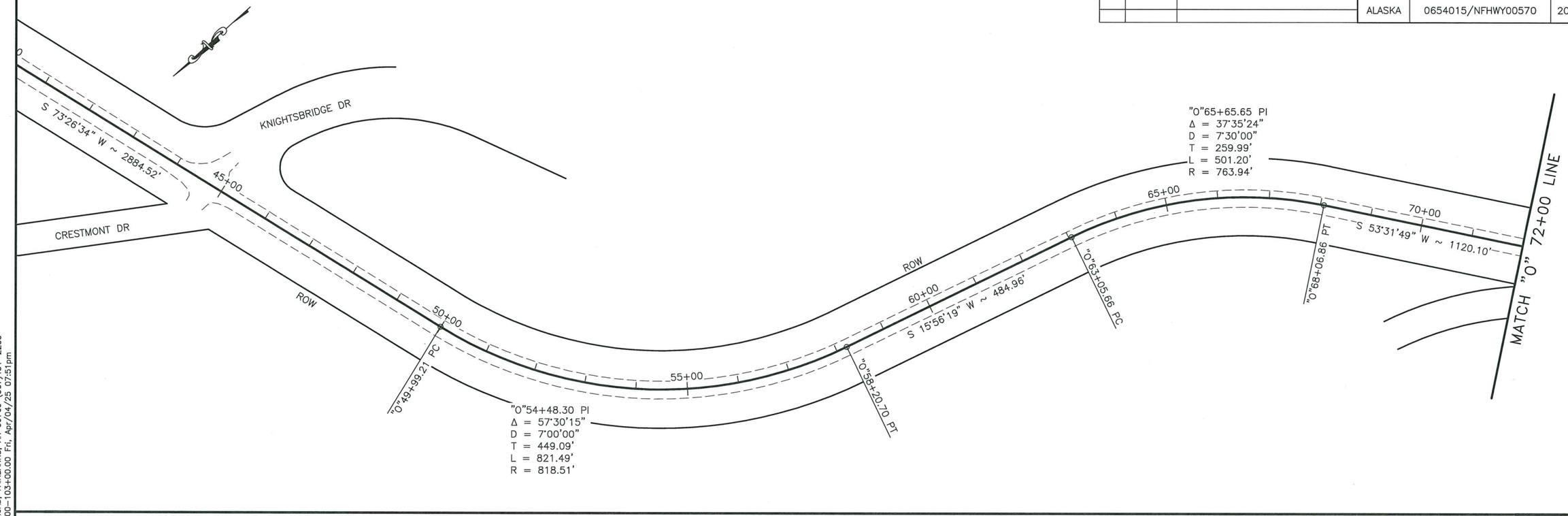

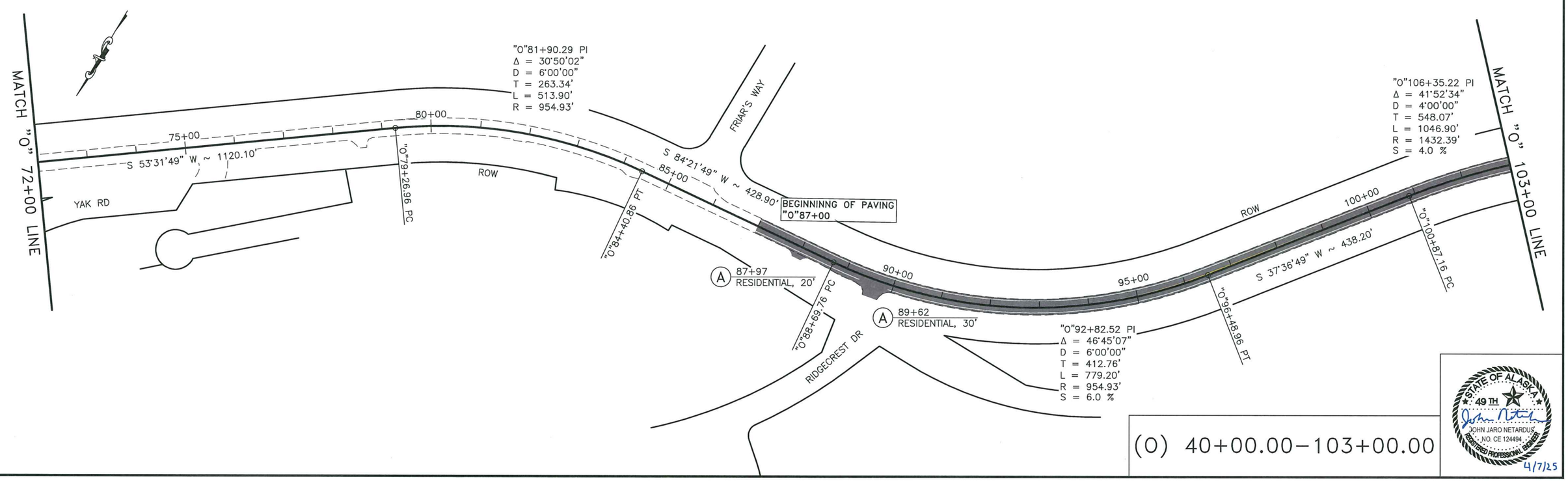

(O) 40+00.00–103+00.00

STATE OF ALASKA
49TH
JOHN JARO NETARDUS
NO. CE 124494
REGISTERED PROFESSIONAL ENGINEER
4/7/25

PLANS DEVELOPED BY: STATE OF ALASKA DEPARTMENT OF TRANSPORTATION & PUBLIC FACILITIES, NORTHERN REGION, 2301 PEGER ROAD, FAIRBANKS, AK 99709 (907)451-2200
H:\Projects\Fbks_NP\nfhwy00570 chena ridge and pump resurfacing\6 Design\5 civil 3d\3 Drawings\00570_P&P-F2 (O) 40+00.00-103+00.00 Fri, Apr/04/25 07:51pm

NO.	DATE	REVISION

STATE	PROJECT DESIGNATION	YEAR	SHEET NO.	TOTAL SHEETS
ALASKA	0654015/NFHWY00570	2025	F3	F14

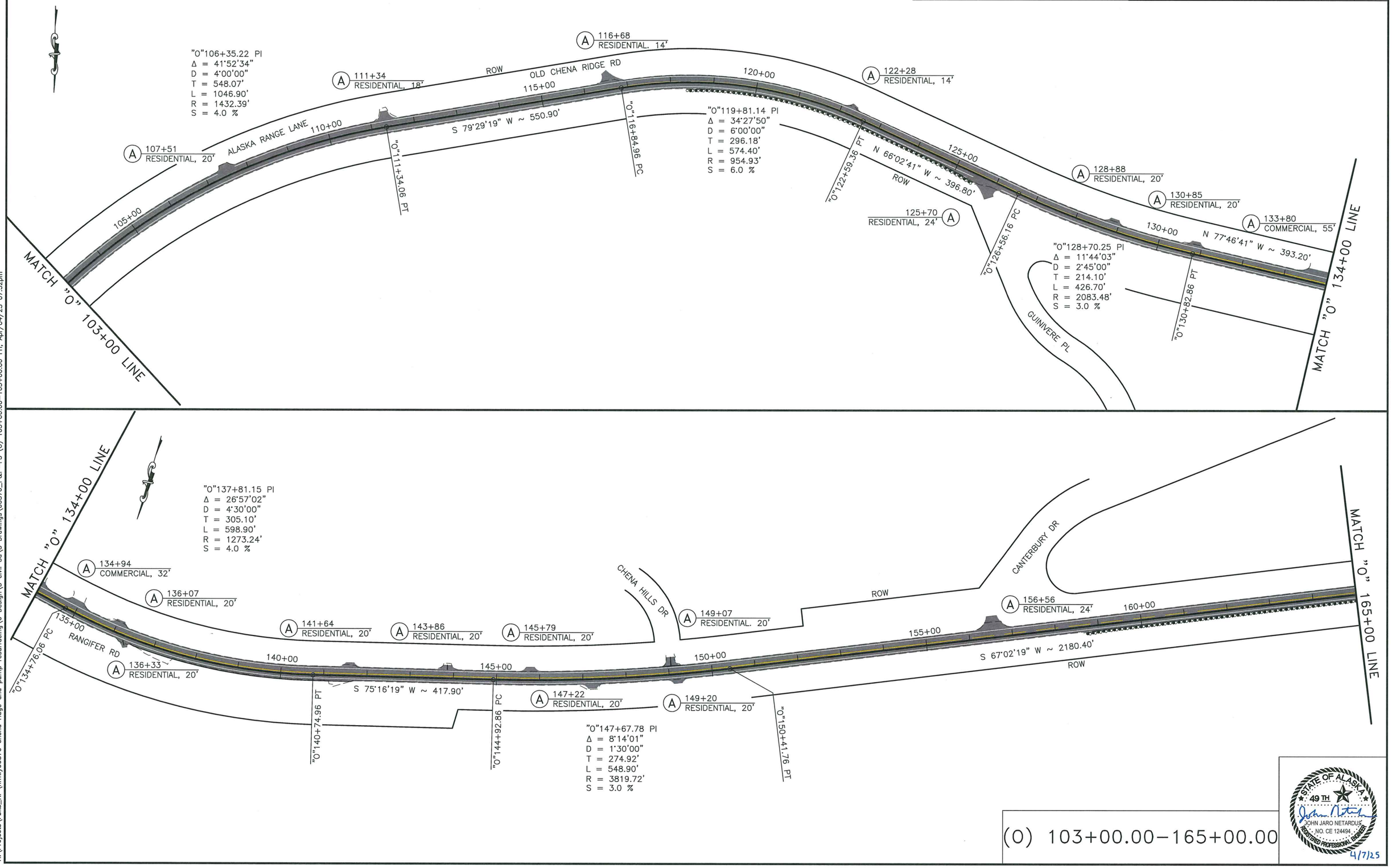

(O) 103+00.00–165+00.00

STATE OF ALASKA
49 TH
JOHN JARO NETARDUS
NO. CE 124494
REGISTERED PROFESSIONAL ENGINEER
4/7/25

PLANS DEVELOPED BY: STATE OF ALASKA DEPARTMENT OF TRANSPORTATION & PUBLIC FACILITIES, NORTHERN REGION, 2301 PEGER ROAD, FAIRBANKS, AK 99709 (907)451-2200
H:\Projects\Fbks_NP\nfhwy00570 chena ridge and pump resurfacing\6 Design\5 civil 3d\3 Drawings\00570_P&P-F3 (O) 103+00.00-165+00.00 Fri, Apr/04/25 07:52pm

NO.	DATE	REVISION

STATE	PROJECT DESIGNATION	YEAR	SHEET NO.	TOTAL SHEETS
ALASKA	0654015/NFHWY00570	2025	F4	F14

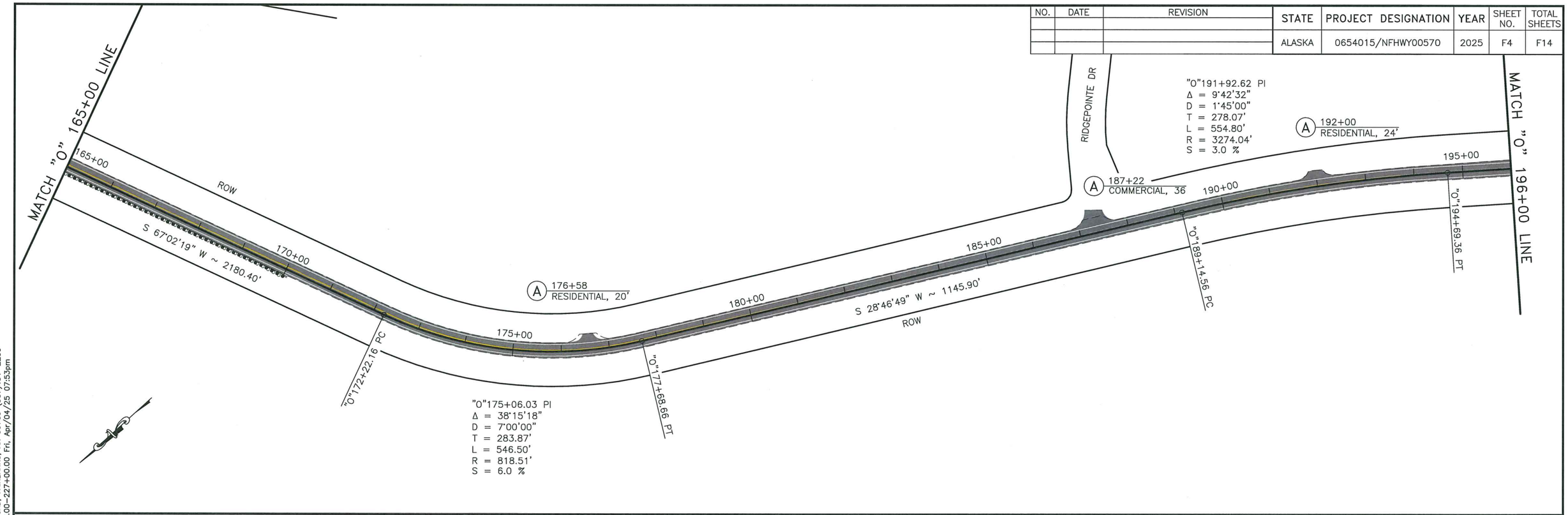

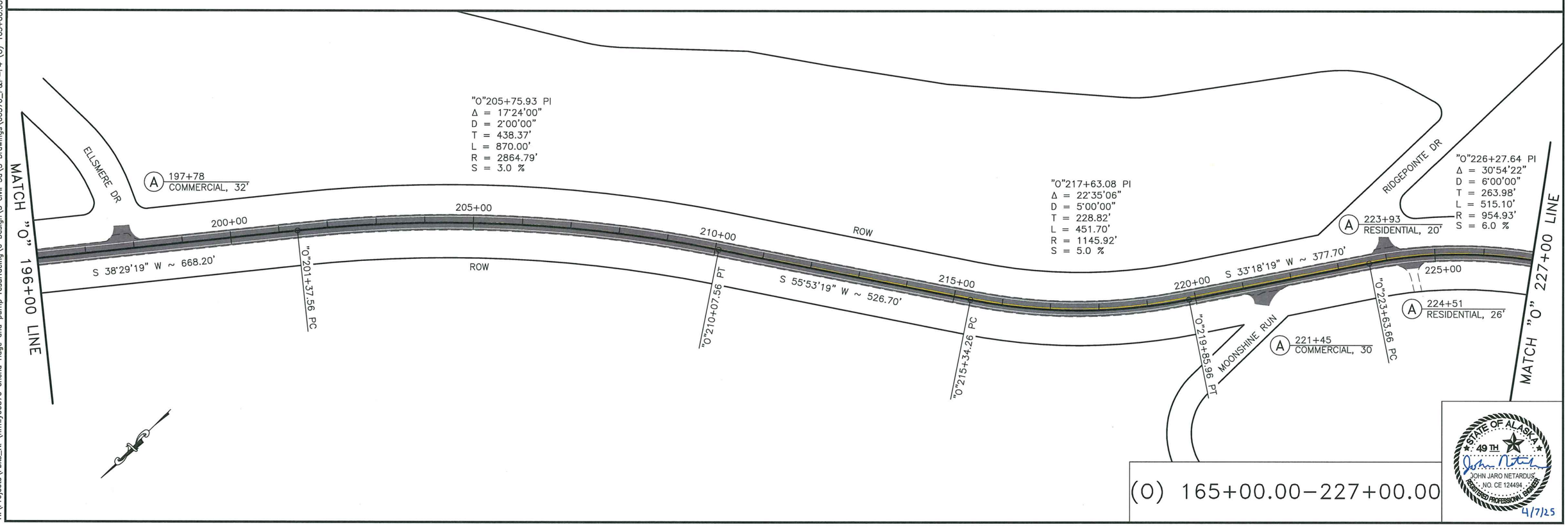

(O) 165+00.00–227+00.00

STATE OF ALASKA
49TH
JOHN JARO NETARDUS
NO. CE 124494
REGISTERED PROFESSIONAL ENGINEER
4/7/25

PLANS DEVELOPED BY: STATE OF ALASKA DEPARTMENT OF TRANSPORTATION & PUBLIC FACILITIES, NORTHERN REGION, 2301 PEGER ROAD, FAIRBANKS, AK 99709 (907)451-2200
H:\Projects\Fbks_NP\nfhwy00570 chena ridge and pump resurfacing\6 Design\5 civil 3d\3 Drawings\00570_P&P-F4 (O) 165+00.00-227+00.00 Fri, Apr/04/25 07:53pm

NO.	DATE	REVISION

STATE	PROJECT DESIGNATION	YEAR	SHEET NO.	TOTAL SHEETS
ALASKA	0654015/NFHWY00570	2025	F5	F14

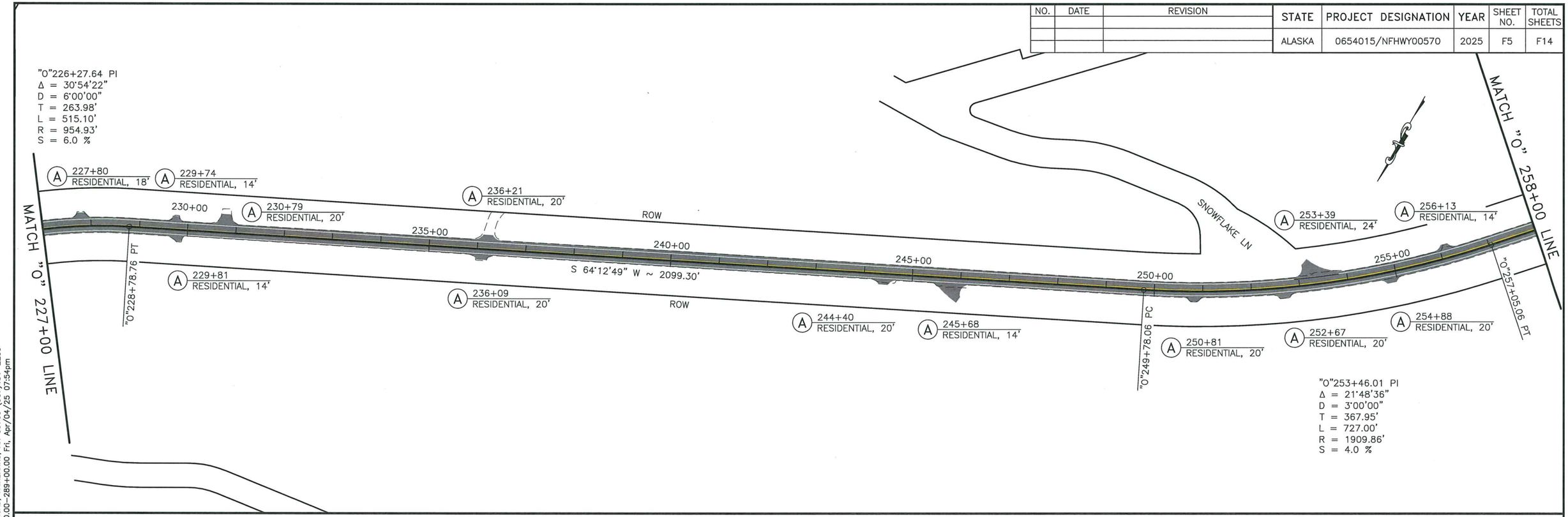

(O) 227+00.00–289+00.00

STATE OF ALASKA 49TH JOHN JARO NETARDUS NO. CE 124494 REGISTERED PROFESSIONAL ENGINEER

4/7/25

PLANS DEVELOPED BY: STATE OF ALASKA DEPARTMENT OF TRANSPORTATION & PUBLIC FACILITIES, NORTHERN REGION, 2301 PEGER ROAD, FAIRBANKS, AK 99709 (907)451-2200
H:\Projects\Fbks_NP\nfhwy00570 chena ridge and pump resurfacing\6 Design\5 civil 3d\3 Drawings\00570_P&P-F5 (O) 227+00.00-289+00.00 Fri, Apr/04/25 07:54pm

ADDENDUM NO. 1, ATTACHMENT NO. 16

NO.	DATE	REVISION
1	06/10/25	ADDENDUM #1

STATE	PROJECT DESIGNATION	YEAR	SHEET NO.	TOTAL SHEETS
ALASKA	0654015/NFHWY00570	2025	F6	F14

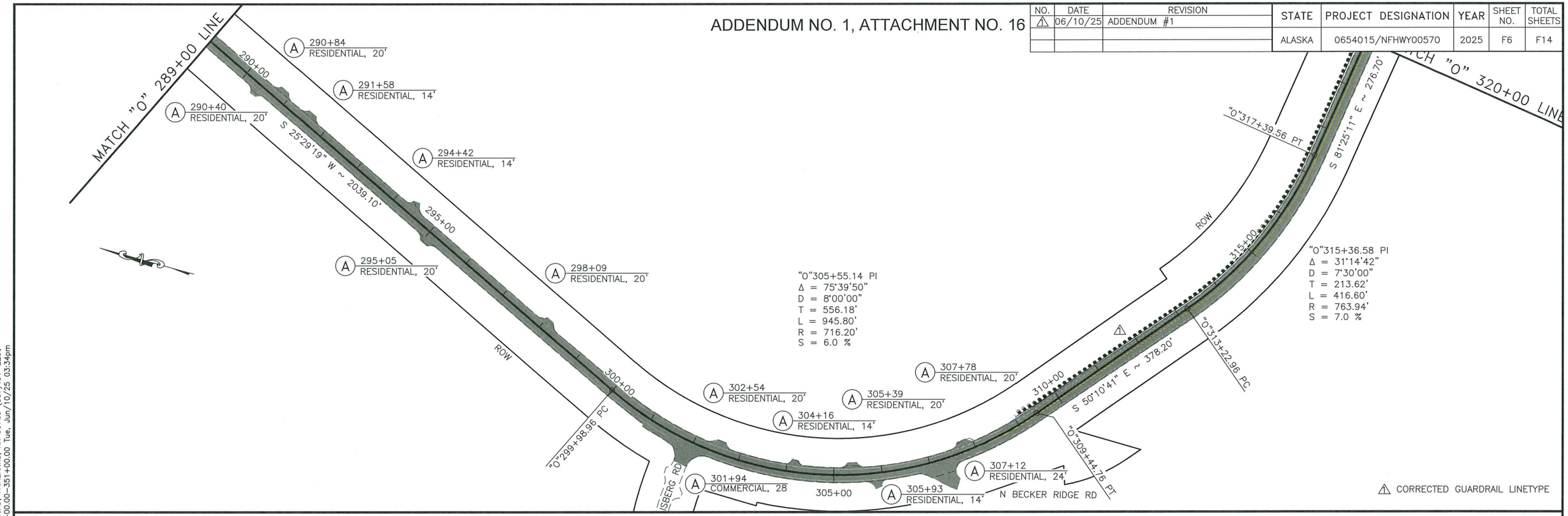

(O) 289+00.00–351+00.00

STATE OF ALASKA 49TH
JOHN JARO NETARDUS
NO. CE 124494
REGISTERED PROFESSIONAL ENGINEER
6/10/25

PLANS DEVELOPED BY: STATE OF ALASKA DEPARTMENT OF TRANSPORTATION & PUBLIC FACILITIES, NORTHERN REGION, 2301 PEGER ROAD, FAIRBANKS, AK 99709 (907)451-2200
H:\Projects\Pbks_NP\NFHWY00570 Chena Ridge and Pump Resurfacing\6 Design\5 Civil 3D\3 Drawings\00570_P&P-F6 (O) 289+00.00-351+00.00 Tue, Jun/10/25 03:34pm

NO.	DATE	REVISION

STATE	PROJECT DESIGNATION	YEAR	SHEET NO.	TOTAL SHEETS
ALASKA	0654015/NFHWY00570	2025	F7	F14

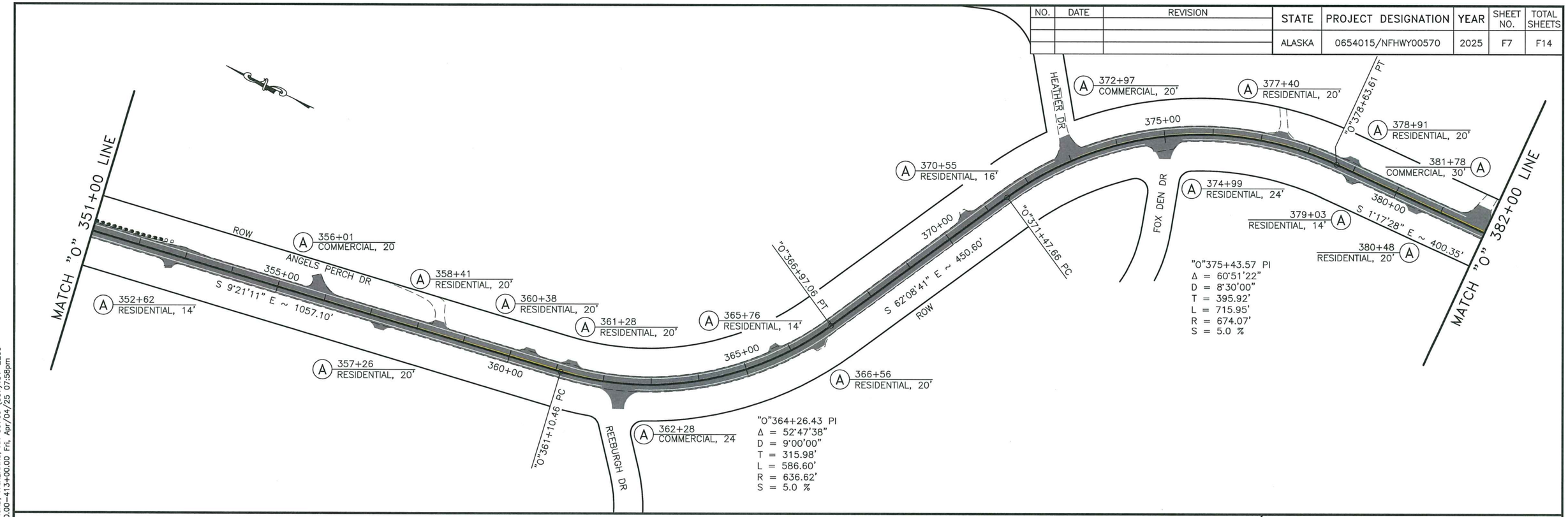

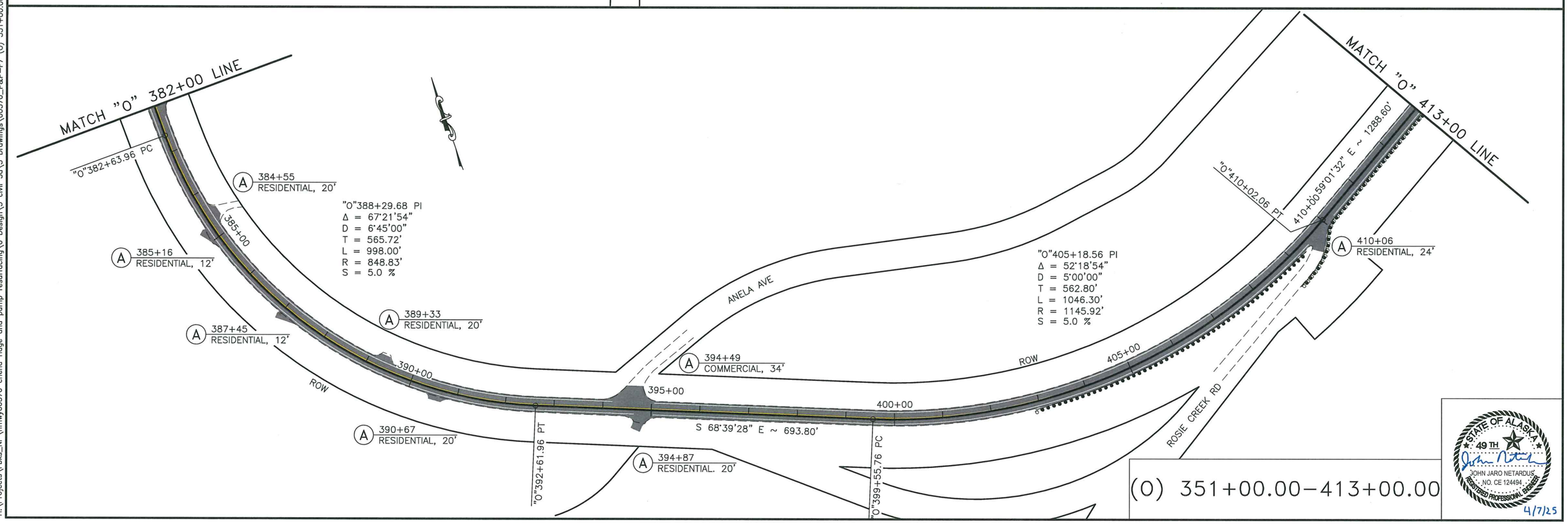

(O) 351+00.00–413+00.00

STATE OF ALASKA 49TH
JOHN JARO NETARDUS
NO. CE 124494
REGISTERED PROFESSIONAL ENGINEER
4/7/25

PLANS DEVELOPED BY: STATE OF ALASKA DEPARTMENT OF TRANSPORTATION & PUBLIC FACILITIES, NORTHERN REGION, 2301 PEGER ROAD, FAIRBANKS, AK 99709 (907)451-2200
H:\Projects\Fbks_NP\nfhwy00570 chena ridge and pump resurfacing\6 Design\5 civil 3d\3 Drawings\00570_P&P-F7 (O) 351+00.00-413+00.00 Fri, Apr/04/25 07:58pm

NO.	DATE	REVISION

STATE	PROJECT DESIGNATION	YEAR	SHEET NO.	TOTAL SHEETS
ALASKA	0654015/NFHWY00570	2025	F8	F14

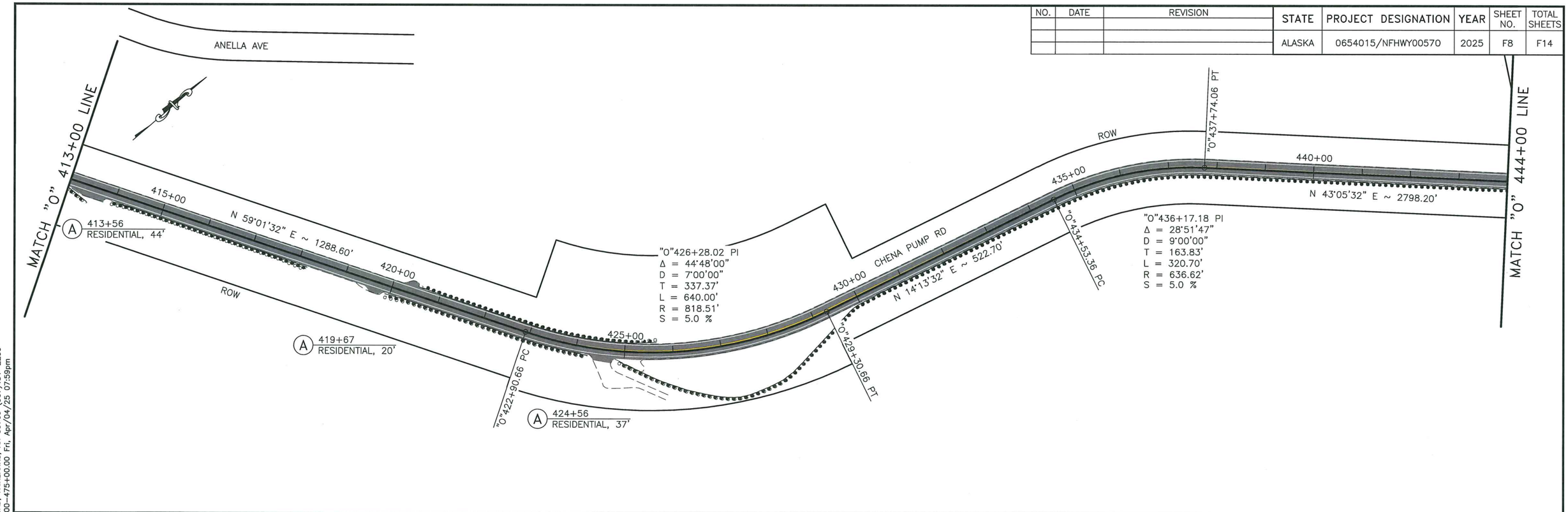

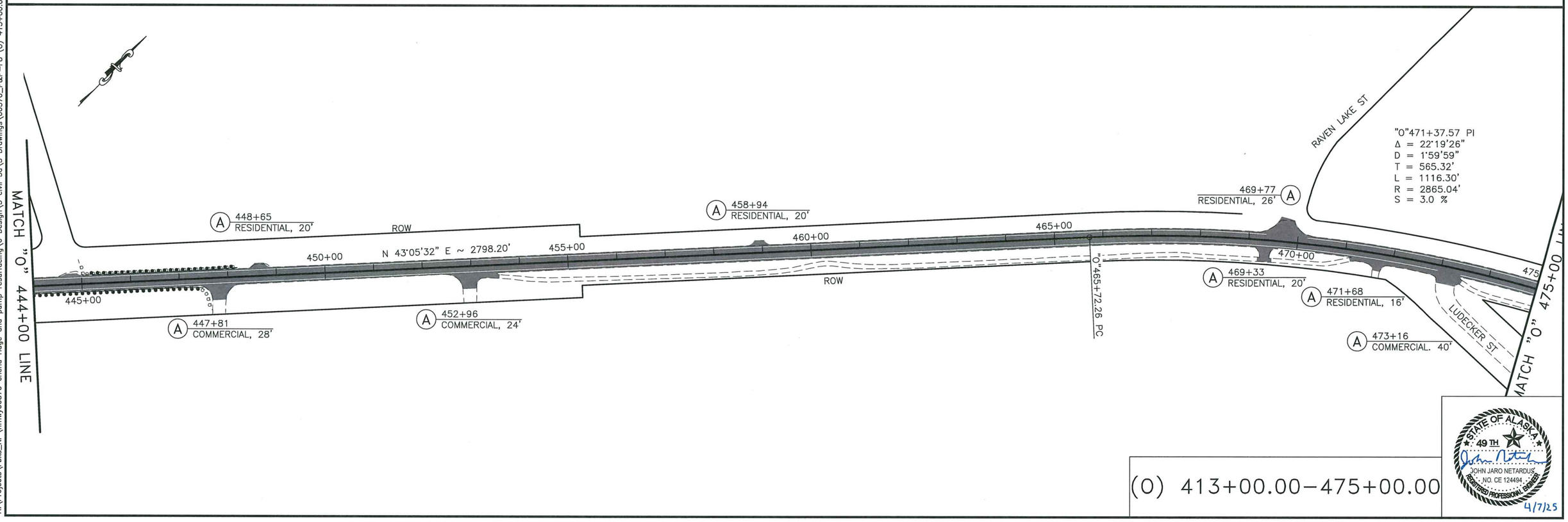

(O) 413+00.00–475+00.00

STATE OF ALASKA
49TH
JOHN JARO NETARDUS
NO. CE 124494
REGISTERED PROFESSIONAL ENGINEER
4/7/25

PLANS DEVELOPED BY: STATE OF ALASKA DEPARTMENT OF TRANSPORTATION & PUBLIC FACILITIES, NORTHERN REGION, 2301 PEGER ROAD, FAIRBANKS, AK 99709 (907)451-2200
H:\Projects\Fbks_NP\nfhwy00570 chena ridge and pump resurfacing\6 Design\5 civil 3d\3 Drawings\00570_P&P-F8 (O) 413+00.00-475+00.00 Fri, Apr/04/25 07:59pm

NO.	DATE	REVISION

STATE	PROJECT DESIGNATION	YEAR	SHEET NO.	TOTAL SHEETS
ALASKA	0654015/NFHWY00570	2025	F9	F14

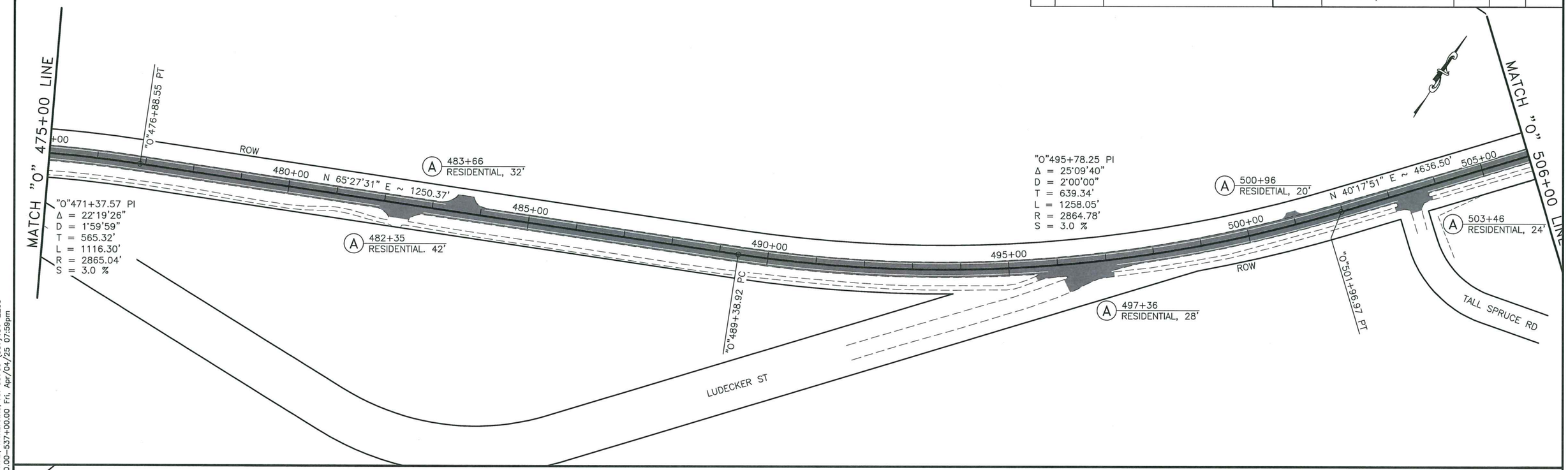

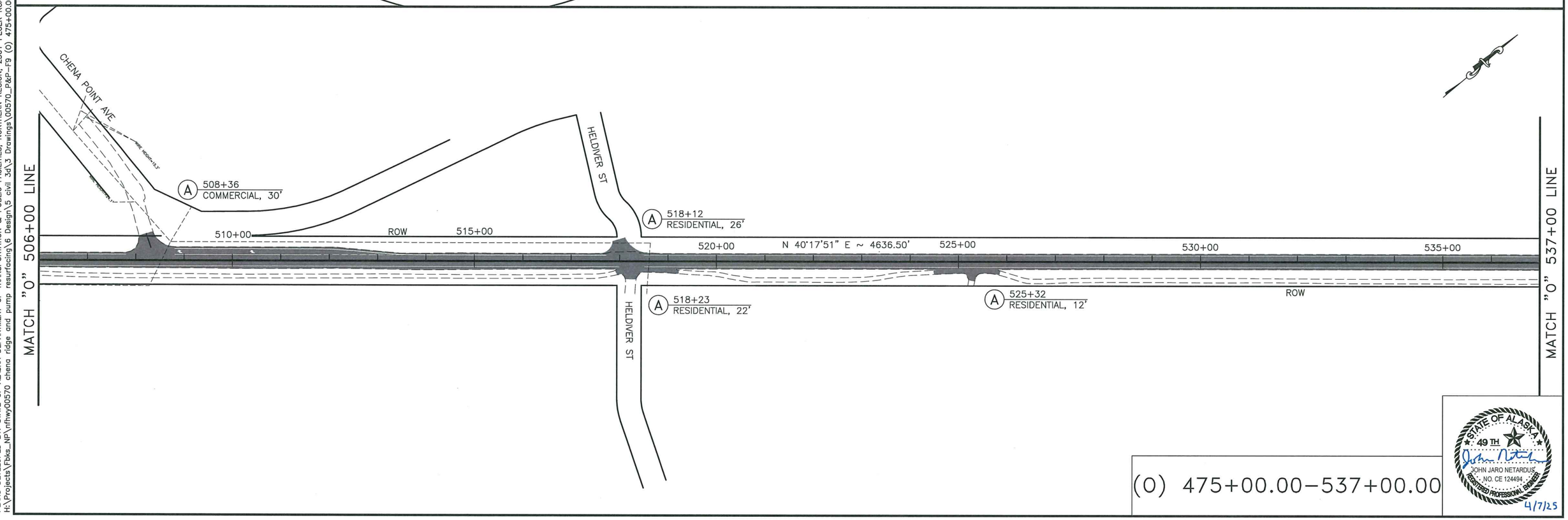

(O) 475+00.00–537+00.00

STATE OF ALASKA
49 TH
JOHN JARO NETARDUS
NO. CE 124494
REGISTERED PROFESSIONAL ENGINEER
4/7/25

PLANS DEVELOPED BY: STATE OF ALASKA DEPARTMENT OF TRANSPORTATION & PUBLIC FACILITIES, NORTHERN REGION, 2301 PEGER ROAD, FAIRBANKS, AK 99709 (907)451-2200
H:\Projects\Fbks_NP\nfhwy00570 chena ridge and pump resurfacing\6 Design\5 civil 3d\3 Drawings\00570_P&P-F9 (O) 475+00.00-537+00.00 Fri, Apr/04/25 07:59pm

NO.	DATE	REVISION

STATE	PROJECT DESIGNATION	YEAR	SHEET NO.	TOTAL SHEETS
ALASKA	0654015/NFHWY00570	2025	F10	F14

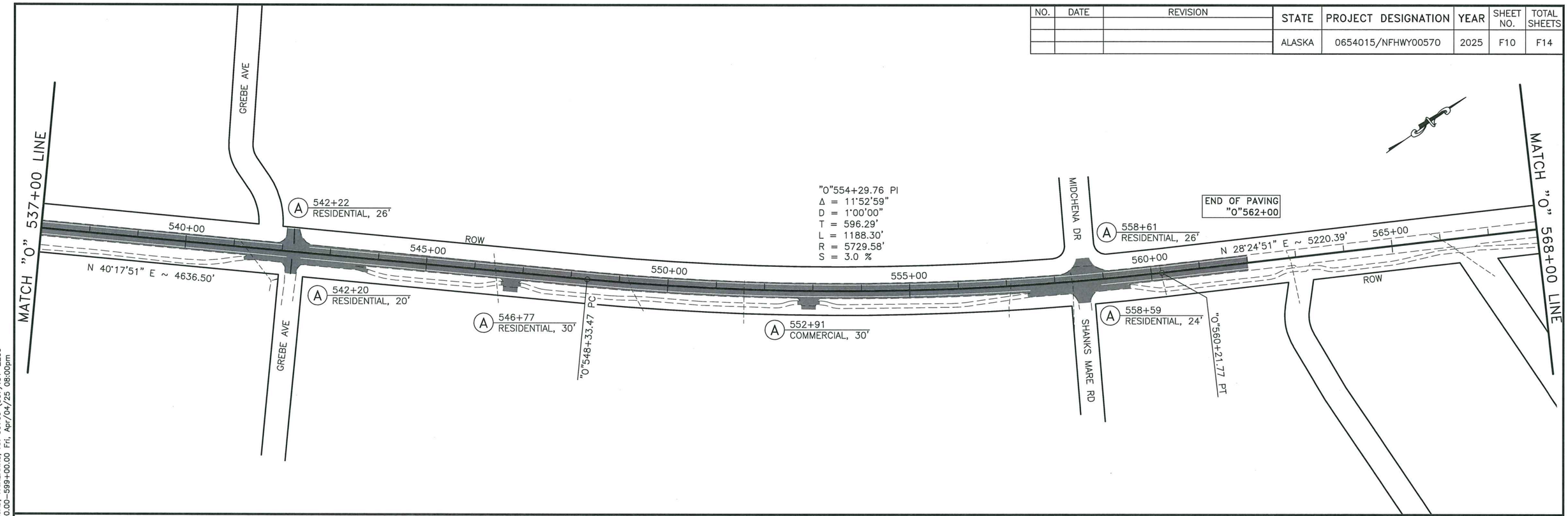

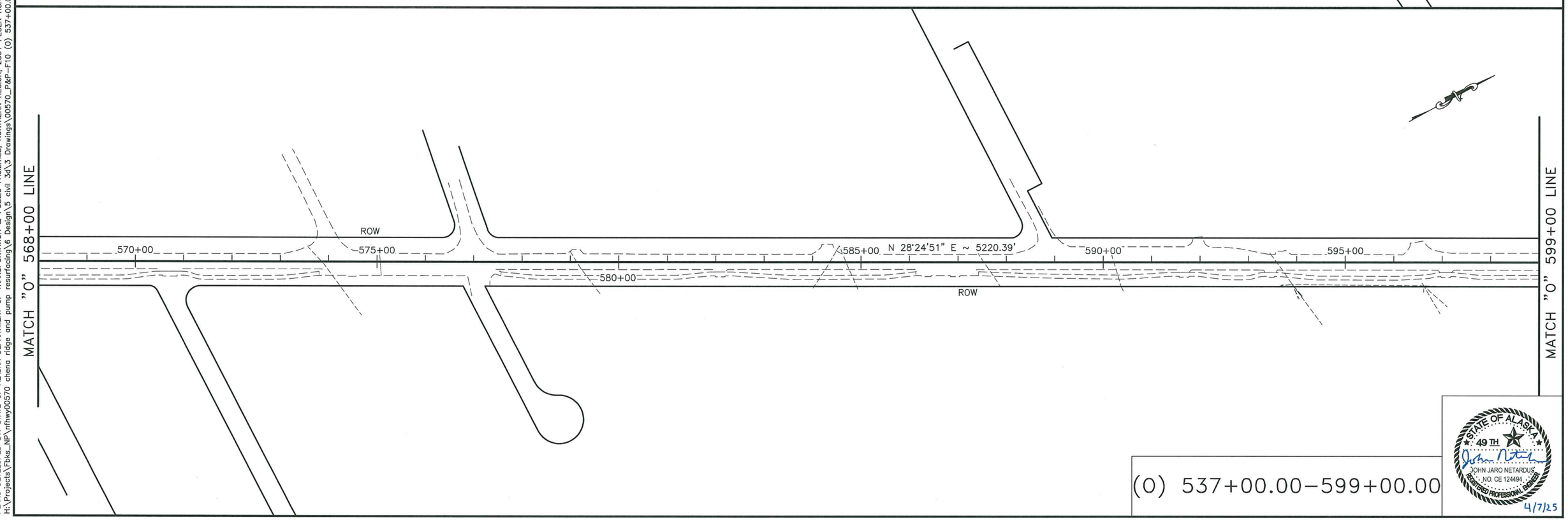

(O) 537+00.00–599+00.00

STATE OF ALASKA
49 TH
JOHN JARO NETARDUS
NO. CE 124494
REGISTERED PROFESSIONAL ENGINEER
4/7/25

PLANS DEVELOPED BY: STATE OF ALASKA DEPARTMENT OF TRANSPORTATION & PUBLIC FACILITIES, NORTHERN REGION, 2301 PEGER ROAD, FAIRBANKS, AK 99709 (907)451-2200
H:\Projects\Fbks_NP\nfhwy00570 chena ridge and pump resurfacing\6 Design\5 civil 3d\3 Drawings\00570_P&P-F10 (O) 537+00.00-599+00.00 Fri, Apr/04/25 08:00pm

NO.	DATE	REVISION

STATE	PROJECT DESIGNATION	YEAR	SHEET NO.	TOTAL SHEETS
ALASKA	0654015/NFHWY00570	2025	F11	F14

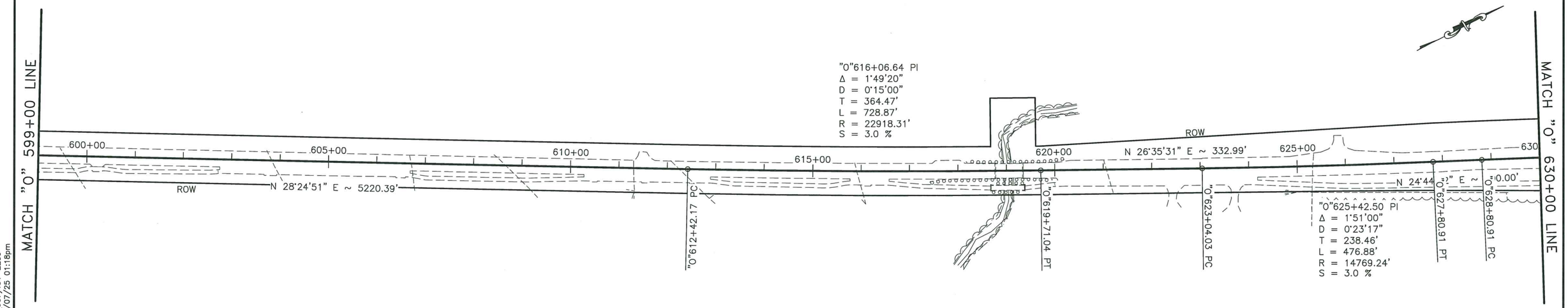

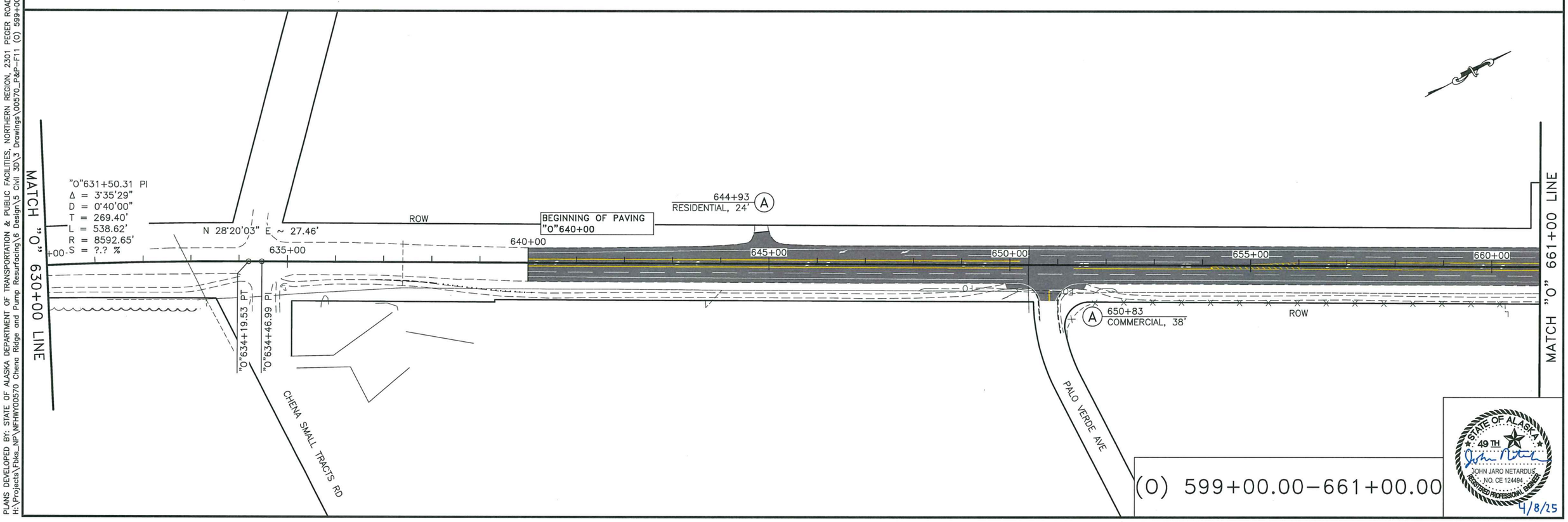

(O) 599+00.00–661+00.00

STATE OF ALASKA
49TH
JOHN JARO NETARDUS
NO. CE 124494
REGISTERED PROFESSIONAL ENGINEER
4/8/25

PLANS DEVELOPED BY: STATE OF ALASKA DEPARTMENT OF TRANSPORTATION & PUBLIC FACILITIES, NORTHERN REGION, 2301 PEGER ROAD, FAIRBANKS, AK 99709 (907)451-2200
H:\Projects\Fbks_NP\NFHWY00570 Chena Ridge and Pump Resurfacing\6 Design\5 Civil 3D\3 Drawings\00570_P&P-F11 (O) 599+00.00-661+00.00 Mon, Apr/07/25 01:18pm

NO.	DATE	REVISION

STATE	PROJECT DESIGNATION	YEAR	SHEET NO.	TOTAL SHEETS
ALASKA	0654015/NFHWY00570	2025	F12	F14

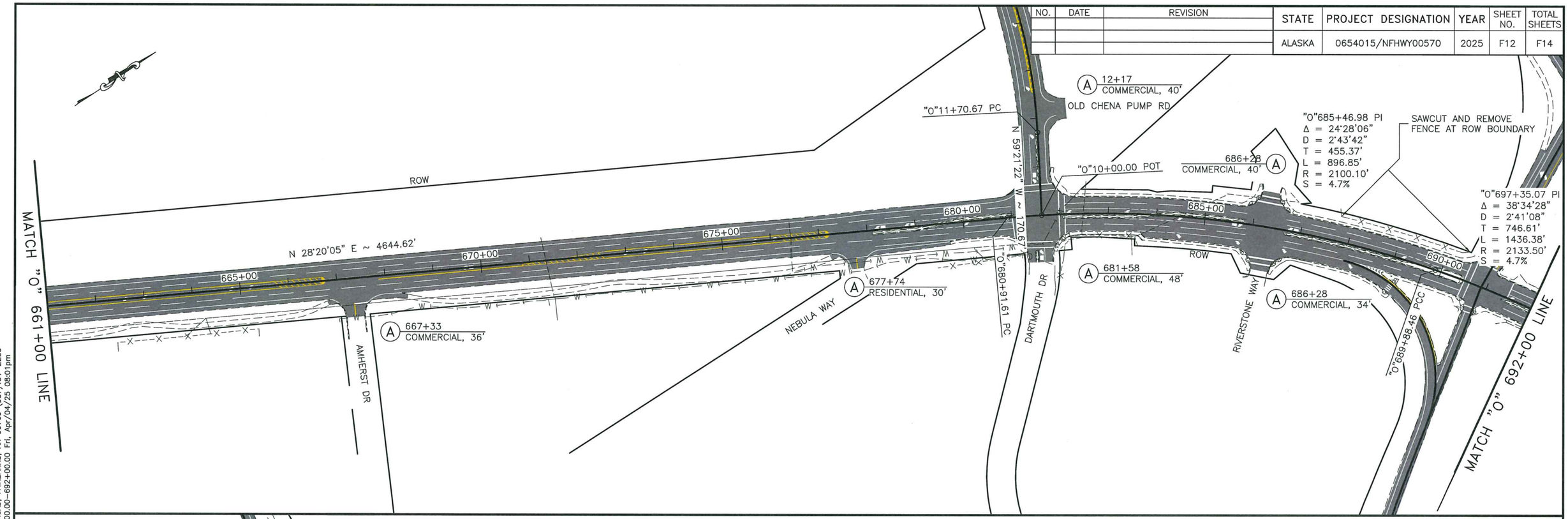

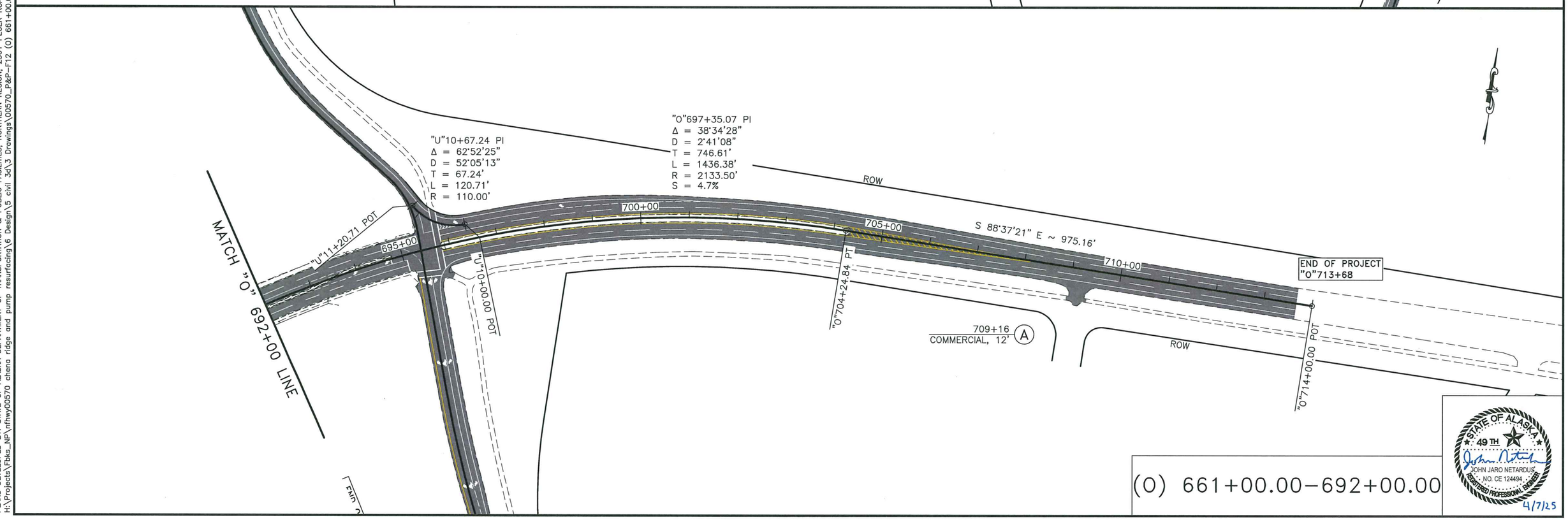

(O) 661+00.00–692+00.00

STATE OF ALASKA
49TH
JOHN JARO NETARDUS
NO. CE 124494
REGISTERED PROFESSIONAL ENGINEER
4/7/25

PLANS DEVELOPED BY: STATE OF ALASKA DEPARTMENT OF TRANSPORTATION & PUBLIC FACILITIES, NORTHERN REGION, 2301 PEGER ROAD, FAIRBANKS, AK 99709 (907)451-2200
H:\Projects\Fbks_NP\nfhwy00570 chena ridge and pump resurfacing\6 Design\5 civil 3d\3 Drawings\00570_P&P-F12 (O) 661+00.00-692+00.00 Fri, Apr/04/25 08:01pm

NO.	DATE	REVISION

STATE	PROJECT DESIGNATION	YEAR	SHEET NO.	TOTAL SHEETS
ALASKA	0654015/NFHWY00570	2025	F13	F14

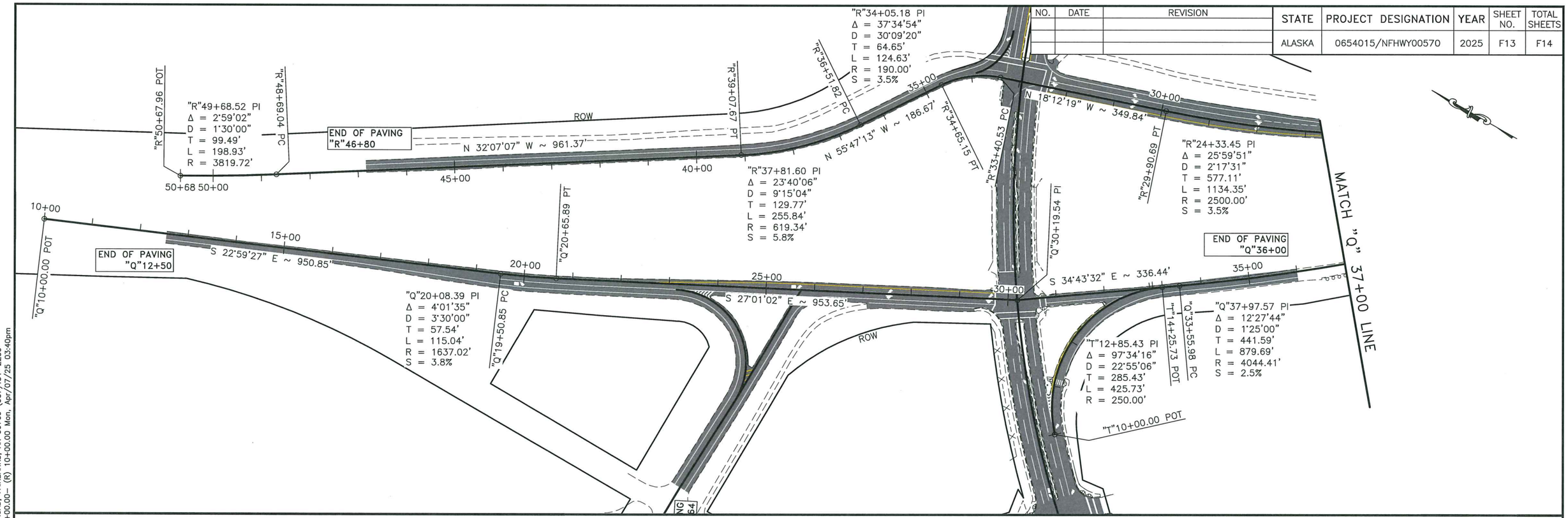

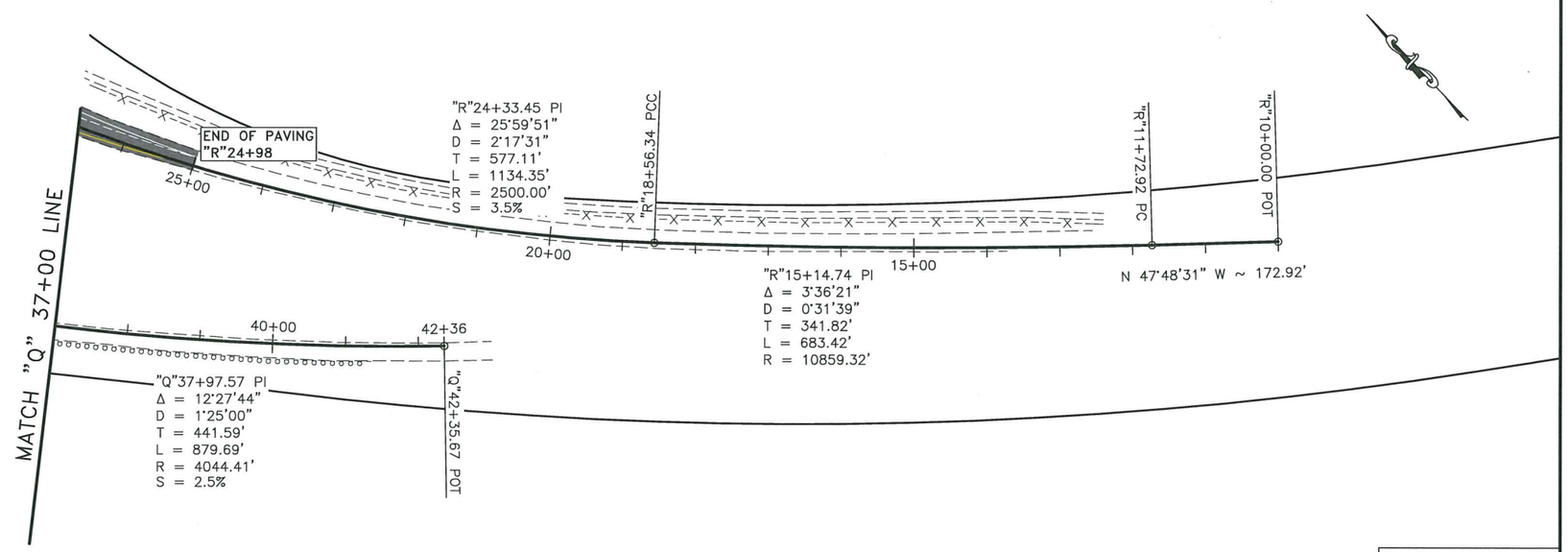

(Q) 10+00.00– (R) 10+00.00

STATE OF ALASKA
49 TH
JOHN JARO NETARDUS
NO. CE 124494
REGISTERED PROFESSIONAL ENGINEER
4/8/25

PLANS DEVELOPED BY: STATE OF ALASKA DEPARTMENT OF TRANSPORTATION & PUBLIC FACILITIES, NORTHERN REGION, 2301 PEGER ROAD, FAIRBANKS, AK 99709 (907)451-2200
H:\Projects\Fbks_NP\NFHWY00570 Chena Ridge and Pump Resurfacing\6 Design\5 Civil 3D\3 Drawings\00570_P&P-F13 (Q) 10+00.00– (R) 10+00.00 Mon, Apr/07/25 03:40pm

ADDENDUM NO. 1, ATTACHMENT NO. 17

NO.	DATE	REVISION
1	06/10/25	ADDENDUM #1

STATE	PROJECT DESIGNATION	YEAR	SHEET NO.	TOTAL SHEETS
ALASKA	0654015/NFHWY00570	2025	F14	F14

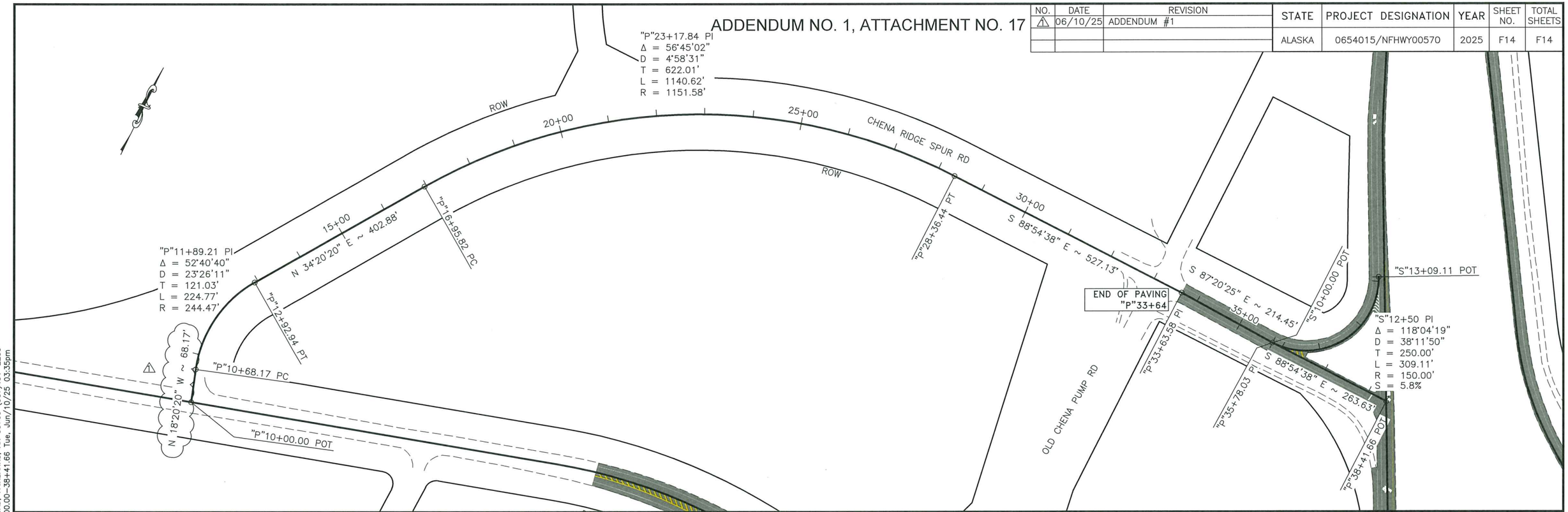

(P) 10+00.00–38+41.66

STATE OF ALASKA 49TH
JOHN JARO NETARDUS
NO. CE 124494
REGISTERED PROFESSIONAL ENGINEER
6/10/25

PLANS DEVELOPED BY: STATE OF ALASKA DEPARTMENT OF TRANSPORTATION & PUBLIC FACILITIES, NORTHERN REGION, 2301 PEGER ROAD, FAIRBANKS, AK 99709 (907)451-2200
H:\Projects\Fbks_NP\NFHWY00570 Chena Ridge and Pump Resurfacing\6 Design\5 Civil 3D\3 Drawings\00570_P&P-F14 (P) 10+00.00-38+41.66 Tue, Jun/10/25 03:35pm

NO.	DATE	REVISION

STATE	PROJECT DESIGNATION	YEAR	SHEET NO.	TOTAL SHEETS
ALASKA	0654015/NFHWY00570	2025	G1	G3

639.0001.000 – DRIVEWAY SUMMARY

NO.	CENTERLINE STATION	LT	RT	WIDTH (FT)	LENGTH (FT)	DRIVEWAY TYPE	EXISTING CONDITION	AREA (SQ-YD)	REMARKS
A1	12+17		X	40	40	COMMERCIAL	PAVED	253	
A2	87+97		X	20	10	RESIDENTIAL	GRAVEL	33	
A3	89+62		X	30	30	RESIDENTIAL	PAVED	113	
A4	107+51	X		20	10	RESIDENTIAL	PAVED	41	
A5	111+34	X		18	20	RESIDENTIAL	PAVED	59	
A6	116+68	X		14	30	RESIDENTIAL	GRAVEL	94	
A7	122+28	X		14	10	RESIDENTIAL	PAVED	23	
A8	125+70		X	24	30	RESIDENTIAL	GRAVEL	96	
A9	128+88	X		20	10	RESIDENTIAL	PAVED	33	
A10	130+85	X		20	10	RESIDENTIAL	PAVED	33	
A11	133+80	X		55	10	COMMERCIAL	PAVED	77	
A12	134+97	X		32	10	COMMERCIAL	PAVED	48	
A13	136+07	X		20	10	RESIDENTIAL	PAVED	33	
A14	136+33		X	12	15	RESIDENTIAL	PAVED	29	
A15	141+64	X		20	10	RESIDENTIAL	PAVED	33	
A16	143+86	X		20	10	RESIDENTIAL	PAVED	33	
A17	145+79	X		20	10	RESIDENTIAL	PAVED	33	
A18	147+22		X	20	10	RESIDENTIAL	PAVED	33	
A19	149+07	X		20	20	RESIDENTIAL	PAVED	56	
A20	149+20		X	20	10	RESIDENTIAL	GRAVEL	33	
A21	156+56	X		24	30	RESIDENTIAL	PAVED	150	
A22	176+58	X		20	15	RESIDENTIAL	PAVED	52	
A23	187+22	X		36	30	COMMERCIAL	PAVED	168	
A24	192+00	X		24	14	RESIDENTIAL	PAVED	65	
A25	197+78	X		32	30	COMMERCIAL	PAVED	173	
A26	221+45		X	30	30	COMMERCIAL	GRAVEL	150	
A27	223+93	X		20	30	RESIDENTIAL	PAVED	108	
A28	224+51		X	26	10	RESIDENTIAL	PAVED	45	
A29	227+80	X		18	10	RESIDENTIAL	PAVED	33	
A30	229+74	X		14	10	RESIDENTIAL	PAVED	23	
A31	229+81		X	10	14	RESIDENTIAL	PAVED	33	
A32	230+79	X		20	20	RESIDENTIAL	PAVED	63	
A33	236+09		X	20	10	RESIDENTIAL	PAVED	33	
A34	236+21	X		20	10	RESIDENTIAL	PAVED	33	
A35	244+40		X	20	10	RESIDENTIAL	PAVED	33	
A36	245+68		X	14	40	RESIDENTIAL	GRAVEL	140	
A37	250+81		X	20	10	RESIDENTIAL	PAVED	33	
A38	252+67		X	20	10	RESIDENTIAL	PAVED	33	
A39	253+39	X		24	30	RESIDENTIAL	PAVED	134	
A40	254+88	X		20	10	RESIDENTIAL	PAVED	33	
A41	256+13	X		14	10	RESIDENTIAL	PAVED	27	
A42	262+49	X		12	10	RESIDENTIAL	PAVED	18	
A43	264+25		X	20	10	RESIDENTIAL	PAVED	33	
A44	264+26	X		20	10	RESIDENTIAL	GRAVEL	33	
A45	265+19	X		16	20	RESIDENTIAL	PAVED	55	
A46	265+32		X	16	20	RESIDENTIAL	PAVED	55	
A47	267+98	X		24	10	RESIDENTIAL	PAVED	39	
A48	269+29		X	14	10	RESIDENTIAL	PAVED	24	
A49	272+51		X	14	10	RESIDENTIAL	PAVED	24	
A50	273+20		X	20	30	RESIDENTIAL	GRAVEL	107	
A51	274+42	X		20	10	RESIDENTIAL	GRAVEL	33	
A52	275+46		X	20	10	RESIDENTIAL	PAVED	33	
A53	278+14	X		14	10	RESIDENTIAL	PAVED	23	
A54	278+43		X	14	10	RESIDENTIAL	PAVED	23	
A55	280+79		X	14	15	RESIDENTIAL	GRAVEL	33	
A56	283+08		X	14	10	RESIDENTIAL	PAVED	23	
A57	283+62	X		14	10	RESIDENTIAL	PAVED	23	

639.0001.000 – DRIVEWAY SUMMARY

NO.	CENTERLINE STATION	LT	RT	WIDTH (FT)	LENGTH (FT)	DRIVEWAY TYPE	EXISTING CONDITION	AREA (SQ-YD)	REMARKS
A58	285+53	X		20	10	RESIDENTIAL	PAVED	33	
A59	285+71		X	20	10	RESIDENTIAL	PAVED	33	
A60	286+79		X	20	10	RESIDENTIAL	PAVED	33	
A61	287+32	X		16	10	RESIDENTIAL	PAVED	33	
A62	290+40		X	20	10	RESIDENTIAL	PAVED	33	
A63	290+84	X		20	10	RESIDENTIAL	PAVED	33	
A64	291+58	X		14	10	RESIDENTIAL	PAVED	23	
A65	294+42	X		14	15	RESIDENTIAL	PAVED	35	
A66	295+05		X	20	10	RESIDENTIAL	PAVED	33	
A67	298+09	X		20	10	RESIDENTIAL	PAVED	33	
A68	301+94		X	28	30	COMMERCIAL	PAVED	163	
A69	302+54	X		20	10	RESIDENTIAL	PAVED	33	
A70	304+16	X		14	10	RESIDENTIAL	PAVED	22	
A71	305+39	X		20	10	RESIDENTIAL	PAVED	33	
A72	305+93		X	14	15	RESIDENTIAL	PAVED	34	
A73	307+12		X	24	50	RESIDENTIAL	PAVED	241	
A74	307+78	X		20	10	RESIDENTIAL	PAVED	33	
A75	321+61	X		14	60	RESIDENTIAL	GRAVEL	190	
A76	326+48		X	16	30	RESIDENTIAL	GRAVEL	138	
A77	332+47	X		12	50	RESIDENTIAL	PAVED	97	
A78	337+47	X		16	50	RESIDENTIAL	PAVED	137	
A79	337+72		X	24	50	RESIDENTIAL	GRAVEL	136	
A80	345+59		X	19	10	RESIDENTIAL	PAVED	33	
A81	348+90			28	30	COMMERCIAL	PAVED	305	
A82	352+62		X	14	15	RESIDENTIAL	PAVED	37	
A83	356+01	X		20	30	COMMERCIAL	PAVED	107	
A84	357+26		X	20	10	RESIDENTIAL	GRAVEL	33	
A85	358+41	X		20	10	RESIDENTIAL	PAVED	33	
A86	360+38	X		20	10	RESIDENTIAL	PAVED	33	
A87	361+28	X		20	10	RESIDENTIAL	GRAVEL	33	
A88	362+28		X	24	30	COMMERCIAL	GRAVEL	164	
A89	365+76	X		14	10	RESIDENTIAL	GRAVEL	23	
A90	366+56		X	20	10	RESIDENTIAL	PAVED	33	
A91	370+55	X		16	10	RESIDENTIAL	PAVED	31	
A92	372+97	X		20	30	COMMERCIAL	PAVED	132	
A93	374+99		X	24	30	RESIDENTIAL	PAVED	138	
A94	377+40	X		20	10	RESIDENTIAL	PAVED	33	
A95	378+91	X		20	10	RESIDENTIAL	GRAVEL	33	
A96	379+03		X	14	10	RESIDENTIAL	PAVED	23	
A97	380+48		X	20	10	RESIDENTIAL	GRAVEL	33	
A98	381+78		X	30	30	COMMERCIAL	PAVED	151	
A99	384+55	X		20	10	RESIDENTIAL	PAVED	33	
A100	385+16		X	12	30	RESIDENTIAL	GRAVEL	46	
A101	387+45		X	12	30	RESIDENTIAL	GRAVEL	46	
A102	389+33	X		20	10	RESIDENTIAL	PAVED	33	
A103	390+67		X	20	10	RESIDENTIAL	GRAVEL	33	
A104	394+49	X		34	30	COMMERCIAL	PAVED	195	
A105	394+87		X	20	30	RESIDENTIAL	PAVED	87	

DRIVEWAY SUMMARY (1 OF 2)

STATE OF ALASKA 49TH JOHN JARO NETARDUS NO. CE 124494 REGISTERED PROFESSIONAL ENGINEER

4/8/25

PLANS DEVELOPED BY: STATE OF ALASKA DEPARTMENT OF TRANSPORTATION & PUBLIC FACILITIES, NORTHERN REGION, 2301 PEGER ROAD, FAIRBANKS, AK 99709 (907)451-2200
H:\Projects\Fbks_NP\NFHWY00570 Chena Ridge and Pump Resurfacing\6 Design\5 Civil 3D\3 Drawings\00570_DRIVE_APPROACH-G1 DRIVEWAY SUMMARY (1 OF 2) Mon, Apr/07/25 04:14pm

NO.	DATE	REVISION

STATE	PROJECT DESIGNATION	YEAR	SHEET NO.	TOTAL SHEETS
ALASKA	0654015/NFHWY00570	2025	G2	G3

639.0001.000 – DRIVEWAY SUMMARY

NO.	CENTERLINE STATION	LT	RT	WIDTH (FT)	LENGTH (FT)	DRIVEWAY TYPE	EXISTING APPROACH	AREA (SQ-YD)	REMARKS
A106	410+06		X	24	30	RESIDENTIAL	PAVED	109	
A107	413+56		X	44	10	RESIDENTIAL	PAVED	33	
A108	419+67		X	20	10	RESIDENTIAL	PAVED	31	
A109	424+56		X	37	10	RESIDENTIAL	PAVED	131	
A110	447+81		X	28	30	COMMERCIAL	PAVED	137	
A111	448+65	X		20	10	RESIDENTIAL	PAVED	147	
A112	452+96		X	24	30	COMMERCIAL	PAVED	186	BIKE PATH INTERSECTION
A113	458+94	X		20	10	RESIDENTIAL	GRAVEL	33	
A114	469+33		X	20	30	RESIDENTIAL	PAVED	86	BIKE PATH INTERSECTION
A115	469+77	X		26	30	RESIDENTIAL	PAVED	191	
A116	471+68		X	16	20	RESIDENTIAL	PAVED	124	BIKE PATH INTERSECTION
A117	473+16		X	40	20	COMMERCIAL	PAVED	153	BIKE PATH INTERSECTION
A118	482+35		X	42	15	RESIDENTIAL	PAVED	99	
A119	483+66	X		32	20	RESIDENTIAL	PAVED	111	
A120	497+36		X	28	70	RESIDENTIAL	PAVED	369	BIKE PATH INTERSECTION
A121	500+96	X		19	10	RESIDENTIAL	GRAVEL	32	
A122	503+46		X	24	30	COMMERCIAL	PAVED	183	BIKE PATH INTERSECTION
A123	508+36	X		30	30	COMMERCIAL	PAVED	146	
A124	518+12	X		26	30	RESIDENTIAL	PAVED	146	
A125	518+23		X	22	20	RESIDENTIAL	PAVED	156	BIKE PATH INTERSECTION
A126	525+32		X	12	30	RESIDENTIAL	PAVED	169	BIKE PATH INTERSECTION
A127	542+20		X	24	30	RESIDENTIAL	PAVED	323	BIKE PATH INTERSECTION
A128	542+22	X		26	24	RESIDENTIAL	PAVED	121	BIKE PATH INTERSECTION
A129	546+77		X	30	15	RESIDENTIAL	PAVED	97	BIKE PATH INTERSECTION
A130	552+91		X	30	15	COMMERCIAL	PAVED	97	BIKE PATH INTERSECTION
A131	558+59		X	24	30	RESIDENTIAL	PAVED	303	BIKE PATH INTERSECTION
A132	558+61	X		26	30	RESIDENTIAL	PAVED	156	
A133	644+85	X		24	30	RESIDENTIAL	PAVED	156	
A134	650+83		X	38'	36	COMMERCIAL	PAVED	348	BIKE PATH INTERSECTION
A135	667+33		X	36	41	COMMERCIAL	PAVED	337	BIKE PATH INTERSECTION
A136	677+74		X	30	36	RESIDENTIAL	PAVED	193	BIKE PATH INTERSECTION
A137	681+58		X	48	60	COMMERCIAL	PAVED	439	
A138	686+28		X	39	30	COMMERCIAL	PAVED	198	
A139	686+28	X		38	30	COMMERCIAL	PAVED	194	
A140	709+16		X	12	42	COMMERCIAL	PAVED	185	BIKE PATH INTERSECTION

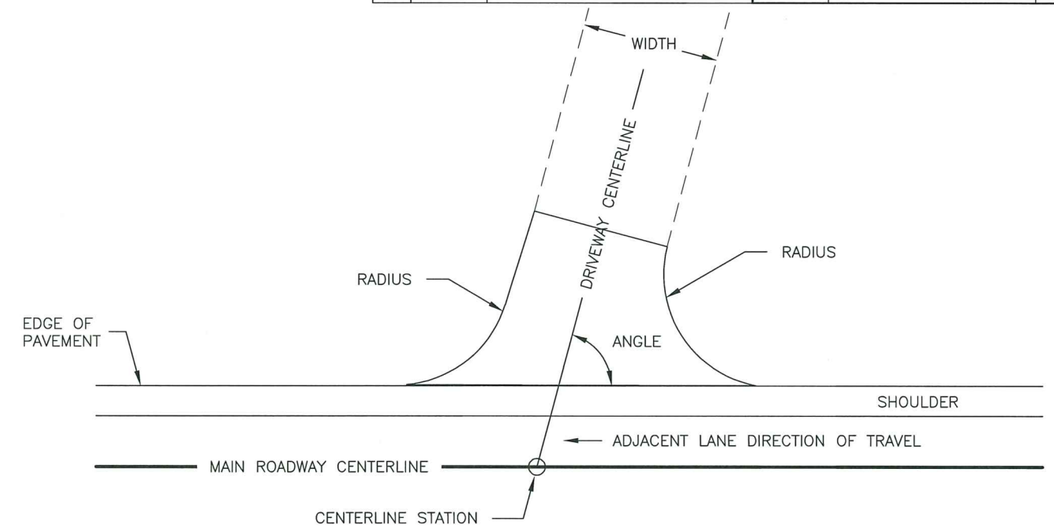

APPROACH PLAN VIEW DETAIL
NTS

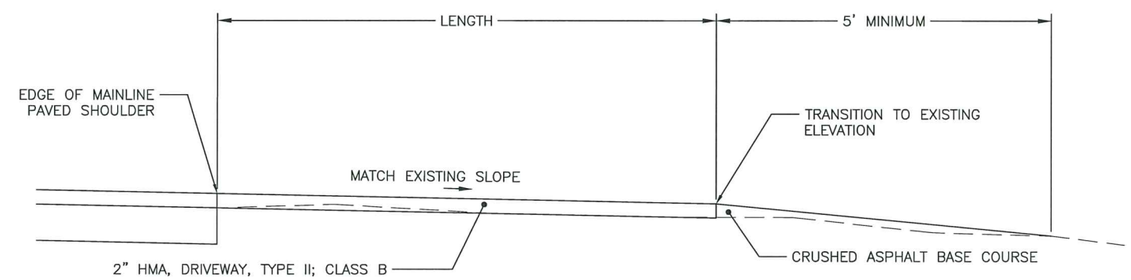

APPROACH CENTERLINE SECTION DETAIL 1
TIE INTO EXISTING UNPAVED ROAD/DRIVEWAY

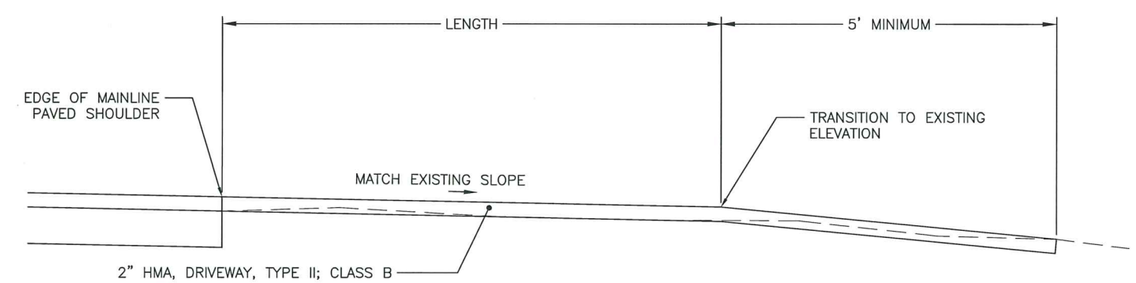

APPROACH CENTERLINE SECTION DETAIL 2
TIE INTO EXISTING PAVEMENT

DRIVEWAY NOTES:

1. THE TERMS "DRIVEWAY" AND "APPROACH" ARE USED INTERCHANGEABLY.
2. DO NOT FILL OUTSIDE THE EXISTING TOE OF SLOPE. IF DRIVEWAY DIMENSIONS CANNOT BE INSTALLED AS DESCRIBED IN THE PLANS, MATCH EXISTING GEOMETRY. LIMITS OF PAVING SHALL BE APPROVED BY ENGINEER PRIOR TO PAVING.
3. REMOVE EXISTING PAVED APPROACHES. WORK WILL BE PAID FOR UNDER 202.0002.0000.
4. CENTER APPROACHES ON EXISTING EMBANKMENT.
5. DRIVEWAY WIDTHS, LENGTHS, AND RADII MAY BE ADJUSTED TO MATCH EXISTING CONDITIONS, AS DIRECTED BY THE ENGINEER.
6. MATCH EXISTING PATH GEOMETRY THROUGH ALL BIKE PATH INTERSECTIONS.

STATE OF ALASKA 49TH
JOHN JARO NETARDUS
NO. CE 124494
REGISTERED PROFESSIONAL ENGINEER
4/7/25

DRIVEWAY SUMMARY (2 OF 2)

PLANS DEVELOPED BY: STATE OF ALASKA DEPARTMENT OF TRANSPORTATION & PUBLIC FACILITIES, NORTHERN REGION, 2301 PEGER ROAD, FAIRBANKS, AK 99709 (907)451-2200
H:\Projects\Fbks_NP\nfhwy00570 chena ridge and pump resurfacing\6 Design\5 civil 3d\3 Drawings\00570_DRIVE_APPROACH-G2 DRIVEWAY SUMMARY (2 OF 2) Fri, Apr/04/25 08:06pm

NO.	DATE	REVISION

STATE	PROJECT DESIGNATION	YEAR	SHEET NO.	TOTAL SHEETS
ALASKA	0654015/NFHWY00570	2025	G3	G3

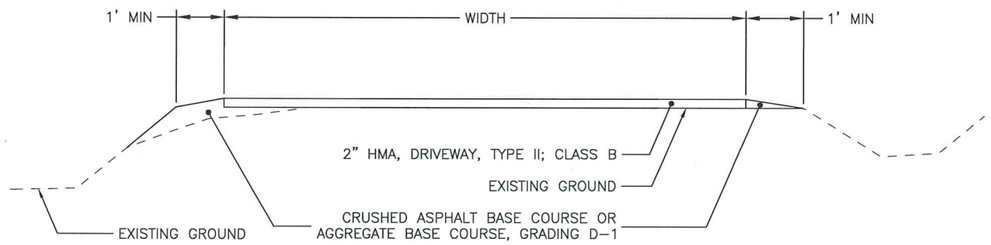

DRVIEWAY CROSS-SECTION DETAIL
NTS

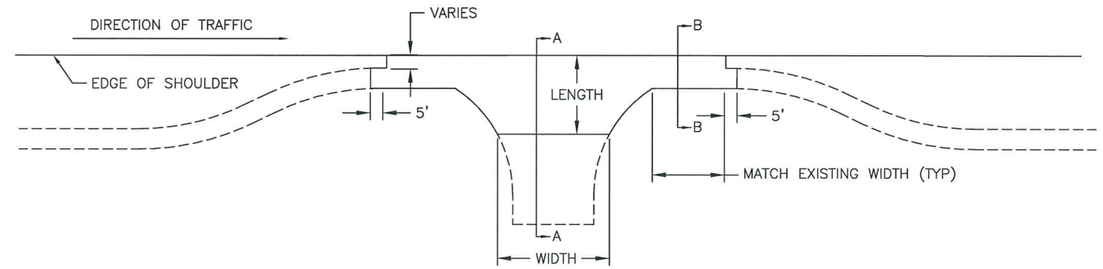

BIKE PATH INTERSECTION PLAN VIEW DETAIL
NTS

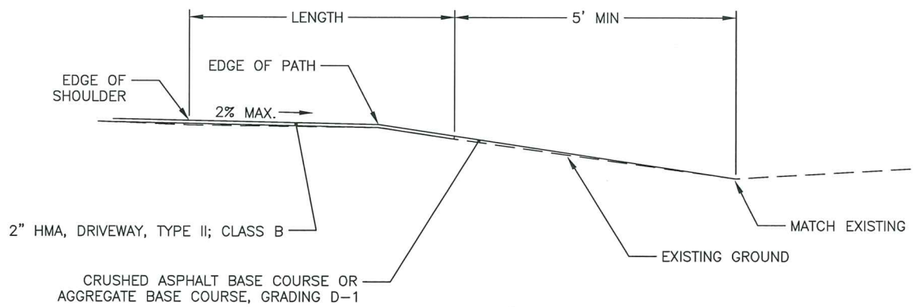

PATH INTERSECTION DETAIL A-A'
UNPAVED TRANSITION

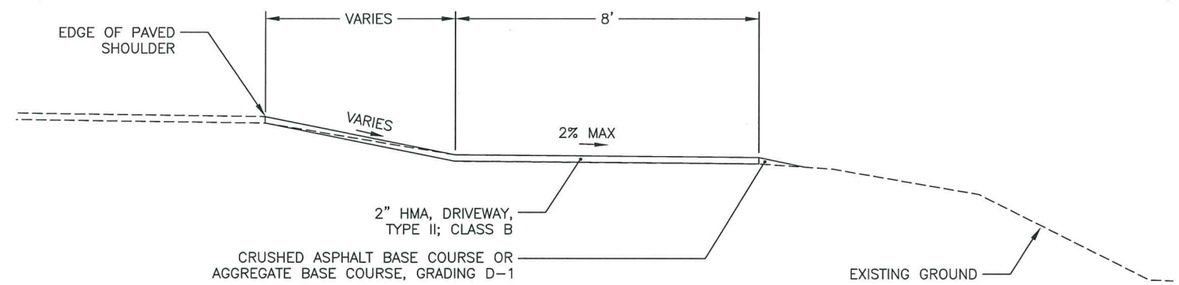

BIKE PATH INTERSECTION DETAIL B-B'
NTS

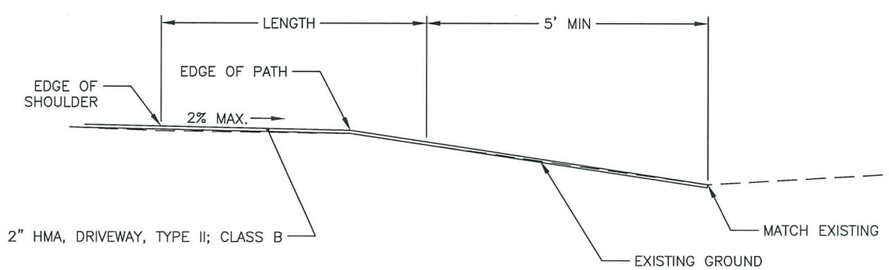

PATH INTERSECTION DETAIL A-A'
PAVED TRANSITION

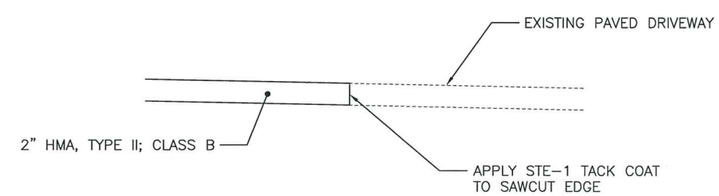

PAVEMENT MATCH DETAIL
NTS

DRIVEWAY DETAILS

STATE OF ALASKA
49TH
JOHN JARO NETARDUS
NO. CE 124494
REGISTERED PROFESSIONAL ENGINEER
4/7/25

PLANS DEVELOPED BY: STATE OF ALASKA DEPARTMENT OF TRANSPORTATION & PUBLIC FACILITIES, NORTHERN REGION, 2301 PEGER ROAD, FAIRBANKS, AK 99709 (907)451-2200
H:\Projects\Fbks_NP\nfhwy00570 chena ridge and pump resurfacing\6 Design\5 civil 3d\3 Drawings\00570_DRIVE_APPROACH-G3 DRIVEWAY DETAILS Fri, Apr/04/25 08:07pm

NO.	DATE	REVISION

STATE	PROJECT DESIGNATION	YEAR	SHEET NO.	TOTAL SHEETS
ALASKA	0654015/NFHWY00570	2025	H1	H24

PLAN VIEW KEY

4"W	4" WHITE LINE	4"DY/S	4" DOUBLE YELLOW SOLID LINE AND SKIP LINE (10' STRIPE AND 30' SKIP PATTERN)
8"W	8" WHITE LINE	4"YS	4" YELLOW SKIP LINE (10' STRIPE AND 30' SKIP PATTERN)
24"W	24" WHITE LINE	4"WS	4" WHITE SKIP LINE (10' STRIPE/ 30' SKIP PATTERN)
4"Y	4" YELLOW LINE	4"WD	4" WHITE DOTTED LINE (2' STRIPE/6' SKIP PATTERN)
4"DY	4" DOUBLE YELLOW LINE	8"WD	8" WHITE DOTTED LINE (2' STRIPE/4' SKIP PATTERN)
ASP	ALASKA STANDARD PLAN		

(#) STATION / SIGN CODE(S) — SIGN LOCATION #

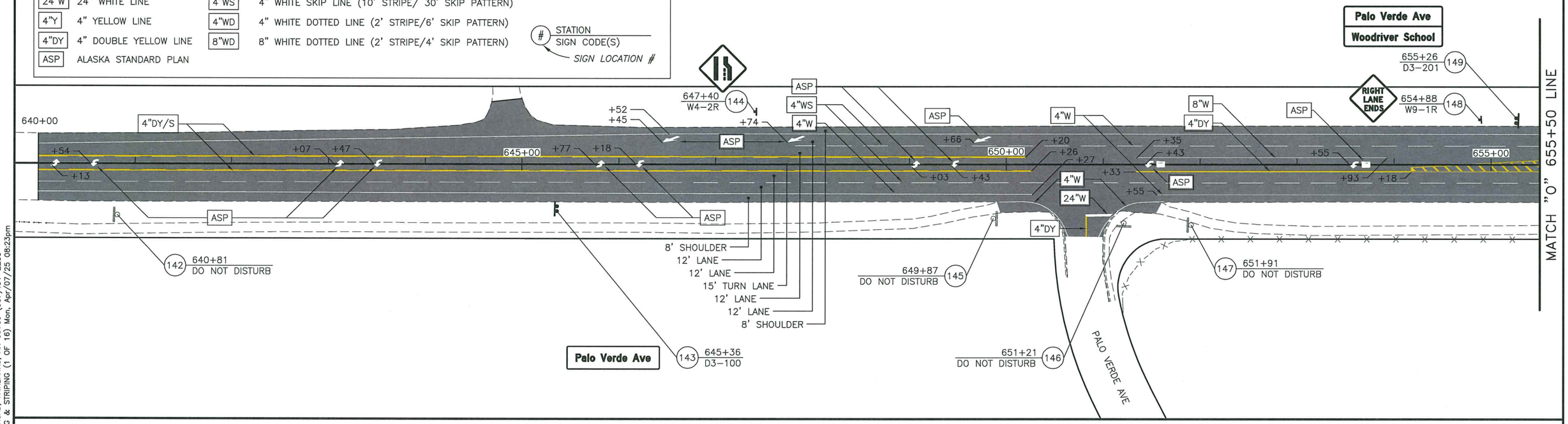

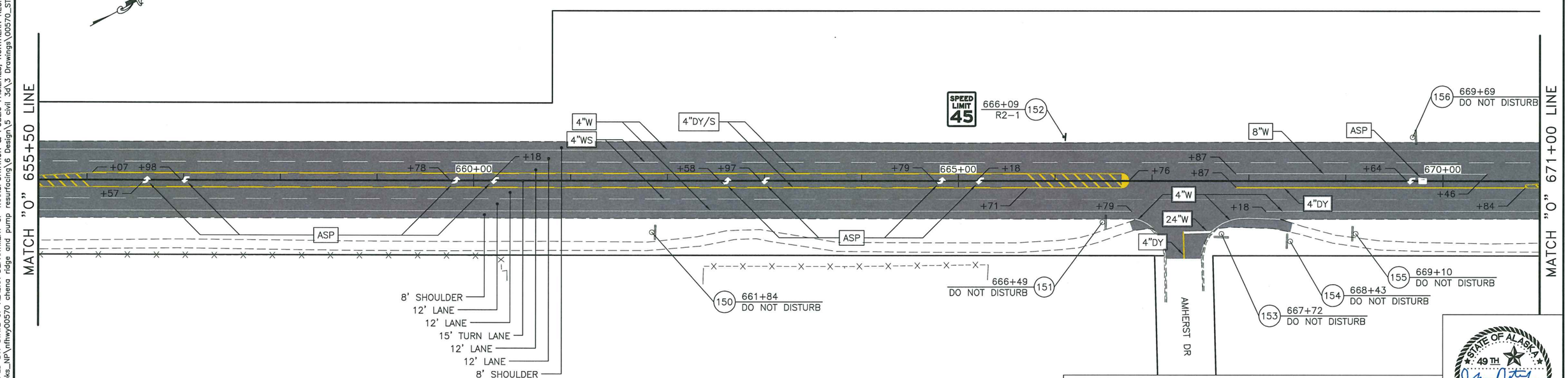

SIGNING & STRIPING (1 OF 16)

STATE OF ALASKA 49TH JOHN JARO NETARDUS NO. CE 124494 REGISTERED PROFESSIONAL ENGINEER 9/8/25

PLANS DEVELOPED BY: STATE OF ALASKA DEPARTMENT OF TRANSPORTATION & PUBLIC FACILITIES, NORTHERN REGION, 2301 PEGER ROAD, FAIRBANKS, AK 99709 (907)451-2200
H:\Projects\Fbks_NP\nfhwy00570 chena ridge and pump resurfacing\6 Design\5 civil 3d\3 Drawings\00570_STRIPING-H1 SIGNING & STRIPING (1 OF 16) Mon, Apr/07/25 08:23pm

ADDENDUM NO. 1, ATTACHMENT NO. 18

NO.	DATE	REVISION
1	06/10/25	ADDENDUM #1

STATE	PROJECT DESIGNATION	YEAR	SHEET NO.	TOTAL SHEETS
ALASKA	0654015/NFHWY00570	2025	H2	H25

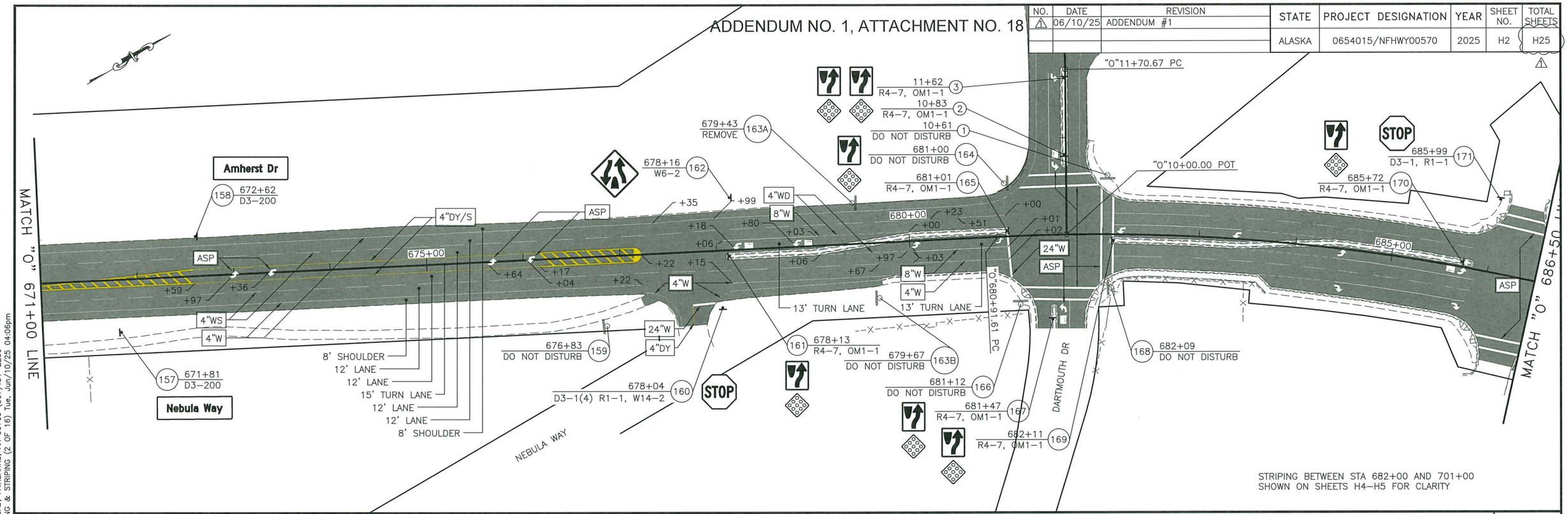

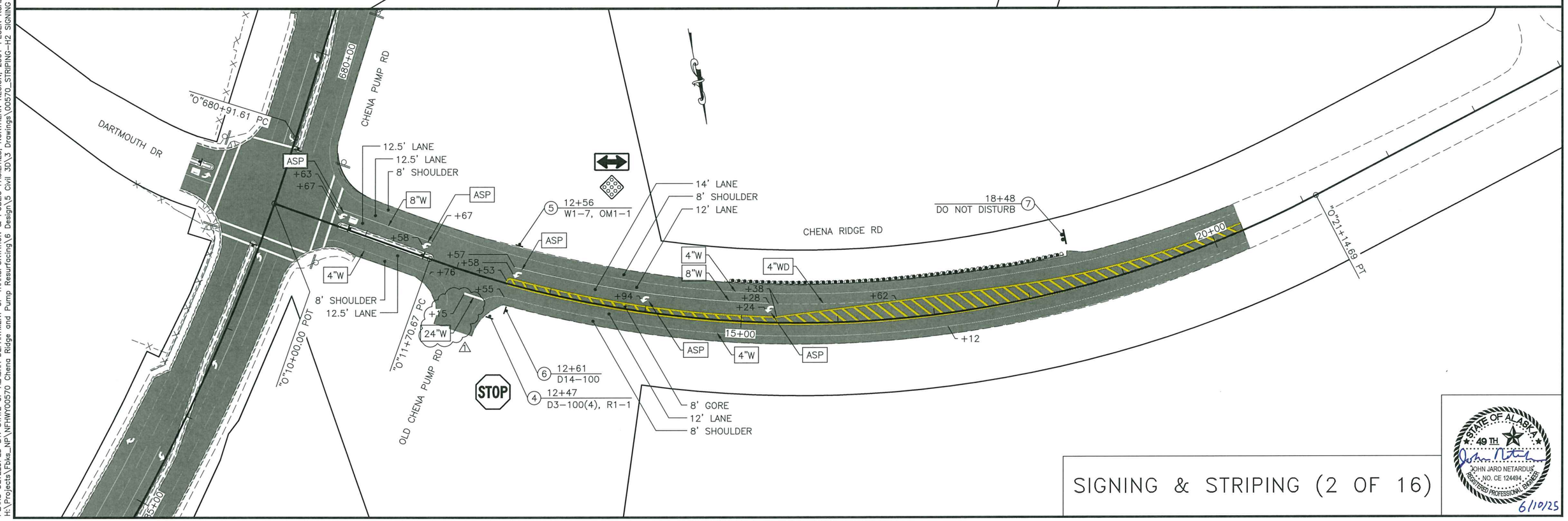

SIGNING & STRIPING (2 OF 16)

STATE OF ALASKA 49TH JOHN JARO NETARDUS NO. CE 124494 REGISTERED PROFESSIONAL ENGINEER

6/10/25

PLANS DEVELOPED BY: STATE OF ALASKA DEPARTMENT OF TRANSPORTATION & PUBLIC FACILITIES, NORTHERN REGION, 2301 PEGER ROAD, FAIRBANKS, AK 99709 (907)451-2200
H:\Projects\Pbks_NP\NFHWY00570 Chena Ridge and Pump Resurfacing\6 Design\5 Civil 3D\3 Drawings\00570_STRIPING-H2 SIGNING & STRIPING (2 OF 16) Tue, Jun/10/25 04:06pm

ADDENDUM NO. 1, ATTACHMENT NO. 19

NO.	DATE	REVISION
1	06/10/25	ADDENDUM #1

STATE	PROJECT DESIGNATION	YEAR	SHEET NO.	TOTAL SHEETS
ALASKA	0654015/NFHWY00570	2025	H3	H25

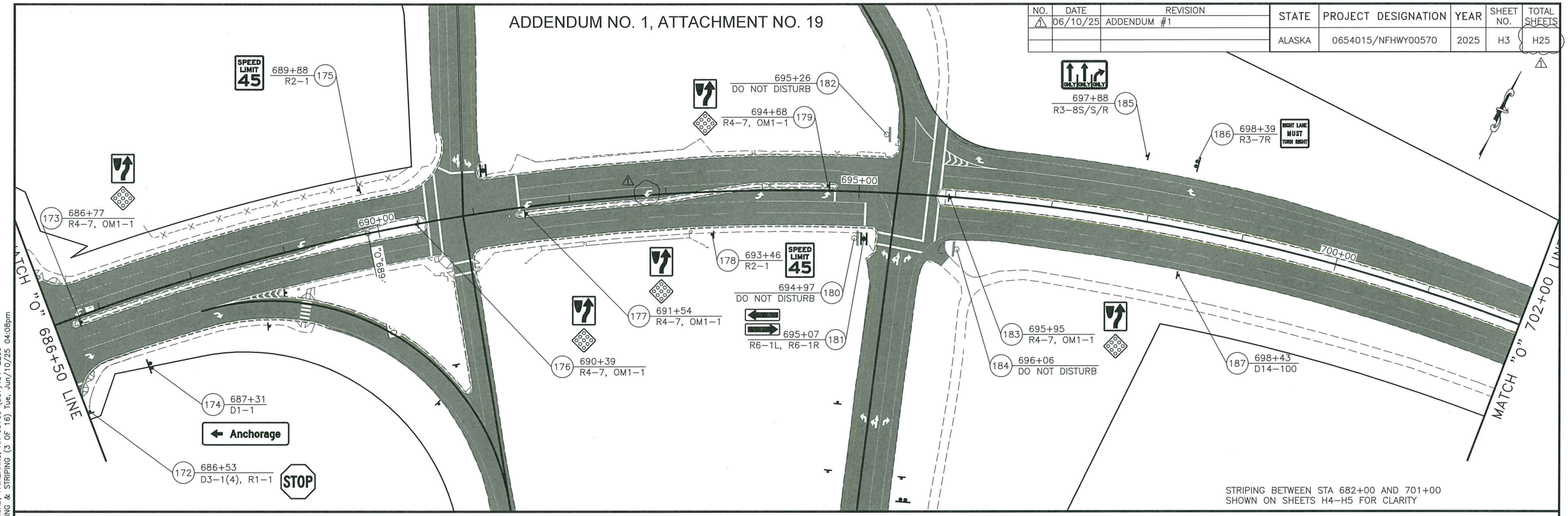

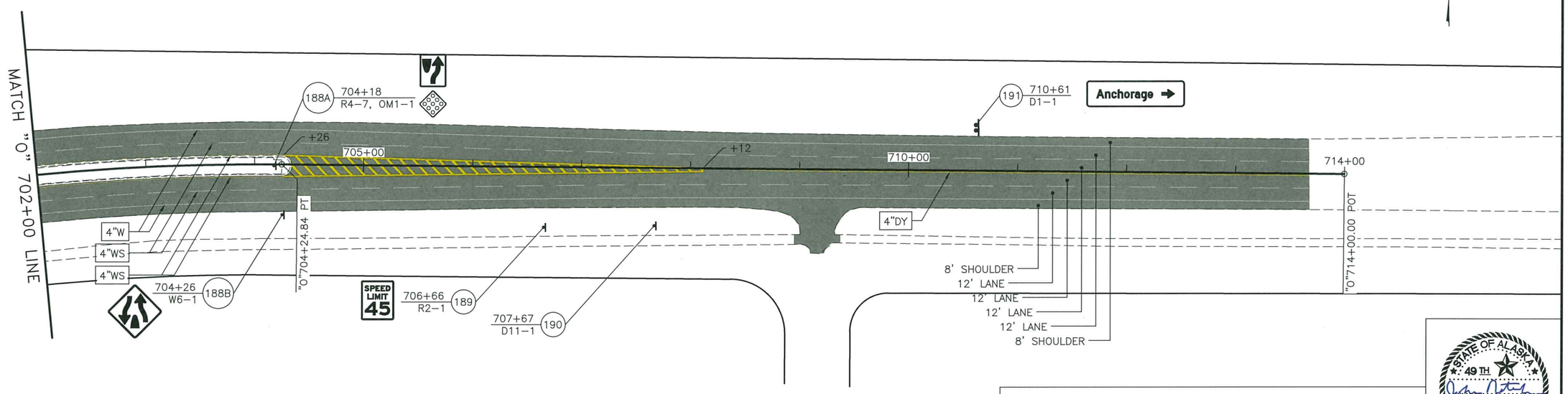

SIGNING & STRIPING (3 OF 16)

STATE OF ALASKA 49TH JOHN JARO NETARDUS NO. CE 124494 REGISTERED PROFESSIONAL ENGINEER 6/10/25

PLANS DEVELOPED BY: STATE OF ALASKA DEPARTMENT OF TRANSPORTATION & PUBLIC FACILITIES, NORTHERN REGION, 2301 PEGER ROAD, FAIRBANKS, AK 99709 (907)451-2200
H:\Projects\Fbks_NP\NFHWY00570 Chena Ridge and Pump Resurfacing\6 Design\5 Civil 3D\3 Drawings\00570_STRIPING-H3 SIGNING & STRIPING (3 OF 16) Tue, Jun/10/25 04:08pm

NO.	DATE	REVISION

STATE	PROJECT DESIGNATION	YEAR	SHEET NO.	TOTAL SHEETS
ALASKA	0654015/NFHWY00570	2025	H4	H24

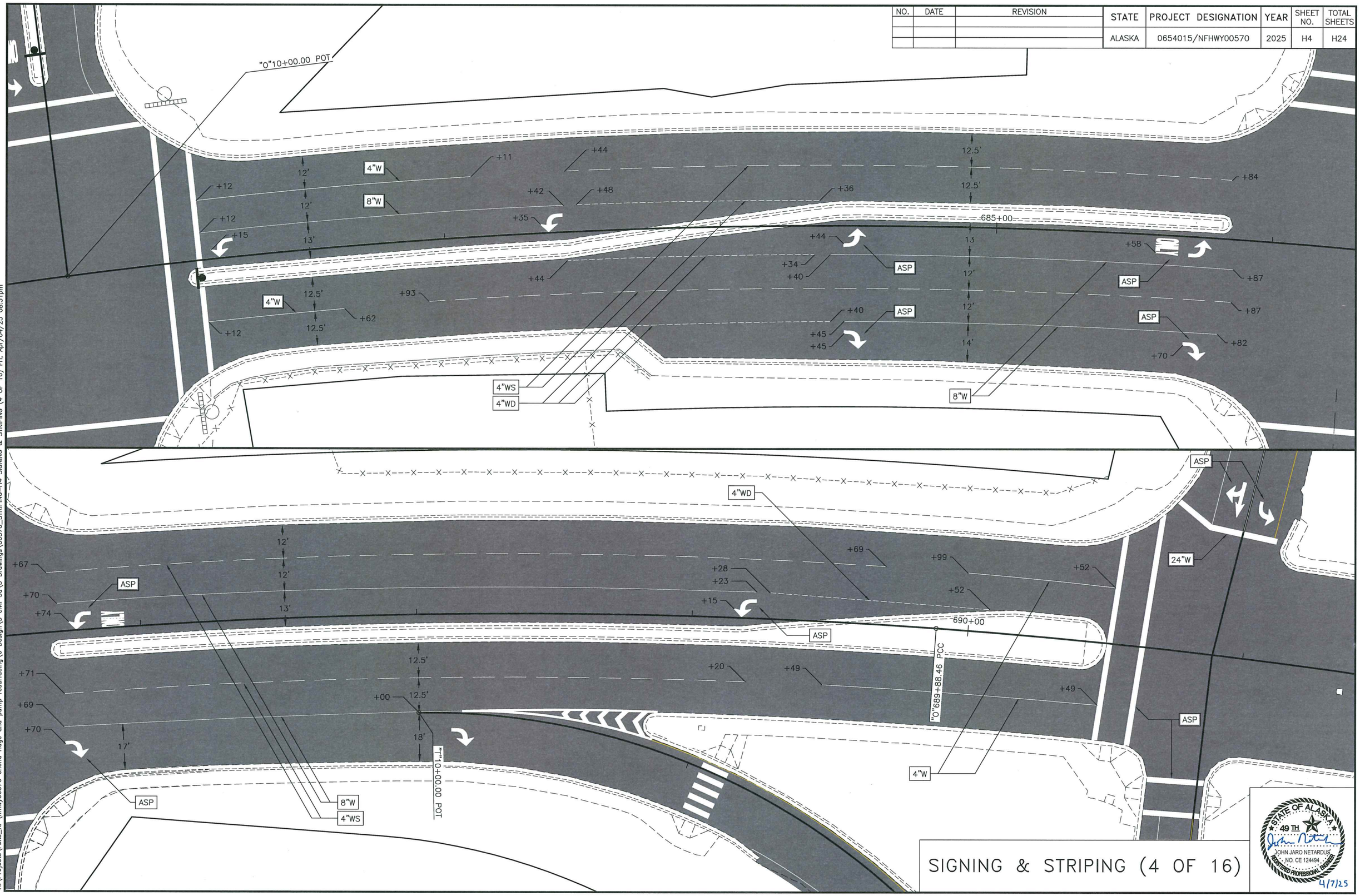

PLANS DEVELOPED BY: STATE OF ALASKA DEPARTMENT OF TRANSPORTATION & PUBLIC FACILITIES, NORTHERN REGION, 2301 PEGER ROAD, FAIRBANKS, AK 99709 (907)451-2200
H:\Projects\Fbks_NR\nfhwy00570 cheng ridge and pump resurfacing\6 Design\5 civil 3d\3 Drawings\00570_STRIPING-H4 SIGNING & STRIPING (4 OF 16) Fri, Apr/04/25 08:31pm

SIGNING & STRIPING (4 OF 16)

STATE OF ALASKA
49TH
JOHN JARO NETARDUS
NO. CE 124494
REGISTERED PROFESSIONAL ENGINEER
4/7/25

ADDENDUM NO. 1, ATTACHMENT NO. 20

NO.	DATE	REVISION
1	06/10/25	ADDENDUM #1

STATE	PROJECT DESIGNATION	YEAR	SHEET NO.	TOTAL SHEETS
ALASKA	0654015/NFHWY00570	2025	H5	H25

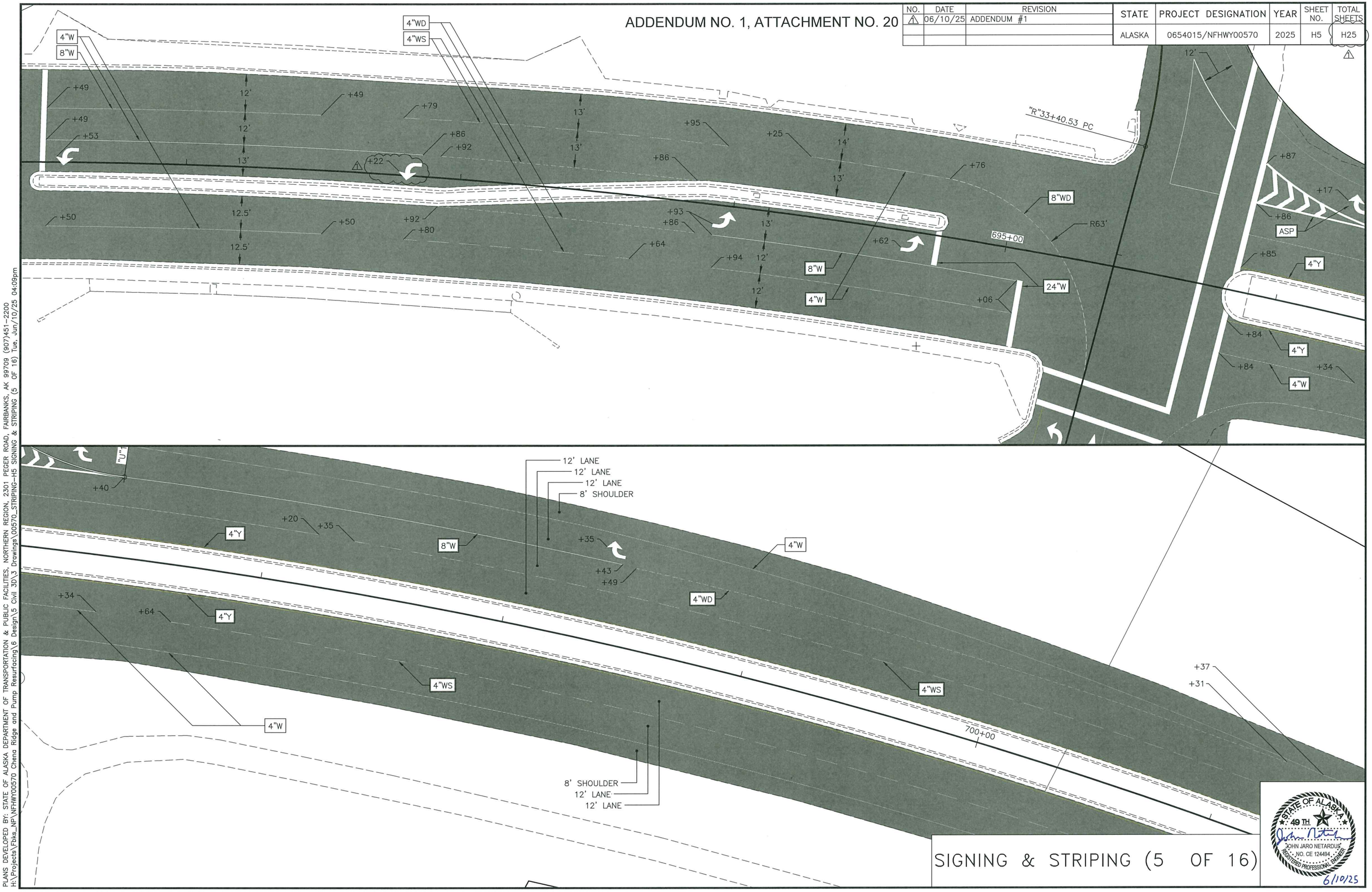

SIGNING & STRIPING (5 OF 16)

STATE OF ALASKA
49TH
JOHN JARO NETARDUS
NO. CE 124494
REGISTERED PROFESSIONAL ENGINEER
6/10/25

PLANS DEVELOPED BY: STATE OF ALASKA DEPARTMENT OF TRANSPORTATION & PUBLIC FACILITIES, NORTHERN REGION, 2301 PEGER ROAD, FAIRBANKS, AK 99709 (907)451-2200
H:\Projects\Fbks_NP\NFHWY00570 Chena Ridge and Pump Resurfacing\6 Design\5 Civil 3D\3 Drawings\00570_STRIPING-H5 SIGNING & STRIPING (5 OF 16) Tue, Jun/10/25 04:09pm

NO.	DATE	REVISION

STATE	PROJECT DESIGNATION	YEAR	SHEET NO.	TOTAL SHEETS
ALASKA	0654015/NFHWY00570	2025	H6	H24

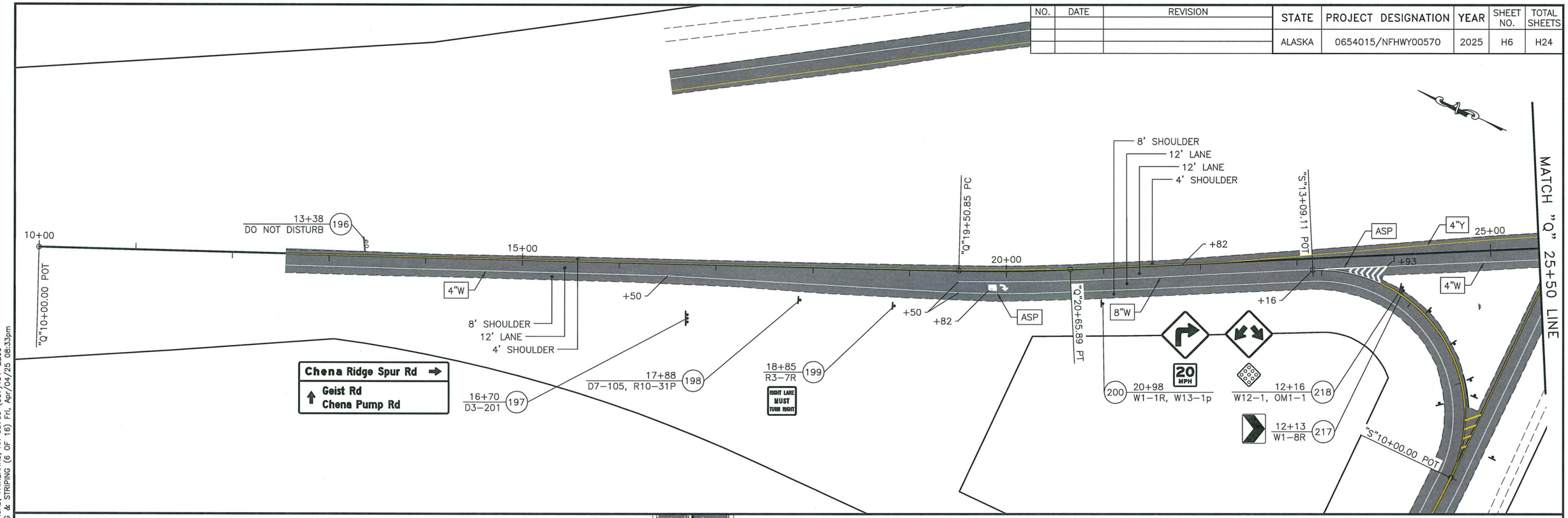

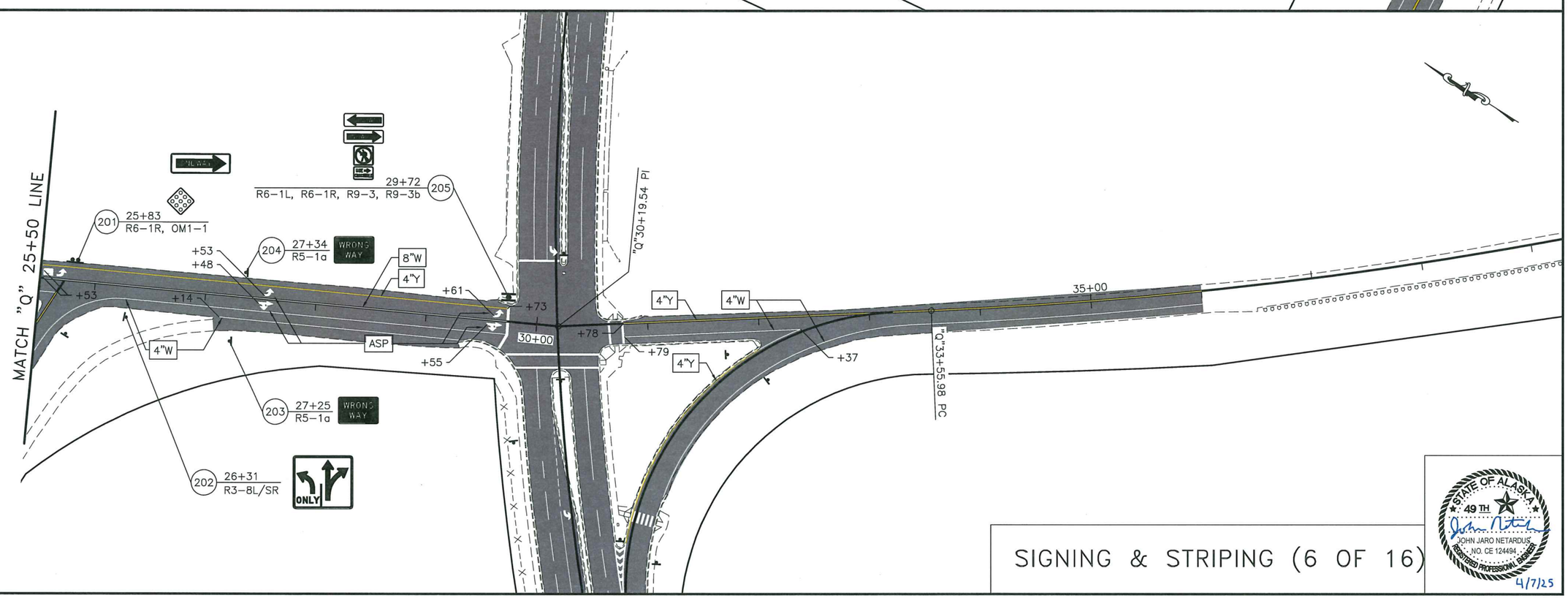

SIGNING & STRIPING (6 OF 16)

STATE OF ALASKA
49TH
JOHN JARO NETARDUS
NO. CE 124494
REGISTERED PROFESSIONAL ENGINEER
4/7/25

PLANS DEVELOPED BY: STATE OF ALASKA DEPARTMENT OF TRANSPORTATION & PUBLIC FACILITIES, NORTHERN REGION, 2301 PEGER ROAD, FAIRBANKS, AK 99709 (907)451-2200
H:\Projects\Fbks_NP\nfhwy00570 chena ridge and pump resurfacing\6 Design\5 civil 3d\3 Drawings\00570_STRIPING-H6 SIGNING & STRIPING (6 OF 16) Fri, Apr/04/25 08:33pm

NO.	DATE	REVISION

STATE	PROJECT DESIGNATION	YEAR	SHEET NO.	TOTAL SHEETS
ALASKA	0654015/NFHWY00570	2025	H7	H24

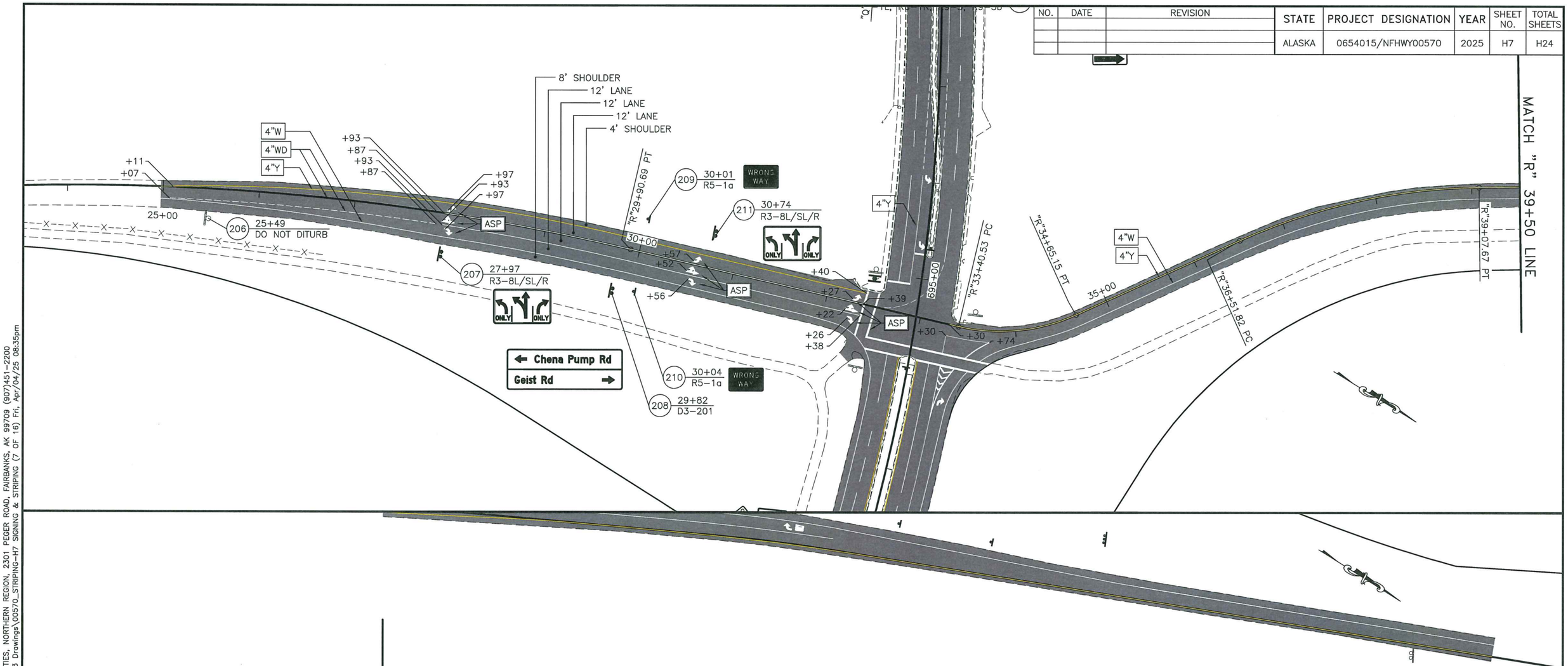

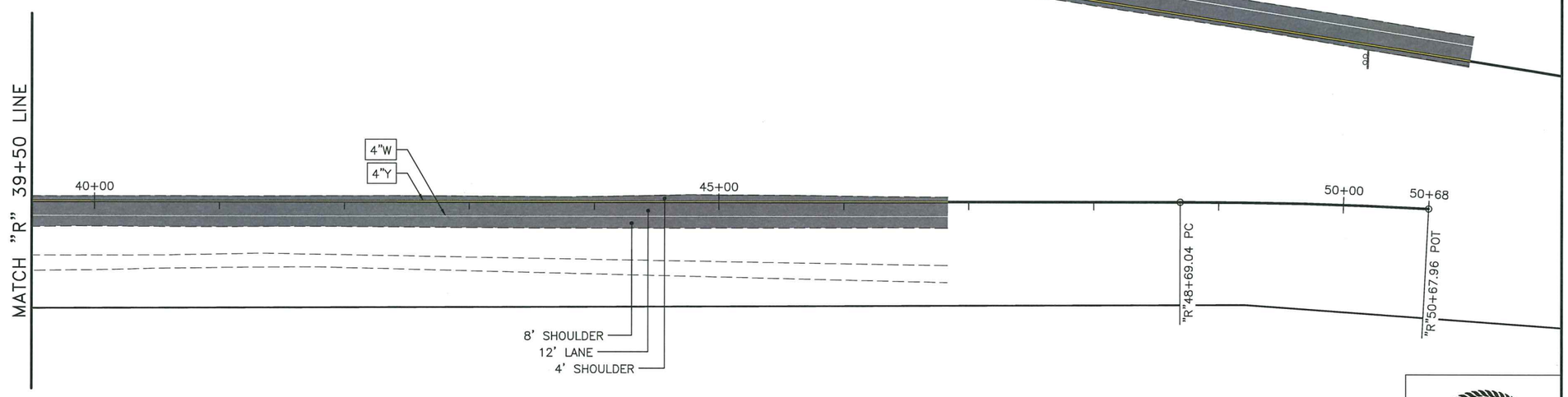

SIGNING & STRIPING (7 OF 16)

STATE OF ALASKA
49 TH
JOHN JARO NETARDUS
NO. CE 124494
REGISTERED PROFESSIONAL ENGINEER
4/7/25

PLANS DEVELOPED BY: STATE OF ALASKA DEPARTMENT OF TRANSPORTATION & PUBLIC FACILITIES, NORTHERN REGION, 2301 PEGER ROAD, FAIRBANKS, AK 99709 (907)451-2200
H:\Projects\Fbks_NP\nfhwy00570 chena ridge and pump resurfacing\6 Design\5 civil 3d\3 Drawings\00570_STRIPING-H7 SIGNING & STRIPING (7 OF 16) Fri, Apr/04/25 08:35pm

NO.	DATE	REVISION
1	06/10/25	ADDENDUM #1

STATE	PROJECT DESIGNATION	YEAR	SHEET NO.	TOTAL SHEETS
ALASKA	0654015/NFHWY00570	2025	H8	H25

ADDENDUM NO. 1, ATTACHMENT NO. 21

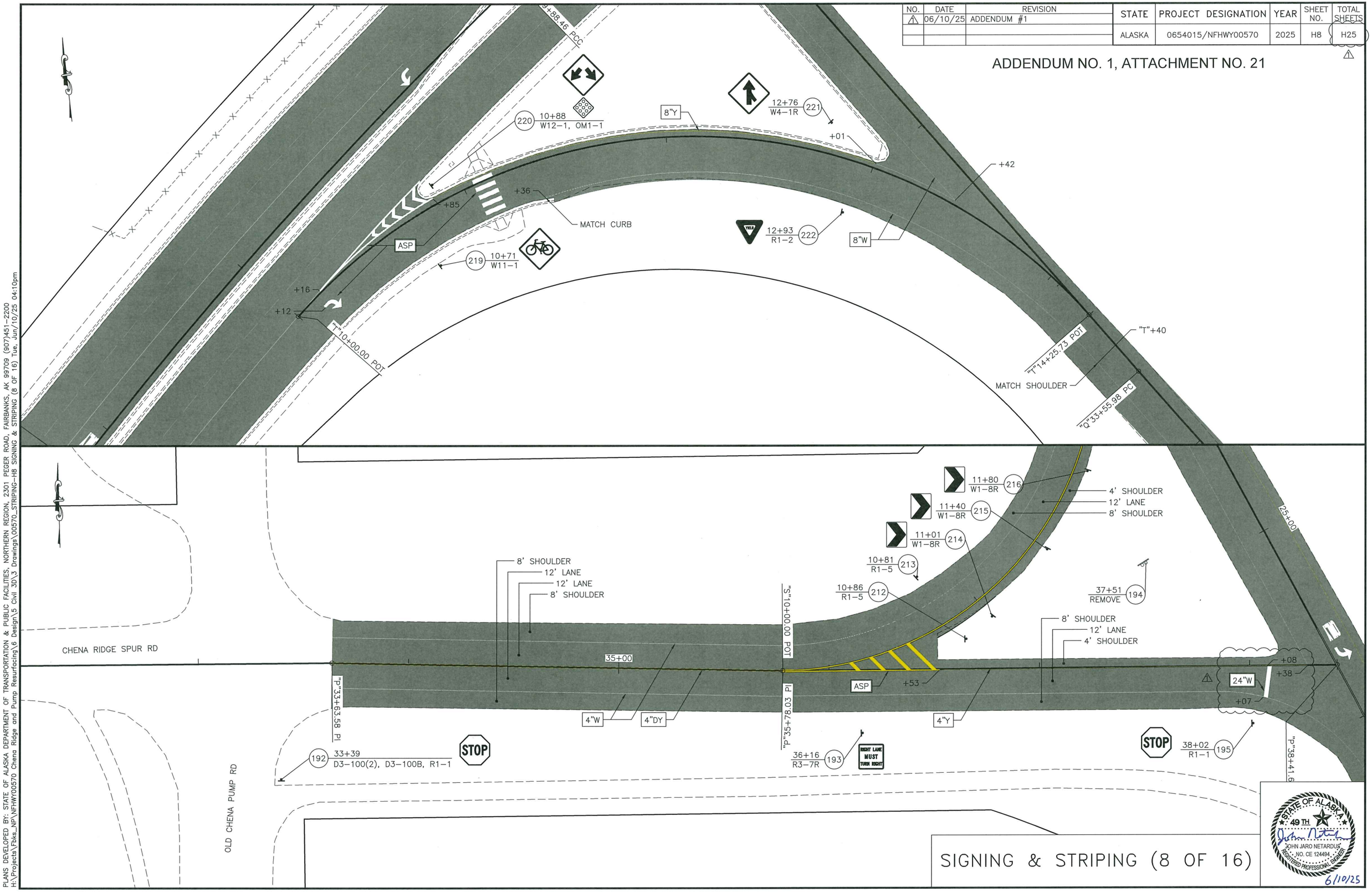

SIGNING & STRIPING (8 OF 16)

STATE OF ALASKA 49TH JOHN JARO NETARDUS NO. CE 124494 REGISTERED PROFESSIONAL ENGINEER

6/10/25

PLANS DEVELOPED BY: STATE OF ALASKA DEPARTMENT OF TRANSPORTATION & PUBLIC FACILITIES, NORTHERN REGION, 2301 PEGER ROAD, FAIRBANKS, AK 99709 (907)451-2200
H:\Projects\Pbks_NP\NFHWY00570 Chena Ridge and Pump Resurfacing\6 Design\5 Civil 3D\3 Drawings\00570_STRIPING-H8 SIGNING & STRIPING (8 OF 16) Tue, Jun/10/25 04:10pm

NO.	DATE	REVISION

STATE	PROJECT DESIGNATION	YEAR	SHEET NO.	TOTAL SHEETS
ALASKA	0654015/NFHWY00570	2025	H9	H24

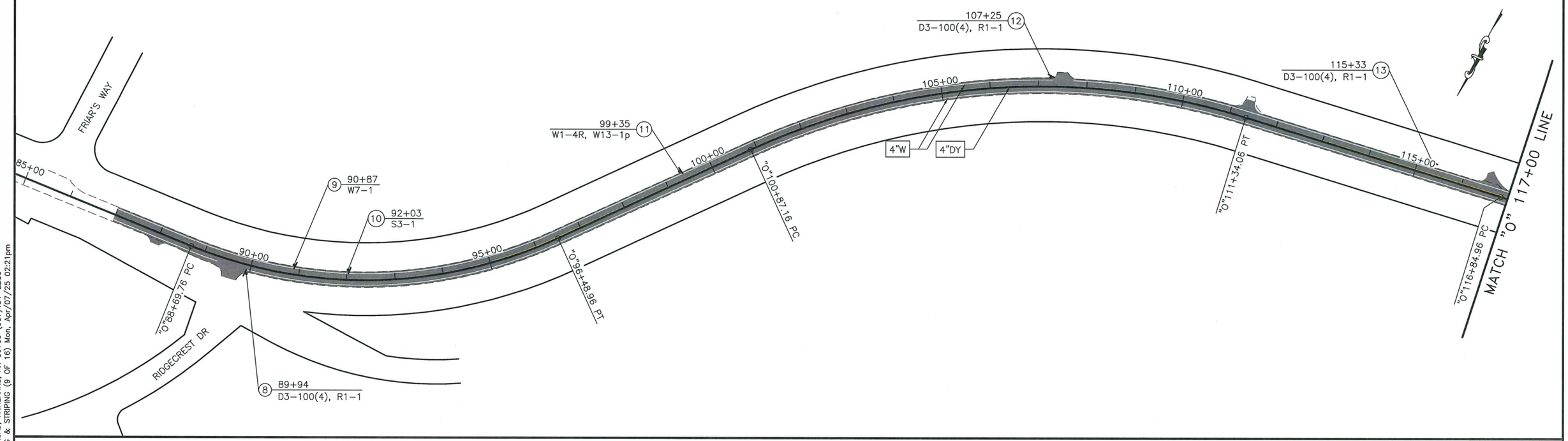

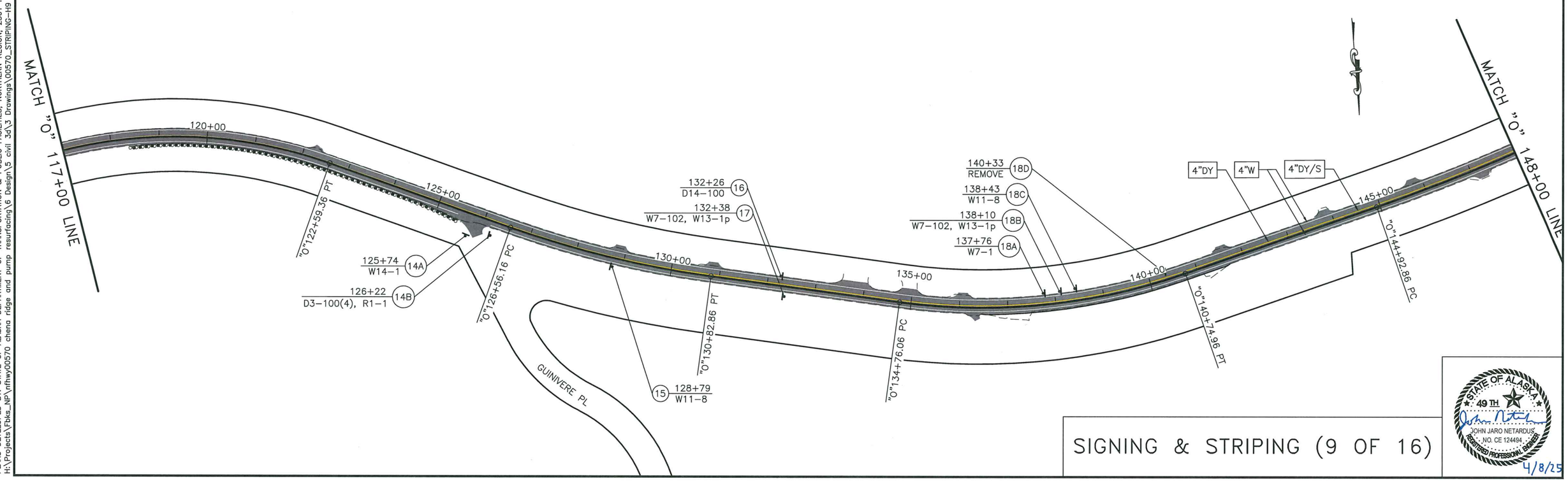

SIGNING & STRIPING (9 OF 16)

STATE OF ALASKA 49TH
JOHN JARO NETARDUS
NO. CE 124494
REGISTERED PROFESSIONAL ENGINEER
4/8/25

PLANS DEVELOPED BY: STATE OF ALASKA DEPARTMENT OF TRANSPORTATION & PUBLIC FACILITIES, NORTHERN REGION, 2301 PEGER ROAD, FAIRBANKS, AK 99709 (907)451-2200
H:\Projects\Fbks_NP\nfhwy00570 chena ridge and pump resurfacing\6 Design\5 civil 3d\3 Drawings\00570_STRIPING-H9 SIGNING & STRIPING (9 OF 16) Mon, Apr/07/25 02:21pm

NO.	DATE	REVISION

STATE	PROJECT DESIGNATION	YEAR	SHEET NO.	TOTAL SHEETS
ALASKA	0654015/NFHWY00570	2025	H10	H24

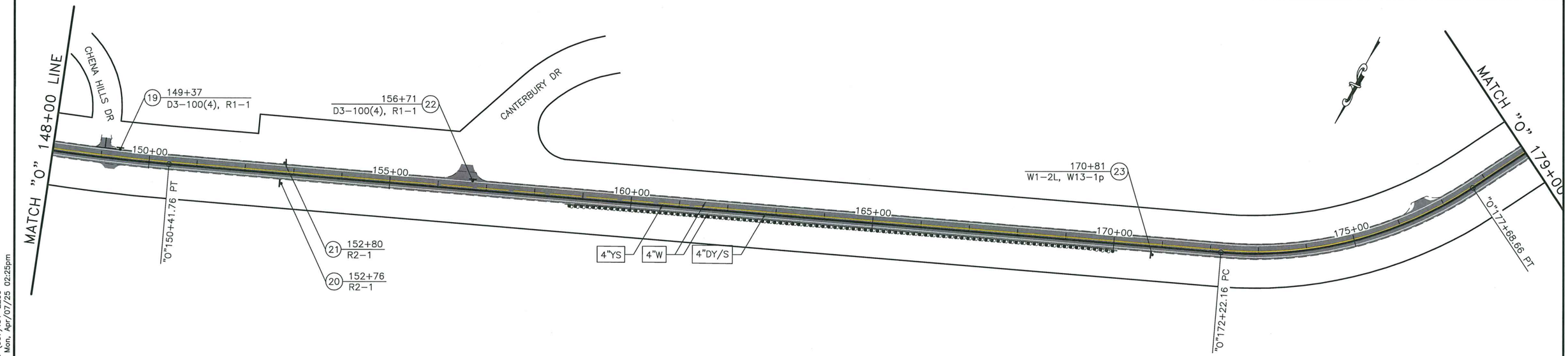

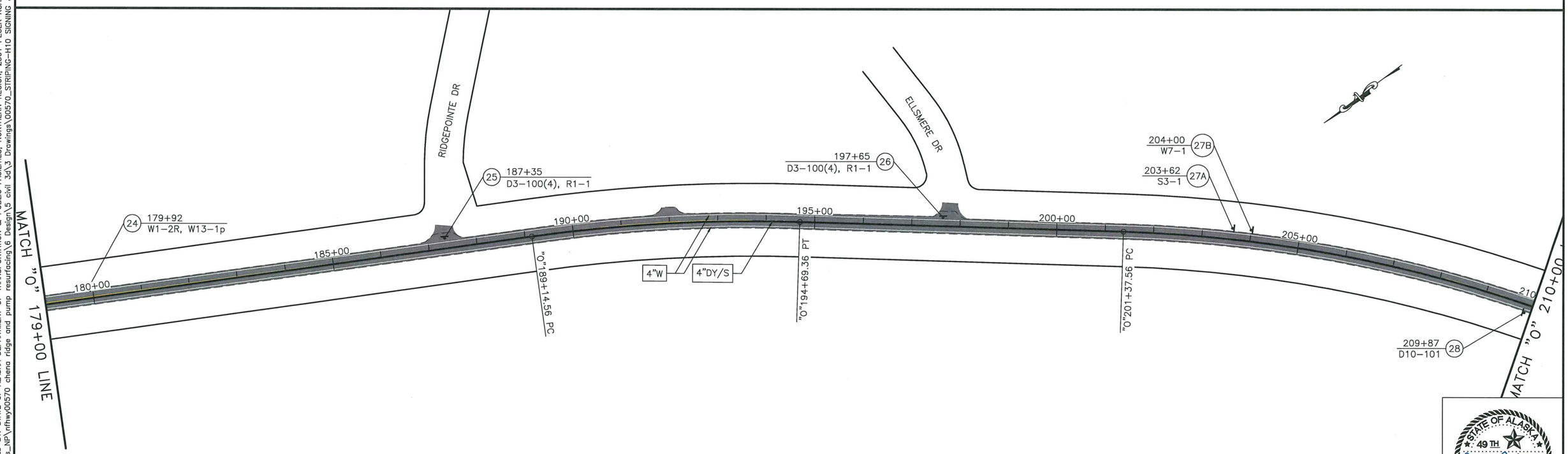

SIGNING & STRIPING (10 OF 16)

STATE OF ALASKA 49TH JOHN NETARDUS NO. CE 124494 REGISTERED PROFESSIONAL ENGINEER 4/8/25

PLANS DEVELOPED BY: STATE OF ALASKA DEPARTMENT OF TRANSPORTATION & PUBLIC FACILITIES, NORTHERN REGION, 2301 PEGER ROAD, FAIRBANKS, AK 99709 (907)451-2200
H:\Projects\Fbks_NP\nfhwy00570 chena ridge and pump resurfacing\6 Design\5 civil 3d\3 Drawings\00570_STRIPING-H10 SIGNING & STRIPING (10 OF 16) Mon, Apr/07/25 02:25pm

NO.	DATE	REVISION

STATE	PROJECT DESIGNATION	YEAR	SHEET NO.	TOTAL SHEETS
ALASKA	0654015/NFHWY00570	2025	H11	H24

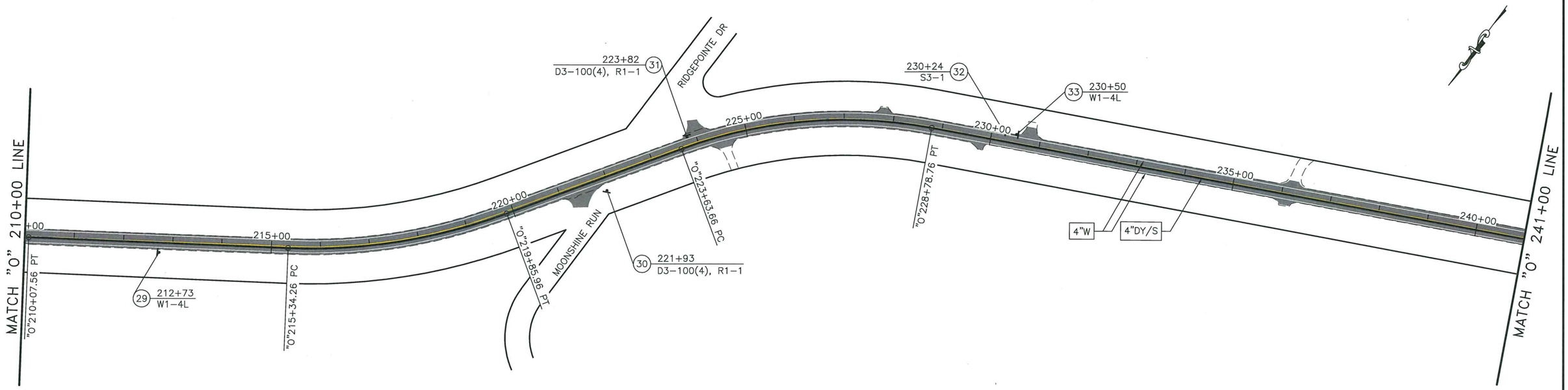

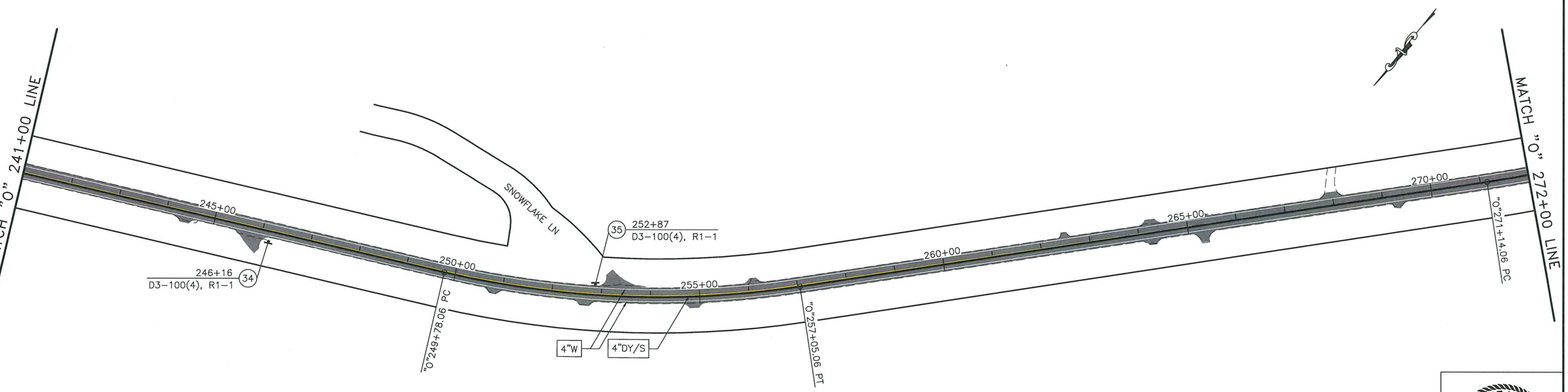

SIGNING & STRIPING (11 OF 16)

STATE OF ALASKA
49TH
JOHN JARO NETARDUS
NO. CE 124494
REGISTERED PROFESSIONAL ENGINEER
4/8/25

PLANS DEVELOPED BY: STATE OF ALASKA DEPARTMENT OF TRANSPORTATION & PUBLIC FACILITIES, NORTHERN REGION, 2301 PEGER ROAD, FAIRBANKS, AK 99709 (907)451-2200
H:\Projects\Fbks_NP\nfhwy00570 chena ridge and pump resurfacing\6 Design\5 civil 3d\3 Drawings\00570_STRIPING-H11 SIGNING & STRIPING (11 OF 16) Mon, Apr/07/25 02:30pm

NO.	DATE	REVISION

STATE	PROJECT DESIGNATION	YEAR	SHEET NO.	TOTAL SHEETS
ALASKA	0654015/NFHWY00570	2025	H12	H24

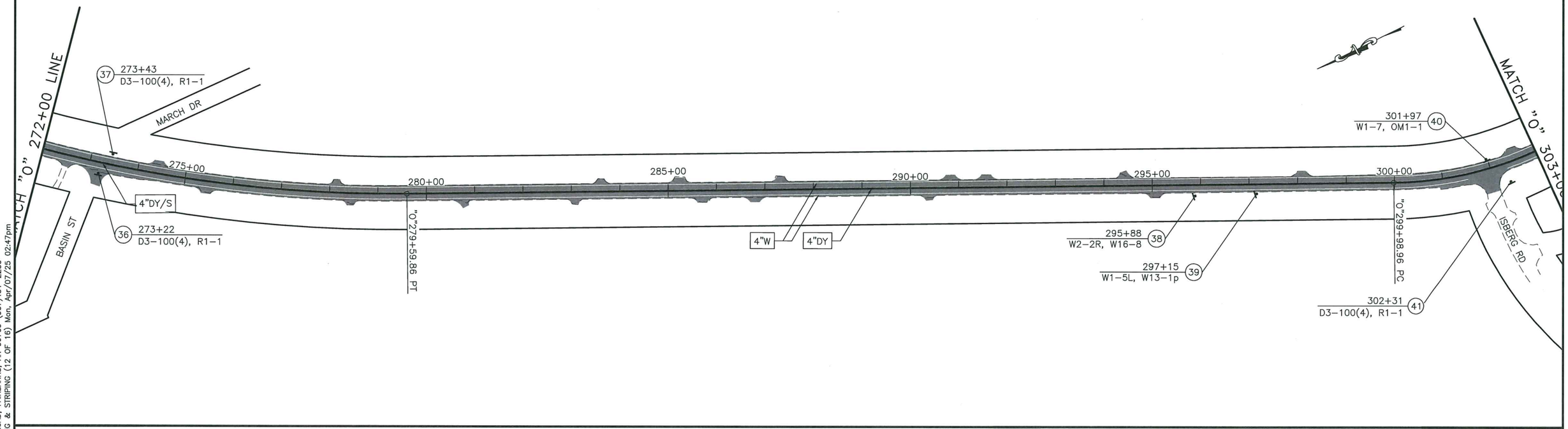

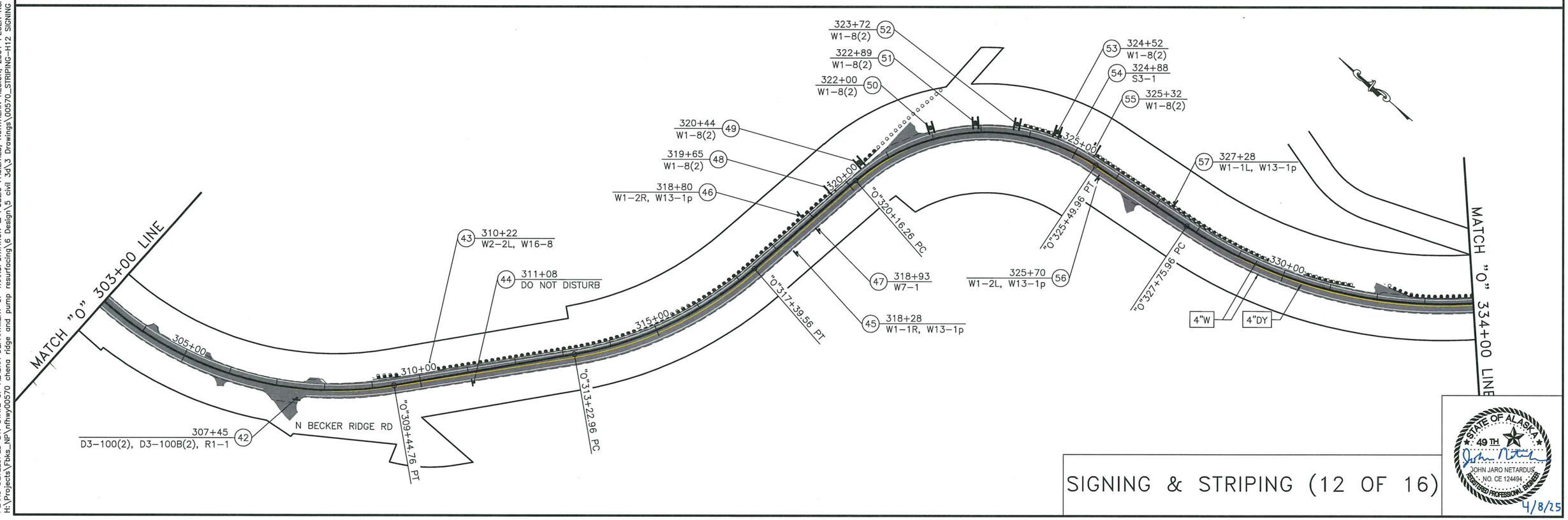

SIGNING & STRIPING (12 OF 16)

STATE OF ALASKA
49TH
JOHN JARO NETARDUS
NO. CE 124494
REGISTERED PROFESSIONAL ENGINEER
4/8/25

PLANS DEVELOPED BY: STATE OF ALASKA DEPARTMENT OF TRANSPORTATION & PUBLIC FACILITIES, NORTHERN REGION, 2301 PEGER ROAD, FAIRBANKS, AK 99709 (907)451-2200
H:\Projects\Fbks_NP\nfhwy00570 chena ridge and pump resurfacing\6 Design\5 civil 3d\3 Drawings\00570_STRIPING-H12 SIGNING & STRIPING (12 OF 16) Mon, Apr/07/25 02:47pm

NO.	DATE	REVISION

STATE	PROJECT DESIGNATION	YEAR	SHEET NO.	TOTAL SHEETS
ALASKA	0654015/NFHWY00570	2025	H13	H24

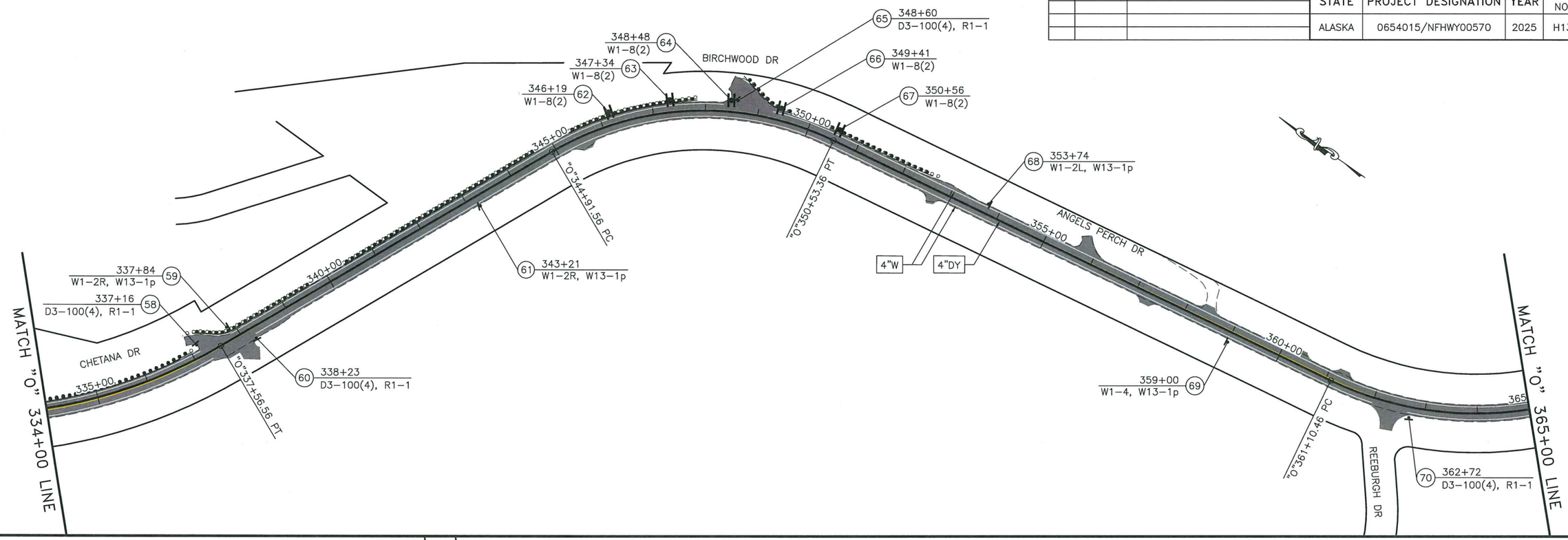

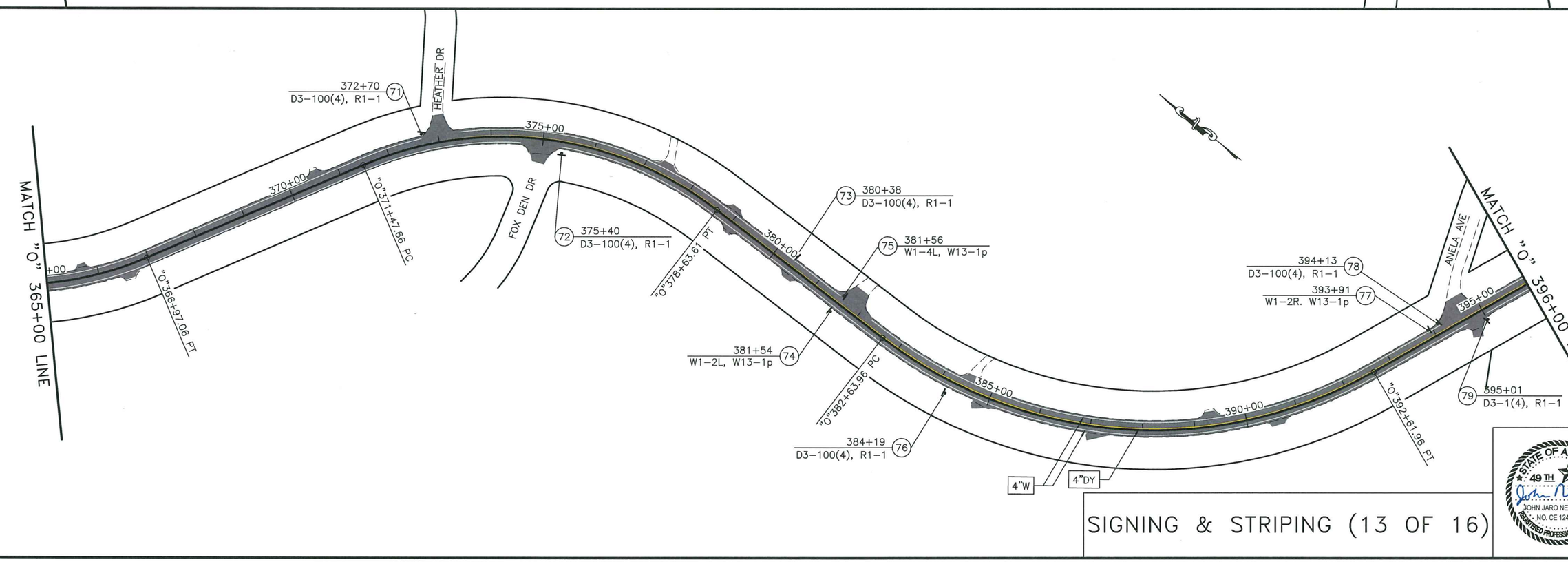

SIGNING & STRIPING (13 OF 16)

STATE OF ALASKA 49TH
JOHN JARO NETARDUS
NO. CE 124494
REGISTERED PROFESSIONAL ENGINEER
4/8/25

PLANS DEVELOPED BY: STATE OF ALASKA DEPARTMENT OF TRANSPORTATION & PUBLIC FACILITIES, NORTHERN REGION, 2301 PEGER ROAD, FAIRBANKS, AK 99709 (907)451-2200
H:\Projects\Fbks_NP\nfhwy00570 chena ridge and pump resurfacing\6 Design\5 civil 3d\3 Drawings\00570_STRIPING-H13 SIGNING & STRIPING (13 OF 16) Mon, Apr/07/25 02:54pm

NO.	DATE	REVISION

STATE	PROJECT DESIGNATION	YEAR	SHEET NO.	TOTAL SHEETS
ALASKA	0654015/NFHWY00570	2025	H14	H24

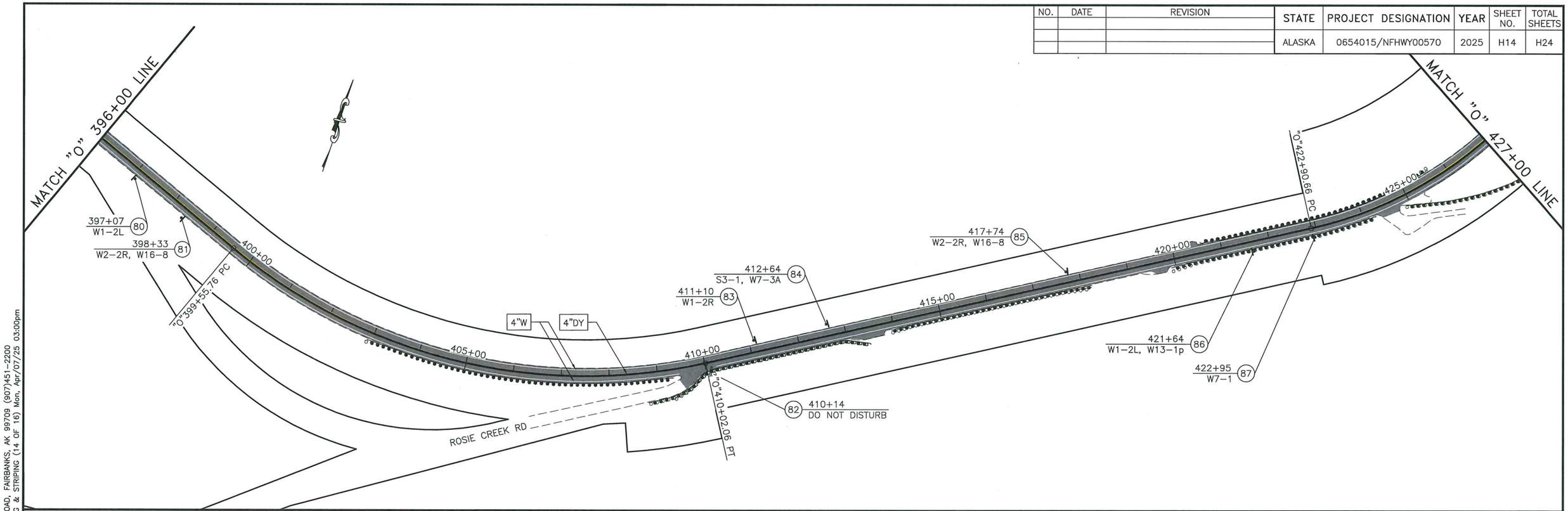

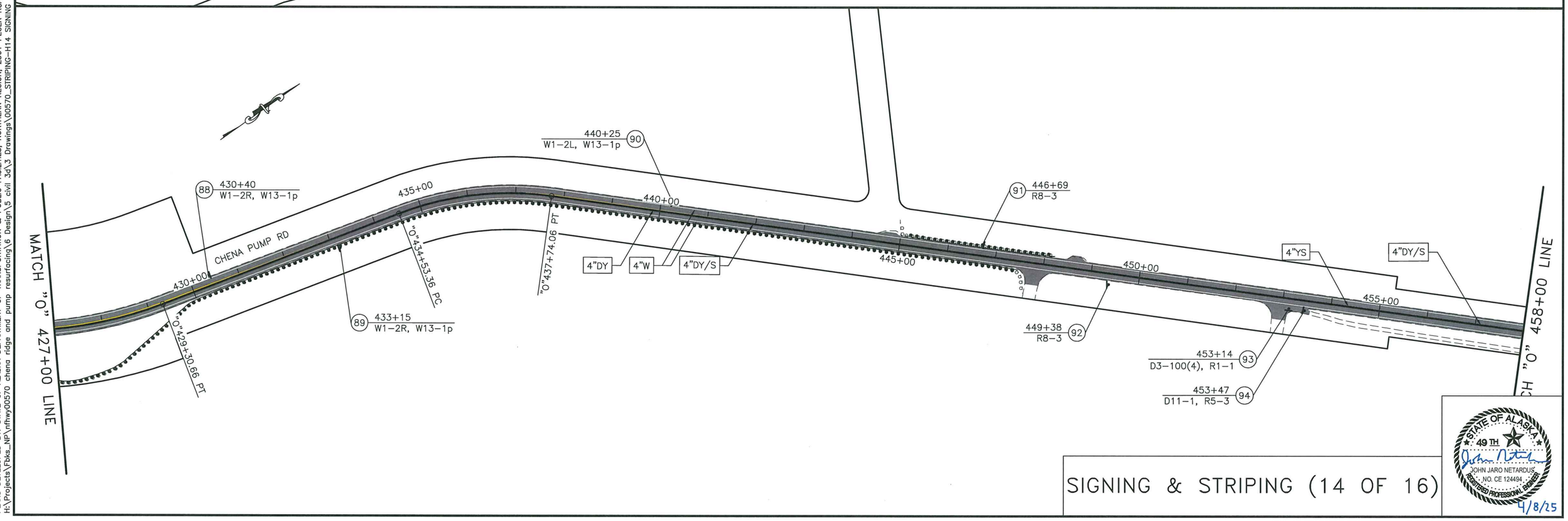

SIGNING & STRIPING (14 OF 16)

STATE OF ALASKA 49TH
JOHN JARO NETARDUS
NO. CE 124494
REGISTERED PROFESSIONAL ENGINEER
4/8/25

PLANS DEVELOPED BY: STATE OF ALASKA DEPARTMENT OF TRANSPORTATION & PUBLIC FACILITIES, NORTHERN REGION, 2301 PEGER ROAD, FAIRBANKS, AK 99709 (907)451-2200
H:\Projects\Fbks_NP\nfhwy00570 chena ridge and pump resurfacing\6 Design\5 civil 3d\3 Drawings\00570_STRIPING-H14 SIGNING & STRIPING (14 OF 16) Mon, Apr/07/25 03:00pm

NO.	DATE	REVISION

STATE	PROJECT DESIGNATION	YEAR	SHEET NO.	TOTAL SHEETS
ALASKA	0654015/NFHWY00570	2025	H15	H24

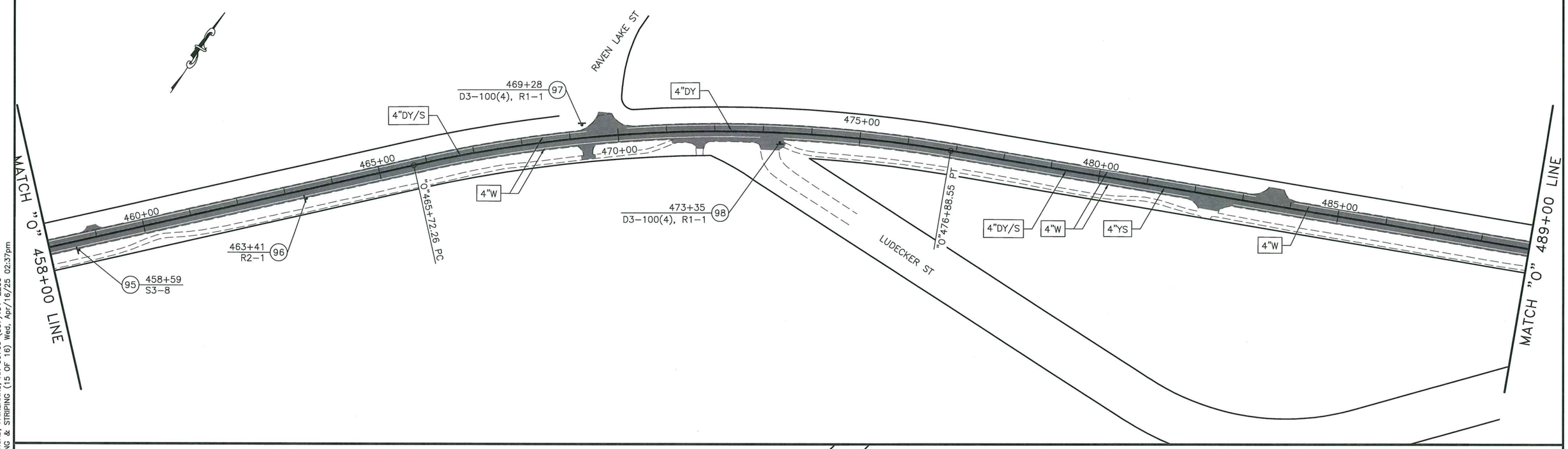

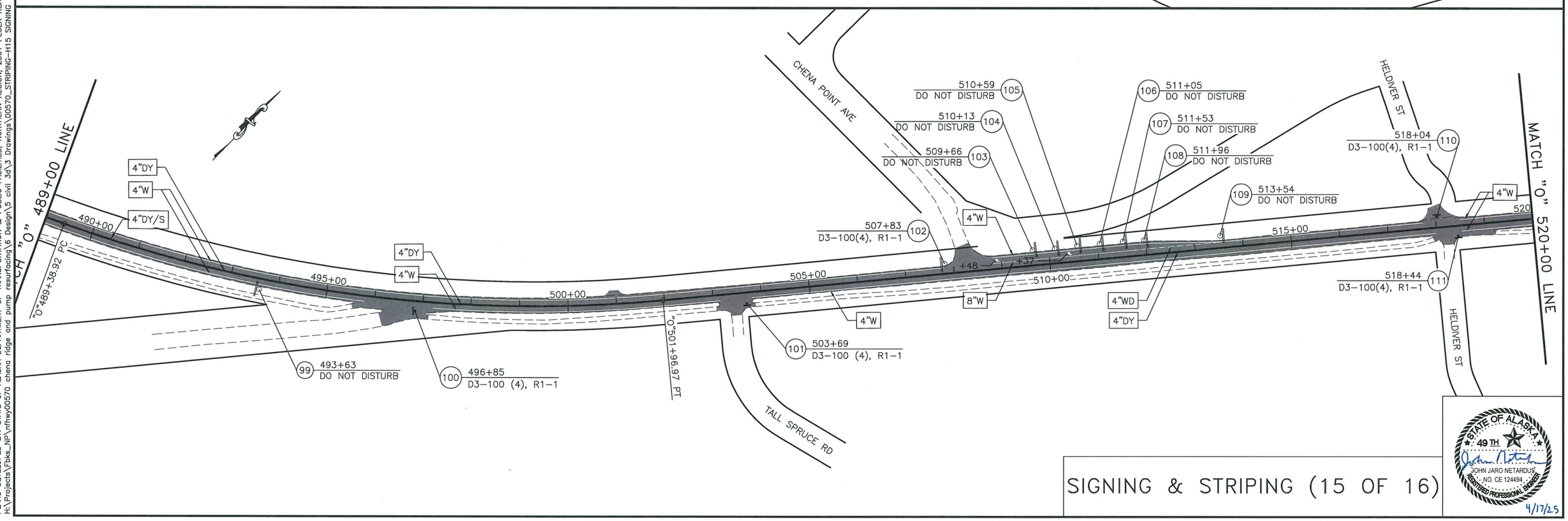

SIGNING & STRIPING (15 OF 16)

STATE OF ALASKA 49TH JOHN JARO NETARDUS NO. CE 124494 REGISTERED PROFESSIONAL ENGINEER

4/17/25

PLANS DEVELOPED BY: STATE OF ALASKA DEPARTMENT OF TRANSPORTATION & PUBLIC FACILITIES, NORTHERN REGION, 2301 PEGER ROAD, FAIRBANKS, AK 99709 (907)451-2200
H:\Projects\Fbks_NP\nfhwy00570 chena ridge and pump resurfacing\6 Design\5 civil 3d\3 Drawings\00570_STRIPING-H15 SIGNING & STRIPING (15 OF 16) Wed, Apr/16/25 02:37pm

NO.	DATE	REVISION

STATE	PROJECT DESIGNATION	YEAR	SHEET NO.	TOTAL SHEETS
ALASKA	0654015/NFHWY00570	2025	H16	H24

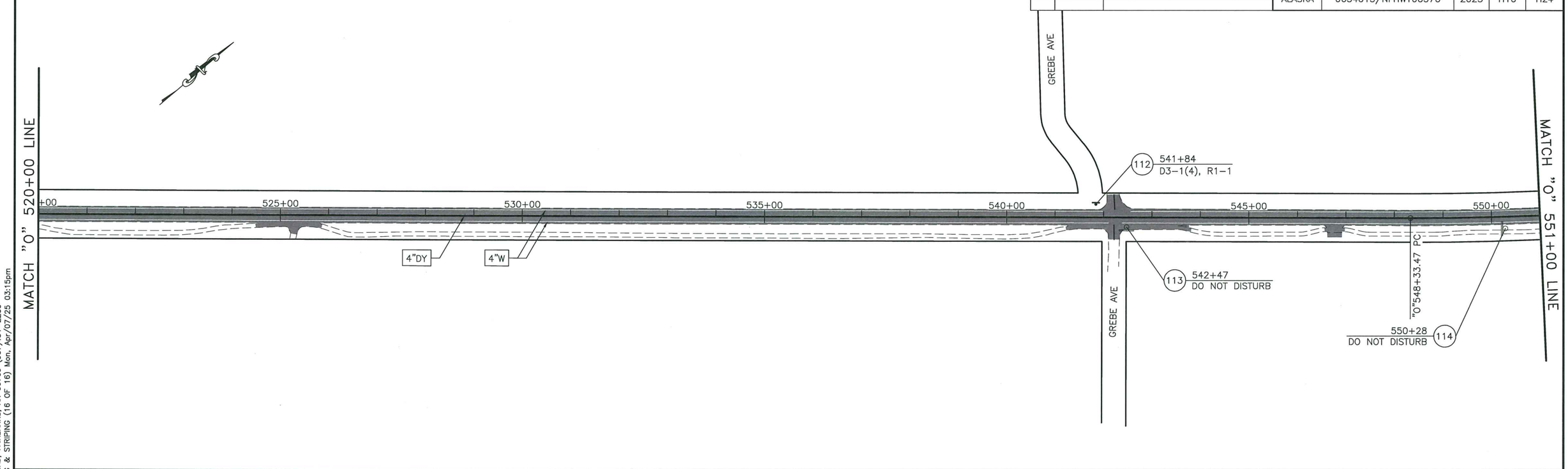

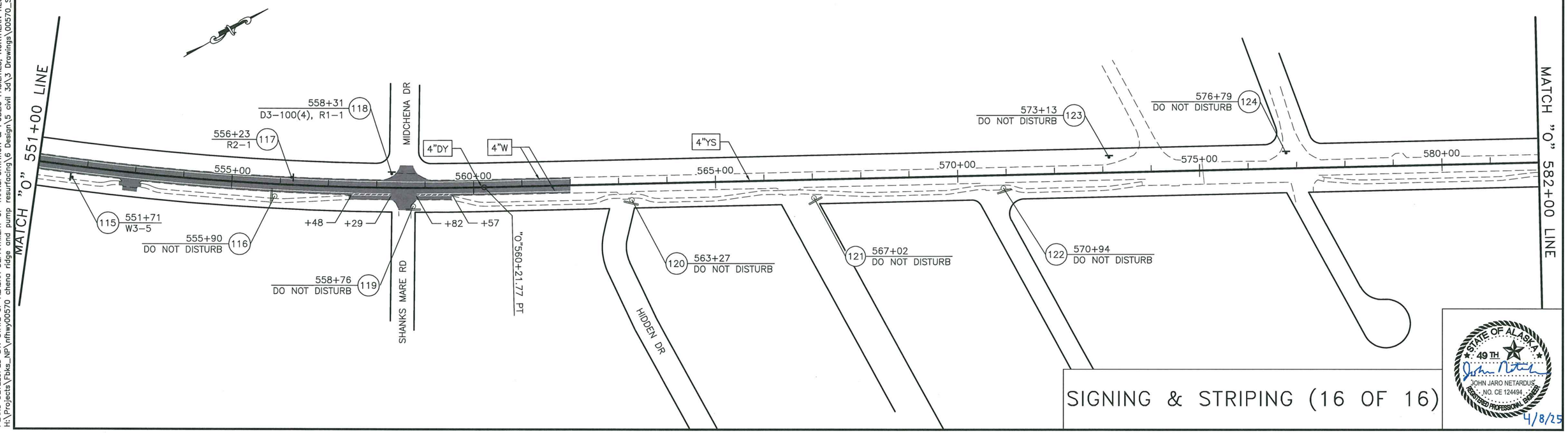

SIGNING & STRIPING (16 OF 16)

STATE OF ALASKA 49TH JOHN JARO NETARDUS NO. CE 124494 REGISTERED PROFESSIONAL ENGINEER

4/8/25

PLANS DEVELOPED BY: STATE OF ALASKA DEPARTMENT OF TRANSPORTATION & PUBLIC FACILITIES, NORTHERN REGION, 2301 PEGER ROAD, FAIRBANKS, AK 99709 (907)451-2200
H:\Projects\Fbks_NP\nfhwy00570 chena ridge and pump resurfacing\6 Design\5 civil 3d\3 Drawings\00570_STRIPING-H16 SIGNING & STRIPING (16 OF 16) Mon, Apr/07/25 03:15pm

NO.	DATE	REVISION	STATE	PROJECT DESIGNATION	YEAR	SHEET NO.	TOTAL SHEETS
1	06/10/25	ADDENDUM #1	ALASKA	0654015/NFHWY00570	2025	H17	H25

ADDENDUM NO. 1, ATTACHMENT NO. 22

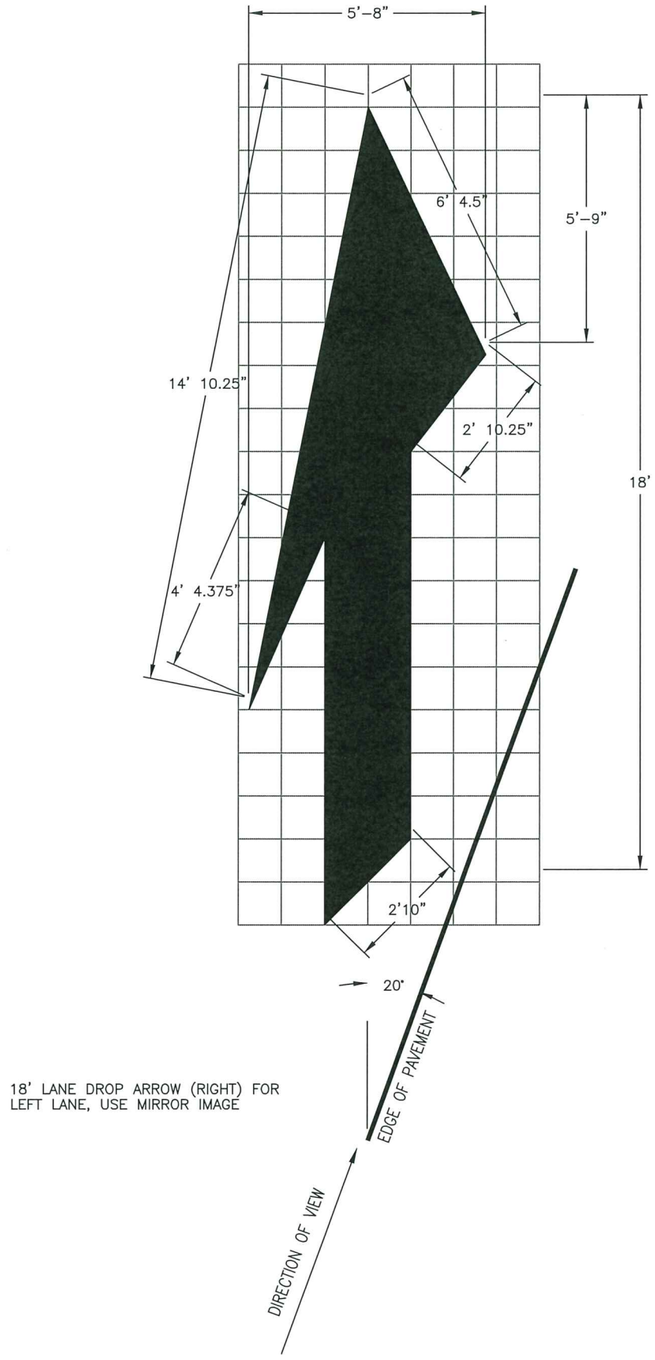

LANE DROP ARROW DETAIL

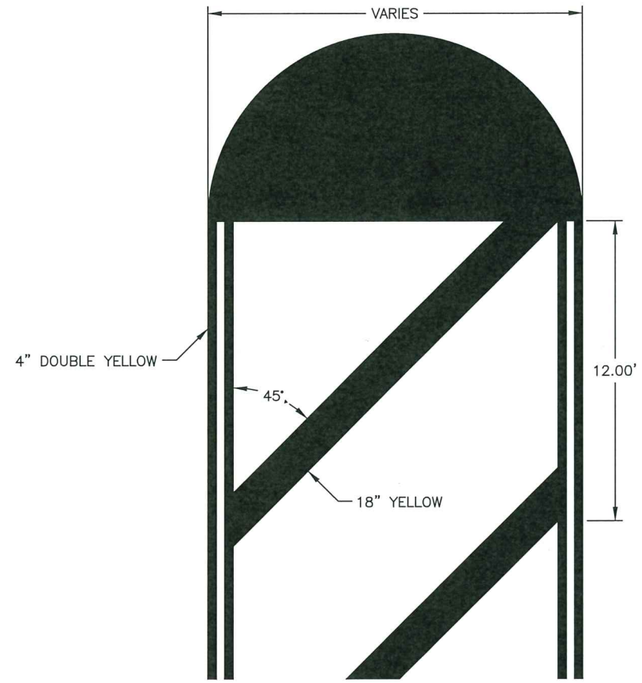

TERMINATION OF GORE STRIPING
PARALLEL

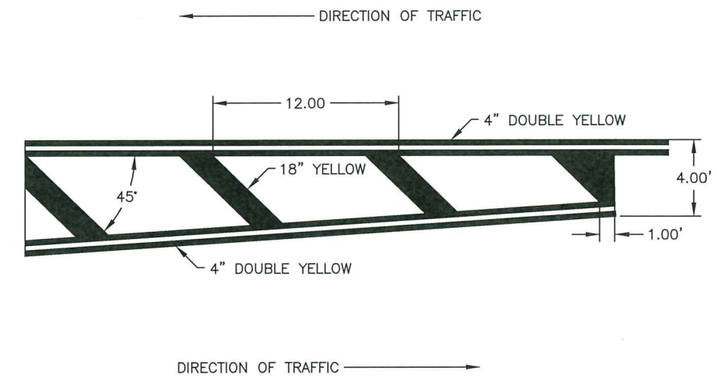

TERMINATION OF GORE STRIPING
SKEW

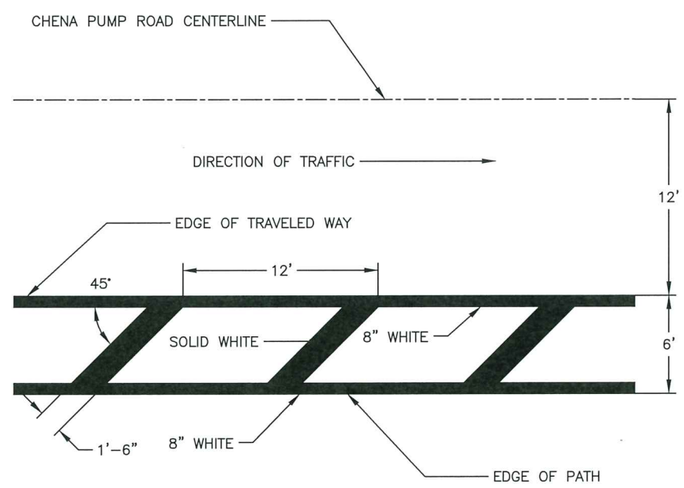

BIKE PATH GORE STRIPING AT INTERSECTION

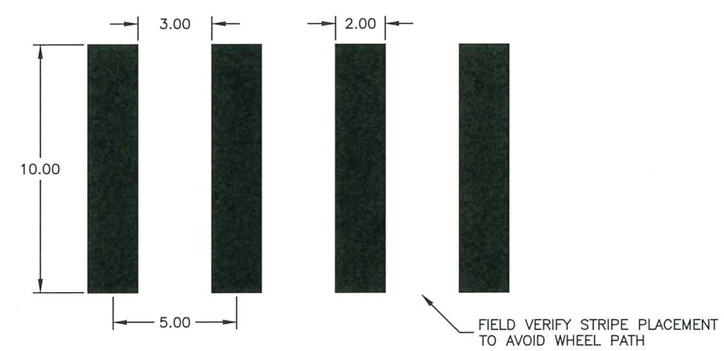

LONGITUDINAL CROSS WALK

TRAFFIC MARKING DETAILS

STATE OF ALASKA 49TH JOHN JARO NETARDUS NO. CE 124494 REGISTERED PROFESSIONAL ENGINEER 6/10/25

H:\Projects\Fbks_NP\NFHWY00570 Chena Ridge and Pump Resurfacing\6 Design\5 Civil 3D\3 Drawings\00570 TRAFFIC MARKING DETAILS Tue, Jun/10/25 04:12pm

H17 TRAFFIC MARKING DETAILS

NO.	DATE	REVISION
1	06/10/25	ADDENDUM #1

STATE	PROJECT DESIGNATION	YEAR	SHEET NO.	TOTAL SHEETS
ALASKA	0654015/NFHWY00570	2025	H18	H25

SIGNING SUMMARY

LOC. NO.	STATION	LOCATION LT.	LOCATION RT.	ASDS CODE	LEGEND	SIZE H X V (INCHES)	BRACING/ FRAMING BRACED	BRACING/ FRAMING FRAMED	AREA (SQ.FT.)	MTG. HGT. (FT.)	DIR.	POST TYPE	POST SIZE (INCHES)	POST NO.	REMARKS
1	"0" 10+61		X												DO NOT DISTURB
2	"0" 10+83	X		R4-7	KEEP RIGHT	24 X 30			5.00		SE	PST	2.5	1	△1
				OM1-1	OBJECT MARKER	18 X 18			2.25						
3	"0" 11+62	X		R4-7	KEEP RIGHT	24 X 30			5.00		W	PST	2.5	1	
				OM1-1	OBJECT MARKER	18 X 18			2.25						
4	"0" 12+47		X	D3-100	Chena Ridge Rd	42 X 8	X		2.33		NE	PST	2.5	1	
				D3-100	Chena Ridge Rd	42 X 8	X		2.33						
				D3-100	Old Chena Pump Rd	48 X 12	X		4.00						
				D3-100	Old Chena Pump Rd	48 X 12	X		4.00						
				R1-1	STOP	30 X 30	X		6.25						
5	"0" 12+56	X		W1-7	TWO DIRECTION LARGE ARROW	48 X 24	X		8.00		N	PST	2.5	1	
				OM1-1	OBJECT MARKER	18 X 18			2.25						
6	"0" 12+61		X		ADOPT A HIGHWAY										REMOVE
				△1	ALASKA FUEL DISTRIBUTORS										REMOVE
7	"0" 18+48	X													DO NOT DISTURB
8	"0" 89+94		X	D3-100	Chena Ridge Rd	42 X 8	X		2.33		N	PST	2.5	1	
				D3-100	Chena Ridge Rd	42 X 8	X		2.33		S				
				D3-100	Ridgecrest Dr	42 X 12	X		3.50		E				
				D3-100	Ridgecrest Dr	42 X 12	X		3.50		W				
				R1-1	STOP	30 X 30	X		6.25		N				
9	"0" 90+87	X		W7-1	HILL (SYMBOL)	30 X 30	X		6.25		W	PST	2.5	1	
10	"0" 92+03	X		S3-1	SCHOOL BUS STOP AHEAD	30 X 30	X		6.25		W	PST	2.5	1	
11	"0" 99+35	X		W1-4R	TURN	30 X 30	X		6.25		E	PST	2.5	1	
				W13-1p	50 MPH	18 X 18			2.25		E				
12	"0" 107+25	X		D3-100	Chena Ridge Rd	42 X 8	X		2.33		S	PST	2.5	1	
				D3-100	Chena Ridge Rd	42 X 8	X		2.33						
				D3-100	Alaska Range Lane	48 X 12	X		4.00						
				D3-100	Alaska Range Lane	48 X 12	X		4.00						
				R1-1	STOP	30 X 30	X		6.25						
13	"0" 115+33	X		D3-100	Chena Ridge Rd	42 X 8	X		2.33		S	PST	2.5	1	
				D3-100	Chena Ridge Rd	42 X 8	X		2.33						
				D3-100	Old Chena Ridge Rd	48 X 12	X		4.00						
				D3-100	Old Chena Ridge Rd	48 X 12	X		4.00						
				R1-1	STOP	30 X 30	X		6.25						
14A	"0" 125+74		X	W14-1	DEAD END	30 X 30	X		6.25		SW	PST	2.5	1	
14B	"0" 126+22		X	D3-100	Chena Ridge Rd	42 X 8	X		2.33		SE	PST	2.5	1	
				D3-100	Chena Ridge Rd	42 X 8	X		2.33						
				D3-100	Guinevere Pl	36 X 12	X		3.00						
				D3-100	Guinevere Pl	36 X 12	X		3.00						
				R1-1	STOP	30 X 30	X		6.25						

SUBTOTAL = 143.58

SIGNING SUMMARY

LOC. NO.	STATION	LOCATION LT.	LOCATION RT.	ASDS CODE	LEGEND	SIZE H X V (INCHES)	BRACING/ FRAMING BRACED	BRACING/ FRAMING FRAMED	AREA (SQ.FT.)	MTG. HGT. (FT.)	DIR.	POST TYPE	POST SIZE (INCHES)	POST NO.	REMARKS
15	"0" 128+79		X	W11-8	EMERGENCY VEHICLE	30 X 30	X		6.25		E	PST	2.5	1	△1
16	"0" 132+26	X		D14-100	ADOPT A HIGHWAY	30 X 24	X		5.00		W	PST	2.5	1	
				D14-100	THAT SCOOPER GUY	30 X 12	X		2.50						
17	"0" 132+38		X	W7-102	HIDDEN DRIVEWAY	30 X 30	X		6.25		E	PST	2.5	1	
				W13-1p	45 MPH	18 X 18			2.25						
18A	"0" 137+76	X		W7-1	HILL (SYMBOL)	30 X 30	X		6.25		W	PST	2.5	1	
18B	"0" 138+10	X		W7-102	HIDDEN DRIVEWAY	30 X 30	X		6.25		W	PST	2.5	1	
				W13-1p	45 MPH	18 X 18			2.25						
18C	"0" 138+43	X		W11-8	EMERGENCY VEHICLE (SYMBOL)	30 X 30	X		6.25		W	PST	2.5	1	
18D	"0" 140+33	X			CAUTION EMERGENCY VEHICLES AHEAD										REMOVE

SUBTOTAL = 43.25

△1 SIGNING NOTES:

1. REMOVE ALL EXISTING SIGNS AND SIGN FOUNDATIONS WITHIN THE PROJECT LIMITS, EXCEPT THOSE DESIGNATED "DO NOT DISTURB."
2. SALVAGE AND DELIVER ALL REMOVED SIGN PANELS TO THE DOT&PF MAINTENANCE YARD LOCATED AT 2301 PEGER ROAD. CONTACT DANIEL SCHACHER AT (907) 451-5276 TO COORDINATE DELIVERY.
3. MOUNTING HEIGHTS ARE PER STANDARD PLAN S-05.02 UNLESS OTHERWISE NOTED.
4. DETERMINE POST LENGTHS IN THE FIELD. DO NOT EXTEND POSTS ABOVE TOP OF SIGN.
5. INSTALL PST SIGN POSTS WITH SLEEVE TYPE SOIL EMBEDMENT. EMBED PST IN SLEEVE 24". PER STANDARD PLAN S-30.05. ATTACH THE SIGN POST TO THE SLEEVE USING GALVANIZED 3/8" BOLT, NUT, SPLIT LOCK WASHER AND TWO FLAT WASHERS.
6. 1/4" X 1 1/2" ALUMINUM ALLOY 6061-T6 BAR MAY ALSO BE USED TO FABRICATE SIGN BRACES AS SHOWN ON STANDARD PLAN S-01.02.
7. INSTALL 48" DIAMOND WARNING SIGNS ON A SINGLE POST WITH A BRACE HAVING EFFECTIVE BRACE LENGTH OF 54". THIS MODIFIES STANDARD PLAN S-01.02.
8. ATTACH ALL SIGNS TO THEIR SUPPORTS WITH 3/8" BOLTS, EXCEPT ATTACH UNFRAMED SIGNS TO PST POSTS WITH ALUMINUM DRIVE RIVETS. WIND WASHERS ARE NOT REQUIRED WITH DRIVE RIVETS. INCLUDE SPLIT LOCK WASHERS WHEN BOLTS ARE USED.
9. ALL FASTENER HARDWARE SHALL MEET THE REQUIREMENTS OF THE "FASTENER SPECIFICATION TABLE" UNDER SECTION 730-2.07 OF THE SSHC.
10. STOP (R1-1) AND YIELD (R1-2) SIGN LOCATIONS, ESPECIALLY THOSE AT LARGE RADIUS INTERSECTIONS, MAY NEED ADJUSTMENT IN THE FIELD. THE ENGINEER WILL APPROVE FINAL LOCATIONS.
11. INSTALL D3-100 SIGNS ABOVE THEIR RESPECTIVE STOP SIGNS. WHEN TWO D3-100 SERIES SIGNS ARE TO BE LOCATED ON THE SAME POST, INSTALL THE CROSS-STREET PANEL IN THE LOWER POSITION.
12. D3-100 SERIES SIGNS REQUIRE TWO SEPARATE SINGLE SIDED PANELS. END-BRACE PANELS PER SMALL STREET NAME SIGN BRACING DETAILS IN STANDARD PLAN S-01.02.
13. MAINTAIN EXISTING SIGNS UNTIL NEW SIGNS ARE INSTALLED. DO NOT LEAVE DUPLICATE OR CONFLICTING SIGNING UP AT ANY TIME.
14. ALL SIGNS NOTED FOR REMOVAL AND REINSTALLATION SHALL BE REPLACED AT THE CONTRACTOR'S EXPENSE IF THEY ARE DAMAGED DURING THE RELOCATION EFFORT.
15. USE SERIES C LETTERS FOR D3-100 SERIES SIGNS UNLESS OTHERWISE NOTED. USE 4.5" FOR DIMENSION "E" FOR 12" D3-100 SIGNS. THE LETTERING INDICATING THE TYPE OF STREET (SUCH AS St, Ave, OR Rd) WILL BE UPPER CASE AND LOWER CASE. THIS MODIFIES THE ASDS.
16. USE A 3" HORIZONTAL SPACING BETWEEN WORDS, BETWEEN CARDINAL DIRECTIONS AND WORDS, AND BETWEEN WORDS AND NUMBERS ON D3-100 AND D3-100A SIGNS UNLESS OTHERWISE NOTED.
17. LOCATE AND PROTECT ALL NEW AND EXISTING UNDERGROUND UTILITIES, INCLUDING BUT NOT LIMITED TO: PIPELINES, INTERCONNECT CABLES, SIGNAL SYSTEMS, LIGHTING SYSTEMS, STORM AND SANITARY SEWERS, WATER SYSTEMS, AND TELEPHONE AND ELECTRICAL CABLES, PRIOR TO INSTALLING SIGN POSTS. NOT ALL EXISTING UTILITIES MAY BE SHOWN ON THE PLANS.
18. CLEARING, AS DIRECTED BY THE ENGINEER, MAY BE REQUIRED TO ENSURE ADEQUATE VISIBILITY OF SIGNS. THIS WORK IS SUBSIDIARY TO PAY ITEM 615.0001.0000.

POST TYPE LEGEND:

P = STEEL PIPE
PST = PERFORATED STEEL TUBE
TS = TUBE STEEL (SQUARE STRUCTURAL STEEL TUBING)
W_X_ = WIDE FLANGE

SIGNING SUMMARY (1 OF 7)

STATE OF ALASKA 49TH JOHN JARO NETARDUS NO. CE 124494 REGISTERED PROFESSIONAL ENGINEER
6/10/25

PLANS DEVELOPED BY: STATE OF ALASKA DEPARTMENT OF TRANSPORTATION & PUBLIC FACILITIES, NORTHERN REGION, 2301 PEGER ROAD, FAIRBANKS, AK 99709 (907)451-2200
H:\Projects\Fbks_NP\NFHWY00570 Chena Ridge and Pump Resurfacing\6 Design\5 Civil 3D\3 Drawings\00570_SUMMARIES-H18 SIGNING SUMMARY (1 OF 7) Tue, Jun/10/25 04:12pm

NO.	DATE	REVISION
1	06/10/25	ADDENDUM #1

STATE	PROJECT DESIGNATION	YEAR	SHEET NO.	TOTAL SHEETS
ALASKA	0654015/NFHWY00570	2025	H19	H25

SIGNING SUMMARY

LOC. NO.	STATION	LOCATION LT.	LOCATION RT.	ASDS CODE	LEGEND	SIZE H X V (INCHES)	BRACING/ FRAMING BRACED	BRACING/ FRAMING FRAMED	AREA (SQ.FT.)	MTG. HGT. (FT.)	DIR.	POST TYPE	POST SIZE (INCHES)	POST NO.	REMARKS
19	"0" 149+37	X		D3-100	Chena Ridge Rd	42 X 8	X		2.33			PST	2.5	1	1
				D3-100	Chena Ridge Rd	42 X 8	X		2.33						
				D3-100	Chena Hills Dr	42 X 12	X		3.50						
				D3-100	Chena Hills Dr	42 X 12	X		3.50						
				R1-1	STOP	30 X 30	X		6.25		S				
20	"0" 152+76		X	R2-1	SPEED LIMIT 55 MPH	24 X 30			5.00		E	PST	2.5	1	
21	"0" 152+80	X		R2-1	SPEED LIMIT 55 MPH	24 X 30			5.00		W	PST	2.5	1	
22	"0" 156+71	X		D3-100	Chena Ridge Rd	42 X 8	X		2.33			PST	2.5	1	
				D3-100	Chena Ridge Rd	42 X 8	X		2.33						
				D3-100	Canterbury Dr	42 X 12	X		3.50						
				D3-100	Canterbury Dr	42 X 12	X		3.50						
				R1-1	STOP	30 X 30	X		6.25		SE				
23	"0" 170+81		X	W1-2L	CURVE	30 X 30	X		6.25		E	PST	2.5	1	
				W13-1p	45 MPH	18 X 18			2.25						
24	"0" 179+92	X		W1-2R	CURVE	30 X 30	X		6.25		NE	PST	2.5	1	
				W13-1p	45 MPH	18 X 18			2.25						
25	"0" 187+35	X		D3-100	Chena Ridge Rd	42 X 8	X		2.33			PST	2.5	1	
				D3-100	Chena Ridge Rd	42 X 8	X		2.33						
				D3-100	Ridgepointe Dr	42 X 12	X		3.50						
				D3-100	Ridgepointe Dr	42 X 12	X		3.50						
				R1-1	STOP	30 X 30	X		6.25		SE				
26	"0" 197+65	X		D3-100	Chena Ridge Rd	42 X 8	X		2.33		SE	PST	2.5	1	
				D3-100	Chena Ridge Rd	42 X 8	X		2.33						
				D3-100	Ellesmere Dr	36 X 12	X		3.00						
				D3-100	Ellesmere Dr	36 X 12	X		3.00						
				R1-1	STOP	30 X 30	X		6.25						
27A	"0" 203+62	X		S3-1	SCHOOL BUS STOP AHEAD	30 X 30	X		6.25		NE	PST	2.5	1	
27B	"0" 204+00	X		W7-1	HILL (SYMBOL)	30 X 30	X		6.25		NE	PST	2.5	1	
28	"0" 209+87														DO NOT DISTURB
29	"0" 212+73		X	W1-4L	REVERSE CURVE	30 X 30	X		6.25		NE	PST	2.5	1	
30	"0" 221+93		X	D3-100	Chena Ridge Rd	42 X 8	X		2.33		NW	PST	2.5	1	
				D3-100	Chena Ridge Rd	42 X 8	X		2.33						
				D3-100	Moonshine Run	42 X 12	X		3.50						
				D3-100	Moonshine Run	42 X 12	X		3.50						
				R1-1	STOP	30 X 30	X		6.25						
31	"0" 223+82	X		D3-100	Chena Ridge Rd	42 X 8	X		2.33		SE	PST	2.5	1	
				D3-100	Chena Ridge Rd	42 X 8	X		2.33						
				D3-100	Ridgepointe Dr	42 X 12	X		3.50						
				D3-100	Ridgepointe Dr	42 X 12	X		3.50						
				R1-1	STOP	30 X 30	X		6.25						
32	"0" 230+24	X		S3-1	SCHOOL BUS STOP AHEAD	30 X 30	X		6.25		SW	PST	2.5	1	

SUBTOTAL = 158.50

SIGNING SUMMARY

LOC. NO.	STATION	LOCATION LT.	LOCATION RT.	ASDS CODE	LEGEND	SIZE H X V (INCHES)	BRACING/ FRAMING BRACED	BRACING/ FRAMING FRAMED	AREA (SQ.FT.)	MTG. HGT. (FT.)	DIR.	POST TYPE	POST SIZE (INCHES)	POST NO.	REMARKS
33	"0" 230+50	X		W1-4L	REVERSE CURVE	30 X 30	X		6.25		SW	PST	2.5	1	1
34	"0" 248+16		X	D3-100	Chena Ridge Rd	42 X 8	X		2.33		N	PST	2.5	1	
				D3-100	Chena Ridge Rd	42 X 8	X		2.33						
				D3-100	Starship Ln	36 X 12	X		3.00						
				D3-100	Starship Ln	36 X 12	X		3.00						
				R1-1	STOP	30 X 30	X		6.25						
35	"0" 252+87	X		D3-100	Chena Ridge Rd	42 X 8	X		2.33		SE	PST	2.5	1	
				D3-100	Chena Ridge Rd	42 X 8	X		2.33						
				D3-100	Snowflake Ln	36 X 12	X		3.00						
				D3-100	Snowflake Ln	36 X 12	X		3.00						
				R1-1	STOP	30 X 30	X		6.25						
36	"0" 273+22		X	D3-100	Chena Ridge Rd	42 X 8	X		2.33		NW	PST	2.5	1	
				D3-100	Chena Ridge Rd	42 X 8	X		2.33						
				D3-100	Basin St	24 X 12	X		2.00						
				D3-100	Basin St	24 X 12	X		2.00						
				R1-1	STOP	30 X 30	X		6.25						
37	"0" 273+43	X		D3-100	Chena Ridge Rd	42 X 8	X		2.33		SE	PST	2.5	1	
				D3-100	Chena Ridge Rd	42 X 8	X		2.33						
				D3-100	March Dr	24 X 12	X		2.00						
				D3-100	March Dr	24 X 12	X		2.00						
				R1-1	STOP	30 X 30	X		6.25						
38	"0" 295+88		X	W2-2R	SIDE ROAD (PERPEDICULAR)	30 X 30	X		6.25		N	PST	2.5	1	
				W16-8	Isberg Rd	24 X 8			1.33		N				
39	"0" 297+15		X	W1-5L	Winding Road	30 X 30	X		6.25		N	PST	2.5	1	
				W13-1P	35 MPH	18 X 18			2.25						
40	"0" 301+97	X		W1-7	TWO DIRECTION LARGE ARROW	48 X 24	X		8.00		E	PST	2.5	1	
				OM1-1	9Button Object Marker	18 X 18			2.25						
41	"0" 302+31		X	D3-100	Chena Ridge Rd	42 X 8	X		2.33		E	PST	2.5	1	
				D3-100	Chena Ridge Rd	42 X 8	X		2.33						
				D3-100	Isberg Rd	30 X 12	X		2.50						
				D3-100	Isberg Rd	30 X 12	X		2.50						
				R1-1	STOP	30 X 30	X		6.25						
42	"0" 307+45		X	D3-100	Chena Ridge Rd	42 X 8	X		2.33		SW	PST	2.5	1	
				D3-100	Chena Ridge Rd	42 X 8	X		2.33						
				D3-100B	N Becker Ridge Rd	30 X 18	X		3.75						USE B SERIES LETTERING
				D3-100B	N Becker Ridge Rd	30 X 18	X		3.75						USE B SERIES LETTERING
				R1-1	STOP	30 X 30	X		6.25						

SUBTOTAL = 130.58

POST TYPE LEGEND:

P = STEEL PIPE
PST = PERFORATED STEEL TUBE
TS = TUBE STEEL (SQUARE STRUCTURAL STEEL TUBING)
W_X_ = WIDE FLANGE

SIGNING SUMMARY (2 OF 7)

STATE OF ALASKA 49TH JOHN JARO NETARDUS NO. CE 124494 REGISTERED PROFESSIONAL ENGINEER
6/10/25

PLANS DEVELOPED BY: STATE OF ALASKA DEPARTMENT OF TRANSPORTATION & PUBLIC FACILITIES, NORTHERN REGION, 2301 PEGER ROAD, FAIRBANKS, AK 99709 (907)451-2200
H:\Projects\Pbks_NP\NFHWY00570 Chena Ridge and Pump Resurfacing\6 Design\5 Civil 3D\3 Drawings\00570_SUMMARIES-H19 SIGNING SUMMARY (2 OF 7) Tue, Jun/10/25 04:12pm

ADDENDUM NO. 1, ATTACHMENT NO. 25

NO.	DATE	REVISION
1	06/10/25	ADDENDUM #1

STATE	PROJECT DESIGNATION	YEAR	SHEET NO.	TOTAL SHEETS
ALASKA	0654015/NFHWY00570	2025	H20	H25

SIGNING SUMMARY

LOC. NO.	STATION	LOCATION LT.	LOCATION RT.	ASDS CODE	LEGEND	SIZE H X V (INCHES)	BRACING/ FRAMING BRACED	BRACING/ FRAMING FRAMED	AREA (SQ.FT.)	MTG. HGT. (FT.)	DIR.	POST TYPE	POST SIZE (INCHES)	POST NO.	REMARKS
43	"0" 310+22	X		W2-2L	SIDE ROAD (PERPENDICULAR)	30 X 30	X		6.25		SE	PST	2.5	1	1
				W16-8	ISBERG RD	24 X 8			1.33						
44	"0" 311+08		X												DO NOT DISTURB
45	"0" 318+28		X	W1-1R	TURN	30 X 30	X		9.00		W	PST	2.5	1	
				W13-1p	30 MPH	18 X 18			2.25						
46	"0" 318+80	X		W1-2R	CURVE	30 X 30	X		6.25		E	PST	2.5	1	
				W13-1p	30 MPH	18 X 18			2.25						
47	"0" 318+93		X	W7-1	HILL (SYMBOL)	30 X 30	X		6.25		W	PST	2.5	1	
48	"0" 319+65	X		W1-8	CHEVRON	18 X 24			3.00		E	PST	2.5	1	ON BOTH SIDES
				W1-8	CHEVRON	18 X 24			3.00						
49	"0" 320+44	X		W1-8	CHEVRON	18 X 24			3.00		E	PST	2.5	1	ON BOTH SIDES
				W1-8	CHEVRON	18 X 24			3.00						
50	"0" 322+00	X		W1-8	CHEVRON	18 X 24			3.00		E	PST	2.5	1	ON BOTH SIDES
				W1-8	CHEVRON	18 X 24			3.00						
51	"0" 322+89	X		W1-8	CHEVRON	18 X 24			3.00		SE	PST	2.5	1	ON BOTH SIDES
				W1-8	CHEVRON	18 X 24			3.00						
52	"0" 323+72	X		W1-8	CHEVRON	18 X 24			3.00		S	PST	2.5	1	ON BOTH SIDES
				W1-8	CHEVRON	18 X 24			3.00						
53	"0" 324+52	X		W1-8	CHEVRON	18 X 24			3.00		S	PST	2.5	1	ON BOTH SIDES
				W1-8	CHEVRON	18 X 24			3.00						
54	"0" 324+88	X		S3-1	SCHOOL BUS STOP AHEAD	30 X 30	X		6.25		S	PST	2.5	1	
55	"0" 325+32	X		W1-8	CHEVRON	18 X 24			3.00		S	PST	2.5	1	
				W1-8	CHEVRON	18 X 24			3.00						
56	"0" 325+70		X	W1-2L	CURVE	30 X 30	X		6.25		N	PST	2.5	1	
				W13-1p	50 MPH	18 X 18			2.25						
57	"0" 327+28	X		W1-1L	TURN	30 X 30	X		6.25		S	PST	2.5	1	
				W13-1p	30 MPH	18 X 18			2.25						
58	"0" 337+16	X		D3-100	Chena Ridge Rd	42 X 8	X		2.33		N	PST	2.5	1	
				D3-100	Chena Ridge Rd	42 X 8	X		2.33						
				D3-100	Chetana Dr	36 X 12	X		3.00						
				D3-100	Chetana Dr	36 X 12	X		3.00						
				R1-1	STOP	30 X 30	X		6.25						
59	"0" 337+84	X		W1-2R	CURVE	30 X 30	X		6.25		E	PST	2.5	1	
				W13-1p	50 MPH	18 X 18			2.25						
60	"0" 338+23		X	D3-100	Chena Ridge Rd	42 X 8	X		2.33			PST	2.5	1	
				D3-100	Chena Ridge Rd	42 X 8	X		2.33						
				D3-100	Taroka Dr	30 X 12	X		2.50						
				D3-100	Taroka Dr	30 X 12	X		2.50						
				R1-1	STOP	30 X 30	X		6.25						

SUBTOTAL = 140.17

SIGNING SUMMARY

LOC. NO.	STATION	LOCATION LT.	LOCATION RT.	ASDS CODE	LEGEND	SIZE H X V (INCHES)	BRACING/ FRAMING BRACED	BRACING/ FRAMING FRAMED	AREA (SQ.FT.)	MTG. HGT. (FT.)	DIR.	POST TYPE	POST SIZE (INCHES)	POST NO.	REMARKS
61	343+21		X	W1-2R	CURVE	30 X 30	X		6.25		NW	PST	2.5	1	1
				W13-1p	35 MPH	18 X 18			2.25						
62	346+19	X		W1-8	CHEVRON	18 X 24			3.00		SE	PST	2.5	1	ON BOTH SIDES
				W1-8	CHEVRON	18 X 24			3.00						
63	347+34	X		W1-8	CHEVRON	18 X 24			3.00		SE	PST	2.5	1	ON BOTH SIDES
				W1-8	CHEVRON	18 X 24			3.00						
64	348+48	X		W1-8	CHEVRON	18 X 24			3.00		SE	PST	2.5	1	
				W1-8	CHEVRON	18 X 24			3.00						
65	348+60	X		D3-100	Chena Ridge Rd	42 X 8	X		2.33		N	PST	2.5	1	
				D3-100	Chena Ridge Rd	42 X 8	X		2.33		S				
				D3-100	Birchwood Dr	42 X 12	X		3.50		E				
				D3-100	Birchwood Dr	42 X 12	X		3.50		W				
				R1-1	STOP	30 X 30	X		6.25		N				
66	349+41	X		W1-8	CHEVRON	18 X 24			3.00		S	PST	2.5	1	ON BOTH SIDES
				W1-8	CHEVRON	18 X 24			3.00						
67	350+56	X		W1-8	CHEVRON	18 X 24			3.00		S	PST	2.5	1	ON BOTH SIDES
				W1-8	CHEVRON	18 X 24			3.00						
68	353+74	X		W1-2L	CURVE	30 X 30	X		6.25		S	PST	2.5	1	
				W13-1p	35 MPH	18 X 18			2.25		S				
69	359+00		X	W1-4L	REVERSE CURVE	30 X 30	X		6.25		N	PST	2.5	1	
				W13-1p	40 MPH	18 X 18			2.25		N				
70	362+72		X	D3-100	Chena Ridge Rd	42 X 8	X		2.33		E	PST	2.5	1	
				D3-100	Chena Ridge Rd	42 X 8	X		2.33		W				
				D3-100	Reeburgh Dr	36 X 12	X		3.00		S				
				D3-100	Reeburgh Dr	36 X 12	X		3.00		N				
				R1-1	STOP	30 X 30	X		6.25		W				
71	372+70	X		D3-100	Chena Ridge Rd	42 X 8	X		2.33		E	PST	2.5	1	
				D3-100	Chena Ridge Rd	42 X 8	X		2.33		W				
				D3-100	Heather Dr	36 X 12	X		3.00		S				
				D3-100	Heather Dr	36 X 12	X		3.00		N				
				R1-1	STOP	30 X 30	X		6.25		E				
72	375+40		X	D3-100	Chena Ridge Rd	42 X 8	X		2.33		E	PST	2.5	1	
				D3-100	Chena Ridge Rd	42 X 8	X		2.33		W				
				D3-100	Fox Den Dr	36 X 12	X		3.00		S				
				D3-100	Fox Den Dr	36 X 12	X		3.00		N				
				R1-1	STOP	30 X 30	X		6.25		W				

SUBTOTAL = 124.17

POST TYPE LEGEND:

P = STEEL PIPE
PST = PERFORATED STEEL TUBE
TS = TUBE STEEL (SQUARE STRUCTURAL STEEL TUBING)
W_X_ = WIDE FLANGE

SIGNING SUMMARY (3 OF 7)

STATE OF ALASKA 49TH JOHN JARO NETARDUS NO. CE 124494 REGISTERED PROFESSIONAL ENGINEER 6/10/25

PLANS DEVELOPED BY: STATE OF ALASKA DEPARTMENT OF TRANSPORTATION & PUBLIC FACILITIES, NORTHERN REGION, 2301 PEGER ROAD, FAIRBANKS, AK 99709 (907)451-2200
H:\Projects\Fbks_NP\NFHWY00570 Chena Ridge and Pump Resurfacing\6 Design\5 Civil 3D\3 Drawings\00570_SUMMARIES-H20 SIGNING SUMMARY (3 OF 7) Tue, Jun/10/25 04:12pm

ADDENDUM NO. 1, ATTACHMENT NO. 26

NO.	DATE	REVISION
1	06/10/25	ADDENDUM #1

STATE	PROJECT DESIGNATION	YEAR	SHEET NO.	TOTAL SHEETS
ALASKA	0654015/NFHWY00570	2025	H21	H25

SIGNING SUMMARY

LOC. NO.	STATION	LOCATION LT.	LOCATION RT.	ASDS CODE	LEGEND	SIZE H X V (INCHES)	BRACING/FRAMING BRACED	BRACING/FRAMING FRAMED	AREA (SQ.FT.)	MTG. HGT. (FT.)	DIR.	POST TYPE	POST SIZE (INCHES)	POST NO.	REMARKS
73	"0" 380+38	X		D3-100	Chena Ridge Rd	42 X 8	X		2.33		S	PST	2.5	1	1
				D3-100	Chena Ridge Rd	42 X 8	X		2.33						
				D3-100	Edby Rd	24 X 12	X		2.00						
				D3-100	Edby Rd	24 X 12	X		2.00						
				R1-1	STOP	30 X 30	X		9.00						
74	"0" 381+54		X	W1-2L	CURVE	30 X 30	X		6.25		N	PST	2.5	1	
				W13-1p	40 MPH	18 X 18			2.25						
75	"0" 381+56		X	W1-4L	Reverse Curve	30 X 30	X		6.25		S	PST	2.5	1	
				W13-1p	40 MPH	18 X 18									
76	"0" 384+19		X	D3-100	Chena Ridge Rd	42 X 8	X		2.33		N	PST	2.5	1	
				D3-100	Chena Ridge Rd	42 X 8	X								
				D3-100	Deshka Dr	30 X 12	X								
				D3-100	Deshka Dr	30 X 12	X								
				R1-1	STOP	30 X 30	X								
77	"0" 393+91	X		W1-2R	CURVE	30 X 30	X		6.25		E	PST	2.5	1	
				W13-1p	45 MPH	18 X 18			2.25						
78	"0" 394+13	X		D3-100	Chena Ridge Rd	42 X 8	X		2.33		E	PST	2.5	1	
				D3-100	Chena Ridge Rd	42 X 8	X								
				D3-100	Anella Rd	30 X 12	X								
				D3-100	Anella Rd	30 X 12	X								
				R1-1	STOP	30 X 30	X								
79	"0" 395+01		X	D3-100	Chena Ridge Rd	42 X 8	X		2.33		E	PST	2.5	1	
				D3-100	Chena Ridge Rd	42 X 8	X								
				D3-100	Deniki Ln	36 X 12	X								
				D3-100	Deniki Ln	36 X 12	X								
				R1-1	STOP	30 X 30	X								
80	"0" 397+07		X	W1-2L	CURVE	30 X 30	X		9.00		SE	PST	2.5	1	
81	"0" 398+33		X	W2-2R	SIDE ROAD (PERPENDICULAR)	30 X 30	X		6.25		W	PST	2.5	1	
				W16-8	Rosie Creek Rd	30 X 8	X		1.67		W				
82	"0" 410+14		X												DO NOT DISTURB
83	"0" 411+10	X		W1-2R	CURVE	30 X 30			9.00		NE	PST	2.5	1	
84	"0" 412+64	X		S3-1	SCHOOL BUS STOP AHEAD	30 X 30	X		9.00		NE	PST	2.5	1	
				W7-3A	NEXT 2 MILES	24 X 8			1.33						
85	"0" 417+74	X		W2-2R	SIDE ROAD (PERPENDICULAR)	30 X 30	X		6.25		NE	PST	2.5	1	
				W16-8	Rosie Creek Rd	30 X 8			1.67						
86	"0" 421+64		X	W1-2L	CURVE	30 X 30	X		6.25		SW	PST	2.5	1	
				W13-1p	45 MPH	18 X 18			2.25						
87	"0" 422+95		X	W7-1	HILL (SYMBOL)	24 X 18			3.00		SW	PST	2.5	1	
88	"0" 430+40	X		W1-2R	CURVE	30 X 30	X		6.25		N	PST	2.5	1	
				W13-1p	45 MPH	18 X 18			2.25						

SUBTOTAL = 112.08

SIGNING SUMMARY

LOC. NO.	STATION	LOCATION LT.	LOCATION RT.	ASDS CODE	LEGEND	SIZE H X V (INCHES)	BRACING/FRAMING BRACED	BRACING/FRAMING FRAMED	AREA (SQ.FT.)	MTG. HGT. (FT.)	DIR.	POST TYPE	POST SIZE (INCHES)	POST NO.	REMARKS
89	"0" 433+15		X	W1-2R	CURVE	30 X 30	X		6.25		S	PST	2.5	1	1
				W13-1P	40 MPH	18 X 18			2.25						
90	"0" 440+25	X		W1-2L	CURVE	30 X 30	X		6.25		E	PST	2.5	1	
				W13-1p	40 MPH	18 X 18			2.25						
91	"0" 446+69	X		R8-3	NO PARKING (Symbol)	24 X 24			4.00		NE	PST	2.5	1	
92	"0" 449+38		X	R8-3	NO PARKING	24 X 30			5.00		SW	PST	2.5	1	
93	"0" 453+14		X	D3-100	Chena Ridge Rd	42 X 8	X		2.33		SE	PST	2.5	1	
				D3-100	Chena Ridge Rd	42 X 8	X		2.33						
				D3-100	Pickering Dr	42 X 12	X		3.50						
				D3-100	Pickering Dr	42 X 12	X		3.50						
				R1-1	STOP	30 X 30	X		6.25						
94	"0" 453+47		X	D11-1	BIKE ROUTE	24 X 18			3.00		SW	PST	2.5	1	
				R5-3	NO MOTOR VEHICLES	24 X 24			4.00						
95	"0" 458+59		X	S3-8	NO PARKING	24 X 30			5.00		SW	PST	2.5	1	
96	"0" 463+41		X	R2-1	SPEED LIMIT 55	24 X 30			5.00		SW	PST	2.5	1	
97	"0" 469+28	X		D3-100	Chena Pump Rd	42 X 8	X		2.33		NW	PST	2.5	1	
				D3-100	Chena Pump Rd	42 X 8	X		2.33						
				D3-100	Raven Lake Rd	42 X 12	X		3.50						USE B SERIES LETTERING
				D3-100	Raven Lake Rd	42 X 12	X		3.50						USE B SERIES LETTERING
				R1-1	STOP	30 X 30	X		6.25						
98	"0" 473+35		X	D3-100	Chena Pump Rd	42 X 8	X		2.33		SE	PST	2.5	1	
				D3-100	Chena Pump Rd	42 X 8	X		2.33						
				D3-100	Ludecker Rd	42 X 12	X		3.50						
				D3-100	Ludecker Rd	42 X 12	X		3.50						
				R1-1	STOP	30 X 30	X		6.25						
99	"0" 493+63		X												DO NOT DISTURB
100	"0" 496+85		X	D3-100	Chena Pump Rd	42 X 8	X		2.33		SW	PST	2.5	1	
				D3-100	Chena Pump Rd	42 X 8	X		2.33						
				D3-100	Ludecker Rd	42 X 12	X		3.50						
				D3-100	Ludecker Rd	42 X 12	X		3.50						
				R1-1	STOP	30 X 30	X		6.25						
101	"0" 503+69		X	D3-100	Chena Pump Rd	42 X 8	X		2.33		SE	PST	2.5	1	
				D3-100	Chena Pump Rd	42 X 8	X		2.33						
				D3-100	Tall Spruce Rd	48 X 12	X		4.00						
				D3-100	Tall Spruce Rd	48 X 12	X		4.00						
				R1-1	STOP	30 X 30	X		6.25						

SUBTOTAL = 133.58

POST TYPE LEGEND:

P = STEEL PIPE
PST = PERFORATED STEEL TUBE
TS = TUBE STEEL (SQUARE STRUCTURAL STEEL TUBING)
W_X_ = WIDE FLANGE

SIGNING SUMMARY (4 OF 7)

STATE OF ALASKA 49TH JOHN JARO NETARDUS NO. CE 124494 REGISTERED PROFESSIONAL ENGINEER
6/10/25

PLANS DEVELOPED BY: STATE OF ALASKA DEPARTMENT OF TRANSPORTATION & PUBLIC FACILITIES, NORTHERN REGION, 2301 PEGER ROAD, FAIRBANKS, AK 99709 (907)451-2200
H:\Projects\Pbks_NP\NFHWY00570 Chena Ridge and Pump Resurfacing\6 Design\5 Civil 3D\3 Drawings\00570_SUMMARIES-H21 SIGNING SUMMARY (4 OF 7) Tue, Jun/10/25 04:13pm

NO.	DATE	REVISION
1	06/10/25	ADDENDUM #1

STATE	PROJECT DESIGNATION	YEAR	SHEET NO.	TOTAL SHEETS
ALASKA	0654015/NFHWY00570	2025	H22	H25

SIGNING SUMMARY

LOC. NO.	STATION	LOCATION LT.	LOCATION RT.	ASDS CODE	LEGEND	SIZE H X V (INCHES)	BRACING/FRAMING BRACED	BRACING/FRAMING FRAMED	AREA (SQ.FT.)	MTG. HGT. (FT.)	DIR.	POST TYPE	POST SIZE (INCHES)	POST NO.	REMARKS
102	"O" 507+83	X		D3-100	Chena Pump Rd	42 X 8	X		2.33		SW	PST	2.5	1	1
				D3-100	Chena Pump Rd	42 X 8	X		2.33						
				D3-100	Chena Point Ave	48 X 12	X		4.00						
				D3-100	Chena Point Ave	48 X 12	X		4.00						
				R1-1	STOP	30 X 30	X		6.25						
103	"O" 509+66	X													DO NOT DISTURB
104	"O" 510+13	X													DO NOT DISTURB
105	"O" 510+59	X													DO NOT DISTURB
106	"O" 511+05	X													DO NOT DISTURB
107	"O" 511+53	X													DO NOT DISTURB
108	"O" 511+96	X													DO NOT DISTURB
109	"O" 513+54	X													DO NOT DISTURB
110	"O" 518+04	X		D3-100	Chena Pump Rd	42 X 8	X		2.33		SE	PST	2.5	1	
				D3-100	Chena Pump Rd	42 X 8	X		2.33						
				D3-100	Shypoke Dr	42 X 12	X		3.50						
				D3-100	Shypoke Dr	42 X 12	X		3.50						
				R1-1	STOP	30 X 30	X		9.00						
111	"O" 518+44		X	D3-100	Chena Pump Rd	42 X 8	X		2.33		NW	PST	2.5	1	
				D3-100	Chena Pump Rd	42 X 8	X		2.33						
				D3-100	Heldiver St	42 X 12	X		3.50						
				D3-100	Heldiver St	42 X 12	X		3.50						
				R1-1	STOP	30 X 30	X		6.25						
112	"O" 541+84	X		D3-100	Chena Pump Rd	42 X 8	X		2.33		NW	PST	2.5	1	
				D3-100	Chena Pump Rd	42 X 8	X		2.33						
				D3-100	Grebe Dr	36 X 12	X		3.00						
				D3-100	Grebe Dr	36 X 12	X		3.00						
				R1-1	STOP	30 X 30	X		6.25						
113	"O" 542+47		X												DO NOT DISTURB
114	"O" 550+28		X												DO NOT DISTURB
115	"O" 551+71		X	W3-5	REDUCED SPEED AHEAD	36 X 36	X		9.00		SW	PST	2.5	1	
116	"O" 555+90		X												DO NOT DISTURB
117	"O" 556+23	X		R2-1	SPEED LIMIT 55 MPH	24 X 30			5.00		NE	PST	2.5	1	
118	"O" 558+31	X		D3-100	Chena Pump Rd	42 X 8	X		2.33		W	PST	2.5	1	
				D3-100	Chena Pump Rd	42 X 8	X		2.33						
				D3-100	Mid Chena Dr	48 X 12	X		4.00						
				D3-100	Mid Chena Dr	48 X 12	X		4.00						
				R1-1	STOP	30 X 30	X		6.25						
119	"O" 558+76		X												DO NOT DISTURB

SUBTOTAL = 107.33

SIGNING SUMMARY

LOC. NO.	STATION	LOCATION LT.	LOCATION RT.	ASDS CODE	LEGEND	SIZE H X V (INCHES)	BRACING/FRAMING BRACED	BRACING/FRAMING FRAMED	AREA (SQ.FT.)	MTG. HGT. (FT.)	DIR.	POST TYPE	POST SIZE (INCHES)	POST NO.	REMARKS
120	"O" 563+27		X								SE				DO NOT DISTURB
121	"O" 567+02		X								E				DO NOT DISTURB
122	"O" 570+94		X								E				DO NOT DISTURB
123	"O" 573+13	X													DO NOT DITURB
124	"O" 576+79	X													DO NOT DISTURB
142	"O" 640+81		X												DO NOT DISTURB
143	"O" 645+36		X	D3-200	Palo Verde Ave	96 X 24	X		16.00		SW	PST	2.5	1	1
144	"O" 647+40	X		W4-2R	LANE ENDS	36 X 36	X		9.00		N	PST	2.5	1	
145	"O" 649+87		X												DO NOT DISTURB
146	"O" 651+21		X												DO NOT DISTURB
147	"O" 651+91		X												DO NOT DISTURB
148	"O" 654+88	X		W9-1R	RIGHT LANE ENDS	36 X 36	X		9.00		N	PST	2.5	1	
149	"O" 655+26	X		D3-201	PALO VERDE AVE WOODRIVER SCHOOL	102 X 42			29.75		NE	PST	2.5	1	
150	"O" 661+84		X												DO NOT DISTURB
151	"O" 666+09	X		R2-1	SPEED LIMIT 45 MPH	30 X 36	X		7.50		NE	PST	2.5	1	POLE MOUNTED
152	"O" 666+49		X												DO NOT DISTURB
153	"O" 667+72		X												DO NOT DISTURB
154	"O" 668+43		X												DO NOT DISTURB
155	"O" 669+10		X												DO NOT DISTURB

SUBTOTAL = 71.25

POST TYPE LEGEND:

P = STEEL PIPE
PST = PERFORATED STEEL TUBE
TS = TUBE STEEL (SQUARE STRUCTURAL STEEL TUBING)
W_X_ = WIDE FLANGE

STATE OF ALASKA 49TH JOHN JARO NETARDUS NO. CE 124494 REGISTERED PROFESSIONAL ENGINEER
6/10/25

SIGNING SUMMARY (5 OF 7)

PLANS DEVELOPED BY: STATE OF ALASKA DEPARTMENT OF TRANSPORTATION & PUBLIC FACILITIES, NORTHERN REGION, 2301 PEGER ROAD, FAIRBANKS, AK 99709 (907)451-2200
H:\Projects\Fbks_NP\NFHWY00570 Chena Ridge and Pump Resurfacing\6 Design\5 Civil 3D\3 Drawings\00570_SUMMARIES-H22 SIGNING SUMMARY (5 OF 7) Tue, Jun/10/25 04:13pm

NO.	DATE	REVISION
1	06/10/25	ADDENDUM #1

STATE	PROJECT DESIGNATION	YEAR	SHEET NO.	TOTAL SHEETS
ALASKA	0654015/NFHWY00570	2025	H23	H25

SIGNING SUMMARY

LOC. NO.	STATION	LOCATION LT.	LOCATION RT.	ASDS CODE	LEGEND	SIZE H X V (INCHES)	BRACING/FRAMING BRACED	BRACING/FRAMING FRAMED	AREA (SQ.FT.)	MTG. HGT. (FT.)	DIR.	POST TYPE	POST SIZE (INCHES)	POST NO.	REMARKS
156	"0" 669+69	X													DO NOT DISTURB
157	"0" 671+81		X	D3-200	Nebula Way	78 X 24		X	13.00		S	PST	2.5	2	1
158	"0" 672+62	X		D3-200	AMHERST DR	78 X 24		X	13.00		NW	PST	2.5	2	
159	"0" 676+83		X								SW				DO NOT DISTURB
160	"0" 678+04		X	D3-100	Chena Pump Rd	42 X 8	X		2.33		E	PST	2.5	1	
				D3-100	Chena Pump Rd	42 X 8	X		2.33						
				D3-100	Nebula Way	42 X 12	X		3.50						
				D3-100	Nebula Way	42 X 12	X		3.50						
				R1-1	STOP	36 X 36	X		9.00						
				W14-2	NO OUTLET	36 X 36	X		9.00						
161	"0" 678+13		X	R4-7	KEEP RIGHT (SYMBOL)	24 X 30			5.00		SW	PST	2.5	1	
				OM1-1	OBJECT MARKER	18 X 18			2.25						
162	"0" 678+16	X		W6-2	DIVIDED HIGHWAY ENDS (SYMBOL)	36 X 36	X		9.00		NE	PST	2.5	1	
163A	"0" 679+43	X		1	ADOPT A HIGHWAY										REMOVE
163B	"0" 679+67		X												DO NOT DISTURB
164	"0" 681+00	X													DO NOT DISTURB
165	"0" 681+01	X		R4-7	KEEP RIGHT (SYMBOL)	24 X 30			5.00		NE	PST	2.5	1	
				OM1-1	OBJECT MARKER	18 X 18			2.25						
166	"0" 681+12		X												DO NOT DISTURB
167	"0" 681+47	X		R4-7	KEEP RIGHT (SYMBOL)	24 X 30			5.00		W	PST	2.5	1	
				OM1-1	OBJECT MARKER	18 X 18			2.25						
168	"0" 682+09	X													DO NOT DISTURB
169	"0" 682+11		X	R4-7	KEEP RIGHT (SYMBOL)	24 X 30			5.00		SW	PST	2.5	1	
				OM1-1	OBJECT MARKER	18 X 18			2.25						
170	"0" 685+72	X		R4-7	KEEP RIGHT (SYMBOL)	24 X 30			5.00		NE	PST	2.5	1	
				OM1-1	OBJECT MARKER	18 X 18			2.25						
171	"0" 685+99	X		D3-1	Chena Pump Rd	42 X 8	X		2.33		W	PST	2.5	1	
				R1-1	STOP	36 X 36	X		9.00		W				
172	"0" 686+53		X	D3-100	Chena Pump Rd	42 X 8	X		2.33		S	PST	2.5	1	
				D3-100	Chena Pump Rd	42 X 8	X		2.33						
				D3-100	Riverstone Way	42 X 12	X		3.50						
				D3-100	Riverstone Way	42 X 12	X		3.50						
				R1-1	STOP	36 X 36	X		9.00						

SUBTOTAL = 132.92

SIGNING SUMMARY

LOC. NO.	STATION	LOCATION LT.	LOCATION RT.	ASDS CODE	LEGEND	SIZE H X V (INCHES)	BRACING/FRAMING BRACED	BRACING/FRAMING FRAMED	AREA (SQ.FT.)	MTG. HGT. (FT.)	DIR.	POST TYPE	POST SIZE (INCHES)	POST NO.	REMARKS
173	"0" 686+77		X	R4-7	KEEP RIGHT (SYMBOL)	24 X 30	X		5.00			PST	2.5	1	1
				OM1-1	OBJECT MARKER	18 X 18			2.25						
174	"0" 687+31		X	D1-1	< ANCHORAGE	90 X 24		X	15.00			P	2.5	2	
175	"0" 689+88	X		R2-1	SPEED LIMIT 45	30 X 36	X		7.50			PST	2.5	1	
176	"0" 690+39		X	R4-7	KEEP RIGHT (SYMBOL)	24 X 30			5.00			PST	2.5	1	
				OM1-1	OBJECT MARKER	18 X 18			2.25						
177	"0" 691+54		X	R4-7	KEEP RIGHT (SYMBOL)	24 X 30			5.00			PST	2.5	1	
				OM1-1	OBJECT MARKER	18 X 18			2.25						
178	"0" 693+46		X	R2-1	SPEED LIMIT 45	30 X 36	X		7.50						POLE MOUNTED
179	"0" 694+68	X		R4-7	KEEP RIGHT (SYMBOL)	24 X 30			5.00			PST	2.5	1	
				OM1-1	OBJECT MARKER	18 X 18			2.25						
180	"0" 694+97		X												DO NOT DISTURB
181	"0" 695+07		X	R6-1L	ONE WAY	48 X 18	X		6.00			PST	2.5	1	
				R6-1R	ONE WAY	48 X 18	X		6.00						
182	"0" 695+26	X													DO NOT DISTURB
183	"0" 695+95		X	R4-7	KEEP RIGHT (SYMBOL)	24 X 30			5.00			PST	2.5	1	
				OM1-1	OBJECT MARKER	18 X 18			2.25						
184	"0" 696+06		X												DO NOT DISTURB
185	"0" 697+88	X		R3-8S/S/R	ADVANCE INTERSECTION LANE CONTROL	48 X 30	X		10.00			PST	2.5	1	
186	"0" 698+39	X		R3-7R	RIGHT LANE MUST TURN RIGHT	36 X 36	X		9.00			PST	2.5	1	
187	"0" 698+43		X	D14-100	ADOPT A HIGHWAY	30 X 24	X		5.00			PST	2.5	1	
				D14-100		30 X 12	X		2.50						
188A	"0" 704+18		X	R4-7	KEEP RIGHT (SYMBOL)	24 X 30			5.00			PST	2.5	1	
				OM1-1	OBJECT MARKER	18 X 18			2.25						
188B	"0" 704+26		X	W6-1	DIVIDED HIGHWAY	36 X 36	X		9.00			PST	2.5	1	
189	"0" 706+66		X	R2-1	SPEED LIMIT 45	30 X 36	X		7.50			PST	2.5	1	
190	"0" 707+67		X	D11-1	BIKE ROUTE	30 X 24	X		5.00			PST	2.5	1	
191	"0" 710+61	X		D1-1	ANCHORAGE >	90 X 24		X	15.00			P	2.5	2	

SUBTOTAL = 148.50

POST TYPE LEGEND:

P = STEEL PIPE
PST = PERFORATED STEEL TUBE
TS = TUBE STEEL (SQUARE STRUCTURAL STEEL TUBING)
W_X_ = WIDE FLANGE

SIGNING SUMMARY (6 OF 7)

STATE OF ALASKA 49TH JOHN JARO NETARDUS NO. CE 124494 REGISTERED PROFESSIONAL ENGINEER 6/10/25

PLANS DEVELOPED BY: STATE OF ALASKA DEPARTMENT OF TRANSPORTATION & PUBLIC FACILITIES, NORTHERN REGION, 2301 PEGER ROAD, FAIRBANKS, AK 99709 (907)451-2200
H:\Projects\Fbks_NP\NFHWY00570 Chena Ridge and Pump Resurfacing\6 Design\5 Civil 3D\3 Drawings\00570_SUMMARIES-H23 SIGNING SUMMARY (6 OF 7) Tue, Jun/10/25 04:13pm

ADDENDUM NO. 1, ATTACHMENT NO. 29

NO.	DATE	REVISION
1	06/10/25	ADDENDUM #1

STATE	PROJECT DESIGNATION	YEAR	SHEET NO.	TOTAL SHEETS
ALASKA	0654015/NFHWY00570	2025	H24	H25

SIGNING SUMMARY

LOC. NO.	STATION	LOCATION LT.	LOCATION RT.	ASDS CODE	LEGEND	SIZE H X V (INCHES)	BRACING/ FRAMING BRACED	BRACING/ FRAMING FRAMED	AREA (SQ.FT.)	MTG. HGT. (FT.)	DIR.	POST TYPE	POST SIZE (INCHES)	POST NO.	REMARKS
192	"P" 33+39		X	D3-100B	Chena Ridge Spur Rd	42 X 18	X		5.25			PST	2.5	1	1
				D3-100B	Chena Ridge Spur Rd	42 X 18	X		5.25						
				D3-100	Old Chena Ridge Rd	48 X 12	X		4.00						
				D3-100	Old Chena Ridge Rd	48 X 12	X		4.00						
				R1-1	STOP	30 X 30	X		6.25						
193	"P" 36+16		X	R3-7R	RIGHT LANE MUST TURN RIGHT	30 X 30	X		6.25			PST	2.5	1	
194	"P" 37+51		X	1	<- GEIST CHENA PUMP ->									2	REMOVE
195	"P" 38+02		X	R1-1	STOP	30 X 30	X		6.25			PST	2.5	1	
196	"Q" 13+38	X													DO NOT DISTURB
197	"Q" 16+70		X	D1-101	Chena Ridge Spur Rd > ^ Geist Rd Chena Pump Rd	156 X 54		X	58.50			W_X	6x9	3	
198	"Q" 17+88		X												DO NOT DISTURB
				R10-31P		24 X 9			1.50			PST	2.5	1	
199	"Q" 18+85		X	R3-7R		36 X 36	X		9.00			PST	2.5	1	
200	"Q" 20+98		X	W1-1R	TURN	36 X 36	X		9.00			PST	2.5	1	
				W13-1P	20 MPH	24 X 24									
201	"Q" 25+83	X		R6-1R	ONE WAY	48 X 18	X		6.00			PST	2.5	1	
				OM1-1	OBJECT MARKER	18 X 18			2.25						
202	"Q" 26+31		X	R3-8L/SR	ADVANCE INTERSECTION LANE CONTROL	54 X 48		X	18.00			PST	2.5	1	
203	"Q" 27+25		X	R5-1a	WRONG WAY	36 X 24	X		6.00			PST	2.5	1	
204	"Q" 27+34	X		R5-1a	WRONG WAY	36 X 24	X		6.00			PST	2.5	1	
205	"Q" 35+50	X		R6-1L	ONE WAY	48 X 18	X		6.00						KEEP POST IN PLACE
				R6-1R	ONE WAY	48 X 18	X		6.00						
				R9-3	NO PEDESTRIAN CROSSING (SYMBOL)	18 X 18			2.25						
				R9-3bP	USE CROSSWALK (PLAQUE)	18 X 12			1.50						
206	"R" 25+49		X												DO NOT DISTURB
207	"R" 27+97		X	R3-8L/SL/R	ADVANCE INTERSECTION LANE CONTROL	60 X 36		X	15.00			PST	2.5	1	
208	"R" 29+82		X	D3-201	< CHENA PUMP RD GEIST RD >	120 X 42		X	35.00			W_X	6x8	2	
209	"R" 30+01	X		R5-1a	WRONG WAY	36 X 24	X		6.00			PST	2.5	1	
210	"R" 30+04		X	R5-1a	WRONG WAY	36 X 24		X	6.00			PST	2.5	1	
211	"R" 30+74	X		R3-8L/SL/R	ADVANCE INTERSECTION LANE CONTROL	60 X 36		X	15.00			PST	2.5	2	

SUBTOTAL = 246.25

SIGNING SUMMARY

LOC. NO.	STATION	LOCATION LT.	LOCATION RT.	ASDS CODE	LEGEND	SIZE H X V (INCHES)	BRACING/ FRAMING BRACED	BRACING/ FRAMING FRAMED	AREA (SQ.FT.)	MTG. HGT. (FT.)	DIR.	POST TYPE	POST SIZE (INCHES)	POST NO.	REMARKS
212	"S" 10+81	X		R1-5	DO NOT ENTER	30 X 30			6.25			PST	2.5	1	1
213	"S" 10+86		X	R1-5	DO NOT ENTER	30 X 30			6.25			PST	2.5	1	
214	"S" 11+01		X	W1-8R	CHEVRON	18 X 24			3.00			PST	2.5	1	
215	"S" 11+40		X	W1-8R	CHEVRON	18 X 24			3.00			PST	2.5	1	
216	"S" 11+80		X	W1-8R	CHEVRON	18 X 24			3.00			PST	2.5	1	
217	"S" 12+13		X	W1-8R	CHEVRON	18 X 24			3.00			PST	2.5	1	
218	"S" 12+16		X	W12-1	DOUBLE ARROW	36 X 36			9.00			PST	2.5	1	
				OM1-1	OBJECT MARKER	18 X 18			2.25						
219	"T" 10+71		X	W11-1	BICYCLE	36 X 36			9.00			PST	2.5	1	
220	"T" 10+88	X		W12-1	DOUBLE ARROW	36 X 36			9.00			PST	2.5	1	
				OM1-1	OBJECT MARKER	18 X 18			2.25						
221	"T" 12+76	X		W4-1R	MERGE	36 X 36			9.00			PST	2.5	1	
222	"T" 12+93		X	R1-2	YIELD	24 X 48			8.00			PST	2.5	1	

SUBTOTAL = 73.00

POST TYPE LEGEND:

P = STEEL PIPE
PST = PERFORATED STEEL TUBE
TS = TUBE STEEL (SQUARE STRUCTURAL STEEL TUBING)
W_X_ = WIDE FLANGE

SIGNING SUMMARY (7 OF 7)

STATE OF ALASKA 49TH JOHN JARO NETARDUS NO. CE 124494 REGISTERED PROFESSIONAL ENGINEER 6/10/25

PLANS DEVELOPED BY: STATE OF ALASKA DEPARTMENT OF TRANSPORTATION & PUBLIC FACILITIES, NORTHERN REGION, 2301 PEGER ROAD, FAIRBANKS, AK 99709 (907)451-2200
H:\Projects\Pbks_NP\NFHWY00570 Chena Ridge and Pump Resurfacing\6 Design\5 Civil 3D\3 Drawings\00570_SUMMARIES-H24 SIGNING SUMMARY (7 OF 7) Tue, Jun/10/25 04:13pm

ADDENDUM NO. 1, ATTACHMENT NO. 31

NO.	DATE	REVISION
1	06/10/25	ADDENDUM #1

STATE	PROJECT DESIGNATION	YEAR	SHEET NO.	TOTAL SHEETS
ALASKA	0654015/NFHWY00570	2025	H25	H25

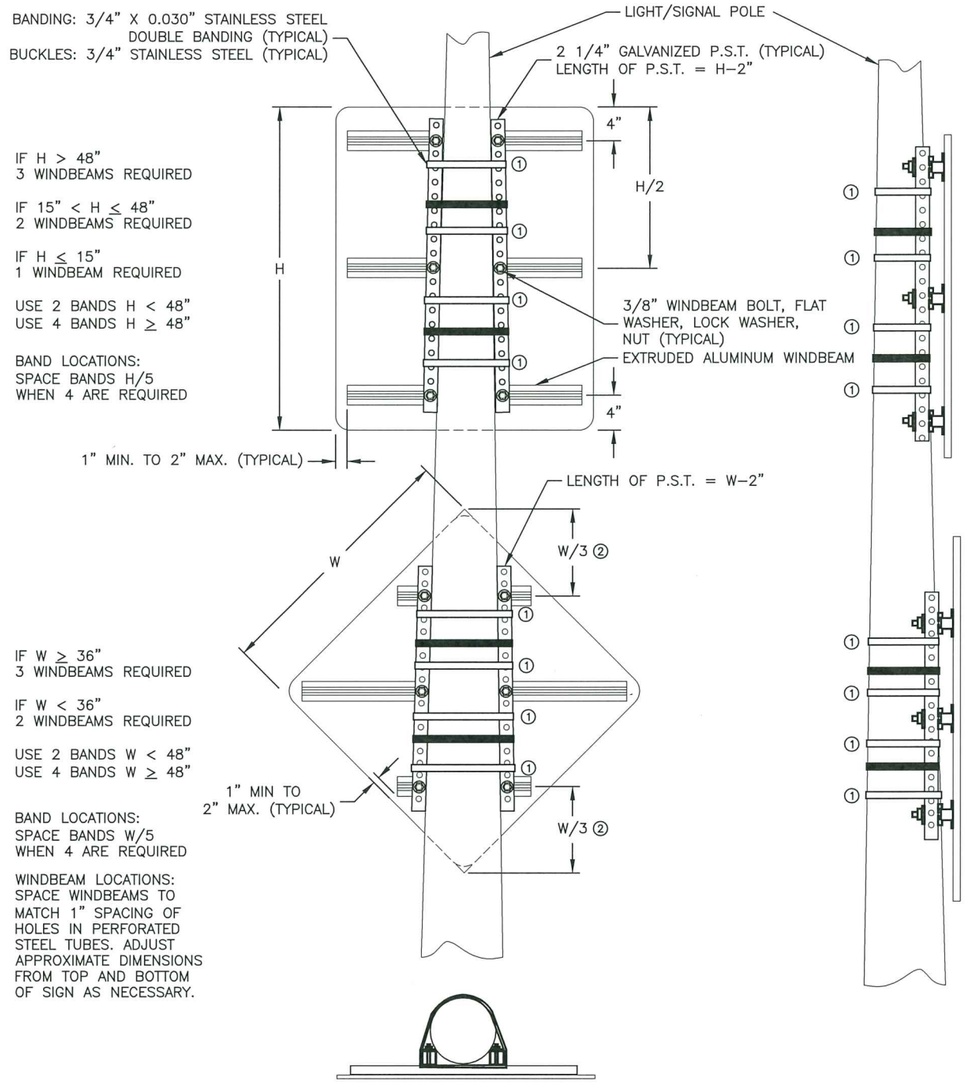

LIGHT/SIGNAL POLE SIGN FRAMING & MOUNTING DETAILS

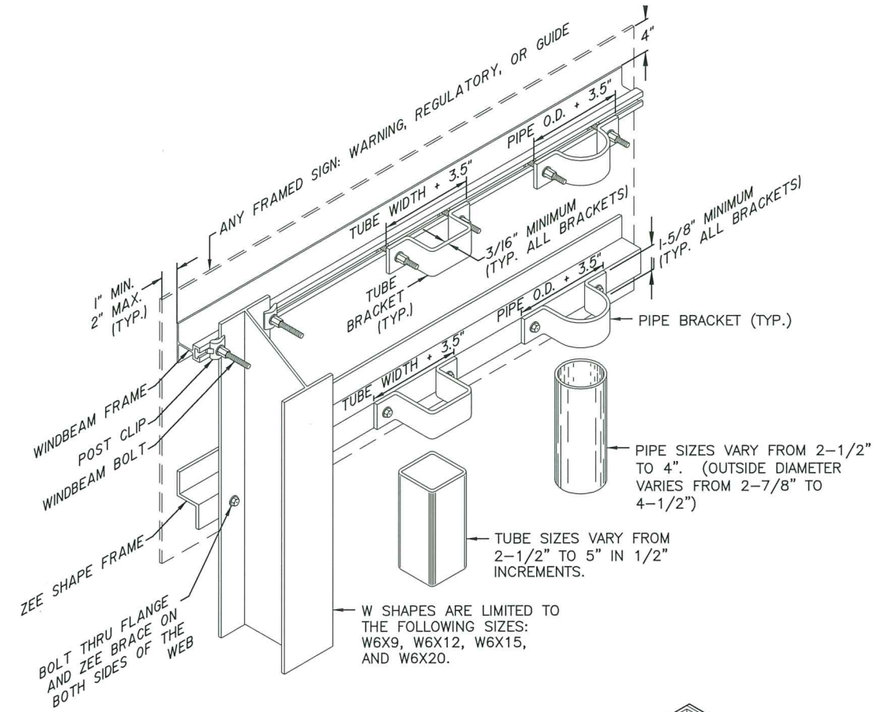

FRAMED SIGN ATTACHMENT BRACKETS

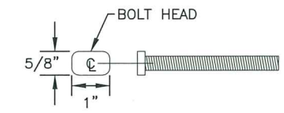

3/8" WINDBEAM BOLT

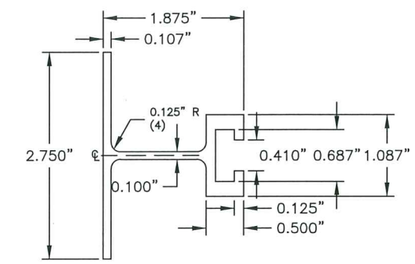

EXTRUDED ALUMINUM WINDBEAM

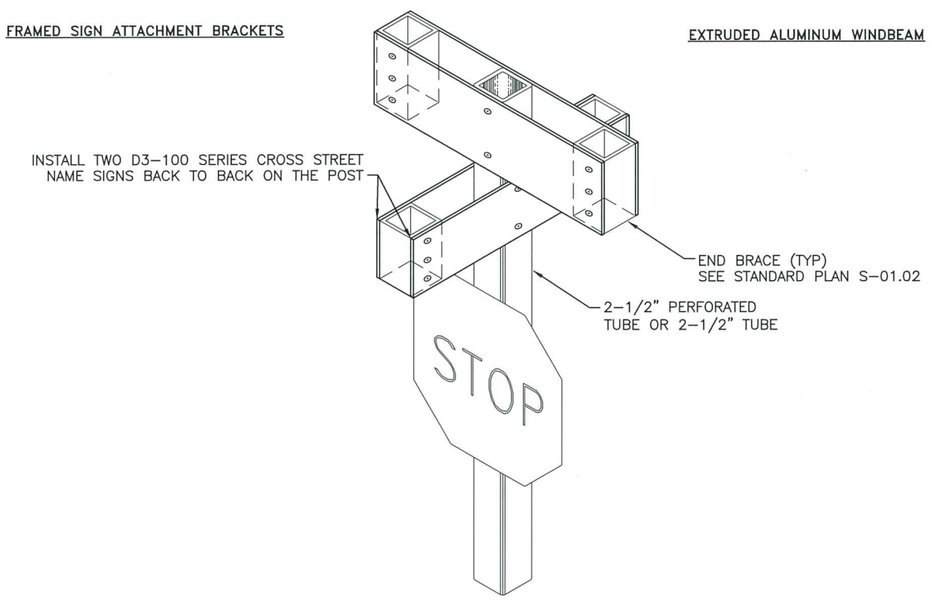

STREET NAME SIGN MOUNTING DETAIL

NOTES:

1. VERTICALLY SEPARATE R1–1 (STOP) SIGN AND ALL OTHER SIGN ASSEMBLIES MOUNTED ON THE SAME POST BY 2–1/2 INCHES.
2. ATTACH FRAMED SIGNS TO POSTS WHEREVER THE FRAMES CROSS THE POSTS. AT EACH CROSSING, ATTACH THE SIGN USING TWO POST CLIPS ON W–SHAPE POSTS, A U–SHAPED BRACKET ON PIPES OR A BRACKET WITH SQUARE CORNERS ON TUBES.
3. THE TUBE BRACKETS USED ON EVEN INCH SIZE TUBES MAY ALSO BE USED ON TUBES 1/2" SMALLER IN SIZE.
4. THE BRACKET DETAILS SHOWN INDICATE GENERAL DESIGNS ONLY. DESIGNS MAY VARY BY MANUFACTURER.
5. ALUMINUM ALLOY 6061–T6 SHALL BE USED FOR ZEE SHAPE FRAMING, EXTRUDED WINDBEAM, AND RIVETS.
6. ATTACH SIGNS TO WINDBEAM WITH 3/16" RIVETS AT 4" STAGGERED SPACING.
7. EACH FRAMING MEMBER SHALL BE ONE CONTINUOUS PIECE.
8. ATTACH SIGN TO WINDBEAMS WITH 3/16" RIVETS AT 4" STAGGERED SPACING.

SIGN DETAILS

STATE OF ALASKA 49TH JOHN JARO NETARDUS NO. CE 124494 REGISTERED PROFESSIONAL ENGINEER 6/10/25

PLANS DEVELOPED BY: STATE OF ALASKA DEPARTMENT OF TRANSPORTATION & PUBLIC FACILITIES, NORTHERN REGION, 2301 PEGER ROAD, FAIRBANKS, AK 99709 (907)451–2200
H:\Projects\Fbks_NP\NFHWY00570 Cheno Ridge and Pump Resurfacing\6 Design\5 Civil 3D\3 Drawings\H25_Signing Details–H25 SIGN DETAILS Tue, Jun/10/25 04:13pm

NO.	DATE	REVISION
1	06/10/25	ADDENDUM #1

STATE	PROJECT DESIGNATION	YEAR	SHEET NO.	TOTAL SHEETS
ALASKA	0654015/NFHWY00570	2025	Q1	Q1

ESCP GENERAL NOTES:

1. CONSTRUCTION ENTRANCE/EXIT MUST BE ESTABLISHED TO MINIMIZE OFF-SITE IMPACTS.
2. INSTALL PERIMETER CONTROL BMP WHEN WORKING WITHIN 25 FEET OF SURFACE WATERS AND ALONG WETLANDS WHERE A 25 FOOT VEGETATIVE BUFFER IS NOT RETAINED.
3. IF EXCAVATION DE-WATERING WILL OCCUR WITHIN 1,500FT OF AN ADEC IDENTIFIED CONTAMINATED SITE, THEN THE PROJECT MUST COMPLY WITH THE ADEC EXCAVATION DE-WATERING GENERAL PERMIT.
4. ALL IN-WATER WORK MUST BE ISOLATED FROM WATERS OF THE U.S. USING APPROPRIATE BMPS. ISOLATION METHODS MAY INCLUDE:
   - 4.1. SILT CURTAINS
   - 4.2. COFFERDAMS
   - 4.3. DIVERSIONS
   - 4.4. OTHER METHODS APPROVED BY THE ENGINEER
5. INLET / OUTLET PROTECTION REQUIRED FOR ALL CULVERTS, CROSSING CULVERT PROTECTION IS SHOWN ON THE ESCP SHEETS, DRIVEWAY CULVERTS ARE NOT SHOWN FOR VISUAL CLARIFICATION.
6. AREAS OF DISTURBANCE, TEMPORARY AND PERMANENT STABILIZATION, WILL BE MARKED AS WORK PROCEEDS AND ADDED TO THE LEGEND.
7. REFER TO APPENDIX A OF THE CONTRACT FOR ENVIRONMENTAL PERMIT INFORMATION.

ENVIRONMENTAL COMMITTMENTS:

1. MECHANIZED LAND VEGETATION CLEARING AND GRUBBING IS PROHIBITED DURING THE MIGRATORY BIRD NESTING SEASON (MAY 1 – JULY 15).

1

ESCP

PLANS DEVELOPED BY: STATE OF ALASKA DEPARTMENT OF TRANSPORTATION & PUBLIC FACILITIES, NORTHERN REGION, 2301 PEGER ROAD, FAIRBANKS, AK 99709 (907)451-2200
H:\Projects\Fbks_NP\NFHWY00570 Chena Ridge and Pump Resurfacing\6 Design\5 Civil 3D\3 Drawings\00570_ESCP-Q1 ESCP Tue, Jun/10/25 04:14pm

NO.	DATE	REVISION

STATE	PROJECT DESIGNATION	YEAR	SHEET NO.	TOTAL SHEETS
ALASKA	0654015/NFHWY00570	2025	T1	T1

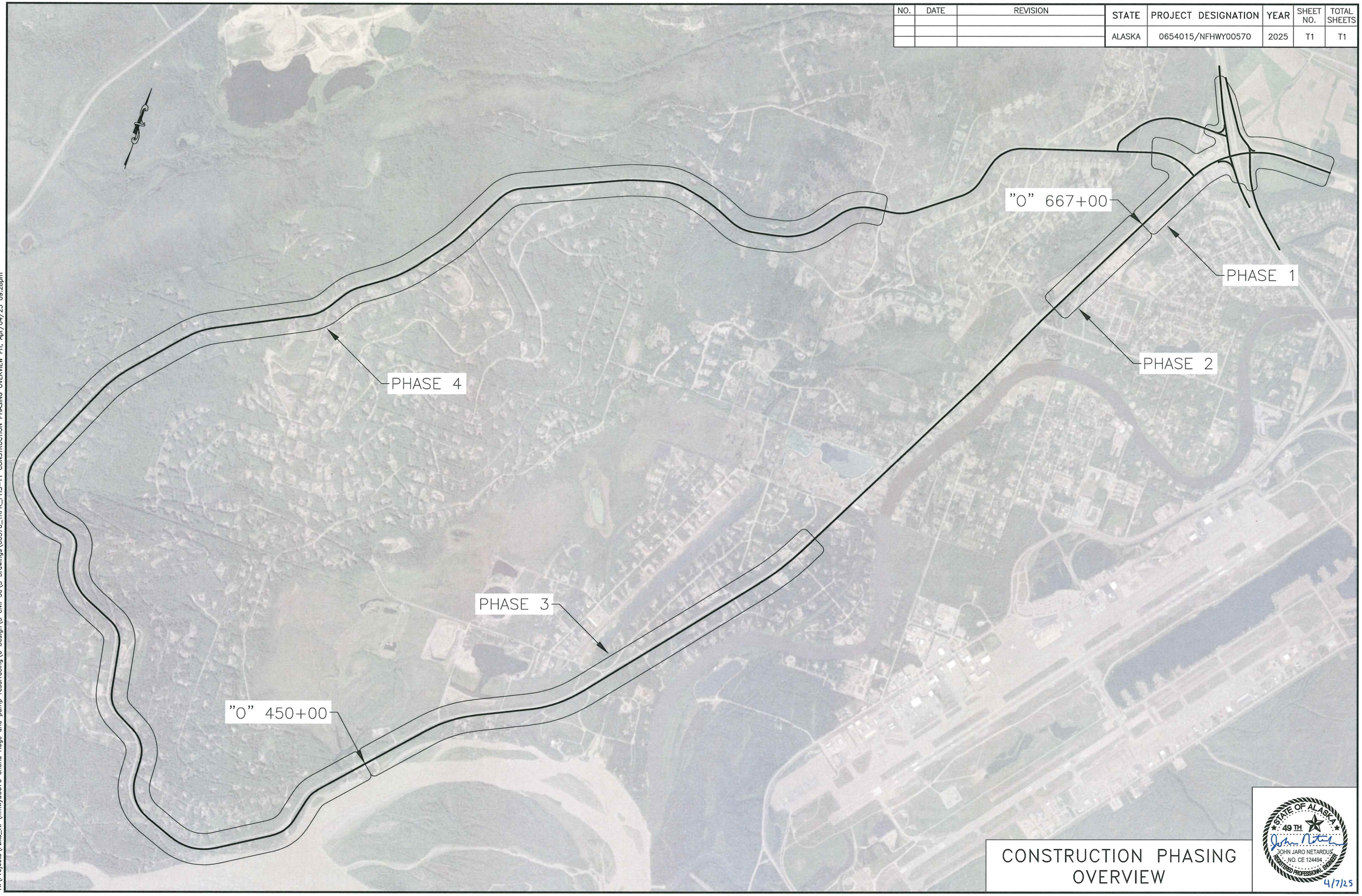

CONSTRUCTION PHASING OVERVIEW

STATE OF ALASKA
49TH
JOHN JARO NETARDUS
NO. CE 124494
REGISTERED PROFESSIONAL ENGINEER
4/7/25

PLANS DEVELOPED BY: STATE OF ALASKA DEPARTMENT OF TRANSPORTATION & PUBLIC FACILITIES, NORTHERN REGION, 2301 PEGER ROAD, FAIRBANKS, AK 99709 (907)451-2200
H:\Projects\Fbks_NP\nfhwy00570 chena ridge and pump resurfacing\6 Design\5 civil 3d\3 Drawings\00570_TRFK_PHS-T1 CONSTRUCTION PHASING OVERVIEW Fri, Apr/04/25 09:28pm

C-05.20 SHEET | of |

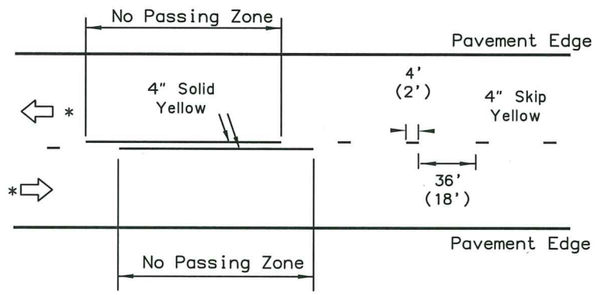

Striping

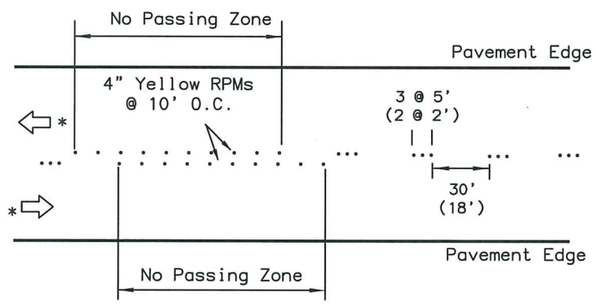

Temporary Raised Pavement Markers

DETAIL A

Two-lane road: No Passing Zones indicated with pavement markings.

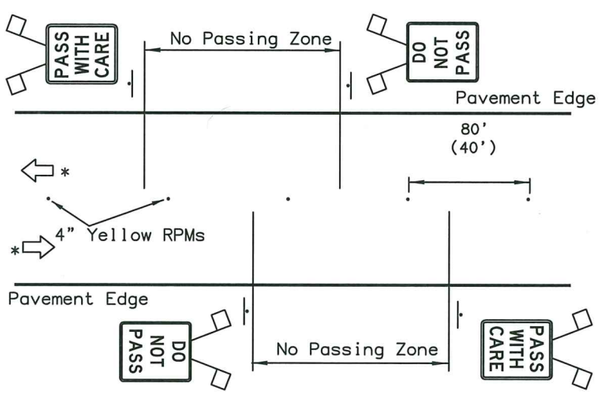

DETAIL B

Two-lane road: No Passing Zones indicated by signs only. Raised pavement markers for centerline delineation.

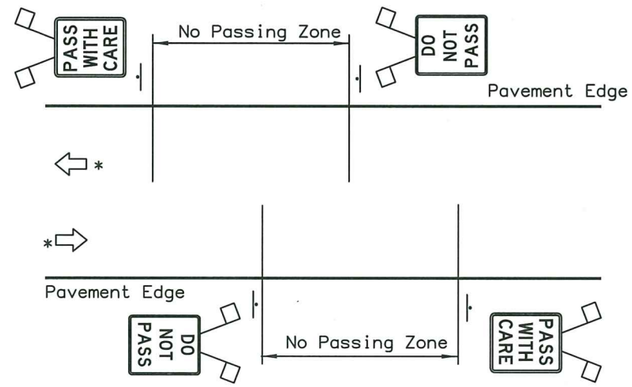

DETAIL C

Two-lane road: No Passing Zones indicated by signs only (see Note 2c). No centerline delineation.

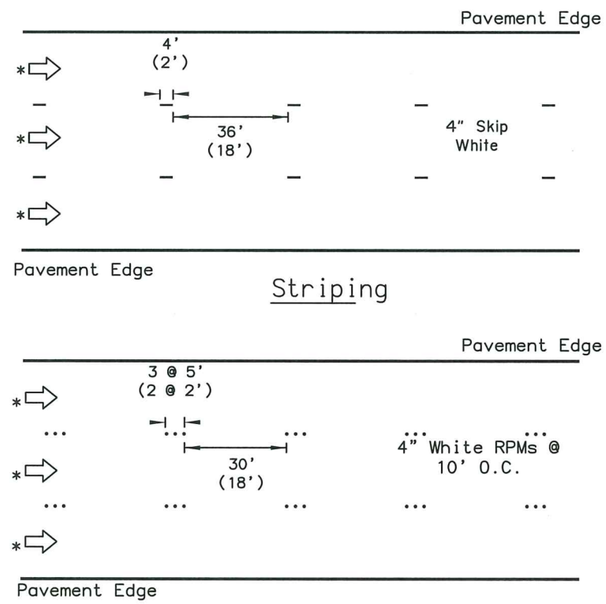

Temporary Raised Pavement Markers

DETAIL D

Multilane one-way road: Lane dividing lines

* Direction of Travel

GENERAL NOTES:

1. Final pavement markings conforming to Part 3 of the Alaska Traffic Manual should be installed before paved roads are open to public travel. If that is not practical, install interim pavement markings as shown on this drawing. Maintain interim pavement markings until final pavement markings are installed.

2. No interim pavement markings are required:
   a. on projects that will not have permanent markings when finished.
   b. in work zones that are open to public travel for no more than one work shift during daytime or for no more than one hour at night.
   c. where DO NOT PASS and PASS WITH CARE signs are installed on two lane roads as shown in Detail C, no pavement markings are required:
      1) for 3 days if seasonal ADT is above 2000, or
      2) for 1 month if seasonal ADT is below 2000.

3. Interim pavement markings should not be in place longer than 14 calendar days before being replaced with permanent markings conforming to Part 3 of the Alaska Traffic Manual unless the Engineer provides written approval.

4. Where R4-1 DO NOT PASS signs are used, install at the beginning of no passing zones and at no more than 1500' spacings within no passing zones.

5. Install high level warning devices on all DO NOT PASS and PASS WITH CARE signs.

6. Offset temporary markings 8"-12" from the future location of permanent markings if applied on the same lift of pavement.

7. Dimensions in parenthesis apply to curves with a radius of 1000 feet or less or where posted speed limit is 30 mph or less.

State of Alaska DOT&PF
ALASKA STANDARD PLAN

INTERIM
PAVEMENT MARKINGS

Adopted as an Alaska Standard Plan by: Kenneth J. Fisher, P.E.
Chief Engineer

Adoption Date: 02/08/2019

Last Code and Stds. Review
By: Date:

Next Code and Standards Review date: 02/08/2029

C-05.20

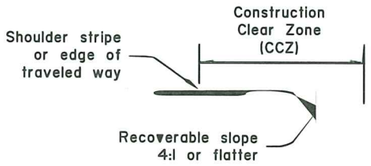

FIGURE 1

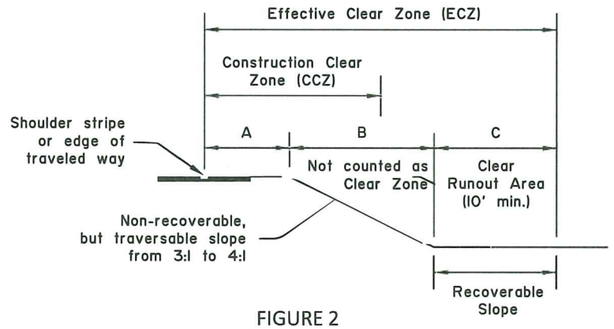

FIGURE 2

Table 1 - Width of Construction Clear Zone (feet)									
Hazard	AADT	Posted Speed Limit (MPH)							
		<=30 MPH		35 to 40 MPH		45 to 55 MPH		>=60 MPH	
		6:1 or flatter	5:1 to 4:1	6:1 or flatter	5:1 to 4:1	6:1 or flatter	5:1 to 4:1	6:1 or flatter	5:1 to 4:1
Fill (Fore) & Cut (Back) Slopes	Under 750	5'	5'	6'	8'	8'	12'	12'	16'
	750 - 6,000	6'	10'	8'	12'	14'	18'	20'	26'
	Over 6,000	10'	10'	12'	14'	16'	20'	22'	28'
Fixed Objects	All	15'		30'					

Table 2 - Treatment for Hazards Within Construction Clear Zone		
Roadside Condition to be Treated	Category	Treatment
Fill (Fore) Slopes, including trenches	Steeper than 3:1 or water 3 ft. or deeper	Use Table 5 to select from the following two options: 1. Install rigid barrier or guardrail if the condition warrants barrier, or 2. Use drums or Type II barricades if the condition does not warrant barrier.
	3 : 1 to 4 : 1	1. Use drums or Type II barricades if 10 ft. of runout at the bottom of the slope is not clear of obstructions. 2. No traffic control devices are required if 10 ft. of runout at the bottom of the slope is clear of obstructions. 3. If water 3 ft. or deeper is at bottom of slope, use Table 5.
	Flatter than 4 : 1	No traffic control devices are required, except when water 3 ft. or deeper is in construction clear zone use Table 5.
Fixed Objects	All	Install rigid barrier or guardrail if called for by the plans or specifications. Otherwise use SSHC Section 643-3.04.3 - Fixed Objects.

GENERAL NOTES:

1. The "Construction Clear Zone" (CCZ) may be called "Work Zone Clear Zone" or "Clear Zone in Work Zones" in other publications.
2. In the case of conflicts, this Standard Plan has lesser precedence than Section 643 (Traffic Maintenance) of the Standard Specifications for Highway Construction (SSHC).
3. During seasonal shutdown or if construction activiy is scheduled for suspension for 45 days or more, treat hazards within a 30 foot CCZ width or within the permanent design clear zone (CZ) width.
4. These guidelines are not comprehensive and are not intended to limit the use of safety measures.
5. During pilot car operations, keep fixed objects and other hazards, 2 feet or farther, away from the edge of traveled way and delineate with channelizing devices as required by the Engineer.

INSTRUCTIONS FOR USING TABLES 1 THROUGH 5:

Use The following tables to determine how to treat roadside fixed object or slopes (including trenches, berms and material stockpiles) in construction clear zones.

TABLE 1: Use to determine whether the hazard in withing the CCZ

TABLE 2: Use to determine the appropriate treatment for hazards within the CCZ. No treatment is required for fixed objects or slopes outside the CCZ.

TABLES 3a and 3b: Use to determine appropriate treatment for pavement edge dropoffs.

TABLE 4: Use to determine barrier flare rates.

TABLE 5: Use to determine whether drums or Type II barricades, or temporary barrier or guardrail, are required on fill slopes or for water hazards.

TABLE 1 NOTES:

1. Measure CCZ from the shoulder stripe. If there is no shoulder stripe, measure from the edge of the traveled way. See Figure 1.
2. If CCZ include or ends on a slope of 3:1 to 4:1, use the Effective Clear Zone (ECZ) that extends beyond the bottom of the slope to proved a clear runout area of 10 foot minimum width. The ECZ width must equal or greater than the CCZ width from Table 1. See Figure 2 and verify that A+C ≥ CCA and C ≥ 10 feet.
3. If a CCZ includes or ends on a slope steeper than 3:1, the top of slope must be delineated by channelizing devices or protected by barrier.
4. The term "fixed objects" is defined in Section 643-1.02 of the SSHC.
5. AADT stands for Average Annual Daily Traffic. Use the higher of the as listed in the plans or the average of June/July/August ADT's, unless otherwise specified by the Engineer.

TABLE 2 NOTES:

1. Eliminate non-traversable slopes (those steeper than 3:1) and fixed objects (as defined in Section 643-1.02 of the SSHC) within the CCZ when practicable. They should only be left in place and treated as treated as shown in this table when elimination is not practicable.
2. Maintain a 2-foot minimum wide lateral buffer space between the edge of traveled way and work areas. This provides an area to install barriers or other delineation by channelizing devices.
3. If necessary to treat multiple hazards on the same road segment (slopes and fixed objects), choose treatments from Table 2 that satisfy the requirements for the most significant of the multiple hazards.

State of Alaska DOT&PF
ALASKA STANDARD PLAN

ROADSIDE SAFETY TREATMENT FOR WORK ZONES

Adopted as an Alaska Standard Plan by: Carolyn H Morehouse
Carolyn Morehouse, P.E.
Chief Engineer

Adoption Date: 09/15/2022

Last Code and Stds. Review
By: LRG Date: 09/15/2022

Next Code and Standards Review date: 09/15/2032

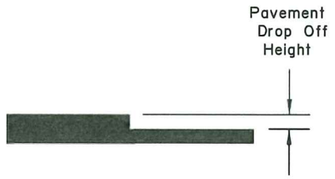

FIGURE 3

Pavement Drop-off Detail

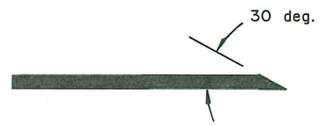

FIGURE 4

Safety Edge Detail

Table 3a - Treatment for Pavement Edge Drop-offs for Posted Speeds > 30 MPH

Nominal Lift Thickness / Height of Pavement Edge Drop-off	Between Active Lanes of traffic moving in same direction	Between Active Lanes of traffic moving in opposing directions	Outside Pavement Edge (if within 3' of traveled way)	Outside Pavement Edge if more than 3' from traveled way and within the CCZ	Across Active Lane, and Entrance and Exit Ramps
0 to 1.0"	No Edge Treatment or Signage Required				
More than 1.0" to 2.0"	**UNEVEN LANE** Signs		**LOW SHOULDER** Signs		Taper Drop-off at slope of 15H:1V or flatter Use BUMP Sign
More than 2.0" to 3.0"	**UNEVEN LANES** Signs - Use Channelizing Devices or Safety Edge	**UNEVEN LANES** Signs - Use Channelizing Devices	**LOW SHOULDER** Signs - Use Channelizing Devices - Consider Safety Edge	**LOW SHOULDER** Signs	
More than 3.0" to 6.0"	**UNEVEN LANES** Signs - Use Channelizing Devices and Use Safety Edge	**UNEVEN LANES** Signs - Use Channelizing Devices	**SHOULDER DROP OFF** Signs - Use Channelizing Devices and Safety Edge; or Use Barrier	**SHOULDER DROP OFF** Signs - Use Channelizing Devices or Barrier	
More than 6"	Prohibited		**Barrier** - Installed on traffic side of drop-off	**Channelizing Devices** or **Barrier** according to Table 5	

Table 3b - Sign Numbers

Legend	Number	ATM * Ref.
UNEVEN LANES	W8-11	6F.45
LOW SHOULDER	W8-9	6F.44
SHOULDER DROP OFF (Symbol)	W8-17	6F.44
SHOULDER DROP OFF (Plaque)	W8-17P	6F.44
BUMP	W8-1	2C.28

* ATM = Alaska Traffic Manual

Table 4 - Barrier Flare Rates

Speed (mph)	Flare Rate	
	Rigid	Semi-Rigid
70	20:1	15:1
60	18:1	14:1
55	16:1	12:1
50	14:1	11:1
45	12:1	10:1
40	10:1	8:1
30	8:1	7:1

TABLE 3 NOTES:

1. This table applies to pavement edge drop-offs that are adjacent to traffic and left after the pavement shift ends and for posted speeds > 30 mph. Use engineering judgment for edge treatment for posted speeds ≤30 mph.
2. Use interim pavement markings and signs as required according to Standard Plan C-05 (for all conditions).
3. A Safety Edge is a formed pavement edge taper sloped at approximately 30°, but not more than 35° from horizontal.
4. Use a Safety Edge for longitudinal or diagonal pavement edge drop-offs more than 2 inches within a traveled lane. See Figure 3. Use a Safety Edge on longitudinal joints between lanes as required by Table 3a.
5. The "Across Active Lane, and Entrance and Exit Ramps" column applies to any location where motorists will cross pavement drop-offs (includes transverse construction joints) at an acute angle (45° or more). Taper may be reduced to 6:l at posted speeds of 30 mph or less.
6. Signage applies to all posted speed for edge drop-offs as shown in Table 3a. For information on signs and locations, see SSHC Section 643-3.04 and the Alaska Traffic Manual (ATM). Signs should be place at the beginning and end points of each paved segment, and in locations between as specified. Also, see Table 3b.
7. "Channelizing Devices" means drums with steady-burn lights, candle, or cones.
8. Treatment for pavement edge drop-offs are in addition to Treatment for Hazards within Construction Clear Zones (CCZs) (i.e. fixed obstacle or slope protection may also be required).

BARRIER TERMINATION AND TABLE 4 NOTES:

1. Terminate portable rigid barrier (concrete or metal) with one of the following methods:
   a) An NCHRP 350 or MASH TL-3 approved end treatment or crash cushion.
   b) An NCHRP 350 or MASH TL-3 approved buried-in-backslope treatment
   c) A Thrie-Beam transition according to Std. Plan G-32 (except attached to a rigid barrier instead of a bridge rail) and terminated with a MASH TL-3 end treatment.
   d) Terminate outside the CCZ by flaring barriers away from the roadway at the rate shown in Table 4 for rigid barriers (maximum 10:l cross slope in front of the barrier).
   e) Sloped ends may be used to terminate barriers within the CZ when the regulatory (black on white sign) speed limit is 30 mph or below. For speeds more than 30 mph, the Engineer may approve sloped ends if they determine NCHRP 350 or MASH compliant end treatments are impracticable. See Std. Plan G-46 for concrete barrier sloped ends.
2. Terminate temporary W-Beam guardrail with one of the following methods:
   a. With a MASH TL-3 approved end treatment
   b. By burying it in a backslope according to Std. Plan G-16
   c. By flaring the guardrail away from the road at the rate shown in Table 4 for semi-rigid barriers (maximum 10:l cross slope in from of the guardrail).
   d. Terminate outside the CZ.

State of Alaska DOT&PF
ALASKA STANDARD PLAN

ROADSIDE SAFETY TREATMENT FOR WORK ZONES

Adopted as an Alaska Standard Plan by: Carolyn H Morehouse
Carolyn Morehouse, P.E.
Chief Engineer

Adoption Date: 09/15/2022

Last Code and Stds. Review
By: LRG Date: 09/15/2022

Next Code and Standards Review date: 09/15/2032

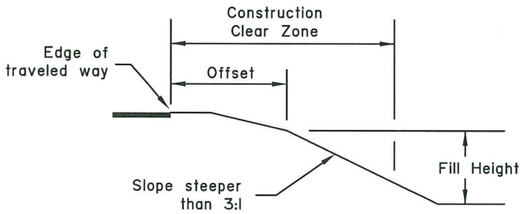

FIGURE 5

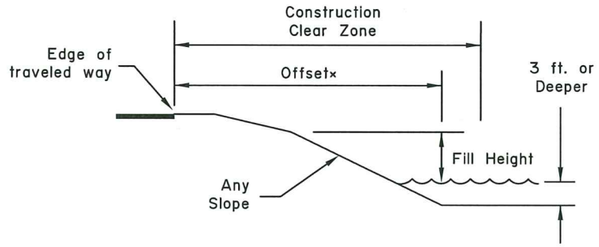

FIGURE 6

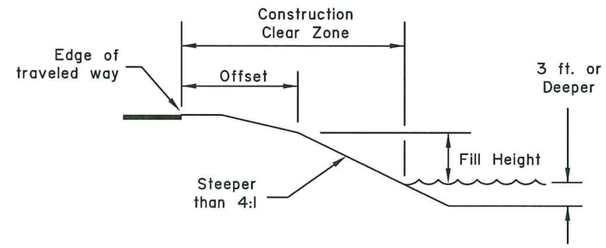

FIGURE 7

Table 5 - Minimum Fill Height at which Temporary Barrier Is Waranted

			Seasonal Traffic Volume - ADT																
			0-750	751-1500			1501-6000				6001-15000				15001+			
Posted WZ Speed Limit	Duration (# days)	Offset (ft)	All Slopes/ Water Condition	slope 2.9:1 to 1.1:1	slope 1:1 to Vert.	Water	slope 2.9:1 to 2.1:1	slope 2:1-1.1:1	slope 1:1-Vert.	Water	slope 2.9:1 to 2.1:1	slope 2:1-1.1:1	slope 1:1-Vert.	Water	slope 2.9:1 to 2.1:1	slope 2:1-1.1:1	slope 1:1-Vert.	Water
30 MPH and lower	4-30	5-10																
		3-5											11'	11'			11'	11'
		0-3																
	31-100	5-10											11'	11'			11'	11'
		3-5							11'	11'						35'		
		0-3										35'				31'		
	101+	5-10														35'	11'	11'
		3-5							11'	11'		35'	11'	11'		29'		
		0-3			11'	11'						31'				17'	8'	8'
35 to 45 MPH	4-30	6-12															10'	10'
		3-6											10'	10'				
		0-3														29'		
	31-100	6-12											10'	10'		29'	10'	10'
		3-6							10'	10'		29'						
		0-3														19'	9'	9'
	101+	6-12										29'	10'	10'		27'	10'	10'
		3-6							10'	10'		28'				12'	7'	7'
		0-3			10'	10'		29'				18'	9'	9'		7'	6'	6'
45 to 55 MPH	4-30	9-18															8'	8'
		3-9											8'	8'		13'		
		0-3																
	31-100	9-18														13'	8'	8'
		3-9							8'	8'		13'	8'	8'			7'	7'
		0-3						13'								7'	6'	6'
	101+	9-18										13'	8'	8'		13'	7'	7'
		3-9							8'	8'		12'	7'	7'	37'	6'	5'	5'
		0-3			8'	8'		13'				7'	6'	6'	23'	5'	3'	3'
60 MPH and above	4-30	13-26															6'	6'
		3-13											6'	6'		10'		
		0-3										10'						
	31-100	13-26											6'	6'		10'	6'	6'
		3-13							6'	6'		10'						
		0-3						10'							40'	6'	5'	5'
	101+	13-26										10'	6'	6'		10'	6'	6'
		3-13							6'	6'					30'	6'	4'	4'
		0-3			6'	6'		10'			34'	6'	5'	5'	10'	3'	1'	1'

TABLE 5 NOTES:

1. Use this table for fill slopes steeper than 3:l or water hazards that start within the Construction Clear Zone (CCZ). See Figures 5, 6, and 7.
2. Near Lane AADT, as used in this table, means the higher of the AADT listed in the plans or the seasonal Average Daily Traffic (ADT) for June, July, and August in the lane nearest the slope or water hazard during the planned construction period. Assume an even distribution of traffic across lanes - i.e. if there is 6000 one-way AADT on three lanes, use 2000 AADT in each lane.
3. Duration is the estimated number of days traffic will be exposed to the fill (fore) slope or water hazard.
4. To use Table 5, fine the cell that corresponds to the speed limit, duration, offset, traffic volume, and the presence of a slope or water hazard.
   a. If the cell is unshaded, a Temporary Barrier is required when the fill height equals or exceeds the height (in feet) shown in the cell.
   b. If the cell is shaded or fill height is less than the height shown in the cell, use drums or Type II barricades.
5. A water hazard is defined as:
   a. Water 3 feet or deeper within the CCZ, or
   b. Where a slope steeper than 4:l starts within the CCZ and leads to water 3 feet or deeper.
6. Consider water depth to be the highest level anticipated during the duration period.
7. If both a water hazard and a slope steeper than 3:l are present, install Temporary Barrier if warranted for either condition.
8. Temporary Barrier is rigid barrier (concrete or metal) or guardrail meeting NCHRP or MASH TL-3, or higher.

State of Alaska DOT&PF
ALASKA STANDARD PLAN

ROADSIDE SAFETY TREATMENT FOR WORK ZONES

Adopted as an Alaska Standard Plan by: Carolyn H Morehouse

Carolyn Morehouse, P.E.
Chief Engineer

Adoption Date: 09/15/2022

Last Code and Stds. Review
By: LRG Date: 09/15/2022

Next Code and Standards Review date: 09/15/2032

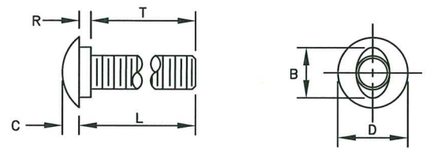

B	C	D	L (Length)	R	T (Thread Length)
15/16"	5/16"	1 5/16" or 1 7/16"	As Required	7/32"	As Required

5/8" BUTTONHEAD BOLT
(FBB01–05)

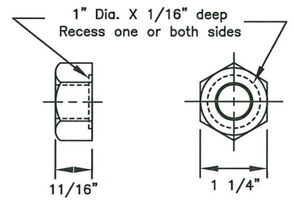

5/8" Dia. RECESSED HEX NUT
(FBB01–05)

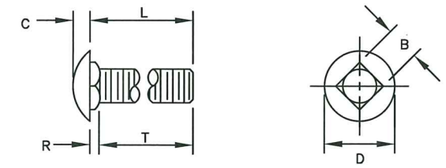

B	C	D	L (Length)	R	T (Thread Length)
5/8"	5/16"	1 5/16"	As Required	3/16"	As Required

5/8" Dia. CARRIAGE BOLT
(FBC10–20)

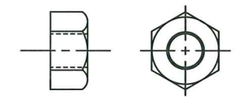

STANDARD HEX NUT

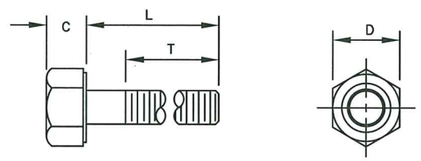

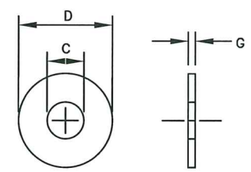

GENERAL NOTES:

1. All covered hardware shall comply with the Task Force 13 (TF13) Guide to Standardized Roadside Safety Hardware online publication. Designators given when possible in parentheses.

Bolt Size	C	D	L (Length)	T (Thread Length)
5/16"	—	—	1 1/2"	7/8"
5/16"	—	—	1"	1"
3/8"	—	—	7 1/2"	1 1/2"
1/2"	—	—	1 1/2"	1 1/2"
1/2"	—	—	1 1/4"	1 1/4"
5/8" H.S.	5/16"	7/8"	8"	1 1/2"
5/8"–11	—	—	1 1/2"	1 1/2"
3/4"	—	—	1 1/2"	1 1/2"
3/4"	—	—	As Required	2"
3/4" H.S.	15/32"	1 1/4"	2"	1 1/2"

STANDARD HEX BOLTS

For Bolt ø	C	D	G
3/8"	7/16"	1"	5/64"
1/2"	17/32"	1 1/16"	3/32"
1/2" H.S.	17/32"	1 1/16"	3/32"
5/8"	11/16"	1 3/4"	9/64"
3/4"	13/16"	1 15/32"	9/64"
3/4" H.S.	13/16"	2"	5/32"
1"	1 1/16"	2"	9/64"

STANDARD STEEL WASHERS

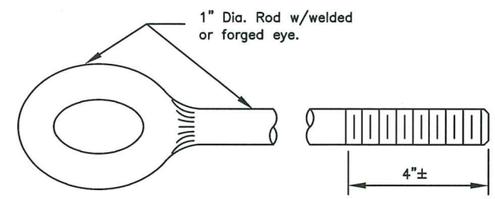

EYE BOLT

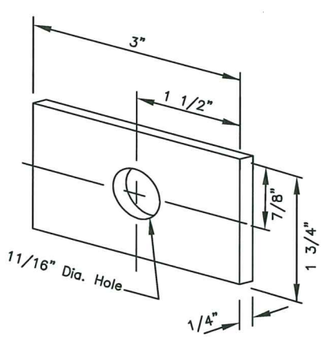

FLAT PLATE WASHER

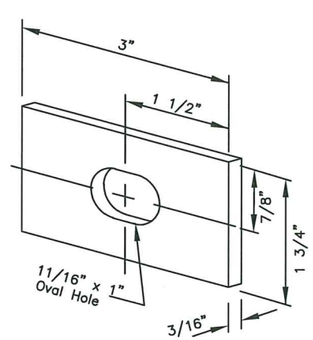

RECTANGULAR POST BOLT WASHER
(FWR03)

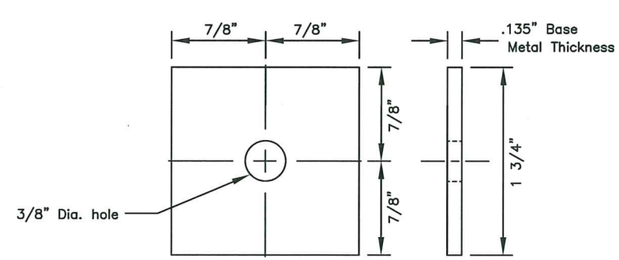

SQUARE STEEL WASHER
(FWR01)

State of Alaska DOT&PF
ALASKA STANDARD PLAN

STANDARD GUARDRAIL HARDWARE
(NUTS, BOLTS & WASHERS)

Adopted as an Alaska Standard Plan by: Carolyn Morehouse
Carolyn Morehouse, P.E.
Chief Engineer

Adoption Date: 7/17/2020

Last Code and Stds. Review
By: KLK Date: 7/8/2020

Next Code and Standards Review Date: 7/8/2030

G-00.05

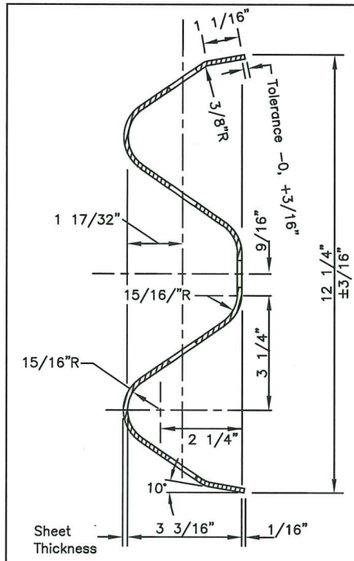

SECTION A–A
(cross section same as RWM02a–b)

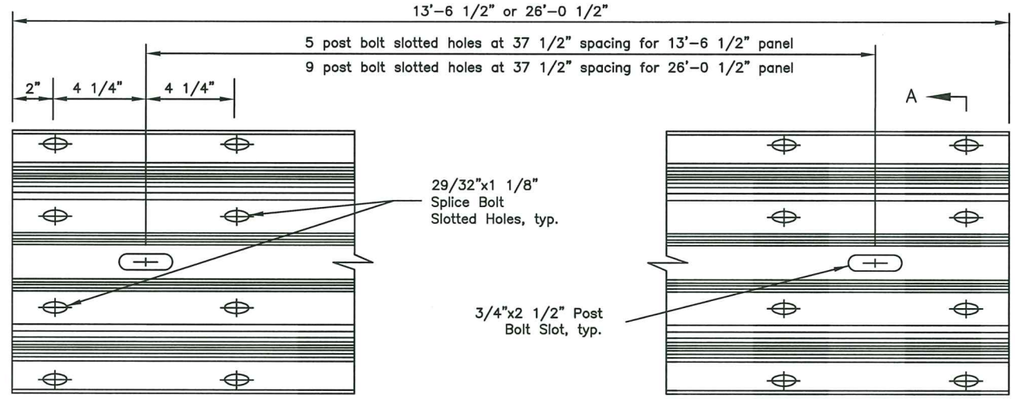

STANDARD W–BEAM PANEL (RWM04a–b)

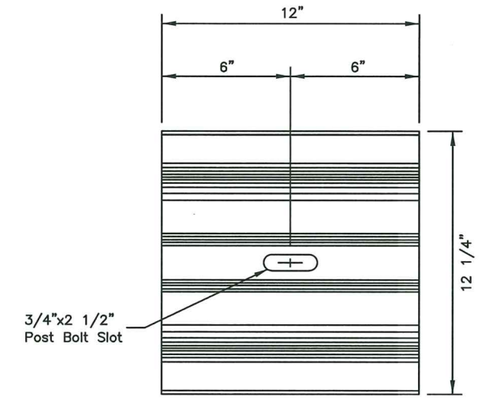

W–BEAM BACKUP PLATE
(RWB01a–b)

GENERAL NOTES:

1. All covered hardware shall comply with the Task Force 13 (TF13) Guide to Standardized Roadside Safety Hardware online publication. Designators given when possible in parentheses.
2. Install back–up plates between blockouts and w–beam or thrie–beam rail at intermediate (non–splice) posts when steel blockouts are used but not with wood, rubber, plastic, or other approved blockouts.

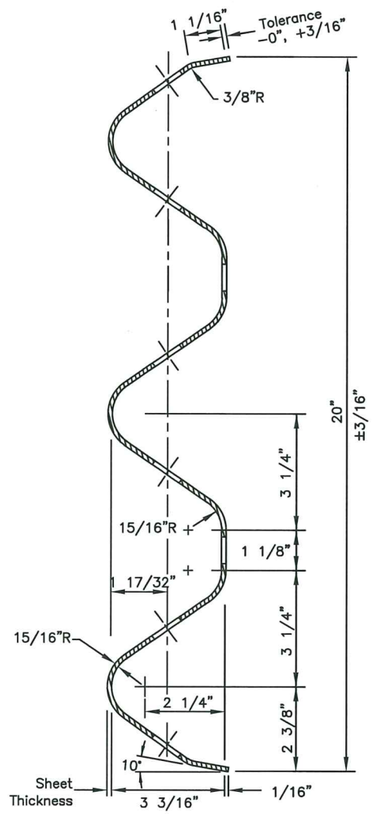

SECTION C–C
(RTM01a–02b)

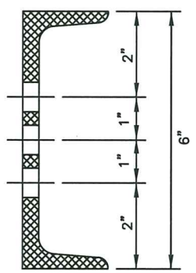

SECTION B–B

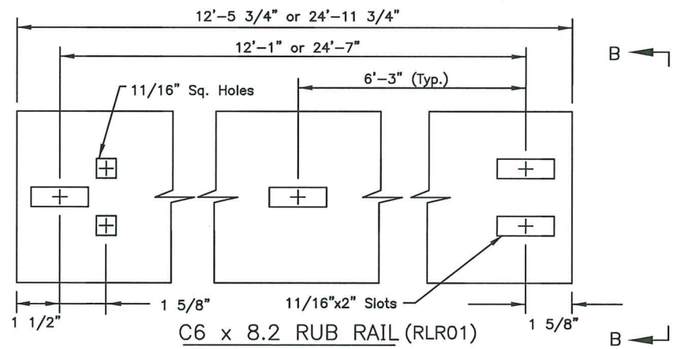

C6 x 8.2 RUB RAIL (RLR01)
ASTM A36 STEEL

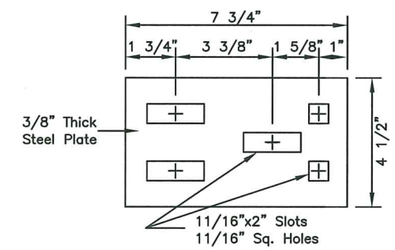

SPLICE PLATE (RLR01)
ASTM A36 STEEL

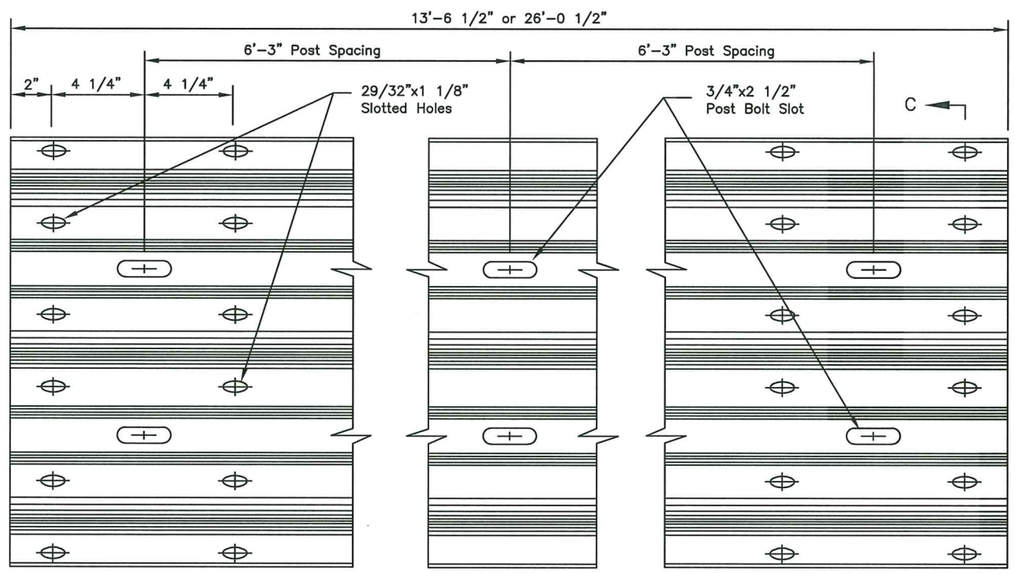

STANDARD THRIE BEAM PANEL (RTM01a–02b)

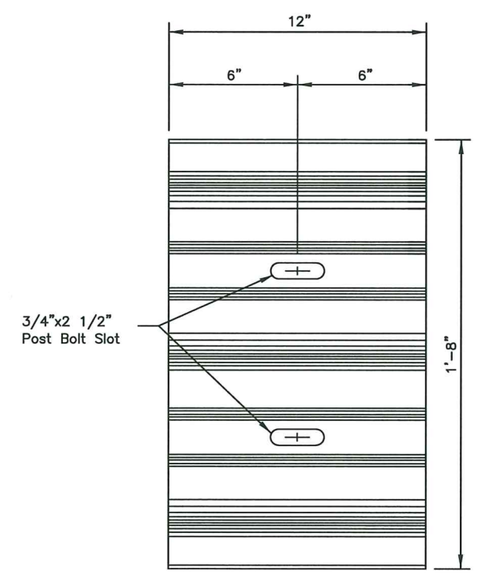

THRIE BEAM BACKUP PLATE
(RTB01a–02b)

State of Alaska DOT&PF
ALASKA STANDARD PLAN

STANDARD GUARDRAIL HARDWARE (RAILS AND SPLICES)

Adopted as an Alaska Standard Plan by: Carolyn Morehouse
Carolyn Morehouse, P.E.
Chief Engineer

Adoption Date: 7/17/2020

Last Code and Stds. Review
By: KLK Date: 7/8/2020

Next Code and Standards Review Date: 7/8/2030

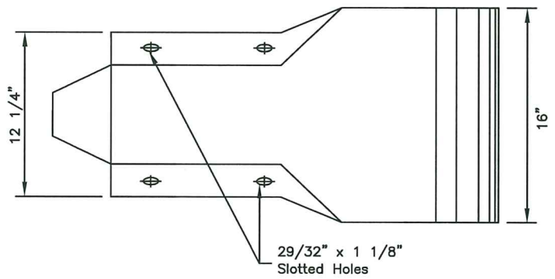

PROFILE

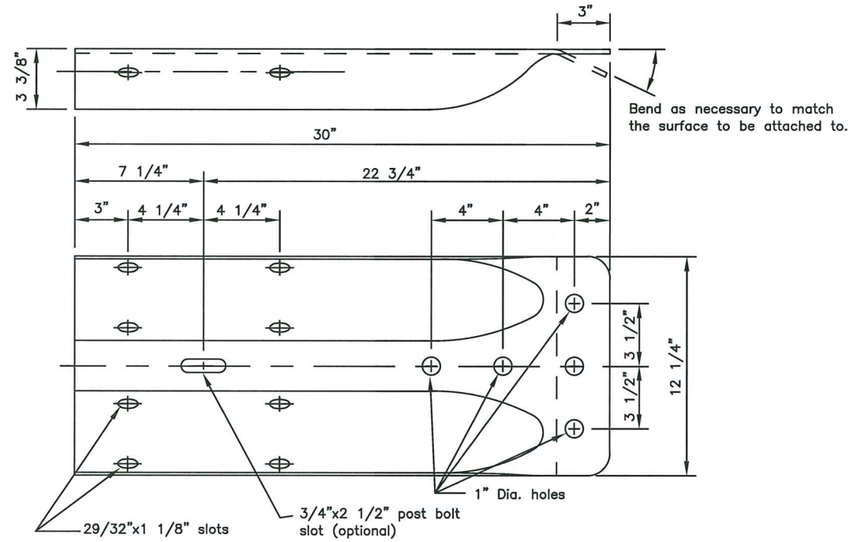

STANDARD W-BEAM TERMINAL CONNECTOR
(RWE02)

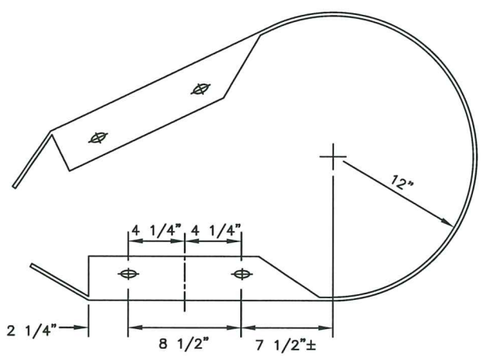

W-BEAM PLAN VIEW

*Radius to be specified on the plans

STANDARD W-BEAM END SECTION
(RWE06)

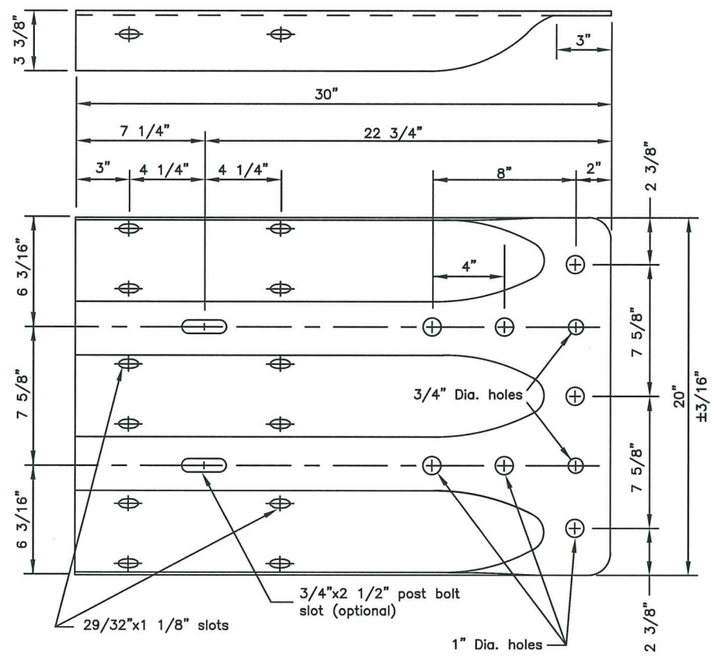

STANDARD THRIE BEAM TERMINAL CONNECTOR
(RTE01b)

GENERAL NOTES:

1. W-Beam and Thrie Beam Terminal Connectors shall conform to AASHTO M 180, Class B, Type II.
2. W-Beam end sections shall conform to AASHTO M 180, Class A, Type II.
3. All covered hardware shall comply with the Task Force 13 (TF13) Guide to Standardized Roadside Safety Hardware online publication. Designators given when possible in parentheses.

State of Alaska DOT&PF
ALASKA STANDARD PLAN

STANDARD GUARDRAIL HARDWARE (TERMINAL CONNECTORS)

Adopted as an Alaska Standard Plan by: Carolyn Morehouse
Carolyn Morehouse, P.E.
Chief Engineer

Adoption Date: 7/17/2020

Last Code and Stds. Review
By: KLK Date: 7/8/2020

Next Code and Standards Review Date: 7/8/2030

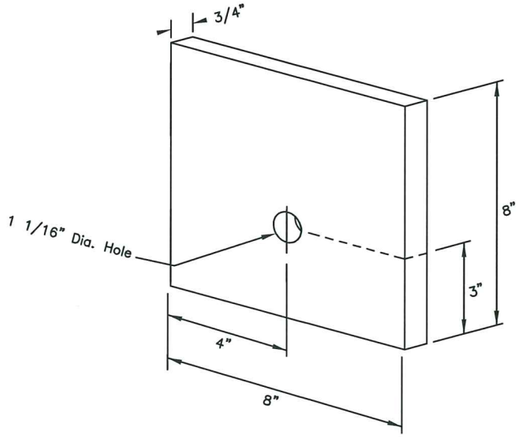

BEARING PLATE for CRT TERMINAL ANCHOR
(FPB01)

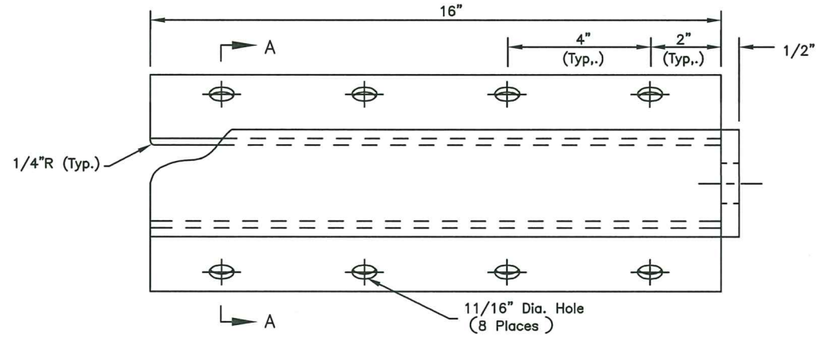

CABLE ANCHOR PLATE
(FPA01)

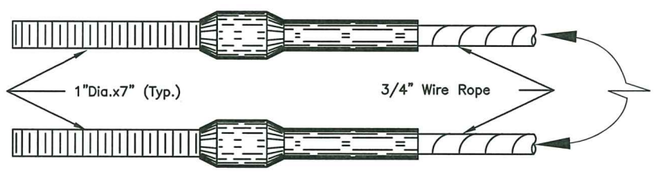

SWAGED FITTING DETAIL
(FCA01–02)

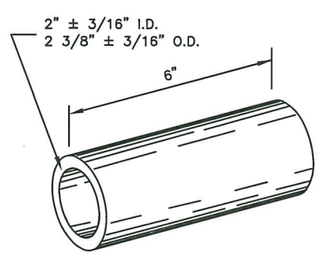

SLEEVE DETAIL
(FMM02)

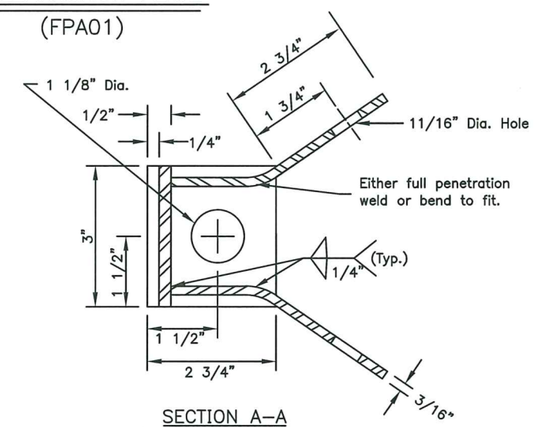

SECTION A–A

CONTROLLED RELEASE TERMINAL HARDWARE DETAILS

GENERAL NOTES:

1. Cable Anchor Plate may be formed in single unit or welded fabrication.
2. Anchor Cable Assembly must conform to AASHTO M 30 with Type II Wire Rope.
3. Provide Sleeve for Wood Posts meeting the requirements of ASTM A53 and made of 2–inch galvanized standard pipe. Sleeve shall be a tight, pressed fit in post.
4. Attach radius ID plates to all shop–bent guardrail sections. Bolt the ID plates to the back side of the guardrail panel with the lower splice bolt nearest the P.C. of the radius.
5. Show the Rail bend radius, in feet, as "XX" on the radius ID plate. Digits shall be etched or stamped and have a min. height of 1 1/2" and a max. width of 3/4". Galvanize the plate after the digits are marked.
6. All covered hardware shall comply with the Task Force 13 (TF13) Guide to Standardized Roadside Safety Hardware online publication. Designators given when possible in parentheses.

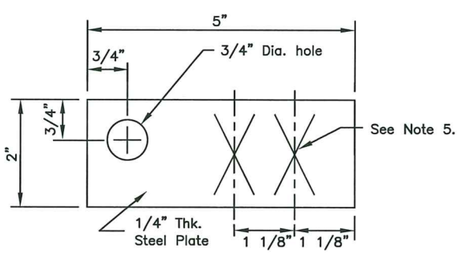

RADIUS I.D. PLATE

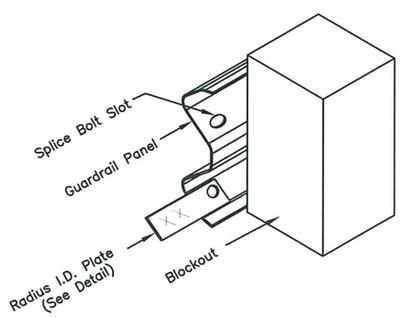

RADIUS I.D. PLATE MOUNTING DETAIL

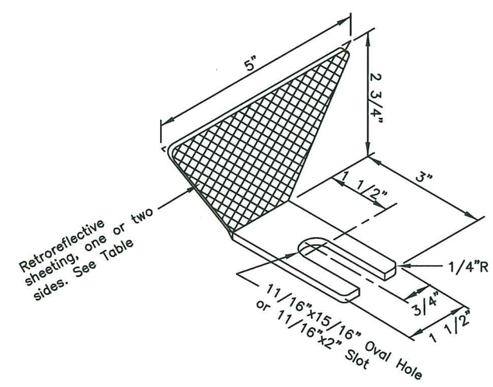

GUARDRAIL REFLECTOR

Guardrail Reflector Table

Type	Color	Reflectorized
A	White	Front & Rear
B	White	Front
C	Yellow	Front
D	Yellow	Front & Rear

State of Alaska DOT&PF
ALASKA STANDARD PLAN

STANDARD GUARDRAIL HARDWARE (MISCELLANEOUS)

Adopted as an Alaska Standard Plan by: Carolyn Morehouse
Carolyn Morehouse, P.E.
Chief Engineer

Adoption Date: 7/17/2020

Last Code and Stds. Review
By: KLK Date: 7/8/2020

Next Code and Standards Review Date: 7/8/2030

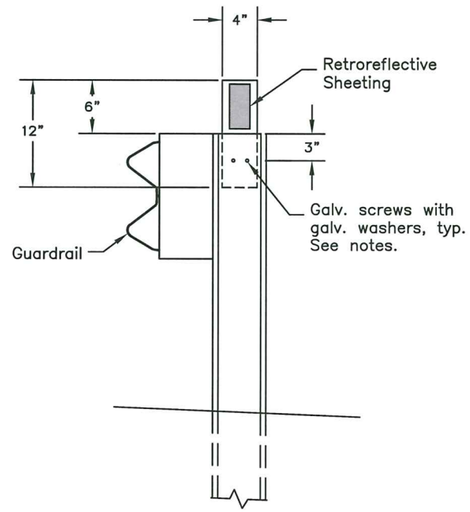

GUARDRAIL FLEXIBLE DELINEATOR DETAIL

(Steel post shown – similar for wood post)

CONSTRUCTION NOTES

1. Install guardrail flexible delineators where shown on the plans.
2. Install guardrail flexible delineators at 50 foot spacing, unless otherwise noted on the plans. Install not less than 2 delineators per guardrail run.
3. Use 3" x 5" white/yellow/red retroreflective sheeting as required per Standard Plan T–05. Install retroreflective sheeting on both sides of delineator on two–way roads.
4. Attach 4" x 12" flexible delineators to the top of new guardrail posts, on the trailing side of the posts relative to the adjacent lane's direction of travel.
5. Use 2 each 1/4" dia. x 1–1/2" long galvanized lag screws for attaching to wood posts and 2 each 1/4" dia. x 3/4" long galvanized self–drilling fasteners for steel posts. Install a galvanized washer between the fastener head and the flexible delineator.

State of Alaska DOT&PF
ALASKA STANDARD PLAN

STANDARD GUARDRAIL HARDWARE (FLEXIBLE DELINEATORS)

Adopted as an Alaska Standard Plan by: Carolyn Morehouse
Carolyn Morehouse, P.E.
Chief Engineer

Adoption Date: 7/17/2020

Last Code and Stds. Review
By: KLK Date: 7/8/2020

Next Code and Standards Review Date: 7/8/2030

G-05.11S

SHEET | of |

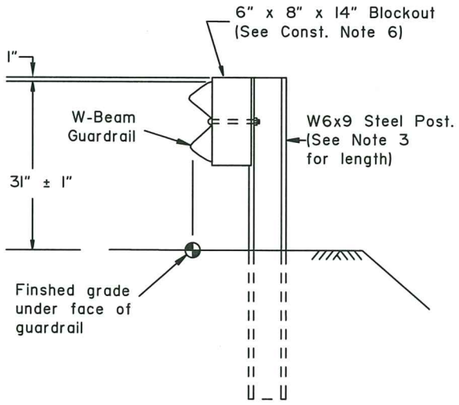

TYPE I POST INSTALLATION

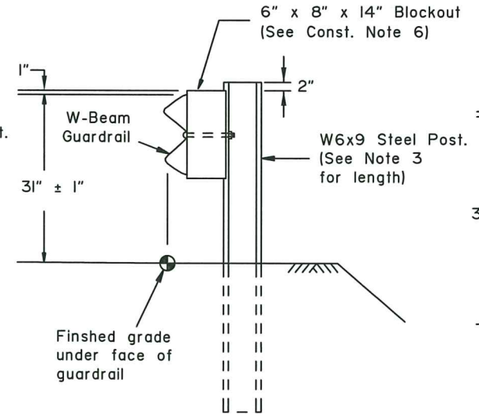

TYPE II POST INSTALLATION

(Facilitates raising rail for future overlays.)

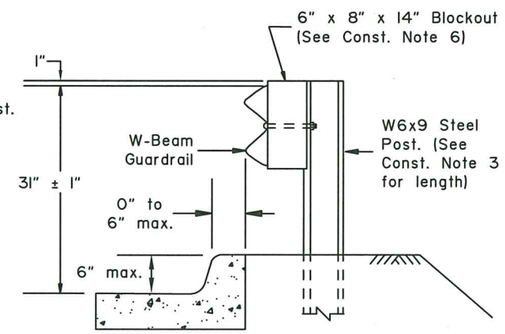

TYPE III POST INSTALLATION

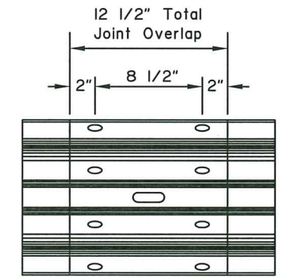

SPLICE DETAIL

(At mid span between posts only. Bolts not shown for clarity)

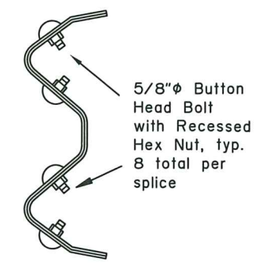

SPLICE CROSS-SECTION

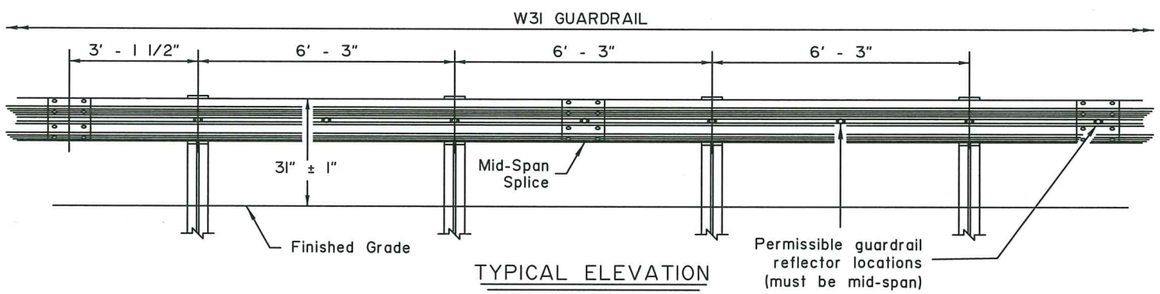

TYPICAL ELEVATION

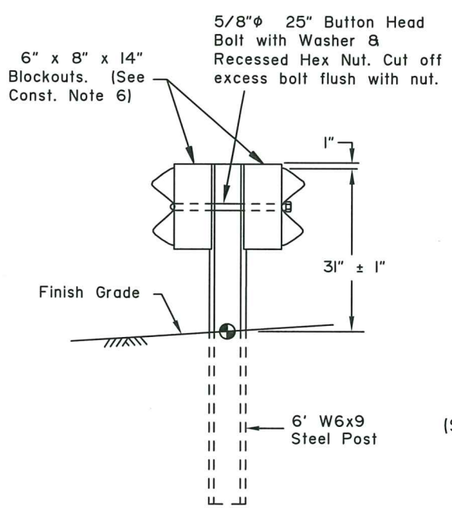

TYPE IV DOUBLE SIDED INSTALLATION

GUARDRAIL REFLECTOR

(See Const. Note 5)

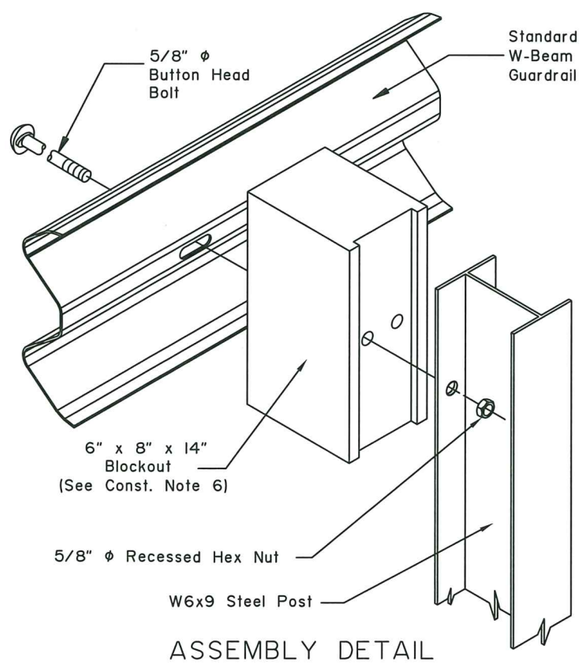

ASSEMBLY DETAIL

(Type I post shown)

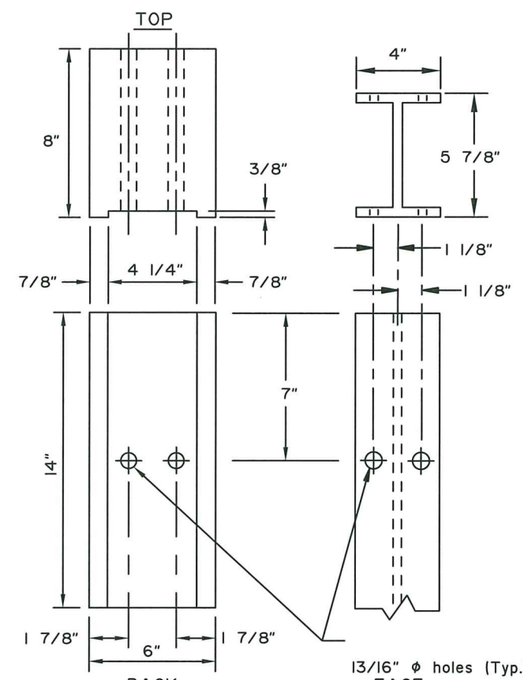

CONSTRUCTION NOTES:

1. Provide hardware compliant with the Task Force 13 (TF13) Guide to Standardized Roadside Safety Hardware.
2. See Standard Plan G-00 for hardware details not shown on this drawing.
3. See Standard Plan G-10 for post lengths corresponding to different combinations of slope and behind-post embankment width.
4. Typical post spacing is 6'-3" center to center.
5. Attach guardrail reflector to guardrail using a 5/8" button head bolt with 5/8" recessed head hex nut and steel washer at location shown in the Typical Elevation. Install reflectors every 25' on tangents and every 12.5' on curves starting 100' before the P.C. and ending 100' after the P.T.
6. Use wood or synthetic blockouts designed, tested, and passed per MASH for use with steel posts. Either bolt hole on the blockout may be used for attachment.
7. Use a 25 linear foot transition to match differing height of existing or new rail elements and end treatments - see Standard Plan G-11.
8. W6x8.5 steel post may be substituted for W6x9 steel post.
9. Install flexible delineators on guardrail posts when called for in the contract. See Standard Plan G-00 for guardrail flexible delineator details.

DESIGN NOTES:

1. No fixed objects allowed within 36" of the back side of guardrail post.
2. This barrier is acceptable under MASH Tests 3-10 and 3-11.

State of Alaska DOT&PF
ALASKA STANDARD PLAN

STEEL POST W31 GUARDRAIL

Adopted as an Alaska Standard Plan by: Carolyn Morehouse

Carolyn Morehouse, P.E.
Chief Engineer

Adoption Date: 05/15/2019

Last Code and Stds. Review
By: LRG Date: 5/15/2019

Next Code and Standards Review date: 5/15/2029

G-05.11S

G-10.21

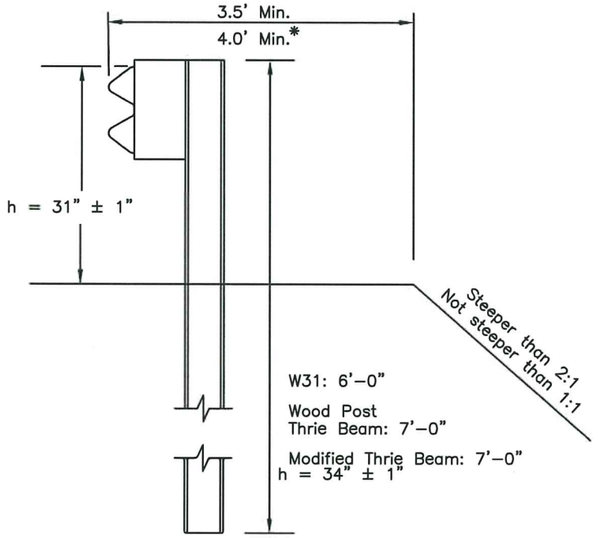

* with Modified Thrie Beam

CASE 1

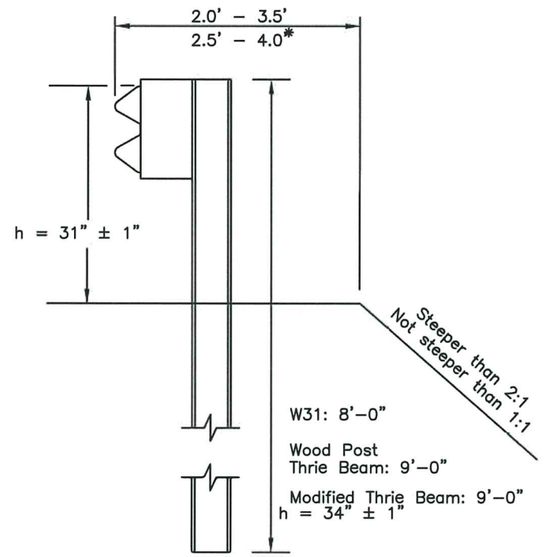

* with Modified Thrie Beam

CASE 2

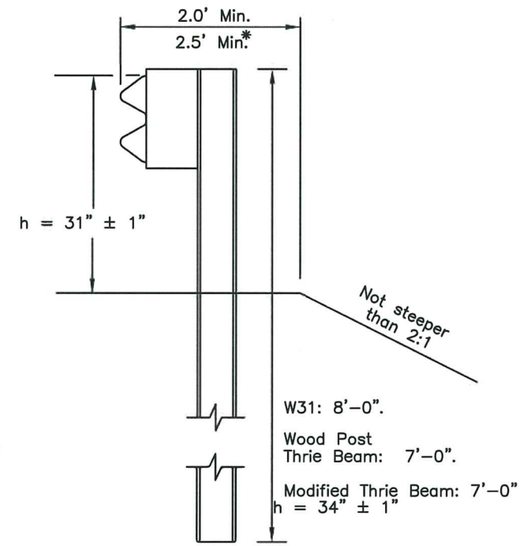

CASE 3

CONSTRUCTION NOTES:

1. This drawings is to be used for post length determination only. See Plans for slopes and behind–post embankment widths.
2. To determine post length, identify the case that matches site conditions and read the length corresponding to the pertinent guardrail type.
3. These dimensions apply to both curbed and uncurbed section.
4. Case 1, 2 and 3 are shown with steel posts. Wood posts may be substituted when allowed by specifications. Wood Post Thrie Beam installations must use wood posts only.
5. Case 4 and 5 apply to W31 guardrail only.

DESIGN NOTES:

1. No fixed objects allowed within 48" of the back of post for Cases 1, 2, 3, 4, and 5.

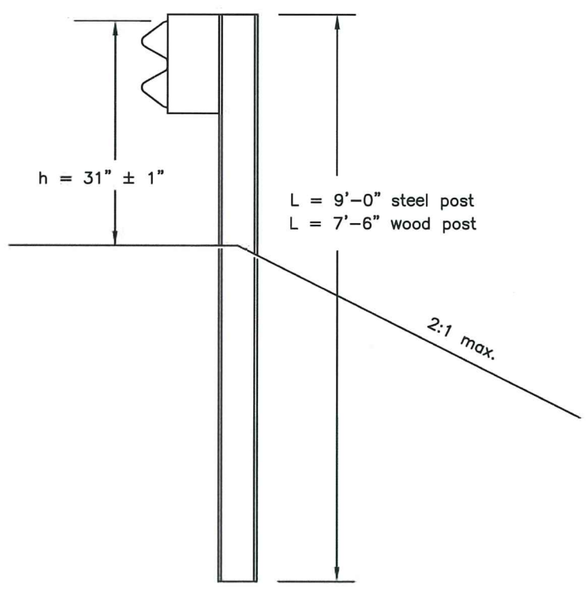

CASE 4

(See Note 5)

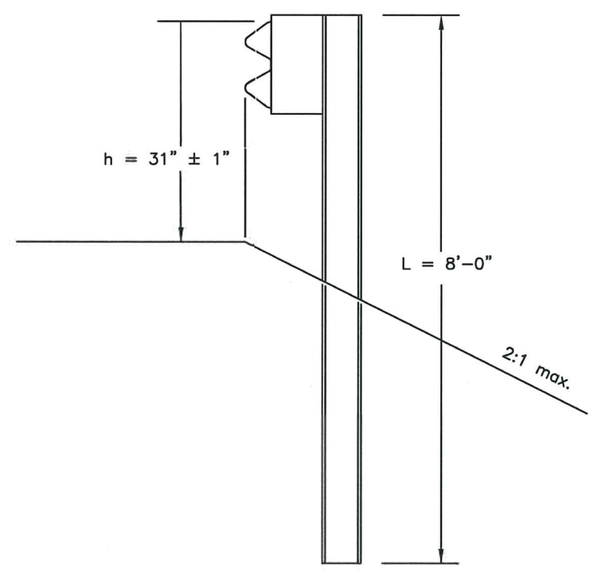

CASE 5

(See Note 5)

State of Alaska DOT&PF
ALASKA STANDARD PLAN

GUARDRAIL POST INSTALLATION

Adopted as an Alaska Standard Plan by: Carolyn H Morehouse

Carolyn Morehouse, P.E.
Chief Engineer

Adoption Date: 09/15/2022

Last Code and Stds. Review
By: LRG Date: 09/15/2022

Next Code and Standards Review date:09/15/2032

G-20.12

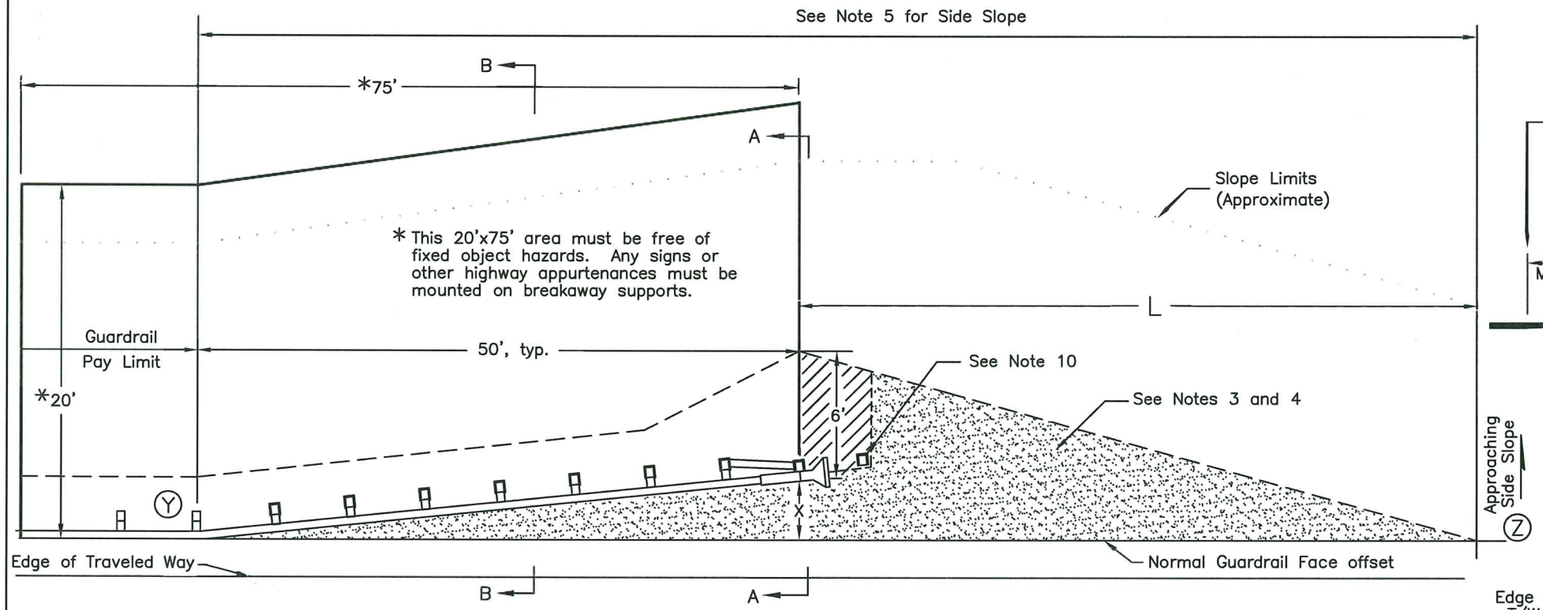

STANDARD GUARDRAIL TERMINAL WIDENING DETAIL

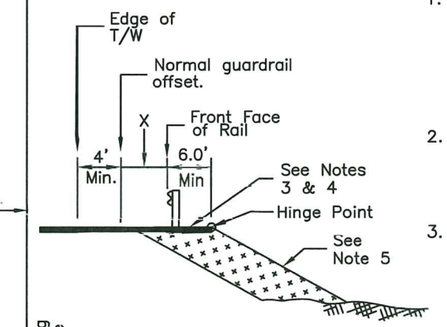

SECTION A–A

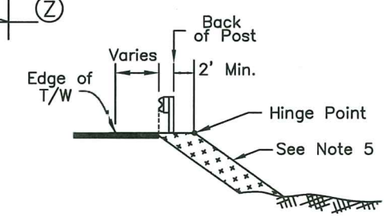

SECTION B–B
(Applies to both details)

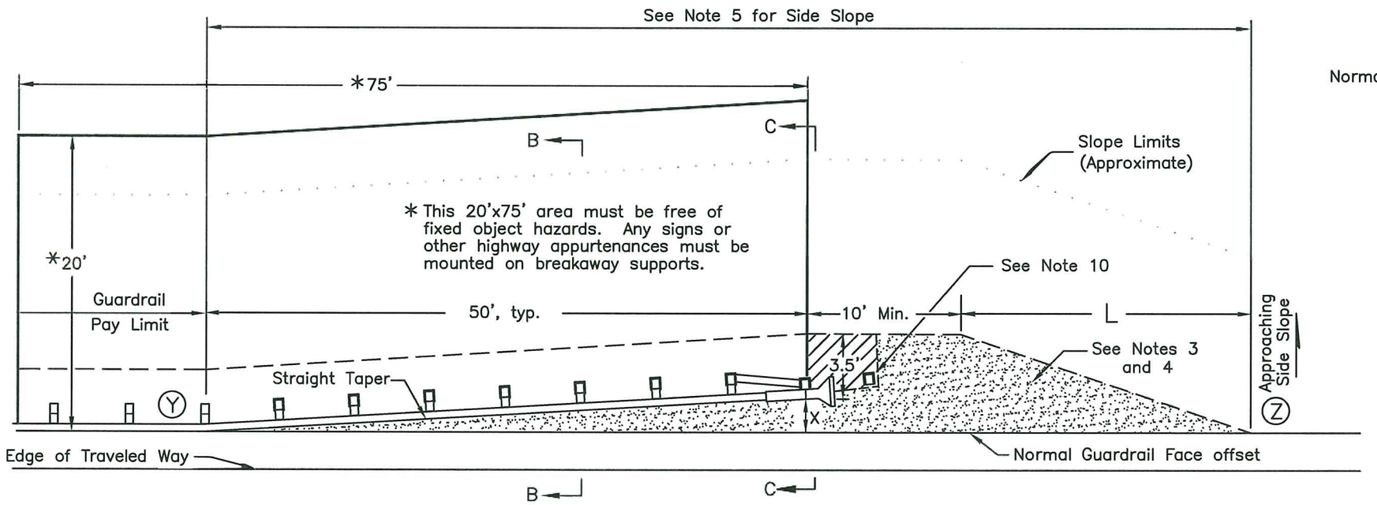

ALTERNATE GUARDRAIL TERMINAL WIDENING DETAIL

(USE ONLY WHEN LIMITED RIGHT–OF–WAY OR LIMITING SITE CONDITIONS MAKE THE STANDARD DETAIL INFEASIBLE)

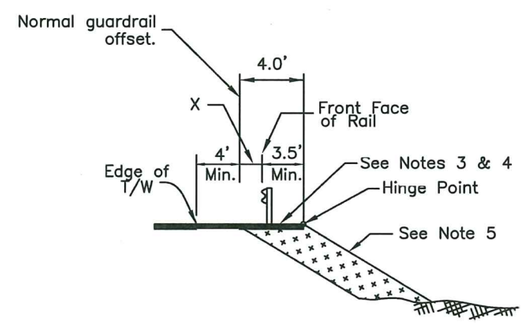

SECTION C–C

X= End offset. See manufacturer's information for the range of acceptable end offsets for each MASH compliant terminal.

Taper Lengths (L) for Common End Offsets (X)		
End Offset	Standard Detail	Alternate Detail
0'	24.0'	13.0'
1'	26.0'	17.0'
1.5'	28.0'	19.0'
2'	30.0'	21.0'
2.5'	32.0'	22.0'
4'	37.0'	28.0'
Interpolate if the end offset falls between table values		

GENERAL NOTES

1. This Std. Dwg. applies to all MASH approved guardrail end terminals (GETs). The alternate detail may only be used with parallel or tangent GETs. The terminal details shown are for illustration only – see manufacturer's drawings for actual post, rail, strut, etc. configuration and layout.
2. Use this Std. Widening Detail for all GETs except when limited right–of–way or limiting site conditions make the use of the Std. Widening Detail infeasible. In that case, the alternate detail is permissable.
3. Construct the shaded areas to match the slope of the adjacent shoulder. The slope may be increased to 10:1 if identified in the plans or when approved by the engineer. Match the slope when the shoulder slopes toward the road as well as away from the road.
4. On paved roads, the shaded areas shall be paved. On gravel roads, surface the shaded areas with the same materials used to surface the travel lanes.
5. From point Ⓨ to point Ⓩ make the side slope match the approaching side slope except where it is flatter than 4:1. In that case, the slope may be steepened to 4:1.
6. Attach a flexible marker at the beginning of each GET.
7. The max. allowable height for foundation tubes or other steel components of terminal post breakaway systems is 4" above the surrounding grade.
8. The details on this sheet do not apply to W31 Downstream End Anchors (Std Dwg G–14).
9. The details on this sheet apply to GETs on both the approach and downstream ends on two–way undivided roads and to any downstream MASH compliant GETs.
10. Some MASH GET systems have an additional post/anchor at the approximate location shown. If this post/anchor is present do not pave the diagonally hatched area. If not present, pave the diagonally hatched area also.

State of Alaska DOT&PF
ALASKA STANDARD PLAN

WIDENING FOR GUARDRAIL END TERMINALS

Adopted as an Alaska Standard Plan by: Kenneth J. Fisher, P.E.
Chief Engineer

Adoption Date: 02/08/2019

Last Code and Stds. Review
By: Date:

Next Code and Standards Review date:02/08/2029

G–20.12

I-81.00

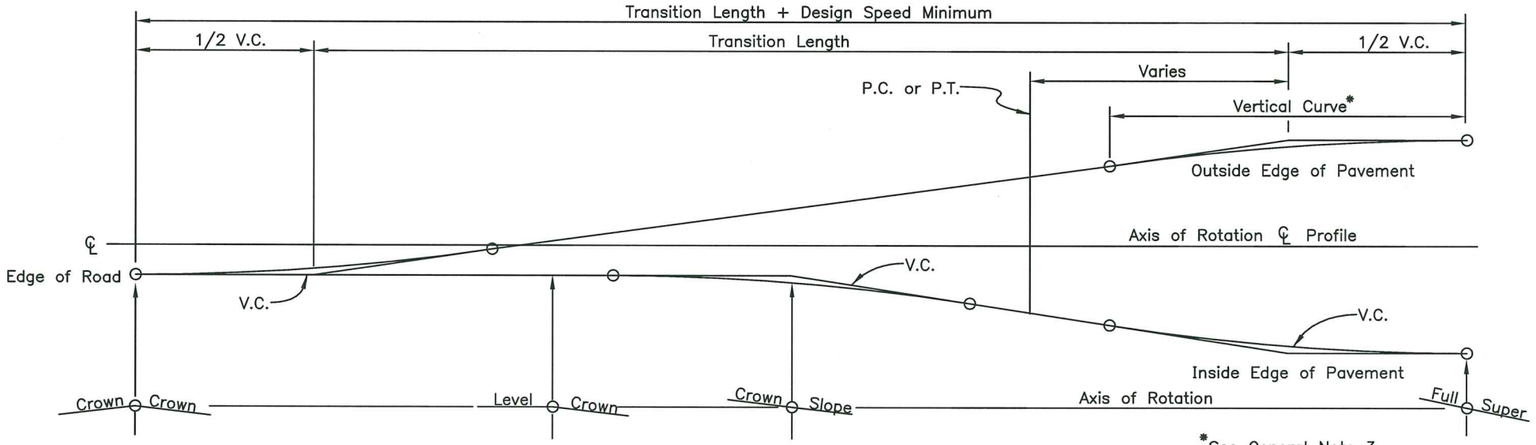

*See General Note 3

CASE I
PAVEMENT REVOLVED ABOUT CENTERLINE

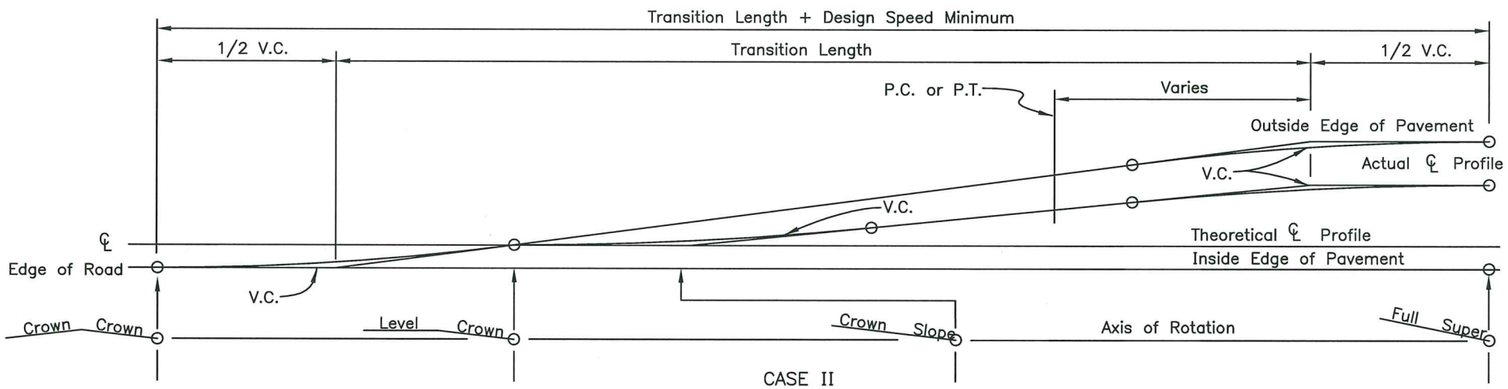

CASE II
PAVEMENT REVOLVED ABOUT INSIDE EDGE
TO BE USED WHERE DRAINAGE IS THE GOVERNING CONSIDERATION

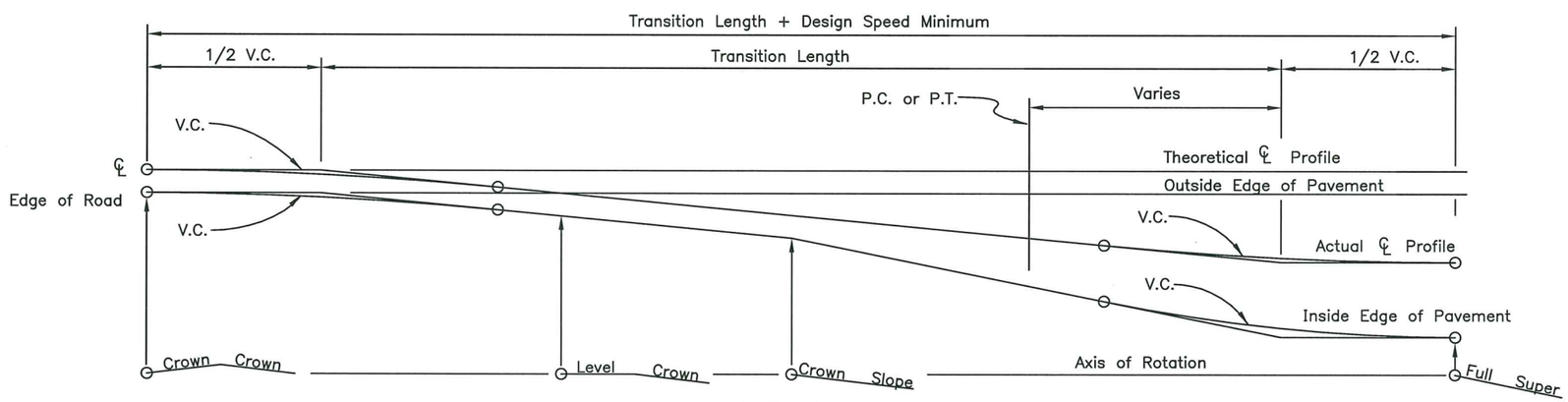

CASE III
PAVEMENT REVOLVED ABOUT OUTSIDE EDGE TO BE
USED WHERE OVERALL APPEARANCE IS THE MAIN CONTROL

GENERAL NOTES:

1. Location of transition length relative to horizontal curves will be shown on the plans or as directed by the Engineer.
2. Widening for guardrail or curvature will not change the location of the axis of rotation.
3. Minimum vertical curve length in feet shall be the numerical value of the design speed in M.P.H.
4. Superelevation shall be built into the subgrade and carried through the shoulders.

State of Alaska DOT&PF
ALASKA STANDARD PLAN

SUPERELEVATION TRANSITION

Adopted as an Alaska Standard Plan by: Carolyn Morehouse
Carolyn Morehouse, P.E.
Chief Engineer

Adoption Date: 7/17/2020

Last Code and Stds. Review
By: KLK Date: 7/8/2020

Next Code and Standards Review Date: 7/8/2030

M-23.13

SHEET 1 of 2

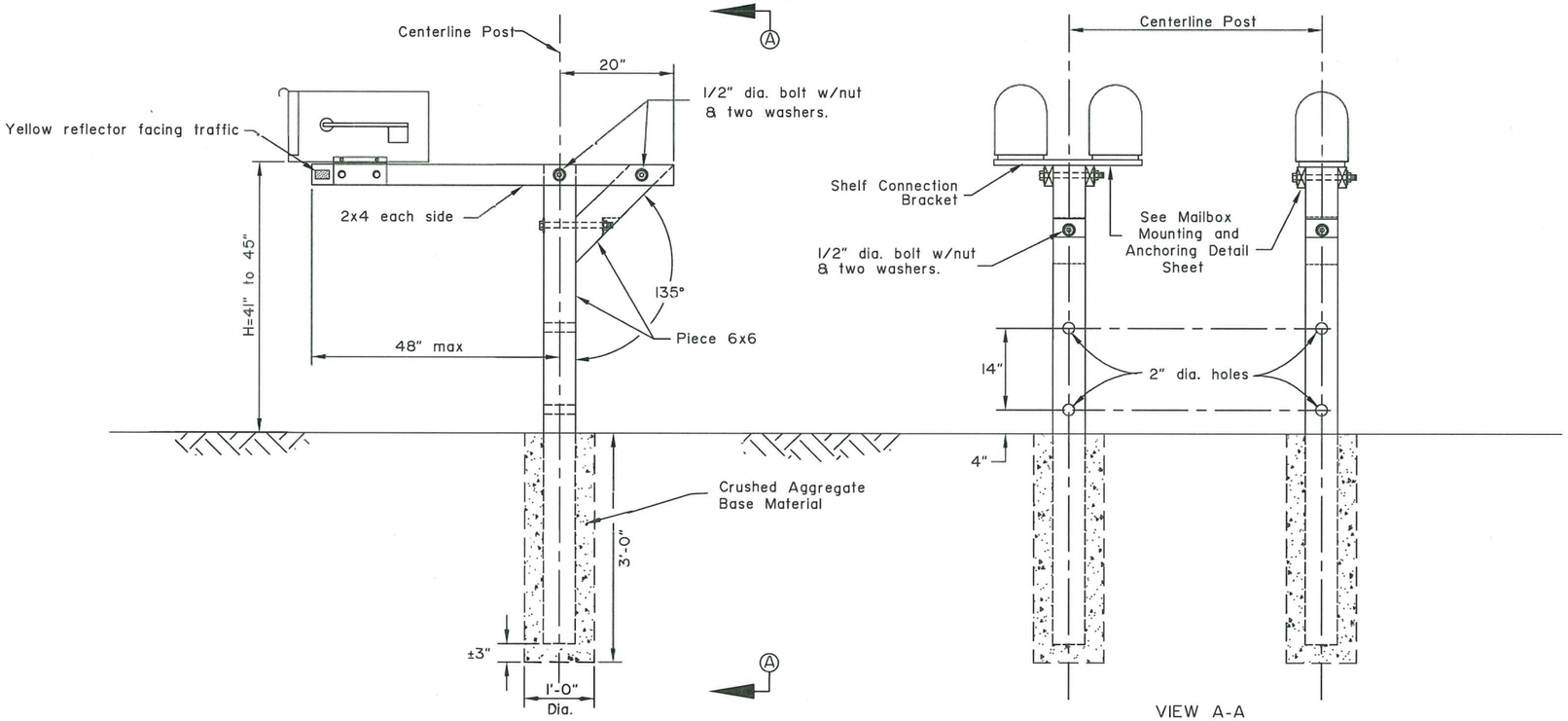

TYPICAL WOOD CANTILEVER INSTALLATION

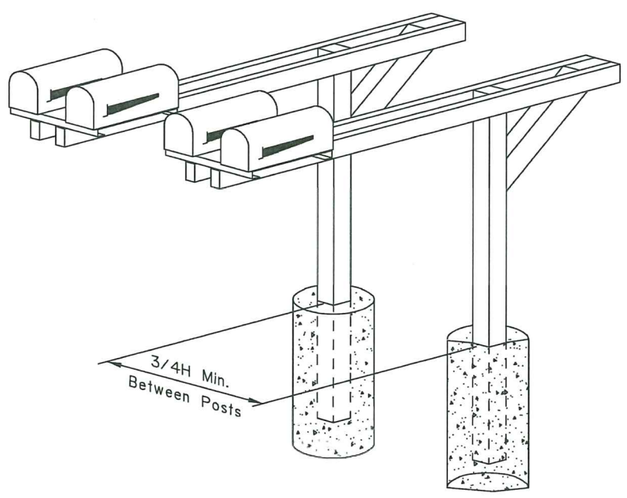

TYPICAL GANG BOX INSTALLATION

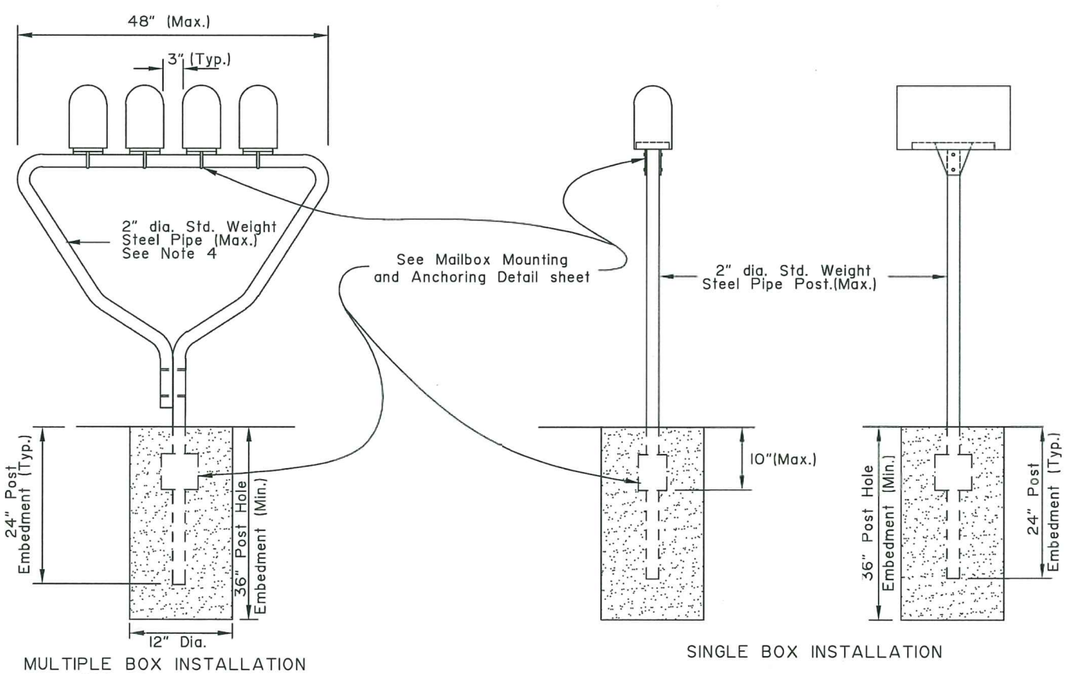

MULTIPLE BOX INSTALLATION (U.S.P.S. Approved)

SINGLE BOX INSTALLATION

METAL POST SUPPORTS (URBAN ONLY)

GENERAL NOTES:

1. See Standard Plan M-20 for locating posts and boxes along roadway.
2. Posts shall be 6"x6" Treated Wood Post S4S or 2" (Max.) Standard Weight Steel Pipe.
3. Each support structure shall not accomodate more than two mailboxes unless the support structure conforms to the requirements of the U.S. Postal Service and is approved by the Engineer.
4. Other steel or aluminum structural sections may be used except, the stiffness properties equivalent to the 2" dia. standard weight steel pipe shall not be exceeded.
5. Reflectors shall have a minimum area of 4.5 sq. in.

State of Alaska DOT&PF
ALASKA STANDARD PLAN

MAILBOX INSTALLATION

Adopted as an Alaska Standard Plan by: Carolyn Morehouse

Carolyn Morehouse, P.E.
Chief Engineer

Adoption Date: 7/17/2020

Last Code and Stds. Review
By: KLH Date: 7/8/2020

Next Code and Standards Review date: 7/8/2030

M-23.13

SHEET 2 of 2

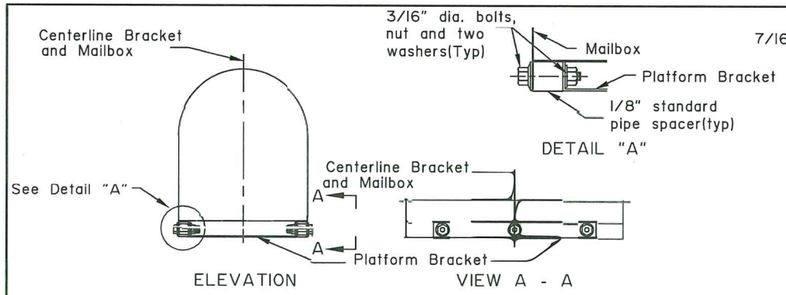

MAILBOX SUPPORT PLATFORM ASSEMBLY

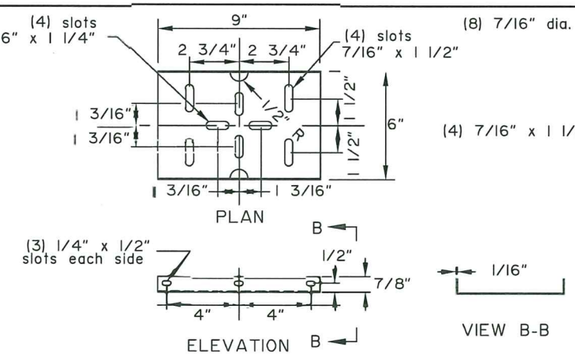

STEEL PLATFORM BRACKET

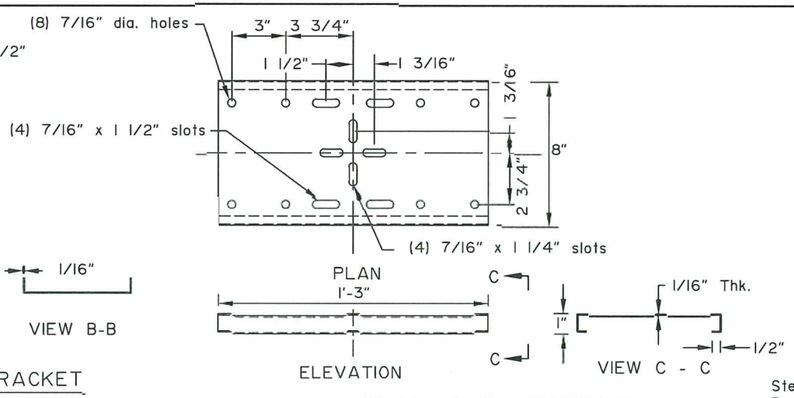

STEEL SHELF BRACKET

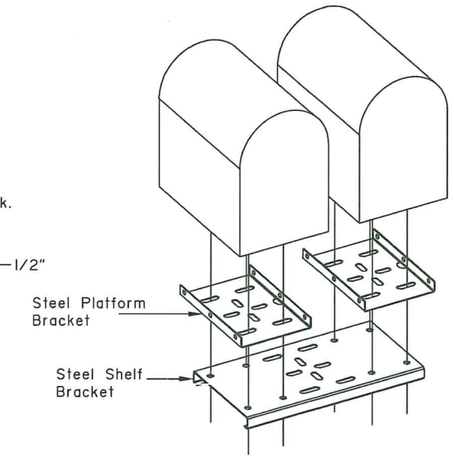

MAILBOX CONNECTION DETAIL

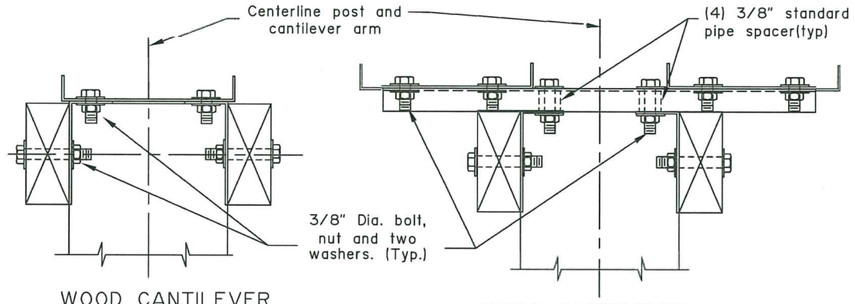

WOOD CANTILEVER ARM PLATFORM CONNECTION

WOOD CANTILEVER ARM SHELF CONNECTION

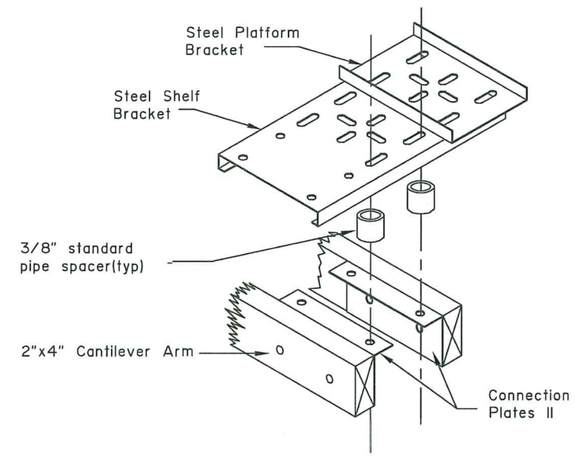

SHELF BRACKET CONNECTION DETAIL

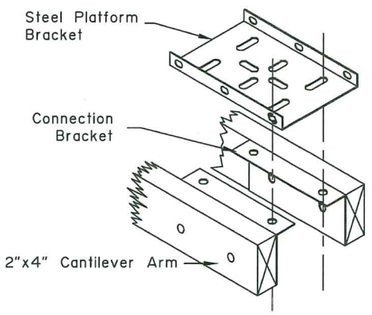

PLATFORM BRACKET CONNECTION DETAIL

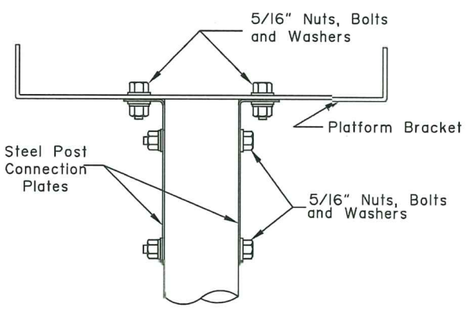

BRACKET ASSEMBLY DETAIL

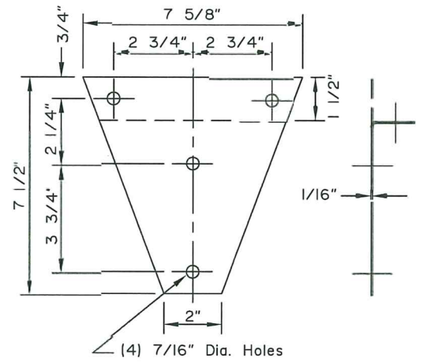

STEEL POST CONNECTION PLATES for STEEL PIPE POST

CLAMP

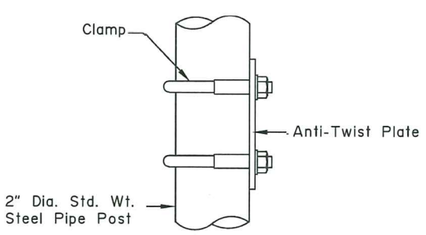

ANTI-TWIST PLATE ASSEMBLY DETAIL

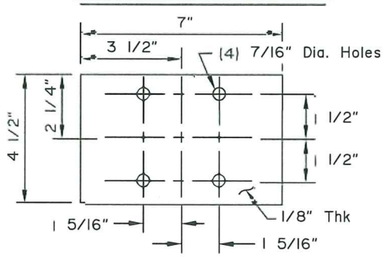

ANTI-TWIST PLATE for STEEL PIPE POST

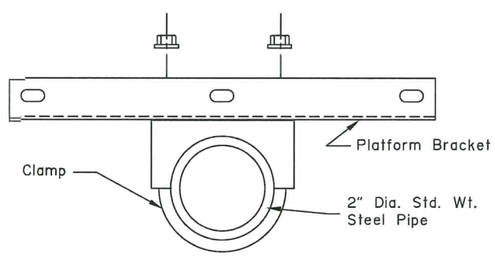

MULTIPLE BOX CLAMP ASSEMBLY DETAIL

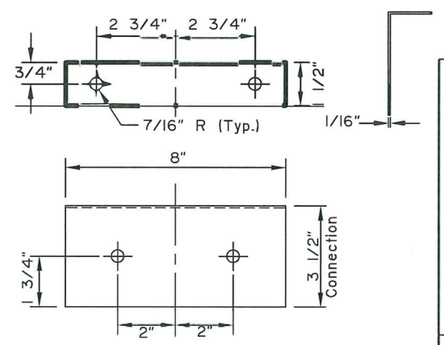

CONNECTION PLATES for WOOD CANTILEVER ARM

State of Alaska DOT&PF
ALASKA STANDARD PLAN

MAILBOX MOUNTING AND ANCHORING DETAILS

Adopted as an Alaska Standard Plan by: Carolyn Morehouse
Carolyn Morehouse, P.E.
Chief Engineer

Adoption Date: 7/17/2020

Last Code and Stds. Review
By: KLH Date: 7/8/2020

Next Code and Standards Review date: 7/8/2030

S-00.12 SHEET 1 of 1

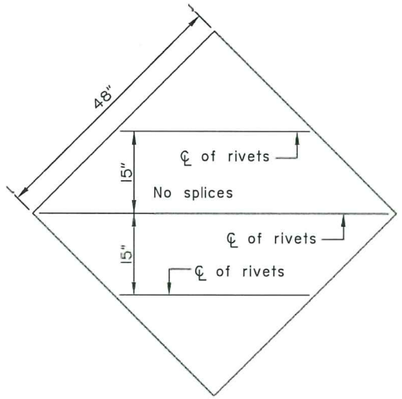

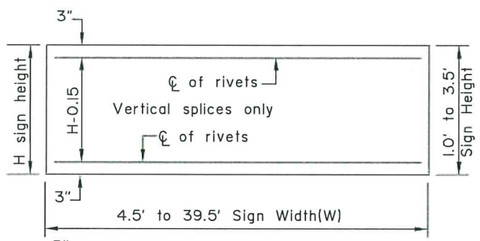

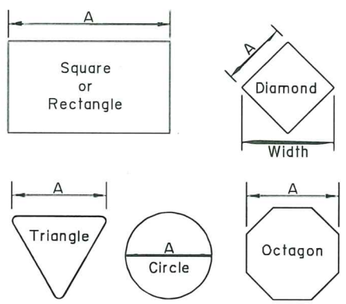

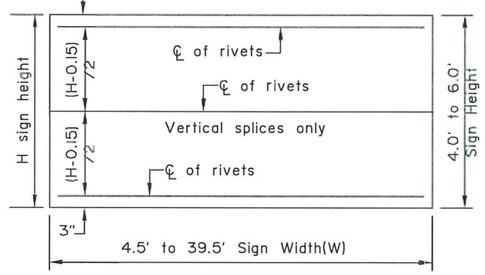

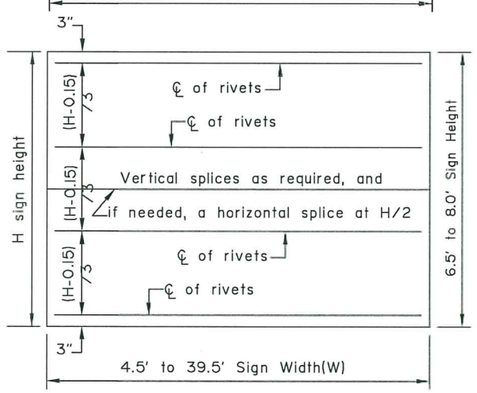

Maximum size unframed signs using 0.125" thick aluminum sheeting.	
Sign Shape	A
Squares, Shields, and Route Markers	48"
Rectangles	48"
Diamonds	48"
Triangles	48"
Rounds and Octagons	48"

Install wind framing on all signs that exceed the dimensions listed.

LIGHT SIGNS

WIND FRAMING LOCATIONS

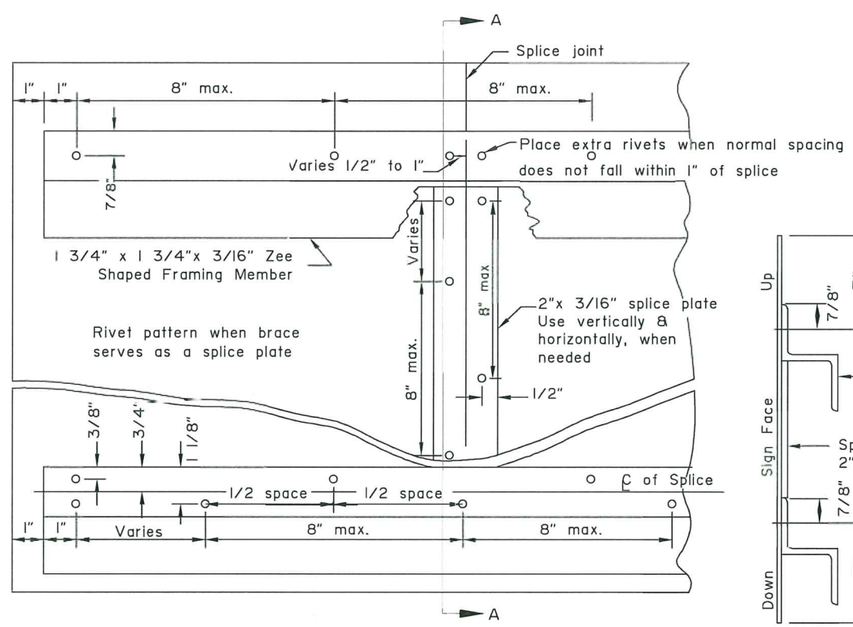

RIVET DETAIL FOR ZEE SHAPED WIND FRAMING & SPLICE PLATE

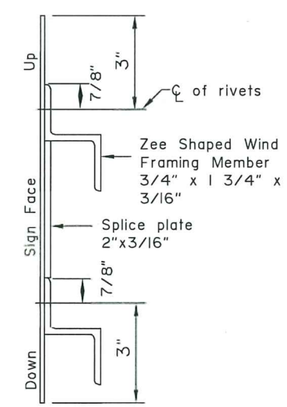

SECTION A-A

Note: Drawing not to scale

GENERAL NOTES

1. See the standard specifications for the aluminum alloys that you may use for sign sheeting and wind framing members.
2. Fabricate all signs from 0.125" thick aluminum sheeting.
3. Sign fabricators may use alternates to the zee shaped framing member with approval of the engineer, if the frame manufacturer certifies their design equals or exceeds the strength of the zee shaped design.
4. Install one piece wind framing members on all signs up to 23.5' wide. Use one splice in each wind frame on all signs wider than 23.5'. Locate splices at least 18" from all posts and panel edges. Stagger splices in adjacent framing members at least 8.0' apart.
5. Attach wind framing members with rivets or with an engineer approved, double sided, high strength, adhesive tape. Clean and handle sheeting and framing members and apply tape in accordance with the tape manufacturer's written instructions. Install two rivets in both ends of each framing member.
6. Use 3/16" diameter rivets conforming to aluminum alloy 6061-T6 for cold driven rivets, or aluminum alloy 6061-T43 for hot driven rivets.
7. Sign fabricators may use sign panels extruded with integral framing with approval of the engineer, if the manufacturer certifies their design equals or exceeds the strength of the 0.125" thick panel with framing attached to it.
8. Frame all signs taller than 8.0' with five wind framing members located (H-0.15)/4 spaces. If needed, make a horizontal splice at the middle wind frame.
9. Do not use round pipes for sign supports.

State of Alaska DOT&PF
ALASKA STANDARD PLAN

SIGN FRAMING

Adopted as an Alaska Standard Plan by: Carolyn Morehouse
Carolyn Morehouse, P.E.
Chief Engineer

Adoption Date: 7/17/2020

Last Code and Stds. Review
By: WTH Date: 7/8/2020

Next Code and Standards Review date: 7/8/2030

S-01.02 SHEET 1 of 1

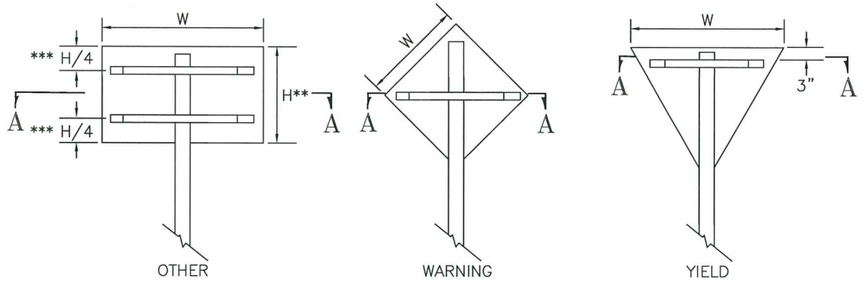

*** Use one brace when H ≤ 18"
Use two braces when 18"< H < 48"
Use three braces when H ≥ 48"

** Position of brace may be varied to match Predrilled mounting holes in panel

SIGN BRACING PLACEMENT

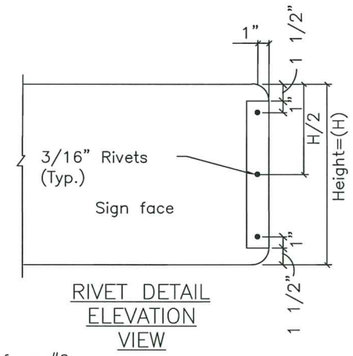

RIVET DETAIL
ELEVATION
VIEW

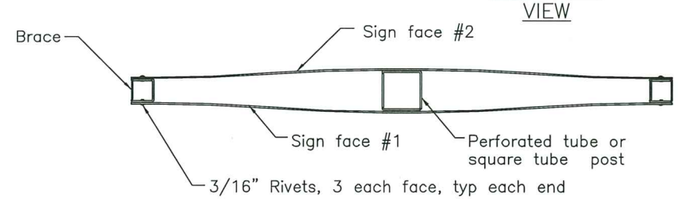

PLAN VIEW

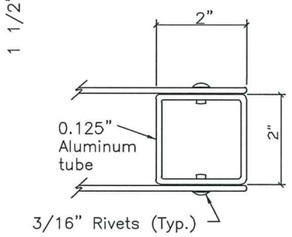

END BRACE DETAIL

SMALL STREET NAME SIGN (D3–1, D3–1A, D3–1D) BRACING DETAILS

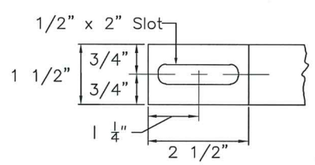

DETAIL OF BRACE SLOT
Elevation view

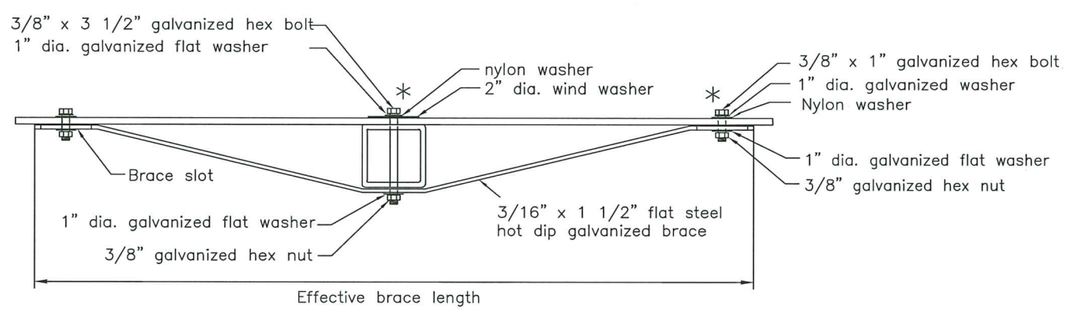

TUBE POST SIGN BRACING SECTION A–A
Plan view

* Adjust location of bracing so that bolts and washers will miss the sign legend

Sign Width(W)	Effective Brace Length		
	Warning	Yield	Other
30"	36"	24"	24"
36"	42"	30"	30"
42"	48"	–	36"
48"	Two posts	36"	42"

< 30" No bracing required and use square tube

Note: Drawing not to scale

State of Alaska DOT&PF
ALASKA STANDARD PLAN

BRACING FOR SIGNS MOUNTED ON SINGLE POST

Adopted as an Alaska Standard Plan by: Carolyn Morehouse
Carolyn Morehouse, P.E.
Chief Engineer

Adoption Date: 7/17/2020

Last Code and Stds. Review
By: WTH Date: 7/8/2020

Next Code and Standards Review date: 7/8/2030

S-01.02

S-05.02 SHEET 1 of 1

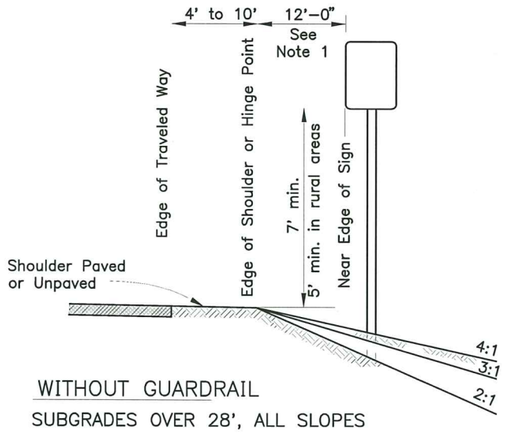

WITHOUT GUARDRAIL
SUBGRADES OVER 28', ALL SLOPES

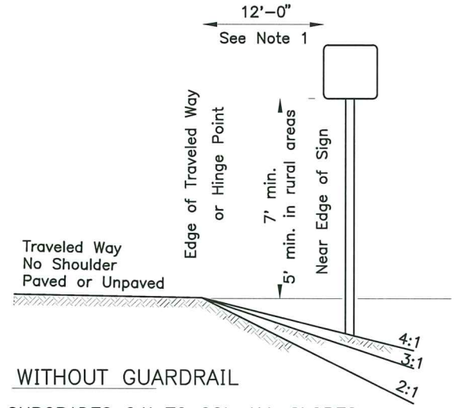

WITHOUT GUARDRAIL
SUBGRADES 24' TO 28', ALL SLOPES

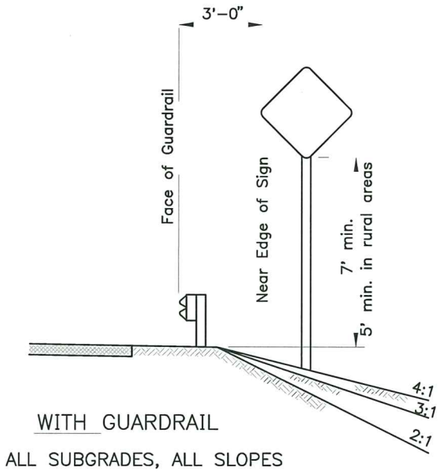

WITH GUARDRAIL
ALL SUBGRADES, ALL SLOPES

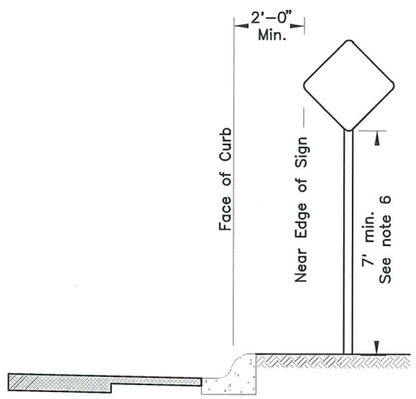

CURB WITHOUT SIDEWALK

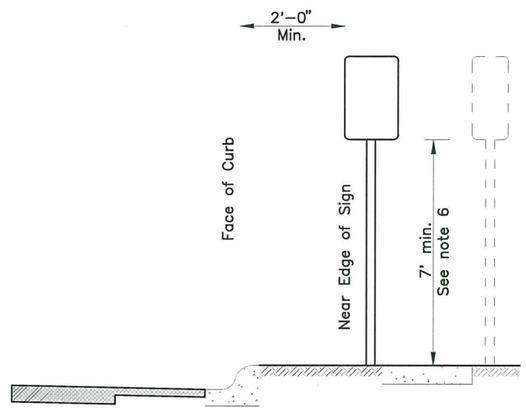

CURB WITH PARKWAY AND SIDEWALK
(If R/W width permits, signs should be placed behind sidewalk.)

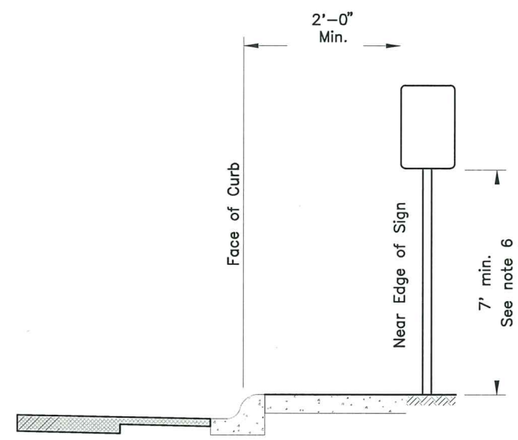

CURB WITH SIDEWALK WITHOUT PARKWAY

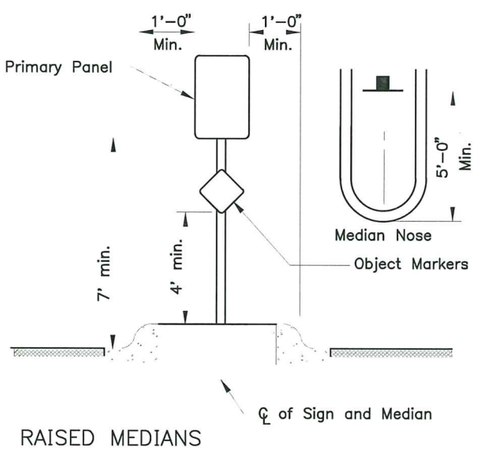

RAISED MEDIANS
Minimum 4' Width for Signing

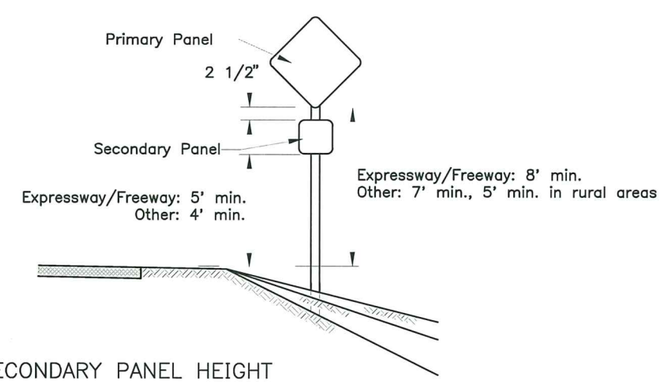

SECONDARY PANEL HEIGHT
ALL TWO PANEL MOUNTING

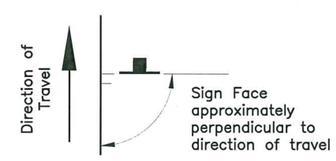

SIGN POSITIONING

GENERAL NOTES

1. Unless shown otherwise on the plans, the standard sign offset is 12'. The minimum is 6' where shoulder width is 6' or greater.
2. Add 6" to mounting height on unpaved roads.
3. If signs extend over bike paths, the minimum vertical clearance is 8' 0".
4. When signs are placed 30' or more from the edge of traveled way, mount them with the bottom of the sign at least 5' above the road surface at the near edge of the road.
5. When multiple hinged sign supports are used, mount hinges at least 7' above the ground.
6. Minimum mounting height is 7'-0" where parking or pedestrian movements are likely to occur, or where sings extend over sidewalks.
7. For construction signs in rural areas, mounting height shall be 7' minimum.

State of Alaska DOT&PF
ALASKA STANDARD PLAN

POST MOUNTED SIGN
OFFSET AND HEIGHT

Adopted as an Alaska Standard Plan by: Carolyn Morehouse
Carolyn Morehouse, P.E.
Chief Engineer

Adoption Date: 7/17/2020

Last Code and Stds. Review
By: KLK Date: 7/8/2020

Next Code and Standards Review Date: 7/8/2030

S-05.02

S-23.00 SHEET 1 of 1

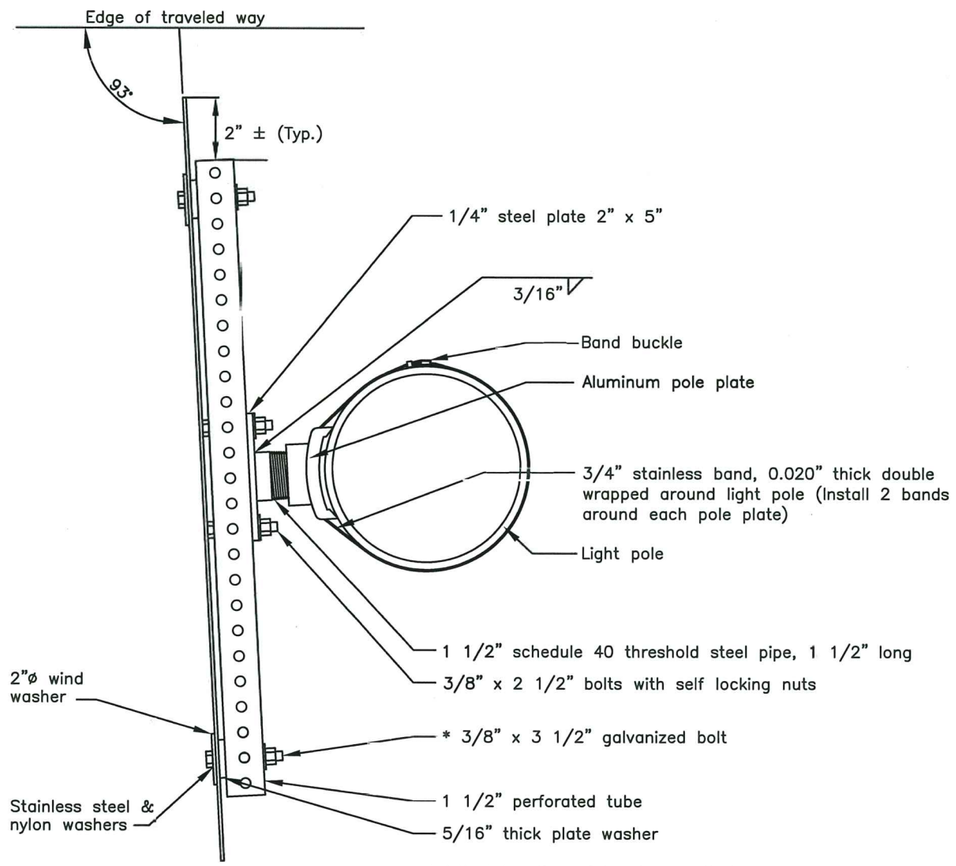

ELECTROLIER SIGN MOUNTING
(PLAN VIEW)

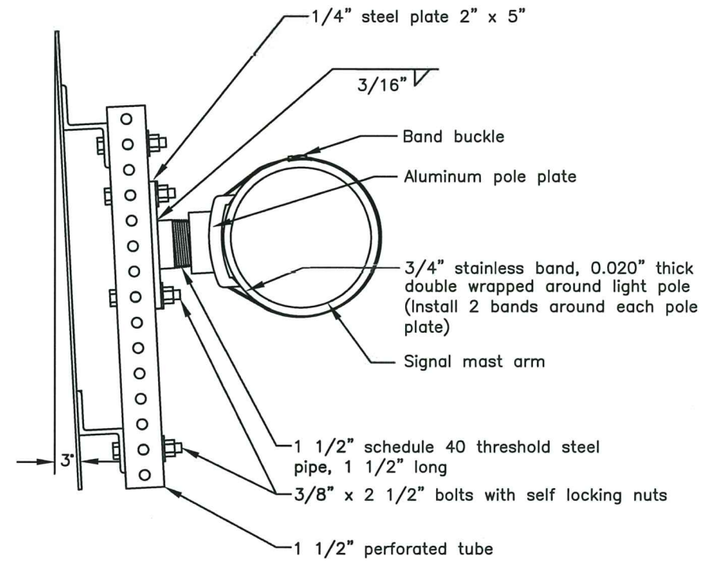

SIGNAL POLE MAST ARM SIGN MOUNTING
(ELEVATION VIEW)

GENERAL NOTES

1. Use pole plate assemblies shown here to install signs on tapered mast arms and light poles. Install one pole plate per 10 square feet of sign panel. Use at least two plates for each installation.
2. Fabricate each pole plate-to-perforated tube adapter (steel plate welded to pipe) using steel plate conforming to ASTM A36 and steel pipe conforming to ASTM A53. Paint these adapters in conformance with section 504 of the Standard Specifications for Highway Construction, latest edition.
3. Paint the assemblies in accordance with AASHTO standard specification M69.
4. Attach each pole plate with two bands of 3/4" wide by 0.020" thick stainless steel banding material. Double wrap each band and tighten it until the band stops moving through the buckle.
5. Install bolts, nuts and washers conforming to ASTM A325.

TABLE 1
POLE PLATE SPACING

NO. OF POLE PLATES	OVERHANG	BETWEEN POLE PLATES	OVERHANG
2	0.2W	1 SPACE AT 0.6W 2	0.2W
3	0.15W	SPACES AT 0.35W 3	0.15W
4	0.125W	SPACES AT 0.25W 1	0.125W
5	0.2W	SPACE AT 0.6W	0.2W

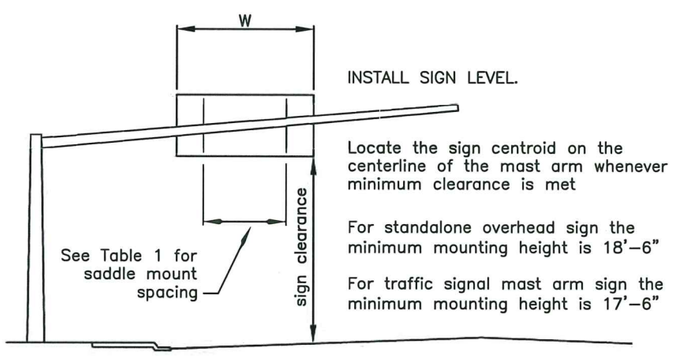

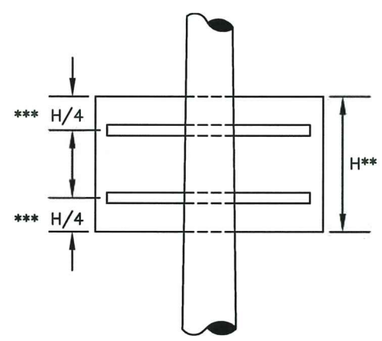

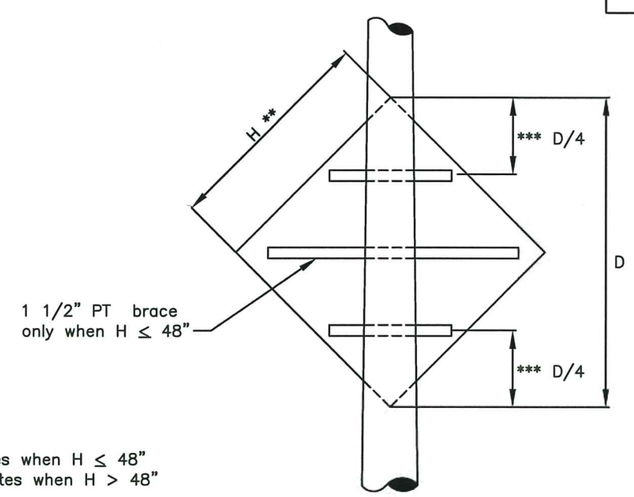

** Use two pole plates when H ≤ 48" use three pole plates when H > 48"

*** When sign panels features predrilled mountings holes, use them to attach the perforated tubes

State of Alaska DOT&PF
ALASKA STANDARD PLAN

POLE AND MASTARM SIGN MOUNTING

Adopted as an Alaska Standard Plan by: Kenneth J. Fisher, P.E.
Chief Engineer

Adoption Date: 02/08/2019

Last Code and Stds. Review
By: Date:

Next Code and Standards Review date: 02/08/2029

S-23.00

S-30.05

SHEET 1 of 1

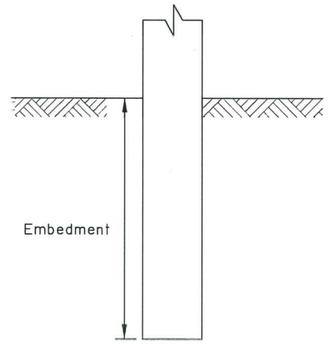

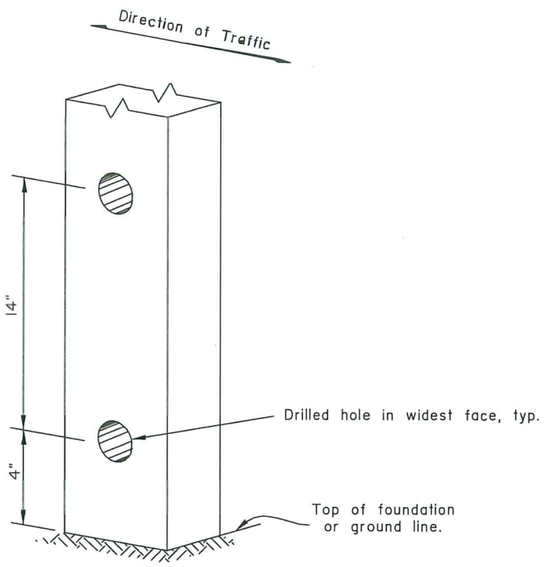

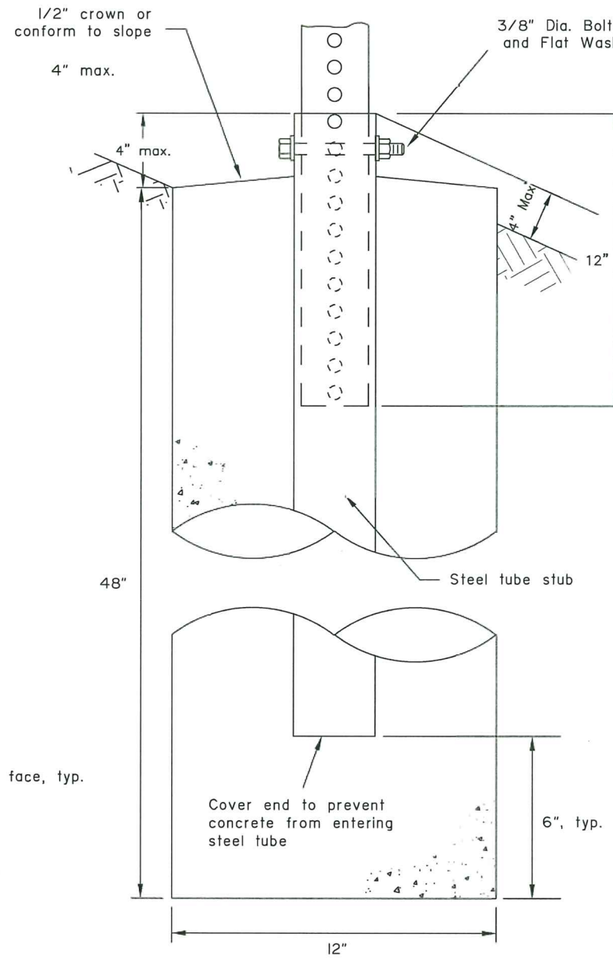

SLEEVE TYPE
CONCRETE FOUNDATION

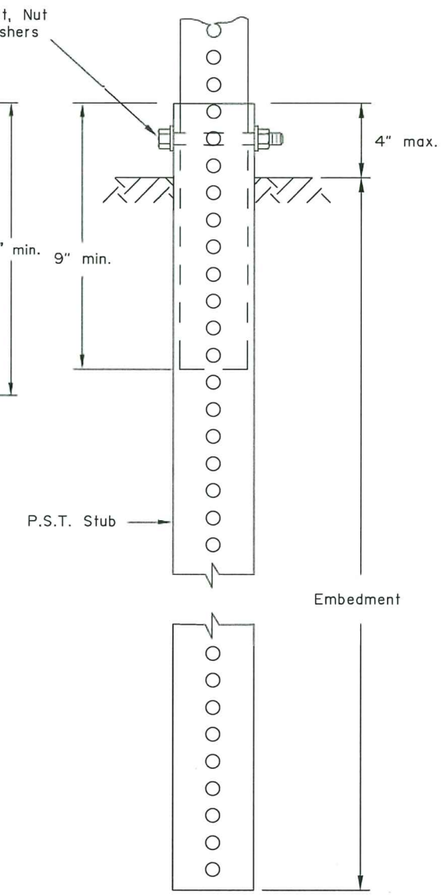

SLEEVE TYPE*
SOIL EMBEDMENT

GENERAL NOTES:

1. Sign shall be placed symmetrically around posts and refer to Standard Plan S-00 for sign framing details.
2. See plans for type of post, size and embedment type.
3. To maintain crashworthiness, install no more than the number of P.S.T.s or wood posts specified in the tables within 7' of each other.
4. Concrete shall be class B.
5. Do not use the supports on this drawing for multiple support signs if supports are separated by more than 7 feet.
6. Treat all field cuts and field drilled holes in wood posts in accordance with Section 730-2.04 of the Standard Specifications.

SIGN POST SPACING NOTES:

1. Install sign support in accordance with the table below, unless otherwise required by plans or specifications.
2. Exceptions:
   a. Use one post for all E5-1 gore signs, regardless of width.
   b. Use one 2.5" P.S.T. for all STOP signs, with or without street name signs.
3. Supports placed within 7' of each other must be acceptable for that use. See tables below for the sizes of wood posts and P.S.T.s that may be used within 7'. See Manufacturer's documentation for breakaway couplings and tubes that may be used within 7'.
4. See Standard Plan S-31 for frangible couplings, hinges, and foundations for tube and W-shape sign supports.

WOOD SIGN POSTS			
SIZE	HOLE DIA.	EMBEDMENT*	NO. OF POSTS WITHIN 7 Ft. PATH
4"x4"	NONE	4'-1"	2
4"x6"	1 1/2"	5'-3"	2
6"x6"	1 1/2"	4'-9"	1
6"x8"	3"	4'-9"	1

* Embedment depth applies in both strong and weak soil.

WOOD POSTS

PERFORATED STEEL TUBES (P.S.T.)		
POST SIZE	Embedment Depth	No. of P.S.T.s permitted within 7 ft path
1 1/2" x 1 1/2"	4'-8"	2
1 3/4" x 1 3/4"	4'-6"	2
2" x 2"	4'-3"	2
2 1/4" x 2 1/4"	5'-0"	1
2 1/2" x 2 1/2"	4'-6"	1

* Use 3"x3"x3/16" Stub for 2 1/2"x2 1/2" PST Applications.

PERFORATED STEEL TUBE (PST) POSTS

TUBE SIGN POST SPACING								
Sign Width (feet)	No. of Posts	Distance Between Posts	Sign Overhang	Post Type				Notes
				P.S.T.	Wood	Steel Tube	W-Shape	
0.5 to 4.0	1	-	0.5W	X	X	X		See Note 2.
4.5 to 10.0	2	0.6W	0.2W	X	X	X		See Note 3.
10.5 to 11.0	2	6	Varies	X	X	X		See Note 3.
11.5 to 13.0	2	8	Varies				X	
13.5 to 20.0	2	0.6W	0.2W				X	
20.5 to 22.5	3	8	Varies				X	
23.0 to 29.5	3	0.35W	0.15W				X	
30.0 to 31.5	4	8	Varies				X	
32.0 to 40.0	4	0.25W	0.125W				X	

TUBE SIGN POST SPACING

Note: Drawing not to scale

State of Alaska DOT&PF
ALASKA STANDARD PLAN

LIGHT SIGN STRUCTURE
POST EMBEDMENT

Adopted as an Alaska Standard Plan by: Carolyn Morehouse
Carolyn Morehouse, P.E.
Chief Engineer

Adoption Date: 7/17/2020

Last Code and Stds. Review
By: WTH Date: 7/8/2020

Next Code and Standards Review date: 7/8/2030

S-30.05

S-31.02

SHEET 1 of 1

NOTE:
Install hinges when more than one post is used to support a sign. Do not install hinges on single post installations.

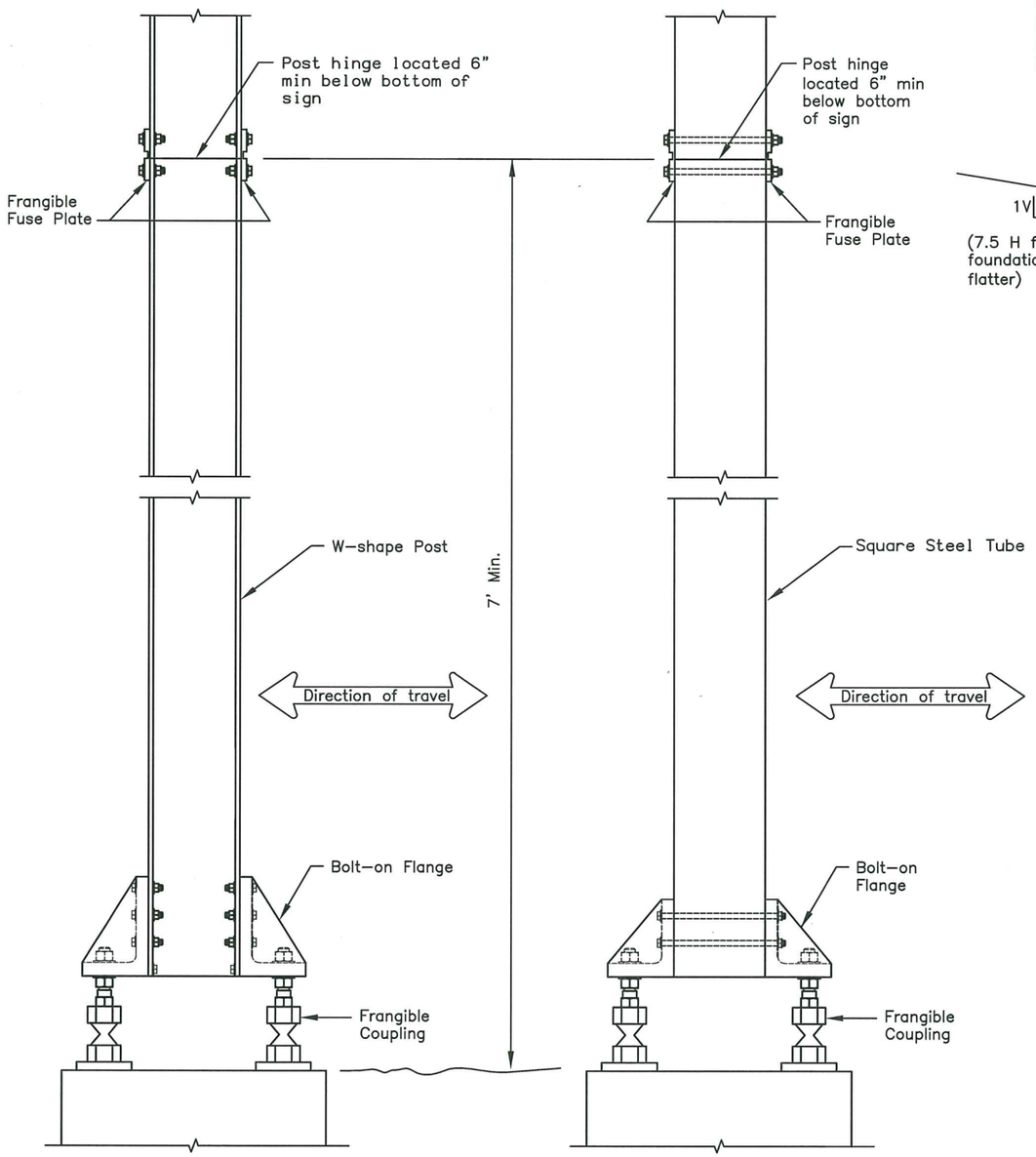

FRANGIBLE COUPLING SYSTEM FOR W-SHAPE POST

FRANGIBLE COUPLING SYSTEM FOR SQUARE STEEL TUBES

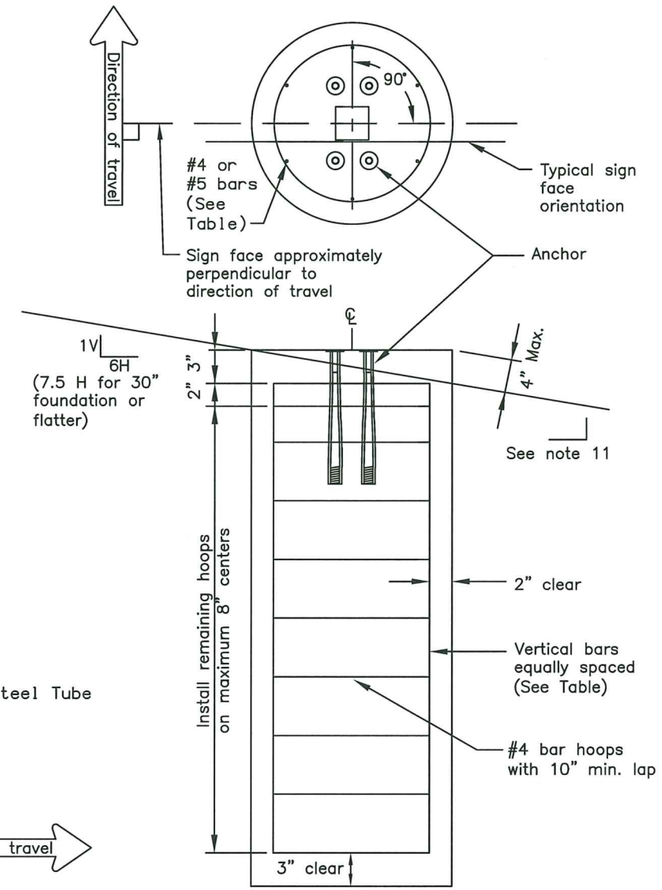

SIGN POST FOUNDATION
See Table for depth and diameter

POST SIZE & TYPE	FOUNDATION *			REINFORCEMENT					
	DIA.	MIN. DEPTH	CY^3 CONC.	VERTICAL BARS			HOOPS		
				QTY.	SIZE	LGTH.	QTY.	SIZE	DIA.
2 1/2" TUBE	1'-6"	6'-0"	0.39	7	#5	5'-6"	10	#4	1'-2"
3" TUBE	1'-6"	6'-0"	0.39	7	#5	5'-6"	10	#4	1'-2"
3 1/2" TUBE	1'-6"	6'-0"	0.39	7	#5	5'-6"	10	#4	1'-2"
4" TUBE	2'-6"	6'-0"	1.09	8	#8	5'-6"	10	#4	2'-2"
4 1/2" TUBE	2'-6"	6'-0"	1.09	8	#8	5'-6"	10	#4	2'-2"
5" TUBE	2'-6"	6'-0"	1.09	8	#8	5'-6"	10	#4	2'-2"
W6 x 9	2'-6"	6'-0"	1.09	8	#8	5'-6"	10	#4	2'-2"
W6 x 12	2'-6"	6'-0"	1.09	8	#8	5'-6"	10	#4	2'-2"
W6 x 15	3'-0"	6'-6"	1.70	8	#11	6'-0"	12	#4	2'-8"
W6 x 30	3'-0"	7'-6"	1.96	8	#11	7'-0"	13	#4	2'-8"

FOUNDATION TABLE

* Foundations sized for use where there are no loose, high moisture, or fine grained soils.

GENERAL NOTES

1. Furnish sign posts with NCHRP 350 compliant frangible couplings designed to break away safely when struck from any direction. There is no MASH compliant device at this time. See SPDR report for more info.
2. Furnish frangible coupling systems with bolt-on flanges.
3. Details on this sheet illustrate only the general components of a frangible coupling system, and are not intended to specify a particular product.
4. Install frangible fuse plates as specified by the manufacturer and hinged joints when multiple posts are used to support a sign. Do not use round pipes.
5. Install the components of the breakaway system, including hinges, in accordance with the written instructions of the system manufacturer.
6. Use Class A, B or W concrete conforming to Sections 501 or 550 of the Standard Specifications. Furnish ASTM A615 grade 60 steel bars for concrete reinforcement conforming to AASHTO M31.
7. Spiral reinforcing steel may be substituted for hoops in concrete foundation. Spiral option shall consist of #3 plain spiral with 6" pitch with three flat turns at the top and one flat turn at the bottom.
8. Install the concrete anchors using a rigid template. Locate the anchors on centers and within tolerances specified by the manufacturer.
9. Install the anchors in fresh concrete as recommended by the manufacturer. Adjust the template's final position until it is level. Remove and replace all foundations that need more than 2 shims under any 1 coupling or more than a total of 3 shims under any pair of couplings to plumb the post.
10. Drill the holes for attaching brackets before the sign posts are hot dip galvanized. Test fit templates in the holes to ensure the brackets can be installed square to the posts.
11. Special grading detail and/or shielding may be required to maintain 4" maximum clear distance.

State of Alaska DOT&PF
ALASKA STANDARD PLAN

SIGN POST BASE AND FOUNDATION

Adopted as an Alaska Standard Plan by: Carolyn Morehouse
Carolyn Morehouse, P.E.
Chief Engineer

Adoption Date: 7/17/2020

Last Code and Stds. Review
By: KLK, MJM Date: 7/8/2020

Next Code and Standards Review Date: 7/8/2030

S-32.02

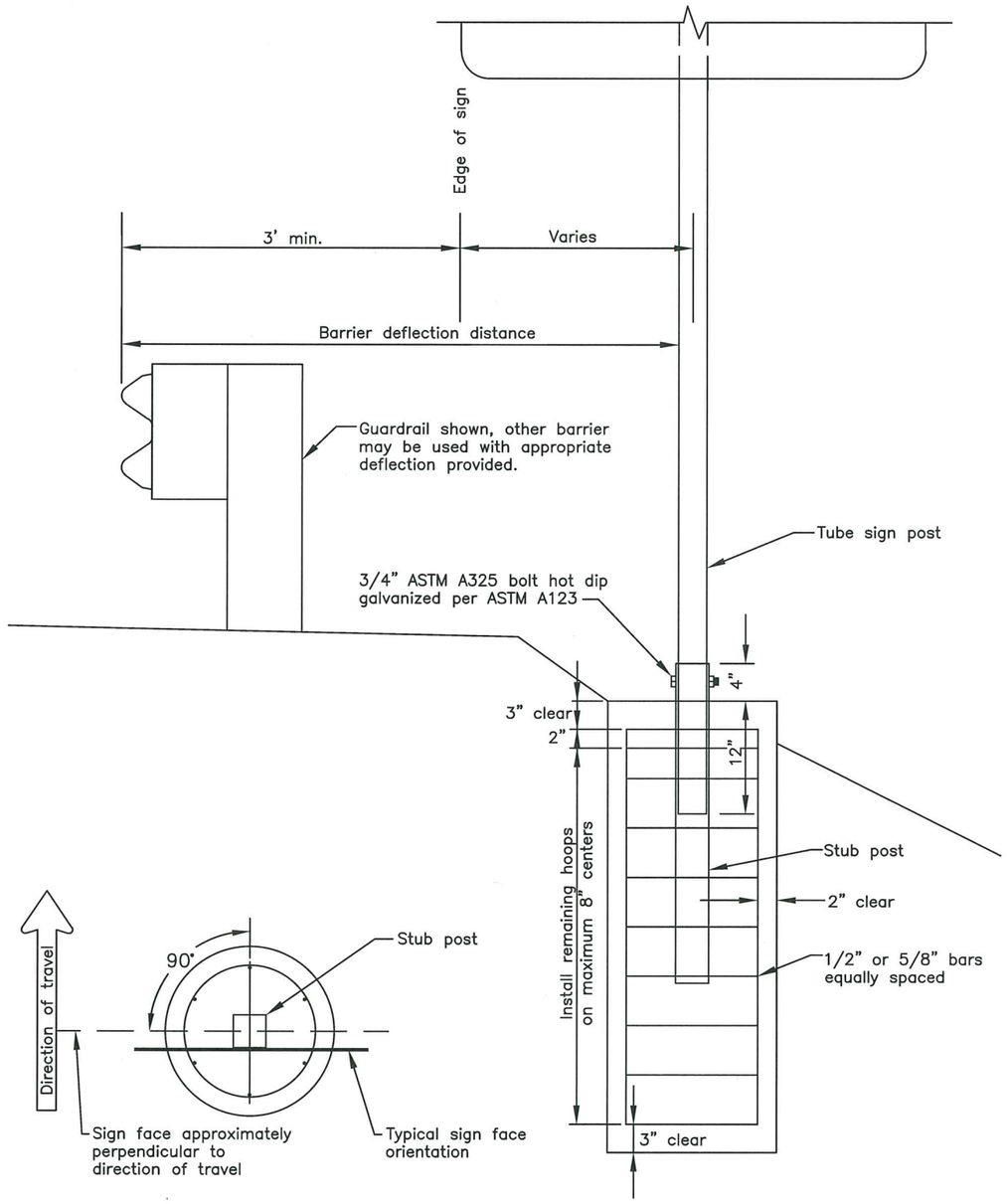

SIGN POST FOUNDATION
(Plan view)

SIGN POST FOUNDATION
See table for depth and diameter

GENERAL NOTES

1. This is a non–crashworthy sign support. It may only be used at locations shielded by a guardrail, barrier, or wall. It may not be used if the sign post is within 20' of the rail and is closer than 75' from the guardrail end post (measured along the rail). For this case use a breakaway sign support. See Standard Plan G–20.
2. Furnish steel tube sign post and stub post that conform to ASTM A500, grade B, and meet ASTM A123 for hot dip galvanizing.
3. Install tubes and stub post with a 0.1875" wall thickness.
4. For Perforated Tubes use Standard Plan S–30.
5. Spiral reinforcing steel may be substituted for hoops in concrete foundation. Spiral option shall consist of No. 3 plain spiral with 6" pitch with three flat turns at the top and one flat turn at the bottom.
6. Use Class A, B or W concrete.

POST SIZE & TYPE	FOUNDATION *			REINFORCEMENT					STUB POST	
				VERTICAL BARS			HOOPS		SLEEVE	
	DIA.	MIN. DEPTH	C.Y. CONC.	QTY.	SIZE	LGTH.	SIZE	DIA.	SIZE	LGTH.
2 1/2" TUBE	1'–0"	4'–6"	0.13	6	#4	4'–0"	#4	8"	3"	3'
3" TUBE	1'–6"	4'–0"	0.25	7	#5	3'–6"	#4	1'–2"	3 1/2"	3'
3 1/2" TUBE	1'–6"	4'–6"	0.27	7	#5	4'–0"	#4	1'–2"	4"	3'
4" TUBE	2'–6"	4'–0"	0.69	8	#8	3'–6"	#4	2'–2"	4 1/2"	3'
4 1/2" TUBE	2'–6"	4'–6"	0.78	8	#8	4'–0"	#4	2'–2"	5"	3'

* Foundation sized for use where there are no loose, high moisture, or fine grained soil.

State of Alaska DOT&PF
ALASKA STANDARD PLAN

SIGN POST BASE AND FOUNDATION BEHIND BARRIER

Adopted as an Alaska Standard Plan by: Carolyn Morehouse
Carolyn Morehouse, P.E.
Chief Engineer

Adoption Date: 7/17/2020

Last Code and Stds. Review
By: KLK Date: 7/8/2020

Next Code and Standards Review Date: 7/8/2030

T-20.04

SHEET 1 of 1

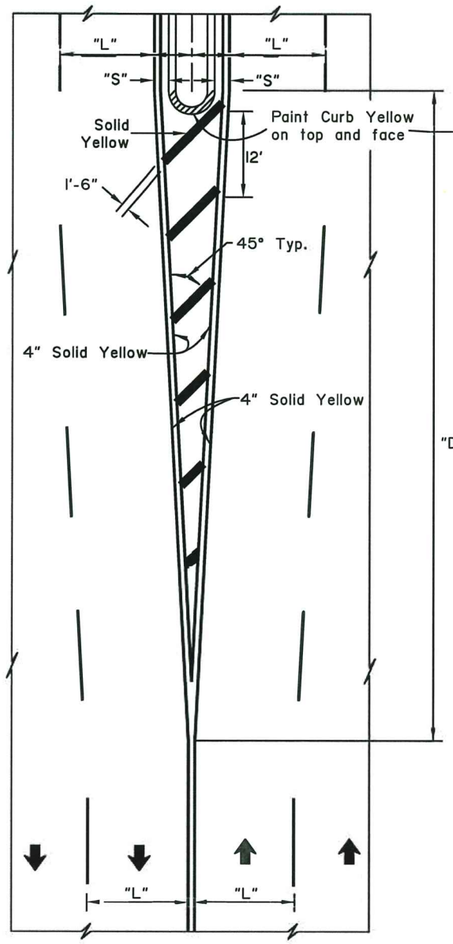

FOUR OR MORE LANES
DRIVE TO RIGHT

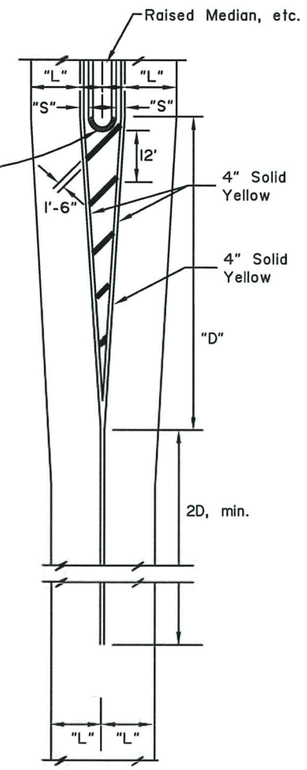

TWO LANES
DRIVE TO RIGHT

White longitudinal and diagonal markers identical to Four Lane Arrangement.

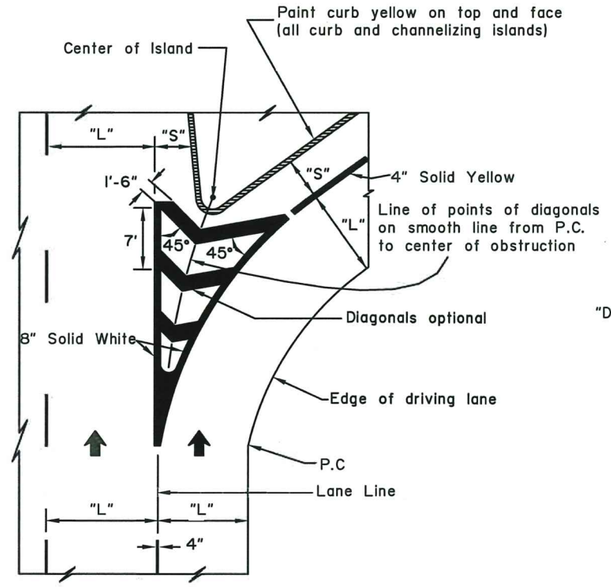

CHANNELIZING ISLAND

NOTES: "D" = Speed limit (mph) X "S" (offset width in feet) or as indicated on the plans. Minimum "D" = 100 feet urban, 200 feet rural.

APPROACH TO OBSTRUCTIONS

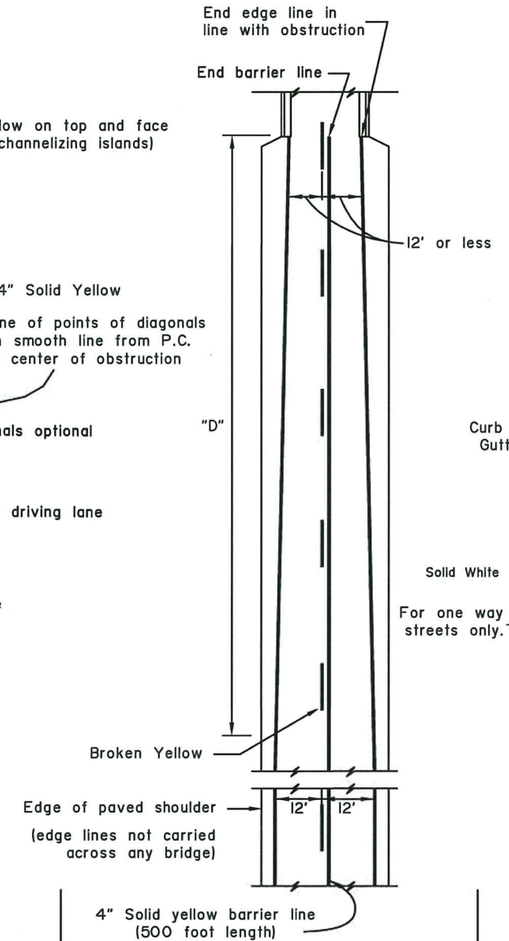

Note: On bridges over 24' wide use standard pavement markings. Barrier lines not used unless otherwise required.

EDGE LINE TRANSITION TO NARROW BRIDGE AND APPROACH BARRIER LINE

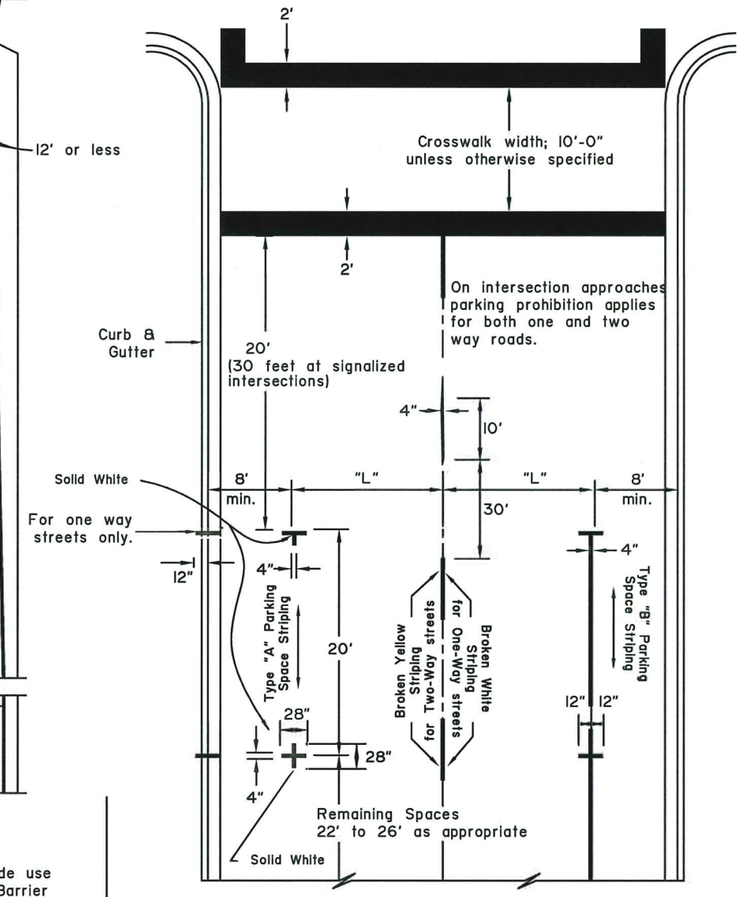

CENTERLINES FOR TWO LANE TWO WAY URBAN ROADS-PARKING LIMIT LINES

RAILROAD CROSSING NOTES:

1. All markings solid while unless indicated otherwise.
2. On 4-lane roadways place railroad crossing approach markings in each lane of the approach.
3. Locate Stop Bar 15' from railroad track or 8' from gate, if present.
4. Place edge lines and lane lines on a uni-directional approach in a normal manner except that the lane line(s) shall be solid 4" white in lieu of broken for a distance of (D+60') in advance of the stop bands.

POSTED LIMIT	D
30 M.P.H.	225'
40	350'
50	475'
60	625'

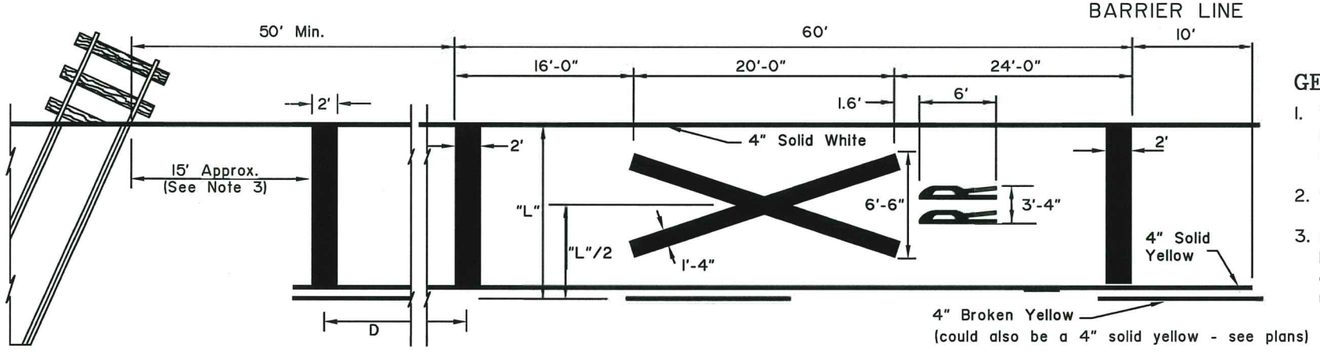

APPROACH TO RAILROAD CROSSING ON 2 LANE 2 WAY HIGHWAY

GENERAL NOTES:

1. "S"= offset distance as shown on the plans, otherwise 1 to 2 feet.
2. "L"= driving lane width.
3. See the Alaska Traffic Manual for additional guidance and/or restrictions on the use of traffic control devices.

NOT TO SCALE

State of Alaska DOT&PF
ALASKA STANDARD PLAN

PAVEMENT MAKING APPLICATIONS

Adopted as an Alaska Standard Plan by: Kenneth J. Fisher, P.E.
Chief Engineer

Adoption Date: 02/08/2019

Last Code and Stds. Review
By: Date:

Next Code and Standards Review date: 02/08/2029

T-20.04

T-21.04

SHEET 1 of 1

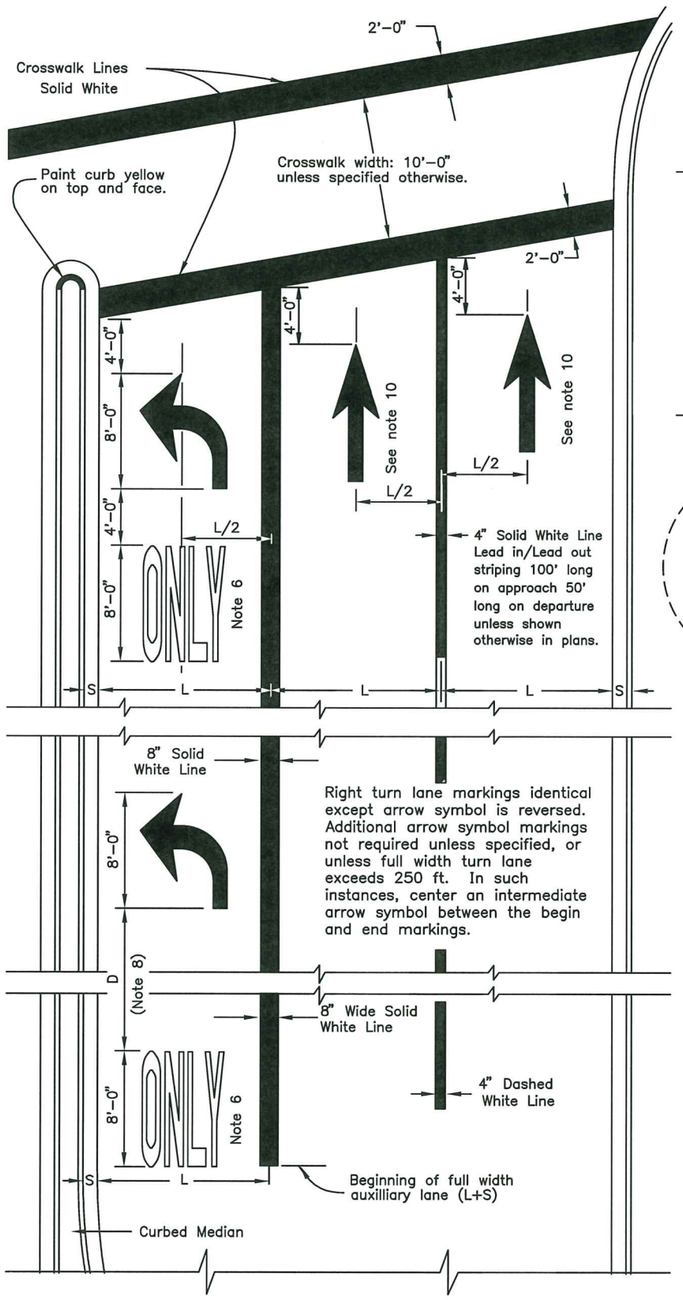

APPROACH TO INTERSECTION

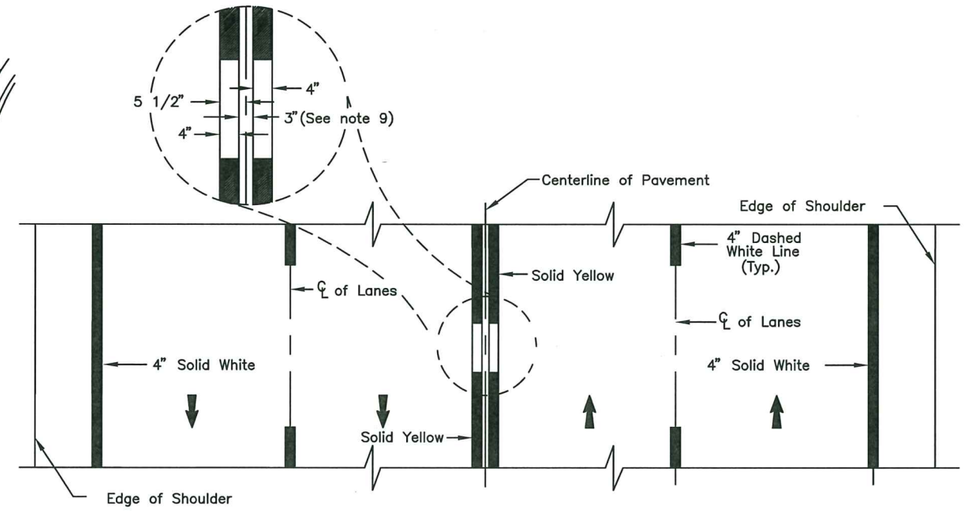

FOUR LANE TWO WAY

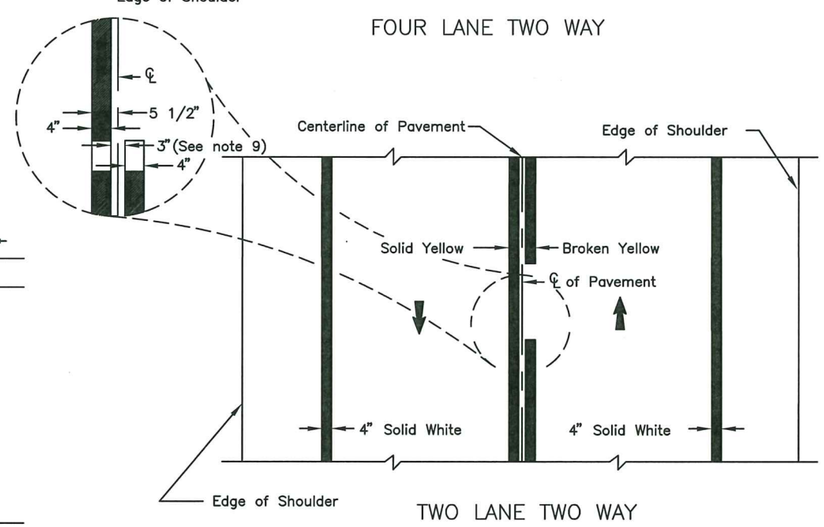

TWO LANE TWO WAY

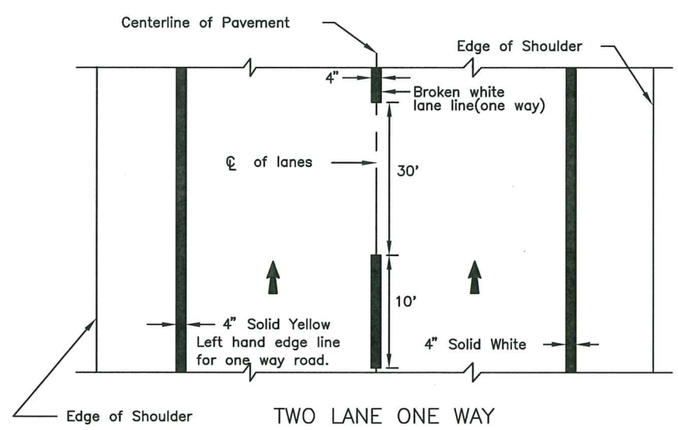

TWO LANE ONE WAY

GENERAL NOTES:

1. All markings white unless indicated otherwise.
2. Lengths of stripe and gap for lane and center lines identical.
3. Lane lines for auxiliary lanes are unbroken solid lines.
4. "L" = driving lane width.
5. "S" = shy distance as shown on plans, otherwise 1 to 2 feet.
6. ONLY markings are required where through lanes change to turn lanes. In other cases, apply ONLY markings as indicated on plans.
7. See ALASKA TRAFFIC MANUAL for additional instruction on the use of TRAFFIC CONTROL DEVICES.
8. Adjust distance D between ONLY and Turn Arrow based on SPEED vs. D table. Table may be used for spacing between pairs of TWLT markings.
9. Adjust centerline spacing from 3" up to 5" where recessed pavement markers are required.
10. Arrows and symbols are used for through lanes only when the lane layout deviates from the normal intersection rules, and shall only be used where indicated in the plans.

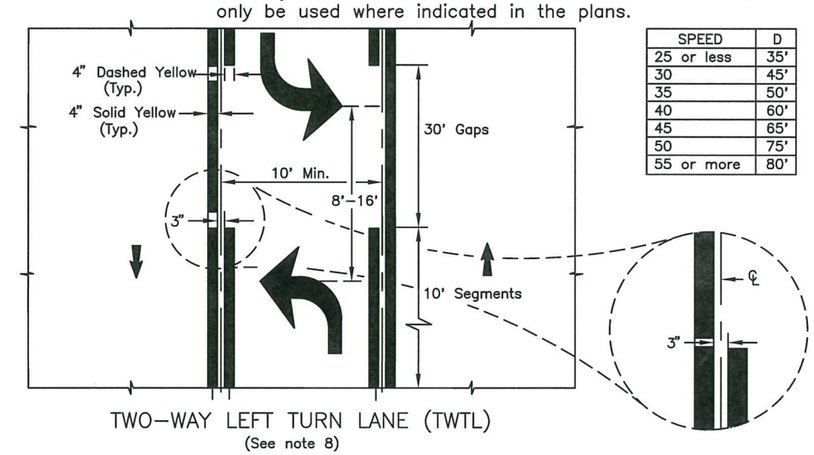

TWO-WAY LEFT TURN LANE (TWTL)
(See note 8)

SPEED	D
25 or less	35'
30	45'
35	50'
40	60'
45	65'
50	75'
55 or more	80'

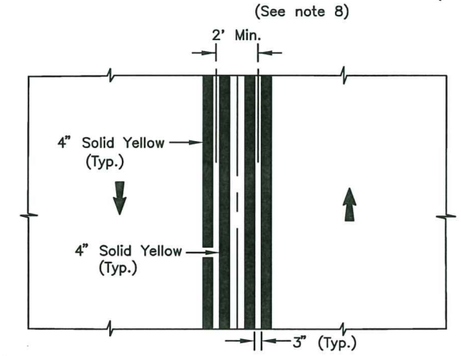

STRIPED MEDIAN

State of Alaska DOT&PF
ALASKA STANDARD PLAN

PAVEMENT MARKING APPLICATIONS

Adopted as an Alaska Standard Plan by: Carolyn Morehouse
Carolyn Morehouse, P.E.
Chief Engineer

Adoption Date: 7/17/2020

Last Code and Stds. Review
By: KLK Date: 7/8/2020

Next Code and Standards Review Date: 7/8/2030

T-21.04

T-22.04

SHEET 1 of 1

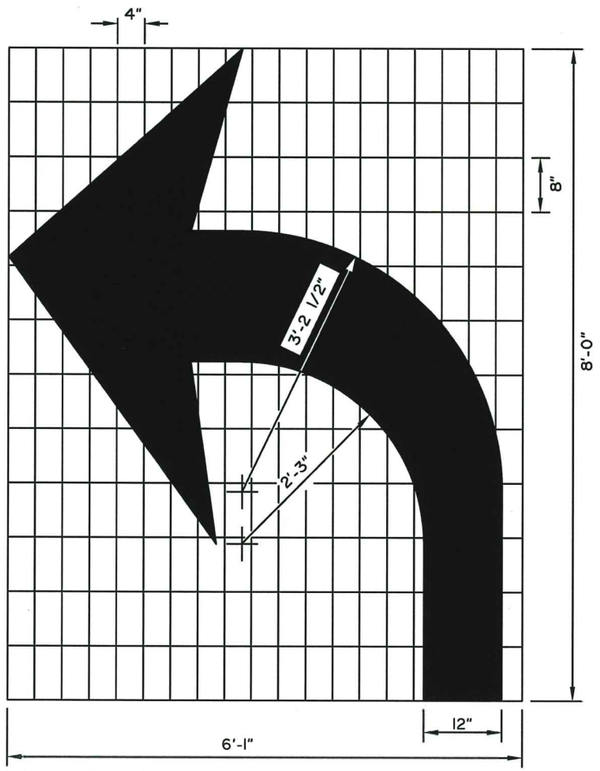

Right turn auxilliary lane usage markings identical except arrow symbol is reversed.

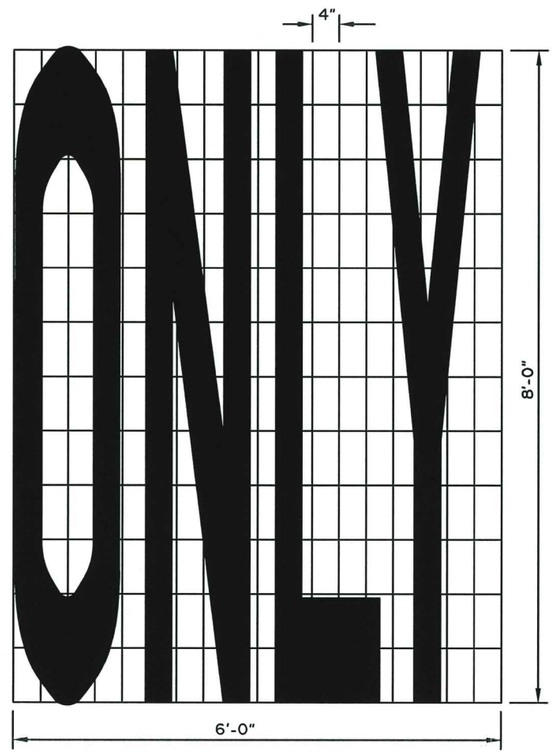

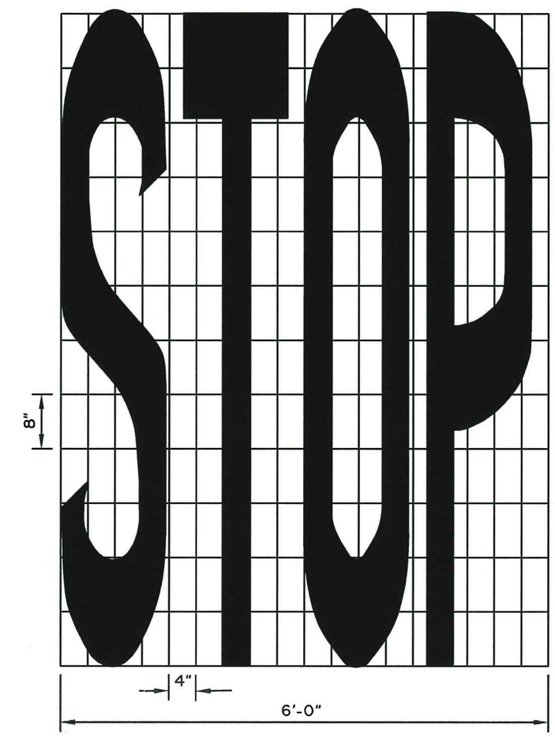

LAYOUT TEMPLATES FOR STENCILS

GENERAL NOTES:

1. All symbols shown shall be white and reflectorized in accordance with the Special Provisions.
2. See the Alaska Sign Design Specifications (ASDS) for lettering and symbols for pavement marking details not provided on this drawing.

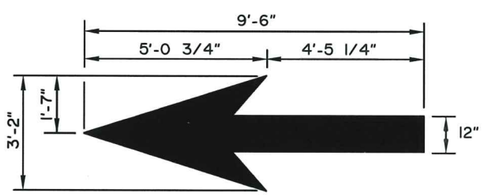

STRAIGHT AHEAD ARROW

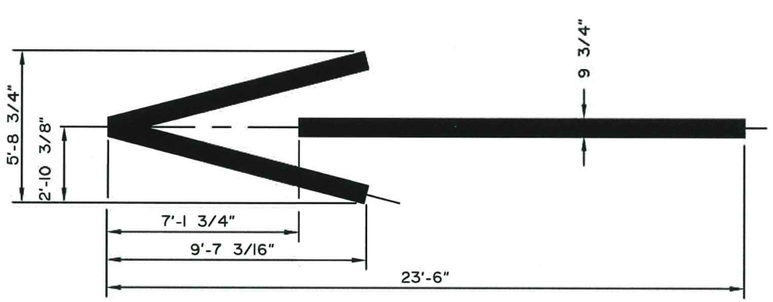

WRONG WAY ARROW

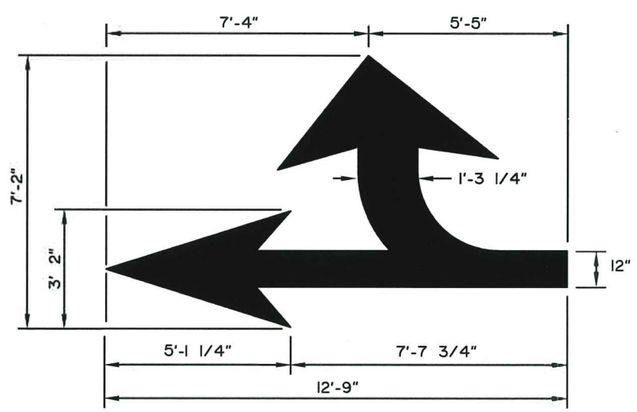

COMBINATION ARROW

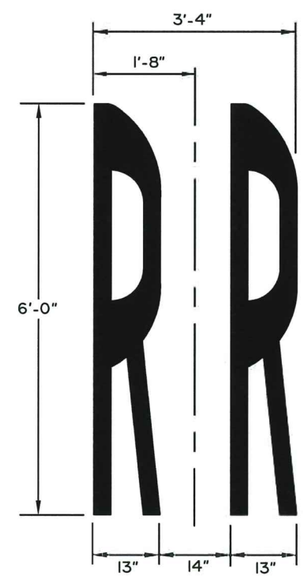

RAILROAD SYMBOL

State of Alaska DOT&PF
ALASKA STANDARD PLAN

PAVEMENT MARKING SYMBOL DIMENSIONS

Adopted as an Alaska Standard Plan by: Kenneth J. Fisher, P.E.
Chief Engineer

Adoption Date: 02/08/2019

Last Code and Stds. Review
By: Date:

Next Code and Standards Review date: 02/08/2029

T-22.04

T-23.01

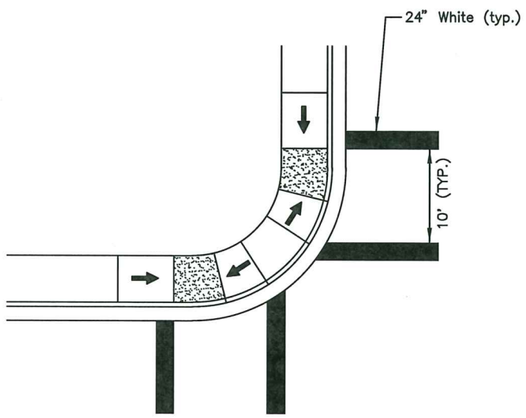

CASE 1

Dual Curb Ramps
Radius ≦ 25'

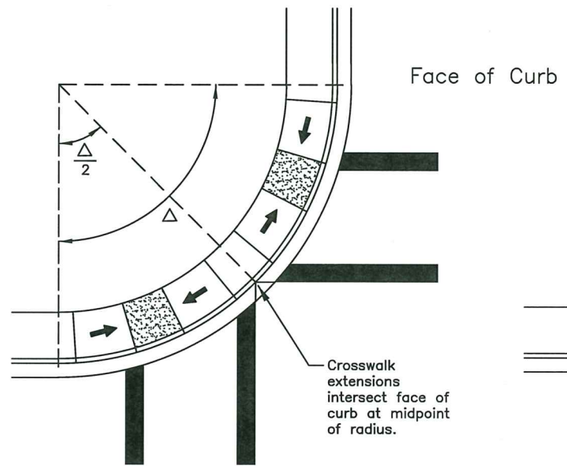

CASE 2

Dual Curb Ramps
25' < Radius ≦ 50'

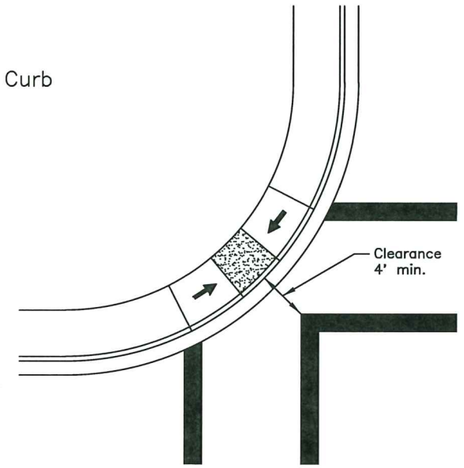

CASE 3

Single Central Curb Ramp
25' ≦ Radius ≦ 50'
(Not Recommended)

GENERAL NOTES

1. The crosswalk locations shown assume a 90–degree intersection – adjust as necessary on skewed intersections to ensure that crosswalk landings (for parallel curb ramps) or ramp runs (for perpendicular curb ramps) fall within the inner edges of crosswalk stripes. If Case 3 (not recommended) is used, the layout should also be adjusted to provide at least the minimum clearance while maximizing the offset.
2. If only one crosswalk connects with a curb radius, it should be located as if there were two connecting crosswalks.
3. These details apply to parallel (shown) as well as perpendicular curb ramps.
4. Case 3, the layout for a single central curb ramp, should be used only when installing two ramps is not feasible. It should not be used for radii under 25 feet. See plans for ramp layout at particular locations.
5. Radius is measured to the face of curb.

State of Alaska DOT&PF
ALASKA STANDARD PLAN

CROSSWALK LOCATION AT SIGNALIZED INTERSECTIONS

Adopted as an Alaska Standard Plan by: Carolyn Morehouse
Carolyn Morehouse, P.E.
Chief Engineer

Adoption Date: 7/17/2020

Last Code and Stds. Review
By: KLK Date: 7/8/2020

Next Code and Standards Review Date: 7/8/2030