AS-BUILT ~~CONSTRUCTION~~ PLANS FOR

CLARKS POINT AIRPORT

CLARKS POINT, ALASKA
AIRPORT RELOCATION, STAGE II
PROJECT No. 55598
AIRPORT IMPROVEMENT PROGRAM
A.I.P. No. 3-02-0062-0304
2004

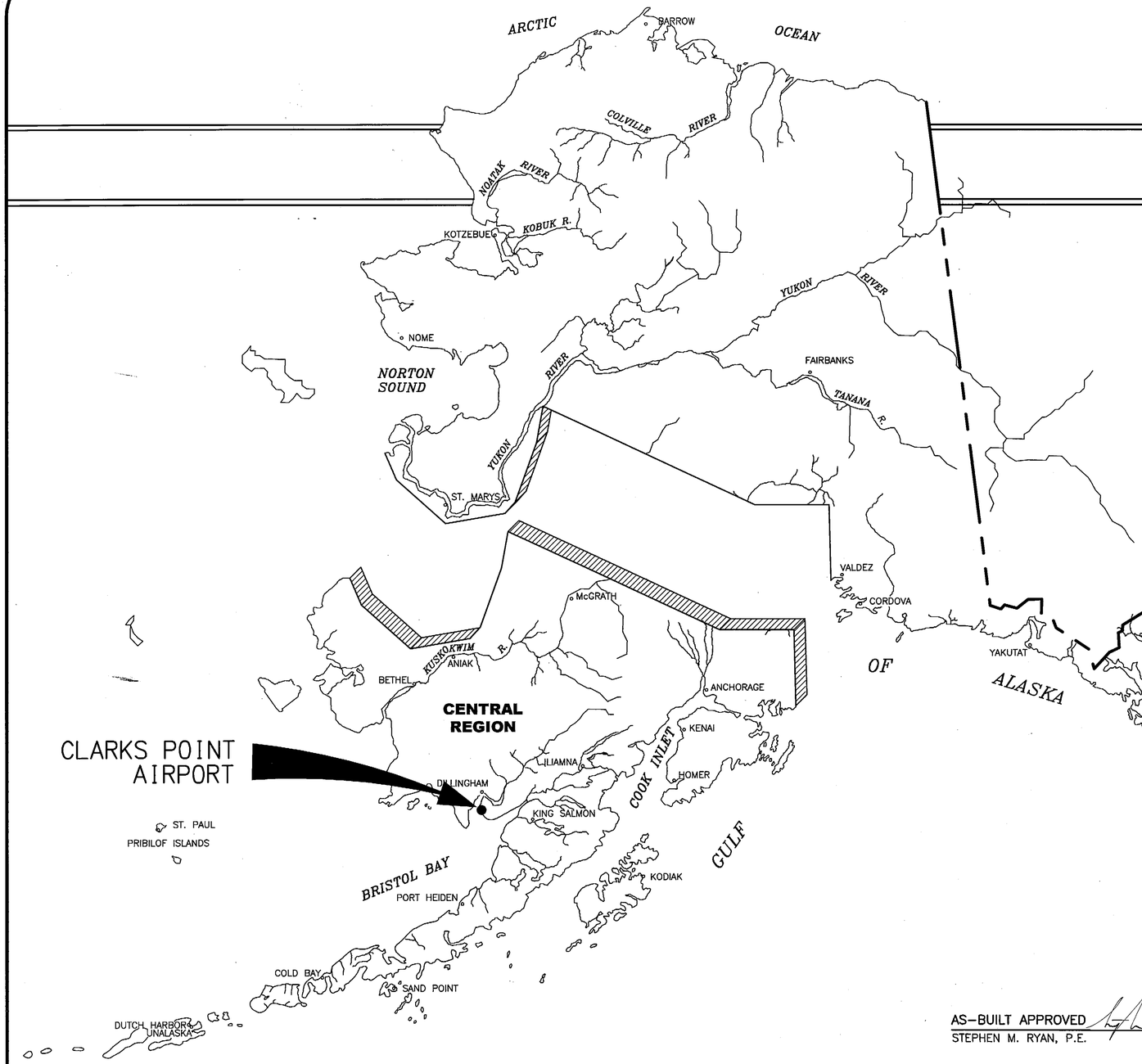

AS ADVERTISED
CENTRAL REGION
DATE JUNE 2004

BID OPEN DATE:	July 21, 2004	PROJECT ENGINEER:	SCOTT RHEE
BID AMOUNT:	$3,617,190.00	AWARDED CONTRACTOR:	BERING PACFIC CONSTRUCTION
FINAL AMOUNT:	$3,598,116.49	ADDRESS:	7801 SCHOON ST. SUITE B ANCHORAGE, AK. 99518

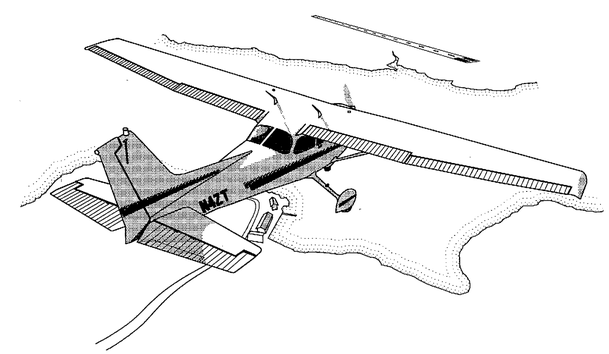

AS-BUILT APPROVED DATE 3/7/08
STEPHEN M. RYAN, P.E. AVIATION CONSTRUCTION GROUP CHIEF

Designed By: TJS
Checked By: BRH
Drawn By: MGT
Date Printed: 2004
Plot Ratio and Layout: 1=1, layout=
File: W:\Projects\Clarks Point\Airport Relocation Phase II 55598 10_2003\Civil Design\Construction drawings\cover_ak8.dwg 6/18/2004 1:21:16 PM AKT

SPONSORED BY
STATE OF ALASKA
DEPARTMENT OF TRANSPORTATION AND PUBLIC FACILITIES
CENTRAL REGION

CONCUR DATE 6/23/04
STEVEN R. HORN, P.E. — DIRECTOR OF CONSTRUCTION AND OPERATIONS

APPROVED DATE 6.23.04
ROBERT A. CAMPBELL, P.E. — REGIONAL PRECONSTRUCTION ENGINEER

APPROVED DATE 6/22/04
STEPHEN M. RYAN, P.E. — DESIGN SECTION CHIEF

APPROVED DATE 6/22/04
HARVEY M. DOUTHIT, P.E. FOR — PROJECT MANAGER

CLARKS POINT AIRPORT
AIRPORT RELOCATION, STAGE II
PROJECT No. 55598

SHEET 1 OF 34

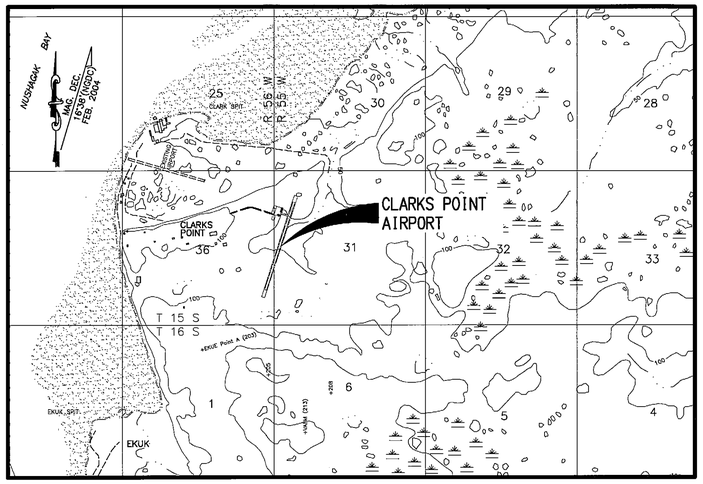

VICINITY MAP

SCALE 2"= 1 MILE
T 15 S, R55 W, SEC. 31
T 15 S, R56 W, SEC. 36
SEWARD MERIDIAN
U.S.G.S. NUSHAGAK BAY (D-2), ALASKA

INDEX

SHEET TITLE	SHEET No.
TITLE SHEET	1
VICINITY MAP & INDEX	2
QUANTITIES & MATERIALS SUMMARY	3
PROJECT LAYOUT PLAN	4
RUNWAY PLAN & PROFILE STA. 26+30 TO STA. 45+00	5
RUNWAY PLAN & PROFILE STA. 45+00 TO STA. 63+35	6
TAXIWAY PLAN & PROFILE, APRON LAYOUT PLAN	7
ACCESS ROAD PLAN & PROFILE	8
TYPICAL SECTIONS	9
PAPI PAD, REIL PAD & SEGMENTED CIRCLE PAD DETAILS	10
SEGEMENTED CIRCLE PANEL DETAILS	11
LIGHTED AND UNLIGHTED WINDCONE & PAD DETAILS	12
THRESHOLD MARKER, TIE-DOWN ANCHOR, & MONUMENT DETAILS	13
SIGN DETAILS	14
RUNWAY & TAXIWAY LIGHTING PLANS	15
RUNWAY, TAXIWAY & THRESHOLD ELECTRICAL LIGHTING DETAILS	16
LIGHTING SYSTEM WIRING DIAGRAM	17
ELECTRICAL ENCLOSURE PLAN & DETAILS	18
ELECTRICAL ENCLOSURE PANEL SCHEDULES & LIGHTING DETAILS	19
SINGLE BAY SNOW REMOVAL EQUIPMENT BUILDING ELEVATIONS	20
FLOOR PLAN, HOIST & BOLLARD DETAILS	21
FLOOR DRAIN SYSTEM DETAILS	22
ROOF ACCESS LADDER & PLATFORM DETAILS	23
ELECTRICAL LEGEND & PANEL SCHEDULES	24
POWER DISTRIBUTION PLAN	25
POWER DISTRIBUTION DETAILS	26
LIGHTING PLAN & SREB ELECTRICAL LAYOUT	27
ROTATING BEACON DETAIL, WIRING & ONE LINE DIAGRAMS	28
MOTOR VEHICLE FUEL PUMP, RECEPTACLE, LIGHTING, & ELECTRICAL DETAILS	29
HEAT CONTROLS & POWER DETAILS	30
MECHANICAL SYSTEM LAYOUT & DETAILS	31
FUEL OIL PIPING AND TANK DETAILS	32
COMPRESSED AIR SYSTEM SCHEMATIC	33
SRE BUILDING WORK BENCH DETAILS	34

INDEX

SHEET TITLE	SHEET No.
REFERENCE DRAWINGS	
SURVEY CONTROL SHEET, RECORD OF SURVEY	1 OF 1
EROSION CONTROL SYSTEM STRAW BALE DETAILS	1 OF 2
EROSION CONTROL SYSTEM SILT FENCE DETAILS	2 OF 2
STANDARD DRAWINGS	
SIGN FRAMING AND POST SPACING	S-00.10
POST MOUNTED SIGN OFFSET AND HEIGHT	S-05.01
SIGN TO SIGN POST CONNECTIONS	S-20.10
LIGHT SIGN STUCTURE POST EMBEDMENT	S-30.03

Date Plotted:	2004
Plot Ratio and Layout:	1=1, layout=
File:	W:\Projects\Clarks Pt\Airport Relocation Phase II 55598 10_2003\Civil Design\Construction drawings\cover_sht.dwg 6/16/2004 1:21:16 PM AKT
Designed By:	BRH
Checked By:	TJS
Drawn By:	MGT

BY	DATE	REVISIONS
S.R.	3/4/08	AS-BUILT

STATE OF ALASKA 49TH Tom J. Schmid No. CE-9973 REGISTERED PROFESSIONAL ENGINEER

STATE OF ALASKA
DEPARTMENT OF TRANSPORTATION AND PUBLIC FACILITIES
CENTRAL REGION

CLARKS POINT AIRPORT
CLARKS POINT, ALASKA
AIRPORT RELOCATION STAGE II
55598
AIP No. 3-02-0062-0304
VICINITY MAP & INDEX

SHEET 2 OF 34

~~ESTIMATED~~ QUANTITIES FINAL

No.	ITEM	QUANTITY	UNIT
D-701a	Corrugated Steel Pipe, 24 inch	155	L.F
D-701f	Repair Existing Corrugated Steel Pipe, 48 inch	50	L.F
G-100a	Mobilization and Demobilization	All Req'd	L.S.
G-130a	Field Office	All Req'd	L.S.
G-131a	Engineering Transportation (Truck)	1	EA
G-135a	Construction Surveying by the Contractor	All Req'd	L.S.
G-135b	Conditional Survey Party	~~50~~ 0	HR
G-135c	Monuments by the Contractor	All Req'd	L.S.
G-150a	Equipment Rental (Wide Pad Dozer, 65 HP Minimum)	~~50~~ 15	HR
G-705a	Water for Dust Control	~~100~~ 18	M-GAL
L-100b	Regulator, L-828	1	EA
L-100d	Medium Intensity Runway Edge and Threshold Light, L-861 and L-861E	46	EA
L-100e	Taxiway Edge Light, L-861T	16	EA
L-100p	Handhole, L-867, size B	1	Each
L-100q	Junction Box, Type II	6	Each
L-101b	Rotating Beacon, Medium Intensity, L-801A	1	Each
L-107b	12-foot Lighted Wind Cone, in place	1	EA
L-107d	12-foot UnLighted Wind Cone, in place	1	EA
L-108a	Underground Cable #8 AWG, copper, 5 kV FAA type "B" or type ?C", L-824	~~8885~~ 8340	L.F
L-108c	#6 Bare Copper Ground Conductor	~~8885~~ 7928	L.F.
L-108g	Ground Rod	12	Each
L-109c	Electrical Enclosure and Foundation in Place	1	Each
L-109e	Installation of Electrical Equipment in New or Existing Structure	All Req'd	L.S.
L-110g	2-inch PE Conduit	~~8885~~ 7559.6	L.F.
P-151a	Clearing	~~9.9~~ 10.01	Acre
P-152a	Unclassified Excavation	~~13745~~ ~~13506~~ 13185	C.Y.

~~ESTIMATED~~ QUANTITIES

No.	ITEM	QUANTITY	UNIT
P-152f	Embankment	11174 ~~11495~~ ~~13185~~	C.Y.
P-152h	Borrow Embankment	8881 ~~9066.1~~ ~~5575~~	C.Y.
P-157a	Erosion and Pollution Control Administration	L.S.	All Req'd
P-157b	Temporary Erosion and Pollution Control	C.S.	All Req'd
P-208a	Crushed Aggregate Surface Course	12234.3 ~~11900~~	C.Y.
P-640b	Segmented Circle (Panel Type)	All Req'd	L.S.
P-650a	Soil Anchor Tiedown	5	SET
P-660b	Reflective Markers, Type II	62	EA
P-660c	Reflective Markers, Type III	20	EA
P-661a	Standard Sign	47	S.F.
P-671a	Runway Closure Marker	3	Each
P-680a	Silt Fence	3365	L.F.
P-685a	Geogrid	8211 ~~10300~~	S.Y.
S-142c	Equipment Storage Building (Steel Floor on Skids)	2	Each
S-142d	Rotating Beacon Roof Access System	1	Each
S-142f	Heating System	1	Each
S-143a	Heating Fuel Tank (1000 gals)	1	Each
S-143b	Fuel	All Req'd	L.S.
S-143d	Electric Dispensing System	1	Each
S-143e	Motor Vehicle Fuel-dispensing Tank (1000 gals)	1	Each
S-143f	Spill Prevention Control and Countermeasure Plan	L.S.	All Req'd
T-901b	Seeding	110 ~~100~~	LB.
T-901c	Water for Maintenance	0 ~~100~~	M-GAL
T-908b	Rolled Matting	2771 ~~995~~	S.Y.
T-908d	Mulching	3500 ~~5000~~	LB.

ADDITIVE ALTERNATES

Additive Alternate #1: PAPI and REILs for Runway End 36

Pay Item Number	Pay Item Description	Quantity	Pay Unit
L-100p.1	Handhole, L-867, size B	3	Each
L-110g.1	2-inch PE Conduit	6289.2 ~~6285~~	L.F.
P-152h.1	Borrow Embankment	2359 ~~2350~~	C.Y.
P-685a.1	Geogrid	~~745~~	S.Y.

Additive Alternate #2: PAPI and REILs for Runway End 18

Pay Item Number	Pay Item Description	Quantity	Pay Unit
L-100p.2	Handhole, L-867, size B	2	Each
L-110g.2	2-inch PE Conduit	904.1 ~~905~~	L.F.
P-152h.2	Borrow Embankment	3074 ~~3400~~	C.Y.
P-685a.2	Geogrid	~~1040~~	S.Y.

MATERIALS SUMMARY

ITEM:	P-152a	P-152f	P-152h	Total P-152	P-208a
Runway	8513 ~~8,990~~	7971 ~~8,990~~	4121 ~~1,135~~	11034 ~~10,125~~	8593 ~~8,650~~
4 Fillets					115 ~~200~~
Taxiway & Apron	2015 ~~1,725~~	2015 ~~1,725~~	3063 ~~2,735~~	5078 ~~4,460~~	2179 ~~2,075~~
Culvert Replacement	341 ~~800~~	341 ~~800~~		341 ~~800~~	
Culvert Repair	416 ~~580~~	416 ~~580~~			
M&O lot	~~540~~	~~540~~		~~2,900~~	449 ~~250~~
Behind M&O lot	432 ~~550~~				
Segmented Circle		432 ~~550~~	1697 ~~1,705~~	2129 ~~2,255~~	
Road					899 ~~725~~
Obstruction Removal	1469 ~~560~~				
Total	13185 ~~13,745~~	11,174 ~~13,185~~	8881 ~~5,575~~	~~20,540~~ 20,055	~~11,900~~ 12,235

Embankment available behind M&O lot to be utilized elsewhere.

BY	DATE	REVISIONS
S.R.	3/4/08	AS-BUILT

STATE OF ALASKA 49TH Tom J. Schmid No. CE-9973 REGISTERED PROFESSIONAL ENGINEER 6/22/04

STATE OF ALASKA
DEPARTMENT OF TRANSPORTATION AND PUBLIC FACILITIES
CENTRAL REGION

CLARKS POINT AIRPORT
CLARKS POINT, ALASKA
AIRPORT RELOCATION STAGE II
55598
AIP No. 3-02-0062-0304
QUANTITIES & MATERIALS SUMMARY

SHEET 3 OF 34

LEGEND

- BLM Monument
- Primary Centerline Monument
- Secondary Centerline Monument
- GPS Control Point
- Deciduous Tree
- Contour Highlighted
- Contour Normal
- Culvert
- Edge of Vegetation
- Trees & Brush ~~to be~~ Removed
- Terrain ~~to be~~ Removed
- Archeological Site
- Existing Fill Limits
- Silt fence
- New Fill Limits
- New Cut Limits

SCOPE OF PROJECT

1. REGRADE EMBANKMENT. INCLUDING R/W, T/W, SAFETY AREAS, APRON, AND ACCESS ROAD. REGRADE SLOPES AS DIRECTED BY THE ENGINEER.
2. CONSTRUCT EMBANKMENT STA.60+00 TO STA.63+35.
3. SURFACE RUNWAY, STA.28+95 TO STA.60+95.
4. SURFACE TAXIWAY, AND APRON.
5. SURFACE ROAD, STA.10+00 TO 25+67.81.
6. CONSTRUCT SEGMENTED CIRCLE PAD AND INSTALL SEGMENTED CIRCLE WITH LIGHTED WIND CONE.
7. INSTALL UNLIGHTED WIND CONE.
8. REPAIR EXISTING 48"CMP, REGRADE SLOPE.
9. CONSTRUCT TWO SINGLE BAY SNOW REMOVAL EQUIPMENT BUILDINGS (SREB).
10. HAND CLEARING OF BRUSH.
11. INSTALL MEDIUM INTENSITY LIGHTING SYSTEM.
12. REMOVE TERRAIN OBSTRUCTIONS.
13. CONSTRUCT PAPI/REIL PADS ADDITIVE ALTERNATE #1 AND #2.
14. INSTALL MONUMENTS.
15. EXTEND ELECTRICAL SERVICE (BY OTHERS)
16. REPLACE EXISTING 18" CMP WITH NEW 24" CMP

NOTES:

1. CLEARING IS PERMITTED BY HAND CLEARING METHODS ONLY.

2. LOCATE AND STAKE 30 FOOT BUFFER ZONE AROUND ARCHELOLOGICAL SITES PRIOR TO CONDUCTING ANY WORK NEAR THESE AREAS. NO MECHANICAL OR MOTORIZED VEHICLES MAY BE USED WITHIN THE FLAGGED BUFFER ZONE. SEE P-151 FOR ADDITIONAL REQUIREMENTS.

2. MAINTAIN TEMPORARY RUNWAY CLOSURE MARKERS AT ALL TIMES, DURING CONSTRUCTION. ALL WORK IS SUBSIDIARY. RUNWAY CLOSER MARKERS WILL BE RELOCATED TO THE OLD RUNWAY AFTER THE NEW RUNWAY IS COMPLETE.

APPROXIMATE LOCATION OF ARCHEOLOGICAL SITES

XNB-058	STA: 66+60 OFFSET: 376' L
XNB-057	STA: 69+38 OFFSET: 17' R
NEAR APRON	STA: 54+51 OFFSET: 269' L
NEAR RW 36	STA: 24+96 OFFSET: 70' R

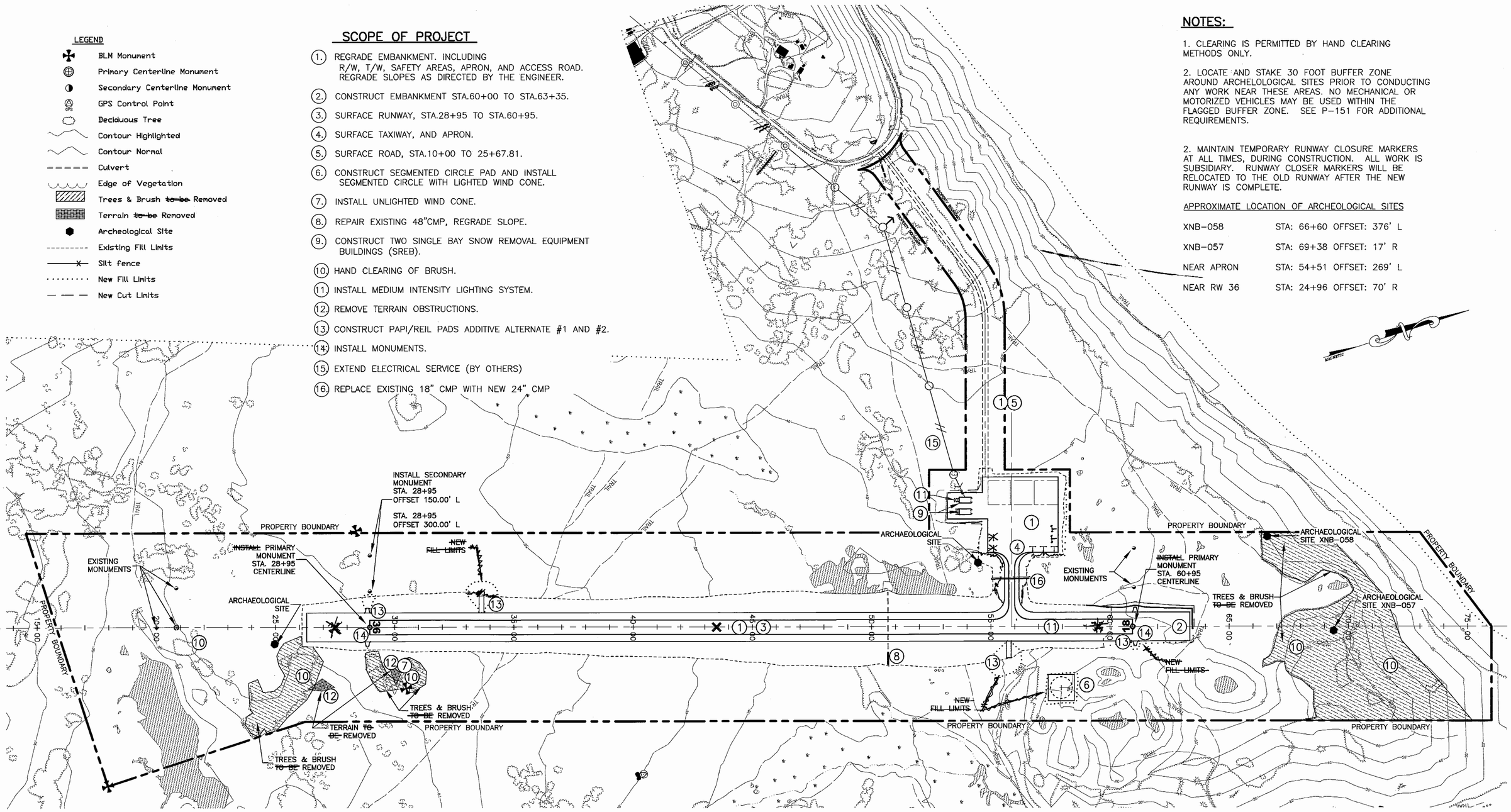

Date Plotted:	2004
Plot Ratio and Layout:	1=1, layout=
File:	W:\Projects\Clarks Point\Airport Relocation Phase II 55598 10_2003\Civil Design\Construction drawings\plp_p4b.dwg 6/18/2004 1:46:49 PM AKT
Designed By:	BRH
Checked By:	TJS
Drawn By:	MGT

BY	DATE	REVISIONS
S.R.	3/4/08	AS-BUILT

STATE OF ALASKA 49TH Tom J. Schmid No. CE-9973 REGISTERED PROFESSIONAL ENGINEER 6/22/04

STATE OF ALASKA
DEPARTMENT OF TRANSPORTATION AND PUBLIC FACILITIES
CENTRAL REGION

CLARKS POINT AIRPORT
CLARKS POINT, ALASKA
AIRPORT RELOCATION STAGE II
55598
AIP No. 3-02-0062-0304
PROJECT LAYOUT PLAN

SHEET 4 OF 34

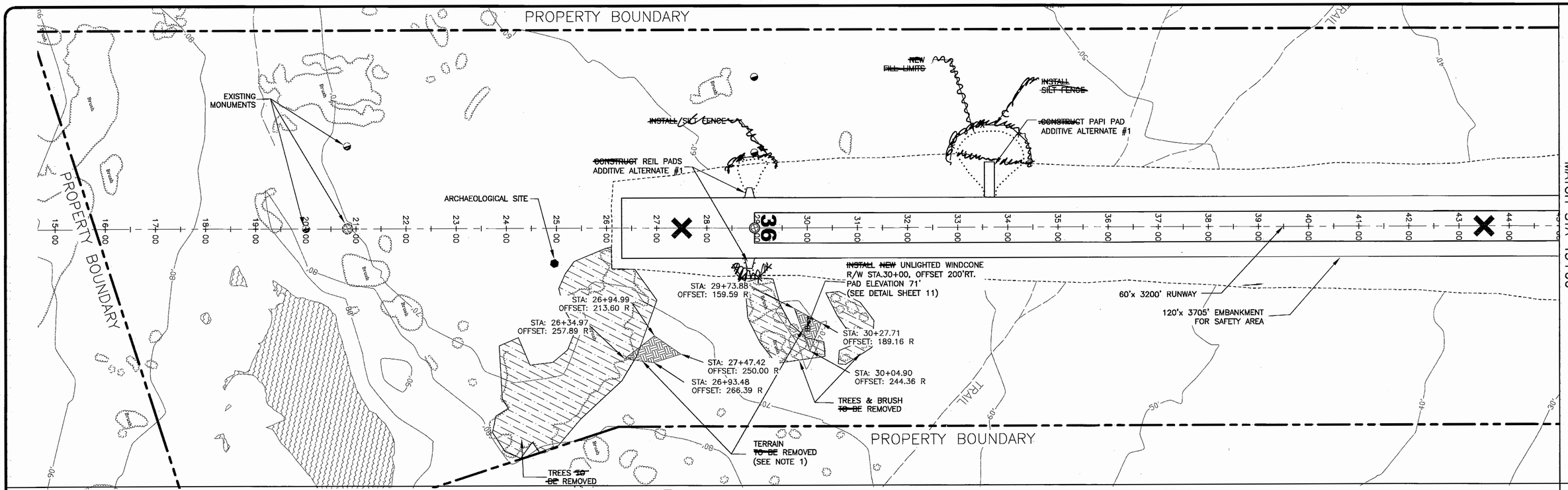

MAGNETIC

GRAPHIC SCALE

100 0 50 100 200

(IN FEET)

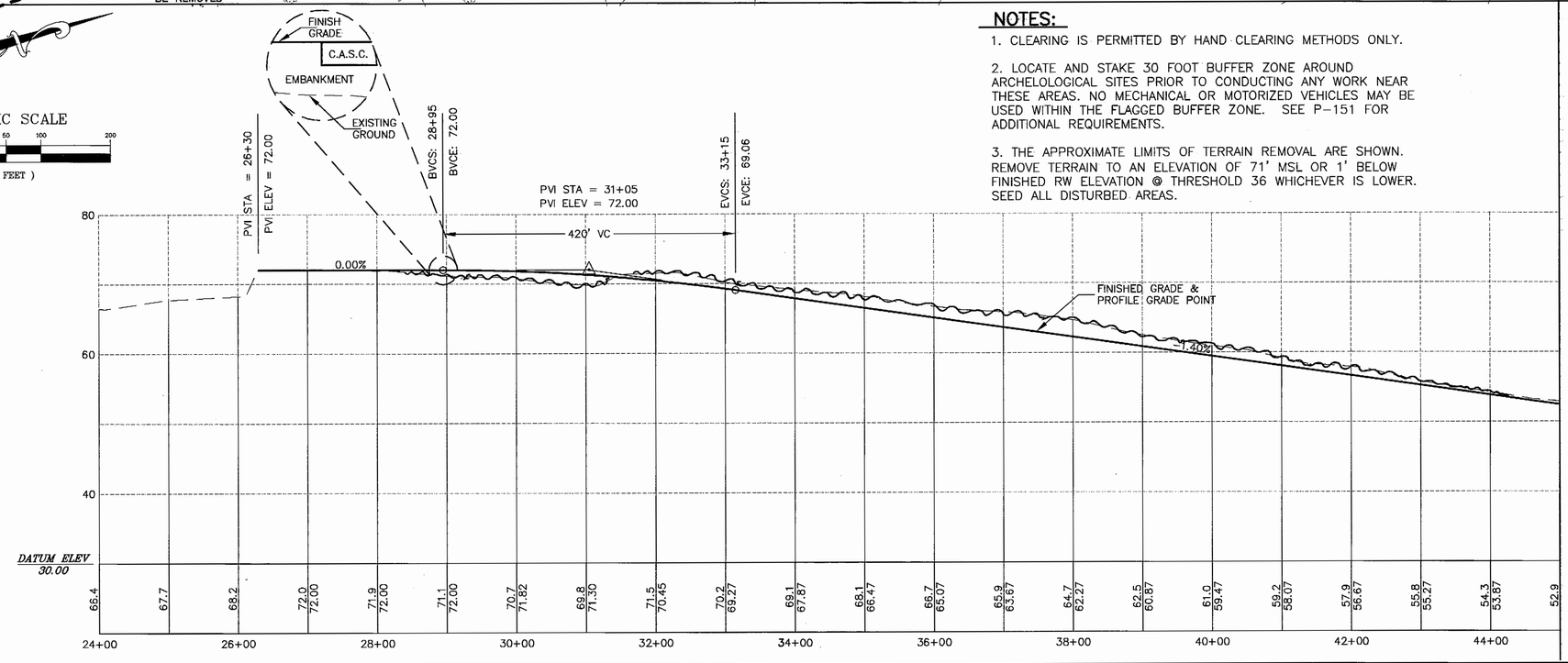

NOTES:

1. CLEARING IS PERMITTED BY HAND CLEARING METHODS ONLY.

2. LOCATE AND STAKE 30 FOOT BUFFER ZONE AROUND ARCHELOLOGICAL SITES PRIOR TO CONDUCTING ANY WORK NEAR THESE AREAS. NO MECHANICAL OR MOTORIZED VEHICLES MAY BE USED WITHIN THE FLAGGED BUFFER ZONE. SEE P-151 FOR ADDITIONAL REQUIREMENTS.

3. THE APPROXIMATE LIMITS OF TERRAIN REMOVAL ARE SHOWN. REMOVE TERRAIN TO AN ELEVATION OF 71' MSL OR 1' BELOW FINISHED RW ELEVATION @ THRESHOLD 36 WHICHEVER IS LOWER. SEED ALL DISTURBED AREAS.

LEGEND

- BLM Monument
- Primary Centerline Monument
- Secondary Centerline Monument
- GPS Control Point
- Deciduous Tree
- Contour Highlighted
- Contour Normal
- Culvert
- Edge of Vegetation
- Trees & Brush ~~to be~~ Removed
- Terrain ~~to be~~ Removed
- Archeological Site
- Existing Fill Limits
- Silt fence
- New Fill Limits
- New Cut Limits

Date Plotted:	2004
Plot Ratio and Layout:	1=1, layout=
File:	W:\Projects\Clarks Point\Airport Relocation Phase II 55598 10_2003\Civil Design\Construction drawings\plp_p&p.dwg 6/18/2004 1:46:49 PM AJT

Designed By:	BRH
Checked By:	TJS
Drawn By:	MGT

BY	DATE	REVISIONS
S.R.	3/4/08	AS-BUILT

STATE OF ALASKA 49TH Tom J. Schmid 6/22/04 No. CE-9973 REGISTERED PROFESSIONAL ENGINEER

STATE OF ALASKA
DEPARTMENT OF TRANSPORTATION AND PUBLIC FACILITIES
CENTRAL REGION

CLARKS POINT AIRPORT
CLARKS POINT, ALASKA
AIRPORT RELOCATION STAGE II
55598
AIP No. 3-02-0062-0304
RUNWAY PLAN & PROFILE
STA. 26+30 TO STA. 45+00

SHEET 5 OF 34

AS-BUILT 4/2006 5 OF 37

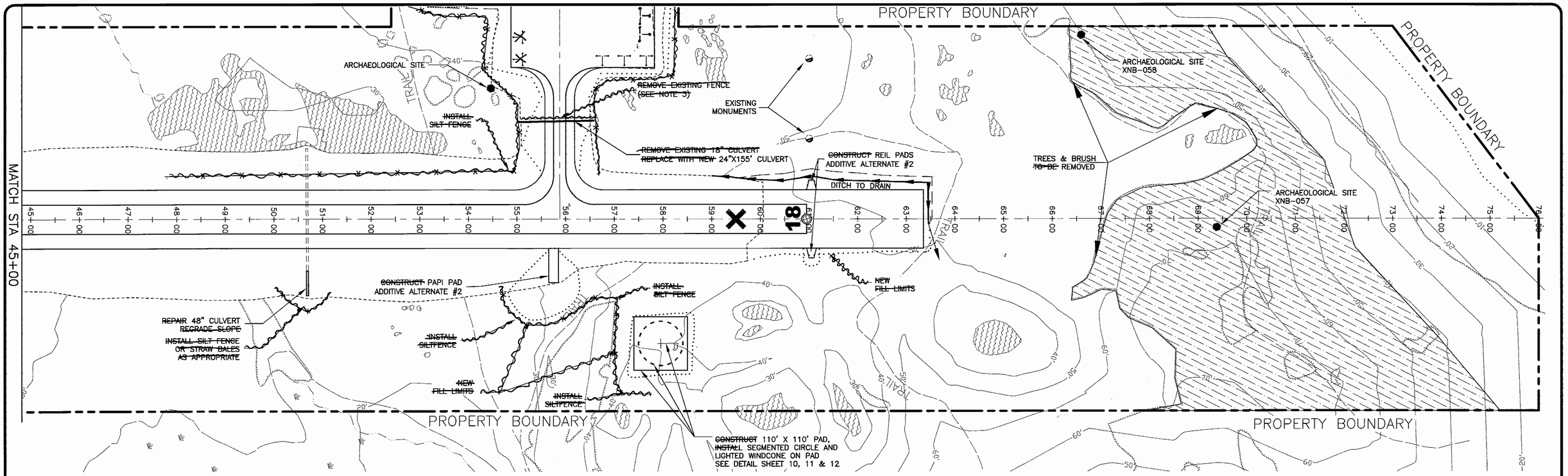

GRAPHIC SCALE

100 0 50 100 200

(IN FEET)

MAGNETIC

NOTES:

1. CLEARING IS PERMITTED BY HAND CLEARING METHODS ONLY.

2. LOCATE AND STAKE 30 FOOT BUFFER ZONE AROUND ARCHELOLOGICAL SITES PRIOR TO CONDUCTING ANY WORK NEAR THESE AREAS. NO MECHANICAL OR MOTORIZED VEHICLES MAY BE USED WITHIN THE FLAGGED BUFFER ZONE. SEE P-151 FOR ADDITIONAL REQUIREMENTS.

~~3. REMOVAL AND DISPOSAL OF EXISTING FENCE, POSTS AND BASES IS SUBSIDIARY TO ITEM P-151.~~

LEGEND

- BLM Monument
- Primary Centerline Monument
- Secondary Centerline Monument
- GPS Control Point
- Deciduous Tree
- Contour Highlighted
- Contour Normal
- Culvert
- Edge of Vegetation
- Trees & Brush ~~to be~~ Removed
- Terrain ~~to be~~ Removed
- Archeological Site
- Existing Fill Limits
- Silt fence
- New Fill Limits
- New Cut Limits

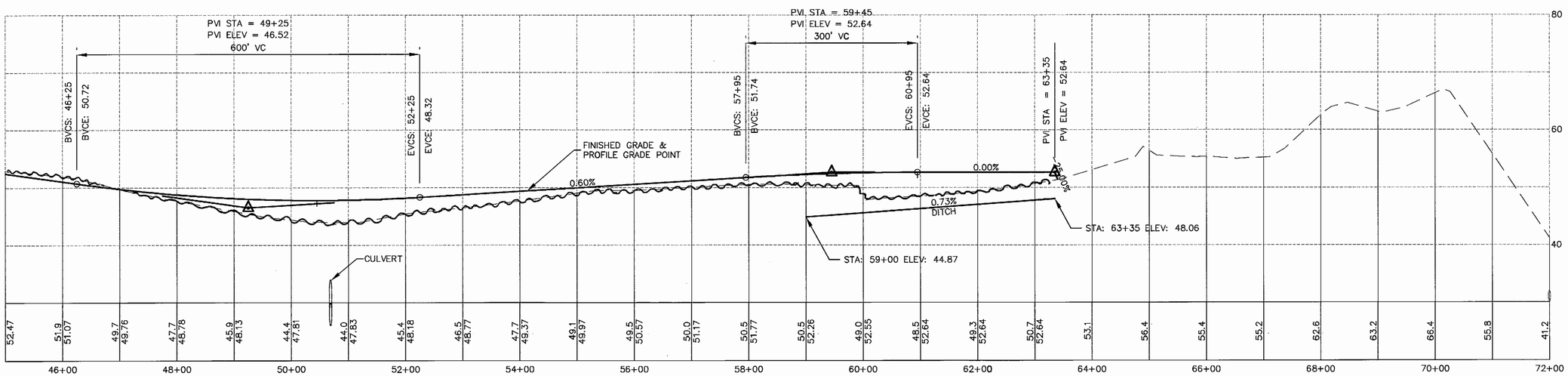

BY	DATE	REVISIONS
S.R.	3/4/08	AS-BUILT

STATE OF ALASKA 49TH Tom J. Schmid No. CE-9973 6/26/04 REGISTERED PROFESSIONAL ENGINEER

STATE OF ALASKA
DEPARTMENT OF TRANSPORTATION AND PUBLIC FACILITIES
CENTRAL REGION

CLARKS POINT AIRPORT
CLARKS POINT, ALASKA
AIRPORT RELOCATION STAGE II
55598
AIP No. 3-02-0062-0304
RUNWAY PLAN & PROFILE
STA. 45+00 TO STA. 63+35

SHEET 6 OF 34

Designed By: BRH
Checked By: TJS
Drawn By: MGT
Date Plotted: 2004
Plot Ratio and Layout: 1=1, layout=
File: W:\Projects\Clarks Point\Airport Relocation Phase II 55598 10_2003\Civil Design\Construction drawings\plp_p4pp.dwg 6/18/2004 1:46:49 PM ADT

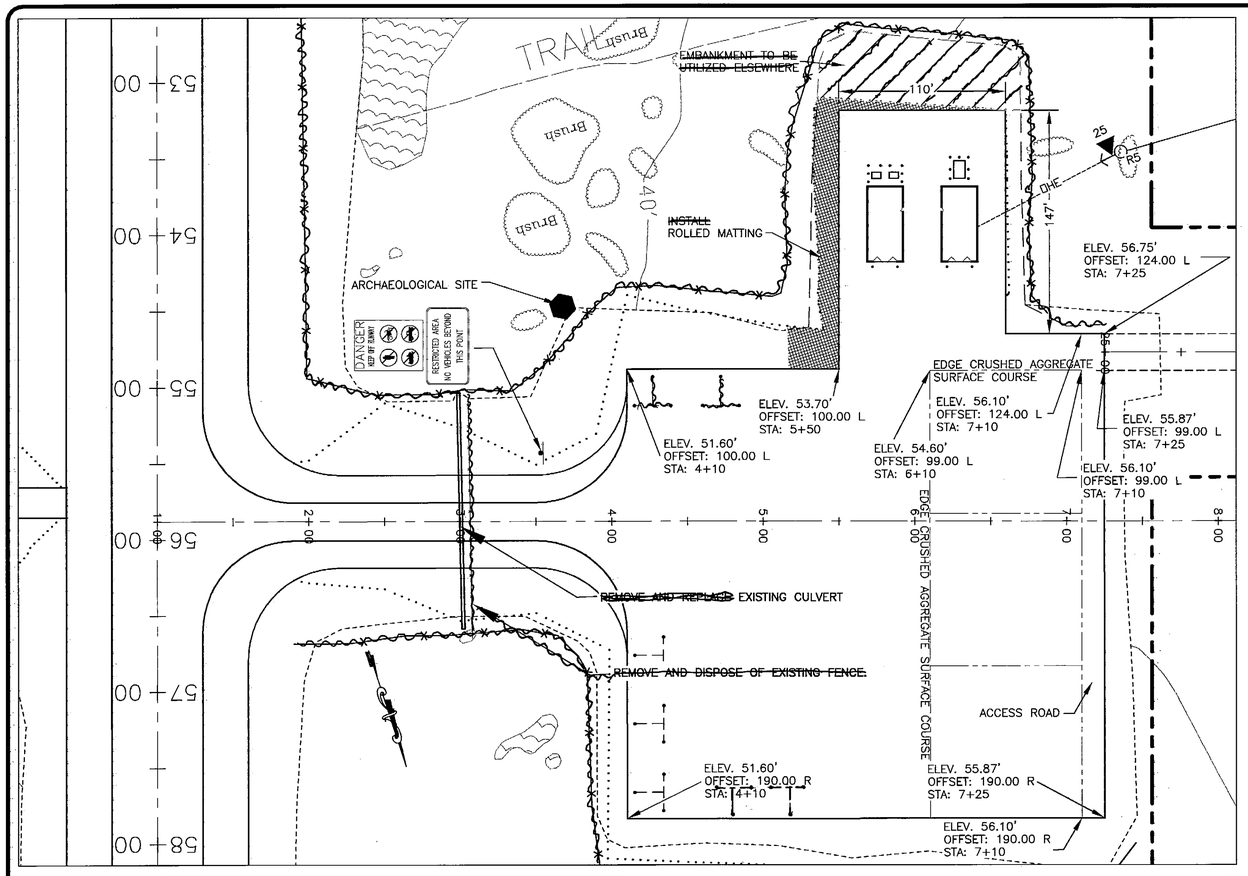

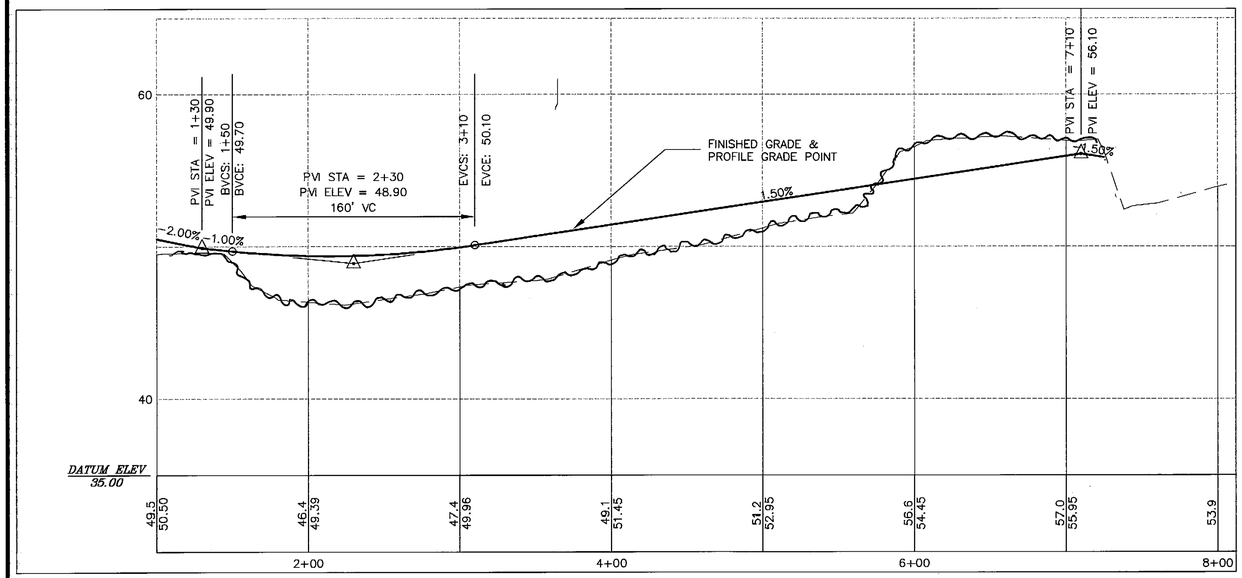

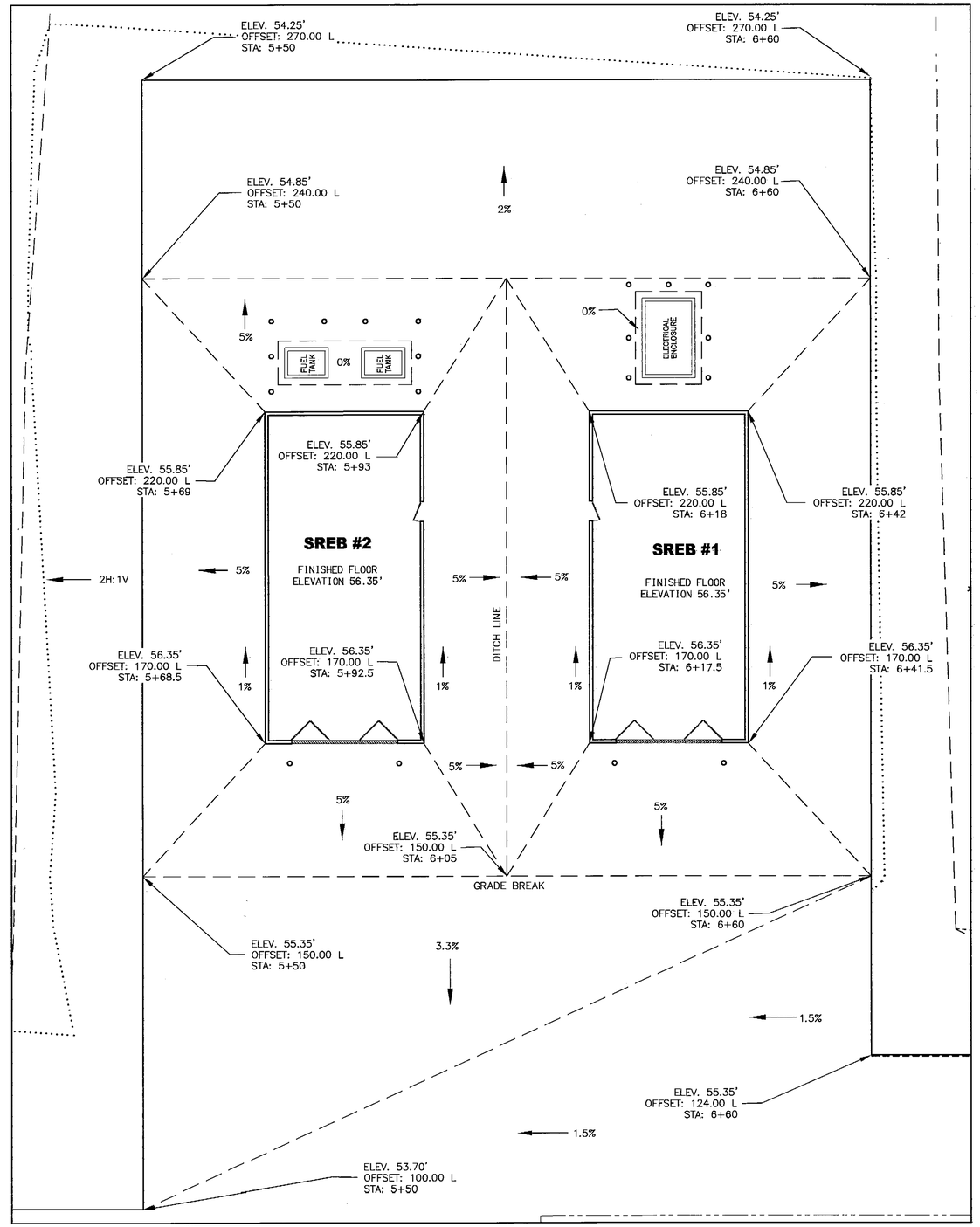

MAINTENANCE & OPERATIONS LOT LAYOUT PLAN

Date Plotted:	2004
Plot Ratio and Layout:	1=1, layout=
File:	W:\Projects\Clarks Point\Airport Relocation Phase II 55598 10_2003\Civil Design\Construction drawings\pdp_pdp.dwg 6/18/2004 1:46:49 PM ADT
Designed By:	BRH
Checked By:	TJS
Drawn By:	MGT

BY	DATE	REVISIONS
S.R.	3/4/08	AS-BUILT

STATE OF ALASKA 49TH Tom Schmid 6/22/04 Tom J. Schmid No. CE-9973 REGISTERED PROFESSIONAL ENGINEER

STATE OF ALASKA
DEPARTMENT OF TRANSPORTATION AND PUBLIC FACILITIES
CENTRAL REGION

CLARKS POINT AIRPORT
CLARKS POINT, ALASKA
AIRPORT RELOCATION STAGE II
55598
AIP No. 3-02-0062-0304
TAXIWAY PLAN & PROFILE
APRON LAYOUT PLAN

SHEET 7 OF 34

AS-BUILT 4/2006 7 OF 37

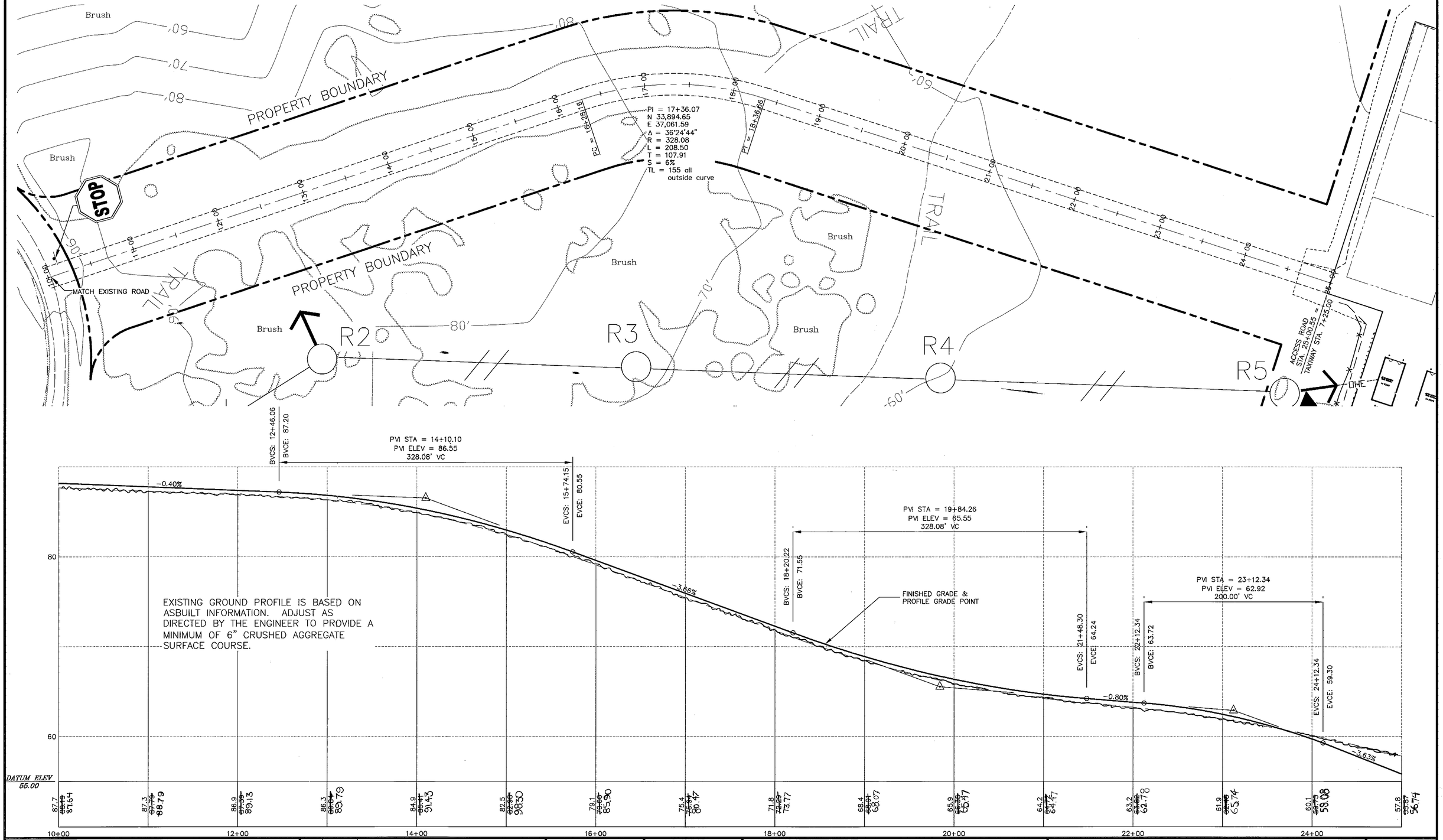

Date Plotted:	2004
Plot Ratio and Layout:	1=1, layout=
File:	M:\Projects\Clarks Point\Airport Relocation Phase II 55598 10_2003\Civil Design\Construction drawings\plp_dep.dwg 6/18/2004 1:46:49 PM ADT
Designed By:	BRH
Checked By:	TJS
Drawn By:	MGT

BY	DATE	REVISIONS
S.R.	3/4/08	AS-BUILT

STATE OF ALASKA
49TH
Tom J. Schmid
No. CE-9973
REGISTERED PROFESSIONAL ENGINEER

STATE OF ALASKA
DEPARTMENT OF TRANSPORTATION AND PUBLIC FACILITIES
CENTRAL REGION

CLARKS POINT AIRPORT
CLARKS POINT, ALASKA
AIRPORT RELOCATION STAGE II
55598
AIP No. 3-02-0062-0304
ACCESS ROAD PLAN & PROFILE

SHEET 8 OF 34

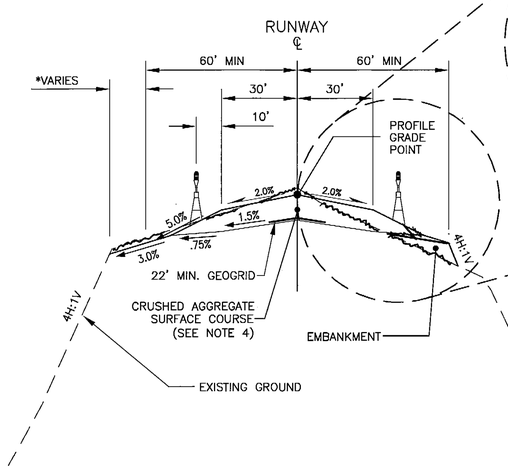

RUNWAY TYPICAL SECTION

STA. 28+95 TO STA. 60+95

*CUT TYPICAL SHOWN LEFT – EXTEND 3% SLOPE AS NECESSARY TO PROVIDE DRAINAGE

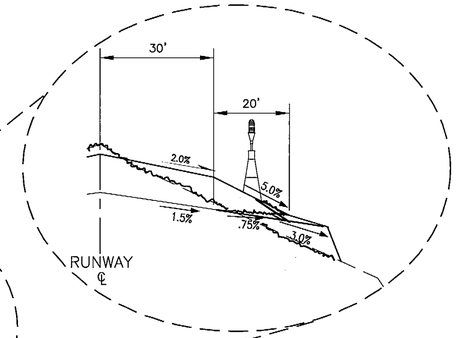

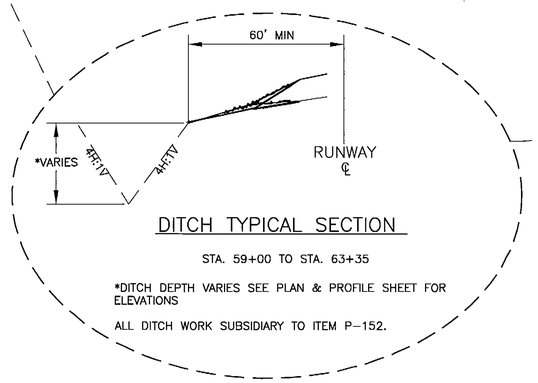

DITCH TYPICAL SECTION

STA. 59+00 TO STA. 63+35

*DITCH DEPTH VARIES SEE PLAN & PROFILE SHEET FOR ELEVATIONS

ALL DITCH WORK SUBSIDIARY TO ITEM P–152.

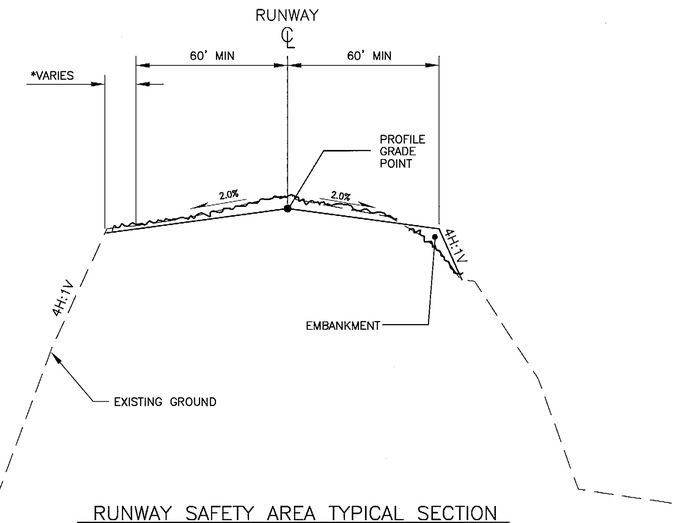

RUNWAY SAFETY AREA TYPICAL SECTION

STA. 26+30 TO STA. 28+95

STA. 60+95 TO STA. 63+35

*CUT TYPICAL SHOWN LEFT – EXTEND 2% SLOPE AS NECESSARY TO PROVIDE DRAINAGE. WARP SLOPE @ STA. 28+95 & STA. 60+95 TO MATCH RUNWAY TYPICAL SECTION.

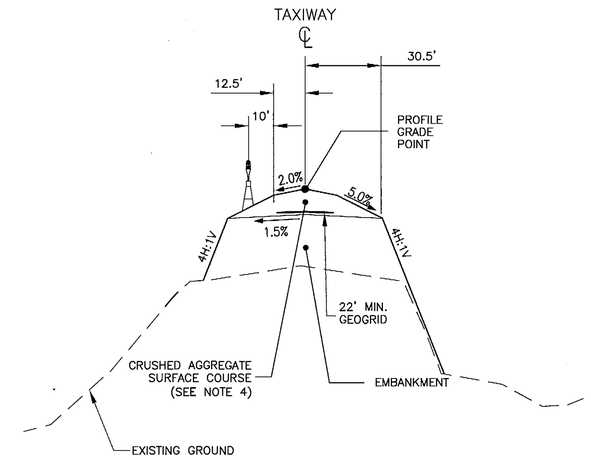

TAXIWAY TYPICAL SECTION

STA. 1+30 TO STA. 4+10

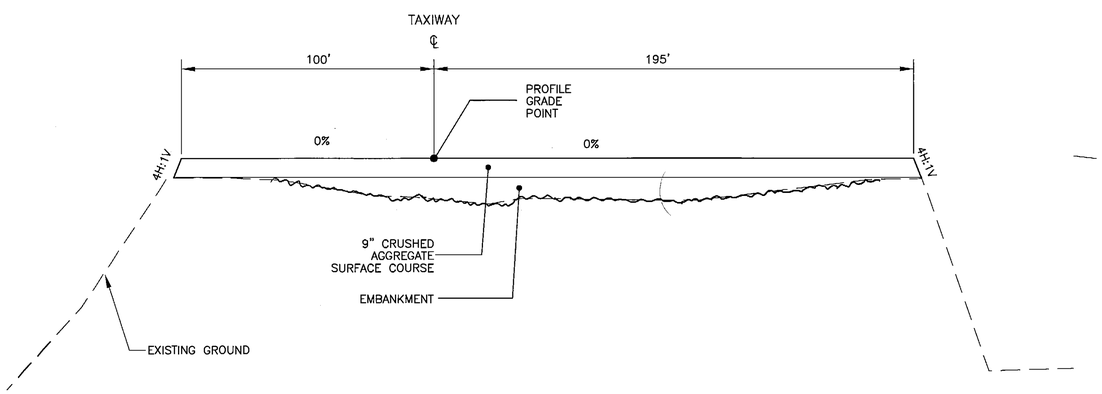

APRON TYPICAL SECTION

T/W STA. 4+10 TO STA. 7+25

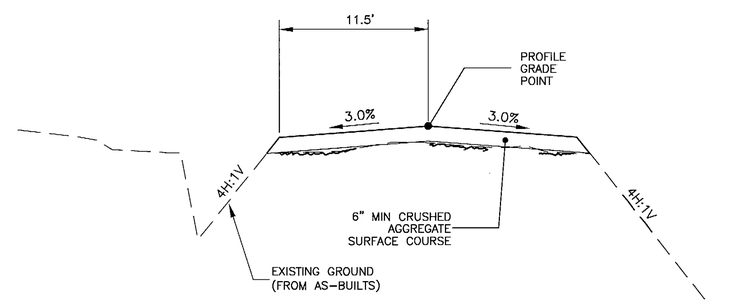

ACCESS ROAD TYPICAL SECTION

STA. 10+00 TO STA. 25+05.55

*EXISTING GROUND MAY VARY. FIELD ADJUST PROFILE AS DIRECTED BY THE ENGINEER TO PROVIDE 6" MINIMUM CRUSHED AGGREGATE SURFACE COURSE.

NOTES:

1. ALL DISTURBED SLOPES SHALL BE TRACKED SEEDED AND MULCHED.
2. ALL AREAS DISTURBED DURING CONSTRUCTION SHALL BE SEEDED.
3. ALL TYPICAL SECTION DRAWINGS ARE NOT TO SCALE.
4. CRUSHED AGGREGATE SURFACE COURSE DEPTH IS 12" AT RUNWAY AND TAXIWAY CENTERLINES.

BY	DATE	REVISIONS
S.R.	3/4/08	AS-BUILT

STATE OF ALASKA 49TH Tom J. Schmid No. CE–9973 6/22/04 REGISTERED PROFESSIONAL ENGINEER

STATE OF ALASKA
DEPARTMENT OF TRANSPORTATION AND PUBLIC FACILITIES
CENTRAL REGION

CLARKS POINT AIRPORT
CLARKS POINT, ALASKA
AIRPORT RELOCATION STAGE II
55598
AIP No. 3–02–0062–0304
TYPICAL SECTIONS

SHEET 9 OF 34

Date Plotted: 2004
Plot Ratio and Layout: 1=1, layout=
File: W:\Projects\Clarks Point\Airport Relocation Phase II 55598 10_2003\Civil Design\Construction drawings\typ sects_details.dwg 6/18/2004 2:48:24 PM AKDT
Designed By: BRH
Checked By: TJS
Drawn By: MGT

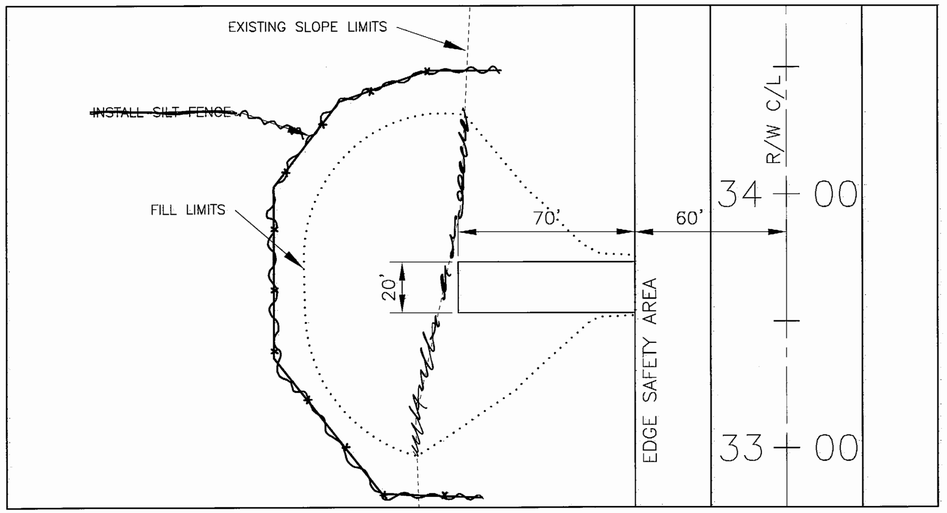

PAPI PAD PLAN

R/W 36 PAPI PAD SHOWN
R/W 18 OPPOSITE
ALL SLOPES ARE 4H:1V

PAPI PAD C/L, R/W 36
STA: 33+63.41 LEFT

PAPI PAD C/L, R/W 18
STA: 55+75 RIGHT

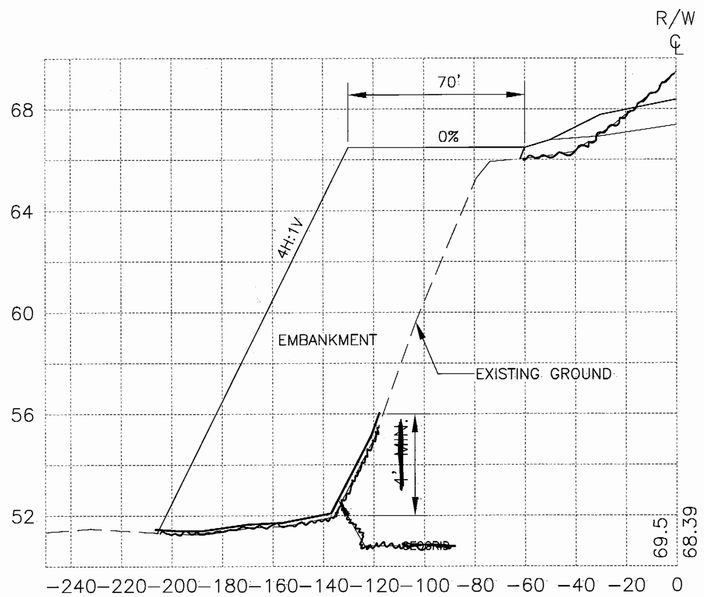

PAPI PAD TYPICAL SECTION

R/W 36 PAPI PAD SHOWN
R/W 18 OPPOSITE

R/W 36 PAPI PAD ELEV 66.5'
R/W 18 PAPI PAD ELEV 48.5'

NOTES:

1. BENCHING REQUIRED PER SPEC P-152.

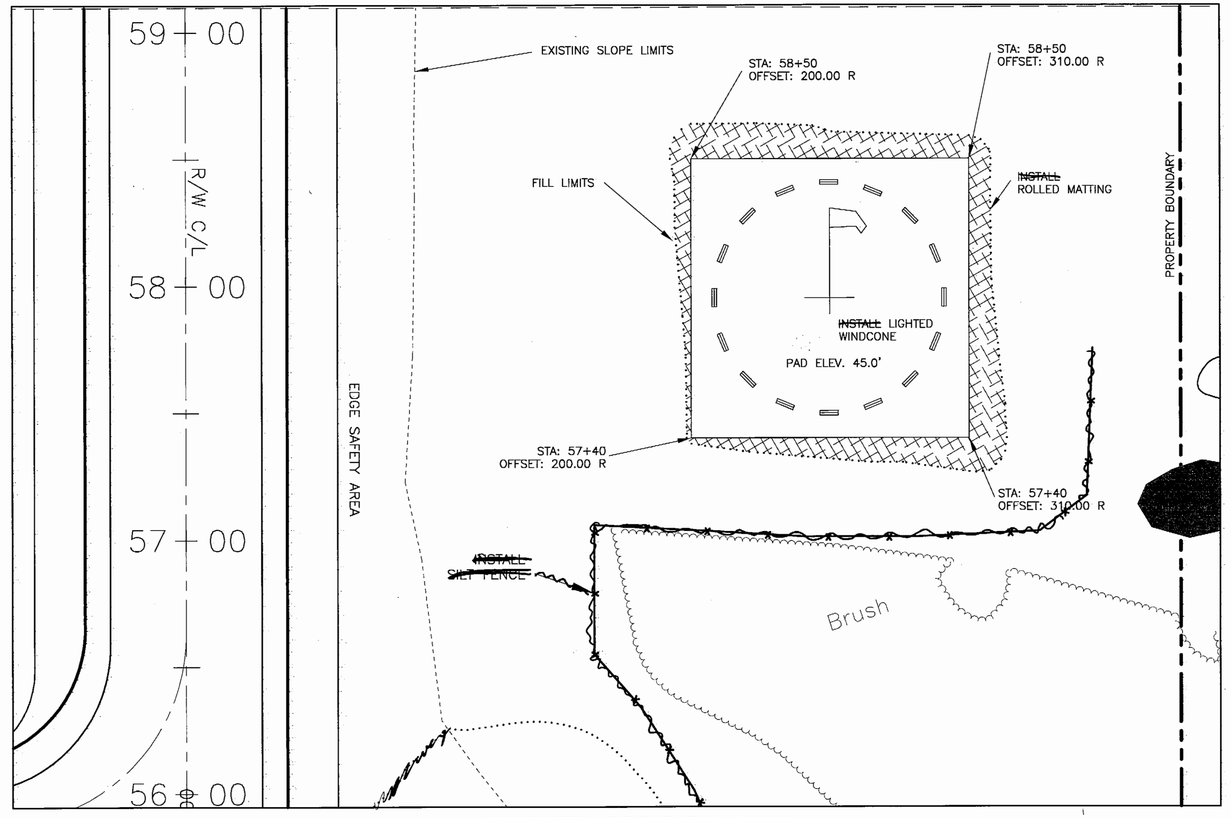

SEGMENTED CIRCLE PAD PLAN

NOTES:

1. SLOPES ARE 2H:1V, PLACE ROLLED MATTING ON SLOPES.
2. ALL WORK SHALL BE WITHIN PREVIOUSLY DISTURBED AREAS.
3. IF VIEW OF THE SEGMENTED CIRCLE IS BLOCKED BY BRUSH, HAND CLEAR BRUSH AS DIRECTED BY THE ENGINEER.

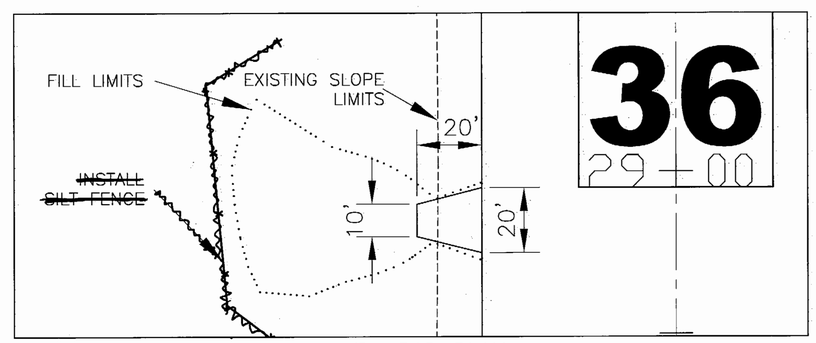

REIL PAD PLAN

REIL PADS C/L, R/W 36
STA: 28+85 RIGHT & LEFT

R/W 36, LEFT REIL PAD SHOWN
ALL SLOPES ARE 4H:1V

REIL PADS C/L, R/W 18
STA: 61+95 RIGHT & LEFT

BY	DATE	REVISIONS
S.R.	3/4/08	AS-BUILT

STATE OF ALASKA 49TH Tom J. Schmid No. CE-9973 REGISTERED PROFESSIONAL ENGINEER 4/21/04

STATE OF ALASKA
DEPARTMENT OF TRANSPORTATION AND PUBLIC FACILITIES
CENTRAL REGION

CLARKS POINT AIRPORT
CLARKS POINT, ALASKA
AIRPORT RELOCATION STAGE II
55598
AIP No. 3-02-0062-0304
PAPI PAD & SEGMENTED CIRCLE PAD DETAILS

SHEET 10 OF 34

Designed By: BRH
Checked By: TJS
Drawn By: MGT

Date Plotted: 2004
Plot Ratio and Layout: 1=1, layout=
File: w:\Projects\Clarks Point\Airport Relocation Phase II 55598 10_2003\Civil Design\Construction drawings\typ sects_details.dwg 6/18/2004 2:48:24 PM AST

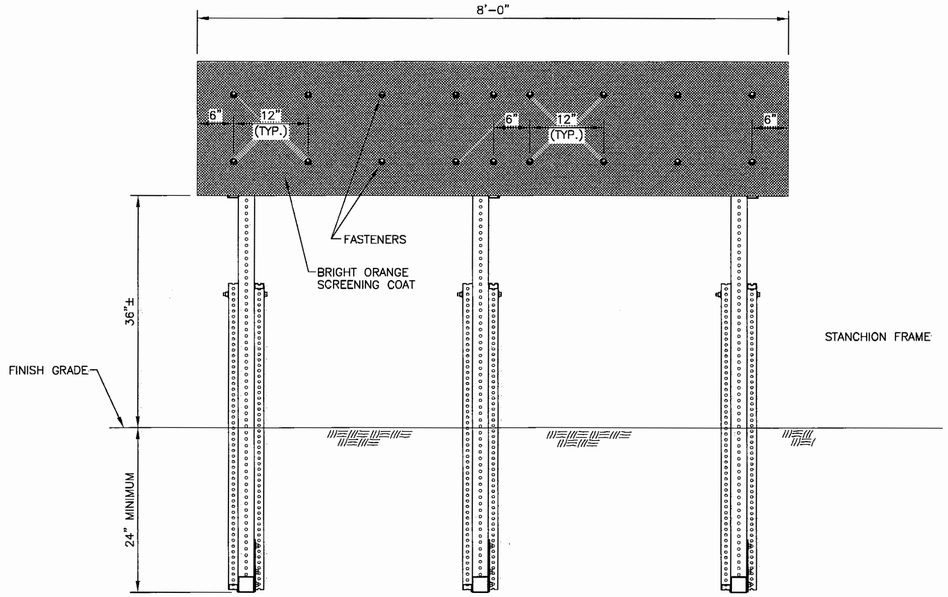

FRONT VIEW DETAIL

NOT TO SCALE

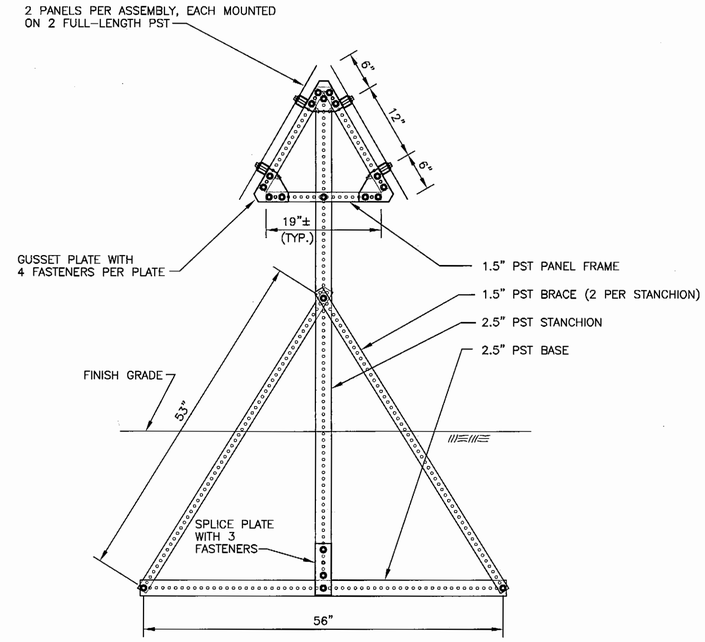

STANCHION FRAME

NOT TO SCALE

NOTES:

1. PERFORATED STEEL TUBING (PST) SHALL BE 0.1" THICK SQUARE, COLD ROLLED CARBON STEEL PER ASTM A 426, CORNER WELDED, GALVANIZED.
2. PLATES SHALL BE 1/8" STEEL, ASTM A 36, GALVANIZED.
3. FASTENERS SHALL BE 3/8" DIA. GALVANIZED GRADE 2 BOLTS WITH NUT AND 2 1" DIA. WASHERS EACH. LENGTH SHALL BE AS REQUIRED TO FASTEN MEMBERS.
4. PANELS SHALL BE 0.08" ALUMINUM WITH A BRIGHT ORANGE SCREEN COAT ON ONE SIDE.
5. ALTERNATE FASTENER AND PLATE CONFIGURATIONS MAY BE APPROVED BY THE ENGINEER.

SEGMENTED CIRCLE PANELS

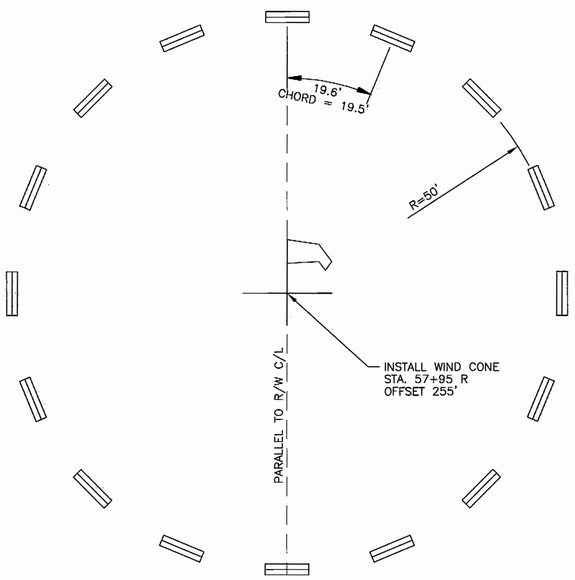

SEGMENTED CIRCLE LAYOUT

NOT TO SCALE

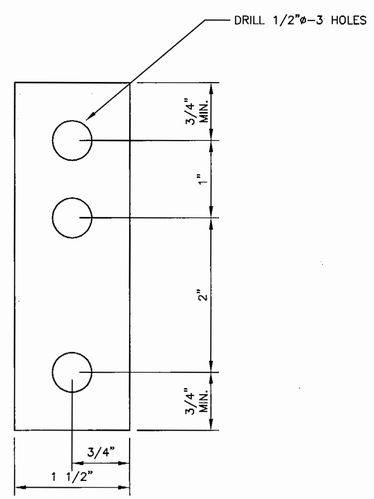

SPLICE PLATE DETAIL

NOT TO SCALE

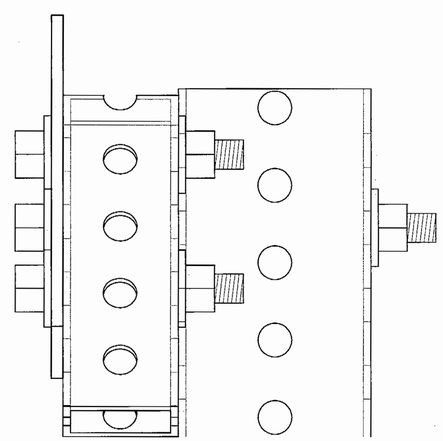

SIDE VIEW

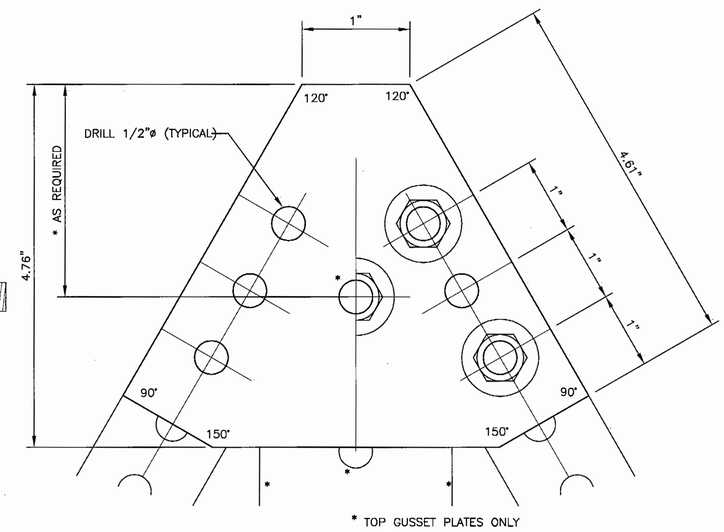

FRONT VIEW

GUSSET PLATE DETAILS

NOT TO SCALE

Date Plotted:	2004
Plot Ratio and Layout:	1=1, v=plan
File:	W:\Projects\Clarks Point\Airport Relocation Phase II 55598 10_2003\Civil Design\Construction drawings\d segcir.dwg 6/18/2004 2:52:20 PM ADT
Designed By:	TJS
Checked By:	BRH
Drawn By:	MGT

BY	DATE	REVISIONS
S.R.	3/4/08	AS-BUILT

STATE OF ALASKA 49TH Tom J. Schmid 6/22/04 No. CE-9973 REGISTERED PROFESSIONAL ENGINEER

STATE OF ALASKA
DEPARTMENT OF TRANSPORTATION AND PUBLIC FACILITIES
CENTRAL REGION

CLARKS POINT AIRPORT
CLARKS POINT, ALASKA
AIRPORT RELOCATION STAGE II
55598
AIP No. 3-02-0062-0304
SEGMENTED CIRCLE PANEL DETAILS

SHEET 11 OF 34

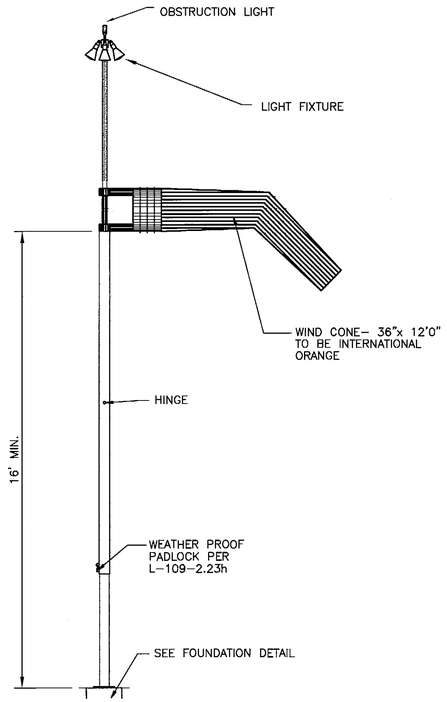

RAISED WIND CONE

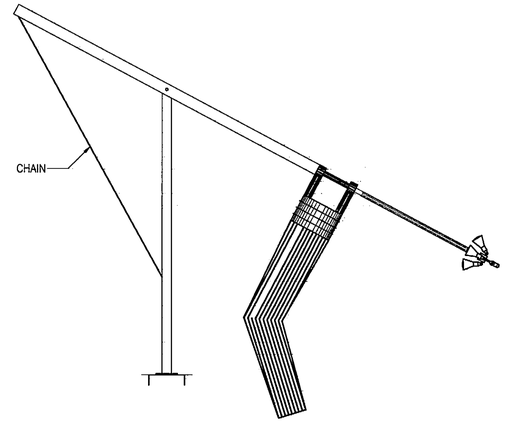

LOWERED WIND CONE

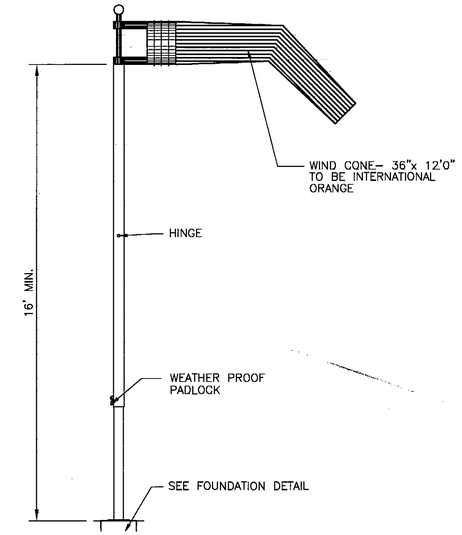

RAISED WIND CONE

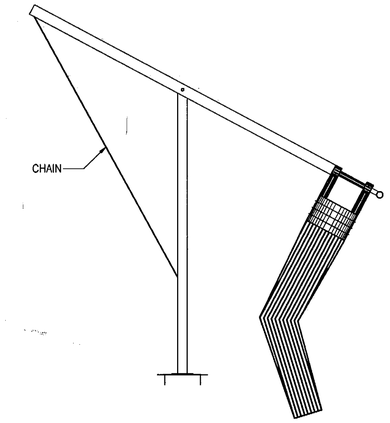

LOWERED WIND CONE

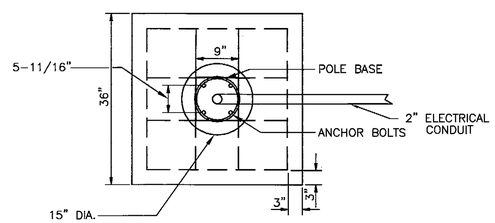

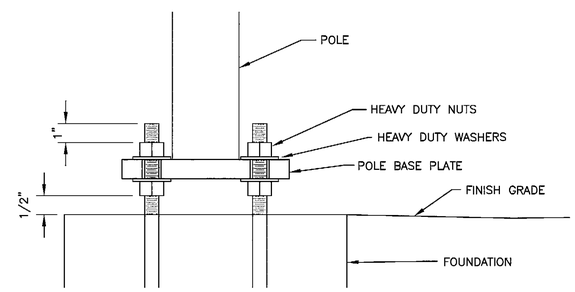

POLE MOUNTING DETAIL

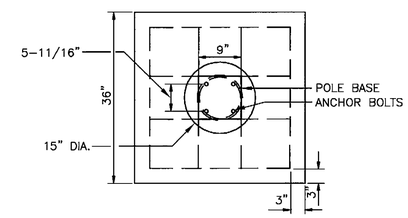

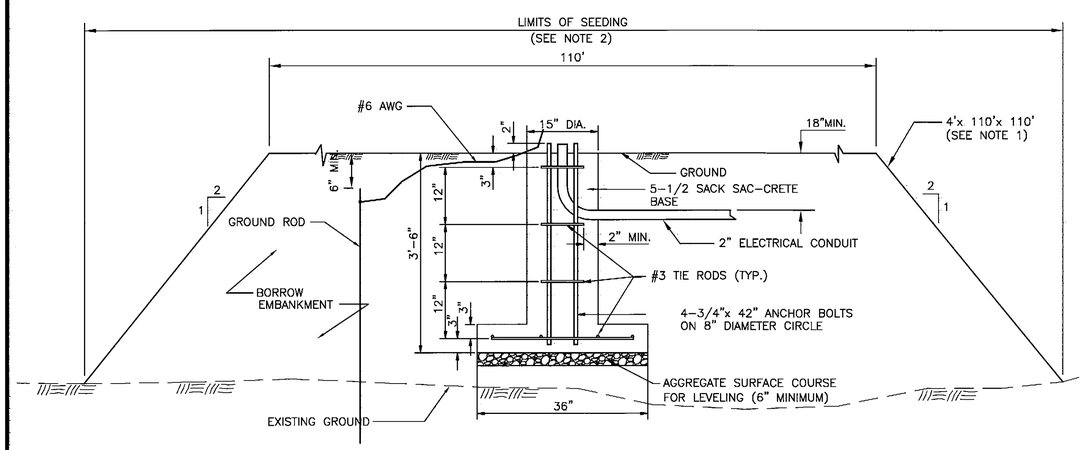

FOUNDATION DETAILS

LIGHTED WIND CONE DETAILS

NOTES:

1. PADS WILL BE CONSTRUCTED WITH BORROW EMBANKMENT ITEM P–152. FOUNDATION CONSTRUCTION IS SUBSIDIARY AND SHALL BE INCIDENTAL TO THE THE CONTRACT, AND NO SEPARATE PAYMENT WILL BE MADE.
2. PLACE ROLLED MATTING ON SEGEMENTED CIRCLE PAD SLOPES.

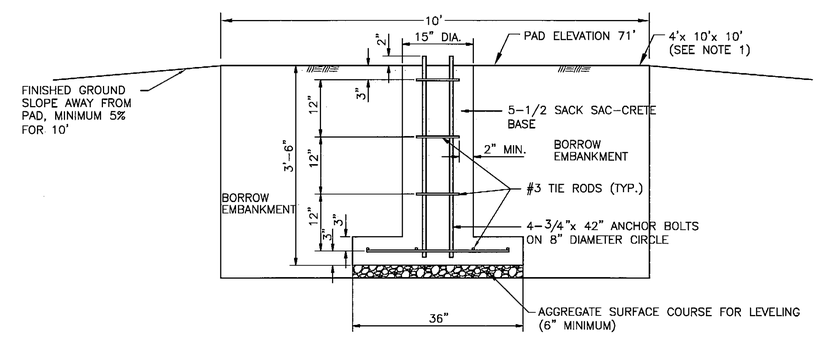

FOUNDATION DETAILS

UNLIGHTED WIND CONE DETAILS

BY	DATE	REVISIONS
S.R.	3/4/08	AS-BUILT

STATE OF ALASKA 49TH Tom J. Schmid No. CE-9973 6/22/09 REGISTERED PROFESSIONAL ENGINEER

STATE OF ALASKA
DEPARTMENT OF TRANSPORTATION AND PUBLIC FACILITIES
CENTRAL REGION

CLARKS POINT AIRPORT
CLARKS POINT, ALASKA
AIRPORT RELOCATION STAGE II
55598
AIP No. 3–02–0062–0304
LIGHTED AND UNLIGHTED
WIND CONE AND PAD DETAILS

SHEET 12 OF 34

Designed By: T.J.S.
Checked By: BRH
Drawn By: MGT

Date Plotted: 2004
Plot Scale and Layout: 1=1
File: W:\Projects\Clarks Point\Airport Relocation Phase II 55598 10_2003\Civil Design\Construction drawings\st wind cone.dwg 6/18/2004 9:07:01 AM AST

RUNWAY THRESHOLD MARKER NOTES:

1. MISCELLANEOUS GRADING FOR INSTALLATION OF RUNWAY THRESHOLD MARKERS AS PER DETAIL IS INCIDENTAL TO THE CONTRACT AND NO SEPARATE PAYMENT WILL BE MADE FOR THIS WORK.
2. THRESHOLD MARKER SHALL BE INSTALLED IN LINE WITH THE THRESHOLD LIGHTS.
3. TYPE II MARKER SHALL BE INSTALLED OVER EACH LIGHT FIXTURE.

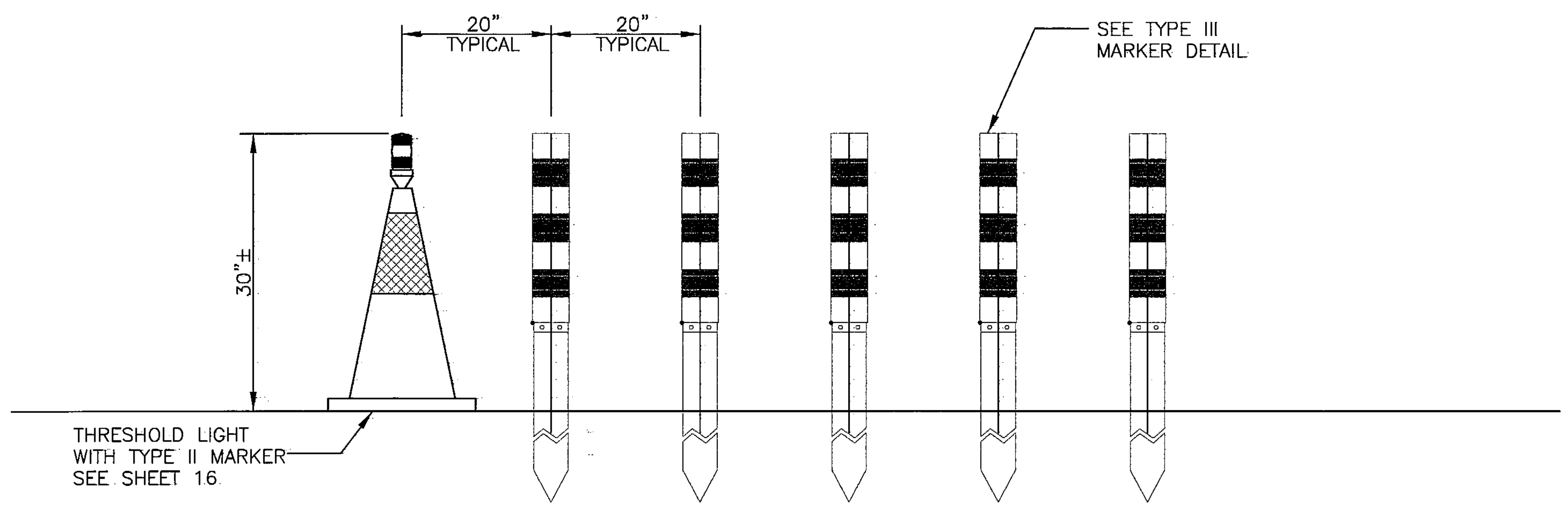

RUNWAY THRESHOLD MARKER LAYOUT
NOT TO SCALE

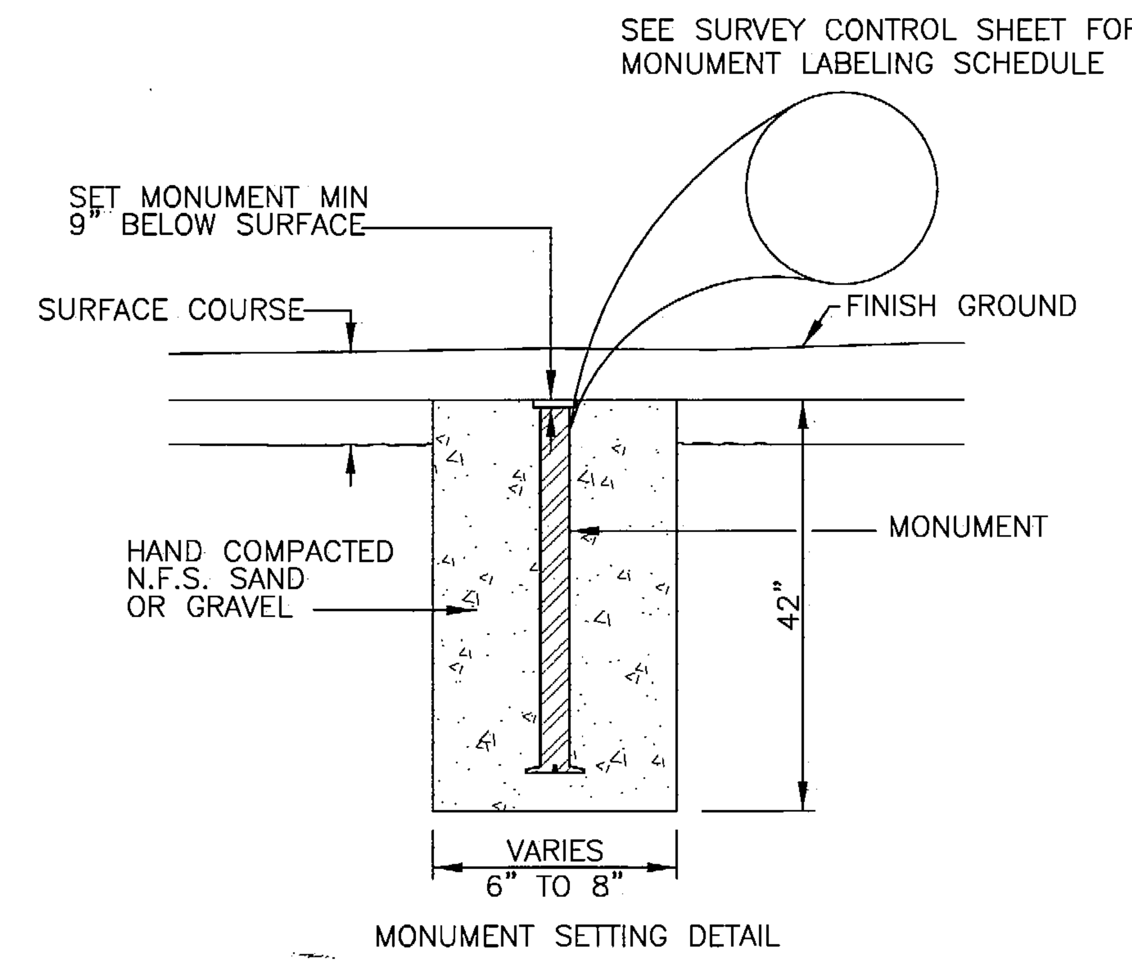

SURVEY PRIMARY MONUMENT
NOT TO SCALE

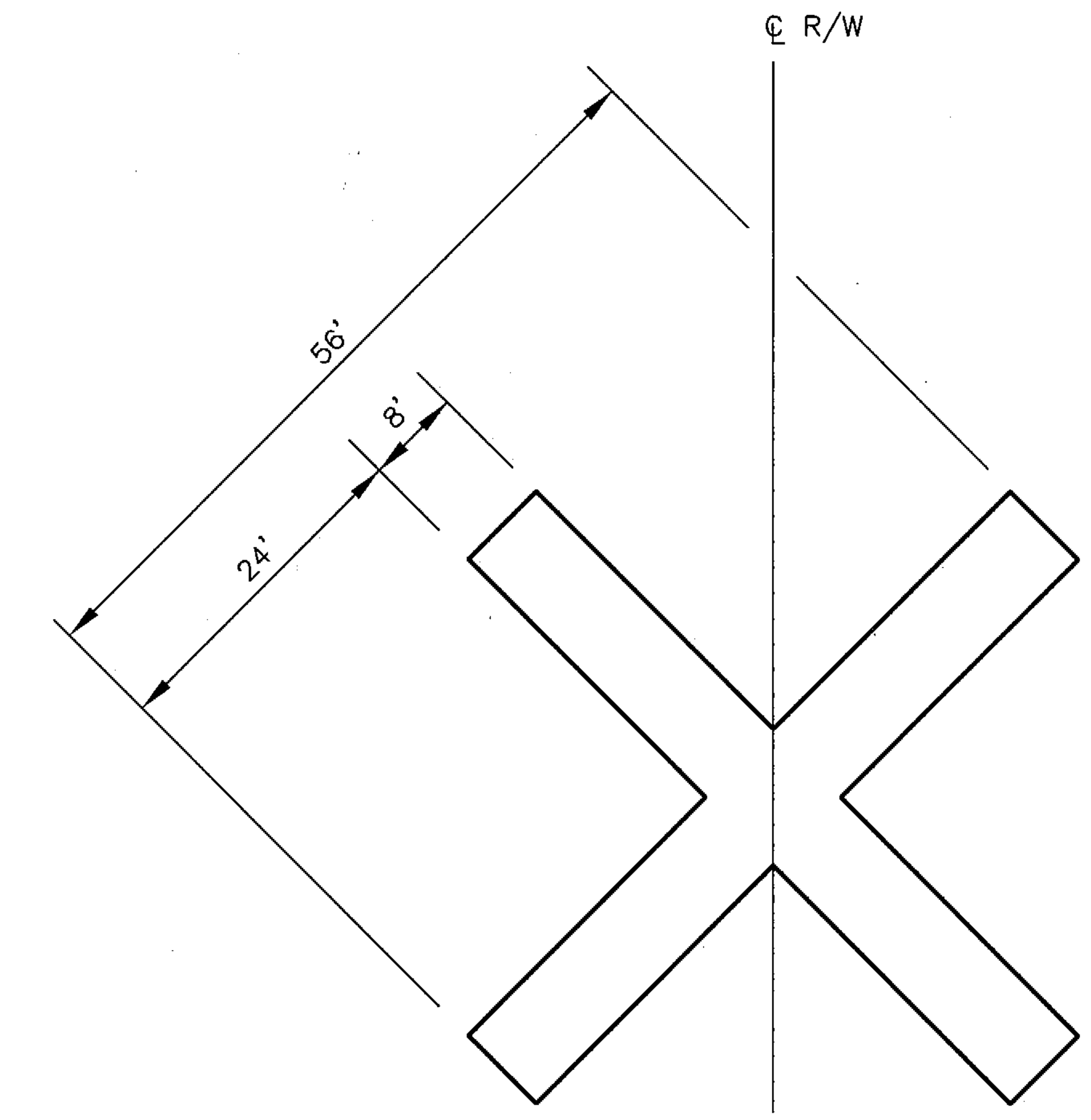

CLOSED RUNWAY MARKER DETAIL
NOT TO SCALE

NOTES:

1. X'S SHALL BE DOUBLE LAYER SNOW FENCE PAINTED YELLOW PER SPEC P-671.
2. X'S SHALL BE ANCHORED SECURELY TO GROUND.

TIE DOWN NOTES:

1. DRIVE ROD USED MUST BE PER MANUFACTURER'S RECOMMENDATIONS.
2. USE G-43 HIGH TEST GALVANIZED CHAIN WITH 3900 LBS. WORKING LOAD (MIN.) 5/16" PROOF COIL, 1/2" MINIMUM I.D.
3. ANCHOR-DUCKBILL MODEL 88-08 1/C OR APPROVED EQUAL.

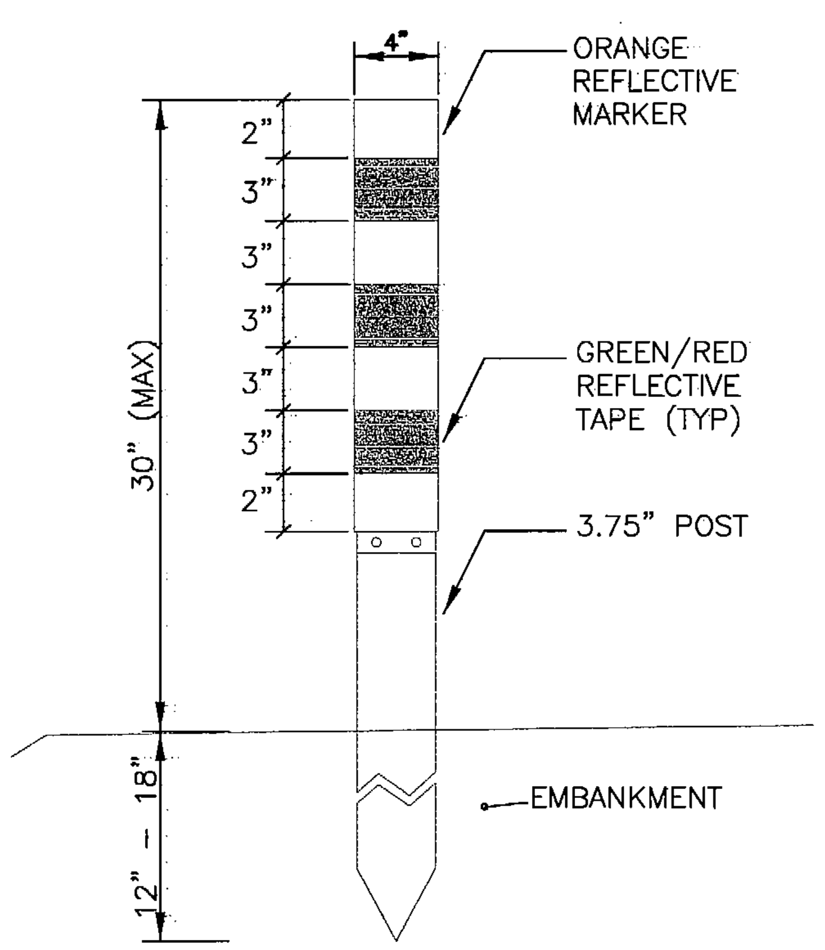

TYPE III MARKER DETAIL
NOT TO SCALE

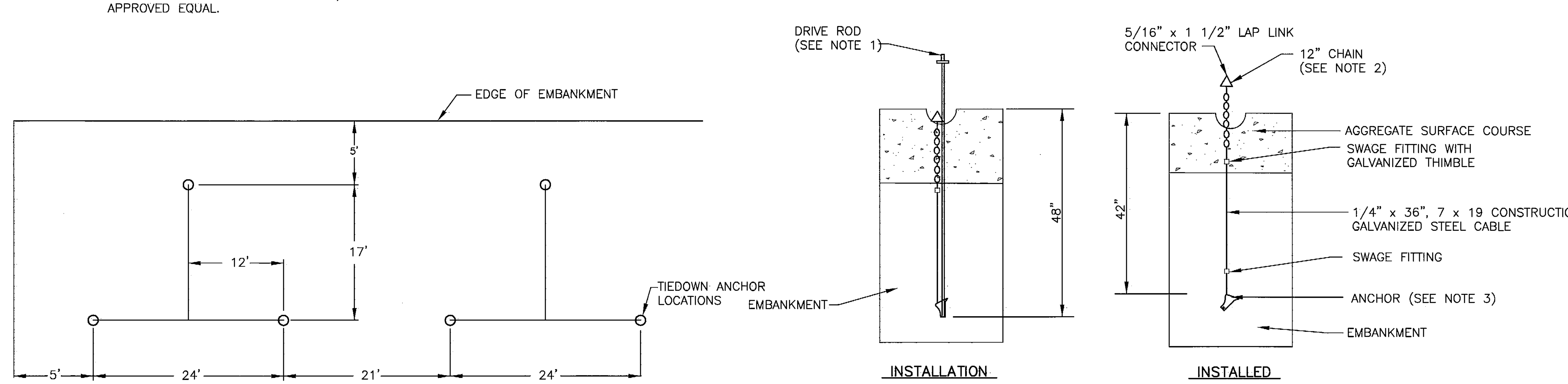

TYPICAL TIE-DOWN ANCHOR DETAILS
NOT TO SCALE

BY	DATE	REVISIONS
S.R.	3/4/08	AS-BUILT

STATE OF ALASKA · 49TH · Tom J. Schmid · No. CE-9973 · REGISTERED PROFESSIONAL ENGINEER · 4/22/08

STATE OF ALASKA
DEPARTMENT OF TRANSPORTATION AND PUBLIC FACILITIES
CENTRAL REGION

CLARKS POINT AIRPORT
CLARKS POINT, ALASKA
AIRPORT RELOCATION STAGE II
55598
AIP No. 3-02-0062-0304
THRESHOLD MARKER, TIE-DOWN ANCHOR, & MONUMENT DETAILS

SHEET 13 OF 34

Date Plotted: 2004 | Plot Ratio and Layout: 1=1, layout= | File: W:\Projects\Clarks Point\Airport Relocation Phase II 55598 10_2003\Civil Design\Construction drawings\d_thold_tiedowns.dwg 06/14/2004 10:10:26 AM ADT
Designed By: BRH | Checked By: TJS | Drawn By: MGT

SIGNING SUMMARY

SIGN NO.	LOCATION	OFFSET LT.	OFFSET RT.	CODE NO.	LEGEND	SIZE INCH	COLOR LEGEND	COLOR BACKGROUND	THICKNESS UNFRAMED INCH	AREA FT 2	POST TYPE *
1	ACCESS RD STA 10+14	18'		R1-1	STOP	30"X30"	WHITE	RED	1/8"	6.25	2 1/2" PT
2	SRE BLDG			SPEC	AUTHORIZED PERSONNEL ONLY	30"X42"	WHITE	RED	1/8"	8.75	
3	SRE BLDG			SPEC	AUTHORIZED PERSONNEL ONLY	30"X42"	WHITE	RED	1/8"	8.75	
4	TAXIWAY STA 3+55		45'	SPEC	SELECTIVE EXCLUSIONS	36"X48"	RED & BLACK	WHITE	1/8"	12.0	3" TS
5	TAXIWAY STA 3+55		45'	SPEC	RESTRICTED AREA	30"X54"	BLACK	WHITE	1/8"	11.25	

*TS – STEEL TUBE (0.25" WALL)
PT – PERFORATED STEEL TUBE

SIGNING NOTES:

1. WORK AND MATERIALS NOT SPECIFICALLY REFERRED TO UNDER A CONTRACT BID ITEM SHALL BE CONSIDERED INCIDENTAL TO EXISTING CONTRACT PAY ITEMS AND NO ADDITIONAL COMPENSATION WILL BE MADE.
2. POST LENGTHS SHALL BE DETERMINED IN THE FIELD BY THE CONTRACTOR USING THE CRITERIA FOR RURAL ROADS, UNLESS DETERMINED OTHERWISE BY THE ENGINEER, SEE STANDARD DRAWING S-05.01. ALL POSTS AND HARDWARE SHALL BE INCIDENTAL TO THE SIGNING BID ITEM. SEE STANDARD DRAWING S-20.10.
3. PRIOR TO INSTALLING POSTS OR FOUNDATIONS, OR DOING ANY EXCAVATION, THE CONTRACTOR SHALL LOCATE AND PROTECT ALL EXISTING UNDERGROUND AND OVERHEAD UTILITIES. THE LOCATION OF CABLES, CONDUITS, J-BOXES, FOUNDATIONS AND POLES THAT ARE SHOWN ON THE PLAN SHEETS ARE APPROXIMATE, AND IT IS THE RESPONSIBILITY OF THE CONTRACTOR TO VERIFY THE ACTUAL LOCATION WHEN WORKING IN THE AREA.
4. SIGN POST EMBEDMENT SHALL BE SLEEVE TYPE WITH SOIL EMBEDMENT, SEE STANDARD DRAWING S-30.03.
5. SEE SIGN SUMMARY FOR MINIMUM SIGN GAUGE AND STANDARD DRAWING S-00.10 FOR FRAMING REQUIREMENTS AND DETAILS.
7. OFFSET DISTANCES ON THE SIGN SUMMARY ARE FROM CENTERLINE TO THE POST.

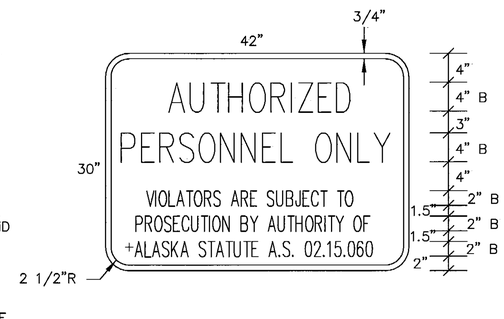

SPECIAL SIGN DETAIL

SIGN SHALL HAVE RED BACKGROUND WITH WHITE LEGEND

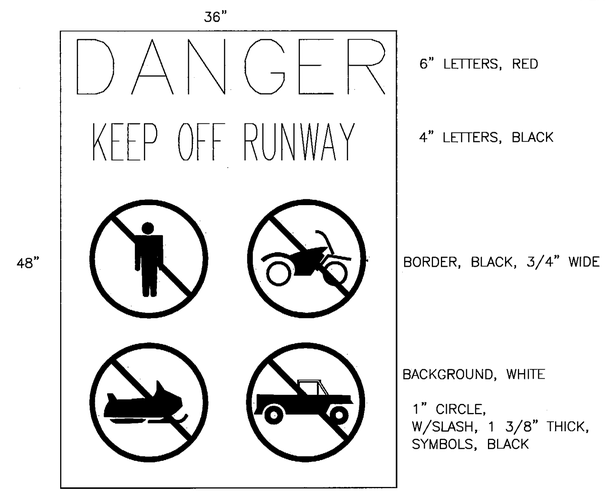

SELECTIVE EXCLUSIONS SIGN DETAIL

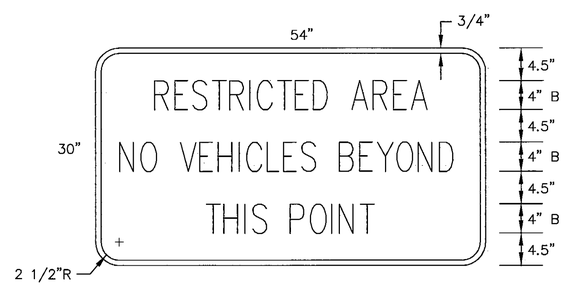

SPECIAL SIGN DETAIL

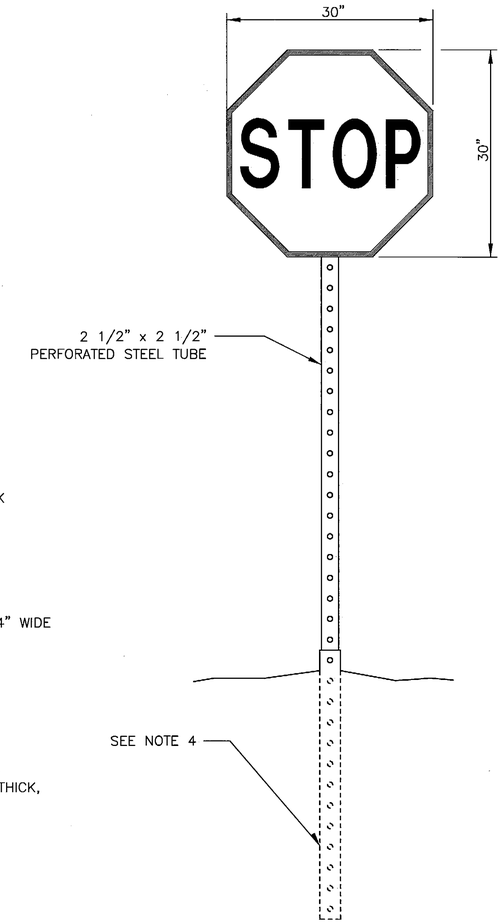

R1-1 SIGN DETAIL
(AS PER ALASKA TRAFFIC MANUAL)

BY	DATE	REVISIONS
S.R.	3/4/08	AS-BUILT

STATE OF ALASKA 49TH Tom J. Schmid No. CE-9973 REGISTERED PROFESSIONAL ENGINEER 4/22/04

STATE OF ALASKA
DEPARTMENT OF TRANSPORTATION AND PUBLIC FACILITIES
CENTRAL REGION

CLARKS POINT AIRPORT
CLARKS POINT, ALASKA
AIRPORT RELOCATION STAGE II
55598
AIP No. 3-02-0062-0304
SIGN DETAILS

SHEET 14 OF 34

Designed By: BRH
Checked By: TJS
Drawn By: MGT
Date Plotted: 2004
Plot Ratio and Layout: 1=1, layout1=
File: W:\Projects\Clarks Point\Airport Relocation Phase II 55598 10_2003\Civil Design\Construction drawings\X sign plan.dwg 6/18/2004 9:10:31 AM ADT

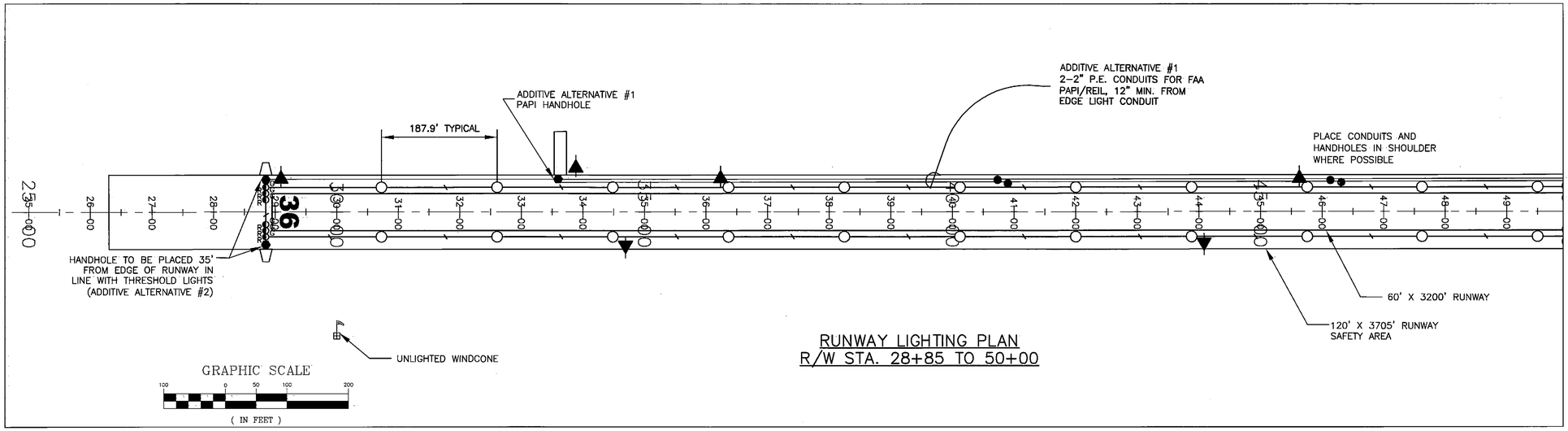

RUNWAY LIGHTING PLAN
R/W STA. 28+85 TO 50+00

LEGEND

- NEW 2" P.E. CONDUIT, HASH MARKS INDICATE NUMBER OF #8 AWG, 5KV CABLES PLUS ONE #6 BARE COPPER GROUND CONDUCTOR
- NEW HANDHOLE (SEE DETAIL, SHEET 15)
- NEW JUNCTION BOX, TYPE II (SEE DETAIL, SHEET 19)
- NEW ROTATING BEACON (ON BUILDING)
- OHE — NEW OVERHEAD POWERLINE TO UTILITY COMPANY TRANSFORMER (BY OTHERS)
- NEW RUNWAY THRESHOLD MARKERS
- NEW 3/4"X10' GROUND ROD
- WIND CONE (UNLIGHTED)
- NEW LIGHTED WIND CONE
- SEGMENTED CIRCLE
- NEW EQUIPMENT STORAGE BUILDING

LIGHT & CONE LEGEND AND SCHEDULE

SYMBOLS		No. REQ.	LOCATION	LIGHT DETAILS			CONE DETAILS	
LIGHT	CONE			LIGHT COLOR	F.A.A. NUMBER	WATTAGE	CONE COLOR	BAND COLOR
	*	12	THRESHOLD	180ø RED-180ø GREEN	L-861E	45	ORANGE	RED-GREEN
⊗	*	16	T/W APRON	BLUE	L-861T	45	ORANGE	BLUE
○	*	34	RUNWAY	WHITE	L-861	30	ORANGE	WHITE
		62	TOTAL UNITS REQUIRED					

* CONES ARE PLACED OVER LIGHT FIXTURES. SEE SHEET 15.

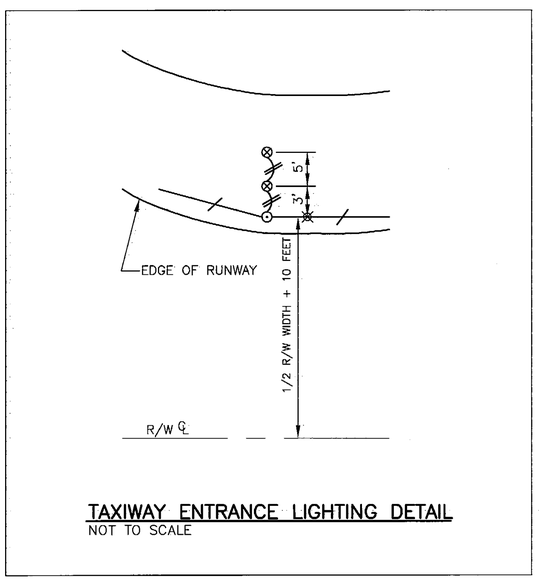

TAXIWAY ENTRANCE LIGHTING DETAIL
NOT TO SCALE

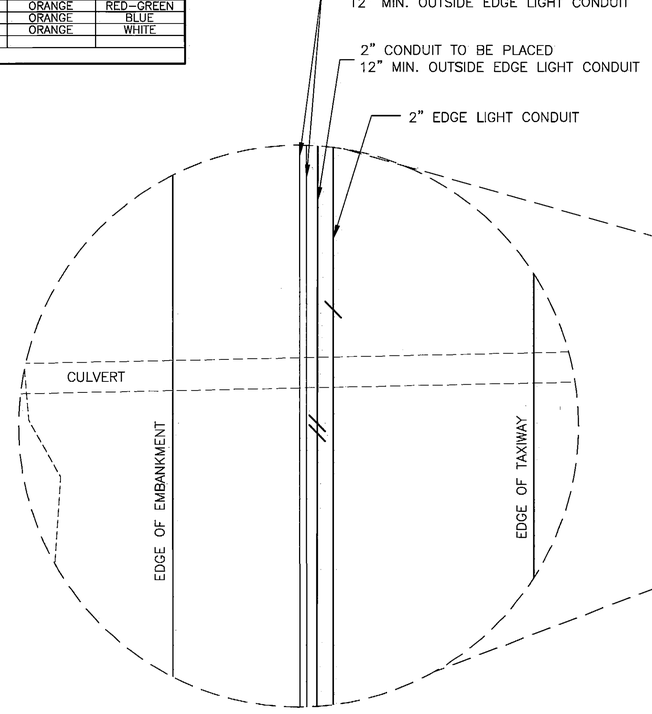

CONDUIT DETAIL ALONG TAXIWAY
NOT TO SCALE

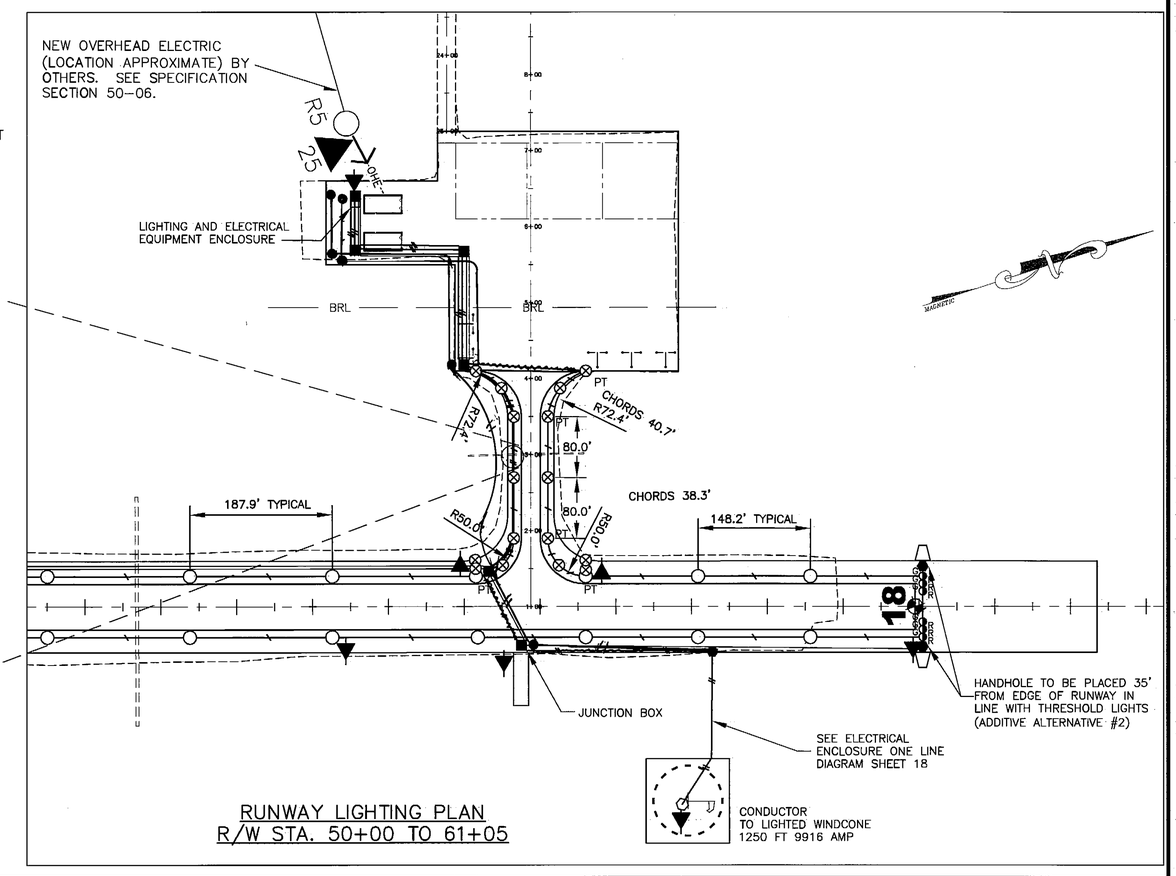

RUNWAY LIGHTING PLAN
R/W STA. 50+00 TO 61+05

BY	DATE	REVISIONS
S.R.	3/4/08	AS-BUILT

STATE OF ALASKA 49TH MICHAEL L. STOIANOFF No. EE-6391 6-22-08 REGISTERED PROFESSIONAL ENGINEER

STATE OF ALASKA
DEPARTMENT OF TRANSPORTATION AND PUBLIC FACILITIES
CENTRAL REGION

CLARKS POINT AIRPORT
CLARKS POINT, ALASKA
AIRPORT RELOCATION STAGE II
55598
AIP No. 3-02-0062-0304
RUNWAY & TAXIWAY LIGHTING PLANS

SHEET 15 OF 34

Designed By: BRH
Checked By: TJS
Drawn By: MGT
Date Plotted: 2004
Plot Ratio and Layout: 1=1, layout=
File: W:\Projects\Clarks Point\Airport Relocation Phase II 55598 10_2003\Civil Design\Construction drawings\ELEC\RW TW lighting plan.dwg 6/21/2004 2:35:12 PM AKT

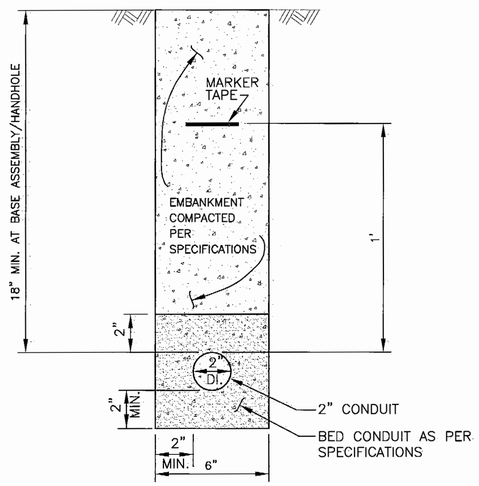

SINGLE CONDUIT TRENCH DETAIL
NOT TO SCALE

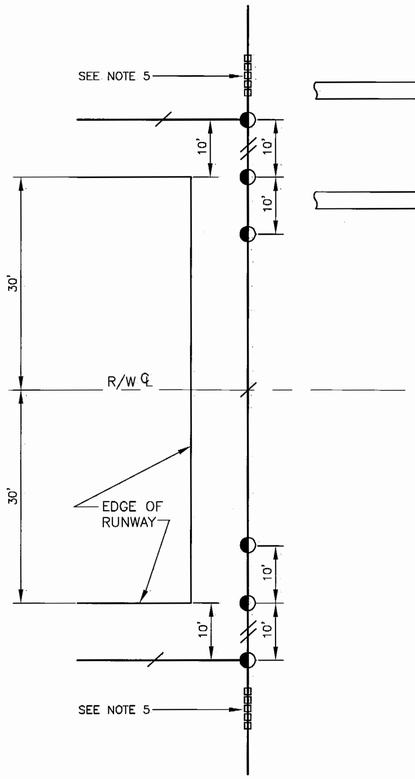

THRESHOLD LIGHTING DETAILS
NOT TO SCALE

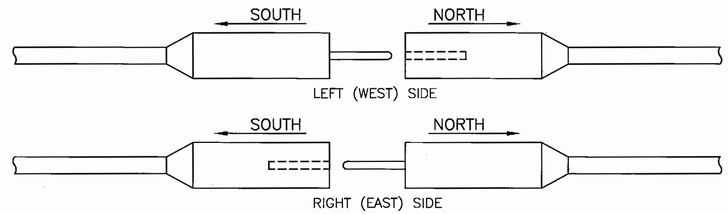

ORIENTATION OF L-823 CABLE CONECTION IN LIGHT BASE DETAIL
NOT TO SCALE

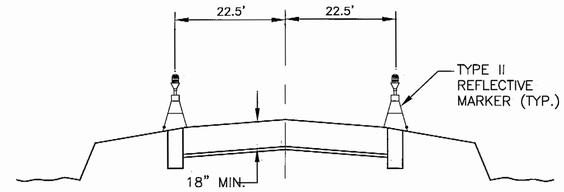

TAXIWAY

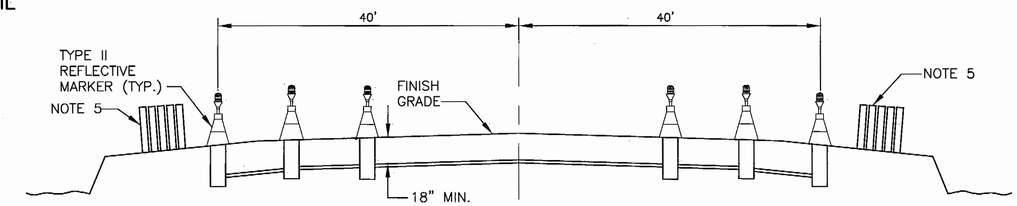

RUNWAY THRESHOLD

TYPICAL LIGHTING SECTION
NOT TO SCALE

NOTES:

1. CONDUITS AND ANY OPENINGS SHALL BE CAULKED TO PREVENT WATER FROM ENTERING THE BASE ASSEMBLIES.
2. BASE ASSEMBLIES SHALL BE SEALED WATERTIGHT AND SHALL BE FILLED WITH GILSULATE 500 (AVAILABLE FROM ALASKA INSULATION SUPPLY, INC. ANCHORAGE, ALASKA) OR APPROVED EQUAL.
3. THE BASE ASSEMBLIES SHALL BE TYPE L-867, CLASS B, SIZE B, MADE FROM HIGH DENSITY POLYETHYLENE.
4. THE CONDUIT STUB SHALL BE SIDEWALL FUSED TO THE BASE ASSEMBLIES AT THE FACTORY OR IN THE FIELD USING SADDLE FITTING MADE FROM HIGH DENSITY POLYETHYLENE, (AVAILABLE FROM MASKED-ROBBINS, INC. ANCHORAGE, ALASKA) OR APPROVED EQUAL.
5. SEE SHEET 13 FOR TYPE III THRESHOLD MARKERS DETAILS.

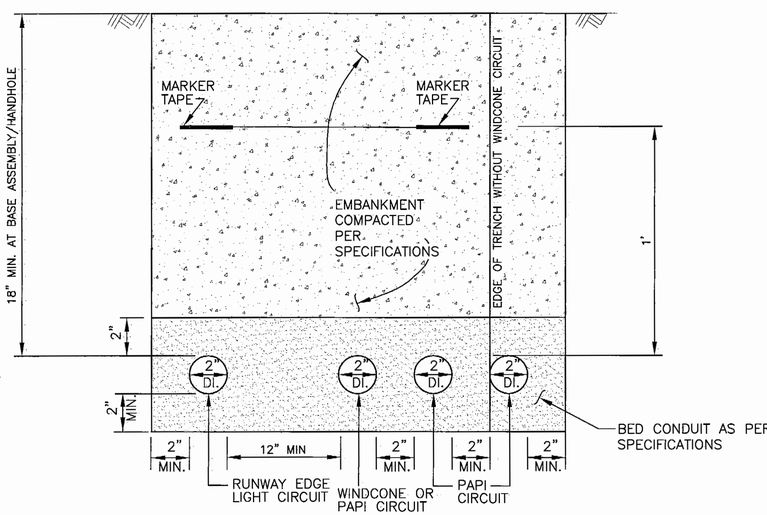

MULTIPLE CONDUIT TRENCH DETAIL
NOT TO SCALE

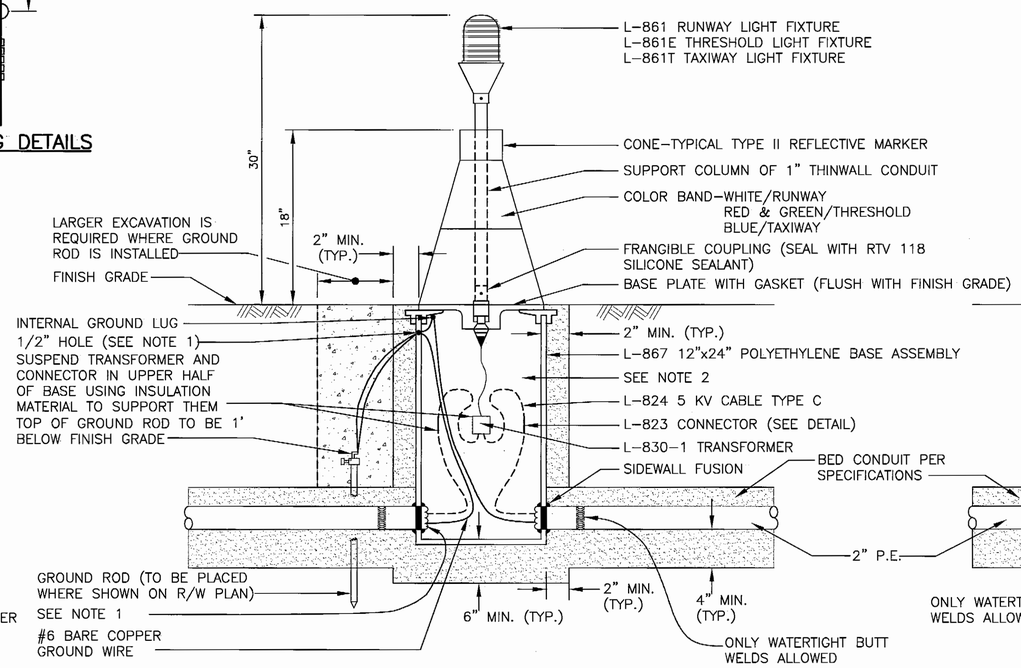

MEDIUM INTENSITY R/W-T/W LIGHT DETAIL
NOT TO SCALE

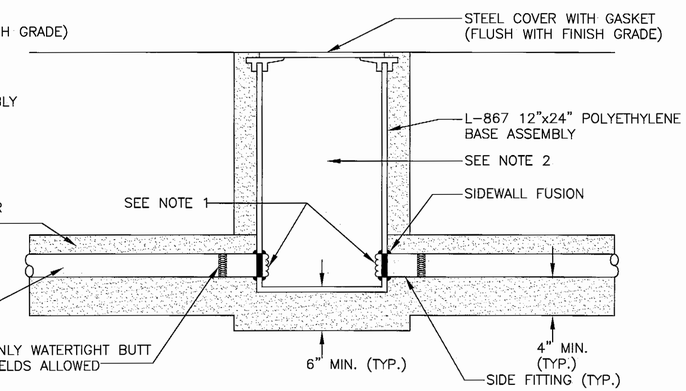

HANDHOLE DETAIL
NOT TO SCALE

BY	DATE	REVISIONS
S.R.	3/4/08	AS-BUILT

STATE OF ALASKA 49TH Michael L. Stoianoff EE-8391 6-22-06 REGISTERED PROFESSIONAL ENGINEER

STATE OF ALASKA
DEPARTMENT OF TRANSPORTATION AND PUBLIC FACILITIES
CENTRAL REGION

CLARKS POINT AIRPORT
CLARKS POINT, ALASKA
AIRPORT RELOCATION STAGE II
55598
AIP No. 3-02-0062-0304
RUNWAY, TAXIWAY & THRESHOLD
ELECTRICAL LIGHTING DETAILS

SHEET 16 OF 34

Designed By: BRH
Checked By: LJS
Drawn By: MGT
Date Plotted: 2004
Plot Rotio and Layout: 1=1, layout=
File: W:\Projects\Clarks Point\Airport Relocation Phase II 55598 10_2003\Civil Design\Construction drawings\ELECtrlighting details.dwg 6/21/2004 2:36:06 PM MDT

EQUIPMENT LIST

1. CONTROL RELAY, 3PDT, IDEC NO. RR3PAU-AC 120V
2. CONTACTOR, GE NO.CR305K002
3. TIMING RELAY, 1-60 MIN. EAGLE SIGNAL HP-56-A6
4. SWITCH, 2PDT, C-H NO. 10250T3011
5. SWITCH, 3-POSITION, C-H NO. 10250T3023
6. PUSH-BUTTON STATION, OFF-ON MOMENTARY CONTACT, WATER-DUST TIGHT, NEMA TYPE 4, GE NO. CR2943AJ302B
7. TERMINAL STRIP, 20A, 12-POINT, GE NO. CR151B2
8. PHOTOELECTRIC CONTROL, TORK NO. 2101
9. PUSH-BUTTON STATION, "ON", MOMENTARY CONTACT, WATER-DUST TIGHT, NEMA TYPE 4, GE NO. CR2943AJ301B
10. SWITCH, 3-POSITION, GE NO. CR104PSG34B91
11. ENCLOSURE, HOFFMAN NO. A 30R3012HCR

NOTE: N.I.C. – NOT IN CONTRACT

S.R.	3/4/08	AS-BUILT
BY	DATE	REVISIONS

Michel L. Stoiaoff, No. EE-6391, 6-22-04 (Professional Engineer seal, State of Alaska)

STATE OF ALASKA
DEPARTMENT OF TRANSPORTATION AND PUBLIC FACILITIES
CENTRAL REGION

CLARKS POINT AIRPORT
CLARKS POINT, ALASKA
AIRPORT RELOCATION STAGE II
55598
AIP No. 3-02-0062-0304
LIGHTING SYSTEM WIRING DIAGRAM

SHEET 17 OF 34

Designed By: BRH | Checked By: TJS | Drawn By: MGT
Date Plotted: 2004 | Plot Ratio and Layout: 1=1, layout=

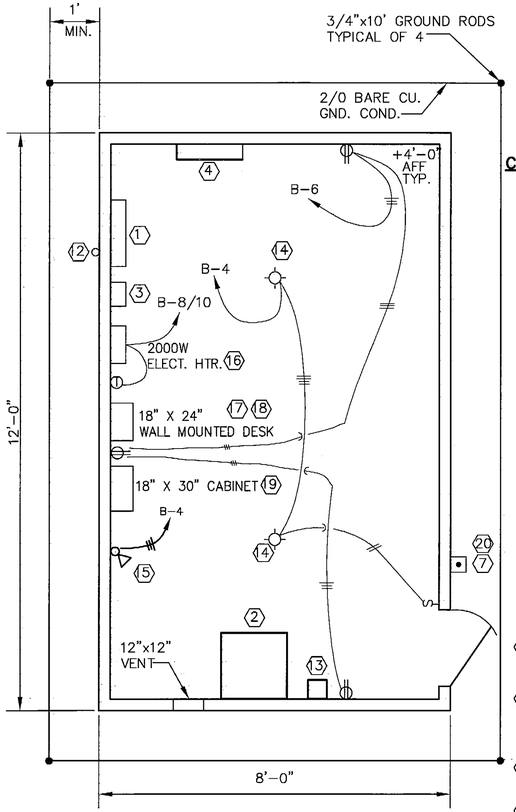

EQUIPMENT ENCLOSURE PLAN
NOT TO SCALE

CONTROL SEQUENCE DESCRIPTION

RUNWAY LIGHTS
ON–RUNWAY LIGHTS ON AT PRESET BRIGHTNESS
OFF–RUNWAY LIGHTS OFF. EXTERIOR SWITCH WILL TURN ON 15 MINUTES AT PRESET BRIGHTNESS
AUTO–EXTERIOR SWITCH WILL TURN ON 15 MINUTES AT PRESET BRIGHTNESS. RADIO CONTROLLER WILL TURN ON RUNWAY LIGHTS WITH RADIO SWITCH AND PRESET BRIGHTNESS

WINDCONE LIGHTS:
WINDCONE LIGHTS ON WHEN RUNWAY LIGHTS ARE ON.

BEACON:
OFF–BEACON OFF
ON–BEACON ON
AUTO–BEACON ON WHEN PHOTOELECTRIC CONTROLLER TURNS ON.

EXTERIOR SWITCH:
MOMENTARY CONTACT SWITCH TURNS RUNWAY LIGHTS ON AT PRESET BRIGHTNESS. 15 MINUTES (ADJUSTABLE BY TIMER)

EQUIPMENT LIST

(1) LIGHTING CONTROL PANEL, SEE SPECS.
(2) CONSTANT CURRENT REGULATOR, HEM–DUTY OR APPROVED EQUAL, 4 KW.
(3) RADIO CONTROLLER–CONTROL INDUSTRIES MODEL NO. RC–ITA FREQUENCY–122.9 MHZ. OR APPROVED EQUAL
(4) CIRCUIT BREAKER PANELBOARD, (PANEL B), SEE SPECS & SHEET 19.
(5) MANUAL TRANSFER SW.–SQUARE D NO. DNRB NIC
(6) EMERGENCY GENERATOR RECEPTACLE–CROUSE-HINDS NO. AREA 10426 WITH MATCHING PLUG NO. APJ10487 OR APPROVED EQUAL. NIC
(7) PUSH BUTTON STATION–GENERAL ELECTRIC NO. CR2943AJ201B OR APPROVED EQUAL.
(8) CIRCUIT BREAKER PANEL BOARD, (PANEL B) SEE SPECS. NIC
(9) KILOWATT HOUR METER–FORM–2S, CLASS 200 TO BE PROVIDED BY CONTRACTOR.
(10) METER BASE–MAIN CIRCUIT BREAKER COMBINATION–TO BE COMPATIBLE WITH METER.
(11) RADIO CONTROL ANTENNA– R.A. MILLER INDUSTRIES, INC., MODEL AV–1. MOUNT ON SREB #1.
(12) PHOTOELECTRIC CONTROL–TORK NO. 2101 OR APPROVED EQUAL
(13) PLUG CUTOUT–5 KV–ADB #S1 IN 14"x12"x8" NEMA 1 BOX WITH HINGED COVER, OR APPROVED EQUAL.
(14) KENALL MODEL 3826–PFC WITH TWO 28 WATT COMPACT FLUORESCENT LAMPS. FURNISH TWO SPARE LAMPS.
(15) EMERGENCY LIGHT WITH NI–CAD BATTERIES, 90 MIN. RATING

(6) 2000–WATT 240–VOLT WALL MOUNTED FAN–FORCED ELECTRIC HEATER WITH WALL THERMOSTAT.

(7) METAL WALL DESK MCMASTER–CARR CATALOG NO. 4796T14 20.5"X16.25"X2.75" SLOPE TOP WITH PIGEON HOLE SHELVES, OR NO. 4808T18 34.25"X28"X13" DESK WITH LOCKING DRAWER MOUNT DESK TOP AT 43" AFF, (ELBOW HEIGHT WHEN STANDING)

(8) METAL CHAIR (ADJUSTABLE LEGS) WITH BACK SUPPORT FOR DESK: MCMASTER–CARR MODEL 4813T1.

(9) METAL WALL CABINET (LOCKABLE) MCMASTER–CARR MODEL 30"X12"X30" WITH TWO SHELVES.

(20) MOUNT WITH STAINLESS STEEL SCREWS A 1/8" THICK ALUMINUM SIGN WITH WHITE REFLECTIVE BACKROUND AND 1/2" MINIMUM BLACK OR BLUE VINYL LETTERING TO READ: PUSH TO TURN ON RUNWAY LIGHTS AUTOMATIC OFF IN 15 MINUTES. MOUNT WITH S/S SCREWS OR COLD WEATHER (–40 DEGREES F) ADHESIVE.

NOTE:
ALL WALL CONDUIT PENETRATIONS SHALL BE SEALED WITH SILICONE SEALANT.

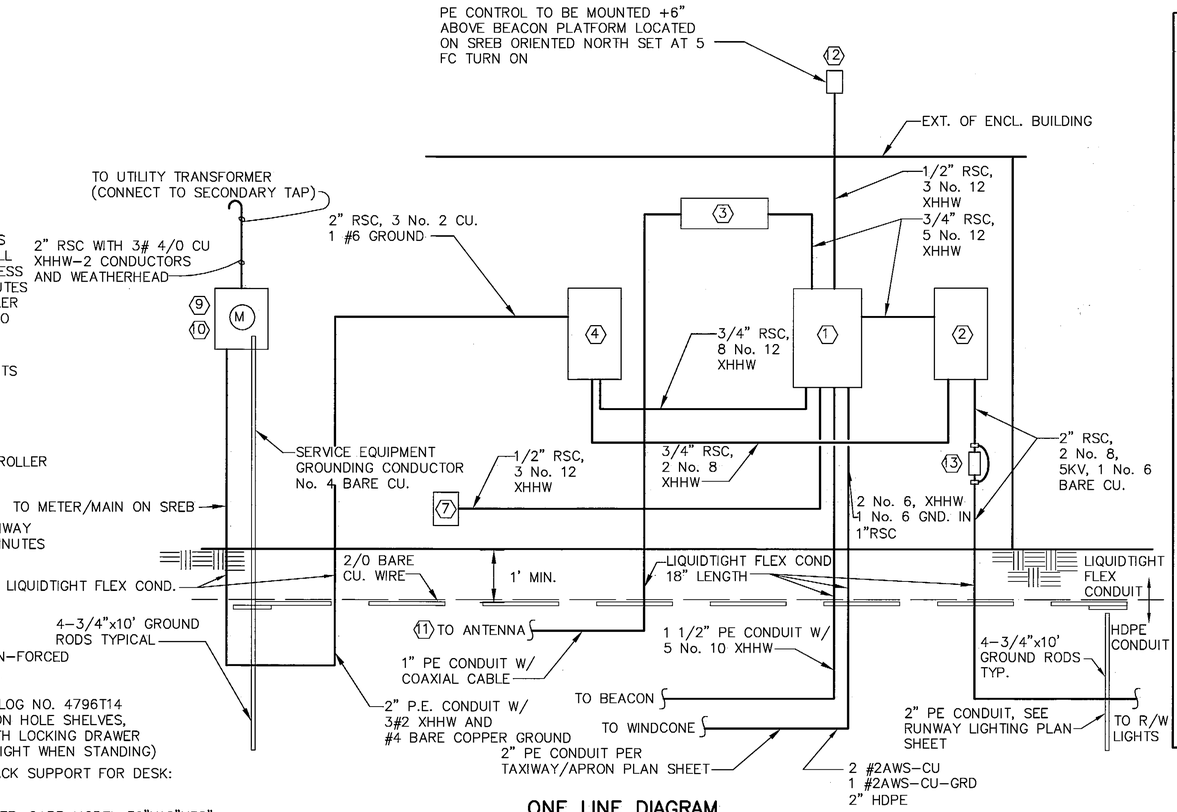

ONE LINE DIAGRAM
NOT TO SCALE

TOTAL CONNECTED LOAD: 50 KVA, 208 AMPS @ 120/240 VOLTS
TOTAL DEMAND LOAD: 26 KVA, 108 AMPS @ 120/240 VOLTS
MINIMUM ELECTRICAL: 200 AMPS @ 120/240 VOLTS

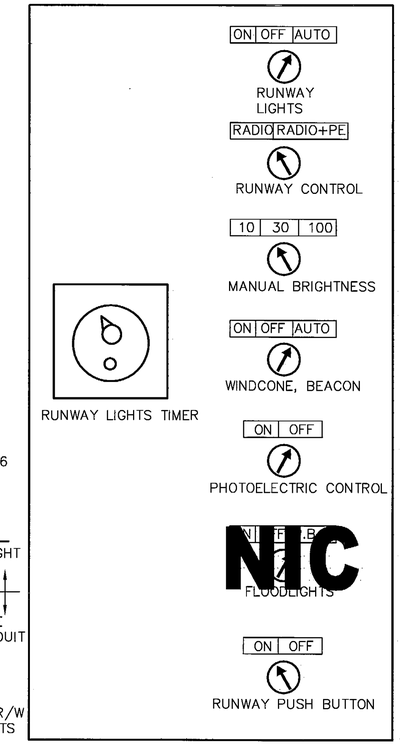

CONTROL PANEL
NOT TO SCALE

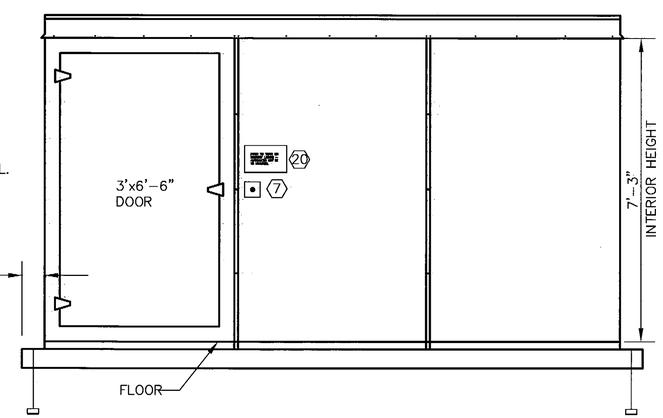

ENCLOSURE SIDE ELEVATION
NOT TO SCALE

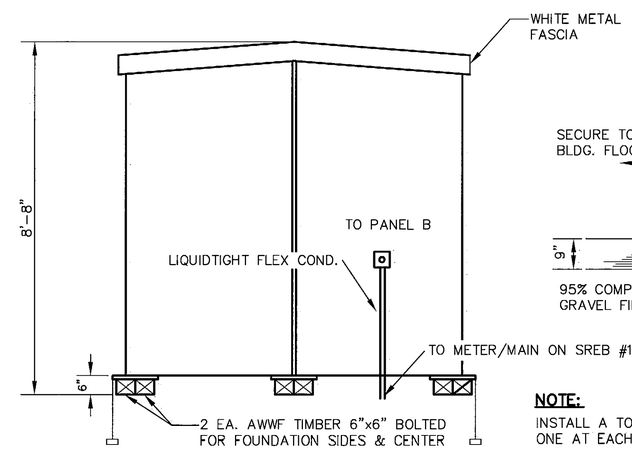

SECTION THRU EQUIP. ENCL. BLDG.
NOT TO SCALE

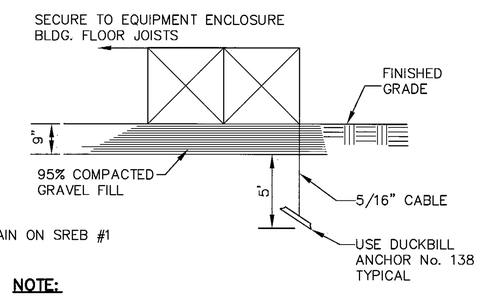

NOTE:
INSTALL A TOTAL OF FOUR ANCHOR, ONE AT EACH CORNER

EQUIP. ENCL. BLDG. TIE DOWN DETAIL
NOT TO SCALE

BY	DATE	REVISIONS
S.R.	3/4/08	AS-BUILT

STATE OF ALASKA 49TH Michael L. Stoiano EE-6391 6-22-07 REGISTERED PROFESSIONAL ENGINEER

STATE OF ALASKA
DEPARTMENT OF TRANSPORTATION AND PUBLIC FACILITIES
CENTRAL REGION

CLARKS POINT AIRPORT
CLARKS POINT, ALASKA
AIRPORT RELOCATION STAGE II
55598
AIP No. 3–02–0062–0304
ELECTRICAL ENCLOSURE PLAN & DETAILS

SHEET 18 OF 34

Designed By: BRH
Checked By: TJS
Drawn By: MGT
Date Plotted: 2004
Plot Ratio and Layout: 1=1, layout=
File: N:\Projects\Clarks Point\Airport Relocation Phase II 55598 10_2003\Cad Design\Construction drawings\GLEC\equipment enclosure.dwg 6/21/2004 3:19:38 PM AST

AS-BUILT 4/2006 18 OF 37

ELECTRIC PANEL SCHEDULE

PROJECT NAME: CLARKS POINT AIRPORT RELOCATION STAGE II				PROJECT NO: 55598			PANEL DESIGNATION: B			
120/240 VOLTS, 1 PHASE, 3 WIRE		INTERRUPTING RATING: 10,000 AIC					CALCULATED PH/PH FAULT: < 10,000 AMPS SYM			
THIS PANEL SERVED FROM: SERVICE DISCONNECT							ISOLATED NEUTRAL (X) YES ( ) NO			
MAIN LUGS ONLY 100 AMPS – SURFACE MOUNT PANEL							ISOLATED GROUND (X) YES ( ) NO			
				LINE		LINE				
LOAD	KVA	AMP	CKT	A		B	CKT	AMP	KVA	LOAD
LIGHTING CONTROL PANEL	0.60	20/1	1	1.00			2	20/1	0.40	ROTATING BEACON HEATER
ROTATING BEACON LIGHTS & MOTOR	0.35	20/1	3			0.44	4	20/1	0.09	ENCLOSURE LIGHTS
SPARE	0.00	20/1	5	0.36			6	20/1	0.54	CONVENIENCE OUTLETS
LIGHTED WIND CONE	0.60	20/1	7			1.60	8	20/	1.00	ELECTRIC HEATER
RUNWAY & TAXIWAY LIGHTING REGULATOR	2.00	40/	9	3.00			10	2	1.00	ELECTRIC HEATER
RUNWAY & TAXIWAY LIGHTING REGULATOR	2.00	2	11			2.08	12	20/1	0.08	LIGHTING CONTROL PANEL 75-WATT HEATER
SPARE		20/1	13				14	20/1		SPARE
SPARE			15				16			SPARE
SPARE			17				18			SPARE
SPARE			19			0.00	20			SPARE
TOTALS – KVA	5.55			4.54		4.12			3.11	
AMPS – LINE TOTALS				37.83		34.33				
TOTAL CONNECTED LOAD – KVA	8.66									
TOTAL CONNECTED LOAD – AMPS	36.08									
TOTAL DEMAND – KVA	8.66									
TOTAL DEMAND – AMPS	36.08									
CONTINUOUS LOAD – KVA	8.11									
DEMAND + 25% CONTINOUS – KVA	10.69									
DEMAND + 25% CONTINOUS – AMPS	44.54									

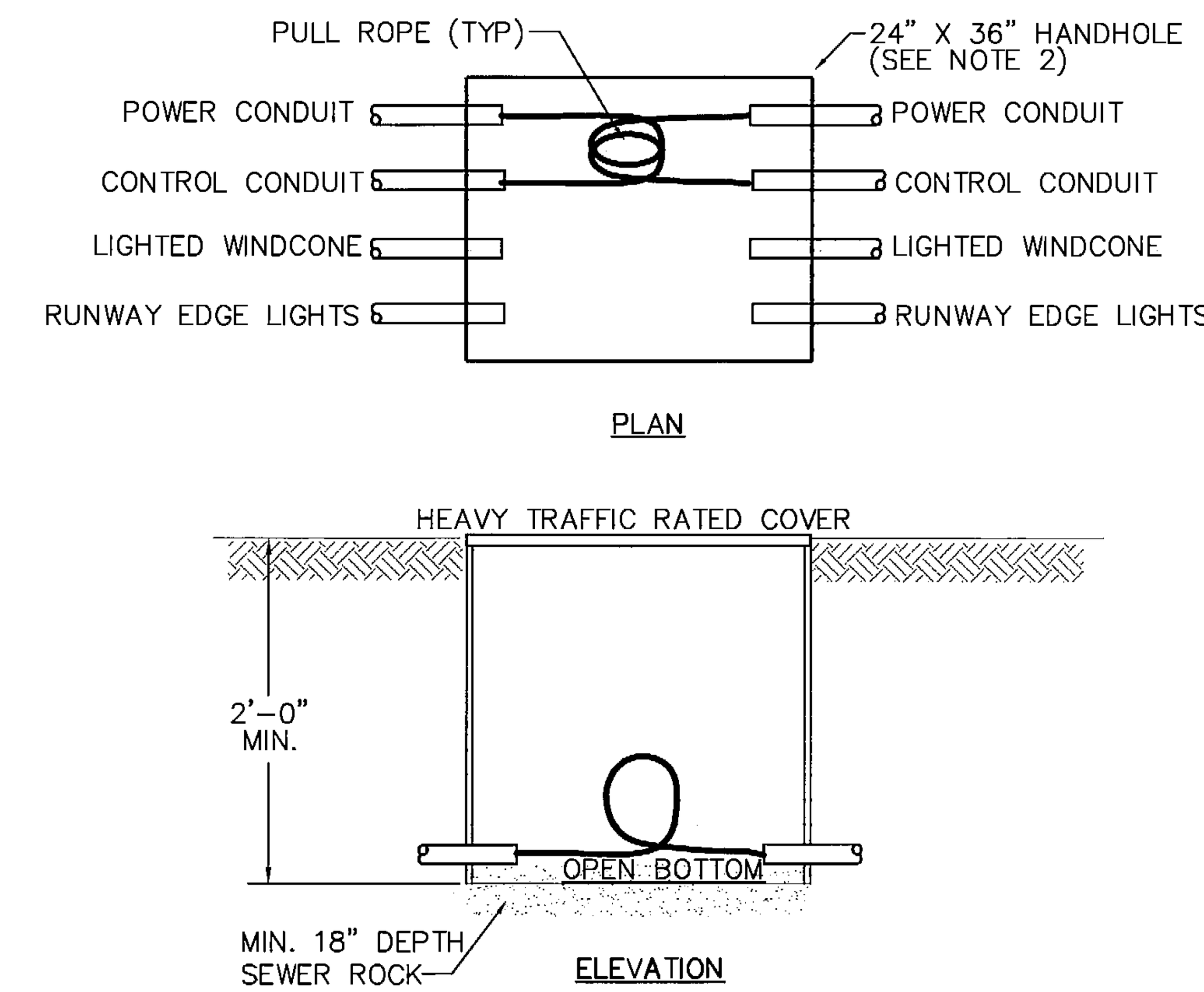

1/19 TYPE II JUNCTION BOX DETAIL

NOT TO SCALE

NOTES:

1. ALL P.E. DUCTS FOR FAA PAPI AND REIL SHALL HAVE A PULL ROPE PROVIDED AS SUPPLIED BY MANUFACTURER.

2. EACH TYPE II JUNCTION BOX SHALL BE CONSTRUCTED OF POLYMER CONCRETE, REINFORCED WITH HEAVY-WEAVE FIBERGLASS, AND A MINIMUM SIZE OF 24 X 36 X 24 INCHES DEEP. THE ENCLOSURE AND COVER SHALL BE GREEN IN COLOR. COVERS SHALL BE HEAVY DUTY TRAFFIC RATED WITH A MINIMUM RATING OF 15,000 POUNDS OVER A 10" X 10" AREA. THE ENCLOSURE SHALL BE DESIGNED AND TESTED TO TEMPERATURES OF MINUS 50°F. THE COVER SHALL BE NON-SLIP AND MARKED WITH THE WORDS "FAA-LIGHTING".

BY	DATE	REVISIONS
S.R.	3/4/08	AS-BUILT

STATE OF ALASKA, 49TH, Michael L. Stoianoff, No. EE-6391, 6-22-06, REGISTERED PROFESSIONAL ENGINEER

STATE OF ALASKA
DEPARTMENT OF TRANSPORTATION AND PUBLIC FACILITIES
CENTRAL REGION

CLARKS POINT AIRPORT
CLARKS POINT, ALASKA
AIRPORT RELOCATION STAGE II
55598
AIP No. 3-02-0062-0304
ELECTRICAL ENCLOSURE PANEL SCHEDULES & LIGHTING DETAILS

SHEET 19 OF 34

AS-BUILT 4/2006

Date Plotted: 2004 | Designed By: BRH | Checked By: TJS | Drawn By: MST | Plot Ratio and Layout: 1=1, layout=

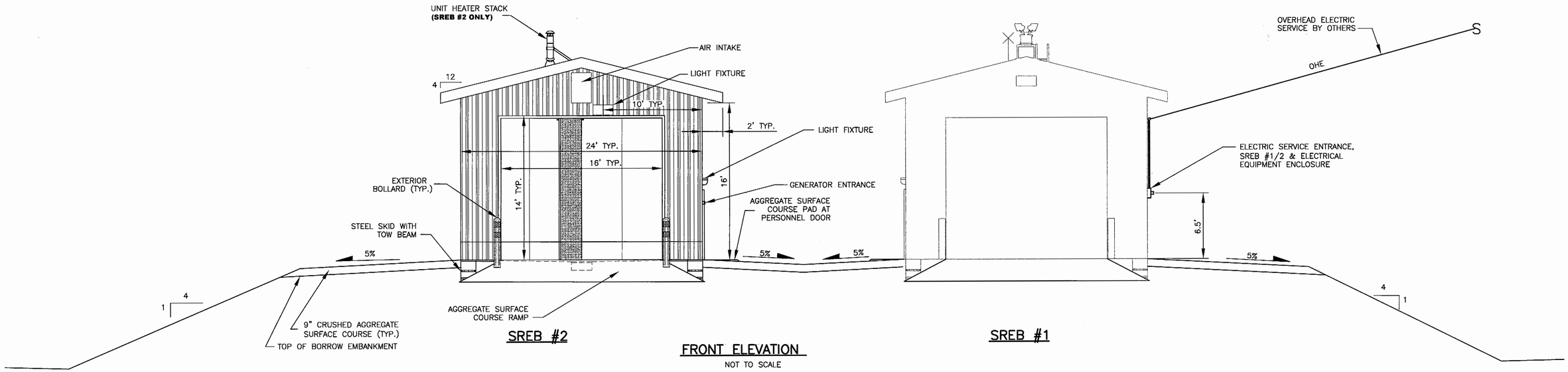

FRONT ELEVATION

NOT TO SCALE

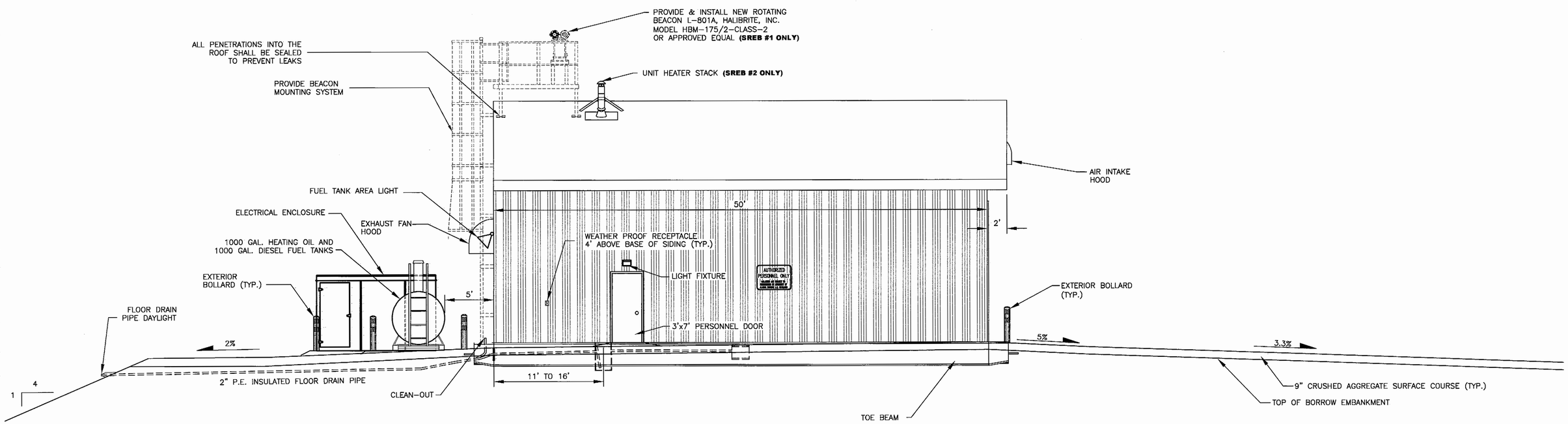

SIDE ELEVATION

NOT TO SCALE

Date Plotted:	
Plot Ratio and Layout:	1=1
File:	W:\Projects\Clarks Point\Airport Relocation Phase II 55598 10_2003\Cad Dwgs\Construction dwgs\SREB\24X36_elev.dwg 8/18/2004 4:24:26 PM AKT
Designed By:	BRH
Checked By:	TJS
Drawn By:	MGT

BY	DATE	REVISIONS
S.R.	3/4/08	AS-BUILT

STATE OF ALASKA 49TH Tom J. Schmid No. CE-9973 REGISTERED PROFESSIONAL ENGINEER 6/22/06

STATE OF ALASKA
DEPARTMENT OF TRANSPORTATION AND PUBLIC FACILITIES
CENTRAL REGION

CLARKS POINT AIRPORT
CLARKS POINT, ALASKA
AIRPORT RELOCATION STAGE II
55598
AIP No. 3-02-0062-0304
SINGLE BAY SNOW REMOVAL EQUIPMENT BUILDING
ELEVATIONS

SHEET 20 OF 34

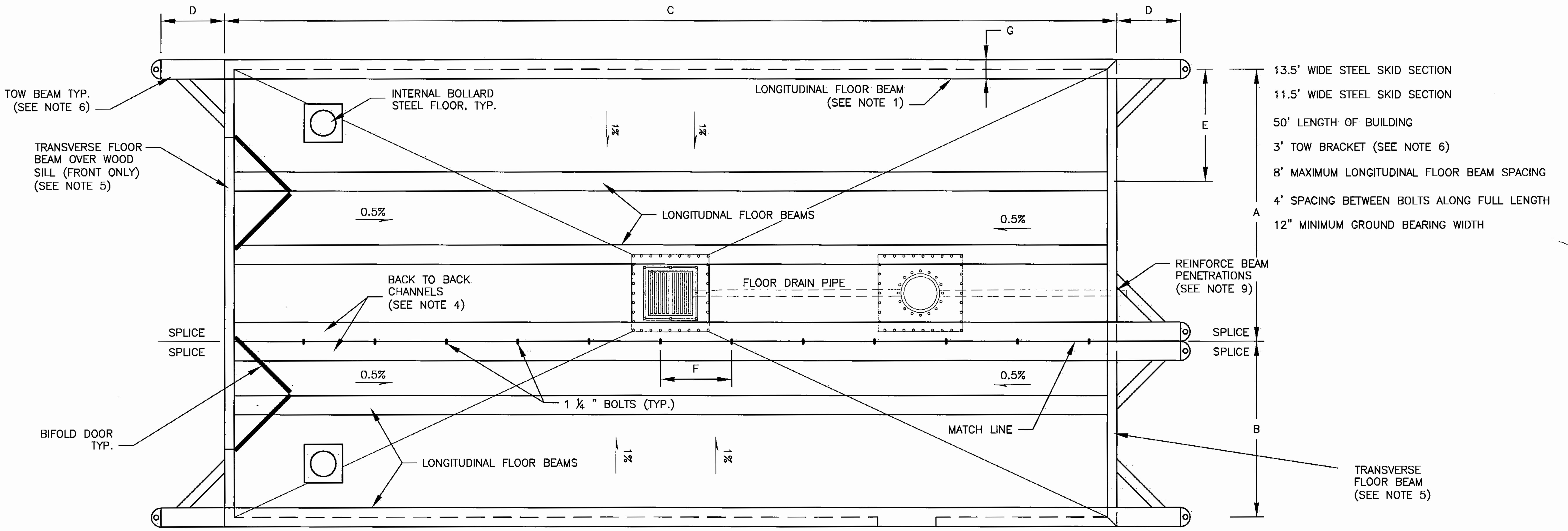

STEEL SKID FOUNDATION DETAIL

NO SCALE

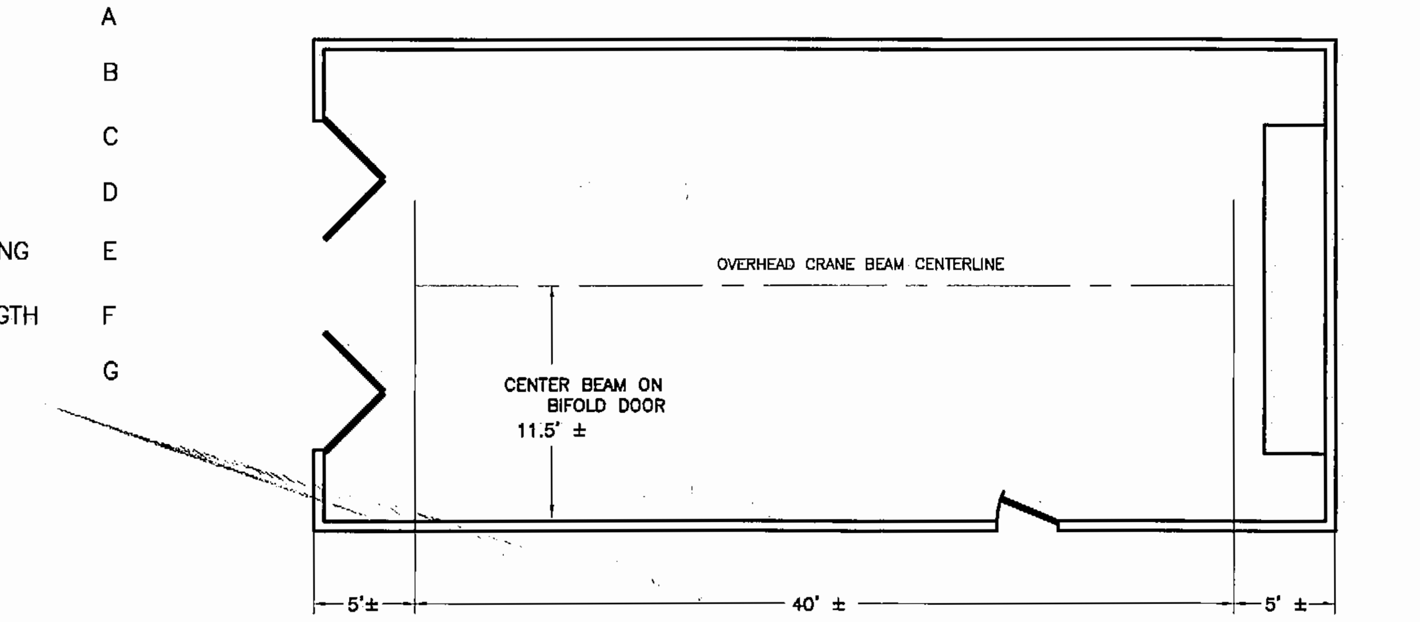

HAND OPERATED HOIST SYSTEM (SREB #2 ONLY)

NOTES:

1. VERIFY THAT HOIST SYSTEM DOES NOT CONFLICT WITH STRUCTURAL MEMBERS, BIFOLD DOORS, LIGHTS, UNIT HEATER STACK, CEILING FAN, OR OTHER BUILDING ELEMENTS.

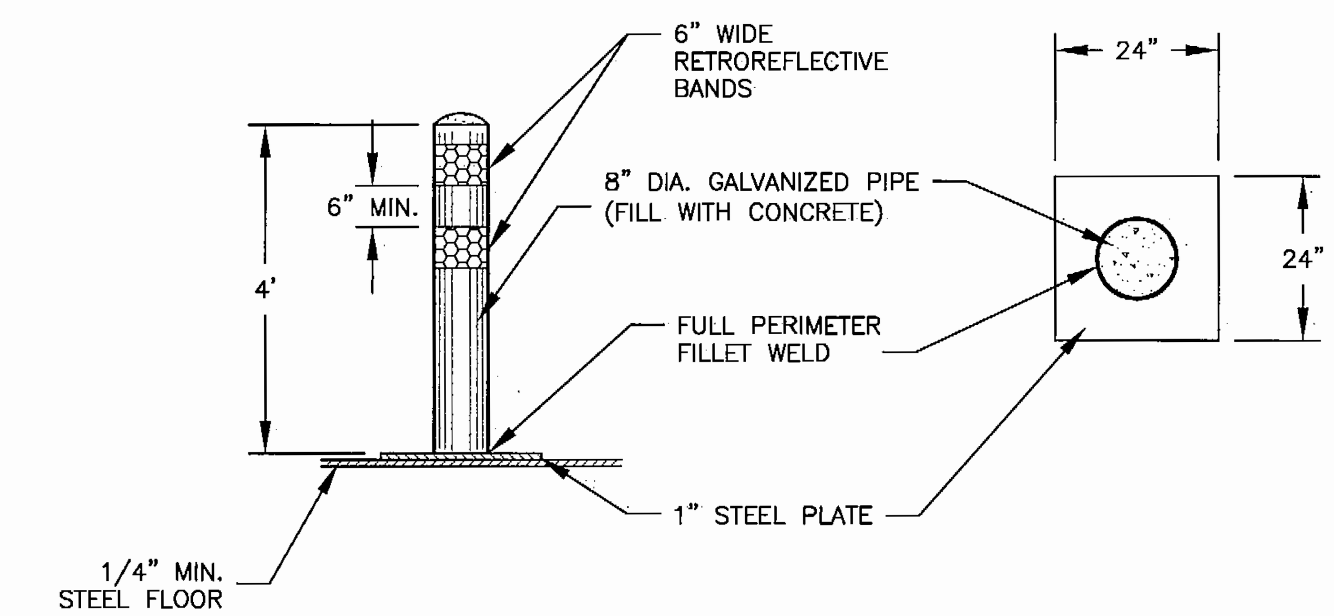

INTERNAL BOLLARD ON STEEL FLOOR DETAIL

NO SCALE

DESIGN NOTES:

1. A STEEL PLATE AT THE BOTTOM OF THE LONGITUDINAL FLOOR BEAM MAY BE USED TO PROVIDE MINIMUM GROUND BEARING WIDTH (G).
2. USE ¼" MINIMUM THICKNESS PATTERN FLOOR PLATE WITH UNDERSIDE REINFORCING RIBS OF ANGLE, TEE, OR CHANNEL SECTIONS, DESIGNED TO SUPPORT THE SPECIFIED LOADS.
3. LATERALLY BRACE LONGITUDINAL SKID BEAMS WITH ANGLE (OR TEE) KNEE BRACES FROM FLOOR PLATE STIFFENERS TO 3" ABOVE BOTTOM FLANGE, SPACED AT 10' MAXIMUM.
4. FABRICATE SKID IN TWO SECTIONS. PROVIDE CHANNEL BEAM SECTION AT MATCH LINE, TO BE FIELD JOINED (BACK TO BACK) WITH (2) 1¼" BOLTS ALONG FULL LENGTH. FIELD WELD LONGITUDINAL SEAM IN FLOOR PLATE TO SEAL. SIZE EACH LONGITUDINAL FLOOR BEAM AS REQUIRED TO SUPPORT ALL TRIBUTARY DEAD LOADS + 25% ALLOWANCE (FOR OTHER LOADS). PROVIDE TRANSVERSE BEAMS AT FRONT AND REAR; PROVIDE FULL MOMENT SPLICE AT MATCH LINE AND SIZE TO SUPPORT DEAD LOADS FROM WALL AND INTERIOR FLOOR BEAMS + 25% ALLOWANCE (FOR OTHER LOADS) AND ALLOW JACKING COMPLETE BUILDING FROM 4 CORNERS.
5. TRANSVERSE BEAMS TO BE LOCATED 6" HIGHER THAN BOTTOM OF LONGITUDINAL FLOOR BEAMS. (IF USING W18 FOR EXTERIOR SKID, USE W12 FOR TRANSVERSE FRAME BEAM.) AT FRONT AND REAR TRANSVERSE BEAM, PROVIDE PRESSURE TREATED WOOD SILL BELOW BOTTOM OF BEAM TO EQUAL DEPTH OF LONGITUDINAL BEAMS, ANCHOR WITH LAG SCREWS THROUGH BOTTOM FLANGE. (THIS IS TO PROVIDE SOLID BEARING AND HEADWALL. WOOD SILL WOULD BE REMOVED PRIOR TO REPOSITIONING STRUCTURE.)
6. PROVIDE TURNBUCKLE ATTACHMENT TO EXTERIOR SKIDS AT BUILDING FRAMES FOR DEADMAN TYPE ANCHORS FOR WIND LOADS. EXTEND EXTERIOR LONGITUDINAL BEAMS WITH SLOPED (UP) BOTTOM AND PROVIDE PAD-EYE ATTACHMENT POINTS FOR FUTURE BUILDING REPOSITIONING. USE PAD-EYES MADE OF 1" PLATE MINIMUM WITH HOLE SIZED FOR 1 ½" MINIMUM SHACKLE PIN. BRACE TOW BRACKET TO TRANSVERSE BEAMS WITH TS4X4 MINIMUM WITH WELDED CONNECTIONS. PROVIDE SIMILAR ARRANGEMENT FOR TOW BEAM NEAR MATCH LINE. ALSO PROVIDE 4"X12" HORIZONTAL ANCHOR PADS ALONG SLOPED UP BOTTOM OF TOW BEAMS FOR RELEVELING BUILDING WITH BOTTLE JACKS.
7. DO NOT EXPOSE STRUCTURAL TIMBER OR WOOD WITHIN 6 INCHES OF THE EXPECTED GROUND SURFACE, UNLESS OTHERWISE SPECIFIED.
8. INSULATE STEEL FLOOR FOUNDATION SYSTEM TO A MINIMUM R-14 VALUE.
9. PROVIDE REINFORCEMENT AT ALL PENETRATIONS THROUGH BEAMS.

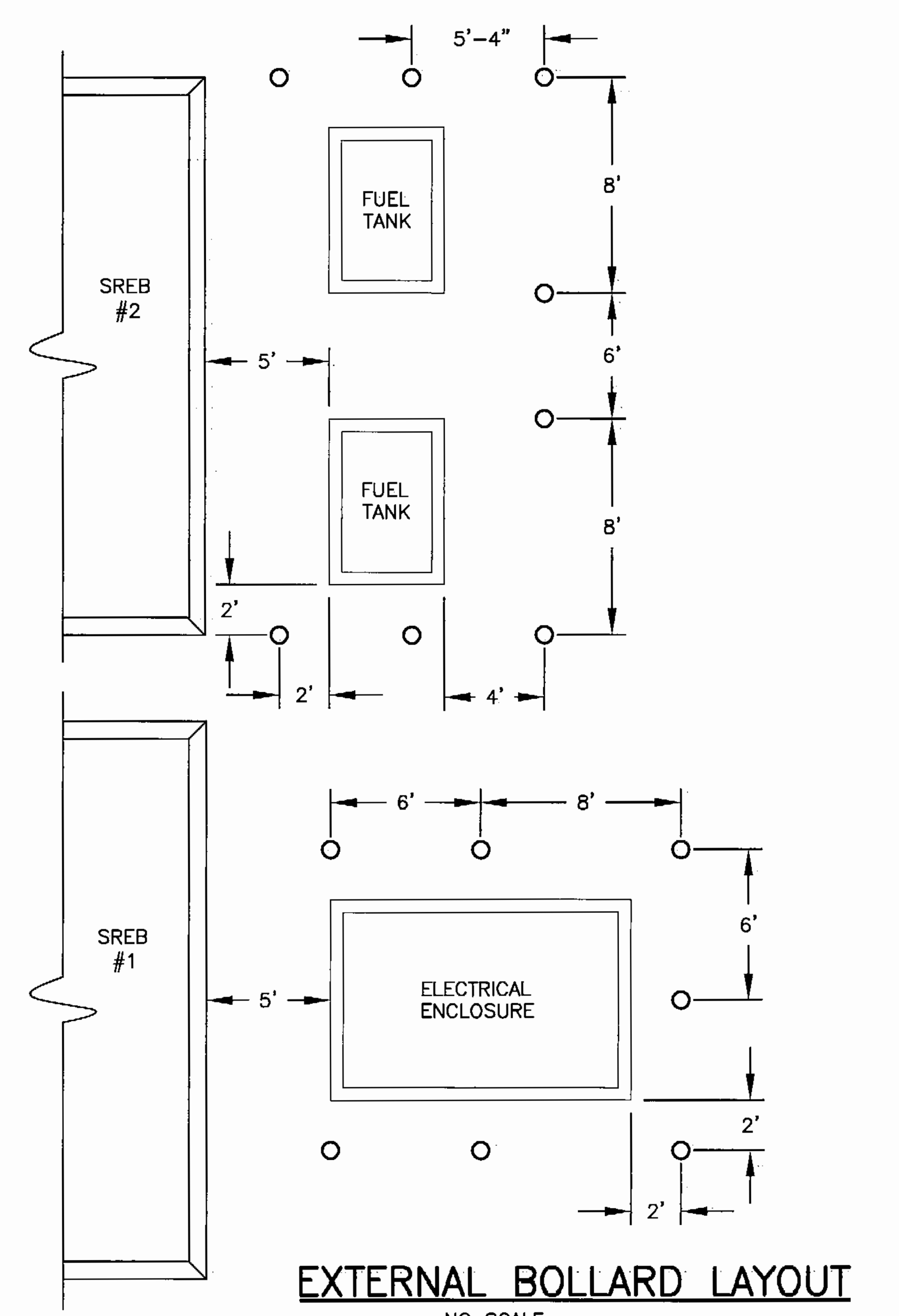

EXTERNAL BOLLARD LAYOUT

NO SCALE

NOTE: ACTUAL NUMBER OF BOLLARDS TO BE FIELD VERIFIED TO MAINTAIN A SPACING NO GREATER THAN 8'

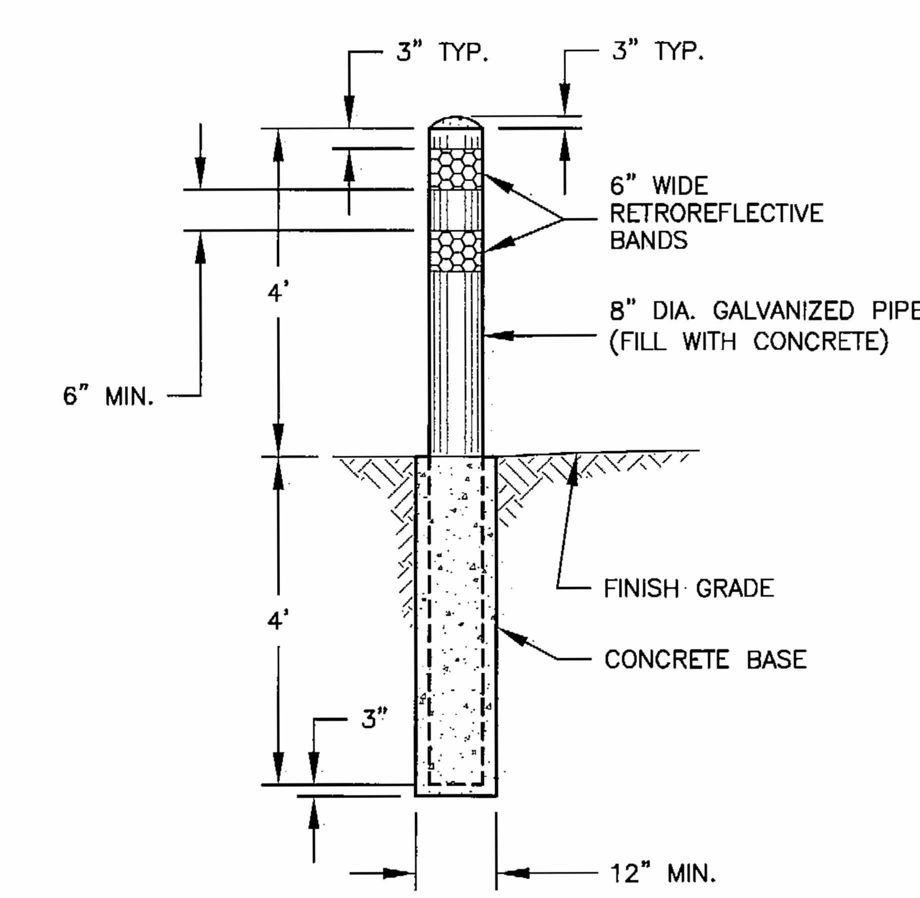

EXTERNAL BOLLARD DETAIL

NO SCALE

BY	DATE	REVISIONS
S.R.	3/4/08	AS-BUILT

STATE OF ALASKA 49TH Tom J. Schmid CE-9973 REGISTERED PROFESSIONAL ENGINEER 6/22/04

STATE OF ALASKA
DEPARTMENT OF TRANSPORTATION AND PUBLIC FACILITIES
CENTRAL REGION

CLARKS POINT AIRPORT
CLARKS POINT, ALASKA
AIRPORT RELOCATION STAGE II
55598
AIP No. 3-02-0062-0304
FLOOR PLAN, HOIST & BOLLARD DETAILS

SHEET 21 OF 34

Designed By: BRH
Checked By: TJS
Drawn By: MGT
Date Plotted: 2004
Plot Ratio and Layout: 1=1, layout=

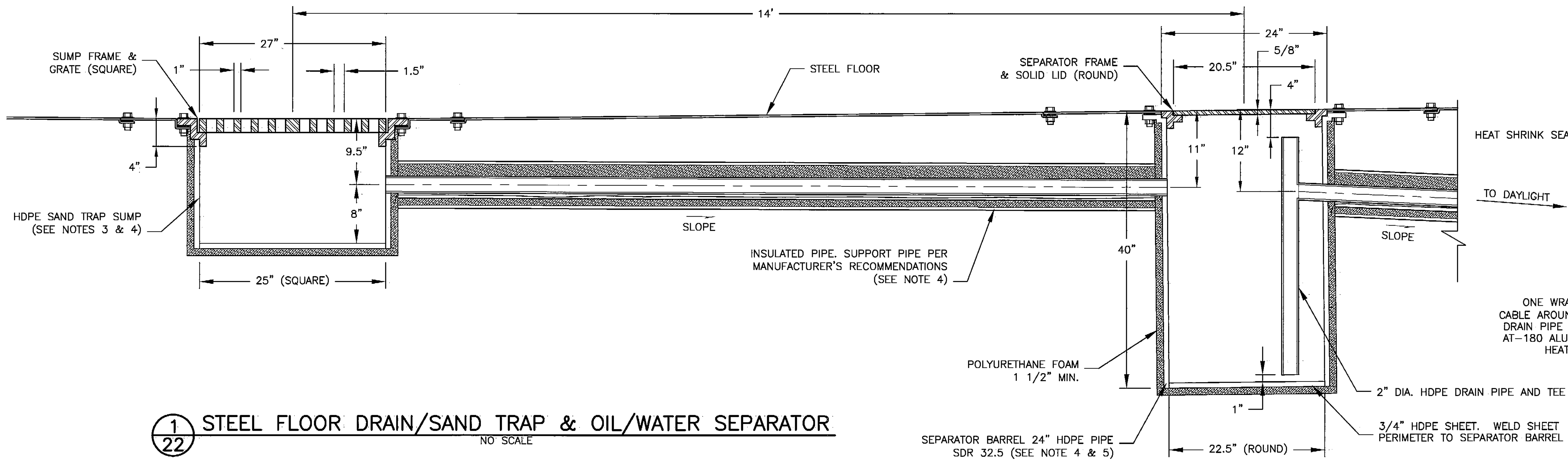

1/22 STEEL FLOOR DRAIN/SAND TRAP & OIL/WATER SEPARATOR

NO SCALE

DESIGNER'S NOTES FOR STEEL FLOOR DRAIN SYSTEM:

1. WELDS SHALL BE FULL THICKNESS OF PARTS.
2. JOIN HEAT TRACE CONDUITS WITH MECHANICAL CONNECTORS. SPRAY URETHANE FOAM OVER COMPLETED JOINTS AND COVER THAT INSULATION WITH HEAT SHRINK SLEEVE.
3. HEAT TRACE AT SEPARATOR SHALL CONSIST OF 27 LAPS AND 12 LAPS AROUND THE SAND TRAP SUMP.
4. HEAT TRACE CABLE FOR SUMP SHALL BE SELF-REGULATING TYPE RATED 10-WATTS/FOOT NOMINAL AT 240-VOLTS @32°F. MAXIMUM MAINTAINED OPERATING TEMPERATURE OF HEAT TRACE SHALL NOT EXCEED 150°F AND SHALL BE LISTED FOR CLASS-1, DIVISION-1, GROUPS A, B, C & D: RAYCHEM 10BTV2-CT AND 5BTV2 RESPECTIVELY OR APPROVED EQUAL. HEAT TRACE SHALL BE INSTALLED IN CONTACT WITH SUMP AND SEPARATOR WITHOUT OVERLAP, COVERED WITH ALUMINUM TAPE AND COVERED IN POLYURETHANE INSULATION. HEAT TRACE INSTALLED IN INSULATED PIPE SHALL BE TERMINATED AT THE OUTFALL AS SHOWN.

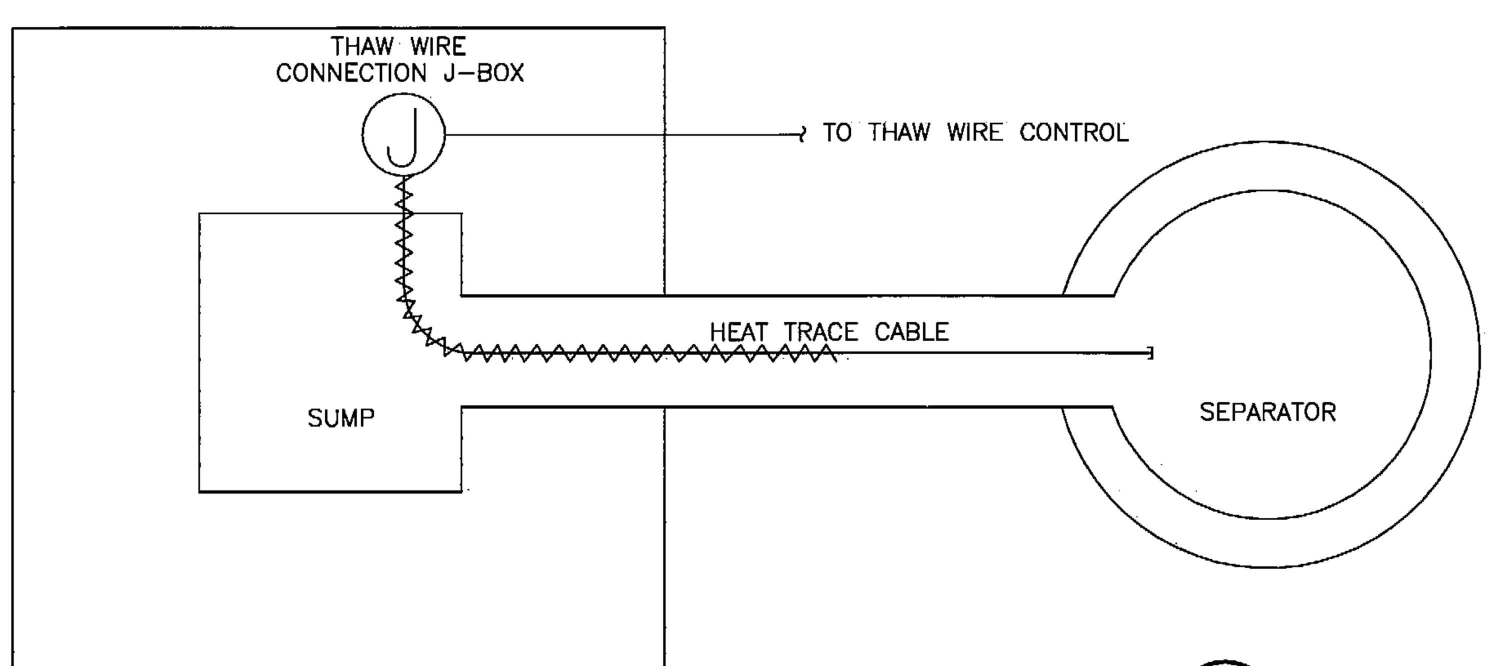

NOTE: SEE HEAT TRACE ONE LINE DIAGRAM 1/30

2/22 THAW WIRE DETAIL

NOT TO SCALE

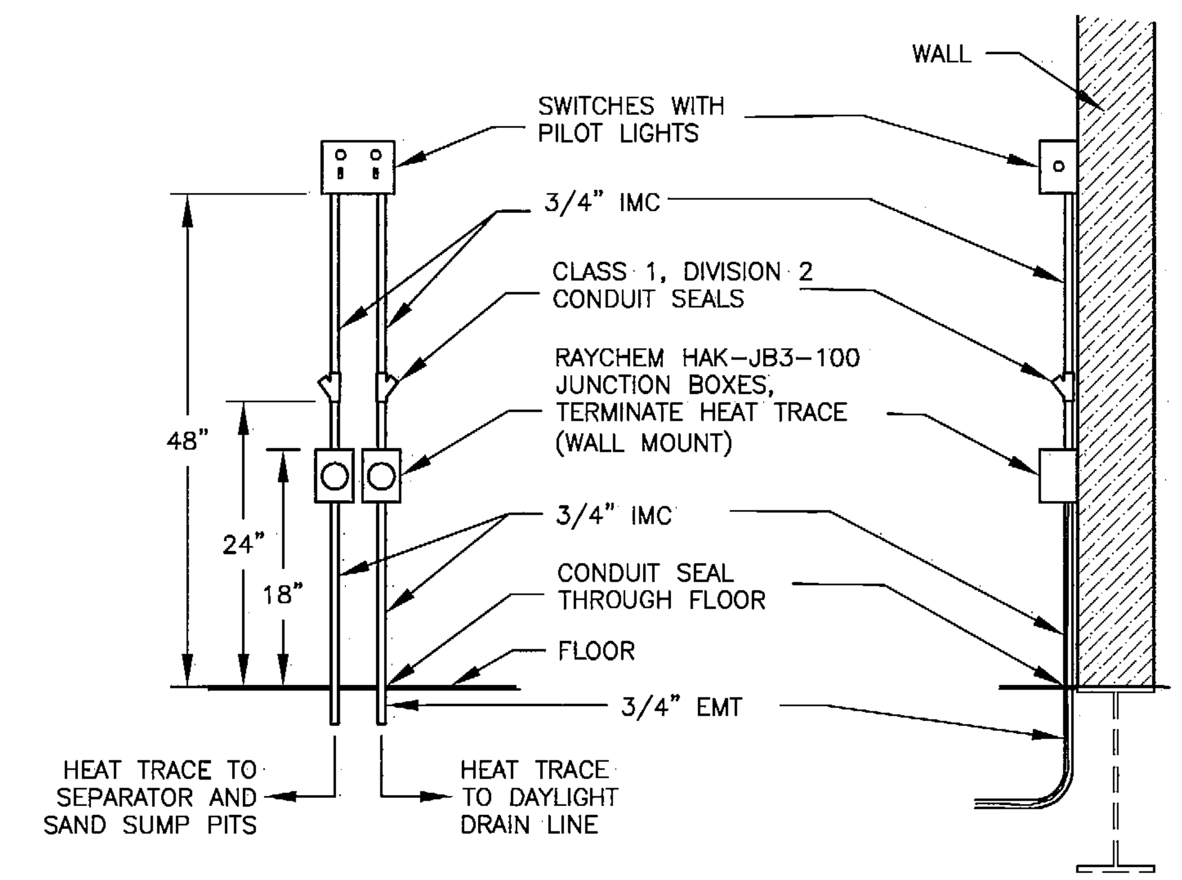

FRONT VIEW

NO SCALE

PROFILE VIEW

NO SCALE

3/22 THAW WIRE SWITCH DETAIL

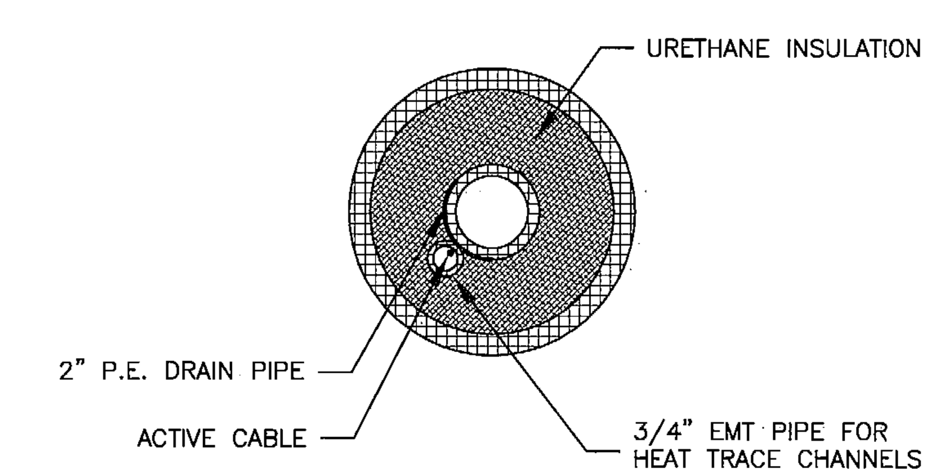

4/22 INSULATED DRAIN PIPE DETAIL

NO SCALE

BY	DATE	REVISIONS
S.R.	3/4/08	AS-BUILT

STATE OF ALASKA 49TH Tom J. Schmid CE-9972 REGISTERED PROFESSIONAL ENGINEER

STATE OF ALASKA 49TH Michael L. Stoianoff EE-6391 6-22-04 REGISTERED PROFESSIONAL ENGINEER

STATE OF ALASKA
DEPARTMENT OF TRANSPORTATION AND PUBLIC FACILITIES
CENTRAL REGION

CLARKS POINT AIRPORT
CLARKS POINT, ALASKA
AIRPORT RELOCATION STAGE II
55598
AIP No. 3-02-0062-0304
FLOOR DRAIN SYSTEM DETAILS

SHEET 22 OF 34

Designed By: BRH
Checked By: TJS
Drawn By: MGT
Date Plotted: 2004
Plot Ratio and Layout: 1=1, layout

NOTES:

1. MOUNT BEACON SO THAT BOTTOM OF ROTATING FIXTURES ARE 4" HIGHER THAN RAIL.
2. ADJUST ROTATING BEACON STEEL MOUNTING PLATFORM SIZE TO MATCH THE DELIVERED BEACON.
3. LADDER, LADDER CAGE, AND LANDING PLATFORM SHALL MEET OSHA & IBC REQUIREMENTS.
4. SEAL ALL ROOF PENETRATIONS TO PREVENT LEAKS.
5. SEE SHEET 28 FOR BEACON ELECTRICAL DETAILS.

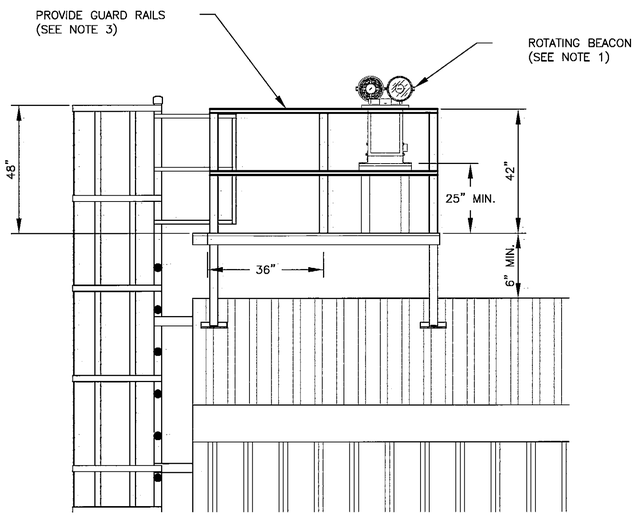

LANDING PLATFORM SIDE VIEW

NOT TO SCALE

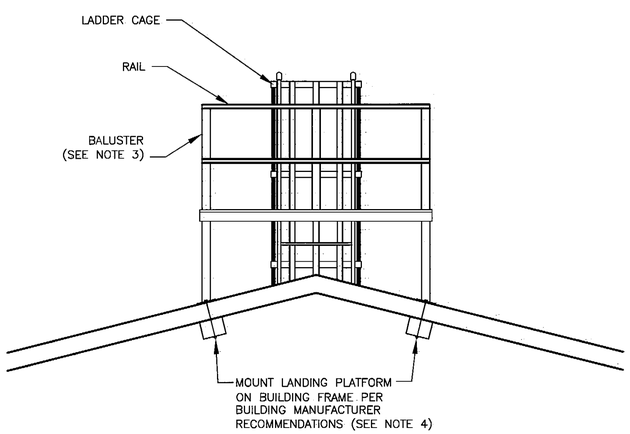

LANDING PLATFORM FRONT VIEW

NOT TO SCALE

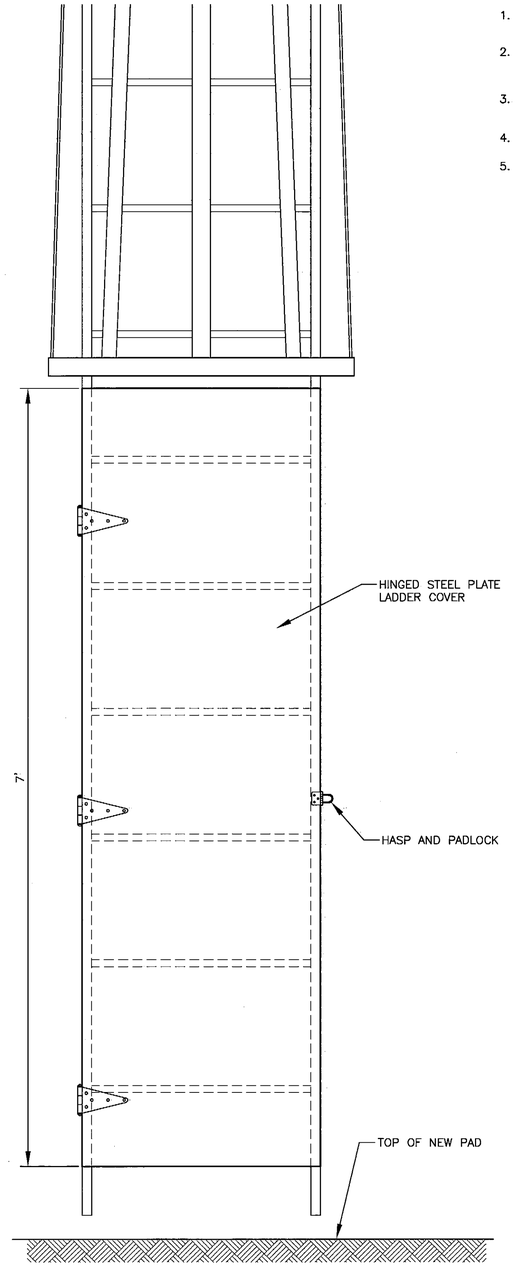

LADDER BASE DETAIL

NOT TO SCALE

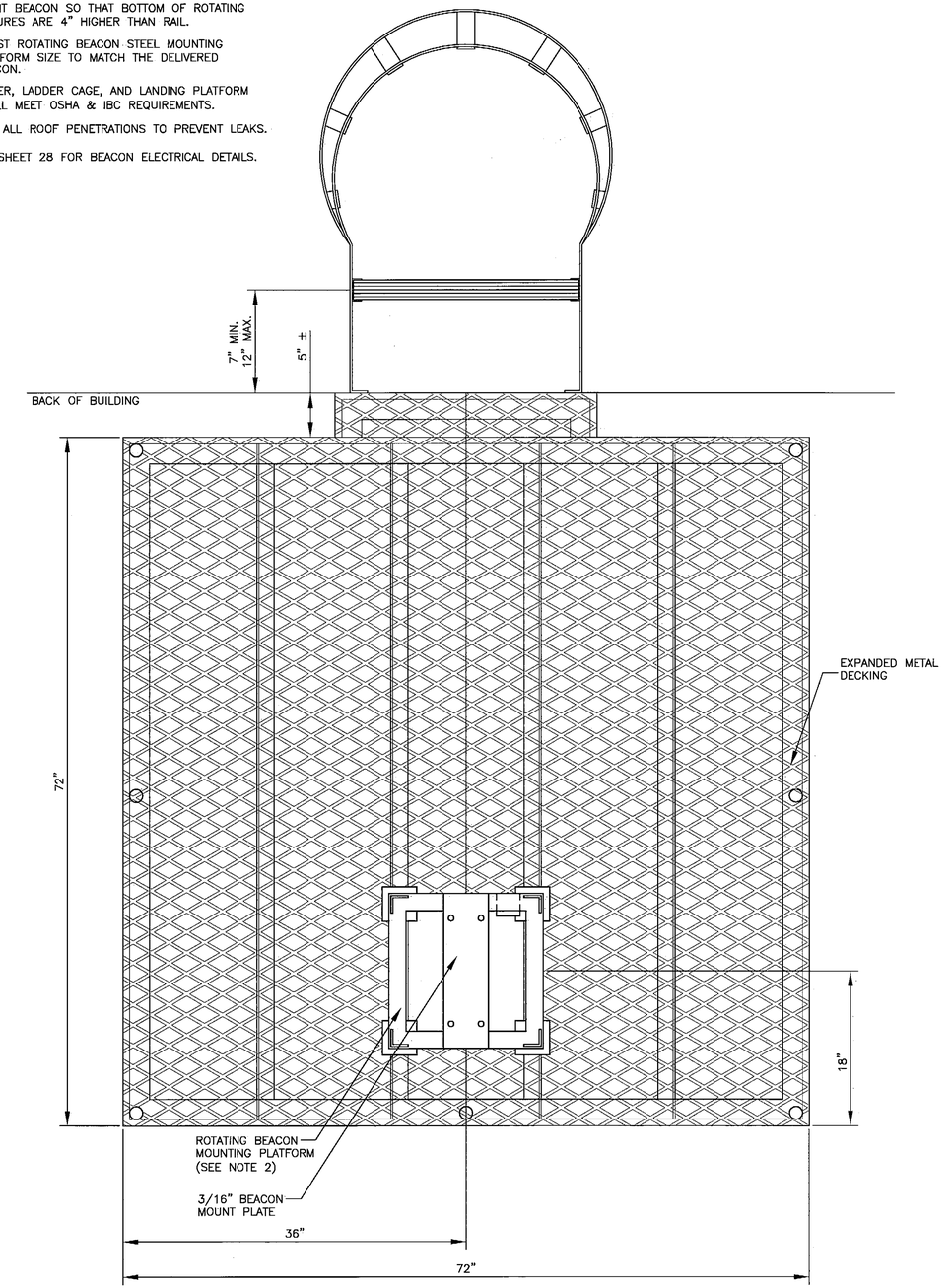

LANDING PLATFORM PLAN

NOT TO SCALE

Date Plotted:	2004
Plot Ratio and Layout:	1=1, layout=
File:	W:\Projects\Clarks Point\Airport Relocation Phase I 55598 10_2003\Civil Design\Construction drawings\SREB\SREB beacon.dwg 06/10/2004 11:17:55 AM ADT

Designed By:	BRH
Checked By:	TJS
Drawn By:	MGT

BY	DATE	REVISIONS
S.R.	3/4/08	AS-BUILT

STATE OF ALASKA 49TH Tom J. Schmid No. CE-9973 REGISTERED PROFESSIONAL ENGINEER 6/22/04

STATE OF ALASKA
DEPARTMENT OF TRANSPORTATION AND PUBLIC FACILITIES
CENTRAL REGION

CLARKS POINT AIRPORT
CLARKS POINT, ALASKA
AIRPORT RELOCATION STAGE II
55598
AIP No. 3-02-0062-0304
ROOF ACCESS LADDER AND PLATFORM DETAILS

SHEET 23 OF 34

LEGEND

FIXTURE	DESCRIPTION	MOUNTING HEIGHT	LAMP SIZE/ TYPE	REMARKS
⟨A⟩	WALL MOUNT BRACKET, LIGHT DISTRIBUTION NEMA 7X7, BALLAST 120-VOLT HPF - KIM LIGHTING AFL11-100-HPS-120, OR APPROVED EQUAL.	12'-0"	100-HPS	AIM FIXTURE AT FLOOR 19 FEET FROM WALL
⟨B⟩	WALL MOUNT AREA LIGHT, POLYCARBONATE REFRACTOR LIGHT DISTRIBUTION, SHORT NON-CUTOFF TYPE-III, , BALLAST 120-VOLT MAGNETIC REGULATOR W/ PHOTOELECTRIC CELL - GENERAL ELECTRIC NO. W1LR-10-S-1-M-PE-L-SN3-DB, OR APPRVD EQUAL.	18'-0"	100-HPS	
⟨C⟩	WALL MOUNT POLYCARBONATE PRISMATIC LENS; BALLAST 120-VOLT HPF, W/PHOTO-ELECTRIC CELL - KENNAL NO. H69D-C-DB-50S-1-120-HPF, OR APPROVED EQUAL.	8'-0"	50-HPS	
⟨E⟩	WALL MOUNT BRACKET, LIGHT DISTRIBUTION NEMA 7X7, BALLAST 120-VOLT HPF - KIM LIGHTING AFL11-100-HPS-120, OR APPROVED EQUAL.	12'-0"	100-HPS	AIM FIXTURE AT CENTER OF WORK BENCH TOP
⟨F⟩ B	EMERGENCY EGRESS LIGHT WITH NI-CAD BATTERIES - DUAL-LITE NO. LM30N OR APPROVED EQUAL.	8'-0"	INCLUDED	
⟨G⟩	EXIT SIGN - WHITE FACE RED LETTERS WITH LED LIGHTS, AND 2-HOUR NI-CAD BATTERY EMERGENCY POWER SYSTEM, 120-VOLTS - DUAL-LITE NO. LXSRWE, OR APPROVED EQUAL.	8'-0"	LED	
<#>	NOTE SYMBOL	8'-0"		
$	SINGLE POLE SWITCH	48"		
$P	SINGLE POLE SWITCH W/PILOT LIGHT	48"		
$TH	SINGLE POLE MANUAL MOTOR STARTER SWITCH W/THERMAL OVERLOAD ELEMENT	48"		
$HOA	DOUBLE POLE HAND-OFF-AUTO SWITCH	48"		
$HOA & SP	DOUBLE POLE HAND-OFF-AUTO SWITCH WITH SPEED CONTROL	48"		
	FLOOR DRAIN HEAT TRACE SWITCH WITH PILOT LIGHT	48"		
	CIRCUIT BREAKER PANEL, SEE PANEL SCHEDULE	6'-6" TO TOP		
	METER BASE WITH 200 AMP MAIN CIRCUIT BREAKER	6'-0" TO 6'-6"		MOUNTING HEIGHT MEASURED TO CENTER OF METER
	ELECTRICAL CIRCUIT			
C-#	HOME RUN TO CIRCUIT PANEL WITH PANEL AND BREAKER NUMBER			
	GROUND ELECTRODE SYSTEM CONNECTION			
CO	CARBON MONOXIDE DETECTOR	5'-6"		
	DUPLEX OUTLET, GFCI, NEMA 5-20R	<2>		
W.P.	DUPLEX OUTLET IN NEMA 3R ENCLOSURE, GFCI, NEMA 5-20R	48"		MID-WEST ELECTRIC #U010010, OR APPROVED EQUAL.
A	RECEPTACLE, 30 AMP, 120V, NEMA 5-30R.	48"		PROVIDE MATCHING ANGLE PLUG
B	RECEPTACLE, 50 AMP, 240V, NEMA 6-50R	48"		PROVIDE MATCHING ANGLE PLUG
C	POWER RECEPTACLE, 20 AMP, 125/250 VOLT, NEMA 5-20R & NEMA 6-20R	12" ABOVE WORKBENCH		LEVITON 5842, OR APPROVED EQUAL.
	DISCONNECT SWITCH, 60A, 2P, S/N, 240V	5'-6"		
(F)	FAN JUNCTION BOX			
(M)	MOTOR			
(T)C	COOLING THERMOSTAT, GRAINGER-DAYTON No. 2E728, FOR PADDLE FAN	MOUNT ABOVE FAN		SET AT 75° F
(T)H	HEATING THERMOSTAT FOR UNIT HEATERS	5'-6"		
G	GENERATOR INLET, NEMA L14-30 IN NEMA-3R ENCLOSURE	48"		

ELECTRIC PANEL SCHEDULE

PROJECT NAME: CLARKS POINT AIRPORT RELOCATION — PROJ NO.: 55598 — PANEL DESIGNATION: C
120/240 VOLTS, 1 PHASE, 3 WIRE — INTERRUPTING RATING: 10,000 AIC — CALCULATED L/L FAULT :< 10,000 AMPS SYM <1>
THIS PANEL SERVED FROM: SERVICE DISCONNECT — ISOLATED NEUTRAL (X)YES ( ) NO
MAIN LUGS ONLY: 200 AMPS — ISOLATED GROUND (X) YES, ( ) NO

LOAD	KVA	AMP	CKT	LINE A		LINE B	CKT	AMP	KVA	LOAD
PANEL-G	3.85	50/	1	6.73			2	30/1	2.88	NEMA 5-30 RECEPTACLE
	3.97	2	3			6.85	4	30/	1.68	HEAT TRACE -TYPE - B GFCI - CB
50 AMP 240 VOLT RECEPTACLE	4.80	50/	5	6.48			6	2	1.68	
NEMA 6-50R	4.80	2	7			6.48	8	20/1	0.18	NEMA 5-20 WP RECEPTACLE
NEMA 5-20 RECEPTACLES (4)	0.72	20/1	9	0.72			10	20/1		SPARE
NEMA 5-20 RECEPTACLES (4)	0.72	20/1	11			0.72	12	20/1		SPARE
AIR COMPRESSSOR - 3 HP	2.39	50/	13	2.39			14	20/1		SPARE
	2.39	2	15			2.39	16	20/1		SPARE
SPARE		20/1	17	0.00			18	20/1		SPARE
SPARE		20/1	19			0.00	20	20/1		SPARE
SPACE			21	0.00			22	20/1		SPARE
SPACE			23			0.00	24	20/		SPARE
SPACE			25	0.00			26	2		
SPACE			27			0.00	28	20/1		SPARE
SPACE			29	0.00			30	20/1		SPARE
TOTALS - KVA	23.64			16.32		16.44			6.42	
AMPS - LINE TOTALS				136.00		137.00				

TOTAL CONNECTED LOAD - KVA	27.69
TOTAL CONNECTED LOAD - AMPS	115.38
TOTAL DEMAND - KVA	24.78
TOTAL DEMAND - AMPS	103.25
25% CONTINUOUS LOAD - KVA	2.15
25% CONTINUOUS LOAD - AMPS	8.97
MINIMAM SERVICE - KVA	26.93
MINIMAM SERVICE - AMPS	112.22

NEC LOAD CALCULATIONS - KVA

LOAD	CONNECTED	DEMAND	CONTINUOUS	MINIMUM SERVICE
LIGHTING - (PANEL-G)	2.97	2.97	2.97	
RECEPTACLES - 10KVA + 50%	15.82	12.91		
HEATING LOADS - (PANEL-G)	2.66	2.66	2.28	
HEAT TRACE	3.36	3.36	3.36	
MOTOR LARGEST	2.88	2.88		
TOTALS	27.69	24.78	8.61	26.93

NOTES:
<1> Fault current based on 25 KVA 1.0% Z transformer

ELECTRIC PANEL SCHEDULE

PROJECT NAME: CLARKS POINT AIRPORT RELOCATION — PROJ NO.: 55598 — PANEL DESIGNATION: D
120/240 VOLTS, 1 PHASE, 3 WIRE — INTERRUPTING RATING: 10,000 AIC — CALCULATED L/L FAULT :< 10,000 AMPS SYM <1>
THIS PANEL SERVED FROM: SERVICE DISCONNECT — ISOLATED NEUTRAL (X) YES, ( ) NO
MAIN LUGS ONLY: 200 AMPS — ISOLATED GROUND (X) YES, ( ) NO

LOAD	KVA	AMP	CKT	LINE A		LINE B	CKT	AMP	KVA	LOAD
LIGHTING - FIXTUERS "A", "F", & "G"	1.44	20/1	1	4.32			2	30/1	2.88	NEMA 5-30 RECEPTACLE
LIGHTING - FIXTUERS "B" & "C"	0.20	20/1	3			3.08	4	30/	0.00	HEAT TRACE -TYPE - B GFCI - CB
50 AMP 240 VOLT RECEPTACLE	4.80	50/	5	6.48			6	2	0.00	SPARE
NEMA 6-50R	4.80	2	7			6.48	8	20/1	0.18	NEMA 5-20 WP RECEPTACLE
NEMA 5-20 RECEPTACLES (4)	0.72	20/1	9	0.72			10	20/1		SPARE
NEMA 5-20 RECEPTACLES (4)	0.72	20/1	11			0.72	12	20/1		SPARE
SPARE		20/1	13	0.00			14	20/1		SPARE
SPARE		20/1	15			0.00	16	20/1		SPARE
SPARE		20/1	17	0.00			18	20/1		SPARE
SPARE		20/1	19			0.00	20	20/1		SPARE
SPACE			21	0.00			22	20/1		SPARE
SPACE			23			0.00	24	20/		SPARE
SPACE			25	0.00			26	2		
SPACE			27			0.00	28	20/1		SPARE
SPACE			29	0.00			30	20/1		SPARE
TOTALS - KVA	12.68			11.52		10.28			6.42	
AMPS - LINE TOTALS				96.00		85.67				

TOTAL CONNECTED LOAD - KVA	16.04
TOTAL CONNECTED LOAD - AMPS	66.83
TOTAL DEMAND - KVA	15.52
TOTAL DEMAND - AMPS	64.67
25% CONTINUOUS LOAD - KVA	1.25
25% CONTINUOUS LOAD - AMPS	5.21
MINIMAM SERVICE - KVA	16.77
MINIMAM SERVICE - AMPS	69.88

NEC LOAD CALCULATIONS - KVA

LOAD	CONNECTED	DEMAND	CONTINUOUS	MINIMUM SERVICE
LIGHTING	1.64	1.64	1.64	
RECEPTACLES - 10KVA + 50%	11.04	10.52		
HEATING LOADS	0.00	0.00	0.00	
HEAT TRACE	3.36	3.36	3.36	
MOTOR LARGEST	0.00	0.00		
TOTALS	16.04	15.52	5.00	16.77

NOTES:
<1> Fault current based on 25 KVA 1.0% Z transformer

ELECTRIC PANEL SCHEDULE

PROJECT NAME: CLARKS POINT AIRPORT RELOCATION — PROJ NO.: 55598 — PANEL DESIGNATION: G
120/240 VOLTS, 1 PHASE, 3 WIRE <2> — INTERRUPTING RATING: 10,000 AIC — CALCULATED L/L FAULT :< 10,000 AMPS SYM <4>
THIS PANEL SERVED FROM: PANEL-C — ISOLATED NEUTRAL (X)YES ( ) NO
MAIN LUGS ONLY: 100 AMPS - SURFACE MOUNT PANEL — ISOLATED GROUND (X) YES, ( ) NO

LOAD	KVA	AMP	CKT	LINE A		LINE B	CKT	AMP	KVA	LOAD
LIGHTING - FIXTUERS "A" & "E"	1.44	20/1	1	1.44			2	60/		Molded Case Switch w/ interlock <1>
LIGHTING - FIXTUERS "B" & "C"	0.20	20/1	3			1.44	4	2		<3>
PADDLE FAN & UNIT HEATER	1.33	20/1	5	1.33			6	60/		Molded Case Switch w/ interlock <1>
VENTILATION FAN - EF-1 & DM-1	1.33	20/1	7			1.33	8	2		<3>
VEHICLE FUEL PUMP	0.70	20/	9	1.08			10	20/1	0.00	SPARE
VEHICLE FUEL PUMP & AREA LIGHT	0.80	2	11			1.20	12	20/1	0.00	SPARE
TOTALS - KVA	5.80			3.85		3.97			0.00	
AMPS - LINE TOTALS				32.08		33.08				

TOTAL CONNECTED LOAD - KVA	7.13
TOTAL CONNECTED LOAD - AMPS	29.71
TOTAL DEMAND - KVA	7.13
TOTAL DEMAND - AMPS	29.71
25% CONTINUOUS LOAD - KVA	1.31
25% CONTINUOUS LOAD - AMPS	5.47
MINIMUM SERVICE - KVA	8.44
MINIMUM SERVICE - AMPS	35.18

NEC LOAD CALCULATIONS - KVA

LOAD	CONNECTED	DEMAND	CONTINUOUS	MINIMUM SERVICE
LIGHTING	2.97	2.97	2.97	
HEATING & VENTILATION LOADS	2.66	2.66	2.28	
VEHICLE FUEL PUMP & AREA LIGHT	1.50	1.50		
TOTALS	7.13	7.13	5.25	8.44

Notes:
<1> Provide interlock device ond devices to secure the switches in the ponel as required for back-fed circuit breakers used as main devices
<2> 14-inch wide panelboard or load center (squore-D QD) may be used in lieu of a 20-inch wide panel
<3> Label switch C-2/4 "UTILITY POWER" & switch C-6/8 "GENERATOR POWER"
<4> Fault current based on 25 KVA 1.0% Z transformer

BY	DATE	REVISIONS
S.R.	3/4/08	AS-BUILT

STATE OF ALASKA 49TH — Michael L. Stoiangff — EE-6391 — 6-22-04 — REGISTERED PROFESSIONAL ENGINEER

STATE OF ALASKA
DEPARTMENT OF TRANSPORTATION AND PUBLIC FACILITIES
CENTRAL REGION

CLARKS POINT AIRPORT
CLARKS POINT, ALASKA
AIRPORT RELOCATION STAGE II
55598
AIP No. 3-02-0062-0304
ELECTRICAL LEGEND & PANEL SCHEDULES

SHEET 24 OF 34

Designed By: BRH | Checked By: TJS | Drawn By: MGT
Date Plotted: 2004 6/21/2004 3:33:03 PM ADT | Plot Ratio and Layout: 1=1, layout= | File: W:\Projects\Clarks Point\Airport Relocation Phase II 55598 10_2003\Civil Design\Construction drawings\SREB\24X50_elec_mech.dwg

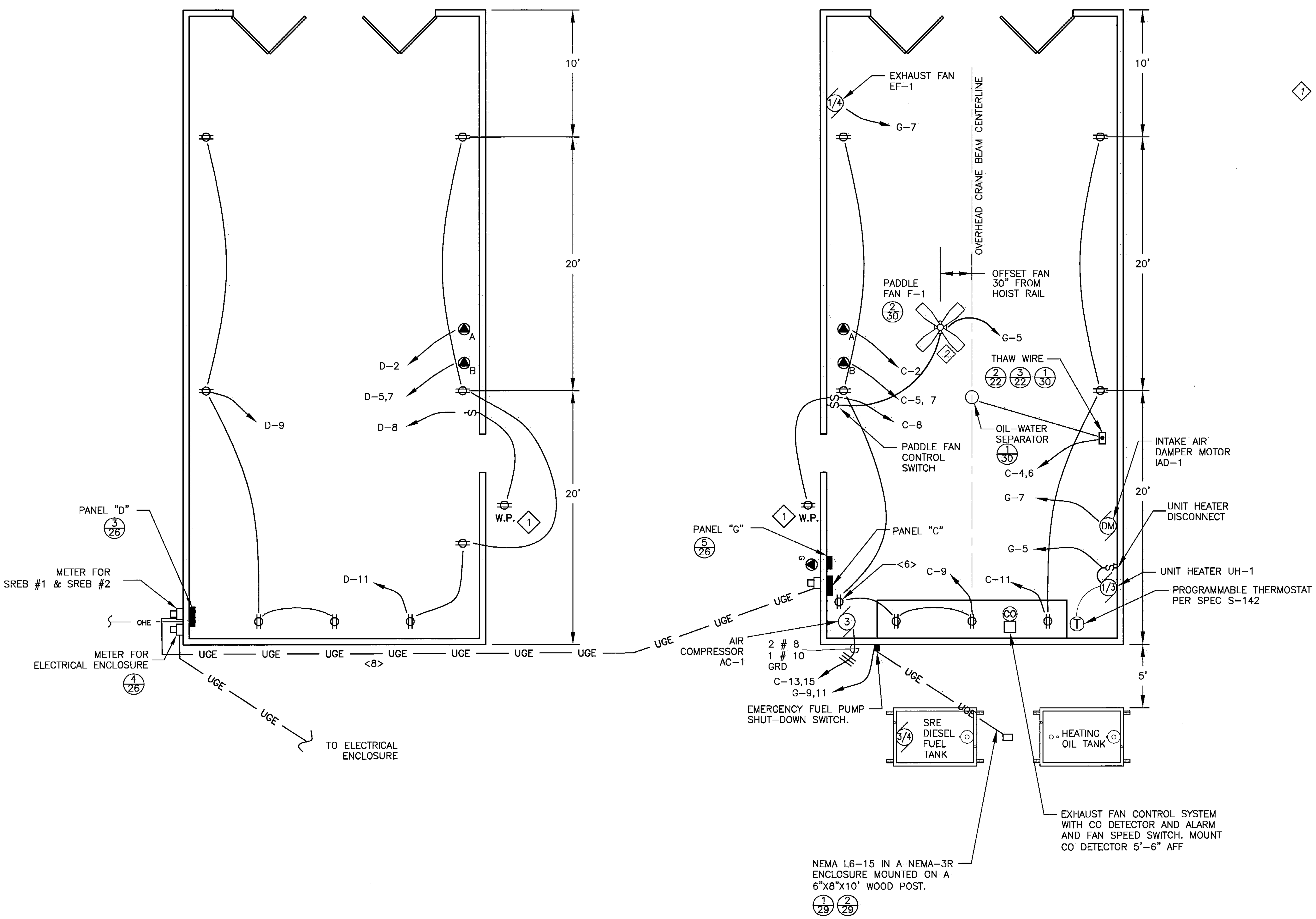

SREB #1

SREB #2

1/25 POWER DISTRIBUTION PLAN
NO SCALE

POWER PLAN
ELECTRICAL EQUIPMENT LIST

(1) *GFCI NEMA 5-20 RECEPTACLE IN SURFACE MOUNT SHEET METAL NEMA-3R ENCLOSURE, MIDWEST ELECTRICAL PRODUCTS CAT NO. U010, OR APPROVED EQUAL. MOUNT 4' ABOVE FINISH GRADE. PROVIDE INTERIOR DISCONNECT SWITCH WITH PILOT LIGHT.*

ELECTRICAL NOTES – SHEETS 25 & 27

<1> MOUNT SWITCHES AND RECEPTACLES 4' MINIMUM ABOVE THE TOP OF THE FLOOR.

<2> ALL CONDUITS IN THE BUILDING, PASSING THROUGH THE ZONE FROM THE FLOOR TO 1.5' ABOVE THE FLOOR, SHALL BE EITHER RMC OR IMC AND SHALL HAVE A SEAL FITTING LOCATED 2' ABOVE THE FLOOR.

<3> RACEWAYS TO BE CONNECTED BEHIND WAINSCOT EXCEPT AT PANEL-C, HEAT TRACE CONTROLS AND ELECTRIC CONNECTIONS TO MECHANICAL EQUIPMENT.

<4> IF STEEL FLOOR IS SPECIFIED, IT IS TO BE BONDED TO THE PANEL-C GROUNDING ELECTRODE SYSTEM WITH A #6 AWG CONDUCTOR AT THE SERVICE ENTRANCE. SERVICE – NEMA-3R.

<5> SWITCHES FOR LIGHT FIXTURES-A & E TO HAVE LOCATOR LIGHTS IN TOGGLE.

<6> 120-VOLT POWER FOR COMPRESSOR CRANKCASE HEATER AND AUTOMATIC CONDENSATE DRAIN CONTROL TO BE CONNECTED TO NEMA-5-20 RECEPTACLE NEXT TO COMPRESSOR.

<7> PROVIDE CONDUITS TO ANTENNA & BEACON IF ROOF ACCESS LADDER AND PLATFORM ARE TO BE MOUNTED ON BUILDING.

<8> INSTALL COAXIAL CABLE TO THE NEW ANTENNA ON SREB #1.

<9> CONNECT BEACON TO LIGHTING CONTROL SYSTEM IN ELECTRICAL ENCLOSURE.

<10> NOT ALL SYMBOLS & NOTES USED.

BY	DATE	REVISIONS
S.R.	3/4/08	AS-BUILT

STATE OF ALASKA 49TH Michael L. Stoinoff EE-6391 6-22-04 REGISTERED PROFESSIONAL ENGINEER

STATE OF ALASKA
DEPARTMENT OF TRANSPORTATION AND PUBLIC FACILITIES
CENTRAL REGION

CLARKS POINT AIRPORT
CLARKS POINT, ALASKA
AIRPORT RELOCATION STAGE II
55598
AIP No. 3-02-0062-0304
POWER DISTRIBUTION PLAN

SHEET 25 OF 34

Designed By: JSD
Checked By: TJS
Drawn By: MGT
Date Plotted: 2004
Plot Ratio and Layout: 1=1, layout=

Date Plotted:	2004	Designed By:	BRH
Plot Ratio and Layout:	1=1, layout=	Checked By:	TJS
File:	W:\Projects\Clarks Point\Airport Relocation Phase II 55598 10_2003\Civil Design\Construction drawings\SREB\24X50_elec_mech.dwg 6/22/2004 9:10:36 AM ADT	Drawn By:	MGT

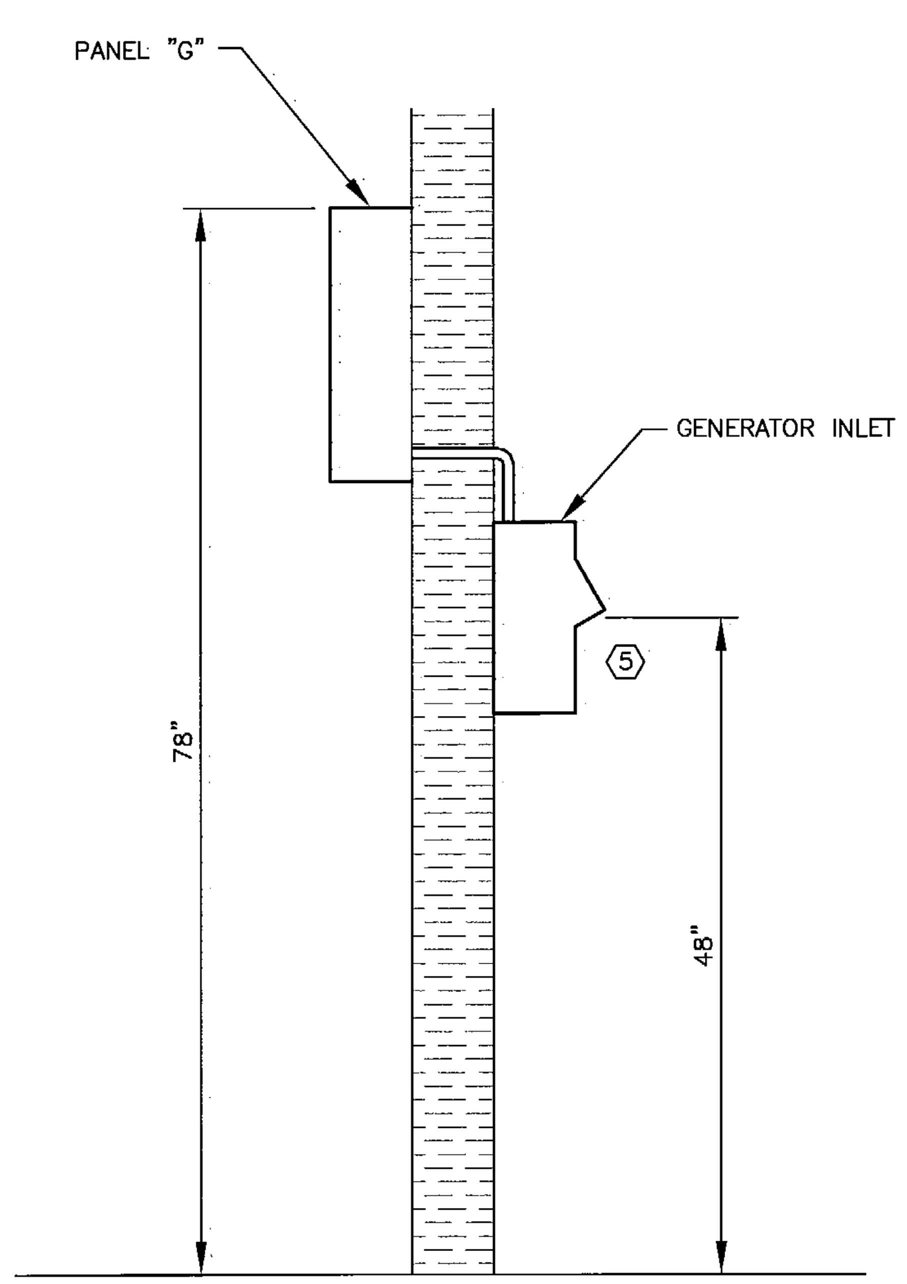

2/26 PANEL "G" – GENERATOR INLET ELEVATION (SREB #1)

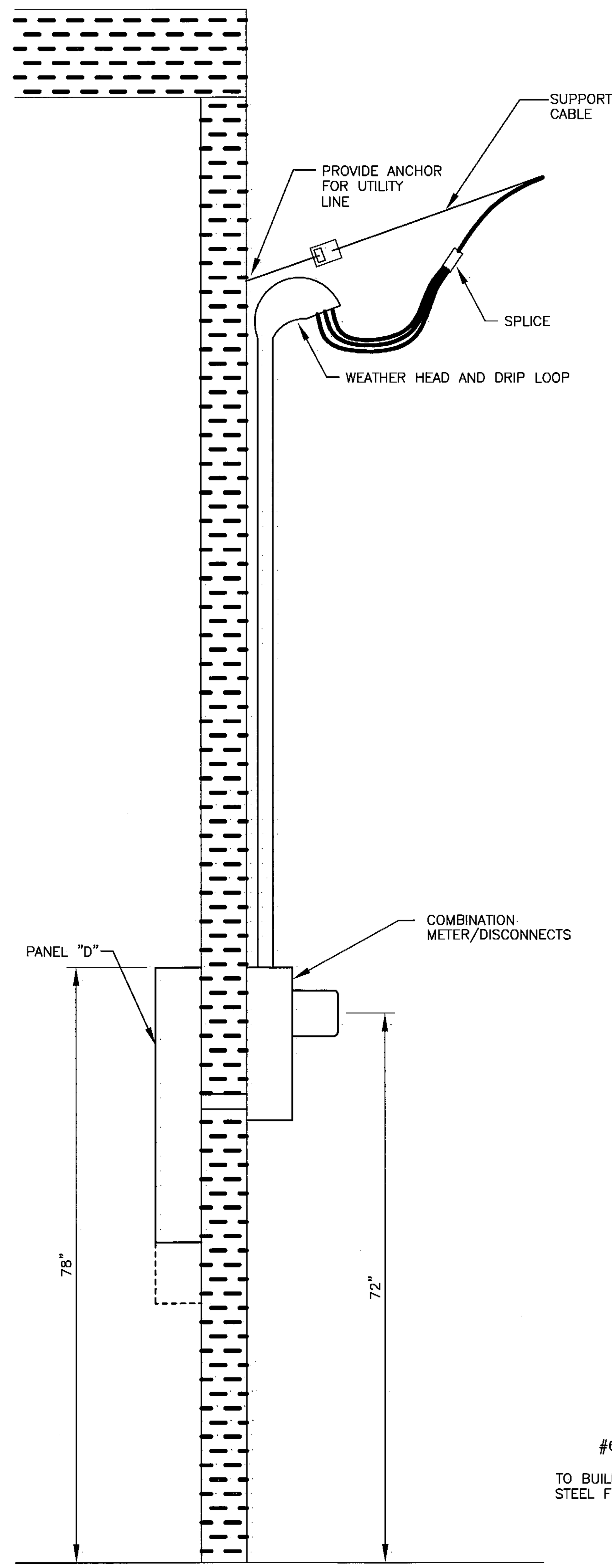

3/26 PANEL "D" – METER ELEVATION

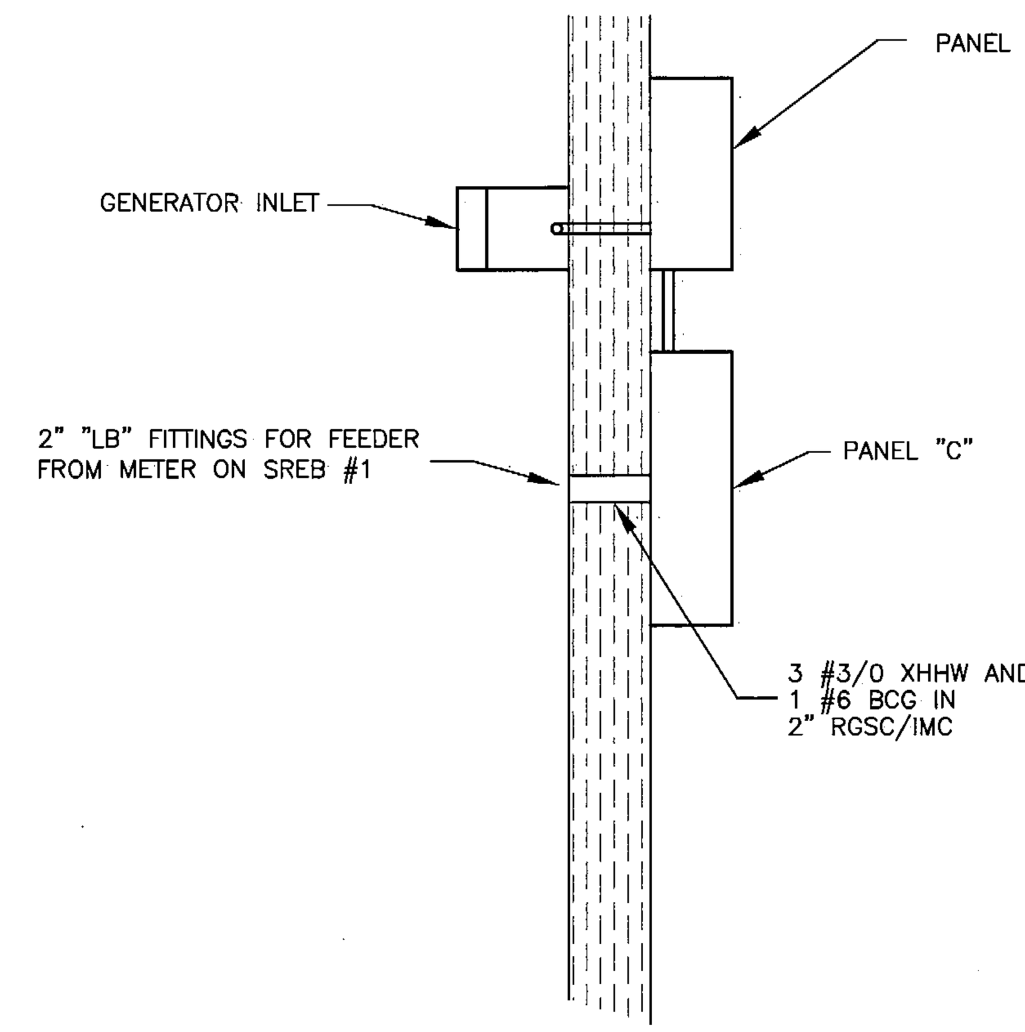

1/26 PLAN VIEW (SREB #2)

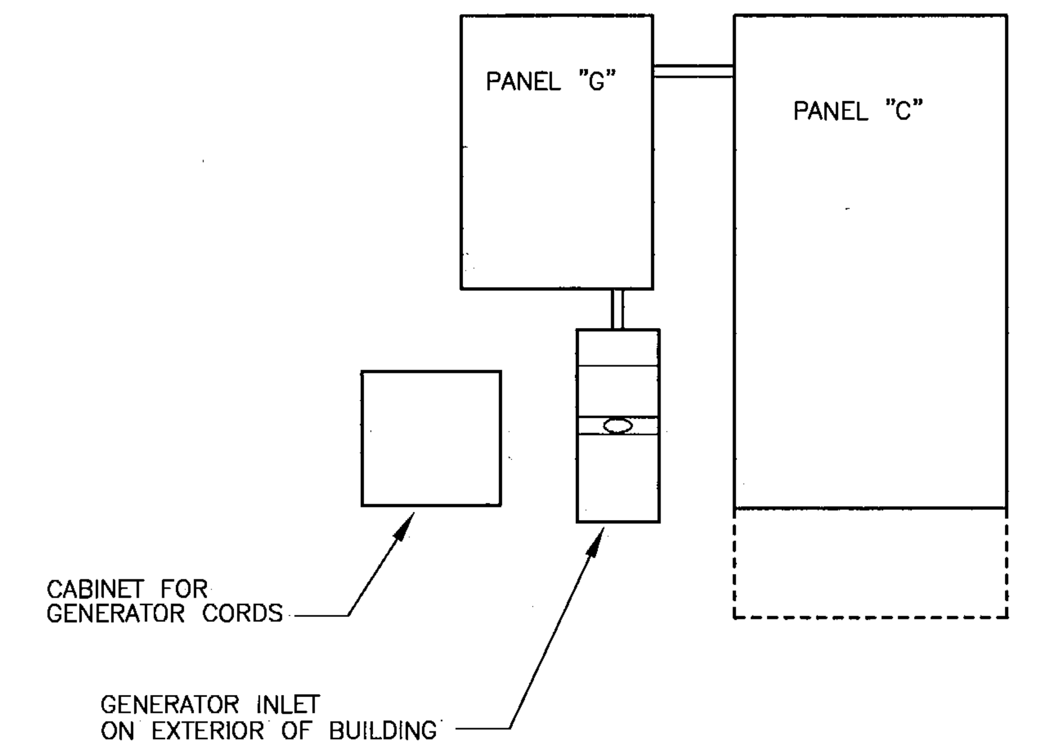

5/26 INSIDE ELEVATION (SREB #2)

NOTES:

1. CONNECTIONS TO NEUTRAL AND GROUND BUSES NOT SHOWN
2. INTERLOCKED MOLDED-CASE SWITCH & CIRCUIT BREAKER WITH HOLD DOWN BRACKETS.
3. CONDUIT SEAL BETWEEN THE INTERIOR AND EXTERIOR OF THE BUILDING.
4. PROVIDE A 20-FOOT "ARCTIC" POWER CORD CONTAINING THREE #8 AWG POWER CONDUCTORS AND ONE #10 AWG GROUND CONDUCTOR WITH A CS63-64* CONNECTOR ON ONE END AND A CS63-65C* PLUG ON THE OTHER. PROVIDE THE FOLLOWING 36-INCH LONG ADAPTER CORDS.
   (A) 1-4C #10 POWER CORD WITH A CS63-64* CONNECTOR ON ONE END AND A NEMA-L14-30 PLUG ON THE OTHER.
   (B) 1-4C #12 POWER CORD WITH A CS63-64* CONNECTOR ON ONE END AND A NEMA-L14-20 PLUG ON THE OTHER. PROVIDE WALL CABINET NEXT TO PANEL-G TO STORE THE CORDS.
5. MOUNT A CS63-75C* (MALE) GENERATOR INLET IN A NEMA-3R GALVANIZED/PAINTED ENCLOSURE WITH THE INLET 48 INCHES ABOVE THE FLOOR LEVEL – MIDWEST ELECTRIC PRODUCTS CAT. NO. U050N.
6. PROTECT HDPE CONDUIT UP 24" ABOVE AND BELOW FINISH GRADE WITH GRC OR IMC.
7. PROVIDE 24-INCHES OF LIQUID TIGHT FLEXIBLE METAL CONDUIT IN AN "S" SHAPE TO ALLOW DIFFERENTIAL MOVEMENT.

* CALIFORNIA STANDARD 125/250-VOLT, 3-POLE, 4-WIRE, NON-NEMA, 50-AMP WIRING DEVICE, LEVITON CATALOG # AS SHOWN, OR APPROVED EQUAL.

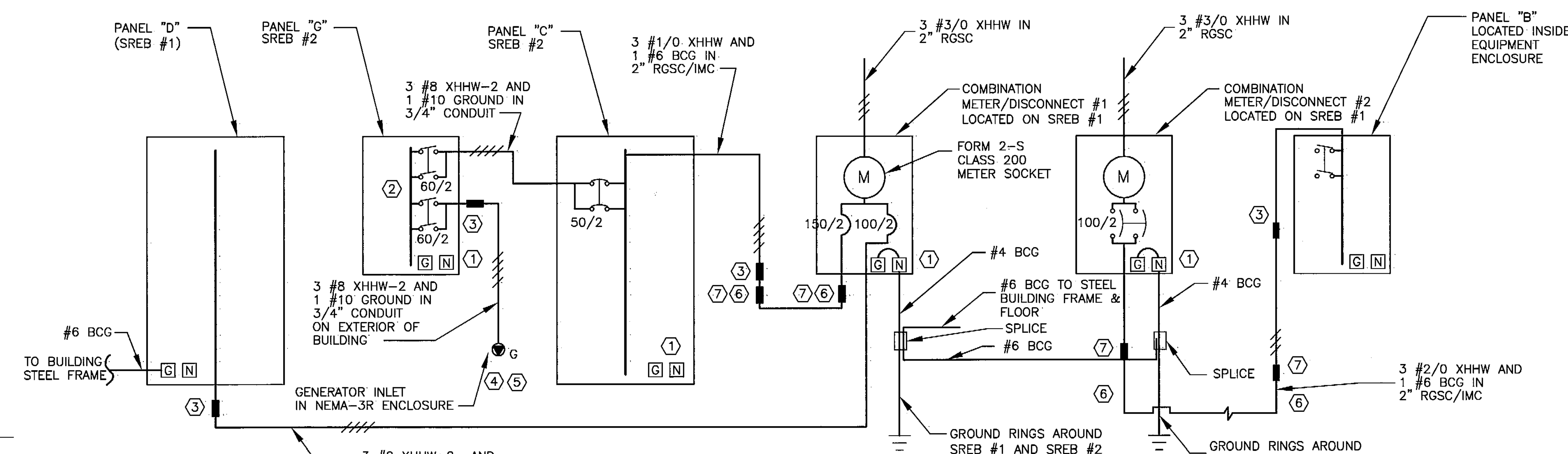

4/26 ONE LINE POWER DIAGRAM

BY	DATE	REVISIONS
S.R.	3/4/08	AS-BUILT

STATE OF ALASKA 49TH — Michael L. Stoiano — EE-6391 — REGISTERED PROFESSIONAL ENGINEER — 6-22-04

STATE OF ALASKA
DEPARTMENT OF TRANSPORTATION AND PUBLIC FACILITIES
CENTRAL REGION

CLARKS POINT AIRPORT
CLARKS POINT, ALASKA
AIRPORT RELOCATION STAGE II
55598
AIP No. 3-02-0062-0304
POWER DISTRIBUTION DETAILS

SHEET 26 OF 34

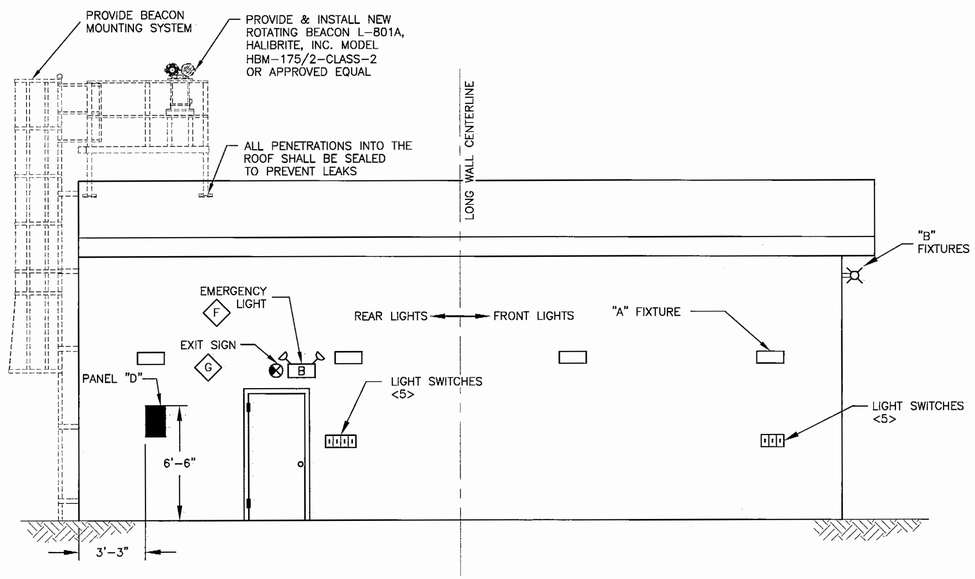

INTERIOR ELEVATION VIEW

1/27 SREB ELECTRICAL LAYOUT (SREB #1 SHOWN)

NOT TO SCALE

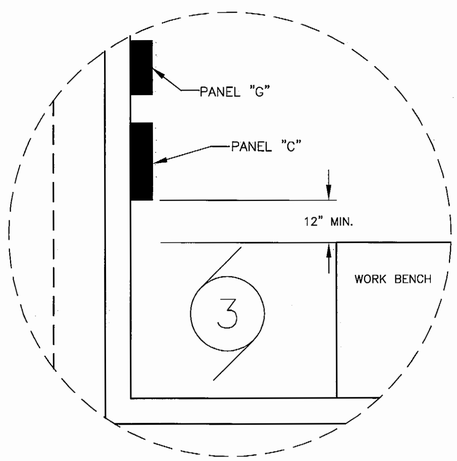

DETAIL A

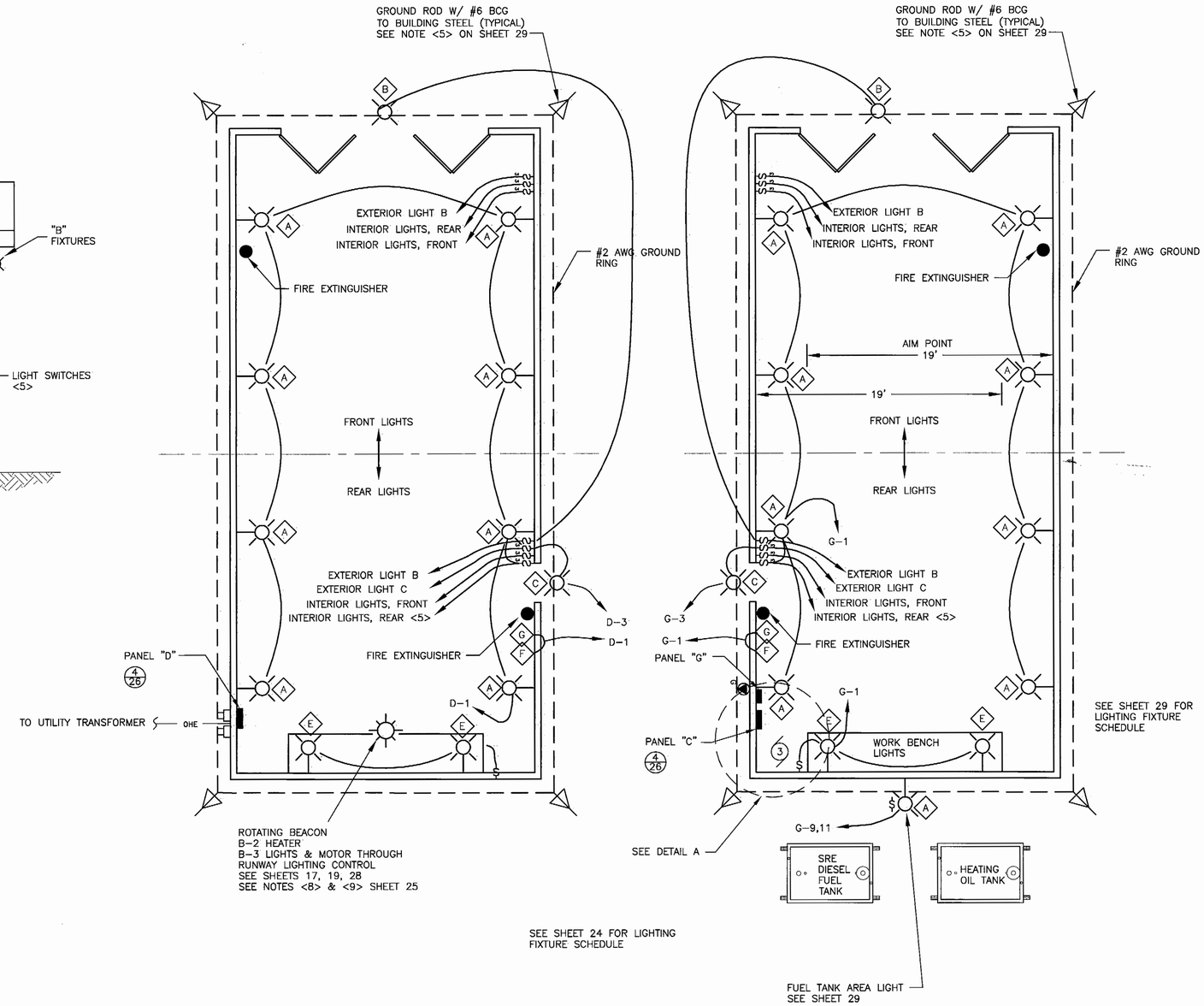

2/27 LIGHTING PLAN

NOT TO SCALE

BY	DATE	REVISIONS
S.R.	3/4/08	AS-BUILT

STATE OF ALASKA 49TH Michael C. Stolanoff EE-6391 6-22-06 REGISTERED PROFESSIONAL ENGINEER

STATE OF ALASKA
DEPARTMENT OF TRANSPORTATION AND PUBLIC FACILITIES
CENTRAL REGION

CLARKS POINT AIRPORT
CLARKS POINT, ALASKA
AIRPORT RELOCATION STAGE II
55598
AIP No. 3-02-0062-0304
LIGHTING PLAN & SREB ELECTRICAL LAYOUT

SHEET 27 OF 34

Designed By:	BRH
Checked By:	TJS
Drawn By:	MGT

Date Plotted: 2004
Plot Ratio and Layout: 1=1, layout=
File: W:\Projects\Clarks Point\Airport Relocation Phase II 55598 18.2002\Civil Design\Construction drawings\SREB\24455_elec.dwg 6/20/2004 10:56:11 AM ADT

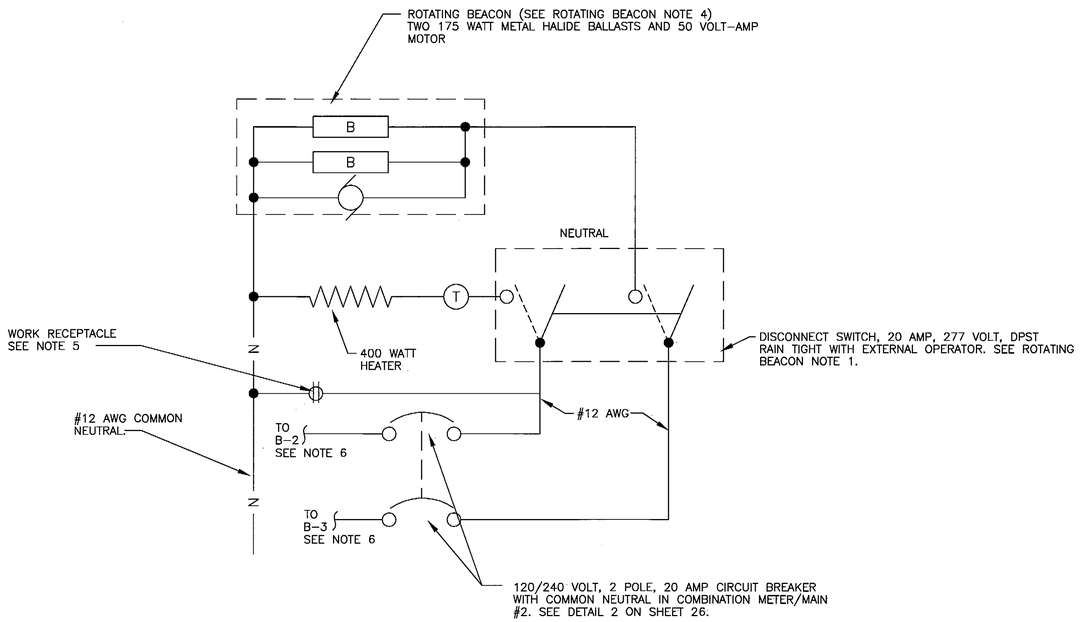

ROTATING BEACON NOTES:

1. MOUNT HOA SWITCH BELOW BEACON. LABEL SWITCH POSITIONS ON-OFF-AUTO.
2. MOUNT PHOTO ELECTRIC CELL WITH WINDOW FACING NORTH.
3. #12 GROUND WIRE – NOT SHOWN.
4. PROVIDE & INSTALL NEW ROTATING BEACON L-801A, HALIBRITE, INC. MODEL HBM-175/2-CLASS-2 OR APPROVED EQUAL.
5. NEMA 5-20 GFCF RECEPTACLE WITH W.P. COVER AT BEACON.
6. WIRES TO CIRCUITS B-2 & B-3 THROUGH AIRPORT R/W LIGHTING CONTROL. SEE 3/28

PROVIDE & INSTALL NEW ROTATING BEACON L-801A, HALIBRITE, INC. MODEL HBM-175/2-CLASS-2 OR APPROVED EQUAL

1/28 ROTATING BEACON WIRING DIAGRAM

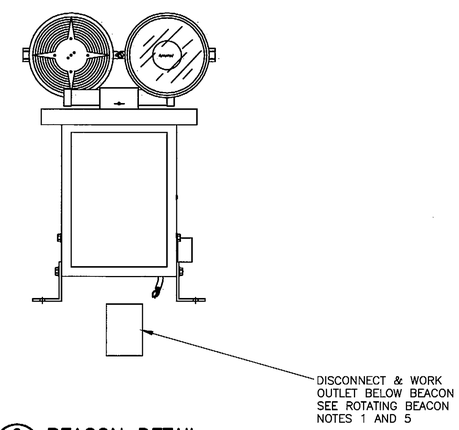

2/28 BEACON DETAIL

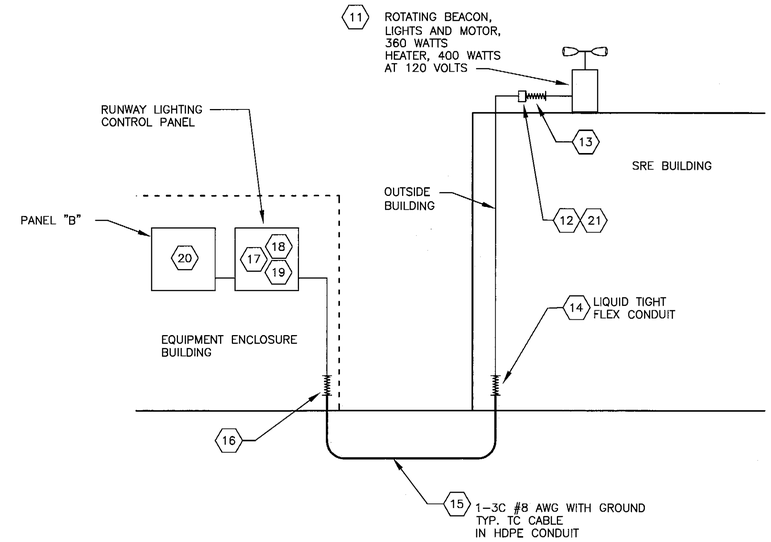

DESCRIPTION

Note:

11. MOUNT BEACON ON PLATFORM SRE BUILDING WITH ELECTRICAL CONNECTIONS TO THE LIGHTING CONTROL PANEL AND PANEL-B IN THE EQUIPMENT ENCLOSURE BUILDING.
12. PROVIDE WEATHERPROOF 2-POLE 20-AMP DISCONNECT SWITCH FOR BOTH BEACON CIRCUITS, BELOW THE BEACON ON THE PLATFORM, LABEL ON & OFF POSITIONS.
13. PROVIDE METALLIC LIQUID TIGHT FLEXIBLE CONDUIT CONNECTION TO BEACON.
14. PROVIDE METALLIC LIQUID TIGHT FLEXIBLE CONDUIT BETWEEN CONDUITS ABOVE AND BELOW GROUND AT SRE BUILDING.
15. 1.5 INCH SCHEDULE -40 OR SRD-11 HDPE CONDUIT UNDERGROUND BETWEEN THE SRE BUILDING AND EQUIPMENT ENCLOSURE BUILDING. BURY A MINIMUM OF 30 INCHES DEEP.
16. PROVIDE METALLIC LIQUID TIGHT FLEXIBLE CONDUIT BETWEEN CONDUITS ABOVE AND BELOW GROUND AT THE EQUIPMENT ENCLOSURE BUILDING.
17. PROVIDE #10 AWG GROUND CONDUCTOR FOR BEACON FROM GROUND CONNECTION IN THE LIGHTING CONTROL PANEL.
18. PROVIDE #10 AWG CONDUCTOR, FOR BEACON LIGHTING, FROM LIGHTING CONTROL PANEL TERMINAL 8C.
19. PROVIDE #10 AWG COMMON NEUTRAL CONDUCTOR FOR BEACON LIGHTING AND HEATER CIRCUITS, FROM LIGHTING CONTROL PANEL TERMINAL 6B. ASSUMES THAT CIRCUITS FOR BEACON LIGHTING (B-3) AND THE HEATER (B-2) ARE ON SEPARATE PANEL LEGS (A&B)
20. CONNECT BEACON HEATER (400-WATT) TO 20-AMP 1-POLE CIRCUIT BREAKER (B-2) OR OTHER POSITION ON PANEL LEG (A OR B) NOT THE SAME AS THE BEACON LIGHTING CIRCUIT. SEE NOTE #19.
21. MOUNT WORK OUTLET IN SAME LOCATION AS DISCONNECT SWITCH

3/28 ROTATING BEACON ONE-LINE DIAGRAM

BY	DATE	REVISIONS
S.R.	3/4/08	AS-BUILT

STATE OF ALASKA 49TH Michael L. Stoiano No. EE-6391 6-22-08 REGISTERED PROFESSIONAL ENGINEER

STATE OF ALASKA
DEPARTMENT OF TRANSPORTATION AND PUBLIC FACILITIES
CENTRAL REGION

CLARKS POINT AIRPORT
CLARKS POINT, ALASKA
AIRPORT RELOCATION STAGE II
55598
AIP No. 3-02-0062-0304
ROTATING BEACON DETAIL, WIRING, AND ONE LINE DIAGRAMS

SHEET 28 OF 34

AS-BUILT 4/2006 28 OF 37

Date Plotted:
Plot Ratio and Layout: 1=1, layout=
File: w:\Projects\Clarks Point\Airport Relocation Phase II 55598 10.2003\Civil Design\Construction drawings\LIGHTS\beacon elec.dwg 6/21/2004 3:54:39 PM ADT

Designed By: HJS
Checked By: BRH
Drawn By: MGT

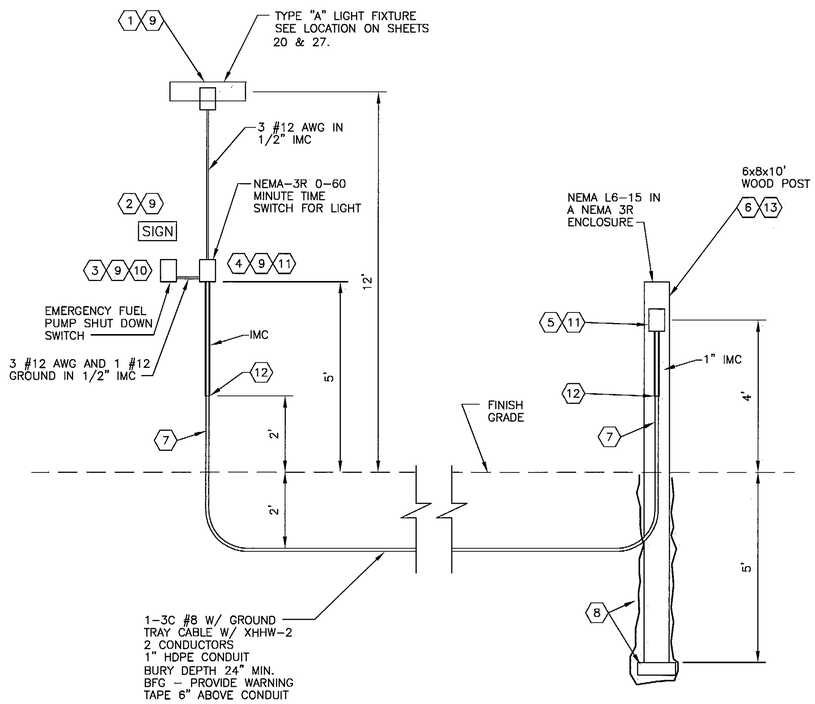

1/29 MOTOR VEHICLE FUEL PUMP AND LIGHTING ELECTRICAL DETAIL

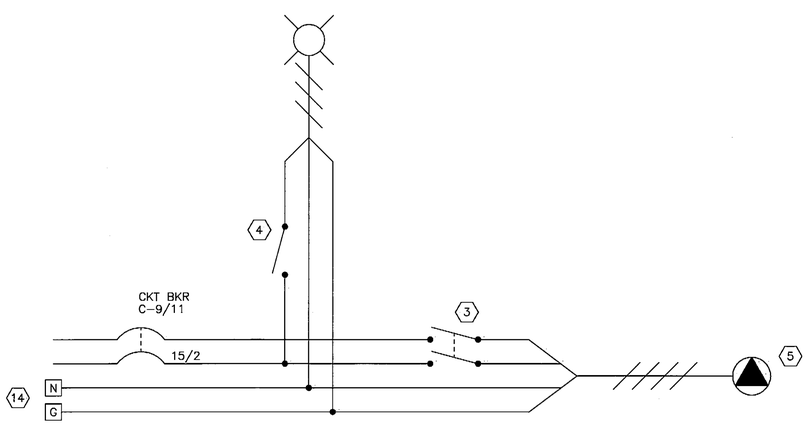

2/29 WIRING DIAGRAM OF FUEL PUMP AND LIGHTING

NOTES:

1. WALL MOUNT AREA LIGHT FIXTURE SAME AS LIGHT FIXTURE "A", MOUNT ON WET LOCATION OUTLET BOX.
2. SIGN: COLORS – WHITE 3/4" LETTERS ON RED BACKGROUND.
   TEXT – "EMERGENCY FUEL PUMP SHUT DOWN SWITCH". MOUNT SIGN 6-INCHES ABOVE EMERGENCY FUEL TANK PUMP SHUT DOWN SWITCH.
3. EMERGENCY VEHICLE FUEL PUMP SHUTDOWN SWITCH. 15-AMP 2-POLE 250-VOLT SWITCH IN A WET LOCATION BOX WITH A RAIN TIGHT ACTUATOR. LABEL SWITCH POSITIONS (UP = ON, DOWN = OFF). DO NOT WIRE LIGHT FIXTURE THROUGH SWITCH.
4. CONTROL SWITCH FOR AREA LIGHT FIXTURE: PROVIDE A 0-60 MINUTE SPRING-MOTOR INTERVAL TIMER WITHOUT HOLD IN A NEMA 3R ENCLOSURE (INTERMATIC MODEL FD60M IN A MIDWEST ELECTRIC POWER OUTLET U010010 ENCLOSURE).
5. MOTOR VEHICLE FUEL TANK PUMP POWER RECEPTACLE: NEMA L6-15 (15-AMP, 250-VOLT TWIST LOCK) RECEPTACLE IN A NEMA 3R ENCLOSURE (MIDWEST ELECTRIC POWER OUTLET U023) ENCLOSURE. PROVIDE AN ANGLE NEMA L6-15 PLUG AND 8 FEET OF 14-GAUGE 300-VOLT ARCTIC POWER CORD FOR CONNECTION TO TANK MOUNTED PUMP CONTROL.
6. PRESSURE TREATED 6x8x10' PRESSURE-TREATED WOOD POST.
7. HDPE ABOVE GROUND TO BE INSTALLED IN A CURVED SHAPE TO ALLOW UP TO 6-INCHES OF DIFFERENTIAL MOVEMENT BETWEEN THE HDPE CONDUIT IN THE GROUND AND THE IMC CONDUIT ATTACHED TO THE BUILDING AND RECEPTACLE MOUNTING POST.
8. BOLT TWO 12" PRESSURE TREATED 2x4s TO THE BASE OF THE RECEPTACLE SUPPORT POST AND WRAP THE POST, BELOW GROUND LEVEL, IN THREE LAYERS OF 6-MIL POLYETHYLENE PLASTIC SHEETING TO PREVENT POST FROM BEING FROST JACKED OUT OF THE GROUND.
9. MOUNT ITEMS NOTED IN NOTES #1, #2, #3, & #4 ON THE SRE BUILDING
10. POWER FOR THE PUMP AND THE LIGHT FIXTURE, FROM A SWITCH-RATED 20-AMP 2-POLE 120/240-VOLT CIRCUIT BREAKER IN PANEL-G. SEAL CONDUIT THROUGH WALL TO PREVENT MOISTURE FROM ENTERING BUILDING.
11. PROVIDE TERMINAL BLOCKS IN ITEMS NOTED IN NOTES #4 & #5 FOR SPLICING #12 AWG WIRES TO THE #8 AWG CONDUCTORS IN THE 1-3C#8 W/GROUND CABLE.
12. CONNECT HDPE TO IMC WITH GALVANIZED "HOSE BARB" FITTING OR INSERT HDPE 12" WIRES TO INSIDE IMC AND SEAL WITH HEAT SHRINK TUBING.
13. SET POST AT FUEL TANK.
14. FEEDER FROM PANEL-G 3 #12 AWG, 1 #12 AWG GROUND 1/2" C.

BY	DATE	REVISIONS
S.R.	3/4/08	AS-BUILT

STATE OF ALASKA 49TH MICHAEL L. STOIANOFF EE-6391 6-22-07 REGISTERED PROFESSIONAL ENGINEER

STATE OF ALASKA
DEPARTMENT OF TRANSPORTATION AND PUBLIC FACILITIES
CENTRAL REGION

CLARKS POINT AIRPORT
CLARKS POINT, ALASKA
AIRPORT RELOCATION STAGE II
55598
AIP No. 3-02-0062-0304
MOTOR VEHICLE FUEL PUMP, RECEPTACLE, LIGHTING, & ELECTRICAL DETAILS

SHEET 29 OF 34

Date Plotted: 2004
Plot Ratio and Layout: 1=1
File: W:\Projects\Clarks Point\Airport Relocation Phase II 55598 10_2003\Civil Design\Construction drawings\ELEC\vehic light & fuel pump.dwg 5/22/2004 9:51:39 AM ADT
Designed By: BRH
Checked By: TJS
Drawn By: BRH

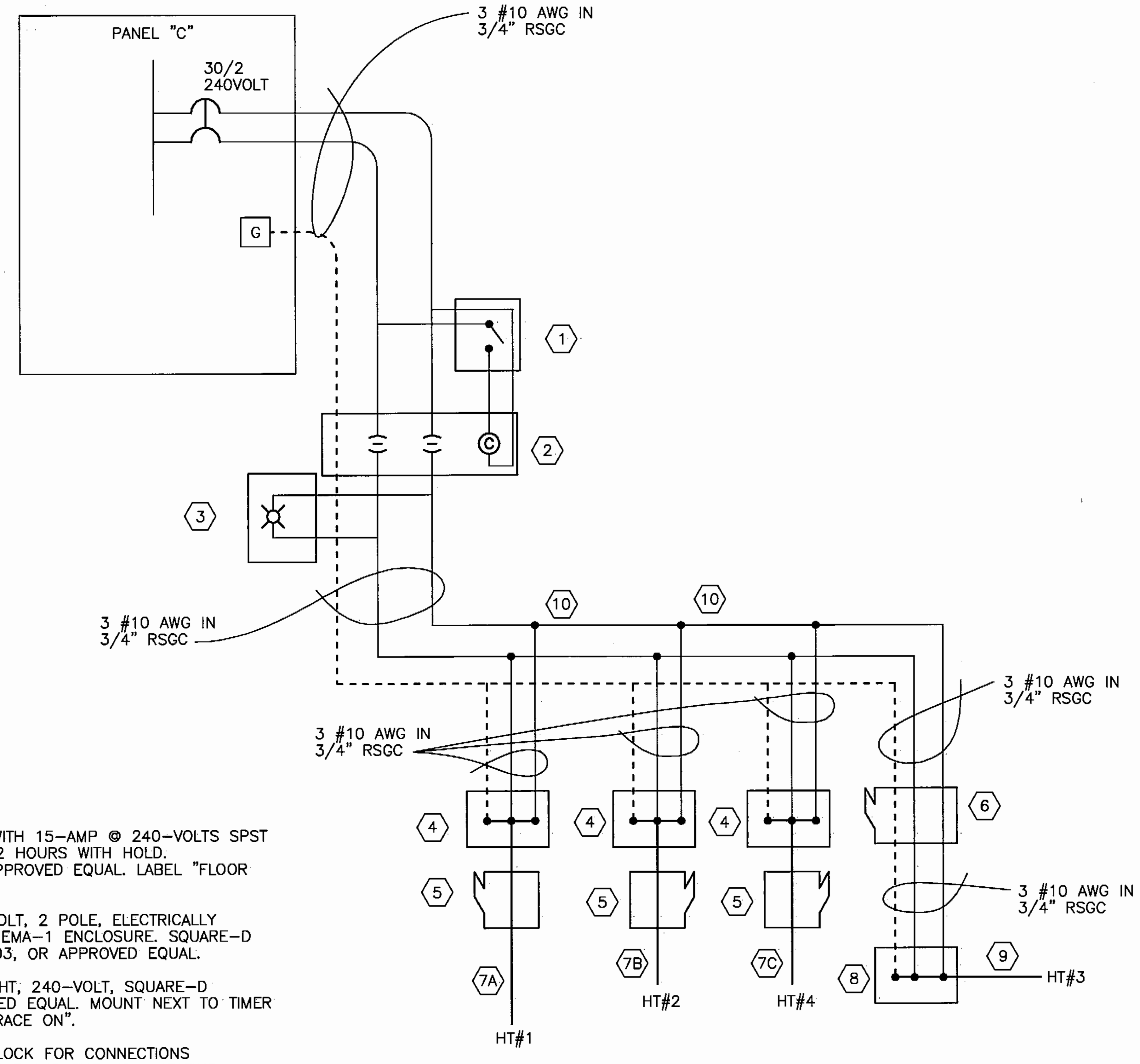

NOTES:

1. SPRING-MOTOR TIME SWITCH WITH 15-AMP @ 240-VOLTS SPST NO CONTACTS. RANGE 0 TO 12 HOURS WITH HOLD. INTERMATIC CAT #FF124 OR APPROVED EQUAL. LABEL "FLOOR DRAIN HEAT TRACE SYSTEM".
2. CONTACTOR 30-AMP @ 600 VOLT, 2 POLE, ELECTRICALLY HELD TYPE, 240-VOLT COIL, NEMA-1 ENCLOSURE. SQUARE-D CLASS 8903 CATALOG #LG20V03, OR APPROVED EQUAL.
3. PUSH-TO-TEST RED PILOT LIGHT, 240-VOLT, SQUARE-D CATALOG #KT73RI, OR APPROVED EQUAL. MOUNT NEXT TO TIMER (NOTE 1) AND LABEL "HEAT TRACE ON".
4. JUNCTION BOX WITH SPLICE BLOCK FOR CONNECTIONS BETWEEN THE HEAT TRACE CABLE AND THE NON-HEATING POWER LEADS. RAYCHEM #HAK-JB2-100, OR APPROVED EQUAL.
5. HEAT TRACE CABLE CONDUIT SEAL & CONNECTION KIT, CLASS-1, DIVISION-1, RAYCHEM #HAK-C-100, OR APPROVED EQUAL.
6. CONDUIT SEAL, CLASS-1, DIVISION-1.

7A. HEAT TRACE CABLE #1 FOR OIL SEPARATOR, 10-WATTS PER FOOT @ 240-VOLTS. RAYCHEM #10BTV2, OR APPROVED EQUAL. SEE FLOOR DRAIN SYSTEM DETAILS SHEET.

7B. HEAT TRACE CABLE #2 FOR OIL SEPARATOR DRAIN LINE TO OUTSIDE, 5-WATTS PER FOOT @ 240-VOLTS. RAYCHEM #5BTV2, OR APPROVED EQUAL. SEE FLOOR DRAIN SYSTEM DETAILS SHEET.

7C. HEAT TRACE CABLE #4 FOR HDPE SAND TRAP SUMP, 10 WATTS PER FOOT @ 240-VOLTS, RAYCHEM #5BTV2, OR APPROVED EQUAL. SEE FLOOR DRAIN SYSTEM DETAILS SHEET.

8. NEMA-4 FLOOR MOUNT JUNCTION BOX WITH SPLICE BLOCK FOR CONNECTONS BETWEEN THE HEAT TRACE CABLE AND THE NON-HEATING POWER LEADS. MOUNT IN FLOOR DRAIN CONCRETE WITH 3/4"-INCH RSGC CONNECTION TO INSIDE SAND TRAP SUMP.
9. HEAT TRACE CABLES FOR DRAIN LINES BETWEEN THE SAND TRAP SUMPS (HT#4) AND THE OIL SEPARATOR SUMP (HT#3), 8-WATTS PER FOOT @ 240-VOLTS, RAYCHEM #8BTV2-CT, WITH END SEAL (RAYCHEM #PMK-HSE2 HEAT SHRINK TYPE OR RAYCHEM #E-150 LOW PROFILE END SEAL). CONNECT TO 3/4-INCH RSGC FROM JUNCTION BOX (NOTE 8) WITH RAYCHEM #FTC-P POWER CONNECTION AND SEAL. MAY SUBSTITUTE APPROVED EQUAL FOR ALL ITEMS IN THIS NOTE.
10. MAKE CONNECTIONS USING TERMINAL STRIP WITH JUMPERS RATED 30-AMPS AT 240-VOLTS.

1/30 HEAT TRACE SYSTEM ONE-LINE DIAGRAM

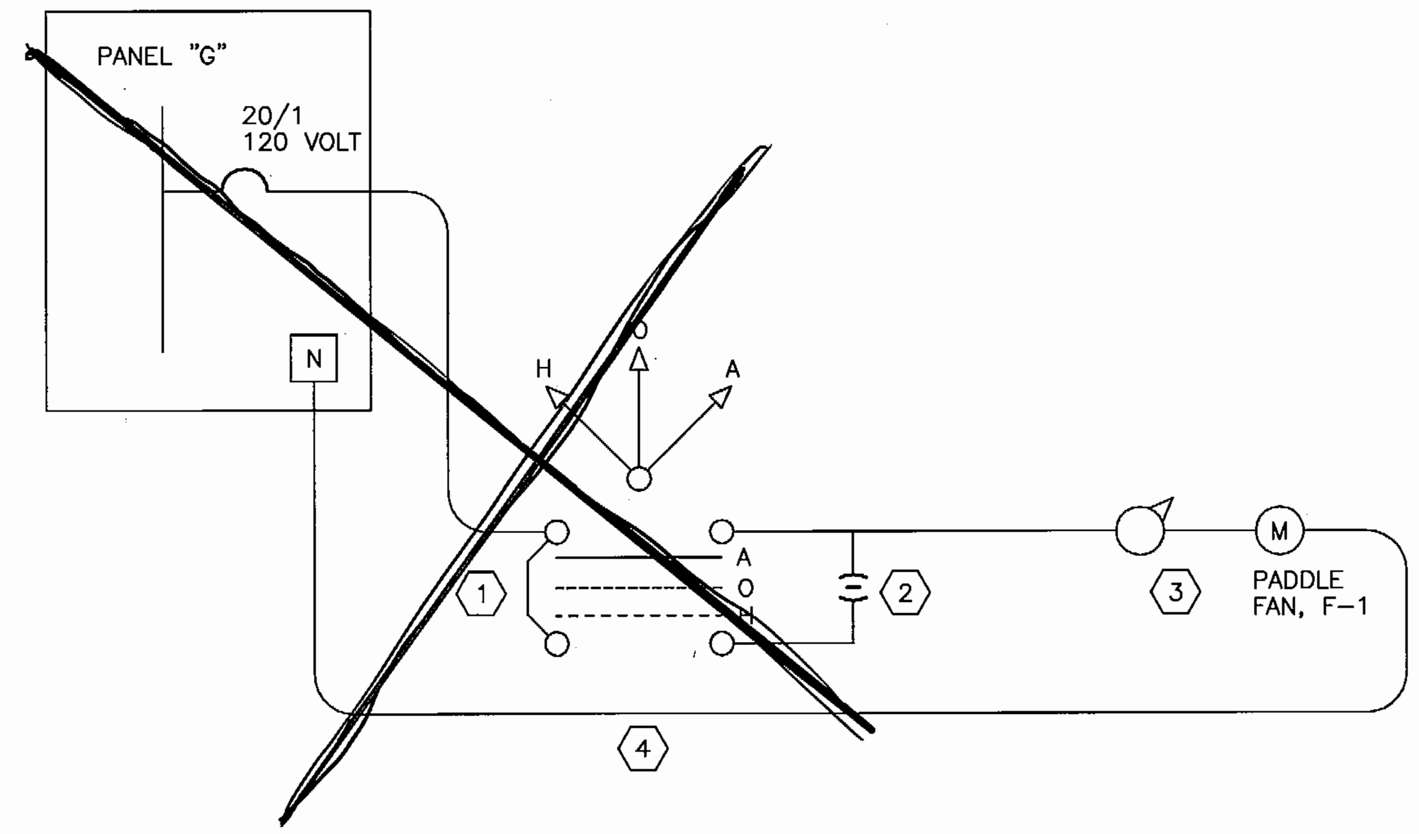

NOTES:

1. HAND-OFF-AUTO SWITCH. DOUBLE-POLE DOUBLE-THROW, CENTER-OFF SWITCH RATED 20-AMPS @ 125-VOLTS. BRYANT CAT. #4925 OR APPROVED EQUAL. LABEL "PADDLE FAN" AND PROVIDE "OPERATING SEQUENCE" SIGN NEXT TO SWITCH.
2. THERMOSTAT WITH COILED BULB CAPILLARY TUBE SENSOR SPDT CONTACTS RATED 22-AMPS @ 120-VAC, RANGE -30%% dF TO 120°F. GRAINGER-DAYTON #2E728 OR APPROVED EQUAL. SET THERMOSTAT TO RUN FAN AT 10°F HIGHER THAN THE THERMOSTAT FOR THE UNIT HEATER (75°F INITIAL).
3. ELECTRONIC SPEED CONTROL – SUPPLIED OR RECOMMENDED BY THE PADDLE FAN MANUFACTURER. MOUNT NEXT TO THE H-O-A SWITCH.
4. SEQUENCE OF CONTROLS – WHEN THE HOA SWITCH IS IN THE HAND POSITION, THE FAN SHALL RUN WHEN THE TEMPERATURE OF THE AIR ABOVE THE FAN IS ABOVE THE SET POINT OF A LINE VOLTAGE THERMOSTAT THAT IS LOCATED ABOVE THE FAN. INITIAL SETTING 75 °F. WITH THE HOA SWITCH IN THE "ON" POSITION, THE FAN WILL RUN CONTROLLED BY THE SPEED CONTROL. THE FAN SHALL ROTATE TO MOVE WARM AIR DOWN.

2/30 PADDLE FAN CONTROL DIAGRAM

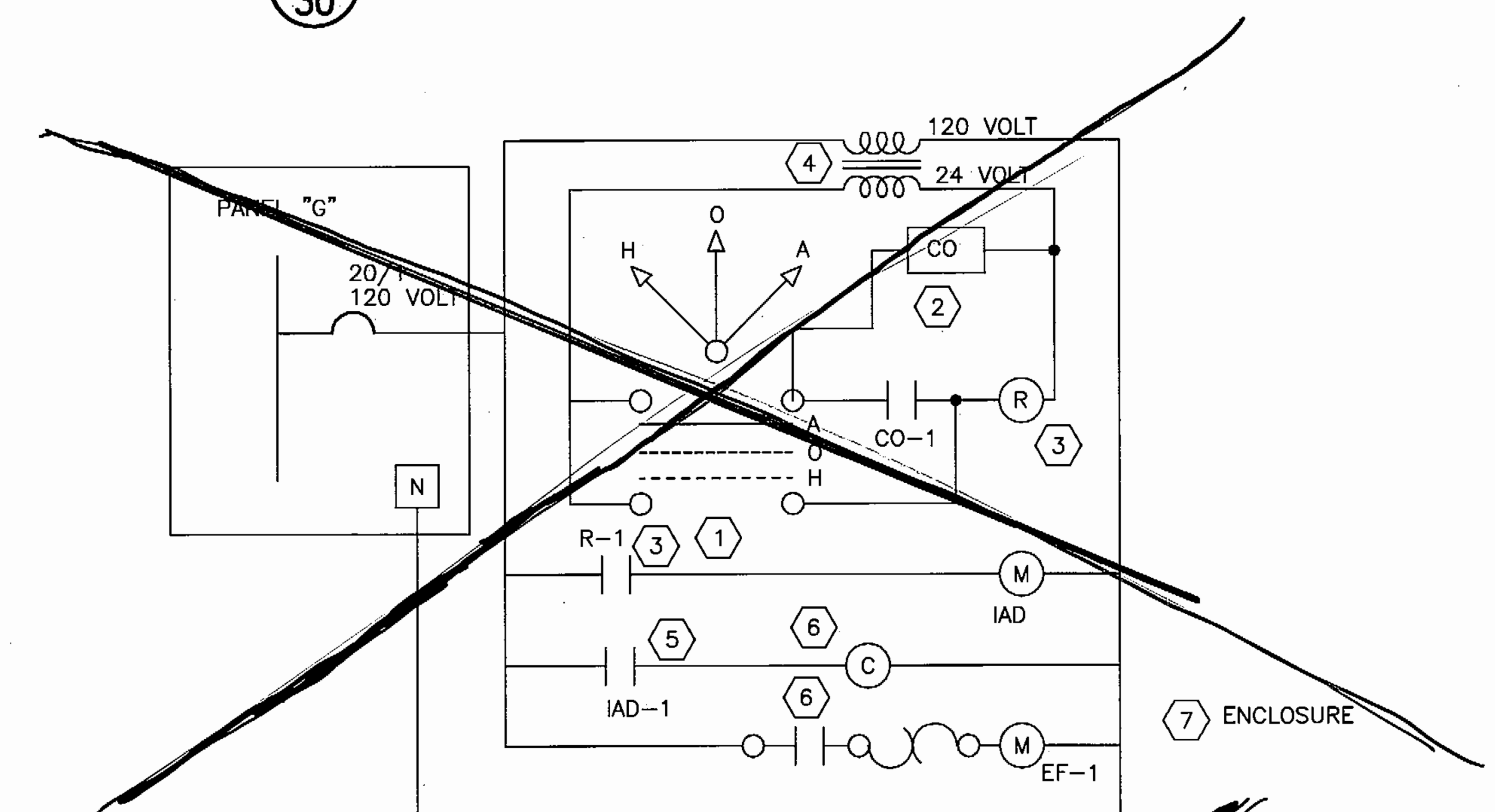

NOTES:

1. HAND-OFF-AUTO SWITCH. RATED 10-AMPS @ 120 VAC. SQUARE-D CLASS 9100 CATALOG #KS43B WITH #KA1 TERMINAL BLOCK & #KN260sp H-O-A LEGEND PLATE, OR APPROVED EQUAL. MOUNT IN COVER OF NEMA ENCLOSURE (NOTE 7). LABEL "VENTILATION SYSTEM" AND PROVIDE "OPERATING SEQUENCE" SIGN NEXT TO OR ON ENCLOSURE.
2. CARBON MONOXIDE DETECTOR. NO CONTACT IN CARBON MONOXIDE DETECTOR, CLOSES WHEN CO IS ABOVE SET POINT. SEE SPECIFICATIONS SECTION S-14[illegible]-3.3 (5). MOUNT NEXT TO ENCLOSURE (NOTE 7).
3. PLUG-IN RELAY WITH 24-VAC CONTROL COIL. NO/NC CONTACT RATED 10-AMPS @ 240 VOLTS. NTE #RLY1023 WITH #RLY9101 8-PIN BASE, OR APPROVED EQUAL. MOUNT IN ENCLOSURE (NOTE 7)
4. CONTROL TRANSFORMER: 24-VA, 120 VAC PRIMARY & 24-VAC SECONDARY. PHILMORE #TR241. OR APPROVED EQUAL. MOUNT IN NEMA-1 ENCLOSURE (NOTE 7)
5. NO END SWITCH IN INTAKE AIR DAMPER MOTOR "IAD-1". CONTACT CLOSES WHEN DAMPER OPENS.
6. MAGNETIC MOTOR STARTER, NEMA SIZE-00, 120-VOLT CONTROL. MOUNT NEXT TO CARBON MONOXIDE DETECTOR. MOUNT IN NEMA-1 ENCLOSURE (NOTE 7).
7. NEMA-1 WITH DOOR, SIZED TO CONTAIN THE ITEMS NOTED ABOVE.
8. SEQUENCE OF CONTROLS – WHEN THE HOA SWITCH IS IN THE "AUTO" POSITION, THE VENTILATION SYSTEM SHALL BE CONTROLLED BY THE CARBON MONOXIDE DETECTOR AS FOLLOWS. WHEN THE CO LEVEL EXCEEDS THE DETECTOR SET POINT, THE INTAKE AIR DAMPER (IAD-1) SHALL OPEN. WHEN THE DAMPER IS OPEN, ITS END SWITCH SHALL CONTROL A MAGNETIC STARTER THAT WILL CAUSE EF-1 TO RUN. WHEN THE CO LEVEL DROPS TO BELOW THE DETECTOR SET POINT, THE IAD-1 SHALL CLOSE AND EF-1 WILL STOP. WITH THE HOA SWITCH IS IN THE "HAND" POSITION, IAD-1 SHALL OPEN AND ITS END SWITCH SHALL CAUSE EF-1 TO RUN.

3/30 VENTILATION SYSTEM CONTROL DIAGRAM

BY	DATE	REVISIONS
S.R.	3/4/08	AS-BUILT

STATE OF ALASKA 49TH
Michael L. Stoian
EE-6391
6-22-04
REGISTERED PROFESSIONAL ENGINEER

STATE OF ALASKA
DEPARTMENT OF TRANSPORTATION AND PUBLIC FACILITIES
CENTRAL REGION

CLARKS POINT AIRPORT
CLARKS POINT, ALASKA
AIRPORT RELOCATION STAGE II
55598
AIP No. 3-02-0062-0304
HEAT CONTROLS & POWER DETAILS

SHEET 30 OF 34

Date Plotted: 2004
Plot Ratio and Layout: 1=1, layout=
Designed By: BRH
Checked By: TJS
Drawn By: MGT

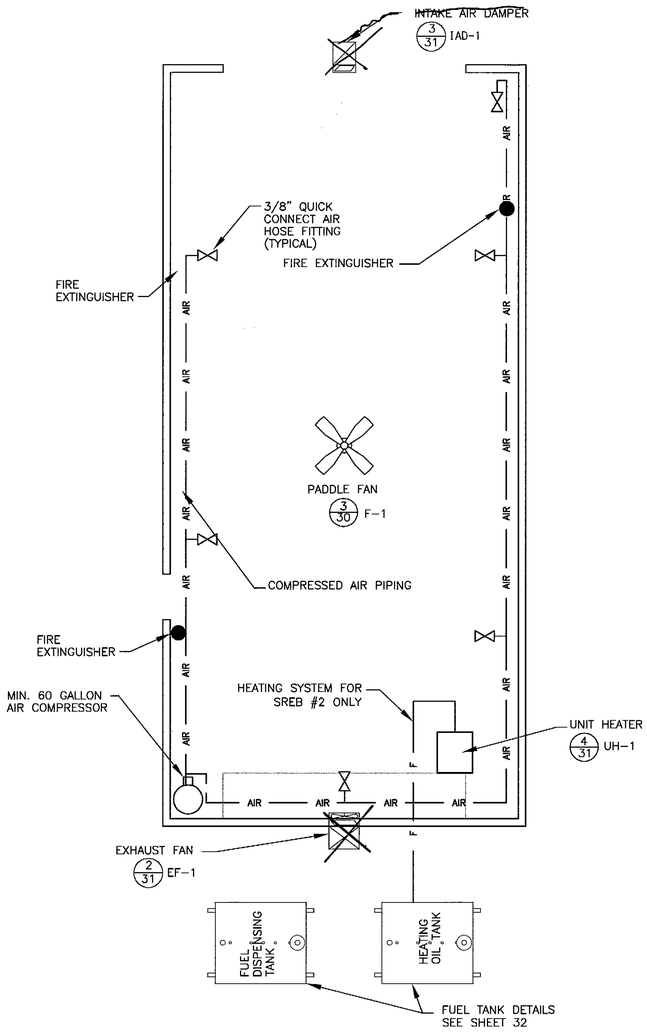

1/31 FUEL PIPING AND MECHANICAL LAYOUT PLAN

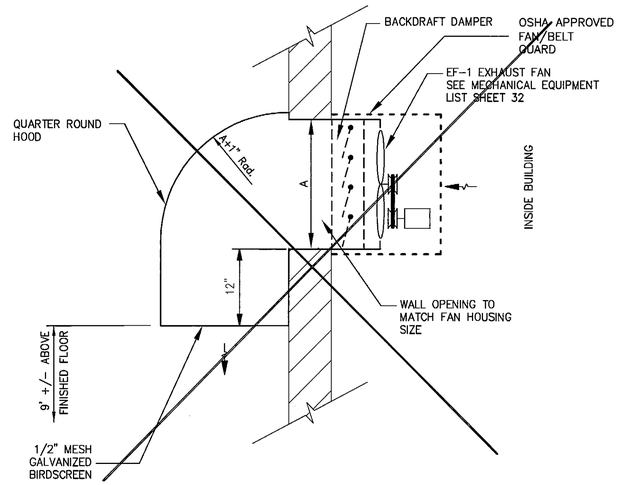

2/31 EF-1 EXHAUST FAN DETAIL

MECHANICAL LEGEND

FIXTURE	DESCRIPTION
<#>	NOTE SYMBOL
	QUICK DISCONNECT AIR VALVE
	BALL VALVE
	FUSIBLE VALVE
	CHECK VALVE
	TEE
	ELBOW
	1/2" FLEXIBLE LINE
	1" FLEXIBLE LINE
—— F ——	FUEL CIRCUIT (SHEET 12)
—— FOS ——	BLACK IRON FUEL SUPPLY LINE
—— FOR ——	BLACK IRON FUEL RETURN LINE
—— V ——	BLACK IRON VENT LINE
—— AIR ——	BLACK IRON AIR LINE

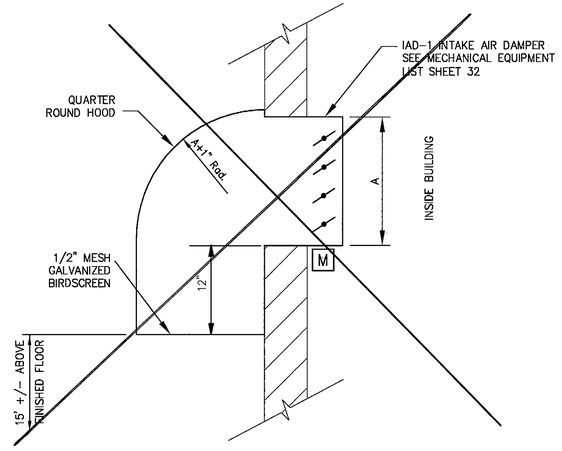

3/31 IAD-1 INTAKE AIR DAMPER HOOD DETAIL

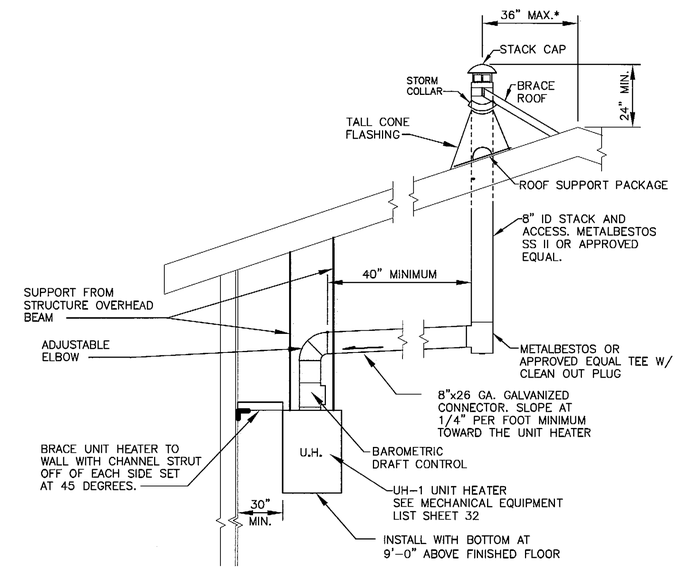

NOTE

UNIT HEATERS MAY, WITH APPROVAL OF THE ENGINEER, BE EXHAUSTED THROUGH THE BACK WALL.

4/31 UNIT HEATER INSTALLATION

Date Plotted:	2004
Plot Ratio and Layout:	1=1, layout=
File:	R:\Projects\Clarks Point\Airport Relocation Phase II 55598 10_2003\Civil Design\Construction drawings\SREB\JAN05_elec_mech.dwg 9/22/2004 10:45:12 AM AKDT
Designed By:	BRH
Checked By:	TJS
Drawn By:	MGT

BY	DATE	REVISIONS
S.R.	3/4/08	AS-BUILT

STATE OF ALASKA 49TH Michael L. Stoiaguin ME-5959 6-24-2009 REGISTERED PROFESSIONAL ENGINEER

STATE OF ALASKA
DEPARTMENT OF TRANSPORTATION AND PUBLIC FACILITIES
CENTRAL REGION

CLARKS POINT AIRPORT
CLARKS POINT, ALASKA
AIRPORT RELOCATION STAGE II
55598
AIP No. 3-02-0062-0304
MECHANICAL SYSTEM LAYOUT & DETAILS

SHEET 31 OF 34

TANK NOTES:

1. INSTALL TANK PER NFPA 30, 30A, & 31.
2. LABEL FUEL OIL FILL PIPE "FUEL OIL FILL".
3. TANK ROTATED 90° IN THIS VEIW FOR CLARITY ONLY.
4. PROVIDE LOCKING FILL CAP.

MECHANICAL EQUIPMENT LIST

AC-1 AIR COMPRESSOR

RECEIVER: 60 GALLON MINIMUM
CAPACITY: 9.0 ACFM @ 175 PSI
MOTOR: 3.0 HP, 1.15 S.F., 230V/60HZ/1PH
AUTOMATIC CONDENSATE DRAIN
CRANKCASE HEATER
LOW OIL LEVEL CUTOUT
AIR FILTER & PRESSURE REGULATOR

F-1 PADDLE FAN

DIAMETER: 36-INCH
CAPACITY: 12,500 CFM @ 395 RPM
MOTOR: 78-VOLT-AMPS @ 120V/60HZ/1PH
CONTROLS:
LINE VOLTAGE THERMOSTAT
BASIS OF DESIGN*:
FAN:
MAKE: GRAINGER-DAYTON
MODEL: STOCK No. 4C852
THERMOSTAT:
MAKE: GRAINGER
MODEL: STOCK No. 2E728

EF-1 EXHAUST FAN

SIZE: 20-INCH, BELT DRIVE
CAPACITY: 2011 CFM @ 1/4-INCH H2O S.P. / 0.27 HP
13.5 SONES @ 892 RPM
1800 CFM @ 800 RPM
MOTOR: 1/4 HP @ 115V/60HZ/1PH
CONTROLS: END SWITCH ON IAD-1
ADDITIONAL REQUIREMENTS:
GRAVITY BACK DRAFT DAMPER
OSHA MOTOR GUARD
BASIS OF DESIGN*:
MAKE: GREENHECK
MODEL: SBE-1H20-4

UH-1 UNIT HEATER

FUEL: #1 DIESEL/FUEL OIL
CONSUMPTION RATE: 1.65 GPH
INPUT: 231 MBTUH
OUTPUT: 184 MBTUH
FAN: 3200 CFM, THROW 56-FEET
MOTOR: 1/4 HP, 1140 RPM, 115V/60HZ/1PH
CONTROLS: PROGRAMMABLE THERMOSTAT
BASIS OF DESIGN*:
MAKE: MODINE
MODEL: POH185

IAD-1 INTAKE AIR DAMPER

20"Wx16"H CONTROL DAMPER W/ 16 GAUGE GALVANIZED STEEL BLADES. PRESSURE DROP AT 1800 CFM, -0.123 INCH H20. CLOSED DAMPER LEAKAGE -2.0 CFM PER SQ. FT. @ 0.1 INCH H20 S.P.
ACTUATOR: 120-VOLT ELECTRIC OPEN SPRING CLOSE.
CONTROLS: CARBON MONOXIDE DETECTOR & HOA SWITCH.
END SWITCH TURNS ON EF-1 WHEN DAMPER IS OPEN.
BASIS OF DESIGN*:
MAKE: GREENHECK
MODEL: VCD-18

*NOTE: FURNISH AND INSTALL MAKES AND MODELS CITED HERE OR IN THE SPECIFICATIONS OR APPROVED EQUALS.

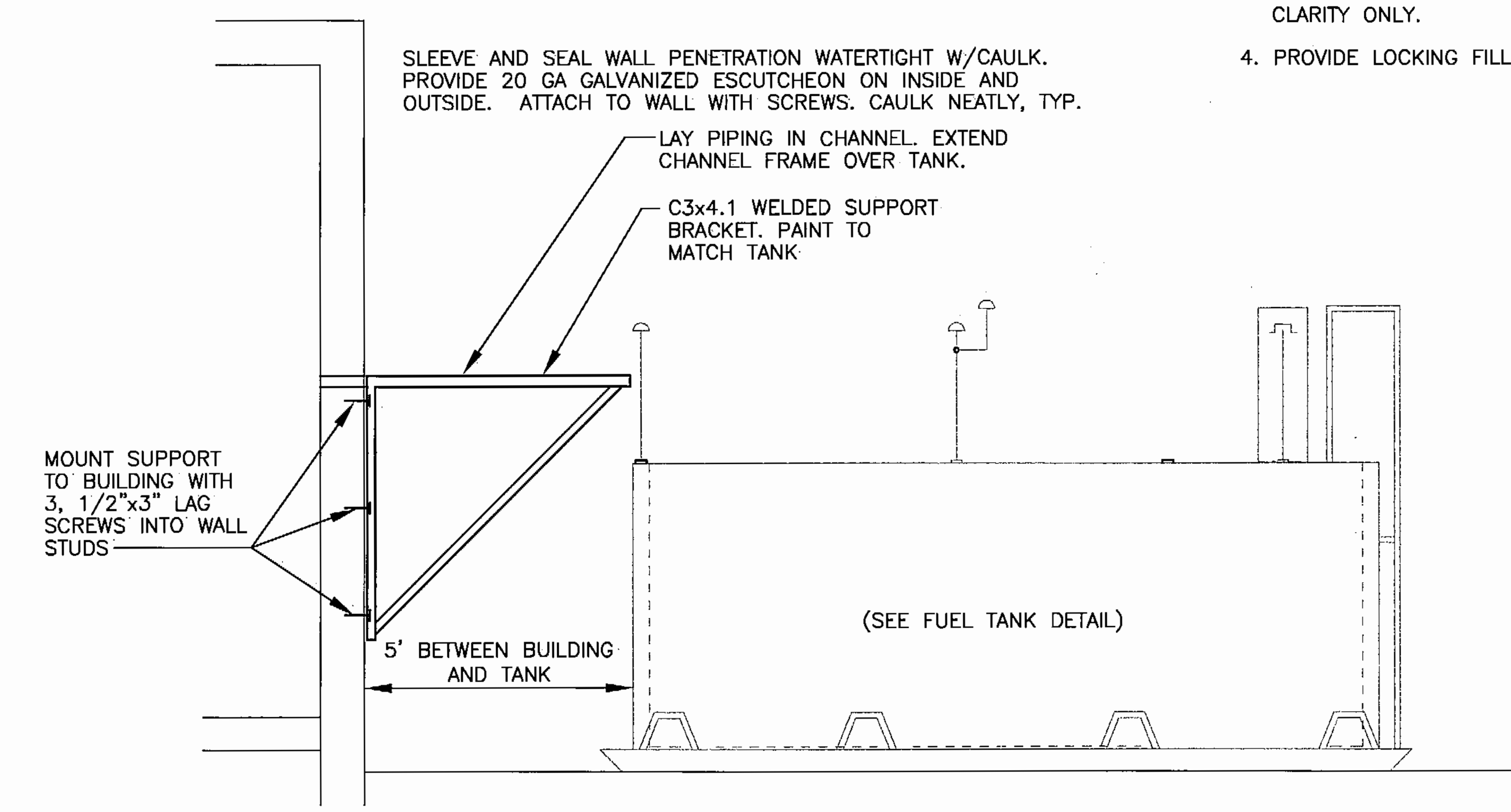

2/32 FUEL TANK PIPING AND SUPPORT BRACKET

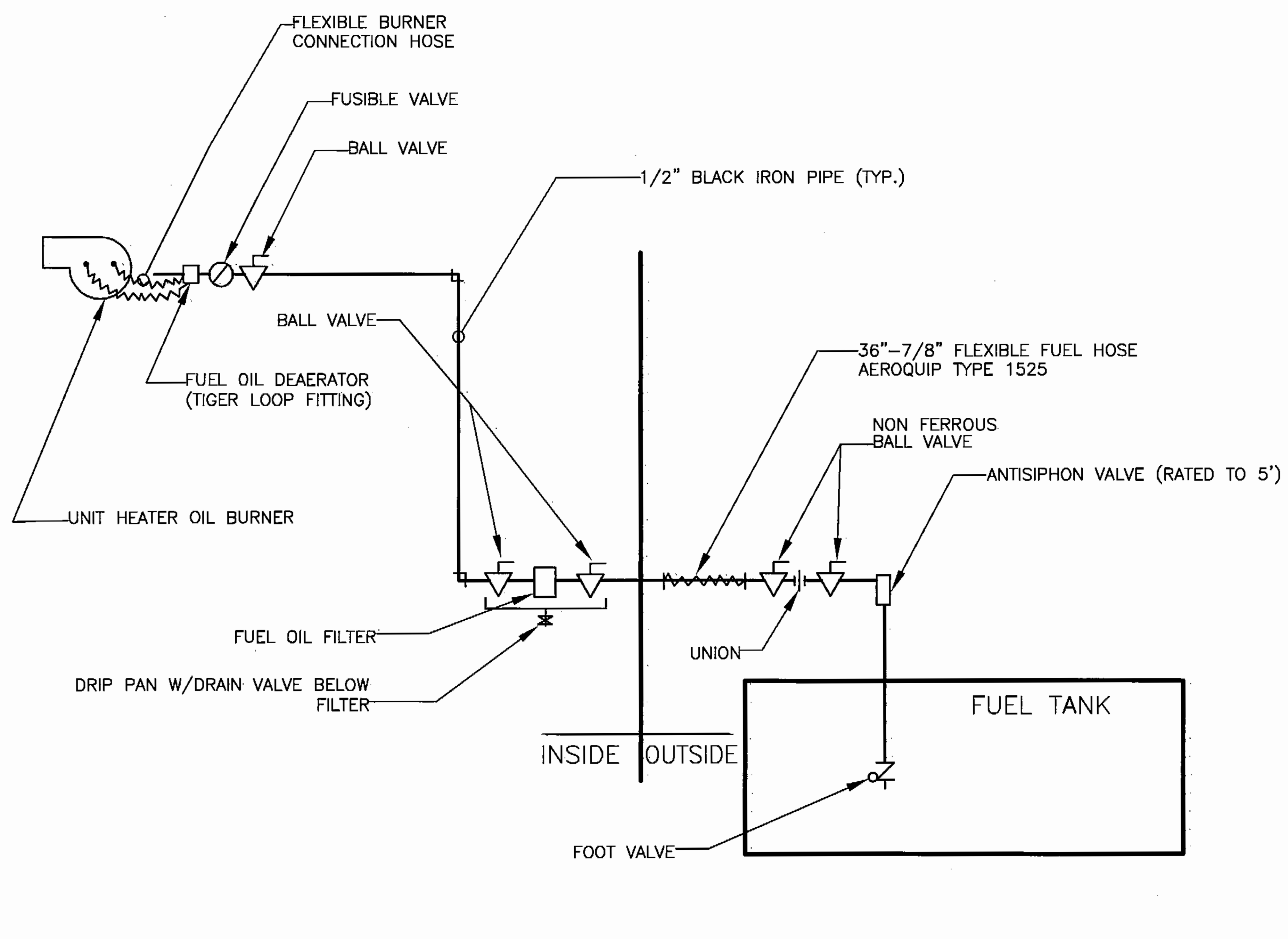

1/32 UNIT HEATER FUEL OIL PIPE ONE-LINE DIAGRAM

INSTALL PIPE SUPPORTS SPACED MAX. 12' HORIZONTAL AND 15' VERTICAL PER IMC TABLE 305.4.

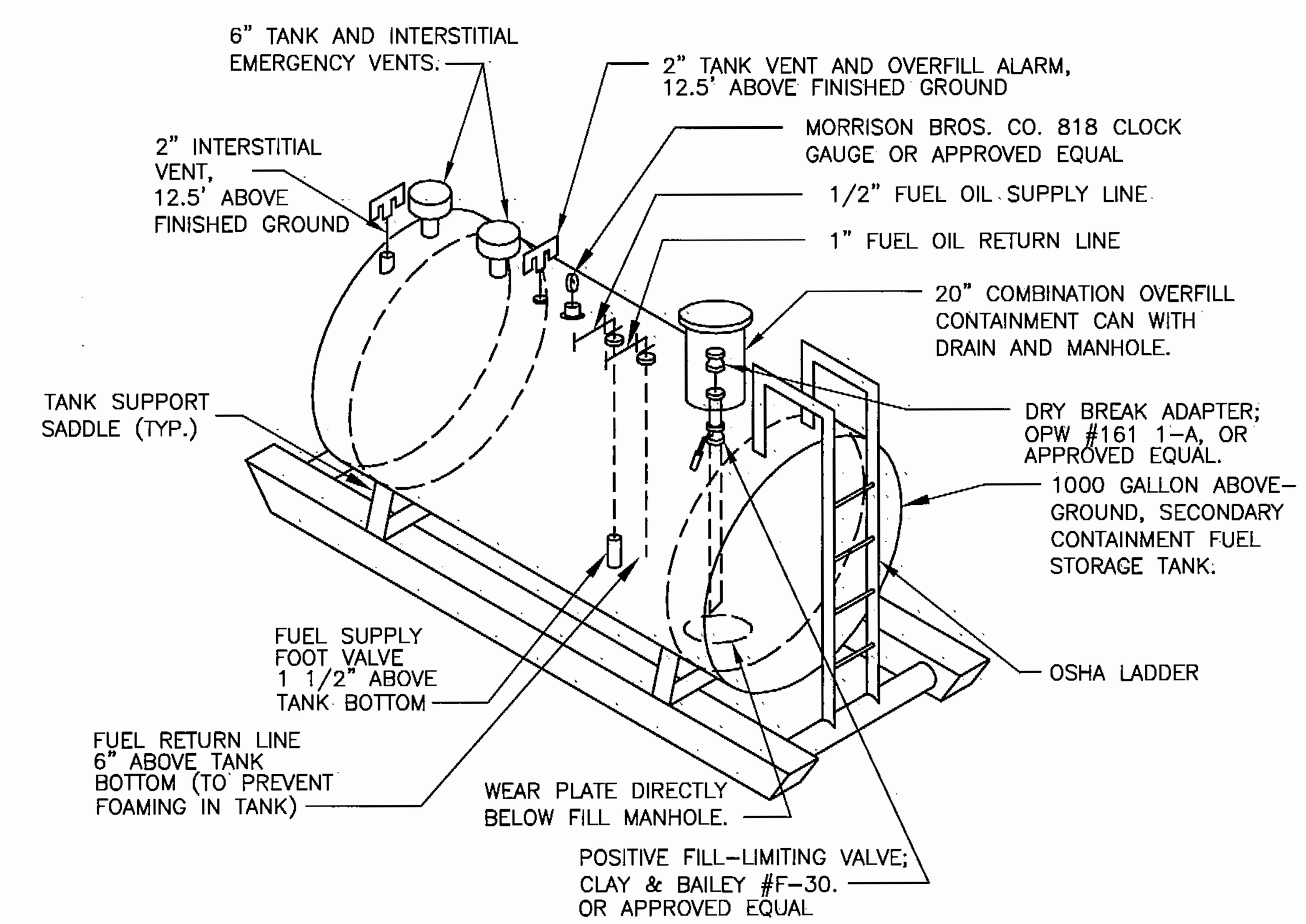

3/32 FUEL TANK DETAIL

BY	DATE	REVISIONS
S.R.	3/4/08	AS-BUILT

STATE OF ALASKA 49TH — Michael L. Stoianoff — ME-5959 — 6-22-04 — REGISTERED PROFESSIONAL ENGINEER

STATE OF ALASKA
DEPARTMENT OF TRANSPORTATION AND PUBLIC FACILITIES
CENTRAL REGION

CLARKS POINT AIRPORT
CLARKS POINT, ALASKA
AIRPORT RELOCATION STAGE II
55598
AIP No. 3-02-0062-0304
FUEL OIL PIPING AND TANK DETAILS

SHEET 32 OF 34

NOTES:

<1> MOUNT 8" ABOVE WORK BENCH.

<2> CENTER OUTLETS ON LONG WALL CENTERLINE, 48" ABOVE FINISHED FLOOR.

<3> SEE MECHANICAL PLAN FOR AIR OUTLET LOCATIONS.

<4> ATTACH 50' HOSE ON REEL. HANG REEL ON WALL.

<5> ATTACH 50' HOSE. HANG HOSE ON HOOKS ATTACHED TO WALL.

<6> SLOPE AIR PIPING TO DRAIN POINTS.

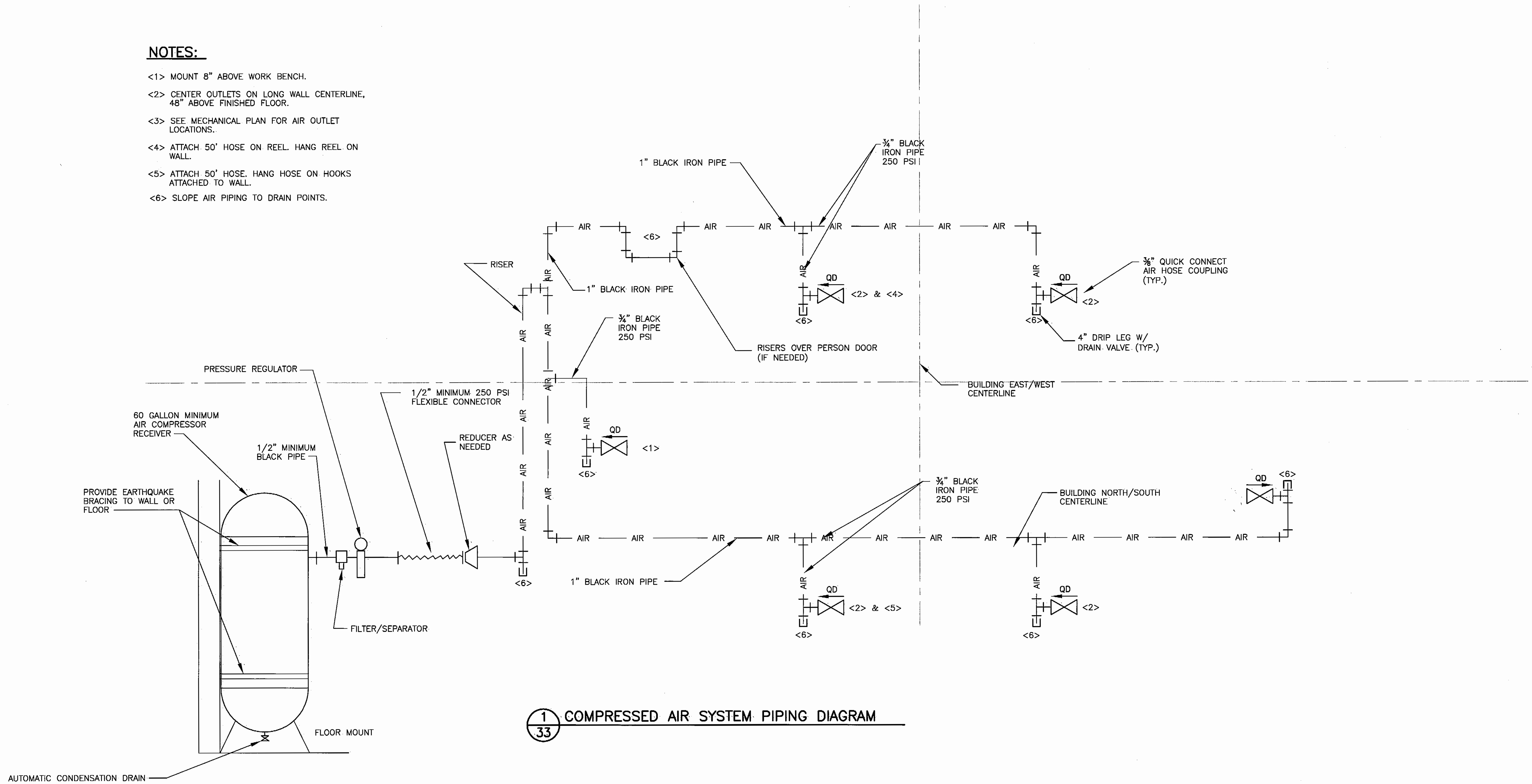

1/33 COMPRESSED AIR SYSTEM PIPING DIAGRAM

BY	DATE	REVISIONS
S.R.	3/4/08	AS-BUILT

STATE OF ALASKA · 49TH · Michael L. Stoianoff · ME-5959 · 6-22-04 · REGISTERED PROFESSIONAL ENGINEER

STATE OF ALASKA
DEPARTMENT OF TRANSPORTATION AND PUBLIC FACILITIES
CENTRAL REGION

CLARKS POINT AIRPORT
CLARKS POINT, ALASKA
AIRPORT RELOCATION STAGE II
55598
AIP No. 3-02-0062-0304
COMPRESSED AIR SYSTEM SCHEMATIC

SHEET 33 OF 34

Designed By: BRH
Checked By: TJS
Drawn By: MGT
Date Plotted: 2004
Plot Ratio and Layout: 1=1, layout=
File:

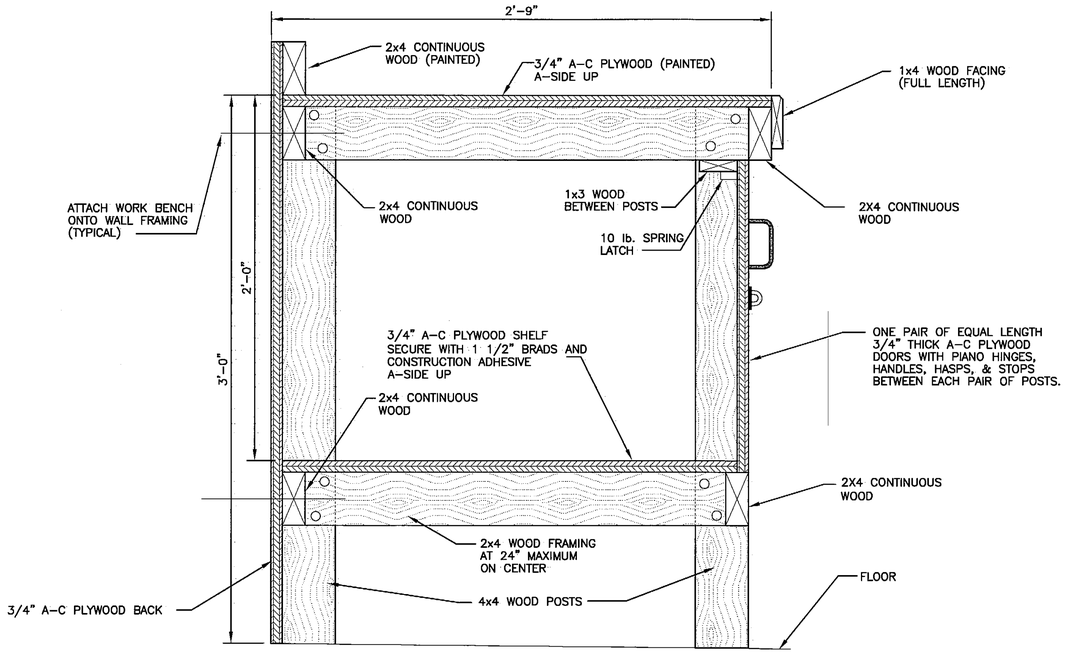

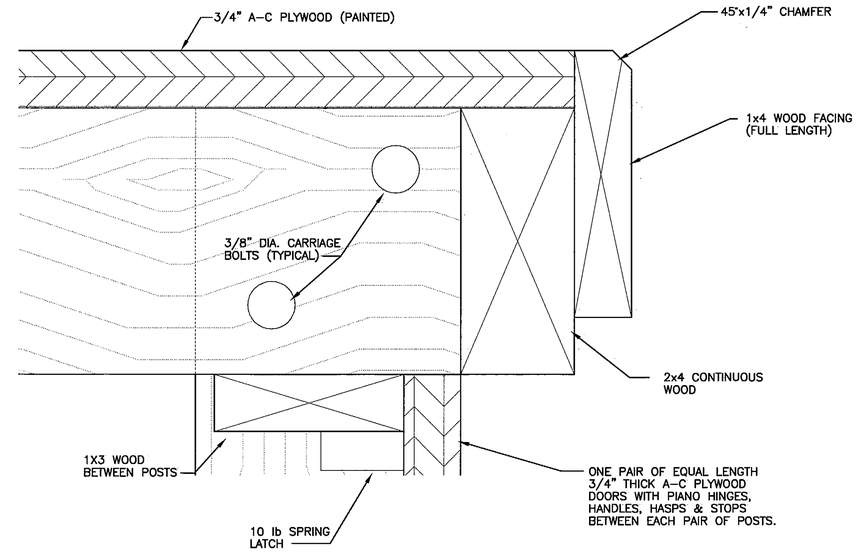

NOTE:

WORKBENCH IS 16' LONG CENTERED ON BACK WALL

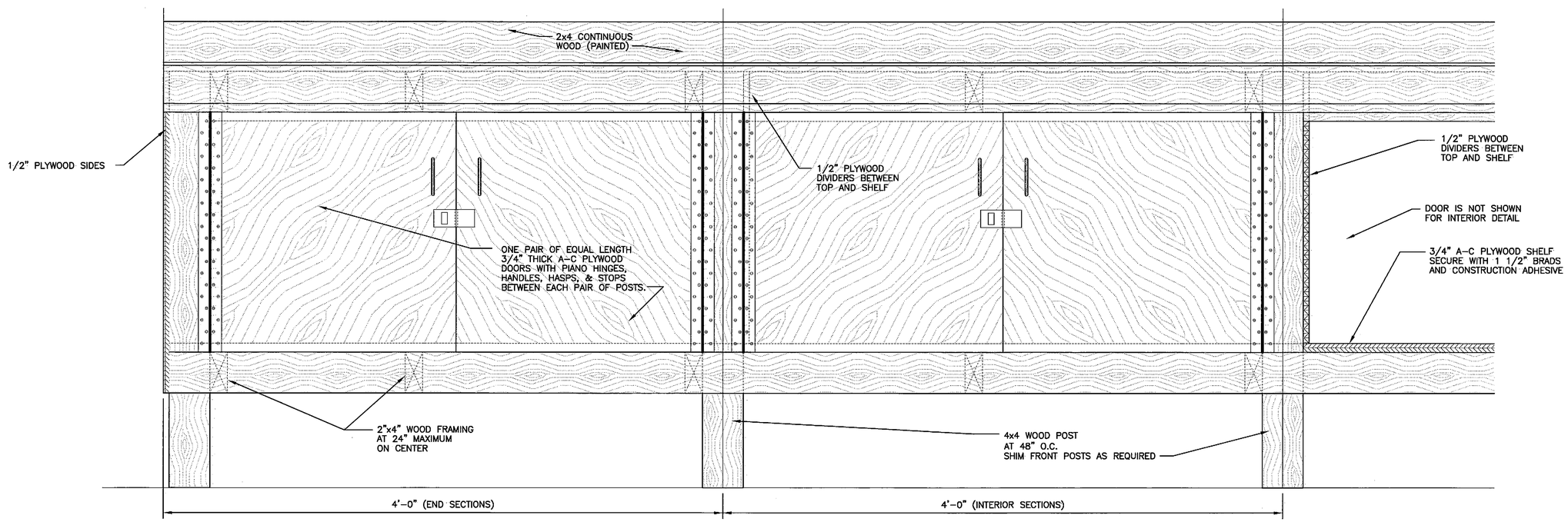

Date Plotted:	2004
Plot Ratio and Layout:	1=1, layout=workbench
File:	w:\Projects\Corp. Post\Airport Relocation Phase 3 55598 10_2003\Civil Design\Construction drawings\SREB\Workbench.dwg 6/21/2004 7:44:35 AM AKT

Designed By:	BRH
Checked By:	T.JS
Drawn By:	MGT

BY	DATE	REVISIONS
S.R.	3/4/08	AS-BUILT

STATE OF ALASKA 49TH Tom J. Schmid CE--9973 6/22/04 REGISTERED PROFESSIONAL ENGINEER

STATE OF ALASKA
DEPARTMENT OF TRANSPORTATION AND PUBLIC FACILITIES
CENTRAL REGION

CLARKS POINT AIRPORT
CLARKS POINT, ALASKA
AIRPORT RELOCATION STAGE II
55598
AIP No. 3-02-0062-0304
SRE BUILDING
WORKBENCH DETAILS

SHEET 34 OF 34

AS-BUILT 4/2006 34 OF 37

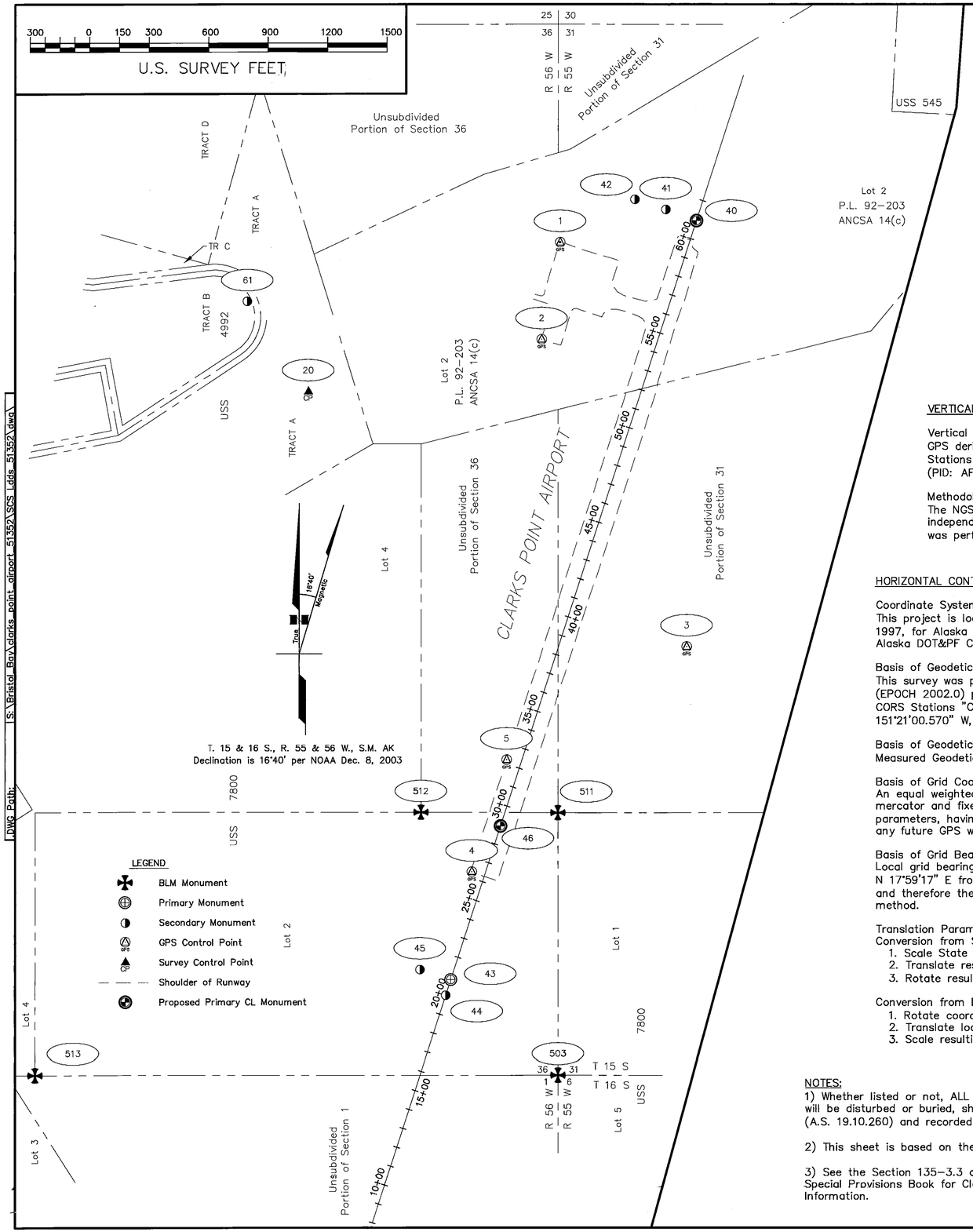

HORIZONTAL CONTROL (MEASURED LOCAL COORDINATES)

Point	Station	Offset	Northing	Easting	Description
513	9+80.00	1849.13 Lt.	29757.01817	35242.56125	Fd BC [BLM]:C8L4/C4L2 USS7800 1988
503	17+95.34	663.13 Rt.	29756.67568	37883.81376	Fd BC [BLM]:T15816S R56855W 1974
43	20+83.07	0.15 Lt.	30235.17279	37341.81419	Fd AC [LS4408]:0+125 R/W C/L 1997
4	26+31.93	66.73 Lt.	30777.76332	37447.97975	Set RPC [LS9108]:USKH Ctrl Pt 2003
512	28+36.94	402.97 Lt.	31076.58693	37191.49390	Fd BC [BLM]:C6L4/L2 USS7800 1988
511	30+47.87	255.30 Rt.	31073.92324	37882.72658	Fd BC [BLM]:C2L2/C4L1 USS7800 1988
5	32+21.85	73.61 Lt.	31340.97390	37623.62249	Set RPC [LS9108]:USKH Ctrl Pt 2003
61	50+09.06	2030.98 Lt.	33645.29973	36313.84633	Fd AC [LS4408]:0+015 A/R C/L RP 1997

HORIZONTAL AND VERTICAL CONTROL POINTS (MEASURED LOCAL COORDINATES)

Point	Station	Offset	Northing	Easting	×Elev.	Description
44	20+00.36	0.00 Lt.	30156.45273	37316.41056	78.22245	Fd AC [LS4408]:0+100 R/W C/L 1997
45	20+82.98	163.90 Lt.	30285.64982	37186.03634	68.69245	Fd AC [LS4408]:0+125 R/W C/L Lt 50 RP 1997
3	40+43.86	615.09 Rt.	31910.12444	38532.50799	40.15245	Set RPC [LS9108]:USKH Ctrl Pt 2003
20	46+73.38	1598.36 Lt.	33192.42342	36621.65440	83.58245	Fd 5/8 RB: PP307
2	52+85.91	558.50 Lt.	33453.88832	37799.84622	54.38745	Set RPC [LS9108]:USKH Ctrl Pt 2003
1	57+79.36	620.71 Lt.	33942.43043	37893.07158	55.63745	Set RPC [LS9108]:USKH Ctrl Pt 2003
41	61+00.91	164.01 Lt.	34107.22558	38426.74218	50.99745	Fd AC [LS4408]:1+350 R/W C/L Lt 50 RP 1997
42	61+00.94	328.11 Lt.	34157.93465	38270.67381	48.78245	Fd AC [LS4408]:1+350 R/W C/L Lt 100 RP 1997

× Elevations established via differential leveling

VERTICAL CONTROL STATEMENT

Vertical Datum:
GPS derived orthometric heights in U.S. Survey Feet, that approximate NAVD88, holding published NAD83(CORS96) (Epoch 2002.0) ellipsoid heights at NGS CORS Stations "Cold Bay 2 Antenna Reference Point (ARP)" (PID: AF9584) as 163.58, "Kenai 1 ARP" (PID: AF9548) as 182.48, and "Kodiak 1 ARP" (PID: AF9549) as 87.20 and applying GEOID99 values.

Methodology:
The NGS Online Positioning User Service (OPUS) was used to solve ellipsoid heights and approximate NAVD88 elevations using the GEOID99 model during two independent observations at each static GPS station. The average resulting elevation of 68.69245 at station 45 was held as the basis for differential leveling which was performed between all vertical control stations listed on this plat. No separation and/or deflection parameters were applied.

HORIZONTAL CONTROL STATEMENT

Coordinate System:
This project is located entirely within a local surface grid developed by Alaskan Consulting Surveyors, Inc. (ACS), for a survey performed between September 1996 and June 1997, for Alaska DOT&PF, Central Region. Record grid coordinates were taken from an unsigned Survey Control Diagram (SCD) dated May 20, 1998, provided to USKH by the Alaska DOT&PF Central Region Survey Department. Coordinates were provided in meters and converted by USKH to U.S. Survey Feet.

Basis of Geodetic Coordinates
This survey was performed by USKH using local static and kinematic GPS vectors, minimally constrained using a least squares network adjustment holding the NAD83(CORS96) (EPOCH 2002.0) position of station 45, which was determined using the average of two independent NGS OPUS solutions. OPUS solutions utilized base station data from NGS CORS Stations "Cold Bay 2 Antenna Reference Point (ARP)" (PID: AF9584) as 55°11'25.511" N, 162°42'24.279" W, "Kenai 1 ARP" (PID: AF9548) as 60°40'30.284" N , 151°21'00.570" W, and "Kodiak 1 ARP" (PID: AF9549) as 57°37'03.689" N, 152°11'36.264" W.

Basis of Geodetic Bearings:
Measured Geodetic Bearings are True NAD83 bearings consistent with "free" GPS baseline vectors, where no distortion or rotation of the observations is required.

Basis of Grid Coordinates:
An equal weighted least squares error distribution adjustment was utilized to site calibrate the USKH minimally constrained GPS survey, projected using a local transverse mercator and fixed ground scale factor, with the existing ACS coordinate system holding record grid positions of recovered stations 20, 41, 42, 61, 503, 511, 512 and 513 as parameters, having a maximum 2D residual of 0.27'. The resulting site definition has been archived by USKH as a Trimble Coordinate System File (727910-site-final.csf) for any future GPS work performed at this location.

Basis of Grid Bearings:
Local grid bearings are oriented to the ACS Record Mean Geodetic Bearing of the runway centerline bearing N 17°59'17" E from the ACS SCD described above. Existing South end runway centerline monumentation was determined to be out of tolerance by USKH during this survey, and therefore the Basis of Grid Bearings has been perpetuated using a "best fit" of recovered local control elements resulting from the over determined site calibration method.

Translation Parameters:
Conversion from State Plane, Zone 6, NAD83 Feet to Local Feet:
1. Scale State Plane coordinates using 1.000094189
2. Translate resulting coordinates using −1,733,696.5465 N −1,502,160.2239 E
3. Rotate resulting coordinates around Point 45 by −00° 27' 31"

Conversion from Local Feet to State Plane, Zone 6, NAD83 Feet:
1. Rotate coordinates around Point 45 by 00° 27' 31"
2. Translate local coordinates using +1,733,696.5465 N +1,502,160.2239 E
3. Scale resulting coordinates using .99990582

PRIMARY MONUMENTS TO BE SET:

Point	Station	Offset	Northing	Easting
40	60+95.00	0	34051.2929	38581.0232
46	28+95.00	0	31007.7060	37592.8033

NOTES:
1) Whether listed or not, ALL monuments or property markers, corners, or accessories, which will be disturbed or buried, shall be referenced or re-established in their original position (A.S. 19.10.260) and recorded (A.S. 34.65.040).

2) This sheet is based on the USKH Record of Survey 2004-2, Bristol Bay Recording District.

3) See the Section 135-3.3 of the Proposal, Contract, Bond, Standard Modifications and Special Provisions Book for Clarks Point Airport Relocation Stage II for Monument Work Item Information.

STATE OF ALASKA 49TH Michael E. Miller LS-7222 6/22/04 REGISTERED PROFESSIONAL LAND SURVEYOR

STATE OF ALASKA
DEPARTMENT OF TRANSPORTATION
&
PUBLIC FACILITIES
Survey Control Sheet

AKSAS 55598
Clarks Point Airport – Phase II
Within Sec. 31, T.15S., R.55W. and Sec. 36, T.15S., R.56W, SM, AK

DRAWN	RMK	DATE	May 19, 2004	SCALE	1"=300'
CHECKED	MEM	DATE	May 19, 2004	SHEET	1 OF 1

DWG Path: S:\Bristol_Bay\clarks_point_airport_51352\SCS_Ldds_51352\dwg\

AS-BUILT 4/2006 35 OF 37

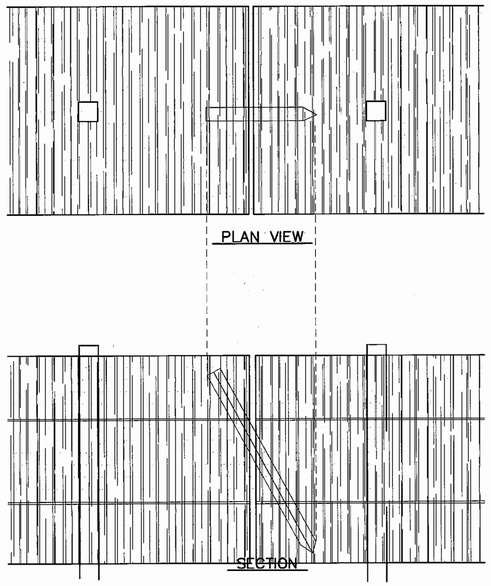

JOINT STAKES DETAIL

NOTE

NOT TO SCALE

JOINT STAKES ARE DRIVEN DIAGONALLY TO PIN ADJACAENT BALES AND PROVIDE TIGHT FIT.

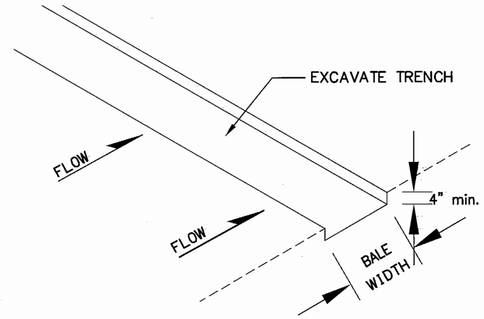

TRENCH DETAIL

NOT TO SCALE

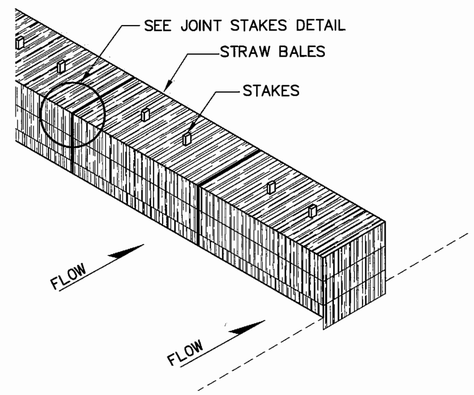

STRAW BALE PLACEMENT DETAIL

NOT TO SCALE

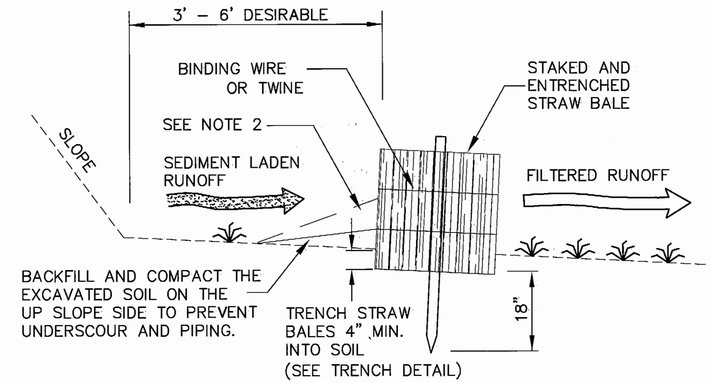

STRAW BALE BARRIER
TYPICAL SECTION

NOT TO SCALE

NOTES:

1. STRAW BALES SHALL BE INSTALLED PRIOR TO ANY CONSTRUCTION OTHER THAN SURVEYING. INSTALL BALES SUCH THAT TWINE/WIRE IS PARALLEL TO GROUND SURFACE (SEE TYPICAL SECTION).
2. REMOVAL OF TRAPPED SEDIMENT TO AN AREA NOT SUBJECT TO EROSION IS REQUIRED WHEN THE SEDIMENT HAS REACHED A HEIGHT OF 6". WHEN APPROVED BY THE ENGINEER, BALES MAY BE LEFT IN PLACE TO DECOMPOSE, OR MAY BE SPREAD AND SEEDED WITH THE ACCUMULATED SEDIMENT.

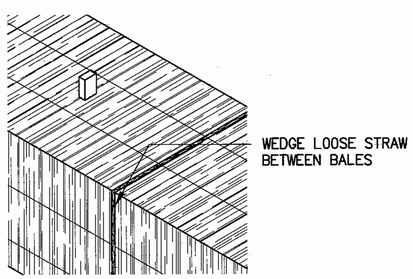

JOINT DETAIL

NOT TO SCALE

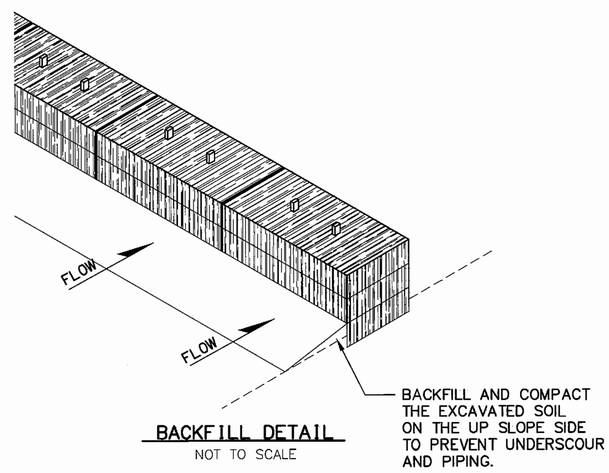

BACKFILL DETAIL

NOT TO SCALE

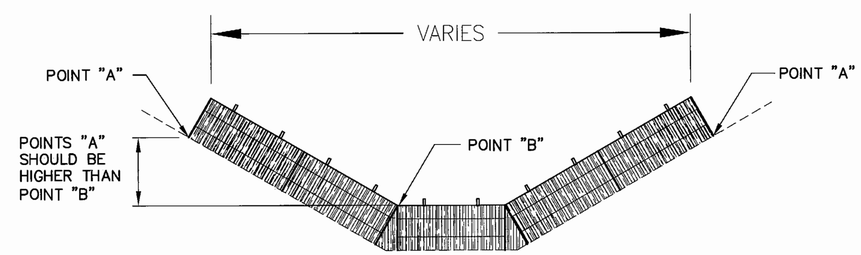

ELEVATION DETAIL

NOT TO SCALE

BY	DATE	REVISIONS
S.R.	3/8/08	AS-BUILT

STATE OF ALASKA
DEPARTMENT OF TRANSPORTATION AND PUBLIC FACILITIES
CENTRAL REGION

CLARKS POINT AIRPORT
CLARKS POINT, ALASKA
AIRPORT RELOCATION STAGE II
55598
AIP No. 3-02-0062-0304
EROSION CONTROL SYSTEM
STRAW BALE DETAILS

SHEET 1 OF 2

Date Plotted: 2004
Plot Ratio and Layout: 1=1, layout=
File: W:\Projects\Clarks Point\Airport Relocation Phase II 55598 TO_2003\Civil Design\Construction drawings\erosion_control.dwg 8/31/2004 7:50:35 AM AKDT
Designed By:
Checked By:
Drawn By:

AS-BUILT 4/2006

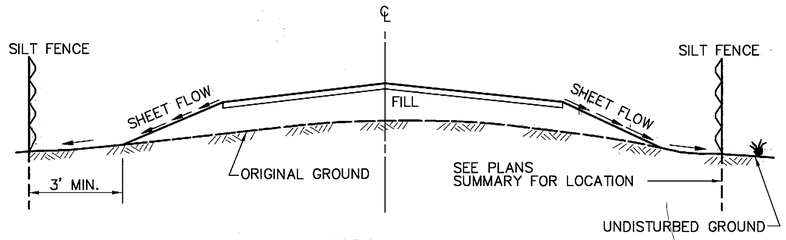

SECTION A–A

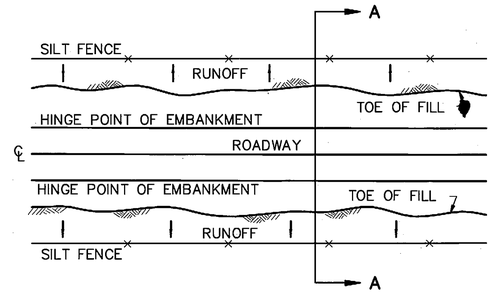

PLAN VIEW

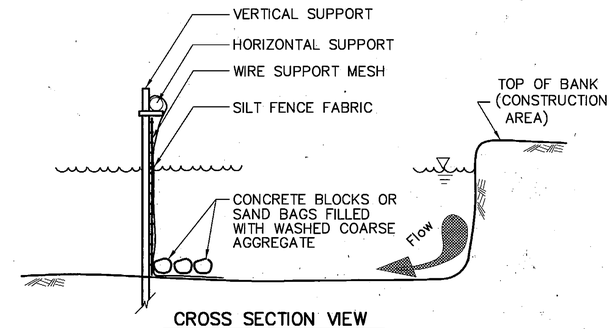

CROSS SECTION VIEW

GENERAL NOTES:

1. INSTALLATION AND APPLICATION SHALL BE IN ACCORDANCE WITH THE PRACTICES AS OUTLINED IN THE EROSION AND SEDIMENT CONTROL PLAN.
2. FILTER FABRIC SHALL BE OVERLAPPED 6" AT FENCE SUPPORTS.
3. FILTER FABRIC SHALL BE TAUT, NOT LOOSE OR FOLDED.
4. THE CONTRACTOR SHALL INSPECT AND REPAIR FENCE AFTER EACH STORM EVENT.
5. SILT FENCE SHALL BE PLACED ON SLOPE CONTOURS TO MAXIMIZE PONDING EFFICIENCY.

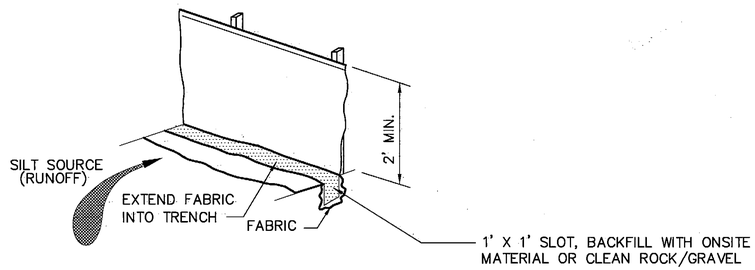

TRENCH ALTERNATE

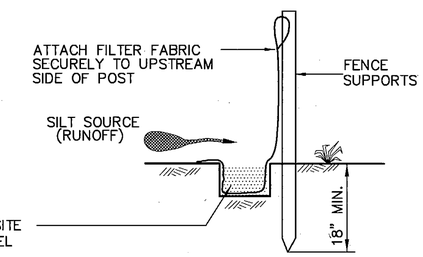

CROSS SECTION VIEW

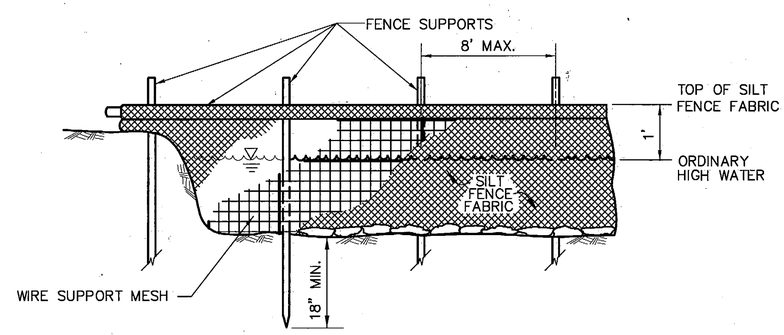

TYPICAL

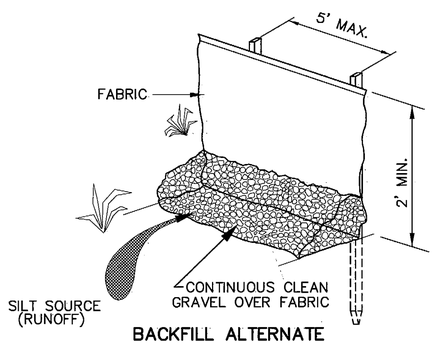

BACKFILL ALTERNATE

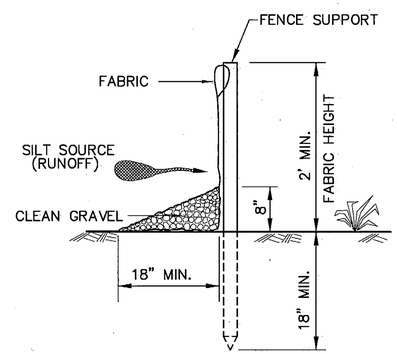

CROSS SECTION VIEW

FOR USE IN WATER

1. SECURE THE ENDS OF SILT FENCE TO THE BANK.
2. SILT FENCE FRAMEWORK SHALL BE FINISHED 2" X 2' WOOD, 3" DIAMETER WOOD, #6 REBAR WITH 2" PVC SLEEVES, 3/4" IRON PIPE, OR OTHER POSTS CAPABLE OF SUPPORTING THE INSTALLATION, AS APPROVED BY THE ENGINEER.
3. THE WIRE MESH SUPPORT SHALL BE WWF 6" X 6", W1 X W1 OR AS APPROVED BY THE ENGINEER.
4. FENCE ANCHORED IN STANDING WATER SHALL HAVE THE BOTTOM ANCHORED WITH SANDBAG OR CONCRETE BLOCKS AS DETAILED ABOVE.

FOR USE ON LAND

1. FENCE SHALL BE PLACED AT LEAST 3' FROM THE TOE OF EMBANKMENT OR EXCAVATON AREAS, OR AS DIRECTED BY THE ENGINEER.
2. ACCUMULATION OF SEDIMENT BEHIND SILT FENCE SHALL BE REMOVED WHEN DEPTH REACHES 6". REMOVED SEDIMENT SHALL BE DEPOSITED TO AN AREA THAT WILL NOT CONTRIBUTE SEDIMENT OFF-SITE AND CAN BE PERMANENTLY STABILIZED.

BY	DATE	REVISIONS
S.R.	3/4/08	AS-BUILT

STATE OF ALASKA
DEPARTMENT OF TRANSPORTATION
AND PUBLIC FACILITIES
CENTRAL REGION

CLARKS POINT AIRPORT
CLARKS POINT, ALASKA
AIRPORT RELOCATION STAGE II
55598
AIP No. 3-02-0062-0304
EROSION CONTROL SYSTEM
SILT FENCE DETAILS

SHEET 2 OF 2

Designed By:
Checked By:
Drawn By:
Date Plotted: 2004
Plot Ratio and Layout: 1=1; layout=
File: W:\Projects\Clarks Point\Airport Relocation Phase II 55598 10_2003\Civil Design\Construction drawings\erosion_control.dwg 6/21/2004 7:50:36 AM ADT

AS-BUILT 4/2006 37 OF 37