STATE OF ALASKA

DEPARTMENT OF TRANSPORTATION AND PUBLIC FACILITIES

NO.	DATE	REVISION

STATE	PROJECT DESIGNATION	YEAR	SHEET NO.	TOTAL SHEETS
ALASKA	0001422/Z524610000	2020	A01	A04

ROUTE NO.	261004X000	MILEPOINT	0.00 TO 0.495
LATITUDE	59°38'44"N	LONGITUDE	151°31'30"W

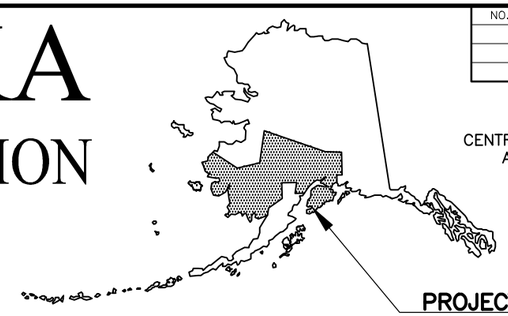

PROJECT LOCATION
M&O STATION: HOMER

PROPOSED HIGHWAY PROJECT

HOMER: LAKE STREET REHABILITATION
PROJECT NO. 0001422/Z524610000

GRADING, DRAINAGE, PAVING, SIGNALIZATION, SIGNING, AND STRIPING

PROJECT SUMMARY		
ROADWAY	WIDTH	LENGTH
LAKE STREET	48'–64'	0.495 MILES

DESIGN DESIGNATIONS	
	ROADWAY NAME
FUNCTIONAL CLASS	MAJOR COLLECTOR
AADT (2012)	5,210
AADT (2035)	6,359
DESIGN SPEED (V) (MPH)	30
DHV (2012)	10.6
DHV (2035)	10.6
T–PERCENT COMMERCIAL TRUCKS (%)	8.37
D–DIRECTIONAL DISTRIBUTION (%)	45 / 55
ESALS	2,134,744

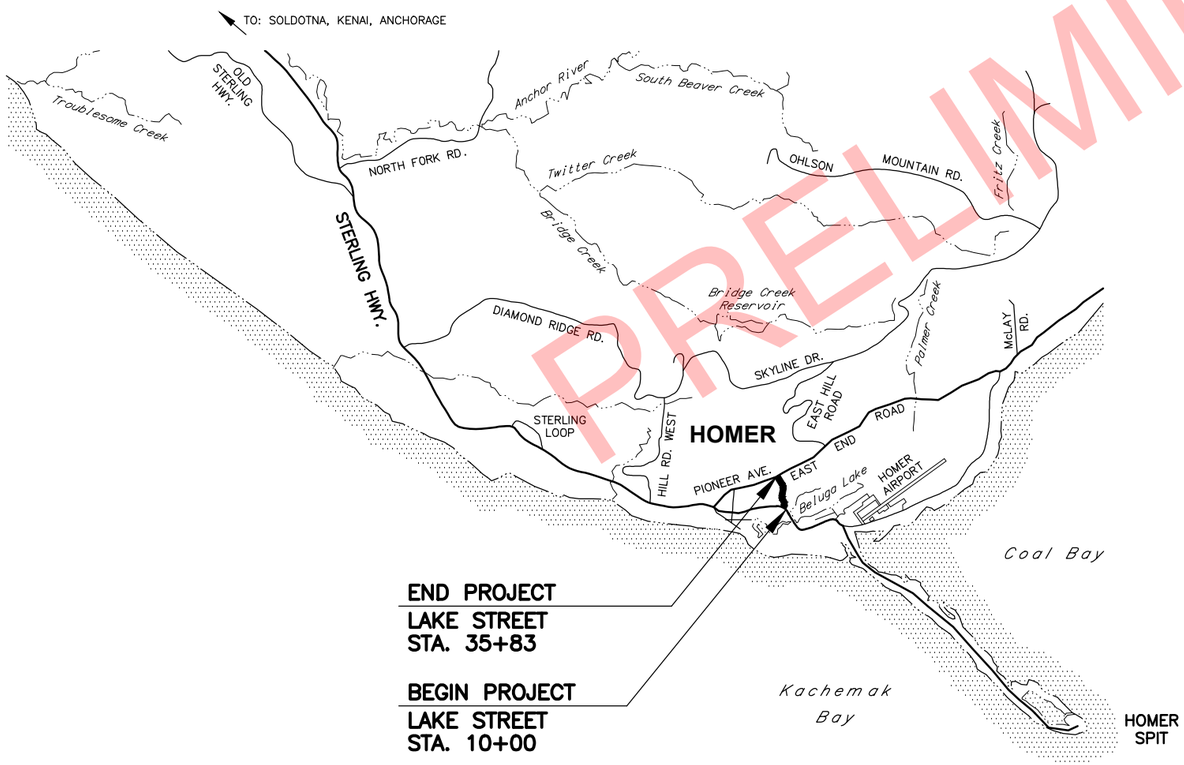

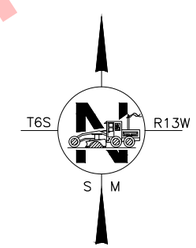

PS&E REVIEW
JUNE 2019

STATE OF ALASKA
DEPARTMENT OF TRANSPORTATION & PUBLIC FACILITIES
4111 AVIATION AVENUE, ANCHORAGE, AK 99502
(907)269–0590

APPROVED:

REGIONAL PRECONSTRUCTION ENGINEER DATE

CONCUR:

REGIONAL CONSTRUCTION ENGINEER DATE

FILE W:\PROJECTS\HOMER LAKE ST. REHAB Z524610000\CIV3D\CIV3D16\PLANSET\52461_A01NA02_TTL.DWG | DATE/TIME 6/5/2019 3:15 PM | SCALE N.T.S. | DESIGNED ALH/ZDK | CHECKED SJR | DRAFTED VJS/ZDK

NO.	DATE	REVISION

STATE	PROJECT DESIGNATION	YEAR	SHEET NO.	TOTAL SHEETS
ALASKA	0001422/Z524610000	2020	A02	A04

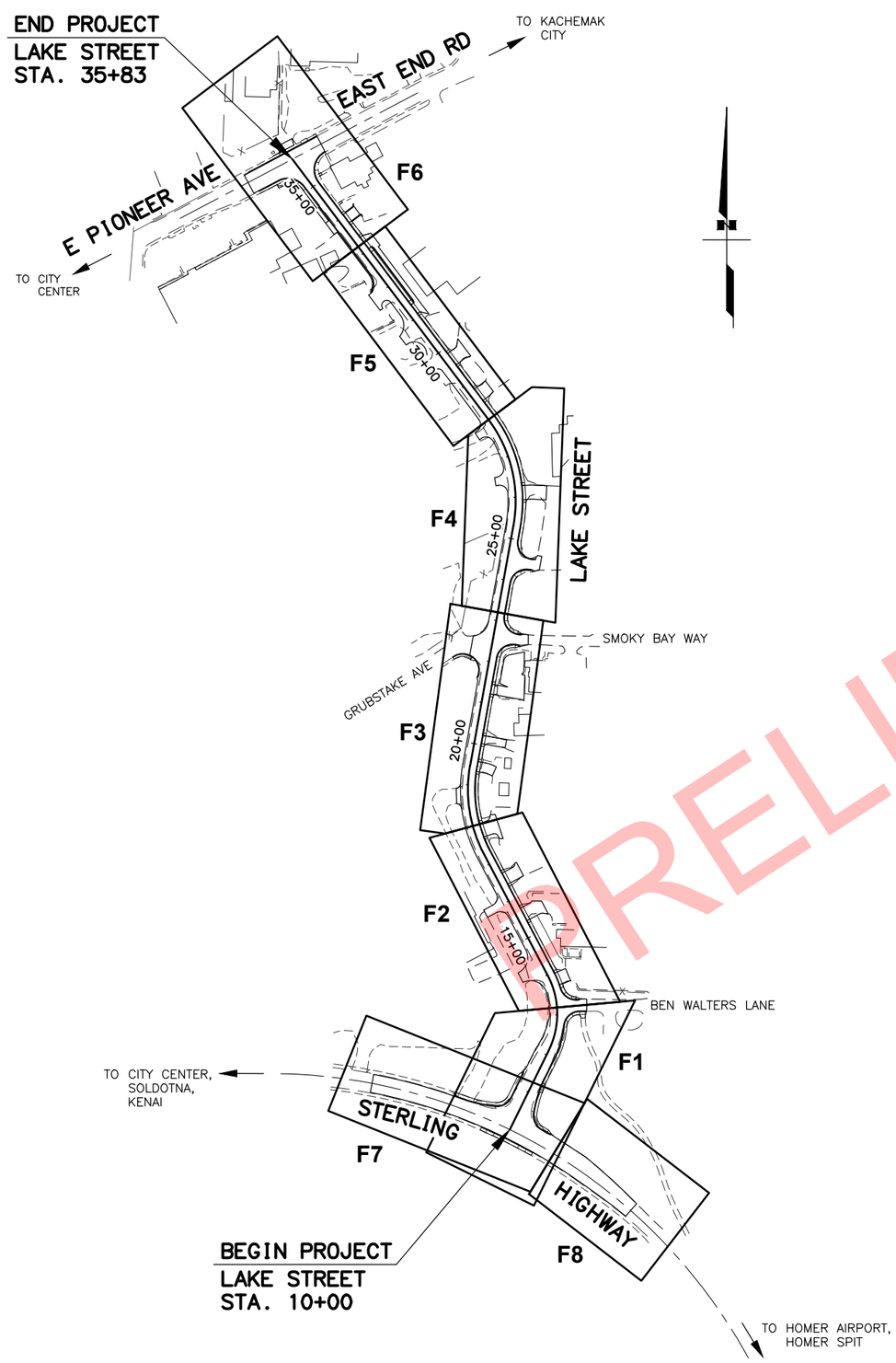

GENERAL NOTES:

1. ALL CONSTRUCTION SHALL BE CONTAINED WITHIN THE RIGHT-OF-WAY, TEMPORARY CONSTRUCTION EASEMENTS, AND TEMPORARY CONSTRUCTION PERMITS. NO EXCESS MATERIAL SHALL BE DISPOSED OF WITHIN THE RIGHT-OF-WAY, UNLESS SPECIFICALLY CALLED FOR IN THE PLANS OR DIRECTED BY THE ENGINEER.
2. ALL PAVEMENT CUTS SHALL BE MADE WITH A SAW OR ALTERNATE METHOD APPROVED BY THE ENGINEER.
3. PLACE 4" TOPSOIL AND SEED ANY AREAS WITHIN THE RIGHT-OF-WAY DISTURBED BY CONSTRUCTION AND AS DIRECTED BY THE ENGINEER.
4. SOME INFORMATION SHOWN IN THE PLANS IS FROM AS-BUILTS AND HAS BEEN PARTIALLY FIELD VERIFIED. FIELD CONDITIONS MAY NOT BE ACCURATELY REPRESENTED AND/OR MAY HAVE CHANGED. ADJUST INSTALLATIONS AS DIRECTED BY THE ENGINEER.
5. CONSTRUCT CURB RAMPS TO AVOID IMPACTING SIGNAL POLE FOUNDATIONS. DO NOT COVER SIGNAL POLE FOUNDATION BOLTS AND BASE PLATES WITH TOPSOIL.
6. ADJUST ALL PAVEMENT PENETRATIONS TO FINAL GRADE PRIOR TO TOP LIFT OF PAVING.

   IF ANY PAVEMENT PENETRATION REQUIRES GRADE ADJUSTMENT AFTER FINAL LIFT PAVING, AS DETERMINED BY THE ENGINEER, SAW CUT A NEAT LINE ALONG THE PAVEMENT TO BE REMOVED. USE AN INFRARED HEATER TO HEAT THE EXISTING PAVEMENT; EQUIPMENT AND MAXIMUM TEMPERATURE SHALL BE APPROVED BY THE ENGINEER. REPLACE THE REMOVED ASPHALT WITH NEW HOT MIX ASPHALT AND THOROUGHLY COMPACT. SEAL JOINTS AT LEAST 12 INCHES WIDE USING ASPHALT SYSTEMS GSB-88 OR APPROVED EQUAL, WHILE THE HOT MIX ASPHALT IS CLEAN, FREE OF MOISTURE AND PRIOR TO STRIPING.

   THERE SHALL BE NO PAYMENT FOR ADDITIONAL WORK CAUSED BY FAILURE TO ADJUST PAVEMENT PENETRATIONS TO FINAL GRADE.
7. CONSTRUCT RAMP RUNS, LANDINGS, FLARES, AND SIDEWALK EXTENSIONS SHOWN IN THE PLANS USING 4" CONCRETE REGARDLESS OF WHETHER THE EXISTING SIDEWALK/PATHWAY IS ASPHALT OR CONCRETE.
8. CLEARING LIMITS SHALL BE 10 FEET BEYOND SLOPE CATCH POINTS OR TO THE RIGHT-OF-WAY LINE, WHICHEVER IS LESS. IN WETLAND AREAS, CLEARING SHALL NOT EXCEED BEYOND SLOPE CATCH POINTS UNLESS OTHERWISE SHOWN IN THE PLANS.
9. GRUBBING LIMITS SHALL BE TO THE SLOPE STAKE CATCH POINT UNLESS SHOWN OTHERWISE IN THE PLANS.
10. CONSTRUCT ALL SIDEWALK TO 1.5% CROSS SLOPE UNLESS SHOWN OTHERWISE IN THE PLANS.

INDEX

THE FOLLOWING ALASKA STANDARD PLANS APPLY TO THIS PROJECT:

C-04.12, C-05.20
D-01.02, D-04.21, D-06.10, D-20.05, D-22.01, D-25.00, D-26.04
I-21.11, I-22.11
S-00.11, S-05.01, S-23.00, S-30.04, S-31.01
T-21.03, T-22.04, T-23.00

SPECIFICATION:

CONSTRUCT THE IMPROVEMENTS COVERED BY THESE PLANS IN ACCORDANCE WITH THE ALASKA DEPARTMENT OF TRANSPORTATION AND PUBLIC FACILITIES 2017 STANDARD SPECIFICATIONS FOR HIGHWAY CONSTRUCTION AND THE PROJECT SPECIAL PROVISIONS.

STATE OF ALASKA
STEVEN C. PEGUES
CIVIL
PSSC REVIEW

STATE OF ALASKA DOT&PF
4111 AVIATION AVENUE
ANCHORAGE, AK 99502
(907) 269-0590

STATE OF ALASKA
DEPARTMENT OF TRANSPORTATION
AND PUBLIC FACILITIES

HOMER: LAKE STREET REHABILITATION

SHEET LAYOUT, INDEX, AND GENERAL NOTES

FILE W:\PROJECTS\HOMER LAKE ST. REHAB Z524610000\CIV3D\CIV3D16\PLANSET\52461_A01NA02_TTL.DWG | DATE/TIME 6/4/2019 8:42 AM | SCALE N.T.S. | DESIGNED ALH/ZDK | CHECKED SJR | DRAFTED VJS/ZDK

NO.	DATE	REVISION

STATE	PROJECT DESIGNATION	YEAR	SHEET NO.	TOTAL SHEETS
ALASKA	0001422/Z524610000	2020	A03	A04

ROADWAY

	EXISTING	PROPOSED
EDGE OF PAVEMENT		
LIMIT OF CUT SLOPE & FILL SLOPE		CUT / FILL
GRAVEL EDGE		
DRIVEWAY APPROACH		
SIDEWALK AND PATH/TRAIL		
CONCRETE SIDEWALK		
CONCRETE CURB & GUTTER		
CONCRETE CURB CUT		
PARALLEL CURB RAMP PERPENDICULAR CURB RAMP		
UNIDIRECTIONAL CURB RAMP & MID-BLOCK CURB RAMP		
DETECTABLE WARNING TILE		
BRIDGE		
TUNNEL		
GUARDRAIL		
END & PARALLEL END SECTIONS		
ROADWAY OBLITERATION		
FENCE	X	X
STONE FENCE		
NOISE BARRIER	====X====X	====X====X
RETAINING WALL		
HEADWALL & WINGWALL		
BOTTOM OF DITCH		
SPECIAL DITCH		
FLAT BOTTOM DITCH		
BERM		
RIPRAP		
DITCH LINING		
BOULDER OR BOULDERS		
PRIVATE SIGN, MAILBOX	MB	MB
POST, BOLLARD		

UTILITIES

	EXISTING	PROPOSED
STORM DRAIN	SD	
STORM DRAIN MANHOLE, CLEANOUT	SD CO	SD CO
CURB INLET CATCH BASIN FIELD INLET CATCH BASIN	FI	FI
PIPE CULVERT WITH END SECTION		
SANITARY SEWER	SS	SS
SANITARY SEWER MANHOLE, CLEANOUT	SS CO	SS CO
SEPTIC VENT, SEWER SERVICE CONNECTION	S	
WATER	W	W
FIRE HYDRANT, VALVE, RISER OR KEY BOX		
WELL, WATER SERVICE CONNECTION	W	
NATURAL GAS	G G	
OIL OR GASOLINE PIPELINE	O O	
TANKS (ABOVE GROUND, UNDERGROUND)	U	
ELECTRIC	OE (OVERHEAD) UE (UNDERGROUND) OE&OT (OVERHEAD)	
UTILITY POLE, POLE WITH LUMINAIRE		
GUY POLE, GUY WIRE ANCHOR	GP	
TRANSMISSION TOWER (WOOD, STEEL)		
ELECTRIC PEDESTAL, TRANSFORMER	E	E
ELECTRIC MANHOLE, METER	E	
ELECTRIC OUTLET, LANDSCAPE LIGHT		
TELEPHONE	OT (OVERHEAD) UT (UNDERGROUND) UT&TV (UNDERGROUND)	
TELEPHONE MANHOLE, PEDESTAL	T	T
FIBER OPTIC	FO	
FIBER OPTIC MANHOLE	FO	
CABLE TV	OTV (OVERHEAD) UTV (UNDERGROUND)	
CABLE TV PEDESTAL, SATELLITE DISH	V	
UNDERGROUND DUCT, UTILIDOR (ELECTRIC, TELEPHONE, FIBER OPTIC)		
VENT		

TRAFFIC

	EXISTING	PROPOSED
LOAD CENTER		
TRAFFIC & BEACON CONTROLLER		
TYPE 1A, II, III, IV JUNCTION BOX	15 26 37 48	60 ## ## ##
FIBER OPTIC VAULT	F/O 59	F/O #
ELECTROLIER	68 99	78 13
HIGHTOWER	HT#	HT#
SIGNAL POLE WITH MASTARM	49	14
PEDESTRIAN PUSH BUTTON & SIGNAL	68 12	
VEHICULAR SIGNAL	44	
VEHICULAR SIGNAL LEFT & RIGHT	65 24	12
OPTICAL, CAMERA, RADAR, AND GPS DETECTOR	CAM RAD GPS	CAM RAD GPS
LOOP DETECTOR	555	735
COMMUNICATION ANTENNA		
MASTARM BEACON		
RURAL & SCHOOL ZONE BEACON	753 77 724 55	763 65 723 45
LOOP DETECTOR CONDUIT		
SIGNAL CONDUIT	TR	TR
LIGHTING CONDUIT	LTG	LTG
SIGNAL & LIGHTING CONDUIT	T/L	T/L
CONDUIT BORING		
CONDUIT SIZE IN INCHES	2" 1-3C4	2" 1-3C4 CKT BA12 CKT BA13
INTERCONNECT	I/C	I/C
SIGN POST		22

PAVEMENT MARKINGS

	PROPOSED
PROJECT CENTERLINE	
8" & 4" WHITE SOLID STRIPE	8"W 4"W
4" WHITE SKIP STRIPE 10' STRIPES AND 30' SPACES	4"W SKIP
8" WHITE LANE GUIDE SKIP LANE CONTINUATION OR TURN SKIP 1' STRIPES AND 3' SPACES	8"W GUIDE SKIP
8" & 4" YELLOW SOLID STRIPE	8"Y 4"Y
4" YELLOW SKIP STRIPE 10' STRIPES AND 30' SPACES	4"Y SKIP
STRIPING CHANGE STATION INTERVAL	+20
2' CROSSWALK OR STOPBAR	24"W (TYP)
LADDER CROSSWALK LAYOUT 2' WIDE RUNGS WITH 2' SPACES ALIGNED TO AVOID TIRE PATHS	10'
TYPICAL PAINTED MEDIAN	12' (2)-4"Y 3" APART VARIES 18"Y @ 45°

RIGHT-OF-WAY

	RECOVERED	SET THIS PROJECT
FEDERAL GOV'T SURVEY MONUMENT		
GOV'T CONTROL STATION		
PRIMARY MONUMENT (BRASS/AL CAP)		
MISC SECONDARY CORNER		
PRIMARY CENTERLINE MONUMENT		
SECONDARY CENTERLINE MONUMENT		
RANDOM CONTROL MONUMENT	RCM	
PRIMARY GPS CONTROL POINT	GPS	
HORIZONTAL CONTROL POINT	CP	
SECONDARY CONTROL POINT	SCP	
VERTICAL BENCHMARK	BM	
TEMPORARY BENCHMARK	TBM	
TOWNSHIP AND RANGE LINES	T13N T12N R2W R3W	
SECTION LINE		
1/4 SECTION LINE		
1/16 SECTION LINE		
CORPORATE or CITY LIMITS		
EXISTING RIGHT-OF-WAY		
RIGHT-OF-WAY OR EASEMENT REQUIRED		
PROJECT RIGHT-OF-WAY LINE		
EXISTING RIGHT-OF-WAY EASEMENT		
EXISTING PROPERTY LINE		
CONTROLLED ACCESS LINE		
EXISTING UTILITY EASEMENT		
PROPOSED UTILITY EASEMENT		
EXISTING CENTERLINE		
RAILROAD CENTERLINE		
TEMPORARY CONSTRUCTION EASEMENT		
TEMPORARY CONSTRUCTION PERMIT		

TOPOGRAPHY

	EXISTING	PROPOSED
LAKE OR POND, WETLANDS	LAKE/POND	
TREE (CONIFER/DECIDUOUS) TREELINE (EDGE OF VEGETATION)		
PLANTER	P	
BUILDING OR FOUNDATION		

	EXISTING	PROPOSED
CONTOUR, MAJOR OR MINOR	520	520
DRAINAGE FLOW		
CREEK (CENTERLINE)		
RIVER (EDGE OF WATER)		

PRELIMINARY

PS&E REVIEW

STATE OF ALASKA
STEVEN R. PETERSON
CE 7347
REGISTERED PROFESSIONAL ENGINEER

STATE OF ALASKA DOT&PF
4111 AVIATION AVENUE
ANCHORAGE, AK 99502
(907) 269-0590

STATE OF ALASKA
DEPARTMENT OF TRANSPORTATION
AND PUBLIC FACILITIES

HOMER: LAKE STREET
REHABILITATION

LEGEND

FILE W:\PROJECTS\HOMER LAKE ST. REHAB Z524610000\CIV3D\CIV3D16\PLANSET\52461_A03_LGD.DWG | DATE/TIME 6/4/2019 8:42 AM | SCALE 1" = 1' | DESIGNED ZDK | CHECKED SJR | DRAFTED VJS

NO.	DATE	REVISION

STATE	PROJECT DESIGNATION	YEAR	SHEET NO.	TOTAL SHEETS
ALASKA	0001422/Z524610000	2020	A04	A04

PRELIMINARY

SURVEY CONTROL PLACE HOLDER

DATE/TIME	SCALE	DESIGNED	CHECKED	DRAFTED
6/4/2019 8:42 AM	N/A	ZDK	SJR	VJS

FILE W:\PROJECTS\HOMER LAKE ST. REHAB Z524610000\CIV3D\CIV3D16\PLANSET\52461_A04_SURVEY.DWG

STATE OF ALASKA
PROFESSIONAL ENGINEER
STEVEN J. ROBINSON
CE 7347

PRELIMINARY REVIEW

STATE OF ALASKA DOT&PF
4111 AVIATION AVENUE
ANCHORAGE, AK 99502
(907) 269-0590

STATE OF ALASKA
DEPARTMENT OF TRANSPORTATION
AND PUBLIC FACILITIES

HOMER: LAKE STREET
REHABILITATION

SURVEY CONTROL

NO.	DATE	REVISION

STATE	PROJECT DESIGNATION	YEAR	SHEET NO.	TOTAL SHEETS
ALASKA	0001422/Z524610000	2020	B01	B04

GENERAL NOTES:

1. WHERE CURB IS PRESENT, TYPICAL SECTION DIMENSIONS ARE MEASURED TO FACE OF CURB. REFER TO CURB AND GUTTER DETAILS.
2. WHERE CURB, BACKING CURB, CONCRETE SIDEWALK OR CURB RAMPS ARE PRESENT, PLACE 2" OF AGGREGATE BASE COURSE, GRADING D-1 FOR LEVELING, OR AS DIRECTED BY THE ENGINEER.
3. WHERE CURB IS NOT ADJACENT TO THE PAVEMENT EDGE, SHOULDER THE PAVEMENT EDGE WITH AGGREGATE BASE COURSE, GRADING D-1 AS DIRECTED BY THE ENGINEER AND WITHIN 48 HOURS OF PAVING.
4. APPLY STE-1 TACK COAT TO CURB EDGES, SAW CUT EDGES, AND BETWEEN LIFTS OF PAVEMENT AND ATB.
5. PAVEMENT STRUCTURAL SECTION NO. 1 EXTENTS INCLUDE PIONEER AVENUE STA. 198+80 TO 200+78.

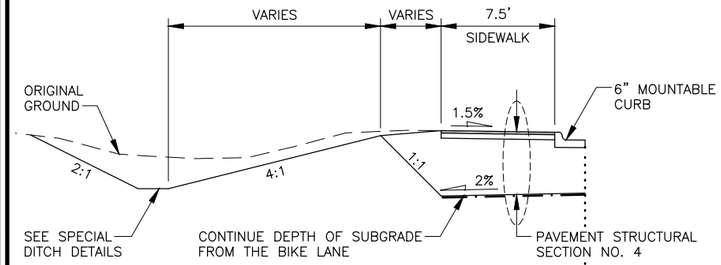

STERLING HWY TO STA. 11+28

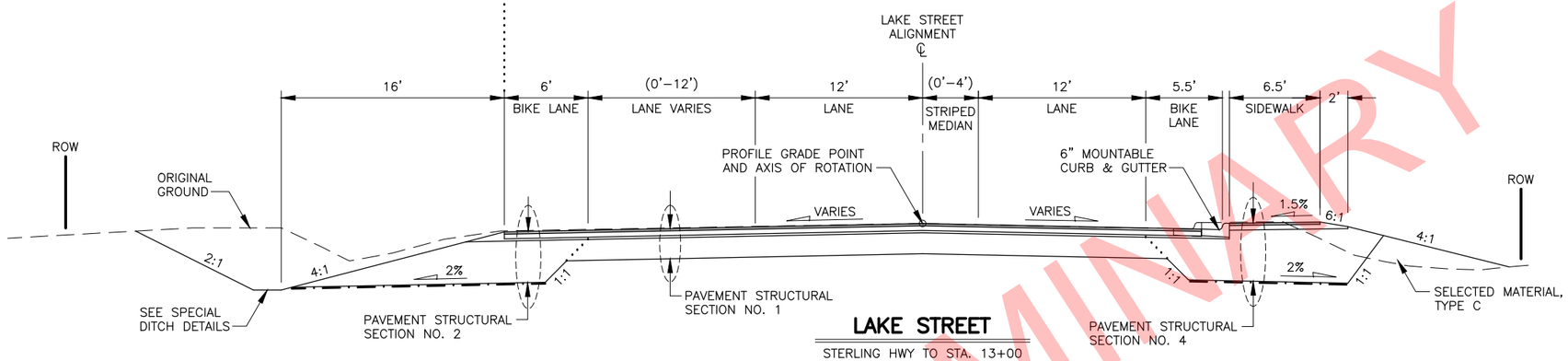

LAKE STREET

STERLING HWY TO STA. 13+00

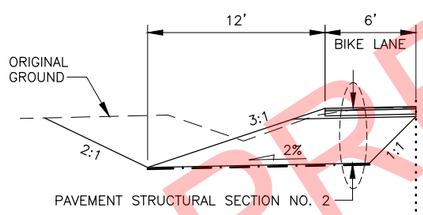

STA. 28+50 TO STA. 32+11

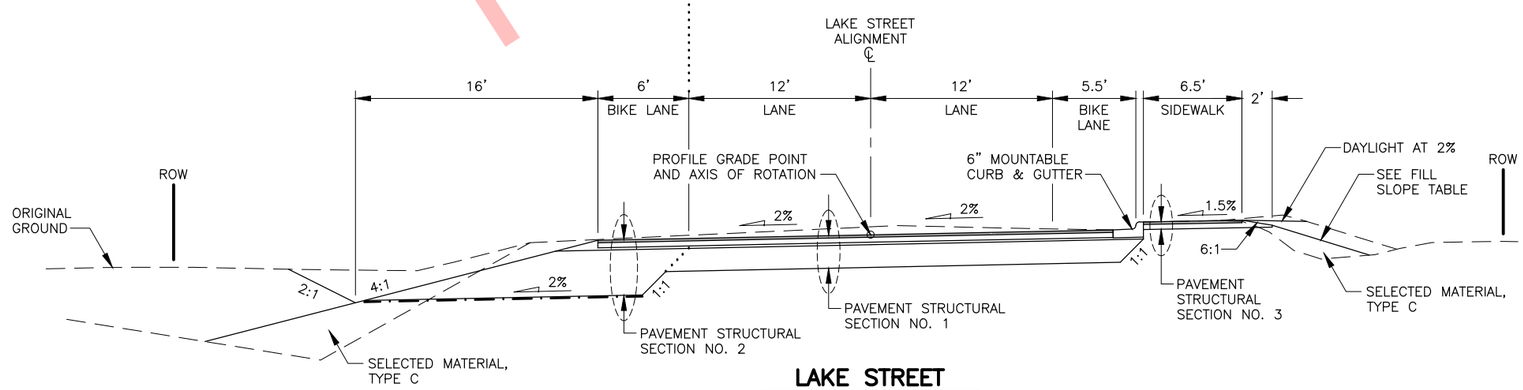

LAKE STREET

STA. 13+00 TO STA. 32+11

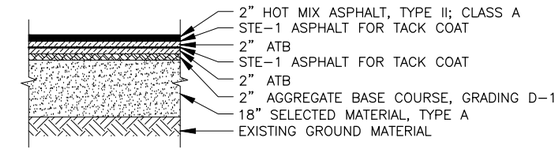

PAVEMENT STRUCTURAL SECTION NO. 1

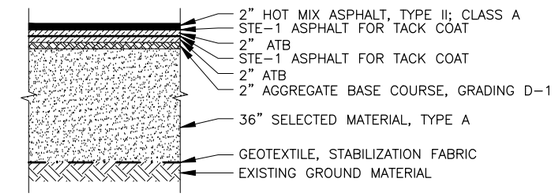

PAVEMENT STRUCTURAL SECTION NO. 2

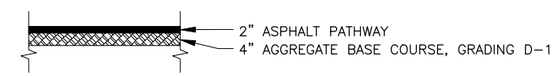

PAVEMENT STRUCTURAL SECTION NO. 3

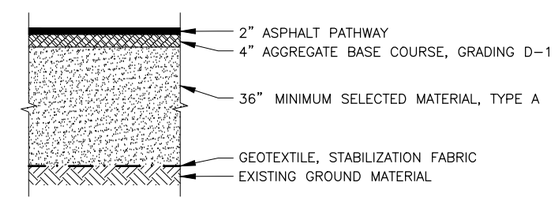

PAVEMENT STRUCTURAL SECTION NO. 4

FILL SLOPE TABLE

STATION TO STATION	OFFSET	SLOPE
17+60 TO 18+40	RT	6:1
19+20 TO 20+04	RT	6:1
21+24 TO 23+00	RT	3:1

PRELIMINARY

PSSE REVIEW

STATE OF ALASKA DOT&PF
4111 AVIATION AVENUE
ANCHORAGE, AK 99502
(907) 269-0590

STATE OF ALASKA
DEPARTMENT OF TRANSPORTATION
AND PUBLIC FACILITIES

HOMER: LAKE STREET REHABILITATION

TYPICAL SECTIONS

DATE/TIME 6/5/2019 3:17 PM | SCALE 1" = 5' | DESIGNED ALH/ZDK | CHECKED SJR | DRAFTED VJS/ZDK

FILE W:\PROJECTS\HOMER LAKE ST. REHAB Z524610000\CIV3D\CIV3D16\PLANSET\52461_B01_TYP.DWG

NO.	DATE	REVISION

STATE	PROJECT DESIGNATION	YEAR	SHEET NO.	TOTAL SHEETS
ALASKA	0001422/Z524610000	2020	B02	B04

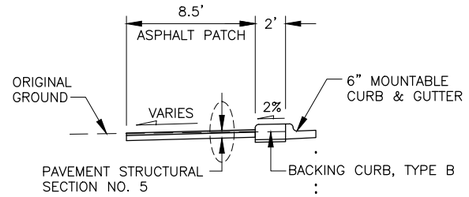

STA. 34+12 LT TO STA. 34+54 LT

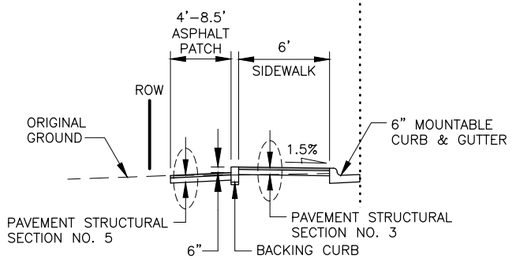

STA. 34+53 LT TO PIONEER AVE.

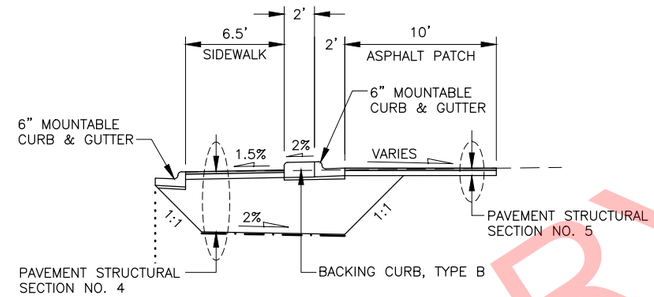

STA. 31+31 RT TO STA. 33+09 RT

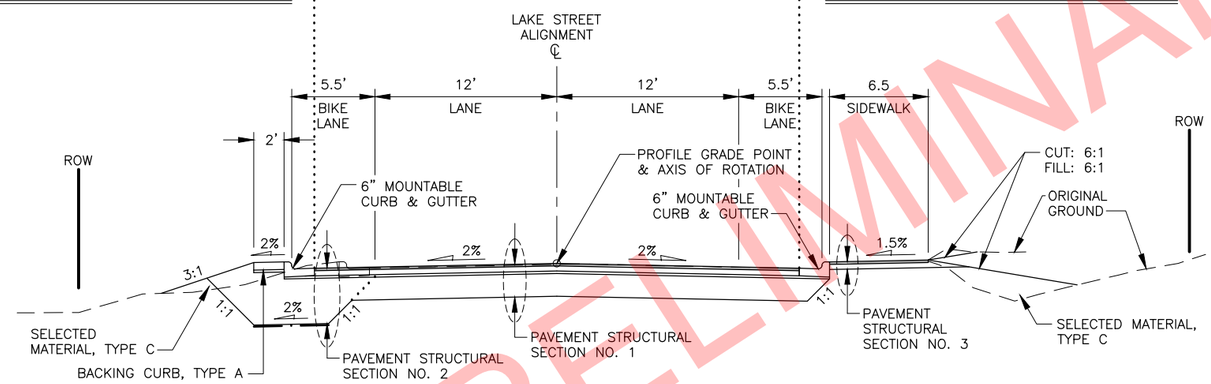

LAKE STREET

STA. 32+50 TO E. PIONEER AVENUE

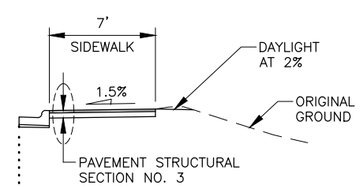

STA. 99+35 RT TO STA. 100+75 RT

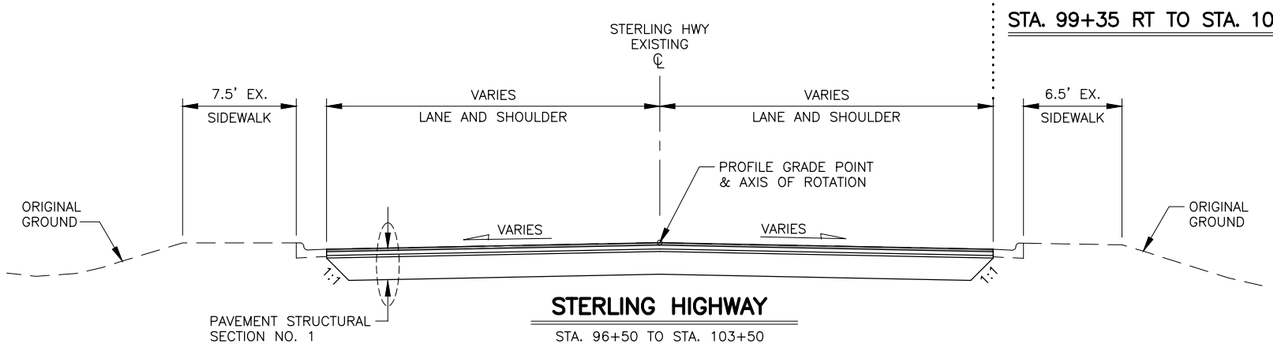

STERLING HIGHWAY

STA. 96+50 TO STA. 103+50

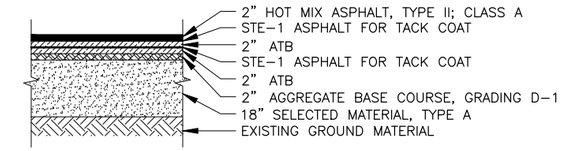

PAVEMENT STRUCTURAL SECTION NO. 1

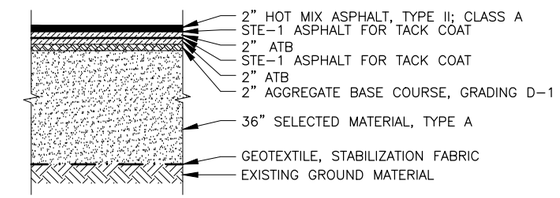

PAVEMENT STRUCTURAL SECTION NO. 2

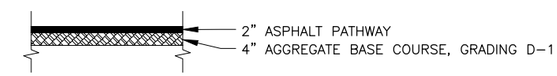

PAVEMENT STRUCTURAL SECTION NO. 3

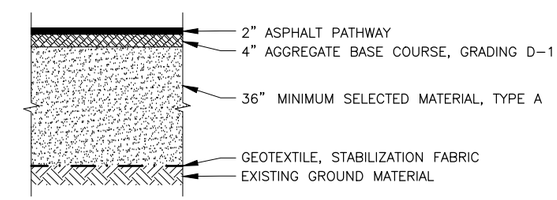

PAVEMENT STRUCTURAL SECTION NO. 4

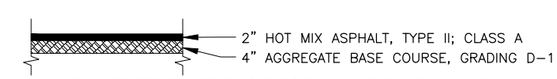

PAVEMENT STRUCTURAL SECTION NO. 5

STATE OF ALASKA DOT&PF
4111 AVIATION AVENUE
ANCHORAGE, AK 99502
(907) 269–0590

STATE OF ALASKA
DEPARTMENT OF TRANSPORTATION
AND PUBLIC FACILITIES

HOMER: LAKE STREET REHABILITATION

TYPICAL SECTIONS

DATE/TIME	SCALE	DESIGNED	CHECKED	DRAFTED
6/5/2019 3:17 PM	1" = 5'	ALH/ZDK	SJR	VJS/ZDK

FILE W:\PROJECTS\HOMER LAKE ST. REHAB Z524610000\CIV3D\CIV3D16\PLANSET\52461_B01_TYP.DWG

NO.	DATE	REVISION

STATE	PROJECT DESIGNATION	YEAR	SHEET NO.	TOTAL SHEETS
ALASKA	0001422/Z524610000	2020	B03	B04

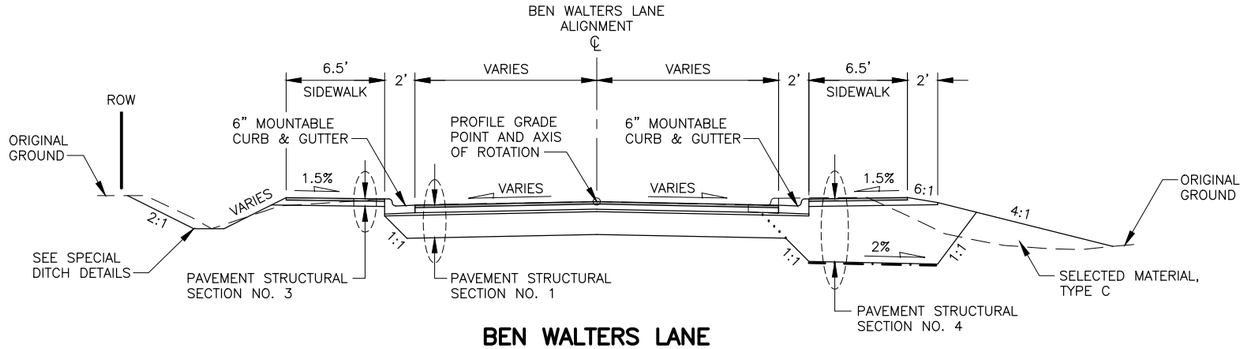

BEN WALTERS LANE

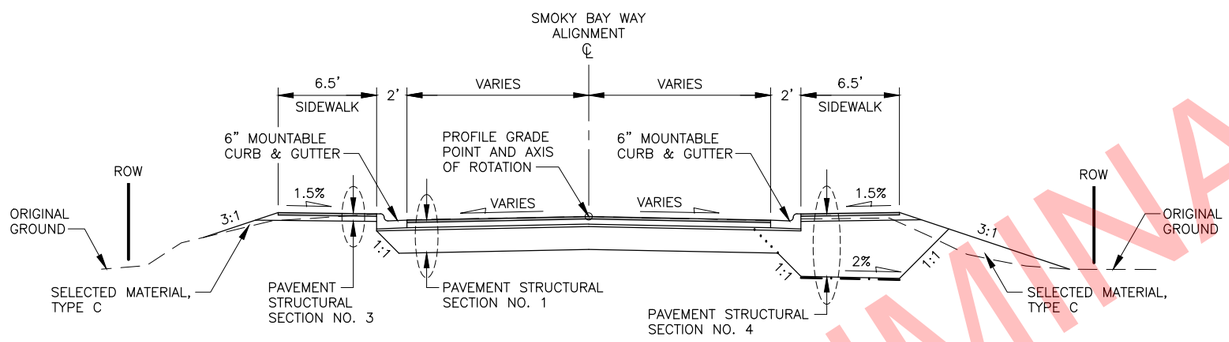

SMOKY BAY WAY

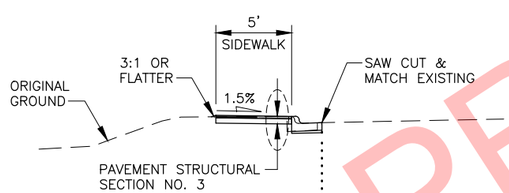

SIDEWALK EXTENSION

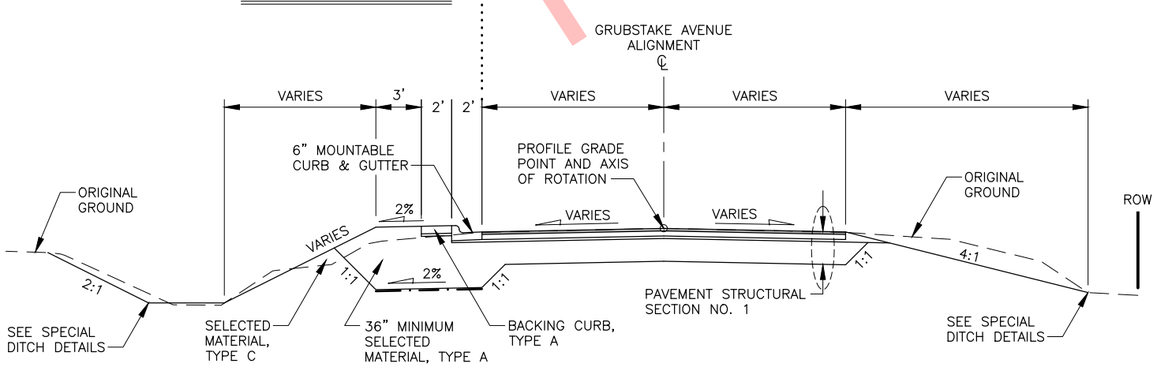

GRUBSTAKE AVENUE

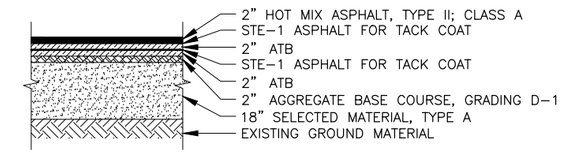

PAVEMENT STRUCTURAL SECTION NO. 1

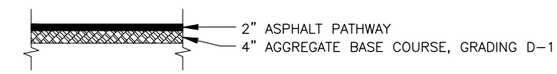

PAVEMENT STRUCTURAL SECTION NO. 3

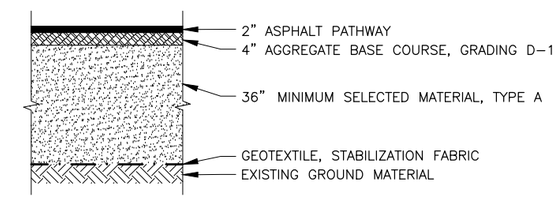

PAVEMENT STRUCTURAL SECTION NO. 4

STATE OF ALASKA DOT&PF
4111 AVIATION AVENUE
ANCHORAGE, AK 99502
(907) 269-0590

STATE OF ALASKA
DEPARTMENT OF TRANSPORTATION
AND PUBLIC FACILITIES

HOMER: LAKE STREET REHABILITATION

TYPICAL SECTIONS

FILE W:\PROJECTS\HOMER LAKE ST. REHAB Z524610000\CIV3D\CIV3D16\PLANSET\52461_B01_TYP.DWG
DATE/TIME 6/5/2019 3:17 PM | SCALE 1" = 5' | DESIGNED ALH/ZDK | CHECKED SJR | DRAFTED VJS/ZDK

NO.	DATE	REVISION

STATE	PROJECT DESIGNATION	YEAR	SHEET NO.	TOTAL SHEETS
ALASKA	0001422/Z524610000	2020	B04	B04

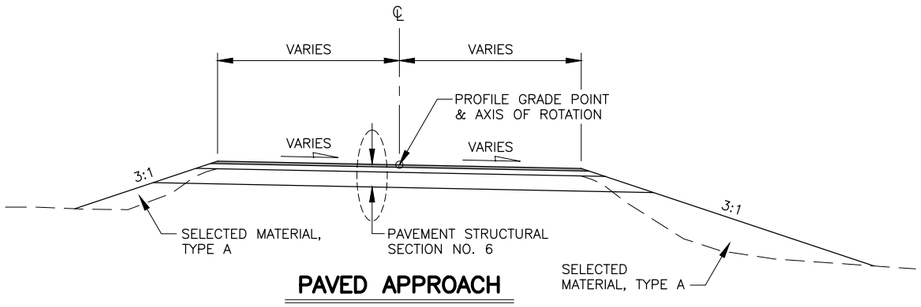

PAVED APPROACH

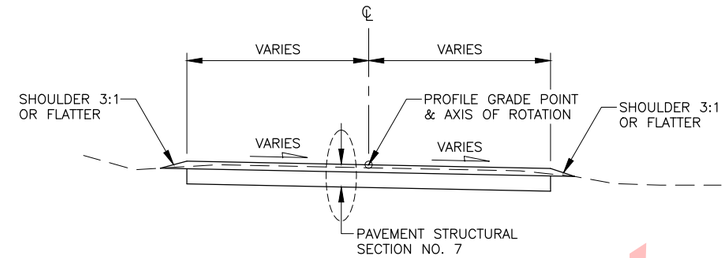

UNPAVED APPROACH

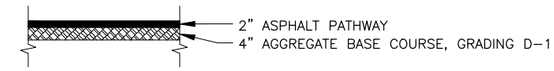

PAVEMENT STRUCTURAL SECTION NO. 3

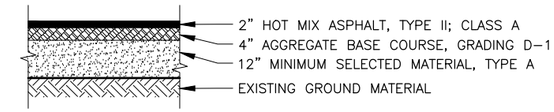

PAVEMENT STRUCTURAL SECTION NO. 6

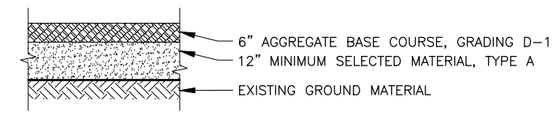

PAVEMENT STRUCTURAL SECTION NO. 7

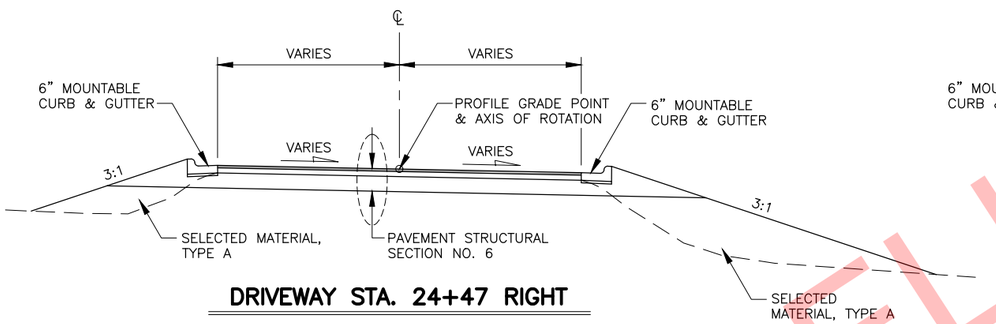

DRIVEWAY STA. 24+47 RIGHT

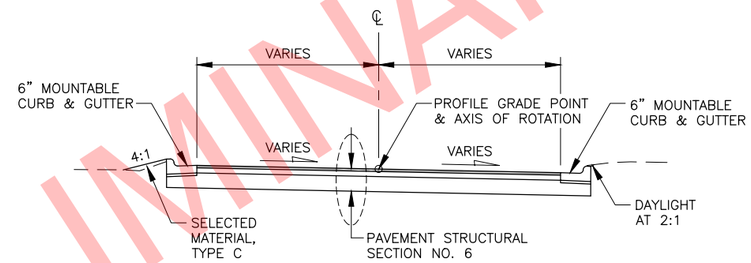

DRIVEWAY STA. 33+91 RIGHT

NOTES:

1. TRANSITION CROSS SLOPE FROM LAKE STREET. GRADE TO EXISTING CROSS SLOPE AT END OF APPROACH.

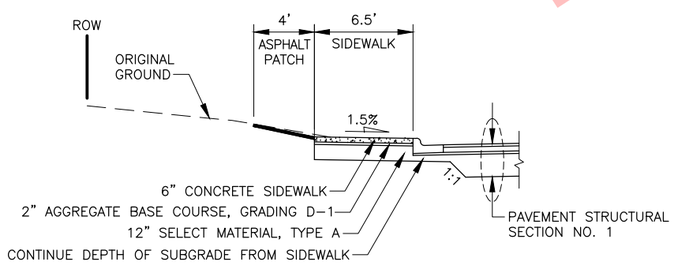

PIONEER AVENUE DRIVEWAY

STA. 199+80 TO STA. 200+15

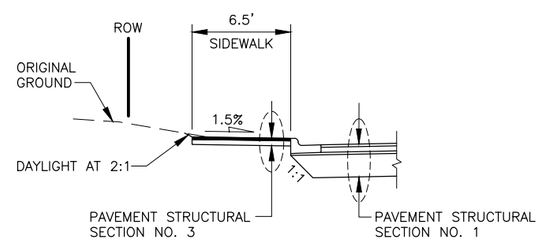

PIONEER AVENUE SIDEWALK

STA. 200+54 TO STA. 200+78 LT

STATE OF ALASKA DOT&PF
4111 AVIATION AVENUE
ANCHORAGE, AK 99502
(907) 269-0590

STATE OF ALASKA
DEPARTMENT OF TRANSPORTATION
AND PUBLIC FACILITIES

HOMER: LAKE STREET
REHABILITATION

TYPICAL SECTIONS

FILE W:\PROJECTS\HOMER LAKE ST. REHAB Z524610000\CIV3D\CIV3D16\PLANSET\52461_B01_TYP.DWG
DATE/TIME 6/4/2019 8:43 AM | SCALE 1" = 5' | DESIGNED ALH/ZDK | CHECKED SJR | DRAFTED VJS/ZDK

NO.	DATE	REVISION

STATE	PROJECT DESIGNATION	YEAR	SHEET NO.	TOTAL SHEETS
ALASKA	0001422/Z524610000	2020	C01	C02

ESTIMATE OF QUANTITIES

ITEM NO.	SSHC 2017 NO.	ITEM DESCRIPTION	PAY UNIT	TOTAL QUANTITY
201.0009.0000	201(3B)	CLEARING AND GRUBBING	LS	ALL REQ'D
202.0001.0000	202(1)	REMOVAL OF STRUCTURES AND OBSTRUCTIONS	LS	ALL REQ'D
202.0002.0000	202(2)	REMOVAL OF PAVEMENT	SY	19,600
202.0003.0000	202(3)	REMOVAL OF SIDEWALK	SY	322
202.0004.0000	202(4)	REMOVAL OF CULVERT PIPE	LF	1,746
202.0006.0000	202(6)	REMOVAL OF MANHOLE	EA	3
202.0008.0000	202(8)	REMOVAL OF INLET	EA	9
202.0009.0000	202(9)	REMOVAL OF CURB AND GUTTER	LF	3,700
202.2022.0000	202(13)	REMOVAL OF FENCE	LF	349
203.0003.0000	203(3)	UNCLASSIFED EXCAVATION	CY	22,800
203.0006.0000	203(6)	BORROW	TON	26,500
301.0001.00D1	301(1)	AGGREGATE BASE COURSE, GRADING D-1	TON	3,400
306.0001.0000	306(1)	ATB	TON	3,550
306.0002.5834	306(2)	ASPHALT BINDER, GRADE 58-34	TON	188
306.2002.0000	306(15)	ASPHALT MATERIAL PRICE ADJUSTMENT	CS	ALL REQ'D
401.0001.002A	401(1A)	HMA, TYPE II; CLASS A	TON	2,250
401.0004.5834	401(2)	ASPHALT BINDER, GRADE 58-34	TON	116
401.0008.002A	401(8A)	HMA PRICE ADJUSTMENT, TYPE II, CLASS A	CS	ALL REQ'D
501.2007.0001	501(10)	HEADWALL, TYPE I	EA	4
501.2007.0002	501(11)	HEADWALL, TYPE II	EA	2
603.2032.0024	603(22-24)	CORRUGATED HDPE PIPE 24 INCH	LF	1,065
603.2032.0036	603(22-36)	CORRUGATED HDPE PIPE 36 INCH	LF	126
603.2032.0042	603(22-42)	CORRUGATED HDPE PIPE 42 INCH	LF	268
603.2032.0048	603(22-48)	CORRUGATED HDPE PIPE 48 INCH	LF	959
604.0001.0001	604(1)	STORM SEWER MANHOLE, TYPE I	EA	4
604.0001.0003	604(1)	STORM SEWER MANHOLE, TYPE III	EA	4
604.0003.0000	604(3)	RECONSTRUCT EXISTING MANHOLE	EA	1
604.0004.0000	604(4)	ADJUST EXISTING MANHOLE	EA	7
604.0005.000A	604(5)	INLET, TYPE A	EA	6
608.0001.0004	608(1A)	CONCRETE SIDEWALK, 4 INCHES THICK	SY	127
608.0006.0000	608(6)	CURB RAMP	EA	18
608.2002.0000	608(7)	ASPHALT PATHWAY	TON	199
608.2022.0000	608(9)	BIKE RAMP	EA	4

ESTIMATE OF QUANTITIES

ITEM NO.	SSHC 2017 NO.	ITEM DESCRIPTION	PAY UNIT	TOTAL QUANTITY
609.0002.0001	609(2)	CURB AND GUTTER, TYPE 1	LF	4,050
609.0003.0000	609(3)	BACKING CURB	LF	49
609.0003.000A	609(3A)	BACKING CURB, TYPE A - 24 INCHES WIDE X 6 INCHES THICK	LF	175
609.0003.000B	609(3B)	BACKING CURB, TYPE B - 24 INCHES WIDE X 12 INCHES THICK	LF	211
610.0001.0000	610(1)	DITCH LINING	CY	171
611.0001.0001	611(1)	RIPRAP, CLASS I	CY	24
611.0001.0002	611(1)	RIPRAP, CLASS II	CY	1,400
615.0001.0000	615(1)	STANDARD SIGN	SF	240
615.0006.0000	615(6)	SALVAGE SIGN	EA	28
618.0002.0000	618(2)	SEEDING	LB	153
618.0003.0000	618(3)	WATER FOR SEEDING	M-GAL	102
620.0001.0000	620(1)	TOPSOIL	SY	11,300
627.0005.0000	627(5)	FIRE HYDRANT INSTALLATION	EA	3
627.0010.0000	627(10)	ADJUSTMENT OF VALVE BOX	EA	22
627.2027.0000	627(10A)	ADJUSTMENT OF KEY BOX	EA	9
630.0002.0001	630(2)	GEOTEXTILE, STABILIZATION, CLASS 1	SY	5,250
635.0001.0000	635(1)	INSULATION BOARD	MBM	17.1
639.2000.0000	639(6)	APPROACH	EA	27
640.0001.0000	640(1)	MOBILIZATION AND DEMOBILIZATION	LS	ALL REQ'D
640.0004.0000	640(4)	WORKER MEALS AND LODGING, OR PER DIEM	LS	ALL REQ'D
641.0001.0000	641(1)	EROSION, SEDIMENT, AND POLLUTION CONTROL ADMINISTRATION	LS	ALL REQ'D
641.0002.0000	641(2)	TEMPORARY EROSION, SEDIMENT, AND POLLUTION CONTROL	CS	ALL REQ'D
641.0006.0000	641(6)	WITHHOLDING	CS	ALL REQ'D
641.0007.0000	641(7)	SWPPP MANAGER	LS	ALL REQ'D
642.0001.0000	642(1)	CONSTRUCTION SURVEYING	LS	ALL REQ'D
642.0003.0000	642(3)	THREE PERSON SURVEY PARTY	HR	100

STATE OF ALASKA
DEPARTMENT OF TRANSPORTATION
AND PUBLIC FACILITIES

HOMER: LAKE STREET
REHABILITATION

ESTIMATE OF QUANTITIES

STATE OF ALASKA DOT&PF
4111 AVIATION AVENUE
ANCHORAGE, AK 99502
(907) 269-0590

FILE W:\PROJECTS\HOMER LAKE ST. REHAB Z524610000\CIV3D\CIV3D\CIV3016\PLANSET\52461_C01_EST.DWG
DATE/TIME 6/5/2019 3:29 PM | SCALE 1" = 1' | DESIGNED ZDK | CHECKED SJR | DRAFTED VJS/ZDK

NO.	DATE	REVISION

STATE	PROJECT DESIGNATION	YEAR	SHEET NO.	TOTAL SHEETS
ALASKA	0001422/Z524610000	2020	C02	C02

ESTIMATE OF QUANTITIES

ITEM NO.	SSHC 2017 NO.	ITEM DESCRIPTION	PAY UNIT	TOTAL QUANTITY
643.0002.0000	643(2)	TRAFFIC MAINTENANCE	LS	ALL REQ'D
643.0003.0000	643(3)	PERMANENT CONSTRUCTION SIGNS	LS	ALL REQ'D
643.0023.0000	643(23)	TRAFFIC PRICE ADJUSTMENT	CS	ALL REQ'D
643.0025.0000	643(25)	TRAFFIC CONTROL	CS	ALL REQ'D
643.0032.0000	643(15A)	FLAGGING	CS	ALL REQ'D
644.0001.0000	644(1)	FIELD OFFICE	LS	ALL REQ'D
644.2004.0000	644(10)	ENGINEERING COMMUNICATIONS	CS	ALL REQ'D
645.0001.0000	645(1)	TRAINING PROGRAM, 1 TRAINEE/APPRENTICE	HR	1,000
646.0001.0000	646(1)	CPM SCHEDULING	CS	ALL REQ'D
647.2002.0000	647(5)	BACKHOE, 4WD, 1CY BUCKET, 75 HP MIN., 15 FT DEPTH	CS	ALL REQ'D
654.2002.0000	654(1)	EAGLE MONITORING	CS	ALL REQ'D
660.0001.0000	660(1A)	TRAFFIC SIGNAL SYSTEM COMPLETE	LS	ALL REQ'D
660.0003.0000	660(3)	HIGHWAY LIGHTING SYSTEM COMPLETE	LS	ALL REQ'D
660.0007.0000	660(7)	TEMPORARY SIGNAL COMPLETE	LS	ALL REQ'D
661.0002.0000	661(2)	LOAD CENTER, TYPE 1A	EA	1
662.2001.0000	662(3)	SIGNAL INTERCONNECT SYSTEM COMPLETE - FIBER	LS	ALL REQ'D
670.2005.0000	670(10C)	MMA PAVEMENT MARKINGS, TRANSVERSE AND GORE SURFACE APPLIED	LF	2,800
670.2006.0000	670(10D)	MMA PAVEMENT MARKINGS, LOGITUDINAL INLAID	LF	14,200
670.2007.0000	670(10E)	MMA PAVEMENT MARKINGS, SYMBOLS AND ARROW(S) INLAID	EA	12
670.2008.0000	670(10F)	MMA PAVEMENT MARKINGS, TRANSVERSE AND GORE SURFACE INLAID	LF	4,900
682.2000.0000	682(1)	VAC-TRUCK POTHOLE	CS	ALL REQ'D

TABLE OF ESTIMATING FACTORS

ITEM NO.	SSHC 2017 NO.	ITEM DESCRIPTION	UNIT
203.0006.0000	203(6)	BORROW	140 LB./FT.3
301.0001.00D1	301(1)	AGGREGATE BASE COURSE, GRADING D-1	148 LB./FT.3
306.0001.0000	306(1)	ATB	150 LB./FT.3
306.0002.5834	306(2)	ASPHALT BINDER, GRADE 58-34	5.3% WT. OF TOTAL WEIGHT OF 306.0001.0000
401.0001.002A	401(1A)	HMA, TYPE II; CLASS A	151 LB./FT.3
401.0004.5834	401(2)	ASPHALT BINDER, GRADE 58-34	5.3% WT. OF TOTAL WEIGHT OF 401.0001.002A
402.0001.STE1	402(1)	STE-1 ASPHALT FOR TACK COAT	0.000316 TON/YD2
608.2002.0000	608(7)	ASPHALT PATHWAY	150 LB./FT.3
618.0002.0000	618(2)	SEEDING	1.5 LB./1000FT.2
618.0003.0000	618(3)	WATER FOR SEEDING	1 GAL./FT.2

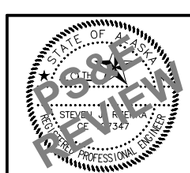

STATE OF ALASKA DOT&PF
4111 AVIATION AVENUE
ANCHORAGE, AK 99502
(907) 269-0590

STATE OF ALASKA
DEPARTMENT OF TRANSPORTATION
AND PUBLIC FACILITIES

HOMER: LAKE STREET
REHABILITATION

ESTIMATE OF QUANTITIES

FILE W:\PROJECTS\HOMER LAKE ST. REHAB Z524610000\CIV3D\CIV3D16\PLANSET\52461_C01_EST.DWG
DATE/TIME 6/5/2019 3:29 PM SCALE 1" = 1' DESIGNED ZDK CHECKED SJR DRAFTED VJS/ZDK

NO.	DATE	REVISION

STATE	PROJECT DESIGNATION	YEAR	SHEET NO.	TOTAL SHEETS
ALASKA	0001422/Z524610000	2020	D00	D07

FOR REVIEW ONLY.

EARTHWORK SUMMARY - 203.0003.0000 & 203.0006.0000

SHEET	STATION		ESTIMATED EXCAVATION					ESTIMATED EMBANKMENT				
			UNCLASSIFIED EXCAVATION MAINLINE	UNCLASSIFIED EXCAVATION MISCELLANEOUS	WASTE EST. @ 30% MAINLINE	UNCLASSIFIED EXCAVATION (USABLE)	*SHRUNK UNCL. EX. USABLE AS SELECTED MATERIAL, TYPE C	SELECTED MATERIAL, TYPE A MAINLINE	SELECTED MATERIAL, TYPE A MISCELLANEOUS	SELECTED MATERIAL, TYPE C MAINLINE	SELECTED MATERIAL, TYPE C MISCELLANEOUS	TOTAL EMBANKMENT
	FROM	TO	(CY)	(CY)	(CY)	(CY)	(CY)	(CY)	(CY)	(CY)	(CY)	(CY)
F1	10+75	13+20	2369.9	125.4	711.0	1658.9	1410.1	1539.7	101.0	105.5	8.2	1754.4
F2	13+20	18+00	3370.4	297.9	1011.1	2359.3	2005.4	1369.5	454.0	69.6	0.0	1893.1
F3	18+00	23+20	3414.9	416.7	1024.5	2390.4	2031.9	1649.6	798.2	133.9	46.2	2627.9
F4	23+20	28+00	3651.4	118.6	1095.4	2556.0	2172.6	1557.8	800.6	57.6	0.0	2416.0
F5	28+00	33+20	3433.2	188.0	1029.9	2403.2	2042.7	1730.3	431.8	7.8	0.0	2170.0
F6	33+20	EOP	1768.4	168.2	530.5	1237.9	1052.2	1108.5	47.1	7.9	0.1	1163.6
F7	96+50	101+20	2483.0	0.0	744.9	1738.1	1477.4	1749.6	0.0	9.8	151.8	1911.2
F8	101+20	103+50	912.7	0.0	273.8	638.9	543.1	653.0	0.0	0.0	0.0	653.0
TOTAL			22,718.5		6,421	14,983	12,735	13,991		598		14,589
ROUNDED TOTAL			22,800		6,500	15,000	12,800	14,000		600		14,600
TOTAL PAY ITEM QUANTITY (ROUNDED)			22,800					26,500				
UNIT			(CY)					(TON)				

WASTE = 0.3 × UNCLASSIFIED EXCAVATION

UNCLASSIFIED EXCAVATION (USABLE) = UNCLASSIFIED EXCAVATION - WASTE

ESTIMATED SHRUNK COMMON EXCAVATION (USABLE) = 0.85 × UNCLASSIFIED EXCAVATION (USABLE)

TOTAL EMBANKMENT = SELECTED MATERIAL, TYPE C + SELECTED MATERIAL, TYPE A

THIS SHEET WILL BE REMOVED FOR ADVERTISEMENT UNLESS THE CONSTRUCTION PROJECT MANAGER REQUIRES IT.
IF IT'S REQUIRED, THE SHEET NUMBER WILL BECOME **D1**.

STATE OF ALASKA DOT&PF
4111 AVIATION AVENUE
ANCHORAGE, AK 99502
(907) 269-0590

STATE OF ALASKA
DEPARTMENT OF TRANSPORTATION
AND PUBLIC FACILITIES

HOMER: LAKE STREET REHABILITATION

SUMMARY TABLES

FILE W:\PROJECTS\HOMER LAKE ST. REHAB Z524610000\CIV3D\CIV3D16\PLANSET\52461_D01_SUM.DWG
DATE/TIME 6/4/2019 9:31 AM | SCALE 1" = 1' | DESIGNED ZDK | CHECKED SJR | DRAFTED VJS/ZDK

NO.	DATE	REVISION

STATE	PROJECT DESIGNATION	YEAR	SHEET NO.	TOTAL SHEETS
ALASKA	0001422/Z524610000	2020	D01	D07

CLEARING AND GRUBBING - 201.0009.0000

SHEET	STATION FROM	STATION TO	OFFSET	AREA (ACRES)	REMARKS
F1	BOP	13+20	RT	0.20	
F1-F2	BOP	14+25	LT	0.44	
F2	13+20	16+50	RT	0.18	CLEAR & GRUB TO ROW
F2-F5	14+25	30+75	LT	1.14	CLEAR & GRUB TO ROW
F2-F3	16+50	19+50	RT	0.09	
F3-F4	19+50	24+50	RT	0.53	CLEAR & GRUB TO ROW
F4-F5	24+50	28+50	RT	0.09	
F5	28+50	29+75	RT	0.05	CLEAR & GRUB TO ROW
F5-F6	29+75	EOP	RT	0.06	
F5-F6	30+75	EOP	LT	0.11	
F6	200+20	200+55	LT	0.01	CLEAR & GRUB TO ROW

REMOVAL OF STRUCTURES AND OBSTRUCTIONS - 202.0001.0000

SHEET	STATION	OFFSET	REMARKS
F2	13+96	46.5 LT	BOLLARD
F2	14+20	40 RT	SIGN
F2	15+65	30 LT	FLAG POLE
F2	15+83	42 RT	SIGN
F3	18+82	52 RT	DECORATIVE GARDEN
F3	20+34	62.5 RT	LARGE SIGN
F5	28+42	48 RT	SIGN
F5	28+71	41 LT	LARGE SIGN
F5	30+57	31 LT	SIGN
F5	30+94	31 LT	SIGN
F5	31+39	36 LT	FDC CINDER BLOCK VAULT
F5	32+22	36 LT	SIGN
F6	35+43	41 LT	LAWN ACCOUTREMENTS

REMOVAL OF PAVEMENT - 202.0002.0000

SHEET	STATION FROM	STATION TO	AREA (SY)	REMARKS
F1	BOP	13+20	3,488	
F2	13+20	18+00	2,748	
F3	18+00	23+20	2,822	
F4	23+20	28+00	2,505	
F5	28+00	33+20	3,112	
F6	33+20	EOP	2,539	
F7	96+50	98+30	875	
F8	101+20	103+50	1,325	
		ROUNDED TOTAL =	19,500	

REMOVAL OF SIDEWALK - 202.0003.0000

SHEET	STATION FROM	STATION TO	OFFSET	AREA (SY)	REMARKS
F1	10+30	10+60	LT	33.5	
F1	10+30	10+60	RT	30.1	
F1	12+87	13+03	RT	13.5	
F1	13+02	13+07	RT	12.0	
F2	13+33	13+48	RT	13.3	
F3	22+15	22+37	RT	10.5	
F3	22+84	23+06	RT	17.0	
F4	24+10	24+25	RT	11.3	
F4	24+62	24+82	RT	13.7	
F6	35+07	35+55	LT	25.3	
F6	35+24	35+44	RT	16.9	
F6	198+93	199+79	LT	48.3	
F6	198+93	199+51	RT	35.0	
F6	200+36	200+54	LT	10.3	
F7	99+50	99+70	RT	14.7	
F7	100+37	100+57	RT	16.2	
		ROUNDED TOTAL =		322	

STATE OF ALASKA DOT&PF
4111 AVIATION AVENUE
ANCHORAGE, AK 99502
(907) 269-0590

STATE OF ALASKA
DEPARTMENT OF TRANSPORTATION
AND PUBLIC FACILITIES

HOMER: LAKE STREET
REHABILITATION

SUMMARY TABLES

FILE W:\PROJECTS\HOMER LAKE ST. REHAB Z524610000\CIV3D\CIV3D16\PLANSET\52461_D01_SUM.DWG | DATE/TIME 6/4/2019 9:31 AM | SCALE 1" = 1' | DESIGNED ZDK | CHECKED SJR | DRAFTED VJS/ZDK

NO.	DATE	REVISION

STATE	PROJECT DESIGNATION	YEAR	SHEET NO.	TOTAL SHEETS
ALASKA	0001422/Z524610000	2020	D02	D07

REMOVAL OF CULVERT PIPE - 202.0004.0000

SHEET	STATION	OFFSET	LENGTH (LF)	REMARKS
F1	10+88	29 RT	16.9	
F1	13+13	55 RT	49.9	
F2	13+81	41 RT	49.3	
F2	14+06	CL	59.7	
F2	14+22	33 LT	50.3	
F2	15+63	33 RT	37.2	
F2	15+98	36 LT	29.9	
F3	18+25	65 LT	39.7	
F3	18+47	CL	65.0	
F3	18+74	37 LT	52.1	
F3	18+77	36 RT	37.6	
F3	19+10	26 RT	16.0	
F3	19+46	49 RT	49.6	
F3	20+17	49 RT	44.2	
F3	22+15	59 RT	191.7	
F4	24+43	54 RT	49.6	
F4	26+12	59 RT	75.9	
F5	28+21	CL	87.9	
F5	28+58	38 RT	47.1	
F5	29+61	20 LT	95.9	
F5	29+69	34 RT	39.4	
F5	30+72	20 LT	76.0	
F5	31+33	CL	36.0	
F5	31+39	22 RT	9.0	
F5	31+97	17 LT	72.0	
F5	32+33	18 LT	10.4	
F6	199+79	CL	159.4	
F6	200+55	12 RT	29.5	
F6	200+56	12 LT	25.2	
F7	99+67	CL	118.2	
F7	100+66	36 RT	25.3	
		ROUNDED TOTAL =	1,746	

REMOVAL OF FENCE - 202.2022.0000

SHEET	STATION FROM	STATION TO	OFFSET	LENGTH (LF)	REMARKS
F2	13+45	13+55	RT	19.0	
F2	14+08	15+37	RT	130.5	
F2	15+83	15+98	RT	20.4	
F3	21+16	21+19	RT	19.0	
F4	24+02	25+06	LT	148.3	
F5	31+24	31+28	LT	11.0	
		ROUNDED TOTAL =		349	

REMOVAL OF MANHOLE & INLET - 202.0006.0000 & 202.0008.0000

SHEET	STATION	OFFSET	TYPE	REMARKS
F1	10+90	21 RT	INLET	
F2	14+23	17.5 RT	MH	
F3	18+58	28 RT	MH	
F3	19+10	17.5 RT	INLET	
F5	29+09	18.5 RT	INLET	
F5	31+39	18 RT	INLET	
F5	31+39	27 RT	INLET	
F5	32+33	13.5 LT	INLET	
F6	200+48	CL	MH	
F6	200+62	21 LT	INLET	
F6	200+65	23 RT	INLET	
F7	100+65	23.5 RT	INLET	

STATE OF ALASKA
PROFESSIONAL ENGINEER
PSSR REVIEW

STATE OF ALASKA DOT&PF
4111 AVIATION AVENUE
ANCHORAGE, AK 99502
(907) 269-0590

STATE OF ALASKA
DEPARTMENT OF TRANSPORTATION
AND PUBLIC FACILITIES

HOMER: LAKE STREET
REHABILITATION

SUMMARY TABLES

FILE W:\PROJECTS\HOMER LAKE ST. REHAB Z524610000\CIV3D\CIV3D16\PLANSET\52461_D01_SUM.DWG | DATE/TIME 6/4/2019 9:31 AM | SCALE 1" = 1' | DESIGNED ZDK | CHECKED SJR | DRAFTED VJS/ZDK

NO.	DATE	REVISION

STATE	PROJECT DESIGNATION	YEAR	SHEET NO.	TOTAL SHEETS
ALASKA	0001422/Z524610000	2020	D03	D07

PIPE SUMMARY - 603.2004.0024, 603.2004.0036, 603.2004.0042, & 603.2004.0048

SHEET	PIPE	SIZE (IN)	LENGTH (LF)	INLET				OUTLET				SLOPE (%)	REMARKS
				STATION	OFFSET	ELEV.	HEADWALL TYPE	STATION	OFFSET	ELEV.	HEADWALL TYPE		
F1	P1-1	42	133.7	99+35.90	68.30' LT	31.05	II	99+97.78	50.01' RT	28.24	II	2.10	
F1	P1-2	42	133.7	99+40.58	70.76' LT	31.05		100+02.77	47.32' RT	28.24		2.10	
F1	P1-3	24	25.3	100+65.34	22.88' RT	29.37		100+68.00	48.00' RT	28.74		2.50	
F1	P1-4	24	22.0	11+00.06	25.00' RT	32.65		11+00.00	47.00' RT	31.93		3.25	
F1	P1-5	24	62.2	13+43.50	44.50' RT	39.00		12+94.00	53.00' RT	37.45		2.50	
F2	P2-1	48	103.0	14+80.00	19.00' RT	40.50		13+94.75	39.72' LT	38.39		2.05	
F2	P2-2	48	198.1	16+78.00	19.00' RT	47.60		14+80.00	19.00' RT	40.67		3.50	
F2	P2-3	48	131.6	18+15.00	19.00' RT	52.40		16+78.00	19.00' RT	47.79		3.50	
F2	P2-4	24	40.8	13+98.00	40.00' RT	41.17		13+64.00	39.00' RT	39.85		3.25	
F2	P2-5	24	55.4	14+51.00	35.00' LT	41.31		13+96.00	44.00' LT	38.55		5.00	
F2	P2-6	24	47.0	15+77.00	40.00' RT	46.99		15+30.00	40.00' RT	45.46		3.25	
F2	P2-7	24	30.0	16+13.00	35.00' LT	47.16		15+83.00	35.00' LT	46.08		3.60	
F3	P3-1	48	89.3	19+10.00	19.00' RT	55.80		18+15.00	19.00' RT	52.67		3.50	
F3	P3-2	48	124.1	20+32.00	53.00' RT	60.40	I	19+10.00	19.00' RT	56.05		3.50	
F3	P3-3	24	26.4	19+05.00	45.00' RT	56.60		19+10.00	19.00' RT	56.33		1.00	
F3	P3-4	24	62.3	19+73.00	49.00' RT	60.40		19+05.00	45.00' RT	56.72		5.92	
F3	P3-5	24	48.7	18+96.00	35.00' LT	59.10		18+52.00	35.00' LT	57.20		3.90	
F3	P3-6	48	199.2	23+05.00	59.00' RT	72.14	I	21+06.00	58.00' RT	63.59		4.30	
F4	P4-1	48	57.1	24+72.00	55.00' RT	81.00	I	24+15.00	55.00' RT	77.98		5.30	
F4	P4-2	48	55.8	26+30.00	59.00' RT	90.33	I	25+83.00	62.00' RT	87.37		5.30	
F4	P4-3	24	35.7	26+63.00	35.00' LT	93.51		26+23.00	35.00' LT	91.44		5.80	
F4	P4-4	24	33.1	27+98.00	35.00' LT	101.49		27+61.00	35.00' LT	99.04		7.40	
F5	P5-1	36	125.1	28+55.14	33.32' LT	104.63		27+62.21	46.47' RT	100.38		3.40	
F5	P5-2	24	45.0	28+85.00	40.00' RT	108.16		28+40.00	40.00' RT	106.47		3.75	
F5	P5-3	24	49.1	29+92.00	40.00' RT	115.69		29+43.00	40.00' RT	112.16		7.20	
F5	P5-4	24	68.1	30+30.00	31.00' LT	115.71		29+62.00	31.00' LT	112.55		4.65	
F5	P5-5	24	77.3	31+07.00	31.00' LT	122.75		30+30.00	31.00' LT	115.82		9.00	
F5	P5-6	24	33.2	30+98.00	17.00' RT	122.91		30+70.00	34.85' RT	121.32		4.80	
F5	P5-7	24	66.1	32+35.00	28.00' LT	129.37		31+69.00	31.00' LT	126.73		4.00	
F5	P5-8	24	18.6	32+50.00	17.00' LT	130.87		32+35.00	28.00' LT	129.75		6.00	
F6	P6-1	24	23.2	200+65.00	22.96' RT	145.08		200+62.00	CL	144.85		1.00	
F6	P6-2	24	21.1	200+62.00	21.09' LT	145.06		200+62.00	CL	144.85		1.00	
F6	P6-3	24	173.7	200+65.00	CL	144.70		198+88.36	1.01' LT	142.10		1.50	

EXISTING MANHOLE SUMMARY - 604.0003.0000 & 604.0004.0000

SHEET	TYPE	STATION	OFFSET	FINISHED TOP OF CASTING ELEVATION	RECONSTRUCT EXISTING MANHOLE (EACH)	ADJUST EXISTING MANHOLE (EACH)	REMARKS
F2	SS MH	13+44	53 RT	39.10		X	
F2	SS MH	17+98	36 RT	57.41		X	
F3	SS MH	18+94	37 RT	59.51		X	
F3	SS MH	22+18	43 RT	74.27		X	
F4	SS MH	26+01	54 RT	95.31		X	
F5	SS MH	31+52	36 RT	130.69		X	
F6	SD MH	198+88	CL	MATCH EXISTING	X		
F6	SS MH	200+33	25 LT	148.31		X	
F6	SS MH	200+33	25 LT	148.31		X	

STATE OF ALASKA
REGISTERED PROFESSIONAL ENGINEER
STEVEN R. RIEMER
CE 7347
PS&E REVIEW

STATE OF ALASKA DOT&PF
4111 AVIATION AVENUE
ANCHORAGE, AK 99502
(907) 269-0590

STATE OF ALASKA
DEPARTMENT OF TRANSPORTATION
AND PUBLIC FACILITIES

HOMER: LAKE STREET
REHABILITATION

SUMMARY TABLES

NO.	DATE	REVISION

STATE	PROJECT DESIGNATION	YEAR	SHEET NO.	TOTAL SHEETS
ALASKA	0001422/Z524610000	2020	D04	D07

STRUCTURE INSTALLATION SUMMARY - 604.0001.0001, 604.0001.0003, & 604.0005.000A

SHEET	STRUCTURE	TYPE	STATION	OFFSET	TOP OF CASTING ELEVATION	TYPE OF CASTING	REMARKS
F1	S1-1	A	100+65.34	22.88 RT	32.32	CI	
F1	S1-2	A	11+00.06	25.00 RT	35.85	CI	
F2	S2-1	III	14+80.00	19.00 RT	47.05	MH CI	
F2	S2-2	III	16+78.00	19.00 RT	53.86	MH CI	
F3	S3-1	III	18+15.00	19.00 RT	58.39	MH CI	
F3	S3-2	III	19+10.00	19.00 RT	62.34	MH CI	
F3	S3-3	A	19+05.00	45.00 RT	61.23	FI	NO SUMP
F5	S5-1	A	30+30.00	31.00 LT	118.50	FI	
F5	S5-2	I	30+98.00	17.00 RT	126.20	CI	
F5	S5-3	I	32+35.00	28.00 LT	133.50	FI	NO SUMP. TOP OF CASTING TO BOTTOM OF STRUCTURE SHALL BE NO LARGER THAN 4'.
F5	S5-4	I	32+50.00	17.00 LT	135.40	CI	
F6	S6-1	A	200+65.00	22.96 RT	147.80	CI	NO SUMP
F6	S6-2	A	200+62.00	21.09 LT	147.95	CI	
F6	S6-3	I	200+62.00	CL	148.32	MH	

REMOVAL OF CURB & GUTTER - 202.0009.0000; CURB & GUTTER, TYPE 1 - 609.0001.0000

SHEET	STATION		OFFSET	REMOVAL OF CURB & GUTTER (LF)	CURB & GUTTER, TYPE 1 (LF)	REMARKS
	FROM	TO				
F1	BOP	13+20	LT/RT	644	717	
F2	13+20	18+00	RT	492	499	
F3	18+00	23+20	RT	605	653	
F4	23+20	28+00	RT	513	532	
F5	28+00	33+20	LT/RT	623	807	
F6	33+20	EOP	LT/RT	823	842	
		ROUNDED TOTAL =		3,700	4,050	

CONCRETE SIDEWALK, 4 INCHES THICK - 608.0001.0000

SHEET	STATION		OFFSET	AREA (SY)	REMARKS
	FROM	TO			
F6	198+93	199+63	LT	46.6	
F6	198+93	199+59	RT	41.1	
F6	199+80	200+39	LT	38.5	USE 6" THICK CONCRETE FROM STA. 199+80 TO 200+15
		ROUNDED TOTAL =		127	

CURB & BIKE RAMPS - 608.0006.0000 & 608.2022.0000

SHEET	STATION	OFFSET	TYPE	ASP	DETAIL	REMARKS
F1	10+37.8	48.1 LT	PARALLEL	X		
F1	10+38.3	51.1 RT	PARALLEL	X		
F1	10+57.5	34.6 RT	PARALLEL	X		
F1	10+57.7	32.4 LT	PARALLEL	X		
F1	11+23.8	30.0 LT	BIKE		X	
F1	11+23.8	21.1 RT	BIKE		X	
F1	12+93.8	22.6 RT	PARALLEL	X		
F2	13+42.5	21.9 RT	PARALLEL	X		
F3	22+35.2	23.5 RT	PARALLEL		X	CR3-1
F3	22+92.5	23.5 RT	PARALLEL		X	CR3-2
F4	24+18.2	23.4 RT	PARALLEL		X	CR4-1
F4	24+75.8	23.4 RT	PARALLEL		X	CR4-2
F6	34+64.7	16.0 LT	BIKE		X	
F6	34+64.7	16.0 RT	BIKE		X	
F6	35+29.7	24.9 RT	PARALLEL	X		
F6	35+34.6	20.9 LT	PARALLEL	X		
F6	35+46.7	45.3 RT	PARALLEL	X		
F6	35+53.3	36.4 LT	PARALLEL	X		
F6	199+70.8	19.8 LT	PARALLEL	X		
F6	200+46.5	20.0 LT	PARALLEL	X		
F7	99+54.4	22.0 RT	PARALLEL	X		
F7	100+50.9	22.0 RT	PARALLEL	X		

STATE OF ALASKA DOT&PF
4111 AVIATION AVENUE
ANCHORAGE, AK 99502
(907) 269-0590

STATE OF ALASKA
DEPARTMENT OF TRANSPORTATION
AND PUBLIC FACILITIES

HOMER: LAKE STREET
REHABILITATION

SUMMARY TABLES

FILE W:\PROJECTS\HOMER LAKE ST. REHAB Z524610000\CIV3D\CIV3D16\PLANSET\52461_D01_SUM.DWG | DATE/TIME 6/4/2019 9:32 AM | SCALE 1" = 1' | DESIGNED ZDK | CHECKED SJR | DRAFTED VJS/ZDK

NO.	DATE	REVISION

STATE	PROJECT DESIGNATION	YEAR	SHEET NO.	TOTAL SHEETS
ALASKA	0001422/Z524610000	2020	D05	D07

BACKING CURB SUMMARY - 609.0003.0000, 609.0003.000A & 609.0003.000B

SHEET	FROM		TO		BACKING CURB (LF)	BACKING CURB, TYPE A - 24 INCHES WIDE X 6 INCHES THICK (LF)	BACKING CURB, TYPE B - 24 INCHES WIDE X 12 INCHES THICK (LF)	REMARKS
	STATION	OFFSET	STATION	OFFSET				
F3	21+59	LT	22+03	LT	-	52.4	-	SEE E DETAILS
F5	31+31	RT	33+09	RT	-	-	169.0	SEE E DETAILS
F5-F6	32+14	LT	33+78	LT	-	174.4	-	SEE E DETAILS
F6	34+12	LT	34+54	LT	-	-	41.6	SEE E DETAILS
F6	34+76	LT	35+24	LT	48.5	-	-	SEE E DETAILS
				ROUNDED TOTAL =	49	175	211	

RIPRAP & DITCH LINING SUMMARY - 610.0001.0000, 611.0001.0001 & 611.0001.0002

SHEET	PIPE LOCATIONS			END TREATMENT	LENGTH (LF)	DITCH LINING (CY)	RIPRAP CLASS I (CY)	RIPRAP CLASS II (CY)	REMARKS
	PIPE ID	INLET/OUTLET	OFFSET						
F1	P1-1 / P1-2	OUTLET	RT	II	16.9	-	-	33.8	PLACE RIPRAP TO ROW
F4	P5-1	OUTLET	RT	I	20.0	-	14.8	-	
F6	P5-2	OUTLET	RT	I	12.0	-	8.9	-	

SHEET	DITCH LOCATIONS				DESCRIPTION	DITCH LINING (CY)	RIPRAP CLASS I (CY)	RIPRAP CLASS II (CY)	REMARKS
	STATION	OFFSET	STATION	OFFSET					
F1	10+68	LT	13+96	LT	SPECIAL DITCH	-	-	689.0	SEE E DETAILS
F3	19+01	RT	19+08	RT	FIELD INLET PERIMETER	0.8	-	-	
F3	20+24	RT	21+06	RT	SPECIAL DITCH	-	-	141.1	SEE E DETAILS
F3-F4	22+95	RT	24+15	RT	SPECIAL DITCH	-	-	207.0	SEE E DETAILS
F4	24+62	RT	25+83	RT	SPECIAL DITCH	-	-	240.7	SEE E DETAILS
F4	26+24	RT	26+50	RT	SPECIAL DITCH	-	-	57.0	SEE E DETAILS
F5	28+55	LT	29+52	LT	ARMORED DITCH	63.6	-	-	SEE E DETAILS
F5	28+85	RT	29+43	RT	ARMORED DITCH	29.8	-	-	SEE E DETAILS
F5	29+92	RT	30+70	RT	ARMORED DITCH	38.5	-	-	SEE E DETAILS
F5	30+27	LT	30+33	LT	FIELD INLET PERIMETER	0.8	-	-	
F5	31+07	LT	31+69	LT	ARMORED DITCH	36.1	-	-	SEE E DETAILS
F5	32+32	LT	32+38	LT	FIELD INLET PERIMETER	0.8	-	-	
F5	32+32	LT	32+38	LT	FIELD INLET PERIMETER	0.8	-	-	SEE E DETAILS
					ROUNDED TOTAL =	170	24	1400	

NOTE:

DEPTH OF RIPRAP IS DETERMINED BY CLASS UNLESS SPECIFIED ELSEWHERE IN THE PLANS.

1. RIPRAP CLASS, I = 2' DEPTH
2. RIPRAP CLASS, II = 3' DEPTH

STATE OF ALASKA
STEVEN T. RIEMER
CE 7347
REGISTERED PROFESSIONAL ENGINEER

PS&E REVIEW

STATE OF ALASKA DOT&PF
4111 AVIATION AVENUE
ANCHORAGE, AK 99502
(907) 269-0590

STATE OF ALASKA
DEPARTMENT OF TRANSPORTATION
AND PUBLIC FACILITIES

HOMER: LAKE STREET REHABILITATION

SUMMARY TABLES

FILE W:\PROJECTS\HOMER LAKE ST. REHAB Z524610000\CIV3D\CIV3D16\PLANSET\52461_D01_SUM.DWG
DATE/TIME 6/4/2019 9:32 AM | SCALE 1" = 1' | DESIGNED ZDK | CHECKED SJR | DRAFTED VJS/ZDK

NO.	DATE	REVISION

STATE	PROJECT DESIGNATION	YEAR	SHEET NO.	TOTAL SHEETS
ALASKA	0001422/Z524610000	2020	D06	D07

ADJUSTMENT OF VALVE BOX - 627.0010.0000

SHEET	STATION	OFFSET	REMARKS
F1	12+63	26 RT	
F2	13+27	50 RT	
F2	13+47	20 LT	
F2	13+50	20 LT	
F2	14+94	37 RT	
F2	16+15	31 LT	
F2	17+22	26 LT	
F3	20+58	44 RT	
F3	22+23	23 LT	
F3	22+24	24 LT	
F3	22+55	23 LT	
F3	22+60	26 LT	
F4	23+72	22 LT	
F4	27+45	25 LT	
F4	27+59	37 LT	
F5	29+15	34 LT	
F5	30+60	17 LT	
F5	31+38	21 LT	
F5	32+70	25 LT	
F6	35+46	21 LT	
F6	35+54	40 RT	
F6	35+69	57 LT	

ADJUSTMENT OF KEY BOX - 627.2027.0000

SHEET	STATION	OFFSET	REMARKS
F2	16+47	42 RT	
F3	19+37	32 RT	
F3	21+71	26 LT	
F3	22+85	20 LT	
F4	26+53	37 LT	
F5	29+65	28 LT	
F5	32+85	31 RT	
F5	33+32	25 LT	
F6	200+18	34 LT	

FIRE HYDRANT INSTALLATION - 627.0005.0000

SHEET	STATION	OFFSET	REMARKS
F2	17+22	47 LT	
F3	21+71	54 LT	
F4	27+41	47 LT	

INSULATION BOARD - 635.0001.0000

SHEET	STATION	OFFSET	LENGTH (FT)	WIDTH (FT)	AREA (MBM)	REMARKS
F2	13+36	42.0 LT	28	24	2.69	
F2	14+17	24.7 LT	32	12	1.54	
F2	14+94	19.0 RT	8	12	0.38	
F2	16+46	19.0 RT	8	12	0.38	
F2	16+97	20.6 RT	8	12	0.38	
F3	19+05	45.0 RT	8	8	0.26	
F3	19+38	28.0 RT	8	12	0.38	
F3	19+87	41.0 RT	60	12	2.88	
F3	20+27	51.7 RT	8	12	0.38	
F3	20+58	53.8 RT	16	8	0.51	
F3	21+48	58.2 RT	8	12	0.38	
F3	22+88	58.9 RT	8	12	0.38	
F4	23+55	55.9 RT	16	8	0.51	
F4	25+04	54.0 RT	16	8	0.51	
F5	28+41	22.2 LT	24	12	1.15	
F5	29+15	27.5 LT	16	8	0.51	
F5	29+30	27.5 LT	16	8	0.51	
F5	29+62	27.5 LT	16	12	0.77	CONTINUE INSULATION DEPTH FROM BOTTOM OF DITCH LINING
F5	30+19	37.3 RT	12	8	0.38	
F5	30+44	28.7 LT	16	8	0.51	SEE PRV INSULATION DETAILS
F5	31+38	27.4 LT	16	8	0.51	
F5	32+50	17.0 LT	12	12	0.58	
F6	200+65	23.0 RT	12	12	0.58	

GEOTEXTILE, STABLIZATION - 630.0002.0000

SHEET	STATION		AREA (SY)	REMARKS
	FROM	TO		
F1	BOP	13+20	1,039.8	
F2	13+20	18+00	1,004.2	
F3	18+00	23+20	1,171.5	
F4	23+20	28+00	970.8	
F5	28+00	33+20	976.0	
F6	33+20	EOP	51.1	
		ROUNDED TOTAL =	5,250	

STATE OF ALASKA DOT&PF
4111 AVIATION AVENUE
ANCHORAGE, AK 99502
(907) 269-0590

STATE OF ALASKA
DEPARTMENT OF TRANSPORTATION
AND PUBLIC FACILITIES

HOMER: LAKE STREET
REHABILITATION

SUMMARY TABLES

FILE W:\PROJECTS\HOMER LAKE ST. REHAB Z524610000\CIV3D\CIV3D16\PLANSET\52461_D01_SUM.DWG
DATE/TIME 6/4/2019 9:32 AM | SCALE 1" = 1' | DESIGNED ZDK | CHECKED SJR | DRAFTED VJS/ZDK

NO.	DATE	REVISION

STATE	PROJECT DESIGNATION	YEAR	SHEET NO.	TOTAL SHEETS
ALASKA	0001422/Z524610000	2020	D07	D07

APPROACH SUMMARY - 639.2001.0000

SHEET	STATION	OFFSET	SKEW ANGLE (90° TYP.)	TYPE			WIDTH (FT)	LENGTH (FT)	REMARKS
				PUB.	RES.	COM.			
F1-F2	13+24	RT	83.75	X			28.0	72.0	BEN WALTERS AVENUE
F2	13+82	RT	90			X	30.0	45.0	
F2	14+24	LT	90			X	26.0	60.0	
F2	15+55	RT	90			X	34.0	70.0	
F2	15+99	LT	90		X		20.0	63.0	
F2	16+52	RT	90			X	30.0	60.0	
F2	17+84	RT	90			X	34.0	60.0	
F3	18+74	LT	90		X		34.0	47.0	
F3	19+47	RT	90			X	24.0	70.0	
F3	20+12	RT	90		X		20.0	75.0	
F3	21+36	RT	90			X	24.0	70.0	
F3	22+50	LT	68.25	X			46.5	52.0	GRUBSTAKE AVENUE
F3	22+63	RT	90	X			24.0	84.0	SMOKY BAY WAY
F4	24+47	RT	90			X	24.0	80.0	
F4	26+10	RT	90			X	34.0	74.5	
F4	26+45	LT	90		X		20.0	55.0	
F4	27+82	LT	90		X		20.0	55.0	
F5	28+62	RT	90			X	34.0	50.0	
F5	29+69	RT	90			X	34.0	58.0	
F5	29+87	LT	90			X	30.0	50.0	
F5	30+75	LT	90			X	26.0	50.0	
F5	31+19	RT	90			X	26.0	38.5	
F5	31+95	LT	90			X	34.0	42.0	
F5-F6	33+18	RT	90			X	34.0	44.0	
F6	33+91	RT	90			X	24.0	50.0	
F6	33+95	LT	90			X	34.0	28.5	
F6	199+89	LT	90			X	VARIES	44.0	

STATE OF ALASKA DOT&PF
4111 AVIATION AVENUE
ANCHORAGE, AK 99502
(907) 269-0590

STATE OF ALASKA
DEPARTMENT OF TRANSPORTATION
AND PUBLIC FACILITIES

HOMER: LAKE STREET
REHABILITATION

SUMMARY TABLES

FILE W:\PROJECTS\HOMER LAKE ST. REHAB Z524610000\CIV3D\CIV3D16\PLANSET\52461_D01_SUM.DWG | DATE/TIME 6/4/2019 9:32 AM | SCALE 1" = 1' | DESIGNED ZDK | CHECKED SJR | DRAFTED VJS/ZDK

NO.	DATE	REVISION	STATE	PROJECT DESIGNATION	YEAR	SHEET NO.	TOTAL SHEETS
			ALASKA	0001422/Z524610000	2020	E01	E23

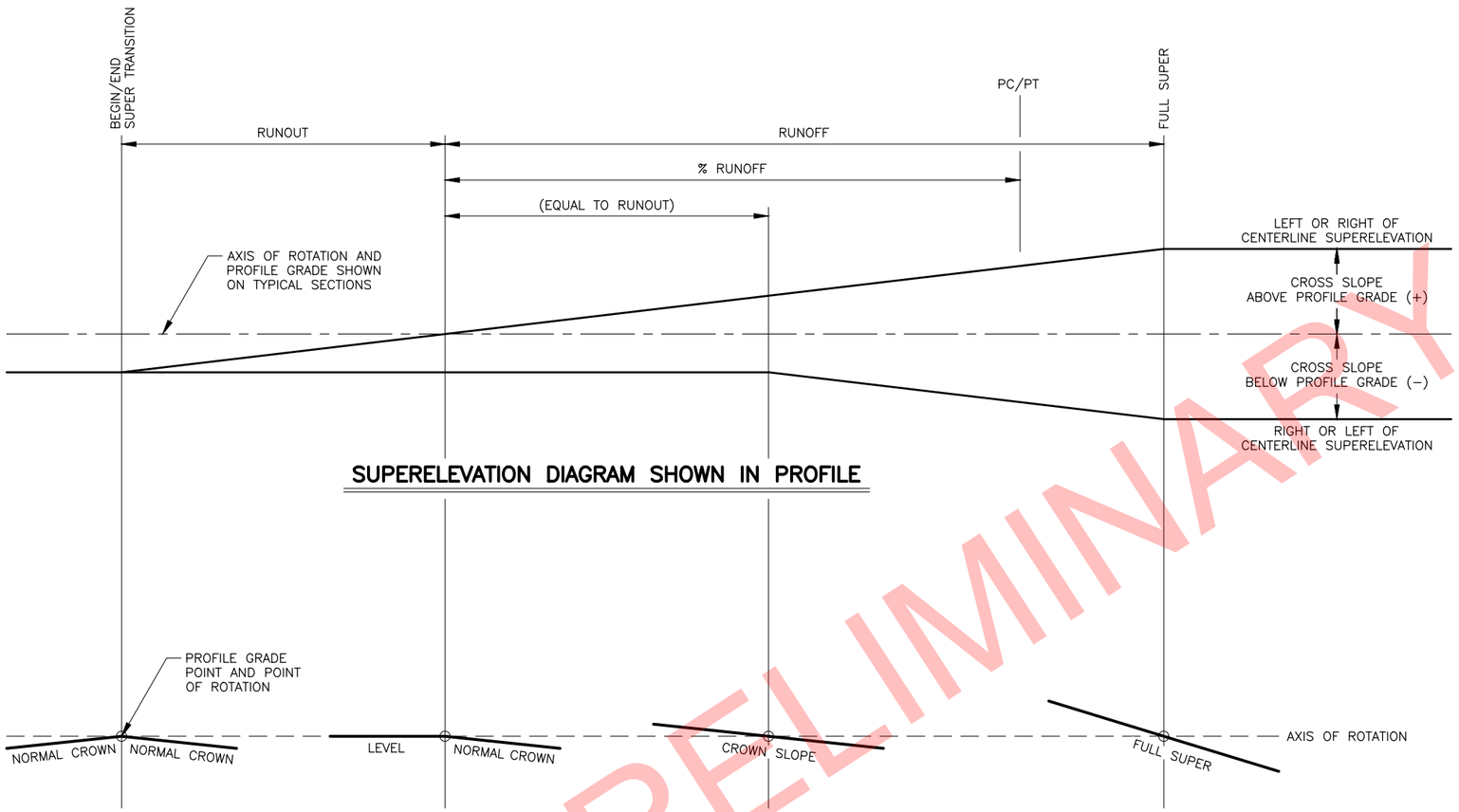

SUPERELEVATION DIAGRAM SHOWN IN PROFILE

SUPERELEVATION TRANSITION

SUPERELEVATION NOTES:

1. REFER TO PLAN AND PROFILE SHEETS FOR SUPERELEVATION VALUES AND SPECIAL CASES.
2. BUILD SUPERELEVATION INTO SUBGRADE AND CARRY THROUGH SHOULDERS.
3. % RUNOFF = PORTION OF RUNOFF ON TANGENT.
4. WIDENING FOR GUARDRAIL OR CURVATURE DOES NOT CHANGE THE LOCATION OF THE AXIS OF ROTATION.

STATE OF ALASKA DOT&PF
4111 AVIATION AVENUE
ANCHORAGE, AK 99502
(907) 269-0590

STATE OF ALASKA
DEPARTMENT OF TRANSPORTATION
AND PUBLIC FACILITIES

HOMER: LAKE STREET REHABILITATION

SUPERELEVATION TRANSITION

FILE W:\PROJECTS\HOMER LAKE ST. REHAB Z524610000\CIV3D\CIV3D16\PLANSET\52461_E01_SUPERS.DWG | DATE/TIME 6/4/2019 8:44 AM | SCALE NONE | DESIGNED ZDK | CHECKED SJR | DRAFTED VJS/ZDK

NO.	DATE	REVISION

STATE	PROJECT DESIGNATION	YEAR	SHEET NO.	TOTAL SHEETS
ALASKA	0001422/Z524610000	2020	E02	E23

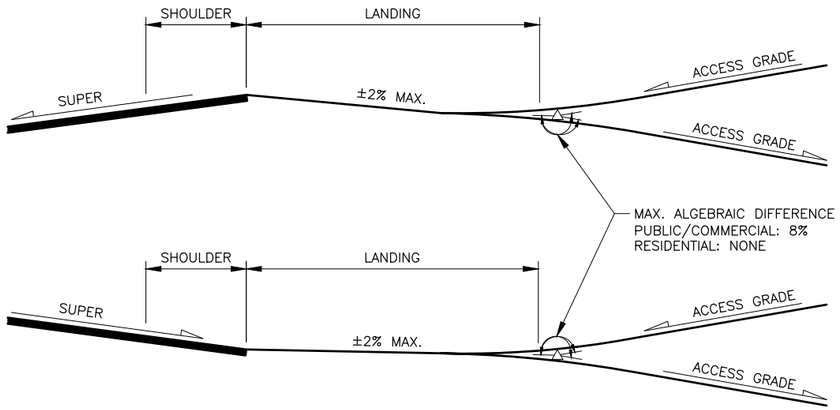

APPROACH PROFILES ON SUPER ELEVATED ROADWAY

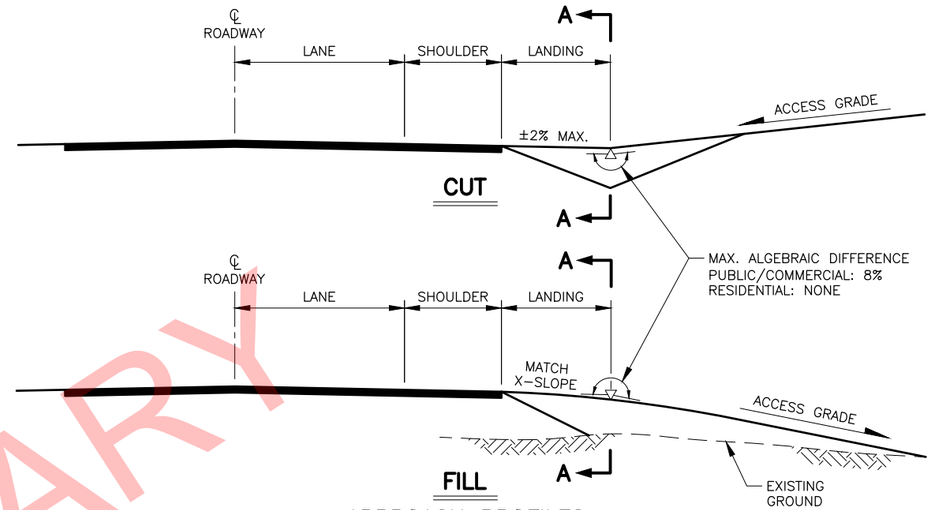

APPROACH PROFILES

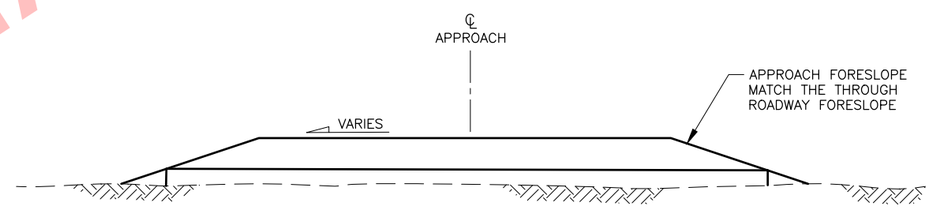

SECTION A–A
APPROACH TYPICAL

APPROACH RADIUS TABLE	
TYPE	RADIUS
RESIDENTIAL	20'
PUBLIC COMMERCIAL	40'

LANDING TABLE	
TYPE	LENGTH
RESIDENTIAL	10'
PUBLIC COMMERCIAL	30'

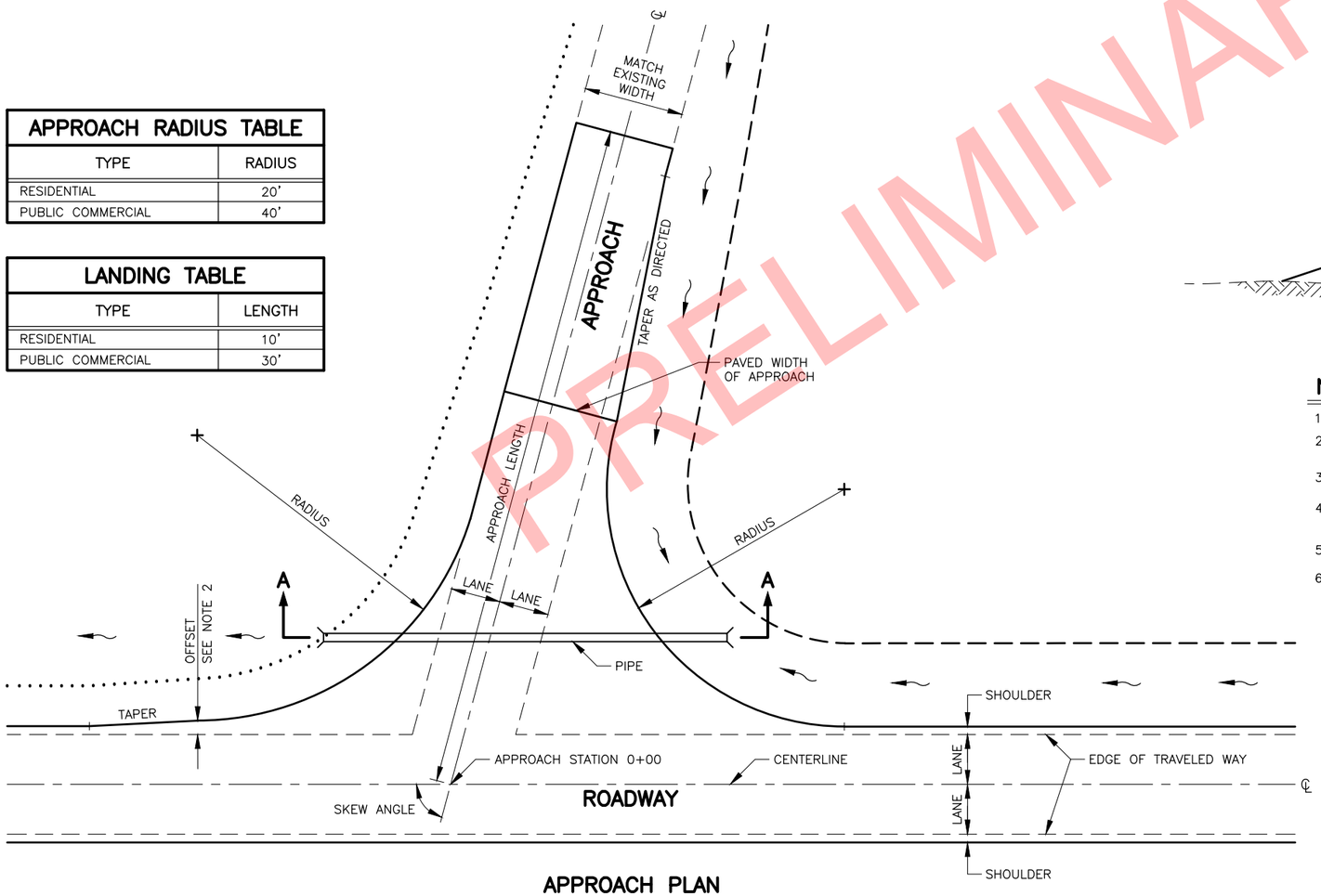

APPROACH PLAN

NOTES:

1. SEE APPROACH SUMMARY FOR APPROACH STATION, LENGTH, WIDTH, SKEW ANGLE, AND TYPE.
2. THE TAPER OFFSET FROM TRAVELED WAY = ASSIGNED VALUE OR SHOULDER WIDTH WHICHEVER IS LARGER. TAPER WILL BE 10 FEET IN LENGTH FOR EACH FOOT OF OFFSET.
3. SEE PUBLIC APPROACH AND DRIVEWAY TYPICAL SECTIONS.
4. APPROACH VERTICAL CURVE REQUIREMENTS: CREST – 2½ INCH MAXIMUM IN A 10–FOOT CHORD
   SAG – 2 INCH MAXIMUM IN A 10–FOOT CHORD
5. WHERE SIDEWALK IS PRESENT BEGIN DRIVEWAY LANDING AT BACK OF SIDEWALK.
6. ACCESS GRADE MAX. 15%

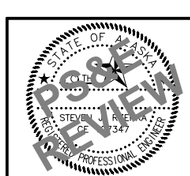

STATE OF ALASKA DOT&PF
4111 AVIATION AVENUE
ANCHORAGE, AK 99502
(907) 269–0590

STATE OF ALASKA
DEPARTMENT OF TRANSPORTATION
AND PUBLIC FACILITIES

HOMER: LAKE STREET
REHABILITATION

APPROACH DETAILS

FILE W:\PROJECTS\HOMER LAKE ST. REHAB Z524610000\CIV3D\CIV3D16\PLANSET\52461_E02_APPR.DWG
DATE/TIME 6/4/2019 8:44 AM
SCALE NONE
DESIGNED ZDK
CHECKED SJR
DRAFTED VJS/ZDK

NO.	DATE	REVISION

STATE	PROJECT DESIGNATION	YEAR	SHEET NO.	TOTAL SHEETS
ALASKA	0001422/Z524610000	2020	E03	E23

CR-T-01.10

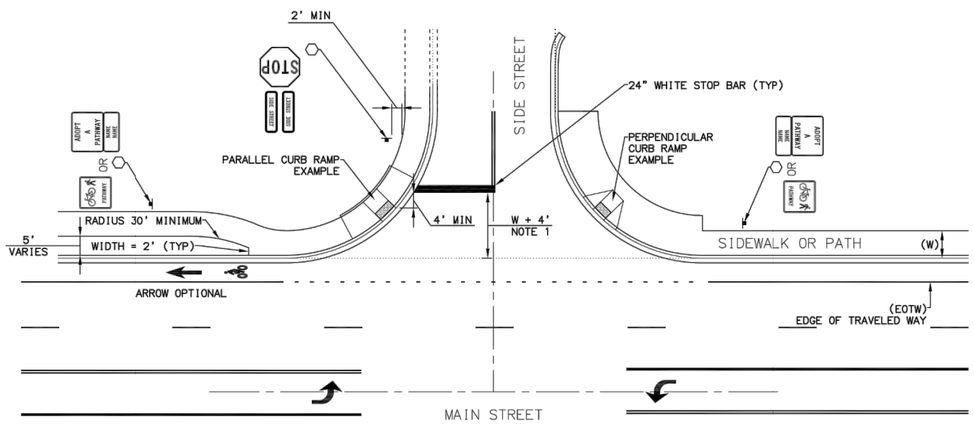

TYPICAL CURBED RETURN WITH SIDEWALK

RESCINDED

FOR REVIEW PURPOSE ONLY

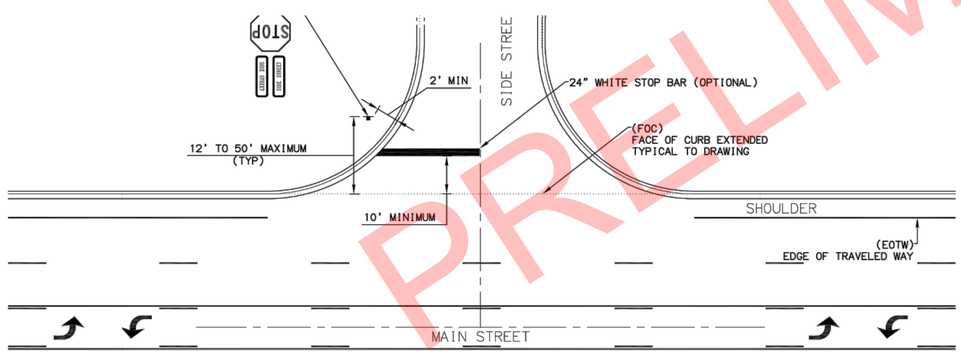

TYPICAL CURBED RETURN WITHOUT SIDEWALK

CURBED INTERSECTION NOTES:

SIGNING:

1. LOCATE STOP SIGN SO IT IS VISIBLE TO APPROACHING TRAFFIC AND NEAR THE STOP BAR.
2. PROVIDE 2' OF CLEARANCE BETWEEN EDGE OF STOP SIGN PANEL AND EDGE OF PATHWAY OR SIDEWALK.
3. PROVIDE 6' OF CLEARANCE BETWEEN EDGE OF STOP SIGN PANEL AND SIDE STREET FACE OF CURB.
4. PLACE PATHWAY REGULATORY SIGNS AT COLLECTOR OR ARTERIAL ROADWAY JUNCTIONS, TYPICALLY GREATER THAN 1000 VEHICLES A DAY, OR SIDE STREETS CONNECTING THROUGH TRAFFIC TO OTHER COLLECTORS OR ARTERIALS.
5. "NO MOTOR VEHICLES" SIGNS ARE NOT REQUIRED WITHIN THE MUNICIPALITY OF ANCHORAGE.
6. SEE PLANS FOR PATHWAY SIGNING REQUIRED AT SIDE STREETS.

STRIPING:

1. STOP BARS ARE NOT REQUIRED WHEN NO PATHWAY OR SIDEWALK IS PRESENT. SEE PLANS.
2. LOCATE STOP BAR 4' MINIMUM BETWEEN THE TOE OF CURB RAMP AND EDGE OF STOP BAR OR A DISTANCE OF THE WIDTH OF THE SIDEWALK OR PATHWAY PLUS 4'.
3. BREAK CENTERLINE STRIPING WITHIN INTERSECTIONS WHICH HAVE DEDICATED TURN LANES.
4. CONTINUE CENTERLINE STRIPING THROUGH INTERSECTIONS WITH CENTER TWO-WAY-LEFT-TURN-ONLY LANES OR WHEN THERE ARE NO LEFT TURN LANES.
5. CONTINUE LANE "SKIP" STRIPING THROUGH INTERSECTIONS.
6. DELETE OUTERMOST EDGE OF TRAVELED WAY STRIPING AT INTERSECTIONS OR WRAP EOTW STRIPING TO SIDE STREET EOTW.
7. MATCH SIDE STREET STRIPING IF STRIPING IS PRESENT.

REVISIONS

Date	Description	By
01/17/13	SHEET NUMBER AND DRAWING	SET
09/16/13	NOTES ADDED	SET
12/10/14	REVISED NOTES	SET
6/10/17	REVISED NOTES	SET

SHEET 2 OF 2

State of Alaska
Department of Transportation
& Public Facilities

UNSIGNALIZED INTERSECTION
STOP AND CROSSING

APPROVED

STATE OF ALASKA 49TH REGISTERED PROFESSIONAL ENGINEER

Date 06/10/17

CR T 01.10 Sheet 2 of 2

PRELIMINARY

PLACE HOLDER. WILL BE UPDATED AT CERTIFICATION.

STATE OF ALASKA 10TH SCOTT E. THOMAS CE-8602 REGISTERED PROFESSIONAL ENGINEER

PRELIMINARY

STATE OF ALASKA DOT&PF
4111 AVIATION AVENUE
ANCHORAGE, AK 99502
(907) 269-0590

STATE OF ALASKA
DEPARTMENT OF TRANSPORTATION
AND PUBLIC FACILITIES

HOMER: LAKE STREET
REHABILITATION

UNSIGNALIZED INTERSECTION
STOP AND CROSSING

FILE W:\PROJECTS\HOMER LAKE ST. REHAB Z524610000\CIV3D\CIV3D16\PLANSET\52461_E03_CR-T-01.10 CURB.DWG | DATE/TIME 6/4/2019 8:44 AM | SCALE NTS | DESIGNED --- | CHECKED --- | DRAFTED ---

NO.	DATE	REVISION

STATE	PROJECT DESIGNATION	YEAR	SHEET NO.	TOTAL SHEETS
ALASKA	0001422/Z524610000	2020	E04	E23

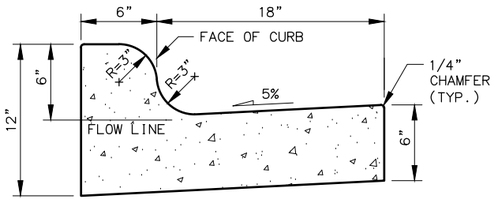

6" MOUNTABLE CURB & GUTTER

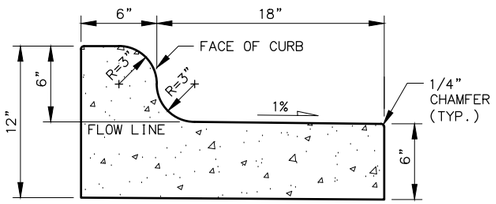

6" MOUNTABLE CURB

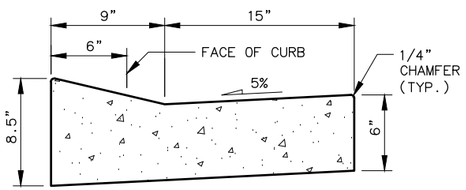

DEPRESSED CURB & GUTTER (CURB CUT)

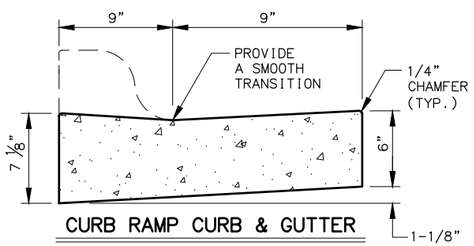

CURB RAMP CURB & GUTTER

CURB NOTE:

MOUNTABLE, DEPRESSED, ROLLED, AND EXPRESSWAY GUTTER PANS SHALL MATCH THE ROADWAY CROSS SLOPE IN THE HIGH SIDE OF SUPER ELEVATED AREAS.

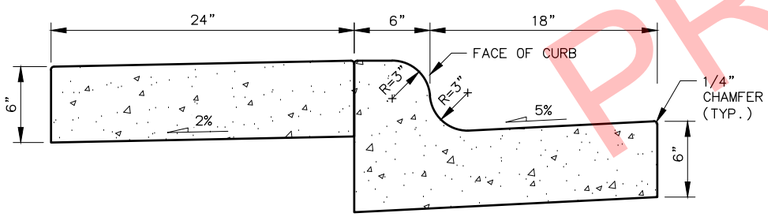

6" MOUNTABLE CURB & GUTTER WITH BACKING CURB, TYPE A

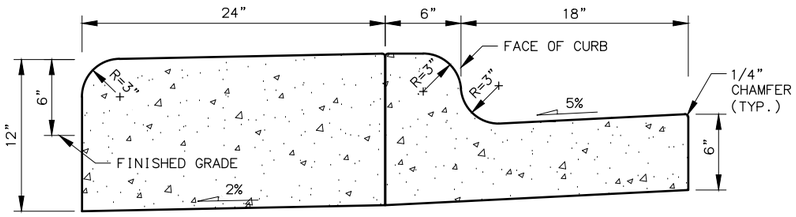

6" MOUNTABLE CURB & GUTTER WITH BACKING CURB, TYPE B

CURBS

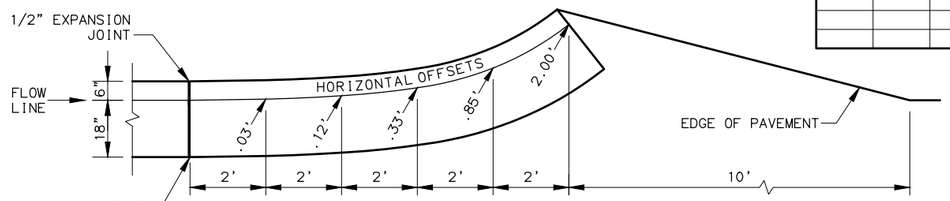

PLAN

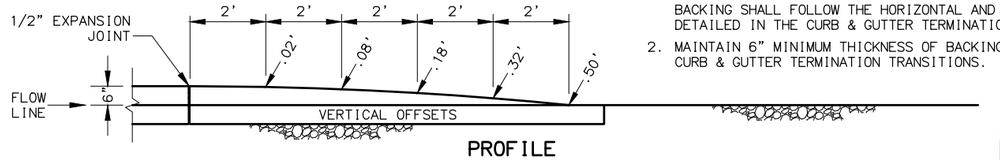

PROFILE

CURB & GUTTER TERMINATION TRANSITIONS

NOTES:

1. WHEN BACKING CURB IS PRESENT AT A CURB TERMINATION, CURB BACKING SHALL FOLLOW THE HORIZONTAL AND VERTICAL OFFSETS DETAILED IN THE CURB & GUTTER TERMINATION TRANSITIONS.
2. MAINTAIN 6" MINIMUM THICKNESS OF BACKING CURB THROUGHOUT CURB & GUTTER TERMINATION TRANSITIONS.

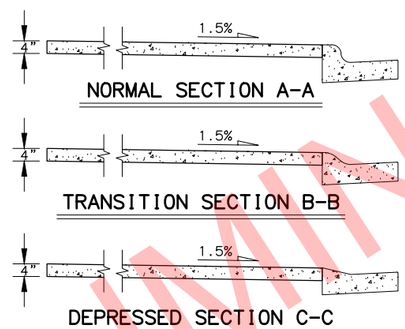

BICYCLE CURB CUT DETAILS

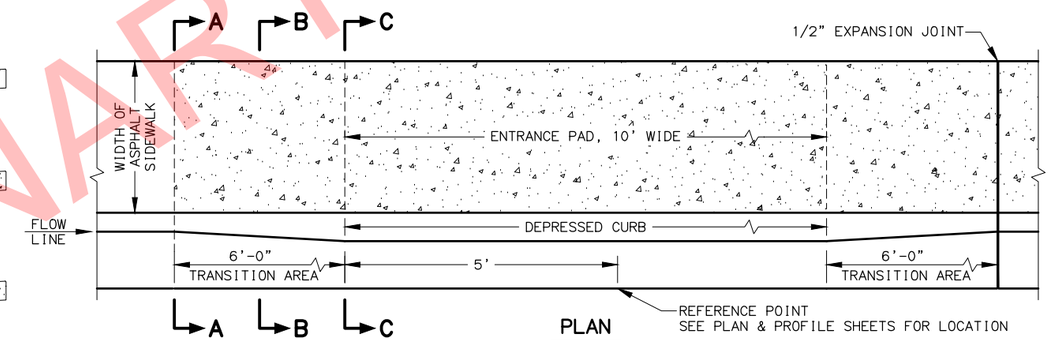

PLAN

BICYCLE CURB CUT

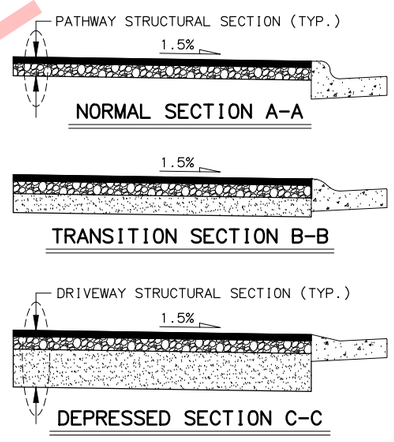

VEHICULAR CURB CUT DETAILS

NOTE:

USE APPROACH STRUCTURAL SECTION WITHIN ENTRANCE PAD. SEE B SHEETS.

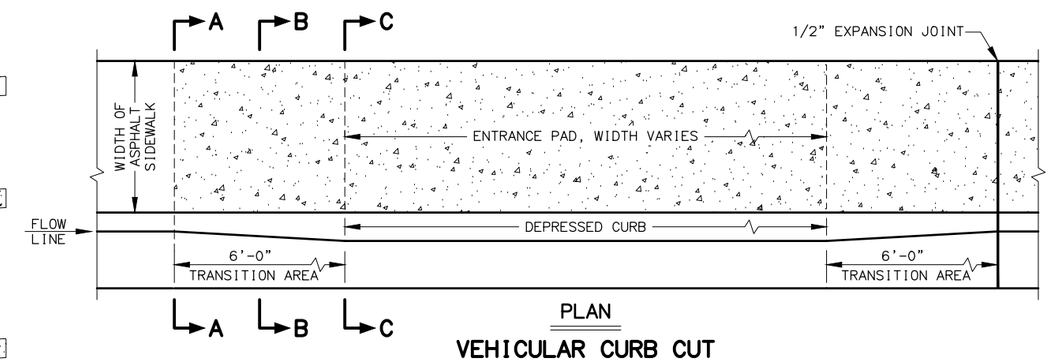

PLAN

VEHICULAR CURB CUT

STATE OF ALASKA DOT&PF
4111 AVIATION AVENUE
ANCHORAGE, AK 99502
(907) 269-0590

STATE OF ALASKA
DEPARTMENT OF TRANSPORTATION
AND PUBLIC FACILITIES

HOMER: LAKE STREET REHABILITATION

BICYCLE/VEHICULAR CURB CUT DETAILS AND CURB & GUTTER DETAILS

DATE/TIME 6/4/2019 8:44 AM | SCALE 1"=1'/ 1"=2' | DESIGNED ZDK | CHECKED SJR | DRAFTED VJS/ZDK
FILE W:\PROJECTS\HOMER LAKE ST. REHAB Z524610000\CIV3D\CIV3D16\PLANSET\52461_E04_C&G DETAIL.DWG

NO.	DATE	REVISION

STATE	PROJECT DESIGNATION	YEAR	SHEET NO.	TOTAL SHEETS
ALASKA	0001422/Z524610000	2020	E05	E23

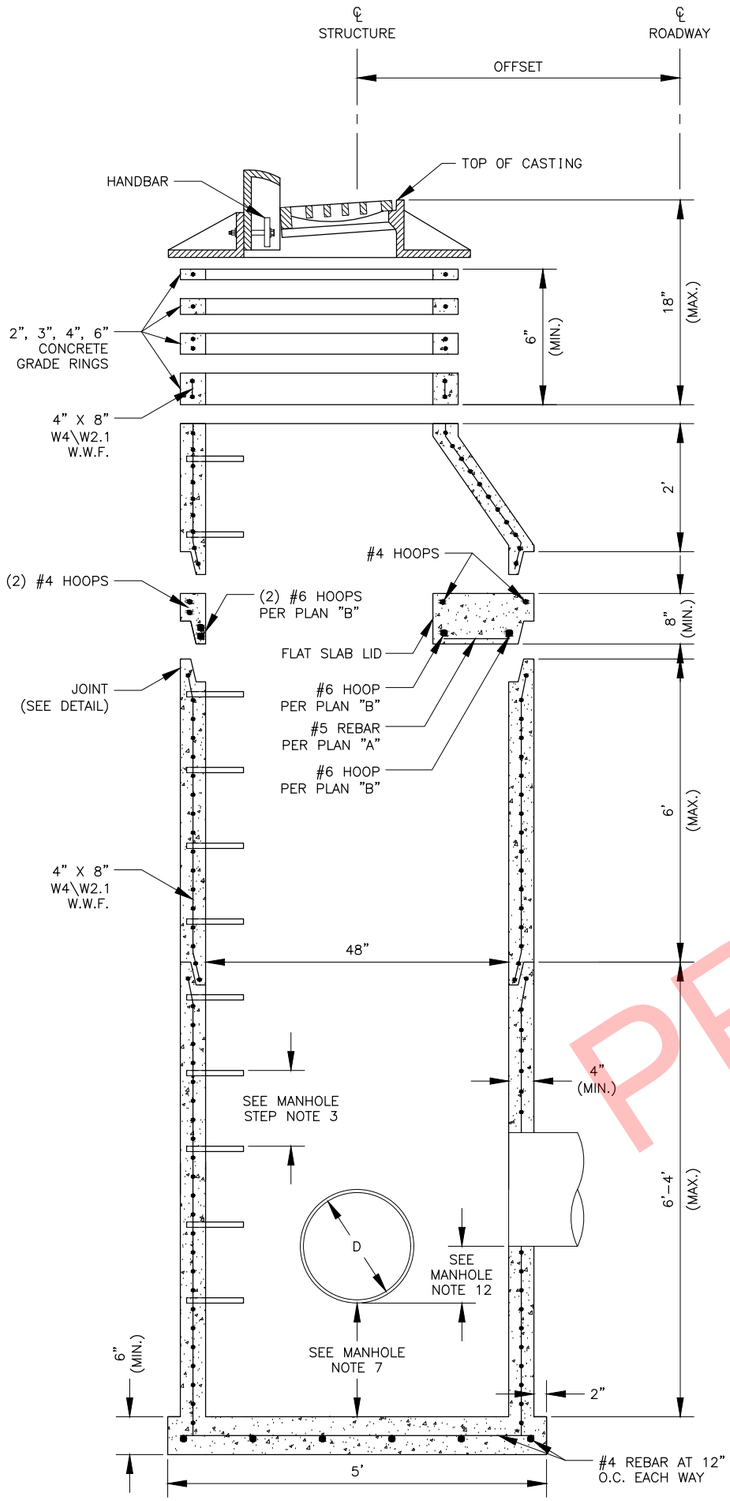

ELEVATION VIEW

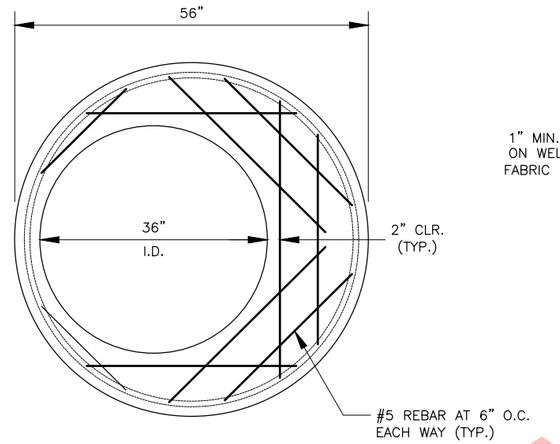

FLAT SLAB LID PLAN "A"

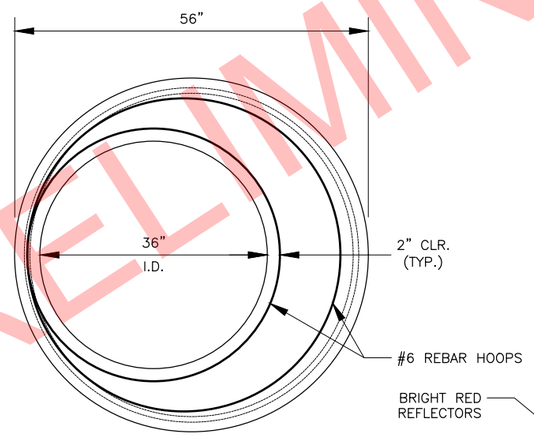

FLAT SLAB LID PLAN "B"

PLAN "B" NOTES:

1. SEE ELEVATION VIEW FOR LOCATIONS OF #4 HOOPS.
2. #6 REBAR HOOPS ARE LOCATED ABOVE #5 REBAR AND WITHIN 3" OF BASE.

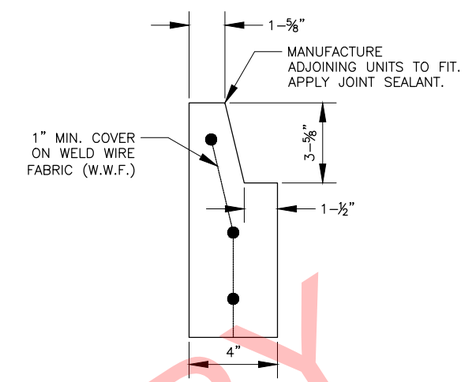

JOINT DETAIL

JOINT DETAIL NOTES:

1. DIMENSIONS ARE NOMINAL.

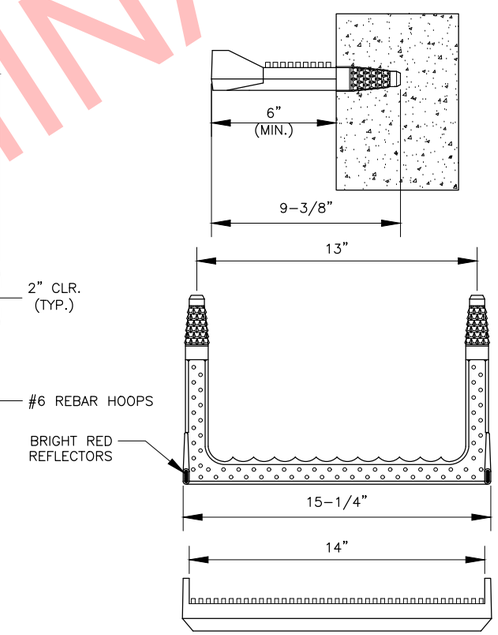

MANHOLE STEP

MANHOLE STEP NOTES:

1. MANHOLE STEPS SHALL BE INJECTION MOLDED, POLYPROPYLENE COVERED GRADE 60 STEEL, TIGHTLY IMBEDDED AT LEAST 3" INTO CONCRETE.
2. THE INSTALLED STEPS SHALL RESIST A PULLOUT FORCE OF 1500 LB.
3. STEPS SHALL BE PLACED 12" O.C. ON AN UNOBSTRUCTED SIDE OF THE STRUCTURE, 24" MAX. FROM TOP OF CASTING AND 18" FROM MANHOLE BASE.

MANHOLE NOTES:

1. THESE DRAWINGS ARE FOR PRECAST REINFORCED CONCRETE FOR HIGHWAY USE.
2. MAXIMUM KNOCKOUT SIZE FOR PIPES IS 32". MINIMUM DISTANCE BETWEEN KNOCKOUTS IS 4".
3. 24" AND LARGER AND PIPES < 90° APART, NEED 8" VERTICAL CLEARANCE.
4. USE CONCRETE WITH A MINIMUM 4000 PSI 28 DAY COMPRESSIVE STRENGTH AND 6% ± 1.5% AIR ENTRAINMENT. MAXIMUM WATER/CEMENT RATIO IS 0.45.
5. MINIMUM STEEL REQUIRED FOR BARREL AS PER AASHTO M199 SHALL BE EMBEDDED IN BASE SO THAT THE FIRST BARREL SECTION IS CONNECTED TO THE BASE BY CONTINUOUS STEEL.
6. MINIMUM COVER ON REINFORCING STEEL IS 1".
7. FORM ALL BLOCKOUTS.
8. ALL STORM DRAIN MANHOLES AND INLETS SHALL HAVE 18" MINIMUM SUMPS. MANHOLES WITH PETROLEUM SEPARATORS SHALL HAVE 24" MINIMUM SUMPS.
9. A FLAT LID WITH A SMALLER OPENING MAY ALSO BE USED IF CALLED FOR. THIS REQUIRES ADDITIONAL #5 REBAR REINFORCEMENT AT THE SAME SPACING AS SHOWN IN PLAN "A". ALSO, ADJUST HOOP DIAMETERS AROUND THE OPENING TO PROVIDE THE SAME COVER.
10. MANHOLES PLACED ALONG CURB LINE SHALL HAVE STEPS ALIGNED UNDER THE CURB INLET.
11. PLACE MANHOLE BASE ON 6" MIN. COMPACTED AGGREGATE BASE COURSE.
12. EXTEND PIPE A MINIMUM OF 2" INTO MANHOLE.
13. MINIMUM DROP BETWEEN PIPES IS 1.5".
14. PIPE LENGTH AND INVERT, AND SLOPE ARE MEASURED FROM CENTER OF MANHOLE.
15. DISTANCE FROM CL OF STRUCTURE TO FACE OF CURB IS:

STRUCTURE UNDER ROADWAY	STRUCTURE OUT OF ROADWAY
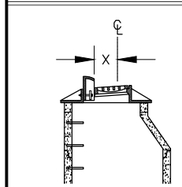	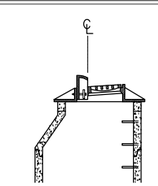
X=-12"	X=0"

STATE OF ALASKA DOT&PF
4111 AVIATION AVENUE
ANCHORAGE, AK 99502
(907) 269-0590

STATE OF ALASKA
DEPARTMENT OF TRANSPORTATION
AND PUBLIC FACILITIES

HOMER: LAKE STREET REHABILITATION

STORM SEWER MANHOLE, TYPE I DETAILS

FILE W:\PROJECTS\HOMER LAKE ST. REHAB Z524610000\CIV3D\CIV3016\PLANSET\52461_E05_MANHOLES.DWG
DATE/TIME 6/4/2019 8:45 AM | SCALE 1" = 1' | DESIGNED --- | CHECKED --- | SJR | DRAFTED ---

NO.	DATE	REVISION

STATE	PROJECT DESIGNATION	YEAR	SHEET NO.	TOTAL SHEETS
ALASKA	0001422/Z524610000	2019	E06	E23

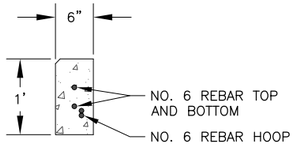

SLAB ℄

SECTION A – A PRECAST CONCRETE REDUCING SLAB

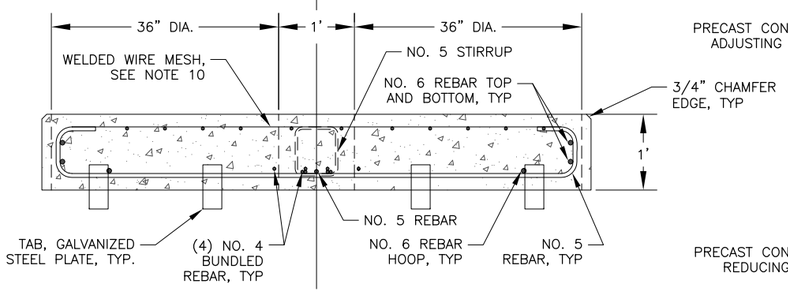

SECTION B – B PRECAST CONCRETE REDUCING SLAB

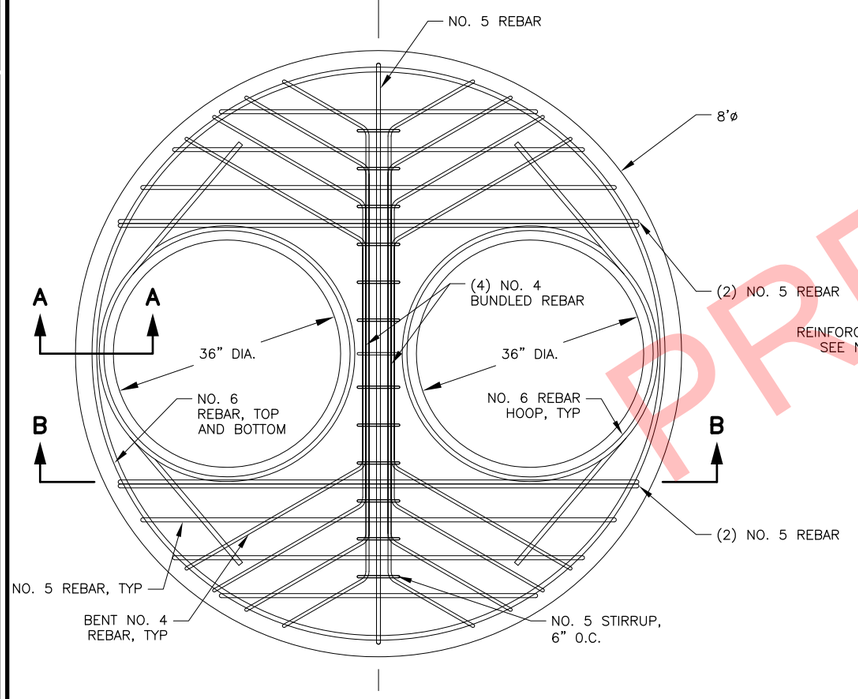

8' DIA PRECAST CONCRETE REDUCING SLAB

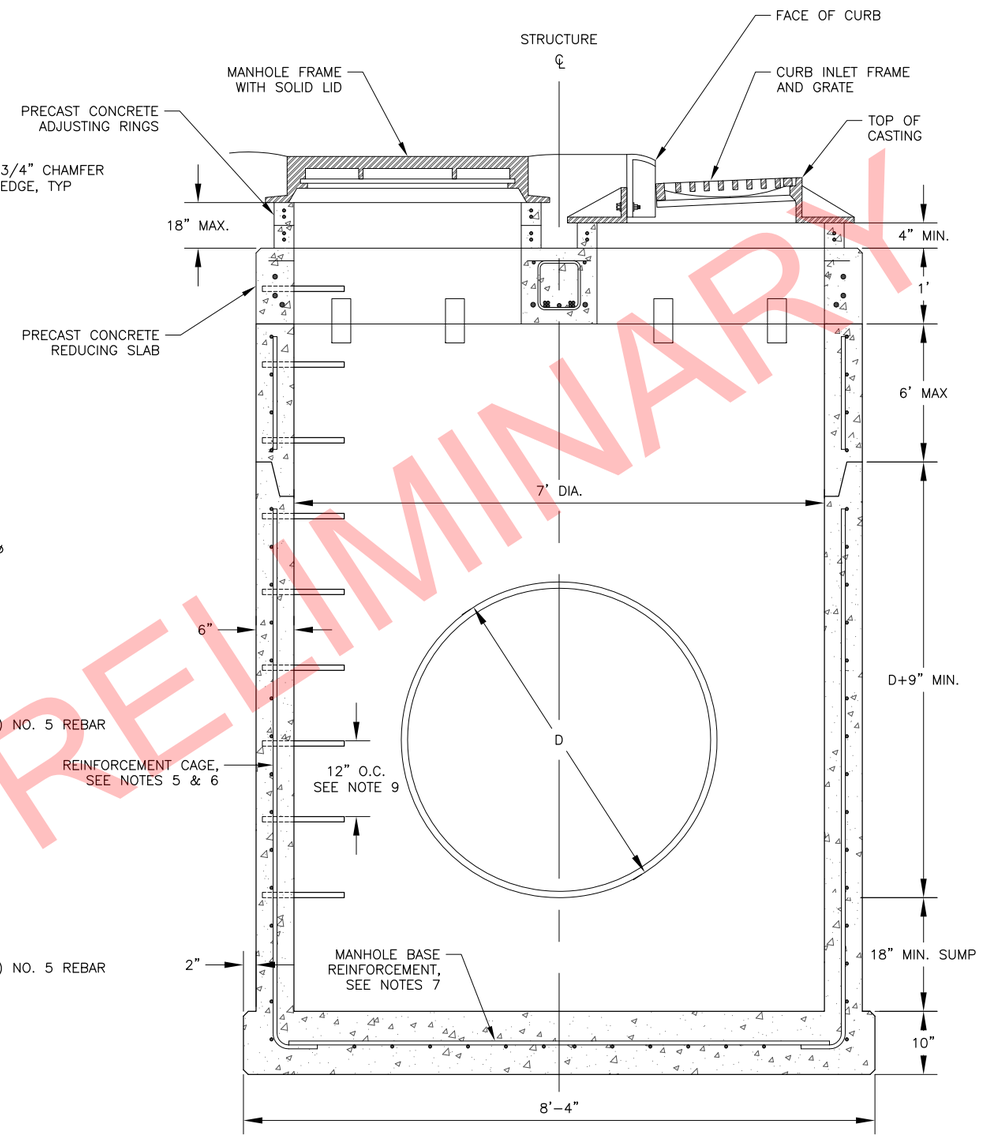

STORM SEWER MANHOLE, TYPE III

GENERAL NOTES:

1. ALL DRAINAGE STRUCTURES SHALL MEET THE REQUIREMENTS OF ASTM C–478
2. DETAILS FOR STRUCTURE ABOVE LARGE REDUCING SLAB ARE SAME AS FOR STORM SEWER MANHOLE, TYPE I.
3. RUBBER GASKET JOINTS, GROUTED JOINTS, OR "RAM NECK" TYPE GASKET JOINTS ARE TO BE USED.
4. MINIMUM CLEARANCE BETWEEN MANHOLE JOINT AND WALL PENETRATION OR BETWEEN TWO WALL PENETRATIONS SHALL BE 12 INCHES.
5. CIRCUMFERENTIAL WALL REINFORCING SHALL BE DOUBLE OR SINGLE CIRCULAR CAGE WITH A TOTAL OF 0.40 SQUARE INCH PER FOOT BOTH WAYS SPACED AS PER ASTM C–478.8.
6. ADDITIONAL WALL REINFORCEMENT IS REQUIRED AT ALL JOINTS. USE A CIRCULAR CAGE 12 INCHES WIDE AND CENTERED AND HAVE A TOTAL ADDITIONAL AREA OF 0.20 SQUARE INCHES PER FOOT BOTH WAYS.
7. A TOTAL REINFORCEMENT AREA OF 0.40 SQUARE INCHES PER FOOT BOTH WAYS IS REQUIRED IN THE MANHOLE BASE SLAB.
8. ALL PENETRATIONS SHALL BE FORMED.
9. PLACE LADDER RUNGS ON THE UNOBSTRUCTED SIDE OF THE MANHOLE AND INLINE WITH THE MANHOLE FRAME. IF UNOBSTRUCTED SIDE NOT AVAILABLE, LADDER RUNG TO BE PLACED 6" OVER SMALLEST PIPE AND CONTINUE SPACING AS DIRECTED BY THE ENGINEER. SEE MANHOLE STEP DETAILS.
10. REINFORCEMENT FOR TOP OF REDUCING SLAB SHALL BE WELDED WIRE MESH WITH MINIMUM AREA OF 0.29 SQUARE INCHES PER FOOT BOTH WAYS.
11. CLASS A CONCRETE WITH A COMPRESSIVE STRENGTH (f'c) = 4500 PSI.
12. ALL BARS SHALL BE CONTINUOUS.
13. MAINTAIN A MINIMUM OF 1 1/2" OF CONCRETE COVER OVER ALL REBAR.
14. TABS WILL BE 1/2"x3"x7" GALVANIZED STEEL PLATES. EVENLY SPACE 8 TABS AROUND SLAB. INSERT TABS 4" INTO CONCRETE, 6 1/2" FROM OUTSIDE EDGE OF SLAB.
15. MINIMUM ELEVATION DROP BETWEEN PIPES IS 1.5".
16. EXTEND PIPE A MINIMUM OF 2" INTO MANHOLE.
17. PLACE MANHOLE BASE ON 12" MINIMUM COMPACTED AGGREGATE BASE COURSE, GRADING D–1.
18. PIPE INVERT AND SLOPE ARE MEASURED FROM THE INSIDE OF WALL MANHOLE.

STATE OF ALASKA
SCOTT A. MCLAREN
PROJECT ENGINEER
REGISTERED PROFESSIONAL ENGINEER
PSSE REVIEW

DEVELOPED BY:
KUNA ENGINEERING, LLC
3111 C STREET, SUITE 300
ANCHORAGE, ALASKA 99503
(907) 339–6500
LICENSE NO. AELS 129381

STATE OF ALASKA
DEPARTMENT OF TRANSPORTATION AND PUBLIC FACILITIES

HOMER: LAKE STREET REHABILITATION

STORM SEWER MANHOLE, TYPE III DETAILS

FILE	DATE/TIME	SCALE	DESIGNED	CHECKED	DRAFTED
P:\ALASKA DOT&PF\P0011957W\EXECUTION\DRAWINGS\CIVIL\52461_E06.DWG	5/14/2019 10:54 AM	1" = 1'	DJH	JRH	BJL

NO.	DATE	REVISION	STATE	PROJECT DESIGNATION	YEAR	SHEET NO.	TOTAL SHEETS
			ALASKA	0001422/Z524610000	2020	E07	E23

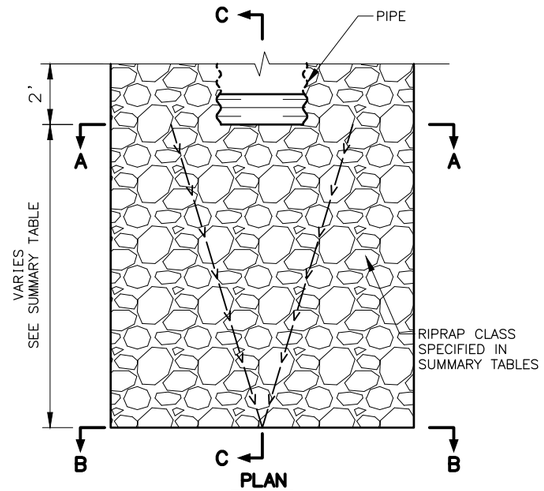

PLAN

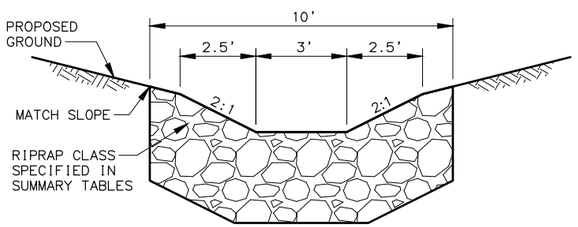

SECTION A-A

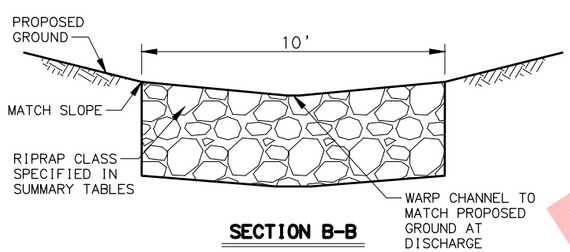

SECTION B-B

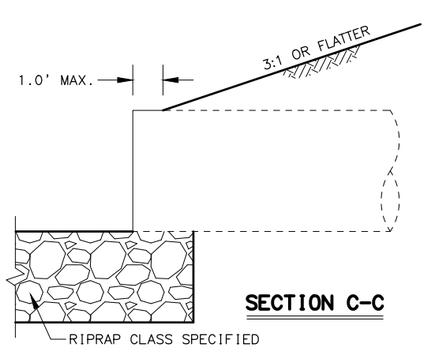

SECTION C-C

END TREATMENT TYPE I
ENERGY DISSIPATOR

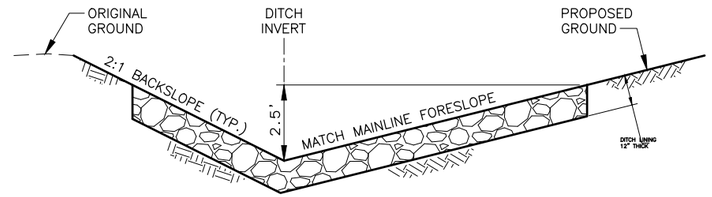

DITCH LINING TYPICAL SECTION

SEE F SHEETS

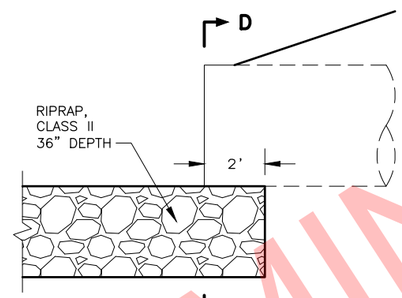

PROFILE VIEW

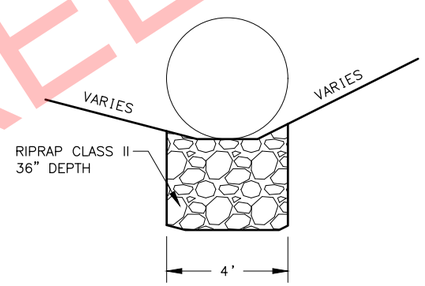

SECTION D-D

48" PIPE OUTLET RIPRAP INSTALLATION

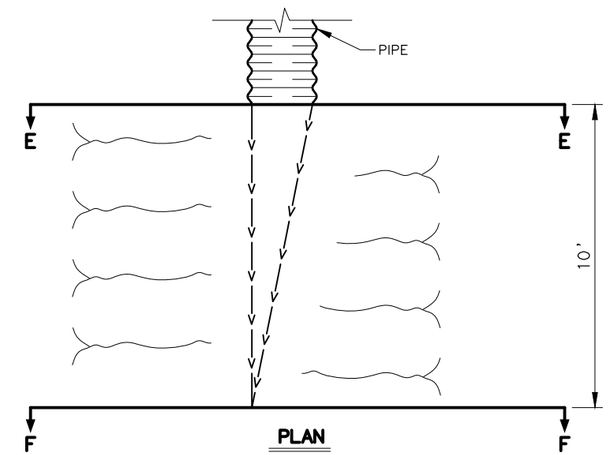

PLAN

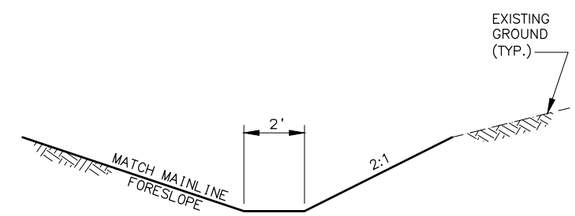

SECTION E-E

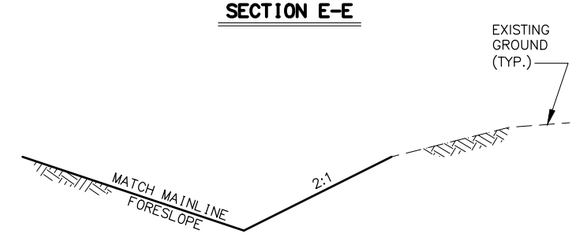

SECTION F-F

V-DITCH PIPE TRANSITION

ENERGY DISSIPATOR NOTES:

1. INSTALL AN ENERGY DISSIPATOR AT THE OUTLET IN CONJUNCTION WITH CULVERT INSTALLATION WHERE SHOWN ON PLANS. ENERGY DISSIPATORS ARE PERMANENT FEATURES AND SHALL BE LEFT IN PLACE.
2. SEE D SHEETS FOR RIPRAP CLASS AND SUMMARY.

STATE OF ALASKA DOT&PF
4111 AVIATION AVENUE
ANCHORAGE, AK 99502
(907) 269-0590

STATE OF ALASKA
DEPARTMENT OF TRANSPORTATION
AND PUBLIC FACILITIES

HOMER: LAKE STREET
REHABILITATION

DRAINAGE IMPROVEMENTS

FILE W:\PROJECTS\HOMER LAKE ST. REHAB Z524610000\CIV3D\CIV3D16\PLANSET\52461_E07_DRN-IMP.DWG
DATE/TIME 6/4/2019 8:45 AM | SCALE 1" = 2.5' | DESIGNED KML/ZDK | CHECKED SJR | DRAFTED VJS/ZDK

NO.	DATE	REVISION

STATE	PROJECT DESIGNATION	YEAR	SHEET NO.	TOTAL SHEETS
ALASKA	0001422/Z524610000	2020	E08	E23

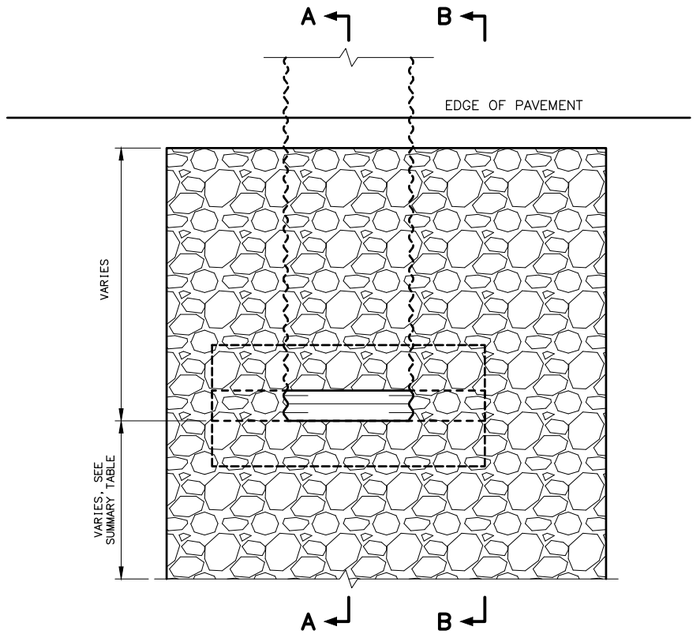

PLAN VIEW

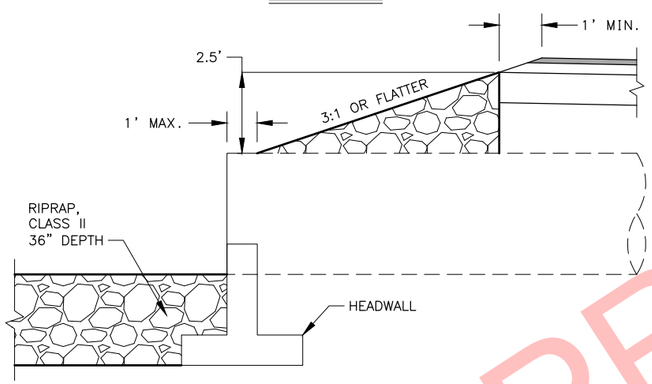

SECTION A–A

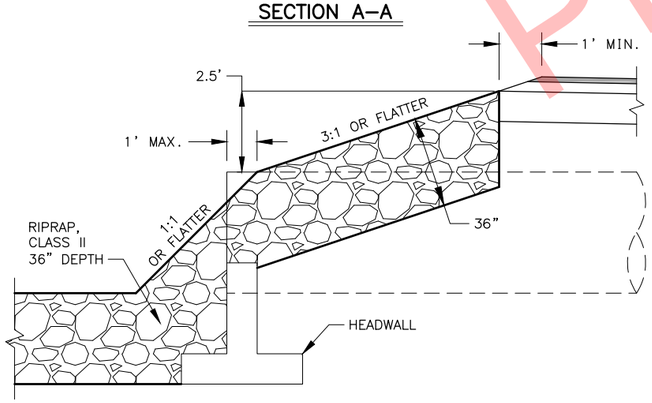

SECTION B–B

HEADWALL TYPE I RIPRAP INSTALLATION

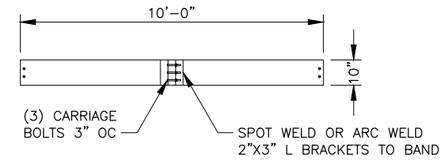

STEEL BAND

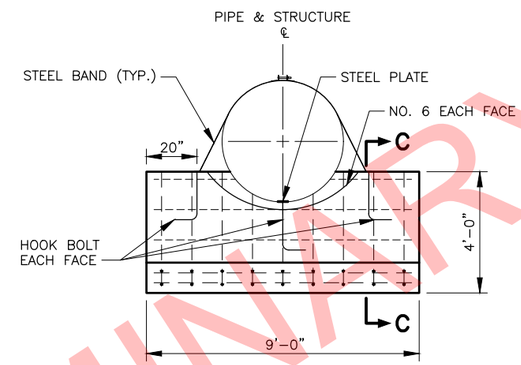

ELEVATION

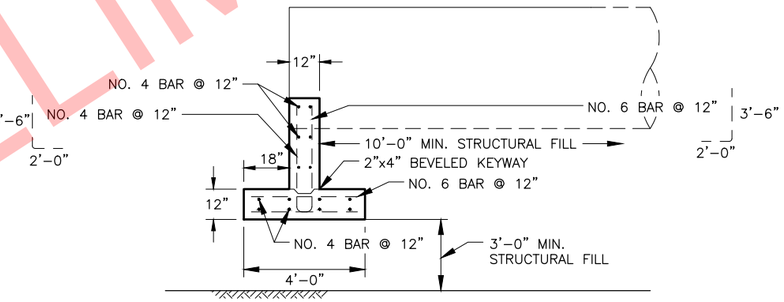

SECTION C–C

48" PIPE HEADWALL INSTALLATION

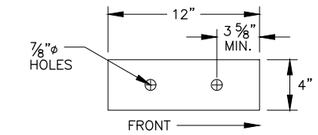

STEEL PLATE

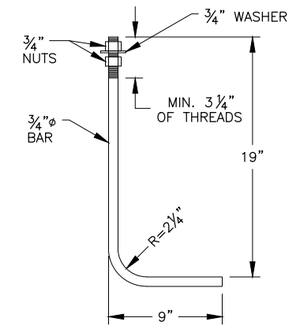

HOOK BOLT

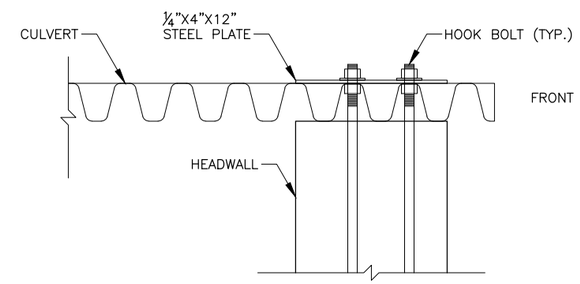

CULVERT ATTACHMENT DETAILS

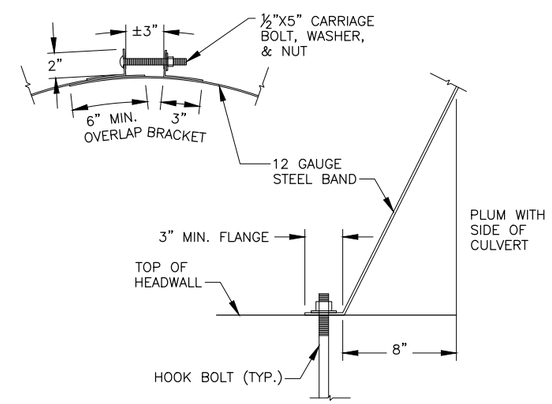

STEEL BAND ATTACHMENT DETAILS

HEADWALL NOTES:

1. USE CLASS A CONCRETE.
2. USE EPOXY–COATED ASTM A706, GRADE 60 REINFORCING STEEL FY = 60,000 PSI.
3. PLACE REINFORCEMENT 3" CLEAR FROM SURFACE OF CONCRETE UNLESS OTHERWISE NOTED.
4. CHAMFER ALL EXPOSED CONCRETE CORNERS 3/4".
5. IF UNSUITABLE FOUNDATION MATERIAL IS ENCOUNTERED, REMOVE AND BACKFILL WITH SELECT MATERIAL TYPE A, AS DIRECTED BY THE ENGINEER.
6. USE GALVANIZED ASTM A307 HOOK BOLTS, WASHERS, NUTS, PLATES, BANDS, AND BRACKETS. TORQUE HOOK BOLT NUTS SNUG.
7. HOOK BOLTS FOR CULVERT ATTACHMENT ARE TO BE SPACED SUCH THAT THEY ARE BETWEEN CORRUGATIONS.
8. HOOK BOLT HOLES FOR THE STEEL BAND ARE TO BE 7/8"ϕ, FIELD DRILLED FOR BEST FIT, AND MAINTAIN 1" OF METAL IN ALL DIRECTIONS AROUND THE HOLE. CENTER BAND ON THE HEADWALL.

STATE OF ALASKA
STEVEN R. PETERSON
CE 9347
REGISTERED PROFESSIONAL ENGINEER
PSE&A REVIEW

STATE OF ALASKA DOT&PF
4111 AVIATION AVENUE
ANCHORAGE, AK 99502
(907) 269–0590

STATE OF ALASKA
DEPARTMENT OF TRANSPORTATION
AND PUBLIC FACILITIES

HOMER: LAKE STREET REHABILITATION

DRAINAGE IMPROVEMENTS
HEADWALL TYPE I

DATE/TIME	6/4/2019 8:45 AM	SCALE	1" = 2.5"	DESIGNED	KML/ZDK	CHECKED	SJR	DRAFTED	VJS/ZDK

FILE W:\PROJECTS\HOMER LAKE ST. REHAB Z524610000\CIV3D\CIV3D16\PLANSET\52461_E07_DRN-IMP.DWG

NO.	DATE	REVISION

STATE	PROJECT DESIGNATION	YEAR	SHEET NO.	TOTAL SHEETS
ALASKA	0001422/Z524610000	2020	E09	E23

HYDROLOGIC AND HYDRAULIC SUMMARY P1-1 AND P1-2

DRAINAGE AREA = 0.43 SQUARE MILES

EXCEEDANCE PROBABILITY	2%	1%	HW/D = 1.0
RETURN PERIOD	50 YEAR (Q_{50})	100 YEAR (Q_{100})	N/A
DESIGN DISCHARGE (CFS)	87.9	109.5	160.0
DESIGN HIGH WATER ELEVATION (FT)	34.1	34.7	35.1
ANTICIPATED ADDITIONAL BACKWATER AT 1% AEP = 0.0 FEET			
OVERTOPPING FLOW = 178 CFS			

HYDROLOGIC AND HYDRAULIC SUMMARY P3-2

DRAINAGE AREA = 0.43 SQUARE MILES

EXCEEDANCE PROBABILITY	2%	1%	HW/D = 1.0
RETURN PERIOD	50 YEAR (Q_{50})	100 YEAR (Q_{100})	N/A
DESIGN DISCHARGE (CFS)	87.9	109.5	66.0
DESIGN HIGH WATER ELEVATION (FT)	65.5	66.7	64.4
ANTICIPATED ADDITIONAL BACKWATER AT 1% AEP = 0.0 FEET			
OVERTOPPING FLOW = 88 CFS			

HYDROLOGIC AND HYDRAULIC SUMMARY P3-6

DRAINAGE AREA = 0.43 SQUARE MILES

EXCEEDANCE PROBABILITY	2%	1%	HW/D = 1.0
RETURN PERIOD	50 YEAR (Q_{50})	100 YEAR (Q_{100})	N/A
DESIGN DISCHARGE (CFS)	87.9	109.5	66.0
DESIGN HIGH WATER ELEVATION (FT)	77.2	78.4	76.1
ANTICIPATED ADDITIONAL BACKWATER AT 1% AEP = 0.0 FEET			
OVERTOPPING FLOW = 120 CFS			

HYDROLOGIC AND HYDRAULIC SUMMARY P4-1

DRAINAGE AREA = 0.41 SQUARE MILES

EXCEEDANCE PROBABILITY	2%	1%	HW/D = 1.0
RETURN PERIOD	50 YEAR (Q_{50})	100 YEAR (Q_{100})	N/A
DESIGN DISCHARGE (CFS)	82.6	103.3	66.0
DESIGN HIGH WATER ELEVATION (FT)	86.0	86.6	85.0
ANTICIPATED ADDITIONAL BACKWATER AT 1% AEP = 0.0 FEET			
OVERTOPPING FLOW = 90 CFS			

HYDROLOGIC AND HYDRAULIC SUMMARY P4-2

DRAINAGE AREA = 0.41 SQUARE MILES

EXCEEDANCE PROBABILITY	2%	1%	HW/D = 1.0
RETURN PERIOD	50 YEAR (Q_{50})	100 YEAR (Q_{100})	N/A
DESIGN DISCHARGE (CFS)	82.6	103.3	66.0
DESIGN HIGH WATER ELEVATION (FT)	95.3	96.6	94.3
ANTICIPATED ADDITIONAL BACKWATER AT 1% AEP = 0.0 FEET			
OVERTOPPING FLOW = 85 CFS			

HYDROLOGIC AND HYDRAULIC SUMMARY P2-1

DRAINAGE AREA = 0.43 SQUARE MILES

EXCEEDANCE PROBABILITY	2%	1%
RETURN PERIOD	50 YEAR (Q_{50})	100 YEAR (Q_{100})
DESIGN DISCHARGE (CFS)	87.9	109.5
DESIGN HIGH WATER ELEVATION (FT)	43.4	44.1
ANTICIPATED ADDITIONAL BACKWATER AT 1% AEP = 0.0 FEET		
OVERTOPPING FLOW = 177 CFS		

HYDROLOGIC AND HYDRAULIC SUMMARY P2-2

DRAINAGE AREA = 0.43 SQUARE MILES

EXCEEDANCE PROBABILITY	2%	1%
RETURN PERIOD	50 YEAR (Q_{50})	100 YEAR (Q_{100})
DESIGN DISCHARGE (CFS)	87.9	109.5
DESIGN HIGH WATER ELEVATION (FT)	49.1	49.3
ANTICIPATED ADDITIONAL BACKWATER AT 1% AEP = 0.0 FEET		
OVERTOPPING FLOW = 201 CFS		

HYDROLOGIC AND HYDRAULIC SUMMARY P2-3

DRAINAGE AREA = 0.43 SQUARE MILES

EXCEEDANCE PROBABILITY	2%	1%
RETURN PERIOD	50 YEAR (Q_{50})	100 YEAR (Q_{100})
DESIGN DISCHARGE (CFS)	87.9	109.5
DESIGN HIGH WATER ELEVATION (FT)	54.9	55.4
ANTICIPATED ADDITIONAL BACKWATER AT 1% AEP = 0.0 FEET		
OVERTOPPING FLOW = 155 CFS		

HYDROLOGIC AND HYDRAULIC SUMMARY P3-1

DRAINAGE AREA = 0.43 SQUARE MILES

EXCEEDANCE PROBABILITY	2%	1%
RETURN PERIOD	50 YEAR (Q_{50})	100 YEAR (Q_{100})
DESIGN DISCHARGE (CFS)	87.9	109.5
DESIGN HIGH WATER ELEVATION (FT)	57.5	57.7
ANTICIPATED ADDITIONAL BACKWATER AT 1% AEP = 0.0 FEET		
OVERTOPPING FLOW = 227 CFS		

STATE OF ALASKA
REGISTERED PROFESSIONAL ENGINEER
PAUL A. JAHR
CE-9475

STATE OF ALASKA DOT&PF
4111 AVIATION AVENUE
ANCHORAGE, AK 99502
(907) 269-0590

STATE OF ALASKA
DEPARTMENT OF TRANSPORTATION
AND PUBLIC FACILITIES

HOMER: LAKE STREET REHABILITATION

DRAINAGE IMPROVEMENTS
H&H SUMMARY TABLES

FILE W:\PROJECTS\HOMER LAKE ST. REHAB Z524610000\CIV3D\CIV3D16\PLANSET\52461_E09_DRN-H&H.DWG | DATE/TIME 6/4/2019 8:46 AM | SCALE N/A | DESIGNED PAJ/KRV | CHECKED PAJ/SJR | DRAFTED ZDK

NO.	DATE	REVISION

STATE	PROJECT DESIGNATION	YEAR	SHEET NO.	TOTAL SHEETS
ALASKA	0001422/Z524610000	2020	E10	E23

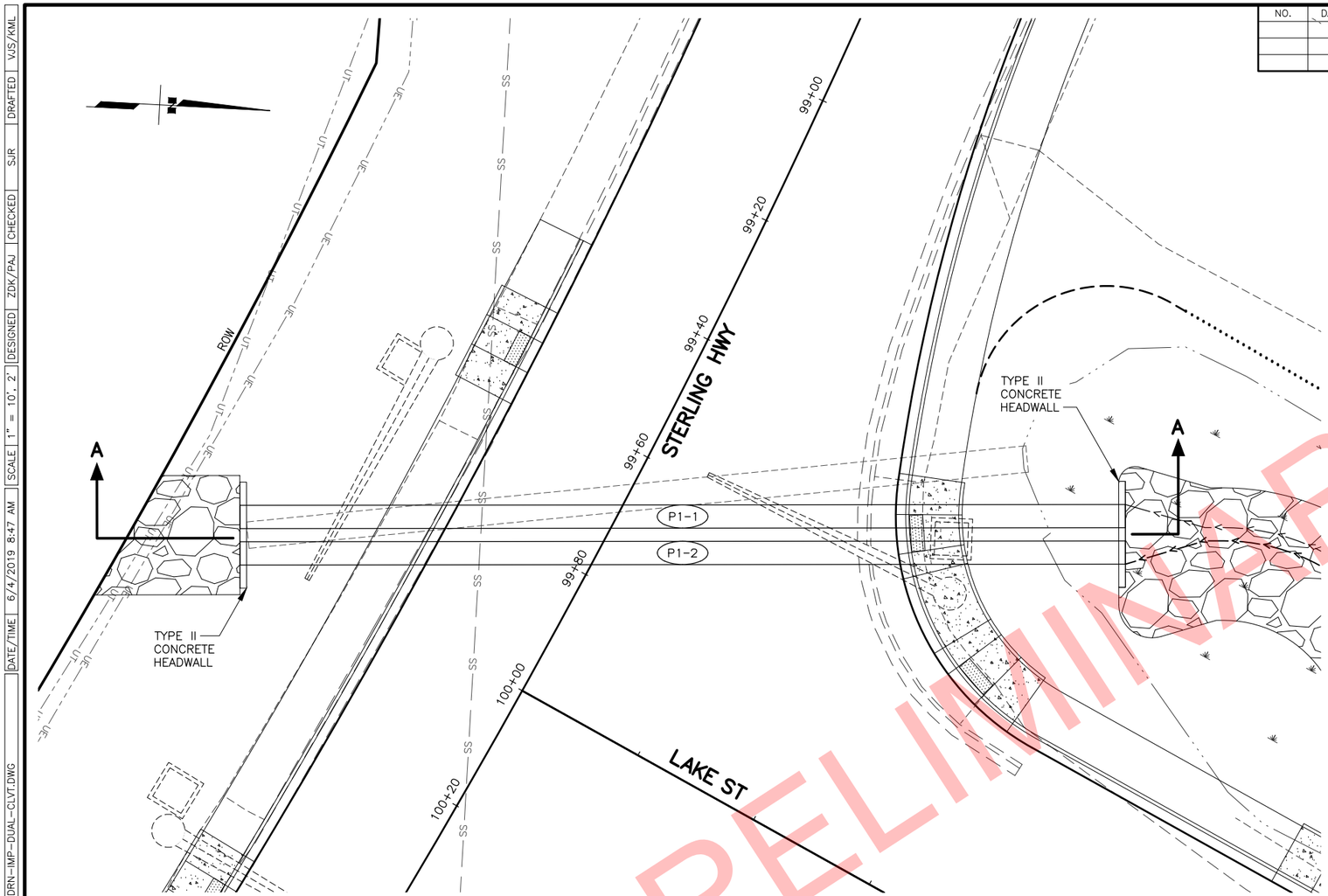

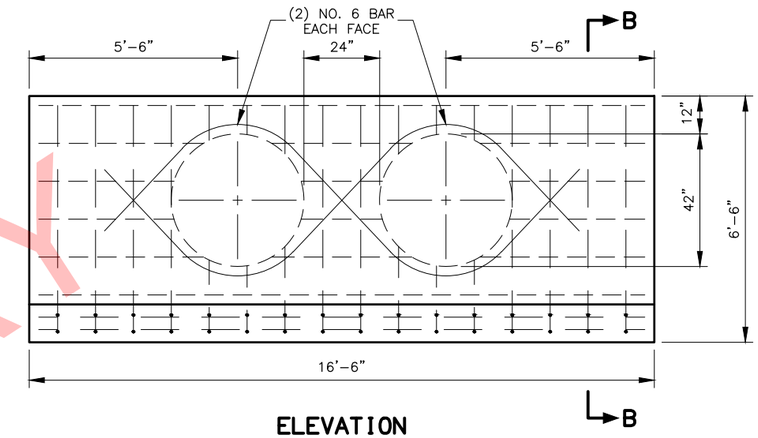

ELEVATION

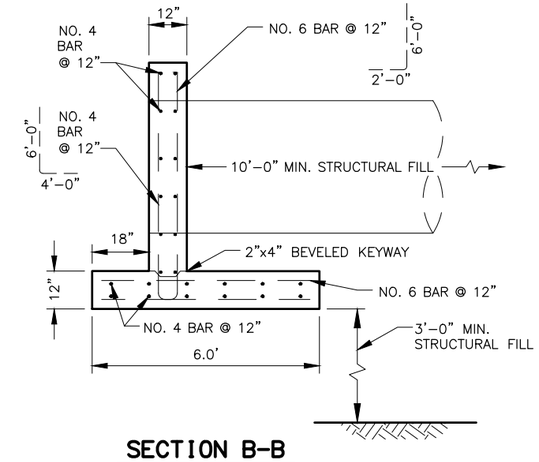

SECTION B-B

MULTIPLE PIPE, TYPE II HEADWALL INSTALLATION

NOTE: SEE HEADWALL NOTES ON SHEET E8.

PIPE SUMMARY

PIPE	SIZE (IN)	LENGTH (FT)	FROM (STERLING HWY STA.)	TO (STERLING HWY STA.)	START INVERT ELEV. (FT)	END INVERT ELEV. (FT)	% GRADE	REMARKS
P1-1	42	133.68	99+35.90	99+97.78	31.05	28.24	2.10%	HDPE
P1-2	42	133.68	99+40.58	100+02.77	31.05	28.24	2.10%	HDPE

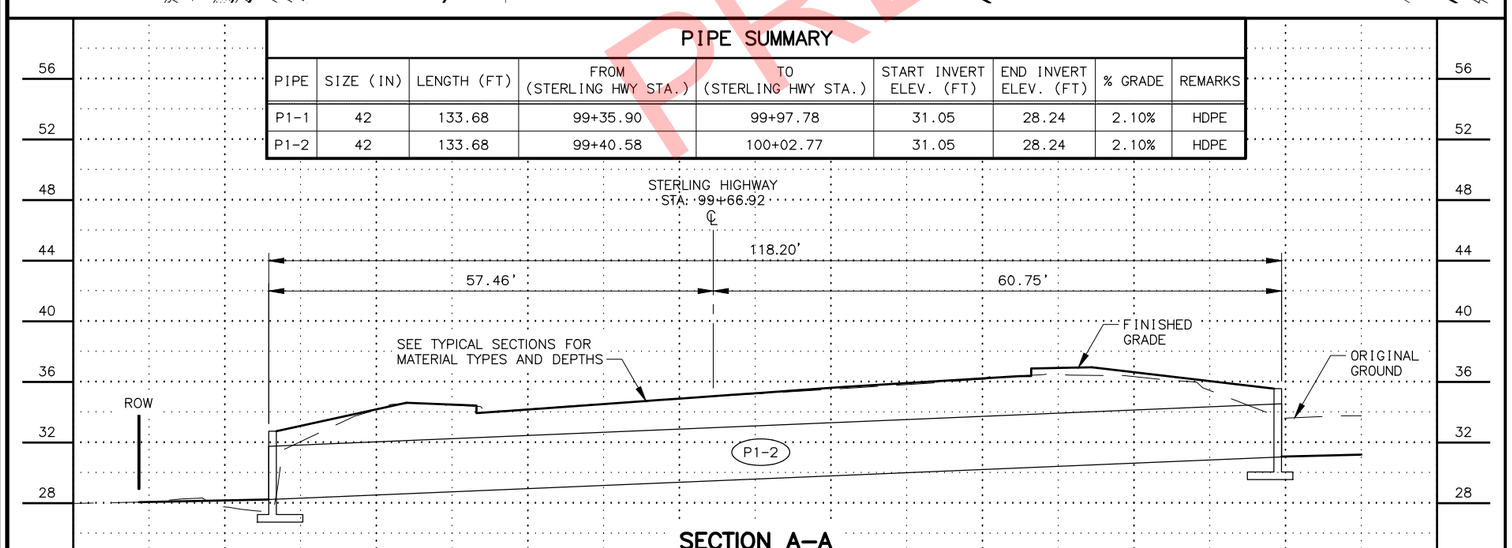

SECTION A-A

STATE OF ALASKA DOT&PF
4111 AVIATION AVENUE
ANCHORAGE, AK 99502
(907) 269-0590

STATE OF ALASKA DOT&PF
4111 AVIATION AVENUE
ANCHORAGE, AK 99502
(907) 269-0590

STATE OF ALASKA
DEPARTMENT OF TRANSPORTATION
AND PUBLIC FACILITIES

HOMER: LAKE STREET REHABILITATION

DRAINAGE IMPROVEMENTS

FILE W:\PROJECTS\HOMER LAKE ST. REHAB Z524610000\CIV3D\CIV3016\PLANSET\52461_E10_DRN-IMP-DUAL-CLVT.DWG | DATE/TIME 6/4/2019 8:47 AM | SCALE 1" = 10', 2' | DESIGNED ZDK/PAJ | CHECKED SJR | DRAFTED VJS/KML

NO.	DATE	REVISION	STATE	PROJECT DESIGNATION	YEAR	SHEET NO.	TOTAL SHEETS
			ALASKA	0001422/Z524610000	2020	E11	E23

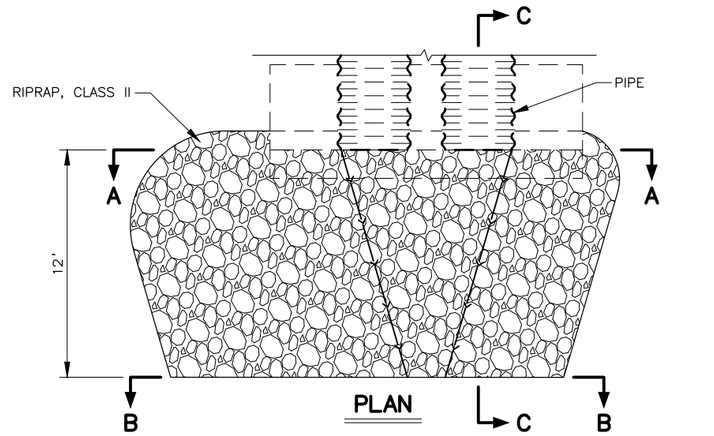

PLAN

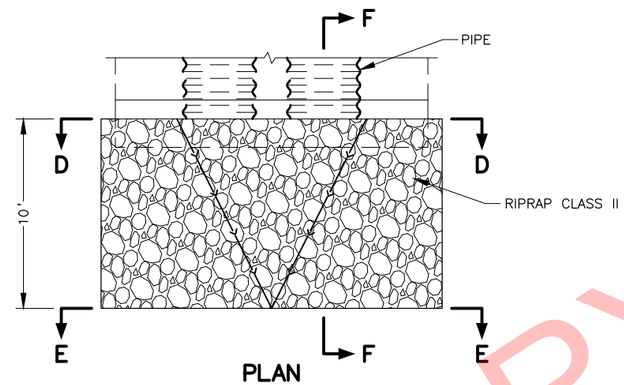

PLAN

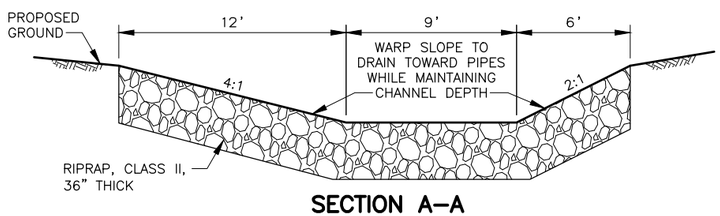

SECTION A–A

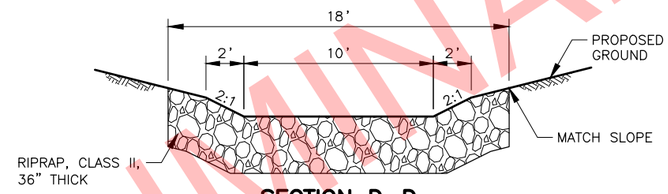

SECTION D–D

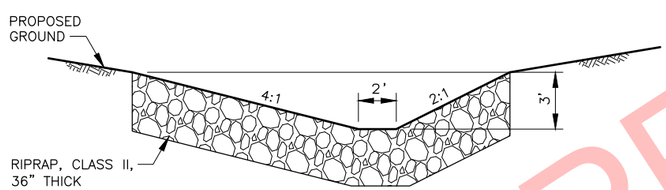

SECTION B–B

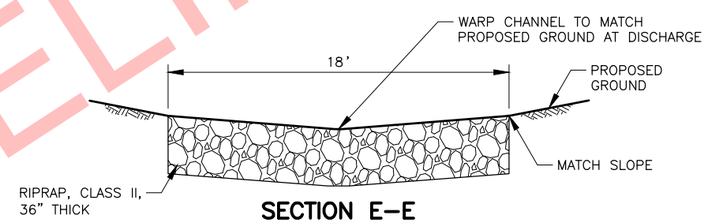

SECTION E–E

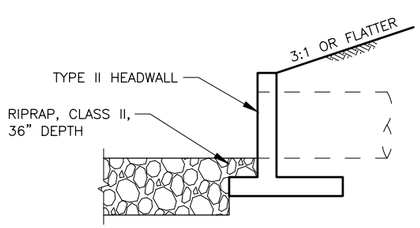

SECTION C–C

MULTIPLE PIPE RIPRAP INSTALLATION

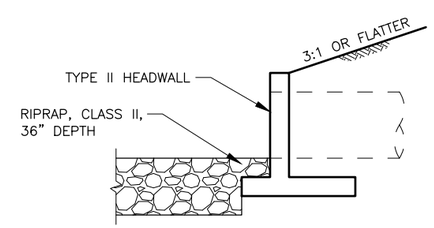

SECTION F–F

END TREATMENT TYPE II
ENERGY DISSIPATOR WITH HEADWALL

ENERGY DISSIPATOR NOTES:

1. INSTALL AN ENERGY DISSIPATOR AT THE OUTLET IN CONJUNCTION WITH CULVERT INSTALLATION WHERE SHOWN ON PLANS. ENERGY DISSIPATORS ARE PERMANENT FEATURES AND SHALL BE LEFT IN PLACE.
2. SEE D SHEETS FOR RIPRAP CLASS AND SUMMARY.

STATE OF ALASKA DOT&PF
4111 AVIATION AVENUE
ANCHORAGE, AK 99502
(907) 269-0590

STATE OF ALASKA
DEPARTMENT OF TRANSPORTATION
AND PUBLIC FACILITIES

HOMER: LAKE STREET
REHABILITATION

DRAINAGE
IMPROVEMENTS

FILE W:\PROJECTS\HOMER LAKE ST. REHAB Z524610000\CIV3D\CIV3D16\PLANSET\52461_E11_DRN-IMP-STRM.DWG
DATE/TIME 6/4/2019 8:48 AM | SCALE 1" = 4' | DESIGNED ZDK/PAJ | CHECKED SJR | DRAFTED VJS/KML

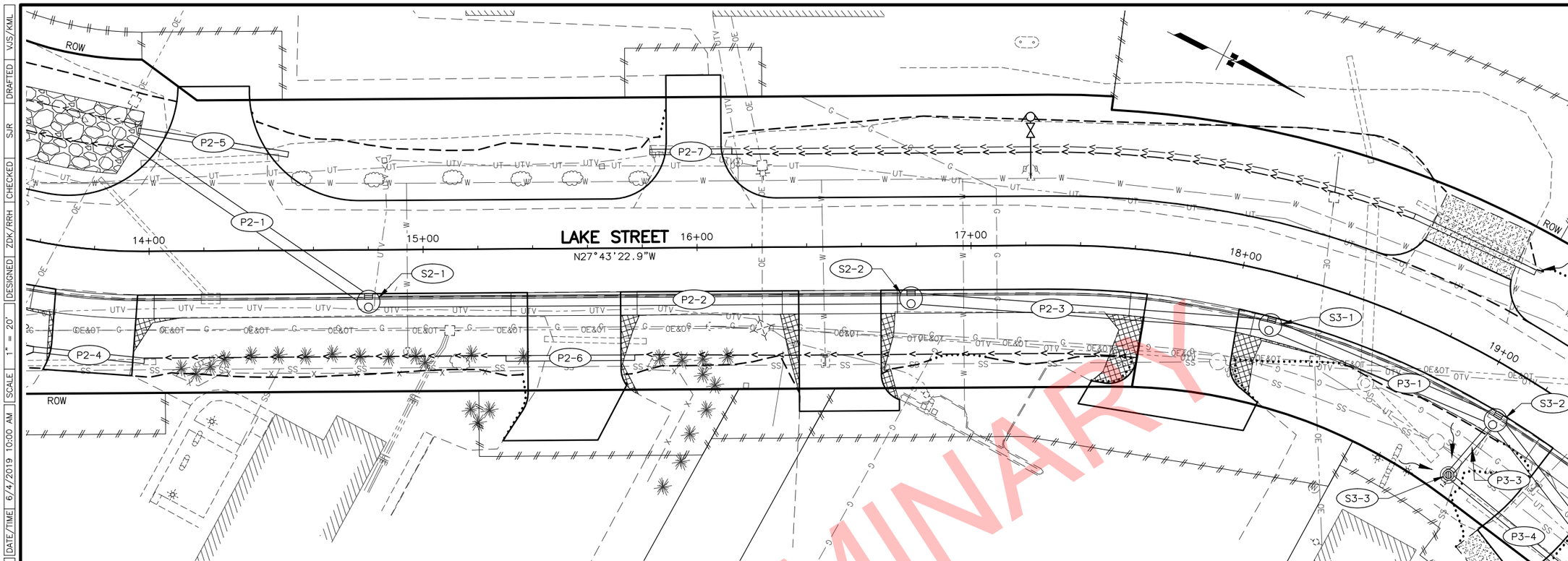

PIPE SUMMARY								
PIPE	SIZE (IN)	LENGTH (FT)	FROM	TO	START INVERT ELEV. (FT)	END INVERT ELEV. (FT)	% GRADE	REMARKS
P2-1	48	103.01	S2-1		40.50	38.39	2.05%	
P2-2	48	198.00	S2-2	S2-1	47.60	40.67	3.50%	
P2-3	48	131.51	S3-1	S2-2	52.40	47.79	3.50%	

STRUCTURE SUMMARY						
STRUCTURE	TYPE	STATION	OFFSET	TOP OF CASTING	TYPE OF CASTING	REMARKS
S2-1	III	14+80.00	19.00 R	47.05	MH CI	
S2-2	III	16+78.00	19.00 R	53.86	MH CI	

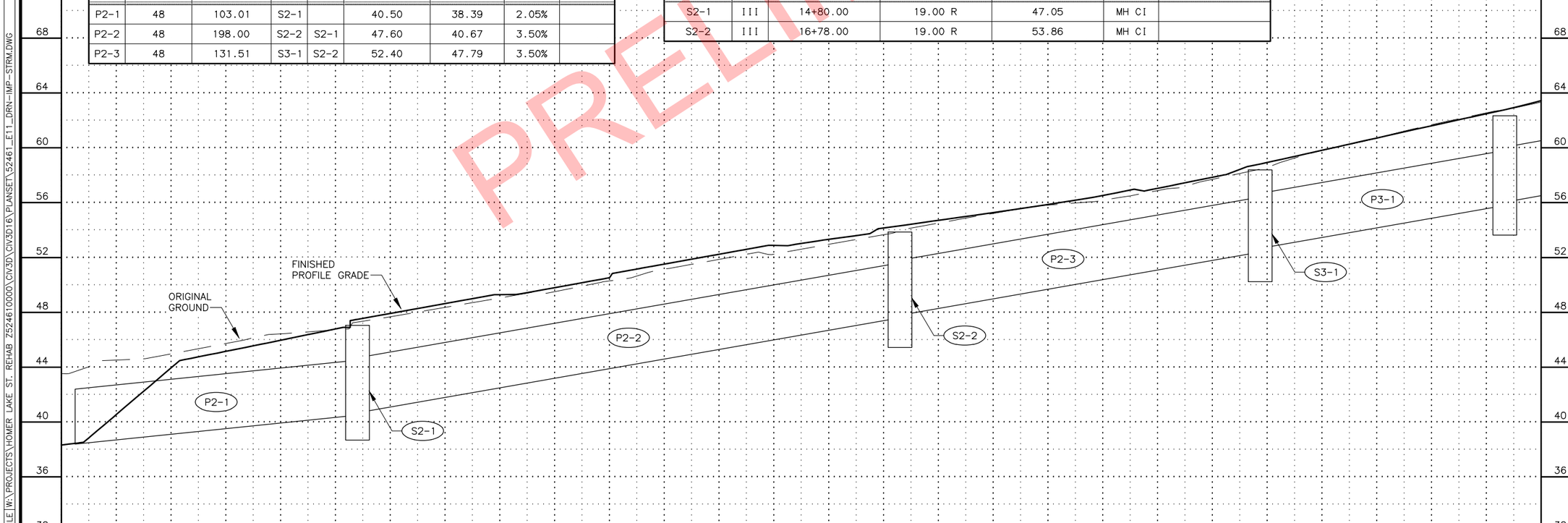

SHEET NO.	TOTAL SHEETS
E12	E23
STATE	YEAR
ALASKA	2020

PROJECT DESIGNATION
0001422/
Z524610000

NO.	REVISION
1	
DATE	
NO.	REVISION
2	
DATE	
NO.	REVISION
3	
DATE	

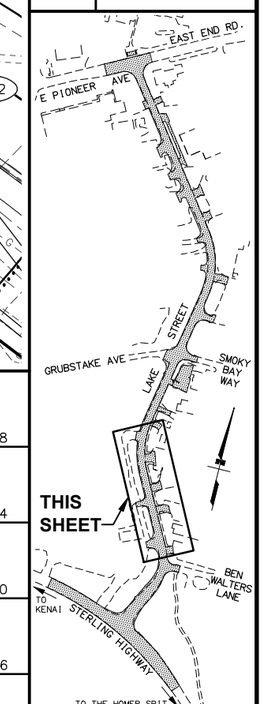

STATE OF ALASKA
STEVEN R. PEDERSEN
CE 13437
REGISTERED PROFESSIONAL ENGINEER
PS&E REVIEW

STATE OF ALASKA DOT&PF
4111 AVIATION AVENUE
ANCHORAGE, AK 99502
(907) 269-0590

STATE OF ALASKA
DEPARTMENT OF TRANSPORTATION
AND PUBLIC FACILITIES

HOMER: LAKE STREET REHABILITATION

DRAINAGE IMPROVEMENTS

FILE W:\PROJECTS\HOMER LAKE ST. REHAB Z524610000\CIV3D\CIV3D16\PLANSET\52461_E11_DRN-IMP-STRM.DWG
DATE/TIME 6/4/2019 10:00 AM | SCALE 1" = 20' | DESIGNED ZDK/RRH | CHECKED SJR | DRAFTED VJS/KML

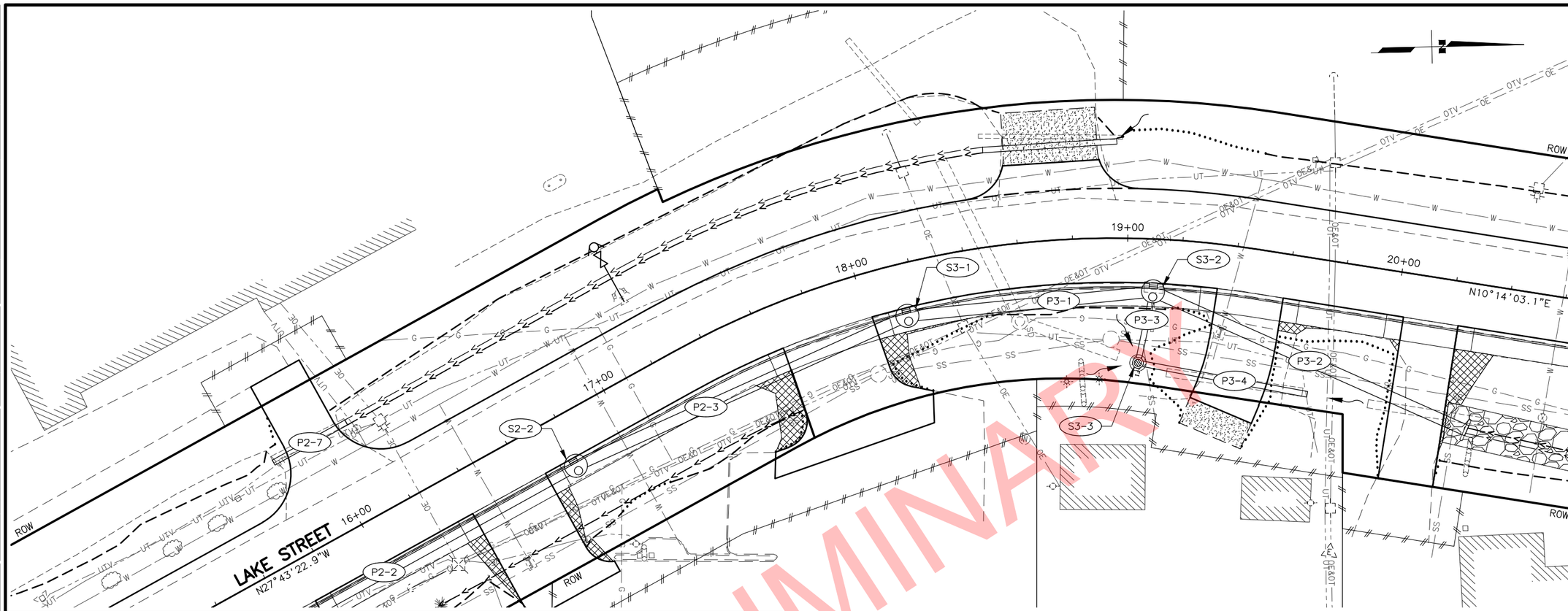

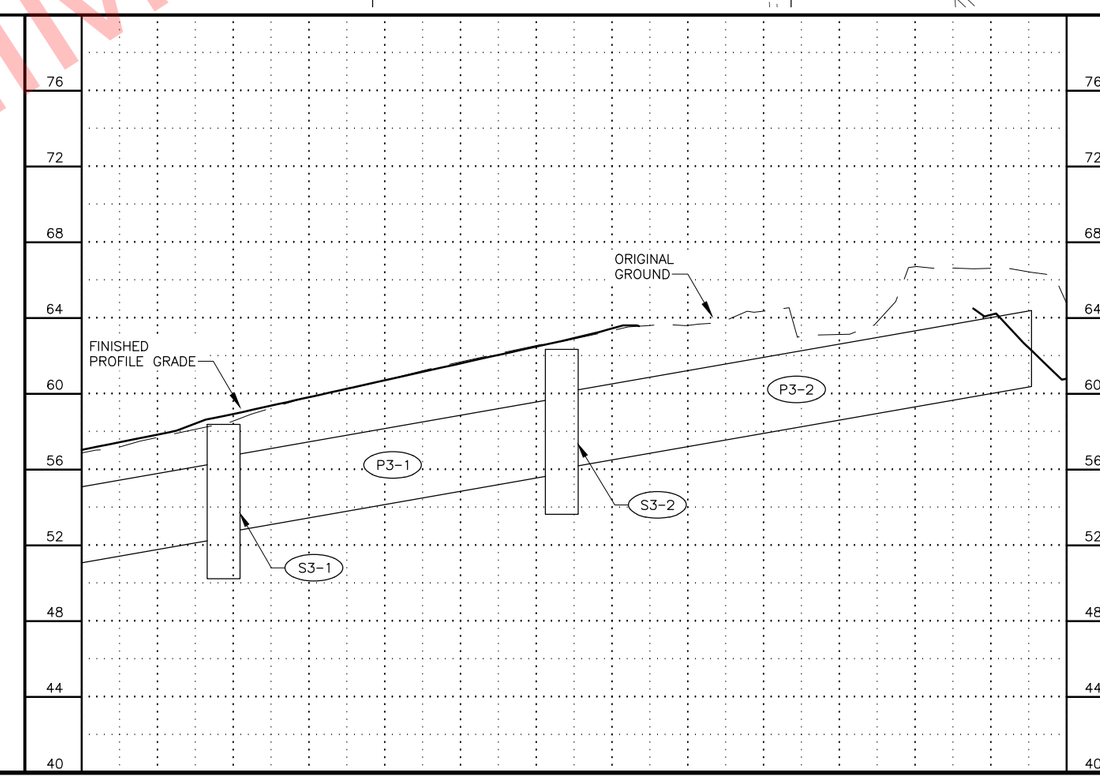

PIPE SUMMARY

PIPE	SIZE (IN)	LENGTH (FT)	FROM	TO	START INVERT ELEV. (FT)	END INVERT ELEV. (FT)	% GRADE	REMARKS
P3-1	48	89.22	S3-2	S3-1	55.80	52.67	3.50%	
P3-2	48	124.01		S3-2	60.40	56.05	3.50%	
P3-3	24	26.39	S3-3	S3-2	56.60	56.33	1.01%	
P3-4	24	62.21		S3-3	60.40	56.72	5.92%	

STRUCTURE SUMMARY

STRUCTURE	TYPE	STATION	OFFSET	TOP OF CASTING	TYPE OF CASTING	REMARKS
S3-1	III	18+15.00	19.00 R	58.39	MH CI	
S3-2	III	19+10.00	19.00 R	62.34	MH CI	
S3-3	A	19+05.00	45.00 R	61.23	FI	

SHEET NO.	TOTAL SHEETS
E13	E23
STATE	YEAR
ALASKA	2020

PROJECT DESIGNATION
0001422/
Z524610000

NO.	REVISION
1	
DATE	
NO.	REVISION
2	
DATE	
NO.	REVISION
3	
DATE	

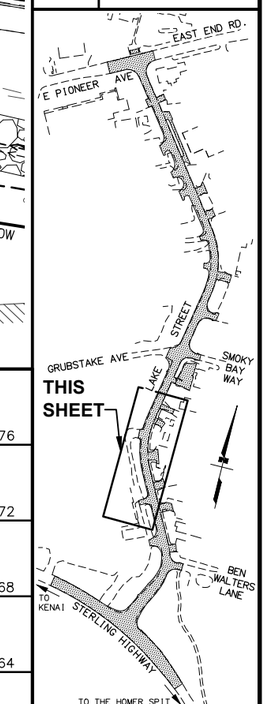

STATE OF ALASKA
STEVEN R. PEDERSEN
CIVIL
REGISTERED PROFESSIONAL ENGINEER
PRELIMINARY REVIEW

STATE OF ALASKA DOT&PF
4111 AVIATION AVENUE
ANCHORAGE, AK 99502
(907) 269-0590

STATE OF ALASKA
DEPARTMENT OF TRANSPORTATION
AND PUBLIC FACILITIES

HOMER: LAKE STREET REHABILITATION

DRAINAGE IMPROVEMENTS

DATE/TIME 6/4/2019 10:02 AM | SCALE 1" = 20' | DESIGNED ZDK/RRH | CHECKED SJR | DRAFTED VJS/KML

FILE W:\PROJECTS\HOMER LAKE ST. REHAB Z524610000\CIV3D\CIV3D16\PLANSET\52461_E11_DRN-IMP-STRM.DWG

DATE/TIME	6/4/2019 8:50 AM	SCALE	1" = 20'	DESIGNED	ZDK	CHECKED	SJR	DRAFTED	VJS/KML

FILE W:\PROJECTS\HOMER LAKE ST. REHAB Z524610000\CIV3D\CIV3D16\PLANSET\52461_E14_SPCL-DTCH.DWG

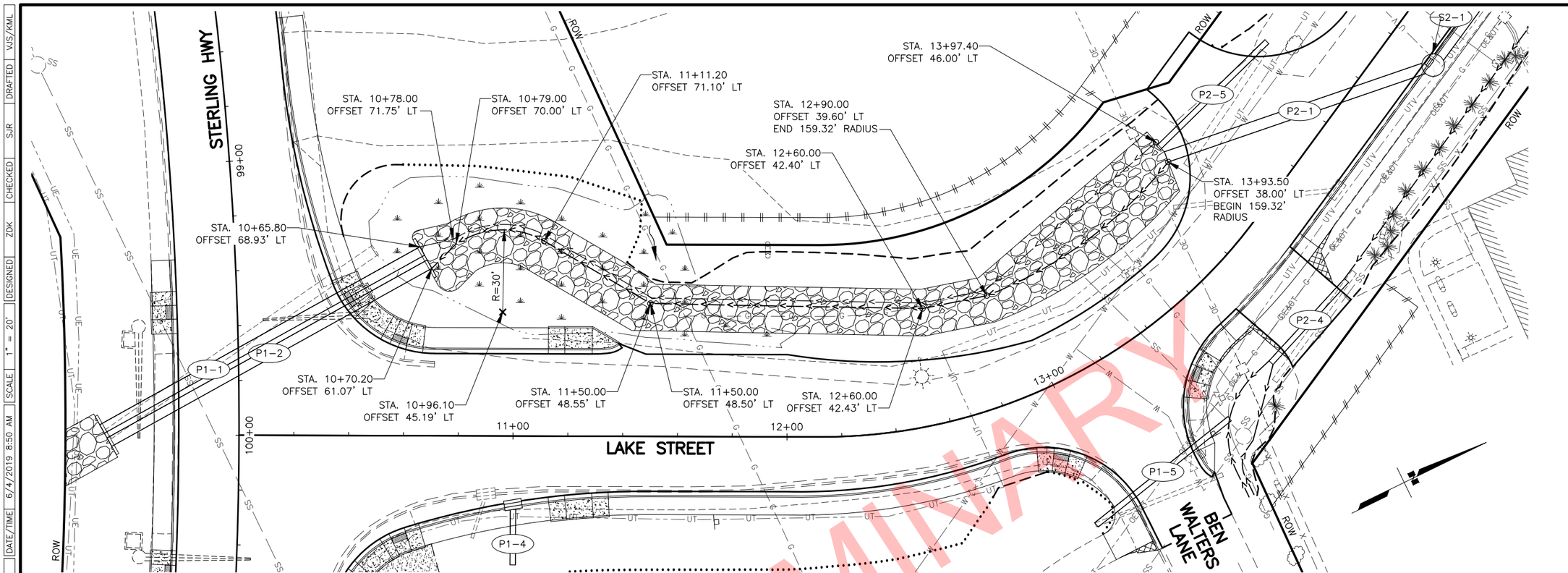

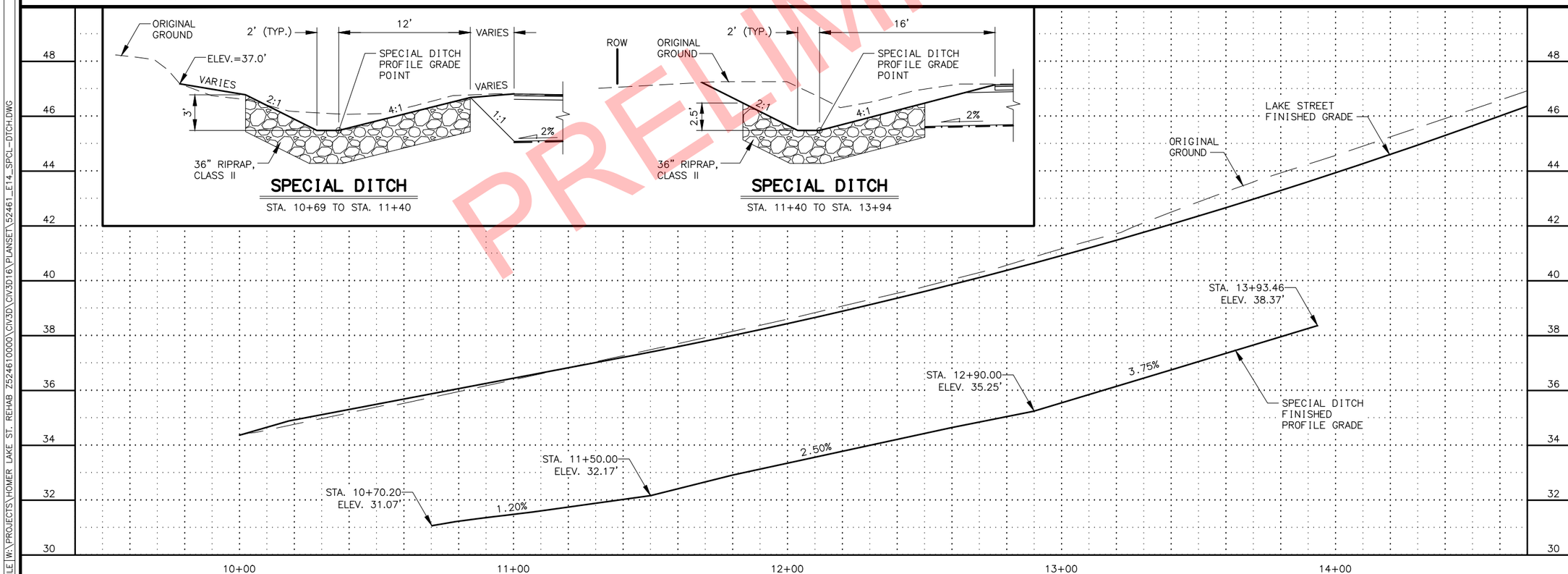

SHEET NO.	TOTAL SHEETS
E14	E23
STATE	YEAR
ALASKA	2020

PROJECT DESIGNATION

0001422/ Z524610000

NO.	REVISION
1	
DATE	
NO.	REVISION
2	
DATE	
NO.	REVISION
3	
DATE	

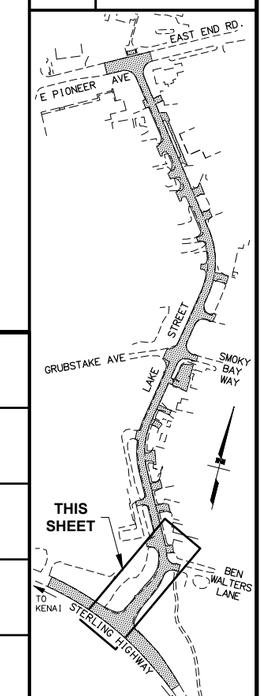

STATE OF ALASKA
STEVEN J. RUSSELL
REGISTERED PROFESSIONAL ENGINEER
PSSE REVIEW

STATE OF ALASKA DOT&PF
4111 AVIATION AVENUE
ANCHORAGE, AK 99502
(907) 269-0590

STATE OF ALASKA
DEPARTMENT OF TRANSPORTATION AND PUBLIC FACILITIES

HOMER: LAKE STREET REHABILITATION

SPECIAL DITCH DETAILS STA. 10+70 TO 13+97

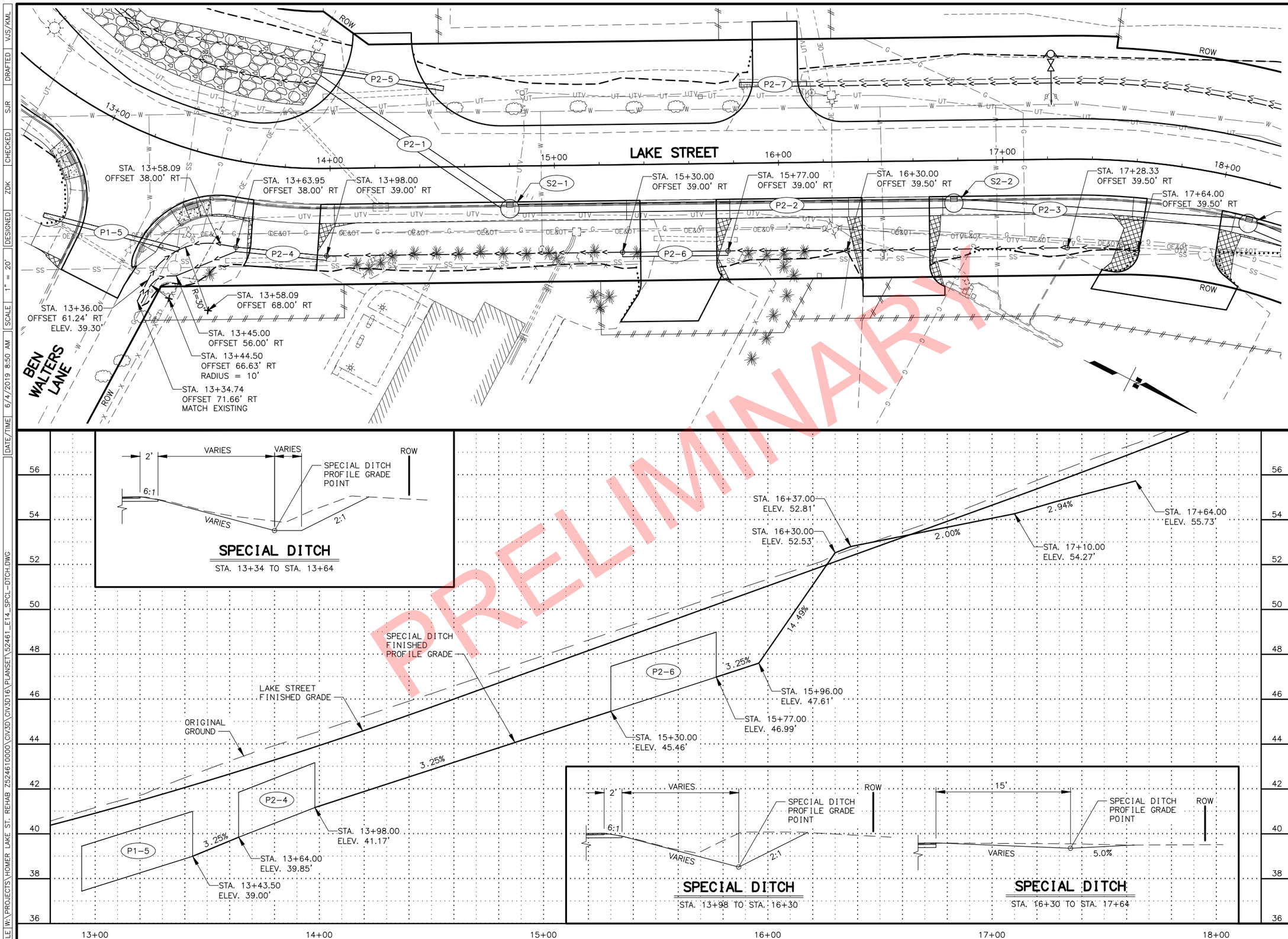

SHEET NO.	TOTAL SHEETS
E15	E23
STATE	YEAR
ALASKA	2020

PROJECT DESIGNATION

0001422/ Z524610000

NO.	REVISION
1	
DATE	
NO.	REVISION
2	
DATE	
NO.	REVISION
3	
DATE	

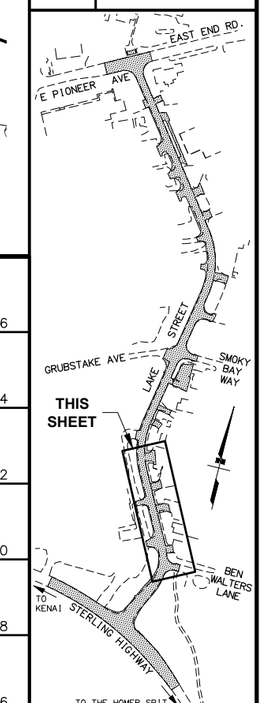

STATE OF ALASKA DOT&PF
4111 AVIATION AVENUE
ANCHORAGE, AK 99502
(907) 269-0590

STATE OF ALASKA
DEPARTMENT OF TRANSPORTATION AND PUBLIC FACILITIES

HOMER: LAKE STREET REHABILITATION

SPECIAL DITCH DETAILS STA. 13+34 TO 17+64

FILE W:\PROJECTS\HOMER LAKE ST. REHAB Z524610000\CIV3D\CIV3D16\PLANSET\52461_E14_SPCL-DTCH.DWG | DATE/TIME 6/4/2019 8:50 AM | SCALE 1" = 20' | DESIGNED ZDK | CHECKED SJR | DRAFTED VJS/KML

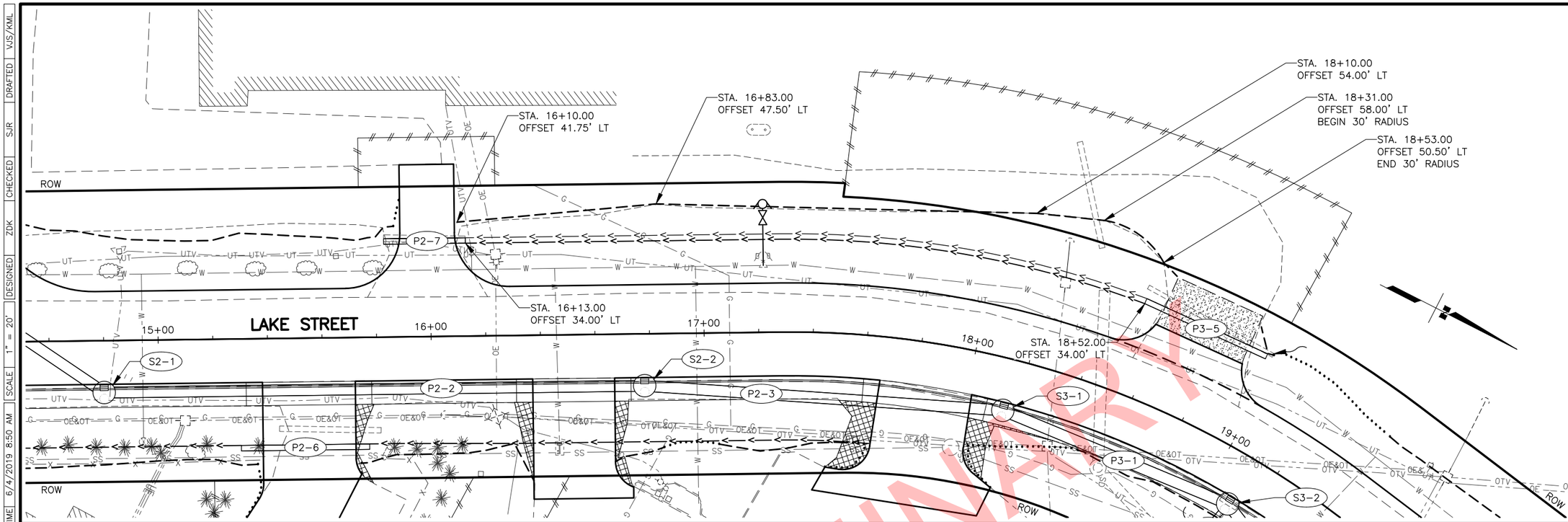

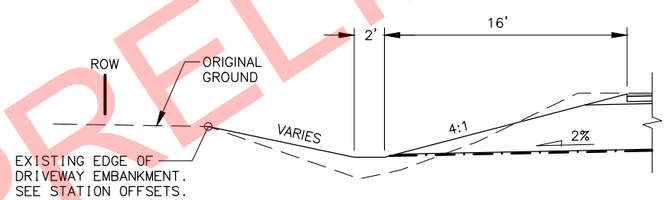

SPECIAL DITCH

STA. 16+13 TO STA. 18+52

SHEET NO.	TOTAL SHEETS
E16	E23
STATE	YEAR
ALASKA	2020

PROJECT DESIGNATION

0001422/
Z524610000

NO.	REVISION
1	
DATE	
NO.	REVISION
2	
DATE	
NO.	REVISION
3	
DATE	

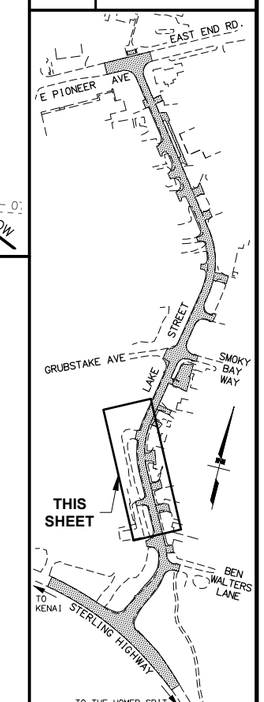

STATE OF ALASKA
STEVEN R. PEDERSEN
CE 3437
REGISTERED PROFESSIONAL ENGINEER
PSSL REVIEW

STATE OF ALASKA DOT&PF
4111 AVIATION AVENUE
ANCHORAGE, AK 99502
(907) 269-0590

STATE OF ALASKA
DEPARTMENT OF TRANSPORTATION
AND PUBLIC FACILITIES

HOMER: LAKE STREET
REHABILITATION

SPECIAL DITCH DETAILS
STA. 16+13 TO 18+52

FILE W:\PROJECTS\HOMER LAKE ST. REHAB Z524610000\CIV3D\CIV3D16\PLANSET\52461_E14_SPCL-DTCH.DWG | DATE/TIME 6/4/2019 8:50 AM | SCALE 1" = 20' | DESIGNED ZDK | CHECKED SJR | DRAFTED VJS/KML

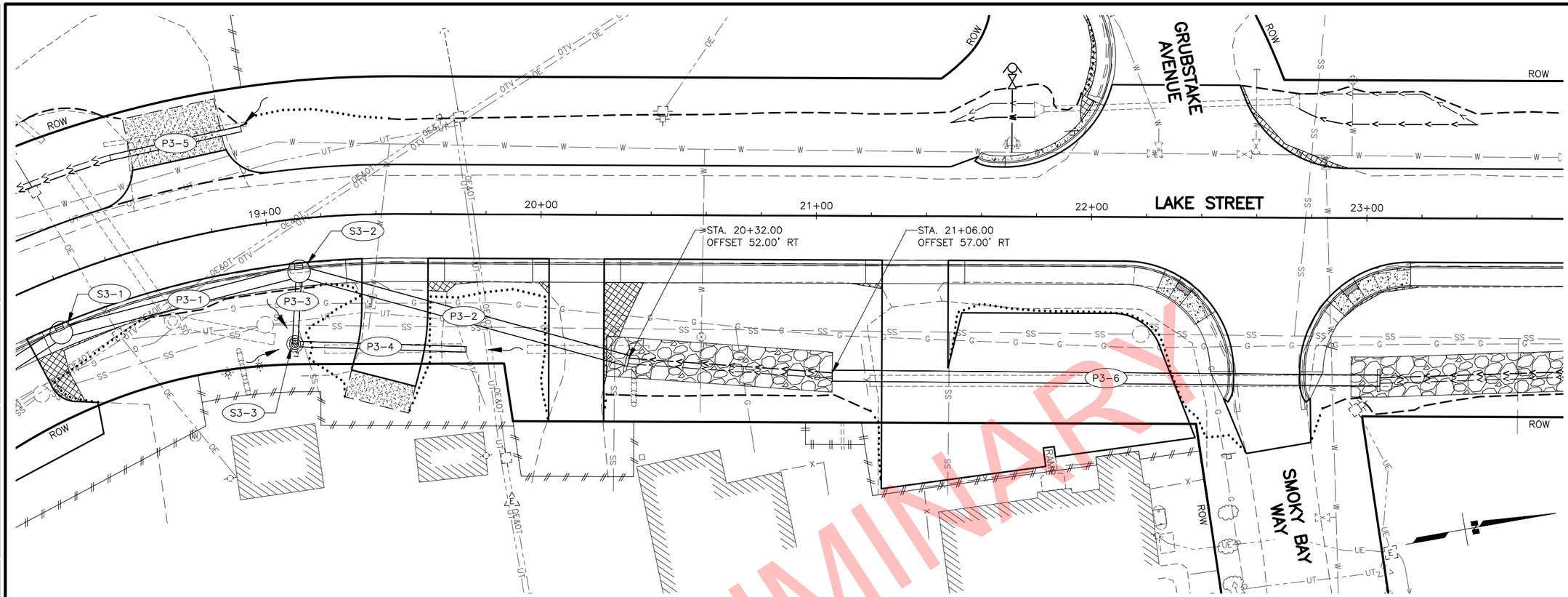

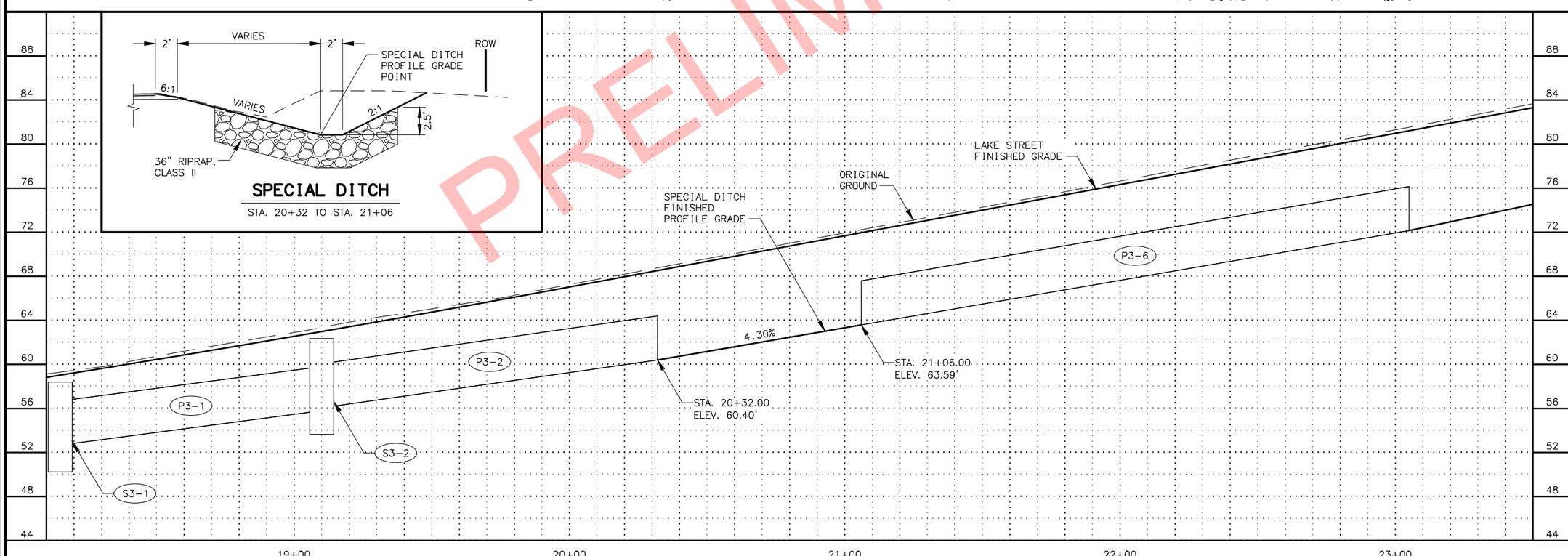

SHEET NO.	TOTAL SHEETS
E17	E23
STATE	YEAR
ALASKA	2020

PROJECT DESIGNATION
0001422/
Z524610000

NO.	REVISION
1	
DATE	
NO.	REVISION
2	
DATE	
NO.	REVISION
3	
DATE	

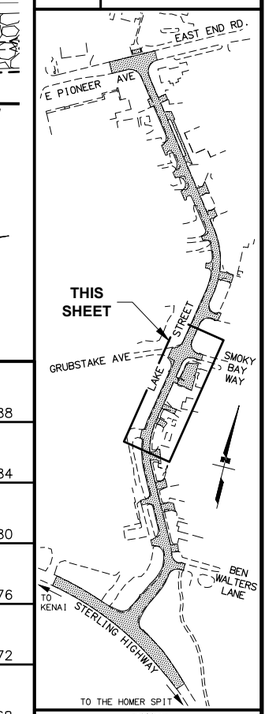

STATE OF ALASKA
STEVEN J. RUSSELL
347
REGISTERED PROFESSIONAL ENGINEER
PS&E REVIEW

STATE OF ALASKA DOT&PF
4111 AVIATION AVENUE
ANCHORAGE, AK 99502
(907) 269-0590

STATE OF ALASKA
DEPARTMENT OF TRANSPORTATION
AND PUBLIC FACILITIES

HOMER: LAKE STREET
REHABILITATION

SPECIAL DITCH DETAILS
STA. 20+30 TO 21+06

DATE/TIME 6/4/2019 8:50 AM | SCALE 1" = 20' | DESIGNED ZDK | CHECKED SJR | DRAFTED VJS/KML

FILE W:\PROJECTS\HOMER LAKE ST. REHAB Z524610000\CIV3D\CIV3016\PLANSET\52461_E14_SPCL-DTCH.DWG

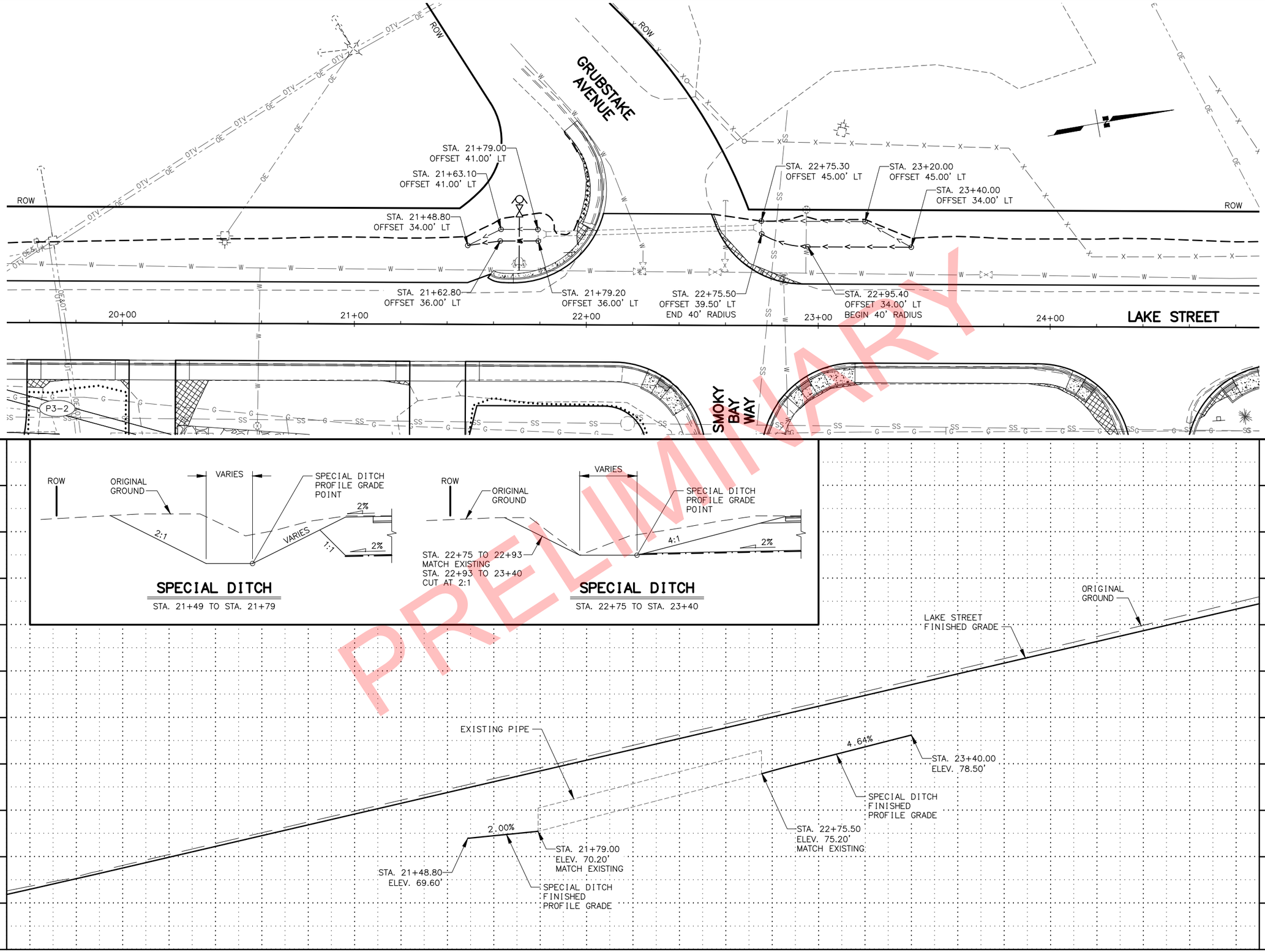

SHEET NO.	TOTAL SHEETS
E18	E23
STATE	YEAR
ALASKA	2020

PROJECT DESIGNATION
0001422/
Z524610000

NO.	REVISION
1	
DATE	
NO.	REVISION
2	
DATE	
NO.	REVISION
3	
DATE	

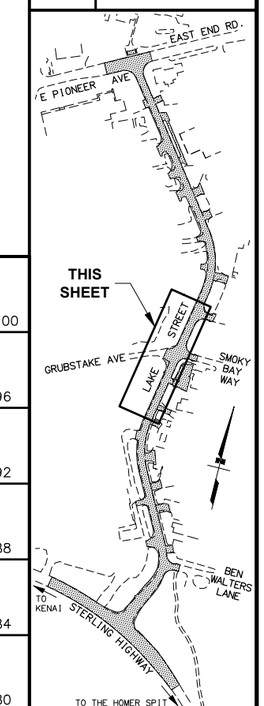

PS&E REVIEW
STATE OF ALASKA
STEVEN R. PEDERSEN
REGISTERED PROFESSIONAL ENGINEER

STATE OF ALASKA DOT&PF
4111 AVIATION AVENUE
ANCHORAGE, AK 99502
(907) 269-0590

STATE OF ALASKA
DEPARTMENT OF TRANSPORTATION
AND PUBLIC FACILITIES

HOMER: LAKE STREET
REHABILITATION

SPECIAL DITCH DETAILS
STA. 21+49 TO 23+40

FILE W:\PROJECTS\HOMER LAKE ST. REHAB Z524610000\CIV3D\CIV3016\PLANSET\52461_E14_SPCL-DITCH.DWG | DATE/TIME 6/4/2019 8:50 AM | SCALE 1" = 20' | DESIGNED ZDK | CHECKED SJR | DRAFTED VJS/KML

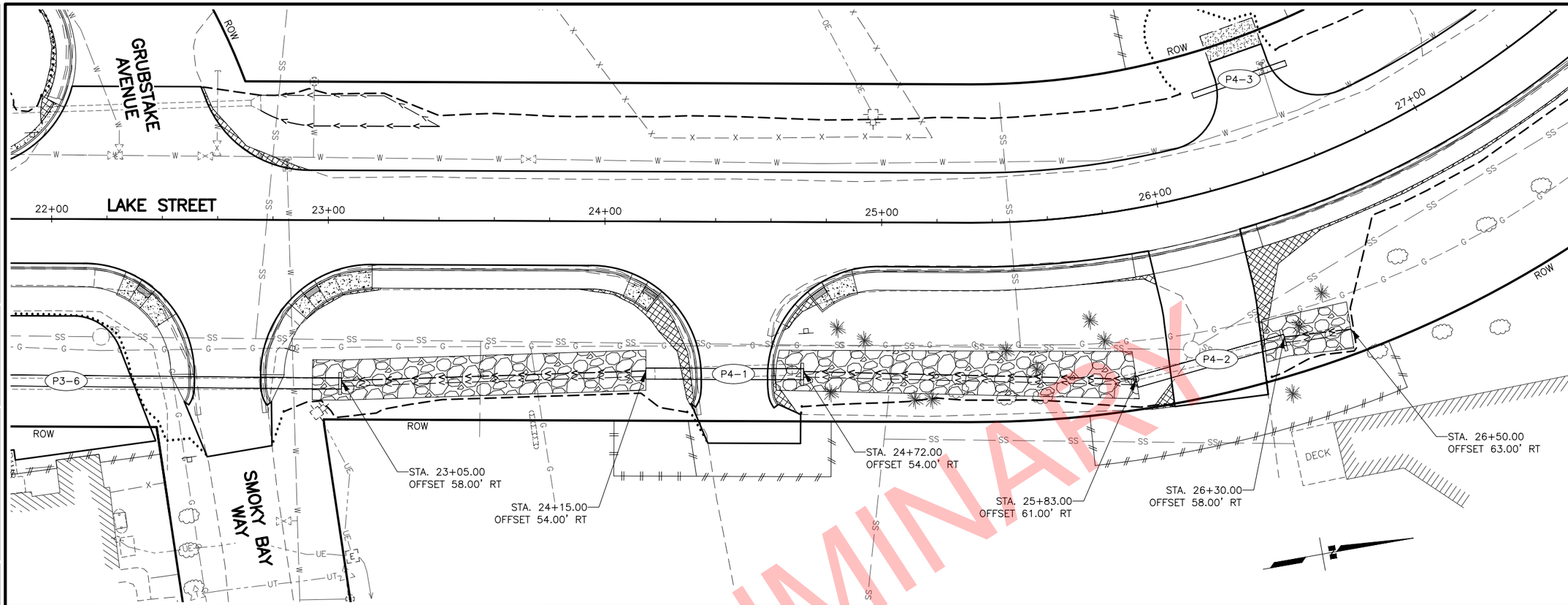

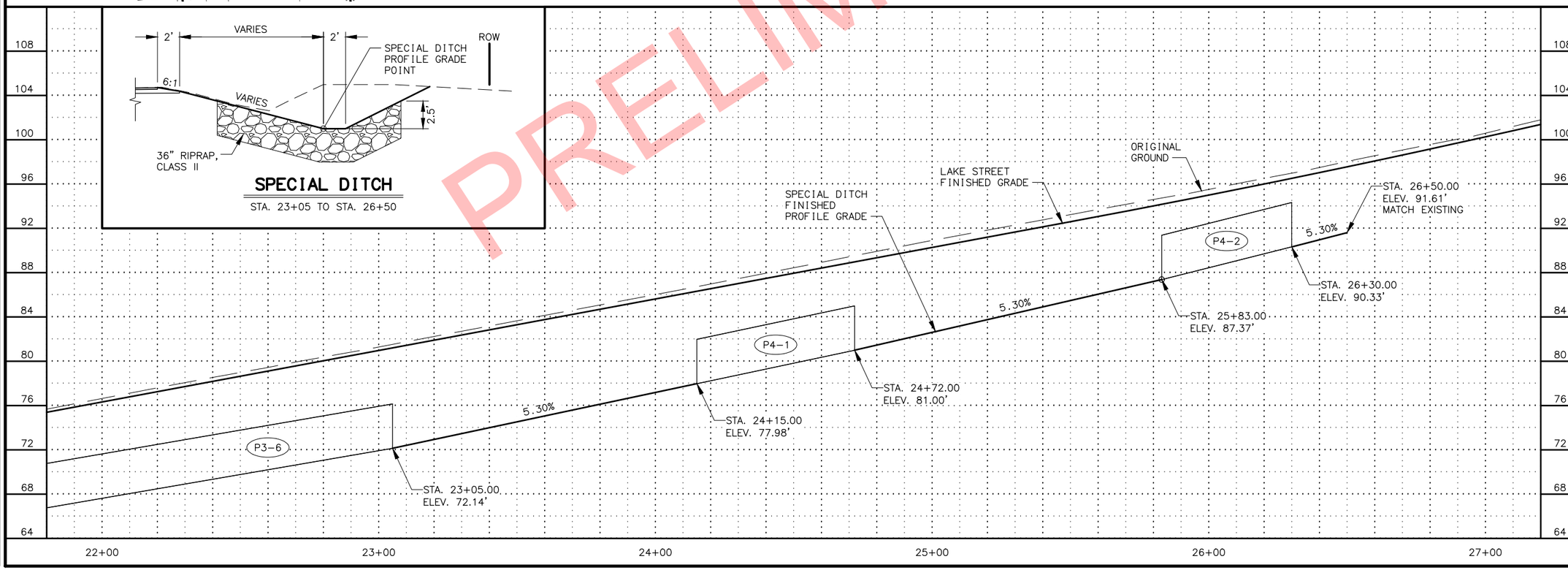

SHEET NO.	TOTAL SHEETS
E19	E23
STATE	YEAR
ALASKA	2020

PROJECT DESIGNATION
0001422/
Z524610000

NO.	REVISION
1	
DATE	
NO.	REVISION
2	
DATE	
NO.	REVISION
3	
DATE	

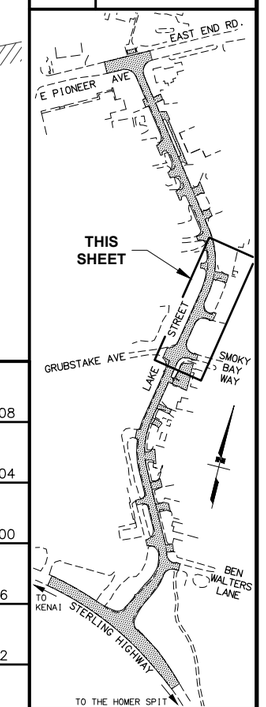

STATE OF ALASKA DOT&PF
4111 AVIATION AVENUE
ANCHORAGE, AK 99502
(907) 269-0590

STATE OF ALASKA
DEPARTMENT OF TRANSPORTATION
AND PUBLIC FACILITIES

HOMER: LAKE STREET
REHABILITATION

SPECIAL DITCH DETAILS
STA. 23+05 TO 26+50

DATE/TIME 6/4/2019 8:50 AM | SCALE 1" = 20' | DESIGNED ZDK | CHECKED SJR | DRAFTED VJS/KML

FILE W:\PROJECTS\HOMER LAKE ST. REHAB Z524610000\CIV3D\CIV3D16\PLANSET\52461_E14_SPCL-DITCH.DWG

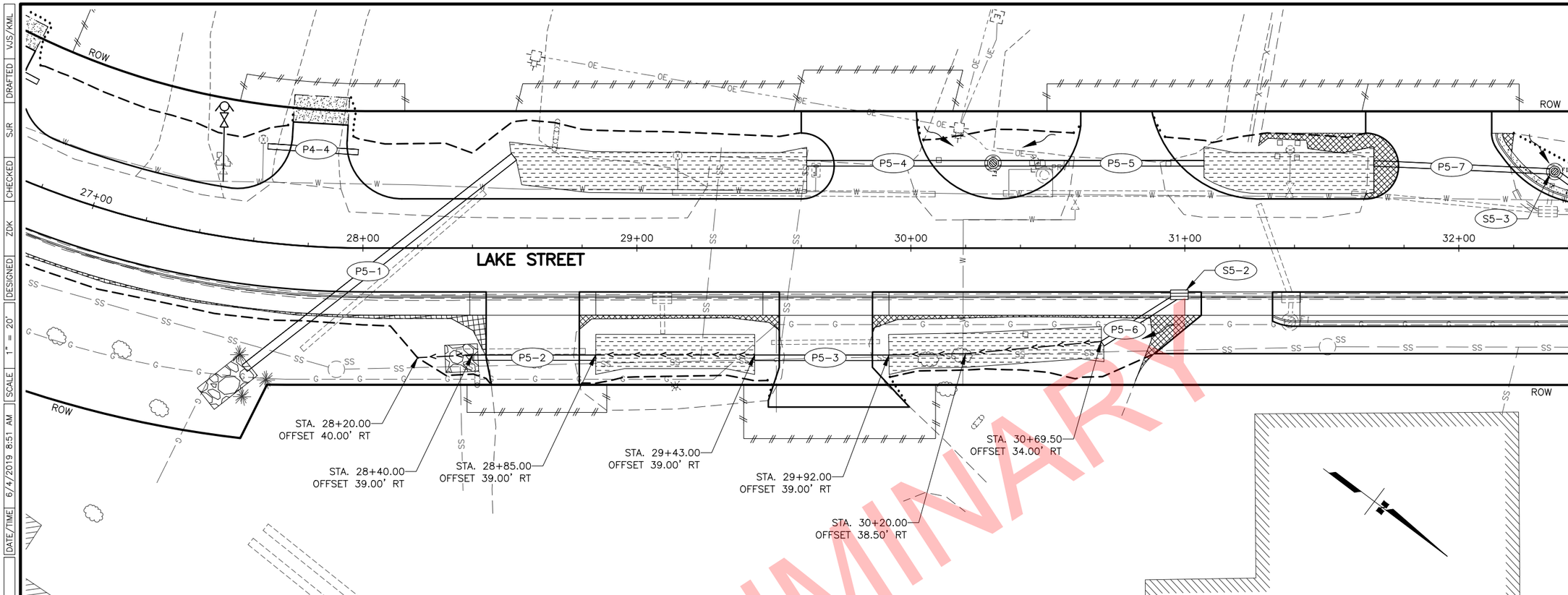

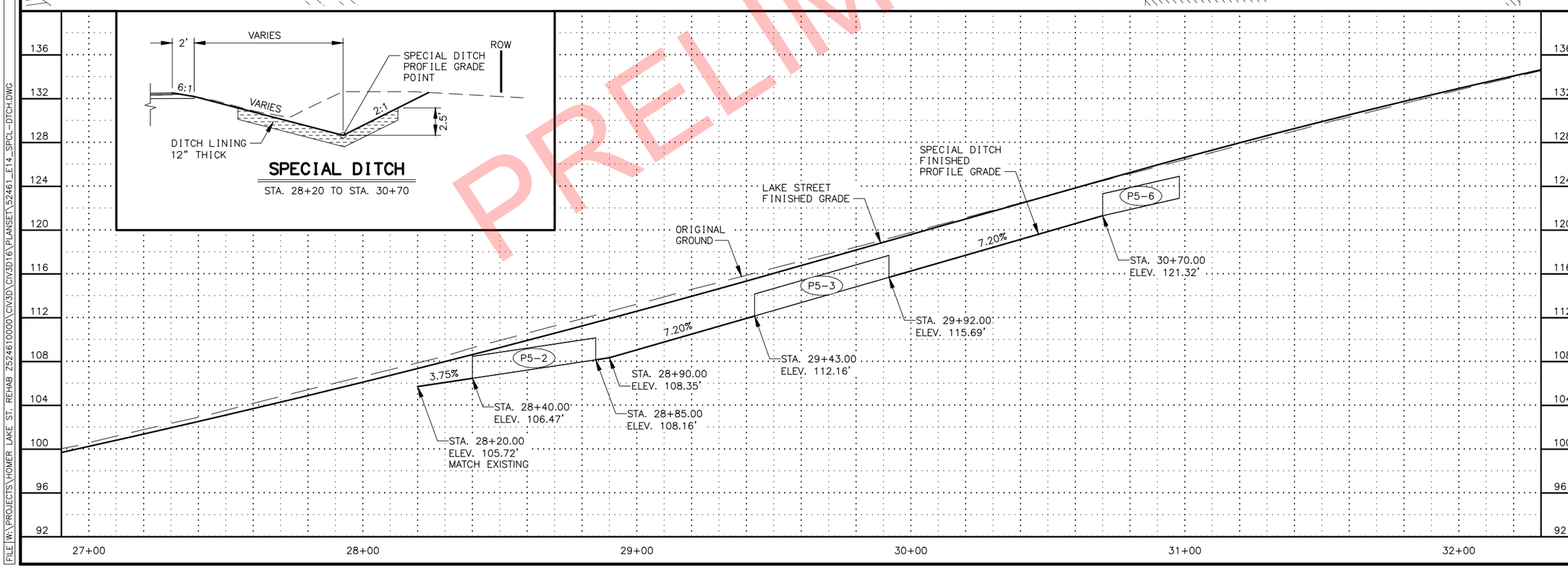

SHEET NO.	TOTAL SHEETS
E20	E23
STATE	YEAR
ALASKA	2020

PROJECT DESIGNATION
0001422/
Z524610000

NO.	REVISION
1	
DATE	
NO.	REVISION
2	
DATE	
NO.	REVISION
3	
DATE	

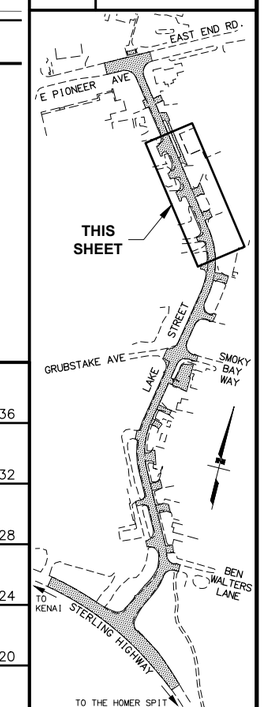

STATE OF ALASKA DOT&PF
4111 AVIATION AVENUE
ANCHORAGE, AK 99502
(907) 269-0590

STATE OF ALASKA
DEPARTMENT OF TRANSPORTATION
AND PUBLIC FACILITIES

HOMER: LAKE STREET
REHABILITATION

SPECIAL DITCH DETAILS
STA. 28+20 TO 30+70

FILE W:\PROJECTS\HOMER LAKE ST. REHAB Z524610000\CIV3D\CIV3D16\PLANSET\52461_E14_SPCL-DTCH.DWG
DATE/TIME 6/4/2019 8:51 AM | SCALE 1" = 20' | DESIGNED ZDK | CHECKED SJR | DRAFTED VJS/KML

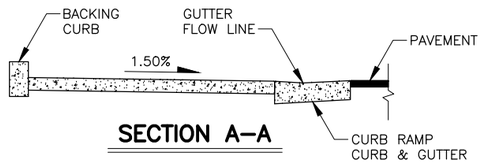

SECTION A–A

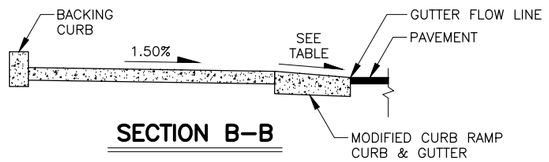

SECTION B–B

MODIFIED CURB RAMP DETAILS

NOTE: SEE ALASKA STANDARD PLAN I–21 FOR MORE INFORMATION.

MODIFIED CURB RAMP CURB & GUTTER SLOPES

CURB RAMP	SLOPE	REMARKS
CR3–1	7.46%	
CR3–2	9.00%	MEMO OF TECHNICAL INFEASABLITY ON FILE
CR4–1	8.55%	MEMO OF TECHNICAL INFEASABLITY ON FILE
CR4–2	6.43%	

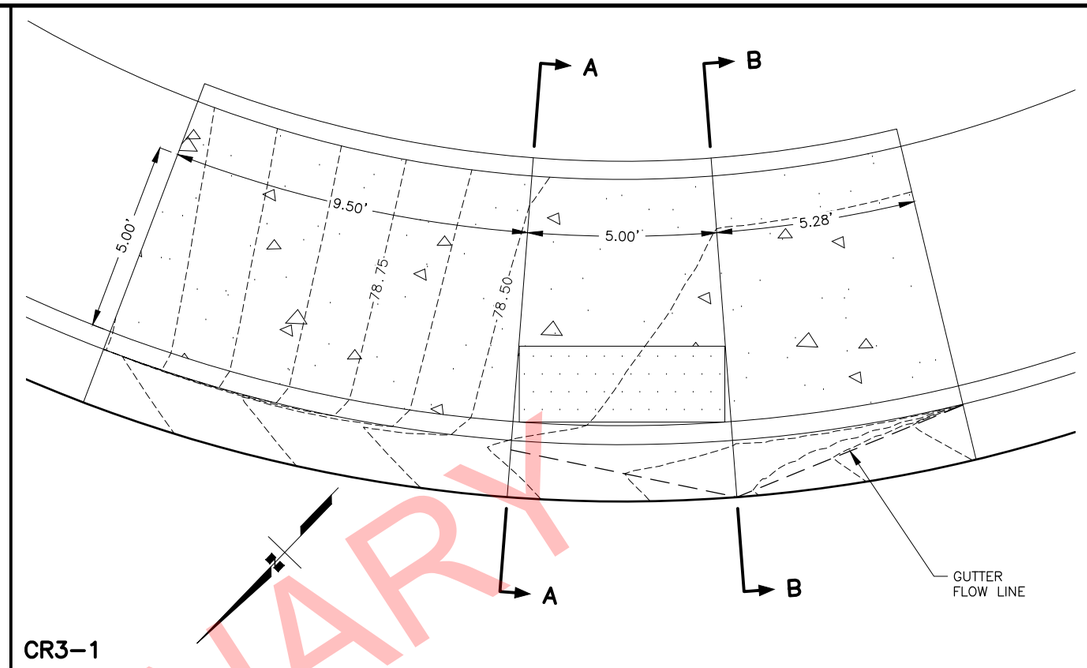

CR3–1

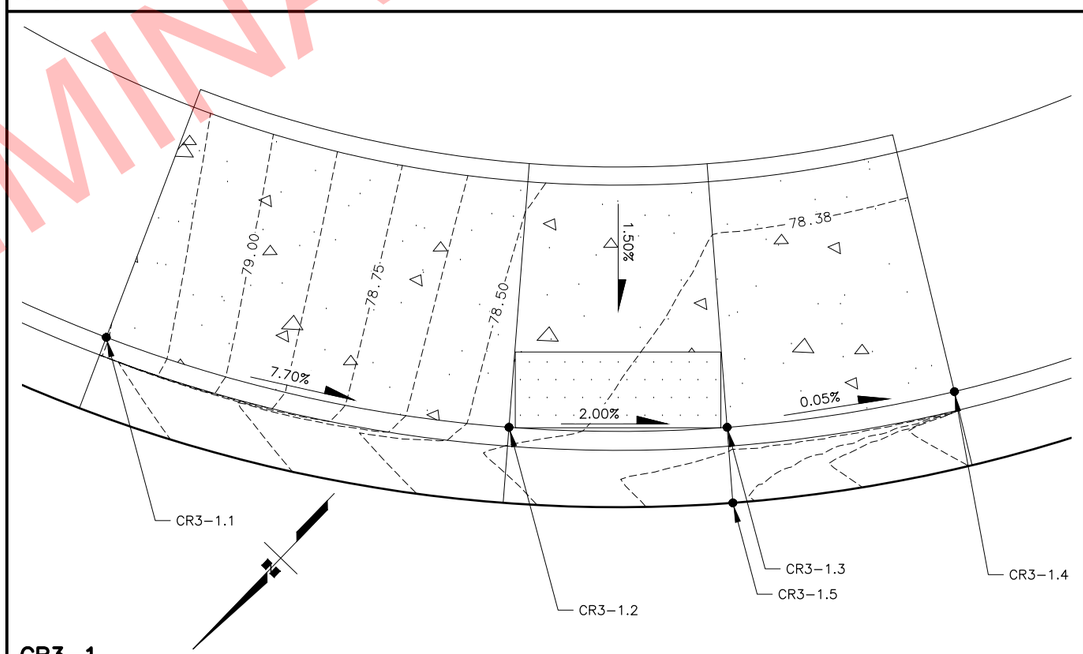

CR3–1

CR3–1 GRADING POINTS

POINT	STATION	OFFSET (FT)	ELEVATION (FT)	REMARKS
CR3–1.1	22+43.53	35.09 RT	79.26	BEGIN RAMP RUN
CR3–1.2	22+36.30	26.95 RT	78.41	BEGIN LANDING
CR3–1.3	22+31.63	23.58 RT	78.30	BEGIN RAMP RUN
CR3–1.4	22+26.21	20.84 RT	78.30	END RAMP RUN
CR3–1.5	22+32.67	21.87 RT	78.15	FLOW LINE REFERENCE

SHEET NO.	TOTAL SHEETS
E21	E23
STATE	YEAR
ALASKA	2020

PROJECT DESIGNATION
0001422/ Z524610000

NO.	REVISION
1	
DATE	
NO.	REVISION
2	
DATE	
NO.	REVISION
3	
DATE	

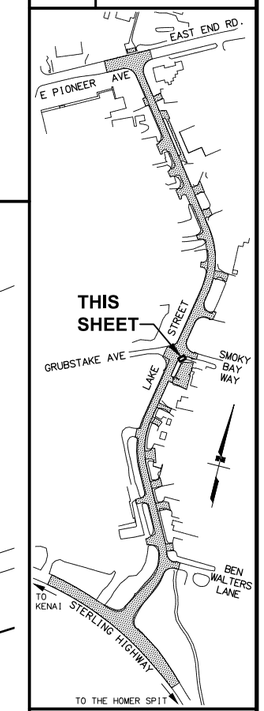

PS&E REVIEW

STATE OF ALASKA DOT&PF
4111 AVIATION AVENUE
ANCHORAGE, AK 99502
(907) 269–0590

STATE OF ALASKA
DEPARTMENT OF TRANSPORTATION AND PUBLIC FACILITIES

HOMER: LAKE STREET REHABILITATION

CURB RAMP GRADING DETAILS

FILE W:\PROJECTS\HOMER LAKE ST. REHAB Z524610000\CIV3D\CIV3D16\PLANSET\52461_E21_CRB-RMP.DWG
DATE/TIME 6/4/2019 8:51 AM | SCALE 1" = 2' | DESIGNED ZDK | CHECKED SJR | DRAFTED ZDK

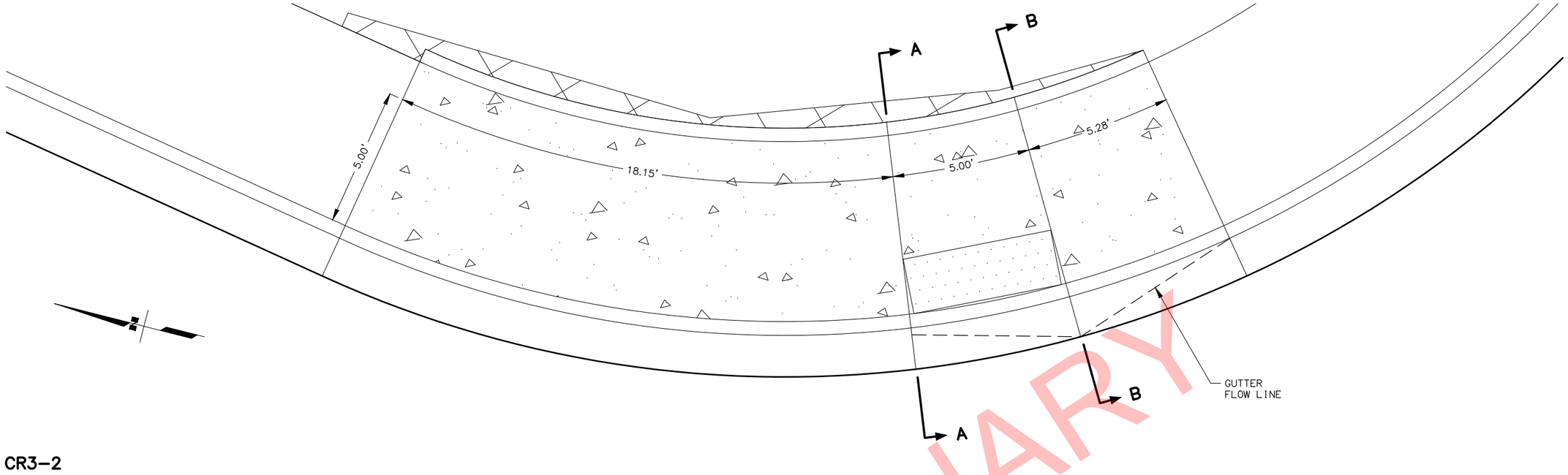

CR3-2

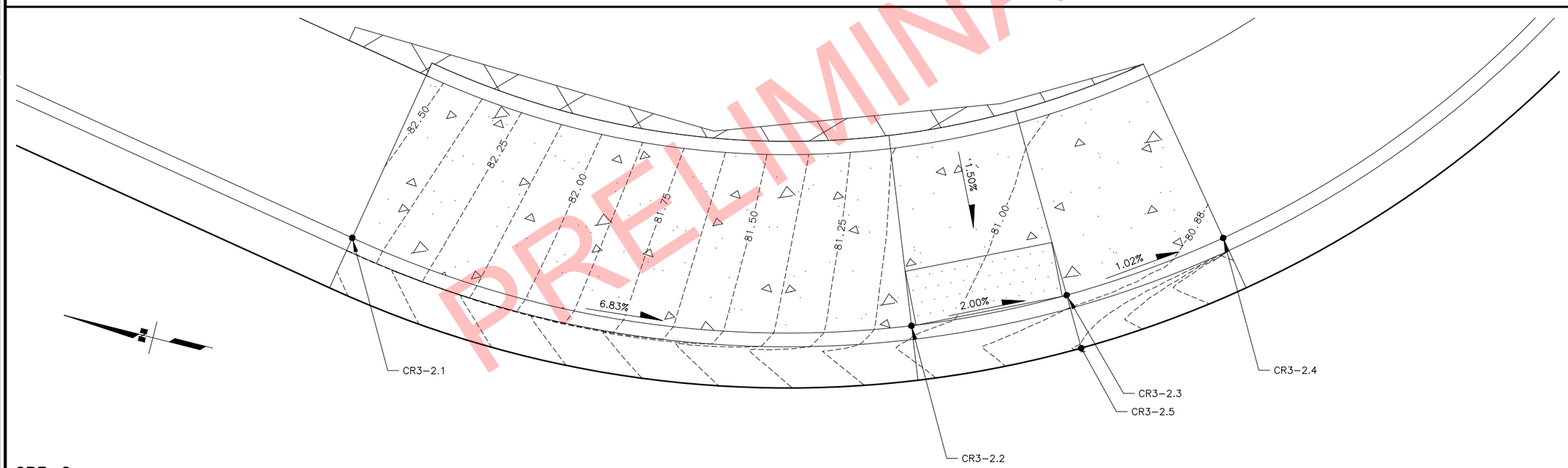

CR3-2

CR3-2 GRADING POINTS

POINT	STATION	OFFSET (FT)	ELEVATION (FT)	REMARKS
CR3-2.1	23+15.94	18.00 RT	82.46	BEGIN RAMP RUN
CR3-2.2	22+96.08	23.52 RT	81.03	BEGIN LANDING
CR3-2.3	22+91.40	26.87 RT	80.92	BEGIN RAMP RUN
CR3-2.4	22+87.07	31.13 RT	80.56	END RAMP RUN
CR3-2.5	22+96.08	23.52 RT	80.74	FLOW LINE REFERENCE

SHEET NO.	TOTAL SHEETS
E22	E23
STATE	YEAR
ALASKA	2020

PROJECT DESIGNATION
0001422/
Z524610000

NO.	REVISION
1	
DATE	
NO.	REVISION
2	
DATE	
NO.	REVISION
3	
DATE	

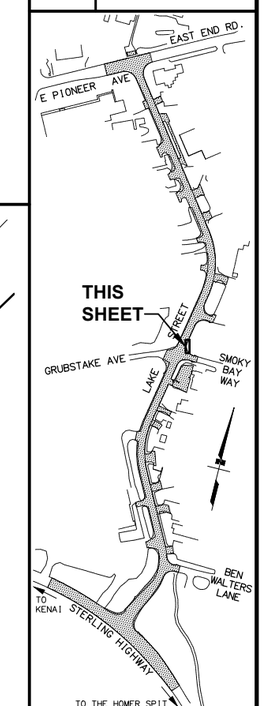

STATE OF ALASKA
STEVEN R. PETERSON
REGISTERED PROFESSIONAL ENGINEER
PS&E REVIEW

STATE OF ALASKA DOT&PF
4111 AVIATION AVENUE
ANCHORAGE, AK 99502
(907) 269-0590

STATE OF ALASKA
DEPARTMENT OF TRANSPORTATION
AND PUBLIC FACILITIES

HOMER: LAKE STREET
REHABILITATION

CURB RAMP GRADING DETAILS

FILE W:\PROJECTS\HOMER LAKE ST. REHAB Z524610000\CIV3D\CIV3016\PLANSET\52461_E21_CRB-RMP.DWG | DATE/TIME 6/4/2019 8:51 AM | SCALE 1" = 2' | DESIGNED ZDK | CHECKED SJR | DRAFTED ZDK

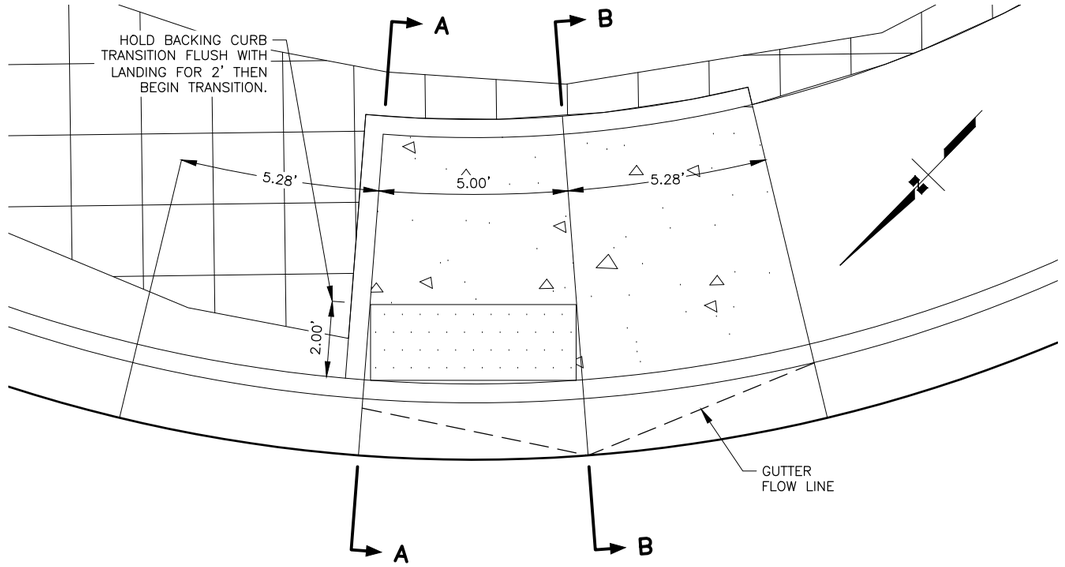

CR4–1

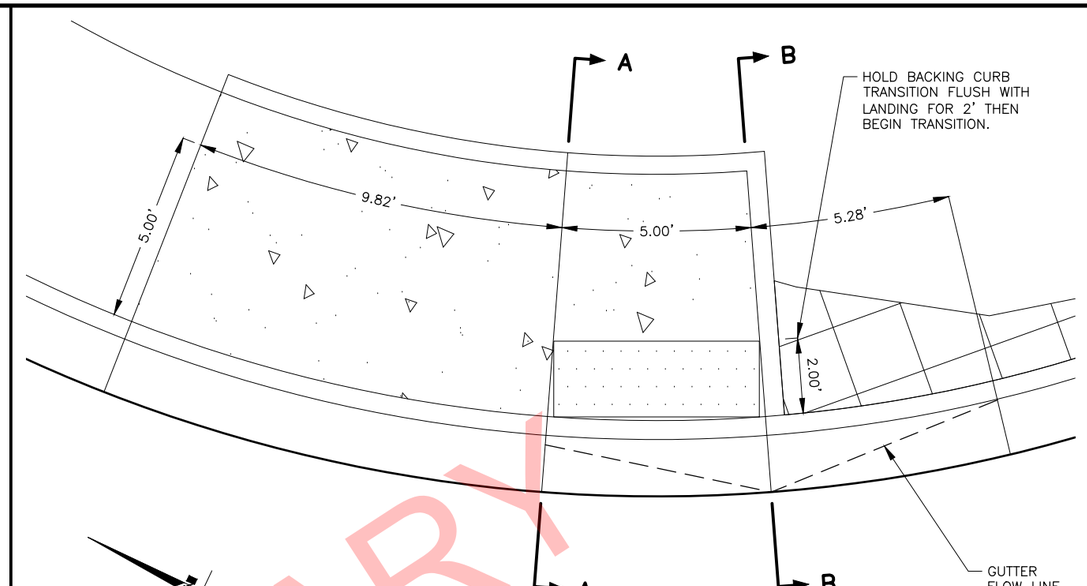

CR4–2

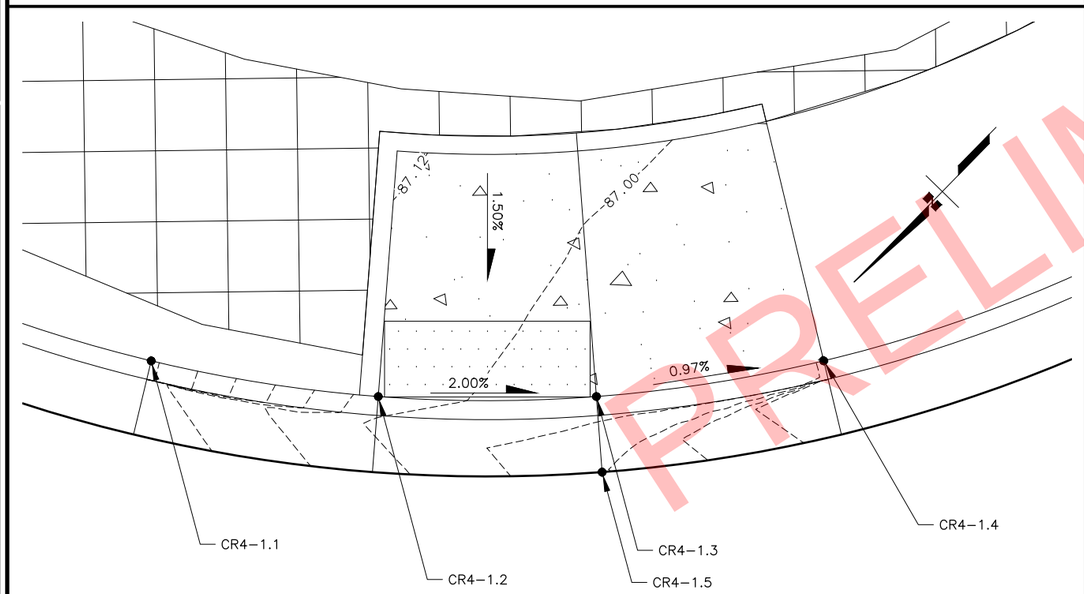

CR4–1

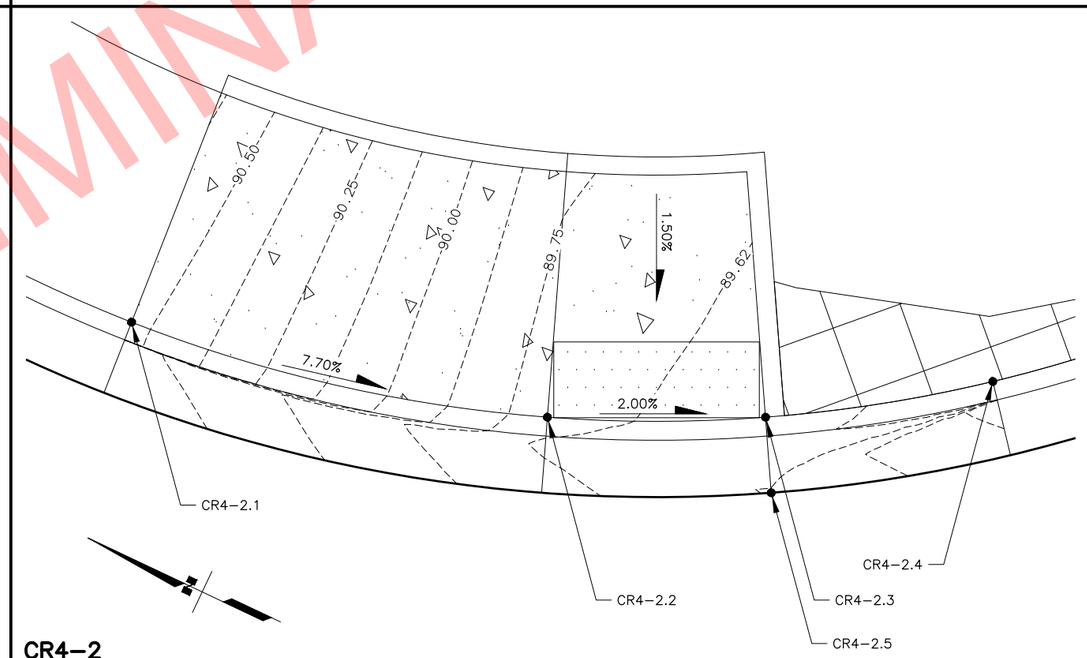

CR4–2

CR4-1 GRADING POINTS

POINT	STATION	OFFSET (FT)	ELEVATION (FT)	REMARKS
CR4-1.1	24+23.68	31.07 RT	87.78	BEGIN CURB TRANSITION
CR4-1.2	24+19.34	26.82 RT	87.05	BEGIN LANDING
CR4-1.3	24+14.66	23.48 RT	86.93	BEGIN RAMP RUN
CR4-1.4	24+09.23	20.76 RT	86.87	END RAMP RUN
CR4-1.5	24+15.69	21.77 RT	86.76	FLOW LINE REFERENCE

CR4-2 GRADING POINTS

POINT	STATION	OFFSET (FT)	ELEVATION (FT)	REMARKS
CR4-2.1	24+89.73	19.15 RT	90.54	BEGIN RAMP RUN
CR4-2.2	24+79.34	23.48 RT	89.67	BEGIN LANDING
CR4-2.3	24+74.65	26.82 RT	89.56	BEGIN CURB TRANSITION
CR4-2.4	24+70.32	31.08 RT	89.71	END CURB TRANSITION
CR4-2.5	24+73.37	25.29 RT	89.49	FLOW LINE REFERENCE

SHEET NO.	TOTAL SHEETS
E23	E23
STATE	YEAR
ALASKA	2020

PROJECT DESIGNATION

0001422/ Z524610000

NO.	REVISION
1	
DATE	
NO.	REVISION
2	
DATE	
NO.	REVISION
3	
DATE	

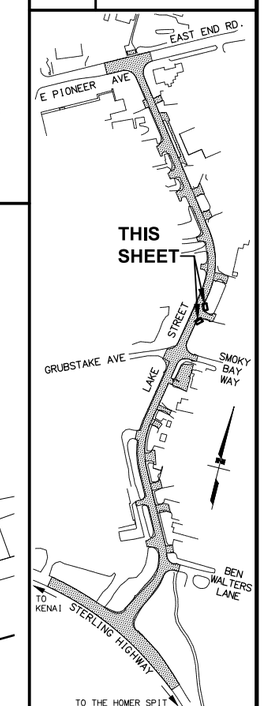

STATE OF ALASKA
STEVEN R. PETERSON
347
REGISTERED PROFESSIONAL ENGINEER
PS&E REVIEW

STATE OF ALASKA DOT&PF
4111 AVIATION AVENUE
ANCHORAGE, AK 99502
(907) 269-0590

STATE OF ALASKA
DEPARTMENT OF TRANSPORTATION
AND PUBLIC FACILITIES

HOMER: LAKE STREET REHABILITATION

CURB RAMP GRADING DETAILS

FILE W:\PROJECTS\HOMER LAKE ST. REHAB Z524610000\CIV3D\CIV3016\PLANSET\52461_E21_CRB-RMP.DWG | DATE/TIME 6/4/2019 8:52 AM | SCALE 1" = 2' | DESIGNED ZDK | CHECKED SJR | DRAFTED ZDK

SHEET NO.	TOTAL SHEETS
F01	F18
STATE	YEAR
ALASKA	2020

PROJECT DESIGNATION
0001422/
Z524610000

NO.	REVISION
1	
DATE	
NO.	REVISION
2	
DATE	
NO.	REVISION
3	
DATE	

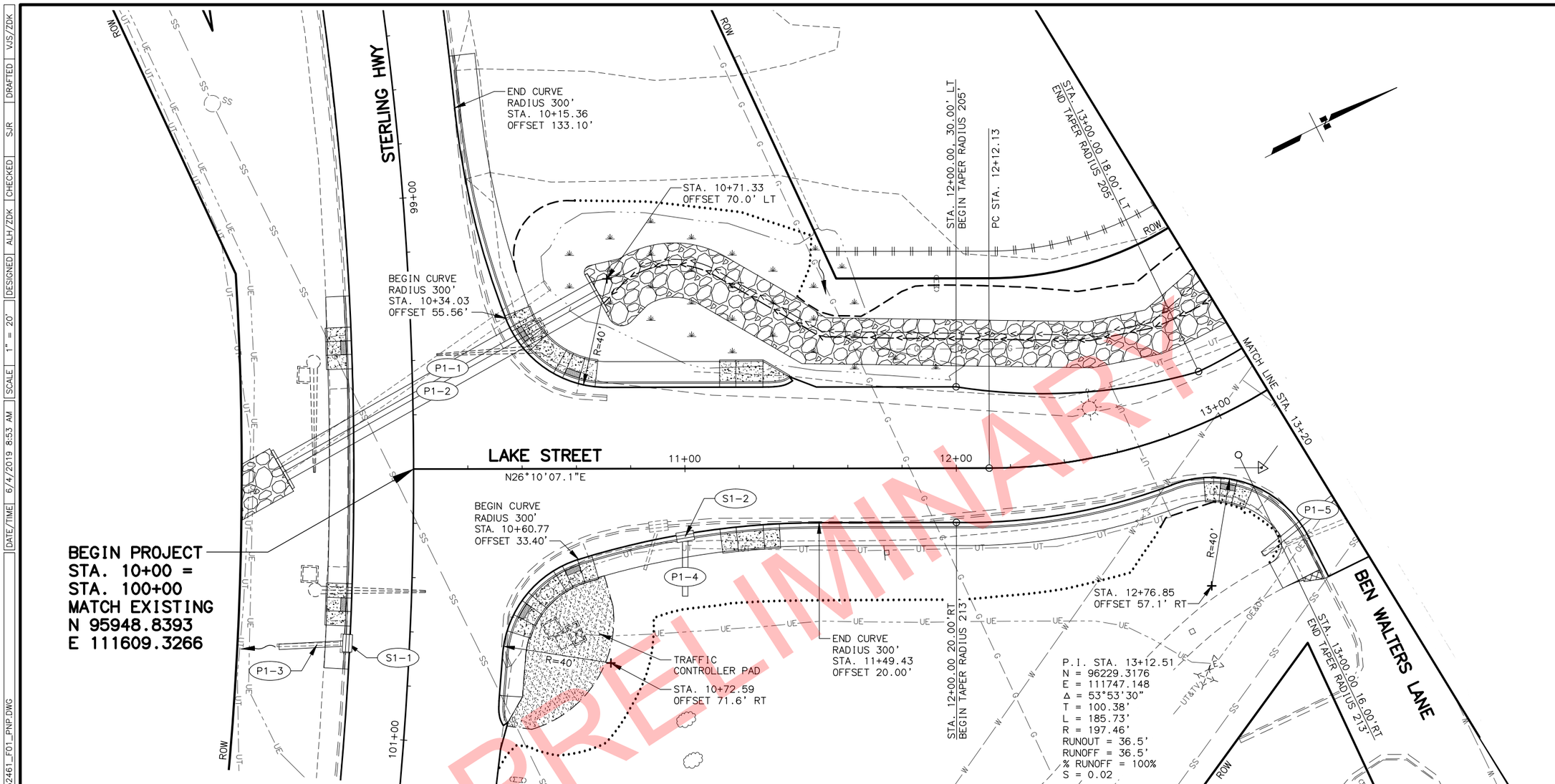

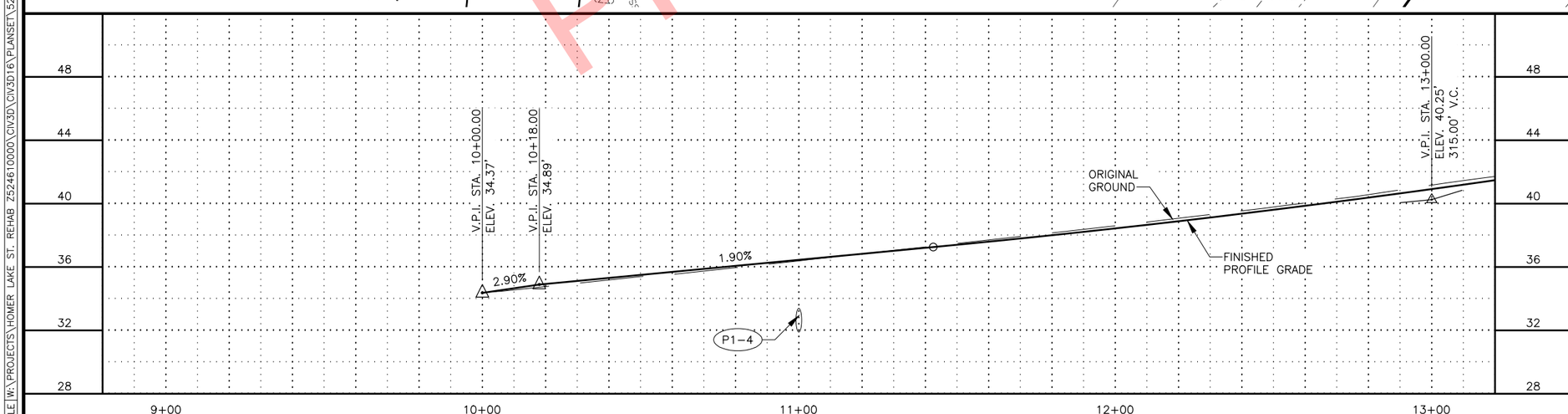

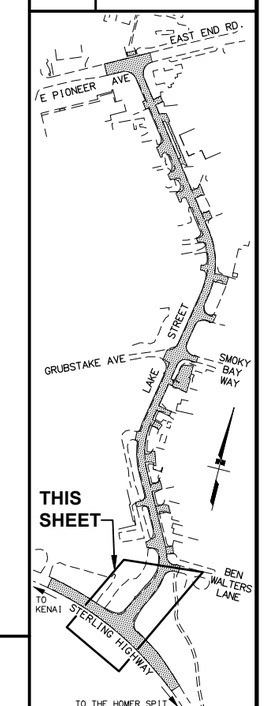

STATE OF ALASKA
STEVEN R. PETERSON
CE 349
REGISTERED PROFESSIONAL ENGINEER
POST REVIEW

STATE OF ALASKA DOT&PF
4111 AVIATION AVENUE
ANCHORAGE, AK 99502
(907) 269-0590

STATE OF ALASKA
DEPARTMENT OF TRANSPORTATION
AND PUBLIC FACILITIES

HOMER: LAKE STREET
REHABILITATION

PLAN AND PROFILE

FILE W:\PROJECTS\HOMER LAKE ST. REHAB Z524610000\CIV3D\CIV3D16\PLANSET\52461_F01_PNP.DWG | DATE/TIME 6/4/2019 8:53 AM | SCALE 1" = 20' | DESIGNED ALH/ZDK | CHECKED SJR | DRAFTED VJS/ZDK

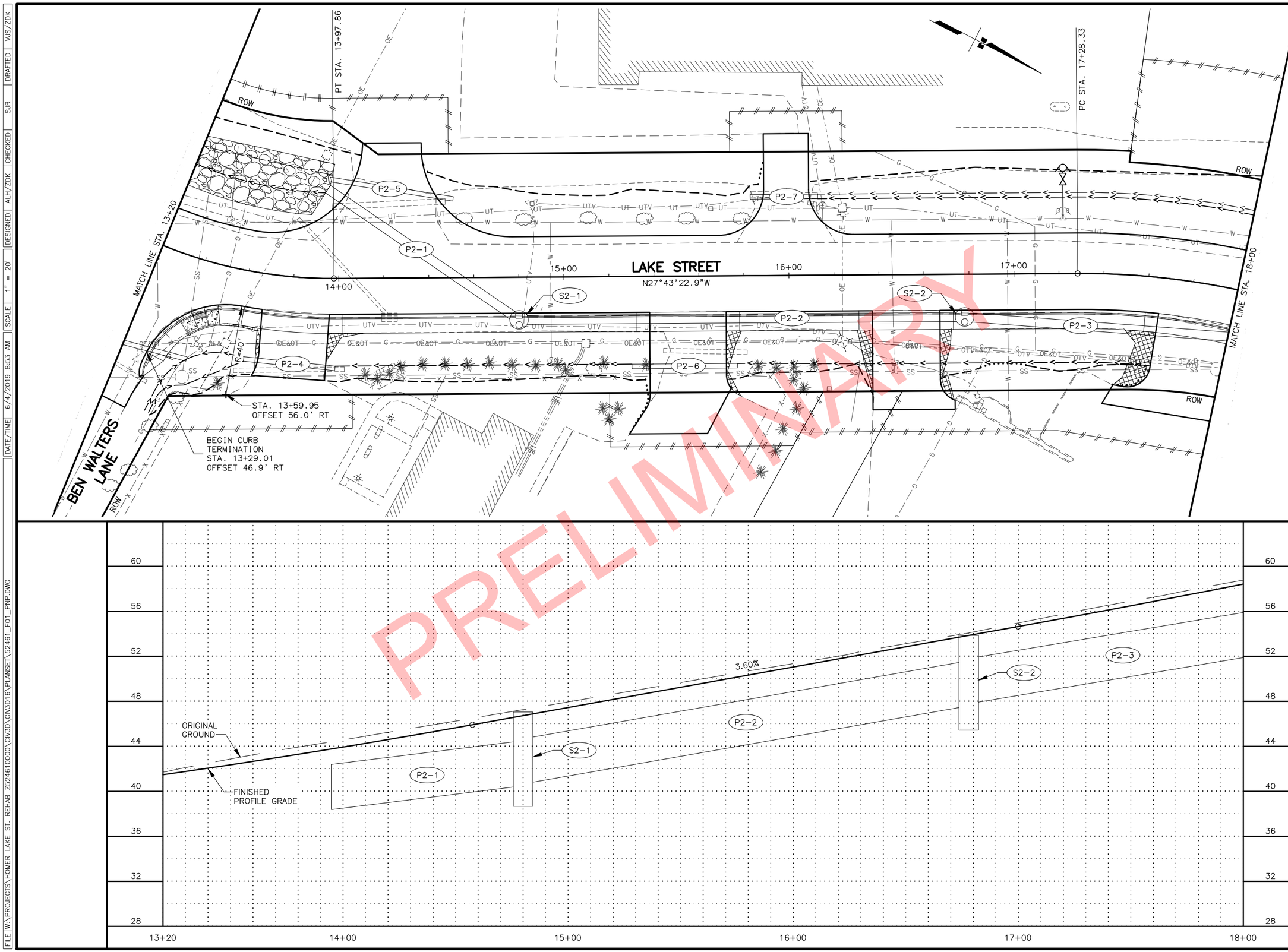

SHEET NO.	TOTAL SHEETS
F02	F18
STATE	YEAR
ALASKA	2020

PROJECT DESIGNATION

0001422/
Z524610000

NO.	REVISION
1	
DATE	
NO.	REVISION
2	
DATE	
NO.	REVISION
3	
DATE	

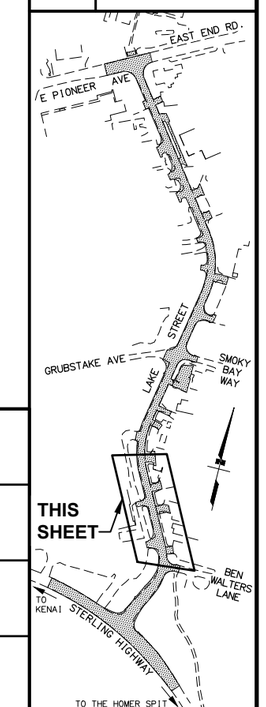

STATE OF ALASKA
STEVEN R. PEDERSEN
CE 13347
REGISTERED PROFESSIONAL ENGINEER

PS&E REVIEW

STATE OF ALASKA DOT&PF
4111 AVIATION AVENUE
ANCHORAGE, AK 99502
(907) 269-0590

STATE OF ALASKA
DEPARTMENT OF TRANSPORTATION
AND PUBLIC FACILITIES

HOMER: LAKE STREET
REHABILITATION

PLAN AND PROFILE

DATE/TIME 6/4/2019 8:53 AM | SCALE 1" = 20' | DESIGNED ALH/ZDK | CHECKED SJR | DRAFTED VJS/ZDK

FILE W:\PROJECTS\HOMER LAKE ST. REHAB Z524610000\CIV3D\CIV3D16\PLANSET\52461_F01_PNP.DWG

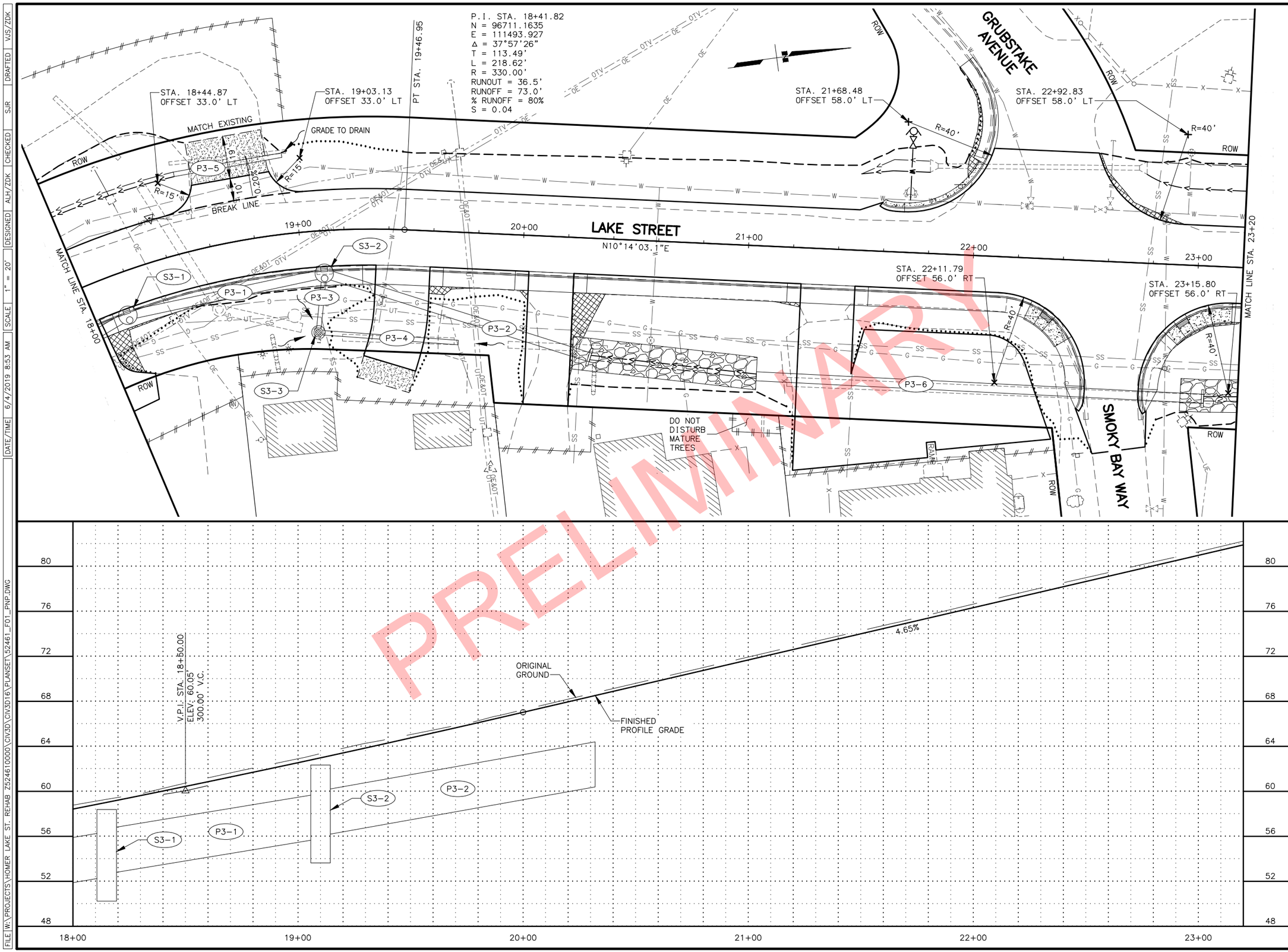

SHEET NO.	TOTAL SHEETS
F03	F18
STATE	YEAR
ALASKA	2020

PROJECT DESIGNATION

0001422/
Z524610000

NO.	REVISION
1	
DATE	

NO.	REVISION
2	
DATE	

NO.	REVISION
3	
DATE	

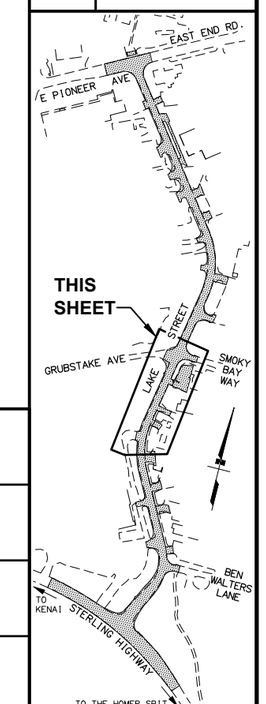

PSSE REVIEW

STATE OF ALASKA DOT&PF
4111 AVIATION AVENUE
ANCHORAGE, AK 99502
(907) 269-0590

STATE OF ALASKA
DEPARTMENT OF TRANSPORTATION
AND PUBLIC FACILITIES

HOMER: LAKE STREET
REHABILITATION

PLAN AND PROFILE

DATE/TIME 6/4/2019 8:53 AM | SCALE 1" = 20' | DESIGNED ALH/ZDK | CHECKED SJR | DRAFTED VJS/ZDK

FILE W:\PROJECTS\HOMER LAKE ST. REHAB Z524610000\CIV3D\CIV3D16\PLANSET\52461_F01_PNP.DWG

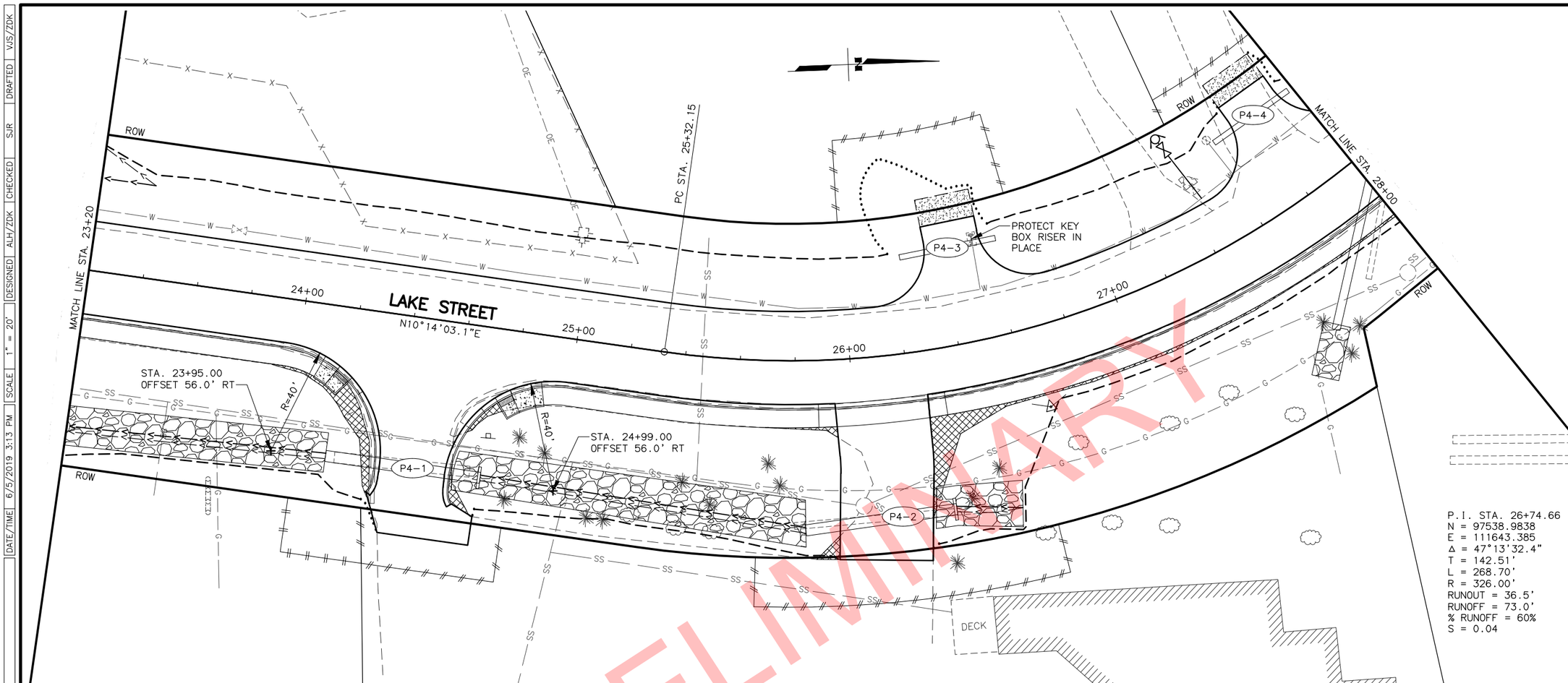

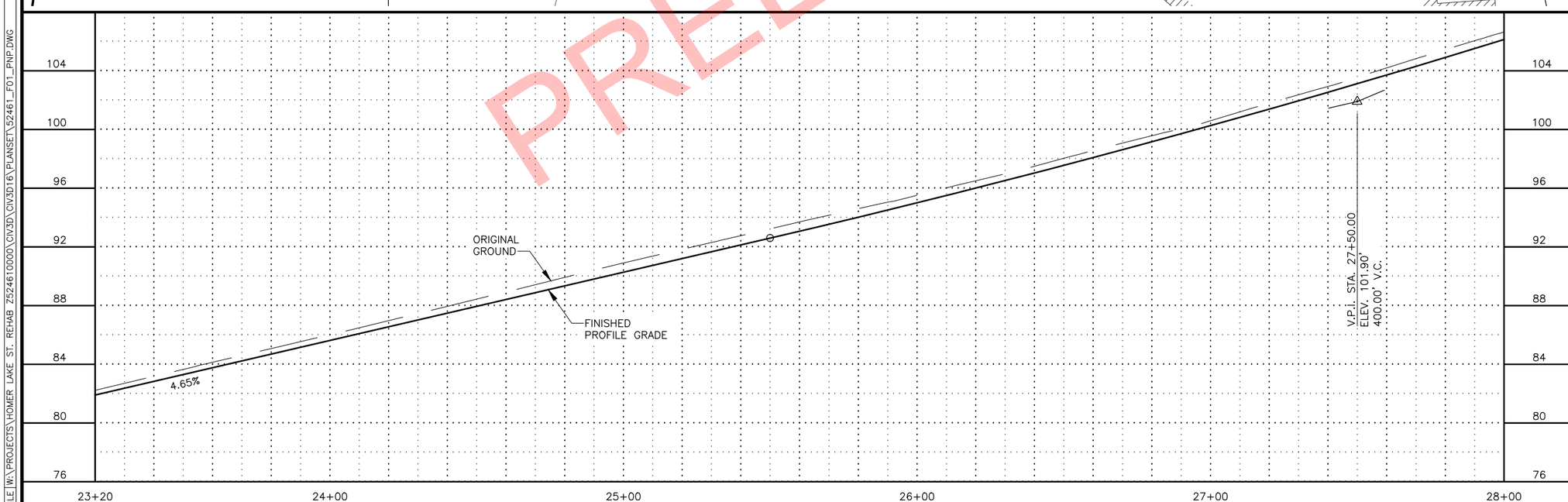

SHEET NO.	TOTAL SHEETS
F04	F18
STATE	YEAR
ALASKA	2020

PROJECT DESIGNATION
0001422/
Z524610000

NO.	REVISION
1	
DATE	
NO.	REVISION
2	
DATE	
NO.	REVISION
3	
DATE	

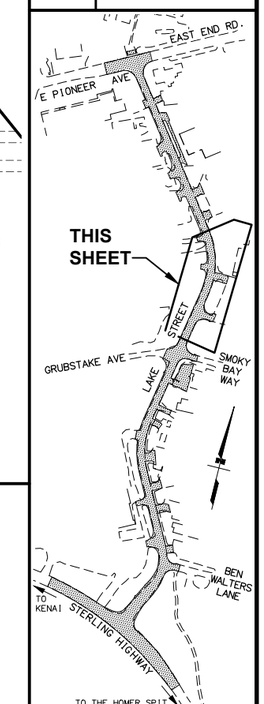

STATE OF ALASKA
STEVEN R. PEDERSEN
49342
REGISTERED PROFESSIONAL ENGINEER
PS&E REVIEW

STATE OF ALASKA DOT&PF
4111 AVIATION AVENUE
ANCHORAGE, AK 99502
(907) 269-0590

STATE OF ALASKA
DEPARTMENT OF TRANSPORTATION
AND PUBLIC FACILITIES

HOMER: LAKE STREET
REHABILITATION

PLAN AND PROFILE

DATE/TIME	SCALE	DESIGNED	CHECKED	DRAFTED
6/5/2019 3:13 PM	1" = 20'	ALH/ZDK	SJR	VJS/ZDK

FILE W:\PROJECTS\HOMER LAKE ST. REHAB Z524610000\CIV3D\CIV3D16\PLANSET\52461_F01_PNP.DWG

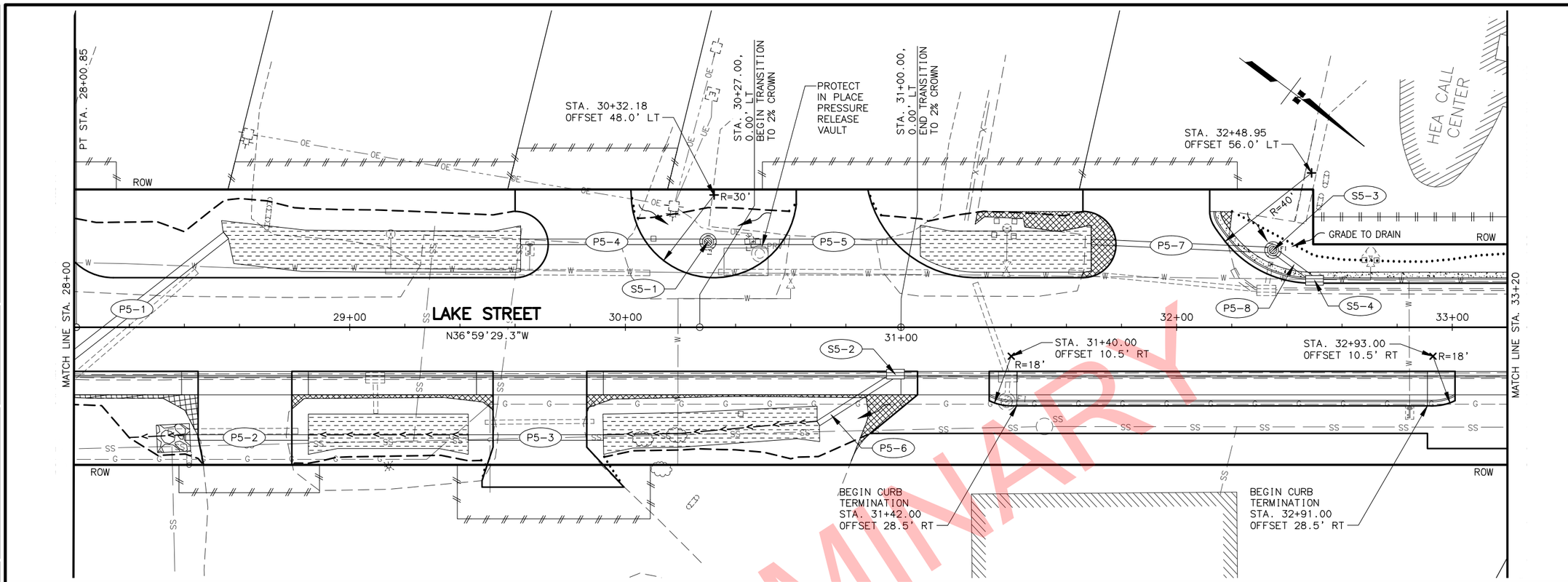

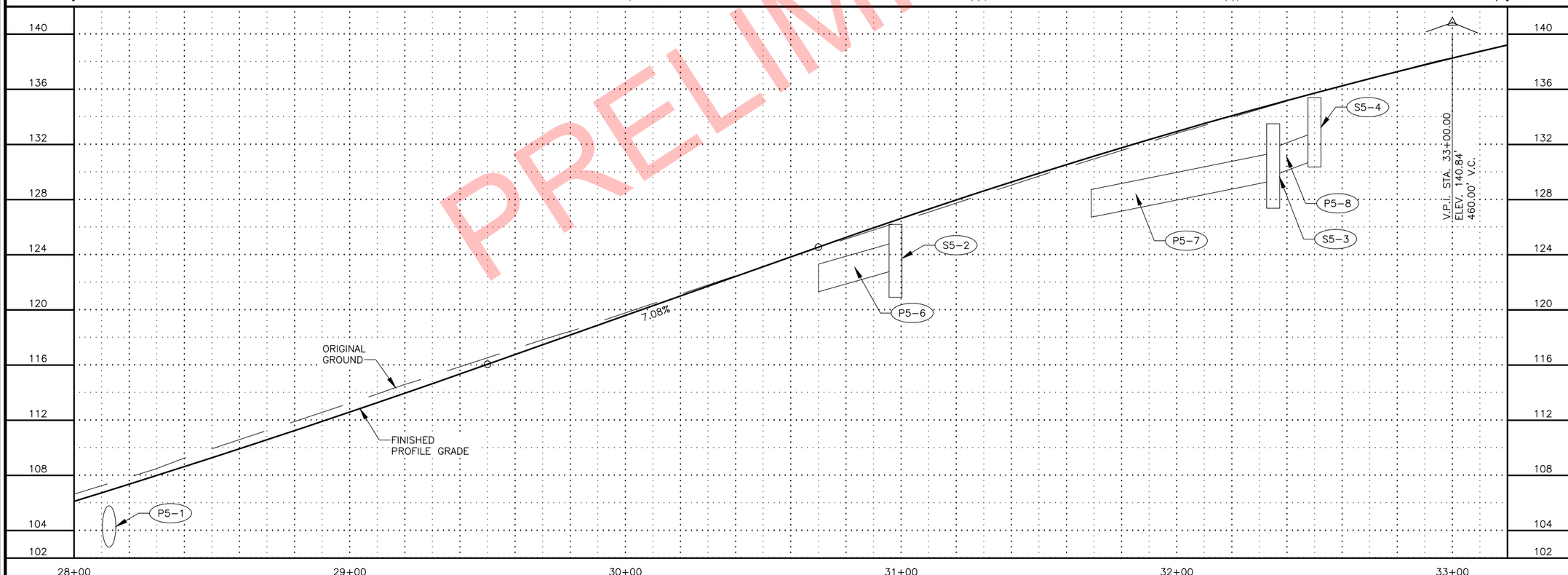

SHEET NO.	TOTAL SHEETS
F05	F18
STATE	YEAR
ALASKA	2020

PROJECT DESIGNATION

0001422/
Z524610000

NO.	REVISION
1	
DATE	
NO.	REVISION
2	
DATE	
NO.	REVISION
3	
DATE	

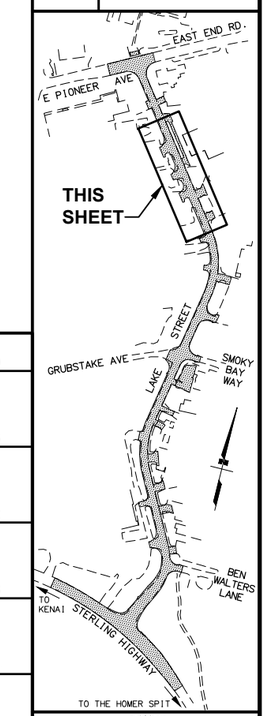

STATE OF ALASKA
STEVEN R. PEDERSEN
REGISTERED PROFESSIONAL ENGINEER
PSSE REVIEW

STATE OF ALASKA DOT&PF
4111 AVIATION AVENUE
ANCHORAGE, AK 99502
(907) 269-0590

STATE OF ALASKA
DEPARTMENT OF TRANSPORTATION
AND PUBLIC FACILITIES

HOMER: LAKE STREET
REHABILITATION

PLAN AND PROFILE

DATE/TIME 6/4/2019 8:53 AM | SCALE 1" = 20' | DESIGNED ALH/ZDK | CHECKED SJR | DRAFTED VJS/ZDK

FILE W:\PROJECTS\HOMER LAKE ST. REHAB Z524610000\CIV3D\CIV3D16\PLANSET\52461_F01_PNP.DWG

SHEET NO.	TOTAL SHEETS
F06	F18
STATE	YEAR
ALASKA	2020

PROJECT DESIGNATION

0001422/
Z524610000

NO.	REVISION
1	
DATE	

NO.	REVISION
2	
DATE	

NO.	REVISION
3	
DATE	

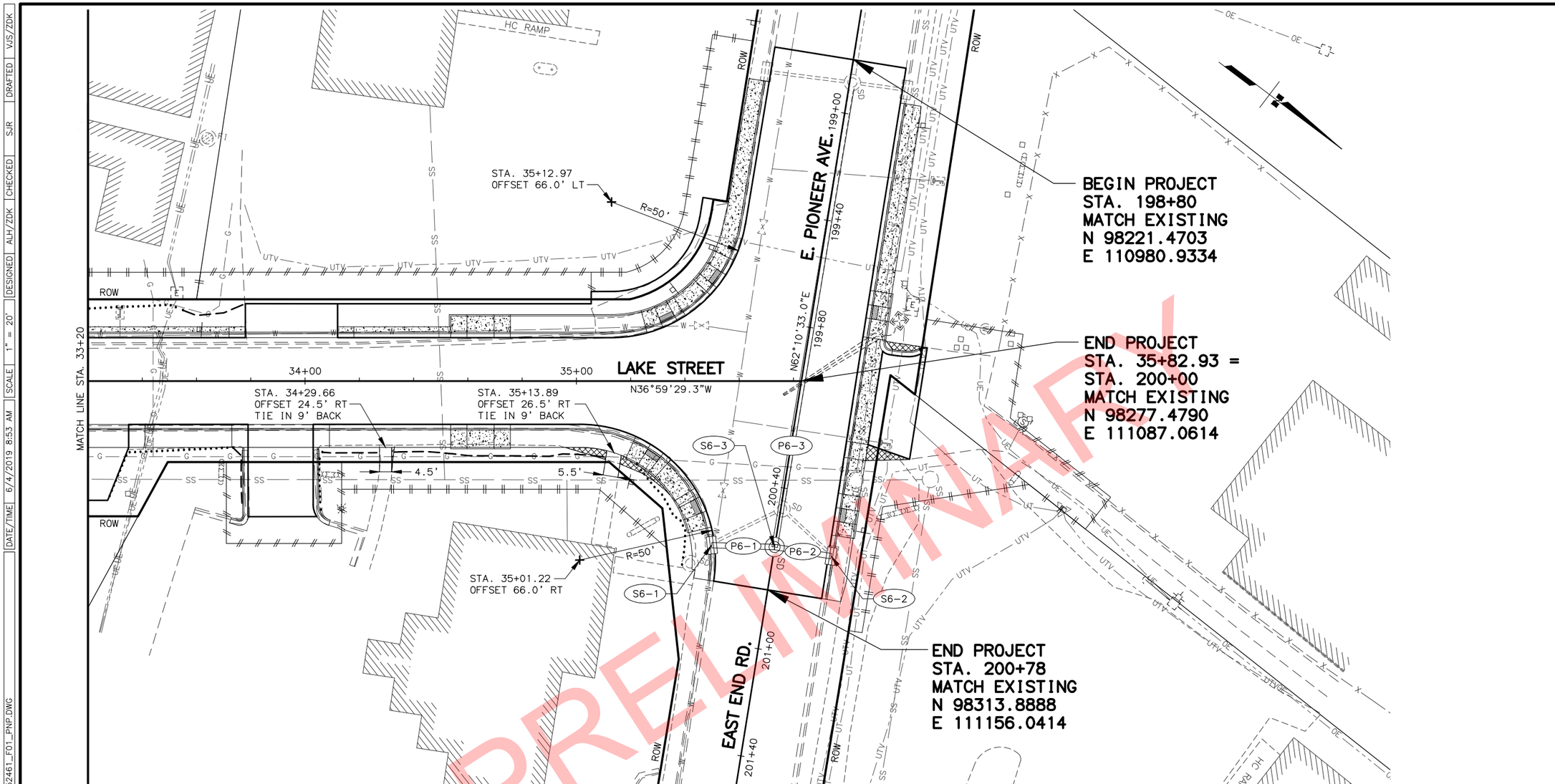

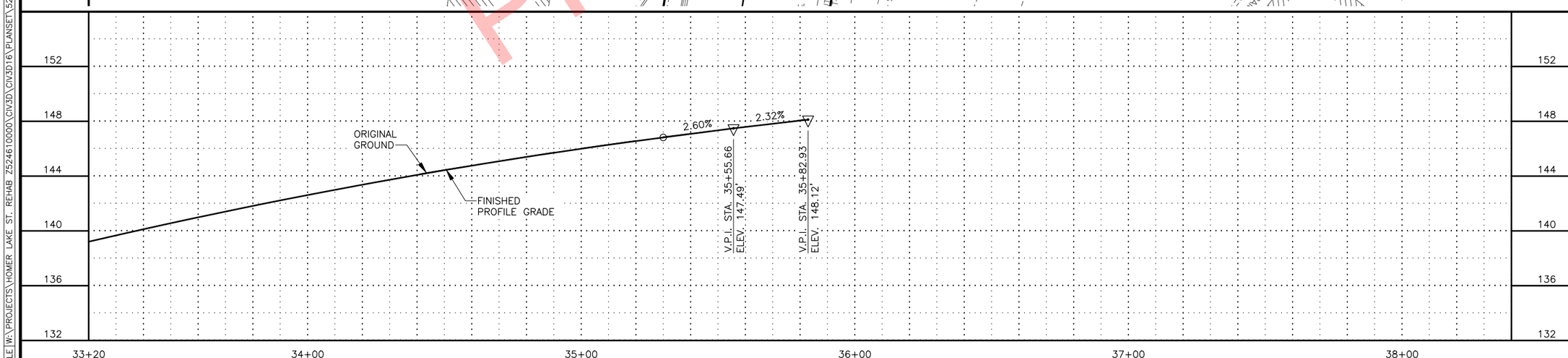

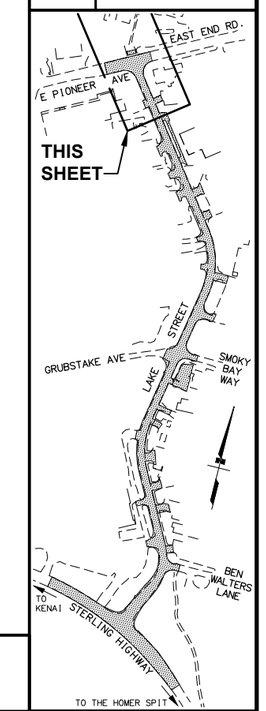

STATE OF ALASKA
STEVEN R. PEDERSEN
REGISTERED PROFESSIONAL ENGINEER
PSSE REVIEW

STATE OF ALASKA DOT&PF
4111 AVIATION AVENUE
ANCHORAGE, AK 99502
(907) 269-0590

STATE OF ALASKA
DEPARTMENT OF TRANSPORTATION
AND PUBLIC FACILITIES

HOMER: LAKE STREET
REHABILITATION

PLAN AND PROFILE

DATE/TIME 6/4/2019 8:53 AM | SCALE 1" = 20' | DESIGNED ALH/ZDK | CHECKED SJR | DRAFTED VJS/ZDK

FILE W:\PROJECTS\HOMER LAKE ST. REHAB Z524610000\CIV3D\CIV3D\16\PLANSET\52461_F01_PNP.DWG

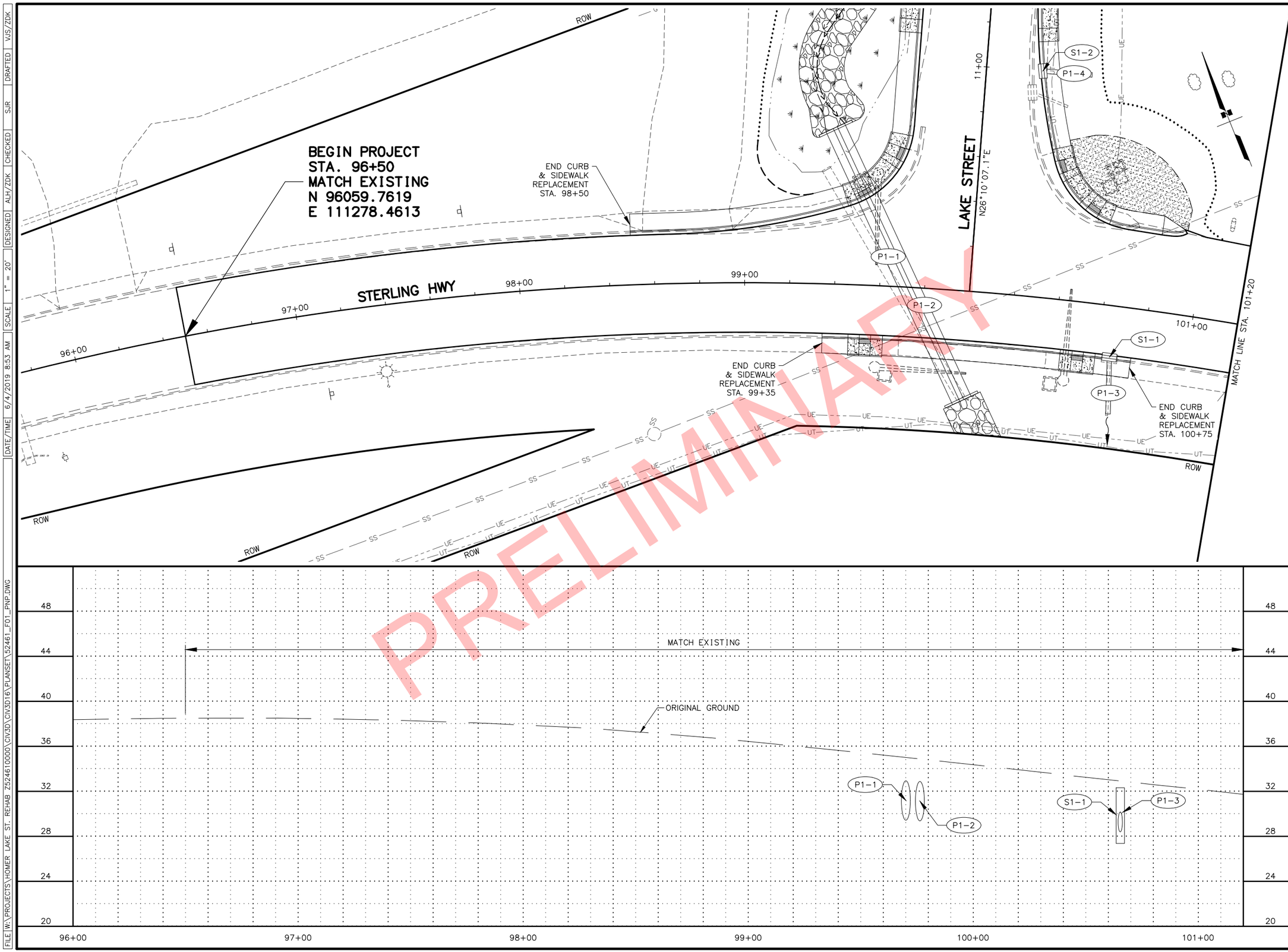

SHEET NO.	TOTAL SHEETS
F07	F18
STATE	YEAR
ALASKA	2020

PROJECT DESIGNATION
0001422/
Z524610000

NO.	REVISION
1	
DATE	
NO.	REVISION
2	
DATE	
NO.	REVISION
3	
DATE	

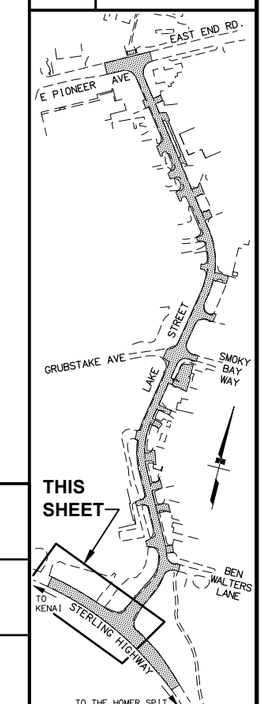

STATE OF ALASKA
STEVEN R. PEDERSEN
REGISTERED PROFESSIONAL ENGINEER
PSSE REVIEW

STATE OF ALASKA DOT&PF
4111 AVIATION AVENUE
ANCHORAGE, AK 99502
(907) 269-0590

STATE OF ALASKA
DEPARTMENT OF TRANSPORTATION
AND PUBLIC FACILITIES

HOMER: LAKE STREET
REHABILITATION

PLAN AND PROFILE

DATE/TIME 6/4/2019 8:53 AM | SCALE 1" = 20' | DESIGNED ALH/ZDK | CHECKED SJR | DRAFTED VJS/ZDK

FILE W:\PROJECTS\HOMER LAKE ST. REHAB Z524610000\CIV3D\CIV3D16\PLANSET\52461_F01_PNP.DWG

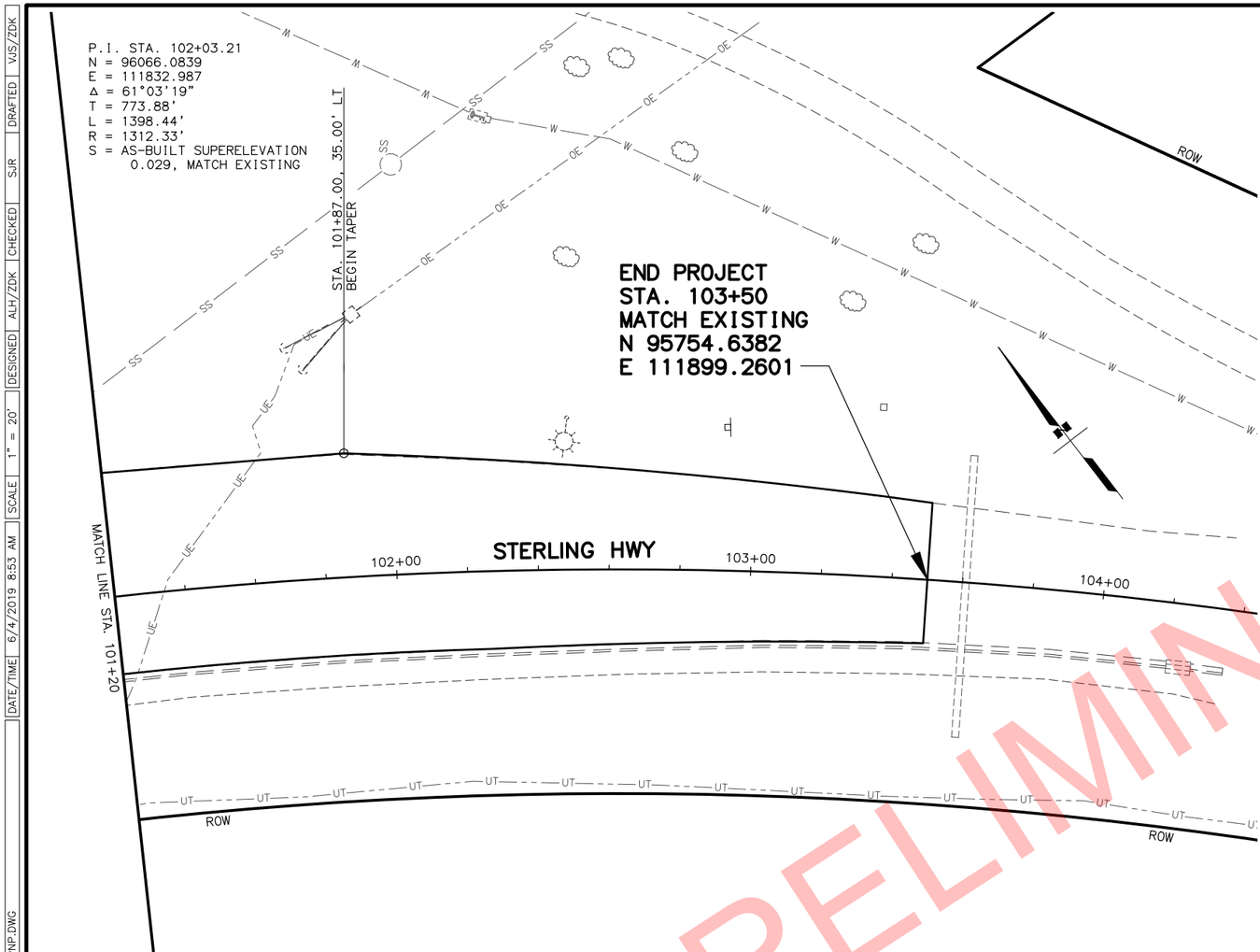

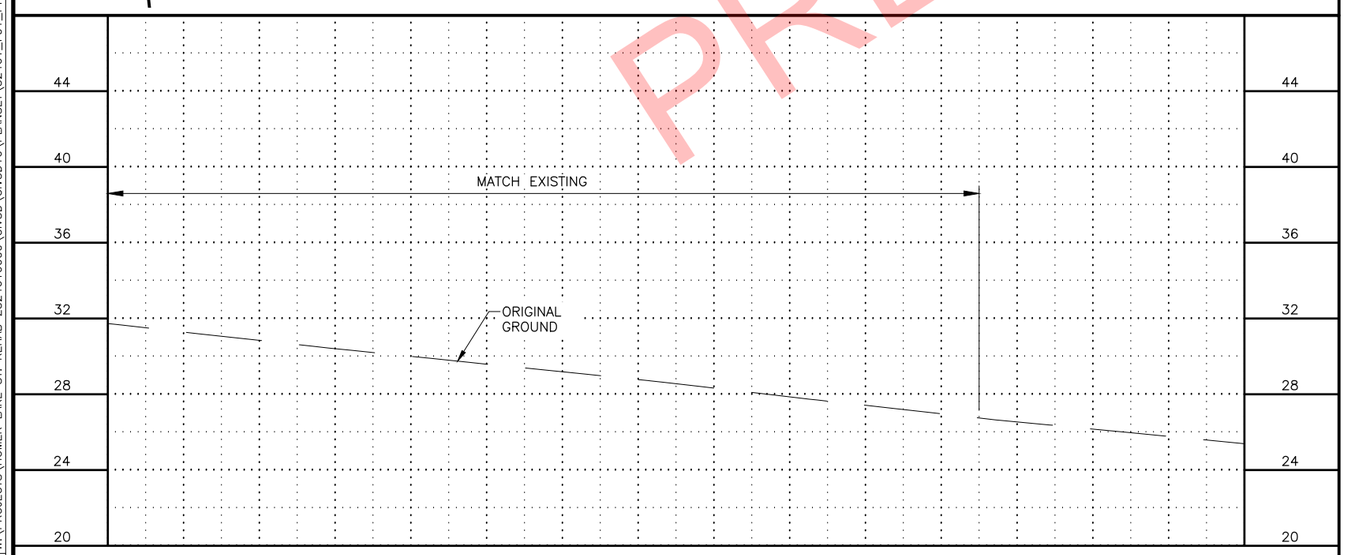

SHEET NO.	TOTAL SHEETS
F08	F18
STATE	YEAR
ALASKA	2020

PROJECT DESIGNATION
0001422/
Z524610000

NO.	REVISION
1	
DATE	

NO.	REVISION
2	
DATE	

NO.	REVISION
3	
DATE	

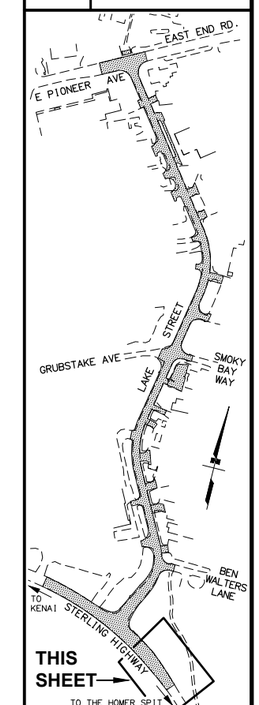

STATE OF ALASKA
STEVEN R. PEDERSEN
REGISTERED PROFESSIONAL ENGINEER
PSSE REVIEW

STATE OF ALASKA DOT&PF
4111 AVIATION AVENUE
ANCHORAGE, AK 99502
(907) 269-0590

STATE OF ALASKA
DEPARTMENT OF TRANSPORTATION
AND PUBLIC FACILITIES

HOMER: LAKE STREET
REHABILITATION

PLAN AND PROFILE

FILE W:\PROJECTS\HOMER LAKE ST. REHAB Z524610000\CIV3D\CIV3D16\PLANSET\52461_F01_PNP.DWG | DATE/TIME 6/4/2019 8:53 AM | SCALE 1" = 20' | DESIGNED ALH/ZDK | CHECKED SJR | DRAFTED VJS/ZDK

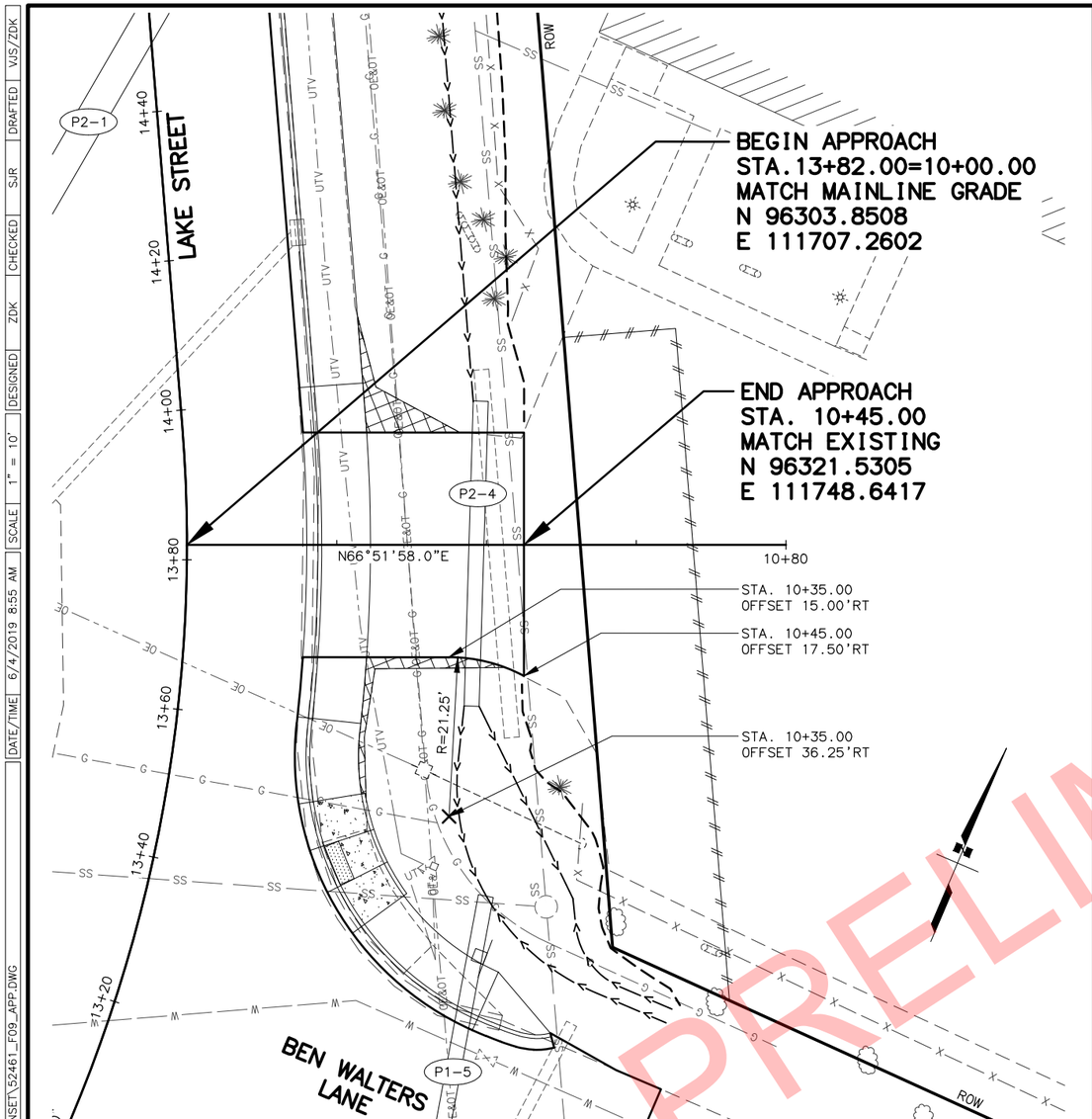

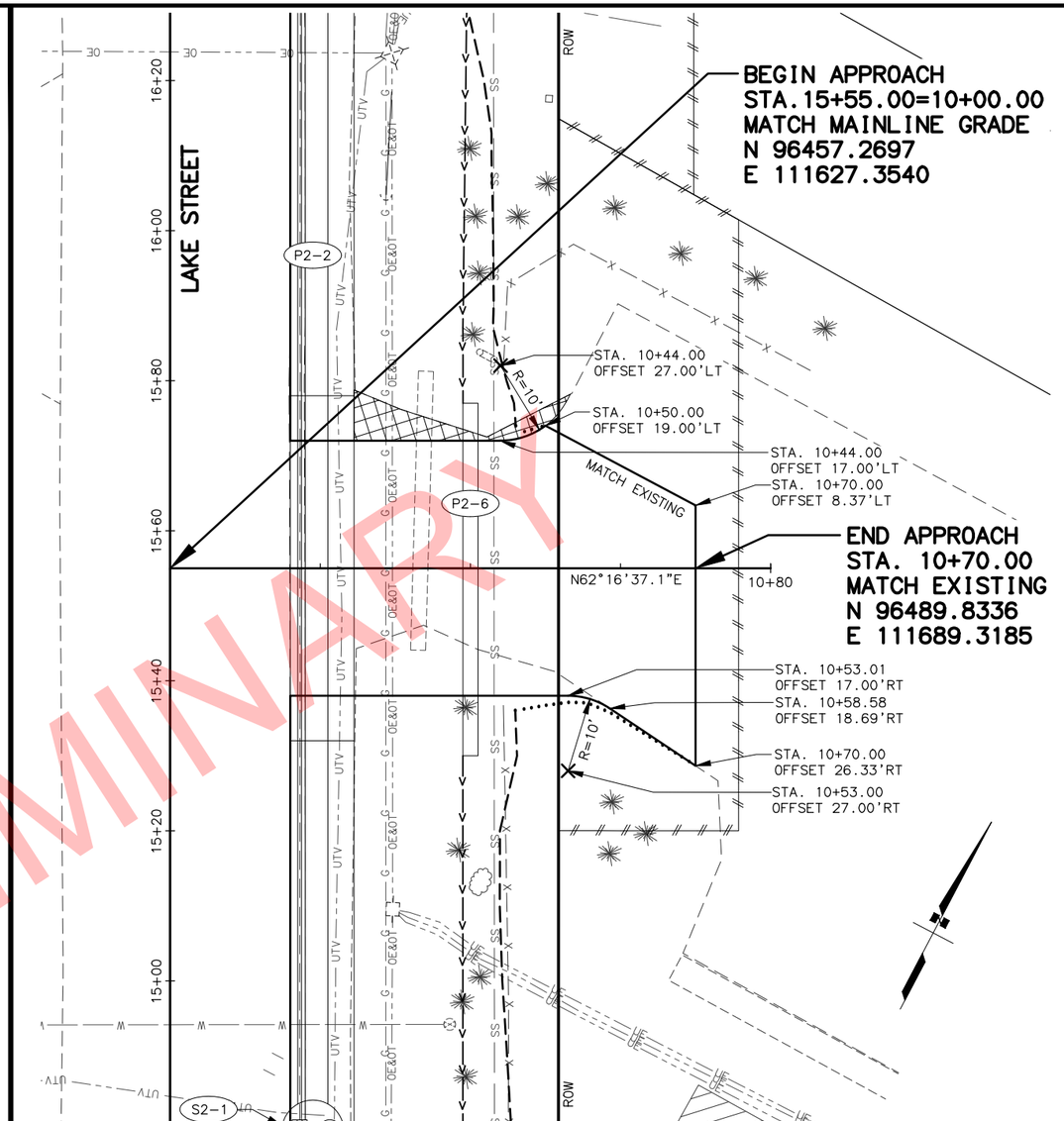

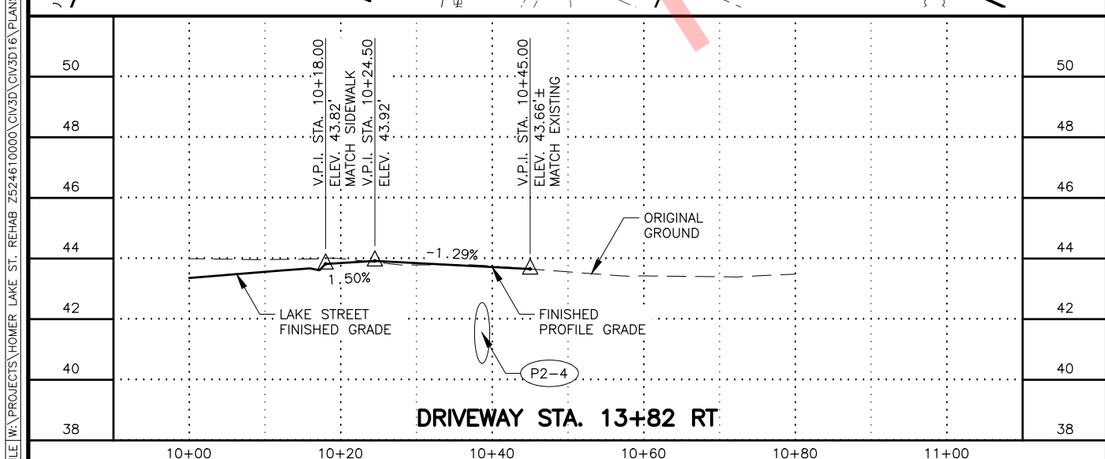

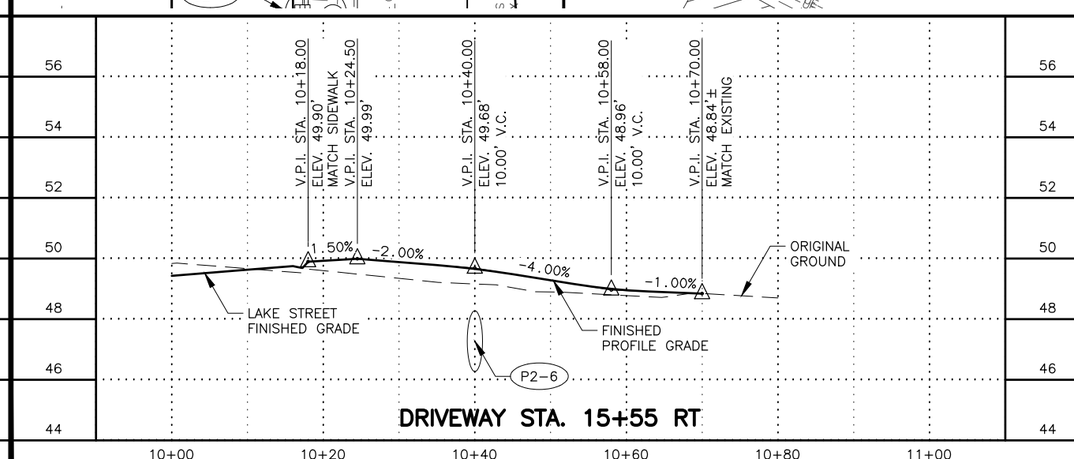

SHEET NO.	TOTAL SHEETS
F09	F18
STATE	YEAR
ALASKA	2020

PROJECT DESIGNATION
0001422/
Z524610000

NO.	REVISION
1	
DATE	
NO.	REVISION
2	
DATE	
NO.	REVISION
3	
DATE	

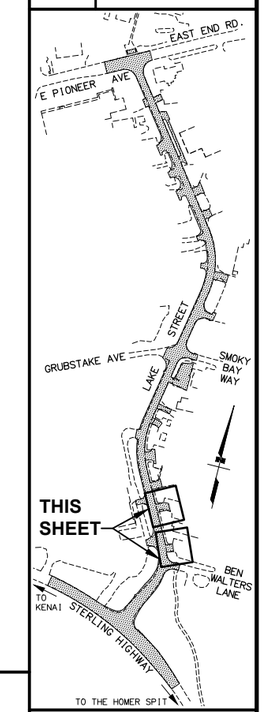

PSSE REVIEW

STATE OF ALASKA DOT&PF
4111 AVIATION AVENUE
ANCHORAGE, AK 99502
(907) 269-0590

STATE OF ALASKA
DEPARTMENT OF TRANSPORTATION
AND PUBLIC FACILITIES

HOMER: LAKE STREET
REHABILITATION

PLAN AND PROFILE
DRIVEWAY STA. 13+82 RT
DRIVEWAY STA. 15+55 RT

FILE W:\PROJECTS\HOMER LAKE ST. REHAB Z524610000\CIV3D\CIV3D16\PLANSET\52461_F09_APP.DWG | DATE/TIME 6/4/2019 8:55 AM | SCALE 1" = 10' | DESIGNED ZDK | CHECKED SJR | DRAFTED VJS/ZDK

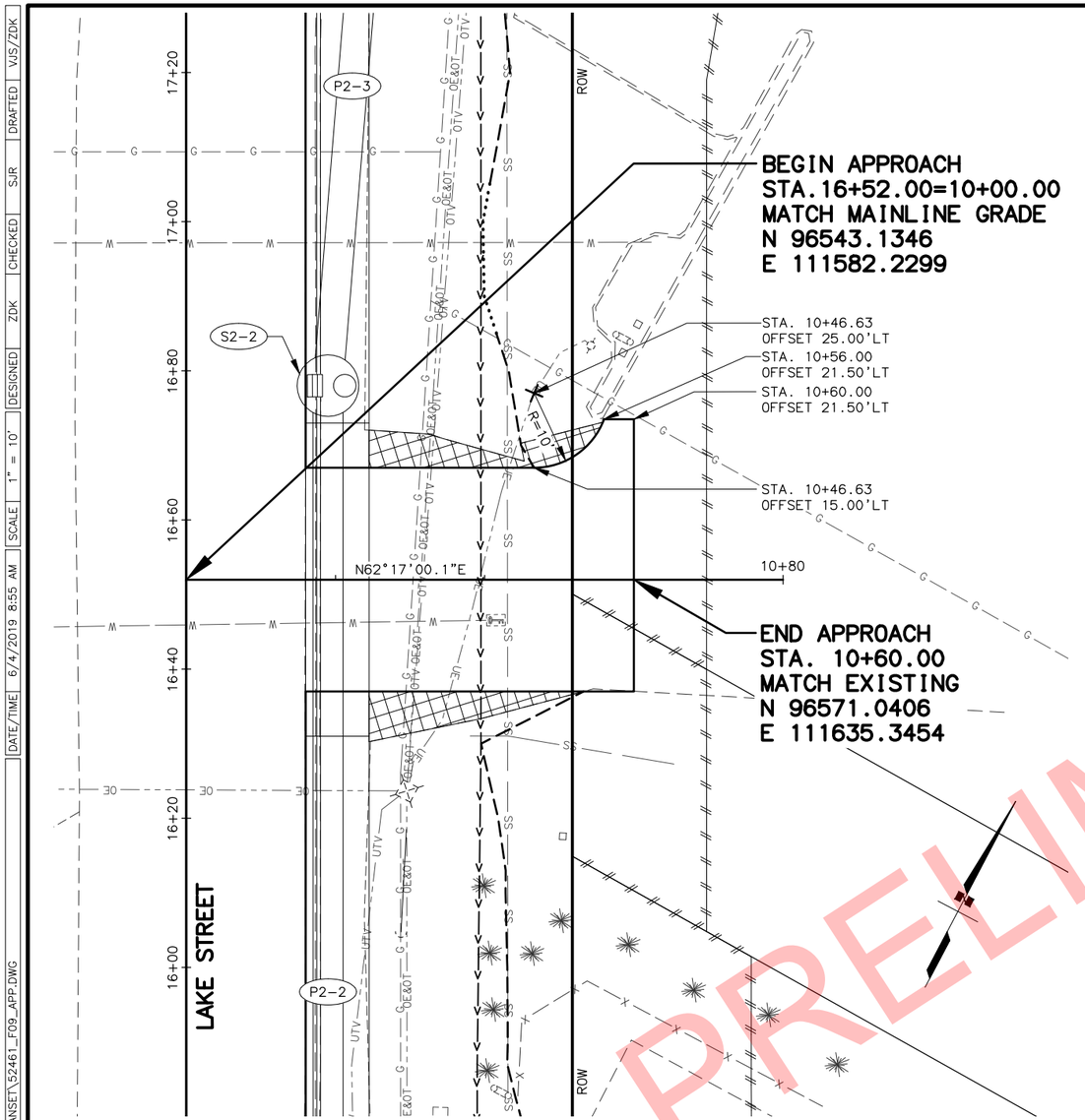

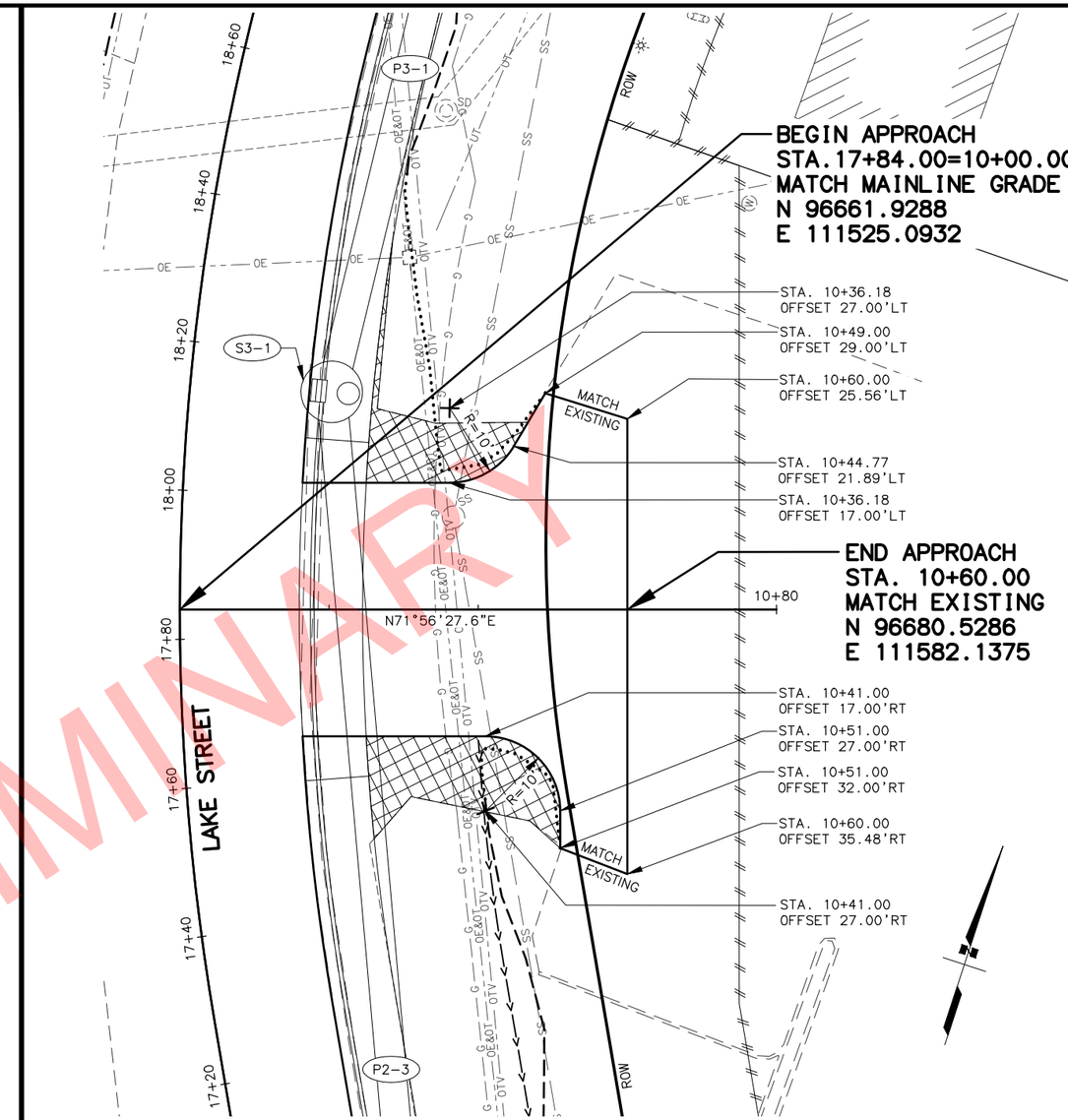

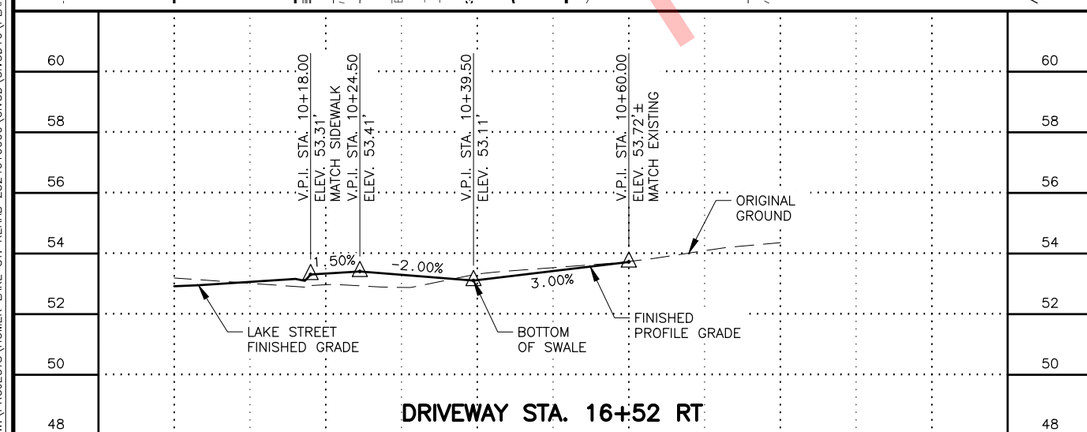

DRIVEWAY STA. 16+52 RT

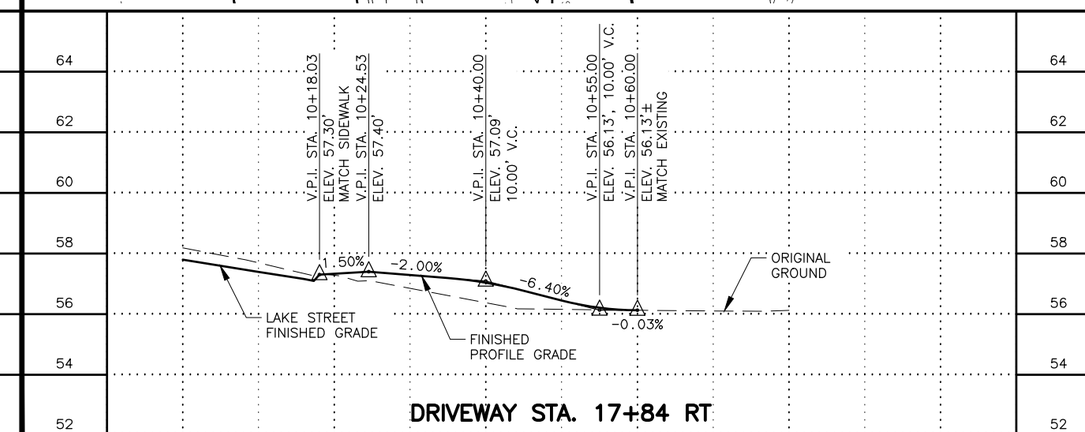

DRIVEWAY STA. 17+84 RT

SHEET NO.	TOTAL SHEETS
F10	F18
STATE	YEAR
ALASKA	2020

PROJECT DESIGNATION
0001422/
Z524610000

NO.	REVISION
1	
DATE	
NO.	REVISION
2	
DATE	
NO.	REVISION
3	
DATE	

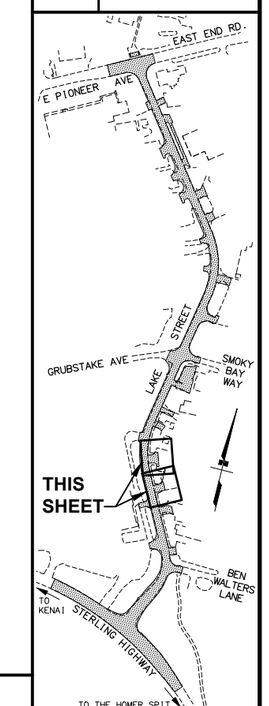

STATE OF ALASKA
STEVEN R. PEDERSEN
CE 7347
PROFESSIONAL ENGINEER
PSSR REVIEW

STATE OF ALASKA DOT&PF
4111 AVIATION AVENUE
ANCHORAGE, AK 99502
(907) 269-0590

STATE OF ALASKA
DEPARTMENT OF TRANSPORTATION
AND PUBLIC FACILITIES

HOMER: LAKE STREET
REHABILITATION

PLAN AND PROFILE
DRIVEWAY STA. 16+52 RT
DRIVEWAY STA. 17+84 RT

FILE W:\PROJECTS\HOMER LAKE ST. REHAB Z524610000\CIV3D\CIV3D\16\PLANSET\52461_F09_APP.DWG
DATE/TIME 6/4/2019 8:55 AM | SCALE 1" = 10' | DESIGNED ZDK | CHECKED SJR | DRAFTED VJS/ZDK

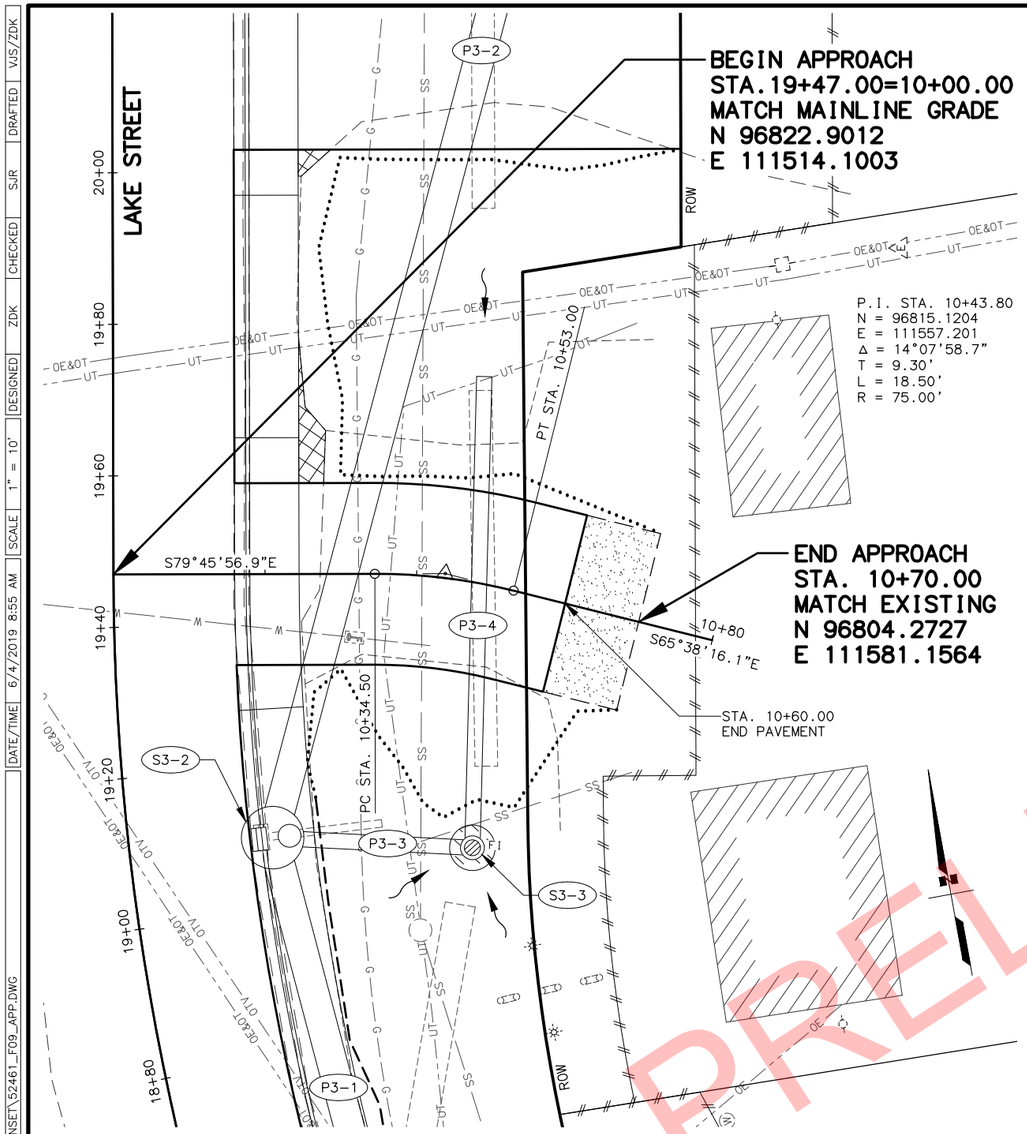

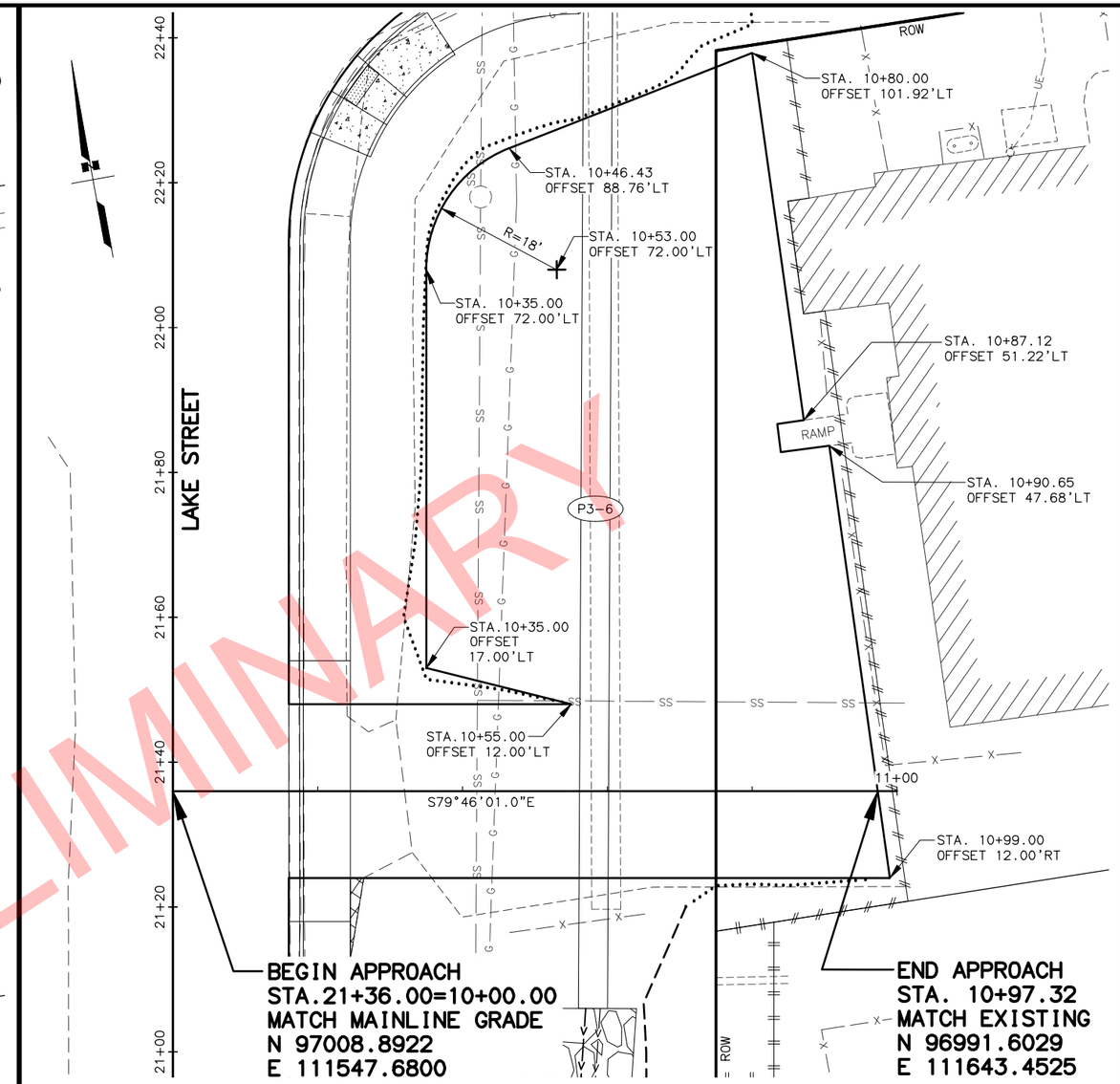

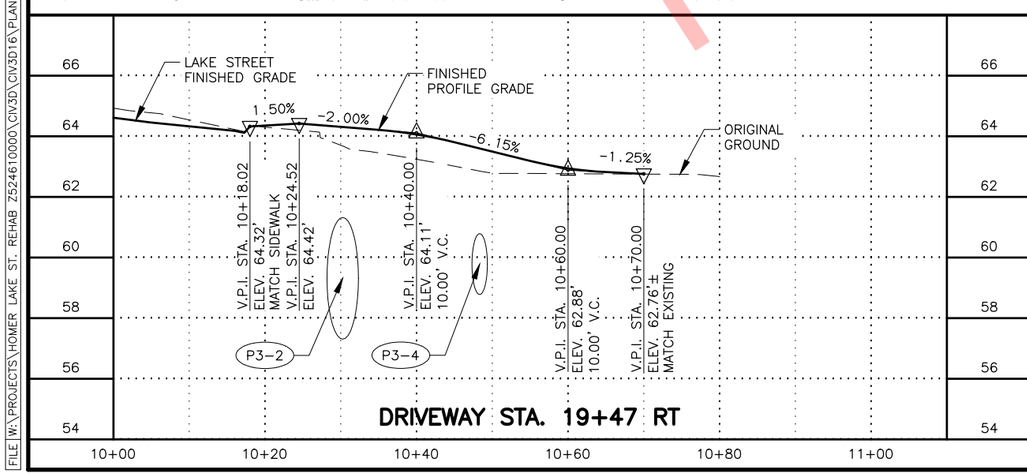

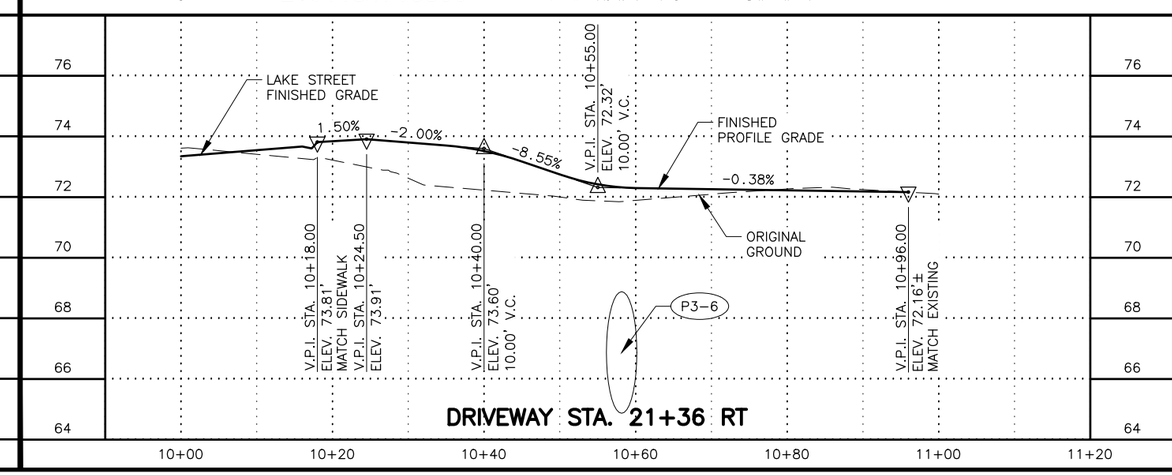

SHEET NO.	TOTAL SHEETS
F11	F18
STATE	YEAR
ALASKA	2020

PROJECT DESIGNATION
0001422/
Z524610000

NO.	REVISION
1	
DATE	
NO.	REVISION
2	
DATE	
NO.	REVISION
3	
DATE	

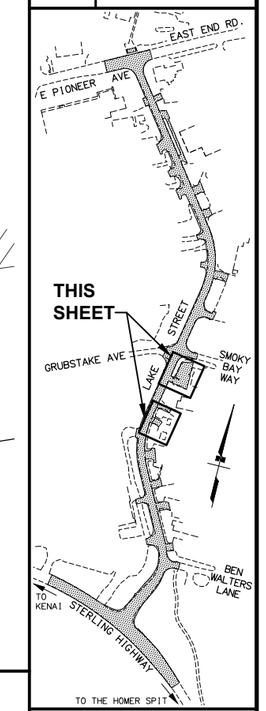

PS&E REVIEW
STATE OF ALASKA
STEVEN R. HERMAN
REGISTERED PROFESSIONAL ENGINEER
47347

STATE OF ALASKA DOT&PF
4111 AVIATION AVENUE
ANCHORAGE, AK 99502
(907) 269-0590

STATE OF ALASKA
DEPARTMENT OF TRANSPORTATION
AND PUBLIC FACILITIES

HOMER: LAKE STREET
REHABILITATION

PLAN AND PROFILE
DRIVEWAY STA. 19+47 RT
DRIVEWAY STA. 21+36 RT

DATE/TIME 6/4/2019 8:55 AM | SCALE 1" = 10' | DESIGNED ZDK | CHECKED SJR | DRAFTED VJS/ZDK

FILE W:\PROJECTS\HOMER LAKE ST. REHAB Z524610000\CIV3D\CIV3016\PLANSET\52461_F09_APP.DWG

DATE/TIME	6/4/2019 8:56 AM	SCALE	1" = 10'	DESIGNED	ZDK	CHECKED	SJR	DRAFTED	VJS/ZDK

FILE W:\PROJECTS\HOMER LAKE ST. REHAB 7524610000\CIV3D\CIV3D16\PLANSET\52461_F09_APP.DWG

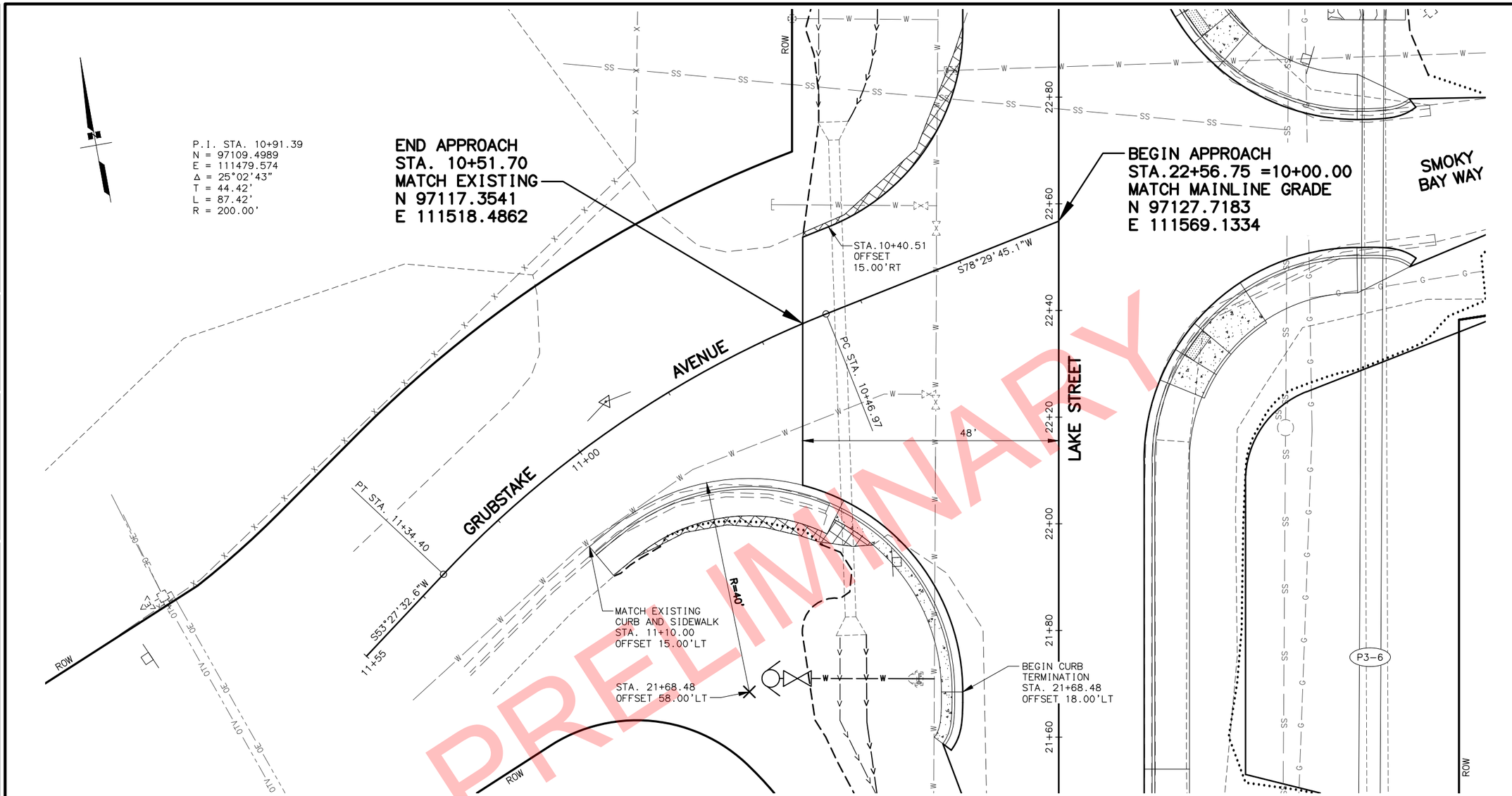

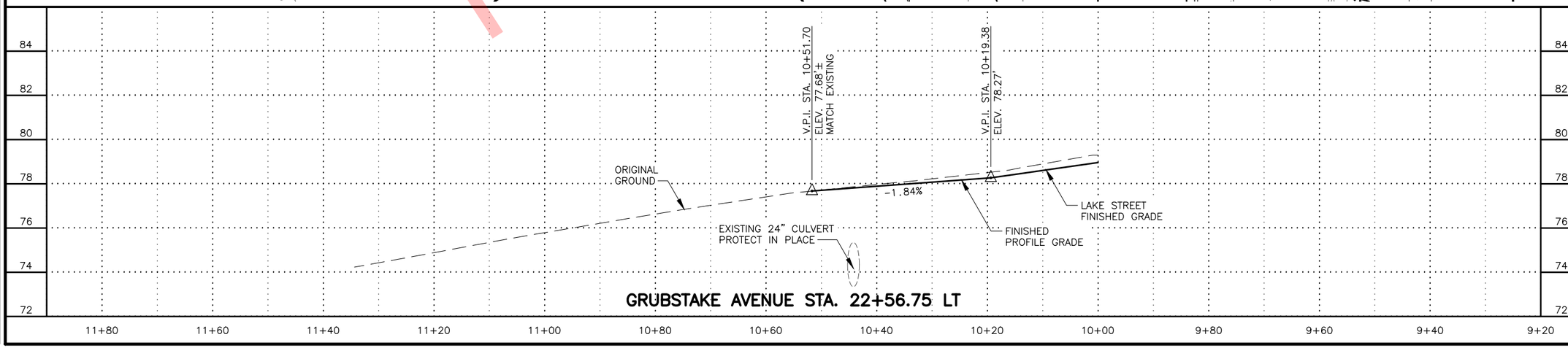

GRUBSTAKE AVENUE STA. 22+56.75 LT

SHEET NO.	TOTAL SHEETS
F12	F18
STATE	YEAR
ALASKA	2020

PROJECT DESIGNATION
0001422/
Z524610000

NO.	REVISION
1	
DATE	
NO.	REVISION
2	
DATE	
NO.	REVISION
3	
DATE	

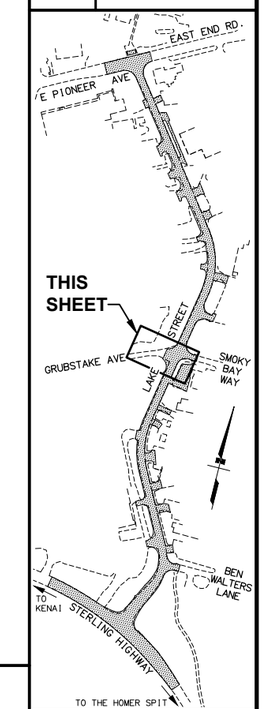

STATE OF ALASKA DOT&PF
4111 AVIATION AVENUE
ANCHORAGE, AK 99502
(907) 269-0590

STATE OF ALASKA
DEPARTMENT OF TRANSPORTATION
AND PUBLIC FACILITIES

HOMER: LAKE STREET
REHABILITATION

PLAN AND PROFILE
GRUBSTAKE AVENUE
STA. 22+56.75 LT

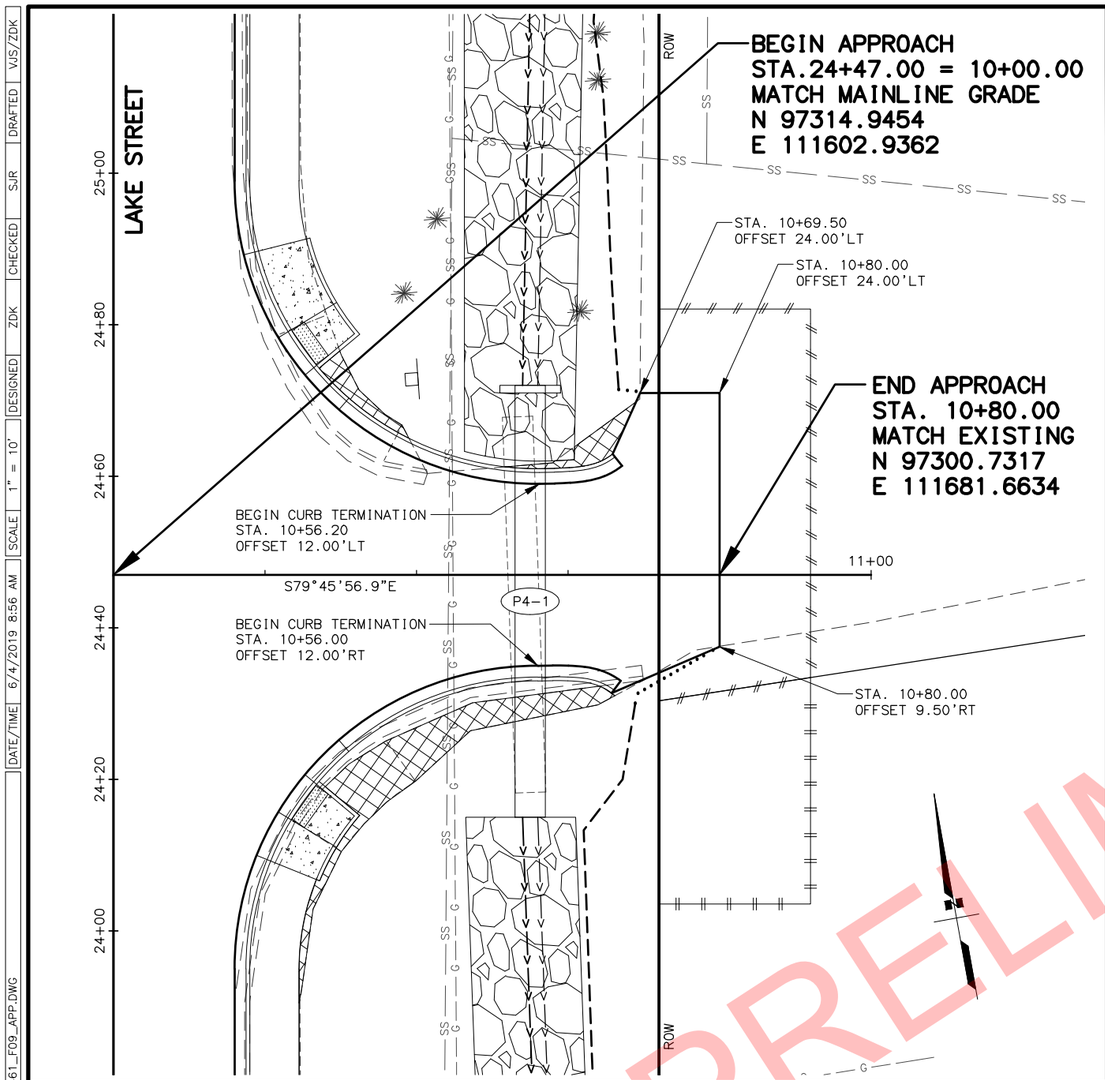

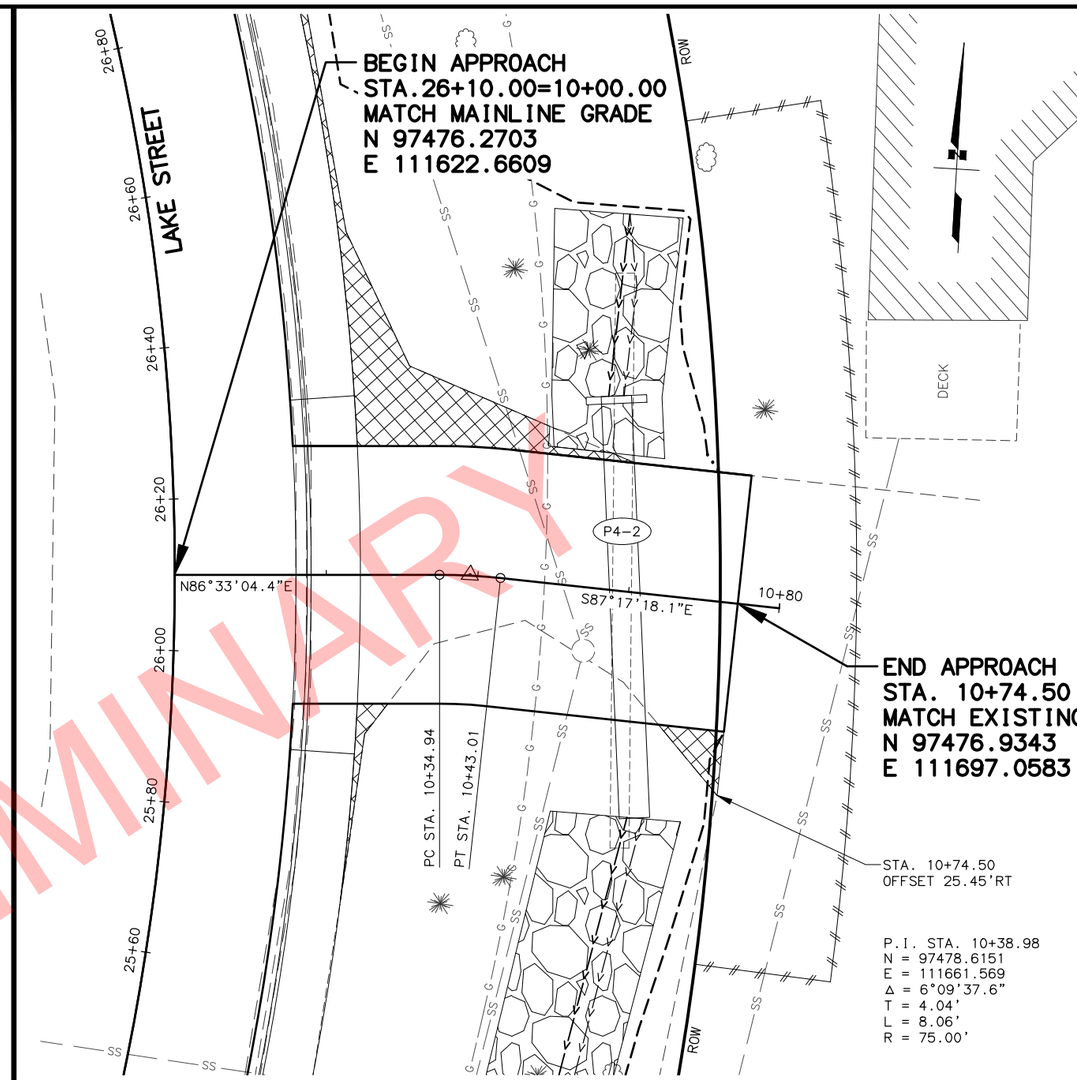

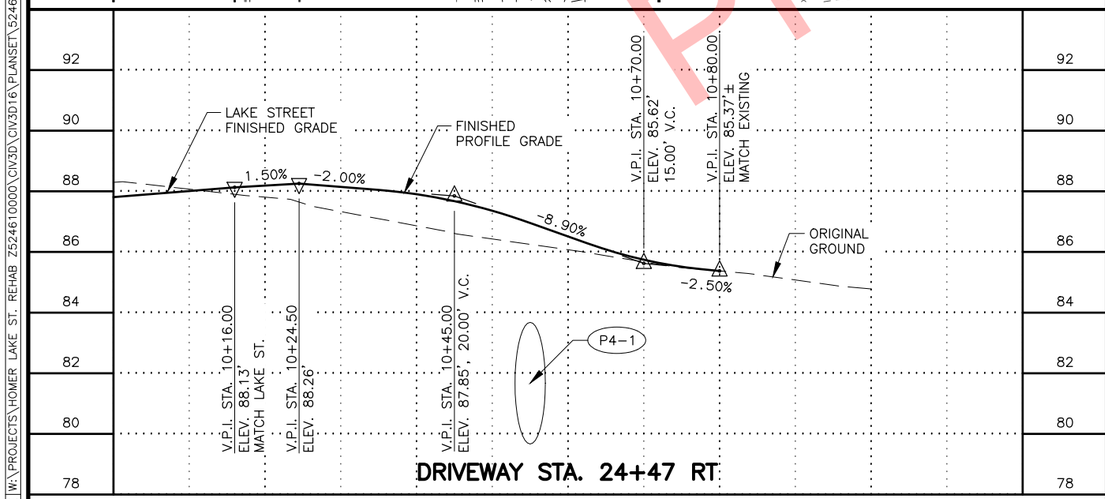

DRIVEWAY STA. 24+47 RT

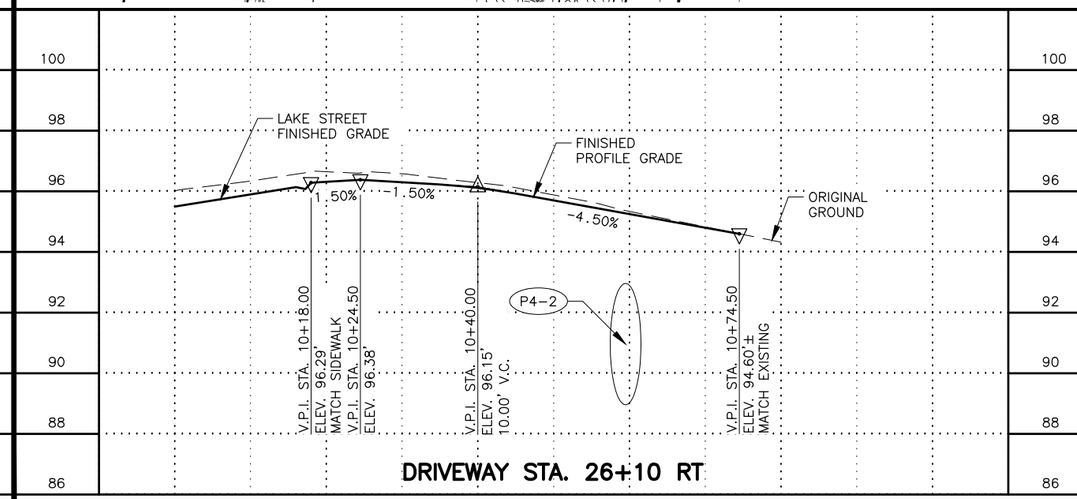

DRIVEWAY STA. 26+10 RT

SHEET NO.	TOTAL SHEETS
F13	F18
STATE	YEAR
ALASKA	2020

PROJECT DESIGNATION
0001422/
Z524610000

NO.	REVISION
1	
DATE	
NO.	REVISION
2	
DATE	
NO.	REVISION
3	
DATE	

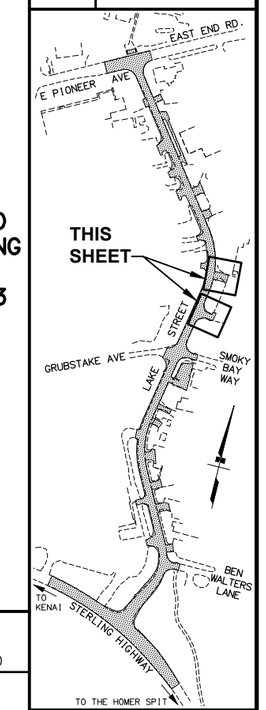

PS&E REVIEW
STATE OF ALASKA
STEVEN R. PETERSEN
CIVIL
No. 13347
REGISTERED PROFESSIONAL ENGINEER

STATE OF ALASKA DOT&PF
4111 AVIATION AVENUE
ANCHORAGE, AK 99502
(907) 269-0590

STATE OF ALASKA
DEPARTMENT OF TRANSPORTATION
AND PUBLIC FACILITIES

HOMER: LAKE STREET
REHABILITATION

PLAN AND PROFILE
DRIVEWAY STA. 24+47 RT
DRIVEWAY STA. 26+10 RT

FILE W:\PROJECTS\HOMER LAKE ST. REHAB Z524610000\CIV3D\CIV3D16\PLANSET\52461_F09_APP.DWG
DATE/TIME 6/4/2019 8:56 AM | SCALE 1" = 10' | DESIGNED ZDK | CHECKED SJR | DRAFTED VJS/ZDK

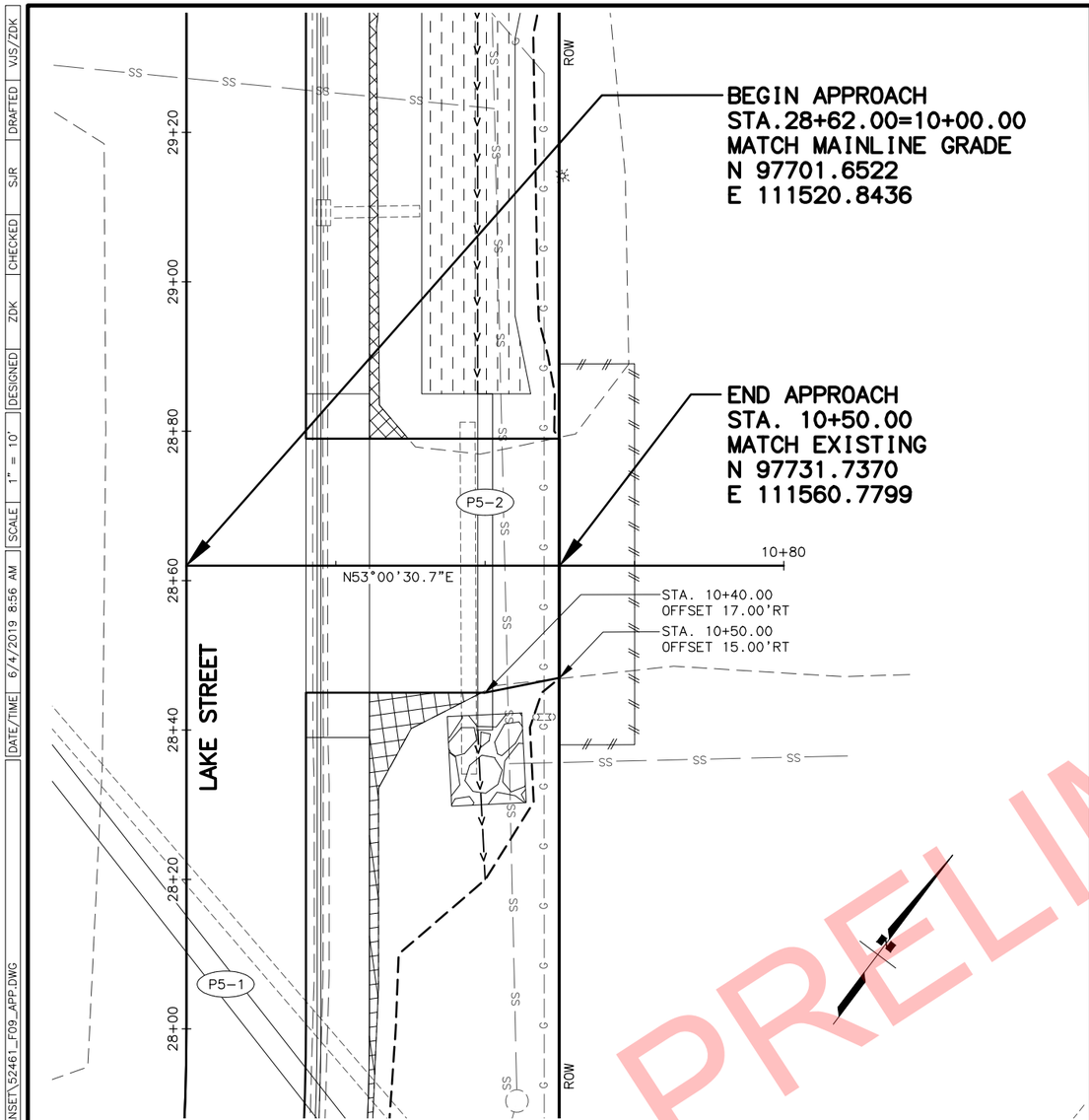

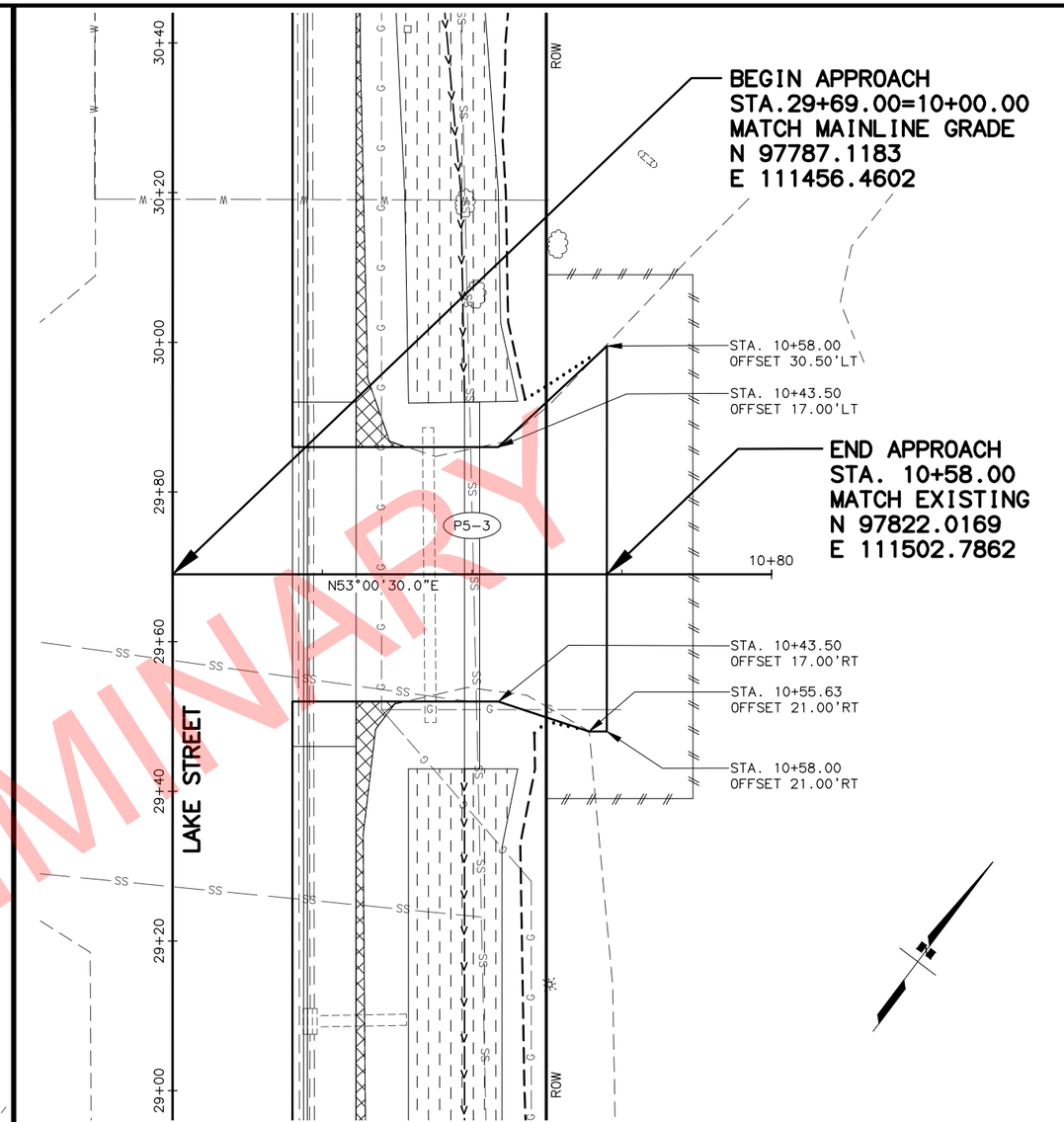

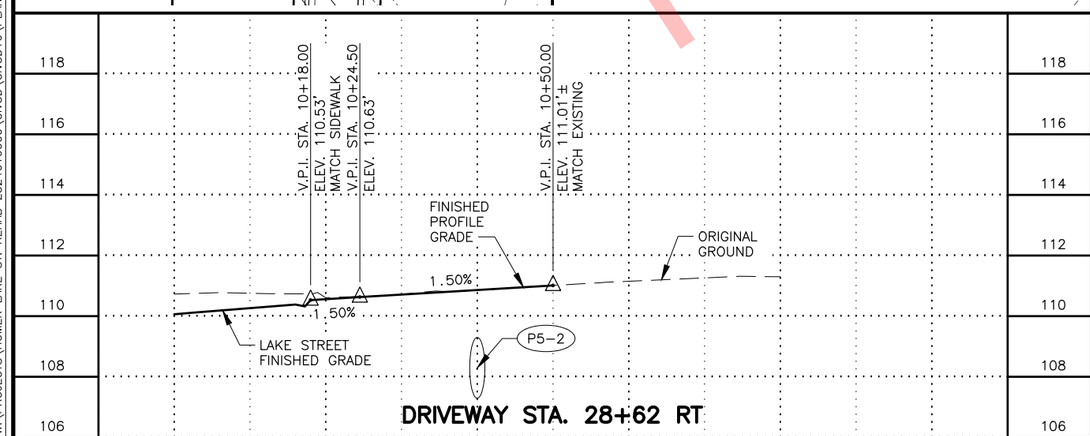

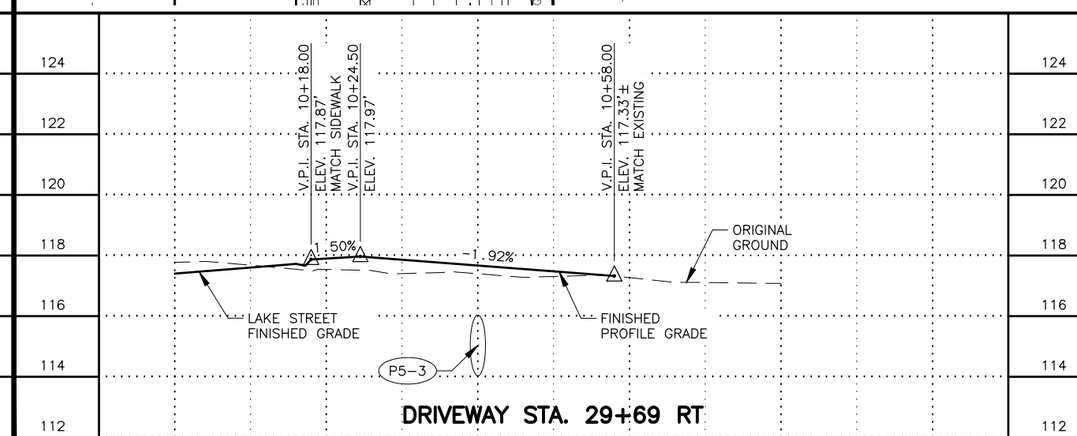

SHEET NO.	TOTAL SHEETS
F14	F18
STATE	YEAR
ALASKA	2020

PROJECT DESIGNATION
0001422/
Z524610000

NO.	REVISION
1	
DATE	
NO.	REVISION
2	
DATE	
NO.	REVISION
3	
DATE	

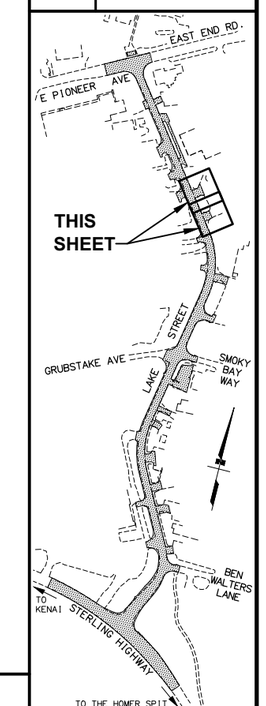

STATE OF ALASKA
STEVEN R. PEDERSEN
REGISTERED PROFESSIONAL ENGINEER
PSSE REVIEW

STATE OF ALASKA DOT&PF
4111 AVIATION AVENUE
ANCHORAGE, AK 99502
(907) 269-0590

STATE OF ALASKA
DEPARTMENT OF TRANSPORTATION
AND PUBLIC FACILITIES

HOMER: LAKE STREET
REHABILITATION

PLAN AND PROFILE
DRIVEWAY STA. 28+62 RT
DRIVEWAY STA. 29+69 RT

DATE/TIME 6/4/2019 8:56 AM | SCALE 1" = 10' | DESIGNED ZDK | CHECKED SJR | DRAFTED VJS/ZDK

FILE W:\PROJECTS\HOMER LAKE ST. REHAB Z524610000\CIV3D\CIV3D16\PLANSET\52461_F09_APP.DWG

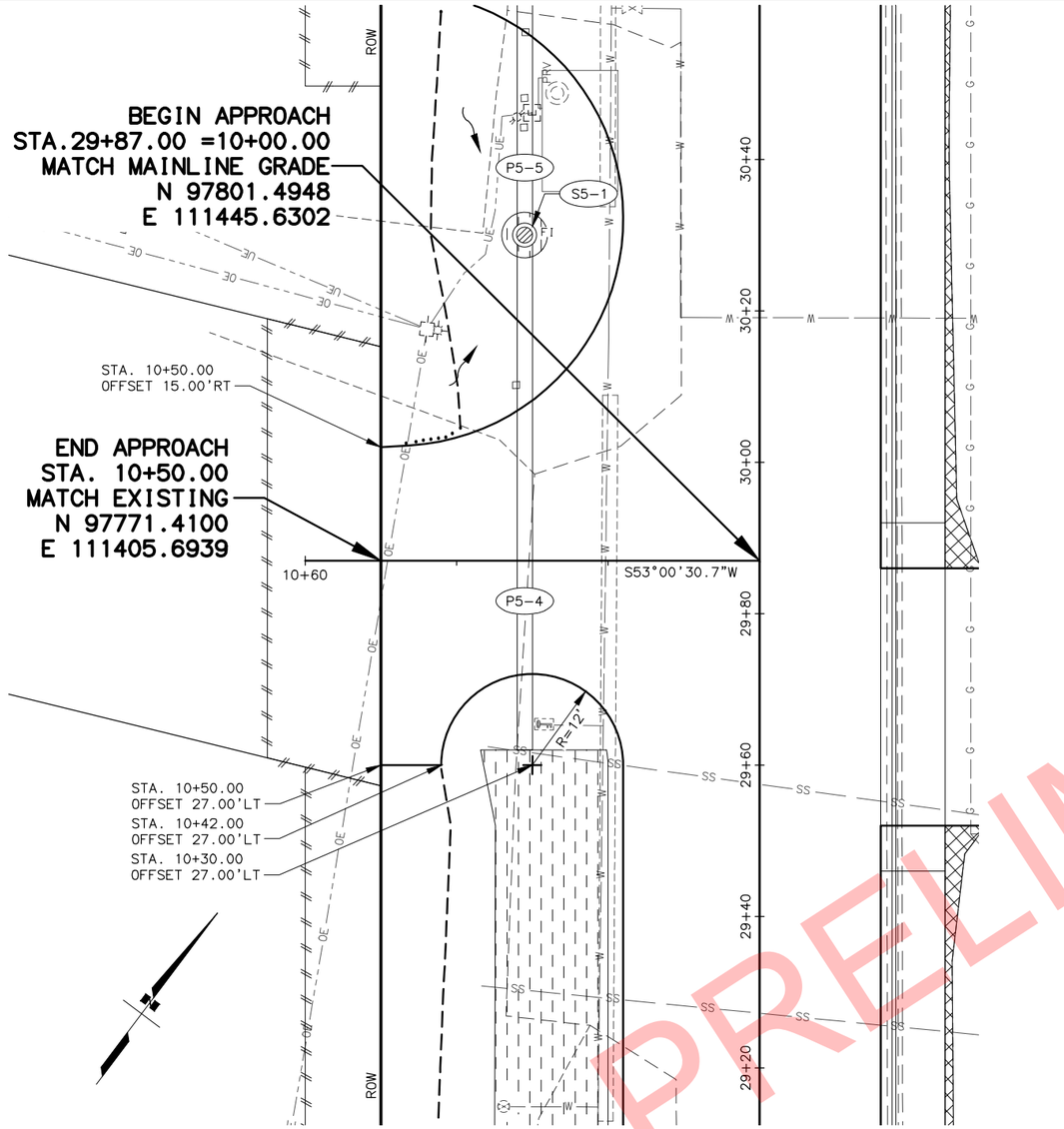

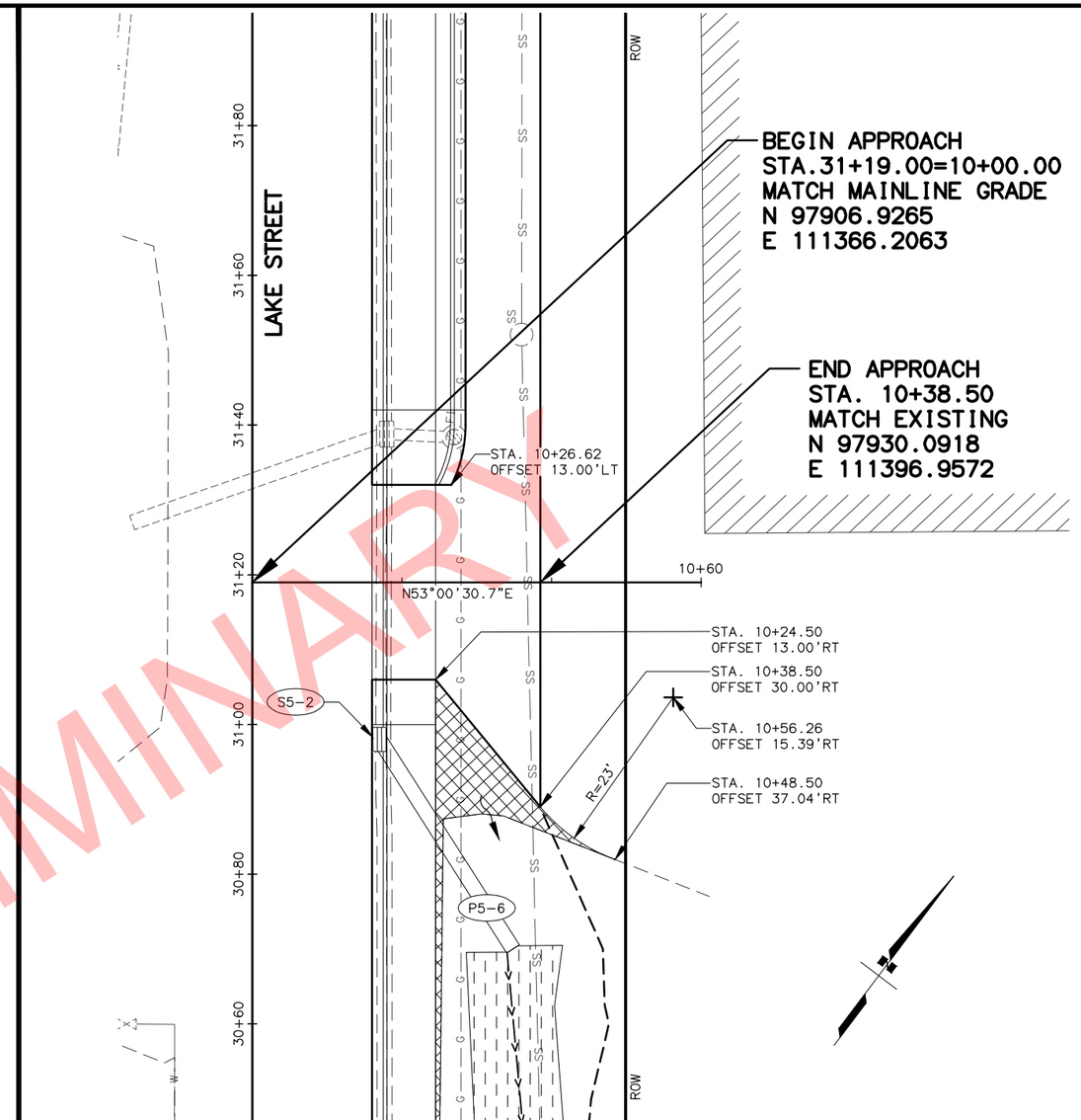

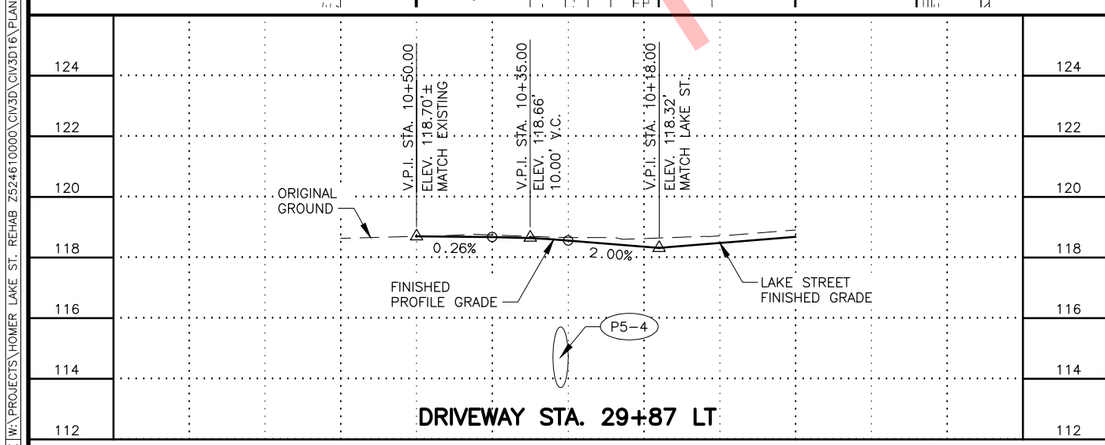

DRIVEWAY STA. 29+87 LT

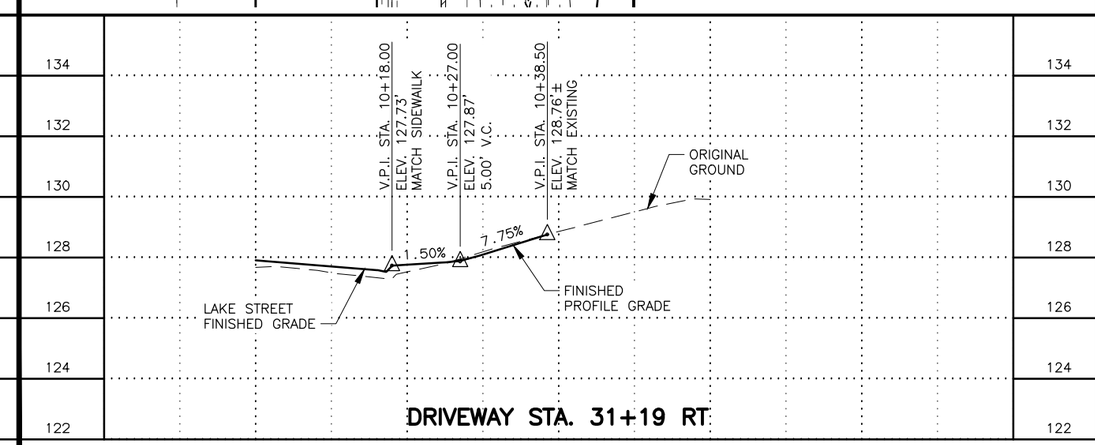

DRIVEWAY STA. 31+19 RT

SHEET NO.	TOTAL SHEETS
F15	F18
STATE	YEAR
ALASKA	2020

PROJECT DESIGNATION
0001422/
Z524610000

NO.	REVISION
1	
DATE	
NO.	REVISION
2	
DATE	
NO.	REVISION
3	
DATE	

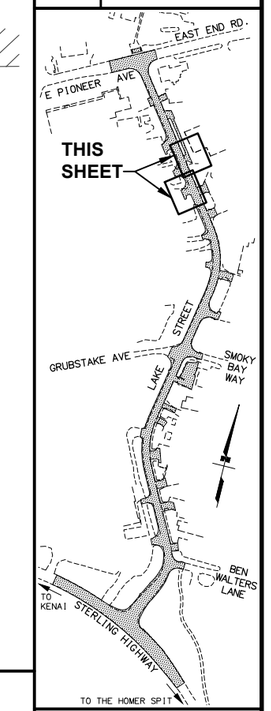

STATE OF ALASKA DOT&PF
4111 AVIATION AVENUE
ANCHORAGE, AK 99502
(907) 269-0590

STATE OF ALASKA
DEPARTMENT OF TRANSPORTATION
AND PUBLIC FACILITIES

HOMER: LAKE STREET
REHABILITATION

PLAN AND PROFILE
DRIVEWAY STA. 29+87 LT
DRIVEWAY STA. 31+19 RT

DATE/TIME 6/5/2019 3:13 PM | SCALE 1" = 10' | DESIGNED ZDK | CHECKED SJR | DRAFTED VJS/ZDK

FILE W:\PROJECTS\HOMER LAKE ST. REHAB Z524610000\CIV3D\CIV3D16\PLANSET\52461_F09_APP.DWG

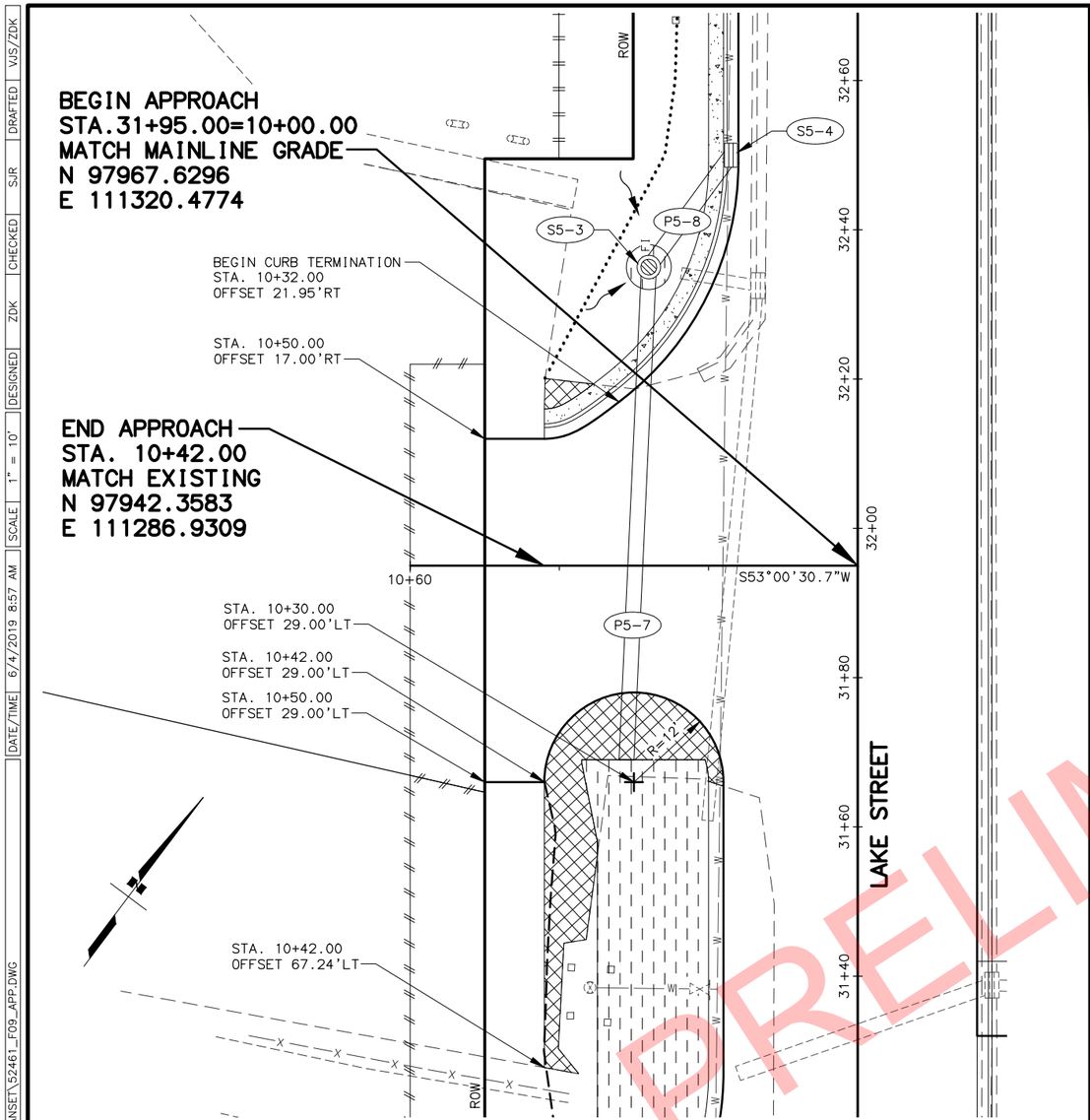

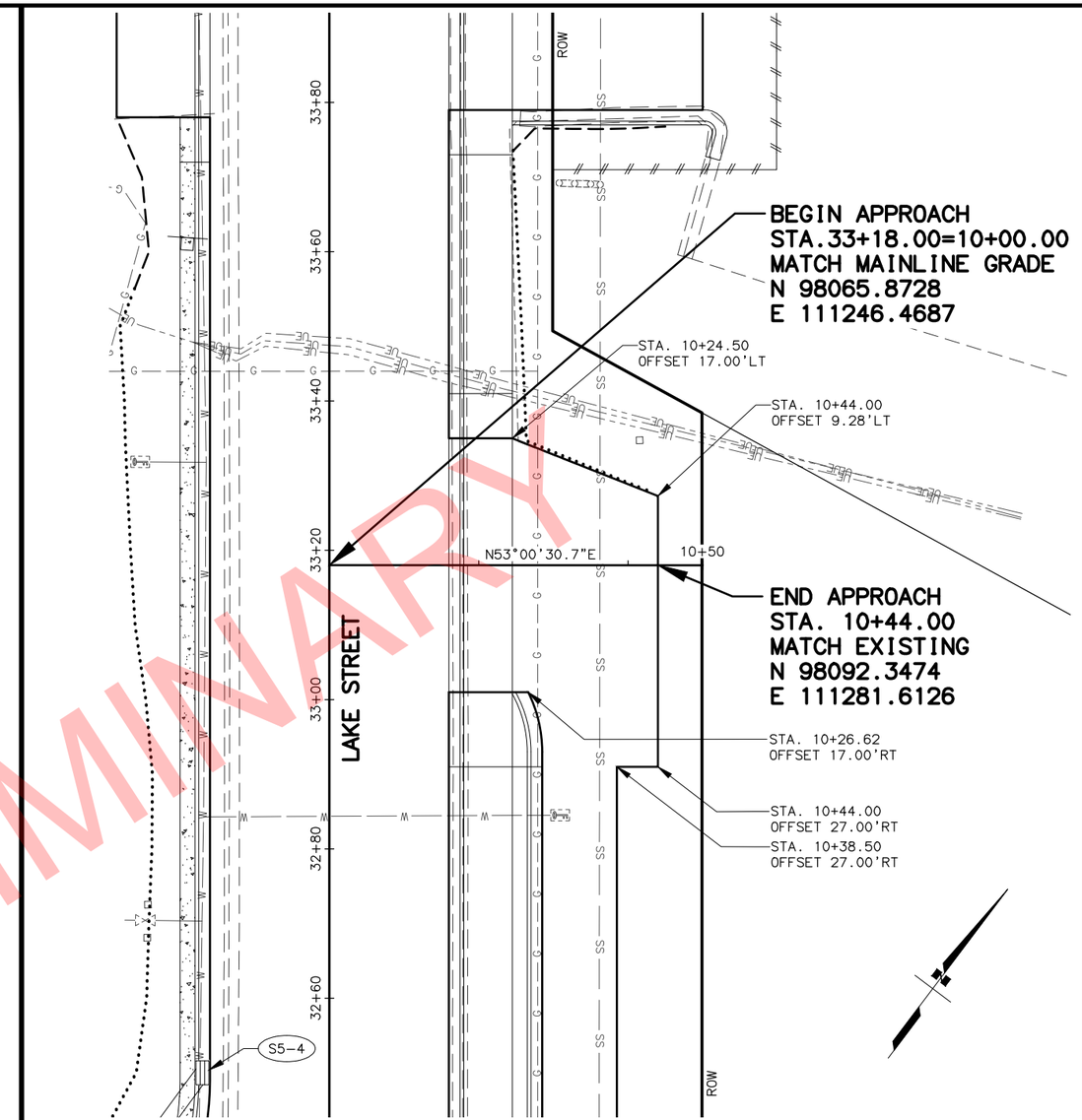

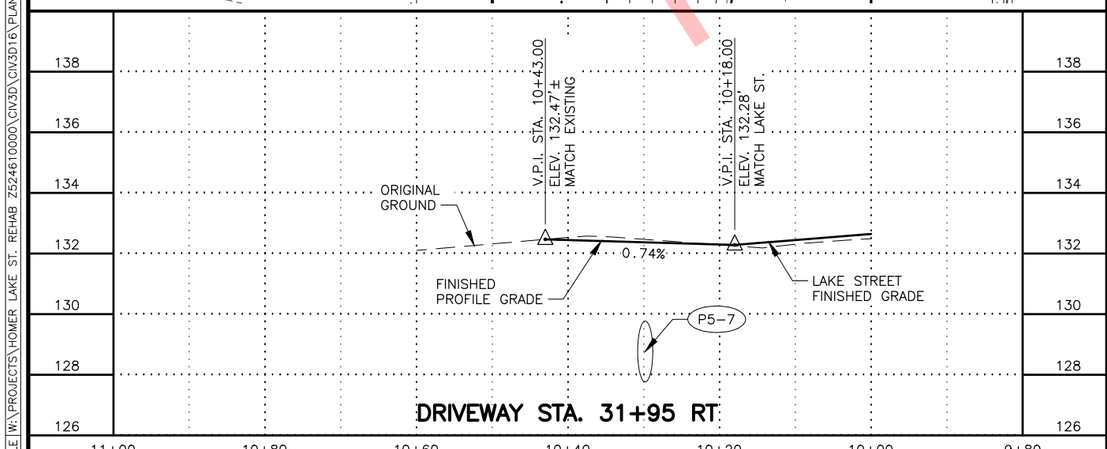

DRIVEWAY STA. 31+95 RT

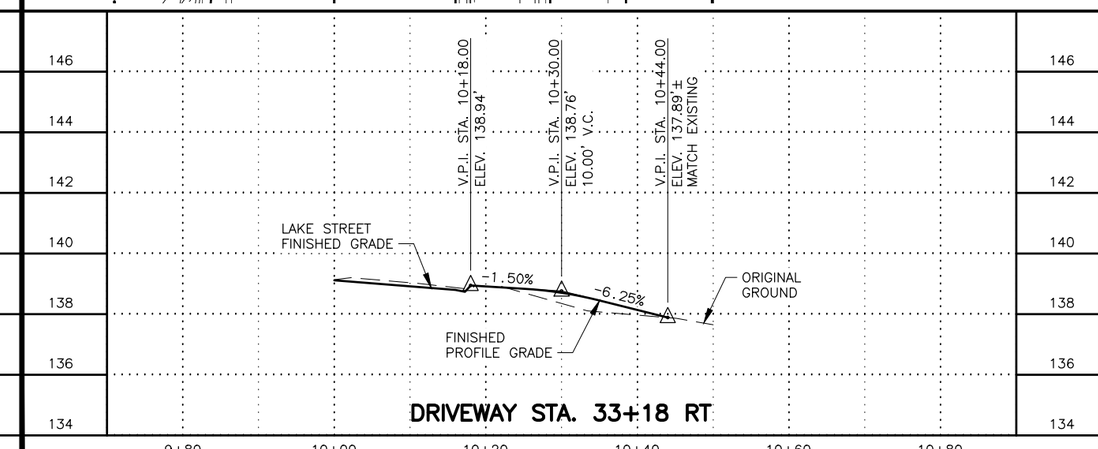

DRIVEWAY STA. 33+18 RT

SHEET NO.	TOTAL SHEETS
F16	F18
STATE	YEAR
ALASKA	2020

PROJECT DESIGNATION
0001422/
Z524610000

NO.	REVISION
1	
DATE	
NO.	REVISION
2	
DATE	
NO.	REVISION
3	
DATE	

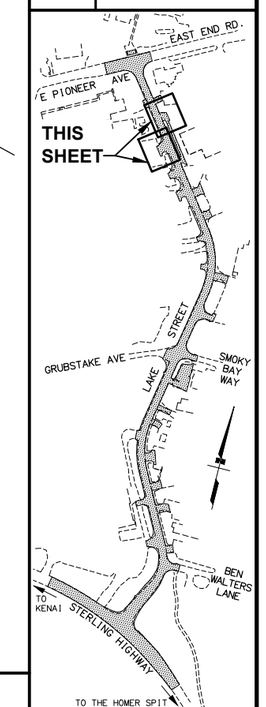

STATE OF ALASKA
STEVEN R. PEDERSEN
PROFESSIONAL ENGINEER
PSSE REVIEW

STATE OF ALASKA DOT&PF
4111 AVIATION AVENUE
ANCHORAGE, AK 99502
(907) 269-0590

STATE OF ALASKA
DEPARTMENT OF TRANSPORTATION
AND PUBLIC FACILITIES

HOMER: LAKE STREET
REHABILITATION

PLAN AND PROFILE
DRIVEWAY STA. 31+95 LT
DRIVEWAY STA. 33+18 RT

DATE/TIME 6/4/2019 8:57 AM | SCALE 1" = 10' | DESIGNED ZDK | CHECKED SJR | DRAFTED VJS/ZDK

FILE W:\PROJECTS\HOMER LAKE ST. REHAB Z524610000\CIV3D\CIV3D16\PLANSET\52461_F09_APP.DWG

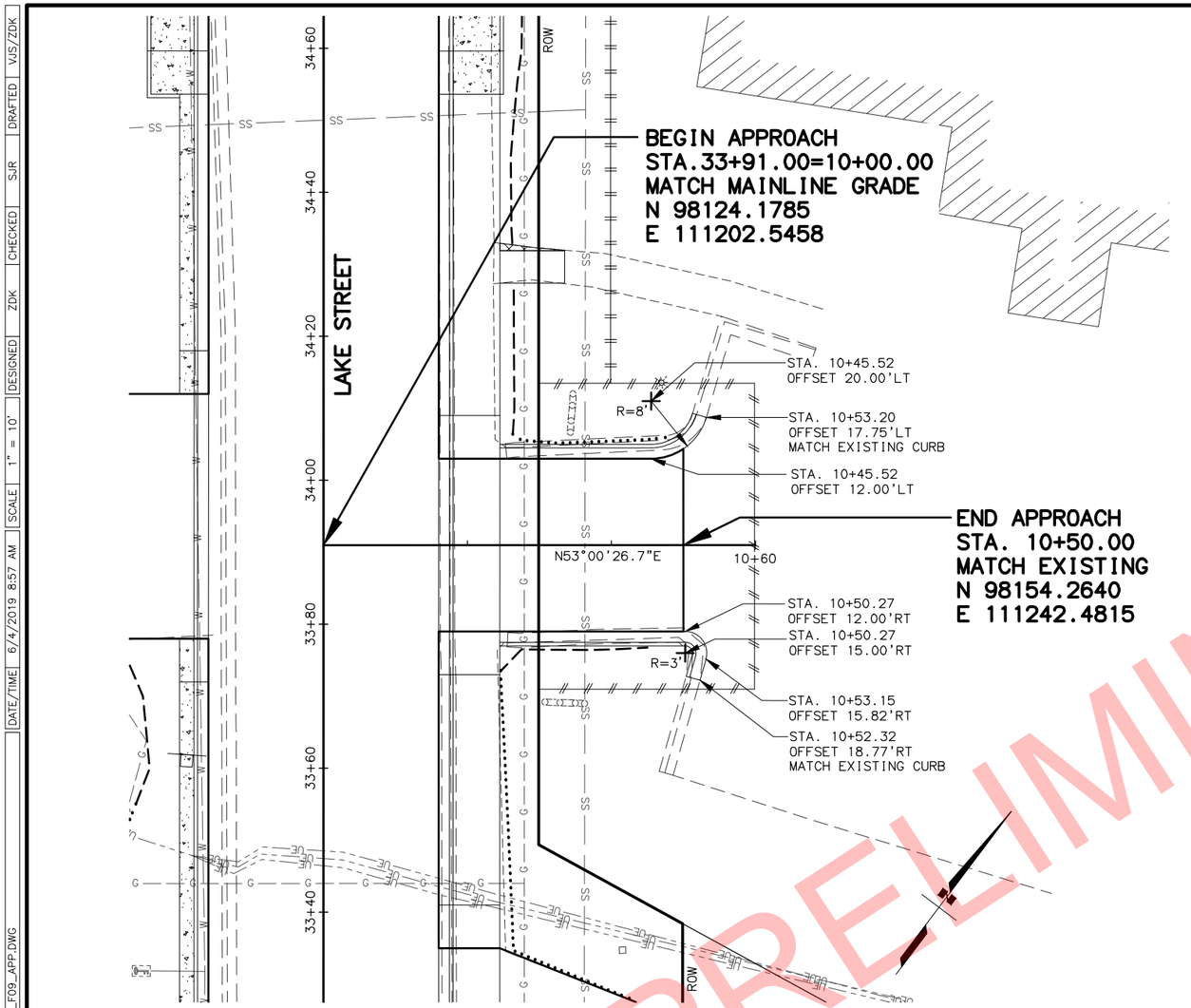

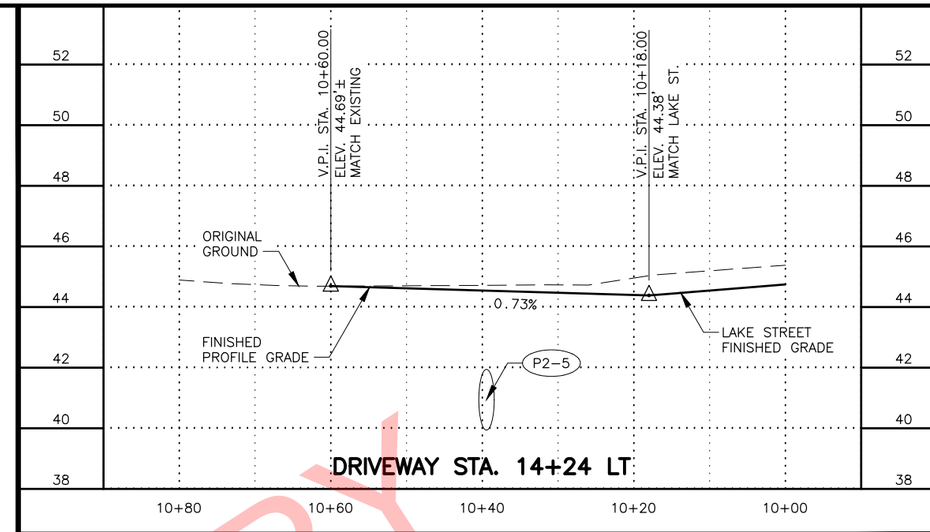

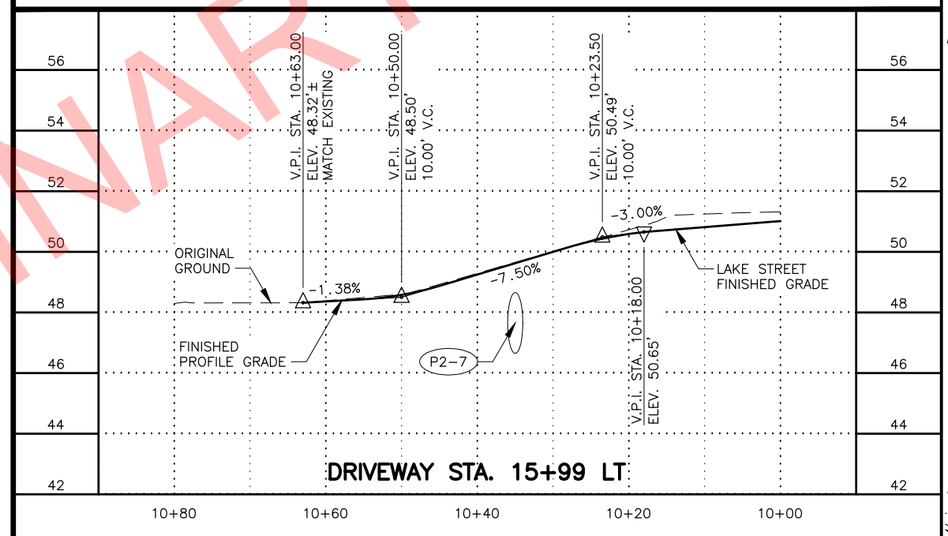

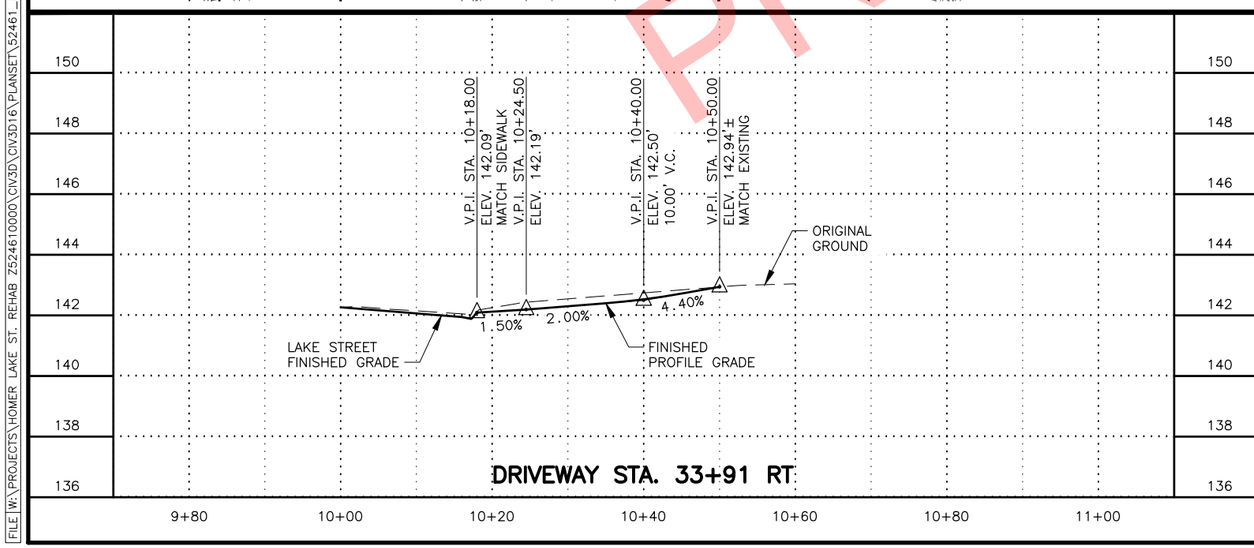

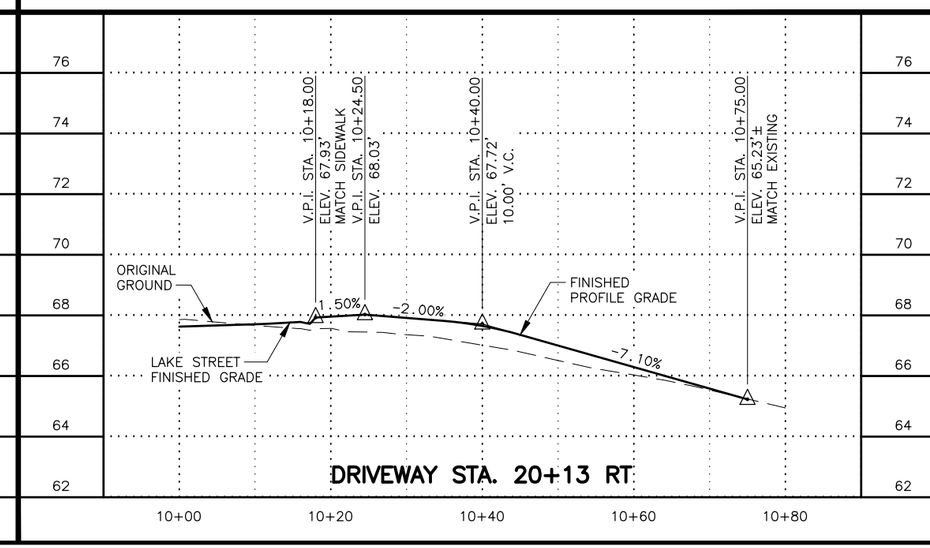

SHEET NO.	TOTAL SHEETS
F17	F18
STATE	YEAR
ALASKA	2020

PROJECT DESIGNATION
0001422/
Z524610000

NO.	REVISION
1	
DATE	
NO.	REVISION
2	
DATE	
NO.	REVISION
3	
DATE	

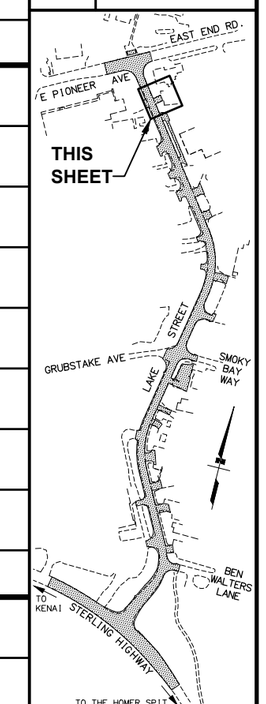

STATE OF ALASKA
STEVEN R. PEDERSEN
34
PROFESSIONAL ENGINEER
PS&E REVIEW

STATE OF ALASKA DOT&PF
4111 AVIATION AVENUE
ANCHORAGE, AK 99502
(907) 269-0590

STATE OF ALASKA
DEPARTMENT OF TRANSPORTATION
AND PUBLIC FACILITIES

HOMER: LAKE STREET
REHABILITATION

PLAN AND PROFILE
DRIVEWAY STA. 33+91 RT
AND
APPROACH PROFILES

DATE/TIME	6/4/2019 8:57 AM	SCALE	1" = 10'	DESIGNED	ZDK	CHECKED	SJR	DRAFTED	VJS/ZDK

FILE W:\PROJECTS\HOMER LAKE ST. REHAB Z524610000\CIV3D\CIV3D16\PLANSET\52461_F09_APP.DWG

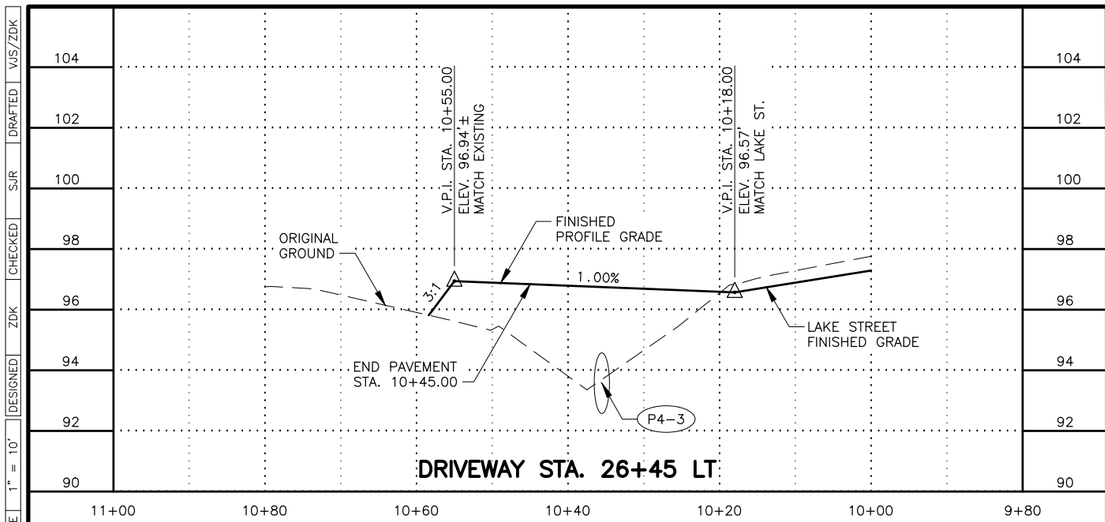

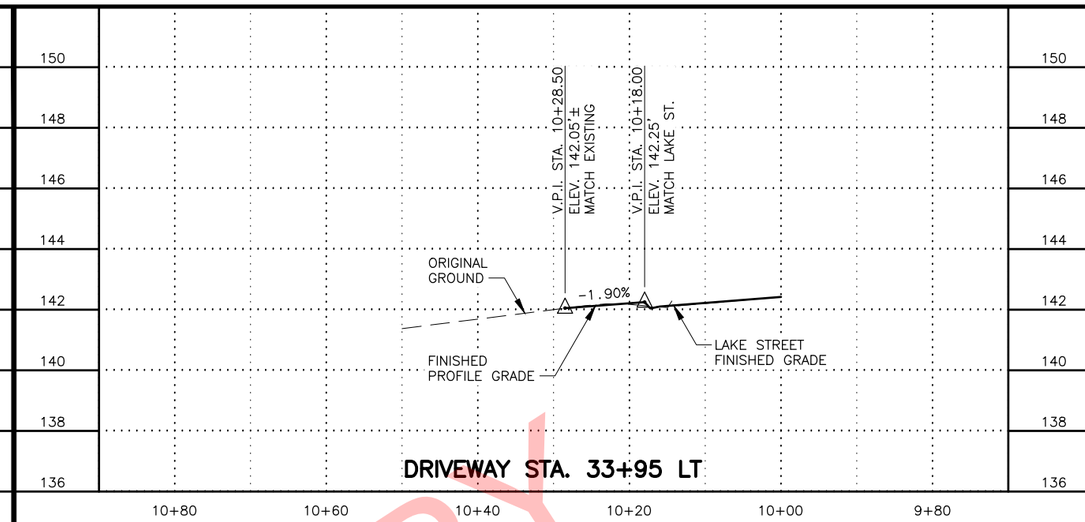

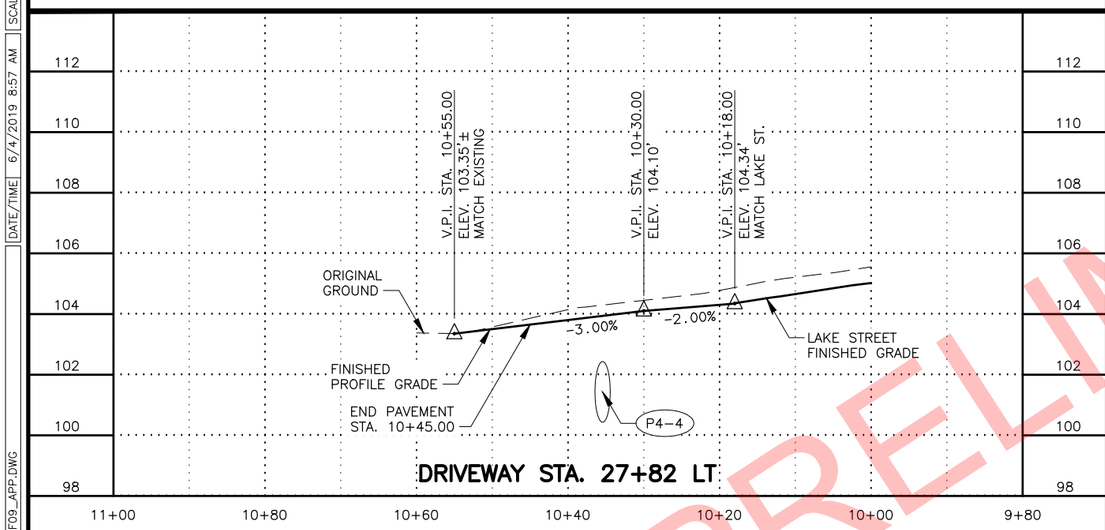

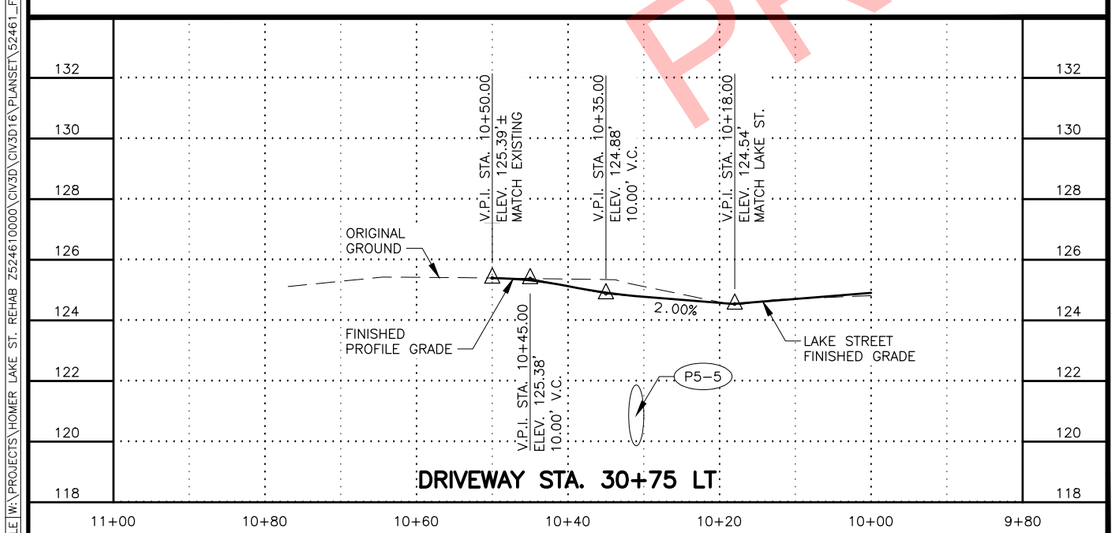

SHEET NO.	TOTAL SHEETS
F18	F18
STATE	YEAR
ALASKA	2020

PROJECT DESIGNATION
0001422/
Z524610000

NO.	REVISION
1	
DATE	
NO.	REVISION
2	
DATE	
NO.	REVISION
3	
DATE	

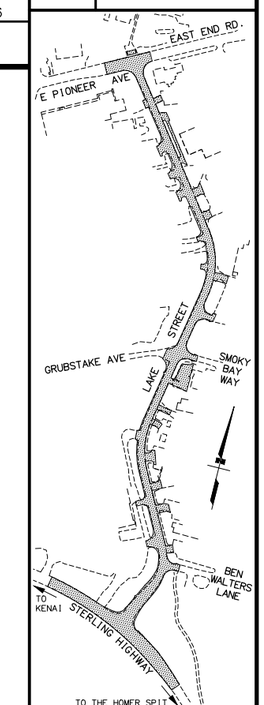

STATE OF ALASKA
STEVEN R. PEDERSEN
REGISTERED PROFESSIONAL ENGINEER
PSSE REVIEW

STATE OF ALASKA DOT&PF
4111 AVIATION AVENUE
ANCHORAGE, AK 99502
(907) 269-0590

STATE OF ALASKA
DEPARTMENT OF TRANSPORTATION
AND PUBLIC FACILITIES

HOMER: LAKE STREET
REHABILITATION

APPROACH PROFILES

FILE W:\PROJECTS\HOMER LAKE ST. REHAB Z524610000\CIV3D\CIV3D16\PLANSET\52461_F09_APP.DWG | DATE/TIME 6/4/2019 8:57 AM | SCALE 1" = 10' | DESIGNED ZDK | CHECKED SJR | DRAFTED VJS/ZDK

STERLING HWY - LAKE ST INTERSECTION

POINT	STATION	OFFSET (FT)	ELEVATION (FT)	REMARKS
NW1	10+13.31	152.18 LT	37.98	MATCH EXISTING
NW2	10+17.35	117.40 LT	37.50	---
NW3	10+24.00	86.00 LT	37.18	---
NW4	10+34.00	55.50 LT	36.47	PCC
NW5	10+47.60	37.80 LT	36.29	---
NW6	10+71.33	30.00 LT	36.21	PT
NW7	10+92.10	30.00 LT	36.35	---
NW8	11+12.80	30.00 LT	36.17	BEGIN BIKE RAMP
NW9	11+28.80	30.00 LT	36.63	CURB TERMINATION
NW10	11+41.25	32.40 LT	36.46	---
NE1	10+33.10	94.60 RT	33.26	---
NE2	10+31.50	83.50 RT	33.50	CURB TERMINATION
NE3	10+32.70	68.40 RT	33.67	PC
NE4	10+41.40	46.60 RT	34.26	---
NE5	10+60.80	33.40 RT	34.85	PCC
NE6	10+86.60	26.66 RT	35.52	---
NE7	11+12.90	22.25 RT	36.16	BEGIN BIKE RAMP
NE8	11+34.75	20.40 RT	36.69	END BIKE RAMP
NE9	11+53.90	20.00 RT	37.28	---

TRAFFIC CONTROLLER PAD

POINT	STATION	OFFSET (FT)	ELEVATION (FT)	REMARKS
TCP1	10+43.40	96.00 RT	33.50	PC
TCP2	10+57.75	88.75 RT	33.76	---
TCP3	10+68.25	76.60 RT	34.04	---
TCP4	10+73.40	61.40 RT	34.56	---
TCP5	10+73.40	50.65 RT	35.02	PT

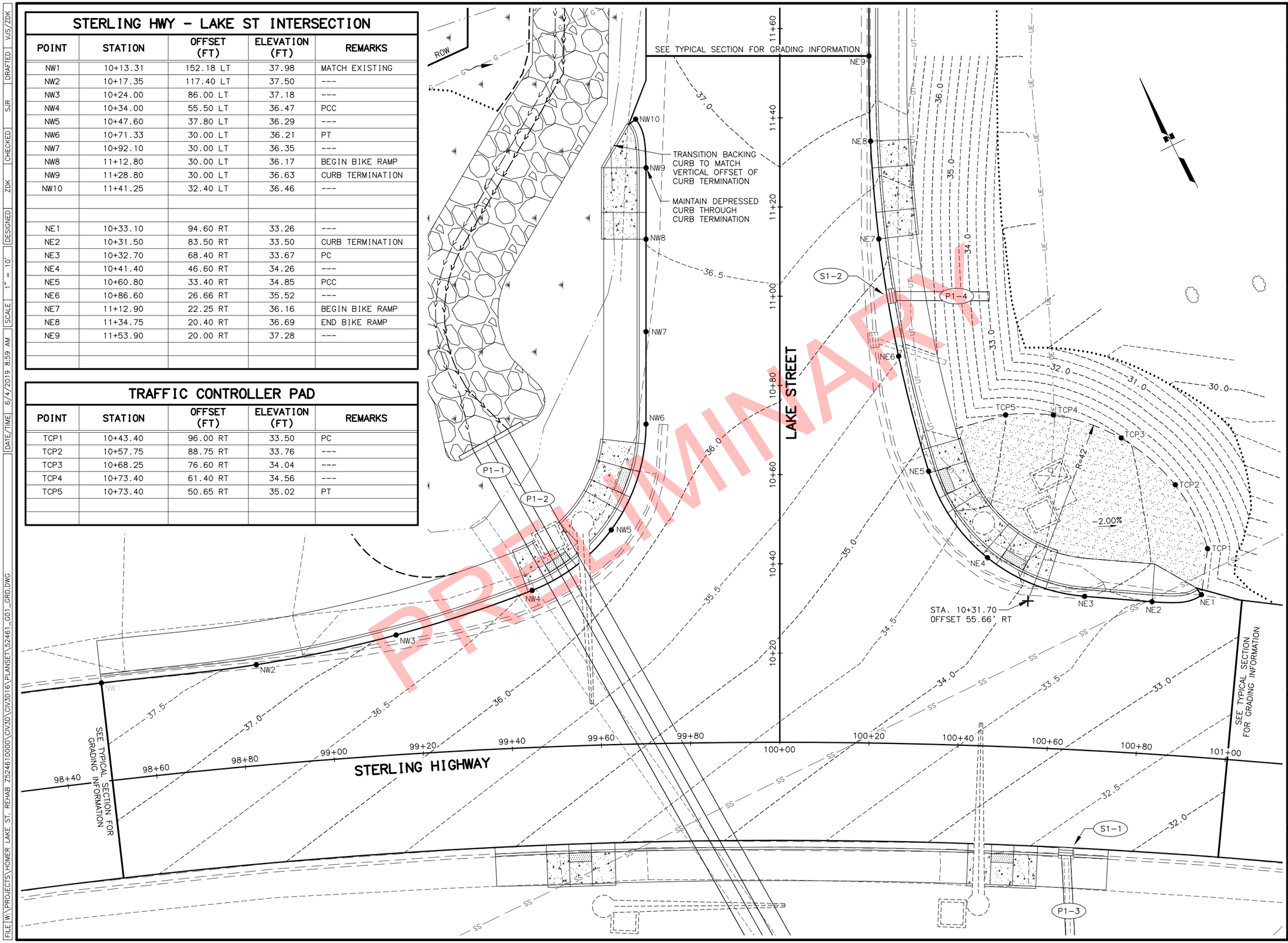

SHEET NO.	TOTAL SHEETS
G01	G04
STATE	YEAR
ALASKA	2020

PROJECT DESIGNATION
0001422/
Z524610000

NO.	REVISION
1	
DATE	
NO.	REVISION
2	
DATE	
NO.	REVISION
3	
DATE	

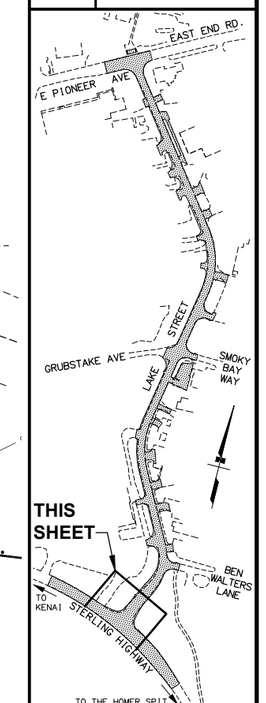

PS&E REVIEW

STATE OF ALASKA DOT&PF
4111 AVIATION AVENUE
ANCHORAGE, AK 99502
(907) 269-0590

STATE OF ALASKA
DEPARTMENT OF TRANSPORTATION
AND PUBLIC FACILITIES

HOMER: LAKE STREET REHABILITATION

LAKE STREET–STERLING HIGHWAY GRADING PLAN

FILE W:\PROJECTS\HOMER LAKE ST. REHAB Z524610000\CIV3D\CIV3D16\PLANSET\52461_G01_GRD.DWG
DATE/TIME 6/4/2019 8:59 AM | SCALE 1" = 10' | DESIGNED ZDK | CHECKED SJR | DRAFTED VJS/ZDK

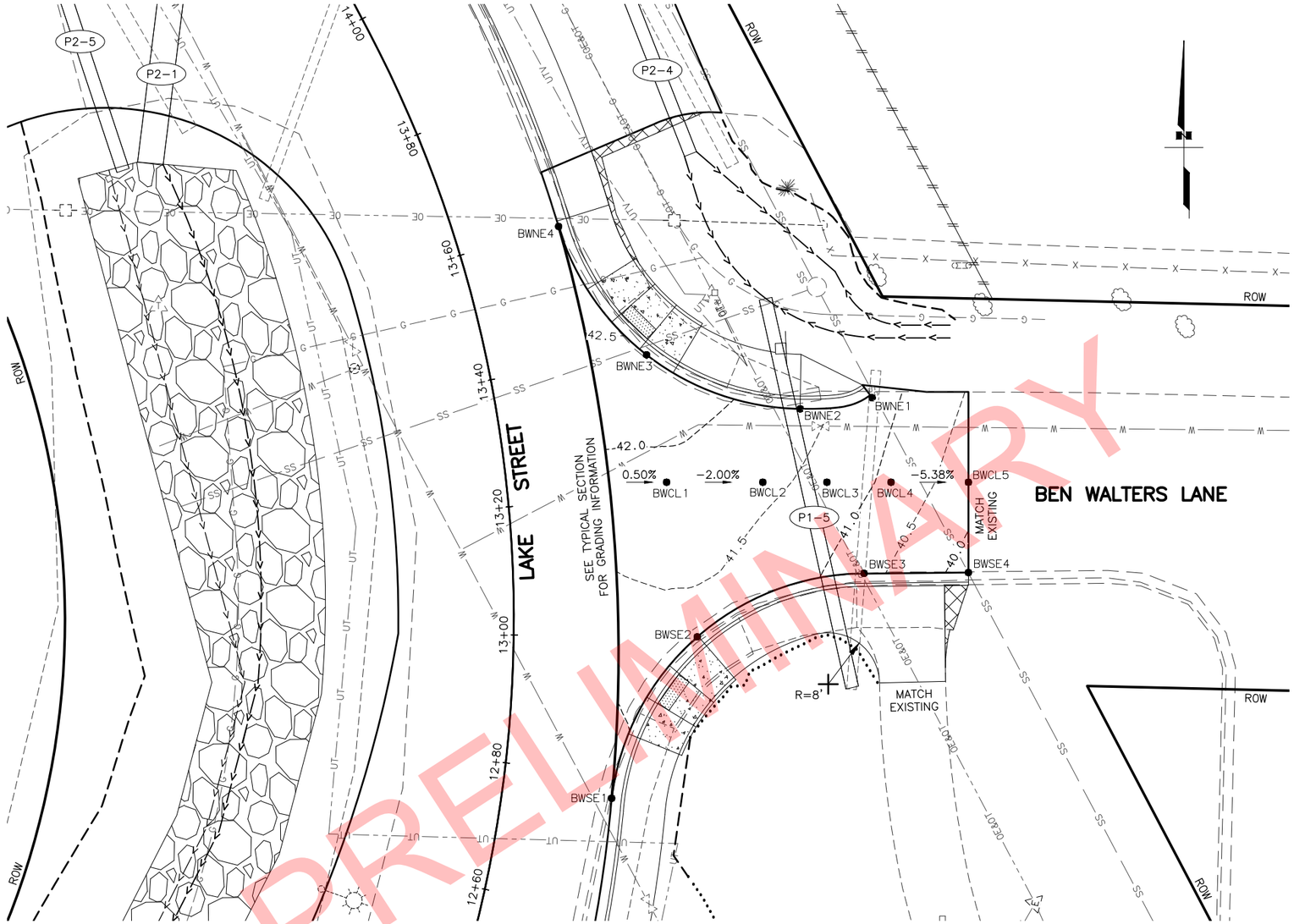

BEN WALTERS LANE - LAKE ST. INTERSECTION

POINT	STATION	OFFSET (FT)	ELEVATION (FT)	REMARKS
BWSE1	12+76.65	17.00 RT	40.55	PC
BWSE2	13+00.00	28.60 RT	41.08	---
BWSE3	13+08.00	54.75 RT	40.54	PT
BWSE4	13+07.75	71.00 RT	39.81	MATCH EXISTING
BWNE1	13+29.15	58.25 RT	41.02	---
BWNE2	13+29.00	46.90 RT	41.37	PC, CURB TERMINATION
BWNE3	13+39.33	24.60 RT	42.59	---
BWNE4	13+60.00	16.00 RT	43.21	PCC
BWCL1	13+21.43	24.90 RT	41.90	GRADE BREAK
BWCL2	13+20.23	39.80 RT	41.61	---
BWCL3	13+19.50	49.80 RT	41.32	---
BWCL4	18+18.84	59.70 RT	40.87	---
BWCL5	13+18.10	71.80 RT	40.23	MATCH EXISTING

SHEET NO.	TOTAL SHEETS
G02	G04
STATE	YEAR
ALASKA	2020

PROJECT DESIGNATION
0001422/
Z524610000

NO.	REVISION
1	
DATE	
NO.	REVISION
2	
DATE	
NO.	REVISION
3	
DATE	

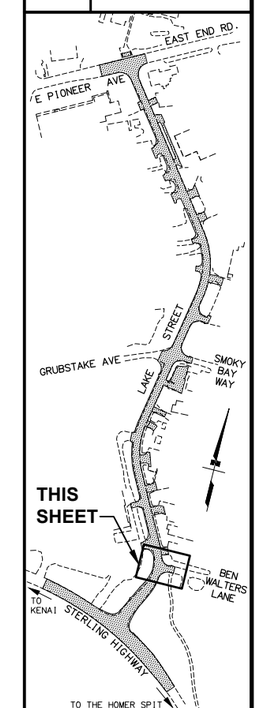

STATE OF ALASKA
STEVEN R. PETERSON
49347
REGISTERED PROFESSIONAL ENGINEER
PS&E REVIEW

STATE OF ALASKA DOT&PF
4111 AVIATION AVENUE
ANCHORAGE, AK 99502
(907) 269-0590

STATE OF ALASKA
DEPARTMENT OF TRANSPORTATION
AND PUBLIC FACILITIES

HOMER: LAKE STREET
REHABILITATION

**LAKE STREET–
BEN WALTERS LANE
GRADING PLAN**

FILE W:\PROJECTS\HOMER LAKE ST. REHAB Z524610000\CIV3D\CIV3016\PLANSET\52461_G01_GRD.DWG | DATE/TIME 6/4/2019 8:59 AM | SCALE 1" = 10' | DESIGNED ZDK | CHECKED SJR | DRAFTED VJS/ZDK

GRUBSTAKE AVE. - LAKE ST INTERSECTION

POINT	STATION	OFFSET (FT)	ELEVATION (FT)	REMARKS
GSW1	21+68.48	18.00 LT	74.50	PC, CURB TERMINATION
GSW2	21+92.98	26.40 LT	75.64	---
GSW3	22+07.21	48.00 LT	76.57	MATCH EXISTING
GNW1	22+53.75	48.00 LT	77.94	MATCH EXISTING
GNW2	22+55.67	43.20 LT	78.12	PC
GNW3	22+70.40	24.90 LT	79.02	---
GNW4	22+92.83	18.00 LT	80.28	PT

SMOKY BAY WAY - LAKE ST INTERSECTION

POINT	STATION	OFFSET (FT)	ELEVATION (FT)	REMARKS
SBSE1	22+11.75	16.00 RT	77.19	PC
SBSE2	22+40.15	27.75 RT	78.24	---
SBSE3	22+51.80	56.00 RT	78.40	PT, CURB TERMINATION
SBSE4	22+50.00	67.25 RT	78.22	---
SBNE1	22+77.67	67.25 RT	79.03	---
SBNE2	22+75.80	56.00 RT	79.14	PC, CURB TERMINATION
SBNE3	22+87.50	27.75 RT	80.23	---
SBNE4	23+15.75	16.00 RT	82.02	PT
SBCL1	22+63.00	25.00 RT	79.60	GRADE BREAK
SBCL2	22+63.00	42.60 RT	79.30	---
SBCL3	22+64.50	59.90 RT	79.01	---
SBCL4	22+68.65	83.50 RT	78.61	MATCH EXISTING

DRIVEWAY STA. 21+36 RT PARKING LOT

POINT	STATION	OFFSET (FT)	ELEVATION (FT)	REMARKS
PL1	10+55.00	12.00 LT	72.63	GRADE BREAK
PL2	10+35.00	17.00 LT	73.00	---
PL3	10+35.00	44.50 LT	73.55	---
PL4	10+35.00	72.00 LT	74.10	PC
PL5	10+38.15	82.14 LT	74.37	---
PL6	10+46.45	88.76 LT	74.58	PT
PL7	10+62.00	94.86 LT	74.22	SWALE GRADE BREAK
PL8	10+80.00	101.92 LT	74.41	---
PL9	10+83.55	76.57 LT	74.16	---
PL10	10+86.90	52.76 LT	74.00	RAMP GRADE BREAK
PL11	10+83.45	50.70 LT	73.76	RAMP MATCH EXISTING
PL12	10+83.95	46.80 LT	73.79	RAMP MATCH EXISTING
PL13	10+91.05	44.70 LT	74.03	RAMP GRADE BREAK
PL14	10+93.35	28.35 LT	73.35	---
PL15	10+95.65	12.00 LT	72.72	GRADE BREAK
PL16	10+62.00	12.00 LT	72.56	SWALE GRADE BREAK

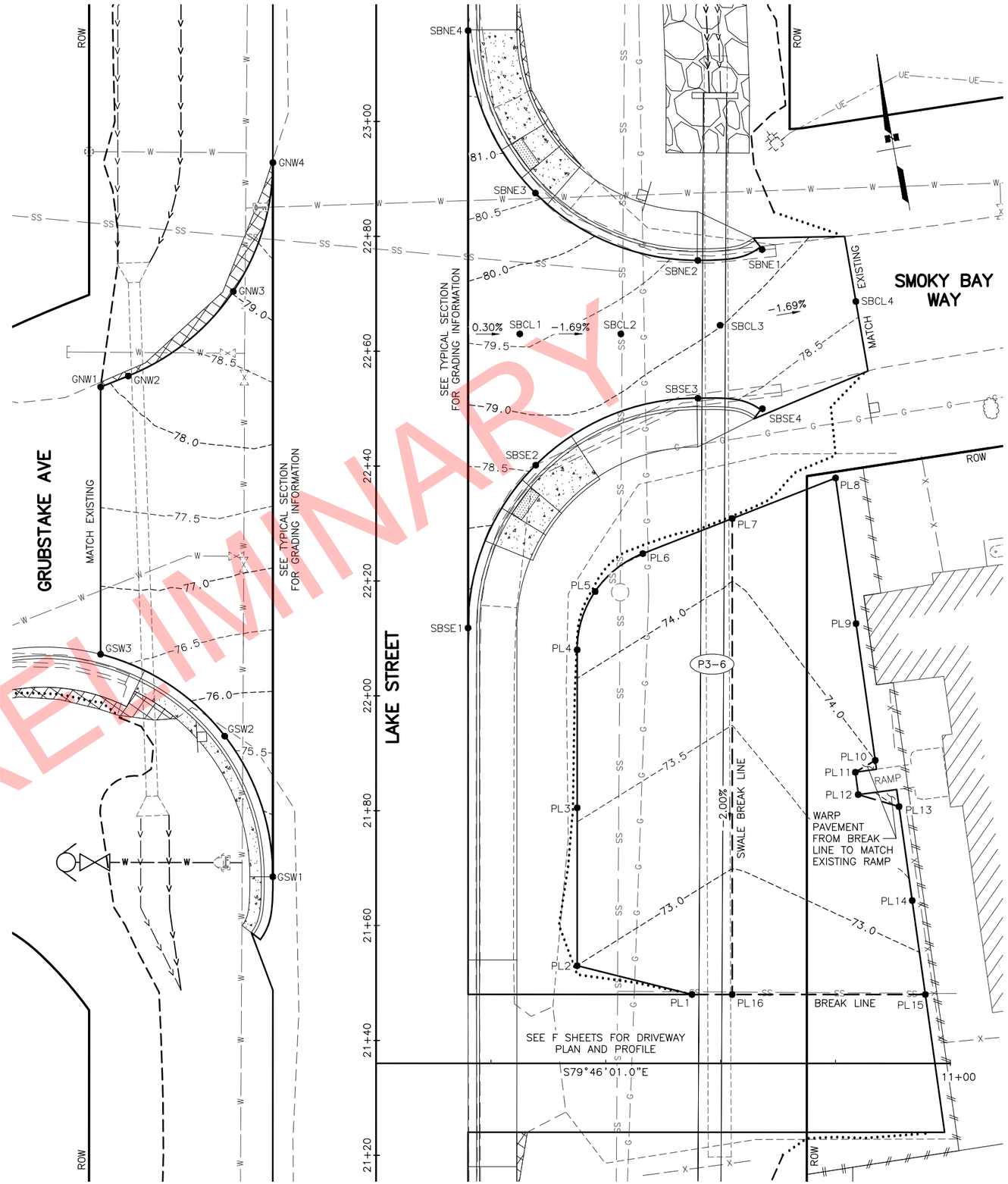

SHEET NO.	TOTAL SHEETS
G03	G04
STATE	YEAR
ALASKA	2020

PROJECT DESIGNATION
0001422/
Z524610000

NO.	REVISION
1	
DATE	
NO.	REVISION
2	
DATE	
NO.	REVISION
3	
DATE	

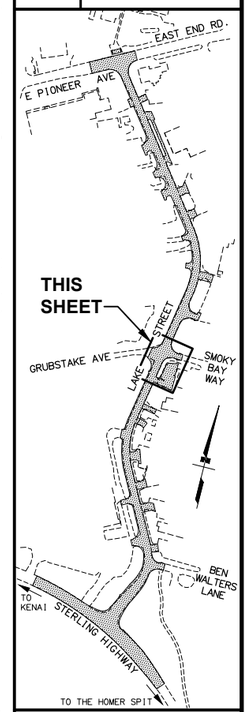

STATE OF ALASKA
STEVEN C. PEGUES
NO. 12342
REGISTERED PROFESSIONAL ENGINEER
PSSE REVIEW

STATE OF ALASKA DOT&PF
4111 AVIATION AVENUE
ANCHORAGE, AK 99502
(907) 269-0590

STATE OF ALASKA
DEPARTMENT OF TRANSPORTATION
AND PUBLIC FACILITIES

HOMER: LAKE STREET REHABILITATION

DRIVEWAY STA. 21+36 RT PARKING LOT
LAKE ST-GRUBSTAKE AVE
LAKE ST-SMOKY BAY WAY
GRADING PLANS

DATE/TIME 6/4/2019 8:59 AM | SCALE 1" = 10' | DESIGNED ZDK | CHECKED SJR | DRAFTED VJS/ZDK

FILE W:\PROJECTS\HOMER LAKE ST. REHAB Z524610000\CIV3D\CIV3D16\PLANSET\52461_G01_GRD.DWG

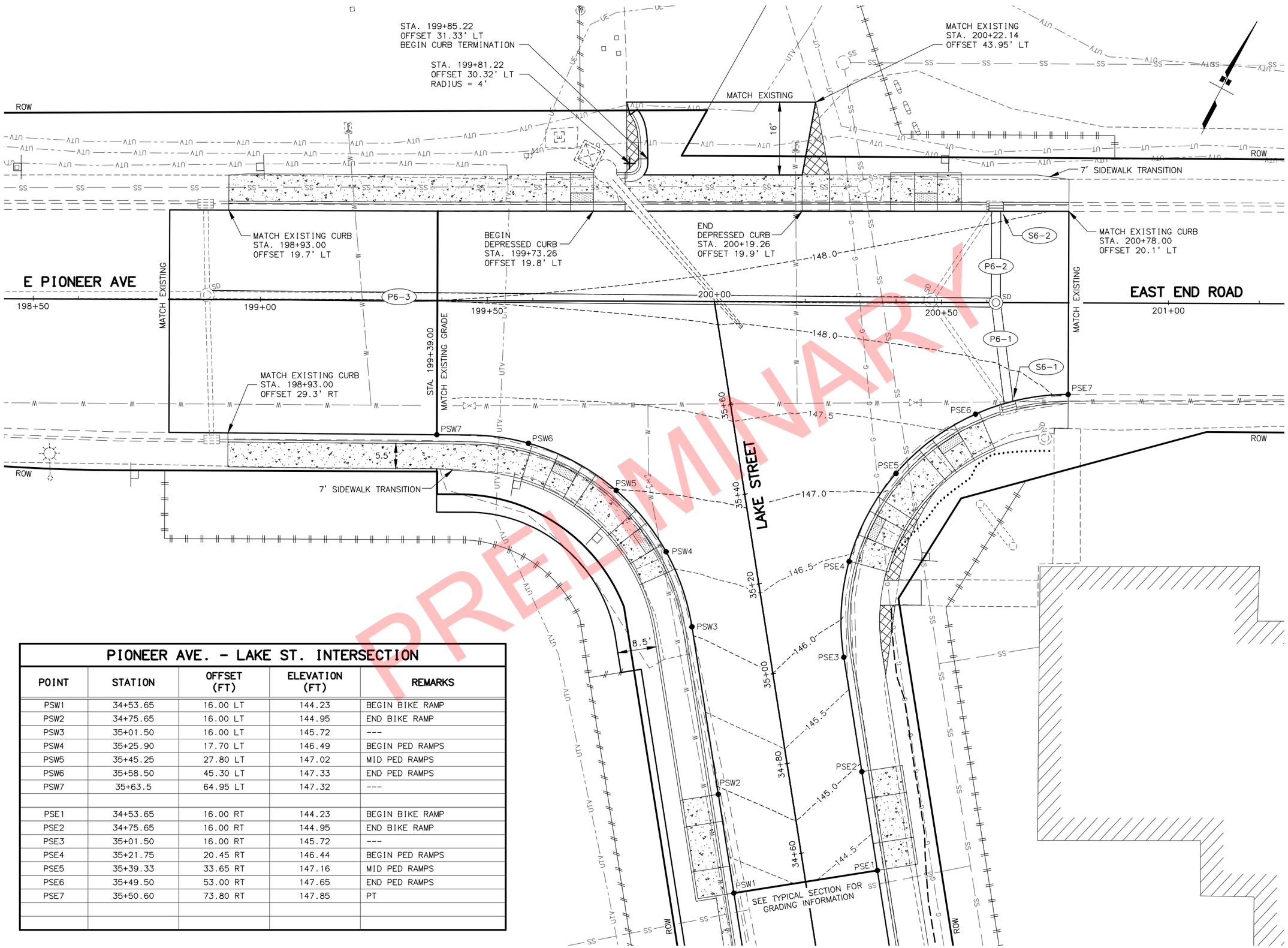

PIONEER AVE. - LAKE ST. INTERSECTION

POINT	STATION	OFFSET (FT)	ELEVATION (FT)	REMARKS
PSW1	34+53.65	16.00 LT	144.23	BEGIN BIKE RAMP
PSW2	34+75.65	16.00 LT	144.95	END BIKE RAMP
PSW3	35+01.50	16.00 LT	145.72	---
PSW4	35+25.90	17.70 LT	146.49	BEGIN PED RAMPS
PSW5	35+45.25	27.80 LT	147.02	MID PED RAMPS
PSW6	35+58.50	45.30 LT	147.33	END PED RAMPS
PSW7	35+63.5	64.95 LT	147.32	---
PSE1	34+53.65	16.00 RT	144.23	BEGIN BIKE RAMP
PSE2	34+75.65	16.00 RT	144.95	END BIKE RAMP
PSE3	35+01.50	16.00 RT	145.72	---
PSE4	35+21.75	20.45 RT	146.44	BEGIN PED RAMPS
PSE5	35+39.33	33.65 RT	147.16	MID PED RAMPS
PSE6	35+49.50	53.00 RT	147.65	END PED RAMPS
PSE7	35+50.60	73.80 RT	147.85	PT

SHEET NO.	TOTAL SHEETS
G04	G04
STATE	YEAR
ALASKA	2020

PROJECT DESIGNATION
0001422/
Z524610000

NO.	REVISION
1	
DATE	
NO.	REVISION
2	
DATE	
NO.	REVISION
3	
DATE	

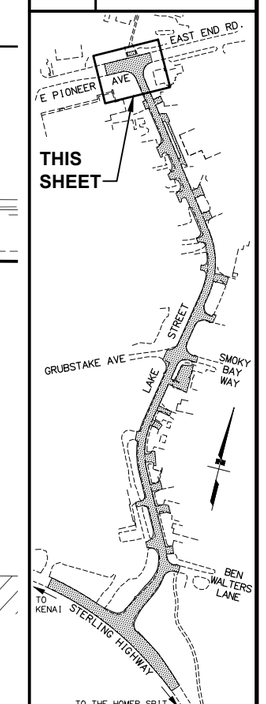

STATE OF ALASKA
STEVEN R. PEDERSEN
CE 9347
REGISTERED PROFESSIONAL ENGINEER
PS&E REVIEW

STATE OF ALASKA DOT&PF
4111 AVIATION AVENUE
ANCHORAGE, AK 99502
(907) 269-0590

STATE OF ALASKA
DEPARTMENT OF TRANSPORTATION
AND PUBLIC FACILITIES

HOMER: LAKE STREET
REHABILITATION

**LAKE STREET–
PIONEER AVENUE
GRADING PLAN**

DATE/TIME 6/4/2019 8:59 AM | SCALE 1" = 10' | DESIGNED ZDK | CHECKED SJR | DRAFTED VJS/ZDK

FILE W:\PROJECTS\HOMER LAKE ST. REHAB Z524610000\CIV3D\CIV3D16\PLANSET\52461_G01_GRD.DWG

NO.	DATE	REVISION

STATE	PROJECT DESIGNATION	YEAR	SHEET NO.	TOTAL SHEETS
ALASKA	0001422/Z524610000	2019	H01	H38

ABBREVIATIONS

AWG	AMERIAN WIRE GAUGE	NB	NORTH BOUND
CAM	CAMERA	OMNI	OMNI DIRECTIONAL ANTENNA
EB	EAST BOUND	P#	TRAFFIC SIGNAL POLE #
GND	GROUND	PE	PHOTOELECTRIC CELL
HDPE	POLYETHYLENE CONDUIT	PED B ##	PEDESTRIAN PUSH BUTTON #
HEAD	VEHICULAR SIGNAL HEAD	PEDI	PEDESTRIAN SIGNAL HEAD
SIG	SIGNAL	PRE #	PREEMPTION #
I/C	INTERCONNECT	PRE CON #	PREEMPTION CONFIRMATION LIGHT #
INTX	INTERSECTION	RAD	RADAR
INTX L	INTERSECTION LIGHTING	RMC	RIGID METAL CONDUIT
LC	LOAD CENTER	SB	SOUTH BOUND
LFNC	LIQUIDTIGHT FLEXIBLE NONMETALLIC CONDUIT	TC	TRAFFIC CONTROLLER
LTG	LIGHTING	WB	WEST BOUND
MUTCD	MANUAL ON UNIFORM TRAFFIC CONTROL DEVICES	YAGI	DIRECTIONAL ANTENNA

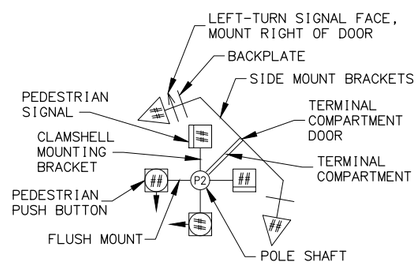

POLE SHAFT LEGEND

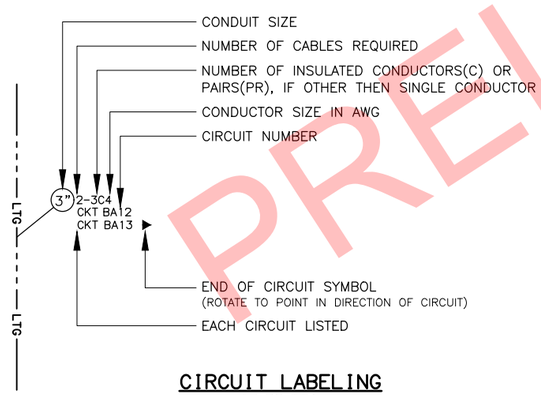

CIRCUIT LABELING LEGEND

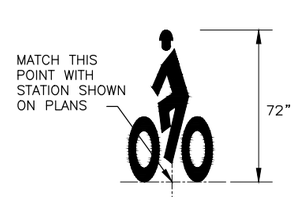

HELMETED MUTCD BIKE SYMBOL
(EXCLUDE ARROW UNLESS SHOWN IN PLANS)

SIGNING & STRIPING NOTES:

1. ALL STATION LOCATIONS FOR SIGN INSTALLATION ARE APPROXIMATE. INSTALL SIGNS AT LOCATIONS AS DIRECTED BY THE ENGINEER.
2. USE THE FOLLOWING DEFINITIONS TO DECIPHER THE ABBREVIATED SIGN POST TYPES IN THE SIGN SUMMARY SHEETS.
   A. PT MEANS A PERFORATED STEEL TUBE.
   B. T MEANS A SQUARE STEEL TUBE.
   C. P MEANS A ROUND STEEL PIPE.
   D. W MEANS A WIDE FLANGE BEAM.
   E. POPL MEANS A POLE PLATE INSTALLED PER ITS ALASKA STANDARD PLAN S-23
3. FABRICATE ALL SIGNS FROM 0.125" THICK ALUMINUM SHEETING, UNLESS STATED ELSEWHERE.
4. FOR SIGNS SUPPORTED BY MULTIPLE POSTS, FABRICATE THE POSTS WITH THEIR TOPS LEVEL WITH ONE ANOTHER.
5. FOR PERFORATED STEEL TUBE SIGNPOSTS, INSTALL THE CONCRETE FOUNDATION OPTION SHOWN ON ALASKA STANDARD PLAN S-30. TRIM EACH PT POST TO LIMIT THE LENGTH INSERTED INTO THE FOUNDATION TO 12 INCHES.
6. FABRICATE GUIDE SIGNS ACCORDING TO THE SHOP DRAWINGS INCLUDED IN THE APPENDICES OF PART 4, CONTRACT PROVISIONS AND SPECIAL PROVISIONS. TRIM THE CORNERS OF ALL SIGNS TO THE RADIUS SHOWN ON EACH SHOP DRAWING.
7. ERECT NEW SIGNS BEFORE REMOVAL OF EXISTING SIGNS WITH SIMILAR MESSAGE. NOTIFY THE ENGINEER A MINIMUM OF 14 DAYS PRIOR TO BEGINNING SIGN REMOVAL AND SALVAGE OR DISPOSAL ACTIVITIES.
8. FOR SIGNS SUPPORTED BY MULTIPLE TUBES OR PIPES, LOCATE THE OUTER POSTS ON MAXIMUM SIX FEET CENTERS. INSTALL ADJACENT WIDE FLANGE POSTS ON MINIMUM EIGHT FEET CENTERS.
9. SELECTIVE AND HAND CLEARING SHALL BE PERFORMED AT THE DISCRETION OF THE ENGINEER, IN ACCORDANCE WITH SECTION 201, UPSTREAM OF ALL SIGN INSTALLATION LOCATIONS TO ACHIEVE MINIMUM SIGN VISIBILITY REQUIREMENTS. IF NOT INCLUDED AS A SEPARATE ITEM, THIS WORK SHALL BE SUBSIDIARY TO THE SIGN INSTALLATION ITEMS AND WORK.
10. FOR ALL FINAL PAVEMENT MARKINGS USE METHYLMETHACRYLATE MATERIALS. LONGITUDINAL MARKINGS SHALL BE INLAID AT 125 MILS, TRANSVERSE AND SYMBOL MARKINGS TO BE INLAID AT 250 MILS, GORE STRIPES SHALL BE SURFACE APPLIED AT 60 MILS.
11. DIMENSIONS REFER TO THE CENTER OF STRIPE AND THE EDGE OF PAVEMENT OR FACE OF CURB WHEN PRESENT.
12. IF THE NEW AND EXISTING PAVEMENT MARKINGS ARE NOT ALIGNED AT MATCH LINE, TRANSITION BETWEEN THE TWO USING A 100:1 TAPER ON THE NEW PAVEMENT.
13. WHERE NEW STRIPING IS TO EXTEND BEYOND PAVING LIMITS, REMOVE EXISTING STRIPING IN ACCORDANCE WITH SUBSECTION 670-3.04 TO THE EXTENT OF STRIPING LIMITS.

FOUNDATIONS NOTES:

1. STATION & C.L. REFERENCE ARE TO THE CENTER OF THE STRUCTURE, EXCEPT ON LOOPS WHICH ARE TO THE CENTER OF THE TRAILING EDGE OF THE LOOP (EDGE NEAREST INTERSECTION).
2. JUNCTION BOX LOCATIONS APPROXIMATE. LOCATE J-BOXES SO THAT THEY ARE LOCATED OUT OF THE PATHWAY, SIDEWALK, CURB RAMPS, AND DRAINAGE COLLECTION AREAS.
3. INSTALL LOAD CENTER AND TRAFFIC CONTROLLER FOUNDATIONS WITHIN 1-DEGREE OF PLUMB.
4. INSTALL ANCHOR BOLTS IN CAST FOUNDATIONS TO BE WITHIN 1:40 OF PLUMB.
5. TOPSOIL AND SEED ANY DISTURBED AREAS.

SIGNAL SYSTEM NOTES:

1. FURNISH THE SIGNAL AND LUMINAIRE MASTARM LENGTHS AND DIMENSIONS SPECIFIED ON THE POLE ELEVATIONS.
2. INSTALL DEVICES SUCH THAT THE DIMENSIONS SHOWN TO THE BOTTOM OF THE DEVICES ON THE POLE ELEVATIONS ARE MINIMUMS. VERTICAL DIMENSIONS TO SIGNAL HEADS ARE TO BOTTOM OF THE BACK PLATE.
3. INSTALL MAST ARMS PERPENDICULAR TO THE ROADWAY CENTERLINE. ACCEPTABLE VARIANCE IS +/- 1-DEGREE.
4. SALVAGE SIGNAL POLE ASSEMBLIES, SIGNS, SIGNAL FACES, AND LUMINARIES AND DELIVER TO MAINTENANCE AND OPERATIONS WITHIN 48-HOURS OF DECOMMISSIONING. COMPONENTS DAMAGED WHILE IN THE CONTRACTORS CUSTODY MUST BE REPLACED AT THE CONTRACTORS EXPENSE. REMOVE AND DISPOSE OF FOUNDATIONS.
5. SALVAGE EXISTING CONTROLLER CABINET AFTER NEW CONTROLLER CABINET IS IN SERVICE AND DELIVER TO MAINTENANCE AND OPERATIONS WITHIN 48-HOURS OF DECOMMISSIONING.
6. VEHICLE SIGNALS AND PEDESTRIAN SIGNALS SHALL BE LED MODULES.
7. REMOVE ABANDONED OR UNUSED TRAFFIC JUNCTION BOXES UNLESS OTHERWISE NOTED.
8. NEW SIGNAL HEADS THAT ARE MOUNTED BUT NOT IN OPERATION SHALL BE COVERED WITH A COMMERCIALLY AVAILABLE SIGNAL-SHIRT. EACH SIGNAL SHIRT SHALL FEATURE ELASTICIZED OPENINGS THAT FIT OVER THE VISORS AND AT LEAST TWO STRAPS TO SECURE IT TO THE SIGNAL. PROVIDE SHIRTS WITH A LEGEND THAT READS "OUT OF SERVICE" AND A CENTER SECTION THAT ALLOWS AN OPERATOR TO SEE THE INDICATIONS DURING SYSTEM TESTS.
9. SIGNAL HEADS ARE TO BE LOCATED PER FIGURE 4D-100, TYPICAL SIGNAL HEAD LOCATIONS, PER THE ALASKA TRAFFIC MANUAL. ACCEPTABLE VARIANCE IS +/- 1-FOOT.
10. AIM SIGNALS PER TABLE 660-2, THROUGH-SIGNAL AIMING POINT, OF THE SPECIAL PROVISIONS. SIGNALS SHALL ALSO BE AIMED SO AS NOT TO BE VISIBLE FROM SIDE STREET TRAFFIC. ACCEPTABLE VARIANCE IS +/- 5 DEGREES.
11. EXISTING CIRCUITS LISTED ON THE LOAD CENTER SUMMARY AND PLAN SHEETS WERE OBTAINED FROM AS-BUILT INFORMATION AND MUST BE VERIFIED BY THE CONTRACTOR PRIOR TO WORK INVOLVING THOSE CIRCUITS.

CALL BEFORE YOU DIG!

CONTRACTOR SHALL CALL A MINIMUM OF 3 DAYS IN ADVANCE OF CONSTRUCTION

ALASKA DIGLINE....907-278-3121 OR 800-478-3121

CALL OR GO TO WWW.AKONECALL.COM/STATEWIDE.HTM FOR MEMBER LIST OF WHO WILL BE NOTIFIED

STATE OF ALASKA
REGISTERED PROFESSIONAL ENGINEER
CHRISTOPHER L. BENTZ
12821
PS&E REVIEW

STATE OF ALASKA DOT&PF
4111 AVIATION AVENUE
ANCHORAGE, AK 99502
(907) 269-0590

STATE OF ALASKA
DEPARTMENT OF TRANSPORTATION
AND PUBLIC FACILITIES

HOMER: LAKE STREET REHABILITATION

TRAFFIC NOTES

DATE/TIME | 6/4/2019 8:59 AM | LAYOUT | TRAF NOTES | DESIGNED | GSB | CHECKED | CLB | DRAFTED | MF

FILE | W:\PROJECTS\HOMER LAKE ST. REHAB Z524610000\CIV3D\CIV3D16\PLANSET\52461_H_TRAF_DTL01.DWG

NO.	DATE	REVISION

STATE	PROJECT DESIGNATION	YEAR	SHEET NO.	TOTAL SHEETS
ALASKA	0001422/Z524610000	2019	H02	H38

EQUIPMENT LEGEND/DESCRIPTION

1. METERING SECTION
2. LOAD SECTION
3. UTILITY CONNECTION SECTION
4. METER READING WINDOW (8"X8")
5. METER SOCKET W/ TEST-BYPASS/DISCONNECT BLOCK AND SAFETY SOCKET FACILITIES
6. HINGED METER SECTION COVER
7. DEADFRONT
8. STAINLESS STEEL PIN HINGE
9. PADLOCKING PROVISIONS
10. DISTRIBUTION PANEL
11. ACCESSORY EQUIPMENT MOUNTING AREA FOR CONTACTOR, SELECTOR SWITCHES, TERMINAL STRIPS, ETC.
12. SERVICE PULL SECTION
13. SELECTOR SWITCH

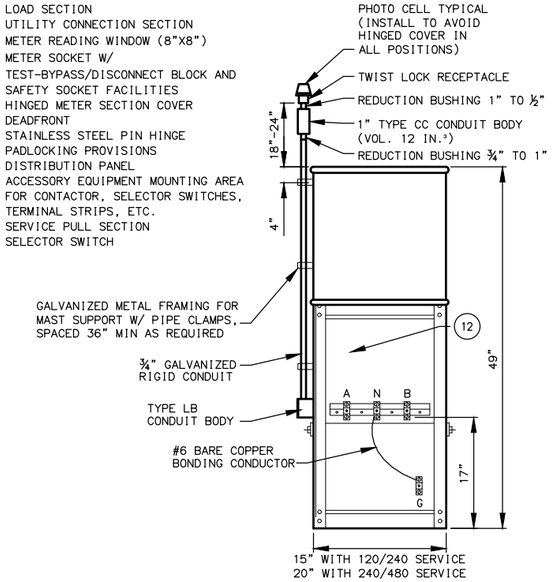

REAR VIEW
(W/ DOOR REMOVED)

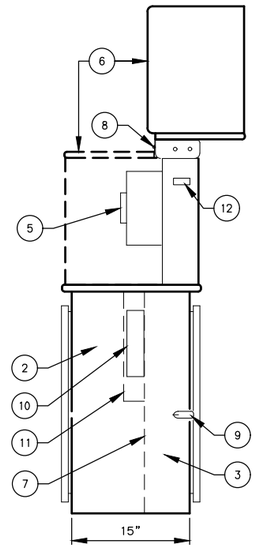

RIGHT SIDE VIEW
(W/ METER SECTION OPEN)

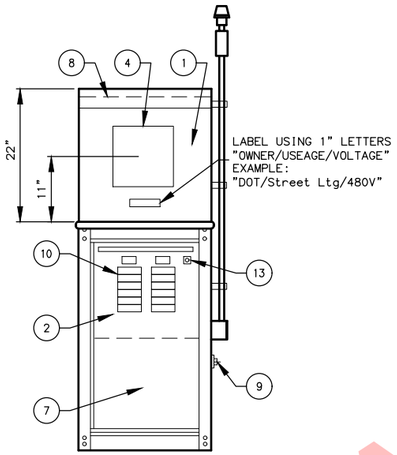

FRONT VIEW
(W/ DOOR REMOVED)

TYPE 1A CABINET DETAILS

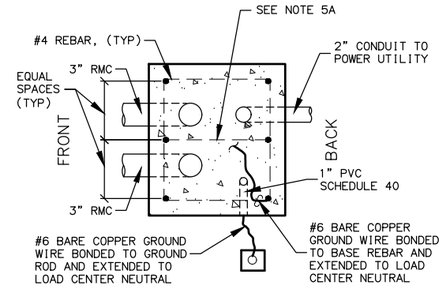

TOP VIEW

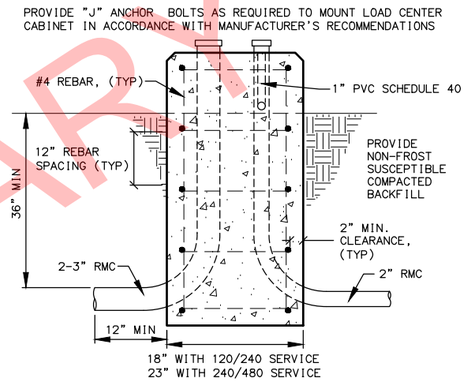

RIGHT SIDE VIEW

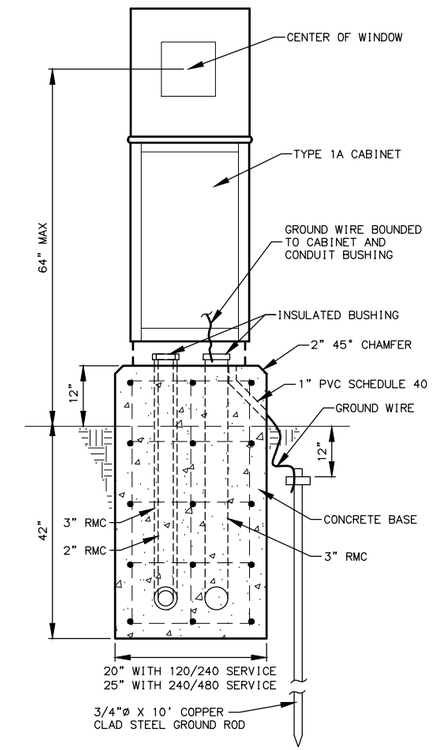

FRONT VIEW

FOUNDATION DETAILS

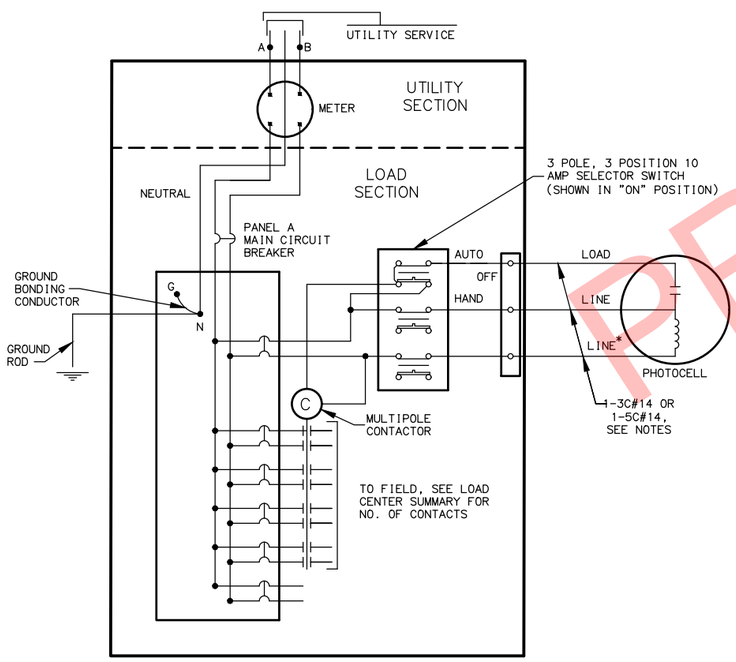

LOAD CENTER ONE LINE DIAGRAM AND SELECTOR SWITCH WIRING

* GROUNDED NEUTRAL, IF SERVICE IS 240/480 VOLT SINGLE PHASE OR 277/480 VOLT THREE-PHASE; AND UNDERGROUND LINE, IF SERVICE IS 120/240 VOLT SINGLE PHASE.

WIRING NOTES:

1. FURNISH ALL EQUIPMENT NOTED IN THE LOAD CENTER SUMMARY, PLUS TWO 20-AMP 2-POLE SPARE CIRCUIT BREAKERS, AND SPACE FOR A MINIMUM OF TWO ADDITIONAL 2-POLE CIRCUIT BREAKERS IN EACH LOAD PANEL. SEE THE LOAD CENTER SUMMARIES FOR LOAD PANEL VOLTAGES, CURRENT RATINGS, AND THE NAME OF THE SERVING UTILITY.
2. INSTALL GROUNDING HUBS THIRD PARTY CERTIFIED FOR WET LOCATIONS (MYERS TYPE), WHEN ATTACHING CONDUITS TO THE LOAD CENTER ENCLOSURE.
3. LABEL ALL CIRCUIT BREAKERS AS TO FUNCTION AND POSITION. LABEL THE SELECTOR SWITCH "LIGHTING" AND ITS POSITIONS "ON-OFF-AUTO".
4. METER BASES SHALL NOT BE MOUNTED ON MOVABLE PANELS OR DOORS.
5. THE LENGTH AND TYPE OF SERVICE ENTRANCE CONDUIT INSTALLED BY THE CONTRACTOR VARIES BY UTILITY. REGARDLESS OF ITS LENGTH, INSTALL A PULL ROPE IN THE SERVICE CONDUIT AND A CAP ON THE BURIED END: MARK THE BURIED END WITH A 2"X 6" STAKE. SEE THE LOAD CENTER SUMMARIES FOR THE FOLLOWING INFORMATION.
   A. STATION AND OFFSET OF THE LOAD CENTER AND POWER SOURCE.
   B. WHERE THE CONTRACTOR TERMINATES THE SERVICE ENTRANCE CONDUIT.
   C. THE TYPE OF SERVICE ENTRANCE CONDUIT (SUCH AS RIGID METAL CONDUIT OR LIQUID-TIGHT FLEXIBLE METAL CONDUIT).
6. STORE A SCHEMATIC DIAGRAM, A CIRCUIT DIRECTORY, AND A MATERIALS LIST THAT INCLUDES THE MANUFACTURER'S NAME AND PART/CATALOG NUMBERS, ALL LAMINATED IN PLASTIC, IN A METAL POCKET ATTACHED TO THE INSIDE OF THE LOAD CENTER. INSTALL THE POCKET ON THE LOAD CENTER DOOR, PROVIDING DRAIN HOLES TO PREVENT WATER ACCUMULATION.
7. SIZE THE DISTRIBUTION PANEL TO ACCOMMODATE THE CIRCUITS SHOWN ON THE LOAD CENTER SUMMARIES AND SPARE CIRCUITS AS DEFINED IN NOTE 1.
8. SEPARATE THE MAIN CIRCUIT BREAKER FROM THE DISTRIBUTION PANEL.
9. MOUNT PHOTOCELL RECEPTACLE TO ½" CONDUIT WITH SILICONE SEALANT. INSTALL A 3C#14 CABLE FROM THE LOAD CENTER TO THE TYPE CC CONDUIT BODY WHERE THE SPLICE TO THE PHOTOCELL RECEPTACLE CABLE SHALL BE MADE. IF PLANS CALL TO MOUNT PHOTOCELL AWAY FROM LOAD CENTER USE A 5C#14 CABLE FROM LOAD CENTER TO RECEPTACLE.

FOUNDATION NOTES:

1. GRADE AWAY FROM THE BASE WITH A MINIMUM SLOPE OF 3%. USE A PRE-MOULDED BITUMINOUS JOINT BETWEEN THE BASE AND CONCRETE SIDEWALK OR PAVING, WHEN ADJACENT TO A SIDEWALK OR PATHWAY.
2. PROVIDE ANCHOR BOLTS OR EXPANSION ANCHORS IN THE BASE FOR MOUNTING THE CABINET PER THE MANUFACTURER'S SHOP DRAWINGS. ANCHOR BOLTS, NUTS, AND WASHERS SHALL CONFORM TO EITHER ASTM A307 OR A449 AND SHALL BE GALVANIZED IN ACCORDANCE WITH ASTM A153.
3. USE GRADE 60 REINFORCING STEEL CONFORMING TO ASTM 615 AND CLASS "A" CONCRETE CONFORMING TO SECTION 501 OF THE SPECIFICATIONS WHEN CASTING THE BASE.
4. IF THE BASE IS PRECAST, INSTALL TWO 3/4" FERRULE LOOP INSERTS IN TWO SIDES OPPOSITE ONE ANOTHER FOR LIFTING.

STATE OF ALASKA
★ 4938 ★
P38★
REVIEW
REGISTERED PROFESSIONAL ENGINEER
CERTIFICATE NUMBER
#####

COMPANY NAME
ADDRESS LINE1
ADDRESS LINE 2
PHONE NUMBER
XXXXXXX

STATE OF ALASKA
★ 4938 ★
P38★
REVIEW
REGISTERED PROFESSIONAL ENGINEER
CERTIFICATE NUMBER
#####

STATE OF ALASKA DOT&PF
4111 AVIATION AVENUE
ANCHORAGE, AK 99502
(907) 269-0590

STATE OF ALASKA
DEPARTMENT OF TRANSPORTATION
AND PUBLIC FACILITIES

HOMER: LAKE STREET REHABILITATION

TYPE 1A LOAD CENTER DETAILS

FILE W:\PROJECTS\HOMER LAKE ST. REHAB Z524610000\CIV3D\CIV3D16\PLANSET\52461_H_TRAF_DTL02.DWG
DATE/TIME 6/4/2019 8:59 AM | LAYOUT 02 1A LD CTR | DESIGNED GSB | CHECKED CLB | DRAFTED MF

NO.	DATE	REVISION

STATE	PROJECT DESIGNATION	YEAR	SHEET NO.	TOTAL SHEETS
ALASKA	0001422/Z524610000	2019	H03	H38

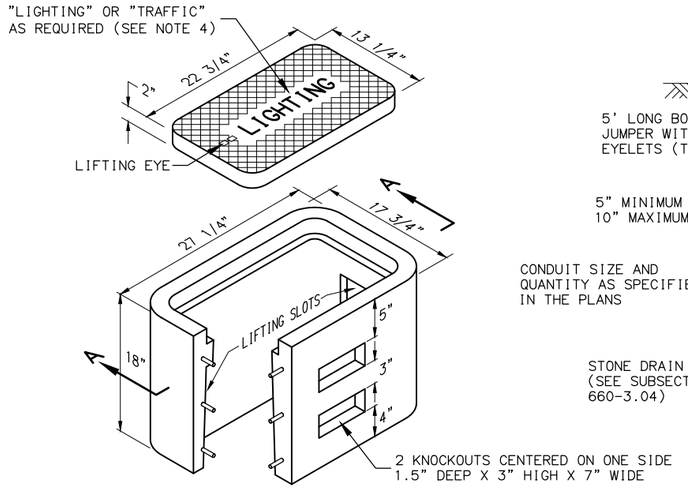

TYPE IA JUNCTION BOX

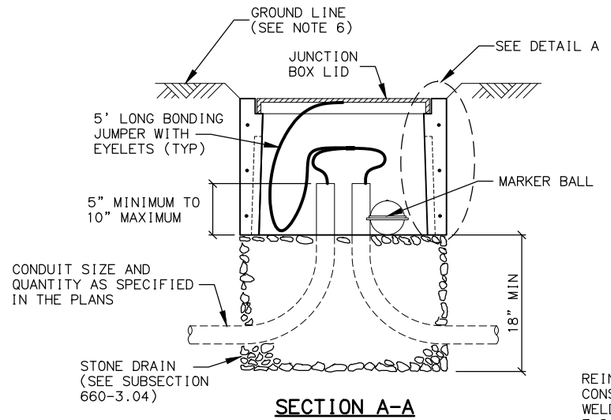

SECTION A-A

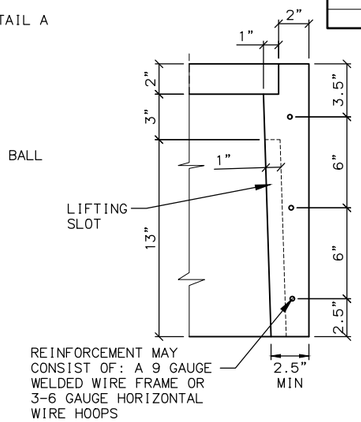

DETAIL A

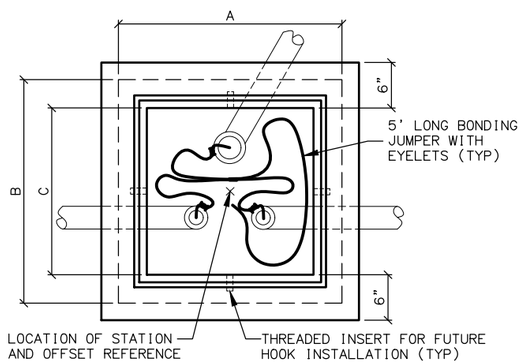

PLAN

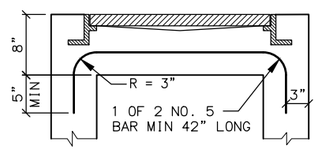

SECTION B-B

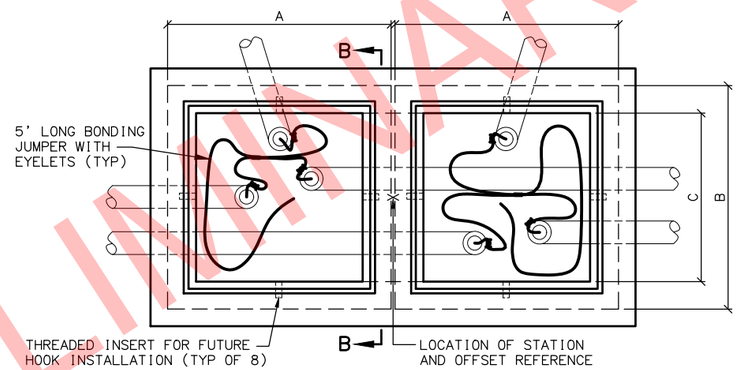

PLAN

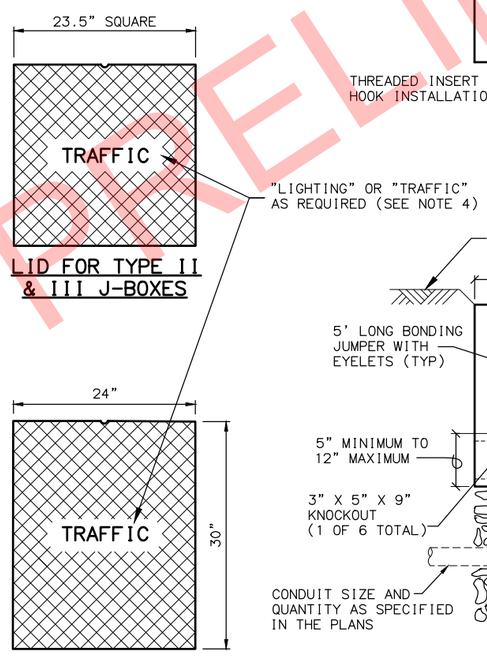

LID FOR TYPE II & III J-BOXES

LID FOR TYPE IV J-BOXES

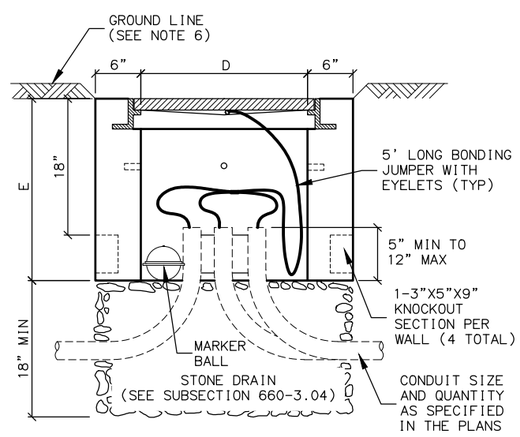

TYPE II JUNCTION BOX

ELEVATION

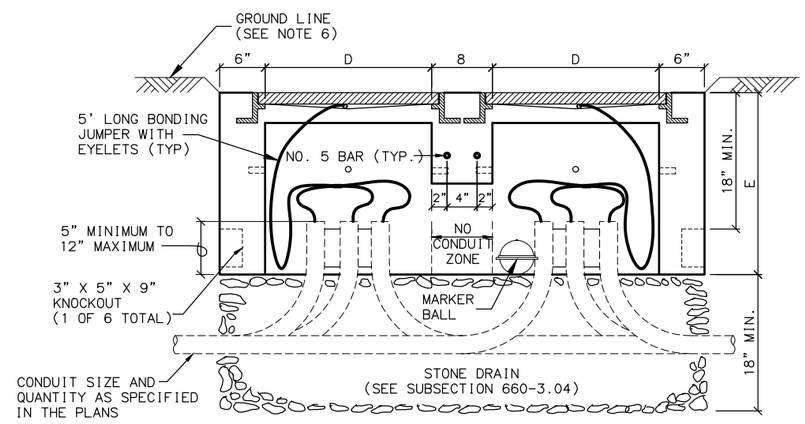

TYPE III/IV JUNCTION BOX

ELEVATION (TYPE III LAYOUT DEPICTED)

NOTES:

1. AVOID INSTALLING TYPE IA JUNCTION BOXES IN DRIVEWAYS OR IN LOCATIONS SUBJECT TO USE BY HEAVY TRUCKS. INSTALL JUNCTION BOXES ONLY AT THE LATERAL LOCATIONS ALLOWED IN SUBSECTION 660-3.04.
2. FURNISH TYPE II, III AND IV JUNCTION BOXES WITH CAST IRON FRAMES AND LIDS THAT WEIGH A MINIMUM OF 210 POUNDS AND ARE RATED FOR HEAVY TRAFFIC LOADS IN COMPLIANCE WITH AASHTO M306. FURNISH TYPE IA JUNCTION BOXES WITH CAST IRON LIDS THAT WEIGH A MINIMUM OF 50 POUNDS.
3. CONSTRUCT JUNCTION BOXES ACCORDING TO SECTION 501 USING CLASS A CONCRETE. REINFORCE TYPE IA JUNCTION BOXES AS SHOWN. SYNTHETIC STRUCTURAL FIBER-REINFORCED CONCRETE THAT MEETS ASTM C 1116 AND CONTAINS FIBER IN PROPORTIONS AS RECOMMENDED BY THE FIBER MANUFACTURER MAY BE ADDED FOR STRENGTH.
4. FOR JUNCTION BOXES THAT CONTAIN ILLUMINATION CONDUCTORS EXCLUSIVELY, FURNISH LIDS WITH THE WORD "LIGHTING" INSCRIBED INTO THEM. FOR OTHER JUNCTION BOXES, FURNISH LIDS WITH THE WORD "TRAFFIC" INSCRIBED INTO THEM.
5. UNDER JUNCTION BOXES, INSTALL STONE DRAINS THAT CONSIST OF POROUS BACKFILL MATERIAL CONFORMING TO SUBSECTION 703-2.10.
6. SET THE TOPS OF JUNCTION BOXES WITH THE FOLLOWING DIMENSIONS BELOW THE FINISHED SURROUNDING SURFACE:
   - 1" IN PAVED MEDIANS AND ADJACENT TO PEDESTRIAN FACILITIES
   - 1/4" IN PEDESTRIAN FACILITIES
   - 2" IN ALL OTHER AREAS
7. BOND JUNCTION BOX LIDS TO THE SYSTEM OF EQUIPMENT GROUNDING CONDUCTORS ACCORDING TO SUBSECTION 660-3.06. ATTACH BONDING JUMPERS TO THE JUNCTION BOX LIDS WITH BRASS OR STAINLESS STEEL HARDWARE.
8. INSTALL LOOP DETECTOR TAILS THROUGH ONE OF THE KNOCKOUTS OF TYPE 1A JUNCTION BOXES. AFTER SETTING THE BOXES TO GRADE, INSTALL GROUT IN THE GAPS THAT REMAIN IN THE KNOCKOUT.
9. INSTALL A 1/2" THICK PREFORMED BITUMINOUS JOINT MATERIAL AROUND JUNCTION BOXES INSTALLED IN PORTLAND CEMENT CONCRETE WALKWAYS.
10. INSTALL AN ELECTRONIC MARKER BALL IN ALL JUNCTION BOXES PER SUBSECTION 660-3.04.
11. PRIOR TO INSTALLATION MARK ALL JUNCTION BOX LOCATIONS WITH A WIRE STAFF VINYL FLAG. THE FLAG SHALL BE RED IN COLOR AND MINIMUM 4-INCHES TALL BY 5-INCHES WIDE. THE WIRE STAFF SHALL BE 21-INCHES IN LENGTH AND CONSTRUCTED OF MINIMUM 15.5 GAUGE STEEL.

J-BOX DIMENSIONS

J-BOX TYPE	DIMENSIONS				
	A (MAX.)	B (MAX.)	C (MIN.)	D (MIN.)	E (MIN.)
II	29 1/2"	29 1/2"	22"	22"	24"
III	29 1/2"	29 1/2"	22"	22"	24"
IV	30"	36"	30"	24"	30"

STATE OF ALASKA
PS&E REVIEW
ST. CHRISTOPHER L. BENTZ
12821
REGISTERED PROFESSIONAL ENGINEER

STATE OF ALASKA DOT&PF
4111 AVIATION AVENUE
ANCHORAGE, AK 99502
(907) 269-0590

STATE OF ALASKA
DEPARTMENT OF TRANSPORTATION
AND PUBLIC FACILITIES

HOMER: LAKE STREET REHABILITATION

JUNCTION BOX DETAILS

NO.	DATE	REVISION

STATE	PROJECT DESIGNATION	YEAR	SHEET NO.	TOTAL SHEETS
ALASKA	0001422/Z524610000	2019	H04	H38

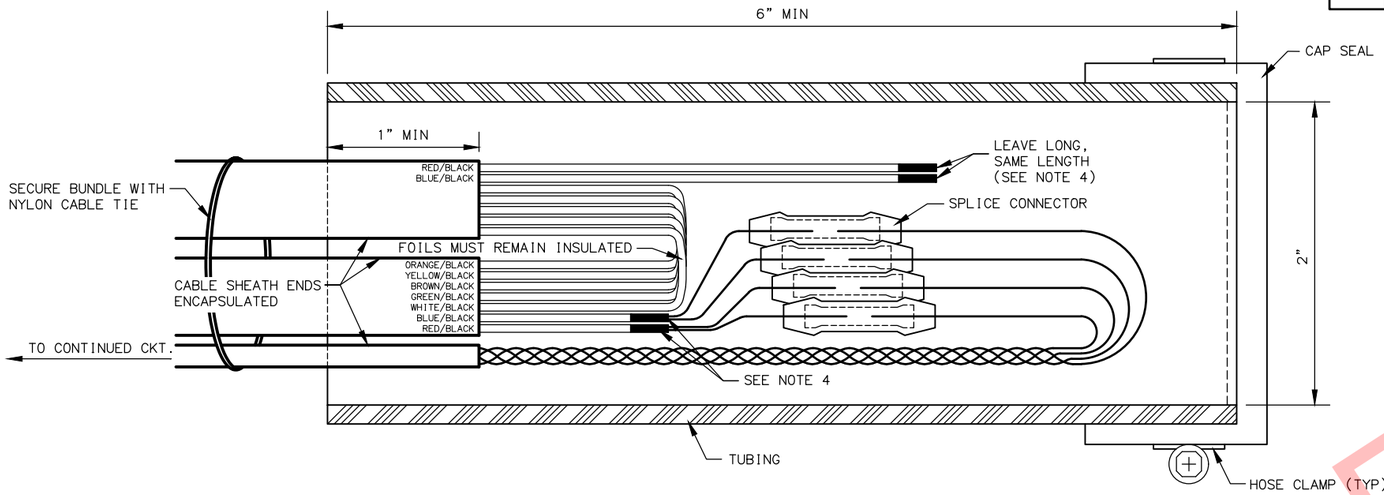

LOOP LEAD-IN SPLICE

NOTES:

LOOP LEAD-IN SPLICE

1. FABRICATE LOOP LEAD-IN SPLICE IN THE FIELD AS SHOWN.
2. CAP SEAL ONE END AND COMPLETELY FILL OPEN END WITH RE-ENTERABLE ENCAPSULATION COMPOUND TO EDGE OF TUBING.
3. LEAVE A MINIMUM OF 1/2" CLEARANCE BETWEEN THE ENCLOSURE AND THE SPLICE AT BOTH ENDS OF THE TUBING.
4. EXPOSE FOIL AND DRAIN WIRES, SEAL WITH HEAT SHRINK TUBING (TYP).
5. INSTALL SPLICE CONNECTORS ACCORDING TO MANUFACTURER'S SPECIFICATIONS.

POWER CABLE SPLICE

6. SECURE CABLE/CONNECTOR BUNDLE WITH HOSE CLAMPS AS SHOWN.

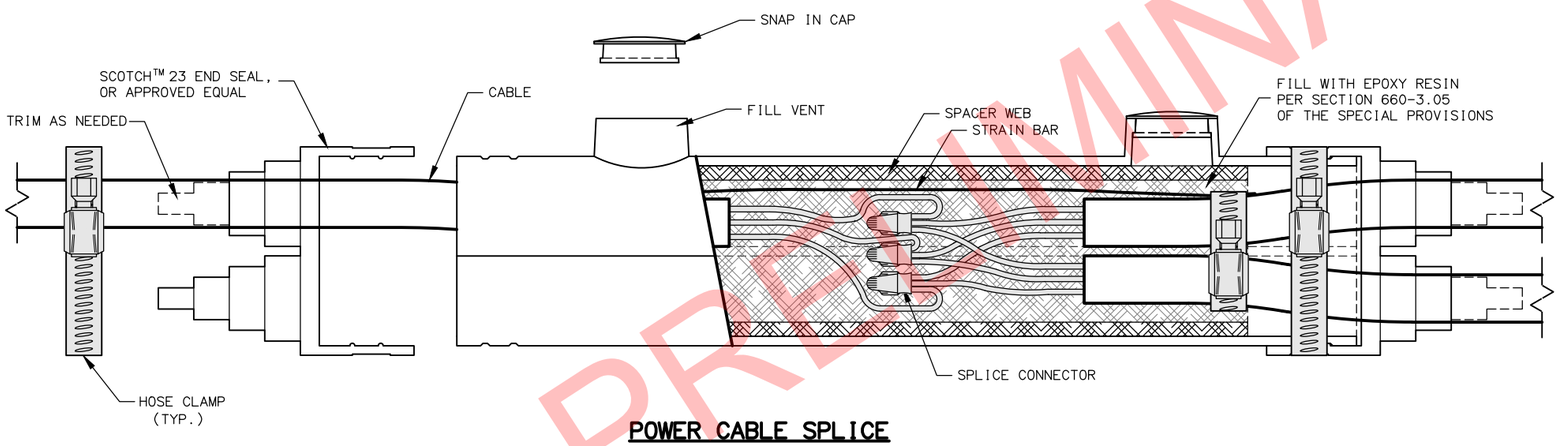

POWER CABLE SPLICE

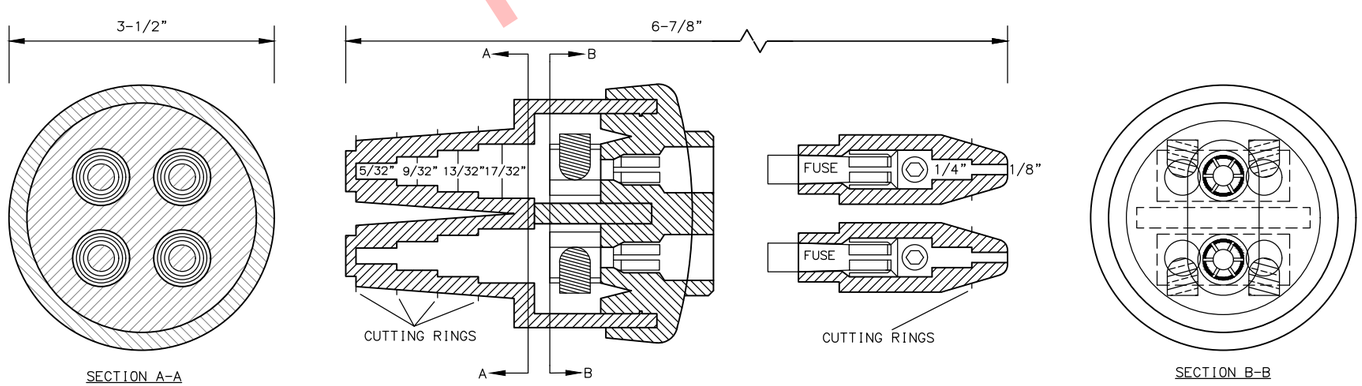

DOUBLE FUSED CONNECTOR

MATERIAL PROPERTIES

LOOP LEAD-IN SPLICE	
TUBING	PER SECTION 660-3.05
CAP SEAL	FERNCO QWIK CAP #QC-102, OR APPROVED EQUAL
HOSE CLAMP	STAINLESS STEEL
SPLICE CONNECTOR	ML56-16, OR APPROVED EQUAL
COMPOUND	RE-ENTERABLE ENCAPSULATION
POWER CABLE SPLICE	
SPLICE KIT	3M MODEL 78R, OR APPROVED EQUAL
SPLICE CONNECTOR	SCOTCHLOCK G, R, OR Y SPRING CONNECTOR, OR APPROVED EQUAL
HOSE CLAMP	(4)- STAINLESS STEEL
EPOXY RESIN	PER SECTION 660-3.05
DOUBLE FUSED CONNECTOR	
DOUBLE FUSED CONNECTOR	SEC-1791-DF-1, OR APPROVED EQUAL
FUSES	(2) - COMPATIBLE 10-AMP

STATE OF ALASKA
DEPARTMENT OF TRANSPORTATION
AND PUBLIC FACILITIES

HOMER: LAKE STREET REHABILITATION

SPLICE DETAILS

STATE OF ALASKA DOT&PF
4111 AVIATION AVENUE
ANCHORAGE, AK 99502
(907) 269-0590

FILE W:\PROJECTS\HOMER LAKE ST. REHAB Z524610000\CIV3D\CIV3016\PLANSET\52461_H_TRAF_DTL10.DWG
DATE/TIME 6/4/2019 9:00 AM
LAYOUT SPLICE
DESIGNED GSB
CHECKED CLB
DRAFTED MF

NO.	DATE	REVISION

STATE	PROJECT DESIGNATION	YEAR	SHEET NO.	TOTAL SHEETS
ALASKA	0001422/Z524610000	2019	H05	H38

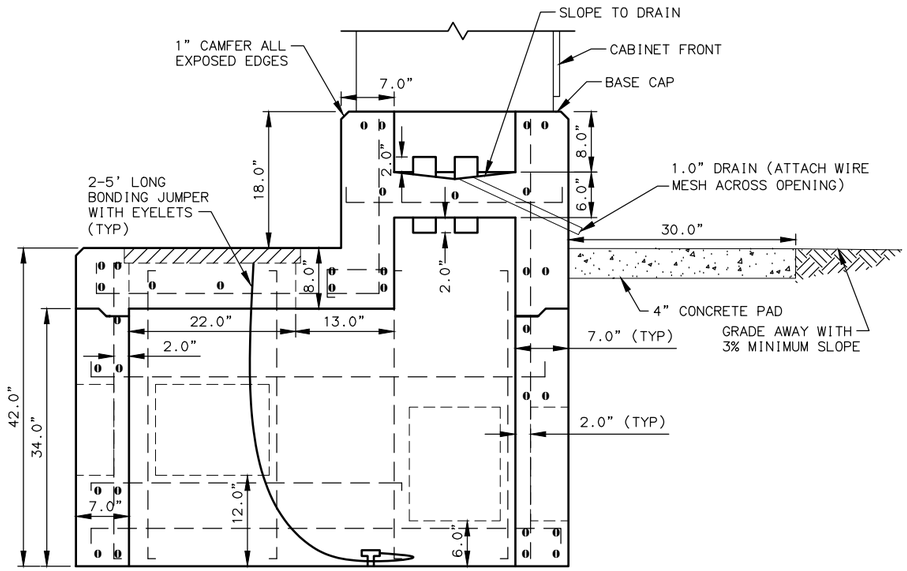

SECTION A-A

NOTE: SEE SECTION B-B FOR REBAR DETAILS

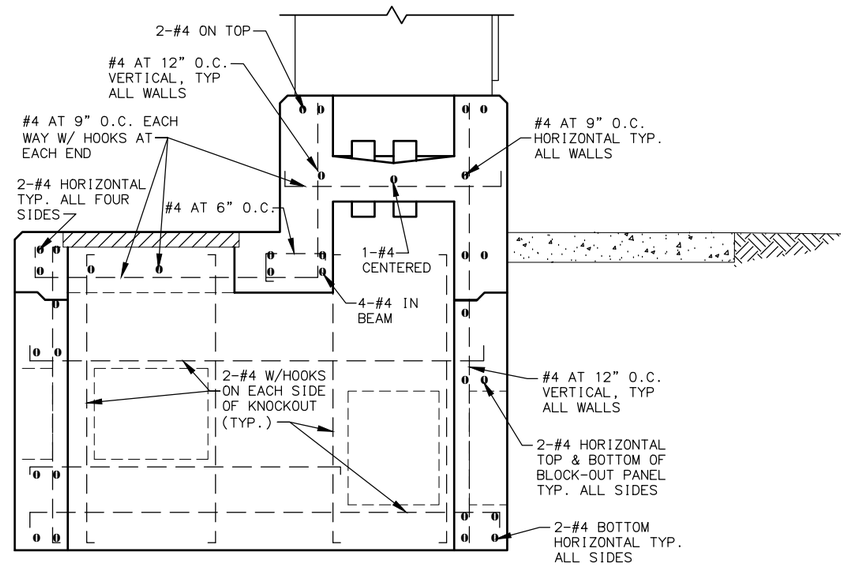

SECTION B-B

NOTE: SEE SECTION A-A FOR DIMENSIONAL DETAILS

NOTES:

1. ANCHOR BOLTS SHALL NOT PROTRUDE MORE THAN 1.5" ABOVE THE TOP OF THE FOUNDATION. ANCHOR BOLT DIMENSIONS SHALL BE AS SPECIFIED BY THE CABINET MANUFACTURER.
2. SEAL UNUSED CONDUIT STUBS WITH WATERTIGHT CAPS. SEAL STUBS CARRYING CONDUCTORS WITH WATERTIGHT SEALING BUSHINGS DESIGNED TO SEAL AROUND CONDUCTORS AND AGAINST THE CONDUIT WALLS.
3. ROUTE THE FIVE FOOT COPPER GROUNDING JUMPER THROUGH THE 2" PIPE NIPPLE AND ATTACH IT TO THE GROUNDING BUSHING ON THE FEEDER CONDUIT.
4. STOP HORIZONTAL & VERTICAL STEEL AT THE BLOCK-OUT PANELS & THE JOINT USING 90 DEGREE HOOKS. USE 2 EXTRA #4 HORIZONTAL & VERTICAL BARS. ALL SIDES AS SHOWN.
5. INSTALL TRAFFIC CONTROLLER CABINET FOUNDATION WITHIN 1-DEGREE OF PLUMB AND ORIENTED AS SHOWN IN PLANS SUCH THAT CABINET DOOR OPENS AWAY FROM INTERSECTION/TRAFFIC.
6. FOR SIGNALS IN THE MUNICIPALITY OF ANCHORAGE (MOA) ORIENT CABINET DOOR TO FACE J-BOX LIDS AND DO NOT PROVIDE CONCRETE PAD.

MATERIAL PROPERTIES		
CONCRETE	CLASS A	F'c = 4000 psi
REINFORCING STEEL	AASHTO M31 GRADE 60	Fy = 60 ksi
CONDUIT	RMC	
BONDING JUMPERS	3M-25T BBE6 OR EQUAL	

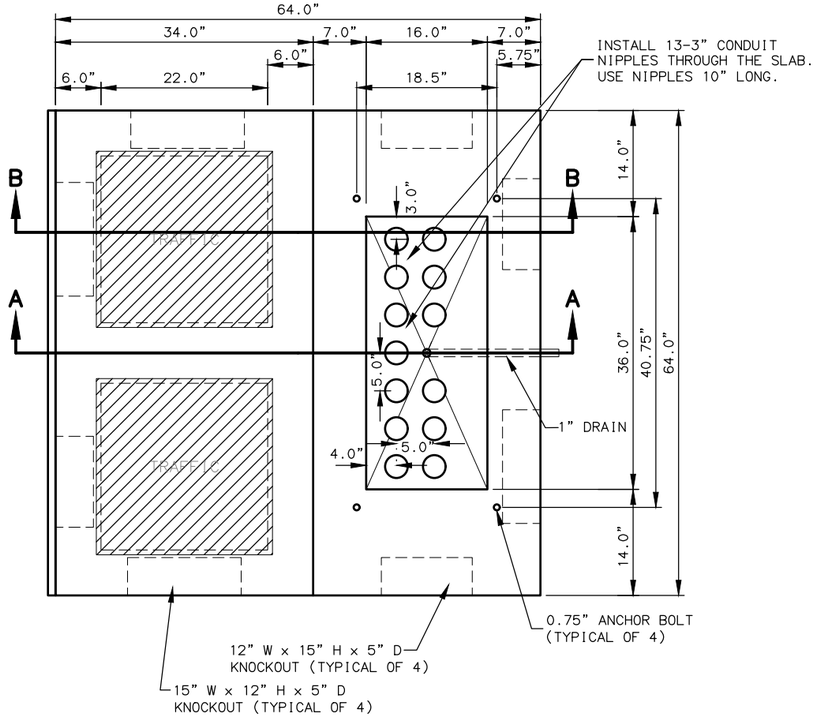

SIZE 6 OR 7 CONTROLLER CABINET FOUNDATION

NOTE: BOLT SPACING DIMENSIONS SHOWN FOR TS2 CONTROLLER CABINETS.

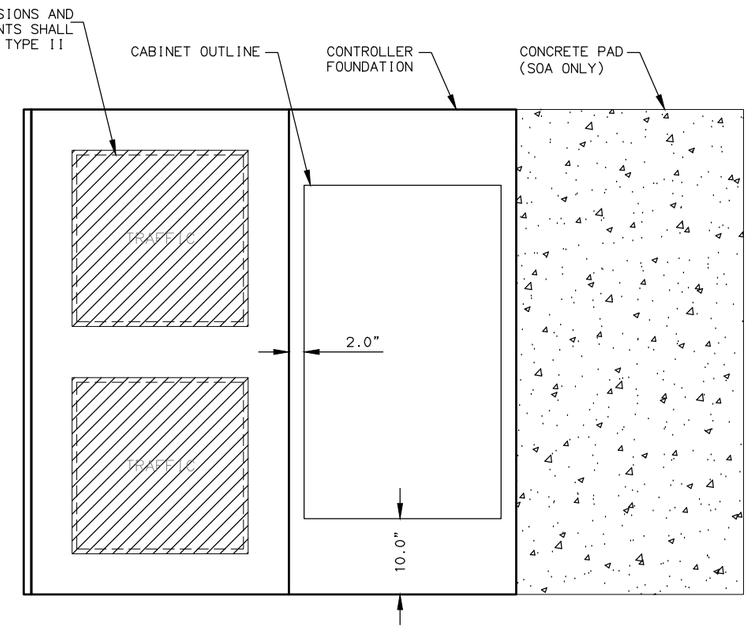

PLAN VIEW

STATE OF ALASKA
PS&E REVIEW
CHRISTOPHER C. BENTZ
12821
REGISTERED PROFESSIONAL ENGINEER

STATE OF ALASKA DOT&PF
4111 AVIATION AVENUE
ANCHORAGE, AK 99502
(907) 269-0590

STATE OF ALASKA
DEPARTMENT OF TRANSPORTATION
AND PUBLIC FACILITIES

HOMER: LAKE STREET REHABILITATION

TS2 CONTROLLER CABINET FOUNDATION DETAILS

FILE W:\PROJECTS\HOMER LAKE ST. REHAB Z524610000\CIV3D\CIV3016\PLANSET\52461_H_TRAF_DTL11.DWG | DATE/TIME 6/4/2019 9:00 AM | LAYOUT CNTLR FDTN | DESIGNED GSB | CHECKED CLB | DRAFTED MF

NO.	DATE	REVISION

STATE	PROJECT DESIGNATION	YEAR	SHEET NO.	TOTAL SHEETS
ALASKA	0001422/Z524610000	2019	H06	H38

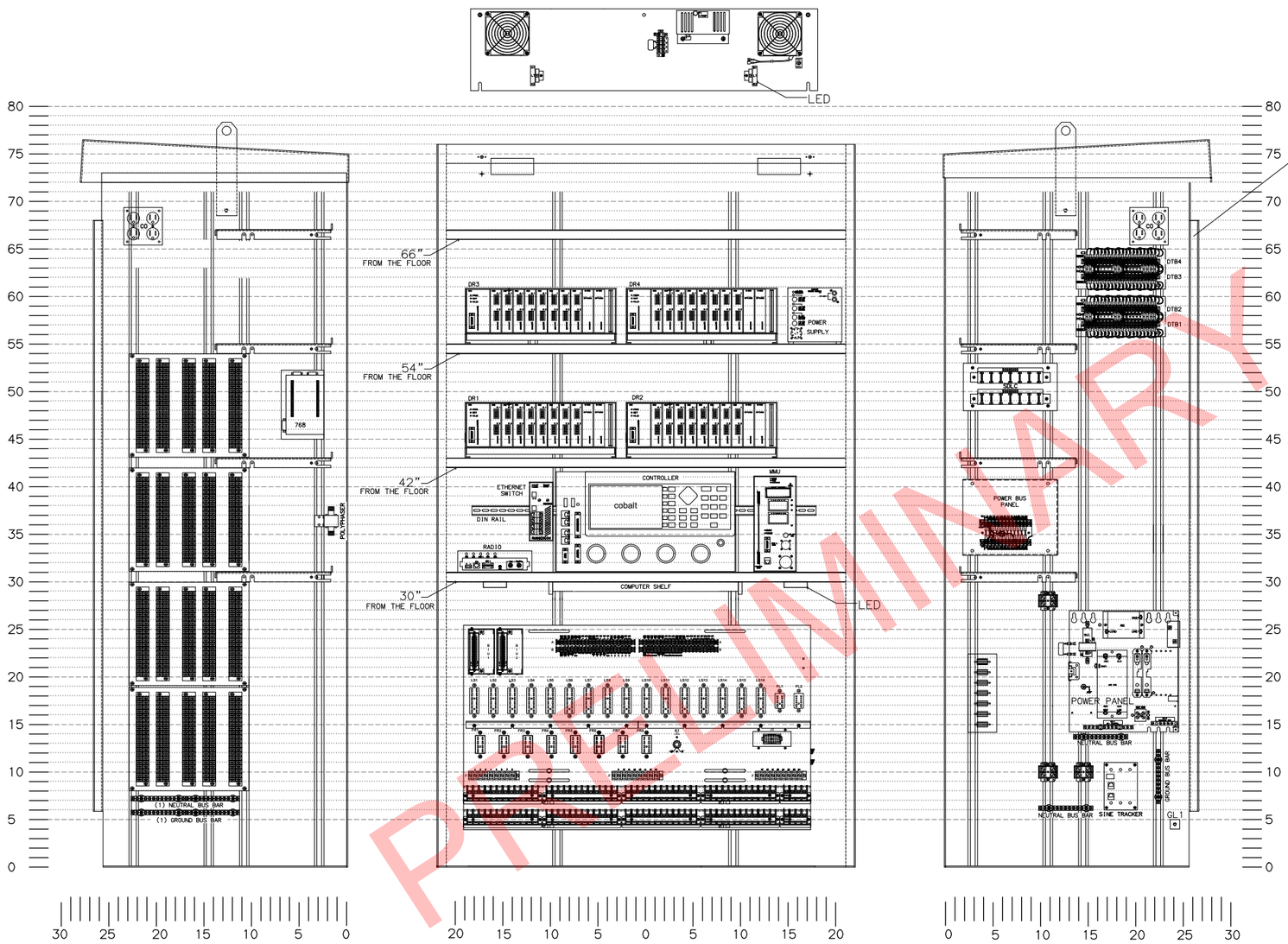

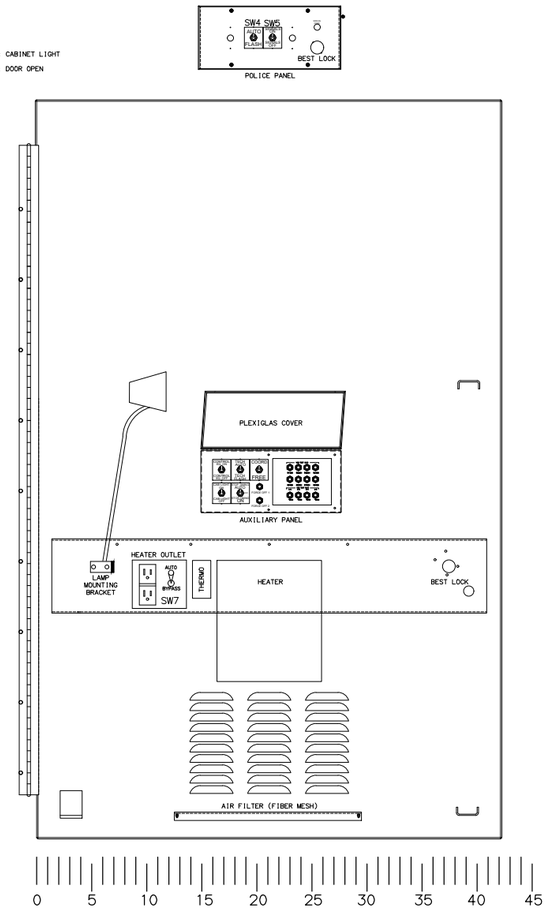

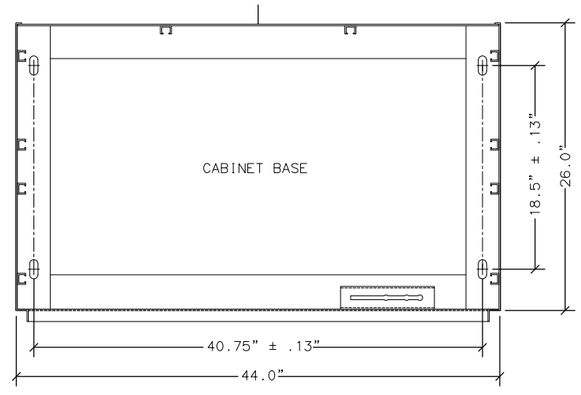

NOTES:

1. PROVIDE SPARE SDLC CABLE IN CABINET.
2. PROVIDE FULLY FUNCTIONING FACTORY WIRED CABINET.
4. PROVIDE FOUR SHELVES INSIDE THE CABINET.

STATE OF ALASKA
REGISTERED PROFESSIONAL ENGINEER
49
C. CHRISTOPHER L. BENTZ
12821
PS&E REVIEW

STATE OF ALASKA DOT&PF
4111 AVIATION AVENUE
ANCHORAGE, AK 99502
(907) 269-0590

STATE OF ALASKA
DEPARTMENT OF TRANSPORTATION
AND PUBLIC FACILITIES

HOMER: LAKE STREET REHABILITATION

TS2 SIZE 7 CONTROLLER ASSEMBLY DETAILS

FILE W:\PROJECTS\HOMER LAKE ST. REHAB 7524610000\CIV3D16\PLANSET\52461_H_TRAF_DTL13.DWG
DATE/TIME 6/4/2019 9:00 AM | LAYOUT S7 CNTLR | DESIGNED GSB | CHECKED CLB | DRAFTED MF

NO.	DATE	REVISION

STATE	PROJECT DESIGNATION	YEAR	SHEET NO.	TOTAL SHEETS
ALASKA	0001422/Z524610000	2019	H07	H38

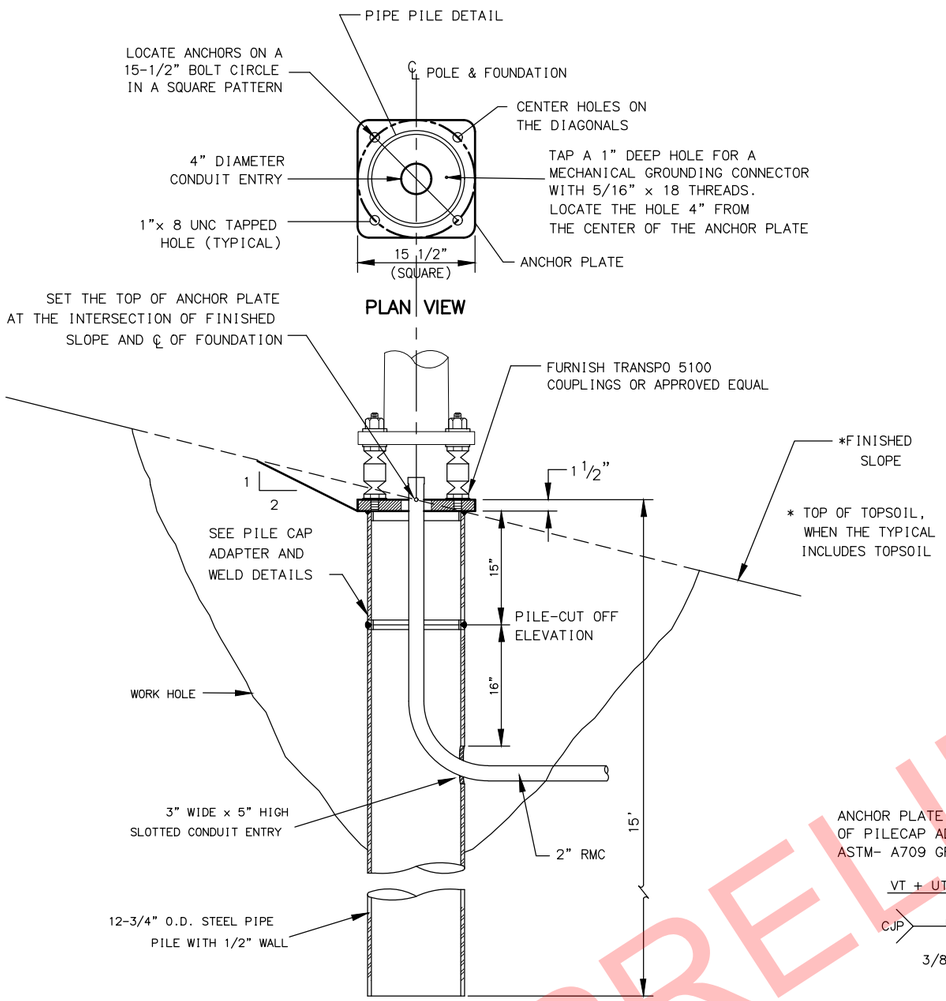

PIPE PILE FOUNDATION

(SHOWN WITH FRANGIBLE COUPLINGS)

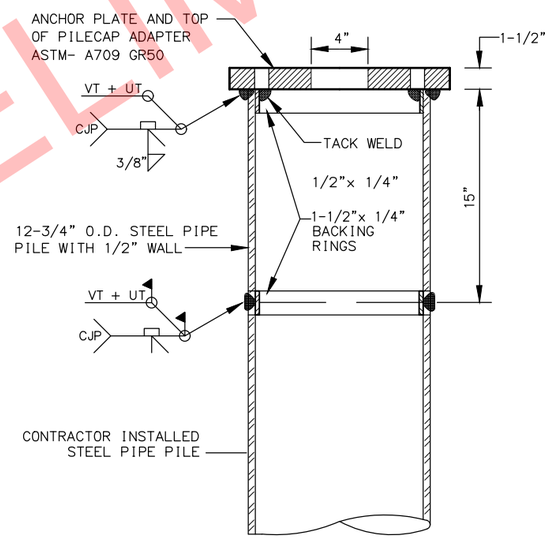

PILECAP ADAPTER AND WELD DETAILS

NOT TO SCALE

DESIGN NOTES:

1. DESIGN STANDARD: 2001 STANDARD SPECIFICATIONS FOR STRUCTURAL SUPPORTS FOR HIGHWAY SIGNS, LUMINAIRE AND TRAFFIC SIGNALS WITH 2006 INTERIM.
2. DESIGN LOADS: 5-KIPS AXIAL, 7.5-KIPS SHEAR, 40-KIP-FT MOMENT.
3. GALVANIZATION OF PILE IS NOT REQUIRED. UNLESS THE GROUND WATER TABLE IS FOUND TO BE, ABOVE 5 FEET, THEN GALVANIZE PILE ACCORDING TO SECTION 505.
4. CHARPY TEST FOR ELECTROLIER POLE PILE FOUNDATIONS ARE NOT REQUIRED.

MATERIAL REQUIREMENTS		
STRUCTURAL STEEL PLATE	ASTM A709 GRADE 50	Fy = 50 ksi
STEEL PIPE PILE	ASTM A709, GRADE 50 T3	Fy = 50 ksi
	API 5L GRADE X 42	Fy = 42 ksi

NOTES:

1. FURNISH STEEL PIPE PILES THAT CONFORM TO THE MATERIAL REQUIREMENTS AND SECTION 660, 715 AND 740 OF THE SPECIFICATIONS. NO SPLICES ARE ALLOWED BELOW THE PILECAP ADAPTER.
2. DRIVE PILES OPEN ENDED. COMPLETE PILE WORK ACCORDING TO SECTIONS 505, 660 AND 715 OF THE SPECIFICATIONS. REMOVE AND REINSTALL PILES OUT OF PLUMB MORE THAN 1:40.
3. FRESH HEAD THE TOP OF PILES IN A LEVEL PLANE AND CUT THE CONDUIT ENTRANCE HOLE AFTER DRIVING THE PILE. NOTE; ONLY MECHANICAL OR PLASMA CUTTER MEANS ARE PERMITTED. OXY-FUEL CUTTING IS PROHIBITED.
4. FURNISH ONLY SHOP FABRICATED PILECAP ADAPTERS. INCLUDE STAMPED ENGINEERING CALCULATIONS, DRAWINGS, MILL CERTIFICATIONS AND WELDING PLANS FOR PILECAP ADAPTERS AND THE PILECAP ADAPTER TO PILE WELD. WELDING SHALL CONFORM TO THE REQUIREMENTS OF THE LATEST EDITION OF THE AWS D1.1, STRUCTURAL WELDING CODE-STEEL AND THE SPECIFICATIONS.
5. WAIT AT LEAST 3 DAYS AFTER BACKFILLING THE WORK HOLE BEFORE ERECTING THE LUMINAIRE POLE.
6. TERMINATE CONDUIT(S) 3" ABOVE THE TOP OF THE ANCHOR PLATE. INSTALL A GROUNDING BUSHING ON THE END OF THE RIGID METAL CONDUIT AND ESTABLISH A BOND WITH THE ANCHOR PLATE.

STATE OF ALASKA
REGISTERED PROFESSIONAL ENGINEER
CHRISTOPHER L. BENTZ
12821
PSSR REVIEW

STATE OF ALASKA DOT&PF
4111 AVIATION AVENUE
ANCHORAGE, AK 99502
(907) 269-0590

STATE OF ALASKA
DEPARTMENT OF TRANSPORTATION
AND PUBLIC FACILITIES

HOMER: LAKE STREET REHABILITATION

ELECTROLIER PIPE PILE FOUNDATION AND BREAKAWAY SUPPORT DETAILS

DATE/TIME	LAYOUT	PP FNDTN	DESIGNED	GSB	CHECKED	CLB	DRAFTED	MF
6/4/2019 9:00 AM								

FILE W:\PROJECTS\HOMER LAKE ST. REHAB Z524610000\CIV3D\16\PLANSET\52461_H_TRAF_DTL15.DWG

NO.	DATE	REVISION

STATE	PROJECT DESIGNATION	YEAR	SHEET NO.	TOTAL SHEETS
ALASKA	0001422/Z524610000	2019	H08	H38

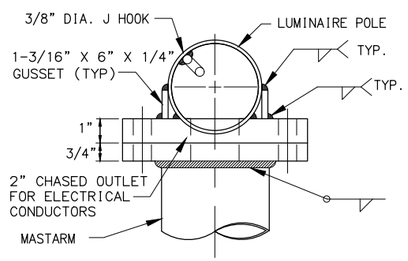

TOP VIEW

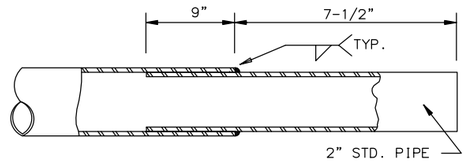

TENON

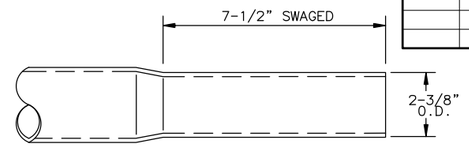

OPTIONAL SWAGED TENON

END OF MASTARM DETAIL

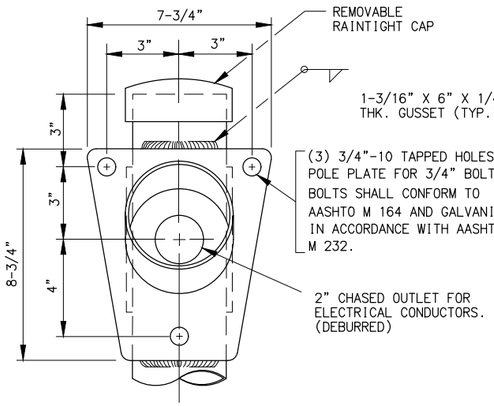

FRONT VIEW

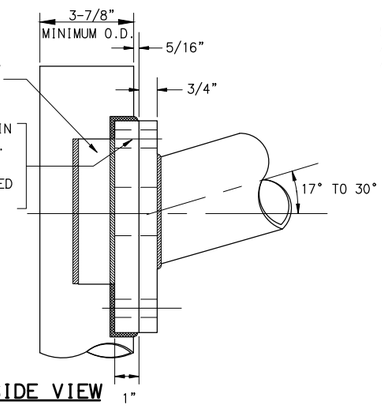

SIDE VIEW

MASTARM CONNECTION DETAIL

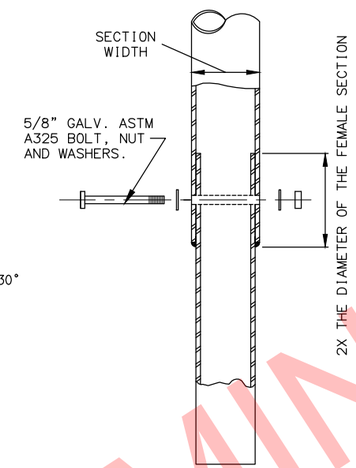

POLE CONNECTION DETAIL

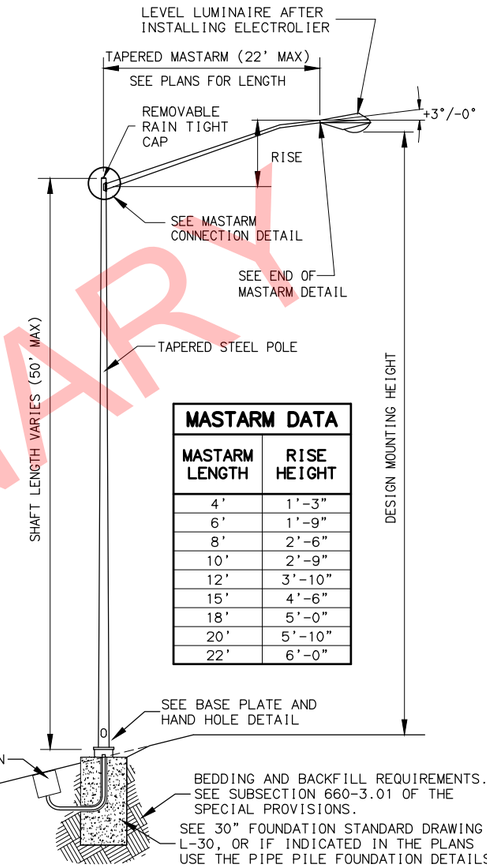

ELECTROLIER ELEVATION

MASTARM DATA	
MASTARM LENGTH	RISE HEIGHT
4'	1'-3"
6'	1'-9"
8'	2'-6"
10'	2'-9"
12'	3'-10"
15'	4'-6"
18'	5'-0"
20'	5'-10"
22'	6'-0"

NOTES:

1. DESIGN AND FABRICATE ALL SHAFTS TO SUPPORT A MASTARM 22 FEET LONG WITH LUMINAIRE. ASSUME EACH LUMINAIRE WEIGHS 55 POUNDS AND HAS AN EFFECTIVE PROJECTED AREA OF 1.2 SQUARE FEET. WITH THIS DEAD LOAD, LIMIT THE ANGULAR ROTATION TO THE POLE TOP 1°40'0" MAXIMUM.
2. WELD SIZE TO BE DETERMINED BY THE MANUFACTURER.
3. MOUNTING HEIGHT, IF SPECIFIED IN THE PLANS, REFERS TO THE HEIGHT OF LUMINAIRE ABOVE THE ROADWAY. ADJUST EACH POLE'S SHAFT LENGTH TO MAINTAIN THIS DIFFERENCE IN ELEVATION WHENEVER SLOPE AND/OR OFFSET VARIES.
4. MINIMUM OUTSIDE DIAMETER AT THE TOP OF POLE EQUALS 3-7/8". POLE DIAMETER SHALL TAPER UNIFORMLY FROM THE TOP OF THE POLE TO THE BASE PLATE, WITH A MAXIMUM TAPER RATE OF 0.14" PER FOOT.
5. APPLY AN ANTI-SEIZING COMPOUND TO ALL THREADED SURFACES, INCLUDING THOSE IN THE ANCHOR PLATE AND ON THE COUPLINGS.
6. MASTARM RISE MAY VARY ±0.5' FROM THE VALUES LISTED IN THE TABLE.
7. LOCATE THE HANDHOLD AT 90 DEGREES TO THE MASTARM ON THE SIDE OF POLE DOWNSTREAM FROM TRAFFIC FLOW.
8. FURNISH ALL POLES WITH A J-HOOK TO SUPPORT THE ILLUMINATION TAP CONDUCTORS. FURNISH ALL MASTARM POLES WITH A REMOVABLE RAIN TIGHT CAP.
9. MOUNT LIGHTING STANDARDS UPON TRANSPO MODEL NO. 5100 FRANGIBLE COUPLINGS AND TRANSPO TYPE B FEMALE ANCHORS, OR APPROVED EQUAL.
10. INSTALL ALL COMPONENTS OF THE BREAKAWAY SUPPORT SYSTEM IN ACCORDANCE WITH THE MANUFACTURER'S WRITTEN INSTRUCTIONS.
11. FABRICATE THE SKIRT FROM FOUR PIECES OF 1/16" THICK 3003 H-14 ALUMINUM SHEET. BEND EACH PLATE TO PROVIDE CORNERS WITH A 3/4" RADIUS. ASSEMBLE THE SKIRT WITH #10 X 3/8" SELF TAPPING STAINLESS SCREWS OR POP RIVETS. THE ASSEMBLED SKIRT MEASURES ABOUT 12-3/4" SQUARE.
12. A JUNCTION BOX IS REQUIRED AT EACH NEW ELECTROLIER. INSTALL THE JUNCTION BOX IMMEDIATELY BEHIND THE FOUNDATION APPROXIMATELY 7' FROM POLE UNLESS OTHERWISE SPECIFIED IN THE PLANS.

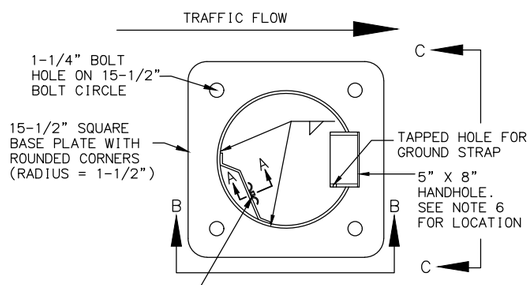

TOP VIEW

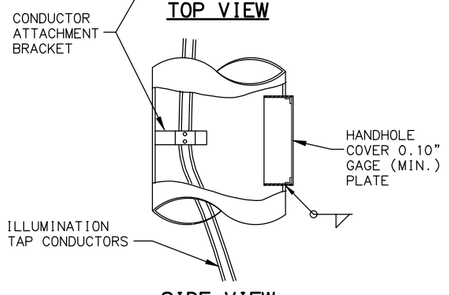

SIDE VIEW

BASE PLATE AND HAND HOLE DETAIL

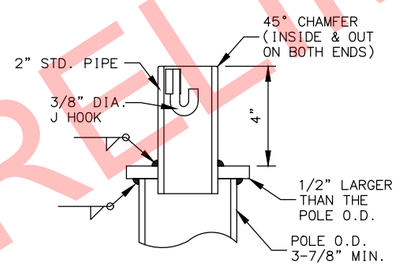

OFFSET LIGHTING STANDARD POLE TOP DETAIL

(CUTAWAY FOR CLARITY)

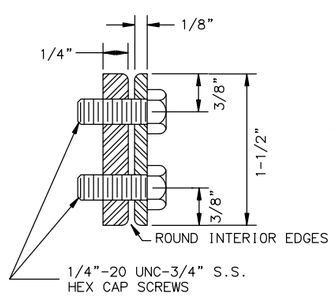

SECTION A-A

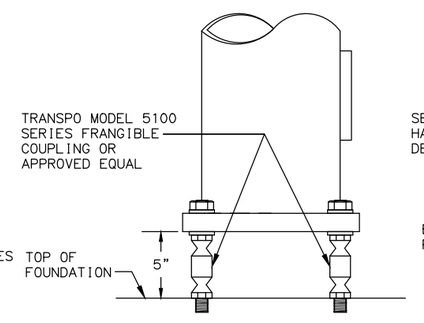

VIEW B-B

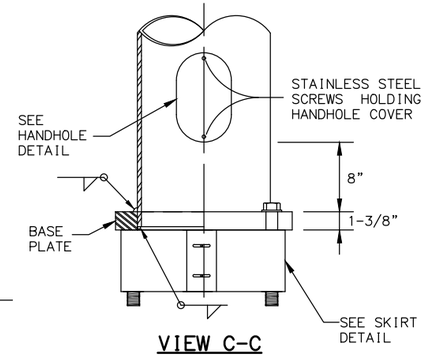

VIEW C-C

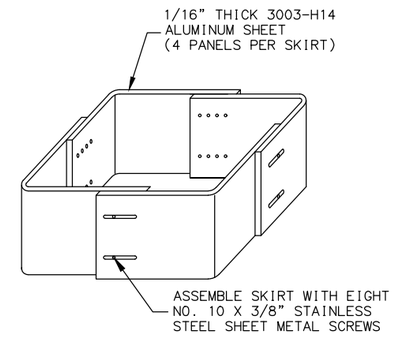

SKIRT DETAIL

STATE OF ALASKA
DEPARTMENT OF TRANSPORTATION AND PUBLIC FACILITIES

HOMER: LAKE STREET REHABILITATION

LIGHTING STANDARD 1 DETAILS

STATE OF ALASKA DOT&PF
4111 AVIATION AVENUE
ANCHORAGE, AK 99502
(907) 269-0590

DATE/TIME 6/4/2019 9:00 AM | LAYOUT LS1 | DESIGNED GSB | CHECKED CLB | DRAFTED MF

FILE W:\PROJECTS\HOMER LAKE ST. REHAB Z524610000\CNX30\CNX3016\PLANSET\52461_H_TRAF_DTL16.DWG

NO.	DATE	REVISION

STATE	PROJECT DESIGNATION	YEAR	SHEET NO.	TOTAL SHEETS
ALASKA	0001422/Z524610000	2019	H09	H38

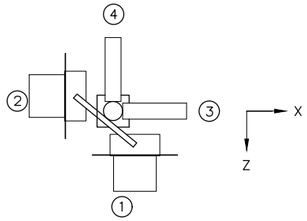

PLAN VIEW
NTS

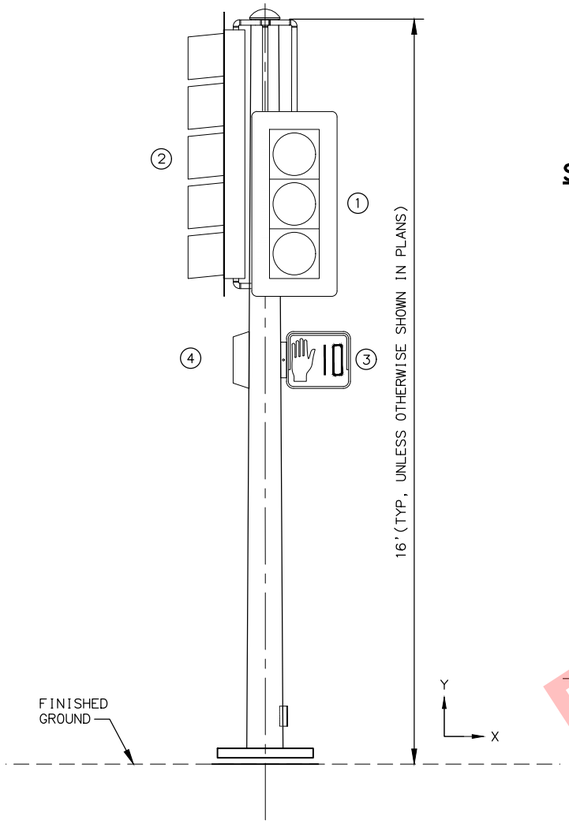

ELEVATION VIEW
NTS

FIXED DESIGN ELEMENTS

ALL ASSEMBLIES	
LENGTH	16'(TYP, MAY VARY IN PLANS)
FIXED END DIAMETER O.D.	10.0"
TAPER	0.14" /FT
TUBE THICKNESS	7 GA.
HAND-HOLE O.D.	5.63" X 7.31"
BASE PLATE	15.5" X 15.5" X 1.375"
BOLT CIRCLE	15.5"
FRANGIBLE BASE	MODEL 5100 POLE SAFE OR APPROVED EQUAL
MATERIAL PROPERTIES	
TUBE	ASTM A572 GR. 55
BASEPLATE	AASHTO M270 F3, GR 50
TOP PLATE	ASTM A36
HANDHOLE REINFORCEMENT	ASTM A53, GR. B
FINISH	AASHTO M111 & M232

POLE DESIGN LOADING

LOAD COMPONENT	EFFECTIVE AREA SQ. FT.	WEIGHT LBS.
1 = SIGNAL	7	60
2 = SIGNAL	11	100
3 = PED HEAD	2.5	25
4 = PED HEAD	2.5	25

NOTES:

1. DESIGN POLE ASSEMBLIES TO THE 2001 AASHTO STANDARD SPECIFICATIONS FOR STRUCTURAL SUPPORTS FOR HIGHWAY SIGNS, LUMINAIRE AND TRAFFIC SIGNALS, THE ALASKA STANDARD SPECIFICATIONS, STANDARD MODIFICATIONS, SPECIAL PROVISIONS AND THESE PLANS. DESIGN FOR A BASIC WIND SPEED OF 100 MPH, FATIGUE CATEGORY II.
2. POLES SHALL BE DESIGNED AND FABRICATED TO INCORPORATE ALL FIXED DESIGN ELEMENTS.
3. DESIGN AND FABRICATE TUBES FROM ONE PIECE OF TAPERED STEEL.
4. STEEL GREATER THAN 1/2" THICK SHALL CONFORM TO AASHTO M270 AND SHALL MEET THE FRACTURE CRITICAL CHARPY V-NOTCH IMPACT TEST REQUIREMENTS FOR ZONE 3.
5. INSTALL A 0.625" THICK 3003-H14 ALUMINUM SHEET SKIRT AROUND THE FRANGIBLE COUPLINGS FASTENED WITH STAINLESS SHEET METAL SCREWS.
6. THE DEPARTMENT WILL REJECT DAMAGED OR DEFECTIVE POLES FOR ANY OF THE FOLLOWING, INCLUDING BUT NOT LIMITED TO;
   A. VARIANCES FROM APPROVED SHOP DRAWINGS.
   B. VARIANCES FROM FIXED DESIGN ELEMENTS.
   C. OUT OF ROUND. SECTIONS ARE OUT OF ROUND WHEN THE DIAMETERS OF ROUND MEMBERS EXCEED 2 PERCENT OF THE DIMENSION SPECIFIED ON THE SHOP DRAWINGS.
   D. BOWED WITH SWEEPS EXCEEDING 0.75" INCH THROUGHOUT THE LENGTH OF THE POLE, MASTARM, OR SEGMENT.
   E. DAMAGED OR DENTED FINISHES.
7. WELD SIZE TO BE DETERMINED BY MANUFACTURER.
8. PROVIDE PERMANENT TAGS PER SECTION 740 TABLE 740-1 OF THE SPECIFICATIONS.
9. THIS DRAWING IS INTENDED FOR POLE DESIGN PURPOSES ONLY. ASSEMBLY CONFIGURATIONS ARE FOR LOADING PURPOSES AND MAY DIFFER FROM THOSE SHOWN IN PLANS. POLES HAVE NOT BEEN EVALUATED FOR LOADING CONDITIONS MORE SEVERE THAN THOSE SHOWN AND WILL REQUIRE INDIVIDUAL ANALYSIS WHEN ENCOUNTERED.

SIDE MOUNT DETAIL

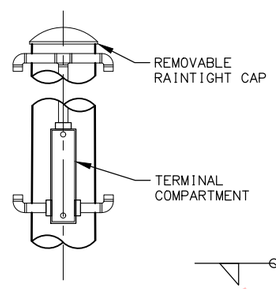

TOP MOUNT DETAIL

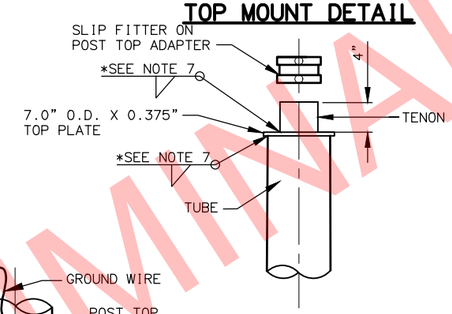

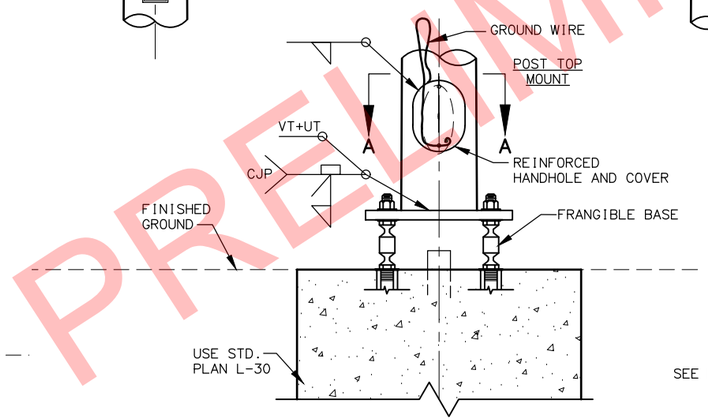

SIGNAL POST AND BASE
NTS

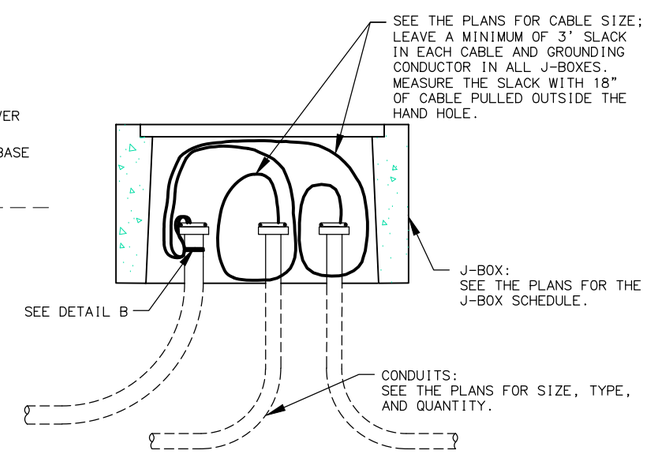

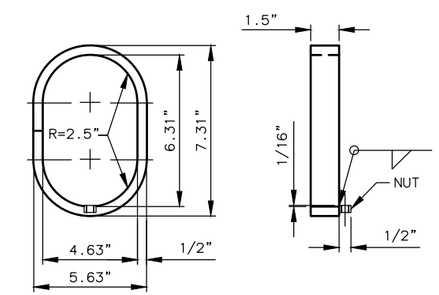

HANDHOLE DETAIL
NTS

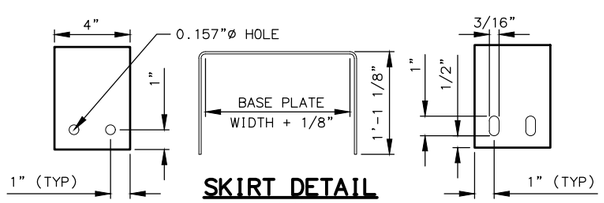

SKIRT DETAIL
NTS
(TWO REQUIRED PER POLE)

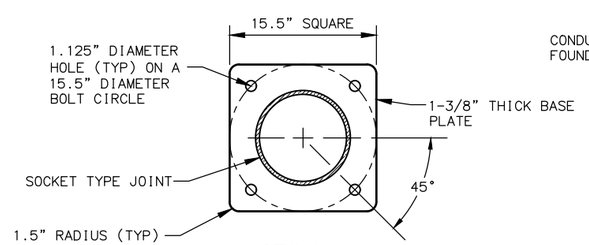

VIEW A-A
PLAN VIEW OF BASE PLATE
NTS

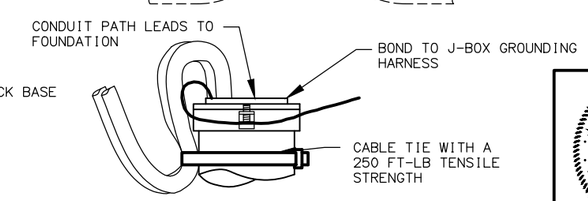

DETAIL B

STATE OF ALASKA
REGISTERED PROFESSIONAL ENGINEER
CHRISTOPHER L. BENTZ
12821
PSE
REVIEW

STATE OF ALASKA DOT&PF
4111 AVIATION AVENUE
ANCHORAGE, AK 99502
(907) 269-0590

STATE OF ALASKA
DEPARTMENT OF TRANSPORTATION
AND PUBLIC FACILITIES

HOMER: LAKE STREET REHABILITATION

BREAKAWAY TRAFFIC SIGNAL POLE DETAILS

DATE/TIME	LAYOUT	BRKAWAY PL	DESIGNED	GSB	CHECKED	CLB	DRAFTED	MF
6/4/2019 9:00 AM								

FILE W:\PROJECTS\HOMER LAKE ST. REHAB Z524610000\CIV3D\CIV3D16\PLANSET\52461_H_TRAF_DTL21.DWG

NO.	DATE	REVISION

STATE	PROJECT DESIGNATION	YEAR	SHEET NO.	TOTAL SHEETS
ALASKA	0001422/Z524610000	2019	H10	H38

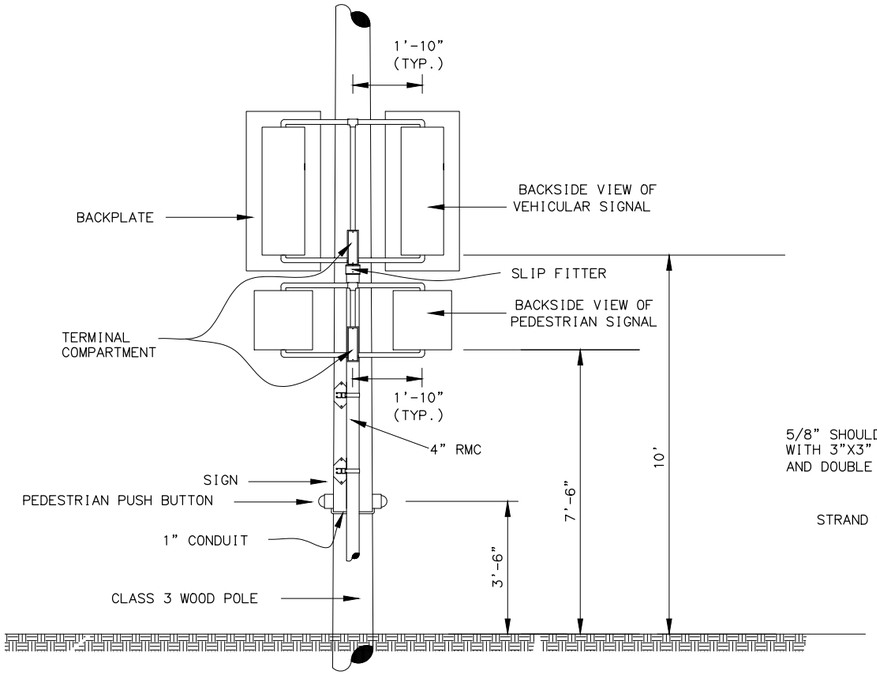

SIDE MOUNTED TRAFFIC SIGNAL HARDWARE

NTS

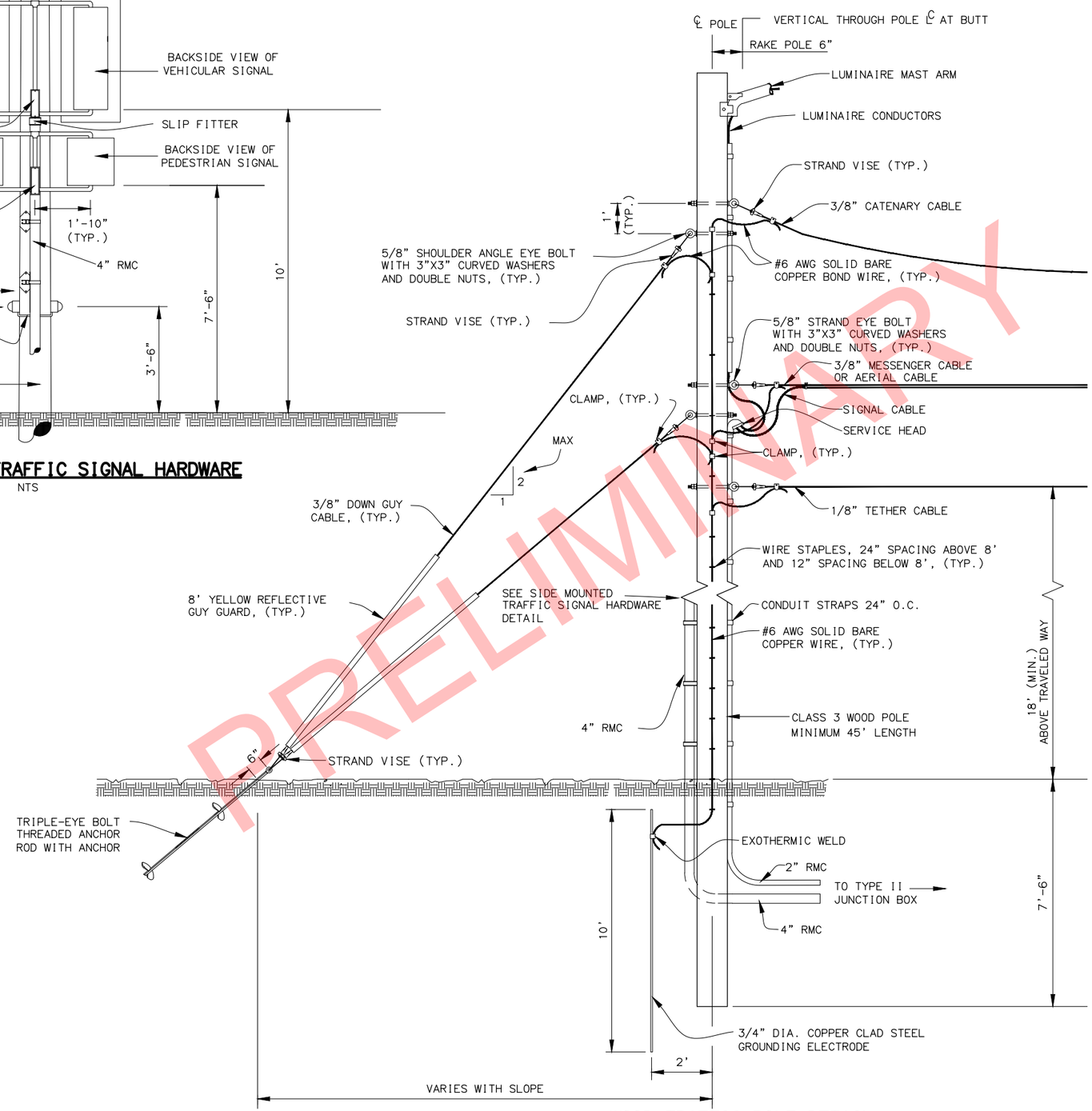

WOOD TRAFFIC POLE DETAIL

NTS
(SINGLE SPAN ATTACHMENT SHOWN)

NOTES:

1. ATTACH A 4 INCH RIGID METAL CONDUIT TO THE WOOD POLE, USING UNISTRUT P9014 WITH P4101 CHANNEL, AND P1121 PIPE CLAMPS, OR APPROVED EQUAL.
2. INSTALL THE 4 INCH CONDUIT ON THE SIDE OF THE POLE AT A LOCATION WHERE A LINE PARALLEL TO THE LONG CORD (P.C. TO P.T.) OF THE RADIUS IS TANGENT TO THE POLE, AS SHOWN IN STANDARD DRAWING T-30 OR THE SIGNAL HARDWARE DETAIL SHEET IN PLANS FOR TERMINAL COMPARTMENT LOCATIONS.
3. USE POST TOP SIGNAL FRAMES WITH TERMINAL COMPARTMENTS TO INSTALL THE VEHICULAR SIGNAL HEADS ON TOP OF THE 4 INCH CONDUIT.
4. USE SIDE MOUNTED SIGNAL FRAMES WITH TERMINAL COMPARTMENTS TO INSTALL THE PEDESTRIAN SIGNAL HEADS ON THE 4 INCH CONDUIT.
5. THE VERTICAL CLEARANCES SHOWN ARE FROM THE WALKING SURFACE FOR THE PEDESTRIAN GEAR AND THE TRAVELED WAY FOR THE VEHICULAR SIGNALS.
6. TERMINATE POLES WITH NO LUMINAIRE A MINIMUM OF 2 FEET ABOVE THE CATENARY CABLE CONNECTION.
7. SEE STANDARD PLAN T-30 OR THE SIGNAL HARDWARE DETAIL SHEET IN PLANS FOR ADDITIONAL TRAFFIC SIGNAL HARDWARE DETAILS.
8. ALL 3/8 INCH SPAN AND GUY CABLE SHALL BE HEAVY DUTY (HD) STEEL WITH MINIMUM 9,700 LB BREAKING STRENGTH. ALL OTHER CABLES SHALL ALSO BE HD RATED.
9. GUY ANCHOR SHALL BE INSTALLED PER MANUFACTURER RECOMMENDATIONS. SOIL CLASSIFICATION SHALL BE USED TO DETERMINE ANCHOR SIZE, FOLLOW MANUFACTURE GUIDELINES AND CONFIRM SOIL CLASSIFICATION WITH ENGINEER PRIOR TO ANCHOR SELECTION.

STATE OF ALASKA
REGISTERED PROFESSIONAL ENGINEER
CHRISTOPHER L. BENTZ
12821
PSAR REVIEW

STATE OF ALASKA DOT&PF
4111 AVIATION AVENUE
ANCHORAGE, AK 99502
(907) 269-0590

STATE OF ALASKA
DEPARTMENT OF TRANSPORTATION
AND PUBLIC FACILITIES

HOMER: LAKE STREET
REHABILITATION

UNDERGROUND SERVICE
TEMPORARY WOOD SIGNAL
POLE DETAILS

DATE/TIME	LAYOUT	DESIGNED	CHECKED	DRAFTED
6/4/2019 9:00 AM	UNDERGROUND SERVICE	GSB	CLB	MF

FILE W:\PROJECTS\HOMER LAKE ST. REHAB Z524610000\CIV3D\CIV3D16\PLANSET\52461_H_TRAF_DTL25.DWG

NO.	DATE	REVISION

STATE	PROJECT DESIGNATION	YEAR	SHEET NO.	TOTAL SHEETS
ALASKA	0001422/Z524610000	2019	H11	H38

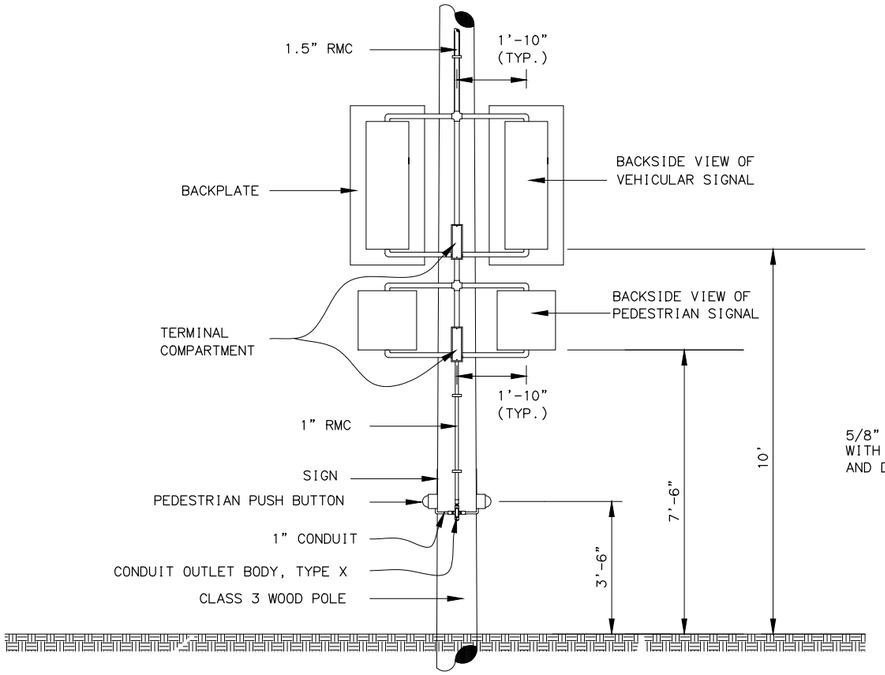

SIDE MOUNTED TRAFFIC SIGNAL HARDWARE

NTS

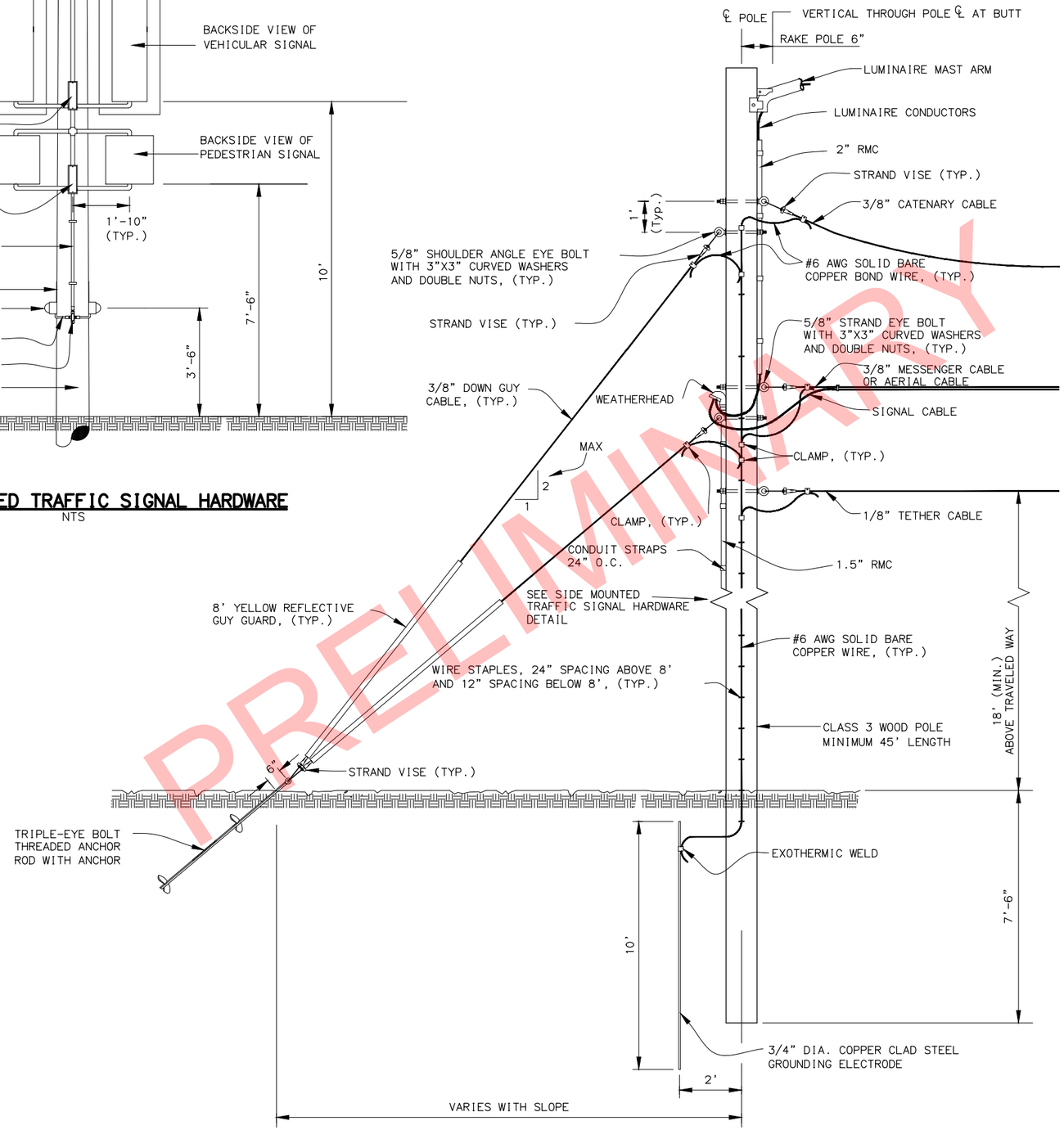

WOOD TRAFFIC POLE DETAIL

NTS
(SINGLE SPAN ATTACHMENT SHOWN)

NOTES:

1. USE SIGNAL FRAMES WITH TERMINAL COMPARTMENTS TO INSTALL THE VEHICULAR AND PEDESTRIAN SIGNAL HEADS ON THE SIDES OF THE WOOD POLES.
2. SECURELY ATTACH THE TERMINAL COMPARTMENTS TO THE WOOD POLES AT THE LOCATIONS SHOWN ON ALASKA STANDARD DRAWING T-30 OR THE SIGNAL HARDWARE DETAIL SHEET IN PLANS.
3. THE VERTICAL CLEARANCES SHOWN ARE FROM THE WALKING SURFACE FOR THE PEDESTRIAN GEAR AND THE TRAVELED WAY FOR THE VEHICULAR SIGNALS.
4. TERMINATE POLES WITH NO LUMINAIRE A MINIMUM OF 2 FEET ABOVE THE CATENARY CABLE CONNECTION.
5. SEE STANDARD PLAN T-30 OR THE SIGNAL HARDWARE DETAIL SHEET IN PLANS FOR ADDITIONAL TRAFFIC SIGNAL HARDWARE DETAILS.
6. ALL 3/8 INCH SPAN AND GUY CABLE SHALL BE HEAVY DUTY (HD) STEEL WITH MINIMUM 9,700 LB BREAKING STRENGTH. ALL OTHER CABLES SHALL ALSO BE HD RATED.
7. GUY ANCHOR SHALL BE INSTALLED PER MANUFACTURER RECOMMENDATIONS. SOIL CLASSIFICATION SHALL BE USED TO DETERMINE ANCHOR SIZE, FOLLOW MANUFACTURE GUIDELINES AND CONFIRM SOIL CLASSIFICATION WITH ENGINEER PRIOR TO ANCHOR SELECTION.

STATE OF ALASKA
REGISTERED PROFESSIONAL ENGINEER
4082
CHRISTOPHER J. BENTZ
12821
PS&E REVIEW

STATE OF ALASKA DOT&PF
4111 AVIATION AVENUE
ANCHORAGE, AK 99502
(907) 269-0590

STATE OF ALASKA
DEPARTMENT OF TRANSPORTATION
AND PUBLIC FACILITIES

HOMER: LAKE STREET REHABILITATION

OVERHEAD SERVICE TEMPORARY WOOD SIGNAL POLE DETAILS

DATE/TIME 6/4/2019 9:00 AM | LAYOUT | OVERHEAD SERVICE | DESIGNED GSB | CHECKED CLB | DRAFTED MF
FILE W:\PROJECTS\HOMER LAKE ST. REHAB 752461000\CIV3D\CIV3D16\PLANSET\52461_H_TRAF_DTL25.DWG

NO.	DATE	REVISION

STATE	PROJECT DESIGNATION	YEAR	SHEET NO.	TOTAL SHEETS
ALASKA	0001422/Z524610000	2019	H12	H38

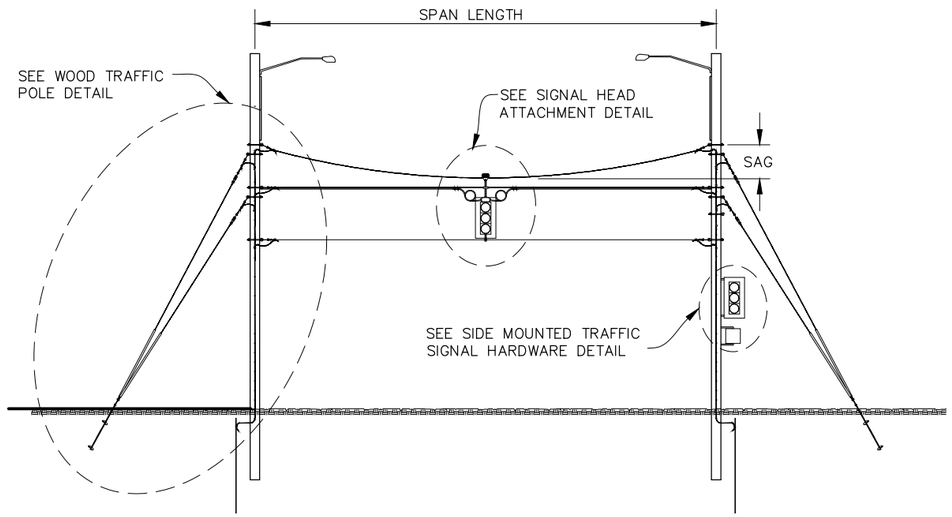

SPAN ELEVATION

NTS

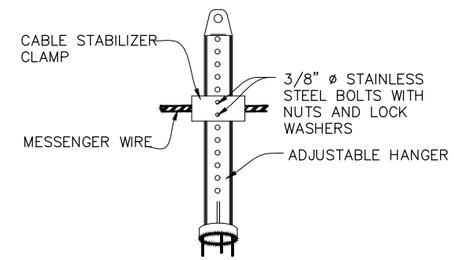

TRI–STUD ADJUSTABLE HANGER

NTS

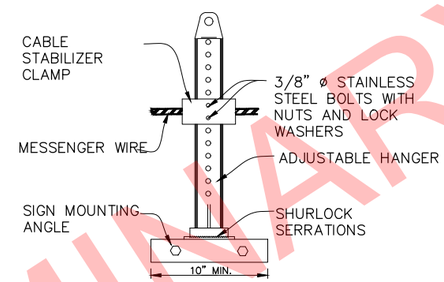

ADJUSTABLE HANGER FOR SIGN MOUNTING

NTS

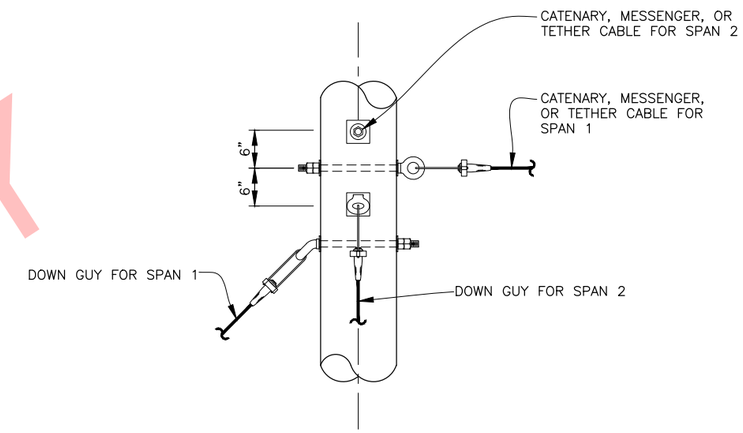

MULTIPLE SPAN ATTACHMENT DETAIL

NTC

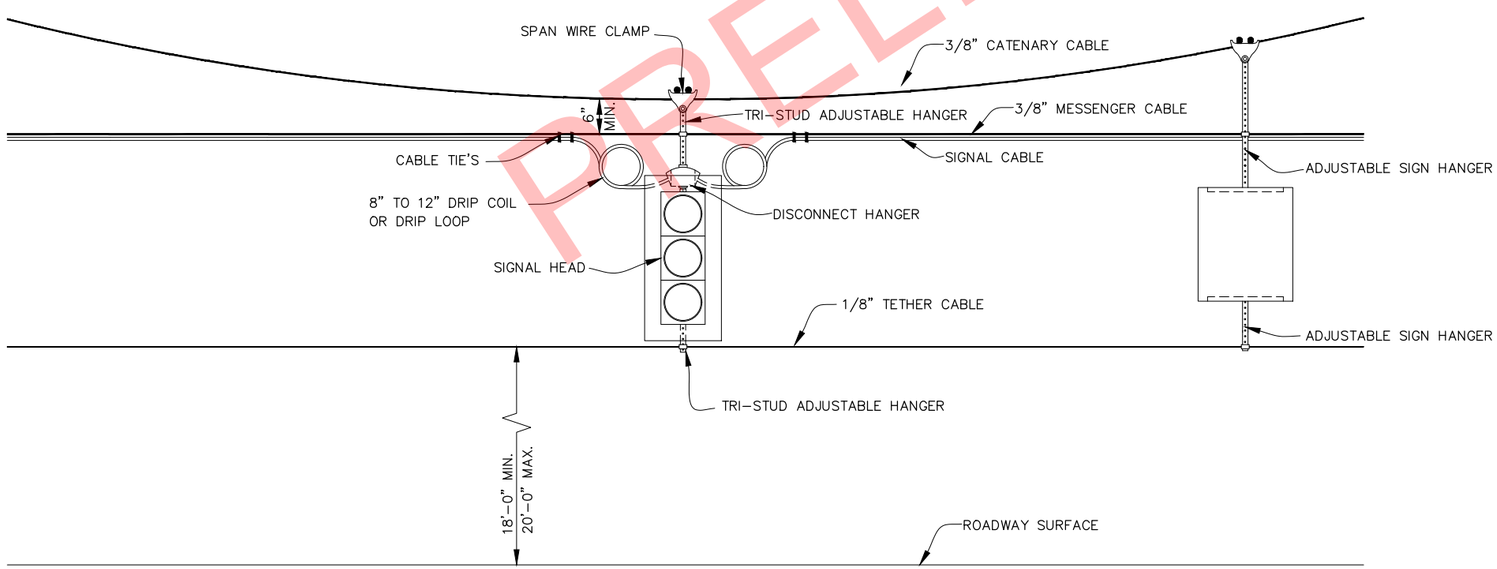

SIGNAL HEAD AND SIGN ATTACHMENT DETAIL

NTS

NOTES:

1. ATTACH ADJUSTABLE HANGERS TO THE MESSENGER AND TETHER CABLES WITH CABLE STABILIZER CLAMPS.
2. ATTACH SIGNAL CABLES TO MESSENGER CABLE EVERY 1' USING 3M HEAVY DUTY BLACK CABLE TIES OR APPROVED EQUAL. CABLE TIES SHALL BE WEATHER RESISTANT BLACK NYLON GREATER THAN 0.065" THICK, HAVE A TENSILE STRENGTH GREATER THAN 110LBS, AND HAVE A TEMPERATURE RANGE BETTER THAN –35°F TO 180°F. USE TWO TIES BEFORE/AFTER DRIP LOOPS. CABLE TIES SHALL BE ATTACHED "SNUG TIGHT", DO NOT OVER TIGHTEN.
3. INSTALL SIGNS SO THAT THE BOTTOM EDGES ARE AT APPROXIMATELY THE SAME ELEVATION.
4. SAG=4% TO 5% OF SPAN LENGTH.

STATE OF ALASKA
4082
PSE REVIEW
REGISTERED PROFESSIONAL ENGINEER

STATE OF ALASKA DOT&PF
4111 AVIATION AVENUE
ANCHORAGE, AK 99502
(907) 269–0590

STATE OF ALASKA
DEPARTMENT OF TRANSPORTATION
AND PUBLIC FACILITIES

HOMER: LAKE STREET REHABILITATION

TEMPORARY TRAFFIC SIGNAL SPAN WIRE DETAILS

MF | DRAFTED | CLB | CHECKED | GSB | DESIGNED | SPAN WR | LAYOUT | DATE/TIME 6/4/2019 9:00 AM

FILE W:\PROJECTS\HOMER LAKE ST. REHAB 752461000\CIV3D\CIV3D16\PLANSET\52461_H_TRAF_DTL26.DWG

NO.	DATE	REVISION

STATE	PROJECT DESIGNATION	YEAR	SHEET NO.	TOTAL SHEETS
ALASKA	0001422/Z524610000	2019	H13	H38

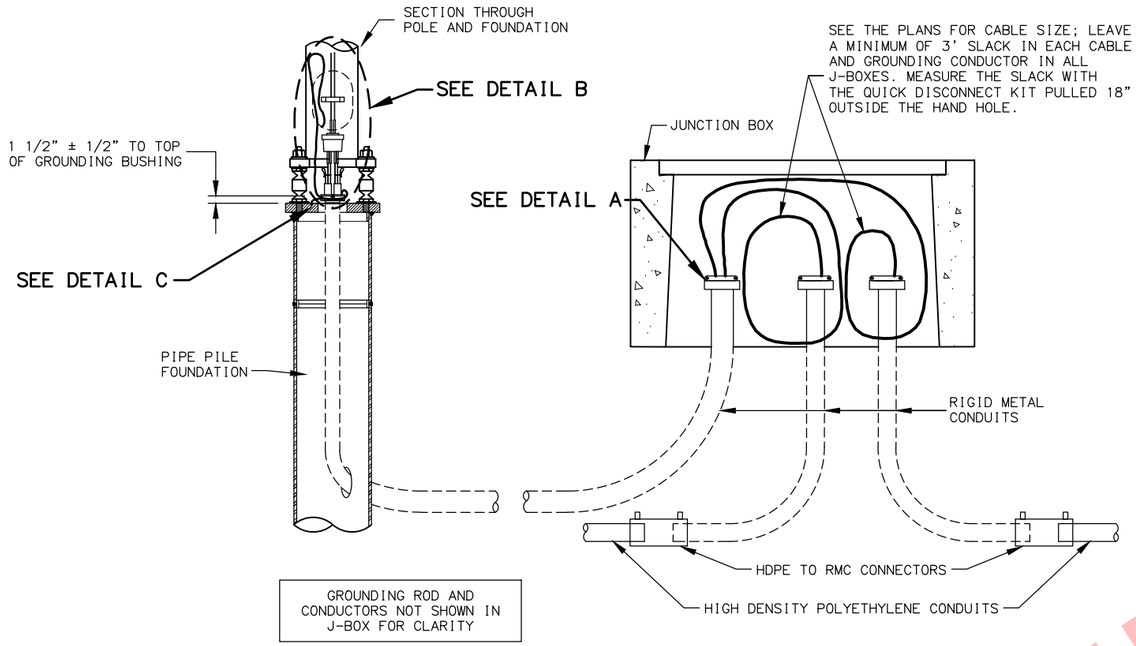

LIGHTING SYSTEM POLE AND J-BOX WIRING DETAILS

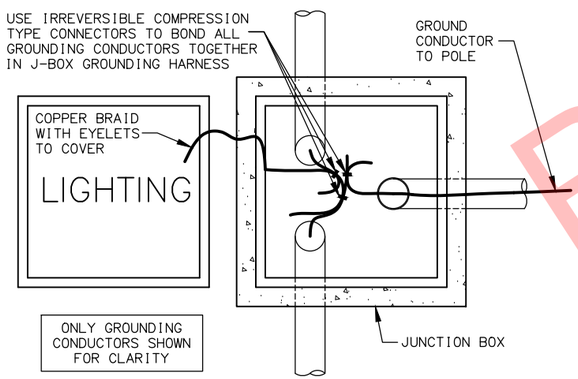

GROUNDING CONDUCTOR BONDING CONNECTIONS

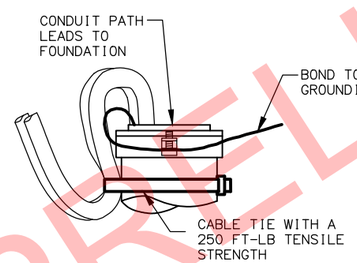

DETAIL A

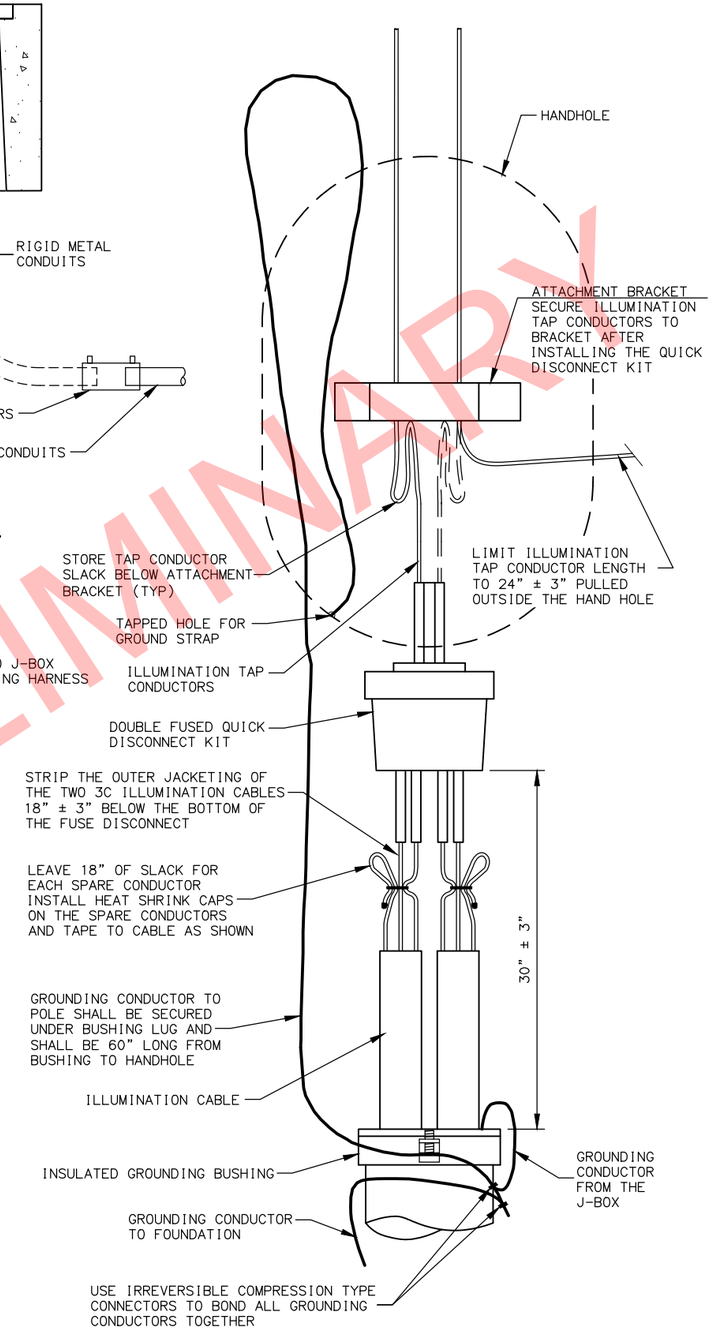

DETAIL B

NOTES:

1. APPLICATION FOR SLIP BASE IS THE SAME EXCEPT FOR BONDING. SEE SUBSECTION 660-3.06 FOR BONDING.
2. LABEL ALL CABLES AND CONDUCTORS IN POLE BASE AND J-BOX. SEE SUBSECTION 660-3.05.
3. MAKE ALL GROUNDING AND BONDING WIRE #8 AWG, EXCEPT IN THOSE CONDUITS THAT CONTAIN CIRCUIT CONDUCTORS LARGER THAN #8 AWG. IN THIS CASE USE WIRE EQUAL IN SIZE TO THE LARGEST CONDUCTOR. THE GROUNDING CONDUCTOR TO THE FOUNDATION SHALL BE #4 AWG.
4. USE LISTED IRREVERSIBLE COMPRESSION TYPE CONNECTORS SIZED FOR EACH APPLICATION AND INSTALLED PER MANUFACTURERS SPECIFICATIONS.

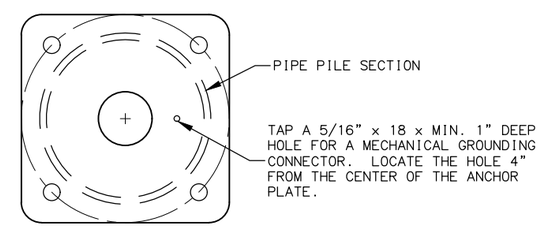

DETAIL C

STATE OF ALASKA
CHRISTOPHER L. BENTZ, P.E.
12821
REGISTERED PROFESSIONAL ENGINEER
PS&E REVIEW

STATE OF ALASKA DOT&PF
4111 AVIATION AVENUE
ANCHORAGE, AK 99502
(907) 269-0590

STATE OF ALASKA
DEPARTMENT OF TRANSPORTATION
AND PUBLIC FACILITIES

HOMER: LAKE STREET REHABILITATION

PIPE PILE FOUNDATION POLE WIRING AND GROUNDING DETAILS

FILE | W:\PROJECTS\HOMER LAKE ST. REHAB Z524610000\CIV3D\CIV3D16\PLANSET\52461_H_TRAF_DTL28.DWG | DATE/TIME | 6/4/2019 9:00 AM | LAYOUT | WR&NDPP | DESIGNED | GSB | CHECKED | CLB | DRAFTED | MF

NO.	DATE	REVISION	STATE	PROJECT DESIGNATION	YEAR	SHEET NO.	TOTAL SHEETS
			ALASKA	0001422/Z524610000	2019	H14	H38

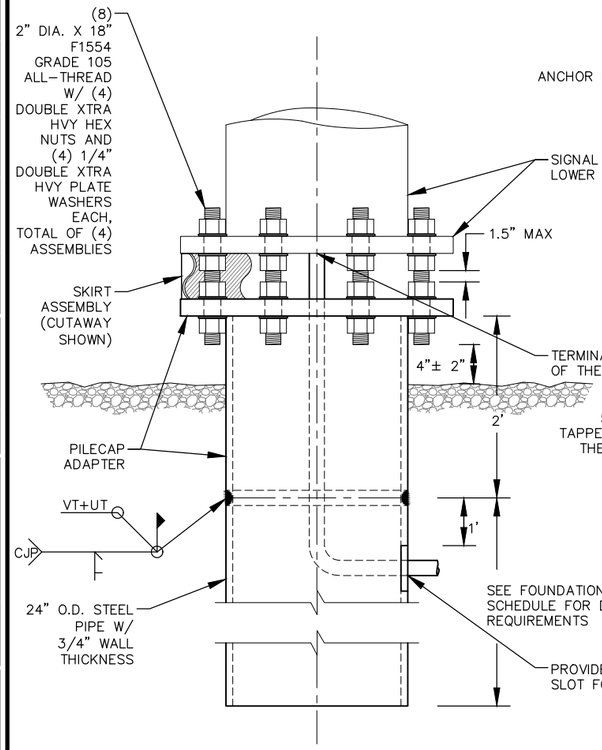

FOUNDATION DETAIL

N.T.S.

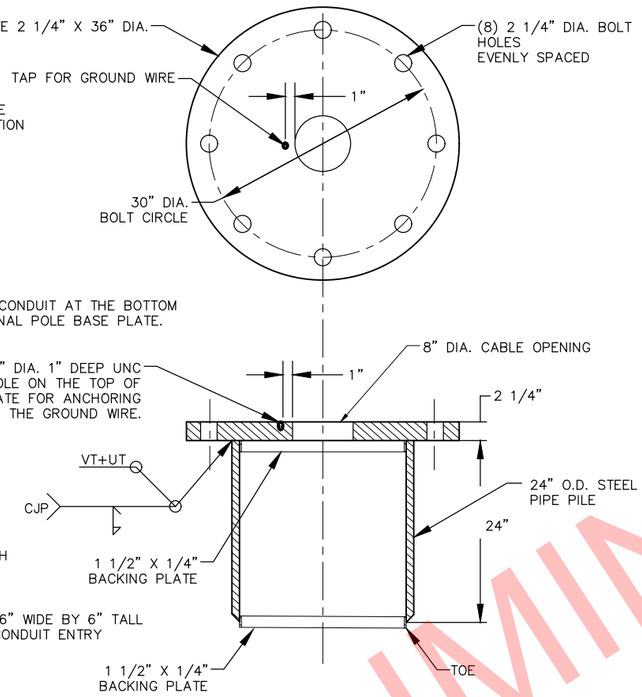

PILE CAP ADAPTER DETAIL

N.T.S.

NOTE: TACK WELD BACKING PLATE TO PIPE PILE SECTION

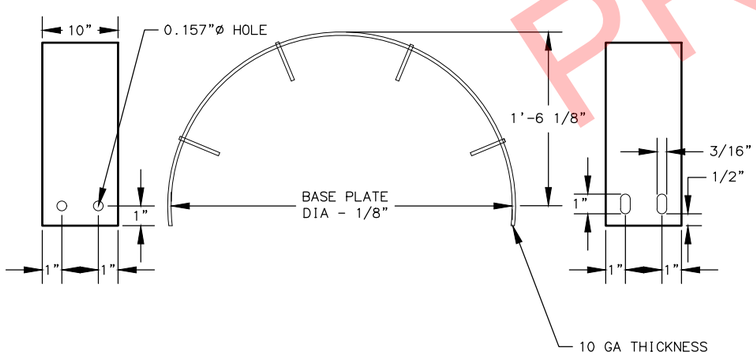

SKIRT DETAIL

N.T.S.

(TWO REQUIRED PER POLE)

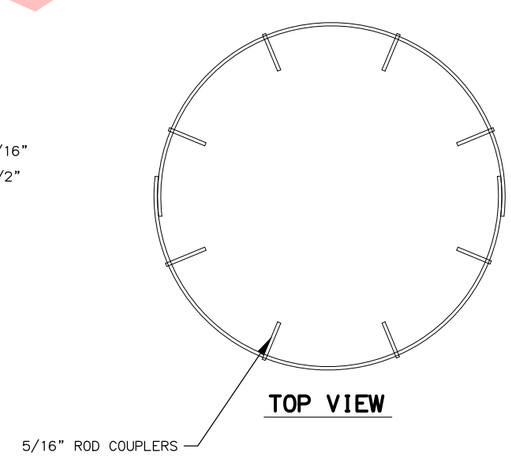

TOP VIEW

DESIGN NOTES

DESIGN: 2013 STANDARD SPECIFICATIONS FOR STRUCTURAL SUPPORTS FOR HIGHWAY SIGNS, LUMINAIRES AND TRAFFIC SIGNALS WITH 2013 ERRATA AND 2015 INTERIM REVISION.

DESIGN LOADS: 6,500 LBS SHEAR, 175 KIP-FT MOMENT AND 6,500 LBS AXIAL.

CONSTRUCTION STANDARD: CURRENT VERSION OF STATE OF ALASKA STANDARD SPECIFICATIONS FOR HIGHWAY CONSTRUCTION, WITH STANDARD PROVISIONS.

NOTES

1. DRIVE ALL PILES OPEN ENDED WITH FLUSH MOUNTED, HARDENED DRIVING SHOES. COMPLETE PILE DRIVING WORK IN ACCORDANCE WITH SECTIONS 505, 660 AND 715 OF THE STANDARD SPECIFICATIONS. INSTALL PILE TO BE WITHIN A DEGREE OF PLUMB, PER 505 STANDARD SPECIFICATION. PILES OUT OF PLUMB MUST BE REMOVED AND REINSTALLED. CUT OF PILE TO ACHIEVE PROPER ELEVATION. THE RESULTING BUT JOINT ALIGNMENT SHALL MEET THE REQUIREMENTS OF AWS D1.
2. PILE MANUFACTURER TO PROVIDE THE REQUIRED PILE CAP ADAPTER, ADAPTER IS TO BE SHOP FABRICATED. HOT DIP GALVANIZE THE ADAPTER TO WITHIN 3 INCHES OF THE TOE. DELIVER THE ADAPTER WITH ALL FASTENERS AND HARDWARE.
3. MACHINE OR PLASMA CUT ANY PENETRATION IN THE ADAPTER OR PILE.
4. ALL WELDS TO BE SIZE BY THE MANUFACTURER. BOTH SHOP AND FIELD CJP WELDS TO BE 100% VISUALLY (VT) AND ULTRASONICALLY (UT) TESTED. SUBMIT WRITTEN RECORDS OF TESTS TO THE PROJECT ENGINEER.
5. MANUFACTURE THE ADAPTER TOP PLATE AND COMPONENTS FROM STEEL MEETING THE REQUIREMENTS OF ASTM A6. THE PERMISSIBLE BOW AND SWEEP OF THE ADAPTER TOP PLATE IS LIMITED TO 1/32". PLATE SHALL BE FLATTENED IN THE SHOP PRIOR TO FIT-UP AND WELDING IN THE SHOP. PRIOR TO HOT DIP GALVANIZING, BURRS AND IMPERFECTIONS SHALL BE REMOVED BY GRINDING OR MACHINING FOR ANY MATERIALS AND OR ASSEMBLIES NOT MEETING THESE REQUIREMENTS.
6. HOT DIP GALVANIZE THE PILE TO WITHIN 3 INCHES OF THE TOP OF THE PILE PER AASHTO M111.
7. CONNECT THE GROUND WIRE TO THE PILE CAP ADAPTER TOP PLATE USING A BOLTED COMPRESSION FITTING WHICH IN TURN IS BOLTED TO THE TAPPED HOLE SHOWN ON THE DETAIL. GROUND WIRE SHALL BE BARE SOLID, STRANDED OR BRAIDED COPPER.
8. INSTALL THE PILE CAP ADAPTER TO WITHIN A DEGREE OF PLUMB, PER 505 STANDARD SPECIFICATION.
9. PROVIDE ANCHOR ROD MATERIAL MEETING THE REQUIREMENTS SHOWN ON THE DETAIL AND AS LISTED IN THE MATERIAL PROPERTIES TABLE.
10. AFTER THE FIELD WELDING, ELECTRICAL CONDUIT AND ELECTRICAL CONDUCTOR WORK IS COMPLETE, BACKFILL AND COMPACT SOIL AROUND THE INSTALLED PILE IN ACCORDANCE WITH SECTION 205, SUBSECTIONS 203-3.04, 660-3.01 AND 660-3.02 OF THE SPECIFICATIONS. USE SELECT TYPE A MATERIAL ONLY AS BACKFILL.
11. INSTALL A 10 GAUGE SHEET STEEL SKIRT AROUND THE SIGNAL POLE BASE AND PILE CAP FASTENED WITH STAINLESS SHEET METAL SCREWS. SIZE SKIRT TO COVER GAP BETWEEN SIGNAL POLE BASE PLATE AND PILE CAP WITH APPROXIMATELY 1" OVERLAP ON EACH PLATE. CONTRACTOR SHALL DRILL HOLES FOR MOUNTING 5/16" STAINLESS STEEL BOLTS WITH 5/16" ROD COUPLERS. TWO ROD COUPLERS SHALL BE INSTALLED DIRECTLY ON TOP OF THE PILING PLATE. TWO ROD COUPLERS SHALL BE INSTALLED DIRECTLY BELOW POLE PLATE AND NEXT TO THE FIRST SET OF ROD COUPLERS.
12. WHEN BACKING CURB IS SHOWN IN THE PLANS INSTALL PILE DIRECTLY BEHIND IT. TOP BACK OF CURB WILL ACT AS GROUND, ALLOWING FOR THE GIVEN CLEARANCE WHEN ACCESSING THE ROD ASSEMBLIES.

MATERIAL PROPERTIES

ITEM	STANDARD	RATING
ANCHOR RODS, 2" X 18"	ASTM F1554	GRADE 105
FASTENERS, WASHERS	AASHTO M270	GRADE 36
FASTENERS, NUTS	AASHTO M292	
ANCHOR PLATE & BASE PLATE	AASTHO M270 F3	GRADE 50
PIPE PILE	ASTM A709 T3	GRADE 50
FINISH, PIPE PILE AND ADAPTER	AASHTO M111	
FINISH, ANCHOR ROD AND FASTENERS	AASHTO M232	
GROUND WIRE		#4 AWG

STATE OF ALASKA
REGISTERED PROFESSIONAL ENGINEER
CHARLES WAGNER
11155
PS&E REVIEW

STATE OF ALASKA DOT&PF
4111 AVIATION AVENUE
ANCHORAGE, AK 99502
(907) 269-0590

STATE OF ALASKA
DEPARTMENT OF TRANSPORTATION
AND PUBLIC FACILITIES

HOMER: LAKE STREET
REHABILITATION

SIGNAL POLE PIPE PILE
FOUNDATION DETAILS

DATE/TIME 6/4/2019 9:00 AM | LAYOUT H6 SIG PPF | DESIGNED GSB | CHECKED CLB | DRAFTED MF
FILE \W:\PROJECTS\HOMER LAKE ST. REHAB Z524610000\CIV3D\CIV3D16\PLANSET\52461_H_TRAF_DTLPPF.DWG

NO.	DATE	REVISION

STATE	PROJECT DESIGNATION	YEAR	SHEET NO.	TOTAL SHEETS
ALASKA	0001422/Z524610000	2019	H15	H38

MASTARM DATA

MASTARM		END SECTION			BASE SECTION		
Length (ft.)	Allowed Deflection Due To Galloping (in.)	Free End O.D. (in.)	Length (ft.)	Thick (in.)	Length (ft.)	Fixed End O.D. (in.)*	Thick (in.)
40	8.0	7.3	25.0	0.1793	18.34	12.5	0.3125
45	8.0	7.3	25.0	0.1793	23.34	13.2	0.3125
50	8.0	7.3	25.0	0.1793	28.34	13.9	0.3125

*Fixed end diameter measured at connection to baseplate.

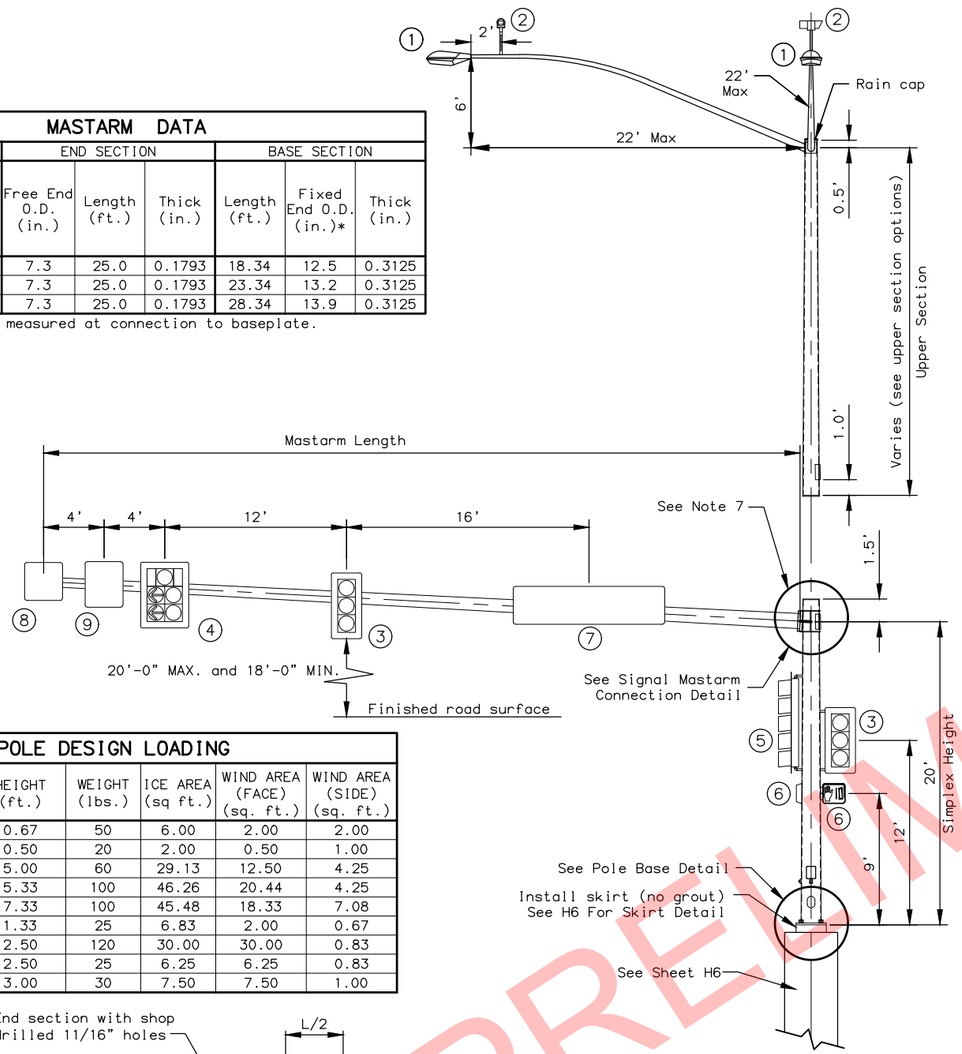

ELEVATION VIEW
NTS

POLE DESIGN LOADING

LOAD COMPONENT	HEIGHT (ft.)	WEIGHT (lbs.)	ICE AREA (sq ft.)	WIND AREA (FACE) (sq. ft.)	WIND AREA (SIDE) (sq. ft.)
1 = Luminaire	0.67	50	6.00	2.00	2.00
2 = Camera	0.50	20	2.00	0.50	1.00
3 = Signal	5.00	60	29.13	12.50	4.25
4 = Signal	5.33	100	46.26	20.44	4.25
5 = Signal	7.33	100	45.48	18.33	7.08
6 = Ped Head	1.33	25	6.83	2.00	0.67
7 = Sign	2.50	120	30.00	30.00	0.83
8 = Sign	2.50	25	6.25	6.25	0.83
9 = Sign	3.00	30	7.50	7.50	1.00

MATERIAL REQUIREMENTS

ALL ASSEMBLIES	
Steel Through 1/2" Thick	ASTM A572 or A595
Steel Over 1/2" Thick	AASHTO M270 F3 (50ksi)
Finish	AASHTO M111 & M232
Mastarm Bolts	AASHTO M164
Anchor Rods	SEE SHEET H6

POLE (LOWER SECTION)	
Design Length	21.5'
Section Shape	Round
Simplex Height	20'
Fixed End Diameter	17" O.D.
Taper	0.14"/ft
Tube Thickness	0.375"
Base Plate	36" DIA X 2.25"
Bolt Circle	30" DIA
Signal Arm Plate	22" X 22" X 2.25"
Top Ring Thickness	0.375"
Bottom Ring Thickness	0.375"
Gusset Plate Thickness	0.375"
Handhole Cover Thickness	10 ga
Pole Skirt Thickness	SEE SHEET H6

MASTARM	
Design Length	50'
Section Shape	Round
Taper	0.14"/ft
Tube Thickness	Mastarm Data
Mastarm Rise	3.0 Degrees
Base Plate	22" X 22" X 2.25"
Bolt Circle	22"
Mastarm Bolts	1.5" X 4.5"

NOTES:

1. PROVIDE POLE ASSEMBLIES MEETING THE FOLLOWING DESIGN CRITERIA; 2001 AASHTO STANDARD SPECIFICATIONS FOR STRUCTURAL SUPPORTS FOR HIGHWAY SIGNS, LUMINAIRES AND TRAFFIC SIGNALS, THE LATEST EDITION OF THE ALASKA STANDARD SPECIFICATIONS FOR HIGHWAY CONSTRUCTION INCLUDING STANDARD MODIFICATIONS AND, SPECIAL PROVISIONS. DESIGN FOR A BASIC WIND SPEED OF 100 MPH, FATIGUE CATEGORY III, WITH GALLOPING. MEASURE ALLOWED DEFLECTION DUE TO GALLOPING AT THE FREE END OF MASTARM.
2. PROVIDE POLES TO ACCOMMODATE THE MAXIMUM LENGTH SHOWN IN THE MASTARM DATA WITH THE GIVEN LOADS, DIMENSIONS AND MATERIAL REQUIREMENTS.
3. THIS DRAWING SHOWS LOADS (SIGNS AND SIGNALS) TO BE USED BY MANUFACTURERS WHEN DESIGNING POLES. IT DOES NOT SHOW ACTUAL LOADING OF POLES/MASTARMS ON INDIVIDUAL PROJECTS. THIS POLE/MASTARM DESIGN MAY BE USED WITHOUT FURTHER ANALYSIS IF THE FOLLOWING CONDITIONS ARE MET:
   - THE GUIDE SIGN (LOAD #7) IS ATTACHED TO THE MASTARM BASE SECTION AND,
   - NOT MORE THAN 4 TRAFFIC SIGNALS AND/OR SIGNS ARE ATTACHED TO THE END SECTION OF THE MASTARM.

   IF THESE CONDITIONS ARE NOT MET, THIS STANDARD POLE/MASTARM DESIGN MAY ONLY BE USED IF DESIGN COMPUTATIONS ARE SUBMITTED THAT DEMONSTRATE CONFORMANCE TO DESIGN CRITERIA (NOTE 1) USING ACTUAL LOADS. NOTE: DEVICES WITH LESS THAN 1 SQUARE FOOT OF PROJECTED AREA MAY BE ADDED TO THE MASTARM WITHOUT CAUSING A NEED FOR ADDITIONAL DESIGN COMPUTATIONS.
4. THE MANUFACTURER IS TO DETERMINE WELD SIZES. ALL WELDS AND TESTING SHALL CONFORM TO THE LATEST EDITION OF THE STRUCTURAL WELDING CODE AWS D1.1. PROVIDE VISUAL TEST (VT) OF 100% OF ALL WELDS. PROVIDE MAGNETIC PARTICLE TEST (MT) OF 100% OF ALL FILLET WELDS. PROVIDE RADIOGRAPHIC (RT) OR ULTRASONIC TEST (UT) OF 100% OF ALL COMPLETE JOINT PENETRATION WELDS AND A RANDOM 25% OF ALL PARTIAL JOINT PENETRATION LONGITUDINAL SEAM WELDS.
5. FABRICATE POLE TUBES FROM NO MORE THAN 2 PIECES OF STEEL. WHEN USING 2 PIECES, PLACE THE LONGITUDINAL WELDED SEAMS DIRECTLY OPPOSITE ONE ANOTHER.
6. FABRICATE LUMINAIRE ARMS AND CONNECTIONS ACCORDING TO STANDARD DRAWING L-03.10.
7. PROVIDE PERMANENT TAGS ON ALL POLE SECTIONS PER SECTION 740 TABLE 740-1 OF THE SPECIFICATIONS. PROVIDE A RAIN CAP WHEN NO UPPER SECTION IS SPECIFIED.
8. THE DEPARTMENT WILL REJECT DAMAGED OR DEFECTIVE POLES FOR ANY OF THE FOLLOWING; VARIANCES FROM APPROVED SHOP DRAWINGS, VARIANCES FROM MATERIAL REQUIREMENTS, SECTIONS MORE THAN 2-PERCENT OUT OF ROUND, SECTIONS BOWED MORE THAN 1-INCH THROUGHOUT THE LENGTH OF THE POLE, MASTARM, OR SEGMENT AND, DAMAGED OR DENTED FINISHES.
9. DRILL A 1" MAXIMUM DIAMETER HOLE AT EACH TRAFFIC SIGNAL LOCATION. ORIENT THE HOLE ON THE HORIZONTAL AXIS OF MASTARMS.
10. INSTALL POLE PLUMB BY ENSURING THE SIDE OPPOSITE THE MASTARM IS VERTICAL IN ITS FINAL DEFLECTED POSITION.
11. ALIGN WELDED SEAMS ON ADJACENT SECTIONS OF MASTARMS TO FORM CONTINUOUS STRAIGHT SEAMS THE LENGTH OF THE MASTARM. MECHANICALLY FORCE MASTARM SECTIONS TOGETHER FOR A SNUG FIT.
12. CLEAN AND REMOVE DIRT, BURRS, MILL SCALE, AND EXCESS GALVANIZATION ON ALL FAYING SURFACES AND THREADED PARTS BEFORE ASSEMBLY. LUBRICATE THE THREADS OF ALL BOLTS AND NUTS WITH LUBRICANT CONTAINING A VISIBLE DYE. TIGHTEN ALL BOLTS ACCORDING TO SECTION 504 OF THE SPECIFICATIONS.
13. SEE SHEET H6 FOR SKIRT INFORMATION.

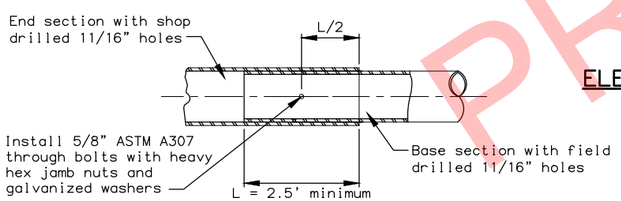

MASTARM SLIP SPLICE ELEVATION DETAIL
NTS

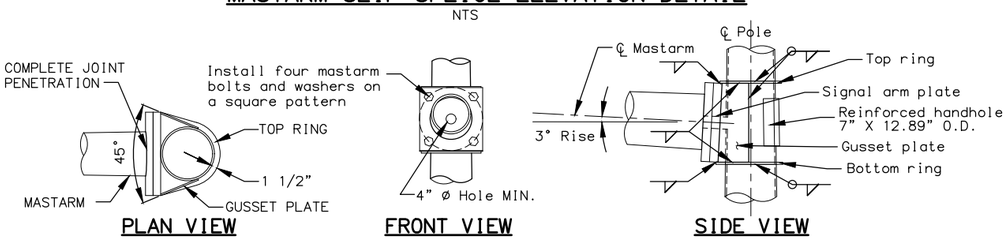

PLAN VIEW FRONT VIEW SIDE VIEW

SIGNAL MASTARM CONNECTION DETAIL
NTS
(Elevation view of a ring stiffened built-up box)

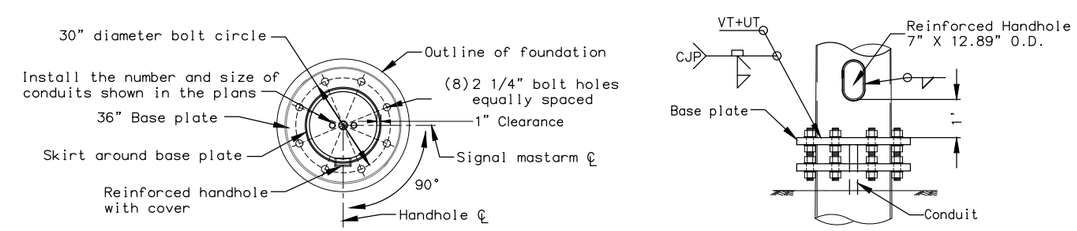

PLAN VIEW
(Shown without anchor bolts and nuts for clarity)

FRONT VIEW
(Skirt omitted for clarity)

POLE BASE DETAIL
NTS

STATE OF ALASKA
REGISTERED PROFESSIONAL ENGINEER
CHARLES WAGNER
11155
PS&E REVIEW

STATE OF ALASKA DOT&PF
4111 AVIATION AVENUE
ANCHORAGE, AK 99502
(907) 269-0590

STATE OF ALASKA
DEPARTMENT OF TRANSPORTATION
AND PUBLIC FACILITIES

HOMER: LAKE STREET REHABILITATION

SIGNAL POLE DETAILS: LOWER SECTION WITH 40' TO 50' MASTARM LENGTH

NO.	DATE	REVISION

STATE	PROJECT DESIGNATION	YEAR	SHEET NO.	TOTAL SHEETS
ALASKA	0001422/Z524610000	2019	H16	H38

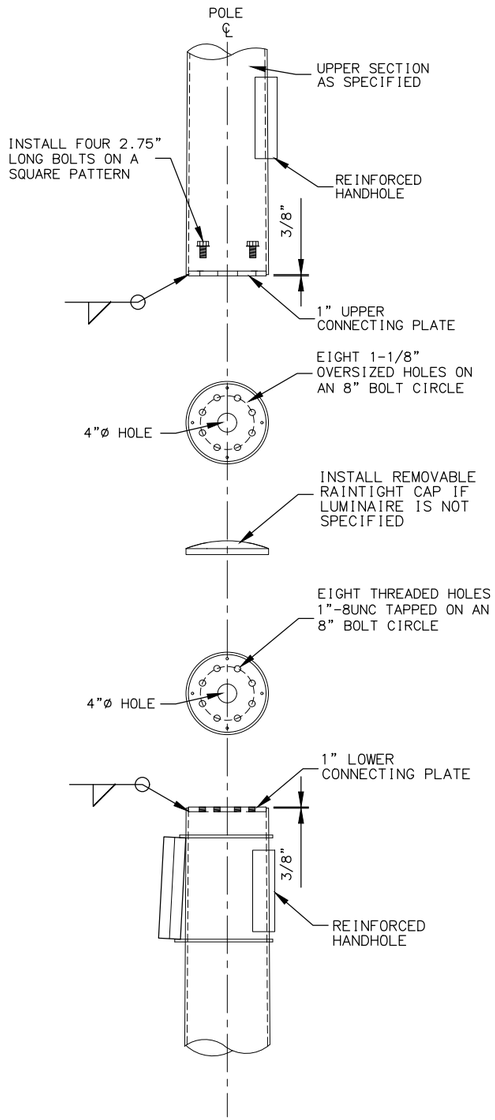

POLE CONNECTING DETAIL

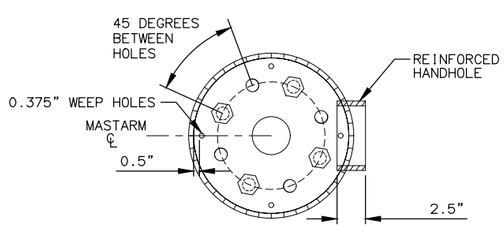

PLATE DETAILS

MATERIAL REQUIREMENTS	
MATERIALS	
Tube Material	A572, A595 GR A or A1011 50 ksi min
Single Luminaire Tube	7 ga
Double Luminaire Tube	7 ga
Davit Luminaire Tube	7 ga
Lower Connecting Plate	AASHTO M270 F3
Upper Connecting Plate	AASHTO M270 F3
Concentric Reducer	A572 or A595 GR A
Connection Tube	A572 or A595 GR A
Luminaire Arm Materials	See L-03.10
Upper Section Attachment Bolts	1"-8UNC / AASHTO M164
Luminaire Attachment Bolts	3/4"-10 / AASHTO M164
Slip-fit Through Bolt	5/8" / AASHTO M164
Finish	AASHTO M111 & M232
Handhole	7" X 12.89" O.D.
SINGLE LUMINAIRE	
Design Length	22.5'
Section Shape	Round
Fixed End Diameter	13.99" O.D.
Taper	0.14"/ft
Luminaire Arm Details	See L-03.10
DOUBLE LUMINAIRE	
Design Length	17.5'
Section Shape	Round
Fixed End Diameter	13.99" O.D.
Taper	0.14"/ft
Luminaire Arm Details	See L-03.10
DAVIT LUMINAIRE ARM	
Design Height	28.5'
Design Offset	15'
Radius	10'
Section Shape	Round
Fixed End Diameter	13.99" O.D.
Free End Diameter	2.375" O.D.
Taper	0.14"/ft
Concentric Reducer	7 ga
Connection Tube	7 ga

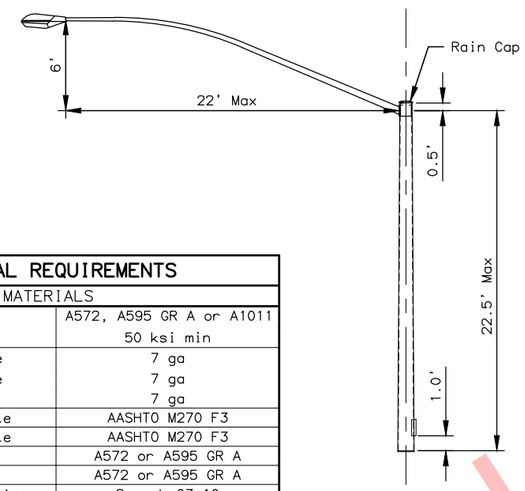

SINGLE LUMINAIRE

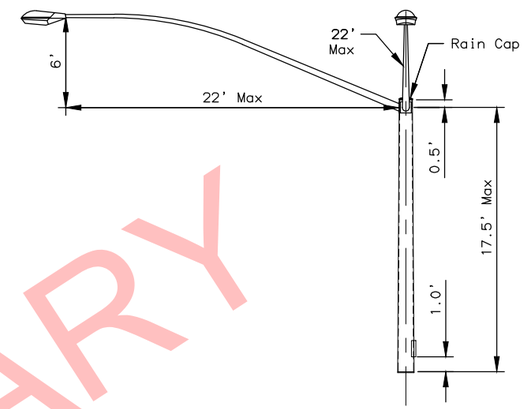

DOUBLE LUMINAIRE

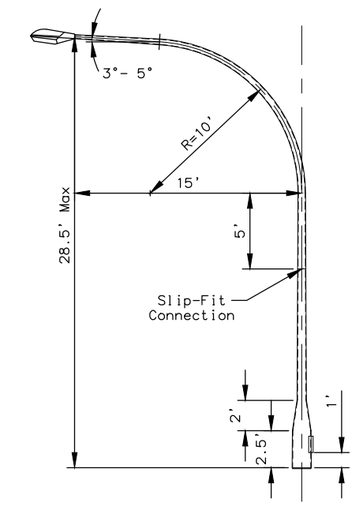

DAVIT LUMINAIRE

UPPER SECTION OPTIONS
NTS

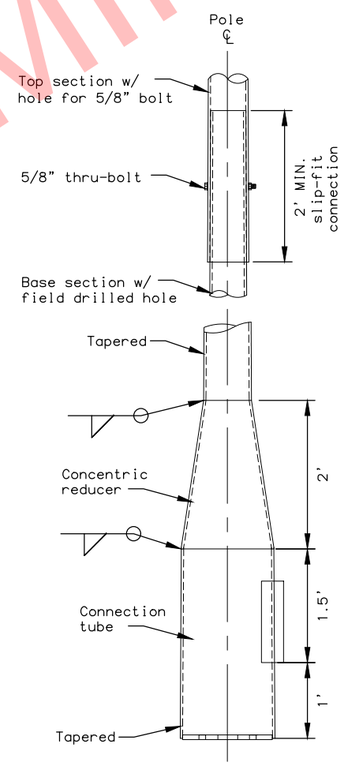

DAVIT CONNECTION DETAIL
NTS

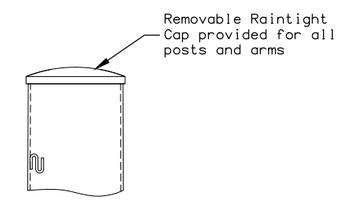

RAIN CAP DETAIL

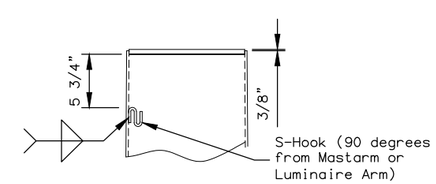

LOWER SECTION POST TOP
NTS

STATE OF ALASKA
CHARLES WAGNER
11155
REGISTERED PROFESSIONAL ENGINEER
PS&E REVIEW

STATE OF ALASKA DOT&PF
4111 AVIATION AVENUE
ANCHORAGE, AK 99502
(907) 269-0590

STATE OF ALASKA
DEPARTMENT OF TRANSPORTATION
AND PUBLIC FACILITIES

HOMER: LAKE STREET REHABILITATION

SIGNAL POLE DETAILS:
UPPER SECTION WITH 40' TO 50' MASTARM LENGTH

DATE/TIME 6/4/2019 9:01 AM | LAYOUT UPPER | DESIGNED GSB | CHECKED CLB | DRAFTED MF

FILE W:\PROJECTS\HOMER LAKE ST. REHAB Z524610000\CIV3D\CIV3016\PLANSET\52461_H_TRAF_DTLMA.DWG

NO.	DATE	REVISION

STATE	PROJECT DESIGNATION	YEAR	SHEET NO.	TOTAL SHEETS
ALASKA	0001422/Z524610000	2019	H17	H38

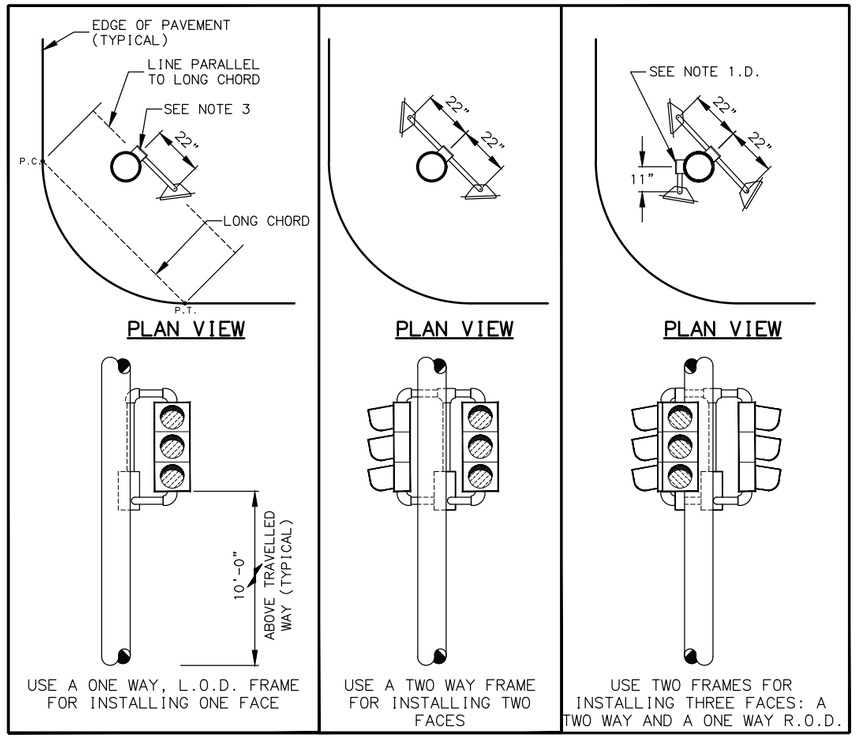

SIDE MOUNTED SIGNAL FRAMES WITH VEHICULAR SIGNALS

(SHOWN WITHOUT BACKPLATES)

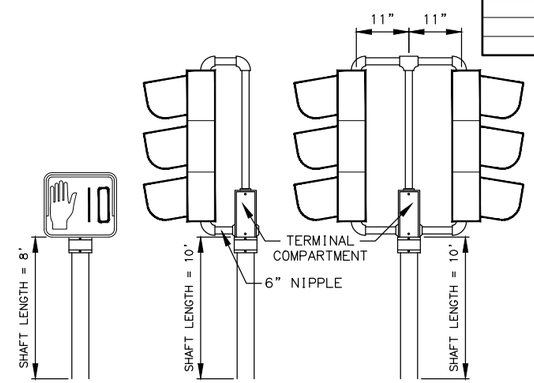

POST MOUNTED SIGNALS

(SHOWN WITHOUT BACKPLATE)

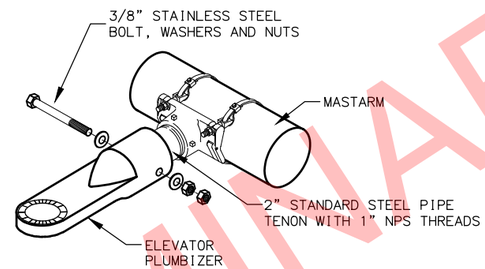

ELEVATOR PLUMBIZER

(SEE NOTE 1.A.)

NOTES:

1. INSTALL THE SIGNAL FACES SHOWN IN THE PLANS AS DETAILED ON THIS SHEET AND PER ALASKA TRAFFIC MANUAL.
   - A. USE ELEVATOR PLUMBIZERS TO INSTALL FACES ON MASTARMS AND WHENEVER TWO INCH PIPE TENONS ARE SPECIFIED. INSTALL THE PLUMBIZER BETWEEN THE RED AND YELLOW SIGNAL INDICATIONS FOR A THREE SECTION HEAD AND BETWEEN THE TWO YELLOW SIGNAL INDICATIONS FOR A FOUR SECTION HEAD. USE STAINLESS STEEL BAND MOUNT HARDWARE, AB-3007-L AS MANUFACTURED BY PELCO PRODUCTS, INC., OR APPROVED EQUAL TO INSTALL PLUMBIZER TO MASTARMS. PELCO MOUNT SHALL HAVE STAINLESS STEEL OPTION.
   - B. USE SLIP FITTERS TO INSTALL PEDESTRIAN SIGNALS ON THE TOP OF POSTS.
   - C. USE SIGNAL FRAMES TO INSTALL SIGNAL FACES ON THE SIDES OF POLES AND ON THE TOPS OF POSTS.
   - D. USE A SECOND SIGNAL FRAME TO INSTALL THE THIRD FACE WHEN THREE SIDE MOUNTED SIGNAL FACES ARE SHOWN.
   - E. USE CLAMSHELL BRACKETS TO INSTALL ALL PEDESTRIAN SIGNALS, EXCEPT THOSE THAT ARE POST TOP MOUNTED.
2. FURNISH ALL SIGNAL FRAMES WITH TERMINAL COMPARTMENTS.
3. INSTALL ONE TERMINAL COMPARTMENT ON THE SIDE OF THE POLE OPPOSITE THE MIDPOINT OF THE RADIUS RETURN. POSITION THE TERMINAL COMPARTMENT AT THE LOCATION WHERE A LINE PARALLEL TO THE LONG CHORD (P.C. TO P.T.) OF THE RADIUS RETURN IS TANGENT TO THE POLE.
4. INSTALL PEDESTRIAN INDICATION TO FACE THE CENTER OF THE FAR SIDE CROSSWALK. ACCEPTABLE VARIANCE IS +/- 1 DEGREE.
5. FIELD DRILL THE HOLES NEEDED FOR ATTACHING ALL SIGNAL HARDWARE. USE HOLE SAWS WHEN DRILL BITS ARE NOT AVAILABLE. TREAT THE BARE STEEL SURFACES IN ACCORDANCE WITH SECTION 660-3.01.8, REPAIRING DAMAGED FINISHES, OF THE STANDARD SPECIFICATIONS.
6. PROVIDE SOLID BACKPLATES SIZED FOR THE NUMBER OF SIGNAL SECTIONS AND MOUNTING TYPE, SO THAT NO LIGHT IS VISIBLE BETWEEN THE BACKPLATE AND THE SIGNAL FACE. FURNISH BACKPLATES FOR DOGHOUSE STYLE SIGNALS THAT FEATURE NOTCHED UPPER CORNERS.
7. ATTACH ALL BACK PLATES USING PLATED STEEL RIVETS WITH LARGE FLANGE BUTTON HEADS. INSTALL 0.187" DIAMETER BY 0.575" LONG RIVETS THAT PROVIDE AT LEAST 530 LBS. AND 670 LBS. SHEAR AND TENSILE STRENGTHS, RESPECTIVELY. BORE OUT THE MOUNTING HOLES IN THE BACK PLATES AND SIGNAL HEADS TO THE DIAMETER RECOMMENDED BY THE RIVET MANUFACTURER.
8. BEFORE INSTALLING THE MACHINE SCREWS THAT SECURE THE VISORS, COAT THE THREADS WITH AN ANTI-SEIZING COMPOUND.

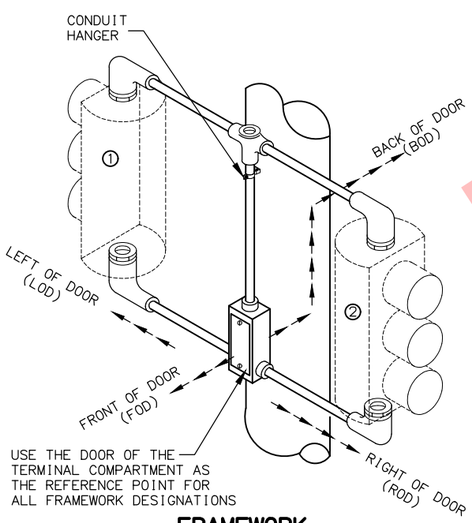

FRAMEWORK DESCRIPTION

HEAD NO. ① OFFSET L.O.D.
HEAD NO. ② OFFSET R.O.D.

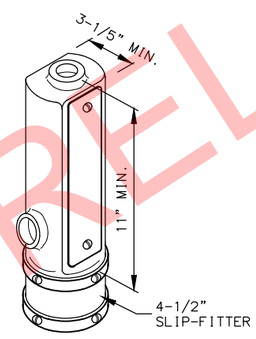

TERMINAL COMPARTMENT WITH SLIP FITTER

(SEE NOTES 1.C. AND 2)

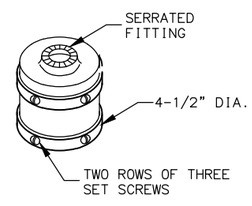

SLIP FITTER

(SEE NOTE 1.B.)

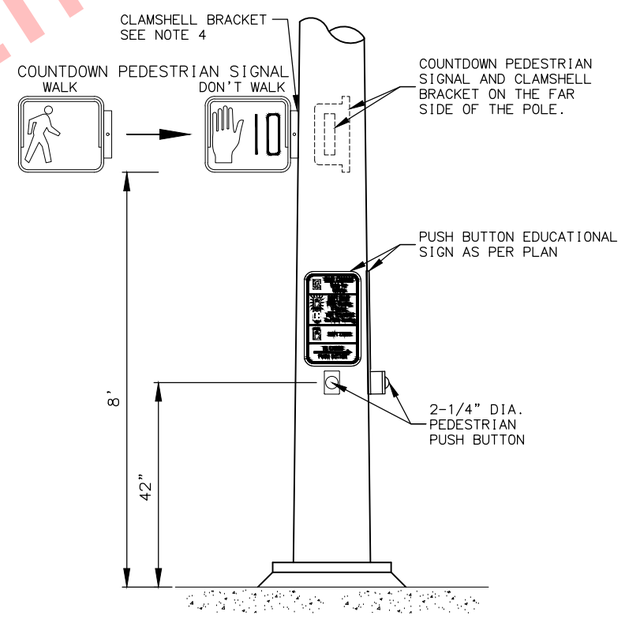

PEDESTRIAN HARDWARE

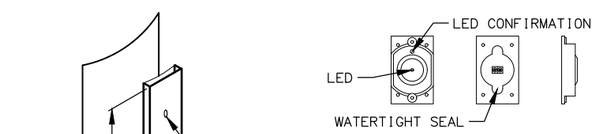

PEDESTRIAN PUSH BUTTON SWITCH

POLARA BULLDOG MODEL RBDLM2-B, OR APPROVED EQUAL

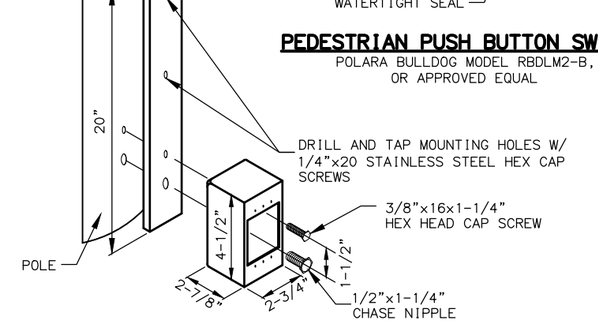

PEDESTRIAN PUSH BUTTON HOUSING

(STYLE A)

STATE OF ALASKA
PS&E REVIEW
STATE OF ALASKA
CHRISTOPHER L. BENTZ
12821
REGISTERED PROFESSIONAL ENGINEER

STATE OF ALASKA DOT&PF
4111 AVIATION AVENUE
ANCHORAGE, AK 99502
(907) 269-0590

STATE OF ALASKA
DEPARTMENT OF TRANSPORTATION
AND PUBLIC FACILITIES

HOMER: LAKE STREET REHABILITATION

SIGNAL HARDWARE DETAILS

DATE/TIME | 6/4/2019 9:01 AM | LAYOUT | SIG HDWR | DESIGNED | GSB | CHECKED | CLB | DRAFTED | MF

FILE | W:\PROJECTS\HOMER LAKE ST. REHAB Z524610000\CIV3D\CIV3D16\PLANSET\52461_H_TRAF_DTL29.DWG

NO.	DATE	REVISION

STATE	PROJECT DESIGNATION	YEAR	SHEET NO.	TOTAL SHEETS
ALASKA	0001422/Z524610000	2019	H18	H38

LOCATION

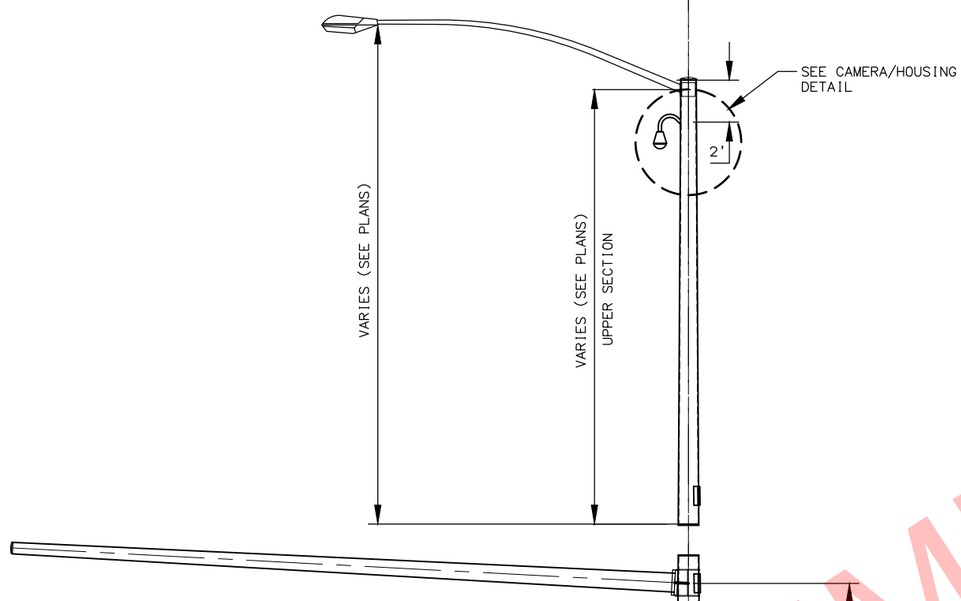

MATERIAL REQUIREMENTS

ALL ASSEMBLIES	
MOUNTING BRACKET	PELCO TRITON BRACKET OR APPROVED EQUAL
POLE MOUNT ADAPTOR	SONY UNI-PMA1 OR APPROVED EQUAL
GOOSENECK WALL MOUNT	SONY UNI-WMB1 OR APPROVED EQUAL
24V AC TRANSFORMER	PSH100AB10 OR APPROVED EQUAL
CABLE 1 (SIGNAL)	CAT-5E, SHIELDED, DIRECT BURIAL
CABLE 2 (POWER)	3C14 (ACCORDING TO MANUFACTURES RECOMMENDATIONS)
CONNECTOR	ENVIRONMENTALLY HARDENED RJ-45
STRAIN RELIEF	REMKE 2201-013 OR APPROVED EQUAL
CAMERA	
CAMERA	SEE SPECIFICATIONS
HOUSING	
PENDANT DOME HOUSING	SEE SPECIFICATIONS

NOTES:

1. PROTECT CABLE ENDS FROM MOISTURE AT ALL TIMES.
2. PULL CABLE IN ACCORDANCE WITH SECTION 660 OF THE SPECIAL PROVISIONS. PULL CABLE SO THAT THERE IS SUFFICIENT LENGTH TO REACH THE TOP OF THE CONTROLLER CABINET. CABLES ARE TO BE PULLED WITHOUT CONNECTORS ATTACHED. WHEN CABLE HAS BEEN PULLED TO FINAL LOCATIONS INSTALL AND MAKE FINAL CONNECTIONS.
3. CABLE RUNS ARE TO BE MADE CONTINUOUS WITHOUT SPLICES EXCEPT FOR IN LOCATION SHOWN IN SPICE DETAIL WITH SPECIFIED CONNECTOR.
4. CABLE WITH DAMAGED INSULATION, OR THAT HAS BEEN CRIMPED OR BENT BEYOND THE MINIMUM BEND RADIUS MUST BE REPLACED AT NO ADDITIONAL COST.
5. THE MIN BEND RADIUS SHALL NOT EXCEED THE MANUFACTURERS RECOMMENDATIONS.
6. ENSURE ADEQUATE LENGTH OF EACH CABLE TO ALLOW WORK ON THE ENDS OF THE CABLE IN THE CONTROLLER CABINET AND THE CAMERA MOUNTING LOCATION.
7. MOUNT THE PENDENT DOME HOUSING AT A 45° ANGLE AT THE REQUIRED HEIGHT. ANGLE AND HEIGHT MAY BE ADJUSTED BY THE ENGINEER TO AVOID WELDS, APPENDICES AND TO APPROVE SITE DISTANCE.
8. ADJUST CAMERA INSIDE THE PENDENT DOME HOUSING AS SHOWN. ENSURE THAT THE CAMERA IS MOUNTED AT A 0° TILT ANGLE.
9. INSTALL WATERTIGHT THREADED RIGID COMPRESSION CONNECTOR WHERE CABLE PASSES THROUGH THE POLE.
10. AT SPLICE LOCATION PROVIDE A SECURE CONNECTION USING CONNECTOR PARTS SPECIFIED. AFTER CONNECTION IS MADE COVER SPLICE WITH HEAT SHRINK. PROVIDE A STRAIN RELIEF CABLE AS NECESSARY.

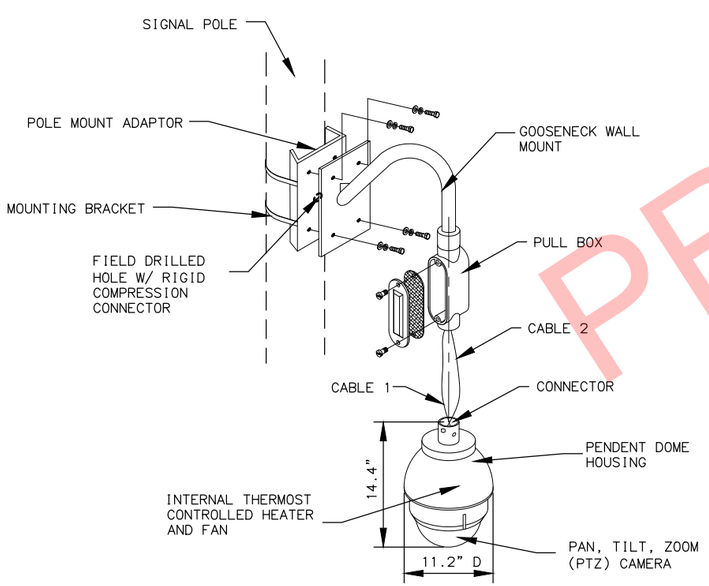

CAMERA/HOUSING DETAIL

NTS

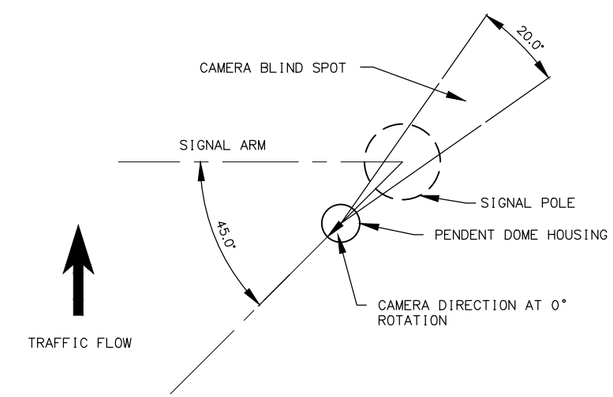

CAMERA/PENDENT DOME ORIENTATION

NTS

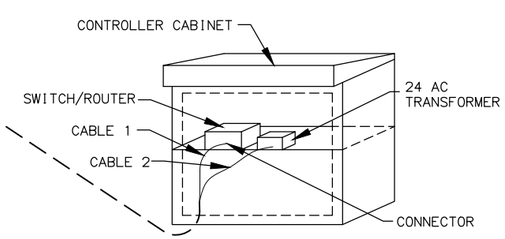

SYSTEM LAYOUT

NTS

STATE OF ALASKA
DEPARTMENT OF TRANSPORTATION
AND PUBLIC FACILITIES

STATE OF ALASKA DOT&PF
4111 AVIATION AVENUE
ANCHORAGE, AK 99502
(907) 269-0590

HOMER: LAKE STREET REHABILITATION

PAN, TILT, ZOOM, CAMERA MOUNTING DETAILS

FILE W:\PROJECTS\HOMER LAKE ST. REHAB Z524610000\CIV30\CIV3016\PLANSET\52461_H_TRAF_DTL32.DWG | DATE/TIME 6/4/2019 9:01 AM | LAYOUT 32 PTZ | DESIGNED GSB | CHECKED CLB | DRAFTED MF

NO.	DATE	REVISION

STATE	PROJECT DESIGNATION	YEAR	SHEET NO.	TOTAL SHEETS
ALASKA	0001422/Z524610000	2019	H19	H38

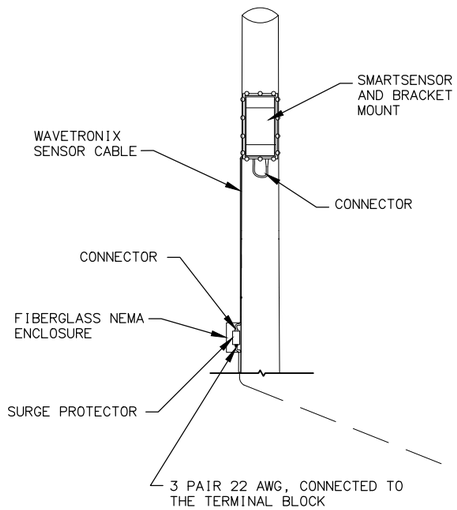

SIDE POLE
OPTION 1

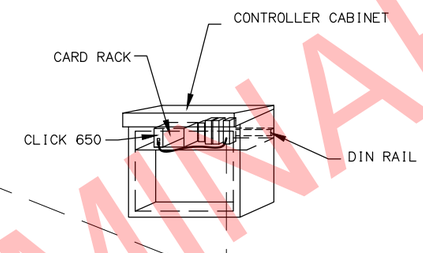

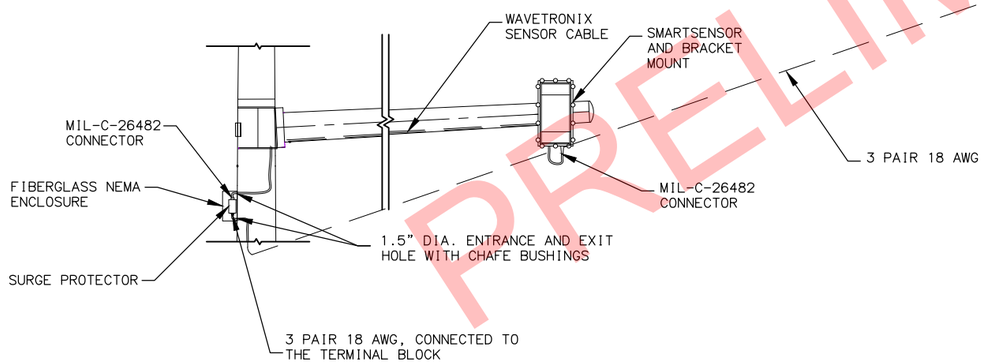

MASTARM
OPTION 2

NOTES:

1. PROTECT CABLE ENDS FROM MOISTURE AT ALL TIMES.
2. PULL CABLE IN ACCORDANCE WITH SECTION 660 OF THE SPECIAL PROVISIONS. PULL CABLE SO THAT THERE IS SUFFICIENT LENGTH TO REACH THE TOP OF THE CONTROLLER CABINET. CABLES ARE TO BE PULLED WITHOUT CONNECTORS ATTACHED. WHEN CABLE HAS BEEN PULLED TO FINAL LOCATIONS INSTALL AND MAKE FINAL CONNECTIONS.
3. CABLE RUNS ARE TO BE MADE CONTINUOUS WITHOUT SPLICES.
4. CABLE WITH DAMAGED INSULATION, OR THAT HAS BEEN CRIMPED OR BENT BEYOND THE MINIMUM BEND RADIUS MUST BE REPLACED AT CONTRACTORS EXPENSE.
5. THE MINIMUM BEND RADIUS SHALL NOT EXCEED MANUFACTURERS RECOMMENDATIONS.
6. ENSURE ADEQUATE LENGTH OF EACH CABLE TO ALLOW WORK ON THE ENDS OF THE CABLE IN THE CONTROLLER CABINET, AT THE POLE MOUNT ENCLOSURE AND RADAR MOUNTING LOCATION.
7. MOUNT THE RADAR AT THE LOCATION STATED IN THE PLANS. PLACEMENT MAY BE ADJUSTED BY THE ENGINEER TO ALLOW FOR BETTER AIMING OF THE RADAR OR TO AVOID OTHER HAZARDS.
8. INSTALL WATERTIGHT RUBBER GROMMETS WHERE CABLE PASSES THROUGH THE POLE.
9. FURNISH ONLY NEW EQUIPMENT OF THE BRAND AND TYPE LISTED OR ITS APPROVED EQUAL. PROVIDE AT NO ADDITIONAL COST ALL NECESSARY DEVICES, WIRES, BRACKETS/HARDWARE ETC. TO PROVIDE A FULLY FUNCTIONING RADAR ADVANCE DETECTION SYSTEM.

RADAR DETECTION EQUIPMENT

QTY	DESCRIPTION
2	SMARTSENSOR ADVANCE (WX-SS-200)
5	SMARTSENSOR CABLE (WX-SS-H701/2/3-040)
5	PELCO MOUNT (WX-SS-H611)
5	CONNECTORS (MIL-C-26482)
3	SMARTSENSOR MATRIX
2	CLICK! 650

ADDITIONAL EQUIPMENT

QTY	DESCRIPTION
1	WAVETRONIX INSTALL KIT (WX-SS-KIT)
1	SMARTSENSOR MANAGER ADVANCE SOFTWARE (WX550-0001)

NEMA ENCLOSURE EQUIPMENT

QTY	DESCRIPTION
4	FIBERGLASS NEMA 4X ENCLOSURE 10"X8"X6" W/CONN, DIN RAIL (WX-CLK-C10-0007) OR EQUIVALENT
5	CLICK! LIGHTING SURGE PROTECTOR

RADAR DETECTION DETAIL
(NTS)

STATE OF ALASKA
REGISTERED PROFESSIONAL ENGINEER
CHRISTOPHER L. BENTZ
12821
P584 REVIEW

STATE OF ALASKA DOT&PF
4111 AVIATION AVENUE
ANCHORAGE, AK 99502
(907) 269-0590

STATE OF ALASKA
DEPARTMENT OF TRANSPORTATION
AND PUBLIC FACILITIES

HOMER: LAKE STREET
REHABILITATION

RADAR DETECTION DETAILS

FILE W:\PROJECTS\HOMER LAKE ST. REHAB Z524610000\CIV3D\CIV3D16\PLANSET\52461_H_TRAF_DTL33.DWG
DATE/TIME 6/4/2019 9:01 AM | LAYOUT 33 RADAR | DESIGNED GSB | CHECKED CLB | DRAFTED MF

NO.	DATE	REVISION

STATE	PROJECT DESIGNATION	YEAR	SHEET NO.	TOTAL SHEETS
ALASKA	0001422/Z524610000	2019	H20	H38

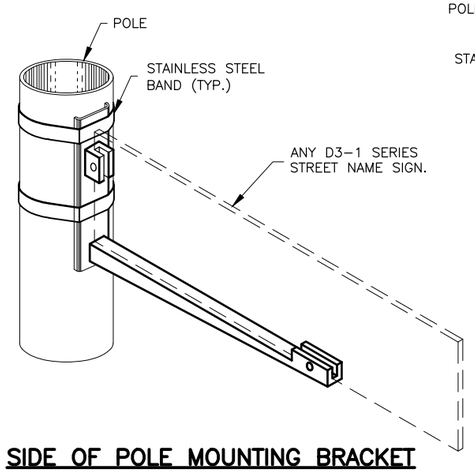

SIDE OF POLE MOUNTING BRACKET

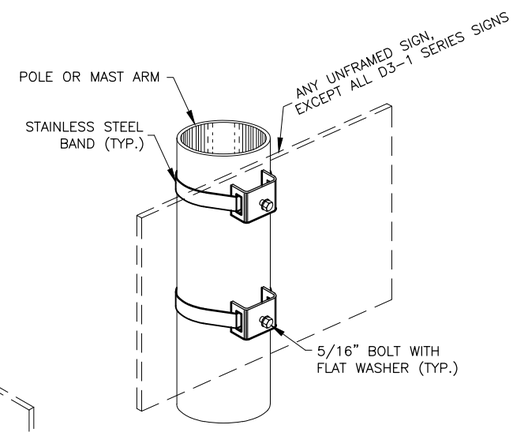

SADDLE BRACKETS

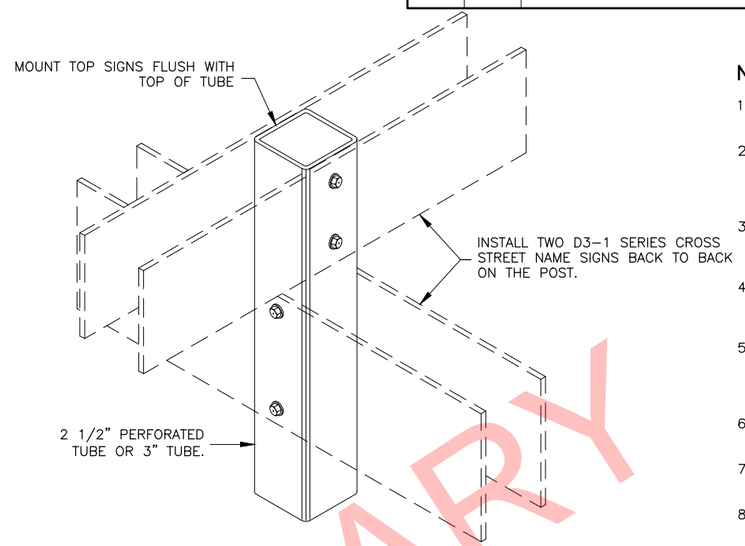

STREET NAME SIGN INSTALLATION

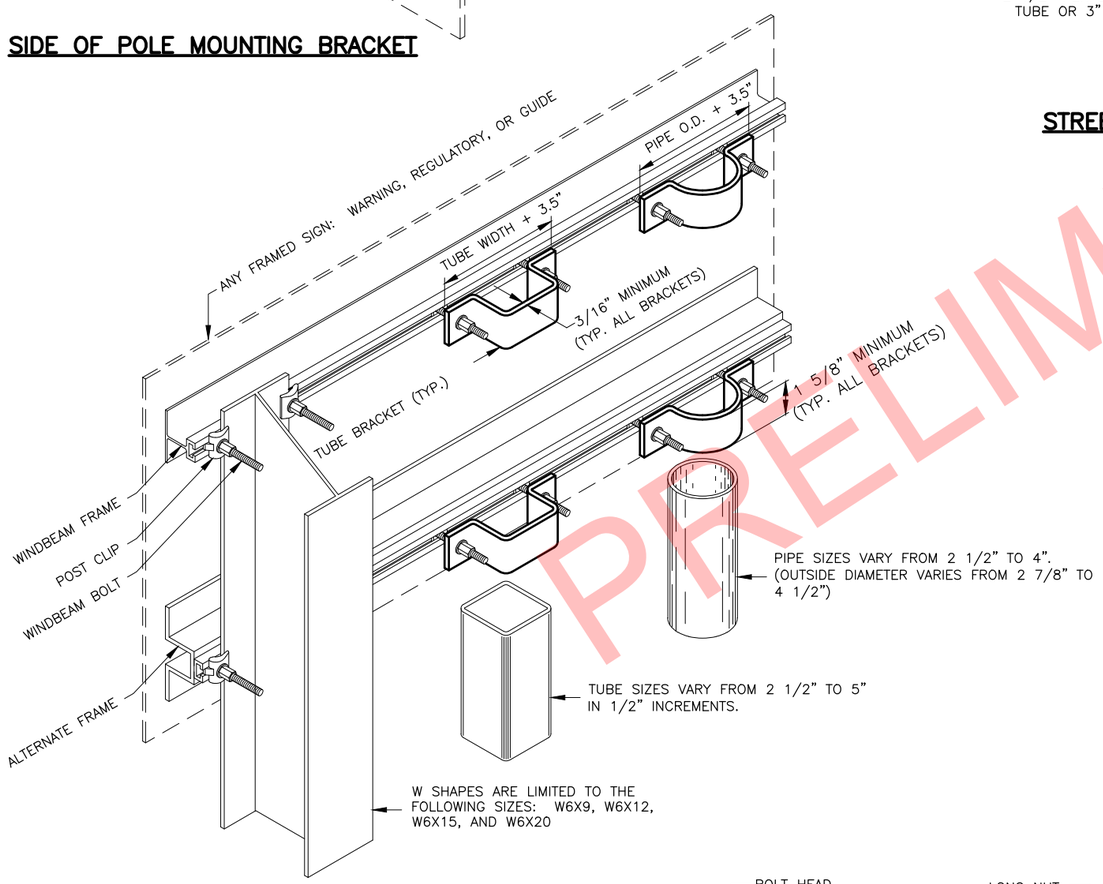

FRAMED SIGN ATTACHMENT BRACKETS

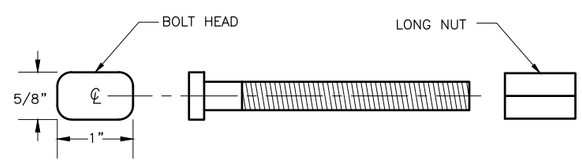

3/8" WINDBEAM BOLT AND LONG NUT

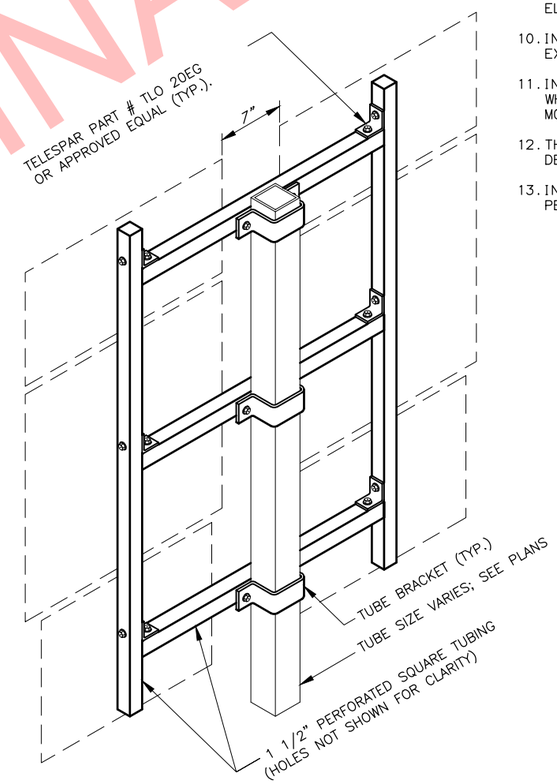

ROUTE MARKER TREE

NOTES:

1. EXCEPT FOR POLES AND MAST ARMS, ONLY USE TUBES TO SUPPORT SIGNS MOUNTED ON ONE POST.
2. ATTACH SIGNS, FRAMED AND UNFRAMED TO THEIR SUPPORTS WITH ZINC PLATED 3/8" BOLTS, EXCEPT ATTACH UNFRAMED SIGNS TO PERFORATED TUBES WITH ACCESSORY DRIVE RIVETS AND TO SADDLES WITH 5/16" BOLTS.
3. BOLT UNFRAMED SIGNS DIRECTLY TO TUBES IN TWO LOCATIONS, NEAR TOP AND NEAR BOTTOM OF MATING SURFACE. ATTACH THEM TO POLES AND MAST ARMS WITH TWO SADDLES.
4. ATTACH BRACKETS TO POLES AND MAST ARMS WITH DOUBLE WRAPS OF 3/4" WIDE BY 0.020" THICK STAINLESS STEEL BANDING MATERIAL. TIGHTEN EACH BAND UNTIL IT STOPS MOVING THROUGH THE BUCKLE.
5. ATTACH FRAMED SIGNS TO POSTS WHEREVER THE FRAMES CROSS THE POSTS. AT EACH CROSSING, ATTACH THE SIGN USING TWO POST CLIPS ON W-SHAPE POSTS, A U-SHAPED BRACKET ON PIPES, AND A BRACKET WITH SQUARE CORNERS ON TUBES.
6. THE TUBE BRACKETS USED ON EVEN INCH SIZE TUBES MAY ALSO BE USED ON TUBES 1/2" SMALLER IN SIZE.
7. ONLY USE THE SPECIAL WINDBEAM BOLTS TO ATTACH SIGNS FRAMED WITH THE WINDBEAM FRAMING MATERIAL.
8. ATTACH FRAMED SIGNS TO POLES AND MAST ARMS USING POLE PLATES INSTALLED ACCORDING TO STANDARD PLAN S-23.
9. FOR ROUTE MARKER TREES, CUT PERFORATED TUBES TO ENSURE TIGHT FITTING JOINTS. ASSEMBLE THE PIECES WITH ACCESSORY ELL-SHAPED ANGLE BRACKETS.
10. INSTALL THE TOP EDGE OF SIGNS 1" ABOVE THE TOPS OF POSTS, EXCEPT FOR THE D3-1 STREET NAME SIGNS.
11. INSTALL THE TOP EDGE OF SIGNS 3" BELOW THE TOP OF POST, WHENEVER THEY ARE MOUNTED BELOW SIGNS SECURED BY POST TOP MOUNTING BRACKETS.
12. THE BRACKET DETAILS SHOWN INDICATE GENERAL DESIGNS ONLY. DESIGNS MAY VARY BY MANUFACTURER.
13. INSTALL WEATHER TIGHT CAPS ON ALL PIPE AND TUBE POSTS, EXCEPT PERFORATED TUBING.

FASTENER SPECIFICATION TABLE

FASTENERS		STEEL	STAINLESS STEEL
BOLTS		ASTM A 307	ASTM F 593
NUTS	REGULAR	ASTM A 563	ASTM F 594
	LOCK		
WASHERS		ASTM A 36	ASTM A 480
POST CLIPS			

STATE OF ALASKA
DEPARTMENT OF TRANSPORTATION
AND PUBLIC FACILITIES

HOMER: LAKE STREET REHABILITATION

SIGN ATTACHMENT DETAILS

STATE OF ALASKA DOT&PF
4111 AVIATION AVENUE
ANCHORAGE, AK 99502
(907) 269-0590

FILE W:\PROJECTS\HOMER LAKE ST. REHAB 7524610000\CIV3D16\PLANSET\52461_H_TRAF_DTL34.DWG | DATE/TIME 6/4/2019 9:01 AM | LAYOUT | SGN ATT | DESIGNED GSB | CHECKED CLB | DRAFTED MF

NO.	DATE	REVISION

STATE	PROJECT DESIGNATION	YEAR	SHEET NO.	TOTAL SHEETS
ALASKA	0001422/Z524610000	2019	H21	H38

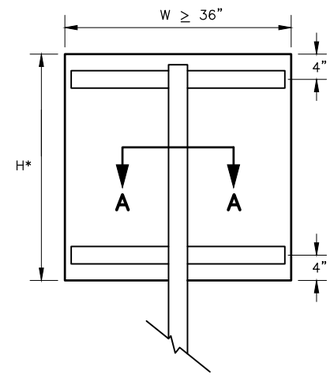

RECTANGLES AND TRAPEZOIDS

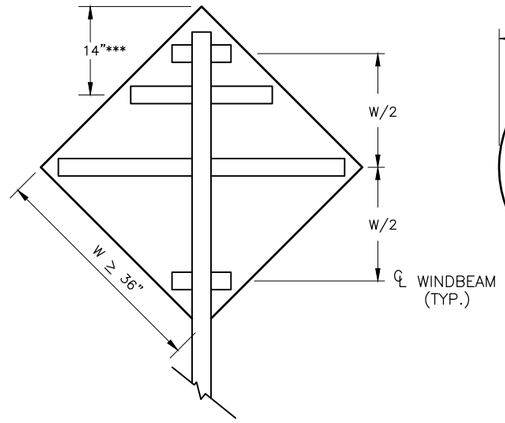

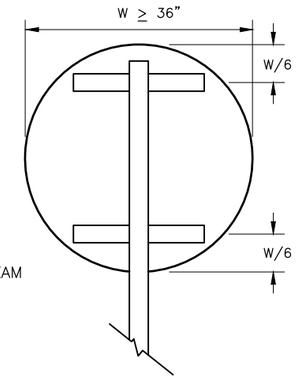

ROUNDS AND OCTAGONS

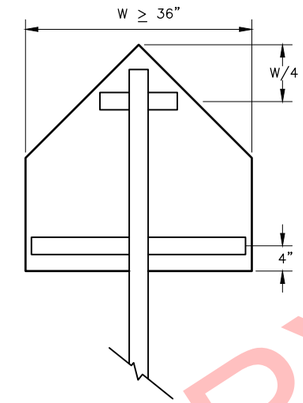

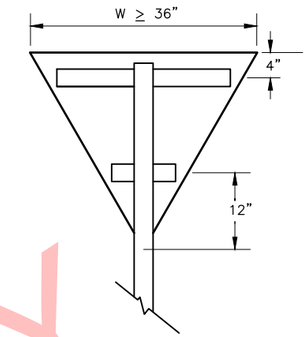

* WHEN H > 42 INCHES, INSTALL A 3RD WINDBEAM CENTERED ON THE SIGN.

** FOR S5-1 SIGNS MOUNTED ON FLASHING BEACON POSTS, USE A 10" OFFSET. OTHERWISE, USE 4".

*** FOR WARNING SIGNS MOUNTED ON FLASHING BEACON POSTS, USE THE 14" OFFSET. OTHERWISE, USE W/2.

WINDBEAM LOCATIONS FOR EACH SIGN SHAPE

ELEVATION VIEW

NOTES:

1. EXCEPT FOR POLES AND MAST ARMS, ONLY USE SQUARE STEEL TUBES TO SUPPORT SIGNS MOUNTED ON SINGLE POSTS.
2. INSTALL WINDBEAM OR ZEE SHAPED FRAMING MEMBERS ON DIAMOND SHAPED SIGNS 36 INCHES AND LONGER ON A SIDE AND ON OTHER SIGNS 36 INCHES WIDE AND WIDER.
3. IN HIGH WIND AREAS, THE PLANS MAY REQUIRE SIGNS SMALLER THAN THOSE LISTED IN NOTE 2 BE FRAMED AS SHOWN HERE IN.
4. THIS DRAWING DEPICTS THE WINDBEAM FRAMING AND ATTACHMENT SYSTEM. ATTACH SIGNS FRAMED WITH ZEE SHAPED FRAMING ACCORDING TO REGIONAL DRAWING "SIGN ATTACHMENT DETAILS", USING "U" SHAPED BRACKETS AND TWO BOLTS WITH NUTS.
5. THE ENGINEER MAY APPROVE OTHER FRAMING MEMBERS. SUBMIT DOCUMENTS THAT DETAIL THE FRAME'S CROSS SECTION AND STRENGTH, AND METHOD OF ATTACHING THE FRAME TO A POST.
6. USE FRAMING MEMBERS MADE FROM ALUMINUM ALLOY 6061-T6.
7. EACH FRAMING MEMBER SHALL BE ONE CONTINUOUS PIECE.
8. ATTACH FRAMING MEMBERS TO THE SIGN PANELS WITH RIVETS OR AN ENGINEER APPROVED, DOUBLE SIDED, HIGH STRENGTH, ADHESIVE TAPE.
9. WITH THE ADHESIVE TAPE, INSTALL TWO RIVETS IN BOTH ENDS OF EACH FRAMING MEMBER, AND ATTACH THE FRAMING MEMBERS TO THE SIGN PANELS ACCORDING TO THE TAPE MANUFACTURER'S WRITTEN INSTRUCTIONS, INCLUDING:
   A. THE CLEANING AND HANDLING OF THE SIGN PANELS AND FRAMING MEMBERS.
   B. THE APPLICATION OF THE ADHESIVE TAPE.
10. WHEN RIVETS ARE USED TO ATTACH FRAMING MEMBERS, INSTALL 2 RIVETS IN EACH END AND THE BALANCE ON 8" MAXIMUM CENTERS.
11. USE 3/16" DIAMETER RIVETS CONFORMING TO ALUMINUM ALLOY 6061-T6 FOR COLD DRIVEN RIVETS, OR ALUMINUM ALLOY 6061-T43 FOR HOT DRIVEN RIVETS.
12. THE BRACKETS USED ON EVEN INCH SIZE TUBES MAY ALSO BE USED ON TUBES 1/2" SMALLER IN SIZE.

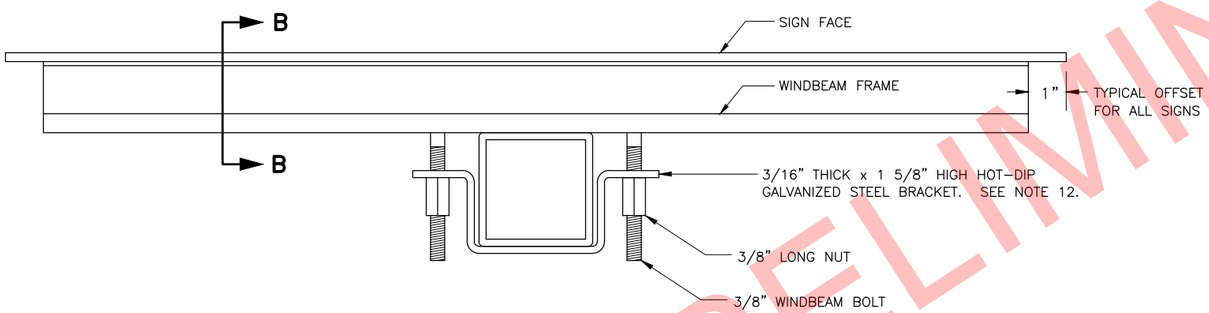

SECTION A - A TYPICAL SIGN ATTACHMENT DETAILS AT EACH WINDBEAM

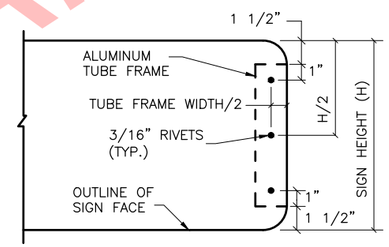

VIEW C - C

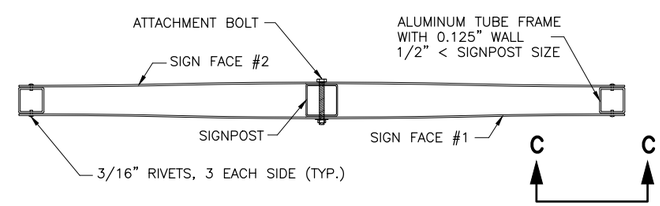

D3-1 STREET NAME SIGN FRAMING DETAIL

PLAN VIEW

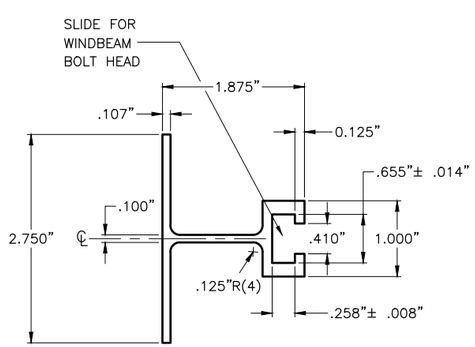

SECTION B - B WINDBEAM CROSS SECTION

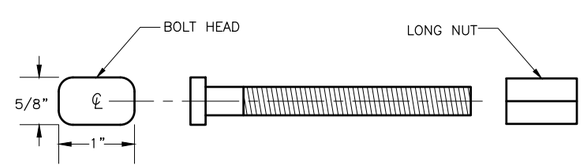

3/8" WINDBEAM BOLT AND LONG NUT

STATE OF ALASKA REGISTERED PROFESSIONAL ENGINEER CHRISTOPHER L. BENTZ 12821 PS&E REVIEW

STATE OF ALASKA DOT&PF
4111 AVIATION AVENUE
ANCHORAGE, AK 99502
(907) 269-0590

STATE OF ALASKA
DEPARTMENT OF TRANSPORTATION AND PUBLIC FACILITIES

HOMER: LAKE STREET REHABILITATION

LIGHT SIGN FRAMING AND ATTACHMENT DETAILS

MF | DRAFTED | CLB | CHECKED | GSB | DESIGNED | LT SGN FRM | LAYOUT | 6/4/2019 9:01 AM | DATE/TIME
FILE W:\PROJECTS\HOMER LAKE ST. REHAB Z524610000\CIV3D\CIV3D16\PLANSET\52461_H_TRAF_DTL35.DWG

NO.	DATE	REVISION

STATE	PROJECT DESIGNATION	YEAR	SHEET NO.	TOTAL SHEETS
ALASKA	0001422/Z524610000	2019	H22	H38

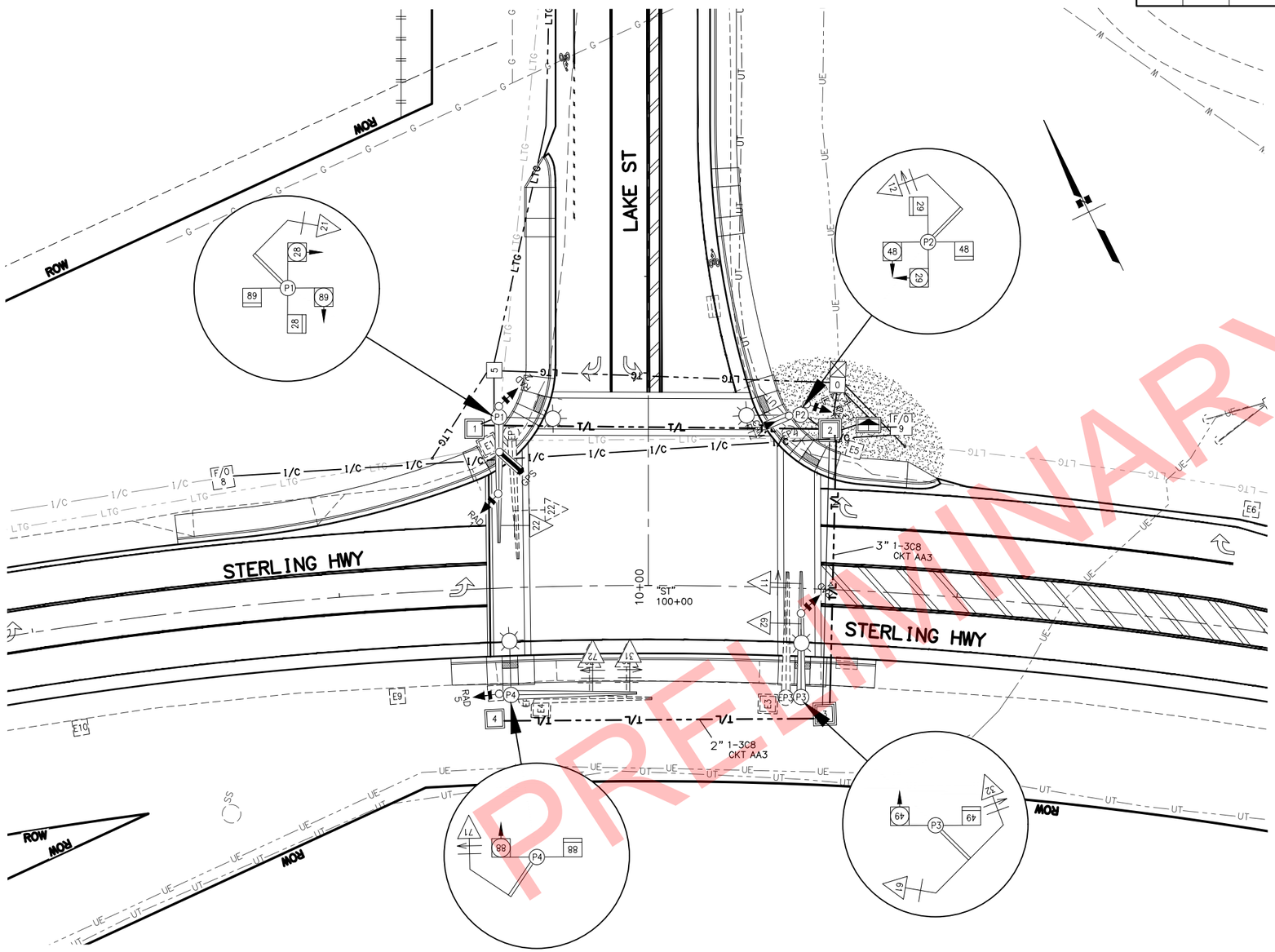

NOTES:

1. INSTALL NEW SIGNAL POLES AND FOUNDATIONS.POLE LOCATIONS SHALL BE STAKED AND APPROVED BY ENGINEER PRIOR TO FOUNDATION INSTALLATION. ADJUSTMENT TO LOCATIONS SHALL BE MADE TO AVOID CONFLICT WITH UTILITIES.
2. INSTALL NEW TRAFFIC CONTROLLER AND LOAD CENTER AT LOCATIONS SHOWN IN THE FOUNDATION SCHEDULE.
3. ALL ITEMS SHOWN ON SALVAGE SCHEDULE SHALL BE DELIVERED TO THE M&O STATION IN HOMER. THIS INCLUDES THE HARDWARE AND ALL THE ASSOCIATED ITEMS WITH THE EXISTING SIGNALS.
4. EXISTING SIGNAL INFORMATION WAS OBTAINED FROM AS-BUILTS. CONTRACTOR SHALL VERIFY LOCATIONS PRIOR TO BEGINNING WORK.

INTERCONNECT:

1. CONTRACTOR SHALL STAKE AN ALIGNMENT FOR INSTALLATION OF THE FIBER INTERCONNECT FOR APPROVAL BY THE ENGINEER FROM EXISTING VAULT #8 TO THE NEW TRAFFIC CONTROLLER. AVOID IMPACTS TO CULVERTS, SIGNS, LIGHTING, CURB RAMPS AND EXISITNG UTILITIES WHERE POSSIBLE.
2. PULL EXISTING INTERCONNECT CABLE (INSTALLED FROM THE MAIN STREET INTERSECTION IMPROVEMENT PROJECT#Z559840000) FROM TRAFFIC CONTROLLER BACK TO VAULT 8.
3. ONCE AN ALIGNMENT IS ESTABLISHED AND APPROVED BY THE ENGINEER, INSTALL HIGH DENSITY POLYETHLENE CONDUIT (HDPE) IN ACCORDANCE WITH 662-3.02 CONDUIT. INSTALL THE EXISTING INTERCONNECT CABLE IN VAULT #8 INTO THE NEW HDPE TO THE TRAFFIC CONTROLLER AND MAKE PROPER CONNECTIONS IN THE TRAFFIC CONTROLLER.

SALVAGE SCHEDULE

ITEM	STATION ALIGNMENT	OFFSET	STRUCTURE
EP1	10+49.2	44.3' LT	SIGNAL POLE 1 & FOUNDATION
EP2	10+49.1	45.9' LT	SIGNAL POLE 2 & FOUNDATION
EP3	100+45.8	35.6' RT	SIGNAL POLE 3 & FOUNDATION
EP4	99+59.4	36.2' RT	SIGNAL POLE 4 & FOUNDATION
E1	10+45.4	51.4' LT	TYPE 2 J-BOX
E2	10+50.9	58.9' RT	TYPE 2 J-BOX
E3	100+40.0	37.7' RT	TYPE 2 J-BOX
E4	99+64.3	39.3' RT	TYPE 2 J-BOX
E5	10+43.8	66.8' RT	TYPE 1A J-BOX
E6	101+90.3	38.8' LT	TYPE 1A J-BOX
E7	102+75.2	34.3' LT	TYPE 1A J-BOX
E8	99+49.2	33.9' RT	TYPE 1A J-BOX
E9	99+16.7	33.3' RT	TYPE 1A J-BOX
E10	98+11.4	32.8' RT	TYPE 1A J-BOX
E11	97+24.6	33.4' RT	TYPE 1A J-BOX
LC	10+59.7	60.7' RT	EXISTING LOAD CENTER
TC	10+59.7	60.7' RT	EXISTING TRAFFIC CONTROLLER & FOUNDATION

FOUNDATION SCHEDULE

	STATION ALIGNMENT	OFFSET	STRUCTURE
LC	10+69.9	61.45' RT	LOAD CENTER
TC	10+51.9	71.3' RT	TRAFFIC CONTROLLER
P1	10+54.5	48.1' LT	SIGNAL POLE 1(??' PILE)
P2	10+55.2	49.4' RT	SIGNAL POLE 2(??' PILE)
P3	100+50.9	35.2' RT	SIGNAL POLE 3(??' PILE)
P4	99+54.5	34.7' RT	SIGNAL POLE 4(??' PILE)

RADAR DETECTION SCHEDULE

LOCATION	RADAR ID	PHASE CALL	FACING DIRECTION	REMARKS
SIGNAL POLE 1 MASTARM	1	1,6	SOUTHWEST	MATRIX
SIGNAL POLE 1	2	3,7	NORTHEAST	MATRIX
SIGNAL POLE 2	3	2	SOUTHEAST	ADVANCE
SIGNAL POLE 3 MASTARM	4	2	NORTHEAST	MATRIX
SIGNAL POLE 4	5	6	WEST	ADVANCE

JUNCTION BOX SCHEDULE

J-BOX	STATION ALIGNMENT	OFFSET	STRUCTURE
0	10+64.9	61.3' RT	TYPE 1A
1	10+50.7	56.3' LT	TYPE 2
2	10+49.9	58.9' RT	TYPE 3
3	100+59.0	40.4' RT	TYPE 3
4	99+48.7	42.5' RT	TYPE 2
5	10+69.6	49.7' LT	TYPE 1A

STATE OF ALASKA
REGISTERED PROFESSIONAL ENGINEER
CHRISTOPHER L. BENTZ
12821
P584 REVIEW

STATE OF ALASKA DOT&PF
4111 AVIATION AVENUE
ANCHORAGE, AK 99502
(907) 269-0590

STATE OF ALASKA
DEPARTMENT OF TRANSPORTATION
AND PUBLIC FACILITIES

HOMER: LAKE STREET REHABILITATION

LAKE STREET SIGNAL SYSTEM PLAN

FILE W:\PROJECTS\HOMER LAKE ST. REHAB Z524610000\CIV3D\CIV3D16\PLANSET\52461_H_TRAF_PLAN.DWG | DATE/TIME 6/4/2019 9:02 AM | LAYOUT SIGSYS | DESIGNED GSB | CHECKED CLB | DRAFTED MF

NO.	DATE	REVISION

STATE	PROJECT DESIGNATION	YEAR	SHEET NO.	TOTAL SHEETS
ALASKA	0001422/Z524610000	2019	H23	H38

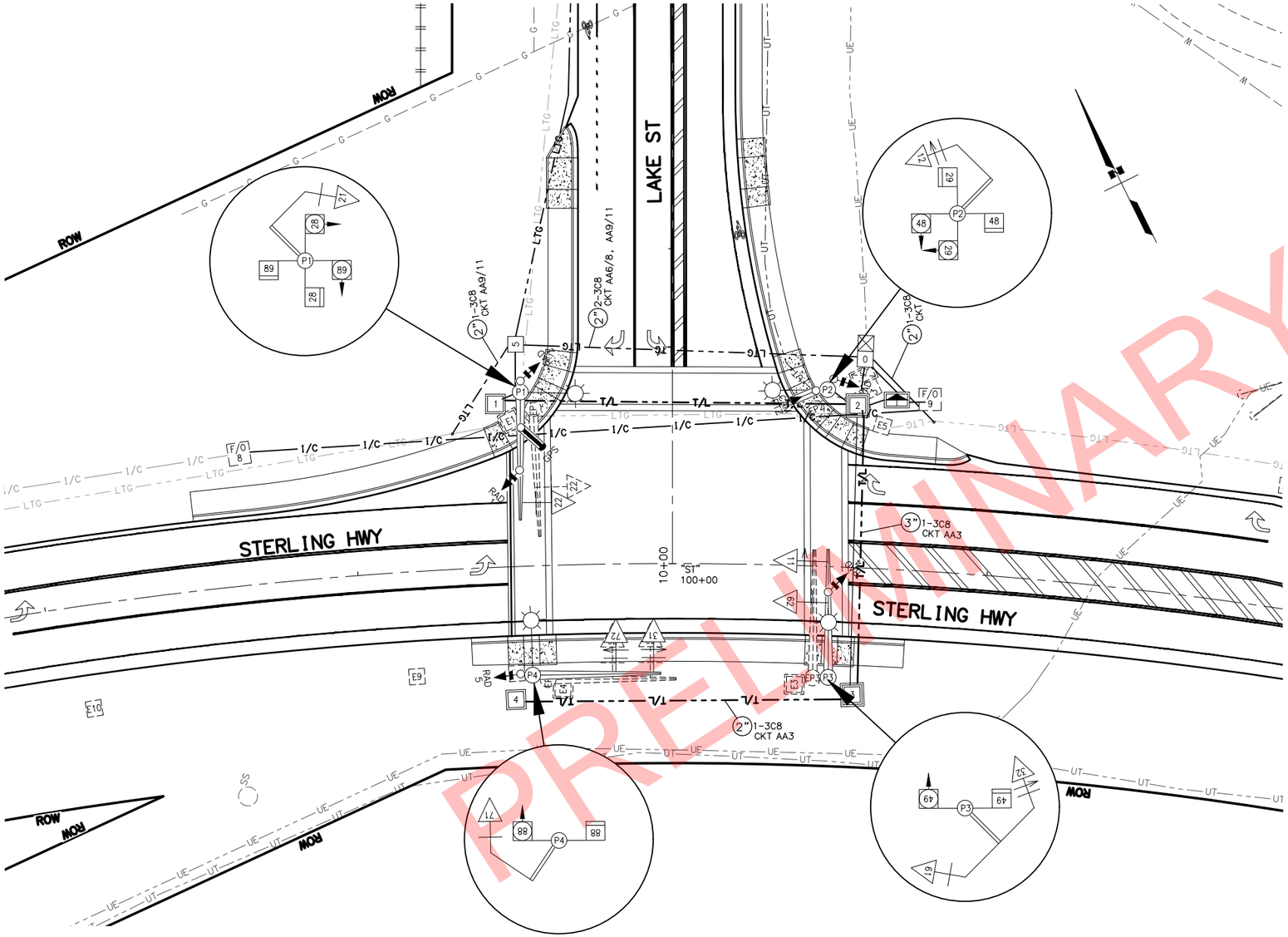

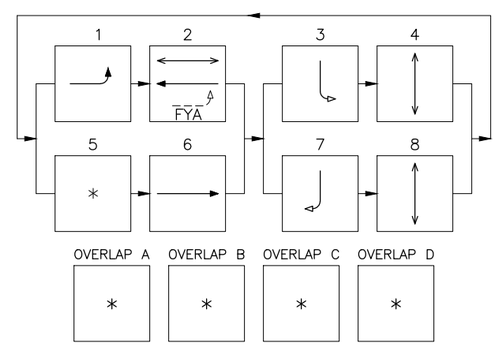

PHASE DIAGRAM

- PEDESTRIAN MOVEMENT
- PROTECTED VEHICLE MOVEMENT
- UNPROTECTED VEHICLE MOVEMENT
- * FUTURE USE/NOT USED

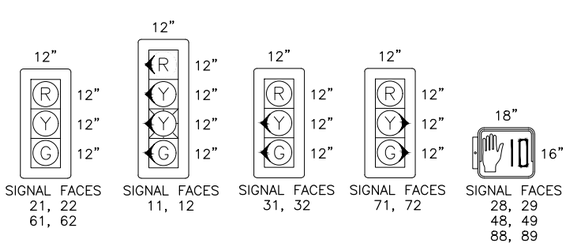

SIGNAL FACES 21, 22 61, 62 | SIGNAL FACES 11, 12 | SIGNAL FACES 31, 32 | SIGNAL FACES 71, 72 | SIGNAL FACES 28, 29 48, 49 88, 89

SIGNAL HEAD CONFIGURATIONS

STATE OF ALASKA DOT&PF
4111 AVIATION AVENUE
ANCHORAGE, AK 99502
(907) 269-0590

STATE OF ALASKA
DEPARTMENT OF TRANSPORTATION
AND PUBLIC FACILITIES

HOMER: LAKE STREET REHABILITATION

LAKE STREET SIGNAL OPERATIONS PLAN

FILE W:\PROJECTS\HOMER LAKE ST. REHAB Z524610000\CIV3D\CIV3D16\PLANSET\52461_H_TRAF_PLAN.DWG | DATE/TIME 6/4/2019 9:02 AM | LAYOUT SIGOP | DESIGNED GSB | CHECKED CLB | DRAFTED MF

NO.	DATE	REVISION

STATE	PROJECT DESIGNATION	YEAR	SHEET NO.	TOTAL SHEETS
ALASKA	0001422/Z524610000	2019	H24	H38

CABLE SCHEDULE

CABLE	CONDUCTOR	J-BOX PATH	LOAD
0	3C6	LC-0-TC	TC POWER
1	3C8	LC-0-2-1-P1-1-2-P2-2-3-P3-3-4-P4	INTXL CKT AA5/7
3	3C20	TC-2-1-P1	GPS
11	7C14	TC-2-3-P3	HEAD 11
12	7C14	TC-2-P2	HEAD 12
21	7C14	TC-2-1-P1	HEAD 21
22	7C14	TC-2-1-P1	HEAD 22
26	4C14	TC-2-1-P1	PED B 28
27	4C14	TC-2-P2	PED B 29
28	4C14	TC-2-1-P1	PED I 28
29	4C14	TC-2-P2	PED I 29
31	7C14	TC-2-3-4-P4	HEAD 31
32	7C14	TC-2-3-P3	HEAD 32
46	4C14	TC-2-P2	PED B 48
47	4C14	TC-2-3-P3	PED B 49
48	4C14	TC-2-P2	PED I 48
49	4C14	TC-2-3-P3	PED I 49
61	7C14	TC-2-3-P3	HEAD 61
62	7C14	TC-2-3-P3	HEAD 62
71	7C14	TC-2-3-4-P4	HEAD 71
72	7C14	TC-2-3-4-P4	HEAD 72
86	4C14	TC-2-3-4-P4	PED B 88
87	4C14	TC-2-1-P1	PED B 89
88	4C14	TC-2-3-4-P4	PED I 88
89	4C14	TC-2-1-P1	PED I 89
100	6C18	TC-2-1-P1	RAD 1
200	6C18	TC-2-1-P1	RAD 2
300	6C18	TC-2-P2	RAD 3
400	6C18	TC-2-3-P3	RAD 4
500	6C18	TC-2-3-4-P4	RAD 5
PTZ	CT5E	TC-2-P2	PTZ CAMERA
PTZP	3C14	TC-2-P2	PTZ CAMERA
900	SM6 TUBE 12 FIBER	F/O VAULT 8-TC	EXISTING INTERCONNECT

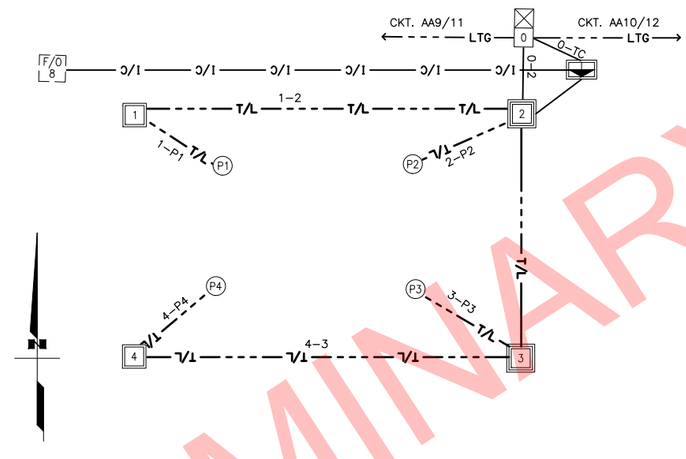

NOTES:

1. UNLESS OTHERWISE NOTED, INSTALL 1 BARE 8 GROUND IN ALL CONDUIT. RUN A #6 NON-INTERGAL GROUND WITH THE 3C6 POWER CABLE.
2. LIGHTING CONDUCTORS NOT SHOWN IN CABLE SCHEDULE FOR CLARITY. SEE SIGNING, STRIPING, ILLUMINATION AND INTERCONNECT SHEETS FOR DETAILS.
3. RADAR LOCATIONS SHALL BE CONFIRMED WITH MANUFACTURER PRIOR TO WIRE ROUTING. ADJUSTMENTS MAY BE NECESSARY.
4. RE-INSTALL FIBER OPTIC CABLE AND CONDUIT FROM F/O VAULT 8, INTERCONNECT WORK TO BE PAID FOR UNDER ITEM 662(3) SIGNAL INTERCONNECT SYSTEM COMPLETE – FIBER.

CONDUIT SCHEDULE

RUN #	CONDUIT		CABLES	DESTINATION
LC-0	3	RMC	0, 1, AA6/8, AA9/11, AA10/12	LIGHTING
0-TC	2	RMC	0	TC POWER
0-2	3	RMC	1	INTXL
TC-2	3	RMC	12, 29, 48, PTZP, PTZ	J-BOX 2
	3	RMC	27, 46, 300	J-BOX 2
	3	RMC	21, 22, 28, 89,	J-BOX 1
	3	RMC	3, 26, 87, 100, 200	J-BOX 1
	3	RMC	11, 32, 49, 61, 62	J-BOX 3
	3	RMC	47, 400	J-BOX 3
	3	RMC	31, 71, 72, 88	J-BOX 4
	3	RMC	86, 500	J-BOX 4
	3	RMC	SPARE	SPARE
2-P2	3	RMC	12, 27, 29, 46, 48, 300, PTZ, PTZP	POLE 2
	2	RMC	1 (IN-OUT)	INTXL
	2	RMC	SPARE	SPARE
2-3	3	RMC	11, 32, 49, 61, 62	J-BOX 3
	3	RMC	47, 400	J-BOX 3
	3	RMC	31, 71, 72, 88	J-BOX 4
	3	RMC	86, 500	J-BOX 4
	2	RMC	1	INTXL
	3	RMC	SPARE	SPARE
3-P3	3	RMC	11, 32, 47, 49, 61, 62, 400	POLE 3
	2	RMC	1 (IN-OUT)	INTXL
	2	RMC	SPARE	SPARE
3-4	3	RMC	31, 71, 72, 88	J-BOX 4
	3	RMC	86, 500	J-BOX 4
	2	RMC	1	INTXL
	3	RMC	SPARE	SPARE
4-P4	3	RMC	31, 71, 72, 86, 88, 500	POLE 4
	2	RMC	1	INTXL
	2	RMC	SPARE	SPARE
2-1	3	RMC	21, 22, 28, 89	J-BOX 1
	3	RMC	3, 26, 87, 100, 200	J-BOX 1
	3	RMC	SPARE	SPARE
	2	RMC	1 (IN-OUT)	INTXL
1-P1	3	RMC	3, 21, 22, 26, 28, 87, 89, 100, 200	POLE 1
	2	RMC	1 (IN-OUT)	INTXL
	2	RMC	SPARE	SPARE

SUMMARY OF LOAD CENTER A

LOAD CENTER TYPE:	1A
MAINTAINED BY:	SOA
SERVING UTILITY:	HOMER ELECTRIC ASSOCIATION
SERVICE CONDUIT TYPE:	RIGID METAL CONDUIT
LOCATION DATA	
LOAD CENTER:	61.5 FEET RIGHT OF STATION 10+69.9
POWER SOURCE:	8.7 FEET RIGHT OF STATION 12+71.3
PHOTOELECTRIC CONTROL:	MOUNT ON LOAD CENTER
SERVICE VOLTAGE:	1PHASE, 3 WIRE, 120/240 VOLTS AC WITH GROUNDED NEUTRAL
PROVIDE METER SOCKET	YES
MAIN BREAKER _	240 VOLT, 2 POLE, 100 AMPERES
CONTACTOR:	600 VOLT,16 POLE, 30 AMPERES
AIC RATING:	

PANEL A

POLE	AMP TRIP	DESCRIPTION	POLE KVA	Aϕ	Bϕ	POLE KVA	DESCRIPTION	AMP TRIP	POLE
1	15/2	PHOTOCELL	0.1	2.6		2.5	TRAFFIC CONTROLLER	50/1	2
3			0.1		0.1				4
5	20/2	INTX LTG P1,P2,P3,P4	0.5	0.17		0.12	LUMINAIRE 27	20/2	6
7			0.5		0.17	0.12			8
9	20/2	EX. LUMINAIRES 21,23	0.24	0.48		0.24	EX. LUMINAIRES 24,26	20/2	10
11			0.24		0.48	0.24			12
* CIRCUIT THROUGH CONTACTOR _							PANEL A KVA		
							AMPS		

STATE OF ALASKA
★ 49584 ★
P58 REVIEW
CHRISTOPHER C. BENTZ
REGISTERED PROFESSIONAL ENGINEER

COMPANY NAME
ADDRESS LINE1
ADDRESS LINE 2
PHONE NUMBER
XXXXXXX

STATE OF ALASKA
★ 49584 ★
P58 REVIEW
CHRISTOPHER C. BENTZ
12821
REGISTERED PROFESSIONAL ENGINEER

STATE OF ALASKA DOT&PF
4111 AVIATION AVENUE
ANCHORAGE, AK 99502
(907) 269-0590

STATE OF ALASKA
DEPARTMENT OF TRANSPORTATION
AND PUBLIC FACILITIES

HOMER: LAKE STREET REHABILITATION

LAKE STREET WIRING DIAGRAM

NO.	DATE	REVISION	STATE	PROJECT DESIGNATION	YEAR	SHEET NO.	TOTAL SHEETS
			ALASKA	0001422/Z524610000	2019	H25	H38

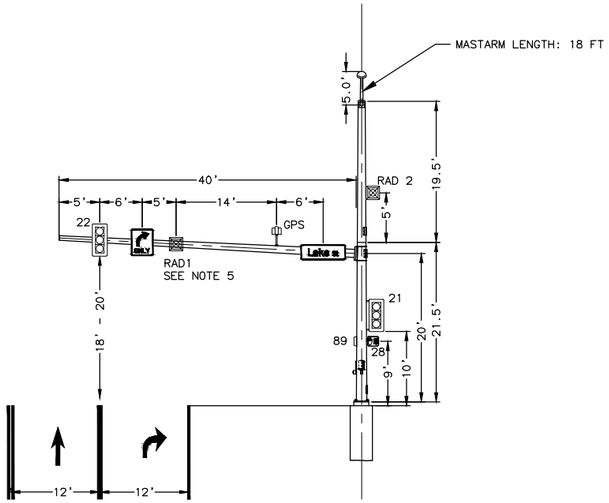

SIGNAL POLE 1
LOOKING WEST

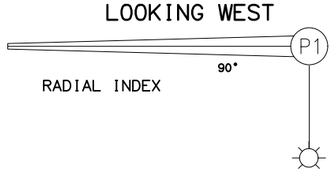

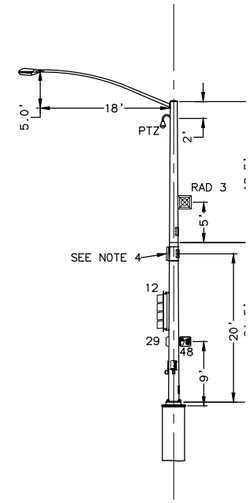

SIGNAL POLE 2
LOOKING NORTH

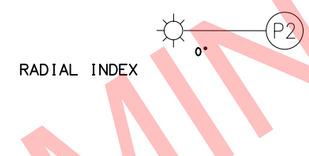

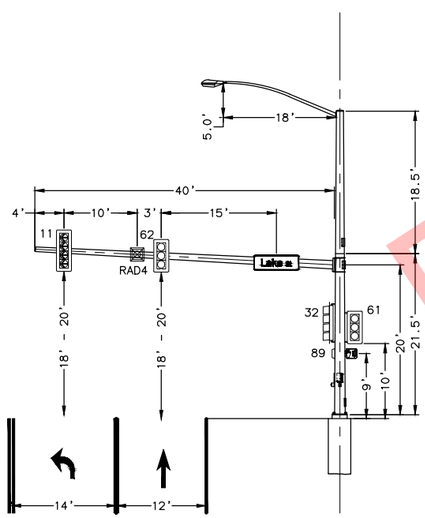

SIGNAL POLE 3
LOOKING EAST

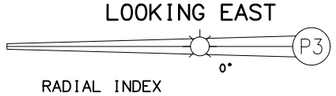

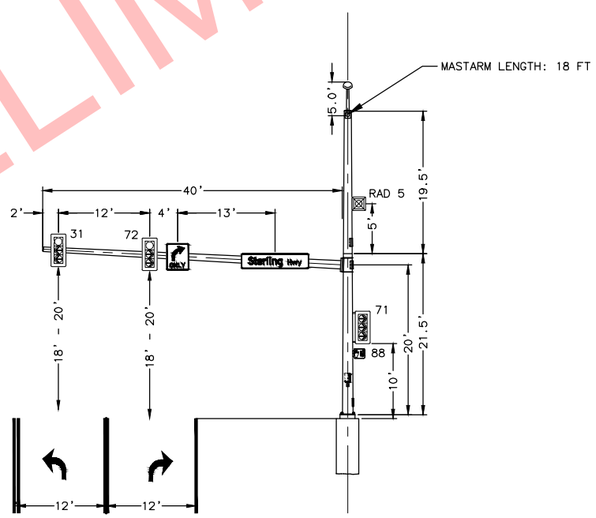

SIGNAL POLE 4
LOOKING SOUTH

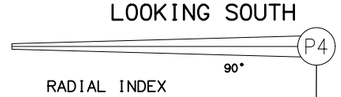

NOTES:

1. ELEVATIONS ARE TO THE TOP OF THE FOUNDATION AND ARE APPROXIMATE. ALL FINAL ELEVATIONS SHALL BE STAKED AND APPROVED BY ENGINEER PRIOR TO FOUNDATION INSTALLATION.
2. INSTALL FULLY FUNCTIONING GPS OPTICOM SYSTEM ON POLE 2.
3. FINAL MOUNTING HEIGHT OF PTZ CAMERA SHALL BE FIELD DETERMINED BY THE ENGINEER.
4. ON SIGNAL POLE 2 PLACE CAP OVER MASTARM ATTACHMENT.
5. RADARS 1 AND 4 (RAD 1, RAD 4) ARE TO BE MOUNTED ON BACKSIDE OF MASTARM.
6. SYMBOL MARKINGS ARE FOR LANE ARRANGEMENT REFERENCE ONLY. SEE SIGNING, STRIPING, AND ILLUMINATION SHEETS FOR STRIPING DETAILS.

STATE OF ALASKA
REGISTERED PROFESSIONAL ENGINEER
CHRISTOPHER L. BENTZ
12821
PS&E REVIEW

STATE OF ALASKA DOT&PF
4111 AVIATION AVENUE
ANCHORAGE, AK 99502
(907) 269-0590

STATE OF ALASKA
DEPARTMENT OF TRANSPORTATION
AND PUBLIC FACILITIES

HOMER: LAKE STREET REHABILITATION

LAKE STREET POLE ELEVATIONS

FILE W:\PROJECTS\HOMER LAKE ST. REHAB Z524610000\CIV3D\CIV3D16\PLANSET\52461_H_TRAF_PLAN.DWG
DATE/TIME 6/4/2019 9:02 AM | LAYOUT P ELEV | DESIGNED GSB | CHECKED CLB | DRAFTED MF

NO.	DATE	REVISION

STATE	PROJECT DESIGNATION	YEAR	SHEET NO.	TOTAL SHEETS
ALASKA	0001422/Z524610000	2019	H26	H38

CONTROLLER CABINET FEATURES

GENERAL OPTIONS	
TYPE	TS2-1
SIZE	NEMA SIZE 7
MATERIALS	0.125" NATURAL ALUMINUM
MODEL	ECONOLITE TS2 TYPE 1 PLUG-N-GO
EXTENDER BASE	NONE
MOUNTING HARDWARE	INCLUDED
PAINT	NONE
SPECIAL OPTIONS	
LIFTING TABS	INCLUDED
EQUIPMENT SHELF	(4) FULL WIDTH, 12"
AIR FILTER	FIBER MESH
MAIN DOOR LOCK	BEST
REAR DOOR	NONE
LED LAMP	(2) 24"
GOOSENECK LAMP	MOUNTED ON DOOR, INTEGRAL SWITCH TYPE A WITH LED
T-STAT CONTROLLED EXHAUST FANS	(2) FANS ON SEPARATE T-STATS
MAIN PANEL	
MAIN PANEL POSITION	16-POSITION HORIZONTAL
RESISTOR LOCATION	SIDEWALL
FLASH TRANSFER RELAYS SOCKETS	(6) INCLUDED
FLASHER SOCKETS	(2) INCLUDED
K1 RELAY SOCKET	INCLUDED
POWER PANEL	
SURGE SUPPRESSION	ACP-340
LINE FILTER (RADIO INTERFERENCE)	50A
SOLID STATE CONTACTOR	NORMALLY OPEN
MAIN CIRCUIT BREAKER	20A
AUXILIARY CIRCUIT BREAKER	20A
GFI LOCATION	POWER PANEL
2 POSITION TERMINAL BLOCK FOR INCOMING POWER, #4-#6 U.S.G.	INCLUDED
16 POSITION NEUTRAL BUS BAR	INCLUDED
16 POSITION CHASSIS GROUND BUS BAR	INCLUDED
EATON MODEL HS-P-SP-120-60-RJ SURGE PROTECTOR	INCLUDED
POLICE PANEL	
POLICE PANEL	INCLUDED
POLICE PANEL SWITCHES	SIGNALS ON/OFF, AUTO/FLASH
POLICE PANEL PUSHBUTTON ALARM	INCLUDED
POLICE DOOR LOCK	SKELETON
POLICE PANEL MANUAL CORD	NONE
AUXILIARY PANEL	
AUXILIARY PANEL SWITCHES	AUTO/FLASH, STOP TIME, CONTROLLER POWER, COORD/FREE, F01, F02
DETECTOR TEST SWITCHES	TACTILE PUSHBUTTON
RACK DETECTION	
DETECTOR RACKS	PROVIDE FOUR (4) 16-CHANNEL DETECTOR RACKS WITH 2 SLOTS EACH FOR OPTICOM. NOTE: ECONOLITE CONFIGURATION #4 WITH ADDITIONAL DETECTOR RACK.
DETECTOR RACK POWER SUPPLY	BIU FOR EACH RACK
EVP REQUIREMENTS	WIRING FOR 3M OPTICOM RACK W/GREENS EACH DETECTOR RACK
DETECTOR LOOP INTERFACE	(4) 5-POSITION SERIAL
ADDITIONAL OPTIONS	
MASTER CABINET	NO
WIRE CABINET FOR UPS	NO
RAILROAD PREEMPTION	2 CHANNELS OF RAILROAD PREEMPTION INCLUDED
RAILROAD PREEMPTION/STAND ALONE PANEL	INCLUDED
RED JUMPERS FOR ALL UNUSED PHASES	INCLUDED
LOAD RISISTORS	(8) INCLUDED
ADDITIONAL GFI OUTLET (NON-FILTERED)	INCLUDED
DOUBLE DUPLEX CONVENIECE OUTLET	(1) LEFT WALL FILTERED, (1) RIGHT WALL NON-FILTERED
DUPLEX OUTLET	FOR HEATER AUTO & BYPASS SWITCH, ON DOOR
ADDITIONAL NEUTRAL BUS BARS	(1) 16 POSITION BUS BAR RIGHT SIDE OF CABINET
	(1) 32 POSITION BUS BAR LEFT SIDE OF CABINET
ADDITIONAL CHASSIS GROUND BUS BARS	(1) 16 POSITION BUS BAR RIGHT SIDE OF CABINET
	(1) 32 POSITION BUS BAR LEFT SIDE OF CABINET
STANDARD WIRING DIAGRAM (AUTOCAD FORMAT)	PROVIDE: (3) PAPER SETS, (1) AUTOCAD FILE, (1) PDF.
48-HOURS FACTORY BURN-IN	INCLUDED
CONTINUOUS WELD	INCLUDED
THERMOSTAT	MOUNTED ON DOOR
ANCHOR BOLTS	NO
SDLC CABLES	(10)

COMMUNICATION EQUIPMENT SCHEDULE

QTY	RADIO INTERCONNECT SYSTEM
0	MDS MODEL 4790A 330-512MHZ LICENSED MASTER RADIO (NON-PROTECTED)
0	MDS MODEL 4710A 330-512MHZ LICENSED TRANCEIVER
0	ANTENEX 450-470MHZ 10.2DB N(F) YAGI ANTENNA
0	ANDREW LDF4-50 COAXIAL CABLE HELIAX .63 OD (UNIT LINEAR FEET)
0	MDS 01-3682A01 AC ADAPTER 12V-30W 110/220VAC
0	ANDREW CONNECTOR, LDF4-50 N(M)
0	ANDREW CONNECTOR, LDF4-50 N(F)
0	POLYPHASER LIGHTING PROTECTOR, FLANGED N(F)-N(F)
QTY	**ON-STREET MASTER CONTROLLER**
0	MASTER CONTROLLER, ECONOLITE ASC/2M-1000
0	56K INDUSTRIAL MODEM & PHONE DROP (INCLUDES TELCO ACTIVATION)
0	ECONOLITE GPS-100 GPS TIME REFERENCE OR APPROVED EQUAL
QTY	**UNINTERRUPTIBLE POWER SUPPLY**
0	ECONOLITE CUSTOM CABINET FOR UPS, MOUNT TC CABINET
0	ECONOLITE DBL 2100 OR APPROVED EQAUL
0	ECONOLITE HOT SWAP BYPASS SWITCH OR APPROVED EQUAL
0	ECONOLITE FAIL-SAFE BYPASS SWITCH OR APPROVED EQUAL
QTY	**OTHER EQUIPMENT**
0	ATSI PCMT-2600 MMU TESTER W/MMU & CMU CABLES
0	FULLY FUNCTIONING TRAFFIC SIGNAL CONTROLLER, MASTER CONTROLLER AND CABINET
0	INDUCTIVE LOOP TEST KITS
0	LOOP FINDERS
0	BIU TESTERS
0	FRAME GRABBER
0	MULTI-SWITCH TESTER
0	BIU SLOT TESTER
0	CARD RACK SLOT TESTER
0	DETECTOR TESTER
0	MCCAIN CID II
0	RADIO SITE SURVEY LOCATIONS
0	INTX DIAGRAM LOCATIONS
1	RS930L OR RS900G SWITCH (COPPER VS FIBER RESPECTIVELY, SEE PLANS)
QTY	**EVP EQUIPMENT**
1	OPTICOM MODEL 764 PHASE SELECTOR
0	OPTICOM MODEL 721 RECEIVERS
0	OPTICOM MODEL 792H EMITTERS W/792 SWITCH
1	768 AUX PANEL

CONTROLLER ASSEMBLY EQUIPMENT

SUPPLY ALL LABOR, EQUIPMENT AND MATERIALS TO PROVIDE A FULLY FUNCTIONING TRAFFIC SIGNAL CONTROLLER ASSEMBLY COMPLIANT WITH THE NEMA STANDARD PUBLICATION NO. TS2-2003 V02.06 AND SPECIAL "SPECIALS" PROVISIONS OF THIS CONTRACT INCLUDING BUT NOT LIMITED TO;

QTY	CONTROLLER/MMU EQUIPMENT
2	ECONOLITE COBALT OR APPROVED EQUAL CONTROLLER
0	CONTROLLER TELEMETRY MODULE TCM-FSK-9
1	CONTROLLER ETHERNET PORT
2	CONTROLLER DATA KEY
1	ECONOLITE MMU2-16LE OR APPROVED EQUAL
1	MMU2 ETHERNET PORT
1	MMU2 CARD
QTY	**CABINET EQUIPMENT**
16	RENO LS-200 LOAD SWITCHES
36	RENO GT-200-SS 2-CHANNEL DETECTOR AMPLIFIERS
6	RENO TR-200 FLASH TRANSFER RELAYS
4	ECONOLITE BIU-64 TERMINAL AND FACILITIES BIU'S
6	ECONOLITE BIU-64 DETECTION BIU'S
1	ECONOLITE PS-2412 TS2 CABINET POWER SUPPLY
2	ECONOLITE 801 FLASHER
2	K1 RELAY
2	750/1500W SELECTABLE THERMOSTATICALLY CONTROLLED CABINET HEATER, MOUNT ON DOOR
0	RE-SEALABLE PRINT POUCH OF SUFFICIENT SIZE TO ACCOMMODATE CABINET PRINTS
2	COMPLETE SET OF MANUAL FOR CONTROLLER, MMU, AND VEHICLE DETECTOR AMPLIFIERS

STATE OF ALASKA
REGISTERED PROFESSIONAL ENGINEER
49
J. CHRISTOPHER BENTZ
12821
PS&E REVIEW

STATE OF ALASKA DOT&PF
4111 AVIATION AVENUE
ANCHORAGE, AK 99502
(907) 269-0590

STATE OF ALASKA
DEPARTMENT OF TRANSPORTATION
AND PUBLIC FACILITIES

HOMER: LAKE STREET REHABILITATION

CONTROLLER EQUIPMENT SCHEDULE

NO.	DATE	REVISION

STATE	PROJECT DESIGNATION	YEAR	SHEET NO.	TOTAL SHEETS
ALASKA	0001422/Z524610000	2019	H27	H38

LUMINAIRE PERFORMANCE CRITERIA

INTERSECTION	
CHARACTERISTICS	
PAVEMENT TYPE	R3
ROADWAY LIGHTING STANDARD	IESNA RP-8-2014
FUNCTIONAL CLASSIFICATION	PRINCIPAL ARTERIAL/MAJOR
PEDESTRIAN AREA CLASSIFICATION	MEDIUM
IES FILE FOR ROADWAY LIGHTING	ERL2_25C330
LUMINAIRE	
LAMP DESCRIPTION	GE ERL2 STREET LIGHT
LIGHT LOSS FACTOR	0.85
ILLUMINANCE CRITERIA	
AVERAGE MAINTAINED ILLUMINATION	2.2 FC
AVERAGE UNIFORMITY RATIO (AVG/MIN)	3.0
ROADWAY	
CHARACTERISTICS	
ROADWAY	2 LANE
LANE WIDTH (FT)	12'
MEDIAN WIDTH (FT)	14'
NUMBER OF LANES	2
PAVEMENT TYPE	R3
ROADWAY LIGHTING STANDARD	IESNA RP-8-00
FUNCTIONAL CLASSIFICATION	PRINCIPAL ARTERIAL/MAJOR
PEDESTRIAN AREA CLASSIFICATION	MEDIUM
IES FILE FOR ROADWAY LIGHTING	ERL2_25C330
LUMINAIRE	
LAMP DESCRIPTION	GE ERL2 STREET LIGHT
LIGHT LOSS FACTOR	0.85
ILLUMINANCE CRITERIA	
AVERAGE LUMINANCE	0.96 cd/m^2
MINIMUM ROADWAY LUMINANCE	0.41 cd/m^2
AVERAGE UNIFORMITY RATIO (AVG/MIN)	3.0
MAX UNIFORMITY RATIO (MAX/MIN)	4.28
MAX VEILING LUMINANCE RATIO (LV-MAX/AVG)	0.23

LUMINAIRE STANDARDS

MANUFACTURE	GE OR APPROVED EQUAL
MODEL	ERL2-3-25-C3-30E
WATTAGE	275
LIGHT SOURCE	LED
VOLTAGE	240
PE CONTROL	ANSI C136.41 7 PIN
PE SENSOR	YES
MOUNTING	HORIZONTAL
HOUSING ENTRY TYPE	TOOLLESS
FIXTURE COLOR	GRAY
IES DISTRIBUTION TYPE	ASYMMETRICAL (FORWARD)
POWER FACTOR	>.0.90
UL LISTED	YES
DRIVE CURRENT	0.910A
CCI	3000K
CRI	MINIMUM 70
INITIAL LUMENS	24000

JUNCTION BOX SCHEDULE

LIGHTING JBOX	STATION	OFFSET	TYPE
20	95+05.4	39.2' LT	EXISTING TYPE 1A
21	95+20.5	33.6' RT	EXISTING TYPE 1A
22	97+36.9	34.5' LT	EXISTING TYPE 1A
23	97+31.2	35.4' RT	EXISTING TYPE 1A
24	102+42.7	44.1' LT	EXISTING TYPE 1A
25	104+37.3	30.9' LT	EXISTING TYPE 1A
26	104+44.9	23.8' RT	EXISTING TYPE 1A
27	12+39.0	29.2' LT	TYPE 1A

LIGHTING NOTES:

1. PULL EXISTING 3C#8 CABLE FROM J-BOX 26 TO J-BOX 20 AND DISCARD. REMOVE EXISTING CONDUCTOR AND CONDUIT FROM J-BOX 20 THAT COMES FROM THE EXISTING LIGHTING FROM THE MAIN STREET LOAD CENTER.
2. INSTALL NEW 3C#8 CABLE FROM THE NEW LOAD CENTER LOCATED AT LAKE STREET TO J-BOX 5, AND THEN INTERCEPT THE EXISTING CONDUIT NEAR STA.99+32. USING THE EXISTING CONDUIT, RUN 3C#8 CABLE TO THE EXISTING J-BOXES AND LIGHT POLES 21 AND 23.
3. INSTALL NEW CONDUIT FROM LOAD CENTER AT LAKE STREET AND INTERCEPT THE EXISTING CONDUIT NEAR STA.100+80.INSTALL NEW 3C#8 CABLE FROM LOAD CENTER TO EXISTING LIGHT POLES 24 AND 26.
4. REMOVE EXISTING LIGHTING FIXTURES FROM POLES 21, 23, 24 AND 26 AND INSTALL NEW LED FIXTURES. EXISTING LIGHTING FIXTURES TO BE SALVAGED AND DELIVERED TO THE M&O STATION IN HOMER.
5. INSTALL NEW ELECTROLIER 27 AS NOTED IN THE ELECTROLIER SCHEDULE AND WIRE AS SHOWN IN THE PLAN SET.

ELECTROLIER SCHEDULE

POLE NO.	STATION	OFFSET	LIGHT DISTRUBUTION TYPE	SYSTEM WATTS	MOUNTING HEIGHT	SHAFT LENGTH	MASTARM LENGTH	REMARKS
21	95+14.3	30.8' RT	TYPE III	214	EXISTING	EXISTING	12'	EXISTING POLE
23	97+36.9	36.4' RT	TYPE III	214	EXISTING	EXISTING	15'	EXISTING POLE
24	102+48.5	42.9' LT	TYPE III	214	EXISTING	EXISTING	12'	EXISTING POLE
26	104+50.9	24.0' RT	TYPE III	214	EXISTING	EXISTING	18'	EXISTING POLE
27	12+44.6	29.2' LT	TYPE III	214	40'	35'	12'	LAKE STREET

SALVAGE ELECTROLIER SCHEDULE

POLE NO.	STATION	OFFSET	POLE TYPE	BASE TYPE	SHAFT LENGTH	MASTARM LENGTH	REMARKS
E27	12+53.8	24.8' LT	MASTARM	N/A	EXISTING	12'	EXISTING POLE

VOLTAGE DROPS

240V IN A 1-PH, 3W CONFIGURATION WITH A POWER-FACTOR OF 1.00, 1 COPPER CONDUCTOR PER PHASE IN A RMC. TEMPERATURE RATING 75°C.

CKT #	SEGMENT	SEGMENT SIZE (AWG)	SEGMENT LENGTH (FT)	LOAD (VA)	TOTAL (AMPS)	SEG. DROP (%VD)	CUMULATIVE DROP (%VD)
AA6/8	LC-27	8	300	214	089	0.16	0.16
AA9/11	LC-23	8	480	214	1.78	0.52	0.52
	23-21	8	370	214	0.89	0.20	0.72
AA10/12	LC-24	8	190	214	1.78	0.20	0.20
	24-26	8	250	214	0.89	0.13	0.33

STATE OF ALASKA
REGISTERED PROFESSIONAL ENGINEER
CHRISTOPHER L. BENTZ
12821
PSE REVIEW

STATE OF ALASKA DOT&PF
4111 AVIATION AVENUE
ANCHORAGE, AK 99502
(907) 269-0590

STATE OF ALASKA
DEPARTMENT OF TRANSPORTATION
AND PUBLIC FACILITIES

HOMER: LAKE STREET REHABILITATION

ILLUMINATION SCHEDULE

FILE W:\PROJECTS\HOMER LAKE ST. REHAB Z524610000\CIV3D\CIV3D16\PLANSET\52461_H_TRAF_PLAN.DWG
DATE/TIME 6/4/2019 9:02 AM | LAYOUT ILUM | DESIGNED GSB | CHECKED CLB | DRAFTED MF

NO.	DATE	REVISION

STATE	PROJECT DESIGNATION	YEAR	SHEET NO.	TOTAL SHEETS
ALASKA	0001422/Z524610000	2019	H28	H38

FIBER SYSTEM MATERIAL REQUIREMENTS

ALL ASSEMBLIES	
PATCH PANEL	GATOR PATCH (TM) ITS DROP CABLE OR APPROVED EQUAL
ETHERNET SWITCH	RUGGEDCOM RS900G-HI-D-2SC10 OR APPROVED EQUAL
NETWORK ROUTER	RUGGEDCOM RX1000-F-RD-HI-XX-XX-XX-TX01-FX05-D01-XXX

FIBER OPTIC NOTES:

1. PATCH PANEL SHALL BE MOUNTED TO CABINET DIN RAIL IN A LOCATION AS TO NOT INTERFERE WITH OTHER EQUIPMENT AND SUCH THAT IT IS READILY ACCESSIBLE. PROVIDE SUFFICIENT SLACK CABLE IN CABINET TO ALLOW THE PATCH PANEL TO BE LOCATED AT ANY LOCATION IN THE CABINET.
2. CONNECT THE SHELF MOUNTED ETHERNET SWITCH TO THE PATCH PANEL WITH TWO SINGLE MODE FIBER PATCH CABLES. THE CABLES SHALL BE OF SUFFICIENT LENGTH TO ALLOW FOR MOVING OF THE ETHERNET SWITCH TO ANY SHELF LOCATION IN THE CABINET ONCE THE PATCH PANEL HAS BEEN AFFIXED TO THE CABINET WALL.
3. NO SPLICES ARE PERMITTED EXCEPT WHERE SPECIFICALLY INDICATED IN THE PLANS. SPLICE CLOSURES MUST CONFORM TO 662-3.10 OF THE SPECIFICATIONS.
4. PROVIDE FOUR (EACH) ETHERNET PATCH CABLES OF FOUR FOOT LENGTHS FOR EACH CABINET RECEIVING AN ETHERNET SWITCH. TO BE CONNECTED TO CABINET COMPONENTS AS DIRECTED BY THE ENGINEER.
5. USE SC TYPE CONNECTORS TO TERMINATE ALL FIBERS TO PATCH PANEL AND ETHERNET SWITCH.
6. ITEMS SHOWN IN MATERIAL REQUIREMENTS TABLE ARE NOT FOR QUANTITY PURPOSES.

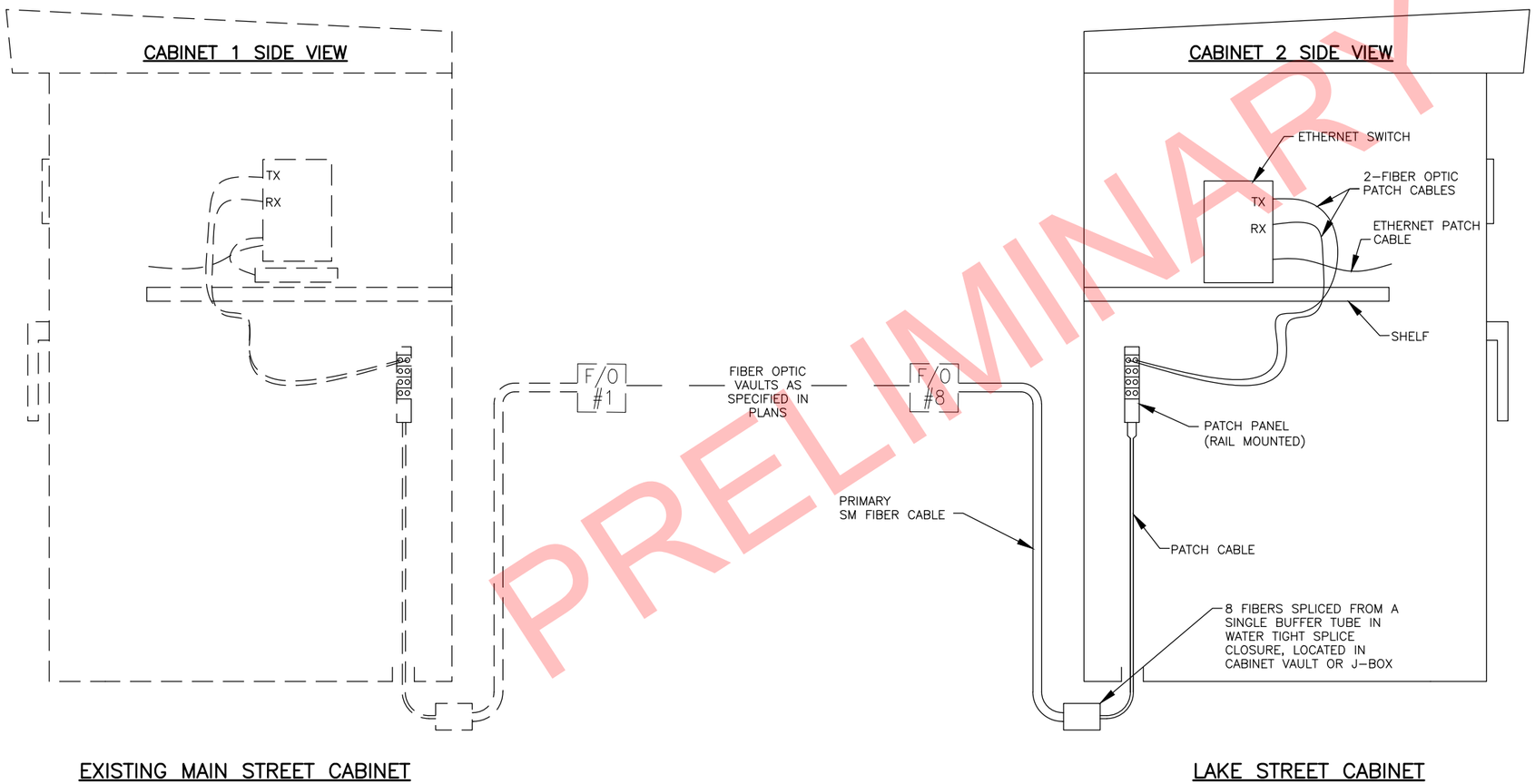

FIBER OPTIC INTERCONNECT LAYOUT

NTS
(NOT ALL COMPONENTS SHOWN, SEE PLANS)

FIBER OPTIC VAULT SCHEDULE

VAULT	STATION ALIGNMENT	OFFSET	REMARKS
8	98+66.2	43.8' RT	EXISTING
9	100+80.9	53.7' RT.	F/O VAULT 9

STATE OF ALASKA
REGISTERED PROFESSIONAL ENGINEER
CHRISTOPHER L. BENTZ
12821
PS&E REVIEW

STATE OF ALASKA DOT&PF
4111 AVIATION AVENUE
ANCHORAGE, AK 99502
(907) 269-0590

STATE OF ALASKA
DEPARTMENT OF TRANSPORTATION
AND PUBLIC FACILITIES

HOMER: LAKE STREET REHABILITATION

FIBER OPTIC INTERCONNECT DETAILS

FILE \W:\PROJECTS\HOMER LAKE ST. REHAB Z524610000\CIV3D\CIV3D16\PLANSET\52461_H_TRAF_PLAN.DWG
DATE/TIME 6/4/2019 9:02 AM | LAYOUT FIBERV | DESIGNED GSB | CHECKED CLB | DRAFTED MF

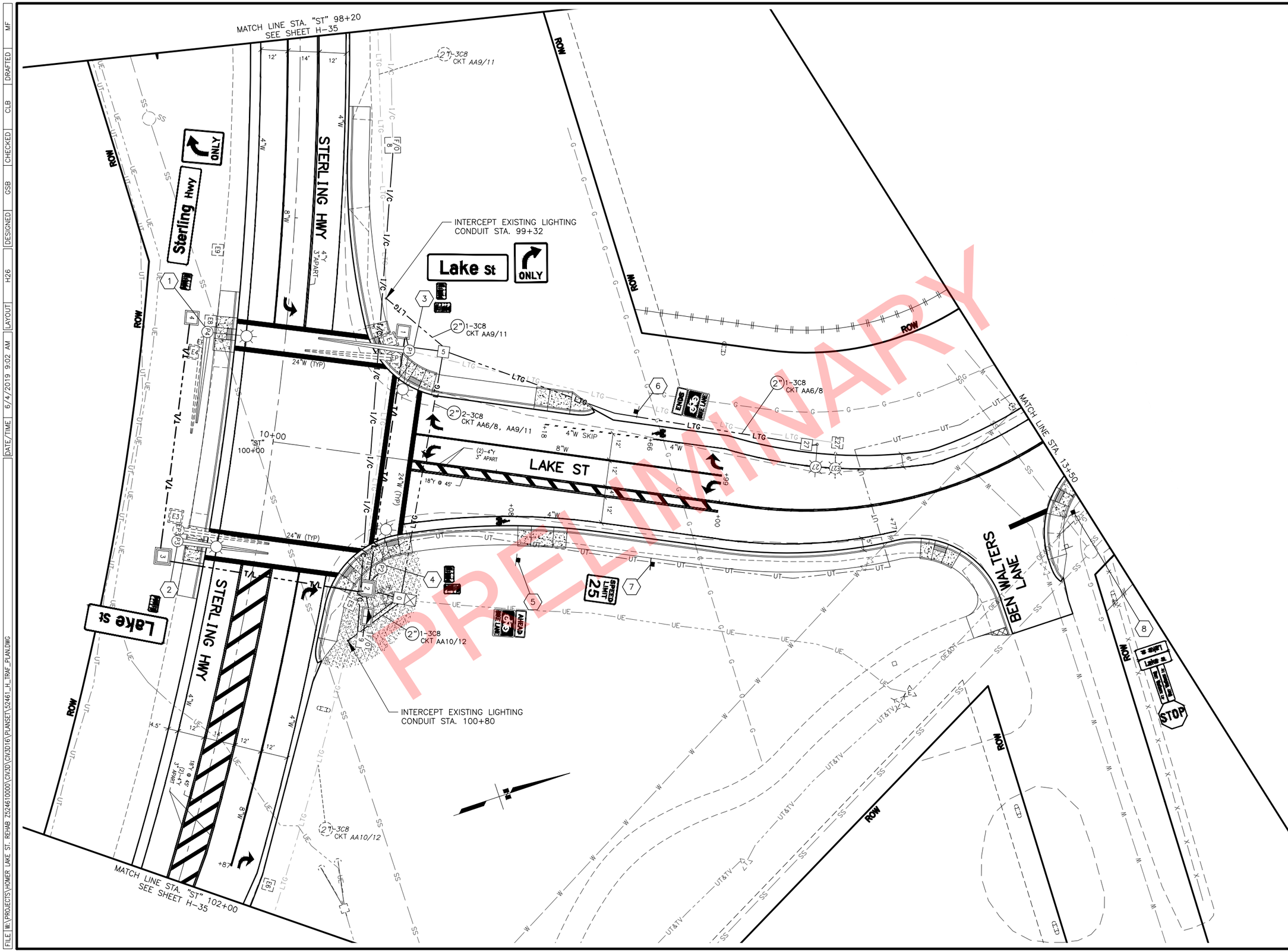

SHEET NO.	TOTAL SHEETS
H29	H38
STATE	YEAR
ALASKA	2019

PROJECT DESIGNATION

0001422/
Z524610000

NO.	REVISION
DATE	
NO.	REVISION
DATE	
NO.	REVISION
DATE	

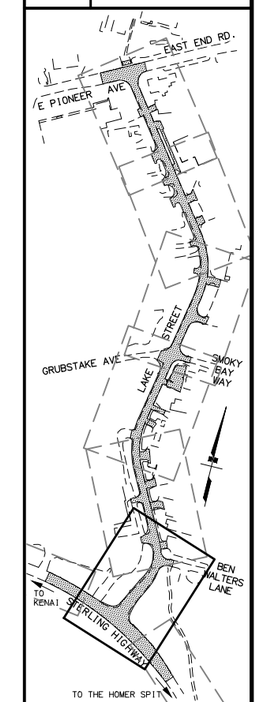

STATE OF ALASKA
CHRISTOPHER L. BENTZ
12821
REGISTERED PROFESSIONAL ENGINEER
PS&E REVIEW

STATE OF ALASKA DOT&PF
4111 AVIATION AVENUE
ANCHORAGE, AK 99502
(907) 269-0590

STATE OF ALASKA
DEPARTMENT OF TRANSPORTATION
AND PUBLIC FACILITIES

HOMER: LAKE STREET
REHABILITATION

SIGNING, STRIPING, AND
ILLUMINATION

DATE/TIME	LAYOUT	DESIGNED	CHECKED	DRAFTED
6/4/2019 9:02 AM	H26	GSB	CLB	MF

FILE W:\PROJECTS\HOMER LAKE ST. REHAB Z524610000\CIV3D\CIV3D16\PLANSET\52461_H_TRAF_PLAN.DWG

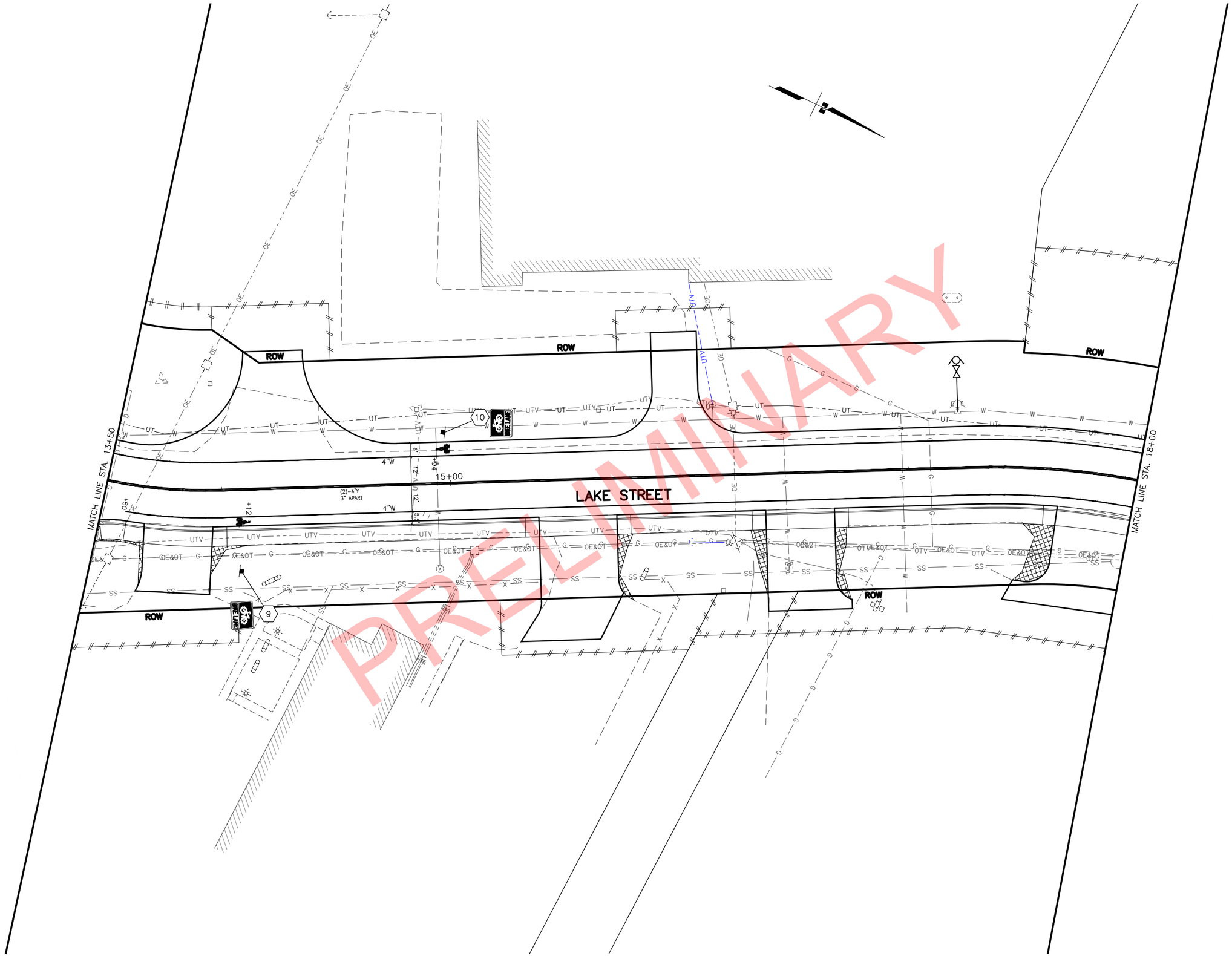

SHEET NO.	TOTAL SHEETS
H30	H38
STATE	YEAR
ALASKA	2019

PROJECT DESIGNATION

0001422/
Z524610000

NO.	REVISION
DATE	
NO.	REVISION
DATE	
NO.	REVISION
DATE	

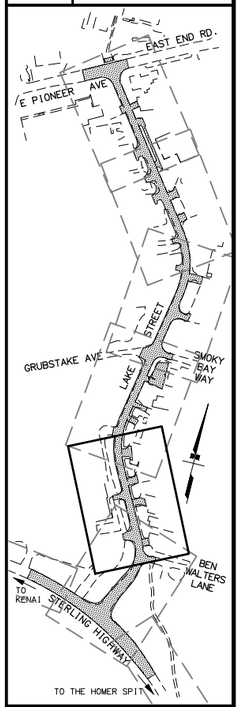

STATE OF ALASKA
CHRISTOPHER L. BENTZ
12821
REGISTERED PROFESSIONAL ENGINEER
PSR REVIEW

STATE OF ALASKA DOT&PF
4111 AVIATION AVENUE
ANCHORAGE, AK 99502
(907) 269-0590

STATE OF ALASKA
DEPARTMENT OF TRANSPORTATION
AND PUBLIC FACILITIES

HOMER: LAKE STREET
REHABILITATION

SIGNING, STRIPING, AND
ILLUMINATION

DATE/TIME	LAYOUT	DESIGNED	CHECKED	DRAFTED
6/4/2019 9:02 AM	H27	GSB	CLB	MF

FILE W:\PROJECTS\HOMER LAKE ST. REHAB Z524610000\CIV3D\CIV3D16\PLANSET\52461_H_TRAF_PLAN.DWG

SHEET NO.	TOTAL SHEETS
H31	H38
STATE	YEAR
ALASKA	2019

PROJECT DESIGNATION

0001422/
Z524610000

NO.	REVISION
DATE	
NO.	REVISION
DATE	
NO.	REVISION
DATE	

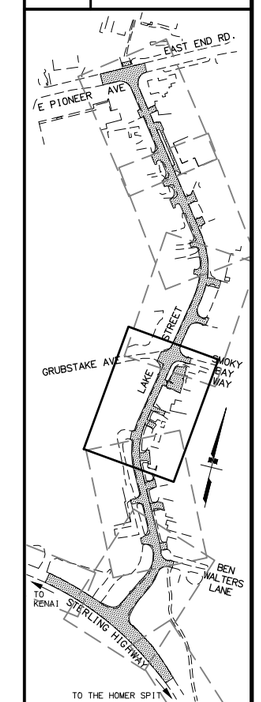

STATE OF ALASKA
CHRISTOPHER L. BENTZ
12821
REGISTERED PROFESSIONAL ENGINEER
PS&E REVIEW

STATE OF ALASKA DOT&PF
4111 AVIATION AVENUE
ANCHORAGE, AK 99502
(907) 269-0590

STATE OF ALASKA
DEPARTMENT OF TRANSPORTATION
AND PUBLIC FACILITIES

HOMER: LAKE STREET
REHABILITATION

SIGNING, STRIPING, AND
ILLUMINATION

DATE/TIME	LAYOUT	DESIGNED	CHECKED	DRAFTED
6/4/2019 9:03 AM	H28	GSB	CLB	MF

FILE W:\PROJECTS\HOMER LAKE ST. REHAB Z524610000\CIV3D\CIV3D16\PLANSET\52461_H_TRAF_PLAN.DWG

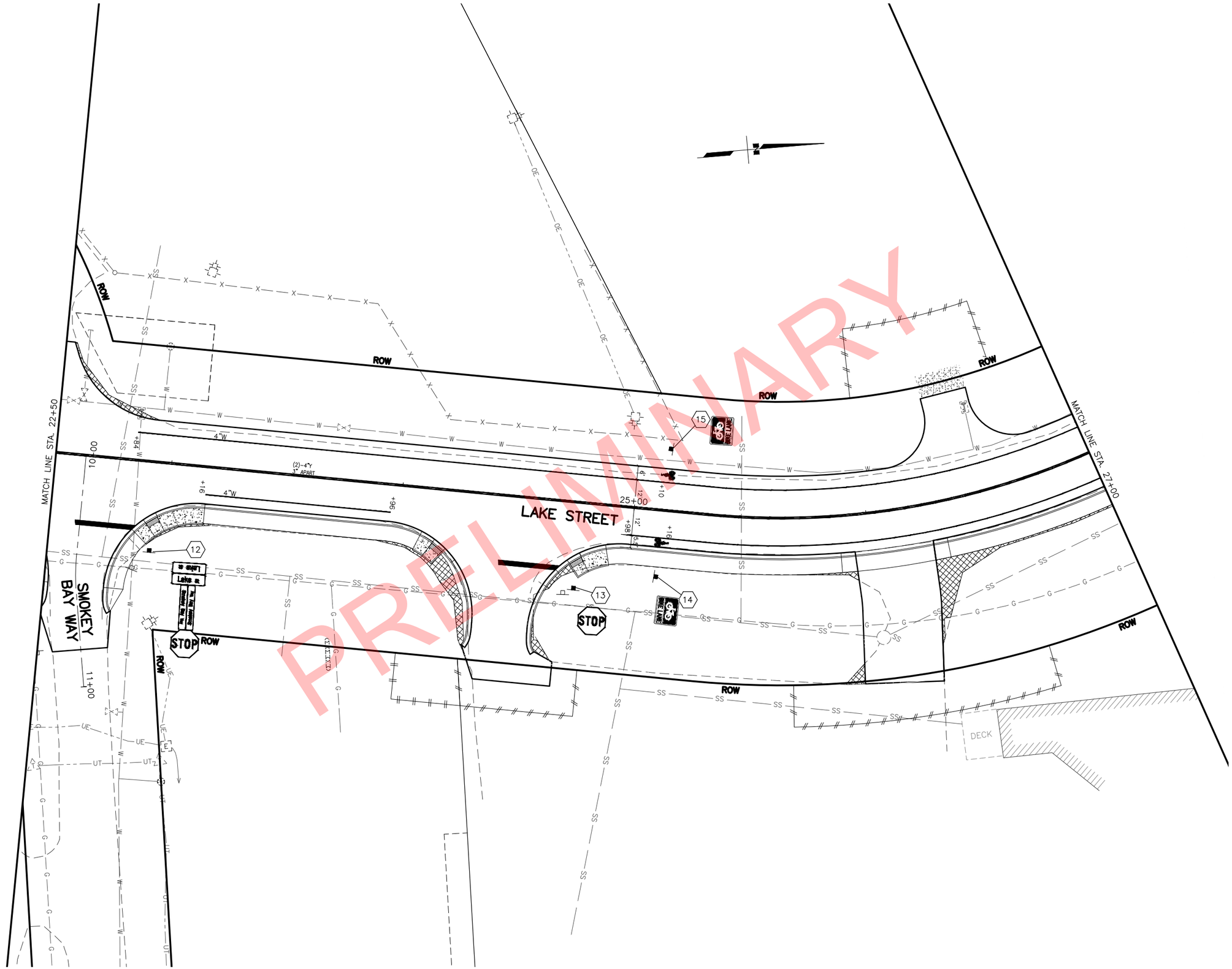

SHEET NO.	TOTAL SHEETS
H32	H38
STATE	YEAR
ALASKA	2019

PROJECT DESIGNATION

0001422/ Z524610000

NO.	REVISION
DATE	
NO.	REVISION
DATE	
NO.	REVISION
DATE	

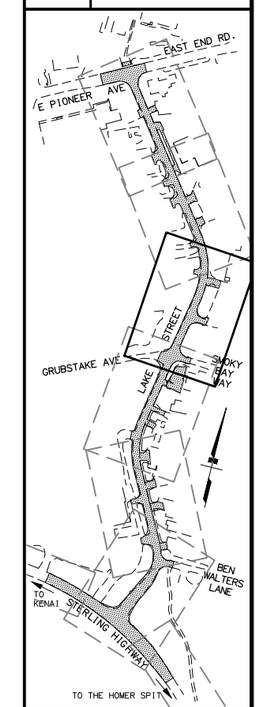

STATE OF ALASKA
PSBA REVIEW
CHRISTOPHER L. BENTZ
12821
REGISTERED PROFESSIONAL ENGINEER

STATE OF ALASKA DOT&PF
4111 AVIATION AVENUE
ANCHORAGE, AK 99502
(907) 269-0590

STATE OF ALASKA
DEPARTMENT OF TRANSPORTATION
AND PUBLIC FACILITIES

HOMER: LAKE STREET REHABILITATION

SIGNING, STRIPING, AND ILLUMINATION

FILE W:\PROJECTS\HOMER LAKE ST. REHAB Z524610000\CIV3D\CIV3D16\PLANSET\52461_H_TRAF_PLAN.DWG | DATE/TIME 6/4/2019 9:03 AM | LAYOUT H29 | DESIGNED GSB | CHECKED CLB | DRAFTED MF

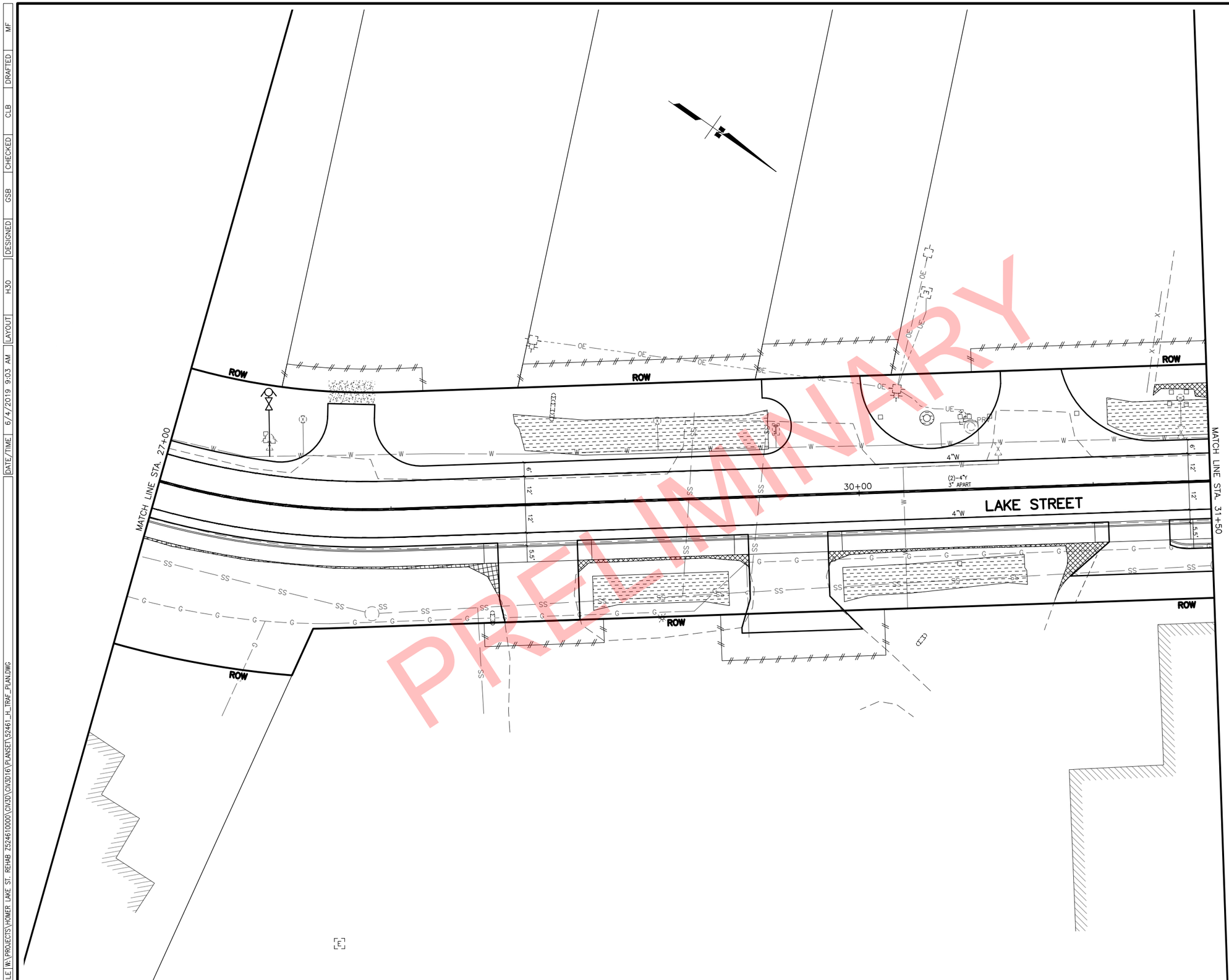

SHEET NO.	TOTAL SHEETS
H33	H38
STATE	YEAR
ALASKA	2019

PROJECT DESIGNATION

0001422/
Z524610000

NO.	REVISION
DATE	
NO.	REVISION
DATE	
NO.	REVISION
DATE	

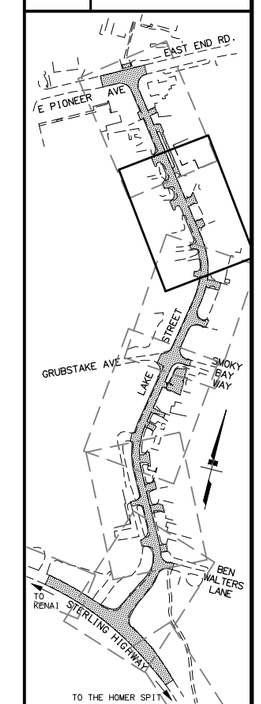

STATE OF ALASKA
CHRISTOPHER L. BENTZ
12821
REGISTERED PROFESSIONAL ENGINEER
PS&E REVIEW

STATE OF ALASKA DOT&PF
4111 AVIATION AVENUE
ANCHORAGE, AK 99502
(907) 269-0590

STATE OF ALASKA
DEPARTMENT OF TRANSPORTATION
AND PUBLIC FACILITIES

HOMER: LAKE STREET
REHABILITATION

SIGNING, STRIPING, AND
ILLUMINATION

FILE	DATE/TIME	LAYOUT	DESIGNED	CHECKED	DRAFTED
W:\PROJECTS\HOMER LAKE ST. REHAB Z524610000\CIV3D\CIV3D16\PLANSET\52461_H_TRAF_PLAN.DWG	6/4/2019 9:03 AM	H30	GSB	CLB	MF

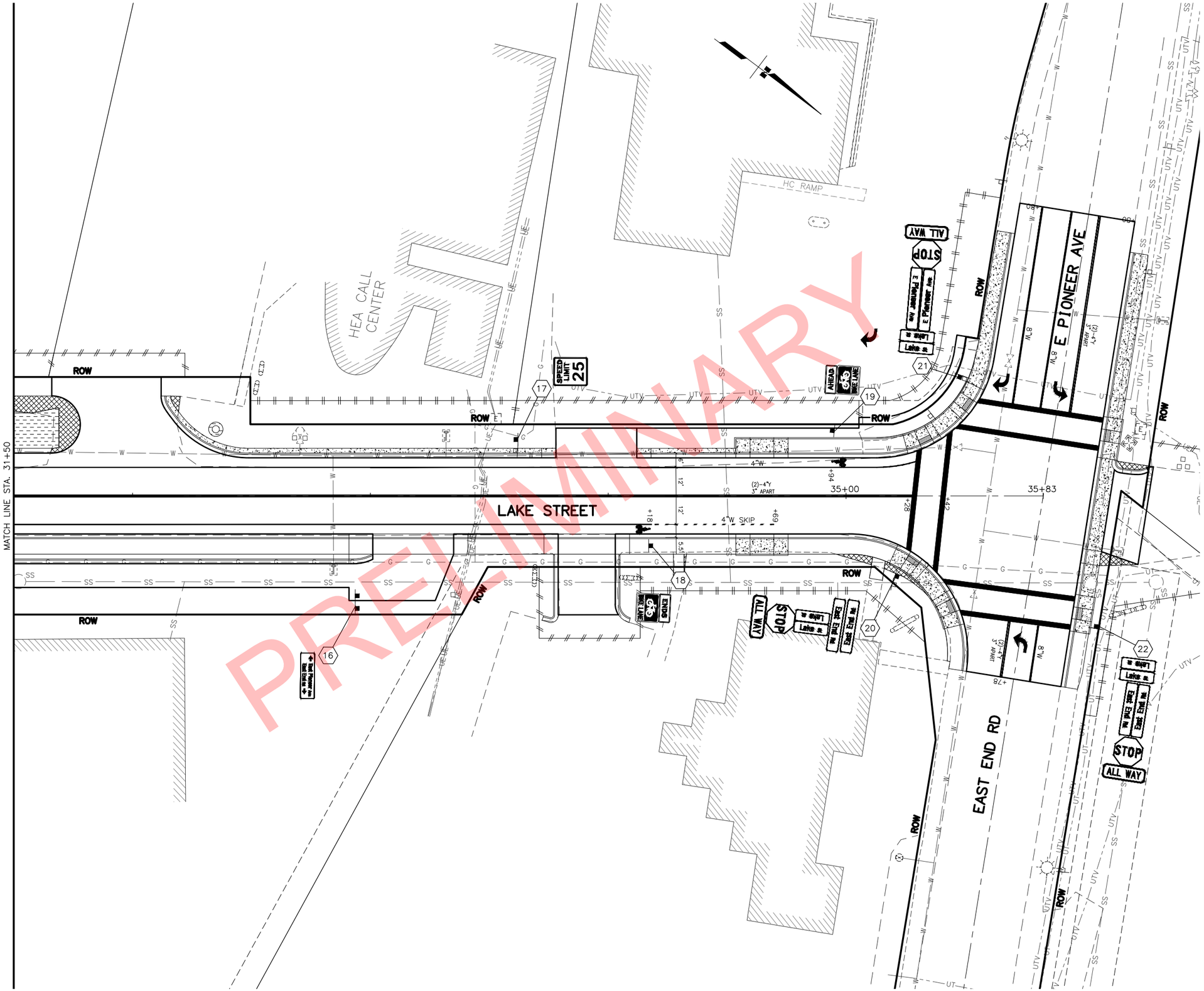

SHEET NO.	TOTAL SHEETS
H34	H38
STATE	YEAR
ALASKA	2019

PROJECT DESIGNATION

0001422/
Z524610000

NO.	REVISION
DATE	
NO.	REVISION
DATE	
NO.	REVISION
DATE	

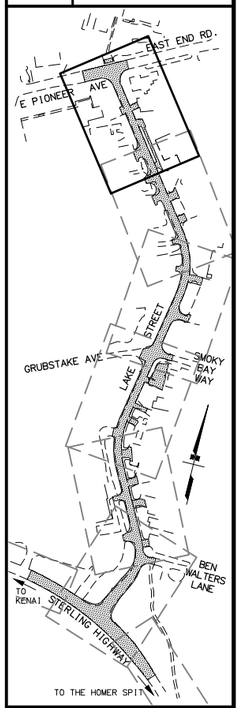

STATE OF ALASKA
PS&E REVIEW
CHRISTOPHER L. BENTZ
12821
REGISTERED PROFESSIONAL ENGINEER

STATE OF ALASKA DOT&PF
4111 AVIATION AVENUE
ANCHORAGE, AK 99502
(907) 269-0590

STATE OF ALASKA
DEPARTMENT OF TRANSPORTATION
AND PUBLIC FACILITIES

HOMER: LAKE STREET
REHABILITATION

SIGNING, STRIPING, AND
ILLUMINATION

DATE/TIME	LAYOUT	DESIGNED	CHECKED	DRAFTED
6/4/2019 9:03 AM	H31	GSB	CLB	MF

FILE W:\PROJECTS\HOMER LAKE ST. REHAB Z524610000\CIV3D\CIV3D16\PLANSET\52461_H_TRAF_PLAN.DWG

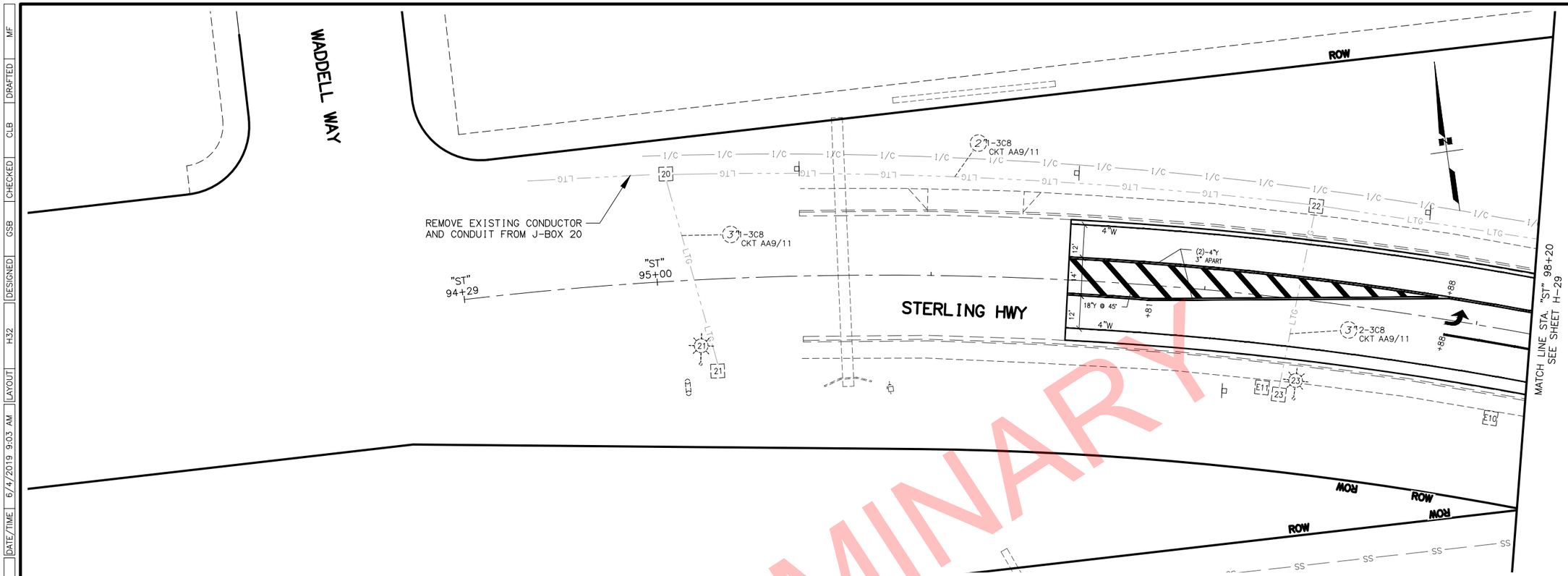

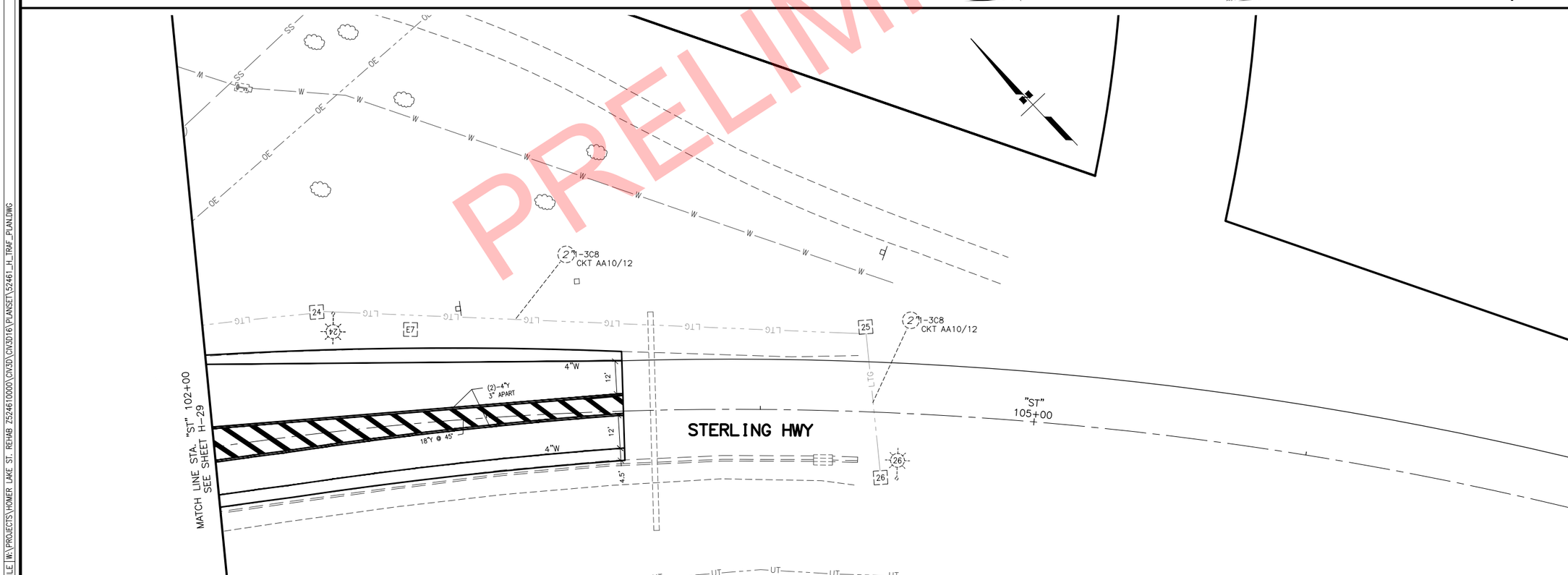

SHEET NO.	TOTAL SHEETS
H35	H38
STATE	YEAR
ALASKA	2019

PROJECT DESIGNATION

0001422/ Z524610000

NO.	REVISION
DATE	
NO.	REVISION
DATE	
NO.	REVISION
DATE	

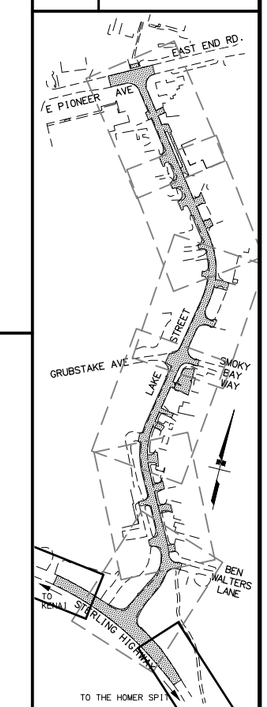

STATE OF ALASKA
CHRISTOPHER L. BENTZ
12821
REGISTERED PROFESSIONAL ENGINEER
PS&E REVIEW

STATE OF ALASKA DOT&PF
4111 AVIATION AVENUE
ANCHORAGE, AK 99502
(907) 269-0590

STATE OF ALASKA
DEPARTMENT OF TRANSPORTATION AND PUBLIC FACILITIES

HOMER: LAKE STREET REHABILITATION

SIGNING, STRIPING, AND ILLUMINATION

FILE W:\PROJECTS\HOMER LAKE ST. REHAB Z524610000\CIV3D\CIV3D16\PLANSET\52461_H_TRAF_PLAN.DWG
DATE/TIME 6/4/2019 9:03 AM | LAYOUT H32 | DESIGNED GSB | CHECKED CLB | DRAFTED MF

NO.	DATE	REVISION

STATE	PROJECT DESIGNATION	YEAR	SHEET NO.	TOTAL SHEETS
ALASKA	0001422/Z524610000	2019	H36	H38

SIGN SUMMARY

SHEET NO.	SIGN NO.	STATION ALIGNMENT	CL REF	TYPE	LEGEND	SIZE (IN) WIDTH	SIZE (IN) HEIGHT	AREA (SQ FT)	SIGN FACES	POST NO., SIZE, & TYPE	FRAMED? YES	FRAMED? NO	REMARKS
H29	1	99+54.4	RT	D3-1	Sterling Hwy	108	24	18.00	N	N/A	X		MOUNT ON MAST ARM
				R3-5R	ONLY	30	36	7.50	E			X	MOUNT ON MAST ARM
				R10-3E R		9	15	0.94	E			X	MOUNT ABOVE PED PUSHBUTTON
H29	2	100+50.8	RT	D3-1	Lake St	72	24	12.00	W	N/A	X		MOUNT ON MAST ARM
				R10-3E L		9	15	0.94	W			X	MOUNT ABOVE PED PUSHBUTTON
H29	3	10+54.5	LT	D3-1	Lake St	72	24	12.00	E	N/A	X		MOUNT ON MAST ARM
				R3-5R	ONLY	30	36	7.50	E			X	MOUNT ON MAST ARM
				R10-3E R		9	15	0.94	S			X	MOUNT ABOVE PED PUSHBUTTON
				R10-3E L		9	15	0.94	E			X	MOUNT ABOVE PED PUSHBUTTON
H29	4	10+55.2	RT	R10-3E R		9	15	0.94	E	N/A		X	MOUNT ABOVE PED PUSHBUTTON
				R10-3E L		9	15	0.94	S			X	MOUNT ABOVE PED PUSHBUTTON
H29	5	11+14.1	RT	R3-17a	AHEAD	30	12	2.50	S	1-2.5" PT		X	
				R3-17	BIKE LANE	30	24	5.00				X	
H29	6	11+58.8	LT	R3-17b	ENDS	30	12	2.50	N	1-2.5" PT		X	
				R3-17	BIKE LANE	30	24	5.00				X	
H29	7	11+73.5	RT	R2-1	SPEED LIMIT 25	24	30	5.00	S	1-3.0" PT		X	
H29	8	13+45.3	RT	D3-1	Lake St	36	12	3.00	E	1-3.0" T	X		MOUNT SIGNS BACK TO BACK
				D3-1	Lake St	36	12	3.00	W		X		
				D3-1	Ben Walters Ln	42	8	2.33	N		X		MOUNT SIGNS BACK TO BACK
				D3-1	Ben Walters Ln	42	8	2.33	S		X		
				R1-1	STOP	30	30	6.25	E			X	
H30	9	14+06.8	RT	R3-17	BIKE LANE	30	24	5.00	N	1-2.5" PT		X	
H30	10	14+98.2	LT	R3-17	BIKE LANE	30	24	5.00	S	1-2.5" PT		X	

STATE OF ALASKA
PS&E REVIEW
CHRISTOPHER L. BENTZ
12821
REGISTERED PROFESSIONAL ENGINEER

STATE OF ALASKA DOT&PF
4111 AVIATION AVENUE
ANCHORAGE, AK 99502
(907) 269-0590

STATE OF ALASKA
DEPARTMENT OF TRANSPORTATION
AND PUBLIC FACILITIES

HOMER: LAKE STREET
REHABILITATION

SIGN SUMMARY

FILE W:\PROJECTS\HOMER LAKE ST. REHAB Z524610000\CIV3D\CIV3D16\PLANSET\52461_H-SIGN_SUMMARY.DWG
DATE/TIME 6/4/2019 9:03 AM LAYOUT SIGNSUM1 DESIGNED GSB CHECKED CLB DRAFTED MF

NO.	DATE	REVISION

STATE	PROJECT DESIGNATION	YEAR	SHEET NO.	TOTAL SHEETS
ALASKA	0001422/Z524610000	2019	H37	H38

SIGN SUMMARY

SHEET NO.	SIGN NO.	STATION ALIGNMENT	CL REF	TYPE	LEGEND	SIZE (IN) WIDTH	SIZE (IN) HEIGHT	AREA (SQ FT)	SIGN FACES	POST NO., SIZE, & TYPE	FRAMED? YES	FRAMED? NO	REMARKS
H31	11	21+90.6	LT	D3-1	Lake St	36	12	3.00	E	1-3.0" T	X		MOUNT SIGNS BACK TO BACK
				D3-1	Lake St	36	12	3.00	W		X		
				D3-1	Grubstake Ave	42	8	2.33	N		X		MOUNT SIGNS BACK TO BACK
				D3-1	Grubstake Ave	42	8	2.33	S		X		
				R1-1	STOP	30	30	6.25	W			X	
H32	12	22+93.9	RT	D3-1	Lake St	36	12	3.00	E	1-3.0" T	X		MOUNT SIGNS BACK TO BACK
				D3-1	Lake St	36	12	3.00	W		X		
				D3-1	Smokey Bay Way	48	8	2.67	N		X		MOUNT SIGNS BACK TO BACK
				D3-1	Smokey Bay Way	48	8	2.67	S		X		
				R1-1	STOP	30	30	6.25	E			X	
H32	13	24+77.2	RT	R1-1	STOP	30	30	6.25	E	1-3.0" T		X	
H32	14	25+12.0	RT	R3-17	BIKE LANE	30	24	5.00	S	1-2.5" PT		X	
H32	15	25+13.4	LT	R3-17	BIKE LANE	30	24	5.00	N	1-2.5" PT		X	
H34	16	32+93.6	RT	D3-200	← East Pioneer Ave / East End Rd →	84	24	14.00	S	2-3.0" T	X		
H34	17	33+61.2	LT	R2-1	SPEED LIMIT 25	24	30	5.00	N	1-3.0" PT		X	
H34	18	34+17.1	RT	R3-17 b	ENDS	30	12	2.50	S	1-2.5" PT		X	
				R3-17	BIKE LANE	30	24	5.00				X	
H34	19	34+94.2	LT	R3-17a	AHEAD	30	12	2.50	N	1-2.5" PT		X	
				R3-17	BIKE LANE	30	24	5.00				X	

STATE OF ALASKA
REGISTERED PROFESSIONAL ENGINEER
CHRISTOPHER L. BENTZ
12821
PS&E REVIEW

STATE OF ALASKA DOT&PF
4111 AVIATION AVENUE
ANCHORAGE, AK 99502
(907) 269-0590

STATE OF ALASKA
DEPARTMENT OF TRANSPORTATION
AND PUBLIC FACILITIES

HOMER: LAKE STREET
REHABILITATION

SIGN SUMMARY

FILE W:\PROJECTS\HOMER LAKE ST. REHAB Z524610000\CIV3D\CIV3D16\PLANSET\52461_H-SIGN_SUMMARY.DWG
DATE/TIME 6/4/2019 9:03 AM | LAYOUT SIGNSUM2 | DESIGNED GSB | CHECKED CLB | DRAFTED MF

NO.	DATE	REVISION

STATE	PROJECT DESIGNATION	YEAR	SHEET NO.	TOTAL SHEETS
ALASKA	0001422/Z524610000	2019	H38	H38

SIGN SUMMARY

SHEET NO.	SIGN NO.	STATION ALIGNMENT	CL REF	TYPE	LEGEND	SIZE (IN) WIDTH	SIZE (IN) HEIGHT	AREA (SQ FT)	SIGN FACES	POST NO., SIZE, & TYPE	FRAMED? YES	FRAMED? NO	REMARKS
H34	20	35+20.1	RT	D3-1	East End Rd	36	8	2.00	N	1-3.0" T	X		MOUNT SIGNS BACK TO BACK
				D3-1	East End Rd	36	8	2.00	S		X		
				D3-1	Lake St	36	12	3.00	E		X		MOUNT SIGNS BACK TO BACK
				D3-1	Lake St	36	12	3.00	W		X		
				R1-1	STOP	30	30	6.25	S			X	
				R1-4	ALL WAY	18	16	2.00	S			X	
H34	21	199+56.4	RT	D3-1	Lake St	36	12	3.00	E	1-3.0" T	X		INSTALL SIGN ON EAST PIONEER AVE
				D3-1	Lake St	36	12	3.00	W		X		
				D3-1	E Pioneer Ave	42	8	2.33	N		X		
				D3-1	E Pioneer Ave	42	8	2.33	S		X		
				R1-1	STOP	30	30	6.25	W			X	
				R1-4	ALL WAY	18	16	2.00	W			X	
H34	22	200+50.7	LT	D3-1	Lake St	36	12	3.00	E	1-3.0" T	X		INSTALL SIGN ON EAST END ROAD
				D3-1	Lake St	36	12	3.00	W		X		
				D3-1	East End Rd	36	8	2.00	S		X		
				D3-1	East End Rd	36	8	2.00	N		X		
				R1-1	STOP	30	30	6.25	E			X	
				R1-4	ALL WAY	18	16	2.00	E			X	

SALVAGE SIGN SUMMARY

STATION	CL REF	TYPE	LEGEND	REMARKS
99+59.4	RT.	R10-3E	PED BUTTON	EXISTING SIGNAL POLE E4
		D3-1B	STERLING HWY	SIGNAL MASTARM
100+45.8	RT	R10-3E	PED BUTTON	EXISTING SIGNAL POLE E3
		D3-1B	LAKE STREET	SIGNAL MASTARM
10+49.2	LT	R10-3E	PED BUTTON	EXISTING SIGNAL POLE E1
		R10-3E	PED BUTTON	
		D3-1B	LAKE STREET	SIGNAL MASTARM
10+49.1	RT	R10-3E	PED BUTTON	EXISTING SIGNAL POLE E2
		R10-3E	PED BUTTON	
11+74.2	RT	R2-1	25 MPH	
13+36.9	RT	D3-1	LAKE STREET	
		D3-1	BEN WALTERS LN	
		R1-1	STOP	
21+96.4	LT	D3-1	LAKE STREET	
		D3-1	SMOKEY BAY WAY	
		R1-1	STOP	
24+72.9	RT	R1-1	STOP	
33+61.0	LT	R2-1	25 MPH	
35+20.2	RT	D3-1	LAKE STREET	
		R1-1	STOP	
		R1-4	ALL WAY	
			PED XING	
35+49.8	LT	R1-1	STOP	
		R1-4	ALL WAY	
200+50.9	LT	D3-1	LAKE STREET	
		R1-1	STOP	
		R1-4	ALL WAY	
			PED XING	

STATE OF ALASKA
REGISTERED PROFESSIONAL ENGINEER
CHRISTOPHER L. BENTZ
12821
PS&E REVIEW

STATE OF ALASKA DOT&PF
4111 AVIATION AVENUE
ANCHORAGE, AK 99502
(907) 269-0590

STATE OF ALASKA
DEPARTMENT OF TRANSPORTATION
AND PUBLIC FACILITIES

HOMER: LAKE STREET
REHABILITATION

SIGN SUMMARY

FILE | W:\PROJECTS\HOMER LAKE ST. REHAB Z524610000\CIV3D\CIV3D16\PLANSET\52461_H-SIGN_SUMMARY.DWG | DATE/TIME | 6/4/2019 9:03 AM | LAYOUT | SIGNSUM3 | DESIGNED | GSB | CHECKED | CLB | DRAFTED | MF

PROJECT DESIGNATION	SHEET NUMBER	TOTAL SHEETS
0001422/Z524610000	R1	R7

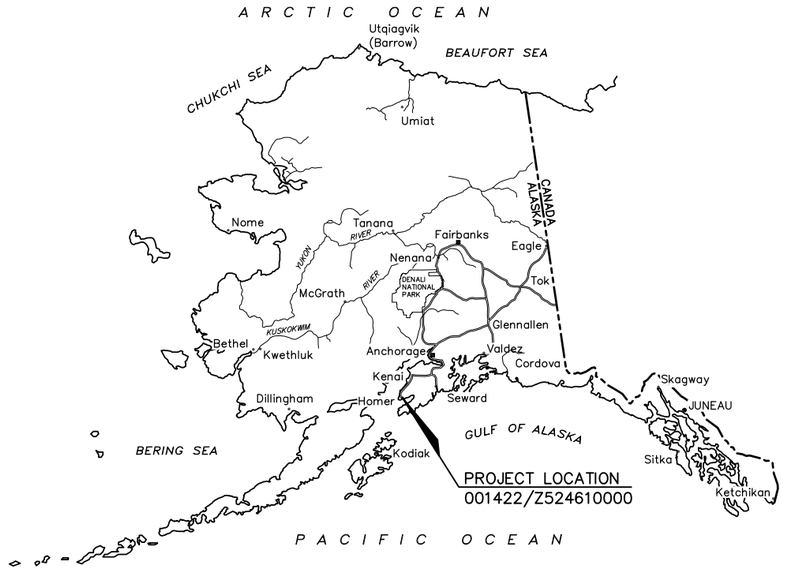

ALASKA STATE MAP

STATE OF ALASKA
DEPARTMENT OF TRANSPORTATION
&
PUBLIC FACILITIES

RIGHT - OF - WAY MAP

ALASKA PROJECT

HOMER LAKE STREET REHABILITATION
0001422/Z524610000

PRELIMINARY

SPECIAL GENERAL NOTE

SUBDIVISION NAMES, PLAT NUMBERS AND DEPICTIONS OF PROPERTIES ADJACENT TO THE RIGHT-OF-WAY SHOWN HEREON WERE GENERATED AT THE TIME OF INITIAL PLAN DEVELOPMENT. THIS PLAN SET DOES NOT NECESSARILY REFLECT THE CURRENT STATUS AT THE TIME OF THE RECORDING OF THIS DOCUMENT.

T6SR13W
S. M.
SEC. 20

END PROJECT
STA. 35+82.93

BEGIN PROJECT
STA 10+00.00

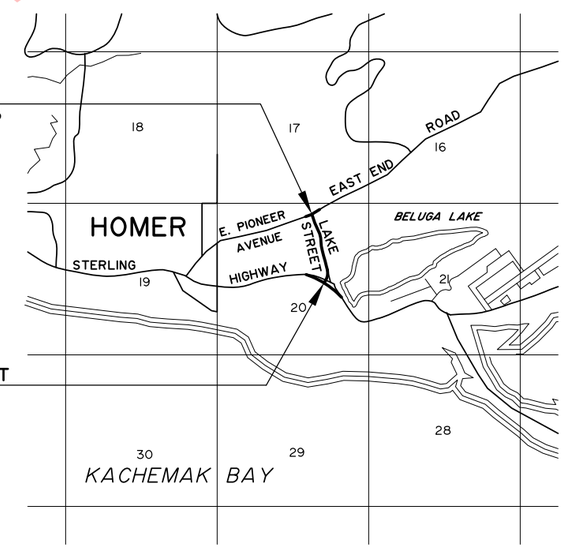

SITE MAP

0 1/2 1
Scale in Miles

ACQUISITION DATES: NOVEMBER 2016 - JULY 2018
CONSTRUCTION DATES: APRIL 2018 - JULY 2019
PROJECT LENGTH: 0.49 MILES

CITY OF HOMER APPROVAL:
THIS RIGHT OF WAY MAP IS APPROVED BY THE CITY OF HOMER CITY MANAGER
THIS _____ DAY OF _____, 20__.

_____
KATIE KOESTER, CITY MANAGER

PLATTING AUTHORITY APPROVAL:
THIS PLAT WAS APPROVED BY THE KENAI PENINSULA BOROUGH PLANNING COMMISSION AT THE MEETING OF _____.

KENAI PENINSULA BOROUGH

BY: _____
AUTHORIZED OFFICIAL

DEPARTMENT LOCATIONS SURVEYOR'S CERTIFICATE
I HEREBY CERTIFY THAT I AM A PROFESSIONAL LAND SURVEYOR REGISTERED IN THE STATE OF ALASKA AND THAT ALL RIGHT-OF-WAY CENTERLINE MONUMENT LOCATIONS HAVE BEEN ESTABLISHED AS INDICATED ON THE RIGHT-OF-WAY PLANS, ALL EXISTING FOUND SUBDIVISION MONUMENTS, PROPERTY CORNERS AND SECTION LINE MONUMENTATION AS INDICATED ON THE RIGHT-OF-WAY PLANS HAVE BEEN REFERENCED TO PROJECT SURVEY CONTROLS BY ME OR UNDER MY SUPERVISION.

_____ _____
DATE REGISTRATION NUMBER

STATE OF ALASKA 49TH ROBERT M. KEINER NO. L.S.-11547 REGISTERED PROFESSIONAL LAND SURVEYOR PRELIMINARY

_____
ROBERT M. KEINER

ALASKA DOT&PF
4111 AVIATION AVENUE
ANCHORAGE AK 99502
PHONE: (907) 269-0700

DEPARTMENT LOCATIONS SURVEYOR'S CERTIFICATE

DEPARTMENT RIGHT-OF-WAY SURVEYOR'S CERTIFICATE
I HEREBY CERTIFY THAT I AM A PROFESSIONAL LAND SURVEYOR REGISTERED IN THE STATE OF ALASKA AND THAT THIS PLAT WAS MADE BY ME OR UNDER MY SUPERVISION. THIS PLAT WAS BASED UPON THE MONUMENTS RECOVERED DURING THE DEPARTMENT'S LOCATIONS SURVEY FOR THIS PROJECT.

_____ _____
DATE REGISTRATION NUMBER

STATE OF ALASKA 49TH LOUISE HOOYER NO. LS-6109 REGISTERED PROFESSIONAL LAND SURVEYOR PRELIMINARY

_____
P. LOUISE HOOYER

ALASKA DOT&PF
4111 AVIATION AVENUE
ANCHORAGE AK 99502
PHONE: (907) 269-0700

DEPARTMENT RIGHT-OF-WAY SURVEYOR'S CERTIFICATE

DEPARTMENT OF TRANSPORTATION AND PUBLIC FACILITIES

APPROVED_____, 20____
Date

_____
REGIONAL CHIEF RIGHT-OF-WAY AGENT

LOCATED WITHIN THE CITY OF HOMER AND A PORTION OF SECTION 20, TOWNSHIP 6 SOUTH, RANGE 13 WEST, SEWARD MERIDIAN, ALASKA

HOMER RECORDING DISTRICT

STATE BUSINESS-NO FEE

W:\Projects\Highways\HOMER\52461-Homer Lake Street Rehab\Engineering\52461 COVER 5/28/2019 2:11:11 PM

PROJECT DESIGNATION	SHEET NUMBER	TOTAL SHEETS
0001422/Z524610000	R2	R7

RIGHT OF WAY

	RECOVERED	SET THIS PROJECT
FED. GOV'T SECTION CORNER	SEC COR 6 5 7 8	
FED. GOV'T 1/4 SECTION CORNER	5 6 1/4 COR	
FED. GOV'T 1/16 SECTION CORNER	1/16 COR	
FED. GOV'T SURVEY MONUMENT		
GOV'T CONTROL STA.		
PRIMARY MONUMENT (BRASS/AL CAP)		
MISC. SECONDARY CORNER		
PRIMARY CENTERLINE MONUMENT		
SECONDARY CENTERLINE MONUMENT		
CONTROL POINT	CP	
TOWNSHIP & RANGE LINE	T. 13 N. / T. 12 N.	R. 2 W. / R. 3 W.
INTERNATIONAL BOUNDARY LINE	ALASKA / CANADA	
SECTION LINE		
1/4 SECTION LINE		
1/16 SECTION LINE		
CORPORATE or CITY LIMITS		
EXISTING RIGHT-OF-WAY		
RIGHT-OF-WAY OR EASEMENT REQUIRED		
STATION EQUATION	STA. 14+33.22 BK. = STA. 16+90.17 AHD.	
PROJECT CENTERLINE	27+00	
EXISTING CENTERLINE		
RAILROAD CENTERLINE		
PROJECT RIGHT-OF-WAY LINE		
EXISTING PROPERTY LINE		
CONTROLLED ACCESS LINE	C/A	
TEMPORARY CONSTRUCTION PERMIT		
TEMPORARY CONSTRUCTION EASEMENT		
EXISTING RIGHT-OF-WAY EASEMENT		

SECTION LINE EASEMENT AND SECTION LINE-CENTERLINE INTERSECTION

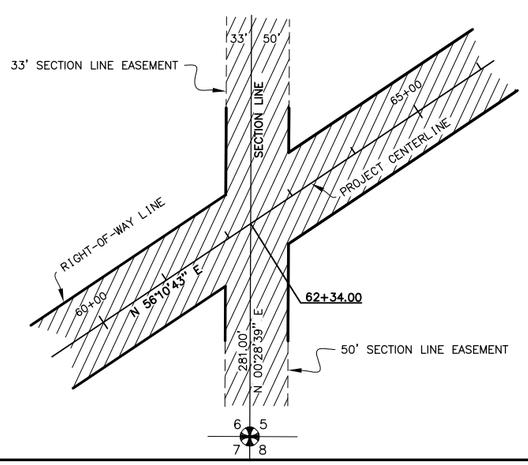

RIGHT OF WAY

EXISTING UTILITY EASEMENT	
PROPOSED UTILITY EASEMENT	

UTILITIES

	EXISTING	PROPOSED
PIPELINES:		
STORM DRAIN	SD	
MANHOLE STORM DRAIN		
CURB INLET CATCH BASIN		
FIELD INLET CATCH BASIN	FI	
PIPE CULVERT w/ END SECTION		
CLEANOUT	CO	
SANITARY SEWER	SS	
MANHOLE SANITARY SEWER	SS	
SEPTIC VENTS		
WATER	W	
FIRE HYDRANT		
WELL	W	
VALVE OR RISER		
WATER SERVICE CONNECT		
NATURAL GAS	G	
OIL OR GASOLINE PIPELINE	O	
ELECTRIC (OVERHEAD)	OE	
ELECTRIC (DIRECT BURY)	UE	
ELECTRIC (OVERHEAD)	OE&OT	
UTILITY POLE		
UTILITY POLE WITH LUMINAIRE		
GUY POLE	GP	
GUY WIRE ANCHOR		
TRANSMISSION TOWER [WOOD]		
TRANSMISSION TOWER [STEEL]		
ELECTRICAL PEDESTAL	E	
ELECTRICAL TRANSFORMER	E	
ELECTRIC METER		
ELECTRICAL OUTLET		
ELECTRIC MANHOLE	E	
TELEPHONE (OVERHEAD)	OT	
TELEPHONE (DIRECT BURY)	UT	
TELEPHONE (DIRECT BURY)	UT&TV	
TELEPHONE PEDESTAL	T	
TELEPHONE MANHOLE	T	
FIBER OPTIC	FO	
FIBER OPTIC MANHOLE	FO	
CABLE TV (OVERHEAD)	OTV	
CABLE TV (DIRECT BURY)	UTV	
CABLE T.V. PEDESTAL	V	
SATELLITE DISH		
U.G. DUCT (E, T, FO)		

UTILITIES

	EXISTING	PROPOSED
TYPE IA JUNCTION BOX		
TYPE II JUNCTION BOX		
TYPE III JUNCTION BOX		
TYPE IV JUNCTION BOX		
TRAFFIC CONTROLLER		
ELECTROLIER		
HIGHTOWER		
SIGNAL POLE WITH MAST		
PEDESTRIAN PUSH BUTTON		
RURAL BEACON		
SCHOOL ZONE BEACON		

EXISTING TOPOGRAPHY

CONIFER TREE OR TREES	
DECIDUOUS TREE OR TREES	
SHRUB OR SHRUBS	
WETLANDS	
CREEK	
RIVER	
LAKE / POND	LAKE POND

EXISTING/PROPOSED

DRAINAGE FLOW	
CONTOURS – MAJOR	515
CONTOURS – MINOR	

MISCELLANEOUS

	EXISTING	PROPOSED
BUILDING		
FOUNDATION		
TANKS ABOVE GROUND		
TANKS UNDERGROUND	U	
PLANTER	P	
PRIVATE SIGN		
POST/BOLLARDS		
MAILBOX	MB	
TRAFFIC SIGN		
VENT		
GAS PUMP	GP	
LANDSCAPE LIGHT		

ROADWAY

	EXISTING	PROPOSED
ROADWAY OBLITERATION		
LIMIT OF CUT SLOPE		
LIMIT OF FILL SLOPE		
EDGE OF PAVEMENT		
CONCRETE CURB		
CONCRETE CURB & GUTTER		
CONCRETE CURB CUT		
SIDEWALK		
CURB RAMPS		
PARALLEL CURB RAMP		
PERPENDICULAR CURB RAMP		
MID-BLOCK CURB RAMP		
UNIDIRECTIONAL CURB RAMP		
DETECTABLE WARNING TILES		
DRIVEWAY APPROACH		
GRAVEL EDGE		
PATH / TRAIL		
BRIDGE		
TUNNEL		
NOISE BARRIER	X X	
FENCE		
STONE FENCE		
RETAINING WALL		
HEAD & WINGWALLS		
GUARDRAIL		
END SECTION		
PARALLEL GUARDRAIL SECTION		
SPECIAL DITCH		
BOTTOM OF DITCH		
RIPRAP		
BOULDER OR BOULDERS		

STATE OF ALASKA
DEPARTMENT OF TRANSPORTATION
&
PUBLIC FACILITIES

RIGHT-OF-WAY MAP
ALASKA PROJECT

0001422/Z524610000

HOMER LAKE STREET REHAB

DRAWN	KMG	DATE	9/28/2016	SCALE	NTS
CHECKED		DATE		SHEET	2 OF 7

PROJECT DESIGNATION	SHEET NUMBER	TOTAL SHEETS
0001422/Z524610000	R3	R7

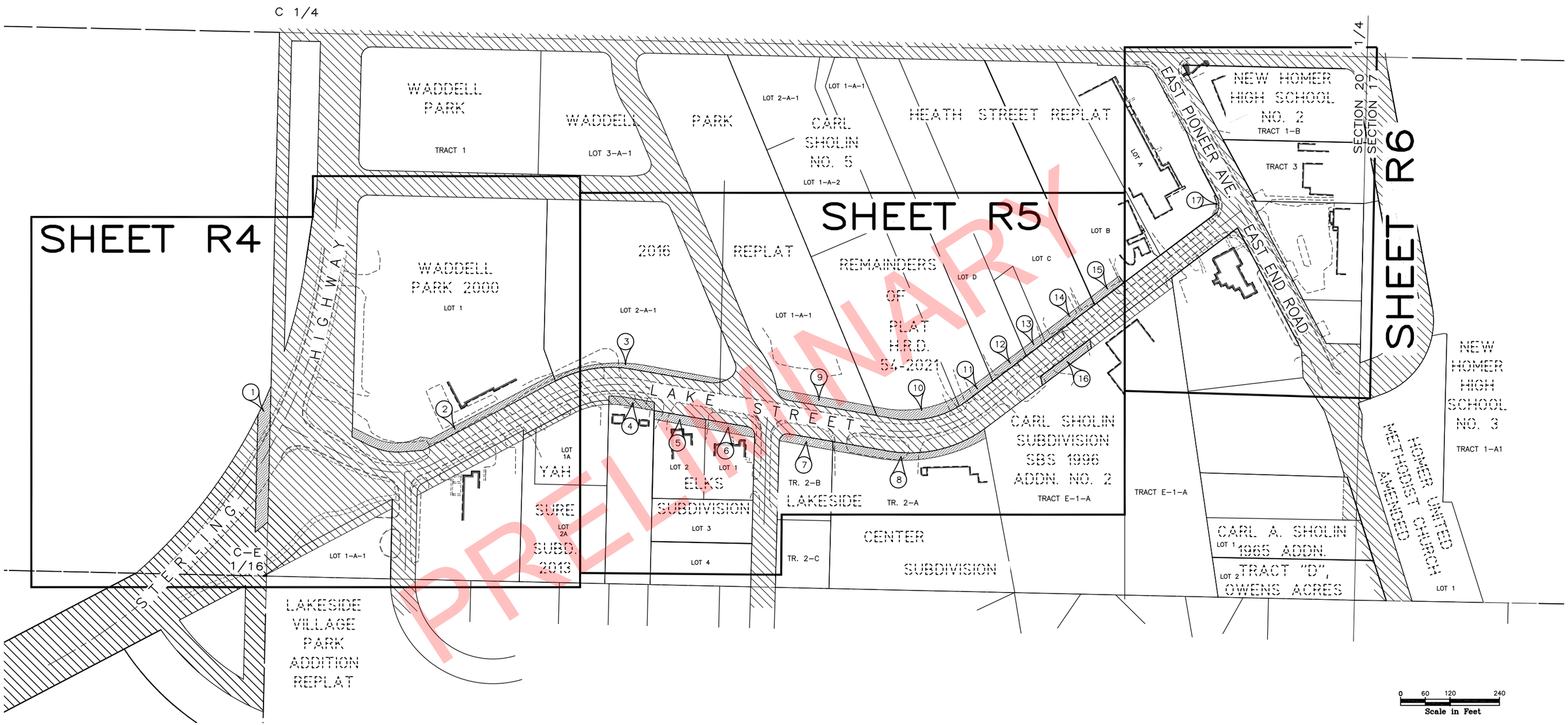

0 60 120 240
Scale in Feet

DATE	REVISIONS	BY
MAR 2017	ADJUST MAPPING LIMITS, ADD PLAT 2016-21	RVK

STATE OF ALASKA
DEPARTMENT OF TRANSPORTATION
&
PUBLIC FACILITIES

RIGHT-OF-WAY MAP
ALASKA PROJECT

0001422/Z524610000

HOMER LAKE STREET REHAB

DRAWN KMG	DATE 9/20/2016	SCALE 1" = 120'	
CHECKED	DATE	SHEET 3	OF 7

W:\Projects\Highways\HOMER\52461-Homer Lake Street Rehab\Engineering\52461 TRACT 5/28/2019 2:11:28 PM

PARCEL NO.	INTEREST ACQUIRED	OWNER	LARGER PARCEL	TAKE INCLUDING EXISTING EASEMENT	NET TAKE	REMAINDER	RECORDED DOCUMENT NUMBER
3	FEE	HOMER ELECTRIC ASSN. INC.	161,233 S.F.	4,898 S.F.	4,898 S.F.	156,335 S.F.	
2	FEE	ALBERT O. WADDELL, JR. AND JANICE S. WADDELL	261,844 S.F.	10,255 S.F.	10,255 S.F.	251,589 S.F.	2017-003290-0
1	FEE	CITY OF HOMER	LARGE	9,195 S.F.	9,195 S.F.	38.623 AC.	

PARCEL INFORMATION

PROJECT DESIGNATION	SHEET NUMBER	TOTAL SHEETS
0001422/Z524610000	R4	R8

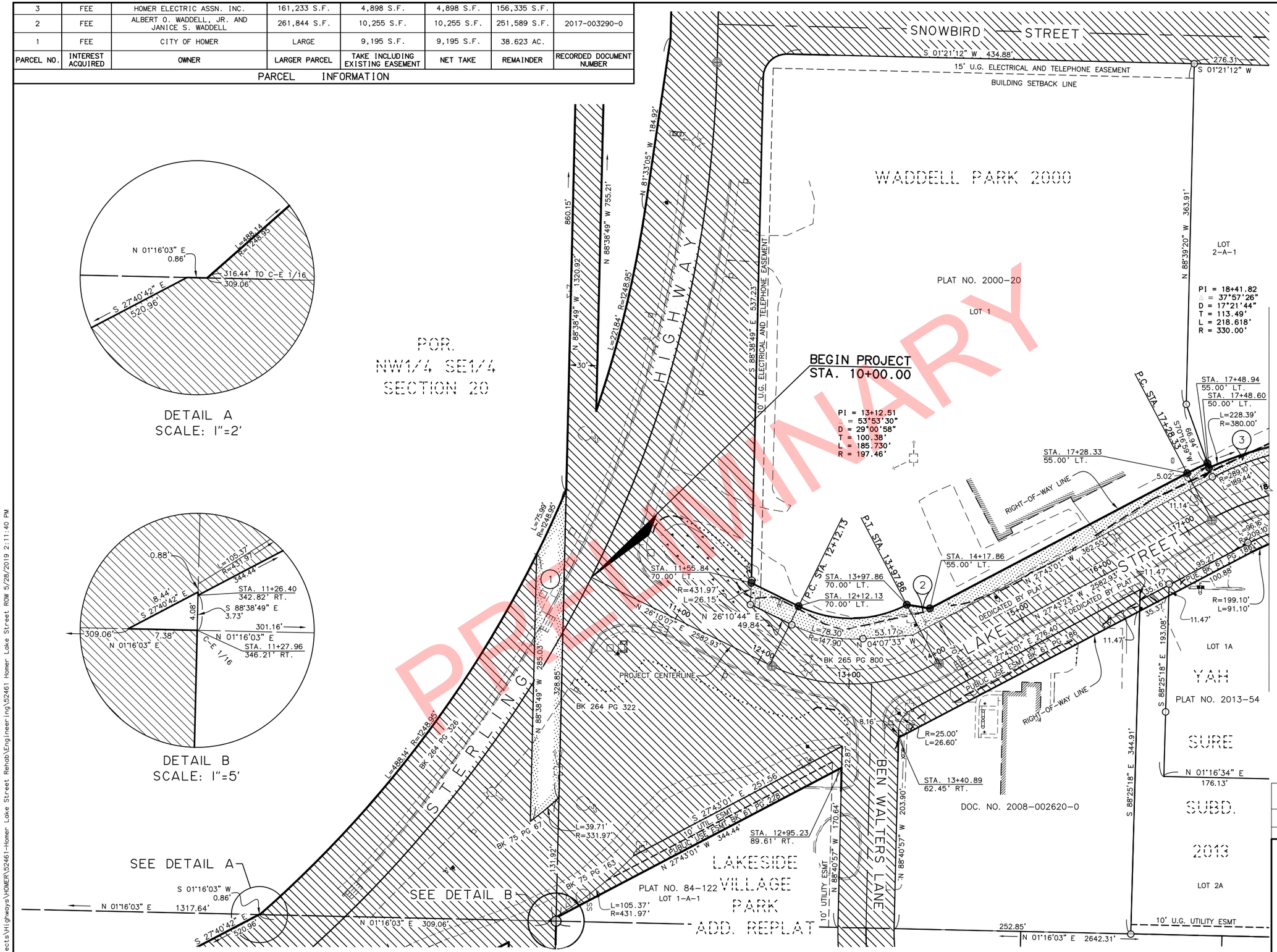

NOTE: STATIONS AND OFFSETS ON THIS SHEET ARE TO COMPUTED POINTS.

DATE	REVISIONS	BY
MARCH 2017	ADJUST PARCELS 1 AND 2, ADD PLAT 2016-21, UPDATE PARCEL TABLE, ADD MONUMENTS PER KPB 20.10.070	RVK
JAN 2017	MISC KPB REQUESTED EDITS, UPDATED PARCEL TABLE	RVK

STATE OF ALASKA
DEPARTMENT OF TRANSPORTATION
&
PUBLIC FACILITIES
RIGHT-OF-WAY MAP
ALASKA PROJECT
0001422/Z524610000
HOMER LAKE STREET REHAB

DRAWN KMG	DATE 10/14/2016	SCALE 1" = 50'	
CHECKED	DATE	SHEET 4	OF 8

W:\Projects\Highways\HOMER\52461-Homer Lake Street Rehab\Engineering\52461 Homer Lake Street ROW 5/28/2019 2:11:40 PM

PROJECT DESIGNATION	SHEET NUMBER	TOTAL SHEETS
0001422/Z524610000	R5	R8

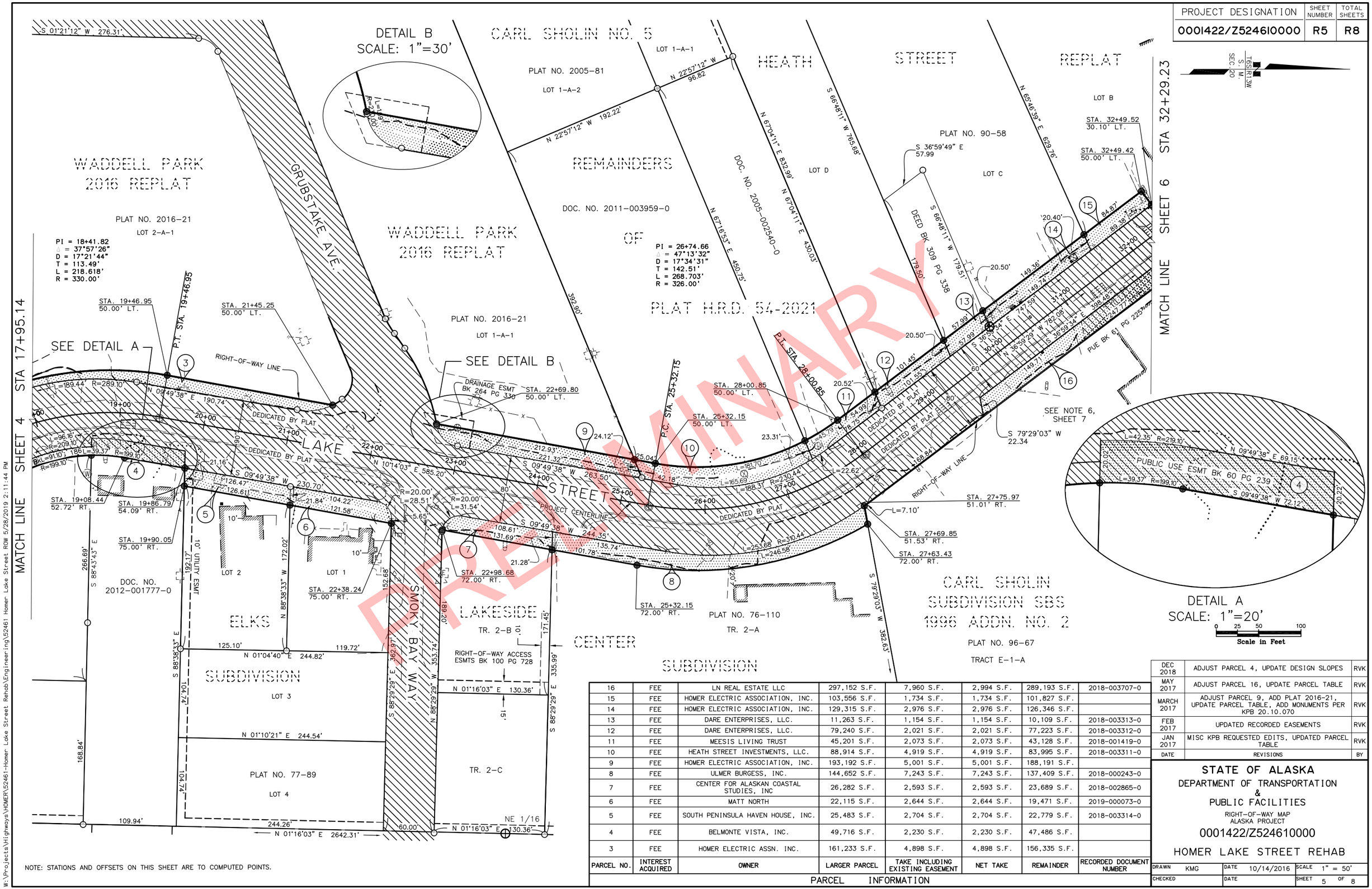

NOTE: STATIONS AND OFFSETS ON THIS SHEET ARE TO COMPUTED POINTS.

PARCEL NO.	INTEREST ACQUIRED	OWNER	LARGER PARCEL	TAKE INCLUDING EXISTING EASEMENT	NET TAKE	REMAINDER	RECORDED DOCUMENT NUMBER
16	FEE	LN REAL ESTATE LLC	297,152 S.F.	7,960 S.F.	2,994 S.F.	289,193 S.F.	2018-003707-0
15	FEE	HOMER ELECTRIC ASSOCIATION, INC.	103,556 S.F.	1,734 S.F.	1,734 S.F.	101,827 S.F.	
14	FEE	HOMER ELECTRIC ASSOCIATION, INC.	129,315 S.F.	2,976 S.F.	2,976 S.F.	126,346 S.F.	
13	FEE	DARE ENTERPRISES, LLC.	11,263 S.F.	1,154 S.F.	1,154 S.F.	10,109 S.F.	2018-003313-0
12	FEE	DARE ENTERPRISES, LLC.	79,240 S.F.	2,021 S.F.	2,021 S.F.	77,223 S.F.	2018-003312-0
11	FEE	MEESIS LIVING TRUST	45,201 S.F.	2,073 S.F.	2,073 S.F.	43,128 S.F.	2018-001419-0
10	FEE	HEATH STREET INVESTMENTS, LLC.	88,914 S.F.	4,919 S.F.	4,919 S.F.	83,995 S.F.	2018-003311-0
9	FEE	HOMER ELECTRIC ASSOCIATION, INC.	193,192 S.F.	5,001 S.F.	5,001 S.F.	188,191 S.F.	
8	FEE	ULMER BURGESS, INC.	144,652 S.F.	7,243 S.F.	7,243 S.F.	137,409 S.F.	2018-000243-0
7	FEE	CENTER FOR ALASKAN COASTAL STUDIES, INC	26,282 S.F.	2,593 S.F.	2,593 S.F.	23,689 S.F.	2018-002865-0
6	FEE	MATT NORTH	22,115 S.F.	2,644 S.F.	2,644 S.F.	19,471 S.F.	2019-000073-0
5	FEE	SOUTH PENINSULA HAVEN HOUSE, INC.	25,483 S.F.	2,704 S.F.	2,704 S.F.	22,779 S.F.	2018-003314-0
4	FEE	BELMONTE VISTA, INC.	49,716 S.F.	2,230 S.F.	2,230 S.F.	47,486 S.F.	
3	FEE	HOMER ELECTRIC ASSN. INC.	161,233 S.F.	4,898 S.F.	4,898 S.F.	156,335 S.F.	

PARCEL INFORMATION

DATE	REVISIONS	BY
DEC 2018	ADJUST PARCEL 4, UPDATE DESIGN SLOPES	RVK
MAY 2017	ADJUST PARCEL 16, UPDATE PARCEL TABLE	RVK
MARCH 2017	ADJUST PARCEL 9, ADD PLAT 2016-21, UPDATE PARCEL TABLE, ADD MONUMENTS PER KPB 20.10.070	RVK
FEB 2017	UPDATED RECORDED EASEMENTS	RVK
JAN 2017	MISC KPB REQUESTED EDITS, UPDATED PARCEL TABLE	RVK

STATE OF ALASKA
DEPARTMENT OF TRANSPORTATION & PUBLIC FACILITIES
RIGHT-OF-WAY MAP
ALASKA PROJECT
0001422/Z524610000
HOMER LAKE STREET REHAB

DRAWN KMG	DATE 10/14/2016	SCALE 1" = 50'	
CHECKED	DATE	SHEET 5	OF 8

W:\Projects\Highways\HOMER\52461-Homer Lake Street Rehab\Engineering\52461 Homer Lake Street ROW 5/28/2019 2:11:44 PM

PROJECT DESIGNATION	SHEET NUMBER	TOTAL SHEETS
0001422/Z524610000	R6	R8

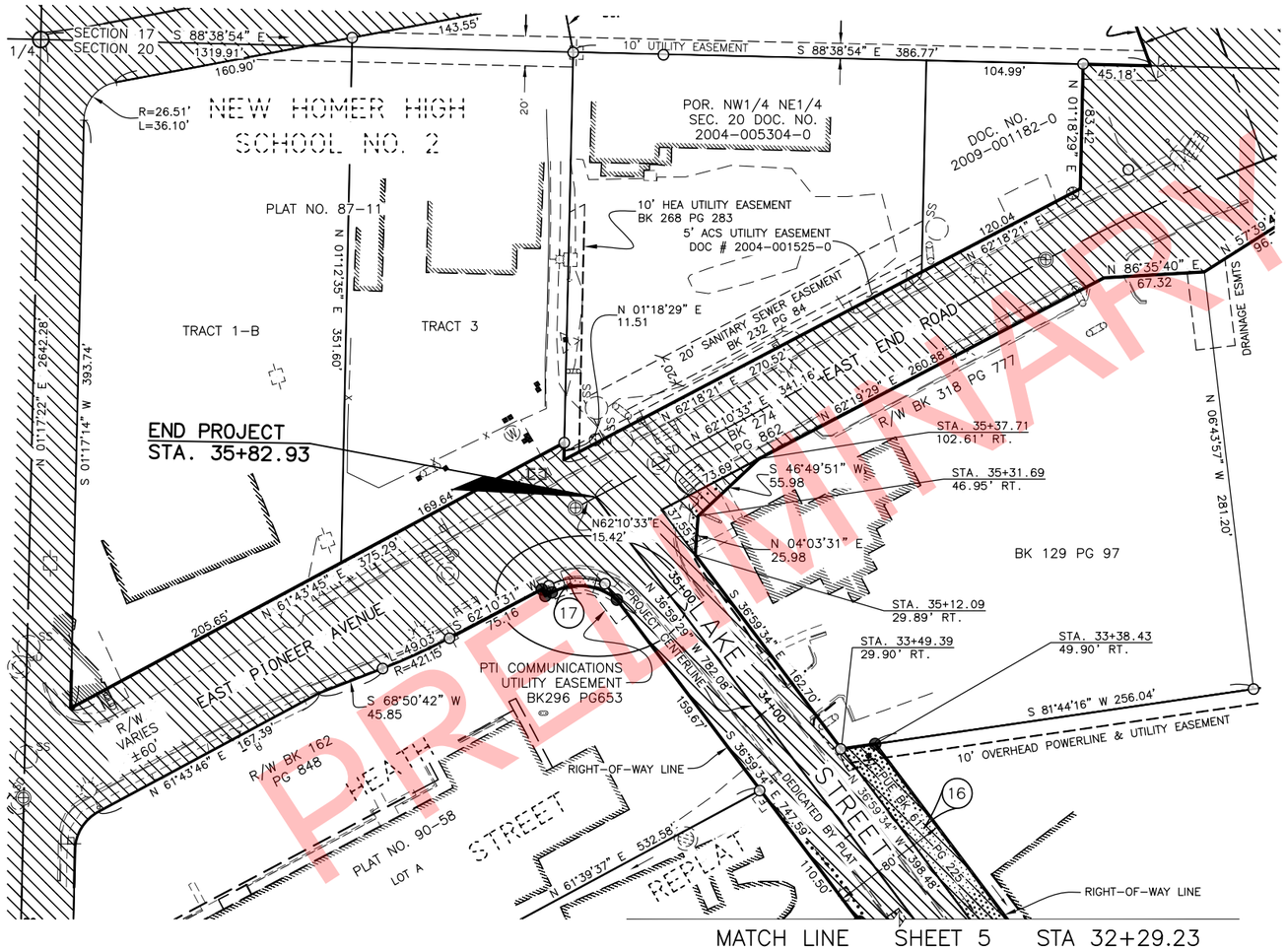

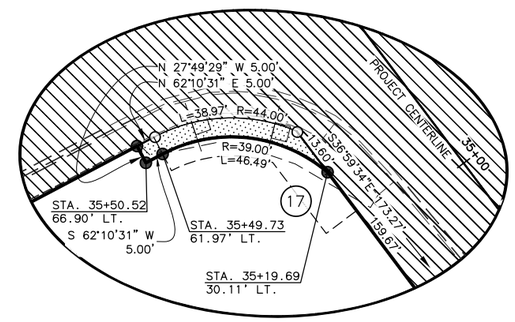

DETAIL A
SCALE: 1"=20'

T6S R13W
S. M.
SEC. 17, 20

DATE	REVISIONS	BY
JAN 2019	DELETE PARCEL 18	RVK
JULY 2018	UPDATE PARCEL 18 OWNER	RVK
MARCH 2018	ADD PARCEL 18, UPDATE EASEMENTS AFFECTING PARCEL 18	RVK
MAY 2017	ADJUSTED PARCEL 16, UPDATED PARCEL TABLE	RVK
MARCH 2017	ADJUST MAPPING LIMITS, ADD DETAIL OF PARCEL 17, ADD MONUMENTS PER KPB 20.10.070	RVK
JAN 2017	MISC KPB REQUESTED EDITS, UPDATED PARCEL TABLE	RVK

PARCEL NO.	INTEREST ACQUIRED	OWNER	LARGER PARCEL	TAKE INCLUDING EXISTING EASEMENT	NET TAKE	REMAINDER	RECORDED DOCUMENT NUMBER
18		DELETED					
17	FEE	NEWBY REVOCABLE TRUST	88,772 S.F.	235 S.F.	235 S.F.	88,537 S.F.	
16	FEE	LN REAL ESTATE, LLC.	297,152 S.F.	7,960 S.F.	2,994 S.F.	289,193 S.F.	2018-003707-0

PARCEL INFORMATION

NOTE: STATIONS AND OFFSETS ON THIS SHEET ARE TO COMPUTED POINTS.

0 25 50 100
Scale in Feet

STATE OF ALASKA
DEPARTMENT OF TRANSPORTATION & PUBLIC FACILITIES
RIGHT-OF-WAY MAP
ALASKA PROJECT
0001422/Z524610000
HOMER LAKE STREET REHAB

DRAWN	KMG	DATE	10/14/2016	SCALE	1" = 50'
CHECKED		DATE		SHEET	6 OF 8

W:\Projects\Highways\HOMER\52461-Homer Lake Street Rehab\Engineering\52461 Homer Lake Street ROW 5/28/2019 2:11:49 PM

NOTES:

1. THESE PLANS MAY BE USED FOR THE ESTABLISHMENT OF RIGHT OF WAY LIMITS ONLY. THESE DRAWINGS SHOULD NOT BE USED AS A BASIS FOR ESTABLISHING ADJOINING PROPERTY LINES AND CORNERS.
2. THIS PROJECT WAS SURVEYED BY THE CENTRAL REGION DOT&PF SURVEY SECTION. THE FIELD SURVEY WAS JANUARY – MAY 2011.
3. ALL DOCUMENTS NOTED IN THIS PLAN SET AND REFERENCED BY INSTRUMENT NUMBER OR BOOK AND PAGE ARE RECORDED IN THE HOMER RECORDING DISTRICT (H.R.D), UNLESS OTHERWISE NOTED.
4. TITLE REPORTS WERE ORDERED AT THE TIME OF PLANS DEVELOPMENT. WHILE A CONSIDERABLE EFFORT HAS BEEN MADE TO SHOW PERTINENT TITLE INTERESTS IN ADJOINING PROPERTIES, EASEMENTS MAY EXIST THAT ARE NOT SHOWN ON THIS RIGHT OF WAY MAP.
5. THE ROW MAPPING (PROJECT HOMER–LAKE STREET REHABILITATION STP–001(73) 1996) SHOWED A 60' ROW, WHICH IS INCORRECT. THEREFORE, WITH THIS PROJECT DOT IS ACQUIRING THIS GAP IN ROW AS PARCEL 1. THE ROW MAPPING WAS COMPLETED IN 1996 AND PROPERTY WAS ACQUIRED IN 1997 AT BOOK 264 PAGE 326.
6. THE CITY OF HOMER ACQUIRED PUBLIC USE EASEMENTS IN 1970 FROM SEVERAL INDIVIDUALS FOR 'A STRIP OF LAND 100 FEET IN WIDTH'. ATTACHED TO EACH DOCUMENT IS AN EXHIBIT WHICH REFERENCES THE EIGHT INTENDED EASEMENTS AND EACH ASSOCIATED LOT. OF THE EIGHT EASEMENTS, ONE PARCEL (C–1) WAS NOT RECORDED AND THEREFORE DOES NOT EXIST. AT THIS LOCATION, DOT IS ACQUIRING A PORTION OF CARL SHOLIN SUBDIVISION SBS 1996 ADDN. NO. 2 AS PARCEL 16.

EXISTING RIGHT OF WAY – SOURCE DOCUMENTS

THE EXISTING LAKE STREET RIGHT OF WAY CORRIDOR DEPICTED HEREIN WAS DETERMINED FROM THE FOLLOWING PLANS AND DOCUMENTS

ROW PLAN SHEET NO.	MAP OR DOCUMENT
4	HOMER–BY PASS QF–021–1(25) ROW MAP 1973: PARCEL 39 (BK 75 PG 67), PARCEL 38 (BK 75 PG 163), PARCEL 37 (FJ C.A. NO. 74–15067 I) HOMER–LAKE STREET REHABILITATION STP–0001(73) 1996: PARCEL 1 (BK 264 PG 322), PARCEL 2 (BK 264, PG 326), PARCEL 3 (BK 265 PG 800) 60' DEDICATION BY WADDELL REPLAT 60–5189 10' DEDICATION BY WADDELL PARK PLAT 84–26 10' DEDICATION BY YAH SURE SUBDIVISION PLAT 85–75
5	HOMER–LAKE STREET REHABILITATION STP–0001(73) 1996: PARCEL E–4 (BK 264 PG 330) 60' DEDICATION BY WADDELL REPLAT 60–5189 60' DEDICATION BY PLAT 54–2021 20' DEDICATION BY NIELSON–HOFFMAN SUBDIVISION PLAT 76–20 20' DEDICATION BY CARL SHOLIN SUBDIVISION SBS 1996 ADDN. NO. 2 PLAT 96–67
6	HOMER–LAKE STREET REHABILITATION STP–0001(73) 1996: PARCEL E–5 (BK 274 PG 862) 60' DEDICATION BY PLAT 54–2021

BK BOOK
PG PAGE
FJ FINAL JUDGEMENT

LAKE STREET – HISTORY AND CONSTRUCTION

THE ALIGNMENT FOR THE EXISTING ROW WAS CREATED WITH MAPS/ASBUILTS FROM THE ALASKA ROAD COMMISSION, BUREAU OF PUBLIC ROADS, DOT RIGHT–OF–WAY PLANS, AND SUBDIVISION PLATS.

AN ALASKA ROAD COMMISSION (ARC) ASBUILT DATED 1947–48 SHOWS THE RUSSIAN RIVER – HOMER ROAD. THIS ASBUILT INCLUDES THE ALIGNMENT FOR WHAT IS TODAY, LAKE STREET. THE ALIGNMENT IS SHOWN AT AN INTERSECTION WITH KACHEMAK ROAD (EAST END ROAD) AT PI STATION 6259+69.5 AND ENDS AT PI STATION 6306+84.2 WHERE IT INTERSECTS WITH AIRPORT ROAD (OCEAN DRIVE).

A BUREAU OF PUBLIC ROADS ASBUILT DATED 1958 SHOWS AN ALIGNMENT SIMILAR TO THE ARC ASBUILT AND INCLUDES ROW AND ADJACENT STRUCTURES.

THE ABOVE LISTED ASBUILTS HAVE BEEN USED IN CONJUNCTION WITH SUBDIVISION PLATS FROM THE 1950'S THAT HAVE DEDICATED THE 60' ROW (WADDELL REPLAT 60–5189 FILED IN 1958 AND PLAT 54–2021).

IN 1973 A PROJECT ALONG THE STERLING HIGHWAY, HOMER BY–PASS QF–021–1(25) ACQUIRED PROPERTY AT LAKE STREET WHERE THE STERLING INTERSECTS NEAR THE SOUTHERLY END.

IN 1996 THE HOMER–LAKE ST REHAB PROJECT ACQUIRED ADDITIONAL PROPERTY AT THE STERLING HIGHWAY INTERSECTION AS WELL AS TWO EASEMENTS.

DATE	REVISIONS	BY

STATE OF ALASKA
DEPARTMENT OF TRANSPORTATION
&
PUBLIC FACILITIES
RIGHT–OF–WAY MAP
ALASKA PROJECT
0001422/Z524610000
HOMER LAKE STREET REHAB

DRAWN KMG	DATE 10/14/2016	SCALE NTS
CHECKED	DATE	SHEET 7 OF 8

MONUMENT SUMMARY

PROJECT DESIGNATION	SHEET NUMBER	TOTAL SHEETS
0001422/Z524610000	R8	R8

RECOVERED CORNERS - SHEET R4

MONUMENT TYPE : LOCATION	NORTHING	EASTING	STATION	OFFSET
Fd AM/BX[4928-S]: PT 10+452.322	95380.7399	112192.6509		
Fd BC[3686-S]: CE 1/16 S20 *T6S R 13W SM	95911.0023	111976.4807	11+27.96	346.21R
Fd Rbr/AC[5522-S]: SE Angle Pt S Line Waddell Park	96119.9392	111612.3636	11+54.90	72.73L
Fd Rbr/AC[5522-S]: SE L1 Waddell Park 2000	96118.5759	111638.3343	11+65.13	48.82L
Fd AC/BX[4928-S]:PC 2+042.926 Lake ST	96141.4584	111703.9696	12+14.61	0.01R
Fd Rbr/AC[5522-S]: PT E Line L1 Waddell Park 2000	96162.7727	111659.9976	12+15.08	48.85L
Fd Rbr/AC[XXXX-S]: SE L1-A-1 Lakeside Village	95903.8863	112280.8664	12+22.64	623.69R
Fd Rbr/AC[5522-S]: PC E Line L1 Waddell Park 2000	96238.8014	111674.8029	13+18.82	47.80L
Fd AC/BX[4928-S]:PT 2+099.366 Lake ST	96319.8367	111701.5167	13+98.84	1.72R
Fd Rbr/AC[4015-S]: SE L2 Yah Sure Subd	96524.8600	111990.2798	14+46.00	352.71R
Fd AM/BX[XXXX]: PC 10+026.076	96083.0921	111059.2978	14+88.03	676.91L
Fd Spike: C 1/4 S20 *T6S R 13W SM	95942.7144	110656.0220	15+51.37	1099.20L
Fd PK: SE L1 Yah Sure Subd	96562.0753	111752.9604	15+89.34	159.94R
Fd Rbr: SW L1 W Line Yah Sure Subd	96565.8365	111616.4524	16+56.18	40.85R
Fd AM/BX[7538-S]: PC 2+199.810 Lake ST	96611.4729	111548.2934	17+28.28	1.75R
Fd Rbr/AC[5522-S]: PT E Line L2 Waddell Park 2000	96612.1225	111502.5459	17+47.84	39.09L
Fd Rbr/AC[5522-S]: Angle Point S Line L2 Waddell Park 2000	96584.2474	111425.0635	17+52.62	121.22L
Fd Rbr: NW L1 Angle Pt W Line Yah Sure Subd	96650.0091	111572.2557	17+54.43	39.98R
Fd Rbr/AC[5522-S]: SW Tr2 Waddel Park Subd	96577.7975	110700.0728	18+34.45	823.93L

RECOVERED CORNERS - SHEET R5

MONUMENT TYPE : LOCATION	NORTHING	EASTING	STATION	OFFSET
Fd AM[4015-S]: NE L2 Yah Sure Subd	96732.5082	111995.0410	16+27.60	453.52R
Fd AM[4015-S]: NW L2 Yah Sure Subd	96737.7937	111756.8746	17+85.09	243.88R
Fd Rbr/AC [5522-S]: SW LE Heath St Replat	96802.5089	110705.1041	18+99.14	804.38L
Fd Rbr/AC[5522-S]: PC E Line L2 Waddell Park 2000	96795.6369	111473.2289	19+16.29	36.96L
Fd AM/BX[7538-S]: PT 2+266.067 Lake ST	96822.4647	111515.7998	19+46.87	1.75R
Fd Rbr/AC[5222-S]: NW L2 Waddell Park Subd	96904.2385	111068.7728	19+47.92	452.69L
Fd Rbr/AC[5522-S]: NE Tr2A Waddell Park Subd	96927.8167	111009.4018	19+60.58	515.31L
Fd Rbr: NW PT Waddell Park Subd	96926.4662	111084.2626	19+72.55	441.40L
Fd Rbr/AC[5188-S]: SW L2A Carl Sholin Subd No4	97030.0527	110710.4115	20+08.06	827.71L
Fd Rbr: SE L2 Elks Subd	96847.3912	111787.6717	20+19.71	264.87R
Fd Rbr/AC[5522-S]: NE PT L2 Waddell Park 2000	96984.9157	111505.7633	21+04.96	36.99L
Fd Rbr: SW L1 Elks Subd	96977.0569	111596.2158	21+13.29	53.42R
Fd Rbr: SE L1 Elks Subd	96972.4642	111790.0248	21+43.21	244.96R
Fd Rbr: SE L2-A-1 Carl Sholin Subd No4	97125.9078	110941.7557	21+43.50	617.07L
Fd Rbr/AC[5522-S]: NE PC L2 Waddell Park 2000	97061.2997	111410.1597	21+63.14	144.64L
Fd Rbr: NW L2A Carl Sholin Subd No4	97241.2634	110715.1665	22+16.76	860.55L
Fd Rbr/AC[XXXX]: CN 1/16 S20 *T6S R 13W SM	97263.8740	110685.5863	22+33.75	893.68L
Fd Rbr: SE LE Heath St Replat	97148.9672	111543.4564	22+73.09	29.04L
Fd Rbr: SW Tr 2-B Lakeside Center Subd	97155.9566	111649.1848	22+98.76	73.76R
Fd Rbr/AC[3686-S]: SE Tr 2-C Lakeside Center Subd	97146.5870	112004.9662	23+52.75	425.55R
Fd AM[466X-S]: CN 1/16 S20 *T6S R 13W SM	97230.6914	112005.6804	24+35.64	411.31R
Fd Rbr: SW Remainders H.R.D.54-2021	97409.9538	111126.3187	24+55.81	485.91L
Fd Rbr/AC[3666-S]: NE Tr 2-C Lakeside Center Subd	97276.9392	112006.8384	24+81.36	404.23R
Fd AM/BX[7538-S]: PT 2+444.888 Lake ST	97399.7376	111620.0233	25+33.47	1.75R
Fd Rbr/AC[7610-S]: NE Tr 2-A Lakeside Center Subd	97727.8630	112016.2696	27+07.96	442.47R
Fd Rbr/PC[3686-S]: NE Tr 2-A Lakeside Center Subd	97727.8679	112016.0554	27+07.99	442.27R
Fd AM/BX[7538-S]: PT 2+527.440 Lake ST	97655.8550	111558.7862	28+02.59	2.75R
Fd IP: SE L D Heath Street Replat	97674.6942	111503.5792	28+50.85	30.01L
Fd ALP: NW Remainders H.R.D.54-2021	97499.0655	111088.5787	29+60.28	467.16L
Fd Rbr: SE L C Heath Street Replat	97801.9910	111407.4422	30+10.37	30.20L
Fd Rbr/AC[3815-S]: SW LD Heath St Replat	97342.1569	110717.5101	30+58.22	857.95L
Fd Rbr: NW Deed BK 67.P334	97723.2117	111222.7185	30+58.60	225.15L
Fd Rbr/AC[3815-S]: SW LC Heath St Replat	97446.0614	110719.7370	31+39.87	793.65L
Fd Rbr: SW LB Heath St Replat	97654.9082	110724.4678	33+03.84	664.21L
Fd Rbr/AC[3815-S]: NW LB Heath St Replat	97828.6358	110728.6422	34+40.09	556.35L
Fd Rbr: SE Angel PT W Line LA Heath St Replat	97928.6521	110735.4805	35+15.86	490.70L

RECOVERED CORNERS - SHEET R6

MONUMENT TYPE : LOCATION	NORTHING	EASTING	STATION	OFFSET
Fd AM/Bx[DOT]:	98076.2337	110703.7263		
Fd AM/Bx[DOT]: BOP 0+00.0	98270.2839	111073.4220		
Fd BC[5XXX-S]: 1/4 S17/S20 *T6S R13W SM	98583.7987	110715.3892		
Fd AM[3686-S]: SE Tr 1 New Homer High School No 2	98573.6123	111132.3045		
Fd Rbr/AC[3686]: NE Tr 3 New Homer High School No 2	98575.1789	111071.8283		
Fd Rbr/AC[3686-S]: NW Tr 3 New Homer High School No 2	98585.0917	110923.8823		
Fd Rbr/AC[3686-S]: Angle Pt S Line Tr 2 New Homer High School No 2	98567.4821	111413.3287		
Fd Rbr/AC[XXXX-S]: SE Tr 3 New Homer High School No 2	98313.9190	111065.8623		
Fd Rbr: SE Tr A Carl Sholin Subd	98149.0043	111527.4184	32+15.35	274.42R
Fd AM[4469-S]: E 1/16 S17/S20 *T6S R13W SM	98552.6660	112034.9335	32+32.40	922.67R
Fd Rbr/AC[5780-S]: NW Carl Sholin Subd Add No.2	98108.8535	111250.9191	33+49.65	29.42R
Fd Rbr: NE L B Heath Street Replat	98081.0455	111196.6408	33+60.10	30.67L
Fd AM/Bx[DOT]: PT 0+191.25	98538.5876	111639.3432	34+59.18	598.23R
Fd AM/Bx[DOT]: PC 0+108.51	98436.4572	111388.2756	35+28.67	336.24R
Fd Spike: ESE PC C2 L A Heath Street Replat	98219.4689	111093.0970	35+32.96	30.08L
Fd Rbr: SE PC Fairview Ave	98496.6666	111443.6325	35+43.45	416.69R
Fd Spike: ENE PT C2 L A Heath Street Replat	98218.1188	111055.5383	35+54.48	60.90L
Fd Nail: E PC C1 L A Heath Street Replat	98183.0084	110989.0220	35+66.46	135.15L
Fd Nail: W PT C1 L A Heath Street Replat	98162.7263	110944.2200	35+77.22	183.14L

BASIS OF COORDINATES AND BEARINGS

COORDINATE SYSTEM:

THIS PROJECT IS LOCATED ENTIRELY WITHIN A MODIFIED LOCAL ADJUSTMENT, A U.S. SURVEY FOOT LOCAL SURFACE GRID COORDINATE SYSTEM DEVELOPED BY THE ALASKA DEPARTMENT OF TRANSPORTATION. THIS LOCAL COORDINATE SYSTEM IS NOT HOM-1.

BASIS OF COORDINATES:

THE BASIS OF COORDINATES IS NGS STATION HOMAIR, A BRASS DISC LOCATED ON HOMER AIRPORT PROPERTY. SAID STATION HAS HOMER-1 COORDINATES OF 94,575.3765 N, 117,735.2248 E.

BASIS OF BEARINGS:

THE BASIS OF BEARINGS IS A LOCAL PLANE BEARING BETWEEN NGS STATION HOMAIR AND RM 125' LT, A BRASS CAP AT THE NORTHEASTERLY END OF THE HOMER AIRPORT RUNWAY. RM 125' LT BEARS N 52°09'40" E A DISTANCE OF 7,007.07 U.S. SURVEY FEET FROM NGS STATION HOMAIR. RM 125' LT HAS LOCAL COORDINATES OF 98,873.8153 N, 123,268.9848 E.

TRANSLATION PARAMETERS:

TO CONVERT THE LOCAL COORDINATES TO NAD83 (NSRS2007) STATE PLANE U.S. SURVEY FOOT COORDINATES, TRANSLATE USING +1,968,487.1707 N, +1,246,708.6707 E, AND SCALE USING 0.9999939374.

TABLE LEGEND

FD	FOUND
BC	BRASS CAP MONUMENT
AM	ALUMINUM MONUMENT
BX	MONUMENT CASE
RBR	REBAR
AC	ALUMINUM CAP ON A REBAR
PC	PLASTIC CAP ON A REBAR

PROJECT CENTERLINE CONTROL

ROW PLAN SHEET NO.	LOCATION	MONUMENT TYPE	NORTHING	EASTING	STATION	OFFSET
4	BOP	N/A	95948.8393'	95948.8393'	10+00.00	0.00'
4	PC	SET RBR/PC	96139.2297'	111702.8808'	12+12.13	0.00'
4	PT	SET RBR/PC	96318.1715'	111700.4534'	13+97.86	0.00'
4	PC	SET RBR/PC	96610.7011'	111546.7221'	17+28.33	0.00'
5	PT	SET RBR/PC	96822.8481'	111514.0907'	19+46.95	0.00'
5	PC	SET RBR/PC	97398.7383'	111618.0646'	25+32.15	0.00'
5	PT	SET RBR/PC	97652.8123'	111557.6357'	28+00.85	0.00'
6	EOP	N/A	98277.4815'	111087.0595'	35+82.93	0.00'

NOTES:

1. WHETHER LISTED OR NOT, UNLESS OTHERWISE NOTED, ALL MONUMENTS OR PROPERTY MARKERS/CORNERS OR ACCESSORIES WHICH WILL BE DISTURBED OR BURIED SHALL BE REFERENCED AND RE-ESTABLISHED IN THEIR ORIGINAL POSITION (A.S. 19.10.260) AND RECORDED (A.S. 34.65.040).

STATE OF ALASKA
49TH
ROBERT M. KEINER
NO. L.S.-11547
REGISTERED PROFESSIONAL LAND SURVEYOR

DATE	REVISIONS	BY

STATE OF ALASKA
DEPARTMENT OF TRANSPORTATION
&
PUBLIC FACILITIES
RIGHT-OF-WAY MAP
ALASKA PROJECT
0001422/Z524610000
HOMER LAKE STREET REHAB

DRAWN KMG	DATE 10/14/2016	SCALE NTS	
CHECKED	DATE	SHEET 8	OF 8

NO.	DATE	REVISION	STATE	PROJECT DESIGNATION	YEAR	SHEET NO.	TOTAL SHEETS
			ALASKA	0001422/Z524610000	2020	U01	U04

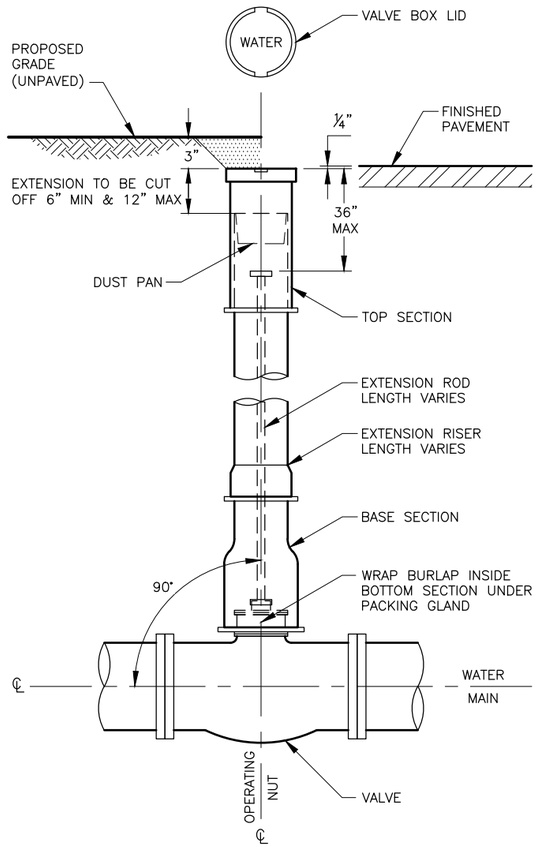

VALVE BOX

NOTES:

1. HYDRANT BARREL MUST BE INSTALLED PLUMB AND THE LEG MUST BE INSTALLED LEVEL.
2. DRAIN PLUG TO BE INSTALLED BY CONTRACTOR.
3. ALL HYDRANTS SHALL BE PAINTED YELLOW PER THE SPECIFICATIONS.
4. USE MEGALUG RESTRAINTS ON ALL MECHANICAL JOINTS.
5. POSTS SHALL BE LOCATED TO ALLOW UNRESTRICTED ACCESS TO PUMPER AND HOSE CONNECTIONS.
6. VALVE BOX LID AND TOP SECTION TO BE OLYMPIC FOUNDRY TYPE C OR EQUAL.
7. VALVE BOX BASE SECTION TO BE OLYMPIC FOUNDRY TYPE B OR EQUAL.

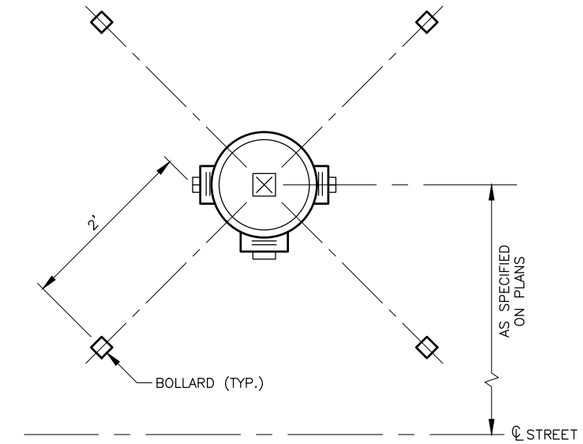

PLAN

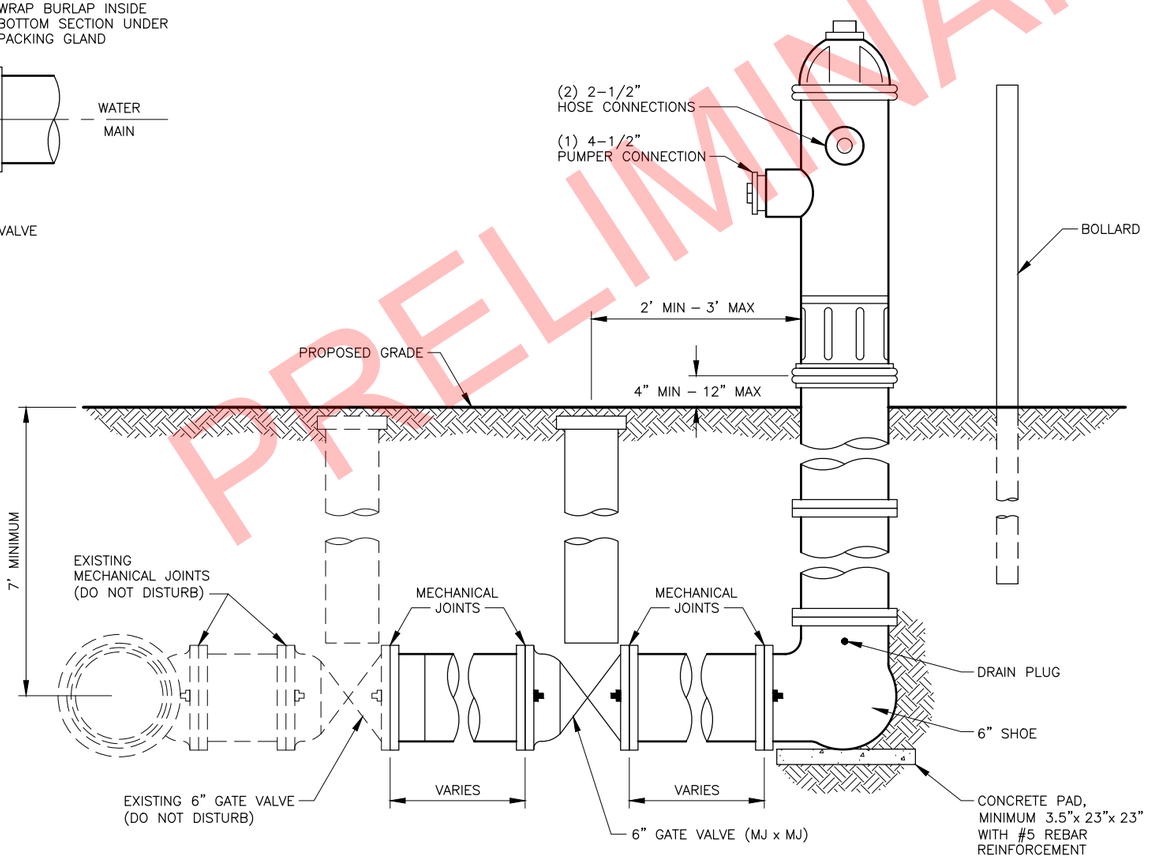

SINGLE PUMPER BASE HYDRANT ASSEMBLY

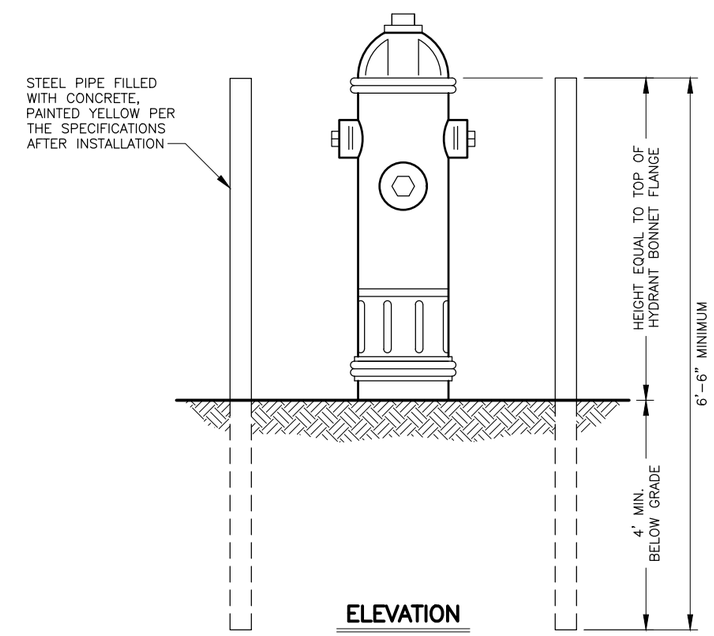

ELEVATION

HYDRANT BOLLARD POSTS

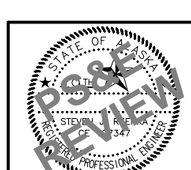

STATE OF ALASKA DOT&PF
4111 AVIATION AVENUE
ANCHORAGE, AK 99502
(907) 269-0590

STATE OF ALASKA
DEPARTMENT OF TRANSPORTATION AND PUBLIC FACILITIES

HOMER: LAKE STREET REHABILITATION

FIRE HYDRANT DETAILS

DATE/TIME	6/4/2019 9:04 AM	SCALE	1" = 5/3"	DESIGNED	KML/ZDK	CHECKED	SJR	DRAFTED	ZDK/VJS

FILE W:\PROJECTS\HOMER LAKE ST. REHAB Z524610000\CIV3D\CIV3D16\PLANSET\52461_U01_FIRE HYD DETAILS.DWG

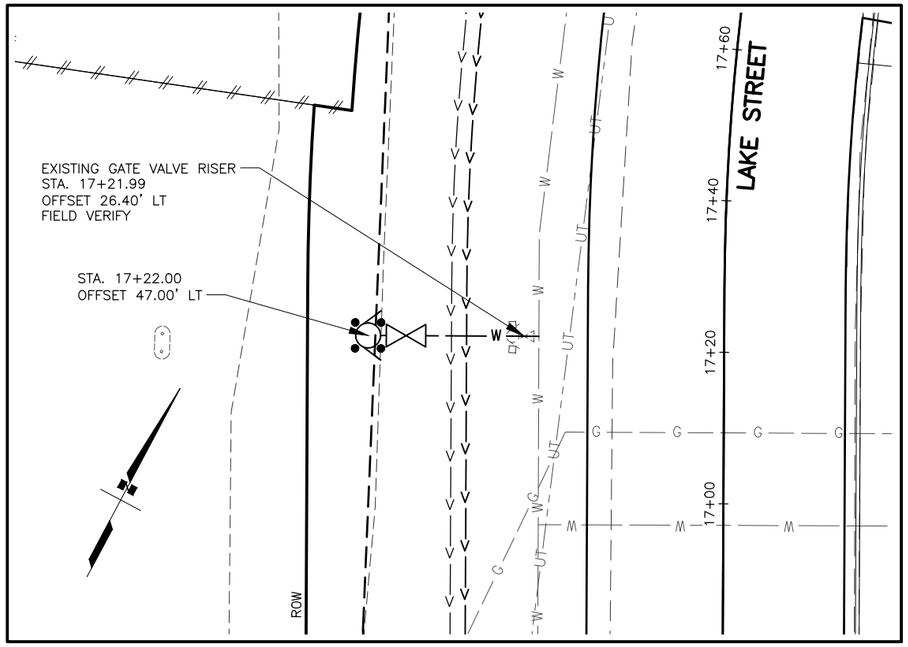

HYDRANT 17+22

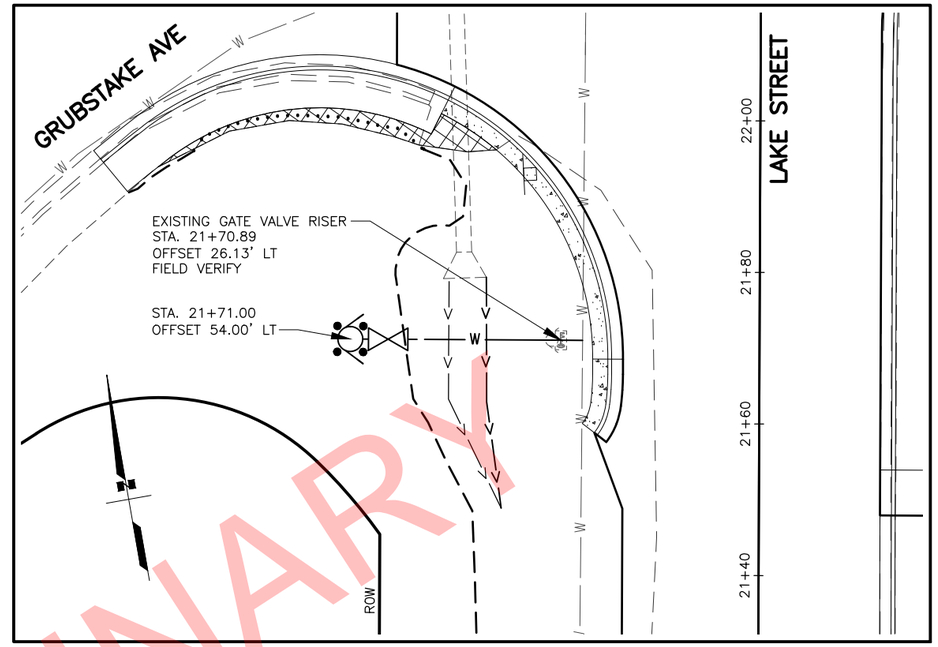

HYDRANT 21+71

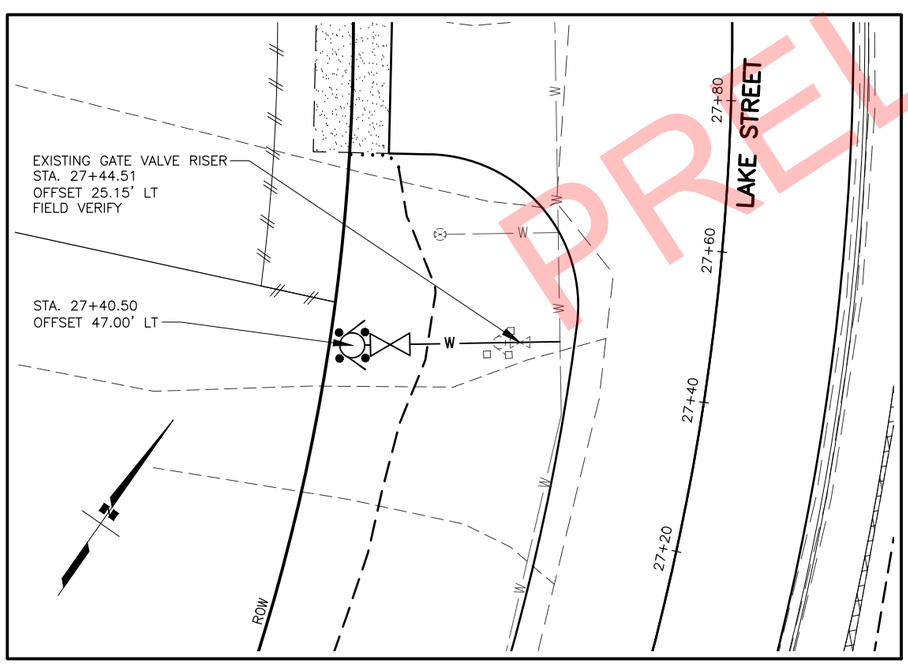

HYDRANT 27+40.5

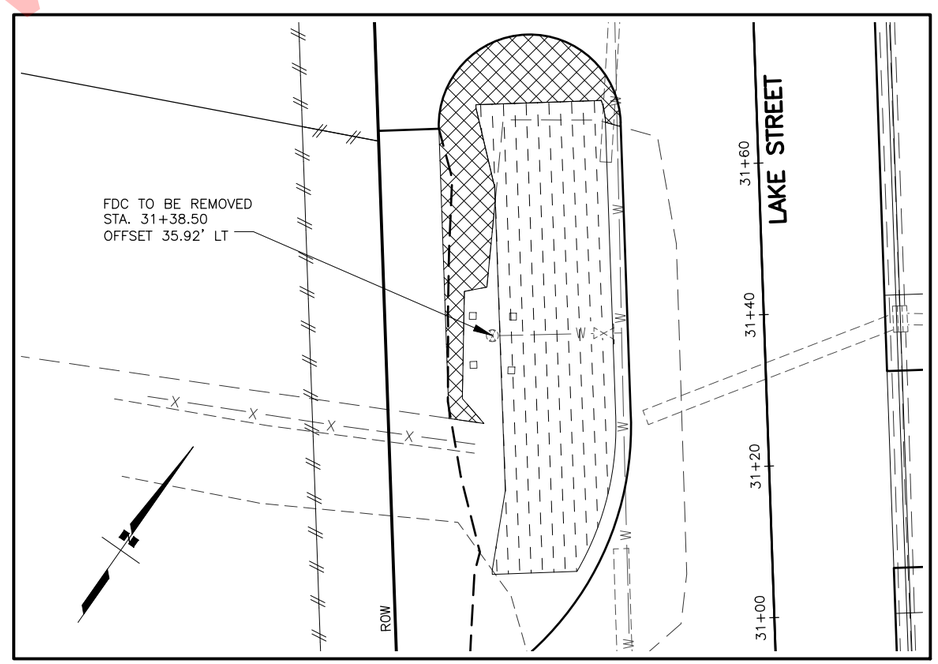

FDC AUTO SPRINKLER 31+38.5

SHEET NO.	TOTAL SHEETS
U02	U04
STATE	YEAR
ALASKA	2020

PROJECT DESIGNATION
0001422/
Z524610000

NO.	REVISION
1	
DATE	
NO.	REVISION
2	
DATE	
NO.	REVISION
3	
DATE	

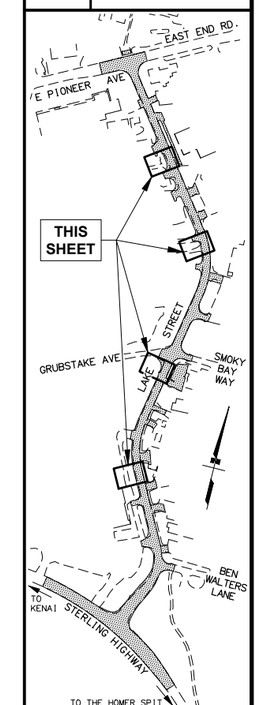

STATE OF ALASKA
STEVEN R. PEDERSEN
CE 3437
PROFESSIONAL ENGINEER
PS&E REVIEW

STATE OF ALASKA DOT&PF
4111 AVIATION AVENUE
ANCHORAGE, AK 99502
(907) 269-0590

STATE OF ALASKA
DEPARTMENT OF TRANSPORTATION
AND PUBLIC FACILITIES

HOMER: LAKE STREET
REHABILITATION

FIRE HYDRANT
LOCATIONS

FILE W:\PROJECTS\HOMER LAKE ST. REHAB Z524610000\CIV3D\CIV3D16\PLANSET\52461_U02_FIRE HYD LOCATIONS.DWG | DATE/TIME 6/4/2019 9:05 AM | SCALE 1" = 10' | DESIGNED KML/ZDK | CHECKED SJR | DRAFTED ZDK/VJS

NO.	DATE	REVISION

STATE	PROJECT DESIGNATION	YEAR	SHEET NO.	TOTAL SHEETS
ALASKA	0001422/Z524610000	2020	U03	U04

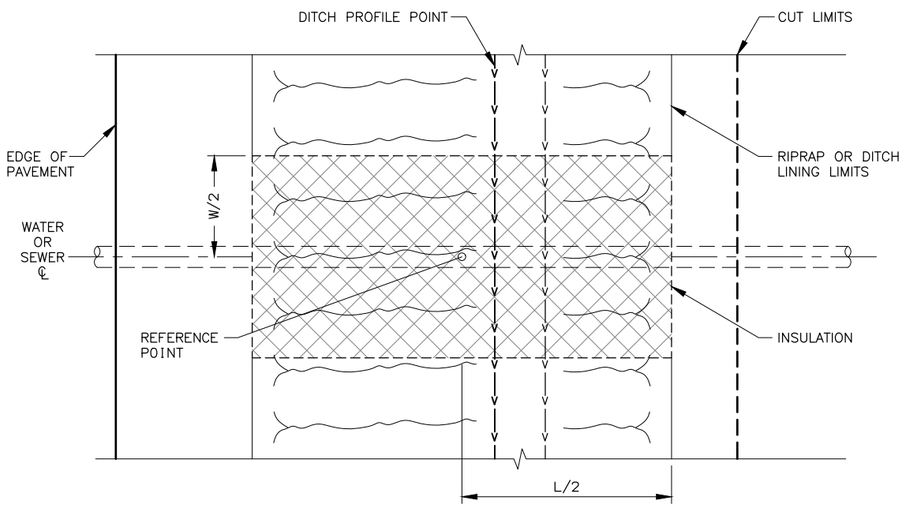

PLAN

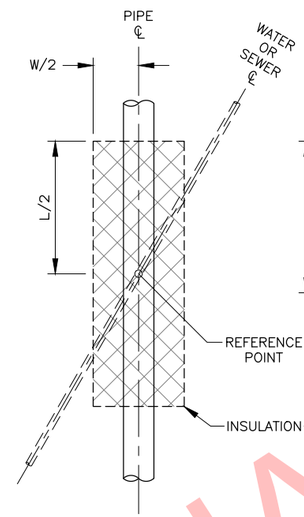

PIPE PLAN

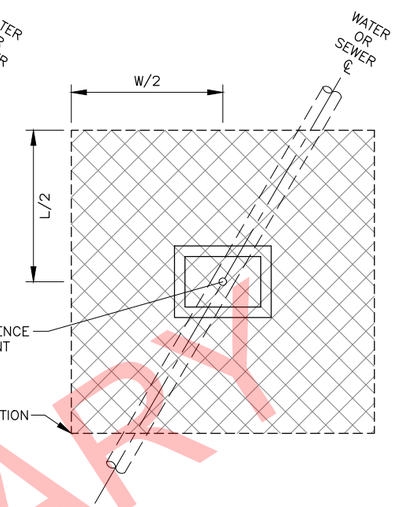

STRUCTURE PLAN

NOTES:

1. INSULATION INSTALLED UNDER RIPRAP OR DITCH LINING WILL BE ORIENTED PERPENDICULAR TO DITCH FLOW LINE.
2. INSULATION INSTALLED UNDER PROPOSED CULVERT PIPES ARE TO BE ORIENTED PARALLEL WITH THE DIRECTION OF THE PIPE CENTERLINE.
3. INSULATION UNDER STORM SEWER STRUCTURES ARE TO BE ORIENTED SUCH THAT THE INSULATION IS PERPENDICULAR TO ALL SIDES OF THE STRUCTURE.
4. INSULATION LOCATIONS, LENGTHS, AND WIDTHS ARE PRESENTED IN THE SUMMARY D SHEETS.

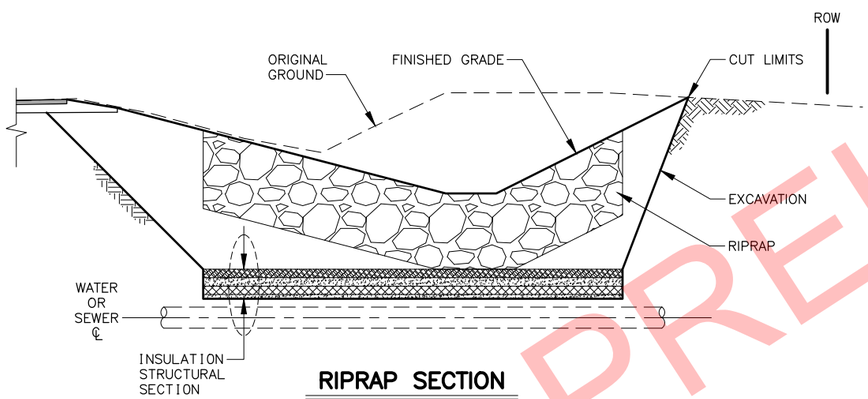

RIPRAP SECTION

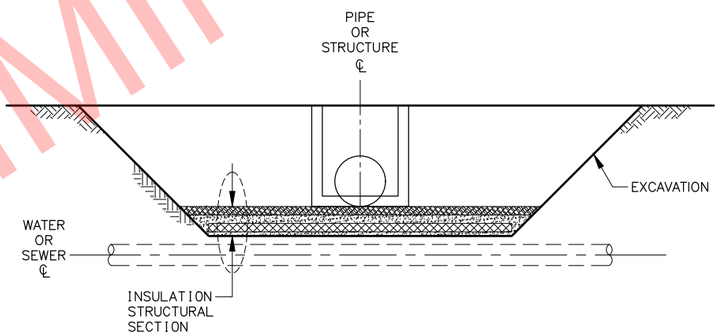

PIPE/STRUCTURE SECTION

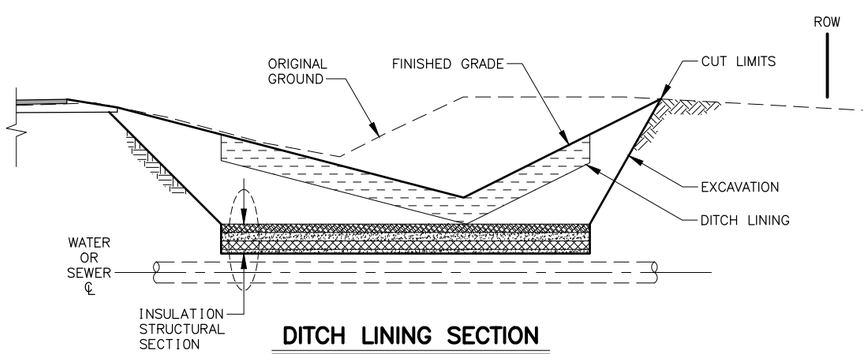

DITCH LINING SECTION

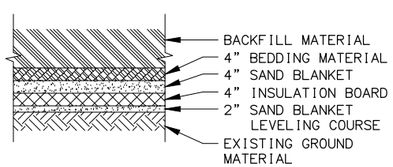

INSULATION STRUCTURAL SECTION

STATE OF ALASKA DOT&PF
4111 AVIATION AVENUE
ANCHORAGE, AK 99502
(907) 269-0590

STATE OF ALASKA
DEPARTMENT OF TRANSPORTATION
AND PUBLIC FACILITIES

HOMER: LAKE STREET
REHABILITATION

INSULATION DETAILS

FILE W:\PROJECTS\HOMER LAKE ST. REHAB Z524610000\CIV3D\CIV3D16\PLANSET\52461_U03_INSUL.DWG | DATE/TIME 6/4/2019 9:05 AM | SCALE 1" = 3' | DESIGNED ZDK | CHECKED SJR | DRAFTED ZDK

NO.	DATE	REVISION

STATE	PROJECT DESIGNATION	YEAR	SHEET NO.	TOTAL SHEETS
ALASKA	0001422/Z524610000	2020	U04	U04

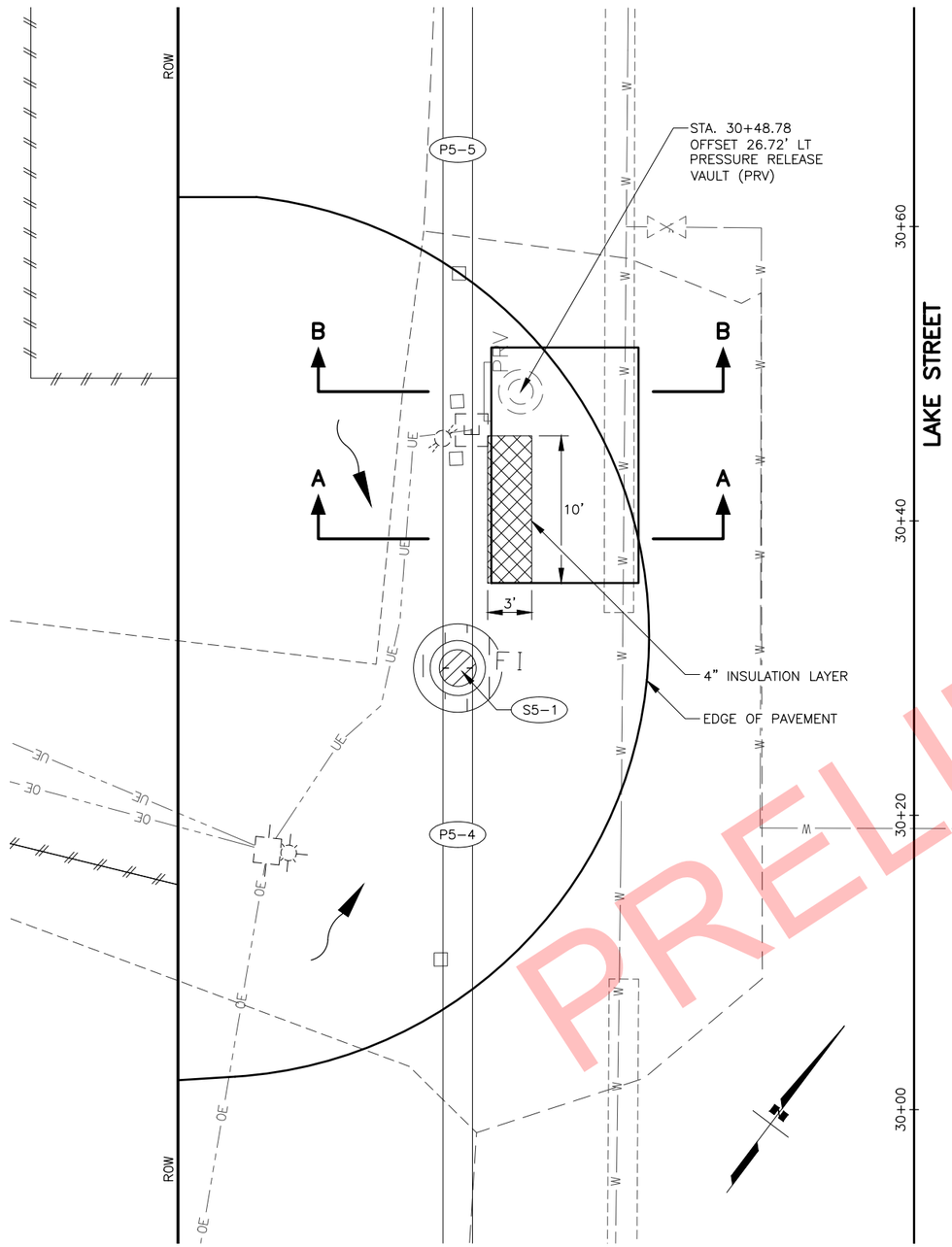

PLAN

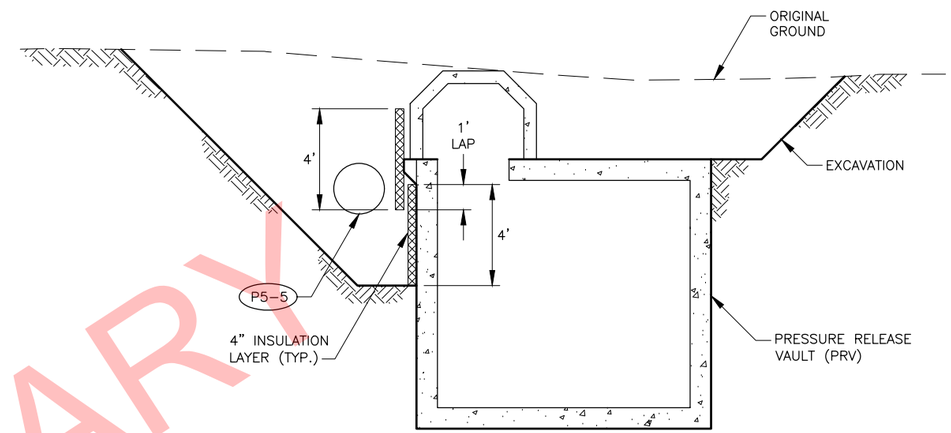

SECTION B–B

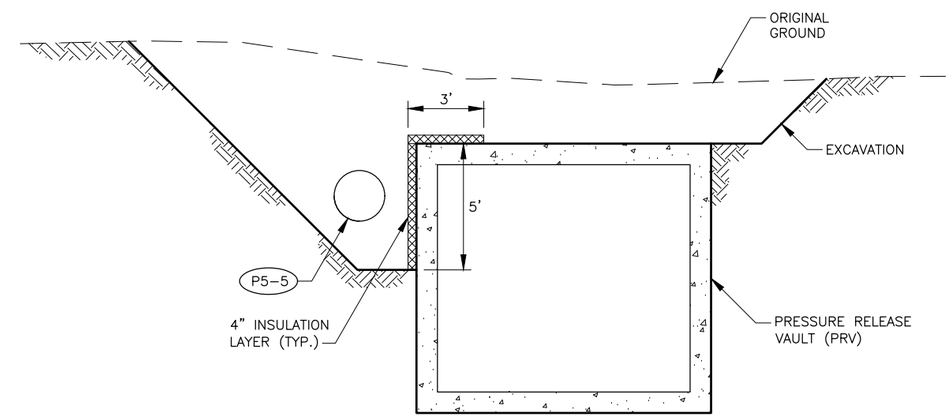

SECTION A–A

NOTES:

1. PRESSURE RELEASE VAULT (PRV) IS TO BE PROTECTED IN PLACE.
2. CLEAN ALL DEBRIS FROM THE EXPOSED VAULT SURFACE BEFORE INSTALLING INSULATION.
3. BACKFILL TO FINISH GRADE PER THE PLANS AND SPECIFICATIONS.
4. INSULATE THE FULL LENGTH OF THE PRV.

STATE OF ALASKA
STEVEN A. RUDINSKY
CE 7347
REGISTERED PROFESSIONAL ENGINEER

PSSAR REVIEW

STATE OF ALASKA DOT&PF
4111 AVIATION AVENUE
ANCHORAGE, AK 99502
(907) 269-0590

STATE OF ALASKA
DEPARTMENT OF TRANSPORTATION
AND PUBLIC FACILITIES

HOMER: LAKE STREET
REHABILITATION

PRESSURE RELEASE VAULT (PRV)
INSULATION DETAILS

DATE/TIME	6/4/2019 9:06 AM	SCALE	1" = 3'	DESIGNED	ZDK	CHECKED	SJR	DRAFTED	ZDK/VJS

FILE W:\PROJECTS\HOMER LAKE ST. REHAB Z524610000\CIV3D\CIV3D16\PLANSET\52461_U04_INSUL_PRV.DWG