ACBR-IM-021-1(51) / 56830

STERLING HIGHWAY: SOLDOTNA URBAN/ KENAI RIVER BRIDGE 0671

Drawings for the Existing Kenai River Bridge 0671 at Soldotna

Provided by the Office of the Chief Bridge Engineer

STATE	PROJECT NUMBER	SHEET NO.	TOTAL SHEETS
ALASKA	F-021-1(18) Section A	6	43

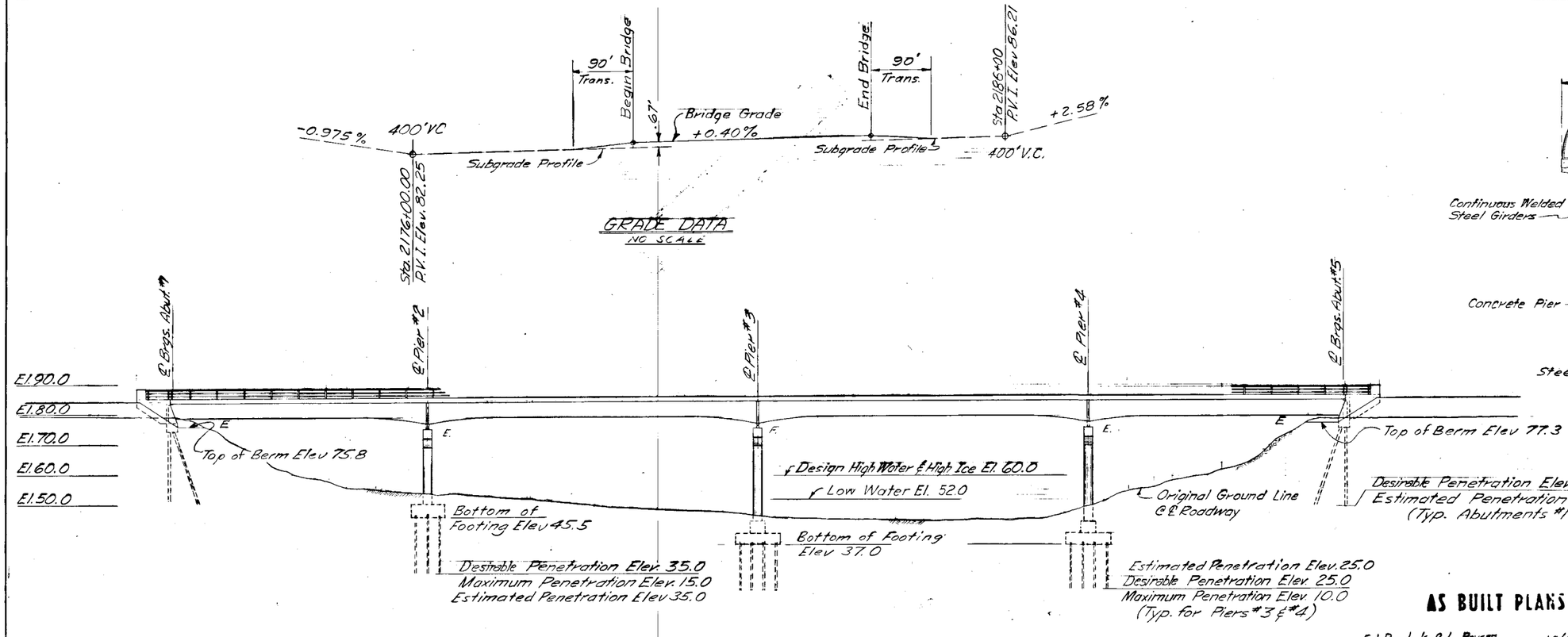

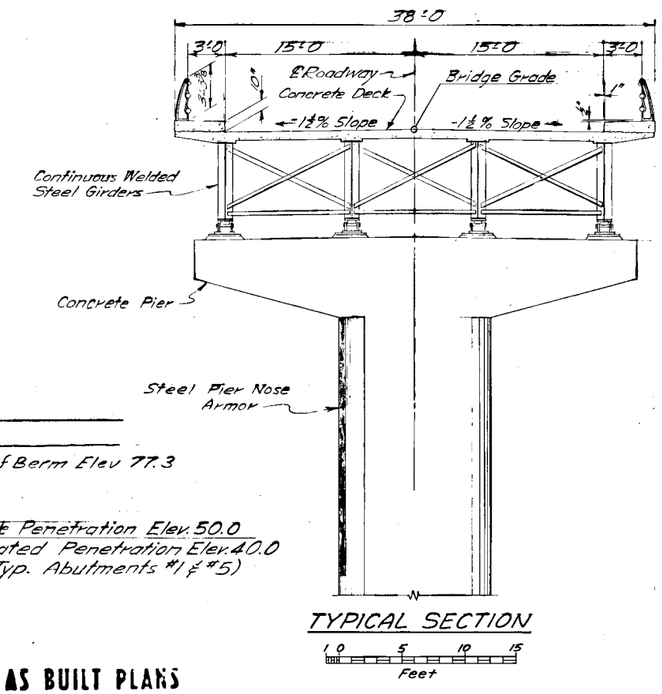

AS BUILT PLANS

E.J. Brach & R.L. Boysen 10166

CORRECTIONS TRANSFERRED

LAC DATE 5/8/67

CHECKED DAP DATE 5/9/67

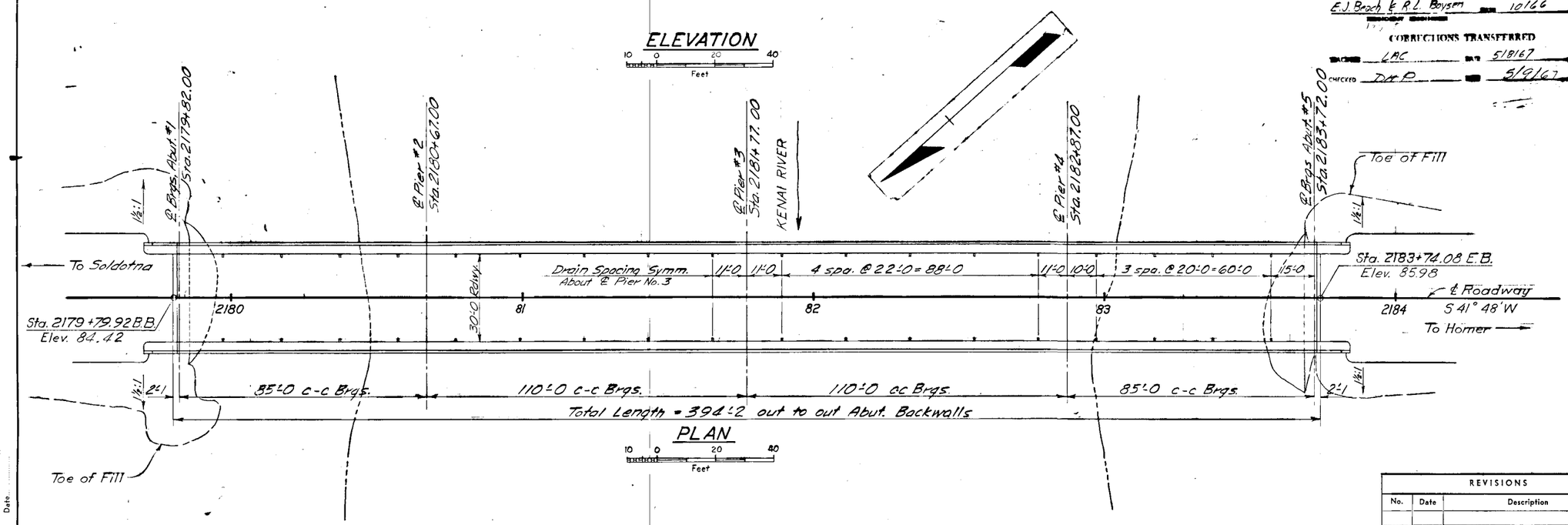

Live Loading H20-S16-44

DRAWING INDEX

TITLE	DWG. NO.
General Layout	1161
Foundation Plan	1162
Abutment Details	1163
Wingwall Details	1164
Pier No. 2	1165
Pier No. 3 & 4	1166
Pier Details	1167
Girder Details No. 1	1168
Girder Details No. 2	1169
Girder Details No. 3	1170
Girder Details No. 4	1171
Bearing Details	1172
Slab & Diaphragm Details	1173
Misc. Superstructure Details	1174
Curb & Rail Details	1175
Log of Test Borings	1176
Std. Bridge Reflector	S-32

REVISIONS		
No.	Date	Description

KENAI RIVER BRIDGE AT SOLDOTNA

ROUTE NO. F - 21

GENERAL LAYOUT

SCALE AS SHOWN

BRIDGE NO. 671

Alaska Department of Public Works
DIVISION OF HIGHWAYS
Juneau, Alaska

Date 1/12/66

Approved [illegible]

DWNG. NO. 1161

Traced By

Date

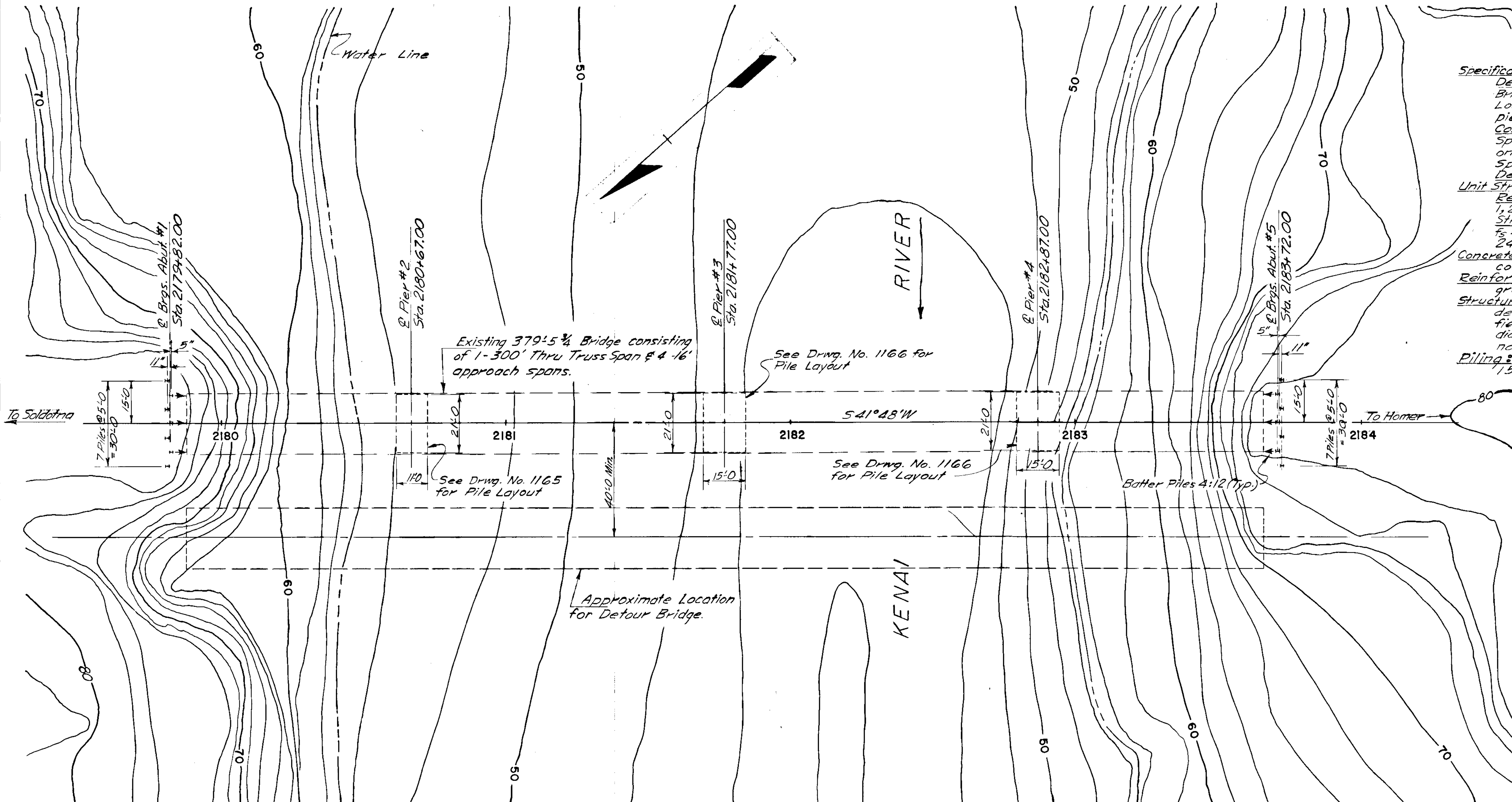

GENERAL NOTES

Specifications:

Design: AASHO Standard Specifications for Highway Bridges, 1961, Eighth Edition, Except Design Ice Load - 200 kips on pier nose or 10 Kips/Lin. ft. on pier sides and 50 Kips on pier nose.

Construction: Bureau of Public Roads Standard Specifications for Construction of Roads and Bridges on Federal Highway Projects, FP-57, and the Special Provisions of this contract.

Design Live Load: H 20-S16-44

Unit Stresses:

Reinforced Concrete: f_s = 20,000 psi; N = 10; f_c = 1,200 psi

Structural Steel: A36, f_s = 20,000 psi; A441, f_s = 27,000 psi for ℔ thickness 3/4" & under, f_s = 24,000 psi for ℔ thickness over 3/4" to 1 1/2".

Concrete: All concrete shall be class "A", with a minimum compressive strength of 3,000 psi at 28 days.

Reinforcement: All reinforcement shall be intermediate grade deformed steel bars.

Structural Steel: Structural steel shall conform to ASTM designations shown on drawing No 1168. All field connections shall be made with 7/8 inch diameter high-Strength bolts except as otherwise noted.

Piling: Type 10BP57 Design Load 35 tons, 15 tons uplift.

AS BUILT PLANS

E. J. Beach & R.L. Boyer Project Engineer 10/66

CORRECTIONS TRANSFERRED

Traced LAC Date 5-8-67

Checked DHP Date 5/9/67

		TOTAL ESTIMATED QUANTITIES				AS BUILT		
	ITEM NO.	ITEM	UNIT	QUANTITIES SUPER.	SUBSTR.	TOTAL	SUPER.	SUBSTR	TOTAL
	103(2)	Excavation for Structures (Bridges)	Cu. Yd.		550	550		627.1	627.1
	400(24)	Load Tests	Each		3	3		0	0
	400(25)	Structural Steel Piles, Furnished & Driven	Lin. Ft.		1433	1433		1348.6	1348.6
	406(1)	Class "A" Concrete	Cu. Yd.	430.2	369.6	799.8	436.41	360.88	797.29
	407(1)	Reinforcement Steel Intermediate Grade	Lb.	99,850	71,630	171,480	100,167.1	71,515.4	171,682.5
	420(7)	Structural Steel, Furnished, Fabricated & Erected (Approx. 280,960 Lbs A441, Approx. 38,310 Lbs. A36	Lump Sum			All Required			All Required
	422(6)	Sidewalk Railing	Lin. Ft.			828			828
	470(1)	Removal of Existing Bridges & Maintenance of Traffic	Lump Sum			All Required			All Required
As Built	400(25)	Overlength Structural Steel Piles, Furnished and Driven	Lin. Ft					45.4	45.4

FOUNDATION PLAN

10 0 20 40 Feet

Topography plotted from surveys of Oct. 1962 and Feb. 1963.

REVISIONS		
No.	Date	Description

KENAI RIVER BRIDGE

AT SOLDOTNA

ROUTE NO. F-21

FOUNDATION PLAN

Scale as Noted BRIDGE NO. 671

State of Alaska

DEPARTMENT OF HIGHWAYS

Juneau, Alaska

11/2/64

DWNG. NO. 1162

STATE	PROJECT NUMBER	SHEET NO.	TOTAL SHEETS
ALASKA	F-021-1(18) Section A	8	63

Note: Bridge number Pl's to be furnished by the State. Place on right hand wingwall end post when facing the bridge. Set face of Pl flush with Concrete surface & 6" Below top of end post

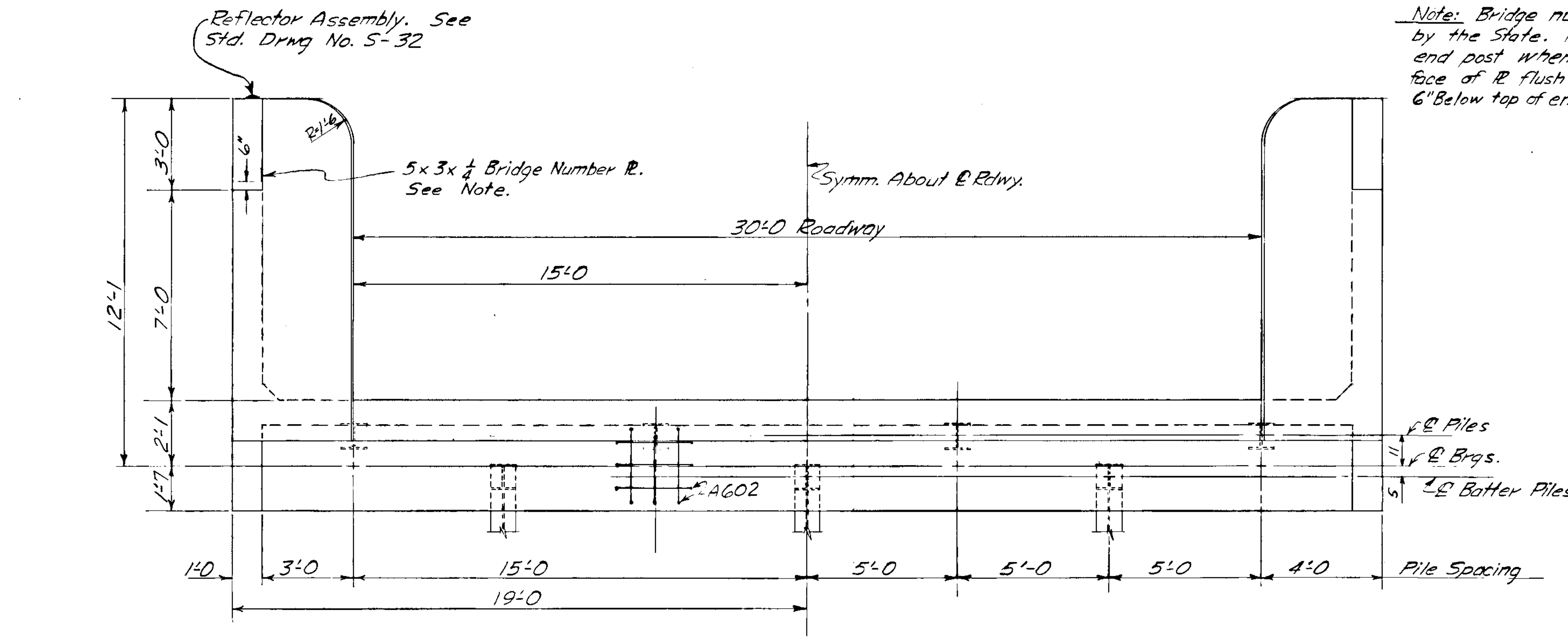

PLAN

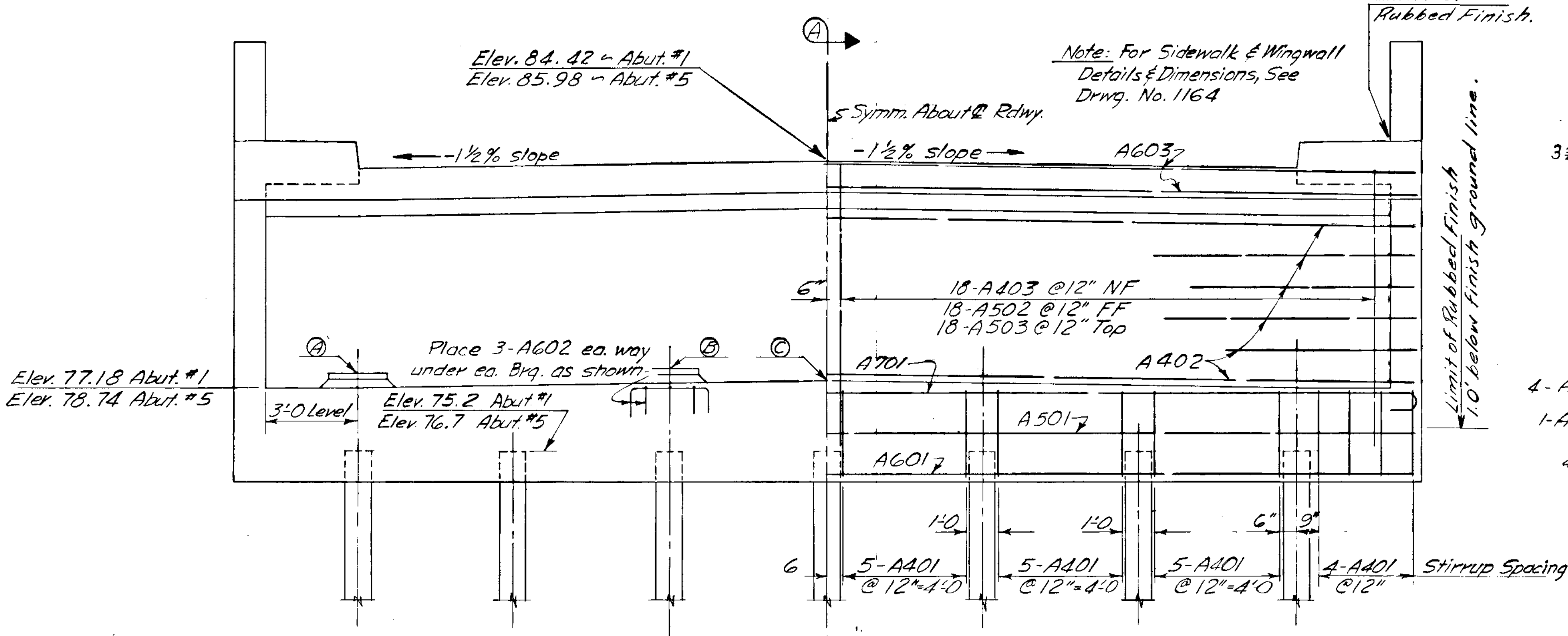

ELEVATION

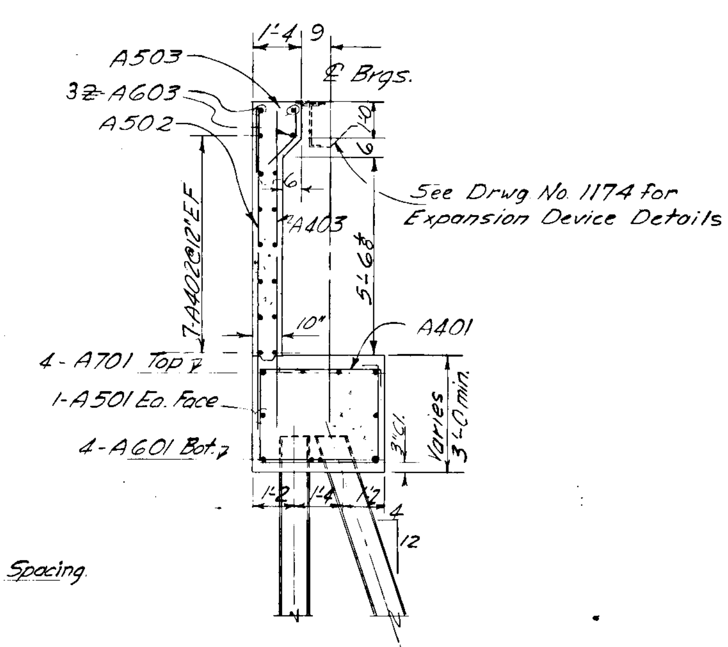

SECTION A-A

ABUT. CAP ELEV.		
LOCATION	ABUT #1	ABUT #5
* ~~Ⓐ~~ Ⓑ	77.73	79.29
* ~~Ⓑ~~ Ⓐ	77.58	79.14
Ⓒ	77.41	78.97

* Elevations Ⓐ & Ⓑ are at top of Masonry Plates.

REINFORCING STEEL ~ 2 ABUTMENTS

LOCATION	MARK	NO.	SIZE	LENGTH	TYPE
Cap	A401	~~72~~ 76	4	12'-10	Bent
	A501	4	5	37'-6	—
	A601	8	6	37'-6	—
	A602	48	6	4'-0	Bent
	A701	8	7	39'-2	Bent
Backwall	A402	28	4	37'-6	—
	A403	72	4	9'-0	—
	A502	72	5	9'-0	—
	A603	~~4~~6	6	37'-6	—
	A503	72	5	4-6	Bent
* Curtain Wall	A404	8	4	5'-9	—
	A405	12	4	10'-6	—
	A702	8	7	12'-5	Bent
	A607	32	6	4'-0	Bent

BENDING DIAGRAMS

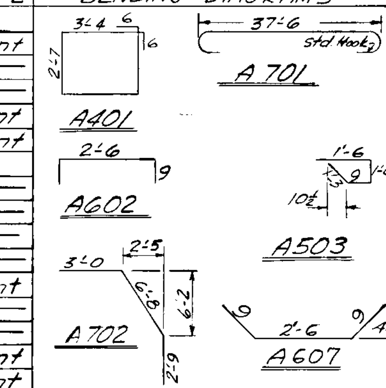

Note: All Dimensions are out to out.

* See Wingwall Details Drwg. No. 1164 For location of Reinforcing bars.

AS BUILT PLANS

E.J. Beach & R.L. Boysen 10/66 RESIDENT ENGINEER

CORRECTIONS TRANSFERRED

TRACING LAC DATE 5-8-67

CHECKED DMP DATE 5/9/67

KENAI RIVER BRIDGE AT SOLDOTNA

ROUTE NO. F-21

ABUTMENT DETAILS

BRIDGE NO. 671

REVISIONS		
No.	Date	Description

Alaska Department of Public Works
DIVISION OF HIGHWAYS
Juneau, Alaska

Date 11/12/64

Approved [signature], P.E.

DWNG. NO. 1163

STATE	PROJECT NUMBER	SHEET NO.	TOTAL SHEETS
ALASKA	F-021-1(18) Section A	9	43

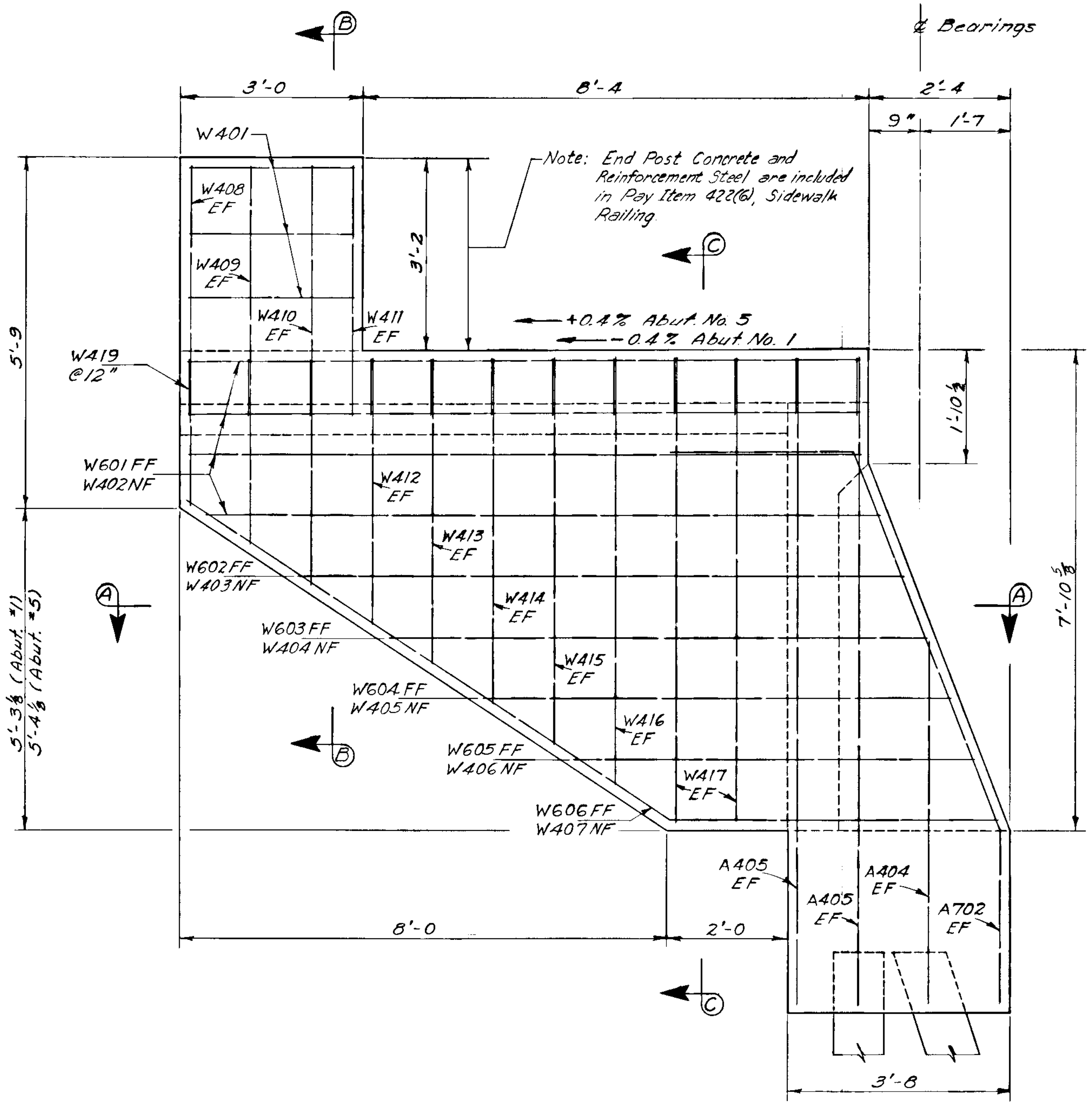

ELEVATION

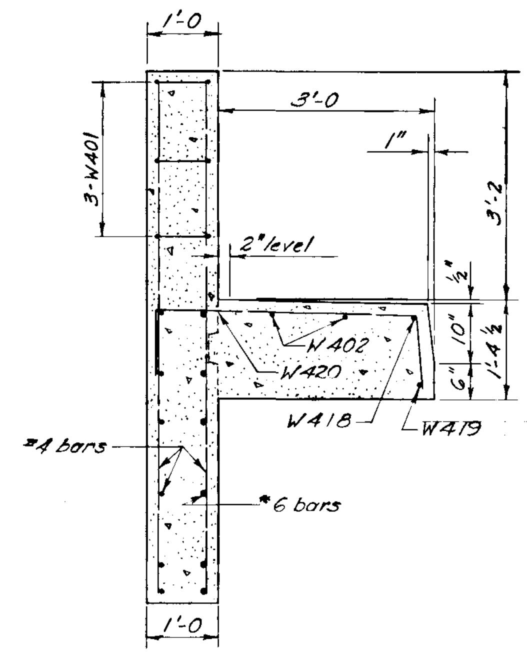

SECTION "B-B"

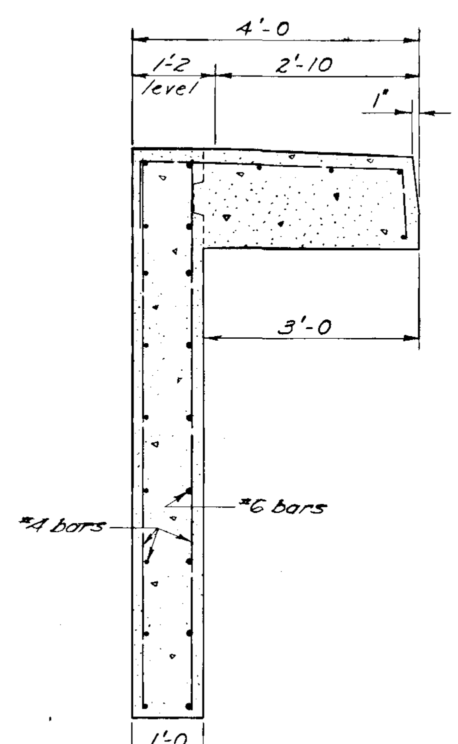

SECTION "C-C"

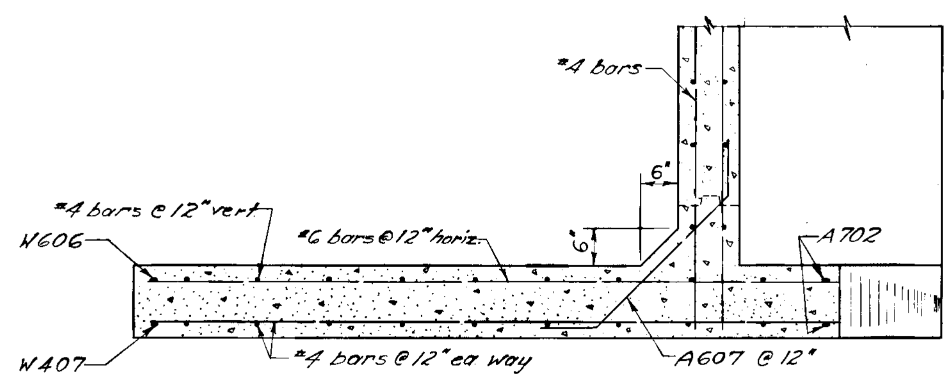

SECTION "A-A"

WINGWALL REINFORCING STEEL - 2 ABUTS.					
LOCATION	MARK	NO.	SIZE	LENGTH	TYPE
WINGWALL	*W401	12	4	7'-8	bent
WING & WALK	W402	24	4	11'-0	——
WINGWALL	W403	4	4	9'-11	——
	W404	4	4	8'-9	——
	W405	4	4	7'-7	——
	W406	4	4	6'-6	——
	W407	4	4	14'-10	bent
	*W408	8	4	5'-6	——
	*W409	8	4	6'-2	——
	*W410	8	4	6'-10	——
	*W411	8	4	4'-1	——
	W412	8	4	4'-4	——
	W413	8	4	5'-0	——
	W414	8	4	5'-8	——
	W415	8	4	6'-4	——
	W416	8	4	7'-0	——
	W417	16	4	7'-7	——
	W601	16	6	11'-0	——
	W602	4	6	9'-11	——
	W603	4	6	8'-9	——
	W604	4	6	7'-7	——
	W605	4	6	6'-6	——
	W606	4	6	14'-10	bent
SIDEWALK	W418	4	4	12-6	bent
	W419	4	4	11-0	bent
	W420	48	4	5-7	bent
	W421	12	4	2'-0	bent

* See Note

BENDING DIAGRAMS

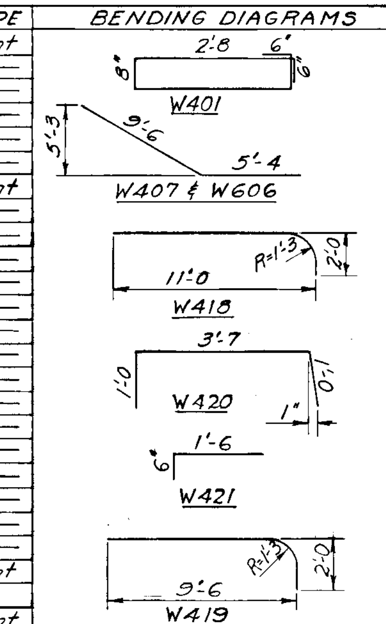

Note: All dimensions are out to out.

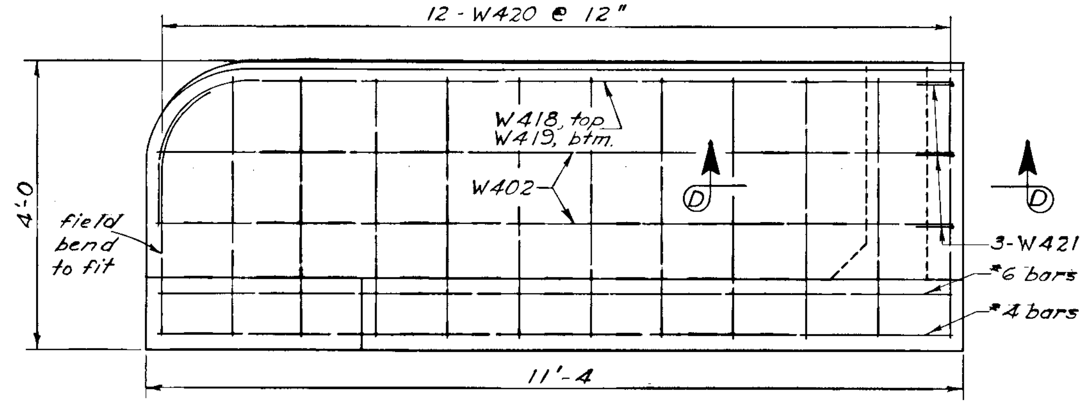

PLAN - SIDEWALK REINF. STEEL

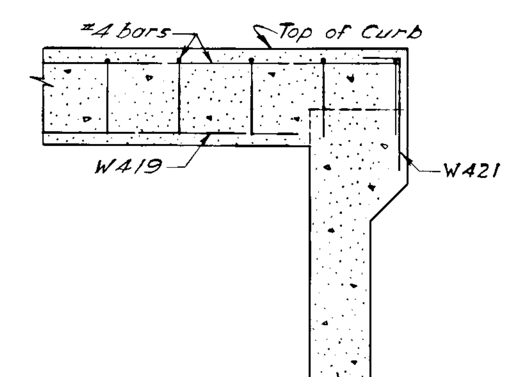

SECTION "D-D"

AS BUILT PLANS

E.J. Beach & R.L. Boysen 10/66

CORRECTIONS TRANSFERRED LAC DATE 5/8/67

CHECKED DAHO DATE 5/9/67

REVISIONS		
No.	Date	Description

KENAI RIVER BRIDGE
AT SOLDOTNA
ROUTE NO. F-21

WINGWALL DETAILS

12 6 0 1 2 3 — Inches — Feet

BRIDGE NO. 671

Alaska Department of Public Works
DIVISION OF HIGHWAYS
Juneau, Alaska

Date 11/12/64

Approved [signature], P.E.

DWNG. NO. 1164

Traced By O.C. Date 7/15/63

STATE	PROJECT NUMBER	SHEET NO.	TOTAL SHEETS
ALASKA	F-021-1(18) Section A	10	43

PIER CAP ELEV	
LOCATION	ELEVATION
Ⓐ	76.38
Ⓑ	76.53
Ⓒ	76.15

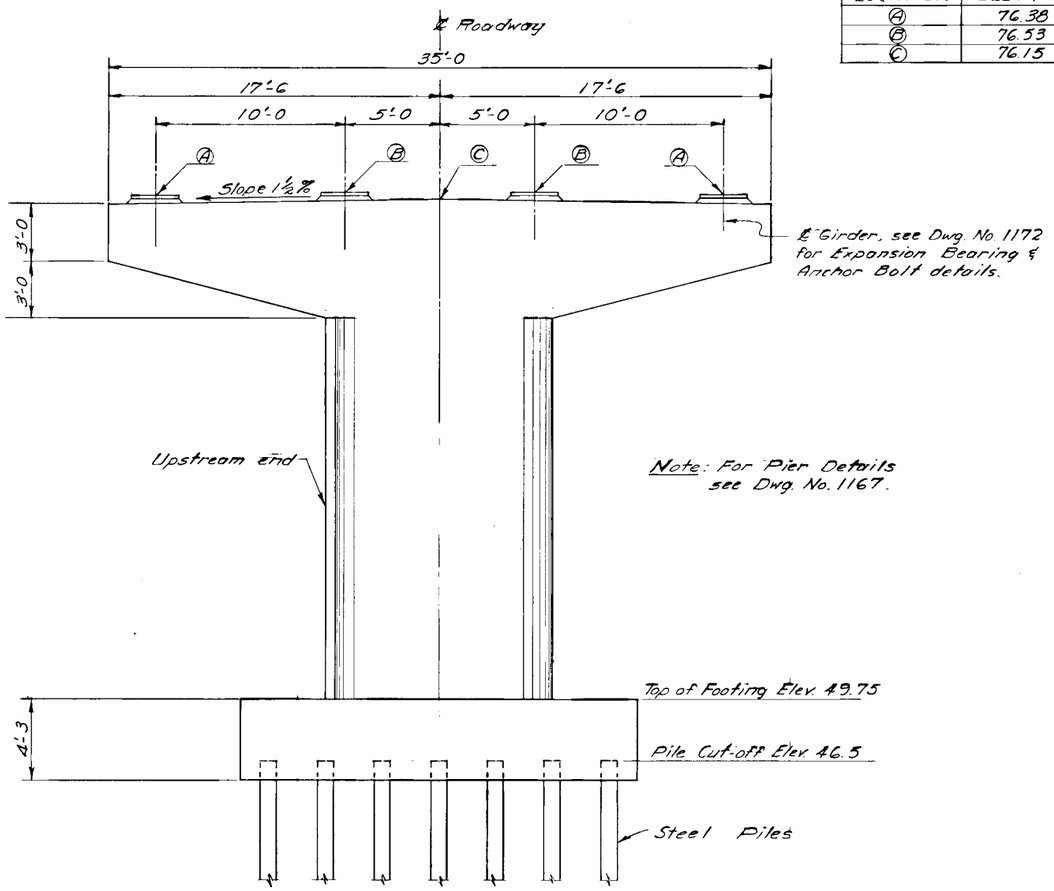

ELEVATION

12 0 5 10
In. Feet

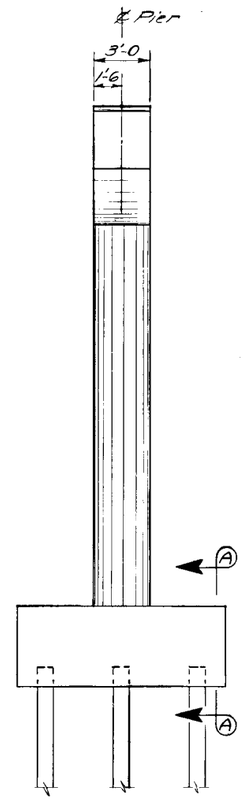

END ELEVATION

12 0 5 10
In. Feet

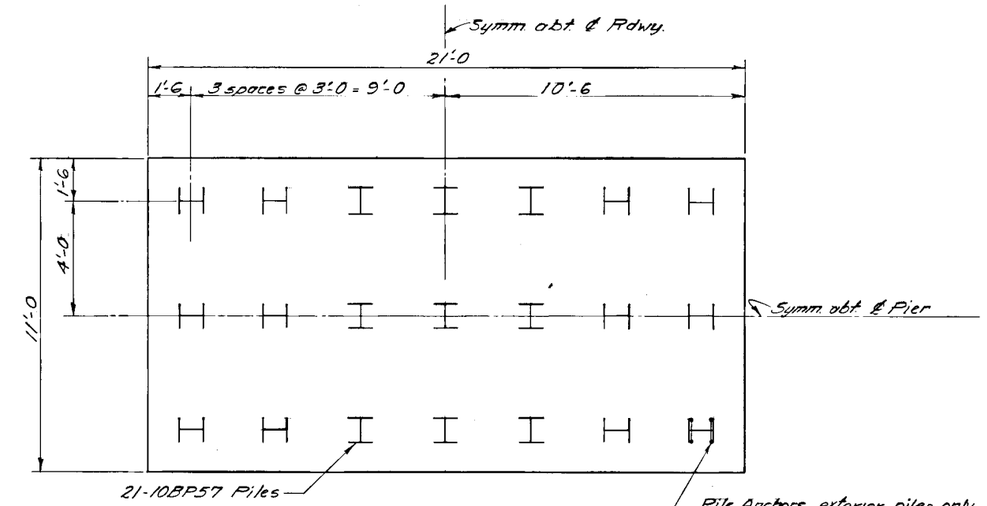

FOOTING PLAN

12 0 1 2 3 4 5 6 7
In. Feet

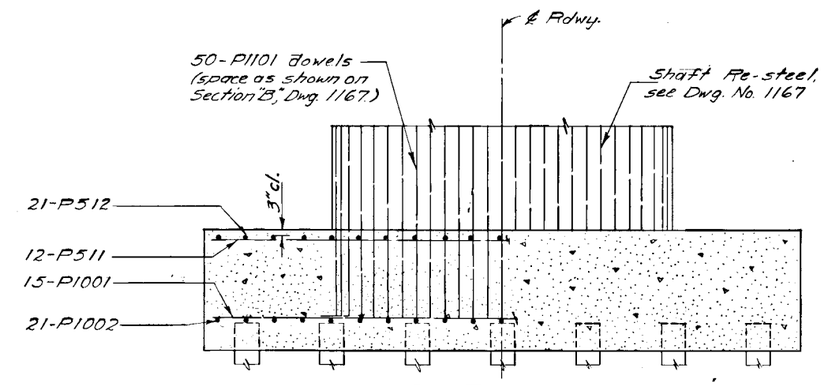

SECTION A-A

12 0 1 2 3 4 5 6 7
In. Feet

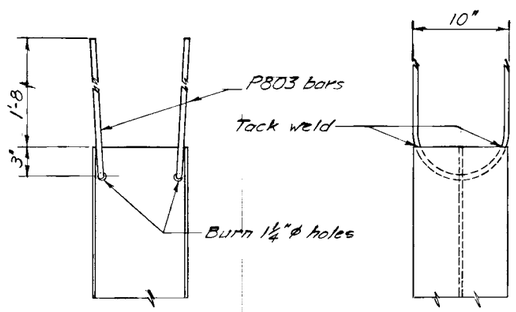

PILE ANCHOR DETAIL
No Scale

AS BUILT PLANS

E.J. Beach & R.L. Boysen DATE 10/66
RESIDENT ENGINEER
CORRECTIONS TRANSFERRED
TRACINGS LAC DATE 5/8/67
CHECKED DWB DATE 5/9/67

KENAI RIVER BRIDGE
AT SOLDOTNA
ROUTE NO. F-21
PIER NO. 2

SCALE AS SHOWN BRIDGE NO. 671

REVISIONS		
No.	Date	Description

Alaska Department of Public Works
DIVISION OF HIGHWAYS
Juneau, Alaska

Date 1/10/68
Approved Charles R. Smith, P.E.

DWNG. NO. 1165

Traced By
Date

STATE	PROJECT NUMBER	SHEET NO.	TOTAL SHEETS
ALASKA	F-021-1(18) Section A	11	43

PIER CAP ELEV.		
LOCATION	PIER NO 3	PIER NO 4
*Ⓐ	77.06	77.26
*Ⓑ	77.21	77.41
Ⓒ	76.87	77.03

* Elevations Ⓐ & Ⓑ are of top of Masonry Plates.

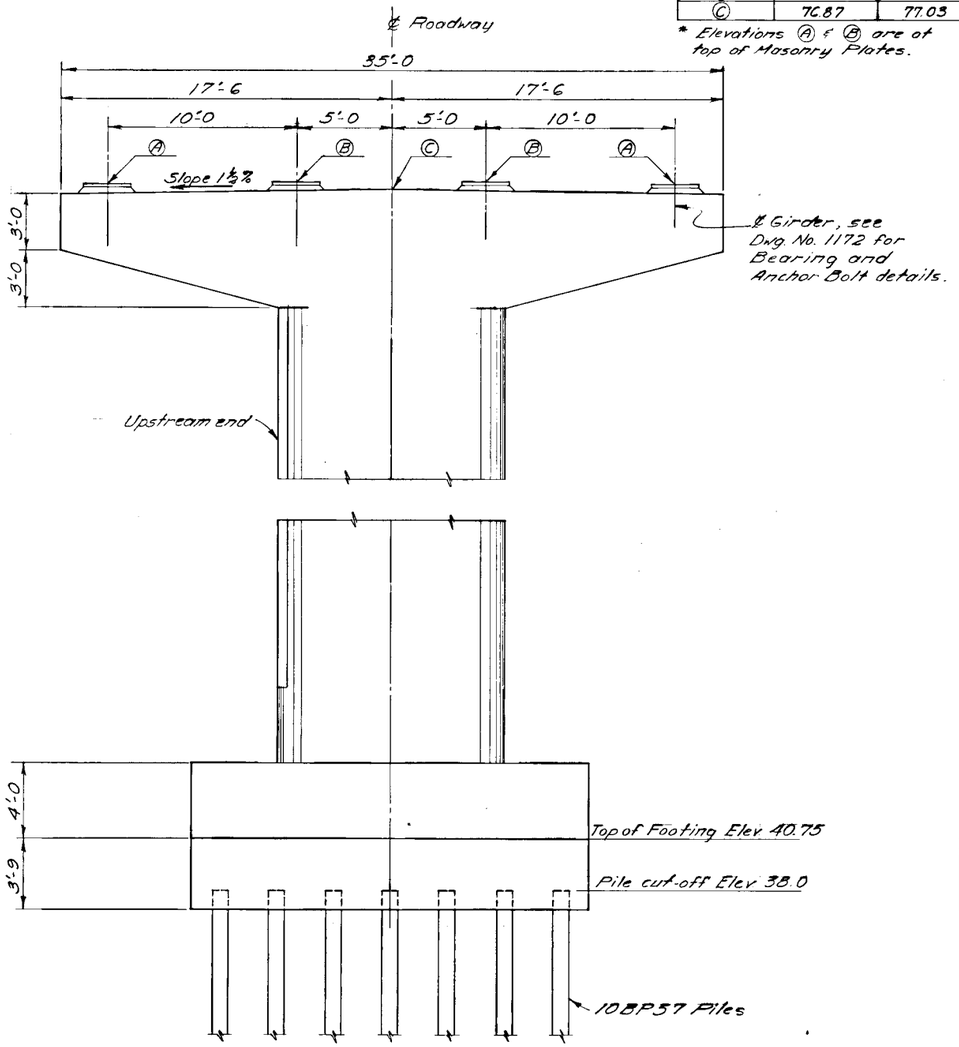

ELEVATION

12 0 5 10
In. Feet

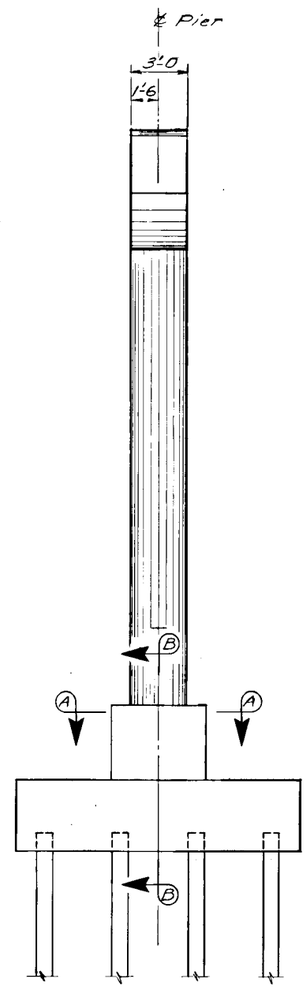

END ELEVATION

12 0 5 10
In. Feet

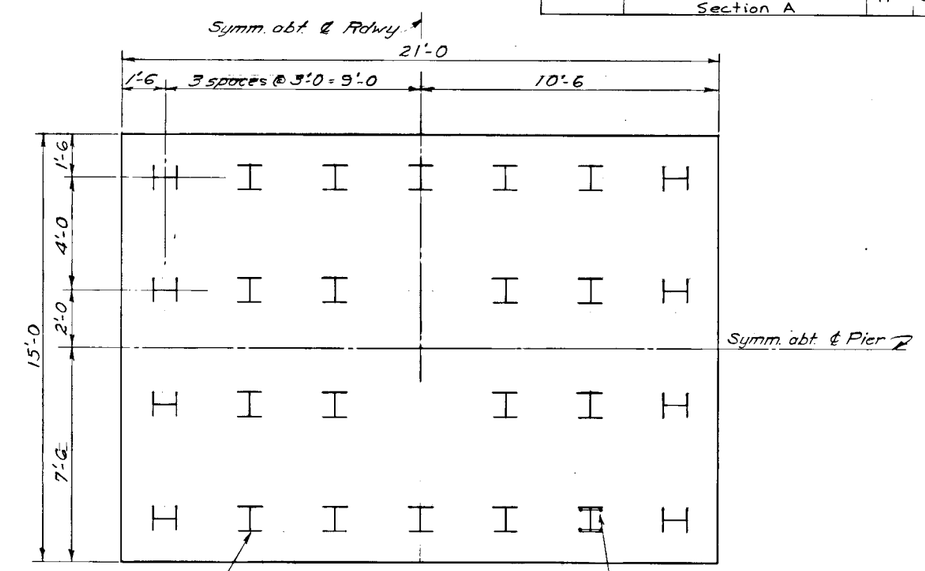

FOOTING PLAN

12 0 1 2 3 4 5 6 7
In. Feet

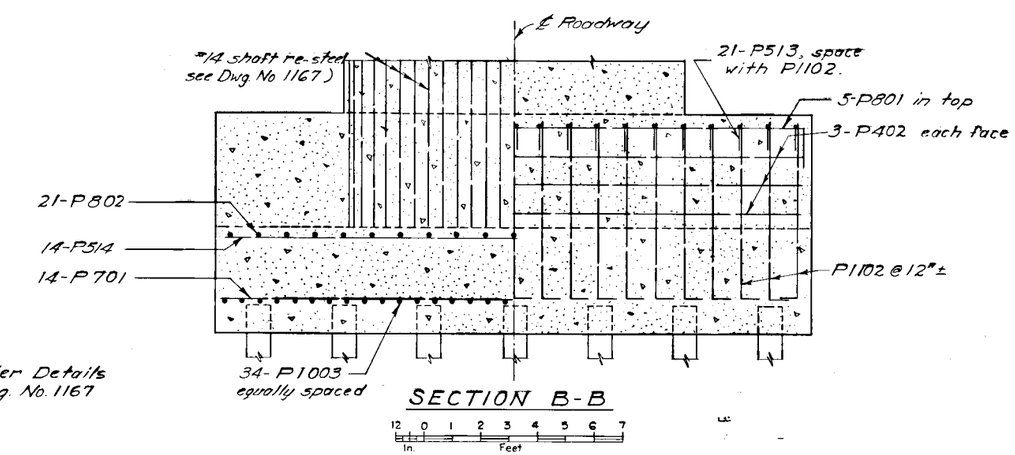

SECTION B-B

12 0 1 2 3 4 5 6 7
In. Feet

Note: For Pier Details see Dwg. No. 1167

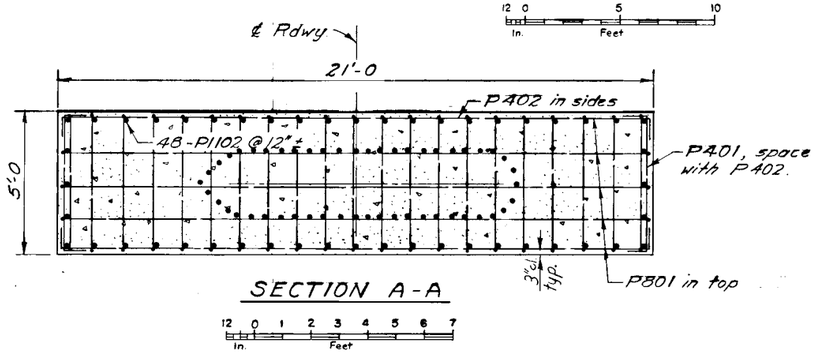

SECTION A-A

12 0 1 2 3 4 5 6 7
In. Feet

AS BUILT PLANS

E.J. Beach & R.L. Boysen 10/66
Project
CORRECTIONS TRANSFERRED
LAC 5/8/67
DAD 5/9/67

KENAI RIVER BRIDGE
AT SOLDOTNA
ROUTE NO. F-21
PIER NO. 3 & 4

SCALE AS SHOWN

BRIDGE NO. 671

REVISIONS		
No.	Date	Description

Alaska Department of Public Works
DIVISION OF HIGHWAYS
Juneau, Alaska

Date 1/12/66
Approved Charles P. Smith, P.E.

DWNG. NO. 1166

Traced By
Date

STATE	PROJECT NUMBER	SHEET NO.	TOTAL SHEETS
ALASKA	F-021-1(18) Section A	12	43

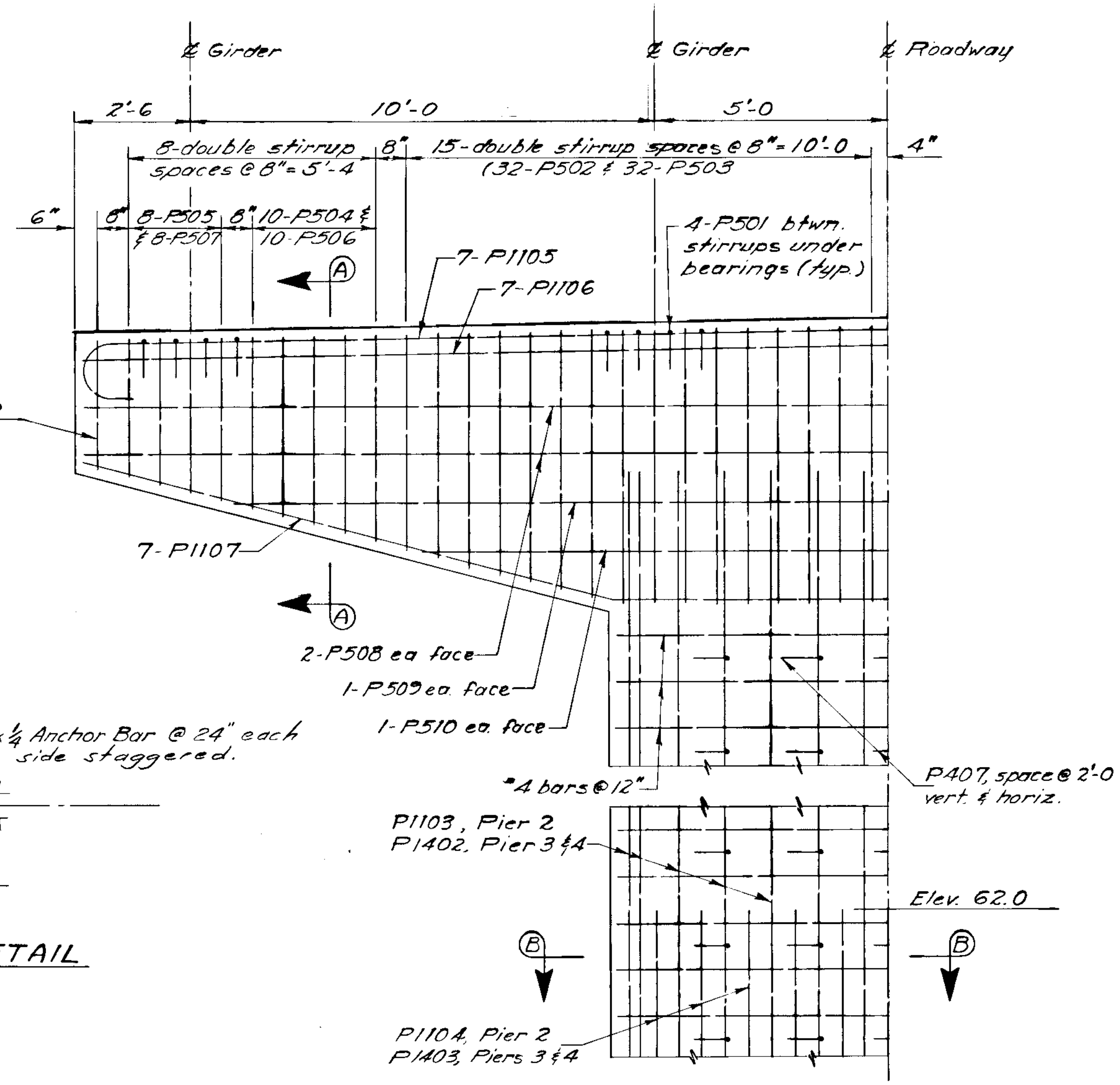

PART PIER ELEVATION (TYP.)

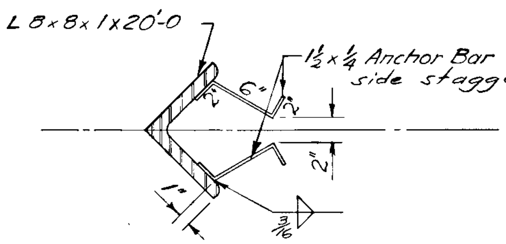

PIER NOSE DETAIL
No Scale

REINFORCING STEEL - 3 PIERS									
LOCATION	MARK	NUMBER				SIZE	LENGTH	TYPE	BENDING DIAGRAMS
		PIER 2	PIER 3	PIER 4	TOTAL				
FOOTING	P401		6	6	12	4	6'-0	bent	
	P402		6	6	12	4	22'-0	bent	
	P511	12			12	5	20'-6	——	
	P512	21			21	5	10'-6	——	
	P513		21	21	42	5	5'-6	bent	
	P514		14	14	28	5	20'-6	——	
	P701		14	14	28	7	20-6	——	
	P801		5	5	10	8	23'-6	bent	
	P802		21	21	42	8	14'-6	——	
	P803	32	36	36	104	8	4'-2	bent	
	P1001	15			15	10	20'-6	——	
	P1002	21			21	10	10-6	——	
	P1003		34	34	68	10	14'-6	——	
	P1101	50			50	11	8'-9	bent	
	P1102		48	48	96	11	8'-6	bent	
SHAFT	P404	20	26	26	72	4	6'-9	bent	
	P405	40	52	52	144	4	8'-7	——	
	P406	20	26	26	72	4	7'-4	bent	
	P407	50	65	65	180	4	3'-8	bent	
	P1103	26			26	11	23'-6	——	
	P1104	24			24	11	12'-3	——	
	P1402		26	26	52	14	33'-3	——	
	P1403		24	24	48	14	21'-3	——	
CAP	P501	16	16	16	48	5	4'-4	bent	
	P502	64	64	64	192	5	8'-0	bent	
	P503	64	64	64	192	5	9'-10	bent	
	P504	20	20	20	60	5	8'-2	bent	
	P505	20	20	20	60	5	7'-4	bent	
	P506	20	20	20	60	5	6'-6	bent	
	P507	16	16	16	48	5	5'-8	bent	
	P508	4	4	4	12	5	34'-6	——	
	P509	2	2	2	6	5	28'-0	——	
	P510	2	2	2	6	5	20'-0	——	
	P1105	7	7	7	21	11	37'-8	bent	
	P1106	7	7	7	21	11	34'-6	bent	
	P1107	7	7	7	21	11	35'-2	bent	

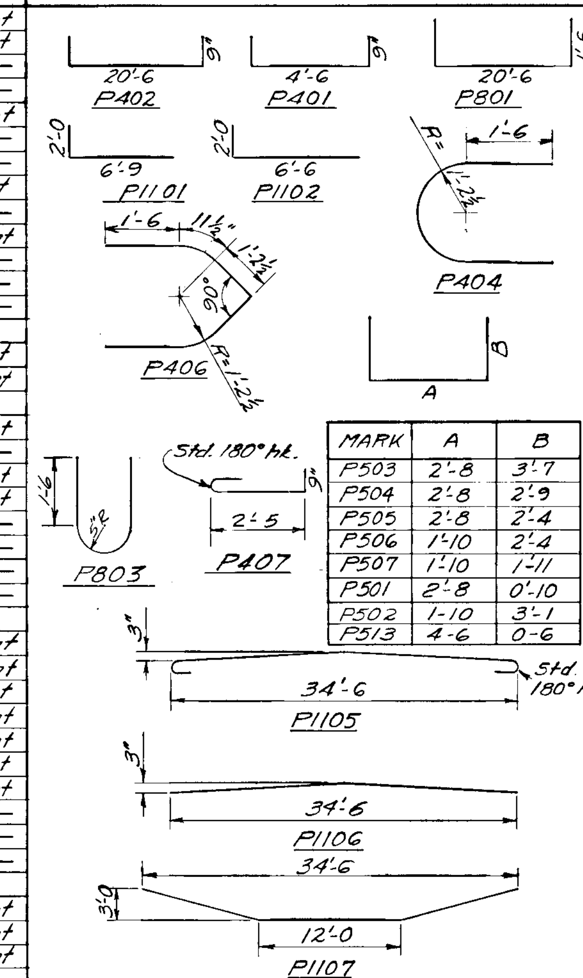

MARK	A	B
P503	2'-8	3'-7
P504	2'-8	2'-9
P505	2'-8	2'-4
P506	1'-10	2'-4
P507	1'-10	1'-11
P501	2'-8	0'-10
P502	1'-10	3'-1
P513	4-6	0-6

Note: All dimensions are out to out.

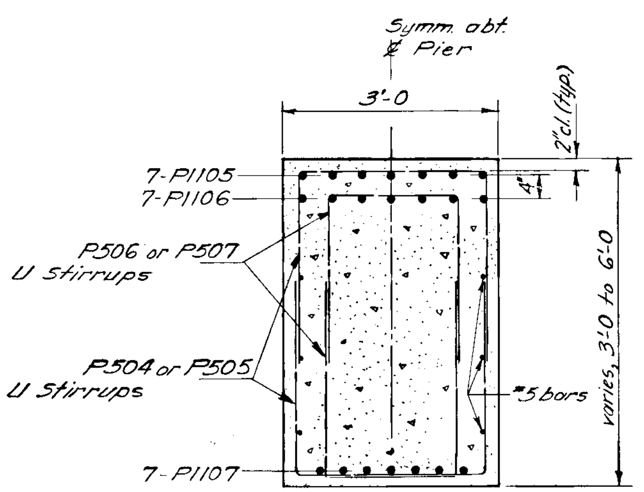

SECTION A-A

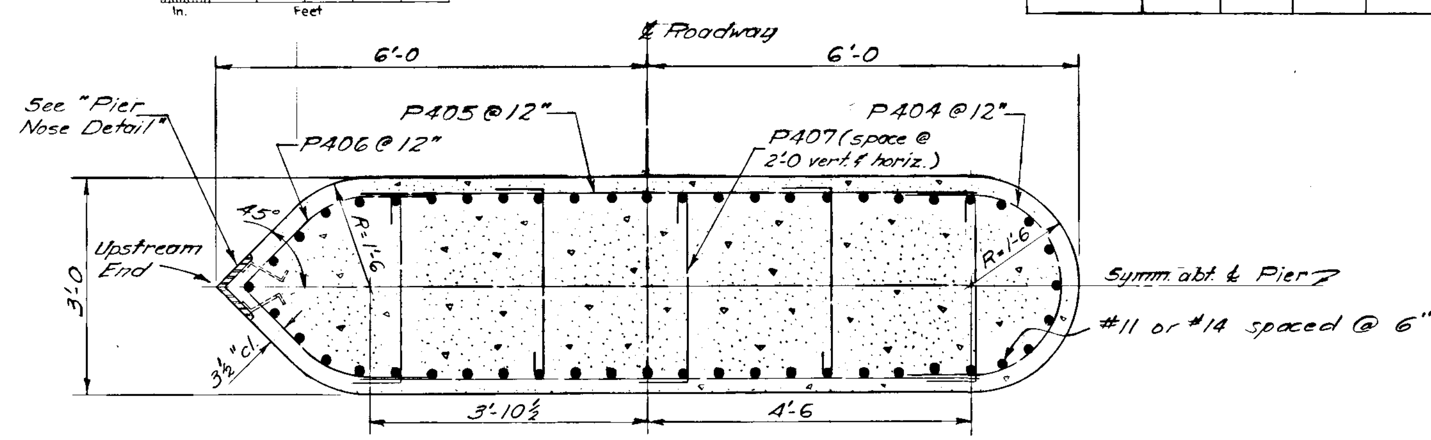

SECTION B-B

AS BUILT PLANS

E.J. Beach & A.L. Boysen DATE 10/66
CORRECTIONS TRANSFERRED
LAC DATE 5/8/67
DHP DATE 5/9/67

KENAI RIVER BRIDGE
AT SOLDOTNA
ROUTE NO. F-21
PIER DETAILS

SCALE AS SHOWN BRIDGE NO. 671

REVISIONS		
No.	Date	Description

Alaska Department of Public Works
DIVISION OF HIGHWAYS
Juneau, Alaska

Date 11/12/66
Approved

DWNG. NO. 1167

STATE	PROJECT NUMBER	SHEET NO.	TOTAL SHEETS
ALASKA	F-021-1(18) Section A	13	43

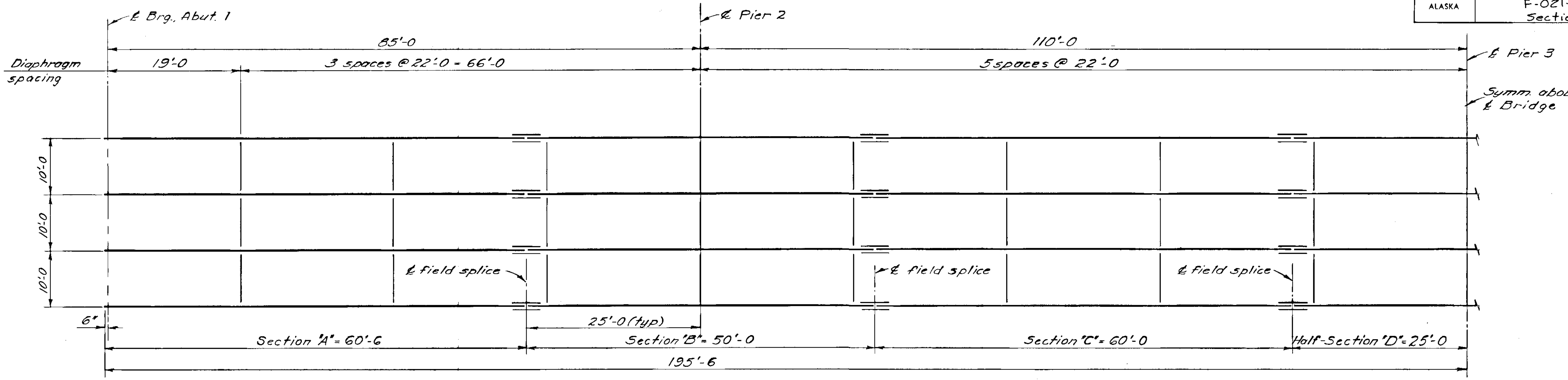

FRAMING PLAN

No Scale

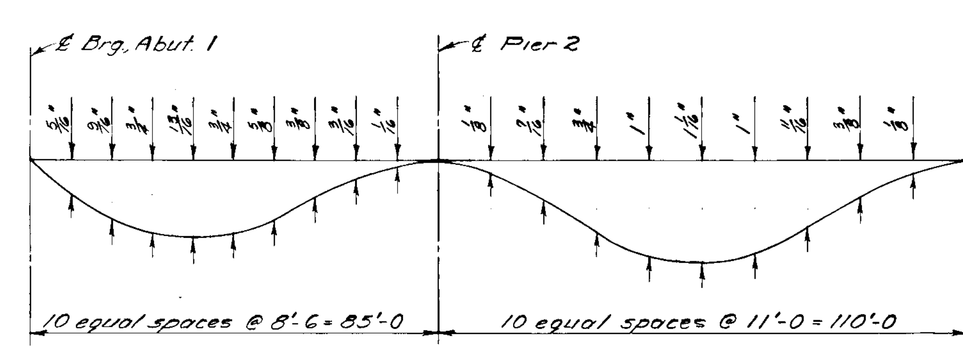

Note: Total dead load deflection shown. Deflection due to deck and sidewalks is 87% of total.

DEAD LOAD DEFLECTION DIAGRAM

No Scale

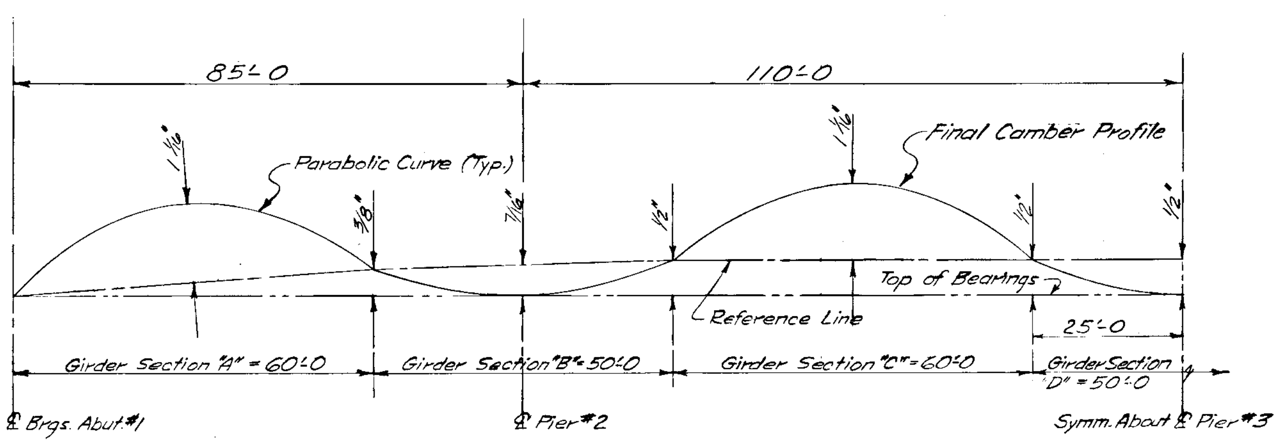

CAMBER DIAGRAM

No Scale

STRUCTURAL STEEL NOTES

Structural steel for girder webs, flanges, splice ℙs and bearing assemblies shall conform to A.S.T.M. A441. Girder bearing pins shall conform to A.S.T.M. A235, Class F-1. All other structural steel shall conform to A.S.T.M. A36.

Shop splices of girder webs shall be located at least 6" from flange splices.

AS BUILT PLANS

E.J. Beach & R.L. Borsen DATE 10/66
HIGHWAY ENGINEER Project

CORRECTIONS TRANSFERRED

TRACED LAC DATE 5/8/67

CHECKED DMP DATE 5/9/67

REVISIONS		
No.	Date	Description

KENAI RIVER BRIDGE
AT SOLDOTNA
ROUTE NO. F-21
GIRDER DETAILS NO. 1

NO SCALE BRIDGE NO. 671

Alaska Department of Public Works
DIVISION OF HIGHWAYS
Juneau, Alaska

Date 11/12/64
Approved Charles P. Smith, P.E.

DWNG. NO. 1168

STATE	PROJECT NUMBER	SHEET NO.	TOTAL SHEETS
ALASKA	F-021-1(18) Section A	14	43

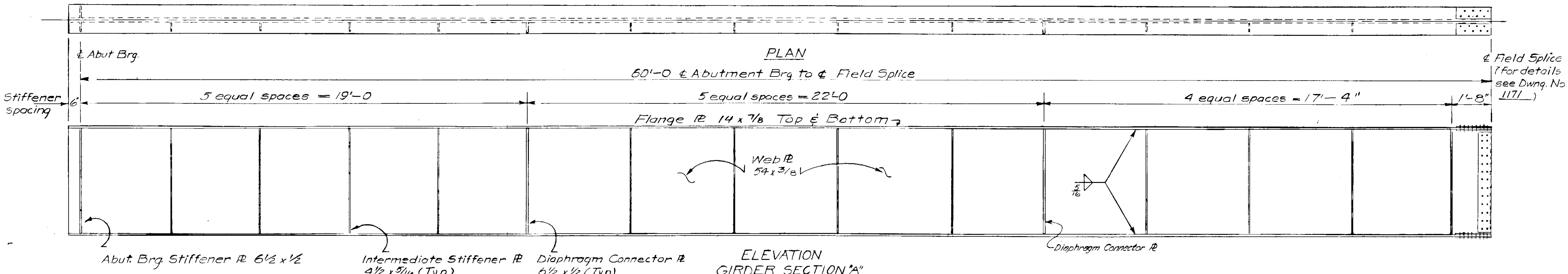

ELEVATION
GIRDER SECTION "A"
(Exterior Girder Shown)

NOTE: Intermediate stiffeners shall be placed on the inside of all exterior girders and shall be staggered on all interior girders.
Bearing stiffeners shall be on both sides of all girders
Diaphragm connector ℗'s shall be on the inside of exterior girders & both sides of interior girders.
For details of stiffeners and diaphragm connector ℗s, see Dwgs. No. 1171
For Camber Diagram See Dwg. No. 1168.

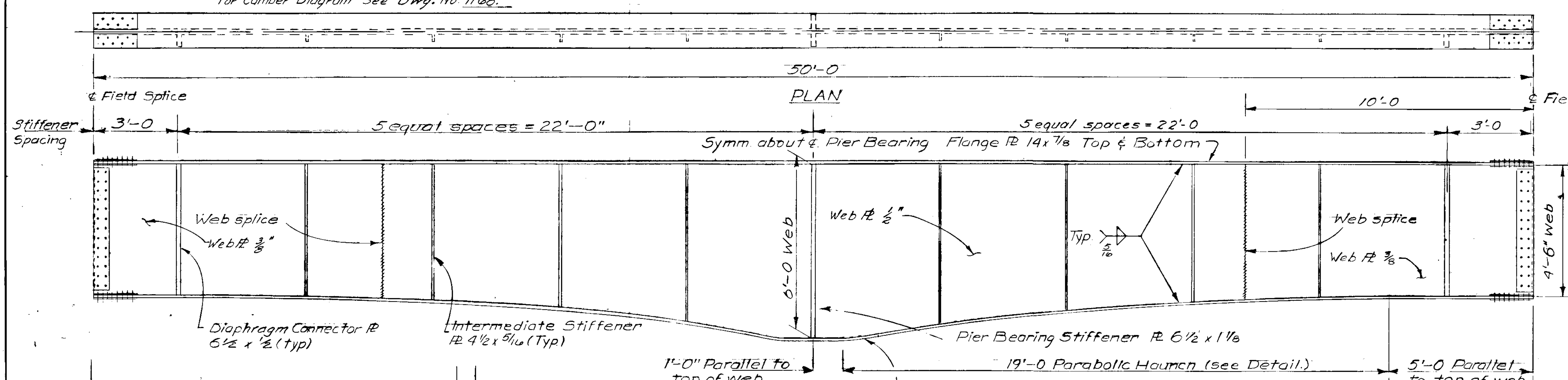

ELEVATION
GIRDER SECTION "B"
(Exterior Girder Shown)

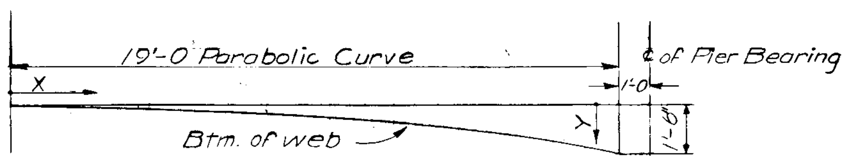

PARABOLIC CURVE OF GIRDER WEB
TYPICAL AT PIERS
NO SCALE

EQUATION OF CURVE

$$Y = \frac{18X^2}{(19)^2}$$

Where X is in feet and Y is in inches

AS BUILT PLANS

E. J. Beach & R. L. Boysen — Resident Engineer — Date 10/66
CORRECTIONS TRANSFERRED
Traced LAC — Date 5/18/66
Checked DMD — Date 5/9/67

KENAI RIVER BRIDGE AT SOLDOTNA

ROUTE NO. F-21

GIRDER DETAILS NO. 2

SCALE AS SHOWN — BRIDGE NO. 671

REVISIONS		
No.	Date	Description

Alaska Department of Public Works
DIVISION OF HIGHWAYS
Juneau, Alaska

Date 11/12/64
Approved Charles R. Smith, P.E.

DWNG. NO. 1169

STATE	PROJECT NUMBER	SHEET NO.	TOTAL SHEETS
ALASKA	F-021-1(18) Section A	15	43

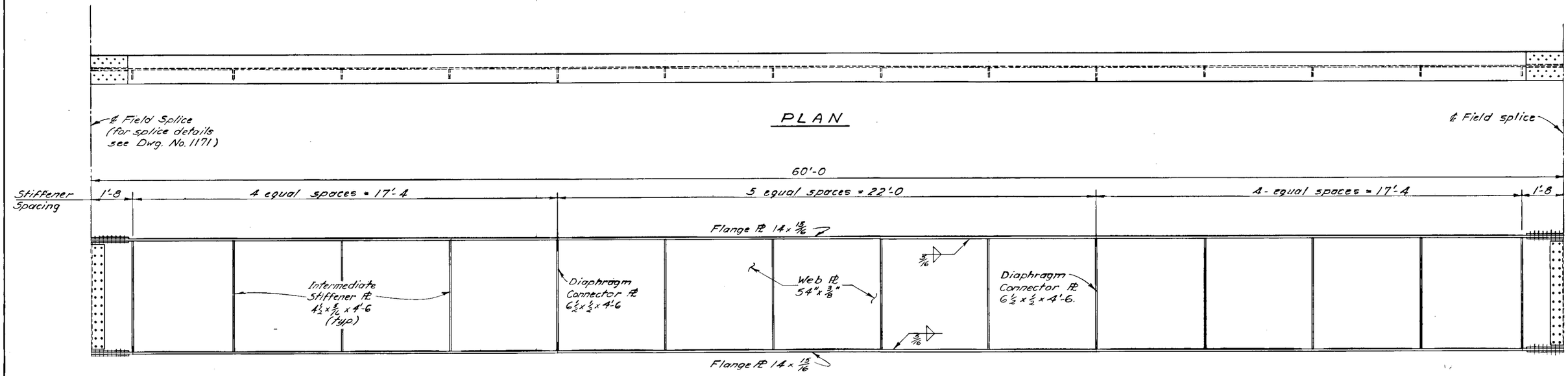

(Exterior Girder Shown)

ELEVATION ~ GIRDER SECTION "C"

12 0 1 2 3 4 5
In. Feet

Note: Intermediate stiffeners shall be placed on the inside of all exterior girders and shall be staggered on all interior girders. Diaphragm connector Pl.'s shall be on inside of exterior girders, both sides of interior girders. For stiffener & connector details see Dwg No. 1171.
For Camber Diagram see Dwg. No. 1168.

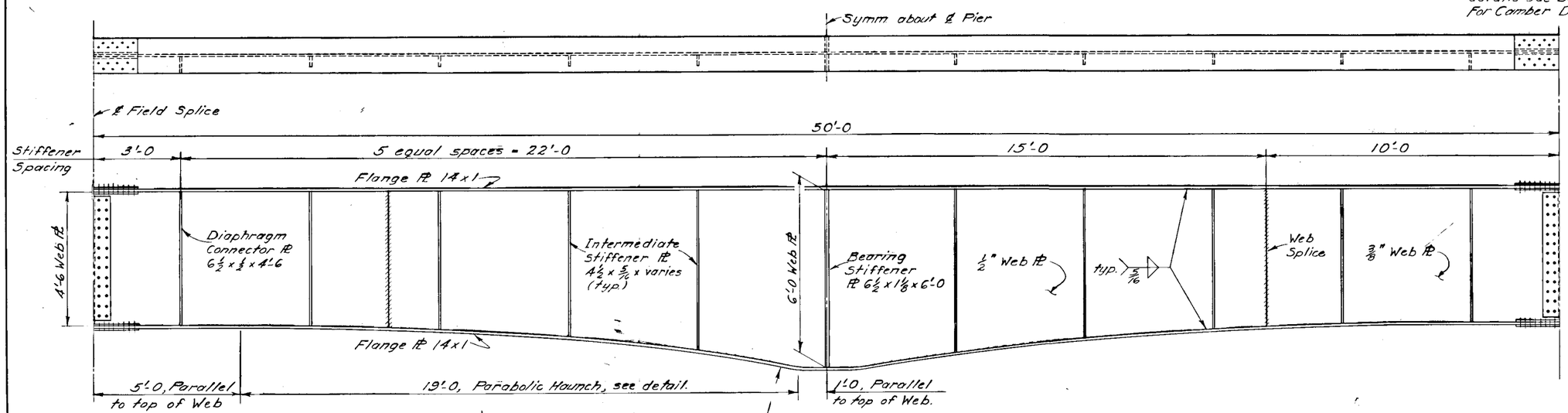

Provide 1'-0 transition curve between parabolic curve and section parallel to top of web.

ELEVATION ~ GIRDER SECTION "D"

(Exterior Girder Shown)

12 0 1 2 3 4 5
In. Feet

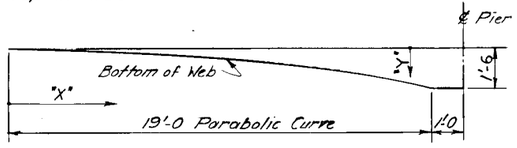

EQUATION OF CURVE

$$Y = \frac{X^2}{19^2}(18)$$

Where X is in ft, Y is in inches.

PARABOLIC CURVE OF GIRDER WEB, TYP. @ PIERS

No Scale

AS BUILT PLANS

E.J. Beach & R.L. Baysen DATE 10/66
RESIDENT ENGINEER

CORRECTIONS TRANSFERRED

TRACINGS LAC DATE 5/8/67
CHECKED DAR DATE 5/9/67

KENAI RIVER BRIDGE
AT SOLDOTNA
ROUTE NO. F- 21
GIRDER DETAILS NO. 3

SCALE AS SHOWN BRIDGE NO. 671

REVISIONS		
No.	Date	Description

Alaska Department of Public Works
DIVISION OF HIGHWAYS
Juneau, Alaska

Date 11/2/66
Approved Charles P. Smith, P.E.

DWG. NO. 1170

Checked by ..... Date .....
Traced By .....

STATE	PROJECT NUMBER	SHEET NO.	TOTAL SHEETS
ALASKA	F-021-1(18) Section A	16	43

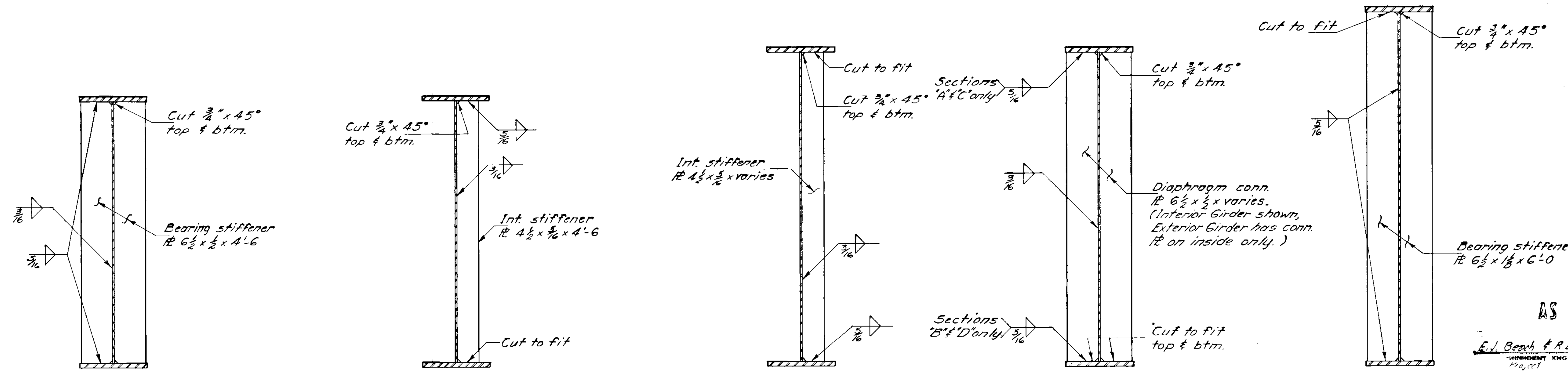

@ ABUTMENTS

TYP. INTERMEDIATE
(Girder Sections 'A' & 'C')

INTERMEDIATE IN HAUNCH
(Girder Sections 'B' & 'D')

@ DIAPHRAGMS

@ PIERS

STIFFENER DETAILS

No Scale

AS BUILT PLANS

E.J. Beach & R.L. Boysen — PROJECT ENGINEER — DATE 10/66
CORRECTIONS TRANSFERRED
TRACINGS LRC — DATE 5/8/67
CHECKED DHP — DATE 5/9/67

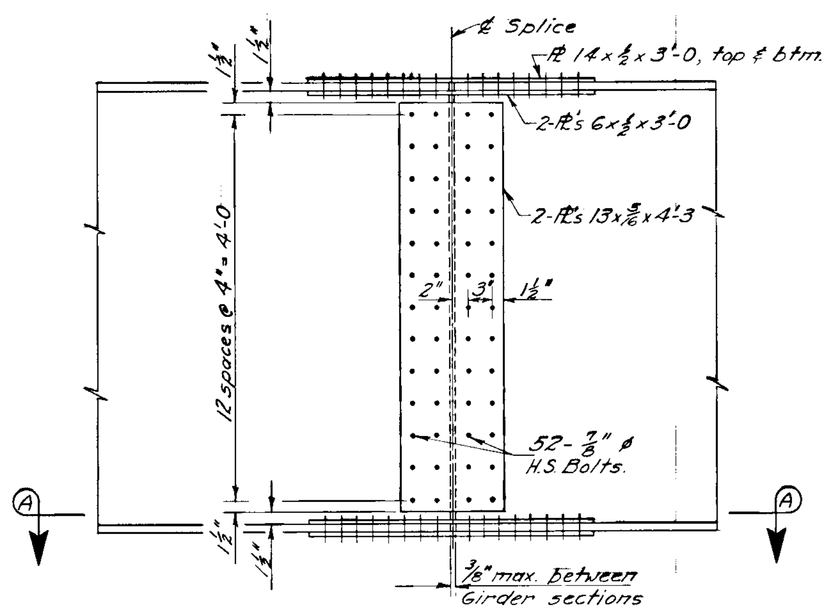

FIELD SPLICE DETAILS

12 6 0 1 2 3
Inches Feet

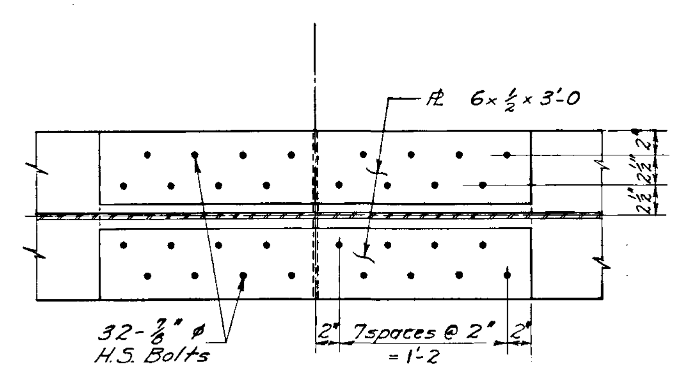

SECTION "A-A"

12 6 0 1 2
Inches Feet

Note:
1" maximum diameter holes in the Girder Webs may be used for Falsework Support at the option of the contractor. Holes shall be spaced 4'-0" minimum center to center and shall not be closer than 6" to any Stiffener.

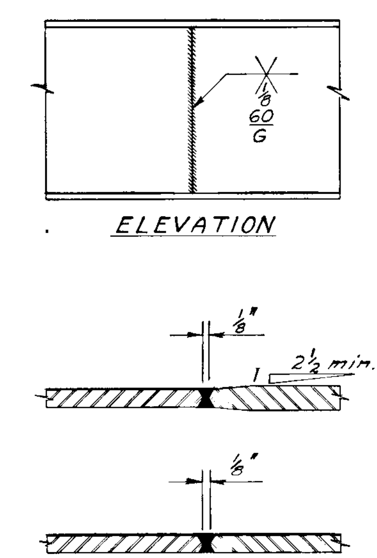

ELEVATION

SECTION THRU WEB

WEB SPLICE

No Scale

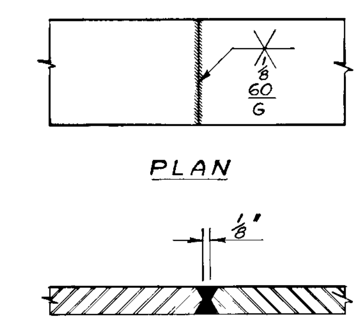

PLAN

SECTION THRU FLANGE

OPTIONAL SHOP FLANGE SPLICE

No Scale

Note: Run-off plates shall be used for all flange & web butt welds. Welds shall be ground flush in a direction parallel with ℄ Girders.

REVISIONS		
No.	Date	Description

KENAI RIVER BRIDGE
AT SOLDOTNA
ROUTE NO. F-21
GIRDER DETAILS NO. 4

SCALE AS SHOWN — BRIDGE NO. 671

Alaska Department of Public Works
DIVISION OF HIGHWAYS
Juneau, Alaska

Date 11/12/64
Approved Charles P. Smith, P.E.

DWNG. NO. 1171

Traced By
Date

STATE	PROJECT NUMBER	SHEET NO.	TOTAL SHEETS
ALASKA	F-021-1(18) Section A	17	43

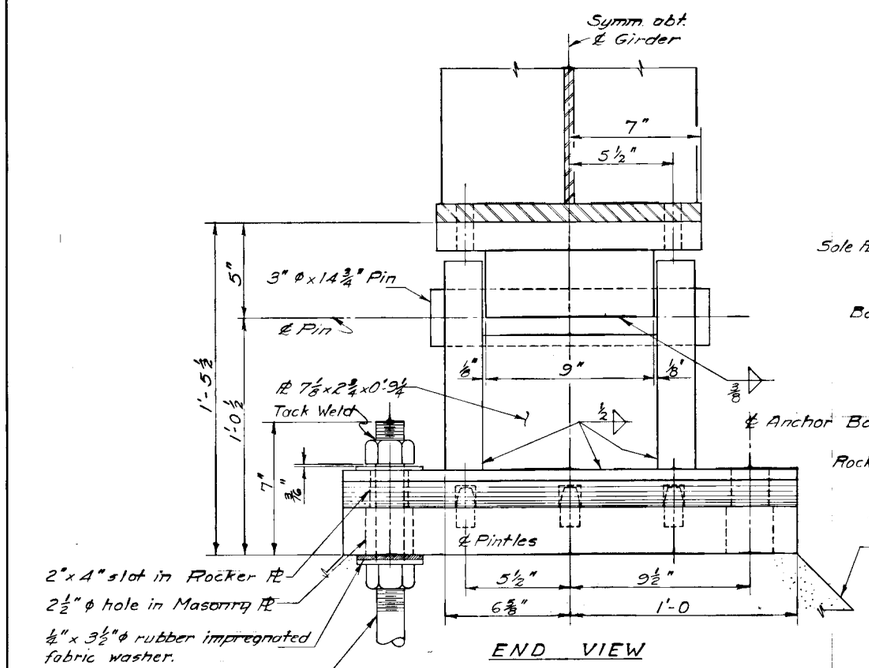

END VIEW

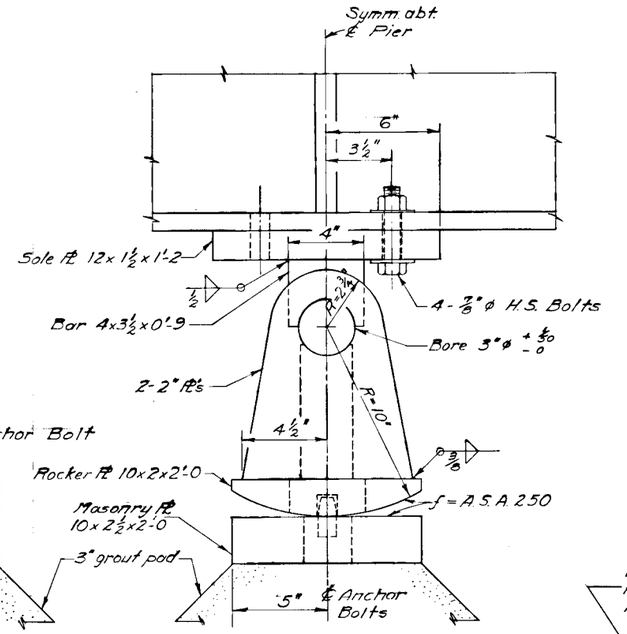

ELEVATION

EXPANSION BEARING @ PIERS 2 & 4

(8 Required)

12 6 0 1
Inches Feet

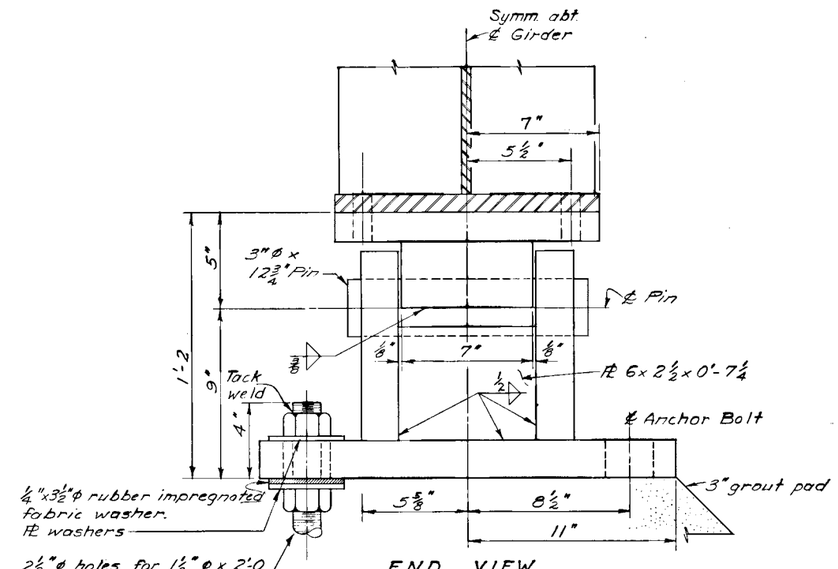

END VIEW

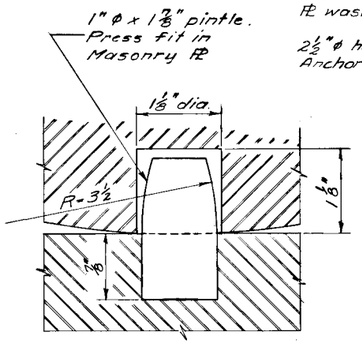

PINTLE DETAIL

No Scale

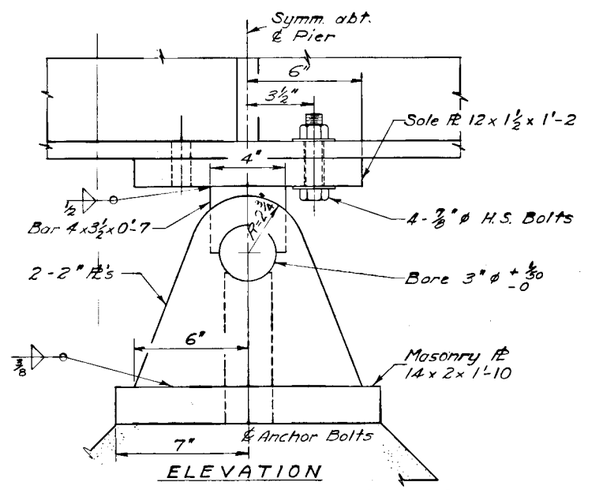

ELEVATION

FIXED BEARING @ PIER 3 (4 Required)

12 6 0 1
Inches Feet

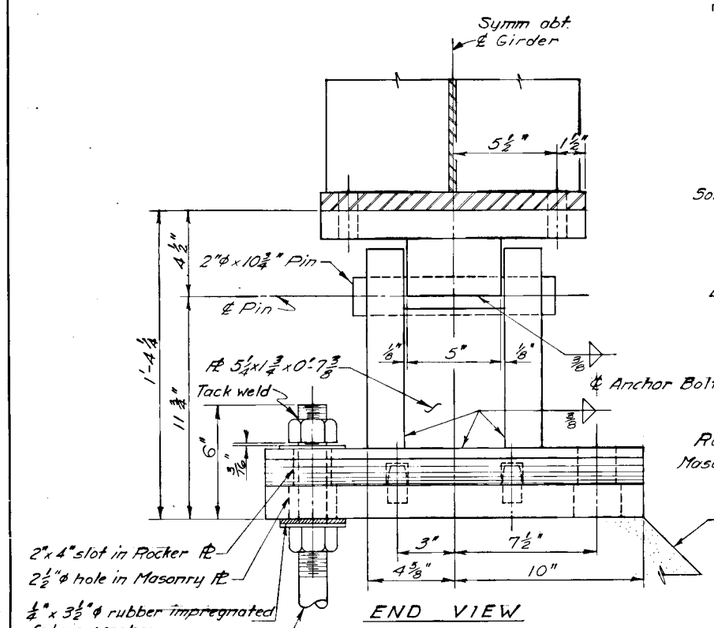

END VIEW

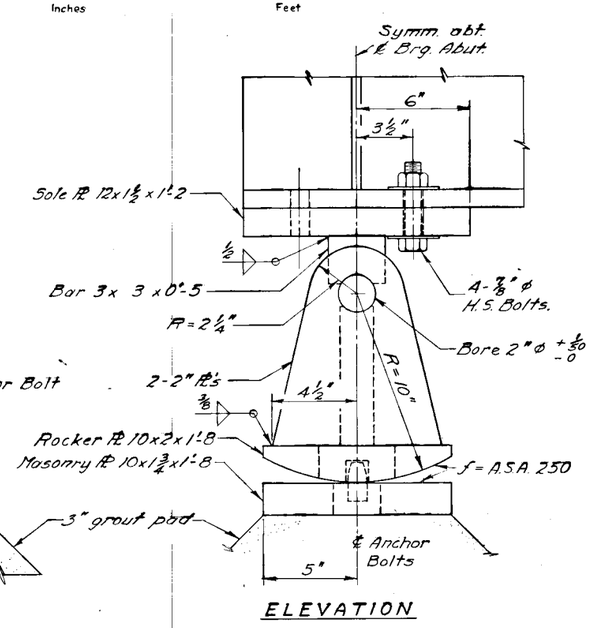

ELEVATION

EXPANSION BEARING @ ABUTMENTS 1 & 5

(8 Required)

12 6 0 1
Inches Feet

Notes:

Finish on all pins & pin bearing surfaces shall be A.S.A. 125.

Grout pad depth may vary. See Abutment & Pier Details for elevations at top of Masonry PL's.

All expansion bearings shall be set vertical at +40° F.

AS BUILT PLANS

E. J. Beach & R. L. Boysen 10166
CONSULTANT ENGINEER

CORRECTIONS TRANSFERRED

TRACED LAC DATE 5/8/67

CHECKED DMD DATE 5/9/67

REVISIONS		
No.	Date	Description

KENAI RIVER BRIDGE
AT SOLDOTNA
ROUTE NO. F-21
BEARING DETAILS

SCALE AS SHOWN BRIDGE NO. 671

Alaska Department of Public Works
DIVISION OF HIGHWAYS
Juneau, Alaska

Date 11/12/66
Approved Ronald P. Smith, P.E.

DWNG. NO. 1172

Traced By
Date

STATE	PROJECT NUMBER	SHEET NO.	TOTAL SHEETS
ALASKA	F-021-1(18) Section A	18	43

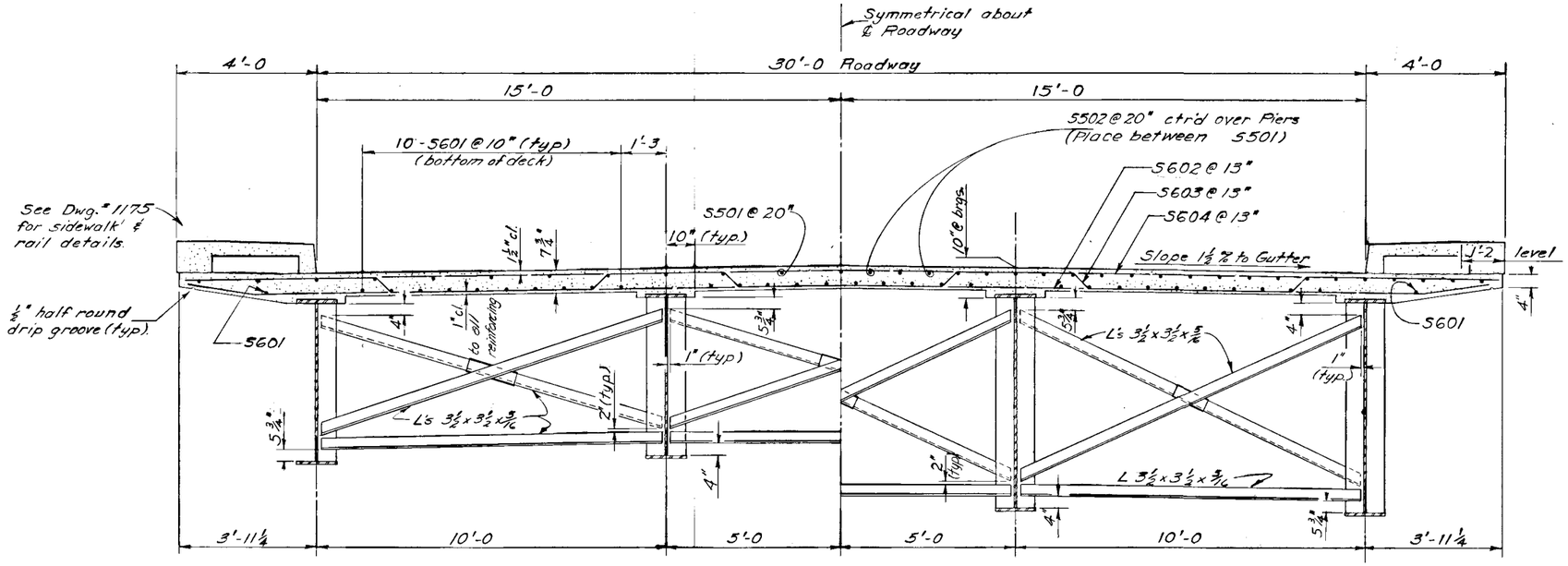

HALF-SECTION NEAR MIDSPAN

HALF-SECTION AT PIERS

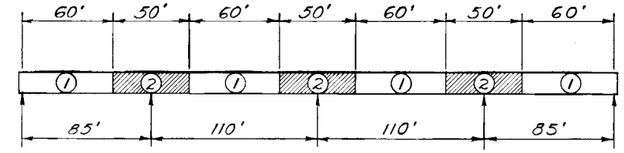

Note: No. 2 sections may be placed only after the adjacent No. 1 sections have been placed.

SLAB CONCRETE PLACING DIAGRAM

No Scale

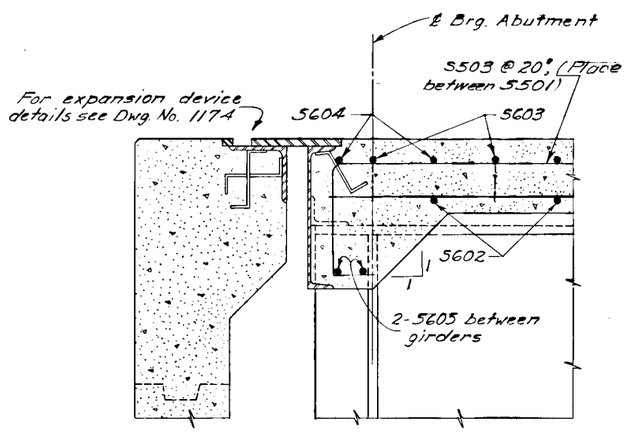

SLAB REINF. @ ABUT.

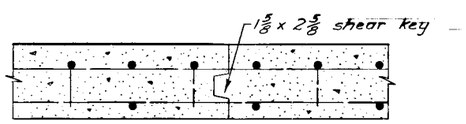

SLAB CONST. JOINT

No Scale

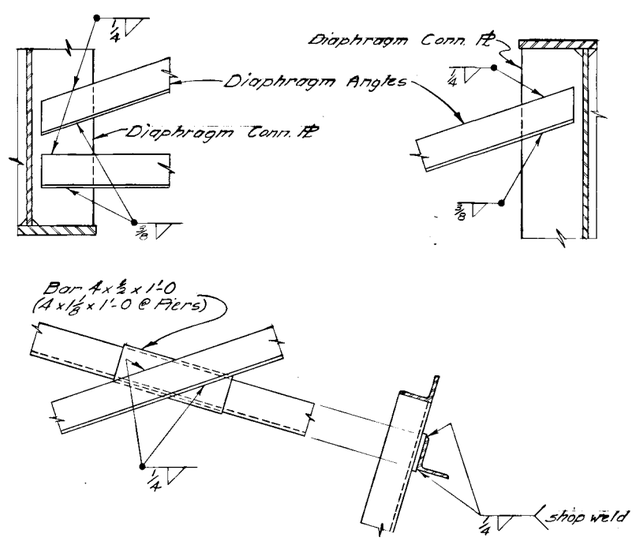

TYPICAL DIAPHRAGM FIELD WELDING DETAILS

No Scale

SLAB REINFORCING STEEL

MARK	NO.	SIZE	LENGTH	TYPE
S601	224	6	57'-0	—
S602	362	6	37'-6	bent
S603	361	6	38'-8	bent
S604	362	6	37'-6	—
S605	12	6	9'-6	—
S501	161	5	57'-0	—
S502	66	5	20'-0	—
S503	36	5	7'-0	bent

BENDING DIAGRAMS

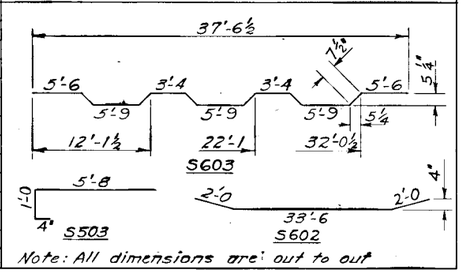

Note: All dimensions are out to out

AS BUILT PLANS

E.J. Brach & R.L. Boyson DATE 10/66
RESIDENT ENGINEER

CORRECTIONS TRANSFERRED

TRACING LAC DATE 5/8/67

CHECKED DHD DATE 5/9/67

KENAI RIVER BRIDGE
AT SOLDOTNA
ROUTE NO. F - 21

SLAB & DIAPHRAGM DETAILS

SCALE AS SHOWN

BRIDGE NO. 671

REVISIONS		
No.	Date	Description

Alaska Department of Public Works
DIVISION OF HIGHWAYS
Juneau, Alaska

Date 11/17/66

Approved Charles P. Smith, P.E.

DWNG. NO. 1173

Traced By

Date

STATE	PROJECT NUMBER	SHEET NO.	TOTAL SHEETS
ALASKA	F-021-1(18) Section A	19	43

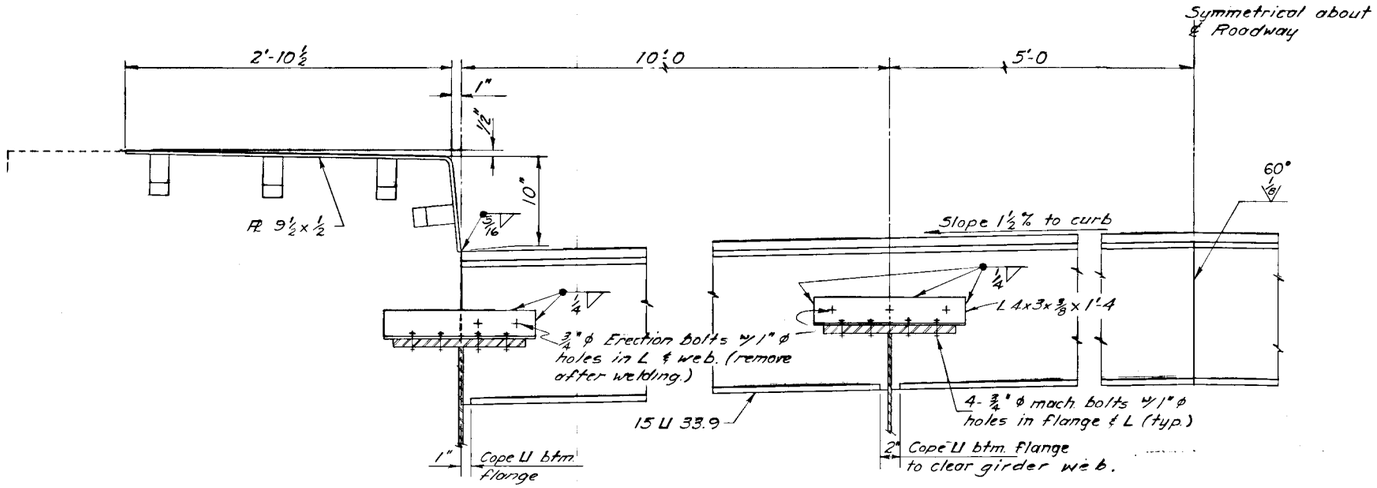

HALF ELEVATION

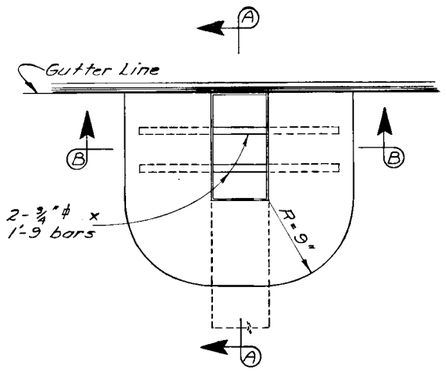

PLAN

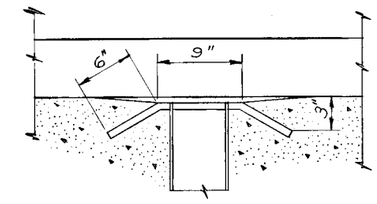

SECTION B-B

Drain Assembly to be galvanized after fabrication. See Dwg. No. 1161 for Drain spacing.

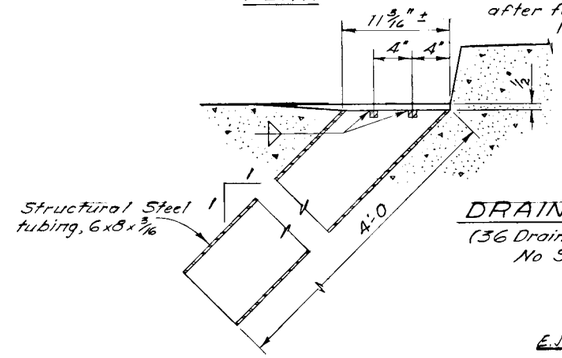

DRAIN DETAILS
(36 Drains required)
No Scale

SECTION A-A

AS BUILT PLANS

E.J. Beach & R.L. Bowen DATE 10/66
RESIDENT ENGINEER

CORRECTIONS TRANSFERRED
TRACINGS LAC DATE 5/8/67
DATE 5/9/67

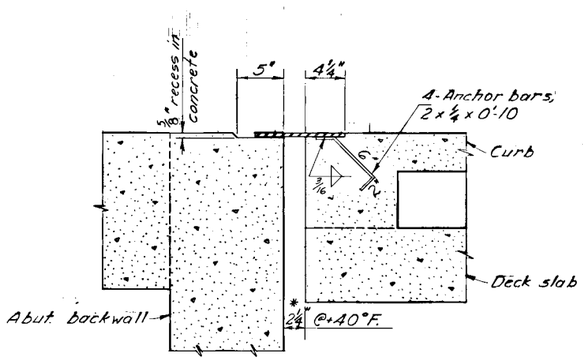

SECTION THRU CURB

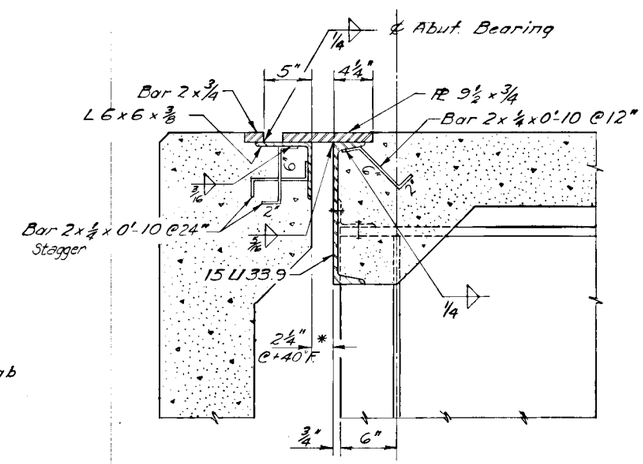

SECTION THRU JOINT

EXPANSION JOINT DETAILS

12 6 0 1 2
Inches Feet

* Vary Joint 5/32" for each 10°F difference in temperature.

REVISIONS		
No.	Date	Description

KENAI RIVER BRIDGE
AT SOLDOTNA
ROUTE NO. F-21
MISC. SUPERSTRUCTURE DETAILS

SCALE AS SHOWN BRIDGE NO. 671

Alaska Department of Public Works
DIVISION OF HIGHWAYS
Juneau, Alaska

Date 11/12/66
Approved Charles P. Smith, P.E.

DWNG. NO. 1174

STATE	PROJECT DESIGNATION	YEAR	SHEET NO.	TOTAL SHEETS
ALASKA	F-021-1(18) Section A	1965	20	43

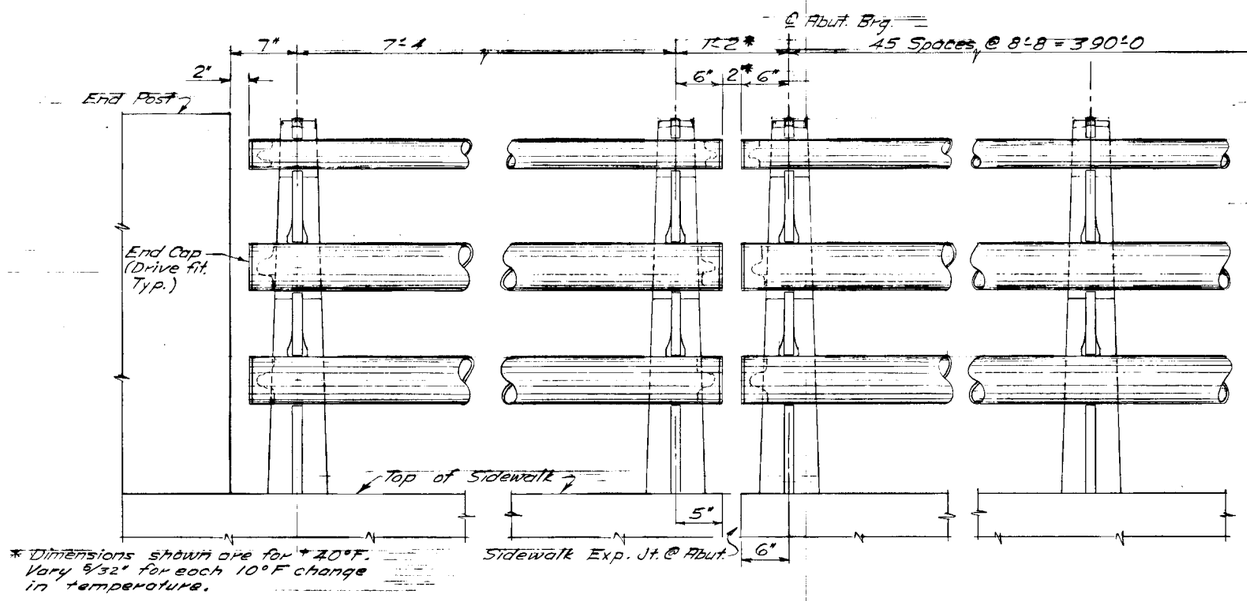

* Dimensions shown are for +40°F. Vary 5/32" for each 10°F change in temperature.

ELEVATION

NOTES

Aluminum surfaces in contact with concrete or steel shall be throughly coated with an aluminum impregnated calking compound.

All railing & Railposts shall be of the same material (either aluminum or steel) except for the Toggle bolts, anchor bolts and their nuts & washers which shall be galvanized steel.

Aluminum rails shall be anodized. All steel Railing elements shall be galvanized.

Railing shall be set parallel to Bridge Grade and railposts shall be set normal to railing.

Provide shims for alignment of railposts.

SIDEWALK REINFORCING STEEL

LOCATION	MARK	NO.	SIZE	LENGTH	TYPE
	C401	140	4	27'-8	
	C402	724	4	2'-5	Bent
	C403	724	4	3'-2	Bent
	C404	724	4	4'-8	Bent

BENDING DIAGRAMS

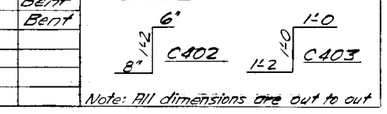

Note: All dimensions are out to out

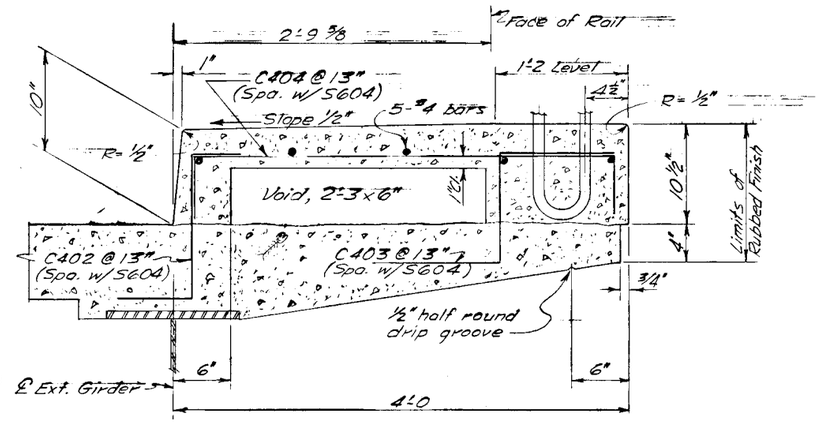

SECTION THRU SIDEWALK

AS BUILT PLANS

E.J. Beach & R.L. Bryson 10/66
RESIDENT ENGINEER Project

CORRECTIONS TRANSFERRED

TRACED LAC DATE 5/8/67
CHECKED DHD DATE 5/9/67

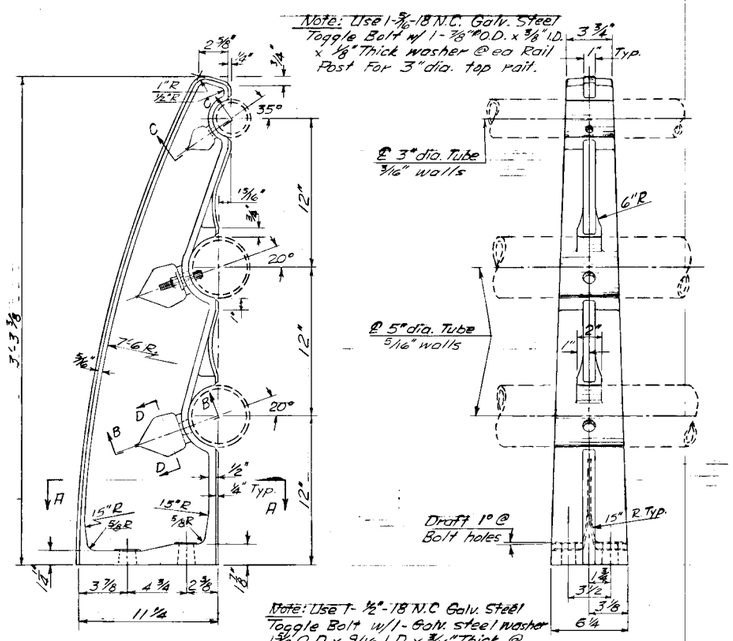

Note: Use 1-1/2"-18 N.C. Galv. Steel Toggle Bolt w/ 1-Galv. steel washer 1 5/8" O.D. x 9/16 I.D. x 3/16" Thick @ ea. Rail Post for ea. 5" dia. Pipe Rail.

Note Unless otherwise specified:
Draft angles to be 3°.
Corner Radii to be 1/8" R.
Fillet Radii to be 1/4" R.

RAIL POST DETAILS

SECTION D-D

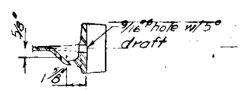

SECTION C-C

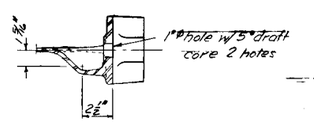

SECTION B-B

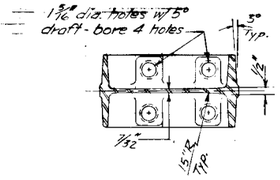

SECTION A-A

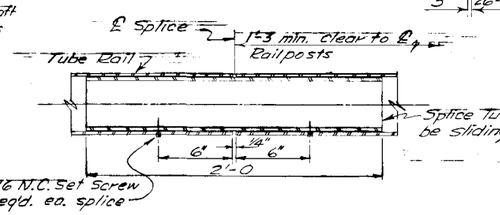

RAILING SPLICE DETAIL

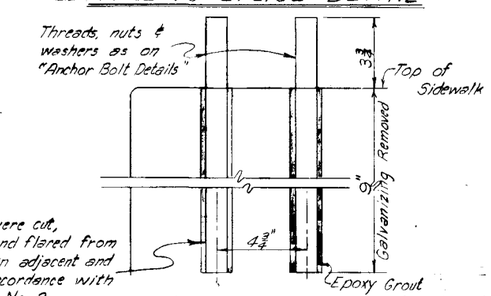

These bolts were cut, straightened and flared from "U" Bolts shown adjacent and installed in accordance with Change Order No. 2

ALTERNATE ANCHOR BOLTS (AS BUILT)

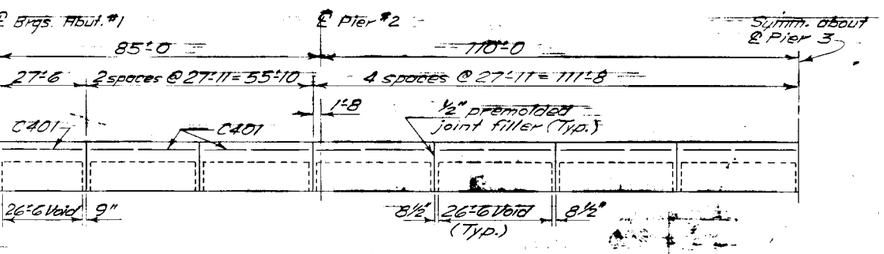

SIDEWALK JOINT & VOID SPACING

Note: Seal top and front face of sidewalk joints with joint sealer.

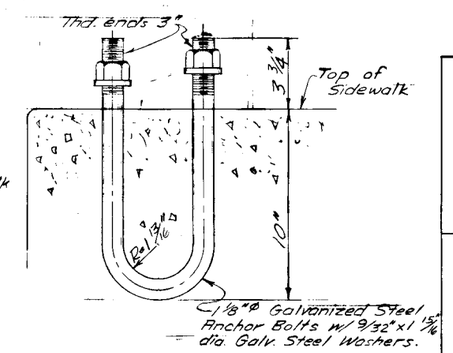

ANCHOR BOLT DETAIL

KENAI RIVER BRIDGE AT SOLDOTNA

ROUTE NO. F-21

CURB & RAIL DETAILS

NO SCALE

State of Alaska
DEPARTMENT OF HIGHWAYS
Juneau, Alaska

Date 11/2/66
Approved [signature], P.E.

BRIDGE NO. 671
DWNG. NO. 1175

Traced By
Date

STATE	PROJECT NUMBER	SHEET NO	TOTAL SHEETS
ALASKA	F-021-1(18) Section A	21	43

Note: Logs of Borings are provided for information only and are not guaranteed to represent the actual sub-surface conditions.

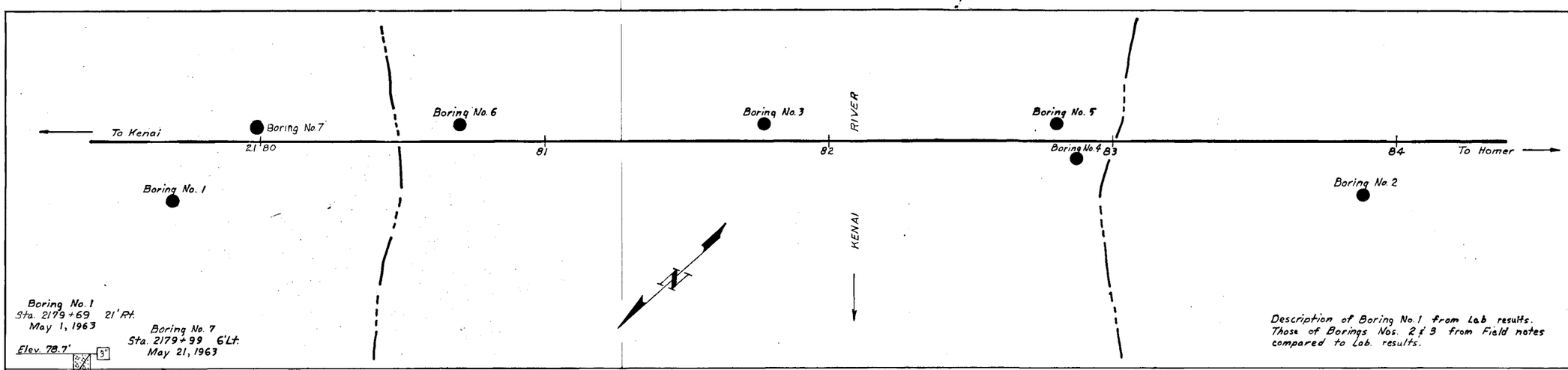

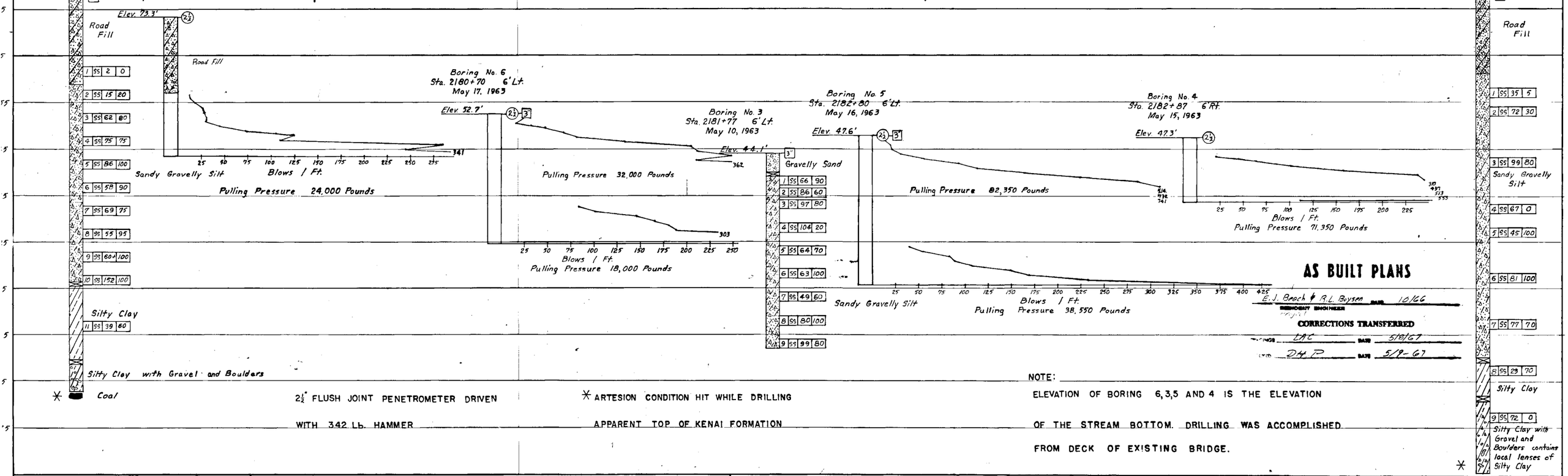

AS BUILT PLANS

E.J. Brach & R.L. Boysen DATE 10/66
RESIDENT ENGINEER

CORRECTIONS TRANSFERRED
DRAWING DAC DATE 5/8/67
CHECK DHP DATE 5/9-67

2½" FLUSH JOINT PENETROMETER DRIVEN WITH 342 Lb. HAMMER

✳ ARTESION CONDITION HIT WHILE DRILLING APPARENT TOP OF KENAI FORMATION

NOTE: ELEVATION OF BORING 6, 3, 5 AND 4 IS THE ELEVATION OF THE STREAM BOTTOM. DRILLING WAS ACCOMPLISHED FROM DECK OF EXISTING BRIDGE.

LEGEND OF EARTH MATERIALS

MATERIAL SYMBOLS: Cobbles or Boulders; Gravel; Sand; Silt; Clay; Peat and/or organic matter; Fill material; Sedimentary rock; Metamorphic rock; Igneous rock

CONSISTENCY CLASSIFICATION — According to the Standard Penetration Test.

No. of blows	Granular	Cohesive
0-5	very loose	very soft
6-10	loose	soft
11-20	slightly compact	stiff
21-35	compact	very stiff
36-70	dense	hard
70+	very dense	very hard

LEGEND OF BORING OPERATIONS

Plan of any boring; Flush penetrometer; Penetrometer; Rotary boring; Auger boring; Sample boring; Jet boring; Diamond core boring; Test pit

ROTARY BORING Location: B-NO. 25"; Top hole elev; Casing Set; Moisture %; Unit weight (#/cu ft.) dry; Unconfined compressive strength (T/sq.ft); Consolidation test; Direct shear test; Expansion test; Triaxial compression test; Shear strength (#/sq.ft.); Vane shear (field); Description of material; Permafrost; Sample No.; Sample type; Blows per foot; % recovery; G.W.S. elevation ground water surface date measured (24 hr reading); Conformable material change; Gradational material change; Estimated material change; Unconformable material change; date of boring

PENETRATION TEST Location: SS=split spoon 2" O.D. ST shelby tube 2" O.D.; B-NO.; Top hole elev; Pushed; elev. ground water surface date measured; No count recorded; Graphic representation of driving rate; Date of boring; Blows per foot (Using a 342 lb. hammer with a 30" drop)

DESIGN PILE TIP ELEVATION

TYPE OF PILE	LOCATION						REMARKS

NORMAL ALLOWABLE BEARING VALUE T/FT²

ELEV.	LOCATION						REMARKS

KENAI RIVER BRIDGE AT SOLDOTNA

ROUTE NO. F-21

LOG OF TEST BORINGS

NO SCALE — BRIDGE NO. 671

Alaska Department of Public Works
DIVISION OF HIGHWAYS
Juneau, Alaska

Date 11/12/66
Approved Charles P. Smith, P.E.

DWNG. NO. 1176

Traced By — Date