STATE OF ALASKA

DEPARTMENT OF TRANSPORTATION AND PUBLIC FACILITIES

NO.	DATE	REVISION

STATE	PROJECT DESIGNATION	YEAR	SHEET NO.	TOTAL SHEETS
ALASKA	TBD/CFHWY01083	2023	A1	A9

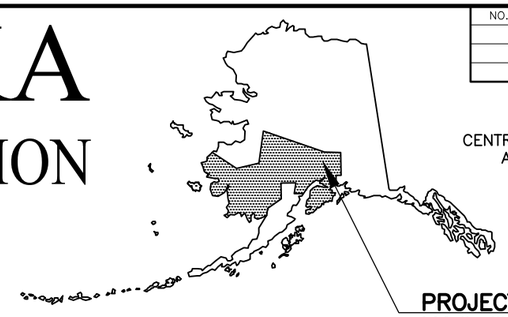

PROJECT LOCATION
M&O STATION: CHULITNA

SITE	ROUTE ID	MILEPOINT	LATITUDE	LONGITUDE
MP 107.5/ 107.7	1140000I000	72.03 - 72.28	62.216104	-150.228618
MP 111.5	1140000I000	76.11 - 76.14	62.269660	-150.243596
MP 115.6	1140000I000	80.21	62.326777	-150.240298
MP 116.2	1140000I000	80.81 - 80.85	62.335466	-150.243958
MP 119.3/ 119.4	1140000I000	83.99 - 84.07	62.379741	-150.267218
MP 120.3	1140000I000	84.92 - 84.96	62.392636	-150.262969
MP 136.1	1140000I000	100.77 - 100.80	62.608674	-150.222727

PROPOSED HIGHWAY PROJECT

PARKS HIGHWAY PHASE I - CULVERT REPLACEMENT PROJECT NO. TBD/CFHWY01083

GRADING, DRAINAGE, PAVING, AND STRIPING

PROJECT SUMMARY

ROADWAY	WIDTH	LENGTH
PARKS HWY MP 99-163	40 FT	64 MILES

DESIGN DESIGNATIONS

ROADWAY	FUNCTIONAL CLASS	AADT (EXISTING YEAR)	DESIGN SPEED
PARKS HWY MP 99-163	RURAL INTERSTATE	1320	65 MPH

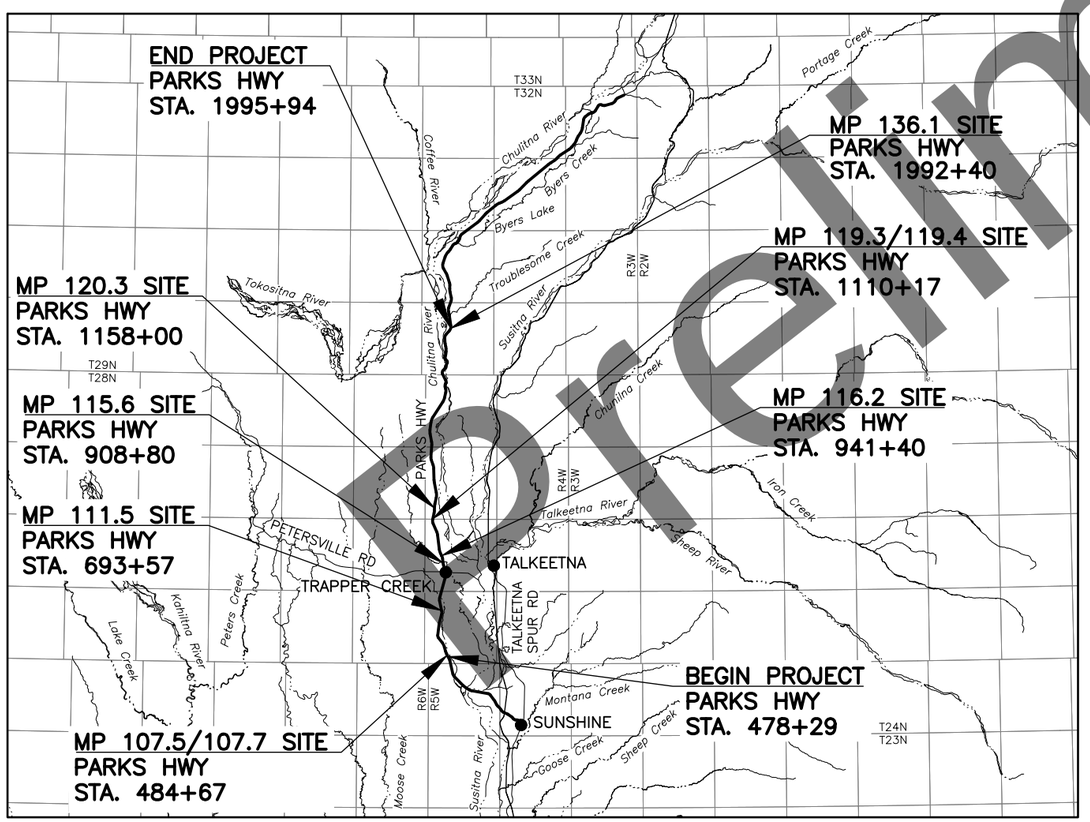

Preliminary

PS&E REVIEW
APRIL 2023

PLANS DEVELOPED BY: HDL ENGINEERING CONSULTANTS, LLC

STATE OF ALASKA
DEPARTMENT OF TRANSPORTATION & PUBLIC FACILITIES
4111 AVIATION AVENUE, ANCHORAGE, AK 99502
(907)269-0590

APPROVED:

REGIONAL PRECONSTRUCTION ENGINEER DATE

CONCUR:

REGIONAL CONSTRUCTION ENGINEER DATE

DESIGNED BY ---
CHECKED BY ---
DRAFTED BY ---
SCALE N/A
DATE 4/25/2023 TIME 11:36 AM
DRAWING LOCATION
H:\JOBS\21-022 PARKS HWY 99-163 H&H (DOTCR)\CAD\DRAWINGS-P1\01083_A01_TTL.DWG

NO.	DATE	REVISION

STATE	PROJECT DESIGNATION	YEAR	SHEET NO.	TOTAL SHEETS
ALASKA	TBD/CFHWY01083	2023	A2	A9

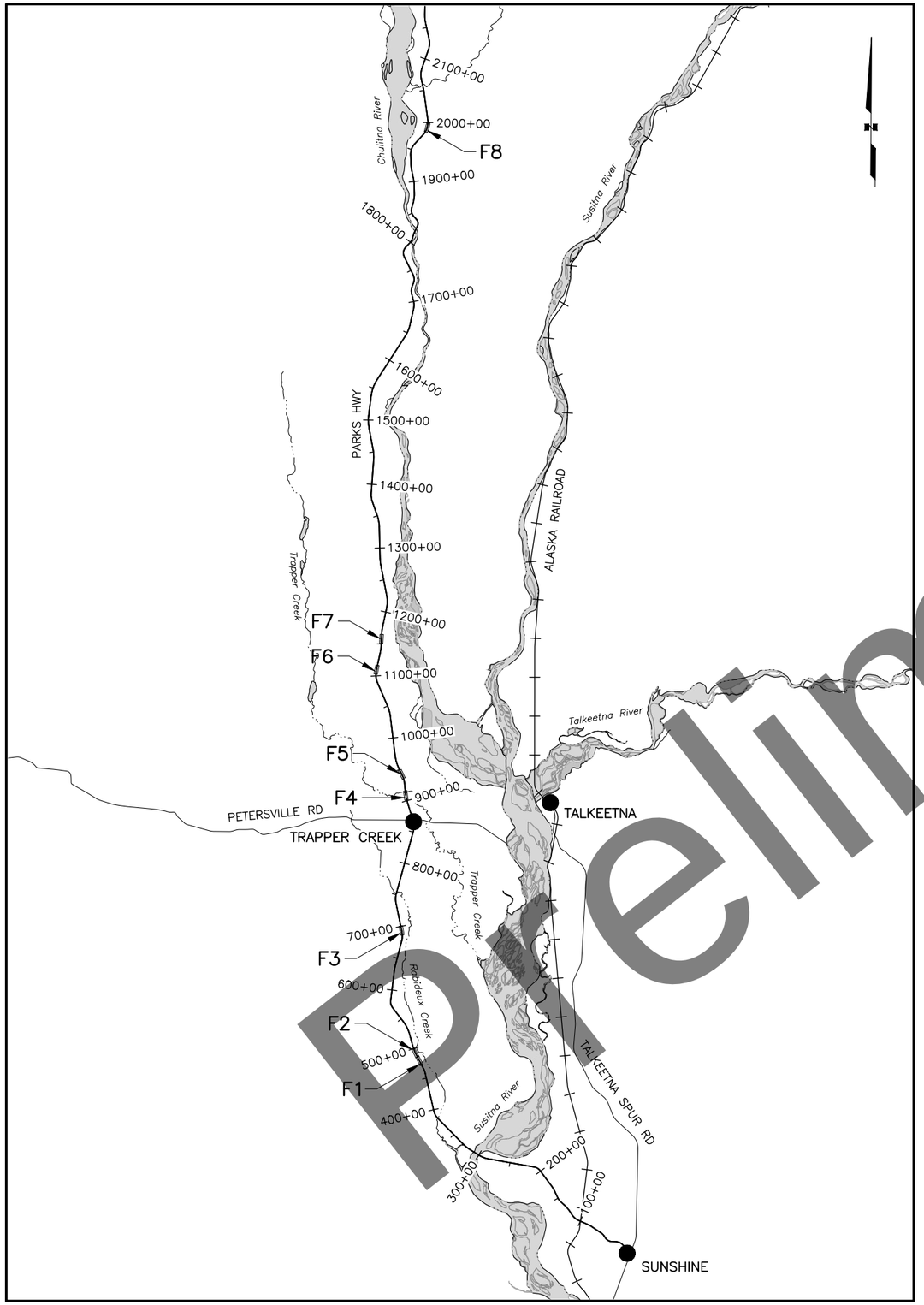

GENERAL NOTES:

1. ALL CONSTRUCTION SHALL BE CONTAINED WITHIN THE RIGHT-OF-WAY, ACQUIRED RIGHT-OF-WAY, TEMPORARY CONSTRUCTION EASEMENTS, AND TEMPORARY CONSTRUCTION PERMITS. NO EXCESS MATERIAL SHALL BE DISPOSED OF WITHIN THE RIGHT-OF-WAY, UNLESS SPECIFICALLY CALLED FOR IN THE PLANS OR DIRECTED BY THE ENGINEER.
2. THE RIGHT-OF-WAY LINES SHOWN WERE CREATED FOR THIS PROJECT BY HDL ENGINEERING CONSULTANTS, LLC AND ARE BASED ON RECORDED DOCUMENTS AND/OR PLATTED SUBDIVISIONS, AND SURVEYED MONUMENTS. THE RIGHT-OF-WAY LINES WERE INSERTED USING A COMMON COORDINATE SYSTEM.
3. ALL PAVEMENT CUTS SHALL BE MADE WITH A SAW OR ALTERNATE METHOD APPROVED BY THE ENGINEER.
4. CLEARING LIMITS SHALL BE LIMITED TO WITHIN STREAM CHANNELS AND AROUND CULVERT HEADWALLS. DO NOT CLEAR BEYOND THE SLOPE CATCH POINT UNLESS OTHERWISE SHOWN ON THE PLANS.
5. PLACE 4" TOPSOIL AND SEED ON ANY AREAS DISTURBED BY CONSTRUCTION AND AS DIRECTED BY THE ENGINEER.
6. THE EXISTING INFORMATION SHOWN IN THE PLANS IS FROM AS-BUILTS AND HAS BEEN PARTIALLY FIELD VERIFIED. FIELD CONDITIONS MAY NOT BE ACCURATELY REPRESENTED AND/OR MAY HAVE CHANGED. ADJUST INSTALLATIONS AS DIRECTED BY THE ENGINEER.

INDEX

SHEET NO.	DESCRIPTION
A1	TITLE SHEET
A2	SHEET LAYOUT, INDEX, AND GENERAL NOTES
A3	LEGEND
AX	SURVEY CONTROL SHEET(S)
B1	TYPICAL SECTIONS
C1	ESTIMATE OF QUANTITIES
D1-D6	SUMMARY TABLES
E1-E27	DETAIL SHEETS
F1-F8	PLAN AND PROFILE SHEETS
H1	TRAFFIC LEGEND AND NOTES

IN THE EVENT OF CONFLICT, CENTRAL REGION STANDARD DETAILS SUPERSEDE ALASKA STANDARD PLANS, STANDARD MODIFICATIONS, AND STANDARD SPECIFICATIONS. PLANS AND SPECIAL PROVISIONS SUPERSEDE CENTRAL REGION STANDARD DETAILS.

THE FOLLOWING ALASKA STANDARD PLANS APPLY TO THIS PROJECT:

C-04.12, C-05.20, C-06.00
D-01.02, D-04.22, D-06.10, D-07.00, D-30.11, D-31.01,
G-00.05, G-05.11S, G-05.11W, G-10.21, G-14.01, G-20.12, G-26.00,
G-29.01, G-47.00
T-05.10, T-21.04, T-25.10

PROJECT SPECIFIC LEGEND

	CUT	FILL
LIMITS OF STREAM CONSTRUCTION	----------	. . . . .
DITCH LINING		
STREAM RECONSTRUCTION		
REGRADE STREAMBED		

SPECIFICATION:

CONSTRUCT THE IMPROVEMENTS COVERED BY THESE PLANS IN ACCORDANCE WITH THE ALASKA DEPARTMENT OF TRANSPORTATION AND PUBLIC FACILITIES 2020 STANDARD SPECIFICATIONS FOR HIGHWAY CONSTRUCTION AND THE PROJECT SPECIAL PROVISIONS.

STATE OF ALASKA
AARON L. YARBEN
10371
REGISTERED PROFESSIONAL ENGINEER
PSUE REVIEW

HDL ENGINEERING CONSULTANTS, LLC
3335 ARCTIC BLVD, STE 100
ANCHORAGE, AK 99503
(907) 564-2120
AECL861

STATE OF ALASKA
DEPARTMENT OF TRANSPORTATION
AND PUBLIC FACILITIES

PARKS HIGHWAY PHASE I – CULVERT REPLACEMENT

SHEET LAYOUT, INDEX, AND GENERAL NOTES

Preliminary

DATE	TIME	SCALE	DESIGNED BY	AAL
4/25/2023	4:13 PM	1"=10000'	CHECKED BY	
			DRAFTED BY	RCY

DRAWING LOCATION
H:\JOBS\21-022 PARKS HWY 99-163 H&H (DOTCR)\CAD\DRAWINGS-P1\01083_A02_NOTES.DWG BY RYARMAK

STATE	PROJECT DESIGNATION	YEAR	SHEET NO.	TOTAL SHEETS
ALASKA	TBD/CFHWY01083	2023	A3	A9

NO.	DATE	REVISION

ROADWAY

EXISTING / PROPOSED

- EDGE OF PAVEMENT
- LIMIT OF CUT SLOPE & FILL SLOPE (CUT / FILL)
- GRAVEL EDGE
- SIDEWALK AND PATH/TRAIL
- CONCRETE CURB & GUTTER
- CONCRETE CURB CUT
- PARALLEL CURB RAMP / PERPENDICULAR CURB RAMP
- UNIDIRECTIONAL CURB RAMP & MID-BLOCK CURB RAMP
- DETECTABLE WARNING TILE
- BRIDGE
- TUNNEL
- GUARDRAIL
- END & PARALLEL END SECTIONS
- ROADWAY OBLITERATION
- FENCE
- STONE FENCE
- NOISE BARRIER
- RETAINING WALL
- HEADWALL & WINGWALL
- BOTTOM OF DITCH
- SPECIAL DITCH
- FLAT BOTTOM DITCH
- BERM
- RIPRAP
- BOULDER OR BOULDERS
- PRIVATE SIGN, MAILBOX
- POST, BOLLARD

UTILITIES

EXISTING / PROPOSED

- STORM DRAIN
- STORM DRAIN MANHOLE, CLEANOUT
- CURB INLET CATCH BASIN / FIELD INLET CATCH BASIN
- PIPE CULVERT WITH END SECTION
- SANITARY SEWER
- SANITARY SEWER MANHOLE, CLEANOUT
- SEPTIC VENT, SEWER SERVICE CONNECTION
- WATER
- FIRE HYDRANT, VALVE OR RISER
- WELL, WATER SERVICE CONNECTION
- NATURAL GAS
- OIL OR GASOLINE PIPELINE
- TANKS (ABOVE GROUND, UNDERGROUND)
- ELECTRIC (OVERHEAD) (UNDERGROUND) (OVERHEAD)
- UTILITY POLE, POLE WITH LUMINAIRE
- GUY POLE, GUY WIRE ANCHOR
- TRANSMISSION TOWER (WOOD, STEEL)
- ELECTRIC PEDESTAL, TRANSFORMER
- ELECTRIC MANHOLE, METER
- ELECTRIC OUTLET, LANDSCAPE LIGHT
- TELEPHONE (OVERHEAD) (UNDERGROUND) (UNDERGROUND)
- TELEPHONE MANHOLE, PEDESTAL
- FIBER OPTIC (OVERHEAD) (UNDERGROUND)
- FIBER OPTIC MANHOLE
- CABLE TV (OVERHEAD) (UNDERGROUND)
- CABLE TV PEDESTAL, SATELLITE DISH
- UNDERGROUND DUCT, UTILIDOR (ELECTRIC, TELEPHONE, FIBER OPTIC)
- VENT

TOPOGRAPHY

EXISTING / EXISTING / PROPOSED

- LAKE OR POND, WETLANDS
- TREE (CONIFER/DECIDUOUS) TREELINE (EDGE OF VEGETATION)
- PLANTER
- BUILDING OR FOUNDATION
- CONTOUR, MAJOR OR MINOR
- DRAINAGE FLOW
- CREEK (CENTERLINE)
- RIVER (EDGE OF WATER)

TRAFFIC

EXISTING / PROPOSED

- LOAD CENTER
- STATE TRAFFIC, MOA TRAFFIC, & BEACON CONTROLLER (ARROW INDICATES DOOR LOCATION)
- TYPE 1A, II, III, IV JUNCTION BOX
- FIBER OPTIC VAULT
- ELECTROLIER
- HIGHTOWER
- SIGNAL POLE WITH MASTARM
- PEDESTRIAN PUSH BUTTON & SIGNAL
- VEHICULAR SIGNAL
- VEHICULAR SIGNAL LEFT & RIGHT
- OPTICAL, CAMERA, RADAR, AND GPS DETECTOR
- LOOP DETECTOR
- COMMUNICATION ANTENNA
- MASTARM BEACON
- RURAL & SCHOOL ZONE BEACON
- LOOP DETECTOR CONDUIT
- SIGNAL CONDUIT
- LIGHTING CONDUIT
- SIGNAL & LIGHTING CONDUIT
- CONDUIT BORING
- CONDUIT SIZE IN INCHES
- INTERCONNECT
- SIGN POST

PAVEMENT MARKINGS

PROPOSED

- TRAFFIC PROJECT CENTERLINE
- 8" & 4" WHITE SOLID STRIPE
- 4" WHITE SKIP STRIPE (10' STRIPES AND 30' SPACES)
- 8" WHITE LANE GUIDE SKIP (LANE CONTINUATION OR TURN SKIP 1' STRIPES AND 3' SPACES)
- 8" & 4" YELLOW SOLID STRIPE
- 4" YELLOW SKIP STRIPE (10' STRIPES AND 30' SPACES)
- STRIPING CHANGE STATION INTERVAL
- 2' CROSSWALK OR STOPBAR
- LADDER CROSSWALK LAYOUT (2' WIDE RUNGS WITH 2' SPACES ALIGNED TO AVOID TIRE PATHS)
- TYPICAL PAINTED MEDIAN

RIGHT-OF-WAY

RECOVERED / SET THIS PROJECT

- FEDERAL GOV'T SURVEY MONUMENT
- GOV'T CONTROL STATION
- PRIMARY MONUMENT (BRASS/AL CAP)
- MISC SECONDARY CORNER
- PRIMARY CENTERLINE MONUMENT
- SECONDARY CENTERLINE MONUMENT
- RANDOM CONTROL MONUMENT
- PRIMARY GPS CONTROL POINT
- HORIZONTAL CONTROL POINT
- SECONDARY CONTROL POINT
- VERTICAL BENCHMARK
- TEMPORARY BENCHMARK
- TOWNSHIP AND RANGE LINES
- SECTION LINE
- 1/4 SECTION LINE
- 1/16 SECTION LINE
- CORPORATE or CITY LIMITS
- EXISTING RIGHT-OF-WAY
- RIGHT-OF-WAY OR EASEMENT REQUIRED
- PROJECT RIGHT-OF-WAY LINE
- EXISTING RIGHT-OF-WAY EASEMENT
- EXISTING PROPERTY LINE
- CONTROLLED ACCESS LINE
- EXISTING UTILITY EASEMENT
- PROPOSED UTILITY EASEMENT
- EXISTING CENTERLINE
- RAILROAD CENTERLINE
- TEMPORARY CONSTRUCTION EASEMENT
- TEMPORARY CONSTRUCTION PERMIT

Preliminary

HDL ENGINEERING CONSULTANTS, LLC
3335 ARCTIC BLVD, STE 100
ANCHORAGE, AK 99503
(907) 564-2120
AECL861

STATE OF ALASKA
DEPARTMENT OF TRANSPORTATION
AND PUBLIC FACILITIES

PARKS HIGHWAY PHASE I – CULVERT REPLACEMENT

LEGEND

DESIGNED BY / CHECKED BY / DRAFTED BY
SCALE: NTS
DATE: 4/25/2023 TIME: 11:32 AM
DRAWING LOCATION: H:\JOBS\21-022 PARKS HWY 99-163 H&H (DOTCR)\CAD\DRAWINGS-P1\01083_A03_LGND.DWG BY RYARMAK

NO.	DATE	REVISION

STATE	PROJECT DESIGNATION	YEAR	SHEET NO.	TOTAL SHEETS
ALASKA	TBD/CFHWY01083	2023	A4	A9

LEGEND

- CONTROL STATION
- GPS CONTROL POINT
- ## POINT NUMBER
- 100 HIGHWAY MILEPOST

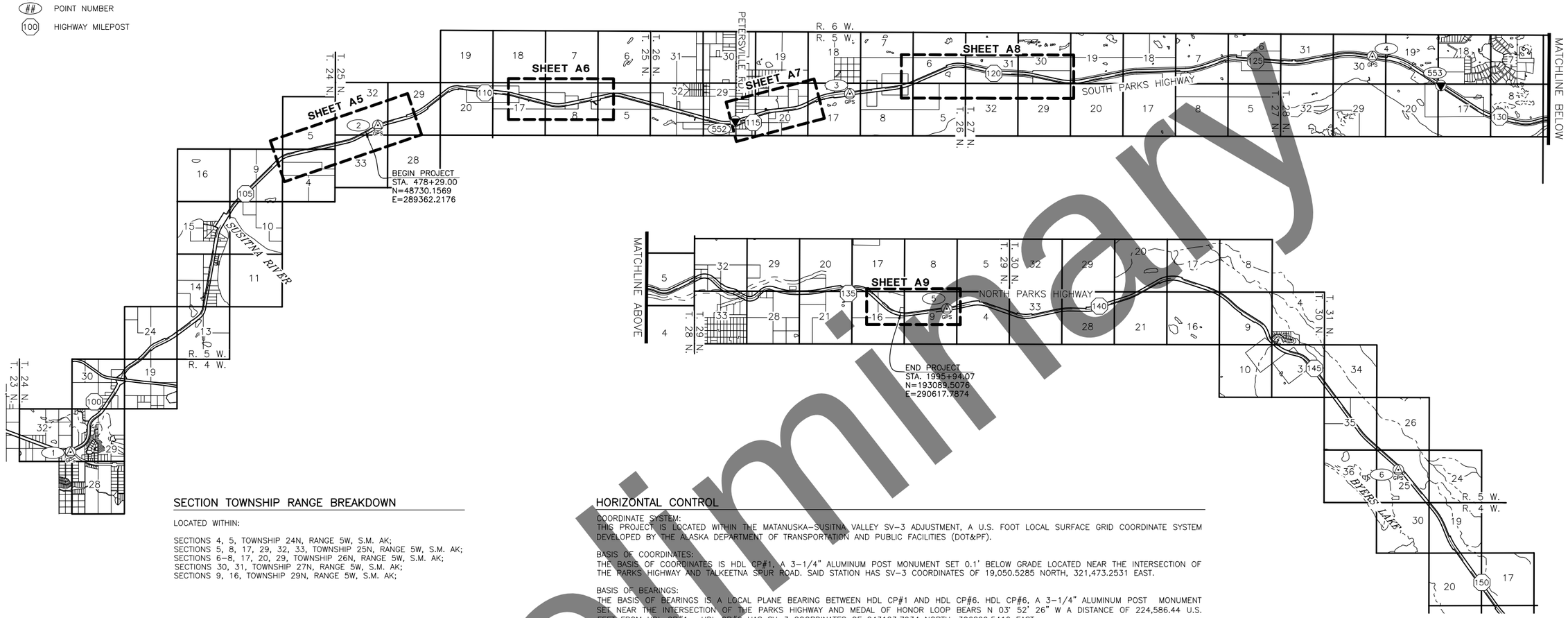

SECTION TOWNSHIP RANGE BREAKDOWN

LOCATED WITHIN:

SECTIONS 4, 5, TOWNSHIP 24N, RANGE 5W, S.M. AK;
SECTIONS 5, 8, 17, 29, 32, 33, TOWNSHIP 25N, RANGE 5W, S.M. AK;
SECTIONS 6-8, 17, 20, 29, TOWNSHIP 26N, RANGE 5W, S.M. AK;
SECTIONS 30, 31, TOWNSHIP 27N, RANGE 5W, S.M. AK;
SECTIONS 9, 16, TOWNSHIP 29N, RANGE 5W, S.M. AK;

HORIZONTAL CONTROL

COORDINATE SYSTEM:
THIS PROJECT IS LOCATED WITHIN THE MATANUSKA-SUSITNA VALLEY SV-3 ADJUSTMENT, A U.S. FOOT LOCAL SURFACE GRID COORDINATE SYSTEM DEVELOPED BY THE ALASKA DEPARTMENT OF TRANSPORTATION AND PUBLIC FACILITIES (DOT&PF).

BASIS OF COORDINATES:
THE BASIS OF COORDINATES IS HDL CP#1, A 3-1/4" ALUMINUM POST MONUMENT SET 0.1' BELOW GRADE LOCATED NEAR THE INTERSECTION OF THE PARKS HIGHWAY AND TALKEETNA SPUR ROAD. SAID STATION HAS SV-3 COORDINATES OF 19,050.5285 NORTH, 321,473.2531 EAST.

BASIS OF BEARINGS:
THE BASIS OF BEARINGS IS A LOCAL PLANE BEARING BETWEEN HDL CP#1 AND HDL CP#6. HDL CP#6, A 3-1/4" ALUMINUM POST MONUMENT SET NEAR THE INTERSECTION OF THE PARKS HIGHWAY AND MEDAL OF HONOR LOOP BEARS N 03° 52' 26" W A DISTANCE OF 224,586.44 U.S. FEET FROM HDL CP#1. HDL CP#6 HAS SV-3 COORDINATES OF 243123.7934 NORTH, 306299.5410 EAST.

TRANSLATION PARAMETERS:
TO CONVERT THE LOCAL COORDINATES TO NAD83 (2011) STATE PLANE U.S. FOOT COORDINATES, TRANSLATE USING +2953136.3570 NORTH, +1312532.0429 EAST, AND SCALE USING 0.9998751356.

VERTICAL CONTROL

ELEVATIONS ARE LISTED IN NAVD88, GEOID12A, ORTHOMETRIC HEIGHTS AS DERIVED FROM HIGH PRECISION POST PROCESSED GPS OBSERVATIONS USING THE NATIONAL GEODETIC SURVEY (NGS) ONLINE POSITIONING USER SERVICE (OPUS). ELEVATIONS OF HDL CP#1 THROUGH HDL CP#6 AND CP#556, WHICH IS AKDOT GPS PARKS MP 169.7 2010, WERE DERIVED USING THE AVERAGE OF SEVERAL GPS STATIC OBSERVATIONS PROCESSED WITH THE NGS OPUS UTILITY. ORTHOMETRIC HEIGHTS OF CONTROL SETS WERE DETERMINED BY LEAST SQUARES ADJUSTED STATIC GPS NETWORKS CONSTRAINED TO CONTROL POINTS 1-6 AND 556. LEVEL LOOPS WERE THEN RUN BETWEEN THE INDIVIDUAL MONUMENTS OF EACH CONTROL SET, HOLDING THE STATIC GPS NETWORK ELEVATION FOR THE CENTER MONUMENT IN EACH CONTROL SET. LEVELS WERE NOT RUN BETWEEN ADJOINING CONTROL SETS ALONG THE PROJECT CORRIDOR. ALL ELEVATIONS SHOULD BE FIELD VERIFIED PRIOR TO USE.

HORIZONTAL CONTROL

	POINT	NORTHING	EASTING	ELEVATION	DESCRIPTION
	1	19050.5285	321473.2531	368.67	Fd AM[11299-S]: CP-1
	3	97384.0741	285481.3077	424.61	Fd AM[11299-S]: CP-3
	4	149919.7208	281738.0467	666.01	Fd AM[11299-S]: CP-4
	6	243123.7934	306299.5410	858.23	Fd AM[11299-S]: CP-6
**	553	156803.0616	284645.2795	626.33	Fd SSROD: AKDOT GPS 34
*	556	321273.3087	387888.8272	1767.26	Fd AM: AKDOT GPS PARKS MP 169.7 2010

* NOT SHOWN HEREON
** COORDINATES ARE PROJECT COORDINATES AND NOT PUBLISHED PER NGS

NOTES

1. ALL DIMENSIONS AND COORDINATES SHOWN ARE IN U.S. SURVEY FEET UNLESS OTHERWISE NOTED.
2. THE FIELD SURVEY FOR THIS PROJECT WAS PERFORMED FROM SEPTEMBER 22, 2021 THROUGH OCTOBER 4, 2021 BY HDL ENGINEERING CONSULTANTS, LLC (HDL) USING LEICA GPS SURVEY EQUIPMENT.
3. RIGHT-OF-WAY LOCATION AND PROPERTY LINES ARE SHOWN FOR ORIENTATION PURPOSES ONLY. PLEASE REFER TO DOT&PF RIGHT-OF-WAY MAPS FOR ANY RIGHT-OF-WAY INFORMATION.
4. PREVIOUS INFORMATION MAY BE FOUND ON PARKS HIGHWAY MP 99-163 DRAINAGE & CULVERT IMPROVEMENTS SCD, PLAT No. 2022-1, TALKEETNA RECORDING DISTRICT.
5. STATIONING FOR MONUMENT POINT DESCRIPTIONS WERE OBTAINED FROM PALMER-CANTWELL HIGHWAY SUNSHINE TO SUSITNA RIVER, SUSITNA RIVER TO CHULITNA RIVER, AND CHULITNA RIVER TO LITTLE COAL CREEK, AS-BUILT PLANS, HIGHWAY PROJECT NOS. F-035-2(9), F-035(10), F-035-3(6), AND EF-035-3(7).
6. VERIFY HORIZONTAL AND VERTICAL CONTROL PRIOR TO USE.
7. IT IS THE CONTRACTOR'S RESPONSIBILITY TO WORK AROUND ALL ENCASED CENTERLINE MONUMENTS WITHOUT DISTURBING THE MONUMENT OR MONUMENT CASE. NEITHER THE MONUMENT NOR THE CASE IS TO BE REMOVED ON THIS PROJECT. IF THIS IS UNAVOIDABLE THE ENTIRE MONUMENT AND CASE MUST BE REMOVED.
8. IF NECESSARY, ALL MONUMENT CASES WILL HAVE A PERMANENT RISER AND NEW LID ADDED PRIOR TO THE START OF PAVING OF SUFFICIENT HEIGHT SO THAT THE TOP OF THE MONUMENT LID MATCHES FINISHED GRADE. IF FINISHED PAVEMENT HEIGHT WILL RESULT IN MONUMENT CASES BEING HIGHER THAN FINISHED GRADE PLEASE CONTACT THE DOT&PF SURVEY SECTION MANAGER.

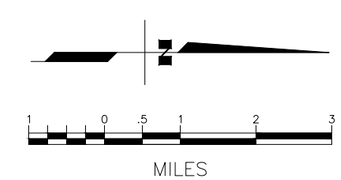

WHETHER LISTED OR NOT, ALL MONUMENTS OR PROPERTY MARKERS, CORNERS, OR ACCESSORIES, WHICH WILL BE DISTURBED OR BURIED, SHALL BE REFERENCED AND RE-ESTABLISHED IN THEIR ORIGINAL POSITION (A.S. 19.10.260) AND RECORDED (A.S. 34.65.040).

STATE OF ALASKA
4TH
TALLAK D. TANKESTADT
LS 13235
REGISTERED PROFESSIONAL LAND SURVEYOR
PRELIMINARY REVIEW

PLANS DEVELOPED BY:
HDL ENGINEERING CONSULTANTS, LLC.
3335 ARCTIC BLVD. SUITE 100
ANCHORAGE, AK. 99503 907-564-2120
REGISTRATION No. AECL 861

STATE OF ALASKA
DEPARTMENT OF TRANSPORTATION
AND PUBLIC FACILITIES

SURVEY CONTROL SHEET
PROJECT NO. CFHWY01083

PARKS HIGHWAY PHASE I –
CULVERT REPLACEMENT

LOCATED WITHIN TOWNSHIPS 24N-27N & 29N, RANGE 5W
SEWARD MERIDIAN, STATE OF ALASKA

DRAWN	JJZ	DATE	4/20/2023	SCALE	1" = 1 MILE
CHECKED	TDM	DATE	4/20/2023	SHEET	1 OF 6

Preliminary

NO.	DATE	REVISION

STATE	PROJECT DESIGNATION	YEAR	SHEET NO.	TOTAL SHEETS
ALASKA	TBD/CFHWY01083	2023	A5	A9

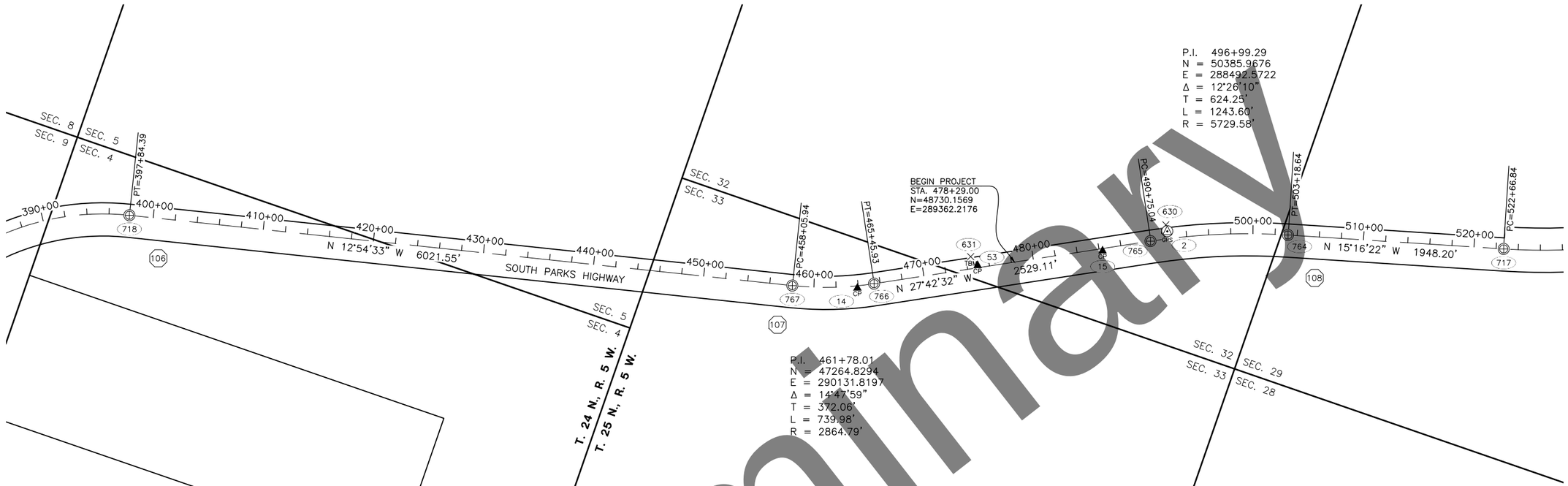

RECOVERED MONUMENTATION					
POINT	STATION	OFFSET	NORTHING	EASTING	DESCRIPTION
718	397+84.08	0.00 LT	41032.5015	291560.2585	Fd BC/Bx[DOH]: Parks Highway PT 397+89.7
767	458+04.71	0.00 RT	46900.9684	290215.2160	Fd BC/Bx[DOH]: Parks Highway PC 458+07.0
766	465+45.54	0.00 RT	47593.8840	289958.9975	Fd BC/Bx[DOH]: Parks Highway PT 465+47.8
765	490+70.96	0.00 RT	49829.6877	288784.7350	Fd BC/Bx[DOH]: Parks Highway PC 490+72.6
764	503+16.15	0.00 LT	50985.7740	288328.7899	Fd BC/Bx[DOH]: Parks Highway PT 503+15.9
717	522+68.88	0.00 RT	52869.5335	287814.4131	Fd BC/Bx[DOH]: Parks Highway PC 522+69.2

HORIZONTAL CONTROL						
POINT	STATION	OFFSET	NORTHING	EASTING	ELEVATION	DESCRIPTION
14	463+91.39	20.42 RT	47464.0437	290045.5137	317.92	Fd Rbr/AC[11299-S]: CP-14
53	474+94.69	20.22 LT	48424.7794	289499.7611	315.24	Fd Rbr/AC[11299-S]: CP-53
15	486+29.77	20.65 RT	49448.6951	289008.1581	309.76	Fd Rbr/AC[11299-S]: CP-15
2	492+33.26	67.19 LT	49944.7838	288650.8850	317.87	Fd AM[11299-S]: CP-2

500 0 250 500 1000 1500

U.S. SURVEY FEET

VERTICAL CONTROL						
POINT	STATION	OFFSET	NORTHING	EASTING	ELEVATION	DESCRIPTION
631	474+45	109 LT	48339	289445	312.85	Fd RR Spike: TBM 631 15" Birch
630	492+27	127 LT	49913	288600	321.42	Fd RR Spike: TBM 630 14" Birch

NOTE

1. SEE SHEET 1 FOR NOTES AND CONTROL INFORMATION.

LEGEND

- GPS CONTROL POINT
- SURVEY CONTROL POINT
- TEMPORARY BENCH MARK
- PRIMARY CENTERLINE MONUMENT
- POINT NUMBER
- HIGHWAY MILEPOST

STATE OF ALASKA 49TH TALLAKSEN, LARS STAD 12235 REGISTERED PROFESSIONAL LAND SURVEYOR

PLANS DEVELOPED BY:
HDL ENGINEERING CONSULTANTS, LLC.
3335 ARCTIC BLVD. SUITE 100
ANCHORAGE, AK. 99503 907-564-2120
REGISTRATION No. AECL 861

STATE OF ALASKA
DEPARTMENT OF TRANSPORTATION
AND PUBLIC FACILITIES

SURVEY CONTROL SHEET
PROJECT NO. CFHWY01083

PARKS HIGHWAY PHASE I –
CULVERT REPLACEMENT

LOCATED WITHIN TOWNSHIPS 24N–27N & 29N, RANGE 5W
SEWARD MERIDIAN, STATE OF ALASKA

DRAWN	JJZ	DATE	4/20/2023	SCALE	1" = 500'
CHECKED	TDM	DATE	4/20/2023	SHEET	2 OF 6

Preliminary

NO.	DATE	REVISION

STATE	PROJECT DESIGNATION	YEAR	SHEET NO.	TOTAL SHEETS
ALASKA	TBD/CFHWY01083	2023	A6	A9

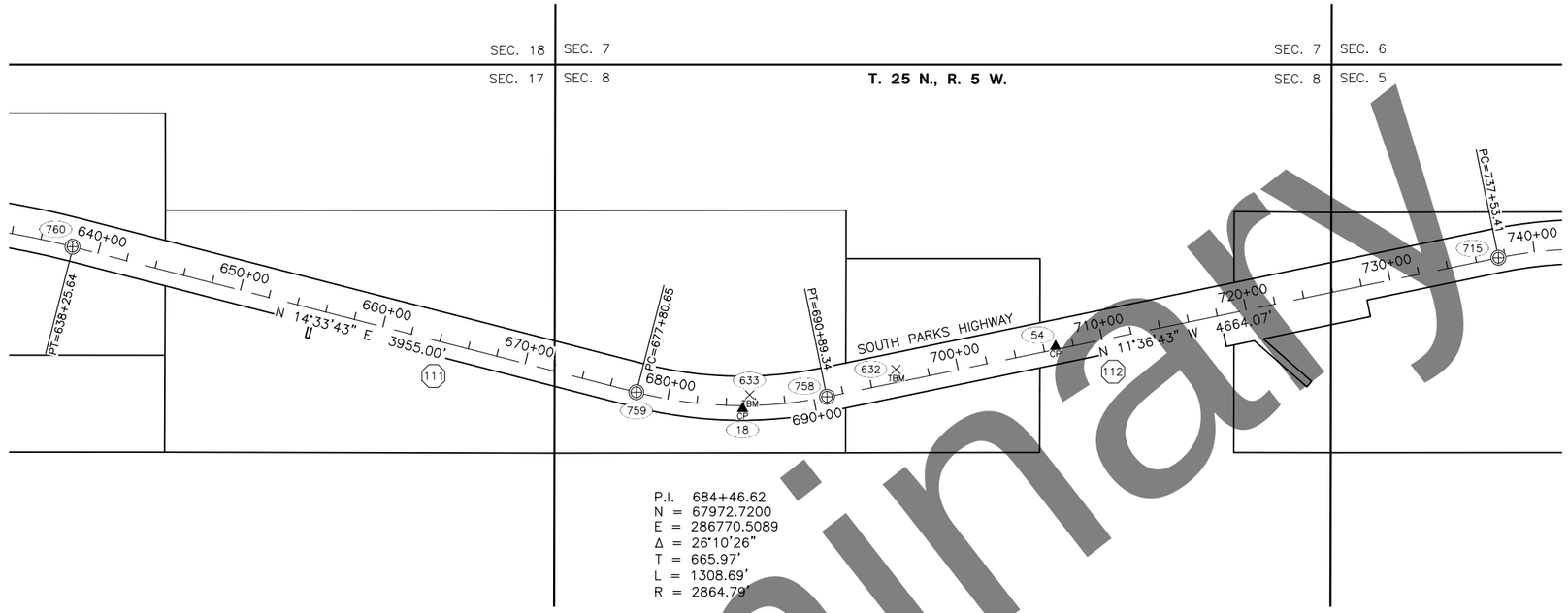

P.I. 684+46.62
N = 67972.7200
E = 286770.5089
Δ = 26°10'26"
T = 665.97'
L = 1308.69'
R = 2864.79'

RECOVERED MONUMENTATION					
POINT	STATION	OFFSET	NORTHING	EASTING	DESCRIPTION
760	638+20.69	0.00 LT	63495.4000	285607.4280	Fd BC/Bx[DOH]: Parks Highway PT 638+05.2 Ahd/638+07.1 Bk
759	677+81.19	0.00 RT	67328.6726	286603.2036	Fd BC/Bx[DOH]: Parks Highway PC 677+63.5
758	690+89.79	0.00 RT	68625.4997	286636.3707	Fd BC/Bx[DOH]: Parks Highway PT 690+72.7
715	737+53.50	0.00 RT	73193.7531	285697.6511	Fd BC/Bx[DOH]: Parks Highway PC 737+34.0

HORIZONTAL CONTROL						
POINT	STATION	OFFSET	NORTHING	EASTING	ELEVATION	DESCRIPTION
18	685+11.47	20.29 RT	68051.1776	286715.3776	352.57	Fd Rbr/AC[11299-S]: CP-18
54	706+81.48	20.73 LT	70180.4382	286295.6848	350.30	Fd Rbr/AC[11299-S]: CP-54

500 0 250 500 1000 1500

U.S. SURVEY FEET

VERTICAL CONTROL						
POINT	STATION	OFFSET	NORTHING	EASTING	ELEVATION	DESCRIPTION
633	685+61	73 LT	68099	286622	350.72	Fd RR Spike: TBM 633 18" Birch
632	695+87	88 LT	69094	286450	343.99	Fd RR Spike: TBM 632 18" Birch

LEGEND

- CP — SURVEY CONTROL POINT
- TBM — TEMPORARY BENCH MARK
- PRIMARY CENTERLINE MONUMENT
- ## — POINT NUMBER
- 100 — HIGHWAY MILEPOST

NOTE

1. SEE SHEET 1 FOR NOTES AND CONTROL INFORMATION.

STATE OF ALASKA
49TH
TALLAKSEN, LARS STAD
49235
REGISTERED PROFESSIONAL LAND SURVEYOR
PRELIMINARY REVIEW

PLANS DEVELOPED BY:
HDL ENGINEERING CONSULTANTS, LLC.
3335 ARCTIC BLVD. SUITE 100
ANCHORAGE, AK. 99503 907-564-2120
REGISTRATION No. AECL 861

STATE OF ALASKA
DEPARTMENT OF TRANSPORTATION
AND PUBLIC FACILITIES

SURVEY CONTROL SHEET
PROJECT NO. CFHWY01083

PARKS HIGHWAY PHASE I –
CULVERT REPLACEMENT

LOCATED WITHIN TOWNSHIPS 24N–27N & 29N, RANGE 5W
SEWARD MERIDIAN, STATE OF ALASKA

DRAWN	JJZ	DATE	4/20/2023	SCALE	1" = 500'
CHECKED	TDM	DATE	4/20/2023	SHEET	3 OF 6

Preliminary

NO.	DATE	REVISION

STATE	PROJECT DESIGNATION	YEAR	SHEET NO.	TOTAL SHEETS
ALASKA	TBD/CFHWY01083	2023	A7	A9

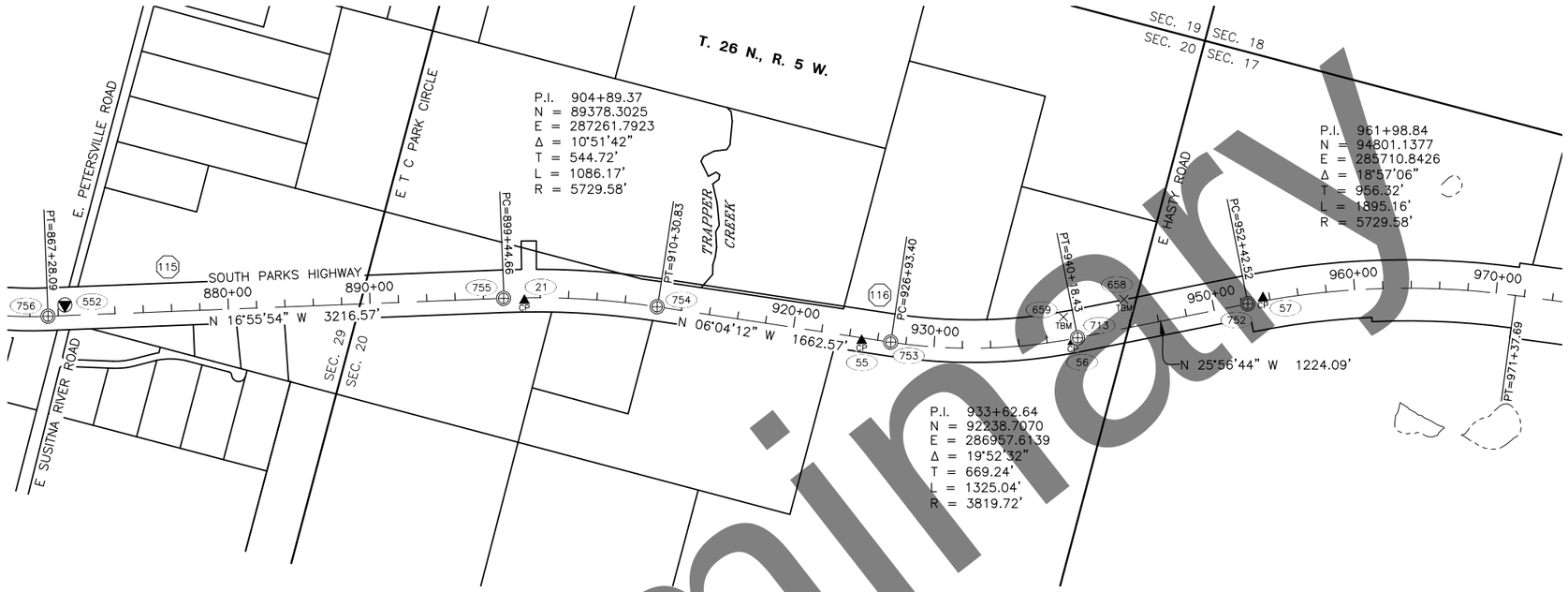

RECOVERED MONUMENTATION					
POINT	STATION	OFFSET	NORTHING	EASTING	DESCRIPTION
756	867+27.80	0.00 RT	85779.7815	288357.2872	Fd BC/Bx[DOH]: Parks Highway PT 867+06.1
755	899+42.12	0.62 RT	88854.9482	287421.7621	Fd BC/Bx[DOH]: Parks Highway PC 899+19.5
754	910+27.90	0.00 LT	89917.0539	287204.5009	Fd BC/Bx[DOH]: Parks Highway PT 910+04.5
753	926+92.99	0.00 RT	91572.8068	287028.4264	Fd BC/Bx[DOH]: Parks Highway PC 926+69.0
713	940+18.09	0.00 RT	92840.1912	286664.9569	Fd BC/Bx[DOH]: Parks Highway PT 939+92.3
752	952+41.23	0.00 RT	93940.0479	286129.8128	Fd BC/Bx[DOH]: Parks Highway PC 952+14.7

HORIZONTAL CONTROL						
POINT	STATION	OFFSET	NORTHING	EASTING	ELEVATION	DESCRIPTION
* 552	868+50.34	75.55 LT	85875.0095	288249.3264	370.84	Fd BC[NGS]: AKDOT GPS-10 1988
21	900+88.56	20.02 RT	89000.7177	287399.5457	386.64	Fd Rbr/AC[11299-S]: CP-21
55	924+89.04	20.80 RT	91372.2018	287070.6787	390.26	Fd Rbr/AC[11299-S]: CP-55
56	939+79.27	20.19 RT	92813.8373	286700.0032	399.98	Fd Rbr/AC[11299-S]: CP-56
57	953+53.84	20.36 LT	94033.2224	286063.0469	414.99	Fd Rbr/AC[11299-S]: CP-57

* COORDINATES ARE PROJECT COORDINATES AND NOT PUBLISHED PER NGS

VERTICAL CONTROL						
POINT	STATION	OFFSET	NORTHING	EASTING	ELEVATION	DESCRIPTION
659	939+44	162 LT	92706	286550	394.69	Fd RR Spike: TBM 659 12" Birch
658	943+91	202 LT	93087	286320	402.60	Fd RR Spike: TBM 658 12" Birch

NOTE

1. SEE SHEET 1 FOR NOTES AND CONTROL INFORMATION.

LEGEND

- CONTROL STATION
- CP — SURVEY CONTROL POINT
- TBM — TEMPORARY BENCH MARK
- PRIMARY CENTERLINE MONUMENT
- ## — POINT NUMBER
- 100 — HIGHWAY MILEPOST

500 0 250 500 1000 1500

U.S. SURVEY FEET

STATE OF ALASKA 49TH PSLS REVIEW WALLACE D. LANESTADT LS 13235 REGIONAL PROFESSIONAL LAND SURVEYOR

PLANS DEVELOPED BY:
HDL ENGINEERING CONSULTANTS, LLC.
3335 ARCTIC BLVD. SUITE 100
ANCHORAGE, AK. 99503 907-564-2120
REGISTRATION No. AECL 861

STATE OF ALASKA
DEPARTMENT OF TRANSPORTATION
AND PUBLIC FACILITIES

SURVEY CONTROL SHEET
PROJECT NO. CFHWY01083

PARKS HIGHWAY PHASE I –
CULVERT REPLACEMENT

LOCATED WITHIN TOWNSHIPS 24N–27N & 29N, RANGE 5W
SEWARD MERIDIAN, STATE OF ALASKA

DRAWN JJZ	DATE 4/20/2023	SCALE 1" = 500'	
CHECKED TDM	DATE 4/20/2023	SHEET 4 OF 6	

Preliminary

NO.	DATE	REVISION

STATE	PROJECT DESIGNATION	YEAR	SHEET NO.	TOTAL SHEETS
ALASKA	TBD/CFHWY01083	2023	A8	A9

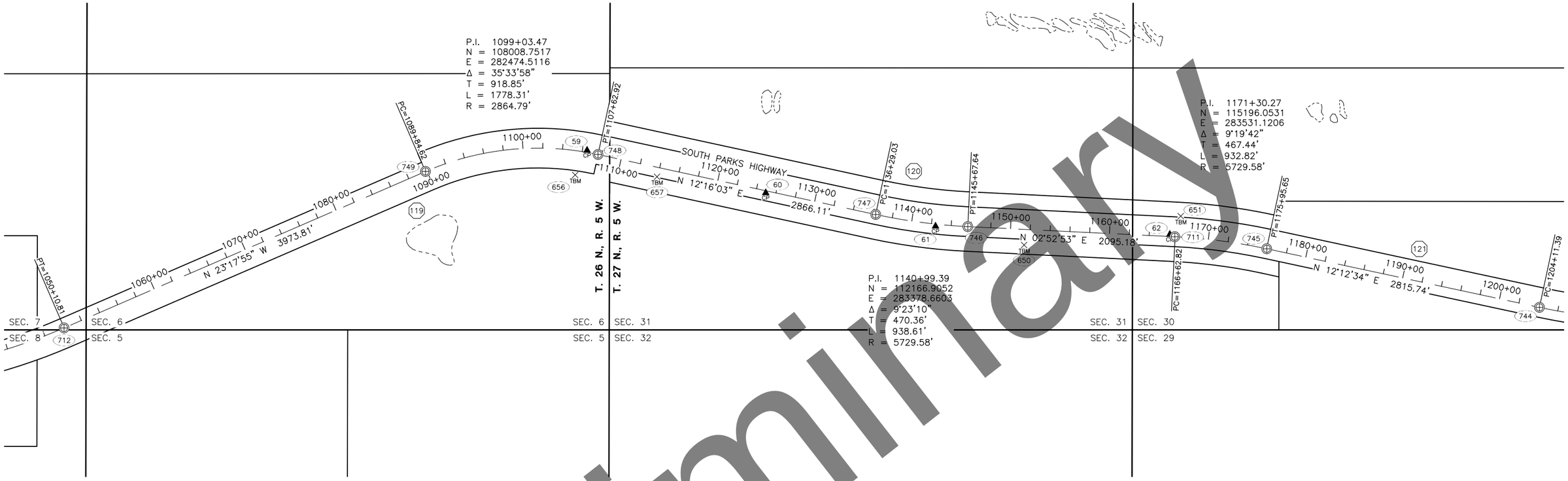

RECOVERED MONUMENTATION					
POINT	STATION	OFFSET	NORTHING	EASTING	DESCRIPTION
712	1050+10.27	0.00 RT	103514.5681	284409.8922	Fd BC/Bx[DOH]: Parks Highway PT 1049+78.8
749	1089+84.65	0.00 RT	107164.8580	282837.9270	Fd BC/Bx[DOH]: Parks Highway PC 1089+65.0 And/1089+53.5 Bk
748	1107+62.78	0.00 RT	108906.4790	282669.7134	Fd AC/Bx: Parks Highway PT 1107+42.5
747	1136+29.62	0.00 RT	111707.8570	283278.8449	Fd BC/Bx[DOH]: Parks Highway PC 1136+08.9
746	1145+67.95	0.00 RT	112636.9742	283402.3194	Fd BC/Bx[DOH]: Parks Highway PT 1145+47.2
711	1166+60.05	0.00 RT	114726.4307	283507.4840	Fd BC/Bx[DOH]: Parks Highway PC 1166+38.6
745	1175+96.67	0.00 RT	115653.9208	283630.1951	Fd BC/Bx[DOH]: Parks Highway PT 1175+75.3
744	1204+12.32	0.00 RT	118405.8888	284225.6725	Fd BC/Bx[DOH]: Parks Highway PC 1203+90.8

HORIZONTAL CONTROL						
POINT	STATION	OFFSET	NORTHING	EASTING	ELEVATION	DESCRIPTION
59	1106+46.10	19.80 LT	108795.4099	282627.7525	495.36	Fd Rbr/AC[11299-S]: CP-59
60	1124+98.42	20.87 RT	110598.0557	283058.8917	513.38	Fd Rbr/AC[11299-S]: CP-60
61	1142+43.67	21.06 RT	112311.4946	283397.8180	505.55	Fd Rbr/AC[11299-S]: CP-61
62	1166+08.40	20.43 LT	114675.8672	283484.4844	504.76	Fd Rbr/AC[11299-S]: CP-62

500 0 250 500 1000 1500

U.S. SURVEY FEET

VERTICAL CONTROL						
POINT	STATION	OFFSET	NORTHING	EASTING	ELEVATION	DESCRIPTION
656	1105+63	244 RT	108675	282875	488.65	Fd RR Spike: TBM 656 12" Birch
657	1113+92	93 RT	109501	282894	498.09	Fd RR Spike: TBM 657 16" Spruce
650	1151+45	158 RT	113205	283589	495.82	Fd RR Spike: TBM 650 16" Spruce
651	1167+08	210 LT	114786	283300	507.71	Fd RR Spike: TBM 651 14" Spruce

LEGEND

- CP — SURVEY CONTROL POINT
- TBM — TEMPORARY BENCH MARK
- PRIMARY CENTERLINE MONUMENT
- ## — POINT NUMBER
- 100 — HIGHWAY MILEPOST

NOTE

1. SEE SHEET 1 FOR NOTES AND CONTROL INFORMATION.

STATE OF ALASKA 49TH TALLAKSEN, LARS ESTADE 12235 REGISTERED PROFESSIONAL LAND SURVEYOR

PLANS DEVELOPED BY:
HDL ENGINEERING CONSULTANTS, LLC.
3335 ARCTIC BLVD. SUITE 100
ANCHORAGE, AK. 99503 907-564-2120
REGISTRATION No. AECL 861

STATE OF ALASKA
DEPARTMENT OF TRANSPORTATION
AND PUBLIC FACILITIES

SURVEY CONTROL SHEET
PROJECT NO. CFHWY01083

PARKS HIGHWAY PHASE I –
CULVERT REPLACEMENT

LOCATED WITHIN TOWNSHIPS 24N–27N & 29N, RANGE 5W
SEWARD MERIDIAN, STATE OF ALASKA

DRAWN	JJZ	DATE	4/20/2023	SCALE	1" = 500'
CHECKED	TDM	DATE	4/20/2023	SHEET	5 OF 6

Preliminary

NO.	DATE	REVISION

STATE	PROJECT DESIGNATION	YEAR	SHEET NO.	TOTAL SHEETS
ALASKA	TBD/CFHWY01083	2023	A9	A9

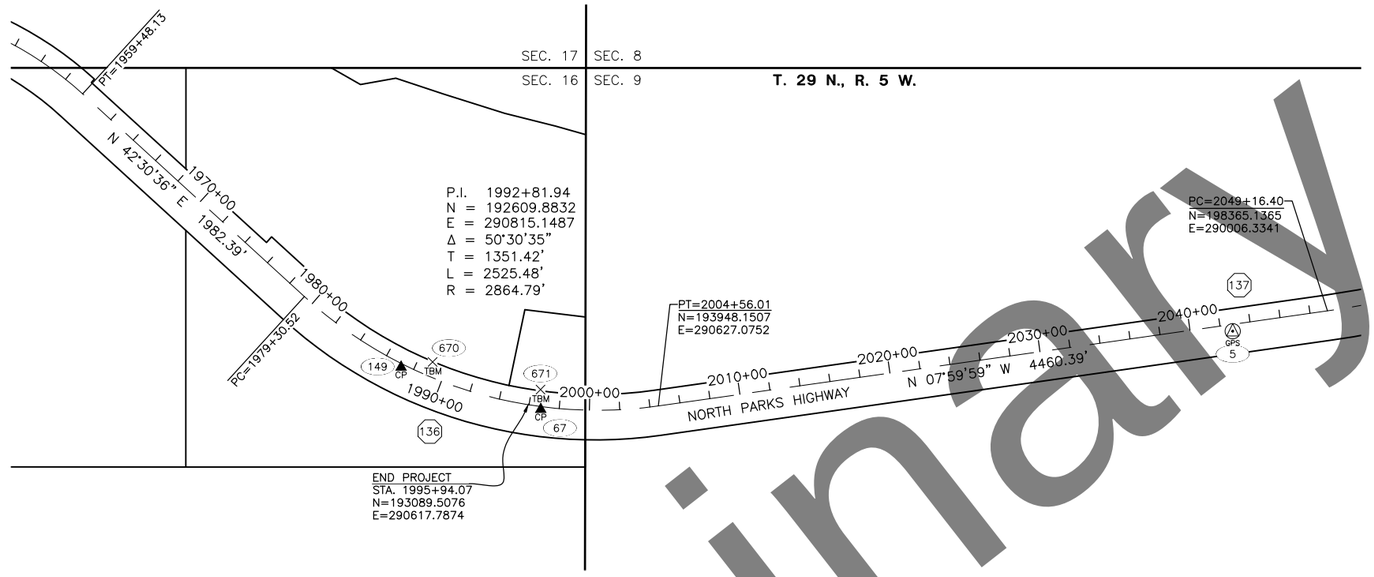

HORIZONTAL CONTROL						
POINT	STATION	OFFSET	NORTHING	EASTING	ELEVATION	DESCRIPTION
149	1987+19.67	22.12 RT	192251.1024	290368.6263	660.78	Fd Rbr/AC[11299-S]: CP-149
67	1996+80.16	18.61 RT	193172.2398	290648.7842	677.15	Fd Rbr/AC[11299-S]: CP-67
5	2042+78.38	45.26 RT	197739.6221	290139.9440	575.84	Fd AM[11299-S]: CP-5

VERTICAL CONTROL						
POINT	STATION	OFFSET	NORTHING	EASTING	ELEVATION	DESCRIPTION
670	1988+96	97 LT	192459	290335	669.32	Fd RR Spike: TBM 670 6" Birch
671	1996+61	111 LT	193171	290518	670.88	Fd RR Spike: TBM 671 16" Spruce

N

500 0 250 500 1000 1500

U.S. SURVEY FEET

NOTE

1. SEE SHEET 1 FOR NOTES AND CONTROL INFORMATION.

LEGEND

- CP — SURVEY CONTROL POINT
- TBM — TEMPORARY BENCH MARK
- ## — POINT NUMBER
- 100 — HIGHWAY MILEPOST

STATE OF ALASKA
49TH
TALLAKSEN LARSTAD
9235
PROFESSIONAL LAND SURVEYOR
PSLS REVIEW

PLANS DEVELOPED BY:
HDL ENGINEERING CONSULTANTS, LLC.
3335 ARCTIC BLVD. SUITE 100
ANCHORAGE, AK. 99503 907-564-2120
REGISTRATION No. AECL 861

STATE OF ALASKA
DEPARTMENT OF TRANSPORTATION
AND PUBLIC FACILITIES

SURVEY CONTROL SHEET
PROJECT NO. CFHWY01083

PARKS HIGHWAY PHASE I –
CULVERT REPLACEMENT

LOCATED WITHIN TOWNSHIPS 24N–27N & 29N, RANGE 5W
SEWARD MERIDIAN, STATE OF ALASKA

DRAWN	JJZ	DATE	4/20/2023	SCALE	1" = 500'
CHECKED	TDM	DATE	4/20/2023	SHEET	6 OF 6

Preliminary

NO.	DATE	REVISION

STATE	PROJECT DESIGNATION	YEAR	SHEET NO.	TOTAL SHEETS
ALASKA	TBD/CFHWY01083	2023	B1	B1

TABLE OF SLOPE EXCEPTIONS

STATION TO STATION	OFFSET	FORE/BACK	SLOPE	REMARKS
STA 940+54 TO STA 942+27	LT	FORE	5:1	

NOTE:

1. WITHIN TWO (2) DAYS AFTER PAVING, PLACE AGGREGATE BASE COURSE, GRADING D-1 AGAINST PAVEMENT EDGE TO ENSURE THERE IS NO VERTICAL DROP AT THE EDGE OF PAVEMENT. USE APPROVED TRAFFIC CONTROL DEVICES IN THE INTERIM.

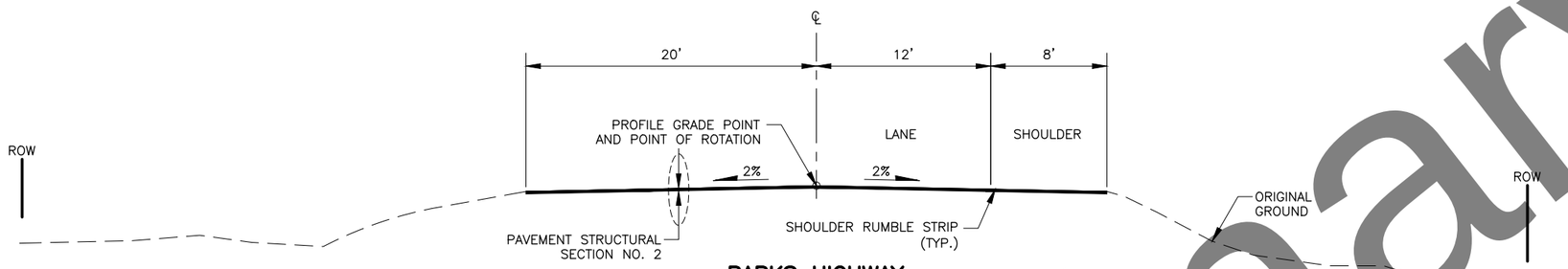

PARKS HIGHWAY
STA 479+52 TO STA 481+13
STA 483+24 TO STA 489+43
STA 1109+66 TO STA 1111+30

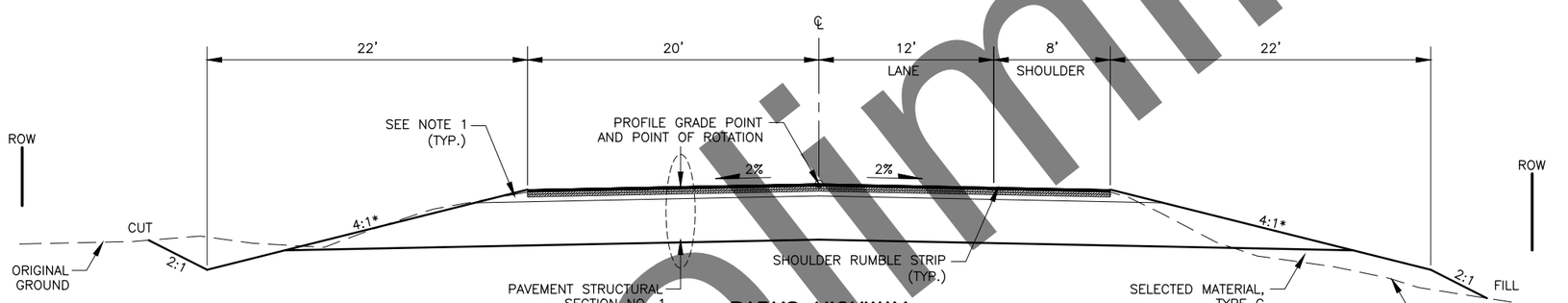

* SEE TABLE OF SLOPE EXCEPTIONS

PARKS HIGHWAY
STA 478+29 TO STA 479+52
STA 481+13 TO STA 483+24
STA 489+43 TO STA 491+05
STA 692+73 TO STA 694+41
STA 940+54 TO STA 942+27
STA 1108+03 TO STA 1109+66
STA 1111+30 TO STA 1112+31
STA 1157+13 TO STA 1158+88
STA 1991+42 TO STA 1993+39

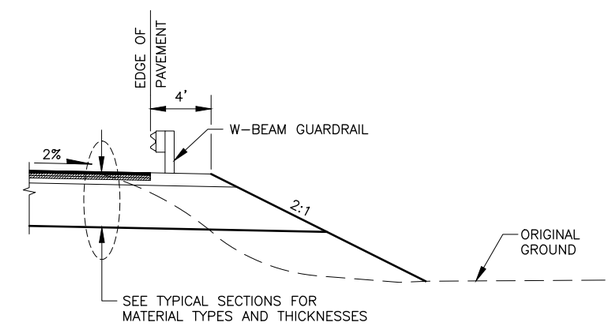

GUARDRAIL
SEE SUMMARY TABLE

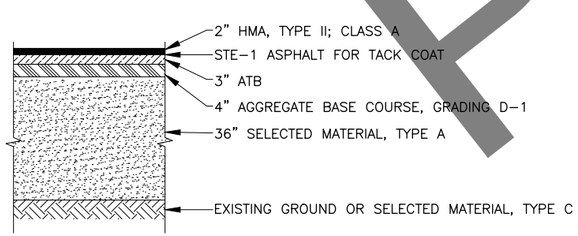

PAVEMENT STRUCTURAL SECTION NO. 1

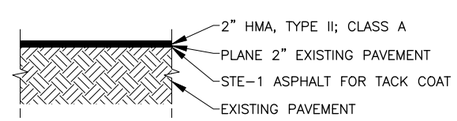

PAVEMENT STRUCTURAL SECTION NO. 2

Preliminary

HDL ENGINEERING CONSULTANTS, LLC
3335 ARCTIC BLVD, STE 100
ANCHORAGE, AK 99503
(907) 564-2120
AECL861

STATE OF ALASKA
DEPARTMENT OF TRANSPORTATION AND PUBLIC FACILITIES

PARKS HIGHWAY PHASE I – CULVERT REPLACEMENT

TYPICAL SECTIONS

DRAWING LOCATION
H:\JOBS\21-022 PARKS HWY 99-163 H&H (DOTCR)\CAD\DRAWINGS-P1\01083_B01_TYP.DWG BY RYARMAK

DATE 4/25/2023 TIME 11:31 AM | SCALE 1" = 5' | DESIGNED BY AAL | CHECKED BY | DRAFTED BY RCY

NO.	DATE	REVISION

STATE	PROJECT DESIGNATION	YEAR	SHEET NO.	TOTAL SHEETS
ALASKA	TBD/CFHWY01083	2023	C1	C1

ESTIMATE OF QUANTITIES

ITEM NO.	ITEM DESCRIPTION	PAY UNIT	TOTAL QUANTITY
201.0009.0000	CLEARING AND GRUBBING	LS	ALL REQ'D
202.0002.0000	REMOVAL OF PAVEMENT	SY	11,000
202.0004.0000	REMOVAL OF CULVERT PIPE	LF	910
202.2016.0000	ABANDON PIPE IN PLACE, CULVERT	LF	107
203.0003.0000	UNCLASSIFIED EXCAVATION	CY	32,200
203.0006.0000	BORROW	TON	59,000
206.0001.0000	FILTER BLANKET	CY	420
301.0001.00D1	AGGREGATE BASE COURSE, GRADING D-1	TON	1,950
306.0001.0000	ATB	TON	1,150
306.0002.5240	ASPHALT BINDER, GRADE PG 52-40 E	TON	61
401.0001.002A	HMA, TYPE II; CLASS A	TON	1,250
401.0004.5240	ASPHALT BINDER, GRADE PG 52-40 E	TON	67
402.0001.STE1	STE-1 ASPHALT FOR TACK COAT	TON	4
406.0008.0000	RUMBLE STRIPS, SHOULDERS	MILE	1
406.2001.0000	SWEEPING AND DISPOSAL OF MILLINGS, SHOULDERS	LS	ALL REQ'D
501.0001.0000	CLASS A CONCRETE	LS	ALL REQ'D
501.2007.0001	HEADWALL, TYPE I	EACH	9
602.0001.0072	STRUCTURAL PLATE PIPE 72" DIAMETER, 10 GAGE	LF	126
602.0001.0084	STRUCTURAL PLATE PIPE 84" DIAMETER, 10 GAGE	LF	129
602.0001.0096	STRUCTURAL PLATE PIPE 96" DIAMETER, 10 GAGE	LF	254
602.0001.0108	STRUCTURAL PLATE PIPE 108" DIAMETER, 10 GAGE	LF	261
603.0001.0036	CSP 36 INCH	LF	107
603.0001.0048	CSP 48 INCH	LF	109
603.2001.0036	DRIVEN PIPE 36 INCH	LF	107
606.0001.0000	W-BEAM GUARDRAIL	LF	2,250
606.0006.0000	REMOVING AND DISPOSING OF GUARDRAIL	LF	2,600
606.0009.0000	SHORT RADIUS GUARDRAIL	EA	1
606.0013.0000	PARALLEL GUARDRAIL TERMINAL	EA	7
610.0002.0000	DITCH LINING	TON	870
611.0002.0001	RIPRAP, CLASS I	TON	1,650
611.0002.0002	RIPRAP, CLASS II	TON	1,300
611.0002.0003	RIPRAP, CLASS III	TON	1,150
618.0002.0000	SEEDING	LB	173
620.0001.0000	TOPSOIL	SY	12,800
639.2000.0000	APPROACH	EA	1
640.0001.0000	MOBILIZATION AND DEMOBILIZATION	LS	ALL REQ'D
640.0004.0000	WORKER MEALS AND LODGING, OR PER DIEM	LS	ALL REQ'D
641.0001.0000	EROSION, SEDIMENT AND POLLUTION CONTROL ADMINISTRATION	LS	ALL REQ'D
641.0005.0000	TEMPORARY EROSION, SEDIMENT AND POLLUTION CONTROL BY DIRECTIVE	CS	ALL REQ'D
641.0006.0000	WITHHOLDING	CS	ALL REQ'D
641.0007.0000	SWPPP MANAGER	LS	ALL REQ'D

ESTIMATE OF QUANTITIES

ITEM NO.	ITEM DESCRIPTION	PAY UNIT	TOTAL QUANTITY
642.0001.0000	CONSTRUCTION SURVEYING	LS	ALL REQ'D
642.0003.0000	THREE PERSON SURVEY PARTY	HOUR	40
642.2005.0000	CONTRACTOR-FURNISHED COMPUTATIONS	LS	ALL REQ'D
642.2006.0000	CONTRACTOR-FURNISHED ENGINEERING TOOLS	CS	ALL REQ'D
643.0002.0000	TRAFFIC MAINTENANCE	LS	ALL REQ'D
643.0003.0000	PERMANENT CONSTRUCTION SIGNS	LS	ALL REQ'D
643.0023.0000	TRAFFIC PRICE ADJUSTMENT	CS	ALL REQ'D
643.0025.0000	TRAFFIC CONTROL	CS	ALL REQ'D
643.0032.0000	FLAGGING	CS	ALL REQ'D
644.0001.0000	FIELD OFFICE	LS	ALL REQ'D
644.0002.0000	FIELD LABORATORY	LS	ALL REQ'D
644.0015.0000	NUCLEAR TESTING EQUIPMENT STORAGE SHED	EACH	1
644.2004.0000	ENGINEERING COMMUNICATIONS	CS	ALL REQ'D
644.2007.0000	VEHICLE (LT/SUV)	EACH	3
645.0001.0000	TRAINING PROGRAM, 1 TRAINEE / APPRENTICE	LABOR HOUR	500
646.0001.0000	CPM SCHEDULING	LS	ALL REQ'D
647.2002.0000	BACKHOE, 4WD, 1 CY BUCKET, 75-HP MINIMUM, 15 FT DEPTH	CS	ALL REQ'D
670.2000.0000	MMA PAVEMENT MARKINGS	LS	ALL REQ'D
682.2000.0000	VAC-TRUCK POTHOLE	CS	ALL REQ'D
683.2008.0000	SAFETY OBSERVER ELECTRICAL LINE WATCH	CS	ALL REQ'D
690.2004.0000	WATERWAY RESTORATION - BRUSH LAYER	LF	300
690.2004.0000	WATERWAY RESTORATION - REGRADE STREAM	LF	33
690.2004.0000	WATERWAY RESTORATION - VOID FILLING	LF	1,150

TABLE OF ESTIMATING FACTORS

ITEM NO.	ITEM DESCRIPTION	UNIT
203.0006.0000	BORROW	144 LB/CF
301.0001.00D1	AGGREGATE BASE COURSE, GRADING D-1	144 LB/CF
306.0001.0000	ATB	151 LB/CF
306.0002.5240	ASPHALT BINDER, GRADE PG 52-40 E	5.3% OF TOTAL WEIGHT OF 306.0001.0000
401.0001.002A	HMA, TYPE II; CLASS A	151 LB/CF
401.0004.5240	ASPHALT BINDER, GRADE PG 52-40 E	5.3% OF TOTAL WEIGHT OF 401.0001.002A
402.0001.STE1	STE-1 ASPHALT FOR TACK COAT	0.000334 TON/SY
610.0002.0000	DITCH LINING	110 LB/CF
611.0002.0001	RIPRAP, CLASS I	108 LB/CF
611.0002.0002	RIPRAP, CLASS II	108 LB/CF
611.0002.0003	RIPRAP, CLASS III	108 LB/CF
	WATER FOR SEEDING	1 MGAL/MSF

Preliminary

STATE OF ALASKA
4/26/23
AVERIAL J. ALLEN
AECL 10371
REGISTERED PROFESSIONAL ENGINEER
PSSC REVIEW

HDL ENGINEERING CONSULTANTS, LLC
3335 ARCTIC BLVD, STE 100
ANCHORAGE, AK 99503
(907) 564-2120
AECL861

STATE OF ALASKA
DEPARTMENT OF TRANSPORTATION
AND PUBLIC FACILITIES

PARKS HIGHWAY PHASE I –
CULVERT REPLACEMENT

ESTIMATE OF QUANTITIES

DRAWING LOCATION
H:\JOBS\21-022 PARKS HWY 99-163 H&H (DOTCR)\CAD\DRAWINGS-P1\01083_C01_EST.DWG BY AANDREWS

DATE 4/26/2023 TIME 12:52 PM
SCALE NTS
DESIGNED BY ---
CHECKED BY ---
DRAFTED BY ---

NO.	DATE	REVISION

STATE	PROJECT DESIGNATION	YEAR	SHEET NO.	TOTAL SHEETS
ALASKA	TBD/CFHWY01083	2023	D1	D6

201.0009.0000 - CLEARING AND GRUBBING

SHEET	STATION FROM	STATION TO	AREA (ACRES)	REMARKS
F1	478+29 LT	479+52 LT	0.072	
	478+29 RT	479+52 RT	0.099	
	481+13 LT	483+24 LT	0.142	
	481+13 RT	483+24 RT	0.167	
F2	489+43 LT	491+05 LT	0.135	
	489+43 RT	491+05 RT	0.148	
F3	692+50 RT	694+80 RT	0.259	
	692+73 LT	694+14 LT	0.146	
F4	908+66 LT	908+90 LT	0.020	
	908+66 RT	908+89 RT	0.020	
F5	940+54 LT	942+27 LT	0.083	
	940+54 RT	942+27 RT	0.139	
F6	1108+03 LT	1109+66 LT	0.162	
	1108+03 RT	1109+66 RT	0.120	
	1111+30 LT	1112+31 LT	0.039	
	1111+30 RT	1112+31 RT	0.067	
F7	1157+13 LT	1158+88 LT	0.169	
	1157+13 RT	1158+88 RT	0.192	
F8	1991+42 LT	1993+39 LT	0.158	
	1991+42 RT	1993+39 RT	0.221	
		TOTAL:	2.56	

202.0004.0000 - REMOVAL OF CULVERT PIPE

SHEET	STATION	OFFSET	LENGTH (FT)	REMARKS
F1	478+98.4	LT/RT	98	MP 107.5
	481+76.7	LT/RT	100	MP 107.5
F2	490+38.7	LT/RT	93	MP 107.7
F3	693+66.4	LT/RT	101	MP 111.7
F5	941+55.5	LT/RT	92	MP 116.3
F6	1108+94.7	LT/RT	99	MP 119.3
	1111+80.0	LT/RT	84	MP 119.4
F7	1157+85.7	LT/RT	105	MP 120.3
F8	1992+50.1	LT/RT	130	MP 136.0
		TOTAL:	902	
		PAY ITEM QUANTITY:	910	

202.2016.0000 - ABANDON PIPE IN PLACE, CULVERT

SHEET	STATION	OFFSET	LENGTH (FT)	REMARKS
F4	908+68.8	LT/RT	107	
		TOTAL:	107	
		PAY ITEM QUANTITY:	107	

202.0002.0000 - REMOVAL OF PAVEMENT

SHEET	STATION FROM	STATION TO	REMOVAL OF PAVEMENT (SY)	REMARKS
F1	478+29	486+00	3,427	
F2	486+00	491+05	2,244	
F3	692+73	694+41	747	
F5	940+54	942+27	939	
F6	1108+03	1112+31	1,902	
F7	1157+13	1158+88	778	
F8	1991+42	1993+39	876	
		TOTAL:	10,913	
		PAY ITEM QUANTITY:	11,000	

Preliminary

STATE OF ALASKA
PROFESSIONAL ENGINEER
AVERIAL L. BARBEN
9371
PSEF REVIEW

HDL ENGINEERING CONSULTANTS, LLC
3335 ARCTIC BLVD, STE 100
ANCHORAGE, AK 99503
(907) 564-2120
AECL861

STATE OF ALASKA
DEPARTMENT OF TRANSPORTATION
AND PUBLIC FACILITIES

PARKS HIGHWAY PHASE I – CULVERT REPLACEMENT

SUMMARY TABLES

DESIGNED BY ---
CHECKED BY ---
DRAFTED BY ---
SCALE NTS
DATE 4/25/2023 TIME 11:40 AM
DRAWING LOCATION
H:\JOBS\21-022 PARKS HWY 99-163 H&H (DOTCR)\CAD\DRAWINGS-P1\01083_D01_SUM.DWG BY AANDREWS

NO.	DATE	REVISION

STATE	PROJECT DESIGNATION	YEAR	SHEET NO.	TOTAL SHEETS
ALASKA	TBD/CFHWY01083	2023	D2	D6

206.0001.0000 - FILTER BLANKET

SHEET	STATION	OFFSET	VOLUME (CY)	REMARKS
F2	490+09.8	61.6 LT	19	INLET
	490+09.8	63.5 RT	29	OUTLET
F3	693+66.4	73.1 LT	21	INLET
	693+66.4	65.1 RT	27	OUTLET
	693+66.4	65.1 RT	264	OVERTOPPING PROTECTION
F4	908+79.2	54.2 RT	15	OUTLET
	908+80.0	52.8 LT	10	INLET
F6	1108+94.8	61.9 LT	21	INLET
	1108+94.8	66.9 RT	29	OUTLET
		TOTAL:	435	
		PAY ITEM QUANTITY:	435	

406.0008.0000 - RUMBLE STRIPS, SHOULDERS

SHEET	STATION		LENGTH (MILE)	REMARKS
	FROM	TO		
F1	478+29	486+00	0.29	
F2	486+00	491+05	0.19	
F3	692+73	694+41	0.06	
F5	940+54	942+27	0.07	
F6	1108+03	1112+31	0.16	
F7	1157+13	1158+88	0.07	
F8	1991+42	1993+39	0.07	
		TOTAL:	0.91	
		PAY ITEM QUANTITY:	1	

Preliminary

STATE OF ALASKA
AVERIAN J. LARSEN
9371
REGISTERED PROFESSIONAL ENGINEER
PSUF
REVIEW

HDL ENGINEERING CONSULTANTS, LLC
3335 ARCTIC BLVD, STE 100
ANCHORAGE, AK 99503
(907) 564-2120
AECL861

STATE OF ALASKA
DEPARTMENT OF TRANSPORTATION
AND PUBLIC FACILITIES

PARKS HIGHWAY PHASE I –
CULVERT REPLACEMENT

SUMMARY TABLES

DESIGNED BY ---
CHECKED BY ---
DRAFTED BY ---
SCALE NTS
DATE 4/25/2023 TIME 11:40 AM
DRAWING LOCATION
H:\JOBS\21-022 PARKS HWY 99-163 H&H (DOTCR)\CAD\DRAWINGS-P1\01083_D01_SUM.DWG BY AANDREWS

NO.	DATE	REVISION

STATE	PROJECT DESIGNATION	YEAR	SHEET NO.	TOTAL SHEETS
ALASKA	TBD/CFHWY01083	2023	D3	D6

602 ITEMS - PIPE SUMMARY

SHEET	PIPE NO.	INLET			OUTLET			602.0001.0072	602.0001.0084	602.0001.0096	602.0001.0108	REMARKS
		STATION	OFFSET	ELEV.	STATION	OFFSET	ELEV.	STRUCTURAL PLATE PIPE 72" DIAMETER (LF)	STRUCTURAL PLATE PIPE 84" DIAMETER (LF)	STRUCTURAL PLATE PIPE 96" DIAMETER (LF)	STRUCTURAL PLATE PIPE 108" DIAMETER (LF)	
F1	P02	481+76.5	55.1 LT	296.42	481+76.5	59.9 RT	294.51			115.1		10 GAGE, TYPE 1 HEADWALLS AT INLET AND OUTLET
F2	P03	490+09.8	61.6 LT	297.52	490+09.8	63.5 RT	296.90	125.1				10 GAGE
F3	P04	693+66.4	73.1 LT	324.09	693+66.4	65.1 RT	322.18			138.2		10 GAGE, TYPE 1 HEADWALLS AT INLET AND OUTLET
F6	P07	1108+94.8	61.9 LT	477.19	1108+94.8	66.9 RT	474.00		128.9			10 GAGE, TYPE 1 HEADWALLS AT INLET AND OUTLET
F7	P08	1158+16.0	60.6 LT	478.71	1158+16.0	61.2 RT	476.90				121.8	10 GAGE, TYPE 1 HEADWALLS AT INLET AND OUTLET
F8	P09	1992+50.5	75.0 RT	651.22	1992+50.5	63.6 LT	642.20				138.6	10 GAGE, TYPE 1 HEADWALL AT INLET, SPECIAL HEADWALL AT OUTLET, SEE SHEET E22
							TOTAL:	125.1	128.9	253.3	260.4	
							PAY ITEM QUANTITY:	126	129	254	261	

603 ITEMS - PIPE SUMMARY

SHEET	PIPE NO.	INLET			OUTLET			PAY LENGTH			REMARKS
								603.0001.0036	603.0001.0048	603.2001.0036	
		STATION	OFFSET	ELEV.	STATION	OFFSET	ELEV.	CSP 36 INCH (LF)	CSP 48 INCH (LF)	DRIVEN PIPE 36 INCH (LF)	
F1	P01	478+82.5	49.9 LT	304.10	478+82.5	57.0 RT	300.80	106.9			10 GAGE
F4	P05	908+80.0	52.8 LT	372.90	908+79.2	54.2 RT	371.72			107	
F5	P06	941+53.9	52.2 LT	392.36	941+53.9	59.6 RT	390.84		108.9		10 GAGE
							TOTAL:	106.9	108.9	107	
							PAY ITEM QUANTITY:	107	109	107	

Preliminary

STATE OF ALASKA
PROFESSIONAL ENGINEER
AVERIAL J. LINDEN
49371
PRELIMINARY
REGISTERED PROFESSIONAL ENGINEER

HDL ENGINEERING CONSULTANTS, LLC
3335 ARCTIC BLVD, STE 100
ANCHORAGE, AK 99503
(907) 564-2120
AECL861

STATE OF ALASKA
DEPARTMENT OF TRANSPORTATION
AND PUBLIC FACILITIES

PARKS HIGHWAY PHASE I –
CULVERT REPLACEMENT

SUMMARY TABLES

DESIGNED BY ---
CHECKED BY ---
DRAFTED BY ---
SCALE NTS
DATE 4/25/2023 TIME 5:29 PM
DRAWING LOCATION
H:\JOBS\21-022 PARKS HWY 99-163 H&H (DOTCR)\CAD\DRAWINGS-P1\01083_D01_SUM.DWG BY AANDREWS

NO.	DATE	REVISION

STATE	PROJECT DESIGNATION	YEAR	SHEET NO.	TOTAL SHEETS
ALASKA	TBD/CFHWY01083	2023	D4	D6

606 ITEMS - GUARDRAIL SUMMARY

SHEET	STATION TO STATION			606.0001.0000	606.0006.0000	606.0009.0000			606.0013.0000	REMARKS
				W-BEAM GUARDRAIL (FT)	REMOVING AND DISPOSING OF GUARDRAIL (FT)	SHORT RADIUS GUARDRAIL			PARALLEL GUARDRAIL TERMINAL (EA)	
	FROM	TO	OFFSET			QUANTITY (EA)	RADIUS	ANGLE (90° TYP.)		
F4	908+44.0	909+06.0	LT	62.5	62.5					
F6	1105+61.0	1110+62.5	RT	500	567				2	
	1107+62.5	1112+25.0	LT	462.5	565				2	
F8	1988+60.0	1995+65.0	LT	700	811	1	16	110	1	
	1990+10.5	1995+07.0	RT	500	580				2	
			TOTAL:	2,225	2,585.5	1			7	
			PAY ITEM QUANTITY:	2,250	2,600	1			7	

610.0002.0000 - DITCH LINING

SHEET	STATION	OFFSET	VOLUME (TON)	REMARKS
F1	478+82.5	49.9 LT	10	INLET
	478+82.5	57.0 RT	31	OUTLET
	481+76.5	55.1 LT	28	INLET
	481+76.5	59.9 RT	49	OUTLET
F3	693+66.4	65.1 RT	243	OVERTOPPING PROTECTION
F4	908+79.2	54.2 RT	12	OUTLET
	908+80.0	52.8 LT	66	INLET
F5	941+53.9	52.2 LT	21	INLET
	941+53.9	59.6 RT	51	OUTLET
F7	1158+16.0	60.6 LT	51	INLET
	1158+16.0	61.2 RT	62	OUTLET
F8	1992+50.5	75.0 RT	189	INLET
	1992+50.5	63.6 LT	68	OUTLET
		TOTAL:	881	
		PAY ITEM QUANTITY:	890	

Preliminary

STATE OF ALASKA
PSEAL
AVERIAL L. BARBEN
9371
REGISTERED PROFESSIONAL ENGINEER
PRELIMINARY REVIEW

HDL ENGINEERING CONSULTANTS, LLC
3335 ARCTIC BLVD, STE 100
ANCHORAGE, AK 99503
(907) 564-2120
AECL861

STATE OF ALASKA
DEPARTMENT OF TRANSPORTATION
AND PUBLIC FACILITIES

PARKS HIGHWAY PHASE I –
CULVERT REPLACEMENT

SUMMARY TABLES

DESIGNED BY ---
CHECKED BY ---
DRAFTED BY ---
SCALE NTS
DATE 4/25/2023 TIME 11:40 AM
DRAWING LOCATION
H:\JOBS\21-022 PARKS HWY 99-163 H&H (DOTCR)\CAD\DRAWINGS-P1\01083_D01_SUM.DWG BY AANDREWS

NO.	DATE	REVISION

STATE	PROJECT DESIGNATION	YEAR	SHEET NO.	TOTAL SHEETS
ALASKA	TBD/CFHWY01083	2023	D5	D6

611 ITEMS - RIPRAP SUMMARY

SHEET	STATION	OFFSET	611.0002.0001 RIPRAP CLASS I (TON)	611.0002.0002 RIPRAP CLASS II (TON)	611.0002.0003 RIPRAP CLASS III (TON)	REMARKS
F1	481+76.5	55.1 LT		98		INLET
	481+76.5	-		137		INSIDE BARREL
	481+76.5	59.9 RT		162		OUTLET
F2	490+09.8	61.6 LT	51			INLET
	490+09.8	-	83			INSIDE BARREL
	490+09.8	63.5 RT	78			OUTLET
F3	693+66.4	73.1 LT		143		INLET
	693+66.4	-	169			INSIDE BARREL
	693+66.4	65.1 RT	78			OUTLET
	693+66.4	65.1 RT	770			OVERTOPPING PROTECTION
F4	908+79.2	54.2 RT		75		OUTLET
	908+80.0	52.8 LT	70			INLET
F5	941+53.9	52.2 LT	45			INLET
	941+53.9	59.6 RT		97		OUTLET
F6	1108+94.8	61.9 LT	63			INLET
	1108+94.8	-	152			INSIDE BARREL
	1108+94.8	66.9 RT	88			OUTLET
F7	1158+16.0	60.6 LT		169		INLET
	1158+16.0	-		160		INSIDE BARREL
	1158+16.0	61.2 RT		258		OUTLET
F8	1992+50.5	75.0 RT			730	INLET
	1992+50.5	63.6 LT			394	OUTLET
		TOTAL:	1,647	1,299	1,124	
		PAY ITEM QUANTITY:	1,650	1,300	1,150	

639.2000.0000 - APPROACH

SHEET	STATION	OFFSET	SKEW ANGLE (90° TYP.)	TYPE	RETURN RADIUS (FT)	WIDTH (FT)	LENGTH (FT)	REMARKS
F5	941+04.5	LT	-	RESIDENTIAL	40	21	40	
			TOTAL:	1				
			PAY ITEM QUANTITY:	1				

Preliminary

STATE OF ALASKA
DEPARTMENT OF TRANSPORTATION
AND PUBLIC FACILITIES

PARKS HIGHWAY PHASE I – CULVERT REPLACEMENT

SUMMARY TABLES

HDL ENGINEERING CONSULTANTS, LLC
3335 ARCTIC BLVD, STE 100
ANCHORAGE, AK 99503
(907) 564-2120
AECL861

DRAWING LOCATION
H:\JOBS\21-022 PARKS HWY 99-163 H&H (DOTCR)\CAD\DRAWINGS-P1\01083_D01_SUM.DWG BY AANDREWS

DATE 4/25/2023 TIME 11:40 AM
SCALE NTS
DESIGNED BY ---
CHECKED BY ---
DRAFTED BY ---

NO.	DATE	REVISION

STATE	PROJECT DESIGNATION	YEAR	SHEET NO.	TOTAL SHEETS
ALASKA	TBD/CFHWY01083	2023	D6	D6

690 ITEMS - WATERWAY RESTORATION SUMMARY

SHEET	STATION	OFFSET	690.2004.0000 WATERWAY RESTORATION - BRUSH LAYER (LF)	690.2004.0000 WATERWAY RESTORATION - REGRADE STREAM (LF)	690.2004.0000 WATERWAY RESTORATION - VOID FILLING (LF)	REMARKS
F1	481+76.5	55.1 LT			13	INLET
	481+76.5	-			116	INSIDE BARREL
	481+76.5	59.9 RT	13		43	OUTLET
F2	490+09.8	61.6 LT			10	INLET
	490+09.8	-			126	INSIDE BARREL
	490+09.8	63.5 RT	35		55	OUTLET
F3	693+66.4	73.1 LT		20	10	INLET
	693+66.4	-			139	INSIDE BARREL
	693+66.4	65.1 RT	20		45	OUTLET
F6	1108+94.8	61.9 LT	132		142	INLET
	1108+94.8	-			129	INSIDE BARREL
	1108+94.8	66.9 RT	15	13	35	OUTLET
F7	1158+16.0	60.6 LT	40		60	INLET
	1158+16.0	-			122	INSIDE BARREL
	1158+16.0	61.2 RT	45		75	OUTLET
		TOTAL:	300	33	1,120	
		PAY ITEM QUANTITY:	300	33	1,150	

Preliminary

STATE OF ALASKA
AVERIAN L. LARSEN
9371
40TH
REGISTERED PROFESSIONAL ENGINEER
PSUF REVIEW

HDL ENGINEERING CONSULTANTS, LLC
3335 ARCTIC BLVD, STE 100
ANCHORAGE, AK 99503
(907) 564-2120
AECL861

STATE OF ALASKA
DEPARTMENT OF TRANSPORTATION
AND PUBLIC FACILITIES

PARKS HIGHWAY PHASE I –
CULVERT REPLACEMENT

SUMMARY TABLES

DESIGNED BY ---
CHECKED BY ---
DRAFTED BY ---
SCALE NTS
DATE 4/25/2023 TIME 5:29 PM
DRAWING LOCATION
H:\JOBS\21-022 PARKS HWY 99-163 H&H (DOTCR)\CAD\DRAWINGS-P1\D1083_D01_SUM.DWG BY AANDREWS

NO.	DATE	REVISION

STATE	PROJECT DESIGNATION	YEAR	SHEET NO.	TOTAL SHEETS
ALASKA	TBD/CFHWY01083	2023	E1	E27

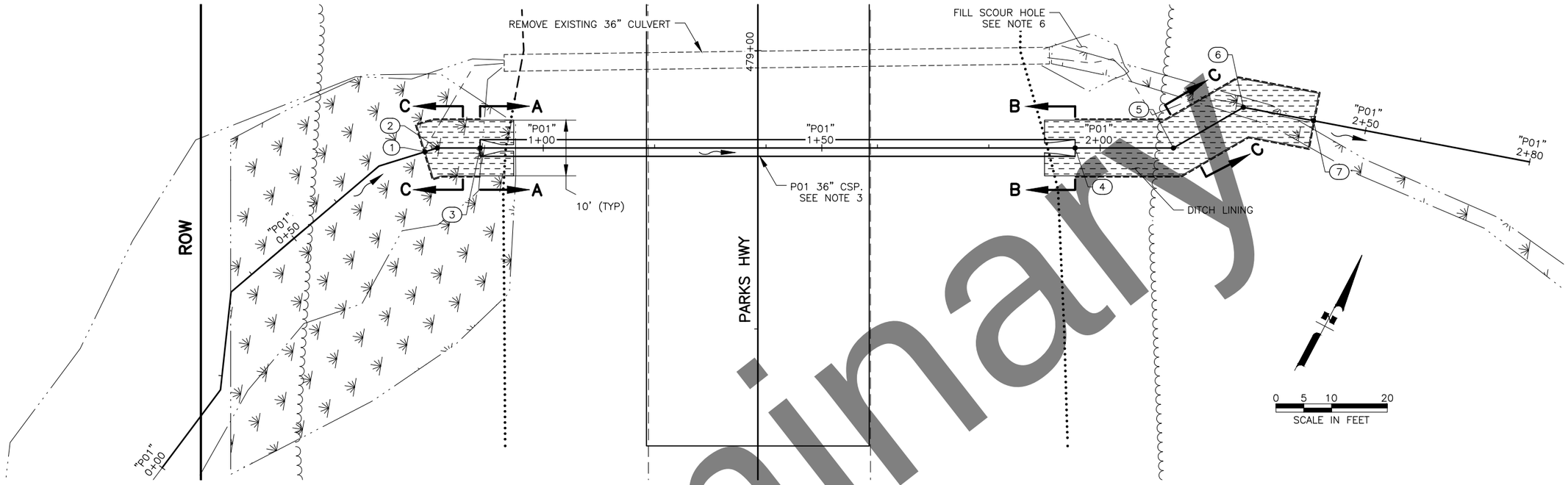

P01 PLAN VIEW

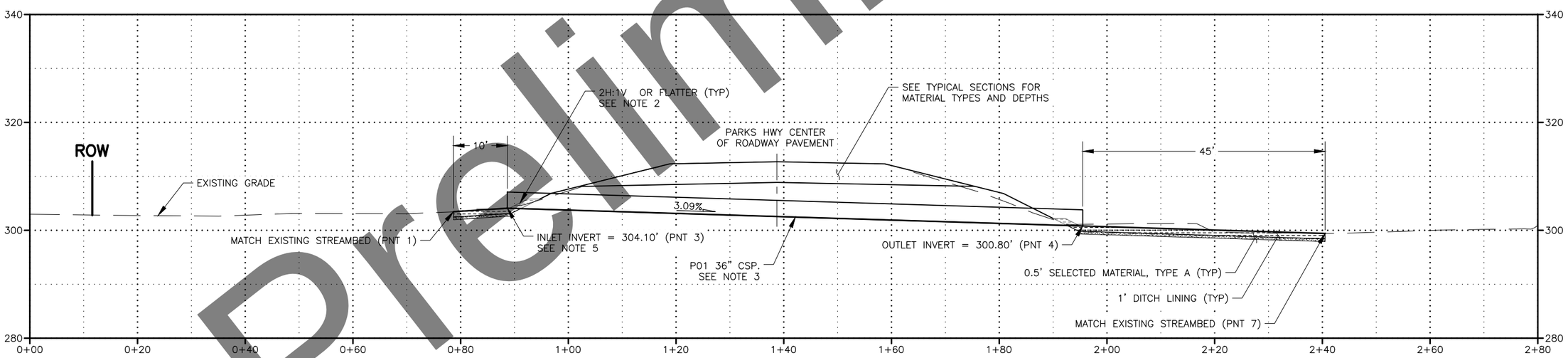

P01 PROFILE VIEW

P01 CULVERT HYDRAULIC AND HYDROLOGIC SUMMARY

DRAINAGE AREA* = 2.3 SQUARE MILES		
EXCEEDANCE PROBABILITY	2% (DESIGN EVENT)	1%
RETURN PERIOD	50 YEAR (Q_{50})	100 YEAR (Q_{100})
DESIGN DISCHARGE	2.2 CFS	2.6 CFS
DESIGN HIGH WATER ELEVATION	304.8 FT	304.8 FT
ANTICIPATED ADDITIONAL BACKWATER AT Q_{100} = 0.0 FT		

* P01 IS HYDRAULICALLY CONNECTED TO P02 AND P03. STREAM SPLITS APPROXIMATELY 1,500 FEET UPSTREAM OF THE HIGHWAY EMBANKMENT. DRAINAGE AREA SHOWN IS ASSOCIATED WITH ALL THREE CULVERTS.

NOTES:

1. SEE SHEET E2 FOR SECTIONS.
2. PLACE DITCH LINING ON FORESLOPE AT CULVERT INLET AND OUTLET TO HEIGHT SHOWN ON SHEET E2. MAINTAIN 2H:1V OR FLATTER SLOPES.
3. PIPE SHALL BE 10 GAGE OR THICKER WITH 3" BY 1" CORRUGATIONS.
4. MATERIAL THICKNESSES ARE MEASURED PERPENDICULAR TO THE FINISHED GROUND SURFACE.
5. INLET INVERT TO BE ELEVATED AS SHOWN TO MAINTAIN UPSTREAM WETLANDS.
6. AFTER PLACEMENT OF OTHER FILL MATERIALS, FILL REMAINING SCOUR HOLE WITH SELECTED MATERIAL, TYPE C.
7. LAYOUT POINT SUMMARY TABLE SHOWN ON SHEET E2.

STATE OF ALASKA
4012
JANIE L. HUSEL
2916
REGISTERED PROFESSIONAL ENGINEER
PSUR SUBMITTAL

AWR ENGINEERING, LLC
4011 ARCTIC BOULVARD, SUITE 106
ANCHORAGE, AK 99503
(907) 441-2973
AECL 1407

STATE OF ALASKA
DEPARTMENT OF TRANSPORTATION
AND PUBLIC FACILITIES

PARKS HIGHWAY PHASE 1 – CULVERT REPLACEMENT

P01 AT STA 478+83 (MP 107.5 SOUTH) CULVERT LAYOUT

Preliminary

DRAWING LOCATION
...\Jobs\1204 HDL\08 – Parks Hwy Culverts\CAD\PIH\00592-E01-E06-MP107.DWG

DATE	TIME	SCALE	DESIGNED BY	CHECKED BY	DRAFTED BY
4/26/2023	9:23 AM	1"=10'	AH/LJ	JD	AH/LJ

NO.	DATE	REVISION

STATE	PROJECT DESIGNATION	YEAR	SHEET NO.	TOTAL SHEETS
ALASKA	TBD/CFHWY01083	2023	E2	E27

DATE	TIME	SCALE	DESIGNED BY	CHECKED BY	DRAFTED BY
4/26/2023	9:24 AM	1"=2'	AH/LJ	JD	AH/LJ

DRAWING LOCATION
...\Jobs\1204 HDL\08 - Parks Hwy Culverts\CAD\PIH\00592-E01-E06-MP107.DWG

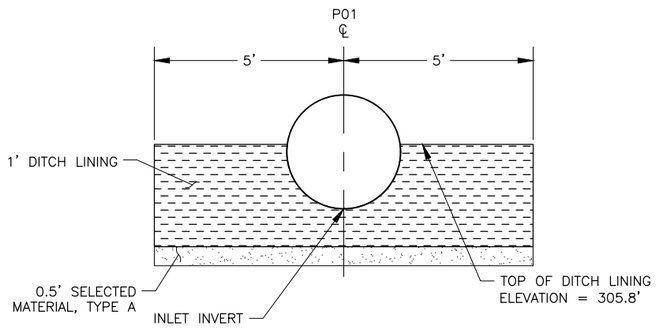

SECTION A–A

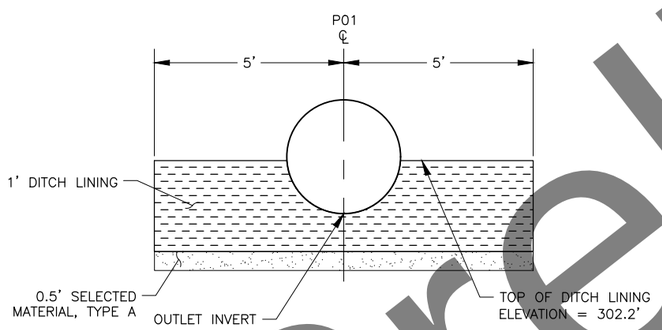

SECTION B–B

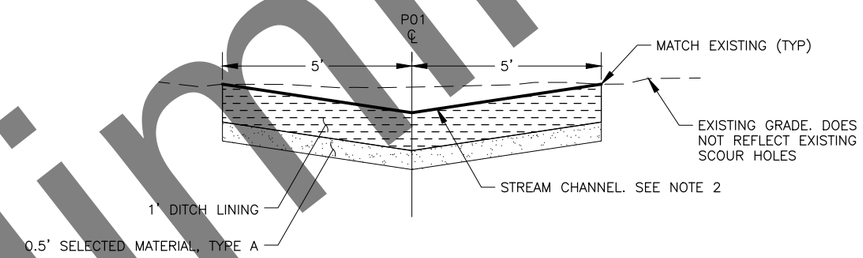

SECTION C–C

LAYOUT POINT SUMMARY

POINT	CULVERT STATION	NORTHING	EASTING	REMARKS
1	0+79.66	48749.1183	289284.7454	ME 303.5' ±
2	0+80.98	48750.7578	289286.3890	PI
3	0+88.66	48754.3281	289293.1870	INLET/GRADE BREAK
4	1+95.50	48804.0064	289387.7748	OUTLET
5	2+13.15	48812.2133	289403.4007	PI
6	2+27.67	48824.5118	289411.1220	PI
7	2+40.50	48828.2469	289423.3948	ME, 299.4 ±

NOTES:

1. MATERIAL THICKNESSES ARE MEASURED PERPENDICULAR TO THE FINISHED GROUND SURFACE.
2. ADJUST STREAM CHANNEL SIDE SLOPES AND DEPTH TO TRANSITION BETWEEN THE CULVERT BARREL AND THE EXISTING WETLAND AREAS OVER LENGTH OF APRONS.

Preliminary

STATE OF ALASKA
JANET L. USEL
2916
REGISTERED PROFESSIONAL ENGINEER
PSSL SUBMITTAL

AWR ENGINEERING, LLC
4011 ARCTIC BOULVARD, SUITE 106
ANCHORAGE, AK 99503
(907) 441-2973
AECL 1407

STATE OF ALASKA
DEPARTMENT OF TRANSPORTATION
AND PUBLIC FACILITIES

PARKS HIGHWAY PHASE 1 –
CULVERT REPLACEMENT

P01 AT STA 478+83
(MP 107.5 SOUTH)
CULVERT DETAILS

NO.	DATE	REVISION

STATE	PROJECT DESIGNATION	YEAR	SHEET NO.	TOTAL SHEETS
ALASKA	TBD/CFHWY01083	2023	E3	E27

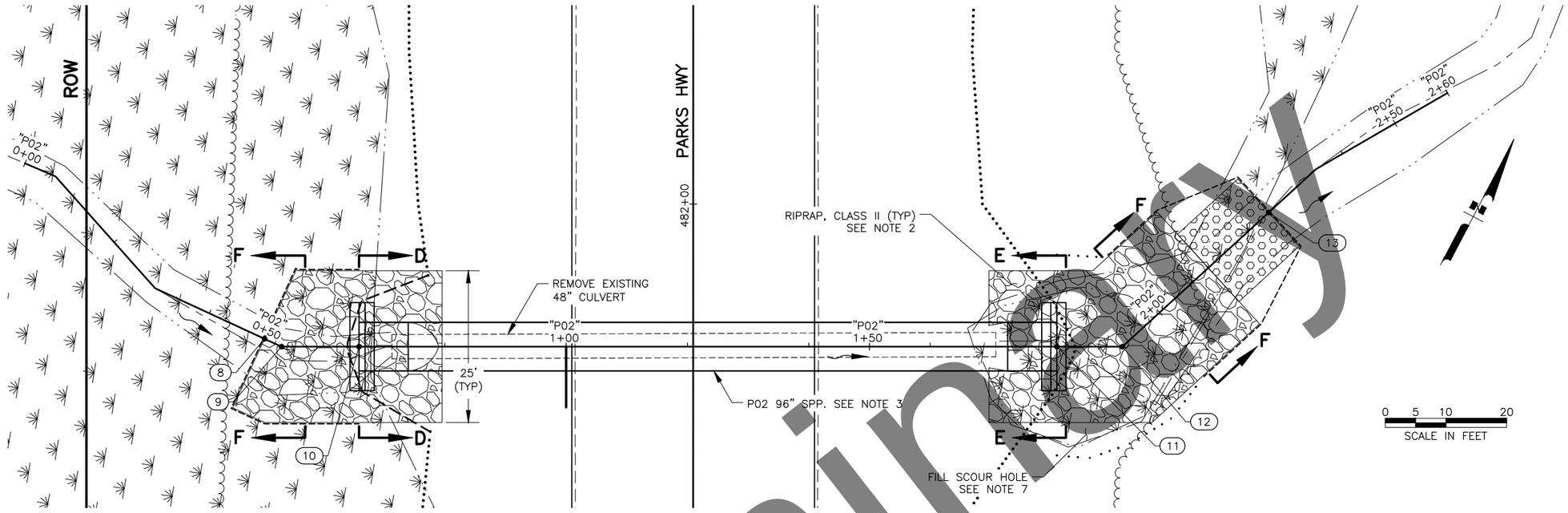

P02 PLAN VIEW

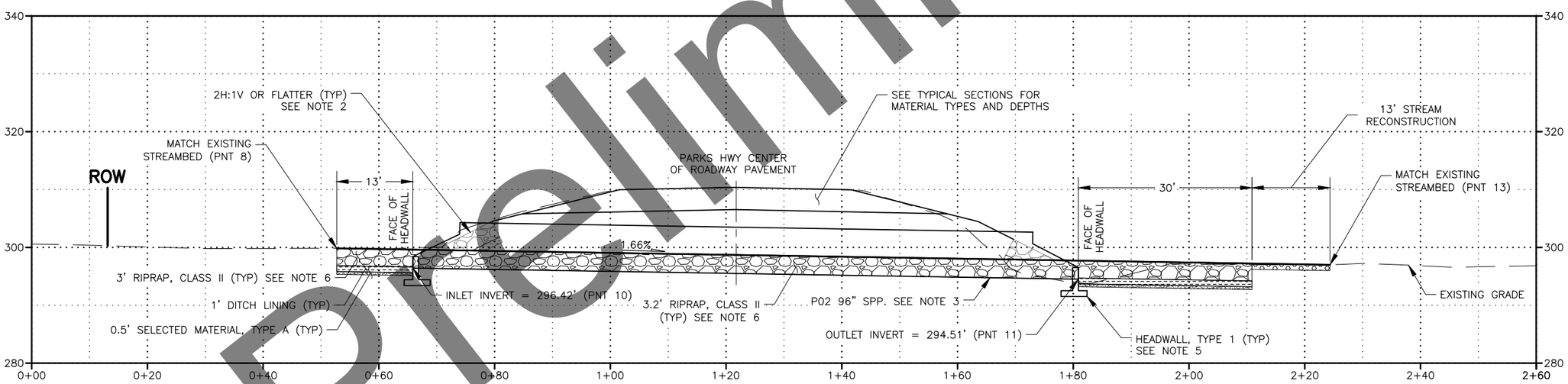

P02 PROFILE VIEW

P02 CULVERT HYDRAULIC AND HYDROLOGIC SUMMARY

DRAINAGE AREA* = 2.3 SQUARE MILES		
EXCEEDANCE PROBABILITY	2% (DESIGN EVENT)	1%
RETURN PERIOD	50 YEAR (Q_{50})	100 YEAR (Q_{100})
DESIGN DISCHARGE	115.7 CFS	137.2 CFS
DESIGN HIGH WATER ELEVATION	303.4 FT	303.9 FT
ANTICIPATED ADDITIONAL BACKWATER AT Q_{100} = 0.0 FT		

* P02 IS HYDRAULICALLY CONNECTED TO P01 AND P03. STREAM SPLITS APPROXIMATELY 1,500 FEET UPSTREAM OF THE HIGHWAY EMBANKMENT. DRAINAGE AREA SHOWN IS ASSOCIATED WITH ALL THREE CULVERTS.

NOTES:

1. SEE SHEET E4 FOR SECTIONS AND SHEET E25 FOR STREAM RECONSTRUCTION DETAILS.
2. PLACE RIPRAP ON FORESLOPE AT CULVERT INLET AND OUTLET TO HEIGHT SHOWN ON SHEET E4. MAINTAIN 2H:1V OR FLATTER SLOPES.
3. PIPE SHALL BE 10 GAGE. USE 2H:1V BEVEL ON INLET AND OUTLET PER STANDARD PLAN D-07.00.
4. MATERIAL THICKNESSES ARE MEASURED PERPENDICULAR TO THE FINISHED GROUND SURFACE.
5. CAST-IN-PLACE OR PRECAST HEADWALLS MAY BE USED. SEE STANDARD PLANS D-30.11 OR D31.01 FOR DETAILS. USE A2/D2 DIMENSIONS IN STANDARD PLAN.
6. AFTER PLACEMENT OF RIPRAP, FILL VOIDS IN RIPRAP WITHIN PIPE AND STREAM CHANNEL AS SHOWN ON SHEET E4. VOID FILL MATERIAL SHALL BE PER SPECIFICATION 690.
7. AFTER PLACEMENT OF OTHER FILL MATERIALS, FILL REMAINING SCOUR HOLE WITH SELECTED MATERIAL, TYPE C.
8. LAYOUT POINT SUMMARY TABLE SHOWN ON SHEET E4.

STATE OF ALASKA
4011
JANIE L. USEL
2916
REGISTERED PROFESSIONAL ENGINEER
PSUBMITTAL

AWR ENGINEERING, LLC
4011 ARCTIC BOULVARD, SUITE 106
ANCHORAGE, AK 99503
(907) 441-2973
AECL 1407

STATE OF ALASKA
DEPARTMENT OF TRANSPORTATION
AND PUBLIC FACILITIES

PARKS HIGHWAY PHASE 1 – CULVERT REPLACEMENT

P02 AT STA 481+77 (MP 107.5 NORTH) CULVERT LAYOUT

Preliminary

DATE	TIME	SCALE	DESIGNED BY	CHECKED BY	DRAFTED BY
4/26/2023	9:24 AM	1"=10'	AH/LJ	JJD	AH/LJ

DRAWING LOCATION
...\Jobs\1204 HDL\08 - Parks Hwy Culverts\CAD\PIH\00592-E01-E06-MP107.DWG

NO.	DATE	REVISION

STATE	PROJECT DESIGNATION	YEAR	SHEET NO.	TOTAL SHEETS
ALASKA	TBD/CFHWY01083	2023	E4	E27

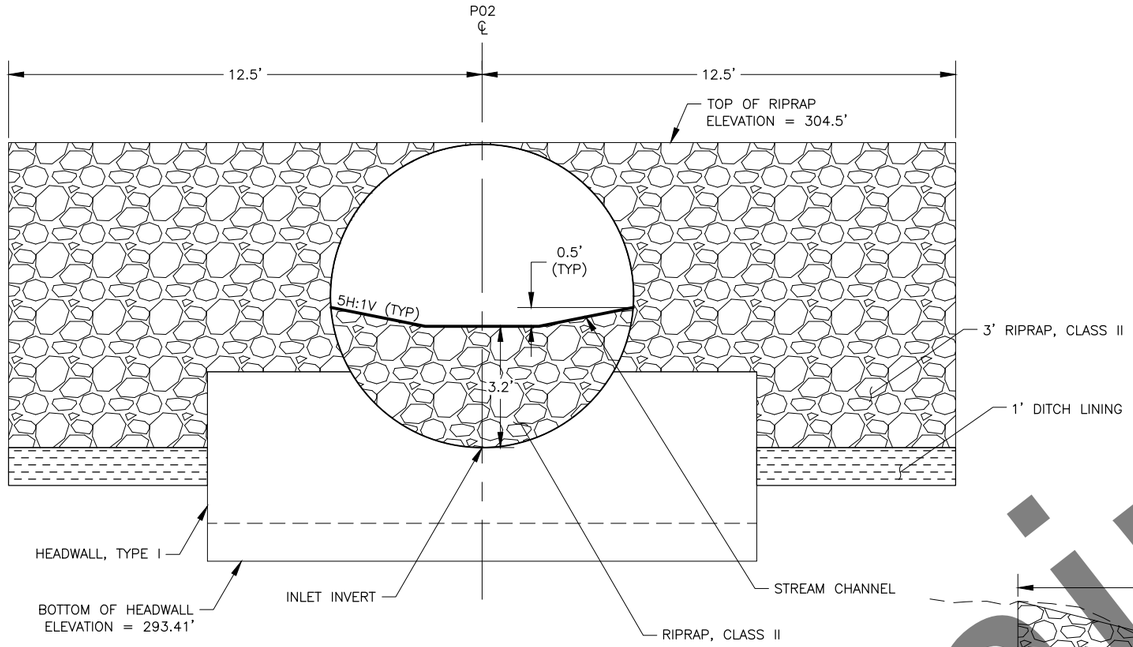

SECTION D–D

LAYOUT POINT SUMMARY				
POINT	CULVERT STATION	NORTHING	EASTING	REMARKS
8	0+50.00	49006.1233	289137.4712	ME, 299.8' ±
9	0+53.09	49006.2820	289140.5525	PI
10	0+65.86	49012.2219	289151.8621	INLET
11	1+80.88	49065.7037	289253.6918	OUTLET
12	1+91.68	49070.7244	289263.2513	PI
13	2+24.37	49101.4847	289274.3231	ME, 297.0' ±

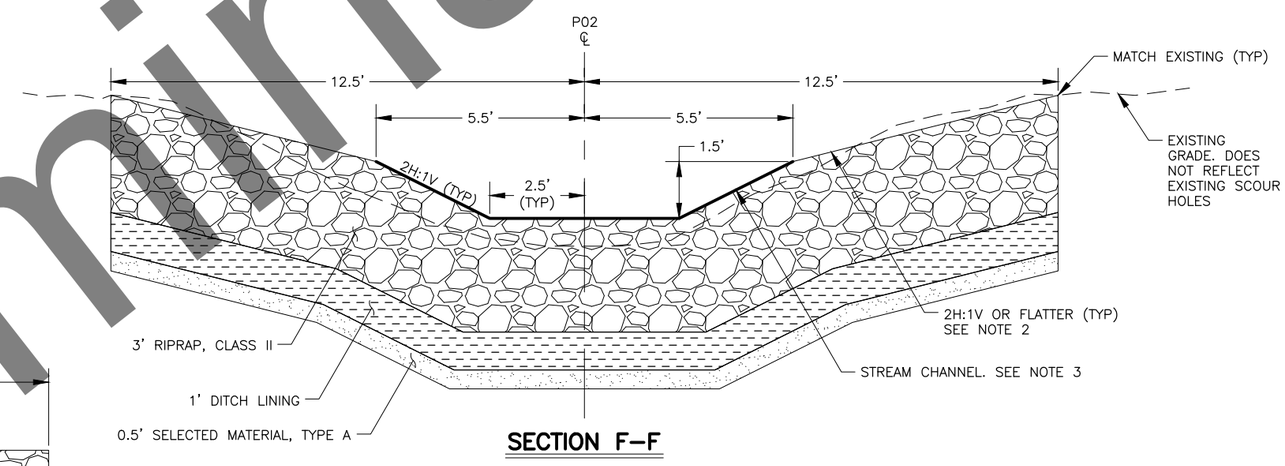

SECTION F–F

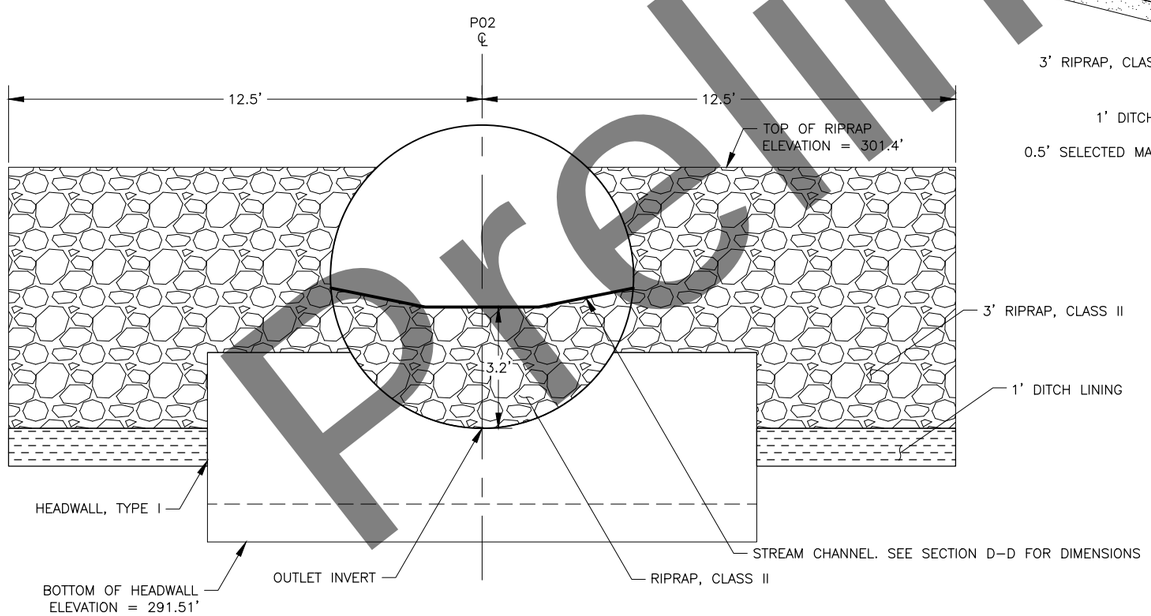

SECTION E–E

NOTES:

1. MATERIAL THICKNESSES ARE MEASURED PERPENDICULAR TO THE FINISHED GROUND SURFACE.
2. FLATTEN APRON SIDE SLOPES TO MATCH EXISTING GROUND OVER LENGTH OF APRON.
3. ADJUST CHANNEL DIMENSIONS TO TRANSITION BETWEEN THE CULVERT BARREL AND RECONSTRUCTED/EXISTING CHANNEL OVER LENGTH OF APRONS.

STATE OF ALASKA
REGISTERED PROFESSIONAL ENGINEER
JANIE MUSEL
49916
PSUBMITTAL

AWR ENGINEERING, LLC
4011 ARCTIC BOULVARD, SUITE 106
ANCHORAGE, AK 99503
(907) 441–2973
AECL 1407

STATE OF ALASKA
DEPARTMENT OF TRANSPORTATION
AND PUBLIC FACILITIES

PARKS HIGHWAY PHASE 1 –
CULVERT REPLACEMENT

P02 AT STA 481+77
(MP 107.5 NORTH)
CULVERT DETAILS

Preliminary

DRAWING LOCATION
...\Jobs\1204 HDL\08 – Parks Hwy Culverts\CAD\PIH\00592-E01-E06-MP107.DWG

DATE	TIME	SCALE	DESIGNED BY	CHECKED BY	DRAFTED BY
4/26/2023	9:24 AM	1"=2'	AH/LJ	JD	AH/LJ

NO.	DATE	REVISION

STATE	PROJECT DESIGNATION	YEAR	SHEET NO.	TOTAL SHEETS
ALASKA	TBD/CFHWY01083	2023	E5	E27

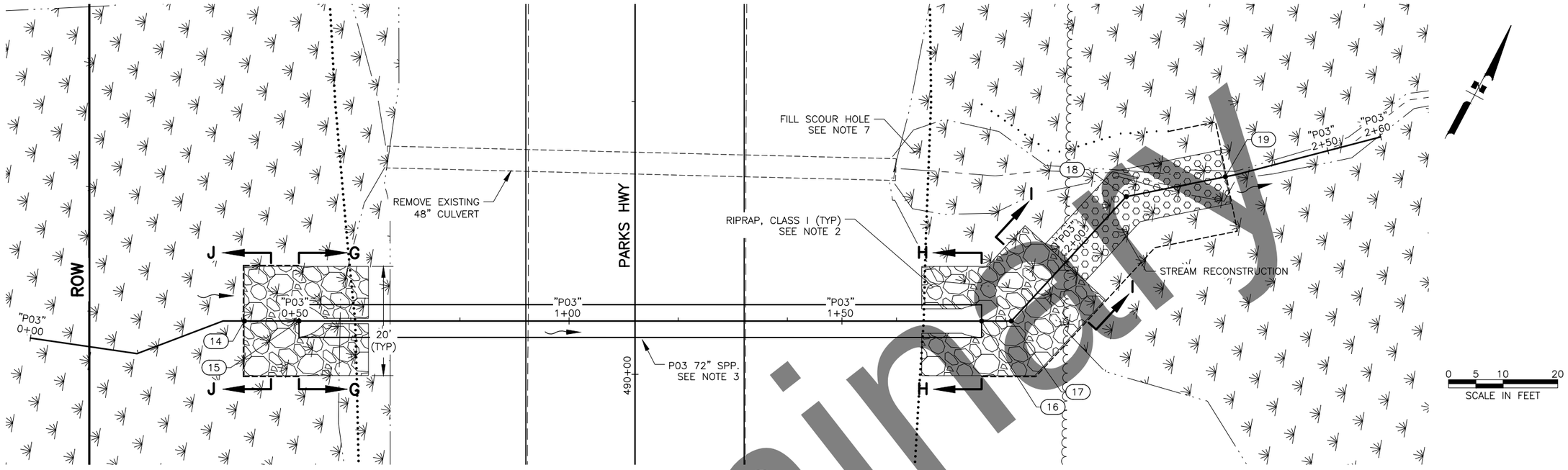

P03 PLAN VIEW

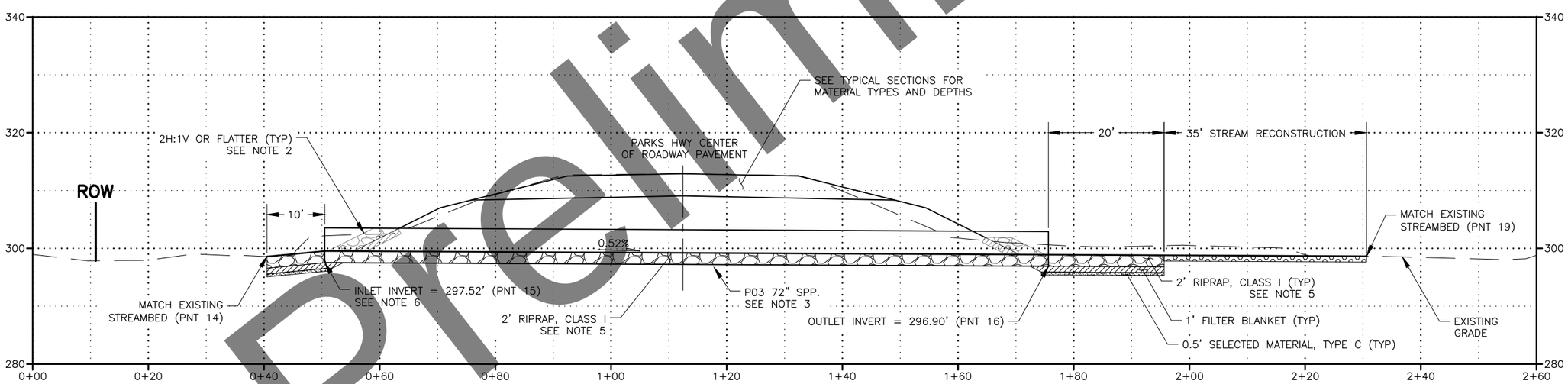

P03 PROFILE VIEW

P03 CULVERT HYDRAULIC AND HYDROLOGIC SUMMARY

DRAINAGE AREA* = 2.3 SQUARE MILES		
EXCEEDANCE PROBABILITY	2% (DESIGN EVENT)	1%
RETURN PERIOD	50 YEAR (Q_{50})	100 YEAR (Q_{100})
DESIGN DISCHARGE	33.1 CFS	41.3 CFS
DESIGN HIGH WATER ELEVATION	302.4 FT	302.7 FT
ANTICIPATED ADDITIONAL BACKWATER AT Q_{100} = 0.0 FT		

* P03 IS HYDRAULICALLY CONNECTED TO P01 AND P02. STREAM SPLITS APPROXIMATELY 1,500 FEET UPSTREAM OF THE HIGHWAY EMBANKMENT. DRAINAGE AREA SHOWN IS ASSOCIATED WITH ALL THREE CULVERTS.

NOTES:

1. SEE SHEET E6 FOR SECTIONS AND SHEET E25 FOR STREAM RECONSTRUCTION DETAILS.
2. PLACE RIPRAP ON FORESLOPE AT CULVERT INLET AND OUTLET TO HEIGHT SHOWN ON SHEET E6. MAINTAIN 2H:1V OR FLATTER SLOPES.
3. PIPE SHALL BE 10 GAGE OR THICKER.
4. MATERIAL THICKNESSES ARE MEASURED PERPENDICULAR TO THE FINISHED GROUND SURFACE.
5. AFTER PLACEMENT OF RIPRAP, FILL VOIDS IN RIPRAP WITHIN PIPE AND STREAM CHANNEL AS SHOWN ON SHEET E6. VOID FILL MATERIAL SHALL BE PER SPECIFICATION 690
6. INLET INVERT TO BE ELEVATED AS SHOWN TO MAINTAIN UPSTREAM WETLANDS.
7. AFTER PLACEMENT OF OTHER FILL MATERIALS, FILL REMAINING SCOUR HOLE WITH SELECTED MATERIAL, TYPE C.
8. LAYOUT POINT SUMMARY TABLE SHOWN ON SHEET E6.

STATE OF ALASKA
4010
JANIE LUSEL
2916
REGISTERED PROFESSIONAL ENGINEER
PSUBMITTAL

AWR ENGINEERING, LLC
4011 ARCTIC BOULVARD, SUITE 106
ANCHORAGE, AK 99503
(907) 441-2973
AECL 1407

STATE OF ALASKA
DEPARTMENT OF TRANSPORTATION
AND PUBLIC FACILITIES

PARKS HIGHWAY PHASE 1 – CULVERT REPLACEMENT

P03 AT STA 490+10 (MP 107.7) CULVERT LAYOUT

Preliminary

DATE	TIME	SCALE	DESIGNED BY	CHECKED BY	DRAFTED BY
4/26/2023	9:24 AM	1"=10'	AH/LJ	JD	AH/LJ

DRAWING LOCATION
...\Jobs\1204 HDL\08 - Parks Hwy Culverts\CAD\PIH\00592-E01-E06-MP107.DWG

NO.	DATE	REVISION

STATE	PROJECT DESIGNATION	YEAR	SHEET NO.	TOTAL SHEETS
ALASKA	TBD/CFHWY01083	2023	E6	E27

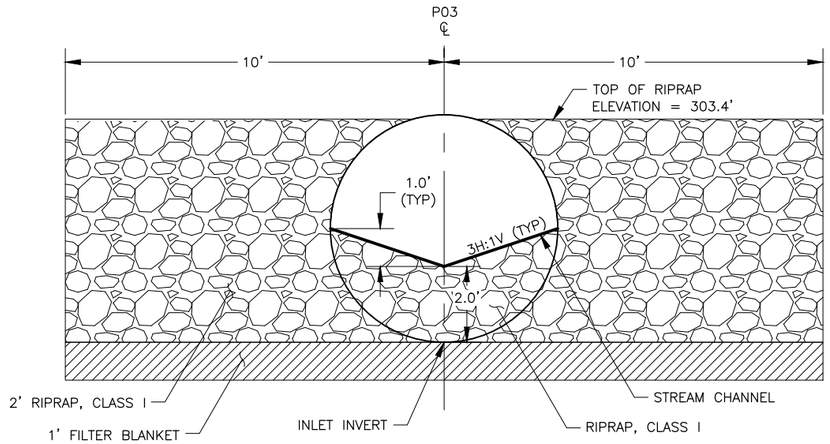

SECTION G–G

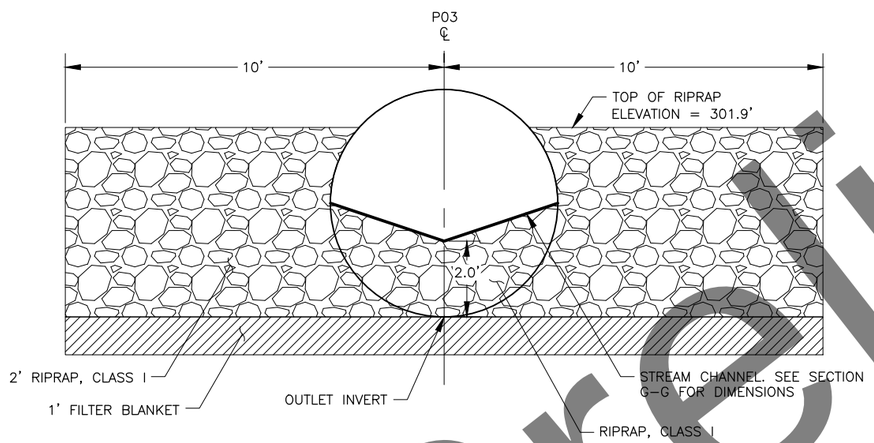

SECTION H–H

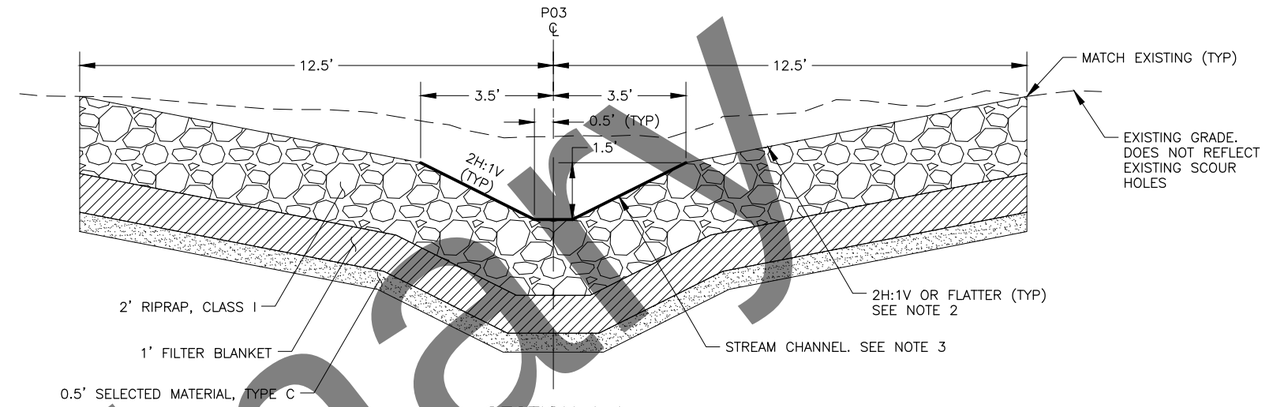

SECTION I–I

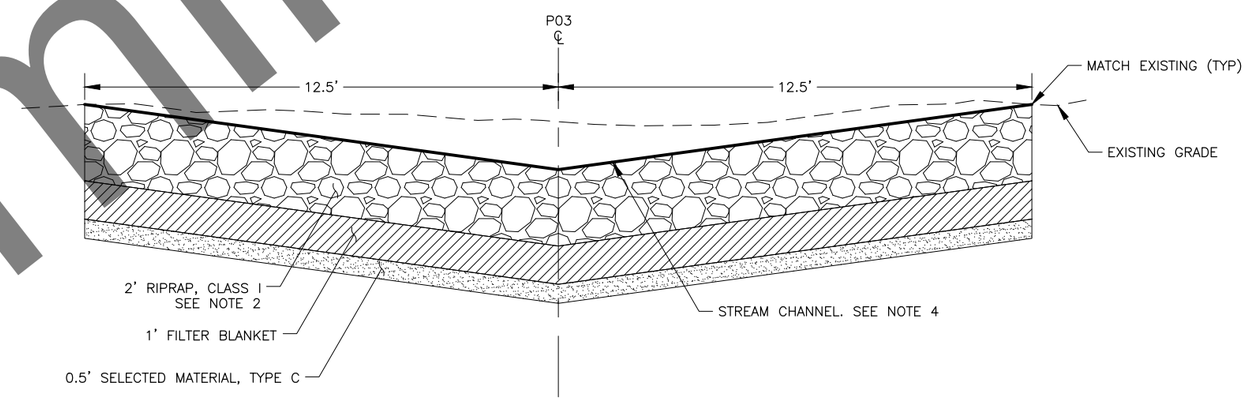

SECTION J–J

LAYOUT POINT SUMMARY

POINT	CULVERT STATION	NORTHING	EASTING	REMARKS
14	0+40.51	49742.2324	288749.8096	ME, 298.6' ±
15	0+50.51	49746.8822	288758.6629	INLET
16	1+75.61	49805.0503	288869.4170	OUTLET
17	1+81.05	49807.5816	288874.2368	PI
18	2+12.09	49837.5623	288882.2689	PI
19	2+30.61	49849.2223	288896.6550	ME, 298.6' ±

NOTES:

1. MATERIAL THICKNESSES ARE MEASURED PERPENDICULAR TO THE FINISHED GROUND SURFACE.
2. FLATTEN APRON SIDE SLOPES TO MATCH EXISTING GROUND OVER LENGTH OF APRON.
3. ADJUST CHANNEL DIMENSIONS TO TRANSITION BETWEEN THE CULVERT BARREL AND RECONSTRUCTED CHANNEL OVER LENGTH OF APRON.
4. ADJUST CHANNEL SIDE SLOPES AND DEPTH TO TRANSITION BETWEEN THE CULVERT BARREL AND THE EXISTING UPSTREAM WETLAND AREA OVER LENGTH OF APRON.

STATE OF ALASKA
49th
JANIE L. USEL
12916
REGISTERED PROFESSIONAL ENGINEER
PS SUBMITTAL

AWR ENGINEERING, LLC
4011 ARCTIC BOULVARD, SUITE 106
ANCHORAGE, AK 99503
(907) 441–2973
AECL 1407

STATE OF ALASKA
DEPARTMENT OF TRANSPORTATION
AND PUBLIC FACILITIES

PARKS HIGHWAY PHASE 1 – CULVERT REPLACEMENT

P03 AT STA 490+10 (MP 107.7) CULVERT DETAILS

Preliminary

DRAWING LOCATION
...\Jobs\1204 HDL\08 – Parks Hwy Culverts\CAD\PIH\00592-E01-E06-MP107.DWG

DATE	TIME	SCALE	DESIGNED BY	CHECKED BY	DRAFTED BY
4/26/2023	9:25 AM	1"=2'	AH/LJ	JJD	AH/LJ

NO.	DATE	REVISION

STATE	PROJECT DESIGNATION	YEAR	SHEET NO.	TOTAL SHEETS
ALASKA	TBD/CFHWY01083	2023	E7	E27

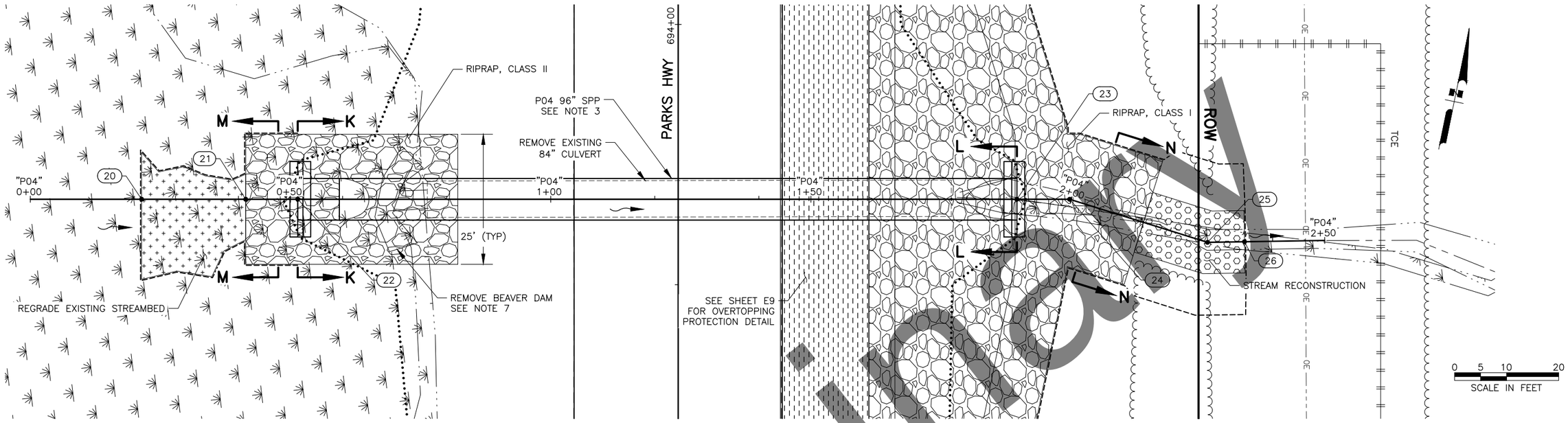

P04 PLAN VIEW

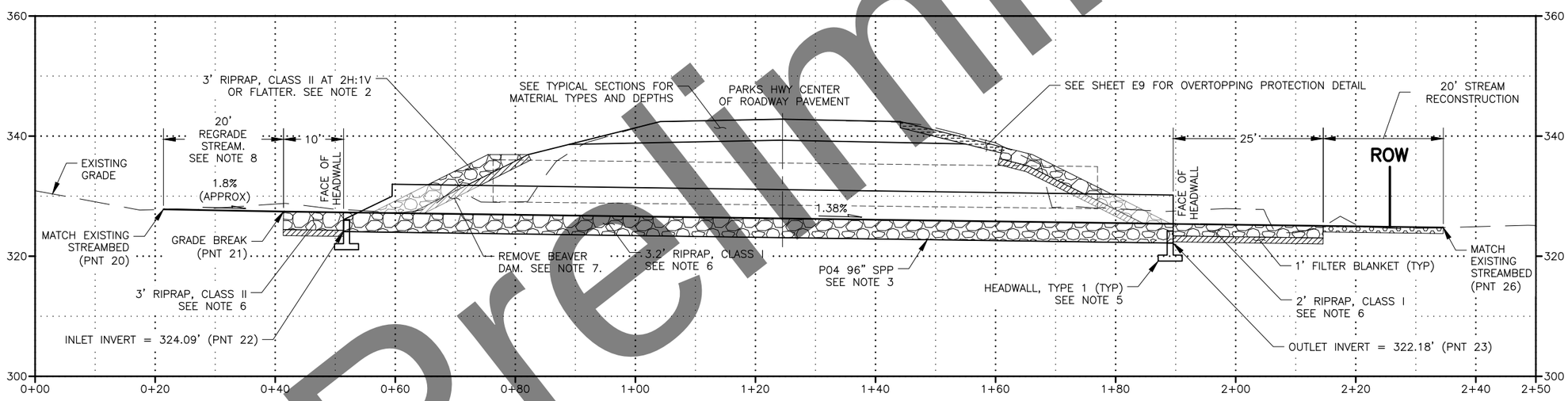

P04 PROFILE VIEW

P04 CULVERT HYDRAULIC AND HYDROLOGIC SUMMARY

DRAINAGE AREA = 1.3 SQUARE MILES		
EXCEEDANCE PROBABILITY	2% (DESIGN EVENT)	1%
RETURN PERIOD	50 YEAR (Q_{50})	100 YEAR (Q_{100})
DESIGN DISCHARGE	116.4 CFS	144.6 CFS
DESIGN HIGH WATER ELEVATION	331.6 FT	332.6 FT
ANTICIPATED ADDITIONAL BACKWATER AT Q_{100} = 0.0 FT		

NOTES:

1. SEE SHEET E8 FOR SECTIONS AND SHEET E25 FOR STREAM RECONSTRUCTION DETAILS.
2. PLACE RIPRAP ON FORESLOPE AT CULVERT INLET AND OUTLET TO HEIGHT SHOWN ON SHEET E8. MAINTAIN 2H:1V OR FLATTER SLOPES.
3. PIPE SHALL BE 10 GAGE OR THICKER. BEVEL PIPE AT INLET ONLY WITH 2H:1V SLOPE DIMENSIONS PER STANDARD PLAN D-07.00.
4. MATERIAL THICKNESSES ARE MEASURED PERPENDICULAR TO THE FINISHED GROUND SURFACE.
5. PRECAST OR CAST-IN-PLACE HEADWALLS MAY BE USED. SEE STANDARD PLANS D-30.11 OR D-31.01 FOR DETAILS. USE A2/D2 DIMENSIONS ON STANDARD PLAN.
6. AFTER PLACEMENT OF RIPRAP, FILL VOIDS IN RIPRAP WITHIN PIPE AND STREAM CHANNEL AS SHOWN ON SHEET E8. VOID FILL MATERIAL SHALL BE PER SPECIFICATION 690.
7. REMOVE BEAVER DAM CLOSEST TO THE HIGHWAY. BEAVER DAM IS APPROXIMATELY 3' TALL, 4' WIDE, AND 20' LONG. LARGER UPSTREAM BEAVER DAM TO REMAIN. THIS WORK IS SUBSIDIARY TO PAY ITEM 202.
8. SEE SPECIFICATION 690 FOR ADDITIONAL REGRADE STREAM CONSTRUCTION DETAILS.
9. LAYOUT POINT SUMMARY TABLE SHOWN ON SHEET E8.
10. DOWNSTREAM STREAM RECONSTRUCTION MAY REQUIRE OVERHEAD ELECTRIC SAFETY WATCH. SEE SPECIFICATION 683 FOR ADDITIONAL DETAILS.

STATE OF ALASKA
JAN MUSEL
49716
2916
REGISTERED PROFESSIONAL ENGINEER
PSEUDO SUBMITTAL

AWR ENGINEERING, LLC
4011 ARCTIC BOULVARD, SUITE 106
ANCHORAGE, AK 99503
(907) 441-2973
AECL 1407

STATE OF ALASKA
DEPARTMENT OF TRANSPORTATION
AND PUBLIC FACILITIES

PARKS HIGHWAY PHASE 1 – CULVERT REPLACEMENT

P04 AT STA 693+66 (MP 111.5) CULVERT LAYOUT

DATE	TIME	SCALE	DESIGNED BY	CHECKED BY	DRAFTED BY
4/26/2023	9:46 AM	1"=10'	AH/LJ	JJD	AH/LJ

DRAWING LOCATION
...\Jobs\1204 HDL\08 – Parks Hwy Culverts\CAD\PIH\00592-E07-E08-MP111.DWG

Preliminary

NO.	DATE	REVISION

STATE	PROJECT DESIGNATION	YEAR	SHEET NO.	TOTAL SHEETS
ALASKA	TBD/CFHWY01083	2023	E8	E27

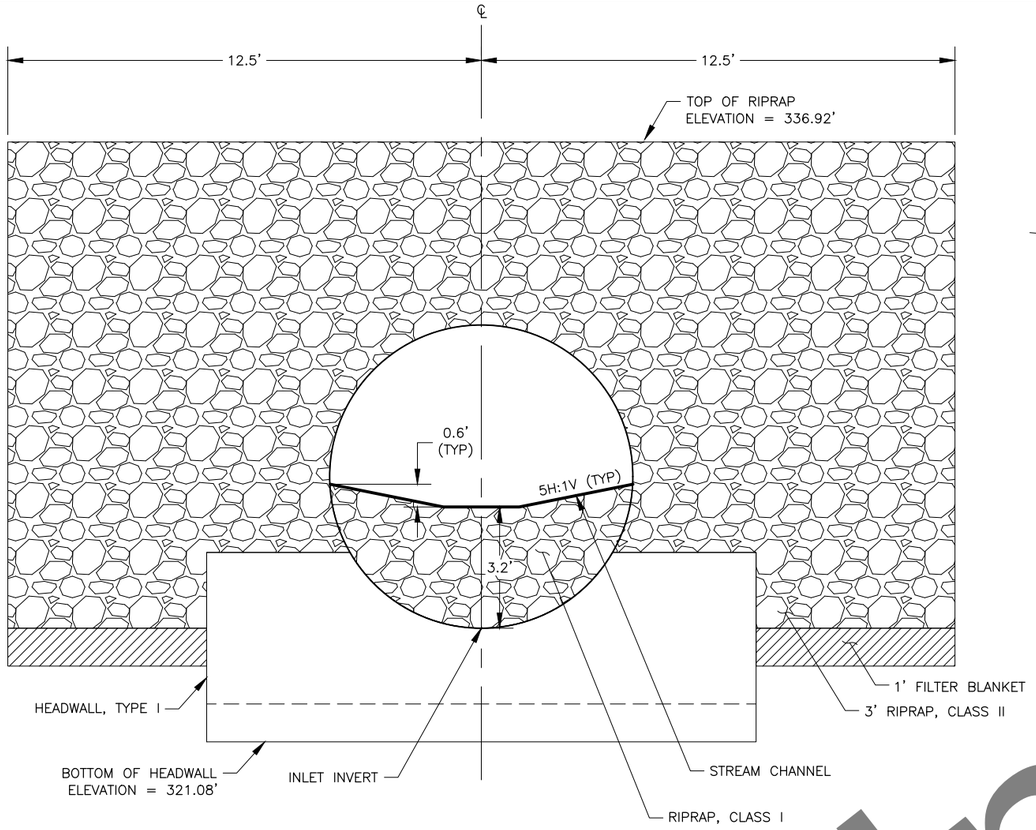

SECTION K–K

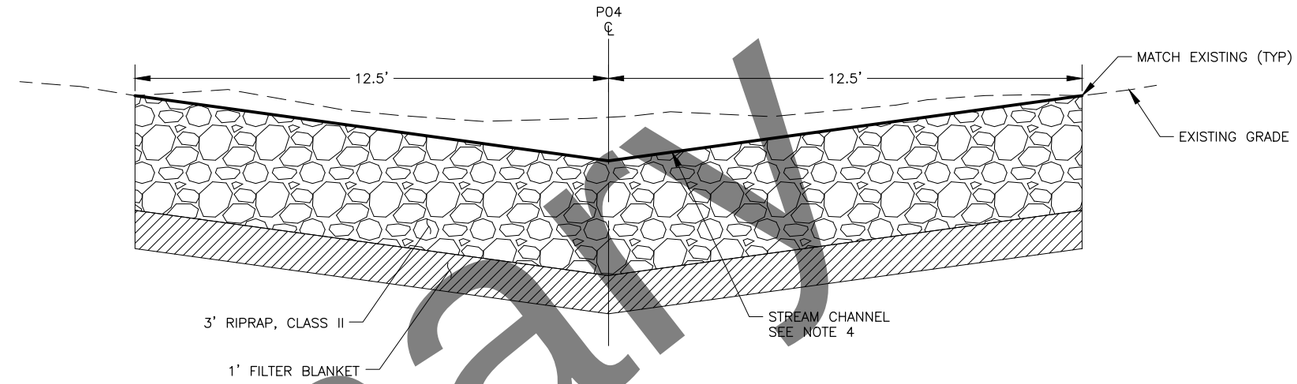

SECTION M–M

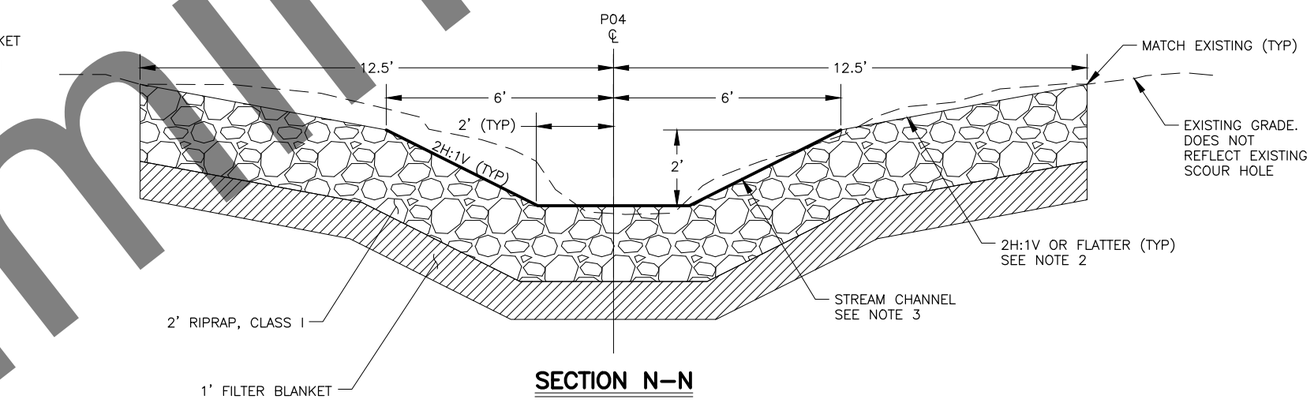

SECTION N–N

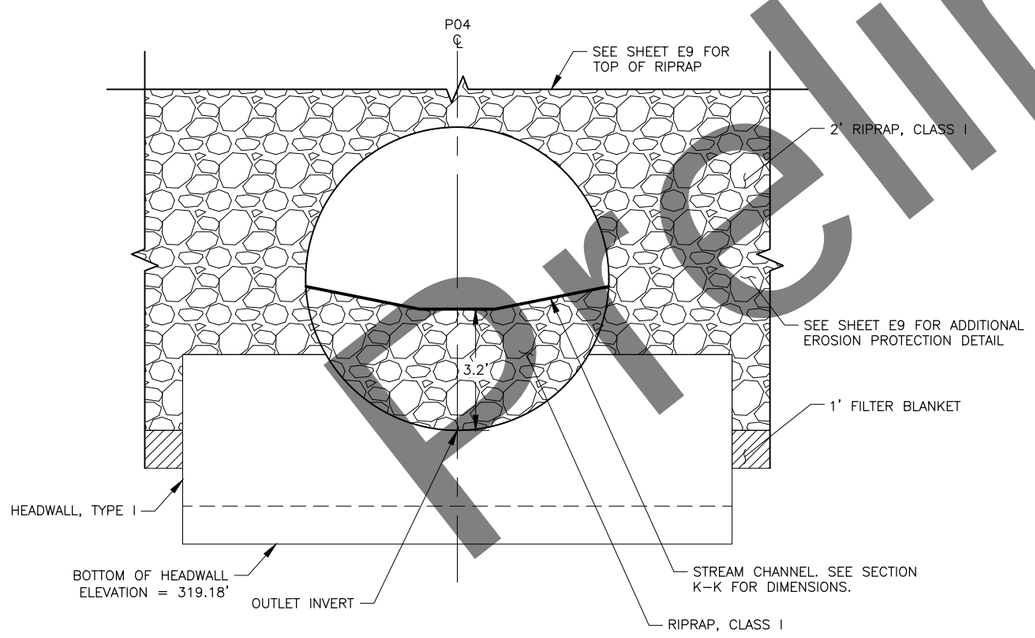

SECTION L–L

LAYOUT POINT SUMMARY

POINT	CULVERT STATION	NORTHING	EASTING	REMARKS
20	0+21.39	68875.7087	286479.6910	ME, 327.8' ±
21	0+41.39	68879.7343	286499.2817	GRADE BREAK
22	0+51.39	68881.7471	286509.0770	INLET
23	1+89.59	68909.5643	286644.4485	OUTLET
24	1+99.72	68911.6033	286654.3712	PI
25	2+27.47	68908.8277	286681.9858	PI
26	2+34.59	68910.3723	286688.9323	ME, 324.8' ±

NOTES:

1. MATERIAL THICKNESS IS MEASURED PERPENDICULAR TO THE FINISHED GROUND SURFACE.
2. FLATTEN APRON SIDE SLOPES TO MATCH EXISTING GROUND OVER LENGTH OF APRON.
3. ADJUST STREAM CHANNEL DIMENSIONS TO TRANSITION BETWEEN THE CULVERT BARREL AND RECONSTRUCTED STREAM OVER LENGTH OF APRON.
4. ADJUST STREAM CHANNEL SIDE SLOPES AND DEPTH TO TRANSITION BETWEEN THE CULVERT BARREL AND THE EXISTING UPSTREAM WETLAND AREA OVER LENGTH OF APRON.

STATE OF ALASKA
4012
JANIE LUSEL
2916
REGISTERED PROFESSIONAL ENGINEER
PSE SUBMITTAL

AWR ENGINEERING, LLC
4011 ARCTIC BOULVARD, SUITE 106
ANCHORAGE, AK 99503
(907) 441–2973
AECL 1407

STATE OF ALASKA
DEPARTMENT OF TRANSPORTATION
AND PUBLIC FACILITIES

PARKS HIGHWAY PHASE 1 – CULVERT REPLACEMENT

P04 AT STA 693+66 (MP 111.5) CULVERT LAYOUT

DATE	TIME	SCALE	DESIGNED BY	CHECKED BY	DRAFTED BY
4/26/2023	9:46 AM	1"=2'	AH/LJ	JD	AH/LJ

DRAWING LOCATION
...\Jobs\1204 HDL\08 – Parks Hwy Culverts\CAD\PIH\00592–E07–E08–MP111.DWG

Preliminary

NO.	DATE	REVISION

STATE	PROJECT DESIGNATION	YEAR	SHEET NO.	TOTAL SHEETS
ALASKA	TBD/CFHWY01083	2023	E9	E27

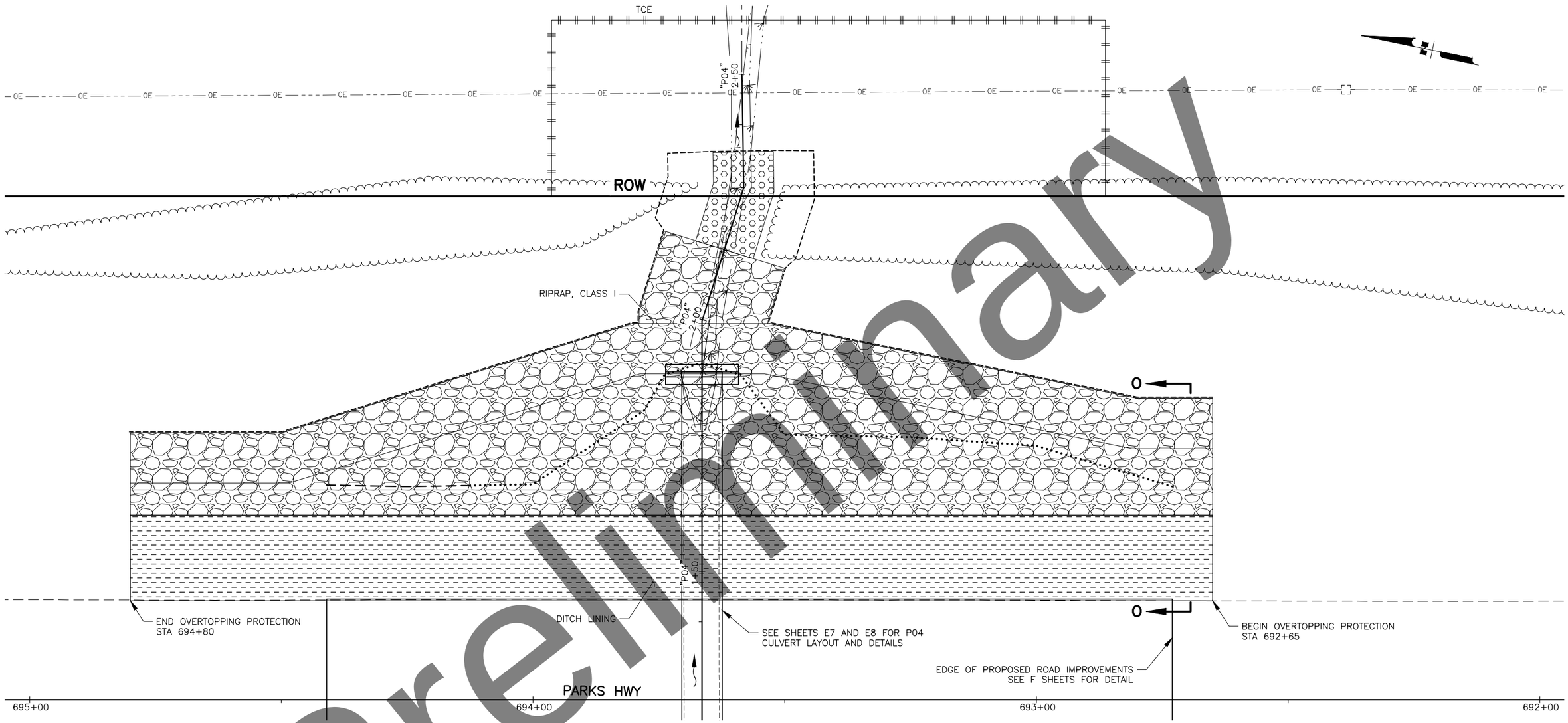

P04 OVERTOPPING PROTECTION PLAN VIEW

SCALE: 1"=10'

0 5 10 20
SCALE IN FEET

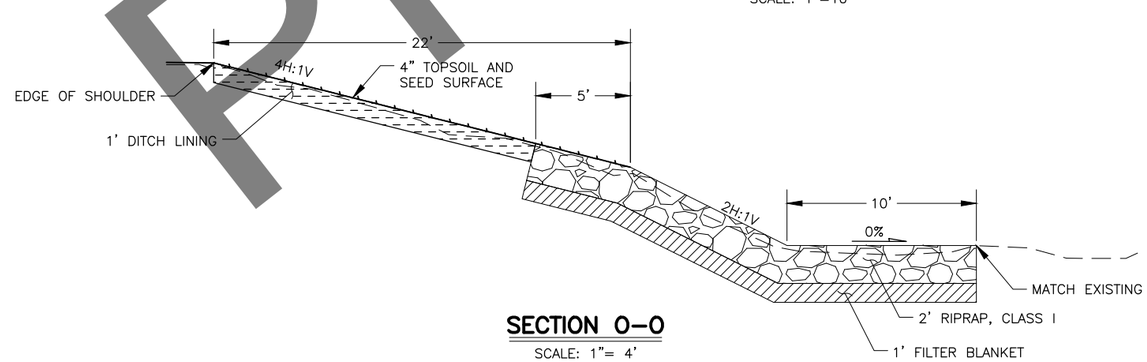

SECTION O–O

SCALE: 1"= 4'

NOTES:

1. MATERIAL THICKNESS IS MEASURED PERPENDICULAR TO THE FINISHED GROUND SURFACE.

STATE OF ALASKA
JANIE MUSEL
49216
PROFESSIONAL ENGINEER
PSCM
SUBMITTAL

AWR ENGINEERING, LLC
4011 ARCTIC BOULVARD, SUITE 106
ANCHORAGE, AK 99503
(907) 441-2973
AECL 1407

STATE OF ALASKA
DEPARTMENT OF TRANSPORTATION
AND PUBLIC FACILITIES

PARKS HIGHWAY PHASE 1 –
CULVERT REPLACEMENT

P04 AT STA 693+66
(MP 111.5) OVERTOPPING
PROTECTION DETAIL

DRAWING LOCATION	DATE	TIME	SCALE	DESIGNED BY	CHECKED BY	DRAFTED BY
...\Jobs\1204 HDL\08 – Parks Hwy Culverts\CAD\PIH\00592-E09-MP111.DWG	4/26/2023	9:49 AM	SEE SHT	AH/LJ	JJD	AH/LJ

Preliminary

NO.	DATE	REVISION

STATE	PROJECT DESIGNATION	YEAR	SHEET NO.	TOTAL SHEETS
ALASKA	TBD/CFHWY01083	2023	E10	E27

DESIGN
CHECK
DRAFT
DESIGNED BY
CHECKED BY
DRAFTED BY
SCALE 1" = 10'
DATE 4/21/2023 TIME 2:01 PM

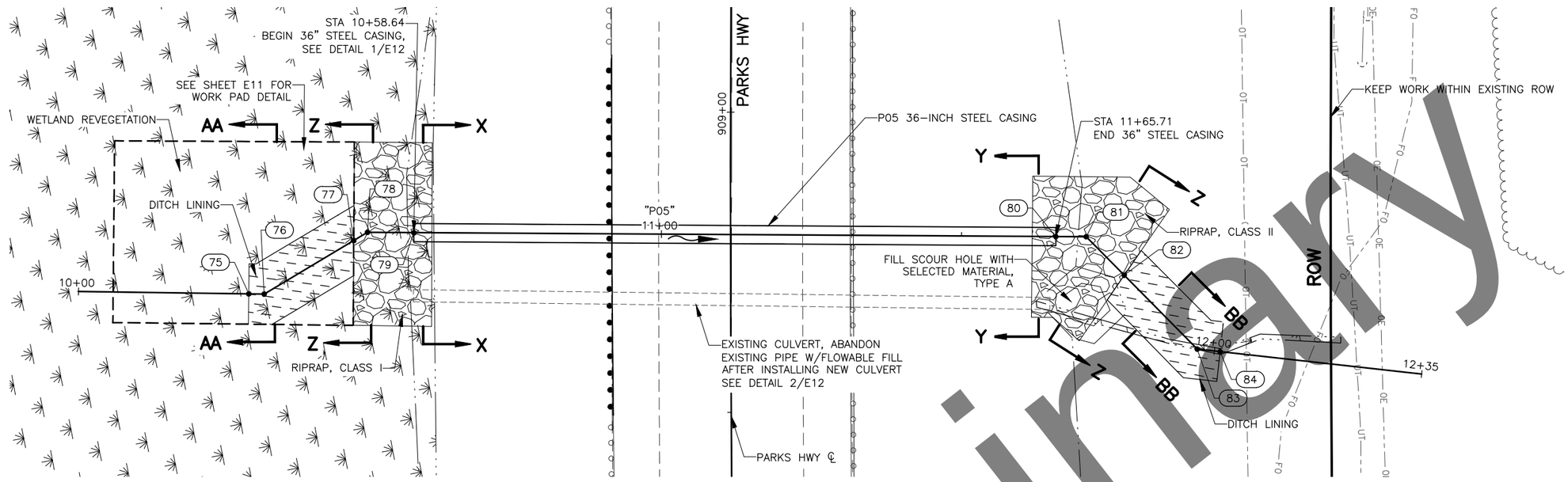

P05 PLAN VIEW

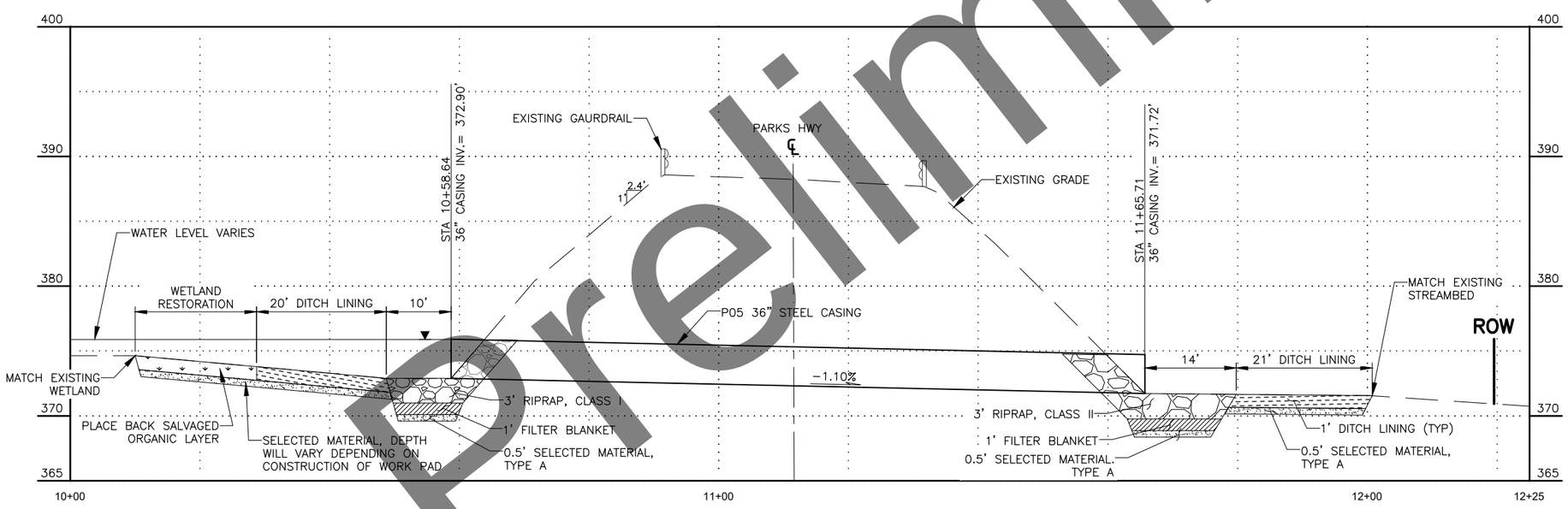

P05 PROFILE VIEW

LAYOUT POINT SUMMARY

POINT	NORTHING	EASTING	REMARKS
75	89749.5283	287143.8637	ME, ±373.81'
76	89749.8273	287146.4075	PI
77	89760.6255	287160.0434	BEGIN RIP RAP
78	89762.2756	287162.1271	PI
79	89763.2402	287169.7942	PIPE INLET
80	89776.5951	287275.94.62	PIPE OUTLET
81	89777.2301	287280.9933	PI
82	89771.7103	287288.1019	BEGIN DITCH LINING
83	89761.0954	287301.7720	PI
84	89761.1745	287305.6186	ME, ±371.55'

NOTES:

1. STEEL CASING SHALL BE INSTALLED BY MEANS OF AUGER BORING OR PIPE RAMMING. SEE SPECIFICATION FOR TRENCHLESS PIPE DETAILS. STEEL CASING MUST BE INSTALLED FROM INLET END TO OUTLET END. INSTALLATION OF STEEL CASING FROM OUTLET END WILL NOT BE ALLOWED.
2. AFTER 36-INCH STEEL CASING IS INSTALLED, INSTALL WEIR PER DETAIL 1/E12.
3. PLACE RIPRAP ON FORESLOPE AT CULVERT INLET AND OUTLET TO HEIGHT SHOWN ON SHEET E12. MAINTAIN 2H:1V OR FLATTER SLOPES.
4. SEE SHEET E12 FOR CROSS SECTIONS SHOWN ON THIS SHEET.
5. SEE SHEET E11 FOR WORK PAD DETAILS.

Preliminary

STATE OF ALASKA
RUSS FORTIER
CE-XXXX
REGISTERED PROFESSIONAL ENGINEER
PRELIMINARY

STEPHL ENGINEERING, LLC
3900 ARCTIC BLVD, STE 204
ANCHORAGE, AK 99503
(907) 562-1468
#AECL1308-AK

STATE OF ALASKA
DEPARTMENT OF TRANSPORTATION
AND PUBLIC FACILITIES

PARKS HIGHWAY PHASE 1 – CULVERT REPLACEMENT

P05 AT STA 908+69
MP(115.6) CULVERT LAYOUT

DRAWING LOCATION
S:\2206 PARKS HWY MP 99-163\07 - CADD\2022-12-14 STEPHL\00592 - E11 - E13 - MP115 - PS&E.DWG BY JMILLER

NO.	DATE	REVISION

STATE	PROJECT DESIGNATION	YEAR	SHEET NO.	TOTAL SHEETS
ALASKA	TBD/CFHWY01083	2023	E11	E27

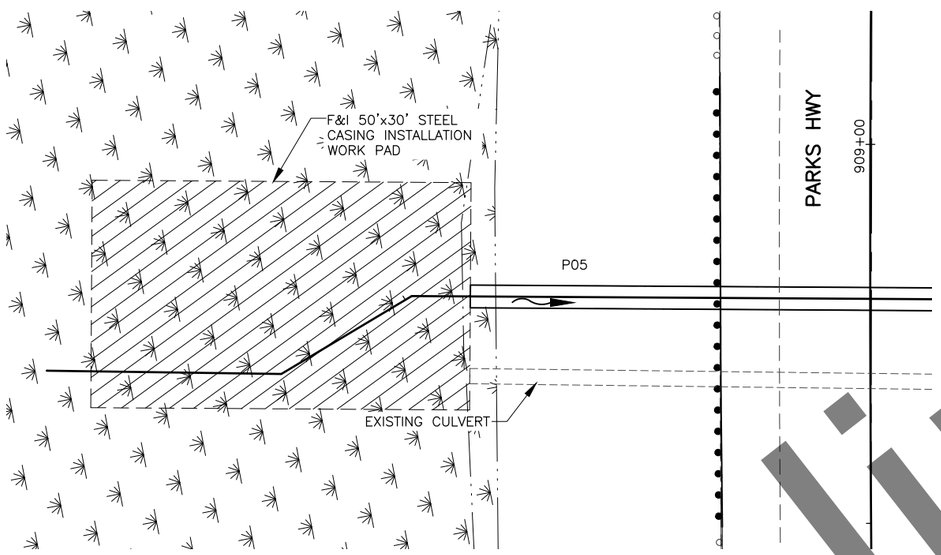

TEMPORARY STEEL CASING WORK PAD

0 5 10 20
SCALE IN FEET
HORIZONTAL TO VERTICAL SCALE RATIO 1:2

NOTES:

1. CONTRACTOR SHALL CONSTRUCT WORK PAD AND DEWATER AREA AS NECESSARY TO INSTALL NEW CULVERT.
2. ORGANIC MATTER REMOVED SHALL BE SALVAGED AND SAVED TO PLACE BACK PER SECTION AA–AA ONCE THE CULVERT IS INSTALLED. APPROXIMATE DEPTH OF ORGANIC MATTER IS 2–10 INCHES.

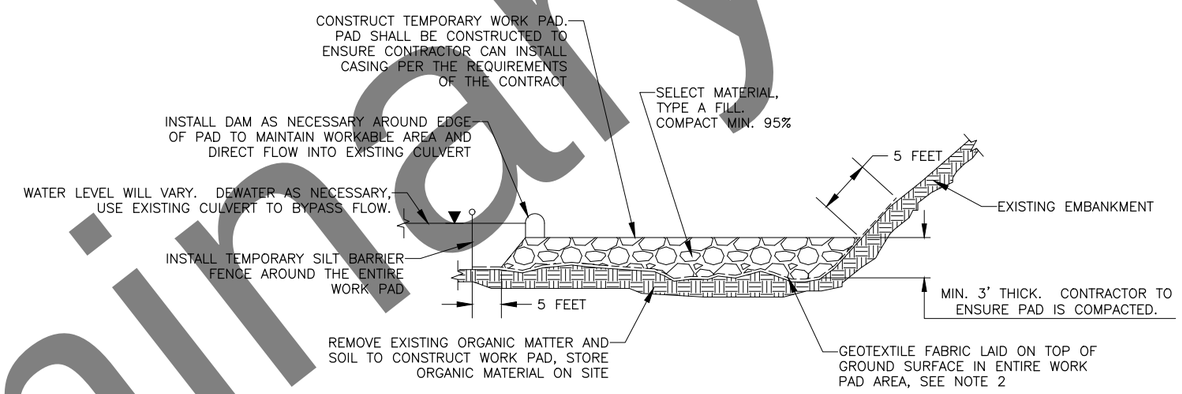

TEMPORARY STEEL CASING WORK PAD

NOTES:

1. ORGANIC MATTER SHOULD BE REMOVED ON–SITE AFTER CULVERT IS INSTALLED. INSTALL ORGANIC MATTER FROM EDGE OF DITCH LINING TO EDGE OF DISTURBED MATERIAL.
2. GEOTEXTILE MATERIAL SHALL BE CLASS A GEOTEXTILE. ALL SEAMS SHALL OVERLAP A MINIMUM OF 4 FEET.
3. GEOTEXTILE SHALL BE USED TO PROTECT EXISTING GROUND SURFACE AND VEGETATION FROM DAMAGE FROM TEMPORARY FILL PAD. EXCAVATION OF EXISTING GROUND SURFACE OR EXISTING VEGETATION THAT IS UNDER THE TEMPORARY FILL FOOTPRINT WILL NOT BE ALLOWED EXCEPT WHERE NEEDED UNDER THE PERMANENT FILL FOOTPRINT AREAS. CONSTRUCTION OF THE PAD SHOULD BE EXECUTED IN A WAY WHERE EQUIPMENT IS NEVER OPERATED ON THE EXISTING GROUND SURFACE. THE CONTRACTOR SHALL PUSH STRUCTURAL FILL FROM THE ROADWAY AND OPERATE ON STRUCTURAL FILL AT ALL TIMES.
4. REMOVE THE TEMPORARY FILL WHEN THE WORK IS COMPLETE. CAREFULLY REMOVE THE TEMPORARY FILL AND GEOTEXTILE MATERIAL WITHOUT DAMAGING THE UNDERLYING GEOTEXTILE FABRIC, EXISTING VEGETATION, AND SOIL.

Preliminary

STATE OF ALASKA
49TH
RUSS PORTER
CE-XXXX
REGISTERED PROFESSIONAL ENGINEER
PRELIMINARY

STEPHL ENGINEERING, LLC
3900 ARCTIC BLVD, STE 204
ANCHORAGE, AK 99503
(907) 562–1468
#AECL1308–AK

STATE OF ALASKA
DEPARTMENT OF TRANSPORTATION
AND PUBLIC FACILITIES

PARKS HIGHWAY PHASE 1 – CULVERT REPLACEMENT

P05 AT STA 908+69
MP(115.6) WORK PAD LAYOUT

DESIGN	DESIGNED BY	SCALE	DATE	TIME
CHECK	CHECKED BY	1" = 10'	4/20/2023	9:54 AM
DRAFT	DRAFTED BY			

DRAWING LOCATION
S:\2206 PARKS HWY MP 99-163\07 - CADD\2022-12-14 STEPHL\00592 - E11 - E13 - MP115 - PS&E.DWG BY JMILLER

NO.	DATE	REVISION

STATE	PROJECT DESIGNATION	YEAR	SHEET NO.	TOTAL SHEETS
ALASKA	TBD/CFHWY01083	2023	E12	E27

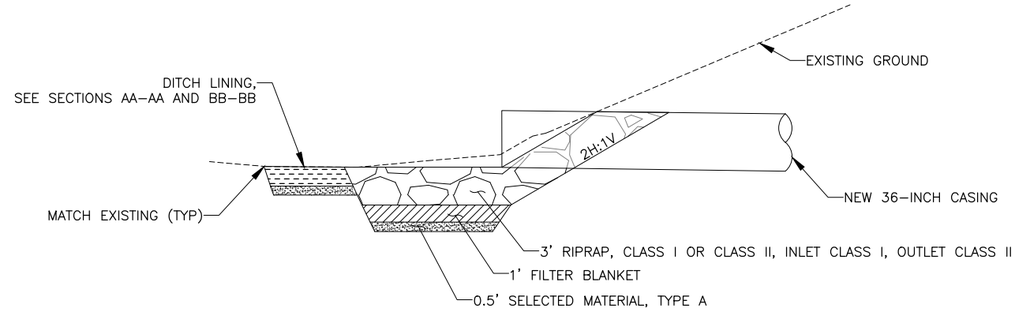

P05 PIPE INLET/OUTLET RIPRAP

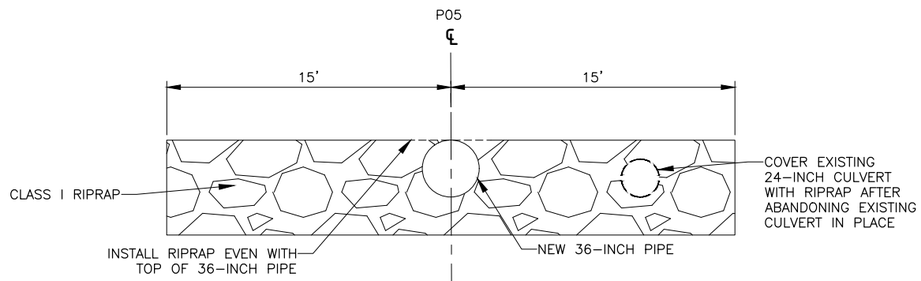

SECTION X–X

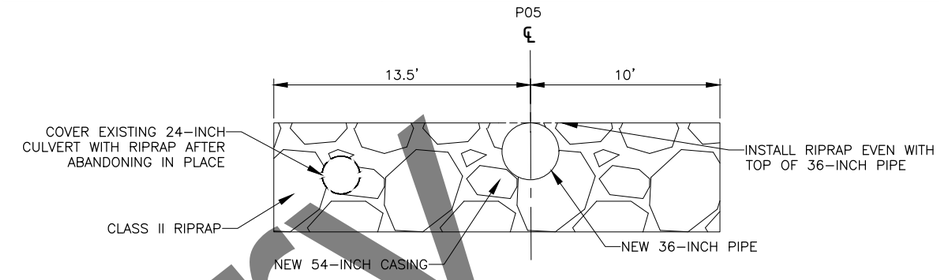

SECTION Y–Y

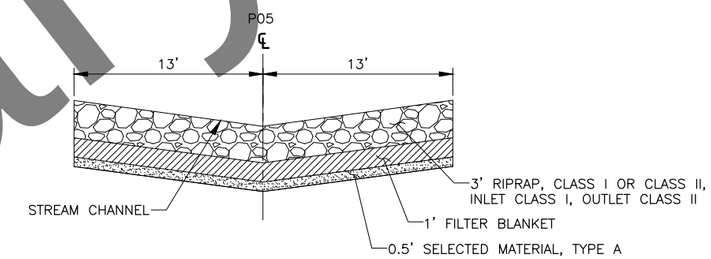

SECTION Z–Z

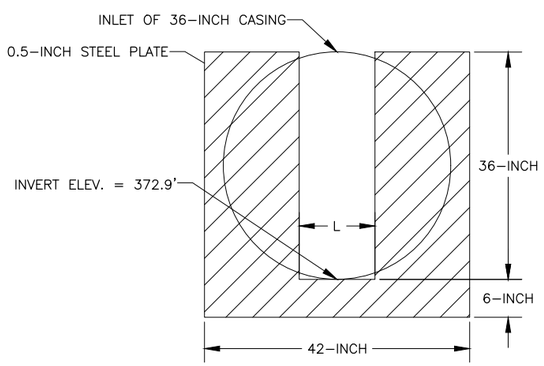

SLOPE OF PIPE	WEIR CREST LENGTH (L)
0.1%	15–INCH
1.1%	13–INCH
2.1%	12–INCH

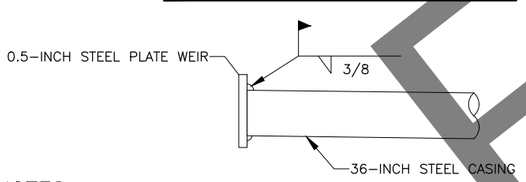

NOTES:

1. PRIOR TO INSTALLING WEIR, CONFIRM SLOPE OF INSTALLED PIPE WITH ENGINEER. ENGINEER WILL DIRECT CONTRACTOR ON WHAT WEIR CREST LENGTH SHALL BE CONSTRUCTED.
2. WELD SHALL BE AROUND THE FULL CIRCUMFERENCE OF THE PIPE END.

1 / E12 **WEIR DETAIL**

SCALE: NTS

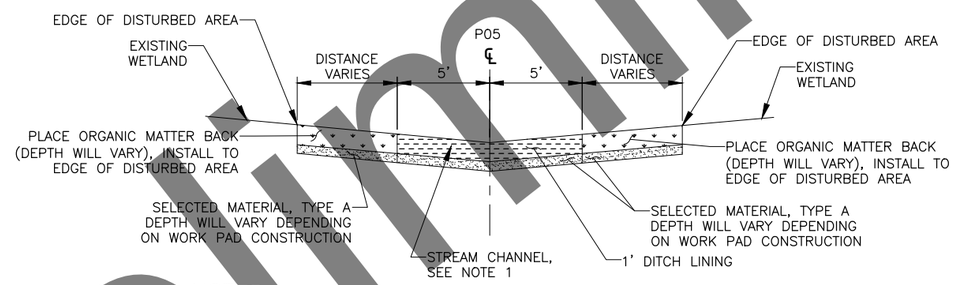

NOTES:

1. ADJUST CHANNEL SIDE SLOPES AND DEPTH TO TRANSITION BETWEEN THE CULVERT INVERT AND THE EXISTING WETLAND AREAS OVER THE LENGTH OF THE APRONS.

SECTION AA–AA

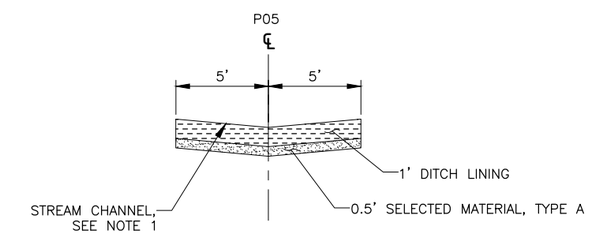

SECTION BB–BB

GROUTING NOTES:

1. CONCRETE PLUG SHALL SEAL THE INLET AND OUTLET OF THE EXISTING CULVERT. INSTALL FILL AND VENT TUBES AS NECESSARY TO FILL THE REMAINING ANNULAR SPACE OF THE CULVERT COMPLETELY WITH GROUT. CONCRETE PLUG SHALL BE LONG ENOUGH TO WITHSTAND GROUTING PRESSURES.
2. FILL THE EXISTING CULVERT WITH GROUT FROM THE DOWNSTREAM TO THE UPSTREAM END.
3. ABANDON EXISTING CULVERT AFTER NEW CULVERT AND STREAM RESTORATION WORK IS COMPLETE. EXISTING CULVERT IS TO REMAIN IN SERVICE TO BYPASS STREAM FLOW UNTIL NEW CULVERT WORK IS COMPLETE AND STREAM FLOW CAN BE RE–ROUTED THROUGH NEW CULVERT.

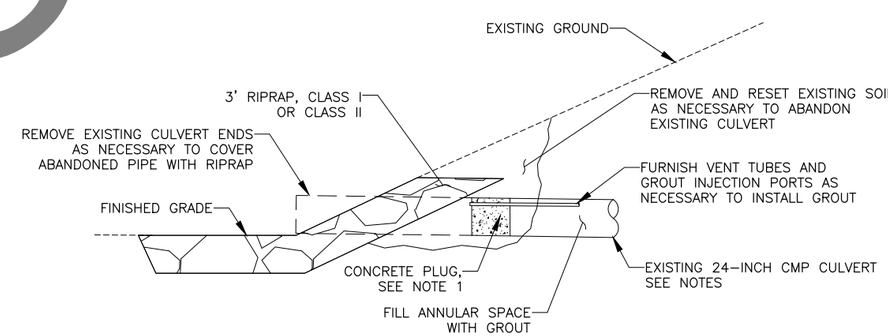

2 / E12 **P05 PIPE ABANDONMENT**

SCALE: NTS

STATE OF ALASKA
RUSS FORTER
CE–XXXX
REGISTERED PROFESSIONAL ENGINEER
PSE REVIEW

STEPHL ENGINEERING, LLC
3900 ARCTIC BLVD, STE 204
ANCHORAGE, AK 99503
(907) 562–1468
#AECL1308–AK

STATE OF ALASKA
DEPARTMENT OF TRANSPORTATION AND PUBLIC FACILITIES

PARKS HIGHWAY PHASE 1 – CULVERT REPLACEMENT

P05 AT STA 908+69
MP(115.6) DETAILS

DESIGN / CHECK / DRAFT
DESIGNED BY / CHECKED BY / DRAFTED BY
SCALE 1" = 10'
DATE 4/20/2023 TIME 9:56 AM

DRAWING LOCATION
S:\2206 PARKS HWY MP 99-163\07 - CADD\2022-12-14 STEPHL\00592 - E11 - E13 - MP115 - PS&E.DWG BY JMILLER

Preliminary

NO.	DATE	REVISION

STATE	PROJECT DESIGNATION	YEAR	SHEET NO.	TOTAL SHEETS
ALASKA	TBD/CFHWY01083	2023	E13	E27

Preliminary

STATE OF ALASKA
RUSS FORTER
CE-XXXX
REGISTERED PROFESSIONAL ENGINEER

Preliminary

STEPHL ENGINEERING, LLC
3900 ARCTIC BLVD, STE 204
ANCHORAGE, AK 99503
(907) 562-1468
#AECL130B-AK

STATE OF ALASKA
DEPARTMENT OF TRANSPORTATION
AND PUBLIC FACILITIES

PARKS HIGHWAY PHASE 1 – CULVERT REPLACEMENT

P05 CULVERT ACCESS

DESIGN
CHECK
DRAFT

DESIGNED BY
CHECKED BY
DRAFTED BY

SCALE 1"=10'

DATE 4/20/2023 TIME 9:57 AM

DRAWING LOCATION
S:\2206 PARKS HWY MP 99-163\07 - CADD\2022-12-14 STEPHL\00592 - E11 - E13 - MP115 - PS&E.DWG BY JMILLER

NO.	DATE	REVISION

STATE	PROJECT DESIGNATION	YEAR	SHEET NO.	TOTAL SHEETS
ALASKA	TBD/CFHWY01083	2023	E14	E27

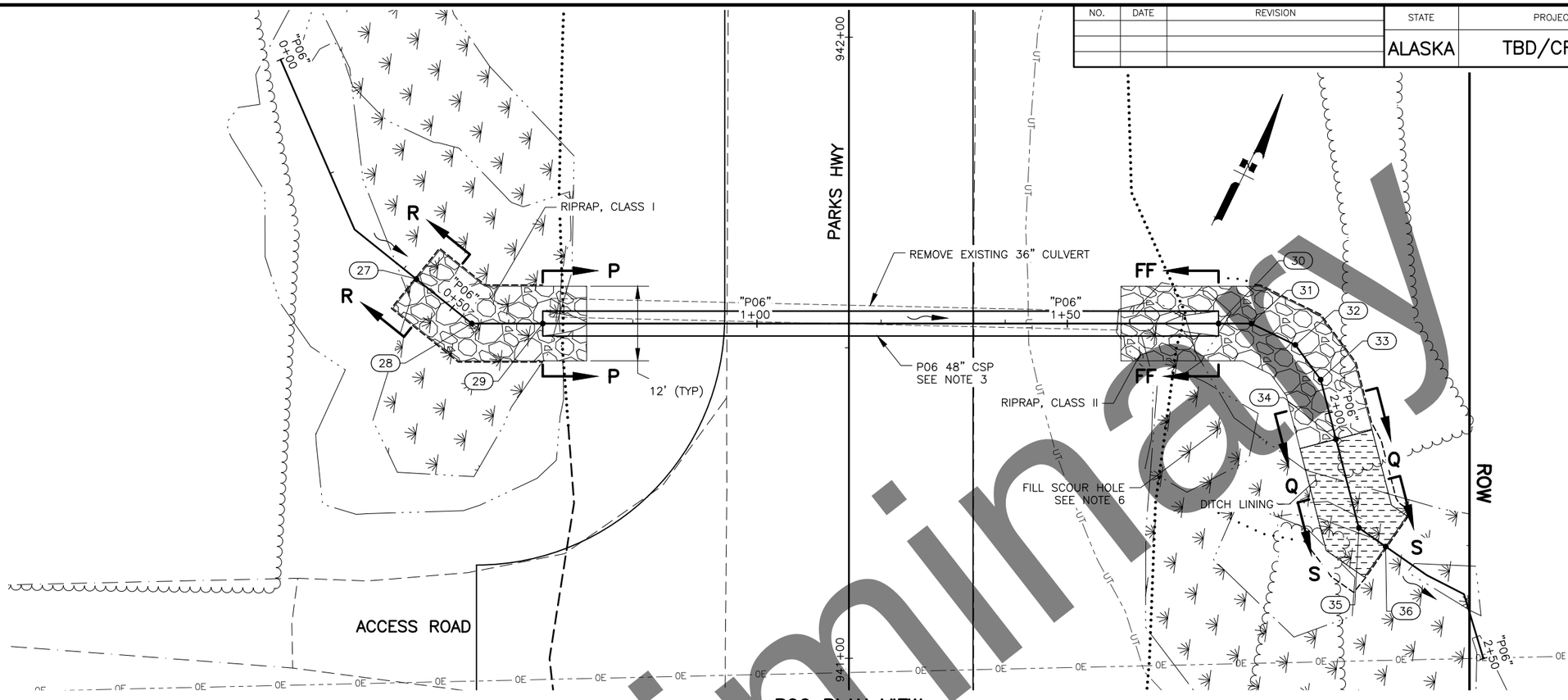

P06 PLAN VIEW

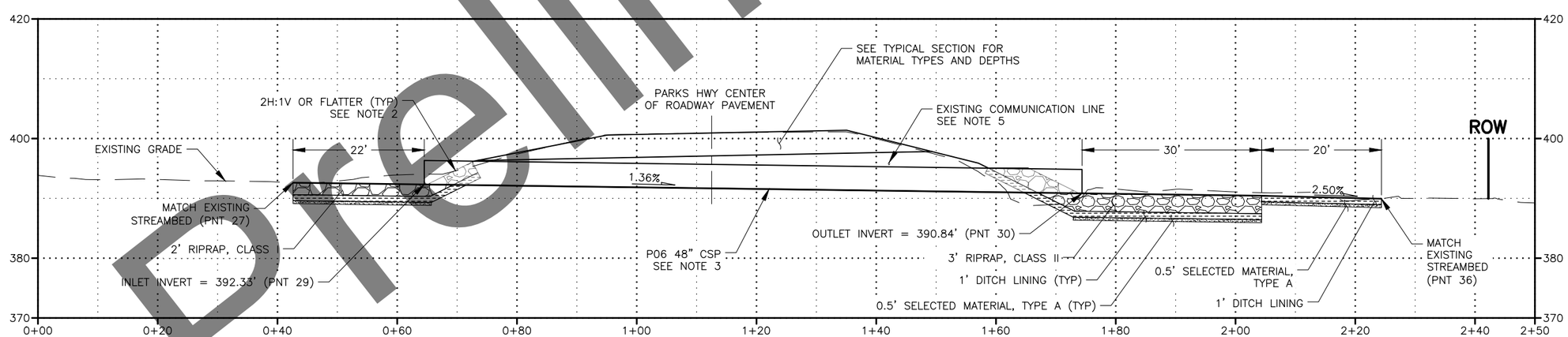

P06 PROFILE VIEW

P06 CULVERT HYDRAULIC AND HYDROLOGIC SUMMARY

DRAINAGE AREA = 0.4 SQUARE MILES		
EXCEEDANCE PROBABILITY	2% (DESIGN EVENT)	1%
RETURN PERIOD	50 YEAR (Q_{50})	100 YEAR (Q_{100})
DESIGN DISCHARGE	30.4 CFS	39.2 CFS
DESIGN HIGH WATER ELEVATION	395.1 FT	395.2 FT
ANTICIPATED ADDITIONAL BACKWATER AT Q_{100} = 0.0 FT		

NOTES:

1. SEE SHEET E15 FOR SECTIONS.
2. PLACE RIPRAP ON FORESLOPE AT CULVERT INLET AND OUTLET TO HEIGHT SHOWN ON E15. MAINTAIN 2H:1V OR FLATTER SLOPES.
3. PIPE SHALL BE 10 GAGE OR THICKER WITH 2-2/3" x 1/2" CORRUGATIONS.
4. MATERIAL THICKNESSES ARE MEASURED PERPENDICULAR TO THE FINISHED GROUND SURFACE.
5. LOCATION IN PROFILE IS APPROXIMATED BASED ON STANDARD UTILITY BURY DEPTHS. ACTUAL DEPTH MAY VARY.
6. AFTER PLACEMENT OF OTHER FILL MATERIALS, FILL REMAINING SCOUR HOLE WITH SELECTED MATERIAL, TYPE C.
7. LAYOUT POINT SUMMARY TABLE SHOWN ON SHEET E15.

STATE OF ALASKA
4011
JANIE LUSEL
2916
REGISTERED PROFESSIONAL ENGINEER
PSCM
SUBMITTAL

AWR ENGINEERING, LLC
4011 ARCTIC BOULVARD, SUITE 106
ANCHORAGE, AK 99503
(907) 441-2973
AECL 1407

STATE OF ALASKA
DEPARTMENT OF TRANSPORTATION
AND PUBLIC FACILITIES

PARKS HIGHWAY PHASE 1 –
CULVERT REPLACEMENT

P06 AT STA 941+55
(MP 116.2) CULVERT LAYOUT

DATE	TIME	SCALE	DESIGNED BY	CHECKED BY	DRAFTED BY
4/26/2023	10:26 AM	1"=10'	AH/LJ	JD	AH/LJ

DRAWING LOCATION
...\Jobs\1204 HDL\08 – Parks Hwy Culverts\CAD\PIH\00592-E14-E15-MP116.DWG

Preliminary

NO.	DATE	REVISION

STATE	PROJECT DESIGNATION	YEAR	SHEET NO.	TOTAL SHEETS
ALASKA	TBD/CFHWY01083	2023	E15	E27

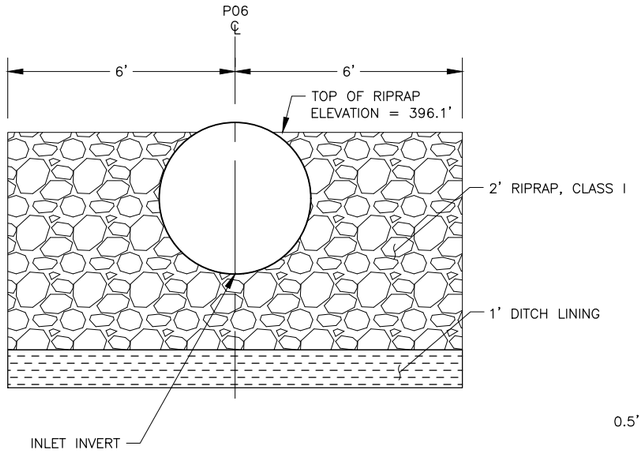

SECTION P–P

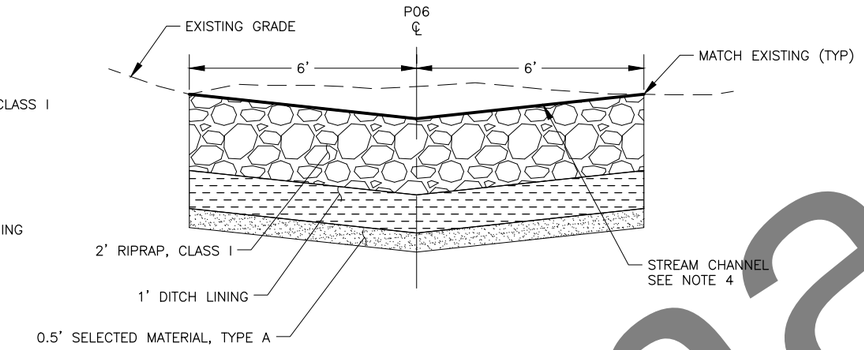

SECTION R–R

LAYOUT POINT SUMMARY

POINT	CULVERT STATION	NORTHING	EASTING	REMARKS
27	0+42.61	92938.2554	286539.7466	ME, 392.6' ±
28	0+54.05	92935.7262	286550.9075	PI
29	0+65.48	92940.7254	286561.1820	INLET
30	1+74.37	92988.3667	286659.0969	OUTLET
31	1+79.66	92990.6811	286663.8538	PI
32	1+87.54	92990.6811	286671.7357	PI
33	1+94.45	92987.4416	286677.8422	PI
34	2+04.37	92979.8916	286684.2698	GRADE BREAK
35	2+19.11	92968.6715	286693.8217	PI
36	2+24.37	92967.8549	286699.0227	ME, 389.9' ±

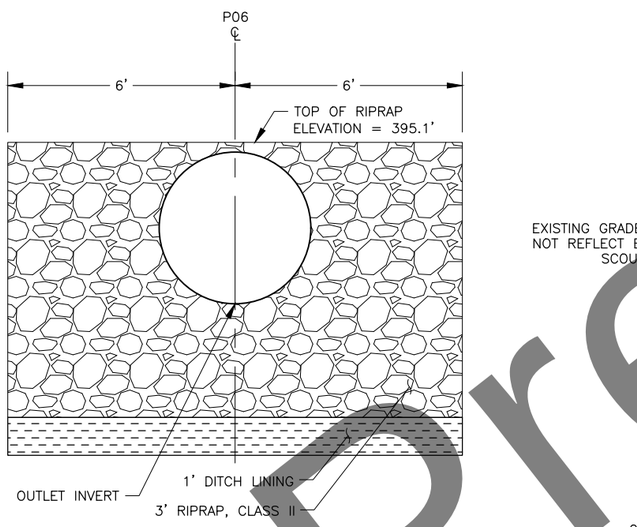

SECTION FF–FF

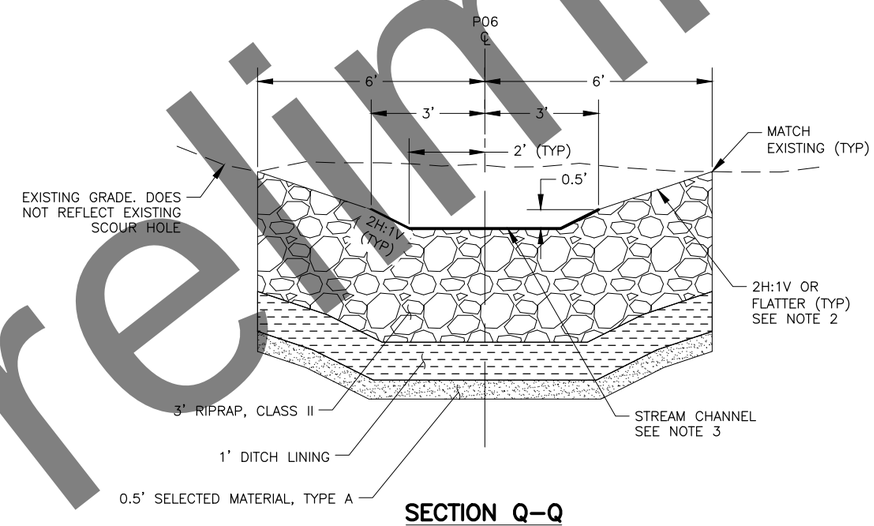

SECTION Q–Q

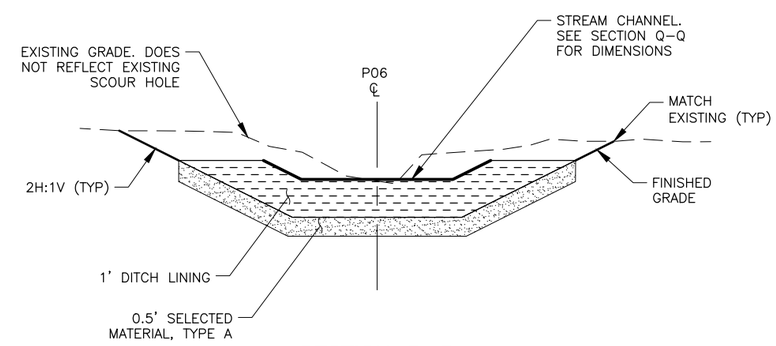

SECTION S–S

NOTES:

1. MATERIAL THICKNESSES ARE MEASURED PERPENDICULAR TO THE FINISHED GROUND SURFACE.
2. FLATTEN APRON SIDE SLOPES TO MATCH EXISTING GROUND OVER LENGTH OF APRON.
3. ADJUST STREAM CHANNEL DIMENSIONS TO TRANSITION BETWEEN THE CULVERT BARREL AND THE STREAM CHANNEL (SECTION Q–Q) OVER LENGTH OF APRON.
4. ADJUST STREAM CHANNEL SIDE SLOPES AND DEPTH TO TRANSITION BETWEEN THE CULVERT BARREL AND THE EXISTING UPSTREAM WETLAND AREA OVER LENGTH OF APRON.

STATE OF ALASKA
★ 4011 ★
JAN M. HUSEL
2916
REGISTERED PROFESSIONAL ENGINEER

PSE SUBMITTAL

AWR ENGINEERING, LLC
4011 ARCTIC BOULVARD, SUITE 106
ANCHORAGE, AK 99503
(907) 441-2973
AECL 1407

STATE OF ALASKA
DEPARTMENT OF TRANSPORTATION
AND PUBLIC FACILITIES

PARKS HIGHWAY PHASE 1 –
CULVERT REPLACEMENT

P06 AT STA 941+55
(MP 116.2) CULVERT DETAILS

Preliminary

DRAWING LOCATION
...\Jobs\1204 HDL\08 – Parks Hwy Culverts\CAD\PIH\00592-E14-E15-MP116.DWG

DATE 4/26/2023 TIME 10:26 AM
SCALE 1"=2'
DESIGNED BY AH/LJ
CHECKED BY JD
DRAFTED BY AH/LJ

NO.	DATE	REVISION

STATE	PROJECT DESIGNATION	YEAR	SHEET NO.	TOTAL SHEETS
ALASKA	TBD/CFHWY01083	2023	E16	E27

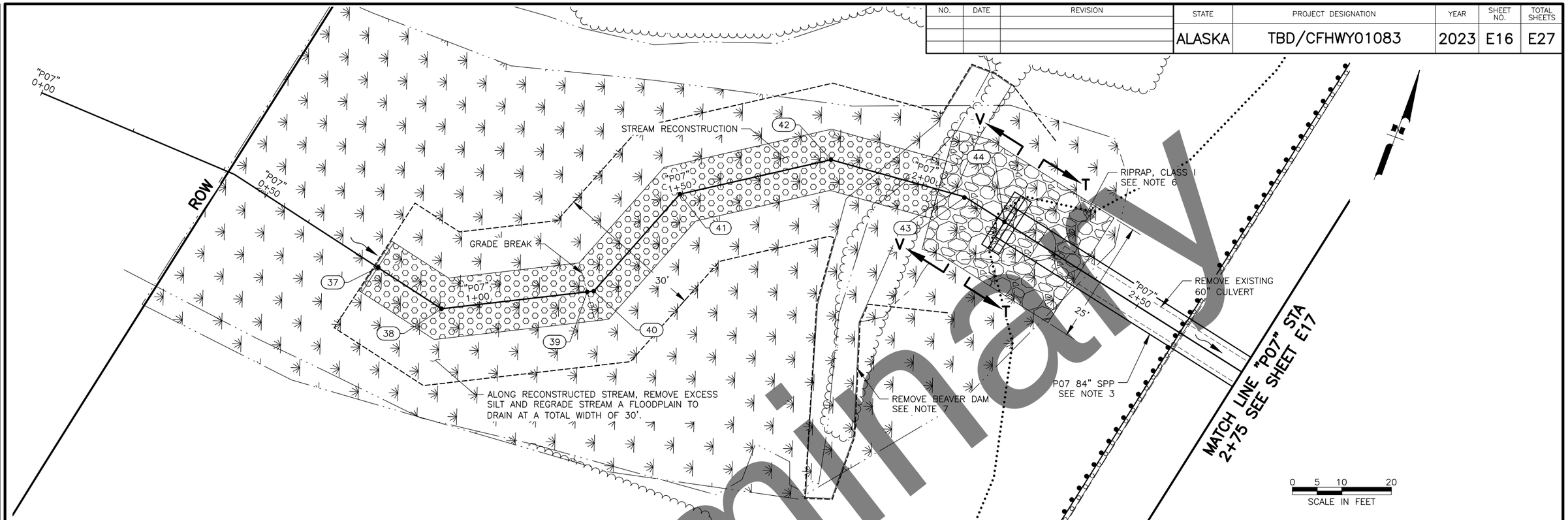

P07 PLAN VIEW WEST (INLET)

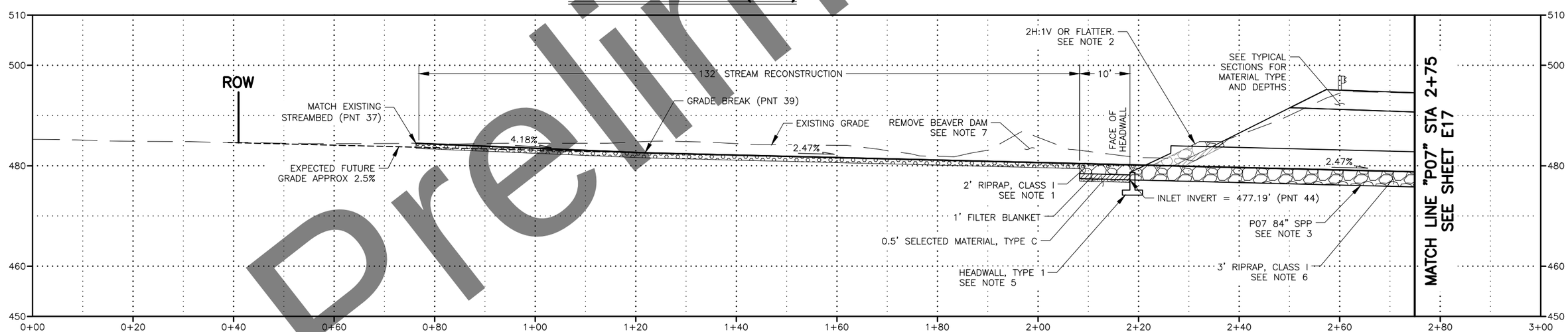

P07 PROFILE VIEW WEST (INLET)

P07 CULVERT HYDRAULIC AND HYDROLOGIC SUMMARY

DRAINAGE AREA = 0.4 SQUARE MILES		
EXCEEDANCE PROBABILITY	2% (DESIGN EVENT)	1%
RETURN PERIOD	50 YEAR (Q_{50})	100 YEAR (Q_{100})
DESIGN DISCHARGE	83.8 CFS	97.1 CFS
DESIGN HIGH WATER ELEVATION	483.7 FT	484.1 FT
ANTICIPATED ADDITIONAL BACKWATER AT Q_{100} = 0.0 FT		

NOTES:

1. SEE SHEET E18 FOR SECTIONS AND SHEET E25 FOR STREAM RECONSTRUCTION DETAILS.
2. PLACE RIPRAP ON FORESLOPE AT CULVERT INLET TO HEIGHT SHOWN ON SHEET E18. MAINTAIN 2H:1V OR FLATTER SLOPES.
3. PIPE SHALL BE 10 GAGE OF THICKER. USE 2H:1V BEVEL ON INLET PER STANDARD PLAN D-07.00.
4. MATERIAL THICKNESSES ARE MEASURED PERPENDICULAR TO THE FINISHED GROUND SURFACE.
5. PRECAST OR CAST-IN-PLACE HEADWALL MAY BE USED. SEE HEADWALL STANDARD PLANS D-30.11 OR D-31.01 FOR DETAILS. USE A2/D2 DIMENSIONS ON STANDARD PLAN.
6. AFTER PLACEMENT OF RIPRAP, FILL VOIDS IN RIPRAP WITHIN PIPE AND STREAM CHANNEL AS SHOWN ON SHEET E18. VOID FILL MATERIAL SHALL BE PER SPECIFICATION 690.
7. BEAVER DAM IS APPROXIMATELY 5' TALL, 10' WIDE, AND 100' LONG. REMOVE BEAVER DAM AND STABILIZE UPSTREAM AREA PRIOR TO INSTALLING THE PROPOSED IMPROVEMENTS. THIS WORK IS SUBSIDIARY TO PAY ITEM 202.
8. LAYOUT POINT SUMMARY TABLE SHOWN ON SHEET E18.

STATE OF ALASKA
4011
JANE HUSEL
2916
REGISTERED PROFESSIONAL ENGINEER
PSSL SUBMITTAL

AWR ENGINEERING, LLC
4011 ARCTIC BOULVARD, SUITE 106
ANCHORAGE, AK 99503
(907) 441-2973
AECL 1407

STATE OF ALASKA
DEPARTMENT OF TRANSPORTATION
AND PUBLIC FACILITIES

PARKS HIGHWAY PHASE 1 – CULVERT REPLACEMENT

P07 AT STA 1108+95 (MP 119.3) CULVERT LAYOUT WEST (INLET)

Preliminary

DRAWING LOCATION ...\Jobs\1204 HDL\08 – Parks Hwy Culverts\CAD\PIH\00592-E16-E18-MP119.DWG

DATE	TIME	SCALE	DESIGNED BY	CHECKED BY	DRAFTED BY
4/26/2023	10:39 AM	1"=10'	AH/LJ	JD	AH/LJ

NO.	DATE	REVISION

STATE	PROJECT DESIGNATION	YEAR	SHEET NO.	TOTAL SHEETS
ALASKA	TBD/CFHWY01083	2023	E17	E27

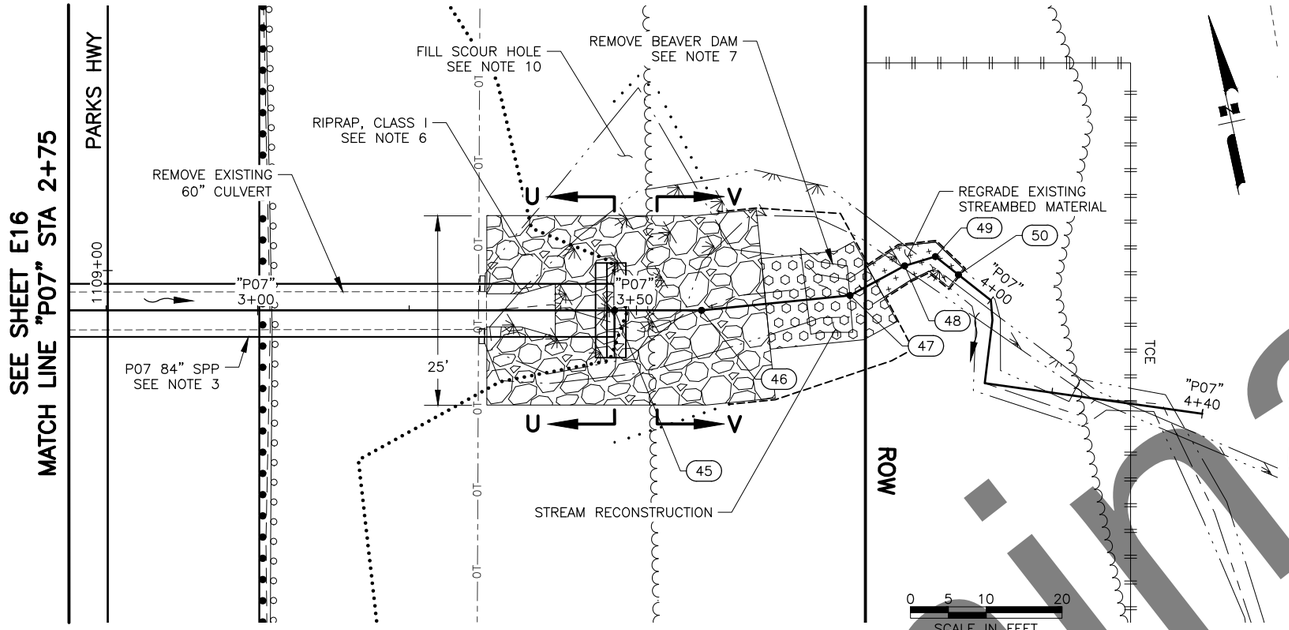

P07 PLAN VIEW EAST (OUTLET)

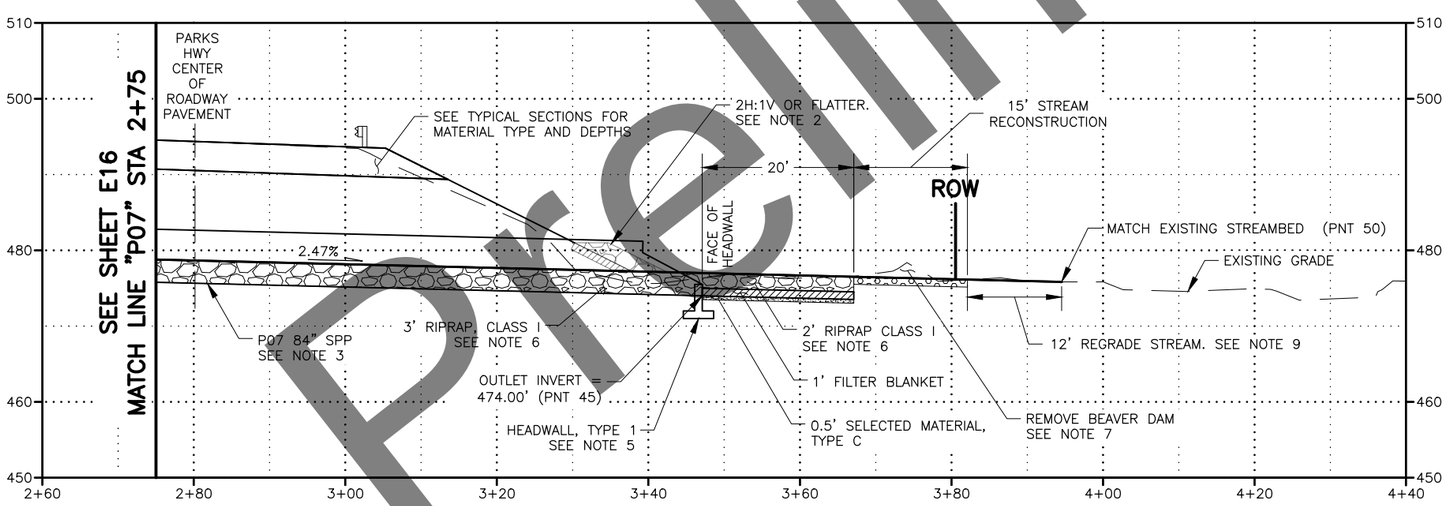

P07 PROFILE VIEW EAST (OUTLET)

NOTES:

1. SEE SHEET E18 FOR SECTIONS AND SHEET E25 FOR STREAM RECONSTRUCTION DETAILS.
2. PLACE RIPRAP ON FORESLOPE AT CULVERT OUTLET TO HEIGHT SHOWN ON SHEET E18. MAINTAIN 2H:1V OR FLATTER SLOPES.
3. PIPE SHALL BE 10 GAGE OF THICKER. USE 2H:1V BEVEL ON OUTLET PER STANDARD PLAN D-07.00.
4. MATERIAL THICKNESSES ARE MEASURED PERPENDICULAR TO THE FINISHED GROUND SURFACE.
5. PRECAST OR CAST-IN-PLACE HEADWALL MAY BE USED. SEE HEADWALL STANDARD PLANS D-30.11 OR D-31.01 FOR DETAILS. USE A2/D2 DIMENSIONS ON STANDARD PLAN.
6. AFTER PLACEMENT OF RIPRAP, FILL VOIDS IN RIPRAP WITHIN PIPE AND STREAM CHANNEL AS SHOWN ON SHEET E18. VOID FILL MATERIAL SHALL BE PER SPECIFICATION 690.
7. BEAVER DAM IS APPROXIMATELY 2' TALL, 6' WIDE, AND 10' LONG. THIS WORK IS SUBSIDIARY TO PAY ITEM 202.
8. SEE SHEET E16 FOR P07 HYDROLOGIC AND HYDRAULIC SUMMARY TABLE.
9. SEE SPECIFICATION 690 FOR ADDITIONAL REGRADE STREAM CONSTRUCTION DETAILS.
10. AFTER PLACEMENT OF OTHER FILL MATERIALS, FILL REMAINING SCOUR HOLE WITH SELECTED MATERIAL, TYPE C.
11. LAYOUT POINT SUMMARY TABLE SHOWN ON SHEET E18.

Preliminary

STATE OF ALASKA
4011
JANIE HUSEL
2916
REGISTERED PROFESSIONAL ENGINEER
PSUBMITTAL

AWR ENGINEERING, LLC
4011 ARCTIC BOULVARD, SUITE 106
ANCHORAGE, AK 99503
(907) 441-2973
AECL 1407

STATE OF ALASKA
DEPARTMENT OF TRANSPORTATION
AND PUBLIC FACILITIES

PARKS HIGHWAY PHASE 1 –
CULVERT REPLACEMENT

P07 AT STA 1108+95
(MP 119.3) CULVERT LAYOUT
EAST (OUTLET)

DATE	TIME	SCALE	DESIGNED BY	CHECKED BY	DRAFTED BY
4/26/2023	10:39 AM	1"=10'	AH/LJ	JD	AH/LJ

DRAWING LOCATION
...\Jobs\1204 HDL\08 - Parks Hwy Culverts\CAD\PIH\00592-E16-E18-MP119.DWG

NO.	DATE	REVISION

STATE	PROJECT DESIGNATION	YEAR	SHEET NO.	TOTAL SHEETS
ALASKA	TBD/CFHWY01083	2023	E18	E27

DRAWING LOCATION	DATE	TIME	SCALE	DESIGNED BY	CHECKED BY	DRAFTED BY
...\Jobs\1204 HDL\08 – Parks Hwy Culverts\CAD\PIH\00592-E16-E18-MP119.DWG	4/26/2023	10:40 AM	1"=2'	AH/LJ	JJD	AH/LJ

LAYOUT POINT SUMMARY

POINT	CULVERT STATION	NORTHING	EASTING	REMARKS
37	0+76.84	108996.6113	282521.3206	ME, 484.5' ±
38	0+92.18	108993.1762	282536.2681	PI
39	1+21.84	109006.4573	282562.7902	GRADE BREAK
40	1+23.19	109007.0615	282563.9968	PI
41	1+49.38	109031.4081	282573.6525	PI
42	1+80.71	109048.3946	282599.9808	PI
43	2+08.76	109050.4546	282627.9538	PI
44	2+18.28	109048.5893	282637.2443	INLET
45	3+47.10	109021.2183	282763.1229	OUTLET
46	3+58.57	109018.7805	282774.3343	PI
47	3+78.27	109016.5446	282793.9004	PI
48	3+86.47	109018.8210	282801.7790	PI
49	3+90.71	109019.1515	282806.0069	PI
50	3+94.59	109016.1559	282808.4721	ME, 475.8 ±

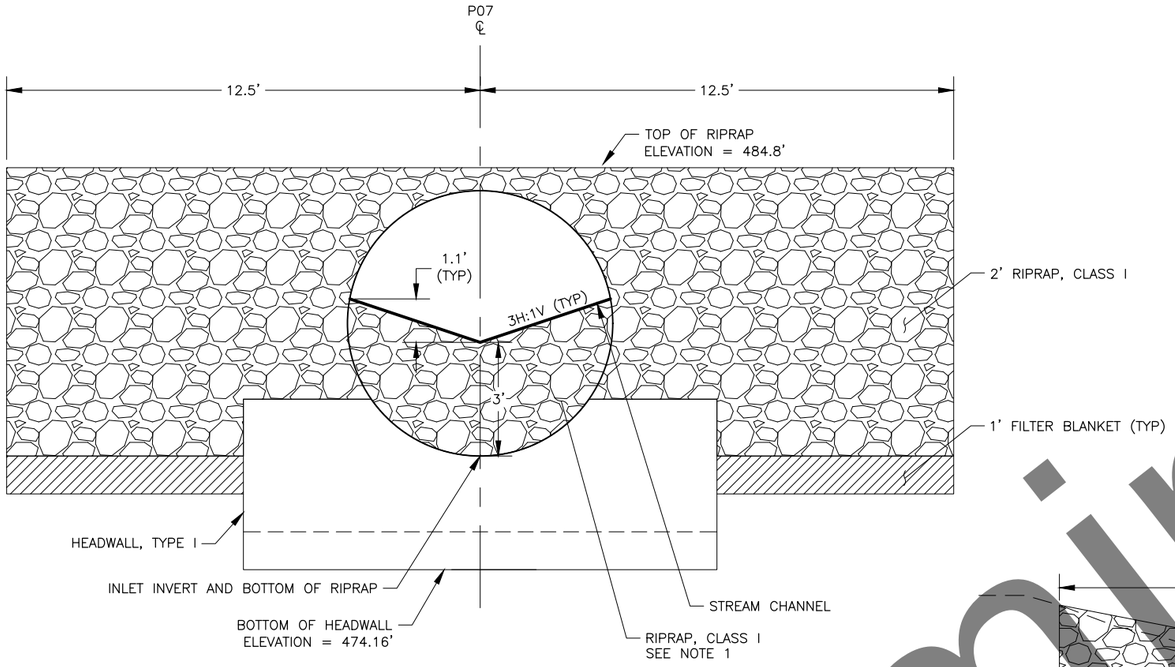

SECTION T–T

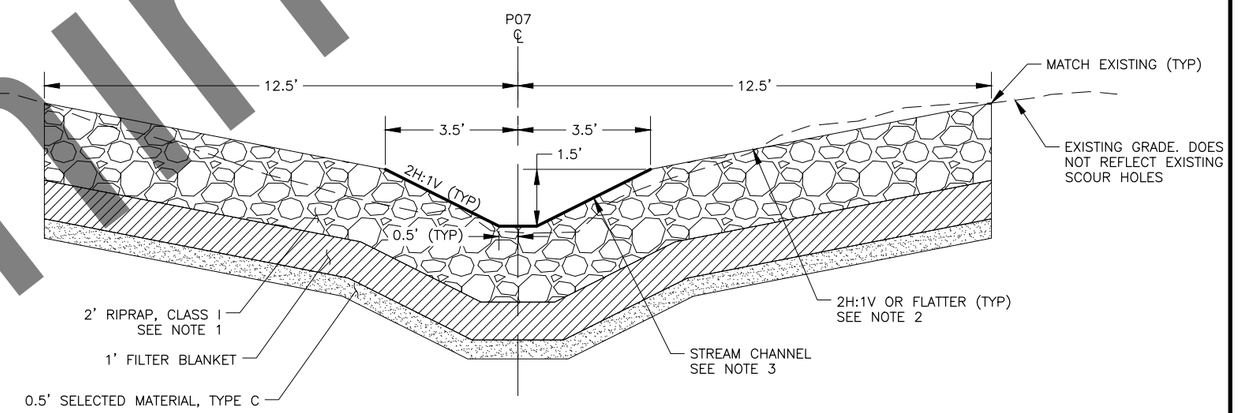

SECTION V–V

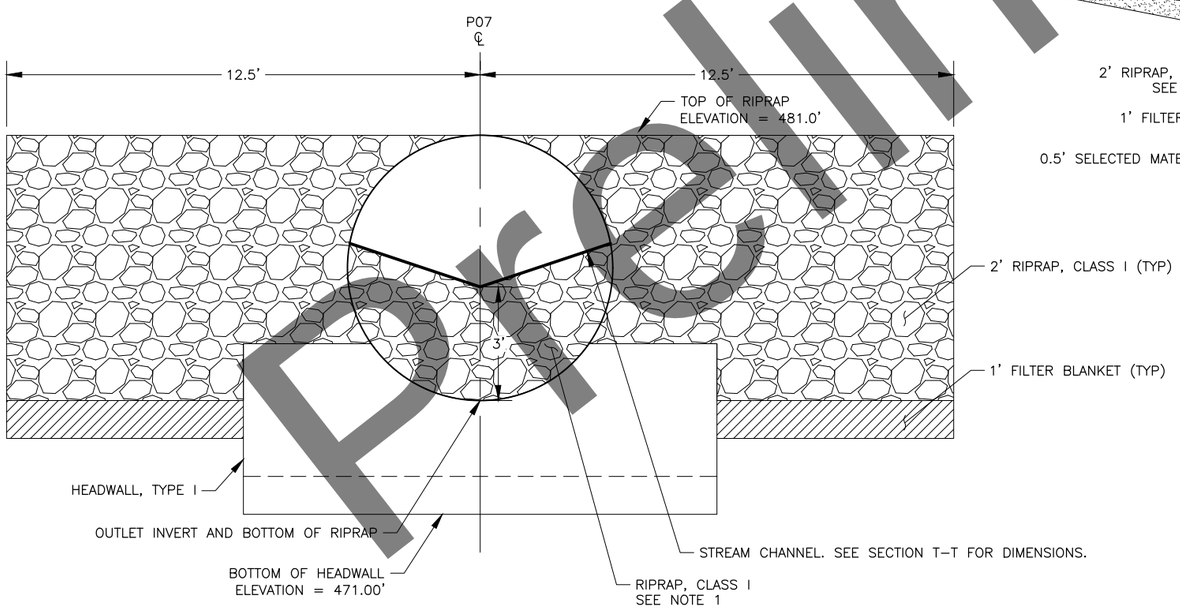

SECTION U–U

NOTES:

1. MATERIAL THICKNESSES ARE MEASURED PERPENDICULAR TO THE FINISHED GROUND SURFACE.
2. FLATTEN APRON SIDE SLOPES TO MATCH EXISTING GROUND OVER LENGTH OF APRON.
3. ADJUST STREAM CHANNEL DIMENSIONS TO TRANSITION BETWEEN THE CULVERT BARREL AND RECONSTRUCTED STREAM OVER LENGTH OF APRON.

STATE OF ALASKA
JANIE MUSELL
49916
REGISTERED PROFESSIONAL ENGINEER
PSEUDO SUBMITTAL

AWR ENGINEERING, LLC
4011 ARCTIC BOULVARD, SUITE 106
ANCHORAGE, AK 99503
(907) 441–2973
AECL 1407

STATE OF ALASKA
DEPARTMENT OF TRANSPORTATION
AND PUBLIC FACILITIES

PARKS HIGHWAY PHASE 1 – CULVERT REPLACEMENT

P07 AT STA 1108+95 (MP 119.3) CULVERT DETAILS

Preliminary

NO.	DATE	REVISION

STATE	PROJECT DESIGNATION	YEAR	SHEET NO.	TOTAL SHEETS
ALASKA	TBD/CFHWY01083	2023	E19	E27

DESIGNED BY AH/LJ
CHECKED BY JD
DRAFTED BY AH/LJ
SCALE 1"=10'
DATE 4/26/2023 TIME 3:51 PM
DRAWING LOCATION ...\Jobs\1204 HDL\08 - Parks Hwy Culverts\CAD\PIH\00592-E19-E20-MP120.DWG

P08 PLAN VIEW

0 5 10 20
SCALE IN FEET

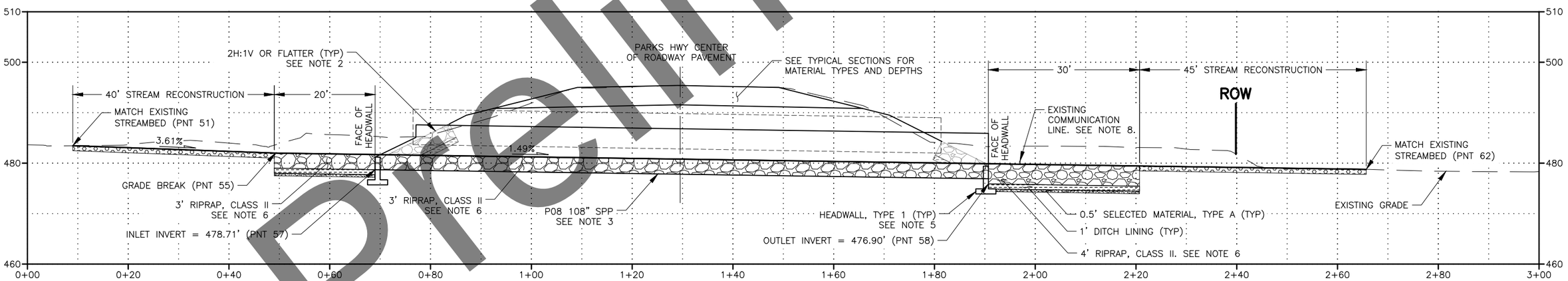

P08 PROFILE VIEW

P08 CULVERT HYDRAULIC AND HYDROLOGIC SUMMARY

DRAINAGE AREA = 1.1 SQUARE MILES		
EXCEEDANCE PROBABILITY	2% (DESIGN EVENT)	1%
RETURN PERIOD	50 YEAR (Q_{50})	100 YEAR (Q_{100})
DESIGN DISCHARGE	179.8 CFS	210.2 CFS
DESIGN HIGH WATER ELEVATION	486.7 FT	487.3 FT
ANTICIPATED ADDITIONAL BACKWATER AT Q_{100} = 0.0 FT		

NOTES:

1. SEE SHEET E20 FOR SECTIONS AND SHEET E25 FOR STREAM RECONSTRUCTION DETAILS.
2. PLACE RIPRAP ON FORESLOPE AT CULVERT INLET TO HEIGHT SHOWN ON SHEET E20. MAINTAIN 2H:1V OR FLATTER SLOPES.
3. PIPE SHALL BE 10 GAGE OF THICKER. USE 2H:1V BEVEL ON INLET PER STANDARD PLAN D-07.00.
4. MATERIAL THICKNESSES ARE MEASURED PERPENDICULAR TO THE FINISHED GROUND SURFACE.
5. PRECAST OR CAST-IN-PLACE HEADWALLS MAY BE USED. SEE HEADWALL STANDARD PLANS D-30.11 OR D-31.01 FOR DETAILS. USE A2/D2 DIMENSIONS IN STANDARD PLAN.
6. AFTER PLACEMENT OF RIPRAP, FILL VOIDS IN RIPRAP WITHIN PIPE AND STREAM CHANNEL AS SHOWN ON SHEET E20. VOID FILL MATERIAL SHALL BE PER SPECIFICATION 690
7. WORK IS SUBSIDIARY TO PAY ITEM 202.
8. LOCATION IN PROFILE IS APPROXIMATED BASED ON STANDARD UTILITY BURY DEPTHS. ACTUAL DEPTH MAY VARY.
9. AFTER PLACEMENT OF OTHER FILL MATERIALS, FILL REMAINING SCOUR HOLE WITH SELECTED MATERIAL, TYPE C.
10. LAYOUT POINT SUMMARY TABLE SHOWN ON SHEET E20.

STATE OF ALASKA
JANET L. USEL
2916
REGISTERED PROFESSIONAL ENGINEER
PSUBMITTAL

AWR ENGINEERING, LLC
4011 ARCTIC BOULVARD, SUITE 106
ANCHORAGE, AK 99503
(907) 441-2973
AECL 1407

STATE OF ALASKA
DEPARTMENT OF TRANSPORTATION
AND PUBLIC FACILITIES

PARKS HIGHWAY PHASE 1 – CULVERT REPLACEMENT

P08 AT STA 1158+16 (MP 120.3) CULVERT LAYOUT

Preliminary

NO.	DATE	REVISION

STATE	PROJECT DESIGNATION	YEAR	SHEET NO.	TOTAL SHEETS
ALASKA	TBD/CFHWY01083	2023	E20	E27

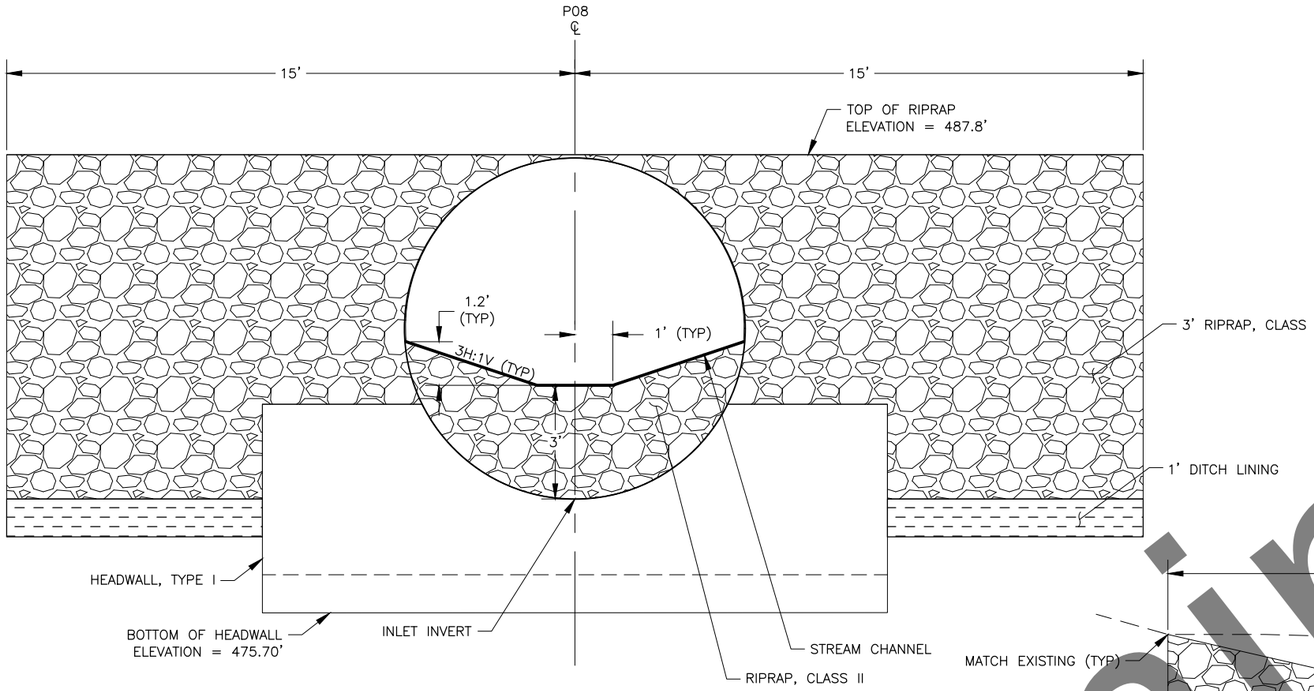

SECTION W–W

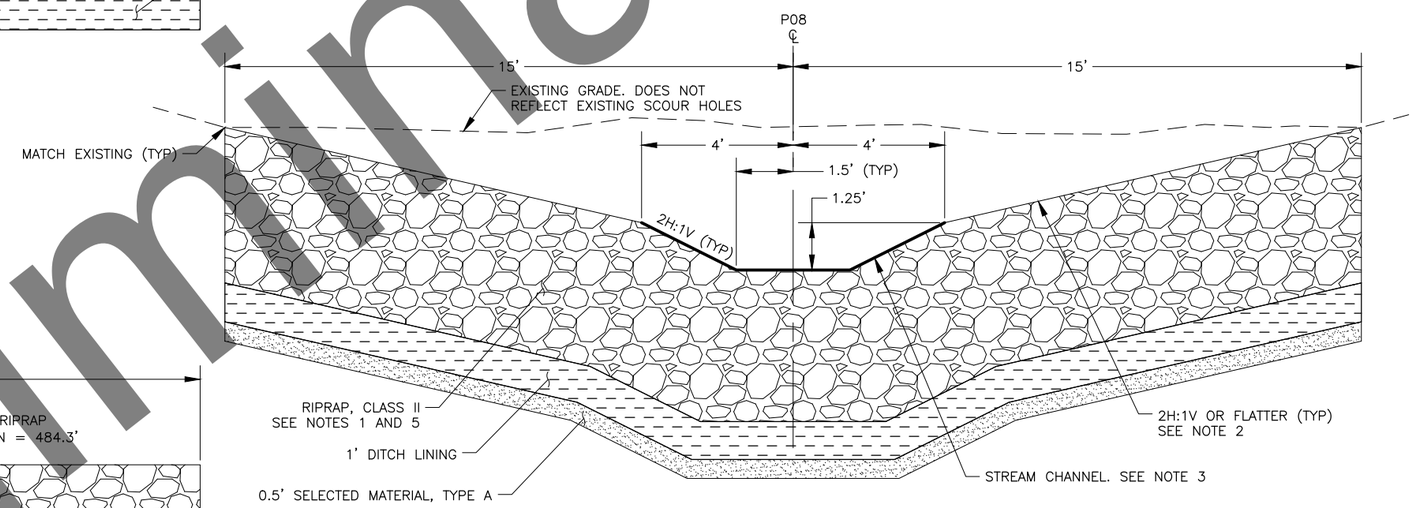

SECTION HH–HH

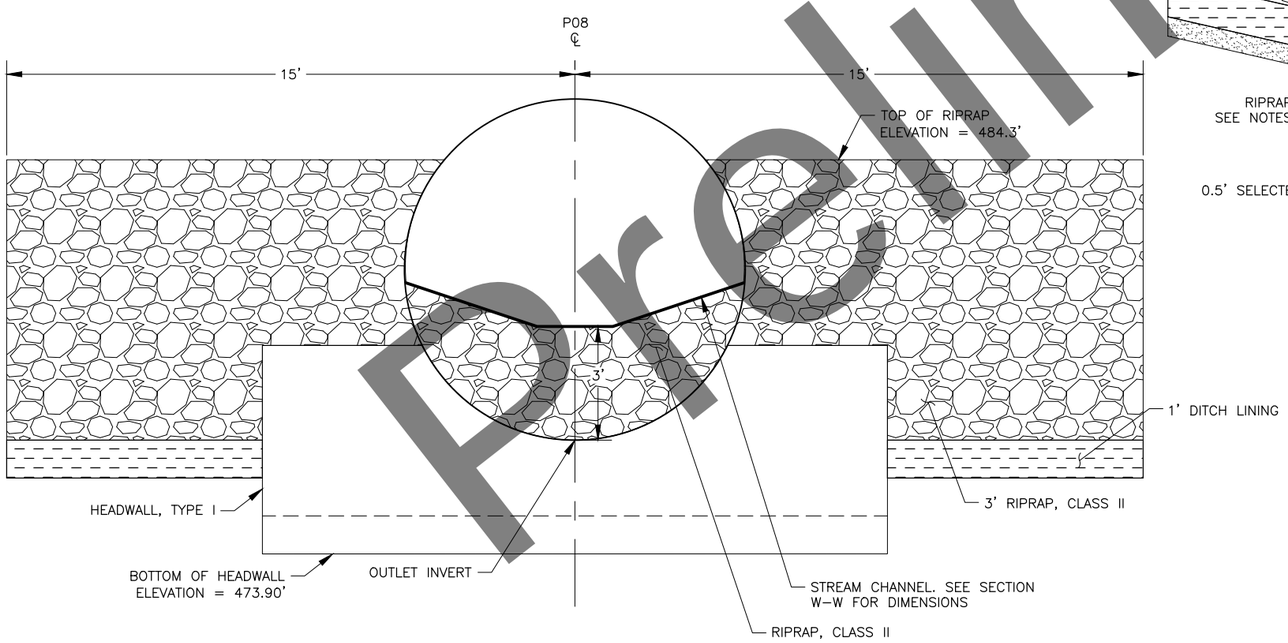

SECTION GG–GG

LAYOUT POINT SUMMARY

POINT	CULVERT STATION	NORTHING	EASTING	REMARKS
51	0+09.23	113928.2228	283382.9629	ME, 483.5' ±
52	0+19.06	113918.5080	283384.4800	PI
53	0+32.37	113905.9654	283380.0477	PI
54	0+45.31	113893.3034	283382.7486	PI
55	0+49.23	113891.1732	283386.0393	GRADE BREAK
56	0+56.72	113887.1033	283392.3263	PI
57	0+68.99	113886.4866	283404.5793	INLET
58	1+90.70	113880.3686	283526.1354	OUTLET
59	2+05.12	113879.6438	283540.5355	PI
60	2+27.82	113867.8946	283559.9628	PI
61	2+43.98	113852.5921	283565.1555	PI
62	2+65.70	113839.9870	283582.8416	ME, 478.8' ±

NOTES:

1. MATERIAL THICKNESSES ARE MEASURED PERPENDICULAR TO THE FINISHED GROUND SURFACE.
2. FLATTEN APRON SIDE SLOPES TO MATCH EXISTING GROUND OVER LENGTH OF APRON.
3. ADJUST STREAM CHANNEL DIMENSIONS TO TRANSITION BETWEEN THE CULVERT BARREL AND RECONSTRUCTED STREAM OVER LENGTH OF APRON.
4. USE 3' OF RIPRAP, CLASS II AT THE INLET AND 4' OF RIPRAP, CLASS II AT THE OUTLET.

STATE OF ALASKA
4011
JANIE LUSEL
2916
REGISTERED PROFESSIONAL ENGINEER
PSUB SUBMITTAL

AWR ENGINEERING, LLC
4011 ARCTIC BOULVARD, SUITE 106
ANCHORAGE, AK 99503
(907) 441–2973
AECL 1407

STATE OF ALASKA
DEPARTMENT OF TRANSPORTATION
AND PUBLIC FACILITIES

PARKS HIGHWAY PHASE 1 –
CULVERT REPLACEMENT

P08 AT STA 1158+16
(MP 120.3) CULVERT DETAILS

DESIGNED BY AH/LJ
CHECKED BY JD
DRAFTED BY AH/LJ
SCALE 1"=2'
DATE 4/26/2023 TIME 11:04 AM
DRAWING LOCATION ...\Jobs\1204 HDL\08 – Parks Hwy Culverts\CAD\PIH\00592–E19–E20–MP120.DWG

Preliminary

NO.	DATE	REVISION

STATE	PROJECT DESIGNATION	YEAR	SHEET NO.	TOTAL SHEETS
ALASKA	TBD/CFHWY01083	2023	E21	E27

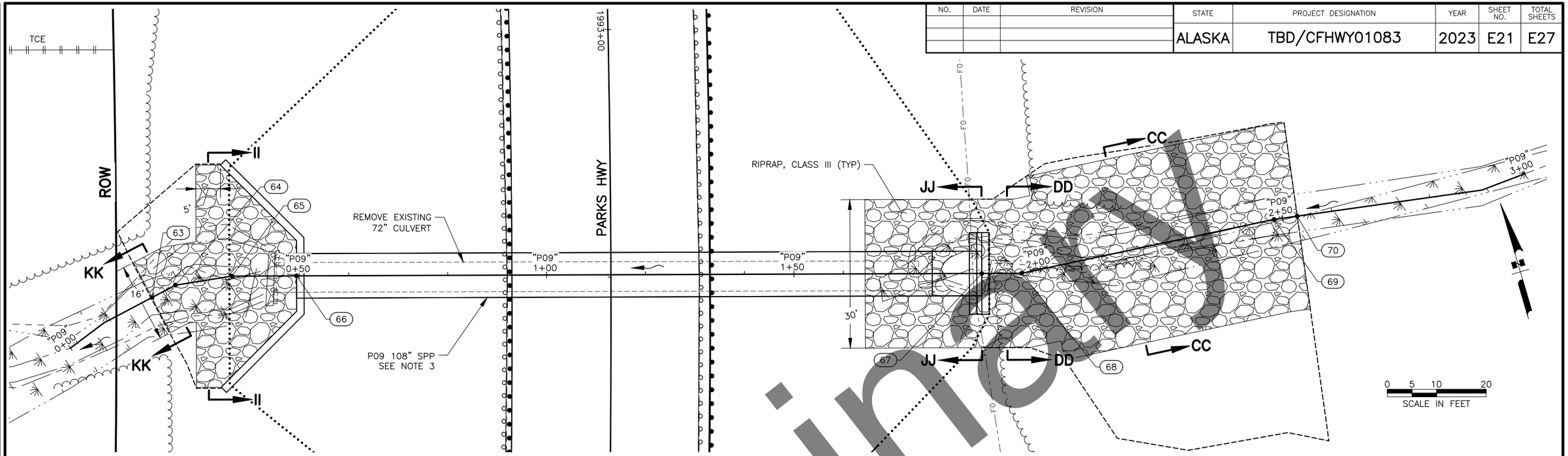

P09 PLAN VIEW

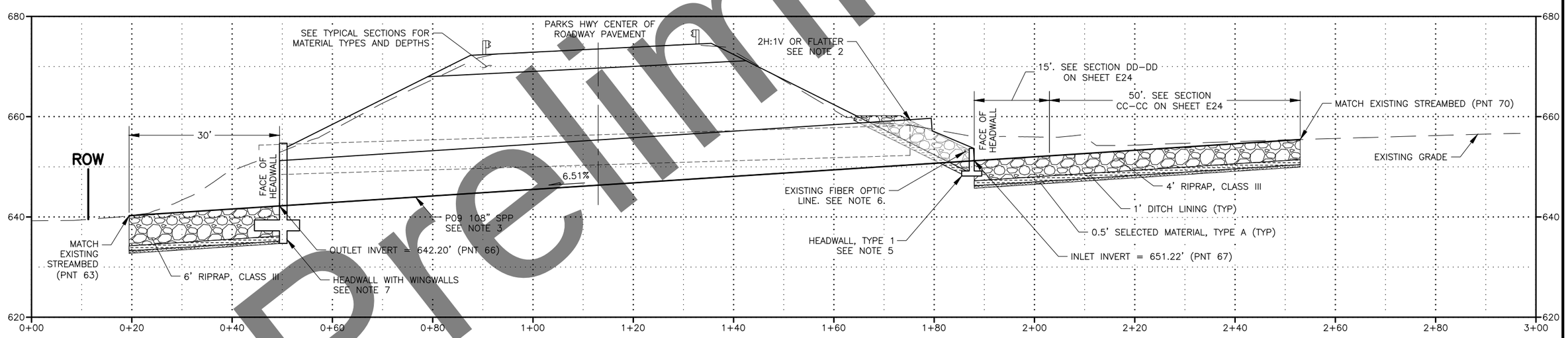

P09 PROFILE VIEW

P09 CULVERT HYDRAULIC AND HYDROLOGIC SUMMARY

DRAINAGE AREA = 1.2 SQUARE MILES		
EXCEEDANCE PROBABILITY	2%	1% (DESIGN EVENT)
RETURN PERIOD	50 YEAR (Q_{50})	100 YEAR (Q_{100})
DESIGN DISCHARGE	317.6 CFS	381.6 CFS
DESIGN HIGH WATER ELEVATION	658.4 FT	659.2 FT
ANTICIPATED ADDITIONAL BACKWATER AT Q_{100} = 0.0 FT		

NOTES:

1. SEE SHEET E23 AND E24 FOR SECTIONS.
2. PLACE RIPRAP ON FORESLOPE AT CULVERT INLET TO HEIGHT SHOWN ON SHEET E23. MAINTAIN 2H:1V OR FLATTER SLOPES.
3. PIPE SHALL BE 10 GAGE OR THICKER. USE 2H:1V BEVEL ON INLET ONLY PER STANDARD PLAN D-07.00.
4. MATERIAL THICKNESSES ARE MEASURED PERPENDICULAR TO THE FINISHED GROUND SURFACE.
5. PRECAST OR CAST-IN-PLACE HEADWALLS MAY BE USED. SEE HEADWALL STANDARD PLANS D-30.11 OR D-31.01 FOR DETAILS. USE A2/D2 DIMENSIONS ON STANDARD PLAN.
6. LOCATION IN PROFILE IS APPROXIMATED BASED ON STANDARD UTILITY BURY DEPTHS. ACTUAL DEPTH MAY VARY.
7. SEE DETAILS ON SHEET E22 FOR HEADWALL DESIGN.
8. LAYOUT POINT SUMMARY TABLE SHOWN ON SHEET E24.

STATE OF ALASKA
49TH
JAMES RUSEL
12916
REGISTERED PROFESSIONAL ENGINEER
SUBMITTAL

AWR ENGINEERING, LLC
4011 ARCTIC BOULVARD, SUITE 106
ANCHORAGE, AK 99503
(907) 441-2973
AECL 1407

STATE OF ALASKA
DEPARTMENT OF TRANSPORTATION
AND PUBLIC FACILITIES

PARKS HIGHWAY PHASE 1 – CULVERT REPLACEMENT

P09 AT STA 1992+50 (MP 136.1) CULVERT LAYOUT

Preliminary

DATE	TIME	SCALE	DESIGNED BY	CHECKED BY	DRAFTED BY
4/26/2023	11:11 AM	1"=10'	AH/LJ	JD	AH/LJ

DRAWING LOCATION
...\Jobs\1204 HDL\08 – Parks Hwy Culverts\CAD\PIH\00592-E21_E23-E24-MP136.DWG

NO.	DATE	REVISION	STATE	PROJECT DESIGNATION	YEAR	SHEET NO.	TOTAL SHEETS
			ALASKA	TBD/CFHWY01083	2023	E22	E27

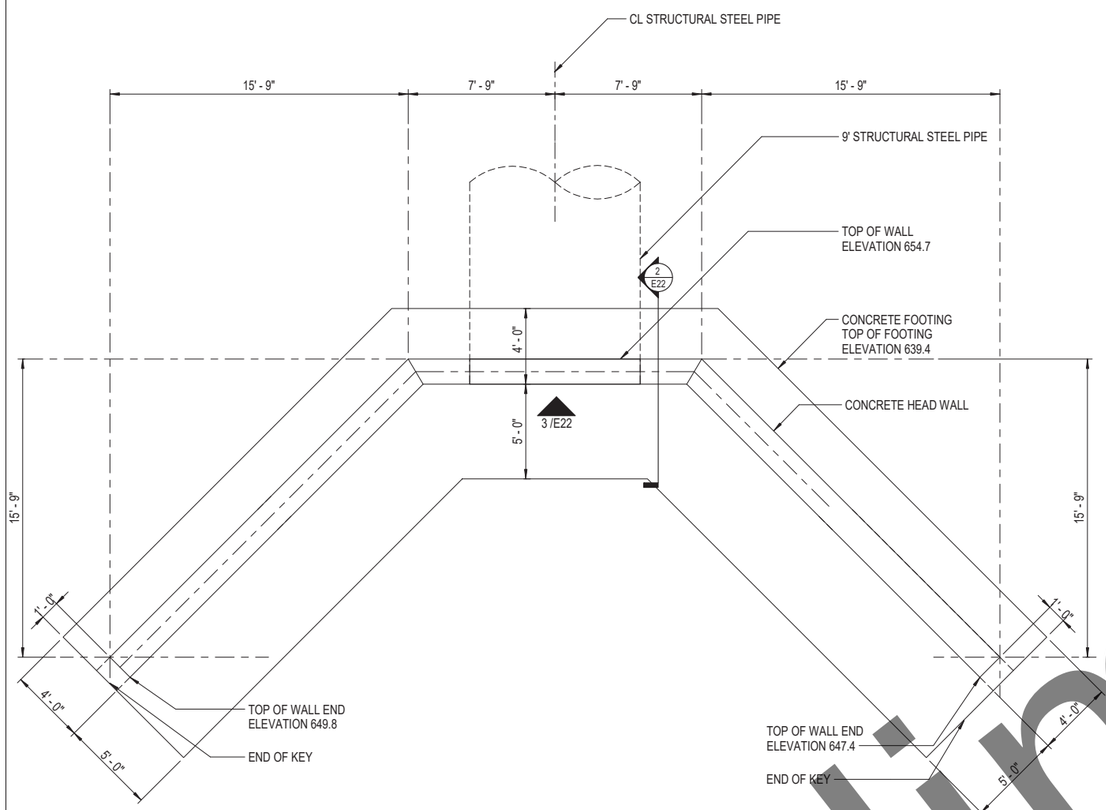

1 HEAD WALL PLAN VIEW
1/4" = 1'-0"

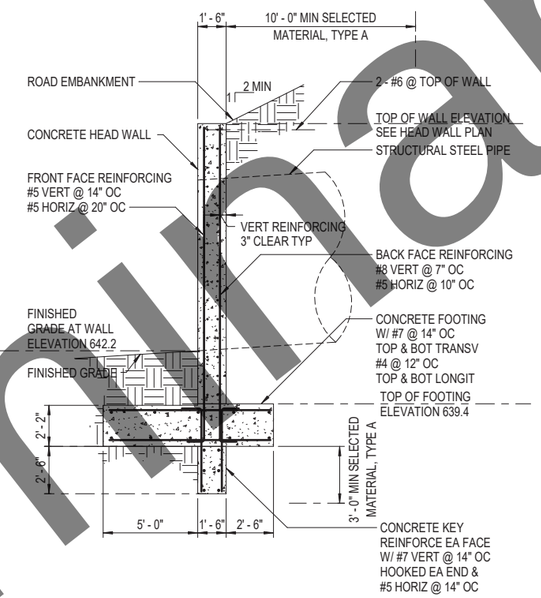

2 HEAD WALL SECTION
1/4" = 1'-0"

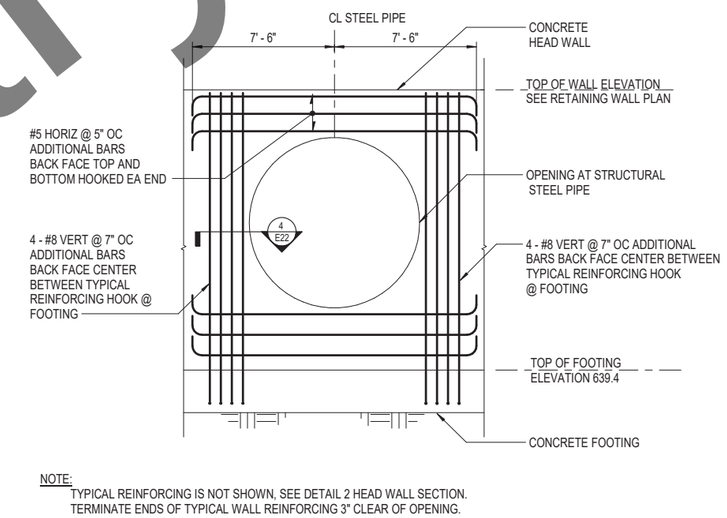

NOTE:
TYPICAL REINFORCING IS NOT SHOWN, SEE DETAIL 2 HEAD WALL SECTION.
TERMINATE ENDS OF TYPICAL WALL REINFORCING 3" CLEAR OF OPENING.

3 HEAD WALL ELEVATION
1/4" = 1'-0"

GENERAL NOTES

1. CONCRETE CONSTRUCTION AND MATERIALS PER AKDOT & PF STANDARD SPECIFICATIONS.
   A. CLASS A CONCRETE PER SECTION 501.
   B. AASHTO M31 GRADE 60 REINFORCING PER SECTION 503.
2. CONCRETE COVER:
   A. FOOTINGS 3".
   B. WALLS WHERE EXPOSED TO WEATHER 1 1/2".
   C. AGAINST EARTH 2".
3. CHAMFER ALL EXPOSED CONCRETE CORNERS 3/4"
4. IF UNSUITABLE FOUNDATIN MATERIAL IS ENCOUNTERED, REMOVE AND BACKFILL WITH SELECTED MATERIAL, TYPE A AS DIRECTED BY THE ENGINEER.

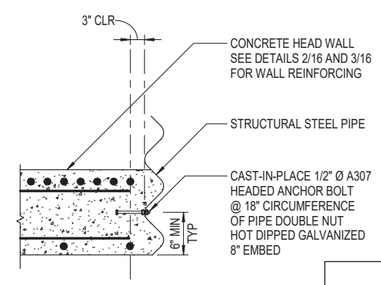

4 PIPE TO HEAD WALL CONNECTION
3/4" = 1'-0"

Preliminary

DESIGNED BY GOL
CHECKED BY GOL
DRAFTED BY CMS
SCALE
DATE TIME 4/24/2023 5:10:19 PM
DRAWING LOCATION C:\Users\Chad\Documents\222053 R20_cschaefer_bbfm.rvt
BY

BBFM ENGINEERS INC.
845 K ST.
ANCHORAGE, AK 99501-1949
(907) 274-2236
CORPORATE AUTH #: C725

HDL ENGINEERING CONSULTANTS, LLC
3335 ARCTIC BLVD, STE 100
ANCHORAGE, AK 99503
(907) 564-2120
AECL861

STATE OF ALASKA
DEPARTMENT OF TRANSPORTATION
AND PUBLIC FACILITIES

PARKS HIGHWAY PHASE I -
CULVERT REPLACEMENT

P09 HEAD WALL DETAIL

NO.	DATE	REVISION

STATE	PROJECT DESIGNATION	YEAR	SHEET NO.	TOTAL SHEETS
ALASKA	TBD/CFHWY01083	2023	E23	E27

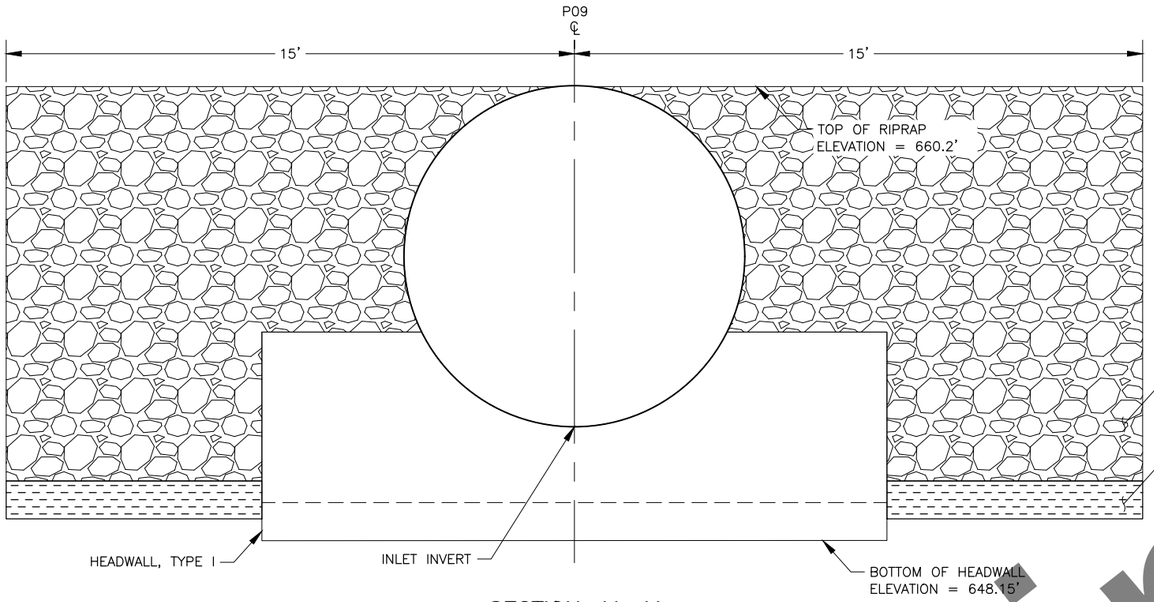

SECTION JJ–JJ

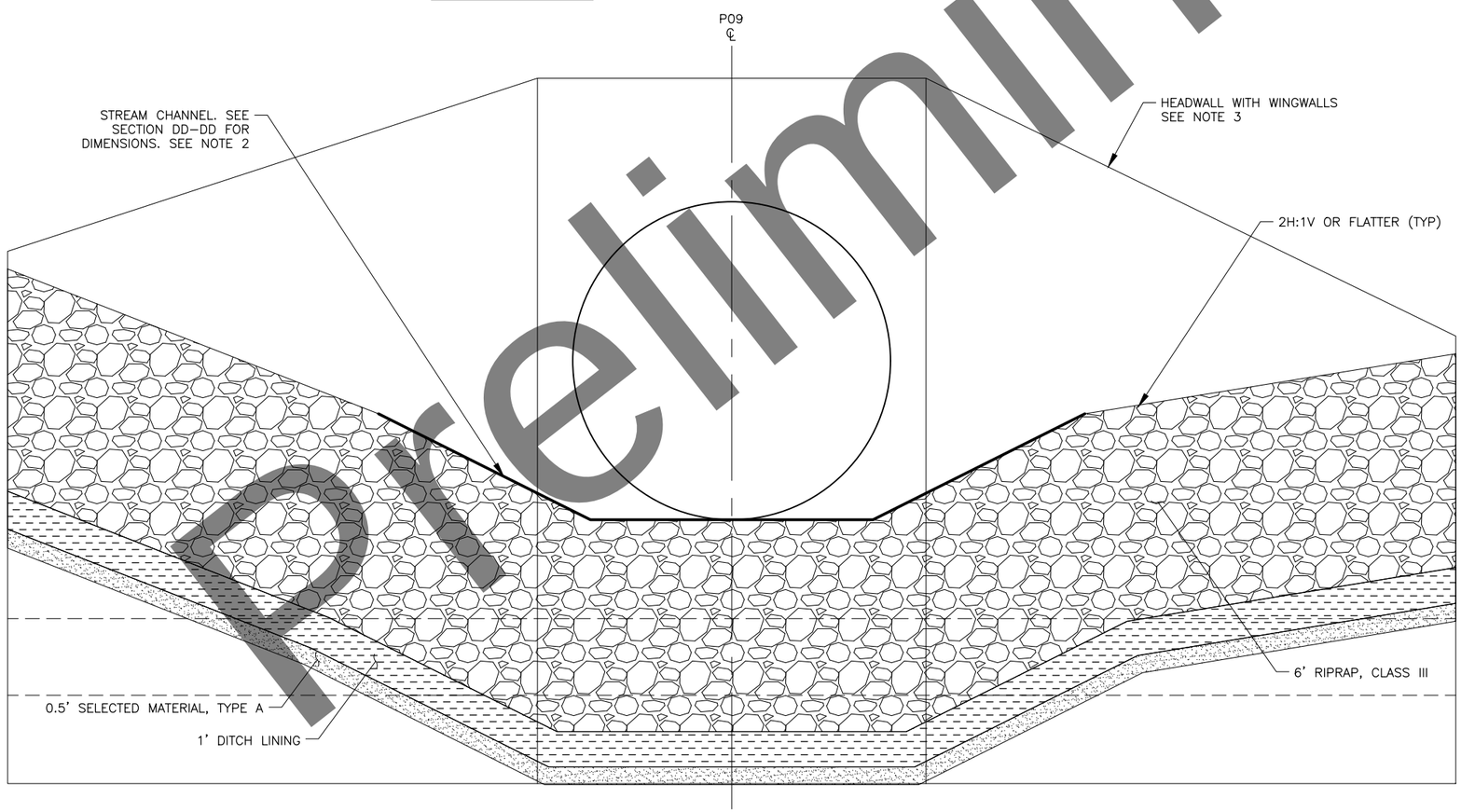

SECTION II–II

NOTES:

1. MATERIAL THICKNESSES ARE MEASURED PERPENDICULAR TO THE FINISHED GROUND SURFACE.
2. ADJUST CHANNEL DIMENSIONS TO TRANSITION BETWEEN THE CULVERT BARREL AND THE DOWNSTREAM STREAM CHANNEL (SECTION KK–KK).
3. SEE DETAIL ON SHEET E22 FOR OUTLET HEADWALL DESIGN.

STATE OF ALASKA
JANIE L. HUSEL
4916
REGISTERED PROFESSIONAL ENGINEER

PSUR SUBMITTAL

AWR ENGINEERING, LLC
4011 ARCTIC BOULVARD, SUITE 106
ANCHORAGE, AK 99503
(907) 441–2973
AECL 1407

STATE OF ALASKA
DEPARTMENT OF TRANSPORTATION
AND PUBLIC FACILITIES

PARKS HIGHWAY PHASE 1 – CULVERT REPLACEMENT

P09 AT STA 1992+50 (MP 136.1) CULVERT DETAILS

Preliminary

DATE	TIME	SCALE	DESIGNED BY	CHECKED BY	DRAFTED BY
4/26/2023	11:11 AM	NTS	AH/LJ	JD	AH/LJ

DRAWING LOCATION
...\Jobs\1204 HDL\08 – Parks Hwy Culverts\CAD\PIH\00592–E21_E23–E24–MP136.DWG

NO.	DATE	REVISION

STATE	PROJECT DESIGNATION	YEAR	SHEET NO.	TOTAL SHEETS
ALASKA	TBD/CFHWY01083	2023	E24	E27

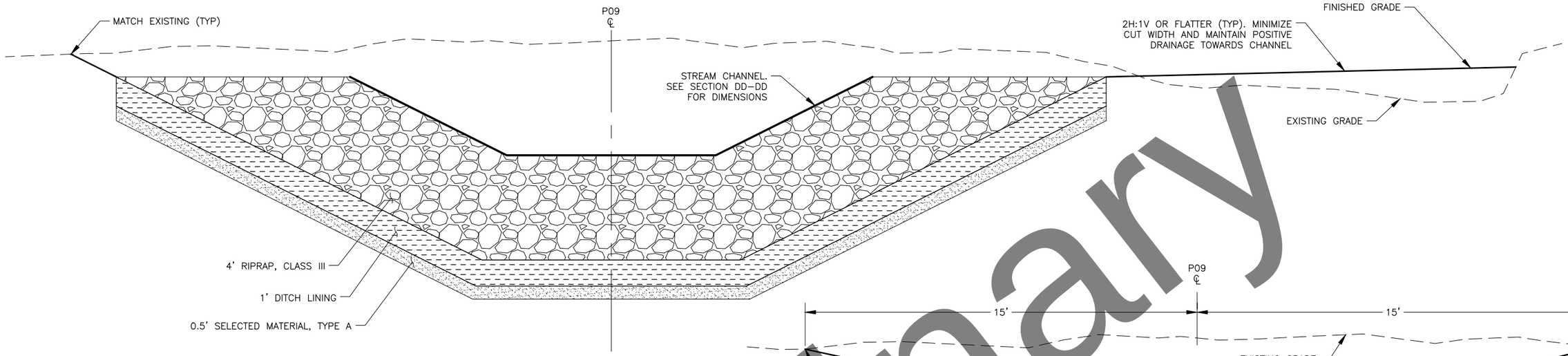

SECTION CC–CC

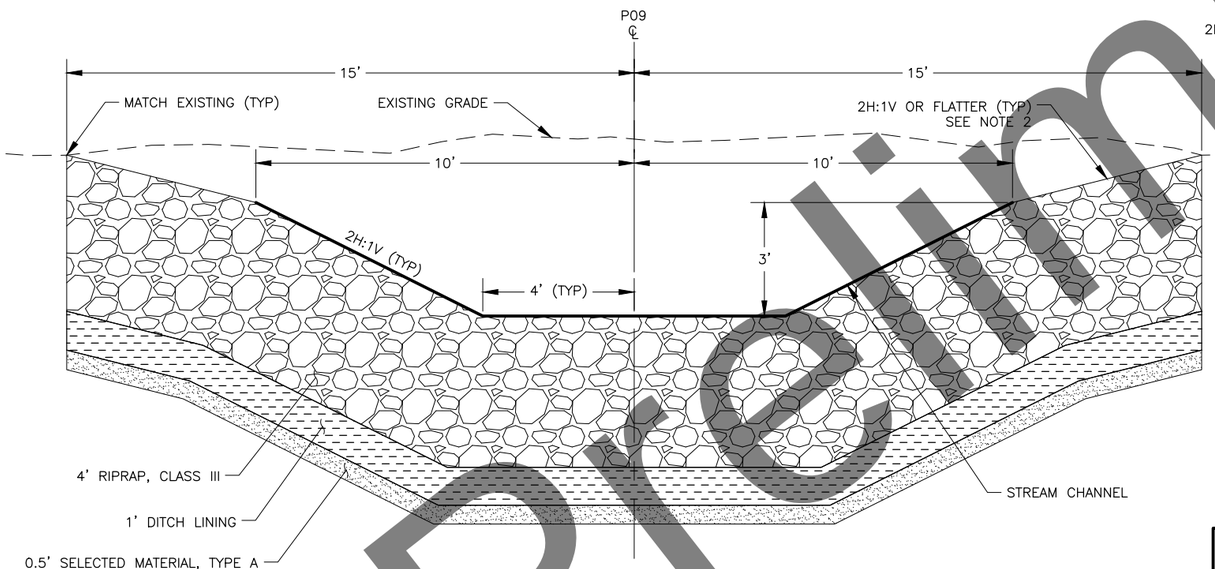

SECTION DD–DD

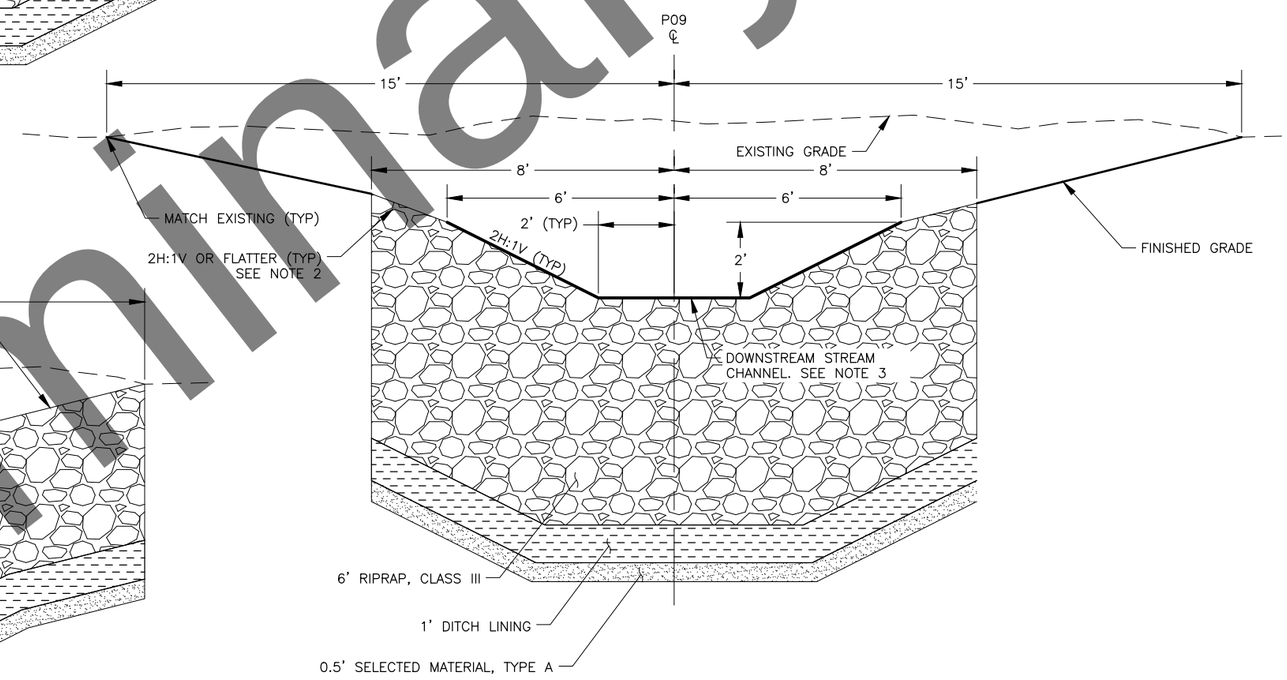

SECTION KK–KK

LAYOUT POINT SUMMARY

POINT	CULVERT STATION	NORTHING	EASTING	REMARKS
63	0+19.45	192776.1306	290452.0875	ME, 640.3' ±
64	0+24.81	192777.1954	290457.3405	PI
65	0+36.38	192775.7467	290468.8178	PI
66	0+49.45	192772.1195	290481.3762	OUTLET
67	1+87.99	192733.6764	290614.4783	INLET
68	1+96.07	192731.4353	290622.2375	PI
69	2+48.23	192727.5534	290674.2505	PI
70	2+52.97	192726.8697	290678.9470	ME, 655.5' ±

NOTES:

1. MATERIAL THICKNESSES ARE MEASURED PERPENDICULAR TO THE FINISHED GROUND SURFACE.
2. FLATTEN APRON SIDE SLOPES TO MATCH EXISTING GROUND OVER LENGTH OF APRON.
3. ADJUST STREAM CHANNEL DIMENSIONS TO TRANSITION BETWEEN THE DOWNSTREAM APRON (SECTION II–II) AND THE EXISTING STREAM CHANNEL OVER LENGTH OF THE DOWNSTREAM STREAM CHANNEL.

STATE OF ALASKA
★ 4011 ★
JAN A. HUSEL
2916
REGISTERED PROFESSIONAL ENGINEER
PSEL SUBMITTAL

AWR ENGINEERING, LLC
4011 ARCTIC BOULVARD, SUITE 106
ANCHORAGE, AK 99503
(907) 441-2973
AECL 1407

STATE OF ALASKA
DEPARTMENT OF TRANSPORTATION
AND PUBLIC FACILITIES

PARKS HIGHWAY PHASE 1 – CULVERT REPLACEMENT

P09 AT STA 1992+50
(MP 136.1) CULVERT DETAILS

Preliminary

DRAWING LOCATION
...\Jobs\1204 HDL\08 – Parks Hwy Culverts\CAD\PIH\00592-E21_E23-E24-MP136.DWG

DATE	TIME	SCALE	DESIGNED BY	CHECKED BY	DRAFTED BY
4/26/2023	11:11 AM	1"=2'	AH/LJ	JD	AH/LJ

NO.	DATE	REVISION

STATE	PROJECT DESIGNATION	YEAR	SHEET NO.	TOTAL SHEETS
ALASKA	TBD/CFHWY01083	2023	E25	E27

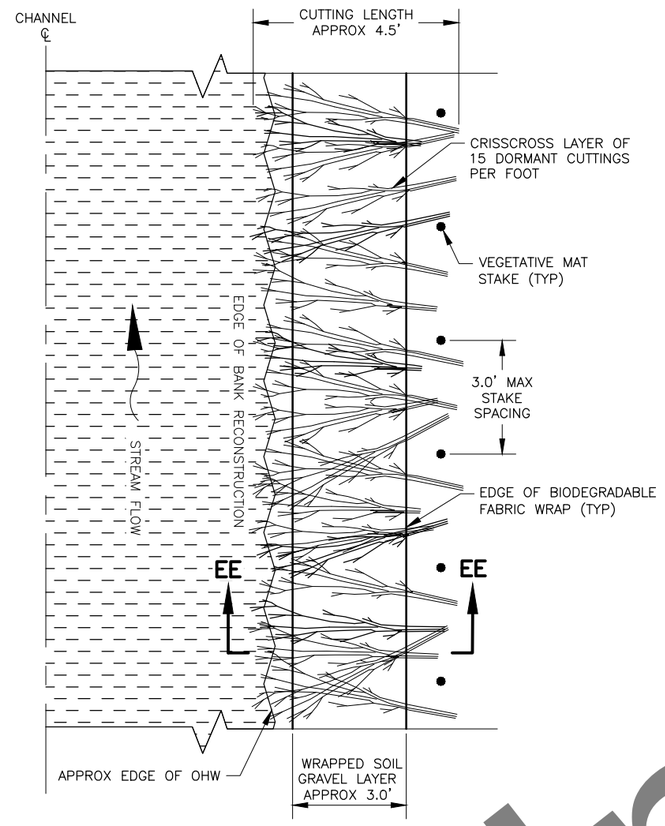

BRUSH LAYER PLAN

NTS

PIPE	OHW WIDTH* (FT)	APPROX TOP OF BANK HEIGHT (FT)
P02	8 TO 10	1.5
P03	3 TO 5	1.5
P04	5 TO 7	2
P07	5 TO 7	1.5
P08	5 TO 7	1.25

* VARY WIDTH TO PROVIDE SMOOTH TRANSITION FROM PROPOSED IMPROVEMENTS TO EXISTING CHANNELS OVER LENGTH OF STREAM RECONSTRUCTION.

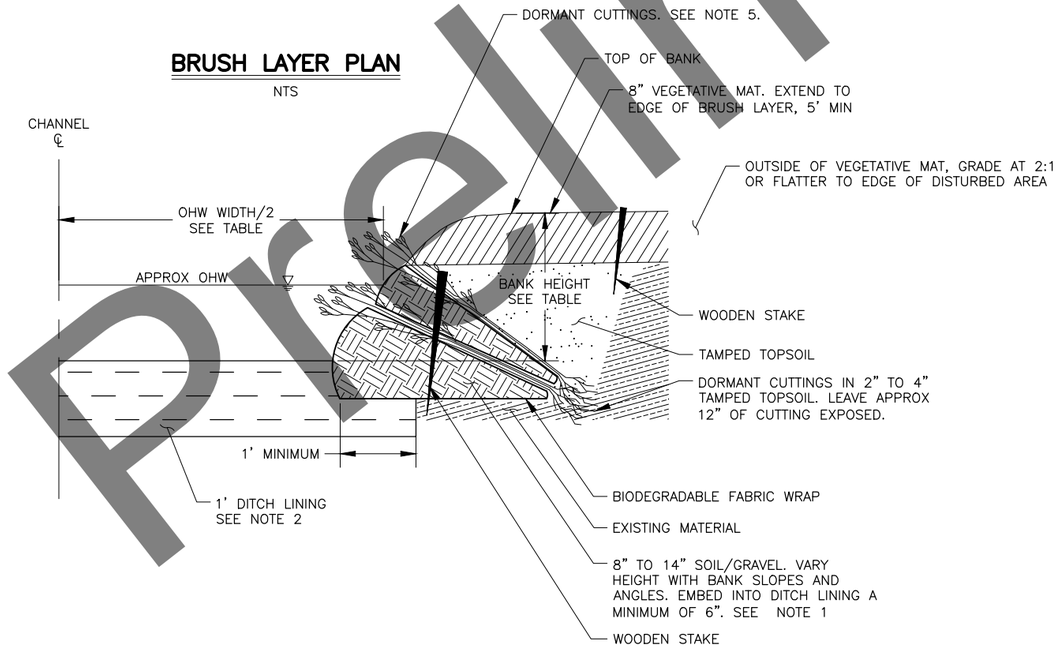

BRUSH LAYER SECTION EE–EE

NTS

NOTES:

1. ADD ADDITIONAL LAYERS OF WRAPPED SOIL/GRAVEL AND TOPSOIL WITH CUTTINGS IF ADDITIONAL BANK HEIGHT IS NEEDED TO MATCH EXISTING.
2. AFTER PLACEMENT OF DITCH LINING, FILL VOIDS IN DITCH LINING. VOID FILL MATERIAL SHALL BE PER SPECIFICATION 690.
3. SEE SPECIFICATION 690 FOR ADDITIONAL BRUSH LAYER CONSTRUCTION DETAILS.
4. MATERIAL THICKNESSES ARE MEASURED PERPENDICULAR TO THE FINISHED GROUND SURFACE.
5. INSTALL CUTTINGS AT APPOX 30 TO 45 DEGREE ANGLE WITH STREAM BOTTOM. LEAVE APPROX 12" OF CUTTING EXPOSED.

Preliminary

STATE OF ALASKA
JANIE HUSEL
2916
REGISTERED PROFESSIONAL ENGINEER
PSSC SUBMITTAL

AWR ENGINEERING, LLC
4011 ARCTIC BOULVARD, SUITE 106
ANCHORAGE, AK 99503
(907) 441–2973
AECL 1407

STATE OF ALASKA
DEPARTMENT OF TRANSPORTATION
AND PUBLIC FACILITIES

PARKS HIGHWAY PHASE 1 – CULVERT REPLACEMENT

STREAM RECONSTRUCTION DETAILS

DATE	TIME	SCALE	DESIGNED BY	CHECKED BY	DRAFTED BY
4/26/2023	11:13 AM	NTS	AH/LJ	JD	AH/LJ

DRAWING LOCATION
...\Jobs\1204 HDL\08 – Parks Hwy Culverts\CAD\PIH\00592-E25-RECON.DWG

NO.	DATE	REVISION

STATE	PROJECT DESIGNATION	YEAR	SHEET NO.	TOTAL SHEETS
ALASKA	TBD/CFHWY01083	2023	E26	E27

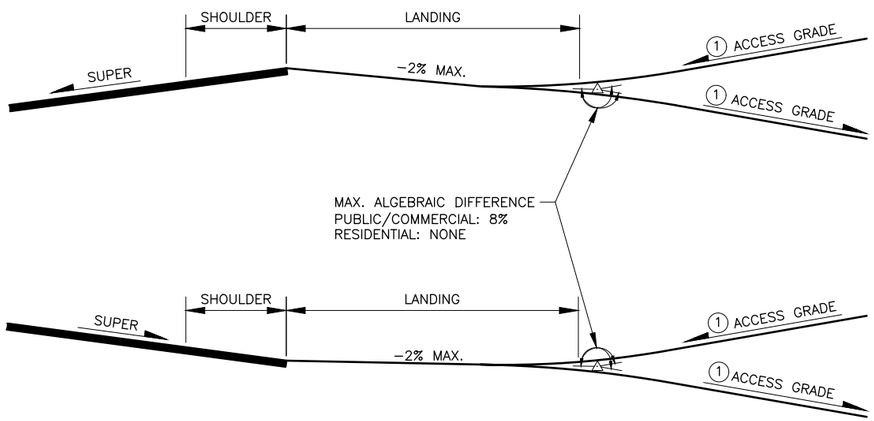

APPROACH PROFILES ON SUPER ELEVATED ROADWAY

1 ACCESS GRADE
MAX. 15%

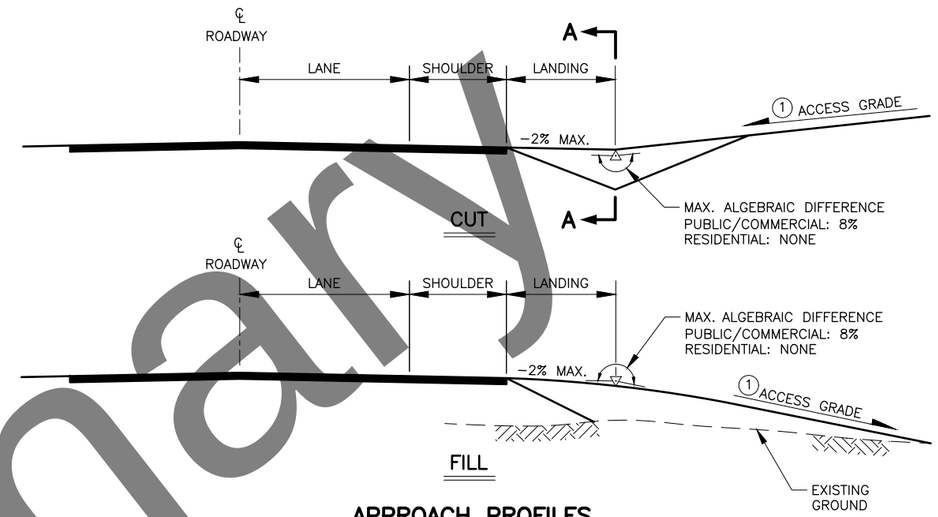

APPROACH PROFILES

APPROACH RADIUS TABLE	
TYPE	RADIUS
RESIDENTIAL	20'
PUBLIC COMMERCIAL	40'

LANDING TABLE	
TYPE	LENGTH
RESIDENTIAL	10'
PUBLIC COMMERCIAL	30'

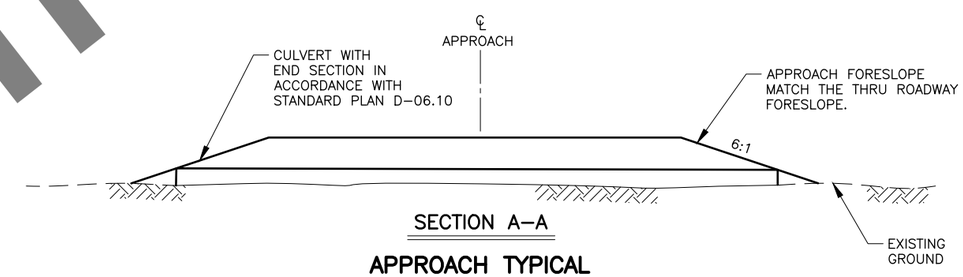

SECTION A–A

APPROACH TYPICAL

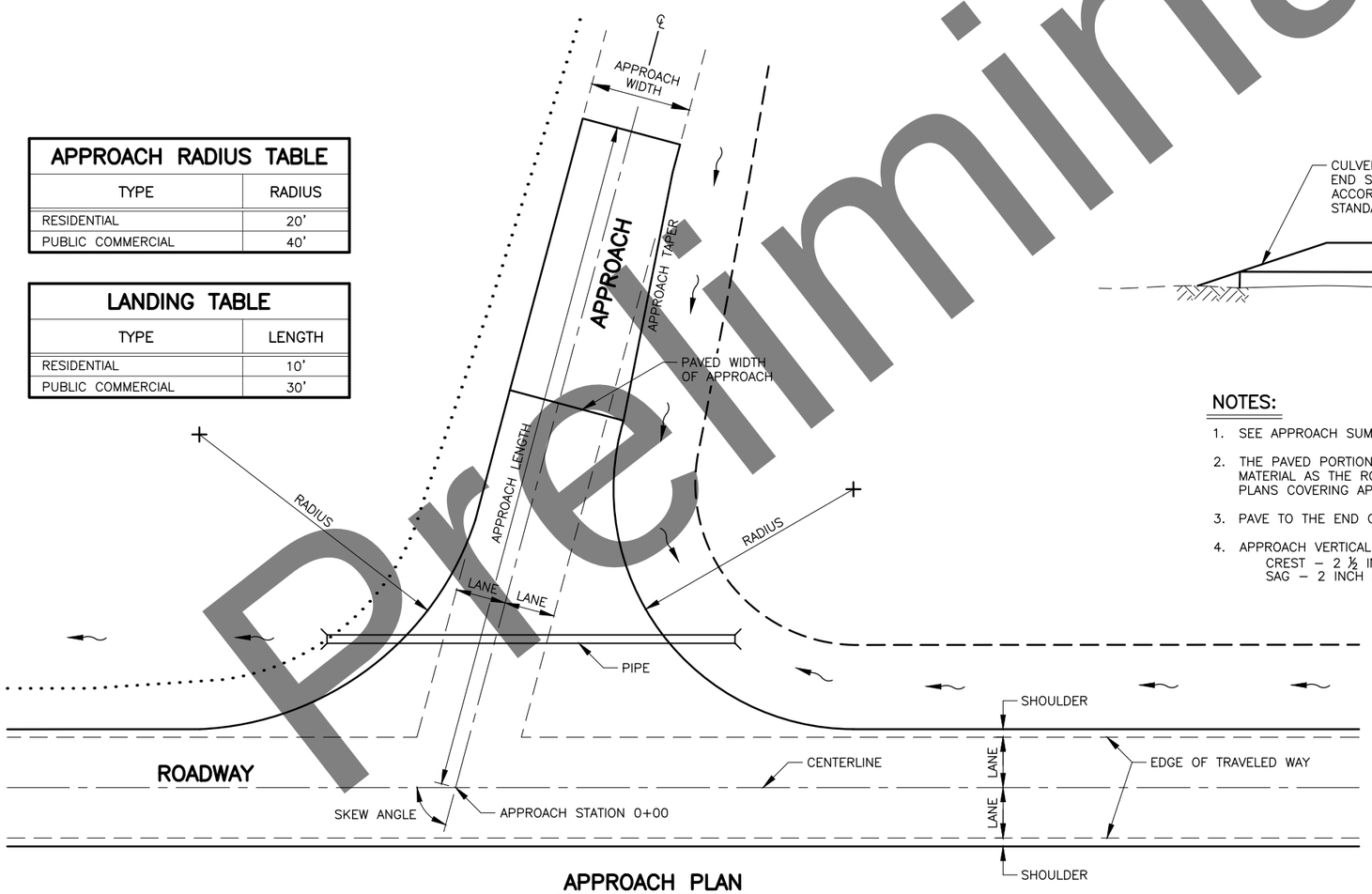

APPROACH PLAN

NOTES:

1. SEE APPROACH SUMMARY FOR APPROACH STATION, LENGTH, WIDTH, SKEW ANGLE, AND TYPE.
2. THE PAVED PORTION OF THE APPROACH STRUCTURAL SECTION SHALL BE CONSTRUCTED OF THE SAME MATERIAL AS THE ROADWAY STRUCTURAL SECTION UNLESS A SEPARATE TYPICAL SECTION IS INCLUDED IN THE PLANS COVERING APPROACHES.
3. PAVE TO THE END OF THE RADIUS RETURN UNLESS OTHERWISE INDICATED.
4. APPROACH VERTICAL CURVE REQUIREMENTS:
   CREST – 2 ½ INCH MAXIMUM IN A 10 FOOT CHORD
   SAG – 2 INCH MAXIMUM IN A 10 FOOT CHORD

Preliminary

STATE OF ALASKA
REGISTERED PROFESSIONAL ENGINEER
AVERIAL J. LARSEN
9371
PSEF REVIEW

HDL ENGINEERING CONSULTANTS, LLC
3335 ARCTIC BLVD, STE 100
ANCHORAGE, AK 99503
(907) 564–2120
AECL861

STATE OF ALASKA
DEPARTMENT OF TRANSPORTATION
AND PUBLIC FACILITIES

PARKS HIGHWAY PHASE I – CULVERT REPLACEMENT

UNCURBED APPROACH DETAILS

DRAWING LOCATION	
H:\JOBS\21-022 PARKS HWY 99-163 H&H (DOTCR)\CAD\DRAWINGS-P1\01083_E26_APPROACH.DWG BY RYARMAK	

DATE	TIME	SCALE	DESIGNED BY	CHECKED BY	DRAFTED BY
4/26/2023	11:03 AM	NTS	AAL	NMO	RCY

NO.	DATE	REVISION

STATE	PROJECT DESIGNATION	YEAR	SHEET NO.	TOTAL SHEETS
ALASKA	TBD/CFHWY01083	2023	E27	E27

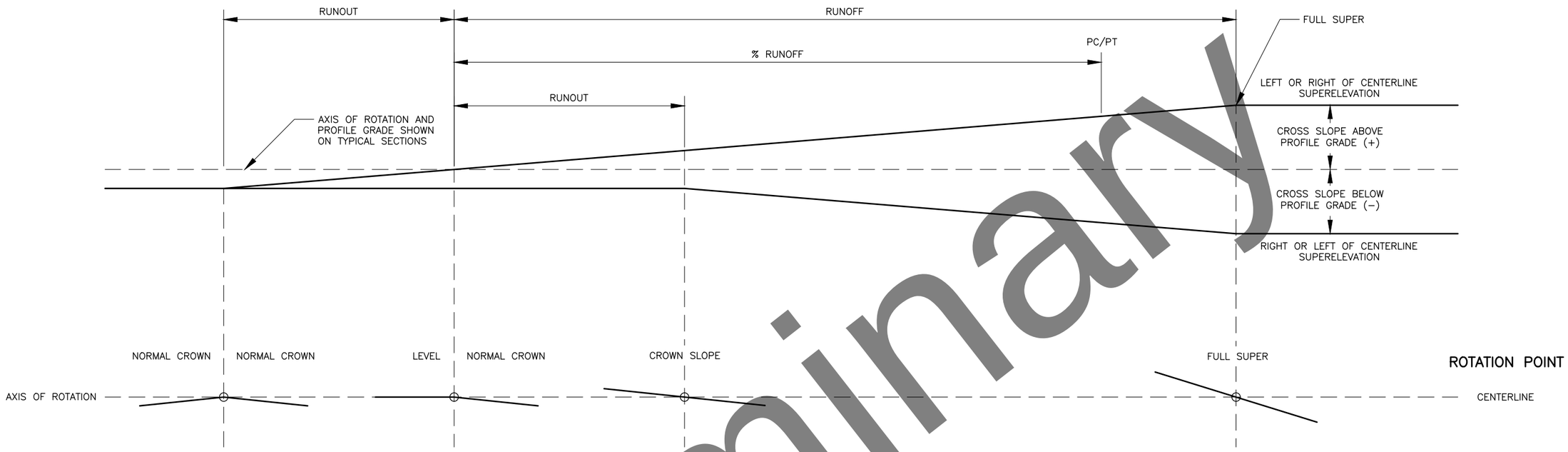

SUPERELEVATION TRANSITION

NOTES:

1. BUILD SUPERELEVATION INTO SUBGRADE AND CARRY THROUGH SHOULDERS.
2. % RUNOFF = PORTION OF RUNOFF ON TANGENT.
3. WIDENING FOR GUARDRAIL OR CURVATURE DOES NOT CHANGE THE LOCATION OF THE AXIS OF ROTATION

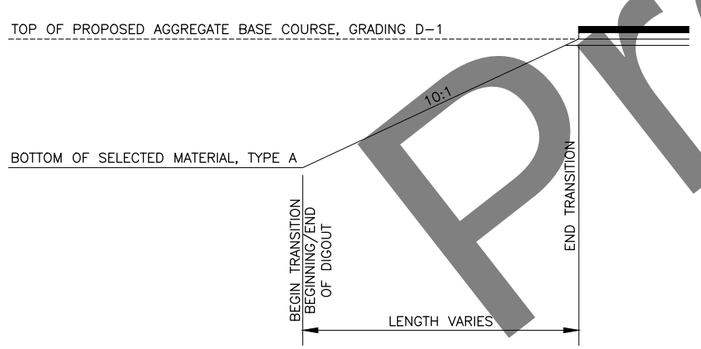

DIGOUT TRANSITION DETAIL

NTS

Preliminary

STATE OF ALASKA
DEPARTMENT OF TRANSPORTATION
AND PUBLIC FACILITIES

PARKS HIGHWAY PHASE I – CULVERT REPLACEMENT

SUPERELEVATION AND DIGOUT TRANSITION DETAILS

STATE OF ALASKA
AVERIAL L. LARSEN
9371
REGISTERED PROFESSIONAL ENGINEER
PSAF REVIEW

HDL ENGINEERING CONSULTANTS, LLC
3335 ARCTIC BLVD, STE 100
ANCHORAGE, AK 99503
(907) 564-2120
AECL861

DRAWING LOCATION
H:\JOBS\21-022 PARKS HWY 99-163 H&H (DOTCR)\CAD\DRAWINGS-P1\01083_E27_SUPER.DWG BY RYARMAK

DATE 4/25/2023 TIME 11:30 AM
SCALE NTS
DESIGNED BY AAL
CHECKED BY NMO
DRAFTED BY RCY

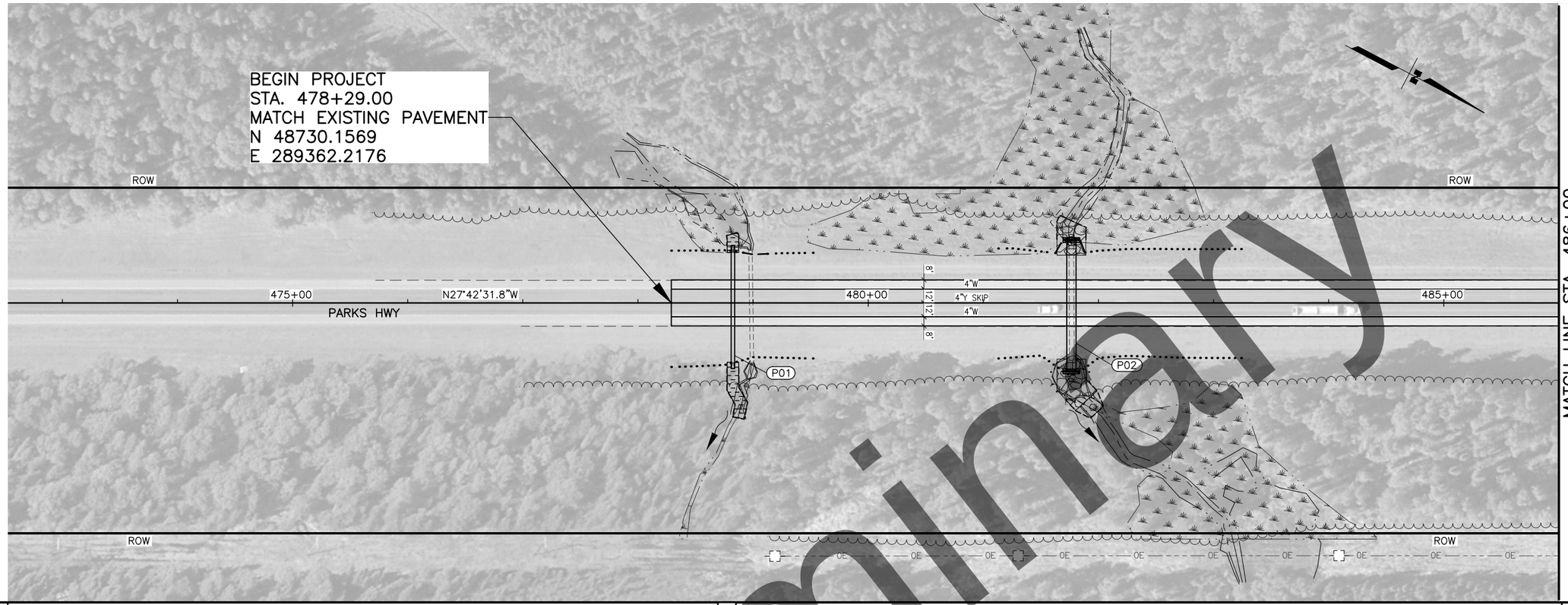

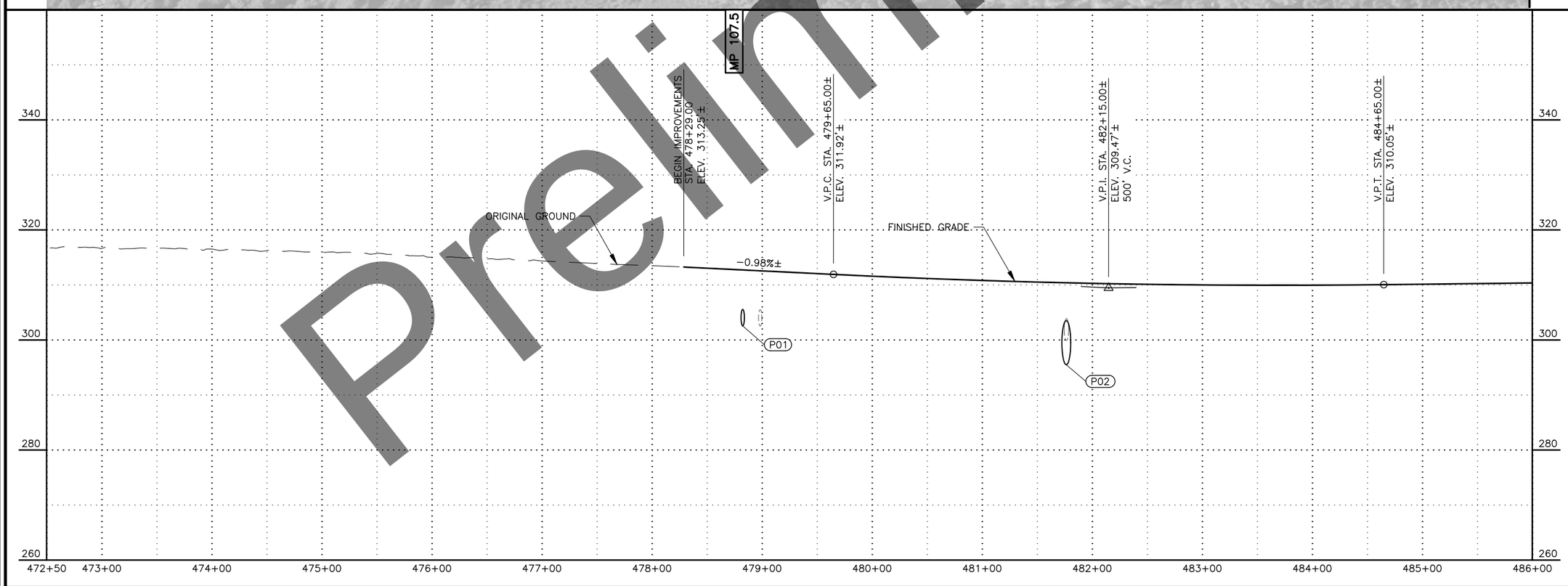

Preliminary

SHEET NO.	TOTAL SHEETS
F1	F8
STATE	YEAR
ALASKA	2023

PROJECT DESIGNATION

TBD/
CFHWY01083

NO.	REVISION
DATE	
NO.	REVISION
DATE	
NO.	REVISION
DATE	

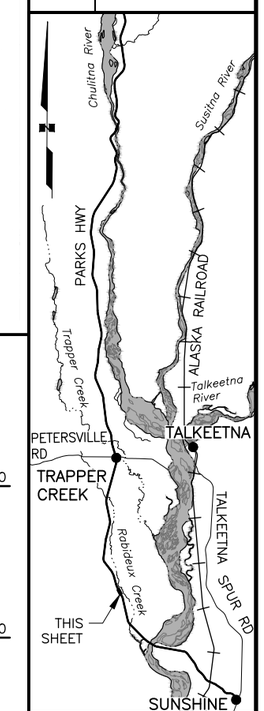

STATE OF ALASKA
AVERIAN BANGEN
49371
PROFESSIONAL ENGINEER
PRELIMINARY

HDL ENGINEERING CONSULTANTS, LLC
3335 ARCTIC BLVD, STE 100
ANCHORAGE, AK 99503
(907) 564-2120
AECL861

STATE OF ALASKA
DEPARTMENT OF TRANSPORTATION
AND PUBLIC FACILITIES

PARKS HIGHWAY PHASE I –
CULVERT REPLACEMENT

PLAN & PROFILE
472+50 TO 486+00

DATE	TIME
4/25/2023	3:55 PM

SCALE 1" = 50'

DESIGNED BY AAL
CHECKED BY ---
DRAFTED BY RCY

DRAWING LOCATION
H:\JOBS\21-022 PARKS HWY 99-163 H&H (DOTCR)\CAD\DRAWINGS-P1\01083_F01_PLANS.DWG BY RYARMAK

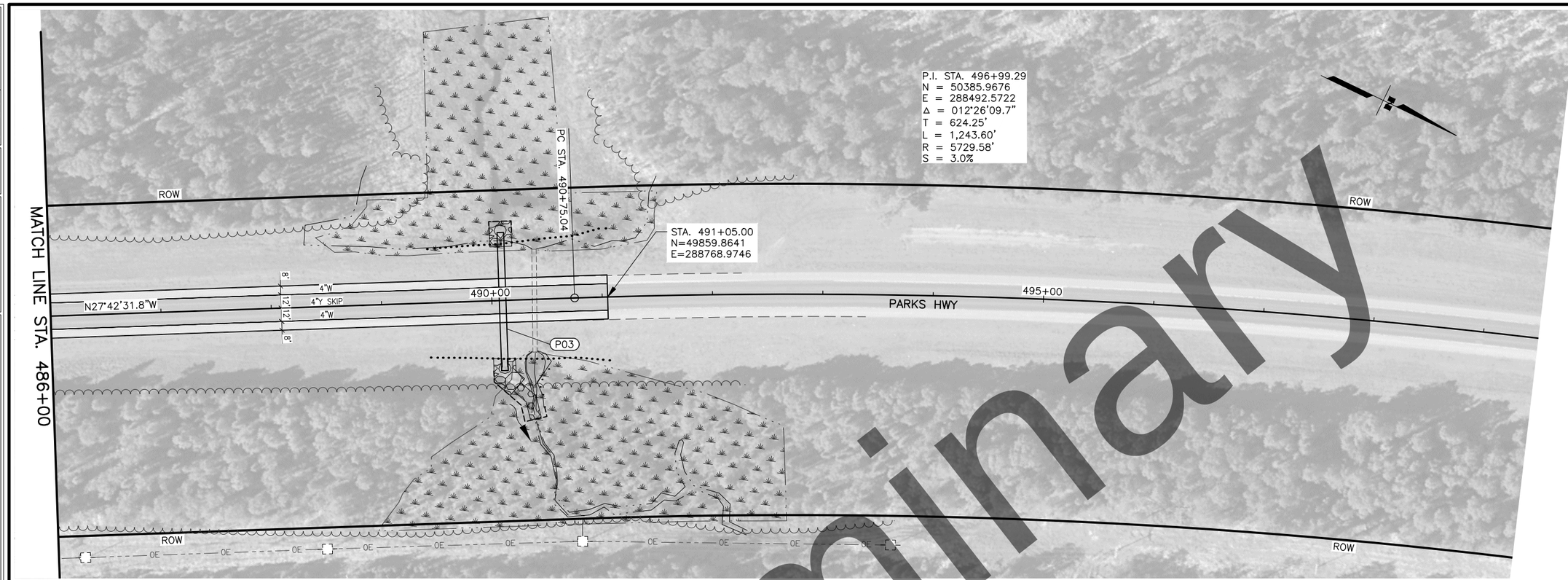

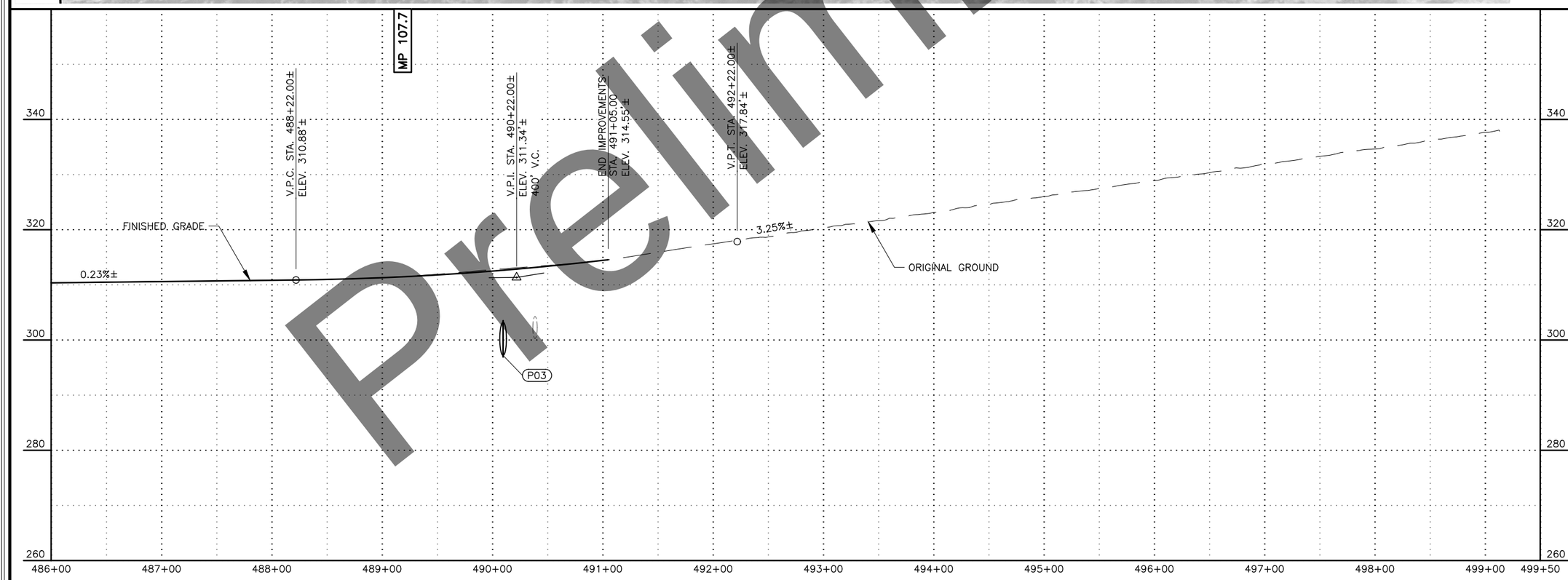

Preliminary

SHEET NO.	TOTAL SHEETS
F2	F8
STATE	YEAR
ALASKA	2023

PROJECT DESIGNATION

TBD/
CFHWY01083

NO.	REVISION
DATE	
NO.	REVISION
DATE	
NO.	REVISION
DATE	

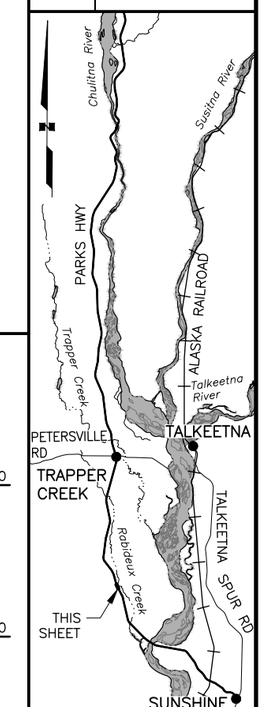

STATE OF ALASKA
49TH
PSEUDO REVIEW
AVERIAL A. BARCEN
NO. 371
REGISTERED PROFESSIONAL ENGINEER

HDL ENGINEERING CONSULTANTS, LLC
3335 ARCTIC BLVD, STE 100
ANCHORAGE, AK 99503
(907) 564-2120
AECL861

STATE OF ALASKA
DEPARTMENT OF TRANSPORTATION
AND PUBLIC FACILITIES

PARKS HIGHWAY PHASE I –
CULVERT REPLACEMENT

PLAN & PROFILE
486+00 TO 499+50

DATE	TIME
4/25/2023	3:55 PM

SCALE
1" = 50'

DESIGNED BY	AAL
CHECKED BY	
DRAFTED BY	RCY

DRAWING LOCATION
H:\JOBS\21-022 PARKS HWY 99-163 H&H (DOTCR)\CAD\DRAWINGS-P1\01083_F01_PLANS.DWG BY RYARMAK

DATE	TIME
4/25/2023	3:55 PM

SCALE 1" = 50'

DESIGNED BY AAL
CHECKED BY ---
DRAFTED BY RCY

DRAWING LOCATION
H:\JOBS\21-022 PARKS HWY 99-163 H&H (DOTCR)\CAD\DRAWINGS-P1\01083_F01_PLANS.DWG BY RYARMAK

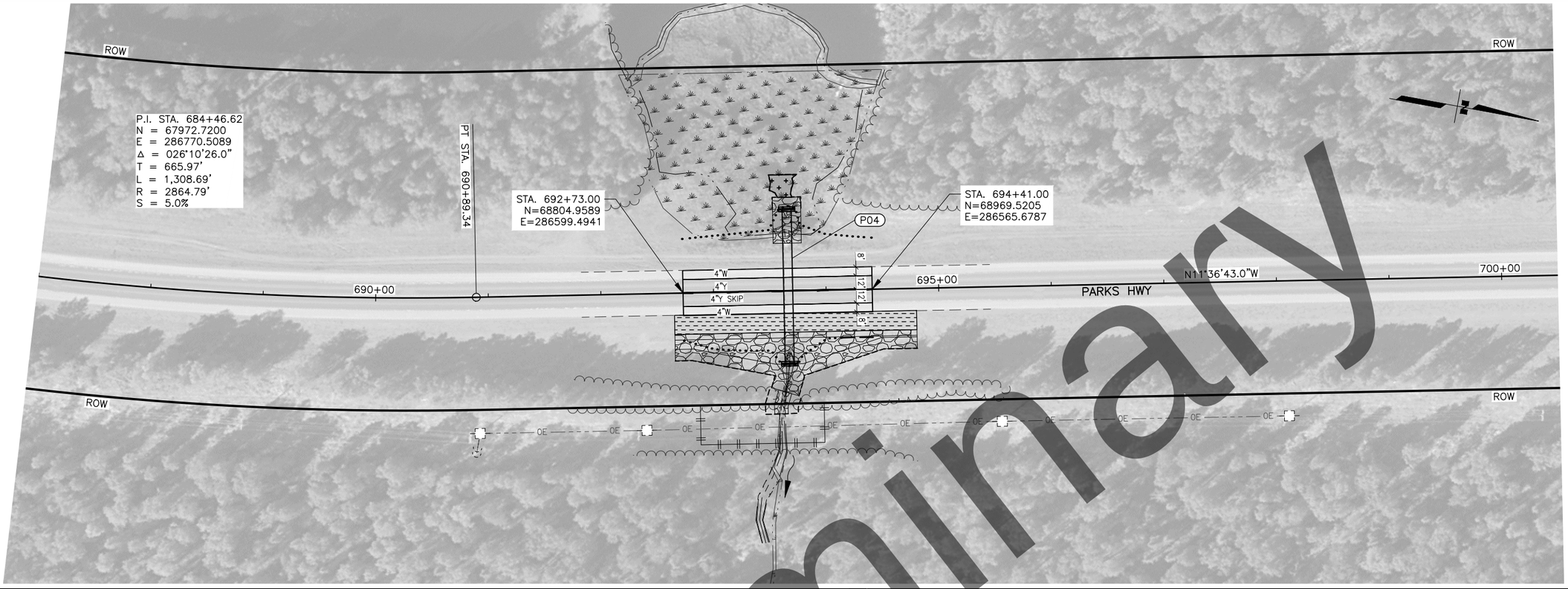

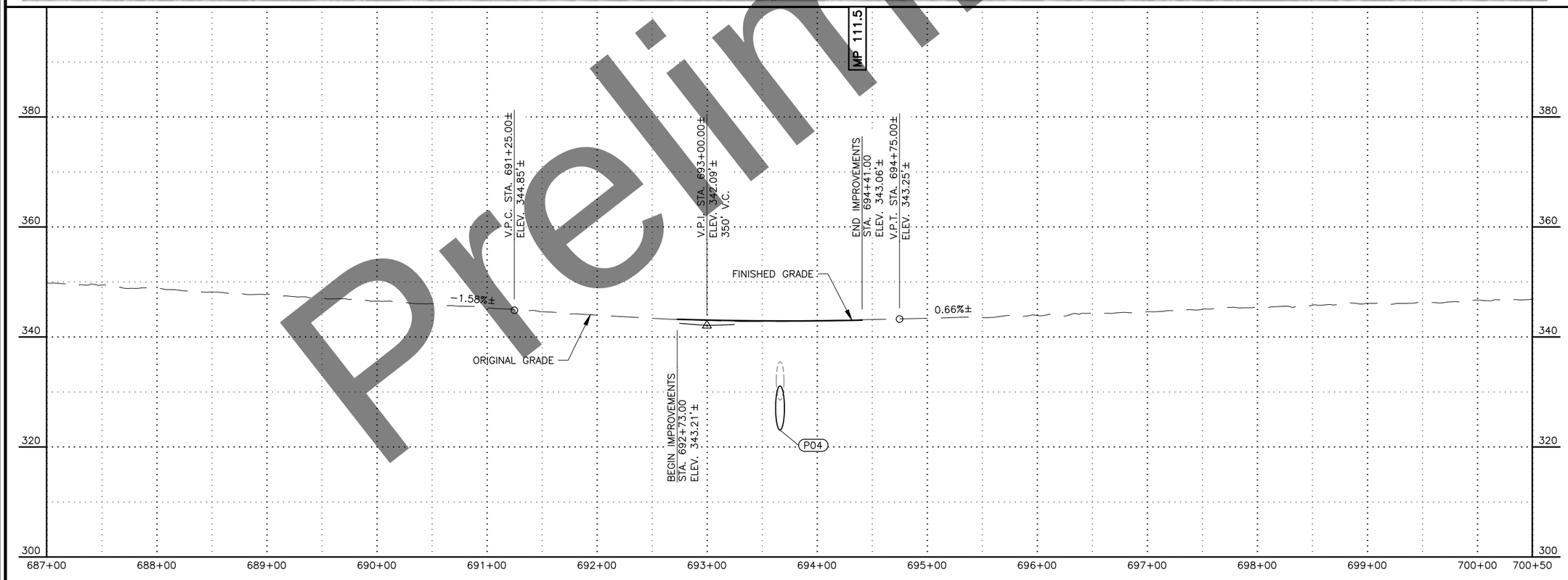

Preliminary

SHEET NO.	TOTAL SHEETS
F3	F8
STATE	YEAR
ALASKA	2023

PROJECT DESIGNATION
TBD/
CFHWY01083

NO.	REVISION
DATE	
NO.	REVISION
DATE	
NO.	REVISION
DATE	

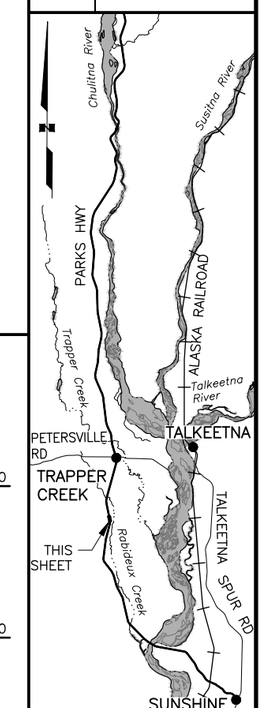

STATE OF ALASKA
49TH
AVERIAN J. BRUSEN
PSEUDO
REVIEW
REGISTERED PROFESSIONAL ENGINEER

HDL ENGINEERING CONSULTANTS, LLC
3335 ARCTIC BLVD, STE 100
ANCHORAGE, AK 99503
(907) 564-2120
AECL861

STATE OF ALASKA
DEPARTMENT OF TRANSPORTATION
AND PUBLIC FACILITIES

PARKS HIGHWAY PHASE I –
CULVERT REPLACEMENT

PLAN & PROFILE
687+00 TO 700+50

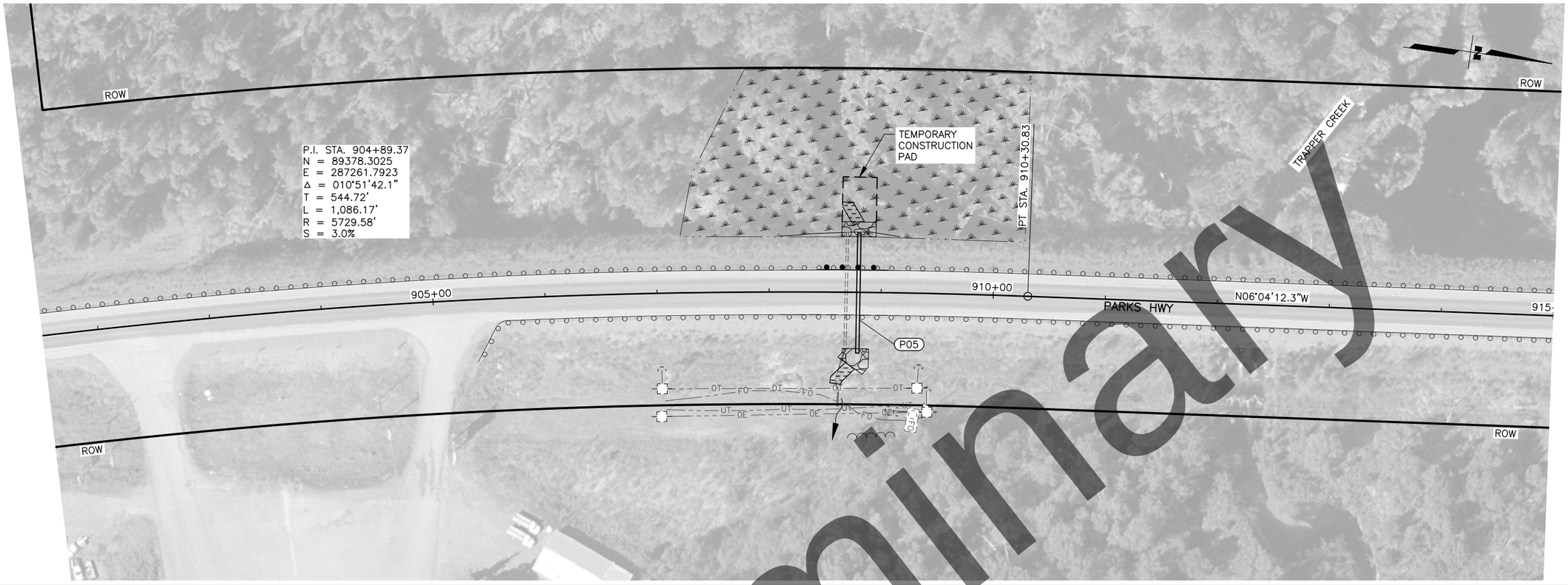

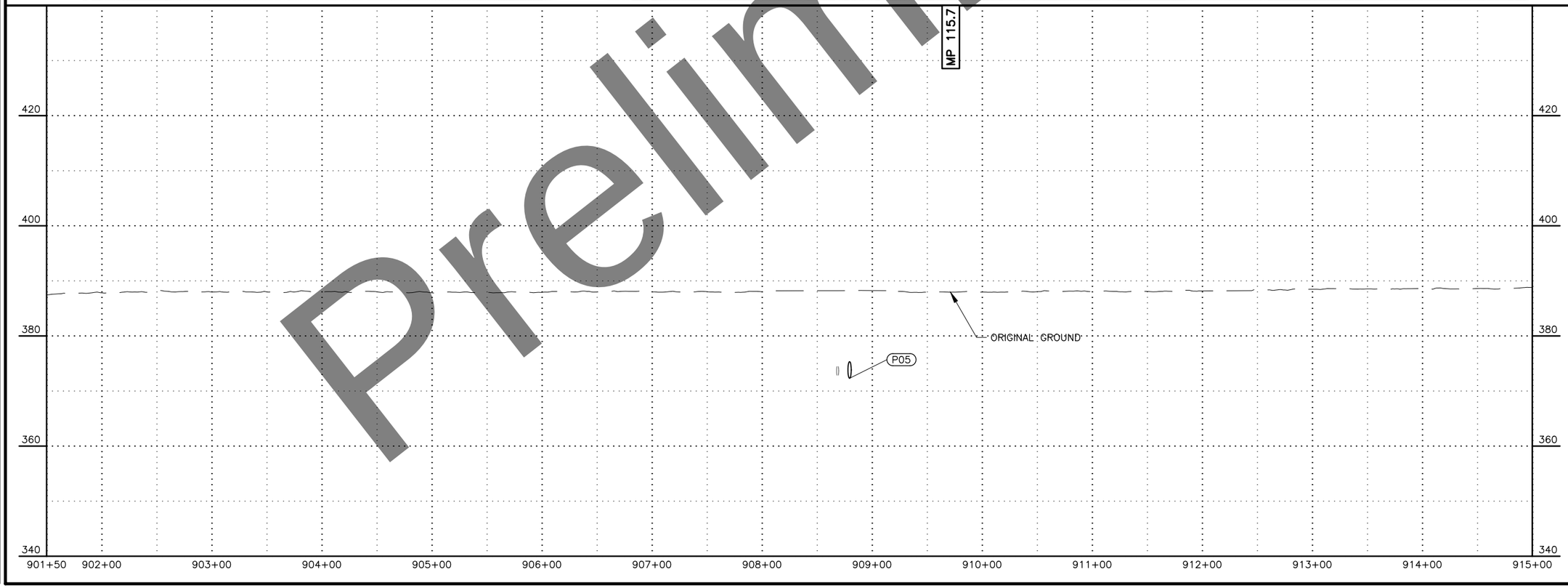

Preliminary

SHEET NO.	TOTAL SHEETS
F4	F8
STATE	YEAR
ALASKA	2023

PROJECT DESIGNATION

TBD/ CFHWY01083

NO.	REVISION
DATE	
NO.	REVISION
DATE	
NO.	REVISION
DATE	

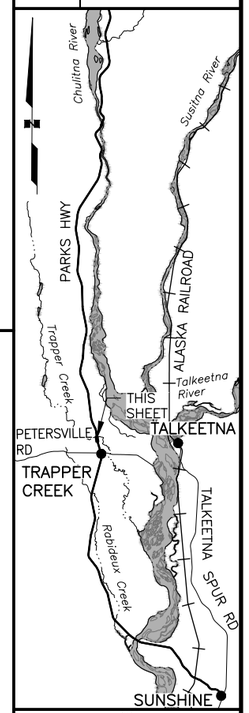

STATE OF ALASKA
49th
AVERIAL A. BARCEN
NO. 371
REGISTERED PROFESSIONAL ENGINEER
PS&E REVIEW

HDL ENGINEERING CONSULTANTS, LLC
3335 ARCTIC BLVD, STE 100
ANCHORAGE, AK 99503
(907) 564-2120
AECL861

STATE OF ALASKA
DEPARTMENT OF TRANSPORTATION
AND PUBLIC FACILITIES

PARKS HIGHWAY PHASE I – CULVERT REPLACEMENT

PLAN & PROFILE
901+50 TO 915+00

DATE	TIME
4/26/2023	10:45 AM

SCALE
1" = 50'

DESIGNED BY	AAL
CHECKED BY	
DRAFTED BY	RCY

DRAWING LOCATION
H:\JOBS\21-022 PARKS HWY 99-163 H&H (DOTCR)\CAD\DRAWINGS-P1\01083_F01_PLANS.DWG BY RYARMAK

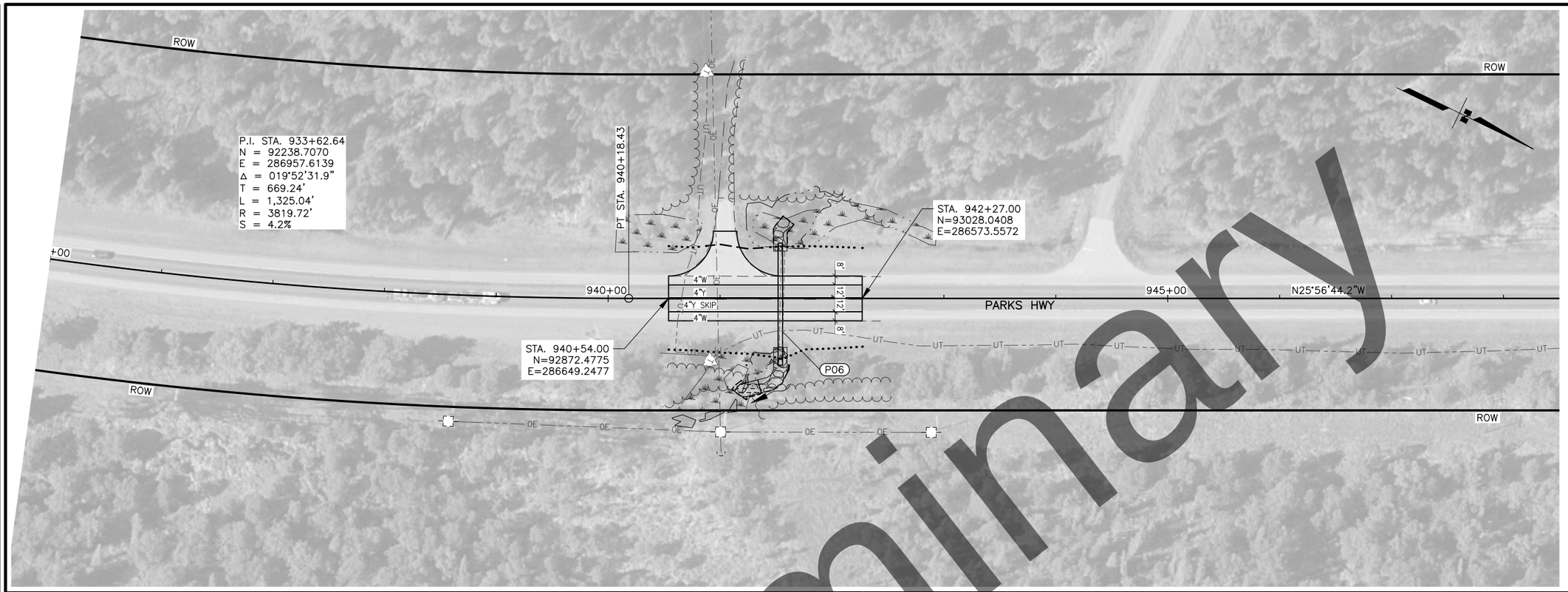

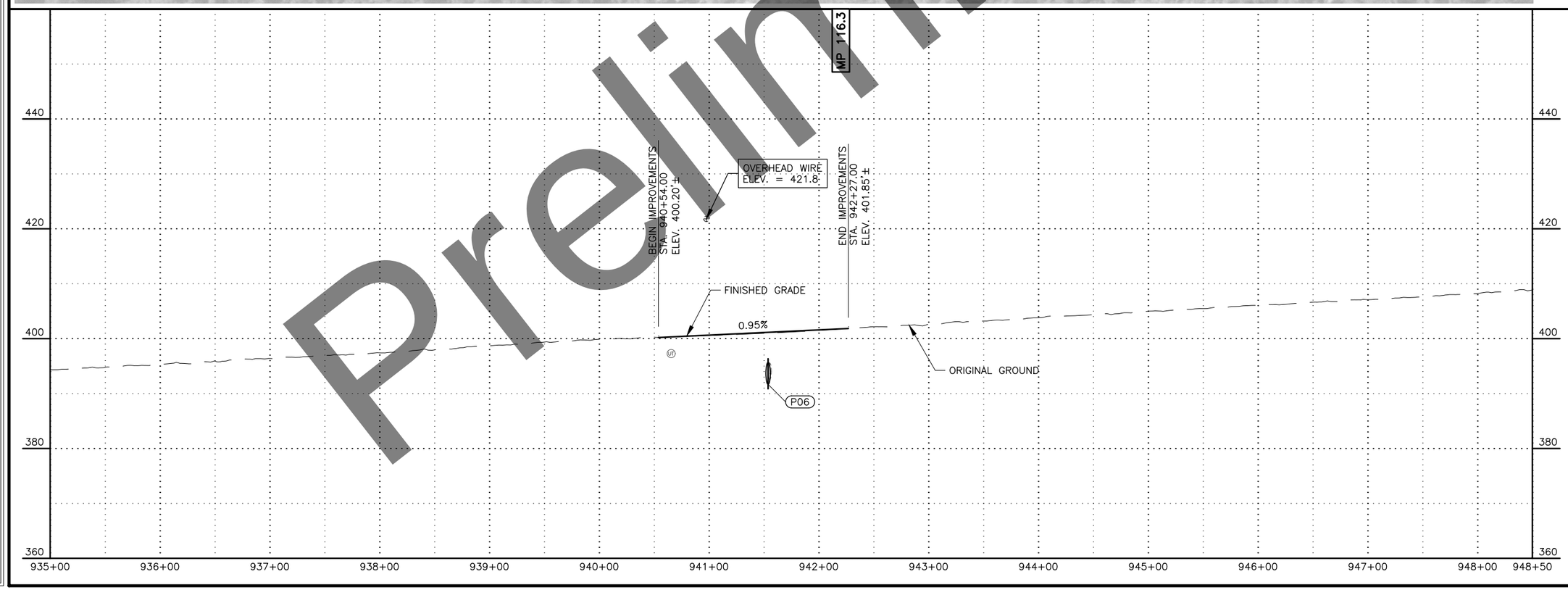

Preliminary

SHEET NO.	TOTAL SHEETS
F5	F8
STATE	YEAR
ALASKA	2023

PROJECT DESIGNATION

TBD/ CFHWY01083

NO.	REVISION
DATE	
NO.	REVISION
DATE	
NO.	REVISION
DATE	

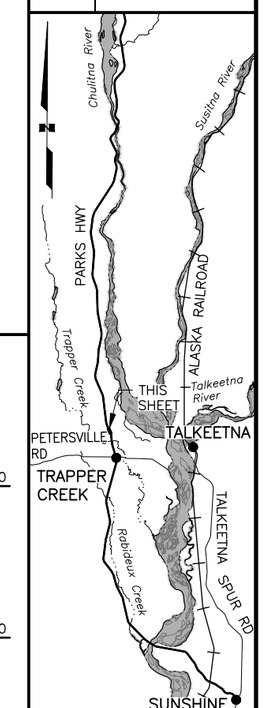

STATE OF ALASKA
49TH
PSLS
AVERIAN J. BENSEN
REGISTERED PROFESSIONAL ENGINEER
PREVIEW

HDL ENGINEERING CONSULTANTS, LLC
3335 ARCTIC BLVD, STE 100
ANCHORAGE, AK 99503
(907) 564-2120
AECL861

STATE OF ALASKA
DEPARTMENT OF TRANSPORTATION
AND PUBLIC FACILITIES

PARKS HIGHWAY PHASE I – CULVERT REPLACEMENT

PLAN & PROFILE
935+00 TO 948+50

DATE	TIME
4/25/2023	3:56 PM

SCALE 1" = 50'

DESIGNED BY ---
CHECKED BY AAL
DRAFTED BY RCY

DRAWING LOCATION
H:\JOBS\21-022 PARKS HWY 99-163 H&H (DOTCR)\CAD\DRAWINGS-P1\01083_F01_PLANS.DWG BY RYARMAK

DATE	TIME	SCALE	DESIGNED BY	CHECKED BY	DRAFTED BY
4/25/2023	3:56 PM	1" = 50'	AAL		RCY

DRAWING LOCATION
H:\JOBS\21-022 PARKS HWY 99-163 H&H (DOTCR)\CAD\DRAWINGS-P1\01083_F01_PLANS.DWG BY RYARMAK

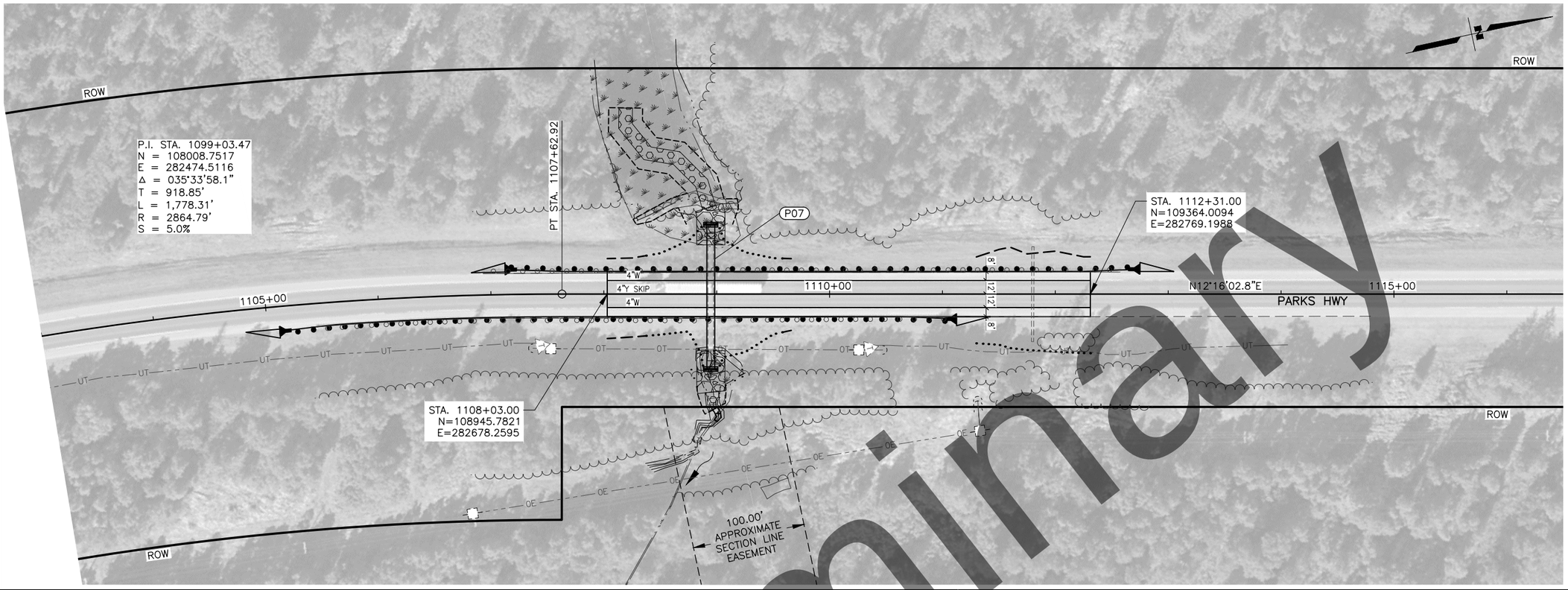

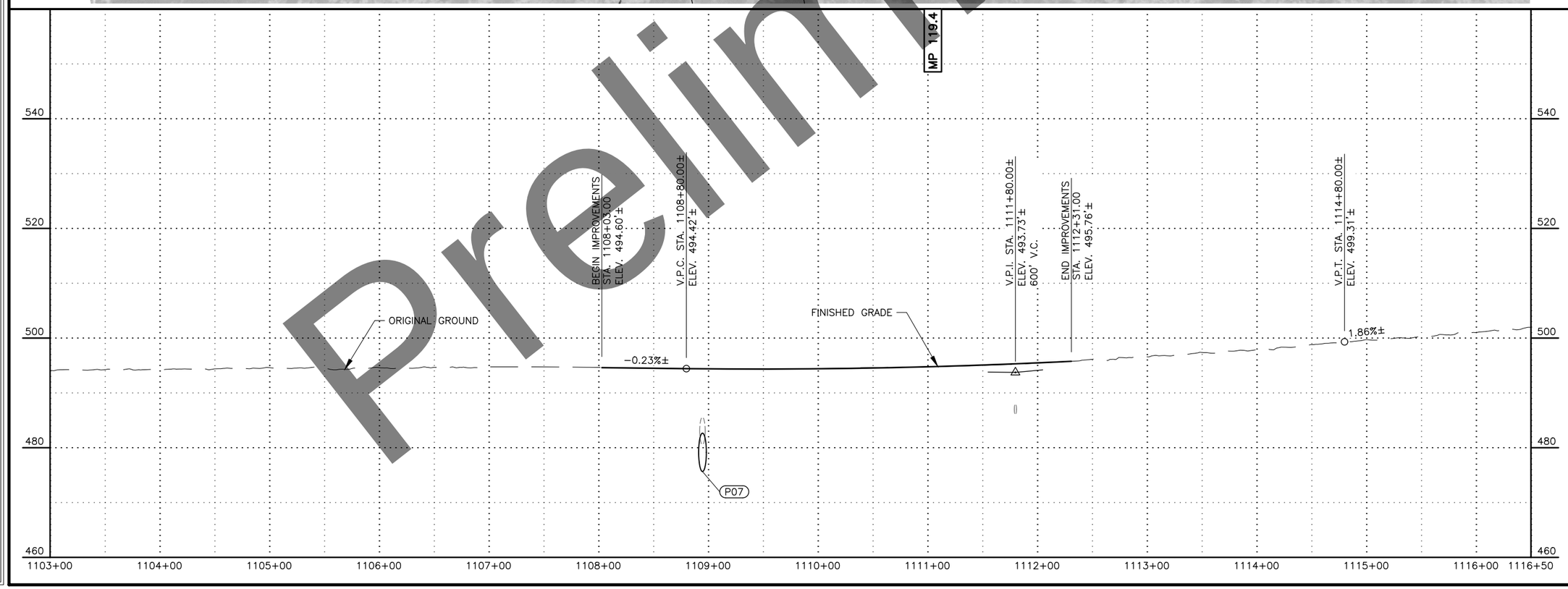

Preliminary

SHEET NO.	TOTAL SHEETS
F6	F8
STATE	YEAR
ALASKA	2023

PROJECT DESIGNATION
TBD/
CFHWY01083

NO.	REVISION
DATE	
NO.	REVISION
DATE	
NO.	REVISION
DATE	

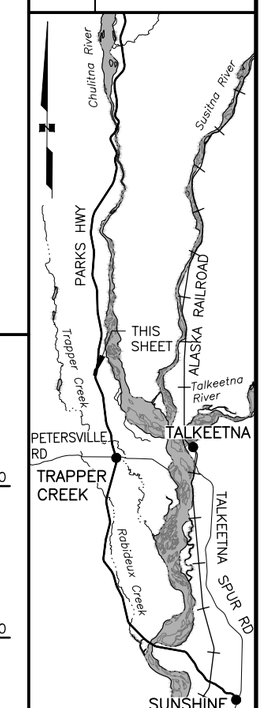

STATE OF ALASKA
49TH
AVERIAN J. BENSEN
PSEF REVIEW
REGISTERED PROFESSIONAL ENGINEER

HDL ENGINEERING CONSULTANTS, LLC
3335 ARCTIC BLVD, STE 100
ANCHORAGE, AK 99503
(907) 564-2120
AECL861

STATE OF ALASKA
DEPARTMENT OF TRANSPORTATION
AND PUBLIC FACILITIES

PARKS HIGHWAY PHASE I –
CULVERT REPLACEMENT

PLAN & PROFILE
1103+00 TO
1116+50

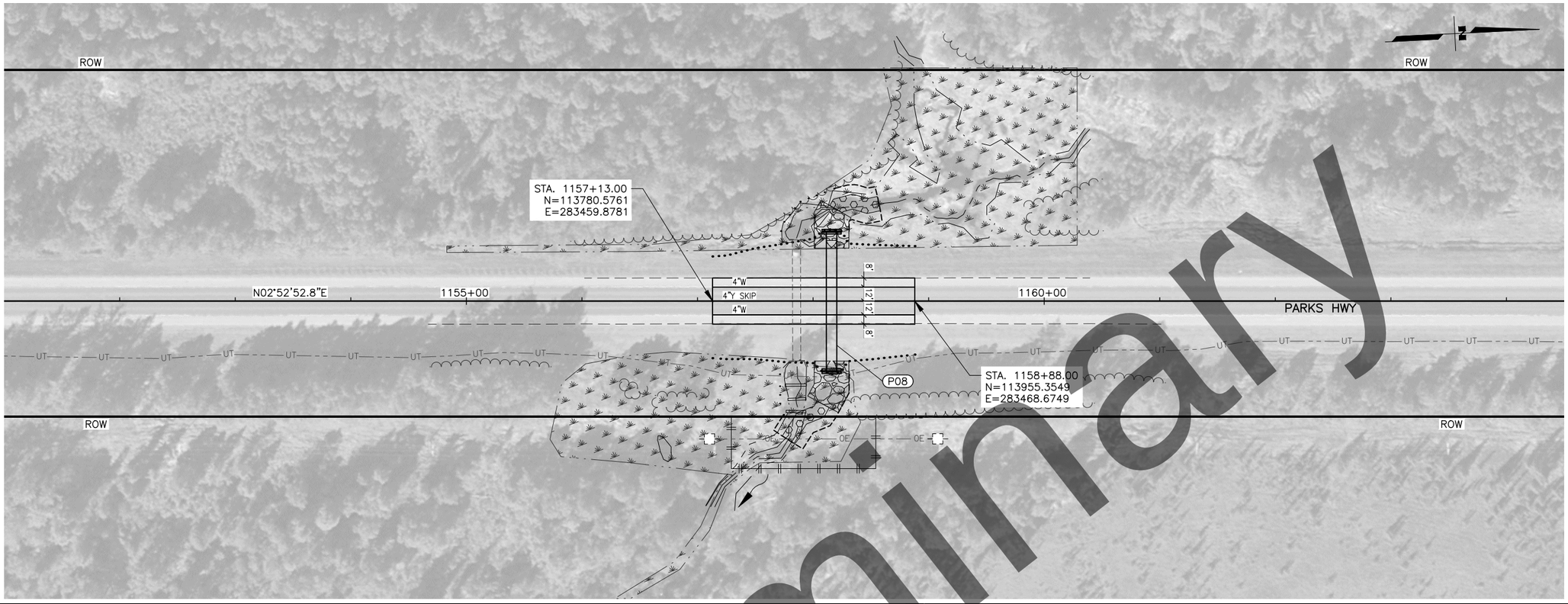

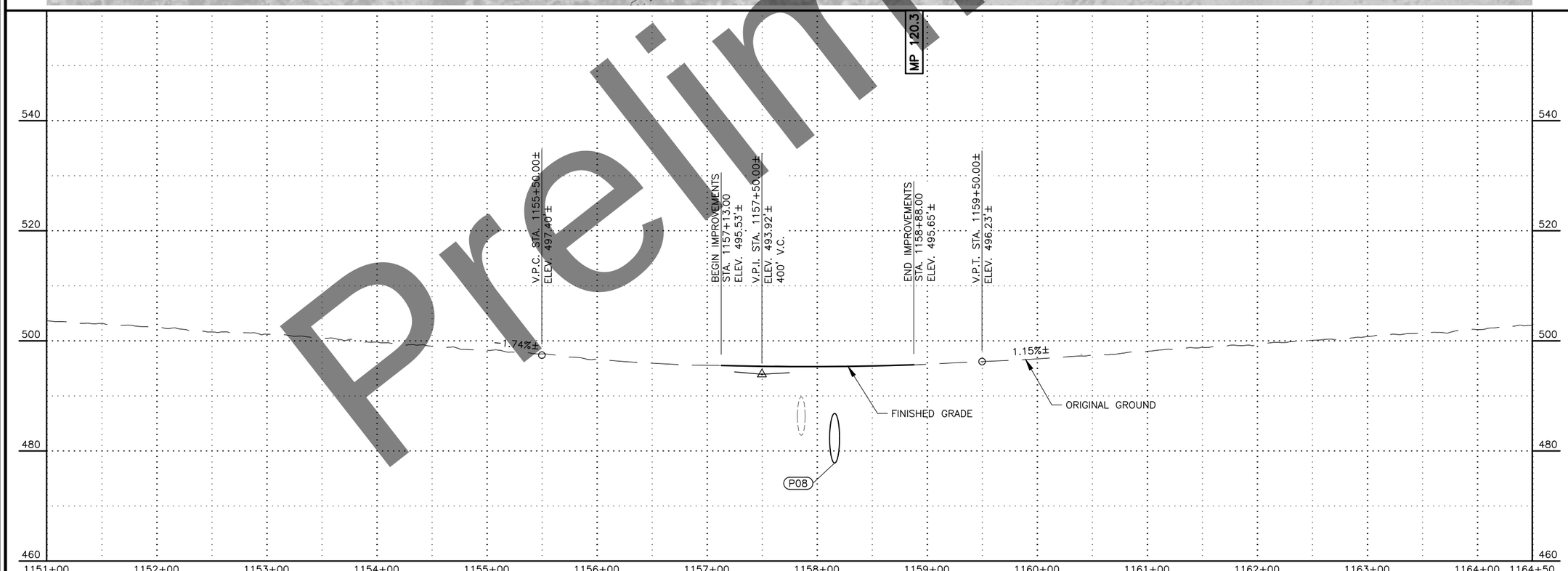

Preliminary

SHEET NO.	TOTAL SHEETS
F7	F8
STATE	YEAR
ALASKA	2023

PROJECT DESIGNATION

TBD/
CFHWY01083

NO.	REVISION
DATE	
NO.	REVISION
DATE	
NO.	REVISION
DATE	

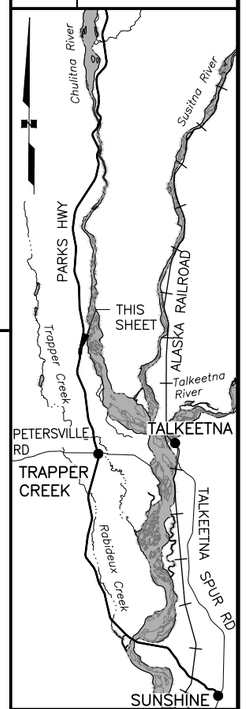

STATE OF ALASKA
49TH
AVERIAN J. BARBEN
PE-9371
PROFESSIONAL ENGINEER
PSE&E REVIEW

HDL ENGINEERING CONSULTANTS, LLC
3335 ARCTIC BLVD, STE 100
ANCHORAGE, AK 99503
(907) 564-2120
AECL861

STATE OF ALASKA
DEPARTMENT OF TRANSPORTATION
AND PUBLIC FACILITIES

PARKS HIGHWAY PHASE I –
CULVERT REPLACEMENT

PLAN & PROFILE
1151+00 TO
1164+50

DATE	TIME	SCALE	DESIGNED BY	CHECKED BY	DRAFTED BY
4/25/2023	3:56 PM	1" = 50'	AAL		RCY

DRAWING LOCATION
H:\JOBS\21-022 PARKS HWY 99-163 H&H (DOTCR)\CAD\DRAWINGS-P1\01083_F01_PLANS.DWG BY RYARMAK

DATE	TIME	SCALE	DESIGNED BY	CHECKED BY	DRAFTED BY
4/25/2023	3:56 PM	1" = 50'	AAL		RCY

DRAWING LOCATION
H:\JOBS\21-022 PARKS HWY 99-163 H&H (DOTCR)\CAD\DRAWINGS-P1\01083_F01_PLANS.DWG BY RYARMAK

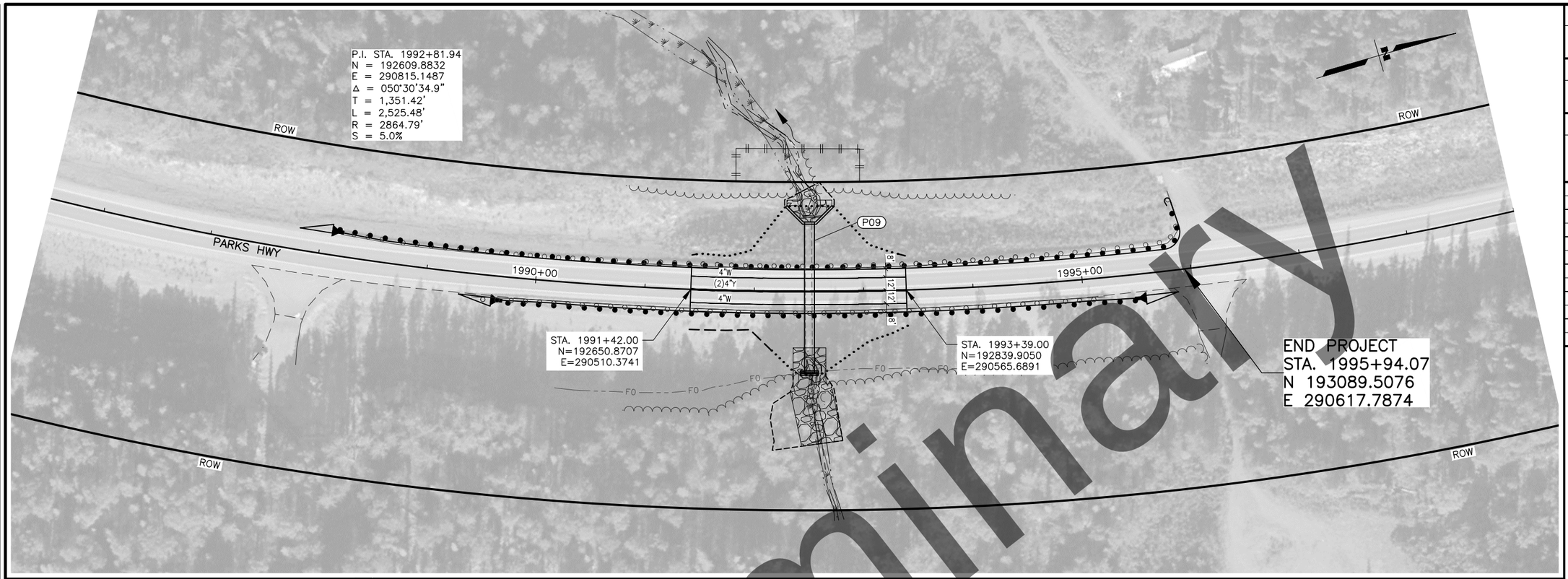

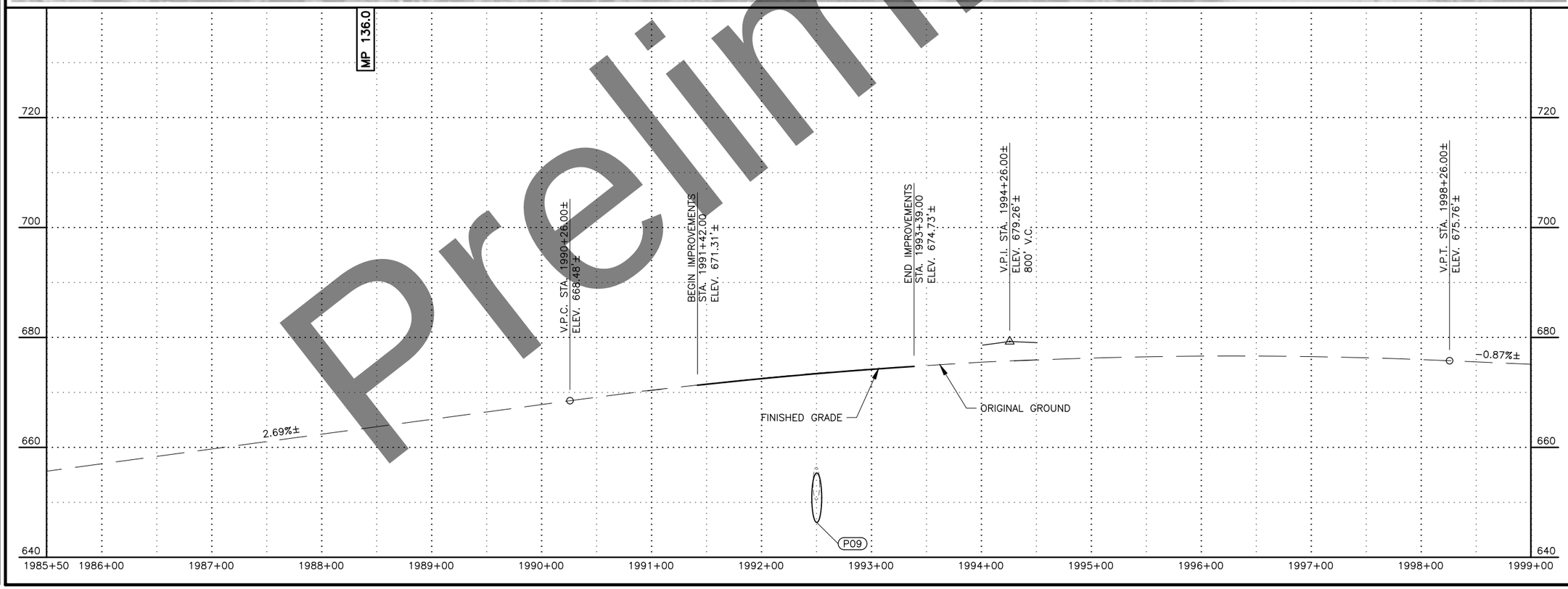

Preliminary

SHEET NO.	TOTAL SHEETS
F8	F8
STATE	YEAR
ALASKA	2023

PROJECT DESIGNATION
TBD/
CFHWY01083

NO.	REVISION
DATE	
NO.	REVISION
DATE	
NO.	REVISION
DATE	

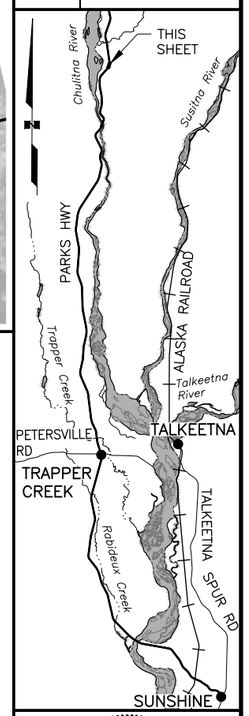

STATE OF ALASKA
49TH
AVERIAN JENSEN
PROFESSIONAL ENGINEER
PSEAE REVIEW

HDL ENGINEERING CONSULTANTS, LLC
3335 ARCTIC BLVD, STE 100
ANCHORAGE, AK 99503
(907) 564-2120
AECL861

STATE OF ALASKA
DEPARTMENT OF TRANSPORTATION
AND PUBLIC FACILITIES

PARKS HIGHWAY PHASE I –
CULVERT REPLACEMENT

PLAN & PROFILE
1985+50 TO
1999+00

NO.	DATE	REVISION

STATE	PROJECT DESIGNATION	YEAR	SHEET NO.	TOTAL SHEETS
ALASKA	TBD/CFHWY01083	2023	H1	H1

STRIPING NOTES:

1. FOR ALL FINAL PAVEMENT MARKINGS USE METHYLMETHACRYLATE MATERIALS. LONGITUDINAL, TRANSVERSE AND SYMBOL MARKINGS SHALL BE INLAID AND GORE STRIPES SHALL BE SURFACE APPLIED AS SPECIFIED IN SECTION 670 OF THE SPECIFICATIONS.
2. DIMENSIONS REFER TO THE CENTER OF STRIPE AND THE EDGE OF PAVEMENT.
3. IF THE NEW AND EXISTING PAVEMENT MARKINGS ARE NOT ALIGNED AT MATCH LINE, TRANSITION BETWEEN THE TWO USING A 100:1 TAPER ON THE NEW PAVEMENT.
4. WHERE NEW STRIPING IS TO EXTEND BEYOND PAVING LIMITS, REMOVE EXISTING STRIPING IN ACCORDANCE WITH SUBSECTION 670-3.04 TO THE EXTENT OF STRIPING LIMITS.

Preliminary

STATE OF ALASKA
AVERIAN L. LARSEN
9371
REGISTERED PROFESSIONAL ENGINEER
PSUF REVIEW

HDL ENGINEERING CONSULTANTS, LLC
3335 ARCTIC BLVD, STE 100
ANCHORAGE, AK 99503
(907) 564-2120
AECL861

STATE OF ALASKA
DEPARTMENT OF TRANSPORTATION
AND PUBLIC FACILITIES

PARKS HIGHWAY PHASE I –
CULVERT REPLACEMENT

TRAFFIC LEGEND AND NOTES

DRAWING LOCATION
H:\JOBS\21-022 PARKS HWY 99-163 H&H (DOTCR)\CAD\DRAWINGS-P1\01083_H01_LEGEND.DWG BY RYARMAK

DATE	TIME	SCALE	DESIGNED BY	---
4/25/2023	11:28 AM	NTS	CHECKED BY	---
			DRAFTED BY	---