NO.	DATE	REVISION

STATE	PROJECT DESIGNATION	YEAR	SHEET NO.	TOTAL SHEETS
ALASKA	0A15037/CFHWY00431 0A15038/CFHWY00432 0A15033/CFHWY00006	2021	A1	A13

CDS ROUTE	135000	MILEPOINT	33.95 TO 38.46
LATITUDE	61.552446	LONGITUDE	−149.179571

STATE OF ALASKA

DEPARTMENT OF TRANSPORTATION AND PUBLIC FACILITIES

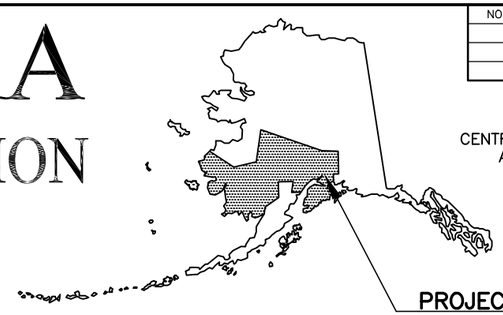

PROPOSED HIGHWAY PROJECT

GLENN HWY: PARKS HWY TO S. INNER SPRINGER LP. (PHASE II)
PROJECT NO. 0A15037/CFHWY00431
GLENN HWY: PARKS TO S. INNER SPRINGER LP. PATHWAY (PHASE II)
PROJECT NO. 0A15038/CFHWY00432
COLLEEN STREET INTERSECTION AND FRONTAGE ROAD
PROJECT NO. 0A15033/CFHWY00006

GRADING, DRAINAGE, PAVING, PATHWAYS, ILLUMINATION, SIGNALIZATION, SIGNING, AND STRIPING

PROJECT SUMMARY		
ROADWAY	WIDTH	LENGTH
GLENN HWY	50'-110'	4.5 MILES
E MATANUSKA SPUR RD	24'	0.3 MILES
E OUTER SPRINGER LP	24'-47'	0.2 MILES
E BRADLEY LAKE AVE	32'	0.2 MILES
E GRANDVIEW RD	32'	0.7 MILES
E JIMMYS DR	47'	0.1 MILES

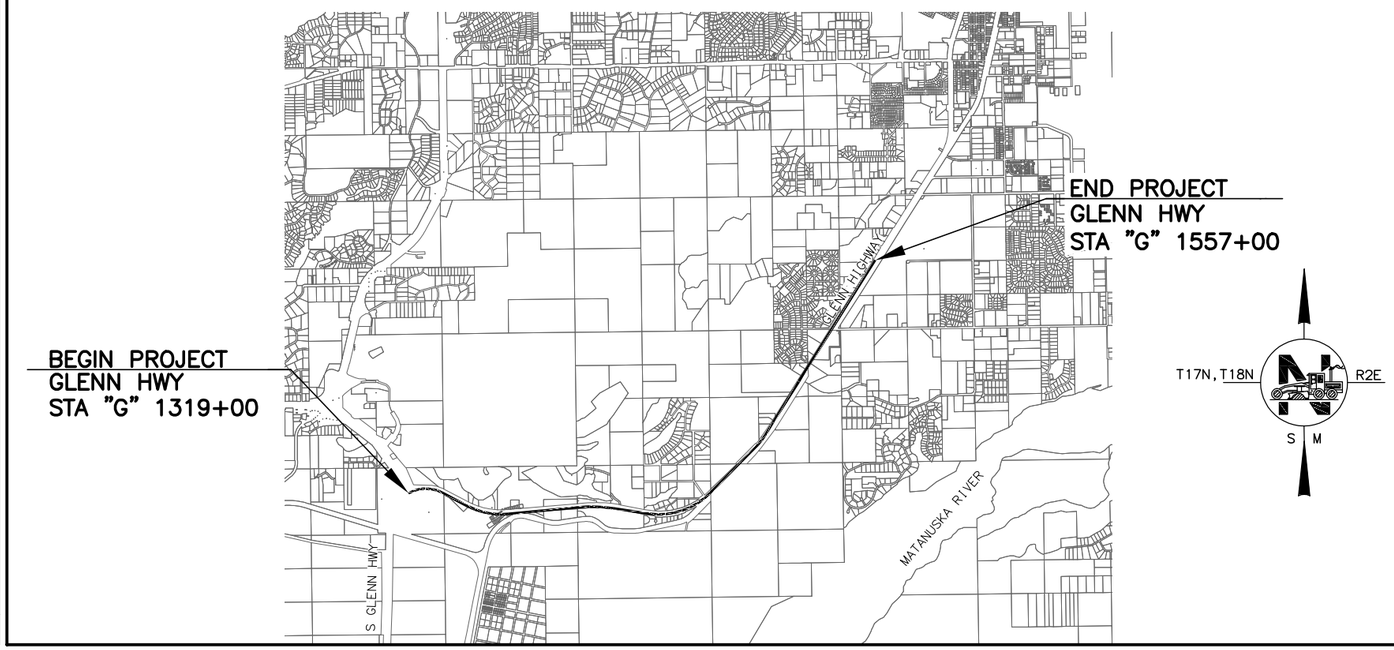

DESIGN DESIGNATIONS			
	GLENN HWY PARKS TO JIMMYS	GLENN HWY JIMMYS TO S INNER SPRINGER	BRADLEY GRANDVIEW JIMMYS
FUNCTIONAL CLASS	INTERSTATE	INTERSTATE	COLLECTOR
AADT (2014)	15,600	19,500	2,000
AADT (2034)	36,000	28,800	3,300
DESIGN SPEED (V) (MPH)	60	60	35
DHV (2014)	1,900	1,900	200
DHV (2034)	4,300	2,900	330
T-PERCENT COMMERCIAL TRUCKS (%)	10%	10%	10%
D-DIRECTIONAL DISTRIBUTION (%)	45/55	45/55	50/50
ESALs	4,000,000	3,500,000	500,000

CERTIFICATION SET
NOVEMBER 2021

PLANS DEVELOPED BY: HDL ENGINEERING CONSULTANTS

STATE OF ALASKA
DEPARTMENT OF TRANSPORTATION & PUBLIC FACILITIES
4111 AVIATION AVENUE, ANCHORAGE, AK 99502
(907)269-0590

APPROVED:

REGIONAL PRECONSTRUCTION ENGINEER DATE

CONCUR:

REGIONAL CONSTRUCTION ENGINEER DATE

LAYOUT: Layout1 | STYLE: ACAD_PS.CTB | FILE: H:\JOBS\08-016 GLENN HIGHWAY 34-42 (DOT)\09 - PS&E\CAD_PH2\DRAWINGS\08016_P2_A01.DWG | DATE/TIME: 11/11/2021 11:37 AM | LAYOUT: LAYOUT1 | DESIGNED: CAB | CHECKED: DRL | DRAFTED: CDB
H:\Jobs\08-016 Glenn Highway 34-42 (DOT)\09 - PS&E\CAD_PH2\DRAWINGS\08016_p2_A01, 1=1, 04/23/18 at 13:55 by unknown

NO.	DATE	REVISION

STATE	PROJECT DESIGNATION	YEAR	SHEET NO.	TOTAL SHEETS
ALASKA	0A15037/CFHWY00431 0A15038/CFHWY00432 0A15033/CFHWY00006	2021	A2	A13

DESIGNED BY: DRL
CHECKED BY: CAB
DRAFTED BY: CDB

SCALE: NTS

DATE TIME: 11/22/2021 4:59 PM

DRAWING LOCATION: H:\JOBS\08-016 GLENN HIGHWAY 34-42 (DOT)\09 - PS&E\CAD_PH2\DRAWINGS\08016_P2_A02.DWG

GENERAL NOTES:

1. ALL CONSTRUCTION SHALL BE CONTAINED WITHIN THE RIGHT-OF-WAY, TEMPORARY CONSTRUCTION EASEMENTS, AND TEMPORARY CONSTRUCTION PERMITS. NO EXCESS MATERIAL SHALL BE DISPOSED OF WITHIN THE RIGHT-OF-WAY, UNLESS SPECIFICALLY CALLED FOR IN THE PLANS OR DIRECTED BY THE ENGINEER.
2. ALL PAVEMENT CUTS SHALL BE MADE WITH A SAW OR ALTERNATE METHOD APPROVED BY THE ENGINEER.
3. CLEARING LIMITS SHALL TYPICALLY BE 10 FEET BEYOND SLOPE CATCH POINTS OR 50 FEET FROM ROADWAY EDGE OF PAVEMENT, WHICHEVER IS GREATER. IN WETLAND AREAS, CLEARING LIMITS SHALL BE TO THE SLOPE CATCH POINTS. CLEARING FOR UTILITIES SHALL TYPICALLY BE THE OUTER 15' OF RIGHT-OF-WAY IN AREAS OF UTILITY RELOCATION, UNLESS OTHERWISE SHOWN.
4. PLACE 4 INCHES OF TOPSOIL AND SEED FROM:

   a. THE SLOPE CATCH TO THE BOTTOM OF AGGREGATE BASE COURSE
   b. IN AREAS BETWEEN ROADWAYS AND PATHWAYS OUTSIDE THE AGGREGATE BASE COURSE LIMITS
   c. AS DIRECTED BY THE ENGINEER.

   OTHER AREAS WITHIN THE RIGHT-OF-WAY DISTURBED BY THE CONTRACTOR SHALL RECEIVE SEED ONLY.
5. USE SEEDING, TYPE B IN ALL WETLAND AND RAIN GARDEN AREAS. USE SEEDING, TYPE A IN ALL OTHER AREAS.
6. THE EXISTING INFORMATION SHOWN IN THE PLANS IS FROM SURVEY PERFORMED FROM 2008-2019. FIELD CONDITIONS MAY NOT BE ACCURATELY REPRESENTED AND/OR MAY HAVE CHANGED. ADJUST INSTALLATIONS AS DIRECTED BY THE ENGINEER.
7. ADJUST ALL PAVEMENT PENETRATIONS TO FINAL GRADE PRIOR TO TOP LIFT OF PAVING.

   IF ANY PAVEMENT PENETRATION REQUIRES GRADE ADJUSTMENT AFTER FINAL LIFT PAVING, AS DETERMINED BY THE ENGINEER, SAW CUT A NEAT LINE ALONG THE PAVEMENT TO BE REMOVED. USE AN INFRARED HEATER TO HEAT THE EXISTING PAVEMENT; EQUIPMENT AND MAXIMUM TEMPERATURE SHALL BE APPROVED BY THE ENGINEER. REPLACE THE REMOVED ASPHALT WITH NEW HOT MIX ASPHALT AND THOROUGHLY COMPACT. SEAL JOINTS AT LEAST 12 INCHES WIDE USING ASPHALT SYSTEMS GSB-88 OR APPROVED EQUAL, WHILE THE HOT MIX ASPHALT IS CLEAN, FREE OF MOISTURE AND PRIOR TO STRIPING.

   THERE SHALL BE NO PAYMENT FOR ADDITIONAL WORK CAUSED BY FAILURE TO ADJUST PAVEMENT PENETRATIONS TO FINAL GRADE.
8. CONSTRUCT CURB RAMPS TO AVOID IMPACTING SIGNAL POLE FOUNDATIONS. DO NOT COVER SIGNAL POLE FOUNDATION BOLTS AND BASE PLATES WITH TOPSOIL.
9. ALL GUARDRAIL TO BE INSTALLED AT 31 INCH HEIGHT PER STANDARD PLAN G-05. ALL GUARDRAIL SHALL HAVE REFLECTORS AND FLEXIBLE DELINEATORS PER STANDARD PLAN G-00. ALL GUARDRAIL POST INSTALLATIONS SHALL BE CASE 1 PER STANDARD PLAN G-10.
10. FOR PARALLEL GUARDRAIL TERMINALS, USE AN END OFFSET OF 2 FEET.
11. ALL TYPE "A" INLET BOXES SHALL HAVE MINIMUM 18" SUMPS.
12. SUPER ELEVATION FOR HORIZONTAL CURVES SHALL BE ROTATED ABOUT THE POINT OF ROTATION AS SHOWN ON SHEET E1, AND TYPICAL SECTIONS.
13. ALL WIRE CROSSING ELEVATIONS SHOWN ON PROFILES ARE THE APPROXIMATE ELEVATIONS WHERE THE LOWEST WIRE CROSSES THE PROPOSED CENTERLINE OF ROADWAY.

ALIGNMENT ABBREVIATIONS

"BL"	BRADLEY LAKE AVE
"G"	GLENN HIGHWAY
"GV"	GRANDVIEW RD
"JD"	JIMMYS DR
"M"	MAX DRIVE
"MS"	MATANUSKA LAKE RD/EAST MATANUSKA SPUR
"OS"	RUBYMAE DR/OUTER SPRINGER LOOP
"P1"	PATHWAY 1
"RR"	RAILROAD SIDING
"S"	SHERROD DR

PROJECT SPECIFIC LEGEND

	EXISTING	PROPOSED
GRADE TO DRAIN		
SLOPE GRADE		2%
FIBER OPTIC VAULT	FDV	
ABANDONED TELEPHONE	UT/AB	
STORM DRAIN MANHOLE CATCH BASIN		
INLET TYPE C, D		
NEWSPAPER BOX	PB	
CLUSTER MAILBOX	MB	MB
MONITORING WELL	MW	
ROAD WEATHER INFORMATION SYSTEM	RWIS	
WATER SPIGOT		
RAILROAD CROSSING SIGNAL		
ALASKA RAILROAD ROW	ARRC ROW	
RAIN GARDEN		
INFILTRATION BASIN		
DITCH BLOCK		
DITCH LINING		
CRASH CUSHION		
ADDITIONAL CLEARING LIMIT	C C	
TURF REINFORCEMENT MAT		
ATR		ATR
DELINEATOR		
PEDESTRIAN PATHWAY DIVERTER		
EASEMENT		
HIGH TENSION CABLE GUARDRAIL		

INDEX

SHEET NO.	DESCRIPTION
A1	TITLE SHEET
A2	INDEX, GENERAL NOTES, AND ABBREVIATIONS
A3	LEGEND SHEET
A4-A5	PROJECT LAYOUT
A6-A13	SURVEY CONTROL
B1-B11	TYPICAL SECTIONS
C1-C4	ESTIMATE OF QUANTITIES
D1-D12	SUMMARY SHEETS
E1-E23	DETAIL SHEETS
E24-E35	PAVEMENT AND MEDIAN LAYOUT SHEETS
F1-F18	PLAN AND PROFILE SHEETS - GLENN HIGHWAY
F19-F22	PLAN AND PROFILE SHEETS - GRANDVIEW
F23-F28	PLAN AND PROFILE SHEETS - SIDESTREETS
F29-F32	PLAN AND PROFILE SHEETS - PATHWAYS
F33	ADDITIONAL CLEARING
F34-F50	APPROACH PROFILES AND LAYOUTS
G1-G8	GRADING PLANS
H1-H38	ILLUMINATION PLANS
HA1-HA5	SIGNAL PLANS - E JIMMYS DR
HB1-HB5	SIGNAL PLANS - S INNER SPRINGER LP
HS1-HS30	SIGNING AND STRIPING SHEETS
J1-J11	TRAFFIC CONTROL SHEETS
K1-K10	AUTOMATED TRAFFIC RECORDERS (ATR)
R1-R67	RIGHT-OF-WAY MAPS
S1-S6	RAILROAD SIDING
UW1-UW13	UTILITY - WATER & SEWER

THE FOLLOWING CENTRAL REGION STANDARD DETAILS APPLY TO THIS PROJECT:

CR-T-01.20, CR-T-04.10

THE FOLLOWING STANDARD PLANS APPLY TO THIS PROJECT:

C-04.12, C-05.20
D-01.02, D-04.22, D-06.10, D-11.01, D-22.01, D-26.04, D-30.11, D-31.01, D-44.12, D-45.12
F-01.04
G-00.05, G-05.11S, G-05.11W, G-10.20, G-11.01, G-20.12
I-21.12, I-22.11
L-30.11
M-20.15, M-23.13
S-00.12, S-05.02, S-23.00, S-30.05, S-31.02, S-32.02
T-05.10, T-20.04, T-21.04, T-22.04, T-23.01, T-25.10, T-30.12
T-52.22, T-53.01, T-55.11, T-56.11, T-57.11

SPECIFICATION:

CONSTRUCT THE IMPROVEMENTS COVERED BY THESE PLANS IN ACCORDANCE WITH THE ALASKA DEPARTMENT OF TRANSPORTATION AND PUBLIC FACILITIES 2020 STANDARD SPECIFICATIONS FOR HIGHWAY CONSTRUCTION AND THE PROJECT SPECIAL PROVISIONS.

CERTIFICATION SET
NOVEMBER 2021

STATE OF ALASKA
49TH
DENNIS R. LINNELL
CE-7649
REGISTERED PROFESSIONAL ENGINEER

HDL ENGINEERING CONSULTANTS, LLC
3335 ARCTIC BOULEVARD, STE 100
ANCHORAGE, AK 99503
(907) 564-2120
AECL861

STATE OF ALASKA
DEPARTMENT OF TRANSPORTATION
AND PUBLIC FACILITIES

GLENN HWY: PARKS HWY TO S. INNER SPRINGER LP. (PHASE II)

INDEX, GENERAL NOTES, AND ABBREVIATIONS

CAB	
DESIGNED BY	DRL
CHECKED BY	CDB
DRAFTED BY	

SCALE	
	NTS

DATE	TIME
11/11/2021	11:36 AM

DRAWING LOCATION
H:\JOBS\08-016 GLENN HIGHWAY 34-42 (DOT)\09 - PS&E\CAD_PH2\DRAWINGS\08016_P2_A03.DWG

ROADWAY

	EXISTING	PROPOSED
EDGE OF PAVEMENT		
LIMIT OF CUT SLOPE & FILL SLOPE		CUT / FILL
GRAVEL EDGE		
SIDEWALK AND PATH/TRAIL		
CONCRETE CURB & GUTTER		
CONCRETE CURB CUT		
PARALLEL CURB RAMP PERPENDICULAR CURB RAMP		
UNIDIRECTIONAL CURB RAMP & MID-BLOCK CURB RAMP		
DETECTABLE WARNING TILE		
BRIDGE		
TUNNEL		
GUARDRAIL		
END & PARALLEL END SECTIONS		
ROADWAY OBLITERATION		
FENCE	X X	X X
STONE FENCE		
NOISE BARRIER	====X====X	====X====X
RETAINING WALL		
HEADWALL & WINGWALL		
BOTTOM OF DITCH		
SPECIAL DITCH		
FLAT BOTTOM DITCH		
BERM		
RIPRAP		
BOULDER OR BOULDERS		
PRIVATE SIGN, MAILBOX	MB	MB
POST, BOLLARD		

UTILITIES

	EXISTING	PROPOSED
STORM DRAIN	SD	
STORM DRAIN MANHOLE, CLEANOUT	SD CO	SD CO
CURB INLET CATCH BASIN FIELD INLET CATCH BASIN	FI	FI
PIPE CULVERT WITH END SECTION		
SANITARY SEWER	SS	SS
SANITARY SEWER MANHOLE, CLEANOUT	SS CO	SS CO
SEPTIC VENT, SEWER SERVICE CONNECTION	S	
WATER	W	W
FIRE HYDRANT, VALVE OR RISER		
WELL, WATER SERVICE CONNECTION	W	
NATURAL GAS	G G	
OIL OR GASOLINE PIPELINE	O O	
TANKS (ABOVE GROUND, UNDERGROUND)	U	
ELECTRIC	OE (OVERHEAD) UE (UNDERGROUND) OE&OT (OVERHEAD)	
UTILITY POLE, POLE WITH LUMINAIRE		
GUY POLE, GUY WIRE ANCHOR	GP	
TRANSMISSION TOWER (WOOD, STEEL)		
ELECTRIC PEDESTAL, TRANSFORMER	E	E
ELECTRIC MANHOLE, METER	E	
ELECTRIC OUTLET, LANDSCAPE LIGHT		
TELEPHONE	OT (OVERHEAD) UT (UNDERGROUND) UT&TV (UNDERGROUND)	
TELEPHONE MANHOLE, PEDESTAL	T	T
FIBER OPTIC	FO	
FIBER OPTIC MANHOLE	FO	
CABLE TV	OTV (OVERHEAD) UTV (UNDERGROUND)	
CABLE TV PEDESTAL, SATELLITE DISH		
UNDERGROUND DUCT, UTILIDOR (ELECTRIC, TELEPHONE, FIBER OPTIC)		
VENT		

TOPOGRAPHY

	EXISTING	EXISTING	PROPOSED
LAKE OR POND, WETLANDS	LAKE/POND	CONTOUR, MAJOR OR MINOR	520 520
TREE (CONIFER/DECIDUOUS) TREELINE (EDGE OF VEGETATION)		DRAINAGE FLOW	
PLANTER	P	CREEK (CENTERLINE)	
BUILDING OR FOUNDATION		RIVER (EDGE OF WATER)	

TRAFFIC

	EXISTING	PROPOSED
LOAD CENTER		
TRAFFIC & BEACON CONTROLLER		
TYPE 1A, II, III, IV JUNCTION BOX	15 26 37 48	60 ## ## ##
FIBER OPTIC VAULT	F/O 59	F/O #
ELECTROLIER	68 99	78 13
HIGHTOWER	HT#	HT#
SIGNAL POLE WITH MASTARM	49	14
PEDESTRIAN PUSH BUTTON & SIGNAL	68 12	
VEHICULAR SIGNAL	44	
VEHICULAR SIGNAL LEFT & RIGHT	65 24	72
OPTICAL, CAMERA, RADAR, AND GPS DETECTOR	CAM A RAD GPS C	CAM A RAD GPS C
LOOP DETECTOR	55	735
COMMUNICATION ANTENNA		
MASTARM BEACON		
RURAL & SCHOOL ZONE BEACON	53 77 74 55	78 65 123 45
LOOP DETECTOR CONDUIT		
SIGNAL CONDUIT	TR	TR
LIGHTING CONDUIT	LTG	LTG
SIGNAL & LIGHTING CONDUIT	T/L	T/L
CONDUIT BORING		
CONDUIT SIZE IN INCHES	(2") 1-3C4	(2") 1-3C4 CKT BA12 CKT BA13
INTERCONNECT	I/C	I/C
SIGN POST		22

PAVEMENT MARKINGS

	PROPOSED
PROJECT CENTERLINE	
8" & 4" WHITE SOLID STRIPE	8"W 4"W
4" WHITE SKIP STRIPE 10' STRIPES AND 30' SPACES	4"W SKIP
8" WHITE LANE GUIDE SKIP LANE CONTINUATION OR TURN SKIP 1' STRIPES AND 3' SPACES	8"W GUIDE SKIP
8" & 4" YELLOW SOLID STRIPE	8"Y 4"Y
4" YELLOW SKIP STRIPE 10' STRIPES AND 30' SPACES	4"Y SKIP
STRIPING CHANGE STATION INTERVAL	+20
2' CROSSWALK OR STOPBAR	24"W (TYP)
LADDER CROSSWALK LAYOUT 2' WIDE RUNGS WITH 2' SPACES ALIGNED TO AVOID TIRE PATHS	10' 12' (2)-4"Y 3" APART
TYPICAL PAINTED MEDIAN	VARIES 18"Y @ 45'

NO.	DATE	REVISION

STATE	PROJECT DESIGNATION	YEAR	SHEET NO.	TOTAL SHEETS
ALASKA	0A15037/CFHWY00431 0A15038/CFHWY00432 0A15033/CFHWY00006	2021	A3	A13

RIGHT-OF-WAY

	RECOVERED	SET THIS PROJECT
FEDERAL GOV'T SURVEY MONUMENT		
GOV'T CONTROL STATION		
PRIMARY MONUMENT (BRASS/AL CAP)		
MISC SECONDARY CORNER		
PRIMARY CENTERLINE MONUMENT		
SECONDARY CENTERLINE MONUMENT		
RANDOM CONTROL MONUMENT	RCM	
PRIMARY GPS CONTROL POINT	GPS	
HORIZONTAL CONTROL POINT	CP	
SECONDARY CONTROL POINT	SCP	
VERTICAL BENCHMARK	BM	
TEMPORARY BENCHMARK	TBM	
TOWNSHIP AND RANGE LINES	T13N / T12N, R2W / R3W	
SECTION LINE		
1/4 SECTION LINE		
1/16 SECTION LINE		
CORPORATE or CITY LIMITS		
EXISTING RIGHT-OF-WAY		
RIGHT-OF-WAY OR EASEMENT REQUIRED		
PROJECT RIGHT-OF-WAY LINE		
EXISTING RIGHT-OF-WAY EASEMENT		
EXISTING PROPERTY LINE		
CONTROLLED ACCESS LINE		
EXISTING UTILITY EASEMENT		
EXISTING CENTERLINE		
RAILROAD		
TEMPORARY CONSTRUCTION EASEMENT		
TEMPORARY CONSTRUCTION PERMIT		

CERTIFICATION SET
NOVEMBER 2021

STATE OF ALASKA 49TH
DENNIS R. LINNELL
CE-7649
REGISTERED PROFESSIONAL ENGINEER

HDL ENGINEERING CONSULTANTS, LLC
3335 ARCTIC BOULEVARD, STE 100
ANCHORAGE, AK 99503
(907) 564-2120
AECL861

STATE OF ALASKA
DEPARTMENT OF TRANSPORTATION
AND PUBLIC FACILITIES

GLENN HWY: PARKS HWY TO S. INNER SPRINGER LP. (PHASE II)

LEGEND

NO.	DATE	REVISION

STATE	PROJECT DESIGNATION	YEAR	SHEET NO.	TOTAL SHEETS
ALASKA	0A15037/CFHWY00431 0A15038/CFHWY00432 0A15033/CFHWY00006	2021	A4	A13

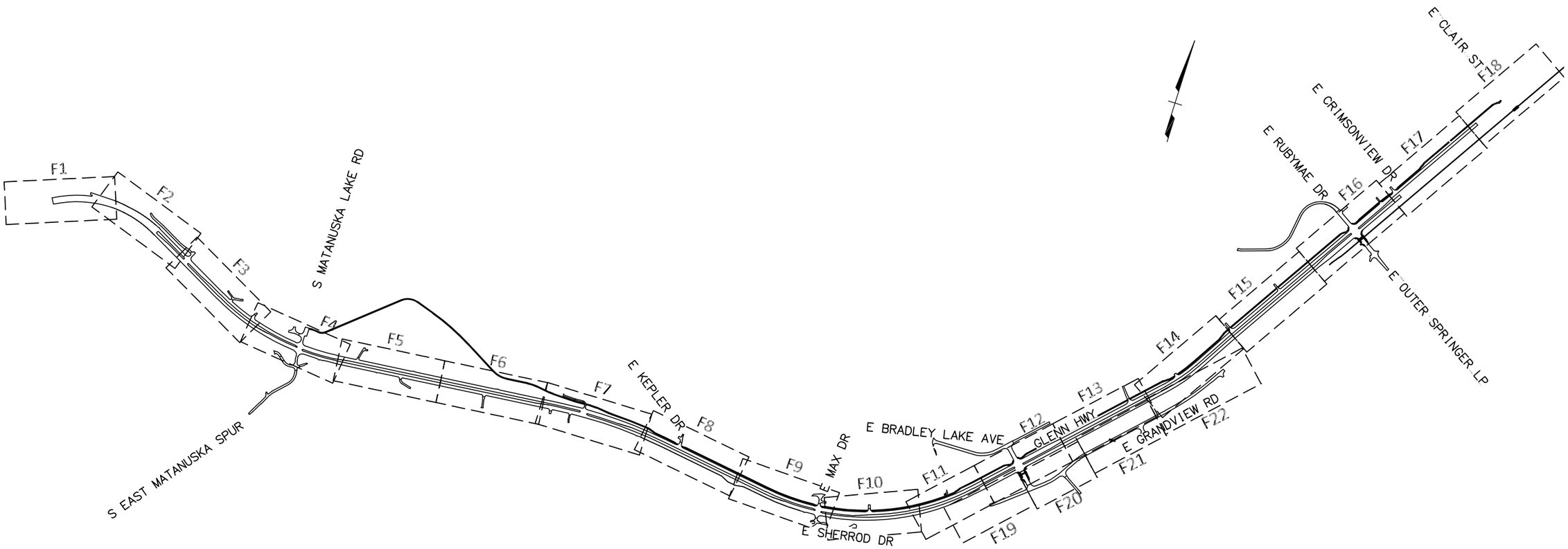

CERTIFICATION SET
NOVEMBER 2021

STATE OF ALASKA
49TH
DENNIS R. LINNELL
CE-7649
REGISTERED PROFESSIONAL ENGINEER

HDL ENGINEERING CONSULTANTS, LLC
3335 ARCTIC BOULEVARD, STE 100
ANCHORAGE, AK 99503
(907) 564-2120
AECL861

STATE OF ALASKA
DEPARTMENT OF TRANSPORTATION
AND PUBLIC FACILITIES

GLENN HWY: PARKS HWY TO S. INNER SPRINGER LP. (PHASE II)

PROJECT LAYOUT
GLENN HIGHWAY AND GRANDVIEW

DESIGNED BY	AAL
CHECKED BY	DRL
DRAFTED BY	CDB
SCALE	NTS
DATE	11/11/2021
TIME	11:35 AM

DRAWING LOCATION
H:\JOBS\08-016 GLENN HIGHWAY 34-42 (DOT)\09 - PS&E\CAD_PH2\DRAWINGS\08016_P2_A04-A05.DWG

NO.	DATE	REVISION

STATE	PROJECT DESIGNATION	YEAR	SHEET NO.	TOTAL SHEETS
ALASKA	0A15037/CFHWY00431 0A15038/CFHWY00432 0A15033/CFHWY00006	2021	A5	A13

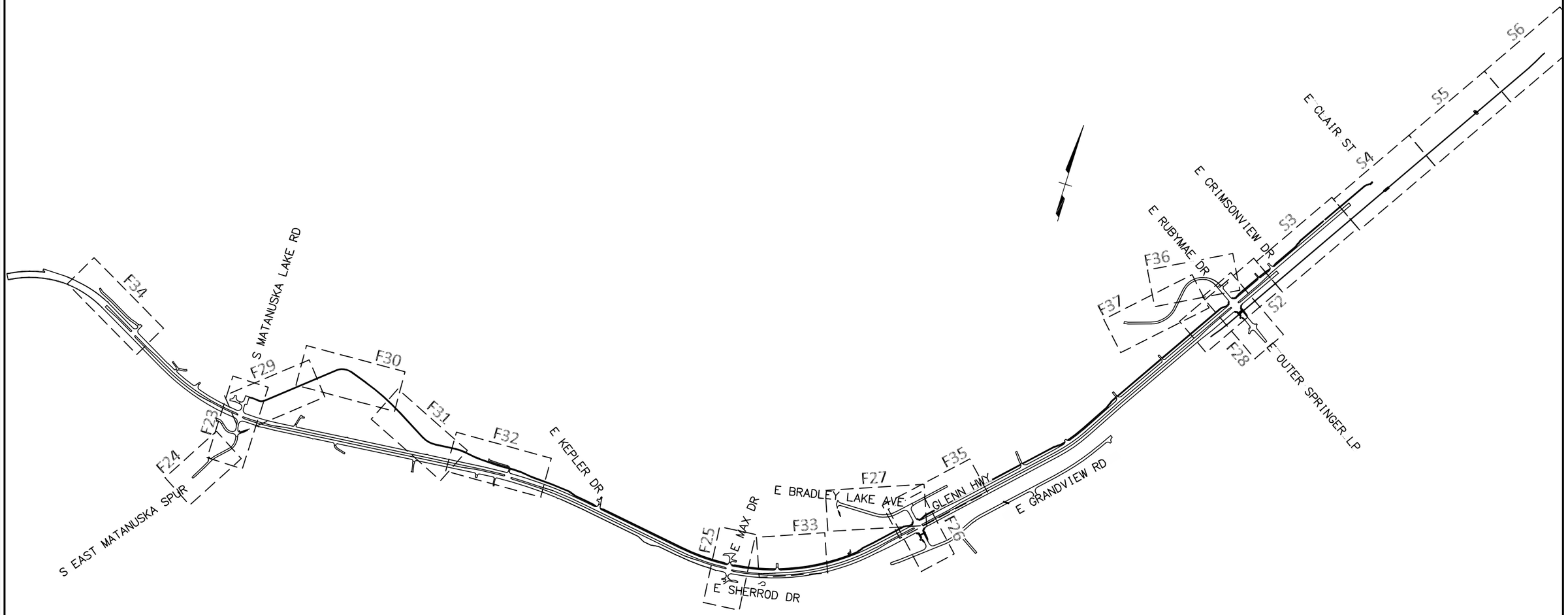

CERTIFICATION SET
NOVEMBER 2021

STATE OF ALASKA
49TH
DENNIS R. LINNELL
CE-7649
REGISTERED PROFESSIONAL ENGINEER

HDL ENGINEERING CONSULTANTS, LLC
3335 ARCTIC BOULEVARD, STE 100
ANCHORAGE, AK 99503
(907) 564-2120
AECL861

STATE OF ALASKA
DEPARTMENT OF TRANSPORTATION
AND PUBLIC FACILITIES

GLENN HWY: PARKS HWY TO S. INNER SPRINGER LP. (PHASE II)

PROJECT LAYOUT
SIDESTREETS, RAILROAD AND PATHWAYS

DESIGNED BY AAL
CHECKED BY DRL
DRAFTED BY CDB

SCALE NTS

DATE 11/11/2021 TIME 11:35 AM

DRAWING LOCATION
H:\JOBS\08-016 GLENN HIGHWAY 34-42 (DOT)\09 - PS&E\CAD_PH2\DRAWINGS\08016_P2_A04-A05.DWG

NO.	DATE	REVISION

STATE	YEAR	PROJECT DESIGNATION	SHEET NO.	TOTAL SHEETS
ALASKA	2021	0A15037/CFHWY00431 0A15038/CFHWY00432 0A15033/CFHWY00006	A6	A13

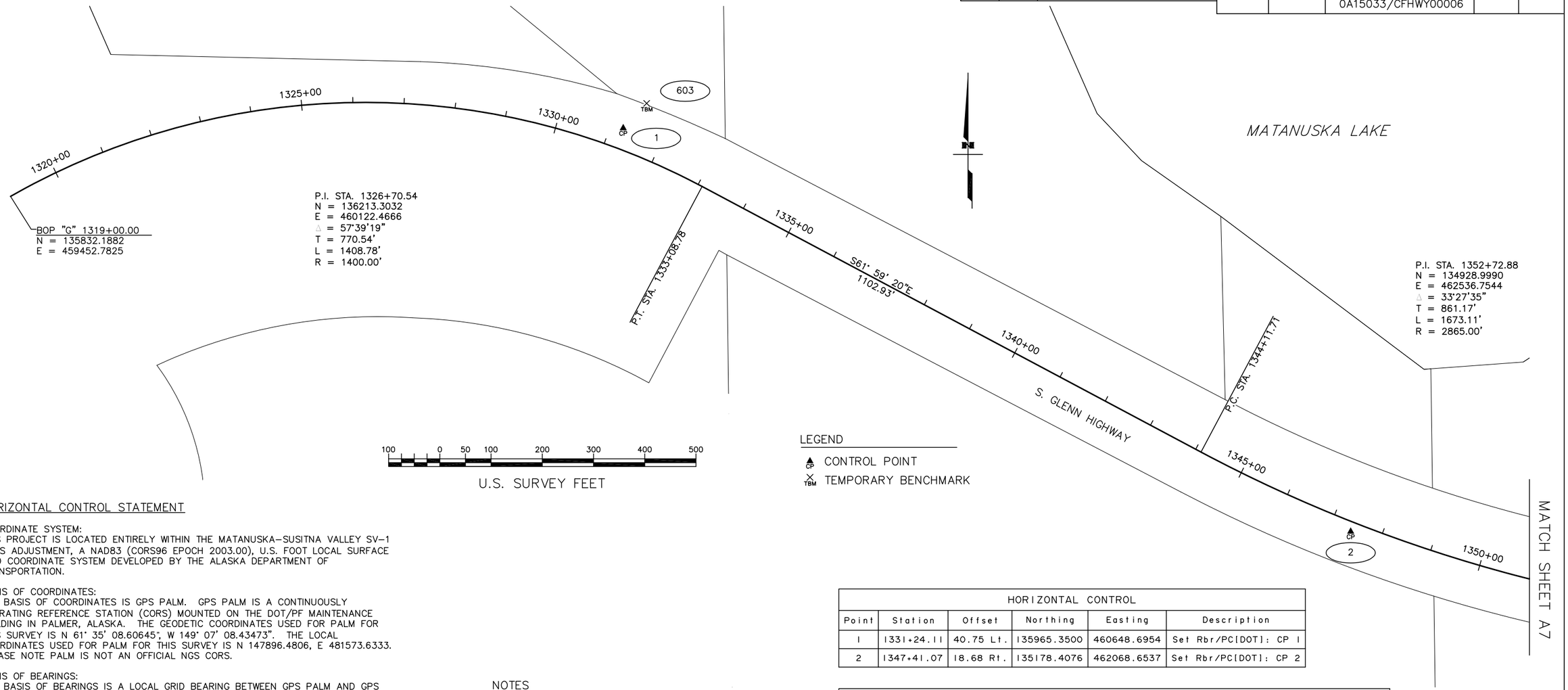

100 0 50 100 200 300 400 500

U.S. SURVEY FEET

LEGEND

CP CONTROL POINT

TBM TEMPORARY BENCHMARK

HORIZONTAL CONTROL STATEMENT

COORDINATE SYSTEM:
THIS PROJECT IS LOCATED ENTIRELY WITHIN THE MATANUSKA-SUSITNA VALLEY SV-1 CORS ADJUSTMENT, A NAD83 (CORS96 EPOCH 2003.00), U.S. FOOT LOCAL SURFACE GRID COORDINATE SYSTEM DEVELOPED BY THE ALASKA DEPARTMENT OF TRANSPORTATION.

BASIS OF COORDINATES:
THE BASIS OF COORDINATES IS GPS PALM. GPS PALM IS A CONTINUOUSLY OPERATING REFERENCE STATION (CORS) MOUNTED ON THE DOT/PF MAINTENANCE BUILDING IN PALMER, ALASKA. THE GEODETIC COORDINATES USED FOR PALM FOR THIS SURVEY IS N 61° 35' 08.60645", W 149° 07' 08.43473". THE LOCAL COORDINATES USED FOR PALM FOR THIS SURVEY IS N 147896.4806, E 481573.6333. PLEASE NOTE PALM IS NOT AN OFFICIAL NGS CORS.

BASIS OF BEARINGS:
THE BASIS OF BEARINGS IS A LOCAL GRID BEARING BETWEEN GPS PALM AND GPS MSB-1. THESE VALUES WERE ESTABLISHED BY STATIC GPS OBSERVATIONS AND PROCESSED USING THE NGS OPUS UTILITY. GPS MSB-1 IS AN NGS BRASS CAP, WHICH IS LOCATED EAST OF THE MATANUSKA-SUSITNA BOROUGH BUILDING. THE LOCAL GIRD BEARING BETWEEN GPS PALM AND GPS MSB-1 IS N 20° 36' 42" E AT A DISTANCE OF 5405.86 FEET. THE GEODETIC COORDINATES USED FOR GPS MSB-1 FOR THIS SURVEY IS N 61° 35' 58.16686", W 149° 06' 27.68867". THE LOCAL COORDINATES FOR GPS MSB-1 ARE N 152956.3007, E 483476.6610.

TRANSLATION PARAMETERS:
TO CONVERT THE LOCAL COORDINATES TO NAD83 (CORS96 EPOCH 2003.00), ALASKA STATE PLANE ZONE 4, U.S. FOOT COORDINATES, TRANSLATE USING +2,624,946.5706 FEET N, +1,312,508.8943 FEET E, AND SCALE USING 0.9998990458.

VERTICAL CONTROL STATEMENT

MSL 1929 NGVD, AS DETERMINED BY THIRD ORDER LEVEL LOOPS PERFORMED BY AK DOT BETWEEN THE FOLLOWING BENCHMARKS:

BM OPTRPK, A 3 1/4" BRASS CAP SET IN THE NORTHEAST ABUTMENT OF TRUNK ROAD OVERPASS BRIDGE HAVING AN ELEVATION OF 187.29'.

BM A 21 (NGS PID TT0630), A 3 1/4" BRASS CAP SET IN A CONCRETE PILLAR APPROXIMATELY 3.8 MILES NORTH OF PALMER ALONG THE GLENN HIGHWAY HAVING A PUBLISHED, NOW SUPERSEDED ELEVATION OF 559.80'.

NOTES

1. ALL DIMENSIONS AND COORDINATES SHOWN ARE IN U.S. SURVEY FEET UNLESS OTHERWISE NOTED.
2. BACKGROUND INFORMATION TAKEN FROM THE MATANUSKA-SUSITNA BOROUGH TAX MAPS IS SHOWN FOR ORIENTATION PURPOSES ONLY, AND SHOULD NOT BE USED FOR ANY OTHER MEANS.
3. PROJECT ELEVATIONS SHOWN ON THIS PLAT WERE ESTABLISHED BY AK DOT USING THIRD ORDER DIFFERENTIAL LEVELING TECHNIQUES USING A LEICA DNA03 DIGITAL LEVEL. ALL ELEVATIONS ARE TO BE FIELD VERIFIED BEFORE USE.
4. PROJECT CONTROL COORDINATES SHOWN ON THIS SHEET WERE ESTABLISHED BY USING LEAST-SQUARES ADJUSTED, CONVENTIONAL CLOSED-TRAVERSE AND STATIC GPS TECHNIQUES.
5. ALL STATIONING IN POINT TABLES REFERS TO THE GLENN HIGHWAY CENTERLINE ALIGNMENT.
6. THIS SURVEY WAS COMPLETED BY ALASKA DOT&PF BETWEEN NOVEMBER 2005 AND JUNE 2021.
7. SEE RIGHT OF WAY PLANS FOR CENTERLINE, PROPERTY, AND PARCEL CORNER MONUMENTS.

HORIZONTAL CONTROL

Point	Station	Offset	Northing	Easting	Description
1	1331+24.11	40.75 Lt.	135965.3500	460648.6954	Set Rbr/PC[DOT]: CP 1
2	1347+41.07	18.68 Rt.	135178.4076	462068.6537	Set Rbr/PC[DOT]: CP 2

VERTICAL CONTROL

Point	Station	Offset	Northing	Easting	Elevation	Description
603	1331+48.32	102.20 Lt.	136014	460694	48.58	Set RR Spike in 8" Aspen: TBM 1

WHETHER LISTED OR NOT, ALL MONUMENTS OR PROPERTY MARKERS, CORNERS, OR ACCESSORIES, WHICH WILL BE DISTURBED OR BURIED, SHALL BE REFERENCED AND RE-ESTABLISHED IN THEIR ORIGINAL POSITION (A.S. 19.10.260) AND RECORDED (A.S. 34.65.040).

PLANS DEVELOPED BY:
STATE OF ALASKA
DOT & PF
4111 AVIATION AVENUE
ANCHORAGE, AK 99502
(907)269-0700

STATE OF ALASKA - 49TH - Travis W. Test LS-13324 - REGISTERED PROFESSIONAL LAND SURVEYOR

STATE OF ALASKA
DEPARTMENT OF TRANSPORTATION
&
PUBLIC FACILITIES

SURVEY CONTROL SHEET

FEDERAL PROJECT NOs. 0A15037/0A15038/0A15033

CFHWY00431/CFHWY00432/CFHWY00006

GLENN HWY: PARKS HWY TO S. INNER SPRINGER LP

DRAWN	TWT	DATE	11/10/2021	SCALE	1" = 100'
CHECKED	RMK	DATE	11/10/2021	SHEET	1 OF 8

NO.	DATE	REVISION

STATE	YEAR	PROJECT DESIGNATION	SHEET NO.	TOTAL SHEETS
ALASKA	2021	0A15037/CFHWY00431 0A15038/CFHWY00432 0A15033/CFHWY00006	A7	A13

100 0 50 100 200 300 400 500

U.S. SURVEY FEET

MATCH SHEET A6

EOP "MS" 30+96.78
N = 134043.6108
E = 462561.7191

S27° 19' 14"W
142.51'

P.I. STA. 29+71.74
N = 134151.2962
E = 462625.3537
Δ = 3°15'35"
T = 71.13'
L = 142.23'
R = 2500.00'

P.T. STA. 27+58.09

P.C. STA. 27+00.97

S30° 34' 48"W
53.95'

30+00

P.T. STA. 30+42.83

P.C. STA. 29+00.60

P.I. STA. 27+29.75
N = 134366.6779
E = 462736.6177
Δ = 17°13'25"
T = 28.77'
L = 57.12'
R = 190.00'

S44° 32' 38"W
217.16'

P.I. STA. 21+34.59
N = 134870.6584
E = 462915.3835
Δ = 16°09'38"
T = 26.97'
L = 53.59'
R = 190.00'

P.T. STA. 21+61.21

P.C. STA. 21+07.62

"G" 1356+06.00
"MS" 20+00.00
N = 135005.2537
E = 462915.7992

1355+00

BOP "MS" 17+26.30
N = 135278.9524
E = 462916.6446

S15° 59' 01"E
121.88'

25+00

P.T. STA. 24+83.81

381.32'

S00° 10' 37"W

BOP "P1" 20+38.14
N = 135273.0143
E = 462954.6264

50

GPS

N85° 15' 41"E
40.70'

P.C. STA. 20+78.84

P.I. STA. 21+07.93
N = 135278.7795
E = 463024.1746
Δ = 16°33'00"
T = 29.09'
L = 57.77'
R = 200.00'

S78° 11' 19"E
16.89'

P.T. STA. 21+36.61

P.C. STA. 21+53.50

P.T. STA. 22+53.67

P.I. STA. 23+93.96
N = 134620.9775
E = 462986.9014
Δ = 60°31'40"
T = 110.87'
L = 200.72'
R = 190.00'

P.C. STA. 22+83.09

CP

3

P.I. STA. 22+07.36
N = 135258.3441
E = 463121.8977
Δ = 52°10'41"
T = 53.86'
L = 100.17'
R = 110.00'

1360+00

25+00

P.I. STA. 1352+72.88
N = 134928.9990
E = 462536.7544
Δ = 33°27'35"
T = 861.17'
L = 1673.11'
R = 2865.00'

P.T. STA. 1360+84.82

MATANUSKA LAKE

NOTES

1) SEE SHEET A6 FOR HORIZONTAL CONTROL, VERTICAL CONTROL AND SURVEY NOTES.

HORIZONTAL CONTROL

Point	Station	Offset	Northing	Easting	Description
50	1356+14.02	536.14 Lt.	135539.5400	462960.8848	Set SS Rod/BC: GPS Park
3	1357+94.24	17.67 Rt.	134980.2166	463103.7512	Set Rbr/PC[DOT]: CP 3

LEGEND

GPS CONTROL POINT

CP CONTROL POINT

ALASKA RAILROAD

S. GLENN HIGHWAY

1365+00

N84° 33' 05"E
2789.71'

N49° 38' 00"E
1023.65'

30+00

P.C. STA. 32+77.32

P.I. STA. 33+89.91
N = 136029.1437
E = 464028.6526
Δ = 58°45'19"
T = 112.59'
L = 205.09'
R = 200.00'

35+00

P.T. STA. 34+82.41

S71° 36' 41"E
236.37'

MATCH SHEET A8

WHETHER LISTED OR NOT, ALL MONUMENTS OR PROPERTY MARKERS, CORNERS, OR ACCESSORIES, WHICH WILL BE DISTURBED OR BURIED, SHALL BE REFERENCED AND RE-ESTABLISHED IN THEIR ORIGINAL POSITION (A.S. 19.10.260) AND RECORDED (A.S. 34.65.040).

PLANS DEVELOPED BY:
STATE OF ALASKA
DOT & PF
4111 AVIATION AVENUE
ANCHORAGE, AK 99502
(907)269-0700

STATE OF ALASKA - 49TH - Travis W. Test LS-13324 - REGISTERED PROFESSIONAL LAND SURVEYOR

STATE OF ALASKA
DEPARTMENT OF TRANSPORTATION & PUBLIC FACILITIES
SURVEY CONTROL SHEET

FEDERAL PROJECT NOs. 0A15037/0A15038/0A15033

CFHWY00431/CFHWY00432/CFHWY00006

GLENN HWY: PARKS HWY TO S. INNER SPRINGER LP

DRAWN	TWT	DATE	11/10/2021	SCALE	1" = 100'
CHECKED	RMK	DATE	11/10/2021	SHEET	2 OF 8

NO.	DATE	REVISION

STATE	YEAR	PROJECT DESIGNATION	SHEET NO.	TOTAL SHEETS
ALASKA	2021	0A15037/CFHWY00431 0A15038/CFHWY00432 0A15033/CFHWY00006	A8	A13

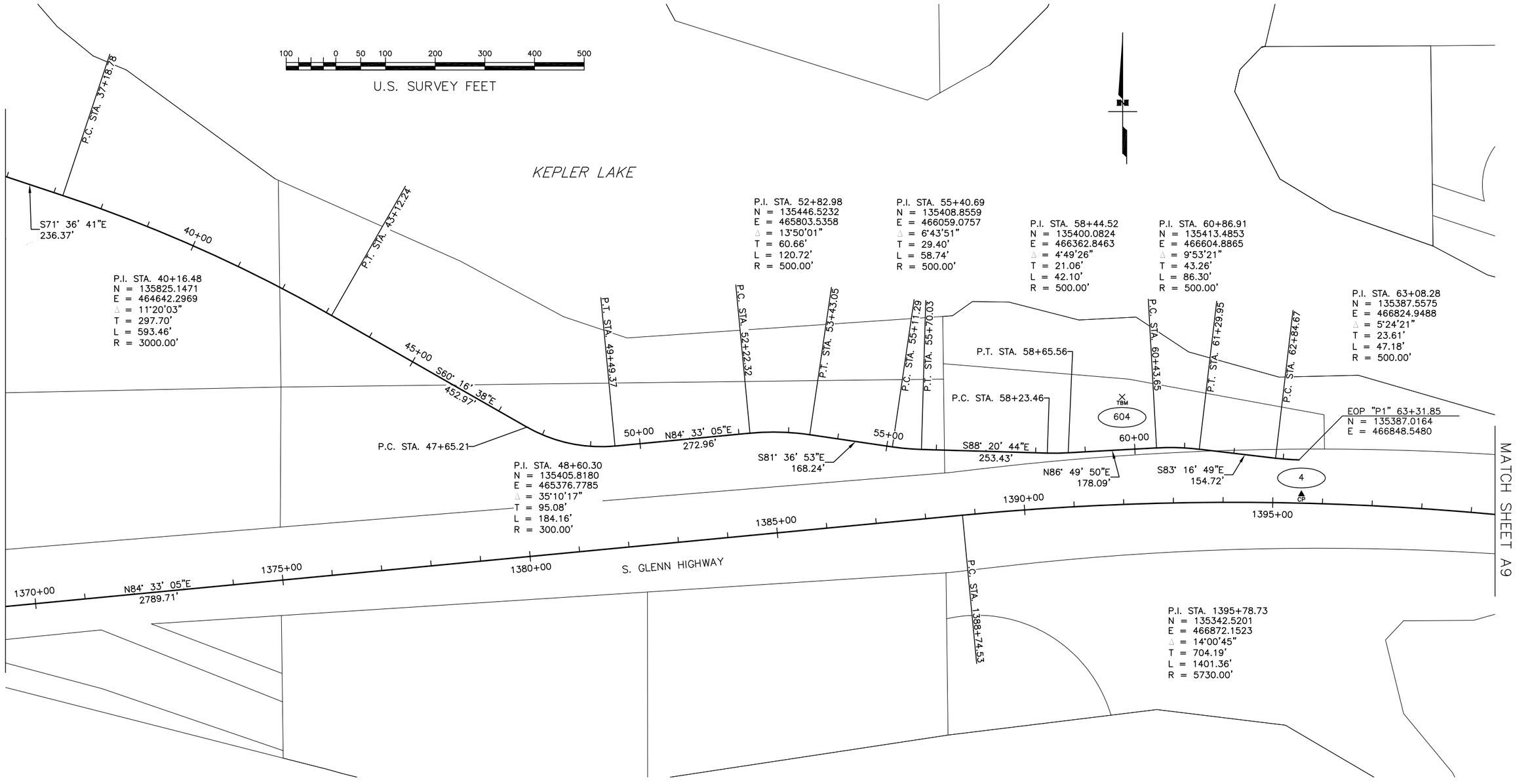

WHETHER LISTED OR NOT, ALL MONUMENTS OR PROPERTY MARKERS, CORNERS, OR ACCESSORIES, WHICH WILL BE DISTURBED OR BURIED, SHALL BE REFERENCED AND RE-ESTABLISHED IN THEIR ORIGINAL POSITION (A.S. 19.10.260) AND RECORDED (A.S. 34.65.040).

NOTES

1) SEE SHEET A6 FOR HORIZONTAL CONTROL, VERTICAL CONTROL AND SURVEY NOTES.

HORIZONTAL CONTROL

Point	Station	Offset	Northing	Easting	Description
4	1395+57.26	17.84 Lt.	135317.7236	466853.4628	Set Rbr/PC[DOT]: CP 4

VERTICAL CONTROL

Point	Station	Offset	Northing	Easting	Elevation	Description
604	1392+04.67	216.18 Lt.	135514	466492	123.62	Set RR Spike in 8" Aspen: TBM 2

LEGEND

CP CONTROL POINT

TBM TEMPORARY BENCHMARK

PLANS DEVELOPED BY:
STATE OF ALASKA
DOT & PF
4111 AVIATION AVENUE
ANCHORAGE, AK 99502
(907)269-0700

STATE OF ALASKA
49TH
Travis W. Test
LS-13324
REGISTERED PROFESSIONAL LAND SURVEYOR

STATE OF ALASKA
DEPARTMENT OF TRANSPORTATION
&
PUBLIC FACILITIES

SURVEY CONTROL SHEET

FEDERAL PROJECT NOs. 0A15037/0A15038/0A15033

CFHWY00431/CFHWY00432/CFHWY00006

GLENN HWY: PARKS HWY TO S. INNER SPRINGER LP

DRAWN	TWT	DATE	11/10/2021	SCALE	1" = 100'
CHECKED	RMK	DATE	11/10/2021	SHEET	3 OF 8

NO.	DATE	REVISION

STATE	YEAR	PROJECT DESIGNATION	SHEET NO.	TOTAL SHEETS
ALASKA	2021	0A15037/CFHWY00431 0A15038/CFHWY00432 0A15033/CFHWY00006	A9	A13

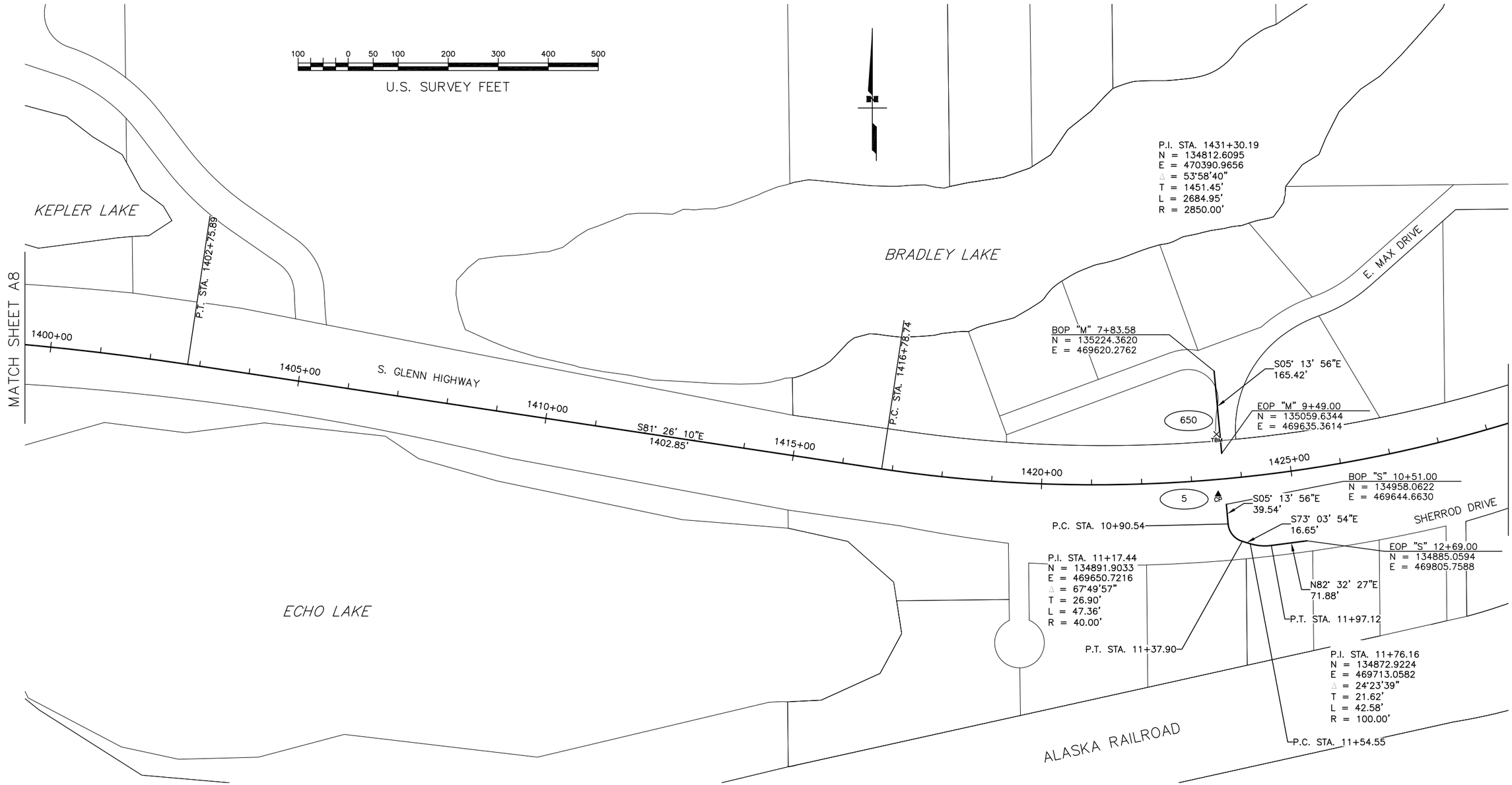

WHETHER LISTED OR NOT, ALL MONUMENTS OR PROPERTY MARKERS, CORNERS, OR ACCESSORIES, WHICH WILL BE DISTURBED OR BURIED, SHALL BE REFERENCED AND RE-ESTABLISHED IN THEIR ORIGINAL POSITION (A.S. 19.10.260) AND RECORDED (A.S. 34.65.040).

NOTES

1) SEE SHEET A6 FOR HORIZONTAL CONTROL, VERTICAL CONTROL AND SURVEY NOTES.

HORIZONTAL CONTROL

Point	Station	Offset	Northing	Easting	Description
5	1423+50.67	29.87 Rt.	134977.8213	469628.3119	Set Rbr/PC[DOT]: CP 5

VERTICAL CONTROL

Point	Station	Offset	Northing	Easting	Elevation	Description
650	1423+58.03	90.15 Lt.	135098	469625	118.99	Set RR Spike in 10" Poplar: TBM Funny

LEGEND

CP CONTROL POINT

TBM TEMPORARY BENCHMARK

PLANS DEVELOPED BY:
STATE OF ALASKA
DOT & PF
4111 AVIATION AVENUE
ANCHORAGE, AK 99502
(907)269-0700

STATE OF ALASKA
49TH
Travis W. Test
LS-13324
REGISTERED PROFESSIONAL LAND SURVEYOR

STATE OF ALASKA
DEPARTMENT OF TRANSPORTATION
&
PUBLIC FACILITIES

SURVEY CONTROL SHEET

FEDERAL PROJECT NOs. 0A15037/0A15038/0A15033
CFHWY00431/CFHWY00432/CFHWY00006
GLENN HWY: PARKS HWY TO S. INNER SPRINGER LP

DRAWN	TWT	DATE	11/10/2021	SCALE	1" = 100'
CHECKED	RMK	DATE	11/10/2021	SHEET	4 OF 8

NO.	DATE	REVISION

STATE	YEAR	PROJECT DESIGNATION	SHEET NO.	TOTAL SHEETS
ALASKA	2021	0A15037/CFHWY00431 0A15038/CFHWY00432 0A15033/CFHWY00006	A10	A13

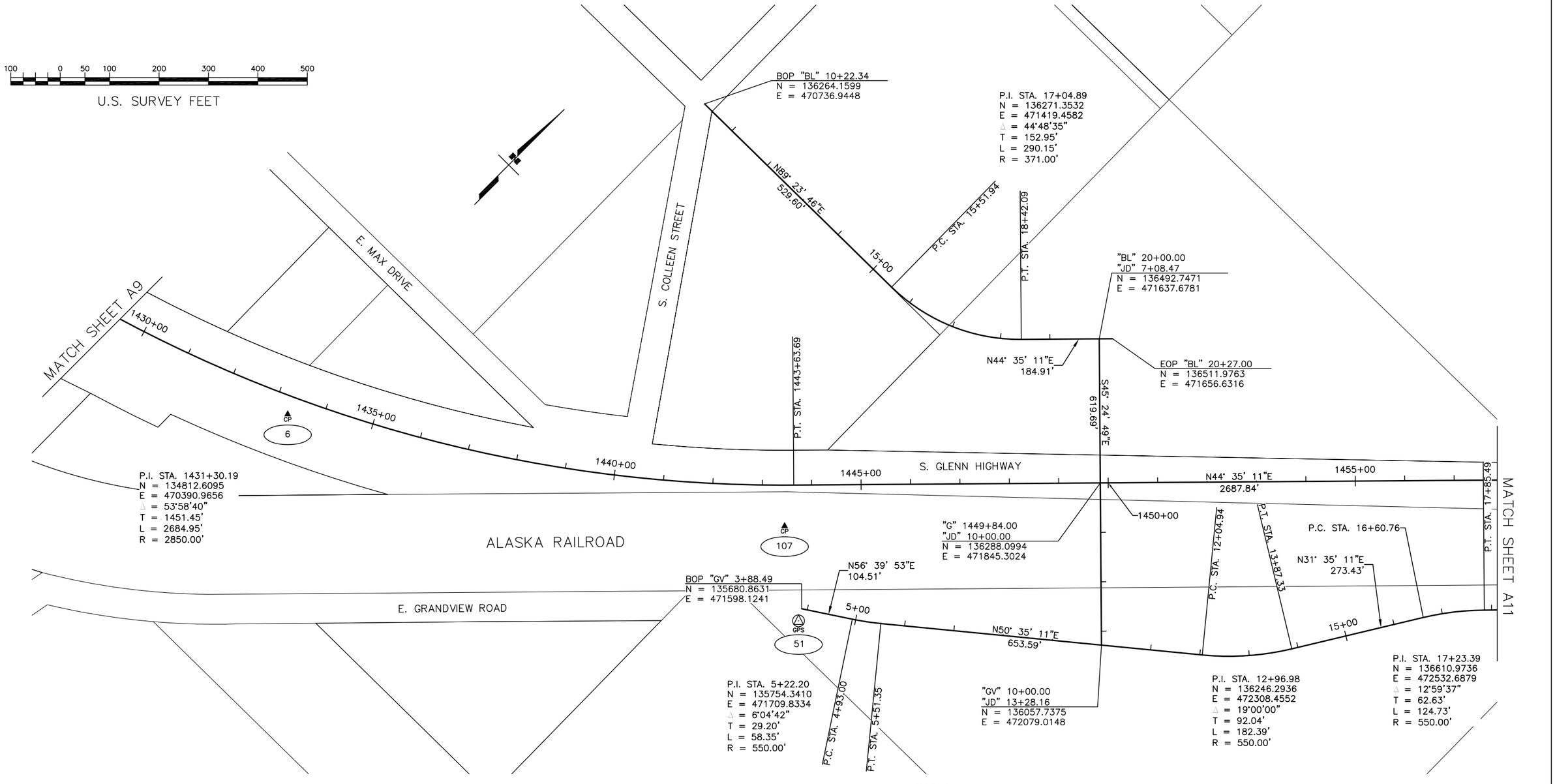

WHETHER LISTED OR NOT, ALL MONUMENTS OR PROPERTY MARKERS, CORNERS, OR ACCESSORIES, WHICH WILL BE DISTURBED OR BURIED, SHALL BE REFERENCED AND RE-ESTABLISHED IN THEIR ORIGINAL POSITION (A.S. 19.10.260) AND RECORDED (A.S. 34.65.040).

NOTES

1) SEE SHEET A6 FOR HORIZONTAL CONTROL, VERTICAL CONTROL AND SURVEY NOTES.

HORIZONTAL CONTROL

Point	Station	Offset	Northing	Easting	Description
6	1433+31.35	36.59 Rt.	135223.6321	470584.4764	Set Rbr/PC[DOT]: CP 6
107	1443+45.19	82.80 Rt.	135774.6788	471455.4131	Set Rbr/PC[DOT]: CP 107
51	1443+71.41	274.57 Rt.	135659.0761	471610.8220	Set SS Rod/BC: GPS Pit

LEGEND

GPS GPS CONTROL POINT

CP CONTROL POINT

PLANS DEVELOPED BY:
STATE OF ALASKA
DOT & PF
4111 AVIATION AVENUE
ANCHORAGE, AK 99502
(907)269-0700

STATE OF ALASKA
DEPARTMENT OF TRANSPORTATION
&
PUBLIC FACILITIES

SURVEY CONTROL SHEET

FEDERAL PROJECT NOs. 0A15037/0A15038/0A15033

CFHWY00431/CFHWY00432/CFHWY00006

GLENN HWY: PARKS HWY TO S. INNER SPRINGER LP

DRAWN	TWT	DATE	11/10/2021	SCALE	1" = 100'
CHECKED	RMK	DATE	11/10/2021	SHEET	5 OF 8

NO.	DATE	REVISION

STATE	YEAR	PROJECT DESIGNATION	SHEET NO.	TOTAL SHEETS
ALASKA	2021	0A15037/CFHWY00431 0A15038/CFHWY00432 0A15033/CFHWY00006	A11	A13

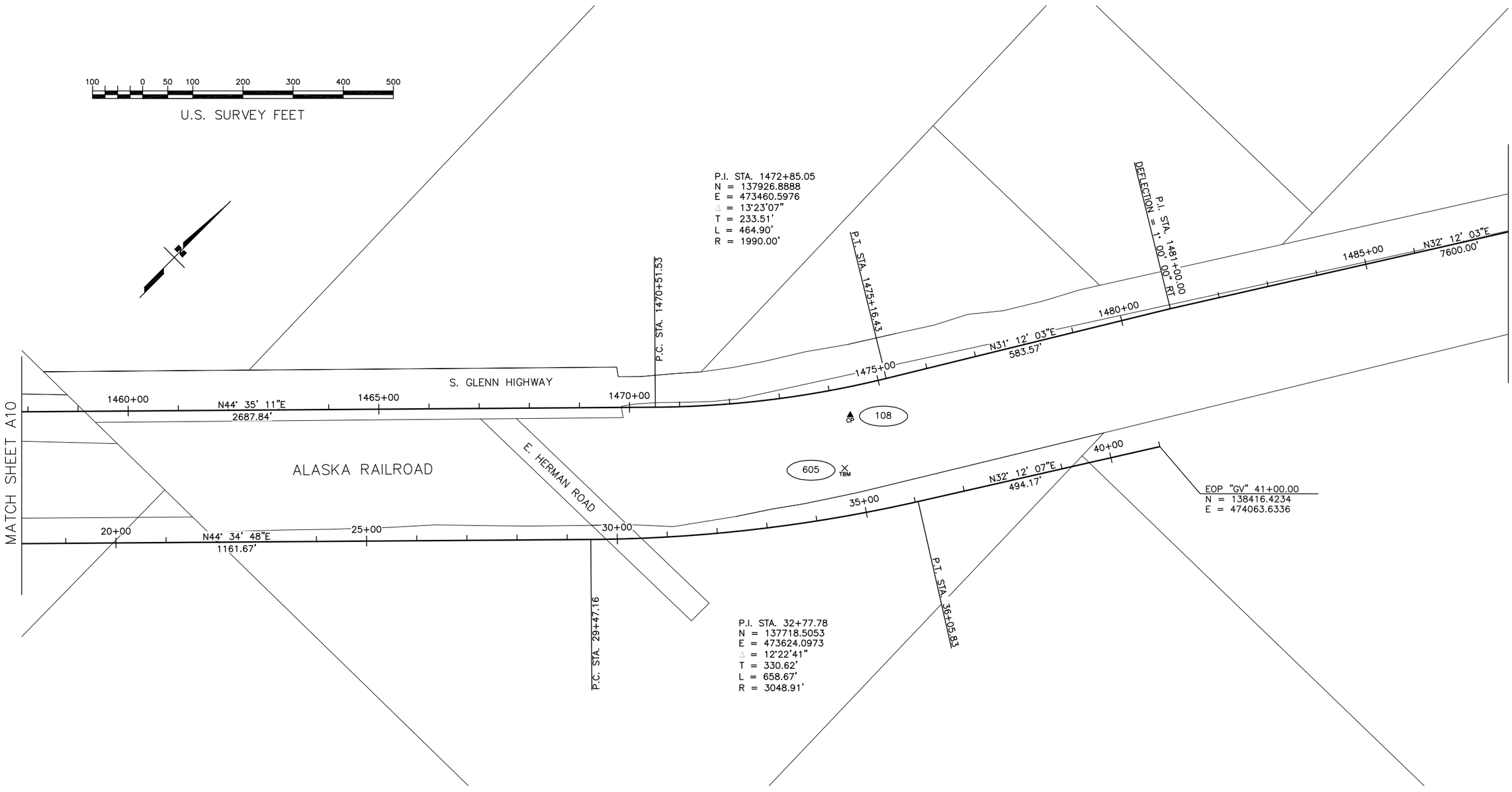

WHETHER LISTED OR NOT, ALL MONUMENTS OR PROPERTY MARKERS, CORNERS, OR ACCESSORIES, WHICH WILL BE DISTURBED OR BURIED, SHALL BE REFERENCED AND RE-ESTABLISHED IN THEIR ORIGINAL POSITION (A.S. 19.10.260) AND RECORDED (A.S. 34.65.040).

NOTES

1) SEE SHEET A6 FOR HORIZONTAL CONTROL, VERTICAL CONTROL AND SURVEY NOTES.

HORIZONTAL CONTROL

Point	Station	Offset	Northing	Easting	Description
108	1474+31.73	55.87 Rt.	138024.1815	473582.6790	Set Rbr/PC[DOT]: CP 108

VERTICAL CONTROL

Point	Station	Offset	Northing	Easting	Elevation	Description
605	1474+02.49	157.61 Rt.	137942	473650	117.07	Set RR Spike in 10" Birch: TBM 3

LEGEND

CP CONTROL POINT

TBM TEMPORARY BENCHMARK

PLANS DEVELOPED BY:
STATE OF ALASKA
DOT & PF
4111 AVIATION AVENUE
ANCHORAGE, AK 99502
(907)269-0700

STATE OF ALASKA
49TH
Travis W. Test
LS-13324
REGISTERED PROFESSIONAL LAND SURVEYOR

STATE OF ALASKA
DEPARTMENT OF TRANSPORTATION
&
PUBLIC FACILITIES

SURVEY CONTROL SHEET

FEDERAL PROJECT NOs. 0A15037/0A15038/0A15033

CFHWY00431/CFHWY00432/CFHWY00006

GLENN HWY: PARKS HWY TO S. INNER SPRINGER LP

DRAWN	TWT	DATE	11/10/2021	SCALE	1" = 100'
CHECKED	RMK	DATE	11/10/2021	SHEET	6 OF 8

NO.	DATE	REVISION

STATE	YEAR	PROJECT DESIGNATION	SHEET NO.	TOTAL SHEETS
ALASKA	2021	0A15037/CFHWY00431 0A15038/CFHWY00432 0A15033/CFHWY00006	A12	A13

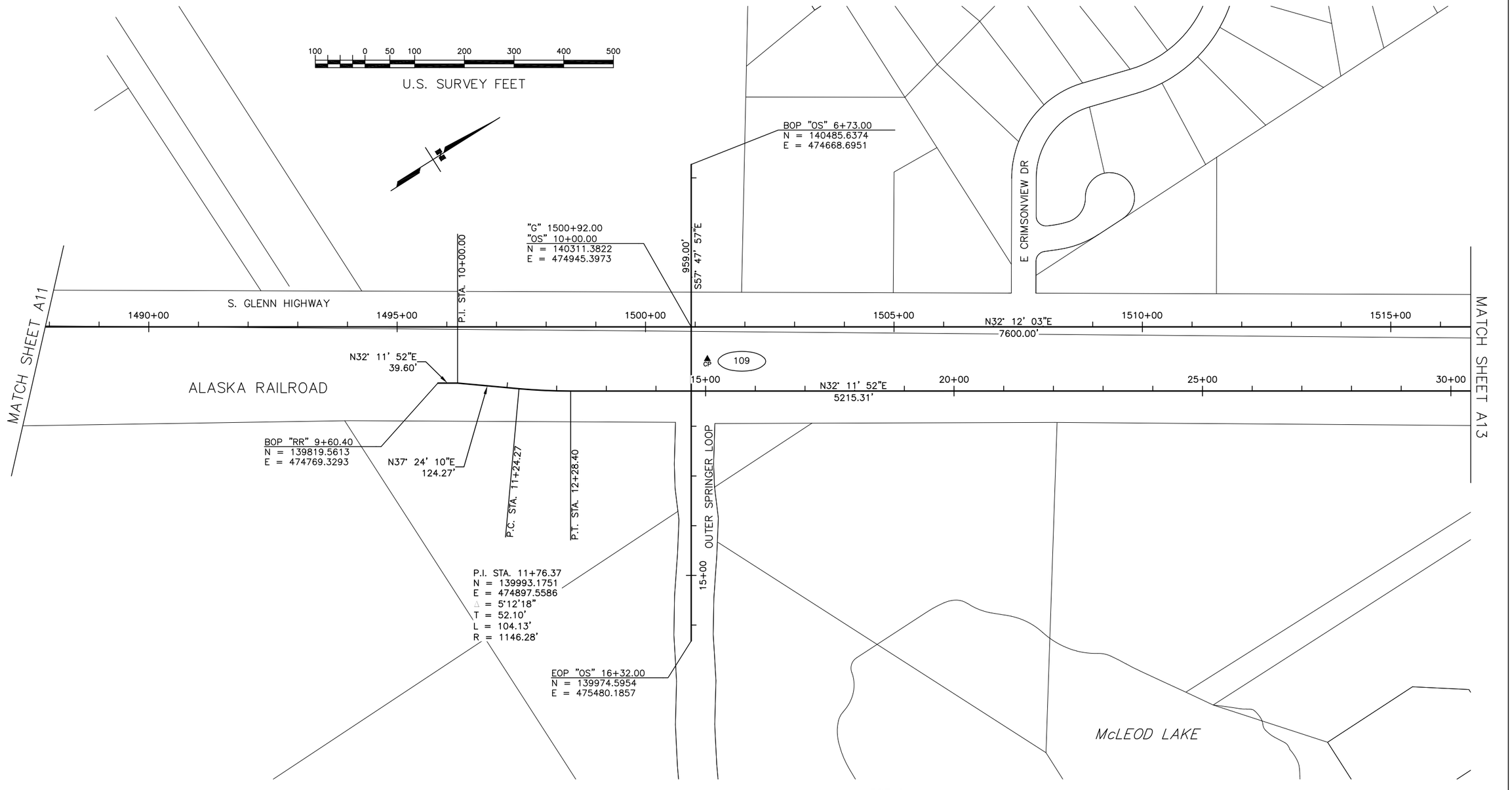

WHETHER LISTED OR NOT, ALL MONUMENTS OR PROPERTY MARKERS, CORNERS, OR ACCESSORIES, WHICH WILL BE DISTURBED OR BURIED, SHALL BE REFERENCED AND RE-ESTABLISHED IN THEIR ORIGINAL POSITION (A.S. 19.10.260) AND RECORDED (A.S. 34.65.040).

NOTES

1) SEE SHEET A6 FOR HORIZONTAL CONTROL, VERTICAL CONTROL AND SURVEY NOTES.

HORIZONTAL CONTROL

Point	Station	Offset	Northing	Easting	Description
109	1501+24.43	64.55 Rt.	140304.4270	475017.3024	Set Rbr/PC[DOT]: CP 109

VERTICAL CONTROL

	Point	Station	Offset	Northing	Easting	Elevation	Description
*	606	1506+23.76	1599.85 Rt.	139909	476583	129.75	Fd BC[DOT]: BM Springer

* NOT SHOWN

LEGEND

CP CONTROL POINT

PLANS DEVELOPED BY:
STATE OF ALASKA
DOT & PF
4111 AVIATION AVENUE
ANCHORAGE, AK 99502
(907)269-0700

STATE OF ALASKA
DEPARTMENT OF TRANSPORTATION
&
PUBLIC FACILITIES

SURVEY CONTROL SHEET

FEDERAL PROJECT NOs. 0A15037/0A15038/0A15033

CFHWY00431/CFHWY00432/CFHWY00006

GLENN HWY: PARKS HWY TO S. INNER SPRINGER LP

DRAWN	TWT	DATE	11/10/2021	SCALE	1" = 100'
CHECKED	RMK	DATE	11/10/2021	SHEET	7 OF 8

NO.	DATE	REVISION

STATE	YEAR	PROJECT DESIGNATION	SHEET NO.	TOTAL SHEETS
ALASKA	2021	0A15037/CFHWY00431 0A15038/CFHWY00432 0A15033/CFHWY00006	A13	A13

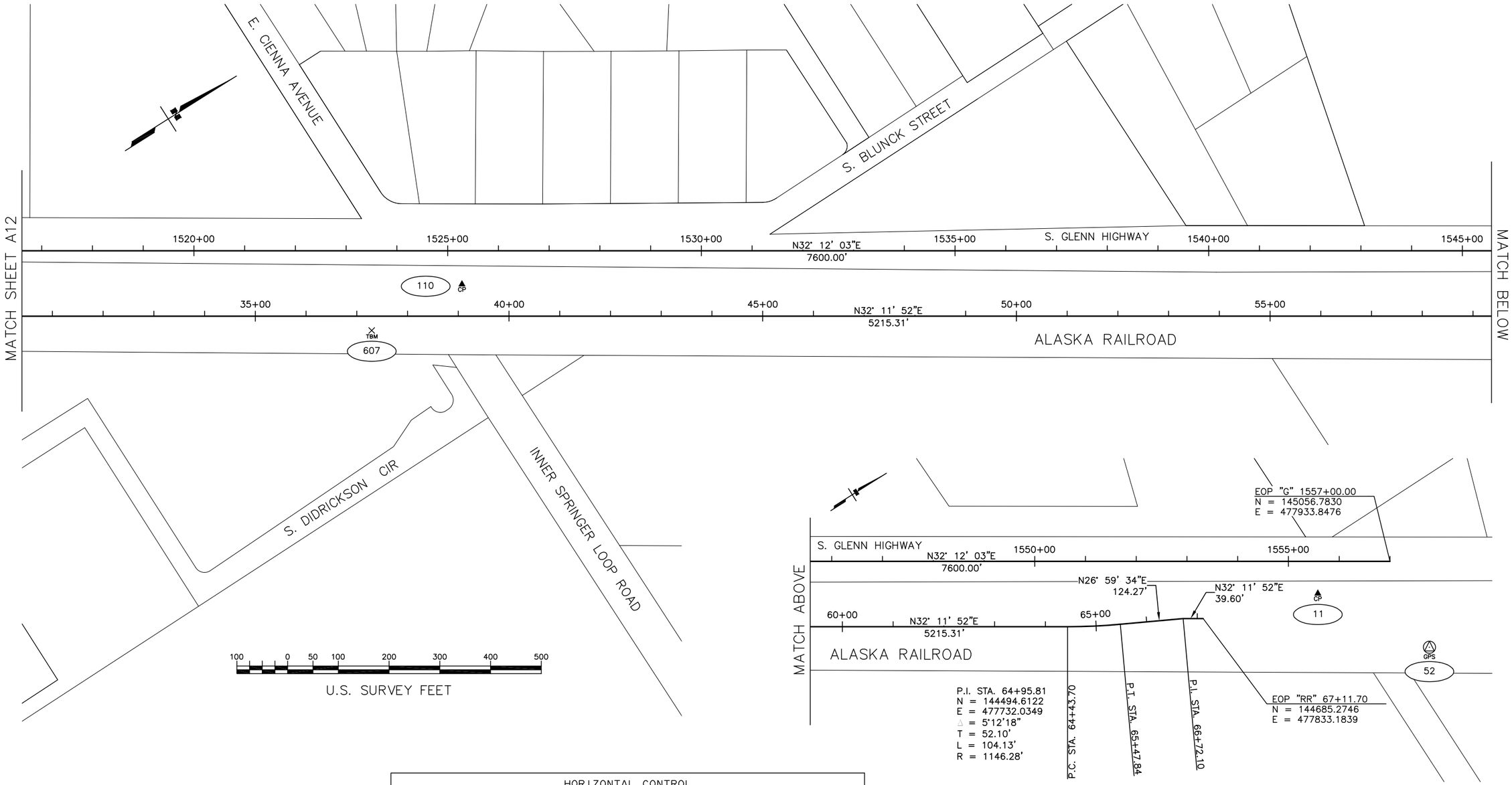

HORIZONTAL CONTROL					
Point	Station	Offset	Northing	Easting	Description
52			145032.3609	478118.6468	Set BC: GPS Depot
110	1525+28.26	66.11 Rt.	142337.6772	476299.6042	Set Rbr/PC[DOT]: CP 110
11	1555+57.92	63.33 Rt.	144902.8033	477911.7241	Set Rbr/PC[DOT]: CP 11

VERTICAL CONTROL						
Point	Station	Offset	Northing	Easting	Elevation	Description
607	1523+50.39	157.23 Rt.	142139	476282	151.64	Set RR Spike in 24" Cottonwood: TBM 4

WHETHER LISTED OR NOT, ALL MONUMENTS OR PROPERTY MARKERS, CORNERS, OR ACCESSORIES, WHICH WILL BE DISTURBED OR BURIED, SHALL BE REFERENCED AND RE-ESTABLISHED IN THEIR ORIGINAL POSITION (A.S. 19.10.260) AND RECORDED (A.S. 34.65.040).

NOTES

1) SEE SHEET A6 FOR HORIZONTAL CONTROL, VERTICAL CONTROL AND SURVEY NOTES.

LEGEND

- GPS CONTROL POINT
- CP CONTROL POINT
- TBM TEMPORARY BENCHMARK

PLANS DEVELOPED BY:
STATE OF ALASKA
DOT & PF
4111 AVIATION AVENUE
ANCHORAGE, AK 99502
(907)269-0700

STATE OF ALASKA
DEPARTMENT OF TRANSPORTATION
&
PUBLIC FACILITIES

SURVEY CONTROL SHEET

FEDERAL PROJECT NOs. 0A15037/0A15038/0A15033
CFHWY00431/CFHWY00432/CFHWY00006
GLENN HWY: PARKS HWY TO S. INNER SPRINGER LP

STATE OF ALASKA 49TH
Travis W. Test
LS-13324
REGISTERED PROFESSIONAL LAND SURVEYOR

DRAWN	TWT	DATE	11/10/2021	SCALE	1" = 100'
CHECKED	RMK	DATE	11/10/2021	SHEET	8 OF 8

NO.	DATE	REVISION	STATE	PROJECT DESIGNATION	YEAR	SHEET NO.	TOTAL SHEETS
			ALASKA	0A15037/CFHWY00431 0A15038/CFHWY00432 0A15033/CFHWY00006	2021	B1	B11

DESIGNED BY CAB
CHECKED BY DRL
DRAFTED BY CDB

SCALE 1" = 20'

DATE TIME 11/12/2021 8:40 AM

DRAWING LOCATION H:\JOBS\08-016 GLENN HIGHWAY 34-42 (DOT)\09 - PS&E\CAD_PH2\DRAWINGS\08016_P2_B01-B11.DWG

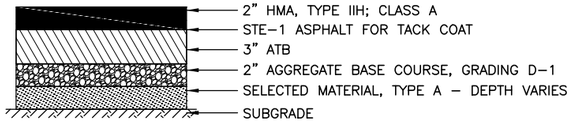

PAVEMENT SECTION A

NTS

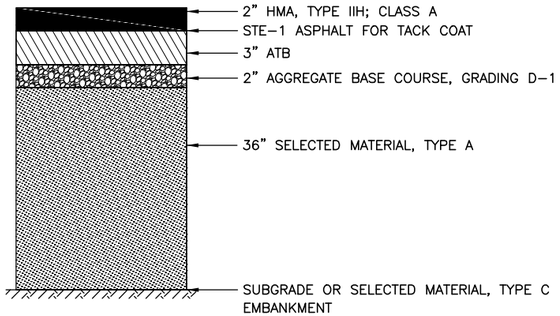

PAVEMENT SECTION B

NTS

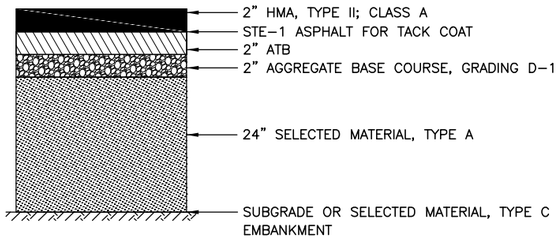

PAVEMENT SECTION C

NTS

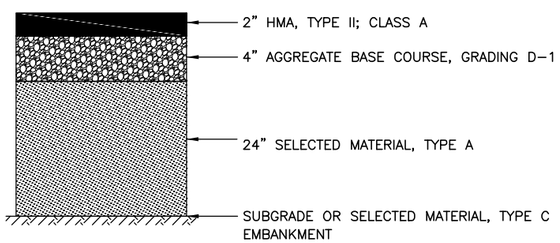

PAVEMENT SECTION D

NTS

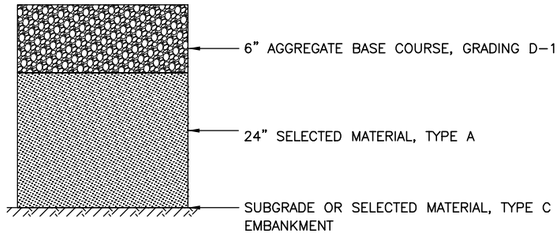

PAVEMENT SECTION E

NTS

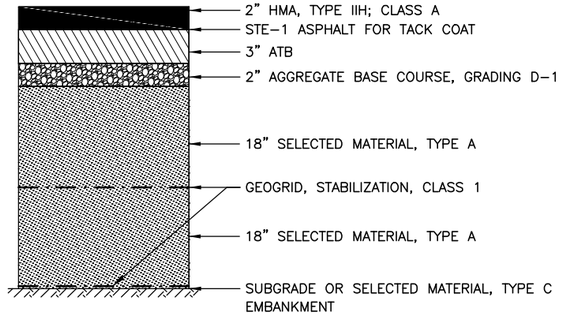

PAVEMENT SECTION F

NTS

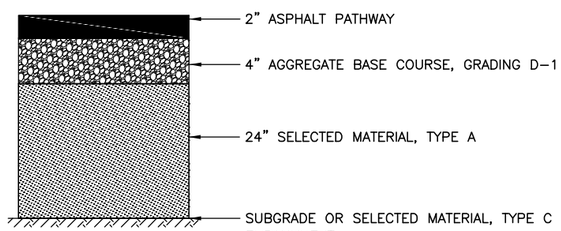

PATHWAY SECTION

NTS

CERTIFICATION SET
NOVEMBER 2021

STATE OF ALASKA
49TH
DENNIS R. LINNELL
CE-7649
REGISTERED PROFESSIONAL ENGINEER

HDL ENGINEERING CONSULTANTS, LLC
3335 ARCTIC BOULEVARD, STE 100
ANCHORAGE, AK 99503
(907) 564-2120
AECL861

STATE OF ALASKA
DEPARTMENT OF TRANSPORTATION
AND PUBLIC FACILITIES

GLENN HWY: PARKS HWY TO S. INNER SPRINGER LP. (PHASE II)

TYPICAL SECTIONS

NO.	DATE	REVISION

STATE	PROJECT DESIGNATION	YEAR	SHEET NO.	TOTAL SHEETS
ALASKA	0A15037/CFHWY00431 0A15038/CFHWY00432 0A15033/CFHWY00006	2021	B2	B11

CAB DRL CDB
DESIGNED BY
CHECKED BY
DRAFTED BY
SCALE 1" = 20'
DATE TIME 11/11/2021 11:37 AM
DRAWING LOCATION H:\JOBS\08-016 GLENN HIGHWAY 34-42 (DOT)\09 - PS&E\CAD_PH2\DRAWINGS\08016_P2_B01-B11.DWG

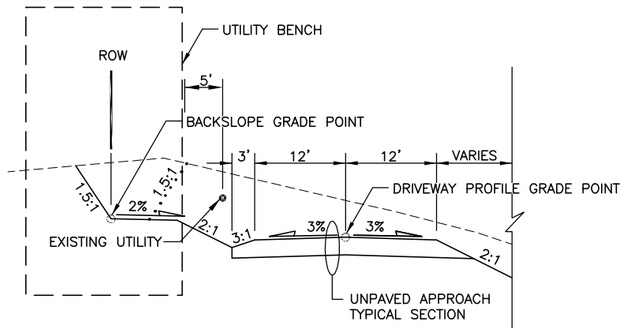

GLENN HIGHWAY

"G" STA 1332+00 TO "G" STA 1333+08.8

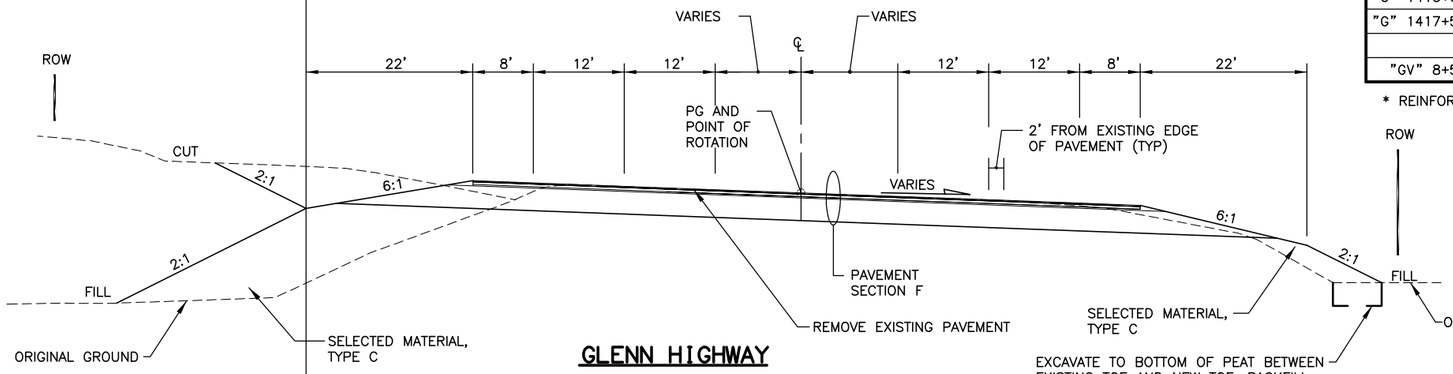

GLENN HIGHWAY

"G" STA 1331+00 TO "G" STA 1333+08.8

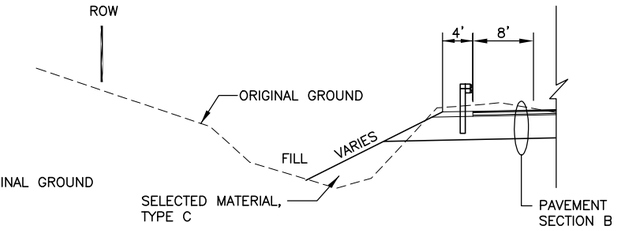

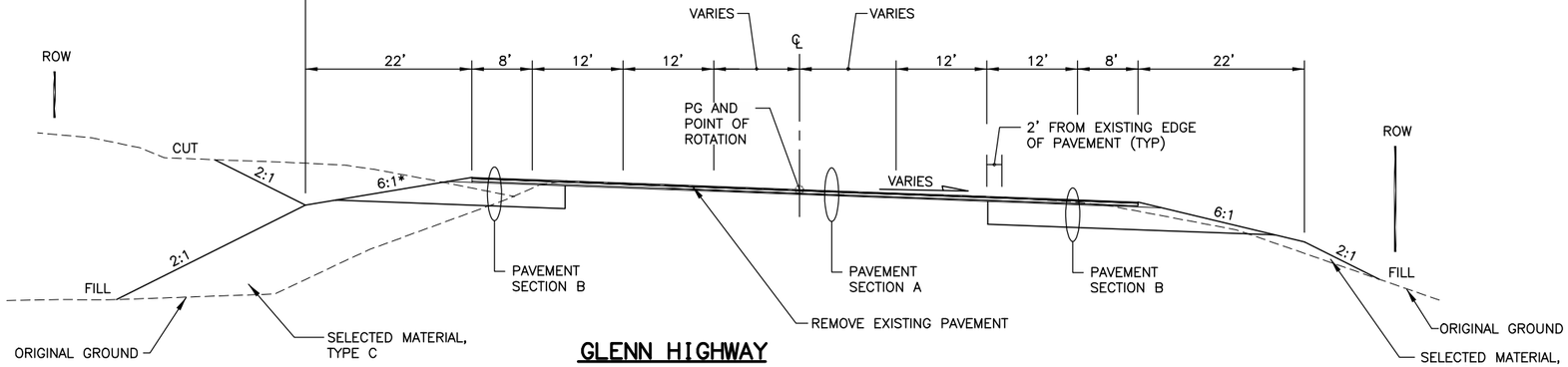

GLENN HIGHWAY

"G" STA 1324+50 TO "G" STA 1331+00

* SEE TABLE OF SLOPE EXCEPTIONS

TABLE OF SLOPE EXCEPTIONS

STATION TO STATION	OFFSET	FORE/ BACK	SLOPE	REMARKS
"G" 1324+50 TO "G" 1330+50	LT	FORE	2:1	–
"G" 1362+00 TO "G" 1365+00	RT	FORE	2:1	–
"G" 1371+00 TO "G" 1373+00	LT	FORE	2:1	–
"G" 1373+00 TO "G" 1374+50	LT	FORE	2:1 TO 1.1:1*	CATCH AT OHW
"G" 1374+50 TO "G" 1377+00	LT	FORE	2:1	–
"G" 1403+50 TO "G" 1404+46	RT	FORE	2:1	–
"G" 1404+46 TO "G" 1408+00	RT	FORE	2:1 TO 1.3:1*	CATCH AT OHW
"G" 1416+00 TO "G" 1417+50	RT	FORE	2:1 TO 1.7:1*	CATCH AT OHW
"G" 1417+50 TO "G" 1421+50	RT	FORE	2:1	–
"GV" 8+50 TO "GV" 10+50	RT	FORE	1.8:1 TO 1.9:1	CATCH WITHIN ROW

* REINFORCE SLOPE, SEE SHEET B10

GUARDRAIL WIDEN LT

"G" STA 1324+50 TO "G" STA 1333+00
"G" STA 1370+50 TO "G" STA 1381+12.5

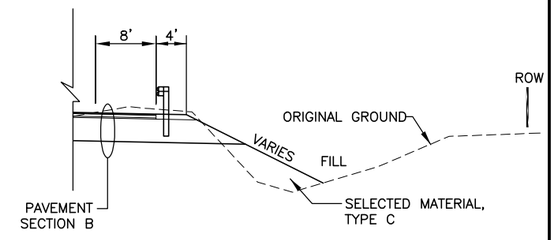

GUARDRAIL WIDEN RT

"G" STA 1358+78 TO "G" STA 1366+00
"G" STA 1399+35 TO "G" STA 1422+00

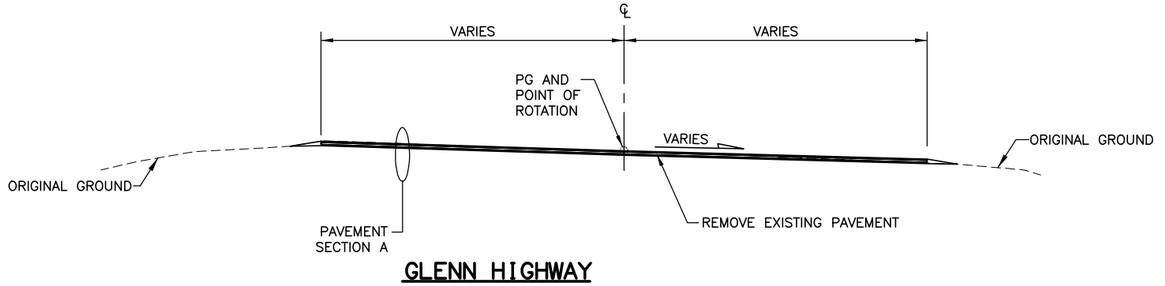

GLENN HIGHWAY

"G" STA 1319+00 TO "G" STA 1324+50

NOTE:

1. SEE GUARDRAIL WIDENING TYPICAL.

CERTIFICATION SET
NOVEMBER 2021

STATE OF ALASKA
49TH
DENNIS R. LINNELL
CE-7649
REGISTERED PROFESSIONAL ENGINEER

HDL ENGINEERING CONSULTANTS, LLC
3335 ARCTIC BOULEVARD, STE 100
ANCHORAGE, AK 99503
(907) 564-2120
AECL861

STATE OF ALASKA
DEPARTMENT OF TRANSPORTATION
AND PUBLIC FACILITIES

GLENN HWY: PARKS HWY TO S. INNER SPRINGER LP. (PHASE II)

TYPICAL SECTIONS

NO.	DATE	REVISION	STATE	PROJECT DESIGNATION	YEAR	SHEET NO.	TOTAL SHEETS
			ALASKA	0A15037/CFHWY00431 0A15038/CFHWY00432 0A15033/CFHWY00006	2021	B3	B11

DESIGNED BY CAB
CHECKED BY DRL
DRAFTED BY CDB

SCALE 1" = 20'

DATE 11/11/2021 TIME 11:37 AM

DRAWING LOCATION
H:\JOBS\08-016 GLENN HIGHWAY 34-42 (DOT)\09 - PS&E\CAD_PH2\DRAWINGS\08016_P2_B01-B11.DWG

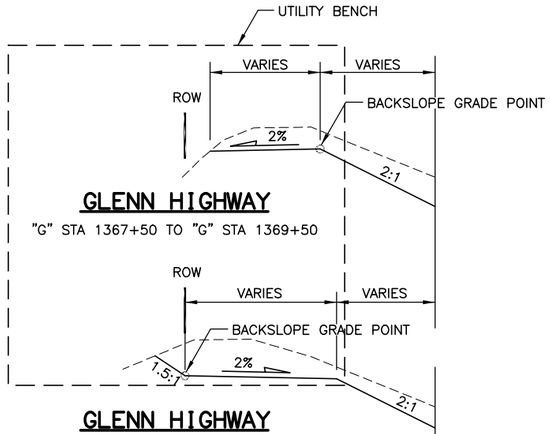

GLENN HIGHWAY

"G" STA 1367+50 TO "G" STA 1369+50

GLENN HIGHWAY

"G" STA 1338+00 TO "G" STA 1343+00

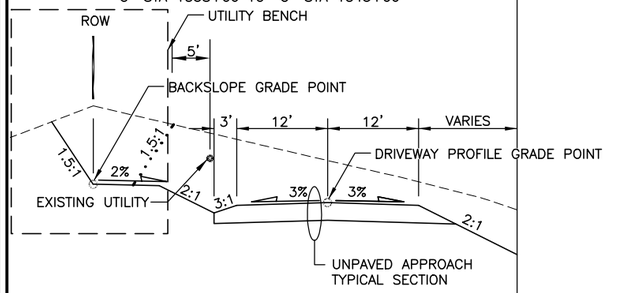

GLENN HIGHWAY

"G" STA 1333+08.8 TO "G" STA 1338+00

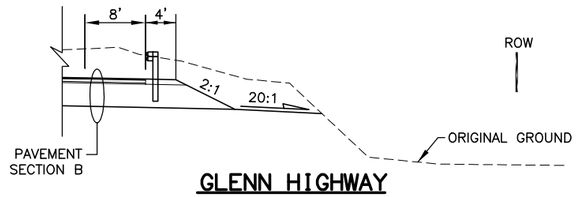

GLENN HIGHWAY

"G" STA 1363+50 TO "G" STA 1365+50

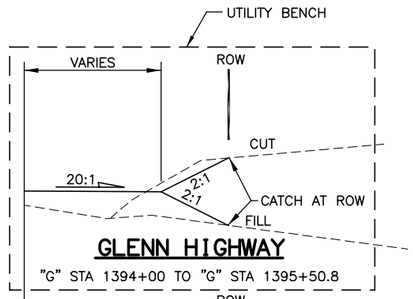

GLENN HIGHWAY

"G" STA 1394+00 TO "G" STA 1395+50.8

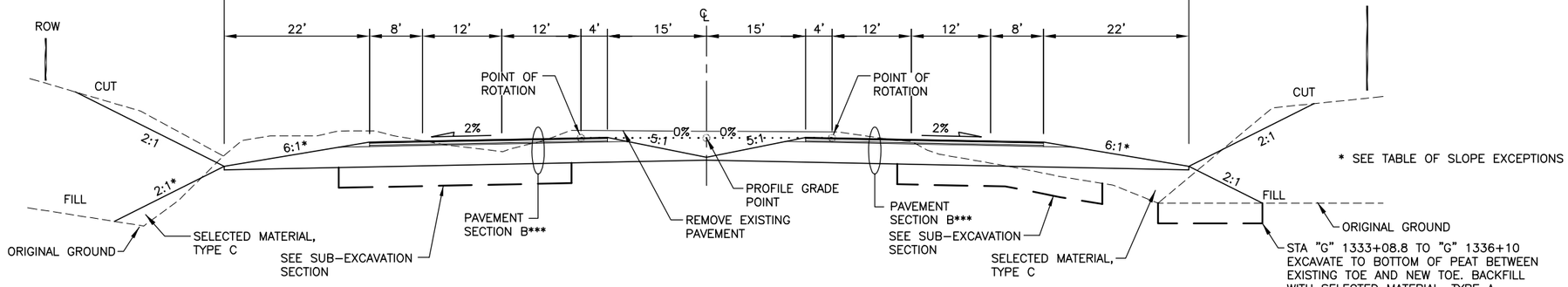

* SEE TABLE OF SLOPE EXCEPTIONS

GLENN HIGHWAY

"G" STA 1333+08.8 TO "G" STA 1395+50.8**
**"G" STA 1375+00 TO "G" STA 1379+00 LT – USE WIDENING OVER SOFT FOUNDATION SOIL, SEE SHEET B11
***"G" STA 1333+08.8 TO "G" STA 1336+50 USE PAVEMENT SECTION F

CERTIFICATION SET
NOVEMBER 2021

STATE OF ALASKA
★ 49TH ★
DENNIS R. LINNELL
CE-7649
REGISTERED PROFESSIONAL ENGINEER

HDL ENGINEERING CONSULTANTS, LLC
3335 ARCTIC BOULEVARD, STE 100
ANCHORAGE, AK 99503
(907) 564-2120
AECL861

STATE OF ALASKA
DEPARTMENT OF TRANSPORTATION
AND PUBLIC FACILITIES

GLENN HWY: PARKS HWY TO S. INNER SPRINGER LP. (PHASE II)

TYPICAL SECTIONS

NO.	DATE	REVISION

STATE	PROJECT DESIGNATION	YEAR	SHEET NO.	TOTAL SHEETS
ALASKA	0A15037/CFHWY00431 0A15038/CFHWY00432 0A15033/CFHWY00006	2021	B4	B11

DESIGNED BY CAB
CHECKED BY DRL
DRAFTED BY CDB

SCALE 1" = 20'

DATE TIME 11/11/2021 11:37 AM

DRAWING LOCATION
H:\JOBS\08-016 GLENN HIGHWAY 34-42 (DOT)\09 - PS&E\CAD_PH2\DRAWINGS\08016_P2_B01-B11.DWG

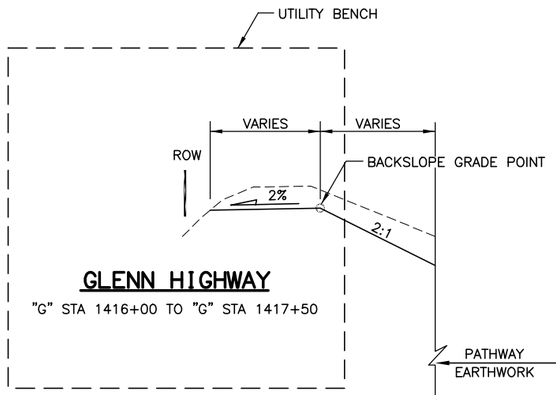

GLENN HIGHWAY

"G" STA 1416+00 TO "G" STA 1417+50

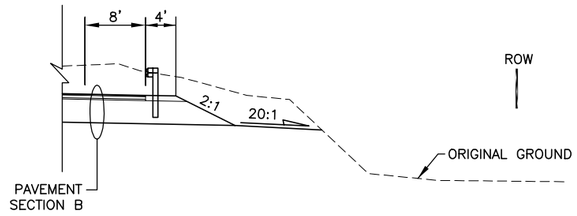

GLENN HIGHWAY

"G" STA 1408+00 TO "G" STA 1416+50

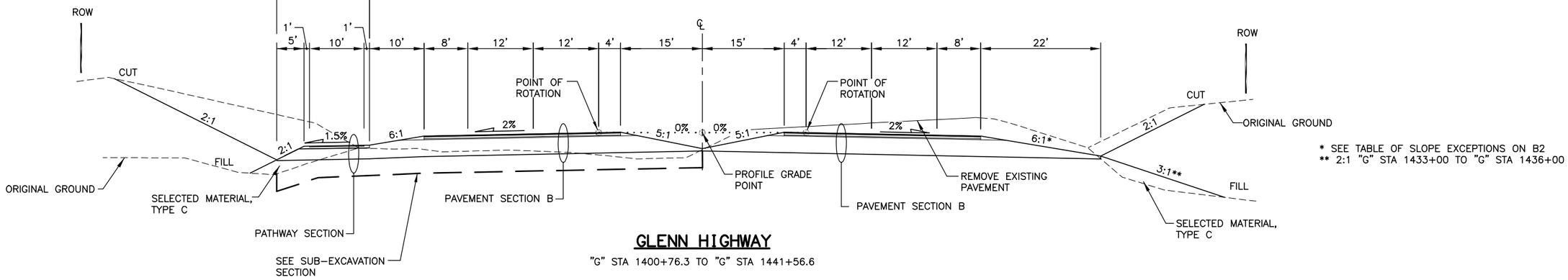

* SEE TABLE OF SLOPE EXCEPTIONS ON B2
** 2:1 "G" STA 1433+00 TO "G" STA 1436+00

GLENN HIGHWAY

"G" STA 1400+76.3 TO "G" STA 1441+56.6

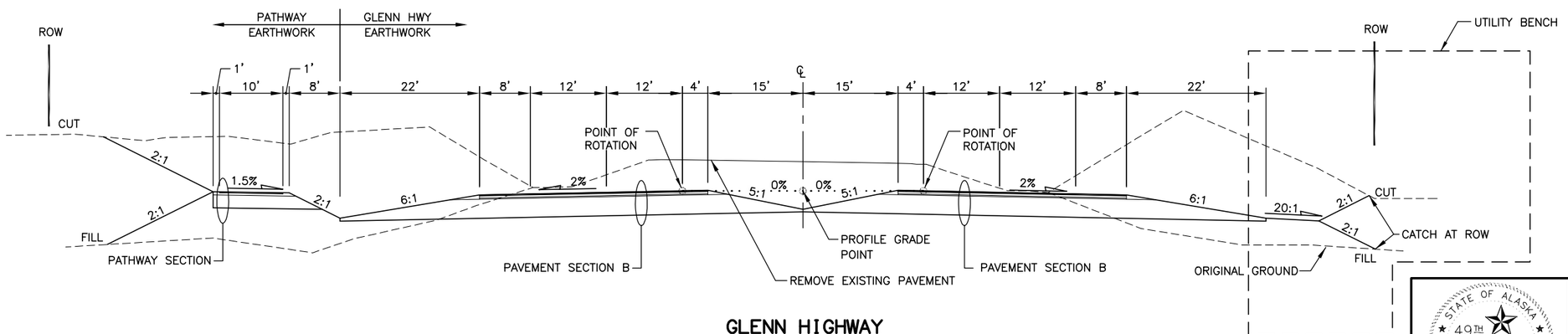

GLENN HIGHWAY

"G" STA 1395+50.8 TO "G" STA 1400+76.3

CERTIFICATION SET
NOVEMBER 2021

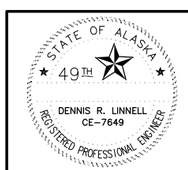

HDL ENGINEERING CONSULTANTS, LLC
3335 ARCTIC BOULEVARD, STE 100
ANCHORAGE, AK 99503
(907) 564-2120
AECL861

STATE OF ALASKA
DEPARTMENT OF TRANSPORTATION
AND PUBLIC FACILITIES

GLENN HWY: PARKS HWY TO S. INNER SPRINGER LP. (PHASE II)

TYPICAL SECTIONS

NO.	DATE	REVISION

STATE	PROJECT DESIGNATION	YEAR	SHEET NO.	TOTAL SHEETS
ALASKA	0A15037/CFHWY00431 0A15038/CFHWY00432 0A15033/CFHWY00006	2021	B5	B11

CAB
DESIGNED BY
DRL
CHECKED BY
CDB
DRAFTED BY

SCALE
1" = 20'

DATE TIME
11/11/2021 11:37 AM

DRAWING LOCATION
H:\JOBS\08-016 GLENN HIGHWAY 34-42 (DOT)\09 - PS&E\CAD_PH2\DRAWINGS\08016_P2_B01-B11.DWG

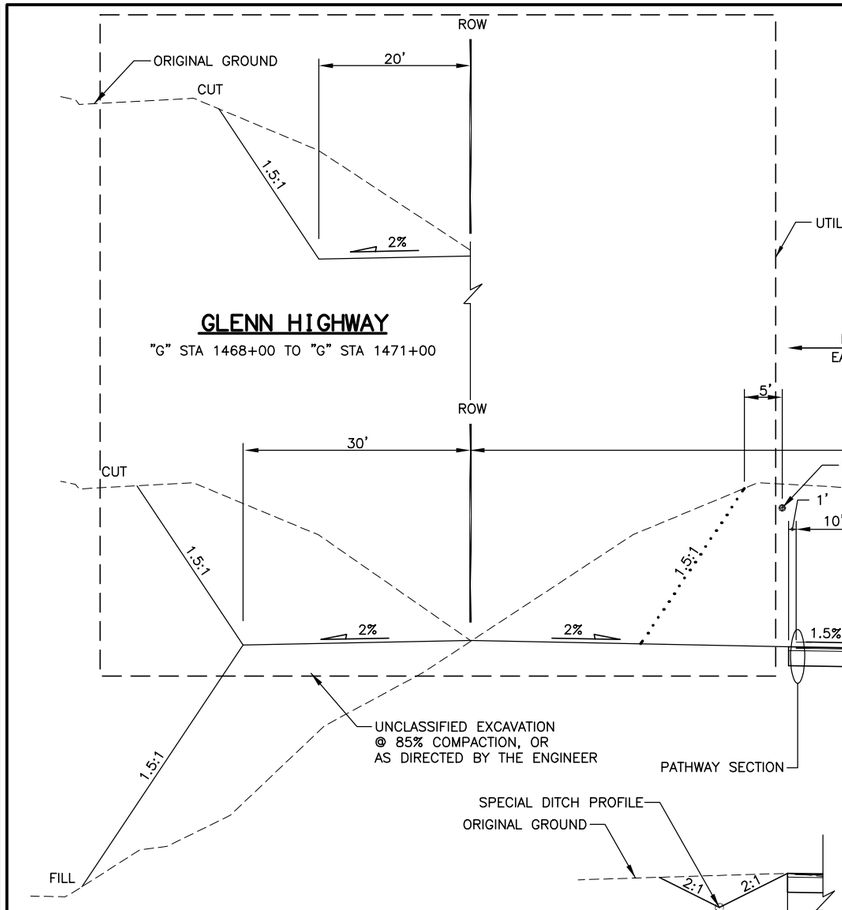

GLENN HIGHWAY
"G" STA 1468+00 TO "G" STA 1471+00

GLENN HIGHWAY
"G" STA 1450+00 TO "G" STA 1471+01.5

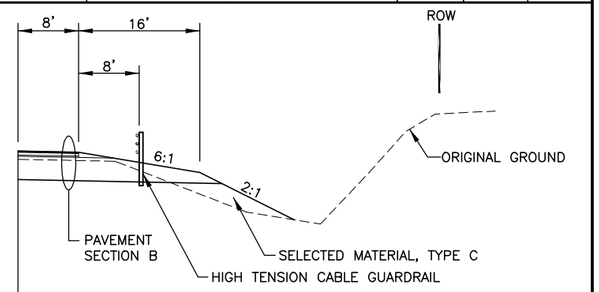

GLENN HIGHWAY
"G" STA 1468+16 TO "G" STA 1471+01.5

SPECIAL DITCH
"G" STA 1442+00 TO "G" STA 1445+50

GLENN HIGHWAY
"G" STA 1441+56.6 TO "G" STA 1450+00
"G" STA 1479+93.6 TO "G" STA 1500+92

GLENN HIGHWAY
"G" STA 1446+00 TO "G" STA 1450+00

CERTIFICATION SET
NOVEMBER 2021

HDL ENGINEERING CONSULTANTS, LLC
3335 ARCTIC BOULEVARD, STE 100
ANCHORAGE, AK 99503
(907) 564-2120
AECL861

STATE OF ALASKA
DEPARTMENT OF TRANSPORTATION
AND PUBLIC FACILITIES

GLENN HWY: PARKS HWY TO S. INNER SPRINGER LP. (PHASE II)

TYPICAL SECTIONS

NO.	DATE	REVISION	STATE	PROJECT DESIGNATION	YEAR	SHEET NO.	TOTAL SHEETS
			ALASKA	0A15037/CFHWY00431 0A15038/CFHWY00432 0A15033/CFHWY00006	2021	B6	B11

DESIGNED BY CAB
CHECKED BY DRL
DRAFTED BY CDB
SCALE 1" = 20'
DATE 11/11/2021 TIME 11:37 AM
DRAWING LOCATION H:\JOBS\08-016 GLENN HIGHWAY 34-42 (DOT)\09 - PS&E\CAD_PH2\DRAWINGS\08016_P2_B01-B11.DWG

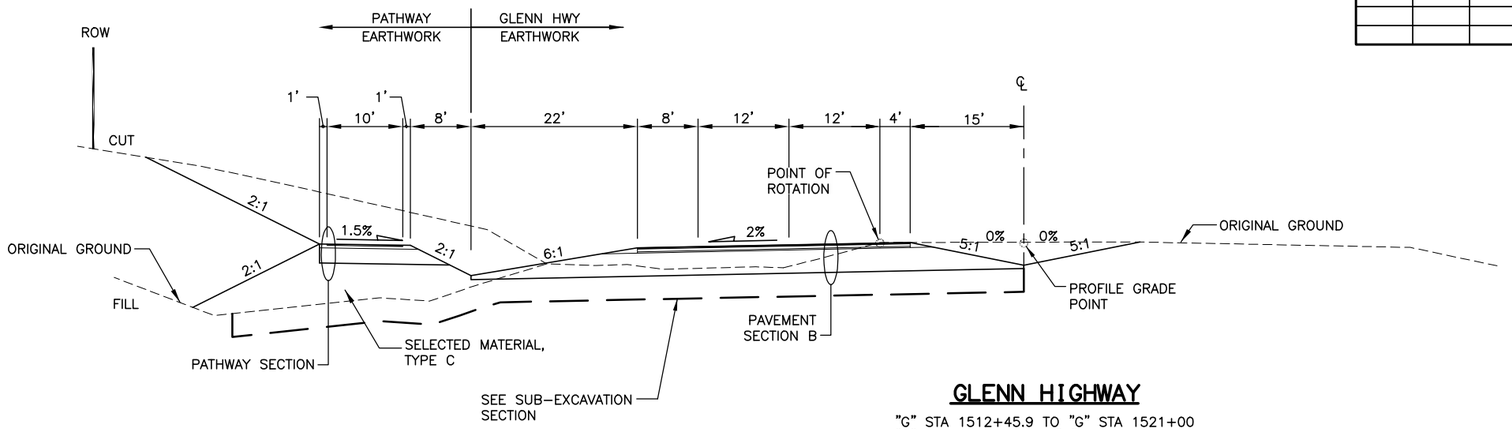

GLENN HIGHWAY

"G" STA 1512+45.9 TO "G" STA 1521+00
"G" STA 1521+00 TO "G" STA 1525+17.5 – PATHWAY ONLY

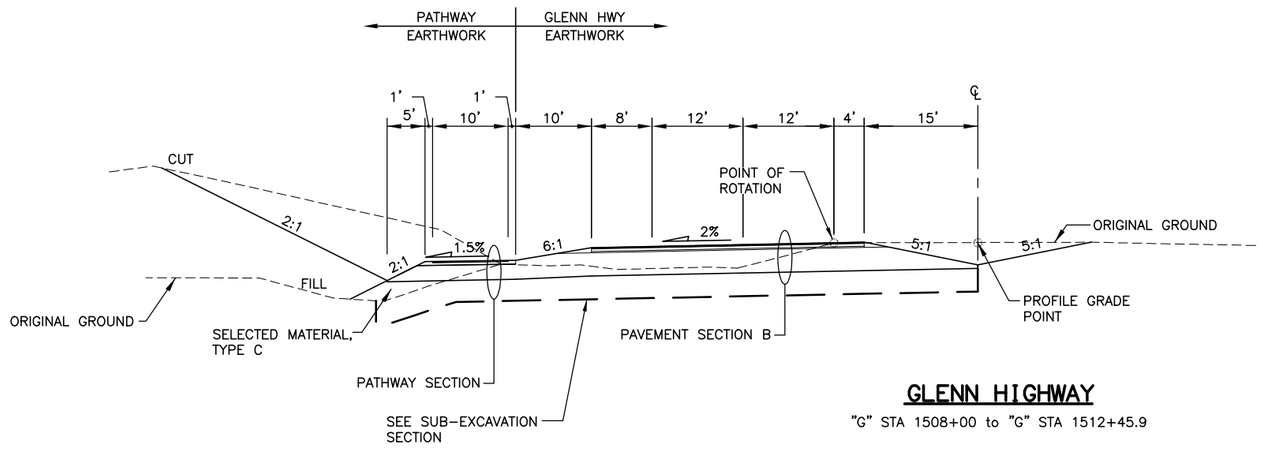

GLENN HIGHWAY

"G" STA 1508+00 to "G" STA 1512+45.9

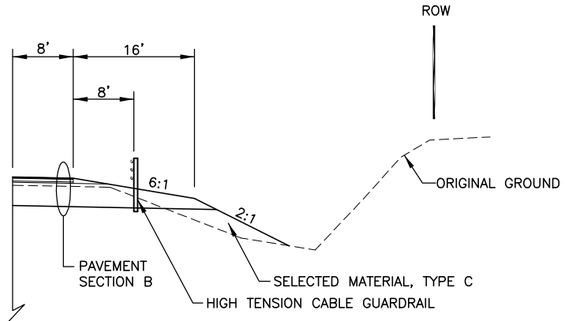

GLENN HIGHWAY

"G" STA 1471+01.5 TO "G" STA 1479+34

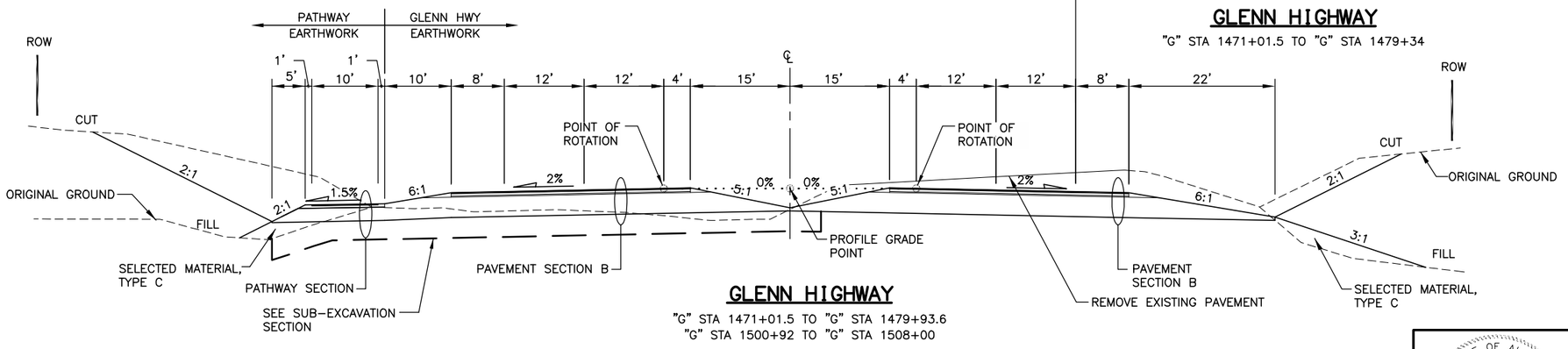

GLENN HIGHWAY

"G" STA 1471+01.5 TO "G" STA 1479+93.6
"G" STA 1500+92 TO "G" STA 1508+00

CERTIFICATION SET
NOVEMBER 2021

STATE OF ALASKA
49TH
DENNIS R. LINNELL
CE-7649
REGISTERED PROFESSIONAL ENGINEER

HDL ENGINEERING CONSULTANTS, LLC
3335 ARCTIC BOULEVARD, STE 100
ANCHORAGE, AK 99503
(907) 564-2120
AECL861

STATE OF ALASKA
DEPARTMENT OF TRANSPORTATION
AND PUBLIC FACILITIES

GLENN HWY: PARKS HWY TO S. INNER SPRINGER LP. (PHASE II)

TYPICAL SECTIONS

NO.	DATE	REVISION

STATE	PROJECT DESIGNATION	YEAR	SHEET NO.	TOTAL SHEETS
ALASKA	0A15037/CFHWY00431 0A15038/CFHWY00432 0A15033/CFHWY00006	2021	B7	B11

DESIGNED BY CAB
CHECKED BY DRL
DRAFTED BY CDB

SCALE 1" = 20'

DATE TIME 11/11/2021 11:37 AM

DRAWING LOCATION
H:\JOBS\08-016 GLENN HIGHWAY 34-42 (DOT)\09 - PS&E\CAD_PH2\DRAWINGS\08016_P2_B01-B11.DWG

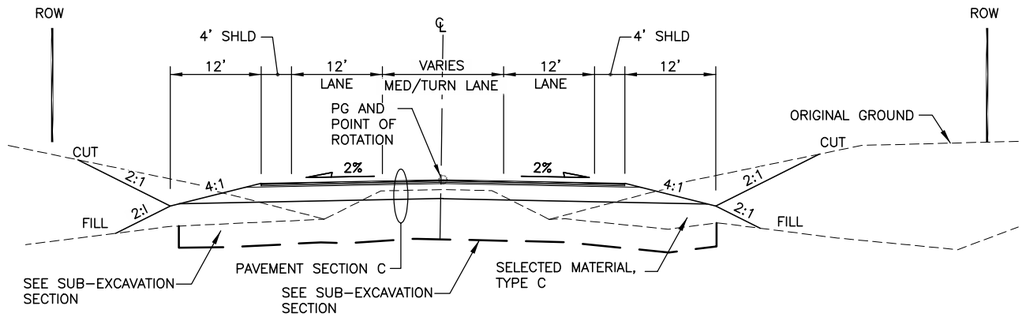

E RUBYMAE DR/E OUTER SPRINGER LP

"OS" STA 6+73 TO "OS" STA 9+45
"OS" STA 12+28.3 TO "OS" STA 16+32

E JIMMYS DR

"JD" STA 7+24.5 TO "JD" STA 9+45.2
"JD" STA 12+27.6 TO "JD" STA 13+12.1

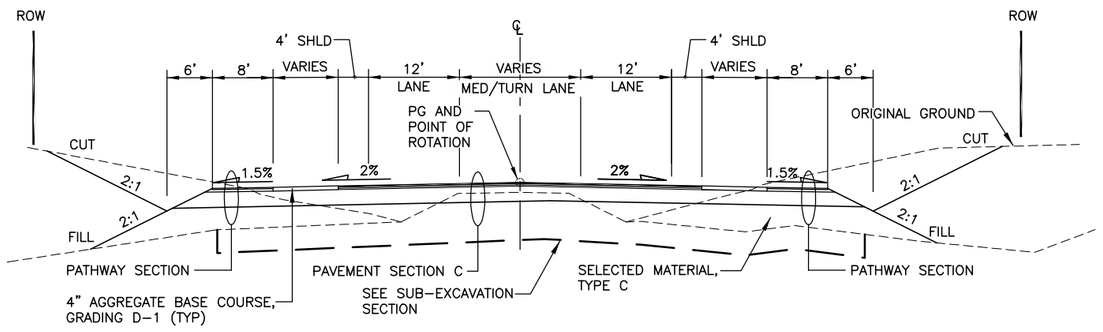

E RUBYMAE DR / E OUTER SPRINGER LP

"OS" STA 10+55.5 TO "OS" STA 12+28.3

E JIMMYS DR

"JD" STA 10+55.4 TO "JD" STA 12+27.6

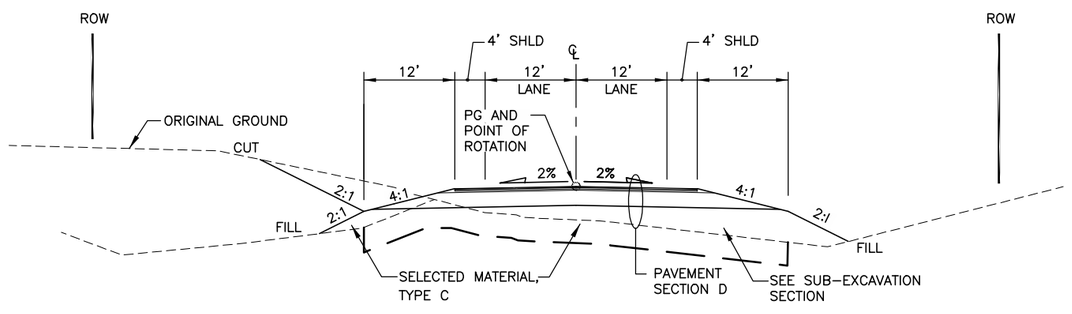

E BRADLEY LAKE AVE

"BL" STA 10+22.3 TO "BL" STA 20+27

CERTIFICATION SET
NOVEMBER 2021

STATE OF ALASKA
49TH
DENNIS R. LINNELL
CE-7649
REGISTERED PROFESSIONAL ENGINEER

HDL ENGINEERING CONSULTANTS, LLC
3335 ARCTIC BOULEVARD, STE 100
ANCHORAGE, AK 99503
(907) 564-2120
AECL861

STATE OF ALASKA
DEPARTMENT OF TRANSPORTATION
AND PUBLIC FACILITIES

GLENN HWY: PARKS HWY TO S. INNER SPRINGER LP. (PHASE II)

TYPICAL SECTIONS

NO.	DATE	REVISION	STATE	PROJECT DESIGNATION	YEAR	SHEET NO.	TOTAL SHEETS
			ALASKA	0A15037/CFHWY00431 0A15038/CFHWY00432 0A15033/CFHWY00006	2021	B8	B11

DESIGNED BY CAB
CHECKED BY DRL
DRAFTED BY CDB

SCALE 1" = 20'

DATE TIME 11/11/2021 11:38 AM

DRAWING LOCATION
H:\JOBS\08-016 GLENN HIGHWAY 34-42 (DOT)\09 - PS&E\CAD_PH2\DRAWINGS\08016_P2_B01-B11.DWG

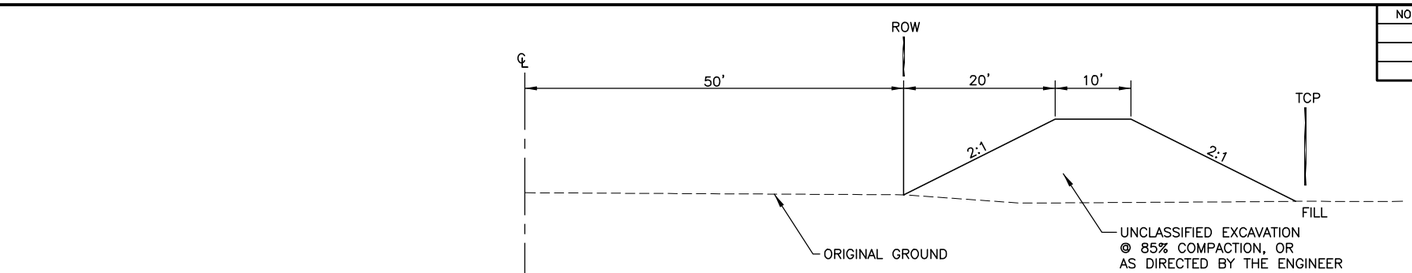

E GRANDVIEW RD

"GV" STA 38+25 TO "GV" STA 39+25

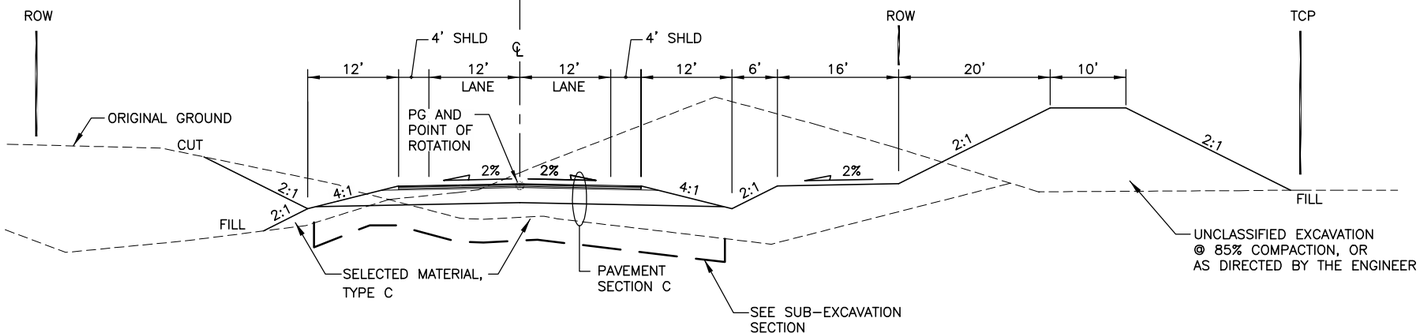

E GRANDVIEW RD

"GV" STA 30+75 TO "GV" STA 37+00

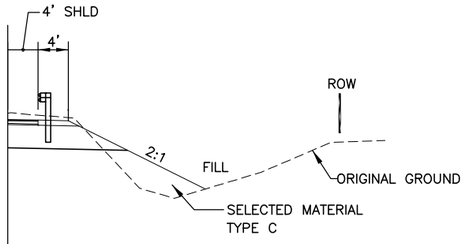

E GRANDVIEW RD

"GV" STA 4+93 TO "GV" STA 16+96.1

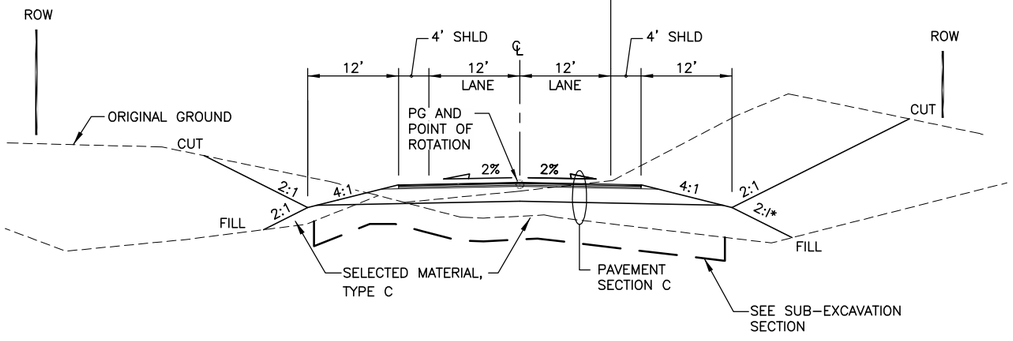

E GRANDVIEW RD

"GV" STA 4+52.9 TO "GV" STA 30+75
"GV" STA 37+00 TO "GV" STA 38+22.8

* SEE TABLE OF SLOPE EXCEPTIONS ON B2

CERTIFICATION SET
NOVEMBER 2021

STATE OF ALASKA
49TH
DENNIS R. LINNELL
CE-7649
REGISTERED PROFESSIONAL ENGINEER

HDL ENGINEERING CONSULTANTS, LLC
3335 ARCTIC BOULEVARD, STE 100
ANCHORAGE, AK 99503
(907) 564-2120
AECL861

STATE OF ALASKA
DEPARTMENT OF TRANSPORTATION
AND PUBLIC FACILITIES

GLENN HWY: PARKS HWY TO S. INNER SPRINGER LP. (PHASE II)

TYPICAL SECTIONS

NO.	DATE	REVISION	STATE	PROJECT DESIGNATION	YEAR	SHEET NO.	TOTAL SHEETS
			ALASKA	0A15037/CFHWY00431 0A15038/CFHWY00432 0A15033/CFHWY00006	2021	B9	B11

DESIGNED BY CAB
CHECKED BY DRL
DRAFTED BY CDB
SCALE 1" = 20'
DATE 11/11/2021 TIME 11:38 AM
DRAWING LOCATION H:\JOBS\08-016 GLENN HIGHWAY 34-42 (DOT)\09 - PS&E\CAD_PH2\DRAWINGS\08016_P2_B01-B11.DWG

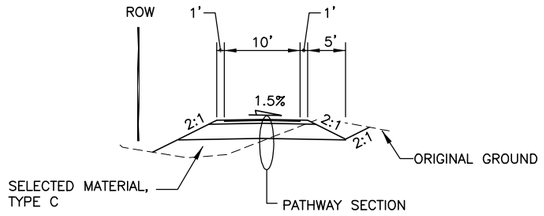

PATHWAY TYPICAL SECTION

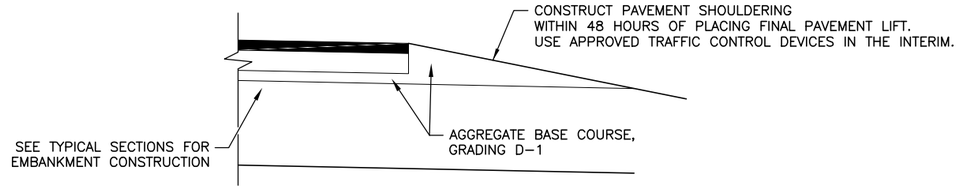

PAVEMENT EDGE DETAIL

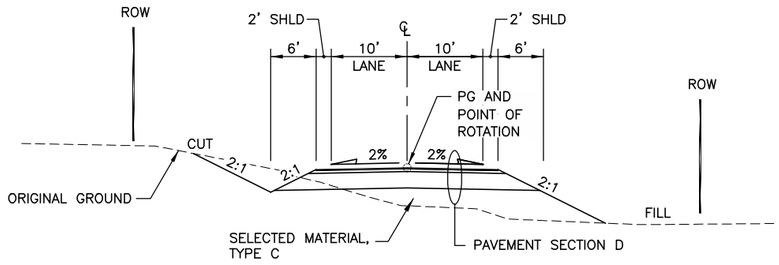

MSB RESIDENTIAL STREETS

"MS" STA 17+26.3 TO "MS" STA 19+48.2
"MS" STA 20+54.7 TO "MS" STA 22+78.6

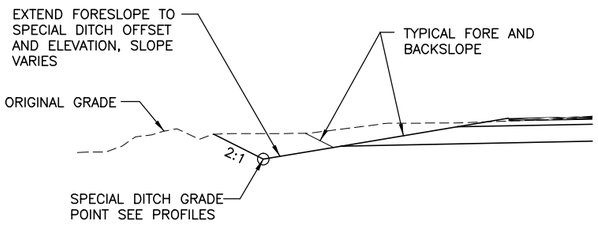

SPECIAL DITCH DETAIL

NTS

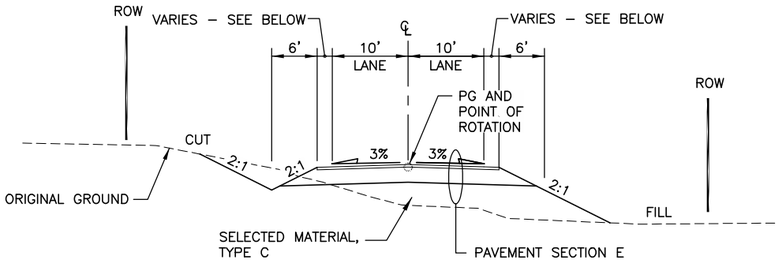

MSB RESIDENTIAL STREETS – GRAVEL SHOULDER

"MS" STA 22+78.6 TO "MS" STA 30+96.8*	2'
"M" STA 7+83.6 TO "M" STA 9+49	0'
"S" STA 10+51 TO "S" STA 12+69 – WIDTH VARIES	VARIES

*"MS" STA 26+25 TO "MS" STA 29+25 LT – USE WIDENING OVER SOFT FOUNDATION SOIL, SEE SHEET B11
*"MS" STA 28+00 TO "MS" STA 29+00 RT – USE WIDENING OVER SOFT FOUNDATION SOIL, SEE SHEET B11

CERTIFICATION SET
NOVEMBER 2021

STATE OF ALASKA
49TH
DENNIS R. LINNELL
CE-7649
REGISTERED PROFESSIONAL ENGINEER

HDL ENGINEERING CONSULTANTS, LLC
3335 ARCTIC BOULEVARD, STE 100
ANCHORAGE, AK 99503
(907) 564-2120
AECL861

STATE OF ALASKA
DEPARTMENT OF TRANSPORTATION
AND PUBLIC FACILITIES

GLENN HWY: PARKS HWY TO S. INNER SPRINGER LP. (PHASE II)

TYPICAL SECTIONS

NO.	DATE	REVISION	STATE	PROJECT DESIGNATION	YEAR	SHEET NO.	TOTAL SHEETS
			ALASKA	0A15037/CFHWY00431 0A15038/CFHWY00432 0A15033/CFHWY00006	2021	B10	B11

DESIGNED BY CAB
CHECKED BY DRL
DRAFTED BY CDB

SCALE 1" = 20'

DATE TIME 11/11/2021 11:38 AM

DRAWING LOCATION
H:\JOBS\08-016 GLENN HIGHWAY 34-42 (DOT)\09 - PS&E\CAD_PH2\DRAWINGS\08016_P2_B01-B11.DWG

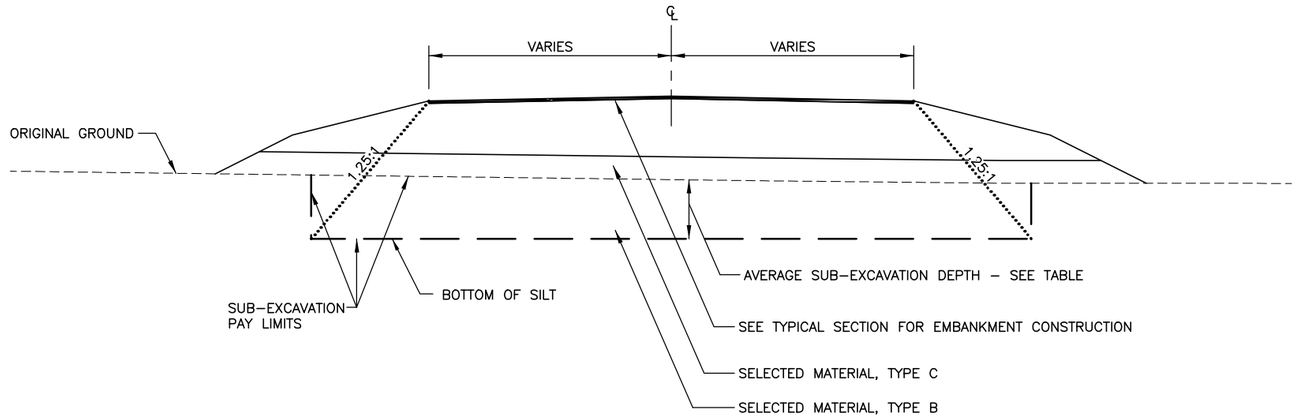

SUB-EXCAVATION - FULL WIDTH

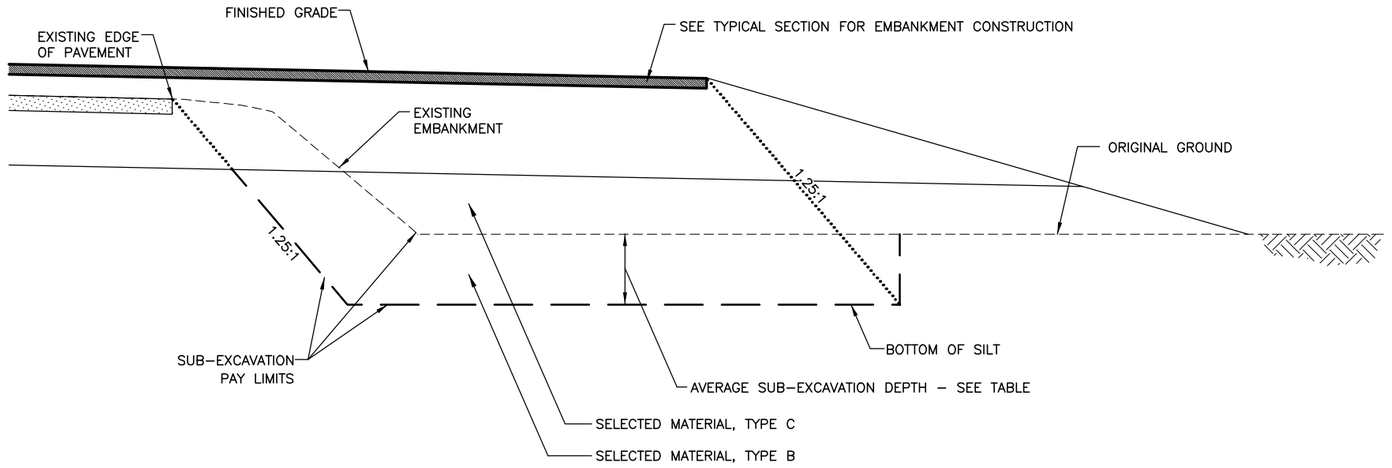

SUB-EXCAVATION - EMBANKMENT WIDENING

SUB-EXCAVATION - EMBANKMENT WIDENING			
STATION TO STATION	OFFSET	AVG. DEPTH	REMARKS
"G" 1338+25 TO "G" 1346+50	LT	1.3'	REMOVE SILT LAYER FROM EXISTING DITCH
"G" 1339+00 TO "G" 1344+75	RT	3.5'	REMOVE SILT LAYER
"G" 1347+00 TO "G" 1348+75	LT	5.5'	REMOVE SILT LAYER
"G" 1349+25 TO "G" 1352+00	LT	2.5'	REMOVE SILT LAYER
"G" 1352+50 TO "G" 1355+50	LT	1.0'	REMOVE SILT LAYER
"G" 1384+50 TO "G" 1386+00	RT	1.5'	REMOVE SILT LAYER
"G" 1390+75 TO "G" 1393+50	RT	1.5'	REMOVE SILT LAYER
"G" 1437+00 TO "G" 1440+00	LT	2.0'	REMOVE SILT LAYER FROM EXISTING DITCH
"G" 1455+00 TO "G" 1459+00	LT	2.5'	REMOVE SILT LAYER FROM EXISTING DITCH
"G" 1472+50 TO "G" 1474+50	LT	5.0' - 7.0'	REMOVE CLAY LAYER
"G" 1474+50 TO "G" 1477+50	LT	3.0'	REMOVE SILT LAYER
"G" 1485+00 TO "G" 1489+00	LT	2.5'	REMOVE SILT LAYER
"G" 1493+75 TO "G" 1521+00	LT	2.3'	REMOVE SILT LAYER
"OS" 11+20 TO "OS" 12+25	LT/RT	2.0'	REMOVE SILT LAYER BENEATH WIDENED SECTIONS
"OS" 14+50 TO "OS" 16+32	LT/RT	2.0'	REMOVE SILT LAYER BENEATH WIDENED SECTIONS

SUB-EXCAVATION - FULL WIDTH

STATION TO STATION	AVG. DEPTH	REMARKS
"G" 1442+00 TO "G" 1448+00	5.5' - 7.0'	REMOVE SILT LAYER
"GV" 2+70 TO "GV" 4+25	5.5' - 7.5'	REMOVE SILT LAYER
"GV" 4+25 TO "GV" 6+75	2.0'	REMOVE SILT LAYER
"GV" 17+75 TO "GV" 19+75	2.5'	REMOVE SILT LAYER
"GV" 36+50 TO "GV" 38+22	2.0'	REMOVE SILT LAYER
"JD" 10+55 TO "JD" 11+05	6.5'	REMOVE SILT LAYER
"JD" 11+20 TO "JD" 12+00	2.0'	REMOVE SILT LAYER
"BL" 10+24 TO "BL" 15+00	2.5'	REMOVE SILT LAYER
"BL" 15+00 TO "BL" 17+00	2.5' - 5.5'	REMOVE SILT LAYER
"OS" 6+93 TO "OS" 9+45	2.0'	REMOVE SILT LAYER
"OS" 10+55 TO "OS" 11+05	6.5'	REMOVE SILT LAYER

SUB-EXCAVATION NOTES:

1. USE A LONGITUDINAL 10:1 SLOPE TO TRANSITION INTO, OUT OF, AND BETWEEN SUB-EXCAVATION ZONES, OR AS DIRECTED BY THE ENGINEER.

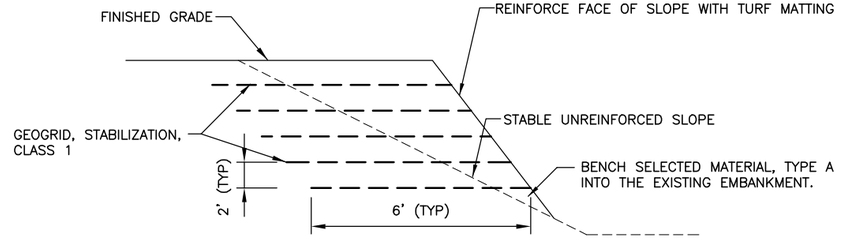

GENERAL REINFORCED SLOPE

"G" STA 1373+00 RT TO "G" STA 1374+50 RT
"G" STA 1404+46 RT TO "G" STA 1408+00 RT
"G" STA 1416+00 RT TO "G" STA 1417+50 RT

CERTIFICATION SET
NOVEMBER 2021

STATE OF ALASKA
49TH
DENNIS R. LINNELL
CE-7649
REGISTERED PROFESSIONAL ENGINEER

HDL ENGINEERING CONSULTANTS, LLC
3335 ARCTIC BOULEVARD, STE 100
ANCHORAGE, AK 99503
(907) 564-2120
AECL861

STATE OF ALASKA
DEPARTMENT OF TRANSPORTATION AND PUBLIC FACILITIES

GLENN HWY: PARKS HWY TO S. INNER SPRINGER LP. (PHASE II)

TYPICAL SECTIONS

NO.	DATE	REVISION

STATE	PROJECT DESIGNATION	YEAR	SHEET NO.	TOTAL SHEETS
ALASKA	0A15037/CFHWY00431 0A15038/CFHWY00432 0A15033/CFHWY00006	2021	B11	B11

WIDENING OVER SOFT FOUNDATION SOIL NOTES:

1. HAND CLEAR THE ORIGINAL GROUND IN THE WIDENING AREA IN SUCH A MANNER AS TO NOT RUPTURE OR OTHERWISE DISTURB THE VEGETATIVE MAT PRIOR TO PLACEMENT OF GEOTEXTILES AND EMBANKMENT.
2. WHEN GROUND IS THAWED, PLACE INITIAL LIFT NO GREATER THAN 3 FEET ABOVE ORIGINAL GROUND. CONSTRUCT LIFT FROM THE FINAL CATCH SLOPE AND WORK TOWARDS THE CENTERLINE. LEAVE THE INITIAL LIFT IN PLACE FOR A MINIMUM OF 2 WEEKS, PRIOR TO PLACEMENT OF THE SECOND LIFT, OR AS DIRECTED BY THE ENGINEER.
3. PLACE THE SECOND LIFT NO GREATER THAN 3 FEET ABOVE THE INITIAL LIFT. LEAVE THE SECOND LIFT IN PLACE FOR A MINIMUM OF 2 WEEKS, PRIOR TO PLACING THE REMAINING LIFTS, OR AS DIRECTED BY THE ENGINEER.
4. PLACE SUBSEQUENT LIFTS IN ACCORDANCE WITH SECTION 203–3.03.
5. EMBANKMENT SHALL BE PLACED TO THE TOP OF SELECT MATERIAL, TYPE A AND SHALL BE LEFT IN PLACE FOR A MINIMUM OF 6 MONTHS. PRIOR APPROVAL FROM THE ENGINEER IS REQUIRED PRIOR TO CONSTRUCTION OF THE PAVEMENT LAYERS TO ENSURE SETTLEMENT WITHIN THE SOFT SOIL LAYERS HAS SUBSIDED.

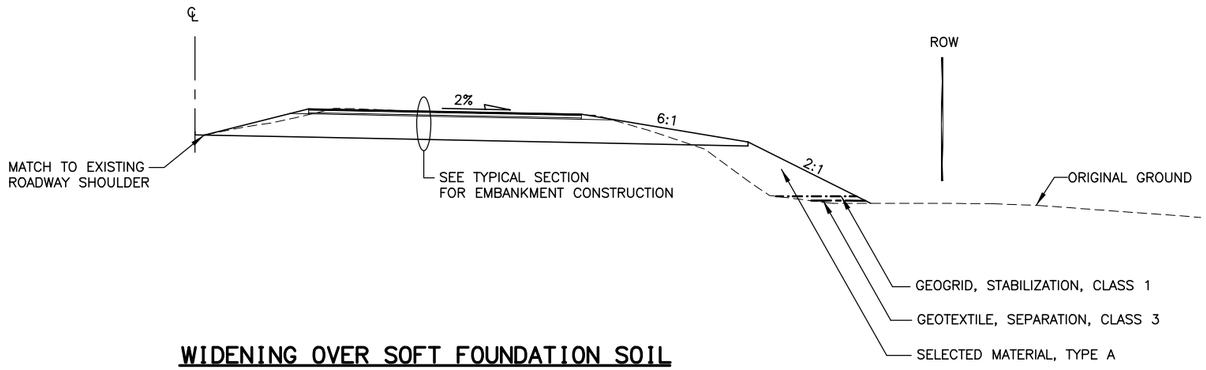

WIDENING OVER SOFT FOUNDATION SOIL

"G" STA 1375+00	TO "G" STA 1379+00	LT
"MS" STA 26+25	TO "MS" STA 29+25	LT
"MS" STA 28+00	TO "MS" STA 29+00	RT

CERTIFICATION SET
NOVEMBER 2021

STATE OF ALASKA
49TH
DENNIS R. LINNELL
CE–7649
REGISTERED PROFESSIONAL ENGINEER

HDL ENGINEERING CONSULTANTS, LLC
3335 ARCTIC BOULEVARD, STE 100
ANCHORAGE, AK 99503
(907) 564–2120
AECL861

STATE OF ALASKA
DEPARTMENT OF TRANSPORTATION
AND PUBLIC FACILITIES

GLENN HWY: PARKS HWY TO S. INNER SPRINGER LP. (PHASE II)

TYPICAL SECTIONS

DESIGNED BY CAB
CHECKED BY DRL
DRAFTED BY CDB

SCALE 1" = 20'

DATE TIME 11/11/2021 11:38 AM

DRAWING LOCATION
H:\JOBS\08–016 GLENN HIGHWAY 34–42 (DOT)\09 – PS&E\CAD_PH2\DRAWINGS\08016_P2_B01–B11.DWG

NO.	DATE	REVISION

STATE	PROJECT DESIGNATION	YEAR	SHEET NO.	TOTAL SHEETS
ALASKA	0A15037/CFHWY00431 0A15038/CFHWY00432 0A15033/CFHWY00006	2021	C1	C4

ESTIMATE OF QUANTITIES

ITEM NO	ITEM DESCRIPTION	PAY UNIT	GLENN HWY	PATHWAY	COLLEEN	TOTALS
201.0001.0000	CLEARING	ACRE	26	13	7	46
201.0002.0000	GRUBBING	ACRE	63	17	14	94
202.0001.0000	REMOVAL OF STRUCTURES AND OBSTRUCTIONS	LS	ALL REQ'D	ALL REQ'D	ALL REQ'D	ALL REQ'D
202.0002.0000	REMOVAL OF PAVEMENT	SY	105,220	-	780	106,000
202.0004.0000	REMOVAL OF CULVERT PIPE	LF	1,910	-	40	1,950
202.0006.0000	REMOVAL OF MANHOLE, SANITARY SEWER	EA	3	-	-	3
202.0010.0000	SINGLE MAIL BOX INSTALLATION	EA	2	-	-	2
202.0012.0000	DOUBLE MAIL BOX INSTALLATION	EA	3	-	-	3
202.2008.0000	REMOVAL OF PIPE, GAS	LF	14,100	-	-	14,100
202.2010.0000	REMOVAL OF TANKS, STORAGE	EA	6	-	-	6
202.2012.0000	GROUND WATER WELL DECOMMISSIONING	EA	1	-	-	1
202.2022.0000	REMOVAL OF FENCE	LF	1,400	50	-	1,450
202.2027.0000	CLUSTER MAIL BOX UNIT	EA	1	-	3	4
203.0003.0000	UNCLASSIFIED EXCAVATION	CY	863,000	35,000	115,000	1,013,000
203.0006.0000	BORROW	TON	507,000	36,000	73,000	616,000
203.0009.0000	OBLITERATION OF ROADWAY	SY	6,330	-	920	7,250
203.2013.0000	CONTAMINATED MATERIAL TESTING, HANDLING & DISPOSAL	CS	ALL REQ'D	-	-	ALL REQ'D
301.0001.00D1	AGGREGATE BASE COURSE, GRADING D-1	TON	32,000	5,500	12,600	50,100
306.0001.0000	ATB	TON	30,200	-	1,900	32,100
306.0002.6440	ASPHALT BINDER, GRADE PG 64-40E	TON	1,601	-	101	1,702
306.2002.0000	ASPHALT MATERIAL PRICE ADJUSTMENT	CS	ALL REQ'D	-	ALL REQ'D	ALL REQ'D
401.0001.002A	HMA, TYPE II; CLASS A	TON	1,350	-	2,300	3,650
401.0004.6440	ASPHALT BINDER, GRADE PG 64-40E	TON	1,150	-	122	1,272
401.0005.002B	HMA, TEMPORARY, TYPE II; CLASS B	TON	5,250	-	-	5,250
401.2001.02HA	HMA, TYPE IIH; CLASS A	TON	19,900	-	-	19,900
401.2022.0000	COMBINED PRICE ADJUSTMENT	CS	ALL REQ'D	-	ALL REQ'D	ALL REQ'D
402.0001.STE1	STE-1 ASPHALT FOR TACK COAT	TON	55	-	6	61
406.0008.0000	RUMBLE STRIPS, SHOULDERS	MILE	14	-	-	14
406.2001.0000	SWEEPING AND DISPOSAL OF MILLINGS, SHOULDERS	LS	ALL REQ'D	-	-	ALL REQ'D
501.2007.0002	HEADWALL, TYPE II	EA	2	-	-	2
601.2001.0000	METAL FLUME DOWNDRAIN - INLET	EA	6	-	-	6
603.0001.0042	CSP 42 INCH, 10 GA	LF	156	-	-	156
603.0017.0024	PIPE 24 INCH, CASING	LF	335	-	-	335
603.2032.0018	CORRUGATED HDPE PIPE 18 INCH	LF	1,350	189	66	1,605
603.2032.0024	CORRUGATED HDPE PIPE 24 INCH	LF	2,450	102	385	2,937
603.2032.0036	CORRUGATED HDPE PIPE 36 INCH	LF	-	-	344	344
603.2032.0042	CORRUGATED HDPE PIPE 42 INCH	LF	170	-	-	170
603.2033.0018	END SECTION FOR CORRUGATED HDPE PIPE 18 INCH	EA	44	8	2	54
603.2033.0024	END SECTION FOR CORRUGATED HDPE PIPE 24 INCH	EA	28	4	10	42
603.2033.0036	END SECTION FOR CORRUGATED HDPE PIPE 36 INCH	EA	-	-	6	6
603.2033.0042	END SECTION FOR CORRUGATED HDPE PIPE 42 INCH	EA	2	-	-	2
604.0001.0001	STORM SEWER MANHOLE, TYPE I	EA	4	-	-	4
604.0002.0000	SANITARY SEWER MANHOLE, TYPE A	EA	3	-	-	3
604.0004.0000	ADJUST EXISTING MANHOLE, SANITARY SEWER	EA	6	-	-	6
604.0005.000A	INLET, TYPE A	EA	4	-	-	4
604.0005.000C	INLET, TYPE C	EA	25	-	-	25
604.0005.000D	INLET, TYPE D	EA	13	-	-	13

CERTIFICATION SET
NOVEMBER 2021

STATE OF ALASKA
49TH
DENNIS R. LINNELL
CE-7649
REGISTERED PROFESSIONAL ENGINEER

HDL ENGINEERING CONSULTANTS, LLC
3335 ARCTIC BOULEVARD, STE 100
ANCHORAGE, AK 99503
(907) 564-2120
AECL861

STATE OF ALASKA
DEPARTMENT OF TRANSPORTATION
AND PUBLIC FACILITIES

GLENN HWY: PARKS HWY TO S. INNER SPRINGER LP. (PHASE II)

ESTIMATE OF QUANTITIES

DESIGNED BY CAB
CHECKED BY DRL
DRAFTED BY CDB

SCALE NTS

DATE TIME 11/23/2021 1:53 PM

DRAWING LOCATION
H:\JOBS\08-016 GLENN HIGHWAY 34-42 (DOT)\09 - PS&E\CAD_PH2\DRAWINGS\08016_P2_C01-C04.DWG

NO.	DATE	REVISION

STATE	PROJECT DESIGNATION	YEAR	SHEET NO.	TOTAL SHEETS
ALASKA	0A15037/CFHWY00431 0A15038/CFHWY00432 0A15033/CFHWY00006	2021	C2	C4

ESTIMATE OF QUANTITIES

ITEM NO	ITEM DESCRIPTION	PAY UNIT	GLENN HWY	PATHWAY	COLLEEN	TOTALS
605.0005.0000	POROUS BACKFILL MATERIAL	CY	2,500	-	-	2,500
606.0001.0000	W-BEAM GUARDRAIL	LF	4,425	-	1,025	5,450
606.0006.0000	REMOVING AND DISPOSING OF GUARDRAIL	LF	3,600	-	-	3,600
606.0009.0000	SHORT RADIUS GUARDRAIL	EA	-	-	2	2
606.0013.0000	PARALLEL GUARDRAIL TERMINAL	EA	7	-	2	9
606.2022.0000	HIGH TENSION CABLE GUARDRAIL	LF	1,100	-	-	1,100
606.2023.0000	HIGH TENSION CABLE GUARDRAIL - END TERMINAL	EA	2	-	-	2
606.2024.0000	HIGH TENSION CABLE GUARDRAIL - FOUNDATION	EA	2	-	-	2
607.2008.0000	RELOCATE GATE	EA	1	-	-	1
608.2002.0000	ASPHALT PATHWAY	TON	-	2,050	24	2,074
608.2007.0000	ASPHALT, MOW STRIP	SY	360	-	-	360
608.2013.0001	CONCRETE SLABS, BROOM FINISH, 6 INCHES THICK	SY	139	-	139	278
609.0002.0001	CURB AND GUTTER, TYPE I	LF	214	-	214	428
610.0002.0000	DITCH LINING	TON	285	-	151	436
611.0002.0001	RIPRAP, CLASS I	TON	1,248	19	133	1,400
615.0001.0000	STANDARD SIGN	SF	1,750	31	560	2,341
615.0002.0000	REMOVE AND RELOCATE SIGN	EA	2	-	-	2
615.0004.0000	DELINEATOR, RIGID	EA	12	-	-	12
615.0005.0000	DELINEATOR, FLEXIBLE	EA	12	-	12	24
615.0006.0000	SALVAGE SIGN	EA	63	-	9	72
616.0001.0075	THAW PIPE 3/4 INCH DIAMETER	LF	150	-	-	150
617.2005.0000	PEDESTRIAN PATHWAY DIVERTER - STEEL	EA	8	-	8	16
618.0002.0000	SEEDING, TYPE A	LB	2,600	690	600	3,890
618.0002.0000	SEEDING, TYPE B	LB	53	-	-	53
618.0003.0000	WATER FOR SEEDING	M GAL.	1,750	473	400	2,623
619.2002.0000	TURF REINFORCEMENT MAT	SY	4,650	-	-	4,650
619.2003.0000	SEDIMENT RETENTION FIBER ROLLS	LF	1,850	-	-	1,850
619.2009.0000	MANUFACTURED INLET PROTECTION SYSTEM	EA	5	-	-	5
620.0001.0000	TOPSOIL	SY	193,000	51,000	44,000	288,000
620.0001.0000	TOPSOIL - RAIN GARDEN	SY	2,350	-	-	2,350
626.2008.0024	SANITARY SEWER CONDUIT, 24-INCH, HDPE, SDR 17	LF	510	-	-	510
626.2009.0000	SANITARY SEWER PIPE CASING, 30-INCH, STEEL, SCHEDULE 20	LF	79	-	-	79
626.2010.0000	SANITARY SEWER BYPASS	LS	ALL REQ'D	-	-	ALL REQ'D

CERTIFICATION SET
NOVEMBER 2021

STATE OF ALASKA
49TH
DENNIS R. LINNELL
CE-7649
REGISTERED PROFESSIONAL ENGINEER

HDL ENGINEERING CONSULTANTS, LLC
3335 ARCTIC BOULEVARD, STE 100
ANCHORAGE, AK 99503
(907) 564-2120
AECL861

STATE OF ALASKA
DEPARTMENT OF TRANSPORTATION
AND PUBLIC FACILITIES

GLENN HWY: PARKS HWY TO S. INNER SPRINGER LP. (PHASE II)

ESTIMATE OF QUANTITIES

CAB
DRL
CDB
DESIGNED BY
CHECKED BY
DRAFTED BY
SCALE NTS
DATE 11/23/2021 TIME 2:28 PM
DRAWING LOCATION
H:\JOBS\08-016 GLENN HIGHWAY 34-42 (DOT)\09 - PS&E\CAD_PH2\DRAWINGS\08016_P2_C01-C04.DWG

NO.	DATE	REVISION

STATE	PROJECT DESIGNATION	YEAR	SHEET NO.	TOTAL SHEETS
ALASKA	0A15037/CFHWY00431 0A15038/CFHWY00432 0A15033/CFHWY00006	2021	C3	C4

ESTIMATE OF QUANTITIES

ITEM NO	ITEM DESCRIPTION	PAY UNIT	GLENN HWY	PATHWAY	COLLEEN	TOTALS
627.0005.0000	FIRE HYDRANT INSTALLATION	EA	2	-	-	2
627.0007.0000	FIRE HYDRANT REMOVAL	EA	2	-	-	2
627.0009.0018	GATE VALVE, 18 INCH	EA	2	-	-	2
627.0010.0000	ADJUSTMENT OF VALVE BOX	EA	6	-	-	6
627.2007.0000	REMOVE VALVE BOX	EA	4	-	-	4
627.2012.0018	HDPE WATER CONDUIT, 18-INCH, SDR 11	LF	690	-	-	690
627.2013.0000	TEMPORARY WATER SYSTEM	LS	ALL REQ'D	-	-	ALL REQ'D
627.2021.0000	WATER PIPE CASING, 24-INCH, STEEL, SCHEDULE 20	LF	108	-	-	108
630.0001.0003	GEOTEXTILE, SEPARATION, CLASS 3	SY	1,450	-	-	1,450
631.0001.0002	GEOTEXTILE, DRAINAGE, CLASS 2	SY	3,700	-	-	3,700
631.0002.0001	GEOTEXTILE, EROSION CONTROL, CLASS 1	SY	366	21	60	447
633.0001.0000	SILT FENCE	LF	3,200	-	-	3,200
634.0001.0001	GEOGRID, STABILIZATION, CLASS 1	SY	13,000	-	-	13,000
639.2000.0000	APPROACH	EA	36	-	5	41
640.0001.0000	MOBILIZATION AND DEMOBILIZATION	LS	ALL REQ'D	ALL REQ'D	ALL REQ'D	ALL REQ'D
641.0001.0000	EROSION, SEDIMENT AND POLLUTION CONTROL ADMINISTRATION	LS	ALL REQ'D	ALL REQ'D	ALL REQ'D	ALL REQ'D
641.0005.0000	TEMPORARY EROSION, SEDIMENT AND POLLUTION CONTROL BY DIRECTIVE	CS	ALL REQ'D	ALL REQ'D	ALL REQ'D	ALL REQ'D
641.0006.0000	WITHHOLDING	CS	ALL REQ'D	ALL REQ'D	ALL REQ'D	ALL REQ'D
641.0007.0000	SWPPP MANAGER	LS	ALL REQ'D	ALL REQ'D	ALL REQ'D	ALL REQ'D
642.0001.0000	CONSTRUCTION SURVEYING	LS	ALL REQ'D	ALL REQ'D	ALL REQ'D	ALL REQ'D
642.0003.0000	THREE PERSON SURVEY PARTY	HR	290	80	80	450
642.2004.0000	CONTRACTOR-FURNISHED AS-BUILTS	LS	ALL REQ'D	ALL REQ'D	ALL REQ'D	ALL REQ'D
642.2005.0000	CONTRACTOR-FURNISHED COMPUTATIONS	LS	ALL REQ'D	ALL REQ'D	ALL REQ'D	ALL REQ'D
642.2006.0000	CONTRACTOR-FURNISHED ENGINEERING TOOLS	CS	ALL REQ'D	ALL REQ'D	ALL REQ'D	ALL REQ'D
643.0002.0000	TRAFFIC MAINTENANCE	LS	ALL REQ'D	ALL REQ'D	ALL REQ'D	ALL REQ'D
643.0003.0000	PERMANENT CONSTRUCTION SIGNS	LS	ALL REQ'D	ALL REQ'D	ALL REQ'D	ALL REQ'D
643.0023.0000	TRAFFIC PRICE ADJUSTMENT	CS	ALL REQ'D	ALL REQ'D	ALL REQ'D	ALL REQ'D
643.0025.0000	TRAFFIC CONTROL	CS	ALL REQ'D	ALL REQ'D	ALL REQ'D	ALL REQ'D
643.0032.0000	FLAGGING	CS	ALL REQ'D	ALL REQ'D	ALL REQ'D	ALL REQ'D
644.0001.0000	FIELD OFFICE	LS	ALL REQ'D	ALL REQ'D	ALL REQ'D	ALL REQ'D
644.0002.0000	FIELD LABORATORY	LS	ALL REQ'D	ALL REQ'D	ALL REQ'D	ALL REQ'D
644.0015.0000	NUCLEAR TESTING EQUIPMENT STORAGE SHED	EA	1	-	-	1
644.0016.0000	STORAGE CONTAINER	EA	1	-	-	1
644.2004.0000	ENGINEERING COMMUNICATIONS	CS	ALL REQ'D	ALL REQ'D	ALL REQ'D	ALL REQ'D
644.2007.0000	VEHICLE (LT/SUV)	EA	3	1	1	5
645.0001.0000	TRAINING PROGRAM, 6 TRAINEES/APPRENTICES	LH	1,800	300	900	3,000
646.0001.0000	CPM SCHEDULING	LS	ALL REQ'D	ALL REQ'D	ALL REQ'D	ALL REQ'D
646.2000.0000	SCHEDULE PRICE ADJUSTMENT	CS	ALL REQ'D	ALL REQ'D	ALL REQ'D	ALL REQ'D
647.2000.0000	WIDE PAD DOZER, 65-HP MINIMUM	CS	ALL REQ'D	ALL REQ'D	ALL REQ'D	ALL REQ'D
647.2002.0000	BACKHOE, 4WD, 1 CY BUCKET, 75-HP MINIMUM, 15 FT DEPTH	CS	ALL REQ'D	ALL REQ'D	ALL REQ'D	ALL REQ'D

CERTIFICATION SET
NOVEMBER 2021

STATE OF ALASKA
49TH
DENNIS R. LINNELL
CE-7649
REGISTERED PROFESSIONAL ENGINEER

HDL ENGINEERING CONSULTANTS, LLC
3335 ARCTIC BOULEVARD, STE 100
ANCHORAGE, AK 99503
(907) 564-2120
AECL861

STATE OF ALASKA
DEPARTMENT OF TRANSPORTATION
AND PUBLIC FACILITIES

GLENN HWY: PARKS HWY TO S. INNER SPRINGER LP. (PHASE II)

ESTIMATE OF QUANTITIES & ESTIMATING FACTORS

DESIGNED BY CAB
CHECKED BY DRL
DRAFTED BY CDB

SCALE NTS

DATE TIME 11/23/2021 1:53 PM

DRAWING LOCATION
H:\JOBS\08-016 GLENN HIGHWAY 34-42 (DOT)\09 - PS&E\CAD_PH2\DRAWINGS\08016_P2_C01-C04.DWG

NO.	DATE	REVISION

STATE	PROJECT DESIGNATION	YEAR	SHEET NO.	TOTAL SHEETS
ALASKA	0A15037/CFHWY00431 0A15038/CFHWY00432 0A15033/CFHWY00006	2021	C4	C4

DESIGNED BY CAB
CHECKED BY DRL
DRAFTED BY CDB

SCALE NTS

DATE TIME 11/23/2021 1:53 PM

DRAWING LOCATION
H:\JOBS\08-016 GLENN HIGHWAY 34-42 (DOT)\09 - PS&E\CAD_PH2\DRAWINGS\08016_P2_C01-C04.DWG

ESTIMATE OF QUANTITIES

ITEM NO	ITEM DESCRIPTION	PAY UNIT	GLENN HWY	PATHWAY	COLLEEN	TOTALS
660.0001.0000	TRAFFIC SIGNAL SYSTEM COMPLETE, E JIMMYS DR	LS	-	-	ALL REQ'D	ALL REQ'D
660.0001.0000	TRAFFIC SIGNAL SYSTEM COMPLETE, E OUTER SPRINGER LP, E RUBYMAE DR	LS	ALL REQ'D	-	-	ALL REQ'D
660.0003.0000	HIGHWAY LIGHTING SYSTEM COMPLETE, GLENN HWY	LS	ALL REQ'D	-	ALL REQ'D	ALL REQ'D
660.2000.0000	TEMPORARY ELECTROLIER, GLENN HWY	CS	ALL REQ'D	-	-	ALL REQ'D
660.2024.0000	SIGNALS AND LIGHTING, MISCELLANEOUS	CS	ALL REQ'D	-	ALL REQ'D	ALL REQ'D
661.0001.0000	LOAD CENTER, TYPE 1	EA	1	-	1	2
661.0002.0000	LOAD CENTER, TYPE 1A	EA	4	-	1	5
662.2001.0000	SIGNAL INTERCONNECT, SYSTEM COMPLETE-FIBER	LS	ALL REQ'D	-	ALL REQ'D	ALL REQ'D
669.2003.0000	AUTOMATED TRAFFIC RECORDER	LS	ALL REQ'D	-	-	ALL REQ'D
670.2000.0000	MMA PAVEMENT MARKINGS	LS	ALL REQ'D	-	ALL REQ'D	ALL REQ'D
682.2000.0000	VAC-TRUCK POTHOLE	CS	ALL REQ'D	-	ALL REQ'D	ALL REQ'D
688.2001.0000	UTILITY SUPPORT	CS	ALL REQ'D	-	-	ALL REQ'D
688.2002.0000	UTILITY SUPPORT PRICE ADJUSTMENT	CS	ALL REQ'D	-	-	ALL REQ'D

TABLE OF ESTIMATING FACTORS

ITEM NO.	ITEM DESCRIPTION	UNIT
203.0006.0000	BORROW	144 LB/CF
301.0001.00D1	AGGREGATE BASE COURSE, GRADING D-1	144 LB/CF
306.0001.0000	ATB	151 LB/CF
306.0002.6440	ASPHALT BINDER, GRADE 64-40E	5.3% OF WEIGHT OF 306.001.000
401.0001.002A	HMA, TYPE II; CLASS A	151 LB/CF
401.0004.6440	ASPHALT BINDER, GRADE PG 64-40E	5.3% OF WEIGHT OF 401.0001.002A & 401.2001.02HA
401.0005.002B	HMA, TEMPORARY, TYPE II, CLASS B	151 LB/CF
401.2001.02HA	HMA, TYPE IIH; CLASS A	151 LB/CF
402.0001.STE1	STE-1 ASPHALT FOR TACK COAT	0.000334 TON/SY
608.2002.0000	ASPHALT PATHWAY	151 LB/CF
610.0002.0000	DITCH LINING	110 LB/CF
611.0002.0001	RIPRAP, CLASS I	108 LB/CF
618.0003.0000	WATER FOR SEEDING	1 MGAL/MSF

CERTIFICATION SET
NOVEMBER 2021

STATE OF ALASKA
★ 49TH ★
DENNIS R. LINNELL
CE-7649
REGISTERED PROFESSIONAL ENGINEER

HDL ENGINEERING CONSULTANTS, LLC
3335 ARCTIC BOULEVARD, STE 100
ANCHORAGE, AK 99503
(907) 564-2120
AECL861

STATE OF ALASKA
DEPARTMENT OF TRANSPORTATION
AND PUBLIC FACILITIES

GLENN HWY: PARKS HWY TO S. INNER SPRINGER LP. (PHASE II)

ESTIMATE OF QUANTITIES &
ESTIMATING FACTORS

NO.	DATE	REVISION

STATE	PROJECT DESIGNATION	YEAR	SHEET NO.	TOTAL SHEETS
ALASKA	0A15037/CFHWY00431 0A15038/CFHWY00432 0A15033/CFHWY00006	2021	D1	D12

DESIGNED BY AAL
CHECKED BY DRL
DRAFTED BY CDB

SCALE NTS

DATE TIME 11/12/2021 8:44 AM

DRAWING LOCATION H:\JOBS\08-016 GLENN HIGHWAY 34-42 (DOT)\09 - PS&E\CAD_PH2\DRAWINGS\08016_P2_D01-D12.DWG

202.0001.0000 - REMOVAL OF STRUCTURES AND OBSTRUCTIONS

SHEET	STATION	OFFSET	REMARKS
F3	"G" 1337+81	47 LT	POST
	"G" 1337+95	98 RT	PRIVATE SIGN
	"G" 1345+09	51 RT	GATE
	"G" 1345+27	53 RT	POST
	"G" 1345+88	80 RT	POST
~~F4~~	~~"G" 1351+27~~	~~99 LT~~	~~PRIVATE SIGN~~ NIC
	~~"G" 1352+72~~	~~103 LT~~	~~GATE~~ NIC
	~~"G" 1359+74~~	~~132 LT~~	~~BUILDING/ALL INCLUSIVE~~ NIC
~~F5~~	~~"G" 1361+21~~	~~129 LT~~	~~BUILDING/ALL INCLUSIVE~~ NIC
	~~"G" 1361+69~~	~~159 LT~~	~~BUILDING/ALL INCLUSIVE~~ NIC
	"G" 1363+88	68 LT	MAILBOX
	"G" 1364+34	28 LT	NEWSPAPER BOX
	"G" 1364+43	120 LT	SHED
	"G" 1365+60	129 LT	CONCRETE
	"G" 1366+10	105 LT	SHED
	"G" 1368+51 TO "G" 1368+90	97 RT	(3) POSTS
F6	"G" 1379+66	114 RT	GATE
	~~"G" 1385+91~~	~~194 LT~~	~~BUILDING/ALL INCLUSIVE~~ NIC
F7	"G" 1387+95	84 RT	PRIVATE SIGN
	"G" 1390+53	106 RT	GATE
	"G" 1391+26	36 LT	PRIVATE SIGN
	~~"G" 1393+40~~	~~123 LT~~	~~PRIVATE SIGNS~~ NIC
~~F8~~	~~"G" 1404+38~~	~~146 LT~~	~~GATE~~ NIC
F9	"G" 1424+41	136 LT	CONEX
~~F10~~	~~"G" 1425+41~~	~~90 LT~~	~~PRIVATE SIGN~~ NIC
	~~"G" 1425+90~~	~~79 LT~~	~~PRIVATE LIGHT~~ NIC
	"G" 1427+12	95 LT	SHED
	~~"G" 1428+76~~	~~121 LT~~	~~BUILDING/ALL INCLUSIVE~~ NIC
	~~"G" 1429+22~~	~~111 LT~~	~~BUILDING/ALL INCLUSIVE~~ NIC
	~~"G" 1431+25~~	~~76 LT~~	~~SHED~~ NIC
	~~"G" 1431+28~~	~~115 LT~~	~~BUILDING (CABIN)~~ NIC
F11	"G" 1437+32	79 LT	POST
	"G" 1439+61	119 LT	PRIVATE SIGN
	"G" 1440+84	60 LT	POST
	"G" 1441+02	74 LT	PRIVATE SIGNS
F13	"G" 1466+39 TO "G" 1466+46	65 LT	(7) JERSEY BARRIERS
	~~"G" 1466+64~~	~~116 LT~~	~~GATE~~ NIC
~~F14~~	~~"G" 1473+91~~	~~79 LT~~	~~PRIVATE SIGN~~ NIC
	"G" 1474+40 TO "G" 1474+60	87 RT	(2) JERSEY BARRIERS
	~~"G" 1475+13~~	~~114 LT~~	~~BUILDING/ALL INCLUSIVE~~ NIC
	~~"G" 1479+43 TO "G" 1481+00~~	~~70 LT~~	~~CONCRETE WALL~~ NIC
~~F15~~	~~"G" 1481+00 TO "G" 1483+99~~	~~70 LT~~	~~CONCRETE WALL~~ NIC
	"G" 1486+36 TO "G" 1493+89	LT/RT	(8) DELINEATOR POSTS
	"G" 1486+36	73 RT	DELINEATOR POST
	"G" 1491+36	73 RT	DELINEATOR POST
	"G" 1492+71	9 LT	CONCRETE

202.0001.0000 - REMOVAL OF STRUCTURES AND OBSTRUCTIONS

SHEET	STATION	OFFSET	REMARKS
F16	"G" 1494+89 TO "G" 1506+08	15 LT	(13) DELINEATOR POSTS
	"G" 1496+36	73 RT	DELINEATOR POST
	"G" 1501+36	73 RT	DELINEATOR POST
	"G" 1506+36	68 RT	DELINEATOR POST
F17	"G" 1507+30 TO "G" 1519+29	35 LT	(13) DELINEATOR POSTS
F18	"G" 1520+29	59 LT	DELINEATOR POST
	"G" 1524+89	60 LT	DELINEATOR POST
F19	"GV" 3+86 TO "GV" 4+05	36 RT	(2) JERSEY BARRIERS RESET
	"GV" 4+08 TO "GV" 9+00	30 RT	(27) JERSEY BARRIERS
F20	"GV" 9+15 TO "GV" 9+39	13 RT	(2) JERSEY BARRIERS
	"GV" 9+15 TO "GV" 9+29	25 LT	(2) JERSEY BARRIERS
	"GV" 9+30	13 RT	PRIVATE SIGN
	"GV" 9+31	5 LT	GATE
F21	"GV" 25+00	31 LT	PRIVATE SIGN
	"GV" 25+59	23 LT	GATE
	"GV" 25+83 TO "GV" 25+89	LT/RT	(5) JERSEY BARRIERS
	"GV" 27+13	40 LT	PRIVATE SIGN
F22	"GV" 36+60	37 LT	POST
~~F23~~	~~"MS" 18+23 TO "MS" 18+64~~	~~95 RT~~	~~(5) POSTS~~ NIC
	"MS" 19+03	22 LT	RELOCATE AS DIRECTED BY ENGINEER
	"MS" 20+93 TO "MS" 21+26	59 RT	RETAINING WALL
F28	"OS" 12+14	40 RT	PRIVATE SIGN

CERTIFICATION SET
NOVEMBER 2021

STATE OF ALASKA
DEPARTMENT OF TRANSPORTATION
AND PUBLIC FACILITIES

GLENN HWY: PARKS HWY TO S. INNER SPRINGER LP. (PHASE II)

SUMMARY TABLES

STATE OF ALASKA
49TH
DENNIS R. LINNELL
CE-7649
REGISTERED PROFESSIONAL ENGINEER

HDL ENGINEERING CONSULTANTS, LLC
3335 ARCTIC BOULEVARD, STE 100
ANCHORAGE, AK 99503
(907) 564-2120
AECL861

NO.	DATE	REVISION

STATE	PROJECT DESIGNATION	YEAR	SHEET NO.	TOTAL SHEETS
ALASKA	0A15037/CFHWY00431 0A15038/CFHWY00432 0A15033/CFHWY00006	2021	D2	D12

DESIGNED BY AAL
CHECKED BY DRL
DRAFTED BY CDB

SCALE NTS

DATE TIME 11/12/2021 8:44 AM

DRAWING LOCATION
H:\JOBS\08-016 GLENN HIGHWAY 34-42 (DOT)\09 - PS&E\CAD_PH2\DRAWINGS\08016_P2_D01-D12.DWG

202.0002.0000 - REMOVAL OF PAVEMENT

SHEET	STATION FROM	STATION TO	OFFSET	AREA (SY)	REMARKS
F1	"G" 1319+00	"G" 1326+00	LT/RT	6,734	
F2	"G" 1326+00	"G" 1337+00	LT/RT	8,062	
F3	"G" 1337+00	"G" 1349+50	LT/RT	5,992	
F4	"G" 1349+50	"G" 1361+00	LT/RT	5,543	
F5	"G" 1361+00	"G" 1374+00	LT/RT	5,935	
F6	"G" 1374+00	"G" 1387+00	LT/RT	5,791	
F7	"G" 1387+00	"G" 1400+00	LT/RT	6,025	
F8	"G" 1400+00	"G" 1413+00	LT/RT	5,897	
F9	"G" 1413+00	"G" 1425+00	LT/RT	5,374	
F10	"G" 1425+00	"G" 1436+00	LT/RT	5,137	
F11	"G" 1436+00	"G" 1445+00	LT/RT	4,780	
F12	"G" 1445+00	"G" 1456+00	RT	4,846	
F13	"G" 1456+00	"G" 1468+00	LT/RT	5,723	
F14	"G" 1468+00	"G" 1481+00	LT/RT	5,937	
F15	"G" 1481+00	"G" 1494+00	LT/RT	6,559	
F16	"G" 1494+00	"G" 1507+00	LT/RT	9,246	
F17	"G" 1507+00	"G" 1520+00	LT/RT	5,580	
F18	"G" 1520+00	"G" 1521+00	LT	400	
F19	"GV" 4+15	"GV" 4+72	LT/RT	217	
F21	"GV" 25+38	"GV" 25+93	LT/RT	502	
F27	"BL" 10+20	"BL" 10+49	LT/RT	55	
F28	"OS" 10+80	"OS" 16+32	LT/RT	1,487	
			TOTAL:	105,822	
			PAY ITEM QUANTITY:	106,000	

202.0004.0000 - REMOVAL OF CULVERT PIPE

SHEET	STATION	OFFSET	LENGTH (LF)	REMARKS
F1	"G" 1323+96	17 LT	158	
F3	"G" 1340+53	8 RT	82	
	"G" 1344+58	40 LT	54	
	"G" 1345+03	39 RT	58	
	"G" 1348+99	67 LT	73	
F4	"G" 1355+39	38 RT	31	
	"G" 1356+05	37 LT	58	
F5	"G" 1364+18	39 LT	41	
	"G" 1368+62	40 RT	30	
F6	"G" 1376+14	47 RT	17	
	"G" 1376+24	51 LT	58	
	"G" 1377+54	2 RT	145	
	"G" 1379+64	43 RT	40	
F9	"G" 1422+44	0 LT	124	
	"G" 1423+90	58 LT	80	
F10	"G" 1426+49	78 LT	48	
F11	"G" 1440+39	14 LT	54	
	"G" 1440+77	108 LT	26	
	"G" 1444+00	86 RT	171	
F13	"G" 1465+33	93 RT	81	
	"G" 1466+19	43 RT	165	REMOVE TO 79 RT AND BLOCK END
F14	"G" 1472+35	14 LT	54	
	"G" 1474+50	83 RT	35	
F15	"G" 1481+17	1 RT	32	
	"G" 1489+19	4 LT	37	
F16	"G" 1500+92	94 RT	52	
	"G" 1502+44	34 LT	34	
	"G" 1505+80	32 LT	30	
F20	"GV" 14+04	75 RT	40	
		TOTAL:	1,908	
		PAY ITEM QUANTITY:	1,950	

CERTIFICATION SET
NOVEMBER 2021

STATE OF ALASKA
★ 49TH ★
DENNIS R. LINNELL
CE-7649
REGISTERED PROFESSIONAL ENGINEER

HDL ENGINEERING CONSULTANTS, LLC
3335 ARCTIC BOULEVARD, STE 100
ANCHORAGE, AK 99503
(907) 564-2120
AECL861

STATE OF ALASKA
DEPARTMENT OF TRANSPORTATION
AND PUBLIC FACILITIES

GLENN HWY: PARKS HWY TO S. INNER SPRINGER LP. (PHASE II)

SUMMARY TABLES

NO.	DATE	REVISION

STATE	PROJECT DESIGNATION	YEAR	SHEET NO.	TOTAL SHEETS
ALASKA	0A15037/CFHWY00431 0A15038/CFHWY00432 0A15033/CFHWY00006	2021	D3	D12

202.0010.0000, 202.0012.0000, 202.2027.0000 - MAIL BOX INSTALLATION

SHEET	EXISTING LOCATION		PROPOSED LOCATION		202.0010.0000	202.0012.0000	202.2027.0000	REMARKS
	STATION	OFFSET	STATION	OFFSET	SINGLE	DOUBLE	CLUSTER	
F3	"G" 1345+71.5	67 LT	"G" 1345+59.0	98 LT	1	2		5 MAILBOXES
F25	"G" 1428+16.5	85 RT	"S" 12+14.0	15 LT			1	8 MAILBOXES
F27	"G" 1440+60.8	53 LT	"BL" 10+92.6	106 RT			2	32 MAILBOXES, COLLEEN ST
	"BL" 12+54.4	295 RT	"BL" 10+92.6	106 RT			1	1 CLUSTER BOX, COLLEEN ST
F28	"OS" 12+99.4	13 RT	"OS" 13+12.7	33 RT	1	1		3 MAILBOXES
				TOTAL:	2	3	4	
				PAY ITEM QUANTITY:	2	3	4	

202.2008.0000 - REMOVAL OF PIPE, GAS

SHEET	STATION		OFFSET	6" STEEL (LF)	8" PLASTIC (LF)	4" PLASTIC (LF)	REMARKS
	FROM	TO					
F2	"G" 1332+10	"G" 1334+00	LT		180		
F3	"G" 1338+00		RT/LT		110		
F5	"G" 1362+80	"G" 1374+00	RT	1,120			
F6	"G" 1378+40	"G" 1381+35	RT	295			
	"G" 1383+00	"G" 1384+40	RT	140			
F7	"G" 1391+50	"G" 1400+00	LT	850			
F8	"G" 1400+00	"G" 1413+00	LT	1,300			
F9	"G" 1415+50	"G" 1421+80	LT	630			
	"G" 1423+80	"G" 1425+00	LT	120			
	"G" 1424+00	"G" 1425+00	LT			100	
F10	"G" 1425+00	"G" 1426+50	LT	150			
	"G" 1425+00	"G" 1426+50	LT			150	
	"G" 1430+50	"G" 1436+00	LT	550			
	"G" 1430+50	"G" 1436+00	LT			550	
F11	"G" 1436+00	"G" 1445+00	LT	900			
	"G" 1436+00	"G" 1445+00	LT			900	
F12	"G" 1445+00	"G" 1456+00	LT	1,100			
	"G" 1445+00	"G" 1456+00	LT			1,100	
F13	"G" 1456+00	"G" 1468+00	LT	1,200			
	"G" 1456+00	"G" 1468+00	LT			1,200	
F14	"G" 1468+00	"G" 1475+00	LT	700			
	"G" 1468+00	"G" 1475+00	LT			700	
			TOTAL:	9,055	290	4,700	
			PAY ITEM QUANTITY:	14,100			

CERTIFICATION SET
NOVEMBER 2021



HDL ENGINEERING CONSULTANTS, LLC
3335 ARCTIC BOULEVARD, STE 100
ANCHORAGE, AK 99503
(907) 564-2120
AECL861

STATE OF ALASKA
DEPARTMENT OF TRANSPORTATION
AND PUBLIC FACILITIES

GLENN HWY: PARKS HWY TO S. INNER SPRINGER LP. (PHASE II)

SUMMARY TABLES

DESIGNED BY AAL
CHECKED BY DRL
DRAFTED BY CDB

SCALE NTS

DATE 11/12/2021 TIME 8:45 AM

DRAWING LOCATION
H:\JOBS\08-016 GLENN HIGHWAY 34-42 (DOT)\09 - PS&E\CAD_PH2\DRAWINGS\08016_P2_D01-D12.DWG

NO.	DATE	REVISION

STATE	PROJECT DESIGNATION	YEAR	SHEET NO.	TOTAL SHEETS
ALASKA	0A15037/CFHWY00431 0A15038/CFHWY00432 0A15033/CFHWY00006	2021	D4	D12

DESIGNED BY AAL
CHECKED BY DRL
DRAFTED BY CDB

SCALE NTS

DATE 11/12/2021 TIME 8:45 AM

DRAWING LOCATION
H:\JOBS\08-016 GLENN HIGHWAY 34-42 (DOT)\09 - PS&E\CAD_PH2\DRAWINGS\08016_P2_D01-D12.DWG

202.2022.0000 - REMOVAL OF FENCE

SHEET	STATION FROM	STATION TO	OFFSET	LENGTH (LF)	REMARKS
F3	"G" 1337+87	"G" 1338+36	LT	49	FENCE AND GATE
	"G" 1344+88	"G" 1344+90	RT	48	
F4	"G" 1355+08	"G" 1355+25	RT	24	
F5	"G" 1363+78	"G" 1363+88	LT	19	
	"G" 1364+53	"G" 1364+95	LT	80	
F7	"G" 1388+09	"G" 1388+19	LT	47	FENCE AND GATE
	"G" 1390+24	"G" 1390+46	RT	23	
F13	"G" 1464+40	"G" 1464+70	LT	113	
F14	~~"G" 1474+00~~	~~"G" 1479+45~~	~~LT~~	~~575~~	NIC
F15	"G" 1491+98	"G" 1492+80	LT	164	
F16	"G" 1496+99	"G" 1502+13	LT	515	
	"G" 1503+91	"G" 1505+72	LT	129	
	~~"G" 1505+91~~	~~"G" 1507+00~~	~~LT~~	~~224~~	NIC
F17	~~"G" 1507+00~~	~~"G" 1507+37~~	~~LT~~	~~76~~	NIC
	"G" 1508+14	"G" 1508+24	LT	46	
F23	"MS" 17+33	"MS" 17+94	RT	62	
	~~"MS" 17+94~~	~~"MS" 18+94~~	~~RT~~	~~100~~	NIC
F25	"M" 7+68	"M" 8+31	LT	81	
F28	~~"OS" 11+86~~	~~"OS" 12+36~~	~~LT~~	~~82~~	NIC
	~~"OS" 12+77~~	~~"OS" 13+56~~	~~LT~~	~~100~~	NIC
	~~"OS" 13+97~~	~~"OS" 14+68~~	~~LT~~	~~90~~	NIC
F32	"P1" 55+87	"P1" 55+89	LT/RT	24	
	"P1" 56+95	"P1" 56+96	LT	22	
			TOTAL:	1,446	
			PAY ITEM QUANTITY:	1,450	

202.2010.0000 - REMOVAL OF TANKS, STORAGE

SHEET	STATION	OFFSET	REMARKS
F4	"G" 1360+41	116 LT	SEPTIC TANK AND SYSTEM
F5	"G" 1363+29	107 LT	SEPTIC TANK AND SYSTEM
F6	"G" 1386+06	203 LT	SEPTIC
F7	"G" 1388+50	122 LT	SEPTIC TANK AND SYSTEM
	~~"G" 1392+06~~	~~144 LT~~	~~SEPTIC TANK AND SYSTEM~~ NIC
F10	~~"G" 1434+06~~	~~122 LT~~	~~SEPTIC~~ NIC
F23	"MS" 21+15	28 LT	FUEL
	"MS" 21+86	114 RT	SEPTIC
		TOTAL:	6
		PAY ITEM QUANTITY:	6

202.2012.0000 GROUND WATER WELL DECOMMISSIONING

SHEET	STATION	OFFSET	REMARKS
F10	~~"G" 1431+99~~	~~90 LT~~	NIC
F23	"MS" 21+83	65 RT	
		TOTAL:	1
		PAY ITEM QUANTITY:	1

CERTIFICATION SET
NOVEMBER 2021

STATE OF ALASKA
49TH
DENNIS R. LINNELL
CE-7649
REGISTERED PROFESSIONAL ENGINEER

HDL ENGINEERING CONSULTANTS, LLC
3335 ARCTIC BOULEVARD, STE 100
ANCHORAGE, AK 99503
(907) 564-2120
AECL861

STATE OF ALASKA
DEPARTMENT OF TRANSPORTATION
AND PUBLIC FACILITIES

GLENN HWY: PARKS HWY TO S. INNER SPRINGER LP. (PHASE II)

SUMMARY TABLES

NO.	DATE	REVISION

STATE	PROJECT DESIGNATION	YEAR	SHEET NO.	TOTAL SHEETS
ALASKA	0A15037/CFHWY00431 0A15038/CFHWY00432 0A15033/CFHWY00006	2021	D5	D12

203.0009.0000 - OBLITERATION OF ROADWAY

SHEET	STATION FROM	STATION TO	OFFSET	AREA (SY)	REMARKS
F2	"G" 1331+02	"G" 1331+39	LT	90	
F3	"G" 1343+77	"G" 1344+10	RT	50	
	"G" 1344+95	"G" 1347+24	RT	163	
F4	"G" 1352+43	"G" 1353+80	LT	166	
	"G" 1355+34	"G" 1355+73	RT	235	
	"G" 1357+53	"G" 1359+41	RT	299	
	"G" 1358+50	"G" 1360+69	RT	674	SE MATANUSKA SPUR
F5	"G" 1361+37	"G" 1362+44	LT	263	
	"G" 1364+02	"G" 1364+43	LT	113	
F8	"G" 1404+71	"G" 1405+49	LT	103	
F9	"G" 1423+87	"G" 1425+00	LT	208	
F10	"G" 1425+00	"G" 1425+62	LT	38	
	"G" 1425+97	"G" 1426+63	LT	95	
	"G" 1428+19	"G" 1428+49	RT	93	
	"G" 1434+74	"G" 1436+00	LT	603	
F11	"G" 1436+00	"G" 1436+74	164 LT	85	
	"G" 1436+00	"G" 1437+89	115 LT	251	
	"G" 1440+59	"G" 1440+96	LT	76	
	"G" 1443+28	"G" 1444+55	RT	606	
F13	"G" 1465+06	"G" 1465+57	RT	128	
	"G" 1466+95	"G" 1467+44	LT	72	
F14	"G" 1474+44	"G" 1474+56	RT	31	
F15	"G" 1489+20	"G" 1489+43	LT	26	
	"G" 1492+09	"G" 1493+47	LT	419	
F16	"G" 1502+35	"G" 1502+57	LT	52	
	"G" 1505+83	"G" 1506+03	LT	18	
F20	"GV" 15+58	"GV" 16+44	RT	52	
F21	"GV" 25+38	"GV" 26+31	LT	655	
F22	"GV" 35+25	"GV" 36+60	LT	213	
F23	"MS" 22+66	"MS" 25+00	RT	139	
	"MS" 23+01	"MS" 25+00	LT	957	SE MATANUSKA SPUR
F24	"MS" 25+00	"MS" 25+30	RT	39	
	"MS" 25+00	"MS" 25+66	LT	33	SE MATANUSKA SPUR
F25	"M" 8+38	"M" 8+58	RT	121	
	"S" 11+28	"S" 11+43	LT	2	
	"S" 11+48	"S" 11+65	RT	7	
F28	"OS" 12+46	"OS" 13+46	RT	42	
	"OS" 12+50	"OS" 12+67	LT	19	
			TOTAL:	7,236	
			PAY ITEM QUANTITY:	7,250	

501.2007.0002 - HEADWALL, TYPE II

SHEET	STATION	OFFSET	REMARKS
F1	"G" 1324+02.0	63 RT	
	"G" 1324+02.0	93 LT	
	TOTAL:	2	
	PAY ITEM QUANTITY:	2	

601.2001.0000 - METAL FLUME DOWNDRAIN - INLET

SHEET	STATION	OFFSET	REMARKS
F5	"G" 1365+00.0	RT	
	"G" 1372+40.0	LT	
F6	"G" 1377+00.0	LT	
F8	"G" 1403+00.0	RT	
	"G" 1408+00.0	RT	
	"G" 1412+50.0	RT	
	TOTAL:	6	
	PAY ITEM QUANTITY:	6	

DESIGNED BY AAL
CHECKED BY DRL
DRAFTED BY CDB

SCALE NTS

DATE 11/19/2021 TIME 10:28 AM

DRAWING LOCATION
H:\JOBS\08-016 GLENN HIGHWAY 34-42 (DOT)\09 - PS&E\CAD_PH2\DRAWINGS\08016_P2_D01-D12.DWG

CERTIFICATION SET
NOVEMBER 2021

STATE OF ALASKA
49TH
DENNIS R. LINNELL
CE-7649
REGISTERED PROFESSIONAL ENGINEER

HDL ENGINEERING CONSULTANTS, LLC
3335 ARCTIC BOULEVARD, STE 100
ANCHORAGE, AK 99503
(907) 564-2120
AECL861

STATE OF ALASKA
DEPARTMENT OF TRANSPORTATION
AND PUBLIC FACILITIES

GLENN HWY: PARKS HWY TO S. INNER SPRINGER LP. (PHASE II)

SUMMARY TABLES

NO.	DATE	REVISION

STATE	PROJECT DESIGNATION	YEAR	SHEET NO.	TOTAL SHEETS
ALASKA	0A15037/CFHWY00431 0A15038/CFHWY00432 0A15033/CFHWY00006	2021	D6	D12

DESIGNED BY AAL
CHECKED BY DRL
DRAFTED BY CDB

SCALE NTS

DATE TIME 11/19/2021 10:30 AM

DRAWING LOCATION
H:\JOBS\08-016 GLENN HIGHWAY 34-42 (DOT)\09 - PS&E\CAD_PH2\DRAWINGS\08016_P2_D01-D12.DWG

603 ITEMS - PIPE SUMMARY

SHEET	PIPE No. / TYPE	INLET LOCATION	INLET INVERT	OUTLET LOCATION	OUTLET INVERT	SLOPE %	SIZE (IN)	LENGTH (LF)	END SECTIONS	REMARKS
F1	P1-1	"G" 1324+02.0, 63.0 RT	22.50	"G" 1324+02.0, 93.0 LT	22.70	0.13	42	156	HEADWALL	CSP, 10 GA
F2	P2-1	S2-1	46.07	"G" 1333+20.0, 113.4 RT	23.32	21.73	24	108	1	
F3	DC	"G" 1338+49.0, 73.0 LT	60.62	"G" 1337+79.0, 73.0 LT	57.85	3.96	18	70	2	
	P3-1	S3-1	61.07	"G" 1338+75.0, 72.6 RT	60.20	1.34	24	67	1	
	P3-2	S3-3	84.86	S3-2	83.59	2.54	24	58	0	
	DC	"G" 1345+81.5, 73.3 LT	85.44	"G" 1345+28.3, 73.3 LT	84.11	2.56	18	52	2	
	DC	"G" 1349+35.0, 84.0 LT	90.30	"G" 1348+75.0, 84.0 LT	87.40	4.98	18	59	2	
F4	P4-1	S4-1	94.42	"G" 1350+00.0, 75.7 LT	90.02	6.54	24	73	1	
	P4-2	S4-3	105.31	S4-2	102.60	4.72	24	66	0	
F5	DC	"G" 1363+20.0, 73.0 LT	99.22	"G" 1363+78.0, 73.0 LT	97.95	2.19	18	58	2	
	P5-1	S5-2	95.35	S5-1	94.80	1.12	24	58	0	
	DC	"G" 1368+82.2, 73.0 RT	80.01	"G" 1369+47.0, 73.0 RT	77.64	3.66	18	65	2	
	P5-2	S5-4	76.64	S5-3	76.09	1.12	24	58	0	
F6	P6-1	S6-1	68.95	S6-2	67.02	5.00	24	44	0	
	P6-2	S6-2	59.64	"G" 1375+03.0, 112.1 LT	42.76	27.50	24	66	1	
	P6-3	"G" 1377+50.0, 78.0 RT	64.53	"G" 1377+50.0, 91.7 LT	58.13	3.77	42	170	2	
	DC	"G" 1379+90.5, 73.0 RT	75.48	"G" 1379+27.1, 73.0 RT	73.74	2.74	18	64	2	
	P6-4	S6-3	76.47	"G" 1380+00.0, 69.6 LT	75.77	1.15	24	65	1	
	P6-5	S6-5	91.47	S6-4	90.92	1.12	24	58	0	
F7	DC	"G" 1392+28.5, 72.9 LT	107.65	"G" 1391+91.0, 72.90 LT	107.55	0.26	18	38	2	
	P7-1	S7-1	93.65	S7-2	92.96	1.39	24	58	0	
F8	PC	"G" 1400+52.5, 73.2 LT	87.55	"G" 1401+16.1, 77.8 LT	85.16	3.70	18	65	2	
	SC	"G" 1404+40.2, 78.0 LT	77.71	"G" 1404+93.4, 78.0 LT	77.39	0.60	24	54	2	
	P8-1	S8-1	78.41	S8-2	76.48	5.00	24	44	0	
	P8-2	S8-2	69.10	"G" 1405+51.0, 85.3 RT	59.10	28.91	24	39	1	
	P8-3	S8-3	86.19	"G" 1410+00.0, 59.2 RT	85.29	1.78	24	55	1	
F9	P9-1	S9-1	100.17	"G" 1415+00.0, 59.2 RT	99.62	1.09	24	55	1	
	P9-2	S9-2	118.68	"G" 1424+50.0, 75.8 LT	117.11	1.89	24	85	1	
F10	P10-1	S10-1	120.47	"G" 1433+50.0, 96.5 RT	108.81	13.27	24	92	1	
F11	P11-1	S11-1	109.14	"G" 1438+00.0, 88.0 RT	104.62	5.76	24	83	1	
	P11-2	S11-3	101.99	S11-2	100.72	2.54	24	58	0	
	PC	"G" 1443+05.0, 76.5 LT	100.20	"G" 1443+05.0, 97.2 LT	100.40	0.97	24	21	2	

604.0001.0001, 604.0005.000A, 604.0005.000C, 604.0005.000D DRAINAGE STRUCTURE SUMMARY

SHEET	STRUCTURE No.	TYPE	STATION	OFFSET	TOP OF CASTING ELEV	TYPE OF CASTING	REMARKS
F2	S2-1	IC	"G" 1333+25.0	0.9 RT	46.73	-	
F3	S3-1	IA	"G" 1338+75.0	6.5 RT	64.23	FI	
	S3-2	ID	"G" 1345+00.0	67.3 LT	83.40	-	
	S3-3	IC	"G" 1345+00.0	0.03 LT	85.51	-	
F4	S4-1	IC	"G" 1350+00.0	0.6 LT	95.07	-	
	S4-2	ID	"G" 1356+75.0	67.3 LT	102.42	-	
	S4-3	IC	"G" 1356+75.0	7.3 RT	105.97	-	
F5	S5-1	ID	"G" 1365+00.0	67.3 LT	94.62	-	
	S5-2	IC	"G" 1365+00.0	0.9 LT	96.01	-	
	S5-3	ID	"G" 1370+00.0	67.3 LT	75.91	-	
	S5-4	IC	"G" 1370+00.0	0.9 LT	77.30	-	
F6	S6-1	IC	"G" 1375+03.0	0.9 LT	69.60	-	
	S6-2	MH1	"G" 1375+03.0	49.0 LT	71.84	FI	
	S6-3	IC	"G" 1380+00.0	0.9 LT	77.12	-	
	S6-4	ID	"G" 1385+00.0	67.3 LT	90.73	-	
	S6-5	IC	"G" 1385+00.0	0.9 LT	92.12	-	
F7	S7-1	IC	"G" 1398+75.0	0.4 RT	94.30	-	
	S7-2	ID	"G" 1398+75.0	67.3 RT	92.77	-	
F8	S8-1	IC	"G" 1405+51.0	0.9 RT	78.96	-	
	S8-2	MH1	"G" 1405+51.0	49.0 RT	81.30	FI	
	S8-3	IC	"G" 1410+00.0	0.9 RT	86.84	-	
F9	S9-1	IC	"G" 1415+00.0	1.0 RT	100.82	-	
	S9-2	IA	"G" 1424+50.0	8.1 RT	121.85	FI	
F10	S10-1	IC	"G" 1433+50.0	0.9 RT	121.13	-	
F11	S11-1	IC	"G" 1438+00.0	1.8 RT	109.80	-	
	S11-2	ID	"G" 1442+91.0	67.3 LT	100.53	-	
	S11-3	IC	"G" 1442+91.0	0.1 LT	102.64	-	

DRAINAGE SUMMARY LEGEND

FI = FIELD INLET
IA = INLET BOX, TYPE A
IC = INLET BOX, TYPE C
ID = INLET BOX, TYPE D
MH1 = STORM SEWER MANHOLE, TYPE I

DC = DRIVEWAY CULVERT
PC = PATHWAY CULVERT
SC = SIDE ST CULVERT

CERTIFICATION SET
NOVEMBER 2021

STATE OF ALASKA
49TH
DENNIS R. LINNELL
CE-7649
REGISTERED PROFESSIONAL ENGINEER

HDL ENGINEERING CONSULTANTS, LLC
3335 ARCTIC BOULEVARD, STE 100
ANCHORAGE, AK 99503
(907) 564-2120
AECL861

STATE OF ALASKA
DEPARTMENT OF TRANSPORTATION
AND PUBLIC FACILITIES

GLENN HWY: PARKS HWY TO S. INNER SPRINGER LP. (PHASE II)

SUMMARY TABLES

NO.	DATE	REVISION

STATE	PROJECT DESIGNATION	YEAR	SHEET NO.	TOTAL SHEETS
ALASKA	0A15037/CFHWY00431 0A15038/CFHWY00432 0A15033/CFHWY00006	2021	D7	D12

DESIGNED BY AAL
CHECKED BY DRL
DRAFTED BY CDB

SCALE NTS

DATE TIME 11/12/2021 8:45 AM

DRAWING LOCATION H:\JOBS\08-016 GLENN HIGHWAY 34-42 (DOT)\09 - PS&E\CAD_PH2\DRAWINGS\08016_P2_D01-D12.DWG

603 ITEMS - PIPE SUMMARY

SHEET	PIPE No. / TYPE	INLET LOCATION	INLET INVERT	OUTLET LOCATION	OUTLET INVERT	SLOPE %	SIZE (IN)	LENGTH (LF)	END SECTIONS	REMARKS
F12	P12-1	S12-2	104.87	"G" 1450+60.0, 82.3 LT	104.00	1.00	24	89	1	
	PC	"G" 1451+35.2, 76.5 LT	106.45	"G" 1451+02.4, 91.0 LT	105.30	3.21	18	36	2	
	P12-2	S12-3	109.33	S12-4	107.94	2.87	24	57	0	
F13	P13-1	S13-2	111.30	S13-1	110.75	1.12	24	58	0	
	P13-2	S13-4	114.07	S13-3	113.53	1.10	24	58	0	
	DC	"G" 1466+06.0, 73.0 LT	113.87	"G" 1465+38.0, 73.0 LT	113.50	0.54	18	68	2	
F14	P14-1	S14-2	116.77	S14-1	115.97	1.61	24	58	0	
	PC	"G" 1471+36.6, 78.0 LT	116.37	"G" 1470+74.4, 73.0 LT	116.13	0.39	18	62	2	
	DC	"G" 1472+62.0, 78.0 LT	116.83	"G" 1472+14.0, 78.0 LT	116.64	0.41	18	46	2	
	P14-2	S14-3	122.09	"G" 1480+00.0, 84.3 RT	116.71	7.12	24	80	1	
	PC	"G" 1480+50.0, 75.6 LT	121.68	"G" 1480+50.0, 99.7 LT	121.31	1.53	18	25	2	
F15	DC	"G" 1481+60.0, 73.0 LT	122.09	"G" 1481+03.0, 73.0 LT	121.80	0.51	18	57	2	
	P15-1	S15-1	124.64	"G" 1485+00.0, 76.5 RT	121.76	4.25	24	72	1	
	DC	"G" 1489+22.0, 73.0 LT	126.06	"G" 1488+83.0, 73.0 LT	125.86	0.51	18	39	2	
	P15-2	S15-2	127.20	"G" 1490+00.0, 78.1 RT	123.80	4.90	24	73	1	
F16	P16-1	S16-1	130.16	S16-2	128.43	2.98	24	68	0	
	P16-2	S16-4	131.74	"G" 1501+75.0, 85.2 LT	130.38	1.50	24	92	1	
	DC	"G" 1505+84.0, 90.0 LT	133.55	"G" 1505+38.5, 90.0 LT	133.33	0.48	18	46	2	
F17	P17-1	S17-1	136.06	S17-2	135.52	1.10	24	58	0	
	PC	"G" 1512+86.9, 73.3 LT	139.40	"G" 1512+24.5, 81.0 LT	138.43	1.54	18	63	2	
	~~DC~~	~~"G" 1517+37.0, 73.0 LT~~	~~142.61~~	~~"G" 1516+74.0, 73.0 LT~~	~~142.16~~	~~0.71~~	~~18~~	~~63~~	~~2~~	INSTALLED PH 1
F20	P20-1	"GV" 9+25.0, 34.6 LT	90.64	"GV" 9+25.0, 84.3 RT	65.75	20.93	36	122	2	
	P20-2	"GV" 13+00.0, 36.5 LT	79.56	"GV" 13+00.0, 62.3 RT	66.84	12.88	36	100	2	
	DC	"GV" 14+99.6, 76.0 RT	69.21	"GV" 13+79.6, 76.0 RT	66.71	2.06	36	122	2	
	P20-3	"GV" 14+86.0, 25.2 LT	83.50	"GV" 15+12.8, 51.5 RT	72.58	13.45	24	82	2	
F22	DC	"GV" 37+30.0, 28.0 RT	114.51	"GV" 37+96.0, 28.0 RT	114.19	0.48	18	66	2	
F23	P23-1	"MS" 19+28.9, 32.6 LT	102.14	"MS" 19+24.0, 36.7 RT	101.32	1.18	24	70	2	
	P23-2	"MS" 20+76.7, 34.6 LT	105.00	"MS" 20+76.6, 34.5 RT	104.27	1.06	24	69	2	
	DC	"MS" 21+83.0, 18.0 RT	100.55	"MS" 22+70.0, 18.0 RT	94.25	7.24	18	88	2	
	DC	"MS" 22+02.0, 18.0 LT	99.44	"MS" 22+57.0, 18.0 LT	95.77	6.67	18	56	2	
F24	DC	"MS" 27+57.5, 25.0 RT	44.34	"MS" 27+94.5, 27.0 RT	41.02	8.94	18	38	2	

604.0001.0001, 604.0005.000A, 604.0005.000C, 604.0005.000D DRAINAGE STRUCTURE SUMMARY

SHEET	STRUCTURE No.	TYPE	STATION	OFFSET	TOP OF CASTING ELEV	TYPE OF CASTING	REMARKS
F12	S12-1	MH1	"G" 1448+00.0	192.0 LT	81.00	FI	RAIN GARDEN DRAIN
	S12-2	IA	"G" 1450+60.0	6.0 RT	108.04	FI	
	S12-3	IC	"G" 1455+50.0	3.6 RT	109.98	-	
	S12-4	ID	"G" 1455+50.0	69.1 RT	107.75	-	
F13	S13-1	ID	"G" 1460+00.0	67.3 LT	110.56	-	
	S13-2	IC	"G" 1460+00.0	0.9 LT	111.95	-	
	S13-3	ID	"G" 1465+00.0	67.3 LT	113.34	-	
	S13-4	IC	"G" 1465+00.0	0.9 LT	114.72	-	
F14	S14-1	ID	"G" 1470+00.0	67.3 LT	115.78	-	
	S14-2	IC	"G" 1470+00.0	0.3 LT	117.42	-	
	S14-3	IC	"G" 1480+00.0	0.9 RT	122.74	-	
F15	S15-1	IC	"G" 1485+00.0	0.9 RT	125.30	-	
	S15-2	IC	"G" 1490+00.0	0.9 RT	127.85	-	
F16	S16-1	IC	"G" 1495+00.0	1.1 LT	130.82	-	
	S16-2	ID	"G" 1495+00.0	74.1 RT	128.25	-	
	S16-3	MH1	"G" 1501+70.0	175.0 LT	129.50	FI	RAIN GARDEN DRAIN
	S16-4	IA	"G" 1501+75.0	6.6 RT	135.04	FI	
F17	S17-1	IC	"G" 1507+50.0	0.9 RT	136.72	-	
	S17-2	ID	"G" 1507+50.0	67.3 RT	135.33	-	

DRAINAGE SUMMARY LEGEND

FI = FIELD INLET
IA = INLET BOX, TYPE A
IC = INLET BOX, TYPE C
ID = INLET BOX, TYPE D
MH1 = STORM SEWER MANHOLE, TYPE I

DC = DRIVEWAY CULVERT
PC = PATHWAY CULVERT
SC = SIDE ST CULVERT

CERTIFICATION SET
NOVEMBER 2021

STATE OF ALASKA
49TH
DENNIS R. LINNELL
CE-7649
REGISTERED PROFESSIONAL ENGINEER

HDL ENGINEERING CONSULTANTS, LLC
3335 ARCTIC BOULEVARD, STE 100
ANCHORAGE, AK 99503
(907) 564-2120
AECL861

STATE OF ALASKA
DEPARTMENT OF TRANSPORTATION
AND PUBLIC FACILITIES

GLENN HWY: PARKS HWY TO S. INNER SPRINGER LP. (PHASE II)

SUMMARY TABLES

NO.	DATE	REVISION

STATE	PROJECT DESIGNATION	YEAR	SHEET NO.	TOTAL SHEETS
ALASKA	0A15037/CFHWY00431 0A15038/CFHWY00432 0A15033/CFHWY00006	2021	D8	D12

DESIGNED BY AAL
CHECKED BY DRL
DRAFTED BY CDB

SCALE NTS

DATE TIME 11/12/2021 8:45 AM

DRAWING LOCATION H:\JOBS\08-016 GLENN HIGHWAY 34-42 (DOT)\09 - PS&E\CAD_PH2\DRAWINGS\08016_P2_D01-D12.DWG

603 ITEMS - PIPE SUMMARY

SHEET	PIPE No. / TYPE	INLET		OUTLET		SLOPE %	SIZE (IN)	LENGTH (LF)	END SECTIONS	REMARKS
		LOCATION	INVERT	LOCATION	INVERT					
F25	DC	"M" 8+49.4, 16.0 LT	121.00	"M" 9+07.2, 20.9 LT	116.20	8.28	18	58	2	
	P25-1	"M" 9+15.4, 15.7 LT	116.10	"M" 9+08.2, 28.5 RT	110.78	11.90	24	45	2	
	P25-2	"S" 10+74.2, 34.1 LT	120.50	"S" 10+82.6, 48.46 RT	116.00	5.42	18	83	2	
	DC	"S" 11+53.7, 17.7 RT	126.60	"S" 10+97.6, 17.8 RT	122.40	6.00	18	70	2	
F26	P26-1	"JD" 8+74.0, 35.7 LT	103.39	"JD" 8+51.1, 35.5 RT	99.75	5.11	24	75	2	
	P26-2	"JD" 10+92.0, 47.0 LT	104.60	"JD" 10+92.0, 48.0 RT	103.95	0.68	24	95	2	
F27	P27-1	"BL" 13+50.0, 24.6 RT	101.09	"BL" 13+50.0, 26.6 LT	100.84	0.49	24	52	2	
	P27-2	"BL" 17+75.0, 34.9 LT	97.57	"BL" 17+75.0, 45.4 RT	93.55	5.00	24	81	2	
F28	P28-1	"OS" 10+97.0, 42.9 LT	131.20	"OS" 10+97.0, 46.3 RT	130.90	0.34	24	90	2	
	DC	"OS" 13+44.7, 35.5 RT	129.30	"OS" 14+09.3, 33.1 RT	128.66	0.99	18	65	2	
	DC	"OS" 13+46.9, 34.4 LT	129.37	"OS" 14+09.8, 31.9 LT	128.66	1.13	18	63	2	
F29	P29-1	"P1" 28+25.0, 35.0 LT	79.51	"P1" 28+25.0, 45.0 RT	74.68	6.04	24	81	2	
F34	P34-1	1+48.88, 16.20 LT	47.90	1+31.24, 51.40 RT	42.50	7.73	18	70	2	"G" 1338+03 APPROACH
F37	P37-1	8+93.0, 17.5 LT	115.51	8+93.0, 31.0 RT	112.63	5.94	24	49	2	"OS" 6+73 APPROACH

DRAINAGE SUMMARY LEGEND

FI = FIELD INLET
IA = INLET BOX, TYPE A
IC = INLET BOX, TYPE C
ID = INLET BOX, TYPE D
MH1 = STORM SEWER MANHOLE, TYPE I

DC = DRIVEWAY CULVERT
PC = PATHWAY CULVERT
SC = SIDE ST CULVERT

CERTIFICATION SET
NOVEMBER 2021

STATE OF ALASKA
49TH
DENNIS R. LINNELL
CE-7649
REGISTERED PROFESSIONAL ENGINEER

HDL ENGINEERING CONSULTANTS, LLC
3335 ARCTIC BOULEVARD, STE 100
ANCHORAGE, AK 99503
(907) 564-2120
AECL861

STATE OF ALASKA
DEPARTMENT OF TRANSPORTATION
AND PUBLIC FACILITIES

GLENN HWY: PARKS HWY TO S. INNER SPRINGER LP. (PHASE II)

SUMMARY TABLES

NO.	DATE	REVISION

STATE	PROJECT DESIGNATION	YEAR	SHEET NO.	TOTAL SHEETS
ALASKA	0A15037/CFHWY00431 0A15038/CFHWY00432 0A15033/CFHWY00006	2021	D9	D12

605.0005.0000, 631.0001.0002 POROUS BACKFILL MATERIAL AND GEOTEXTILE, DRAINAGE

SHEET	STATION FROM	STATION TO	OFFSET	POROUS BACKFILL MATERIAL (CY)	GEOTEXTILE, DRAINAGE, CLASS 2 (SY)	REMARKS
F3	"G" 1347+71	"G" 1348+72	LT	391	330	INFILTRATION BASIN
F3-F4	"G" 1349+39	"G" 1350+00	LT	279	230	INFILTRATION BASIN
F12	"G" 1446+35	"G" 1449+08	LT	980	1,744	RAIN GARDEN
F16	"G" 1501+37	"G" 1501+98	LT	582	1,042	RAIN GARDEN
E16	"G" 1668+83	"G" 1669+45	LT	223	333	INFILTRATION TRENCH
			TOTAL:	2,455	3,679	
			PAY ITEM QUANTITY:	2,500	3,700	

606.0001.0000, 606.0009.0000, 606.0013.0000 - GUARDRAIL SUMMARY

SHEET	STATION FROM	STATION TO	OFFSET	606.0001.0000	606.0009.0000 SHORT RADIUS GUARDRAIL			606.0013.0000	REMARKS
				W-BEAM GUARDRAIL (LF)	(EACH)	RADIUS	ANGLE (90TYP)	PARALLEL TERMINAL (EA)	
F2	"G" 1326+10	"G" 1332+39	LT	650.00				1	CONNECT TO EXISTING RAIL
F4-F5	"G" 1359+28	"G" 1365+50	RT	625.00				2	
F5-F6	"G" 1371+00	"G" 1380+63	LT	962.50				2	BATTER BOARDS
F7-F9	"G" 1399+81	"G" 1421+54	RT	2,187.5				2	BATTER BOARDS
F19-F20	"GV" 4+70	"GV" 13+63	RT	900.00	1	36	60	1	
F20	"GV" 15+20	"GV" 16+45	RT	125.00	1	36	60	1	
			TOTAL:	5,450	2			9	
			PAY ITEM QUANTITY:	5,450	2			9	

606.2022.0000, 606.2023.0000, 606.2024.0000 - HIGH TENSION CABLE GUARDRAIL SUMMARY

SHEET	STATION FROM	STATION TO	OFFSET	606.2022.0000 HIGH TENSION CABLE GUARDRAIL (HTCG) (LF)	606.2023.0000 HTCG END TERMINAL (EA)	606.2024.0000 HTCG END TERMINAL FOUNDATION (EA)	REMARKS
F14	"G" 1468+16	"G" 1468+46	59 RT		1	1	* ACTUAL STATION MAY VARY
F14	"G" 1468+46	"G" 1479+04	59 RT	1,072			
F14	"G" 1479+04	"G" 1479+34	59 RT		1	1	* ACTUAL STATION MAY VARY
			TOTAL:	1,072	2	2	
			PAY ITEM QUANTITY:	1,100	2	2	

606.0006.0000 - REMOVING AND DISPOSING OF GUARDRAIL

SHEET	STATION FROM	STATION TO	OFFSET	LENGTH (LF)	REMARKS
F2	"G" 1326+10	"G" 1331+20	LT	556	
F5	"G" 1370+58	"G" 1374+00	LT	343	
F6	"G" 1374+00	"G" 1379+59	LT	560	
F7	"G" 1399+79	"G" 1400+00	RT	21	
F8	"G" 1400+00	"G" 1400+29	RT	29	
	"G" 1402+49	"G" 1408+51	RT	603	
	"G" 1404+97	"G" 1408+11	LT	315	
F9	"G" 1416+76	"G" 1423+47	RT	678	
F10	"G" 1433+38	"G" 1436+00	RT	267	
F11	"G" 1436+00	"G" 1438+07	RT	211	
			TOTAL:	3,583	
			PAY ITEM QUANTITY:	3,600	

CERTIFICATION SET
NOVEMBER 2021

STATE OF ALASKA
★ 49TH ★
DENNIS R. LINNELL
CE-7649
REGISTERED PROFESSIONAL ENGINEER

HDL ENGINEERING CONSULTANTS, LLC
3335 ARCTIC BOULEVARD, STE 100
ANCHORAGE, AK 99503
(907) 564-2120
AECL861

STATE OF ALASKA
DEPARTMENT OF TRANSPORTATION
AND PUBLIC FACILITIES

GLENN HWY: PARKS HWY TO S. INNER SPRINGER LP. (PHASE II)

SUMMARY TABLES

DESIGNED BY AAL
CHECKED BY DRL
DRAFTED BY CDB

SCALE NTS

DATE TIME 11/12/2021 8:45 AM

DRAWING LOCATION
H:\JOBS\08-016 GLENN HIGHWAY 34-42 (DOT)\09 - PS&E\CAD_PH2\DRAWINGS\08016_P2_D01-D12.DWG

NO.	DATE	REVISION

STATE	PROJECT DESIGNATION	YEAR	SHEET NO.	TOTAL SHEETS
ALASKA	0A15037/CFHWY00431 0A15038/CFHWY00432 0A15033/CFHWY00006	2021	D10	D12

DESIGNED BY AAL
CHECKED BY DRL
DRAFTED BY CDB

SCALE NTS

DATE TIME 11/12/2021 8:45 AM

DRAWING LOCATION H:\JOBS\08-016 GLENN HIGHWAY 34-42 (DOT)\09 - PS&E\CAD_PH2\DRAWINGS\08016_P2_D01-D12.DWG

608.2013.0001 - CONCRETE SLABS, BROOM FINISH, 6 INCHES THICK

SHEET	STATION	OFFSET	WIDTH (FT)	RADIUS	LENGTH OR ARC LENGTH	AREA (SY)	REMARKS
F12	"G" 1449+49.4	73.6 RT	10.0	48.0	32.0	31.9	WITH DETECTABLE WARNING TILES
	"G" 1449+49.4	65.6 LT	10.0	48.0	32.0	31.9	WITH DETECTABLE WARNING TILES
	"G" 1450+25.6	65.6 RT	10.0	48.0	32.0	31.9	WITH DETECTABLE WARNING TILES
	"G" 1450+25.9	73.4 LT	10.0	48.0	32.0	31.9	WITH DETECTABLE WARNING TILES
F16	"G" 1500+53.4	73.6 RT	10.0	48.0	32.0	31.9	WITH DETECTABLE WARNING TILES
	"G" 1500+53.4	65.6 LT	10.0	48.0	32.0	31.9	WITH DETECTABLE WARNING TILES
	"G" 1501+29.6	65.6 RT	10.0	48.0	32.0	31.9	WITH DETECTABLE WARNING TILES
	"G" 1501+29.6	73.6 LT	10.0	48.0	32.0	31.9	WITH DETECTABLE WARNING TILES
F26	"JD" 11+03.0	28.6 RT	3.0	-	8.0	2.7	WITH DETECTABLE WARNING TILES
	"JD" 11+03.0	43.6 LT	3.0	-	8.0	2.7	WITH DETECTABLE WARNING TILES
	"JD" 11+23.0	28.6 RT	3.0	-	8.0	2.7	WITH DETECTABLE WARNING TILES
	"JD" 11+23.0	43.6 LT	3.0	-	8.0	2.7	WITH DETECTABLE WARNING TILES
F28	"OS" 11+03.0	31.6 LT	3.0	-	8.0	2.7	WITH DETECTABLE WARNING TILES
	"OS" 11+03.0	32.6 RT	3.0	-	8.0	2.7	WITH DETECTABLE WARNING TILES
	"OS" 11+39.0	31.6 LT	3.0	-	8.0	2.7	WITH DETECTABLE WARNING TILES
	"OS" 11+39.0	32.6 RT	3.0	-	8.0	2.7	WITH DETECTABLE WARNING TILES
					TOTAL:	276.8	
					PAY ITEM QUANTITY:	278	

610.0002.0000 - DITCH LINING

SHEET	STATION FROM	STATION TO	OFFSET	DITCH LINING (TON)	REMARKS
F8	"G" 1404+53	"G" 1405+00	LT	50	E KEPLER DR
F20	"GV" 11+00	"GV" 12+50	LT	50	
F20-F21	"GV" 17+00	"GV" 20+00	LT	101	
F23	"MS" 21+00	"MS" 22+00	LT	32	
	"MS" 21+00	"MS" 21+81	RT	29	
	"MS" 22+59	"MS" 24+50	LT	71	
F23-F24	"MS" 22+72	"MS" 26+00	RT	103	
			TOTAL:	436	
			PAY ITEM QUANTITY:	436	

609.0002.0001 - CURB & GUTTER, TYPE I

SHEET	STATION FROM	STATION TO	OFFSET	LENGTH (LF)	CURB STYLE	REMARKS
F12	"G" 1449+25.4	"G" 1449+60.4	LT	53.3	ADA	
	"G" 1449+25.4	"G" 1449+60.4	RT	53.3	ADA	
	"G" 1450+14.6	"G" 1450+49.6	RT	53.3	ADA	
	"G" 1450+14.8	"G" 1450+49.9	LT	53.3	ADA	
F16	"G" 1500+29.4	"G" 1500+64.4	LT	53.3	ADA	
	"G" 1500+29.4	"G" 1500+64.4	RT	53.3	ADA	
	"G" 1501+18.6	"G" 1501+53.6	LT	53.3	ADA	
	"G" 1501+18.6	"G" 1501+53.6	RT	53.3	ADA	
			TOTAL:	426.4		
			PAY ITEM QUANTITY:	428		

CERTIFICATION SET
NOVEMBER 2021

STATE OF ALASKA
49TH
DENNIS R. LINNELL
CE-7649
REGISTERED PROFESSIONAL ENGINEER

HDL ENGINEERING CONSULTANTS, LLC
3335 ARCTIC BOULEVARD, STE 100
ANCHORAGE, AK 99503
(907) 564-2120
AECL861

STATE OF ALASKA
DEPARTMENT OF TRANSPORTATION
AND PUBLIC FACILITIES

GLENN HWY: PARKS HWY TO S. INNER SPRINGER LP. (PHASE II)

SUMMARY TABLES

NO.	DATE	REVISION

STATE	PROJECT DESIGNATION	YEAR	SHEET NO.	TOTAL SHEETS
ALASKA	0A15037/CFHWY00431 0A15038/CFHWY00432 0A15033/CFHWY00006	2021	D11	D12

611.0002.0001, 631.0002.0001 - RIPRAP AND GEOTEXTILE, EROSION CONTROL

SHEET	STATION TO STATION	OFFSET	611.0002.0001 RIPRAP CLASS I (TON)	631.0002.0001 GEOTEXTILE, EROSION CONTROL, CLASS 1 (SY)	REMARKS
F1	"G" 1323+95 TO "G" 1324+09	LT	34	50	HEADWALL ENERGY DISSIPATOR
	"G" 1323+95 TO "G" 1324+09	RT	34	50	HEADWALL ENERGY DISSIPATOR
F2	"G" 1336+00 TO "G" 1336+50	RT	51		CUT/FILL TRANSITION LINING
F3	"G" 1337+67 TO "G" 1337+78	LT	7	14	CULVERT ENERGY DISSIPATOR
	"G" 1344+13 TO "G" 1344+50	RT	24		CUT/FILL TRANSITION LINING
F5	"G" 1349+96 TO "G" 1350+04	LT	12	21	CULVERT ENERGY DISSIPATOR
	"G" 1364+93 TO "G" 1365+07	RT	17		ROCK FLUME DOWNDRAIN
	"G" 1369+48 TO "G" 1369+59	RT	7	14	CULVERT ENERGY DISSIPATOR
	"G" 1370+00 TO "G" 1370+50	LT	36		CUT/FILL TRANSITION LINING
	"G" 1372+33 TO "G" 1372+47	LT	71		ROCK FLUME DOWNDRAIN
F6	"G" 1374+99 TO "G" 1375+07	LT	12	21	CULVERT ENERGY DISSIPATOR
	"G" 1375+07 TO "G" 1380+05	LT	331		CUT/FILL TRANSITION LINING
	"G" 1376+93 TO "G" 1377+07	LT	49		ROCK FLUME DOWNDRAIN
F8	"G" 1401+17 TO "G" 1401+28	LT	7	14	CULVERT ENERGY DISSIPATOR
	"G" 1402+93 TO "G" 1403+07	RT	17		ROCK FLUME DOWNDRAIN
	"G" 1403+50 TO "G" 1404+00	RT	34		CUT/FILL TRANSITION LINING
	"G" 1407+50 TO "G" 1408+00	RT	40		CUT/FILL TRANSITION LINING
	"G" 1407+93 TO "G" 1408+07	RT	17		ROCK FLUME DOWNDRAIN
	"G" 1412+43 TO "G" 1412+57	RT	17		ROCK FLUME DOWNDRAIN
F9	"G" 1419+50 TO "G" 1423+18	RT	251		CUT/FILL TRANSITION LINING
F10	"G" 1433+00 TO "G" 1433+50	RT	42		CUT/FILL TRANSITION LINING
	"G" 1433+46 TO "G" 1433+54	RT	12	21	CULVERT ENERGY DISSIPATOR
F11	"G" 1437+96 TO "G" 1438+04	RT	12	21	CULVERT ENERGY DISSIPATOR
F14	"G" 1474+96 TO "G" 1475+04	RT	12	21	CULVERT ENERGY DISSIPATOR
	"G" 1479+96 TO "G" 1480+04	RT	12	21	CULVERT ENERGY DISSIPATOR
F15	"G" 1484+96 TO "G" 1485+04	RT	12	21	CULVERT ENERGY DISSIPATOR
	"G" 1489+96 TO "G" 1490+04	RT	12	21	CULVERT ENERGY DISSIPATOR
F20	"GV" 12+94 TO "GV" 13+06	RT	25	39	CULVERT ENERGY DISSIPATOR
	"GV" 15+10 TO "GV" 15+22	RT	12	21	CULVERT ENERGY DISSIPATOR
F24	"MS" 27+96 TO "MS" 28+07	RT	7	14	CULVERT ENERGY DISSIPATOR
F25	"M" 9+04 TO "M" 9+13	RT	12	21	CULVERT ENERGY DISSIPATOR
F26	"JD" 8+20 TO "JD" 8+57	RT	58		ROCK FLUME DOWNDRAIN
F27	"BL" 17+68 TO "BL" 17+82	RT	38		ROCK FLUME DOWNDRAIN
F29	"P1" 28+21 TO "P1" 28+29	RT	12	21	CULVERT ENERGY DISSIPATOR
F37	8+88 TO 8+98	RT	12	21	CULVERT ENERGY DISSIPATOR, "OS" 6+73 APPROACH
		TOTAL:	1,358	447	
		PAY ITEM QUANTITY:	1,400	447	

619.2002.0000 - TURF REINFORCEMENT MAT

SHEET	STATION FROM	STATION TO	OFFSET	AREA (SY)	REMARKS
F5	"G" 1373+00	"G" 1374+00	LT	630	
F6	"G" 1374+00	"G" 1374+50	LT	292	
F8	"G" 1404+46	"G" 1408+00	RT	1,840	
F9	"G" 1416+00	"G" 1417+50	RT	1,840	
			TOTAL:	4,602	
			PAY ITEM QUANTITY:	4,650	

CERTIFICATION SET
NOVEMBER 2021

STATE OF ALASKA
DEPARTMENT OF TRANSPORTATION
AND PUBLIC FACILITIES

GLENN HWY: PARKS HWY TO S. INNER SPRINGER LP. (PHASE II)

SUMMARY TABLES

STATE OF ALASKA
49TH
DENNIS R. LINNELL
CE-7649
REGISTERED PROFESSIONAL ENGINEER

HDL ENGINEERING CONSULTANTS, LLC
3335 ARCTIC BOULEVARD, STE 100
ANCHORAGE, AK 99503
(907) 564-2120
AECL861

DESIGNED BY AAL
CHECKED BY DRL
DRAFTED BY CDB

SCALE NTS

DATE TIME 11/19/2021 8:31 AM

DRAWING LOCATION
H:\JOBS\08-016 GLENN HIGHWAY 34-42 (DOT)\09 - PS&E\CAD_PH2\DRAWINGS\08016_P2_D01-D12.DWG

NO.	DATE	REVISION

STATE	PROJECT DESIGNATION	YEAR	SHEET NO.	TOTAL SHEETS
ALASKA	0A15037/CFHWY00431 0A15038/CFHWY00432 0A15033/CFHWY00006	2021	D12	D12

639.2000.0000 - APPROACH SUMMARY

SHEET	STATION	OFFSET	WIDTH (FT)	LENGTH (FT)	DESIGN RADIUS	SKEW ANGLE	TYPICAL SECTION	HS/LS APPROACH	REMARKS
F3	"G" 1338+03.0	123.0 LT	24	722.0	20	90°	UNPAVED	LS	SEE SHEET F34
	"G" 1338+15.0	LT	24	104.0	40	90°	PAVED	HS	
	"G" 1345+56.1	94.1 LT	14	109.0	20	-	UNPAVED	HS	SHARED APPROACH
	"G" 1345+59.0	LT	20	160.0	20	90°	UNPAVED	HS	SHARED APPROACH
	"G" 1349+00.1	LT	24	85.0	40	80°	UNPAVED	HS	
F5	"G" 1363+35.0	LT	16	173.0	20	70°	UNPAVED	HS	SHARED APPROACH
	"G" 1363+93.5	188.3 LT	16	45.0	10/20	-	UNPAVED	LS	SHARED APPROACH
	"G" 1369+00.0	RT	18	200.0	20	75°	UNPAVED	HS	
F6	"G" 1379+64.0	RT	24	158.4	20	90°	UNPAVED	HS	
F7	"G" 1388+08.0	RT	24	55.0	20	90°	UNPAVED	HS	
	"G" 1390+53.0	RT	14	113.0	20	90°	UNPAVED	HS	
	"G" 1392+10.0	LT	14	364.1	20	90°	PAVE/UNPAVED	HS	
F8	"G" 1404+44.0	147.3 LT	24	36.0	10/20	78°	UNPAVED	LS	
	"G" 1404+76.0	LT	24	157.0	40	77°	UNPAVED	HS	E KEPLER DR
F10	"G" 1430+10.0	LT	24	87.8	40	90°	UNPAVED	HS	GRADE PATH TO DRIVEWAY
F11	"G" 1440+36.9	97.3 LT	14	45.0	40/0	-	UNPAVED	LS	OFF OF COLLEEN ST
F13	"G" 1465+73.0	LT	24	214.0	40	90°	UNPAVED	HS	GRADE PATH TO DRIVEWAY
F14	"G" 1472+38.0	LT	24	40.7	40	90°	PAVED	HS	GRADE PATH TO DRIVEWAY
F15	"G" 1481+31.1	LT	20	114.5	40	90°	UNPAVED	HS	GRADE PATH TO DRIVEWAY
	"G" 1489+03.0	LT	20	95.0	20	90°	UNPAVED	HS	GRADE PATH TO DRIVEWAY
F16	"G" 1505+62.0	LT	14	85.4	20	90°	UNPAVED	HS	GRADE PATH TO DRIVEWAY
F17	"G" 1507+78.5	LT	20	80.0	40	90°	PAVED	HS	E CRIMSONVIEW DR/UNPAVED 2' SHOULDERS
~~—~~	~~"G" 1517+06.0~~	~~LT~~	~~24~~	~~46.0~~	~~40~~	~~90°~~	~~PAVED~~	~~HS~~	~~CONSTRUCTED IN PH 1~~
F20	"GV" 14+40.5	RT	34	330.0	50	90°	UNPAVED	LS	
F21	"GV" 25+70.0	RT	34	100.0	50	90°	PAVED	LS	
F22	"GV" 37+62.8	RT	20	40.0	40	90°	PAVED	LS	FIRETRUCK TURNAROUND
F23	"MS" 18+30.6	124.9 RT	24	67.8	50	-	UNPAVED	LS	SHARED APPROACH
	"MS" 18+43.4	RT	24	170.1	40	82°29'	UNPAVED	LS	SHARED APPROACH
	"MS" 22+26.5	RT	24	334.8	40	90°	PAVE/UNPAVED	LS	
	"MS" 22+37.0	LT	20	135.0	20	69°	UNPAVED	LS	
F24	"MS" 27+80.0	RT	14	45.0	10	90°	UNPAVED	LS	
F25	"M" 8+77.5	LT	20	68.4	20	90°	UNPAVED	LS	
	"S" 11+14.9	RT	14	65.0	20/10	79°18'	UNPAVED	LS	
	"S" 11+28.6	RT	26	71.2	10/15	80°10'	UNPAVED	LS	
F26	"JD" 7+08.5	LT	32	562.0	50/0	90°	UNPAVED	LS	SEE SHEET F35
	"JD" 11+68.0	RT	15	35.0	20	90°	UNPAVED	LS	ARRC SIGNAL HUT PAD
F28	"OS" 6+73.0	0	24	1,558.0	0	90°	UNPAVED	LS	SEE SHEET F36/F37
	"OS" 7+06.0	LT	26	97.0	20	90°	UNPAVED	LS	
	"OS" 11+74.0	RT	15	35.0	20	90°	UNPAVED	LS	ARRC SIGNAL HUT PAD
	"OS" 13+61.0	RT	24	90.0	20/30	60°	PAVED	LS	
	"OS" 13+77.0	LT	14	38.0	20	90°	UNPAVED	LS	
S5	"RR" 55+20	LT/RT	24	17/20	0	-	PAVED	LS	
				TOTAL:	41				
				PAY ITEM QUANTITY:	41				

APPROACH LEGEND

HS = HIGH-SPEED ROADWAY APPROACH, SEE SHEET E4.
LS = LOW-SPEED ROADWAY APPROACH

CERTIFICATION SET
NOVEMBER 2021

STATE OF ALASKA
49TH
DENNIS R. LINNELL
CE-7649
REGISTERED PROFESSIONAL ENGINEER

HDL ENGINEERING CONSULTANTS, LLC
3335 ARCTIC BOULEVARD, STE 100
ANCHORAGE, AK 99503
(907) 564-2120
AECL861

STATE OF ALASKA
DEPARTMENT OF TRANSPORTATION
AND PUBLIC FACILITIES

GLENN HWY: PARKS HWY TO S. INNER SPRINGER LP. (PHASE II)

SUMMARY TABLES

DESIGNED BY AAL
CHECKED BY DRL
DRAFTED BY CDB
SCALE NTS
DATE TIME 11/12/2021 8:45 AM
DRAWING LOCATION H:\JOBS\08-016 GLENN HIGHWAY 34-42 (DOT)\09 - PS&E\CAD_PH2\DRAWINGS\08016_PS_D01-D12.DWG

NO.	DATE	REVISION

STATE	PROJECT DESIGNATION	YEAR	SHEET NO.	TOTAL SHEETS
ALASKA	0A15037/CFHWY00431 0A15038/CFHWY00432 0A15033/CFHWY00006	2021	E1	E35

DESIGNED BY CAB
CHECKED BY DRL
DRAFTED BY CDB

SCALE NTS

DATE 11/11/2021 TIME 1:30 PM

DRAWING LOCATION
H:\JOBS\08-016 GLENN HIGHWAY 34-42 (DOT)\09 - PS&E\CAD_PH2\DRAWINGS\08016_P2_E01.DWG

NOTES:

1. BUILD SUPERELEVATION INTO SUBGRADE AND CARRY THROUGH SHOULDERS.
2. % RUNOFF = PORTION OF RUNOFF ON TANGENT.
3. WIDENING FOR GUARDRAIL OR CURVATURE DOES NOT CHANGE THE LOCATION OF THE AXIS OF ROTATION.

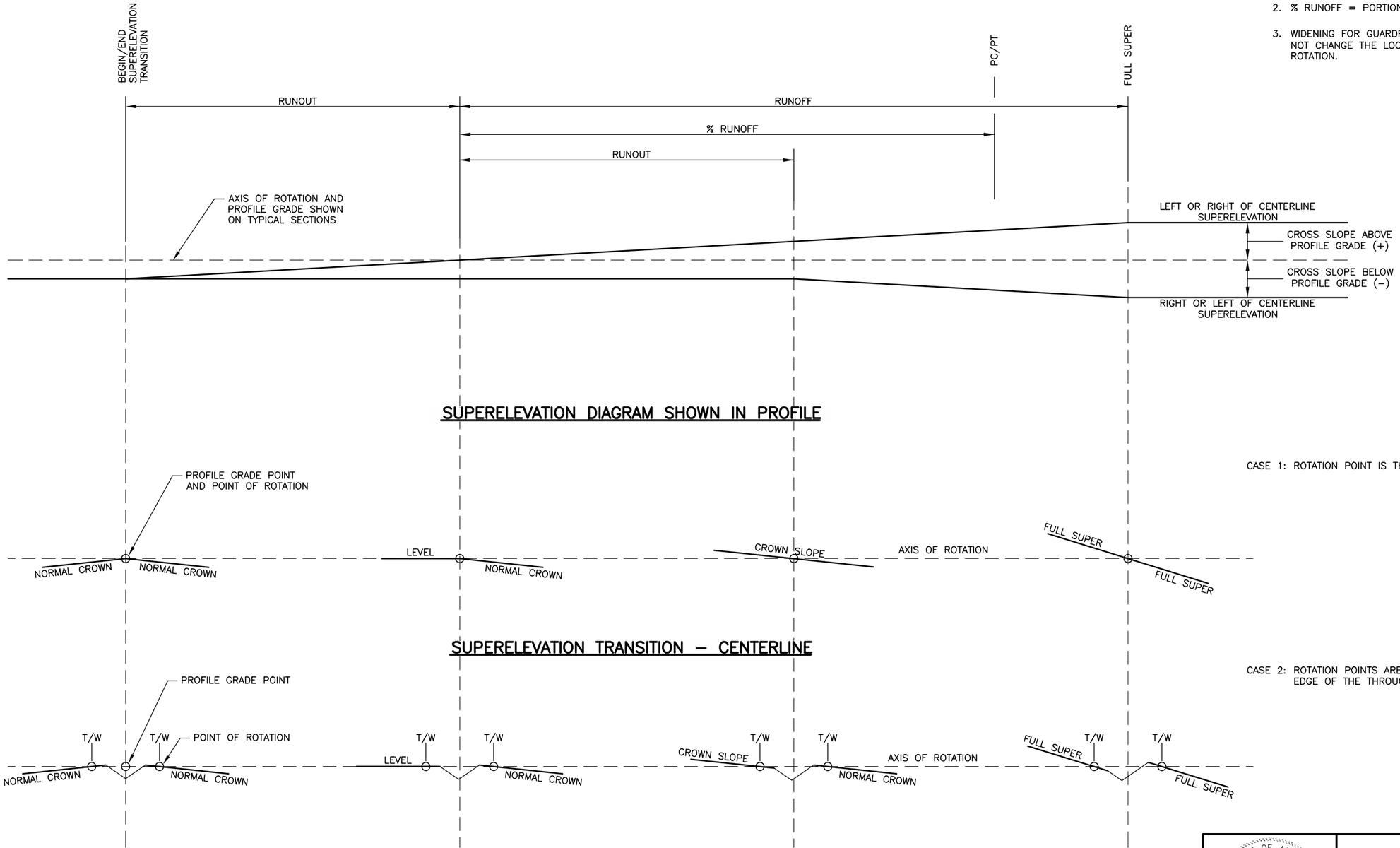

SUPERELEVATION DIAGRAM SHOWN IN PROFILE

CASE 1: ROTATION POINT IS THE PROFILE GRADE POINT.

SUPERELEVATION TRANSITION – CENTERLINE

CASE 2: ROTATION POINTS ARE LOCATED AT THE INSIDE EDGE OF THE THROUGH LANE TRAVEL WAY (T/W).

SUPERELEVATION TRANSITION – MEDIAN DITCH

CERTIFICATION SET
NOVEMBER 2021

STATE OF ALASKA
★ 49TH ★
DENNIS R. LINNELL
CE-7649
REGISTERED PROFESSIONAL ENGINEER

HDL ENGINEERING CONSULTANTS, LLC
3335 ARCTIC BOULEVARD, STE 100
ANCHORAGE, AK 99503
(907) 564-2120
AECL861

STATE OF ALASKA
DEPARTMENT OF TRANSPORTATION
AND PUBLIC FACILITIES

GLENN HWY: PARKS HWY TO S. INNER SPRINGER LP. (PHASE II)

SUPERELEVATION TRANSITION DETAIL

NO.	DATE	REVISION

STATE	PROJECT DESIGNATION	YEAR	SHEET NO.	TOTAL SHEETS
ALASKA	0A15037/CFHWY00431 0A15038/CFHWY00432 0A15033/CFHWY00006	2021	E2	E35

DESIGNED BY CAB
CHECKED BY DRL
DRAFTED BY CDB

SCALE 1" = 20'

DATE 11/11/2021 TIME 1:30 PM

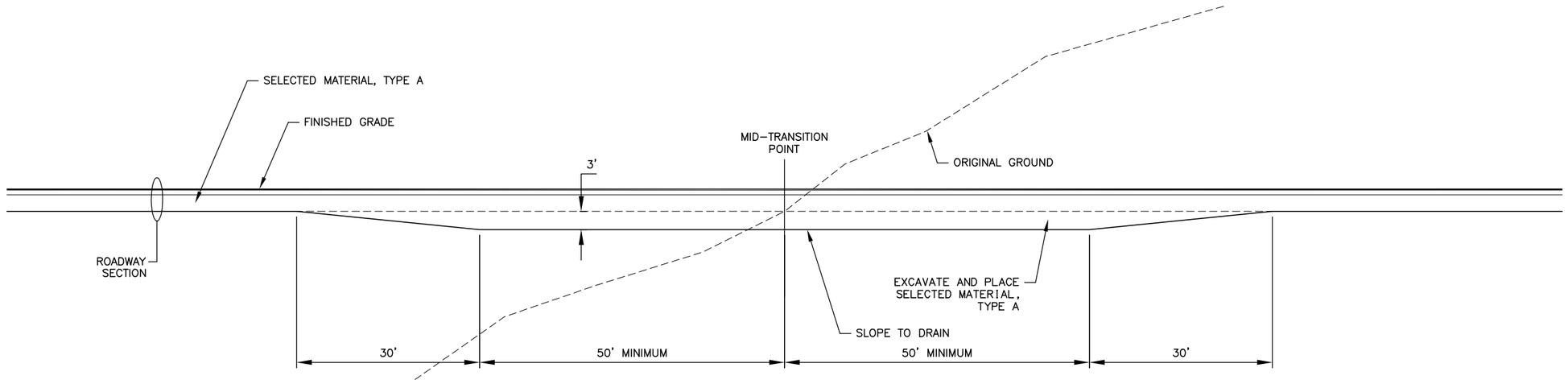

CUT-FILL LONGITUDINAL TRANSITION

TO BE USED WHERE DIFFERENCE BETWEEN GROUND SLOPE AND FINISHED GRADE IS GREATER THAN 10%.

CERTIFICATION SET
NOVEMBER 2021

STATE OF ALASKA
49TH
DENNIS R. LINNELL
CE-7649
REGISTERED PROFESSIONAL ENGINEER

HDL ENGINEERING CONSULTANTS, LLC
3335 ARCTIC BOULEVARD, STE 100
ANCHORAGE, AK 99503
(907) 564-2120
AECL861

STATE OF ALASKA
DEPARTMENT OF TRANSPORTATION
AND PUBLIC FACILITIES

GLENN HWY: PARKS HWY TO S. INNER SPRINGER LP. (PHASE II)

CUT-FILL LONGITUDINAL TRANSITION DETAIL

DRAWING LOCATION
H:\JOBS\08-016 GLENN HIGHWAY 34-42 (DOT)\09 - PS&E\CAD_PH2\DRAWINGS\08016_P2_E02-CUTFILL.DWG

NO.	DATE	REVISION

STATE	PROJECT DESIGNATION	YEAR	SHEET NO.	TOTAL SHEETS
ALASKA	0A15037/CFHWY00431 0A15038/CFHWY00432 0A15033/CFHWY00006	2021	E3	E35

DESIGNED BY CAB
CHECKED BY DRL
DRAFTED BY CDB

SCALE NTS

DATE TIME 11/11/2021 1:34 PM

DRAWING LOCATION H:\JOBS\08-016 GLENN HIGHWAY 34-42 (DOT)\09 - PS&E\CAD_PH2\DRAWINGS\08016_P2_E03-E04.DWG

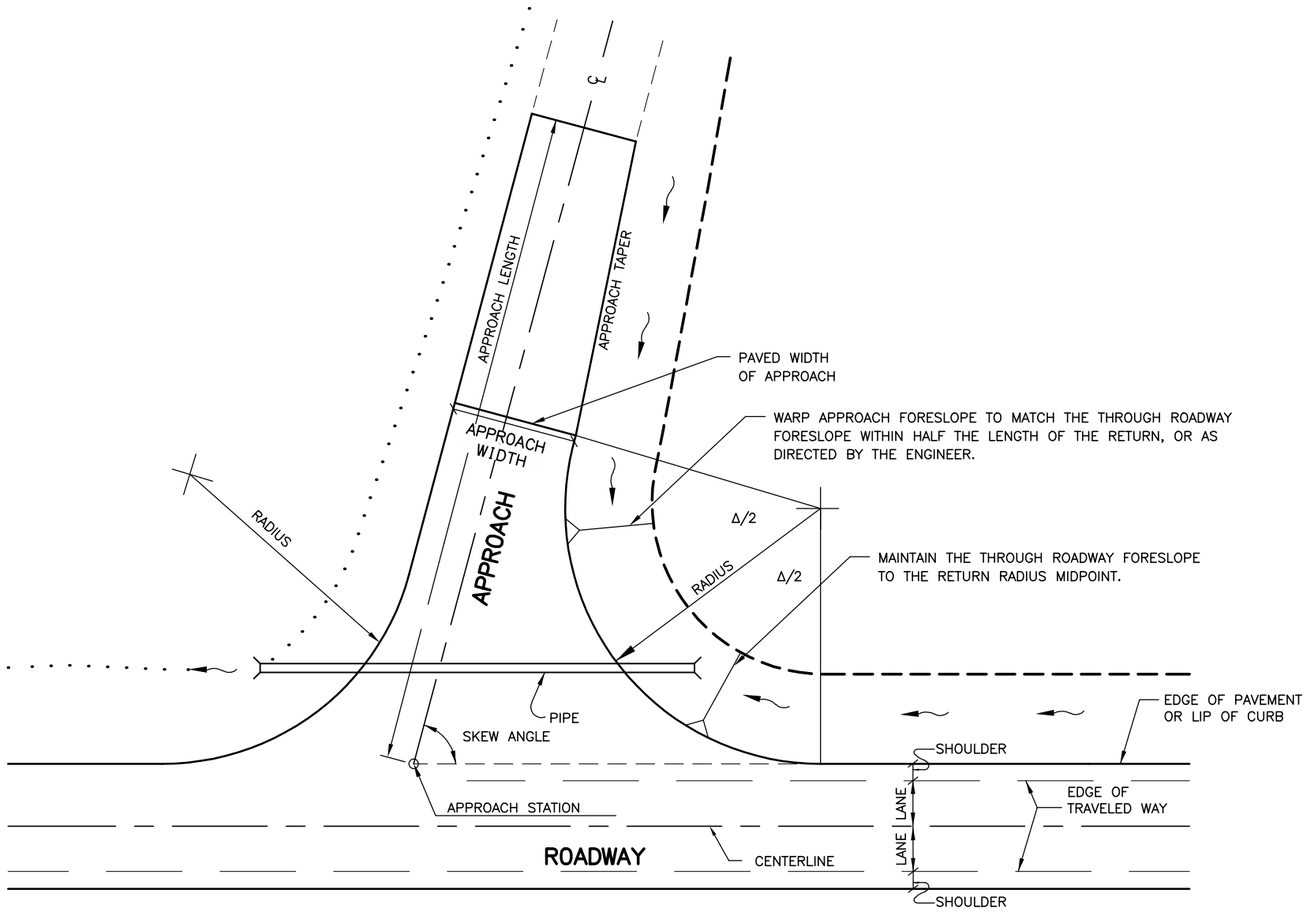

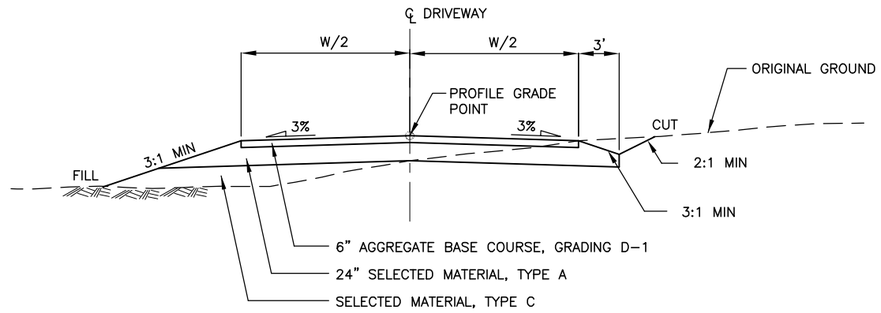

UNPAVED APPROACH TYPICAL SECTION

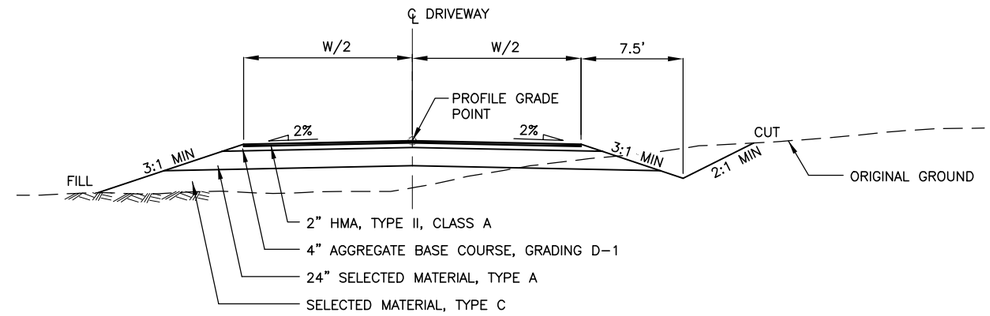

PAVED APPROACH TYPICAL SECTION

NOTES:

1. SEE APPROACH SUMMARY FOR APPROACH ROADWAY STATION, OFFSET, LENGTH, WIDTH, DESIGN RADIUS, SKEW ANGLE, AND TYPICAL SECTION.
2. PAVE TO THE END OF THE RADIUS RETURN, OR 5' BEYOND PATHWAY, USING THE SAME MATERIALS AND THICKNESS AS ROADWAY STRUCTURAL SECTION. SEE PAVED OR UNPAVED APPROACH TYPICAL SECTION FOR PAVED AND UNPAVED APPROACHES BEYOND THE RETURN RADIUS.
3. APPROACH VERTICAL CURVE REQUIREMENTS:
   CREST – 3 1/4" MAXIMUM IN A 12–FOOT CHORD
   SAG – 2" MAXIMUM IN A 12–FOOT CHORD

CERTIFICATION SET
NOVEMBER 2021

STATE OF ALASKA
DEPARTMENT OF TRANSPORTATION
AND PUBLIC FACILITIES

GLENN HWY: PARKS HWY TO S. INNER SPRINGER LP. (PHASE II)

UNCURBED APPROACH DETAILS

STATE OF ALASKA 49TH
DENNIS R. LINNELL
CE-7649
REGISTERED PROFESSIONAL ENGINEER

HDL ENGINEERING CONSULTANTS, LLC
3335 ARCTIC BOULEVARD, STE 100
ANCHORAGE, AK 99503
(907) 564-2120
AECL861

NO.	DATE	REVISION	STATE	PROJECT DESIGNATION	YEAR	SHEET NO.	TOTAL SHEETS
			ALASKA	0A15037/CFHWY00431 0A15038/CFHWY00432 0A15033/CFHWY00006	2021	E4	E35

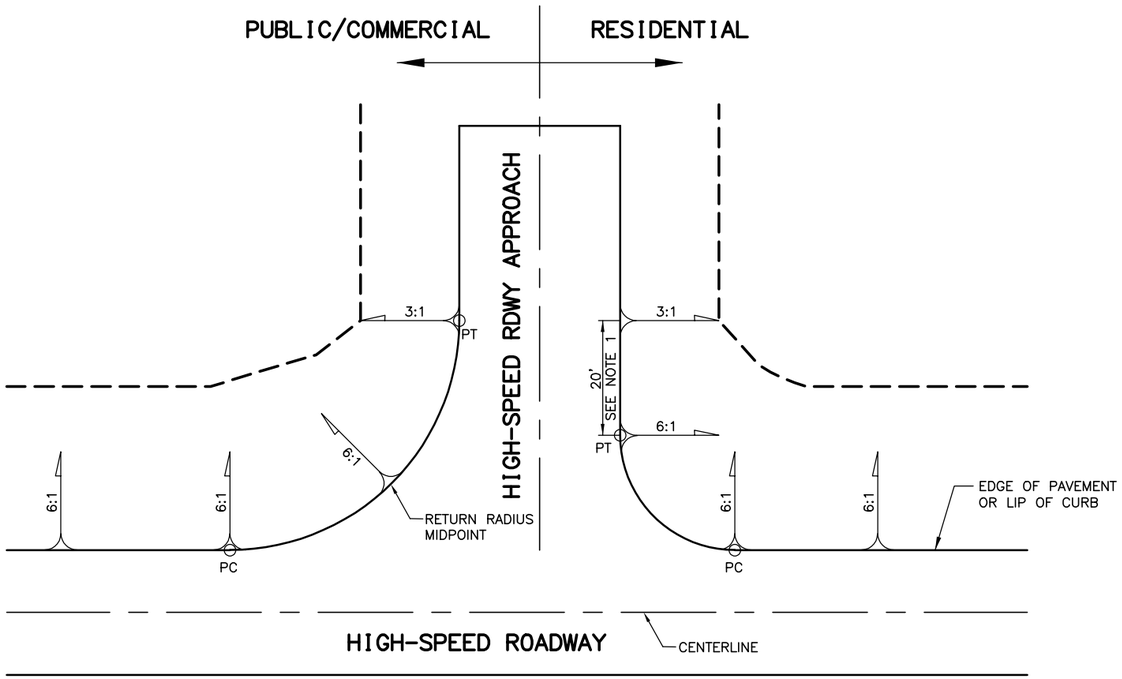

HIGH-SPEED ROADWAY APPROACH GRADING

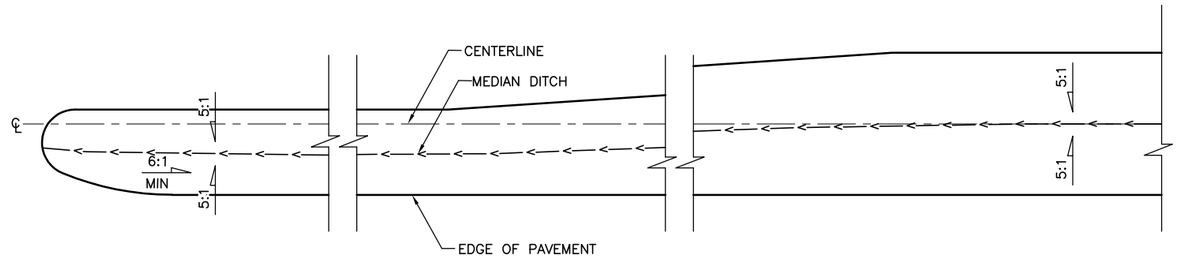

GRADING AT MEDIAN OPENINGS

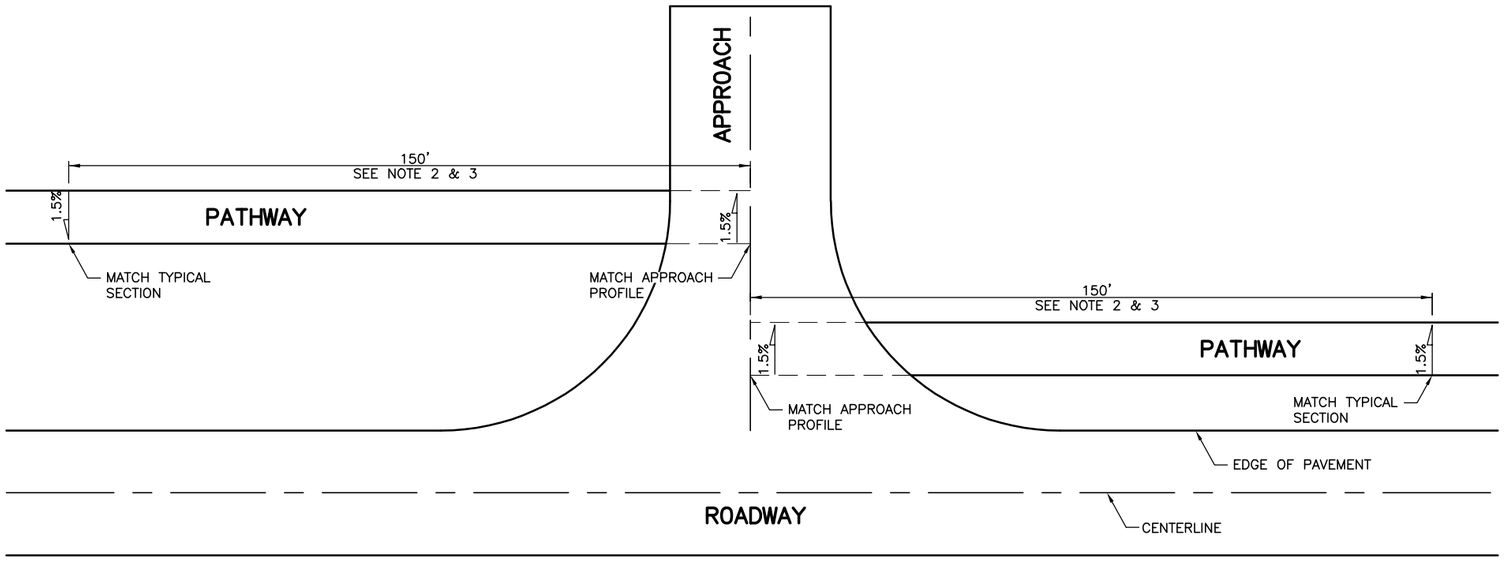

PATHWAY GRADING AT APPROACHES

NOTES:

1. WHEN APPROACH LENGTH IS LESS THAN 40 FEET, MAINTAIN FORESLOPE GRADE AT PT THROUGH END OF APPROACH.
2. WHERE THE PATHWAY INTERSECTS AN APPROACH, GRADE THE PATHWAY TO MATCH THE APPROACH PROFILE. TRANSITION THE PATHWAY FROM THE TYPICAL SECTION 150 FEET FROM THE APPROACH CENTERLINE.
3. LONGITUDINAL GRADES SHOULD NOT EXCEED 2.0%. IF THE LONGITUDINAL GRADE EXCEEDS 2.0%, EXTEND THE TRANSITION LENGTH.

CERTIFICATION SET
NOVEMBER 2021

STATE OF ALASKA
DEPARTMENT OF TRANSPORTATION
AND PUBLIC FACILITIES

GLENN HWY: PARKS HWY TO S. INNER SPRINGER LP. (PHASE II)

HIGH-SPEED ROADWAY
APPROACH GRADING DETAILS

STATE OF ALASKA
49TH
DENNIS R. LINNELL
CE-7649
REGISTERED PROFESSIONAL ENGINEER

HDL ENGINEERING CONSULTANTS, LLC
3335 ARCTIC BOULEVARD, STE 100
ANCHORAGE, AK 99503
(907) 564-2120
AECL861

DESIGNED BY CAB
CHECKED BY DRL
DRAFTED BY CDB

SCALE NTS

DATE 11/11/2021 TIME 1:34 PM

DRAWING LOCATION
H:\JOBS\08-016 GLENN HIGHWAY 34-42 (DOT)\09 - PS&E\CAD_PH2\DRAWINGS\08016_P2_E03-E04.DWG

NO.	DATE	REVISION	STATE	PROJECT DESIGNATION	YEAR	SHEET NO.	TOTAL SHEETS
			ALASKA	0A15037/CFHWY00431 0A15038/CFHWY00432 0A15033/CFHWY00006	2021	E5	E35

DESIGNED BY CAB
CHECKED BY DRL
DRAFTED BY CDB

SCALE NTS

DATE TIME 11/11/2021 1:35 PM

DRAWING LOCATION
H:\JOBS\08-016 GLENN HIGHWAY 34-42 (DOT)\09 - PS&E\CAD_PH2\DRAWINGS\08016_P2_E05-E06_CG.DWG

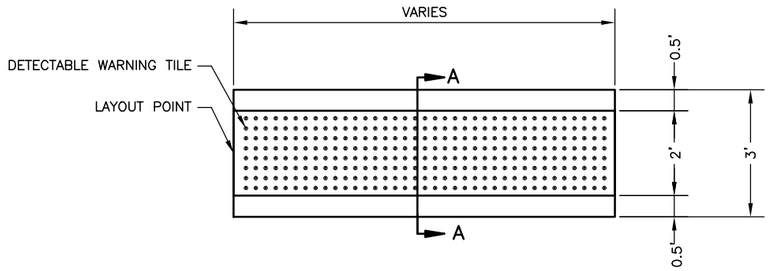

PLAN

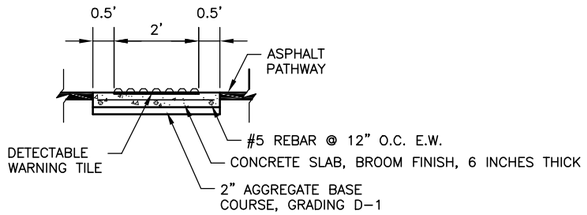

SECTION A-A

CONCRETE LANDING IN ASPHALT PATHWAY

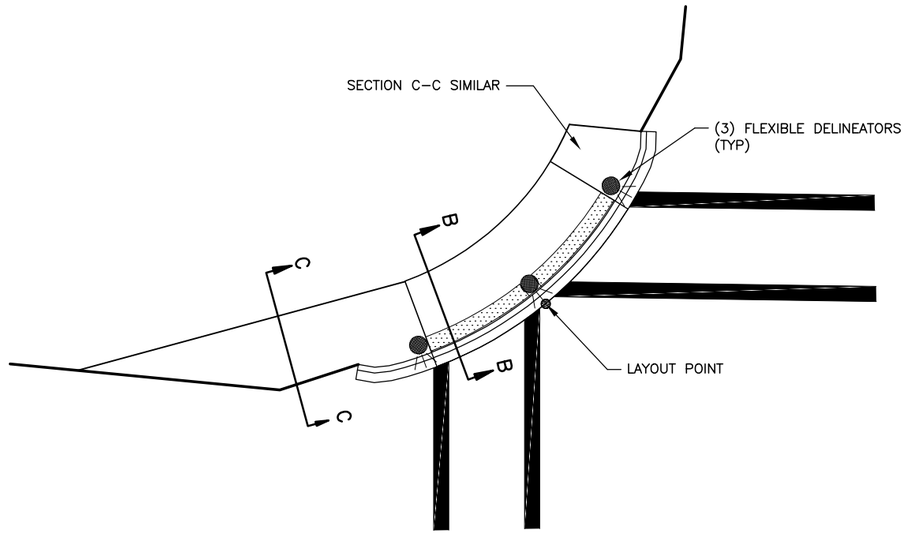

PLAN

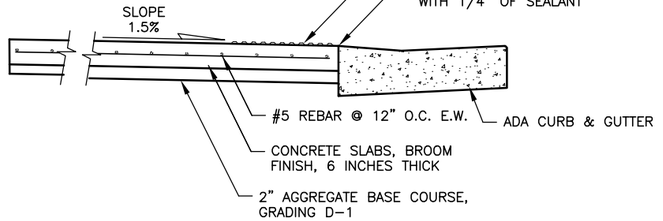

SECTION B-B

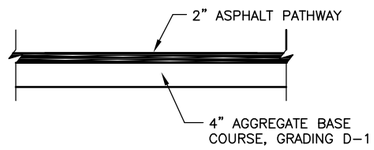

SECTION C-C

CONCRETE LANDING AT RETURNS

NOTES:

1. CONSTRUCT CONCRETE LANDINGS IN ACCORDANCE WITH I-21.
2. INSTALL 24-IN RADIAL DETECTABLE WARNING TILES ALONG TOP BACK OF CURB FOR THE LENGTH OF THE LANDING, LEAVING A CENTER GAP FOR THE FLEXIBLE DELINEATOR. DETECTABLE WARNINGS SHALL BE INSTALLED I.A.W. MANUFACTURER'S RECOMMENDATIONS AND ALIGN SUCH THAT THE TRUNCATED DOMES ARE IN LINE WITH THE DIRECTION OF TRAVEL.
3. TRUNCATED DOMES SHALL HAVE A DIAMETER OF 0.9-IN AT THE BOTTOM, A DIAMETER OF 0.4-IN AT THE TOP, A HEIGHT OF 0.2-IN AND A CENTER-TO-CENTER SPACING OF 2.35-IN MEASURED ALONG ONE SIDE OF A SQUARE ARRANGEMENT.
4. WHERE POSSIBLE, THE DETECTABLE WARNING SHOULD BE LOCATED SO THAT THE EDGE NEAREST THE CURB LINE OR OTHER POTENTIAL HAZARD IS A MAXIMUM OF 2-IN FROM THE CURB LINE OR OTHER POTENTIAL HAZARD OR AS DIRECTED BY THE ENGINEER.
5. THE DETECTABLE WARNING SHALL BE FEDERAL YELLOW OR APPROVED EQUAL. THE MATERIAL USED TO PROVIDE VISUAL CONTRAST SHALL BE AN INTEGRAL PART OF THE DETECTABLE WARNING SURFACE.
6. INSTALL DETECTABLE WARNINGS SO THAT THE FIELD AREA AT THE BASE OF THE DOMES IS FLUSH WITH THE SURROUNDING CONCRETE. DO NOT ALLOW VERTICAL FACES EQUAL TO OR GREATER THAN 1/4-IN AT THE EDGE OF THE DETECTABLE WARNING.
7. SEE STANDARD PLAN I-21 FOR ADDITIONAL REQUIREMENTS OF DETECTABLE WARNING TILES.

CERTIFICATION SET
NOVEMBER 2021

STATE OF ALASKA 49TH
DENNIS R. LINNELL
CE-7649
REGISTERED PROFESSIONAL ENGINEER

HDL ENGINEERING CONSULTANTS, LLC
3335 ARCTIC BOULEVARD, STE 100
ANCHORAGE, AK 99503
(907) 564-2120
AECL861

STATE OF ALASKA
DEPARTMENT OF TRANSPORTATION
AND PUBLIC FACILITIES

GLENN HWY: PARKS HWY TO S. INNER SPRINGER LP. (PHASE II)

CONCRETE LANDING DETAILS

NO.	DATE	REVISION	STATE	PROJECT DESIGNATION	YEAR	SHEET NO.	TOTAL SHEETS
			ALASKA	0A15037/CFHWY00431 0A15038/CFHWY00432 0A15033/CFHWY00006	2021	E6	E35

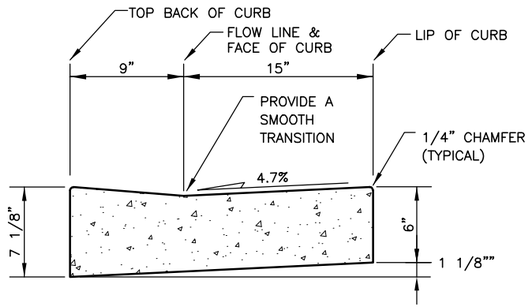

ADA CURB & GUTTER

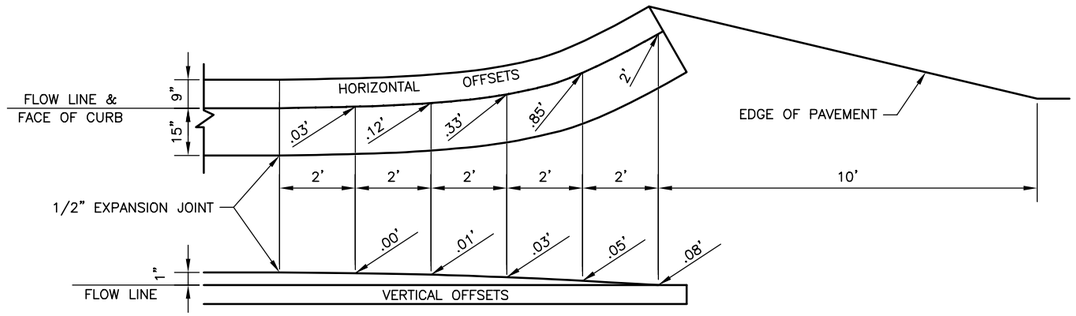

ADA CURB AND GUTTER TERMINATION TRANSITIONS

CERTIFICATION SET
NOVEMBER 2021

STATE OF ALASKA
DEPARTMENT OF TRANSPORTATION
AND PUBLIC FACILITIES

GLENN HWY: PARKS HWY TO S. INNER SPRINGER LP. (PHASE II)

CURB & GUTTER DETAILS

STATE OF ALASKA
49TH
DENNIS R. LINNELL
CE-7649
REGISTERED PROFESSIONAL ENGINEER

HDL ENGINEERING CONSULTANTS, LLC
3335 ARCTIC BOULEVARD, STE 100
ANCHORAGE, AK 99503
(907) 564-2120
AECL861

DESIGNED BY CAB
CHECKED BY DRL
DRAFTED BY CDB

SCALE NTS

DATE TIME 11/11/2021 1:35 PM

DRAWING LOCATION
H:\JOBS\08-016 GLENN HIGHWAY 34-42 (DOT)\09 - PS&E\CAD_PH2\DRAWINGS\08016_P2_E05-E06_CG.DWG

NO.	DATE	REVISION	STATE	PROJECT DESIGNATION	YEAR	SHEET NO.	TOTAL SHEETS
			ALASKA	0A15037/CFHWY00431 0A15038/CFHWY00432 0A15033/CFHWY00006	2021	E7	E35

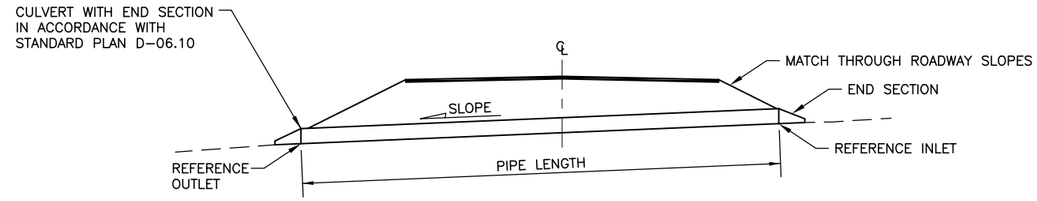

TYPICAL CULVERT SECTION

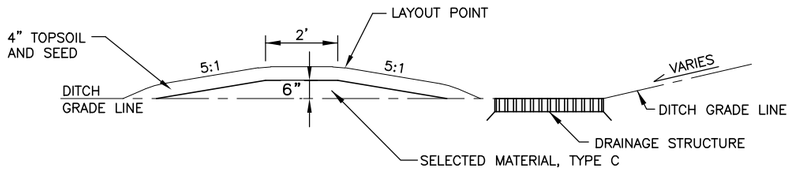

DITCH BLOCK SECTION A-A

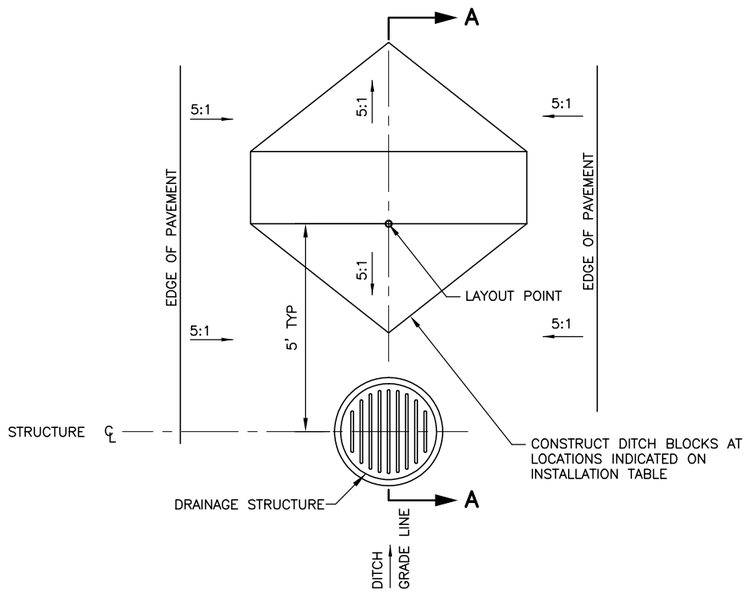

DITCH BLOCK PLAN

DITCH BLOCK INSTALLATION

SHEET	STATION	OFFSET	REMARKS
F3	"G" 1344+95	0.9 RT	
F4	"G" 1349+95	0.5 RT	
F5	"G" 1365+05	0.0 RT	
	"G" 1370+05	0.0 RT	
F6	"G" 1379+95	0.0 RT	
	"G" 1384+95	0.0 RT	
F7	"G" 1398+80	0.5 LT	
F8	"G" 1409+95	0.0 RT	
F9	"G" 1414+95	0.0 RT	
F10	"G" 1433+55	0.0 RT	
F11	"G" 1438+05	0.9 RT	
F12	"G" 1455+45	2.7 RT	
F13	"G" 1459+95	0.0 RT	
	"G" 1464+95	0.0 RT	
F14	"G" 1469+95	0.6 RT	
	"G" 1474+95	0.9 RT	
	"G" 1479+95	0.0 RT	
F15	"G" 1484+95	0.0 RT	
	"G" 1489+95	0.0 RT	
F16	"G" 1494+95	0.0 RT	
F17	"G" 1507+45	0.0 RT	

CERTIFICATION SET
NOVEMBER 2021

STATE OF ALASKA
49TH
KYLE M. ALBERT
CE-141837
REGISTERED PROFESSIONAL ENGINEER

HDL ENGINEERING CONSULTANTS, LLC
3335 ARCTIC BOULEVARD, STE 100
ANCHORAGE, AK 99503
(907) 564-2120
AECL861

STATE OF ALASKA
DEPARTMENT OF TRANSPORTATION
AND PUBLIC FACILITIES

GLENN HWY: PARKS HWY TO S. INNER SPRINGER LP. (PHASE II)

DITCH BLOCK AND CULVERT DETAILS

DESIGNED BY KMA
CHECKED BY DRL
DRAFTED BY CDB

SCALE NTS

DATE TIME 11/11/2021 1:41 PM

DRAWING LOCATION
H:\JOBS\08-016 GLENN HIGHWAY 34-42 (DOT)\09 - PS&E\CAD_PH2\DRAWINGS\08016_P2_E07-E13_DRAINAGE_SD.DWG
Glenn Highway 34-42 (DOT)\09 - PS&E\CAD\DRAWINGS\08016_PO_E09-E20_DRAINAGE_SD_1-1_04/20/17_at_15:05_by_CDB

NO.	DATE	REVISION

STATE	PROJECT DESIGNATION	YEAR	SHEET NO.	TOTAL SHEETS
ALASKA	0A15037/CFHWY00431 0A15038/CFHWY00432 0A15033/CFHWY00006	2021	E8	E35

DESIGNED BY KMA
DRAFTED BY DRL
CHECKED BY CDB

SCALE NTS

DATE 11/11/2021 TIME 1:41 PM

DRAWING LOCATION
H:\JOBS\08-016 GLENN HIGHWAY 34-42 (DOT)\09 - PS&E\CAD DRAWINGS\08016_09_E00-E20_DRAINAGE_SD_1:1_04/20/17 at 15:06 by CDB
H:\JOBS\08-016 GLENN HIGHWAY 34-42 (DOT)\09 - PS&E\CAD_PH2\DRAWINGS\08016_P2_E07-E13_DRAINAGE_SD.DWG

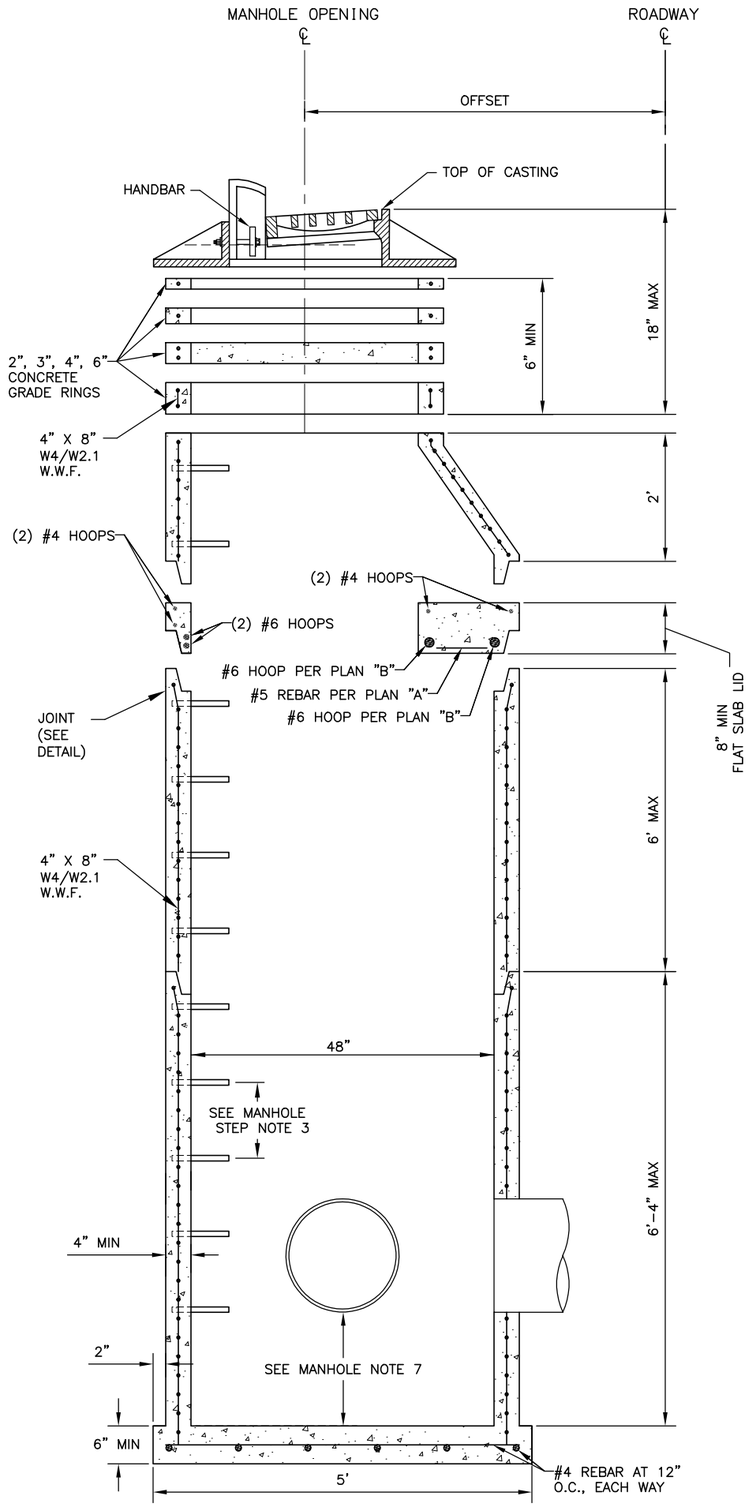

STORM SEWER MANHOLE, TYPE I

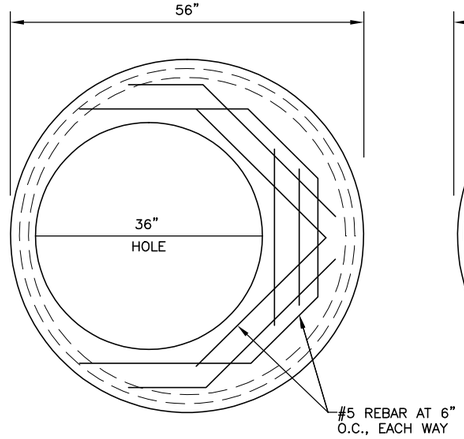

FLAT SLAB LID PLAN "A"

#5 REBAR BOTTOM REINFORCEMENT

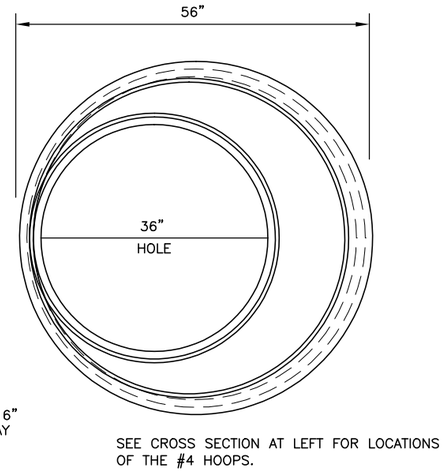

SEE CROSS SECTION AT LEFT FOR LOCATIONS OF THE #4 HOOPS.

FLAT SLAB LID PLAN "B"

#6 REBAR HOOPS ABOVE #5 REBAR AND WITHIN 3" OF BASE

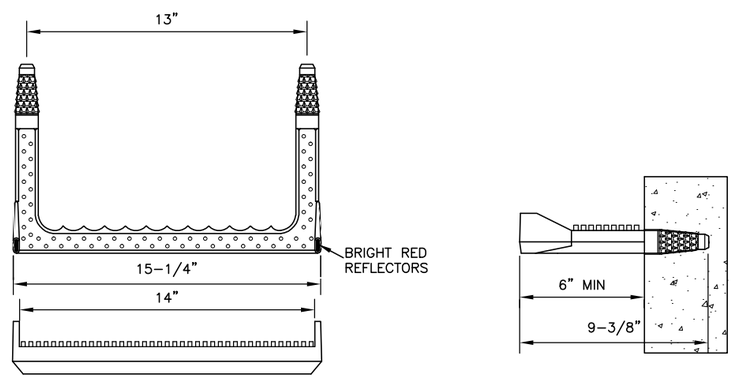

MANHOLE STEP

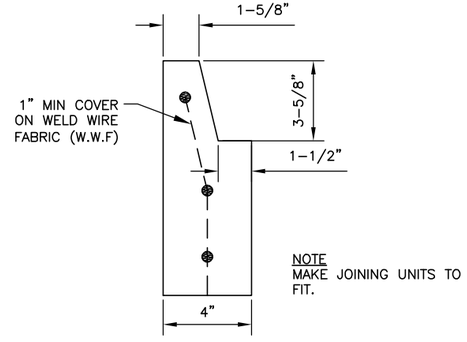

JOINT DETAIL

(NOMINAL DIMENSIONS)

MANHOLE NOTES:

1. THESE DRAWINGS ARE FOR PRECAST REINFORCED CONCRETE FOR HIGHWAY USE.
2. MAXIMUM KNOCKOUT SIZE FOR PIPES IS 32". MINIMUM DISTANCE BETWEEN KNOCKOUTS IS 4".
3. USE CONCRETE WITH A MINIMUM 4000 PSI 28 DAY COMPRESSIVE STRENGTH AND 6% ± 1.5% AIR ENTRAINMENT. MAXIMUM WATER/CEMENT RATIO IS 0.45.
4. MINIMUM STEEL REQUIRED FOR BARREL AS PER AASHTO M199 SHALL BE IMBEDDED IN BASE SO THAT THE FIRST BARREL SECTION IS CONNECTED TO THE BASE BY CONTINUOUS STEEL.
5. MINIMUM COVER ON REINFORCING STEEL IS 1".
6. FORM ALL BLOCKOUTS.
7. ALL STORM DRAIN MANHOLES AND INLETS SHALL HAVE 18" MINIMUM SUMPS. MANHOLES WITH PETROLEUM SEPARATORS SHALL HAVE 24" MINIMUM SUMPS.
8. A FLAT LID WITH A SMALLER OPENING MAY ALSO BE USED IF CALLED FOR. THIS REQUIRES ADDITIONAL #5 REBAR REINFORCEMENT AT THE SAME SPACING AS SHOWN IN PLAN "A". ALSO, ADJUST HOOP DIAMETERS AROUND THE OPENING TO PROVIDE THE SAME COVER.
9. MANHOLES PLACED ALONG CURB LINE SHALL HAVE STEPS ALIGNED UNDER THE CURB INLET.
10. PLACE MANHOLE BASE ON 6' MIN COMPACTED AGGREGATE BASE COURSE.

MANHOLE STEP NOTES:

1. MANHOLE STEPS SHALL BE INJECTION MOLDED POLYPROPYLENE COVERED GRADE 60 STEEL TIGHTLY IMBEDDED AT LEAST 3" INTO CONCRETE.
2. THE INSTALLED STEPS SHALL RESIST A PULLOUT FORCE OF 1500 LB.
3. STEPS SHALL BE PLACED 12" O.C. ON AN UNOBSTRUCTED SIDE OF THE STRUCTURE, 24" MAX FROM TOP OF CASTING AND 18" FROM MANHOLE BASE.

CERTIFICATION SET
NOVEMBER 2021

STATE OF ALASKA
49TH
KYLE M. ALBERT
CE-141837
REGISTERED PROFESSIONAL ENGINEER

HDL ENGINEERING CONSULTANTS, LLC
3335 ARCTIC BOULEVARD, STE 100
ANCHORAGE, AK 99503
(907) 564-2120
AECL861

STATE OF ALASKA
DEPARTMENT OF TRANSPORTATION
AND PUBLIC FACILITIES

GLENN HWY: PARKS HWY TO S. INNER SPRINGER LP. (PHASE II)

STORM DRAIN MANHOLE, TYPE I DETAILS

NO.	DATE	REVISION	STATE	PROJECT DESIGNATION	YEAR	SHEET NO.	TOTAL SHEETS
			ALASKA	0A15037/CFHWY00431 0A15038/CFHWY00432 0A15033/CFHWY00006	2021	E9	E35

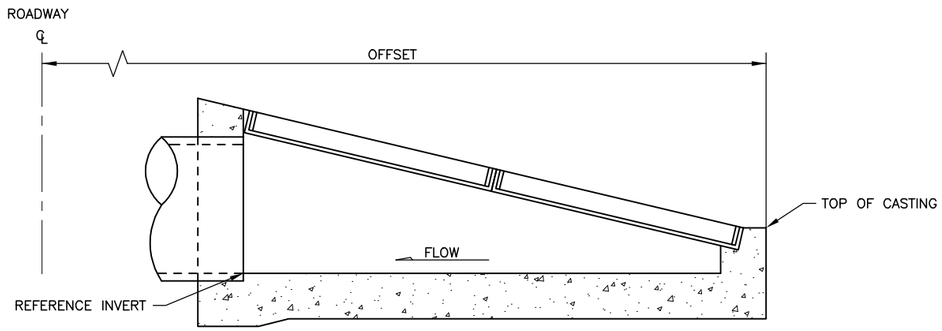

TYPICAL TYPE C INLET BOX SECTION

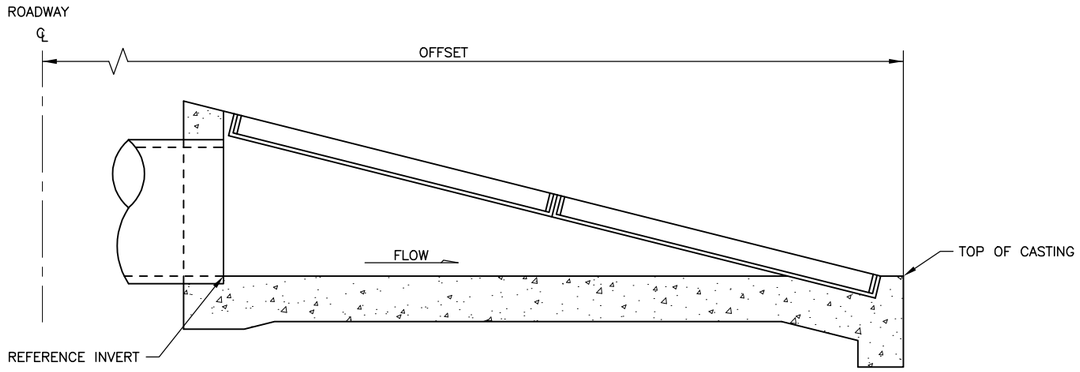

TYPICAL TYPE D INLET BOX SECTION

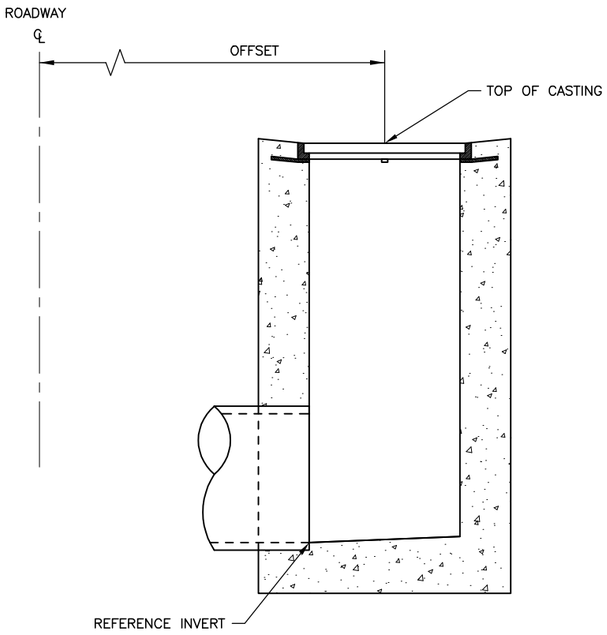

TYPICAL TYPE A INLET BOX SECTION

CERTIFICATION SET
NOVEMBER 2021

STATE OF ALASKA
49TH
KYLE M. ALBERT
CE-141837
REGISTERED PROFESSIONAL ENGINEER

HDL ENGINEERING CONSULTANTS, LLC
3335 ARCTIC BOULEVARD, STE 100
ANCHORAGE, AK 99503
(907) 564-2120
AECL861

STATE OF ALASKA
DEPARTMENT OF TRANSPORTATION
AND PUBLIC FACILITIES

GLENN HWY: PARKS HWY TO S. INNER SPRINGER LP. (PHASE II)

MEDIAN DRAINAGE STRUCTURE DETAILS

DESIGNED BY KMA
CHECKED BY DRL
DRAFTED BY CDB

SCALE NTS

DATE TIME 11/11/2021 1:41 PM

LAST SAVED BY: cbarnes

DRAWING LOCATION
H:\JOBS\08-016 GLENN HIGHWAY 34-42 (DOT)\09 - PS&E\CAD_PH2\DRAWINGS\08016_P2_E07-E13_DRAINAGE_SD.DWG

~~H:\JOBS\08-016 GLENN Highway 34-42 (DOT)\09 - PS&E\CAD_PH2\DRAWINGS\08016_00_E00_E20_DRAINAGE_SD_1-1_04/20/17_at_15:05_by_CDB~~

NO.	DATE	REVISION

STATE	PROJECT DESIGNATION	YEAR	SHEET NO.	TOTAL SHEETS
ALASKA	0A15037/CFHWY00431 0A15038/CFHWY00432 0A15033/CFHWY00006	2021	E10	E35

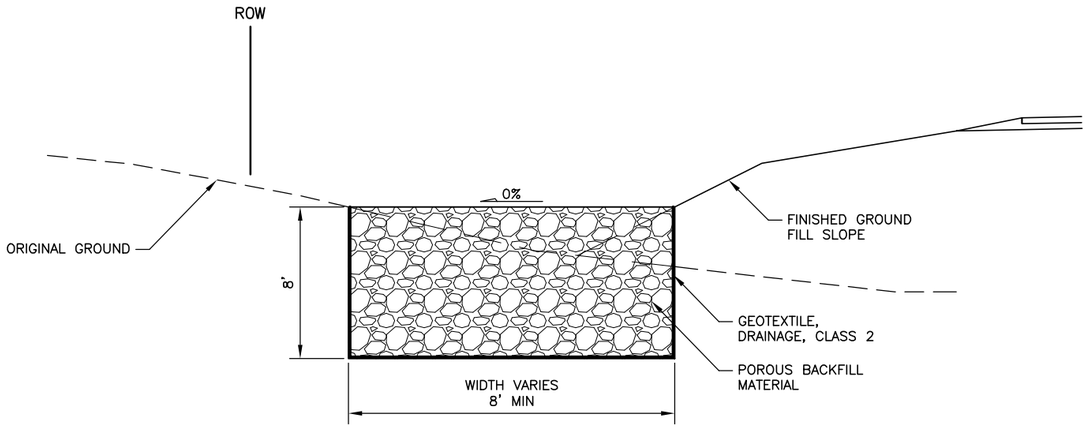

INFILTRATION BASIN SECTION

INFILTRATION BASIN INSTALLATION				
SHEET	STATION TO STATION	OFFSET	TOP ELEVATION	REMARKS
F3	"G" 1347+71.0 TO "G" 1348+72.0	LT	87.2'	
F3–F4	"G" 1349+38.5 TO "G" 1350+00.0	LT	89.8'	

CERTIFICATION SET
NOVEMBER 2021

STATE OF ALASKA
49TH
KYLE M. ALBERT
CE-141837
REGISTERED PROFESSIONAL ENGINEER

HDL ENGINEERING CONSULTANTS, LLC
3335 ARCTIC BOULEVARD, STE 100
ANCHORAGE, AK 99503
(907) 564-2120
AECL861

STATE OF ALASKA
DEPARTMENT OF TRANSPORTATION
AND PUBLIC FACILITIES

GLENN HWY: PARKS HWY TO S. INNER SPRINGER LP. (PHASE II)

STORMWATER INFILTRATION BASIN DETAILS

DESIGNED BY KMA
CHECKED BY DRL
DRAFTED BY CDB

SCALE NTS

DATE TIME 11/11/2021 1:41 PM

DRAWING LOCATION
H:\JOBS\08-016 GLENN HIGHWAY 34-42 (DOT)\09 - PS&E\CAD\DRAWINGS\08016_P2_E07-E13_DRAINAGE_SD.DWG

NO.	DATE	REVISION	STATE	PROJECT DESIGNATION	YEAR	SHEET NO.	TOTAL SHEETS
			ALASKA	0A15037/CFHWY00431 0A15038/CFHWY00432 0A15033/CFHWY00006	2021	E11	E35

KMA DRL CDB — DESIGNED BY / CHECKED BY / DRAFTED BY

SCALE: NTS

DATE TIME: 11/11/2021 1:41 PM

DRAWING LOCATION:
H:\JOBS\08-016 GLENN HIGHWAY 34-42 (DOT)\09 - PS&E\CAD_PH2\DRAWINGS\08016_P2_E07-E13_DRAINAGE_SD.DWG

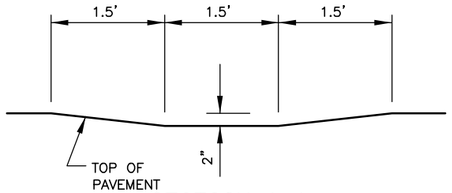

SECTION A-A

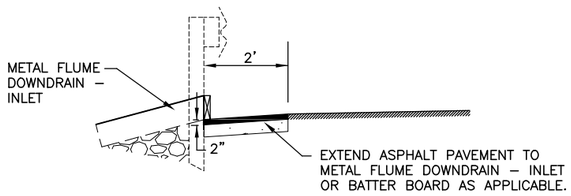

SECTION B-B

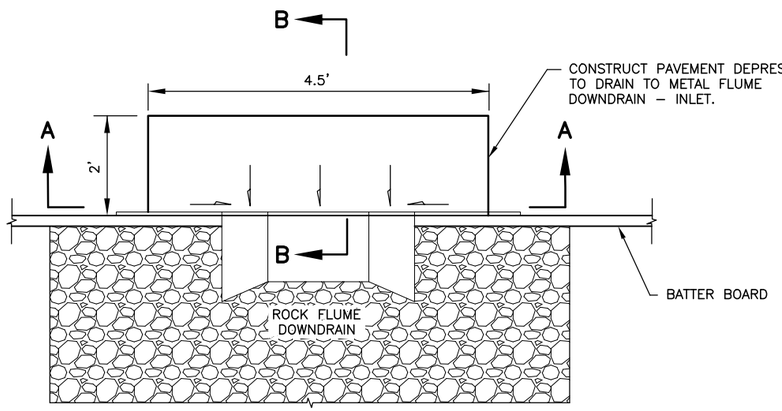

PLAN VIEW

PAVEMENT DEPRESSION AT METAL FLUME DOWNDRAIN – INLET

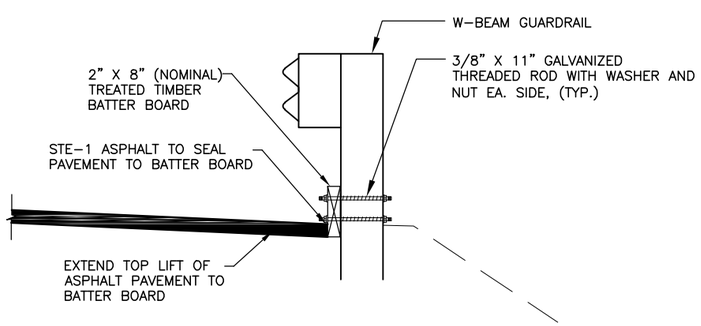

TREATED TIMBER BATTER BOARD DETAIL

INSTALL BATTER BOARD PRIOR TO PLACING TOP LIFT OF PAVEMENT.

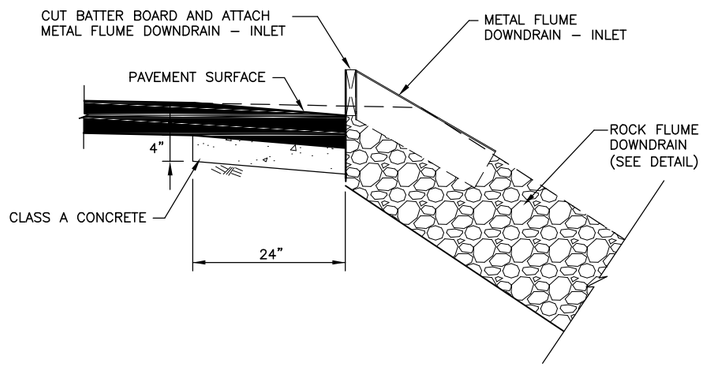

ELEVATION VIEW

METAL FLUME DOWNDRAIN – INLET

NOTE: LOCATE CENTER OF METAL FLUME DOWNDRAIN – INLET AT MIDPOINT BETWEEN W–BEAM GUARDRAIL POSTS.

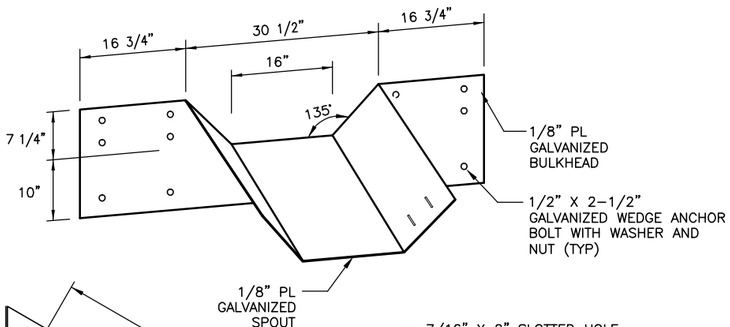

SIDE VIEW

SECTION D–D

METAL FLUME DOWNDRAIN – INLET

CERTIFICATION SET
NOVEMBER 2021

STATE OF ALASKA
DEPARTMENT OF TRANSPORTATION AND PUBLIC FACILITIES

GLENN HWY: PARKS HWY TO S. INNER SPRINGER LP. (PHASE II)

METAL FLUME DOWNDRAIN – INLET DETAILS

STATE OF ALASKA 49TH — KYLE M. ALBERT CE–141837 — REGISTERED PROFESSIONAL ENGINEER

HDL ENGINEERING CONSULTANTS, LLC
3335 ARCTIC BOULEVARD, STE 100
ANCHORAGE, AK 99503
(907) 564–2120
AECL861

NO.	DATE	REVISION	STATE	PROJECT DESIGNATION	YEAR	SHEET NO.	TOTAL SHEETS
			ALASKA	0A15037/CFHWY00431 0A15038/CFHWY00432 0A15033/CFHWY00006	2021	E12	E35

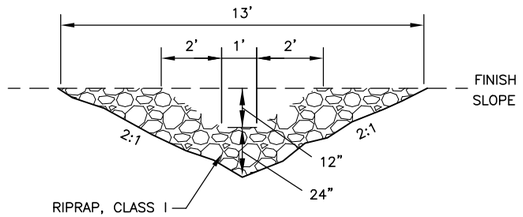

SECTION B-B

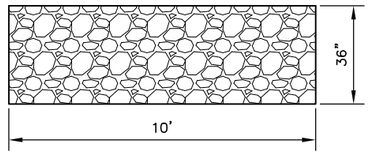

SECTION C-C

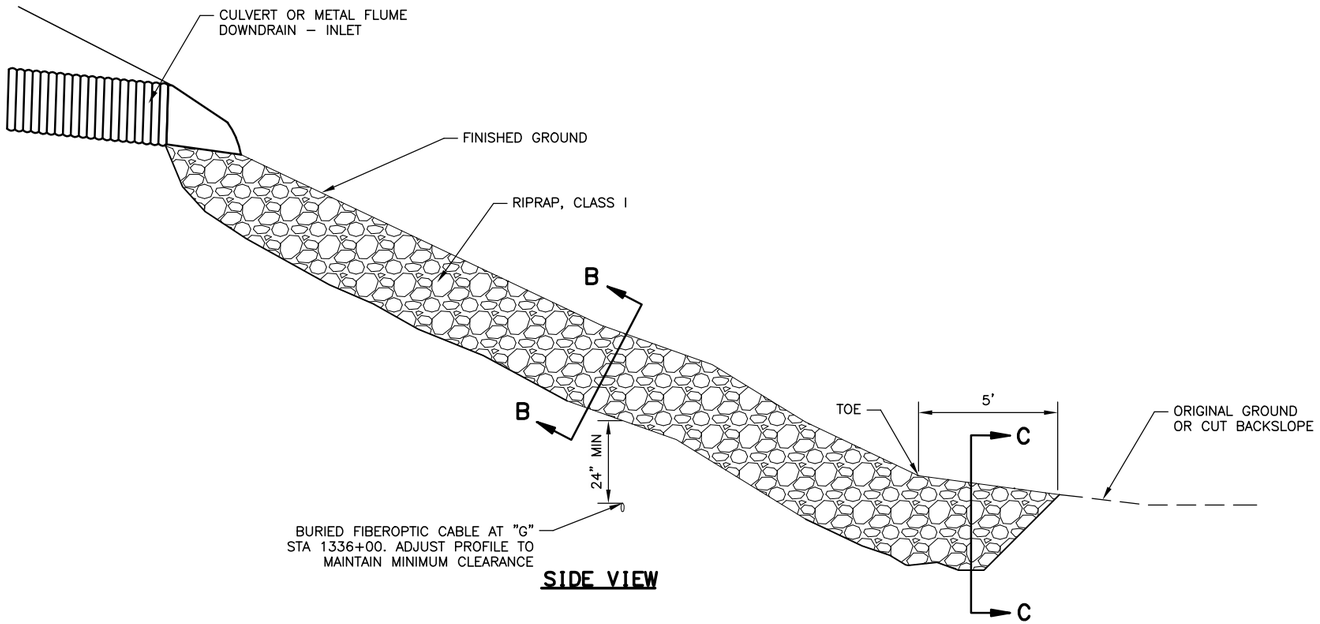

SIDE VIEW

ROCK FLUME DOWNDRAIN

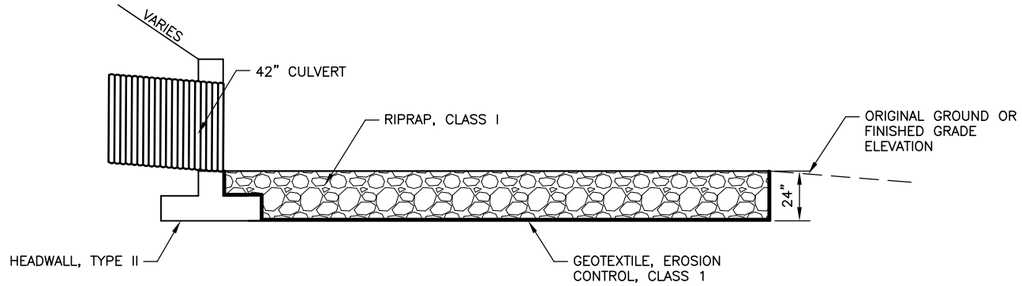

SECTION D-D

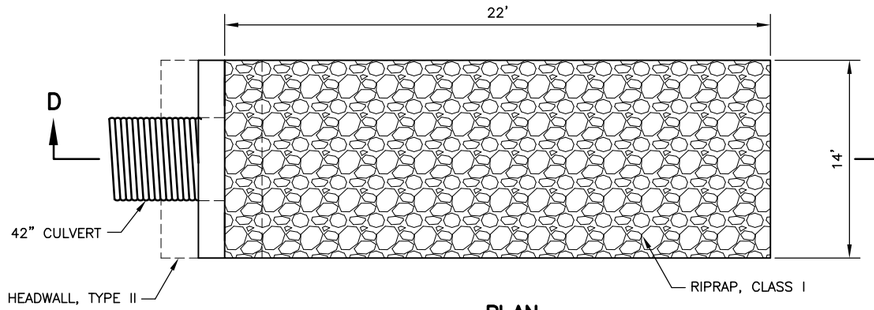

PLAN

HEADWALL ENERGY DISSIPATOR

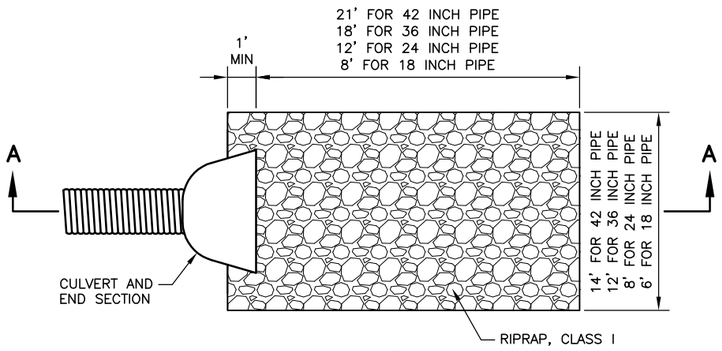

PLAN

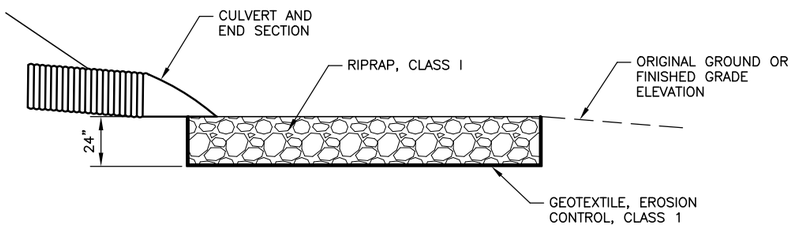

SECTION A-A

CULVERT ENERGY DISSIPATOR

CERTIFICATION SET
NOVEMBER 2021

STATE OF ALASKA
49TH
KYLE M. ALBERT
CE-141837
REGISTERED PROFESSIONAL ENGINEER

HDL ENGINEERING CONSULTANTS, LLC
3335 ARCTIC BOULEVARD, STE 100
ANCHORAGE, AK 99503
(907) 564-2120
AECL861

STATE OF ALASKA
DEPARTMENT OF TRANSPORTATION
AND PUBLIC FACILITIES

GLENN HWY: PARKS HWY TO S. INNER SPRINGER LP. (PHASE II)

ROCK FLUME AND RIPRAP DETAILS

DESIGNED BY KMA
CHECKED BY DRL
DRAFTED BY CDB

SCALE NTS

DATE TIME 11/19/2021 10:20 AM

DRAWING LOCATION
H:\JOBS\08-016 GLENN HIGHWAY 34-42 (DOT)\09 - PS&E\CAD\DRAWINGS\08016_P2_E07-E20_DRAINAGE_SD 1:1, 04/20/17 at 15:05 by CDB
H:\JOBS\08-016 GLENN HIGHWAY 34-42 (DOT)\09 - PS&E\CAD_PH2\DRAWINGS\08016_P2_E07-E13_DRAINAGE_SD.DWG

NO.	DATE	REVISION	STATE	PROJECT DESIGNATION	YEAR	SHEET NO.	TOTAL SHEETS
			ALASKA	0A15037/CFHWY00431 0A15038/CFHWY00432 0A15033/CFHWY00006	2021	E13	E35

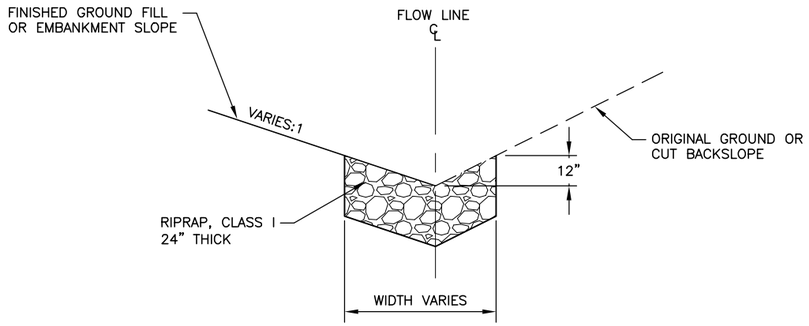

CUT/FILL TRANSITION LINING SECTION

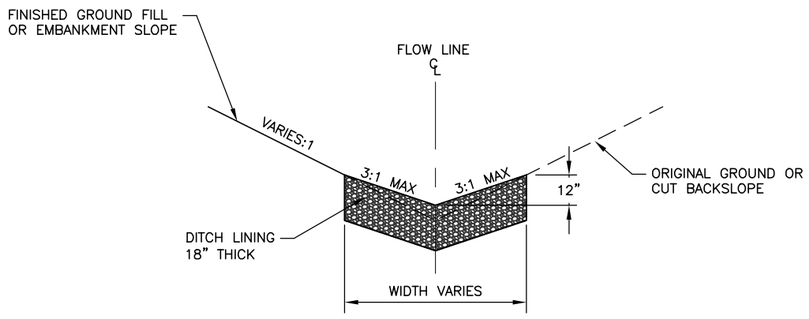

DITCH LINING SECTION

NOTE:

1. DITCH LINING MAY FOLLOW FLOW LINE AROUND DRIVEWAY AND SIDE STREET RETURNS AS DIRECTED BY THE ENGINEER.

CERTIFICATION SET
NOVEMBER 2021

STATE OF ALASKA
49TH
KYLE M. ALBERT
CE-141837
REGISTERED PROFESSIONAL ENGINEER

HDL ENGINEERING CONSULTANTS, LLC
3335 ARCTIC BOULEVARD, STE 100
ANCHORAGE, AK 99503
(907) 564-2120
AECL861

STATE OF ALASKA
DEPARTMENT OF TRANSPORTATION
AND PUBLIC FACILITIES

GLENN HWY: PARKS HWY TO S. INNER SPRINGER LP. (PHASE II)

DITCH LINING DETAILS

DESIGNED BY KMA
CHECKED BY DRL
DRAFTED BY CDB
SCALE NTS
DATE 11/11/2021 TIME 1:41 PM
DRAWING LOCATION
H:\JOBS\08-016 GLENN HIGHWAY 34-42 (DOT)\09 - PS&E\CAD_PH2\DRAWINGS\08016_P2_E07-E13_DRAINAGE_SD.DWG

NO.	DATE	REVISION	STATE	PROJECT DESIGNATION	YEAR	SHEET NO.	TOTAL SHEETS
			ALASKA	0A15037/CFHWY00431 0A15038/CFHWY00432 0A15033/CFHWY00006	2021	E14	E35

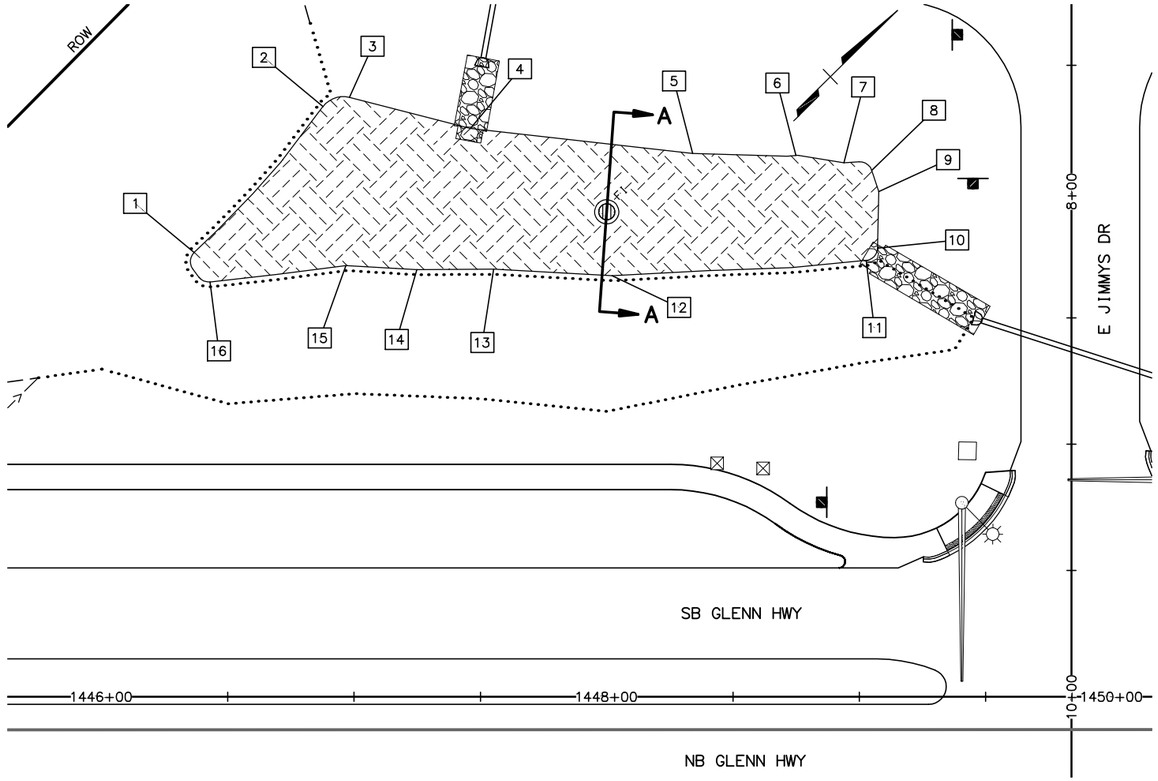

RAIN GARDEN LAYOUT

POINT	STATION	OFFSET	ELEVATION	REMARKS
1	"G" 1446+36.7	175.9 LT	80.00	-
2	"G" 1446+87.7	233.7 LT	80.00	-
3	"G" 1446+98.2	237.3 LT	80.00	-
4	"G" 1447+46.1	225.0 LT	80.00	-
5	"G" 1448+34.0	215.1 LT	80.00	-
6	"G" 1448+74.9	214.3 LT	80.00	-
7	"G" 1448+94.0	211.4 LT	80.00	-
8	"G" 1449+04.9	208.3 LT	80.00	-
9	"G" 1448+02.2	166.7 LT	80.00	-
10	"G" 1449+07.3	177.6 LT	80.00	-
11	"G" 1449+02.8	172.8 LT	80.00	-
12	"G" 1448+02.2	166.7 LT	80.00	-
13	"G" 1447+55.2	169.3 LT	80.00	-
14	"G" 1447+24.8	169.1 LT	80.00	-
15	"G" 1446+96.8	170.7 LT	80.00	-
16	"G" 1446+43.0	164.3 LT	80.00	-

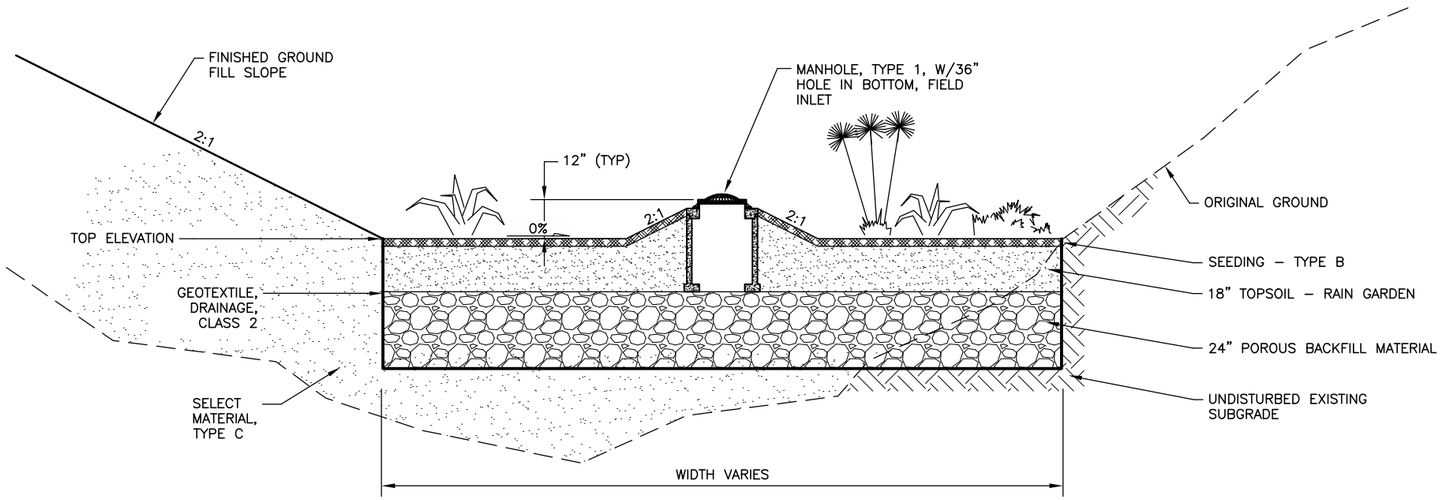

RAIN GARDEN TYPICAL SECTION
SECTION A-A

CERTIFICATION SET
NOVEMBER 2021

STATE OF ALASKA
49TH
KYLE M. ALBERT
CE-141837
REGISTERED PROFESSIONAL ENGINEER

HDL ENGINEERING CONSULTANTS, LLC
3335 ARCTIC BOULEVARD, STE 100
ANCHORAGE, AK 99503
(907) 564-2120
AECL861

STATE OF ALASKA
DEPARTMENT OF TRANSPORTATION
AND PUBLIC FACILITIES

GLENN HWY: PARKS HWY TO S. INNER SPRINGER LP. (PHASE II)

RAIN GARDEN DETAILS

DESIGNED BY KMA
CHECKED BY DRL
DRAFTED BY CDB
SCALE 1" = 60'
DATE 11/11/2021 TIME 1:43 PM
DRAWING LOCATION
H:\JOBS\08-016 GLENN HIGHWAY 34-42 (DOT)\09 - PS&E\CAD\DRAWINGS\08016_P2_E14-E15-RAINGARDENS.DWG

NO.	DATE	REVISION

STATE	PROJECT DESIGNATION	YEAR	SHEET NO.	TOTAL SHEETS
ALASKA	0A15037/CFHWY00431 0A15038/CFHWY00432 0A15033/CFHWY00006	2021	E15	E35

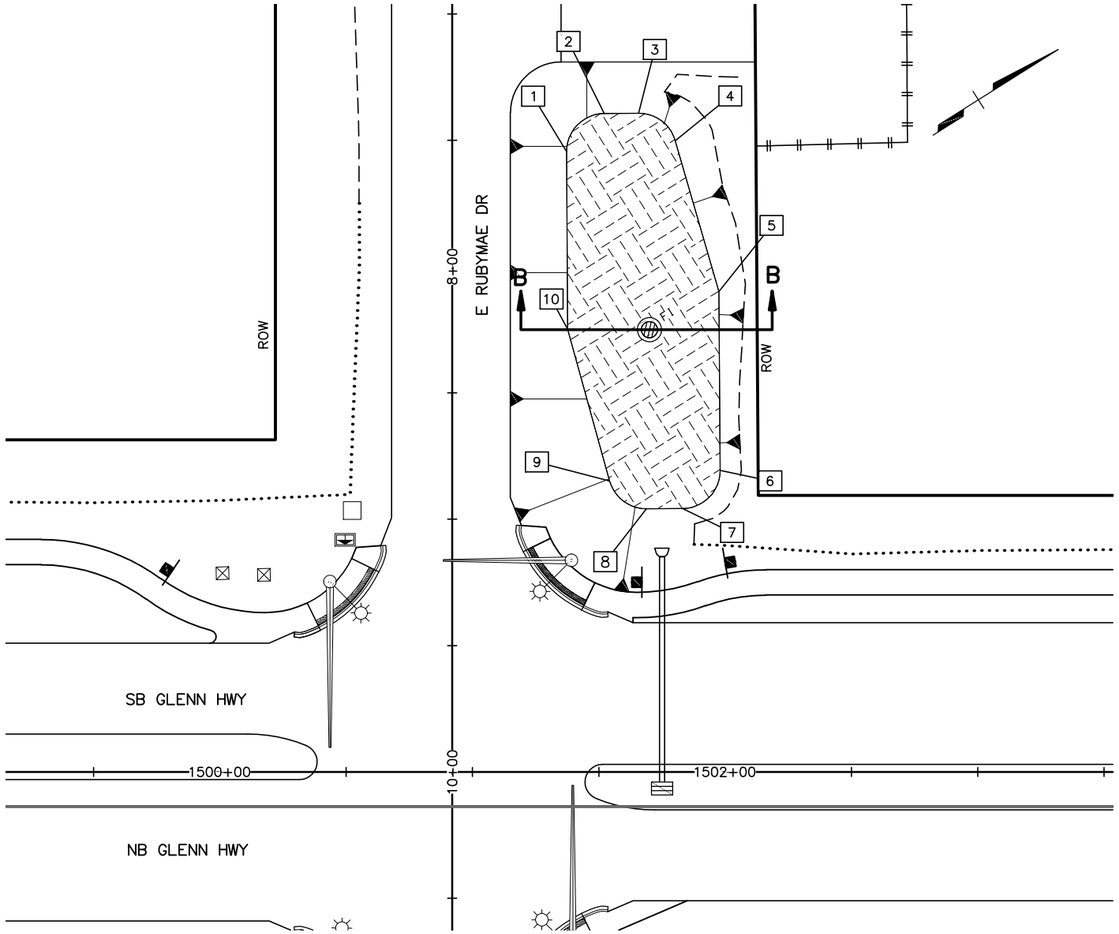

RAIN GARDEN LAYOUT

POINT	STATION	OFFSET	ELEVATION	REMARKS
1	"G" 1501+37.2	245.5 LT	128.50	-
2	"G" 1501+37.2	260.6 LT	128.50	-
3	"G" 1501+65.8	260.7 LT	128.50	-
4	"G" 1501+80.3	249.9 LT	128.50	-
5	"G" 1501+97.6	190.1 LT	128.50	-
6	"G" 1501+98.0	119.3 LT	128.50	-
7	"G" 1501+83.1	104.2 LT	128.50	-
8	"G" 1501+68.8	104.1 LT	128.50	-
9	"G" 1501+54.2	115.1 LT	128.50	-
10	"G" 1501+37.7	175.2 LT	128.50	-

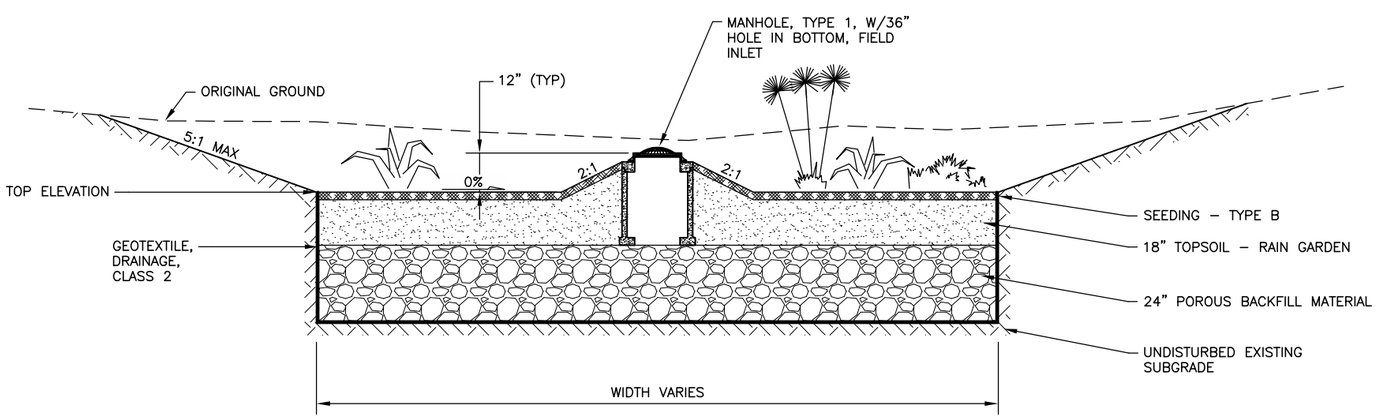

RAIN GARDEN TYPICAL SECTION
SECTION B-B

CERTIFICATION SET
NOVEMBER 2021

STATE OF ALASKA
49TH
KYLE M. ALBERT
CE-141837
REGISTERED PROFESSIONAL ENGINEER

HDL ENGINEERING CONSULTANTS, LLC
3335 ARCTIC BOULEVARD, STE 100
ANCHORAGE, AK 99503
(907) 564-2120
AECL861

STATE OF ALASKA
DEPARTMENT OF TRANSPORTATION
AND PUBLIC FACILITIES

GLENN HWY: PARKS HWY TO S. INNER SPRINGER LP. (PHASE II)

RAIN GARDEN DETAILS

DESIGNED BY KMA
CHECKED BY DRL
DRAFTED BY CDB

SCALE 1" = 60'

DATE 11/11/2021 TIME 1:43 PM

DRAWING LOCATION:
H:\JOBS\08-016 GLENN HIGHWAY 34-42 (DOT)\09 - PS&E\CAD\DRAWINGS\08016_P2_E14-E15-RAINGARDENS.DWG

NO.	DATE	REVISION	STATE	PROJECT DESIGNATION	YEAR	SHEET NO.	TOTAL SHEETS
			ALASKA	0A15037/CFHWY00431 0A15038/CFHWY00432 0A15033/CFHWY00006	2021	E16	E35

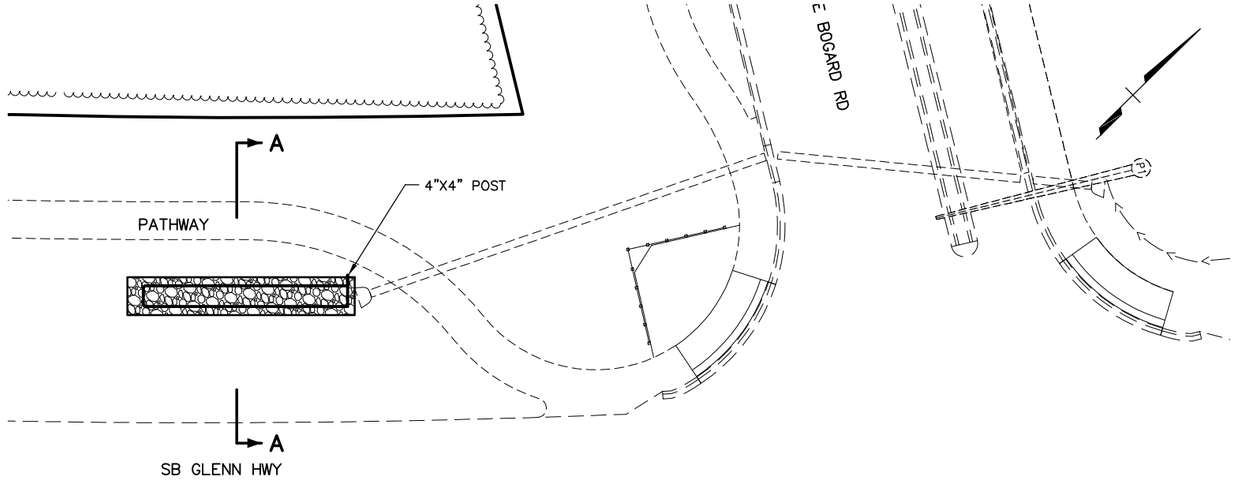

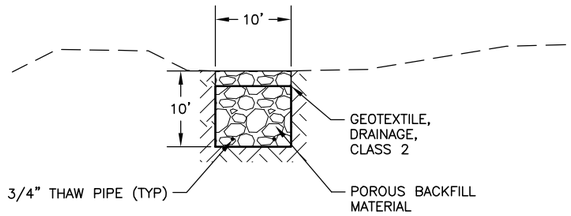

SECTION A-A

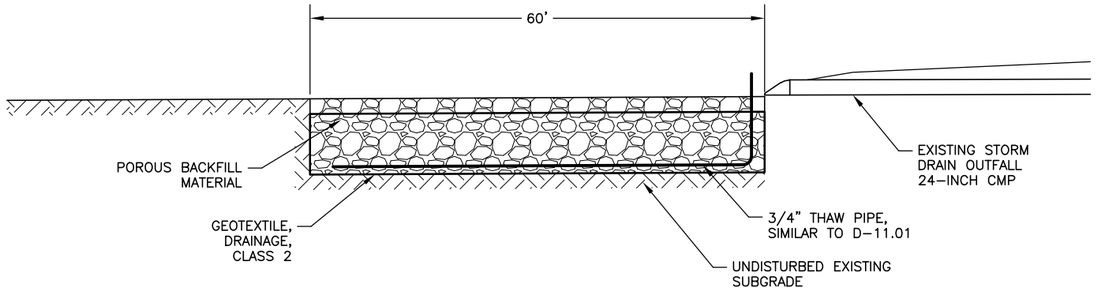

PROFILE VIEW

CERTIFICATION SET
NOVEMBER 2021

STATE OF ALASKA
49TH
KYLE M. ALBERT
CE-141837
REGISTERED PROFESSIONAL ENGINEER

HDL ENGINEERING CONSULTANTS, LLC
3335 ARCTIC BOULEVARD, STE 100
ANCHORAGE, AK 99503
(907) 564-2120
AECL861

STATE OF ALASKA
DEPARTMENT OF TRANSPORTATION
AND PUBLIC FACILITIES

GLENN HWY: PARKS HWY TO S. INNER SPRINGER LP. (PHASE II)

INFILTRATION TRENCH DETAIL

DESIGNED BY KMA
CHECKED BY DRL
DRAFTED BY CDB

SCALE 1" = 60'

DATE TIME 11/11/2021 1:45 PM

DRAWING LOCATION
H:\JOBS\08-016 GLENN HIGHWAY 34-42 (DOT)\09 - PS&E\CAD_PH2\DRAWINGS\08016_P2_E16-INFILT-TRENCH.DWG

Layout: E-16 Tab: ENLARGE-REQUIRED
Highway_34-42_(DOT)_09_-_PS&E\CAD_DRAWINGS\08016_00_Error-triggerdwg, 1:10, 11/07/16 at 10:57 by CDB

NO.	DATE	REVISION

STATE	PROJECT DESIGNATION	YEAR	SHEET NO.	TOTAL SHEETS
ALASKA	0A15037/CFHWY00431 0A15038/CFHWY00432 0A15033/CFHWY00006	2021	E17	E35

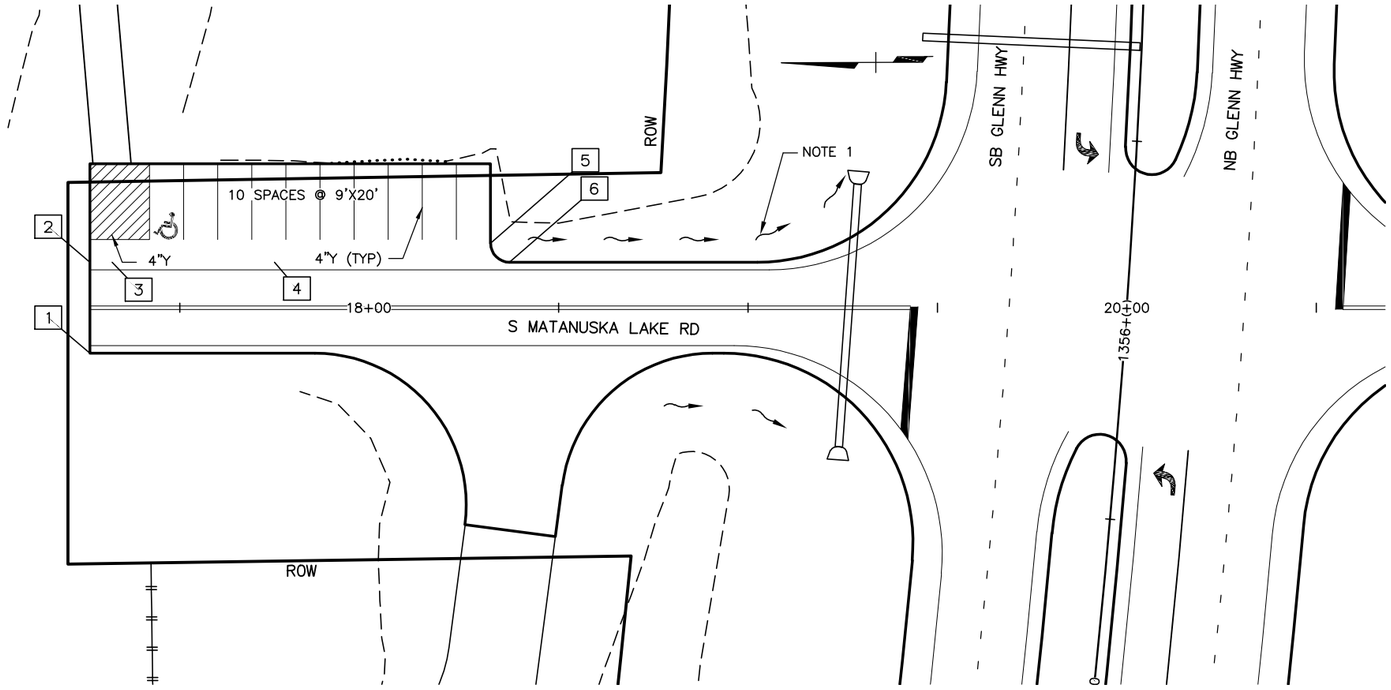

NOTE:

1. GRADE TO DRAIN S MATANUSKA LAKE RD DITCH TO GLENN HIGHWAY DITCH.

PAVEMENT LAYOUT SCHEDULE

POINT	STATION	OFFSET	ELEVATION	REMARKS
1	"MS" 17+26.30	12.00 RT	100.28±	MATCH EXISTING
2	"MS" 17+26.30	12.00 LT	100.51	
3	"MS" 17+32.12	12.00 LT	100.48	ASPHALT SWALE
4	"MS" 17+75.00	12.00 LT	101.73	ASPHALT SWALE
5	"MS" 18+32.00	17.00 LT	101.22	EDGE OF PAVEMENT, PC, R=5'
6	"MS" 18+37.00	12.00 LT	101.99	EDGE OF PAVEMENT, PT

MATANUSKA LAKE RD PARKING AREA

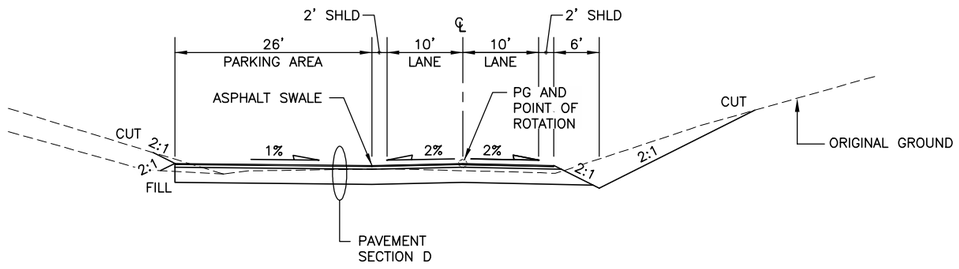

TYPICAL SECTION

CERTIFICATION SET
NOVEMBER 2021

STATE OF ALASKA
49TH
DENNIS R. LINNELL
CE-7649
REGISTERED PROFESSIONAL ENGINEER

HDL ENGINEERING CONSULTANTS, LLC
3335 ARCTIC BOULEVARD, STE 100
ANCHORAGE, AK 99503
(907) 564-2120
AECL861

STATE OF ALASKA
DEPARTMENT OF TRANSPORTATION
AND PUBLIC FACILITIES

GLENN HWY: PARKS HWY TO S. INNER SPRINGER LP. (PHASE II)

MATANUSKA LAKE RD PARKING AREA DETAILS

DESIGNED BY CAB
CHECKED BY DRL
DRAFTED BY CDB

SCALE 1" = 40'

DATE TIME 11/11/2021 1:46 PM

DRAWING LOCATION
H:\JOBS\08-016 GLENN HIGHWAY 34-42 (DOT)\09 - PS&E\CAD_PH2\DRAWINGS\08016_P2_E17-MATSPUR.DWG

NO.	DATE	REVISION

STATE	PROJECT DESIGNATION	YEAR	SHEET NO.	TOTAL SHEETS
ALASKA	0A15037/CFHWY00431 0A15038/CFHWY00432 0A15033/CFHWY00006	2021	E18	E35

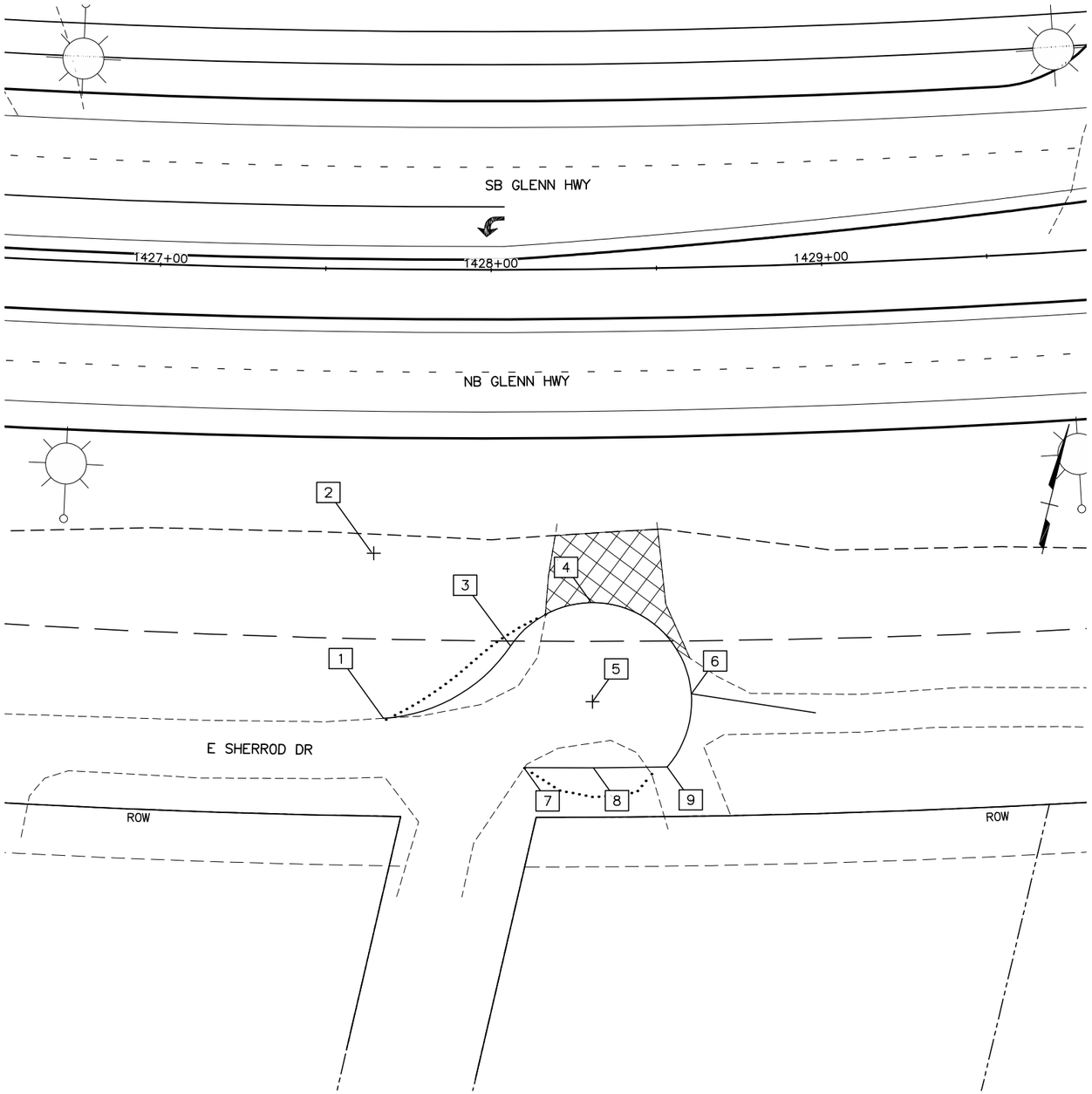

E SHERROD DR TURNAROUND

LAYOUT TABLE

NO.	STATION	OFFSET	ELEVATION	REMARKS
1	"G" 1427+68.78	135.81 RT	124.0± ME	EDGE OF TURNAROUND/PC
2	"G" 1427+65.44	85.93 RT	-	R=50'
3	"G" 1428+05.53	113.83 RT	127.56	PCC
4	"G" 1428+29.17	100.84 RT	129.8 ± ME	EDGE OF TURNAROUND
5	"G" 1428+29.22	130.84 RT	129.16	R=30'
6	"G" 1428+57.86	128.97 RT	131.5 ± ME	EDGE OF TURNAROUND
7	"G" 1428+09.34	150.75 RT	126.4± ME	EDGE OF TURNAROUND
8	"G" 1428+29.25	150.85 RT	128.76	EDGE OF TURNAROUND
9	"G" 1428+50.44	150.94 RT	130.7 ± ME	EDGE OF TURNAROUND

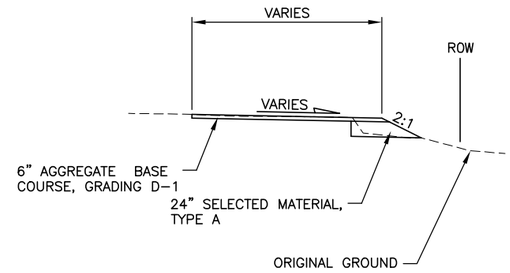

E SHERROD DR TYPICAL SECTION

CERTIFICATION SET
NOVEMBER 2021

STATE OF ALASKA
49TH
DENNIS R. LINNELL
CE-7649
REGISTERED PROFESSIONAL ENGINEER

HDL ENGINEERING CONSULTANTS, LLC
3335 ARCTIC BOULEVARD, STE 100
ANCHORAGE, AK 99503
(907) 564-2120
AECL861

STATE OF ALASKA
DEPARTMENT OF TRANSPORTATION
AND PUBLIC FACILITIES

GLENN HWY: PARKS HWY TO S. INNER SPRINGER LP. (PHASE II)

E SHERROD DR
TURNAROUND

DESIGNED BY CAB
CHECKED BY DRL
DRAFTED BY CDB

SCALE 1" = 40'

DATE 11/11/2021 TIME 1:46 PM

DRAWING LOCATION
H:\JOBS\08-016 GLENN HIGHWAY 34-42 (DOT)\09 - PS&E\CAD_PH2\DRAWINGS\08016_P2_E18-TURNAROUND.DWG

NO.	DATE	REVISION

STATE	PROJECT DESIGNATION	YEAR	SHEET NO.	TOTAL SHEETS
ALASKA	0A15037/CFHWY00431 0A15038/CFHWY00432 0A15033/CFHWY00006	2021	E19	E35

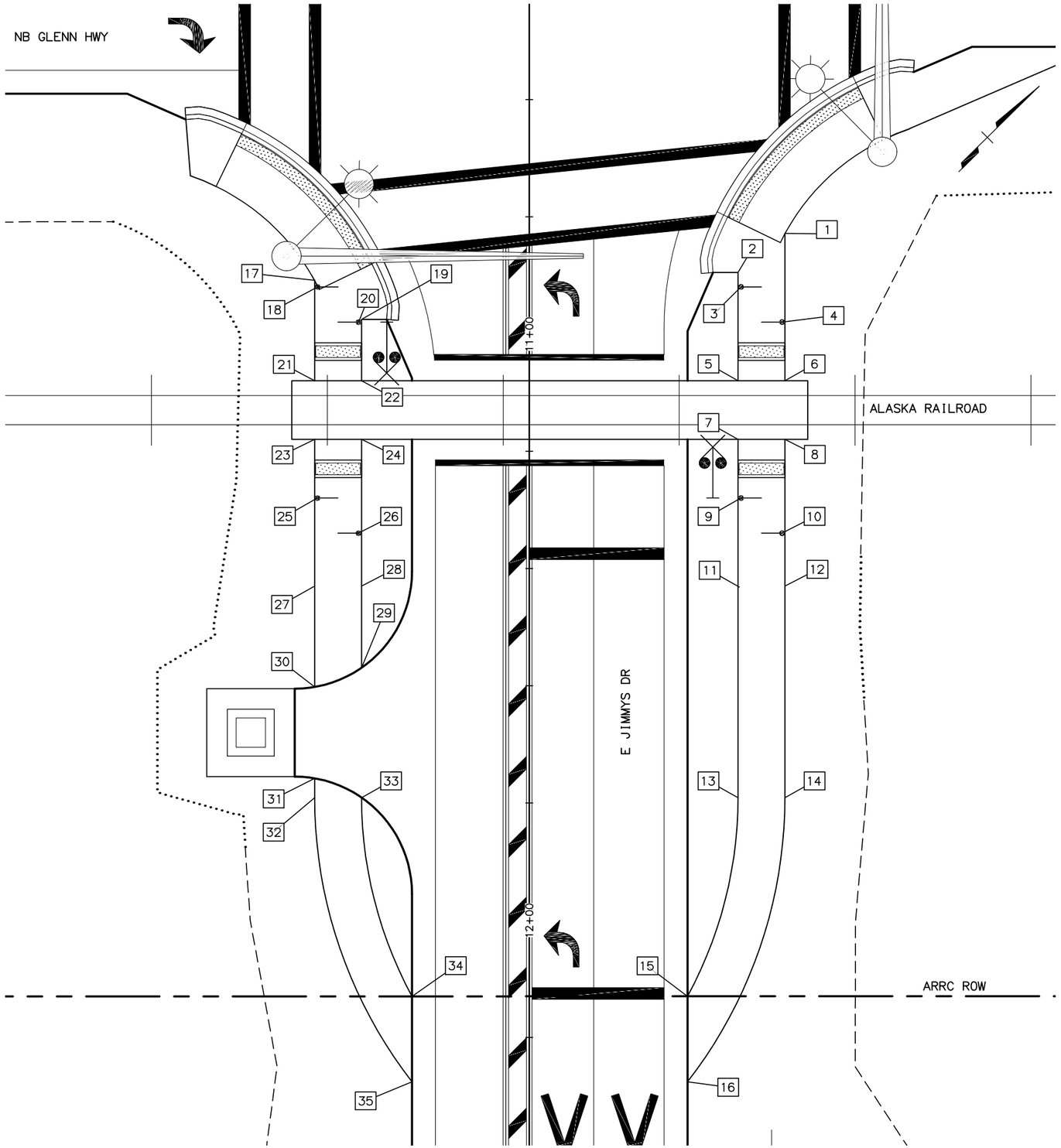

E JIMMYS DR PEDESTRIAN RAILROAD CROSSING

LAYOUT TABLE

NO.	STATION	OFFSET	ELEVATION	REMARKS
1	"JD" 10+82.85	43.62 LT	109.36	EDGE OF PATHWAY, BEGIN PATHWAY
2	"JD" 10+89.52	35.62 LT	109.36	EDGE OF PATHWAY, BEGIN PATHWAY
3	"JD" 10+91.00	36.12 LT	-	PEDESTRIAN PATHWAY DIVERTER, SIGN FACING W
4	"JD" 10+98.00	43.12 LT	-	PEDESTRIAN PATHWAY DIVERTER, SIGN FACING W
5	"JD" 11+07.98	35.62 LT	109.47	PATHWAY, RAILROAD PAD
6	"JD" 11+07.98	43.62 LT	109.51	PATHWAY, RAILROAD PAD
7	"JD" 11+17.98	35.62 LT	109.47	PATHWAY, RAILROAD PAD
8	"JD" 11+17.98	43.62 LT	109.51	PATHWAY, RAILROAD PAD
9	"JD" 11+28.00	36.12 LT	-	PEDESTRIAN PATHWAY DIVERTER, SIGN FACING E
10	"JD" 11+34.00	43.12 LT	-	PEDESTRIAN PATHWAY DIVERTER, SIGN FACING E
11	"JD" 11+43.00	35.62 LT	108.91	PATHWAY
12	"JD" 11+43.00	43.62 LT	108.79	PATHWAY
13	"JD" 11+79.11	35.62 LT	107.96	PATHWAY, PC, R=71'
14	"JD" 11+79.11	43.62 LT	107.84	PATHWAY, PC, R=79'
15	"JD" 12+12.98	27.02 LT	106.28	EDGE OF ROADWAY, END PATHWAY, R=71'
16	"JD" 12+27.56	27.02 LT	105.33	EDGE OF ROADWAY, END PATHWAY, R=79'
17	"JD" 10+90.86	36.61 RT	109.02	EDGE OF PATHWAY, BEGIN PATHWAY
18	"JD" 10+92.00	36.11 RT	-	PEDESTRIAN PATHWAY DIVERTER, SIGN FACING W
19	"JD" 10+97.52	28.61 RT	109.10	EDGE OF PATHWAY, BEGIN PATHWAY
20	"JD" 10+98.00	29.11 RT	-	PEDESTRIAN PATHWAY DIVERTER, SIGN FACING W
21	"JD" 11+07.98	36.61 RT	109.09	PATHWAY, RAILROAD PAD
22	"JD" 11+07.98	28.61 RT	109.13	PATHWAY, RAILROAD PAD
23	"JD" 11+17.98	36.61 RT	109.09	PATHWAY, RAILROAD PAD
24	"JD" 11+17.98	28.61 RT	109.13	PATHWAY, RAILROAD PAD
25	"JD" 11+28.00	36.11 RT	-	PEDESTRIAN PATHWAY DIVERTER, SIGN FACING E
26	"JD" 11+34.00	29.11 RT	-	PEDESTRIAN PATHWAY DIVERTER, SIGN FACING E
27	"JD" 11+43.00	36.61 RT	108.59	PATHWAY
28	"JD" 11+43.00	28.61 RT	108.71	PATHWAY
29	"JD" 11+56.94	28.61 RT	108.53	PATHWAY
30	"JD" 11+60.21	36.61 RT	108.33	PATHWAY
31	"JD" 11+75.79	36.61 RT	107.87	PATHWAY
32	"JD" 11+79.11	36.61 RT	107.74	PATHWAY, PC, R=79'
33	"JD" 11+79.11	28.61 RT	107.86	PATHWAY, PC, R=71'
34	"JD" 12+13.00	20.00 RT	106.26	EDGE OF ROADWAY, END PATHWAY, R=71'
35	"JD" 12+27.57	20.00 RT	105.39	EDGE OF ROADWAY, END PATHWAY, R=79'

CERTIFICATION SET
NOVEMBER 2021

STATE OF ALASKA
49TH
DENNIS R. LINNELL
CE-7649
REGISTERED PROFESSIONAL ENGINEER

HDL ENGINEERING CONSULTANTS, LLC
3335 ARCTIC BOULEVARD, STE 100
ANCHORAGE, AK 99503
(907) 564-2120
AECL861

STATE OF ALASKA
DEPARTMENT OF TRANSPORTATION
AND PUBLIC FACILITIES

GLENN HWY: PARKS HWY TO S. INNER SPRINGER LP. (PHASE II)

E JIMMYS DR
PEDESTRIAN RAILROAD CROSSING

DESIGNED BY AAL
CHECKED BY DRL
DRAFTED BY CDB

SCALE 1" = 20'

DATE TIME 11/11/2021 1:47 PM

DRAWING LOCATION
H:\JOBS\08-016 GLENN HIGHWAY 34-42 (DOT)\09 - PS&E\CAD_PH2\DRAWINGS\08016_P2_E19-JIMMYS-RR.DWG

NO.	DATE	REVISION

STATE	PROJECT DESIGNATION	YEAR	SHEET NO.	TOTAL SHEETS
ALASKA	0A15037/CFHWY00431 0A15038/CFHWY00432 0A15033/CFHWY00006	2021	E20	E35

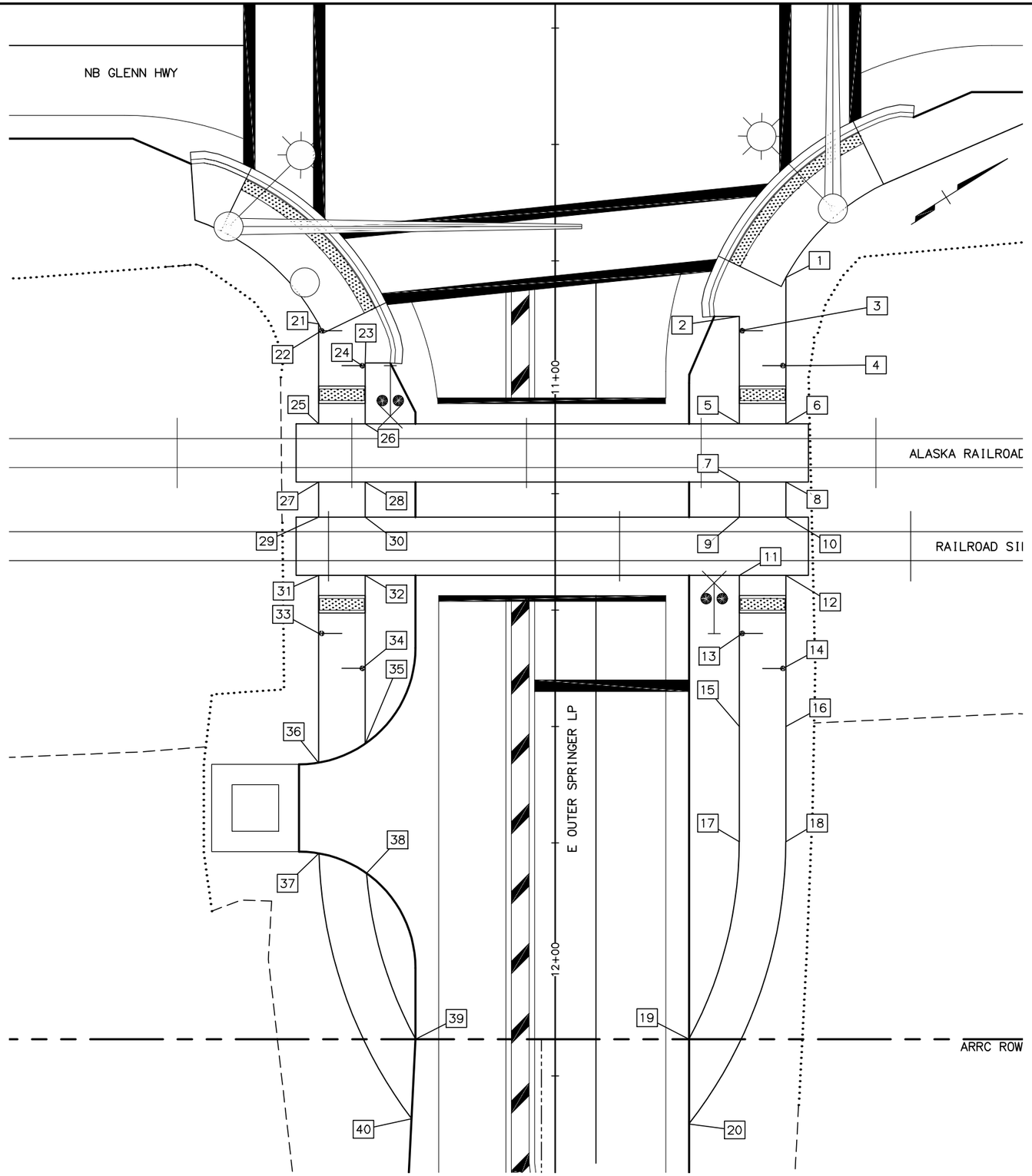

E OUTER SPRINGER LP PEDESTRIAN RAILROAD CROSSING

LAYOUT TABLE

NO.	STATION	OFFSET	ELEVATION	REMARKS
1	"OS" 10+82.85	39.62 LT	135.59	EDGE OF PATHWAY, BEGIN PATHWAY
2	"OS" 10+89.50	31.62 LT	135.49	EDGE OF PATHWAY, BEGIN PATHWAY
3	"OS" 10+92.00	32.12 LT	–	PEDESTRIAN PATHWAY DIVERTER, SIGN FACING W
4	"OS" 10+98.00	39.12 LT	–	PEDESTRIAN PATHWAY DIVERTER, SIGN FACING W
5	"OS" 11+08.00	31.62 LT	134.57	PATHWAY, RAILROAD PAD
6	"OS" 11+08.00	39.62 LT	134.64	PATHWAY, RAILROAD PAD
7	"OS" 11+18.00	31.62 LT	134.57	PATHWAY, RAILROAD PAD
8	"OS" 11+18.00	39.62 LT	134.64	PATHWAY, RAILROAD PAD
9	"OS" 11+24.00	31.62 LT	134.57	PATHWAY, RAILROAD PAD
10	"OS" 11+24.00	39.62 LT	134.64	PATHWAY, RAILROAD PAD
11	"OS" 11+34.00	31.62 LT	134.57	PATHWAY, RAILROAD PAD
12	"OS" 11+34.00	39.62 LT	134.64	PATHWAY, RAILROAD PAD
13	"OS" 11+44.00	32.12 LT	–	PEDESTRIAN PATHWAY DIVERTER, SIGN FACING E
14	"OS" 11+50.00	39.12 LT	–	PEDESTRIAN PATHWAY DIVERTER, SIGN FACING E
15	"OS" 11+60.00	31.62 LT	134.98	PATHWAY
16	"OS" 11+60.00	39.62 LT	134.86	PATHWAY
17	"OS" 11+79.80	31.62 LT	134.67	PATHWAY, PC, R=71'
18	"OS" 11+79.80	39.62 LT	134.55	PATHWAY, PC, R=79'
19	"OS" 12+13.71	23.00 LT	134.28	EDGE OF ROADWAY, END PATHWAY, R=71'
20	"OS" 12+28.27	23.00 LT	134.03	EDGE OF ROADWAY, END PATHWAY, R=79'
21	"OS" 10+90.84	40.62 RT	135.09	BEGIN PATHWAY
22	"OS" 10+92.00	40.12 RT	–	PEDESTRIAN PATHWAY DIVERTER, SIGN FACING W
23	"OS" 10+97.52	32.62 RT	134.93	BEGIN PATHWAY
24	"OS" 10+98.00	33.12 RT	–	PEDESTRIAN PATHWAY DIVERTER, SIGN FACING W
25	"OS" 11+08.00	40.62 RT	134.91	PATHWAY, RAILROAD PAD
26	"OS" 11+08.00	32.62 RT	134.98	PATHWAY, RAILROAD PAD
27	"OS" 11+18.00	40.62 RT	134.91	PATHWAY, RAILROAD PAD
28	"OS" 11+18.00	32.62 RT	134.98	PATHWAY, RAILROAD PAD
29	"OS" 11+24.00	40.62 RT	134.91	PATHWAY, RAILROAD PAD
30	"OS" 11+24.00	32.62 RT	134.98	PATHWAY, RAILROAD PAD
31	"OS" 11+34.00	40.62 RT	134.91	PATHWAY, RAILROAD PAD
32	"OS" 11+34.00	32.62 RT	134.98	PATHWAY, RAILROAD PAD
33	"OS" 11+44.00	40.12 RT	–	PEDESTRIAN PATHWAY DIVERTER, SIGN FACING E
34	"OS" 11+50.00	33.12 RT	–	PEDESTRIAN PATHWAY DIVERTER, SIGN FACING E
35	"OS" 11+62.95	32.62 RT	134.56	PATHWAY
36	"OS" 11+66.21	40.62 RT	134.46	PATHWAY
37	"OS" 11+81.79	40.59 RT	134.15	PATHWAY, R=79'
38	"OS" 11+79.80	32.41 RT	134.29	PATHWAY, R=71'
39	"OS" 12+13.71	24.00 RT	133.95	EDGE OF ROADWAY, END PATHWAY, R=71'
40	"OS" 12+27.38	24.68 RT	133.77	EDGE OF ROADWAY, END PATHWAY, R=79'

CERTIFICATION SET
NOVEMBER 2021

STATE OF ALASKA
49TH
DENNIS R. LINNELL
CE-7649
REGISTERED PROFESSIONAL ENGINEER

HDL ENGINEERING CONSULTANTS, LLC
3335 ARCTIC BOULEVARD, STE 100
ANCHORAGE, AK 99503
(907) 564-2120
AECL861

STATE OF ALASKA
DEPARTMENT OF TRANSPORTATION
AND PUBLIC FACILITIES

GLENN HWY: PARKS HWY TO S. INNER SPRINGER LP. (PHASE II)

E OUTER SPRINGER LP PEDESTRIAN RAILROAD CROSSING

DESIGNED BY AAL
CHECKED BY DRL
DRAFTED BY CDB

SCALE 1" = 20'

DATE TIME 11/11/2021 1:53 PM

DRAWING LOCATION
H:\JOBS\08-016 GLENN HIGHWAY 34-42 (DOT)\09 - PS&E\CAD_PH2\DRAWINGS\08016_P2_E20-OS-RR.DWG

NO.	DATE	REVISION	STATE	PROJECT DESIGNATION	YEAR	SHEET NO.	TOTAL SHEETS
			ALASKA	0A15037/CFHWY00431 0A15038/CFHWY00432 0A15033/CFHWY00006	2021	E21	E35

DESIGNED BY AAL
CHECKED BY DRL
DRAFTED BY CDB

SCALE NTS

DATE TIME 11/12/2021 8:46 AM

DRAWING LOCATION
H:\JOBS\08-016 GLENN HIGHWAY 34-42 (DOT)\09 - PS&E\CAD_PH2\DRAWINGS\08016_P2_E21.DWG

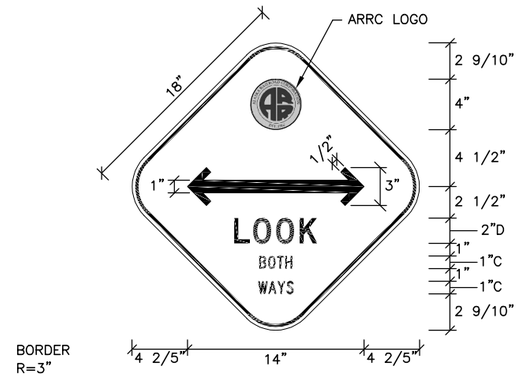

BORDER
R=3"
THICKNESS=1/4"
INSET=1/4"
BORDER & LEGEND COLOR: BLUE
BACKGROUND COLOR: YELLOW

SIGN DETAIL

NTS

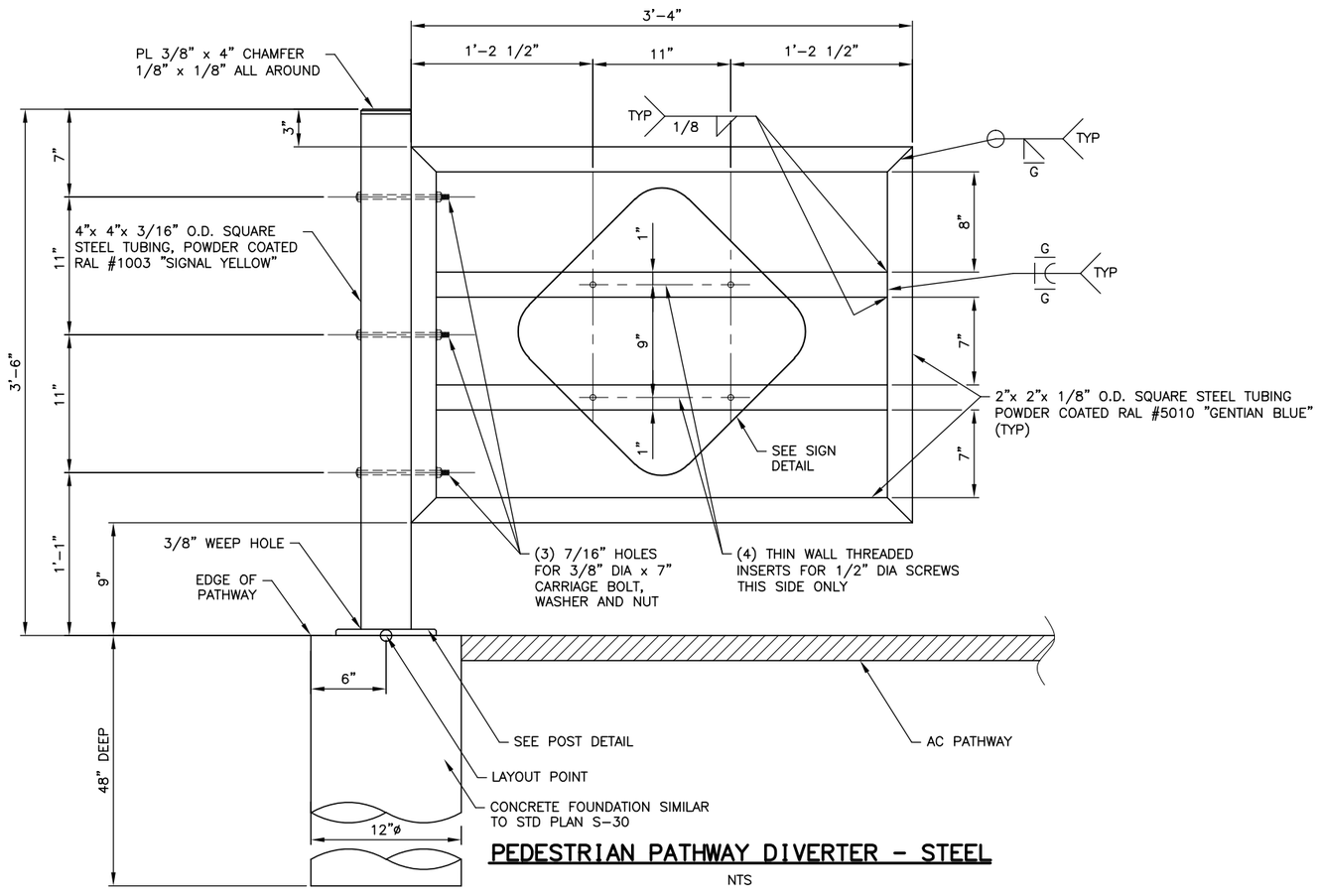

PEDESTRIAN PATHWAY DIVERTER - STEEL

NTS

ABBREVIATIONS

O.D.	OUTSIDE DIAMETER
PL	PLATE
STN STL	STAINLESS STEEL

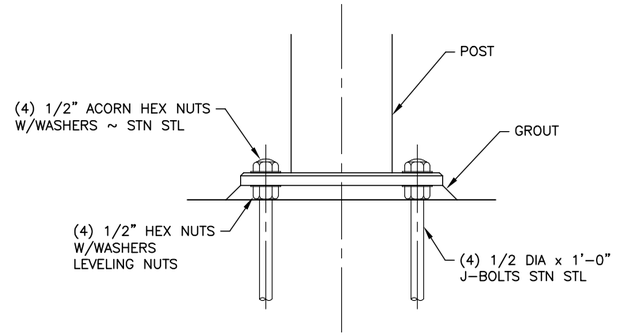

POST BASE SECTION

NTS

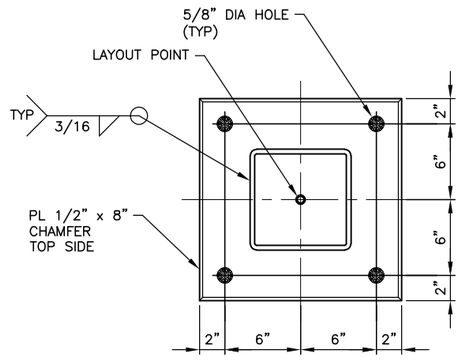

POST BASE PLAN

NTS

CERTIFICATION SET
NOVEMBER 2021

STATE OF ALASKA
DEPARTMENT OF TRANSPORTATION
AND PUBLIC FACILITIES

GLENN HWY: PARKS HWY TO S. INNER SPRINGER LP. (PHASE II)

PEDESTRIAN PATHWAY DIVERTER – STEEL

STATE OF ALASKA
49TH
DENNIS R. LINNELL
CE-7649
REGISTERED PROFESSIONAL ENGINEER

HDL ENGINEERING CONSULTANTS, LLC
3335 ARCTIC BOULEVARD, STE 100
ANCHORAGE, AK 99503
(907) 564-2120
AECL861

NO.	DATE	REVISION	STATE	PROJECT DESIGNATION	YEAR	SHEET NO.	TOTAL SHEETS
			ALASKA	0A15037/CFHWY00431 0A15038/CFHWY00432 0A15033/CFHWY00006	2021	E22	E35

DESIGNED BY AAL
CHECKED BY DRL
DRAFTED BY CDB

SCALE NTS

DATE TIME 11/11/2021 1:48 PM

DRAWING LOCATION
H:\JOBS\08-016 GLENN HIGHWAY 34-42 (DOT)\09 - PS&E\CAD_PH2\DRAWINGS\08016_P2_E22.DWG

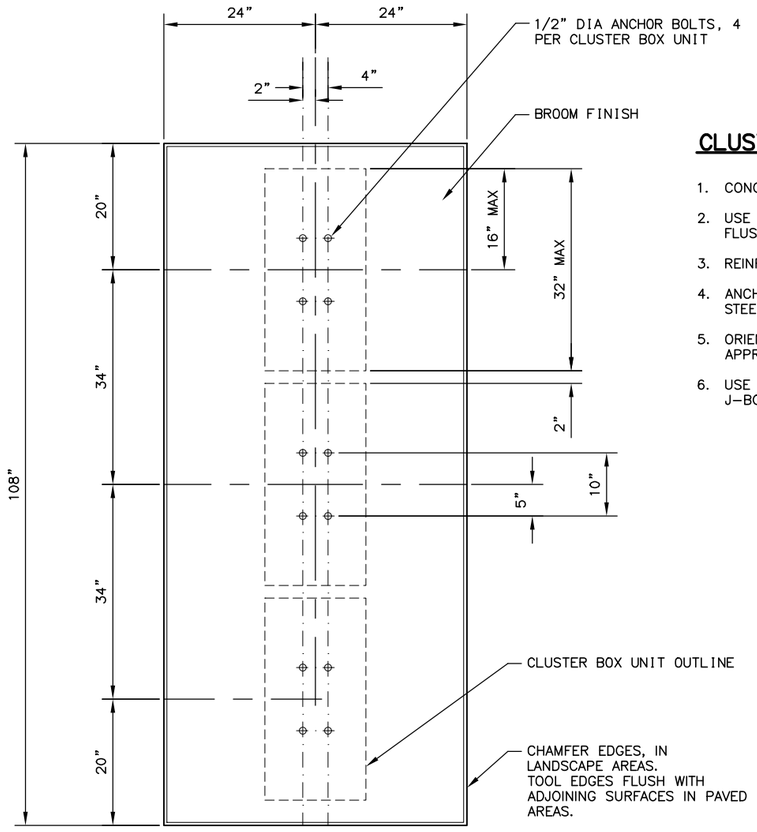

PLAN VIEW

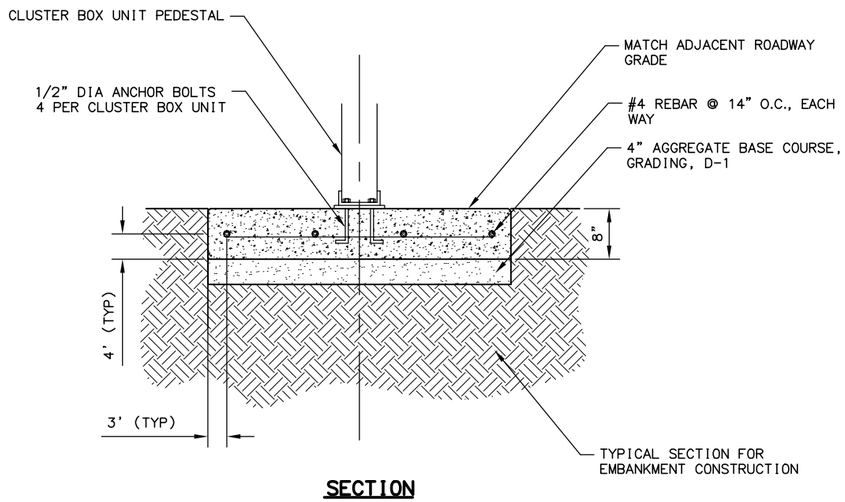

SECTION

CLUSTER MAILBOX FOUNDATION

CLUSTER MAILBOX NOTES:

1. CONCRETE FOUNDATION IS SUBSIDIARY TO CLUSTER MAILBOX ITEMS.
2. USE CLASS A CONCRETE. BROOM FINISH EXPOSED SURFACE AND TOOL EDGES FLUSH WITH ADJOINING PAVED SURFACE.
3. REINFORCING STEEL BARS SHALL CONFORM TO AASHTO M 31–86, GRADE 60.
4. ANCHOR BOLTS SHALL CONFORM TO ASTM A193, GRADE B8M, STAINLESS STEEL.
5. ORIENT LONG DIMENSION IN THE DIRECTION OF ADJACENT TRAFFIC, OR AS APPROVED BY THE ENGINEER
6. USE ANCHOR BOLT TEMPLATE APPROVED BY THE ENGINEER TO ENSURE J–BOLT ALIGNMENT. MINIMUM DEPTH OF EMBEDMENT IS 4.5 INCHES.

CERTIFICATION SET
NOVEMBER 2021

STATE OF ALASKA
49TH
DENNIS R. LINNELL
CE-7649
REGISTERED PROFESSIONAL ENGINEER

HDL ENGINEERING CONSULTANTS, LLC
3335 ARCTIC BOULEVARD, STE 100
ANCHORAGE, AK 99503
(907) 564-2120
AECL861

STATE OF ALASKA
DEPARTMENT OF TRANSPORTATION
AND PUBLIC FACILITIES

GLENN HWY: PARKS HWY TO S. INNER SPRINGER LP. (PHASE II)

CLUSTER MAILBOX DETAILS

NO.	DATE	REVISION	STATE	PROJECT DESIGNATION	YEAR	SHEET NO.	TOTAL SHEETS
			ALASKA	0A15037/CFHWY00431 0A15038/CFHWY00432 0A15033/CFHWY00006	2021	E23	E35

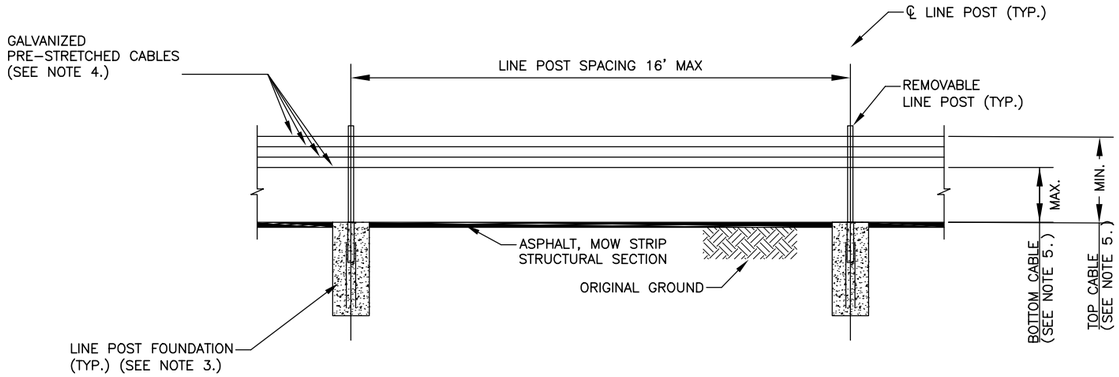

GENERAL HTCG ELEVATION VIEW

NTS

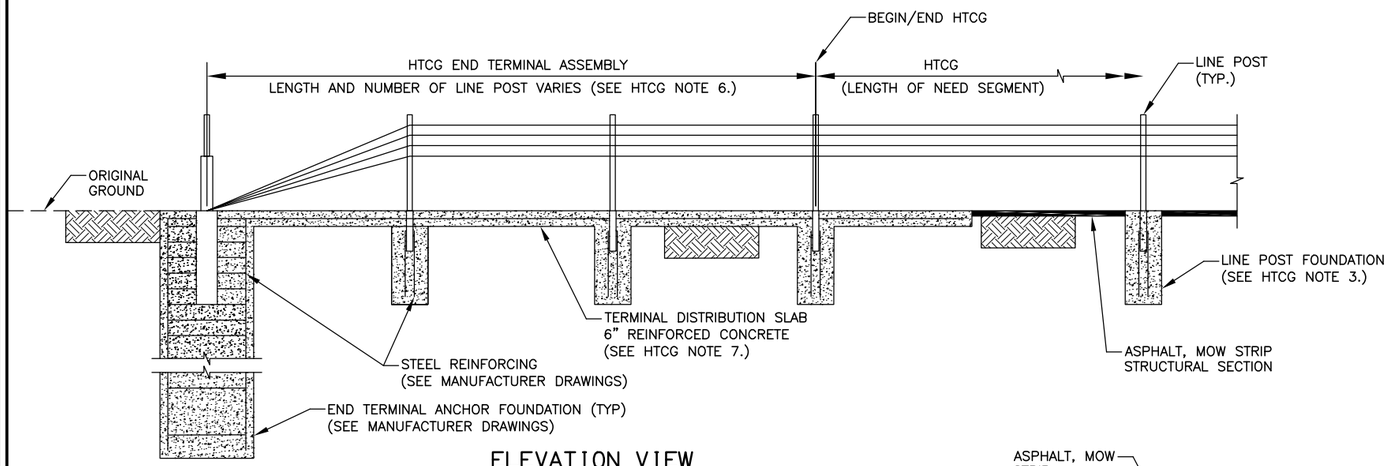

HTCG END TERMINAL

NTS

HIGH TENSION CABLE GUARDRAIL NOTES:

1. THE DRAWINGS SHOWN ARE SCHEMATIC ONLY, PROVIDING GENERAL GEOMETRY AND COMPONENT REQUIREMENTS FOR HIGH TENSION CABLE GUARDRAIL (HTCG). HTCG BARRIER SYSTEMS CONSIST OF (A GENERAL HTCG SEGMENT BETWEEN BEGIN/END LENGTH OF NEED AND END TERMINAL ASSEMBLIES) OUTSIDE THE LENGTH OF NEED. THE LINE POST SPACING, CABLE HEIGHTS, FOUNDATION DEPTHS AND OVERALL LENGTH WILL VARY BY MANUFACTURER. NO MORE THAN ONE TYPE OF PROPRIETARY HTCG WILL BE INSTALLED WITHIN THE PROJECT LIMITS.
2. HTCG HARDWARE, INCLUDING BUT NOT LIMITED TO REMOVABLE LINE POSTS, SOCKET SLEEVES, TURNBUCKLES, TERMINAL FITTINGS, TERMINAL ANCHORAGE DEVICES, CABLE–TO–LINE POST CONNECTORS, AND SPLICE FITTINGS MAY VARY BY MANUFACTURER. INSTALL ONLY HARDWARE APPROVED BY THE MANUFACTURER, AND CONFORMS TO "BUY AMERICA PROVISIONS". DO NOT USE DIFFERENT TYPES OF PROPRIETARY HARDWARE WITHOUT PRIOR APPROVAL FROM THE ENGINEER.
3. FOLLOW MANUFACTURER RECOMMENDATIONS FOR HTCG POST FOUNDATION. SITE SPECIFIC LINE POST FOUNDATION DESIGNS ARE REQUIRED FOR SOIL CONDITIONS NOT MEETING THE MINIMUM CRITERIA INCLUDED IN CONCRETE FOUNDATION SPECIFICATIONS. FROST INFLUENCE SHOULD BE THE EMBEDMENT DEPTH, MINIMUM OF 4'.
4. FOLLOW MANUFACTURER'S RECOMMENDATIONS FOR SYSTEM SPECIFIC CABLE HEIGHTS, AND AS SHOWN ON FHWA FEDERAL AID ELIGIBILITY LETTER.
5. HTCG END TERMINALS CONSIST OF CONCRETE FOUNDATIONS FOR CABLES AND MAY VARY IN LENGTH BY MANUFACTURER RECOMMENDATIONS AND AS APPROVED BY FHWA FEDERAL AID ELIGIBILITY LETTER. THE END TERMINAL FOUNDATION LOCATION(S) MAY VARY FROM THAT SHOWN IN THE PLANS. FOLLOW MANUFACTURER RECOMMENDATIONS FOR PROJECT SPECIFIC END TERMINAL ASSEMBLY GEOMETRY. INSTALL END TERMINAL ASSEMBLIES OUTSIDE THE LIMITS OF THE LENGTH OF NEED. SEE HTCG END TERMINAL DETAILS FOR BEGIN/END LENGTH OF NEED LOCATIONS, AND MOW STRIP LIMITS.
6. INSTALL SINGLE OR MULTIPLE FOUNDATION END TERMINALS PER MANUFACTURER RECOMMENDATIONS. THE END TERMINALS SHALL MEET MASH STANDARDS AND PROVIDED FHWA FEDERAL AID ELIGIBILITY LETTER.
7. INSTALL REINFORCED CONCRETE SLAB PER SPECIFICATION 501 AND MANUFACTURER RECOMMENDATIONS, AS SHOWN ON HTCG END TERMINAL DETAILS SHEET.

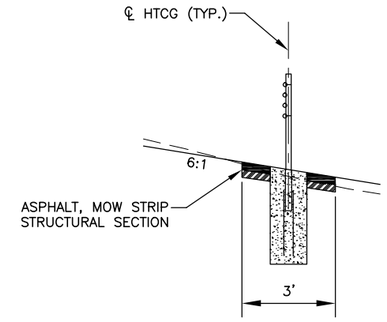

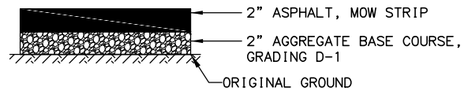

ASPHALT, MOW STRIP STRUCTURAL SECTION

NTS

CERTIFICATION SET
NOVEMBER 2021

WORK IN PROGRESS
This document represents current concepts as of ___. (See date @ left border)

HDL ENGINEERING CONSULTANTS, LLC
3335 ARCTIC BOULEVARD, STE 100
ANCHORAGE, AK 99503
(907) 564–2120
AECL861

STATE OF ALASKA
DEPARTMENT OF TRANSPORTATION
AND PUBLIC FACILITIES

GLENN HWY: PARKS HWY TO S. INNER SPRINGER LP. (PHASE II)

HIGH TENSION CABLE GUARDRAIL DETAILS

DESIGNED BY AAL
CHECKED BY DRL
DRAFTED BY CDB

SCALE NTS

DATE TIME 11/16/2021 2:32 PM

DRAWING LOCATION
H:\JOBS\08-016 GLENN HIGHWAY 34-42 (DOT)\09 - PS&E\CAD_PH2\DRAWINGS\08016_P2_E23.DWG

SHEET NO.	TOTAL SHEETS
E24	E35
STATE	YEAR
ALASKA	2021

PROJECT DESIGNATION

0A15037/CFHWY00431
0A15038/CFHWY00432
0A15033/CFHWY00006

NO.	REVISION
DATE	
NO.	REVISION
DATE	
NO.	REVISION
DATE	

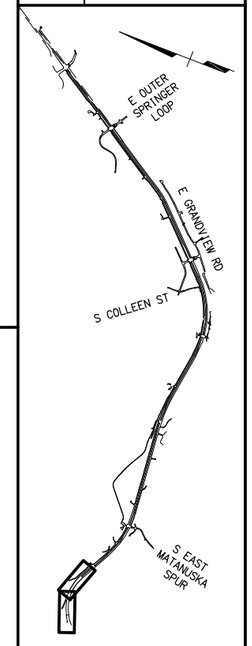

CERTIFICATION SET
NOVEMBER 2021

STATE OF ALASKA
49TH
DENNIS R. LINNELL
CE-7649
REGISTERED PROFESSIONAL ENGINEER

HDL ENGINEERING CONSULTANTS, LLC
3335 ARCTIC BOULEVARD, STE 100
ANCHORAGE, AK 99503
(907) 564-2120
AECL861

STATE OF ALASKA
DEPARTMENT OF TRANSPORTATION
AND PUBLIC FACILITIES

GLENN HWY: PARKS HWY TO
S. INNER SPRINGER LP.
(PHASE II)
GLENN HWY
PAVEMENT & MEDIAN
LAYOUT
BOP TO 1337+00

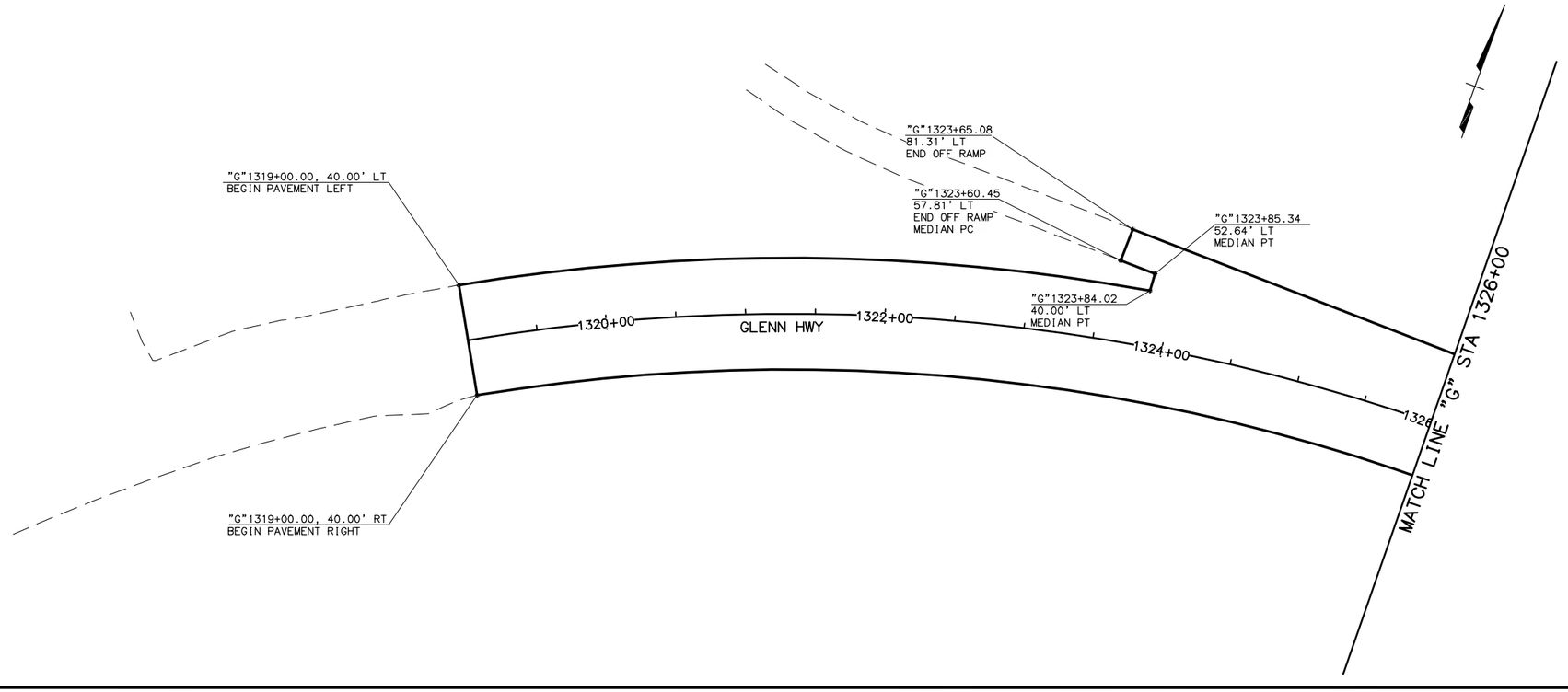

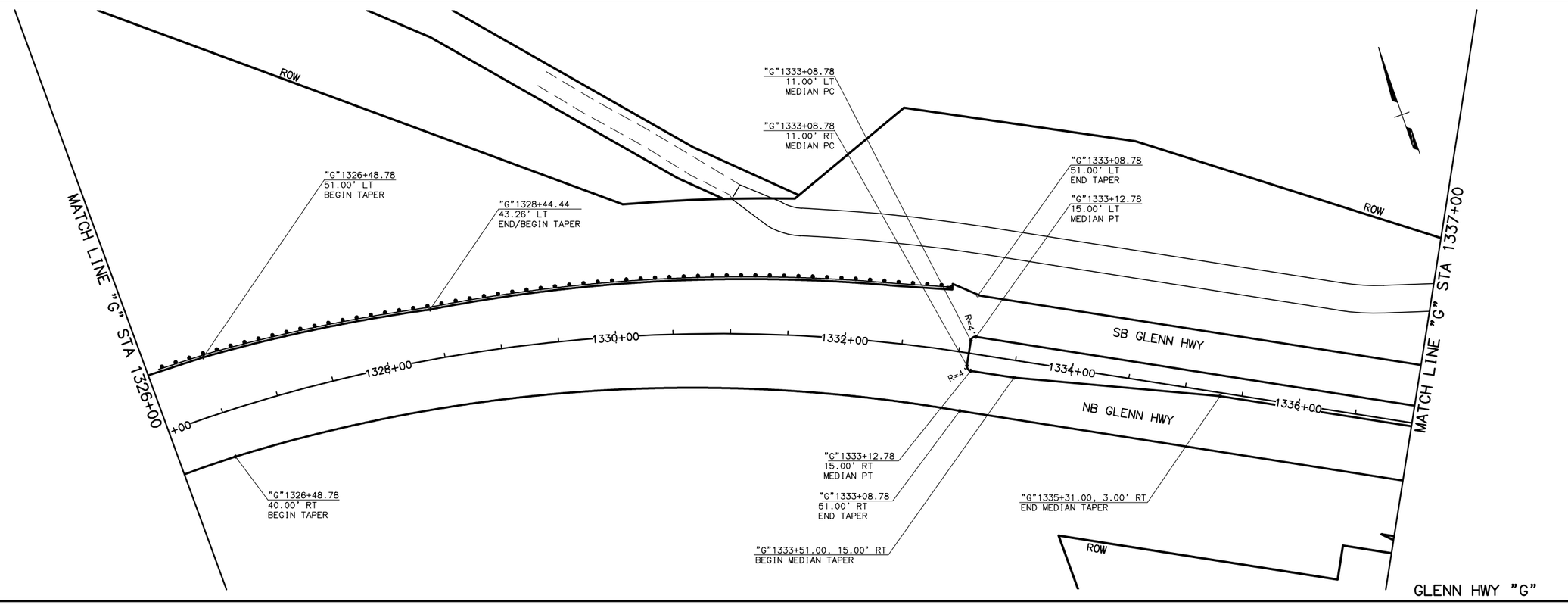

GLENN HWY "G"

DRAWING LOCATION
H:\JOBS\08-016 GLENN HIGHWAY 34-42 (DOT)\09 - PS&E\CAD_PH2\DRAWINGS\08016_P2_E24-E35-LAYOUTS.DWG

DESIGNED BY	CAB
CHECKED BY	DRL
DRAFTED BY	CDB

SCALE 1" = 100'

DATE TIME
11/11/2021 1:50 PM

SHEET NO.	TOTAL SHEETS
E25	E35
STATE	YEAR
ALASKA	2021

PROJECT DESIGNATION

0A15037/CFHWY00431
0A15038/CFHWY00432
0A15033/CFHWY00006

NO.	REVISION
DATE	
NO.	REVISION
DATE	
NO.	REVISION
DATE	

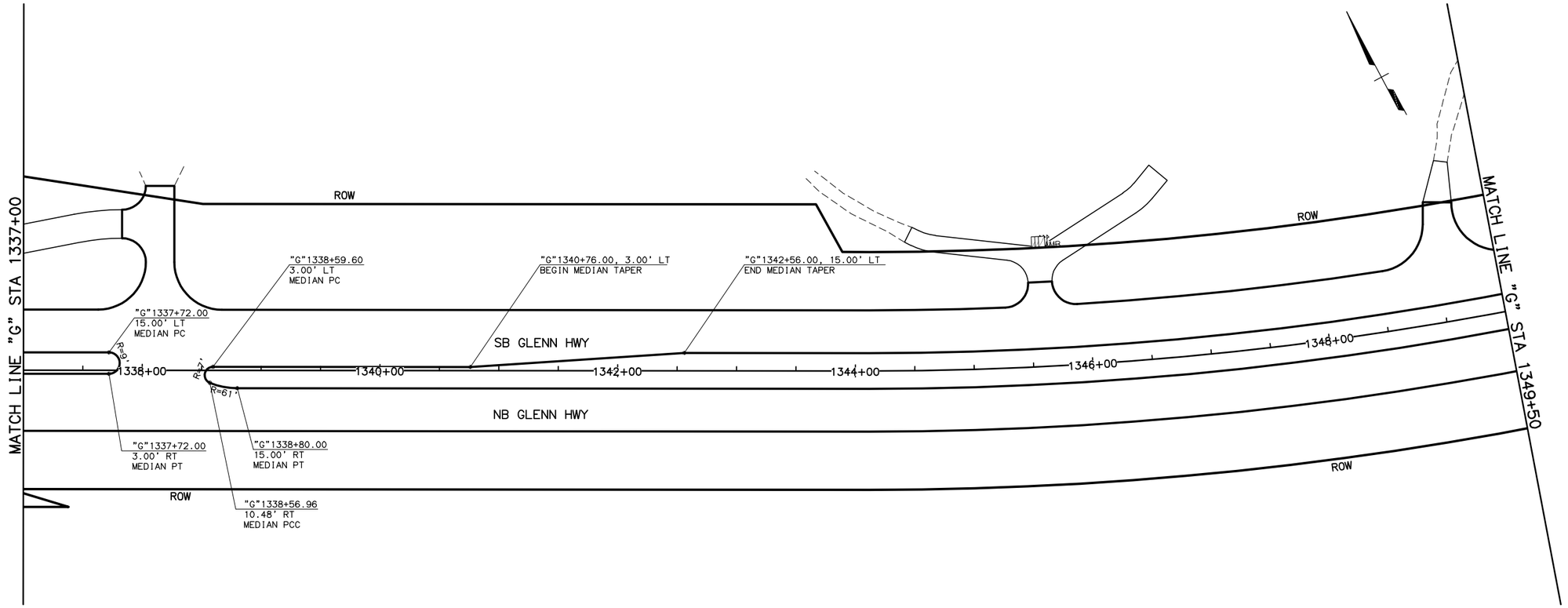

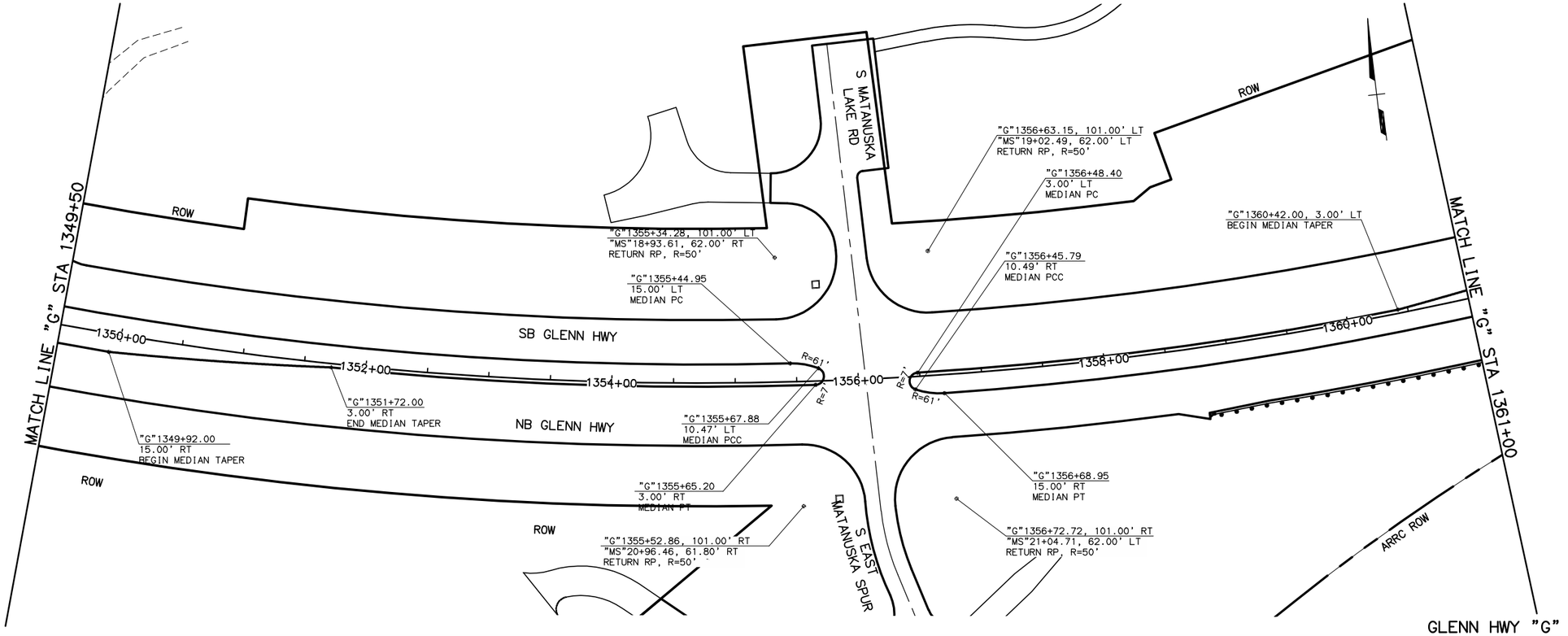

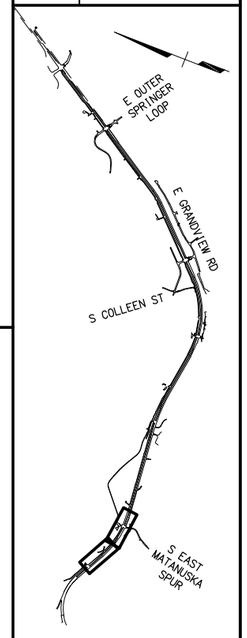

CERTIFICATION SET
NOVEMBER 2021

STATE OF ALASKA
49TH
DENNIS R. LINNELL
CE-7649
REGISTERED PROFESSIONAL ENGINEER

HDL ENGINEERING CONSULTANTS, LLC
3335 ARCTIC BOULEVARD, STE 100
ANCHORAGE, AK 99503
(907) 564-2120
AECL861

STATE OF ALASKA
DEPARTMENT OF TRANSPORTATION
AND PUBLIC FACILITIES

GLENN HWY: PARKS HWY TO S. INNER SPRINGER LP. (PHASE II) GLENN HWY PAVEMENT & MEDIAN LAYOUT 1337+00 TO 1361+00

DESIGNED BY	CAB
CHECKED BY	DRL
DRAFTED BY	CDB
SCALE	1" = 100'
DATE	11/11/2021
TIME	1:50 PM

DRAWING LOCATION
H:\JOBS\08-016 GLENN HIGHWAY 34-42 (DOT)\09 - PS&E\CAD_PH2\DRAWINGS\08016_P2_E24-E35-LAYOUTS.DWG

DRAWING LOCATION
H:\JOBS\08-016 GLENN HIGHWAY 34-42 (DOT)\09 - PS&E\CAD_PH2\DRAWINGS\08016_P2_E24-E35-LAYOUTS.DWG

DESIGNED BY	CAB
CHECKED BY	DRL
DRAFTED BY	CDB

SCALE	DATE	TIME
1" = 100'	11/11/2021	1:50 PM

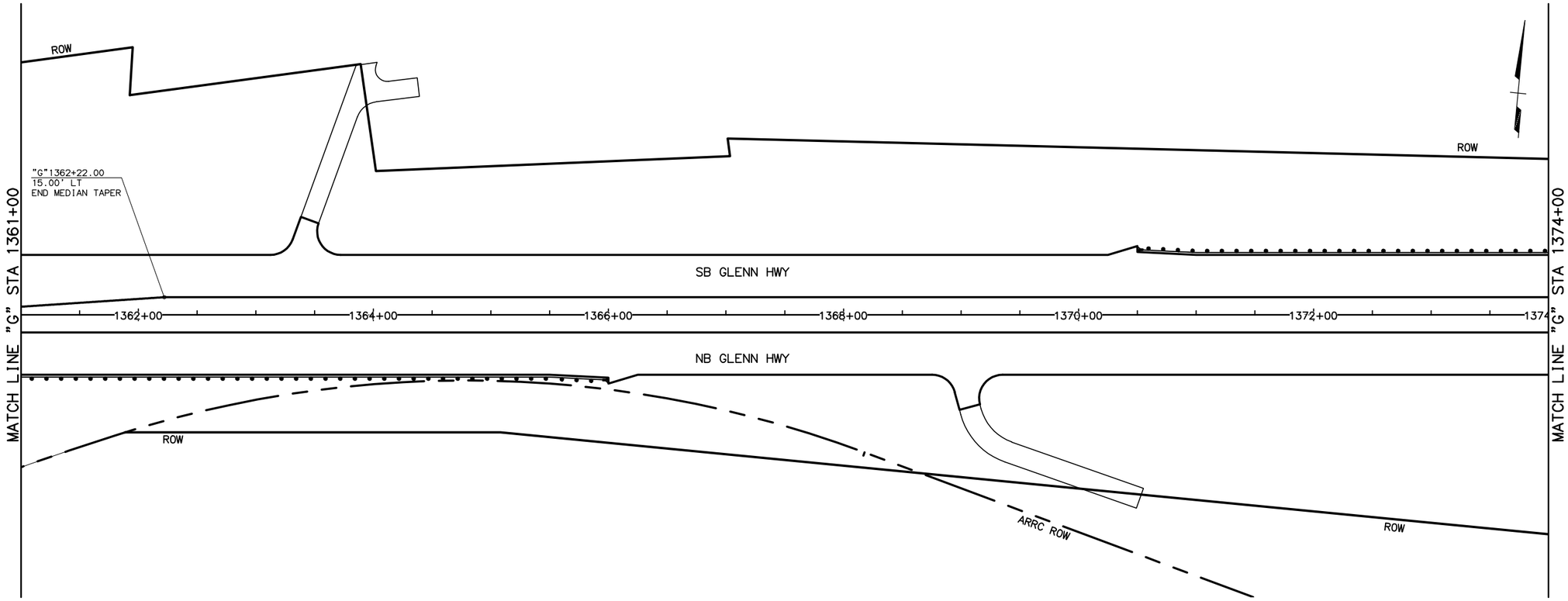

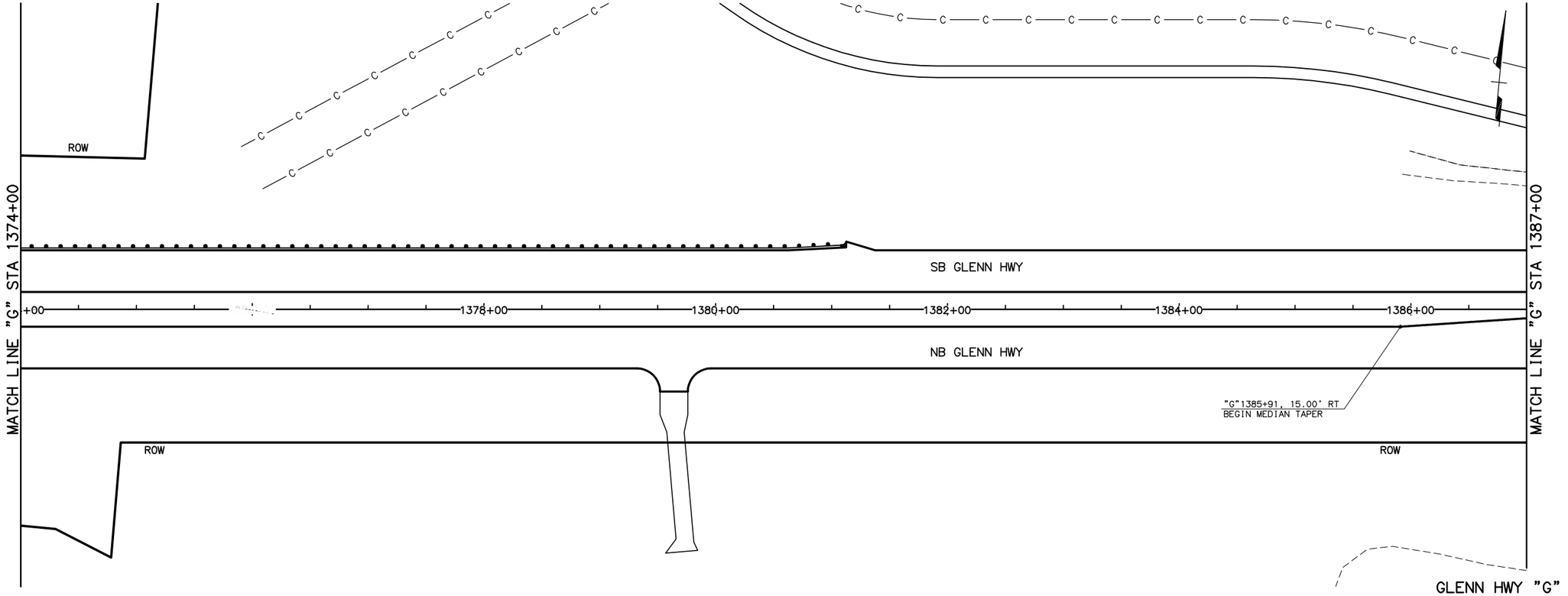

SHEET NO.	TOTAL SHEETS
E26	E35
STATE	YEAR
ALASKA	2021

PROJECT DESIGNATION

0A15037/CFHWY00431
0A15038/CFHWY00432
0A15033/CFHWY00006

NO.	REVISION
DATE	
NO.	REVISION
DATE	
NO.	REVISION
DATE	

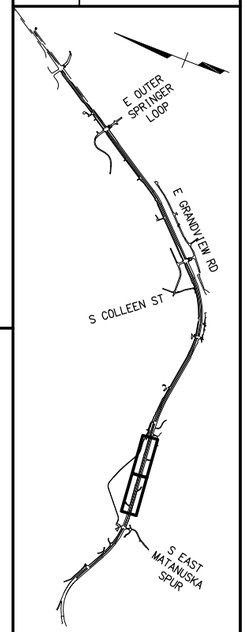

CERTIFICATION SET
NOVEMBER 2021

STATE OF ALASKA
49TH
DENNIS R. LINNELL
CE-7649
REGISTERED PROFESSIONAL ENGINEER

HDL ENGINEERING CONSULTANTS, LLC
3335 ARCTIC BOULEVARD, STE 100
ANCHORAGE, AK 99503
(907) 564-2120
AECL861

STATE OF ALASKA
DEPARTMENT OF TRANSPORTATION
AND PUBLIC FACILITIES

GLENN HWY: PARKS HWY TO S. INNER SPRINGER LP. (PHASE II)

GLENN HWY
PAVEMENT & MEDIAN
LAYOUT
1361+00 TO 1387+00

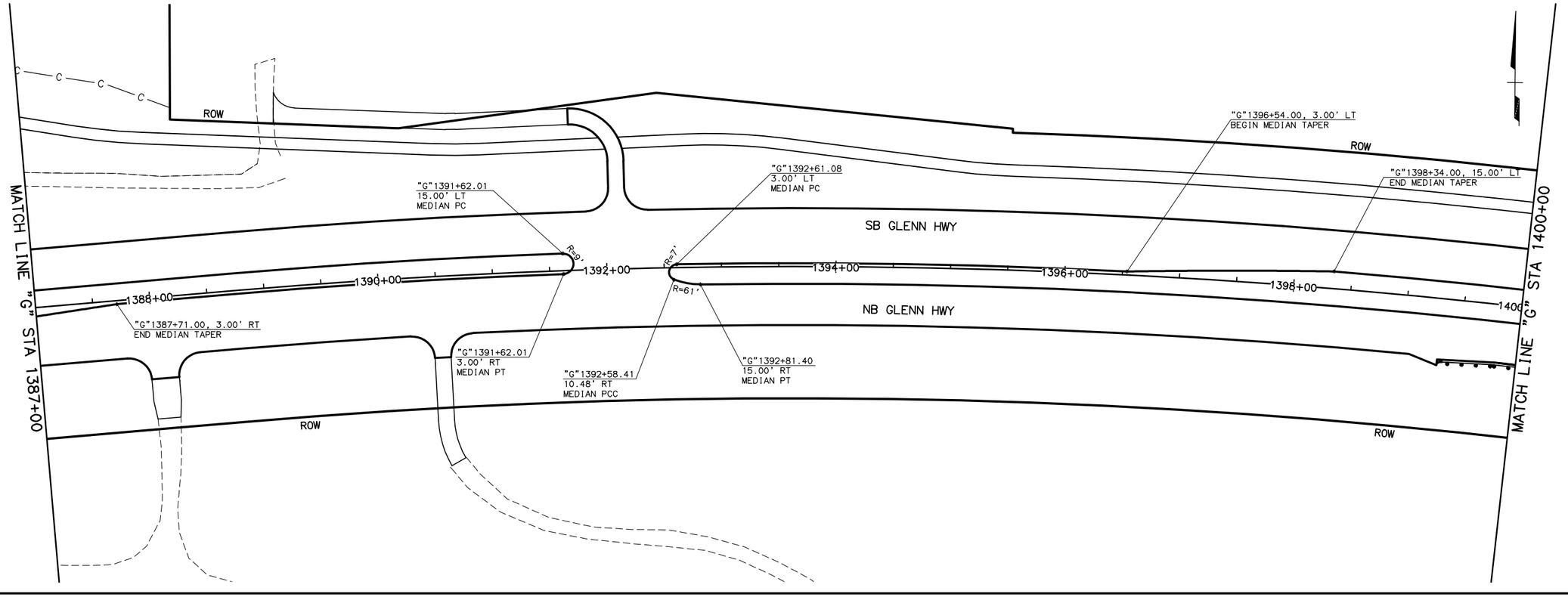

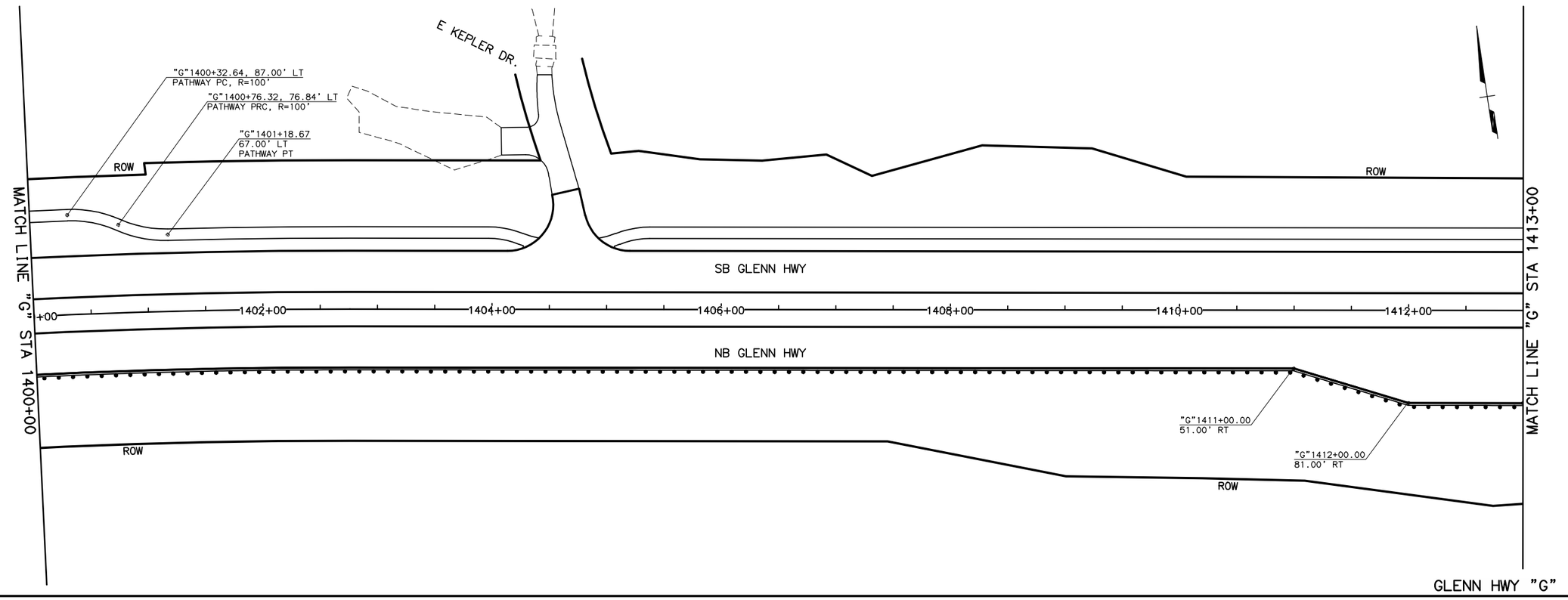

SHEET NO.	TOTAL SHEETS
E27	E35
STATE	YEAR
ALASKA	2021

PROJECT DESIGNATION

0A15037/CFHWY00431
0A15038/CFHWY00432
0A15033/CFHWY00006

NO.	REVISION
DATE	
NO.	REVISION
DATE	
NO.	REVISION
DATE	

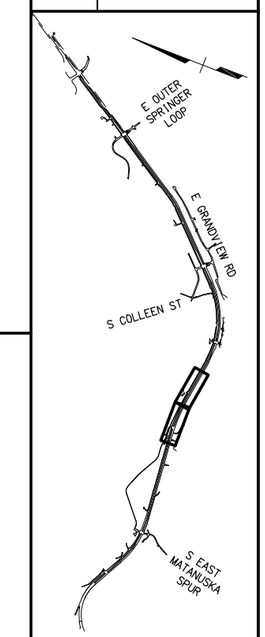

CERTIFICATION SET
NOVEMBER 2021

STATE OF ALASKA
49TH
DENNIS R. LINNELL
CE-7649
REGISTERED PROFESSIONAL ENGINEER

HDL ENGINEERING CONSULTANTS, LLC
3335 ARCTIC BOULEVARD, STE 100
ANCHORAGE, AK 99503
(907) 564-2120
AECL861

STATE OF ALASKA
DEPARTMENT OF TRANSPORTATION
AND PUBLIC FACILITIES

GLENN HWY: PARKS HWY TO
S. INNER SPRINGER LP.
(PHASE II)
GLENN HWY
PAVEMENT & MEDIAN
LAYOUT
1387+00 TO 1413+00

DESIGNED BY CAB
CHECKED BY DRL
DRAFTED BY CDB
SCALE 1" = 100'
DATE 11/11/2021 TIME 1:51 PM
DRAWING LOCATION
H:\JOBS\08-016 GLENN HIGHWAY 34-42 (DOT)\09 - PS&E\CAD_PH2\DRAWINGS\08016_P2_E24-E35-LAYOUTS.DWG

DESIGNED BY	CAB
CHECKED BY	DRL
DRAFTED BY	CDB

SCALE: 1" = 100'

DATE TIME: 11/11/2021 1:51 PM

DRAWING LOCATION
H:\JOBS\08-016 GLENN HIGHWAY 34-42 (DOT)\09 - PS&E\CAD_PH2\DRAWINGS\08016_P2_E24-E35-LAYOUTS.DWG

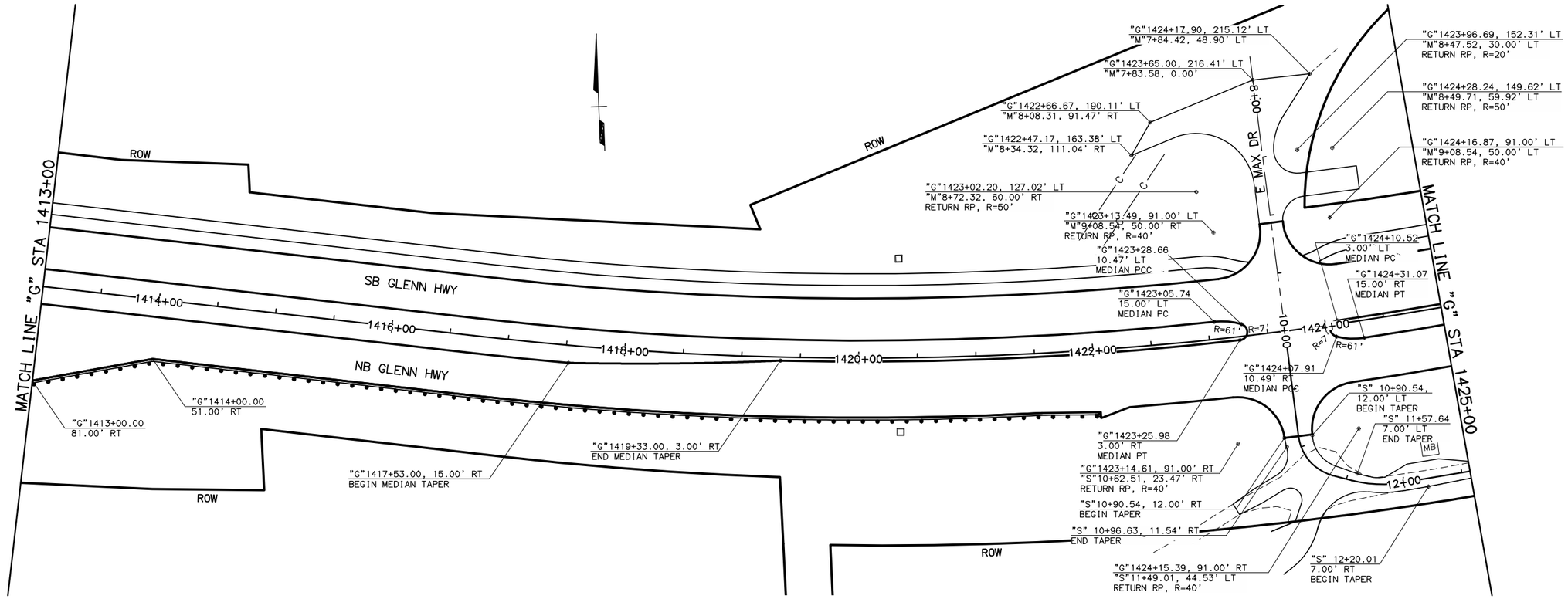

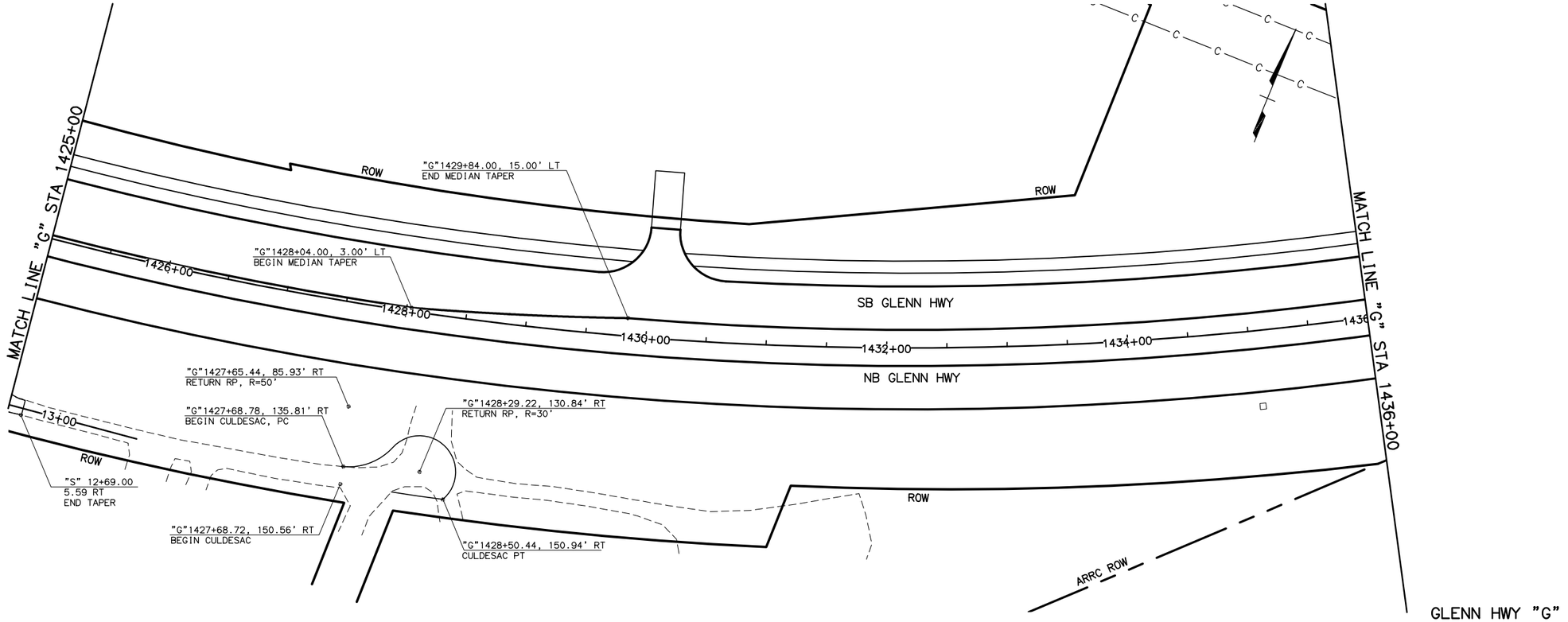

GLENN HWY "G"

SHEET NO.	TOTAL SHEETS
E28	E35
STATE	YEAR
ALASKA	2021

PROJECT DESIGNATION
0A15037/CFHWY00431
0A15038/CFHWY00432
0A15033/CFHWY00006

NO.	REVISION
DATE	
NO.	REVISION
DATE	
NO.	REVISION
DATE	

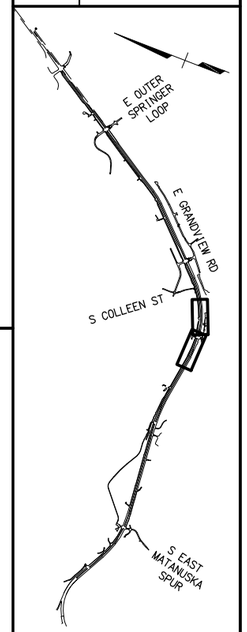

CERTIFICATION SET
NOVEMBER 2021

STATE OF ALASKA
49TH
DENNIS R. LINNELL
CE-7649
REGISTERED PROFESSIONAL ENGINEER

HDL ENGINEERING CONSULTANTS, LLC
3335 ARCTIC BOULEVARD, STE 100
ANCHORAGE, AK 99503
(907) 564-2120
AECL861

STATE OF ALASKA
DEPARTMENT OF TRANSPORTATION
AND PUBLIC FACILITIES

GLENN HWY: PARKS HWY TO
S. INNER SPRINGER LP.
(PHASE II)
GLENN HWY
PAVEMENT & MEDIAN
LAYOUT
1413+00 TO 1436+00

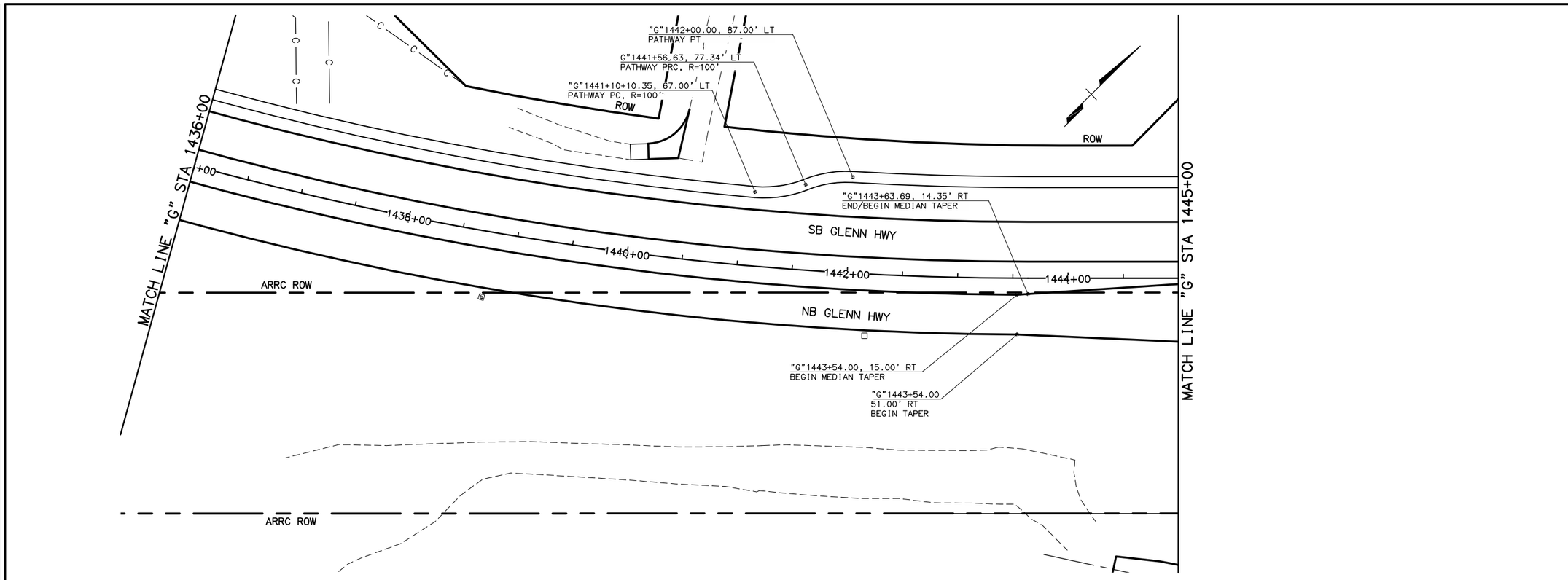

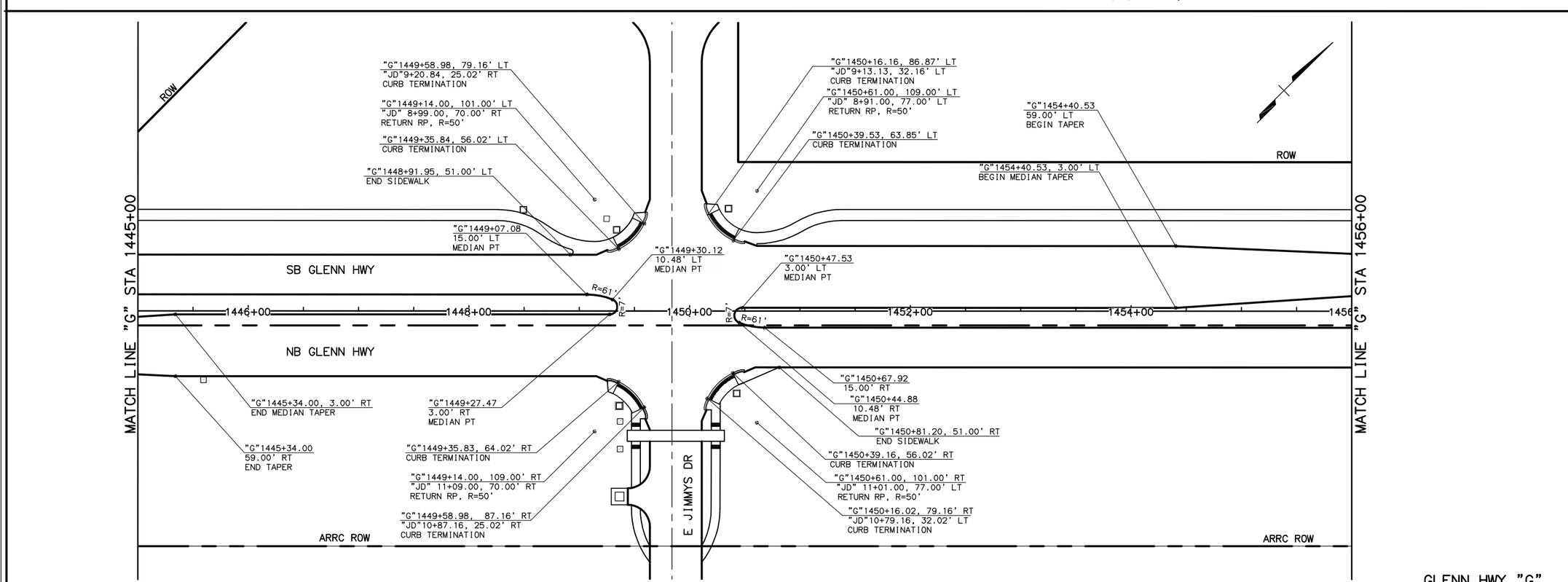

GLENN HWY "G"

SHEET NO.	TOTAL SHEETS
E29	E35
STATE	YEAR
ALASKA	2021

PROJECT DESIGNATION

0A15037/CFHWY00431
0A15038/CFHWY00432
0A15033/CFHWY00006

NO.	REVISION
DATE	
NO.	REVISION
DATE	
NO.	REVISION
DATE	

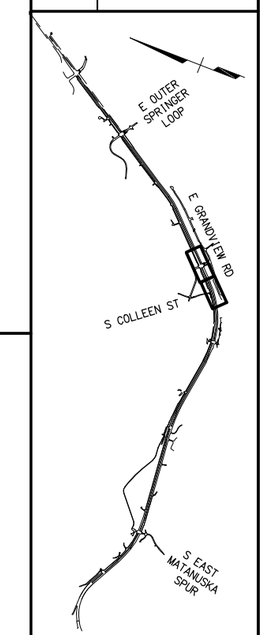

CERTIFICATION SET
NOVEMBER 2021

STATE OF ALASKA
49TH
DENNIS R. LINNELL
CE-7649
REGISTERED PROFESSIONAL ENGINEER

HDL ENGINEERING CONSULTANTS, LLC
3335 ARCTIC BOULEVARD, STE 100
ANCHORAGE, AK 99503
(907) 564-2120
AECL861

STATE OF ALASKA
DEPARTMENT OF TRANSPORTATION
AND PUBLIC FACILITIES

GLENN HWY: PARKS HWY TO
S. INNER SPRINGER LP.
(PHASE II)
GLENN HWY
PAVEMENT & MEDIAN
LAYOUT
1436+00 TO 1456+00

DESIGNED BY CAB
CHECKED BY DRL
DRAFTED BY CDB
SCALE 1" = 100'
DATE 11/11/2021 TIME 1:51 PM
DRAWING LOCATION
H:\JOBS\08-016 GLENN HIGHWAY 34-42 (DOT)\09 - PS&E\CAD_PH2\DRAWINGS\08016_P2_E24-E35-LAYOUTS.DWG

DESIGNED BY	CAB
CHECKED BY	DRL
DRAFTED BY	CDB

SCALE: 1" = 100'

DATE: 11/11/2021 TIME: 1:52 PM

DRAWING LOCATION
H:\JOBS\08-016 GLENN HIGHWAY 34-42 (DOT)\09 - PS&E\CAD_PH2\DRAWINGS\08016_P2_E24-E35-LAYOUTS.DWG

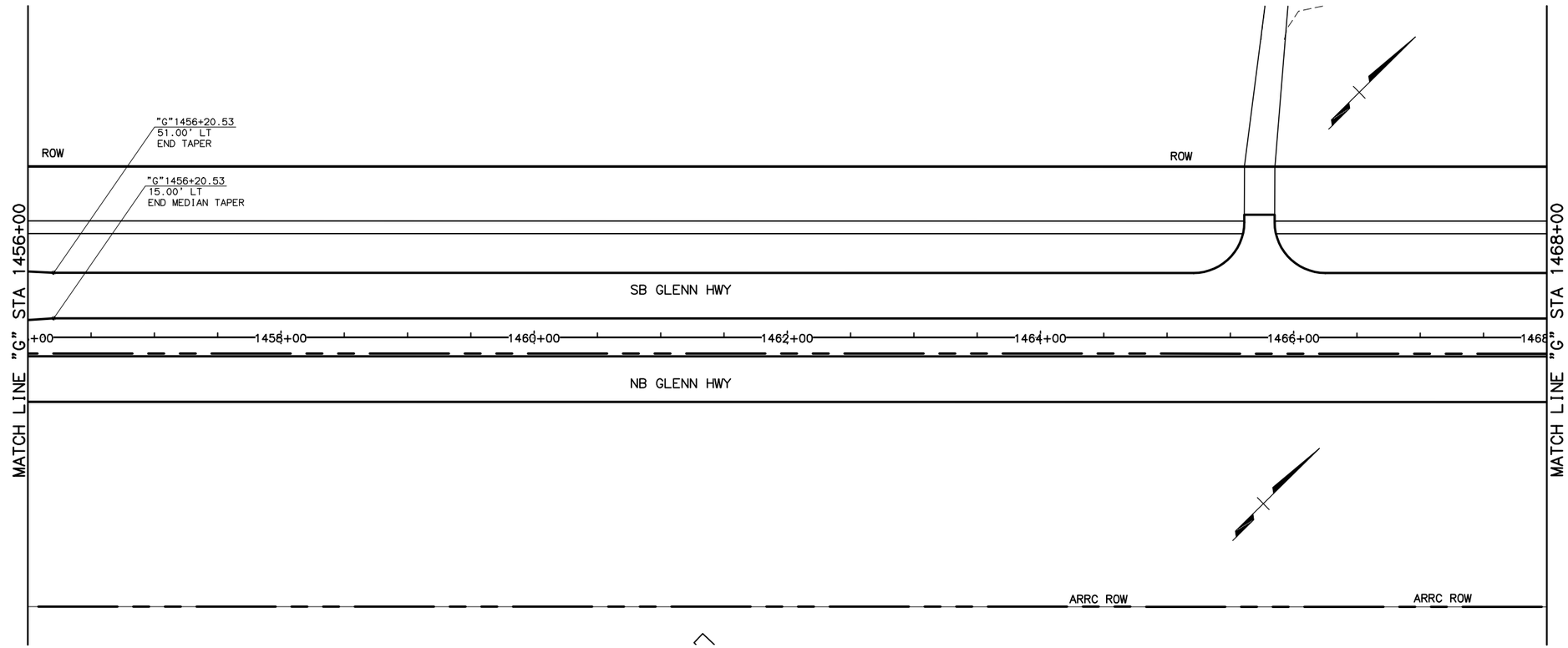

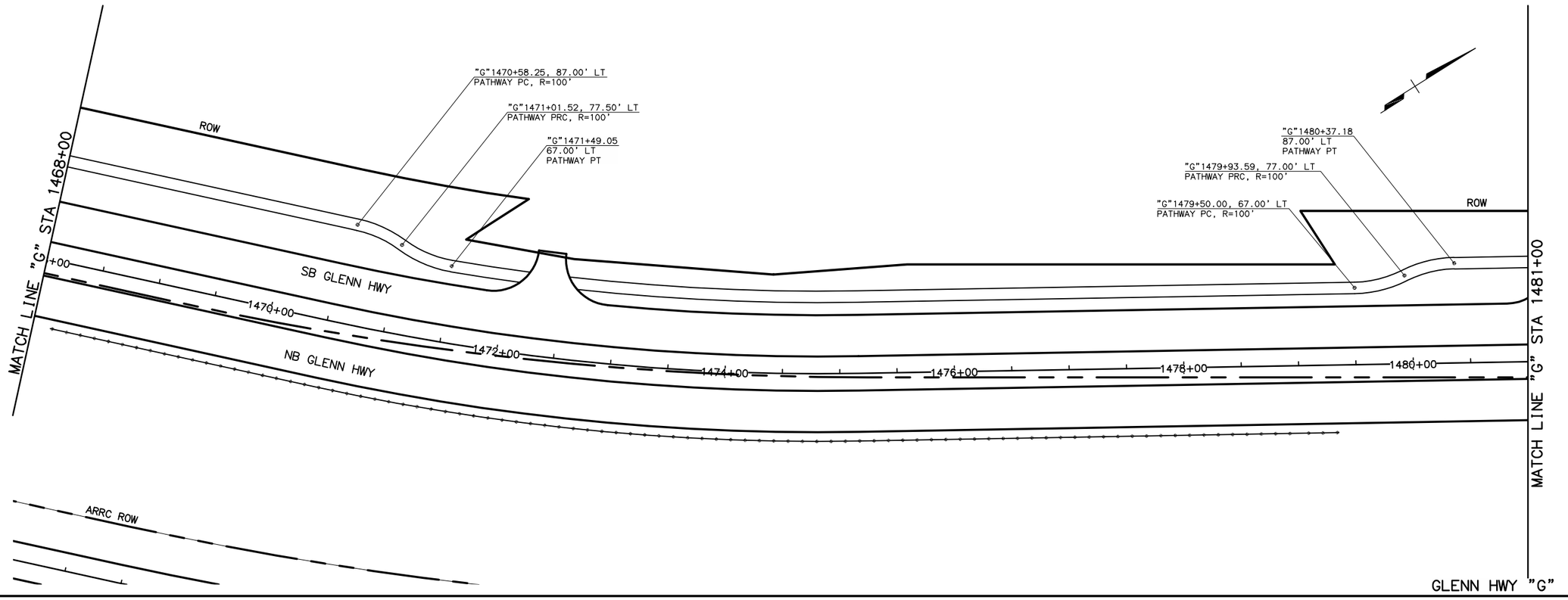

GLENN HWY "G"

SHEET NO.	TOTAL SHEETS
E30	E35
STATE	YEAR
ALASKA	2021

PROJECT DESIGNATION

0A15037/CFHWY00431
0A15038/CFHWY00432
0A15033/CFHWY00006

NO.	REVISION
DATE	
NO.	REVISION
DATE	
NO.	REVISION
DATE	

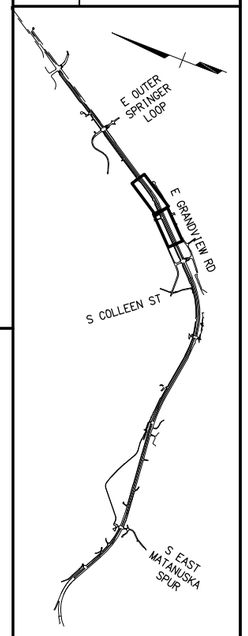

CERTIFICATION SET
NOVEMBER 2021

STATE OF ALASKA
49TH
DENNIS R. LINNELL
CE-7649
REGISTERED PROFESSIONAL ENGINEER

HDL ENGINEERING CONSULTANTS, LLC
3335 ARCTIC BOULEVARD, STE 100
ANCHORAGE, AK 99503
(907) 564-2120
AECL861

STATE OF ALASKA
DEPARTMENT OF TRANSPORTATION
AND PUBLIC FACILITIES

GLENN HWY: PARKS HWY TO S. INNER SPRINGER LP. (PHASE II)

GLENN HWY
PAVEMENT & MEDIAN
LAYOUT
1456+00 TO 1481+00

DESIGNED BY CAB
CHECKED BY DRL
DRAFTED BY CDB

SCALE 1" = 100'

DATE TIME 11/11/2021 1:52 PM

DRAWING LOCATION
H:\JOBS\08-016 GLENN HIGHWAY 34-42 (DOT)\09 - PS&E\CAD_PH2\DRAWINGS\08016_P2_E24-E35-LAYOUTS.DWG

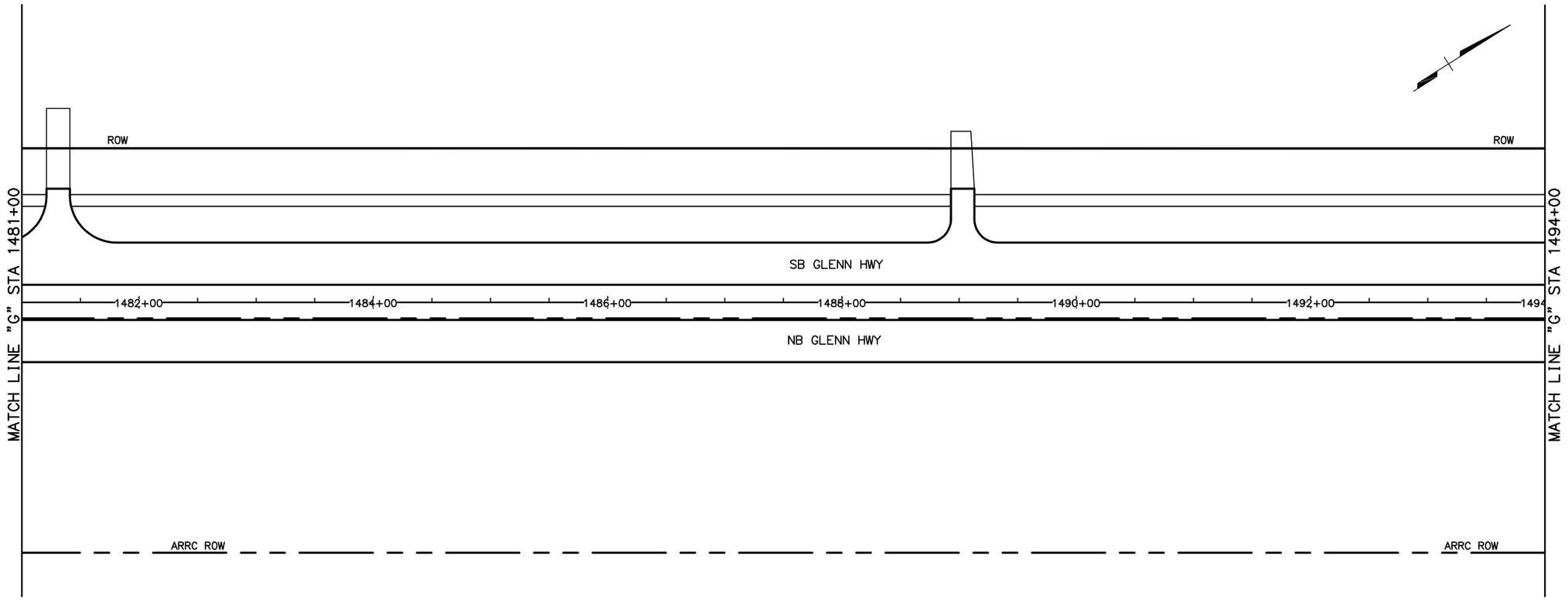

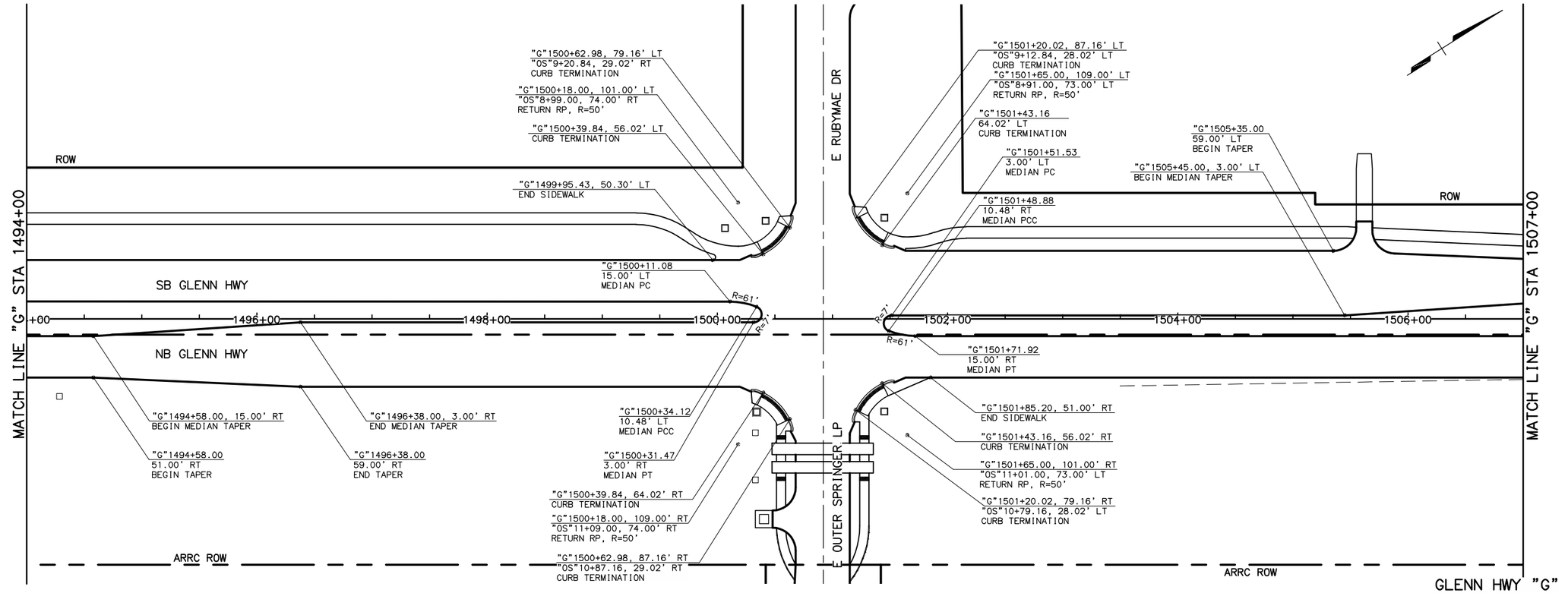

SHEET NO.	TOTAL SHEETS
E31	E35
STATE	YEAR
ALASKA	2021

PROJECT DESIGNATION

0A15037/CFHWY00431
0A15038/CFHWY00432
0A15033/CFHWY00006

NO.	REVISION
DATE	
NO.	REVISION
DATE	
NO.	REVISION
DATE	

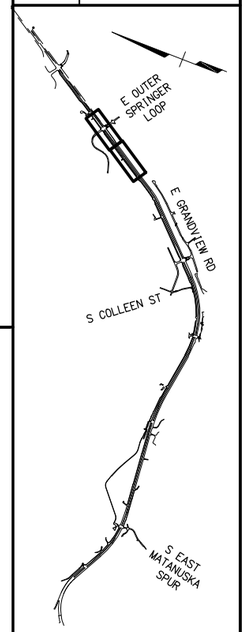

CERTIFICATION SET
NOVEMBER 2021

STATE OF ALASKA
49TH
DENNIS R. LINNELL
CE-7649
REGISTERED PROFESSIONAL ENGINEER

HDL ENGINEERING CONSULTANTS, LLC
3335 ARCTIC BOULEVARD, STE 100
ANCHORAGE, AK 99503
(907) 564-2120
AECL861

STATE OF ALASKA
DEPARTMENT OF TRANSPORTATION
AND PUBLIC FACILITIES

GLENN HWY: PARKS HWY TO S. INNER SPRINGER LP. (PHASE II)

GLENN HWY
PAVEMENT & MEDIAN
LAYOUT
1481+00 TO 1507+00

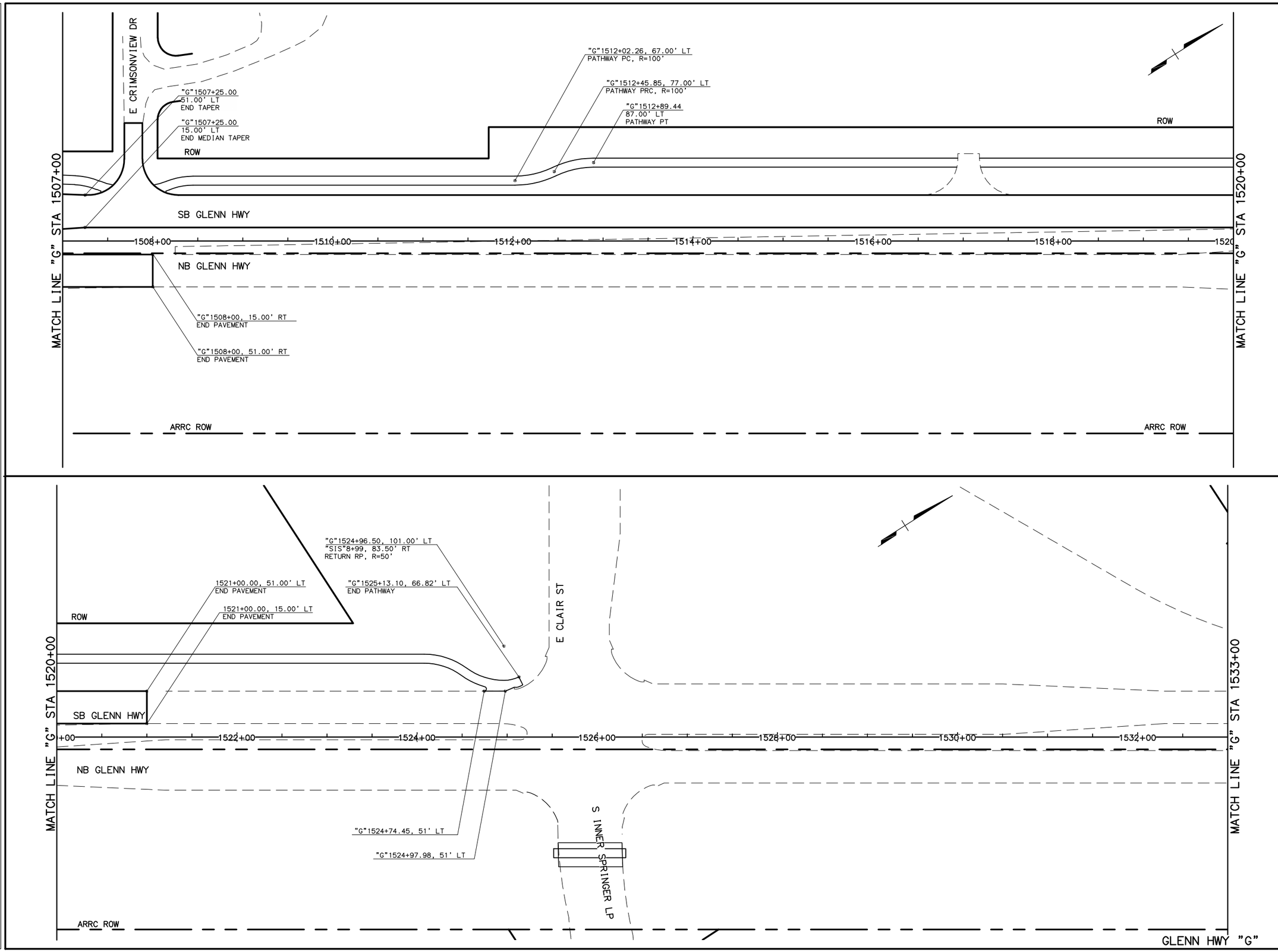

SHEET NO.	TOTAL SHEETS
E32	E35
STATE	YEAR
ALASKA	2021

PROJECT DESIGNATION

0A15037/CFHWY00431
0A15038/CFHWY00432
0A15033/CFHWY00006

NO.	REVISION
DATE	
NO.	REVISION
DATE	
NO.	REVISION
DATE	

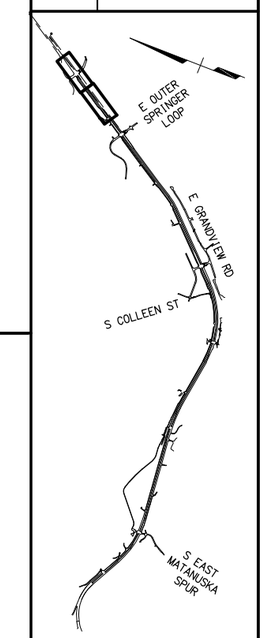

CERTIFICATION SET
NOVEMBER 2021

STATE OF ALASKA
49TH
DENNIS R. LINNELL
CE-7649
REGISTERED PROFESSIONAL ENGINEER

HDL ENGINEERING CONSULTANTS, LLC
3335 ARCTIC BOULEVARD, STE 100
ANCHORAGE, AK 99503
(907) 564-2120
AECL861

STATE OF ALASKA
DEPARTMENT OF TRANSPORTATION
AND PUBLIC FACILITIES

GLENN HWY: PARKS HWY TO
S. INNER SPRINGER LP.
(PHASE II)
GLENN HWY
PAVEMENT & MEDIAN
LAYOUT
1507+00 TO 1533+00

DESIGNED BY CAB
CHECKED BY DRL
DRAFTED BY CDB
SCALE 1" = 100'
DATE 11/11/2021 TIME 1:52 PM
DRAWING LOCATION
H:\JOBS\08-016 GLENN HIGHWAY 34-42 (DOT)\09 - PS&E\CAD_PH2\DRAWINGS\08016_P2_E24-E35-LAYOUTS.DWG

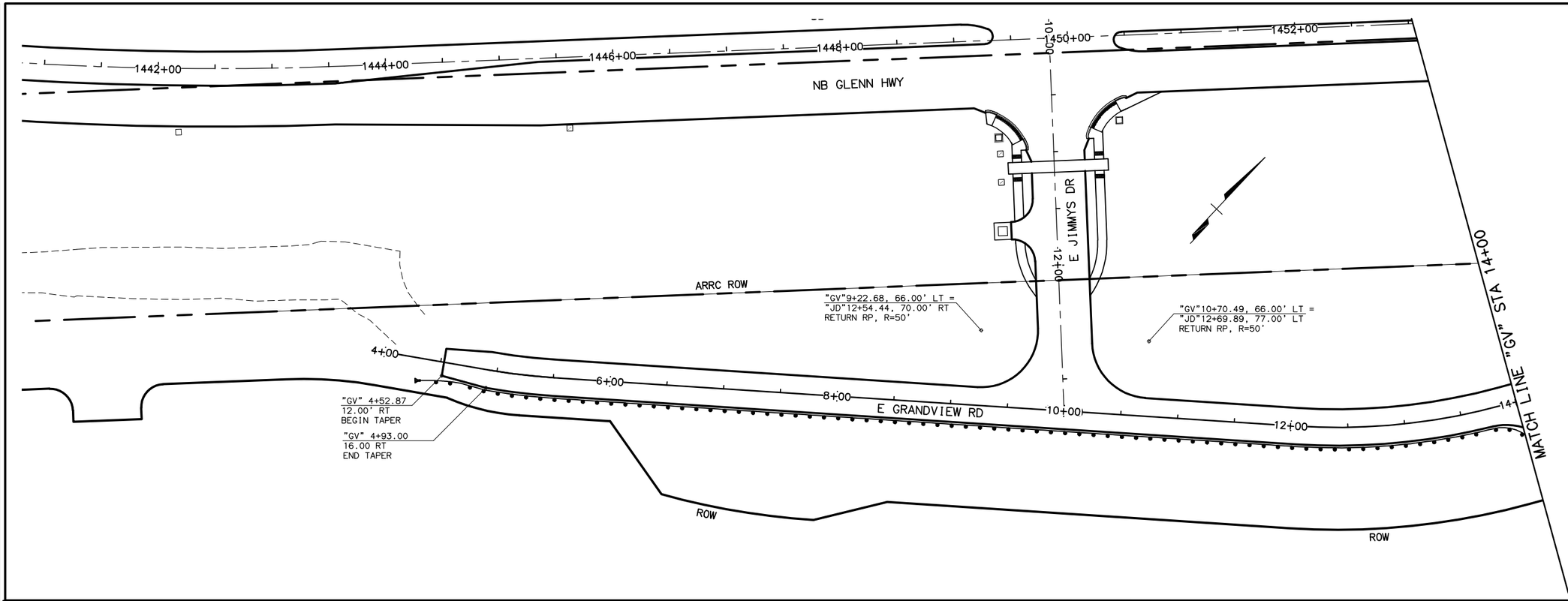

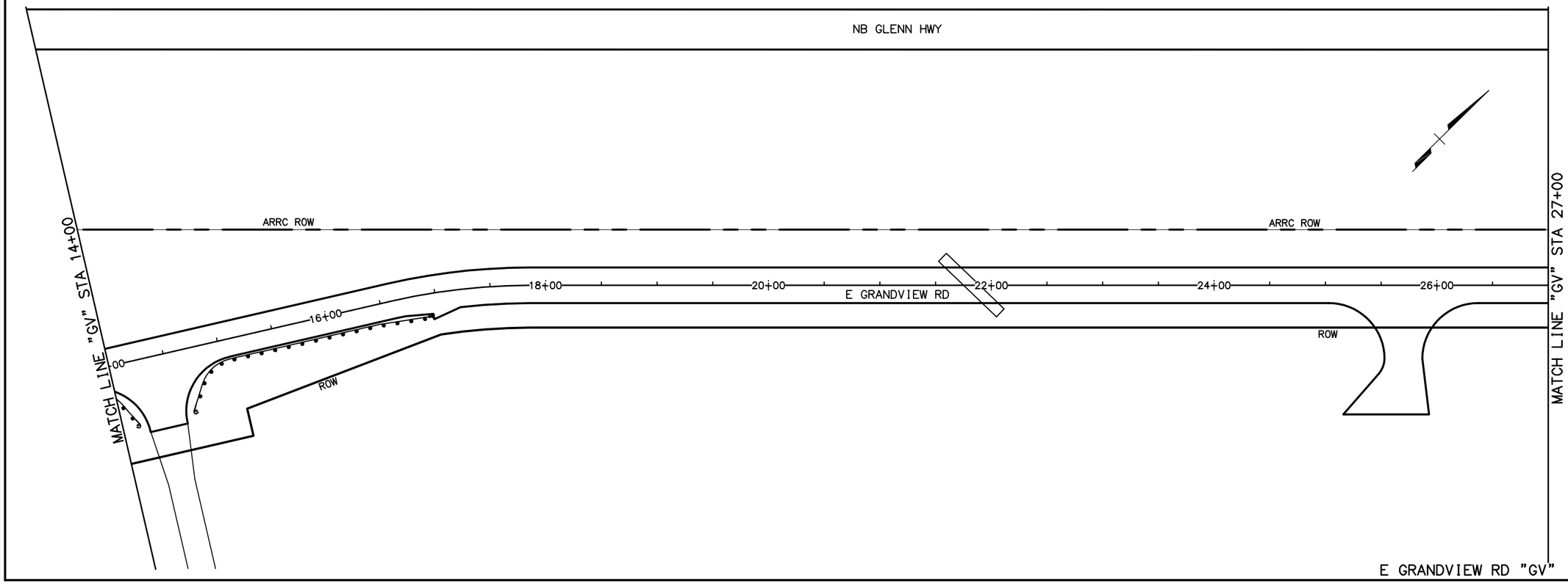

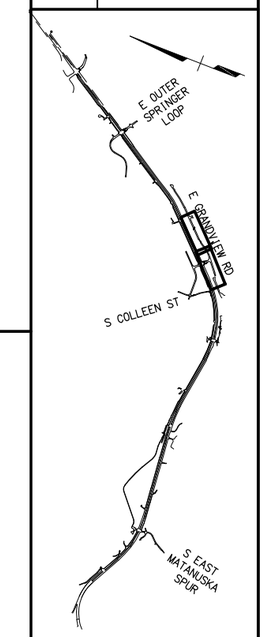

SHEET NO.	TOTAL SHEETS
E33	E35
STATE	YEAR
ALASKA	2021

PROJECT DESIGNATION

0A15037/CFHWY00431
0A15038/CFHWY00432
0A15033/CFHWY00006

NO.	REVISION
DATE	
NO.	REVISION
DATE	
NO.	REVISION
DATE	

CERTIFICATION SET
NOVEMBER 2021

STATE OF ALASKA
49TH
DENNIS R. LINNELL
CE-7649
REGISTERED PROFESSIONAL ENGINEER

HDL ENGINEERING CONSULTANTS, LLC
3335 ARCTIC BOULEVARD, STE 100
ANCHORAGE, AK 99503
(907) 564-2120
AECL861

STATE OF ALASKA
DEPARTMENT OF TRANSPORTATION
AND PUBLIC FACILITIES

GLENN HWY: PARKS HWY TO
S. INNER SPRINGER LP.
(PHASE II)
E GRANDVIEW RD
PAVEMENT & MEDIAN
LAYOUT
4+14.6 TO 27+00

DRAWING LOCATION
H:\JOBS\08-016 GLENN HIGHWAY 34-42 (DOT)\09 - PS&E\CAD_PH2\DRAWINGS\08016_P2_E24-E35-LAYOUTS.DWG

DATE 11/11/2021 TIME 1:53 PM
SCALE 1" = 100'
DESIGNED BY CAB
CHECKED BY DRL
DRAFTED BY CDB

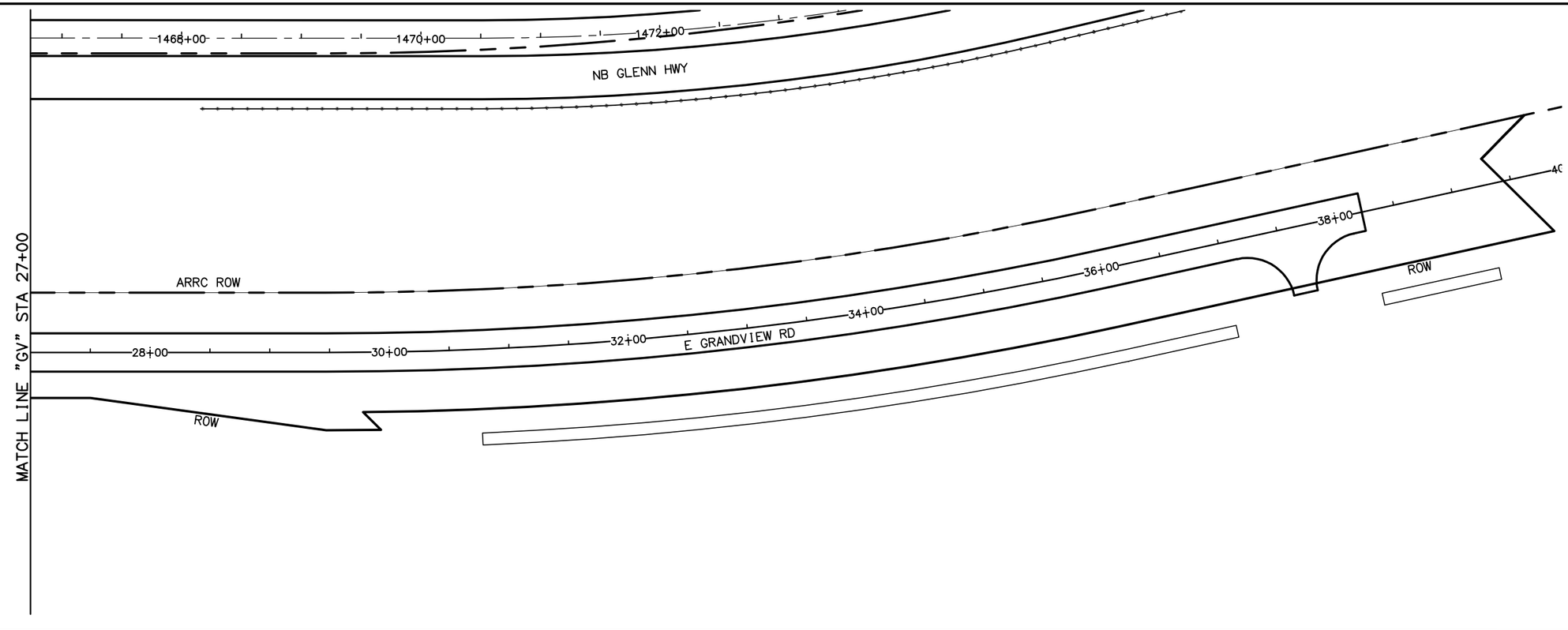

E GRANDVIEW RD "GV"

SHEET NO.	TOTAL SHEETS
E34	E35
STATE	YEAR
ALASKA	2021

PROJECT DESIGNATION

0A15037/CFHWY00431
0A15038/CFHWY00432
0A15033/CFHWY00006

NO.	REVISION
DATE	
NO.	REVISION
DATE	
NO.	REVISION
DATE	

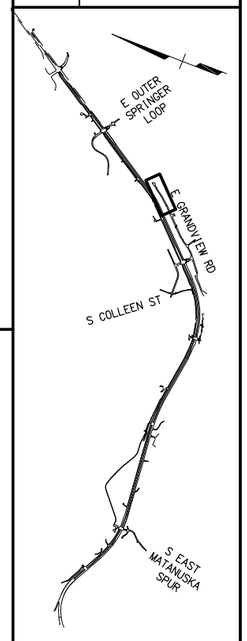

CERTIFICATION SET
NOVEMBER 2021

STATE OF ALASKA
49TH
DENNIS R. LINNELL
CE-7649
REGISTERED PROFESSIONAL ENGINEER

HDL ENGINEERING CONSULTANTS, LLC
3335 ARCTIC BOULEVARD, STE 100
ANCHORAGE, AK 99503
(907) 564-2120
AECL861

STATE OF ALASKA
DEPARTMENT OF TRANSPORTATION
AND PUBLIC FACILITIES

GLENN HWY: PARKS HWY TO
S. INNER SPRINGER LP.
(PHASE II)
E GRANDVIEW RD
PAVEMENT & MEDIAN
LAYOUT
27+00 TO 38+22.8

DRAWING LOCATION
H:\JOBS\08-016 GLENN HIGHWAY 34-42 (DOT)\09 - PS&E\CAD_PH2\DRAWINGS\08016_P2_E24-E35-LAYOUTS.DWG

DESIGNED BY	CAB
CHECKED BY	DRL
DRAFTED BY	CDB

SCALE 1" = 100'

DATE TIME
11/11/2021 1:53 PM

DRAWING LOCATION
H:\JOBS\08-016 GLENN HIGHWAY 34-42 (DOT)\09 - PS&E\CAD_PH2\DRAWINGS\08016_P2_E24-E35-LAYOUTS.DWG

DESIGNED BY	CAB
CHECKED BY	DRL
DRAFTED BY	CDB

SCALE: 1" = 100'

DATE TIME: 11/11/2021 1:53 PM

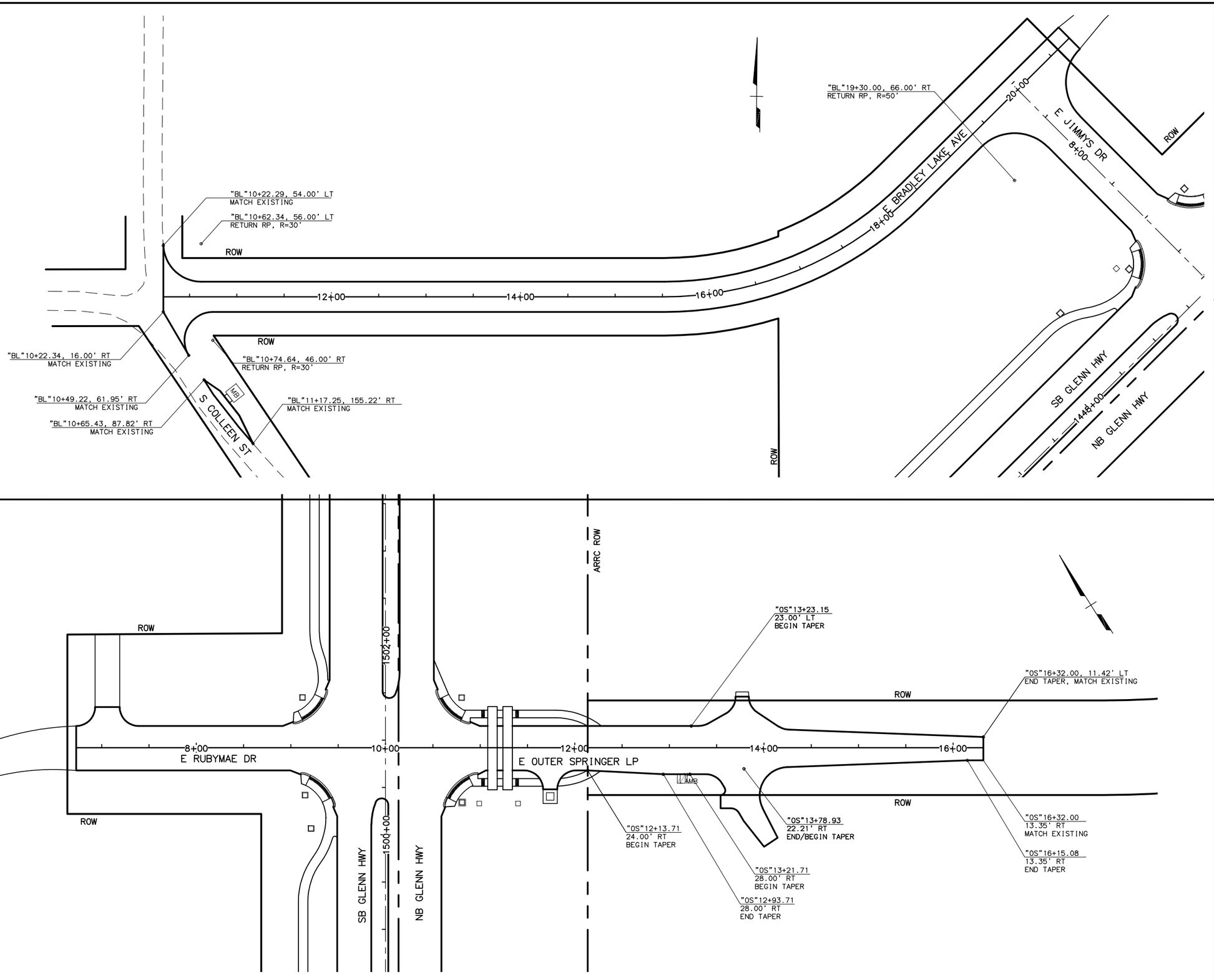

BRADLEY LAKE AND E OUTER SPRINGER LP

SHEET NO.	TOTAL SHEETS
E35	E35
STATE	YEAR
ALASKA	2021

PROJECT DESIGNATION
0A15037/CFHWY00431
0A15038/CFHWY00432
0A15033/CFHWY00006

NO.	REVISION
DATE	
NO.	REVISION
DATE	
NO.	REVISION
DATE	

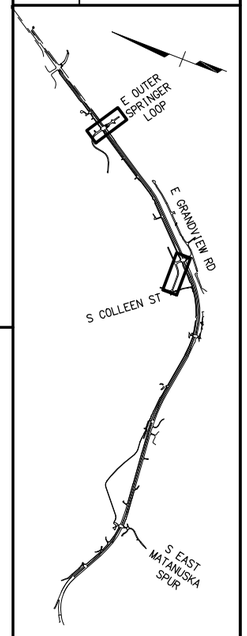

CERTIFICATION SET
NOVEMBER 2021

STATE OF ALASKA
49TH
DENNIS R. LINNELL
CE-7649
REGISTERED PROFESSIONAL ENGINEER

HDL ENGINEERING CONSULTANTS, LLC
3335 ARCTIC BOULEVARD, STE 100
ANCHORAGE, AK 99503
(907) 564-2120
AECL861

STATE OF ALASKA
DEPARTMENT OF TRANSPORTATION AND PUBLIC FACILITIES

GLENN HWY: PARKS HWY TO S. INNER SPRINGER LP. (PHASE II)
BRADLEY AND E OUTER SPRINGER LP
PAVEMENT & MEDIAN LAYOUT

DESIGNED BY	CAB
CHECKED BY	DRL
DRAFTED BY	CDB
SCALE	1"=100'
DATE	11/19/2021
TIME	10:25 AM

DRAWING LOCATION
H:\JOBS\08-016 GLENN HIGHWAY 34-42 (DOT)\09 - PS&E\CAD_PH2\DRAWINGS\08016_P2_F01-F18_GLENN.DWG

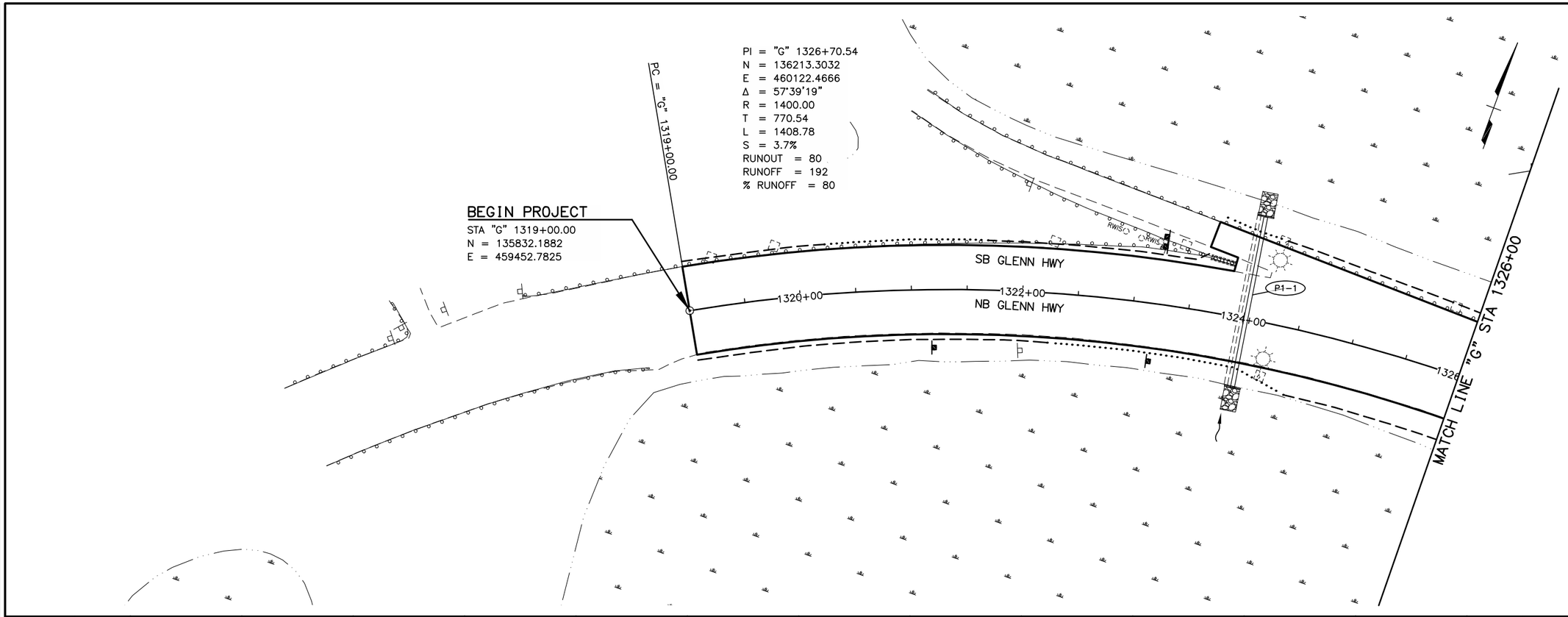

SHEET NO.	TOTAL SHEETS
F1	F50
STATE	YEAR
ALASKA	2021

PROJECT DESIGNATION

0A15037/CFHWY00431
0A15038/CFHWY00432
0A15033/CFHWY00006

NO.	REVISION
DATE	
NO.	REVISION
DATE	
NO.	REVISION
DATE	

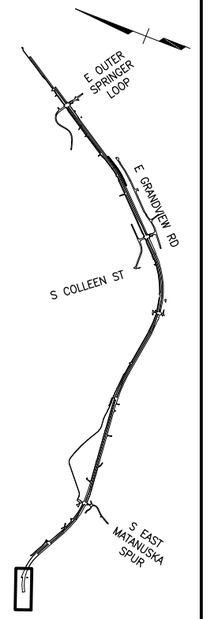

CERTIFICATION SET
NOVEMBER 2021

STATE OF ALASKA
49TH
DENNIS R. LINNELL
CE-7649
REGISTERED PROFESSIONAL ENGINEER

HDL ENGINEERING CONSULTANTS, LLC
3335 ARCTIC BOULEVARD, STE 100
ANCHORAGE, AK 99503
(907) 564-2120
AECL861

STATE OF ALASKA
DEPARTMENT OF TRANSPORTATION
AND PUBLIC FACILITIES

GLENN HWY: PARKS HWY TO
S. INNER SPRINGER LP.
(PHASE II)

GLENN HWY
PLAN & PROFILE
1319+00 TO 1326+00

DESIGNED BY	CAB
CHECKED BY	DRL
DRAFTED BY	CDB

SCALE 1"=100'

DATE 11/19/2021 TIME 10:10 AM

DRAWING LOCATION
H:\JOBS\08-016 GLENN HIGHWAY 34-42 (DOT)\09 - PS&E\CAD_PH2\DRAWINGS\08016_P2_F01-F18_GLENN.DWG

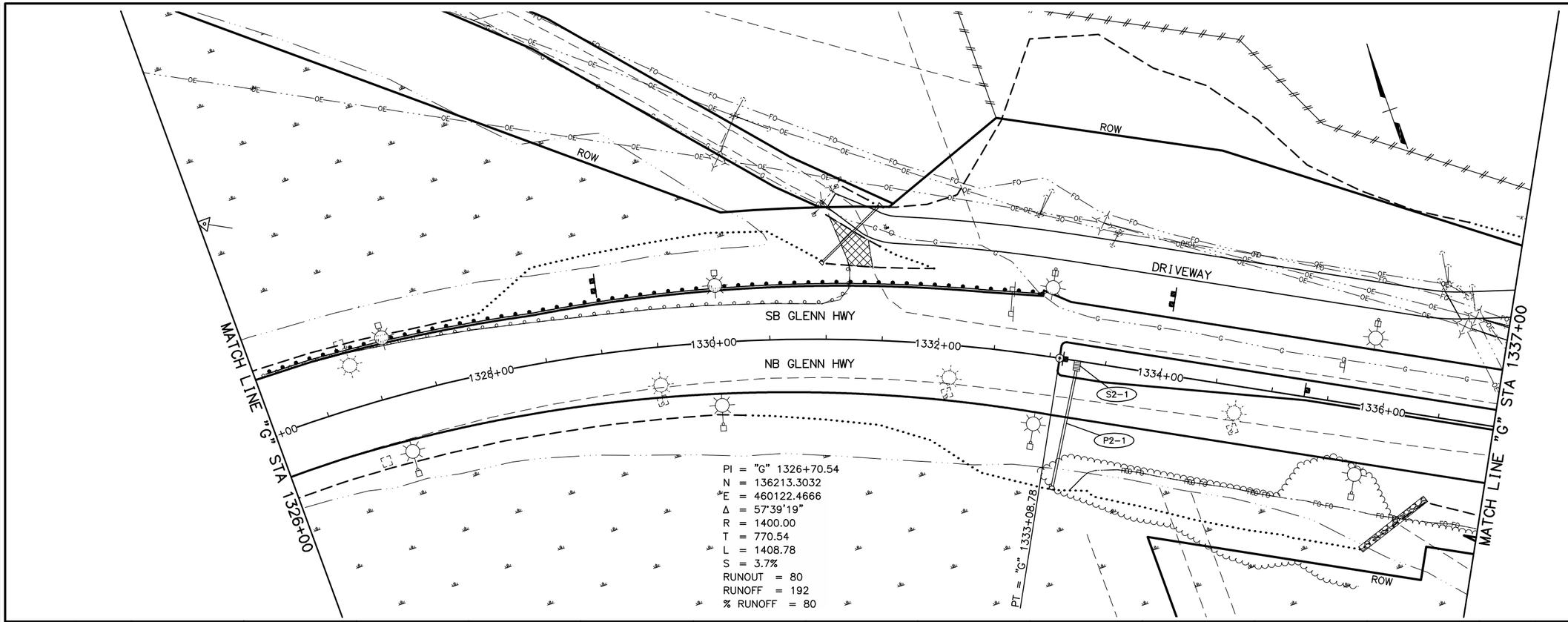

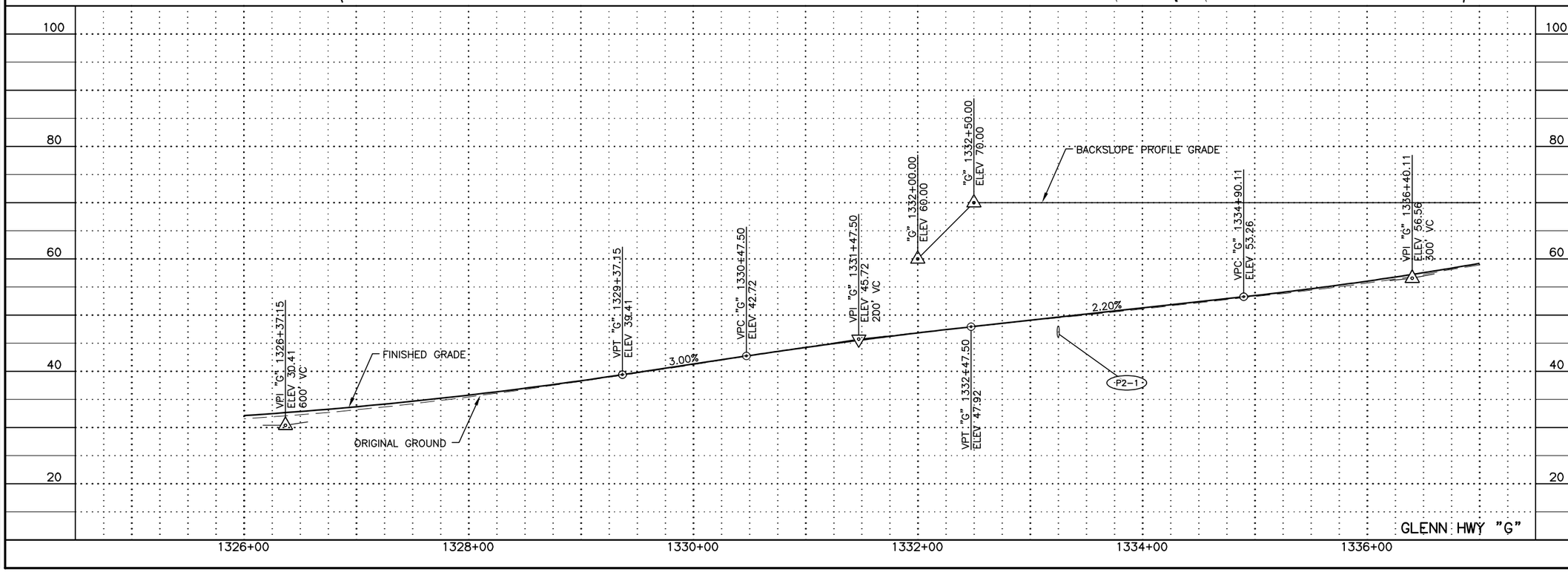

SHEET NO.	TOTAL SHEETS
F2	F50
STATE	YEAR
ALASKA	2021

PROJECT DESIGNATION

0A15037/CFHWY00431
0A15038/CFHWY00432
0A15033/CFHWY00006

NO.	REVISION
DATE	
NO.	REVISION
DATE	
NO.	REVISION
DATE	

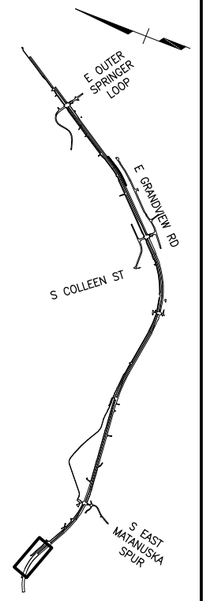

CERTIFICATION SET
NOVEMBER 2021

STATE OF ALASKA
49TH
DENNIS R. LINNELL
CE-7649
REGISTERED PROFESSIONAL ENGINEER

HDL ENGINEERING CONSULTANTS, LLC
3335 ARCTIC BOULEVARD, STE 100
ANCHORAGE, AK 99503
(907) 564-2120
AECL861

STATE OF ALASKA
DEPARTMENT OF TRANSPORTATION
AND PUBLIC FACILITIES

GLENN HWY: PARKS HWY TO
S. INNER SPRINGER LP.
(PHASE II)

GLENN HWY
PLAN & PROFILE
1326+00 TO 1337+00

DRAWING LOCATION
H:\JOBS\08-016 GLENN HIGHWAY 34-42 (DOT)\09 - PS&E\CAD_PH2\DRAWINGS\08016_P2_F01-F18_GLENN.DWG

DESIGNED BY	CAB
CHECKED BY	DRL
DRAFTED BY	CDB

SCALE 1"=100'

DATE TIME
11/19/2021 10:10 AM

PI = "G" 1352+72.88
N = 134928.9990
E = 462536.7544
Δ = 33°27'35.0"
R = 2865.00
T = 861.17
L = 1673.11
S = 4.5%
RUNOUT = 80
RUNOFF = 178
% RUNOFF = 80

PC = "G" 1344+11.71

INFILTRATION BASIN
SEE E SHEETS

MATCH LINE "G" STA 1337+00

MATCH LINE "G" STA 1349+50

ROW

SB GLENN HWY

NB GLENN HWY

ROW

S3-2
P3-2
S3-3
S3-1
P3-1

1338+00
1340+00
1342+00
1344+00
1346+00
1348+00

OVERHEAD WIRE
ELEV 94.8

OVERHEAD WIRE
ELEV 123.6

VPT "G" 1337+90.11
ELEV 62.56

"G" 1338+33.00
ELEV 70.00

BACKSLOPE PROFILE GRADE

FINISHED GRADE

VPC "G" 1341+30.00
ELEV 76.16

"G" 1343+00.00
ELEV 84.00

VPI "G" 1344+80.00
ELEV 90.16
700' VC

VPT "G" 1348+30.00
ELEV 95.41

4.00%

1.50%

ORIGINAL GROUND

S3-1
P3-1

P3-2

120
100
80
60
40

1338+00
1340+00
1342+00
1344+00
1346+00
1348+00

GLENN HWY "G"

SHEET NO.	TOTAL SHEETS
F3	F50
STATE	YEAR
ALASKA	2021

PROJECT DESIGNATION
0A15037/CFHWY00431
0A15038/CFHWY00432
0A15033/CFHWY00006

NO.	REVISION
DATE	
NO.	REVISION
DATE	
NO.	REVISION
DATE	

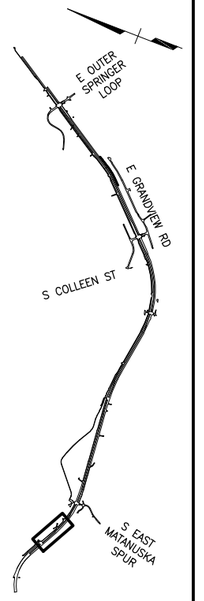

CERTIFICATION SET
NOVEMBER 2021

STATE OF ALASKA
49TH
DENNIS R. LINNELL
CE-7649
REGISTERED PROFESSIONAL ENGINEER

HDL ENGINEERING CONSULTANTS, LLC
3335 ARCTIC BOULEVARD, STE 100
ANCHORAGE, AK 99503
(907) 564-2120
AECL861

STATE OF ALASKA
DEPARTMENT OF TRANSPORTATION
AND PUBLIC FACILITIES

GLENN HWY: PARKS HWY TO
S. INNER SPRINGER LP.
(PHASE II)

GLENN HWY
PLAN & PROFILE
1337+00 TO 1349+50

DESIGNED BY	CAB
CHECKED BY	DRL
DRAFTED BY	CDB

SCALE: 1"=100'

DATE TIME: 11/19/2021 10:11 AM

DRAWING LOCATION
H:\JOBS\08-016 GLENN HIGHWAY 34-42 (DOT)\09 - PS&E\CAD_PH2\DRAWINGS\08016_P2_F01-F18_GLENN.DWG

PI = "G" 1352+72.88
N = 134928.9990
E = 462536.7544
Δ = 33°27'35.0"
R = 2865.00
T = 861.17
L = 1673.11
S = 4.5%
RUNOUT = 80
RUNOFF = 178
% RUNOFF = 80

INFILTRATION BASIN
SEE E SHEETS

SEE F SHEETS FOR PATHWAY 1

REMOVE AND RESET EXISTING SIGN AS DIRECTED BY THE ENGINEER

MATCH LINE "G" STA 1349+50

MATCH LINE "G" STA 1361+00

PT = "G" 1360+84.82

S MATANUSKA LAKE RD

ROW

SB GLENN HWY

NB GLENN HWY

P4-1

P4-2

S4-1

S4-2

S4-3

1350+00

1352+00

1354+00

1356+00

1358+00

1360+00

18+00

20+00

22+00

"G" 1356+06.00 =
"MS" 20+00.00

S EAST MATANUSKA SPUR

E TEX COBB CIR

ARRC ROW

OVERHEAD WIRE
ELEV 135.5

VPC "G" 1355+45.00
ELEV 106.13

VPI "G" 1357+00.00
ELEV 108.46
310' VC

VPT "G" 1358+55.00
ELEV 107.68

VPC "G" 1360+83.18
ELEV 106.54

ORIGINAL GROUND

FINISHED GRADE

1.50%

-0.50%

GLENN HWY "G"

SHEET NO.	TOTAL SHEETS
F4	F50
STATE	YEAR
ALASKA	2021

PROJECT DESIGNATION
0A15037/CFHWY00431
0A15038/CFHWY00432
0A15033/CFHWY00006

NO.	REVISION
DATE	
NO.	REVISION
DATE	
NO.	REVISION
DATE	

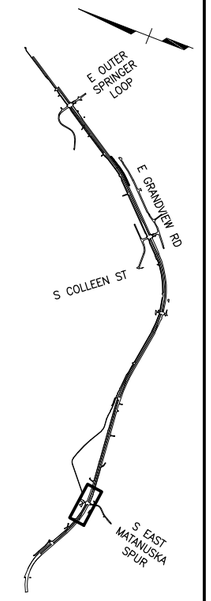

CERTIFICATION SET
NOVEMBER 2021

STATE OF ALASKA
49TH
DENNIS R. LINNELL
CE-7649
REGISTERED PROFESSIONAL ENGINEER

HDL ENGINEERING CONSULTANTS, LLC
3335 ARCTIC BOULEVARD, STE 100
ANCHORAGE, AK 99503
(907) 564-2120
AECL861

STATE OF ALASKA
DEPARTMENT OF TRANSPORTATION
AND PUBLIC FACILITIES

GLENN HWY: PARKS HWY TO
S. INNER SPRINGER LP.
(PHASE II)

GLENN HWY
PLAN & PROFILE
1349+50 TO 1361+00

DESIGNED BY	CAB
CHECKED BY	DRL
DRAFTED BY	CDB

SCALE	1"=100'

DATE	TIME
11/19/2021	10:11 AM

DRAWING LOCATION
H:\JOBS\08-016 GLENN HIGHWAY 34-42 (DOT)\09 - PS&E\CAD_PH2\DRAWINGS\08016_P2_F01-F18_GLENN.DWG

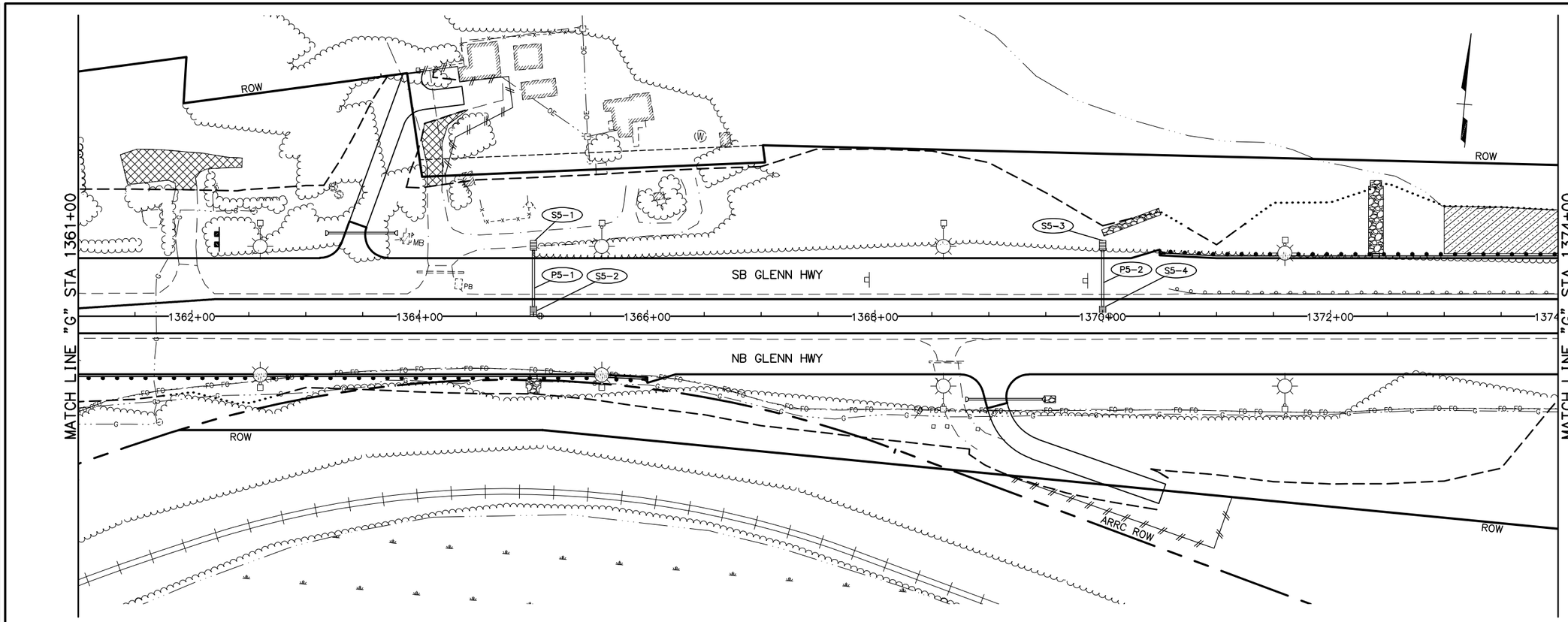

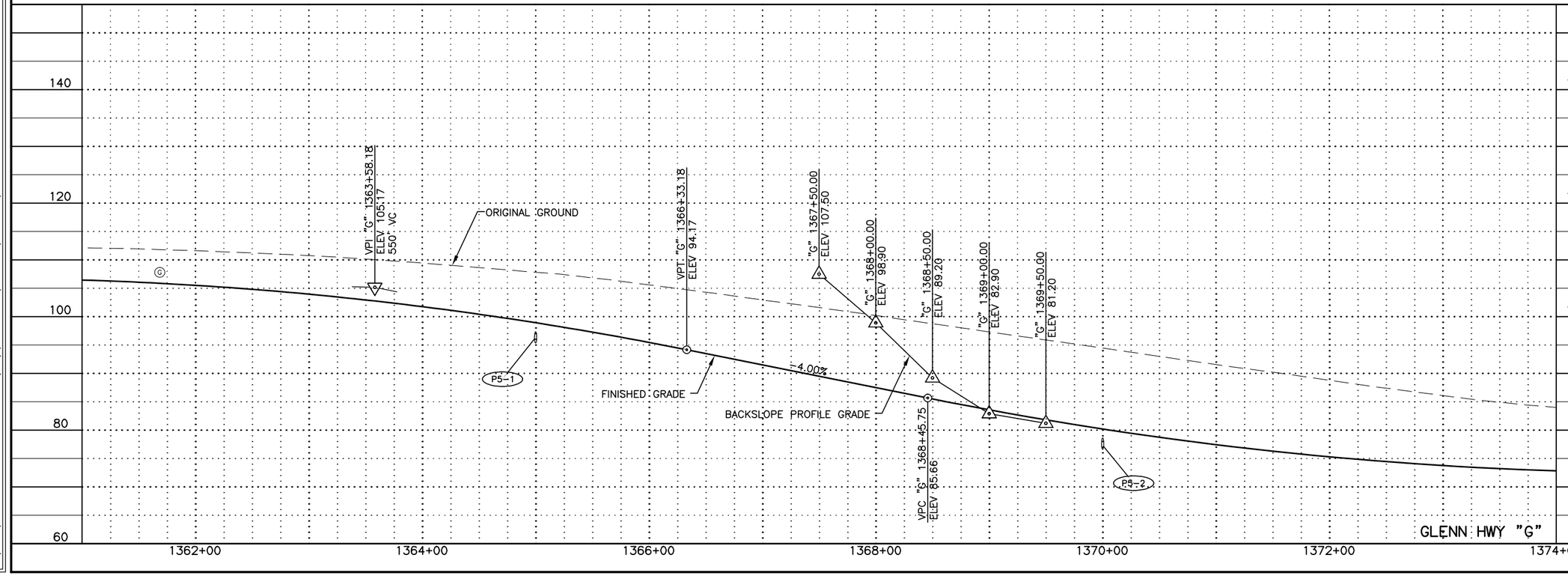

SHEET NO.	TOTAL SHEETS
F5	F50
STATE	YEAR
ALASKA	2021

PROJECT DESIGNATION

0A15037/CFHWY00431
0A15038/CFHWY00432
0A15033/CFHWY00006

NO.	REVISION
DATE	
NO.	REVISION
DATE	
NO.	REVISION
DATE	

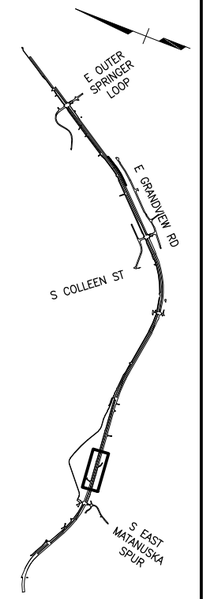

CERTIFICATION SET
NOVEMBER 2021

STATE OF ALASKA
49TH
DENNIS R. LINNELL
CE-7649
REGISTERED PROFESSIONAL ENGINEER

HDL ENGINEERING CONSULTANTS, LLC
3335 ARCTIC BOULEVARD, STE 100
ANCHORAGE, AK 99503
(907) 564-2120
AECL861

STATE OF ALASKA
DEPARTMENT OF TRANSPORTATION
AND PUBLIC FACILITIES

GLENN HWY: PARKS HWY TO
S. INNER SPRINGER LP.
(PHASE II)

GLENN HWY
PLAN & PROFILE
1361+00 TO 1374+00

DESIGNED BY	CAB
CHECKED BY	DRL
DRAFTED BY	CDB
SCALE	1"=100'
DATE	11/19/2021
TIME	10:12 AM

DRAWING LOCATION
H:\JOBS\08-016 GLENN HIGHWAY 34-42 (DOT)\09 - PS&E\CAD_PH2\DRAWINGS\08016_P2_F01-F18_GLENN.DWG

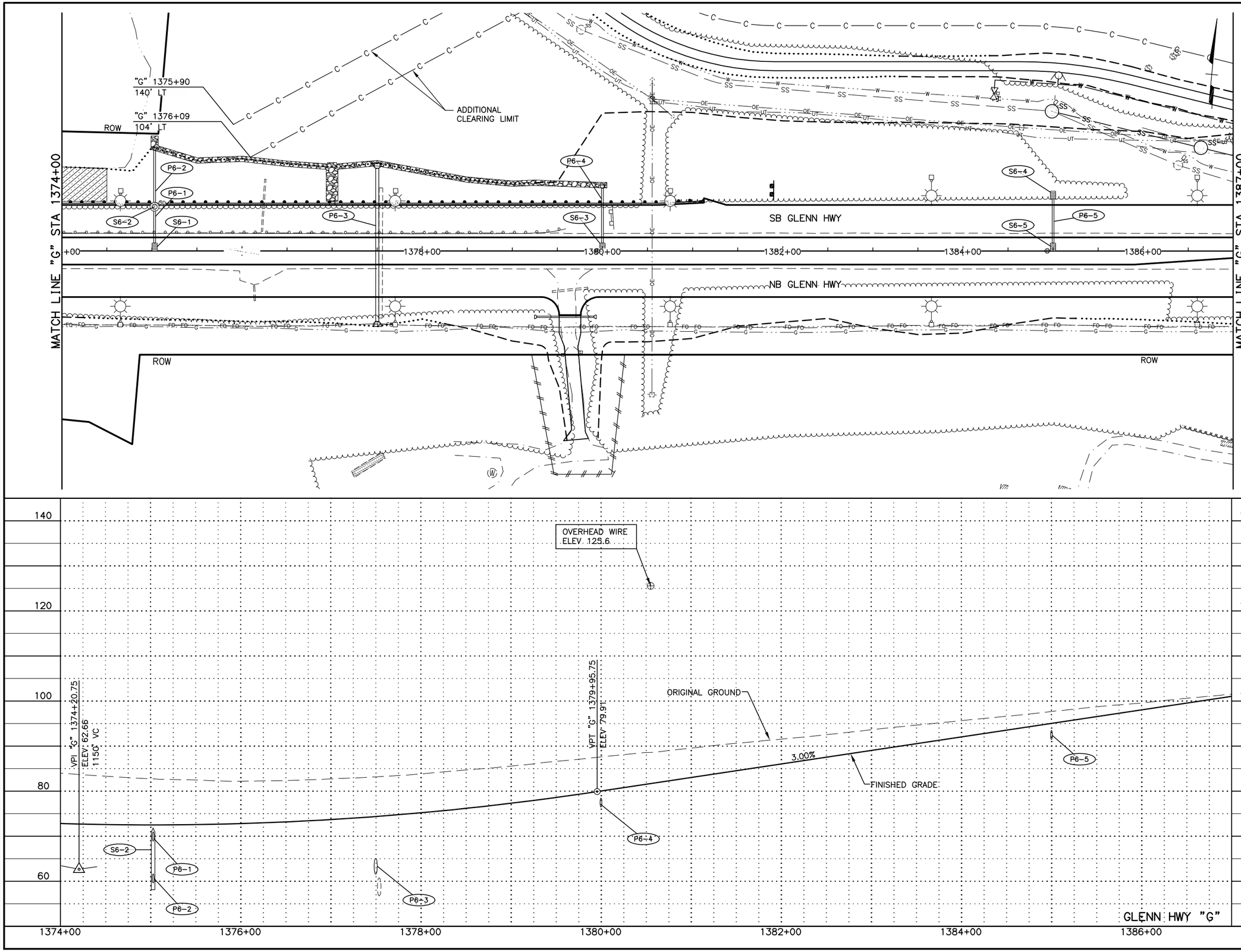

SHEET NO.	TOTAL SHEETS
F6	F50
STATE	YEAR
ALASKA	2021

PROJECT DESIGNATION
0A15037/CFHWY00431
0A15038/CFHWY00432
0A15033/CFHWY00006

NO.	REVISION
DATE	
NO.	REVISION
DATE	
NO.	REVISION
DATE	

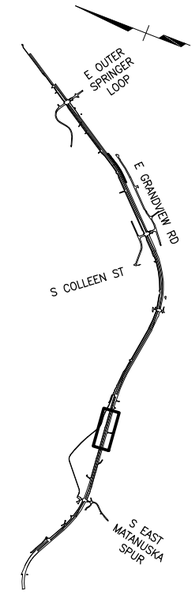

CERTIFICATION SET
NOVEMBER 2021

STATE OF ALASKA
49TH
DENNIS R. LINNELL
CE-7649
REGISTERED PROFESSIONAL ENGINEER

HDL ENGINEERING CONSULTANTS, LLC
3335 ARCTIC BOULEVARD, STE 100
ANCHORAGE, AK 99503
(907) 564-2120
AECL861

STATE OF ALASKA
DEPARTMENT OF TRANSPORTATION
AND PUBLIC FACILITIES

GLENN HWY: PARKS HWY TO
S. INNER SPRINGER LP.
(PHASE II)

GLENN HWY
PLAN & PROFILE
1374+00 TO 1387+00

DESIGNED BY	CAB
CHECKED BY	DRL
DRAFTED BY	CDB

SCALE	1"=100'

DATE	TIME
11/19/2021	10:12 AM

DRAWING LOCATION
H:\JOBS\08-016 GLENN HIGHWAY 34-42 (DOT)\09 - PS&E\CAD_PH2\DRAWINGS\08016_P2_F01-F18_GLENN.DWG

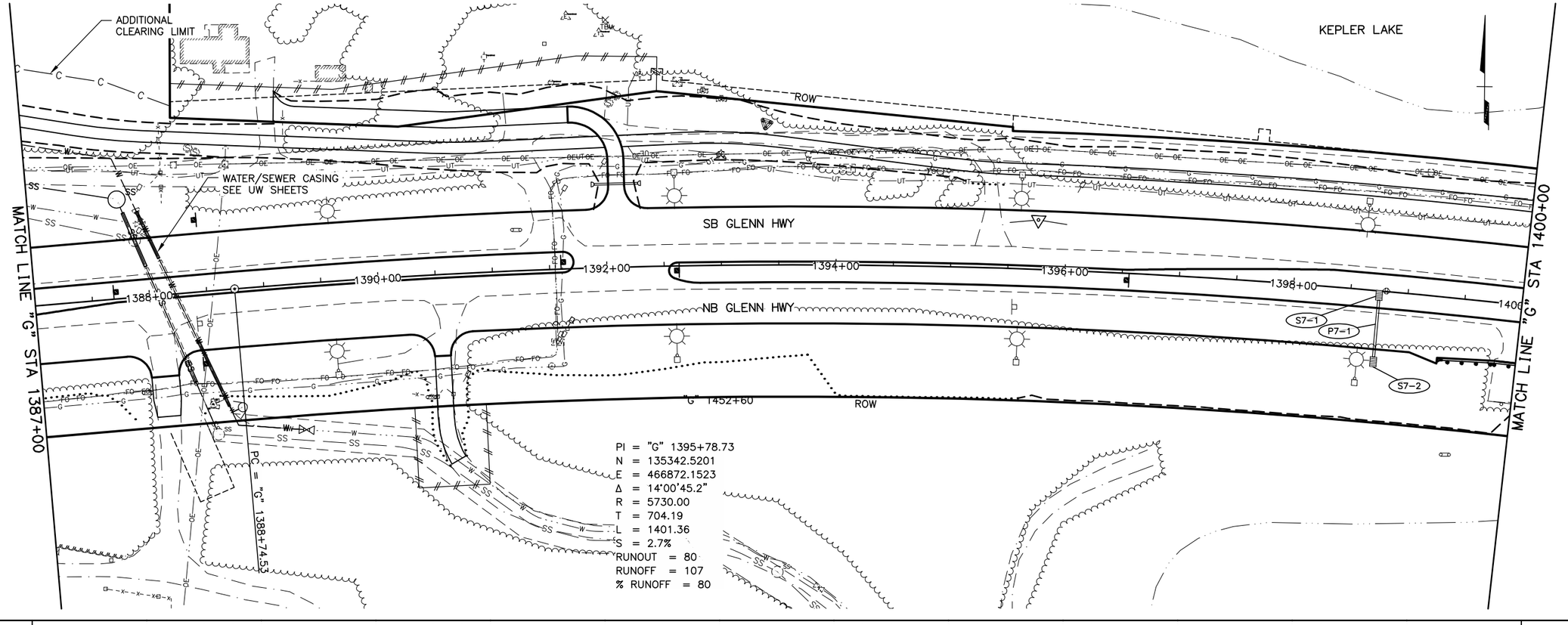

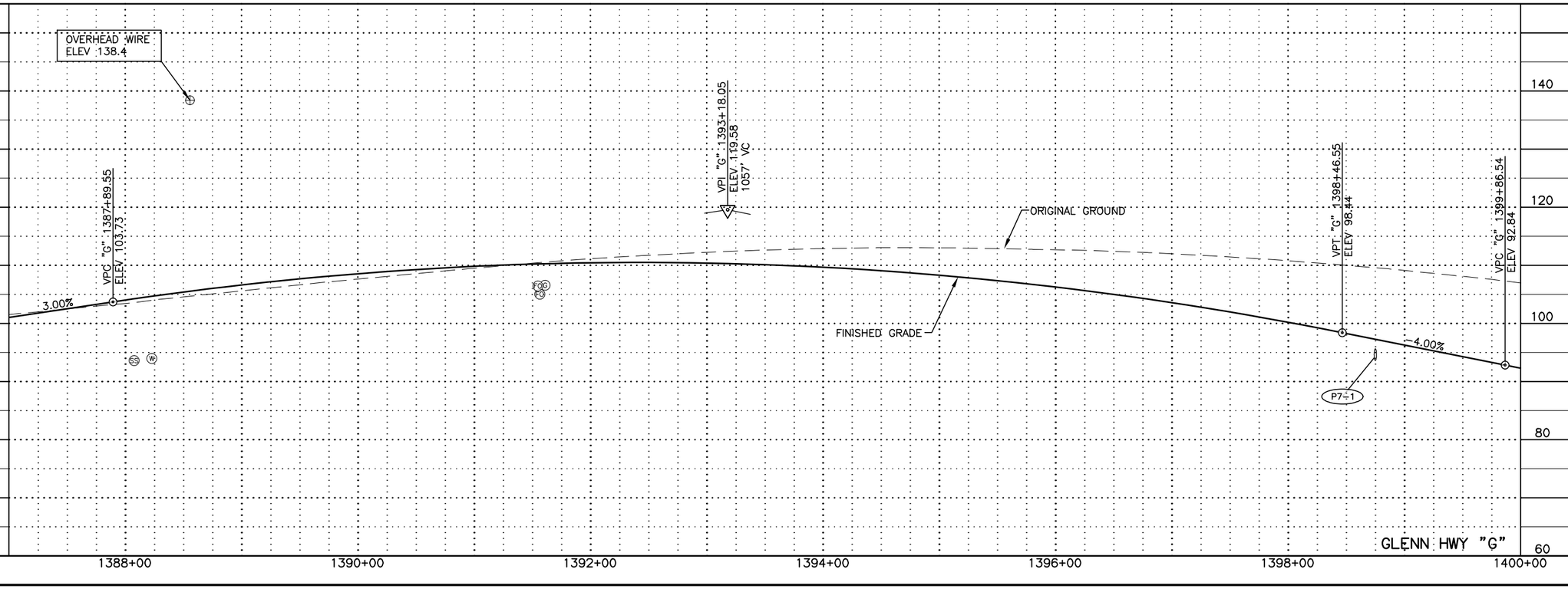

SHEET NO.	TOTAL SHEETS
F7	F50
STATE	YEAR
ALASKA	2021

PROJECT DESIGNATION

0A15037/CFHWY00431
0A15038/CFHWY00432
0A15033/CFHWY00006

NO.	REVISION
DATE	
NO.	REVISION
DATE	
NO.	REVISION
DATE	

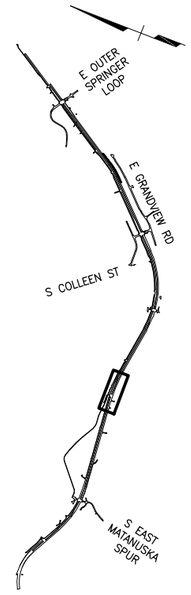

CERTIFICATION SET
NOVEMBER 2021

STATE OF ALASKA
49TH
DENNIS R. LINNELL
CE-7649
REGISTERED PROFESSIONAL ENGINEER

HDL ENGINEERING CONSULTANTS, LLC
3335 ARCTIC BOULEVARD, STE 100
ANCHORAGE, AK 99503
(907) 564-2120
AECL861

STATE OF ALASKA
DEPARTMENT OF TRANSPORTATION AND PUBLIC FACILITIES

GLENN HWY: PARKS HWY TO S. INNER SPRINGER LP. (PHASE II)

GLENN HWY
PLAN & PROFILE
1387+00 TO 1400+00

KEPLER LAKE

BRADLEY LAKE

E. KEPLER DR

ROW

ROW

MATCH LINE "G" STA 1400+00

MATCH LINE "G" STA 1413+00

SB GLENN HWY

NB GLENN HWY

S8-1

S8-2

S8-3

P8-1

P8-2

P8-3

1402+00

1404+00

1406+00

1408+00

1410+00

1412+00

PI = "G" 1395+78.73
N = 135342.5201
E = 466872.1523
Δ = 14°00'45.2"
R = 5730.00
T = 704.19
L = 1401.36
S = 2.7%
RUNOUT = 80
RUNOFF = 107
% RUNOFF = 80

PT = "G" 1402+75.89

ROW

ROW

ECHO LAKE

VPI "G" 1404+49.04
ELEV 74.34
925' VC

VPT "G" 1409+11.54
ELEV 87.29

ORIGINAL GROUND

FINISHED GRADE

2.80%

S8+2

P8-1

P8-2

P8-3

140
120
100
80
60

GLENN HWY "G"

1400+00 1402+00 1404+00 1406+00 1408+00 1410+00 1412+00

SHEET NO.	TOTAL SHEETS
F8	F50
STATE	YEAR
ALASKA	2021

PROJECT DESIGNATION

0A15037/CFHWY00431
0A15038/CFHWY00432
0A15033/CFHWY00006

NO.	REVISION
DATE	
NO.	REVISION
DATE	
NO.	REVISION
DATE	

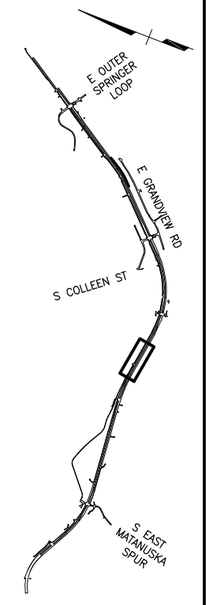

CERTIFICATION SET
NOVEMBER 2021

STATE OF ALASKA
49TH
DENNIS R. LINNELL
CE-7649
REGISTERED PROFESSIONAL ENGINEER

HDL ENGINEERING CONSULTANTS, LLC
3335 ARCTIC BOULEVARD, STE 100
ANCHORAGE, AK 99503
(907) 564-2120
AECL861

STATE OF ALASKA
DEPARTMENT OF TRANSPORTATION
AND PUBLIC FACILITIES

GLENN HWY: PARKS HWY TO
S. INNER SPRINGER LP.
(PHASE II)

GLENN HWY
PLAN & PROFILE
1400+00 TO 1413+00

DESIGNED BY CAB
CHECKED BY DRL
DRAFTED BY CDB

SCALE 1"=100'

DATE TIME
11/19/2021 10:13 AM

DRAWING LOCATION
H:\JOBS\08-016 GLENN HIGHWAY 34-42 (DOT)\09 - PS&E\CAD_PH2\DRAWINGS\08016_P2_F01-F18_GLENN.DWG

DESIGNED BY	CAB
CHECKED BY	DRL
DRAFTED BY	CDB
SCALE	1"=100'
DATE	11/19/2021
TIME	10:13 AM

DRAWING LOCATION
H:\JOBS\08-016 GLENN HIGHWAY 34-42 (DOT)\09 - PS&E\CAD_PH2\DRAWINGS\08016_P2_F01-F18_GLENN.DWG

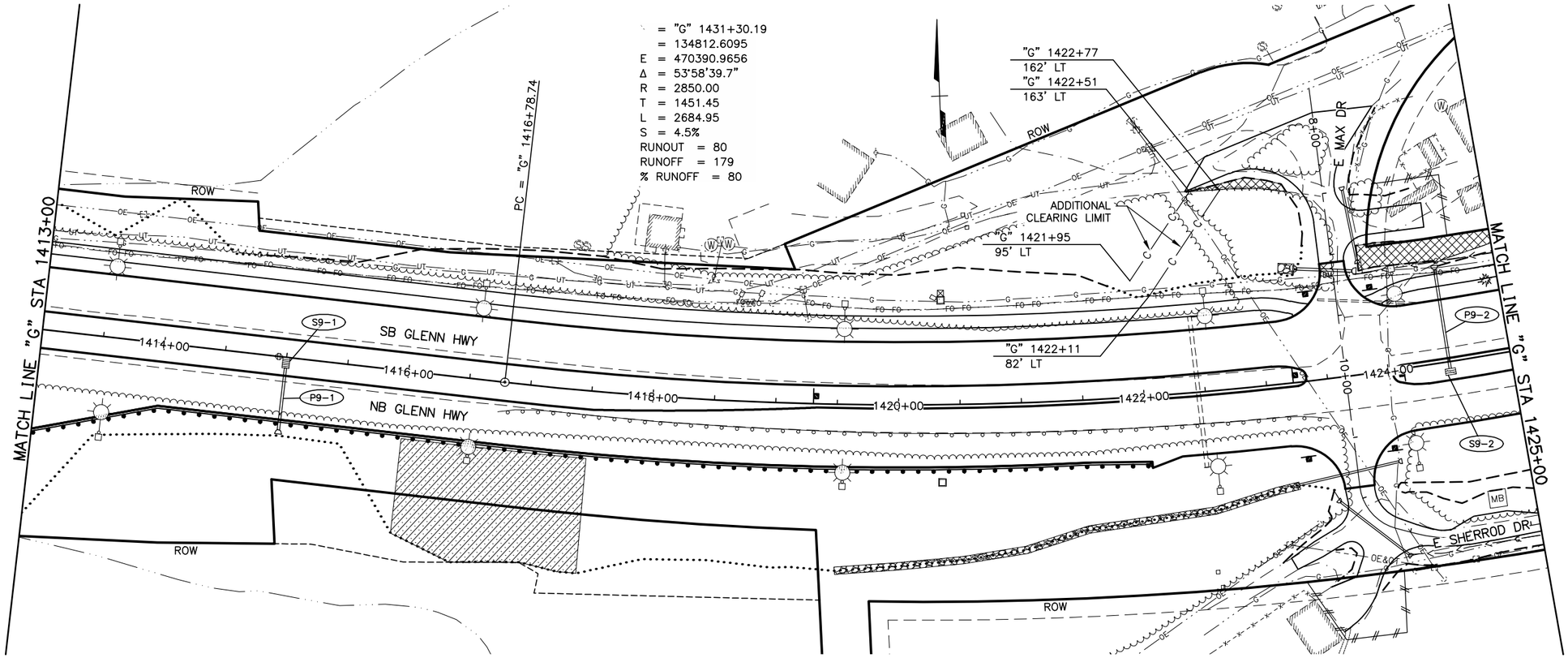

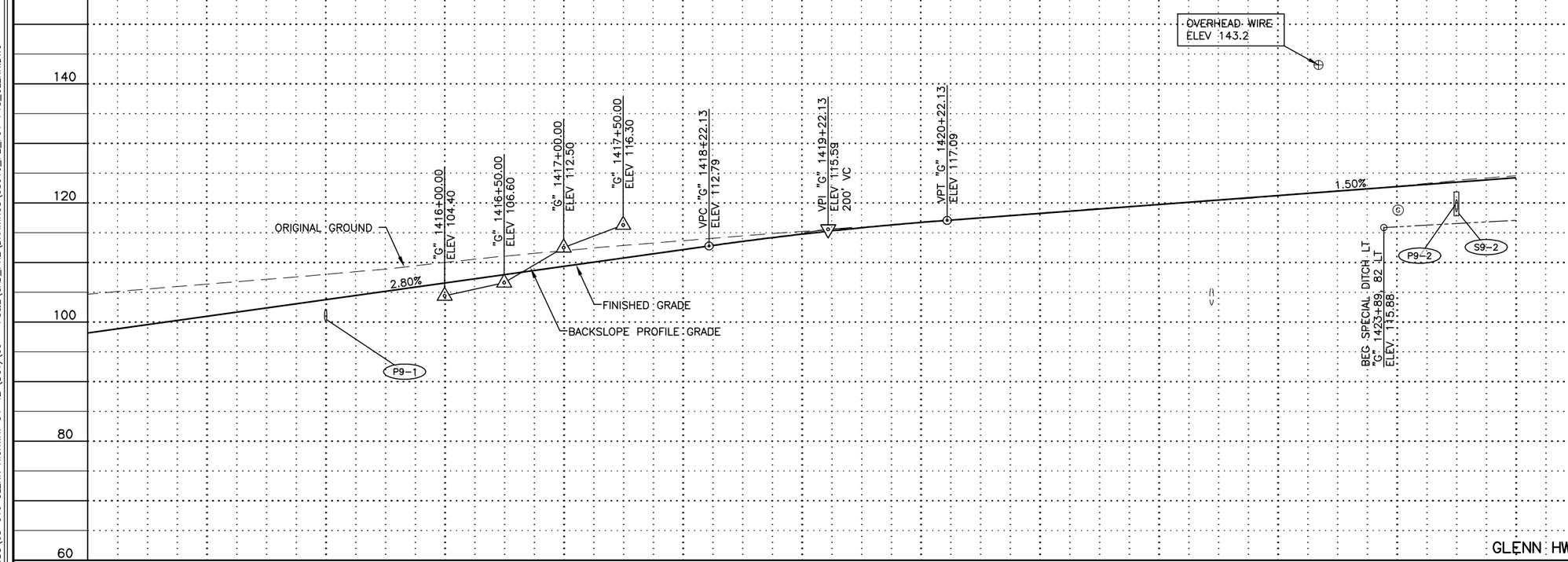

SHEET NO.	TOTAL SHEETS
F9	F50
STATE	YEAR
ALASKA	2021

PROJECT DESIGNATION
0A15037/CFHWY00431
0A15038/CFHWY00432
0A15033/CFHWY00006

NO.	REVISION
DATE	
NO.	REVISION
DATE	
NO.	REVISION
DATE	

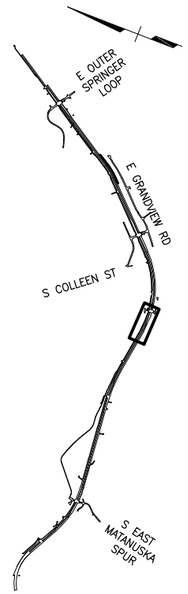

CERTIFICATION SET
NOVEMBER 2021

STATE OF ALASKA
49TH
DENNIS R. LINNELL
CE-7649
REGISTERED PROFESSIONAL ENGINEER

HDL ENGINEERING CONSULTANTS, LLC
3335 ARCTIC BOULEVARD, STE 100
ANCHORAGE, AK 99503
(907) 564-2120
AECL861

STATE OF ALASKA
DEPARTMENT OF TRANSPORTATION AND PUBLIC FACILITIES

GLENN HWY: PARKS HWY TO S. INNER SPRINGER LP. (PHASE II)

GLENN HWY
PLAN & PROFILE
1413+00 TO 1425+00

DESIGNED BY	CAB
CHECKED BY	DRL
DRAFTED BY	CDB

SCALE	DATE	TIME
1"=100'	11/19/2021	10:13 AM

DRAWING LOCATION
H:\JOBS\08-016 GLENN HIGHWAY 34-42 (DOT)\09 - PS&E\CAD_PH2\DRAWINGS\08016_P2_F01-F18_GLENN.DWG

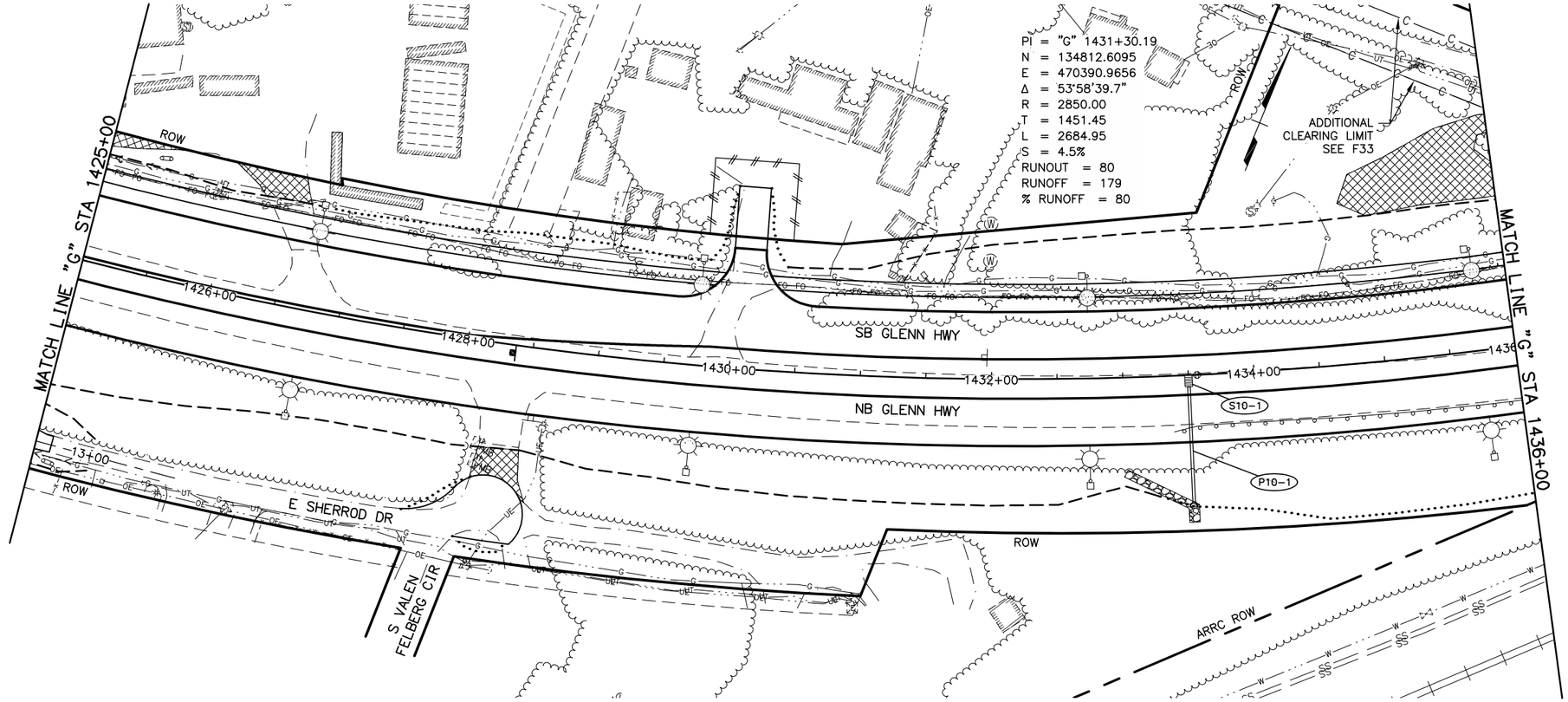

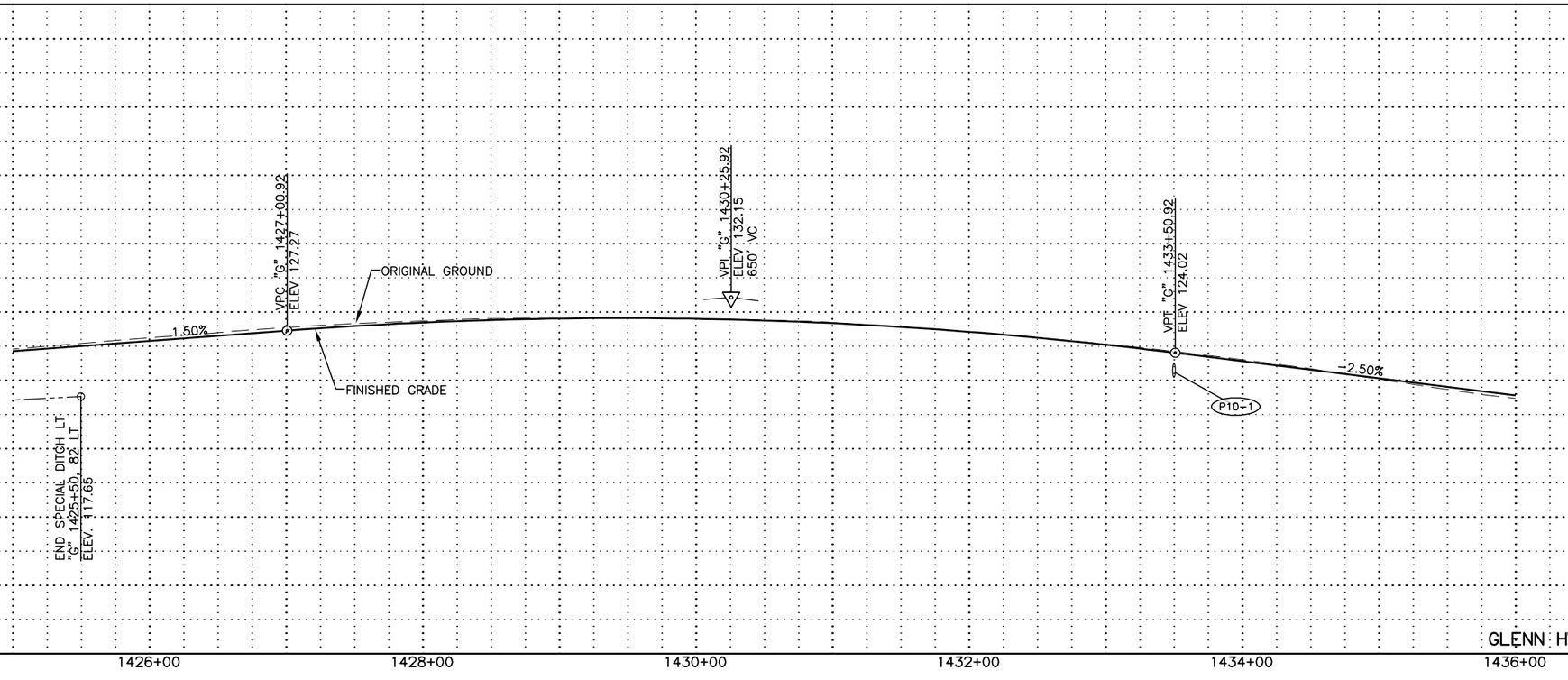

SHEET NO.	TOTAL SHEETS
F10	F50
STATE	YEAR
ALASKA	2021

PROJECT DESIGNATION

0A15037/CFHWY00431
0A15038/CFHWY00432
0A15033/CFHWY00006

NO.	REVISION
DATE	
NO.	REVISION
DATE	
NO.	REVISION
DATE	

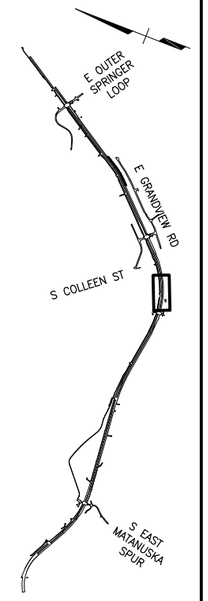

CERTIFICATION SET
NOVEMBER 2021

STATE OF ALASKA
49TH
DENNIS R. LINNELL
CE-7649
REGISTERED PROFESSIONAL ENGINEER

HDL ENGINEERING CONSULTANTS, LLC
3335 ARCTIC BOULEVARD, STE 100
ANCHORAGE, AK 99503
(907) 564-2120
AECL861

STATE OF ALASKA
DEPARTMENT OF TRANSPORTATION
AND PUBLIC FACILITIES

GLENN HWY: PARKS HWY TO
S. INNER SPRINGER LP.
(PHASE II)

GLENN HWY
PLAN & PROFILE
1425+00 TO 1436+00

DESIGNED BY	CAB
CHECKED BY	DRL
DRAFTED BY	CDB
SCALE	1"=100'
DATE	11/19/2021
TIME	10:14 AM

DRAWING LOCATION
H:\JOBS\08-016 GLENN HIGHWAY 34-42 (DOT)\09 - PS&E\CAD_PH2\DRAWINGS\08016_P2_F01-F18_GLENN.DWG

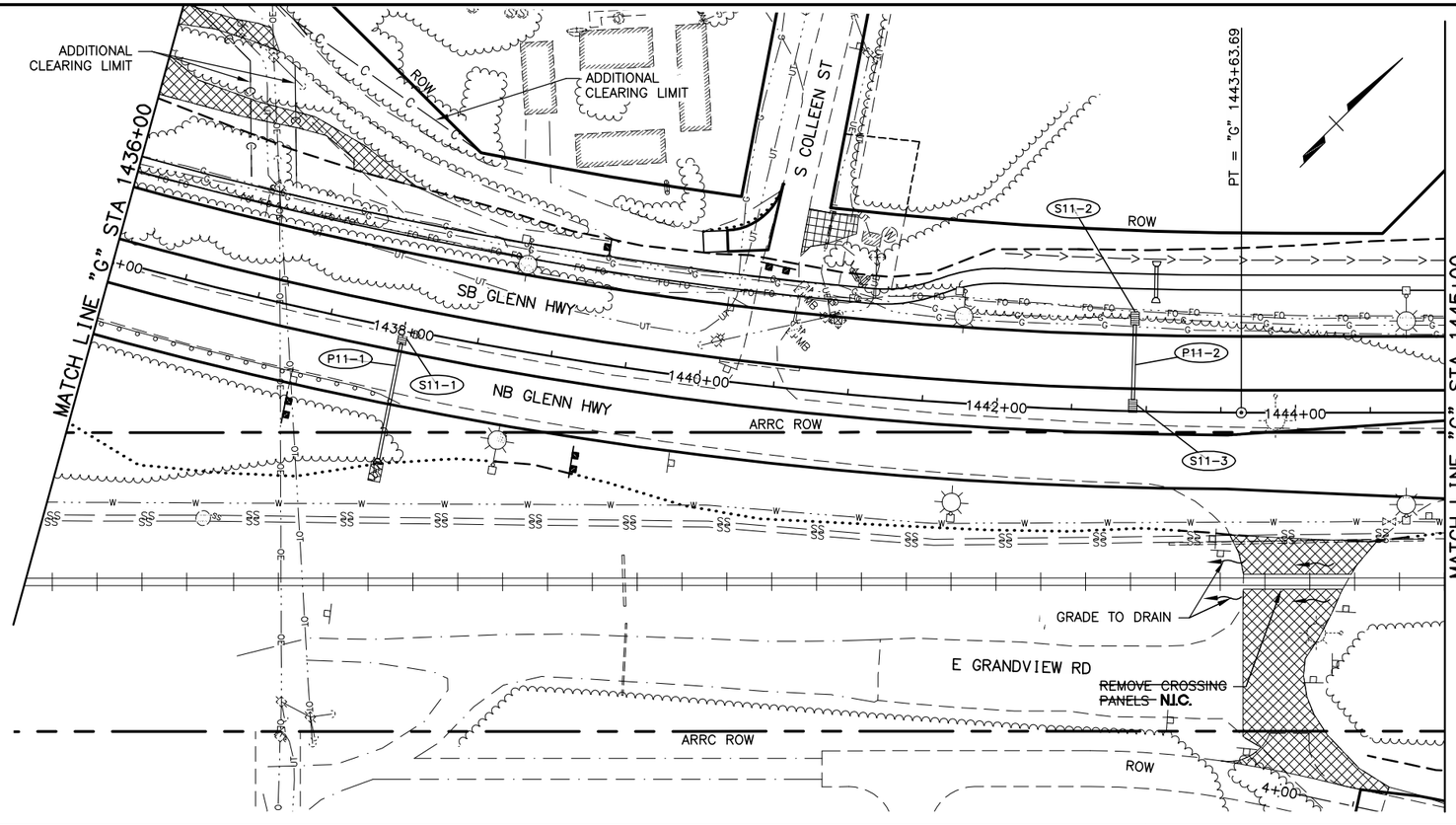

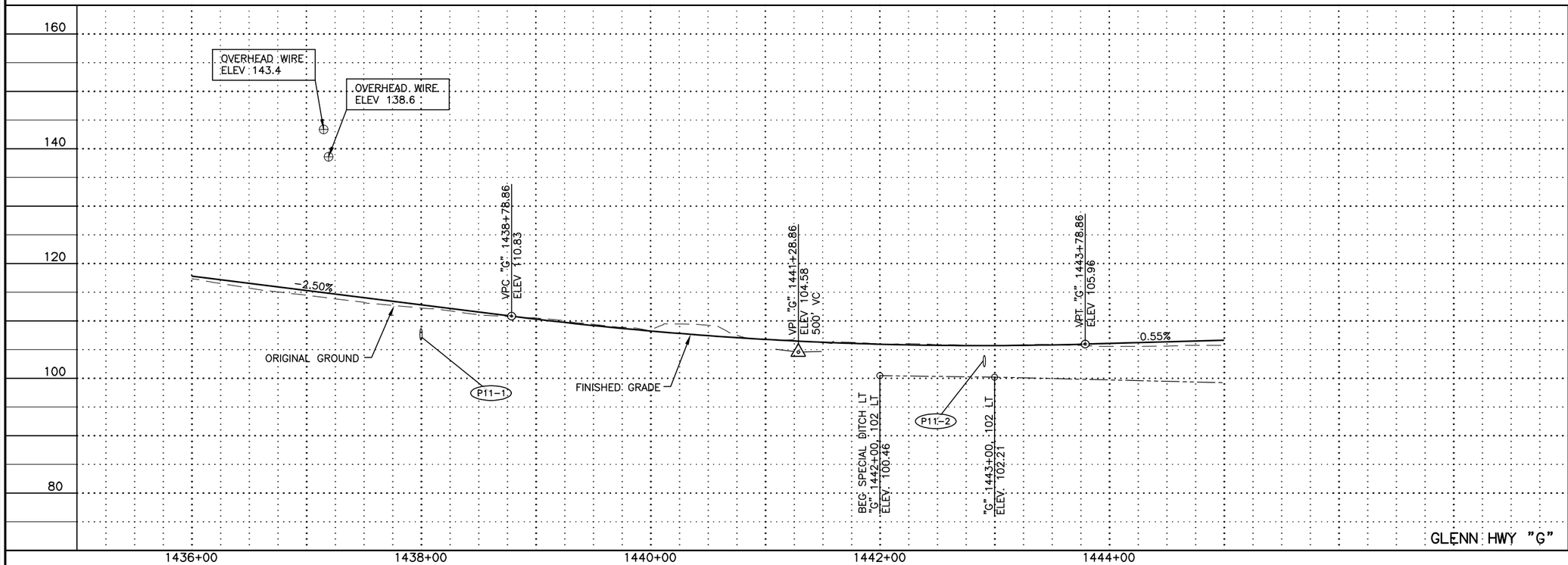

SHEET NO.	TOTAL SHEETS
F11	F50
STATE	YEAR
ALASKA	2021

PROJECT DESIGNATION

0A15037/CFHWY00431
0A15038/CFHWY00432
0A15033/CFHWY00006

NO.	REVISION
DATE	
NO.	REVISION
DATE	
NO.	REVISION
DATE	

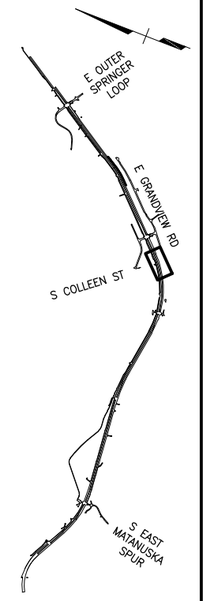

CERTIFICATION SET
NOVEMBER 2021

STATE OF ALASKA
49TH
DENNIS R. LINNELL
CE-7649
REGISTERED PROFESSIONAL ENGINEER

HDL ENGINEERING CONSULTANTS, LLC
3335 ARCTIC BOULEVARD, STE 100
ANCHORAGE, AK 99503
(907) 564-2120
AECL861

STATE OF ALASKA
DEPARTMENT OF TRANSPORTATION AND PUBLIC FACILITIES

GLENN HWY: PARKS HWY TO S. INNER SPRINGER LP. (PHASE II)

GLENN HWY
PLAN & PROFILE
1436+00 TO 1445+00

DRAWING LOCATION
H:\JOBS\08-016 GLENN HIGHWAY 34-42 (DOT)\09 - PS&E\CAD_PH2\DRAWINGS\08016_P2_F01-F18_GLENN.DWG

DATE	TIME
11/19/2021	10:30 AM

SCALE
1"=100'

DESIGNED BY	CAB
CHECKED BY	DRL
DRAFTED BY	CDB

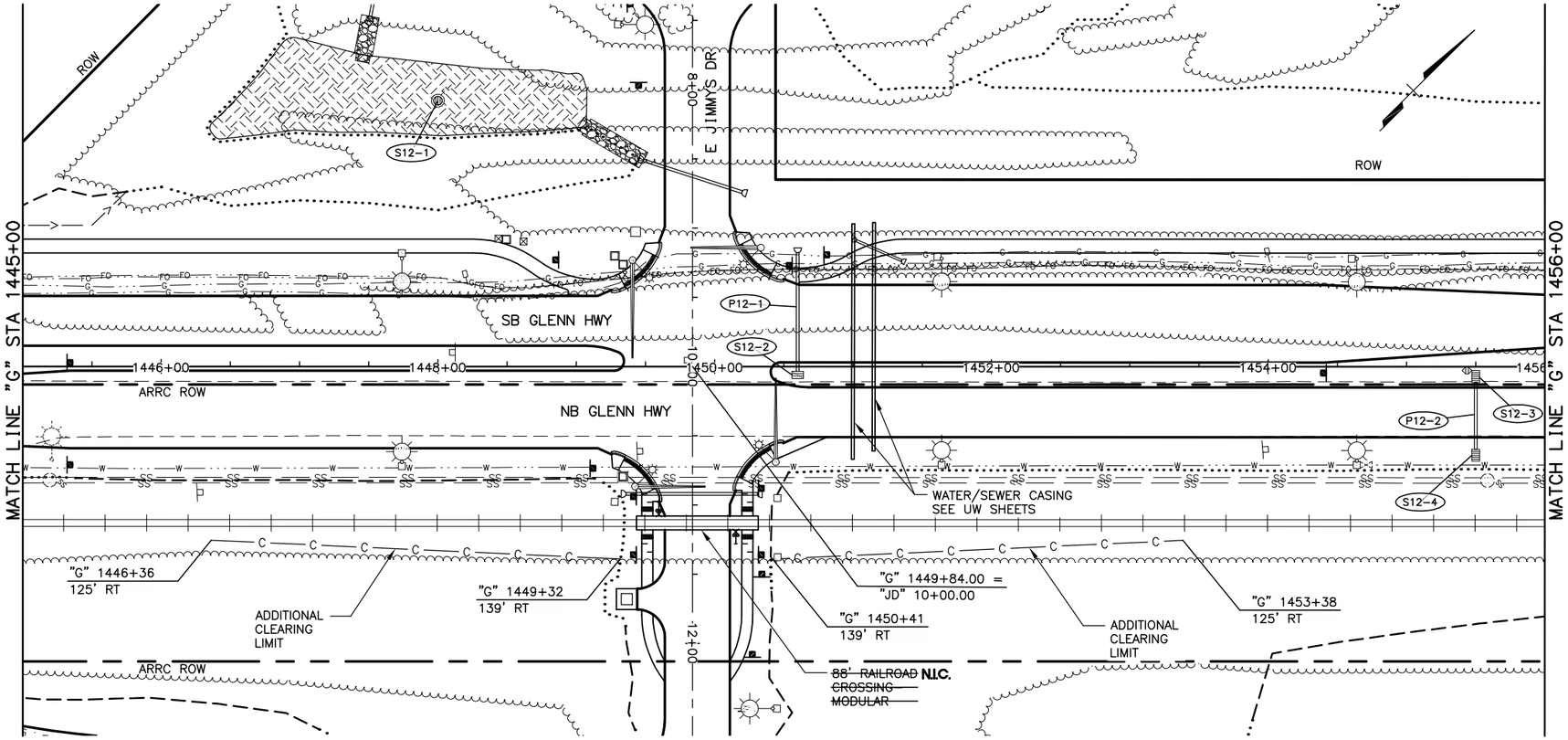

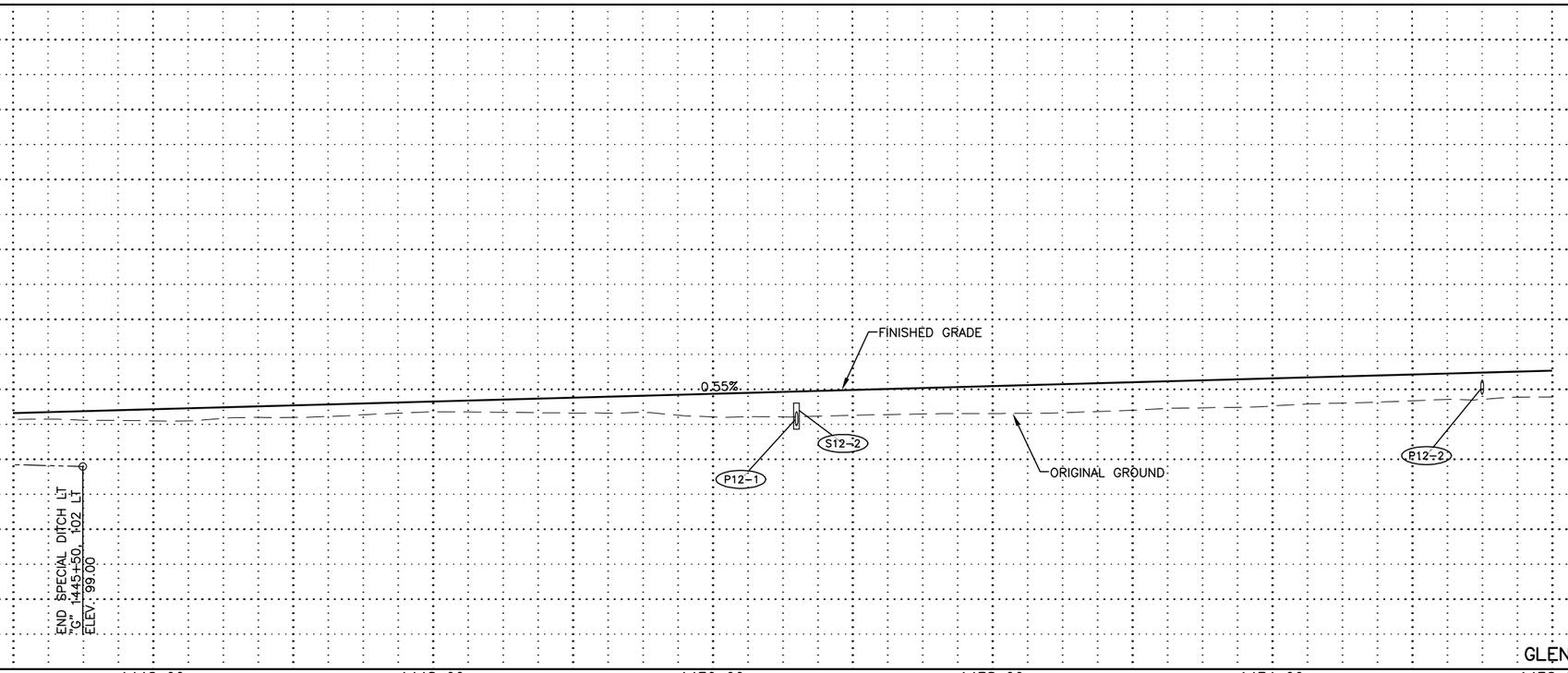

SHEET NO.	TOTAL SHEETS
F12	F50
STATE	YEAR
ALASKA	2021

PROJECT DESIGNATION

0A15037/CFHWY00431
0A15038/CFHWY00432
0A15033/CFHWY00006

NO.	REVISION
DATE	
NO.	REVISION
DATE	
NO.	REVISION
DATE	

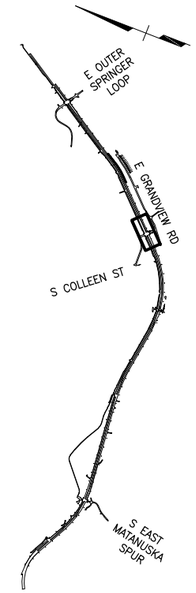

CERTIFICATION SET
NOVEMBER 2021

STATE OF ALASKA
49TH
DENNIS R. LINNELL
CE-7649
REGISTERED PROFESSIONAL ENGINEER

HDL ENGINEERING CONSULTANTS, LLC
3335 ARCTIC BOULEVARD, STE 100
ANCHORAGE, AK 99503
(907) 564-2120
AECL861

STATE OF ALASKA
DEPARTMENT OF TRANSPORTATION
AND PUBLIC FACILITIES

GLENN HWY: PARKS HWY TO
S. INNER SPRINGER LP.
(PHASE II)

GLENN HWY
PLAN & PROFILE
1445+00 TO 1456+00

DESIGNED BY CAB
CHECKED BY DRL
DRAFTED BY CDB

SCALE 1"=100'

DATE TIME
11/19/2021 10:31 AM

DRAWING LOCATION
H:\JOBS\08-016 GLENN HIGHWAY 34-42 (DOT)\09 - PS&E\CAD_PH2\DRAWINGS\08016_P2_F01-F18_GLENN.DWG

SHEET NO.	TOTAL SHEETS
F13	F50
STATE	YEAR
ALASKA	2021

PROJECT DESIGNATION
0A15037/CFHWY00431
0A15038/CFHWY00432
0A15033/CFHWY00006

NO.	REVISION
DATE	
NO.	REVISION
DATE	
NO.	REVISION
DATE	

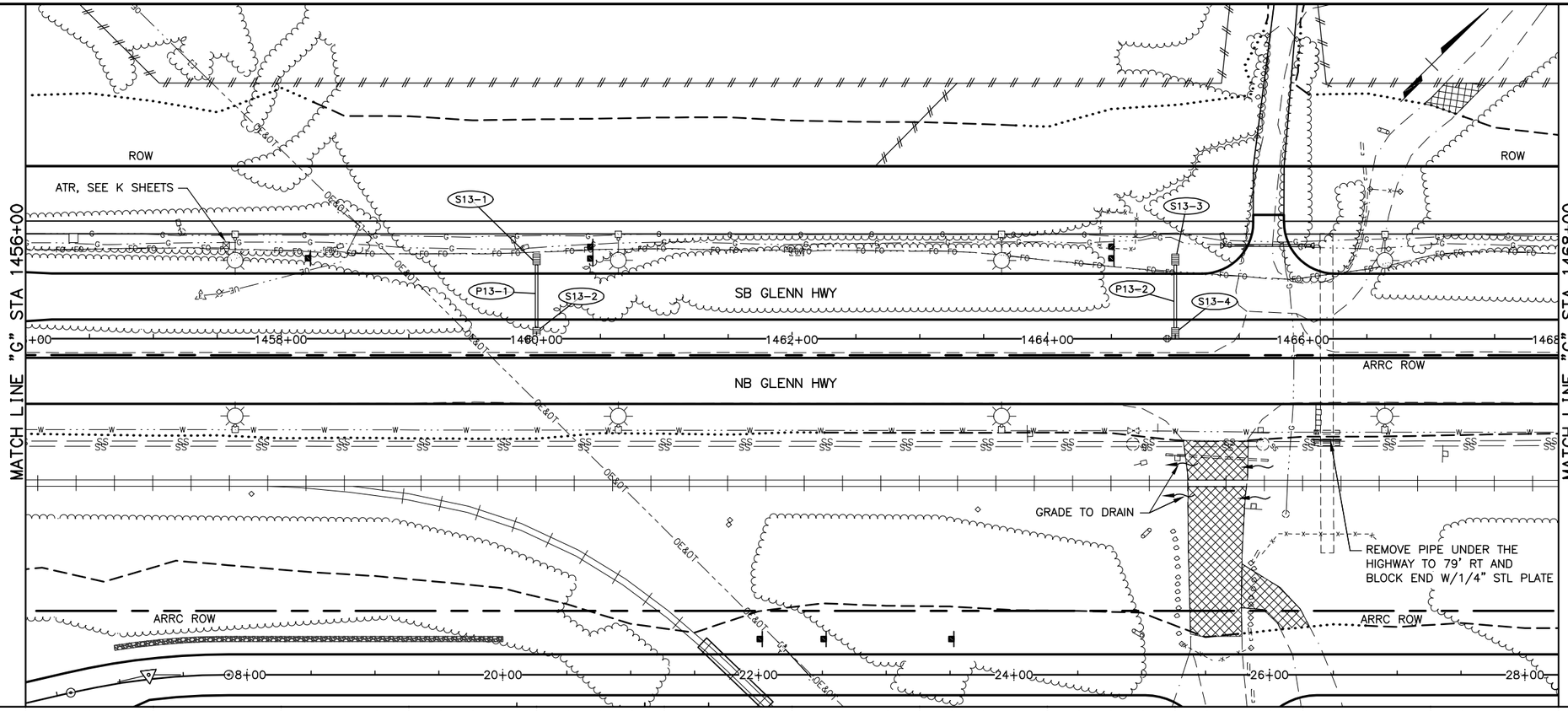

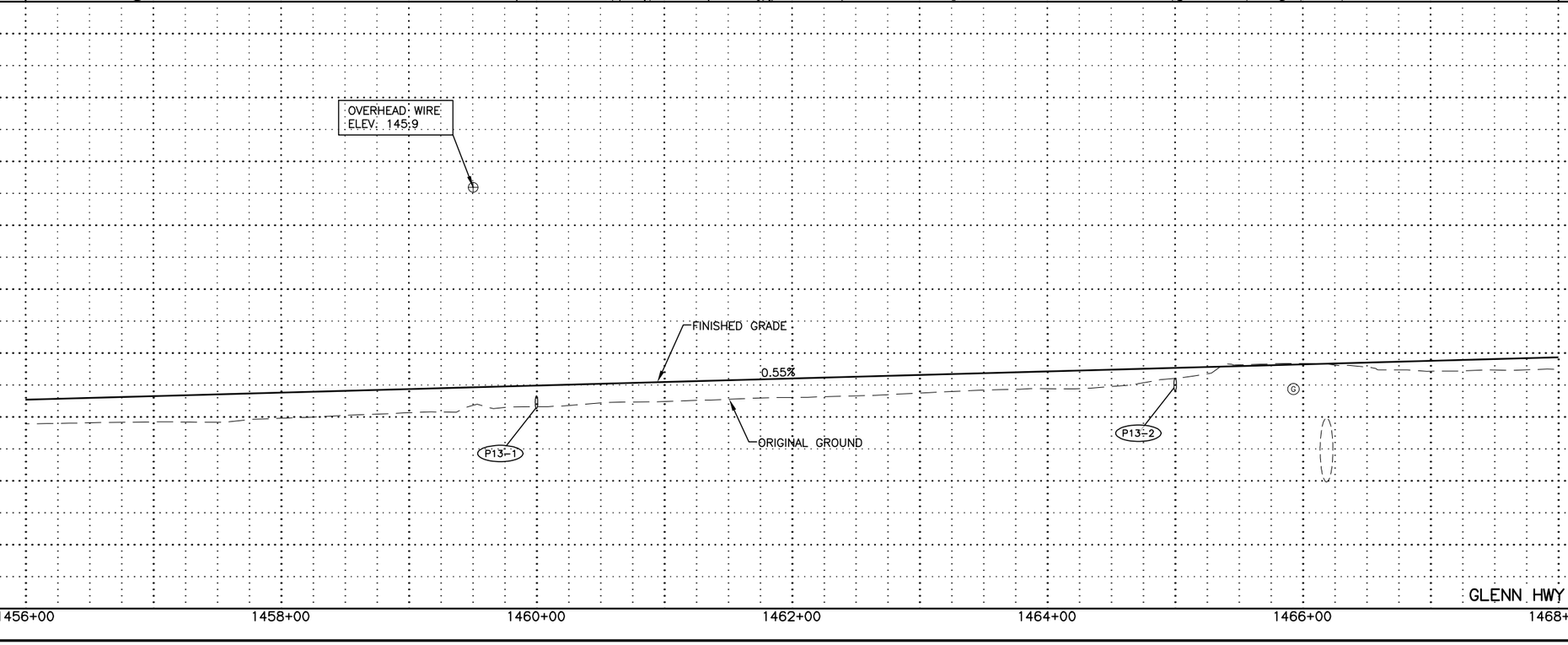

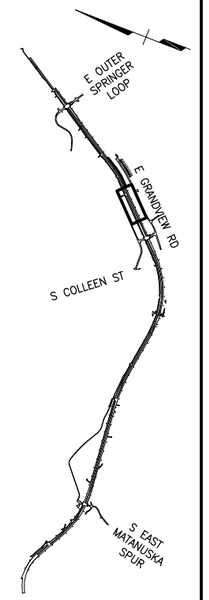

CERTIFICATION SET
NOVEMBER 2021

STATE OF ALASKA
49TH
DENNIS R. LINNELL
CE-7649
REGISTERED PROFESSIONAL ENGINEER

HDL ENGINEERING CONSULTANTS, LLC
3335 ARCTIC BOULEVARD, STE 100
ANCHORAGE, AK 99503
(907) 564-2120
AECL861

STATE OF ALASKA
DEPARTMENT OF TRANSPORTATION
AND PUBLIC FACILITIES

GLENN HWY: PARKS HWY TO
S. INNER SPRINGER LP.
(PHASE II)

GLENN HWY
PLAN & PROFILE
1456+00 TO 1468+00

DESIGNED BY	CAB
CHECKED BY	DRL
DRAFTED BY	CDB

SCALE	1"=100'

DATE	TIME
11/19/2021	10:31 AM

DRAWING LOCATION
H:\JOBS\08-016 GLENN HIGHWAY 34-42 (DOT)\09 - PS&E\CAD_PH2\DRAWINGS\08016_P2_F01-F18_GLENN.DWG

PI = "G" 1472+85.05
N = 137926.8888
E = 473460.5976
Δ = 13°23'07.3"
R = 1990.00
T = 233.51
L = 464.90
S = 5.4%
RUNOUT = 80
RUNOFF = 217
% RUNOFF = 80

PC = "G" 1470+51.53

PT = "G" 1475+16.43

MATCH LINE "G" STA 1468+00

MATCH LINE "G" STA 1481+00

ROW

SB GLENN HWY

NB GLENN HWY

ARRC ROW

DRYWELL

GRADE TO DRAIN

TBM

S14-1 S14-2 S14-3 P14-1 P14-2

PI = "G" 1481+00.
N = 138625.7833
E = 473883.8793
Δ = 1°00'00"

OVERHEAD WIRE
ELEV. 154±

VPI "G" 1472+89.61
ELEV. 122.03

FINISHED GRADE

ORIGINAL GROUND

0.55%

0.51%

BEG SPECIAL DITCH LT
"G" 1471+50. 78 LT
ELEV. 116.4

END SPECIAL DITCH LT
"G" 1475+50. 78 LT
ELEV. 117.9

GLENN HWY "G"

SHEET NO.	TOTAL SHEETS
F14	F50
STATE	YEAR
ALASKA	2021

PROJECT DESIGNATION
0A15037/CFHWY00431
0A15038/CFHWY00432
0A15033/CFHWY00006

NO.	REVISION
DATE	
NO.	REVISION
DATE	
NO.	REVISION
DATE	

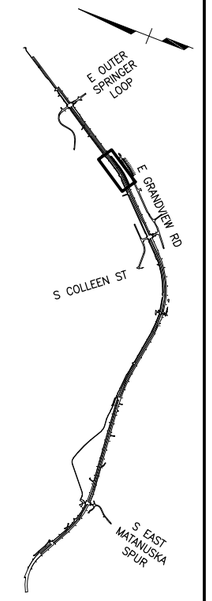

CERTIFICATION SET
NOVEMBER 2021

STATE OF ALASKA
49TH
DENNIS R. LINNELL
CE-7649
REGISTERED PROFESSIONAL ENGINEER

HDL ENGINEERING CONSULTANTS, LLC
3335 ARCTIC BOULEVARD, STE 100
ANCHORAGE, AK 99503
(907) 564-2120
AECL861

STATE OF ALASKA
DEPARTMENT OF TRANSPORTATION
AND PUBLIC FACILITIES

GLENN HWY: PARKS HWY TO
S. INNER SPRINGER LP.
(PHASE II)

GLENN HWY
PLAN & PROFILE
1468+00 TO 1481+00

DESIGNED BY CAB
CHECKED BY DRL
DRAFTED BY CDB

SCALE 1"=100'

DATE TIME
11/19/2021 10:31 AM

DRAWING LOCATION
H:\JOBS\08-016 GLENN HIGHWAY 34-42 (DOT)\09 - PS&E\CAD_PH2\DRAWINGS\08016_P2_F01-F18_GLENN.DWG

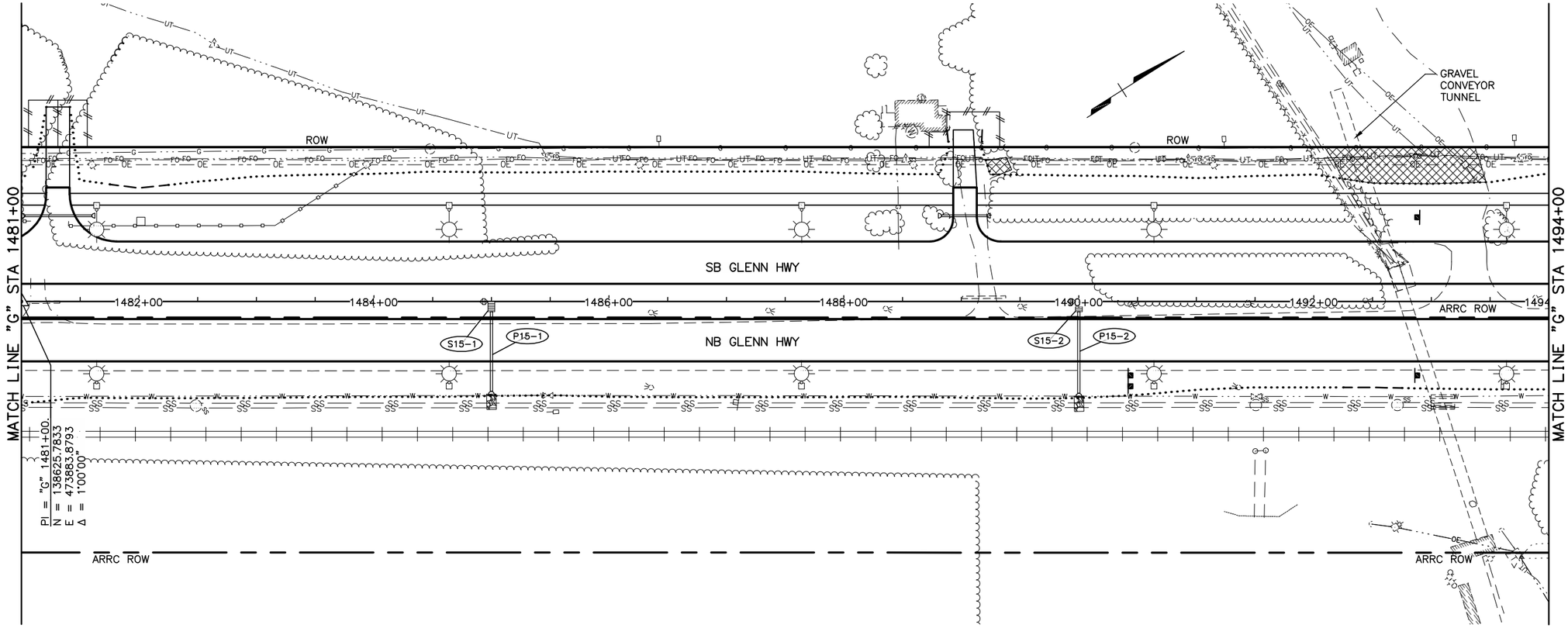

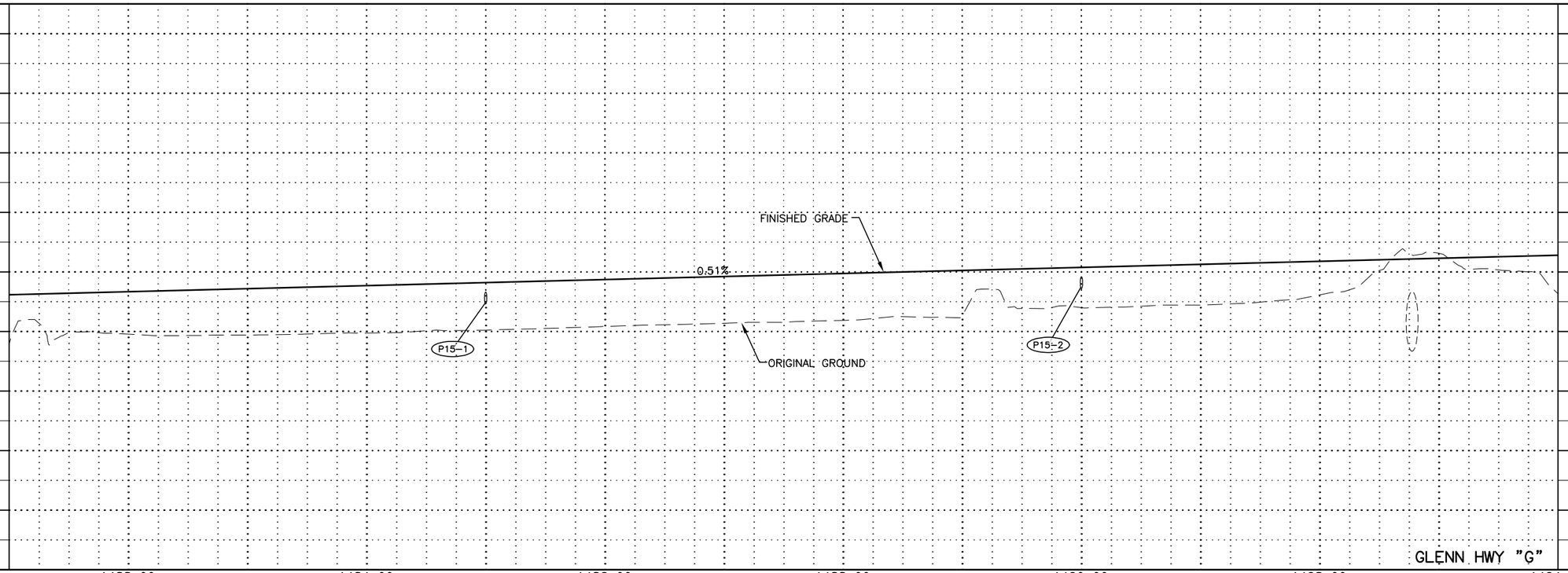

SHEET NO.	TOTAL SHEETS
F15	F50
STATE	YEAR
ALASKA	2021

PROJECT DESIGNATION
0A15037/CFHWY00431
0A15038/CFHWY00432
0A15033/CFHWY00006

NO.	REVISION
DATE	
NO.	REVISION
DATE	
NO.	REVISION
DATE	

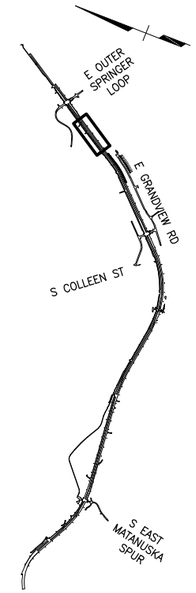

CERTIFICATION SET
NOVEMBER 2021

STATE OF ALASKA
49TH
DENNIS R. LINNELL
CE-7649
REGISTERED PROFESSIONAL ENGINEER

HDL ENGINEERING CONSULTANTS, LLC
3335 ARCTIC BOULEVARD, STE 100
ANCHORAGE, AK 99503
(907) 564-2120
AECL861

STATE OF ALASKA
DEPARTMENT OF TRANSPORTATION
AND PUBLIC FACILITIES

GLENN HWY: PARKS HWY TO
S. INNER SPRINGER LP.
(PHASE II)

GLENN HWY
PLAN & PROFILE
1481+00 TO 1494+00

DESIGNED BY	CAB
CHECKED BY	DRL
DRAFTED BY	CDB

SCALE	1"=100'

DATE	TIME
11/19/2021	10:32 AM

DRAWING LOCATION
H:\JOBS\08-016 GLENN HIGHWAY 34-42 (DOT)\09 - PS&E\CAD_PH2\DRAWINGS\08016_P2_F01-F18_GLENN.DWG

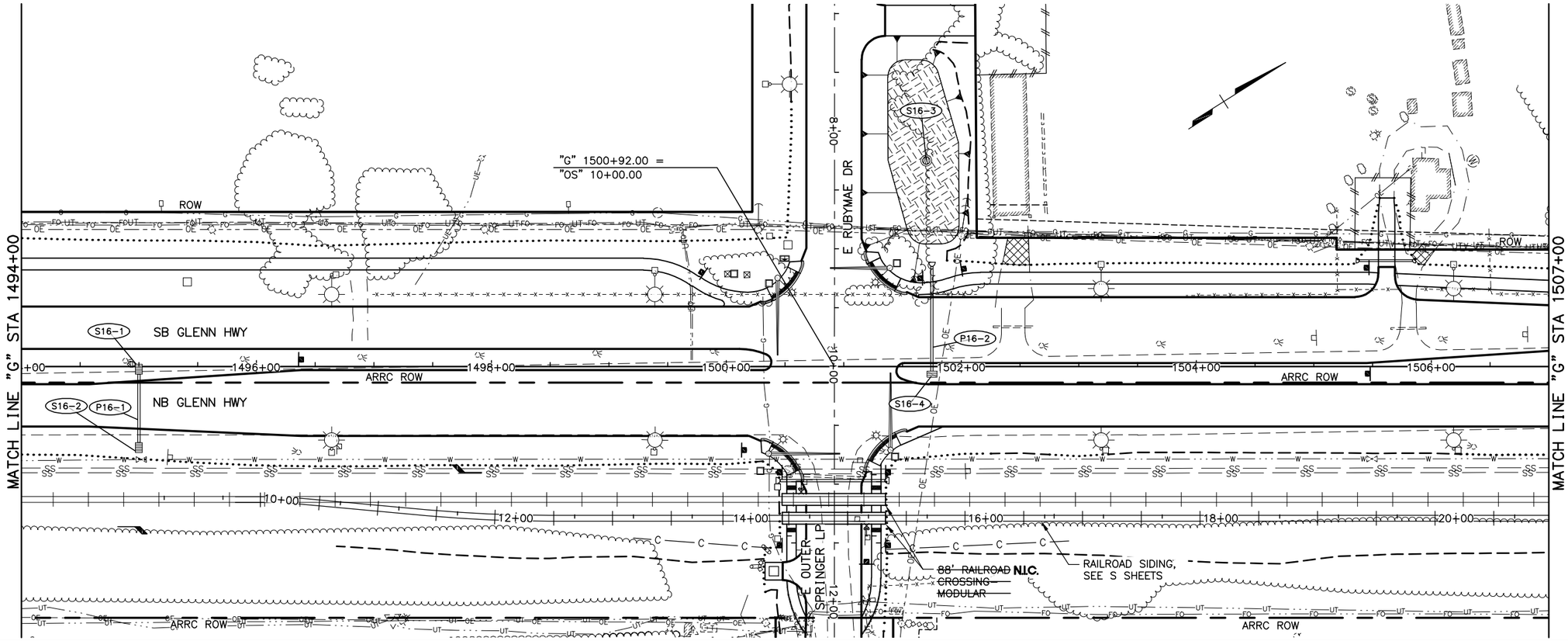

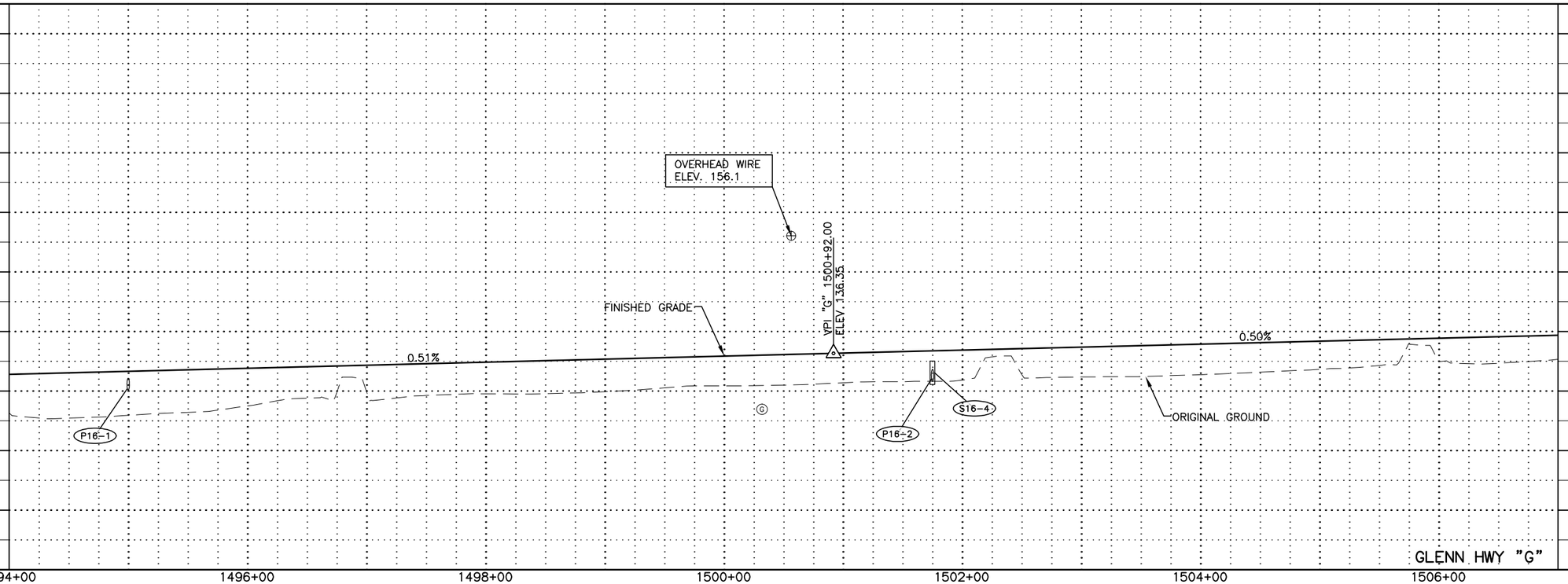

SHEET NO.	TOTAL SHEETS
F16	F50
STATE	YEAR
ALASKA	2021

PROJECT DESIGNATION
0A15037/CFHWY00431
0A15038/CFHWY00432
0A15033/CFHWY00006

NO.	REVISION
DATE	
NO.	REVISION
DATE	
NO.	REVISION
DATE	

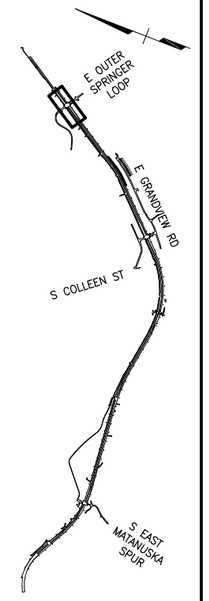

CERTIFICATION SET
NOVEMBER 2021

STATE OF ALASKA
49TH
DENNIS R. LINNELL
CE-7649
REGISTERED PROFESSIONAL ENGINEER

HDL ENGINEERING CONSULTANTS, LLC
3335 ARCTIC BOULEVARD, STE 100
ANCHORAGE, AK 99503
(907) 564-2120
AECL861

STATE OF ALASKA
DEPARTMENT OF TRANSPORTATION
AND PUBLIC FACILITIES

GLENN HWY: PARKS HWY TO
S. INNER SPRINGER LP.
(PHASE II)

GLENN HWY
PLAN & PROFILE
1494+00 TO 1507+00

DRAWING LOCATION
H:\JOBS\08-016 GLENN HIGHWAY 34-42 (DOT)\09 - PS&E\CAD_PH2\DRAWINGS\08016_P2_F01-F18_GLENN.DWG

DATE	TIME
11/19/2021	10:32 AM

SCALE
1"=100'

DESIGNED BY	CAB
CHECKED BY	DRL
DRAFTED BY	CDB

E CRIMSONVIEW DR

ROW

SB GLENN HWY

NB GLENN HWY

ARRC ROW

MATCH LINE "G" STA 1507+00

MATCH LINE "G" STA 1520+00

1508+00 1510+00 1512+00 1514+00 1516+00 1518+00 1520

22+00 24+00 26+00 28+00 30+00 32+00

S17-1

P17-1

S17-2

RAILROAD SIDING,
SEE S SHEETS

OVERHEAD WIRE
ELEV. UNKNOWN

VPI "G" 1508+00.00
ELEV 139.89

FINISHED GRADE

ORIGINAL GROUND

0.50%

0.71%

P17-1

180 160 140 120 100

1508+00 1510+00 1512+00 1514+00 1516+00 1518+00 1520+00

GLENN HWY "G"

SHEET NO.	TOTAL SHEETS
F17	F50
STATE	YEAR
ALASKA	2021

PROJECT DESIGNATION

0A15037/CFHWY00431
0A15038/CFHWY00432
0A15033/CFHWY00006

NO.	REVISION
DATE	
NO.	REVISION
DATE	
NO.	REVISION
DATE	

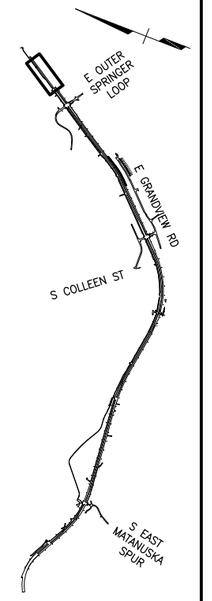

CERTIFICATION SET
NOVEMBER 2021

STATE OF ALASKA
49TH
DENNIS R. LINNELL
CE-7649
REGISTERED PROFESSIONAL ENGINEER

HDL ENGINEERING CONSULTANTS, LLC
3335 ARCTIC BOULEVARD, STE 100
ANCHORAGE, AK 99503
(907) 564-2120
AECL861

STATE OF ALASKA
DEPARTMENT OF TRANSPORTATION
AND PUBLIC FACILITIES

GLENN HWY: PARKS HWY TO
S. INNER SPRINGER LP.
(PHASE II)

GLENN HWY
PLAN & PROFILE
1507+00 TO 1520+00

DESIGNED BY	CAB
CHECKED BY	DRL
DRAFTED BY	CDB

SCALE 1"=100'

DATE TIME 11/19/2021 10:32 AM

DRAWING LOCATION
H:\JOBS\08-016 GLENN HIGHWAY 34-42 (DOT)\09 - PS&E\CAD_PH2\DRAWINGS\08016_P2_F01-F18_GLENN.DWG

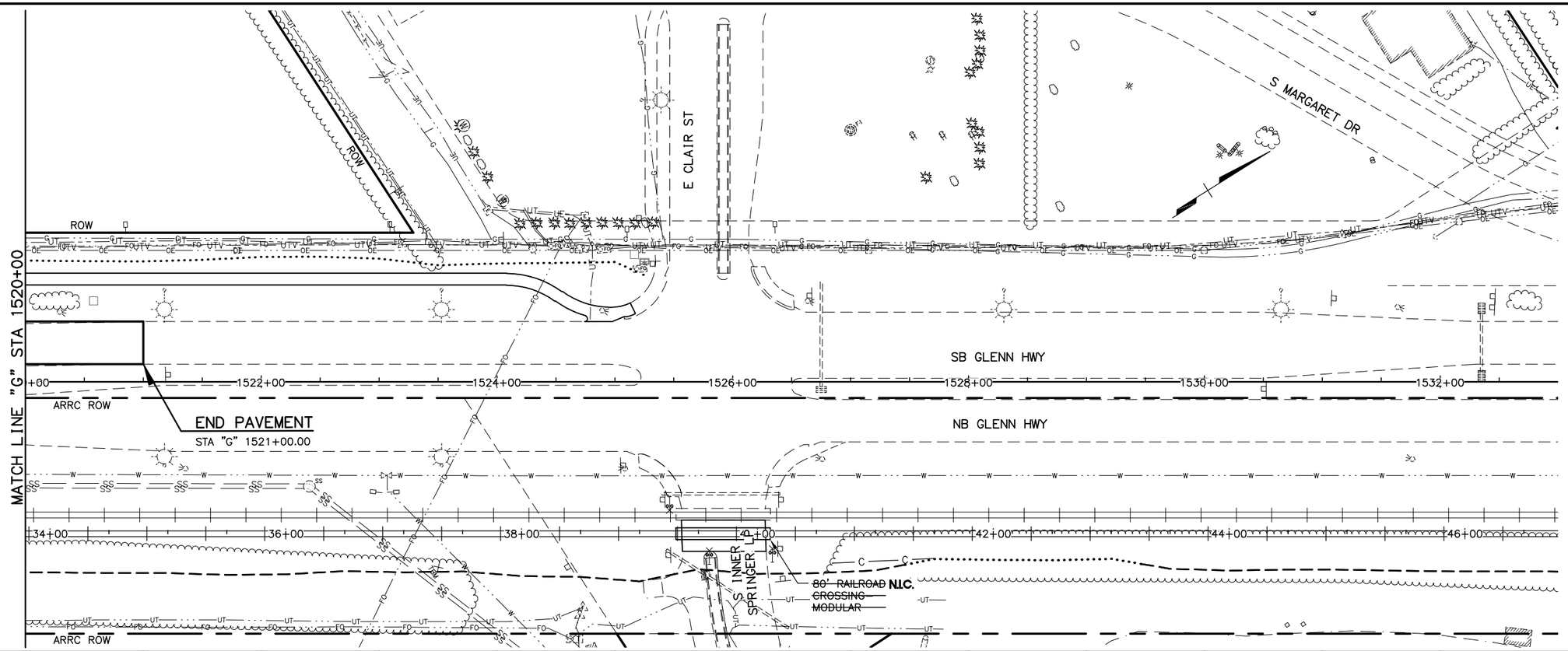

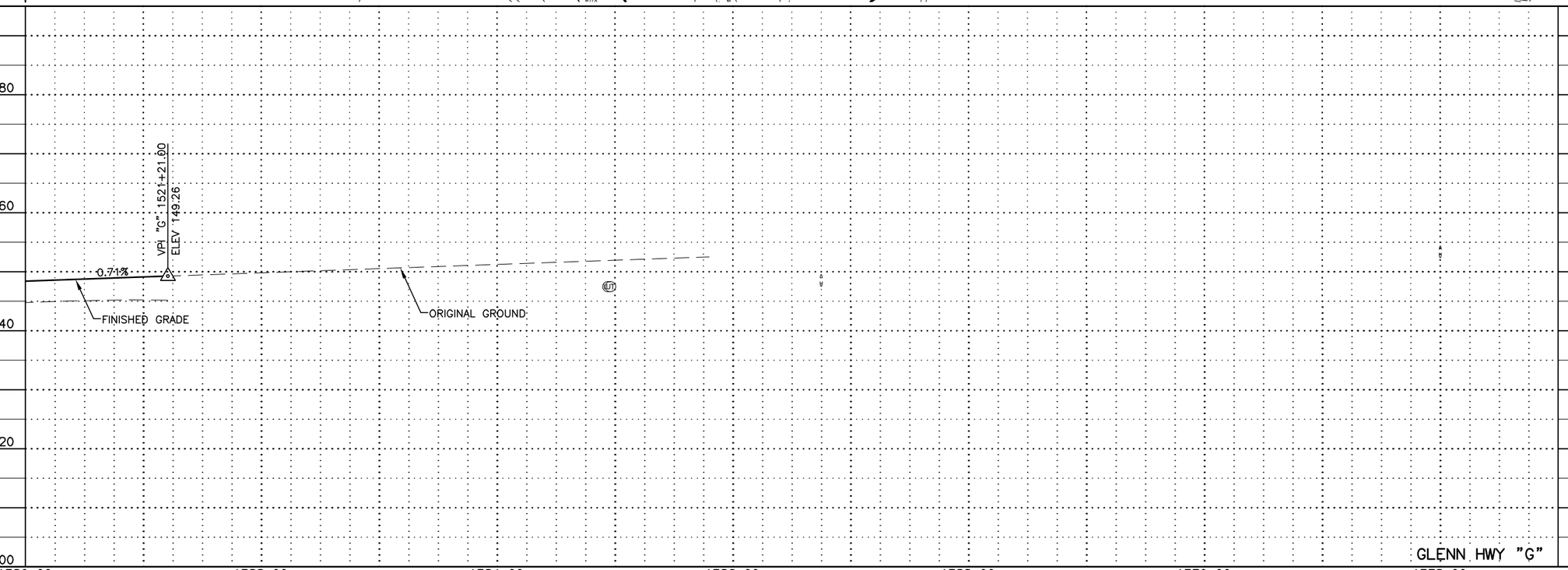

SHEET NO.	TOTAL SHEETS
F18	F50
STATE	YEAR
ALASKA	2021

PROJECT DESIGNATION

0A15037/CFHWY00431
0A15038/CFHWY00432
0A15033/CFHWY00006

NO.	REVISION
DATE	
NO.	REVISION
DATE	
NO.	REVISION
DATE	

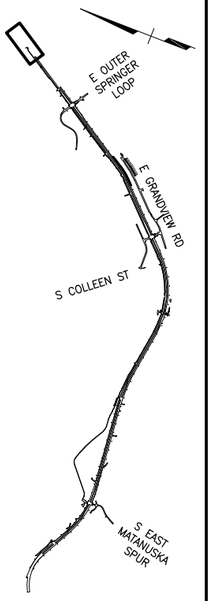

CERTIFICATION SET
NOVEMBER 2021

STATE OF ALASKA
49TH
DENNIS R. LINNELL
CE-7649
REGISTERED PROFESSIONAL ENGINEER

HDL ENGINEERING CONSULTANTS, LLC
3335 ARCTIC BOULEVARD, STE 100
ANCHORAGE, AK 99503
(907) 564-2120
AECL861

STATE OF ALASKA
DEPARTMENT OF TRANSPORTATION
AND PUBLIC FACILITIES

GLENN HWY: PARKS HWY TO
S. INNER SPRINGER LP.
(PHASE II)

GLENN HWY
PLAN & PROFILE
1520+00 TO 1533+00

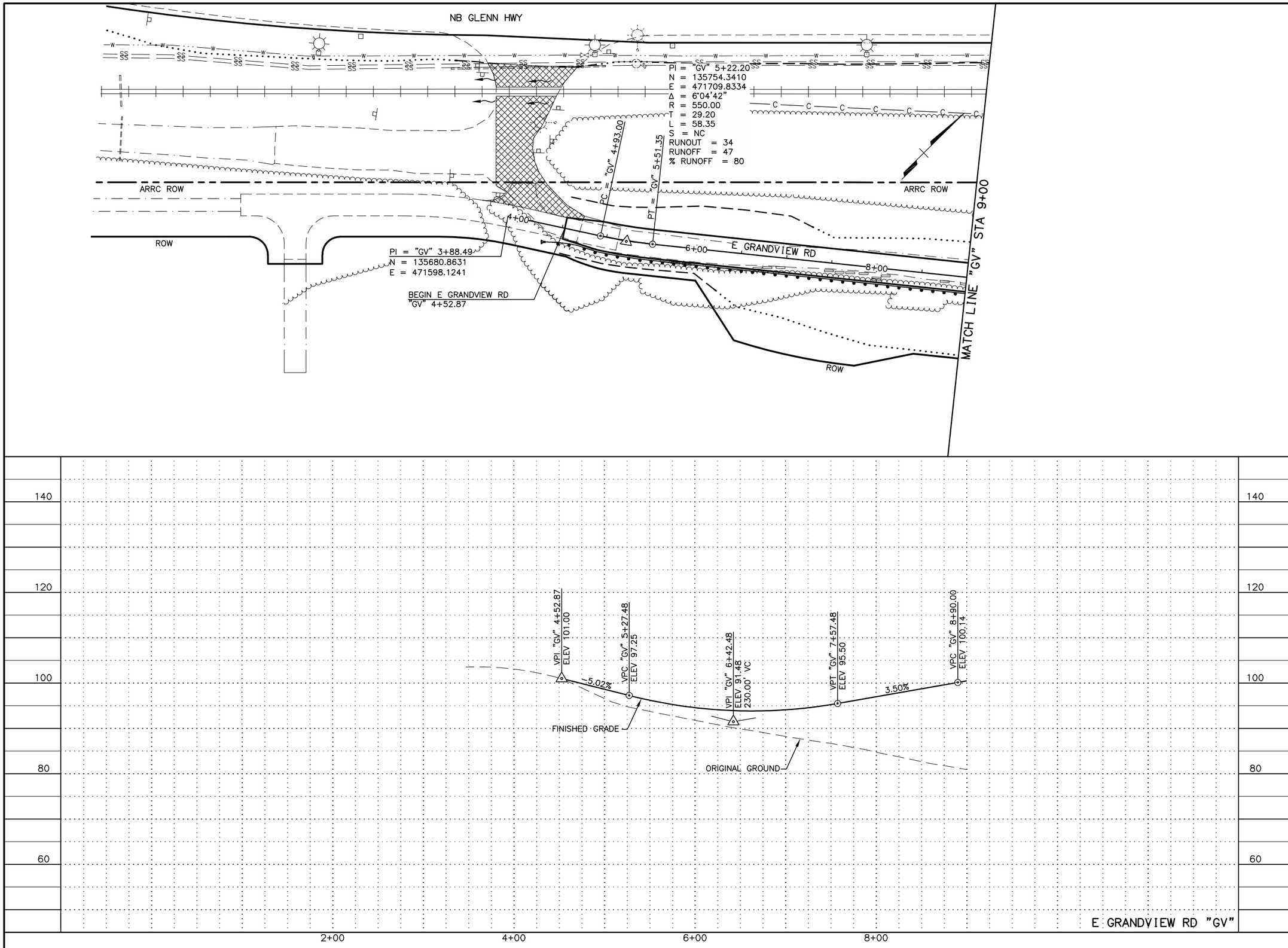

SHEET NO.	TOTAL SHEETS
F19	F50
STATE	YEAR
ALASKA	2021

PROJECT DESIGNATION

0A15037/CFHWY00431
0A15038/CFHWY00432
0A15033/CFHWY00006

NO.	REVISION
DATE	
NO.	REVISION
DATE	
NO.	REVISION
DATE	

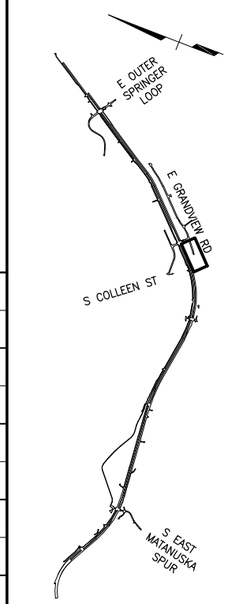

CERTIFICATION SET
NOVEMBER 2021

STATE OF ALASKA
49TH
DENNIS R. LINNELL
CE-7649
REGISTERED PROFESSIONAL ENGINEER

HDL ENGINEERING CONSULTANTS, LLC
3335 ARCTIC BOULEVARD, STE 100
ANCHORAGE, AK 99503
(907) 564-2120
AECL861

STATE OF ALASKA
DEPARTMENT OF TRANSPORTATION
AND PUBLIC FACILITIES

GLENN HWY: PARKS HWY TO
S. INNER SPRINGER LP.
(PHASE II)

E GRANDVIEW RD
PLAN & PROFILE
4+00. TO 9+00

DESIGNED BY CAB
CHECKED BY DRL
DRAFTED BY CDB
SCALE 1" = 100'
DATE 11/11/2021 TIME 1:58 PM

DRAWING LOCATION
H:\JOBS\08-016 GLENN HIGHWAY 34-42 (DOT)\09 - PS&E\CAD_PH2\DRAWINGS\08016_P2_F19-F22_GRANDVIEW.DWG

DESIGNED BY CAB
CHECKED BY DRL
DRAFTED BY CDB

SCALE 1" = 100'

DATE TIME
11/11/2021 1:58 PM

DRAWING LOCATION
H:\JOBS\08-016 GLENN HIGHWAY 34-42 (DOT)\09 - PS&E\CAD_PH2\DRAWINGS\08016_P2_F19-F22_GRANDVIEW.DWG

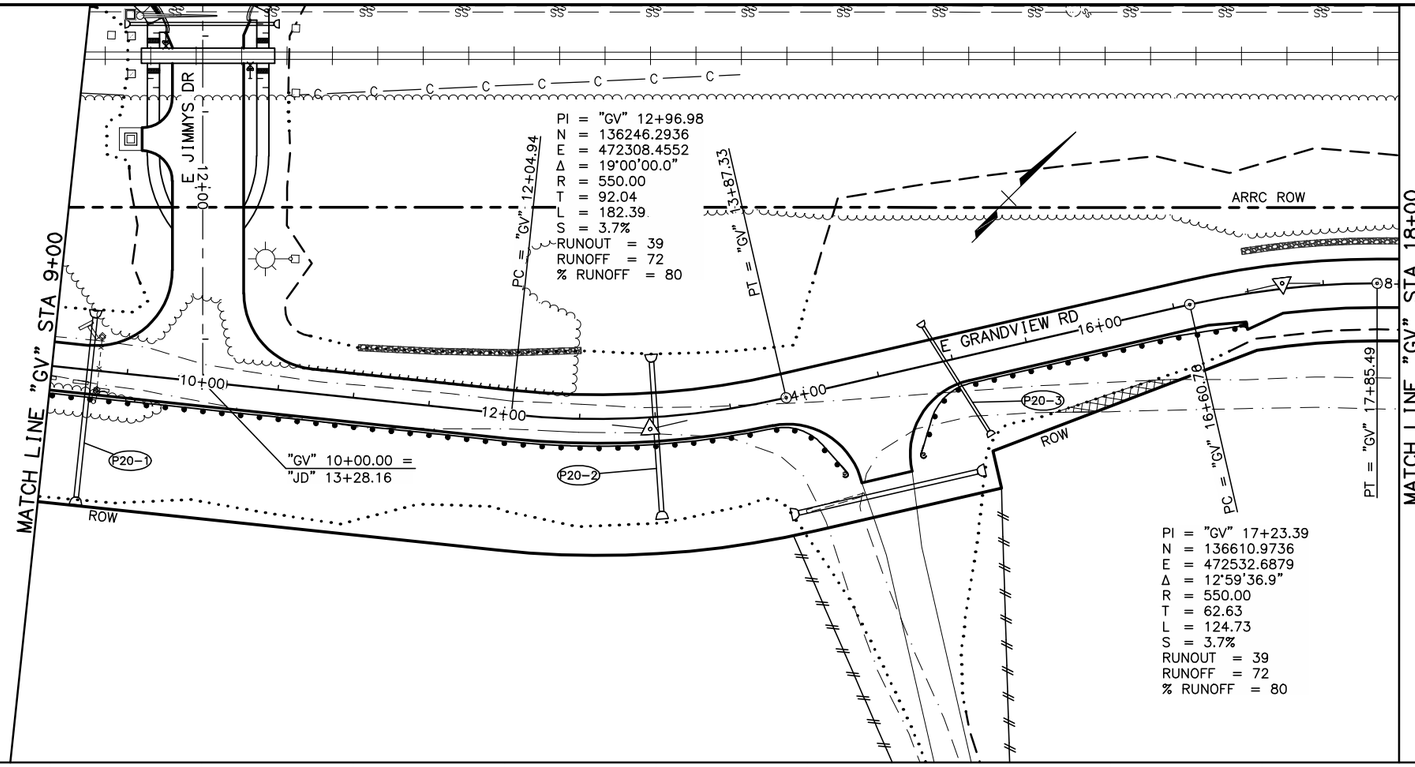

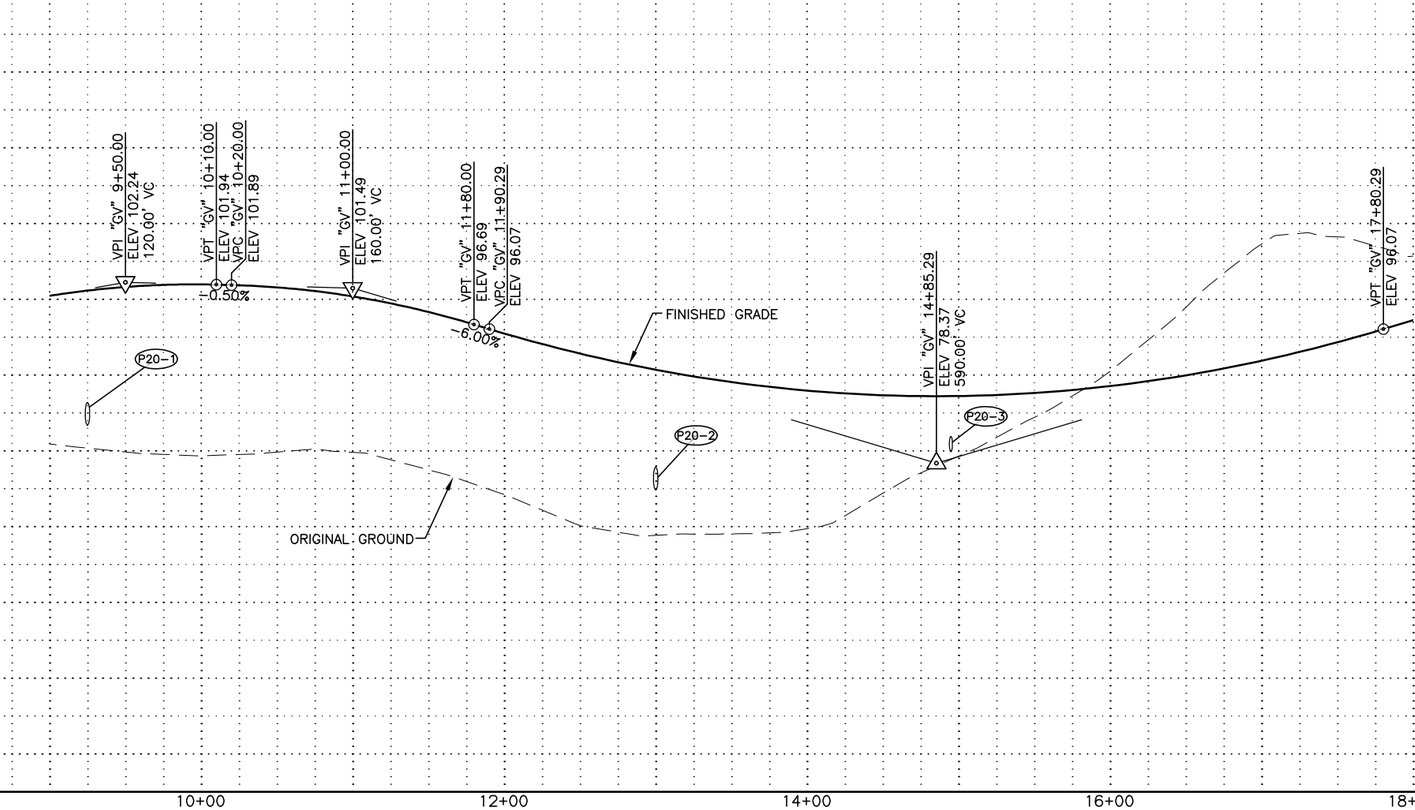

SHEET NO.	TOTAL SHEETS
F20	F50
STATE	YEAR
ALASKA	2021

PROJECT DESIGNATION
0A15037/CFHWY00431
0A15038/CFHWY00432
0A15033/CFHWY00006

NO.	REVISION
DATE	
NO.	REVISION
DATE	
NO.	REVISION
DATE	

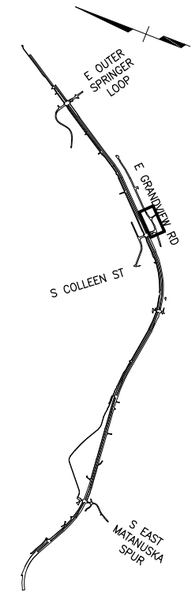

CERTIFICATION SET
NOVEMBER 2021

STATE OF ALASKA
49TH
DENNIS R. LINNELL
CE-7649
REGISTERED PROFESSIONAL ENGINEER

HDL ENGINEERING CONSULTANTS, LLC
3335 ARCTIC BOULEVARD, STE 100
ANCHORAGE, AK 99503
(907) 564-2120
AECL861

STATE OF ALASKA
DEPARTMENT OF TRANSPORTATION
AND PUBLIC FACILITIES

GLENN HWY: PARKS HWY TO
S. INNER SPRINGER LP.
(PHASE II)

E GRANDVIEW RD
PLAN & PROFILE
9+00 TO 18+00

DRAWING LOCATION
H:\JOBS\08-016 GLENN HIGHWAY 34-42 (DOT)\09 - PS&E\CAD_PH2\DRAWINGS\08016_P2_F19-F22_GRANDVIEW.DWG

DATE	TIME
11/11/2021	1:59 PM

SCALE	DESIGNED BY	CAB
1" = 100'	CHECKED BY	DRL
	DRAFTED BY	CDB

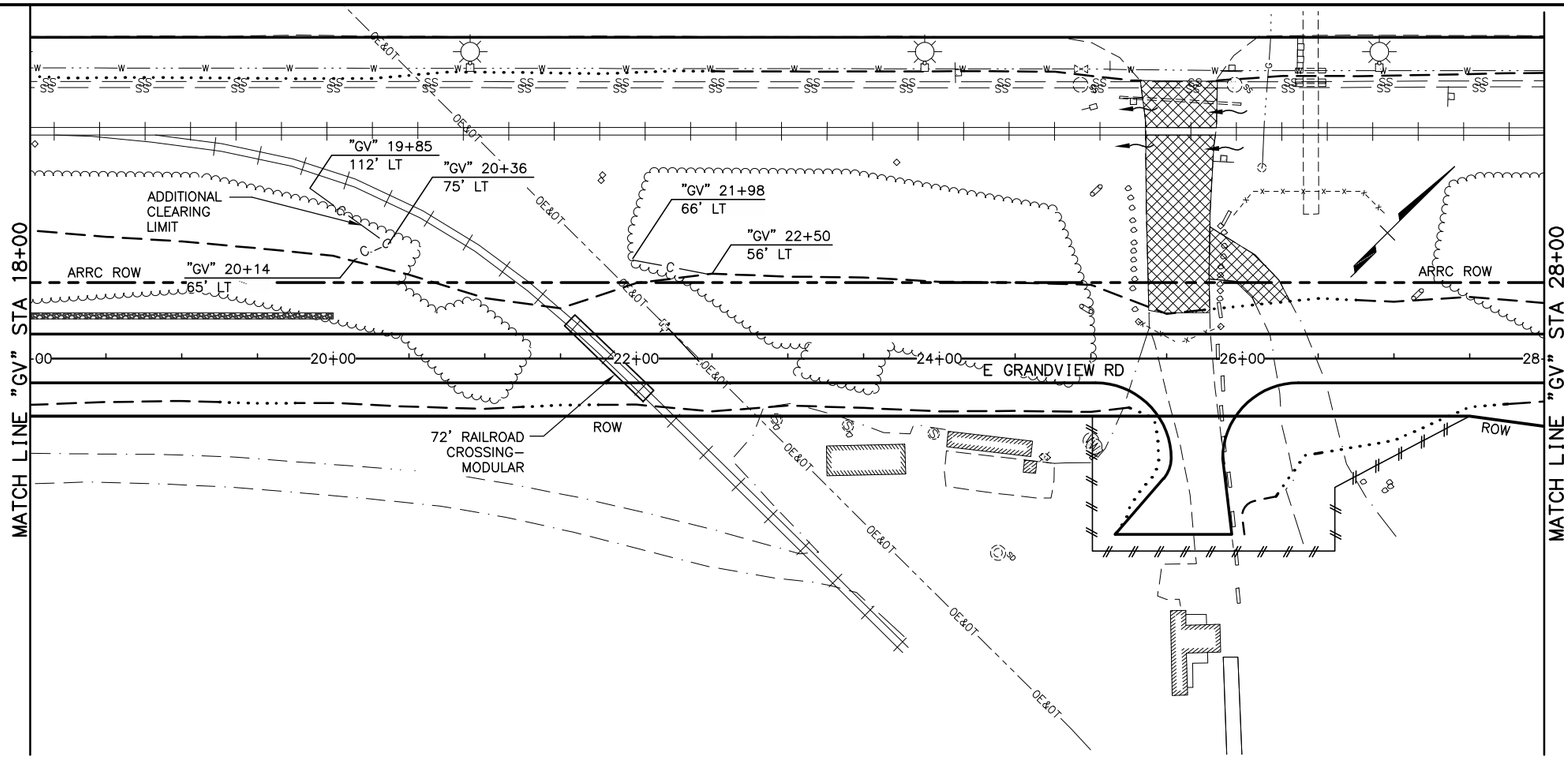

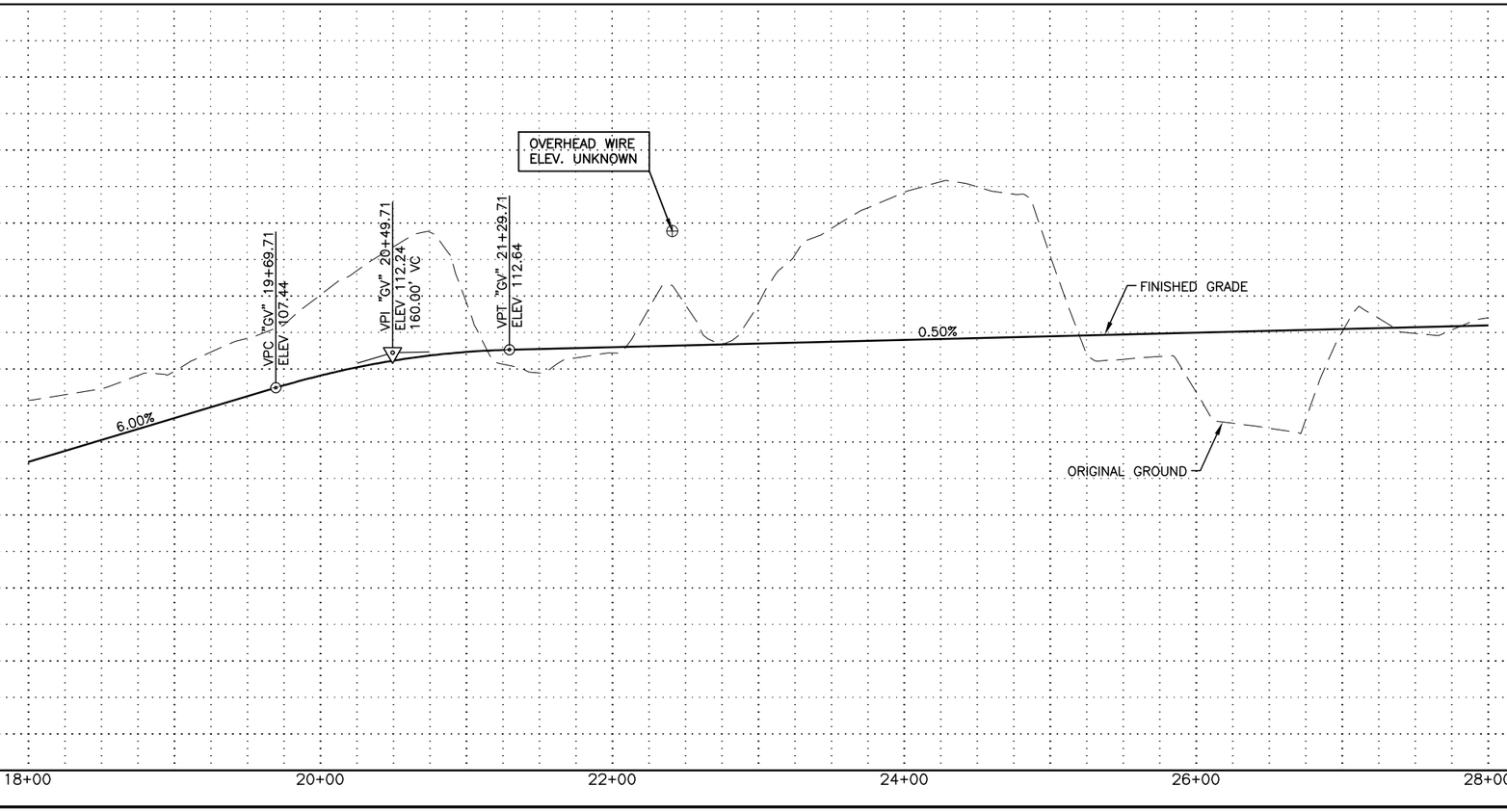

SHEET NO.	TOTAL SHEETS
F21	F50
STATE	YEAR
ALASKA	2021

PROJECT DESIGNATION

0A15037/CFHWY00431
0A15038/CFHWY00432
0A15033/CFHWY00006

NO.	REVISION
DATE	
NO.	REVISION
DATE	
NO.	REVISION
DATE	

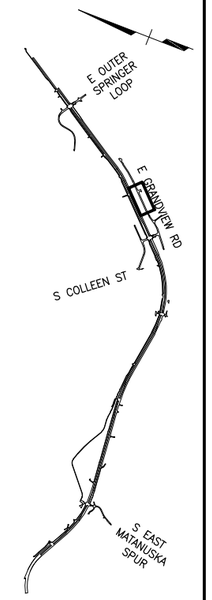

CERTIFICATION SET
NOVEMBER 2021

STATE OF ALASKA
49TH
DENNIS R. LINNELL
CE-7649
REGISTERED PROFESSIONAL ENGINEER

HDL ENGINEERING CONSULTANTS, LLC
3335 ARCTIC BOULEVARD, STE 100
ANCHORAGE, AK 99503
(907) 564-2120
AECL861

STATE OF ALASKA
DEPARTMENT OF TRANSPORTATION AND PUBLIC FACILITIES

GLENN HWY: PARKS HWY TO S. INNER SPRINGER LP. (PHASE II)

E GRANDVIEW RD
PLAN & PROFILE
18+00 TO 28+00

DRAWING LOCATION
H:\JOBS\08-016 GLENN HIGHWAY 34-42 (DOT)\09 - PS&E\CAD_PH2\DRAWINGS\08016_P2_F19-F22_GRANDVIEW.DWG

DATE	TIME
11/11/2021	1:59 PM

SCALE
1" = 100'

DESIGNED BY	CAB
CHECKED BY	DRL
DRAFTED BY	CDB

MATCH LINE "GV" STA 28+00

DRYWELL

PI = "GV" 32+77.78
N = 137718.5053
E = 473624.0973
Δ = 12°22'40.6"
R = 3048.91
T = 330.62
L = 658.67
S = 2.0%
RUNOUT = 39
RUNOFF = 39
% RUNOFF = 80

PC "GV" 29+47.16

ARRC ROW

E GRANDVIEW RD

ROW

"GV" 36+05.83

END E GRANDVIEW RD
"GV" 38+22.81

PI = "GV" 41+00.00
N = 138416.4234
E = 474063.6336

ARRC ROW

ROW

28+00 30+00 32+00 34+00 36+00 38+00 40+00

OE

OVERHEAD WIRE
ELEV. 160±

VPC "GV" 34+00.00
ELEV 118.99

VPI "GV" 34+50.00
ELEV 119.24
100.00' VC

VPT "GV" 35+00.00
ELEV 118.99

VPI "GV" 38+22.81
ELEV 117.38

ORIGINAL GROUND

FINISHED GRADE

0.50%

-0.50%

2:1

140 120 100 80 60

28+00 30+00 32+00 34+00 36+00 38+00

E GRANDVIEW RD "GV"

SHEET NO.	TOTAL SHEETS
F22	F50
STATE	YEAR
ALASKA	2021

PROJECT DESIGNATION

0A15037/CFHWY00431
0A15038/CFHWY00432
0A15033/CFHWY00006

NO.	REVISION
DATE	
NO.	REVISION
DATE	
NO.	REVISION
DATE	

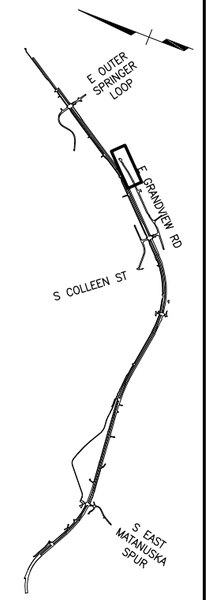

CERTIFICATION SET
NOVEMBER 2021

STATE OF ALASKA
49TH
DENNIS R. LINNELL
CE-7649
REGISTERED PROFESSIONAL ENGINEER

HDL ENGINEERING CONSULTANTS, LLC
3335 ARCTIC BOULEVARD, STE 100
ANCHORAGE, AK 99503
(907) 564-2120
AECL861

STATE OF ALASKA
DEPARTMENT OF TRANSPORTATION
AND PUBLIC FACILITIES

GLENN HWY: PARKS HWY TO
S. INNER SPRINGER LP.
(PHASE II)

E GRANDVIEW RD
PLAN & PROFILE
28+00 TO 41+00

DESIGNED BY CAB
CHECKED BY DRL
DRAFTED BY CDB

SCALE 1" = 100

DATE TIME
11/11/2021 2:01 PM

DRAWING LOCATION
H:\JOBS\08-016 GLENN HIGHWAY 34-42 (DOT)\09 - PS&E\CAD_PH2\DRAWINGS\08016_P2_F23-F27_SIDESTREET.DWG

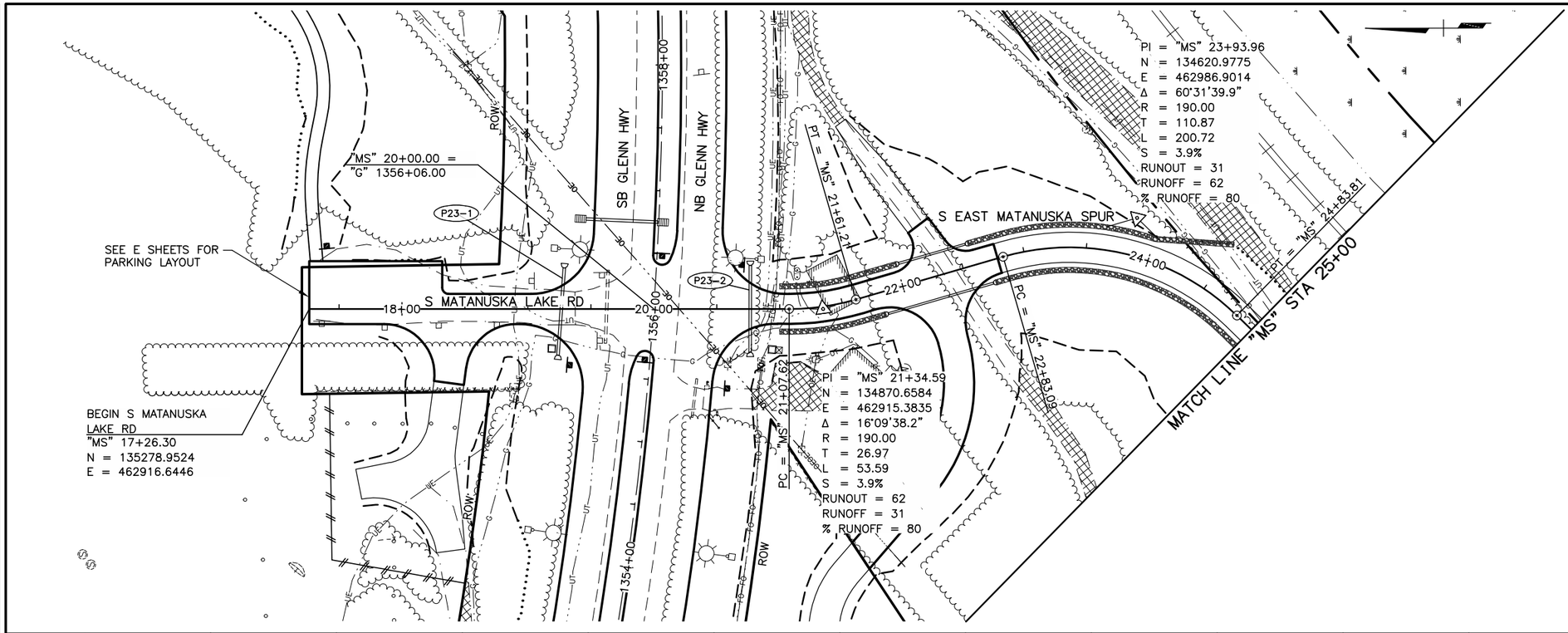

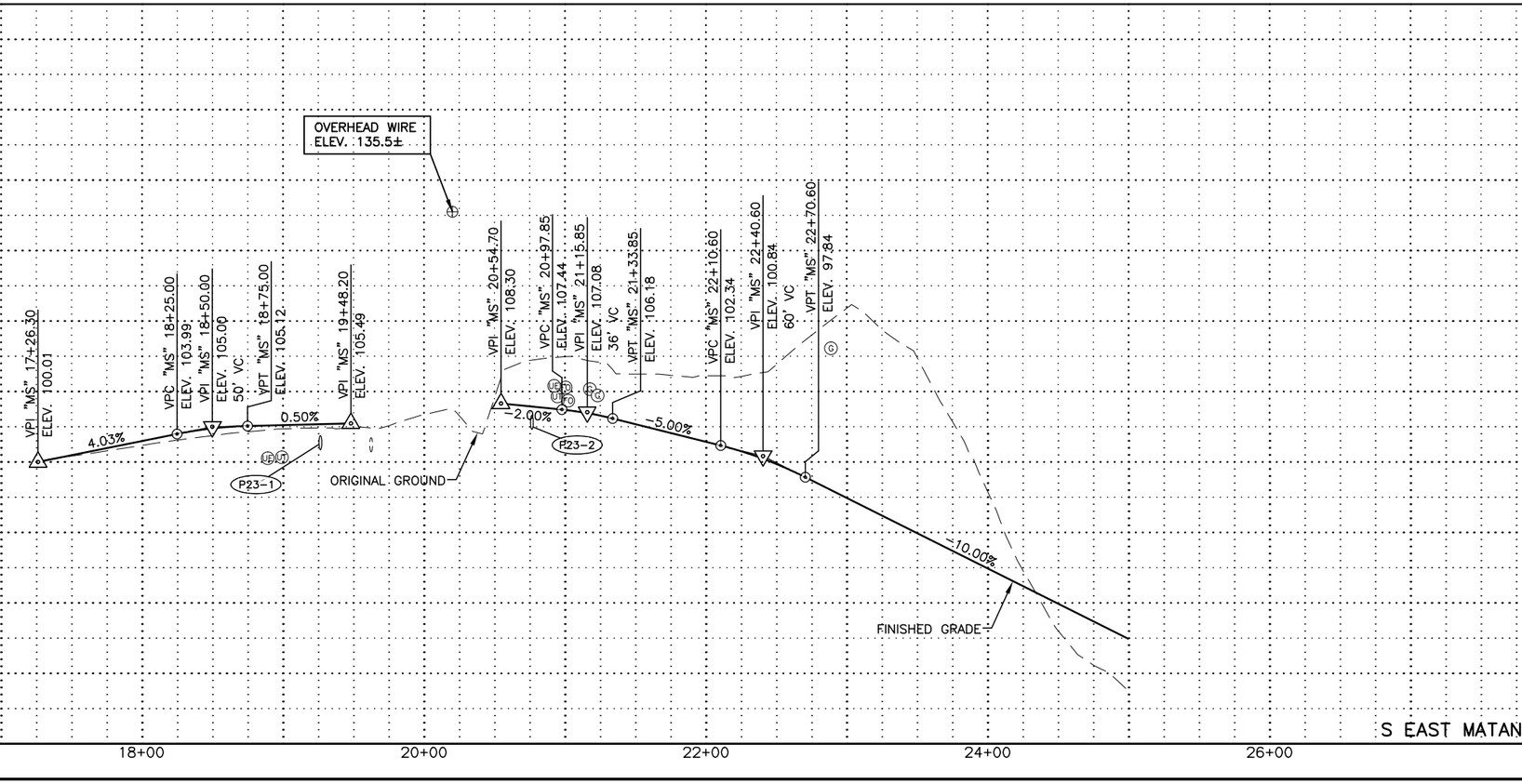

SHEET NO.	TOTAL SHEETS
F23	F50
STATE	YEAR
ALASKA	2021

PROJECT DESIGNATION

0A15037/CFHWY00431
0A15038/CFHWY00432
0A15033/CFHWY00006

NO.	REVISION
DATE	
NO.	REVISION
DATE	
NO.	REVISION
DATE	

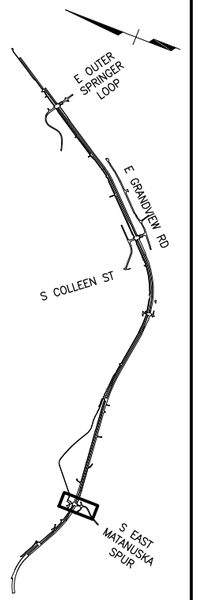

CERTIFICATION SET
NOVEMBER 2021

STATE OF ALASKA
49TH
DENNIS R. LINNELL
CE-7649
REGISTERED PROFESSIONAL ENGINEER

HDL ENGINEERING CONSULTANTS, LLC
3335 ARCTIC BOULEVARD, STE 100
ANCHORAGE, AK 99503
(907) 564-2120
AECL861

STATE OF ALASKA
DEPARTMENT OF TRANSPORTATION
AND PUBLIC FACILITIES

GLENN HWY: PARKS HWY TO
S. INNER SPRINGER LP.
(PHASE II)

S MATANUSKA LAKE RD
S EAST MATANUSKA SPUR
PLAN & PROFILE
17+26.3 TO 25+00

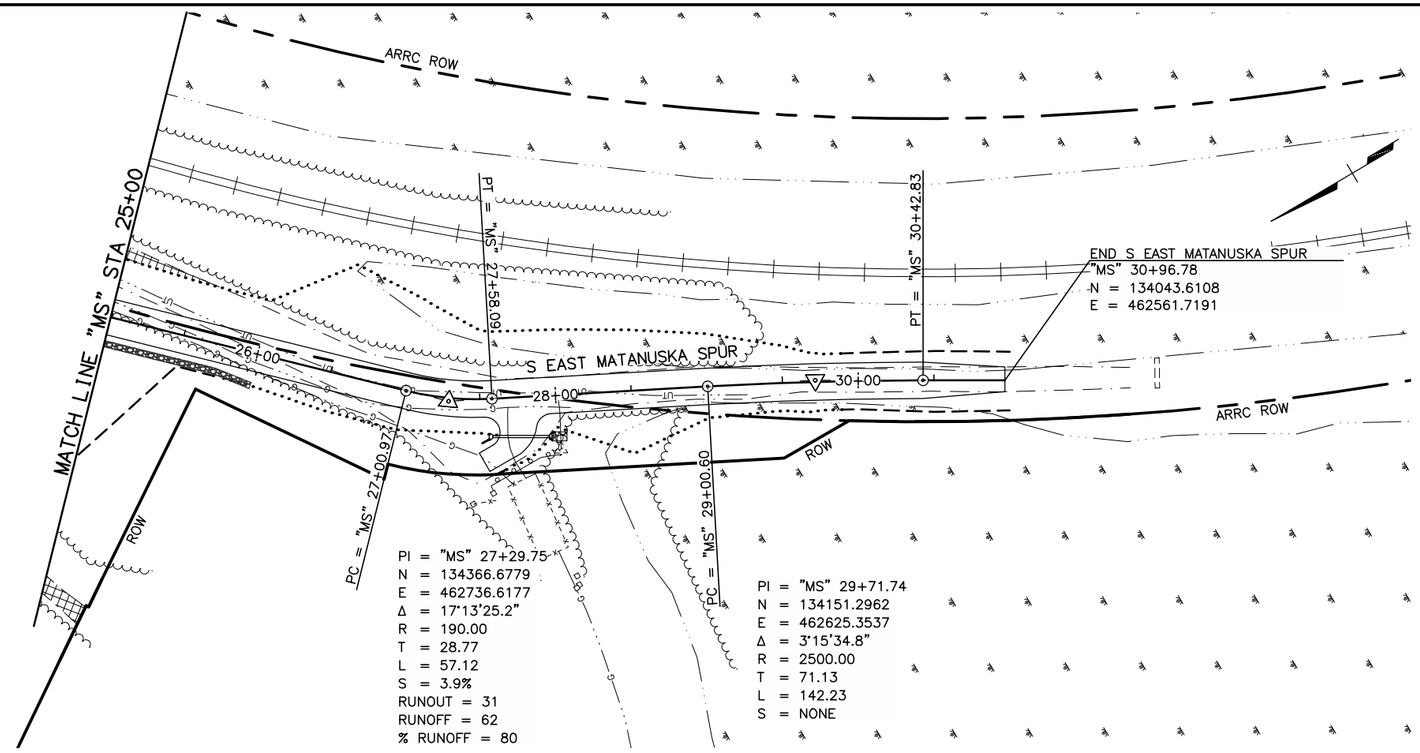

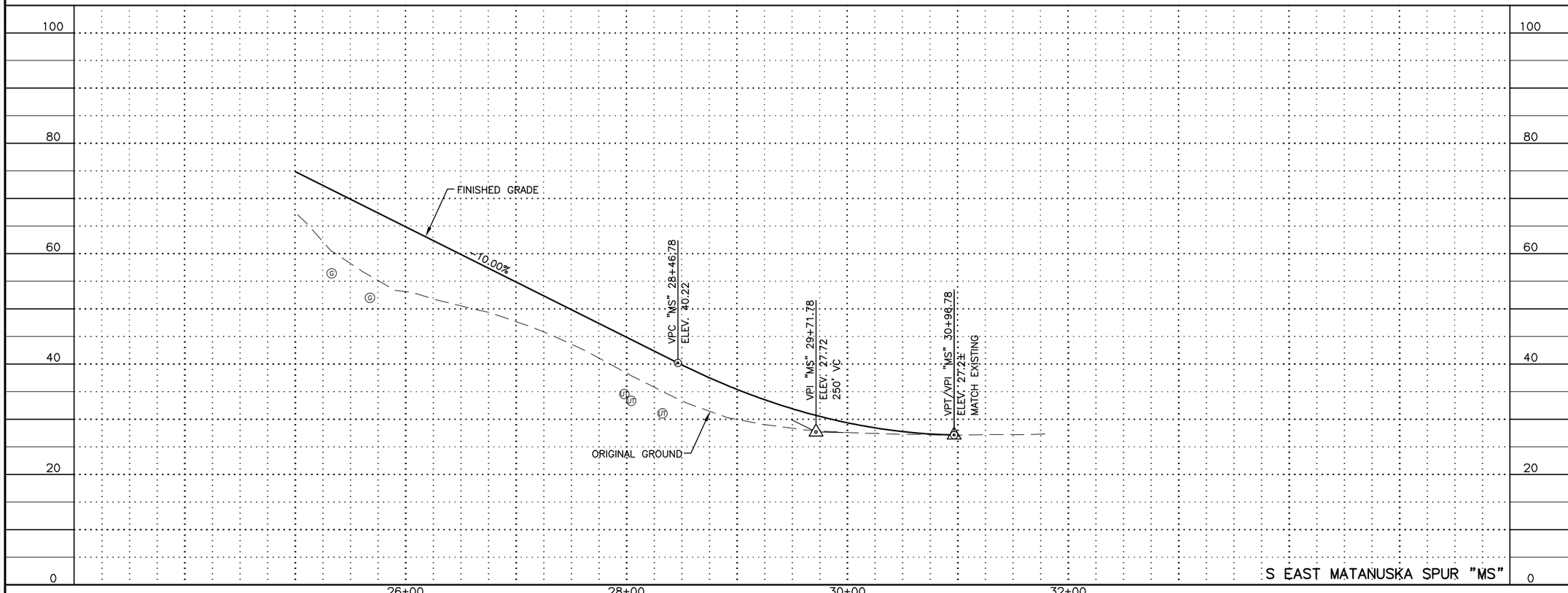

SHEET NO.	TOTAL SHEETS
F24	F50
STATE	YEAR
ALASKA	2021

PROJECT DESIGNATION

0A15037/CFHWY00431
0A15038/CFHWY00432
0A15033/CFHWY00006

NO.	REVISION
DATE	
NO.	REVISION
DATE	
NO.	REVISION
DATE	

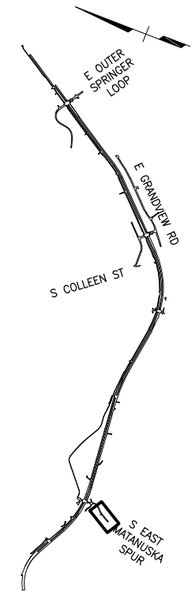

CERTIFICATION SET
NOVEMBER 2021

STATE OF ALASKA
49TH
DENNIS R. LINNELL
CE-7649
REGISTERED PROFESSIONAL ENGINEER

HDL ENGINEERING CONSULTANTS, LLC
3335 ARCTIC BOULEVARD, STE 100
ANCHORAGE, AK 99503
(907) 564-2120
AECL861

STATE OF ALASKA
DEPARTMENT OF TRANSPORTATION
AND PUBLIC FACILITIES

GLENN HWY: PARKS HWY TO
S. INNER SPRINGER LP.
(PHASE II)

S EAST MATANUSKA SPUR
PLAN & PROFILE
25+00 TO 30+96.8

DESIGNED BY	CAB
CHECKED BY	DRL
DRAFTED BY	CDB

SCALE 1" = 100

DATE 11/11/2021 TIME 2:01 PM

DRAWING LOCATION
H:\JOBS\08-016 GLENN HIGHWAY 34-42 (DOT)\09 - PS&E\CAD_PH2\DRAWINGS\08016_P2_F23-F27_SIDESTREET.DWG

DRAWING LOCATION
H:\JOBS\08-016 GLENN HIGHWAY 34-42 (DOT)\09 - PS&E\CAD_PH2\DRAWINGS\08016_P2_F23-F27_SIDESTREET.DWG

DATE	TIME
11/11/2021	2:02 PM

SCALE
1" = 100'

DESIGNED BY	CAB
CHECKED BY	DRL
DRAFTED BY	CDB

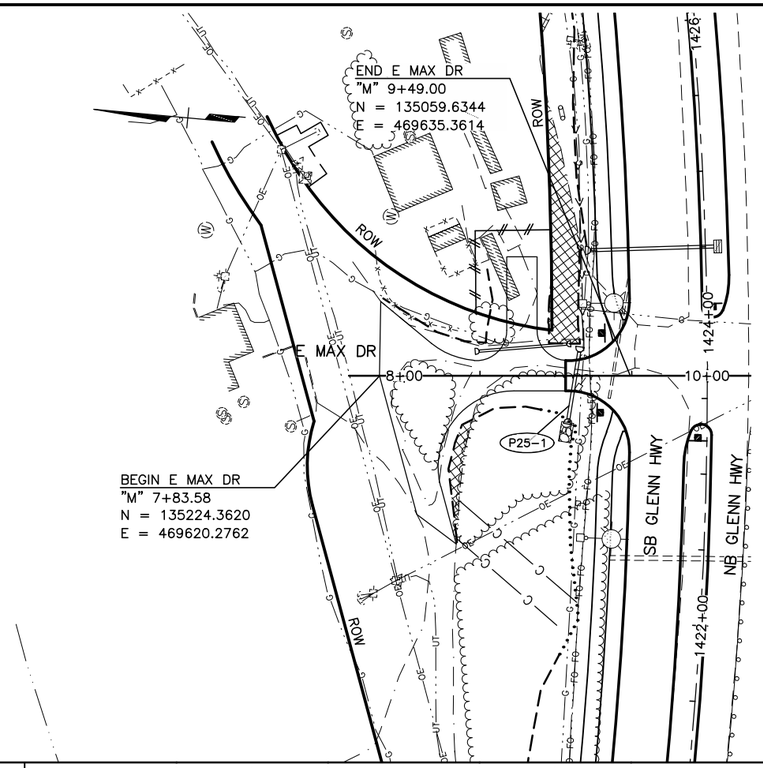

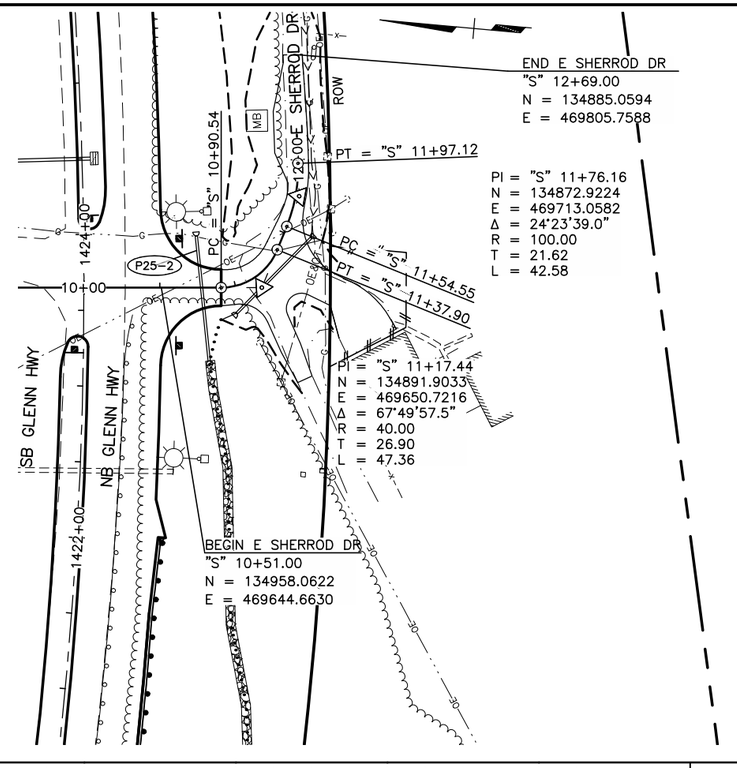

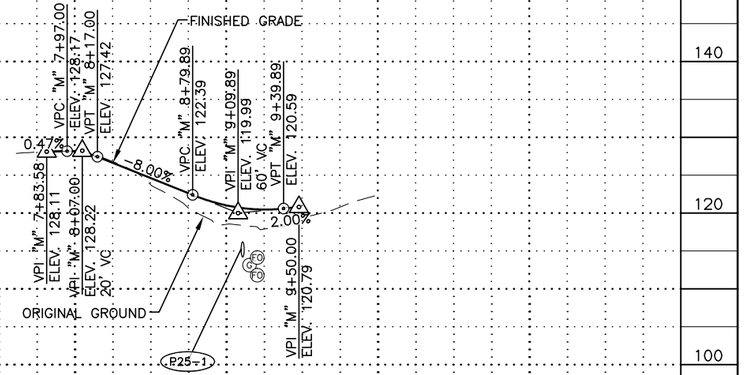

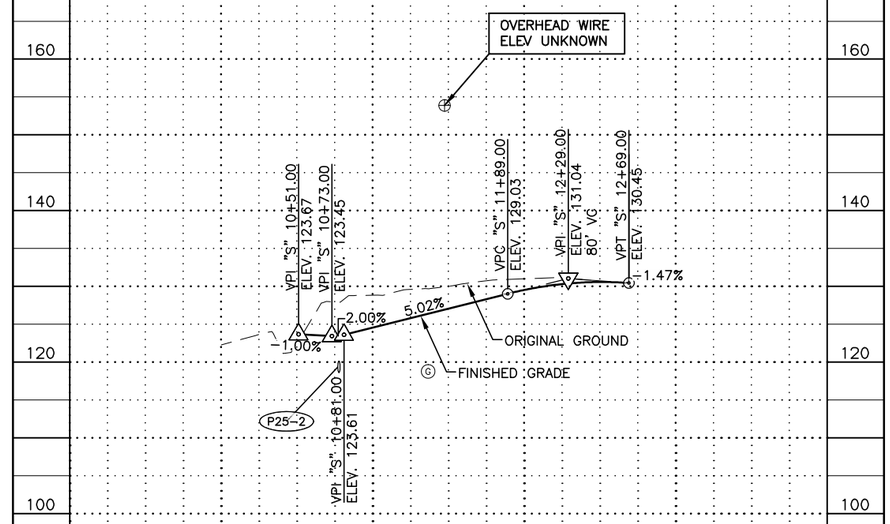

SHEET NO.	TOTAL SHEETS
F25	F50
STATE	YEAR
ALASKA	2021

PROJECT DESIGNATION
0A15037/CFHWY00431
0A15038/CFHWY00432
0A15033/CFHWY00006

NO.	REVISION
DATE	
NO.	REVISION
DATE	
NO.	REVISION
DATE	

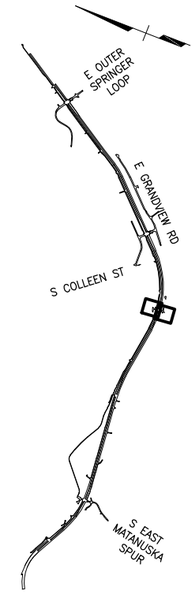

CERTIFICATION SET
NOVEMBER 2021

STATE OF ALASKA
49TH
DENNIS R. LINNELL
CE-7649
REGISTERED PROFESSIONAL ENGINEER

HDL ENGINEERING CONSULTANTS, LLC
3335 ARCTIC BOULEVARD, STE 100
ANCHORAGE, AK 99503
(907) 564-2120
AECL861

STATE OF ALASKA
DEPARTMENT OF TRANSPORTATION
AND PUBLIC FACILITIES

GLENN HWY: PARKS HWY TO
S. INNER SPRINGER LP.
(PHASE II)

E MAX DR/E SHERROD DR
PLAN & PROFILE

DRAWING LOCATION
H:\JOBS\08-016 GLENN HIGHWAY 34-42 (DOT)\09 - PS&E\CAD_PH2\DRAWINGS\08016_P2_F23-F27_SIDESTREET.DWG

DATE	TIME	SCALE	DESIGNED BY	CAB
11/11/2021	2:02 PM	1" = 100'	CHECKED BY	DRL
			DRAFTED BY	CDB

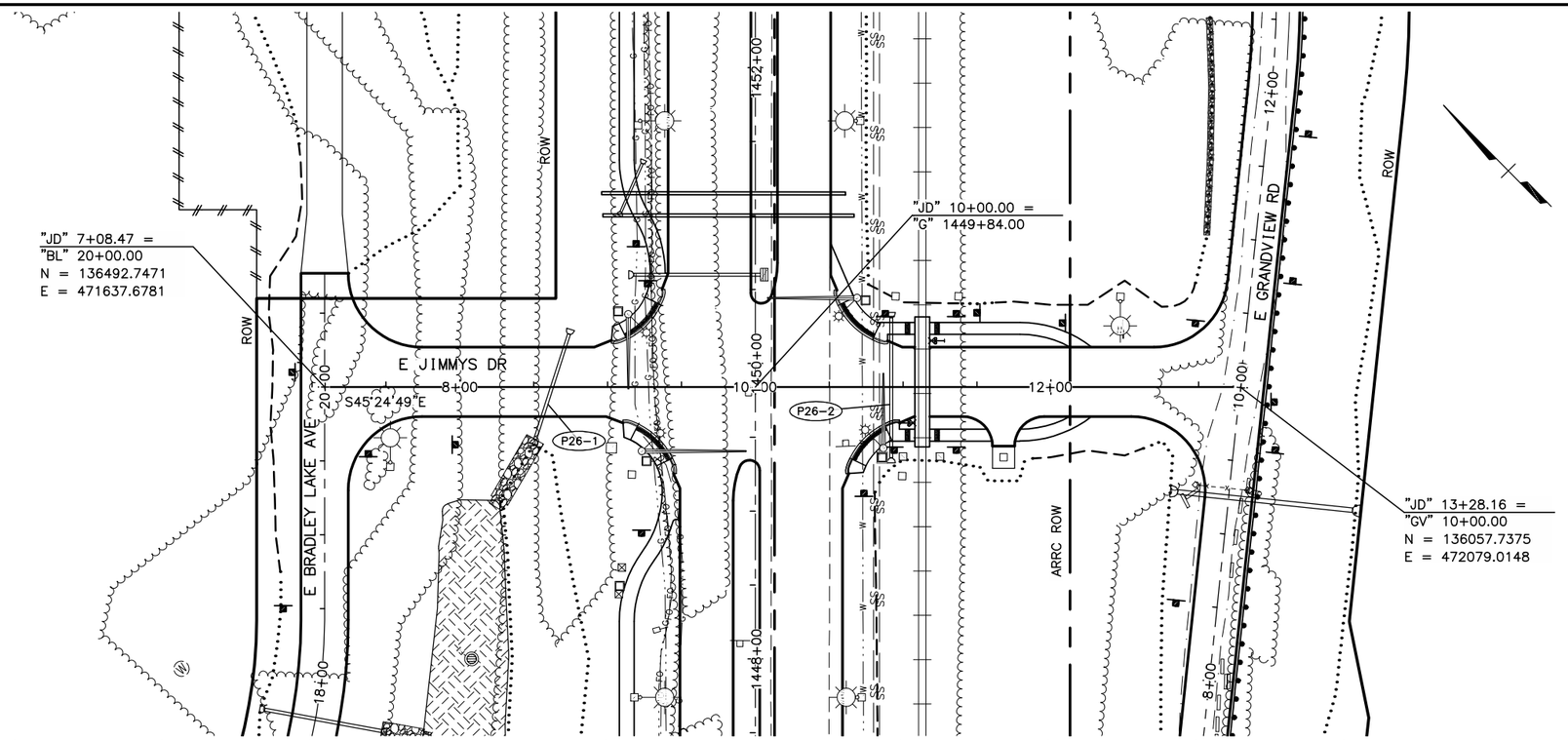

SHEET NO.	TOTAL SHEETS
F26	F50
STATE	YEAR
ALASKA	2021

PROJECT DESIGNATION
0A15037/CFHWY00431
0A15038/CFHWY00432
0A15033/CFHWY00006

NO.	REVISION
DATE	
NO.	REVISION
DATE	
NO.	REVISION
DATE	

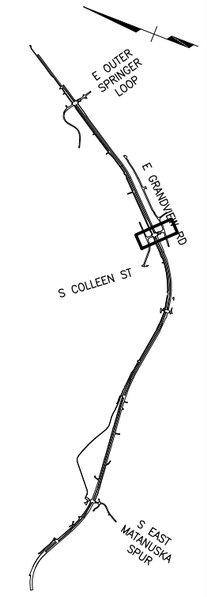

CERTIFICATION SET
NOVEMBER 2021

STATE OF ALASKA
49TH
DENNIS R. LINNELL
CE-7649
REGISTERED PROFESSIONAL ENGINEER

HDL ENGINEERING CONSULTANTS, LLC
3335 ARCTIC BOULEVARD, STE 100
ANCHORAGE, AK 99503
(907) 564-2120
AECL861

STATE OF ALASKA
DEPARTMENT OF TRANSPORTATION
AND PUBLIC FACILITIES

GLENN HWY: PARKS HWY TO
S. INNER SPRINGER LP.
(PHASE II)

E JIMMYS DR
PLAN & PROFILE

DESIGNED BY CAB
CHECKED BY DRL
DRAFTED BY CDB

SCALE 1" = 100

DATE TIME
11/11/2021 2:02 PM

DRAWING LOCATION
H:\JOBS\08-016 GLENN HIGHWAY 34-42 (DOT)\09 - PS&E\CAD_PH2\DRAWINGS\08016_P2_F23-F27_SIDESTREET.DWG

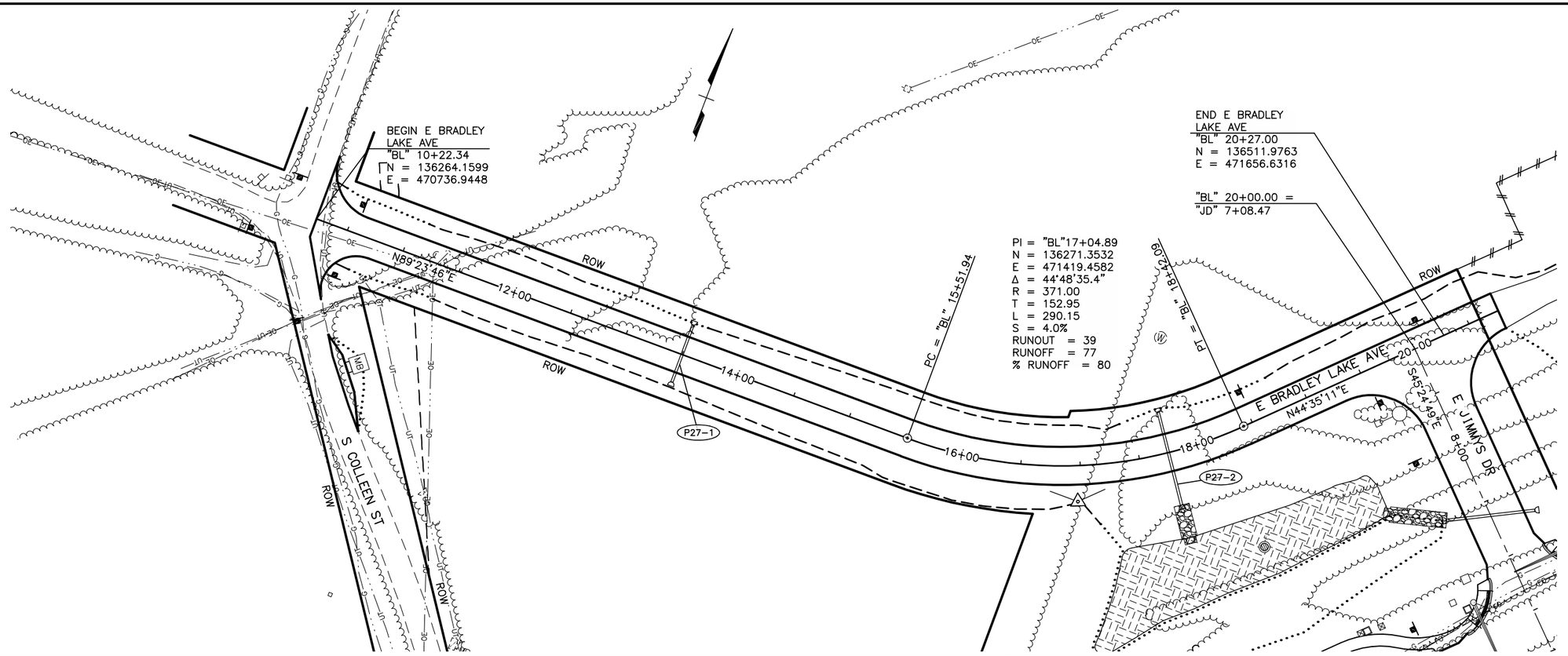

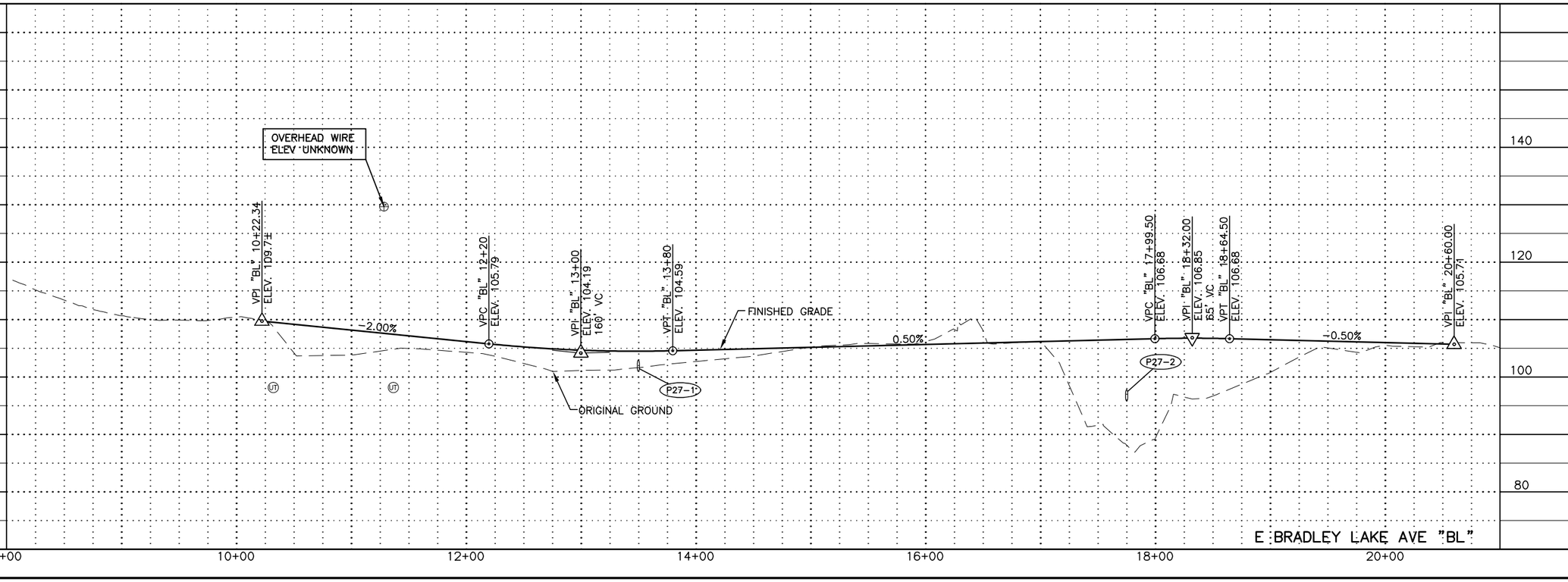

SHEET NO.	TOTAL SHEETS
F27	F50
STATE	YEAR
ALASKA	2021

PROJECT DESIGNATION
0A15037/CFHWY00431
0A15038/CFHWY00432
0A15033/CFHWY00006

NO.	REVISION
DATE	
NO.	REVISION
DATE	
NO.	REVISION
DATE	

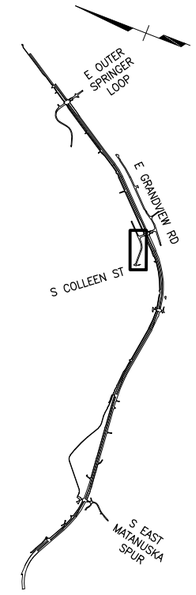

CERTIFICATION SET
NOVEMBER 2021

STATE OF ALASKA
49TH
DENNIS R. LINNELL
CE-7649
REGISTERED PROFESSIONAL ENGINEER

HDL ENGINEERING CONSULTANTS, LLC
3335 ARCTIC BOULEVARD, STE 100
ANCHORAGE, AK 99503
(907) 564-2120
AECL861

STATE OF ALASKA
DEPARTMENT OF TRANSPORTATION
AND PUBLIC FACILITIES

GLENN HWY: PARKS HWY TO
S. INNER SPRINGER LP.
(PHASE II)

E BRADLEY LAKE AVE
PLAN & PROFILE

DESIGNED BY	CAB
CHECKED BY	DRL
DRAFTED BY	CDB
SCALE	1" = 100'
DATE	11/12/2021
TIME	11:11 AM

DRAWING LOCATION
H:\JOBS\08-016 GLENN HIGHWAY 34-42 (DOT)\09 - PS&E\CAD_PH2\DRAWINGS\08016_P2_F28_SIDESTREET.DWG

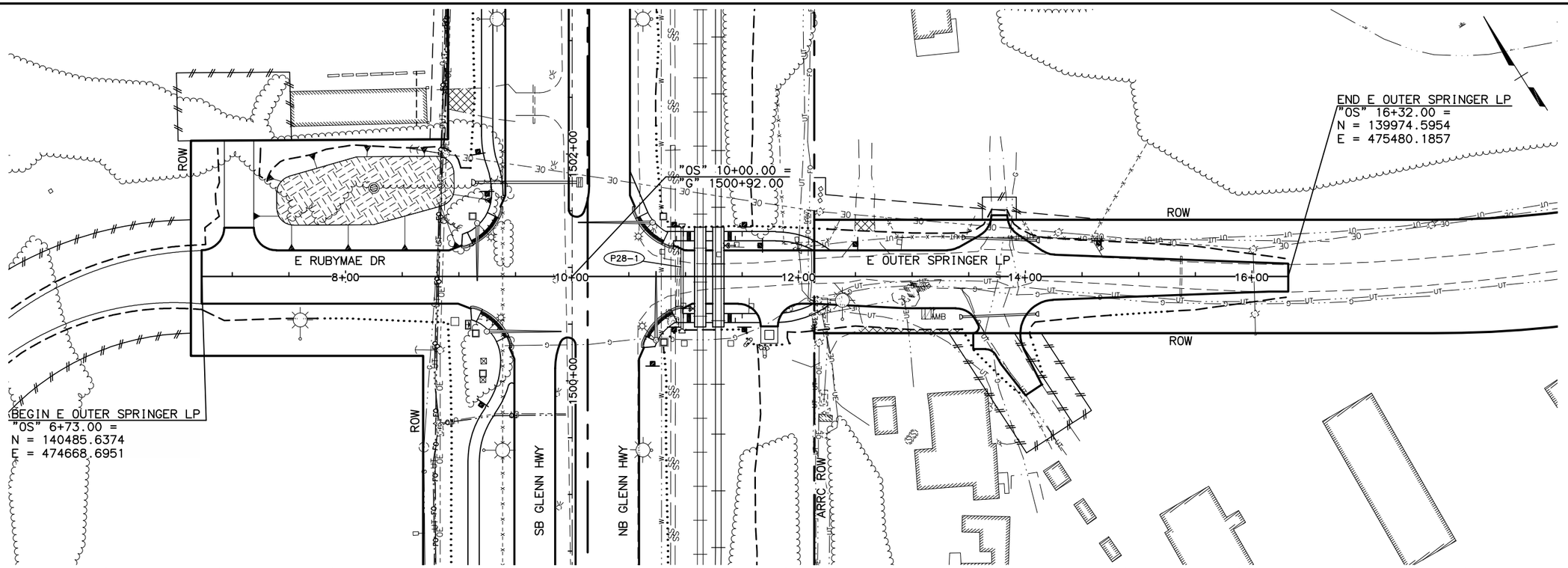

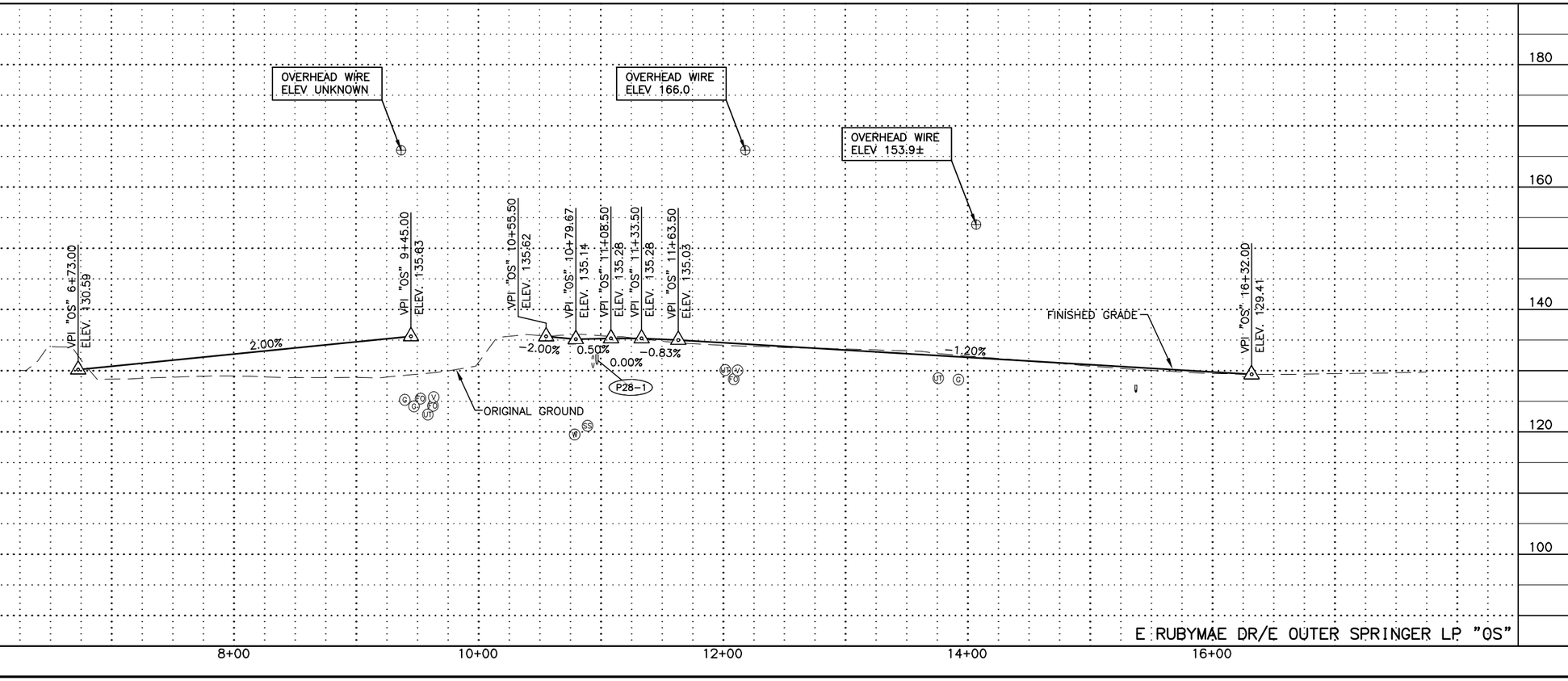

E RUBYMAE DR/E OUTER SPRINGER LP "OS"

SHEET NO.	TOTAL SHEETS
F28	F50
STATE	YEAR
ALASKA	2021

PROJECT DESIGNATION

0A15037/CFHWY00431
0A15038/CFHWY00432
0A15033/CFHWY00006

NO.	REVISION
DATE	
NO.	REVISION
DATE	
NO.	REVISION
DATE	

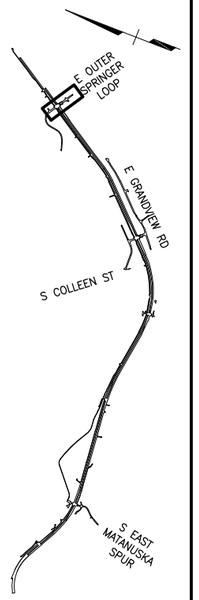

CERTIFICATION SET
NOVEMBER 2021

STATE OF ALASKA
49TH
DENNIS R. LINNELL
CE-7649
REGISTERED PROFESSIONAL ENGINEER

HDL ENGINEERING CONSULTANTS, LLC
3335 ARCTIC BOULEVARD, STE 100
ANCHORAGE, AK 99503
(907) 564-2120
AECL861

STATE OF ALASKA
DEPARTMENT OF TRANSPORTATION
AND PUBLIC FACILITIES

GLENN HWY: PARKS HWY TO
S. INNER SPRINGER LP.
(PHASE II)

E RUBYMAE DR
E OUTER SPRINGER LP
PLAN & PROFILE

DRAWING LOCATION
H:\JOBS\08-016 GLENN HIGHWAY 34-42 (DOT)\09 - PS&E\CAD_PH2\DRAWINGS\08016_P2_F29-F32_PATH.DWG

DATE	TIME
11/11/2021	2:06 PM

SCALE
1" = 100'

DESIGNED BY	CAB
CHECKED BY	DRL
DRAFTED BY	CDB

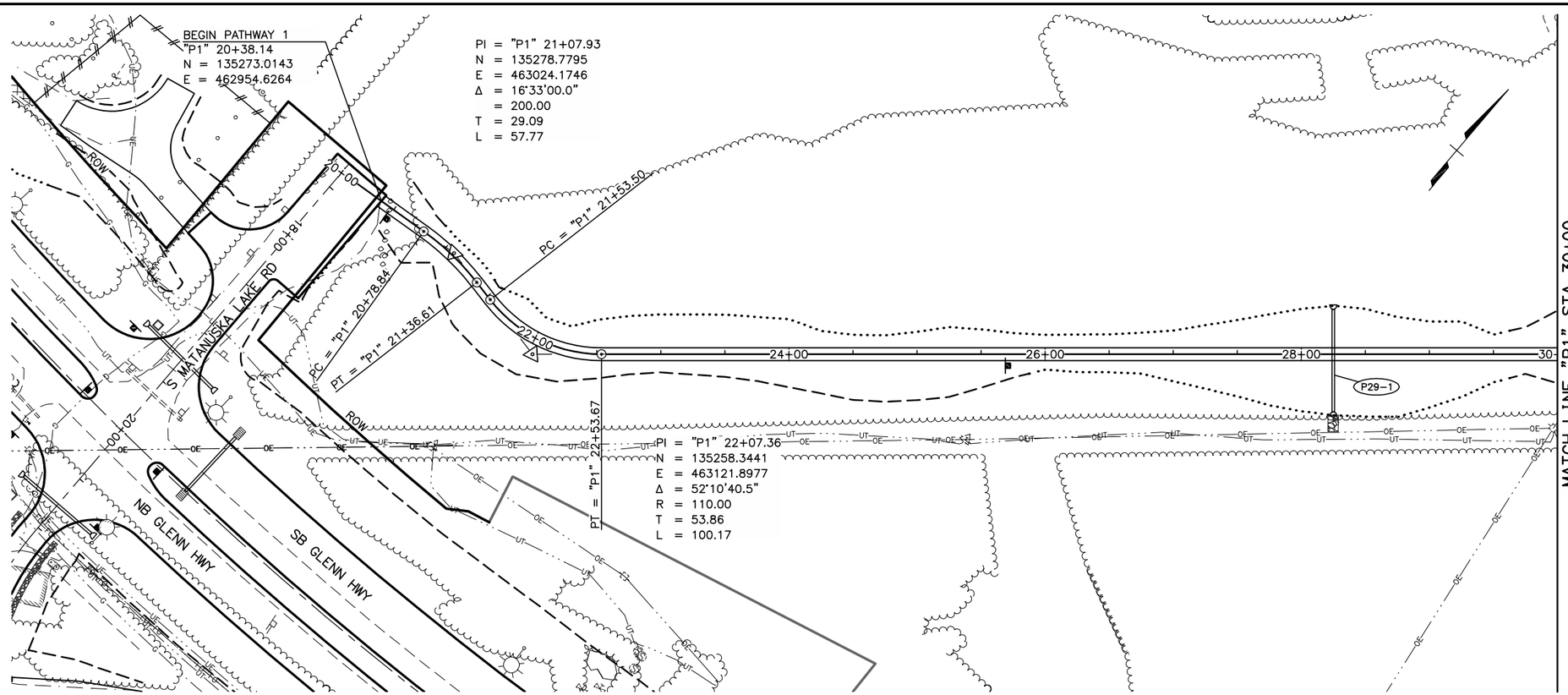

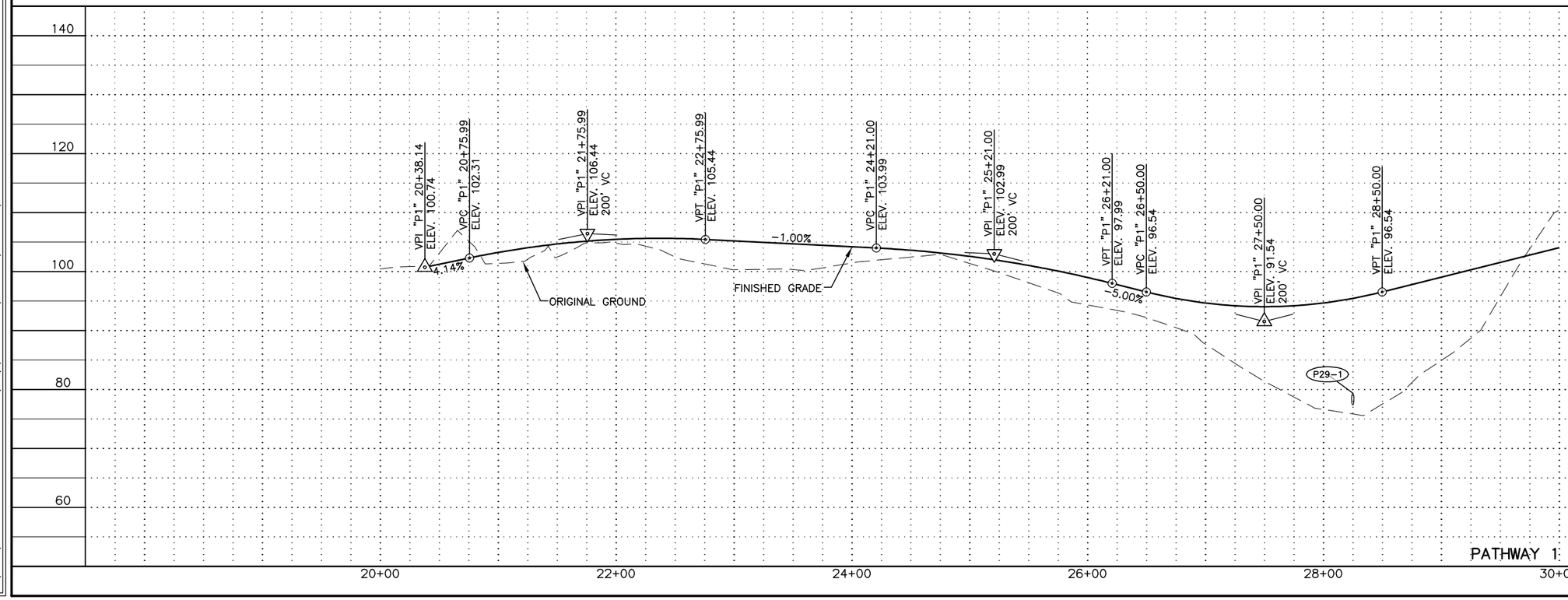

PATHWAY 1 "P1"

SHEET NO.	TOTAL SHEETS
F29	F50
STATE	YEAR
ALASKA	2021

PROJECT DESIGNATION

0A15037/CFHWY00431
0A15038/CFHWY00432
0A15033/CFHWY00006

NO.	REVISION
DATE	
NO.	REVISION
DATE	
NO.	REVISION
DATE	

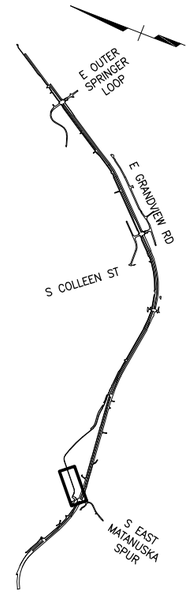

CERTIFICATION SET
NOVEMBER 2021

STATE OF ALASKA
49TH
DENNIS R. LINNELL
CE-7649
REGISTERED PROFESSIONAL ENGINEER

HDL ENGINEERING CONSULTANTS, LLC
3335 ARCTIC BOULEVARD, STE 100
ANCHORAGE, AK 99503
(907) 564-2120
AECL861

STATE OF ALASKA
DEPARTMENT OF TRANSPORTATION
AND PUBLIC FACILITIES

GLENN HWY: PARKS HWY TO
S. INNER SPRINGER LP.
(PHASE II)

PATHWAY 1
PLAN & PROFILE
20+38.1 TO 30+00

DESIGNED BY	CAB
CHECKED BY	DRL
DRAFTED BY	CDB

SCALE
1" = 100'

DATE	TIME
11/11/2021	2:06 PM

DRAWING LOCATION
H:\JOBS\08-016 GLENN HIGHWAY 34-42 (DOT)\09 - PS&E\CAD_PH2\DRAWINGS\08016_P2_F29-F32_PATH.DWG

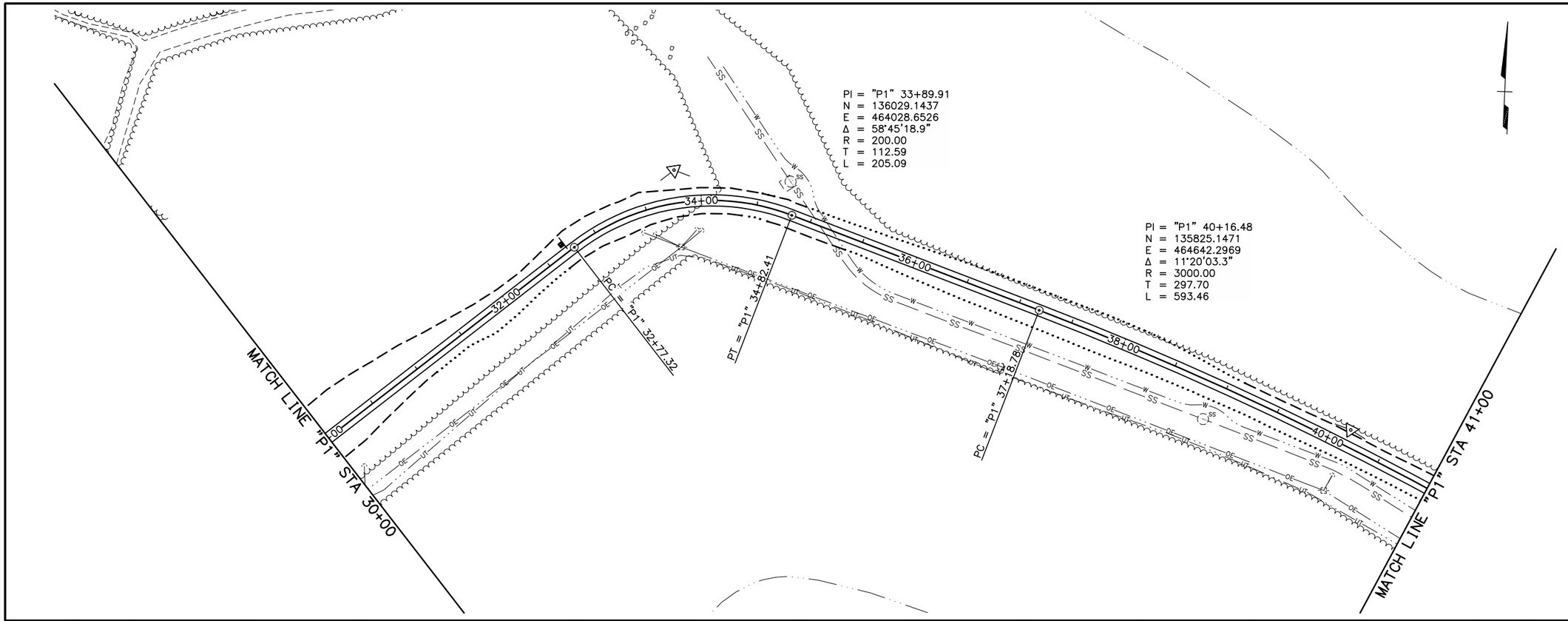

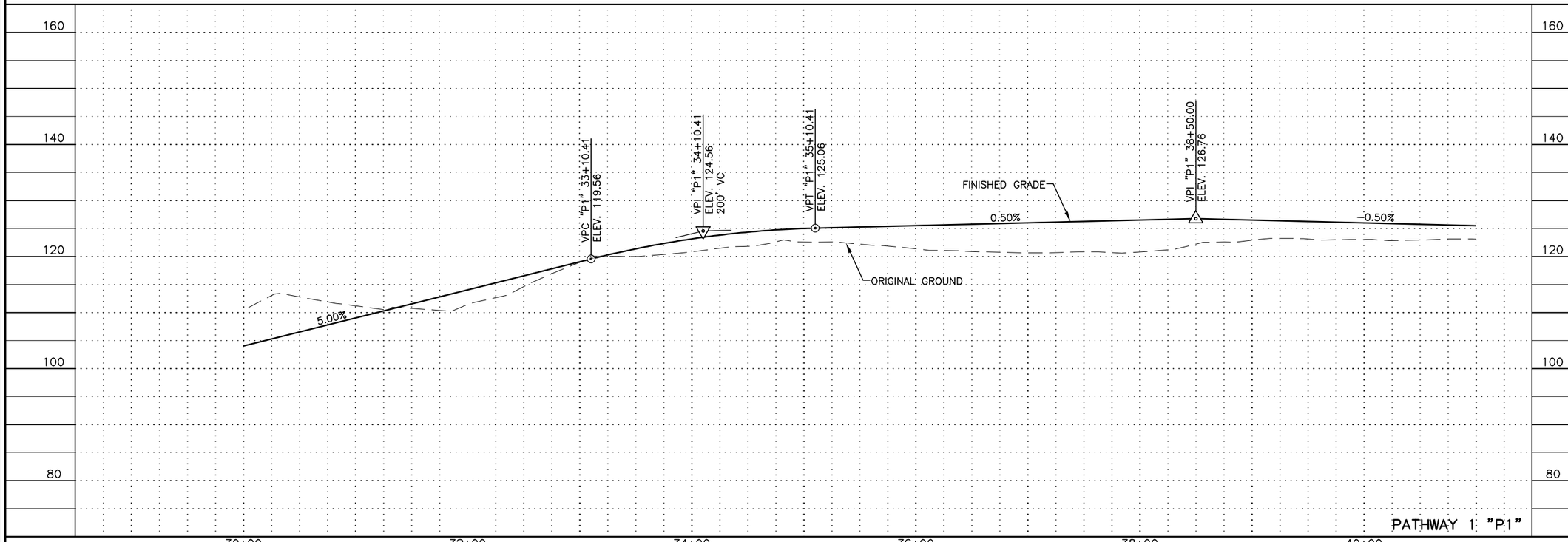

SHEET NO.	TOTAL SHEETS
F30	F50
STATE	YEAR
ALASKA	2021

PROJECT DESIGNATION

0A15037/CFHWY00431
0A15038/CFHWY00432
0A15033/CFHWY00006

NO.	REVISION
DATE	
NO.	REVISION
DATE	
NO.	REVISION
DATE	

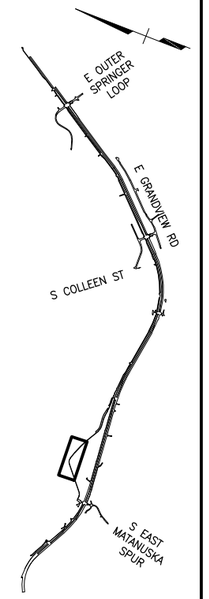

CERTIFICATION SET
NOVEMBER 2021

STATE OF ALASKA
49TH
DENNIS R. LINNELL
CE-7649
REGISTERED PROFESSIONAL ENGINEER

HDL ENGINEERING CONSULTANTS, LLC
3335 ARCTIC BOULEVARD, STE 100
ANCHORAGE, AK 99503
(907) 564-2120
AECL861

STATE OF ALASKA
DEPARTMENT OF TRANSPORTATION
AND PUBLIC FACILITIES

GLENN HWY: PARKS HWY TO
S. INNER SPRINGER LP.
(PHASE II)

PATHWAY 1
PLAN & PROFILE
30+00 TO 41+00

DRAWING LOCATION
H:\JOBS\08-016 GLENN HIGHWAY 34-42 (DOT)\09 - PS&E\CAD_PH2\DRAWINGS\08016_P2_F29-F32_PATH.DWG

DATE	TIME
11/11/2021	2:06 PM

SCALE
1" = 100'

DESIGNED BY	CAB
CHECKED BY	DRL
DRAFTED BY	CDB

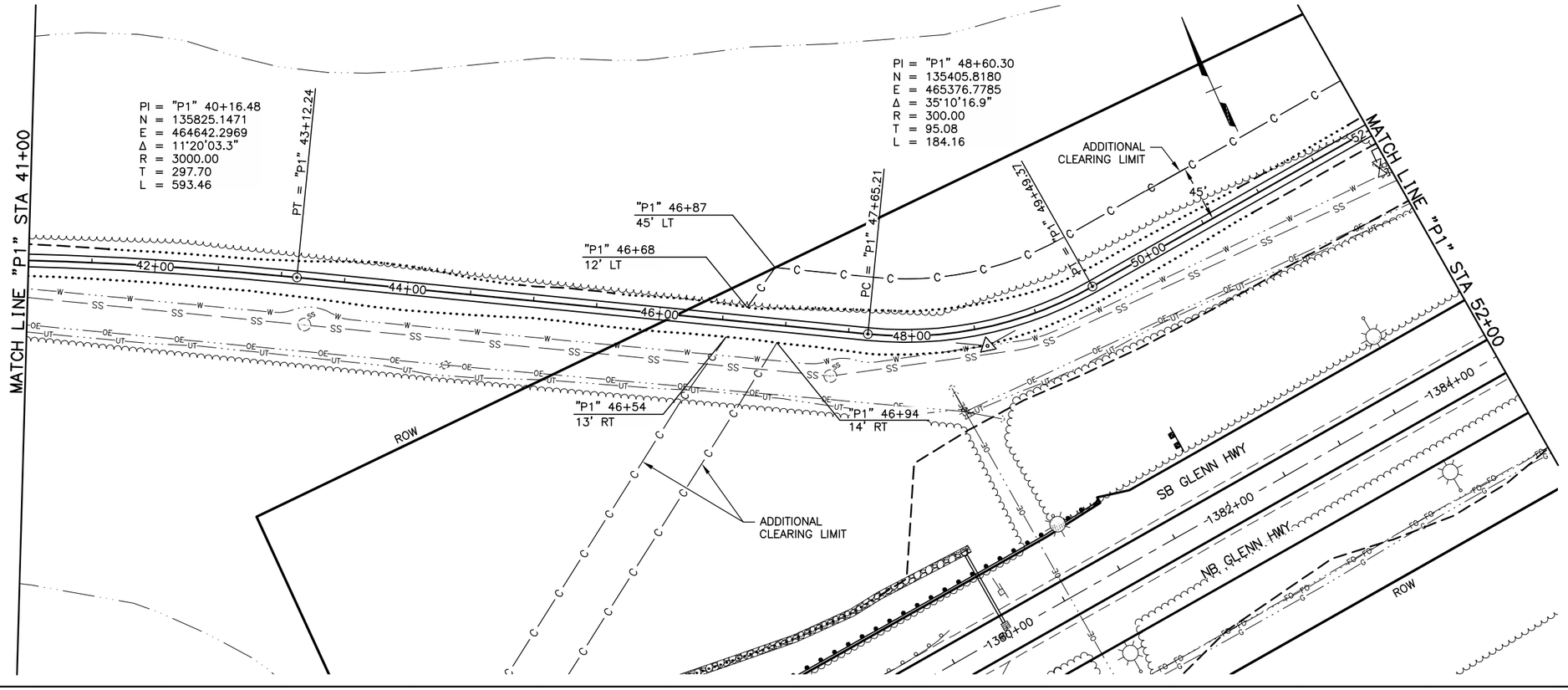

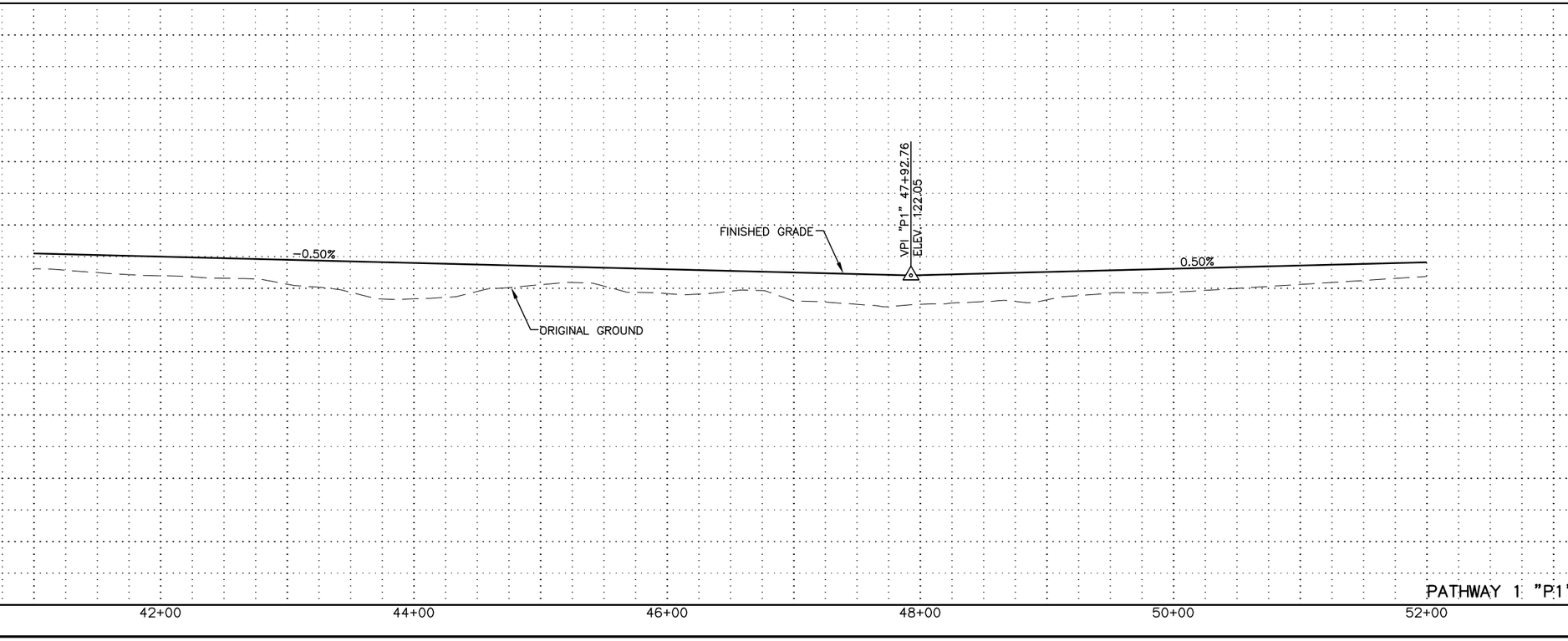

SHEET NO.	TOTAL SHEETS
F31	F50
STATE	YEAR
ALASKA	2021

PROJECT DESIGNATION

0A15037/CFHWY00431
0A15038/CFHWY00432
0A15033/CFHWY00006

NO.	REVISION
DATE	
NO.	REVISION
DATE	
NO.	REVISION
DATE	

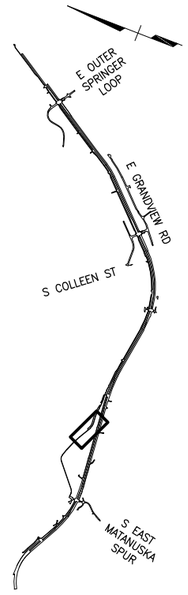

CERTIFICATION SET
NOVEMBER 2021

STATE OF ALASKA
49TH
DENNIS R. LINNELL
CE-7649
REGISTERED PROFESSIONAL ENGINEER

HDL ENGINEERING CONSULTANTS, LLC
3335 ARCTIC BOULEVARD, STE 100
ANCHORAGE, AK 99503
(907) 564-2120
AECL861

STATE OF ALASKA
DEPARTMENT OF TRANSPORTATION
AND PUBLIC FACILITIES

GLENN HWY: PARKS HWY TO
S. INNER SPRINGER LP.
(PHASE II)

PATHWAY 1
PLAN & PROFILE
41+00 TO 52+00

DESIGNED BY CAB
CHECKED BY DRL
DRAFTED BY CDB

SCALE 1" = 100'

DATE TIME 11/11/2021 2:06 PM

DRAWING LOCATION
H:\JOBS\08-016 GLENN HIGHWAY 34-42 (DOT)\09 - PS&E\CAD_PH2\DRAWINGS\08016_P2_F29-F32_PATH.DWG

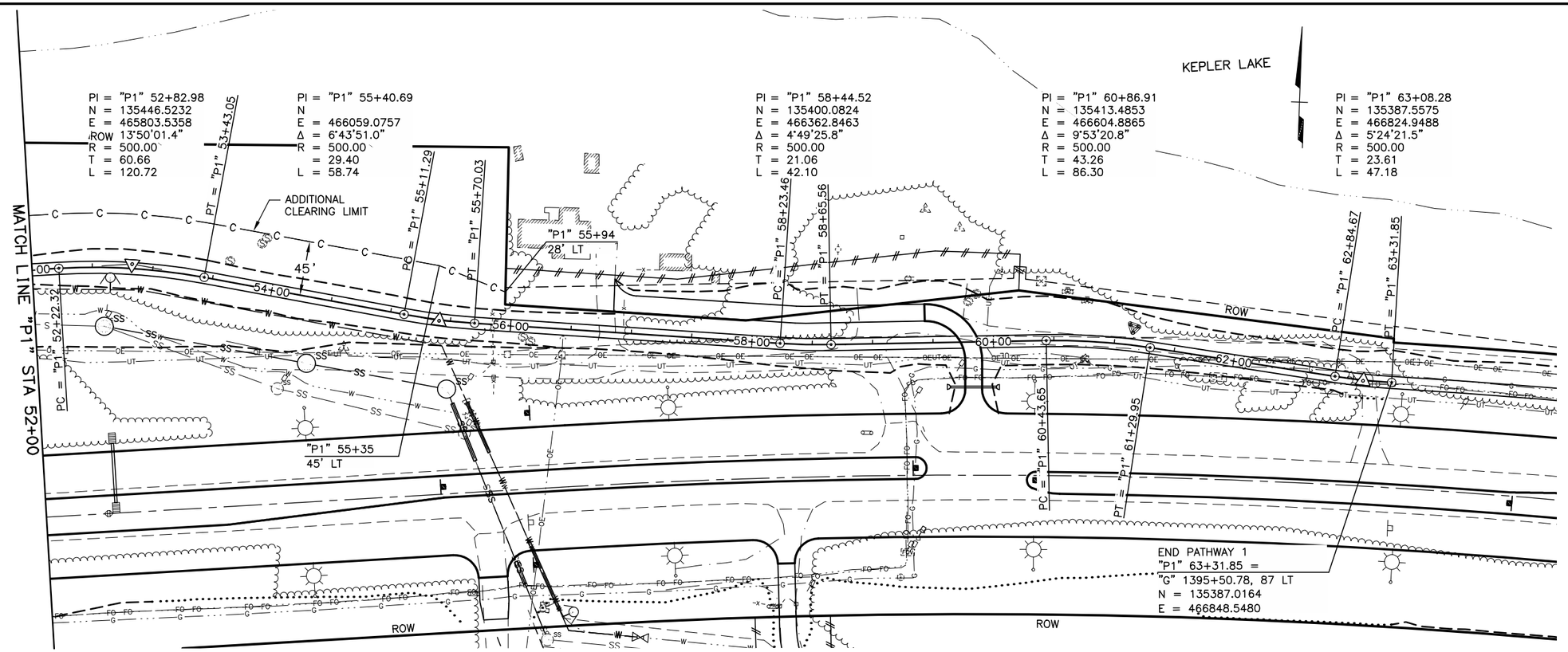

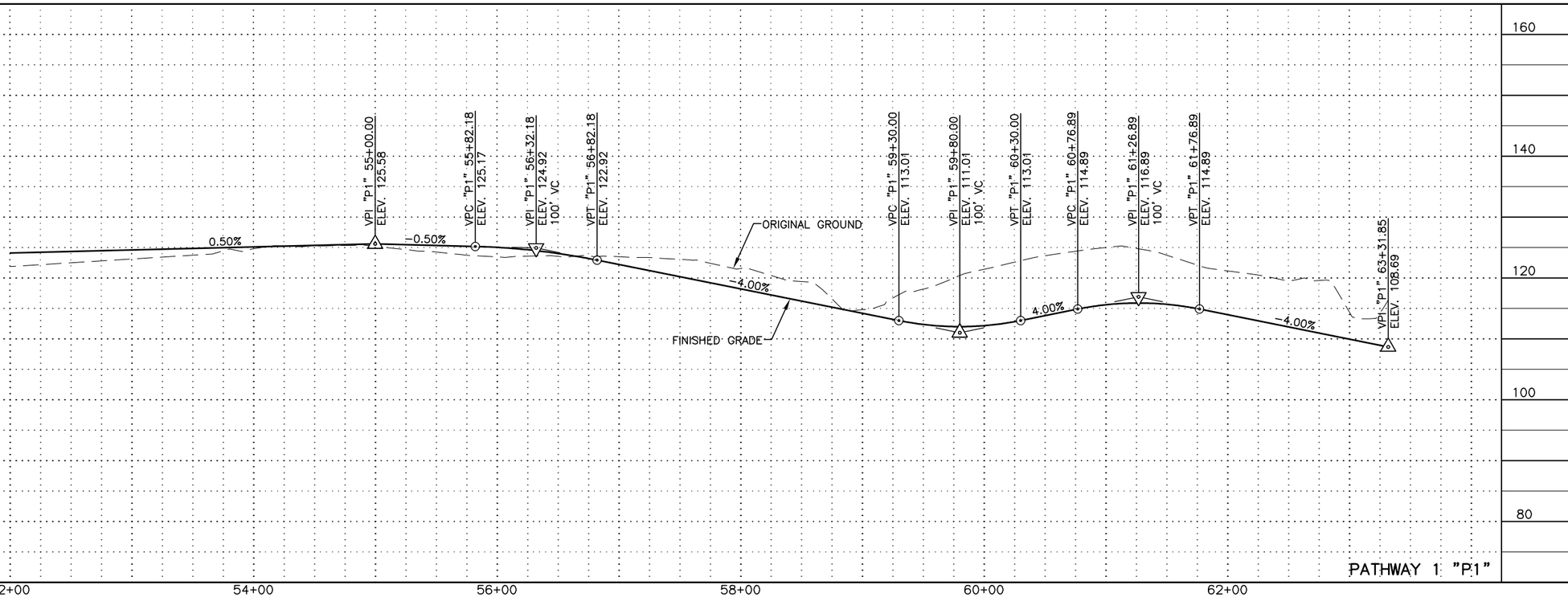

SHEET NO.	TOTAL SHEETS
F32	F50
STATE	YEAR
ALASKA	2021

PROJECT DESIGNATION
0A15037/CFHWY00431
0A15038/CFHWY00432
0A15033/CFHWY00006

NO.	REVISION
DATE	
NO.	REVISION
DATE	
NO.	REVISION
DATE	

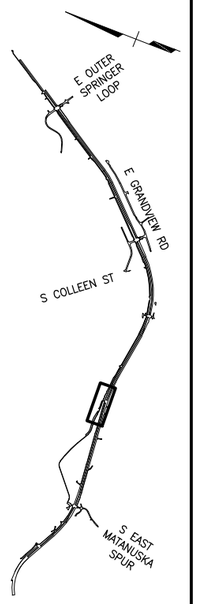

CERTIFICATION SET
NOVEMBER 2021

STATE OF ALASKA
49TH
DENNIS R. LINNELL
CE-7649
REGISTERED PROFESSIONAL ENGINEER

HDL ENGINEERING CONSULTANTS, LLC
3335 ARCTIC BOULEVARD, STE 100
ANCHORAGE, AK 99503
(907) 564-2120
AECL861

STATE OF ALASKA
DEPARTMENT OF TRANSPORTATION
AND PUBLIC FACILITIES

GLENN HWY: PARKS HWY TO
S. INNER SPRINGER LP.
(PHASE II)

PATHWAY 1
PLAN & PROFILE
52+00 TO 63+31.9

DESIGNED BY	CAB
CHECKED BY	DRL
DRAFTED BY	CDB

SCALE: 1" = 100'

DATE TIME: 11/11/2021 2:07 PM

DRAWING LOCATION
H:\JOBS\08-016 GLENN HIGHWAY 34-42 (DOT)\09 - PS&E\CAD_PH2\DRAWINGS\08016_P2_F33_CLEAR.DWG

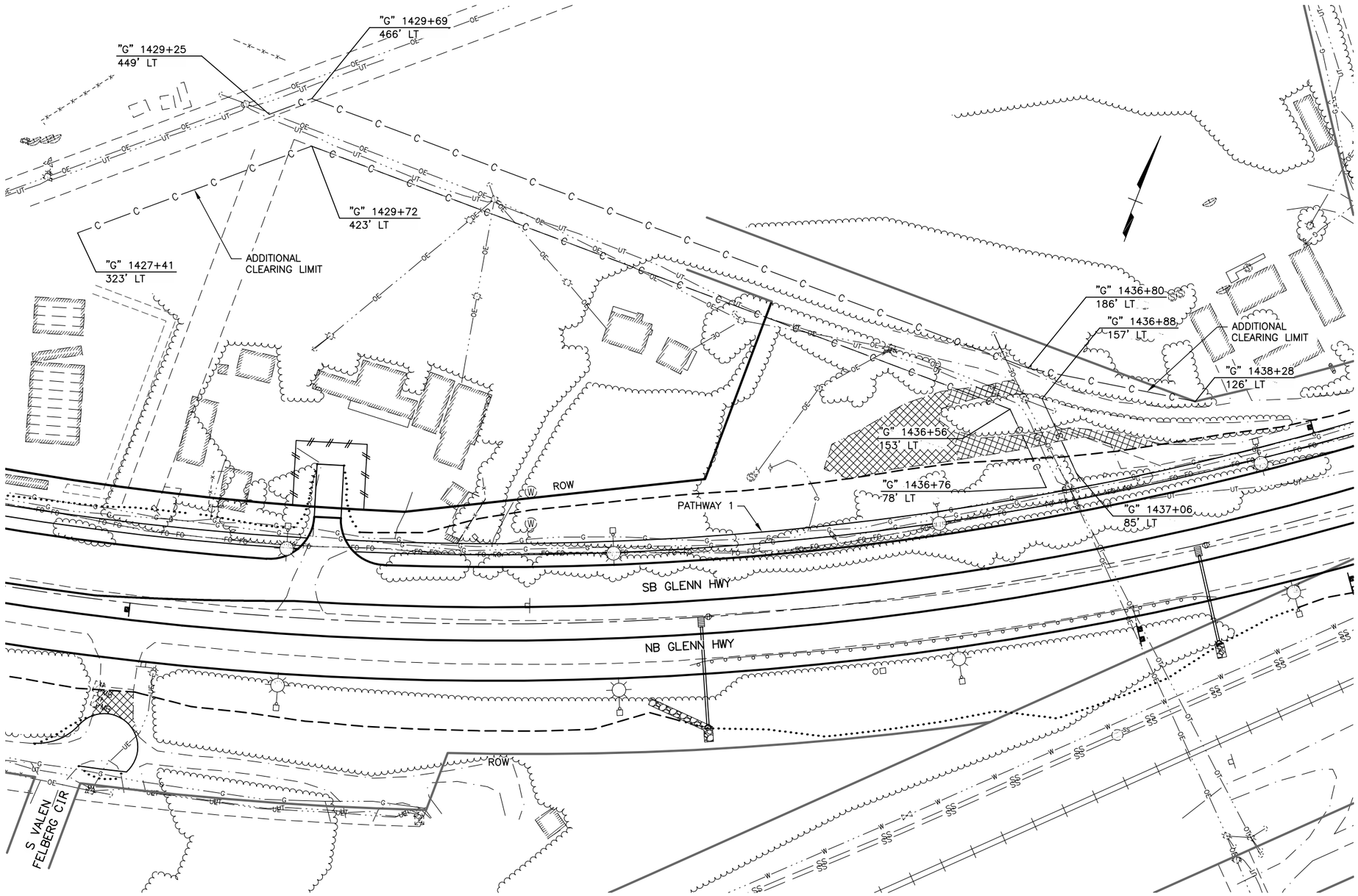

SHEET NO.	TOTAL SHEETS
F33	F50
STATE	YEAR
ALASKA	2021

PROJECT DESIGNATION

0A15037/CFHWY00431
0A15038/CFHWY00432
0A15033/CFHWY00006

NO.	REVISION
DATE	

NO.	REVISION
DATE	

NO.	REVISION
DATE	

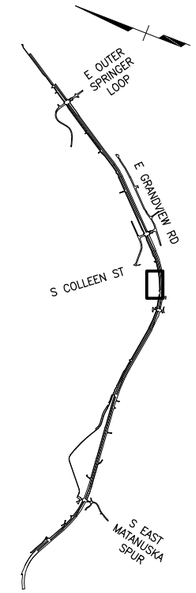

CERTIFICATION SET
NOVEMBER 2021

STATE OF ALASKA
49TH
DENNIS R. LINNELL
CE-7649
REGISTERED PROFESSIONAL ENGINEER

HDL ENGINEERING CONSULTANTS, LLC
3335 ARCTIC BOULEVARD, STE 100
ANCHORAGE, AK 99503
(907) 564-2120
AECL861

STATE OF ALASKA
DEPARTMENT OF TRANSPORTATION
AND PUBLIC FACILITIES

GLENN HWY: PARKS HWY TO
S. INNER SPRINGER LP.
(PHASE II)

ADDITIONAL CLEARING

DRAWING LOCATION
H:\JOBS\08-016 GLENN HIGHWAY 34-42 (DOT)\09 - PS&E\CAD DRAWINGS\08016_00_F66_driveP_1-50_11-13-15_01:15:21_byCDB
H:\JOBS\08-016 GLENN HIGHWAY 34-42 (DOT)\09 - PS&E\CAD_PH2\DRAWINGS\08016_P2_F34_DRIVEPNP.DWG

DESIGNED BY	CAB
DRAWN BY	DRL
CHECKED BY	CDB
DRAFTED BY	
SCALE	1" = 100'
DATE	11/11/2021
TIME	2:08 PM

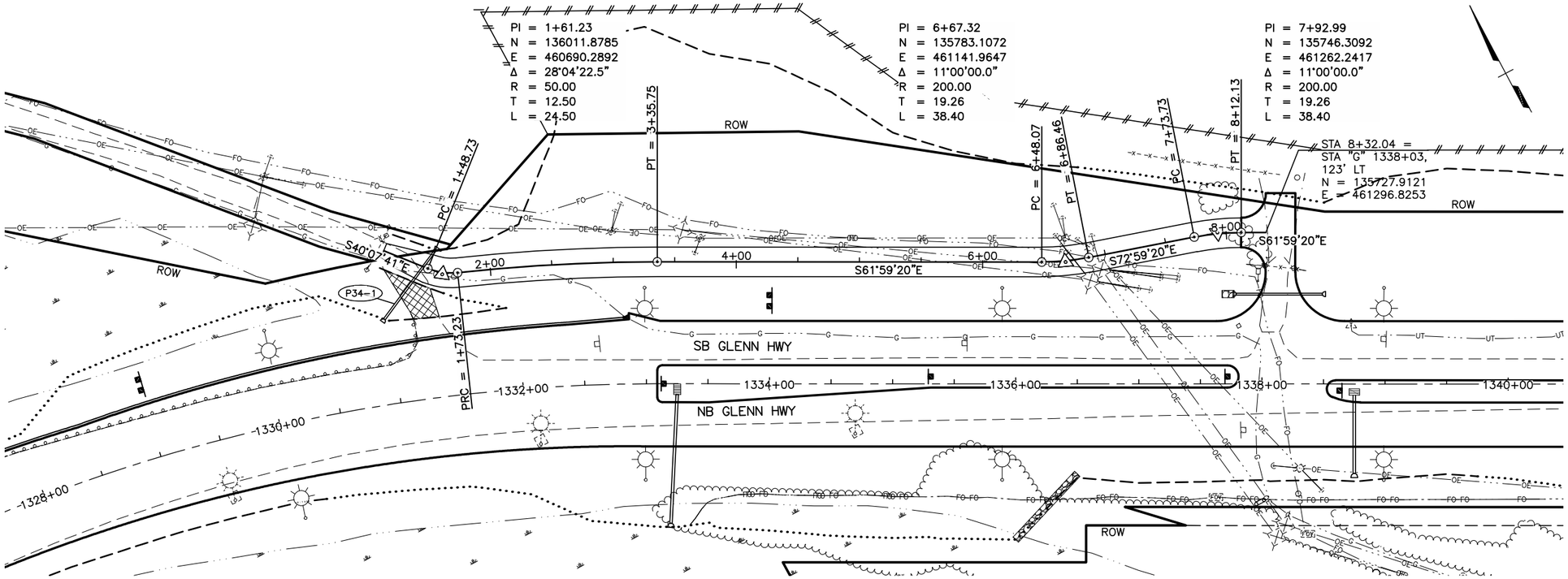

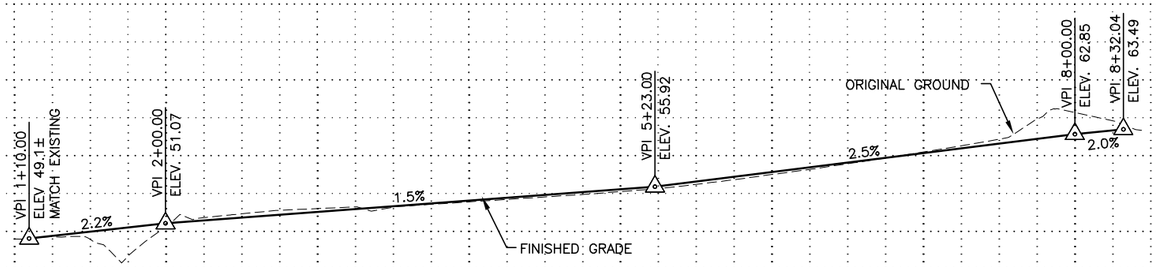

SHEET NO.	TOTAL SHEETS
F34	F50
STATE	YEAR
ALASKA	2021

PROJECT DESIGNATION

0A15037/CFHWY00431
0A15038/CFHWY00432
0A15033/CFHWY00006

NO.	REVISION
DATE	
NO.	REVISION
DATE	
NO.	REVISION
DATE	

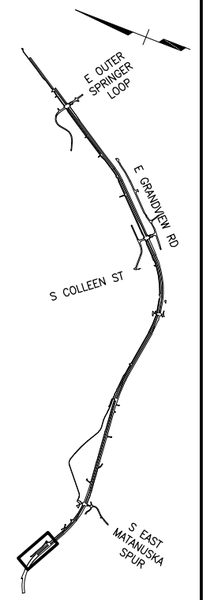

CERTIFICATION SET
NOVEMBER 2021

STATE OF ALASKA
49TH
DENNIS R. LINNELL
CE-7649
REGISTERED PROFESSIONAL ENGINEER

HDL ENGINEERING CONSULTANTS, LLC
3335 ARCTIC BOULEVARD, STE 100
ANCHORAGE, AK 99503
(907) 564-2120
AECL861

STATE OF ALASKA
DEPARTMENT OF TRANSPORTATION
AND PUBLIC FACILITIES

GLENN HWY: PARKS HWY TO
S. INNER SPRINGER LP.
(PHASE II)

APPROACH
"G" 1338+03 LT
PLAN & PROFILE

DESIGNED BY	CAB
CHECKED BY	DRL
DRAFTED BY	CDB

SCALE: 1" = 100

DATE TIME: 11/11/2021 2:08 PM

DRAWING LOCATION
H:\JOBS\08-016 GLENN HIGHWAY 34-42 (DOT)\09 - PS&E\CAD_PH2\DRAWINGS\08016_P2_F35_BLDRIVEPNP.DWG

LAYOUT SCHEDULE

POINT	STATION	OFFSET	REMARKS
1	0+90.00	12.00 LT	END TAPER
2	0+90.00	12.00 RT	END TAPER

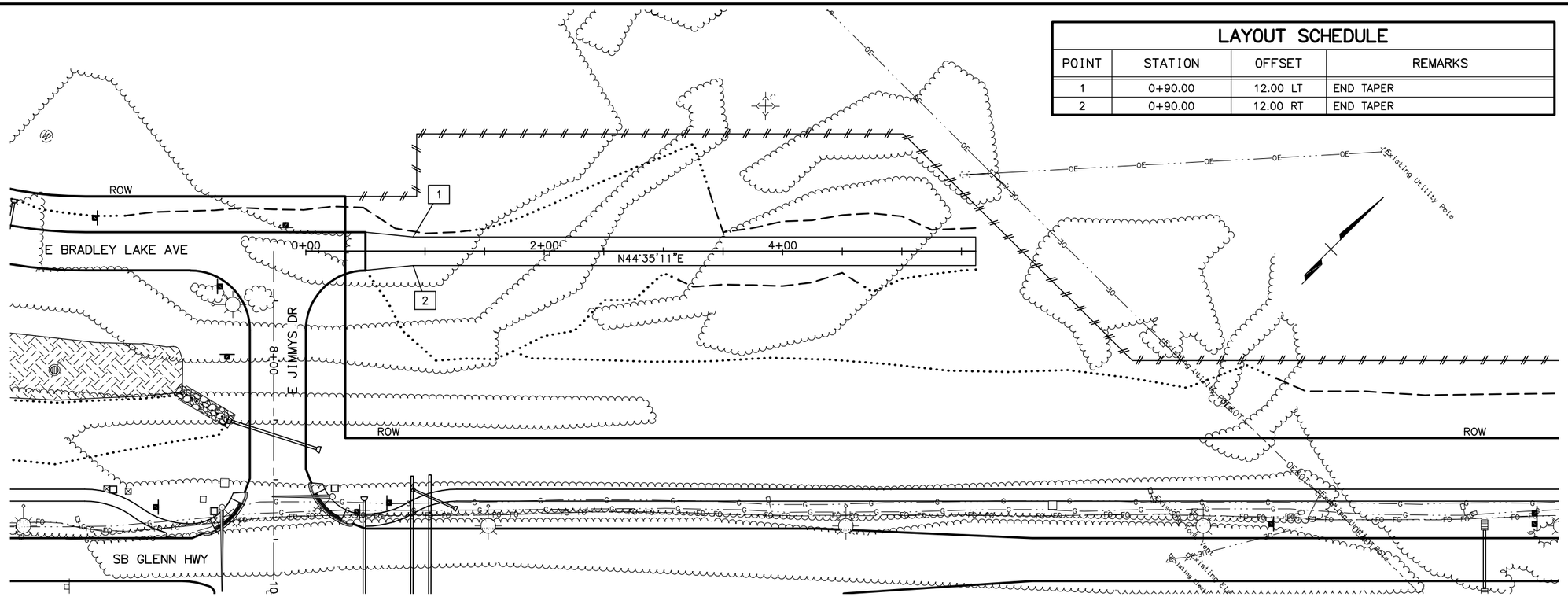
ROW
E BRADLEY LAKE AVE
0+00
2+00
4+00
N44°35'11"E
1
2
E JIMMYS DR
8+00
ROW
ROW
SB GLENN HWY
OE
Existing Utility Pole
Existing Utility Pole
Existing Utility Pole

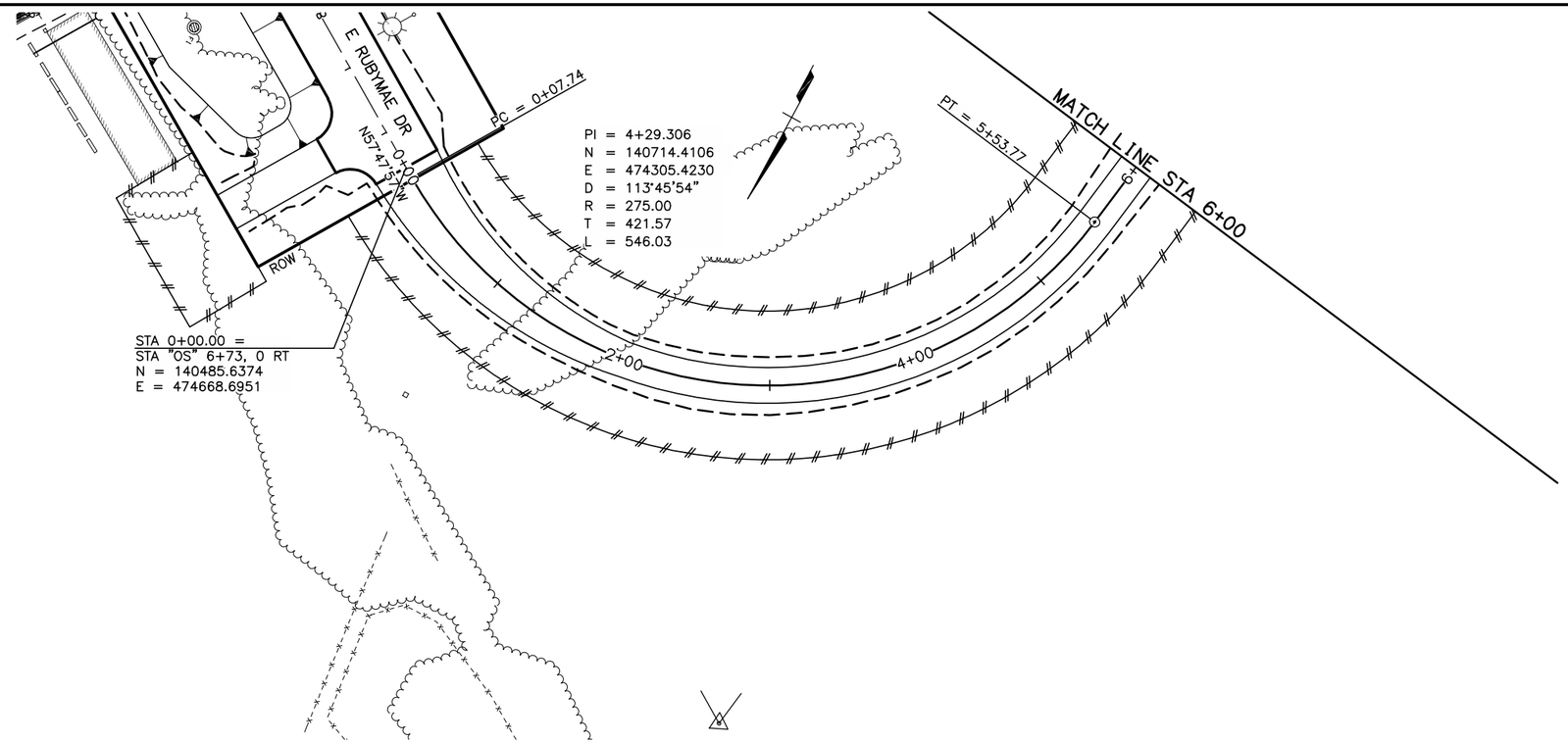

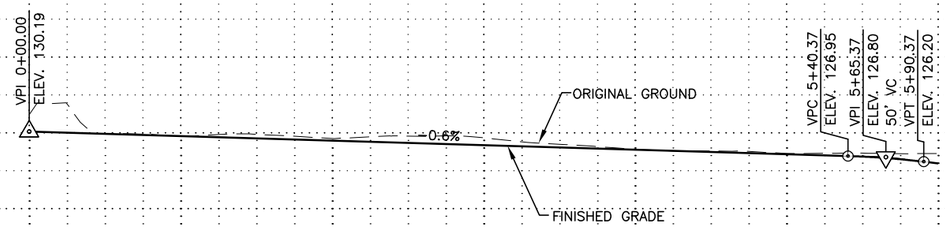

DRIVEWAY

SHEET NO.	TOTAL SHEETS
F36	F50
STATE	YEAR
ALASKA	2021

PROJECT DESIGNATION

0A15037/CFHWY00431
0A15038/CFHWY00432
0A15033/CFHWY00006

NO.	REVISION
DATE	
NO.	REVISION
DATE	
NO.	REVISION
DATE	

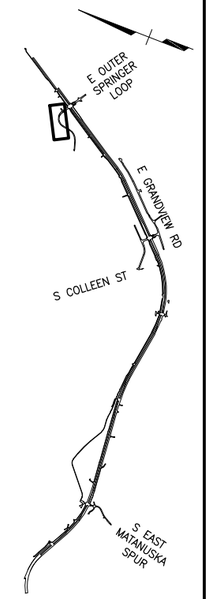

CERTIFICATION SET
NOVEMBER 2021

STATE OF ALASKA
49TH
DENNIS R. LINNELL
CE-7649
REGISTERED PROFESSIONAL ENGINEER

HDL ENGINEERING CONSULTANTS, LLC
3335 ARCTIC BOULEVARD, STE 100
ANCHORAGE, AK 99503
(907) 564-2120
AECL861

STATE OF ALASKA
DEPARTMENT OF TRANSPORTATION
AND PUBLIC FACILITIES

GLENN HWY: PARKS HWY TO
S. INNER SPRINGER LP.
(PHASE II)

APPROACH
"OS" 6+73
PLAN & PROFILE

DESIGNED BY CAB
CHECKED BY DRL
DRAFTED BY CDB

SCALE 1" = 100

DATE TIME
11/11/2021 2:07 PM

DRAWING LOCATION
H:\JOBS\08-016 GLENN HIGHWAY 34-42 (DOT)\09 - PS&E\CAD_PH2\DRAWINGS\08016_P2_F36-F37-ASG_DRIVEPNP.DWG

DESIGNED BY	CAB
CHECKED BY	DRL
DRAFTED BY	CDB

SCALE	DATE	TIME
1" = 100	11/11/2021	2:07 PM

DRAWING LOCATION
H:\JOBS\08-016 GLENN HIGHWAY 34-42 (DOT)\09 - PS&E\CAD_PH2\DRAWINGS\08016_P2_F36-F37-ASG_DRIVEPNP.DWG

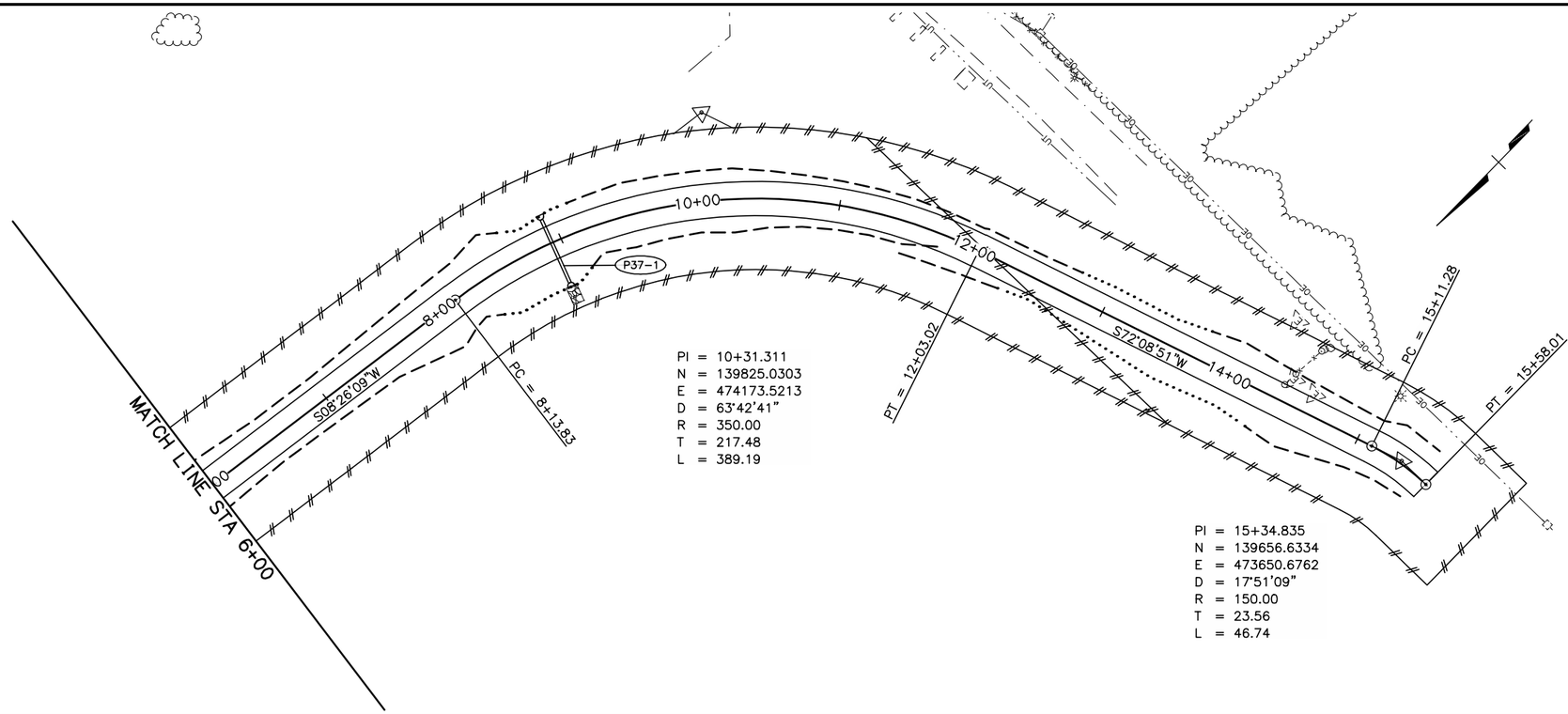

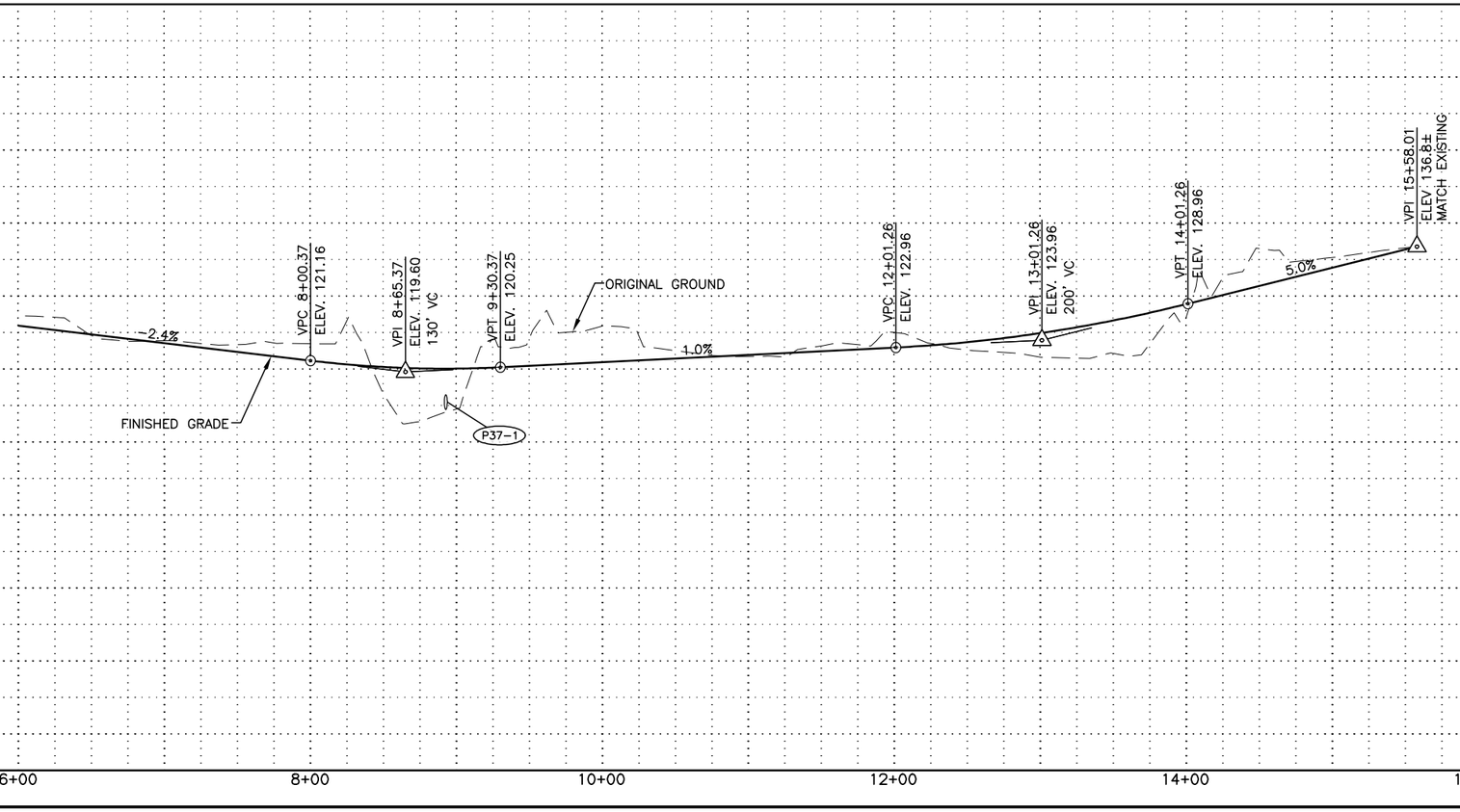

SHEET NO.	TOTAL SHEETS
F37	F50
STATE	YEAR
ALASKA	2021

PROJECT DESIGNATION

0A15037/CFHWY00431
0A15038/CFHWY00432
0A15033/CFHWY00006

NO.	REVISION
DATE	
NO.	REVISION
DATE	
NO.	REVISION
DATE	

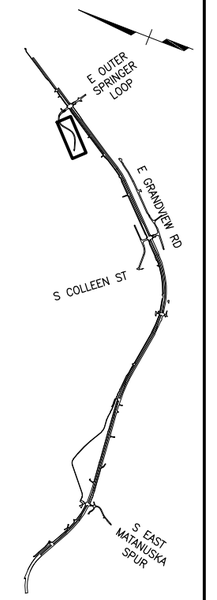

CERTIFICATION SET
NOVEMBER 2021

STATE OF ALASKA
49TH
DENNIS R. LINNELL
CE-7649
REGISTERED PROFESSIONAL ENGINEER

HDL ENGINEERING CONSULTANTS, LLC
3335 ARCTIC BOULEVARD, STE 100
ANCHORAGE, AK 99503
(907) 564-2120
AECL861

STATE OF ALASKA
DEPARTMENT OF TRANSPORTATION
AND PUBLIC FACILITIES

GLENN HWY: PARKS HWY TO
S. INNER SPRINGER LP.
(PHASE II)

APPROACH
"OS" 6+73
PLAN & PROFILE

NO.	DATE	REVISION	STATE	PROJECT DESIGNATION	YEAR	SHEET NO.	TOTAL SHEETS
			ALASKA	0A15037/CFHWY00431 0A15038/CFHWY00432 0A15033/CFHWY00006	2021	F38	F50

DESIGNED BY AAL
CHECKED BY DRL
DRAFTED BY CDB

SCALE 1" = 40'

DATE 11/11/2021 TIME 2:10 PM

DRAWING LOCATION
H:\JOBS\08-016 GLENN HIGHWAY 34-42 (DOT)\09 - PS&E\CAD_PH2\DRAWINGS\08016_P2_F38-F50_APPPROF.DWG

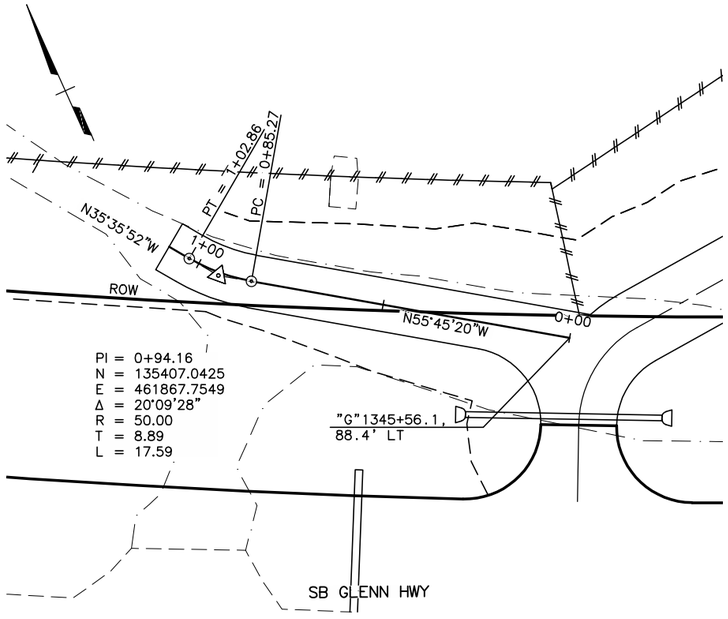

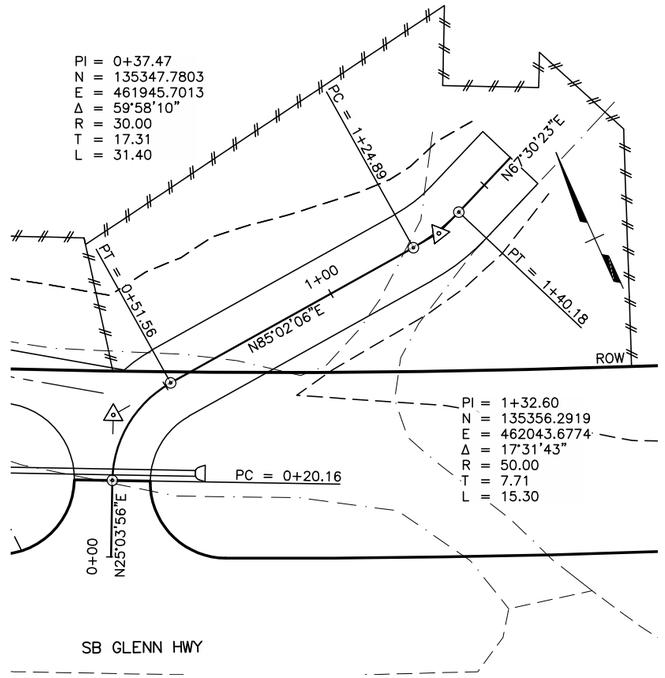

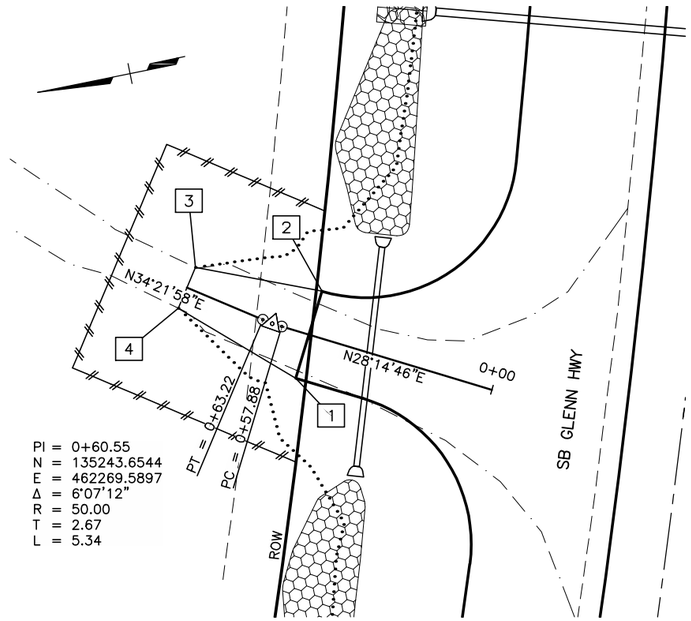

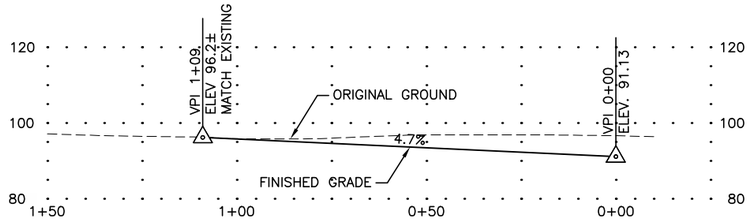

"G" 1345+56.1, 88.4' LT

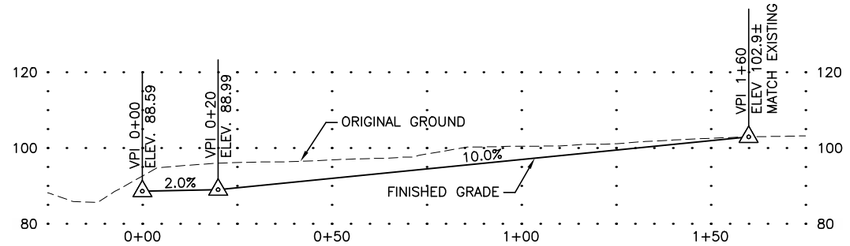

"G" 1345+59 LT

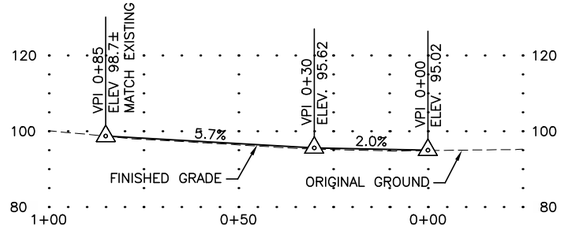

"G" 1349+00 LT

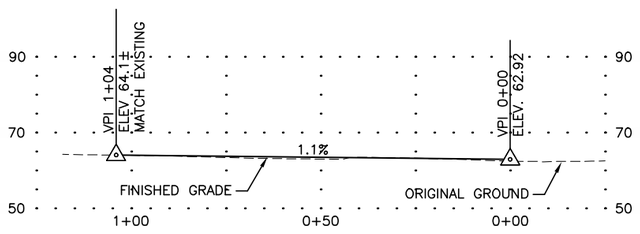

"G" 1338+15 LT

LAYOUT SCHEDULE

POINT	STATION	OFFSET	REMARKS
1	0+50.44	12.00 LT	BEGIN TAPER
2	0+50.44	12.00 RT	BEGIN TAPER
3	0+85.00	5.79 RT	END TAPER
4	0+85.00	5.89 LT	END TAPER

CERTIFICATION SET
NOVEMBER 2021

STATE OF ALASKA
49TH
DENNIS R. LINNELL
CE-7649
REGISTERED PROFESSIONAL ENGINEER

HDL ENGINEERING CONSULTANTS, LLC
3335 ARCTIC BOULEVARD, STE 100
ANCHORAGE, AK 99503
(907) 564-2120
AECL861

STATE OF ALASKA
DEPARTMENT OF TRANSPORTATION
AND PUBLIC FACILITIES

GLENN HWY: PARKS HWY TO S. INNER SPRINGER LP. (PHASE II)

APPROACH PROFILES AND LAYOUTS

NO.	DATE	REVISION

STATE	PROJECT DESIGNATION	YEAR	SHEET NO.	TOTAL SHEETS
ALASKA	0A15037/CFHWY00431 0A15038/CFHWY00432 0A15033/CFHWY00006	2021	F39	F50

DESIGNED BY AAL
CHECKED BY DRL
DRAFTED BY CDB

SCALE 1" = 40'

DATE 11/11/2021 TIME 2:10 PM

DRAWING LOCATION
H:\JOBS\08-016 GLENN HIGHWAY 34-42 (DOT)\09 - PS&E\CAD_PH2\DRAWINGS\08016_P2_F38-F50_APPPROF.DWG

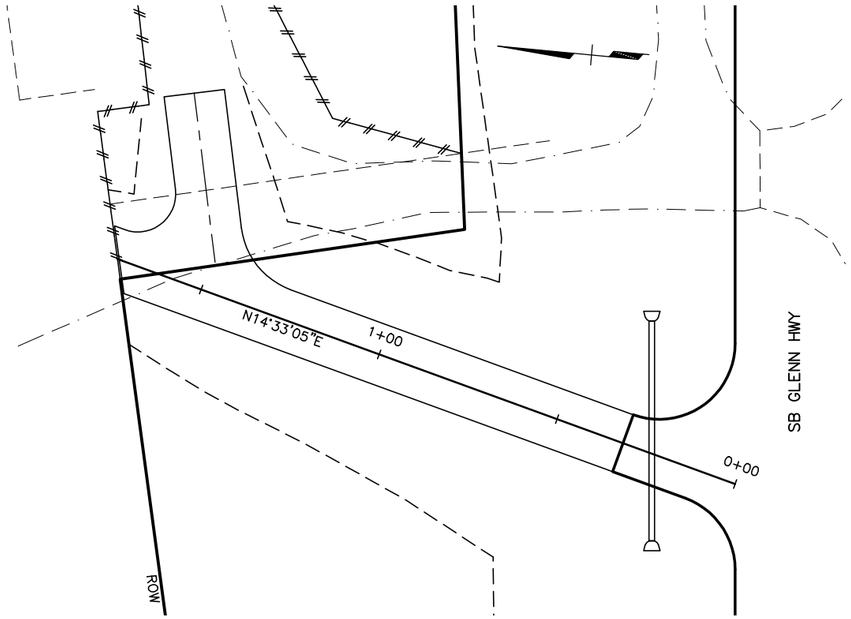

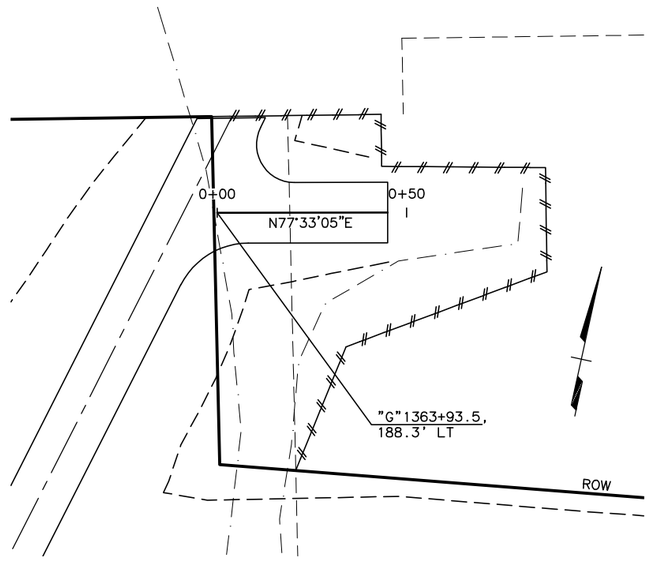

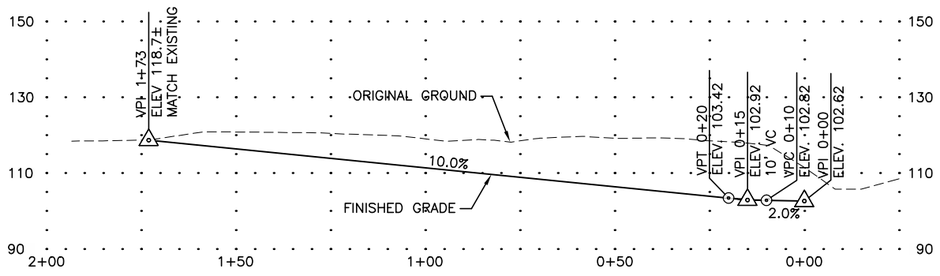

"G" 1363+35 LT

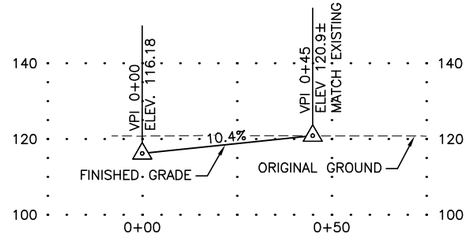

"G" 1363+93.5, 188.3' LT

CERTIFICATION SET
NOVEMBER 2021

STATE OF ALASKA
49TH
DENNIS R. LINNELL
CE-7649
REGISTERED PROFESSIONAL ENGINEER

HDL ENGINEERING CONSULTANTS, LLC
3335 ARCTIC BOULEVARD, STE 100
ANCHORAGE, AK 99503
(907) 564-2120
AECL861

STATE OF ALASKA
DEPARTMENT OF TRANSPORTATION
AND PUBLIC FACILITIES

GLENN HWY: PARKS HWY TO S. INNER SPRINGER LP. (PHASE II)

APPROACH PROFILES AND LAYOUTS

NO.	DATE	REVISION

STATE	PROJECT DESIGNATION	YEAR	SHEET NO.	TOTAL SHEETS
ALASKA	0A15037/CFHWY00431 0A15038/CFHWY00432 0A15033/CFHWY00006	2021	F40	F50

DESIGNED BY AAL
CHECKED BY DRL
DRAFTED BY CDB

SCALE 1" = 40'

DATE 11/11/2021 TIME 2:11 PM

DRAWING LOCATION
H:\JOBS\08-016 GLENN HIGHWAY 34-42 (DOT)\09 - PS&E\CAD_PH2\DRAWINGS\08016_P2_F38-F50_APPPROF.DWG

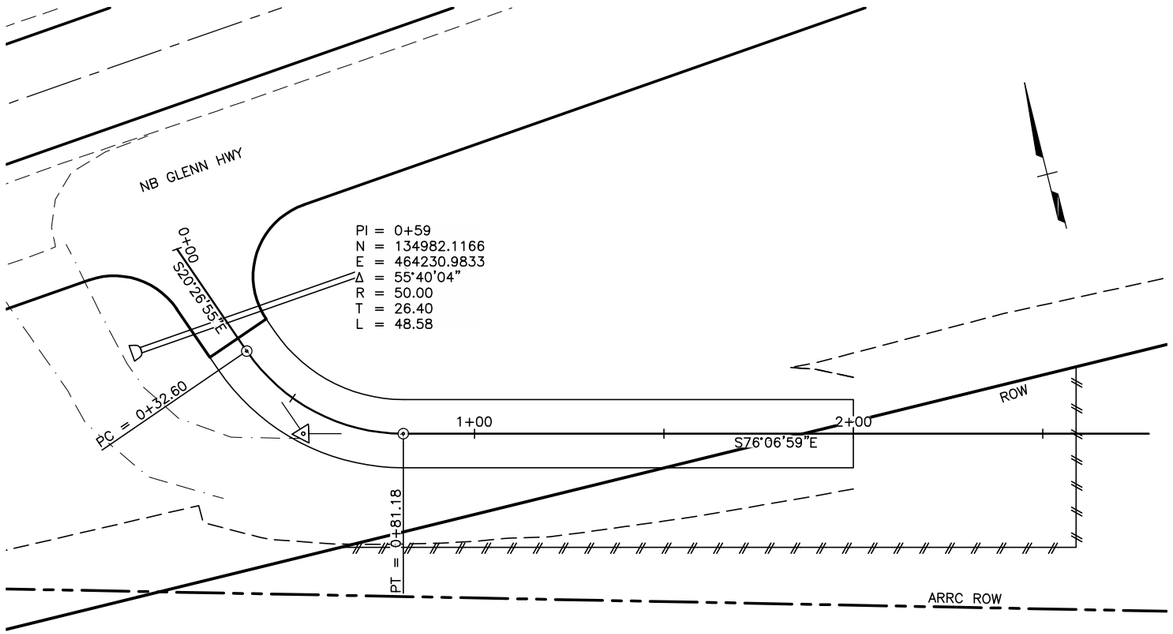

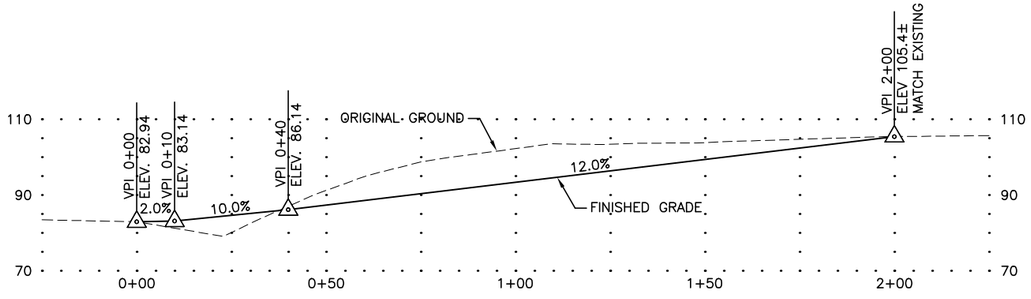

"G" 1369+00 RT

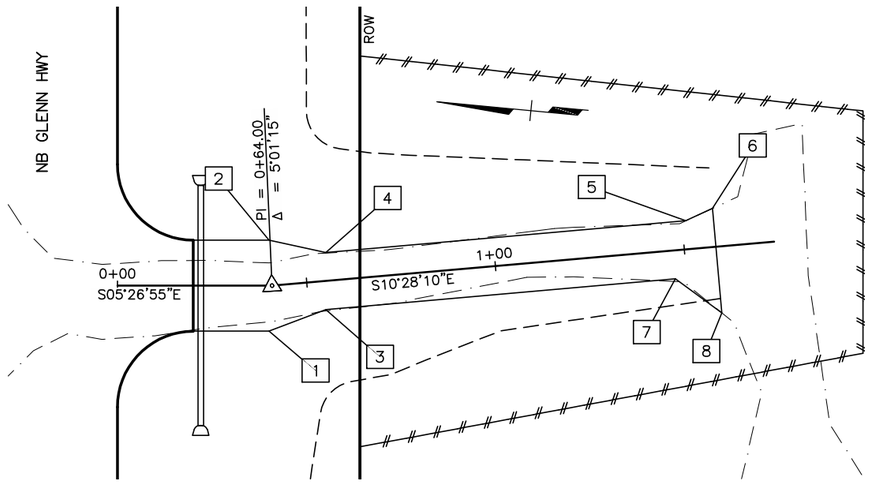

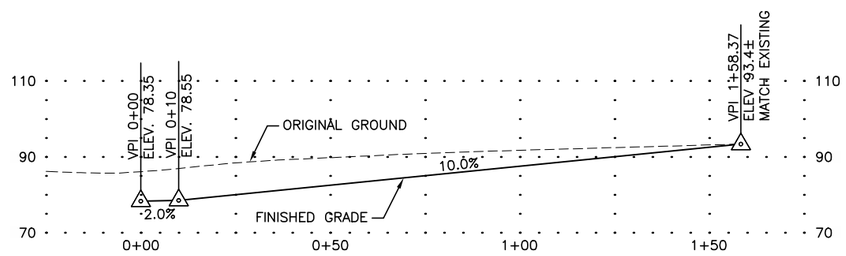

"G" 1379+64 RT

LAYOUT SCHEDULE

POINT	STATION	OFFSET	REMARKS
1	0+40.00	12.00 RT	BEGIN TAPER
2	0+40.00	12.00 LT	BEGIN TAPER
3	0+54.40	7.50 RT	END TAPER
4	0+55.71	7.50 LT	END TAPER
5	1+51.05	7.50 LT	
6	1+58.40	10.16 LT	MATCH EXISTING
7	1+47.00	7.50 RT	
8	1+58.40	17.54 RT	MATCH EXISTING

CERTIFICATION SET
NOVEMBER 2021

STATE OF ALASKA
STATE OF ALASKA 49TH
DENNIS R. LINNELL
CE-7649
REGISTERED PROFESSIONAL ENGINEER

HDL ENGINEERING CONSULTANTS, LLC
3335 ARCTIC BOULEVARD, STE 100
ANCHORAGE, AK 99503
(907) 564-2120
AECL861

STATE OF ALASKA
DEPARTMENT OF TRANSPORTATION
AND PUBLIC FACILITIES

GLENN HWY: PARKS HWY TO S. INNER SPRINGER LP. (PHASE II)

APPROACH PROFILES AND LAYOUTS

NO.	DATE	REVISION

STATE	PROJECT DESIGNATION	YEAR	SHEET NO.	TOTAL SHEETS
ALASKA	0A15037/CFHWY00431 0A15038/CFHWY00432 0A15033/CFHWY00006	2021	F41	F50

DESIGNED BY	AAL
CHECKED BY	DRL
DRAFTED BY	CDB
SCALE	1" = 40'
DATE	11/11/2021
TIME	2:11 PM

DRAWING LOCATION
H:\JOBS\08-016 GLENN HIGHWAY 34-42 (DOT)\09 - PS&E\CAD_PH2\DRAWINGS\08016_P2_F38-F50_APPPROF.DWG

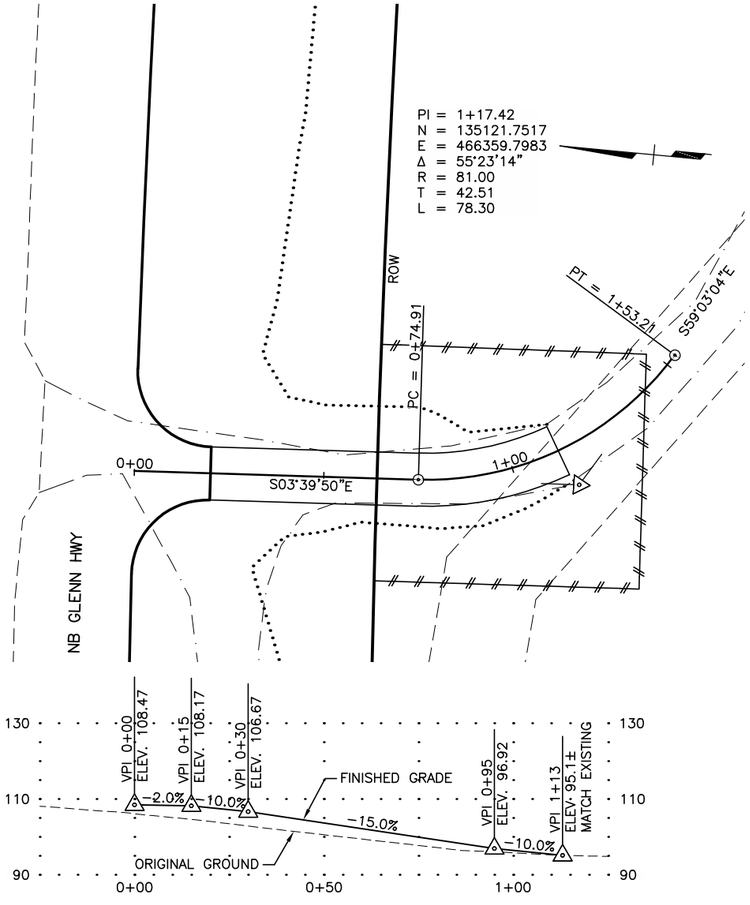

"G" 1390+53 RT

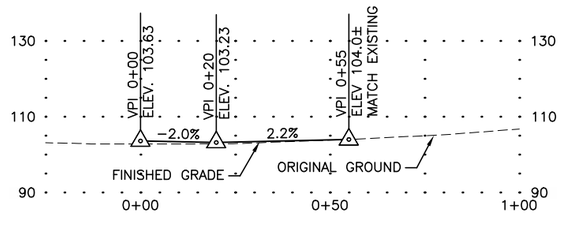

"G" 1388+08 RT

CERTIFICATION SET
NOVEMBER 2021

STATE OF ALASKA
49TH
DENNIS R. LINNELL
CE-7649
REGISTERED PROFESSIONAL ENGINEER

HDL ENGINEERING CONSULTANTS, LLC
3335 ARCTIC BOULEVARD, STE 100
ANCHORAGE, AK 99503
(907) 564-2120
AECL861

STATE OF ALASKA
DEPARTMENT OF TRANSPORTATION
AND PUBLIC FACILITIES

GLENN HWY: PARKS HWY TO S. INNER SPRINGER LP. (PHASE II)

APPROACH PROFILES AND LAYOUTS

NO.	DATE	REVISION

STATE	PROJECT DESIGNATION	YEAR	SHEET NO.	TOTAL SHEETS
ALASKA	0A15037/CFHWY00431 0A15038/CFHWY00432 0A15033/CFHWY00006	2021	F42	F50

DESIGNED BY AAL
CHECKED BY DRL
DRAFTED BY CDB

SCALE 1" = 40'

DATE TIME 11/11/2021 2:12 PM

DRAWING LOCATION
H:\JOBS\08-016 GLENN HIGHWAY 34-42 (DOT)\09 - PS&E\CAD_PH2\DRAWINGS\08016_P2_F38-F50_APPPROF.DWG

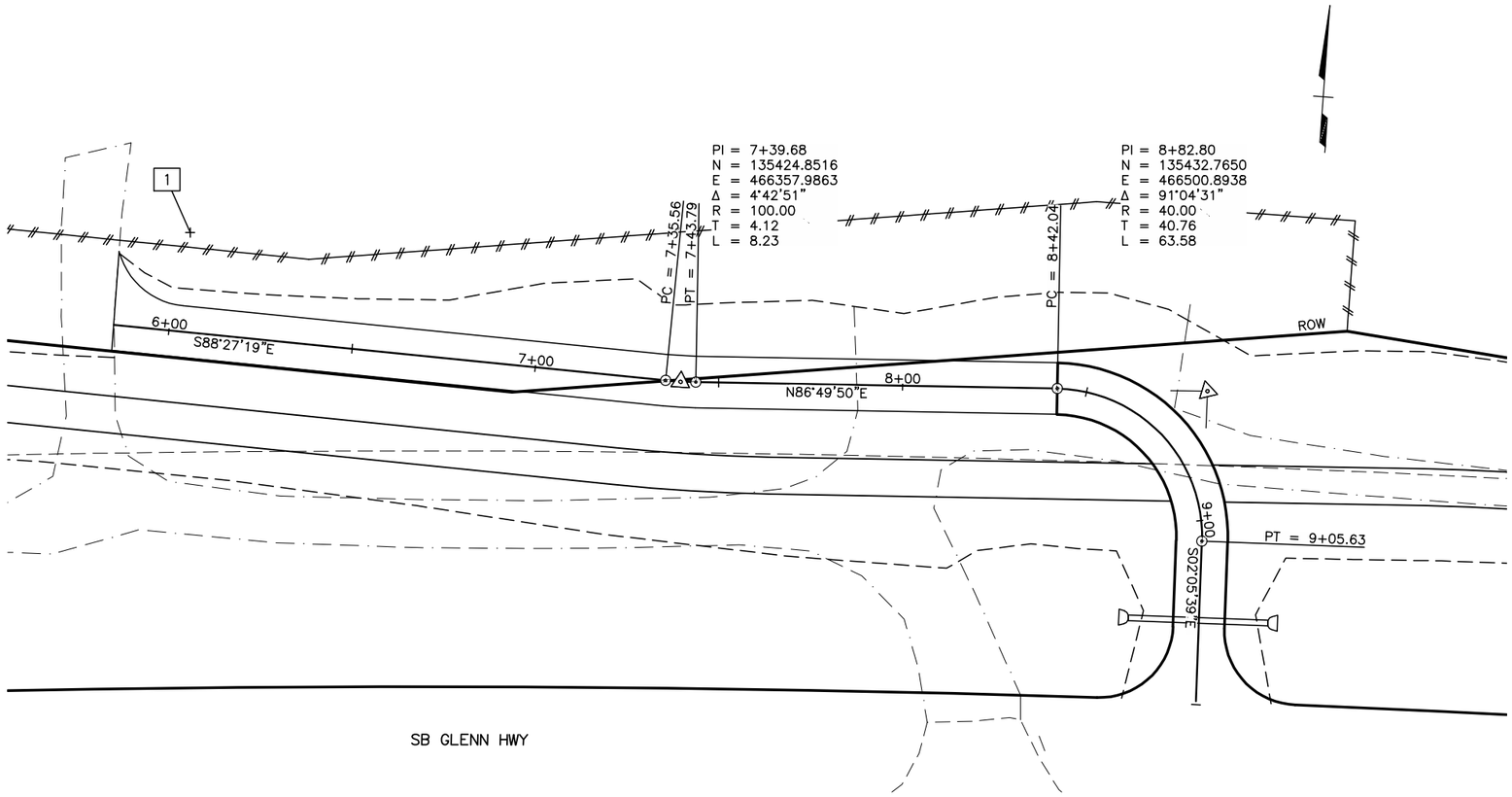

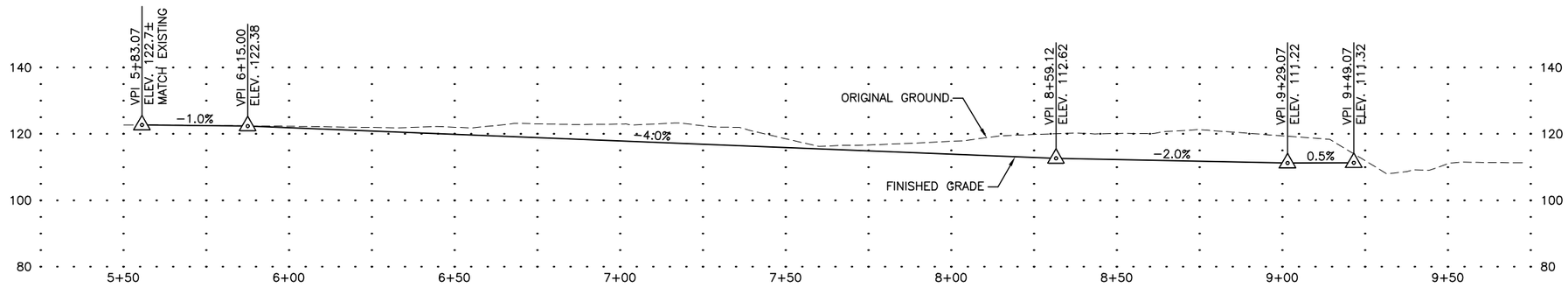

"G" 1392+10 LT

LAYOUT SCHEDULE

POINT	STATION	OFFSET	REMARKS
1	6+03.07	27.00 LT	RETURN RP, R=20'

CERTIFICATION SET
NOVEMBER 2021

STATE OF ALASKA
49TH
DENNIS R. LINNELL
CE-7649
REGISTERED PROFESSIONAL ENGINEER

HDL ENGINEERING CONSULTANTS, LLC
3335 ARCTIC BOULEVARD, STE 100
ANCHORAGE, AK 99503
(907) 564-2120
AECL861

STATE OF ALASKA
DEPARTMENT OF TRANSPORTATION
AND PUBLIC FACILITIES

GLENN HWY: PARKS HWY TO S. INNER SPRINGER LP. (PHASE II)

APPROACH PROFILES AND LAYOUTS

NO.	DATE	REVISION

STATE	PROJECT DESIGNATION	YEAR	SHEET NO.	TOTAL SHEETS
ALASKA	0A15037/CFHWY00431 0A15038/CFHWY00432 0A15033/CFHWY00006	2021	F43	F50

DESIGNED BY AAL
CHECKED BY DRL
DRAFTED BY CDB

SCALE 1" = 40'

DATE TIME 11/11/2021 2:12 PM

DRAWING LOCATION
H:\JOBS\08-016 GLENN HIGHWAY 34-42 (DOT)\09 - PS&E\CAD_PH2\DRAWINGS\08016_P2_F38-F50_APPPROF.DWG

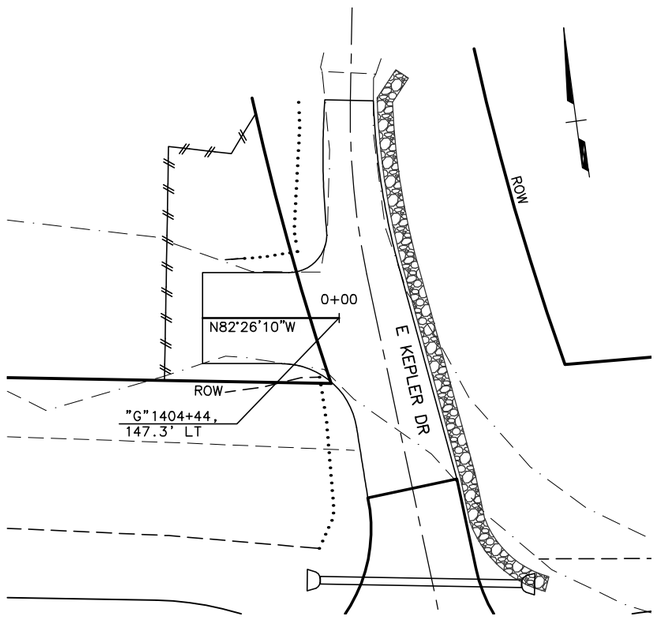

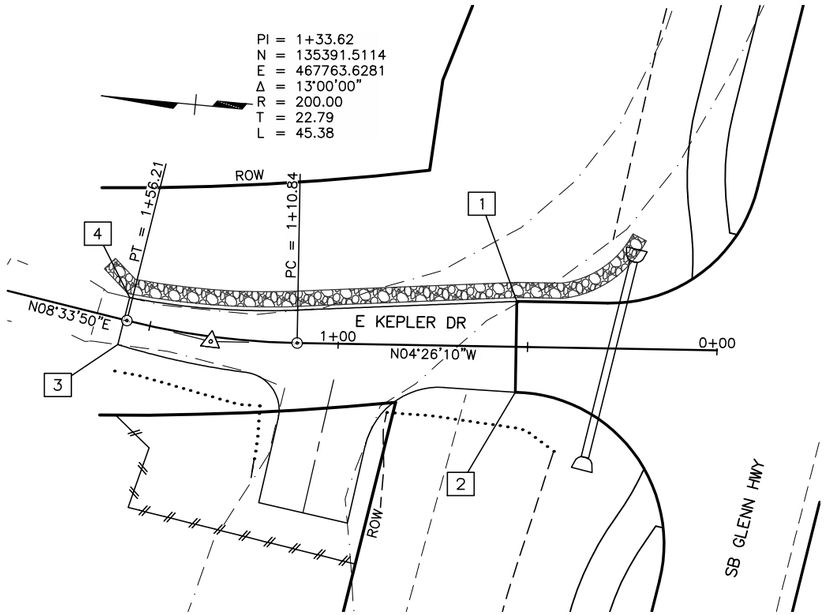

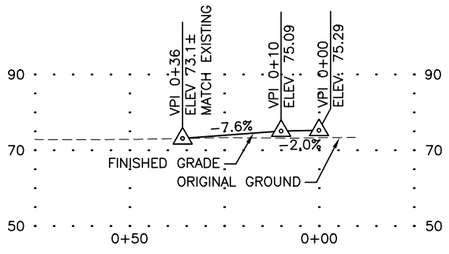

"G" 1404+44, 147.3' LT

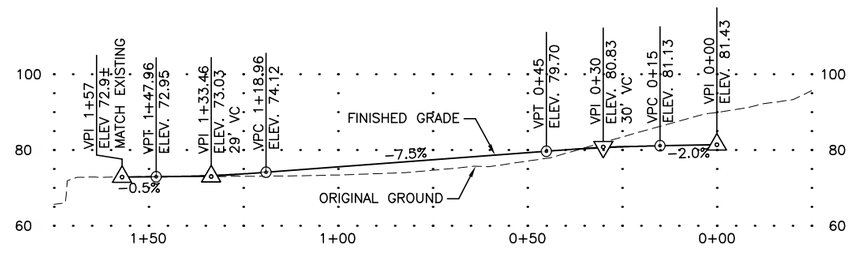

"G" 1404+76 LT
E KEPLER DR

LAYOUT SCHEDULE			
POINT	STATION	OFFSET	REMARKS
1	0+53.06	12.00 RT	BEGIN TAPER
2	0+53.06	12.00 LT	BEGIN TAPER
3	1+57.00	6.73 LT	END TAPER
4	1+57.00	6.05 RT	END TAPER

CERTIFICATION SET
NOVEMBER 2021

STATE OF ALASKA
★ 49TH ★
DENNIS R. LINNELL
CE-7649
REGISTERED PROFESSIONAL ENGINEER

HDL ENGINEERING CONSULTANTS, LLC
3335 ARCTIC BOULEVARD, STE 100
ANCHORAGE, AK 99503
(907) 564-2120
AECL861

STATE OF ALASKA
DEPARTMENT OF TRANSPORTATION
AND PUBLIC FACILITIES

GLENN HWY: PARKS HWY TO S. INNER SPRINGER LP. (PHASE II)

APPROACH PROFILES AND LAYOUTS

NO.	DATE	REVISION

STATE	PROJECT DESIGNATION	YEAR	SHEET NO.	TOTAL SHEETS
ALASKA	0A15037/CFHWY00431 0A15038/CFHWY00432 0A15033/CFHWY00006	2021	F44	F50

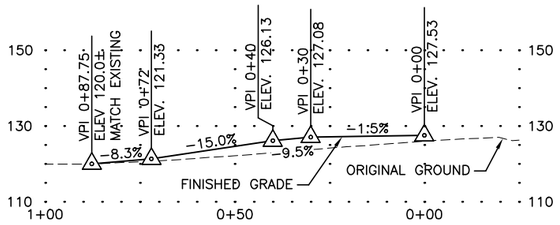

"G" 1430+10 LT

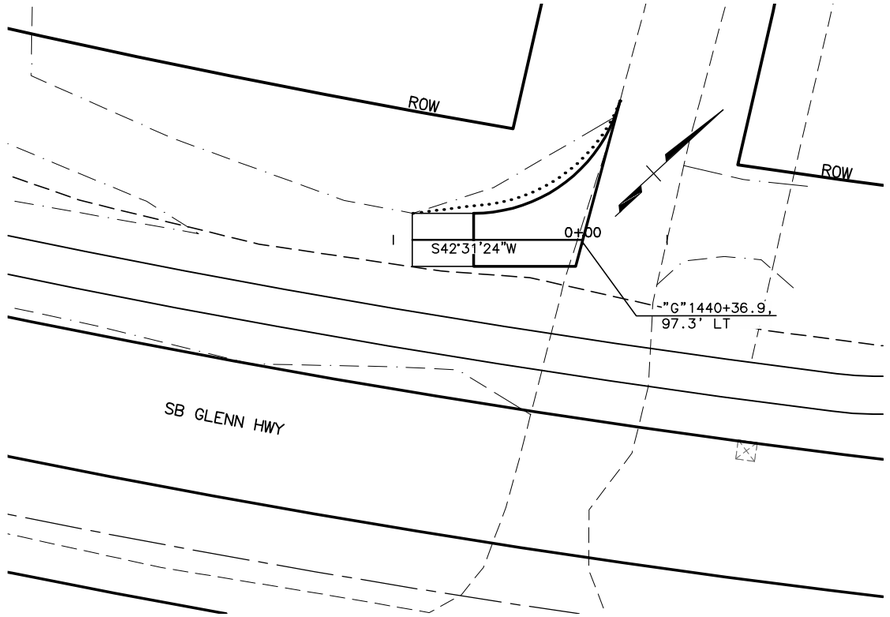

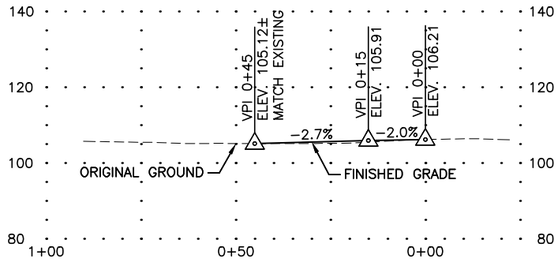

"G" 1440+36.9, 97.3' LT

CERTIFICATION SET
NOVEMBER 2021

STATE OF ALASKA
49TH
DENNIS R. LINNELL
CE-7649
REGISTERED PROFESSIONAL ENGINEER

HDL ENGINEERING CONSULTANTS, LLC
3335 ARCTIC BOULEVARD, STE 100
ANCHORAGE, AK 99503
(907) 564-2120
AECL861

STATE OF ALASKA
DEPARTMENT OF TRANSPORTATION
AND PUBLIC FACILITIES

GLENN HWY: PARKS HWY TO S. INNER SPRINGER LP. (PHASE II)

APPROACH PROFILES AND LAYOUTS

DESIGNED BY AAL
CHECKED BY DRL
DRAFTED BY CDB

SCALE 1" = 40'

DATE TIME 11/11/2021 2:13 PM

DRAWING LOCATION
H:\JOBS\08-016 GLENN HIGHWAY 34-42 (DOT)\09 - PS&E\CAD_PH2\DRAWINGS\08016_P2_F38-F50_APPPROF.DWG

NO.	DATE	REVISION

STATE	PROJECT DESIGNATION	YEAR	SHEET NO.	TOTAL SHEETS
ALASKA	0A15037/CFHWY00431 0A15038/CFHWY00432 0A15033/CFHWY00006	2021	F45	F50

DESIGNED BY AAL
CHECKED BY DRL
DRAFTED BY CDB

SCALE 1" = 40'

DATE TIME
11/11/2021 2:13 PM

DRAWING LOCATION
H:\JOBS\08-016 GLENN HIGHWAY 34-42 (DOT)\09 - PS&E\CAD_PH2\DRAWINGS\08016_P2_F38-F50_APPPROF.DWG

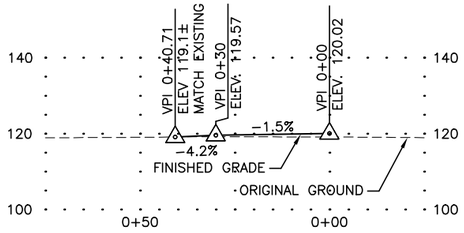

"G" 1472+38 LT

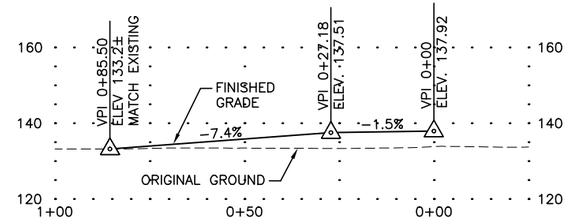

"G" 1505+62 LT

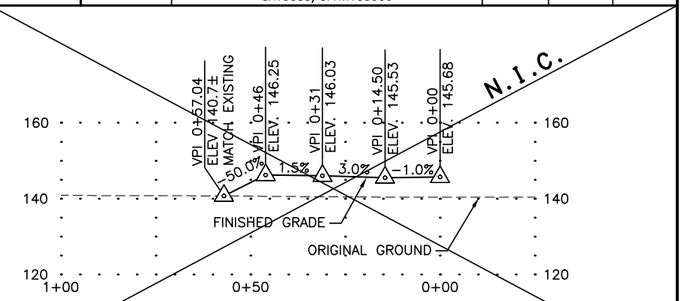

"G" 1517+06 LT
CONSTRUCTED IN PH1

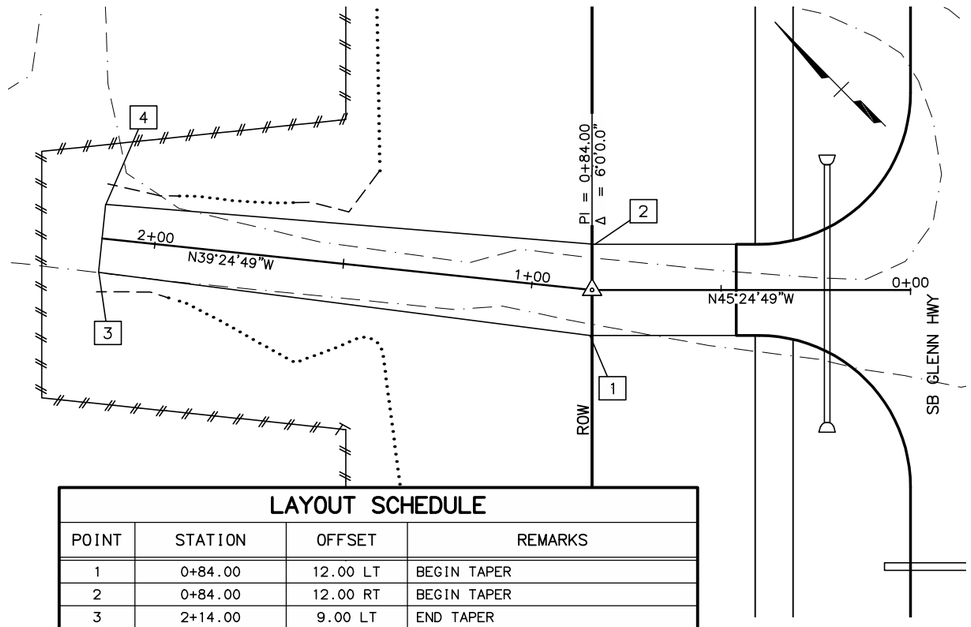

LAYOUT SCHEDULE			
POINT	STATION	OFFSET	REMARKS
1	0+84.00	12.00 LT	BEGIN TAPER
2	0+84.00	12.00 RT	BEGIN TAPER
3	2+14.00	9.00 LT	END TAPER
4	2+14.00	9.00 RT	END TAPER

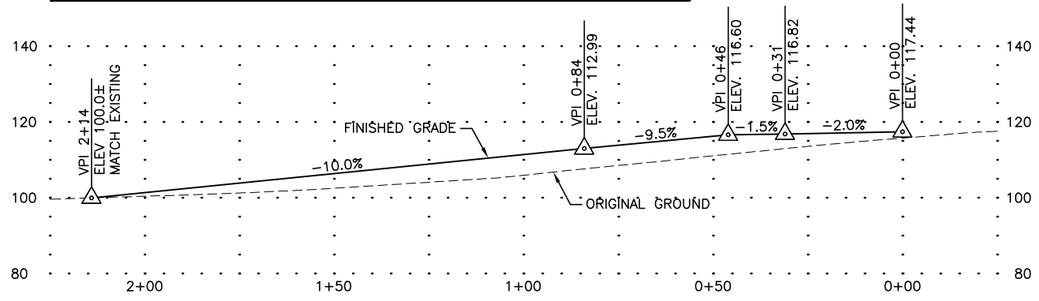

"G" 1465+73 LT

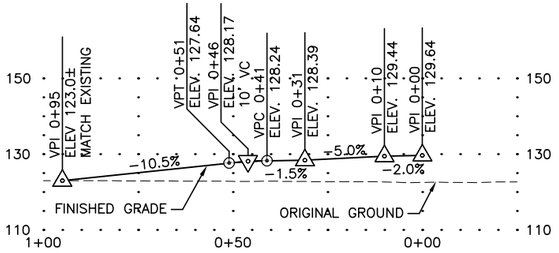

"G" 1489+03 LT

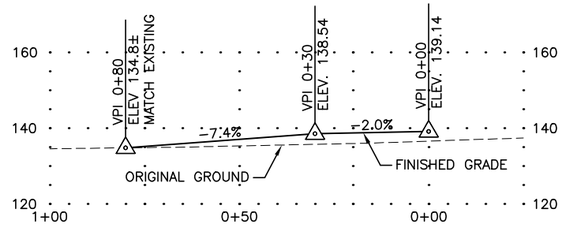

"G" 1507+78.5 LT
E CRIMSONVIEW DR

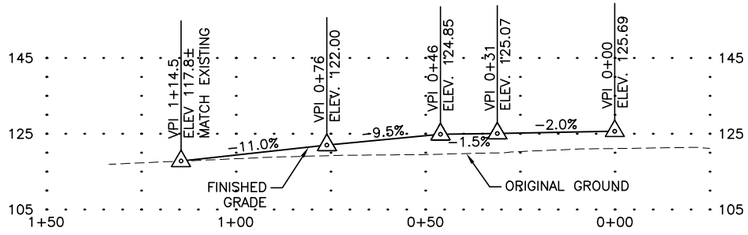

"G" 1481+31.1 LT

CERTIFICATION SET
NOVEMBER 2021

STATE OF ALASKA
49TH
DENNIS R. LINNELL
CE-7649
REGISTERED PROFESSIONAL ENGINEER

HDL ENGINEERING CONSULTANTS, LLC
3335 ARCTIC BOULEVARD, STE 100
ANCHORAGE, AK 99503
(907) 564-2120
AECL861

STATE OF ALASKA
DEPARTMENT OF TRANSPORTATION
AND PUBLIC FACILITIES

GLENN HWY: PARKS HWY TO S. INNER SPRINGER LP. (PHASE II)

APPROACH PROFILES AND LAYOUTS

NO.	DATE	REVISION

STATE	PROJECT DESIGNATION	YEAR	SHEET NO.	TOTAL SHEETS
ALASKA	0A15037/CFHWY00431 0A15038/CFHWY00432 0A15033/CFHWY00006	2021	F46	F50

DESIGNED BY AAL
CHECKED BY DRL
DRAFTED BY CDB

SCALE 1" = 40'

DATE 11/11/2021 TIME 2:14 PM

DRAWING LOCATION
H:\JOBS\08-016 GLENN HIGHWAY 34-42 (DOT)\09 - PS&E\CAD_PH2\DRAWINGS\08016_P2_F38-F50_APPPROF.DWG

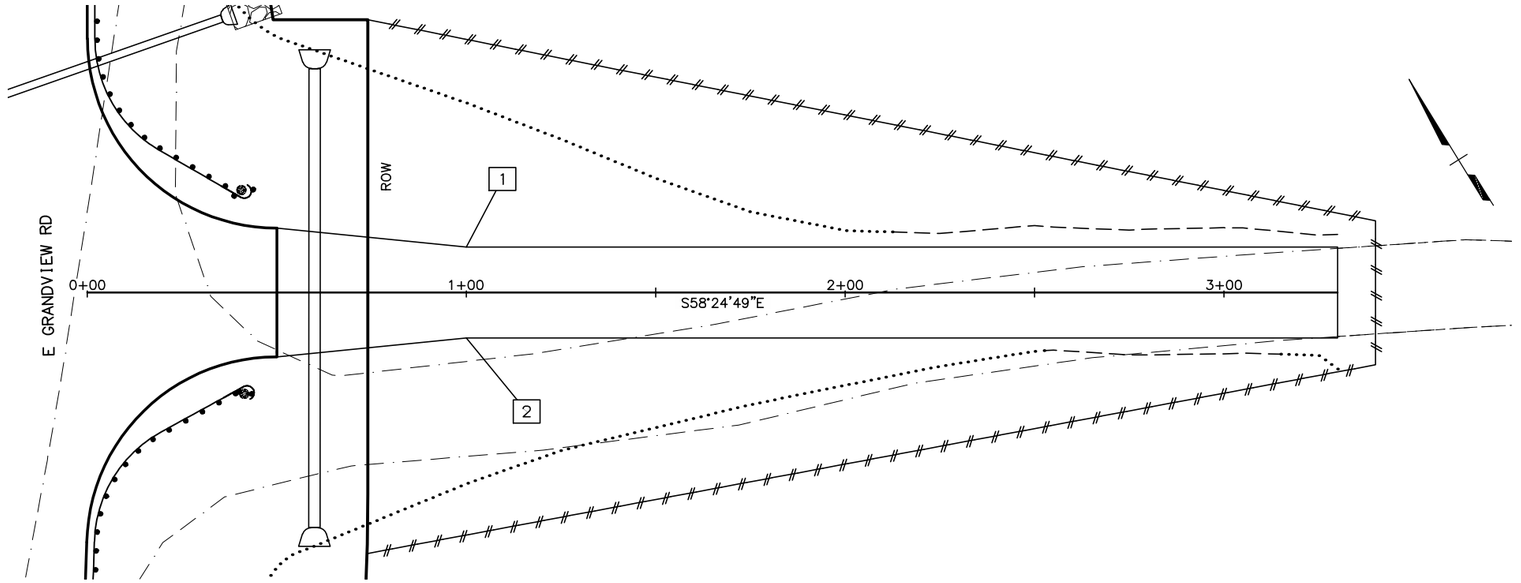

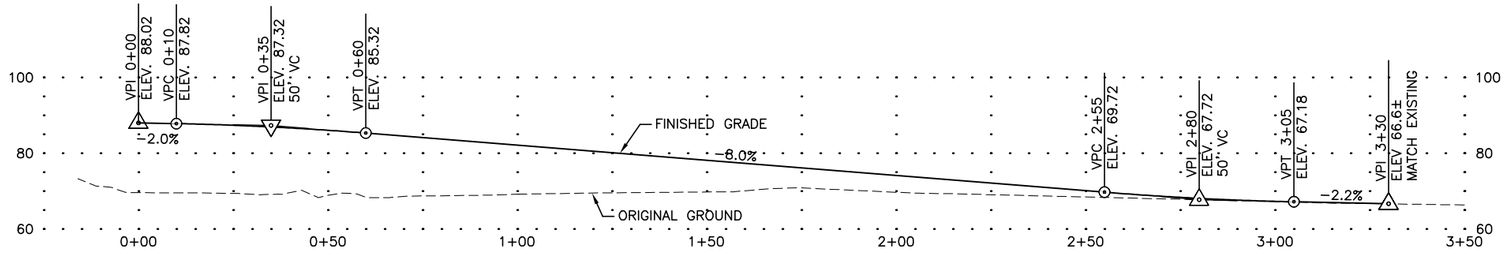

"GV" 14+40.5 RT

LAYOUT SCHEDULE			
POINT	STATION	OFFSET	REMARKS
1	1+00.00	12.00 LT	END TAPER
2	1+00.00	12.00 RT	END TAPER

LAYOUT SCHEDULE			
POINT	STATION	OFFSET	REMARKS
1	0+50.00	17.00 LT	BEGIN TAPER
2	0+50.00	37.00 RT	RETURN RP, R=20'
3	0+63.13	21.91 RT	BEGIN TAPER
4	1+00.00	23.00 LT	END TAPER
5	1+00.00	54.00 RT	END TAPER

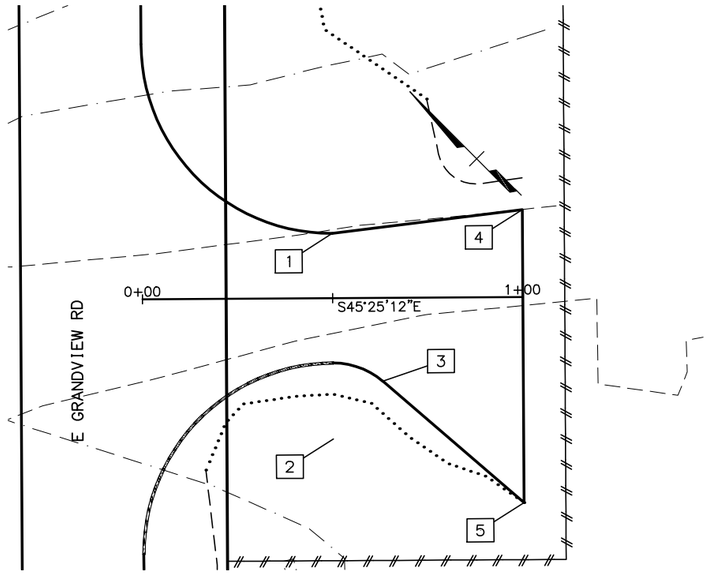

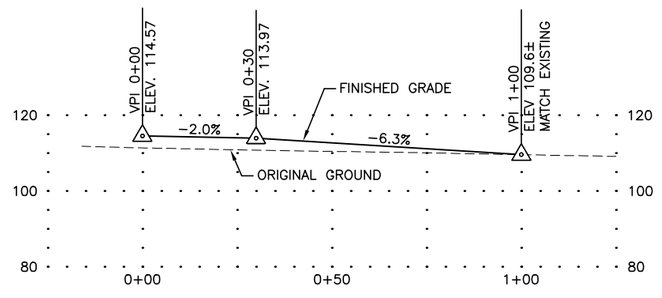

"GV" 25+70 RT

CERTIFICATION SET
NOVEMBER 2021

STATE OF ALASKA
49TH
DENNIS R. LINNELL
CE-7649
REGISTERED PROFESSIONAL ENGINEER

HDL ENGINEERING CONSULTANTS, LLC
3335 ARCTIC BOULEVARD, STE 100
ANCHORAGE, AK 99503
(907) 564-2120
AECL861

STATE OF ALASKA
DEPARTMENT OF TRANSPORTATION
AND PUBLIC FACILITIES

GLENN HWY: PARKS HWY TO S. INNER SPRINGER LP. (PHASE II)

APPROACH PROFILES AND LAYOUTS

NO.	DATE	REVISION

STATE	PROJECT DESIGNATION	YEAR	SHEET NO.	TOTAL SHEETS
ALASKA	0A15037/CFHWY00431 0A15038/CFHWY00432 0A15033/CFHWY00006	2021	F47	F50

DESIGNED BY AAL
CHECKED BY DRL
DRAFTED BY CDB

SCALE 1" = 40'

DATE 11/11/2021 TIME 2:15 PM

DRAWING LOCATION
H:\JOBS\08-016 GLENN HIGHWAY 34-42 (DOT)\09 - PS&E\CAD_PH2\DRAWINGS\08016_P2_F38-F50_APPROF.DWG

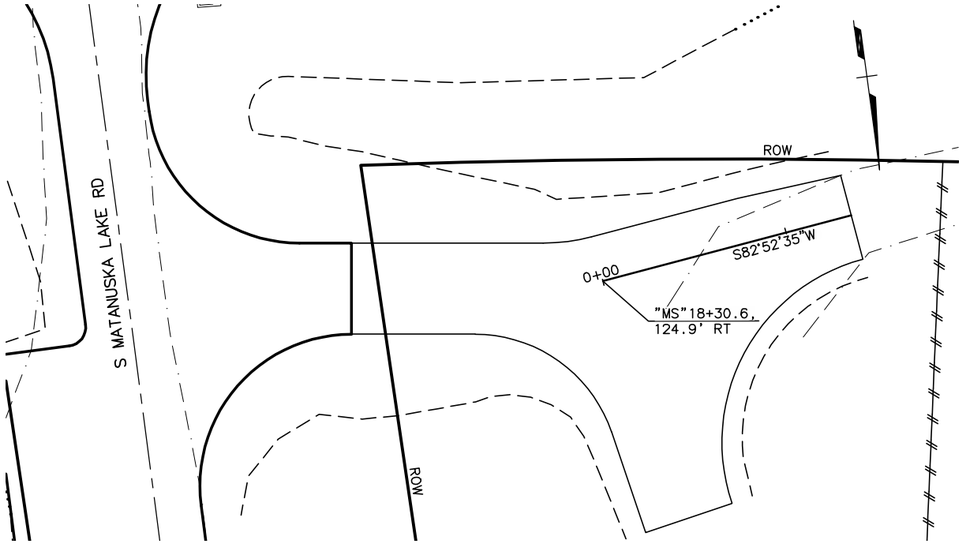

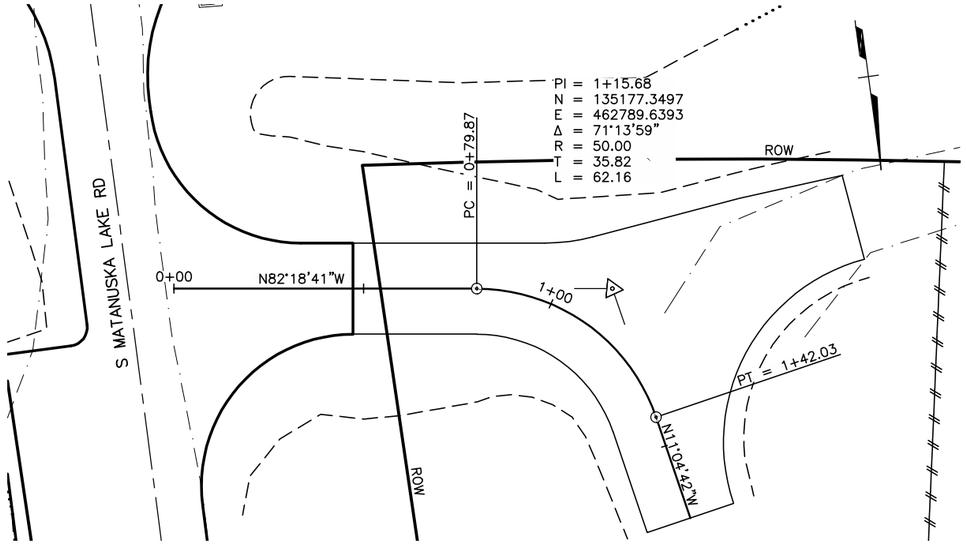

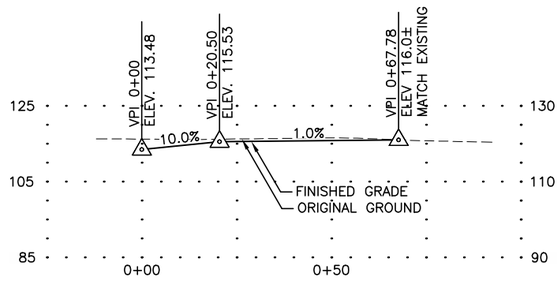

"MS" 18+30.6, 124.9' RT

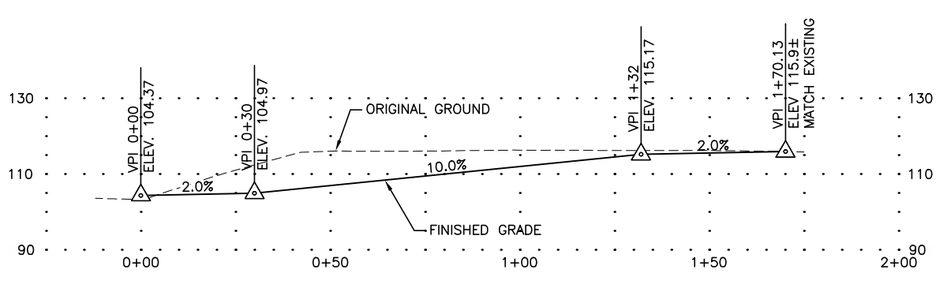

"MS" 18+43.4 RT

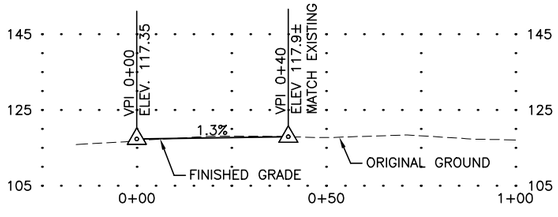

"GV" 37+62.8 RT

CERTIFICATION SET
NOVEMBER 2021

STATE OF ALASKA
★ 49TH ★
DENNIS R. LINNELL
CE-7649
REGISTERED PROFESSIONAL ENGINEER

HDL ENGINEERING CONSULTANTS, LLC
3335 ARCTIC BOULEVARD, STE 100
ANCHORAGE, AK 99503
(907) 564-2120
AECL861

STATE OF ALASKA
DEPARTMENT OF TRANSPORTATION
AND PUBLIC FACILITIES

GLENN HWY: PARKS HWY TO S. INNER SPRINGER LP. (PHASE II)

APPROACH PROFILES AND LAYOUTS

NO.	DATE	REVISION

STATE	PROJECT DESIGNATION	YEAR	SHEET NO.	TOTAL SHEETS
ALASKA	0A15037/CFHWY00431 0A15038/CFHWY00432 0A15033/CFHWY00006	2021	F48	F50

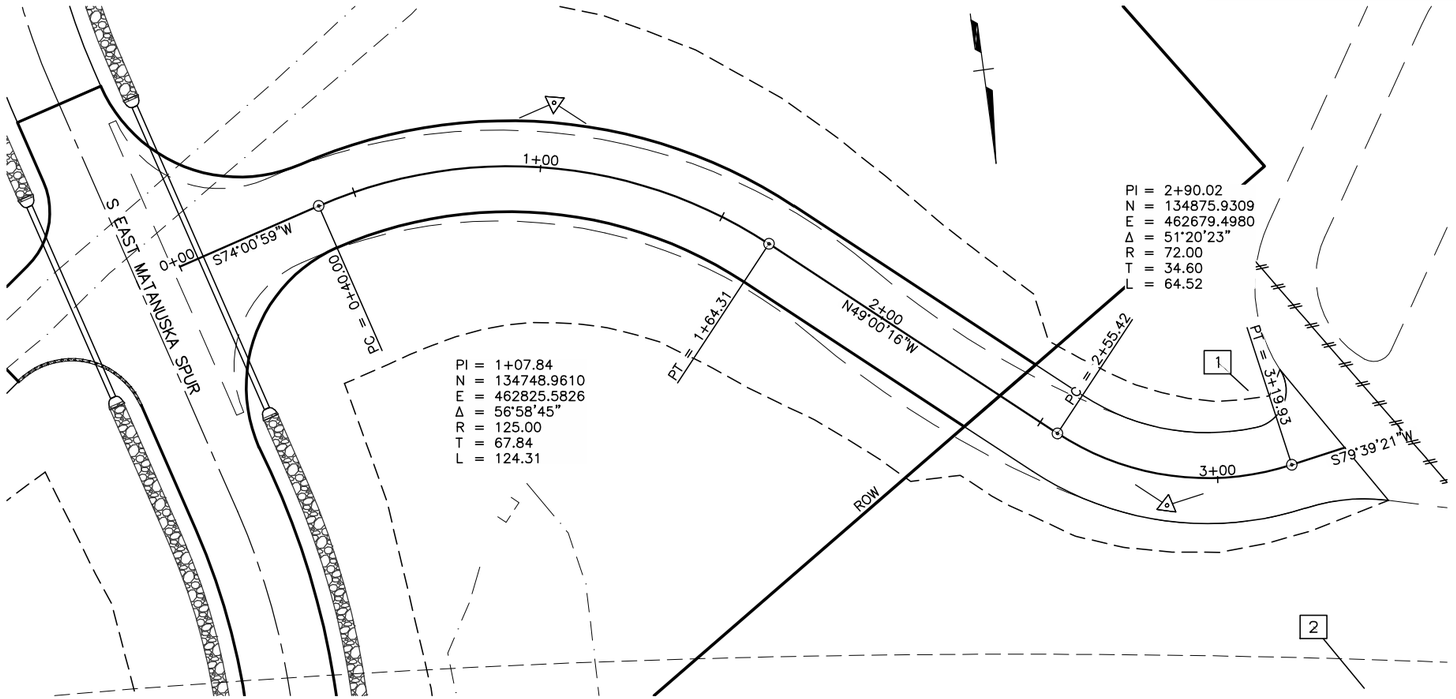

LAYOUT SCHEDULE

POINT	STATION	OFFSET	REMARKS
1	3+12.95	22.00 LT	RETURN RP, R=10'
2	3+19.93	62.00 RT	RETURN RP, R=50'

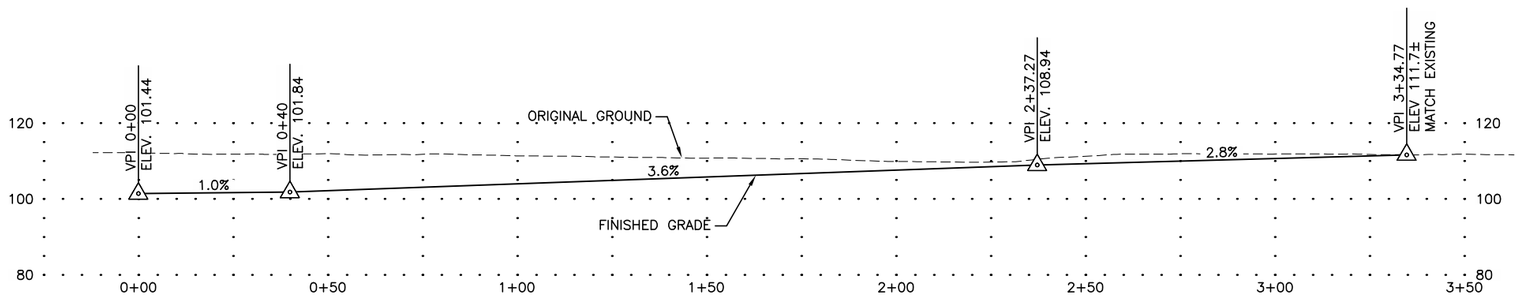

"MS" 22+26.5 RT

CERTIFICATION SET
NOVEMBER 2021

STATE OF ALASKA
DEPARTMENT OF TRANSPORTATION
AND PUBLIC FACILITIES

GLENN HWY: PARKS HWY TO S. INNER SPRINGER LP. (PHASE II)

APPROACH PROFILES AND LAYOUTS

STATE OF ALASKA 49TH
DENNIS R. LINNELL
CE-7649
REGISTERED PROFESSIONAL ENGINEER

HDL ENGINEERING CONSULTANTS, LLC
3335 ARCTIC BOULEVARD, STE 100
ANCHORAGE, AK 99503
(907) 564-2120
AECL861

DESIGNED BY AAL
CHECKED BY DRL
DRAFTED BY CDB

SCALE 1" = 40'

DATE TIME 11/11/2021 2:15 PM

DRAWING LOCATION
H:\JOBS\08-016 GLENN HIGHWAY 34-42 (DOT)\09 - PS&E\CAD_PH2\DRAWINGS\08016_P2_F38-F50_APPPROF.DWG

NO.	DATE	REVISION

STATE	PROJECT DESIGNATION	YEAR	SHEET NO.	TOTAL SHEETS
ALASKA	0A15037/CFHWY00431 0A15038/CFHWY00432 0A15033/CFHWY00006	2021	F49	F50

DESIGNED BY AAL
CHECKED BY DRL
DRAFTED BY CDB

SCALE 1" = 40'

DATE 11/11/2021 TIME 2:16 PM

DRAWING LOCATION
H:\JOBS\08-016 GLENN HIGHWAY 34-42 (DOT)\09 - PS&E\CAD_PH2\DRAWINGS\08016_P2_F38-F50_APPPROF.DWG

LAYOUT SCHEDULE

POINT	STATION	OFFSET	REMARKS
1	0+42.42	7.00 LT	BEGIN TAPER
2	0+65.00	5.24 LT	END TAPER
3	0+42.42	7.00 RT	BEGIN TAPER
4	0+65.00	5.21 RT	END TAPER

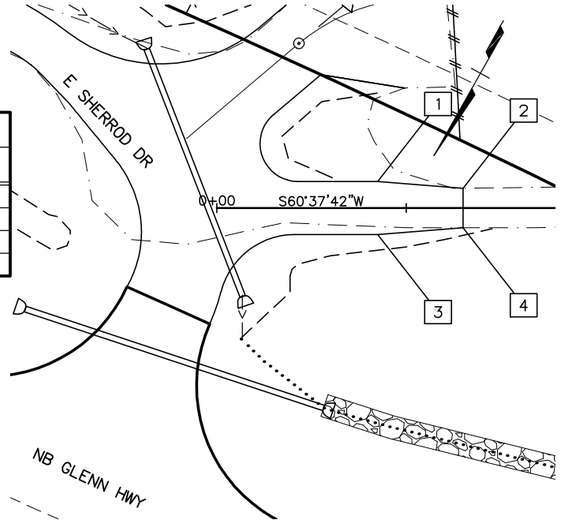

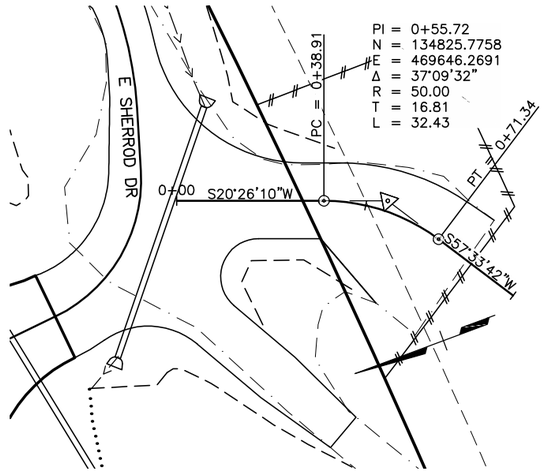

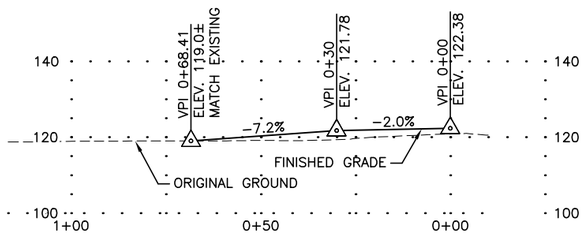

"M" 8+77.5 LT

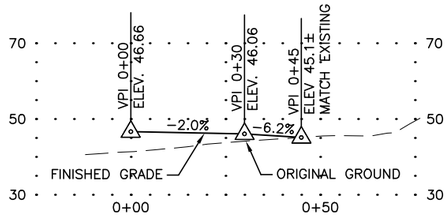

"MS" 27+80 RT

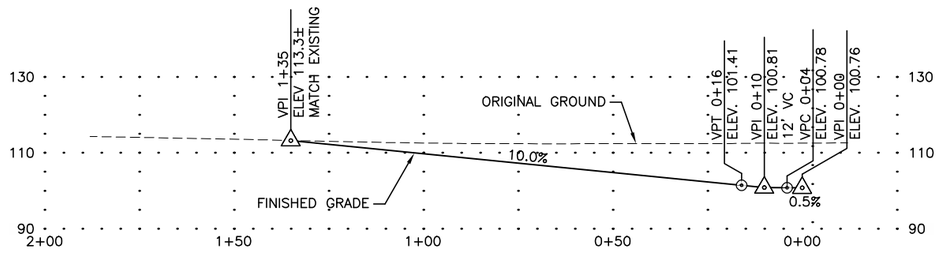

"MS" 22+37 LT

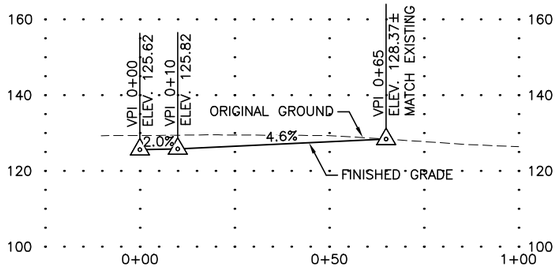

"S" 11+14.9 RT

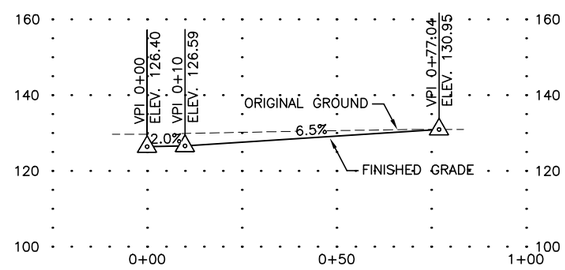

"S" 11+28 RT

CERTIFICATION SET
NOVEMBER 2021



HDL ENGINEERING CONSULTANTS, LLC
3335 ARCTIC BOULEVARD, STE 100
ANCHORAGE, AK 99503
(907) 564-2120
AECL861

STATE OF ALASKA
DEPARTMENT OF TRANSPORTATION
AND PUBLIC FACILITIES

GLENN HWY: PARKS HWY TO S. INNER SPRINGER LP. (PHASE II)

APPROACH PROFILES AND LAYOUTS

NO.	DATE	REVISION	STATE	PROJECT DESIGNATION	YEAR	SHEET NO.	TOTAL SHEETS
			ALASKA	0A15037/CFHWY00431 0A15038/CFHWY00432 0A15033/CFHWY00006	2021	F50	F50

DESIGNED BY AAL
CHECKED BY DRL
DRAFTED BY CDB
SCALE 1" = 40'
DATE 11/11/2021 TIME 2:17 PM

DRAWING LOCATION
H:\JOBS\08-016 GLENN HIGHWAY 34-42 (DOT)\09 - PS&E\CAD_PH2\DRAWINGS\08016_P2_F38-F50_APPPROF.DWG

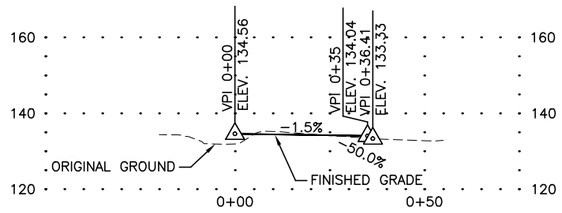

"0S" 11+74 RT

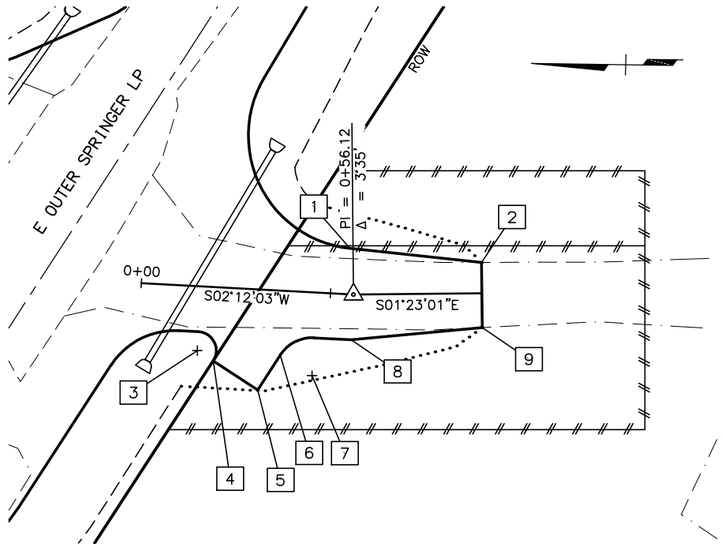

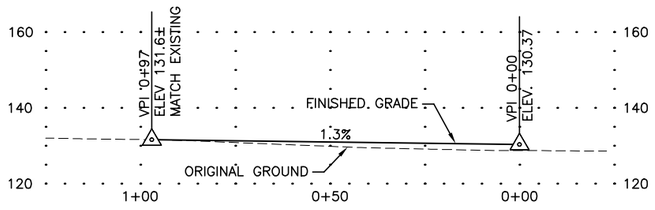

"0S" 7+06 LT

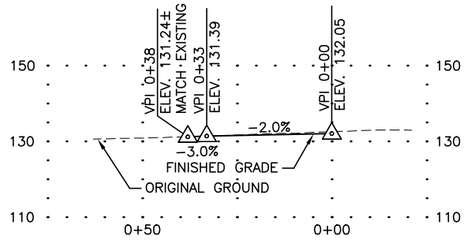

"0S" 13+77 LT

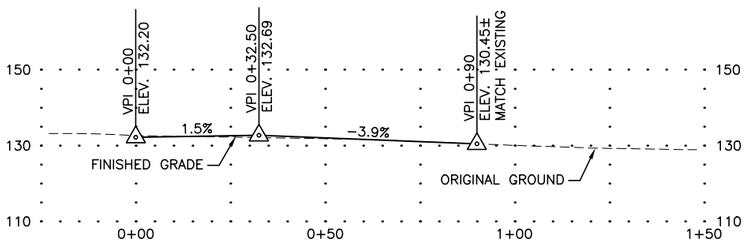

"0S" 13+61 RT

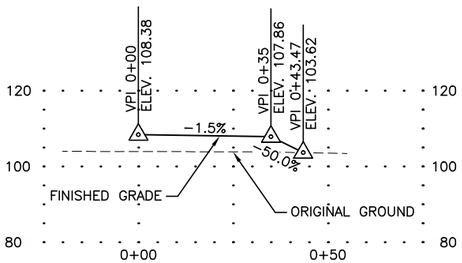

"JD" 11+68 RT

LAYOUT SCHEDULE

POINT	STATION	OFFSET	REMARKS
1	0+54.55	12.08 LT	BEGIN TAPER
2	0+90	8.13 LT	END TAPER
3	0+15.73	17.00 RT	RETURN RP, R=5'
4	0+20.06	19.50 RT	BEGIN TAPER
5	0+32.18	26.50 RT	END TAPER/BEGIN TAPER
6	0+37.67	17.00 RT	END TAPER
7	0+46.33	22.00 RT	RETURN RP, R=10'
8	0+56.12	12.00 RT	BEGIN TAPER
9	0+90	9.05 RT	END TAPER

CERTIFICATION SET
NOVEMBER 2021

STATE OF ALASKA
49TH
DENNIS R. LINNELL
CE-7649
REGISTERED PROFESSIONAL ENGINEER

HDL ENGINEERING CONSULTANTS, LLC
3335 ARCTIC BOULEVARD, STE 100
ANCHORAGE, AK 99503
(907) 564-2120
AECL861

STATE OF ALASKA
DEPARTMENT OF TRANSPORTATION
AND PUBLIC FACILITIES

GLENN HWY: PARKS HWY TO S. INNER SPRINGER LP. (PHASE II)

APPROACH PROFILES AND LAYOUTS

NO.	DATE	REVISION

STATE	PROJECT DESIGNATION	YEAR	SHEET NO.	TOTAL SHEETS
ALASKA	0A15037/CFHWY00431 0A15038/CFHWY00432 0A15033/CFHWY00006	2021	G1	G8

DESIGNED BY	AAL
CHECKED BY	DRL
DRAFTED BY	CDB
SCALE	1" = 40'
DATE	11/15/2021
TIME	3:20 PM

DRAWING LOCATION
H:\JOBS\08-016 GLENN HIGHWAY 34-42 (DOT)\09 - PS&E\CAD_PH2\DRAWINGS\08016_P2_G01-G08_GRADING.DWG

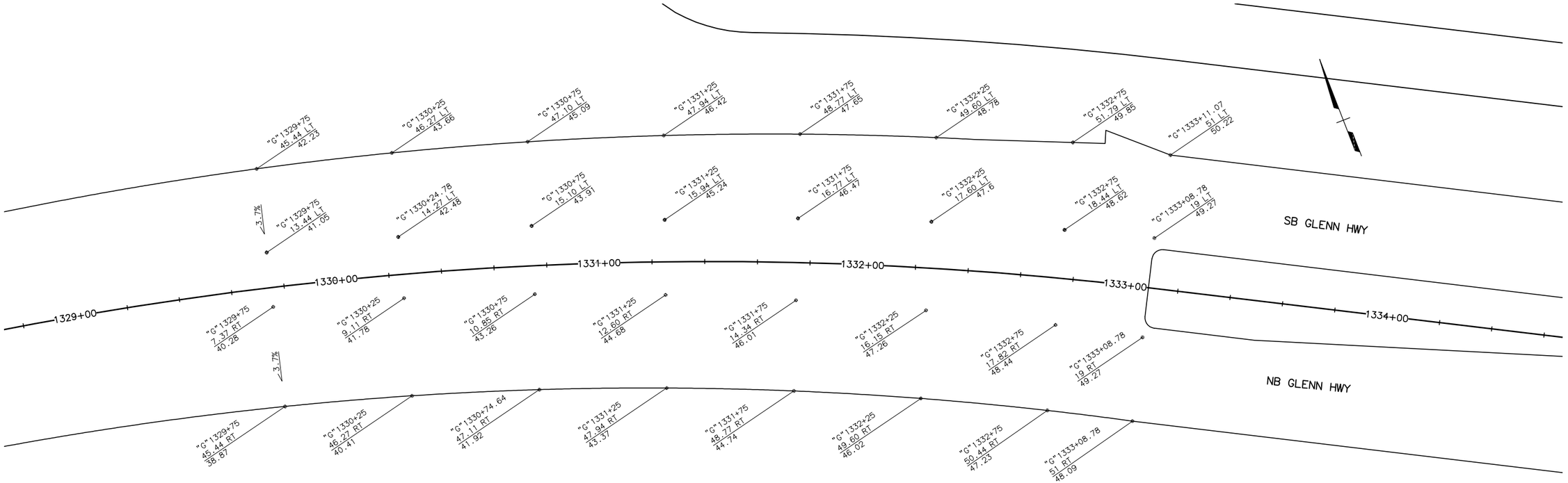

GLENN HWY

CERTIFICATION SET
NOVEMBER 2021

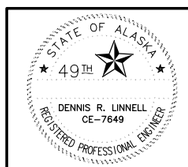

HDL ENGINEERING CONSULTANTS, LLC
3335 ARCTIC BOULEVARD, STE 100
ANCHORAGE, AK 99503
(907) 564-2120
AECL861

STATE OF ALASKA
DEPARTMENT OF TRANSPORTATION
AND PUBLIC FACILITIES

GLENN HWY: PARKS HWY TO S. INNER SPRINGER LP. (PHASE II)

GRADING PLAN

NO.	DATE	REVISION

STATE	PROJECT DESIGNATION	YEAR	SHEET NO.	TOTAL SHEETS
ALASKA	0A15037/CFHWY00431 0A15038/CFHWY00432 0A15033/CFHWY00006	2021	G2	G8

DESIGNED BY AAL
CHECKED BY DRL
DRAFTED BY CDB

SCALE 1" = 40'

DATE TIME 11/15/2021 3:20 PM

DRAWING LOCATION
H:\JOBS\08-016 GLENN HIGHWAY 34-42 (DOT)\09 - PS&E\CAD_PH2\DRAWINGS\08016_P2_G01-G08_GRADING.DWG

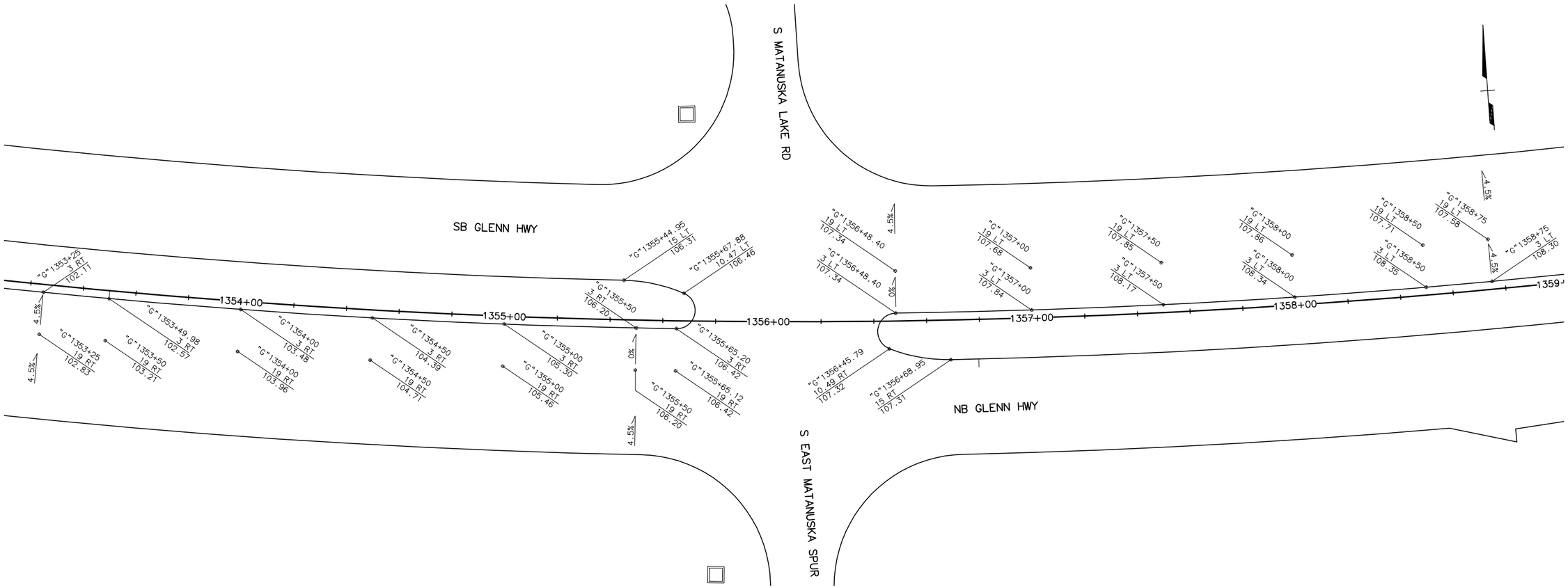

GLENN HWY AT S EAST MATANUSKA SPUR

CERTIFICATION SET
NOVEMBER 2021

STATE OF ALASKA
DEPARTMENT OF TRANSPORTATION
AND PUBLIC FACILITIES

GLENN HWY: PARKS HWY TO S. INNER SPRINGER LP. (PHASE II)

GRADING PLAN

STATE OF ALASKA
49TH
DENNIS R. LINNELL
CE-7649
REGISTERED PROFESSIONAL ENGINEER

HDL ENGINEERING CONSULTANTS, LLC
3335 ARCTIC BOULEVARD, STE 100
ANCHORAGE, AK 99503
(907) 564-2120
AECL861

NO.	DATE	REVISION

STATE	PROJECT DESIGNATION	YEAR	SHEET NO.	TOTAL SHEETS
ALASKA	0A15037/CFHWY00431 0A15038/CFHWY00432 0A15033/CFHWY00006	2021	G3	G8

DESIGNED BY AAL
CHECKED BY DRL
DRAFTED BY CDB

SCALE 1" = 40'

DATE 11/15/2021 TIME 3:21 PM

DRAWING LOCATION
H:\JOBS\08-016 GLENN HIGHWAY 34-42 (DOT)\09 - PS&E\CAD_PH2\DRAWINGS\08016_P2_G01-G08_GRADING.DWG

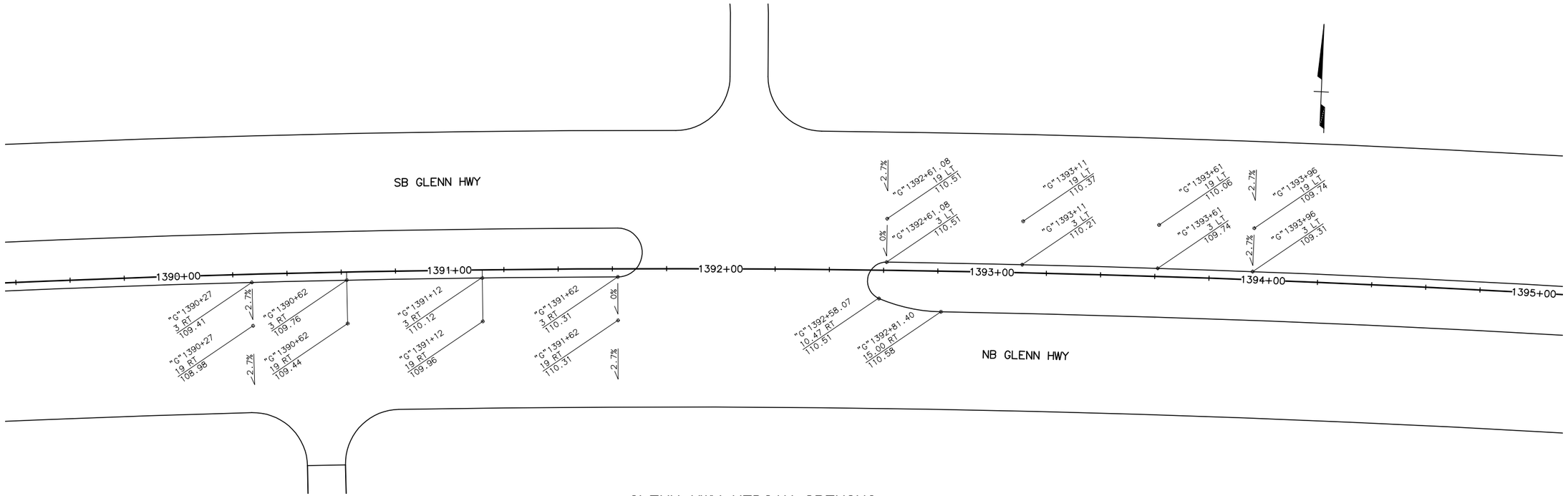

GLENN HWY MEDIAN OPENING

CERTIFICATION SET
NOVEMBER 2021

STATE OF ALASKA
49TH
DENNIS R. LINNELL
CE-7649
REGISTERED PROFESSIONAL ENGINEER

HDL ENGINEERING CONSULTANTS, LLC
3335 ARCTIC BOULEVARD, STE 100
ANCHORAGE, AK 99503
(907) 564-2120
AECL861

STATE OF ALASKA
DEPARTMENT OF TRANSPORTATION
AND PUBLIC FACILITIES

GLENN HWY: PARKS HWY TO S. INNER SPRINGER LP. (PHASE II)

GRADING PLAN

NO.	DATE	REVISION

STATE	PROJECT DESIGNATION	YEAR	SHEET NO.	TOTAL SHEETS
ALASKA	0A15037/CFHWY00431 0A15038/CFHWY00432 0A15033/CFHWY00006	2021	G4	G8

DESIGNED BY AAL
CHECKED BY DRL
DRAFTED BY CDB

SCALE 1" = 40'

DATE TIME 11/15/2021 3:21 PM

DRAWING LOCATION
H:\JOBS\08-016 GLENN HIGHWAY 34-42 (DOT)\09 - PS&E\CAD_PH2\DRAWINGS\08016_P2_G01-G08_GRADING.DWG

E MAX DR 8+00
9+00
10+00
11+00
12+00
SB GLENN HWY
NB GLENN HWY
E SHERROD DR
1421+00
1422+00
1423+00
1424+00
1425+00
1426+00
"M" 8+39.79 0 RT 125.05
"M" 8+39.79 10 LT 124.85
"M" 8+55.42 0 RT 123.92
"M" 8+55.42 17.52 LT 123.66
"M" 8+75.48 0 RT 122.49
"M" 8+75.48 10 LT 122.39
"M" 8+91.10 0 RT 121.58
"M" 8+91.10 10 LT 121.48
"M" 9+06.24 0 RT 120.98
"M" 8+91.10 15.08 LT 121.38
"M" 9+06.24 10 LT 120.98
"M" 9+32.92 18.14 RT 120.26
"M" 9+32.92 18.50 LT 120.78
"G" 1423+13.73 51 LT 120.02
"G" 1424+16.87 51 LT 121.57
"G" 1423+05.74 15 LT 121.52
"G" 1423+28.66 10.47 LT 121.69
"G" 1424+10.52 19 LT 122.92
"G" 1424+10.52 3 LT 122.92
"G" 1424+60 19 LT 123.66
"G" 1424+60 3 LT 123.82
"G" 1425+10 19 LT 124.41
"G" 1425+10 3 LT 124.75
"G" 1425+60 19 LT 125.16
"G" 1425+60 3 LT 125.64
"G" 1426+10 19 LT 125.99
"G" 1426+10 3 LT 126.63
"G" 1426+35 19 LT 126.26
"G" 1426+35 3 LT 127.00
"G" 1420+99 3 RT 117.52
"G" 1420+99 19 RT 118.24
"G" 1421+24 3 RT 117.98
"G" 1421+24 19 RT 118.62
"G" 1421+74 3 RT 118.89
"G" 1421+74 19 RT 119.37
"G" 1422+24 3 RT 119.80
"G" 1422+24 19 RT 120.12
"G" 1422+74 3 RT 120.71
"G" 1422+74 19 RT 120.87
"G" 1423+25.98 3 RT 121.65
"G" 1423+25.98 19 RT 121.65
"G" 1424+07.91 10.49 RT 122.88
"G" 1424+31.07 15 RT 123.04
"G" 1424+15.39 51 RT 124.43
"G" 1423+14.61 51 RT 122.92
"S" 10+62.51 0 RT 123.55
"S" 10+73 0 RT 123.45
"S" 10+81 0 RT 123.61
"S" 10+62.51 23.47 RT 123.45
"S" 10+73 16.05 RT 123.54
"S" 10+81 13.15 RT 123.78
"S" 10+90.54 12 RT 124.36
"S" 10+62.51 23.47 LT 123.65
"S" 10+73 16.05 LT 123.61
"S" 10+81 13.15 LT 123.44
"S" 10+90.54 12 LT 123.82
"S" 11+14.86 0 RT 125.31
"S" 11+14.86 10.19 RT 125.62
"S" 11+28.58 9.17 RT 126.28
"S" 11+57.64 0 RT 127.46
"S" 11+14.86 10.19 LT 125.06
"S" 11+83.58 7 LT
"S" 11+57.64 7 RT 127.67
"S" 12+63.91 7 LT
"S" 12+69 0 RT 130.45
"S" 12+69 6.59 RT 130.26
"S" 12+20 0 RT 130.19
"S" 12+20 7 RT 130.16
2%
4.5%
0.0%
3.0%

GLENN HWY AT E MAX DR/E SHERROD DR

CERTIFICATION SET
NOVEMBER 2021

STATE OF ALASKA
49TH
DENNIS R. LINNELL
CE-7649
REGISTERED PROFESSIONAL ENGINEER

HDL ENGINEERING CONSULTANTS, LLC
3335 ARCTIC BOULEVARD, STE 100
ANCHORAGE, AK 99503
(907) 564-2120
AECL861

STATE OF ALASKA
DEPARTMENT OF TRANSPORTATION
AND PUBLIC FACILITIES

GLENN HWY: PARKS HWY TO S. INNER SPRINGER LP. (PHASE II)

GRADING PLAN

NO.	DATE	REVISION

STATE	PROJECT DESIGNATION	YEAR	SHEET NO.	TOTAL SHEETS
ALASKA	0A15037/CFHWY00431 0A15038/CFHWY00432 0A15033/CFHWY00006	2021	G5	G8

DESIGNED BY	AAL
CHECKED BY	DRL
DRAFTED BY	CDB
SCALE	1" = 40'
DATE	11/15/2021
TIME	3:21 PM

DRAWING LOCATION
H:\JOBS\08-016 GLENN HIGHWAY 34-42 (DOT)\09 - PS&E\CAD_PH2\DRAWINGS\08016_P2_G01-G08_GRADING.DWG

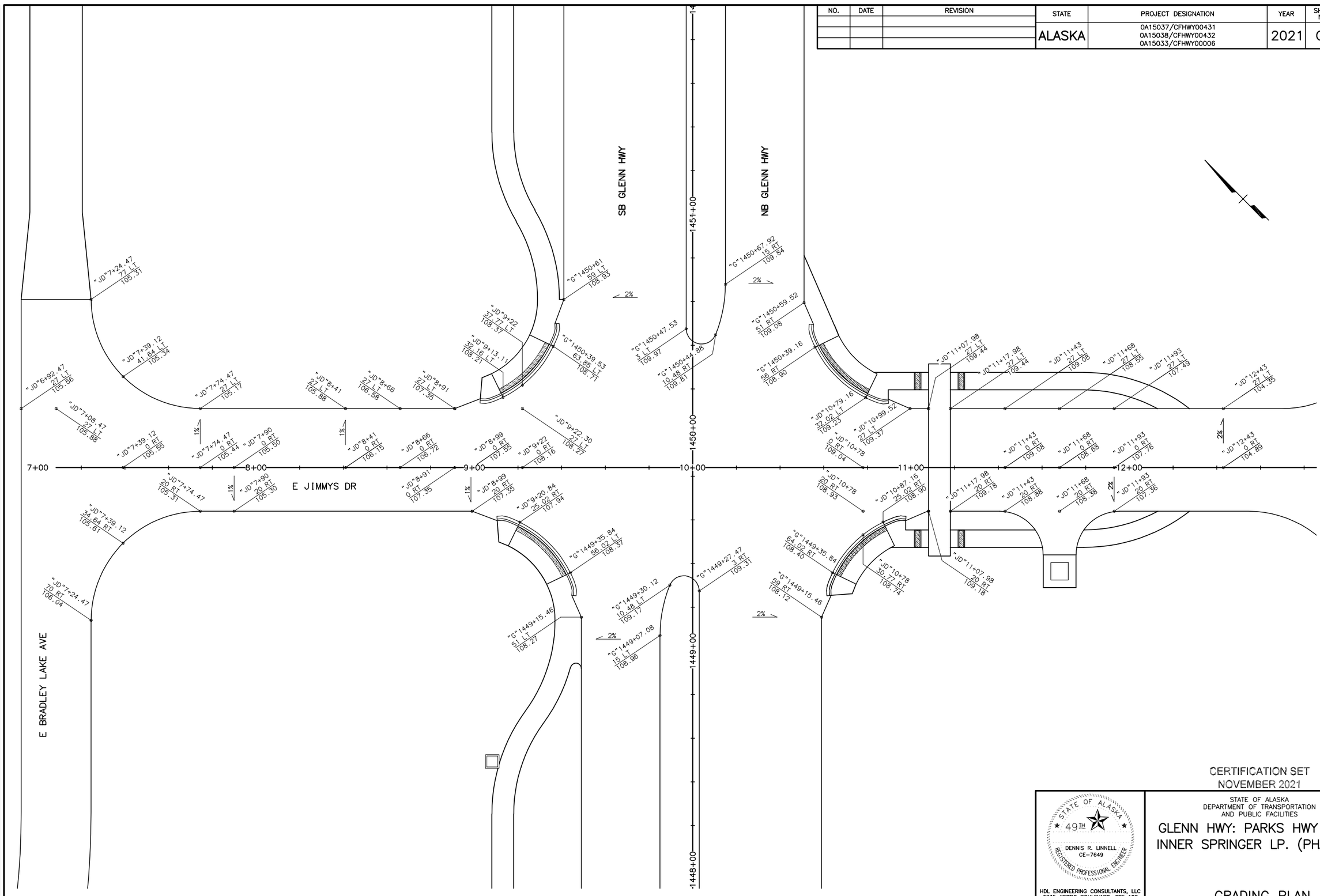

GLENN HWY AT E JIMMYS DR

CERTIFICATION SET
NOVEMBER 2021

HDL ENGINEERING CONSULTANTS, LLC
3335 ARCTIC BOULEVARD, STE 100
ANCHORAGE, AK 99503
(907) 564-2120
AECL861

STATE OF ALASKA
DEPARTMENT OF TRANSPORTATION
AND PUBLIC FACILITIES

GLENN HWY: PARKS HWY TO S. INNER SPRINGER LP. (PHASE II)

GRADING PLAN

NO.	DATE	REVISION

STATE	PROJECT DESIGNATION	YEAR	SHEET NO.	TOTAL SHEETS
ALASKA	0A15037/CFHWY00431 0A15038/CFHWY00432 0A15033/CFHWY00006	2021	G6	G8

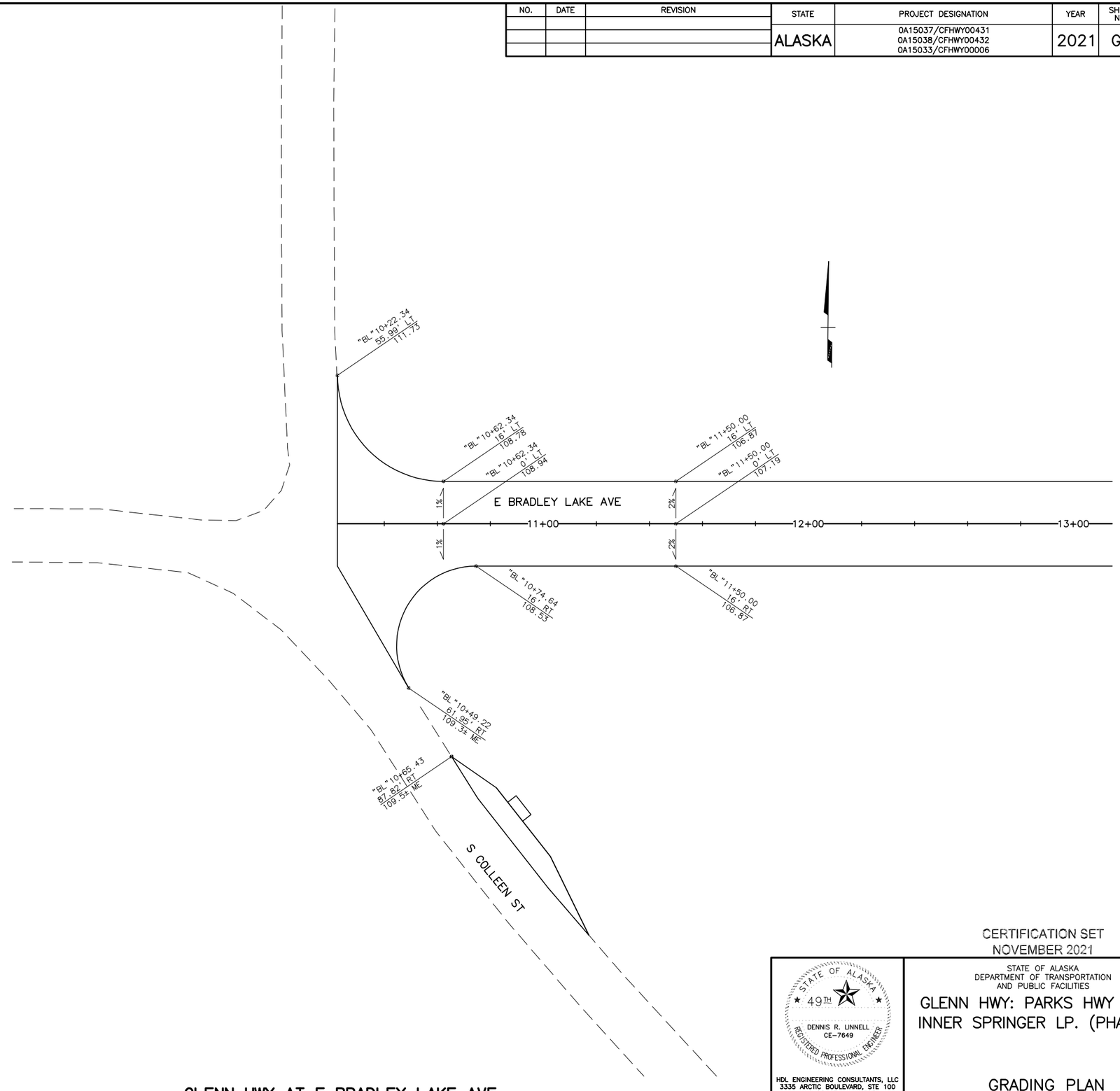

GLENN HWY AT E BRADLEY LAKE AVE

CERTIFICATION SET
NOVEMBER 2021

STATE OF ALASKA
49TH
DENNIS R. LINNELL
CE-7649
REGISTERED PROFESSIONAL ENGINEER

HDL ENGINEERING CONSULTANTS, LLC
3335 ARCTIC BOULEVARD, STE 100
ANCHORAGE, AK 99503
(907) 564-2120
AECL861

STATE OF ALASKA
DEPARTMENT OF TRANSPORTATION
AND PUBLIC FACILITIES

GLENN HWY: PARKS HWY TO S. INNER SPRINGER LP. (PHASE II)

GRADING PLAN

DESIGNED BY AAL
CHECKED BY DRL
DRAFTED BY CDB

SCALE 1" = 40'

DATE 11/15/2021 TIME 3:21 PM

DRAWING LOCATION
H:\JOBS\08-016 GLENN HIGHWAY 34-42 (DOT)\09 - PS&E\CAD_PH2\DRAWINGS\08016_P2_G01-G08_GRADING.DWG

NO.	DATE	REVISION

STATE	PROJECT DESIGNATION	YEAR	SHEET NO.	TOTAL SHEETS
ALASKA	0A15037/CFHWY00431 0A15038/CFHWY00432 0A15033/CFHWY00006	2021	G7	G8

DESIGNED BY	AAL
CHECKED BY	DRL
DRAFTED BY	CDB

SCALE: 1" = 40'

DATE TIME: 11/15/2021 3:21 PM

DRAWING LOCATION
H:\JOBS\08-016 GLENN HIGHWAY 34-42 (DOT)\09 - PS&E\CAD_PH2\DRAWINGS\08016_P2_G01-G08_GRADING.DWG

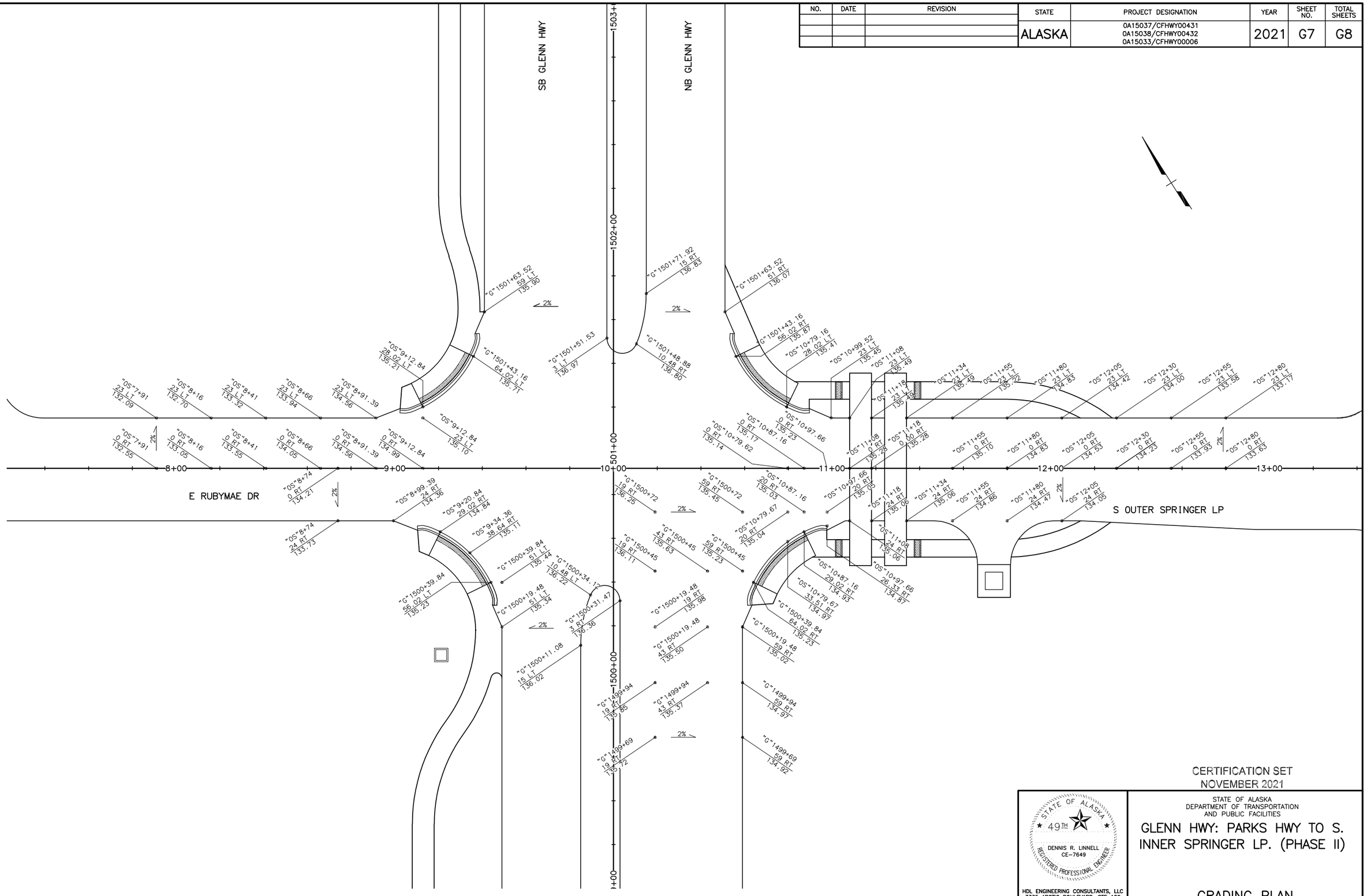

GLENN HWY AT S OUTER SPRINGER LP

CERTIFICATION SET
NOVEMBER 2021

STATE OF ALASKA
49TH
DENNIS R. LINNELL
CE-7649
REGISTERED PROFESSIONAL ENGINEER

HDL ENGINEERING CONSULTANTS, LLC
3335 ARCTIC BOULEVARD, STE 100
ANCHORAGE, AK 99503
(907) 564-2120
AECL861

STATE OF ALASKA
DEPARTMENT OF TRANSPORTATION
AND PUBLIC FACILITIES

GLENN HWY: PARKS HWY TO S. INNER SPRINGER LP. (PHASE II)

GRADING PLAN

NO.	DATE	REVISION

STATE	PROJECT DESIGNATION	YEAR	SHEET NO.	TOTAL SHEETS
ALASKA	0A15037/CFHWY00431 0A15038/CFHWY00432 0A15033/CFHWY00006	2021	G8	G8

DESIGNED BY AAL
CHECKED BY DRL
DRAFTED BY CDB

SCALE 1" = 40'

DATE TIME
11/15/2021 3:21 PM

DRAWING LOCATION
H:\JOBS\08-016 GLENN HIGHWAY 34-42 (DOT)\09 - PS&E\CAD_PH2\DRAWINGS\08016_P2_G01-G08_GRADING.DWG

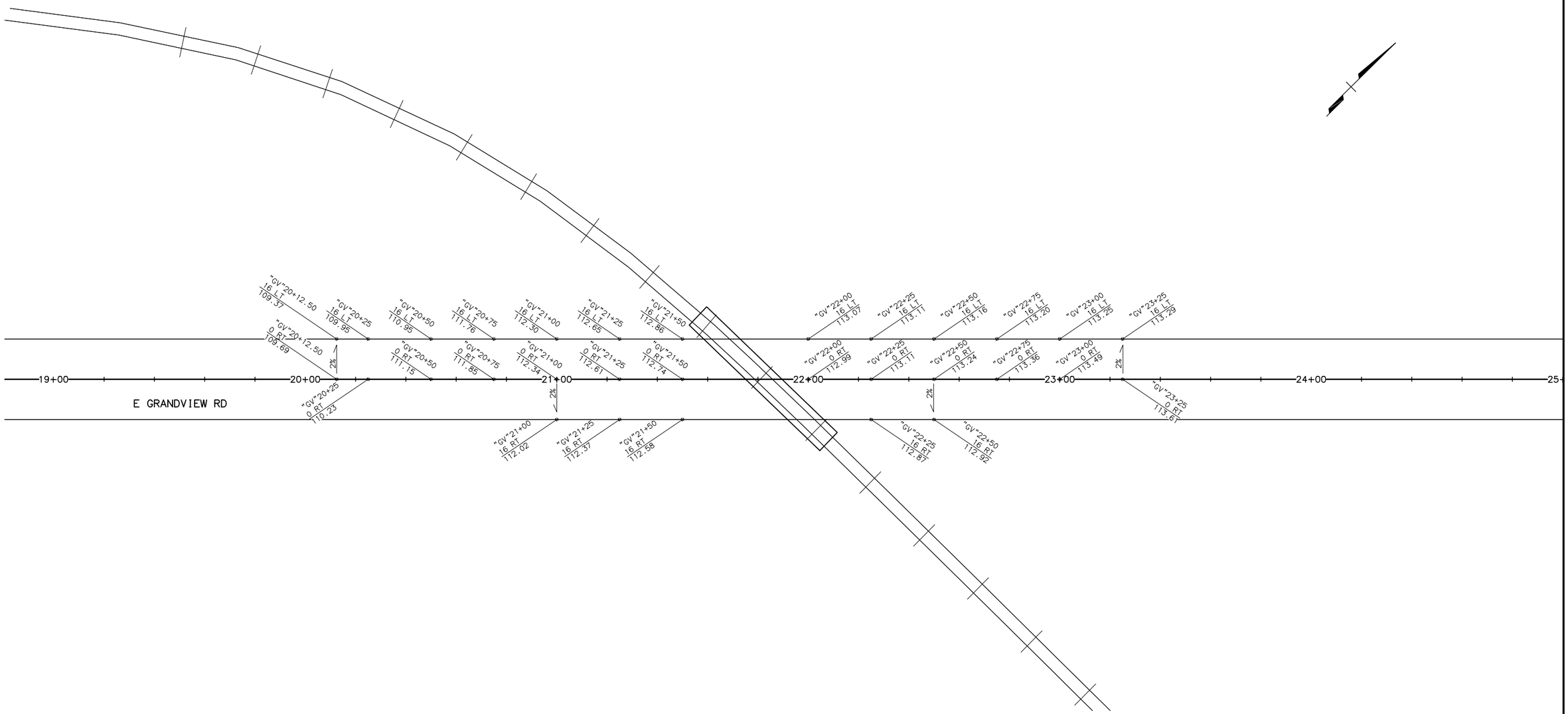

E GRANDVIEW RD AT RAILROAD CROSSING

CERTIFICATION SET
NOVEMBER 2021

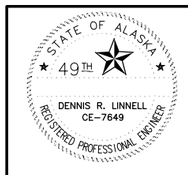

HDL ENGINEERING CONSULTANTS, LLC
3335 ARCTIC BOULEVARD, STE 100
ANCHORAGE, AK 99503
(907) 564-2120
AECL861

STATE OF ALASKA
DEPARTMENT OF TRANSPORTATION
AND PUBLIC FACILITIES

GLENN HWY: PARKS HWY TO S. INNER SPRINGER LP. (PHASE II)

GRADING PLAN

NO.	DATE	REVISION

STATE	PROJECT DESIGNATION	YEAR	SHEET NO.	TOTAL SHEETS
ALASKA	0A15037/CFHWY00431 0A15038/CFHWY00432 0A15033/CFHWY00006	2021	H1	H38

ABBREVIATIONS

AWF	ADVANCE WARNING FLASHING (BEACON)	NB	NORTH BOUND
AWG	AMERICAN WIRE GAUGE	OMNI	OMNI DIRECTIONAL ANTENNA
CAM	CAMERA	P#	TRAFFIC SIGNAL POLE #
EB	EAST BOUND	PE	PHOTOELECTRIC CELL
GND	GROUND	PED B ##	PEDESTRIAN PUSH BUTTON #
HDPE	HIGH DENSITY POLYETHYLENE CONDUIT	PEDI	PEDESTRIAN SIGNAL HEAD
HEAD	VEHICULAR SIGNAL HEAD	PRE #	PREEMPTION #
SIG	SIGNAL	PRE CON #	PREEMPTION CONFIRMATION LIGHT #
I/C	INTERCONNECT	RAD	RADAR
INTX	INTERSECTION	RMC	RIGID METAL CONDUIT
INTX L	INTERSECTION LIGHTING	SB	SOUTH BOUND
LC	LOAD CENTER	TC	TRAFFIC CONTROLLER
LFNC	LIQUIDTIGHT FLEXIBLE NONMETALLIC CONDUIT	WB	WEST BOUND
LTG	LIGHTING	YAGI	DIRECTIONAL ANTENNA
MUTCD	MANUAL ON UNIFORM TRAFFIC CONTROL DEVICES		

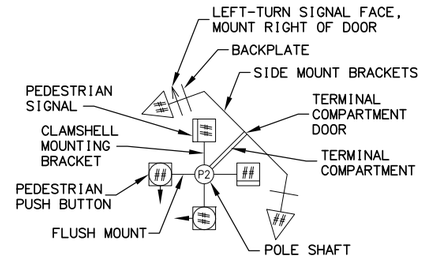

POLE SHAFT LEGEND

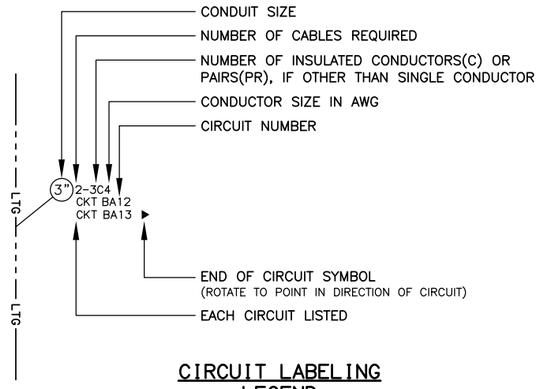

CIRCUIT LABELING LEGEND

CALL BEFORE YOU DIG!

CONTRACTOR SHALL CALL A MINIMUM OF 3 DAYS IN ADVANCE OF CONSTRUCTION

ALASKA DIGLINE....907-278-3121 OR 800-478-3121

CALL OR GO TO WWW.AKONECALL.COM/STATEWIDE.HTM FOR MEMBER LIST OF WHO WILL BE NOTIFIED

FOUNDATIONS NOTES:

1. STATION & C.L. REFERENCE ARE TO THE CENTER OF THE STRUCTURE, EXCEPT ON LOOPS WHICH ARE TO THE CENTER OF THE TRAILING EDGE OF THE LOOP (EDGE NEAREST INTERSECTION).
2. JUNCTION BOX LOCATIONS APPROXIMATE. LOCATE J–BOXES SO THAT THEY ARE LOCATED OUT OF THE PATHWAY, SIDEWALK, CURB RAMPS, AND DRAINAGE COLLECTION AREAS.
3. INSTALL LOAD CENTER AND TRAFFIC CONTROLLER FOUNDATIONS WITHIN 1–DEGREE OF PLUMB.
4. INSTALL ANCHOR BOLTS IN CAST FOUNDATIONS TO BE WITHIN 1:48 OF PLUMB.
5. TOPSOIL AND SEED ANY DISTURBED AREAS.

SIGNAL SYSTEM NOTES:

1. FURNISH THE SIGNAL AND LUMINAIRE MASTARM LENGTHS AND DIMENSIONS SPECIFIED ON THE POLE ELEVATIONS.
2. INSTALL DEVICES SUCH THAT THE DIMENSIONS SHOWN TO THE BOTTOM OF THE DEVICES ON THE POLE ELEVATIONS ARE MINIMUMS. VERTICAL DIMENSIONS TO SIGNAL HEADS ARE TO BOTTOM OF THE BACK PLATE.
3. INSTALL MAST ARMS PERPENDICULAR TO THE ROADWAY CENTERLINE. ACCEPTABLE VARIANCE IS +/– 1–DEGREE.
4. SALVAGE SIGNAL POLE ASSEMBLIES, SIGNS, SIGNAL FACES, AND LUMINAIRES AND DELIVER TO MAINTENANCE AND OPERATIONS WITHIN 48–HOURS OF DECOMMISSIONING. COMPONENTS DAMAGED WHILE IN THE CONTRACTOR'S CUSTODY MUST BE REPLACED AT THE CONTRACTOR'S EXPENSE. REMOVE AND DISPOSE OF FOUNDATIONS.
5. SALVAGE EXISTING CONTROLLER CABINET AFTER NEW CONTROLLER CABINET IS IN SERVICE AND DELIVER TO MAINTENANCE AND OPERATIONS WITHIN 48–HOURS OF DECOMMISSIONING.
6. REMOVE ABANDONED OR UNUSED TRAFFIC JUNCTION BOXES UNLESS OTHERWISE NOTED.
7. NEW SIGNAL HEADS THAT ARE MOUNTED BUT NOT IN OPERATION SHALL BE COVERED WITH A COMMERCIALLY AVAILABLE SIGNAL–SHIRT. EACH SIGNAL SHIRT SHALL FEATURE ELASTICIZED OPENINGS THAT FIT OVER THE VISORS AND AT LEAST TWO STRAPS TO SECURE IT TO THE SIGNAL. PROVIDE SHIRTS WITH A LEGEND THAT READS "OUT OF SERVICE" AND A CENTER SECTION THAT ALLOWS AN OPERATOR TO SEE THE INDICATIONS DURING SYSTEM TESTS.
8. SIGNAL HEADS ARE TO BE LOCATED PER FIGURE 4D–100, TYPICAL SIGNAL HEAD LOCATIONS, PER THE ALASKA TRAFFIC MANUAL. ACCEPTABLE VARIANCE IS +/– 1–FOOT.
9. AIM SIGNALS PER TABLE 660–2, THROUGH–SIGNAL AIMING POINT, OF THE SPECIAL PROVISIONS. SIGNALS SHALL ALSO BE AIMED SO AS NOT TO BE VISIBLE FROM SIDE STREET TRAFFIC. ACCEPTABLE VARIANCE IS +/– 5 DEGREES.
10. EXISTING CIRCUITS LISTED ON THE LOAD CENTER SUMMARY AND PLAN SHEETS WERE OBTAINED FROM AS–BUILT INFORMATION AND MUST BE VERIFIED BY THE CONTRACTOR PRIOR TO WORK INVOLVING THOSE CIRCUITS.

CHECK SET NOV 2021

STATE OF ALASKA – 49TH – REGISTERED PROFESSIONAL ENGINEER
DENNIS R. LINNELL
CE–7649

HDL ENGINEERING CONSULTANTS, LLC
3335 ARCTIC BOULEVARD, STE 100
ANCHORAGE, AK 99503
(907) 564–2120
AECL861

STATE OF ALASKA – 49TH – REGISTERED PROFESSIONAL ENGINEER
ROY N. PACE
EE–12053

EDC, INC.
213 WEST FIREWEED LANE
ANCHORAGE, AK 99503
(907) 257–0601
AECC705

STATE OF ALASKA
DEPARTMENT OF TRANSPORTATION AND PUBLIC FACILITIES

GLENN HWY: PARKS HWY TO S. INNER SPRINGER LP. (PHASE II)

TRAFFIC LEGEND AND NOTES

FILE | P:\PROJECTS\HDL\GLENN HIGHWAY 34-49 - PHASE 2\DWGS\DOT STD DETAILS\01-TRAFFIC_LEGEND_AND_NOTES.DWG by roy | DATE/TIME | 11/23/2021 1:32 PM | LAYOUT | H1 | DESIGNED | CHECKED | DRAFTED

NO.	DATE	REVISION	STATE	PROJECT DESIGNATION	YEAR	SHEET NO.	TOTAL SHEETS
			ALASKA	0A15037/CFHWY00431 0A15038/CFHWY00432 0A15033/CFHWY00006	2021	H2	H38

NOTES:

1. APPLICABLE STATE OF ALASKA DOT&PF ELECTRICAL EQUIPMENT MUST BE LABELED WITH DOT&PF–DEFINED SITE–SPECIFIC PPE LEVELS, AS DEFINED IN NFPA 70E 130.5(H)(3)(c). THE LEVELS ARE: LEVEL 1 (0 TO 4 CAL/CM^2), 2 (4.1 TO 8.0 CAL/CM^2), 3 (8.1 TO 25.0 CAL/CM^2), 4 (25.1 TO 39.9 CAL/CM^2), OR WP (WORK PROHIBITED, FOR EQUIPMENT IN WHICH THE CALCULATED ARC FLASH INCIDENT ENERGY IS ≥ 40 CAL/CM^2).

2. MINIMUM PPE REQUIREMENTS FOR EACH PPE LEVEL DESCRIBED IN NOTE 1 ARE THE SAME REQUIREMENTS AS DESCRIBED IN NFPA 70E TABLE 130.7(C)(15)(c). THESE PPE REQUIREMENTS ARE TO BE USED AS THE SITE–SPECIFIC PPE LEVELS.

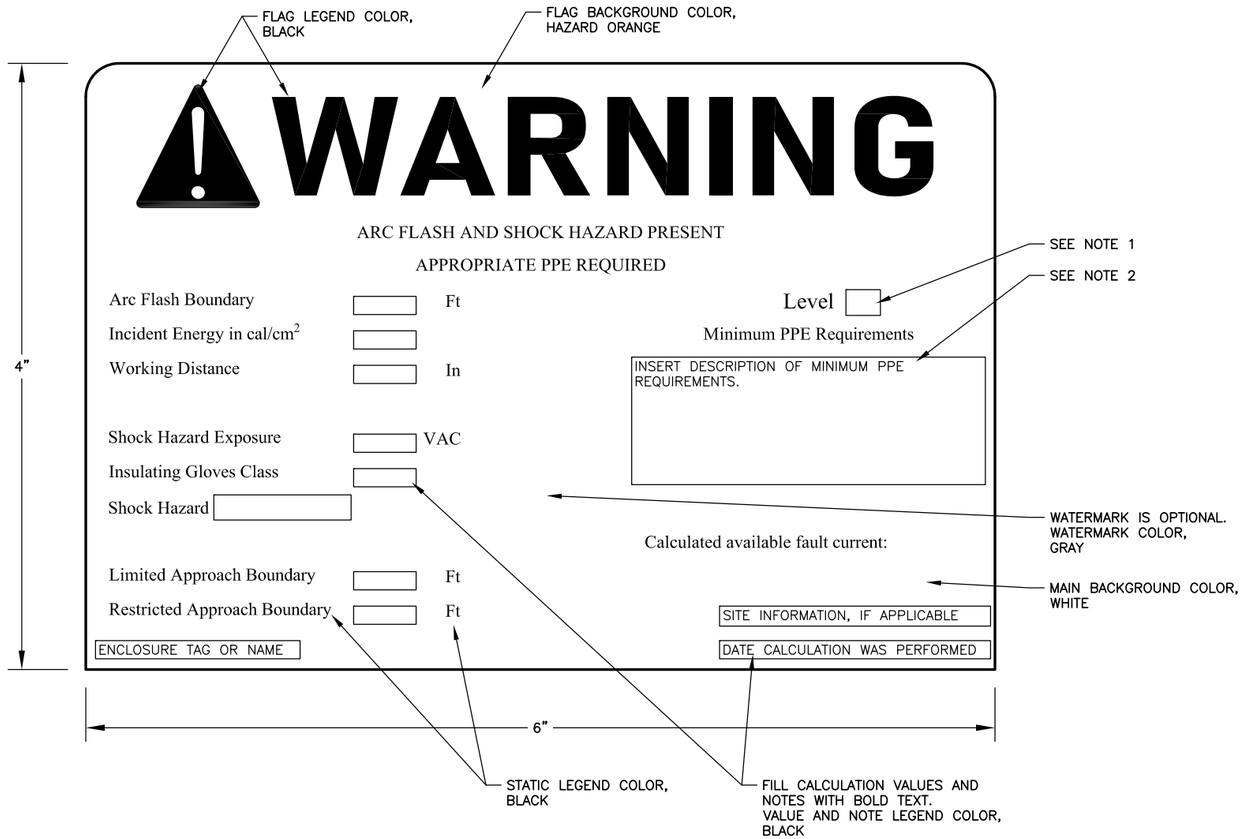

CHECK SET NOV 2021

STATE OF ALASKA
49TH
ROY N. PACE
EE–12053
REGISTERED PROFESSIONAL ENGINEER

EDC, INC.
213 WEST FIREWEED LANE
ANCHORAGE, AK 99503
(907) 257–0601
AECC705

STATE OF ALASKA
DEPARTMENT OF TRANSPORTATION
AND PUBLIC FACILITIES

GLENN HWY: PARKS HWY TO S. INNER SPRINGER LP. (PHASE II)

ARC FLASH SHOCK HAZARD LABELING

FILE | P:\PROJECTS\HDL\GLENN HIGHWAY 34-49 – PHASE 2\DWGS\DOT STD DETAILS\02-ARC_FLASH_SHOCK_HAZARD_LABELING.DWG by roy | DATE/TIME | 11/23/2021 1:32 PM | LAYOUT | H2 | DESIGNED | CHECKED | DRAFTED |

NO.	DATE	REVISION

STATE	PROJECT DESIGNATION	YEAR	SHEET NO.	TOTAL SHEETS
ALASKA	0A15037/CFHWY00431 0A15038/CFHWY00432 0A15033/CFHWY00006	2021	H3	H38

EQUIPMENT LEGEND/DESCRIPTION

1. METERING SECTION
2. LOAD SECTION
3. UTILITY CONNECTION SECTION
4. METER READING WINDOW (8"X8")
5. METER SOCKET W/ TEST-BYPASS/DISCONNECT BLOCK AND SAFETY SOCKET FACILITIES
6. HINGED METER SECTION COVER
7. DEADFRONT
8. STAINLESS STEEL PIN HINGE
9. PADLOCKING PROVISIONS
10. DISTRIBUTION PANEL
11. ACCESSORY EQUIPMENT MOUNTING AREA FOR CONTACTOR, SELECTOR SWITCHES, TERMINAL STRIPS, ETC.
12. SERVICE PULL SECTION
13. SELECTOR SWITCH
14. ENCLOSURE HEATER (WHEN SPECIFIED IN THE PLANS). APPROX DIMS.: 8"X5"X6"

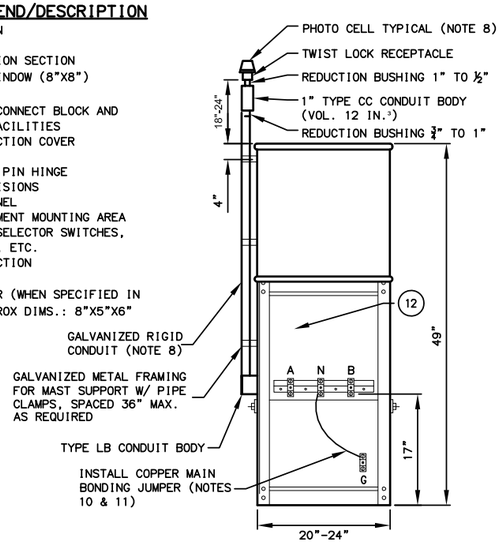

REAR VIEW
(W/ DOOR REMOVED)

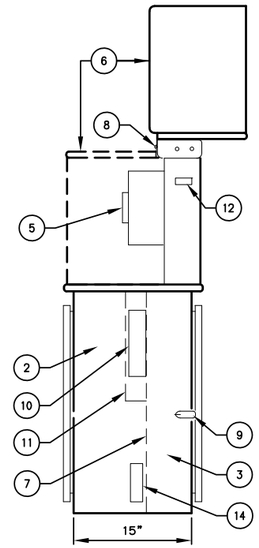

RIGHT SIDE VIEW
(W/ METER SECTION OPEN)

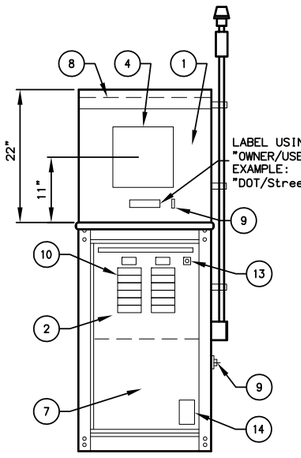

FRONT VIEW
(W/ DOOR REMOVED)

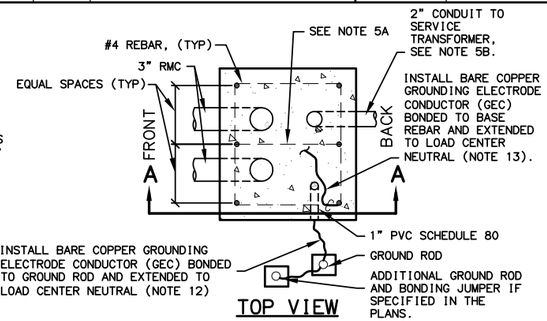

TOP VIEW

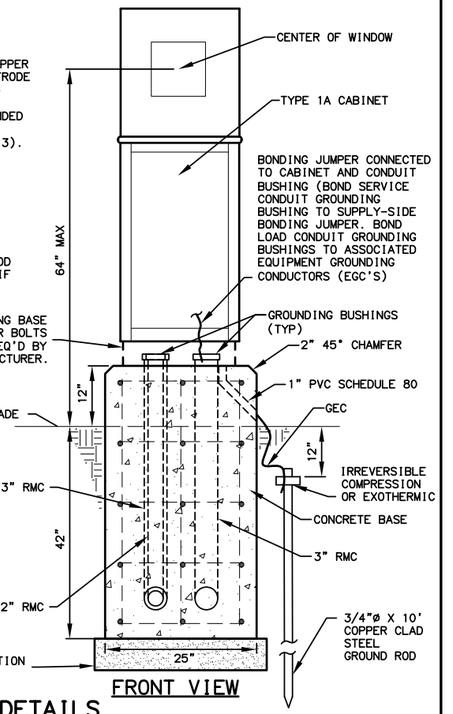

FRONT VIEW

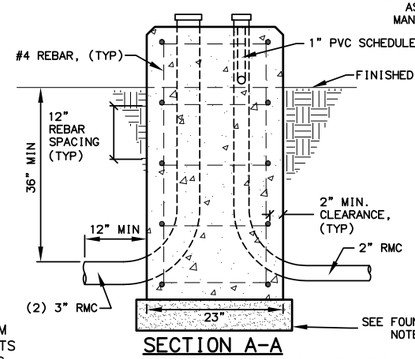

SECTION A-A

FOUNDATION DETAILS

TYPE 1A CABINET DETAILS

FOUNDATION NOTES:

1. GRADE AWAY FROM THE BASE WITH A MINIMUM SLOPE OF 3%. USE A PRE-MOULDED BITUMINOUS JOINT BETWEEN THE BASE AND CONCRETE SIDEWALK OR PAVING, WHEN ADJACENT TO A SIDEWALK OR PATHWAY.
2. PROVIDE ANCHOR BOLTS OR EXPANSION ANCHORS IN THE BASE FOR MOUNTING THE CABINET PER THE MANUFACTURER'S SHOP DRAWINGS. ANCHOR BOLTS, NUTS, AND WASHERS SHALL CONFORM TO EITHER ASTM A307 OR A449 AND SHALL BE GALVANIZED IN ACCORDANCE WITH ASTM A153. PROVIDE "J" ANCHOR BOLTS IF REQUIRED TO MOUNT LOAD CENTER CABINET IN ACCORDANCE WITH MANUFACTURER'S RECOMMENDATIONS. ENSURE 2" MIN. CLEARANCE IS MAINTAINED BETWEEN EDGE OF BOLT HOLE AND BEGINNING OF CHAMFERED EDGE.
3. USE GRADE 60 REINFORCING STEEL CONFORMING TO ASTM 615 AND CLASS "B" CONCRETE CONFORMING TO SECTION 550 OF THE SPECIFICATIONS WHEN CASTING THE BASE.
4. IF THE BASE IS PRECAST, INSTALL TWO 3/4" FERRULE LOOP INSERTS IN TWO SIDES OPPOSITE ONE ANOTHER FOR LIFTING.
5. WHEN INSTALLING THE BASE, EXCAVATE AND INSTALL A DRAIN CONSISTING OF 12" MIN. OF COARSE CONCRETE AGGREGATE, OR OTHER APPROVED NON-FROST SUSCEPTIBLE COMPACTED BACKFILL.

WIRING NOTES:

1. FURNISH ALL EQUIPMENT NOTED IN THE LOAD CENTER SUMMARY, PLUS TWO 20-AMP 2-POLE SPARE CIRCUIT BREAKERS, AND SPACE FOR A MINIMUM OF TWO ADDITIONAL 2-POLE CIRCUIT BREAKERS IN EACH LOAD PANEL. SEE THE LOAD CENTER SUMMARIES FOR LOAD PANEL VOLTAGES, CURRENT RATINGS, SHORT CIRCUIT INTERRUPTING RATINGS, AND THE NAME OF THE SERVING UTILITY.
2. INSTALL GROUNDING HUBS THIRD PARTY CERTIFIED FOR WET LOCATIONS, WHEN ATTACHING CONDUITS TO THE LOAD CENTER ENCLOSURE.
3. LABEL ALL CIRCUIT BREAKERS AS TO FUNCTION AND POSITION. LABEL THE SELECTOR SWITCH "LIGHTING" AND ITS POSITIONS "ON-OFF-AUTO".
4. METER BASES SHALL NOT BE MOUNTED ON MOVABLE PANELS OR DOORS.
5. THE LENGTH AND TYPE OF SERVICE ENTRANCE CONDUIT REQUIRED TO BE INSTALLED BY THE CONTRACTOR VARIES BY ELECTRIC UTILITY. REGARDLESS OF ITS LENGTH, INSTALL A PULL ROPE IN THE SERVICE CONDUIT AND A CAP ON THE BURIED END: MARK THE BURIED END WITH A 2"X 6" WOOD STAKE. SEE THE LOAD CENTER SUMMARY(IES) IN THE PLANS FOR THE FOLLOWING INFORMATION.
   A. STATION AND OFFSET OF THE LOAD CENTER AND POWER SOURCE.
   B. WHERE THE SERVICE ENTRANCE CONDUIT IS TO BE TERMINATED BY THE CONTRACTOR.
   C. THE TYPE OF SERVICE ENTRANCE CONDUIT (SUCH AS RIGID METAL CONDUIT OR LIQUID-TIGHT FLEXIBLE METAL CONDUIT).
6. STORE A SCHEMATIC DIAGRAM, A CIRCUIT DIRECTORY, AND A MATERIALS LIST THAT INCLUDES THE MANUFACTURER'S NAME AND PART/CATALOG NUMBERS, ALL LAMINATED IN PLASTIC, IN A METAL POCKET ATTACHED TO THE INSIDE OF THE LOAD CENTER. INSTALL THE POCKET ON THE LOAD CENTER DOOR, PROVIDING DRAIN HOLES TO PREVENT WATER ACCUMULATION.
7. SIZE THE DISTRIBUTION PANEL TO ACCOMMODATE THE CIRCUITS SHOWN ON THE LOAD CENTER SUMMARIES AND SPARE CIRCUITS AS DEFINED IN WIRING NOTE 1.
8. INSTALL THE PHOTOELECTRIC CONTROL UNIT ON A 3/4" OR LARGER CONDUIT. LOCATE THE UNIT 18"-24" ABOVE THE TOP OF THE LOAD CENTER. ORIENT THE CONTROL WINDOW FACING NORTH AND/OR AWAY FROM ARTIFICIAL LIGHT SOURCES THAT MAY INTERFERE WITH AMBIENT LIGHT CONTROL. INSTALL A 3C#14 CABLE FROM THE LOAD CENTER TO THE CONDUIT BODY WHERE THE SPLICE TO THE PHOTOCELL RECEPTACLE CABLE SHALL BE MADE. IF PLANS CALL TO MOUNT PHOTOCELL AWAY FROM LOAD CENTER USE A 5C#14 CABLE FROM LOAD CENTER TO RECEPTACLE. PHOTOCELL MUST BE ENCLOSED IN A METALLIC ENCLOSURE.

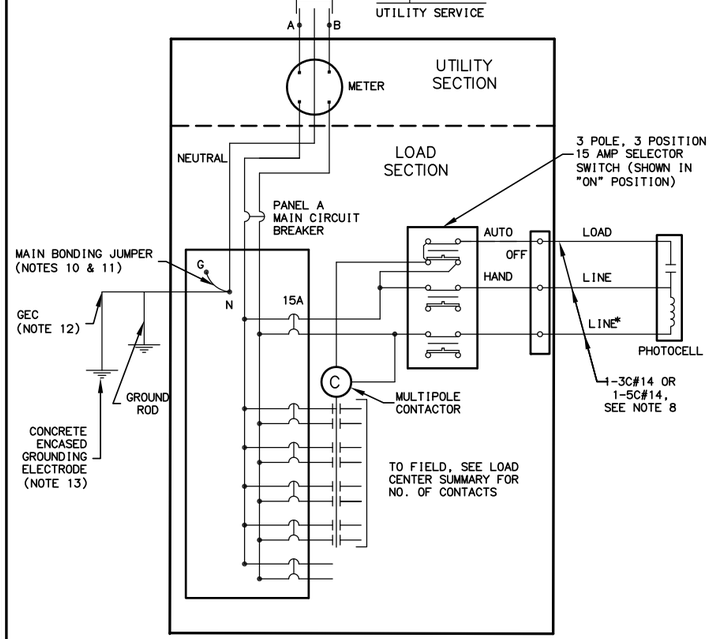

LOAD CENTER ONE LINE DIAGRAM AND SELECTOR SWITCH WIRING

* GROUNDED NEUTRAL, IF SERVICE IS 240/480 VOLT SINGLE PHASE OR 277/480 VOLT THREE-PHASE; AND UNGROUNDED LINE, IF SERVICE IS 120/240 VOLT SINGLE PHASE.

WIRING NOTES CONTINUED:

9. SEPARATE THE MAIN CIRCUIT BREAKER FROM THE DISTRIBUTION PANEL
10. INSTALL #6 AWG COPPER MAIN BONDING JUMPER, OR SIZE PER NEC TABLE 250.102 (C) (1), WHICHEVER IS LARGER.
11. INSTALLATION MUST COMPLY WITH NEC 250.24 (C) AND 250.24 (C) EXCEPTION WHEN MORE THAN ONE PANELBOARD IS PRESENT.
12. INSTALL #6 AWG COPPER GROUNDING ELECTRODE CONDUCTOR (GEC), OR SIZE PER NEC TABLE 250.66, WHICHEVER IS LARGER.
13. THE REINFORCING BARS WITHIN THE CONCRETE FOUNDATION MUST BE CONNECTED TOGETHER BY EFFECTIVE MEANS AND WILL BECOME PART OF THE GROUNDING ELECTRODE SYSTEM PER NEC 250.50 AND 250.52(A)(3). INSTALL AN IRREVERSIBLE COMPRESSION GROUNDING CONNECTOR, NRTL-LISTED FOR DIRECT BURIAL IN EARTH AND CONCRETE, TO CONNECT THE REINFORCING BARS TO THE GEC. INSTALL A COPPER GEC, SIZED PER NEC 250.66 BUT NOT SMALLER THAN #6 AWG, BETWEEN THE COMPRESSION CONNECTOR AND THE LOAD CENTER NEUTRAL.
14. INSTALL LABEL(S) ON ENCLOSURE EXTERIOR PER ARC FLASH AND SHOCK HAZARD LABELING DETAIL:
   A. TO WARN OF THE POTENTIAL ARC FLASH HAZARD [PER NEC 110.16 AND NFPA 70E], AND
   B. TO IDENTIFY THE AVAILABLE FAULT CURRENT [PER NEC 110.24(A)]
15. MAXIMUM METER HEIGHT SHALL NOT EXCEED 64" FROM FINISHED GRADE TO CENTER OF THE METER SOCKET COVER.
16. WHEN SHOWN ON THE PLANS, INSTALL ENCLOSURE HEATER WITH INTEGRAL THERMOSTAT, SET TO ENERGIZE THE HEATER AT TEMPERATURES AT OR BELOW 32-DEG F. SCHNEIDER ELECTRIC CAT. NO. NSYCRP1W230VTVC, NVENT-HOFFMAN CAT. NO. DAH4002B, OR APPROVED EQUAL.

CHECK SET NOV 2021

STATE OF ALASKA
DEPARTMENT OF TRANSPORTATION AND PUBLIC FACILITIES

GLENN HWY: PARKS HWY TO S. INNER SPRINGER LP. (PHASE II)

TYPE 1A LOAD CENTER

STATE OF ALASKA
49TH
ROY N. PACE
EE-12053
REGISTERED PROFESSIONAL ENGINEER

EDC, INC.
213 WEST FIREWEED LANE
ANCHORAGE, AK 99503
(907) 257-0601
AECC705

DRAFTED | CHECKED | DESIGNED | LAYOUT H3 | DATE/TIME 11/23/2021 1:32 PM
FILE P:\PROJECTS\HDL\GLENN HIGHWAY 34-49 - PHASE 2\DWGS\DOT STD DETAILS\03-TYPE_1A_LOAD_CENTER.DWG by roy

NO.	DATE	REVISION

STATE	PROJECT DESIGNATION	YEAR	SHEET NO.	TOTAL SHEETS
ALASKA	0A15037/CFHWY00431 0A15038/CFHWY00432 0A15033/CFHWY00006	2021	H4	H38

DRAFTED | CHECKED | DESIGNED | H4 | LAYOUT | DATE/TIME 11/23/2021 1:32 PM

FILE P:\PROJECTS\HDL\GLENN HIGHWAY 34-49 - PHASE 2\DWGS\DOT STD DETAILS\H04_TYPE-1-LOAD-CENTER W XFRM.DWG by roy

NOTES:

1. FURNISH ALL EQUIPMENT NOTED IN THE LOAD CENTER SUMMARY(IES) IN THE PLANS, PLUS TWO 20-AMP 2-POLE SPARE CIRCUIT BREAKERS, AND SPACE FOR A MINIMUM OF TWO ADDITIONAL 2-POLE CIRCUIT BREAKERS IN EACH LOAD PANEL. SEE THE LOAD CENTER SUMMARIES FOR LOAD PANEL VOLTAGES, CURRENT RATINGS, SHORT CIRCUIT INTERRUPTING RATINGS, AND THE NAME OF THE SERVING UTILITY.
2. INSTALL GROUNDING HUBS THIRD PARTY CERTIFIED FOR WET LOCATIONS, WHEN ATTACHING CONDUITS TO THE LOAD CENTER ENCLOSURE.
3. LABEL ALL CIRCUIT BREAKERS AS TO FUNCTION AND POSITION. LABEL THE SELECTOR SWITCH "LIGHTING" AND ITS POSITIONS "ON-OFF-AUTO".
4. INSTALL THE PHOTOELECTRIC CONTROL UNIT ON A 3/4", OR LARGER, CONDUIT. LOCATE THE UNIT 18"-24" ABOVE THE TOP OF THE LOAD CENTER. ORIENT THE CONTROL WINDOW FACING NORTH AND/OR AWAY FROM ARTIFICIAL LIGHT SOURCES THAT MAY INTERFERE WITH AMBIENT LIGHT CONTROL. INSTALL A 3C#14 CABLE FROM THE LOAD CENTER TO THE CONDUIT BODY WHERE THE CONNECTION TO THE PHOTOCELL RECEPTACLE CABLE SHALL BE MADE. IF PLANS CALL TO MOUNT PHOTOCELL AWAY FROM LOAD CENTER USE A 5C#14 CABLE FROM LOAD CENTER TO RECEPTACLE. PHOTOCELL MUST BE ENCLOSED IN A METALLIC ENCLOSURE.
5. METER BASES SHALL NOT BE MOUNTED ON MOVABLE PANELS OR DOORS.
6. LOCATE THE LOAD CENTER AS SHOWN ON THE PLANS.
7. STORE A SCHEMATIC DIAGRAM, A CIRCUIT DIRECTORY, AND A MATERIALS LIST THAT INCLUDES THE MANUFACTURER'S NAME AND PART/CATALOG NUMBERS, ALL LAMINATED IN PLASTIC, IN A METAL POCKET ATTACHED TO THE INSIDE OF THE LOAD CENTER. INSTALL THE POCKET ON THE LOAD CENTER DOOR, PROVIDING DRAIN HOLES TO PREVENT WATER ACCUMULATION.
8. MAXIMUM METER HEIGHT SHALL NOT EXCEED 64" FROM CAST IRON COVER TO CENTER OF THE METER SOCKET COVER.
9. INSTALL #6 AWG COPPER MAIN BONDING JUMPER, OR SIZE PER NEC TABLE 250.102 (C)(1), WHICHEVER IS LARGER.
10. INSTALLATION MUST COMPLY WITH THE NEC 250.24 (C) AND 250.24 (C) EXCEPTION WHEN MORE THAN ONE PANELBOARD IS PRESENT.
11. THE LENGTH AND TYPE OF SERVICE ENTRANCE CONDUIT INSTALLED BY THE CONTRACTOR VARIES BY UTILITY. REGARDLESS OF ITS LENGTH, INSTALL A PULL ROPE IN THE SERVICE CONDUIT AND A CAP ON THE BURIED END: MARK THE BURIED END WITH A 2"X 6" WOOD STAKE. SEE THE LOAD CENTER SUMMARIES FOR THE FOLLOWING INFORMATION.
    A. STATION AND OFFSET OF THE LOAD CENTER AND POWER SOURCE.
    B. WHERE THE CONTRACTOR TERMINATES THE SERVICE ENTRANCE CONDUIT.
    C. THE TYPE OF SERVICE ENTRANCE CONDUIT (SUCH AS RIGID METAL CONDUIT OR LIQUID-TIGHT FLEXIBLE METAL CONDUIT).
12. INSTALL #6 AWG COPPER GROUNDING ELECTRODE CONDUCTOR (GEC), OR SIZE PER NEC TABLE 250.66, WHICHEVER IS LARGER.
13. THE REINFORCING BARS WITHIN THE CONCRETE PAD MUST BE CONNECTED TOGETHER BY EFFECTIVE MEANS AND WILL BECOME PART OF THE GROUNDING ELECTRODE SYSTEM PER NEC 250.50 AND 250.52(A)(3). INSTALL AN IRREVERSIBLE COMPRESSION GROUNDING CONNECTOR, NRTL-LISTED FOR DIRECT BURIAL IN EARTH AND CONCRETE, TO CONNECT THE REINFORCING BARS TO THE GEC. INSTALL A BARE COPPER GEC, SIZED PER NEC 250.66 BUT NOT SMALLER THAN #6 AWG, BETWEEN THE COMPRESSION CONNECTOR AND THE LOAD CENTER NEUTRAL.
14. INSTALL LABEL(S) ON ENCLOSURE EXTERIOR PER ARC FLASH AND SHOCK HAZARD LABELING DETAIL:
    A. TO WARN OF THE POTENTIAL ARC FLASH HAZARD [PER NEC 110.16 AND NFPA 70E], AND
    B. TO IDENTIFY THE AVAILABLE FAULT CURRENT [PER NEC 110.24(A)].
15. WHEN SHOWN IN THE PLANS, INSTALL ENCLOSURE HEATER WITH INTEGRAL THERMOSTAT, SET TO ENERGIZE THE HEATER AT TEMPERATURES AT OR BELOW 32-DEG F. SCHNEIDER ELECTRIC CAT. NO. NSYCRP1W230VTVC, NVENT-HOFFMAN CAT. NO. DAH4002B, OR APPROVED EQUAL.
16. BOND SERVICE CONDUIT GROUNDING BUSHING TO SUPPLY-SIDE BONDING JUMPER. BOND LOAD CONDUIT GROUNDING BUSHINGS TO ASSOCIATED EQUIPMENT GROUNDING CONDUCTORS (EGC'S).
17. CURFEW PHOTOCELL SHALL BE A RIPLEY PHOTOCLOCK II RC8744 OR APPROVED EQUAL. PROVIDE WITH PROGRAMING CABLE. PHOTOCELL SHALL BE DAYLIGHT SAVINGS ENABLED AND BE CONFIGURED FOR ON AT DUSK, OFF AT MIDNIGHT, ON AT 5AM, AND OFF AT DAWN.
18. LOAD CENTER SHALL BE CONFIGURED SUCH THAT THE INTERSECTION LIGHTING REMAINS ON DURING CURFEW HOURS.
19. LOAD CENTER, INCLUDING TRANSFORMER SHALL BE AN ASSEMBLY LIST BY A NATIONALLY RECOGNIZED TESTING LABORATORY.

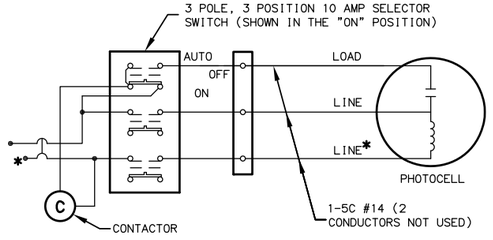

SELECTOR SWITCH WIRING DETAIL

* GROUNDED NEUTRAL, IF SERVICE IS 240/480 VOLT SINGLE PHASE AND UNGROUNDED LINE, IF SERVICE IS 120/240 VOLT SINGLE PHASE.

FOUNDATION NOTES:

1. INSTALL THE SURFACE WITH CAST IRON COVER FLUSH WITH THE PAVEMENT, SIDEWALK, OR FINISHED GRADE. GRADE AWAY FROM THE BASE WITH A MINIMUM SLOPE OF 3%. USE A PRE-MOULDED BITUMINOUS JOINT BETWEEN THE BASE AND CONCRETE SIDEWALK OR PAVING.
2. WHEN INSTALLING THE BASE, EXCAVATE TO 60" BELOW FINISHED GRADE AND INSTALL A DRAIN CONSISTING OF 18" OF COARSE CONCRETE AGGREGATE MATERIAL CONFORMING TO 703-2.10. BACKFILL AROUND THE BASE IN 6" LIFTS WITH SELECTED MATERIAL TYPE "A".
3. BACKFILL INSIDE THE FOUNDATION TO WITHIN 24" OF THE LID AFTER ALL CONDUITS ARE INSTALLED, USING COARSE AGGREGATE MATERIAL CONFORMING TO 703-2.10. TERMINATE THE ENDS OF ALL LOAD CONDUITS A MINIMUM OF 6" ABOVE THE COARSE CONCRETE AGGREGATE BACKFILL AND A MINIMUM OF 12" BELOW THE LID.
4. PROVIDE ANCHOR BOLTS OR EXPANSION ANCHORS IN THE BASE FOR MOUNTING THE CABINET PER THE MANUFACTURER'S SHOP DRAWINGS. ANCHOR BOLTS, NUTS, AND WASHERS SHALL CONFORM TO EITHER ASTM A307 OR A449 AND SHALL BE GALVANIZED IN ACCORDANCE WITH ASTM A153.
5. USE GRADE 60 REINFORCING STEEL CONFORMING TO ASTM 615 AND CLASS "A" CONCRETE CONFORMING TO SECTION 501 OF THE SPECIFICATIONS WHEN CASTING THE BASE.
6. FINISH THE BASE ACCESS OPENING WITH A 24" SQUARE IRON FRAME AND COVER WITH PICK HOLE FOR REMOVAL, WEIGHING APPROXIMATELY 280 LBS. PROVIDE COVERS INSCRIBED WITH THE LEGEND "LIGHTING" FOR THOSE LOAD CENTERS WITH STREET LIGHTING CIRCUITS ONLY, AND "TRAFFIC" FOR THOSE LOAD CENTERS WITH A TRAFFIC SIGNAL CIRCUIT.
7. IF THE BASE IS PRECAST, INSTALL TWO 3/4" FERRULE LOOP INSERTS IN TWO SIDES OPPOSITE ONE ANOTHER FOR LIFTING.

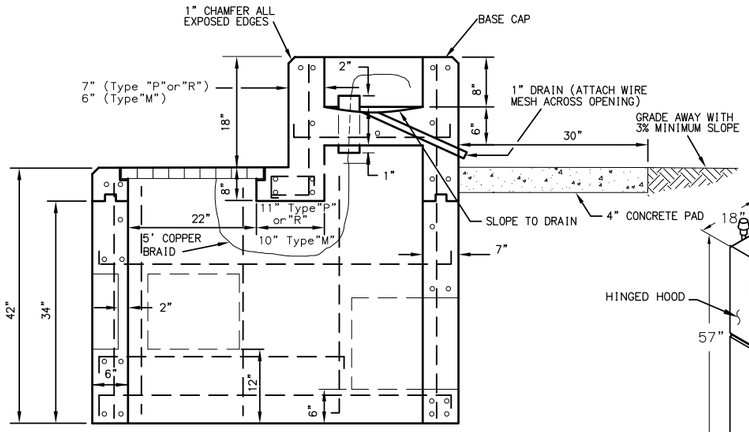

FOUNDATION SIDE VIEW

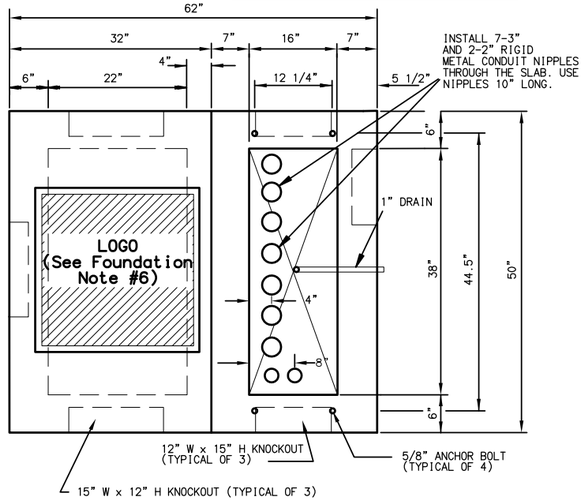

FOUNDATION PLAN VIEW

NOTE: FOUNDATION IS A MODIFIED TYPE P CONTROLLER CABINET FOUNDATION.

LOAD CENTER FOUNDATION

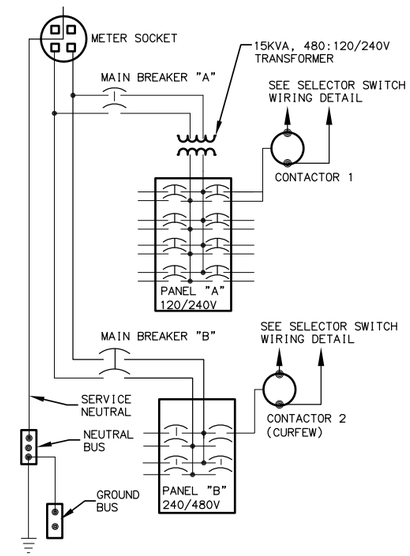

WIRING DIAGRAM

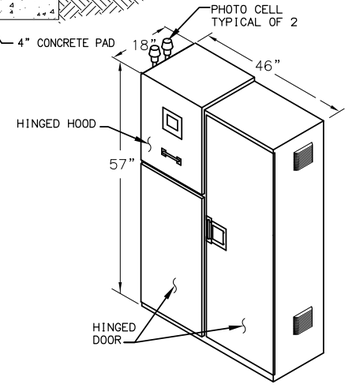

SIDE & FRONT VIEW

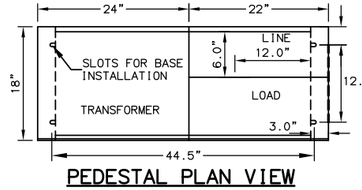

PEDESTAL PLAN VIEW

CABINET BASE TO FIT FOUNDATION

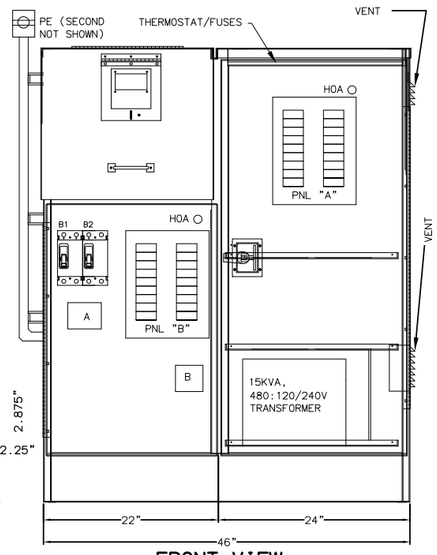

FRONT VIEW

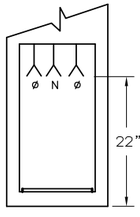

SIDE & REAR LANDING

CABINET DETAILS

CHECK SET NOV 2021

STATE OF ALASKA
DEPARTMENT OF TRANSPORTATION AND PUBLIC FACILITIES

GLENN HWY: PARKS HWY TO S. INNER SPRINGER LP. (PHASE II)

TYPE 1 LOAD CENTER WITH TRANSFORMER

STATE OF ALASKA 49TH
ROY N. PACE
EE-12053
REGISTERED PROFESSIONAL ENGINEER

EDC, INC.
213 WEST FIREWEED LANE
ANCHORAGE, AK 99503
(907) 257-0601
AECC705

NO.	DATE	REVISION

STATE	PROJECT DESIGNATION	YEAR	SHEET NO.	TOTAL SHEETS
ALASKA	0A15037/CFHWY00431 0A15038/CFHWY00432 0A15033/CFHWY00006	2021	H5	H38

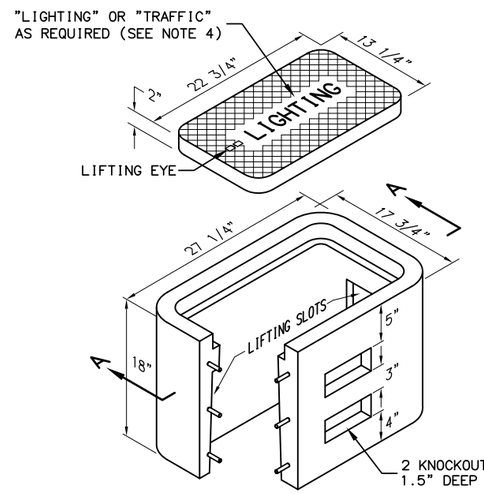

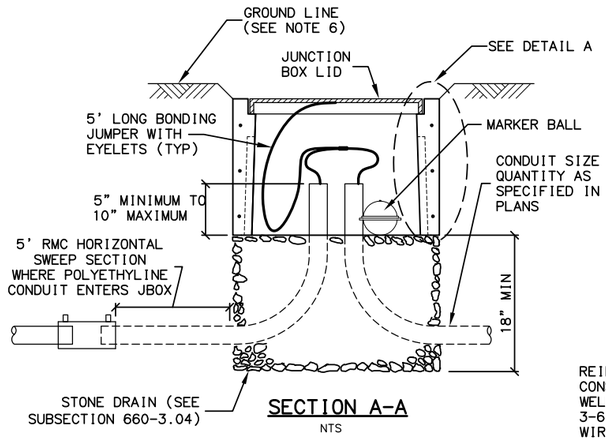

SECTION A-A
NTS

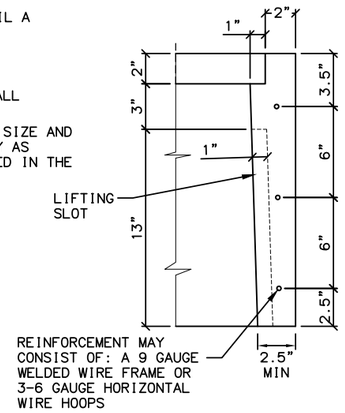

DETAIL A

TYPE IA JUNCTION BOX

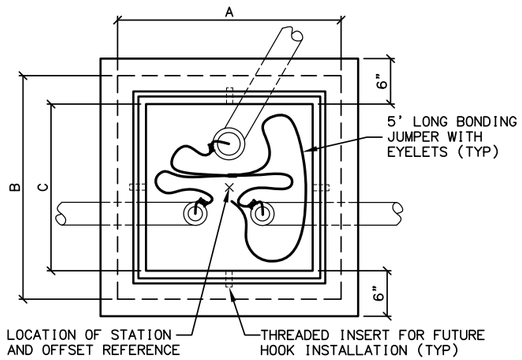

PLAN

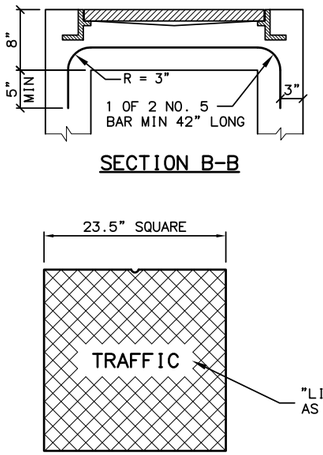

SECTION B-B

LID FOR TYPE II & III J-BOXES

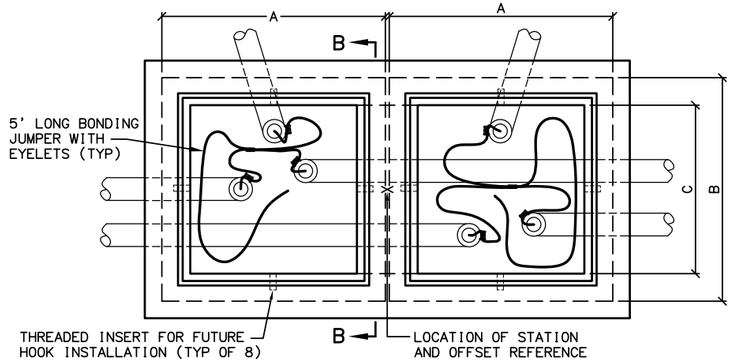

PLAN

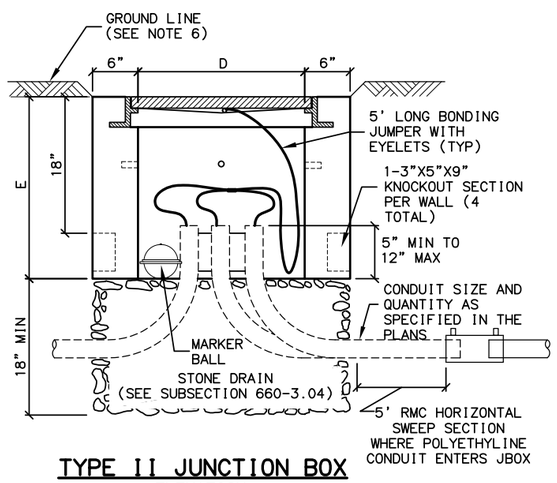

TYPE II JUNCTION BOX
ELEVATION
NTS

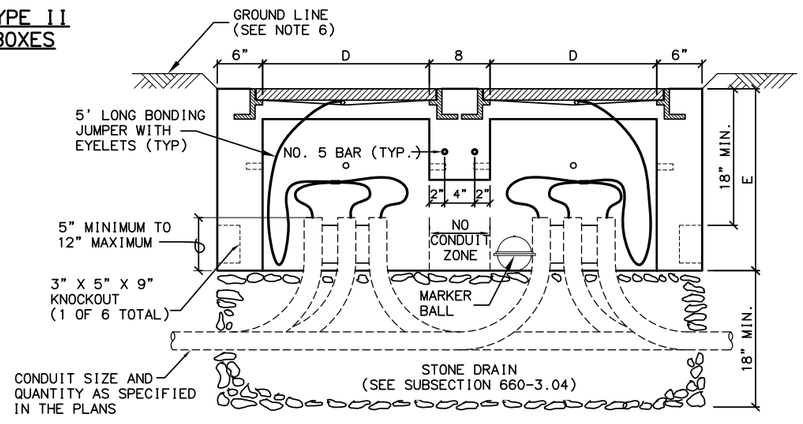

TYPE III JUNCTION BOX
ELEVATION

NOTES:

1. AVOID INSTALLING TYPE IA JUNCTION BOXES IN DRIVEWAYS OR IN LOCATIONS SUBJECT TO USE BY HEAVY TRUCKS. INSTALL JUNCTION BOXES ONLY AT THE LATERAL LOCATIONS ALLOWED IN SUBSECTION 660-3.04.
2. FURNISH TYPE II, III AND IV JUNCTION BOXES WITH CAST IRON FRAMES AND LIDS THAT WEIGH A MINIMUM OF 210 POUNDS AND ARE RATED FOR HEAVY TRAFFIC LOADS IN COMPLIANCE WITH AASHTO M306. FURNISH TYPE IA JUNCTION BOXES WITH CAST IRON LIDS THAT WEIGH A MINIMUM OF 50 POUNDS.
3. CONSTRUCT JUNCTION BOXES ACCORDING TO SECTION 501 USING CLASS A CONCRETE. REINFORCE TYPE IA JUNCTION BOXES AS SHOWN. SYNTHETIC STRUCTURAL FIBER-REINFORCED CONCRETE THAT MEETS ASTM C 1116 AND CONTAINS FIBER IN PROPORTIONS AS RECOMMENDED BY THE FIBER MANUFACTURER MAY BE ADDED FOR STRENGTH.
4. FOR JUNCTION BOXES THAT CONTAIN ILLUMINATION CONDUCTORS EXCLUSIVELY, FURNISH LIDS WITH THE WORD "LIGHTING" INSCRIBED INTO THEM. FOR OTHER JUNCTION BOXES, FURNISH LIDS WITH THE WORD "TRAFFIC" INSCRIBED INTO THEM.
5. UNDER JUNCTION BOXES, INSTALL STONE DRAINS THAT CONSIST OF POROUS BACKFILL MATERIAL CONFORMING TO SUBSECTION 703-2.10.
6. SET THE TOPS OF JUNCTION BOXES WITH THE FOLLOWING DIMENSIONS BELOW THE FINISHED SURROUNDING SURFACE:
   - 1" IN PAVED MEDIANS AND ADJACENT TO PEDESTRIAN FACILITIES
   - 1/4" IN PEDESTRIAN FACILITIES
   - 2" IN ALL OTHER AREAS
7. BOND JUNCTION BOX LIDS TO THE SYSTEM OF EQUIPMENT GROUNDING CONDUCTORS ACCORDING TO SUBSECTION 660-3.06. ATTACH BONDING JUMPERS TO THE JUNCTION BOX LIDS WITH BRASS OR STAINLESS STEEL HARDWARE.
8. INSTALL LOOP DETECTOR TAILS THROUGH ONE OF THE KNOCKOUTS OF TYPE 1A JUNCTION BOXES. AFTER SETTING THE BOXES TO GRADE, INSTALL GROUT IN THE GAPS THAT REMAIN IN THE KNOCKOUT.
9. INSTALL A 1/2" THICK PREFORMED BITUMINOUS JOINT MATERIAL AROUND JUNCTION BOXES INSTALLED IN PORTLAND CEMENT CONCRETE WALKWAYS.
10. INSTALL AN ELECTRONIC MARKER BALL IN ALL JUNCTION BOXES PER SUBSECTION 660-3.04.
11. PRIOR TO INSTALLATION MARK ALL JUNCTION BOX LOCATIONS WITH A WIRE STAFF VINYL FLAG. THE FLAG SHALL BE RED IN COLOR AND MINIMUM 4-INCHES TALL BY 5-INCHES WIDE. THE WIRE STAFF SHALL BE 21-INCHES IN LENGTH AND CONSTRUCTED OF MINIMUM 15.5 GAUGE STEEL.
12. WHERE MODIFIED TYPE II JUNCTION BOXES ARE REQUIRED FOR DETECTOR LOOP TAIL INSTALLATIONS, ADD ONE(1) ADDITIONAL 5" DEEP X 3" HIGH X 18" WIDE KNOCKOUT 12" BELOW TOP OF JUNCTION BOX.

J-BOX DIMENSIONS

J-BOX TYPE	DIMENSIONS				
	A (MAX.)	B (MAX.)	C (MIN.)	D (MIN.)	E (MIN.)
II	29 1/2"	29 1/2"	22"	22"	24"
III	29 1/2"	29 1/2"	22"	22"	24"
IV	30"	36"	30"	24"	30"

CHECK SET NOV 2021

STATE OF ALASKA 49TH — DENNIS R. LINNELL CE-7649 REGISTERED PROFESSIONAL ENGINEER
HDL ENGINEERING CONSULTANTS, LLC
3335 ARCTIC BOULEVARD, STE 100
ANCHORAGE, AK 99503
(907) 564-2120
AECL861

STATE OF ALASKA 49TH — ROY N. PACE EE-12053 REGISTERED PROFESSIONAL ENGINEER
EDC, INC.
213 WEST FIREWEED LANE
ANCHORAGE, AK 99503
(907) 257-0601
AECC705

STATE OF ALASKA
DEPARTMENT OF TRANSPORTATION AND PUBLIC FACILITIES

GLENN HWY: PARKS HWY TO S. INNER SPRINGER LP. (PHASE II)

JUNCTION BOX

DRAFTED | CHECKED | DESIGNED | H5 | LAYOUT | DATE/TIME 11/23/2021 1:32 PM | FILE P:\PROJECTS\HDL\GLENN HIGHWAY 34-49 - PHASE 2\DWGS\DOT STD DETAILS\H05-JUNCTION_BOX.DWG by roy

NO.	DATE	REVISION

STATE	PROJECT DESIGNATION	YEAR	SHEET NO.	TOTAL SHEETS
ALASKA	0A15037/CFHWY00431 0A15038/CFHWY00432 0A15033/CFHWY00006	2021	H6	H38

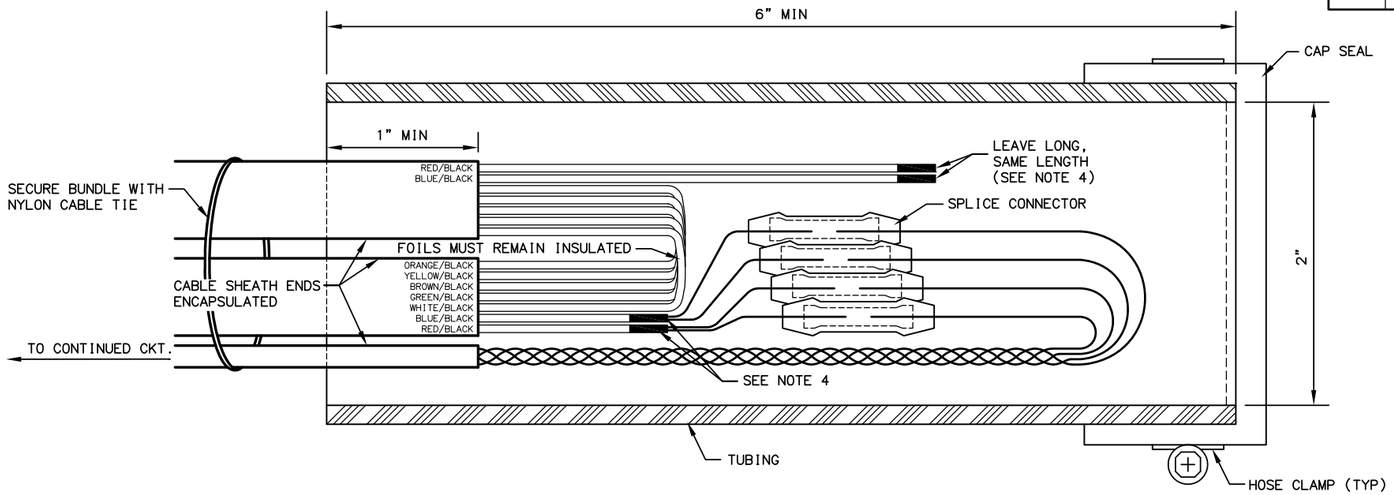

LOOP LEAD-IN SPLICE

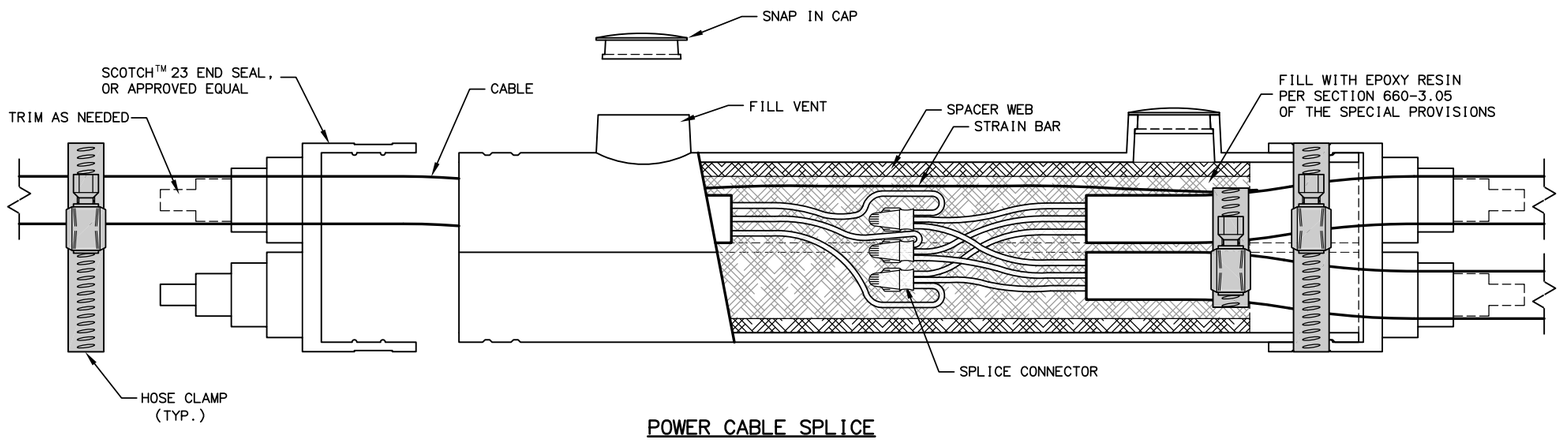

POWER CABLE SPLICE

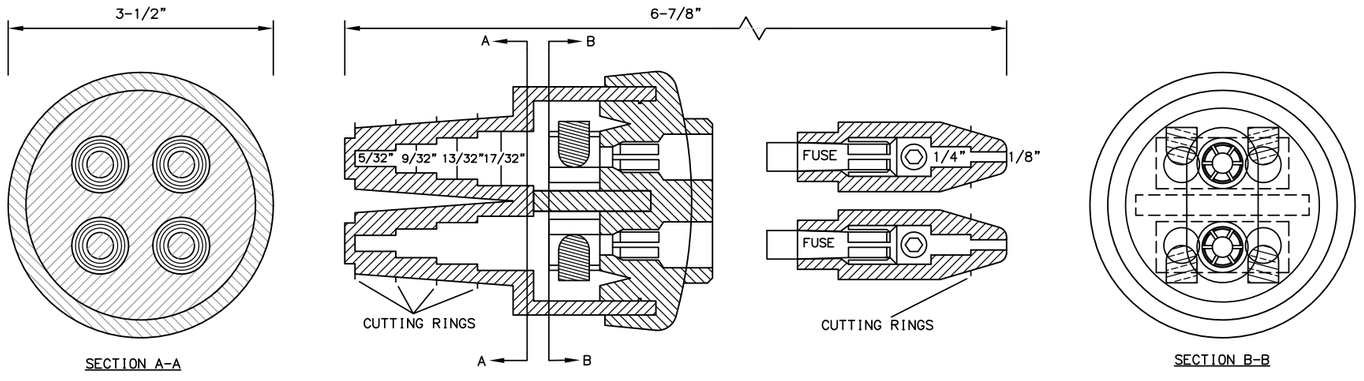

DOUBLE FUSED CONNECTOR

NOTES:

LOOP LEAD-IN SPLICE

1. FABRICATE LOOP LEAD-IN SPLICE IN THE FIELD AS SHOWN.
2. CAP SEAL ONE END AND COMPLETELY FILL OPEN END WITH RE-ENTERABLE ENCAPSULATION COMPOUND TO EDGE OF TUBING.
3. LEAVE A MINIMUM OF 1/2" CLEARANCE BETWEEN THE ENCLOSURE AND THE SPLICE AT BOTH ENDS OF THE TUBING.
4. EXPOSE FOIL AND DRAIN WIRES, SEAL WITH HEAT SHRINK TUBING (TYP).
5. INSTALL SPLICE CONNECTORS ACCORDING TO MANUFACTURER'S SPECIFICATIONS.

POWER CABLE SPLICE

6. SECURE CABLE/CONNECTOR BUNDLE WITH HOSE CLAMPS AS SHOWN.

MATERIAL PROPERTIES	
LOOP LEAD-IN SPLICE	
TUBING	PER SECTION 660-3.05
CAP SEAL	FERNCO QWIK CAP #QC-102, OR APPROVED EQUAL
HOSE CLAMP	STAINLESS STEEL
SPLICE CONNECTOR	ML56-16, OR APPROVED EQUAL
COMPOUND	RE-ENTERABLE ENCAPSULATION
POWER CABLE SPLICE	
SPLICE KIT	3M MODEL 78R, OR APPROVED EQUAL
SPLICE CONNECTOR	SCOTCHLOCK G, R, OR Y SPRING CONNECTOR, OR APPROVED EQUAL
HOSE CLAMP	(4)- STAINLESS STEEL
EPOXY RESIN	PER SECTION 660-3.05
DOUBLE FUSED CONNECTOR	
DOUBLE FUSED CONNECTOR	SEC-1791-DF-1, OR APPROVED EQUAL
FUSES	(2) - COMPATIBLE 10-AMP

CHECK SET NOV 2021

STATE OF ALASKA 49TH — DENNIS R. LINNELL CE-7649 — REGISTERED PROFESSIONAL ENGINEER
HDL ENGINEERING CONSULTANTS, LLC
3335 ARCTIC BOULEVARD, STE 100
ANCHORAGE, AK 99503
(907) 564-2120
AECL861

STATE OF ALASKA 49TH — ROY N. PACE EE-12053 — REGISTERED PROFESSIONAL ENGINEER
EDC, INC.
213 WEST FIREWEED LANE
ANCHORAGE, AK 99503
(907) 257-0601
AECC705

STATE OF ALASKA
DEPARTMENT OF TRANSPORTATION
AND PUBLIC FACILITIES

GLENN HWY: PARKS HWY TO S. INNER SPRINGER LP. (PHASE II)

SPLICE DETAILS

DATE/TIME 11/23/2021 1:33 PM | LAYOUT H6 | DESIGNED | CHECKED | DRAFTED
FILE P:\PROJECTS\HDL\GLENN HIGHWAY 34-49 - PHASE 2\DWGS\DOT STD DETAILS\H04-SPLICE_DETAILS.DWG by Oka

NO.	DATE	REVISION

STATE	PROJECT DESIGNATION	YEAR	SHEET NO.	TOTAL SHEETS
ALASKA	0A15037/CFHWY00431 0A15038/CFHWY00432 0A15033/CFHWY00006	2021	H7	H38

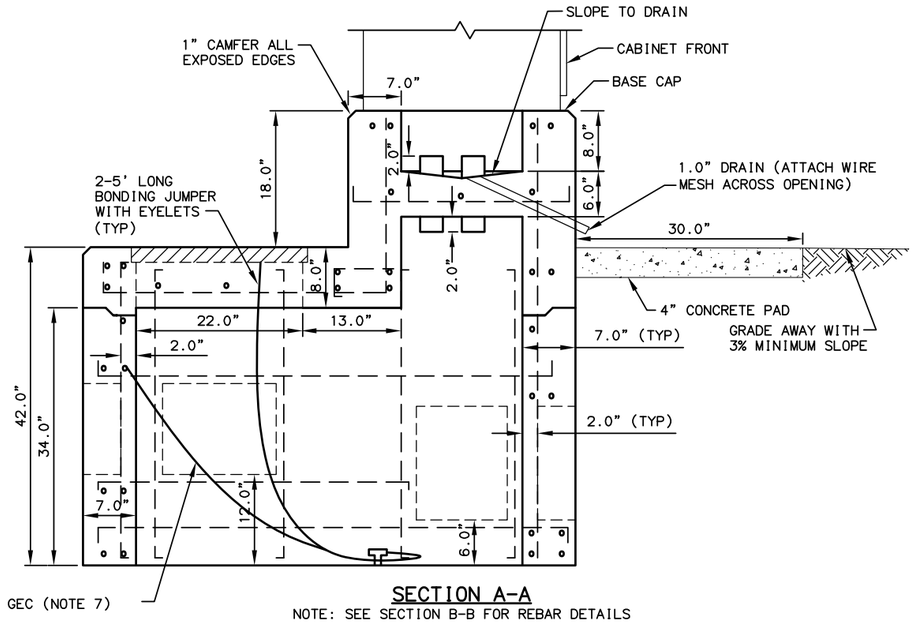

SECTION A-A

NOTE: SEE SECTION B-B FOR REBAR DETAILS

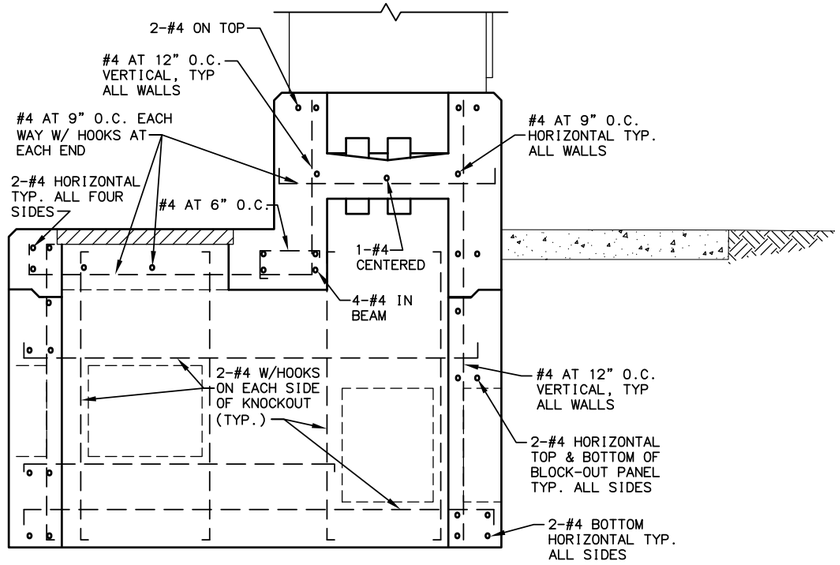

SECTION B-B

NOTE: SEE SECTION A-A FOR DIMENSIONAL DETAILS

NOTES:

1. ANCHOR BOLTS SHALL NOT PROTRUDE MORE THAN 1.5" ABOVE THE TOP OF THE FOUNDATION. ANCHOR BOLT DIMENSIONS SHALL BE AS SPECIFIED BY THE CABINET MANUFACTURER.
2. SEAL UNUSED CONDUIT STUBS WITH WATERTIGHT CAPS. SEAL STUBS CARRYING CONDUCTORS WITH WATERTIGHT SEALING BUSHINGS DESIGNED TO SEAL AROUND CONDUCTORS AND AGAINST THE CONDUIT WALLS.
3. ROUTE THE FIVE FOOT COPPER GROUNDING JUMPER THROUGH THE 2" PIPE NIPPLE AND ATTACH IT TO THE GROUNDING BUSHING ON THE FEEDER CONDUIT.
4. STOP HORIZONTAL & VERTICAL STEEL AT THE BLOCK-OUT PANELS & THE JOINT USING 90 DEGREE HOOKS. USE 2 EXTRA #4 HORIZONTAL & VERTICAL BARS. ALL SIDES AS SHOWN.
5. INSTALL TRAFFIC CONTROLLER CABINET FOUNDATION WITHIN 1-DEGREE OF PLUMB AND ORIENTED AS SHOWN IN PLANS SUCH THAT CABINET DOOR OPENS AWAY FROM INTERSECTION/TRAFFIC.
6. FOR SIGNALS IN THE MUNICIPALITY OF ANCHORAGE (MOA) ORIENT CABINET DOOR TO FACE J-BOX LIDS AND DO NOT PROVIDE CONCRETE PAD.
7. INSTALL #6 AWG COPPER GROUNDING ELECTRODE CONDUCTOR (GEC), OR SIZE PER NEC TABLE 250.66, WHICHEVER IS LARGER.
8. THE REINFORCING BARS WITHIN THE CONCRETE FOUNDATION MUST BE CONNECTED TOGETHER BY EFFECTIVE MEANS AND WILL BECOME PART OF THE GROUNDING ELECTRODE SYSTEM PER NEC 250.50 AND 250.52(A)(3). INSTALL AN IRREVERSIBLE COMPRESSION GROUNDING CONNECTOR, NRTL-LISTED FOR DIRECT BURIAL IN EARTH AND CONCRETE, TO CONNECT THE REINFORCING BARS TO THE GEC. INSTALL A COPPER GEC, SIZED PER NEC 250.66 BUT NOT SMALLER THAN #6 AWG, BETWEEN THE COMPRESSION CONNECTOR AND THE CONTROLLER CABINET GROUND BUS.

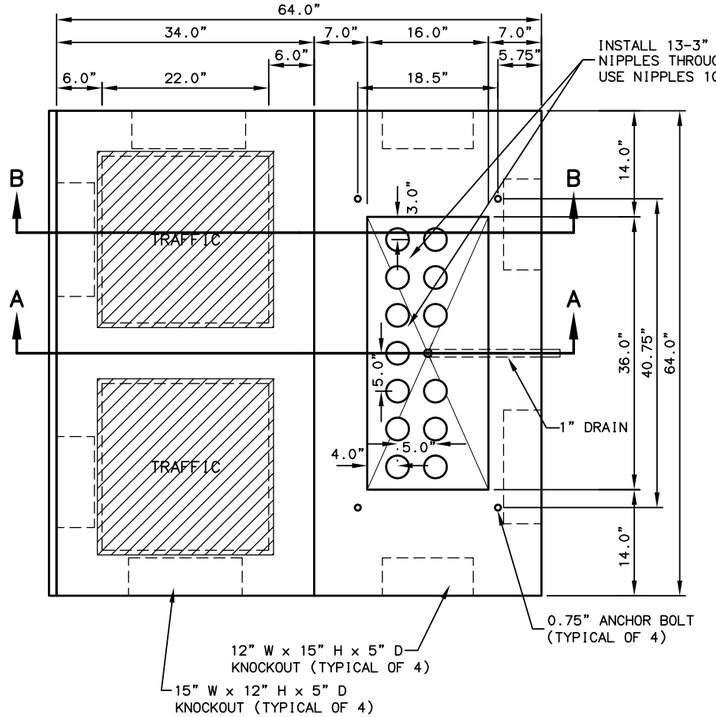

SIZE 6 OR 7 CONTROLLER CABINET FOUNDATION

NOTE: BOLT SPACING DIMENSIONS SHOWN FOR TS2 CONTROLLER CABINETS.

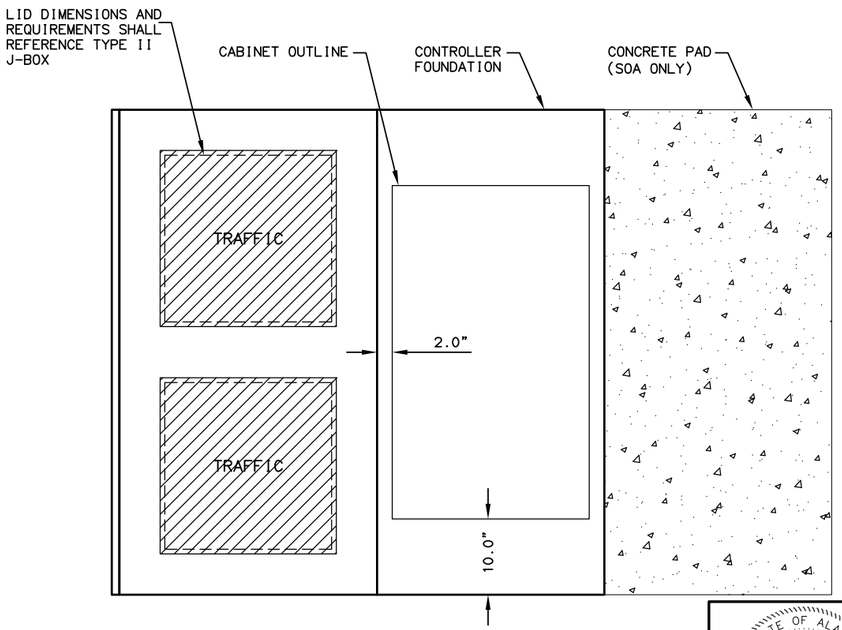

PLAN VIEW

MATERIAL PROPERTIES		
CONCRETE	CLASS A	F'c = 4000 psi
REINFORCING STEEL	AASHTO M31 GRADE 60	Fy = 60 ksi
CONDUIT	RMC	
BONDING JUMPERS	3M-25T BBE6 OR EQUAL	

CHECK SET NOV 2021

STATE OF ALASKA 49TH REGISTERED PROFESSIONAL ENGINEER
DENNIS R. LINNELL
CE-7649
HDL ENGINEERING CONSULTANTS, LLC
3335 ARCTIC BOULEVARD, STE 100
ANCHORAGE, AK 99503
(907) 564-2120
AECL861

STATE OF ALASKA 49TH REGISTERED PROFESSIONAL ENGINEER
ROY N. PACE
EE-12053
EDC, INC.
213 WEST FIREWEED LANE
ANCHORAGE, AK 99503
(907) 257-0601
AECC705

STATE OF ALASKA
DEPARTMENT OF TRANSPORTATION AND PUBLIC FACILITIES

GLENN HWY: PARKS HWY TO S. INNER SPRINGER LP. (PHASE II)

CONTROLLER FOUNDATION

FILE P:\PROJECTS\HDL\GLENN HIGHWAY 34-49 - PHASE 2\DWGS\DOT STD DETAILS\H07-CONTROLLER_FOUNDATION.DWG by roy | DATE/TIME 11/23/2021 1:33 PM | LAYOUT H7 | DESIGNED | CHECKED | DRAFTED

NO.	DATE	REVISION

STATE	PROJECT DESIGNATION	YEAR	SHEET NO.	TOTAL SHEETS
ALASKA	0A15037/CFHWY00431 0A15038/CFHWY00432 0A15033/CFHWY00006	2021	H8	H38

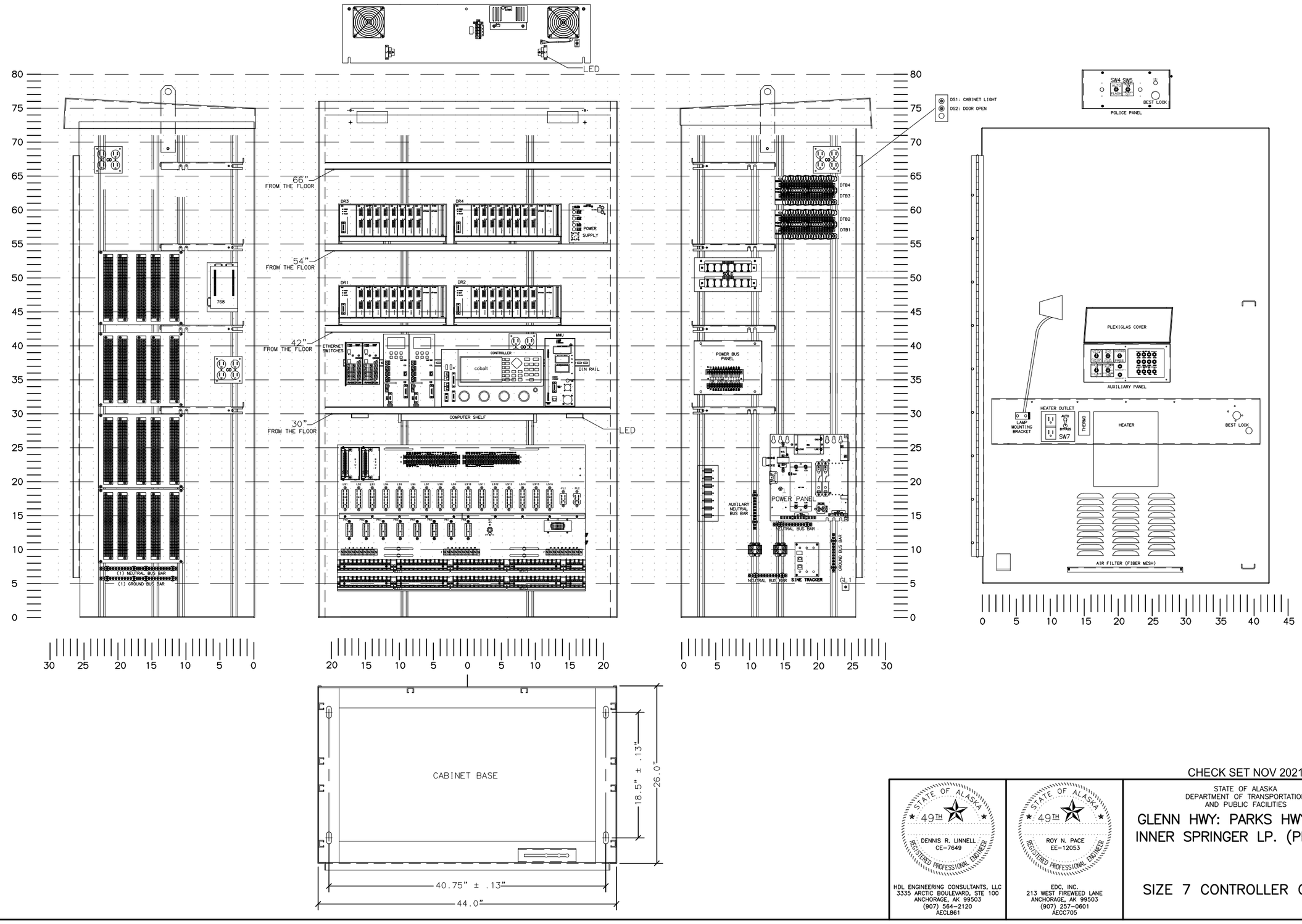

CHECK SET NOV 2021

HDL ENGINEERING CONSULTANTS, LLC
3335 ARCTIC BOULEVARD, STE 100
ANCHORAGE, AK 99503
(907) 564-2120
AECL861

DENNIS R. LINNELL
CE-7649

EDC, INC.
213 WEST FIREWEED LANE
ANCHORAGE, AK 99503
(907) 257-0601
AECC705

ROY N. PACE
EE-12053

STATE OF ALASKA
DEPARTMENT OF TRANSPORTATION
AND PUBLIC FACILITIES

GLENN HWY: PARKS HWY TO S. INNER SPRINGER LP. (PHASE II)

SIZE 7 CONTROLLER CABINET

FILE | P:\PROJECTS\HDL\GLENN HIGHWAY 34-49 - PHASE 2\DWGS\DOT STD DETAILS\H08-SIZE_7_CONTROLLER_CABINET.DWG by roy | DATE/TIME | 11/23/2021 1:33 PM | LAYOUT | H8 | DESIGNED | CHECKED | DRAFTED

NO.	DATE	REVISION	STATE	PROJECT DESIGNATION	YEAR	SHEET NO.	TOTAL SHEETS
			ALASKA	0A15037/CFHWY00431 0A15038/CFHWY00432 0A15033/CFHWY00006	2021	H9	H38

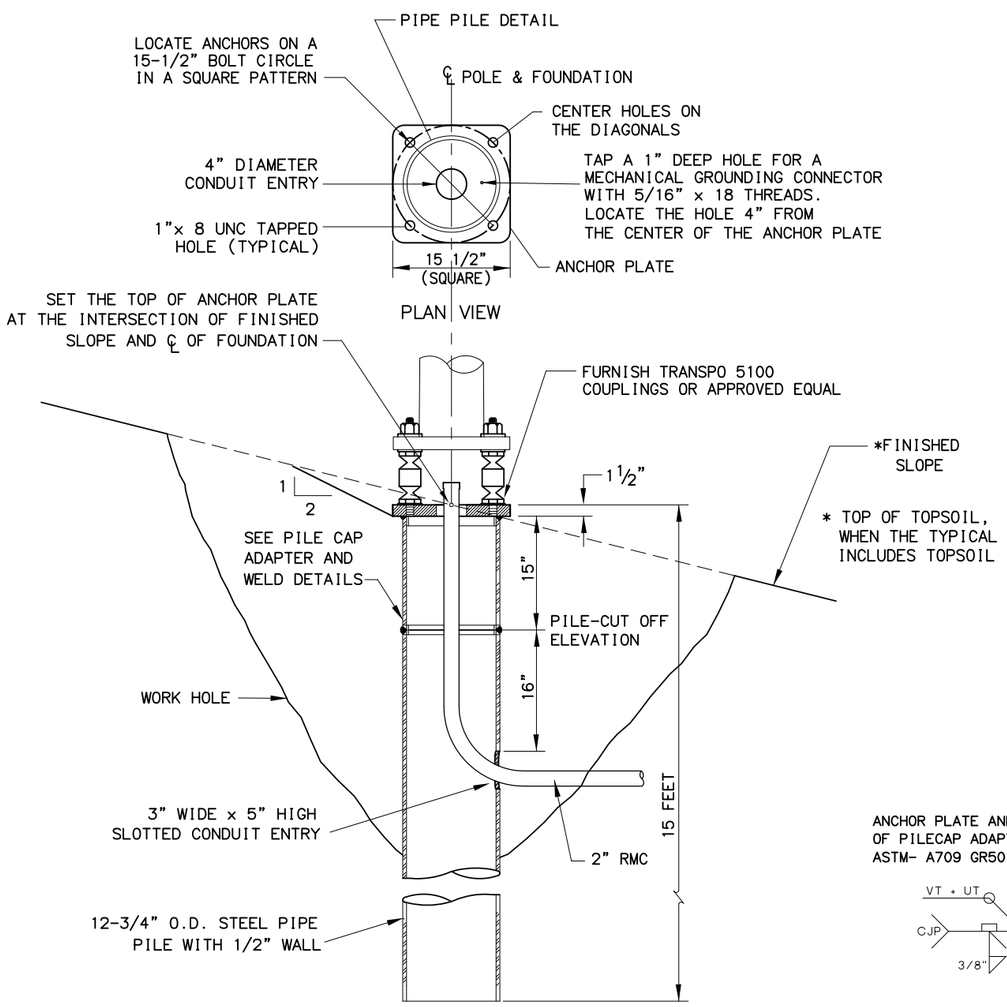

PIPE PILE FOUNDATION

(SHOWN WITH FRANGIBLE COUPLINGS)

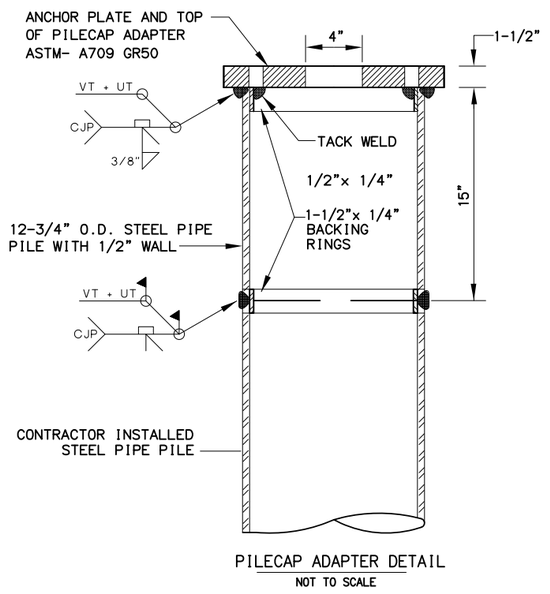

PILECAP ADAPTER DETAIL

NOT TO SCALE

PILECAP ADAPTER AND WELD DETAILS

DESIGN NOTES:

1. DESIGN STANDARD: 2013 STANDARD SPECIFICATIONS FOR STRUCTURAL SUPPORTS FOR HIGHWAY SIGNS, LUMINAIRES AND TRAFFIC SIGNALS.
2. DESIGN LOADS: 5-KIPS AXIAL, 7.5-KIPS SHEAR, 40-KIP-FT MOMENT.
3. GALVANIZATION OF PILE IS NOT REQUIRED. UNLESS THE GROUND WATER TABLE IS FOUND TO BE, ABOVE 5 FEET, THEN GALVANIZE PILE ACCORDING TO SECTION 505.
4. CHARPY TEST FOR ELECTROLIER POLE PILE FOUNDATIONS ARE NOT REQUIRED.

MATERIAL REQUIREMENTS		
STRUCTURAL STEEL PLATE	ASTM A709 GRADE 50	Fy = 50 ksi
STEEL PIPE PILE	ASTM A709, GRADE 50 T3	Fy = 50 ksi
	API 5L GRADE X 42	Fy = 42 ksi

NOTES:

1. FURNISH STEEL PIPE PILES THAT CONFORM TO THE MATERIAL REQUIREMENTS AND SECTION 660, 715 AND 740 OF THE SPECIFICATIONS. NO SPLICES ARE ALLOWED BELOW THE PILECAP ADAPTER.
2. DRIVE PILES OPEN ENDED. COMPLETE PILE WORK ACCORDING TO SECTIONS 505, 660 AND 715 OF THE SPECIFICATIONS. REMOVE AND REINSTALL PILES OUT OF PLUMB MORE THAN 1:40.
3. FRESH HEAD THE TOP OF PILES IN A LEVEL PLANE AND CUT THE CONDUIT ENTRANCE HOLE AFTER DRIVING THE PILE. NOTE; ONLY MECHANICAL OR PLASMA CUTTER MEANS ARE PERMITTED. OXY-FUEL CUTTING IS PROHIBITED.
4. FURNISH ONLY SHOP FABRICATED PILECAP ADAPTERS. INCLUDE STAMPED ENGINEERING CALCULATIONS, DRAWINGS, MILL CERTIFICATIONS AND WELDING PLANS FOR PILECAP ADAPTERS AND THE PILECAP ADAPTER TO PILE WELD. WELDING SHALL CONFORM TO THE REQUIREMENTS OF THE LATEST EDITION OF THE AWS D1.1, STRUCTURAL WELDING CODE-STEEL AND THE SPECIFICATIONS.
5. WAIT AT LEAST 3 DAYS AFTER BACKFILLING THE WORK HOLE BEFORE ERECTING THE LUMINAIRE POLE.
6. TERMINATE CONDUIT(S) 3" ABOVE THE TOP OF THE ANCHOR PLATE. INSTALL A GROUNDING BUSHING ON THE END OF THE RIGID METAL CONDUIT AND ESTABLISH A BOND WITH THE ANCHOR PLATE.

CHECK SET NOV 2021

STATE OF ALASKA, 49TH, DENNIS R. LINNELL, CE-7649, REGISTERED PROFESSIONAL ENGINEER

HDL ENGINEERING CONSULTANTS, LLC
3335 ARCTIC BOULEVARD, STE 100
ANCHORAGE, AK 99503
(907) 564-2120
AECL861

STATE OF ALASKA, 49TH, ROY N. PACE, EE-12053, REGISTERED PROFESSIONAL ENGINEER

EDC, INC.
213 WEST FIREWEED LANE
ANCHORAGE, AK 99503
(907) 257-0601
AECC705

STATE OF ALASKA
DEPARTMENT OF TRANSPORTATION AND PUBLIC FACILITIES

GLENN HWY: PARKS HWY TO S. INNER SPRINGER LP. (PHASE II)

PIPE PILE FOR ELECTROLIERS WITH BREAKAWAY SUPPORTS DETAIL

FILE | P:\PROJECTS\HDL\GLENN HIGHWAY 34-49 - PHASE 2\DWGS\DOT STD DETAILS\H09-PIPE_PILE_FOUNDATION.DWG by roy
DATE/TIME | 11/23/2021 1:33 PM | LAYOUT | H9 | DESIGNED | CHECKED | DRAFTED

NO.	DATE	REVISION

STATE	PROJECT DESIGNATION	YEAR	SHEET NO.	TOTAL SHEETS
ALASKA	0A15037/CFHWY00431 0A15038/CFHWY00432 0A15033/CFHWY00006	2021	H10	H38

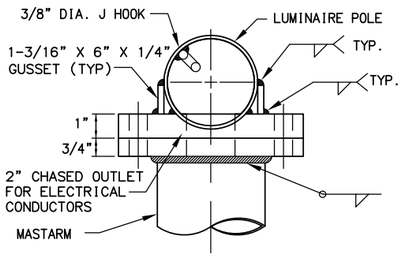

TOP VIEW

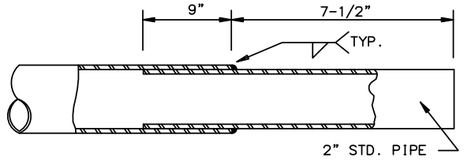

TENON

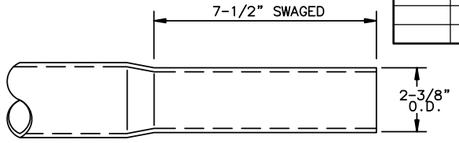

OPTIONAL SWAGED TENON

END OF MASTARM DETAIL

NTS

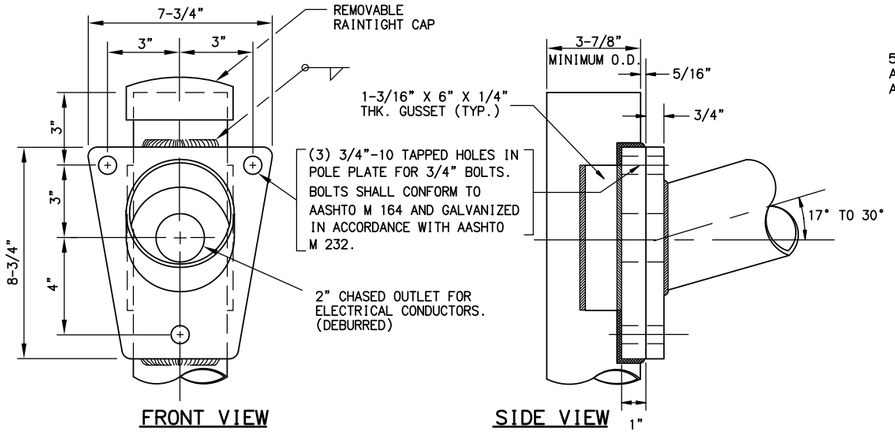

FRONT VIEW SIDE VIEW

MASTARM CONNECTION DETAIL

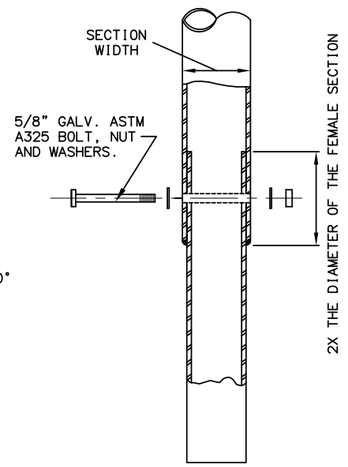

POLE CONNECTION DETAIL

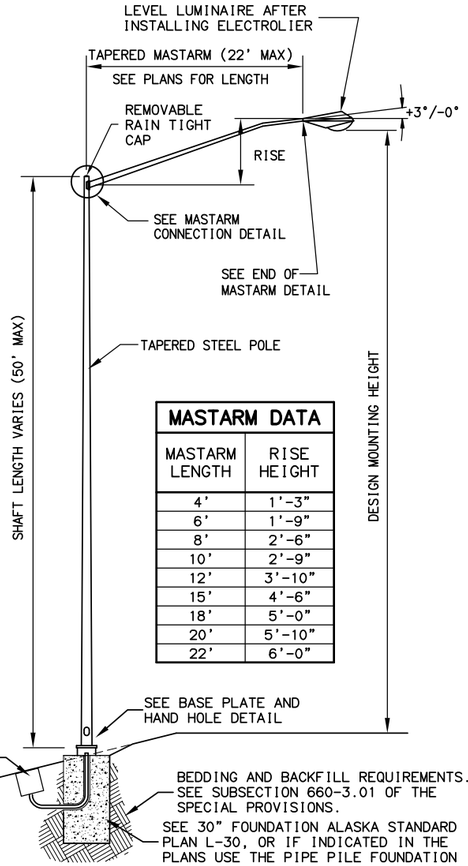

ELECTROLIER ELEVATION

MASTARM DATA	
MASTARM LENGTH	RISE HEIGHT
4'	1'-3"
6'	1'-9"
8'	2'-6"
10'	2'-9"
12'	3'-10"
15'	4'-6"
18'	5'-0"
20'	5'-10"
22'	6'-0"

NOTES:

1. DESIGN AND FABRICATE ALL SHAFTS TO SUPPORT A MASTARM 22 FEET LONG WITH LUMINAIRE. ASSUME EACH LUMINAIRE WEIGHS 55 POUNDS AND HAS AN EFFECTIVE PROJECTED AREA OF 1.2 SQUARE FEET. WITH THIS DEAD LOAD, LIMIT THE ANGULAR ROTATION TO THE POLE TOP 1°40'0" MAXIMUM.
2. WELD SIZE TO BE DETERMINED BY THE MANUFACTURER.
3. MOUNTING HEIGHT, IF SPECIFIED IN THE PLANS, REFERS TO THE HEIGHT OF LUMINAIRE ABOVE THE ROADWAY. ADJUST EACH POLE'S SHAFT LENGTH TO MAINTAIN THIS DIFFERENCE IN ELEVATION WHENEVER SLOPE AND/OR OFFSET VARIES.
4. MINIMUM OUTSIDE DIAMETER AT THE TOP OF POLE EQUALS 3-7/8". POLE DIAMETER SHALL TAPER UNIFORMLY FROM THE TOP OF THE POLE TO THE BASE PLATE, WITH A MAXIMUM TAPER RATE OF 0.14" PER FOOT.
5. APPLY AN ANTI-SEIZING COMPOUND TO ALL THREADED SURFACES, INCLUDING THOSE IN THE ANCHOR PLATE AND ON THE COUPLINGS.
6. MASTARM RISE MAY VARY ±6" FROM THE VALUES LISTED IN THE TABLE.
7. LOCATE THE HANDHOLD AT 90 DEGREES TO THE MASTARM ON THE SIDE OF POLE DOWNSTREAM FROM TRAFFIC FLOW.
8. FURNISH ALL POLES WITH A J-HOOK TO SUPPORT THE ILLUMINATION TAP CONDUCTORS. FURNISH ALL MASTARM POLES WITH A REMOVABLE RAIN TIGHT CAP.
9. MOUNT LIGHTING STANDARDS UPON TRANSPO MODEL NO. 5100 FRANGIBLE COUPLINGS AND TRANSPO TYPE B FEMALE ANCHORS, OR APPROVED EQUAL.
10. INSTALL ALL COMPONENTS OF THE BREAKAWAY SUPPORT SYSTEM IN ACCORDANCE WITH THE MANUFACTURER'S WRITTEN INSTRUCTIONS.
11. FABRICATE THE SKIRT FROM FOUR PIECES OF 1/16" THICK 3003 H-14 ALUMINUM SHEET. BEND EACH PLATE TO PROVIDE CORNERS WITH A 3/4" RADIUS. ASSEMBLE THE SKIRT WITH #10 X 3/8" SELF TAPPING STAINLESS SCREWS OR POP RIVETS. THE ASSEMBLED SKIRT MEASURES ABOUT 12-3/4" SQUARE.
12. A JUNCTION BOX IS REQUIRED AT EACH NEW ELECTROLIER. INSTALL THE JUNCTION BOX IMMEDIATELY BEHIND THE FOUNDATION APPROXIMATELY 7' FROM POLE UNLESS OTHERWISE SPECIFIED IN THE PLANS.

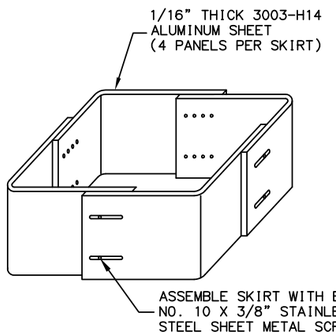

SKIRT DETAIL

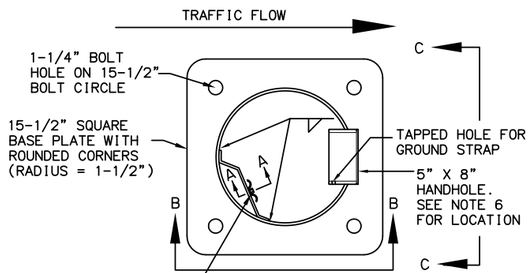

TOP VIEW

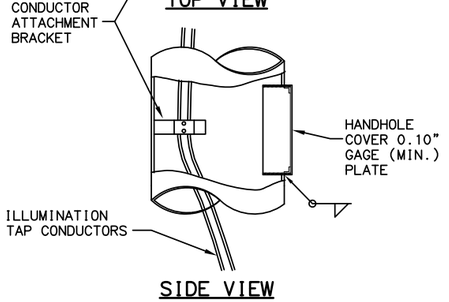

SIDE VIEW

BASE PLATE AND HAND HOLE DETAIL

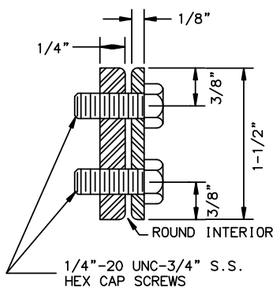

SECTION A-A

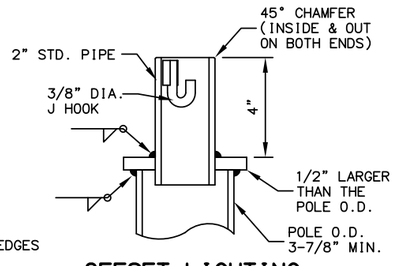

OFFSET LIGHTING STANDARD POLE TOP DETAIL

(CUTAWAY FOR CLARITY)

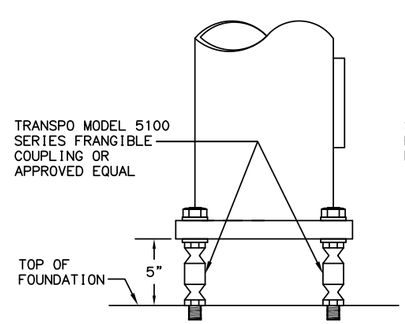

VIEW B-B

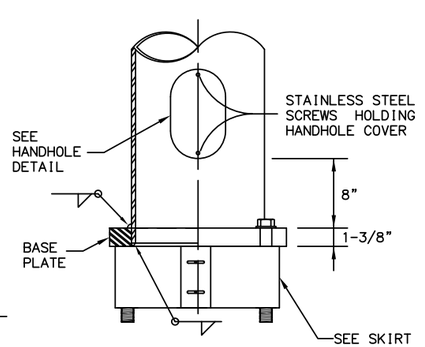

VIEW C-C

CHECK SET NOV 2021

STATE OF ALASKA 49TH
DENNIS R. LINNELL CE-7649
REGISTERED PROFESSIONAL ENGINEER
HDL ENGINEERING CONSULTANTS, LLC
3335 ARCTIC BOULEVARD, STE 100
ANCHORAGE, AK 99503
(907) 564-2120
AECL861

STATE OF ALASKA 49TH
ROY N. PACE EE-12053
REGISTERED PROFESSIONAL ENGINEER
EDC, INC.
213 WEST FIREWEED LANE
ANCHORAGE, AK 99503
(907) 257-0601
AECC705

STATE OF ALASKA
DEPARTMENT OF TRANSPORTATION AND PUBLIC FACILITIES

GLENN HWY: PARKS HWY TO S. INNER SPRINGER LP. (PHASE II)

LIGHTING STANDARD 1

DRAFTED | CHECKED | DESIGNED | LAYOUT H10 | DATE/TIME 11/23/2021 1:33 PM

FILE P:\PROJECTS\HDL\GLENN HIGHWAY 34-49 - PHASE 2\DWGS\DOT STD DETAILS\H10-LIGHTING_STANDARD-1.DWG by roy

NO.	DATE	REVISION

STATE	PROJECT DESIGNATION	YEAR	SHEET NO.	TOTAL SHEETS
ALASKA	0A15037/CFHWY00431 0A15038/CFHWY00432 0A15033/CFHWY00006	2021	H11	H38

DRAFTED | CHECKED | DESIGNED | H11 | LAYOUT | DATE/TIME 11/23/2021 1:33 PM

FILE P:\PROJECTS\HDL\GLENN HIGHWAY 34-49 - PHASE 2\DWGS\DOT STD DETAILS\H11-LIGHTING_STANDARD-2.DWG by roy

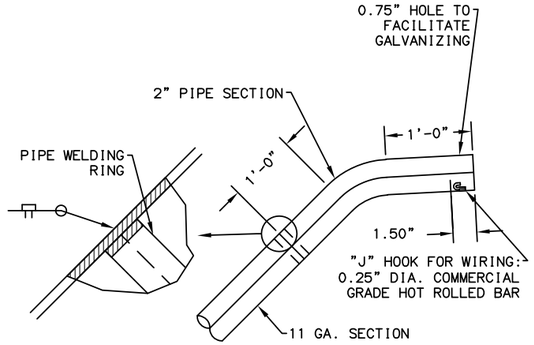

END OF MASTARM DETAIL

NTS

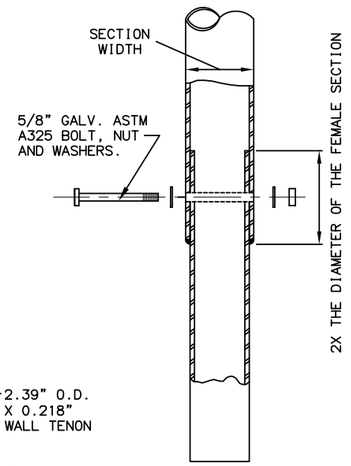

POLE CONNECTION DETAIL

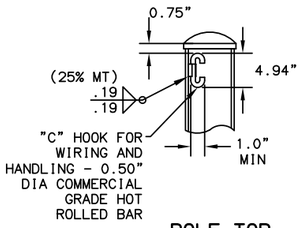

POLE TOP

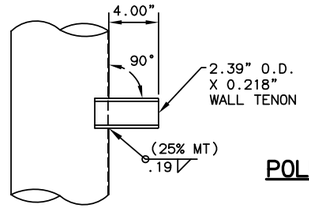

POLE TENON

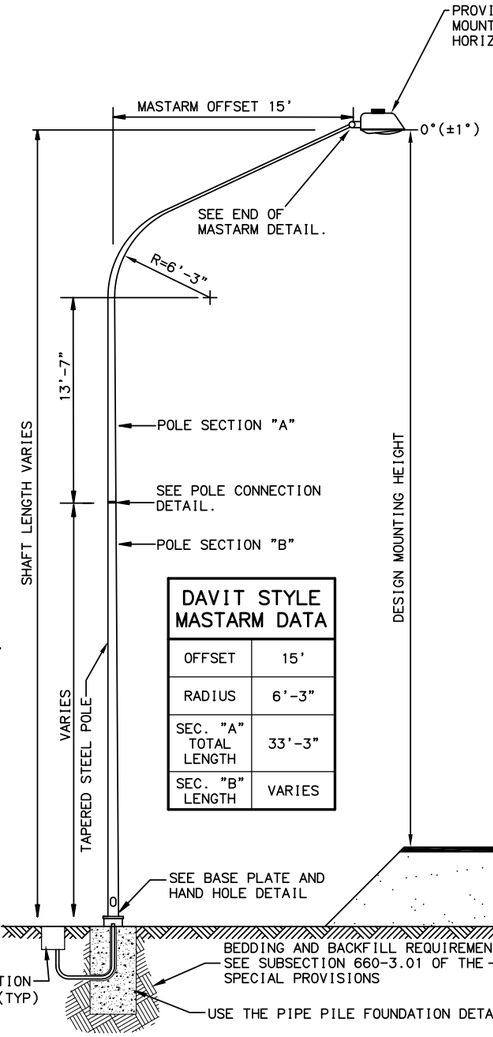

DAVIT STYLE MASTARM DATA	
OFFSET	15'
RADIUS	6'-3"
SEC. "A" TOTAL LENGTH	33'-3"
SEC. "B" LENGTH	VARIES

ELECTROLIER ELEVATION

DAVIT TYPE

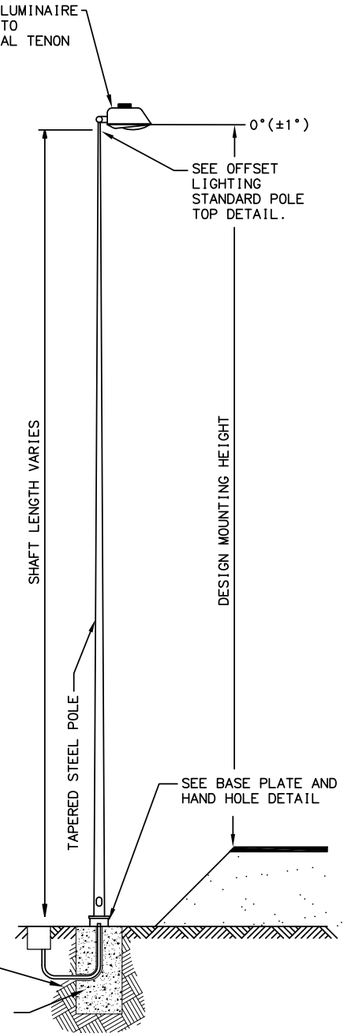

ELECTROLIER ELEVATION

OFFSET TYPE

NOTES:

1. DESIGN AND FABRICATE OFFSET TYPE SHAFTS AS SHOWN WITH AN OFFSET FIXTURE. FOR DAVIT TYPE SHAFTS, SECTION "A" IS CONSTRUCTED AS SHOWN AND SECTION "B" VARIES IN LENGTH. SECURE THE SLIP FIT CONNECTION BETWEEN THE TWO SECTIONS WITH A 5/8" THROUGH BOLT AND SELF LOCKING NUT. ASSUME EACH OFFSET FIXTURE WEIGHS 60 POUNDS AND HAS AN EFFECTIVE PROJECTED AREA OF 2.8 SQUARE FEET. WITH THIS DEAD LOAD, LIMIT THE ANGULAR ROTATION TO THE POLE TOP 1°40'0" MAXIMUM.
2. WELD SIZE TO BE DETERMINED BY THE MANUFACTURER.
3. MOUNTING HEIGHT, IF SPECIFIED IN THE PLANS, REFERS TO THE HEIGHT OF LUMINAIRE ABOVE THE ROADWAY. ADJUST EACH POLE'S SHAFT LENGTH TO MAINTAIN THIS DIFFERENCE IN ELEVATION WHENEVER SLOPE AND/OR OFFSET VARIES.
4. MINIMUM OUTSIDE DIAMETER AT THE TOP OF AN OFFSET TYPE POLE EQUALS 3-7/8" AND FOR A DAVIT TYPE POLE EQUALS 2-3/8". POLE DIAMETER SHALL TAPER UNIFORMLY FROM THE TOP OF THE POLE TO THE BASE PLATE, WITH A MAXIMUM TAPER RATE OF 0.14" PER FOOT.
5. APPLY AN ANTI-SEIZING COMPOUND TO ALL THREADED SURFACES, INCLUDING THOSE IN THE ANCHOR PLATE AND ON THE COUPLINGS.
6. MASTARM ANGLE MUST NOT VARY MORE THEN ±1° FROM THE 25° SPECIFIED.
7. LOCATE THE HANDHOLD AT 90 DEGREES TO THE MASTARM ON THE SIDE OF POLE DOWNSTREAM FROM TRAFFIC FLOW.
8. FURNISH ALL POLES WITH A J-HOOK TO SUPPORT THE ILLUMINATION TAP CONDUCTORS.
9. MOUNT LIGHTING STANDARDS UPON TRANSPO MODEL NO. 5100 FRANGIBLE COUPLINGS AND TRANSPO TYPE B FEMALE ANCHORS, OR APPROVED EQUAL.
10. INSTALL ALL COMPONENTS OF THE BREAKAWAY SUPPORT SYSTEM IN ACCORDANCE WITH THE MANUFACTURER'S WRITTEN INSTRUCTIONS.
11. FABRICATE THE SKIRT FROM FOUR PIECES OF 1/16" THICK 3003 H-14 ALUMINUM SHEET. BEND EACH PLATE TO PROVIDE CORNERS WITH A 3/4" RADIUS. ASSEMBLE THE SKIRT WITH #10 X 3/8" SELF TAPPING STAINLESS SCREWS OR POP RIVETS. THE ASSEMBLED SKIRT MEASURES ABOUT 12-3/4" SQUARE.
12. A JUNCTION BOX IS REQUIRED AT EACH NEW ELECTROLIER. INSTALL THE JUNCTION BOX IMMEDIATELY BEHIND THE FOUNDATION APPROXIMATELY 7' FROM POLE UNLESS OTHERWISE SPECIFIED IN THE PLANS.

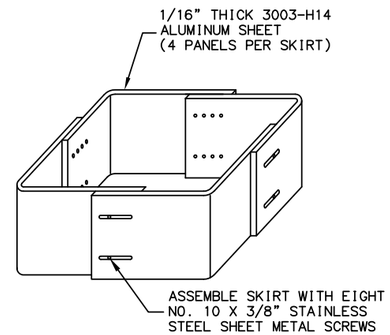

SKIRT DETAIL

OFFSET LIGHTING STANDARD POLE TOP DETAIL

(CUTAWAY FOR CLARITY)

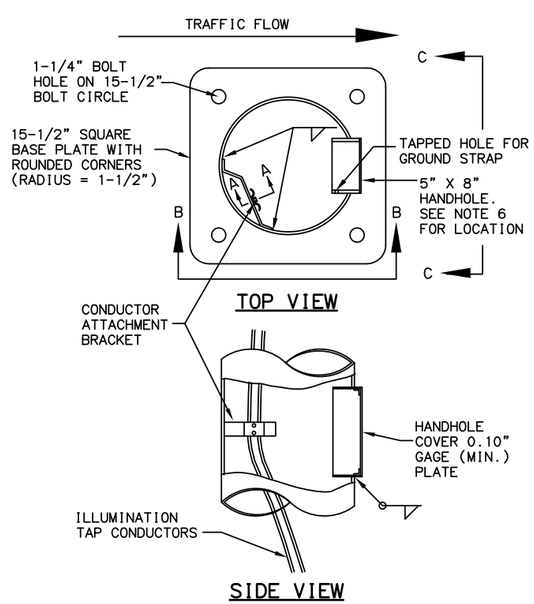

TOP VIEW

SIDE VIEW

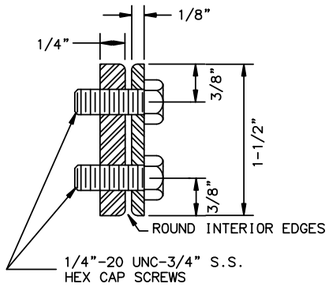

SECTION A-A

BASE PLATE AND HAND HOLE DETAIL

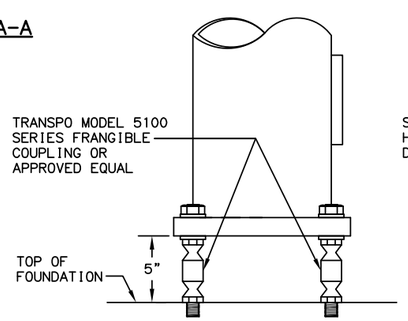

VIEW B-B

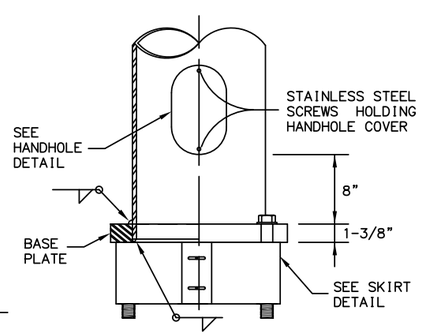

VIEW C-C

CHECK SET NOV 2021

STATE OF ALASKA 49TH — DENNIS R. LINNELL CE-7649 REGISTERED PROFESSIONAL ENGINEER

HDL ENGINEERING CONSULTANTS, LLC
3335 ARCTIC BOULEVARD, STE 100
ANCHORAGE, AK 99503
(907) 564-2120
AECL861

STATE OF ALASKA 49TH — ROY N. PACE EE-12053 REGISTERED PROFESSIONAL ENGINEER

EDC, INC.
213 WEST FIREWEED LANE
ANCHORAGE, AK 99503
(907) 257-0601
AECC705

STATE OF ALASKA
DEPARTMENT OF TRANSPORTATION AND PUBLIC FACILITIES

GLENN HWY: PARKS HWY TO S. INNER SPRINGER LP. (PHASE II)

LIGHTING STANDARD 2

NO.	DATE	REVISION

STATE	PROJECT DESIGNATION	YEAR	SHEET NO.	TOTAL SHEETS
ALASKA	0A15037/CFHWY00431 0A15038/CFHWY00432 0A15033/CFHWY00006	2021	H12	H38

FIXED DESIGN ELEMENTS	
ALL ASSEMBLIES	
LENGTH	16'(TYP, MAY VARY IN PLANS)
FIXED END DIAMETER O.D.	10.0"
TAPER	0.14" /FT
TUBE THICKNESS	7 GA.
HAND-HOLE O.D.	5.63" X 7.31"
BASE PLATE	15.5" X 15.5" X 1.375"
BOLT CIRCLE	15.5"
FRANGIBLE BASE	MODEL 5100 POLE SAFE OR APPROVED EQUAL
MATERIAL PROPERTIES	
TUBE	ASTM A572 GR. 55
BASEPLATE	AASHTO M270 F3, GR 50
TOP PLATE	ASTM A36
HANDHOLE REINFORCEMENT	ASTM A53, GR. B
FINISH	AASHTO M111 & M232

POLE DESIGN LOADING		
LOAD COMPONENT	EFFECTIVE AREA SQ. FT.	WEIGHT LBS.
1 = SIGNAL	7	60
2 = SIGNAL	11	100
3 = PED HEAD	2.5	25
4 = PED HEAD	2.5	25

NOTES:

1. DESIGN POLE ASSEMBLIES TO THE 2001 AASHTO STANDARD SPECIFICATIONS FOR STRUCTURAL SUPPORTS FOR HIGHWAY SIGNS, LUMINAIRES AND TRAFFIC SIGNALS, THE ALASKA STANDARD SPECIFICATIONS, STANDARD MODIFICATIONS, SPECIAL PROVISIONS AND THESE PLANS. DESIGN FOR A BASIC WIND SPEED OF 100 MPH, FATIGUE CATEGORY II.
2. POLES SHALL BE DESIGNED AND FABRICATED TO INCORPORATE ALL FIXED DESIGN ELEMENTS.
3. DESIGN AND FABRICATE TUBES FROM ONE PIECE OF TAPERED STEEL.
4. STEEL GREATER THAN 1/2" THICK SHALL CONFORM TO AASHTO M270 AND SHALL MEET THE FRACTURE CRITICAL CHARPY V-NOTCH IMPACT TEST REQUIREMENTS FOR ZONE 3.
5. INSTALL A 0.625" THICK 3003-H14 ALUMINUM SHEET SKIRT AROUND THE FRANGIBLE COUPLINGS FASTENED WITH STAINLESS SHEET METAL SCREWS.
6. THE DEPARTMENT WILL REJECT DAMAGED OR DEFECTIVE POLES FOR ANY OF THE FOLLOWING, INCLUDING BUT NOT LIMITED TO;
   A. VARIANCES FROM APPROVED SHOP DRAWINGS.
   B. VARIANCES FROM FIXED DESIGN ELEMENTS.
   C. OUT OF ROUND. SECTIONS ARE OUT OF ROUND WHEN THE DIAMETERS OF ROUND MEMBERS EXCEED 2 PERCENT OF THE DIMENSION SPECIFIED ON THE SHOP DRAWINGS.
   D. BOWED WITH SWEEPS EXCEEDING 0.75" INCH THROUGHOUT THE LENGTH OF THE POLE, MASTARM, OR SEGMENT.
   E. DAMAGED OR DENTED FINISHES.
7. WELD SIZE TO BE DETERMINED BY MANUFACTURER.
8. PROVIDE PERMANENT TAGS PER SECTION 740 TABLE 740-1 OF THE SPECIFICATIONS.
9. THIS DRAWING IS INTENDED FOR POLE DESIGN PURPOSES ONLY. ASSEMBLY CONFIGURATIONS ARE FOR LOADING PURPOSES AND MAY DIFFER FROM THOSE SHOWN IN PLANS. POLES HAVE NOT BEEN EVALUATED FOR LOADING CONDITIONS MORE SEVERE THAN THOSE SHOWN AND WILL REQUIRE INDIVIDUAL ANALYSIS WHEN ENCOUNTERED.

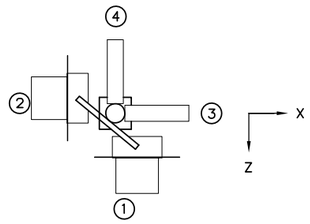

PLAN VIEW
NTS

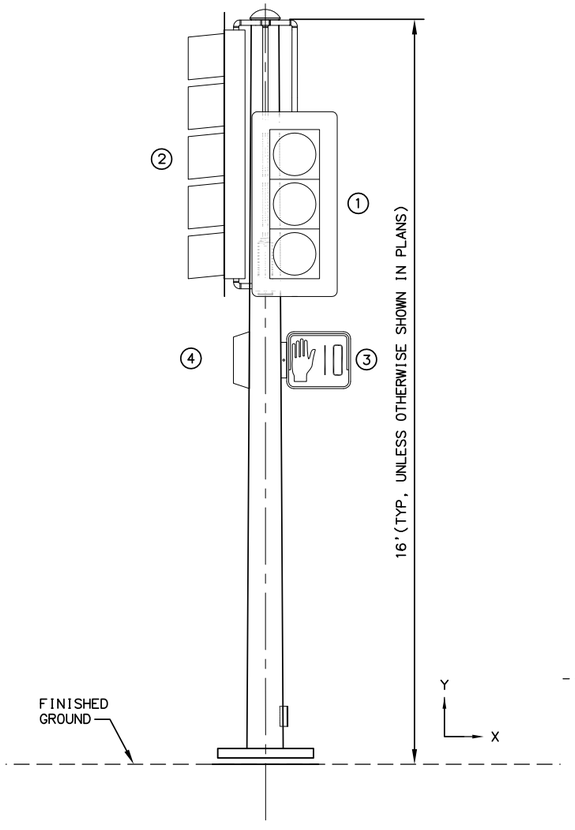

ELEVATION VIEW
NTS

SIDE MOUNT DETAIL

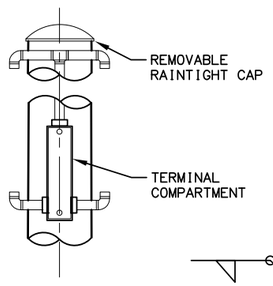

TOP MOUNT DETAIL

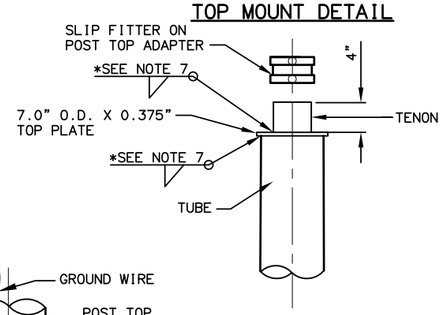

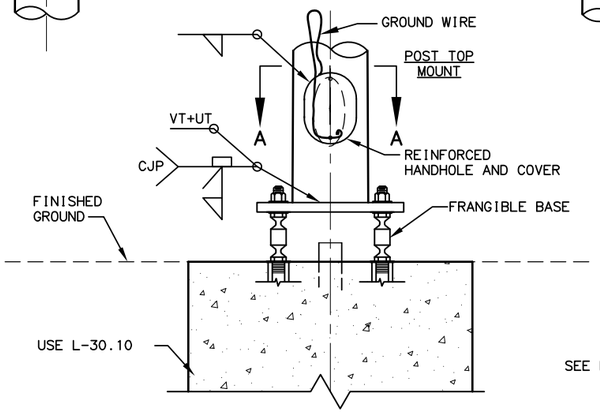

SIGNAL POST AND BASE
NTS

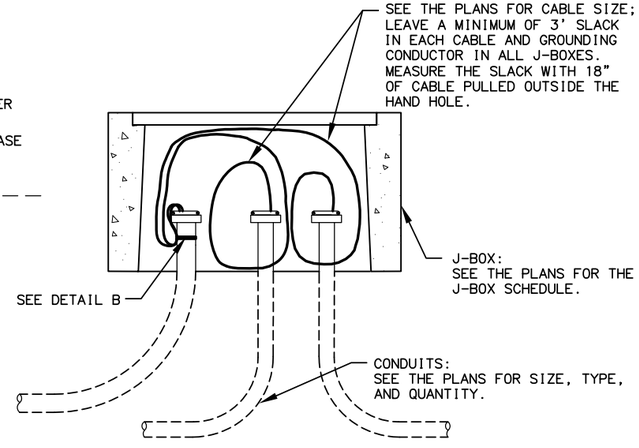

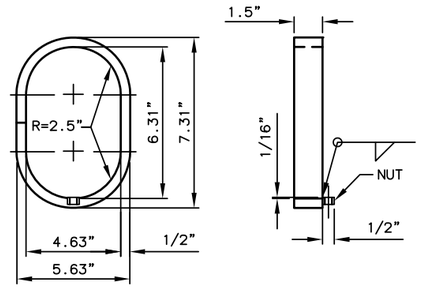

HANDHOLE DETAIL
NTS

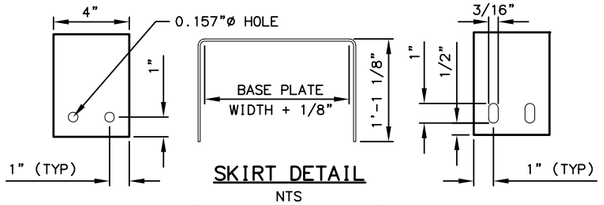

SKIRT DETAIL
NTS
(TWO REQUIRED PER POLE)

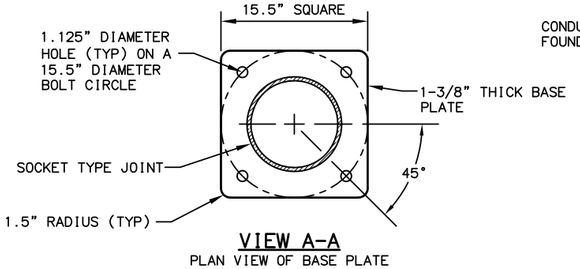

VIEW A-A
PLAN VIEW OF BASE PLATE
NTS

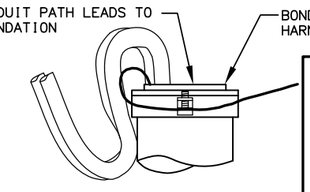

DETAIL B

CHECK SET NOV 2021



HDL ENGINEERING CONSULTANTS, LLC
3335 ARCTIC BOULEVARD, STE 100
ANCHORAGE, AK 99503
(907) 564-2120
AECL861



EDC, INC.
213 WEST FIREWEED LANE
ANCHORAGE, AK 99503
(907) 257-0601
AECC705

STATE OF ALASKA
DEPARTMENT OF TRANSPORTATION AND PUBLIC FACILITIES

GLENN HWY: PARKS HWY TO S. INNER SPRINGER LP. (PHASE II)

BREAKAWAY TRAFFIC SIGNAL POLE

FILE | P:\PROJECTS\HDL\GLENN HIGHWAY 34-49 - PHASE 2\DWGS\DOT STD DETAILS\H12-BREAKAWAY_TRAFFIC_SIGNAL_POLE.DWG by Christopher | DATE/TIME 11/23/2021 1:33 PM | LAYOUT H12 | DESIGNED | CHECKED | DRAFTED

NO.	DATE	REVISION

STATE	PROJECT DESIGNATION	YEAR	SHEET NO.	TOTAL SHEETS
ALASKA	0A15037/CFHWY00431 0A15038/CFHWY00432 0A15033/CFHWY00006	2021	H13	H38

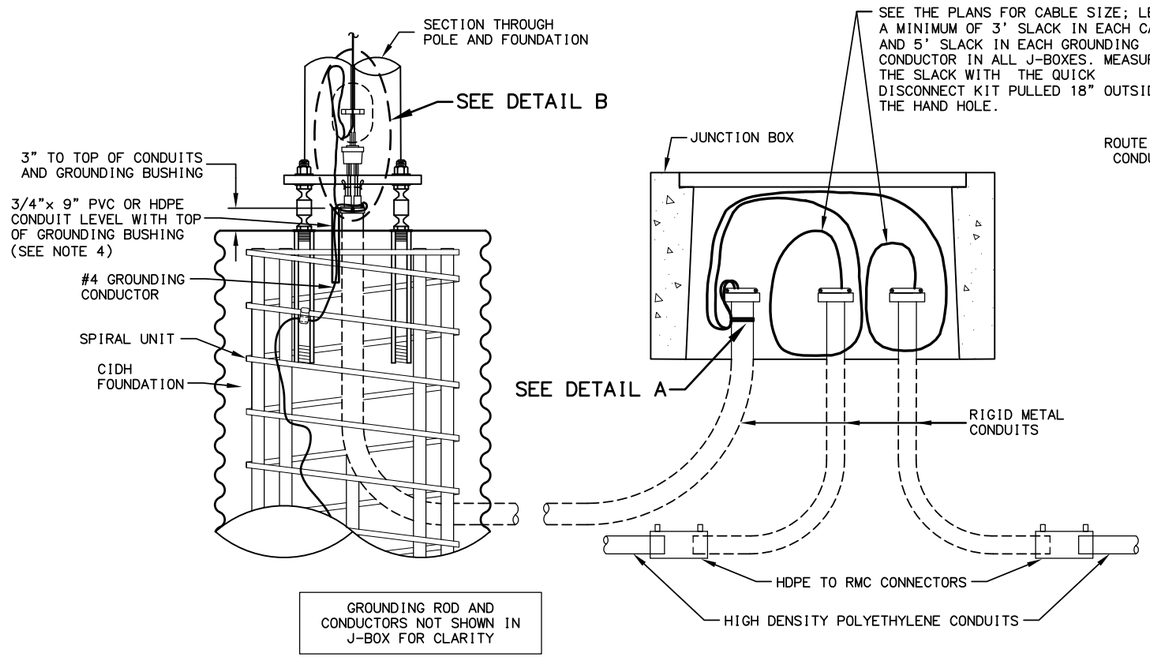

LIGHTING SYSTEM POLE AND J-BOX WIRING DETAILS

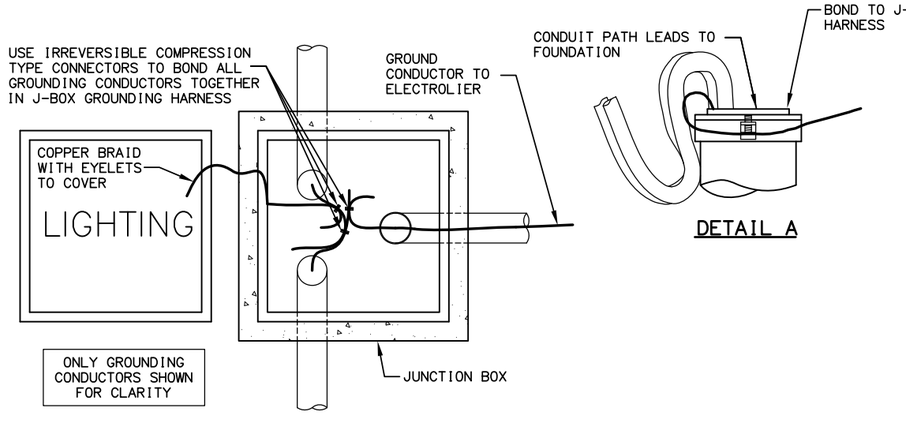

GROUNDING CONDUCTOR BONDING CONNECTIONS

DETAIL A

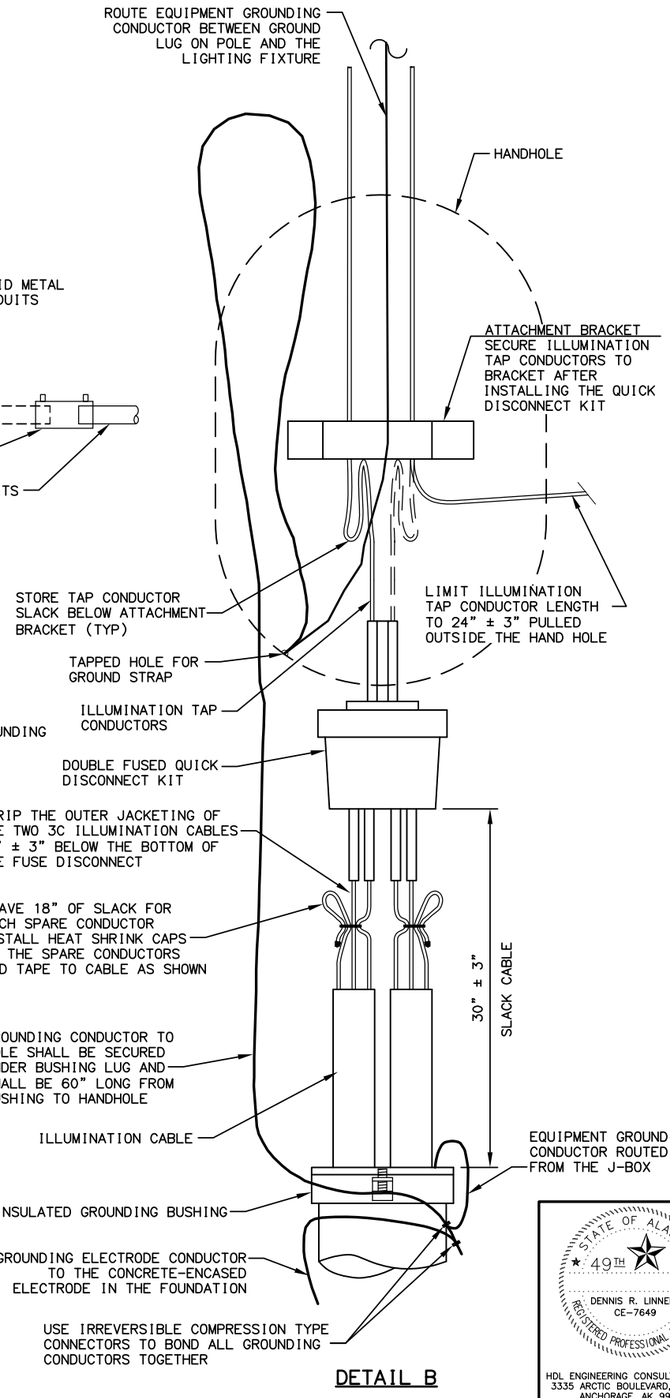

DETAIL B

NOTES:

1. APPLICATION FOR SLIP BASE IS THE SAME EXCEPT FOR BONDING. SEE SUBSECTION 660-3.06 FOR BONDING.
2. LABEL ALL CABLES AND CONDUCTORS IN POLE BASE AND J-BOX. SEE SUBSECTION 660-3.05.
3. MAKE ALL GROUNDING AND BONDING WIRE #8 AWG, EXCEPT IN THOSE CONDUITS THAT CONTAIN CIRCUIT CONDUCTORS LARGER THAN #8 AWG. IN THIS CASE USE WIRE EQUAL IN SIZE TO THE LARGEST CONDUCTOR. THE GROUNDING ELECTRODE CONDUCTOR TO THE CONCRETE-ENCASED ELECTRODE IN THE FOUNDATION SHALL BE #4 AWG.
4. USE LISTED IRREVERSIBLE COMPRESSION TYPE CONNECTORS SIZED FOR EACH APPLICATION AND INSTALLED PER MANUFACTURERS SPECIFICATIONS.
5. PROTECT GROUND WIRE WITH 3/4" PVC OR HDPE CONDUIT TO 6" BELOW TOP OF FOUNDATION FILLED WITH SILICONE SEALANT.

CHECK SET NOV 2021

STATE OF ALASKA 49TH REGISTERED PROFESSIONAL ENGINEER
DENNIS R. LINNELL
CE-7649
HDL ENGINEERING CONSULTANTS, LLC
3335 ARCTIC BOULEVARD, STE 100
ANCHORAGE, AK 99503
(907) 564-2120
AECL861

STATE OF ALASKA 49TH REGISTERED PROFESSIONAL ENGINEER
ROY N. PACE
EE-12053
EDC, INC.
213 WEST FIREWEED LANE
ANCHORAGE, AK 99503
(907) 257-0601
AECC705

STATE OF ALASKA
DEPARTMENT OF TRANSPORTATION AND PUBLIC FACILITIES

GLENN HWY: PARKS HWY TO S. INNER SPRINGER LP. (PHASE II)

CIDH FOUNDATION POLE WIRING AND GROUNDING DETAILS

FILE P:\PROJECTS\HDL\GLENN HIGHWAY 34-49 - PHASE 2\DWGS\DOT STD DETAILS\H13-CIDH_POLE_WIRING_AND_GROUNDING.DWG by roy
DATE/TIME 11/23/2021 1:33 PM | LAYOUT H13 | DESIGNED | CHECKED | DRAFTED

NO.	DATE	REVISION

STATE	PROJECT DESIGNATION	YEAR	SHEET NO.	TOTAL SHEETS
ALASKA	0A15037/CFHWY00431 0A15038/CFHWY00432 0A15033/CFHWY00006	2021	H14	H38

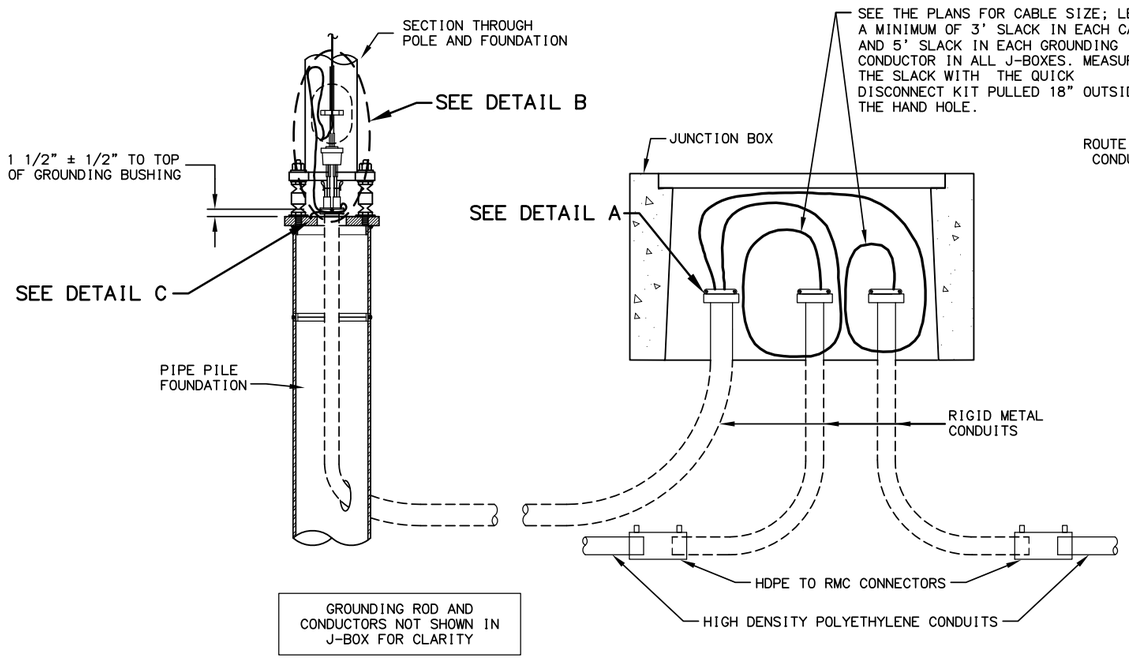

LIGHTING SYSTEM POLE AND J-BOX WIRING DETAILS

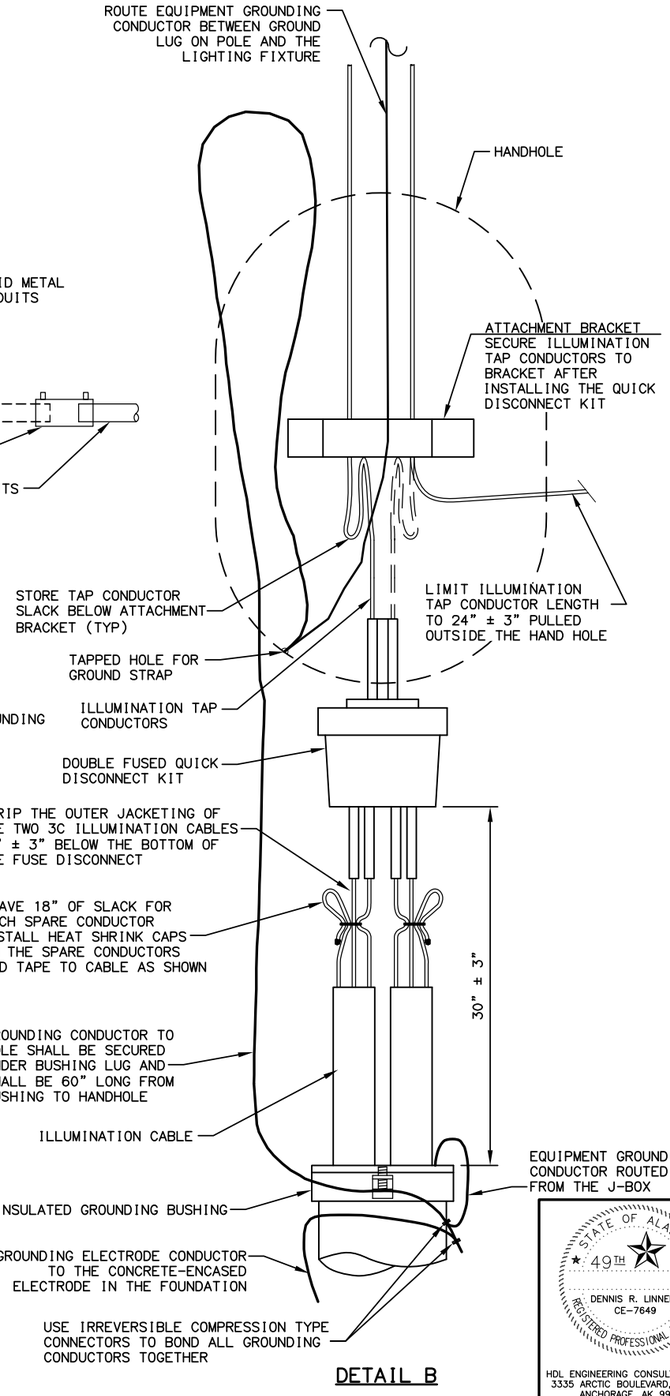

DETAIL B

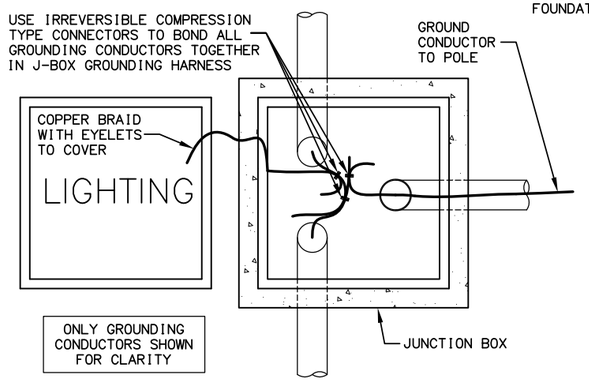

GROUNDING CONDUCTOR BONDING CONNECTIONS

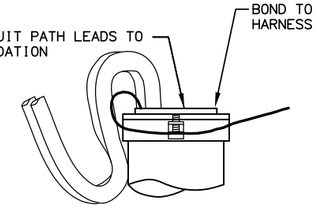

DETAIL A

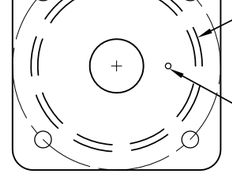

DETAIL C

NOTES:

1. APPLICATION FOR SLIP BASE IS THE SAME EXCEPT FOR BONDING. SEE SUBSECTION 660-3.06 FOR BONDING.
2. LABEL ALL CABLES AND CONDUCTORS IN POLE BASE AND J-BOX. SEE SUBSECTION 660-3.05.
3. MAKE ALL GROUNDING AND BONDING WIRE #8 AWG, EXCEPT IN THOSE CONDUITS THAT CONTAIN CIRCUIT CONDUCTORS LARGER THAN #8 AWG. IN THIS CASE USE WIRE EQUAL IN SIZE TO THE LARGEST CONDUCTOR. THE GROUNDING ELECTRODE CONDUCTOR TO THE CONCRETE-ENCASED ELECTRODE IN THE FOUNDATION SHALL BE #4 AWG.
4. USE LISTED IRREVERSIBLE COMPRESSION TYPE CONNECTORS SIZED FOR EACH APPLICATION AND INSTALLED PER MANUFACTURERS SPECIFICATIONS.

CHECK SET NOV 2021

STATE OF ALASKA
DEPARTMENT OF TRANSPORTATION AND PUBLIC FACILITIES

GLENN HWY: PARKS HWY TO S. INNER SPRINGER LP. (PHASE II)

PIPE PILE POLE WIRING AND GROUNDING

STATE OF ALASKA 49TH — DENNIS R. LINNELL CE-7649 — REGISTERED PROFESSIONAL ENGINEER

HDL ENGINEERING CONSULTANTS, LLC
3335 ARCTIC BOULEVARD, STE 100
ANCHORAGE, AK 99503
(907) 564-2120
AECL861

STATE OF ALASKA 49TH — ROY N. PACE EE-12053 — REGISTERED PROFESSIONAL ENGINEER

EDC, INC.
213 WEST FIREWEED LANE
ANCHORAGE, AK 99503
(907) 257-0601
AECC705

FILE P:\PROJECTS\HDL\GLENN HIGHWAY 34-49 - PHASE 2\DWGS\DOT STD DETAILS\H14-PIPE_PILE_POLE_WIRING_AND_GROUNDING.DWG by roy | DATE/TIME 11/23/2021 1:33 PM | LAYOUT H14 | DESIGNED | CHECKED | DRAFTED

NO.	DATE	REVISION

STATE	PROJECT DESIGNATION	YEAR	SHEET NO.	TOTAL SHEETS
ALASKA	0A15037/CFHWY00431 0A15038/CFHWY00432 0A15033/CFHWY00006	2021	H15	H38

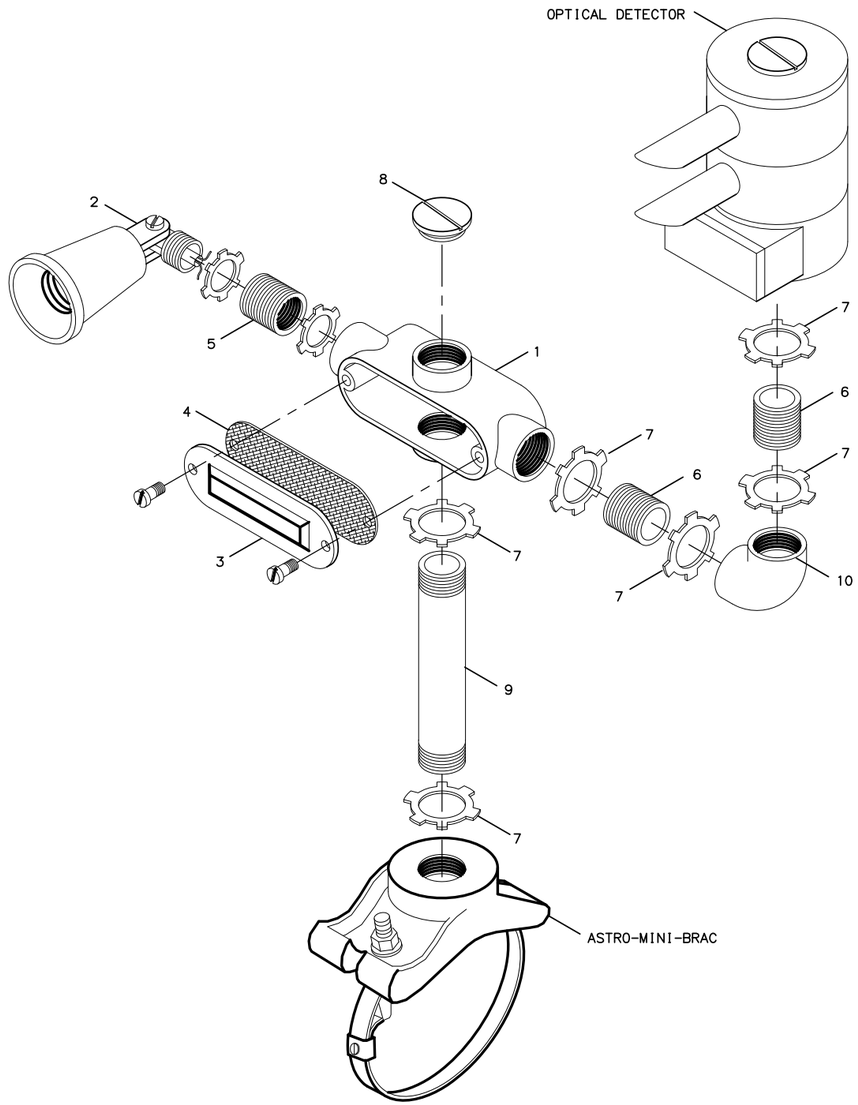

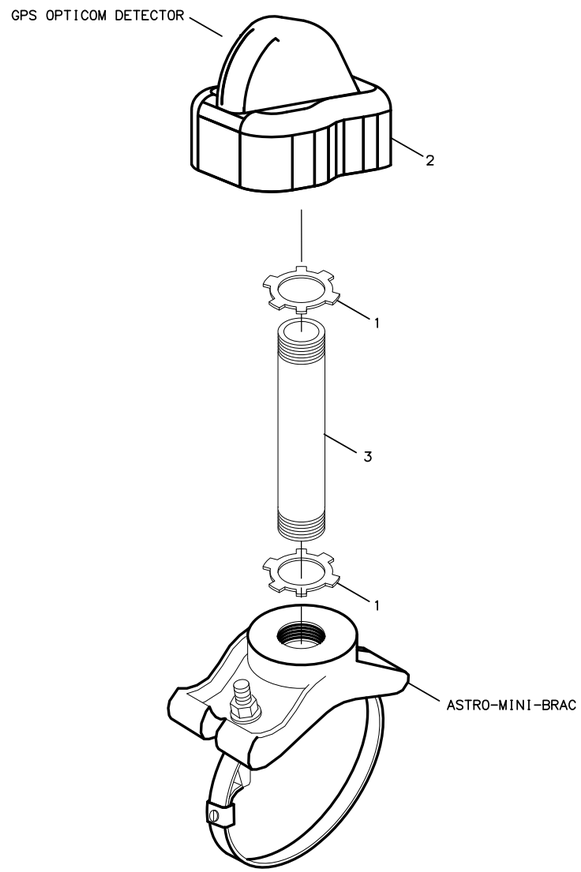

NOTES:

1. SEE THE SIGNAL PLANS FOR THE SIGNAL POLE MAST ARMS SCHEDULED FOR EVP INSTALLATION.
2. FOR EACH EVP INSTALLATION, FURNISH:
   A. A GTT MODEL 711, 721, 722 OPTICOM DETECTOR AS CALLED FOR IN PLANS.
   B. AN ASTRO-MINI-BRAC, MODEL AB-0155-L, AS MANUFACTURED BY PELCO PRODUCTS OR AN APPROVED EQUAL.
   C. A GTT MODEL 575 CONFIRMATION LIGHT KIT WITH THE ADDITIONAL PARTS SHOWN IN THE PARTS LIST, OR STEEL PARTS, WITH A HOT DIP GALVANIZED FINISH, AS SHOWN IN THE PARTS LIST.
   D. WITH EACH OPTICOM DETECTOR INSTALLED, FURNISH A PAR38 20 WATT LED FLOOD LAMP RATED FOR 120 VOLT OPERATION, 1250 INITIAL LUMENS, AND A 25000 HOUR LAMP LIFE.
3. MOUNT EVP DETECTORS TO HAVE DIRECT, UNOBSTRUCTED LINE-OF-SIGHT OF APPROACHING VEHICLES. DRILL A 1 INCH HOLE IN THE TOP DEAD CENTER OF THE MAST ARM AT THE LOCATION PRE-APPROVED BY THE ENGINEER. ASSEMBLE AND TIGHTEN THE PARTS AND LOCKNUTS AS SHOWN ON THIS SHEET.
4. BEFORE ATTACHING THE MODEL 138 DETECTOR CABLE TO THE OPTICOM DETECTOR, STRIP THE INSULATION FROM THE THREE INSULATED CONDUCTORS AT THE CONTROLLER CABINET AND ATTACH ALL FOUR CONDUCTORS TO GROUND.
5. PREEMPTION EMITTERS SHALL BE ASSIGNED ID NUMBERS BY JURISDICTION AS SHOWN IN VEHICLE EMITTER TABLE.

VEHICLE EMITTER TABLE

CLASS	VEHICLE I.D. NO.	JURISDICTION	VEHICLE TYPE
0	NOT USED	MUNICIPALITY OF ANCHORAGE	FIRE & EMS
1	NOT USED	MUNICIPALITY OF ANCHORAGE	OTHER
2	NOT USED	FAIRBANKS	FIRE & EMS
3	NOT USED	FAIRBANKS	OTHER
4	1-30	MATANUSKA/SUSITNA	FIRE & EMS
5	NOT USED	MATANUSKA/SUSITNA	OTHER
6	NOT USED	KENAI PENINSULA	FIRE & EMS
7	NOT USED	KENAI PENINSULA	OTHER
8	NOT USED	ELMENDORF/FT. RICHARDSON	FIRE & EMS
9	NOT USED	ELMENDORF/FT. RICHARDSON	OTHER

PARTS LIST FOR EACH GTT OPTICOM DETECTOR INSTALLED

GTT OPTICOM MODEL 575 CONFIRMATION LIGHT KIT
CONFIGURE AS SHOWN FROM PARTS BELOW

PART NO.	PART TYPE	LIGHT KIT QUANTITY
1	"X" CONDUIT BODY	1
2	PAR 38 LAMP HOLDER	2
3	CONDUIT COVER	1
4	COVER GASKET	1
5	REDUCING BUSHING	2
6	3/4" CLOSE NIPPLE	2
7	3/4" LOCKNUT	6
8	3/4" HOLE PLUG	2
9	3/4" X 6" NIPPLE	ADD 1 TO KIT
10	3/4" X 90° ELBOW	ADD 1 TO KIT

PARTS LIST FOR EACH GPS OPTICOM DETECTOR INSTALLED

GTT OPTICOM MODEL 3100 RADIO/GPS UNIT AS SHOWN FROM PARTS BELOW

PART NO.	PART TYPE	LIGHT KIT QUANTITY
1	3/4" LOCKNUT	2
2	GPS OPTICOM UNIT	1
3	3/4" X 6" NIPPLE	1

CHECK SET NOV 2021

STATE OF ALASKA 49TH — DENNIS R. LINNELL CE-7649 — REGISTERED PROFESSIONAL ENGINEER

HDL ENGINEERING CONSULTANTS, LLC
3335 ARCTIC BOULEVARD, STE 100
ANCHORAGE, AK 99503
(907) 564-2120
AECL861

STATE OF ALASKA 49TH — ROY N. PACE EE-12053 — REGISTERED PROFESSIONAL ENGINEER

EDC, INC.
213 WEST FIREWEED LANE
ANCHORAGE, AK 99503
(907) 257-0601
AECC705

STATE OF ALASKA
DEPARTMENT OF TRANSPORTATION
AND PUBLIC FACILITIES

GLENN HWY: PARKS HWY TO S. INNER SPRINGER LP. (PHASE II)

EVP DETECTOR DETAILS

FILE | P:\PROJECTS\HDL\GLENN HIGHWAY 34-49 - PHASE 2\DWGS\DOT STD DETAILS\H14-GPS_DETECTOR_DETAILS.DWG by roy | DATE/TIME | 11/23/2021 1:33 PM | LAYOUT | H14 | DESIGNED | CHECKED | DRAFTED

NO.	DATE	REVISION	STATE	PROJECT DESIGNATION	YEAR	SHEET NO.	TOTAL SHEETS
			ALASKA	0A15037/CFHWY00431 0A15038/CFHWY00432 0A15033/CFHWY00006	2021	H16	H38

CAB
DPS
CDB

DESIGNED BY
CHECKED BY
DRAFTED BY

SCALE
NTS

DATE TIME
11/22/2021 4:53 PM

DRAWING LOCATION
H:\JOBS\08-016 GLENN HIGHWAY 34-42 (DOT)\09 - PS&E\CAD_PH2\DRAWINGS\08016_P2_H16.DWG

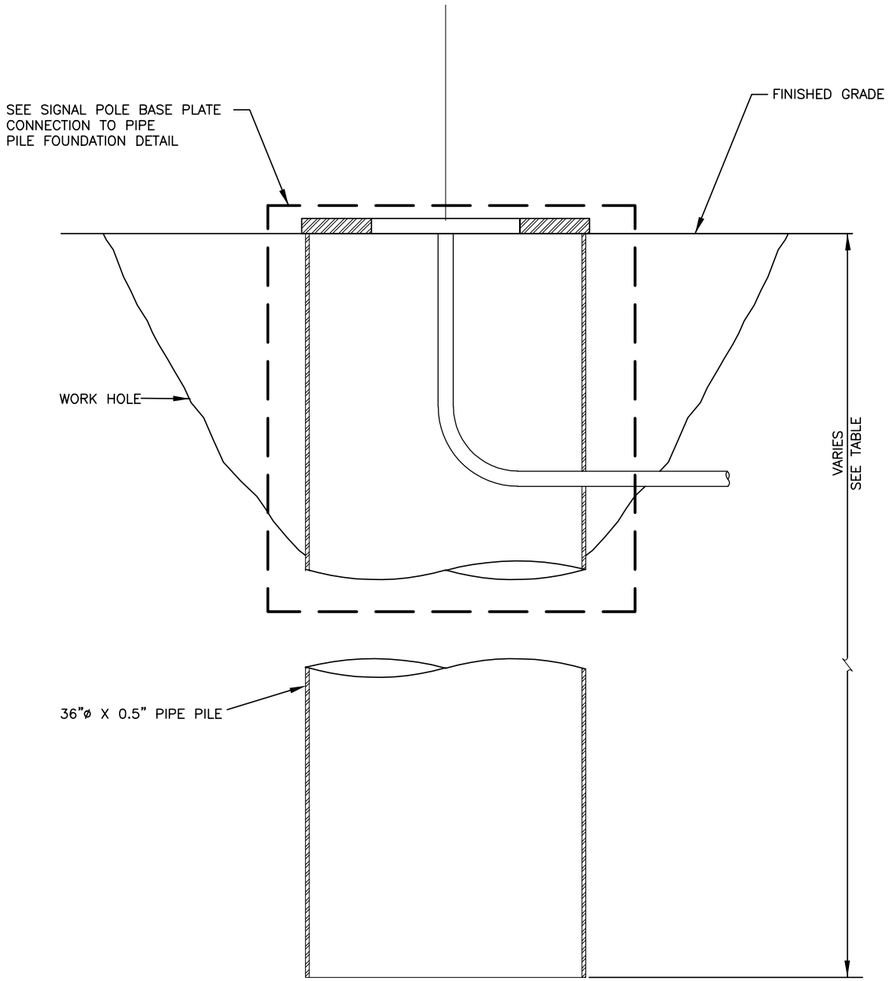

PIPE PILE FOUNDATION

MATERIAL REQUIREMENTS		
STEEL PIPE PILE	ASTM A709, GRADE 50 T3	Fy = 50 ksi
	API 5L, GRADE 52 PSL2	Fy = 52 ksi

DEPTH TABLE	
MASTARM(S) LENGTH (FT)	FOUNDATION DEPTH BY APPLICATION (FT) SINGLE MASTARM
70 <= L <= 75	25
55 <= L <= 65	25
35 <= L <= 50	20

SAND SLURRY MIX DESIGN		
ITEM	BATCHING QUANTITIES PER CYD BATCH (LBS)	APPLICABLE SPECS
PORTLAND CEMENT CONCRETE	188	701–2.01
WATER (52.1 GAL)	435	712–2.01
FINE AGGREGATE SSD	3041	703–2.01
ADMIXTURE: MICROAIR	2.0 OZ	711–2.02
TOTAL	3664	

NOTES:

1. FURNISH STEEL PIPE PILES THAT CONFORM TO THE MATERIAL REQUIREMENTS AND SECTION 660, 715 AND 740 OF THE SPECIFICATIONS. NO SPLICES ARE ALLOWED.
2. DRIVE PILES OPEN ENDED. COMPLETE PILE WORK ACCORDING TO SECTIONS 505, 660 AND 715 OF THE SPECIFICATIONS. REMOVE AND REINSTALL PILES OUT OF PLUMB MORE THAN 1:40.
3. FRESH HEAD THE TOP OF PILES IN A LEVEL PLANE AND CUT THE CONDUIT ENTRANCE HOLE AFTER DRIVING THE PILE. NOTE; ONLY MECHANICAL OR PLASMA CUTTER MEANS ARE PERMITTED. OXY–FUEL CUTTING IS PROHIBITED.
4. WELDING SHALL CONFORM TO THE REQUIREMENTS OF THE LATEST EDITION OF THE AWS D1.1, STRUCTURAL WELDING CODE–STEEL AND THE SPECIFICATIONS.
5. BACKFILL AND COMPACT WORK HOLE ACCORDING TO SECTION 205, AND SUBSECTIONS 203–3.04 AND 660–3.01 OF THE SPECIFICATIONS. USE SELECT MATERIAL, TYPE A OR SAND SLURRY AS BACKFILL MATERIAL.
6. WAIT AT LEAST 3 DAYS AFTER BACKFILLING THE WORK HOLE BEFORE ERECTING THE SIGNAL POLE.
7. TERMINATE CONDUIT(S) 3" ABOVE THE TOP OF THE TOP PLATE.

CERTIFICATION SET
NOVEMBER 2021

STATE OF ALASKA ★ 49TH ★ DOUGLAS P. SIMON CE–13943 REGISTERED PROFESSIONAL ENGINEER

HDL ENGINEERING CONSULTANTS, LLC
3335 ARCTIC BOULEVARD, STE 100
ANCHORAGE, AK 99503
(907) 564–2120
AECL861

STATE OF ALASKA
DEPARTMENT OF TRANSPORTATION
AND PUBLIC FACILITIES

GLENN HWY: PARKS HWY TO S. INNER SPRINGER LP. (PHASE II)

PIPE PILE FOUNDATION FOR SIGNAL POLE

NO.	DATE	REVISION
1	7-17-19	ENLARGED CONDUIT HOLE

STATE	PROJECT DESIGNATION	YEAR	SHEET NO.	TOTAL SHEETS
ALASKA	0A15037/CFHWY00431 0A15038/CFHWY00432 0A15033/CFHWY00006	2019	H17	H38

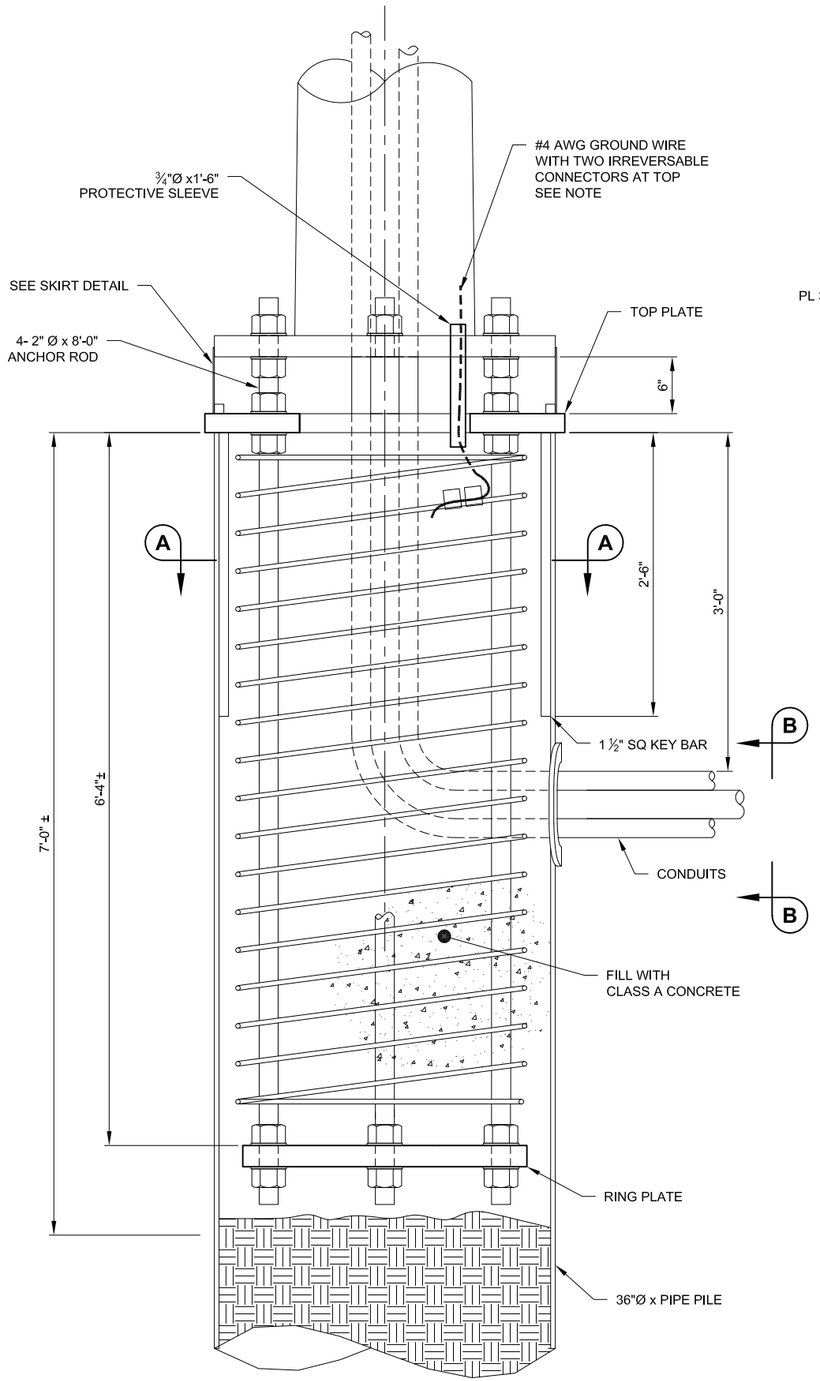

SIGNAL POLE PILE CONNECTION

0 1' 2'

ALL BOLTS NOT SHOWN FOR CLARITY

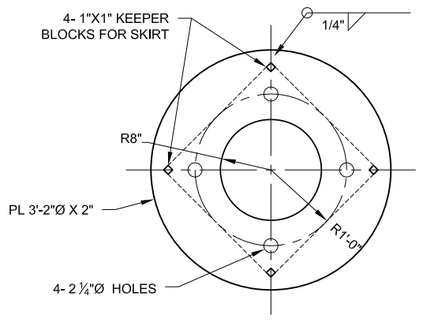

TOP PLATE DETAIL

0 1' 2' 3'

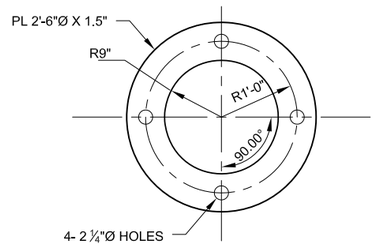

RING PLATE DETAIL

0 1' 2' 3'

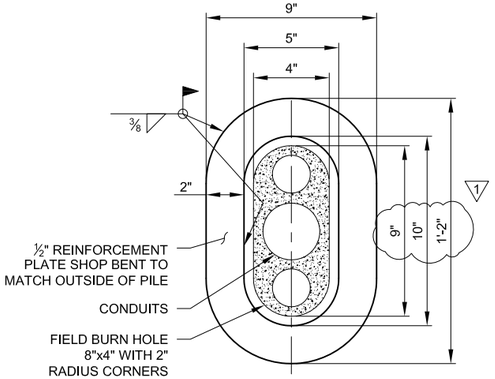

SECTION B-B

0 3" 6" 9" 1'-0"

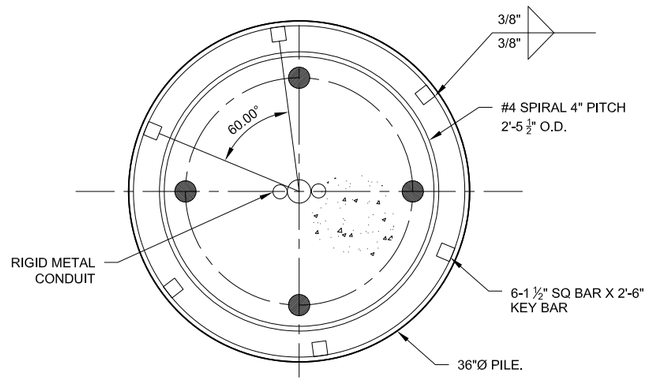

SECTION A-A

0 1' 2'

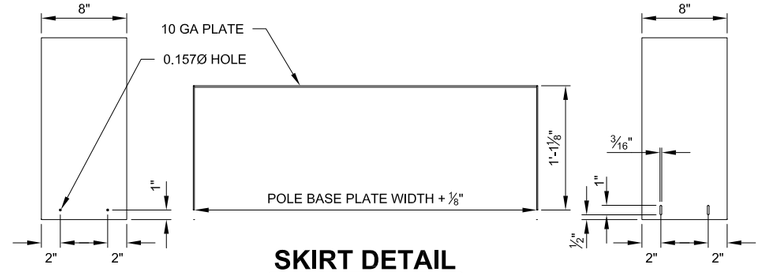

SKIRT DETAIL

0 1' 2'

(TWO REQUIRED PER POLE)

GENERAL NOTES

1. PROVIDE 1.5 EXTRA TURNS AT EACH END OF THE SPIRAL REINFORCING STEEL. REINFORCING SHALL NOT BE SPLICED. TIE SPIRAL TO ANCHOR RODS.
2. CONNECT GROUND WIRE NEAR THE TOP OF SPIRAL REINFORCING STEEL WITH TWO IRREVERSIBLE CONNECTORS AS SHOWN. FASTEN CONNECTORS ACCORDING TO THE MANUFACTURES RECOMMENDATIONS INCLUDING THE USE OF MANUFACTURES SPECIFIED TOOLS. THE GROUND WIRE MAY BE BARE SOLID, STRANDED, OR BRAIDED COPPER. PROTECT GROUND WIRE WITH PROTECTIVE SLEEVE AS SHOWN AND FILL WITH SILICON SEALANT.
3. ANCHOR RODS ARE SUBJECT TO CHARPY V-NOTCH IMPACT TESTING. SUBMIT MILL CERTIFICATES FOR ANCHOR RODS, NUTS, WASHERS. GALVANIZE ANCHOR RODS FULL LENGTH. PROVIDE PERMANENT MANUFACTURES' IDENTIFICATION AND PERMANENT GRADE IDENTIFICATION ON EACH END OF ANCHOR ROD BY STEEL DIE STAMP. SECURE EXPOSED ANCHOR ROD WITH A RING PLATE WHEN NOT IN SERVICE. INSTALL ANCHOR RODS PLUMB. ANCHOR RODS GREATER THAN 1:40 OUT OF PLUMB WILL RESULT IN FOUNDATION REJECTION.
4. COMPLETE ALL CONCRETE WORK IN ACCORDANCE WITH SECTION 501, 503 AND 660 OF THE STANDARD SPECIFICATIONS. USE A TUBE WITH A HOPPER HEAD OR OTHER APPROVED DEVICE WHEN DROPPING CONCRETE MORE THAN 5 FEET PER SUB SECTION 501-3.08. VIBRATE CONCRETE DURING PLACEMENT BY MECHANICAL VIBRATION PER SUBSECTION 501-3.08. ENSURE UPPER ANCHOR ROD THREADS ARE PROTECTED FROM CONTACT WITH CONCRETE DURING POUR.

MATERIAL REQUIREMENTS

CONCRETE	CLASS A	f'c = 4000 psi
SPIRAL REINFORCING STEEL	AASHTO M31 #4	GR 60
GROUND WIRE		#4 awg
ANCHOR RODS 2" Ø x LENGTH VARIES	ASTM F1554 S2, S3, & S4	GR 105
FASTENERS, WASHERS	AASHTO M293	
FASTENERS, NUTS	AASHTO M292	
FINISH, ANCHOR RODS & FASTENERS	AASHTO M232	
STEEL SHAPE & PLATES	ASTM 709	GR 50
STEEL SHAPES & PLATES FINISH	ASTM A153	
CONDUIT	Sch 40	RMC
PROTECTIVE SLEEVE	Sch 40	PVC

STATE OF ALASKA
49 TH
David R. Shearer
No. CE 8373
REGISTERED PROFESSIONAL ENGINEER
5/18/21

SHEARER DESIGN LLC
Project Design, Construction Engineering, Homeowner Assistance
3613 Phinney Ave N, # B (206) 781-7830
Seattle WA 98103 WWW.SHEARERDESIGN.NET

STATE OF ALASKA
DEPARTMENT OF TRANSPORTATION
AND PUBLIC FACILITIES

GLENN HWY: PARKS HWY TO S. INNER SPRINGER LP. (PHASE II)

4–HOLE SIGNAL POLE BASE PLATE CONNECTION TO PIPE PILE FOUNDATION

FILE [C:\USERS\DAVID\ONEDRIVE\DESKTOP\SHEARER DESIGN\D DRIVE\JOBS\0297 GLENN HWY POLE\DESIGN\DWG\0297 SIGNAL POLE DETAILS 11.DWG by david] DATE/TIME 11/23/2021 12:12 PM LAYOUT 4 HOLES DESIGNED JLP CHECKED DRS DRAFTED JLP

NO.	DATE	REVISION
1	7-17-19	ENLARGED CONDUIT HOLE

STATE	PROJECT DESIGNATION	YEAR	SHEET NO.	TOTAL SHEETS
ALASKA	0A15037/CFHWY00431 0A15038/CFHWY00432 0A15033/CFHWY00006	2019	H18	H38

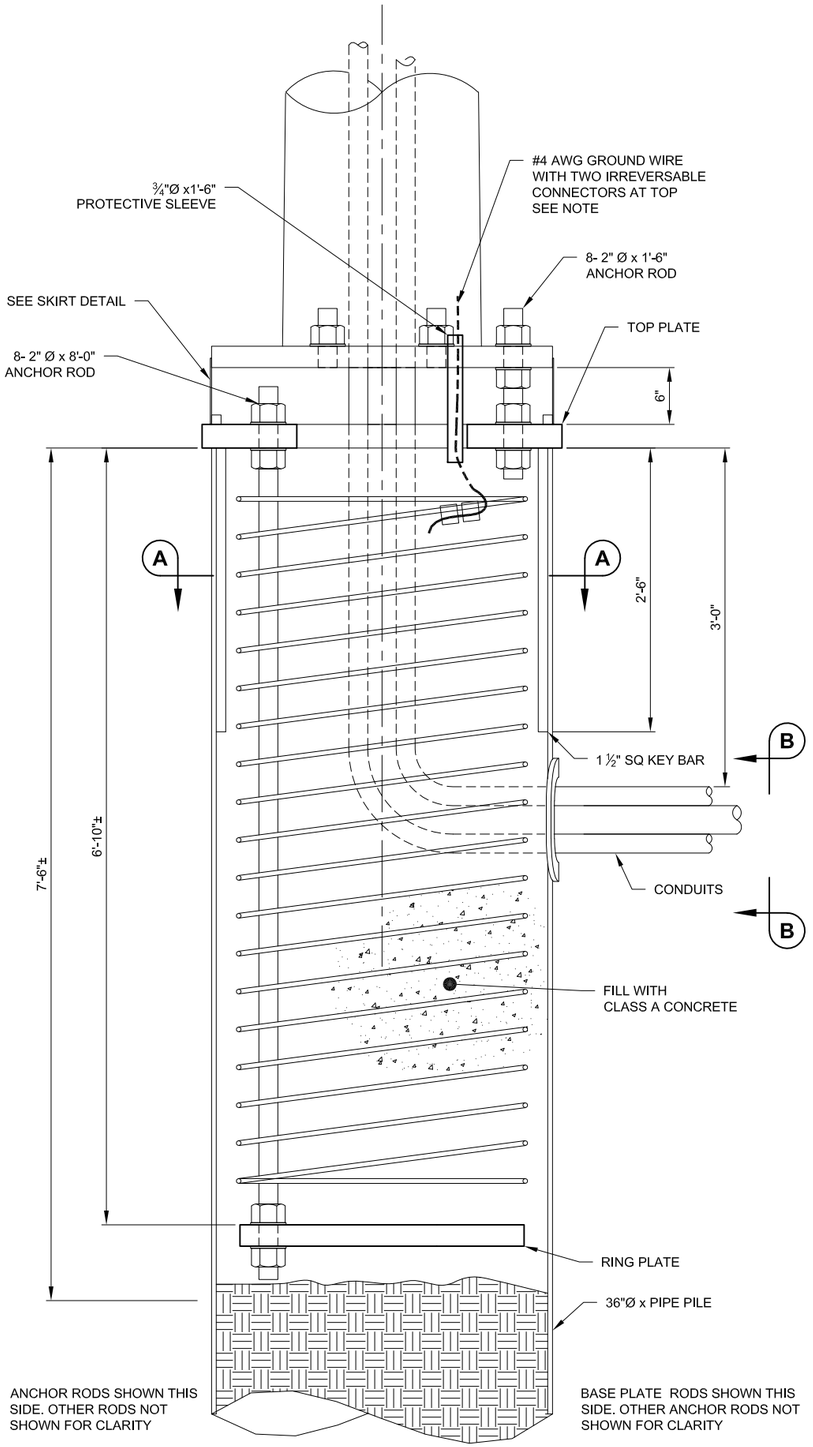

SIGNAL POLE PILE CONNECTION

0 1' 2'

ALL BOLTS NOT SHOWN FOR CLARITY

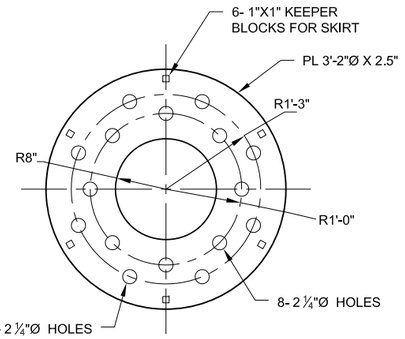

TOP PLATE DETAIL

0 1' 2' 3'

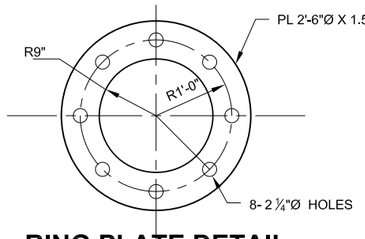

RING PLATE DETAIL

0 1' 2' 3'

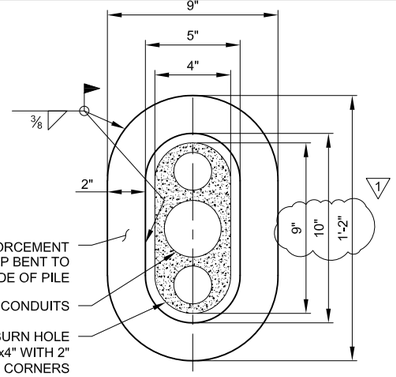

SECTION B-B

0 3" 6" 9" 1'-0"

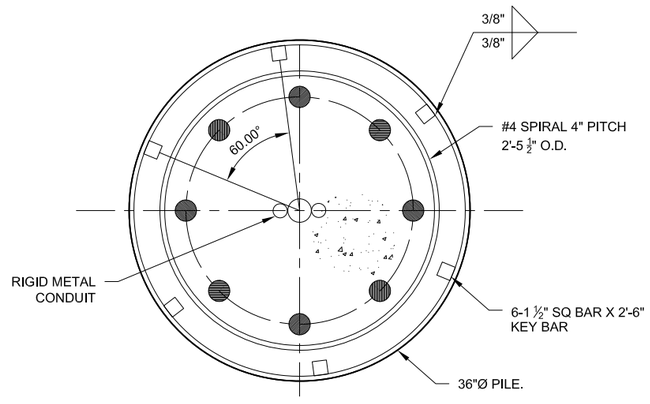

SECTION A-A

0 1' 2'

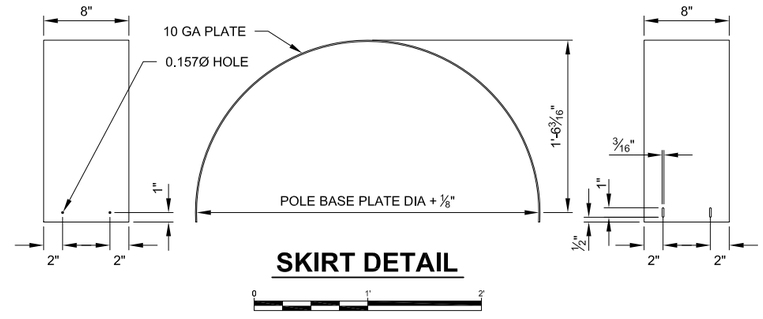

SKIRT DETAIL

0 1' 2'

(TWO REQUIRED PER POLE)

GENERAL NOTES

1. PROVIDE 1.5 EXTRA TURNS AT EACH END OF THE SPIRAL REINFORCING STEEL. REINFORCING SHALL NOT BE SPLICED. TIE SPIRAL TO ANCHOR RODS.
2. CONNECT GROUND WIRE NEAR THE TOP OF SPIRAL REINFORCING STEEL WITH TWO IRREVERSIBLE CONNECTORS AS SHOWN. FASTEN CONNECTORS ACCORDING TO THE MANUFACTURES RECOMMENDATIONS INCLUDING THE USE OF MANUFACTURES SPECIFIED TOOLS. THE GROUND WIRE MAY BE BARE SOLID, STRANDED, OR BRAIDED COPPER. PROTECT GROUND WIRE WITH PROTECTIVE SLEEVE AS SHOWN AND FILL WITH SILICON SEALANT.
3. ANCHOR RODS ARE SUBJECT TO CHARPY V-NOTCH IMPACT TESTING, SUBMIT MILL CERTIFICATES FOR ANCHOR RODS, NUTS, WASHERS. GALVANIZE ANCHOR RODS FULL LENGTH. PROVIDE PERMANENT MANUFACTURES' IDENTIFICATION AND PERMANENT GRADE IDENTIFICATION ON EACH END OF ANCHOR ROD BY STEEL DIE STAMP. SECURE EXPOSED ANCHOR ROD WITH A RING PLATE WHEN NOT IN SERVICE. INSTALL ANCHOR RODS PLUMB. ANCHOR RODS GREATER THAN 1:40 OUT OF PLUMB WILL RESULT IN FOUNDATION REJECTION.
4. COMPLETE ALL CONCRETE WORK IN ACCORDANCE WITH SECTION 501, 503 AND 660 OF THE STANDARD SPECIFICATIONS. USE A TUBE WITH A HOPPER HEAD OR OTHER APPROVED DEVICE WHEN DROPPING CONCRETE MORE THAN 5 FEET PER SUB SECTION 501-3.08. VIBRATE CONCRETE DURING PLACEMENT BY MECHANICAL VIBRATION PER SUBSECTION 501-3.08. ENSURE UPPER ANCHOR ROD THREADS ARE PROTECTED FROM CONTACT WITH CONCRETE DURING POUR.

MATERIAL REQUIREMENTS

CONCRETE	CLASS A	f'c = 4000 psi
SPIRAL REINFORCING STEEL	AASHTO M31 #4	GR 60
GROUND WIRE		#4 awg
ANCHOR RODS 2" Ø x LENGTH VARIES	ASTM F1554 S2, S3, & S4	GR 105
FASTENERS, WASHERS	AASHTO M293	
FASTENERS, NUTS	AASHTO M292	
FINISH, ANCHOR RODS & FASTENERS	AASHTO M232	
STEEL SHAPE & PLATES	ASTM 709	GR 50
STEEL SHAPES & PLATES FINISH	ASTM A153	
CONDUIT	Sch 40	RMC
PROTECTIVE SLEEVE	Sch 40	PVC

STATE OF ALASKA
49 TH
David R. Shearer
No. CE 8373
REGISTERED PROFESSIONAL ENGINEER
5/18/21

SHEARER DESIGN LLC
Bridge Design, Construction Engineering, Infrastructure Aesthetics
3613 Phinney Ave N, # B Seattle WA 98103
(206) 781-7830 www.SHEARERDESIGN.NET

STATE OF ALASKA
DEPARTMENT OF TRANSPORTATION AND PUBLIC FACILITIES

GLENN HWY: PARKS HWY TO S. INNER SPRINGER LP. (PHASE II)

8–HOLE SIGNAL POLE BASE PLATE CONNECTION TO PIPE PILE FOUNDATION

FILE C:\USERS\DAVID\ONEDRIVE\DESKTOP\SHEARER DESIGN\D DRIVE\JOBS\0297 GLENN HWY POLE\DESIGN\DWG\0297 SIGNAL POLE DETAILS 11.DWG by david | DATE/TIME 11/23/2021 12:13 PM | LAYOUT 8 HOLES | DESIGNED JLP | CHECKED DRS | DRAFTED JLP

NO.	DATE	REVISION

STATE	PROJECT DESIGNATION	YEAR	SHEET NO.	TOTAL SHEETS
ALASKA	0A15037/CFHWY00431 0A15038/CFHWY00432 0A15033/CFHWY00006	2021	H19	H38

DATE/TIME 11/23/2021 1:34 PM | LAYOUT H19 | DESIGNED | CHECKED | DRAFTED
FILE P:\PROJECTS\HDL\GLENN HIGHWAY 34-49 - PHASE 2\DWGS\DOT STD DETAILS\H19-PTZ_MOUNTING_DETAILS.DWG by roy

LOCATION

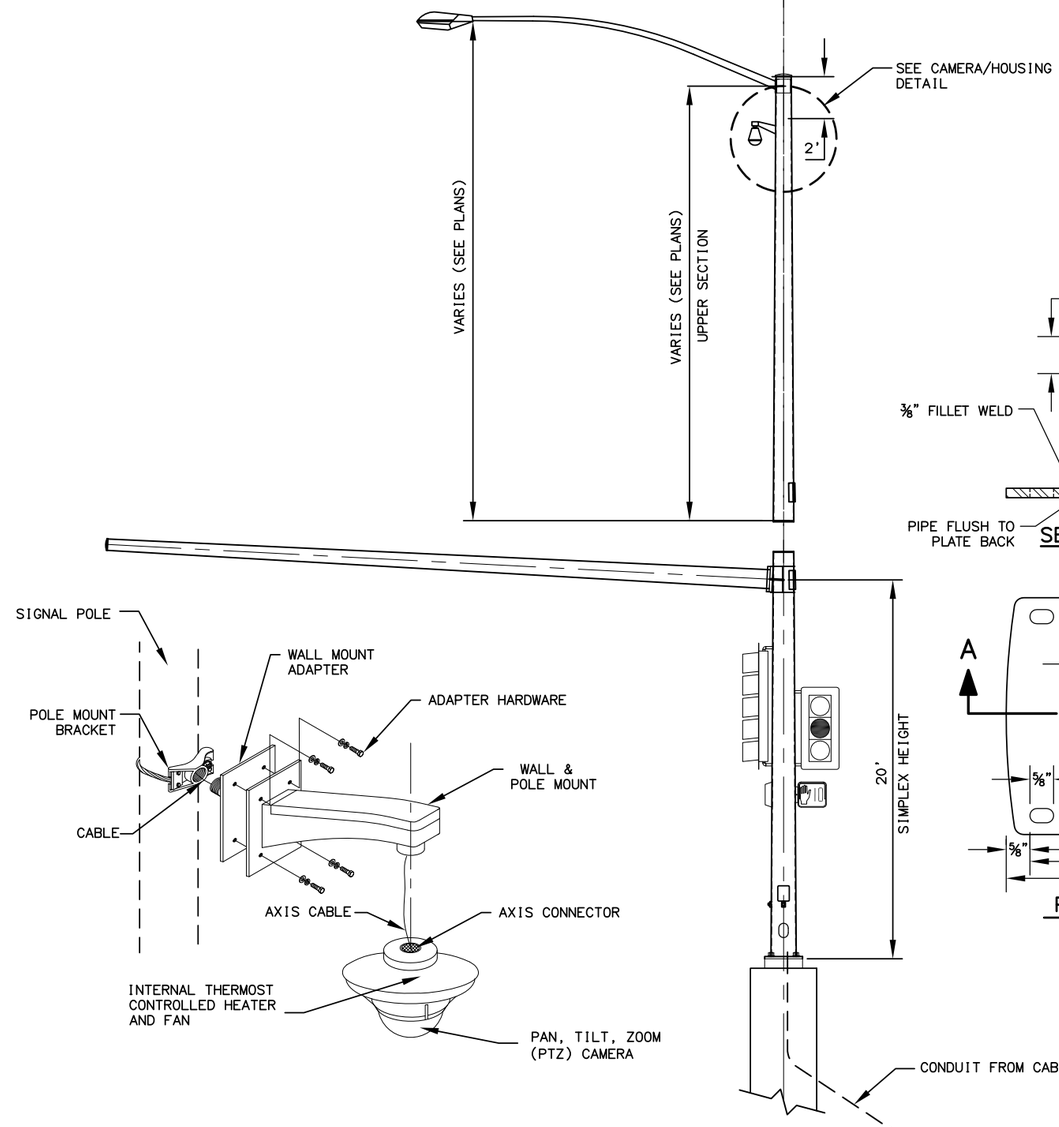

CAMERA/HOUSING DETAIL
NTS

SYSTEM LAYOUT
NTS

MATERIAL REQUIREMENTS	
ALL ASSEMBLIES	
MOUNTING BRACKET	ASTRO-BRAC AB-0160-45-SS-PNC
WALL ADAPTOR	STEEL FABRICATORS OR APPROVED EQUAL
WALL MOUNT	AXIS T91L61 OR APPROVED EQUAL
CABLE 1 (SIGNAL)	CAT-5E, SHIELDED, DIRECT BURIAL
CONNECTOR	ENVIRONMENTALLY HARDENED RJ-45
STRAIN RELIEF	REMKE 2201-013 OR APPROVED EQUAL
ADAPTER HARDWARE, EACH	(1) 5/16" 18X1" HEX BOLT, STAINLESS (2) 5/16" FLAT WASHER, STAINLESS (1) 5/16" NY-LOCK NUT, STAINLESS
CAMERA	
CAMERA	SEE SPECIFICATIONS

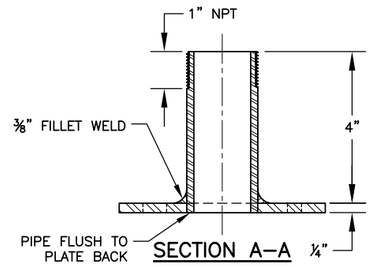

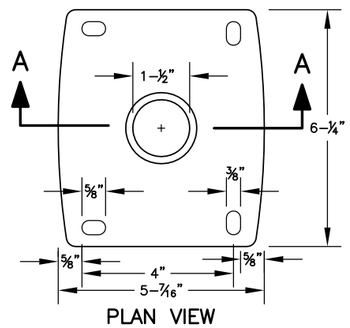

PLAN VIEW

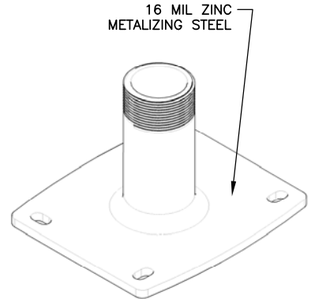

ISO VIEW

WALL MOUNT ADAPTER DETAIL

NOTES:

1. PROTECT CABLE ENDS FROM MOISTURE AT ALL TIMES.
2. PULL CABLE IN ACCORDANCE WITH SECTION 660 OF THE SPECIAL PROVISIONS. PULL CABLE SO THAT THERE IS SUFFICIENT LENGTH TO REACH THE TOP OF THE CONTROLLER CABINET. CABLES ARE TO BE PULLED WITHOUT CONNECTORS ATTACHED. WHEN CABLE HAS BEEN PULLED TO FINAL LOCATIONS INSTALL AND MAKE FINAL CONNECTIONS.
3. CABLE RUNS ARE TO BE MADE CONTINUOUS WITHOUT SPLICES EXCEPT FOR IN LOCATION SHOWN IN SPICE DETAIL WITH SPECIFIED CONNECTOR.
4. CABLE WITH DAMAGED INSULATION, OR THAT HAS BEEN CRIMPED OR BENT BEYOND THE MINIMUM BEND RADIUS MUST BE REPLACED AT NO ADDITIONAL COST.
5. THE MINIMUM BEND RADIUS SHALL NOT EXCEED THE MANUFACTURERS RECOMMENDATIONS.
6. ENSURE ADEQUATE LENGTH OF EACH CABLE TO ALLOW WORK ON THE ENDS OF THE CABLE IN THE CONTROLLER CABINET AND THE CAMERA MOUNTING LOCATION.
7. MOUNT THE PENDENT DOME HOUSING AT A 45° ANGLE AT THE REQUIRED HEIGHT. ANGLE AND HEIGHT MAY BE ADJUSTED BY THE ENGINEER TO AVOID WELDS, APPENDICES AND TO APPROVE SIGHT DISTANCE.
8. ADJUST CAMERA INSIDE THE PENDENT DOME HOUSING AS SHOWN. ENSURE THAT THE CAMERA IS MOUNTED AT A 0° TILT ANGLE.
9. INSTALL WATERTIGHT THREADED RIGID COMPRESSION CONNECTOR WHERE CABLE PASSES THROUGH THE POLE.
10. AT SPLICE LOCATION PROVIDE A SECURE CONNECTION USING CONNECTOR PARTS SPECIFIED. AFTER CONNECTION IS MADE COVER SPLICE WITH HEAT SHRINK. PROVIDE A STRAIN RELIEF CABLE AS NECESSARY.
11. CAMERA/HOUSING MOUNTING HEIGHT TO BE DETERMINED IN THE FIELD BY THE ENGINEER.

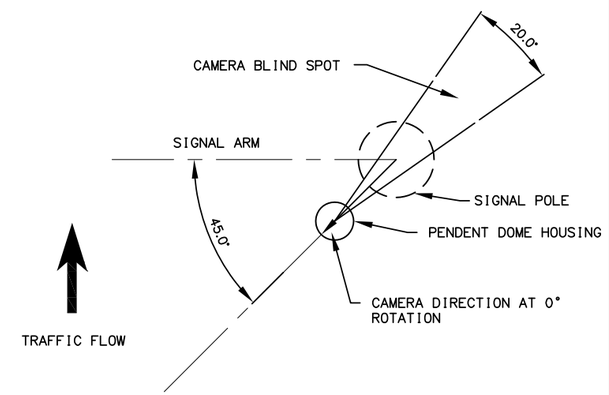

CAMERA/PENDENT DOME ORIENTATION
NTS

CHECK SET NOV 2021

STATE OF ALASKA
DEPARTMENT OF TRANSPORTATION AND PUBLIC FACILITIES

GLENN HWY: PARKS HWY TO S. INNER SPRINGER LP. (PHASE II)

PAN-TILT-ZOOM CAMERA MOUNTING DETAILS

STATE OF ALASKA 49TH
DENNIS R. LINNELL
CE-7649
REGISTERED PROFESSIONAL ENGINEER

HDL ENGINEERING CONSULTANTS, LLC
3335 ARCTIC BOULEVARD, STE 100
ANCHORAGE, AK 99503
(907) 564-2120
AECL861

STATE OF ALASKA 49TH
ROY N. PACE
EE-12053
REGISTERED PROFESSIONAL ENGINEER

EDC, INC.
213 WEST FIREWEED LANE
ANCHORAGE, AK 99503
(907) 257-0601
AECC705

NO.	DATE	REVISION

STATE	PROJECT DESIGNATION	YEAR	SHEET NO.	TOTAL SHEETS
ALASKA	0A15037/CFHWY00431 0A15038/CFHWY00432 0A15033/CFHWY00006	2021	H20	H38

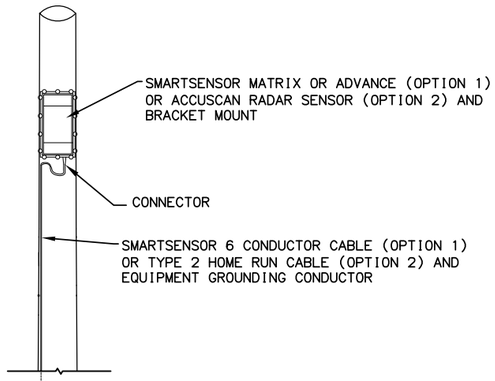

SIDE POLE
MOUNTING STYLE 1

ACCUSCAN RADAR DETECTION EQUIPMENT - OPTION 2
ITEMS TO BE PROVIDED FOR INSTALLATION
PEDESTAL MOUNT FOR HORIZONTAL MOUNTING SURFACES (AMBKTM11)
MATRIX TYPE 2 HOME RUN CABLE (MTX2 HMRN)
ACCUSCAN RADAR INTERFACE PANEL
ACCUSCAN 600C RADAR SENSOR
ACCUSCAN TRAFFIC MANAGEMENT INTERFACE BOARD

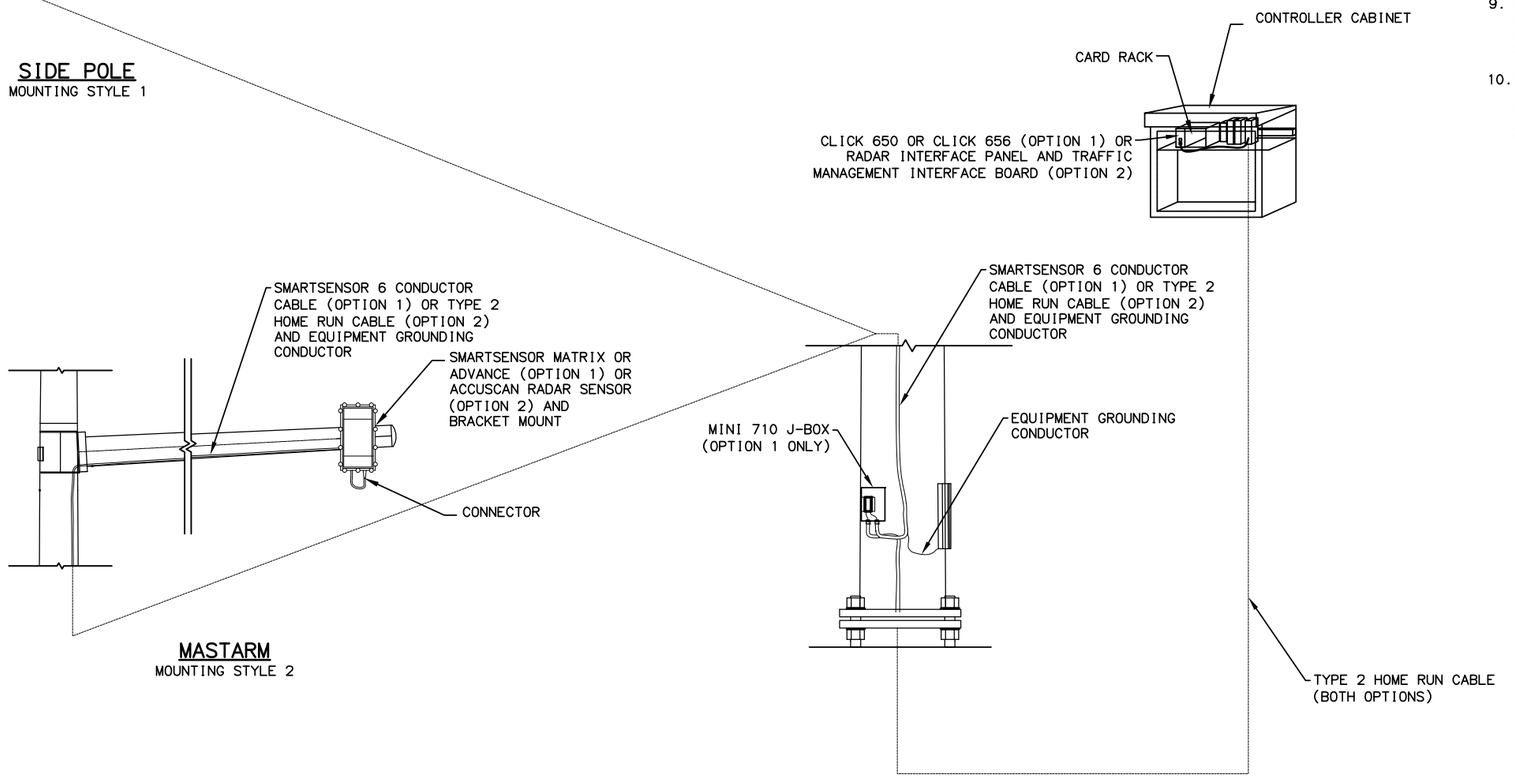

MASTARM
MOUNTING STYLE 2

RADAR DETECTION DETAIL
(NTS)

NOTES:

1. PROTECT CABLE ENDS FROM MOISTURE AT ALL TIMES.
2. PULL CABLE IN ACCORDANCE WITH SECTION 660 OF THE SPECIAL PROVISIONS. PULL CABLE SO THAT THERE IS SUFFICIENT LENGTH TO REACH THE TOP OF THE CONTROLLER CABINET. WHEN CABLE HAS BEEN PULLED TO FINAL LOCATIONS INSTALL AND MAKE FINAL CONNECTIONS.
3. CABLE RUNS ARE TO BE MADE CONTINUOUS WITHOUT SPLICES.
4. CABLE WITH DAMAGED INSULATION, OR THAT HAS BEEN CRIMPED OR BENT BEYOND THE MINIMUM BEND RADIUS MUST BE REPLACED AT CONTRACTORS EXPENSE.
5. THE MINIMUM BEND RADIUS SHALL NOT EXCEED MANUFACTURERS RECOMMENDATIONS.
6. ENSURE ADEQUATE LENGTH OF EACH CABLE TO ALLOW WORK ON THE ENDS OF THE CABLE IN THE CONTROLLER CABINET, AT THE POLE MOUNT ENCLOSURE AND RADAR MOUNTING LOCATION.
7. MOUNT THE RADAR AT THE LOCATION STATED IN THE PLANS. PLACEMENT MAY BE ADJUSTED BY THE ENGINEER TO ALLOW FOR BETTER AIMING OF THE RADAR OR TO AVOID OTHER HAZARDS.
8. INSTALL WATERTIGHT THREADED RIGID COMPRESSION CONNECTOR WHERE CABLE PASSES THROUGH THE POLE.
9. FURNISH ONLY NEW EQUIPMENT OF THE BRAND AND TYPE LISTED OR ITS APPROVED EQUAL. PROVIDE AT NO ADDITIONAL COST ALL NECESSARY DEVICES, WIRES, BRACKETS/HARDWARE ETC. TO PROVIDE A FULLY FUNCTIONING RADAR DETECTION SYSTEM.
10. INSTALL #10 AWG GROUNDING CONDUCTOR WITH GREEN COLORED INSULATION BETWEEN THE EXTERNAL GROUNDING LUG ON THE RADAR UNIT AND THE HAND HOLE AT THE POLE BASE. CONNECT THE GROUNDING CONDUCTOR TO A POLE GROUNDING CONDUCTOR USING AN IRREVERSIBLE COMPRESSION CONNECTOR. IDENTIFY THE CONDUCTOR WITH TAG AS "RADAR GND".

MATRIX RADAR DETECTION EQUIPMENT - OPTION 1
ITEMS TO BE PROVIDED FOR INSTALLATION
SENSOR MOUNT - 6" 3 AXIS ALUM. BRACKET. (SS-611)
MINI 710- SENSOR CABLE J-BOX WITH TERMINAL BLOCKS (102-0453)
MATRIX TYPE 2 HOME RUN CABLE (MTX2 HMRN)
SMARTSENSOR 6 CONDUCTOR CABLE (SS-704-040) WITH SINGLE END CONNECTOR (SS-709) FACTORY INSTALLED
SMARTSENSOR MATRIX (SS-225)
KNUCKLE BRACKET (360-0129), WHEN IDENTIFIED IN PLANSET

ADVANCE RADAR DETECTION EQUIPMENT - OPTION 1
ITEMS TO BE PROVIDED FOR INSTALLATION
SENSOR MOUNT - 6" 3 AXIS ALUM. BRACKET. (SS-611)
MINI 710- SENSOR CABLE J-BOX WITH TERMINAL BLOCKS (102-0453)
MATRIX TYPE 2 HOME RUN CABLE (MTX2 HMRN)
SMARTSENSOR 6 CONDUCTOR CABLE (SS-704-040) WITH SINGLE END CONNECTOR (SS-709) FACTORY INSTALLED
SMARTSENSOR ADVANCE EXTENDED RANGE (SS-200E)
SMARTSENSOR ADVANCE VIEW FINDER (360-0283)
KNUCKLE BRACKET (360-0129), WHEN IDENTIFIED IN PLANS

CHECK SET NOV 2021

STATE OF ALASKA 49TH
DENNIS R. LINNELL
CE-7649
REGISTERED PROFESSIONAL ENGINEER

HDL ENGINEERING CONSULTANTS, LLC
3335 ARCTIC BOULEVARD, STE 100
ANCHORAGE, AK 99503
(907) 564-2120
AECL861

STATE OF ALASKA 49TH
ROY N. PACE
EE-12053
REGISTERED PROFESSIONAL ENGINEER

EDC, INC.
213 WEST FIREWEED LANE
ANCHORAGE, AK 99503
(907) 257-0601
AECC705

STATE OF ALASKA
DEPARTMENT OF TRANSPORTATION
AND PUBLIC FACILITIES

GLENN HWY: PARKS HWY TO S. INNER SPRINGER LP. (PHASE II)

RADAR DETECTOR DETAILS

DATE/TIME 11/23/2021 1:34 PM | LAYOUT H20 | DESIGNED | CHECKED | DRAFTED
FILE P:\PROJECTS\HDL\GLENN HIGHWAY 34-49 - PHASE 2\DWGS\DOT STD DETAILS\H20_RADAR DETECTOR.DWG by roy

NO.	DATE	REVISION

STATE	PROJECT DESIGNATION	YEAR	SHEET NO.	TOTAL SHEETS
ALASKA	0A15037/CFHWY00431 0A15038/CFHWY00432 0A15033/CFHWY00006	2021	H21	H38

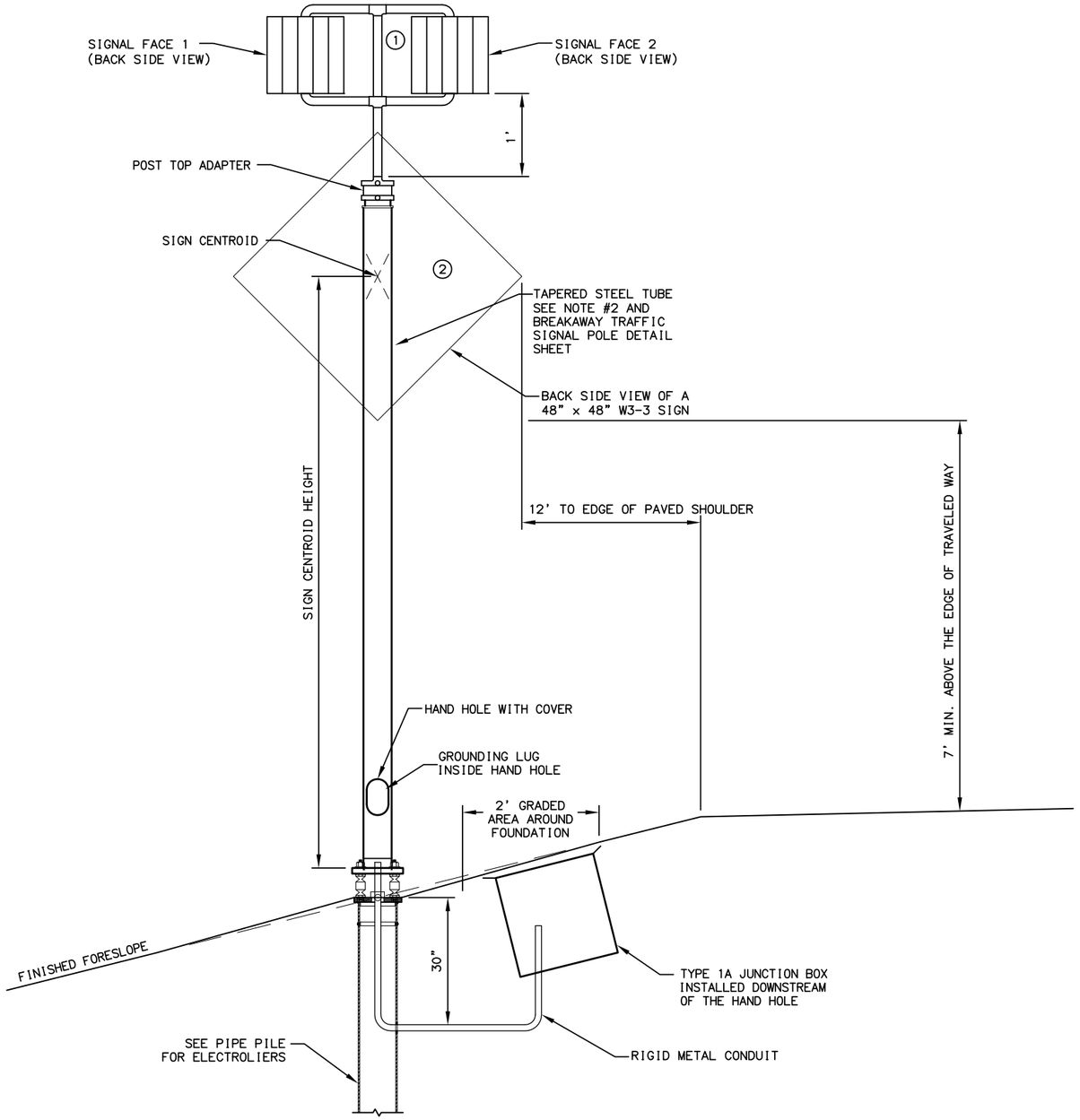

POLE DESIGN LOADING		
LOAD COMPONENT	EFFECTIVE AREA SQ. FT.	WEIGHT LBS.
1 = FLASHING BEACONS	2.2	30
2 = SIGN	16	20

NOTES:

1. INSTALL ADVANCE WARNING FLASHING BEACONS AS SHOWN ON THIS SHEET.
2. FURNISH BEACON POSTS THAT PROVIDE A 7' DIFFERENCE IN ELEVATION BETWEEN THE BOTTOM OF THE SIGN AND THE EDGE OF TRAVELED WAY. OFFSET CONDITIONS NOT SHOWN ON THIS DRAWING SHALL BE INSTALLED PER STANDARD PLAN S-05.
3. EQUIP BEACON POSTS WITH FRANGIBLE COUPLING BASES. INSTALL MODEL 5100 BREAK-SAFE BASES FROM TRANSPO INDUSTRIES OR AN APPROVED EQUAL.
4. FURNISH BEACON POSTS AND PED POLES HOT-DIP GALVANIZED ACCORDING TO AASHTO M111M.
5. EACH FLASHING SIGNAL HEAD SHALL CONSIST OF TWO 12" SIGNAL FACES WITH AMBER L.E.D.S AND TUNNEL TYPE VISORS.
6. WIRE SIGNAL FACE 1 ON FLASHER CIRCUIT 1 AND SIGNAL FACE 2 ON FLASHER CIRCUIT 2.

CHECK SET NOV 2021

STATE OF ALASKA
DEPARTMENT OF TRANSPORTATION
AND PUBLIC FACILITIES

GLENN HWY: PARKS HWY TO S. INNER SPRINGER LP. (PHASE II)

ADVANCE WARNING FLASHING BEACON DETAIL

STATE OF ALASKA 49TH
DENNIS R. LINNELL
CE-7649
REGISTERED PROFESSIONAL ENGINEER

HDL ENGINEERING CONSULTANTS, LLC
3335 ARCTIC BOULEVARD, STE 100
ANCHORAGE, AK 99503
(907) 564-2120
AECL861

STATE OF ALASKA 49TH
ROY N. PACE
EE-12053
REGISTERED PROFESSIONAL ENGINEER

EDC, INC.
213 WEST FIREWEED LANE
ANCHORAGE, AK 99503
(907) 257-0601
AECC705

FILE P:\PROJECTS\HDL\GLENN HIGHWAY 34-49 - PHASE 2\DWGS\DOT STD DETAILS\H21-ADVANCE WARNING BEACON DETAIL SHEET.DWG by roy | DATE/TIME 11/23/2021 1:34 PM | LAYOUT H21 | DESIGNED | CHECKED | DRAFTED

NO.	DATE	REVISION

STATE	PROJECT DESIGNATION	YEAR	SHEET NO.	TOTAL SHEETS
ALASKA	0A15037/CFHWY00431 0A15038/CFHWY00432 0A15033/CFHWY00006	2021	H22	H38

SUMMARY OF EXISTING LOAD CENTER "XE"

LOAD CENTER TYPE:	TYPE 1 (STATE OF ALASKA)
SERVING UTILITY:	MATANUSKA ELECTRIC ASSOCIATION
SERVICE CONDUIT TYPE:	RIGID METAL CONDUIT

LOCATION DATA

LOAD CENTER:	E. FIREWEED RD, 61.548829° N, 149.252095° W
POWER SOURCE:	EXISITNG
PHOTOELECTRIC CONTROL:	EXSITING, TOP OF SIGNAL POLE 31
SERVICE VOLTAGE:	240/480V, 1-PHASE, 3-WIRE WITH GROUNDED NEUTRAL
PROVIDE METER SOCKET:	EXISTING
MAIN BREAKER A:	480V, 35A, 2-POLE
MAIN BREAKER B:	480V, 100A, 2-POLE
CONTACTOR 1:	600V, 2-POLE
AIC RATING:	10,000A

PANEL A - 480V

POLE	AMP TRIP	DESCRIPTION	POLE KVA	AØ	BØ	POLE KVA	DESCRIPTION	AMP TRIP	POLE
1	*15/1*	*PHOTOCELL*	0.1	0.1		0.0			2
3	*25/2*	*SIGNAL (FUTURE)*	0.0		0.0	0.0			4
5			0.0	0.0		0.0			6
7			0.6		0.6	0.0			8
9			0.0	0.0		0.0			10
11			0.0		0.0	0.0			12
*THROUGH CONTACTOR *ITALIC* = EXISTING				0.1	0.6		PANEL A TOTAL KVA		0.7
							PANEL A AMPS		2.9

PANEL B - 480V*

1	*30/2*	*LUMS X26,X29, X30,X40,X41*	3.7	8.1		4.4	*LUMS X31-X33, X36,X38,X39*	*30/2*	2
3			3.7		8.1	4.4			4
5	*30/2*	*LUMS X17,X20*	5.7	9.4		3.7	*LUMS X34,X35,X37*	*30/2*	6
7			5.7		9.4	3.7			8
9			0.0	0.0		0.0			10
11			0.0		0.0	0.0			12
13			0.0	0.0		0.0			14
15			0.0		0.0	0.0			16
17			0.0	0.0		0.0			18
*THROUGH CONTACTOR *ITALIC* = EXISTING			17.5	17.5		PANEL B TOTAL KVA			35.0
						PANEL B AMPS			72.9
						TOTAL KVA			35.7
						AMPS			74.4

SUMMARY OF LOAD CENTER "A"

LOAD CENTER TYPE:	TYPE 1 (STATE OF ALASKA)
SERVING UTILITY:	MATANUSKA ELECTRIC ASSOCIATION
SERVICE CONDUIT TYPE:	RIGID METAL CONDUIT

LOCATION DATA

LOAD CENTER:	GLENN HWY AND E. JIMMYS, "G" 1448+61.9, 90.4' LT
POWER SOURCE:	NEW LINE EXTENSION
PHOTOELECTRIC CONTROL:	AT LOAD CENTER
SERVICE VOLTAGE:	240/480V, 1-PHASE, 3-WIRE WITH GROUNDED NEUTRAL
PROVIDE METER SOCKET:	YES
MAIN BREAKER A:	480V, 40A, 2-POLE (TRANSFORMER PRIMARY)
MAIN BREAKER B:	480V, 100A, 2-POLE
CONTACTOR 1:	600V, 12-POLE
CONTACTOR 2:	600V, 12-POLE
AIC RATING:	10,000A

PANEL A - 240V (THROUGH TRANSFORMER)

POLE	AMP TRIP	DESCRIPTION	POLE KVA	AØ	BØ	POLE KVA	DESCRIPTION	AMP TRIP	POLE
1	15/2	PHOTOCELL	0.1	3.7		3.6	TRAFFIC CONTROLLER	40/1	2
3			0.1		0.1	0.0			4
5	20/2	SIGNAL POLE LUMINAIRES, P1-P4*	0.6	0.6		0.0	SPARE	20/2	6
7			0.6		0.6	0.0			8
9			0.0	0.0		0.0			10
11			0.0		0.0	0.0			12
* = THROUGH CONTACTOR 1			4.3	0.7		PANEL A TOTAL KVA			5.0
						PANEL A AMPS			20.8

PANEL B - 480V

1	15/1	PHOTOCELL 2	0.1	1.4		1.3	GLENN HWY LUMINAIRES, 85-101 ODD**	20/2	2
3			0.0		1.3	1.3			4
5	20/2	GLENN HWY LUMINAIRES, 81,83**	0.3	1.6		1.3	GLENN HWY LUMINAIRES, 86-102 EVEN**	20/2	6
7			0.3		1.6	1.3			8
9	20/2	GLENN HWY LUMINAIRES, 82,84**	0.3	0.3		0.0	SPARE	20/2	10
11			0.3		0.3	0.0			12
13			0.0	0.0		0.0			14
15			0.0		0.0	0.0			16
17			0.0	0.0		0.0			18
** = THROUGH CONTACTOR 2			3.3	3.2		PANEL B TOTAL KVA			6.5
						PANEL B AMPS			13.5
NOTE: SEE H3 FOR TRANSFORMER DETAILS						TOTAL KVA			11.5
						AMPS			24.0

SUMMARY OF LOAD CENTER "B"

LOAD CENTER TYPE:	TYPE 1A (MAT-SU BOROUGH)
SERVING UTILITY:	MATANUSKA ELECTRIC ASSOCIATION
SERVICE CONDUIT TYPE:	RIGID METAL CONDUIT

LOCATION DATA

LOAD CENTER:	GLENN HWY AND E. JIMMYS,"G" 1448+43.8, 92.4' LT
POWER SOURCE:	NEW LINE EXTENSION
PHOTOELECTRIC CONTROL:	AT LOAD CENTER
SERVICE VOLTAGE:	240/480V, 1-PHASE, 3-WIRE WITH GROUNDED NEUTRAL
PROVIDE METER SOCKET:	YES
MAIN BREAKER A:	480V, 100A, 2-POLE
CONTACTOR:	600V, 12-POLE
AIC RATING:	10,000A

PANEL A

POLE	AMP TRIP	DESCRIPTION	POLE KVA	AØ	BØ	POLE KVA	DESCRIPTION	AMP TRIP	POLE
1	15/1	PHOTOCELL	0.1	0.1		0.0	SPARE	20/2	2
3			0.0		0.0	0.0			4
5	20/2	E. JIMMYS LUMINAIRES, 123*	0.1	0.1		0.0			6
7			0.1		0.1	0.0			8
9	20/2	E. JIMMYS LUMINAIRES, 124*	0.1	0.1		0.0			10
11			0.1		0.1	0.0			12
13			0.0	0.0		0.0			14
15			0.0		0.0	0.0			16
17			0.0	0.0		0.0			18
*THROUGH CONTACTOR			0.3	0.2		TOTAL KVA			0.5
						AMPS			1.0

SHORT CIRCUIT CALCULATION - LC "B"

TRANSFORMER RATING	25KVA
VOLTAGE	240/480V
TRANSFORMER IMPEDANCE	1.2%
LET-THRU SHORT CIRCUIT CURRENT	4,341A
SERVICE CONDUCTOR LENGTH	80'
SERVICE CONDUCTOR SIZE	1/0 AWG ALUMINUM
CONDUIT	NON-MAGNETIC
MAXIMUM FAULT CURRENT	3,484A
DATE CALCULATED	9/30/2021

ARC FLASH CALCULATION - LC "B"

INCIDENT ENERGY	0.29 cal/cm²
ARC-FLASH BOUNDARY	36"
WORKING DISTANCE	18"
INSULATING GLOVES CLASS	00
NOMINAL SYSTEM VOLTAGE	480V
LIMITED APPROACH BOUNDARY	42"
RESTRICTED APPROACH BOUNDARY	12"
CALCULATION DATE	9/30/2021

VOLTAGE DROP CALCULATION - LC "A"

1-PH, 2W CONFIGURATION, 1 COPPER CONDUCTOR PER PHASE IN RMC.
TEMPERATURE RATING 75°C.

CKT #	CONDUCTOR SIZE (AWG)	LENGTH	VOLTAGE	POWER FACTOR	LOAD (KVA)	TOTAL (AMPS)	%VD
AB-5,7	8	450'	480	0.90	0.6	1.2	0.10
AB-9,11	8	550'	480	0.90	0.6	1.2	0.14
AB-2,4	8	2850'	480	0.90	2.5	5.3	2.61
AB-6,8	8	2950'	480	0.90	2.5	5.3	2.77

SHORT CIRCUIT CALCULATION - LC "XE", PANEL A

TRANSFORMER RATING	15KVA
VOLTAGE	120/240V
TRANSFORMER IMPEDANCE	1.0%
AVAILABLE SHORT CIRCUIT CURRENT AT TRANSFORMER PRIMARY	4,041A
FEEDER CONDUCTOR LENGTH	0'
FEEDER CONDUCTOR SIZE	2 AWG COPPER
CONDUIT	NONE
MAXIMUM FAULT CURRENT, L-N	5,282A
DATE CALCULATED	9/30/2021

SHORT CIRCUIT CALCULATION - LC "XE", PANEL B

TRANSFORMER RATING	25KVA
VOLTAGE	240/480V
TRANSFORMER IMPEDANCE	1.2%
LET-THRU SHORT CIRCUIT CURRENT	4,341A
SERVICE CONDUCTOR LENGTH	25'
SERVICE CONDUCTOR SIZE	1/0 AWG ALUMINUM
CONDUIT	NON-MAGNETIC
MAXIMUM FAULT CURRENT	4,041A
DATE CALCULATED	9/30/2021

ARC FLASH CALCULATION - LC "XE", PANEL A

INCIDENT ENERGY	0.37 cal/cm²
ARC-FLASH BOUNDARY	19"
WORKING DISTANCE	18"
INSULATING GLOVES CLASS	00
NOMINAL SYSTEM VOLTAGE	240V
LIMITED APPROACH BOUNDARY	42"
RESTRICTED APPROACH BOUNDARY	12"
CALCULATION DATE	9/30/2021

ARC FLASH CALCULATION - LC "XE", PANEL B

INCIDENT ENERGY	0.31 cal/cm²
ARC-FLASH BOUNDARY	36"
WORKING DISTANCE	18"
INSULATING GLOVES CLASS	00
NOMINAL SYSTEM VOLTAGE	480V
LIMITED APPROACH BOUNDARY	42"
RESTRICTED APPROACH BOUNDARY	12"
CALCULATION DATE	9/30/2021

SHORT CIRCUIT CALCULATION - LC "A", PANEL A

TRANSFORMER RATING	15KVA
VOLTAGE	120/240V
TRANSFORMER IMPEDANCE	1.0%
AVAILABLE SHORT CIRCUIT CURRENT AT TRANSFORMER PRIMARY	3,484A
FEEDER CONDUCTOR LENGTH	0'
FEEDER CONDUCTOR SIZE	2 AWG COPPER
CONDUIT	NONE
MAXIMUM FAULT CURRENT, L-N	4,943A
DATE CALCULATED	9/30/2021

SHORT CIRCUIT CALCULATION - LC "A", PANEL B

TRANSFORMER RATING	25KVA
VOLTAGE	240/480V
TRANSFORMER IMPEDANCE	1.2%
LET-THRU SHORT CIRCUIT CURRENT	4,341A
SERVICE CONDUCTOR LENGTH	80'
SERVICE CONDUCTOR SIZE	1/0 AWG ALUMINUM
CONDUIT	NON-MAGNETIC
MAXIMUM FAULT CURRENT	3,484A
DATE CALCULATED	9/30/2021

ARC FLASH CALCULATION - LC "A", PANEL A

INCIDENT ENERGY	0.35 cal/cm²
ARC-FLASH BOUNDARY	19"
WORKING DISTANCE	18"
INSULATING GLOVES CLASS	00
NOMINAL SYSTEM VOLTAGE	240V
LIMITED APPROACH BOUNDARY	42"
RESTRICTED APPROACH BOUNDARY	12"
CALCULATION DATE	9/30/2021

ARC FLASH CALCULATION - LC "A", PANEL B

INCIDENT ENERGY	0.29 cal/cm²
ARC-FLASH BOUNDARY	36"
WORKING DISTANCE	18"
INSULATING GLOVES CLASS	00
NOMINAL SYSTEM VOLTAGE	480V
LIMITED APPROACH BOUNDARY	42"
RESTRICTED APPROACH BOUNDARY	12"
CALCULATION DATE	9/30/2021

NOTES:

LOAD CENTER "XE"

1. LOAD CENTER LOCATED OUTSIDE PROJECT LIMITS, FIELD LOCATE USING GIVEN GPS COORDINATES.
2. EXISTING PHOTOELECTRIC CELL, CONTACTORS, CIRCUIT BREAKERS, ETC ARE EXISTING TO REMAIN.
3. DISCONNECT EXISTING LUMINAIRES X24-X27 & X30 FROM CIRCUIT #XFB-1,3. PROVIDE A NEW TYPED SCHEDULE.

CHECK SET NOV 2021

STATE OF ALASKA
DEPARTMENT OF TRANSPORTATION
AND PUBLIC FACILITIES

GLENN HWY: PARKS HWY TO S. INNER SPRINGER LP. (PHASE II)

LOAD CENTER SUMMARY

STATE OF ALASKA
49TH
ROY N. PACE
EE-12053
REGISTERED PROFESSIONAL ENGINEER

EDC, INC.
213 WEST FIREWEED LANE
ANCHORAGE, AK 99503
(907) 257-0601
AECC705

DRAFTED | CHECKED | DESIGNED | H21 | LAYOUT | DATE/TIME 11/23/2021 1:34 PM

FILE P:\PROJECTS\HDL\GLENN HIGHWAY 34-49 - PHASE 2\DWGS\ELEC\H22-H24 LOAD CENTER CALCS.DWG by roy

NO.	DATE	REVISION

STATE	PROJECT DESIGNATION	YEAR	SHEET NO.	TOTAL SHEETS
ALASKA	0A15037/CFHWY00431 0A15038/CFHWY00432 0A15033/CFHWY00006	2021	H23	H38

SUMMARY OF LOAD CENTER "C"

LOAD CENTER TYPE:	TYPE 1 (STATE OF ALASKA)
SERVING UTILITY:	MATANUSKA ELECTRIC ASSOCIATION
SERVICE CONDUIT TYPE:	RIGID METAL CONDUIT
LOCATION DATA	
LOAD CENTER:	GLENN HWY AND E. OUTER SPRINGER, "G" 1500+17.4, 78.1' LT
POWER SOURCE:	NEW LINE EXTENSION
PHOTOELECTRIC CONTROL:	AT LOAD CENTER
SERVICE VOLTAGE:	240/480V, 1-PHASE, 3-WIRE WITH GROUNDED NEUTRAL
PROVIDE METER SOCKET:	YES
MAIN BREAKER A:	480V, 40A, 2-POLE (TRANSFORMER PRIMARY)
MAIN BREAKER B:	480V, 100A, 2-POLE
CONTACTOR 1:	600V, 12-POLE
CONTACTOR 2:	600V, 12-POLE
AIC RATING:	10,000A

PANEL A - 240V (THROUGH TRANSFORMER)

POLE	AMP TRIP	DESCRIPTION	POLE KVA	AØ	BØ	POLE KVA	DESCRIPTION	AMP TRIP	POLE
1	15/2	PHOTOCELL	0.1	3.7		3.6	TRAFFIC CONTROLLER	40/1	2
3			0.1		0.1	0.0			4
5	20/2	SIGNAL POLE LUMINAIRES, P1-P4*	0.6	0.6		0.0	SPARE	20/2	6
7			0.6		0.6	0.0			8
9			0.0	0.0		0.0			10
11			0.0		0.0	0.0			12
* = THROUGH CONTACTOR 1				4.3	0.7	PANEL A TOTAL KVA			5.0
						PANEL A AMPS			20.8

PANEL B - 480V

1	15/1	PHOTOCELL 2	0.1	0.4		0.3	GLENN HWY LUMINAIRES, 119-121 ODD**	20/2	2
3			0.0		0.3	0.3			4
5	20/2	GLENN HWY LUMINAIRES, 103-117 ODD**	1.1	1.4		0.3	GLENN HWY LUMINAIRES, 120-122 EVEN**	20/2	6
7			1.1		1.4	0.3			8
9	20/2	GLENN HWY LUMINAIRES, 104-118 EVEN**	1.1	1.1		0.0	SPARE	20/2	10
11			1.1		1.1	0.0			12
13			0.0	0.0		0.0			14
15			0.0		0.0	0.0			16
17			0.0	0.0		0.0			18
** = THROUGH CONTACTOR 2				2.9	2.8	PANEL B TOTAL KVA			5.7
						PANEL B AMPS			11.9
NOTE: SEE H3 FOR TRANSFORMER DETAILS						TOTAL KVA			10.7
						AMPS			22.3

VOLTAGE DROP CALCULATION - LC "C"

1-PH, 2W CONFIGURATION, 1 COPPER CONDUCTOR PER PHASE IN RMC. TEMPERATURE RATING 75°C.

CKT #	CONDUCTOR SIZE (AWG)	LENGTH	VOLTAGE	POWER FACTOR	LOAD (KVA)	TOTAL (AMPS)	%VD
CB-5,7	8	2250'	480	0.90	2.2	4.7	1.69
CB-9,11	8	2550'	480	0.90	2.2	4.7	2.11
CB-2,4	8	750'	480	0.90	0.6	1.2	0.21
CB-6,8	8	850'	480	0.90	0.6	1.2	0.24

SHORT CIRCUIT CALCULATION - LC "C", PANEL A

TRANSFORMER RATING	15KVA
VOLTAGE	120/240V
TRANSFORMER IMPEDANCE	1.0%
AVAILABLE SHORT CIRCUIT CURRENT AT TRANSFORMER PRIMARY	4,041A
FEEDER CONDUCTOR LENGTH	0'
FEEDER CONDUCTOR SIZE	2 AWG COPPER
CONDUIT	NONE
MAXIMUM FAULT CURRENT, L-N	5,282A
DATE CALCULATED	9/30/2021

SHORT CIRCUIT CALCULATION - LC "C", PANEL B

TRANSFORMER RATING	25KVA
VOLTAGE	240/480V
TRANSFORMER IMPEDANCE	1.2%
LET-THRU SHORT CIRCUIT CURRENT	4,341A
SERVICE CONDUCTOR LENGTH	25'
SERVICE CONDUCTOR SIZE	1/0 AWG ALUMINUM
CONDUIT	NON-MAGNETIC
MAXIMUM FAULT CURRENT	4,041A
DATE CALCULATED	9/30/2021

ARC FLASH CALCULATION - LC "C", PANEL A

INCIDENT ENERGY	0.37 cal/cm²
ARC-FLASH BOUNDARY	19"
WORKING DISTANCE	18"
INSULATING GLOVES CLASS	00
NOMINAL SYSTEM VOLTAGE	240V
LIMITED APPROACH BOUNDARY	42"
RESTRICTED APPROACH BOUNDARY	12"
CALCULATION DATE	9/30/2021

ARC FLASH CALCULATION - LC "C", PANEL B

INCIDENT ENERGY	0.31 cal/cm²
ARC-FLASH BOUNDARY	36"
WORKING DISTANCE	18"
INSULATING GLOVES CLASS	00
NOMINAL SYSTEM VOLTAGE	480V
LIMITED APPROACH BOUNDARY	42"
RESTRICTED APPROACH BOUNDARY	12"
CALCULATION DATE	9/30/2021

SUMMARY OF LOAD CENTER "D"

LOAD CENTER TYPE:	TYPE 1A (MAT-SU BOROUGH)
SERVING UTILITY:	MATANUSKA ELECTRIC ASSOCIATION
SERVICE CONDUIT TYPE:	RIGID METAL CONDUIT
LOCATION DATA	
LOAD CENTER:	GLENN HWY AND E. OUTER SPRINGER, "G" 1499+97.4, 78.1' LT
POWER SOURCE:	NEW LINE EXTENSION
PHOTOELECTRIC CONTROL:	AT LOAD CENTER
SERVICE VOLTAGE:	240/480V, 1-PHASE, 3-WIRE WITH GROUNDED NEUTRAL
PROVIDE METER SOCKET:	YES
MAIN BREAKER A:	480V, 100A, 2-POLE
CONTACTOR:	600V, 12-POLE
AIC RATING:	10,000A

PANEL A

POLE	AMP TRIP	DESCRIPTION	POLE KVA	AØ	BØ	POLE KVA	DESCRIPTION	AMP TRIP	POLE
1	15/1	PHOTOCELL	0.1	0.1		0.0	SPARE	20/2	2
3			0.0		0.0	0.0			4
5	20/2	E. OUTER SPRINGER LUMINAIRE, 125*	0.1	0.1		0.0			6
7			0.1		0.1	0.0			8
9	20/2	E. OUTER SPRINGER LUMINAIRE, 126*	0.1	0.1		0.0			10
11			0.1		0.1	0.0			12
13			0.0	0.0		0.0			14
15			0.0		0.0	0.0			16
17			0.0	0.0		0.0			18
*THROUGH CONTACTOR				0.3	0.2	TOTAL KVA			0.5
						AMPS			1.0

SHORT CIRCUIT CALCULATION - LC "D"

TRANSFORMER RATING	25KVA
VOLTAGE	240/480V
TRANSFORMER IMPEDANCE	1.2%
LET-THRU SHORT CIRCUIT CURRENT	4,341A
SERVICE CONDUCTOR LENGTH	25'
SERVICE CONDUCTOR SIZE	1/0 AWG ALUMINUM
CONDUIT	NON-MAGNETIC
MAXIMUM FAULT CURRENT	4,041A
DATE CALCULATED	9/30/2021

ARC FLASH CALCULATION - LC "D"

INCIDENT ENERGY	0.31 cal/cm²
ARC-FLASH BOUNDARY	36"
WORKING DISTANCE	18"
INSULATING GLOVES CLASS	00
NOMINAL SYSTEM VOLTAGE	480V
LIMITED APPROACH BOUNDARY	42"
RESTRICTED APPROACH BOUNDARY	12"
CALCULATION DATE	9/30/2021

CHECK SET NOV 2021

STATE OF ALASKA
DEPARTMENT OF TRANSPORTATION
AND PUBLIC FACILITIES

GLENN HWY: PARKS HWY TO S. INNER SPRINGER LP. (PHASE II)

LOAD CENTER SUMMARY

STATE OF ALASKA 49TH ROY N. PACE EE-12053 REGISTERED PROFESSIONAL ENGINEER

EDC, INC.
213 WEST FIREWEED LANE
ANCHORAGE, AK 99503
(907) 257-0601
AECC705

FILE | P:\PROJECTS\HDL\GLENN HIGHWAY 34-49 - PHASE 2\DWGS\ELEC\H22-H24 LOAD CENTER CALCS.DWG by roy | DATE/TIME | 11/23/2021 1:34 PM | LAYOUT | H23 | DESIGNED | CHECKED | DRAFTED

NO.	DATE	REVISION

STATE	PROJECT DESIGNATION	YEAR	SHEET NO.	TOTAL SHEETS
ALASKA	0A15037/CFHWY00431 0A15038/CFHWY00432 0A15033/CFHWY00006	2021	H24	H38

SUMMARY OF LOAD CENTER "E"

LOAD CENTER TYPE:	TYPE 1A (STATE OF ALASKA)
SERVING UTILITY:	MATANUSKA ELECTRIC ASSOCIATION
SERVICE CONDUIT TYPE:	RIGID METAL CONDUIT

LOCATION DATA

LOAD CENTER:	GLENN HWY,"G" 1355+81.1, 101.7' RT
POWER SOURCE:	NEW LINE EXTENSION
PHOTOELECTRIC CONTROL:	AT LOAD CENTER
SERVICE VOLTAGE:	240/480V, 1-PHASE, 3-WIRE WITH GROUNDED NEUTRAL
PROVIDE METER SOCKET:	YES
MAIN BREAKER A:	480V, 100A, 2-POLE
CONTACTOR:	600V, 12-POLE
AIC RATING:	10,000A

PANEL A

POLE	AMP TRIP	DESCRIPTION	POLE KVA	AØ	BØ	POLE KVA	DESCRIPTION	AMP TRIP	POLE
1	15/1	PHOTOCELL	0.1	1.6		1.5	GLENN HWY LUMINAIRES, 21-41 ODD*	20/2	2
3			0.0		1.5	1.5			4
5	20/2	GLENN HWY LUMINAIRES, 1-19 ODD*	1.4	2.9		1.5	GLENN HWY LUMINAIRES, 22-42 EVEN*	20/2	6
7			1.4		2.9	1.5			8
9	20/2	GLENN HWY LUMINAIRES, 2-20 EVEN*	1.4	1.4		0.0			10
11			1.4		1.4	0.0			12
13			0.0	0.0		0.0			14
15			0.0		0.0	0.0			16
17			0.0	0.0		0.0			18
*THROUGH CONTACTOR				5.9	5.8	TOTAL KVA			11.7
						AMPS			24.4

VOLTAGE DROP CALCULATION - LC "E"

1-PH, 2W CONFIGURATION, 1 COPPER CONDUCTOR PER PHASE IN RMC.
TEMPERATURE RATING 75°C.

CKT #	CONDUCTOR SIZE (AWG)	LENGTH	VOLTAGE	POWER FACTOR	LOAD (KVA)	TOTAL (AMPS)	%VD
E-5,7	8	3150'	480	0.90	2.8	5.8	3.17
E-9,11	8	2850'	480	0.90	2.8	5.8	2.64
E-2,4	8	3450'	480	0.90	3.1	6.4	3.78
E-6,8	8	3150'	480	0.90	3.1	6.4	3.20

SHORT CIRCUIT CALCULATION - LC "E"

TRANSFORMER RATING	25KVA
VOLTAGE	240/480V
TRANSFORMER IMPEDANCE	1.2%
LET-THRU SHORT CIRCUIT CURRENT	4,341A
SERVICE CONDUCTOR LENGTH	15'
SERVICE CONDUCTOR SIZE	1/0 AWG ALUMINUM
CONDUIT	NON-MAGNETIC
MAXIMUM FAULT CURRENT	4,150A
DATE CALCULATED	9/30/2021

ARC FLASH CALCULATION - LC "E"

INCIDENT ENERGY	0.32 cal/cm²
ARC-FLASH BOUNDARY	36"
WORKING DISTANCE	18"
INSULATING GLOVES CLASS	00
NOMINAL SYSTEM VOLTAGE	480V
LIMITED APPROACH BOUNDARY	42"
RESTRICTED APPROACH BOUNDARY	12"
CALCULATION DATE	9/30/2021

SUMMARY OF LOAD CENTER "F"

LOAD CENTER TYPE:	TYPE 1A (STATE OF ALASKA)
SERVING UTILITY:	MATANUSKA ELECTRIC ASSOCIATION
SERVICE CONDUIT TYPE:	RIGID METAL CONDUIT

LOCATION DATA

LOAD CENTER:	GLENN HWY,"G" 1420+35.0, 90.5' LT
POWER SOURCE:	NEW LINE EXTENSION
PHOTOELECTRIC CONTROL:	AT LOAD CENTER
SERVICE VOLTAGE:	240/480V, 1-PHASE, 3-WIRE WITH GROUNDED NEUTRAL
PROVIDE METER SOCKET:	YES
MAIN BREAKER A:	480V, 100A, 2-POLE
CONTACTOR:	600V, 12-POLE
AIC RATING:	10,000A

PANEL A

POLE	AMP TRIP	DESCRIPTION	POLE KVA	AØ	BØ	POLE KVA	DESCRIPTION	AMP TRIP	POLE
1	15/1	PHOTOCELL	0.1	1.4		1.3	GLENN HWY LUMINAIRES, 63-79 ODD*	20/2	2
3			0.0		1.3	1.3			4
5	20/2	GLENN HWY LUMINAIRES, 43-61 ODD*	1.4	2.7		1.3	GLENN HWY LUMINAIRES, 64-80 EVEN*	20/2	6
7			1.4		2.7	1.3			8
9	20/2	GLENN HWY LUMINAIRES, 44-62 EVEN*	1.4	1.4		0.0			10
11			1.4		1.4	0.0			12
13			0.0	0.0		0.0			14
15			0.0		0.0	0.0			16
17			0.0	0.0		0.0			18
*THROUGH CONTACTOR				5.5	5.4	TOTAL KVA			10.9
						AMPS			22.7

VOLTAGE DROP CALCULATION - LC "F"

1-PH, 2W CONFIGURATION, 1 COPPER CONDUCTOR PER PHASE IN RMC.
TEMPERATURE RATING 75°C.

CKT #	CONDUCTOR SIZE (AWG)	LENGTH	VOLTAGE	POWER FACTOR	LOAD (KVA)	TOTAL (AMPS)	%VD
F-5,7	8	2850'	480	0.90	2.8	5.8	2.64
F-9,11	8	3150'	480	0.90	2.8	5.8	3.17
F-2,4	8	2550'	480	0.90	2.5	5.3	2.14
F-6,8	8	2850'	480	0.90	2.5	5.3	2.61

SHORT CIRCUIT CALCULATION - LC "F"

TRANSFORMER RATING	25KVA
VOLTAGE	240/480V
TRANSFORMER IMPEDANCE	1.2%
LET-THRU SHORT CIRCUIT CURRENT	4,341A
SERVICE CONDUCTOR LENGTH	15'
SERVICE CONDUCTOR SIZE	1/0 AWG ALUMINUM
CONDUIT	NON-MAGNETIC
MAXIMUM FAULT CURRENT	4,150A
DATE CALCULATED	9/30/2021

ARC FLASH CALCULATION - LC "F"

INCIDENT ENERGY	0.32 cal/cm²
ARC-FLASH BOUNDARY	36"
WORKING DISTANCE	18"
INSULATING GLOVES CLASS	00
NOMINAL SYSTEM VOLTAGE	480V
LIMITED APPROACH BOUNDARY	42"
RESTRICTED APPROACH BOUNDARY	12"
CALCULATION DATE	9/30/2021

SUMMARY OF LOAD CENTER "G"

LOAD CENTER TYPE:	TYPE 1A (STATE OF ALASKA)
SERVING UTILITY:	MATANUSKA ELECTRIC ASSOCIATION
SERVICE CONDUIT TYPE:	RIGID METAL CONDUIT

LOCATION DATA

LOAD CENTER:	GLENN HWY, "G" 1457+57, 73.0' LT
POWER SOURCE:	NEW LINE EXTENSION
PHOTOELECTRIC CONTROL:	NONE
SERVICE VOLTAGE:	120/240V, 1-PHASE, 3-WIRE WITH GROUNDED NEUTRAL
PROVIDE METER SOCKET:	NEW
MAIN BREAKER A:	NEW 240, 40A, 2-POLE
CONTACTOR:	NONE
AIC RATING:	10,000A

PANEL A

POLE	AMP TRIP	DESCRIPTION	POLE KVA	AØ	BØ	POLE KVA	DESCRIPTION	AMP TRIP	POLE
1	40/2	AUTOMATED TRAFFIC RECORDER	1.3	1.3		0.0	SPARE	20/2	2
3			1.3		1.3	0.0			4
5			0.0	0.0		0.0	SPARE	20/2	6
7			0.0		0.0	0.0			8
9			0.0	0.0		0.0			10
11			0.0		0.0	0.0			12
13			0.0	0.0		0.0			14
15			0.0		0.0	0.0			16
17			0.0	0.0		0.0			18
				1.3	1.3	TOTAL KVA			2.6
						AMPS			10.8

SHORT CIRCUIT CALCULATION - LC "G"

TRANSFORMER RATING	25KVA
VOLTAGE	120/240V
TRANSFORMER IMPEDANCE	1.2%
LET-THRU SHORT CIRCUIT CURRENT	7,440A
SERVICE CONDUCTOR LENGTH	20'
SERVICE CONDUCTOR SIZE	2 AWG ALUMINUM
CONDUIT	NON-MAGNETIC
MAXIMUM FAULT CURRENT	5,986A
DATE CALCULATED	9/30/2021

ARC FLASH CALCULATION - LC "G"

INCIDENT ENERGY	0.29 cal/cm²
ARC-FLASH BOUNDARY	8"
WORKING DISTANCE	18"
INSULATING GLOVES CLASS	00
NOMINAL SYSTEM VOLTAGE	240V
LIMITED APPROACH BOUNDARY	42"
RESTRICTED APPROACH BOUNDARY	12"
CALCULATION DATE	9/30/2021

CHECK SET NOV 2021

STATE OF ALASKA
DEPARTMENT OF TRANSPORTATION
AND PUBLIC FACILITIES

GLENN HWY: PARKS HWY TO S. INNER SPRINGER LP. (PHASE II)

LOAD CENTER SUMMARY

STATE OF ALASKA 49TH
ROY N. PACE
EE-12053
REGISTERED PROFESSIONAL ENGINEER

EDC, INC.
213 WEST FIREWEED LANE
ANCHORAGE, AK 99503
(907) 257-0601
AECC705

DRAFTED | CHECKED | DESIGNED | H24 | LAYOUT | DATE/TIME 11/23/2021 1:34 PM

FILE P:\PROJECTS\HDL\GLENN HIGHWAY 34-49 - PHASE 2\DWGS\ELEC\H22-H24 LOAD CENTER CALCS.DWG by roy

NO.	DATE	REVISION

STATE	PROJECT DESIGNATION	YEAR	SHEET NO.	TOTAL SHEETS
ALASKA	0A15037/CFHWY00431 0A15038/CFHWY00432 0A15033/CFHWY00006	2021	H25	H38

ELECTROLIER SCHEDULE

POLE NO.	STATION ALIGNMENT	OFFSET	LIGHT DISTRIBUTION TYPE	LAMP WATTS	DRIVER VOLTAGE	SHAFT LENGTH	MOUNTING HEIGHT	MASTARM LENGTH	FOUNDATION TYPE	DESIGNER NOTES
X28	"G" 1324+23.9	48.8' LT	B3 TYPE II WIDE	278	480	EXISTING OFFSET				EXISTING TO REMAIN, SEE NOTE 1
X29	"G" 1324+24.0	74.1' RT	B3 TYPE II WIDE	278	480	EXISTING OFFSET				EXISTING TO REMAIN, SEE NOTE 1
1	"G" 1327+14.0	61.0' LT	B3 TYPE II WIDE	278	480	50.0'	45'	OFFSET	PILE	
2	"G" 1327+14.0	68.0' RT	B3 TYPE II WIDE	278	480	50.0'	45'	15' DAVIT	PILE	
3	"G" 1330+04.0	58.0' LT	B3 TYPE II WIDE	278	480	51.0'	45'	OFFSET	PILE	
4	"G" 1330+04.0	73.0' RT	B3 TYPE II WIDE	278	480	52.0'	45'	15' DAVIT	PILE	
5	"G" 1332+94.0	78.0' LT	B3 TYPE II WIDE	278	480	45.5'	45'	15' DAVIT	PILE	
6	"G" 1332+94.0	78.0' RT	B3 TYPE II WIDE	278	480	51.0'	45'	15' DAVIT	PILE	
7	"G" 1335+84.0	78.0' LT	B3 TYPE II WIDE	278	480	45.5'	45'	15' DAVIT	PILE	
8	"G" 1335+84.0	78.0' RT	B3 TYPE II WIDE	278	480	50.5'	45'	15' DAVIT	PILE	
9	"G" 1338+84.0	78.0' LT	B3 TYPE II WIDE	278	480	45.5'	45'	15' DAVIT	CIP	
10	"G" 1338+84.0	78.0' RT	B3 TYPE II WIDE	278	480	46.0'	45'	15' DAVIT	CIP	
11	"G" 1341+84.0	78.0' LT	B3 TYPE II WIDE	278	480	45.5'	45'	15' DAVIT	CIP	
12	"G" 1341+84.0	78.0' RT	B3 TYPE II WIDE	278	480	50.0'	45'	15' DAVIT	PILE	
13	"G" 1344+84.0	78.0' LT	B3 TYPE II WIDE	278	480	47.0'	45'	15' DAVIT	CIP	
14	"G" 1344+84.0	78.0' RT	B3 TYPE II WIDE	278	480	45.5'	45'	15' DAVIT	CIP	
15	"G" 1347+84.0	78.0' LT	B3 TYPE II WIDE	278	480	48.5'	45'	15' DAVIT	PILE	
16	"G" 1347+84.0	78.0' RT	B3 TYPE II WIDE	278	480	45.5'	45'	15' DAVIT	CIP	
17	"G" 1350+84.0	78.0' LT	B3 TYPE II WIDE	278	480	45.5'	45'	15' DAVIT	PILE	
18	"G" 1350+84.0	78.0' RT	B3 TYPE II WIDE	278	480	45.5'	45'	15' DAVIT	CIP	
19	"G" 1353+84.0	78.0' LT	B3 TYPE II WIDE	278	480	48.5'	45'	15' DAVIT	PILE	
20	"G" 1353+84.0	78.4' RT	B3 TYPE II WIDE	278	480	45.5'	45'	15' DAVIT	CIP	
21	"G" 1356+60.0	78.0' LT	B3 TYPE II WIDE	278	480	45.5'	45'	15' DAVIT	CIP	MOVED WEST TO AVOID OHE
22	"G" 1356+60.0	78.0' RT	B3 TYPE II WIDE	278	480	45.0'	45'	15' DAVIT	CIP	
23	"G" 1359+60.0	78.0' LT	B3 TYPE II WIDE	278	480	45.5'	45'	15' DAVIT	CIP	
24	"G" 1359+60.0	63.0' RT	B3 TYPE II WIDE	278	480	47.0'	45'	OFFSET	CIP	
25	"G" 1362+60.0	78.0' LT	B3 TYPE II WIDE	278	480	45.5'	45'	15' DAVIT	CIP	
26	"G" 1362+60.0	59.0' RT	B3 TYPE II WIDE	278	480	47.0'	45'	OFFSET	CIP	MOVED NORTH TO AVOID NEW GAS BORE
27	"G" 1365+60.0	78.0' LT	B3 TYPE II WIDE	278	480	45.5'	45'	15' DAVIT	CIP	
28	"G" 1365+60.0	59.0' RT	B3 TYPE II WIDE	278	480	47.0'	45'	OFFSET	CIP	MOVED NORTH TO AVOID NEW GAS BORE
29	"G" 1368+60.0	78.0' LT	B3 TYPE II WIDE	278	480	45.5'	45'	15' DAVIT	CIP	
30	"G" 1368+60.0	78.0' RT	B3 TYPE II WIDE	278	480	45.5'	45'	15' DAVIT	CIP	
31	"G" 1371+60.0	63.0' LT	B3 TYPE II WIDE	278	480	49.0'	45'	OFFSET	CIP	
32	"G" 1371+60.0	78.0' RT	B3 TYPE II WIDE	278	480	45.5'	45'	15' DAVIT	CIP	
33	"G" 1374+65.0	63.0' LT	B3 TYPE II WIDE	278	480	49.5'	45'	OFFSET	CIP	
34	"G" 1374+65.0	78.0' RT	B3 TYPE II WIDE	278	480	48.5'	45'	15' DAVIT	CIP	
35	"G" 1377+70.0	63.0' LT	B3 TYPE II WIDE	278	480	47.0'	45'	OFFSET	CIP	
36	"G" 1377+70.0	78.0' RT	B3 TYPE II WIDE	278	480	50.0'	45'	15' DAVIT	CIP	
37	"G" 1380+75.0	63.0' LT	B3 TYPE II WIDE	278	480	47.0'	45'	OFFSET	CIP	
38	"G" 1380+75.0	78.0' RT	B3 TYPE II WIDE	278	480	45.5'	45'	15' DAVIT	CIP	
39	"G" 1383+65.0	78.0' LT	B3 TYPE II WIDE	278	480	45.5'	45'	15' DAVIT	CIP	
40	"G" 1383+65.0	78.0' RT	B3 TYPE II WIDE	278	480	45.5'	45'	15' DAVIT	CIP	
41	"G" 1386+60.0	78.0' LT	B3 TYPE II WIDE	278	480	45.5'	45'	15' DAVIT	CIP	
42	"G" 1386+60.0	78.0' RT	B3 TYPE II WIDE	278	480	50.0'	45'	15' DAVIT	CIP	
43	"G" 1389+60.0	78.0' LT	B3 TYPE II WIDE	278	480	45.5'	45'	15' DAVIT	CIP	
44	"G" 1389+60.0	78.0' RT	B3 TYPE II WIDE	278	480	50.0'	45'	15' DAVIT	CIP	
45	"G" 1392+60.0	78.0' LT	B3 TYPE II WIDE	278	480	45.5'	45'	15' DAVIT	CIP	
46	"G" 1392+60.0	78.0' RT	B3 TYPE II WIDE	278	480	49.0'	45'	15' DAVIT	CIP	
47	"G" 1395+60.0	78.0' LT	B3 TYPE II WIDE	278	480	45.5'	45'	15' DAVIT	CIP	
48	"G" 1395+60.0	78.0' RT	B3 TYPE II WIDE	278	480	48.5'	45'	15' DAVIT	CIP	

NOTES:

1. REMOVE EXISTING HPS LUMINAIRE FROM ELECTROLIER. FIELD MODIFY POST TOP TO MATCH OFFSET LIGHTING STANDARD POLE TOP DETAIL ON SHEET H11. FURNISH AND INSTALL A NEW LUMINAIRE IN ACCORDANCE WITH THE ELECTROLIER SCHEDULE. ALL WORK DESCRIBED SHALL BE SUBSIDIARY TO 660.0003.0000.

CHECK SET NOV 2021

STATE OF ALASKA 49TH REGISTERED PROFESSIONAL ENGINEER
DENNIS R. LINNELL
CE-7649

HDL ENGINEERING CONSULTANTS, LLC
3335 ARCTIC BOULEVARD, STE 100
ANCHORAGE, AK 99503
(907) 564-2120
AECL861

STATE OF ALASKA 49TH REGISTERED PROFESSIONAL ENGINEER
ROY N. PACE
EE-12053

EDC, INC.
213 WEST FIREWEED LANE
ANCHORAGE, AK 99503
(907) 257-0601
AECC705

STATE OF ALASKA
DEPARTMENT OF TRANSPORTATION
AND PUBLIC FACILITIES

GLENN HWY: PARKS HWY TO S. INNER SPRINGER LP. (PHASE II)

ILLUMINATION SUMMARY

DRAFTED | CHECKED | DESIGNED | H25 | LAYOUT | DATE/TIME 11/23/2021 1:34 PM | FILE P:\PROJECTS\HDL\GLENN HIGHWAY 34-49 - PHASE 2\DWGS\ELEC\H25-H29 ILLUMINATION SCHEDULES.DWG by roy

NO.	DATE	REVISION

STATE	PROJECT DESIGNATION	YEAR	SHEET NO.	TOTAL SHEETS
ALASKA	0A15037/CFHWY00431 0A15038/CFHWY00432 0A15033/CFHWY00006	2021	H26	H38

ELECTROLIER SCHEDULE

POLE NO.	STATION ALIGNMENT	OFFSET	LIGHT DISTRIBUTION TYPE	LAMP WATTS	DRIVER VOLTAGE	SHAFT LENGTH	MOUNTING HEIGHT	MASTARM LENGTH	FOUNDATION TYPE	DESIGNER NOTES
49	"G" 1398+60.0	73.5' LT	B3 TYPE II WIDE	278	480	48.0'	45'	15' DAVIT	CIP	MOVED SOUTH TO AVOID NEW OHE
50	"G" 1398+60.0	78.0' RT	B3 TYPE II WIDE	278	480	48.5'	45'	15' DAVIT	CIP	
51	"G" 1401+40.0	74.5' LT	B3 TYPE II WIDE	278	480	47.5'	45'	15' DAVIT	CIP	MOVED SOUTH TO AVOID NEW OHE
52	"G" 1401+40.0	63.0' RT	B3 TYPE II WIDE	278	480	45.0'	45'	OFFSET	CIP	
53	"G" 1404+45.0	74.5' LT	B3 TYPE II WIDE	278	480	47.0'	45'	15' DAVIT	CIP	MOVED SOUTH TO AVOID NEW OHE
54	"G" 1404+45.0	63.0' RT	B3 TYPE II WIDE	278	480	49.0'	45'	OFFSET	CIP	
55	"G" 1407+50.0	74.5' LT	B3 TYPE II WIDE	278	480	47.0'	45'	15' DAVIT	CIP	MOVED SOUTH TO AVOID NEW OHE
56	"G" 1407+50.0	63.0' RT	B3 TYPE II WIDE	278	480	49.0'	45'	OFFSET	CIP	
57	"G" 1410+55.0	74.5' LT	B3 TYPE II WIDE	278	480	47.0'	45'	15' DAVIT	CIP	MOVED SOUTH TO AVOID NEW OHE
58	"G" 1410+55.0	63.0' RT	B3 TYPE II WIDE	278	480	49.0'	45'	OFFSET	CIP	
59	"G" 1413+55.0	74.5' LT	B3 TYPE II WIDE	278	480	47.0'	45'	15' DAVIT	CIP	MOVED SOUTH TO AVOID NEW OHE
60	"G" 1413+55.0	78.0' RT	B3 TYPE II WIDE	278	480	49.0'	45'	15' DAVIT	CIP	
61	"G" 1416+55.0	74.5' LT	B3 TYPE II WIDE	278	480	47.0'	45'	15' DAVIT	CIP	MOVED SOUTH TO AVOID NEW OHE
62	"G" 1416+55.0	63.0' RT	B3 TYPE II WIDE	278	480	49.0'	45'	OFFSET	CIP	
63	"G" 1419+55.0	78.0' LT	B3 TYPE II WIDE	278	480	48.5'	45'	15' DAVIT	CIP	
64	"G" 1419+55.0	63.0' RT	B3 TYPE II WIDE	278	480	49.0'	45'	OFFSET	CIP	
65	"G" 1422+55.0	78.0' LT	B3 TYPE II WIDE	278	480	49.0'	45'	15' DAVIT	CIP	
66	"G" 1422+55.0	78.0' RT	B3 TYPE II WIDE	278	480	49.0'	45'	15' DAVIT	CIP	
67	"G" 1424+14.0	78.0' LT	B3 TYPE II WIDE	278	480	49.0'	45'	15' DAVIT	CIP	
68	"G" 1424+14.0	78.0' RT	B3 TYPE II WIDE	278	480	45.5'	45'	15' DAVIT	CIP	
69	"G" 1426+74.0	78.0' LT	B3 TYPE II WIDE	278	480	49.0'	45'	15' DAVIT	CIP	
70	"G" 1426+74.0	78.0' RT	B3 TYPE II WIDE	278	480	45.5'	45'	15' DAVIT	CIP	
71	"G" 1429+74.0	78.0' LT	B3 TYPE II WIDE	278	480	49.0'	45'	15' DAVIT	CIP	
72	"G" 1429+74.0	78.0' RT	B3 TYPE II WIDE	278	480	45.5'	45'	15' DAVIT	CIP	
73	"G" 1432+74.0	78.0' LT	B3 TYPE II WIDE	278	480	49.0'	45'	15' DAVIT	CIP	
74	"G" 1432+74.0	78.0' RT	B3 TYPE II WIDE	278	480	45.5'	45'	15' DAVIT	CIP	
75	"G" 1435+74.0	78.0' LT	B3 TYPE II WIDE	278	480	49.0'	45'	15' DAVIT	PILE	
76	"G" 1435+74.0	78.0' RT	B3 TYPE II WIDE	278	480	50.5'	45'	15' DAVIT	CIP	
77	"G" 1438+74.0	74.5' LT	B3 TYPE II WIDE	278	480	47.0'	45'	15' DAVIT	CIP	
78	"G" 1438+74.0	78.0' RT	B3 TYPE II WIDE	278	480	48.5'	45'	15' DAVIT	CIP	
79	"G" 1441+74.0	75.0' LT	B3 TYPE II WIDE	278	480	48.0'	45'	15' DAVIT	CIP	
80	"G" 1441+74.0	74.0' RT	B3 TYPE II WIDE	278	480	44.0'	40'	OFFSET	PILE	POTHOLE WATERLINE
81	"G" 1444+74.0	78.0' LT	B3 TYPE II WIDE	278	480	45.5'	45'	15' DAVIT	CIP	
82	"G" 1444+74.0	69.0' RT	B3 TYPE II WIDE	278	480	42.0'	40'	OFFSET	PILE	POTHOLE WATERLINE
83	"G" 1447+74.0	78.0' LT	B3 TYPE II WIDE	278	480	45.5'	45'	15' DAVIT	CIP	
84	"G" 1447+74.0	69.0' RT	B3 TYPE II WIDE	278	480	41.5'	40'	OFFSET	PILE	POTHOLE WATERLINE
85	"G" 1451+64.0	78.0' LT	B3 TYPE II WIDE	278	480	47.5'	45'	15' DAVIT	CIP	
86	"G" 1451+64.0	68.0' RT	B3 TYPE II WIDE	278	480	43.0'	40'	OFFSET	PILE	POTHOLE WATERLINE
87	"G" 1454+64.0	78.0' LT	B3 TYPE II WIDE	278	480	46.0'	45'	15' DAVIT	CIP	
88	"G" 1454+64.0	68.0' RT	B3 TYPE II WIDE	278	480	41.0'	40'	OFFSET	PILE	POTHOLE WATERLINE
89	"G" 1457+64.0	78.0' LT	B3 TYPE II WIDE	278	480	45.5'	45'	15' DAVIT	CIP	
90	"G" 1457+64.0	68.0' RT	B3 TYPE II WIDE	278	480	43.0'	40'	OFFSET	PILE	POTHOLE WATERLINE
91	"G" 1460+64.0	78.0' LT	B3 TYPE II WIDE	278	480	45.5'	45'	15' DAVIT	CIP	
92	"G" 1460+64.0	68.0' RT	B3 TYPE II WIDE	278	480	43.0'	40'	OFFSET	PILE	POTHOLE WATERLINE
93	"G" 1463+64.0	78.0' LT	B3 TYPE II WIDE	278	480	45.5'	45'	15' DAVIT	CIP	
94	"G" 1463+64.0	68.0' RT	B3 TYPE II WIDE	278	480	43.0'	40'	OFFSET	PILE	POTHOLE WATERLINE
95	"G" 1466+64.0	78.0' LT	B3 TYPE II WIDE	278	480	45.5'	45'	15' DAVIT	CIP	
96	"G" 1466+64.0	68.0' RT	B3 TYPE II WIDE	278	480	43.0'	40'	OFFSET	PILE	POTHOLE WATERLINE
97	"G" 1469+64.0	78.0' LT	B3 TYPE II WIDE	278	480	46.0'	45'	15' DAVIT	CIP	
98	"G" 1469+64.0	67.0' RT	B3 TYPE II WIDE	278	480	42.5'	40'	OFFSET	PILE	POTHOLE WATERLINE

CHECK SET NOV 2021

STATE OF ALASKA 49TH
DENNIS R. LINNELL
CE-7649
REGISTERED PROFESSIONAL ENGINEER

HDL ENGINEERING CONSULTANTS, LLC
3335 ARCTIC BOULEVARD, STE 100
ANCHORAGE, AK 99503
(907) 564-2120
AECL861

STATE OF ALASKA 49TH
ROY N. PACE
EE-12053
REGISTERED PROFESSIONAL ENGINEER

EDC, INC.
213 WEST FIREWEED LANE
ANCHORAGE, AK 99503
(907) 257-0601
AECC705

STATE OF ALASKA
DEPARTMENT OF TRANSPORTATION
AND PUBLIC FACILITIES

GLENN HWY: PARKS HWY TO S. INNER SPRINGER LP. (PHASE II)

ILLUMINATION SUMMARY

FILE [P:\PROJECTS\HDL\GLENN HIGHWAY 34-49 - PHASE 2\DWGS\ELEC\H25-H29 ILLUMINATION SCHEDULES.DWG by roy] DATE/TIME [11/23/2021 1:34 PM] LAYOUT [H26] DESIGNED [] CHECKED [] DRAFTED []

NO.	DATE	REVISION

STATE	PROJECT DESIGNATION	YEAR	SHEET NO.	TOTAL SHEETS
ALASKA	0A15037/CFHWY00431 0A15038/CFHWY00432 0A15033/CFHWY00006	2021	H27	H38

ELECTROLIER SCHEDULE

POLE NO.	STATION ALIGNMENT	OFFSET	LIGHT DISTRIBUTION TYPE	LAMP WATTS	DRIVER VOLTAGE	SHAFT LENGTH	MOUNTING HEIGHT	MASTARM LENGTH	FOUNDATION TYPE	DESIGNER NOTES
99	"G" 1472+64.0	80.0' LT	B3 TYPE II WIDE	278	480	46.0'	45'	15' DAVIT	CIP	
100	"G" 1472+64.0	65.0' RT	B3 TYPE II WIDE	278	480	42.5'	40'	OFFSET	PILE	POTHOLE WATERLINE
101	"G" 1475+64.0	80.0' LT	B3 TYPE II WIDE	278	480	49.5'	45'	15' DAVIT	CIP	
102	"G" 1475+64.0	67.0' RT	B3 TYPE II WIDE	278	480	42.5'	40'	OFFSET	PILE	POTHOLE WATERLINE
103	"G" 1478+64.0	78.0' LT	B3 TYPE II WIDE	278	480	49.0'	45'	15' DAVIT	CIP	
104	"G" 1478+64.0	67.0' RT	B3 TYPE II WIDE	278	480	42.5'	40'	OFFSET	PILE	POTHOLE WATERLINE
105	"G" 1481+64.0	78.0' LT	B3 TYPE II WIDE	278	480	45.5'	45'	15' DAVIT	CIP	
106	"G" 1481+64.0	69.0' RT	B3 TYPE II WIDE	278	480	43.0'	40'	OFFSET	PILE	POTHOLE WATERLINE
107	"G" 1484+64.0	78.0' LT	B3 TYPE II WIDE	278	480	46.5'	45'	15' DAVIT	CIP	
108	"G" 1484+64.0	69.0' RT	B3 TYPE II WIDE	278	480	43.0'	40'	OFFSET	PILE	POTHOLE WATERLINE
109	"G" 1487+64.0	78.0' LT	B3 TYPE II WIDE	278	480	45.5'	45'	15' DAVIT	CIP	
110	"G" 1487+64.0	69.0' RT	B3 TYPE II WIDE	278	480	43.0'	40'	OFFSET	PILE	POTHOLE WATERLINE
111	"G" 1490+64.0	78.0' LT	B3 TYPE II WIDE	278	480	45.5'	45'	15' DAVIT	CIP	
112	"G" 1490+64.0	69.0' RT	B3 TYPE II WIDE	278	480	43.0'	40'	OFFSET	PILE	POTHOLE WATERLINE
113	"G" 1493+64.0	78.0' LT	B3 TYPE II WIDE	278	480	45.5'	45'	15' DAVIT	CIP	
114	"G" 1493+64.0	69.0' RT	B3 TYPE II WIDE	278	480	43.0'	40'	OFFSET	PILE	POTHOLE WATERLINE
115	"G" 1496+64.0	78.0' LT	B3 TYPE II WIDE	278	480	45.5'	45'	15' DAVIT	CIP	
116	"G" 1496+64.0	70.0' RT	B3 TYPE II WIDE	278	480	42.0'	40'	OFFSET	PILE	POTHOLE WATERLINE
117	"G" 1499+39.0	78.0' LT	B3 TYPE II WIDE	278	480	45.5'	45'	15' DAVIT	CIP	
118	"G" 1499+39.0	70.0' RT	B3 TYPE II WIDE	278	480	42.0'	40'	OFFSET	PILE	POTHOLE WATERLINE
119	"G" 1503+19.0	83.0' LT	B3 TYPE II WIDE	278	480	47.5'	45'	15' DAVIT	CIP	
120	"G" 1503+19.0	70.0' RT	B3 TYPE II WIDE	278	480	44.5'	40'	OFFSET	PILE	POTHOLE WATERLINE
121	"G" 1506+19.0	83.0' LT	B3 TYPE II WIDE	278	480	39.0'	45'	15' DAVIT	CIP	
122	"G" 1506+19.0	70.0' RT	B3 TYPE II WIDE	278	480	43.0'	40'	OFFSET	PILE	POTHOLE WATERLINE
123	"JD" 7+53.0	51.0' RT	B3 TYPE II WIDE	149	480	44.0'	40'	15' MAST ARM	CIP	
124	"JD" 12+47.0	58.0' LT	B3 TYPE II WIDE	149	480	29.0'	40'	15' MAST ARM	CIP	
125	"OS" 7+60.0	55.0' RT	B3 TYPE II WIDE	149	480	38.5'	40'	15' MAST ARM	CIP	
126	"OS" 12+38.5	37.6' RT	B3 TYPE II WIDE	149	480	37.0'	40'	15' MAST ARM	PILE	

FIBER OPTIC VAULT SCHEDULE

VAULT	STATION	OFFSET	TYPE
1	"G" 1449+42.8	97.4' LT	FIBER OPTIC VAULT
2	"G" 1456+39.0	80.1' LT	FIBER OPTIC VAULT
3	"G" 1472+77.7	79.1' LT	FIBER OPTIC VAULT
4	"G" 1482+01.8	68.1' LT	FIBER OPTIC VAULT
5	"G" 1495+41.2	72.0' LT	FIBER OPTIC VAULT
6	"G" 1500+52.4	103.5' LT	FIBER OPTIC VAULT
X1	"G" 1520+57.8	68.6' LT	EXISTING FIBER OPTIC VAULT
X2	"G" 1525+16.1	106.6' LT	EXISTING FIBER OPTIC VAULT

EXISTING ELECTROLIER

POLE	STATION	OFFSET	NOTES
X1	"G" 1443+86.5	11.3' LT	SALVAGE POLE, LC "XA"
X2	"G" 1444+30.4	147.3' RT	SALVAGE POLE, LC "XA"
X3	"G" 1445+21.0	67.3' RT	SALVAGE POLE, LC "XA"
X24	"G" 1334+69.7	40.6' RT	SALVAGE POLE, LC "XE"
X25	"G" 1332+11.0	45.7' RT	SALVAGE POLE, LC "XE"
X27	"G" 1329+49.5	50.5' RT	SALVAGE POLE, LC "XE"
X28	"G" 1324+23.9	48.8' RT	POLE TO REMAIN, LC "XE"
X29	"G" 1324+24.0	74.1' LT	POLE TO REMAIN, LC "XE"
X30	"G" 1326+82.0	54.3' LT	SALVAGE POLE, LC "XE"

COMMUNICATION EQUIPMENT SCHEDULE
INNER SPRINGER LP

QTY	FIBER INTERCONNECT EQUIPMENT
1	3 FOOT SC TO SC PATCH CABLE
1	6 FOOT SC TO SC PATCH CABLE
1	PATCH PANEL - 8 SC DUPLEX CONNECTORS (12 FIBERS SPLICED)
0	RS900G(32M) ETHERNET SWITCH OR APPROVED EQUAL (SC) 1310 SM,

ADD THE ABOVE EQUIPMENT TO THE TRAFFIC CONTROLLER LOCATED AT GLENN HWY AND INNER SPRINGER LP. WORK IS SUBSIDIARY TO 662.2001.0000

CHECK SET NOV 2021

STATE OF ALASKA
49TH
DENNIS R. LINNELL
CE-7649
REGISTERED PROFESSIONAL ENGINEER

HDL ENGINEERING CONSULTANTS, LLC
3335 ARCTIC BOULEVARD, STE 100
ANCHORAGE, AK 99503
(907) 564-2120
AECL861

STATE OF ALASKA
49TH
ROY N. PACE
EE-12053
REGISTERED PROFESSIONAL ENGINEER

EDC, INC.
213 WEST FIREWEED LANE
ANCHORAGE, AK 99503
(907) 257-0601
AECC705

STATE OF ALASKA
DEPARTMENT OF TRANSPORTATION
AND PUBLIC FACILITIES

GLENN HWY: PARKS HWY TO S. INNER SPRINGER LP. (PHASE II)

ILLUMINATION SUMMARY

DRAFTED | CHECKED | DESIGNED | H27 | LAYOUT | 11/23/2021 1:34 PM | DATE/TIME
FILE P:\PROJECTS\HDL\GLENN HIGHWAY 34-49 - PHASE 2\DWGS\ELEC\H25-H29 ILLUMINATION SCHEDULES.DWG by roy

NO.	DATE	REVISION

STATE	PROJECT DESIGNATION	YEAR	SHEET NO.	TOTAL SHEETS
ALASKA	0A15037/CFHWY00431 0A15038/CFHWY00432 0A15033/CFHWY00006	2021	H28	H38

JUNCTION BOX SCHEDULE

J-BOX	STATION	OFFSET	TYPE
0F	"G" 1420+35.0	84.9' LT	2
0E	"G" 1355+81.1	96.1' RT	2
1	"G" 1327+14.0	64.0' LT	1A
2	"G" 1327+14.0	71.0' RT	1A
3	"G" 1330+04.0	61.0' LT	1A
4	"G" 1330+04.0	76.0' RT	1A
5	"G" 1332+94.0	75.0' LT	1A
6	"G" 1332+94.0	81.0' RT	1A
7	"G" 1335+84.0	75.0' LT	1A
8	"G" 1335+84.0	81.0' RT	1A
9	"G" 1338+84.0	81.0' LT	1A
10	"G" 1338+84.0	81.0' RT	1A
11	"G" 1341+84.0	81.0' LT	1A
12	"G" 1341+84.0	81.0' RT	1A
13	"G" 1344+84.0	81.0' LT	1A
14	"G" 1344+84.0	81.0' RT	1A
15	"G" 1347+84.0	75.0' LT	1A
16	"G" 1347+84.0	81.0' RT	1A
17	"G" 1350+84.0	81.0' LT	1A
18	"G" 1350+84.0	81.0' RT	1A
19A	"G" 1355+67.9	78.4' LT	2
19	"G" 1353+84.0	81.0' LT	1A
20	"G" 1353+84.0	81.0' RT	1A
21	"G" 1356+60.0	81.0' LT	1A
22	"G" 1356+60.0	81.0' RT	1A
23	"G" 1359+60.0	81.0' LT	1A
24	"G" 1359+60.0	66.0' RT	1A
25	"G" 1362+60.0	81.0' LT	1A
26	"G" 1362+60.0	62.0' RT	1A
27	"G" 1365+60.0	81.0' LT	1A
28	"G" 1365+60.0	62.0' RT	1A
29	"G" 1368+60.0	81.0' LT	1A
30	"G" 1368+60.0	81.0' RT	1A
31	"G" 1371+60.0	66.0' LT	1A
32	"G" 1371+60.0	81.0' RT	1A
33	"G" 1374+65.0	66.0' LT	1A
34	"G" 1374+65.0	81.0' RT	1A
35	"G" 1377+70.0	66.0' LT	1A
36	"G" 1377+70.0	81.0' RT	1A
37	"G" 1380+75.0	66.0' LT	1A
38	"G" 1380+75.0	81.0' RT	1A
39	"G" 1383+65.0	81.0' LT	1A

JUNCTION BOX SCHEDULE

J-BOX	STATION	OFFSET	TYPE
40	"G" 1383+65.0	81.0' RT	1A
41	"G" 1386+60.0	81.0' LT	1A
42	"G" 1386+60.0	81.0' RT	1A
43	"G" 1389+60.0	81.0' LT	1A
44	"G" 1389+60.0	81.0' RT	1A
45	"G" 1392+60.1	81.0' LT	1A
46	"G" 1392+59.9	81.0' RT	1A
47	"G" 1395+60.0	81.0' LT	1A
48	"G" 1395+60.1	81.0' RT	1A
49	"G" 1398+60.0	76.5' LT	1A
50	"G" 1398+60.0	81.0' RT	1A
51	"G" 1401+37.0	74.5' LT	1A
52	"G" 1401+40.0	66.0' RT	1A
53	"G" 1404+42.0	74.5' LT	1A
54	"G" 1404+45.0	66.0' RT	1A
55	"G" 1407+47.0	74.5' LT	1A
56	"G" 1407+50.0	66.0' RT	1A
57	"G" 1410+55.0	77.5' LT	1A
58	"G" 1410+55.0	66.0' RT	1A
59	"G" 1413+55.0	77.5' LT	1A
60	"G" 1413+55.0	81.0' RT	1A
61	"G" 1416+52.0	74.5' LT	1A
62A	"G" 1420+35.0	63.3' RT	2
62	"G" 1416+55.0	66.0' RT	1A
63	"G" 1419+51.9	78.0' LT	1A
64	"G" 1419+55.2	66.0' RT	1A
65	"G" 1422+55.0	81.0' LT	1A
66	"G" 1422+55.0	81.0' RT	1A
67	"G" 1424+14.0	81.0' LT	1A
68	"G" 1424+14.0	81.0' RT	1A
69	"G" 1426+74.0	81.0' LT	1A
70	"G" 1426+74.0	81.0' RT	1A
71	"G" 1429+74.0	81.0' LT	1A
72	"G" 1429+74.0	81.0' RT	1A
73	"G" 1432+70.9	78.0' LT	1A
74	"G" 1432+74.0	81.0' RT	1A
75	"G" 1435+70.9	78.0' LT	1A
76	"G" 1435+74.0	81.0' RT	1A
77	"G" 1438+70.9	74.5' LT	1A
78	"G" 1438+74.0	81.0' RT	1A
79	"G" 1441+70.9	75.0' LT	1A
80	"G" 1441+74.0	77.0' RT	1A

JUNCTION BOX SCHEDULE

J-BOX	STATION	OFFSET	TYPE
81	"G" 1444+74.0	81.0' LT	1A
82	"G" 1444+74.0	72.0' RT	1A
83B	"G" 1450+39.6	82.4' LT	1A
83A	"G" 1449+33.9	73.6' LT	2
83	"G" 1447+74.0	81.0' LT	1A
84B	"G" 1450+35.5	78.3' RT	1A
84A	"G" 1449+33.7	79.5' RT	2
84	"G" 1447+74.0	72.0' RT	1A
85	"G" 1451+64.0	81.0' LT	1A
86	"G" 1451+64.0	71.0' RT	1A
87	"G" 1454+64.0	81.0' LT	1A
88	"G" 1454+64.0	71.0' RT	1A
89	"G" 1457+64.0	81.0' LT	1A
90	"G" 1457+64.0	71.0' RT	1A
91	"G" 1460+64.0	81.0' LT	1A
92	"G" 1460+64.0	71.0' RT	1A
93	"G" 1463+64.0	81.0' LT	1A
94	"G" 1463+64.0	71.0' RT	1A
95	"G" 1466+64.0	81.0' LT	1A
96	"G" 1466+64.0	71.0' RT	1A
97	"G" 1469+64.0	81.0' LT	1A
98	"G" 1469+64.0	70.0' RT	1A
99	"G" 1472+64.0	83.0' LT	1A
100	"G" 1472+64.0	68.0' RT	1A
101	"G" 1475+64.0	83.0' LT	1A
102	"G" 1475+64.0	70.0' RT	1A
103	"G" 1478+64.0	81.0' LT	1A
104	"G" 1478+64.0	70.0' RT	1A
105	"G" 1481+64.0	81.0' LT	1A
106	"G" 1481+64.0	72.0' RT	1A
107	"G" 1484+64.0	81.0' LT	1A
108	"G" 1484+64.0	72.0' RT	1A
109	"G" 1487+64.0	81.0' LT	1A
110	"G" 1487+64.0	72.0' RT	1A
111	"G" 1490+64.0	81.0' LT	1A
112	"G" 1490+64.0	72.0' RT	1A
113	"G" 1493+64.0	81.0' LT	1A
114	"G" 1493+64.0	72.0' RT	1A
115	"G" 1496+64.0	81.0' LT	1A
116	"G" 1496+64.0	73.0' RT	1A
117B	"OS" 9+20.9	55.1' LT	1A
117A	"OS" 9+29.3	55.7' RT	2

JUNCTION BOX SCHEDULE

J-BOX	STATION	OFFSET	TYPE
117	"G" 1499+39.0	81.0' LT	1A
118B	"OS" 10+82.0	45.2' LT	1A
118A	"OS" 10+88.8	63.1' RT	2
118	"G" 1499+38.3	72.8' RT	1A
119	"G" 1503+19.0	86.0' LT	1A
120	"G" 1503+22.0	70.0' RT	1A
121	"G" 1506+19.0	86.0' LT	1A
122	"G" 1506+22.0	70.0' RT	1A
123A	"JD" 9+20.1	56.2' RT	1A
123	"JD" 7+53.0	54.0' RT	1A
124C	"JD" 11+37.7	61.4' LT	1A
124B	"JD" 10+95.0	61.3' LT	1A
124A	"JD" 10+97.8	56.2' RT	1A
124	"JD" 12+47.0	61.0' LT	1A
125A	"OS" 8+89.1	55.2' RT	1A
125	"OS" 7+60.0	58.0' RT	1A
126B	"OS" 11+46.5	48.4' RT	1A
126A	"OS" 11+02.3	48.4' RT	1A
126	"OS" 12+38.5	40.6' RT	1A

CHECK SET NOV 2021

STATE OF ALASKA 49TH
DENNIS R. LINNELL
CE-7649
REGISTERED PROFESSIONAL ENGINEER

HDL ENGINEERING CONSULTANTS, LLC
3335 ARCTIC BOULEVARD, STE 100
ANCHORAGE, AK 99503
(907) 564-2120
AECL861

STATE OF ALASKA 49TH
ROY N. PACE
EE-12053
REGISTERED PROFESSIONAL ENGINEER

EDC, INC.
213 WEST FIREWEED LANE
ANCHORAGE, AK 99503
(907) 257-0601
AECC705

STATE OF ALASKA
DEPARTMENT OF TRANSPORTATION
AND PUBLIC FACILITIES

GLENN HWY: PARKS HWY TO S. INNER SPRINGER LP. (PHASE II)

J-BOX SUMMARY

DATE/TIME 11/23/2021 1:35 PM | LAYOUT H28 | DESIGNED | CHECKED | DRAFTED
FILE P:\PROJECTS\HDL\GLENN HIGHWAY 34-49 - PHASE 2\DWGS\ELEC\H25-H29 ILLUMINATION SCHEDULES.DWG by roy

NO.	DATE	REVISION

STATE	PROJECT DESIGNATION	YEAR	SHEET NO.	TOTAL SHEETS
ALASKA	0A15037/CFHWY00431 0A15038/CFHWY00432 0A15033/CFHWY00006	2021	H29	H38

LUMINAIRE SCHEDULE	
MANUFACTURER	GE OR APPROVED EQUAL
MODEL	ERL2 OR APPROVED EQUAL
WATTAGE	149
LIGHT SOURCE	LED
VOLTAGE	480
DRIVER	19
POWER FACTOR	>0.9
PE CONTROL	ANSI C136.41 7-PIN, WITH SHORTING CAP
MINIMUM CRI	70
CCT	3000K
LENS TYPE	FLAT GLASS
IES DISTRIBUTION TYPE	B3 TYPE 2 WIDE
INITIAL LUMENS	17,700
HOUSING COLOR	GREY
HOUSING ENTRY	TOOLLESS
MOUNTING	HORIZONTAL SLIPFITTER
UL LISTED	YES
IES FILE	ERL2_19C330_____.IES

LUMINAIRE SCHEDULE	
MANUFACTURER	GE OR APPROVED EQUAL
MODEL	ERL2 OR APPROVED EQUAL
WATTAGE	251
LIGHT SOURCE	LED
VOLTAGE	240 (INTERSECTION)
POWER FACTOR	>0.9
PE CONTROL	ANSI C136.41 7-PIN, WITH SHORTING CAP
MINIMUM CRI	70
CCT	3000K
LENS TYPE	FLAT GLASS
IES DISTRIBUTION TYPE	D3 TYPE 4
INITIAL LUMENS	26,900
HOUSING COLOR	GREY
HOUSING ENTRY	TOOLLESS
MOUNTING	HORIZONTAL SLIPFITTER
UL LISTED	YES
IES FILE	ERL2_28D330_____.IES

LUMINAIRE SCHEDULE	
MANUFACTURER	GE OR APPROVED EQUAL
MODEL	ERL2 OR APPROVED EQUAL
WATTAGE	278
LIGHT SOURCE	LED
VOLTAGE	480
POWER FACTOR	>0.9
PE CONTROL	ANSI C136.41 7-PIN, WITH SHORTING CAP
MINIMUM CRI	70
CCT	3000K
LENS TYPE	FLAT GLASS
IES DISTRIBUTION TYPE	B3 TYPE 2 WIDE
INITIAL LUMENS	28,800
HOUSING COLOR	GREY
HOUSING ENTRY	TOOLLESS
MOUNTING	HORIZONTAL SLIPFITTER
UL LISTED	YES
IES FILE	ERL2_30B330_____.IES

LUMINAIRE PERFORMANCE CRITERIA	
LUMINAIRE LIGHT LOSS FACTOR	0.85
LIGHTING CALCULATION METHOD	IES RP-8-2014
INTERSECTION ILLUMINANCE CRITERIA - JIMMY'S DR	
INTERSECTION CLASSIFICATION	MAJOR/MAJOR
PEDESTRIAN AREA CLASSIFICATION	LOW
AVERAGE ILLLUMINANCE	3.19 FC
AVERAGE UNIFORMITY RATIO (AVG/MIN)	1.52
INTERSECTION ILLUMINANCE CRITERIA - OUTER SPRINGER LP	
INTERSECTION CLASSIFICATION	MAJOR/MAJOR
PEDESTRIAN AREA CLASSIFICATION	LOW
AVERAGE ILLLUMINANCE	3.34 FC
AVERAGE UNIFORMITY RATIO (AVG/MIN)	1.76
ROADWAY ILLUMINANCE CRITERIA - GLENN HWY	
FUNCTIONAL CLASSIFICATION	MAJOR ROADWAY
PEDESTRIAN AREA CLASSIFICATION	LOW
AVERAGE ILLLUMINANCE	1.08 FC
MINIMUM ROADWAY ILLLUMINANCE	0.4 FC
AVERAGE UNIFORMITY RATIO (AVG/MIN)	2.70
MAX VEILING LUMINANCE RATIO (LV-MAX/AVG)	0.30
ROADWAY ILLUMINANCE CRITERIA - JIMMY'S DR	
FUNCTIONAL CLASSIFICATION	MAJOR ROADWAY
PEDESTRIAN AREA CLASSIFICATION	LOW
AVERAGE ILLLUMINANCE	0.97 FC
MINIMUM ROADWAY ILLLUMINANCE	0.3 FC
AVERAGE UNIFORMITY RATIO (AVG/MIN)	2.70
MAX VEILING LUMINANCE RATIO (LV-MAX/AVG)	0.30
ROADWAY ILLUMINANCE CRITERIA - OUTER SPRINGER LOOP	
FUNCTIONAL CLASSIFICATION	MAJOR ROADWAY
PEDESTRIAN AREA CLASSIFICATION	LOW
AVERAGE ILLLUMINANCE	1.08 FC
MINIMUM ROADWAY ILLLUMINANCE	0.4 FC
AVERAGE UNIFORMITY RATIO (AVG/MIN)	2.70
MAX VEILING LUMINANCE RATIO (LV-MAX/AVG)	0.30

CHECK SET NOV 2021

STATE OF ALASKA · 49TH · REGISTERED PROFESSIONAL ENGINEER
DENNIS R. LINNELL
CE-7649

HDL ENGINEERING CONSULTANTS, LLC
3335 ARCTIC BOULEVARD, STE 100
ANCHORAGE, AK 99503
(907) 564-2120
AECL861

STATE OF ALASKA · 49TH · REGISTERED PROFESSIONAL ENGINEER
ROY N. PACE
EE-12053

EDC, INC.
213 WEST FIREWEED LANE
ANCHORAGE, AK 99503
(907) 257-0601
AECC705

STATE OF ALASKA
DEPARTMENT OF TRANSPORTATION
AND PUBLIC FACILITIES

GLENN HWY: PARKS HWY TO S. INNER SPRINGER LP. (PHASE II)

LUMINAIRE PERFORMANCE CRITERIA

DATE/TIME 11/23/2021 1:35 PM | LAYOUT H29 | DESIGNED | CHECKED | DRAFTED
FILE P:\PROJECTS\HDL\GLENN HIGHWAY 34-49 - PHASE 2\DWGS\ELEC\H25-H29 ILLUMINATION SCHEDULES.DWG by roy

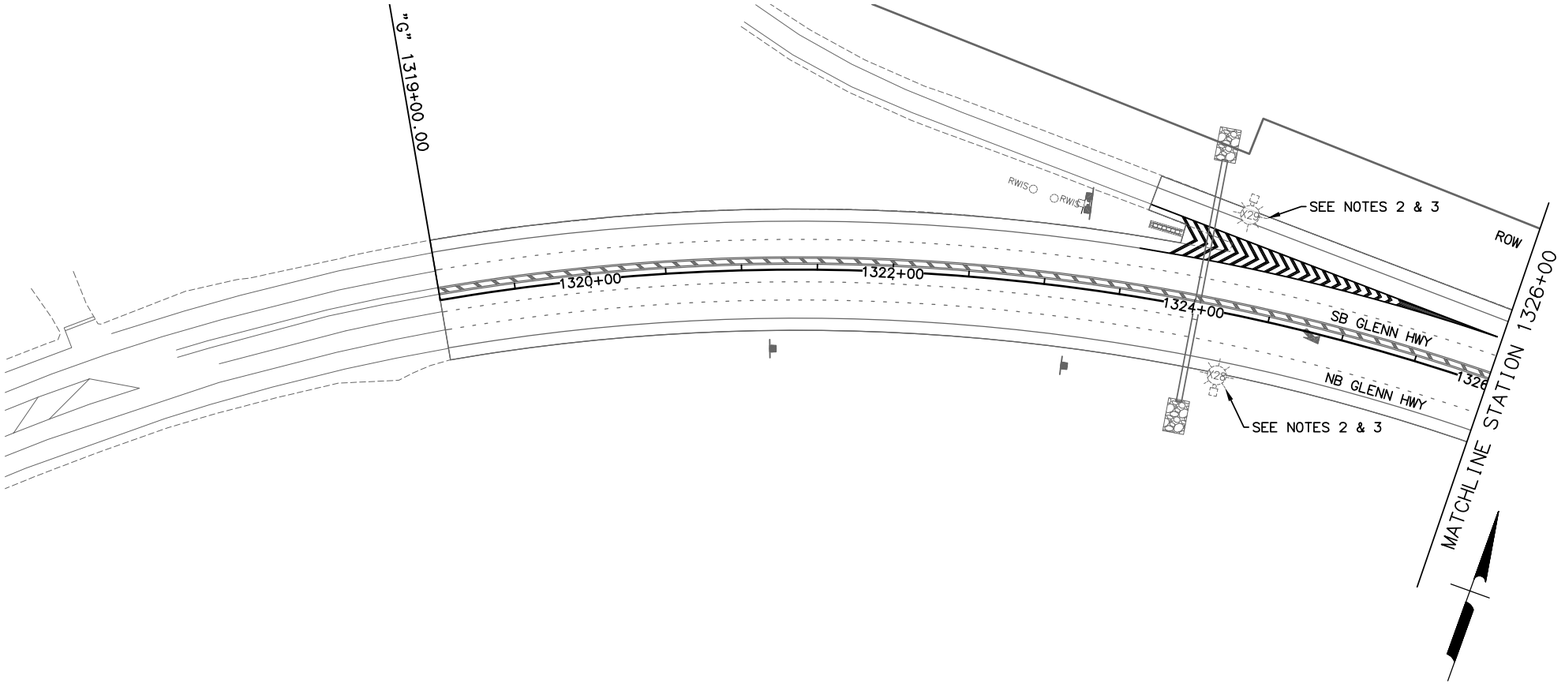

NOTES:

1. CONDUIT RUNS ARE HDPE UNLESS OTHERWISE NOTED.
2. EXISTING ELECTROLIERS ARE POWERED FROM EXISTING LOAD CENTER XLC "E", SEE SHEET H22.
3. REMOVE EXISTING HPS LUMINAIRE FROM ELECTROLIER. FIELD MODIFY POST TOP TO MATCH OFFSET LIGHTING STANDARD POLE TOP DETAIL ON SHEET H11. FURNISH AND INSTALL A NEW LUMINAIRE IN ACCORDANCE WITH THE ELECTROLIER SCHEDULE. ALL WORK DESCRIBED SHALL BE SUBSIDIARY TO 660.0003.0000.

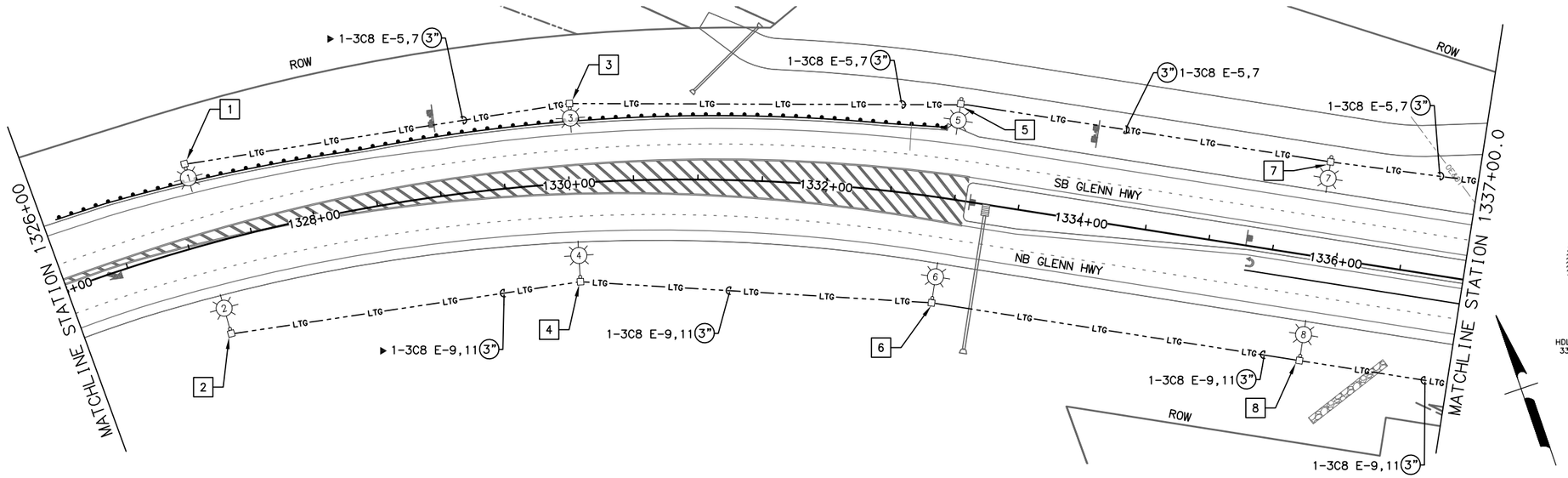

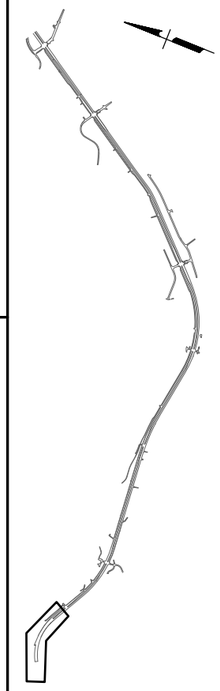

0 50 100

HDL ENGINEERING CONSULTANTS, LLC
3335 ARCTIC BOULEVARD, STE 100
ANCHORAGE, AK 99503
(907) 564-2120
AECL861

DENNIS R. LINNELL
CE-7649
REGISTERED PROFESSIONAL ENGINEER

ROY N. PACE
EE-12053
REGISTERED PROFESSIONAL ENGINEER

EDC, INC.
213 WEST FIREWEED LANE
ANCHORAGE, AK 99503
(907) 257-0601
AECC705

STATE OF ALASKA
DEPARTMENT OF TRANSPORTATION
AND PUBLIC FACILITIES

GLENN HWY: PARKS HWY TO S. INNER SPRINGER LP. (PHASE II)

ILLUMINATION PLAN
1319+00 TO 1337+00

SHEET NO.	TOTAL SHEETS
H30	H38
STATE	YEAR
ALASKA	2021

PROJECT DESIGNATION
0A15037/CFHWY00431
0A15038/CFHWY00432
0A15033/CFHWY00006

NO.	REVISION
DATE	
NO.	REVISION
DATE	
NO.	REVISION
DATE	

DRAFTED | CHECKED | DESIGNED | H30 | LAYOUT | 11/23/2021 1:35 PM | DATE/TIME

FILE [P:\PROJECTS\HDL\GLENN HIGHWAY 34-49 - PHASE 2\DWGS\ELEC\H30-H38 ILLUMINATION PLAN.DWG

DATE/TIME 11/23/2021 1:35 PM | LAYOUT H31 | DESIGNED | CHECKED | DRAFTED

FILE [P:\PROJECTS\HDL\GLENN HIGHWAY 34-49 - PHASE 2\DWGS\ELEC\H30-H38 ILLUMINATION PLAN.DWG

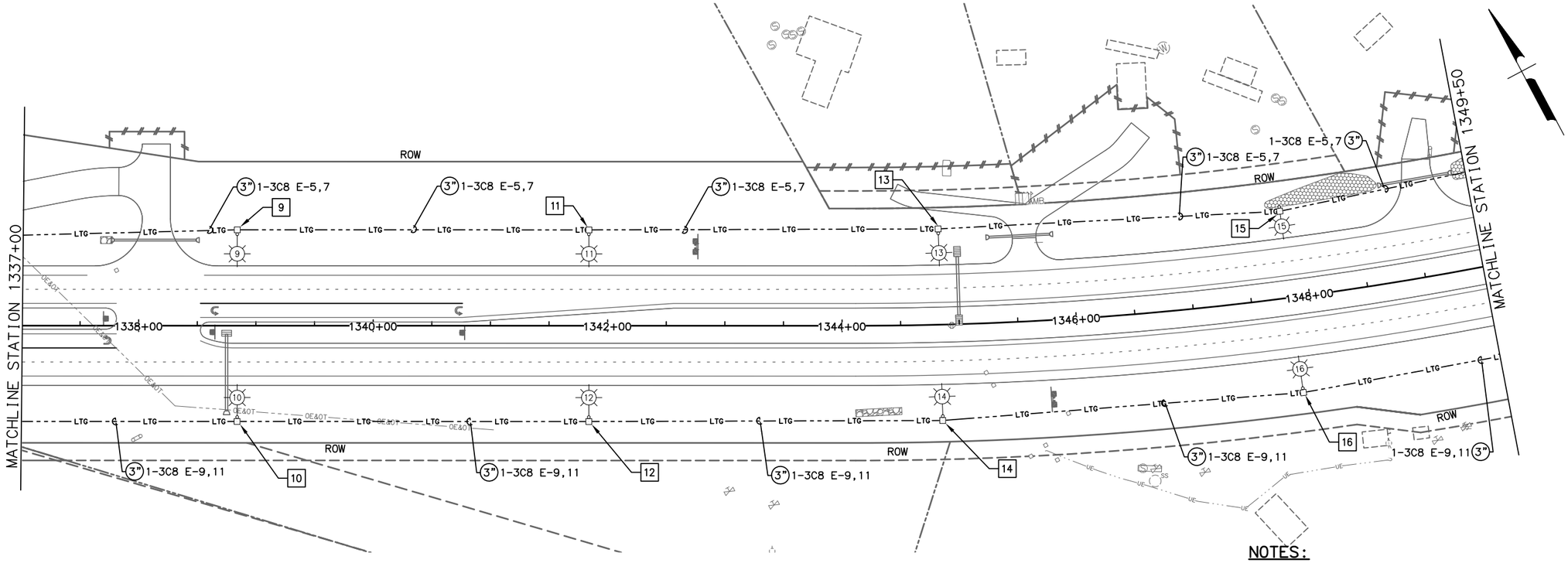

NOTES:

1. CONDUIT RUNS ARE HDPE UNLESS OTHERWISE NOTED.

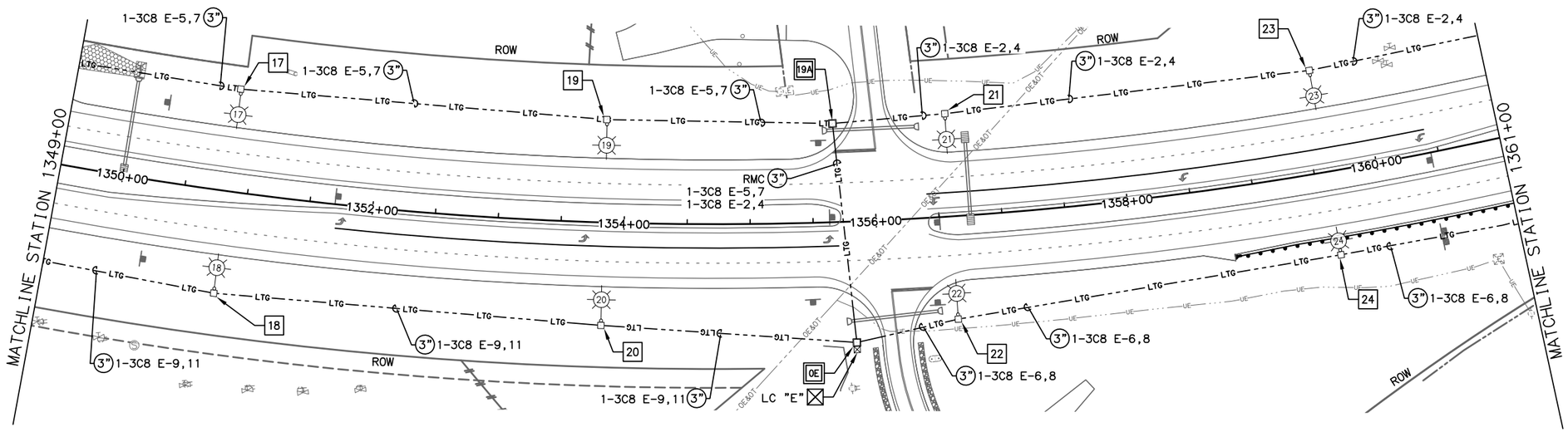

0 50 100

SHEET NO.	TOTAL SHEETS
H31	H38
STATE	YEAR
ALASKA	2021

PROJECT DESIGNATION

0A15037/CFHWY00431
0A15038/CFHWY00432
0A15033/CFHWY00006

NO.	REVISION
DATE	
NO.	REVISION
DATE	
NO.	REVISION
DATE	

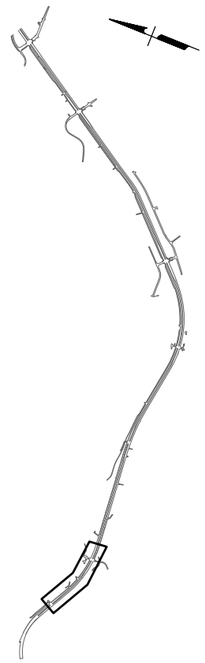

STATE OF ALASKA 49TH
DENNIS R. LINNELL
CE-7649
REGISTERED PROFESSIONAL ENGINEER

HDL ENGINEERING CONSULTANTS, LLC
3335 ARCTIC BOULEVARD, STE 100
ANCHORAGE, AK 99503
(907) 564-2120
AECL861

STATE OF ALASKA 49TH
ROY N. PACE
EE-12053
REGISTERED PROFESSIONAL ENGINEER

EDC, INC.
213 WEST FIREWEED LANE
ANCHORAGE, AK 99503
(907) 257-0601
AECC705

STATE OF ALASKA
DEPARTMENT OF TRANSPORTATION
AND PUBLIC FACILITIES

GLENN HWY: PARKS HWY TO S. INNER SPRINGER LP. (PHASE II)

ILLUMINATION PLAN
1337+00 TO 1361+00

DATE/TIME 11/23/2021 1:35 PM | LAYOUT H32 | DESIGNED | CHECKED | DRAFTED
FILE P:\PROJECTS\HDL\GLENN HIGHWAY 34-49 - PHASE 2\DWGS\ELEC\H30-H38 ILLUMINATION PLAN.DWG

NOTES:

1. CONDUIT RUNS ARE HDPE UNLESS OTHERWISE NOTED.

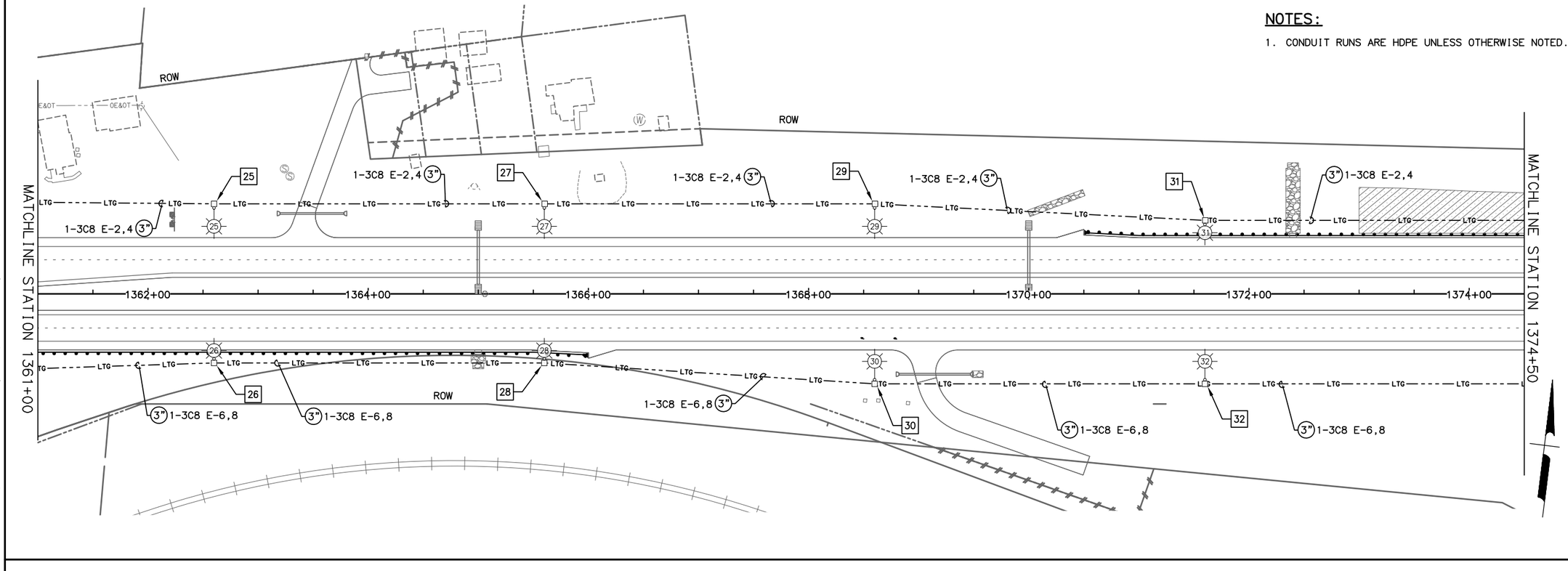

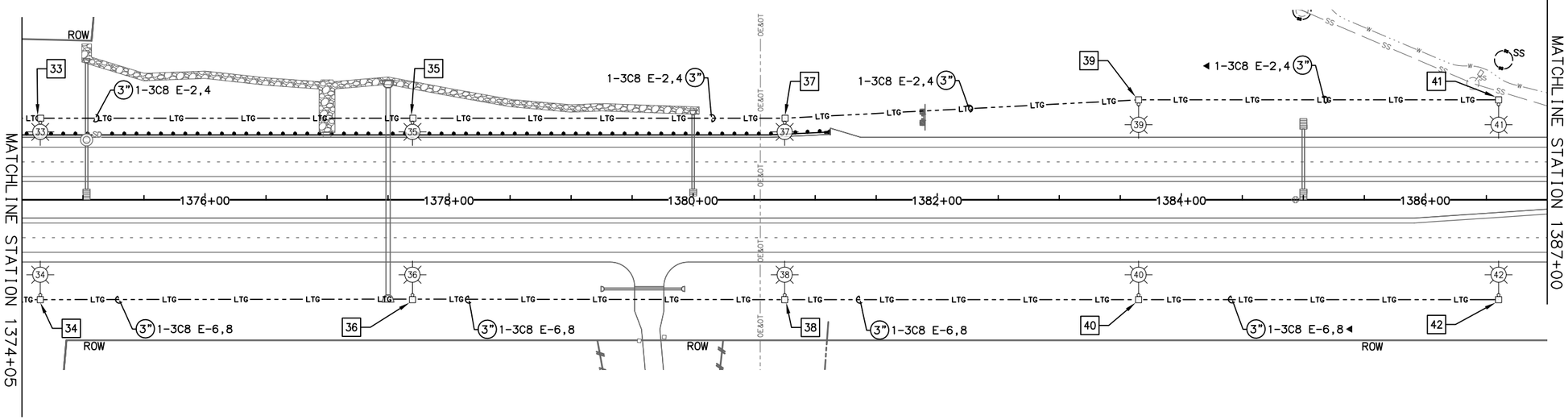

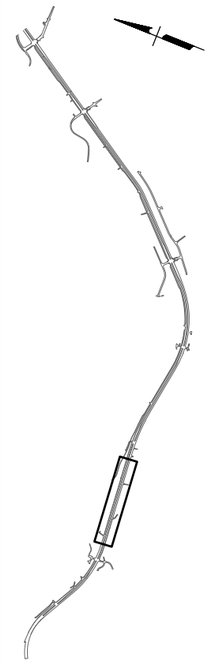

SHEET NO.	TOTAL SHEETS
H32	H38
STATE	YEAR
ALASKA	2021

PROJECT DESIGNATION

0A15037/CFHWY00431
0A15038/CFHWY00432
0A15033/CFHWY00006

NO.	REVISION
DATE	
NO.	REVISION
DATE	
NO.	REVISION
DATE	

STATE OF ALASKA
49TH
DENNIS R. LINNELL
CE-7649
REGISTERED PROFESSIONAL ENGINEER

HDL ENGINEERING CONSULTANTS, LLC
3335 ARCTIC BOULEVARD, STE 100
ANCHORAGE, AK 99503
(907) 564-2120
AECL861

0 50 100

STATE OF ALASKA
49TH
ROY N. PACE
EE-12053
REGISTERED PROFESSIONAL ENGINEER

EDC, INC.
213 WEST FIREWEED LANE
ANCHORAGE, AK 99503
(907) 257-0601
AECC705

STATE OF ALASKA
DEPARTMENT OF TRANSPORTATION
AND PUBLIC FACILITIES

GLENN HWY: PARKS HWY TO S. INNER SPRINGER LP. (PHASE II)

ILLUMINATION PLAN
1361+00 TO 1387+00

NOTES:

1. CONDUIT RUNS ARE HDPE UNLESS OTHERWISE NOTED.

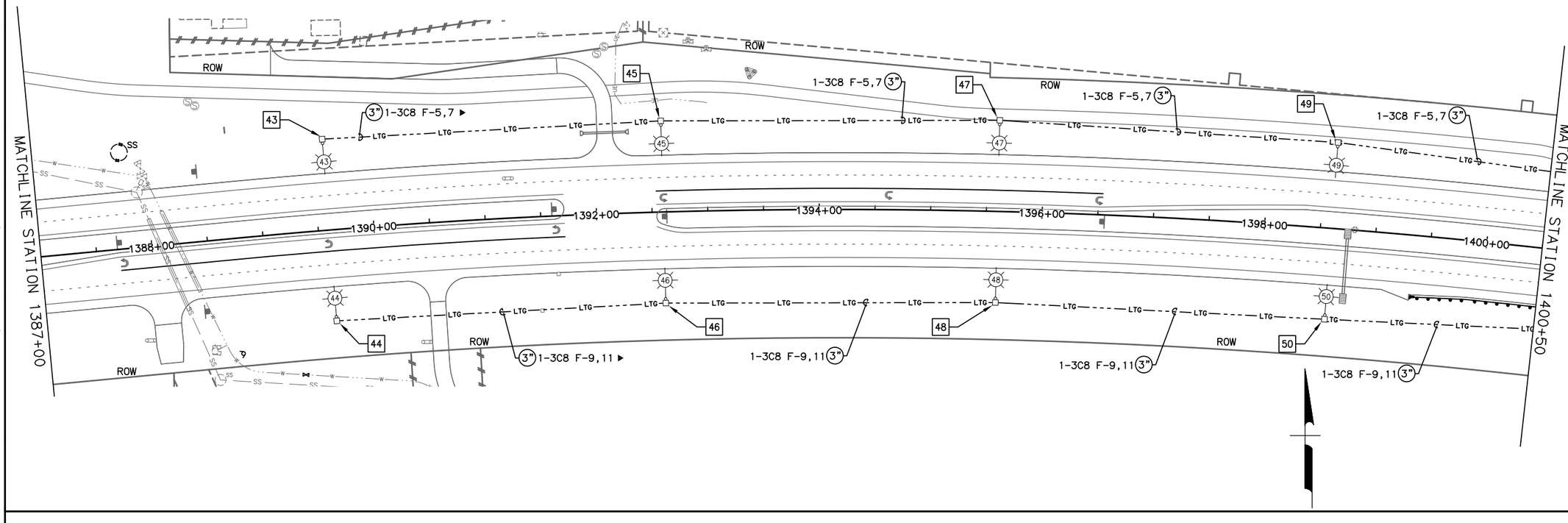

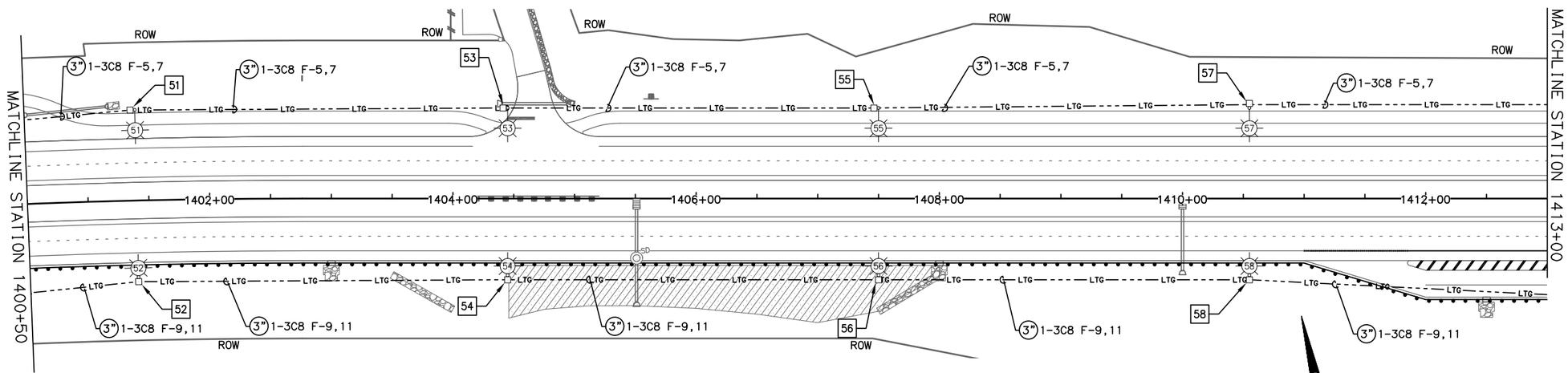

0 50 100

SHEET NO.	TOTAL SHEETS
H33	H38
STATE	YEAR
ALASKA	2021

PROJECT DESIGNATION

0A15037/CFHWY00431
0A15038/CFHWY00432
0A15033/CFHWY00006

NO.	REVISION
DATE	
NO.	REVISION
DATE	
NO.	REVISION
DATE	

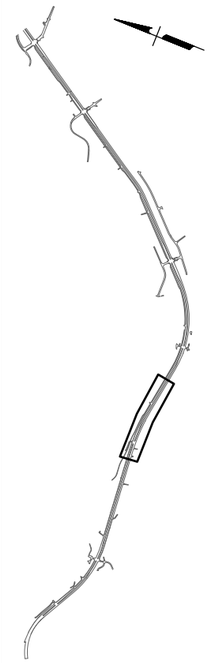

STATE OF ALASKA
49TH
DENNIS R. LINNELL
CE-7649
REGISTERED PROFESSIONAL ENGINEER

HDL ENGINEERING CONSULTANTS, LLC
3335 ARCTIC BOULEVARD, STE 100
ANCHORAGE, AK 99503
(907) 564-2120
AECL861

STATE OF ALASKA
49TH
ROY N. PACE
EE-12053
REGISTERED PROFESSIONAL ENGINEER

EDC, INC.
213 WEST FIREWEED LANE
ANCHORAGE, AK 99503
(907) 257-0601
AECC705

STATE OF ALASKA
DEPARTMENT OF TRANSPORTATION
AND PUBLIC FACILITIES

GLENN HWY: PARKS HWY TO S. INNER SPRINGER LP. (PHASE II)

ILLUMINATION PLAN
1387+00 TO 1413+00

DRAFTED | CHECKED | DESIGNED | LAYOUT H33 | DATE/TIME 11/23/2021 1:35 PM

FILE P:_PROJECTS\HDL\GLENN HIGHWAY 34-49 - PHASE 2\DWGS\ELEC\H30-H38 ILLUMINATION PLAN.DWG

DATE/TIME 11/23/2021 1:35 PM | LAYOUT H34 | DESIGNED | CHECKED | DRAFTED
FILE P:\PROJECTS\HDL\GLENN HIGHWAY 34-49 - PHASE 2\DWGS\ELEC\H30-H38 ILLUMINATION PLAN.DWG

NOTES:

1. CONDUIT RUNS ARE HDPE UNLESS OTHERWISE NOTED.

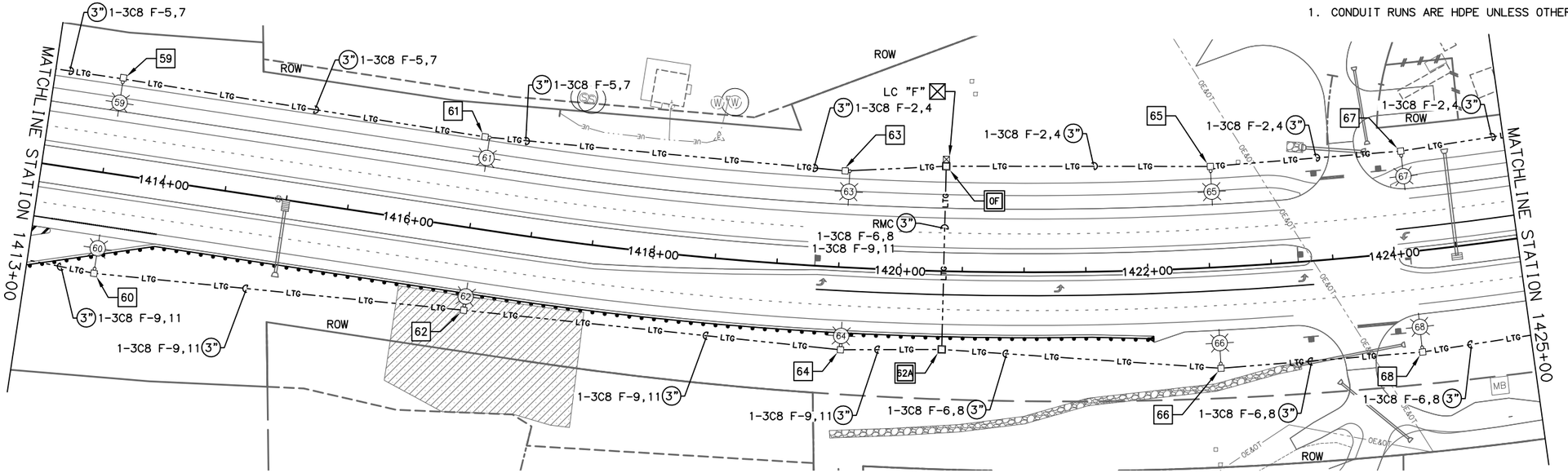

SHEET NO.	TOTAL SHEETS
H34	H38
STATE	YEAR
ALASKA	2021

PROJECT DESIGNATION
0A15037/CFHWY00431
0A15038/CFHWY00432
0A15033/CFHWY00006

NO.	REVISION
DATE	
NO.	REVISION
DATE	
NO.	REVISION
DATE	

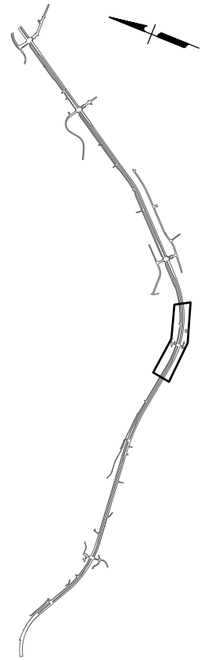

STATE OF ALASKA
49TH
DENNIS R. LINNELL
CE-7649
REGISTERED PROFESSIONAL ENGINEER

HDL ENGINEERING CONSULTANTS, LLC
3335 ARCTIC BOULEVARD, STE 100
ANCHORAGE, AK 99503
(907) 564-2120
AECL861

STATE OF ALASKA
49TH
ROY N. PACE
EE-12053
REGISTERED PROFESSIONAL ENGINEER

EDC, INC.
213 WEST FIREWEED LANE
ANCHORAGE, AK 99503
(907) 257-0601
AECC705

STATE OF ALASKA
DEPARTMENT OF TRANSPORTATION
AND PUBLIC FACILITIES

GLENN HWY: PARKS HWY TO S. INNER SPRINGER LP. (PHASE II)

ILLUMINATION PLAN
1413+00 TO 1436+00

0 50 100

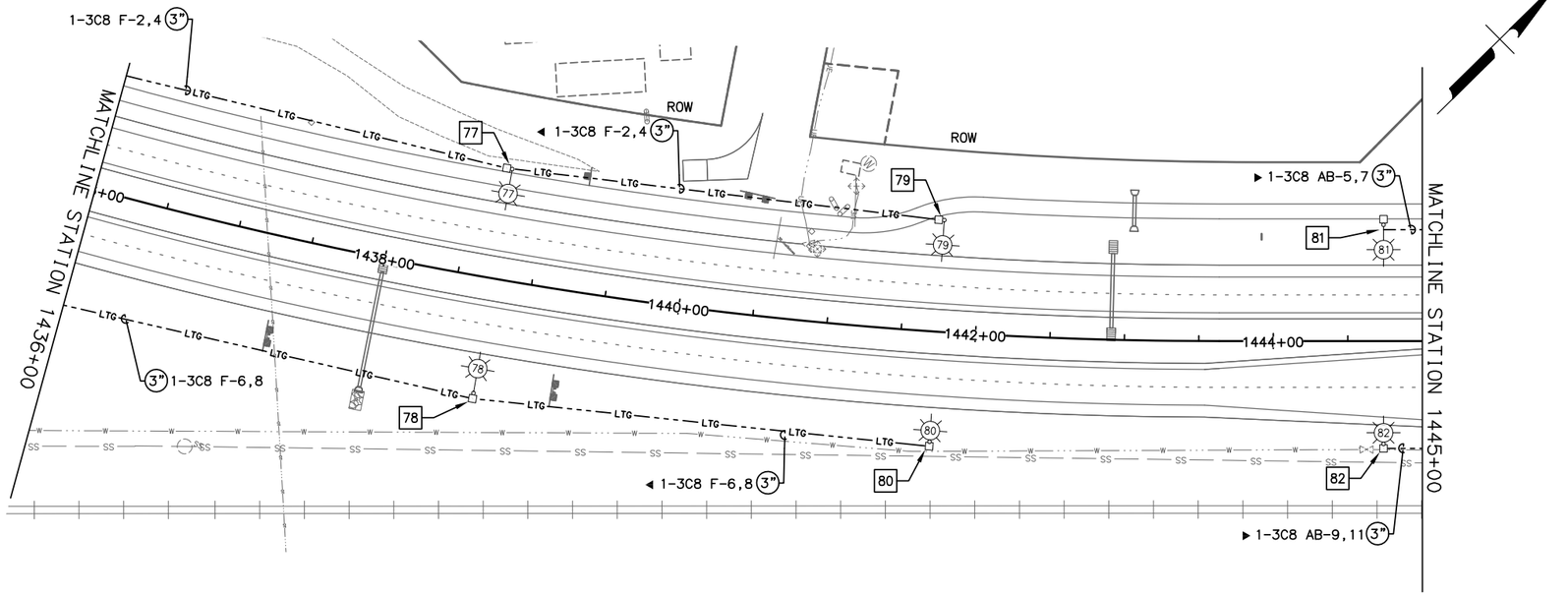

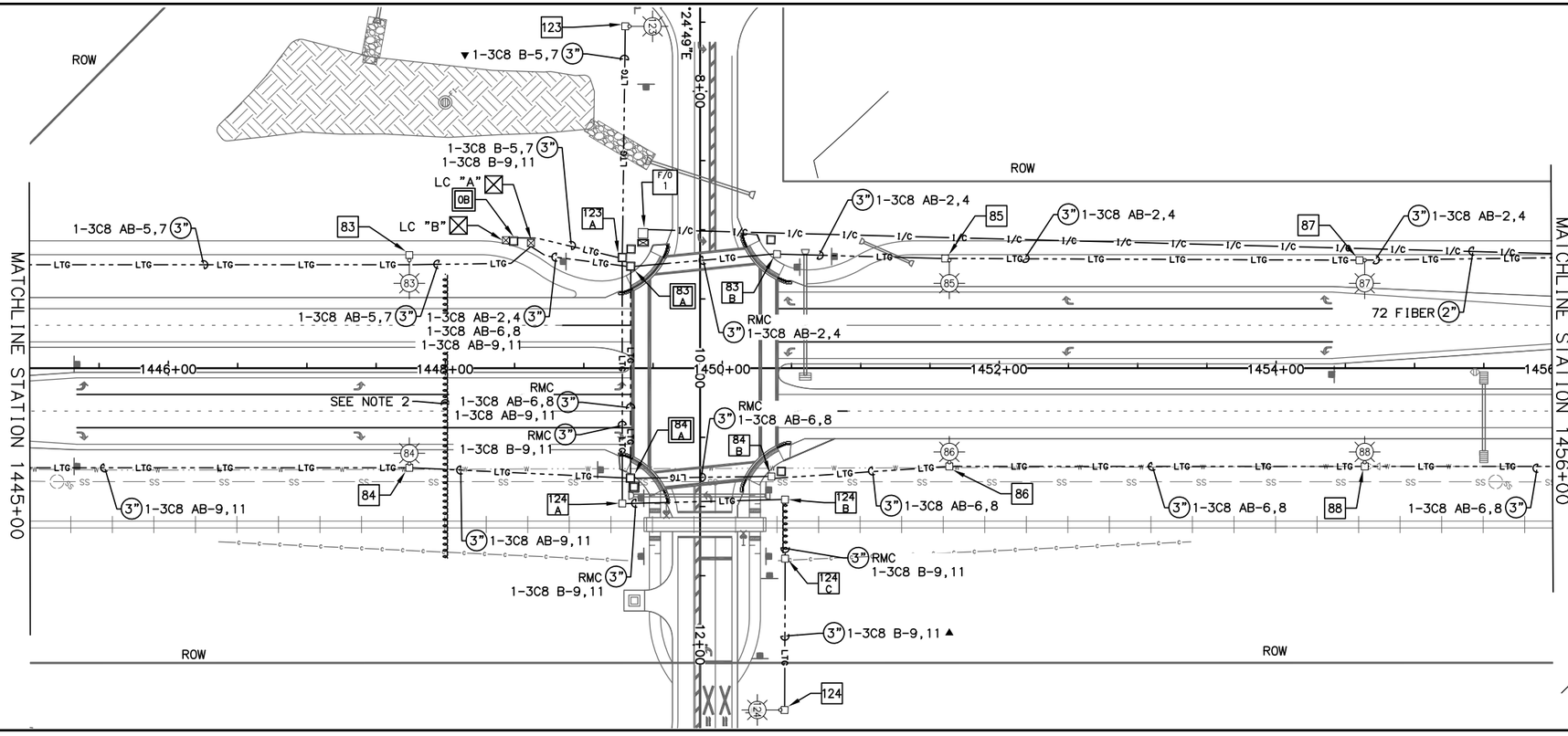

NOTES:

1. CONDUIT RUNS ARE HDPE UNLESS OTHERWISE NOTED.
2. PROVIDE 6" RMC FOR MEA. CAP CONDUIT ENDS AND INSTALL WOOD MARKERS FOR LOCATES. CONDUIT SHALL START AT STA "G" 1448+00, 68' LT AND END AT "G" 1448+00, 137' RT.
3. CONDUIT UNDER THE RAILROAD TRACKS AND 15' BEYOND SHALL BE INSTALLED USING HORIZONTAL DIRECTIONAL DRILLING. THE REMAINDER OF THE CONDUIT SYSTEM MAY BE INSTALLED PER CONTRACTOR'S PREFERENCE.
4. ILLUMINATION CONDUITS CONTAINING CIRCUITS FROM DIFFERENT LOAD CENTERS AND SIGNAL SYSTEM CONDUITS MAY ALL SHARE THE SAME TRENCH.

SHEET NO.	TOTAL SHEETS
H35	H38
STATE	YEAR
ALASKA	2021

PROJECT DESIGNATION

0A15037/CFHWY00431
0A15038/CFHWY00432
0A15033/CFHWY00006

NO.	REVISION
DATE	
NO.	REVISION
DATE	
NO.	REVISION
DATE	

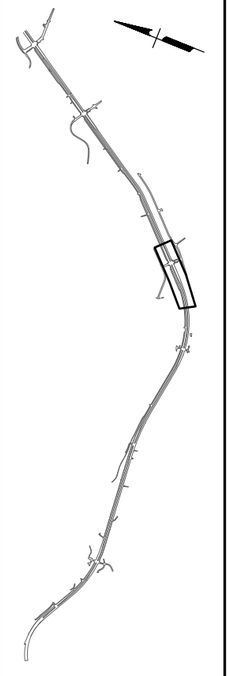

0 50 100

STATE OF ALASKA
49TH
DENNIS R. LINNELL
CE-7649
REGISTERED PROFESSIONAL ENGINEER

HDL ENGINEERING CONSULTANTS, LLC
3335 ARCTIC BOULEVARD, STE 100
ANCHORAGE, AK 99503
(907) 564-2120
AECL861

STATE OF ALASKA
49TH
ROY N. PACE
EE-12053
REGISTERED PROFESSIONAL ENGINEER

EDC, INC.
213 WEST FIREWEED LANE
ANCHORAGE, AK 99503
(907) 257-0601
AECC705

STATE OF ALASKA
DEPARTMENT OF TRANSPORTATION
AND PUBLIC FACILITIES

GLENN HWY: PARKS HWY TO S. INNER SPRINGER LP. (PHASE II)

ILLUMINATION PLAN
1436+00 TO 1456+00

DRAFTED | CHECKED | DESIGNED | LAYOUT H35 | DATE/TIME 11/23/2021 1:35 PM

FILE P:\PROJECTS\HDL\GLENN HIGHWAY 34-49 - PHASE 2\DWGS\ELEC\H36-H38 ILLUMINATION PLAN.DWG

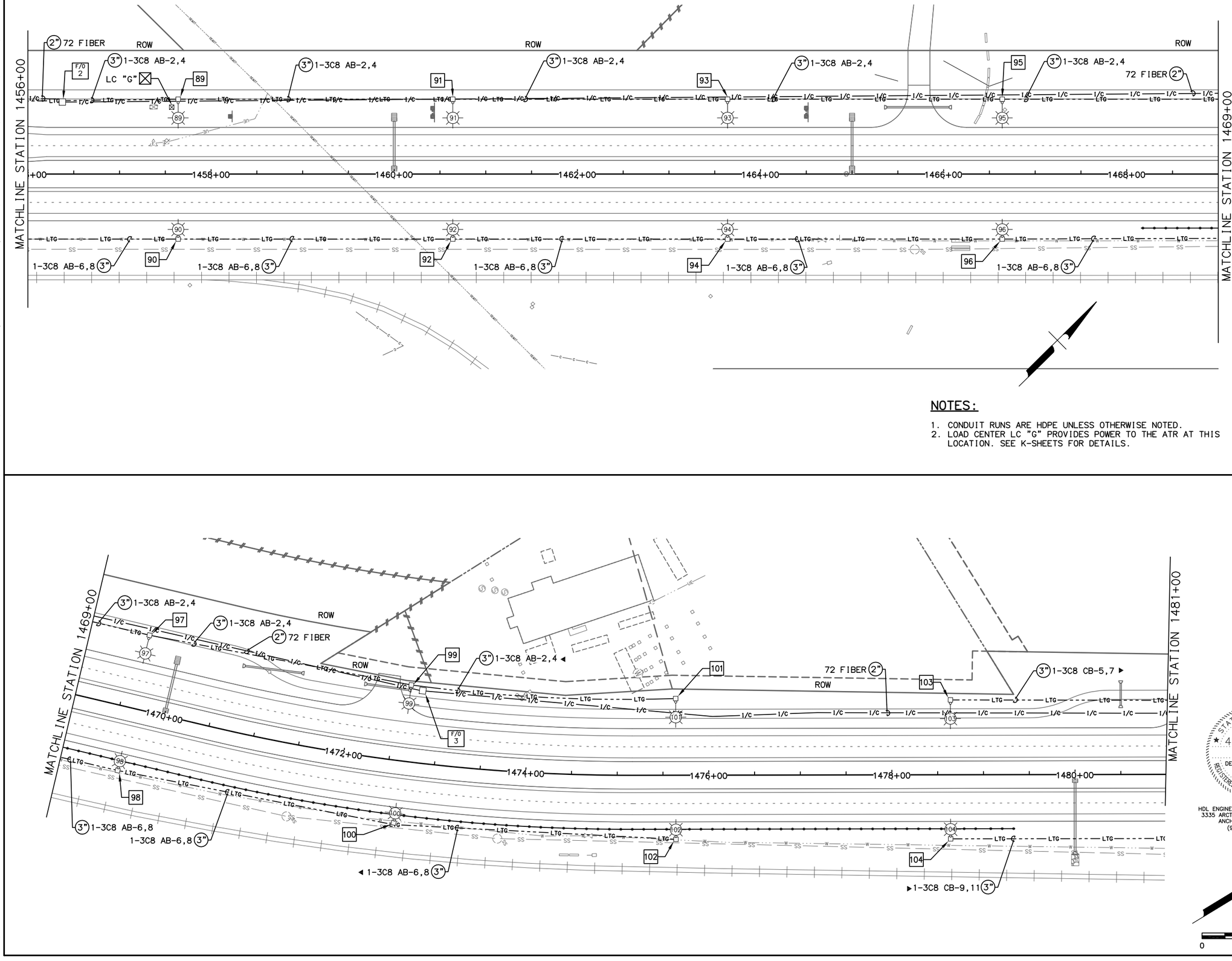

NOTES:

1. CONDUIT RUNS ARE HDPE UNLESS OTHERWISE NOTED.
2. LOAD CENTER LC "G" PROVIDES POWER TO THE ATR AT THIS LOCATION. SEE K-SHEETS FOR DETAILS.

SHEET NO.	TOTAL SHEETS
H36	H38
STATE	YEAR
ALASKA	2021

PROJECT DESIGNATION

0A15037/CFHWY00431
0A15038/CFHWY00432
0A15033/CFHWY00006

NO.	REVISION
DATE	
NO.	REVISION
DATE	
NO.	REVISION
DATE	

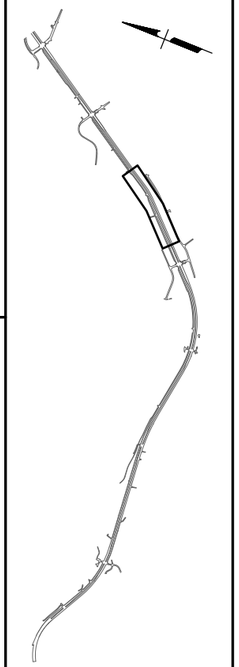

STATE OF ALASKA
49TH
DENNIS R. LINNELL
CE-7649
REGISTERED PROFESSIONAL ENGINEER

HDL ENGINEERING CONSULTANTS, LLC
3335 ARCTIC BOULEVARD, STE 100
ANCHORAGE, AK 99503
(907) 564-2120
AECL861

STATE OF ALASKA
49TH
ROY N. PACE
EE-12053
REGISTERED PROFESSIONAL ENGINEER

EDC, INC.
213 WEST FIREWEED LANE
ANCHORAGE, AK 99503
(907) 257-0601
AECC705

STATE OF ALASKA
DEPARTMENT OF TRANSPORTATION
AND PUBLIC FACILITIES

GLENN HWY: PARKS HWY TO S. INNER SPRINGER LP. (PHASE II)

ILLUMINATION PLAN
1456+00 TO 1481+00

0 50 100

DRAFTED | CHECKED | DESIGNED | H36 | LAYOUT | 11/23/2021 1:35 PM | DATE/TIME

FILE [P:\PROJECTS\HDL\GLENN HIGHWAY 34-49 – PHASE 2\DWGS\ELEC\H30-H38 ILLUMINATION PLAN.DWG

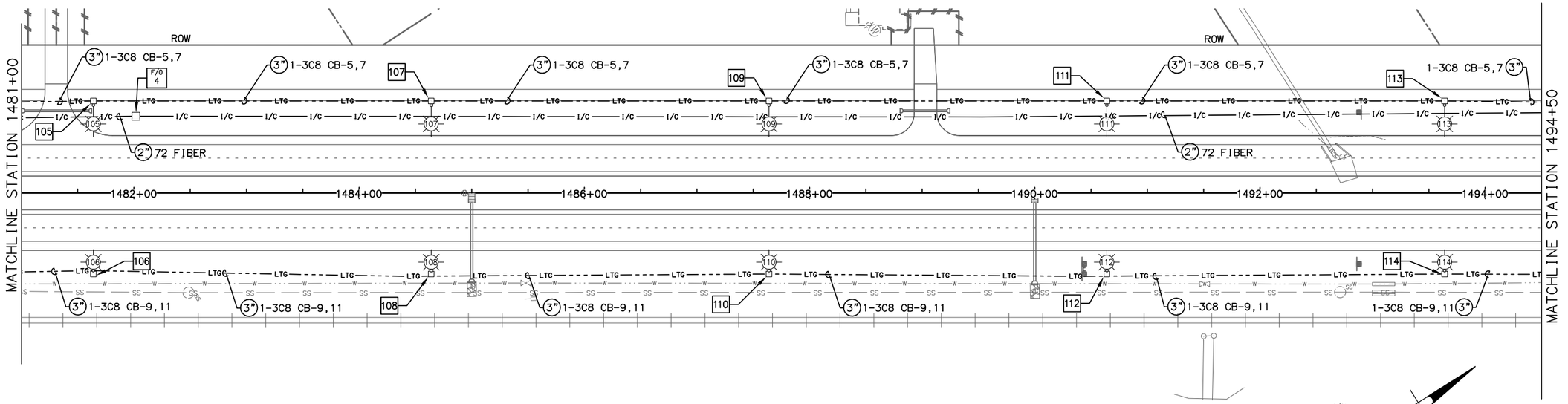

NOTES:

1. CONDUIT RUNS ARE HDPE UNLESS OTHERWISE NOTED.
2. CONDUIT UNDER THE RAILROAD TRACKS AND 15' BEYOND SHALL BE INSTALLED USING HORIZONTAL DIRECTIONAL DRILLING. THE REMAINDER OF THE CONDUIT SYSTEM MAY BE INSTALLED PER CONTRACTOR'S PREFERENCE.
3. ILLUMINATION CONDUITS CONTAINING CIRCUITS FROM DIFFERENT LOAD CENTERS AND SIGNAL SYSTEM CONDUITS MAY ALL SHARE THE SAME TRENCH.

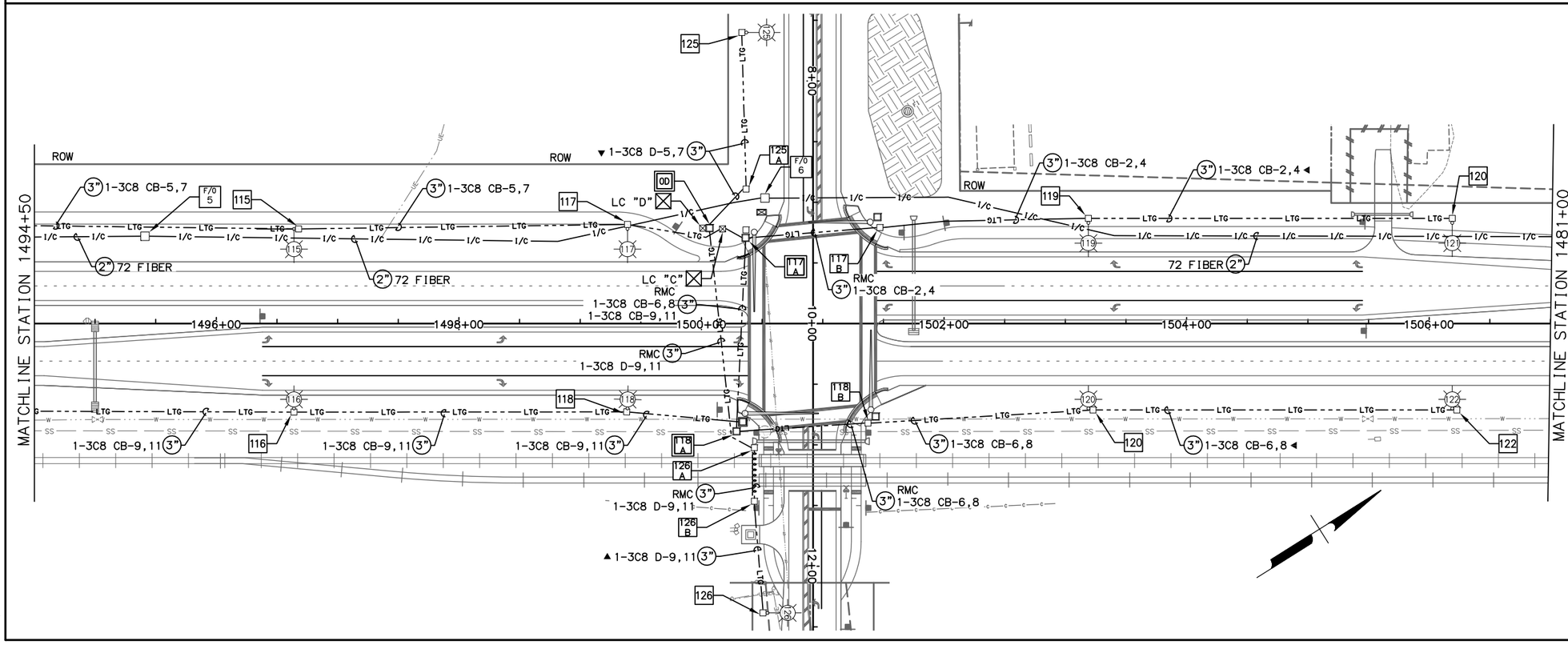

SHEET NO.	TOTAL SHEETS
H37	H38
STATE	YEAR
ALASKA	2021

PROJECT DESIGNATION

0A15037/CFHWY00431
0A15038/CFHWY00432
0A15033/CFHWY00006

NO.	REVISION
DATE	
NO.	REVISION
DATE	
NO.	REVISION
DATE	

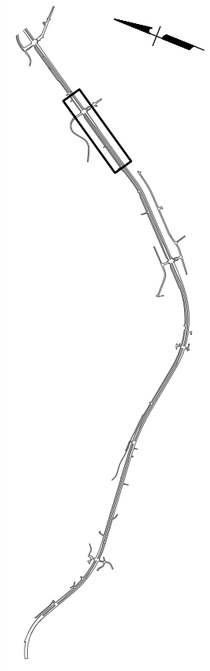

STATE OF ALASKA 49TH
DENNIS R. LINNELL
CE-7649
REGISTERED PROFESSIONAL ENGINEER

HDL ENGINEERING CONSULTANTS, LLC
3335 ARCTIC BOULEVARD, STE 100
ANCHORAGE, AK 99503
(907) 564-2120
AECL861

STATE OF ALASKA 49TH
ROY N. PACE
EE-12053
REGISTERED PROFESSIONAL ENGINEER

EDC, INC.
213 WEST FIREWEED LANE
ANCHORAGE, AK 99503
(907) 257-0601
AECC705

STATE OF ALASKA
DEPARTMENT OF TRANSPORTATION
AND PUBLIC FACILITIES

GLENN HWY: PARKS HWY TO S. INNER SPRINGER LP. (PHASE II)

ILLUMINATION PLAN
1481+00 TO 1507+00

DRAFTED | CHECKED | DESIGNED | H37 | LAYOUT | 11/23/2021 1:36 PM | DATE/TIME

FILE P:\PROJECTS\HDL\GLENN HIGHWAY 34-49 - PHASE 2\DWGS\ELEC\H30-H38 ILLUMINATION PLAN.DWG

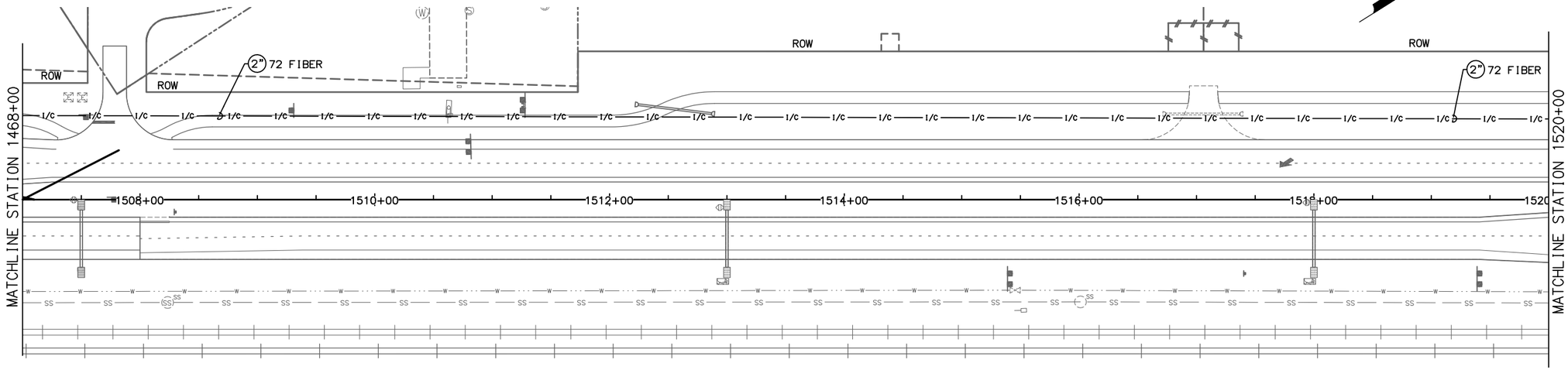

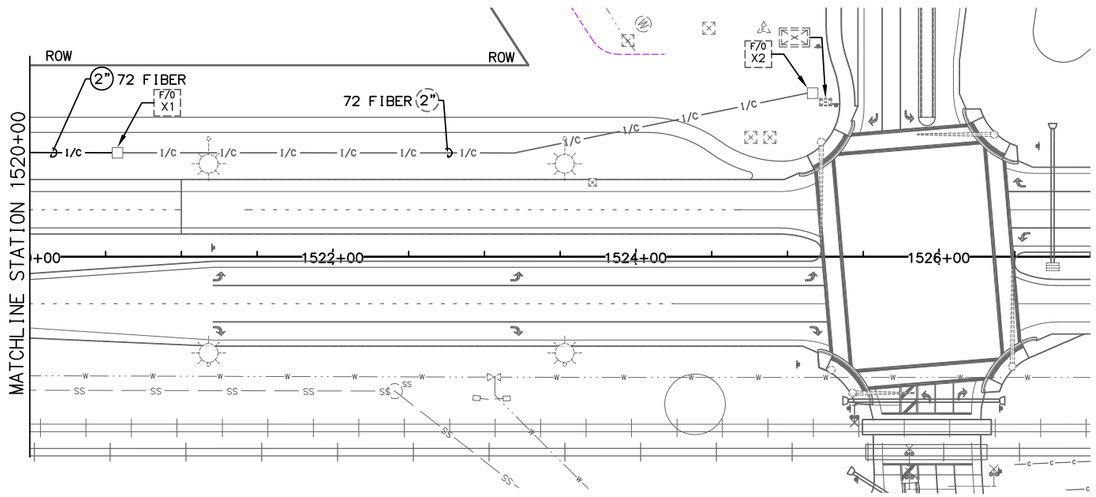

NOTES:

1. CONDUIT RUNS ARE HDPE UNLESS OTHERWISE NOTED.
2. CONNECT NEW HDPE CONDUIT TO EXISTING VAULT. PULL FIBER OPTIC CABLE THROUGH EXISTING CONDUIT SYSTEM AND INTO EXISTING VAULT 2.
3. CUT EXISTING GATOR PATCH AND PULL ENDS INTO EXISTING CONTROLLER.
4. INSTALL NEW 12-TERMINATION GATOR PATCH IN EXISTING CONTROLLER.
5. PULL NEW AND EXISTING GATOR PATCH ENDS INTO EXISTING VAULT 2 AND TERMINATE FIBER CABLES.

0 50 100

SHEET NO.	TOTAL SHEETS
H38	H38
STATE	YEAR
ALASKA	2021

PROJECT DESIGNATION

0A15037/CFHWY00431
0A15038/CFHWY00432
0A15033/CFHWY00006

NO.	REVISION
DATE	
NO.	REVISION
DATE	
NO.	REVISION
DATE	

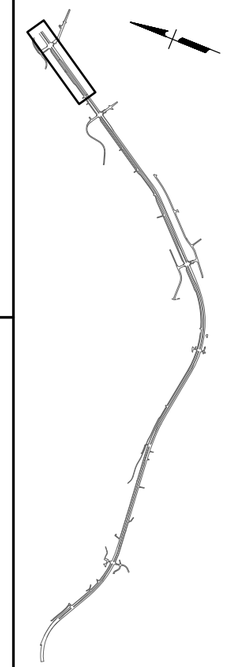

STATE OF ALASKA
49TH
DENNIS R. LINNELL
CE-7649
REGISTERED PROFESSIONAL ENGINEER

HDL ENGINEERING CONSULTANTS, LLC
3335 ARCTIC BOULEVARD, STE 100
ANCHORAGE, AK 99503
(907) 564-2120
AECL861

STATE OF ALASKA
49TH
ROY N. PACE
EE-12053
REGISTERED PROFESSIONAL ENGINEER

EDC, INC.
213 WEST FIREWEED LANE
ANCHORAGE, AK 99503
(907) 257-0601
AECC705

STATE OF ALASKA
DEPARTMENT OF TRANSPORTATION
AND PUBLIC FACILITIES

GLENN HWY: PARKS HWY TO S. INNER SPRINGER LP. (PHASE II)

ILLUMINATION PLAN
0000+00 TO 0000+00

DATE/TIME 11/23/2021 1:36 PM | LAYOUT H38 | DESIGNED | CHECKED | DRAFTED

FILE P:\PROJECTS\HDL\GLENN HIGHWAY 34-49 - PHASE 2\DWGS\ELEC\H30-H38 ILLUMINATION PLAN.DWG

NO.	DATE	REVISION

STATE	PROJECT DESIGNATION	YEAR	SHEET NO.	TOTAL SHEETS
ALASKA	0A15037/CFHWY00431 0A15038/CFHWY00432 0A15033/CFHWY00006	2021	HA1	HA5

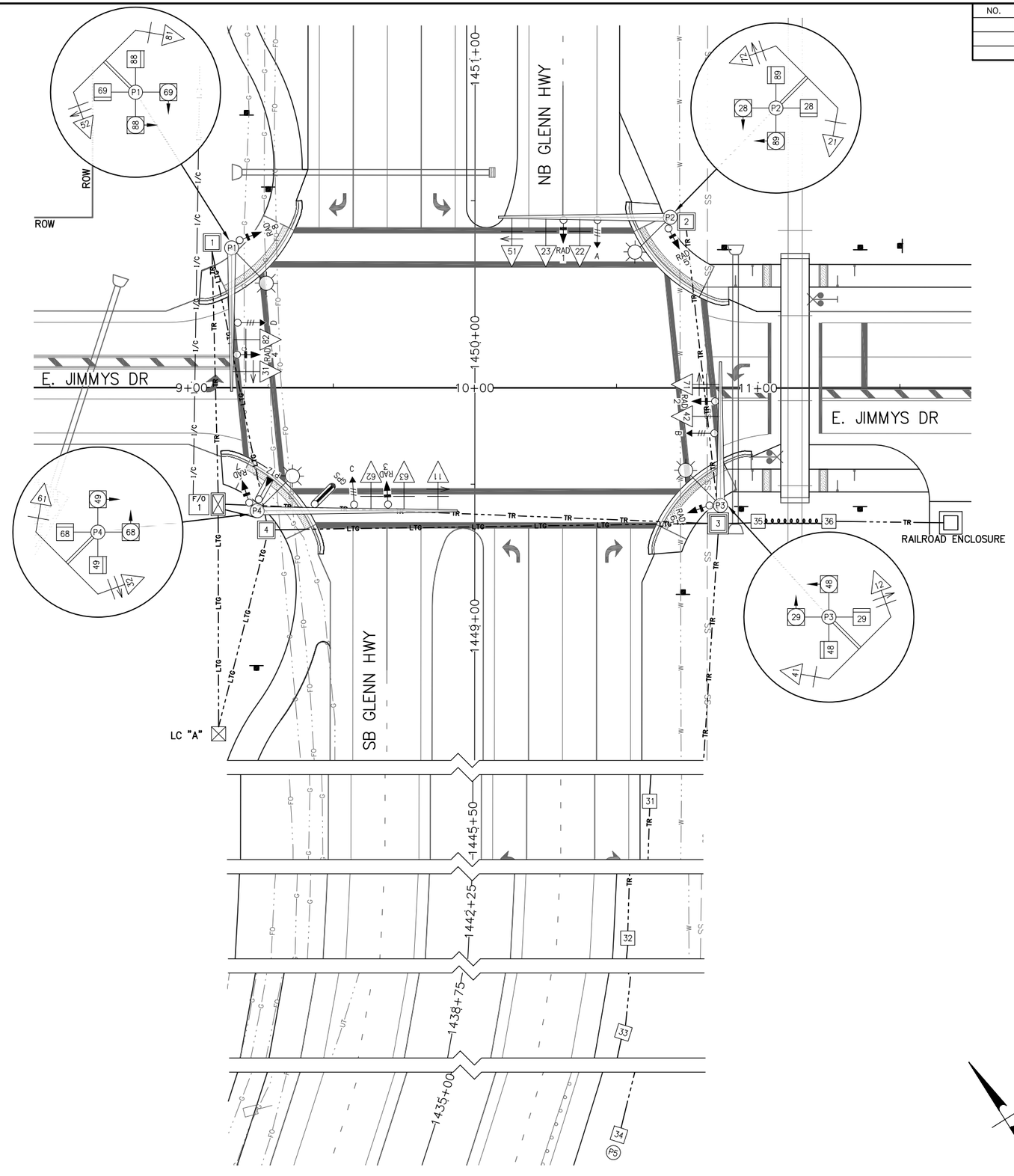

NOTES:

1. PROVIDE SIGNAL CABLES SUFFICIENT TO REACH THE END OF EACH MAST ARM.
2. CONDUIT CROSSING UNDER RAILROAD TRACKS TO BE BORED IN ACCORDANCE WITH ARRC AGREEMENT.
3. CONNECT CONDUIT TO 2" STUB-OUT AT RAILROAD ENCLOSURE.
4. PULL RAILROAD INTERCONNECT INTO RAILROAD ENCLOSURE, LEAVING 10' OF SPARE CABLE. INTERCONNECT WILL BE TERMINATED BY OTHERS.
5. RADAR LOCATIONS SHALL BE CONFIRMED WITH MANUFACTURER PRIOR TO WIRE ROUTING. ADJUSTMENTS MAY BE NECESSARY.

FOUNDATION SCHEDULE

FOUNDATION	STATION	OFFSET	NOTES
LC "A"	"G" 1448+61.9	90.4' LT	TYPE 1A LOAD CENTER WITH UPS
P1	"G" 1450+33.3	85.9' LT	SIGNAL POLE, PILE FOUNDATION
P2	"G" 1450+44.2	68.9' RT	SIGNAL POLE, PILE FOUNDATION
P3	"G" 1449+42.6	86.7' RT	SIGNAL POLE, PILE FOUNDATION
P4	"G" 1449+40.6	76.8' LT	SIGNAL POLE, PILE FOUNDATION
P5	"G" 1435+00.0	63.0' RT	ADVANCE WARNING BEACON, PILE FOUNDATION
TC	"G" 1449+42.9	90.6' LT	TRAFFIC CONTROLLER

JUNCTION BOX SCHEDULE

J-BOX	STATION	OFFSET	TYPE
1	"G" 1450+35.2'	92.8' LT	2
2	"G" 1450+42.7'	74.6' RT	2
3	"G" 1449+36.2'	85.9' RT	3
4	"G" 1449+33.9'	73.6' LT	2
31	"G" 1445+59.6'	62.4' RT	1A
32	"G" 1442+18.5'	56.0' RT	1A
33	"G" 1438+76.9'	59.3' RT	1A
34	"G" 1435+06.4'	63.0' RT	1A
35	"G" 1449+37.0'	100.0' RT	1A
36	"G" 1449+37.0'	125.0' RT	1A

CHECK SET NOV 2021

STATE OF ALASKA
49TH
DENNIS R. LINNELL
CE-7649
REGISTERED PROFESSIONAL ENGINEER

HDL ENGINEERING CONSULTANTS, LLC
3335 ARCTIC BOULEVARD, STE 100
ANCHORAGE, AK 99503
(907) 564-2120
AECL861

STATE OF ALASKA
49TH
ROY N. PACE
EE-12053
REGISTERED PROFESSIONAL ENGINEER

EDC, INC.
213 WEST FIREWEED LANE
ANCHORAGE, AK 99503
(907) 257-0601
AECC705

STATE OF ALASKA
DEPARTMENT OF TRANSPORTATION
AND PUBLIC FACILITIES

GLENN HWY: PARKS HWY TO S. INNER SPRINGER LP. (PHASE II)

SIGNAL PLAN
E. JIMMYS DR

DRAFTED | CHECKED | DESIGNED | LAYOUT HA1 | DATE/TIME 11/23/2021 1:36 PM

FILE P:\PROJECTS\HDL\GLENN HIGHWAY 34-49 - PHASE 2\DWGS\ELEC\58104_HA1_SIGNAL PLAN.DWG by roy

NO.	DATE	REVISION

STATE	PROJECT DESIGNATION	YEAR	SHEET NO.	TOTAL SHEETS
ALASKA	0A15037/CFHWY00431 0A15038/CFHWY00432 0A15033/CFHWY00006	2021	HA2	HA5

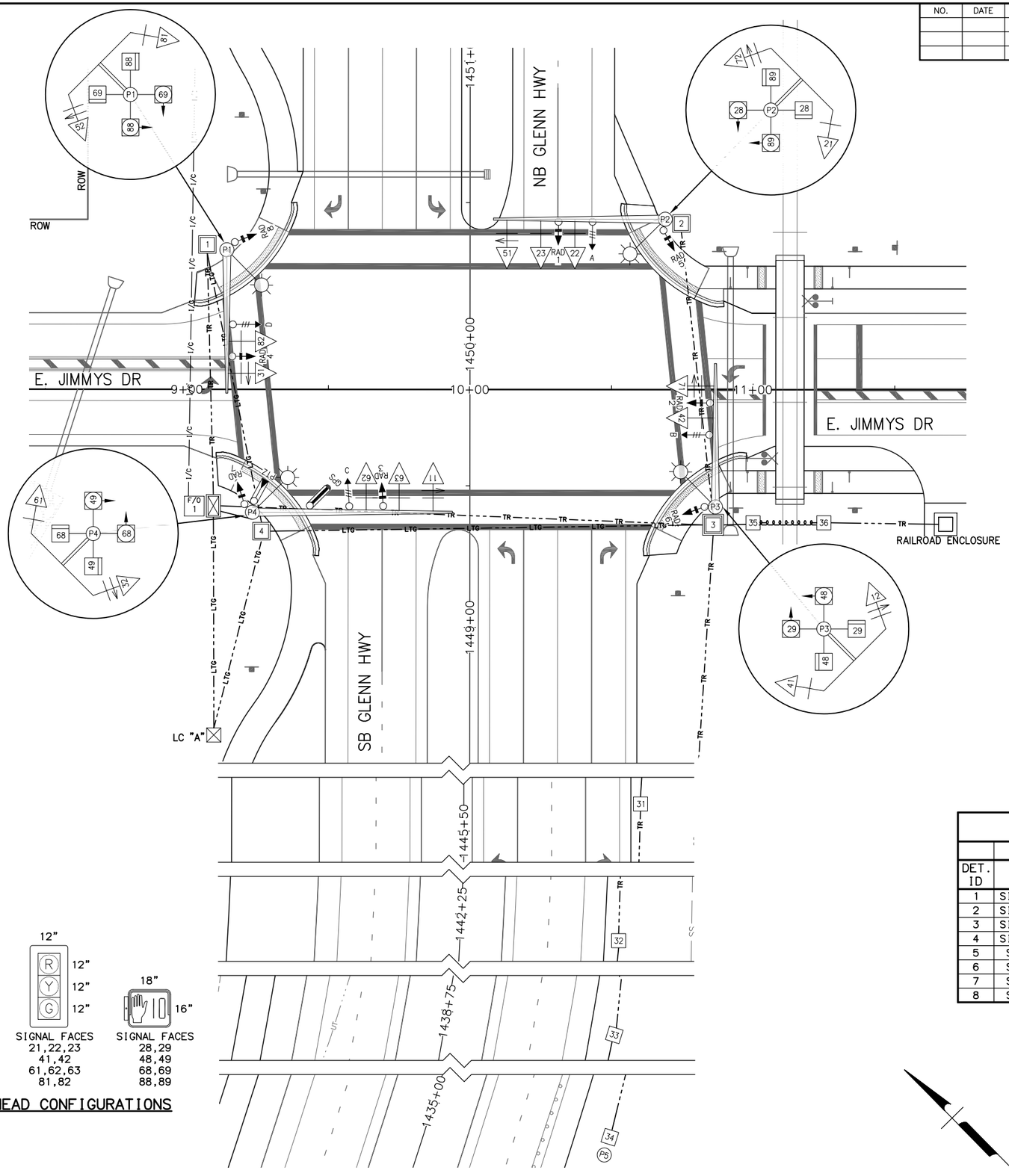

NOTES:

1. PROVIDE SIGNAL CABLES SUFFICIENT TO REACH THE END OF EACH MAST ARM.
2. CONDUIT CROSSING UNDER RAILROAD TRACKS TO BE BORED IN ACCORDANCE WITH ARRC AGREEMENT.
3. CONNECT CONDUIT TO 2" STUB-OUT AT RAILROAD ENCLOSURE.
4. PULL RAILROAD INTERCONNECT INTO RAILROAD ENCLOSURE, LEAVING 10' OF SPARE CABLE. INTERCONNECT WILL BE TERMINATED BY OTHERS.
5. RADAR LOCATIONS SHALL BE CONFIRMED WITH MANUFACTURER PRIOR TO WIRE ROUTING. ADJUSTMENTS MAY BE NECESSARY.

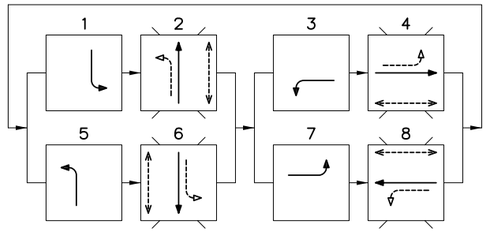

PHASE DIAGRAM

- PEDESTRIAN MOVEMENT
- PROTECTED VEHICLE MOVEMENT
- UNPROTECTED VEHICLE MOVEMENT
- * FUTURE USE/NOT USED

OPTICOM DETECTOR SCHEDULE

LOCATION	DETECTOR ID	PHASE CALL	FACING DIRECTION	REMARKS
SIGNAL POLE 4 MASTARM	GPS	ALL	-	-
SIGNAL POLE 2 MASTARM	A	2,5	SW	OPTICOM 721
SIGNAL POLE 3 MASTARM	B	4,7	NW	OPTICOM 721
SIGNAL POLE 4 MASTARM	C	1,6	NE	OPTICOM 721
SIGNAL POLE 1 MASTARM	D	3,8	SE	OPTICOM 721

RADAR DETECTION SCHEDULE

			RADAR OPTION 1		RADAR OPTION 2	
DET. ID	LOCATION	FACING DIRECTION	PHASE DET.	MODEL	PHASE DET.	MODEL
1	SIGNAL POLE 2 MASTARM	SW	2	WAVETRONIX ADVANCE XR	2,5	ACCUSCAN 600C
2	SIGNAL POLE 3 MASTARM	NW	N/A		4,7	ACCUSCAN 600C
3	SIGNAL POLE 4 MASTARM	NE	6	WAVETRONIX ADVANCE XR	1,6	ACCUSCAN 600C
4	SIGNAL POLE 1 MASTARM	SE	N/A		3,8	ACCUSCAN 600C
5	SIGNAL POLE 2 SHAFT	S	2,5	WAVETRONIX MATRIX	N/A	
6	SIGNAL POLE 3 SHAFT	W	4,7	WAVETRONIX MATRIX	N/A	
7	SIGNAL POLE 4 SHAFT	N	1,6	WAVETRONIX MATRIX	N/A	
8	SIGNAL POLE 1 SHAFT	E	3,8	WAVETRONIX MATRIX	N/A	

SIGNAL HEAD CONFIGURATIONS

CHECK SET NOV 2021

STATE OF ALASKA 49TH REGISTERED PROFESSIONAL ENGINEER
DENNIS R. LINNELL
CE-7649
HDL ENGINEERING CONSULTANTS, LLC
3335 ARCTIC BOULEVARD, STE 100
ANCHORAGE, AK 99503
(907) 564-2120
AECL861

STATE OF ALASKA 49TH REGISTERED PROFESSIONAL ENGINEER
ROY N. PACE
EE-12053
EDC, INC.
213 WEST FIREWEED LANE
ANCHORAGE, AK 99503
(907) 257-0601
AECC705

STATE OF ALASKA
DEPARTMENT OF TRANSPORTATION
AND PUBLIC FACILITIES

GLENN HWY: PARKS HWY TO S. INNER SPRINGER LP. (PHASE II)

SIGNAL OPERATIONS
E. JIMMYS DR

DRAFTED | CHECKED | DESIGNED | HA2 | LAYOUT | 11/23/2021 1:37 PM | DATE/TIME
FILE P:\PROJECTS\HDL\GLENN HIGHWAY 34-49 - PHASE 2\DWGS\ELEC\58104_HA2_SIGNAL OPERATIONS.DWG by roy

NO.	DATE	REVISION

STATE	PROJECT DESIGNATION	YEAR	SHEET NO.	TOTAL SHEETS
ALASKA	0A15037/CFHWY00431 0A15038/CFHWY00432 0A15033/CFHWY00006	2021	HA3	HA5

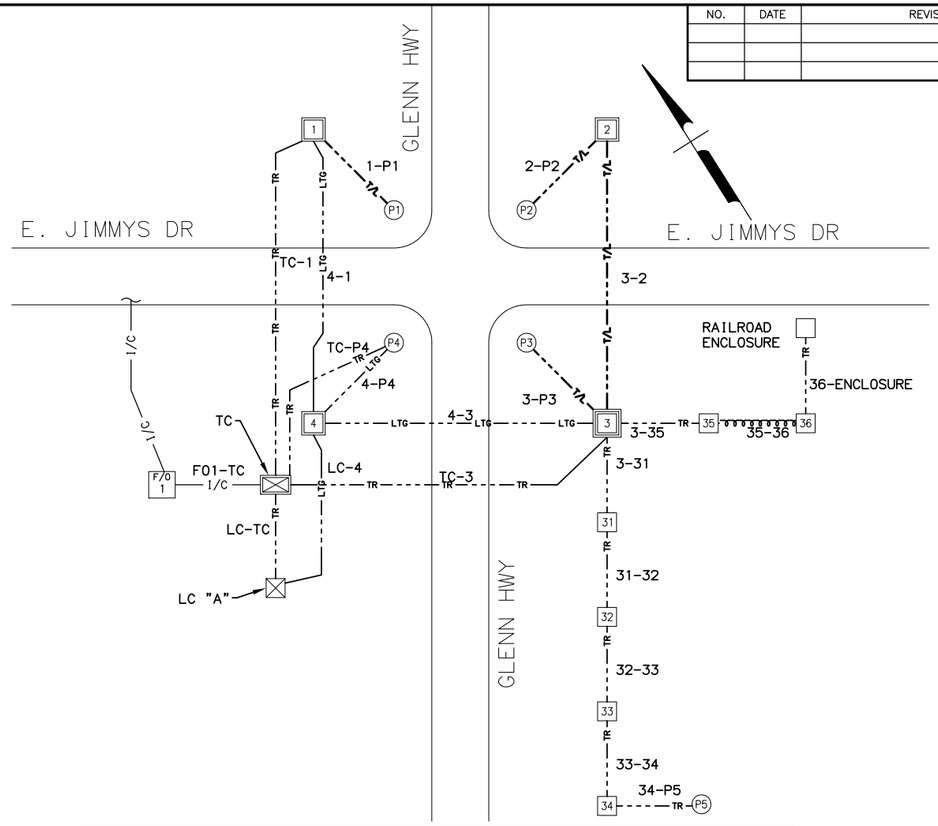

NOTES:

1. PROVIDE SIGNAL CABLES SUFFICIENT TO REACH THE END OF EACH MAST ARM.
2. ROUTE ILLUMINATION CABLES THROUGH INTERSECTION LIGHTING CONDUITS. SEE ILLUMINATION SHEETS FOR CIRCUITS.
3. CONDUIT CROSSING UNDER RAILROAD TRACKS TO BE BORED IN ACCORDANCE WITH ARRC AGREEMENT.
4. CONNECT CONDUIT TO 2" STUB-OUT AT RAILROAD ENCLOSURE.
5. PULL RAILROAD INTERCONNECT INTO RAILROAD ENCLOSURE, LEAVING 10' OF SPARE CABLE. INTERCONNECT WILL BE TERMINATED BY OTHERS.

CABLE SCHEDULE

CABLE	CONDUCTOR	J-BOX PATH	LOAD
AA2	3C6	LC-TC	TC POWER
AA57	3C8	LC-4-P4-4-1-P1-1-4-3-P3-3-2-P2	INTXL
11	7C14	TC-P4	SIG 11
12	7C14	TC-3-P3	SIG 12
21	7C14	TC-3-2-P2	SIG 21
22	7C14	TC-3-2-P2	SIG 22
23	7C14	TC-3-2-P2	SIG 23
28I	4C14	TC-3-2-P2	PEDI 28
28B	4C14	TC-3-2-P2	PED B 28
29I	4C14	TC-3-P3	PEDI 29
29B	4C14	TC-3-P3	PED B 29
31	7C14	TC-1-P1	SIG 31
32	7C14	TC-P4	SIG 32
41	7C14	TC-3-P3	SIG 41
42	7C14	TC-3-P3	SIG 42
48I	4C14	TC-3-P3	PEDI 48
48B	4C14	TC-3-P3	PED B 48
49I	4C14	TC-P4	PEDI 49
49B	4C14	TC-P4	PED B 49
51	7C14	TC-3-2-P2	SIG 51
52	7C14	TC-1-P1	SIG 52
61	7C14	TC-P4	SIG 61
62	7C14	TC-P4	SIG 62
63	7C14	TC-P4	SIG 63
68I	4C14	TC-P4	PEDI 68
68B	4C14	TC-P4	PED B 68
69I	4C14	TC-1-P1	PEDI 69
69B	4C14	TC-1-P1	PED B 69
71	7C14	TC-3-P3	SIG 71
72	7C14	TC-3-2-P2	SIG 72
81	7C14	TC-1-P1	SIG 81
82	7C14	TC-1-P1	SIG 82
88I	4C14	TC-1-P1	PEDI 88
88B	4C14	TC-1-P1	PED B 88
89I	4C14	TC-3-2-P2	PEDI 89
89B	4C14	TC-3-2-P2	PED B 89
PTZ	CAT 6	TC-P4	PTZ CAMERA
GPS	5C20	TC-P4	GPS
A	3C20	TC-3-2-P2	PRE A
B	3C20	TC-3-P3	PRE B
C	3C20	TC-P4	PRE C
D	3C20	TC-1-P1	PRE D
AWB	3C8	TC-3-31-32-33-34-P5	ADVANCE WARNING BEACON
RR	7C14	TC-3-35-36-ENCLOSURE	RAILROAD PREEMPTION
100	MTX2 HMRN	TC-3-2-P2	RAD 1
200	MTX2 HMRN	TC-3-P3	RAD 2
300	MTX2 HMRN	TC-P4	RAD 3
400	MTX2 HMRN	TC-1-P1	RAD 4
500	MTX2 HMRN	TC-3-2-P2	RAD 5
600	MTX2 HMRN	TC-3-P3	RAD 6
700	MTX2 HMRN	TC-P4	RAD 7
800	MTX2 HMRN	TC-1-P1	RAD 8
900	72 FIBER	F01-TC	INTERCONNECT

CONDUIT SCHEDULE

RUN #	CONDUIT		CABLES	DESTINATION
LC-TC	3	RMC	AA2	TC POWER
LC-4	3	RMC	AA57	INTXL
TC-1	3	RMC	31,52,69I,81,82,88I	POLE 1
	2	RMC	400,800,69B,88B,D	POLE 1
	3	RMC	SPARE	SPARE
1-P1	3	RMC	31,52,69I,81,82,88I	POLE 1
	2	RMC	AA57,AA57	INTXL
	2	RMC	400,800,69B,88B,D	POLE 1
2-P2	3	RMC	21,22,23,28I,51,72,89I	POLE 2
	2	RMC	AA57	INTXL
	2	RMC	100,500,28B,89B,A	POLE 2
3-35	2	PE	RR	RR PRE
35-36	2	PE	RR	RR PRE
36-ENC	2	PE	RR	RR PRE
TC-3	3	RMC	12,29I,41,42,48I,71,AWB	POLE 3
	3	RMC	21,22,23,28I,51,72,89I	POLE 2
	2	RMC	RR	RR PRE
	3	RMC	200,600,100,500,28B,29B,48B,89B,A,B	POLE 2,3
	3	RMC	SPARE	
3-2	2	RMC	AA57	INTXL
	3	RMC	21,22,23,28I,51,72,89I	POLE 2
	2	RMC	100,500,28B,89B,A	POLE 2
	3	RMC	SPARE	
3-P3	3	RMC	12,29I,41,42,48I,71	POLE 3
	2	RMC	AA57,AA57	INTXL
	2	RMC	200,600,29B,48B,B	POLE 3
3-31	2	PE	AWB	POLE 5
31-32	2	PE	AWB	POLE 5
32-33	2	PE	AWB	POLE 5
33-34	2	PE	AWB	POLE 5
34-P5	2	PE	AWB	POLE 5
4-1	2	RMC	AA57,AA57	INTXL
4-3	2	RMC	AA57	INTXL
TC-P4	3	RMC	11,32,49I,61,62,63,68I	POLE 4
	3	RMC	PTZ,700,300,49B,68B,GPS,C	POLE 4
4-P4	2	RMC	AA57,AA57	INTXL
F01-TC	2	PE	900	IC

SUMMARY OF LOAD CENTER "A"

LOAD CENTER TYPE:	TYPE 1 (STATE OF ALASKA)
SERVING UTILITY:	MATANUSKA ELECTRIC ASSOCIATION
SERVICE CONDUIT TYPE:	RIGID METAL CONDUIT

LOCATION DATA

LOAD CENTER:	GLENN HWY AND E. JIMMYS, "G" 1448+61.9, 90.4' LT
POWER SOURCE:	NEW LINE EXTENSION
PHOTOELECTRIC CONTROL:	AT LOAD CENTER
SERVICE VOLTAGE:	240/480V, 1-PHASE, 3-WIRE WITH GROUNDED NEUTRAL
PROVIDE METER SOCKET:	YES
MAIN BREAKER A:	480V, 40A, 2-POLE (TRANSFORMER PRIMARY)
MAIN BREAKER B:	480V, 100A, 2-POLE
CONTACTOR 1:	600V, 12-POLE
CONTACTOR 2:	600V, 12-POLE
AIC RATING:	10,000A

PANEL A - 240V (THROUGH TRANSFORMER)

POLE	AMP TRIP	DESCRIPTION	POLE KVA	AØ	BØ	POLE KVA	DESCRIPTION	AMP TRIP	POLE
1	15/2	PHOTOCELL	0.1	3.7		3.6	TRAFFIC CONTROLLER	40/1	2
3			0.1		0.1	0.0			4
5	20/2	SIGNAL POLE LUMINAIRES, P1-P4*	0.6	0.6		0.0	SPARE	20/2	6
7			0.6		0.6	0.0			8
9			0.0	0.0		0.0			10
11			0.0		0.0	0.0			12
* = THROUGH CONTACTOR 1				4.3	0.7	PANEL A TOTAL KVA			5.0
				PANEL A AMPS					20.8

PANEL B - 480V

1	15/1	PHOTOCELL 2	0.1	1.4		1.3	GLENN HWY LUMINAIRES, 85-101 ODD**	20/2	2
3			0.0		1.3	1.3			4
5	20/2	GLENN HWY LUMINAIRES, 81,83**	0.3	1.6		1.3	GLENN HWY LUMINAIRES, 86-102 EVEN**	20/2	6
7			0.3		1.6	1.3			8
9	20/2	GLENN HWY LUMINAIRES, 82,84**	0.3	0.3		0.0	SPARE	20/2	10
11			0.3		0.3	0.0			12
13			0.0	0.0		0.0			14
15			0.0		0.0	0.0			16
17			0.0	0.0		0.0			18
** = THROUGH CONTACTOR 2				3.3	3.2	PANEL B TOTAL KVA			6.5
				PANEL B AMPS					13.5
NOTE: SEE H3 FOR TRANSFORMER DETAILS				TOTAL KVA					11.5
				AMPS					24.0

CHECK SET NOV 2021



HDL ENGINEERING CONSULTANTS, LLC
3335 ARCTIC BOULEVARD, STE 100
ANCHORAGE, AK 99503
(907) 564-2120
AECL861



EDC, INC.
213 WEST FIREWEED LANE
ANCHORAGE, AK 99503
(907) 257-0601
AECC705

STATE OF ALASKA
DEPARTMENT OF TRANSPORTATION
AND PUBLIC FACILITIES

GLENN HWY: PARKS HWY TO S. INNER SPRINGER LP. (PHASE II)

SIGNAL WIRING
E. JIMMYS DR

DRAFTED | CHECKED | DESIGNED | HA3 | LAYOUT | DATE/TIME 11/23/2021 1:37 PM

FILE P:\PROJECTS\HDL\GLENN HIGHWAY 34-49 - PHASE 2\DWGS\ELEC\58104_HA3_SIGNAL_WIRING.DWG by roy

NO.	DATE	REVISION

STATE	PROJECT DESIGNATION	YEAR	SHEET NO.	TOTAL SHEETS
ALASKA	0A15037/CFHWY00431 0A15038/CFHWY00432 0A15033/CFHWY00006	2021	HA4	HA5

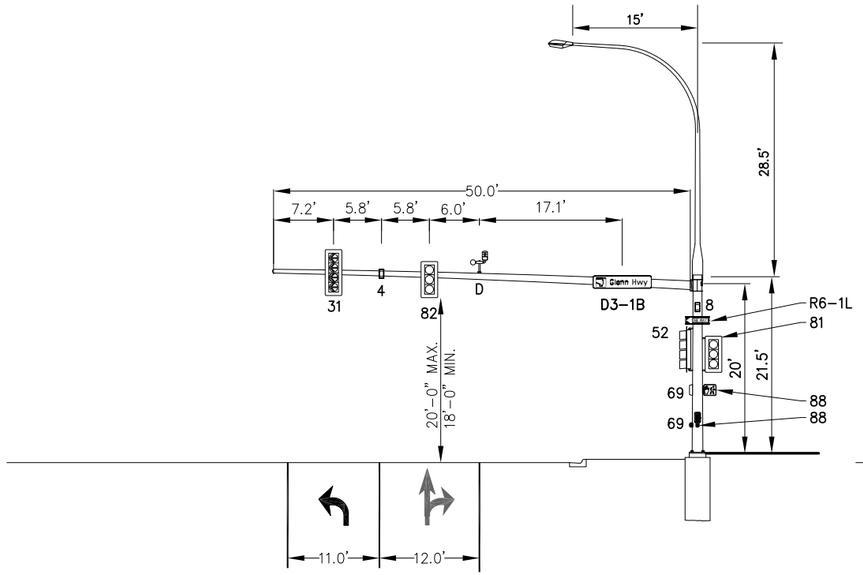

SIGNAL POLE 1 – WB TRAFFIC

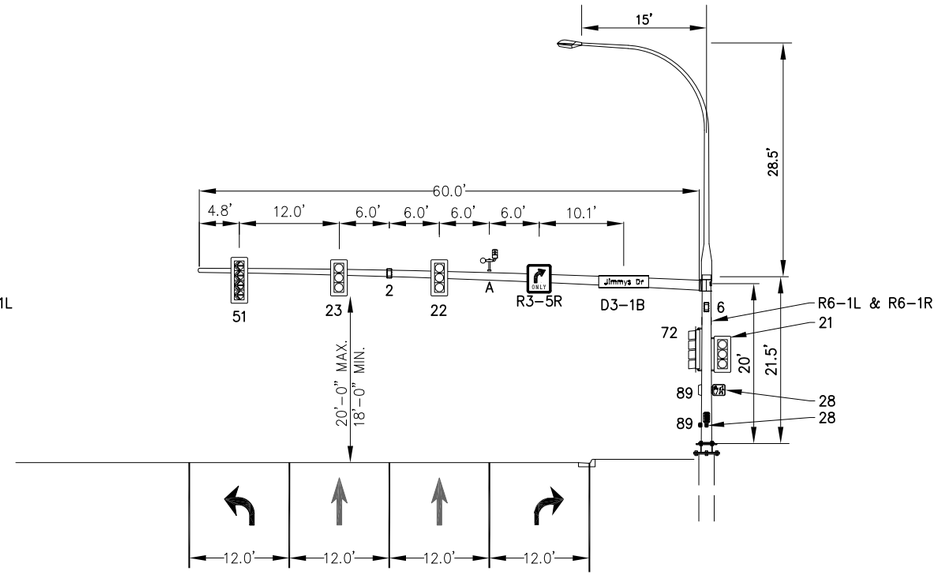

SIGNAL POLE 2 – NB TRAFFIC

NOTES:

1. TOP OF FOUNDATIONS SHALL BE WITHIN +4" OF EDGE OF PAVEMENT.
2. FOUNDATION ELEVATIONS TO BE APPROVED BY CONSTRUCTION ENGINEER BEFORE INSTALLATION AND ADJUSTED AS NEEDED.
3. AIM GPS DETECTOR 45° TOWARDS CENTER OF INTERSECTION.

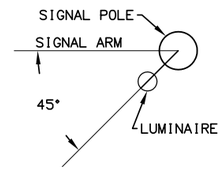

LUMINAIRE ORIENTATION

N.T.S.

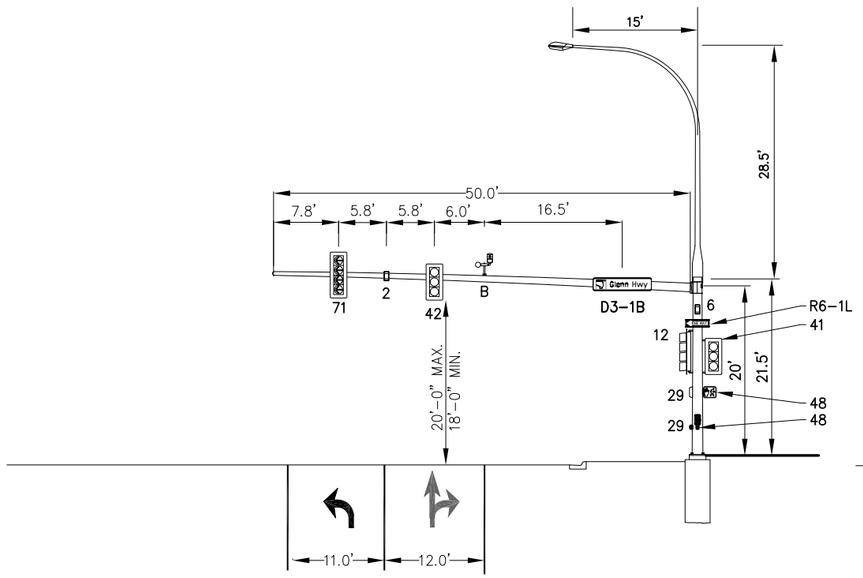

SIGNAL POLE 3 – EB TRAFFIC

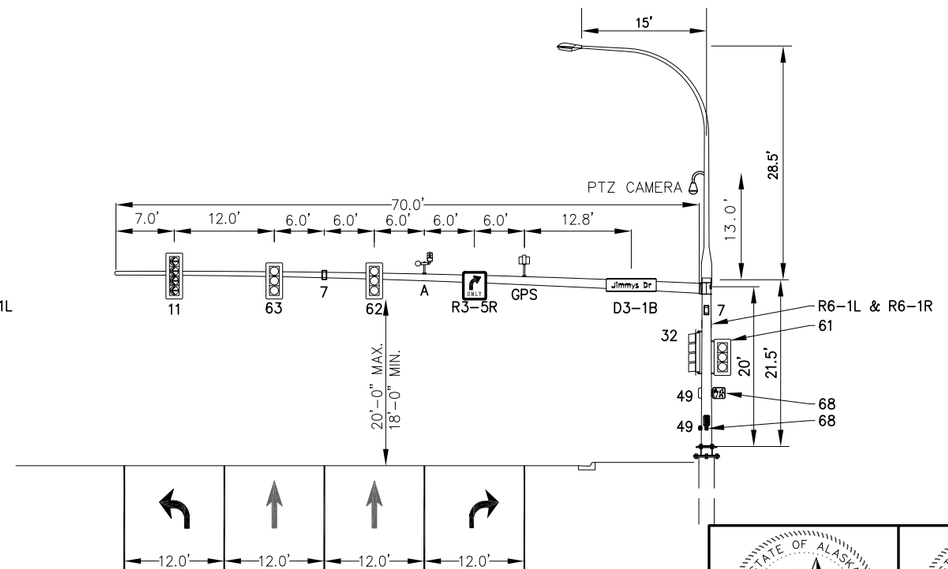

SIGNAL POLE 4 – SB TRAFFIC

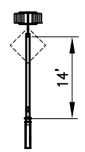

AWF BEACON

CHECK SET NOV 2021

STATE OF ALASKA 49TH
DENNIS R. LINNELL
CE-7649
REGISTERED PROFESSIONAL ENGINEER

HDL ENGINEERING CONSULTANTS, LLC
3335 ARCTIC BOULEVARD, STE 100
ANCHORAGE, AK 99503
(907) 564-2120
AECL861

STATE OF ALASKA 49TH
ROY N. PACE
EE-12053
REGISTERED PROFESSIONAL ENGINEER

EDC, INC.
213 WEST FIREWEED LANE
ANCHORAGE, AK 99503
(907) 257-0601
AECC705

STATE OF ALASKA
DEPARTMENT OF TRANSPORTATION
AND PUBLIC FACILITIES

GLENN HWY: PARKS HWY TO S. INNER SPRINGER LP. (PHASE II)

POLE ELEVATIONS
E. JIMMYS DR

FILE P:\PROJECTS\HDL\GLENN HIGHWAY 34-49 – PHASE 2\DWGS\ELEC\58104_HA4_SIGNAL_ELEVATION.DWG by roy | DATE/TIME 11/23/2021 1:37 PM | LAYOUT HA4 | DESIGNED | CHECKED | DRAFTED

NO.	DATE	REVISION

STATE	PROJECT DESIGNATION	YEAR	SHEET NO.	TOTAL SHEETS
ALASKA	0A15037/CFHWY00431 0A15038/CFHWY00432 0A15033/CFHWY00006	2021	HA5	HA5

CONTROLLER CABINET FEATURES
E JIMMY DR

GENERAL OPTIONS	
TYPE	TS2-1
SIZE	NEMA SIZE 7
MATERIALS	0.125" NATURAL ALUMINUM
MODEL	ECONOLITE TS2 TYPE 1 PLUG-N-GO
MOUNTING HARDWARE	INCLUDED
PAINT	NONE
SPECIAL OPTIONS	
LIFTING TABS	INCLUDED
EQUIPMENT SHELF	(4) FULL WIDTH, 12"
AIR FILTER	FIBER MESH
MAIN DOOR LOCK	BEST
REAR DOOR	NONE
LED LAMP	(2) 24" (1) TOP OF CAB, (1) UNDER CONT. SHELF
GOOSENECK LAMP	INTEGRAL SWITCH TYPE A WITH LED
T-STAT CONTROLLED EXHAUST FANS	(2) FANS ON SEPARATE T-STATS
MAIN PANEL	
16 POSITION - HORIZONTAL	INCLUDED
RESISTOR LOCATION	SIDEWALL
FLASH TRANSFER RELAYS SOCKETS	(6) INCLUDED
FLASHER SOCKETS	(2) INCLUDED
K1 RELAY SOCKET	INCLUDED
POWER PANEL	
SURGE SUPPRESSION	ACP-340
LINE FILTER (RADIO INTERFERENCE)	50A
SOLID STATE CONTACTOR	NORMALLY OPEN
MAIN CIRCUIT BREAKER	20A
AUXILIARY CIRCUIT BREAKER	20A
GFI LOCATION	POWER PANEL
2 POSITION TERMINAL BLOCK #6 U.S.G.	INCLUDED
16 POSITION NEUTRAL BUS BAR	INCLUDED
16 POSITION CHASSIS GROUND BUS BAR	INCLUDED
EATON MODEL HS-P-SP-120-60-RJ SURGE PROTECTOR OR APPROVED EQUAL	INCLUDED
POLICE PANEL	
POLICE PANEL	INCLUDED
POLICE PANEL SWITCHES	SIGNALS ON/OFF, AUTO/FLASH
POLICE PANEL PUSHBUTTON ALARM	INCLUDED
POLICE DOOR LOCK	SKELETON
POLICE PANEL MANUAL CORD	NONE
AUXILIARY PANEL	
AUXILIARY PANEL SWITCHES	AUTO/FLASH, STOP TIME, CONTROLLER POWER, COORD/FREE, FO1, FO2
DETECTOR TEST SWITCHES	TACTILE PUSHBUTTON
RACK DETECTION	
DETECTOR RACKS	PROVIDE FOUR (4) 16-CHANNEL DETECTOR RACKS WITH 2 SLOTS EACH FOR OPTICOM. NOTE: ECONOLITE CONFIG. #4 WITH ADDITIONAL DETECTOR RACK.
DETECTOR RACK POWER SUPPLY	BIU FOR EACH RACK
EVP REQUIREMENTS	WIRING FOR OPTICOM RACK W/GREENS EACH DETECTOR RACK
DETECTOR LOOP INTERFACE	(4) 5-POSITION SERIAL
ADDITIONAL OPTIONS	
RAILROAD PREEMPTION	2 CHANNELS OF RAILROAD PREEMPTION INCLUDED
RAILROAD PREEMPTION/STAND ALONE PANEL	INCLUDED
RED JUMPERS FOR ALL UNUSED PHASES	INCLUDED
LOAD RESISTORS	(8) INCLUDED
ADDITIONAL GFI OUTLET (NON-FILTERED)	INCLUDED
DOUBLE DUPLEX CONVENIECE OUTLET	(1) LEFT WALL FILTERED, (1) RIGHT WALL NON-FILTERED
DUPLEX OUTLET	FOR HEATER AUTO & BYPASS SWITCH, ON DOOR
ADDITIONAL NEUTRAL BUS BARS	(1) 16 POSITION BUS BAR RIGHT SIDE OF CABINET
	(1) 32 POSITION BUS BAR LEFT SIDE OF CABINET
ADDITIONAL CHASSIS GROUND BUS BARS	(1) 16 POSITION BUS BAR RIGHT SIDE OF CABINET
	(1) 16 POSITION BUS BAR LEFT SIDE OF CABINET
GTT OPTICOM 757 HARNESS	INCLUDED - WIRED INTO CABINET
GTT OPTICOM 768 AUXILIARY INTERFACE PANEL	INCLUDED - WIRED INTO CABINET
STANDARD WIRING DIAGRAM (AUTOCAD FORMAT)	PROVIDE: (3) PAPER SETS, (1) AUTOCAD FILE, (1) PDF.
SDLC CABLES	(10)

CONTROLLER ASSEMBLY EQUIPMENT
E JIMMY DR

SUPPLY ALL LABOR, EQUIPMENT AND MATERIALS TO PROVIDE A FULLY FUNCTIONING TRAFFIC SIGNAL CONTROLLER ASSEMBLY COMPLIANT WITH THE NEMA STANDARD PUBLICATION NO. TS2-2003 V02.06 AND SPECIAL "SPECIALS" PROVISIONS OF THIS CONTRACT INCLUDING BUT NOT LIMITED TO;

QTY	CONTROLLER/MMU EQUIPMENT
1	ECONOLITE COBALT CONTROLLER
1	CONTROLLER ETHERNET PORT
1	CONTROLLER DATA KEY
1	ECONOLITE MMU2-16LEIP
1	MMU2 CARD
QTY	**CABINET EQUIPMENT**
16	RENO LS-200 OR APPROVED EQUAL LOAD SWITCHES
36	RENO GT-200-SS OR APPROVED EQUAL 2-CHANNEL DETECTOR AMPLIFIERS
8	RENO TR-200 OR APPROVED EQUAL FLASH TRANSFER RELAYS
4	ECONOLITE BIU-64 TERMINAL AND FACILITIES BIU'S
6	ECONOLITE BIU-64 DETECTION BIU'S
1	ECONOLITE PS-2412 TS2 CABINET POWER SUPPLY
2	ECONOLITE 801 FLASHER
2	K1 RELAY
2	750/1500W SELECTABLE THERMOSTATICALLY CONTROLLED CABINET HEATER, MOUNT ON DOOR
1	THERMOSTAT, MOUNT ON DOOR
0	RE-SEALABLE PRINT POUCH OF SUFFICIENT SIZE TO ACCOMMODATE CABINET PRINTS
1	COMPLETE SET OF MANUALS FOR CONTROLLER, MMU, AND VEHICLE DETECTOR AMPLIFIERS

COMMUNICATION EQUIPMENT SCHEDULE
E JIMMY DR

QTY	FIBER INTERCONNECT EQUIPMENT
3	3 FOOT CAT6 PATCH CABLE
1	6 FOOT CAT6 PATCH CABLE
0	3 FOOT LC TO LC PATCH CABLE
0	6 FOOT LC TO LC PATCH CABLE
0	3 FOOT SC TO LC PATCH CABLE
0	6 FOOT SC TO LC PATCH CABLE
2	3 FOOT SC TO SC PATCH CABLE
2	6 FOOT SC TO SC PATCH CABLE
0	PATCH PANEL - 8 LC DUPLEX CONNECTORS (12 FIBERS SPLICED)
1	PATCH PANEL - 8 SC DUPLEX CONNECTORS (12 FIBERS SPLICED)
0	SFP OPTICS FX SM 1310NM 10KM LC MODULE OR APPROVED EQUAL
0	CARRIER-CLASS ELEMENT MANAGEMENT SYSTEM
0	LC DUPLEX SM FIBER OPTIC CABLE ASSEMBLY 1 METER OR APPROVED EQUAL
0	SFP 1112-1 RJ45 ELECTRICAL TRANSCEIVER
0	RSP1300 802.at POE EXTERNAL POWER SUPPLY
0	WALL MOUNTING KIT 510R21080 OR APPROVED EQUAL
0	RSG920P ETHERNET SWITCH OR APPROVED EQUAL (LC)
1	RS900G(32M) ETHERNET SWITCH OR APPROVED EQUAL (SC) 1310 SM,
0	RSL910 ETHERNET SWITCH (COPPER AND FIBER) OR APPROVED EQUAL (LC)
QTY	**OTHER EQUIPMENT**
0	ATSI PCMT-2600 MMU TESTER W/MMU & CMU CABLES
0	FULLY FUNCTIONING TRAFFIC SIGNAL CONTROLLER, MASTER CONTROLLER AND CABINET
0	INDUCTIVE LOOP TEST KITS
0	LOOP FINDERS
0	BIU TESTERS
0	FRAME GRABBER
0	MULTI-SWITCH TESTER
0	BIU SLOT TESTER
0	CARD RACK SLOT TESTER
0	DETECTOR TESTER
0	MCCAIN CID II
0	RADIO SITE SURVEY LOCATIONS
0	INTX DIAGRAM LOCATIONS
QTY	**EVP EQUIPMENT**
1	OPTICOM MODEL 764 PHASE SELECTOR
0	OPTICOM MODEL 792H EMITTERS W/792 SWITCH
4	OPTICOM MODEL 721 RECEIVERS
1	OPTICOM MODEL 3100 GPS RADIO UNIT
QTY	**RADAR EQUIPMENT**
2	CLICK! 650 (102-0416)
1	INSTALLER KIT

CHECK SET NOV 2021

STATE OF ALASKA 49TH REGISTERED PROFESSIONAL ENGINEER
DENNIS R. LINNELL
CE-7649
HDL ENGINEERING CONSULTANTS, LLC
3335 ARCTIC BOULEVARD, STE 100
ANCHORAGE, AK 99503
(907) 564-2120
AECL861

STATE OF ALASKA 49TH REGISTERED PROFESSIONAL ENGINEER
ROY N. PACE
EE-12053
EDC, INC.
213 WEST FIREWEED LANE
ANCHORAGE, AK 99503
(907) 257-0601
AECC705

STATE OF ALASKA
DEPARTMENT OF TRANSPORTATION
AND PUBLIC FACILITIES

GLENN HWY: PARKS HWY TO S. INNER SPRINGER LP. (PHASE II)

TRAFFIC EQUIPMENT
E. JIMMYS DR

DRAFTED | CHECKED | DESIGNED | HA5 | LAYOUT | 11/23/2021 1:37 PM | DATE/TIME

FILE | P:\PROJECTS\HDL\GLENN HIGHWAY 34-49 - PHASE 2\DWGS\ELEC\58104_HA5_SIGNAL_EQUIP.DWG by roy

NO.	DATE	REVISION

STATE	PROJECT DESIGNATION	YEAR	SHEET NO.	TOTAL SHEETS
ALASKA	0A15037/CFHWY00431 0A15038/CFHWY00432 0A15033/CFHWY00006	2021	HB1	HB5

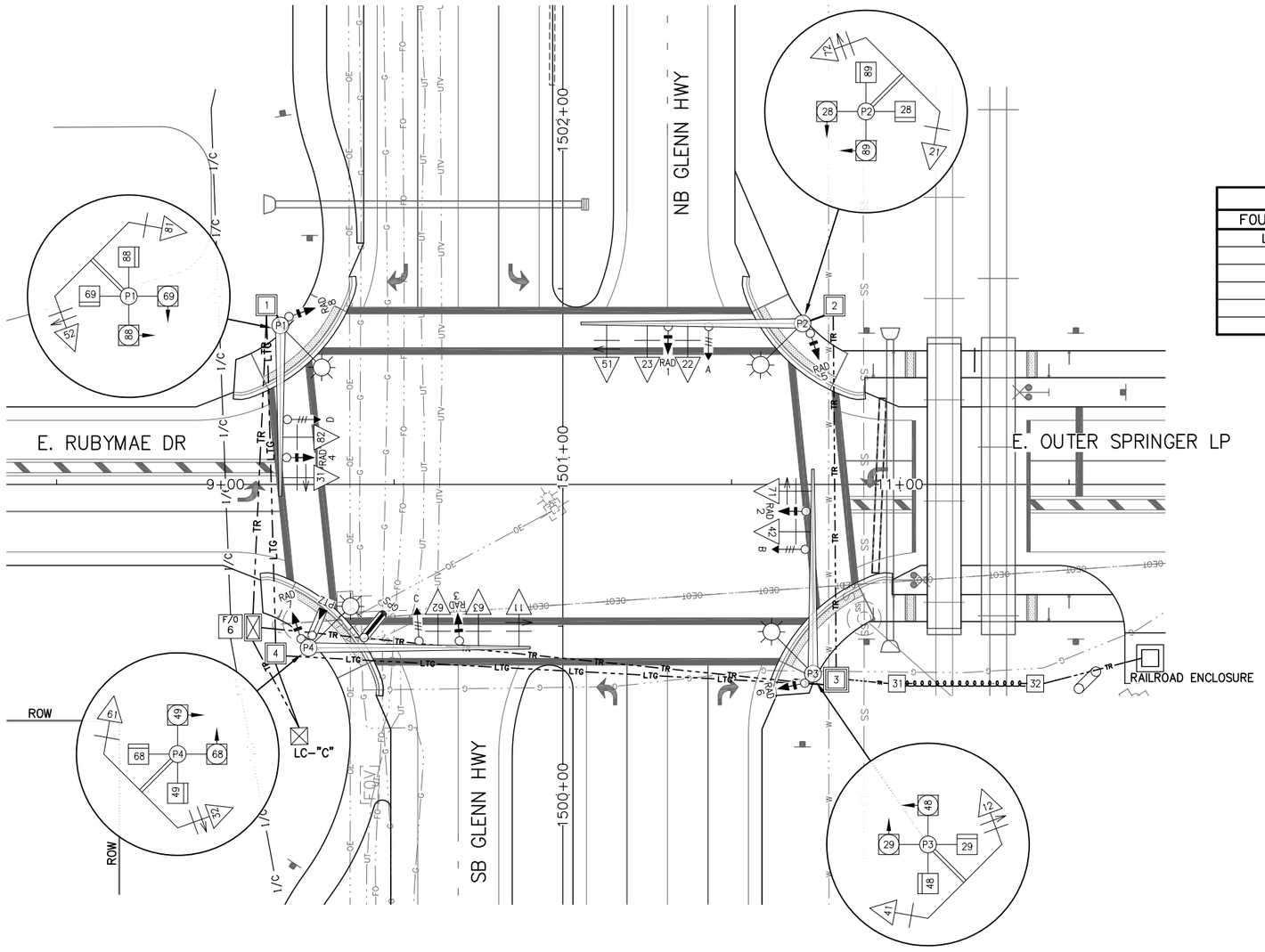

NOTES:

1. PROVIDE SIGNAL CABLES SUFFICIENT TO REACH THE END OF EACH MAST ARM.
2. CONDUIT CROSSING UNDER RAILROAD TRACKS TO BE BORED IN ACCORDANCE WITH ARRC AGREEMENT.
3. CONNECT CONDUIT TO 2" STUB-OUT AT RAILROAD ENCLOSURE.
4. PULL RAILROAD INTERCONNECT INTO RAILROAD ENCLOSURE, LEAVING 10' OF SPARE CABLE. INTERCONNECT WILL BE TERMINATED BY OTHERS.
5. RADAR LOCATIONS SHALL BE CONFIRMED WITH MANUFACTURER PRIOR TO WIRE ROUTING. ADJUSTMENTS MAY BE NECESSARY.

FOUNDATION SCHEDULE

FOUNDATION	STATION	OFFSET	NOTES
LC "C"	"G" 1500+17.4	78.1' LT	TYPE 1 LOAD CENTER WITH TRANSFORMER
P1	"G" 1501+39.1	83.7' LT	SIGNAL POLE, PILE FOUNDATION
P2	"G" 1501+39.7	71.0' RT	SIGNAL POLE, PILE FOUNDATION
P3	"G" 1500+35.9	74.1' RT	SIGNAL POLE, PILE FOUNDATION
P4	"G" 1500+43.6	75.3' LT	SIGNAL POLE, PILE FOUNDATION
TC	"G" 1500+49.6	91.8' LT	TRAFFIC CONTROLLER

JUNCTION BOX SCHEDULE

J-BOX	STATION	OFFSET	TYPE
1	"G" 1501+45.1	87.8' LT	2
2	"G" 1501+45.0	80.5' RT	2
3	"G" 1500+34.1	81.0' RT	3
4	"G" 1500+41.9	85.1' LT	2
31	"G" 1500+33.0	99.0' RT	1A
32	"G" 1500+33.1	140.0' RT	1A

CHECK SET NOV 2021

STATE OF ALASKA 49TH — DENNIS R. LINNELL CE-7649 — REGISTERED PROFESSIONAL ENGINEER

HDL ENGINEERING CONSULTANTS, LLC
3335 ARCTIC BOULEVARD, STE 100
ANCHORAGE, AK 99503
(907) 564-2120
AECL861

STATE OF ALASKA 49TH — ROY N. PACE EE-12053 — REGISTERED PROFESSIONAL ENGINEER

EDC, INC.
213 WEST FIREWEED LANE
ANCHORAGE, AK 99503
(907) 257-0601
AECC705

STATE OF ALASKA
DEPARTMENT OF TRANSPORTATION
AND PUBLIC FACILITIES

GLENN HWY: PARKS HWY TO S. INNER SPRINGER LP. (PHASE II)

SIGNAL PLAN
E. OUTER SPRINGER LOOP

DATE/TIME 11/23/2021 1:37 PM | LAYOUT HB1 | DESIGNED | CHECKED | DRAFTED

FILE P:\PROJECTS\HDL\GLENN HIGHWAY 34-49 - PHASE 2\DWGS\ELEC\58104_HB1_SIGNAL PLAN - OUTER SPRINGER LOOP.DWG by roy

NO.	DATE	REVISION

STATE	PROJECT DESIGNATION	YEAR	SHEET NO.	TOTAL SHEETS
ALASKA	0A15037/CFHWY00431 0A15038/CFHWY00432 0A15033/CFHWY00006	2021	HB2	HB5

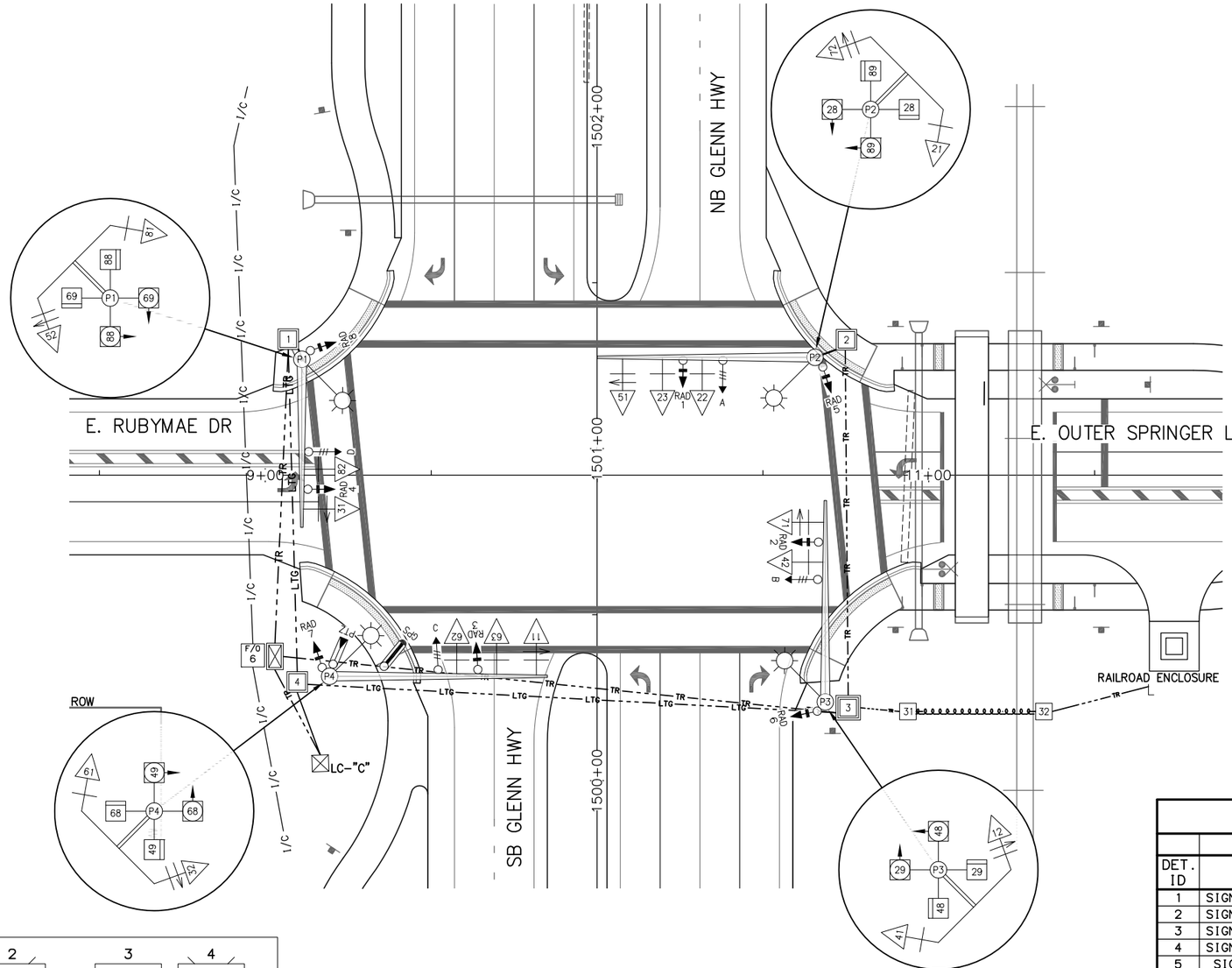

NOTES:

1. PROVIDE SIGNAL CABLES SUFFICIENT TO REACH THE END OF EACH MAST ARM.
2. CONDUIT CROSSING UNDER RAILROAD TRACKS TO BE BORED IN ACCORDANCE WITH ARRC AGREEMENT.
3. CONNECT CONDUIT TO 2" STUB-OUT AT RAILROAD ENCLOSURE.
4. PULL RAILROAD INTERCONNECT INTO RAILROAD ENCLOSURE, LEAVING 10' OF SPARE CABLE. INTERCONNECT WILL BE TERMINATED BY OTHERS.
5. RADAR LOCATIONS SHALL BE CONFIRMED WITH MANUFACTURER PRIOR TO WIRE ROUTING. ADJUSTMENTS MAY BE NECESSARY.

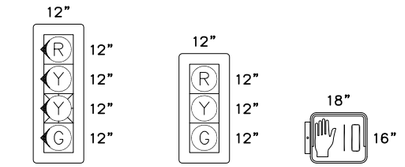

SIGNAL FACES	SIGNAL FACES	SIGNAL FACES
11,12	21,22,23	28,29
31,32	41,42	48,49
51,52	61,62,63	68,69
71,72	81,82	88,89

SIGNAL HEAD CONFIGURATIONS

OPTICOM DETECTOR SCHEDULE				
LOCATION	DETECTOR ID	PHASE CALL	FACING DIRECTION	REMARKS
SIGNAL POLE 4 MASTARM	GPS	ALL	-	-
SIGNAL POLE 2 MASTARM	A	2,5	SW	OPTICOM 721
SIGNAL POLE 3 MASTARM	B	4,7	NW	OPTICOM 721
SIGNAL POLE 4 MASTARM	C	1,6	NE	OPTICOM 721
SIGNAL POLE 1 MASTARM	D	3,8	SE	OPTICOM 721

RADAR DETECTION SCHEDULE						
			RADAR OPTION 1		RADAR OPTION 2	
DET. ID	LOCATION	FACING DIRECTION	PHASE DET.	MODEL	PHASE DET.	MODEL
1	SIGNAL POLE 2 MASTARM	SW	2	WAVETRONIX ADVANCE XR	2,5	ACCUSCAN 600C
2	SIGNAL POLE 3 MASTARM	NW		N/A	4,7	ACCUSCAN 600C
3	SIGNAL POLE 4 MASTARM	NE	6	WAVETRONIX ADVANCE XR	1,6	ACCUSCAN 600C
4	SIGNAL POLE 1 MASTARM	SE		N/A	3,8	ACCUSCAN 600C
5	SIGNAL POLE 2 SHAFT	S	2,5	WAVETRONIX MATRIX		N/A
6	SIGNAL POLE 3 SHAFT	W	4,7	WAVETRONIX MATRIX		N/A
7	SIGNAL POLE 4 SHAFT	N	1,6	WAVETRONIX MATRIX		N/A
8	SIGNAL POLE 1 SHAFT	E	3,8	WAVETRONIX MATRIX		N/A

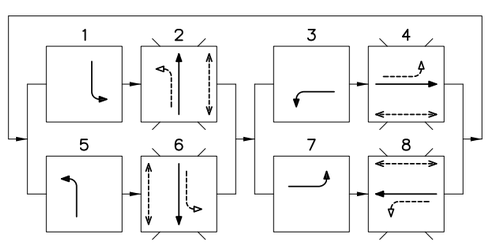

PHASE DIAGRAM

- PEDESTRIAN MOVEMENT
- PROTECTED VEHICLE MOVEMENT
- UNPROTECTED VEHICLE MOVEMENT
- * FUTURE USE/NOT USED

CHECK SET NOV 2021

STATE OF ALASKA 49TH
DENNIS R. LINNELL
CE-7649
REGISTERED PROFESSIONAL ENGINEER

HDL ENGINEERING CONSULTANTS, LLC
3335 ARCTIC BOULEVARD, STE 100
ANCHORAGE, AK 99503
(907) 564-2120
AECL861

STATE OF ALASKA 49TH
ROY N. PACE
EE-12053
REGISTERED PROFESSIONAL ENGINEER

EDC, INC.
213 WEST FIREWEED LANE
ANCHORAGE, AK 99503
(907) 257-0601
AECC705

STATE OF ALASKA
DEPARTMENT OF TRANSPORTATION
AND PUBLIC FACILITIES

GLENN HWY: PARKS HWY TO S. INNER SPRINGER LP. (PHASE II)

SIGNAL OPERATIONS
E. OUTER SPRINGER LOOP

FILE P:\PROJECTS\HDL\GLENN HIGHWAY 34-49 - PHASE 2\DWGS\ELEC\58104_HB2_SIGNAL OPERATIONS - OUTER SPRINGER LOOP.DWG by roy | DATE/TIME 11/23/2021 1:38 PM | LAYOUT HB2 | DESIGNED | CHECKED | DRAFTED

NO.	DATE	REVISION

STATE	PROJECT DESIGNATION	YEAR	SHEET NO.	TOTAL SHEETS
ALASKA	0A15037/CFHWY00431 0A15038/CFHWY00432 0A15033/CFHWY00006	2021	HB3	HB5

CABLE SCHEDULE

CABLE	CONDUCTOR	J-BOX PATH	LOAD
CA2	3C6	LC-TC	TC POWER
CA57	3C8	LC-4-P4-4-1-P1-1-4-3-P3-3-2-P2	INTXL
CB24	3C8	LC-4-1	ILLUMINATION
CB68	3C8	LC-4-3-2	ILLUMINATION
CB911	3C8	LC-4-3	ILLUMINATION
11	7C14	TC-P4	SIG 11
12	7C14	TC-3-P3	SIG 12
21	7C14	TC-3-2-P2	SIG 21
22	7C14	TC-3-2-P2	SIG 22
23	7C14	TC-3-2-P2	SIG 23
28I	4C14	TC-3-2-P2	PEDI 28
28B	4C14	TC-3-2-P2	PED B 28
29I	4C14	TC-3-P3A	PEDI 29
29B	4C14	TC-3-P3A	PED B 29
31	7C14	TC-1-P1	SIG 31
32	7C14	TC-P4	SIG 32
41	7C14	TC-3-P3	SIG 41
42	7C14	TC-3-P3	SIG 42
48I	4C14	TC-3-P3A	PEDI 48
48B	4C14	TC-3-P3A	PED B 48
49I	4C14	TC-P4	PEDI 49
49B	4C14	TC-P4	PED B 49
51	7C14	TC-3-2-P2	SIG 51
52	7C14	TC-1-P1	SIG 52
61	7C14	TC-P4	SIG 61
62	7C14	TC-P4	SIG 62
63	7C14	TC-P4	SIG 63
68I	4C14	TC-P4	PEDI 68
68B	4C14	TC-P4	PED B 68
69I	4C14	TC-1-P1	PEDI 69
69B	4C14	TC-1-P1	PED B 69
71	7C14	TC-3-P3	SIG 71
72	7C14	TC-3-2-P2	SIG 72
81	7C14	TC-1-P1	SIG 81
82	7C14	TC-1-P1	SIG 82
88I	4C14	TC-1-P1	PEDI 88
88B	4C14	TC-1-P1	PED B 88
89I	4C14	TC-3-2-P2	PEDI 89
89B	4C14	TC-3-2-P2	PED B 89
100	MTX2 HMRN	TC-3-2-P2	RAD 1
200	MTX2 HMRN	TC-3-P3	RAD 2
300	MTX2 HMRN	TC-P4	RAD 3
400	MTX2 HMRN	TC-1-P1	RAD 4
500	MTX2 HMRN	TC-3-2-P2	RAD 5
600	MTX2 HMRN	TC-3-P3	RAD 6
700	MTX2 HMRN	TC-P4	RAD 7
800	MTX2 HMRN	TC-1-P1	RAD 8
GPS	5C20	TC-P4	GPS
A	3C20	TC-3-2-P2	PRE A
B	3C20	TC-3-P3	PRE B
C	3C20	TC-P4	PRE C
D	3C20	TC-1-P1	PRE D
PTZ	CAT 6	TC-P4	PTZ CAMERA
RR	7C14	TC-3-31-32-ENCLOSURE	RAILROAD PREEMPTION
900	72 FIBER	F05-TC-F05	INTERCONNECT

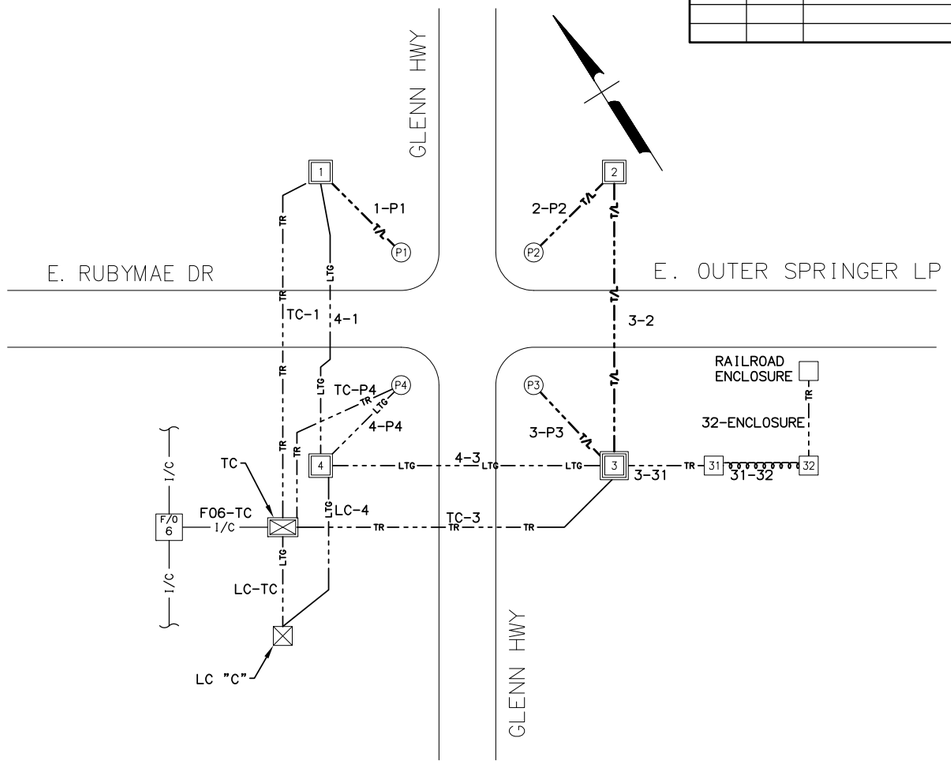

SUMMARY OF LOAD CENTER "C"

LOAD CENTER TYPE:	TYPE 1 (STATE OF ALASKA)
SERVING UTILITY:	MATANUSKA ELECTRIC ASSOCIATION
SERVICE CONDUIT TYPE:	RIGID METAL CONDUIT
LOCATION DATA	
LOAD CENTER:	GLENN HWY AND E. OUTER SPRINGER, "G" 1500+17.4, 78.1' LT
POWER SOURCE:	NEW LINE EXTENSION
PHOTOELECTRIC CONTROL:	AT LOAD CENTER
SERVICE VOLTAGE:	240/480V, 1-PHASE, 3-WIRE WITH GROUNDED NEUTRAL
PROVIDE METER SOCKET:	YES
MAIN BREAKER A:	480V, 40A, 2-POLE (TRANSFORMER PRIMARY)
MAIN BREAKER B:	480V, 100A, 2-POLE
CONTACTOR 1:	600V, 12-POLE
CONTACTOR 2:	600V, 12-POLE
AIC RATING:	10,000A

PANEL A - 240V (THROUGH TRANSFORMER)

POLE	AMP TRIP	DESCRIPTION	POLE KVA	AØ	BØ	POLE KVA	DESCRIPTION	AMP TRIP	POLE
1	15/2	PHOTOCELL	0.1	3.7		3.6	TRAFFIC CONTROLLER	40/1	2
3			0.1		0.1	0.0			4
5	20/2	SIGNAL POLE LUMINAIRES, P1-P4*	0.6	0.6		0.0	SPARE	20/2	6
7			0.6		0.6	0.0			8
9			0.0	0.0		0.0			10
11			0.0		0.0	0.0			12
* = THROUGH CONTACTOR 1				4.3	0.7	PANEL A TOTAL KVA			5.0
						PANEL A AMPS			20.8

PANEL B - 480V

1	15/1	PHOTOCELL 2	0.1	0.4		0.3	GLENN HWY LUMINAIRES, 119-121 ODD**	20/2	2
3			0.0		0.3	0.3			4
5	20/2	GLENN HWY LUMINAIRES, 103-117 ODD**	1.1	1.4		0.3	GLENN HWY LUMINAIRES, 120-122 EVEN**	20/2	6
7			1.1		1.4	0.3			8
9	20/2	GLENN HWY LUMINAIRES, 104-118 EVEN**	1.1	1.1		0.0	SPARE	20/2	10
11			1.1		1.1	0.0			12
13			0.0	0.0		0.0			14
15			0.0		0.0	0.0			16
17			0.0	0.0		0.0			18
** = THROUGH CONTACTOR 2				2.9	2.8	PANEL B TOTAL KVA			5.7
						PANEL B AMPS			11.9
NOTE: SEE H3 FOR TRANSFORMER DETAILS						TOTAL KVA			10.7
						AMPS			22.3

NOTES:

1. PROVIDE SIGNAL CABLES SUFFICIENT TO REACH THE END OF EACH MAST ARM.
2. ROUTE ILLUMINATION CABLES THROUGH INTERSECTION LIGHTING CONDUITS. SEE ILLUMINATION SHEETS FOR CIRCUITS.
3. CONDUIT CROSSING UNDER RAILROAD TRACKS TO BE BORED IN ACCORDANCE WITH ARRC AGREEMENT.
4. CONNECT CONDUIT TO 2" STUB-OUT AT RAILROAD ENCLOSURE.
5. PULL RAILROAD INTERCONNECT INTO RAILROAD ENCLOSURE, LEAVING 10' OF SPARE CABLE. INTERCONNECT WILL BE TERMINATED BY OTHERS.

CONDUIT SCHEDULE

RUN #	CONDUIT		CABLES	DESTINATION
LC-TC	2	RMC	CA2	TC POWER
LC-4	3	RMC	CA57	INTXL
TC-1	3	RMC	31,52,69I,81,82,88I	JBOX 1
	2	RMC	400,800,69B,88B,D	POLE 1
	3	RMC	SPARE	SPARE
1-P1	3	RMC	31,52,69I,81,82,88I	POLE 1
	2	RMC	CA57,CA57	INTXL
	2	RMC	400,800,69B,88B,D	POLE 1
2-P2	3	RMC	21,22,23,28I,51,72,89I	POLE 2
	2	RMC	CA57	INTXL
	2	RMC	100,500,28B,89B,A	POLE 2
3-31	2	PE	RR	RR PRE
31-32	2	PE	RR	RR PRE
32-ENC	2	PE	RR	RR PRE
TC-3	3	RMC	12,29I,41,42,48I,71	JBOX 3
	3	RMC	21,22,23,28I,51,72,89I	JBOX 2
	3	RMC	200,600,100,500,28B,29B,48B,89B,A,B	POLE 2,POLE 3
	2	RMC	RR	RR PRE
	3	RMC	SPARE	SPARE
3-2	3	RMC	CA57	INTXL
	3	RMC	21,22,23,28I,51,72,89I	JBOX 2
	2	RMC	100,500,28B,89B,A	POLE 2
3-P3	3	RMC	12,29I,41,42,48I,71	POLE 3
	2	RMC	CA57,CA57	INTXL
	2	RMC	200,600,29B,48B,B	POLE 3
4-1	3	RMC	CA57,CA57	INTXL
4-3	3	RMC	CA57	INTXL
TC-P4	3	RMC	11,32,49I,61,62,63,68I	POLE 4
	2	RMC	PTZ,700,300,49B,68B,GPS,C	POLE 4
4-P4	2	RMC	CA57,CA57	INTXL
F06-TC	2	PE	900,900	IC

CHECK SET NOV 2021

HDL ENGINEERING CONSULTANTS, LLC
3335 ARCTIC BOULEVARD, STE 100
ANCHORAGE, AK 99503
(907) 564-2120
AECL861

DENNIS R. LINNELL
CE-7649
REGISTERED PROFESSIONAL ENGINEER
STATE OF ALASKA 49TH

EDC, INC.
213 WEST FIREWEED LANE
ANCHORAGE, AK 99503
(907) 257-0601
AECC705

ROY N. PACE
EE-12053
REGISTERED PROFESSIONAL ENGINEER
STATE OF ALASKA 49TH

STATE OF ALASKA
DEPARTMENT OF TRANSPORTATION
AND PUBLIC FACILITIES

GLENN HWY: PARKS HWY TO S. INNER SPRINGER LP. (PHASE II)

WIRING DIAGRAM
OUTER SPRINGER LOOP

DRAFTED | CHECKED | DESIGNED | HB3 | LAYOUT | DATE/TIME 11/23/2021 1:38 PM | FILE P:\PROJECTS\HDL\GLENN HIGHWAY 34-49 - PHASE 2\DWGS\ELEC\58104_HB3_WIRING DIAGRAM - OUTER SPRINGER LOOP.DWG by roy

NO.	DATE	REVISION

STATE	PROJECT DESIGNATION	YEAR	SHEET NO.	TOTAL SHEETS
ALASKA	0A15037/CFHWY00431 0A15038/CFHWY00432 0A15033/CFHWY00006	2021	HB4	HB5

NOTES:

1. TOP OF FOUNDATIONS SHALL BE WITHIN +4" OF EDGE OF PAVEMENT.
2. FOUNDATION ELEVATIONS TO BE APPROVED BY CONSTRUCTION ENGINEER BEFORE INSTALLATION AND ADJUSTED AS NEEDED.

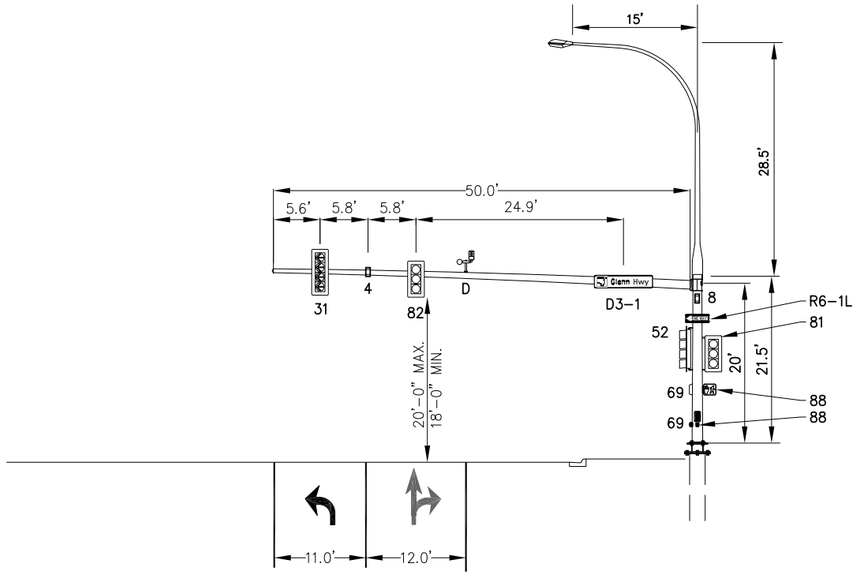

SIGNAL POLE 1 – WB TRAFFIC

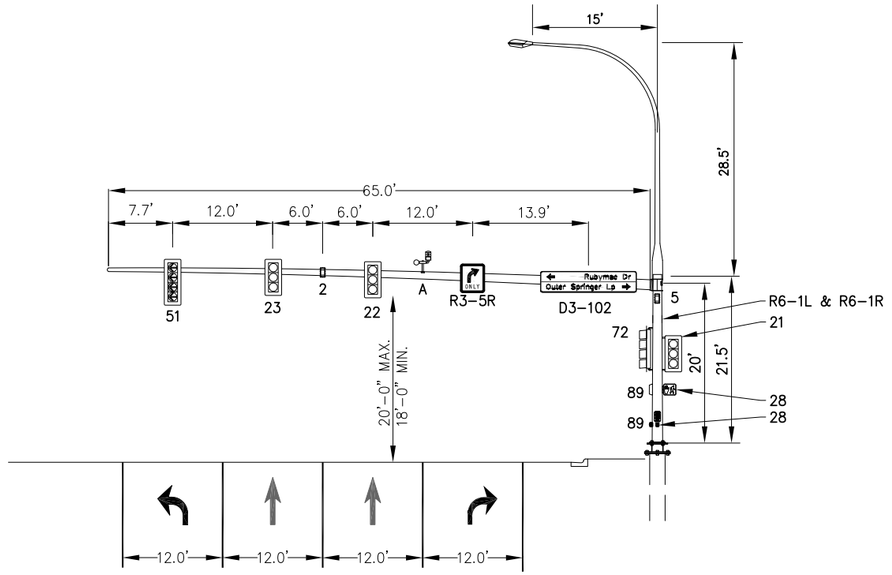

SIGNAL POLE 2 – NB TRAFFIC

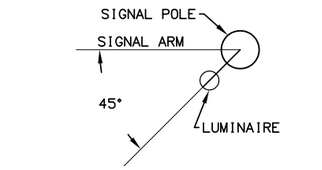

LUMINAIRE ORIENTATION

N.T.S.

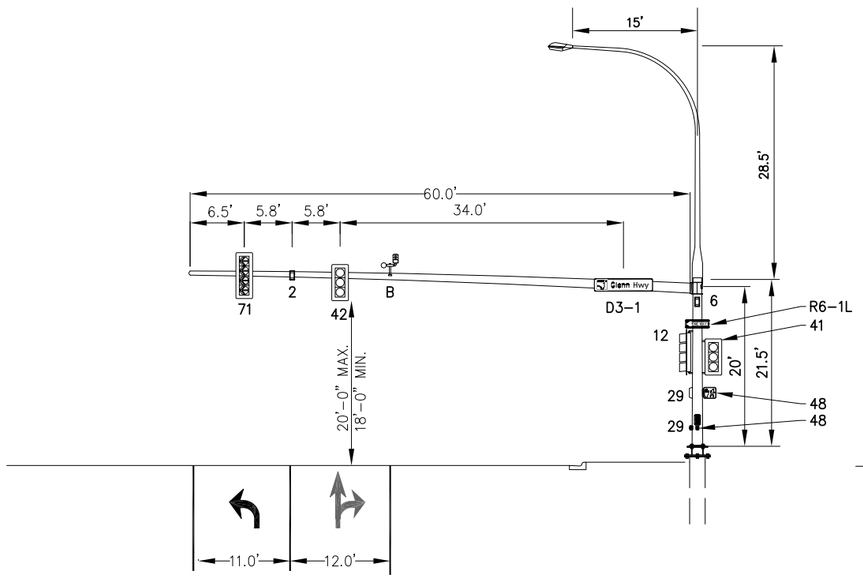

SIGNAL POLE 3 – EB TRAFFIC

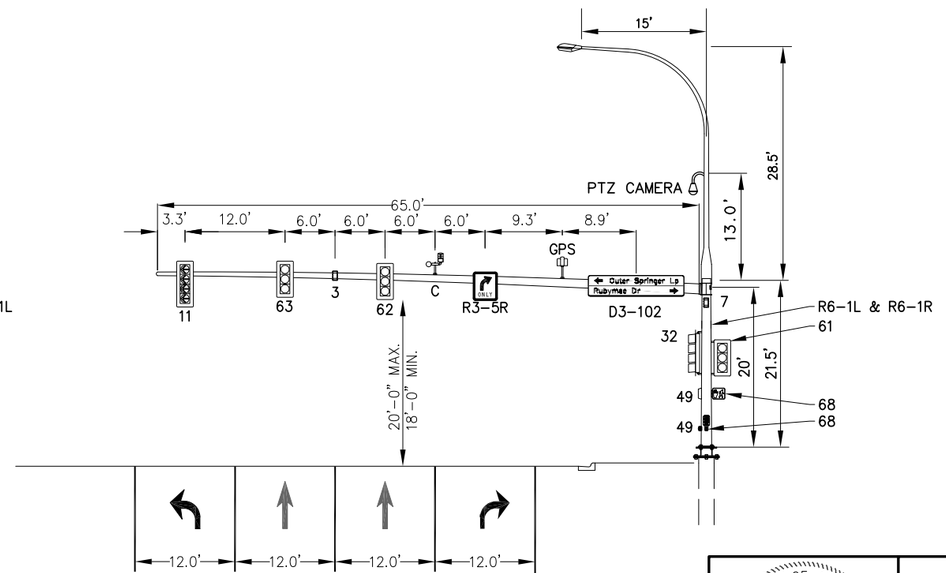

SIGNAL POLE 4 – SB TRAFFIC

CHECK SET NOV 2021

DENNIS R. LINNELL
CE-7649
REGISTERED PROFESSIONAL ENGINEER

HDL ENGINEERING CONSULTANTS, LLC
3335 ARCTIC BOULEVARD, STE 100
ANCHORAGE, AK 99503
(907) 564-2120
AECL861

ROY N. PACE
EE-12053
REGISTERED PROFESSIONAL ENGINEER

EDC, INC.
213 WEST FIREWEED LANE
ANCHORAGE, AK 99503
(907) 257-0601
AECC705

STATE OF ALASKA
DEPARTMENT OF TRANSPORTATION
AND PUBLIC FACILITIES

GLENN HWY: PARKS HWY TO S. INNER SPRINGER LP. (PHASE II)

POLE ELEVATIONS
E. OUTER SPRINGER LOOP

FILE P:\PROJECTS\HDL\GLENN HIGHWAY 34-49 – PHASE 2\DWGS\ELEC\58104_HB4_POLE ELEVATIONS – OUTER SPRINGER LOOP.DWG by roy | DATE/TIME 11/23/2021 1:38 PM | LAYOUT HB4 | DESIGNED | CHECKED | DRAFTED

NO.	DATE	REVISION

STATE	PROJECT DESIGNATION	YEAR	SHEET NO.	TOTAL SHEETS
ALASKA	0A15037/CFHWY00431 0A15038/CFHWY00432 0A15033/CFHWY00006	2021	HB5	HB5

CONTROLLER CABINET FEATURES
OUTER SPRINGER LP

GENERAL OPTIONS	
TYPE	TS2-1
SIZE	NEMA SIZE 7
MATERIALS	0.125" NATURAL ALUMINUM
MODEL	ECONOLITE TS2 TYPE 1 PLUG-N-GO
MOUNTING HARDWARE	INCLUDED
PAINT	NONE
SPECIAL OPTIONS	
LIFTING TABS	INCLUDED
EQUIPMENT SHELF	(4) FULL WIDTH, 12"
AIR FILTER	FIBER MESH
MAIN DOOR LOCK	BEST
REAR DOOR	NONE
LED LAMP	(2) 24" (1) TOP OF CAB, (1) UNDER CONT. SHELF
GOOSENECK LAMP	INTEGRAL SWITCH TYPE A WITH LED
T-STAT CONTROLLED EXHAUST FANS	(2) FANS ON SEPARATE T-STATS
MAIN PANEL	
16 POSITION - HORIZONTAL	INCLUDED
RESISTOR LOCATION	SIDEWALL
FLASH TRANSFER RELAYS SOCKETS	(6) INCLUDED
FLASHER SOCKETS	(2) INCLUDED
K1 RELAY SOCKET	INCLUDED
POWER PANEL	
SURGE SUPPRESSION	ACP-340
LINE FILTER (RADIO INTERFERENCE)	50A
SOLID STATE CONTACTOR	NORMALLY OPEN
MAIN CIRCUIT BREAKER	20A
AUXILIARY CIRCUIT BREAKER	20A
GFI LOCATION	POWER PANEL
2 POSITION TERMINAL BLOCK #6 U.S.G.	INCLUDED
16 POSITION NEUTRAL BUS BAR	INCLUDED
16 POSITION CHASSIS GROUND BUS BAR	INCLUDED
EATON MODEL HS-P-SP-120-60-RJ SURGE PROTECTOR OR APPROVED EQUAL	INCLUDED
POLICE PANEL	
POLICE PANEL	INCLUDED
POLICE PANEL SWITCHES	SIGNALS ON/OFF, AUTO/FLASH
POLICE PANEL PUSHBUTTON ALARM	INCLUDED
POLICE DOOR LOCK	SKELETON
POLICE PANEL MANUAL CORD	NONE
AUXILIARY PANEL	
AUXILIARY PANEL SWITCHES	AUTO/FLASH, STOP TIME, CONTROLLER POWER, COORD/FREE, FO1, FO2
DETECTOR TEST SWITCHES	TACTILE PUSHBUTTON
RACK DETECTION	
DETECTOR RACKS	PROVIDE FOUR (4) 16-CHANNEL DETECTOR RACKS WITH 2 SLOTS EACH FOR OPTICOM. NOTE: ECONOLITE CONFIG. #4 WITH ADDITIONAL DETECTOR RACK.
DETECTOR RACK POWER SUPPLY	BIU FOR EACH RACK
EVP REQUIREMENTS	WIRING FOR OPTICOM RACK W/GREENS EACH DETECTOR RACK
DETECTOR LOOP INTERFACE	(4) 5-POSITION SERIAL
ADDITIONAL OPTIONS	
RAILROAD PREEMPTION	2 CHANNELS OF RAILROAD PREEMPTION INCLUDED
RAILROAD PREEMPTION/STAND ALONE PANEL	INCLUDED
RED JUMPERS FOR ALL UNUSED PHASES	INCLUDED
LOAD RESISTORS	(8) INCLUDED
ADDITIONAL GFI OUTLET (NON-FILTERED)	INCLUDED
DOUBLE DUPLEX CONVENIECE OUTLET	(1) LEFT WALL FILTERED, (1) RIGHT WALL NON-FILTERED
DUPLEX OUTLET	FOR HEATER AUTO & BYPASS SWITCH, ON DOOR
ADDITIONAL NEUTRAL BUS BARS	(1) 16 POSITION BUS BAR RIGHT SIDE OF CABINET
	(1) 32 POSITION BUS BAR LEFT SIDE OF CABINET
ADDITIONAL CHASSIS GROUND BUS BARS	(1) 16 POSITION BUS BAR RIGHT SIDE OF CABINET
	(1) 16 POSITION BUS BAR LEFT SIDE OF CABINET
GTT OPTICOM 757 HARNESS	INCLUDED - WIRED INTO CABINET
GTT OPTICOM 768 AUXILIARY INTERFACE PANEL	INCLUDED - WIRED INTO CABINET
STANDARD WIRING DIAGRAM (AUTOCAD FORMAT)	PROVIDE: (3) PAPER SETS, (1) AUTOCAD FILE, (1) PDF.
SDLC CABLES	(10)

CONTROLLER ASSEMBLY EQUIPMENT
OUTER SPRINGER LP

SUPPLY ALL LABOR, EQUIPMENT AND MATERIALS TO PROVIDE A FULLY FUNCTIONING TRAFFIC SIGNAL CONTROLLER ASSEMBLY COMPLIANT WITH THE NEMA STANDARD PUBLICATION NO. TS2-2003 V02.06 AND SPECIAL "SPECIALS" PROVISIONS OF THIS CONTRACT INCLUDING BUT NOT LIMITED TO;

QTY	CONTROLLER/MMU EQUIPMENT
1	ECONOLITE COBALT CONTROLLER
1	CONTROLLER ETHERNET PORT
1	CONTROLLER DATA KEY
1	ECONOLITE MMU2-16LEIP
1	MMU2 CARD
QTY	**CABINET EQUIPMENT**
16	RENO LS-200 OR APPROVED EQUAL LOAD SWITCHES
36	RENO GT-200-SS OR APPROVED EQUAL 2-CHANNEL DETECTOR AMPLIFIERS
8	RENO TR-200 OR APPROVED EQUAL FLASH TRANSFER RELAYS
4	ECONOLITE BIU-64 TERMINAL AND FACILITIES BIU'S
6	ECONOLITE BIU-64 DETECTION BIU'S
1	ECONOLITE PS-2412 TS2 CABINET POWER SUPPLY
2	ECONOLITE 801 FLASHER
2	K1 RELAY
2	750/1500W SELECTABLE THERMOSTATICALLY CONTROLLED CABINET HEATER, MOUNT ON DOOR
1	THERMOSTAT, MOUNT ON DOOR
0	RE-SEALABLE PRINT POUCH OF SUFFICIENT SIZE TO ACCOMMODATE CABINET PRINTS
1	COMPLETE SET OF MANUALS FOR CONTROLLER, MMU, AND VEHICLE DETECTOR AMPLIFIERS

COMMUNICATION EQUIPMENT SCHEDULE
OUTER SPRINGER LP

QTY	FIBER INTERCONNECT EQUIPMENT
3	3 FOOT CAT6 PATCH CABLE
1	6 FOOT CAT6 PATCH CABLE
0	3 FOOT LC TO LC PATCH CABLE
0	6 FOOT LC TO LC PATCH CABLE
0	3 FOOT SC TO LC PATCH CABLE
0	6 FOOT SC TO LC PATCH CABLE
2	3 FOOT SC TO SC PATCH CABLE
2	6 FOOT SC TO SC PATCH CABLE
0	PATCH PANEL - 8 LC DUPLEX CONNECTORS (12 FIBERS SPLICED)
2	PATCH PANEL - 8 SC DUPLEX CONNECTORS (12 FIBERS SPLICED)
0	SFP OPTICS FX SM 1310NM 10KM LC MODULE OR APPROVED EQUAL
0	CARRIER-CLASS ELEMENT MANAGEMENT SYSTEM
0	LC DUPLEX SM FIBER OPTIC CABLE ASSEMBLY 1 METER OR APPROVED EQUAL
0	SFP 1112-1 RJ45 ELECTRICAL TRANSCEIVER
0	RSP1300 802.at POE EXTERNAL POWER SUPPLY
0	WALL MOUNTING KIT 510R21080 OR APPROVED EQUAL
0	RSG920P ETHERNET SWITCH OR APPROVED EQUAL (LC)
1	RS900G(32M) ETHERNET SWITCH OR APPROVED EQUAL (SC) 1310 SM,
0	RSL910 ETHERNET SWITCH (COPPER AND FIBER) OR APPROVED EQUAL (LC)
QTY	**OTHER EQUIPMENT**
0	ATSI PCMT-2600 MMU TESTER W/MMU & CMU CABLES
0	FULLY FUNCTIONING TRAFFIC SIGNAL CONTROLLER, MASTER CONTROLLER AND CABINET
0	INDUCTIVE LOOP TEST KITS
0	LOOP FINDERS
0	BIU TESTERS
0	FRAME GRABBER
0	MULTI-SWITCH TESTER
0	BIU SLOT TESTER
0	CARD RACK SLOT TESTER
0	DETECTOR TESTER
0	MCCAIN CID II
0	RADIO SITE SURVEY LOCATIONS
0	INTX DIAGRAM LOCATIONS
QTY	**EVP EQUIPMENT**
1	OPTICOM MODEL 764 PHASE SELECTOR
0	OPTICOM MODEL 792H EMITTERS W/792 SWITCH
4	OPTICOM MODEL 721 RECEIVERS
1	OPTICOM MODEL 3100 GPS RADIO UNIT
QTY	**RADAR EQUIPMENT**
2	CLICK! 650 (102-0416)
1	INSTALLER KIT

CHECK SET NOV 2021

STATE OF ALASKA · 49TH · REGISTERED PROFESSIONAL ENGINEER
DENNIS R. LINNELL
CE-7649

HDL ENGINEERING CONSULTANTS, LLC
3335 ARCTIC BOULEVARD, STE 100
ANCHORAGE, AK 99503
(907) 564-2120
AECL861

STATE OF ALASKA · 49TH · REGISTERED PROFESSIONAL ENGINEER
ROY N. PACE
EE-12053

EDC, INC.
213 WEST FIREWEED LANE
ANCHORAGE, AK 99503
(907) 257-0601
AECC705

STATE OF ALASKA
DEPARTMENT OF TRANSPORTATION
AND PUBLIC FACILITIES

GLENN HWY: PARKS HWY TO S. INNER SPRINGER LP. (PHASE II)

TRAFFIC EQUIPMENT
E. OUTER SPRINGER LOOP

FILE P:\PROJECTS\HDL\GLENN HIGHWAY 34-49 - PHASE 2\DWGS\ELEC\58104_HB5_TRAFFIC EQUIPMENT - OUTER SPRINGER LOOP.DWG by roy | DATE/TIME 11/23/2021 1:38 PM | LAYOUT HB5 | DESIGNED | CHECKED | DRAFTED

NO.	DATE	REVISION	STATE	PROJECT DESIGNATION	YEAR	SHEET NO.	TOTAL SHEETS
			ALASKA	0A15037/CFHWY00431 0A15038/CFHWY00432 0A15033/CFHWY00006	2021	HS1	HS30

DESIGNED BY AAL
CHECKED BY DRL
DRAFTED BY CDB

SCALE NTS

DATE 11/11/2021 TIME 2:20 PM

DRAWING LOCATION
H:\JOBS\08-016 GLENN HIGHWAY 34-42 (DOT)\09 - PS&E\CAD_PH2\DRAWINGS\08016_P2_HS01.DWG

PAVEMENT MARKING LEGEND

PROPOSED

8"W	8" WHITE SOLID STRIPE
4"W	4" WHITE SOLID STRIPE
4"W SKIP	4" WHITE SKIP STRIPE 10' STRIPES AND 30' SPACES
8"W IGM	8" WHITE LANE GUIDE SKIP INTERSECTION GUIDE MARKING 1' STRIPES AND 3' SPACES
8"W LLM	8" WHITE LANE GUIDE SKIP LONGITUDINAL LANE MARKING 3' STRIPES AND 9' SPACES
4"Y	4" YELLOW SOLID STRIPE
+20	STATION INTERVAL LABEL
24"W (TYP)	2' CROSSWALK OR STOPBAR
7 1/2', 8"W, VARIES, W/2, 18"W @ 45°	TYPICAL LANE SEPARATION
12', (2) 4"Y 3" APART, VARIES, 18"Y @ 45°	TYPICAL PAINTED MEDIAN
24"W (TYP)	GAPPED LADDER CROSSING
O	ADVANCED WARNING BEACON SYMBOL

SIGNING & STRIPING NOTES:

1. ALL STATION LOCATIONS FOR SIGN INSTALLATION ARE APPROXIMATE. INSTALL SIGNS AT LOCATIONS AS DIRECTED BY THE ENGINEER.
2. USE THE FOLLOWING DEFINITIONS TO DECIPHER THE ABBREVIATED SIGN POST TYPES IN THE SIGN SUMMARY SHEETS.
   A. PST MEANS A PERFORATED STEEL TUBE.
   B. TS MEANS A SQUARE STEEL TUBE.
   C. W MEANS A WIDE FLANGE BEAM.
   D. POPL MEANS A POLE PLATE INSTALLED PER ITS ALASKA STANDARD PLAN S-23.
3. FABRICATE ALL SIGNS FROM 0.125" THICK ALUMINUM SHEETING, UNLESS STATED ELSEWHERE.
4. FOR SIGNS SUPPORTED BY MULTIPLE POSTS, FABRICATE THE POSTS WITH THEIR TOPS LEVEL WITH ONE ANOTHER.
5. FOR PERFORATED STEEL TUBE SIGNPOSTS, INSTALL THE CONCRETE FOUNDATION OPTION SHOWN ON STANDARD PLAN S-30. TRIM EACH PST POST TO LIMIT THE LENGTH INSERTED INTO THE FOUNDATION TO 12 INCHES.
6. FABRICATE GUIDE SIGNS ACCORDING TO THE SHOP DRAWINGS INCLUDED IN THE APPENDICES OF PART 4, CONTRACT PROVISIONS AND SPECIAL PROVISIONS. TRIM THE CORNERS OF ALL SIGNS TO THE RADIUS SHOWN ON EACH SHOP DRAWING.
7. ERECT NEW SIGNS BEFORE REMOVAL OF EXISTING SIGNS WITH SIMILAR MESSAGE. NOTIFY THE ENGINEER A MINIMUM OF 14 DAYS PRIOR TO BEGINNING SIGN REMOVAL AND SALVAGE OR DISPOSAL ACTIVITIES.
8. FOR SIGNS SUPPORTED BY MULTIPLE TUBES OR PIPES, LOCATE THE OUTER POSTS ON MAXIMUM SIX FEET CENTERS. INSTALL ADJACENT WIDE FLANGE POSTS ON MINIMUM EIGHT FEET CENTERS.
9. SELECTIVE AND HAND CLEARING SHALL BE PERFORMED AT THE DISCRETION OF THE ENGINEER, IN ACCORDANCE WITH SECTION 201, UPSTREAM OF ALL SIGN INSTALLATION LOCATIONS TO ACHIEVE MINIMUM SIGN VISIBILITY REQUIREMENTS. IF NOT INCLUDED AS A SEPARATE ITEM, THIS WORK SHALL BE SUBSIDIARY TO THE SIGN INSTALLATION ITEMS AND WORK.
10. FOR ALL FINAL PAVEMENT MARKINGS USE METHYLMETHACRYLATE MATERIALS.
    a. ALL GLENN HIGHWAY, "G", MARKINGS SHALL BE INLAID TO A DEPTH OF 250 MILS WITH THE EXCEPTION OF THE DIAGONAL GORE MARKINGS, WHICH SHALL BE SURFACE APPLIED TO YIELD A THICKNESS OF 60 MILS.
    b. ALL OTHER SIDE STREET MARKINGS SHALL BE SURFACE APPLIED TO YIELD A THICKNESS OF 60 MILS WITH THE EXCEPTION OF THE APPROACH TO RAILROAD CROSSING MARKINGS WHICH SHALL BE INLAID TO A DEPTH OF 250 MILS.
11. DIMENSIONS REFER TO THE CENTER OF STRIPE AND THE EDGE OF PAVEMENT OR LIP OF CURB WHEN PRESENT.
12. IF THE NEW AND EXISTING PAVEMENT MARKINGS ARE NOT ALIGNED AT MATCH LINE, TRANSITION BETWEEN THE TWO USING A 100:1 TAPER ON THE NEW PAVEMENT.
13. WHERE NEW STRIPING IS TO EXTEND BEYOND PAVING LIMITS, REMOVE EXISTING STRIPING IN ACCORDANCE WITH SUBSECTION 670-3.04 TO THE EXTENT OF STRIPING LIMITS.
14. ALL DIMENSIONS ARE IN FEET UNLESS OTHERWISE NOTED.
15. RUMBLE STRIPS SHALL BE INSTALLED FROM "G" STA 1319+00 TO "G" STA 1521+00

CALL BEFORE YOU DIG!

CONTRACTOR SHALL CALL A MINIMUM OF 3 DAYS IN ADVANCE OF CONSTRUCTION

ALASKA DIGLINE....907-278-3121 OR 800-478-3121

CALL OR GO TO WWW.AKONECALL.COM/STATEWIDE.HTM FOR MEMBER LIST OF WHO WILL BE NOTIFIED

CERTIFICATION SET
NOVEMBER 2021

STATE OF ALASKA
49TH
AVERIAN A. LARSEN
CE-119371
REGISTERED PROFESSIONAL ENGINEER

HDL ENGINEERING CONSULTANTS, LLC
3335 ARCTIC BOULEVARD, STE 100
ANCHORAGE, AK 99503
(907) 564-2120
AECL861

STATE OF ALASKA
DEPARTMENT OF TRANSPORTATION
AND PUBLIC FACILITIES

GLENN HWY: PARKS HWY TO S. INNER SPRINGER LP. (PHASE II)

SIGNING & STRIPING NOTES AND LEGEND

NO.	DATE	REVISION	STATE	PROJECT DESIGNATION	YEAR	SHEET NO.	TOTAL SHEETS
			ALASKA	0A15037/CFHWY00431 0A15038/CFHWY00432 0A15033/CFHWY00006	2021	HS2	HS30

DESIGNED BY AAL
CHECKED BY DRL
DRAFTED BY CDB
SCALE NTS
DATE TIME 11/11/2021 2:19 PM
DRAWING LOCATION H:\JOBS\08-016 GLENN HIGHWAY 34-42 (DOT)\09 - PS&E\CAD_PH2\DRAWINGS\08016_P2_HS02.DWG

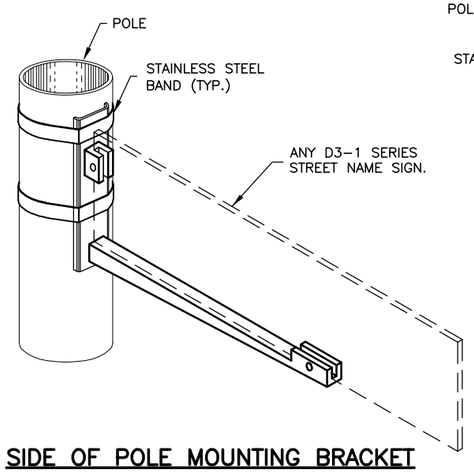

SIDE OF POLE MOUNTING BRACKET

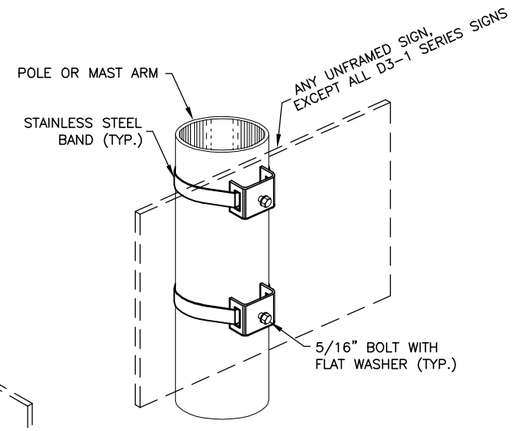

SADDLE BRACKETS

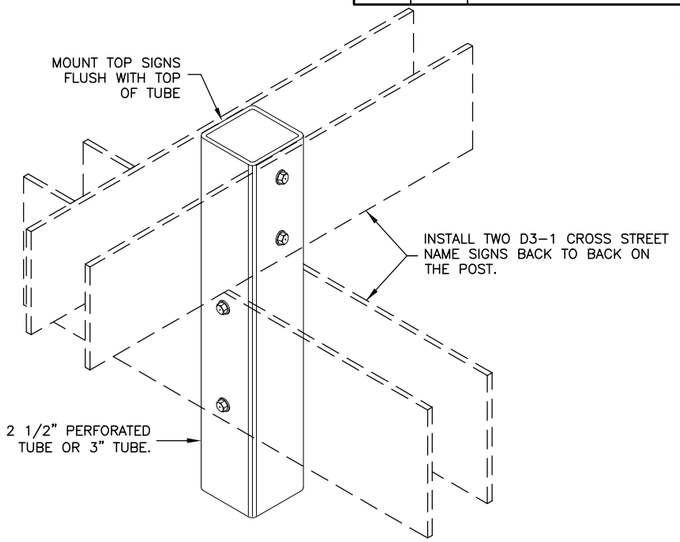

STREET NAME SIGN INSTALLATION

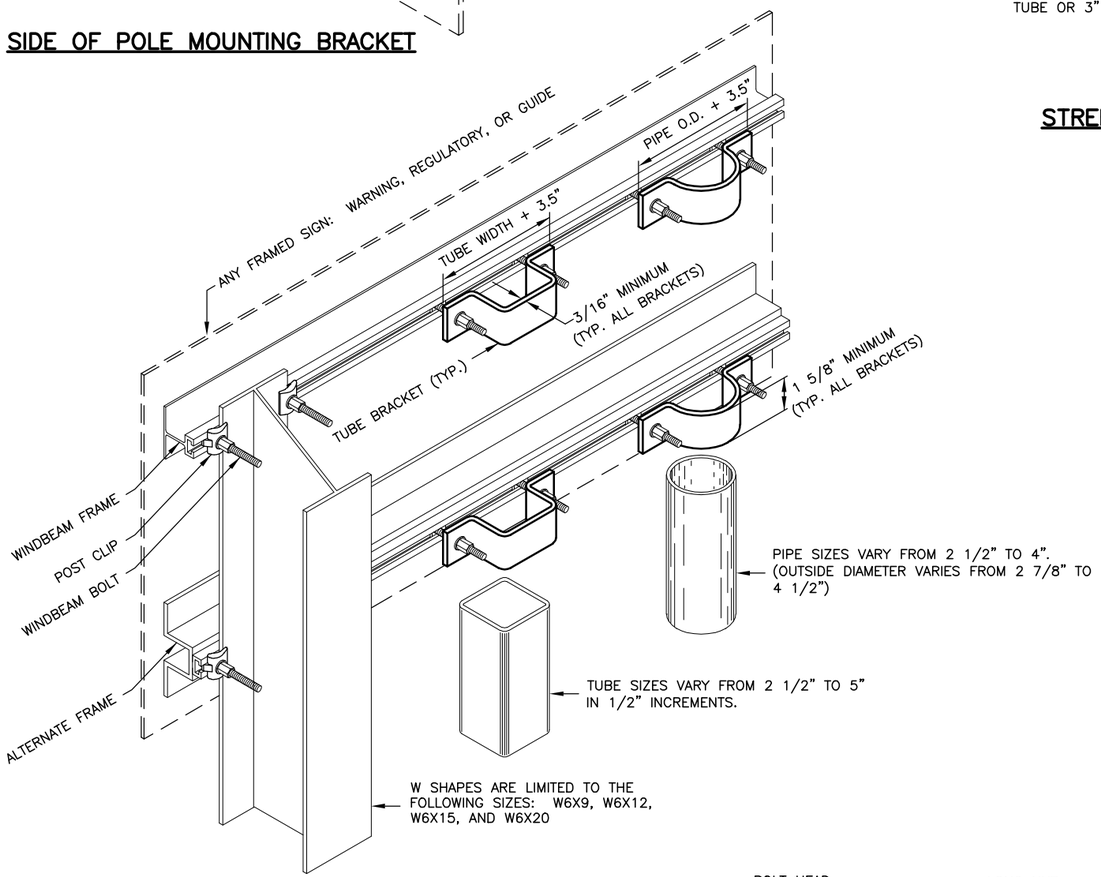

FRAMED SIGN ATTACHMENT BRACKETS

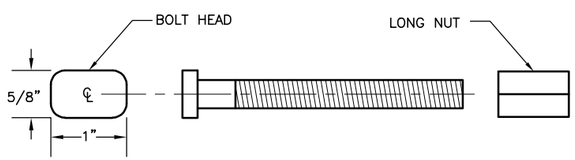

3/8" WINDBEAM BOLT AND LONG NUT

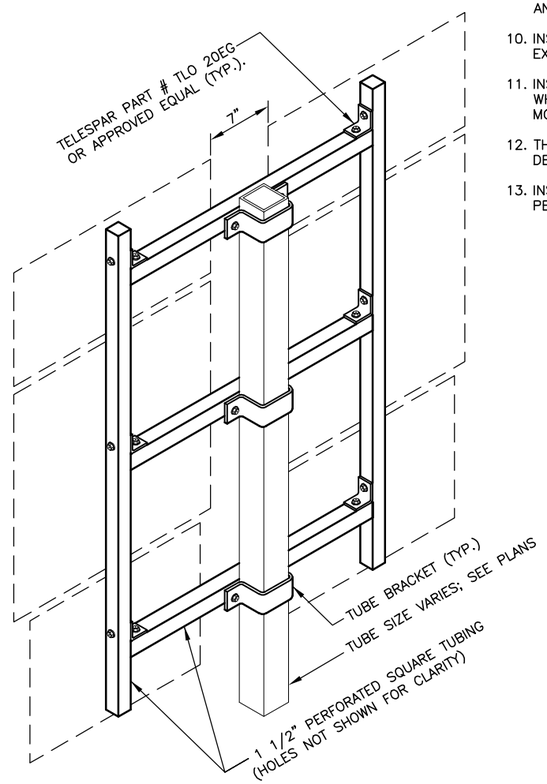

ROUTE MARKER TREE

NOTES:

1. EXCEPT FOR POLES AND MAST ARMS, ONLY USE TUBES TO SUPPORT SIGNS MOUNTED ON ONE POST.
2. ATTACH SIGNS, FRAMED AND UNFRAMED TO THEIR SUPPORTS WITH ZINC PLATED 3/8" BOLTS, EXCEPT ATTACH UNFRAMED SIGNS TO PERFORATED TUBES WITH ACCESSORY DRIVE RIVETS AND TO SADDLES WITH 5/16" BOLTS.
3. BOLT UNFRAMED SIGNS DIRECTLY TO TUBES IN TWO LOCATIONS, NEAR TOP AND NEAR BOTTOM OF MATING SURFACE. ATTACH THEM TO POLES AND MAST ARMS WITH TWO SADDLES.
4. ATTACH BRACKETS TO POLES AND MAST ARMS WITH DOUBLE WRAPS OF 3/4" WIDE BY 0.020" THICK STAINLESS STEEL BANDING MATERIAL. TIGHTEN EACH BAND UNTIL IT STOPS MOVING THROUGH THE BUCKLE.
5. ATTACH FRAMED SIGNS TO POSTS WHEREVER THE FRAMES CROSS THE POSTS. AT EACH CROSSING, ATTACH THE SIGN USING TWO POST CLIPS ON W-SHAPE POSTS, A U-SHAPED BRACKET ON PIPES, AND A BRACKET WITH SQUARE CORNERS ON TUBES.
6. THE TUBE BRACKETS USED ON EVEN INCH SIZE TUBES MAY ALSO BE USED ON TUBES 1/2" SMALLER IN SIZE.
7. ONLY USE THE SPECIAL WINDBEAM BOLTS TO ATTACH SIGNS FRAMED WITH THE WINDBEAM FRAMING MATERIAL.
8. ATTACH FRAMED SIGNS TO POLES AND MAST ARMS USING POLE PLATES INSTALLED ACCORDING TO STANDARD PLAN S-23.
9. FOR ROUTE MARKER TREES, CUT PERFORATED TUBES TO ENSURE TIGHT FITTING JOINTS. ASSEMBLE THE PIECES WITH ACCESSORY ELL-SHAPED ANGLE BRACKETS.
10. INSTALL THE TOP EDGE OF SIGNS 1" ABOVE THE TOPS OF POSTS, EXCEPT FOR THE D3-1 STREET NAME SIGNS.
11. INSTALL THE TOP EDGE OF SIGNS 3" BELOW THE TOP OF POST, WHENEVER THEY ARE MOUNTED BELOW SIGNS SECURED BY POST TOP MOUNTING BRACKETS.
12. THE BRACKET DETAILS SHOWN INDICATE GENERAL DESIGNS ONLY. DESIGNS MAY VARY BY MANUFACTURER.
13. INSTALL WEATHER TIGHT CAPS ON ALL PIPE AND TUBE POSTS, EXCEPT PERFORATED TUBING.

FASTENER SPECIFICATION TABLE			
FASTENERS		STEEL	STAINLESS STEEL
BOLTS		ASTM A 307	ASTM F 593
NUTS	REGULAR	ASTM A 563	ASTM F 594
	LOCK		
WASHERS		ASTM A 36	ASTM A 480
POST CLIPS			

CERTIFICATION SET
NOVEMBER 2021

STATE OF ALASKA
49TH
AVERIAN A. LARSEN
CE-119371
REGISTERED PROFESSIONAL ENGINEER

HDL ENGINEERING CONSULTANTS, LLC
3335 ARCTIC BOULEVARD, STE 100
ANCHORAGE, AK 99503
(907) 564-2120
AECL861

STATE OF ALASKA
DEPARTMENT OF TRANSPORTATION AND PUBLIC FACILITIES

GLENN HWY: PARKS HWY TO S. INNER SPRINGER LP. (PHASE II)

SIGN ATTACHMENT DETAIL

NO.	DATE	REVISION

STATE	PROJECT DESIGNATION	YEAR	SHEET NO.	TOTAL SHEETS
ALASKA	0A15037/CFHWY00431 0A15038/CFHWY00432 0A15033/CFHWY00006	2021	HS3	HS30

DESIGNED BY AAL
DRAWN BY DRL
CHECKED BY CDB
DRAFTED BY

SCALE NTS

DATE TIME 11/11/2021 2:19 PM

DRAWING LOCATION
H:\JOBS\08-016 GLENN HIGHWAY 34-42 (DOT)\09 - PS&E\CAD_PH2\DRAWINGS\08016_P2_HS03.DWG

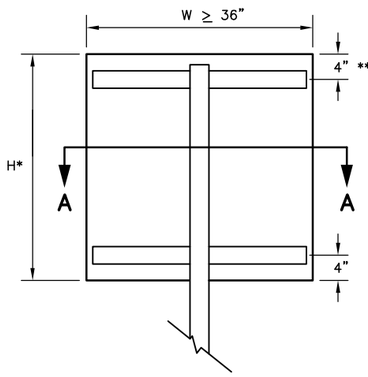

RECTANGLES AND TRAPEZOIDS

* WHEN H > 42 INCHES, INSTALL A 3RD WINDBEAM CENTERED ON THE SIGN.

** FOR S5-1 SIGNS MOUNTED ON FLASHING BEACON POSTS, USE A 10" OFFSET. OTHERWISE, USE 4".

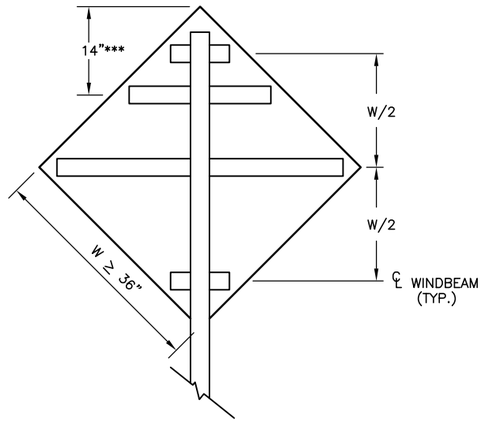

*** FOR WARNING SIGNS MOUNTED ON FLASHING BEACON POSTS, USE THE 14" OFFSET. OTHERWISE, USE W/2.

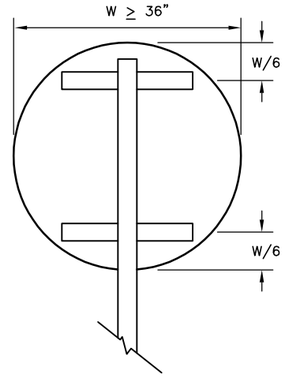

ROUNDS AND OCTAGONS

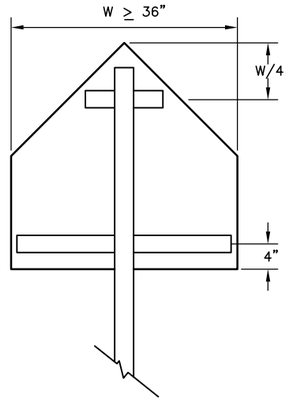

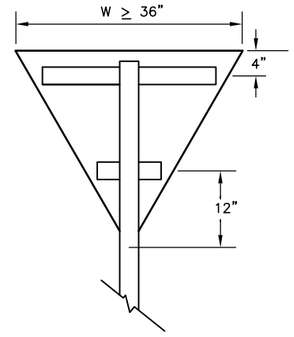

NOTES:

1. EXCEPT FOR POLES AND MAST ARMS, ONLY USE SQUARE STEEL TUBES TO SUPPORT SIGNS MOUNTED ON SINGLE POSTS.
2. INSTALL WINDBEAM OR ZEE SHAPED FRAMING MEMBERS ON DIAMOND SHAPED SIGNS 36 INCHES AND LONGER ON A SIDE AND ON OTHER SIGNS 36 INCHES WIDE AND WIDER.
3. IN HIGH WIND AREAS, THE PLANS MAY REQUIRE SIGNS SMALLER THAN THOSE LISTED IN NOTE 2 BE FRAMED AS SHOWN HERE IN.
4. THIS DRAWING DEPICTS THE WINDBEAM FRAMING AND ATTACHMENT SYSTEM. ATTACH SIGNS FRAMED WITH ZEE SHAPED FRAMING ACCORDING TO REGIONAL DRAWING "SIGN ATTACHMENT DETAILS", USING "U" SHAPED BRACKETS AND TWO BOLTS WITH NUTS.
5. THE ENGINEER MAY APPROVE OTHER FRAMING MEMBERS. SUBMIT DOCUMENTS THAT DETAIL THE FRAME'S CROSS SECTION AND STRENGTH, AND METHOD OF ATTACHING THE FRAME TO A POST.
6. USE FRAMING MEMBERS MADE FROM ALUMINUM ALLOY 6061-T6.
7. EACH FRAMING MEMBER SHALL BE ONE CONTINUOUS PIECE.
8. ATTACH FRAMING MEMBERS TO THE SIGN PANELS WITH RIVETS OR AN ENGINEER APPROVED, DOUBLE SIDED, HIGH STRENGTH, ADHESIVE TAPE.
9. WITH THE ADHESIVE TAPE, INSTALL TWO RIVETS IN BOTH ENDS OF EACH FRAMING MEMBER, AND ATTACH THE FRAMING MEMBERS TO THE SIGN PANELS ACCORDING TO THE TAPE MANUFACTURER'S WRITTEN INSTRUCTIONS, INCLUDING:
   A. THE CLEANING AND HANDLING OF THE SIGN PANELS AND FRAMING MEMBERS.
   B. THE APPLICATION OF THE ADHESIVE TAPE.
10. WHEN RIVETS ARE USED TO ATTACH FRAMING MEMBERS, INSTALL 2 RIVETS IN EACH END AND THE BALANCE ON 8" MAXIMUM CENTERS.
11. USE 3/16" DIAMETER RIVETS CONFORMING TO ALUMINUM ALLOY 6061-T6 FOR COLD DRIVEN RIVETS, OR ALUMINUM ALLOY 6061-T43 FOR HOT DRIVEN RIVETS.
12. THE BRACKETS USED ON EVEN INCH SIZE TUBES MAY ALSO BE USED ON TUBES 1/2" SMALLER IN SIZE.

WINDBEAM LOCATIONS FOR EACH SIGN SHAPE

ELEVATION VIEW

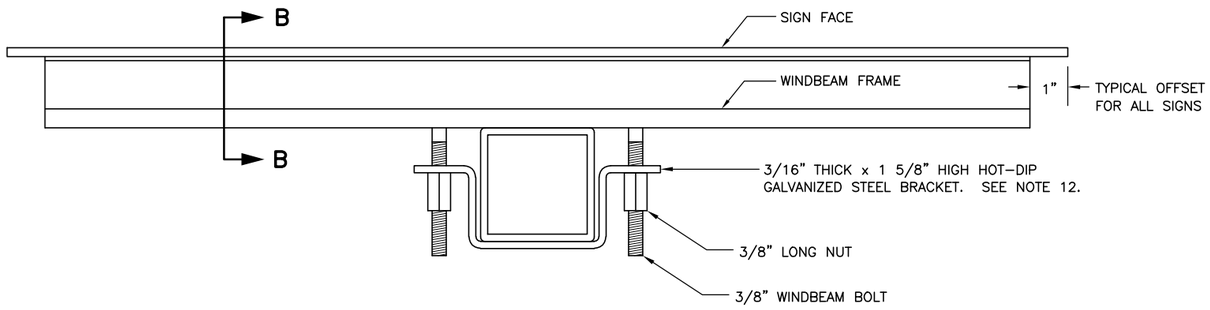

SECTION A - A TYPICAL SIGN ATTACHMENT DETAILS AT EACH WINDBEAM

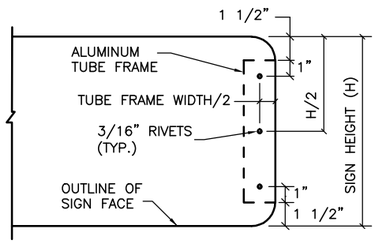

VIEW C - C

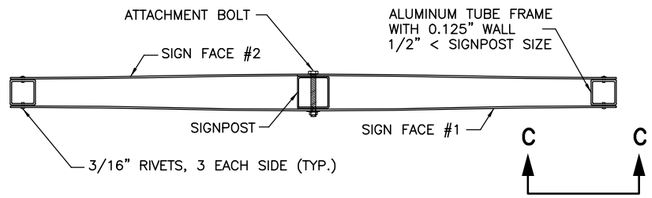

D3-1 STREET NAME SIGN FRAMING DETAIL

PLAN VIEW

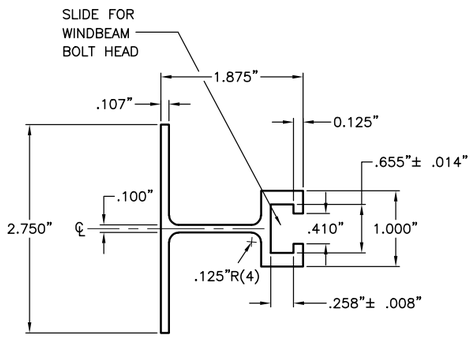

SECTION B - B WINDBEAM CROSS SECTION

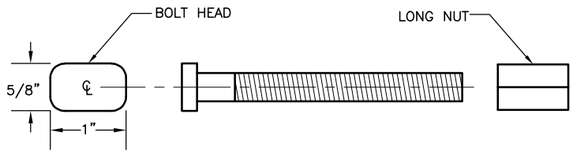

3/8" WINDBEAM BOLT AND LONG NUT

CERTIFICATION SET
NOVEMBER 2021

STATE OF ALASKA
49TH
AVERIAN A. LARSEN
CE-119371
REGISTERED PROFESSIONAL ENGINEER

HDL ENGINEERING CONSULTANTS, LLC
3335 ARCTIC BOULEVARD, STE 100
ANCHORAGE, AK 99503
(907) 564-2120
AECL861

STATE OF ALASKA
DEPARTMENT OF TRANSPORTATION AND PUBLIC FACILITIES

GLENN HWY: PARKS HWY TO S. INNER SPRINGER LP. (PHASE II)

LIGHT SIGN FRAMING AND ATTACHMENT DETAILS

NO.	DATE	REVISION

STATE	PROJECT DESIGNATION	YEAR	SHEET NO.	TOTAL SHEETS
ALASKA	0A15037/CFHWY00431 0A15038/CFHWY00432 0A15033/CFHWY00006	2021	HS4	HS30

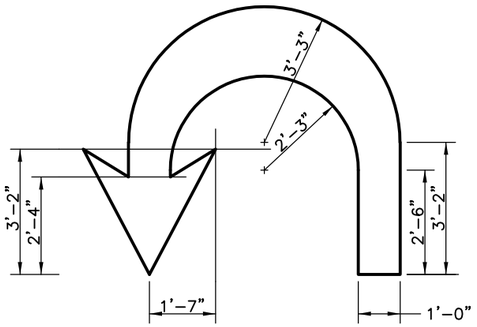

U-TURN ARROW DETAIL

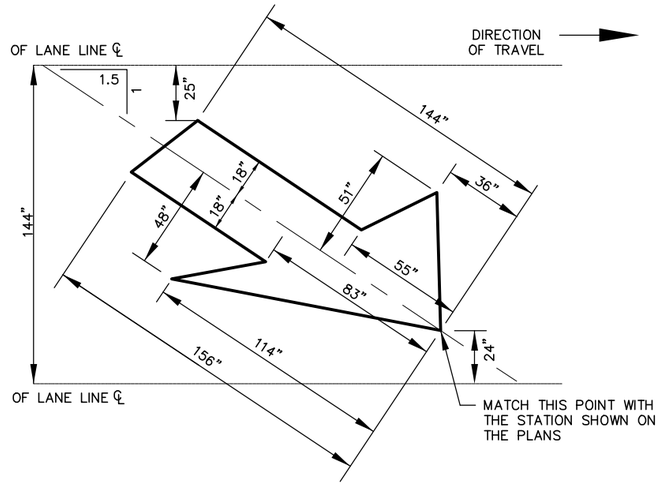

LANE DROP ARROW DETAIL

CERTIFICATION SET
NOVEMBER 2021

STATE OF ALASKA
49TH
AVERIAN A. LARSEN
CE-119371
REGISTERED PROFESSIONAL ENGINEER

HDL ENGINEERING CONSULTANTS, LLC
3335 ARCTIC BOULEVARD, STE 100
ANCHORAGE, AK 99503
(907) 564-2120
AECL861

STATE OF ALASKA
DEPARTMENT OF TRANSPORTATION
AND PUBLIC FACILITIES

GLENN HWY: PARKS HWY TO S. INNER SPRINGER LP. (PHASE II)

SIGNING & STRIPING DETAILS

DESIGNED BY AAL
CHECKED BY DRL
DRAFTED BY CDB

SCALE NTS

DATE TIME
11/12/2021 3:00 PM

DRAWING LOCATION
H:\JOBS\08-016 GLENN HIGHWAY 34-42 (DOT)\09 - PS&E\CAD_PH2\DRAWINGS\08016_P2_HS04.DWG

DESIGNED BY	AAL
CHECKED BY	DRL
DRAFTED BY	CDB

SCALE
1" = 100'

DATE	TIME
11/19/2021	11:23 AM

DRAWING LOCATION
H:\JOBS\08-016 GLENN HIGHWAY 34-42 (DOT)\09 - PS&E\CAD_PH2\DRAWINGS\08016_P2_HS05-HS19.DWG

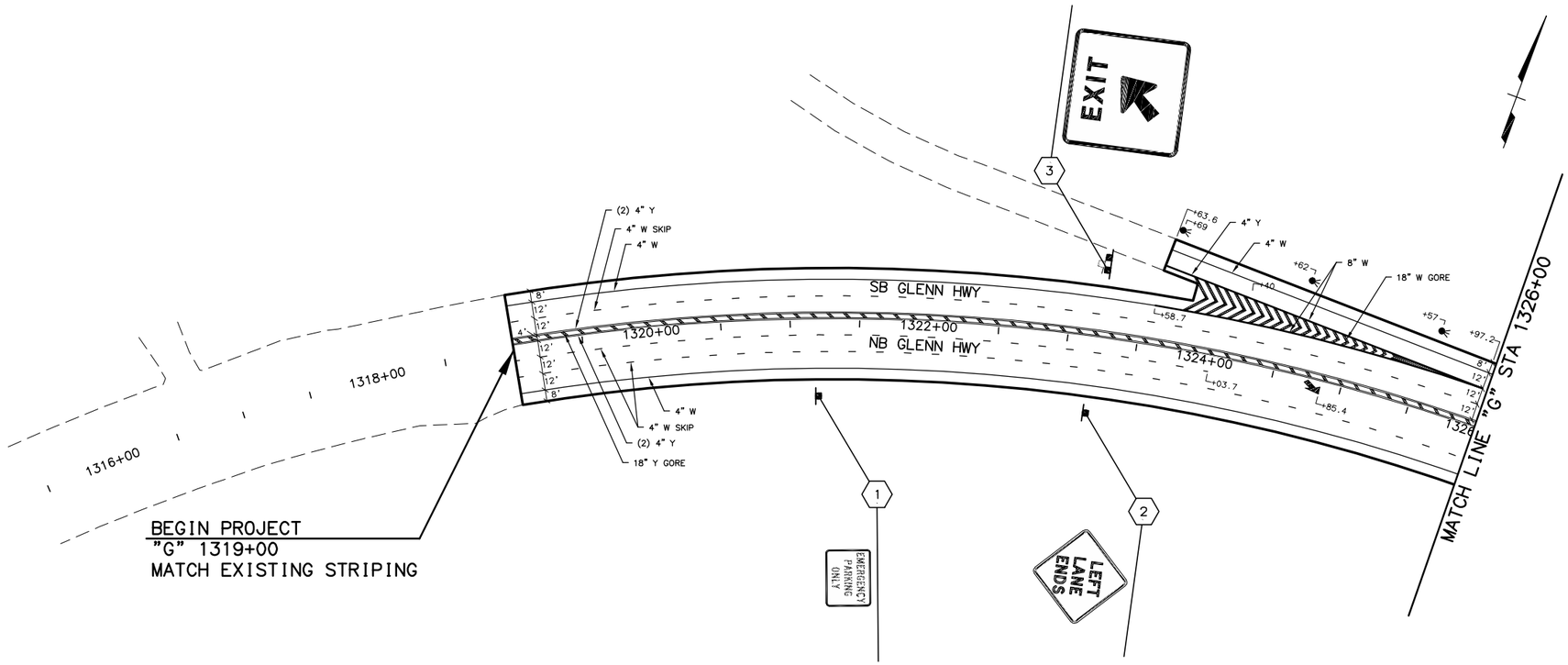

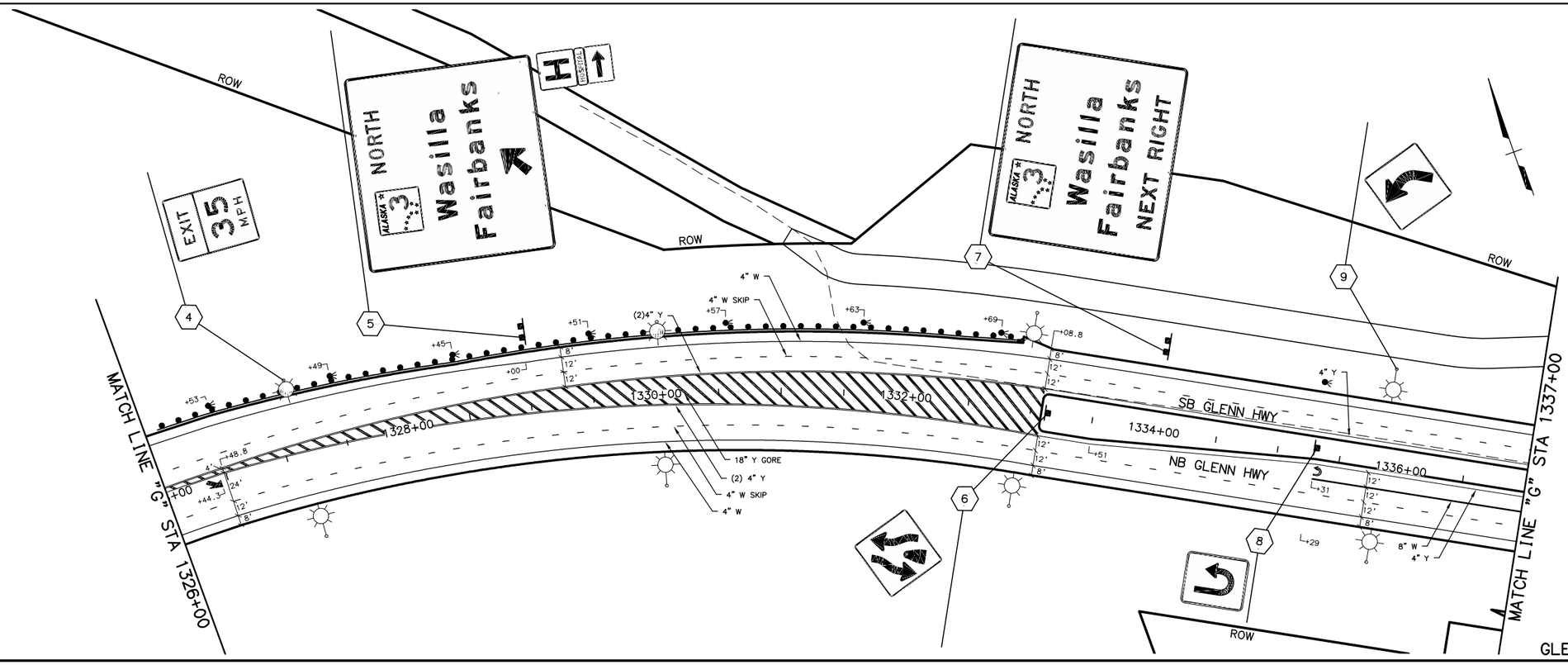

GLENN HWY "G"

SHEET NO.	TOTAL SHEETS
HS5	HS30
STATE	YEAR
ALASKA	2021

PROJECT DESIGNATION

0A15037/CFHWY00431
0A15038/CFHWY00432
0A15033/CFHWY00006

NO.	REVISION
DATE	
NO.	REVISION
DATE	
NO.	REVISION
DATE	

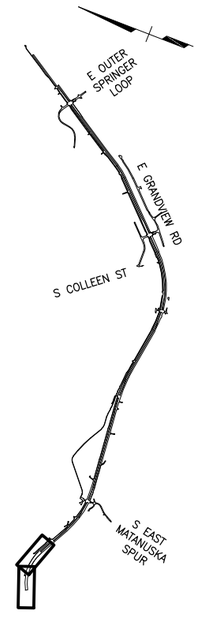

CERTIFICATION SET
NOVEMBER 2021

STATE OF ALASKA
49TH
AVERIAN A. LARSEN
CE-119371
REGISTERED PROFESSIONAL ENGINEER

HDL ENGINEERING CONSULTANTS, LLC
3335 ARCTIC BOULEVARD, STE 100
ANCHORAGE, AK 99503
(907) 564-2120
AECL861

STATE OF ALASKA
DEPARTMENT OF TRANSPORTATION
AND PUBLIC FACILITIES

GLENN HWY: PARKS HWY TO
S. INNER SPRINGER LP.
(PHASE II)

GLENN HWY
SIGNING & STRIPING
1319+00 TO 1337+00

DESIGNED BY	AAL
CHECKED BY	DRL
DRAFTED BY	CDB

SCALE: 1" = 100'

DATE TIME: 11/19/2021 11:23 AM

DRAWING LOCATION
H:\JOBS\08-016 GLENN HIGHWAY 34-42 (DOT)\09 - PS&E\CAD_PH2\DRAWINGS\08016_P2_HS05-HS19.DWG

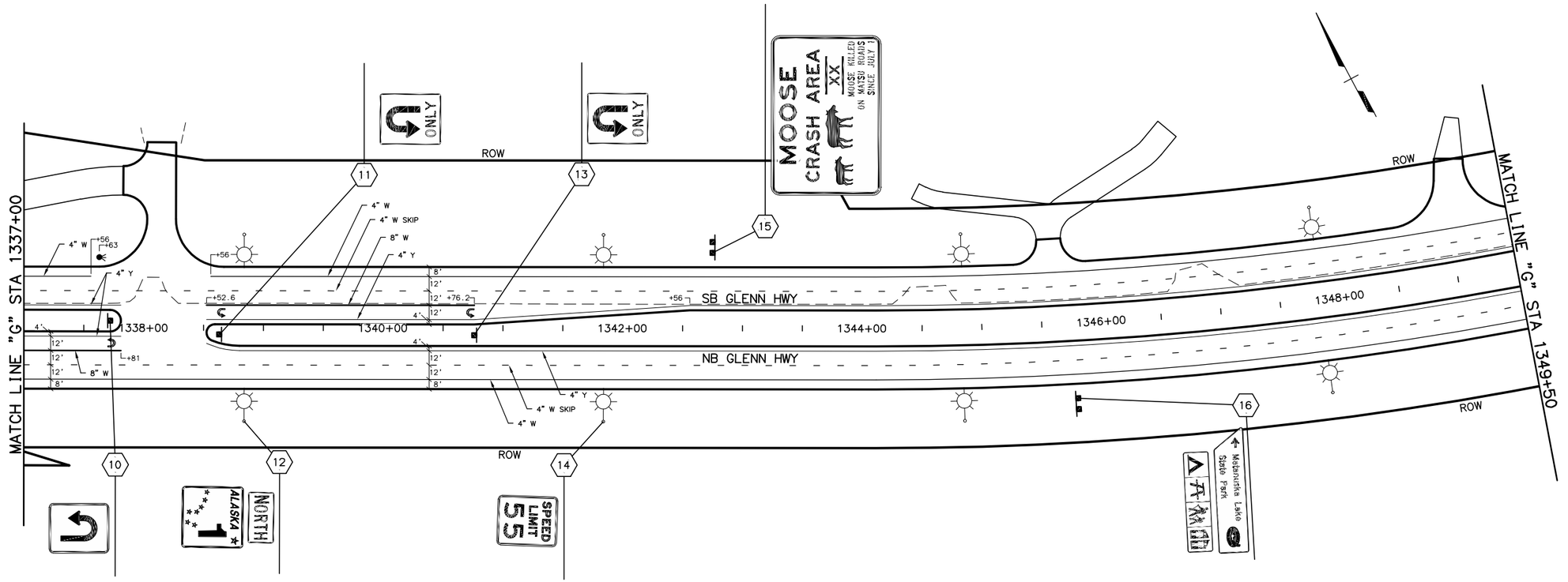

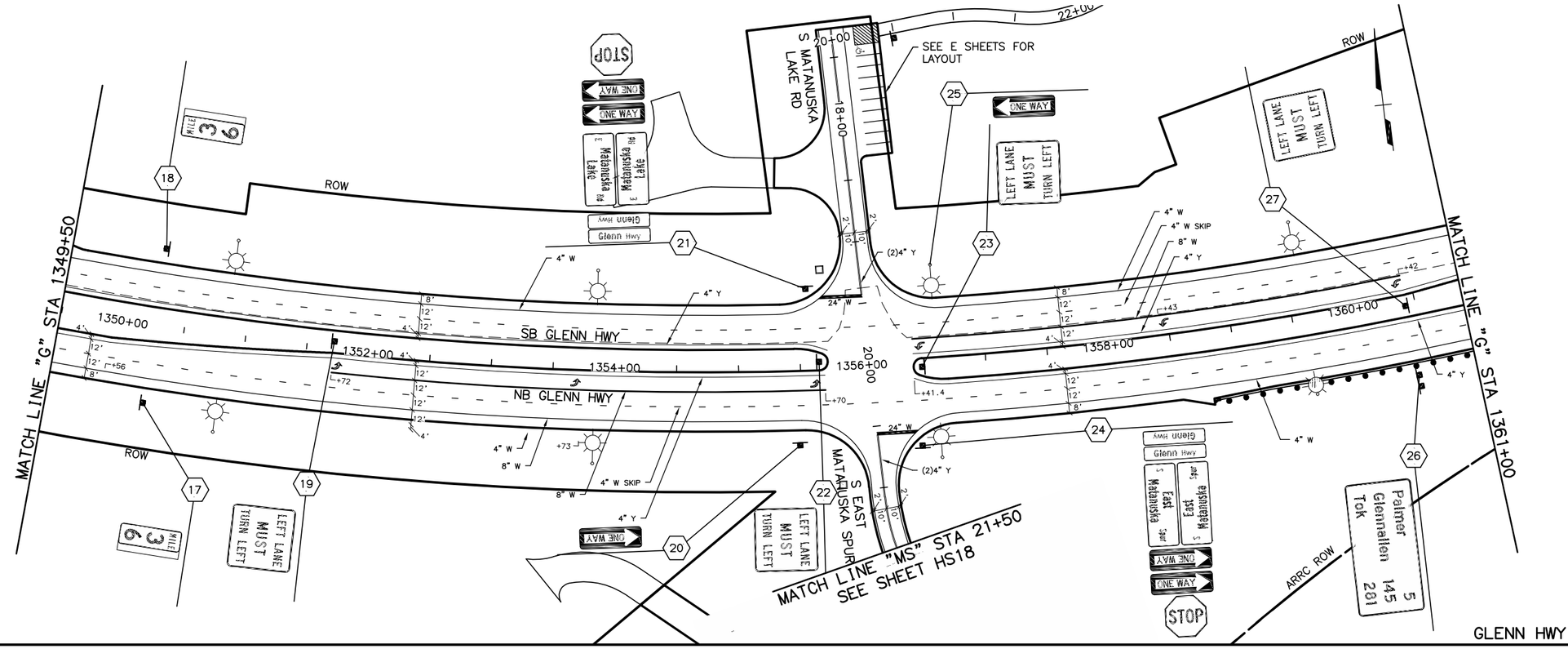

GLENN HWY "G"

SHEET NO.	TOTAL SHEETS
HS6	HS30
STATE	YEAR
ALASKA	2021

PROJECT DESIGNATION
0A15037/CFHWY00431
0A15038/CFHWY00432
0A15033/CFHWY00006

NO.	REVISION
DATE	
NO.	REVISION
DATE	
NO.	REVISION
DATE	

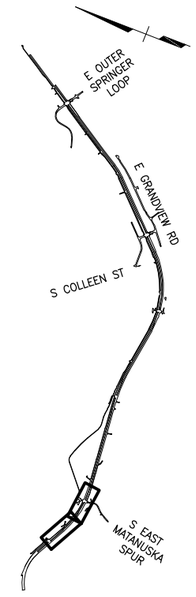

CERTIFICATION SET
NOVEMBER 2021

STATE OF ALASKA
49TH
AVERIAN A. LARSEN
CE-119371
REGISTERED PROFESSIONAL ENGINEER

HDL ENGINEERING CONSULTANTS, LLC
3335 ARCTIC BOULEVARD, STE 100
ANCHORAGE, AK 99503
(907) 564-2120
AECL861

STATE OF ALASKA
DEPARTMENT OF TRANSPORTATION AND PUBLIC FACILITIES

GLENN HWY: PARKS HWY TO S. INNER SPRINGER LP. (PHASE II)

GLENN HWY
SIGNING & STRIPING
1337+00 TO 1361+00

DESIGNED BY	AAL
CHECKED BY	DRL
DRAFTED BY	CDB

SCALE
1" = 100'

DATE	TIME
11/19/2021	11:27 AM

DRAWING LOCATION
H:\JOBS\08-016 GLENN HIGHWAY 34-42 (DOT)\09 - PS&E\CAD_PH2\DRAWINGS\08016_P2_HS05-HS19.DWG

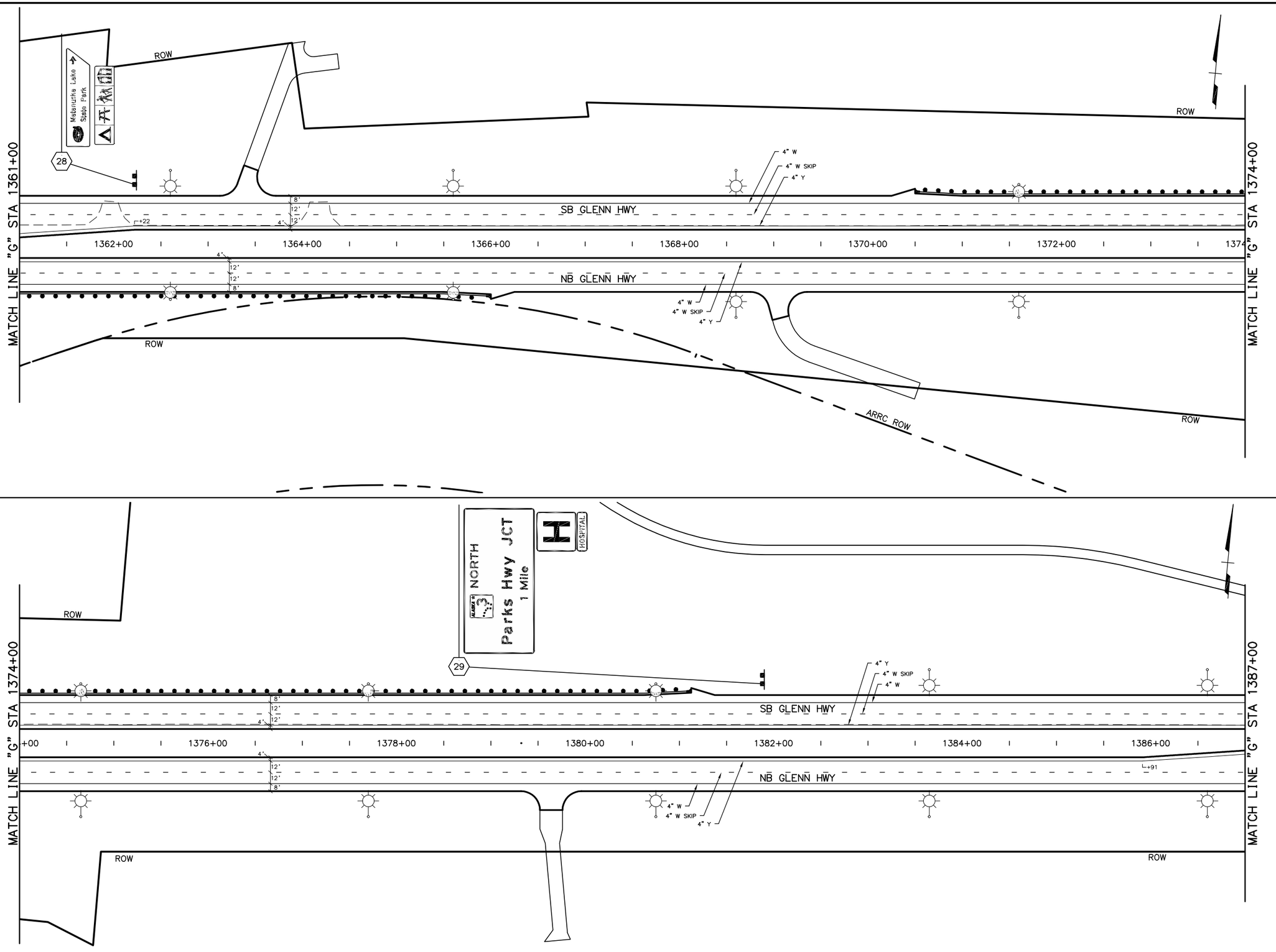

GLENN HWY "G"

SHEET NO.	TOTAL SHEETS
HS7	HS30
STATE	YEAR
ALASKA	2021

PROJECT DESIGNATION

0A15037/CFHWY00431
0A15038/CFHWY00432
0A15033/CFHWY00006

NO.	REVISION
DATE	
NO.	REVISION
DATE	
NO.	REVISION
DATE	

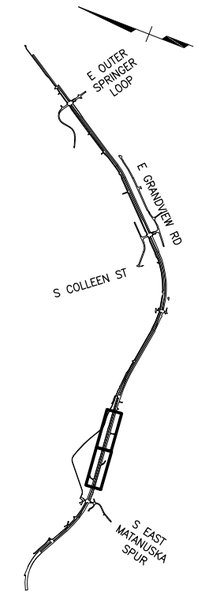

CERTIFICATION SET
NOVEMBER 2021

STATE OF ALASKA
49TH
AVERIAN A. LARSEN
CE-119371
REGISTERED PROFESSIONAL ENGINEER

HDL ENGINEERING CONSULTANTS, LLC
3335 ARCTIC BOULEVARD, STE 100
ANCHORAGE, AK 99503
(907) 564-2120
AECL861

STATE OF ALASKA
DEPARTMENT OF TRANSPORTATION
AND PUBLIC FACILITIES

GLENN HWY: PARKS HWY TO
S. INNER SPRINGER LP.
(PHASE II)

GLENN HWY
SIGNING & STRIPING
1361+00 TO 1387+00

DESIGNED BY AAL
CHECKED BY DRL
DRAFTED BY CDB

SCALE 1" = 100'

DATE 11/19/2021 TIME 11:27 AM

DRAWING LOCATION
H:\JOBS\08-016 GLENN HIGHWAY 34-42 (DOT)\09 - PS&E\CAD_PH2\DRAWINGS\08016_P2_HS05-HS19.DWG

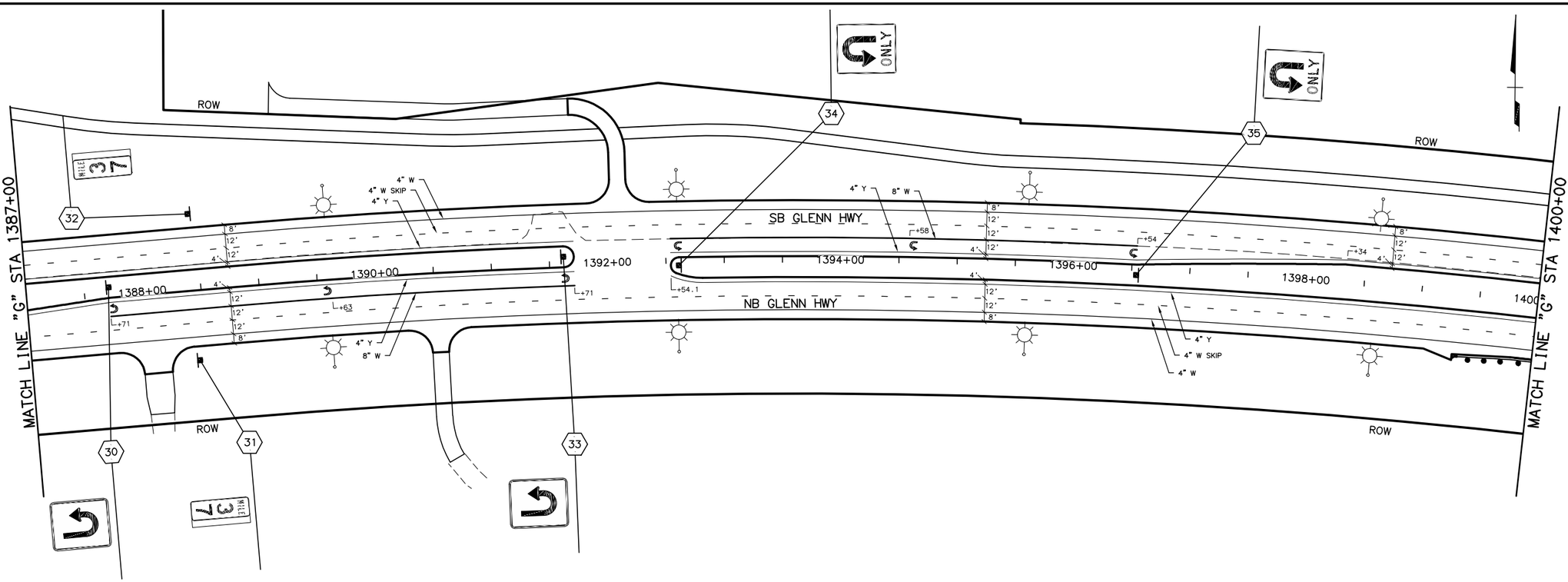

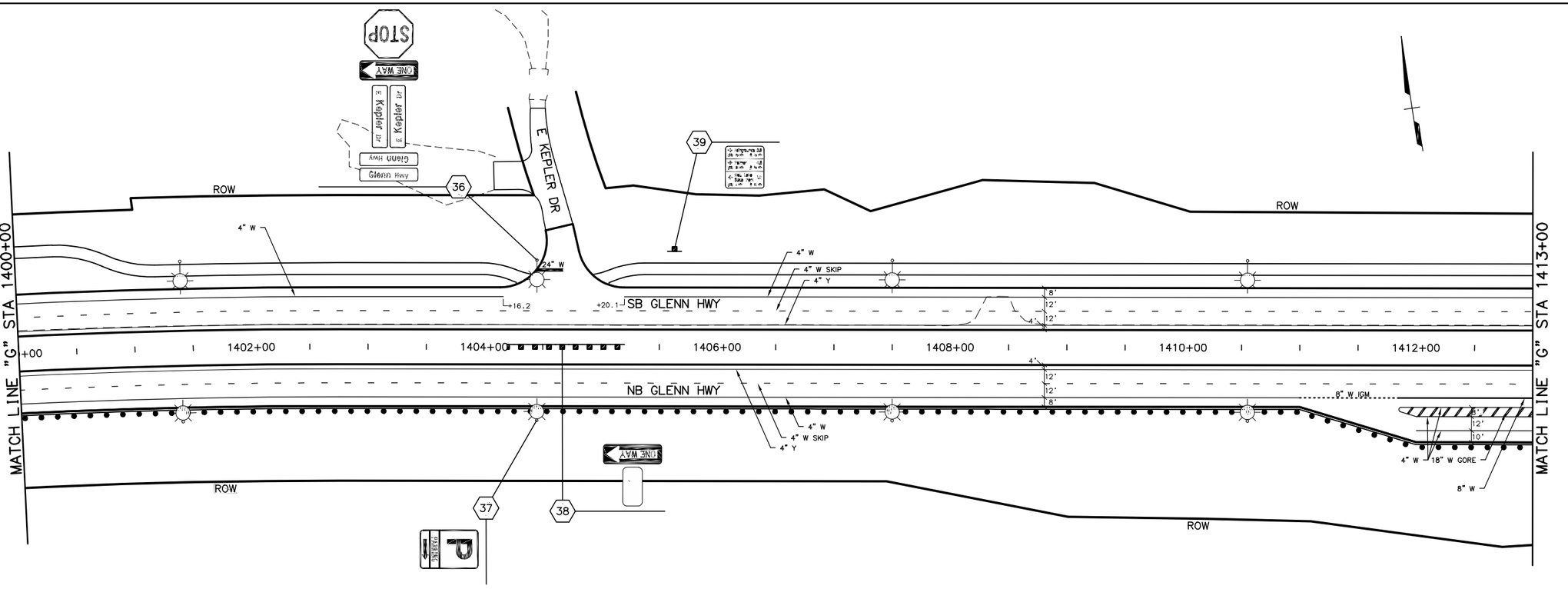

GLENN HWY "G"

SHEET NO.	TOTAL SHEETS
HS8	HS30
STATE	YEAR
ALASKA	2021

PROJECT DESIGNATION

0A15037/CFHWY00431
0A15038/CFHWY00432
0A15033/CFHWY00006

NO.	REVISION
DATE	
NO.	REVISION
DATE	
NO.	REVISION
DATE	

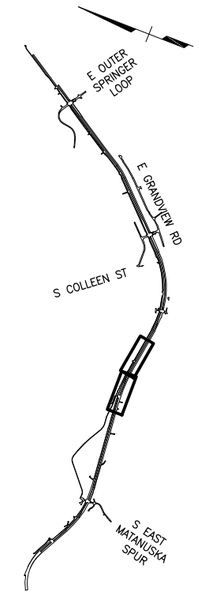

CERTIFICATION SET
NOVEMBER 2021

STATE OF ALASKA
49TH
AVERIAN A. LARSEN
CE-119371
REGISTERED PROFESSIONAL ENGINEER

HDL ENGINEERING CONSULTANTS, LLC
3335 ARCTIC BOULEVARD, STE 100
ANCHORAGE, AK 99503
(907) 564-2120
AECL861

STATE OF ALASKA
DEPARTMENT OF TRANSPORTATION
AND PUBLIC FACILITIES

GLENN HWY: PARKS HWY TO
S. INNER SPRINGER LP.
(PHASE II)

GLENN HWY
SIGNING & STRIPING
1387+00 TO 1413+00

DESIGNED BY	AAL
CHECKED BY	DRL
DRAFTED BY	CDB

SCALE	DATE	TIME
1" = 100'	11/19/2021	11:28 AM

DRAWING LOCATION
H:\JOBS\08-016 GLENN HIGHWAY 34-42 (DOT)\09 - PS&E\CAD_PH2\DRAWINGS\08016_P2_HS05-HS19.DWG

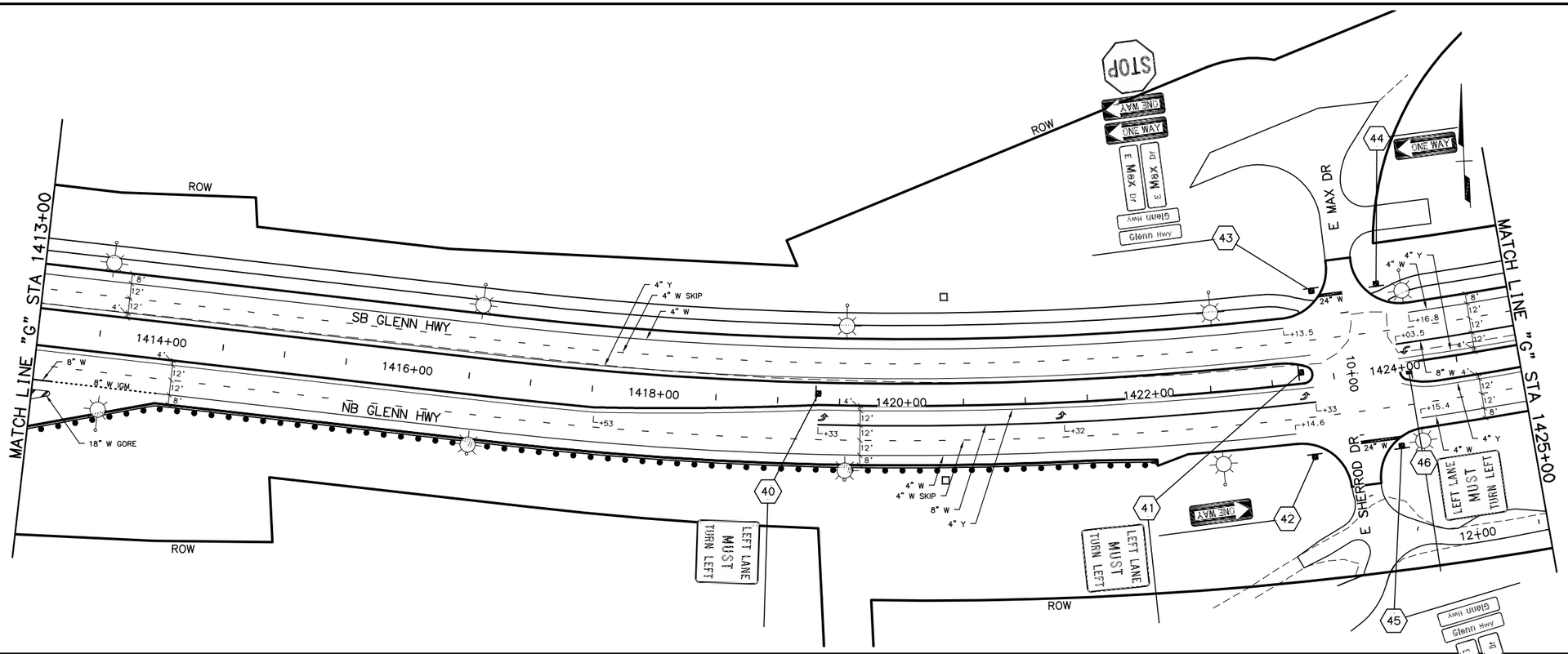

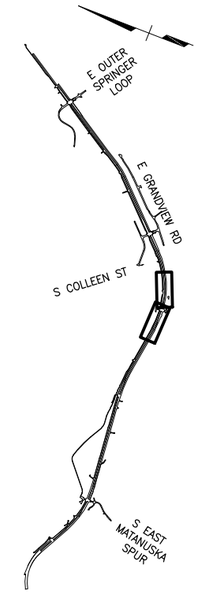

SHEET NO.	TOTAL SHEETS
HS9	HS30
STATE	YEAR
ALASKA	2021

PROJECT DESIGNATION

0A15037/CFHWY00431
0A15038/CFHWY00432
0A15033/CFHWY00006

NO.	REVISION
DATE	
NO.	REVISION
DATE	
NO.	REVISION
DATE	

CERTIFICATION SET
NOVEMBER 2021

STATE OF ALASKA
49TH
AVERIAN A. LARSEN
CE-119371
REGISTERED PROFESSIONAL ENGINEER

HDL ENGINEERING CONSULTANTS, LLC
3335 ARCTIC BOULEVARD, STE 100
ANCHORAGE, AK 99503
(907) 564-2120
AECL861

STATE OF ALASKA
DEPARTMENT OF TRANSPORTATION
AND PUBLIC FACILITIES

GLENN HWY: PARKS HWY TO
S. INNER SPRINGER LP.
(PHASE II)

GLENN HWY
SIGNING & STRIPING
1413+00 TO 1436+00

GLENN HWY "G"

DRAWING LOCATION
H:\JOBS\08-016 GLENN HIGHWAY 34-42 (DOT)\09 - PS&E\CAD_PH2\DRAWINGS\08016_P2_HS05-HS19.DWG

DESIGNED BY	AAL
CHECKED BY	DRL
DRAFTED BY	CDB

SCALE	DATE	TIME
1" = 100'	11/19/2021	11:28 AM

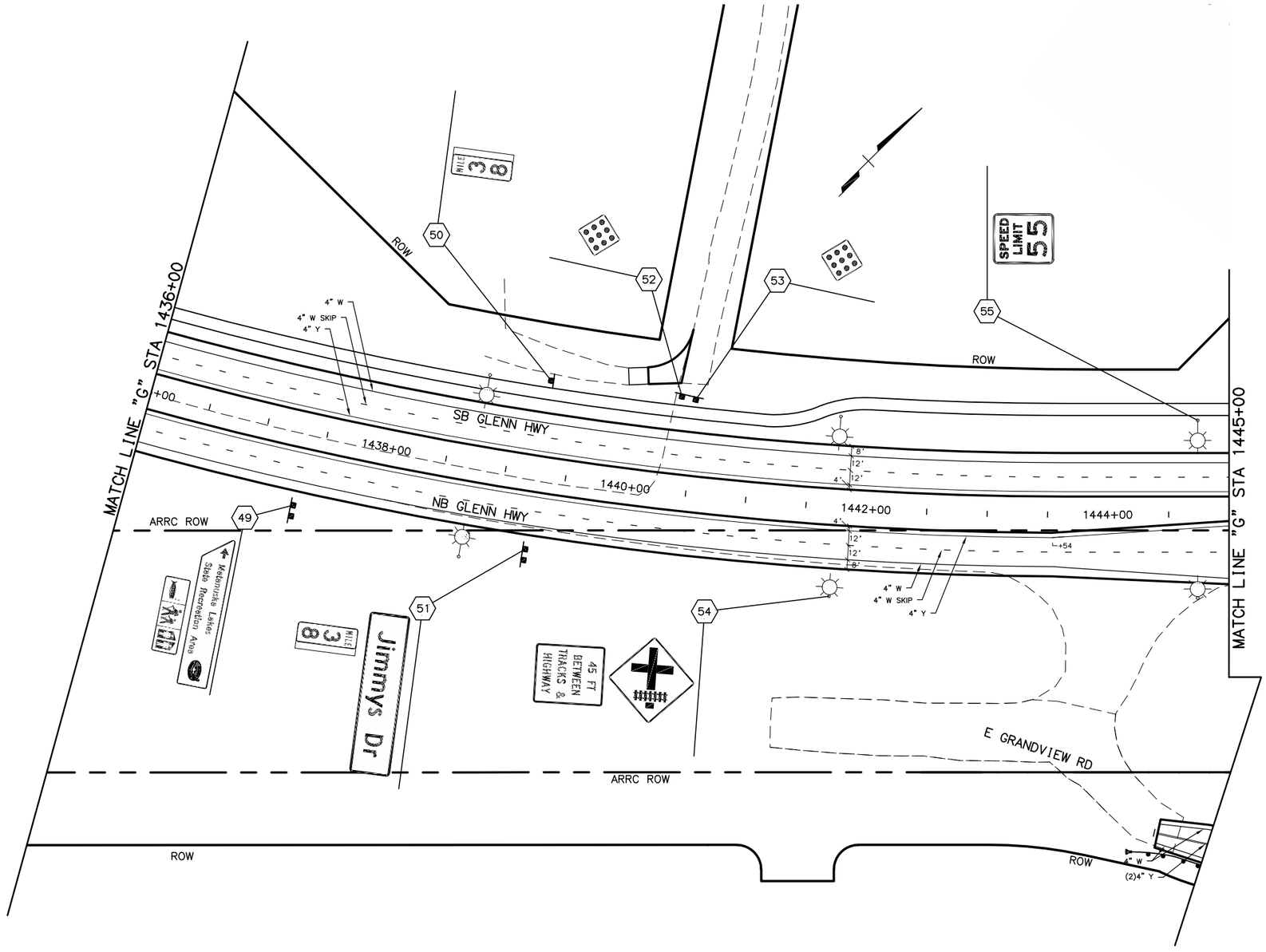

GLENN HWY "G"

SHEET NO.	TOTAL SHEETS
HS10	HS30
STATE	YEAR
ALASKA	2021

PROJECT DESIGNATION

0A15037/CFHWY00431
0A15038/CFHWY00432
0A15033/CFHWY00006

NO.	REVISION
DATE	
NO.	REVISION
DATE	
NO.	REVISION
DATE	

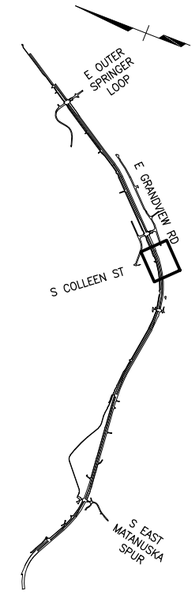

CERTIFICATION SET
NOVEMBER 2021

STATE OF ALASKA
49TH
AVERIAN A. LARSEN
CE-119371
REGISTERED PROFESSIONAL ENGINEER

HDL ENGINEERING CONSULTANTS, LLC
3335 ARCTIC BOULEVARD, STE 100
ANCHORAGE, AK 99503
(907) 564-2120
AECL861

STATE OF ALASKA
DEPARTMENT OF TRANSPORTATION
AND PUBLIC FACILITIES

GLENN HWY: PARKS HWY TO
S. INNER SPRINGER LP.
(PHASE II)

GLENN HWY
SIGNING & STRIPING
1436+00 TO 1445+00

DESIGNED BY	AAL
CHECKED BY	DRL
DRAFTED BY	CDB

SCALE: 1" = 100

DATE: 11/19/2021 TIME: 11:29 AM

DRAWING LOCATION
H:\JOBS\08-016 GLENN HIGHWAY 34-42 (DOT)\09 - PS&E\CAD_PH2\DRAWINGS\08016_P2_HS05-HS19.DWG

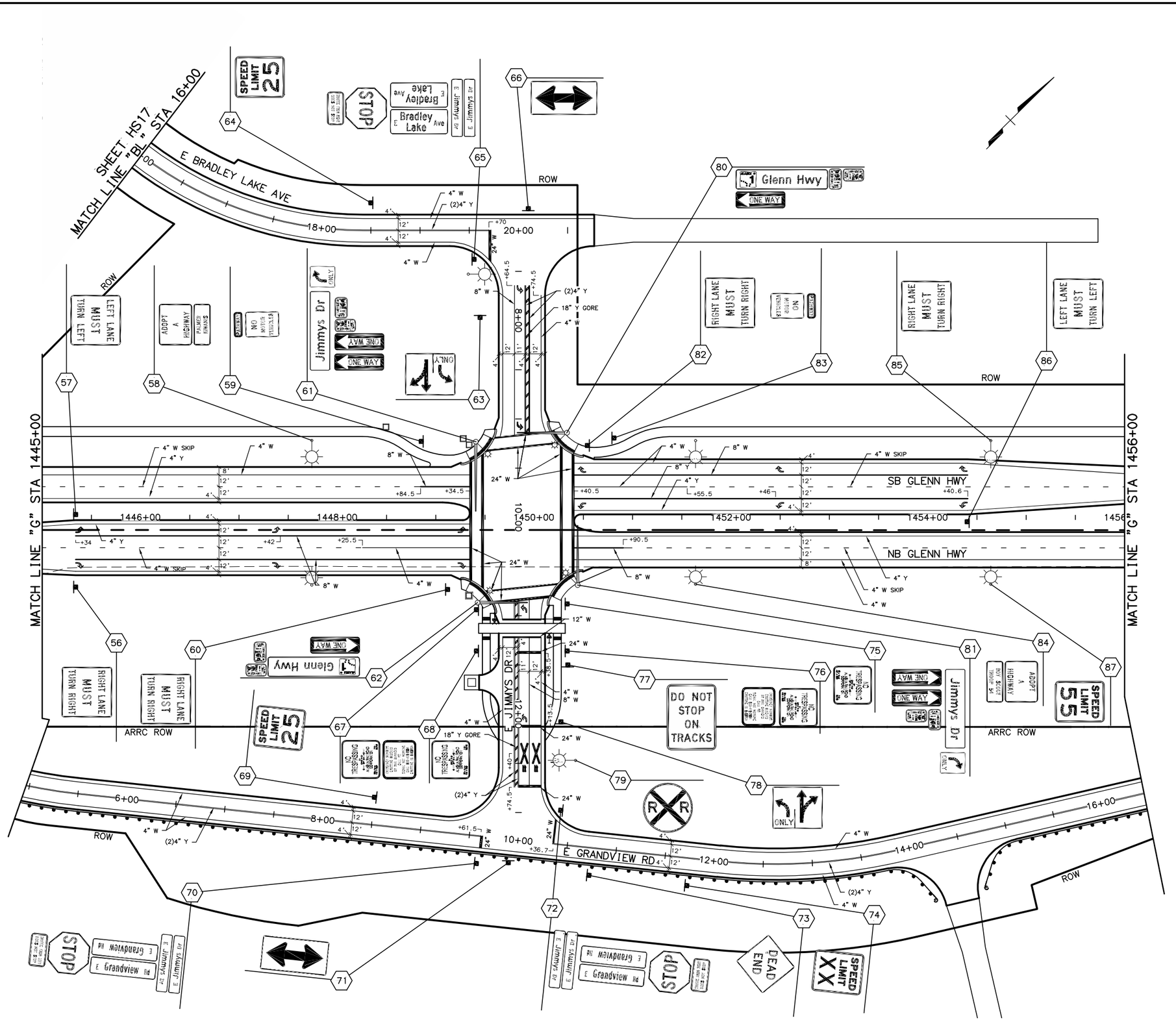

SHEET NO.	TOTAL SHEETS
HS11	HS30
STATE	YEAR
ALASKA	2021

PROJECT DESIGNATION

0A15037/CFHWY00431
0A15038/CFHWY00432
0A15033/CFHWY00006

NO.	REVISION
DATE	
NO.	REVISION
DATE	
NO.	REVISION
DATE	

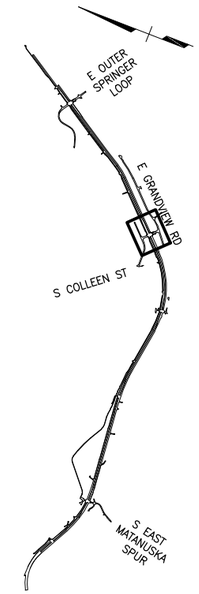

CERTIFICATION SET
NOVEMBER 2021

STATE OF ALASKA
49TH
AVERIAN A. LARSEN
CE-119371
REGISTERED PROFESSIONAL ENGINEER

HDL ENGINEERING CONSULTANTS, LLC
3335 ARCTIC BOULEVARD, STE 100
ANCHORAGE, AK 99503
(907) 564-2120
AECL861

STATE OF ALASKA
DEPARTMENT OF TRANSPORTATION
AND PUBLIC FACILITIES

GLENN HWY: PARKS HWY TO
S. INNER SPRINGER LP.
(PHASE II)

GLENN HWY
SIGNING & STRIPING
1445+00 TO 1456+00

DRAWING LOCATION
H:\JOBS\08-016 GLENN HIGHWAY 34-42 (DOT)\09 - PS&E\CAD_PH2\DRAWINGS\08016_P2_HS05-HS19.DWG

DESIGNED BY	AAL
CHECKED BY	DRL
DRAFTED BY	CDB

SCALE	DATE	TIME
1" = 100'	11/19/2021	11:29 AM

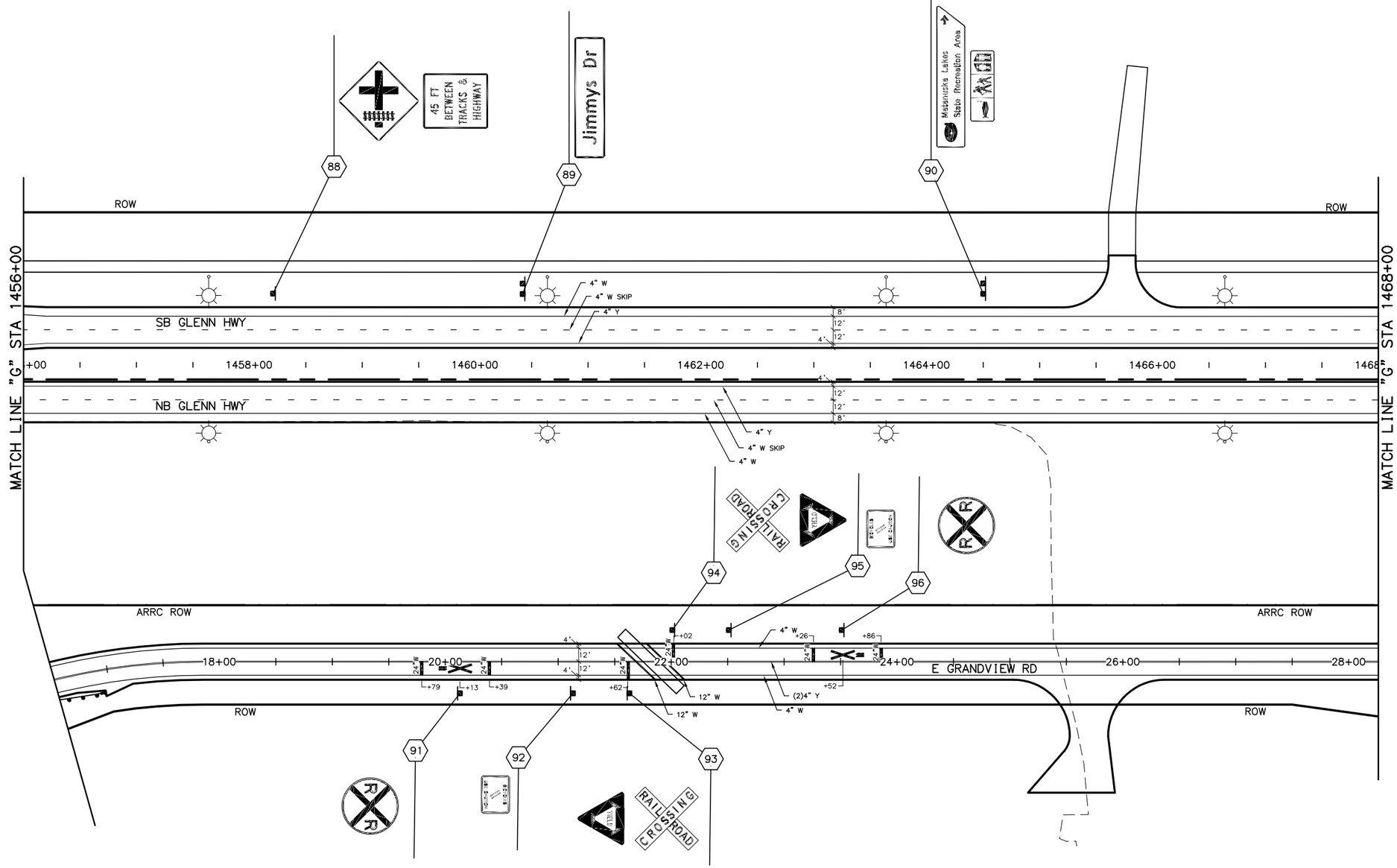

GLENN HWY "G"

SHEET NO.	TOTAL SHEETS
HS12	HS30
STATE	YEAR
ALASKA	2021

PROJECT DESIGNATION

0A15037/CFHWY00431
0A15038/CFHWY00432
0A15033/CFHWY00006

NO.	REVISION
DATE	

NO.	REVISION
DATE	

NO.	REVISION
DATE	

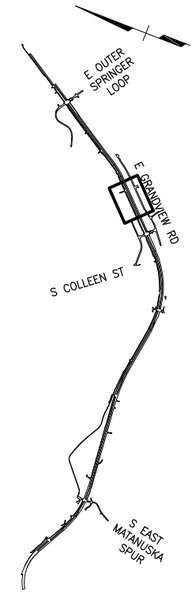

CERTIFICATION SET
NOVEMBER 2021

STATE OF ALASKA
49TH
AVERIAN A. LARSEN
CE-119371
REGISTERED PROFESSIONAL ENGINEER

HDL ENGINEERING CONSULTANTS, LLC
3335 ARCTIC BOULEVARD, STE 100
ANCHORAGE, AK 99503
(907) 564-2120
AECL861

STATE OF ALASKA
DEPARTMENT OF TRANSPORTATION
AND PUBLIC FACILITIES

GLENN HWY: PARKS HWY TO
S. INNER SPRINGER LP.
(PHASE II)

GLENN HWY
SIGNING & STRIPING
1456+00 TO 1468+00

DESIGNED BY AAL
CHECKED BY DRL
DRAFTED BY CDB

SCALE 1" = 100'

DATE 11/19/2021 TIME 11:29 AM

DRAWING LOCATION
H:\JOBS\08-016 GLENN HIGHWAY 34-42 (DOT)\09 - PS&E\CAD_PH2\DRAWINGS\08016_P2_HS05-HS19.DWG

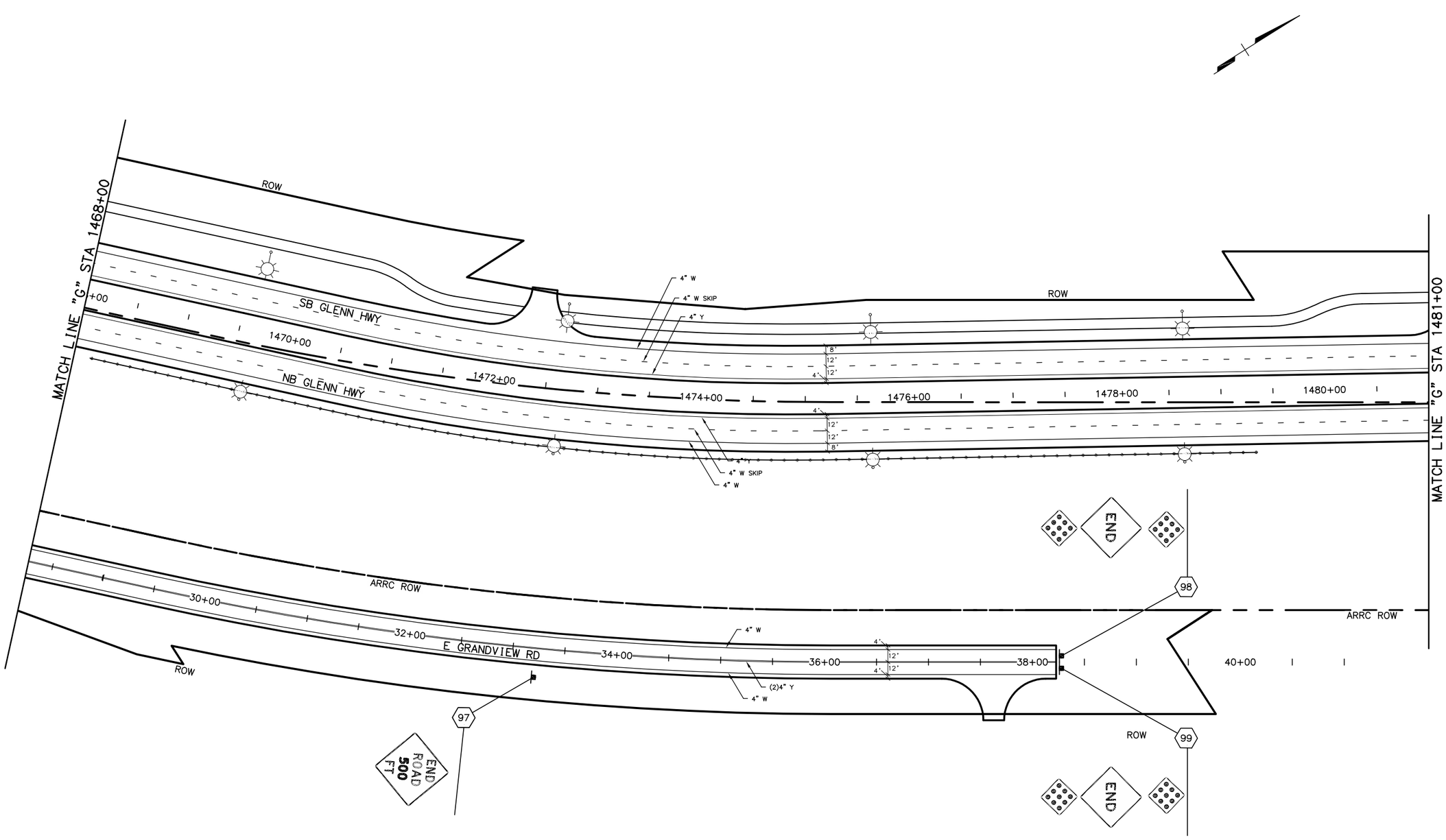

GLENN HWY "G"

SHEET NO.	TOTAL SHEETS
HS13	HS30
STATE	YEAR
ALASKA	2021

PROJECT DESIGNATION

0A15037/CFHWY00431
0A15038/CFHWY00432
0A15033/CFHWY00006

NO.	REVISION
DATE	
NO.	REVISION
DATE	
NO.	REVISION
DATE	

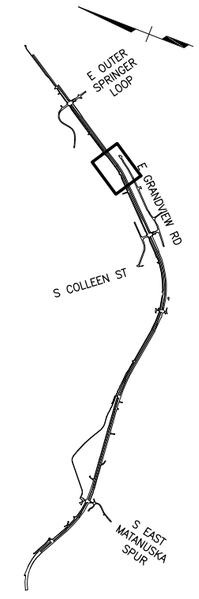

CERTIFICATION SET
NOVEMBER 2021

STATE OF ALASKA
49TH
AVERIAN A. LARSEN
CE-119371
REGISTERED PROFESSIONAL ENGINEER

HDL ENGINEERING CONSULTANTS, LLC
3335 ARCTIC BOULEVARD, STE 100
ANCHORAGE, AK 99503
(907) 564-2120
AECL861

STATE OF ALASKA
DEPARTMENT OF TRANSPORTATION
AND PUBLIC FACILITIES

GLENN HWY: PARKS HWY TO
S. INNER SPRINGER LP.
(PHASE II)

GLENN HWY
SIGNING & STRIPING
1468+00 TO 1481+00

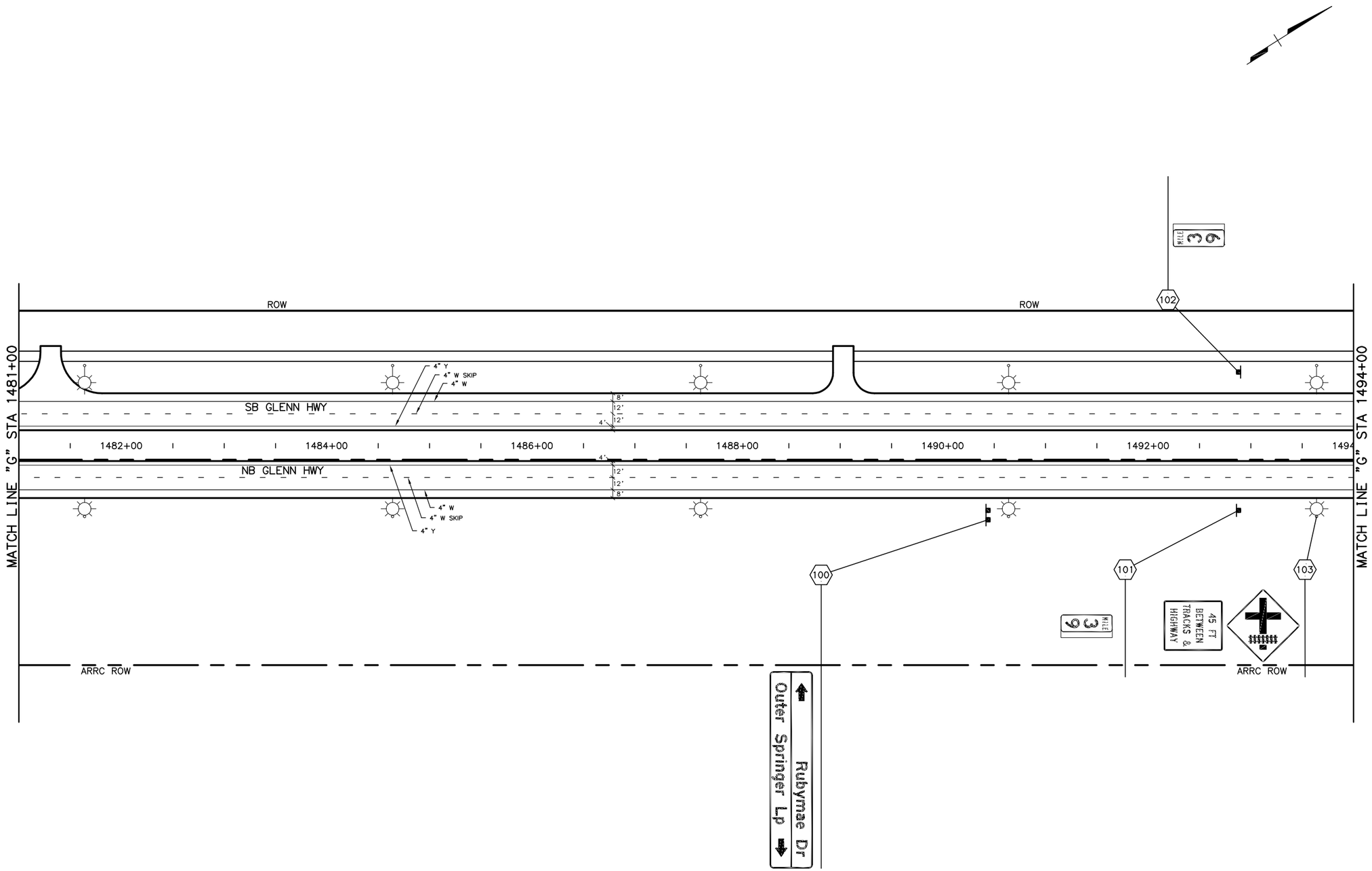

GLENN HWY "G"

SHEET NO.	TOTAL SHEETS
HS14	HS30
STATE	YEAR
ALASKA	2021

PROJECT DESIGNATION

0A15037/CFHWY00431
0A15038/CFHWY00432
0A15033/CFHWY00006

NO.	REVISION
DATE	
NO.	REVISION
DATE	
NO.	REVISION
DATE	

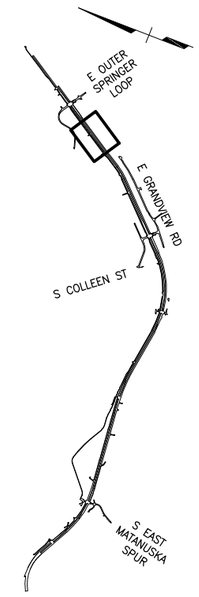

CERTIFICATION SET
NOVEMBER 2021

STATE OF ALASKA
49TH
AVERIAN A. LARSEN
CE-119371
REGISTERED PROFESSIONAL ENGINEER

HDL ENGINEERING CONSULTANTS, LLC
3335 ARCTIC BOULEVARD, STE 100
ANCHORAGE, AK 99503
(907) 564-2120
AECL861

STATE OF ALASKA
DEPARTMENT OF TRANSPORTATION AND PUBLIC FACILITIES

GLENN HWY: PARKS HWY TO S. INNER SPRINGER LP. (PHASE II)

GLENN HWY
SIGNING & STRIPING
1481+00 TO 1494+00

DESIGNED BY AAL
CHECKED BY DRL
DRAFTED BY CDB

SCALE 1" = 100'

DATE 11/19/2021 TIME 11:30 AM

DRAWING LOCATION
H:\JOBS\08-016 GLENN HIGHWAY 34-42 (DOT)\09 - PS&E\CAD_PH2\DRAWINGS\08016_P2_HS05-HS19.DWG

DESIGNED BY	AAL
CHECKED BY	DRL
DRAFTED BY	CDB

SCALE
1" = 100'

DATE	TIME
11/19/2021	11:30 AM

DRAWING LOCATION
H:\JOBS\08-016 GLENN HIGHWAY 34-42 (DOT)\09 - PS&E\CAD_PH2\DRAWINGS\08016_P2_HS05-HS19.DWG

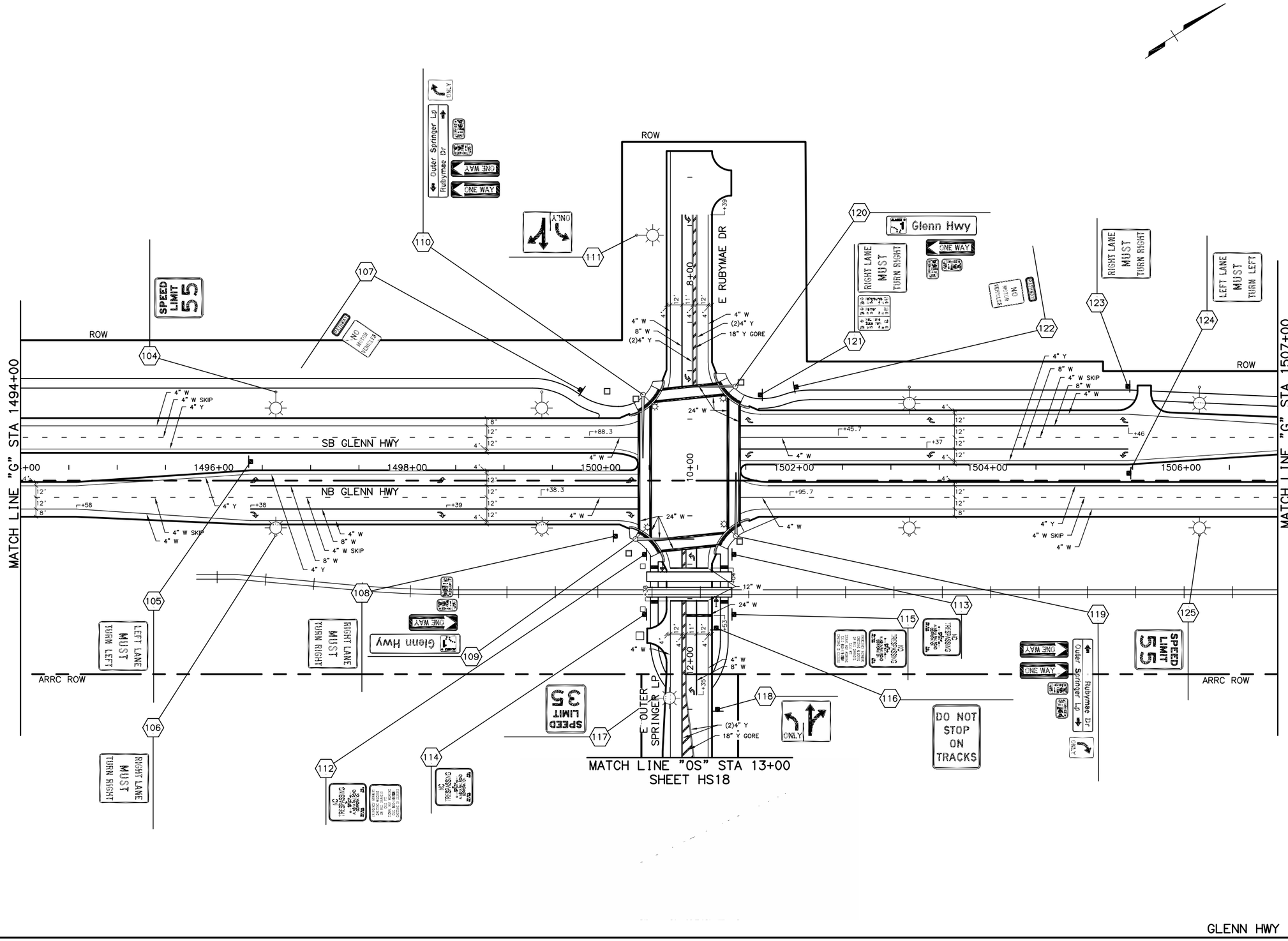

SHEET NO.	TOTAL SHEETS
HS15	HS30
STATE	YEAR
ALASKA	2021

PROJECT DESIGNATION

0A15037/CFHWY00431
0A15038/CFHWY00432
0A15033/CFHWY00006

NO.	REVISION
DATE	
NO.	REVISION
DATE	
NO.	REVISION
DATE	

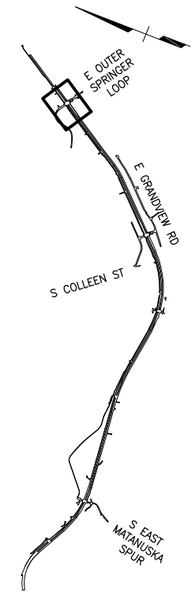

CERTIFICATION SET
NOVEMBER 2021

STATE OF ALASKA
49TH
AVERIAN A. LARSEN
CE-119371
REGISTERED PROFESSIONAL ENGINEER

HDL ENGINEERING CONSULTANTS, LLC
3335 ARCTIC BOULEVARD, STE 100
ANCHORAGE, AK 99503
(907) 564-2120
AECL861

STATE OF ALASKA
DEPARTMENT OF TRANSPORTATION
AND PUBLIC FACILITIES

GLENN HWY: PARKS HWY TO
S. INNER SPRINGER LP.
(PHASE II)

GLENN HWY
SIGNING & STRIPING
1494+00 TO 1507+00

DESIGNED BY AAL
CHECKED BY DRL
DRAFTED BY CDB

SCALE 1" = 100'

DATE 11/19/2021 TIME 11:31 AM

DRAWING LOCATION
H:\JOBS\08-016 GLENN HIGHWAY 34-42 (DOT)\09 - PS&E\CAD_PH2\DRAWINGS\08016_P2_HS05-HS19.DWG

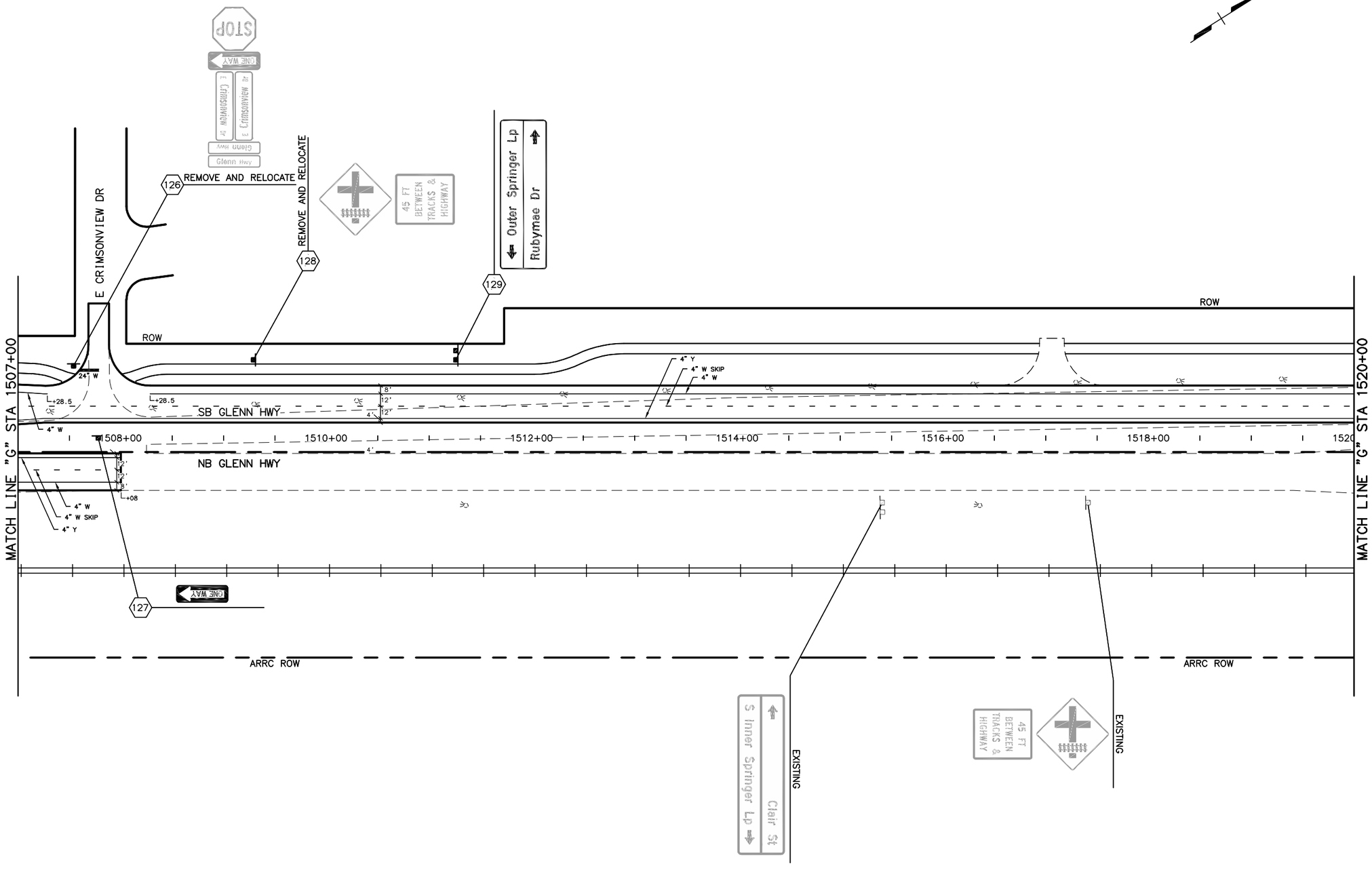

GLENN HWY "G"

SHEET NO.	TOTAL SHEETS
HS16	HS30
STATE	YEAR
ALASKA	2021

PROJECT DESIGNATION
0A15037/CFHWY00431
0A15038/CFHWY00432
0A15033/CFHWY00006

NO.	REVISION
DATE	
NO.	REVISION
DATE	
NO.	REVISION
DATE	

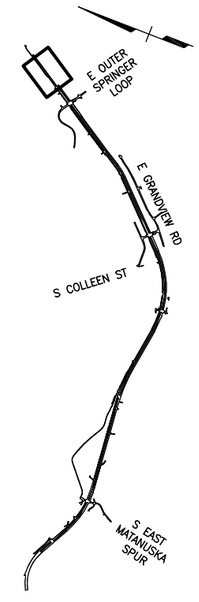

CERTIFICATION SET
NOVEMBER 2021

STATE OF ALASKA
49TH
AVERIAN A. LARSEN
CE-119371
REGISTERED PROFESSIONAL ENGINEER

HDL ENGINEERING CONSULTANTS, LLC
3335 ARCTIC BOULEVARD, STE 100
ANCHORAGE, AK 99503
(907) 564-2120
AECL861

STATE OF ALASKA
DEPARTMENT OF TRANSPORTATION
AND PUBLIC FACILITIES

GLENN HWY: PARKS HWY TO
S. INNER SPRINGER LP.
(PHASE II)

GLENN HWY
SIGNING & STRIPING
1507+00 TO 1520+00

DRAWING LOCATION
H:\JOBS\08-016 GLENN HIGHWAY 34-42 (DOT)\09 - PS&E\CAD_PH2\DRAWINGS\08016_P2_HS05-HS19.DWG

DESIGNED BY	AAL
CHECKED BY	DRL
DRAFTED BY	CDB

SCALE	DATE	TIME
1" = 100'	11/19/2021	11:31 AM

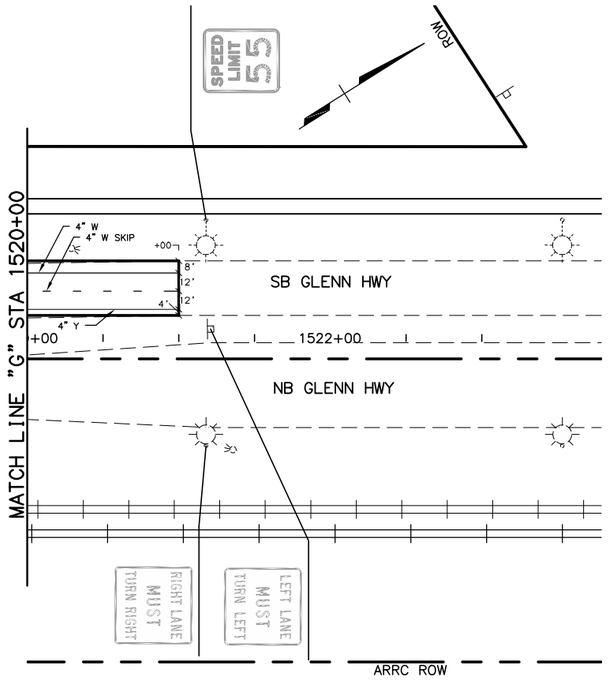

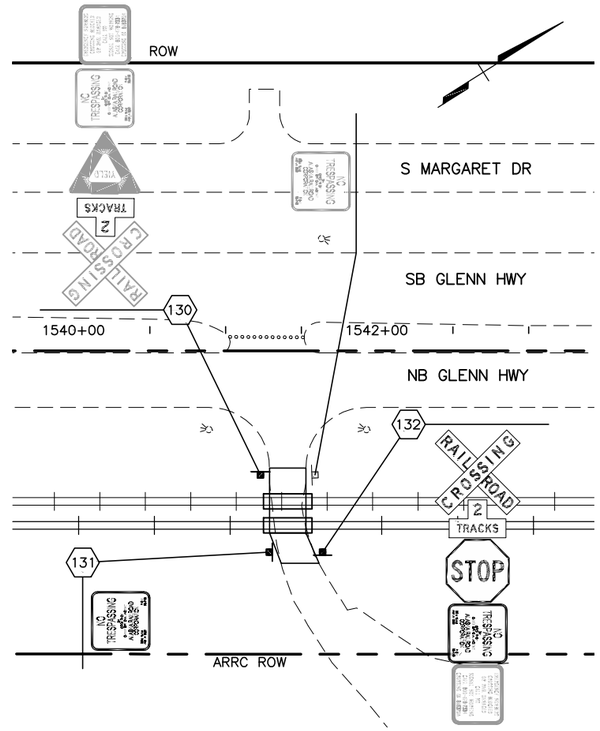

GLENN HWY "G"

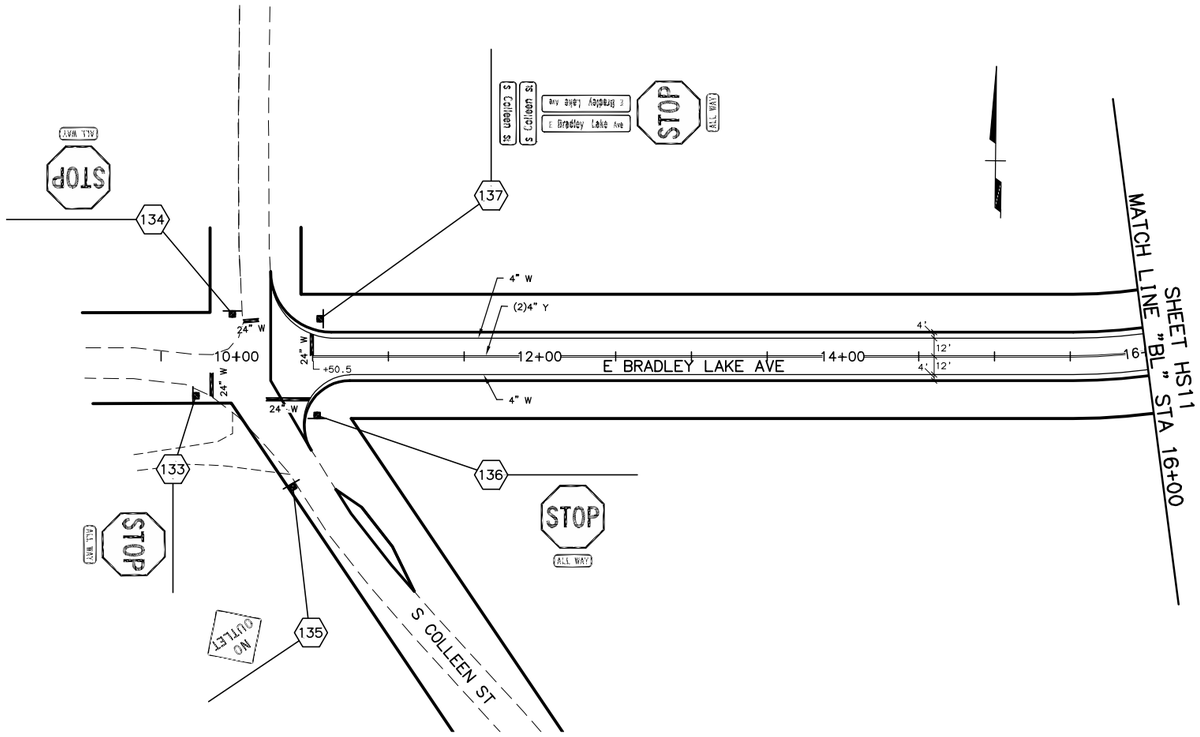

E BRADLEY LAKE AVE "BL"

SHEET NO.	TOTAL SHEETS
HS17	HS30
STATE	YEAR
ALASKA	2021

PROJECT DESIGNATION
0A15037/CFHWY00431
0A15038/CFHWY00432
0A15033/CFHWY00006

NO.	REVISION
DATE	
NO.	REVISION
DATE	
NO.	REVISION
DATE	

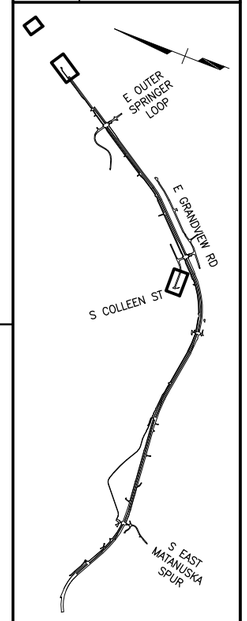

CERTIFICATION SET
NOVEMBER 2021

STATE OF ALASKA
49TH
AVERIAN A. LARSEN
CE-119371
REGISTERED PROFESSIONAL ENGINEER

HDL ENGINEERING CONSULTANTS, LLC
3335 ARCTIC BOULEVARD, STE 100
ANCHORAGE, AK 99503
(907) 564-2120
AECL861

STATE OF ALASKA
DEPARTMENT OF TRANSPORTATION
AND PUBLIC FACILITIES

GLENN HWY: PARKS HWY TO
S. INNER SPRINGER LP.
(PHASE II)

GLENN HWY
BRADLEY LAKE
SIGNING & STRIPING

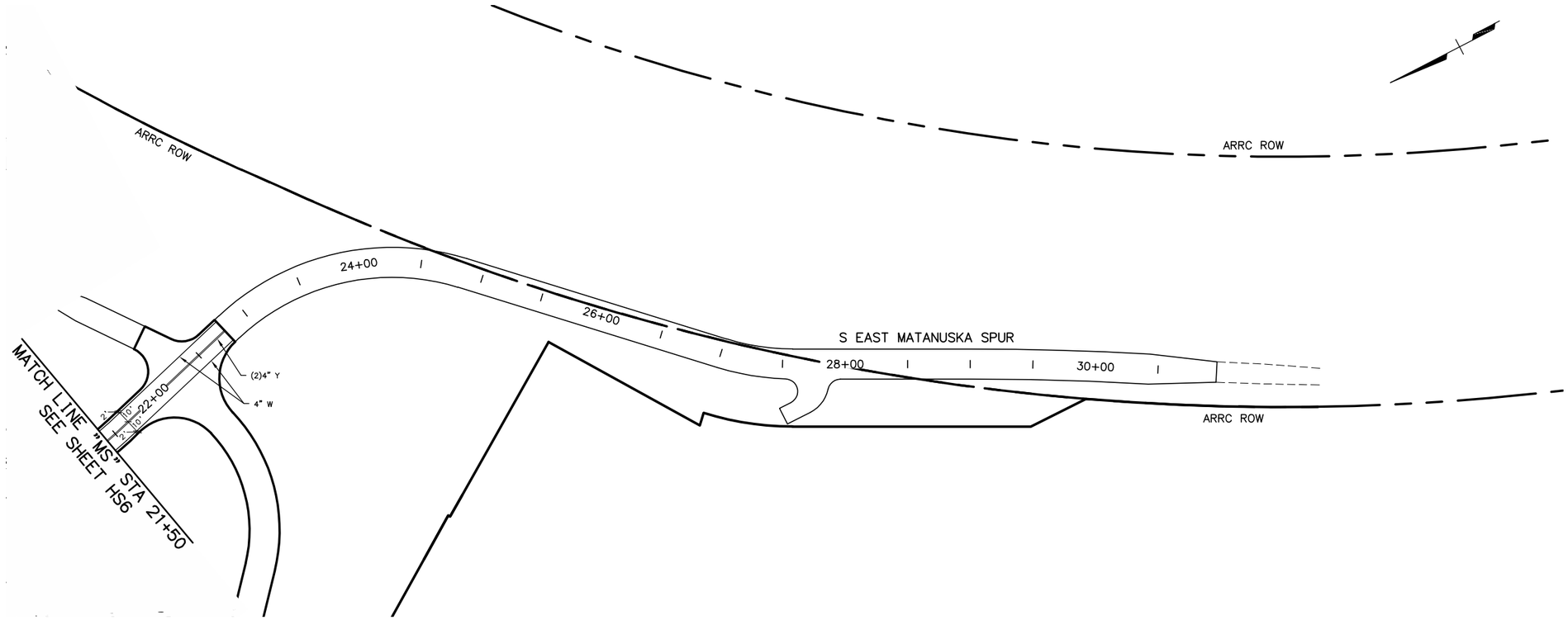

S EAST MATANUSKA SPUR "MS"

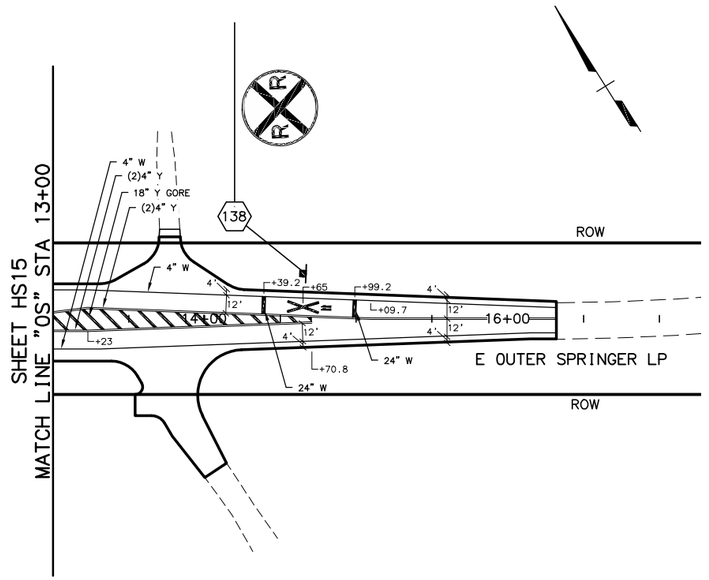

E OUTER SPRINGER LOOP "OS"

SHEET NO.	TOTAL SHEETS
HS18	HS30
STATE	YEAR
ALASKA	2021

PROJECT DESIGNATION

0A15037/CFHWY00431
0A15038/CFHWY00432
0A15033/CFHWY00006

NO.	REVISION
DATE	
NO.	REVISION
DATE	
NO.	REVISION
DATE	

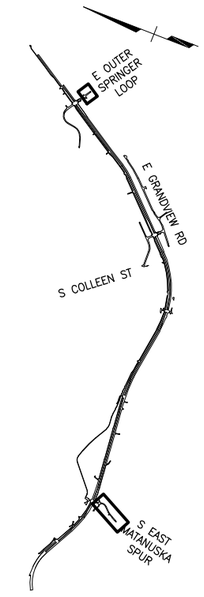

CERTIFICATION SET
NOVEMBER 2021

STATE OF ALASKA
49TH
AVERIAN A. LARSEN
CE-119371
REGISTERED PROFESSIONAL ENGINEER

HDL ENGINEERING CONSULTANTS, LLC
3335 ARCTIC BOULEVARD, STE 100
ANCHORAGE, AK 99503
(907) 564-2120
AECL861

STATE OF ALASKA
DEPARTMENT OF TRANSPORTATION
AND PUBLIC FACILITIES

GLENN HWY: PARKS HWY TO
S. INNER SPRINGER LP.
(PHASE II)

S EAST MATANUSKA SPUR
E OUTER SPRINGER LP
SIGNING & STRIPING

DESIGNED BY	AAL
CHECKED BY	DRL
DRAFTED BY	CDB

SCALE: 1" = 100'

DATE: 11/19/2021 TIME: 11:31 AM

DRAWING LOCATION
H:\JOBS\08-016 GLENN HIGHWAY 34-42 (DOT)\09 - PS&E\CAD_PH2\DRAWINGS\08016_P2_HS05-HS19.DWG

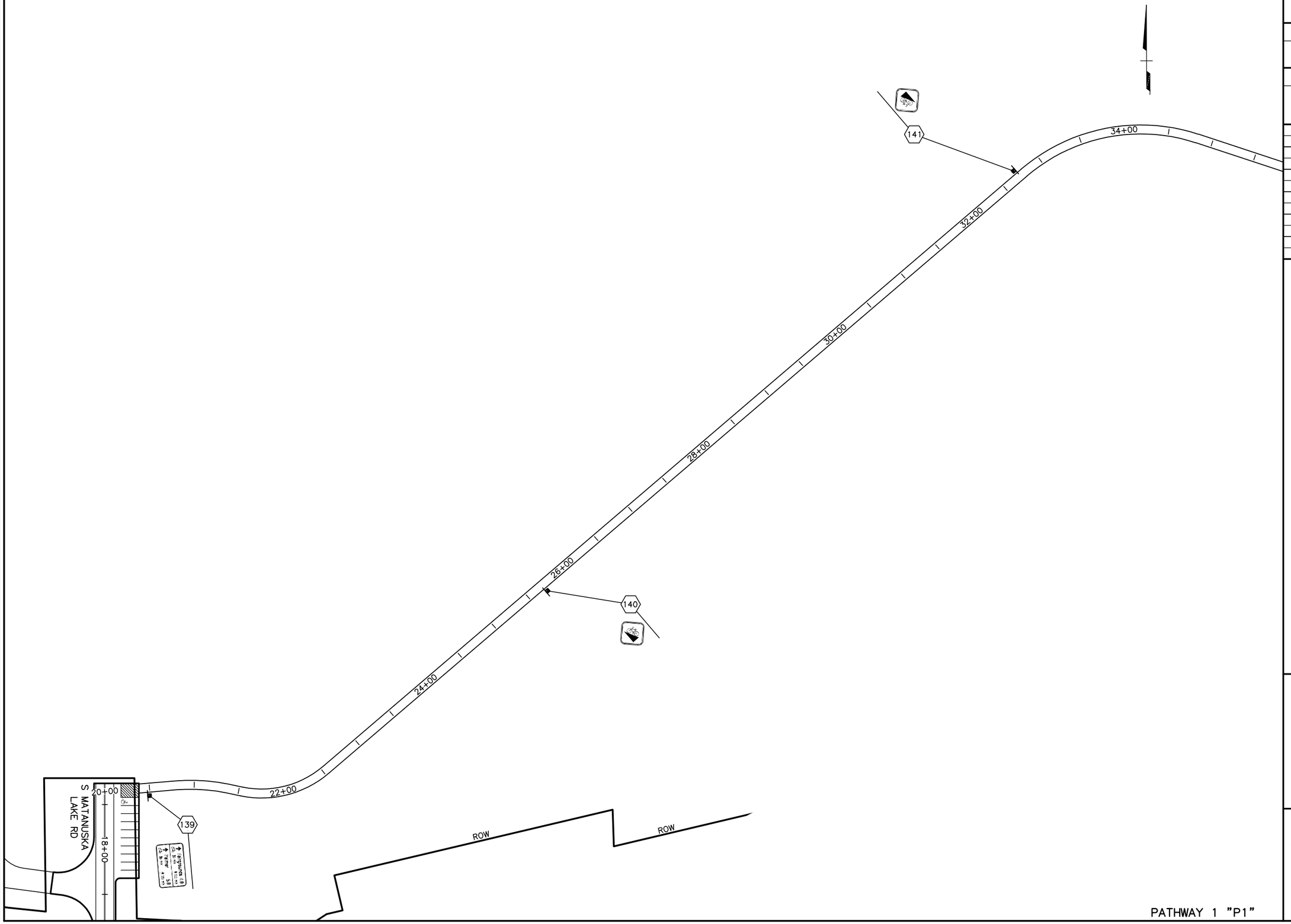

PATHWAY 1 "P1"

SHEET NO.	TOTAL SHEETS
HS19	HS30
STATE	YEAR
ALASKA	2021

PROJECT DESIGNATION

0A15037/CFHWY00431
0A15038/CFHWY00432
0A15033/CFHWY00006

NO.	REVISION
DATE	
NO.	REVISION
DATE	
NO.	REVISION
DATE	

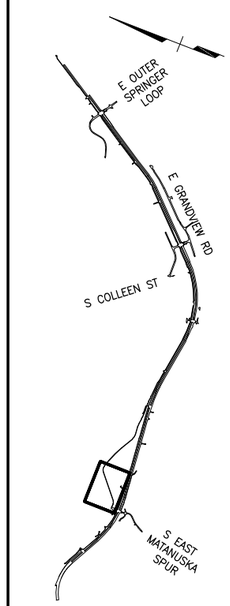

CERTIFICATION SET
NOVEMBER 2021

STATE OF ALASKA
49TH
AVERIAN A. LARSEN
CE-119371
REGISTERED PROFESSIONAL ENGINEER

HDL ENGINEERING CONSULTANTS, LLC
3335 ARCTIC BOULEVARD, STE 100
ANCHORAGE, AK 99503
(907) 564-2120
AECL861

STATE OF ALASKA
DEPARTMENT OF TRANSPORTATION
AND PUBLIC FACILITIES

GLENN HWY: PARKS HWY TO
S. INNER SPRINGER LP.
(PHASE II)

PATHWAY 1
SIGNING & STRIPING

DESIGNED BY AAL
CHECKED BY DRL
DRAFTED BY CDB

SCALE 1" = 100'

DATE 11/19/2021 TIME 11:32 AM

DRAWING LOCATION
H:\JOBS\08-016 GLENN HIGHWAY 34-42 (DOT)\09 - PS&E\CAD_PH2\DRAWINGS\08016_P2_HS05-HS19.DWG

NO.	DATE	REVISION

STATE	PROJECT DESIGNATION	YEAR	SHEET NO.	TOTAL SHEETS
ALASKA	0A15037/CFHWY00431 0A15038/CFHWY00432 0A15033/CFHWY00006	2021	HS20	HS30

DESIGNED BY AAL
CHECKED BY DRL
DRAFTED BY CDB

SCALE NTS

DATE TIME 11/19/2021 11:26 AM

DRAWING LOCATION H:\JOBS\08-016 GLENN HIGHWAY 34-42 (DOT)\09 - PS&E\CAD_PH2\DRAWINGS\08016_P2_HS20-HS29.DWG

SIGN SUMMARY

SHEET NO.	POST NO.	STATION	CL REF.	TYPE	LEGEND	SIZE (INCHES) WIDTH	SIZE (INCHES) HEIGHT	AREA SQ FT	SIGN FACES*	POSTS NO., SIZE, & TYPE	THICKNESS (IN) FRAMED YES	THICKNESS (IN) NO	REMARKS
HS5	1	"G" 1321+20	RT	R8-4	EMERGENCY PARKING ONLY	30	24	5.00	S	2.5" PST		0.125	
	2	"G" 1323+20	RT	W9-1L	LEFT LANE ENDS	48	48	16.00	S	3.0" TS	0.125		
	3	"G" 1323+22	LT	E5-1	EXIT	72	60	30.00	N	(2)3.0" TS	0.125		
	4	"G" 1327+14	LT	W13-2-35	EXIT 35 MPH	36	48	12.00	N	POPL	0.125		ON LIGHT POLE
	5	"G" 1329+00	LT	SPECIAL	North Wasilla Fairbanks	156	150	162.50	N	(5)6x15 W	0.125		LETTERS - EM,D
				D9-2	H	30	30	6.25	N			0.125	FABRICATE AS ONE PANEL
				D9-13AP	HOSPITAL	30	12	2.50	N			0.125	
				M6-1R		30	21	4.38	N			0.125	
	6	"G" 1333+14	-	W6-1		48	48	16.00	S	3.0" TS	0.125		
	7	"G" 1334+00	LT	SPECIAL	North Wasilla Fairbanks EXIT ONLY	138	150	143.75	N	(4)6x15 W	0.125		LETTERS - EM,D
	8	"G" 1335+31	LT	SPECIAL		30	36	7.50	S	2.5" PST		0.125	
	9	"G" 1335+84	LT	W1-2L		36	36	9.00	N	POPL	0.125		ON LIGHT POLE
HS6	10	"G" 1337+72	LT	SPECIAL		30	36	7.50	S	2.5" PST		0.125	
	11	"G" 1338+63	RT	SPECIAL	ONLY	30	36	7.50	N	2.5" PST		0.125	
	12	"G" 1338+84	RT	M3-1	NORTH	36	18	4.50	S	POPL	0.125		ON LIGHT POLE
				M1-5	ALASKA 1	42	42	12.25	S		0.125		
	13	"G" 1340+76	RT	SPECIAL	ONLY	30	36	7.50	N	2.5" PST		0.125	
	14	"G" 1341+84	RT	R2-1-55	SPEED LIMIT 55	36	48	12.00	S	POPL	0.125		ON LIGHT POLE
	15	"G" 1342+75	LT	W16-115	MOOSE CRASH AREA	96	66	44.00	N	(2)6x9 W	0.125		MATSU ROADS
	16	"G" 1345+77	RT	D7-102	Matanuska Lake State Park	150	36	37.50	S	(2)6x12 W	0.125		LETTERS - 8" D
				SPECIAL		120	30	25.00	S		0.125		
	17	"G" 1350+26	RT	D10-202	MM 36	16	36	4.00	S	2.5" PST		0.125	
	18	"G" 1350+26	LT	D10-202	MM 36	16	36	4.00	N	2.5" PST		0.125	
	19	"G" 1351+72	LT	R3-7L	LEFT LANE MUST TURN LEFT	36	36	9.00	S	3.0" TS	0.125		
	20	"G" 1355+51	RT	R6-1L	ONE WAY	36	12	3.00	W	3.0" TS	0.125		

* FOR THE PURPOSE OF SIGNING DIRECTION, THE GLENN HIGHWAY IS ASSUMED TO RUN NORTH-SOUTH.

CERTIFICATION SET
NOVEMBER 2021

STATE OF ALASKA
49TH
AVERIAN A. LARSEN
CE-119371
REGISTERED PROFESSIONAL ENGINEER

HDL ENGINEERING CONSULTANTS, LLC
3335 ARCTIC BOULEVARD, STE 100
ANCHORAGE, AK 99503
(907) 564-2120
AECL861

STATE OF ALASKA
DEPARTMENT OF TRANSPORTATION
AND PUBLIC FACILITIES

GLENN HWY: PARKS HWY TO S. INNER SPRINGER LP. (PHASE II)

SIGN SUMMARY

NO.	DATE	REVISION

STATE	PROJECT DESIGNATION	YEAR	SHEET NO.	TOTAL SHEETS
ALASKA	0A15037/CFHWY00431 0A15038/CFHWY00432 0A15033/CFHWY00006	2021	HS21	HS30

DESIGNED BY AAL
CHECKED BY DRL
DRAFTED BY CDB
SCALE NTS
DATE 11/19/2021 TIME 11:26 AM
DRAWING LOCATION H:\JOBS\08-016 GLENN HIGHWAY 34-42 (DOT)\09 - PS&E\CAD_PH2\DRAWINGS\08016_P2_HS20-HS29.DWG

SIGN SUMMARY

SHEET NO.	POST NO.	STATION	CL REF.	TYPE	LEGEND	SIZE (INCHES) WIDTH	SIZE (INCHES) HEIGHT	AREA SQ FT	SIGN FACES*	POSTS NO., SIZE, & TYPE	THICKNESS (IN) FRAMED YES	THICKNESS (IN) FRAMED NO	REMARKS
HS6	21	"G" 1355+57	LT	D3-1	Glenn Hwy	36	8	4.00	E/W	3.0" TS	0.125		2 SIGNS BACK TO BACK
				D3-100B	E Matanuska Lake Rd	42	18	10.50	N/S		0.125		2 SIGNS BACK TO BACK
				R6-1R	ONE WAY	36	12	3.00	W		0.125		
				R6-1L	ONE WAY	36	12	3.00	E		0.125		
				R1-1	STOP	36	36	9.00	W		0.125		
	22	"G" 1355+65	LT	R3-7L	LEFT LANE MUST TURN LEFT	36	36	9.00	S	3.0" TS	0.125		
	23	"G" 1356+48	RT	R3-7L	LEFT LANE MUST TURN LEFT	36	36	9.00	N	3.0" TS	0.125		
	24	"G" 1356+45	RT	D3-1	Glenn Hwy	36	8	4.00	E/W	3.0" TS	0.125		2 SIGNS BACK TO BACK
				D3-100B	S East Matanuska Spur	48	18	12.00	N/S		0.125		2 SIGNS BACK TO BACK
				R6-1R	ONE WAY	36	12	3.00	E		0.125		
				R6-1L	ONE WAY	36	12	3.00	W		0.125		
				R1-1	STOP	36	36	9.00	E		0.125		
	25	"G" 1356+60	LT	R6-1L	ONE WAY	36	12	3.00	E	POPL	0.125		ON LIGHT POLE
	26	"G" 1360+42	RT	D2-3	Palmer 5 Glennallen 145 Tok 281	96	48	32.00	S	(2)3.0" TS	0.125		LETTERS - 8" D
	27	"G" 1360+42	RT	R3-7L	LEFT LANE MUST TURN LEFT	36	36	9.00	N	3.0" TS	0.125		
HS7	28	"G" 1362+22	LT	D7-102	Matanuska Lake State Park	150	36	37.50	N	(2)6x12 W	0.125		LETTERS - 8" D
				SPECIAL		120	30	25.00	N		0.125		
	29	"G" 1381+88	LT	SPECIAL	NORTH Parks Hwy JCT 1 Mile	222	108	166.50	N	(5)6x15 W	0.125		LETTERS - EM,F
				D9-2	H	30	30	6.25	N			0.125	FABRICATE AS ONE PANEL
				D9-13AP	HOSPITAL	30	12	2.50	N			0.125	
HS8	30	"G" 1387+71	LT	SPECIAL		30	36	7.50	S	2.5" PST		0.125	
	31	"G" 1388+44	RT	D10-202	MILE 3 7	16	36	4.00	S	2.5" PST		0.125	
	32	"G" 1388+44	LT	D10-202	MILE 3 7	16	36	4.00	N	2.5" PST		0.125	
	33	"G" 1391+62	LT	SPECIAL		30	36	7.50	S	2.5" PST		0.125	
	34	"G" 1392+61	RT	SPECIAL	ONLY	30	36	7.50	N	2.5" PST		0.125	
	35	"G" 1396+54	RT	SPECIAL	ONLY	30	36	7.50	N	2.5" PST		0.125	

CERTIFICATION SET
NOVEMBER 2021

STATE OF ALASKA
49TH
AVERIAN A. LARSEN
CE-119371
REGISTERED PROFESSIONAL ENGINEER

HDL ENGINEERING CONSULTANTS, LLC
3335 ARCTIC BOULEVARD, STE 100
ANCHORAGE, AK 99503
(907) 564-2120
AECL861

STATE OF ALASKA
DEPARTMENT OF TRANSPORTATION
AND PUBLIC FACILITIES

GLENN HWY: PARKS HWY TO S. INNER SPRINGER LP. (PHASE II)

SIGN SUMMARY

NO.	DATE	REVISION

STATE	PROJECT DESIGNATION	YEAR	SHEET NO.	TOTAL SHEETS
ALASKA	0A15037/CFHWY00431 0A15038/CFHWY00432 0A15033/CFHWY00006	2021	HS22	HS30

SIGN SUMMARY

SHEET NO.	POST NO.	STATION	CL REF.	TYPE	LEGEND	SIZE (INCHES) WIDTH	SIZE (INCHES) HEIGHT	AREA SQ FT	SIGN FACES*	POSTS NO., SIZE, & TYPE	THICKNESS (IN) FRAMED YES	THICKNESS (IN) FRAMED NO	REMARKS
HS8	36	"G" 1404+45	LT	D3-1	Glenn Hwy	36	8	4.00	E/W	POPL	0.125		2 SIGNS BACK TO BACK ON LIGHT POLE
				D3-1	E Kepler Dr	48	12	8.00	N/S		0.125		2 SIGNS BACK TO BACK
				R6-1R	ONE WAY	36	12	3.00	W		0.125		
				R1-1	STOP	36	36	9.00	W		0.125		
	37	"G"1404+45	RT	D9-105	P	24	36	6	-	POPL		0.125	ON LIGHT POLE
	38	"G"1404+67	-	OM2-2V		6	12	10.50	W	3.0" TS		0.125	21 @ 5' SPACING FROM "G"1404+14 TO "G"1405+20
				R6-1R	ONE WAY	36	12	3.00	W		0.125		
	39	"G"1405+63	LT	SPECIAL		24	26	4.33	E	2.5" PST		0.125	
HS9	40	"G" 1419+33	LT	R3-7L	LEFT LANE MUST TURN LEFT	36	36	9.00	S	3.0" TS	0.125		
	41	"G" 1423+24	LT	R3-7L	LEFT LANE MUST TURN LEFT	36	36	9.00	S	3.0" TS	0.125		
	42	"G" 1423+28	RT	R6-1L	ONE WAY	36	12	3.00	E	3.0" TS		0.125	
	43	"G" 1423+40	LT	D3-1	Glenn Hwy	36	8	4.00	E/W	3.0" TS	0.125		2 SIGNS BACK TO BACK
				D3-1	E Max Dr	42	12	7.00	N/S		0.125		2 SIGNS BACK TO BACK
				R6-1R	ONE WAY	36	12	3.00	W		0.125		
				R6-1L	ONE WAY	36	12	3.00	E		0.125		
				R1-1	STOP	36	36	9.00	W		0.125		
	44	"G" 1423+94	LT	R6-1L	ONE WAY	36	12	3.00	W	3.0" TS	0.125		
	45	"G" 1423+97	RT	D3-1	Glenn Hwy	36	8	4.00	E/W	3.0" TS	0.125		2 SIGNS BACK TO BACK
				D3-1	E Sherrod Dr	42	12	7.00	N/S		0.125		2 SIGNS BACK TO BACK
				R6-1R	ONE WAY	36	12	3.00	E		0.125		
				R6-1L	ONE WAY	36	12	3.00	W		0.125		
				R1-1	STOP	36	36	9.00	E		0.125		
	46	"G" 1424+11	RT	R3-7L	LEFT LANE MUST TURN LEFT	36	36	9.00	N	3.0" TS	0.125		
	47	"G" 1428+35	RT	R3-7L	LEFT LANE MUST TURN LEFT	36	36	9.00	N	3.0" TS	0.125		
	48	"G" 1435+00	RT	W3-3		48	48	16.00	S	POPL	0.125		ADVANCE WARNING BEACON

CERTIFICATION SET
NOVEMBER 2021

STATE OF ALASKA
AVERIAN A. LARSEN
CE-119371
REGISTERED PROFESSIONAL ENGINEER

HDL ENGINEERING CONSULTANTS, LLC
3335 ARCTIC BOULEVARD, STE 100
ANCHORAGE, AK 99503
(907) 564-2120
AECL861

STATE OF ALASKA
DEPARTMENT OF TRANSPORTATION
AND PUBLIC FACILITIES

GLENN HWY: PARKS HWY TO S. INNER SPRINGER LP. (PHASE II)

SIGN SUMMARY

DESIGNED BY AAL
CHECKED BY DRL
DRAFTED BY CDB

SCALE NTS

DATE TIME 11/18/2021 9:48 AM

DRAWING LOCATION
H:\JOBS\08-016 GLENN HIGHWAY 34-42 (DOT)\09 - PS&E\CAD_PH2\DRAWINGS\08016_P2_HS20-HS29.DWG

NO.	DATE	REVISION

STATE	PROJECT DESIGNATION	YEAR	SHEET NO.	TOTAL SHEETS
ALASKA	0A15037/CFHWY00431 0A15038/CFHWY00432 0A15033/CFHWY00006	2021	HS23	HS30

SIGN SUMMARY

SHEET NO.	POST NO.	STATION	CL REF.	TYPE	LEGEND	SIZE (INCHES) WIDTH	SIZE (INCHES) HEIGHT	AREA SQ FT	SIGN FACES*	POSTS NO., SIZE, & TYPE	THICKNESS (IN) FRAMED YES	THICKNESS (IN) FRAMED NO	REMARKS
HS10	49	"G" 1437+35	RT	D7-102	← Meganosha Lakes State Recreation Area	180	36	45.00	S	(2)6x9 W	0.125		LETTERS - 8" D
				SPECIAL		90	30	18.75	S		0.125		
	50	"G" 1439+26	LT	D10-202		16	36	4.00	N	2.5" PST		0.125	
	51	"G" 1439+26	RT	D3-200	Jimmys Dr	96	24	16.00	S	(2)3.0" TS	0.125		LETTERS - 10.7" EM
				D10-202		16	36	4.00	S			0.125	
	52	"G" 1440+38	LT	OM4-1		18	18	2.25	W	2.5" PST		0.125	
	53	"G" 1440+50	LT	OM4-1		18	18	2.25	W	2.5" PST		0.125	
	54	"G" 1441+74	RT	W10-2R		48	48	16.00	S	POPL	0.125		ON LIGHT POLE
				W10-11A	45 FT. BETWEEN TRACKS & HIGHWAY	36	42	10.50	S		0.125		
	55	"G" 1444+74	LT	R2-1-55	SPEED LIMIT 55	36	48	12.00	N	POPL	0.125		ON LIGHT POLE
HS11	56	"G" 1445+34	RT	R3-7R	RIGHT LANE MUST TURN RIGHT	36	36	9.00	S	3.0" TS	0.125		
	57	"G" 1445+34	LT	R3-7L	LEFT LANE MUST TURN LEFT	36	36	9.00	S	3.0" TS	0.125		
	58	"G" 1447+74	LT	D14-100	ADOPT A HIGHWAY	30	24	5.00	N	POPL		0.125	ON LIGHT POLE
				D14-100	PALMER KIWANIS	30	12	2.50	N			0.125	PALMER KIWANIS
	59	"G" 1448+85	LT	R5-103P	DAYLIGHT	18	6	0.75	N	2.5" PST		0.125	
				R5-103	NO MOTOR VEHICLES	18	24	3.00	N			0.125	
	60	"G" 1449+12	RT	R3-7R	RIGHT LANE MUST TURN RIGHT	36	36	9.00	S	3.0" TS	0.125		
	61	"G" 1449+40.7	LT	D3-1	Jimmys Dr	72	18	9.00	N	MAST ARM	0.125		LETTERS - 8" D
				R3-5R	ONLY	30	36	7.50	N			0.125	
				R6-1L	ONE WAY	36	12	3.00	E	POPL	0.125		MOUNT ON POLE
				R6-1R	ONE WAY	36	12	3.00	W	POPL	0.125		MOUNT ON POLE
				R10-3ER		9	15	0.94	E	POPL		0.125	MOUNT ON POLE
				R10-3EL		9	15	0.94	N	POPL		0.125	MOUNT ON POLE

CERTIFICATION SET
NOVEMBER 2021

STATE OF ALASKA
DEPARTMENT OF TRANSPORTATION
AND PUBLIC FACILITIES

GLENN HWY: PARKS HWY TO S. INNER SPRINGER LP. (PHASE II)

SIGN SUMMARY

STATE OF ALASKA
49TH
AVERIAN A. LARSEN
CE-119371
REGISTERED PROFESSIONAL ENGINEER

HDL ENGINEERING CONSULTANTS, LLC
3335 ARCTIC BOULEVARD, STE 100
ANCHORAGE, AK 99503
(907) 564-2120
AECL861

DESIGNED BY AAL
CHECKED BY DRL
DRAFTED BY CDB

SCALE NTS

DATE TIME 11/12/2021 10:13 AM

DRAWING LOCATION
H:\JOBS\08-016 GLENN HIGHWAY 34-42 (DOT)\09 - PS&E\CAD_PH2\DRAWINGS\08016_P2_HS20-HS29.DWG

NO.	DATE	REVISION

STATE	PROJECT DESIGNATION	YEAR	SHEET NO.	TOTAL SHEETS
ALASKA	0A15037/CFHWY00431 0A15038/CFHWY00432 0A15033/CFHWY00006	2021	HS24	HS30

SIGN SUMMARY

SHEET NO.	POST NO.	STATION	CL REF.	TYPE	LEGEND	SIZE (INCHES) WIDTH	SIZE (INCHES) HEIGHT	AREA SQ FT	SIGN FACES*	POSTS NO., SIZE, & TYPE	THICKNESS (IN) FRAMED YES	THICKNESS (IN) FRAMED NO	REMARKS
HS11	62	"G" 1449+42.4	RT	D3-1A	Glenn Hwy	84	18	10.50	W	MAST ARM	0.125		LETTERS - 8" D
				R6-1L	ONE WAY	36	12	3.00	W	POPL	0.125		MOUNT ON POLE
				R10-3ER		9	15	0.94	N	POPL		0.125	MOUNT ON POLE
				R10-3EL		9	15	0.94	W	POPL		0.125	MOUNT ON POLE
	63	"JD" 7+97	RT	R3-8L/SR		36	30	7.50	W	3.0" TS	0.125		
	64	"BL" 18+50	LT	R2-1-25	SPEED LIMIT 25	30	36	7.50	N	2.5" PST		0.125	
	65	"BL" 19+55	RT	D3-1	E Jimmys Dr	42	8	4.67	N/S	3.0" TS	0.125		2 SIGNS BACK TO BACK
				D3-100B	E Bradley Lake Ave	42	18	10.50	E/W		0.125		2 SIGNS BACK TO BACK
				R1-1	STOP	30	30	6.25	S			0.125	
				W4-W4AP	TRAFFIC FROM MERGE DOES NOT STOP	24	12	2.00	S			0.125	LETTERS - BLACK BACKGROUND - YELLOW
	66	"BL" 20+10	LT	W1-7		48	24	8.00	E	3.0" TS	0.125		
	67	"JD" 10+90	RT	SPECIAL	NO TRESPASSING	30	30	6.25	N	2.5" PST		0.125	
				I-13		-	-	-	N			-	ID #868320A REMOVE AND RELOCATE BY ARRC
	68	"JD" 11+36	RT	SPECIAL	NO TRESPASSING	30	30	6.25	N	2.5" PST		0.125	
	69	"GV" 8+50	LT	R2-1	SPEED LIMIT 25	30	36	7.50	N	2.5" PST		0.125	
	70	"GV" 9+60	RT	D3-1	E Jimmys Dr	42	8	4.67	N/S	3.0" TS	0.125		2 SIGNS BACK TO BACK
				D3-1	E Grandview Rd	48	12	8.00	E/W		0.125		2 SIGNS BACK TO BACK
				R1-1	STOP	30	30	6.25	S			0.125	
				W4-W4AP	TRAFFIC FROM LEFT DOES NOT STOP	24	12	2.00	S			0.125	LETTERS - BLACK BACKGROUND - YELLOW
	71	"GV" 9+92	RT	W1-7		48	24	8.00	W	3.0" TS	0.125		
	72	"GV" 10+40	LT	D3-1	E Jimmys Dr	42	8	4.67	N/S	3.0" TS	0.125		2 SIGNS BACK TO BACK
				D3-1	E Grandview Rd	48	12	8.00	E/W		0.125		2 SIGNS BACK TO BACK
				R1-1	STOP	30	30	6.25	N			0.125	
				W4-W4AP	TRAFFIC FROM MERGE DOES NOT STOP	24	12	2.00	N			0.125	LETTERS - BLACK BACKGROUND - YELLOW
	73	"GV" 10+75	RT	W14-1	DEAD END	30	30	6.25	S	2.5" PST		0.125	
	74	"GV" 11+75	RT	R2-1	SPEED LIMIT XX	30	36	7.50	S	2.5" PST		0.125	
	75	"JD" 10+90	LT	SPECIAL	NO TRESPASSING	30	30	6.25	S	2.5" PST		0.125	

DESIGNED BY AAL
CHECKED BY DRL
DRAFTED BY CDB

SCALE NTS

DATE TIME 11/12/2021 3:39 PM

DRAWING LOCATION
H:\JOBS\08-016 GLENN HIGHWAY 34-42 (DOT)\09 - PS&E\CAD_PH2\DRAWINGS\08016_P2_HS20-HS29.DWG

CERTIFICATION SET
NOVEMBER 2021

STATE OF ALASKA
49TH
AVERIAN A. LARSEN
CE-119371
REGISTERED PROFESSIONAL ENGINEER

HDL ENGINEERING CONSULTANTS, LLC
3335 ARCTIC BOULEVARD, STE 100
ANCHORAGE, AK 99503
(907) 564-2120
AECL861

STATE OF ALASKA
DEPARTMENT OF TRANSPORTATION
AND PUBLIC FACILITIES

GLENN HWY: PARKS HWY TO S. INNER SPRINGER LP. (PHASE II)

SIGN SUMMARY

NO.	DATE	REVISION

STATE	PROJECT DESIGNATION	YEAR	SHEET NO.	TOTAL SHEETS
ALASKA	0A15037/CFHWY00431 0A15038/CFHWY00432 0A15033/CFHWY00006	2021	HS25	HS30

DESIGNED BY AAL
CHECKED BY DRL
DRAFTED BY CDB

SCALE NTS

DATE 11/12/2021 TIME 10:14 AM

DRAWING LOCATION
H:\JOBS\08-016 GLENN HIGHWAY 34-42 (DOT)\09 - PS&E\CAD_PH2\DRAWINGS\08016_P2_HS20-HS29.DWG

SIGN SUMMARY

SHEET NO.	POST NO.	STATION	CL REF.	TYPE	LEGEND	SIZE (INCHES) WIDTH	SIZE (INCHES) HEIGHT	AREA SQ FT	SIGN FACES*	POSTS NO., SIZE, & TYPE	THICKNESS (IN) FRAMED YES	THICKNESS (IN) FRAMED NO	REMARKS
HS11	76	"JD" 11+36	LT	SPECIAL		30	30	6.25	S	2.5" PST		0.125	
				I-13		-	-	-	S			-	ID #868320A REMOVE AND RELOCATE BY ARRC
	77	"JD" 11+50	LT	R8-8		36	48	12.00	E	3.0" TS	0.125		2" REFLECTIVE WHITE POST SHEATHING
	78	"JD" 12+08	LT	R3-8L/SR		36	30	7.50	E	3.0" TS	0.125		
	79	"JD" 12+47	LT	W10-1		36	36	9.00	E	POPL	0.125		ON LIGHT POLE
	80	"G" 1450+33.2	LT	D3-1A	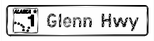	84	18	10.50	E	MAST ARM	0.125		LETTERS - 8" D
				R6-1L		36	12	3.00	E	POPL	0.125		MOUNT ON POLE
				R10-3ER		9	15	0.94	S	POPL		0.125	MOUNT ON POLE
				R10-3EL		9	15	0.94	E	POPL		0.125	MOUNT ON POLE
	81	"G" 1450+44.2	RT	D3-1	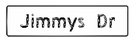	72	18	9.00	S	MAST ARM	0.125		LETTERS - 8" D
				R3-5R		30	36	7.50	S			0.125	
				R6-1L		36	12	3.00	W	POPL	0.125		MOUNT ON POLE
				R6-1R		36	12	3.00	E	POPL	0.125		MOUNT ON POLE
				R10-3ER		9	15	0.94	W	POPL		0.125	MOUNT ON POLE
				R10-3EL		9	15	0.94	S	POPL		0.125	MOUNT ON POLE
	82	"G" 1450+54	LT	R3-7R		36	36	9.00	N	3.0" TS	0.125		
	83	"G" 1450+81	LT	R5-103P		18	6	0.75	S	2.5" PST		0.125	
				R5-103		18	24	3.00	S			0.125	
	84	"G" 1451+64	RT	D14-100		30	24	5.00	S	POPL		0.125	ON LIGHT POLE
				D14-100		30	12	2.50	S				BOY SCOUT TROOP 54
	85	"G" 1454+64	LT	R3-7R		36	36	9.00	N	POPL	0.125		ON LIGHT POLE
	86	"G" 1454+40	RT	R3-7L		36	36	9.00	N	3.0" TS	0.125		
	87	"G" 1454+64	RT	R2-1-55		36	48	12.00	S	POPL	0.125		ON LIGHT POLE
HS12	88	"G" 1458+21	LT	W10-2L		48	48	16.00	N	3.5" TS	0.125		
				W10-11A		36	42	10.50	N		0.125		
	89	"G" 1460+42	LT	D3-200	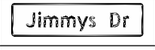	96	24	16.00	N	(2)3.0" TS	0.125		LETTERS - 10.7" D
	90	"G" 1464+50	LT	D7-102	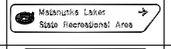	180	36	45.00	N	(2)6x9 W	0.125		LETTERS - 8" D
				SPECIAL		90	30	18.75	N		0.125		

CERTIFICATION SET
NOVEMBER 2021



HDL ENGINEERING CONSULTANTS, LLC
3335 ARCTIC BOULEVARD, STE 100
ANCHORAGE, AK 99503
(907) 564-2120
AECL861

STATE OF ALASKA
DEPARTMENT OF TRANSPORTATION
AND PUBLIC FACILITIES

GLENN HWY: PARKS HWY TO S. INNER SPRINGER LP. (PHASE II)

SIGN SUMMARY

NO.	DATE	REVISION

STATE	PROJECT DESIGNATION	YEAR	SHEET NO.	TOTAL SHEETS
ALASKA	0A15037/CFHWY00431 0A15038/CFHWY00432 0A15033/CFHWY00006	2021	HS26	HS30

DESIGNED BY AAL
CHECKED BY DRL
DRAFTED BY CDB

SCALE NTS

DATE 11/12/2021 TIME 10:14 AM

DRAWING LOCATION
H:\JOBS\08-016 GLENN HIGHWAY 34-42 (DOT)\09 - PS&E\CAD_PH2\DRAWINGS\08016_P2_HS20-HS29.DWG

SIGN SUMMARY

SHEET NO.	POST NO.	STATION	CL REF.	TYPE	LEGEND	SIZE (INCHES) WIDTH	SIZE (INCHES) HEIGHT	AREA SQ FT	SIGN FACES*	POSTS NO., SIZE, & TYPE	THICKNESS (IN) FRAMED YES	THICKNESS (IN) FRAMED NO	REMARKS
HS12	91	"GV" 20+13	RT	W10-1		36	36	9.00	S	3.0" TS	0.125		
	92	"GV" 21+13	RT	W10-100		24	18	3.00	S	2.5" PST		0.125	
	93	"GV" 21+63	RT	R15-1		9	48	6.00	S	3.0" TS		0.125	2" REFLECTIVE WHITE ON BACK OF SIGN
				R1-2		36	36	4.50	S		0.125		
	94	"GV" 22+01	LT	R15-1		9	48	6.00	N	3.0" TS		0.125	2" REFLECTIVE WHITE ON BACK OF SIGN
				R1-2		36	36	4.50	N		0.125		
	95	"GV" 22+51	LT	W10-100		24	18	3.00	N	2.5" PST		0.125	
	96	"GV" 23+51	LT	W10-1		36	36	9.00	N	3.0" TS	0.125		
HS13	97	"GV" 33+22	RT	W14-101		36	36	9.00	S	3.0" TS	0.125		
	98	"GV" 38+28	LT	OM4-1		18	18	2.25	S	3.0" TS		0.125	
				W14-100		30	30	6.25	S			0.125	
				OM4-1		18	18	2.25	S			0.125	
	99	"GV" 38+28	RT	OM4-1		18	18	2.25	S	3.0" TS		0.125	
				W14-100		30	30	6.25	S			0.125	
				OM4-1		18	18	2.25	S			0.125	
HS14	100	"G" 1490+44	RT	D3-201	← Rubymae Dr / Outer Springer Lp →	174	54	65.25	S	(2)4.5" TS	0.125		LETTERS - 10.7" D
	101	"G" 1492+88	LT	D10-202		16	36	4.00	N	2.5" PST		0.125	
	102	"G" 1492+88	RT	D10-202		16	36	4.00	S	2.5" PST		0.125	
	103	"G" 1493+64	RT	W10-2R		48	48	16.00	S	POPL	0.125		ON LIGHT POLE
				W10-11A		36	42	10.50	S		0.125		
HS15	104	"G" 1496+64	LT	R2-1-55		36	48	12.00	N	POPL	0.125		ON LIGHT POLE
	105	"G" 1496+38	LT	R3-7L		36	36	9.00	S	3.0" TS	0.125		
	106	"G" 1496+64	RT	R3-7R		36	36	9.00	S	POPL	0.125		ON LIGHT POLE
	107	"G" 1499+79	LT	R5-103P		18	6	0.75	N	2.5" PST		0.125	
				R5-103		18	24	3.00	N			0.125	
	108	"G" 1500+15	RT	R3-7R		36	36	9.00	S	3.0" TS	0.125		

CERTIFICATION SET
NOVEMBER 2021

STATE OF ALASKA
★ 49TH ★
AVERIAN A. LARSEN
CE-119371
REGISTERED PROFESSIONAL ENGINEER

HDL ENGINEERING CONSULTANTS, LLC
3335 ARCTIC BOULEVARD, STE 100
ANCHORAGE, AK 99503
(907) 564-2120
AECL861

STATE OF ALASKA
DEPARTMENT OF TRANSPORTATION
AND PUBLIC FACILITIES

GLENN HWY: PARKS HWY TO S. INNER SPRINGER LP. (PHASE II)

SIGN SUMMARY

NO.	DATE	REVISION

STATE	PROJECT DESIGNATION	YEAR	SHEET NO.	TOTAL SHEETS
ALASKA	0A15037/CFHWY00431 0A15038/CFHWY00432 0A15033/CFHWY00006	2021	HS27	HS30

SIGN SUMMARY

SHEET NO.	POST NO.	STATION	CL REF.	TYPE	LEGEND	SIZE (INCHES) WIDTH	SIZE (INCHES) HEIGHT	AREA SQ FT	SIGN FACES*	POSTS NO., SIZE, & TYPE	THICKNESS (IN) FRAMED YES	THICKNESS (IN) FRAMED NO	REMARKS
HS15	109	"G" 1500+35.9	RT	D3-1A	ALASKA 1 Glenn Hwy	84	18	10.50	W	MAST ARM	0.125		LETTERS - 8" D
				R6-1L	ONE WAY	36	12	3.00	W	POPL	0.125		MOUNT ON POLE
				R10-3ER		9	15	0.94	N	POPL		0.125	MOUNT ON POLE
				R10-3EL		9	15	0.94	W	POPL		0.125	MOUNT ON POLE
	110	"G" 1500+43.5	LT	D3-102	Outer Springer Lp / Rubymae Dr	138	30	28.75	N	MAST ARM	0.125		LETTERS - 8" E
				R3-5R	ONLY	30	36	7.50	N			0.125	
				R6-1L	ONE WAY	36	12	3.00	E	POPL	0.125		MOUNT ON POLE
				R6-1R	ONE WAY	36	12	3.00	W	POPL	0.125		MOUNT ON POLE
				R10-3ER		9	15	0.94	E	POPL		0.125	MOUNT ON POLE
				R10-3EL		9	15	0.94	N	POPL		0.125	MOUNT ON POLE
	111	"0S" 7+60	RT	R3-8L/SR	ONLY	36	30	7.50	W	POPL	0.125		ON LIGHT POLE
	112	"0S" 10+94	RT	SPECIAL	NO TRESPASSING	30	30	6.25	N	2.5" PST		0.125	
				I-13		-	-	-	N			-	ID #868512S REMOVE AND RELOCATE BY ARRC
	113	"0S" 10+94	LT	SPECIAL	NO TRESPASSING	30	30	6.25	S	2.5" PST		0.125	
	114	"0S" 11+52	RT	SPECIAL	NO TRESPASSING	30	30	6.25	N	2.5" PST		0.125	
	115	"0S" 11+52	LT	SPECIAL	NO TRESPASSING	30	30	6.25	S	2.5" PST		0.125	
				I-13		-	-	-	S			-	ID #868512S REMOVE AND RELOCATE BY ARRC
	116	"0S" 11+66	LT	R8-8	DO NOT STOP ON TRACKS	36	48	12.00	E	3.0" TS	0.125		2" REFLECTIVE WHITE POST SHEATHING
	117	"0S" 12+38.5	RT	R2-1-35	SPEED LIMIT 35	30	36	7.50	W	POPL		0.125	ON LIGHT POLE
	118	"0S" 12+43	LT	R3-8L/SR	ONLY	36	30	7.50	E	3.0" TS	0.125		
	119	"G" 1501+39.7	RT	D3-102	Rubymae Dr / Outer Springer Lp	138	30	28.75	S	MAST ARM	0.125		LETTERS - 8" E
				R3-5R	ONLY	30	36	7.50	S			0.125	
				R6-1L	ONE WAY	36	12	3.00	W	POPL	0.125		MOUNT ON POLE
				R6-1R	ONE WAY	36	12	3.00	E	POPL	0.125		MOUNT ON POLE
				R10-3ER		9	15	0.94	W	POPL		0.125	MOUNT ON POLE
				R10-3EL		9	15	0.94	S	POPL		0.125	MOUNT ON POLE

CERTIFICATION SET
NOVEMBER 2021

STATE OF ALASKA
49TH
AVERIAN A. LARSEN
CE-119371
REGISTERED PROFESSIONAL ENGINEER

HDL ENGINEERING CONSULTANTS, LLC
3335 ARCTIC BOULEVARD, STE 100
ANCHORAGE, AK 99503
(907) 564-2120
AECL861

STATE OF ALASKA
DEPARTMENT OF TRANSPORTATION
AND PUBLIC FACILITIES

GLENN HWY: PARKS HWY TO S. INNER SPRINGER LP. (PHASE II)

SIGN SUMMARY

DESIGNED BY AAL
CHECKED BY DRL
DRAFTED BY CDB

SCALE NTS

DATE 11/12/2021 TIME 10:14 AM

DRAWING LOCATION
H:\JOBS\08-016 GLENN HIGHWAY 34-42 (DOT)\09 - PS&E\CAD_PH2\DRAWINGS\08016_P2_HS20-HS29.DWG

NO.	DATE	REVISION

STATE	PROJECT DESIGNATION	YEAR	SHEET NO.	TOTAL SHEETS
ALASKA	0A15037/CFHWY00431 0A15038/CFHWY00432 0A15033/CFHWY00006	2021	HS28	HS30

SIGN SUMMARY

SHEET NO.	POST NO.	STATION	CL REF.	TYPE	LEGEND	SIZE (INCHES) WIDTH	SIZE (INCHES) HEIGHT	AREA SQ FT	SIGN FACES*	POSTS NO., SIZE, & TYPE	THICKNESS (IN) FRAMED YES	THICKNESS (IN) FRAMED NO	REMARKS
HS15	120	"G" 1501+39.1	LT	D3-1A	ALASKA 1 Glenn Hwy	84	18	10.50	E	MAST ARM	0.125		LETTERS - 8" D
				R6-1L	ONE WAY	36	12	3.00	E	POPL	0.125		MOUNT ON POLE
				R10-3ER		9	15	0.94	S	POPL		0.125	MOUNT ON POLE
				R10-3EL		9	15	0.94	E	POPL		0.125	MOUNT ON POLE
	121	"G" 1501+65	LT	R3-7R	RIGHT LANE MUST TURN RIGHT	36	36	9.00	N	3.0" TS	0.125		
				SPECIAL		24	26	4.33	E			0.125	
	122	"G" 1502+02	LT	R5-103P	DAMAGE	18	6	0.75	S	2.5" PST		0.125	
				R5-103	NO MOTOR VEHICLES	18	24	3.00	S			0.125	
	123	"G" 1505+45	LT	R3-7R	RIGHT LANE MUST TURN RIGHT	36	36	9.00	N	3.0" TS	0.125		
	124	"G" 1505+46	RT	R3-7L	LEFT LANE MUST TURN LEFT	36	36	9.00	N	3.0" TS	0.125		
	125	"G" 1506+19	RT	R2-1-55	SPEED LIMIT 55	36	48	12.00	S	POPL	0.125		ON LIGHT POLE
HS16	126	"G" 1507+54	LT	D3-1	Glenn Hwy	-	-	-	E/W	-	-		REMOVE AND RELOCATE FROM STA "G" 1507+49
				D3-1	E Crimsonview Dr	-	-	-	N/S		-		
				R6-1R	ONE WAY	-	-	-	W		-		
				R1-1	STOP	-	-	-	W		-		
	127	"G" 1507+78	-	R6-1R	ONE WAY	36	12	3.00	W	3.0" TS	0.125		
	128	"G" 1509+29	LT	W10-2L		-	-	-	N	-	-		REMOVE AND RELOCATE FROM STA "G" 1506+80
				W10-11A	45 FT BETWEEN TRACKS & HIGHWAY	-	-	-	N		-		
	129	"G" 1511+26	LT	D3-201	Outer Springer Lp / Rubymae Dr	174	54	65.25	N	(2)4.5" TS	0.125		LETTERS - 10.7" D
HS17	130	"G" 1541+23	RT	R15-1	RAILROAD CROSSING	-	-	-	W	-	-		EXISTING
				R15-2P	2 TRACKS	27	18	3.38	W			0.125	ADD TO EXISTING POST
				R1-2	YIELD	-	-	-	W		-		EXISTING
				SPECIAL	NO TRESPASSING	-	-	-	N		-		EXISTING
				I-13		-	-	-	N			-	ID #868514F REMOVE AND RELOCATE BY ARRC
	131	"G" 1541+29	RT	SPECIAL	NO TRESPASSING	30	30	6.25	N	2.5" PST		0.125	

CERTIFICATION SET
NOVEMBER 2021

STATE OF ALASKA
49TH
AVERIAN A. LARSEN
CE-119371
REGISTERED PROFESSIONAL ENGINEER

HDL ENGINEERING CONSULTANTS, LLC
3335 ARCTIC BOULEVARD, STE 100
ANCHORAGE, AK 99503
(907) 564-2120
AECL861

STATE OF ALASKA
DEPARTMENT OF TRANSPORTATION
AND PUBLIC FACILITIES

GLENN HWY: PARKS HWY TO S. INNER SPRINGER LP. (PHASE II)

SIGN SUMMARY

DESIGNED BY AAL
CHECKED BY DRL
DRAFTED BY CDB
SCALE NTS
DATE 11/12/2021 TIME 10:15 AM
DRAWING LOCATION H:\JOBS\08-016 GLENN HIGHWAY 34-42 (DOT)\09 - PS&E\CAD_PH2\DRAWINGS\08016_P2_HS20-HS29.DWG

NO.	DATE	REVISION

STATE	PROJECT DESIGNATION	YEAR	SHEET NO.	TOTAL SHEETS
ALASKA	0A15037/CFHWY00431 0A15038/CFHWY00432 0A15033/CFHWY00006	2021	HS29	HS30

SIGN SUMMARY

SHEET NO.	POST NO.	STATION	CL REF.	TYPE	LEGEND	SIZE (INCHES) WIDTH	SIZE (INCHES) HEIGHT	AREA SQ FT	SIGN FACES*	POSTS NO., SIZE, & TYPE	THICKNESS (IN) FRAMED YES	THICKNESS (IN) FRAMED NO	REMARKS
HS17	132	"G" 1541+64	RT	R15-1		9	48	6.00	E	3.0" TS		0.125	
				R15-2P	2 TRACKS	27	18	3.38	E			0.125	
				R1-1	STOP	36	36	9.00	E		0.125		
				SPECIAL	NO TRESPASSING	30	30	6.25	S			0.125	
				I-13		-	-	-	S		-		ID #868514F REMOVE AND RELOCATE BY ARRC
	133	"BL" 9+73	RT	R1-1	STOP	30	30	6.25	W	3.0" TS		0.125	
				R1-4	ALL WAY	18	6	0.75	W			0.125	
	134	"BL" 9+97	LT	R1-1	STOP	30	30	6.25	N	3.0" TS		0.125	
				R1-4	ALL WAY	18	6	0.75	N			0.125	
	135	"BL" 10+37	RT	W14-2	NO OUTLET	30	30	6.25	N	2.5" PST		0.125	
	136	"BL" 10+53	RT	R1-1	STOP	30	30	6.25	S	3.0" TS		0.125	
				R1-4	ALL WAY	18	6	0.75	S			0.125	
	137	"BL" 10+55	LT	D3-1	S Colleen St	42	8	4.67	E/W	3.0" TS	0.125		2 SIGNS BACK TO BACK
				D3-1	E Bradley Lake Ave	42	8	4.67	N/S		0.125		2 SIGNS BACK TO BACK
				R1-1	STOP	30	30	6.25	E			0.125	
				R1-4	ALL WAY	18	6	0.75	E			0.125	
HS18	138	"0S" 14+65	LT	W10-1	RR	36	36	9.00	E	3.0" TS	0.125		
HS19	139	"P1" 20+49	RT	SPECIAL		24	15	2.50	W	2.5" PST		0.125	
	140	"P1" 25+71	RT	W7-5		18	18	2.25	W	2.5" PST		0.125	
	141	"P1" 32+70	LT	W7-5		18	18	2.25	E	2.5" PST		0.125	

CERTIFICATION SET
NOVEMBER 2021

STATE OF ALASKA
DEPARTMENT OF TRANSPORTATION
AND PUBLIC FACILITIES

GLENN HWY: PARKS HWY TO S. INNER SPRINGER LP. (PHASE II)

SIGN SUMMARY

STATE OF ALASKA 49TH
AVERIAN A. LARSEN
CE-119371
REGISTERED PROFESSIONAL ENGINEER

HDL ENGINEERING CONSULTANTS, LLC
3335 ARCTIC BOULEVARD, STE 100
ANCHORAGE, AK 99503
(907) 564-2120
AECL861

DESIGNED BY AAL
CHECKED BY DRL
DRAFTED BY CDB

SCALE NTS

DATE TIME 11/12/2021 10:15 AM

DRAWING LOCATION
H:\JOBS\08-016 GLENN HIGHWAY 34-42 (DOT)\09 - PS&E\CAD_PH2\DRAWINGS\08016_P2_HS20-HS29.DWG

NO.	DATE	REVISION	STATE	PROJECT DESIGNATION	YEAR	SHEET NO.	TOTAL SHEETS
			ALASKA	0A15037/CFHWY00431 0A15038/CFHWY00432 0A15033/CFHWY00006	2021	HS30	HS30

DESIGNED BY AAL
CHECKED BY DRL
DRAFTED BY CDB

SCALE NTS

DATE TIME 11/12/2021 1:24 PM

DRAWING LOCATION
H:\JOBS\08-016 GLENN HIGHWAY 34-42 (DOT)\09 - PS&E\CAD_PH2\DRAWINGS\08016_P2_HS30.DWG

SALVAGE SIGN SUMMARY

SHEET	STATION	OFFSET	REMARKS
F1	"G" 1322+00.1	RT	EMERGENCY PARKING ONLY
	"G" 1323+20.6	LT	EXIT RIGHT ARROW
	"G" 1324+23.9	RT	RIGHT LANE ENDS (ON LIGHT POLE)
F2	"G" 1326+82.0	LT	EXIT 35 MPH (ON LIGHT POLE)
	"G" 1332+11.0	RT	RIGHT LANE ENDS (SYMBOL) (ON LIGHT POLE)
	"G" 1332+61.0	LT	NORTH ALASKA WASILLA FAIRBANKS RIGHT ARROW, HOSPITAL
	"G" 1335+58.4	LT	W1-2
F3	"G" 1337+84.9	RT	NORTH ALASKA 1
	"G" 1338+30.0	LT	ALASKA 3 NORTH WASILLA-FAIRBANKS NEXT RIGHT
	"G" 1342+70.0	LT	W16-115
	"G" 1346+04.4	RT	LEFT FOX RUN CAMPGROUND
	"G" 1347+41.7	RT	SPEED LIMIT 55
	"G" 1349+14.8	LT	RV PARK ENTRANCE
F4	"G" 1350+24.8	RT	MILE 36
	"G" 1351+79.1	LT	FOX RUN RV CAMPGROUND RIGHT ARROW
	"G" 1352+67.8	RT	MATANUSKA LAKES STATE RECREATION AREA
	"G" 1355+77.5	LT	STOP SIGN
	"G" 1356+30.2	LT	PARK ENTRANCE
	"G" 1357+94.5	RT	PALMER 5 GLENNALLEN 145 TOK 281
	"G" 1360+03.8	RT	FIREWORKS PROHIBITED MSB
	"G" 1360+05.1	LT	FIREWORKS PROHIBITED MSB
	"G" 1360+96.1	LT	MATANUSKA LAKE STATE RECREATION AREA RIGHT
	"G" 1360+97.1	RT	STOP, E. MATANUSKA RD, GLENN HWY
F5	"G" 1367+92.9	LT	PICNIC (SYMBOL), FISHING (SYMBOL), RIGHT ARROW
	"G" 1369+84.8	LT	T INTERSECTION
F6	"G" 1380+10.1	LT	JUNCTION-1 MILE AK 1 GLENN HWY AK 3 PARKS HWY, HOSPITAL
F7	"G" 1388+41.8	RT	MILE 37
	"G" 1395+56.7	RT	ECHO LAKE, PARKING RIGHT ARROW
F8	"G" 1400+04.1	RT	ECHO LAKE PUBLIC PARKING AREA
	"G" 1402+44.8	RT	LAKE ACCESS
	"G" 1404+87.0	LT	ECHO LAKE, PARKING LEFT ARROW
	"G" 1408+21.0	LT	STOP, E KEPLER DR, GLENN HWY
F10	"G" 1428+54.9	RT	STOP, E SHERROD DR, GLENN HWY
	"G" 1431+94.4	LT	PLEASE DRIVE SAFELY, IN MEMORY OF ALLAN CHASE, IN MEMORY OF SOPHIA CHASE, IN MEMORY OF MELISSA PIKE
F11	"G" 1437+35.1	RT	POST ONLY
	"G" 1439+88.9	RT	RIGHT SYM WITH TRACKS, 60' BETWEEN TRACKS & HWY, MILE 38
	"G" 1440+15.1	LT	STOP, E MAX DR
	"G" 1440+17.7	LT	STOP, S COLLEEN ST, GLENN HWY
	"G" 1443+50.2	RT	CROSSBUCK, YIELD
	"G" 1443+86.5	LT	SPEED LIMIT 55 (ON LIGHT POLE)
	"G" 1444+89.3	RT	STOP, E GRANDVIEW RD, GLENN HWY

SALVAGE SIGN SUMMARY

SHEET	STATION	OFFSET	REMARKS
F12	"G" 1448+10.4	LT	ADOPT A HIGHWAY, PALMER KIWANIS
	"G" 1449+46.1	RT	ADOPT A HIGHWAY, BOY SCOUT TROOP 54
	"G" 1449+80.1	LT	LEFT SYM WITH TRACKS, 60' BETWEEN TRACKS & HIGHWAY
	"G" 1453+98.1	RT	SPEED LIMIT 55
F13	"G" 1465+01.7	RT	CROSSBUCK, YIELD
	"G" 1465+66.7	RT	STOP
	"G" 1466+12.1	RT	MAT VALLEY SPORTMEN'S RANGE
F15	"G" 1493+61.6	RT	MILE 39
F16	"G" 1495+26.5	RT	OUTER SPRINGER LOOP RIGHT
	"G" 1496+70.6	RT	RIGHT WITH SYM TRACKS, 45' BETWEEN TRACKS & HIGHWAY
	"G" 1500+66.5	RT	CROSSBUCK, YIELD
	"G" 1501+13.8	RT	STOP, E OUTER SPRINGER LP, GLENN HWY
	"G" 1505+00.0	LT	LEFT, STRAIGHT ARROW
F17	"G" 1508+30.0	RT	DIVIDED HIGHWAY (SYMBOL)
	"G" 1510+80.0	LT	OUTER SPRINGER LOOP
F18	"G" 1523+54.2	LT	RIGHT LANE ENDS (ON LIGHT POLE)
F19	"GV" 3+16.5	RT	CROSSBUCK
	"GV" 3+73.4	RT	ALTERNATE ENTRANCE, 15 MPH, NO TRESPASSING
	"GV" 4+04.7	LT	STOP
	"GV" 4+11.5	LT	CROSSBUCK, STOP
F21	"GV" 25+87.7	LT	CROSSBUCK, YIELD
F23	"MS" 17+35.0	RT	NO PARKING THIS SIDE
	"MS" 17+86.2	RT	NO PARKING THIS SIDE
	"MS" 18+30.0	RT	NO PARKING THIS SIDE
	"MS" 18+75.1	RT	NO PARKING THIS SIDE
F27	"BL" 9+66.4	RT	STOP, E BRADLEY LAKE AVE
	"BL" 9+87.8	LT	SCHOOL CROSSING (SYMBOL)
F28	"OS" 11+29.7	LT	CROSSBUCK, STOP
	"OS" 11+58.2	RT	MEIRS LAKE STOCKED BY ADF&G
	"OS" 12+88.9	LT	STOP AHEAD
	"OS" 14+66.0	LT	RAILROAD CROSSING

CERTIFICATION SET
NOVEMBER 2021

STATE OF ALASKA
★ 49TH ★
AVERIAN A. LARSEN
CE-119371
REGISTERED PROFESSIONAL ENGINEER

HDL ENGINEERING CONSULTANTS, LLC
3335 ARCTIC BOULEVARD, STE 100
ANCHORAGE, AK 99503
(907) 564-2120
AECL861

STATE OF ALASKA
DEPARTMENT OF TRANSPORTATION
AND PUBLIC FACILITIES

GLENN HWY: PARKS HWY TO S. INNER SPRINGER LP. (PHASE II)

SALVAGE SIGN SUMMARY

NO.	DATE	REVISION

STATE	PROJECT DESIGNATION	YEAR	SHEET NO.	TOTAL SHEETS
ALASKA	0A15037/CFHWY00431 0A15038/CFHWY00432 0A15033/CFHWY00006	2021	J1	J11

DESIGNED BY AAL
CHECKED BY DRL
DRAFTED BY CDB

SCALE 1"=1400'

DATE 11/11/2021 TIME 2:23 PM

DRAWING LOCATION
H:\JOBS\08-016 GLENN HIGHWAY 34-42 (DOT)\09 - PS&E\CAD_PH2\DRAWINGS\08016_P2_J01.DWG

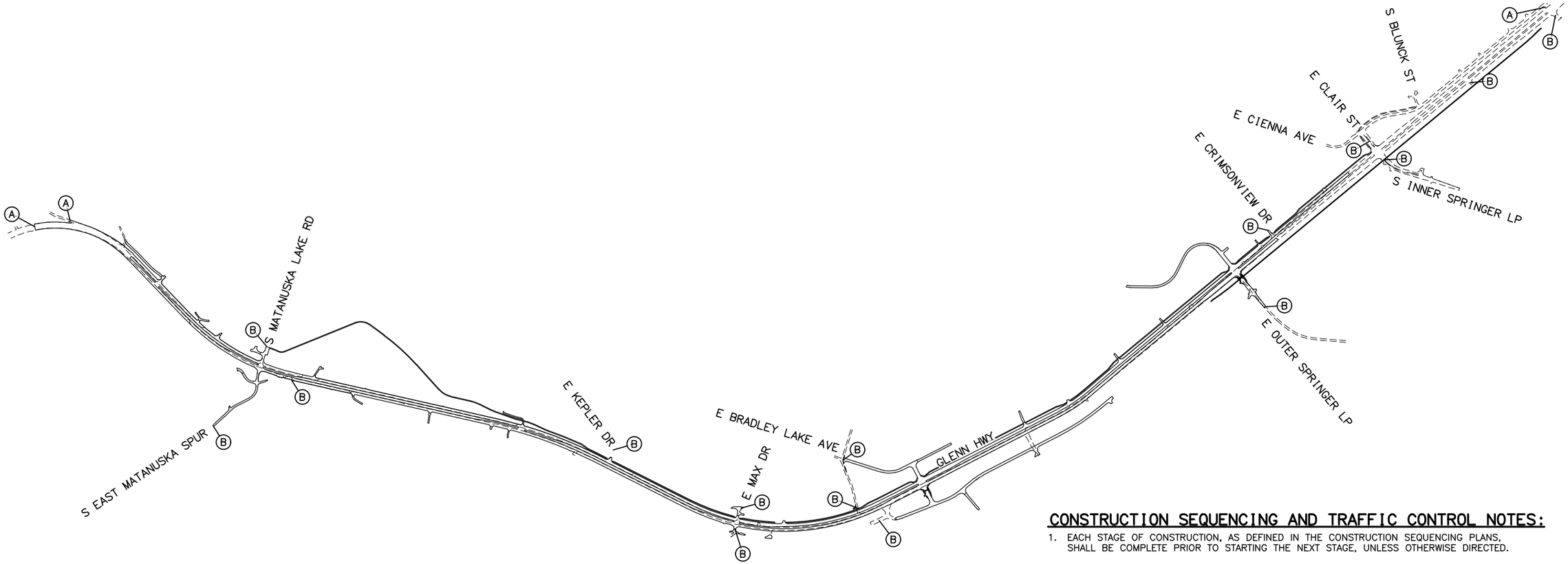

CONSTRUCTION SEQUENCING AND TRAFFIC CONTROL NOTES:

1. EACH STAGE OF CONSTRUCTION, AS DEFINED IN THE CONSTRUCTION SEQUENCING PLANS, SHALL BE COMPLETE PRIOR TO STARTING THE NEXT STAGE, UNLESS OTHERWISE DIRECTED.

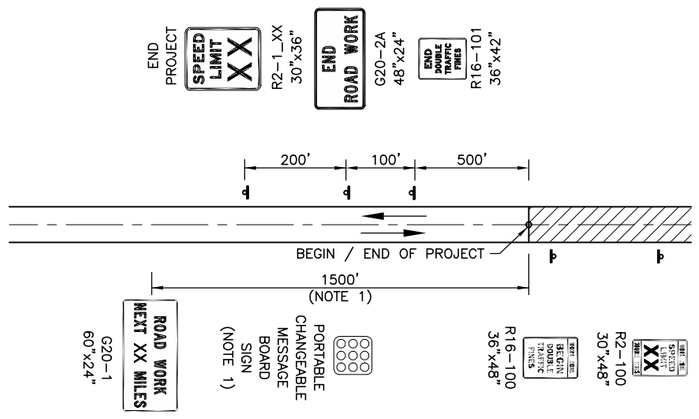

A TYPICAL LAYOUT
BEGIN / END OF PROJECT
PERMANENT CONSTRUCTION SIGNS

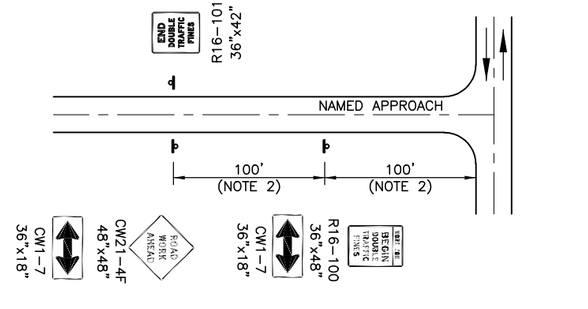

B TYPICAL LAYOUT
NAMED APPROACH
PERMANENT CONSTRUCTION SIGNS

PERMANENT CONSTRUCTION SIGN NOTES:

1. LOCATION TO BE DETERMINED BY THE PROJECT ENGINEER.
2. WHERE SIDE STREETS ARE TO BE RECONSTRUCTED, LOCATE SIGNS 200' PRIOR TO CONSTRUCTION LIMITS. WHERE SIDE STREETS ARE NOT LONG ENOUGH TO PERMIT 200' TOTAL ADVANCE SIGNING, DISTANCE SHALL BE REDUCED AS DIRECTED BY THE ENGINEER.
3. SPEED LIMIT TO BE DETERMINED BY THE PROJECT ENGINEER.
4. SEE STANDARD PLAN C-04 FOR SPACING OF DOUBLE FINE AND SPEED LIMIT SIGNS.

CERTIFICATION SET
NOVEMBER 2021

STATE OF ALASKA 49TH
AVERIAN A. LARSEN
CE-119371
REGISTERED PROFESSIONAL ENGINEER

HDL ENGINEERING CONSULTANTS, LLC
3335 ARCTIC BOULEVARD, STE 100
ANCHORAGE, AK 99503
(907) 564-2120
AECL861

STATE OF ALASKA
DEPARTMENT OF TRANSPORTATION
AND PUBLIC FACILITIES

GLENN HWY: PARKS HWY TO S. INNER SPRINGER LP. (PHASE II)

TRAFFIC CONTROL PERMANENT CONSTRUCTION SIGNS

NO.	DATE	REVISION

STATE	PROJECT DESIGNATION	YEAR	SHEET NO.	TOTAL SHEETS
ALASKA	0A15037/CFHWY00431 0A15038/CFHWY00432 0A15033/CFHWY00006	2021	J2	J11

DESIGNED BY	AAL
CHECKED BY	DRL
DRAFTED BY	CDB

SCALE 1"=800'

DATE 11/12/2021 TIME 2:35 PM

DRAWING LOCATION
H:\JOBS\08-016 GLENN HIGHWAY 34-42 (DOT)\09 - PS&E\CAD_PH2\DRAWINGS\08016_P2_J02-J09.DWG

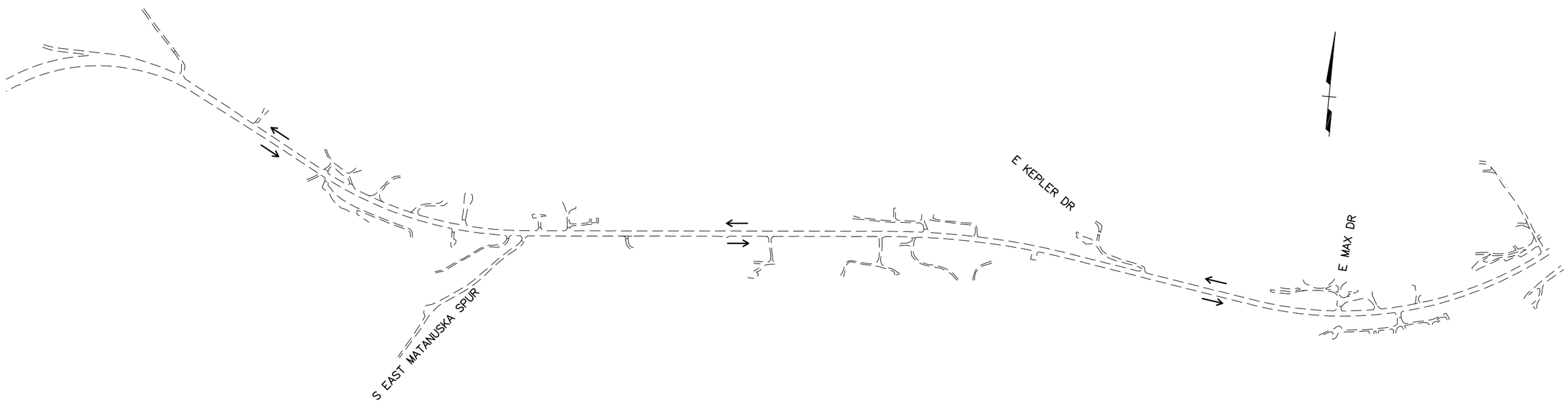

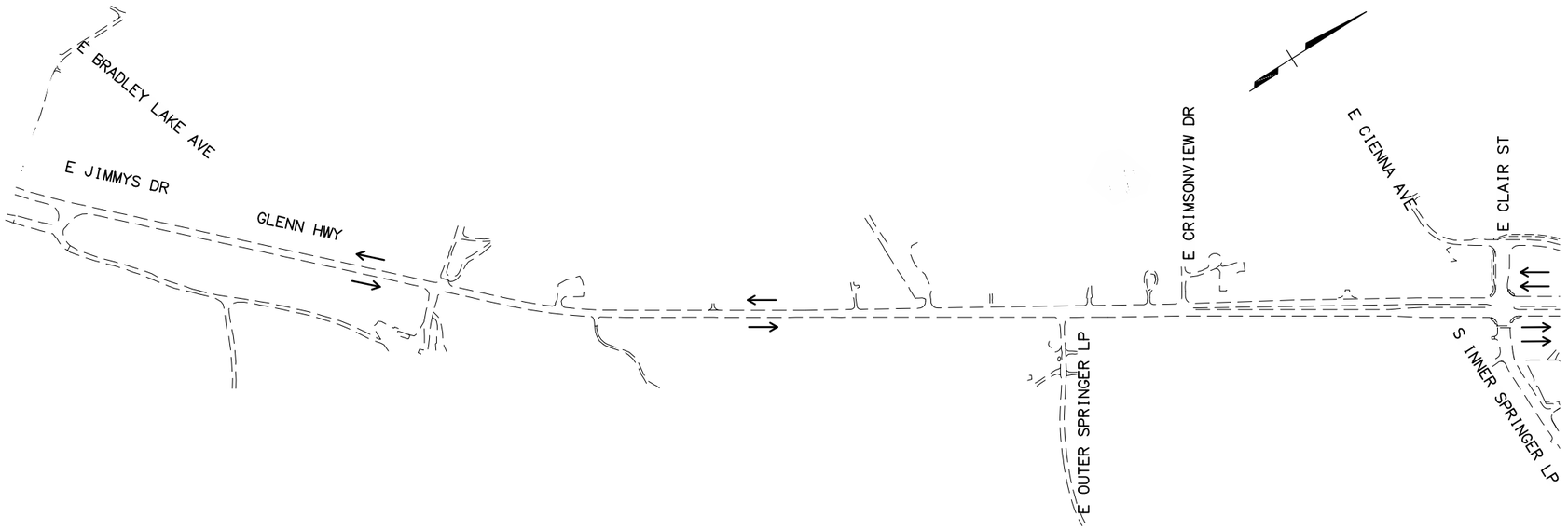

STAGE 1 NOTES:

1. MAINTAIN THROUGH TRAFFIC ON EXISTING HIGHWAY AND SIDE STREETS.
2. UTILITIES TO BE RELOCATED BY OTHERS. SEE SECTION 651 CONTROL OF WORK – SUPPLEMENTAL REQUIREMENTS FOR WORK DONE BY UTILITY OWNERS AND CONTRACTOR REQUIREMENTS FOR UTILITIES BEING RELOCATED.
3. CONTRACTOR MAY, AT THEIR OWN DISCRETION, CONSTRUCT GRANDVIEW ROAD AND ARRC SIDING IMPROVEMENTS CONCURRENTLY WITH THIS STAGE, OR DURING THE DESIGNATED STAGES IDENTIFIED HEREIN.

LEGEND:

CONSTRUCTION ZONE, NOT A TRAVELED WAY

TRAVELED WAY, NO CONSTRUCTION

TRAVELED WAY AND CONSTRUCTION ZONE

CERTIFICATION SET
NOVEMBER 2021

STATE OF ALASKA
49TH
AVERIAN A. LARSEN
CE-119371
REGISTERED PROFESSIONAL ENGINEER

HDL ENGINEERING CONSULTANTS, LLC
3335 ARCTIC BOULEVARD, STE 100
ANCHORAGE, AK 99503
(907) 564-2120
AECL861

STATE OF ALASKA
DEPARTMENT OF TRANSPORTATION
AND PUBLIC FACILITIES

GLENN HWY: PARKS HWY TO S. INNER SPRINGER LP. (PHASE II)

TRAFFIC CONTROL CONSTRUCTION SEQUENCE STAGE 1

NO.	DATE	REVISION

STATE	PROJECT DESIGNATION	YEAR	SHEET NO.	TOTAL SHEETS
ALASKA	0A15037/CFHWY00431 0A15038/CFHWY00432 0A15033/CFHWY00006	2021	J3	J11

DESIGNED BY AAL
CHECKED BY DRL
DRAFTED BY CDB

SCALE 1"=800'

DATE 11/12/2021 TIME 2:35 PM

DRAWING LOCATION
H:\JOBS\08-016 GLENN HIGHWAY 34-42 (DOT)\09 - PS&E\CAD_PH2\DRAWINGS\08016_P2_J02-J09.DWG

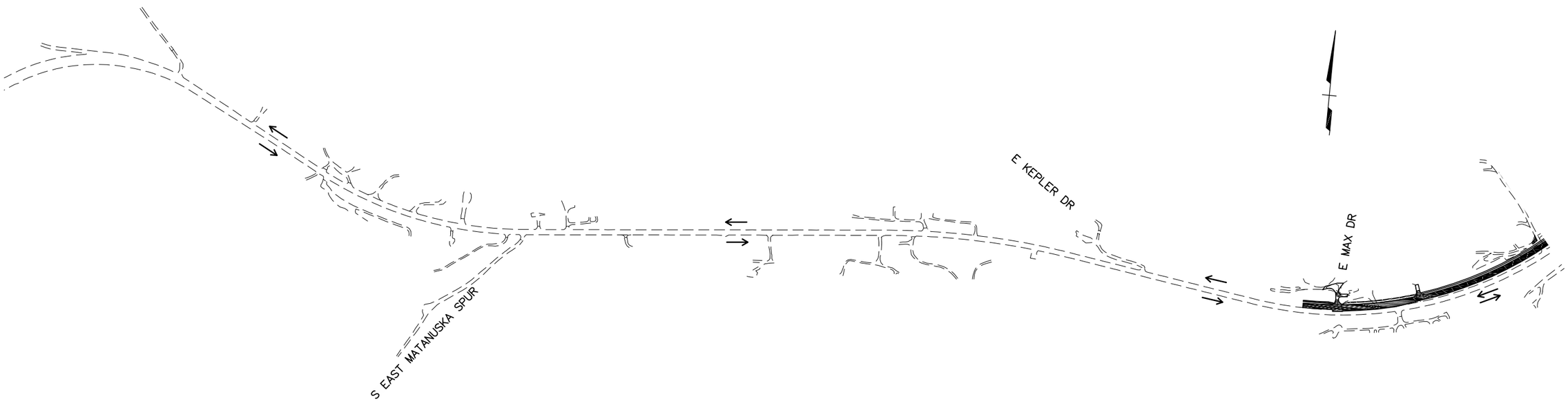

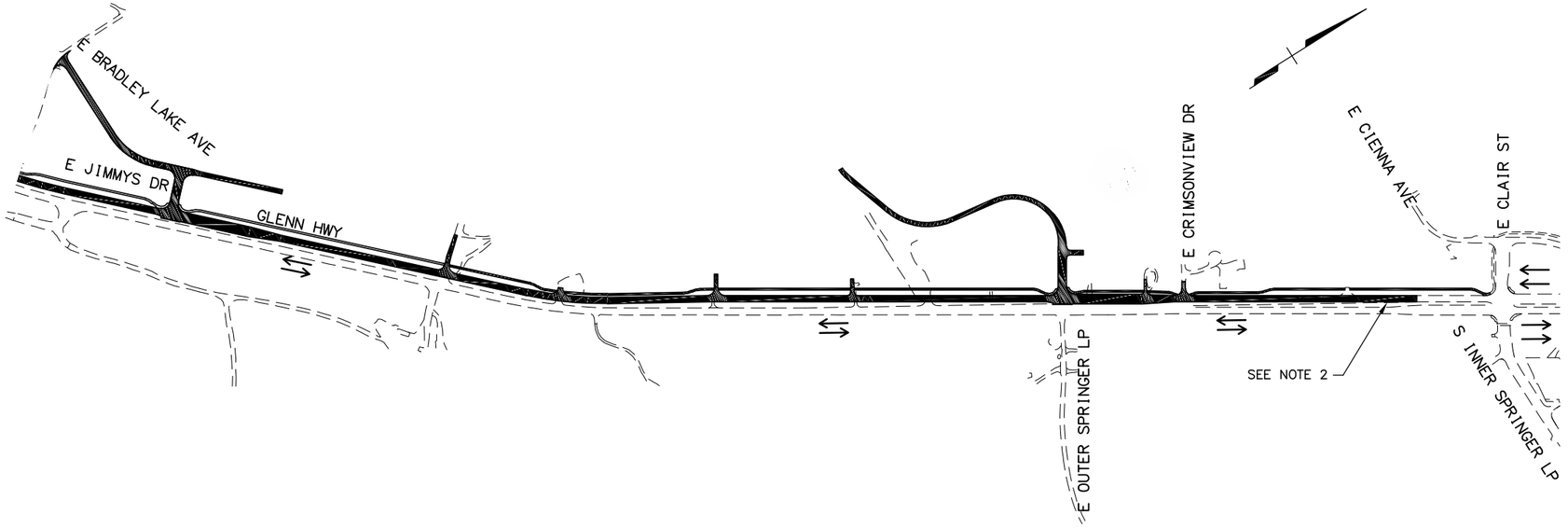

STAGE 2 NOTES:

1. FROM BEGINNING OF PROJECT TO "G" 1486+00, SOUTH OF OUTER SPRINGER LOOP, MAINTAIN THROUGH TRAFFIC ON EXISTING HIGHWAY AND SIDE STREETS.
2. CONSTRUCT TEMPORARY CROSSING FOR ONE WAY SOUTHBOUND TRAFFIC SOUTH OF S INNER SPRINGER LOOP.
3. FROM "G" 1486+00 TO TEMPORARY CROSSING AT S INNER SPRINGER LOOP, INSTALL TEMPORARY LANE CONTROL DEVICES FOR TWO WAY TRAFFIC AND ROUTE TWO WAY TRAFFIC OVER EXISTING NORTHBOUND GLENN HIGHWAY.
4. FROM TEMPORARY CROSSING AT S INNER SPRINGER LOOP TO END OF PROJECT, MAINTAIN THROUGH TRAFFIC ON EXISTING HIGHWAY AND SIDE STREETS.
5. FROM MAX DRIVE TO S INNER SPRINGER LOOP, CONSTRUCT PATHWAY AND SOUTHBOUND EMBANKMENT.
6. CONSTRUCT THE RUBYMAE DRIVE, JIMMYS DRIVE, BRADLEY LAKE AVENUE, AND MAX DRIVE IMPROVEMENTS ON THE WEST SIDE OF THE GLENN HIGHWAY.

LEGEND:

CONSTRUCTION ZONE, NOT A TRAVELED WAY

TRAVELED WAY, NO CONSTRUCTION

TRAVELED WAY AND CONSTRUCTION ZONE

CERTIFICATION SET
NOVEMBER 2021

STATE OF ALASKA
49TH
AVERIAN A. LARSEN
CE-119371
REGISTERED PROFESSIONAL ENGINEER

HDL ENGINEERING CONSULTANTS, LLC
3335 ARCTIC BOULEVARD, STE 100
ANCHORAGE, AK 99503
(907) 564-2120
AECL861

STATE OF ALASKA
DEPARTMENT OF TRANSPORTATION
AND PUBLIC FACILITIES

GLENN HWY: PARKS HWY TO S. INNER SPRINGER LP. (PHASE II)

TRAFFIC CONTROL CONSTRUCTION SEQUENCE STAGE 2

NO.	DATE	REVISION

STATE	PROJECT DESIGNATION	YEAR	SHEET NO.	TOTAL SHEETS
ALASKA	0A15037/CFHWY00431 0A15038/CFHWY00432 0A15033/CFHWY00006	2021	J4	J11

DESIGNED BY AAL
CHECKED BY DRL
DRAFTED BY CDB

SCALE 1"=800'

DATE 11/12/2021 TIME 2:35 PM

DRAWING LOCATION
H:\JOBS\08-016 GLENN HIGHWAY 34-42 (DOT)\09 - PS&E\CAD_PH2\DRAWINGS\08016_P2_J02-J09.DWG

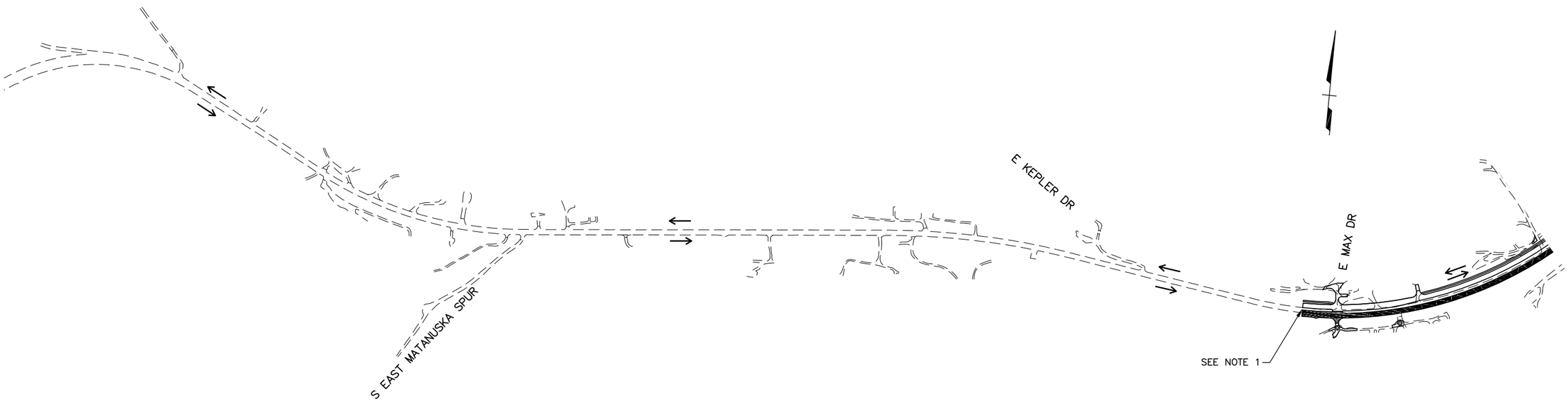

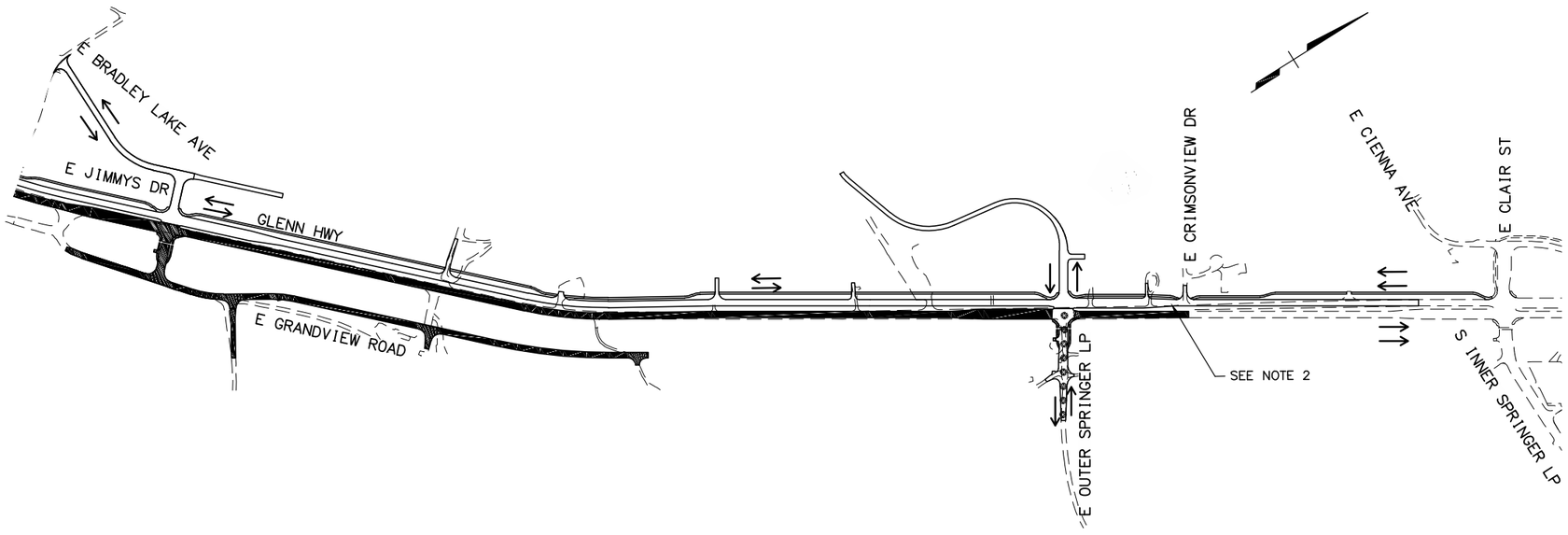

STAGE 3 NOTES:

1. CONSTRUCT STAGE 3 TEMPORARY CROSSING FOR TWO WAY TRAFFIC AT MAX DRIVE.
2. REMOVE STAGE 2 TEMPORARY CROSSING AND CONSTRUCT TEMPORARY CROSSING FOR ONE WAY NORTHBOUND TRAFFIC AT CRIMSONVIEW DRIVE.
3. FROM BEGINNING OF PROJECT TO TEMPORARY CROSSING AT MAX DRIVE, MAINTAIN THROUGH TRAFFIC ON EXISTING HIGHWAY AND SIDE STREETS.
4. FROM MAX DRIVE TO CRIMSONVIEW DRIVE, INSTALL PAVEMENT MARKINGS AND TEMPORARY LANE CONTROL DEVICES FOR TWO WAY TRAFFIC.
5. ROUTE TRAFFIC OVER NEW SOUTHBOUND GLENN HIGHWAY.
6. FROM CRIMSONVIEW DRIVE TO THE END OF PROJECT, MAINTAIN THROUGH TRAFFIC ON NEWLY CONSTRUCTED SOUTHBOUND AND EXISTING NORTHBOUND GLENN HIGHWAY.
7. FROM MAX DRIVE TO CRIMSONVIEW DRIVE, CONSTRUCT NORTHBOUND EMBANKMENT.
8. CONSTRUCT OUTER SPRINGER LOOP, JIMMYS DRIVE AND GRANDVIEW ROAD IMPROVEMENTS ON THE EAST SIDE OF THE GLENN HIGHWAY.
9. CONSTRUCT ARRC SIDING IMPROVEMENTS.

LEGEND:

- CONSTRUCTION ZONE, NOT A TRAVELED WAY
- TRAVELED WAY, NO CONSTRUCTION
- TRAVELED WAY AND CONSTRUCTION ZONE

CERTIFICATION SET
NOVEMBER 2021

STATE OF ALASKA
★ 49TH ★
AVERIAN A. LARSEN
CE-119371
REGISTERED PROFESSIONAL ENGINEER

HDL ENGINEERING CONSULTANTS, LLC
3335 ARCTIC BOULEVARD, STE 100
ANCHORAGE, AK 99503
(907) 564-2120
AECL861

STATE OF ALASKA
DEPARTMENT OF TRANSPORTATION
AND PUBLIC FACILITIES

GLENN HWY: PARKS HWY TO S. INNER SPRINGER LP. (PHASE II)

TRAFFIC CONTROL CONSTRUCTION SEQUENCE STAGE 3

NO.	DATE	REVISION

STATE	PROJECT DESIGNATION	YEAR	SHEET NO.	TOTAL SHEETS
ALASKA	0A15037/CFHWY00431 0A15038/CFHWY00432 0A15033/CFHWY00006	2021	J5	J11

DESIGNED BY AAL
CHECKED BY DRL
DRAFTED BY CDB

SCALE 1"=800'

DATE 11/12/2021 TIME 2:35 PM

DRAWING LOCATION
H:\JOBS\08-016 GLENN HIGHWAY 34-42 (DOT)\09 - PS&E\CAD_PH2\DRAWINGS\08016_P2_J02-J09.DWG

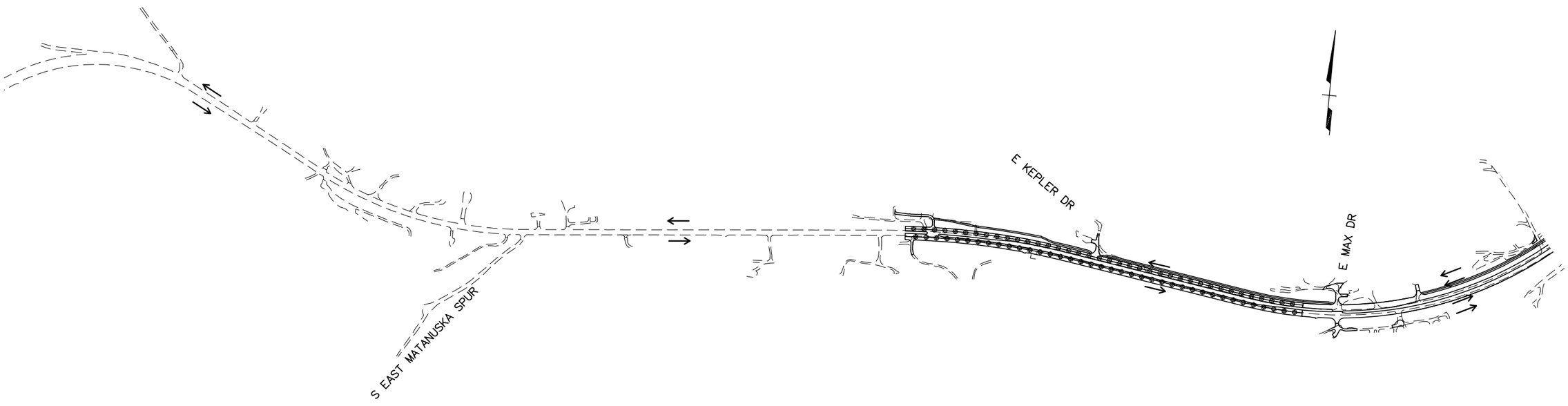

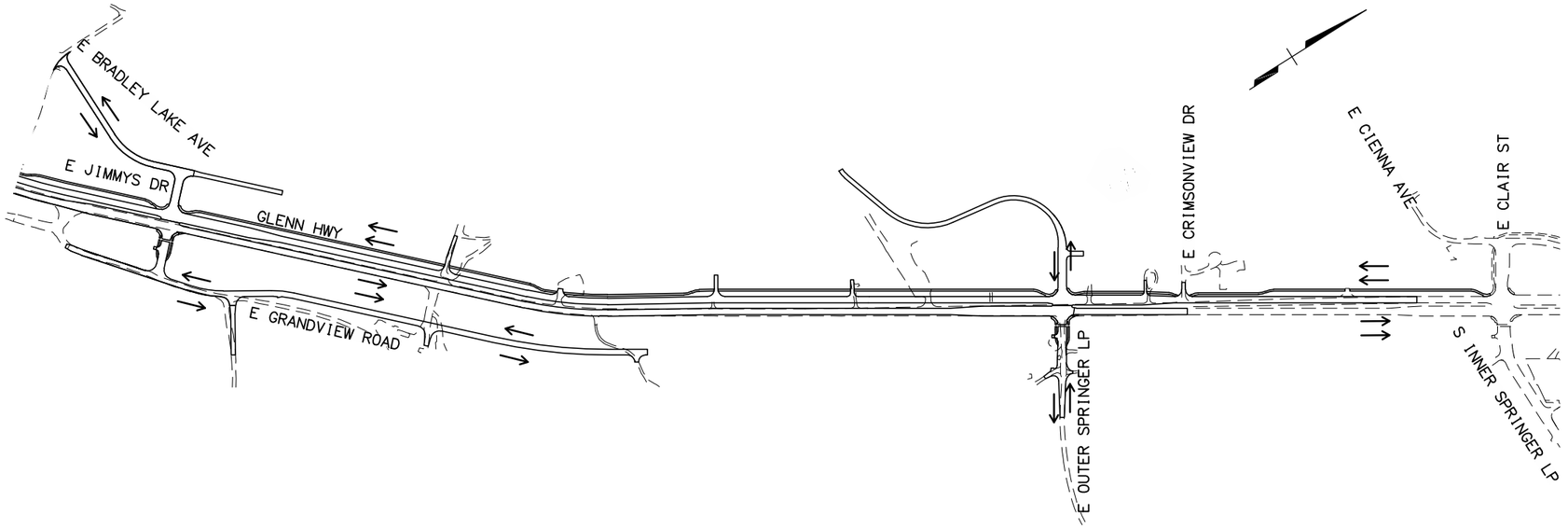

STAGE 4 NOTES:

1. STAGE 4 DIGOUT MAY BE CONSTRUCTED CONCURRENTLY WITH OTHER STAGES, ROUTE TRAFFIC ACCORDINGLY.
2. FROM "G" 1391+00 TO MAX DRIVE, EXCAVATE SOUTHBOUND EMBANKMENT AND CONSTRUCT TEMPORARY LANES FOR TWO WAY TRAFFIC.
3. ROUTE TRAFFIC TO TEMPORARY LANES.
4. FROM "G" 1391+00 TO MAX DRIVE, EXCAVATE NORTHBOUND EMBANKMENT AND CONSTRUCT NORTHBOUND GLENN HIGHWAY IMPROVEMENTS.
5. FROM "G" 1391+00 TO MAX DRIVE, INSTALL PAVEMENT MARKINGS AND TEMPORARY LANE CONTROL DEVICES FOR TWO WAY TRAFFIC.
6. ROUTE TRAFFIC ON NEWLY CONSTRUCTED NORTHBOUND GLENN HIGHWAY.
7. FROM "G" 1391+00 TO MAX DRIVE, CONSTRUCT SOUTHBOUND GLENN HIGHWAY, PATHWAY, AND SIDE STREET IMPROVEMENTS.

LEGEND:

- CONSTRUCTION ZONE, NOT A TRAVELED WAY
- TRAVELED WAY, NO CONSTRUCTION
- TRAVELED WAY AND CONSTRUCTION ZONE

CERTIFICATION SET
NOVEMBER 2021

STATE OF ALASKA
49TH
AVERIAN A. LARSEN
CE-119371
REGISTERED PROFESSIONAL ENGINEER

HDL ENGINEERING CONSULTANTS, LLC
3335 ARCTIC BOULEVARD, STE 100
ANCHORAGE, AK 99503
(907) 564-2120
AECL861

STATE OF ALASKA
DEPARTMENT OF TRANSPORTATION
AND PUBLIC FACILITIES

GLENN HWY: PARKS HWY TO S. INNER SPRINGER LP. (PHASE II)

TRAFFIC CONTROL CONSTRUCTION SEQUENCE STAGE 4

NO.	DATE	REVISION

STATE	PROJECT DESIGNATION	YEAR	SHEET NO.	TOTAL SHEETS
ALASKA	0A15037/CFHWY00431 0A15038/CFHWY00432 0A15033/CFHWY00006	2021	J6	J11

DESIGNED BY AAL
CHECKED BY DRL
DRAFTED BY CDB

SCALE 1"=800'

DATE 11/12/2021 TIME 2:35 PM

DRAWING LOCATION
H:\JOBS\08-016 GLENN HIGHWAY 34-42 (DOT)\09 - PS&E\CAD_PH2\DRAWINGS\08016_P2_J02-J09.DWG

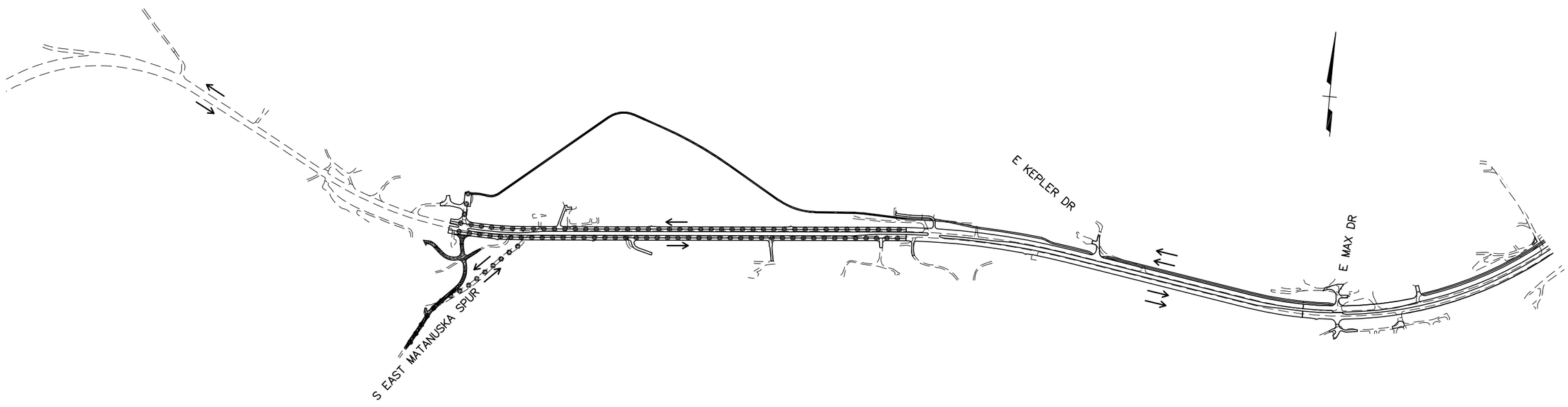

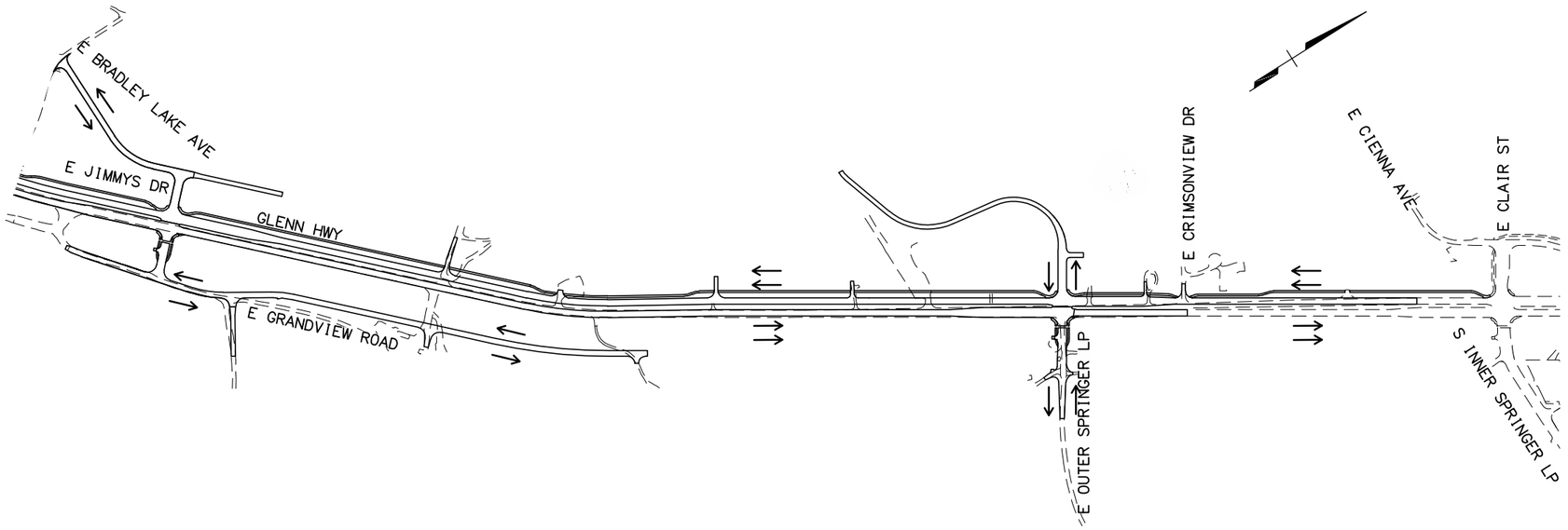

STAGE 5 NOTES:

1. STAGE 5 DIGOUT MAY BE CONSTRUCTED CONCURRENTLY WITH OTHER STAGES, ROUTE TRAFFIC ACCORDINGLY.
2. FROM EAST MATANUSKA SPUR TO "G"1391+00, EXCAVATE NORTHBOUND EMBANKMENT AND CONSTRUCT TEMPORARY LANES FOR TWO WAY TRAFFIC.
3. ROUTE TRAFFIC TO TEMPORARY LANES.
4. FROM EAST MATANUSKA SPUR TO "G" 1391+00, EXCAVATE SOUTHBOUND EMBANKMENT AND CONSTRUCT SOUTHBOUND GLENN HIGHWAY, SIDE STREET, AND PATHWAY IMPROVEMENTS.
5. FROM EAST MATANUSKA SPUR TO "G" 1391+00, INSTALL PAVEMENT MARKINGS AND TEMPORARY LANE CONTROL DEVICES FOR TWO WAY TRAFFIC.
6. ROUTE TRAFFIC ON NEWLY CONSTRUCTED SOUTHBOUND GLENN HIGHWAY.
7. FROM EAST MATANUSKA SPUR TO "G" 1391+00, CONSTRUCT NORTHBOUND GLENN HIGHWAY AND SIDE STREET IMPROVEMENTS.

LEGEND:

CONSTRUCTION ZONE, NOT A TRAVELED WAY

TRAVELED WAY, NO CONSTRUCTION

TRAVELED WAY AND CONSTRUCTION ZONE

CERTIFICATION SET
NOVEMBER 2021

STATE OF ALASKA
49TH
AVERIAN A. LARSEN
CE-119371
REGISTERED PROFESSIONAL ENGINEER

HDL ENGINEERING CONSULTANTS, LLC
3335 ARCTIC BOULEVARD, STE 100
ANCHORAGE, AK 99503
(907) 564-2120
AECL861

STATE OF ALASKA
DEPARTMENT OF TRANSPORTATION
AND PUBLIC FACILITIES

GLENN HWY: PARKS HWY TO S. INNER SPRINGER LP. (PHASE II)

TRAFFIC CONTROL CONSTRUCTION SEQUENCE STAGE 5

NO.	DATE	REVISION

STATE	PROJECT DESIGNATION	YEAR	SHEET NO.	TOTAL SHEETS
ALASKA	0A15037/CFHWY00431 0A15038/CFHWY00432 0A15033/CFHWY00006	2021	J7	J11

DESIGNED BY	AAL
CHECKED BY	DRL
DRAFTED BY	CDB
SCALE	1"=800'
DATE	11/12/2021
TIME	2:36 PM

DRAWING LOCATION
H:\JOBS\08-016 GLENN HIGHWAY 34-42 (DOT)\09 - PS&E\CAD_PH2\DRAWINGS\08016_P2_J02-J09.DWG

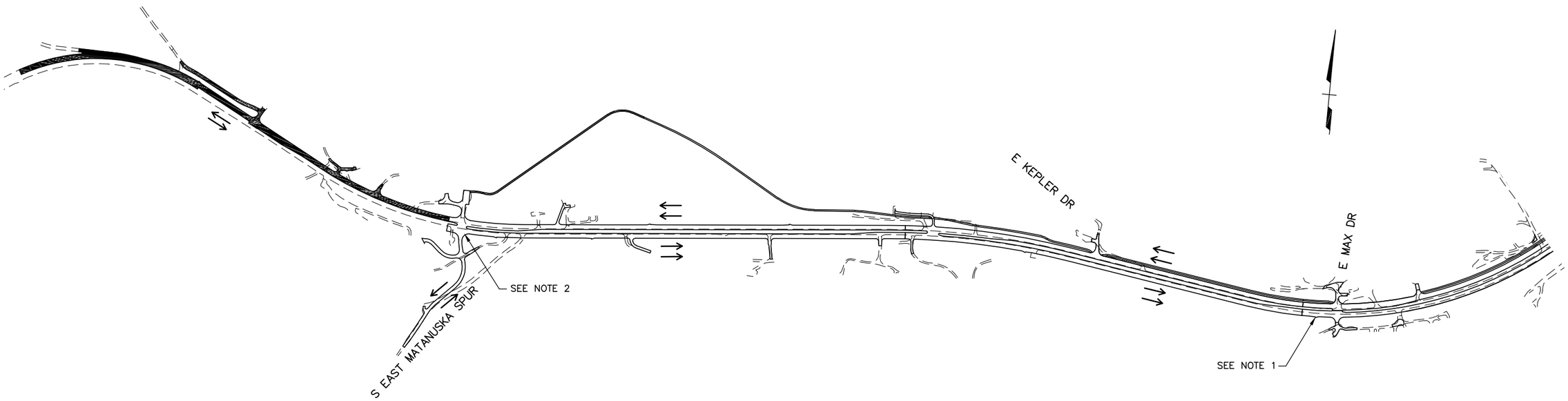

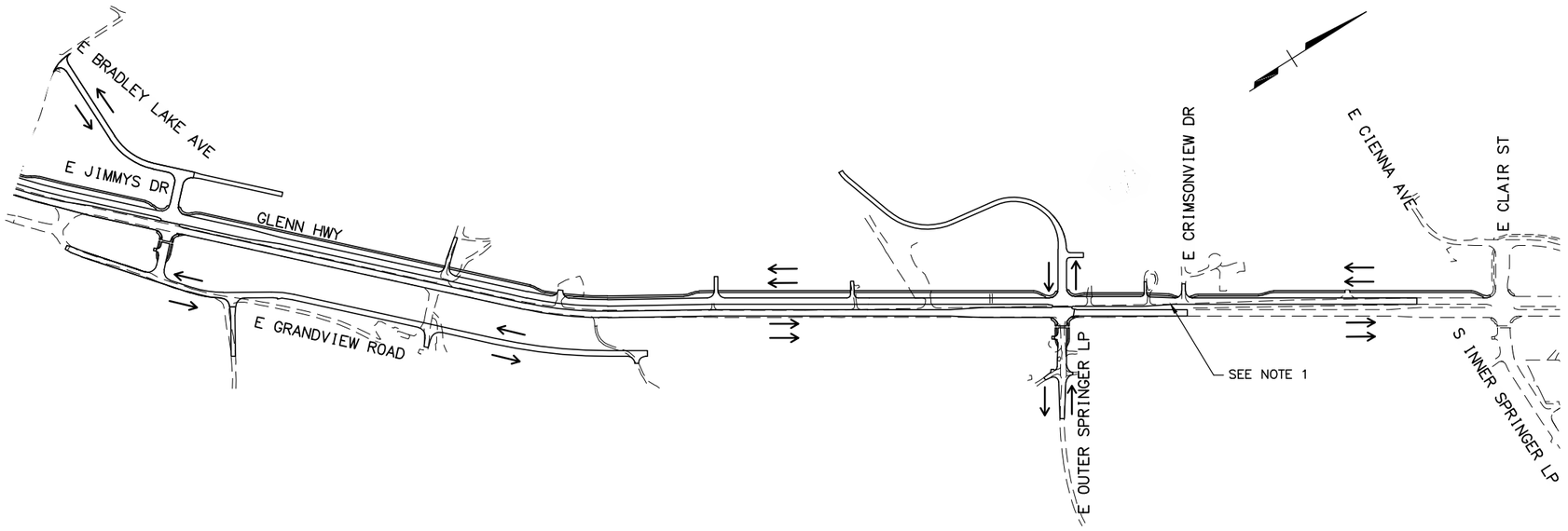

STAGE 6 NOTES:

1. REMOVE STAGE 3 TEMPORARY CROSSINGS.
2. CONSTRUCT STAGE 6 TEMPORARY CROSSINGS AT EAST MATANUSKA SPUR.
3. FROM BEGINNING OF PROJECT TO EAST MATANUSKA SPUR, MAINTAIN THROUGH TRAFFIC ON EXISTING HIGHWAY.
4. FROM EAST MATANUSKA SPUR TO END OF PROJECT, MAINTAIN THROUGH TRAFFIC ON NEWLY CONSTRUCTED GLENN HIGHWAY AND SIDE STREETS.
5. FROM BEGINNING OF PROJECT TO EAST MATANUSKA SPUR, WIDEN AND CONSTRUCT SOUTHBOUND EMBANKMENT AND SIDE STREETS.

LEGEND:

CONSTRUCTION ZONE, NOT A TRAVELED WAY

TRAVELED WAY, NO CONSTRUCTION

TRAVELED WAY AND CONSTRUCTION ZONE

CERTIFICATION SET
NOVEMBER 2021

STATE OF ALASKA
49TH
AVERIAN A. LARSEN
CE-119371
REGISTERED PROFESSIONAL ENGINEER

HDL ENGINEERING CONSULTANTS, LLC
3335 ARCTIC BOULEVARD, STE 100
ANCHORAGE, AK 99503
(907) 564-2120
AECL861

STATE OF ALASKA
DEPARTMENT OF TRANSPORTATION
AND PUBLIC FACILITIES

GLENN HWY: PARKS HWY TO S. INNER SPRINGER LP. (PHASE II)

TRAFFIC CONTROL CONSTRUCTION SEQUENCE STAGE 6

NO.	DATE	REVISION

STATE	PROJECT DESIGNATION	YEAR	SHEET NO.	TOTAL SHEETS
ALASKA	0A15037/CFHWY00431 0A15038/CFHWY00432 0A15033/CFHWY00006	2021	J8	J11

DESIGNED BY AAL
CHECKED BY DRL
DRAFTED BY CDB

SCALE 1"=800'

DATE 11/12/2021 TIME 2:36 PM

DRAWING LOCATION
H:\JOBS\08-016 GLENN HIGHWAY 34-42 (DOT)\09 - PS&E\CAD_PH2\DRAWINGS\08016_P2_J02-J09.DWG

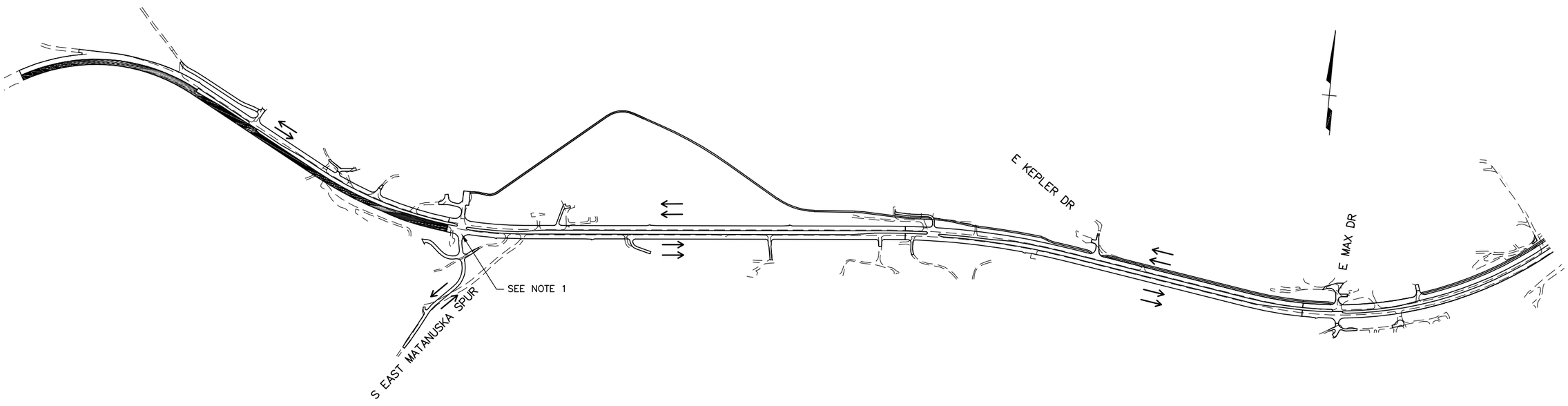

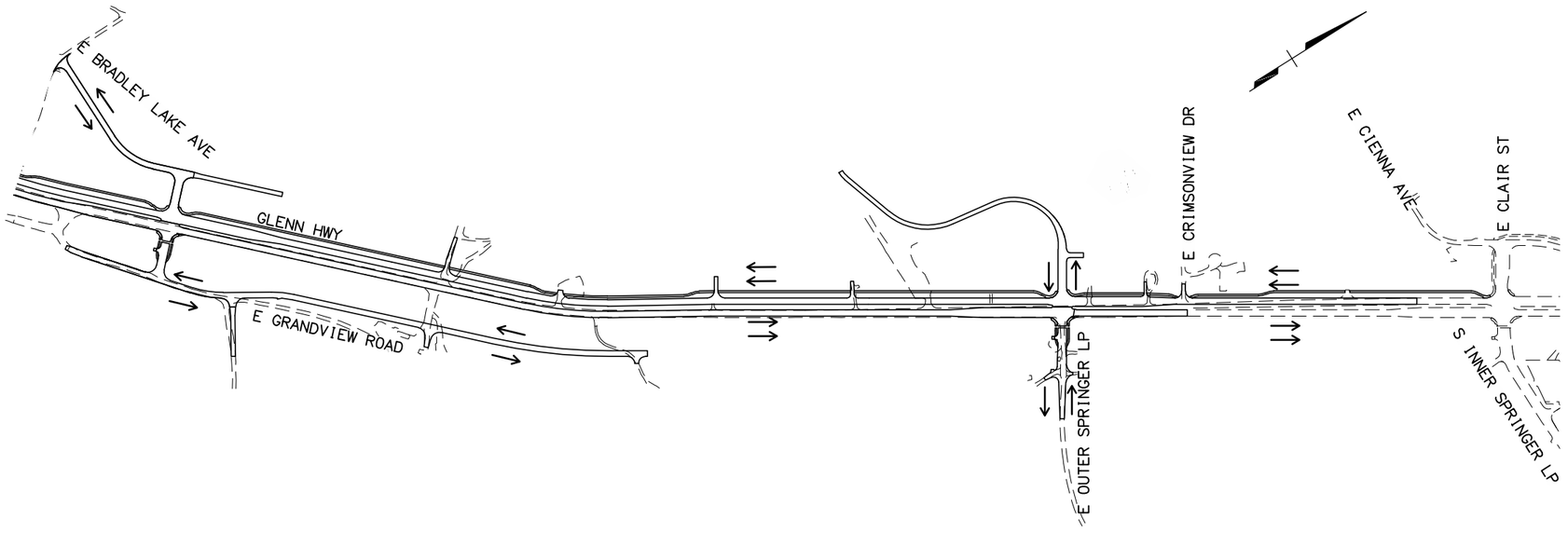

STAGE 7 NOTES:

1. REMOVE STAGE 6 TEMPORARY CROSSING.
2. FROM BEGINNING OF PROJECT TO EAST MATANUSKA SPUR, INSTALL TEMPORARY LANE CONTROL DEVICE FOR TWO WAY TRAFFIC.
3. ROUTE TRAFFIC OVER WIDENED SOUTHBOUND GLENN HIGHWAY.
4. FROM EAST MATANUSKA SPUR TO END OF PROJECT, MAINTAIN THROUGH TRAFFIC ON NEWLY CONSTRUCTED GLENN HIGHWAY.
5. FROM BEGINNING OF PROJECT TO EAST MATANUSKA SPUR, CONSTRUCT NORTHBOUND EMBANKMENT, MEDIANS, AND AUXILIARY LANES.

LEGEND:

CONSTRUCTION ZONE, NOT A TRAVELED WAY

TRAVELED WAY, NO CONSTRUCTION

TRAVELED WAY AND CONSTRUCTION ZONE

CERTIFICATION SET
NOVEMBER 2021

STATE OF ALASKA
★ 49TH ★
AVERIAN A. LARSEN
CE-119371
REGISTERED PROFESSIONAL ENGINEER

HDL ENGINEERING CONSULTANTS, LLC
3335 ARCTIC BOULEVARD, STE 100
ANCHORAGE, AK 99503
(907) 564-2120
AECL861

STATE OF ALASKA
DEPARTMENT OF TRANSPORTATION
AND PUBLIC FACILITIES

GLENN HWY: PARKS HWY TO S. INNER SPRINGER LP. (PHASE II)

TRAFFIC CONTROL CONSTRUCTION SEQUENCE STAGE 7

NO.	DATE	REVISION

STATE	PROJECT DESIGNATION	YEAR	SHEET NO.	TOTAL SHEETS
ALASKA	0A15037/CFHWY00431 0A15038/CFHWY00432 0A15033/CFHWY00006	2021	J9	J11

DESIGNED BY	AAL
CHECKED BY	DRL
DRAFTED BY	CDB

SCALE: 1"=800'

DATE TIME: 11/12/2021 2:36 PM

DRAWING LOCATION
H:\JOBS\08-016 GLENN HIGHWAY 34-42 (DOT)\09 - PS&E\CAD_PH2\DRAWINGS\08016_P2_J02-J09.DWG

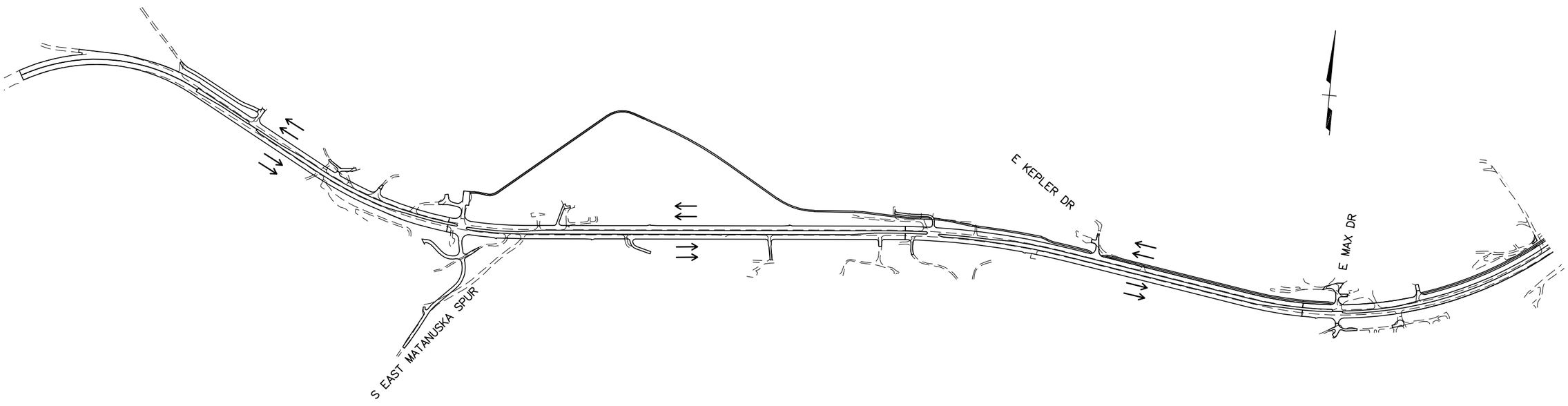

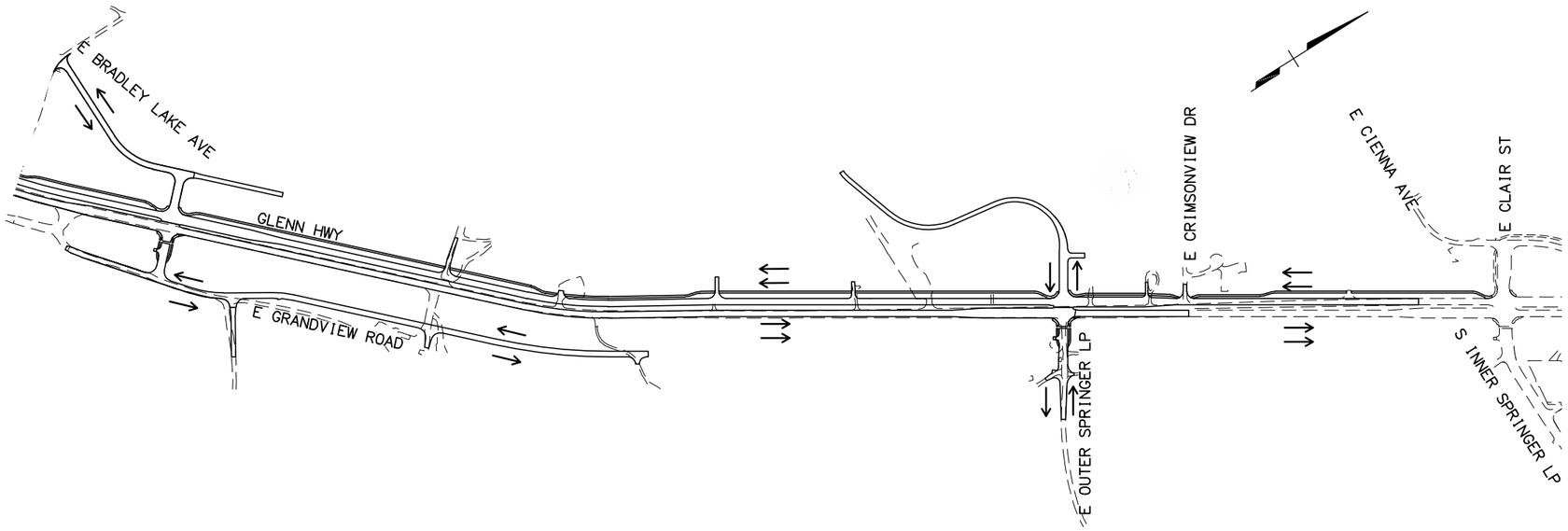

STAGE 8 NOTES:

1. REMOVE TEMPORARY CONTROL DEVICES.
2. ROUTE SOUTHBOUND TRAFFIC OVER NEW SOUTHBOUND GLENN HIGHWAY AND NORTHBOUND TRAFFIC OVER NEW NORTHBOUND GLENN HIGHWAY.

LEGEND:

- CONSTRUCTION ZONE, NOT A TRAVELED WAY
- TRAVELED WAY, NO CONSTRUCTION
- TRAVELED WAY AND CONSTRUCTION ZONE

CERTIFICATION SET
NOVEMBER 2021

STATE OF ALASKA
49TH
AVERIAN A. LARSEN
CE-119371
REGISTERED PROFESSIONAL ENGINEER

HDL ENGINEERING CONSULTANTS, LLC
3335 ARCTIC BOULEVARD, STE 100
ANCHORAGE, AK 99503
(907) 564-2120
AECL861

STATE OF ALASKA
DEPARTMENT OF TRANSPORTATION
AND PUBLIC FACILITIES

GLENN HWY: PARKS HWY TO S. INNER SPRINGER LP. (PHASE II)

TRAFFIC CONTROL CONSTRUCTION SEQUENCE STAGE 8

NO.	DATE	REVISION

STATE	PROJECT DESIGNATION	YEAR	SHEET NO.	TOTAL SHEETS
ALASKA	0A15037/CFHWY00431 0A15038/CFHWY00432 0A15033/CFHWY00006	2021	J10	J11

DESIGNED BY AAL
CHECKED BY DRL
DRAFTED BY CDB

SCALE NTS

DATE 11/11/2021 TIME 2:22 PM

DRAWING LOCATION
H:\JOBS\08-016 GLENN HIGHWAY 34-42 (DOT)\09 - PS&E\CAD_PH2\DRAWINGS\08016_P2_J10.DWG

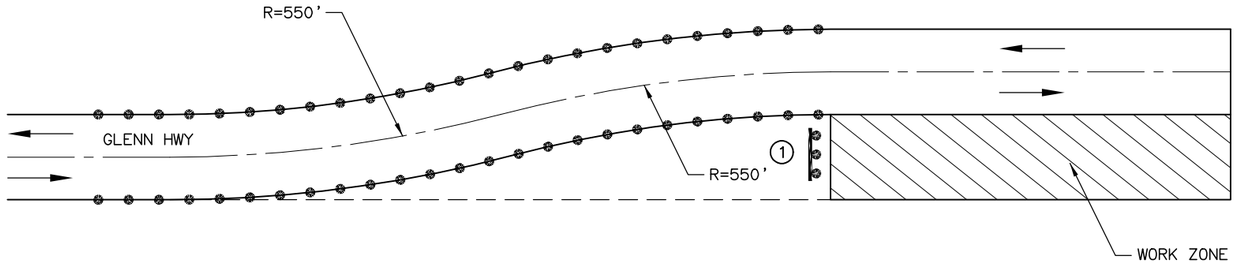

TYPICAL CROSSOVER

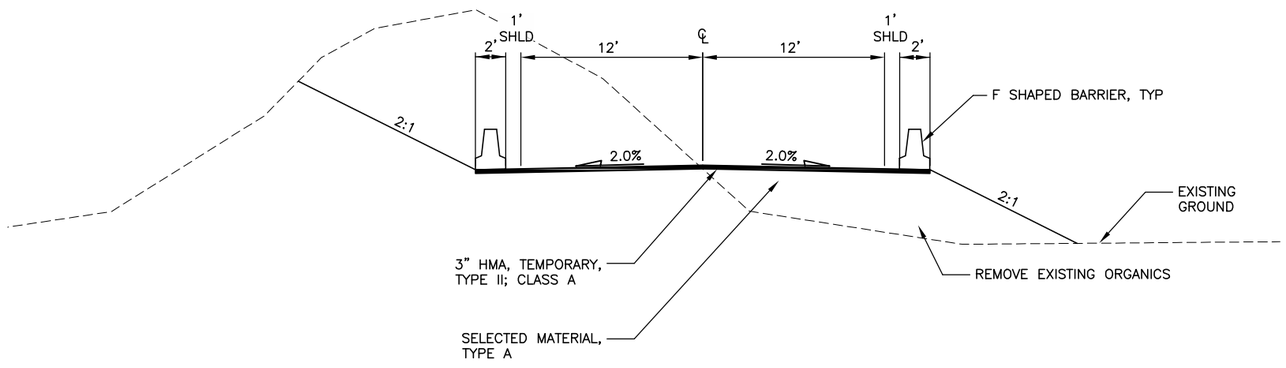

TYPICAL TEMPORARY ROADWAY AND CROSSOVERS

NOTE:

1. SIGN CROSSOVERS FOR 35 MPH, OR AS DIRECTED BY THE ENGINEER.
2. EXCLUDE OPPOSING 12 FOOT LANE FOR ONE WAY TRAFFIC.

LEGEND

- TRAVELED WAY
- WORK ZONE
- CONES/ OR DRUMS
- TYPE III BARRICADE

① ROAD CLOSED
R11-2
48"x30"

CERTIFICATION SET
NOVEMBER 2021

STATE OF ALASKA
49TH
AVERIAN A. LARSEN
CE-119371
REGISTERED PROFESSIONAL ENGINEER

HDL ENGINEERING CONSULTANTS, LLC
3335 ARCTIC BOULEVARD, STE 100
ANCHORAGE, AK 99503
(907) 564-2120
AECL861

STATE OF ALASKA
DEPARTMENT OF TRANSPORTATION
AND PUBLIC FACILITIES

GLENN HWY: PARKS HWY TO S. INNER SPRINGER LP. (PHASE II)

TRAFFIC CONTROL TEMPORARY CROSSING

NO.	DATE	REVISION	STATE	PROJECT DESIGNATION	YEAR	SHEET NO.	TOTAL SHEETS
			ALASKA	0A15037/CFHWY00431 0A15038/CFHWY00432 0A15033/CFHWY00006	2021	J11	J11

DESIGNED BY AAL
CHECKED BY DRL
DRAFTED BY CDB

SCALE NTS

DATE 11/11/2021 TIME 2:21 PM

DRAWING LOCATION
H:\JOBS\08-016 GLENN HIGHWAY 34-42 (DOT)\09 - PS&E\CAD_PH2\DRAWINGS\08016_P2_J11.DWG

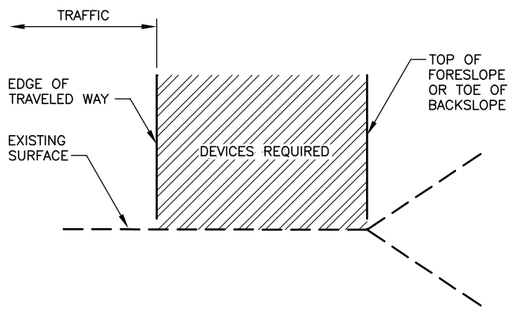

EMBANKMENT SECTION

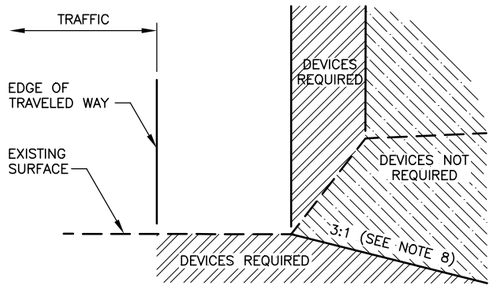

BACKSLOPE SECTION

CURB AND GUTTER SECTION

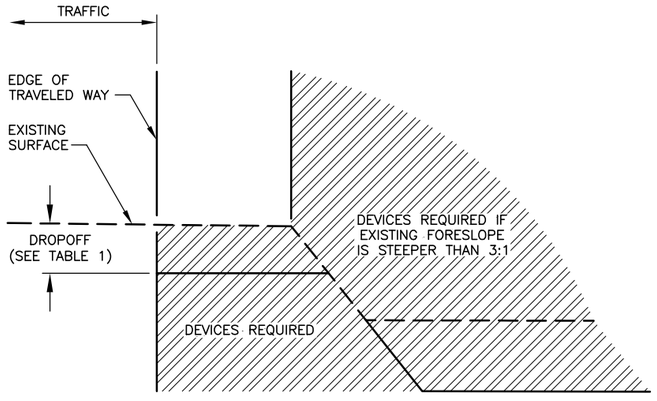

FORESLOPE SECTION

NOTES:

1. TRAFFIC CONTROL DEVICES REQUIRED BY THE GUIDELINES ON THIS SHEET ARE INTENDED FOR CONDITIONS WHICH WILL BE IN PLACE LONGER THAN ONE CONTINUOUS WORK SHIFT. AN APPROVED TRAFFIC CONTROL PLAN IS REQUIRED PRIOR TO BEGINNING WORK.
2. THE EXISTING GROUND CROSS SECTION AT A LOCATION DETERMINES WHETHER TRAFFIC CONTROL DEVICES ARE NEEDED AT THE SAME LOCATION DURING CONSTRUCTION.
3. GUARDRAIL EXISTING AT A LOCATION BEFORE CONSTRUCTION SHALL REMAIN IN PLACE DURING CONSTRUCTION OR APPROVED ALTERNATE DEVICES SHALL BE INSTALLED.
4. INSTALL TRAFFIC CONTROL DEVICES BETWEEN THE EDGE OF TRAVELED WAY AND THE WORK AREA ON ANY ROADWAY OPENED TO TRAFFIC WHEN REQUIRED BY THIS DRAWING.
5. FOR EXISTING ROADWAY ALIGNMENTS INSTALL TRAFFIC CONTROL DEVICES WHEN WORK OCCURS IN THE "DEVICES REQUIRED" AREAS SHOWN ON THIS DRAWING.
6. FOR DETOURS, TEMPORARY ROADWAYS, OR NEW ROADWAYS NOT YET COMPLETE, INSTALL TRAFFIC CONTROL DEVICES WHEN ANY OF THE FOLLOWING CONDITIONS EXIST:
   A. THE PROPOSED HORIZONTAL OR VERTICAL CURVATURE IS STEEPER THAN THE EXISTING.
   B. THE ROADWAY OR SHOULDER WIDTH IS LESS THAN THE EXISTING.
   C. THE PROPOSED BACKSLOPE OR FORESLOPE IS STEEPER THAN THE EXISTING.
7. FOR DROPOFFS, INSTALL TRAFFIC CONTROL DEVICES IN ACCORDANCE WITH THE FORESLOPE SECTION DETAIL AND TABLE 1.
8. ON ANY NEWLY CONSTRUCTED SLOPE STEEPER THAN 4:1 BUT FLATTER THAN 3:1, PROVIDE A TEN FOOT FLAT RECOVERY AREA AT THE TOE OF SLOPE OR INSTALL TRAFFIC CONTROL DEVICES IN ACCORDANCE WITH THE FORESLOPE SECTION DETAIL.
9. TRAFFIC CONTROL DEVICE REQUIREMENTS:
   A. ON ROADWAYS WITH A SPEED LIMIT GREATER THAN 40 MILES PER HOUR OR AVERAGE DAILY TRAFFIC VOLUME GREATER THAN 4000 VEHICLES PER DAY, INSTALL TEMPORARY PORTABLE CONCRETE BARRIER OR TEMPORARY GUARDRAIL. ON MULTI-LANE ROADWAYS, CLOSE THE LANE CLOSEST TO THE WORK AREA AND INSTALL DRUMS.
   B. TERMINATE RUNS OF TEMPORARY PORTABLE CONCRETE BARRIER USING ONE OF THE FOLLOWING TWO METHODS:
      i. TEMPORARY CRASH ATTENUATOR
      ii. RIGID TO SEMI-RIGID GUARDRAIL TRANSITION WITH AN APPROVED CRASHWORTHY END TREATMENT
   C. TERMINATE RUNS OF TEMPORARY GUARDRAIL USING EITHER OF THE FOLLOWING TWO METHODS:
      i. AN APPROVED CRASHWORTHY END TREATMENT
      ii. FLARE THE ENDS OF THE TEMPORARY GUARDRAIL AWAY FROM THE ROADWAY AT A RATE OF 15:1 ON A TRANSVERSE SLOPE OF 10:1 OR FLATTER TO THE OUTSIDE EDGE OF THE CLEAR ZONE.
   D. ON ALL OTHER ROADWAYS, INSTALL TYPE II BARRICADES, DRUMS OR DELINEATORS WHEN DEVICES ARE REQUIRED. SPACE THE DEVICES IN ACCORDANCE WITH THE REQUIREMENTS FOR SPACING TYPE II BARRICADES AND DRUMS SET FORTH IN THE ALASKA TRAFFIC MANUAL.
10. DO NOT CONSTRUCT VERTICAL DROPOFFS GREATER THAN 1.5" WITHIN THE TRAFFIC LANE OR ACTIVE WHEEL TRACK. PROVIDE 2' OF SHY DISTANCE FROM EDGE OF ALL TRAFFIC CONTROL DEVICES TO THE EDGE OF THE TRAVELED WAY.

TABLE 1
TRAFFIC CONTROL DEVICES REQUIRED FOR VERTICAL DROPOFFS ≤ 4 FEET FROM THE TRAVELED WAY *

ROADWAY TYPE	DROPOFF ≤ 2"	2" < DROPOFF < 12"	DROPOFF ≥ 12"
AVERAGE DAILY TRAFFIC > 4000 OR SPEED > 40 MPH	TAPER ASPHALT AT 1:1 (45°)	TYPE II BARRICADES OR DRUMS	TEMPORARY PORTABLE CONCRETE BARRIER OR TEMPORARY GUARDRAIL
ALL OTHER ROADWAYS	NONE REQUIRED	TUBULAR CANDLES OR DELINEATORS	TYPE II BARRICADES OR DRUMS

SPACE THE DEVICES IN ACCORDANCE WITH REQUIREMENTS FOR SPACING TYPE II BARRICADES AND DRUMS SET FORTH IN THE ALASKA TRAFFIC MANUAL.

CERTIFICATION SET
NOVEMBER 2021

STATE OF ALASKA
49TH
AVERIAN A. LARSEN
CE-119371
REGISTERED PROFESSIONAL ENGINEER

HDL ENGINEERING CONSULTANTS, LLC
3335 ARCTIC BOULEVARD, STE 100
ANCHORAGE, AK 99503
(907) 564-2120
AECL861

STATE OF ALASKA
DEPARTMENT OF TRANSPORTATION
AND PUBLIC FACILITIES

GLENN HWY: PARKS HWY TO S. INNER SPRINGER LP. (PHASE II)

TRAFFIC CONTROL DEVICES FOR ROADSIDES

NO.	DATE	REVISION	STATE	PROJECT DESIGNATION	YEAR	SHEET NO.	TOTAL SHEETS
			ALASKA	0A15037/CFHWY00431 0A15038/CFHWY00432 0A15033/CFHWY00006	2021	K1	K10

DESIGNED BY DRL
CHECKED BY DRL
DRAFTED BY CDB

SCALE NTS

DATE 11/11/2021 TIME 2:26 PM

DRAWING LOCATION
H:\JOBS\08-016 GLENN HIGHWAY 34-42 (DOT)\09 - PS&E\CAD_PH2\DRAWINGS\08016_P2_K01-ATR_SITE_PLAN-MODEL.DWG

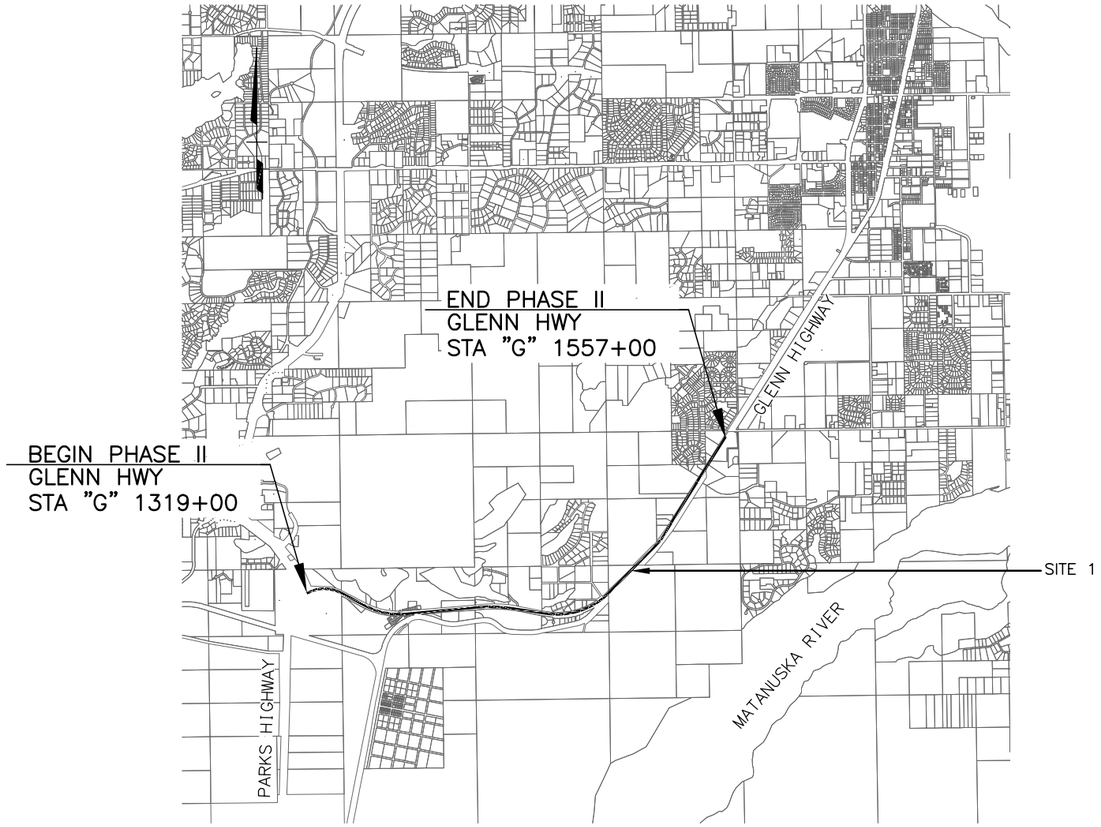

SITE PLAN
NTS

GENERAL NOTES:

1. INSTALLATION OF EQUIPMENT AND MATERIALS SHALL CONFORM TO APPLICABLE REQUIREMENTS OF THE CURRENT NATIONAL ELECTRICAL CODE, ALASKA DOT&PF STANDARD SPECIFICATIONS FOR HIGHWAY CONSTRUCTION, AND LOCAL AMENDMENTS.
2. EVERY EFFORT HAS BEEN MADE TO MAKE THE INFORMATION CONTAINED IN THESE DOCUMENTS COMPLETE AND ACCURATE, HOWEVER, THE CONTRACTOR SHALL FIELD VERIFY ALL EXISTING SITE CONDITIONS AND DIMENSIONS.
3. PVC CONDUIT FROM JUNCTION BOXES TO TRAFFIC LOOPS IS NOT ALLOWED. USE RMC OR IMC ONLY.
4. ALL PVC CONDUIT AND FITTINGS SHALL BE 1 INCH SCHEDULE 80.
5. JUNCTION BOX LOCATIONS ARE APPROXIMATE. LOCATE PROPOSED J-BOXES SO THAT THEY ARE LOCATED OUT OF THE PATHWAY AND DRAINAGE COLLECTION AREAS.

ATR ASSEMBLIES SCHEDULE

CONSTRUCION SITE NUMBER	SITE LOCATION	COUNT SITE NUMBER	NUMBER OF LANES	NUMBER OF PRESENCE LOOPS	NUMBER OF PIEZOELECTRIC SENSORS	LOOP AND CONDUIT	REMARKS
1	"G" STA 1457+37, 33' LT N61°33'21" W149°10'14"	53676000	4	8	8	INSTALL NEW	INSTALL GROUND TEMPERATURE SENSOR, PAVEMENT SURFACE TEMPERATURE SENSOR, AMBIENT AIR SENSOR, AND TILT POLE RADAR

CERTIFICATION SET
NOVEMBER 2021

STATE OF ALASKA
49TH
DENNIS R. LINNELL
CE-7649
REGISTERED PROFESSIONAL ENGINEER

HDL ENGINEERING CONSULTANTS, LLC
3335 ARCTIC BOULEVARD, STE 100
ANCHORAGE, AK 99503
(907) 564-2120
AECL861

STATE OF ALASKA
DEPARTMENT OF TRANSPORTATION
AND PUBLIC FACILITIES

GLENN HWY: PARKS HWY TO S. INNER SPRINGER LP. (PHASE II)

ATR SITE PLAN

NO.	DATE	REVISION

STATE	PROJECT DESIGNATION	YEAR	SHEET NO.	TOTAL SHEETS
ALASKA	0A15037/CFHWY00431 0A15038/CFHWY00432 0A15033/CFHWY00006	2021	K2	K10

DESIGNED BY DRL
CHECKED BY DRL
DRAFTED BY CDB

SCALE NTS

DATE TIME 11/11/2021 2:27 PM

DRAWING LOCATION
P:\PROJECTS\0A15037 GLENN HIGHWAY 34-42 (DOT)\09 - PS&E\CAD_PH2\DRAWINGS\06016_P2_K02 TRAFFIC LEGEND AND NOTES_MODEL.DWG

SYMBOL LEGEND

EXISTING	PROPOSED	
IXI	⊠	TRAFFIC RECORDER CABINET
#	#	TYPE II JUNCTION BOX
###	###	LOOP DETECTOR
_____	_____	CONDUIT
		PIEZOELECTRIC SENSOR
	(TG)	GROUND TEMPERATURE SENSOR (TG)
	(TS)	SURFACE TEMPERATURE SENSOR (TS)
	(TA)	AMBIENT AIR PROBE (TA)
		TILT POLE RADAR SENSOR

ABBREVIATIONS

AWG	AMERICAN WIRE GAUGE
EB	EAST BOUND
HEAD	VEHICULAR SIGNAL HEAD
IMC	INTERMEDIATE METAL CONDUIT
INTX	INTERSECTION
INTX L	INTERSECTION LIGHTING
LC	LOAD CENTER
LFNC	LIQUIDTIGHT FLEXIBLE NONMETALLIC CONDUIT
LTG	LIGHTING
NB	NORTH BOUND
NID	NETWORK INTERFACE DEVICE
OMNI	OMNI DIRECTIONAL ANTENNA
P1	TRAFFIC SIGNAL POLE #
PE	POLYETHYLENE CONDUIT
PEC	PHOTOELECTRIC CELL
PED B 28	PEDESTRIAN PUSH BUTTON #
PEDI	PEDESTRIAN SIGNAL HEAD
PRE 2	PREEMPTION #
PRE CON 2	PREEMPTION CONTROLLER #
PVC	POLYVINYL CHLORIDE CONDUIT
RMC	RIGID METAL CONDUIT
SB	SOUTH BOUND
SIG	SERVICE TO CONTROLLER
TC	TRAFFIC CONTROLLER
TYP	TYPICAL
WB	WEST BOUND
YAGI	DIRECTIONAL ANTENNA

INDUCTIVE LOOPS

ALL INDUCTIVE LOOPS SHALL BE WOUND IN THE SAME DIRECTION WITH THE STARTING LEAD MARKED "S" PER SECTION 660–3.05.13.

LEAD–IN WIRES FOR EACH LOOP SHALL BE IN SEPARATE CONDUITS TO THE FIRST JUNCTION BOX. THESE CONDUITS SHALL BE SEPARATED FROM OTHER LOOPS BY A MINIMUM OF 12 INCHES.

INDUCTIVE LOOPS SHALL BE INSTALLED IMMEDIATELY PRIOR TO PAVING THE SECTION OF ROADWAY. FINAL LIFT ASPHALT PAVEMENT SHALL BE SMOOTH OVER ALL INDUCTIVE LOOPS AND WITHOUT TRANSVERSE SEAMS, JOINTS, OR ROUGHNESS WITHIN 50 FEET OF THE LOOPS.

LABELS

ALL CABLES SHALL BE LABELED AT BOTH ENDS AND AT EVERY JUNCTION BOX THROUGH WHICH THE CABLES PASS, PER SPECIFICATION SECTION 660–3.05.

ALL WIRE PAIRS SHALL BE LABELED AT THE TERMINAL BLOCK AND AT ANY LOOSE ENDS.

THE FOLLOWING CONVENTIONS SHALL APPLY TO DESIGNATING AND LABELING CABLES AND WIRE PAIRS:

LANES: TRAFFIC LANES AND THEIR RESPECTIVE LOOPS AND SENSORS SHALL BE LABELED FROM THE OUTSIDE EDGE OF THE ROAD TOWARD THE CENTER AS FOLLOWS:

A	B	C	D		D	C	B	A

TERMINAL BLOCKS: WIRES FROM SENSORS PLACED IN LANES WHICH ARE CLOSEST TO THE CONTROL BOX SHALL BE PLACED AT THE LEFT OR AT THE TOP OF THE TERMINAL BLOCK, DEPENDING ON ORIENTATION.

WIRES FOR INDUCTIVE LOOPS, SENSORS AND RESERVES ARE LABELED AS FOLLOWS:

PnDLc

WHERE:

P IS THE PREFIX:
- V TRAFFIC VOLUME LOOP
- H VEHICLE CLASSIFICATION / SPEED LOOP
- GL AUTOMATIC VEHICLE CLASSIFICATION (AVC) SENSOR
- GA AUTOMATIC VEHICLE CLASSIFICATION PIEZO

n NUMBER SUFFIX FOR MULTIPLE LOOPS IN THE SAME LANE

D DIRECTION (N, S, E, W, NE, SE, SW, NW)

L IS THE PREFIX FOR ROAD DESIGNATION

L LANE*

c IS THE SUFFIX FOR LANE DESIGNATION (A, B, C, D)

REFERENCE SPECIFICATIONS

ALL WIRING IN THIS SECTION SHALL BE CONSTRUCTED PER SPECIFICATION SECTION 660 SIGNALS AND LIGHTING, EXCEPT WHERE NOTED ON THE PLANS OR IN THE SPECIAL PROVISIONS. IN PARTICULAR, ALL CONSTRUCTION SHALL CONFORM TO SPECIFICATION SECTIONS 660–3.03 CONDUIT, 660–3.04 JUNCTION BOXES, 660–3.05 WIRING, 660–3.06 BONDING AND GROUNDING, AND 660–3.01.7 FIELD TESTS, EXCEPT AS MODIFIED BY SECTION 669 AUTOMATED TRAFFIC RECORDERS.

CERTIFICATION SET
NOVEMBER 2021

WORK IN PROGRESS
This document represents current concepts as of ___.
(See date @ left border)

HDL ENGINEERING CONSULTANTS, LLC
3335 ARCTIC BOULEVARD, STE 100
ANCHORAGE, AK 99503
(907) 564–2120
AECL861

STATE OF ALASKA
DEPARTMENT OF TRANSPORTATION
AND PUBLIC FACILITIES

GLENN HWY: PARKS HWY TO S. INNER SPRINGER LP. (PHASE II)

TRAFFIC LEGEND AND NOTES

NO.	DATE	REVISION

STATE	PROJECT DESIGNATION	YEAR	SHEET NO.	TOTAL SHEETS
ALASKA	0A15037/CFHWY00431 0A15038/CFHWY00432 0A15033/CFHWY00006	2021	K3	K10

DRL DRL CDB
DESIGNED BY CHECKED BY DRAFTED BY
SCALE NTS
DATE TIME 11/11/2021 2:27 PM

DRAWING LOCATION
H:\JOBS\08-016 GLENN HIGHWAY 34-42 (DOT)\09 - PS&E\CAD_PH2\DRAWINGS\08016_P2_K03_JUNCTION-BOX-DETAILS.DWG

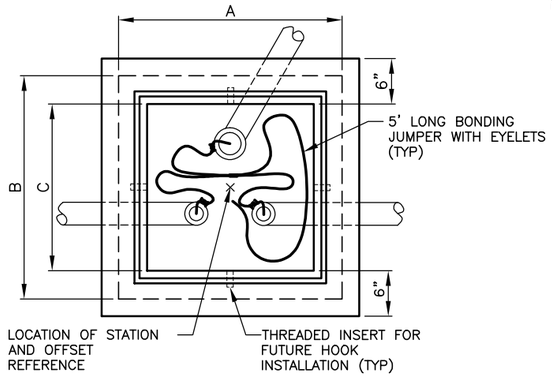

PLAN

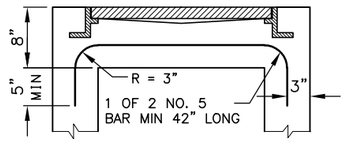

SECTION B–B

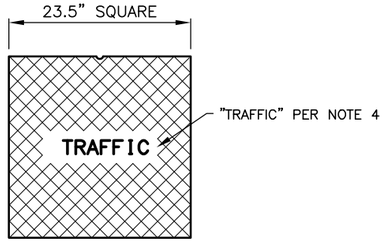

LID FOR TYPE II J–BOXES

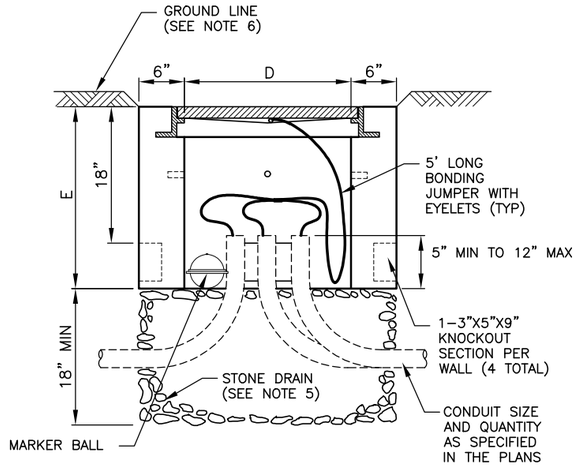

ELEVATION

TYPE II JUNCTION BOX

NOTES

1. AVOID INSTALLING JUNCTION BOXES IN DRIVEWAYS OR IN LOCATIONS SUBJECT TO USE BY HEAVY TRUCKS. INSTALL JUNCTION BOXES ONLY AT THE LATERAL LOCATIONS ALLOWED IN SUBSECTION 660–3.04.
2. FURNISH TYPE II JUNCTION BOXES WITH CAST IRON FRAMES AND LIDS THAT WEIGH A MINIMUM OF 210 POUNDS AND ARE RATED FOR HEAVY TRAFFIC LOADS IN COMPLIANCE WITH AASHTO M306.
3. CONSTRUCT JUNCTION BOXES ACCORDING TO SECTION 501 USING CLASS A CONCRETE. SYNTHETIC STRUCTURAL FIBER–REINFORCED CONCRETE THAT MEETS ASTM C 1116 AND CONTAINS FIBER IN PROPORTIONS AS RECOMMENDED BY THE FIBER MANUFACTURER MAY BE ADDED FOR STRENGTH.
4. FURNISH LIDS WITH THE WORD "TRAFFIC" INSCRIBED INTO THEM.
5. UNDER JUNCTION BOXES, INSTALL STONE DRAINS THAT CONSIST OF POROUS BACKFILL MATERIAL CONFORMING TO SUBSECTION 703–2.10.
6. SET THE TOPS OF JUNCTION BOXES WITH THE FOLLOWING DIMENSIONS BELOW THE FINISHED SURROUNDING SURFACE:
   - 1" IN PAVED MEDIANS AND ADJACENT TO PEDESTRIAN FACILITIES
   - 1/4" IN PEDESTRIAN FACILITIES
   - 2" IN ALL OTHER AREAS
7. BOND JUNCTION BOX LIDS TO THE SYSTEM OF EQUIPMENT GROUNDING CONDUCTORS ACCORDING TO SUBSECTION 660–3.06. ATTACH BONDING JUMPERS TO THE JUNCTION BOX LIDS WITH BRASS OR STAINLESS STEEL HARDWARE.
8. INSTALL LOOP DETECTOR TAILS THROUGH ONE OF THE KNOCKOUTS OF TYPE II JUNCTION BOXES. AFTER SETTING THE BOXES TO GRADE, INSTALL GROUT IN THE GAPS THAT REMAIN IN THE KNOCKOUT.
9. INSTALL AN ELECTRONIC MARKER BALL IN ALL JUNCTION BOXES PER SUBSECTION 660–3.04.
10. PRIOR TO INSTALLATION MARK ALL JUNCTION BOX LOCATIONS WITH A WIRE STAFF VINYL FLAG. THE FLAG SHALL BE RED IN COLOR AND MINIMUM 4–INCHES TALL BY 5–INCHES WIDE. THE WIRE STAFF SHALL BE 21–INCHES IN LENGTH AND CONSTRUCTED OF MINIMUM 15.5 GAUGE STEEL.

J–BOX DIMENSIONS					
J–BOX TYPE	DIMENSIONS				
	A (MAX.)	B (MAX.)	C (MIN.)	D (MIN.)	E (MIN.)
II	29 1/2"	29 1/2"	22"	22"	24"

CERTIFICATION SET
NOVEMBER 2021

STATE OF ALASKA
STATE OF ALASKA 49TH
DENNIS R. LINNELL CE–7649
REGISTERED PROFESSIONAL ENGINEER

HDL ENGINEERING CONSULTANTS, LLC
3335 ARCTIC BOULEVARD, STE 100
ANCHORAGE, AK 99503
(907) 564–2120
AECL861

STATE OF ALASKA
DEPARTMENT OF TRANSPORTATION
AND PUBLIC FACILITIES

GLENN HWY: PARKS HWY TO S. INNER SPRINGER LP. (PHASE II)

AUTOMATED TRAFFIC RECORDER JUNCTION–BOX

NO.	DATE	REVISION	STATE	PROJECT DESIGNATION	YEAR	SHEET NO.	TOTAL SHEETS
			ALASKA	0A15037/CFHWY00431 0A15038/CFHWY00432 0A15033/CFHWY00006	2021	K4	K10

DESIGNED BY DRL
DRAFTED BY DRL
CHECKED BY CDB
SCALE NTS
DATE 11/11/2021 TIME 2:28 PM
DRAWING LOCATION H:\JOBS\08-016 GLENN HIGHWAY 34-42 (DOT)\09 - PS&E\CAD_PH2\DRAWINGS\08016_P2_K04_PIEZO_DETAILS.DWG

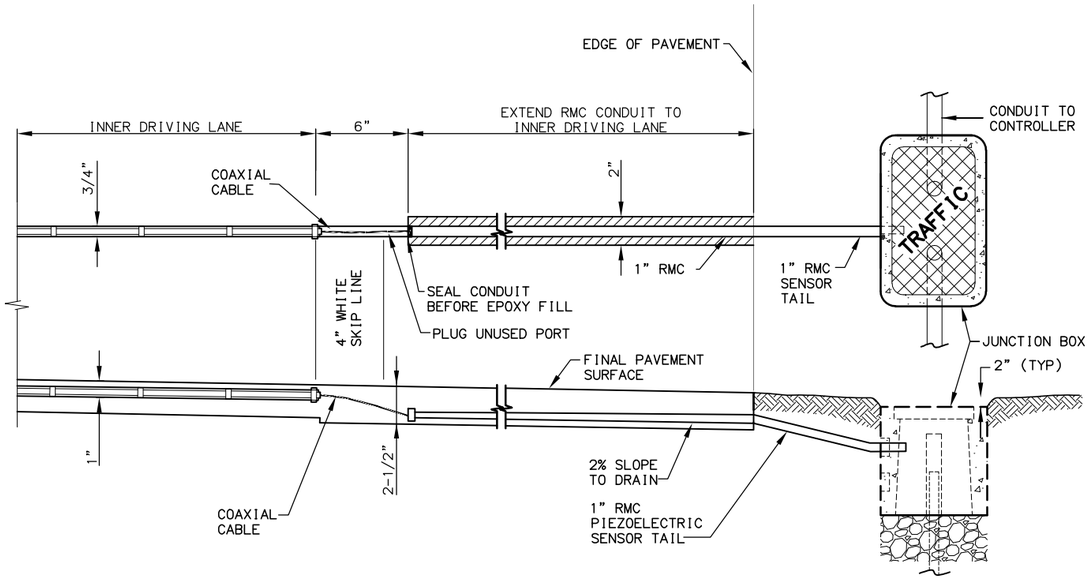

SHOULDER SECTION FOR INNER LANES

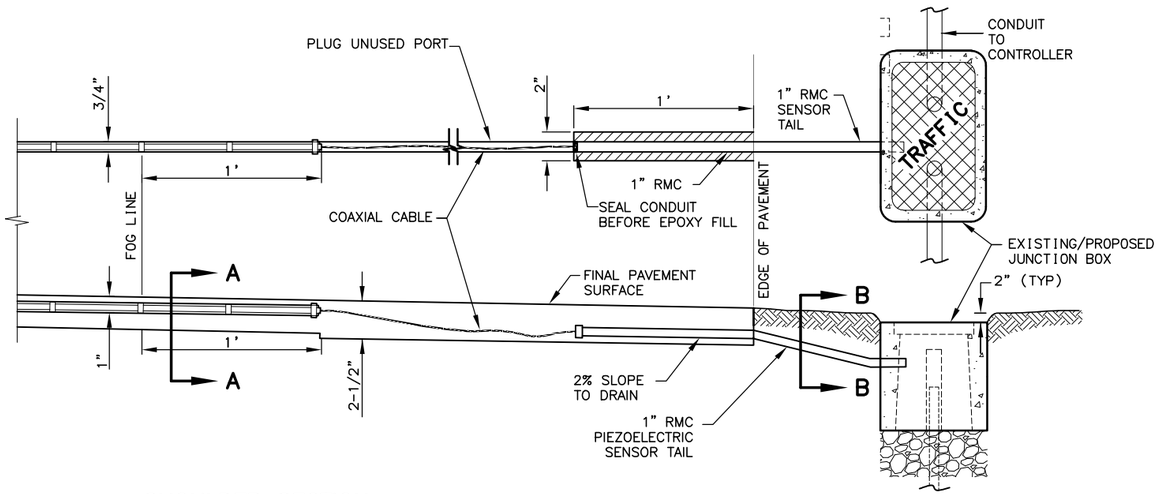

SHOULDER SECTION

TYPICAL PIEZOELECTRIC SENSOR DETAILS

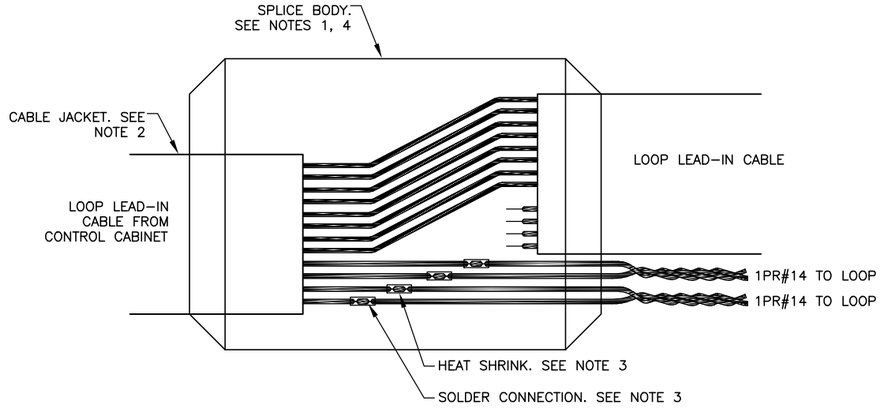

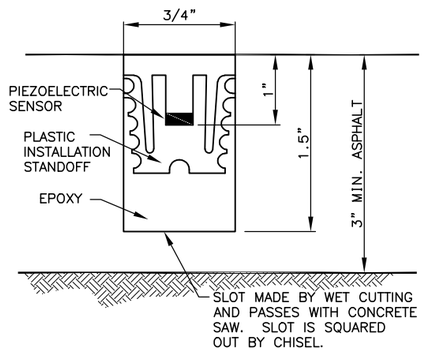

SECTION A–A

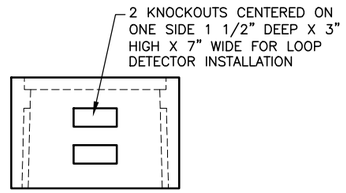

SECTION B–B

NOTES:

1. TERMINATE ALL SPARES WITHIN THE SPLICE BODY.
2. SPLICE BODY TO ENCLOSE ALL CABLE JACKETS.
3. STAGGER SPLICE POINTS. SOLDER CONNECTIONS, ENCLOSE EXPOSED CONDUCTORS IN ADHESIVE WALL HEAT SHRINK TUBING.
4. USE A NON–REENTERABLE, WET LOCATION, COMMERCIAL SPLICE KIT 3M TYPE 82–F1 OR EQUIVALENT AS APPROVED BY THE ENGINEER.
5. MINIMUM SPACING BETWEEN TAIL AND LOOP OF PIEZO IS 1 FOOT. DO NOT CROSS SENSOR TAILS.
6. LOCATE SHOULDERED LANE PIEZO SENSORS WITH ONE END EXTENDED 1 FOOT BEYOND FOG LINE. LOCATE PIEZO SENSORS IN LANES WITHOUT SHOULDERS IN THE CENTER OF THE TRAVELED LANE.
7. ALL WORK TO BE COMPLETED WITHIN ROW.
8. COAX CABLE FOR PIEZO SENSORS TO BE RUN WITHOUT SPLICES TO "F" CONNECTOR AT TERMINAL BLOCK IN CABINET.
9. SEAL END OF CONDUIT WITH 3M TYPE LOOP SEALANT OR EQUIVALENT AS APPROVED BY THE ENGINEER.
10. TEST PIEZOELECTRIC SENSOR FOR CONTINUITY AND INSULATION INTEGRITY BEFORE SEALING. PROVIDE ENGINEER A WRITTEN RECORD OF FIELD TESTS AS REQUIRED IN 660–3.01(7).

CERTIFICATION SET
NOVEMBER 2021

STATE OF ALASKA
DEPARTMENT OF TRANSPORTATION
AND PUBLIC FACILITIES

GLENN HWY: PARKS HWY TO S. INNER SPRINGER LP. (PHASE II)

PIEZOELECTRIC SENSOR AND SPLICE DETAILS

STATE OF ALASKA
49TH
DENNIS R. LINNELL
CE–7649
REGISTERED PROFESSIONAL ENGINEER

HDL ENGINEERING CONSULTANTS, LLC
3335 ARCTIC BOULEVARD, STE 100
ANCHORAGE, AK 99503
(907) 564–2120
AECL861

NO.	DATE	REVISION	STATE	PROJECT DESIGNATION	YEAR	SHEET NO.	TOTAL SHEETS
			ALASKA	0A15037/CFHWY00431 0A15038/CFHWY00432 0A15033/CFHWY00006	2021	K5	K10
		07/11/2012 CENTRAL REGION DETAIL - REPLACES STD. DWG. T-32.10					

DESIGNED BY DRL
CHECKED BY DRL
DRAFTED BY CDB

SCALE NTS

DATE 11/11/2021 TIME 2:32 PM

DRAWING LOCATION
H:\JOBS\08-016 GLENN HIGHWAY 34-42 (DOT)\09 - PS&E\CAD_PH2\DRAWINGS\08016_P2_K05_LOOP_DETECTOR.DWG

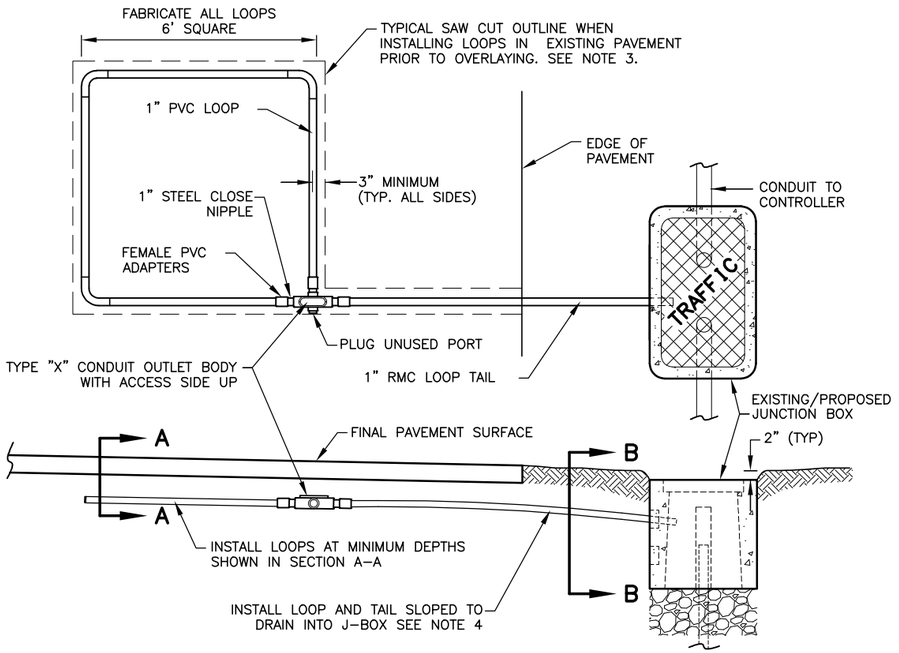

SHOULDER SECTION

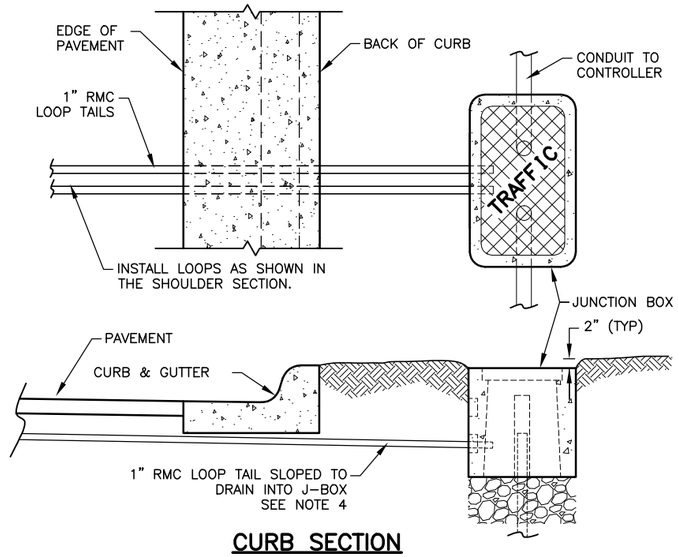

CURB SECTION

NOTES:

1. EACH LOOP DETECTOR SHALL CONSIST OF A SINGLE PIECE OF #14 AWG CONDUCTOR INSTALLED IN ONE INCH SCHEDULE 80 PVC CONDUIT. BUILD ALL LOOPS 6 FEET SQUARE, UNLESS OTHERWISE NOTED, BY SOLVENT WELDING ALL PVC TO PVC JOINTS. USE TYPE X OUTLET BODIES MADE OF HOT DIP GALVANIZED STEEL TO JOIN THE LOOPS AND TAILS.
2. INSTALL 4 TURNS OF CONDUCTOR IN ALL LOOPS AND PROVIDE TAILS THAT EXTEND TO THE JUNCTION BOX SPECIFIED ON THE PLANS. USE #14 AWG CONDUCTOR IN A POLYETHYLENE TUBE CONFORMING TO IMSA SPECIFICATION 51–5. WIND THE TAIL CONDUCTORS TOGETHER AT A RATE OF 3 TWISTS PER FOOT.
3. INSTALL ALL LOOP DETECTORS BEFORE OVERLAYING THE EXISTING PAVEMENT OR PAVING THE NEW ROADWAY.
4. INSTALL ALL LOOP DETECTORS SLOPED TO DRAIN INTO THE JUNCTION BOX THE LOOP TAIL ENTERS. IF CONTRACTOR CANNOT INSTALL THE LOOP TO DRAIN INTO THE J–BOX, DRILL FIVE 1/4" WEEP HOLES ON 1 FOOT CENTERS IN THE UNDERSIDE OF THE CONDUIT AT THE LOW SPOT.
5. CONTRACTOR MAY INSTALL A LOOP TAIL IMMEDIATELY ADJACENT TO A LOOP AND OTHER LOOP TAILS. LOOP TAILS SHALL NOT CROSS LOOP CONDUITS.
6. TEST ALL LOOP DETECTORS FOR CONTINUITY AND INSULATION INTEGRITY BEFORE SEALING THE LOOPS UNDER THE FINAL LIFT OF ASPHALT. PROVIDE THE ENGINEER A WRITTEN RECORD OF FIELD TESTING TO INCLUDE; CONTINUITY, INSULATION RESISTANCE AND INDUCTANCE TESTS AS REQUIRED IN SECTION 660–3.01(7) OF THE STANDARD SPECIFICATION FOR HIGHWAY CONSTRUCTION.

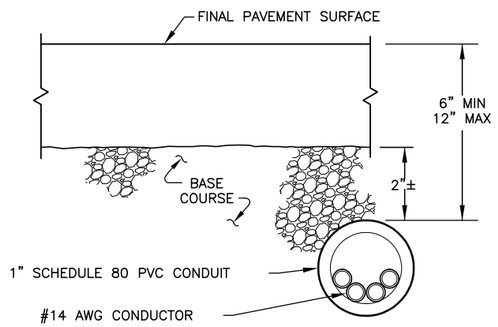

SECTION A–A

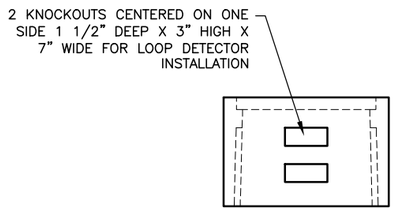

SECTION B–B

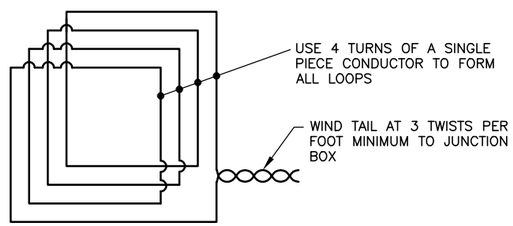

6'X6' LOOP WIRING DETAIL

CERTIFICATION SET
NOVEMBER 2021

STATE OF ALASKA
49TH
DENNIS R. LINNELL
CE–7649
REGISTERED PROFESSIONAL ENGINEER

HDL ENGINEERING CONSULTANTS, LLC
3335 ARCTIC BOULEVARD, STE 100
ANCHORAGE, AK 99503
(907) 564–2120
AECL861

STATE OF ALASKA
DEPARTMENT OF TRANSPORTATION
AND PUBLIC FACILITIES

GLENN HWY: PARKS HWY TO S. INNER SPRINGER LP. (PHASE II)

LOOP DETECTOR DETAIL

NO.	DATE	REVISION	STATE	PROJECT DESIGNATION	YEAR	SHEET NO.	TOTAL SHEETS
			ALASKA	0A15037/CFHWY00431 0A15038/CFHWY00432 0A15033/CFHWY00006	2021	K6	K10

DESIGNED BY DRL
CHECKED BY DRL
DRAFTED BY CDB

SCALE NTS

DATE 11/11/2021 TIME 2:32 PM

DRAWING LOCATION
H:\JOBS\08-016 GLENN HIGHWAY 34-42 (DOT)\09 - PS&E\CAD_PH2\DRAWINGS\08016_P2_K06_TEMP_DETAILS-MODEL.DWG

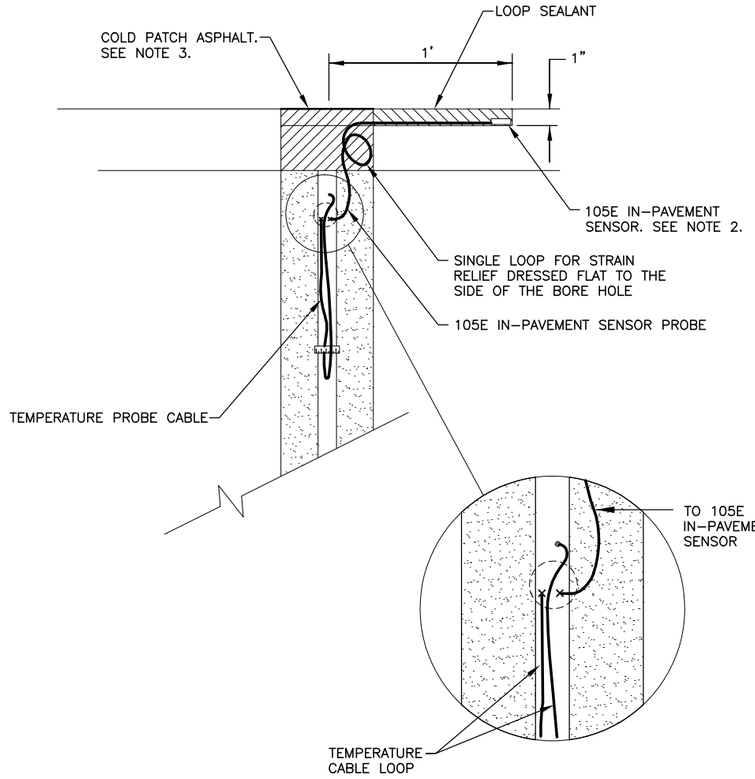

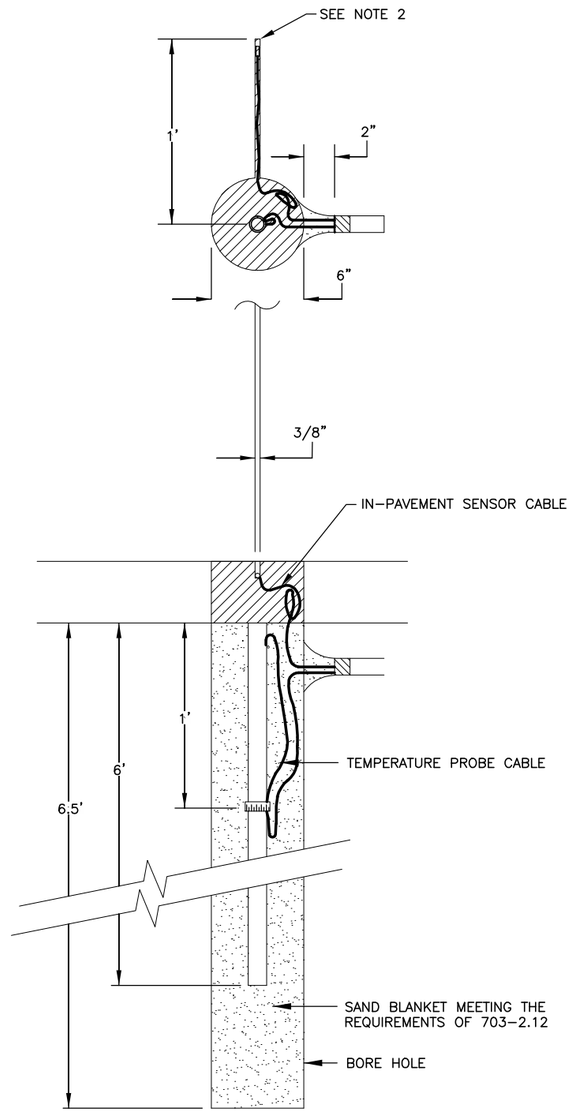

NOTES:

1. SEAL END OF CONDUIT WITH 3M TYPE LOOP SEALANT OR EQUIVALENT6 AS APPROVED BY THE ENGINEER.
2. SLOT FOR IN-PAVEMENT SENSORS PARALLEL TO TRAVELED ROADWAY.
3. DO NOT USE TORCH TO HEAT COLD PATCH WHILE IT IS ON TOP OF TEMPERATURE PROBES. HEAT COLD PATCH TO THE SIDE, THEN SHOVEL IT INTO PATCH.

TEMPERATURE SENSOR DETAILS

NTS

CERTIFICATION SET
NOVEMBER 2021

STATE OF ALASKA
49TH
DENNIS R. LINNELL
CE-7649
REGISTERED PROFESSIONAL ENGINEER

HDL ENGINEERING CONSULTANTS, LLC
3335 ARCTIC BOULEVARD, STE 100
ANCHORAGE, AK 99503
(907) 564-2120
AECL861

STATE OF ALASKA
DEPARTMENT OF TRANSPORTATION
AND PUBLIC FACILITIES

GLENN HWY: PARKS HWY TO S. INNER SPRINGER LP. (PHASE II)

TEMPERATURE SENSOR DETAILS

NO.	DATE	REVISION	STATE	PROJECT DESIGNATION	YEAR	SHEET NO.	TOTAL SHEETS
			ALASKA	0A15037/CFHWY00431 0A15038/CFHWY00432 0A15033/CFHWY00006	2021	K7	K10
		07/11/2012 CENTRAL REGION DETAIL					

DESIGNED BY DRL
CHECKED BY DRL
DRAFTED BY CDB
SCALE NTS
DATE 11/11/2021 TIME 2:32 PM
DRAWING LOCATION
H:\JOBS\08-016 GLENN HIGHWAY 34-42 (DOT)\09 - PS&E\CAD_PH2\DRAWINGS\08016_P2_K07_TILT POLE DETAILS-MODEL.DWG

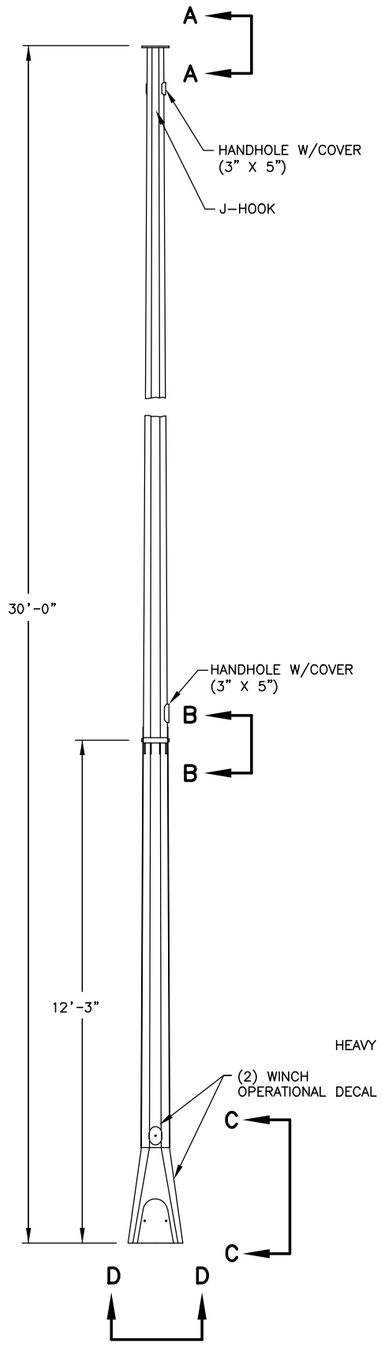

TILT POLE SIDE VIEW

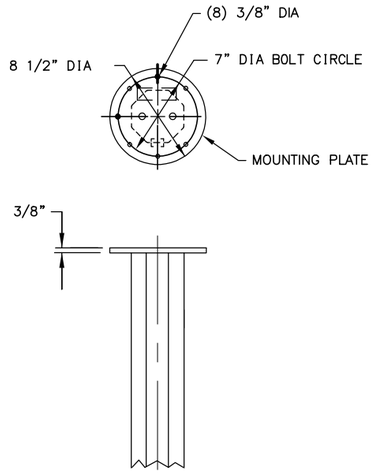

SECTION A-A
POLE TOP DETAIL

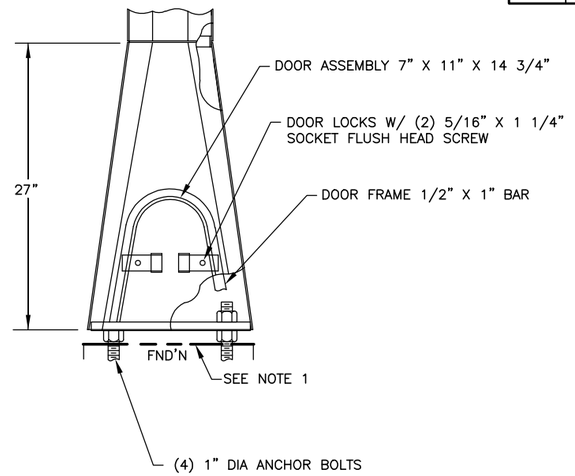

TILT POLE NOTES:

1. CONTRACTOR TO FURNISH AND INSTALL TILT POLE ON PIPE PILE FOUNDATION FOR ELECTROLIERS WITH MODIFIED BOLT PATTERN.
2. MATERIAL – HIGH STRENGTH LOW ALLOY STEEL 50,000 (334738 KPA) PSI MIN YIELD PER ASTM A572 OR A607 (A588 OR A606 IF SELF WEATHERING) BASE PLATE MATERIAL 36,000 (248211 KPA) PSI MIN YIELD PER ASTM A36 (A588 IF SELF WEATHERING).
3. DO NOT GROUT BETWEEN THE BASE PLATE AND FOUNDATION. AIR MUST BE ALLOWED TO FLOW THROUGH THE POLE TO PREVENT MOISTURE INSIDE THE POLE.
4. FINISH – GALVANIZED.
5. POLE SHOULD TILT PARALLEL TO THE ROADWAY.

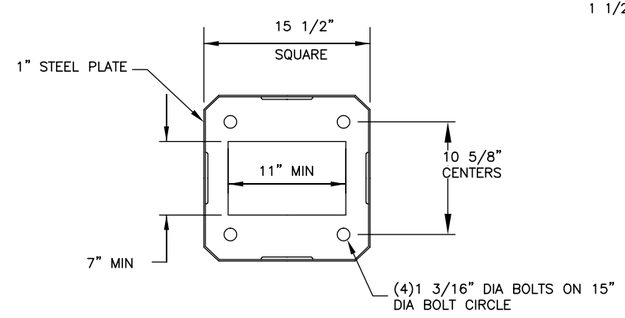

SECTION D-D
POLE BASE DETAIL

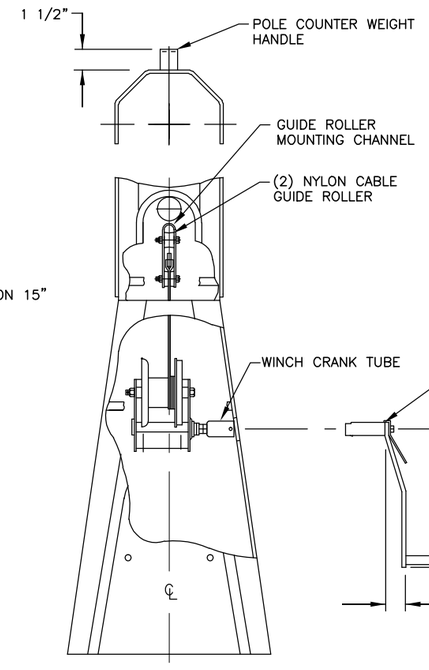

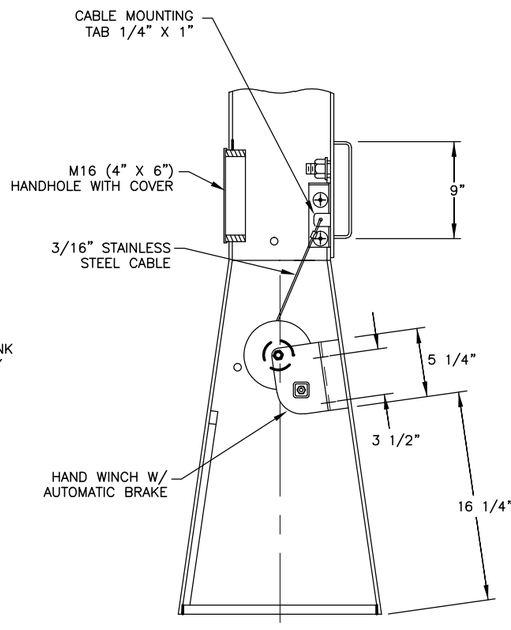

SECTION C-C
WINCH DETAIL

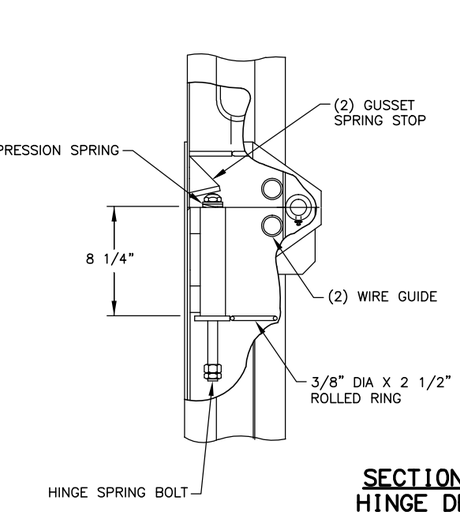

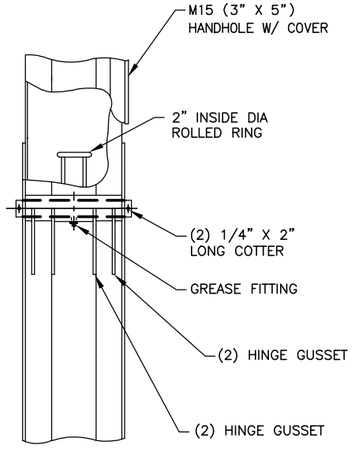

SECTION B-B
HINGE DETAIL

CERTIFICATION SET
NOVEMBER 2021

STATE OF ALASKA
49TH
DENNIS R. LINNELL
CE-7649
REGISTERED PROFESSIONAL ENGINEER

HDL ENGINEERING CONSULTANTS, LLC
3335 ARCTIC BOULEVARD, STE 100
ANCHORAGE, AK 99503
(907) 564-2120
AECL861

STATE OF ALASKA
DEPARTMENT OF TRANSPORTATION
AND PUBLIC FACILITIES

GLENN HWY: PARKS HWY TO S. INNER SPRINGER LP. (PHASE II)

TILT POLE DETAILS

NO.	DATE	REVISION

STATE	PROJECT DESIGNATION	YEAR	SHEET NO.	TOTAL SHEETS
ALASKA	0A15037/CFHWY00431 0A15038/CFHWY00432 0A15033/CFHWY00006	2021	K8	K10

DRL DRL CDB
DESIGNED BY CHECKED BY DRAFTED BY
SCALE NTS
DATE 11/11/2021 TIME 2:34 PM

DRAWING LOCATION
D:\DOT\GLENN HIGHWAY 34-42 (DOT)\09 - PS&E\CAD_PH2\DRAWINGS\08016_P2_K08_ATR CBA2 CABINET DETAILS- MODEL.DWG

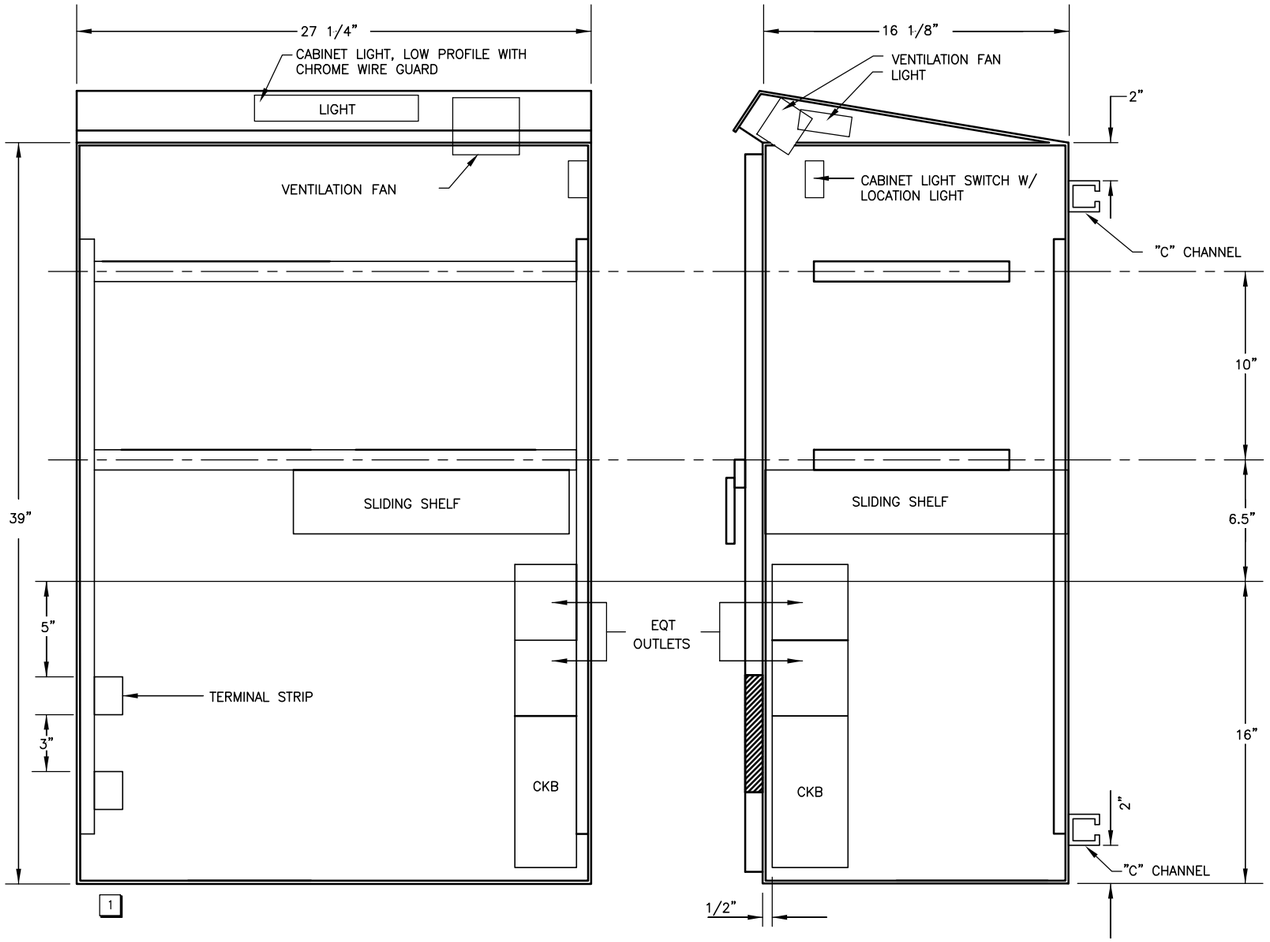

CBA2 CABINET DETAILS

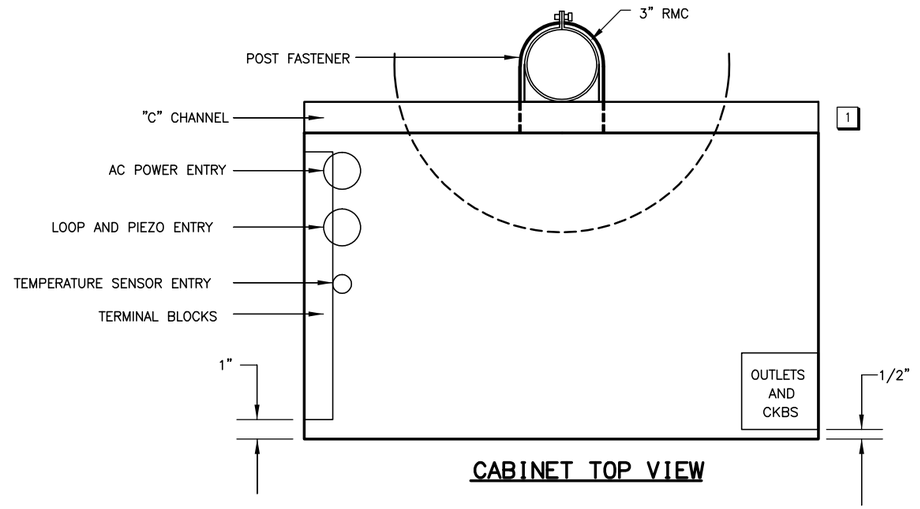

CABINET TOP VIEW

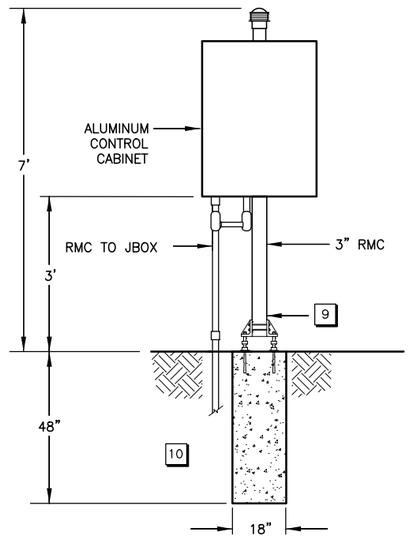

FRONT ELEVATION

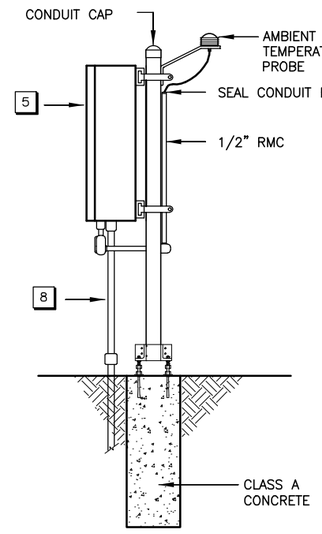

SIDE ELEVATION

CABINET TYPE CBA2

CERTIFICATION SET
NOVEMBER 2021

NOTES:

1. USE CONDUIT HUBS IN BOTTOM OF CABINET. USE MYERS HUBS WITH NEOPRENE SEAL AND INSULATED THROAT FOR NON-POWER CONDUITS WITH DETECTOR LEAD-IN CABLES AND TELEPHONE SERVICE. USE MYERS HUBS FOR SERVICE ENTRANCE CONDUIT AND CONNECT FLEXIBLE METAL CONDUIT TO CB PANEL INSIDE CABINET.
2. PROVIDE VOLTAGE SURGE PROTECTION IN CB PANEL.
3. ALL 120V WIRING, INCLUDING THAT FOR PANELBOARD, LIGHT, FAN, AND THERMOSTATS TO BE IN FLEXIBLE METAL CONDUIT WITH EXCEPTION OF CORD CONNECTED ELECTRONIC EQUIPMENT.
4. ALL EQUIPMENT INSIDE CABINET TO BE FASTENED TO RAILS WITH NO SCREW PENETRATIONS OF THE CABINET SURFACE.
5. CONTROLLER CABINET DOORS TO OPEN AWAY FROM ROADWAY.
6. USE FACTORY 90° ELBOWS TO/FROM J-BOXES ON ALL CONDUITS LARGER THAN 1 INCH.
7. ALL CONDUIT SHALL BE RMC UNLESS NOTED OTHERWISE. SEE SCHEDULE FOR SIZE.
8. NOT ALL CONDUITS SHOWN IN DETAIL. ADD OTHERS AS REQUIRED.
9. PROVIDE FLANGE, FRANGIBLE COUPLING AND FOUNDATION PER DOT STANDARD PLAN S-31.
10. INSTALL FOUNDATION IN SELECT MATERIAL, TYPE A. THE CONTRACTOR SHALL EXCAVATE AND BACKFILL WITH GRAVEL 2 FEET BELOW AND SURROUNDING THE FOUNDATION.
11. LOCKS SHALL BE CORBIN NO. 2, AND SHALL BE COMPATIBLE WITH EXISTING LOCKS.
12. TERMINAL STRIPS SHALL BE POSITIONED AND LABELED TO REFLECT ORIENTATION OF LANES ON ROADWAY.

STATE OF ALASKA
49TH
DENNIS R. LINNELL
CE-7649
REGISTERED PROFESSIONAL ENGINEER

HDL ENGINEERING CONSULTANTS, LLC
3335 ARCTIC BOULEVARD, STE 100
ANCHORAGE, AK 99503
(907) 564-2120
AECL861

STATE OF ALASKA
DEPARTMENT OF TRANSPORTATION
AND PUBLIC FACILITIES

GLENN HWY: PARKS HWY TO S. INNER SPRINGER LP. (PHASE II)

ATR CBA2 CABINET DETAILS

NO.	DATE	REVISION

STATE	PROJECT DESIGNATION	YEAR	SHEET NO.	TOTAL SHEETS
ALASKA	0A15037/CFHWY00431 0A15038/CFHWY00432 0A15033/CFHWY00006	2021	K9	K10

DESIGNED BY DRL
CHECKED BY DRL
DRAFTED BY CDB

SCALE NTS

DATE TIME 11/11/2021 5:02 PM

DRAWING LOCATION
H:\JOBS\08-016 GLENN HIGHWAY 34-42 (DOT)\09 - PS&E\CAD_PH2\DRAWINGS\08016_P2_K09-K10.DWG

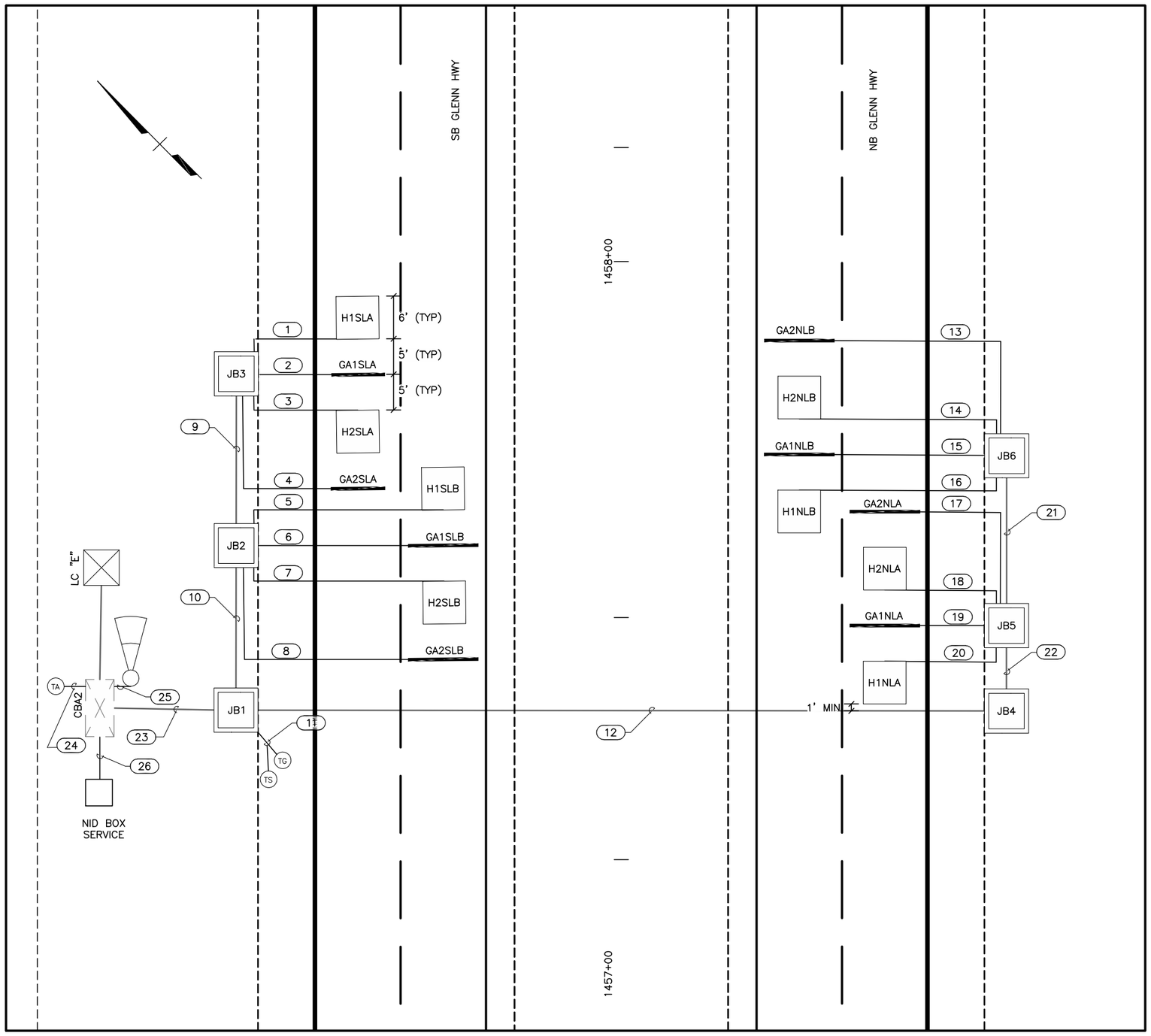

SITE 1 GLENN HWY, NORTH OF COLLEEN ST
NTS

NOTES:

1. CBA2 CABINET RECEIVES POWER FROM A RELOCATED LOAD CENTER "E" LOCATED NEAR STA "G" 1457+57, 73' LT.
2. RELOCATE CBA2 CABINET, ASSOCIATED TRANSFORMER AND PROVIDE NEW 2" RMC AS NEEDED.
3. INSTALL A NEW TELEPHONE SERVICE. SERVICE INSTALLATION INCLUDES INSTALLING A 6-INCH BY 6-INCH WOODEN POST, TO A DEPTH OF 3 FEET BELOW GRADE AND AT A HEIGHT OF 5 FEET ABOVE GRADE. LOCATE THE WOODEN POST UP TO 15 FEET FROM THE CABINET, OUTSIDE OF THE CLEAR ZONE, AS INDICATED IN THE PLANS OR APPROVED BY THE ENGINEER. PROVIDE A MINIMUM 1/2-INCH RMC LEADING FROM THE CABINET TO THE FUTURE NID BOX. NOTIFY THE LOCAL TELEPHONE UTILITY COMPANY WHEN THE SERVICE INSTALLATION IS COMPLETE. TELEPHONE COMPANY TO FURNISH AND INSTALL A NID BOX.
4. COORDINATE FIELD TESTING WITH DOT HIGHWAY DATA DEPARTMENT.
5. MOUNT AMBIENT AIR TEMPERATURE SENSOR PER K8.

CABLE SCHEDULE

# TAG	CONDUIT SIZE	NEW/ EXISTING	FROM	TO	CABLE TYPE	CABLE COMMENT
1	1"	NEW	H1SLA	JB3	1-1PR#14	
2	1"	NEW	GA1SLA	JB3	RG58 COAX	
3	1"	NEW	H2SLA	JB3	1-1PR#14	
4	1"	NEW	GA2SLA	JB3	RG58 COAX	
5	1"	NEW	H1SLB	JB3	1-1PR#14	
6	1"	NEW	GA1SLB	JB3	RG58 COAX	
7	1"	NEW	H2SLB	JB3	1-1PR#14	
8	1"	NEW	GA2SLB	JB3	RG58 COAX	
9	2"	NEW	JB3	JB3	1-6PR#18 2-RG58 COAX	
10	2"	NEW	JB2	JB3	1-6PR#18 4-RG58 COAX	
11	1"	NEW	TG, TS	JB3	2-2C#18	
12	2"	NEW	JB4	JB3	1-6PR#18 4-RG58 COAX	
13	1"	NEW	GA2NLB	JB3	RG58 COAX	
14	1"	NEW	H2NLB	JB3	1-1PR#14	
15	1"	NEW	GA1NLB	JB3	RG58 COAX	
16	1"	NEW	H1NLB	JB3	1-1PR#14	
17	1"	NEW	GA2NLA	JB3	RG58 COAX	
18	1"	NEW	H2NLA	JB3	1-1PR#14	
19	1"	NEW	GA1NLA	JB3	RG58 COAX	
20	1"	NEW	H1NLA	JB5	1-1PR#14	
21	2"	NEW	JB6	JB5	1-6PR#18 2-RG58 COAX	
22	2"	NEW	JB5	JB4	1-6PR#18 4-RG58 COAX	
23	2"	NEW	JB1	CBA2	2-6PR#18 8-RG58 COAX 2-2C#18	RELOCATE EXISTING CBA2
24	1"	NEW	TA	CBA2	1-2C#18	
25	1"	NEW	TILT POLE	CBA2		
26	1"	NEW	NID BOX	CBA2		

CERTIFICATION SET
NOVEMBER 2021

STATE OF ALASKA
49TH
DENNIS R. LINNELL
CE-7649
REGISTERED PROFESSIONAL ENGINEER

HDL ENGINEERING CONSULTANTS, LLC
3335 ARCTIC BOULEVARD, STE 100
ANCHORAGE, AK 99503
(907) 564-2120
AECL861

STATE OF ALASKA
DEPARTMENT OF TRANSPORTATION
AND PUBLIC FACILITIES

GLENN HWY: PARKS HWY TO S. INNER SPRINGER LP. (PHASE II)

SITE 1
GLENN HWY, NORTH OF COLLEEN ST LAYOUT

NO.	DATE	REVISION

STATE	PROJECT DESIGNATION	YEAR	SHEET NO.	TOTAL SHEETS
ALASKA	0A15037/CFHWY00431 0A15038/CFHWY00432 0A15033/CFHWY00006	2021	K10	K10

DRAWING LOCATION
H:\JOBS\08-016 GLENN HIGHWAY 34-42 (DOT)\09 - PS&E\CAD_PH2\DRAWINGS\08016_P2_K09-K10.DWG

DESIGNED BY DRL
CHECKED BY DRL
DRAFTED BY CDB

SCALE NTS

DATE 11/19/2021 TIME 11:29 AM

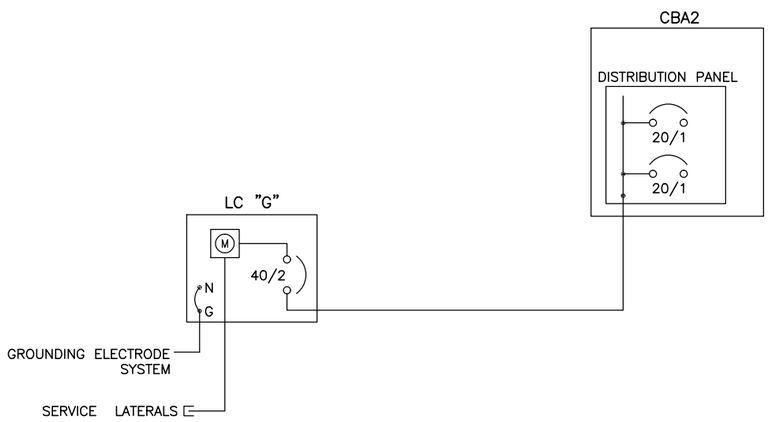

NEW LOAD CENTER "G" ONE LINE

NTS

LOAD CENTER NOTES:

1. ELECTRIC UTILITY: MATANUSKA ELECTRIC ASSOCIATION
2. PROVIDE A 3C#8 FEEDER IN 2" RMC FROM LOAD CENTER "G" TO CBA2. LENGTH IS APPROXIMATELY 20'.

SUMMARY OF LOAD CENTER "G"	
LOAD CENTER TYPE:	TYPE 1A (STATE OF ALASKA)
SERVING UTILITY:	MATANUSKA ELECTRIC ASSOCIATION
SERVICE CONDUIT TYPE:	RIGID METAL CONDUIT
LOCATION DATA	
LOAD CENTER:	GLENN HWY, "G" 1457+57.0, 73.0' LT
POWER SOURCE:	NEW LINE EXTENSION
PHOTOELECTRIC CONTROL:	NONE
SERVICE VOLTAGE:	120/240V, 1-PHASE, 3-WIRE WITH GROUNDED NEUTRAL
PROVIDE METER SOCKET:	NEW
MAIN BREAKER A:	NEW 240, 40A, 2-POLE
CONTRACTOR:	NONE
AIC RATING:	10,000A

PANEL A

POLE	AMP TRIP	DESCRIPTION	POLE KVA	AØ	BØ	POLE KVA	DESCRIPTION	AMP TRIP	POLE
1	40/2	AUTOMATED TRAFFIC RECORDER	1.3	1.3		0.0	SPARE	20/2	2
3			1.3		1.3	0.0			4
5			0.0	0.0		0.0	SPARE	20/2	6
7			0.0		0.0	0.0			8
9			0.0	0.0		0.0			10
11			0.0		0.0	0.0			12
13			0.0	0.0		0.0			14
15			0.0		0.0	0.0			16
17			0.0	0.0		0.0			18
				1.3	1.3		TOTAL KVA		2.6
							AMPS		10.8

SHORT CIRCUIT CALCULATION - LC "G"	
TRANSFORMER RATING	25KVA
VOLTAGE	120/240V
TRANSFORMER IMPEDANCE	1.2%
LET-THRU SHORT CIRCUIT CURRENT	7,440A
SERVICE CONDUCTOR LENGTH	240'
SERVICE CONDUCTOR SIZE	2 AWG ALUMINUM
SERVICE CONDUIT	NON-MAGNETIC
MAX FAULT CURRENT	5,986A
DATE CALCULATED	9/30/2021

ARC FLASH CALCULATION - LC "G"	
INCIDENT ENERGY	0.29 cal/cm²
ARC-FLASH BOUNDARY	8"
WORKING DISTANCE	18"
INSULATED GLOVES CLASS	00
NOMINAL SYSTEM VOLTAGE	240V
LIMITED APPROACH BOUNDARY	42"
RESTRICTED APPROACH BOUNDARY	12"
CALCULATION DATE	9/30/2021

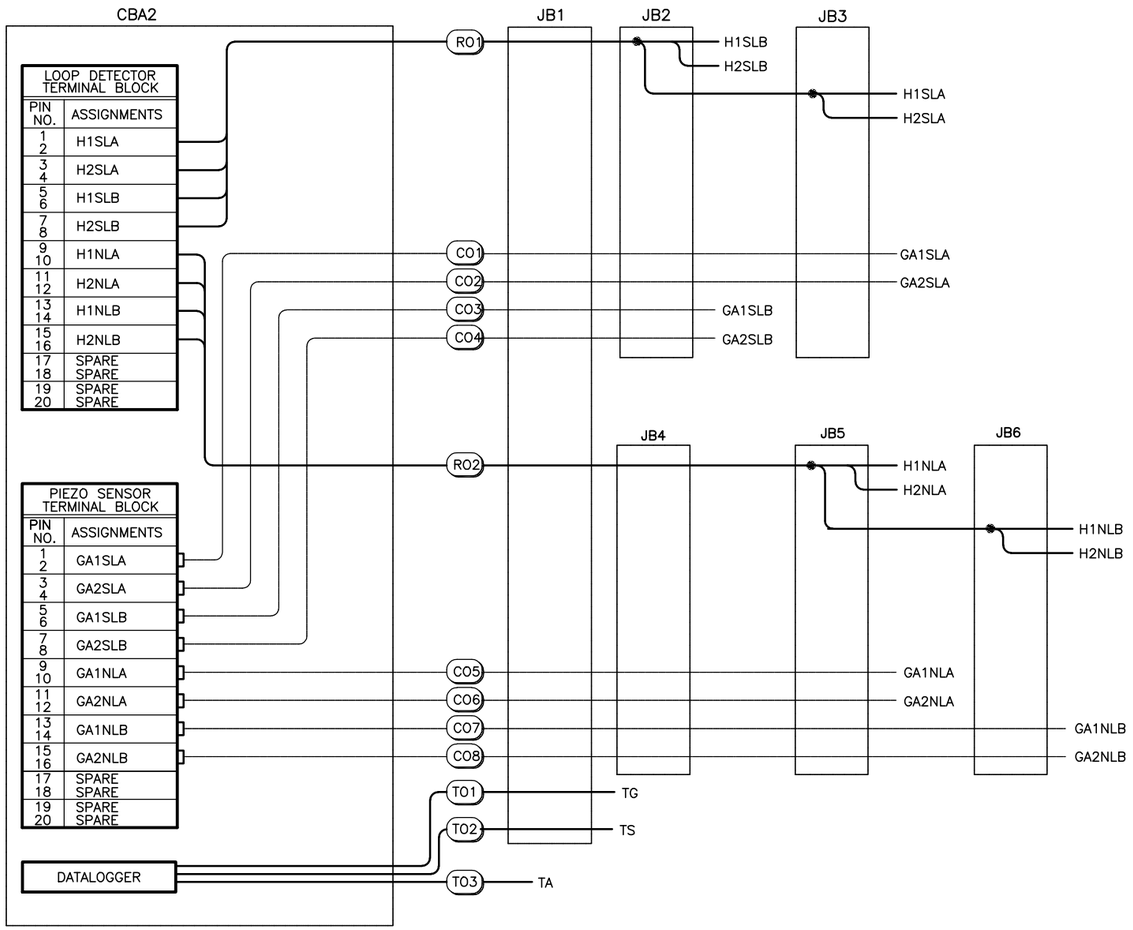

SITE 1 – WIRING DIAGRAM

NTS

CERTIFICATION SET
NOVEMBER 2021

STATE OF ALASKA 49TH REGISTERED PROFESSIONAL ENGINEER
ROY N. PACE
EE-12053

EDC, LLC
213 WEST FIREWEED LANE
ANCHORAGE, AK 99503
(907) 257-0601
AECC705

STATE OF ALASKA 49TH REGISTERED PROFESSIONAL ENGINEER
DENNIS R. LINNELL
CE-7649

HDL ENGINEERING CONSULTANTS, LLC
3335 ARCTIC BOULEVARD, STE 100
ANCHORAGE, AK 99503
(907) 564-2120
AECL861

STATE OF ALASKA
DEPARTMENT OF TRANSPORTATION
AND PUBLIC FACILITIES

GLENN HWY: PARKS HWY TO S. INNER SPRINGER LP. (PHASE II)

SITE 1
WIRING DIAGRAM

PROJECT DESIGNATION	SHEET NO.	TOTAL SHEETS
0A15024	R-1	R-67

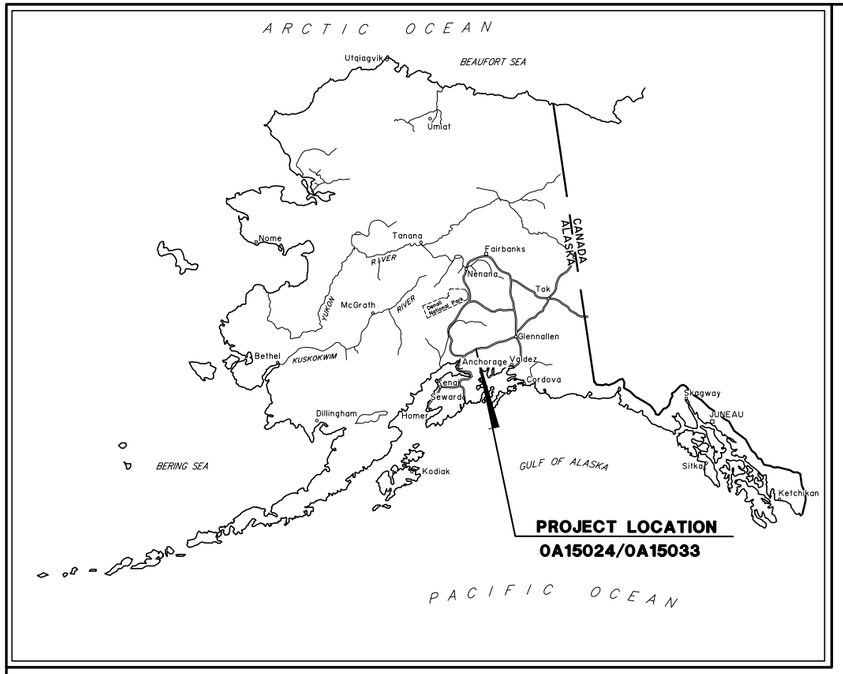

REVISION DATE: NOVEMBER 2, 2021

SPECIAL GENERAL NOTE

SUBDIVISION NAMES, PLAT NUMBERS AND DEPICTIONS OF PROPERTIES ADJACENT TO THE RIGHT OF WAY SHOWN HEREON WERE GENERATED AT THE TIME OF INITIAL PLAN DEVELOPMENT. THIS PLAN SET DOES NOT NECESSARILY REFLECT THE CURRENT STATUS AT THE TIME OF THE RECORDING OF THIS DOCUMENT.

CONSTRUCTION AND ACQUISITION

ACQUISITION: SEPTEMBER 2015 TO AUGUST 2020

CONSTRUCTION: 2018 TO 2023

PROJECT LENGTH 8.0 MI.

SCALE

0 3.0 6.0 12.0

Scale in Miles

STATE OF ALASKA
DEPARTMENT OF TRANSPORTATION
&
PUBLIC FACILITIES

RIGHT OF WAY MAP

ALASKA PROJECT

GLENN HIGHWAY
MP 34 TO 42
RECONSTRUCTION

PARKS HWY TO OLD GLENN HWY

0A15024/0A15033
Z581040000/CFHWY00006

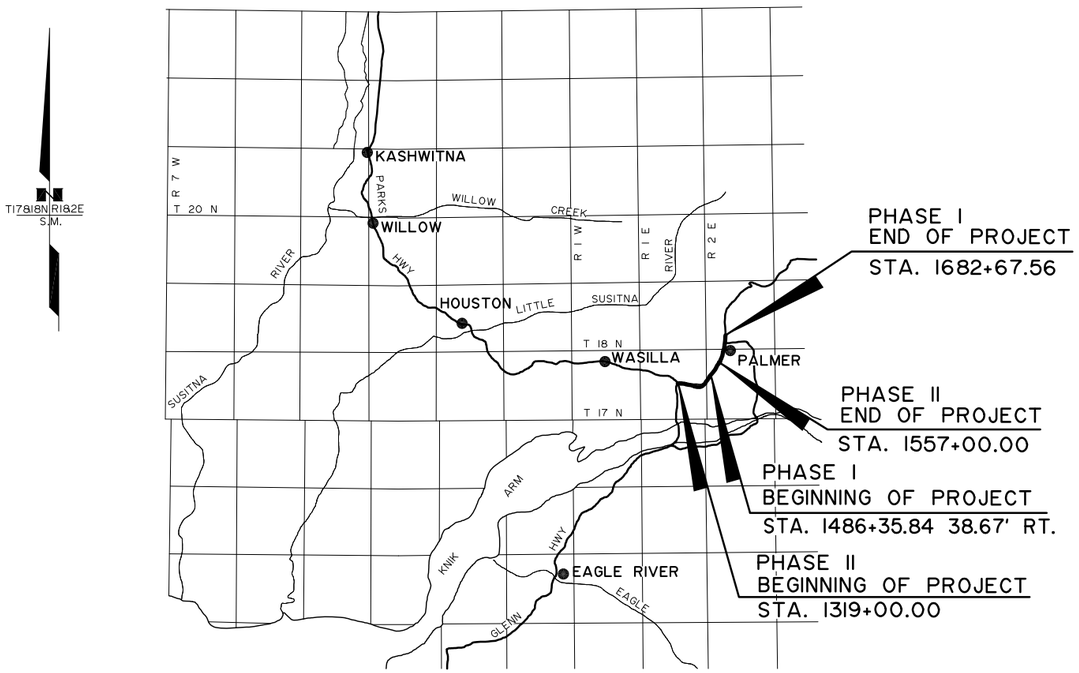

CERTIFICATE OF APPROVAL BY THE PLATTING AUTHORITY

I HEREBY CERTIFY THAT THE RIGHT OF WAY PLAT SHOWN HEREON HAS BEEN FOUND TO COMPLY WITH THE REGULATIONS OF THE MATANUSKA-SUSITNA BOROUGH PLATTING AUTHORITY AND THAT SAID PLAT HAS BEEN APPROVED BY THE PLATTING AUTHORITY BY PLAT RESOLUTION NO._____, DATED _____, AND THAT THE PLAT SHOWN HEREON HAS BEEN APPROVED FOR RECORDING IN THE PALMER RECORDING DISTRICT, THIRD JUDICIAL DISTRICT, STATE OF ALASKA, IN WHICH THE PLAT IS LOCATED.

ATTEST:

PLATTING CLERK

PLANNING & LAND USE DIRECTOR
MATANUSKA-SUSITNA BOROUGH
PLATTING AUTHORITY

DEPARTMENT LOCATIONS SURVEYOR'S CERTIFICATE

I HEREBY CERTIFY THAT I AM A PROFESSIONAL LAND SURVEYOR REGISTERED IN THE STATE OF ALASKA AND THAT ALL RIGHT-OF-WAY CENTERLINE MONUMENT LOCATIONS HAVE BEEN ESTABLISHED AS INDICATED ON THE RIGHT-OF-WAY PLANS, ALL EXISTING FOUND SUBDIVISION MONUMENTS, PROPERTY CORNERS AND SECTION LINE MONUMENTATION AS INDICATED ON THE RIGHT-OF-WAY PLANS HAVE BEEN REFERENCED TO PROJECT SURVEY CONTROLS BY ME OR UNDER MY SUPERVISION.

DATE _____ REGISTRATION NUMBER _____

TRAVIS W. TEST

AKDOT&PF
4111 AVIATION AVENUE
ANCHORAGE, AK 99502
PHONE (907) 269-0700

STATE OF ALASKA 49TH TRAVIS W. TEST NO. LS-13324 REGISTERED PROFESSIONAL LAND SURVEYOR

CONSULTANT RIGHT-OF-WAY SURVEYOR'S CERTIFICATE

I HEREBY CERTIFY THAT I AM A PROFESSIONAL LAND SURVEYOR REGISTERED IN THE STATE OF ALASKA AND THAT THIS PLAT WAS MADE BY ME OR UNDER MY SUPERVISION. THIS PLAT WAS BASED UPON THE MONUMENTS RECOVERED DURING THE DEPARTMENT'S LOCATIONS SURVEY FOR THIS PROJECT.

DATE _____ REGISTRATION NUMBER _____

JAMES H. SHARP

HDL ENGINEERING CONSULTANTS, LLC
3335 ARCTIC BLVD, SUITE 100
ANCHORAGE, AK 99503
PHONE (907) 564-2120
REGISTRATION NO. AECL861

STATE OF ALASKA 49TH JAMES H. SHARP NO. 4015-S REGISTERED PROFESSIONAL LAND SURVEYOR

DEPARTMENT OF TRANSPORTATION & PUBLIC FACILITIES

APPROVED_____, 20____
Date

REGIONAL CHIEF R/W AGENT

LOCATED WITHIN SECTIONS 22-24, T17N, R1E, SECTIONS 5, 7-8 AND 17-19, T17N, R2E AND SECTIONS 32-33, T18N, R2E SEWARD MERIDIAN ALASKA

PALMER RECORDING DISTRICT

STATE BUSINESS - NO FEE

	RECOVERED	TO BE SET THIS PROJECT
GOV'T SECTION CORNER	6 5 7 8 Sec. Cor.	
GOV'T 1/4 SECTION CORNER	5 6 1/4 Cor.	
GOV'T 1/16 SECTION CORNER	1/16 Cor.	
GOV'T SURVEY MONUMENT		
GOV'T CONTROL STA.		
PRIMARY MON. {BRASS/AL CAP}		
SECONDARY CORNER		
PRIMARY CENTERLINE MONUMENT		
SECONDARY CENTERLINE MONUMENT		
SURVEY CONTROL POINT	CP	
SECONDARY SURVEY CONT. POINT	SCP	
GPS CONTROL POINT	GPS	
BENCH MARK	BM	
ROCK MONUMENT		

INTERNATIONAL BOUNDARY LINE — ALASKA / CANADA

TOWNSHIP & RANGE LINE — T. 13 N. / T. 12 N.; R. 2 W. / R. 3 W.

SECTION LINE

1/4 SECTION LINE

1/16 SECTION LINE

CORPORATE or CITY LIMITS

SECTION LINE EASEMENT AND
SECTION LINE-CENTERLINE INTERSECTION

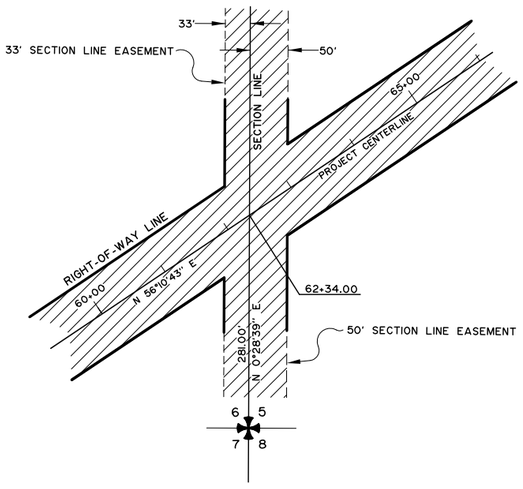

HIGHWAY MILEPOST — 6.5 / 23+12.56

RAILROAD MILEPOST — R.R. 2580+60 / HWY. 126+33 — 842

EXISTING RIGHT-OF-WAY

RIGHT-OF-WAY REQUIRED

STATION EQUATION — STA. 14+33.22 BK. = STA. 16+90.17 AHD.

27+00

PROJECT CENTERLINE

EXISTING CENTERLINE

RAILROAD CENTERLINE

PROJECT RIGHT-OF-WAY LINE

EXISTING PROPERTY LINE

CONTROLLED ACCESS LINE

PERMIT LINE

EXISTING EASEMENT LINE

LIMIT OF CUT SLOPE

LIMIT OF FILL SLOPE

PROPOSED ROADWAY

EXISTING ROADWAY

NOISE BARRIER

FENCE

STONE FENCE

HEAD & WINGWALLS

GUARD RAIL EXISTING

PROPOSED

RETAINING WALL

TUNNEL

INTERMITTENT DRAINAGE

INTERCEPTOR DITCH

MARSHLAND

CREEK

RIVER

LAKE

RESERVOIR

CHANNEL CHANGE

	EXISTING	PROPOSED
PIPELINES:		
SANITARY SEWER	SS	SS
OIL	O	O
GAS	G	G
WATER	W	W
STORM DRAIN	SD	SD
SIDEWALK		
CONCRETE CURB		
CONCRETE CURB & GUTTER		
DRIVEWAY, APPROACH, & SIDEDRAIN		
BRIDGE		
RIPRAP		

		EXISTING
TELEPHONE	(OVERHEAD)	O.H. TELE
	(DIRECT BURY)	U.G. TELE
ELECTRIC	(OVERHEAD)	O.H. ELECT
	(DIRECT BURY)	U.G. ELECT
FIBER OPTIC		FO
U.G. CABLE		U.G. TV
U.G. DUCT		
TELEPHONE MANHOLE		T
ELECTRIC MANHOLE		E
FOUNDATION		
BUILDING		

	EXISTING	PROPOSED
MANHOLE	M.H.	M.H.
FIRE HYDRANT		
METER		
PIPE CULVERT w/ END SECT.		
UTILITY POLE		
ELECTROLIER		
UTILITY POLE WITH LUMINAIRE		
POLE ANCHOR /w GUY		
TRANSMISSION TOWER {WOOD}		
TRANSMISSION TOWER {STEEL}		
ELECTRICAL OUTLET		
ELECTRICAL PEDESTAL	E	E
TELEPHONE PEDESTAL	T	T
CABLE T.V. PEDESTAL	TV	TV

	EXISTING
PLANTER	P
VENT	
TANK VENT	
WELL	W
SEPTIC	S
TANKS	
Above Ground	
Below Ground	
SATELLITE DISH	
PRIVATE SIGN	
GAS PUMP	GP
POST	
BOULDER OR BOULDERS	
LANDSCAPE LIGHT	
DECIDUOUS TREE	
CONIFER TREE	
SHRUB OR SHRUBS	

PROJECT DESIGNATION	SHEET NO.	SHEETS
0A15024	R-2	R-67

STATE OF ALASKA
DEPARTMENT OF TRANSPORTATION
&
PUBLIC FACILITIES

0A15024/0A15033

STATE PROJECT NO. Z581040000/CFHWY00006

RIGHT-OF-WAY LEGEND SHEET

GLENN HIGHWAY MP 34-42
PARKS HWY TO OLD GLENN HWY

DRAWN JHS	DATE MARCH 2013	SCALE NTS	
CHECKED JRC	DATE OCT 2021	SHEET 2	OF 67

PROJECT DESIGNATION	SHEET NO.	TOTAL SHEETS
0AI5024	R-3	R-67

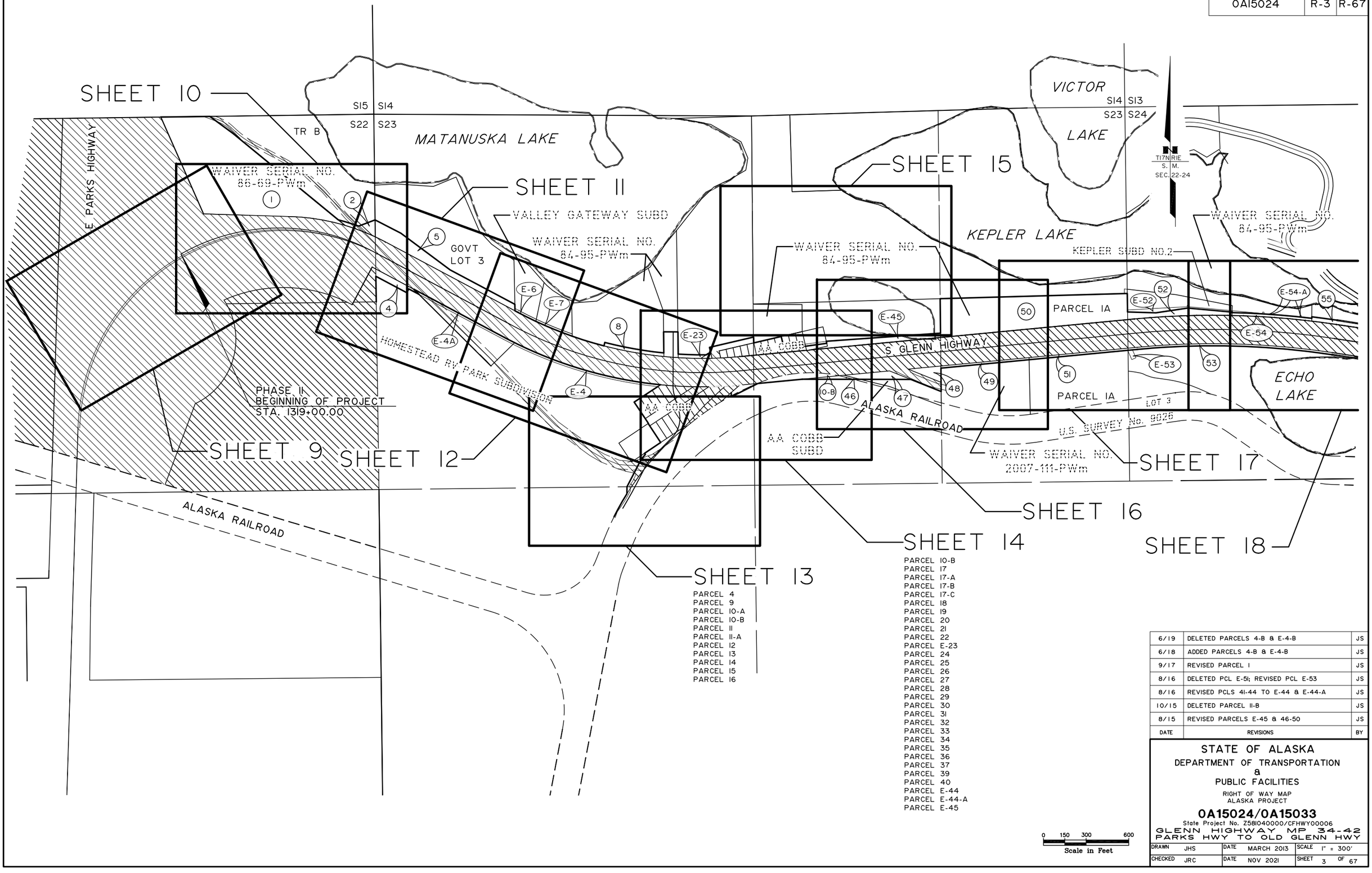

SHEET 13

PARCEL 4
PARCEL 9
PARCEL 10-A
PARCEL 10-B
PARCEL 11
PARCEL 11-A
PARCEL 12
PARCEL 13
PARCEL 14
PARCEL 15
PARCEL 16

SHEET 14

PARCEL 10-B
PARCEL 17
PARCEL 17-A
PARCEL 17-B
PARCEL 17-C
PARCEL 18
PARCEL 19
PARCEL 20
PARCEL 21
PARCEL 22
PARCEL E-23
PARCEL 24
PARCEL 25
PARCEL 26
PARCEL 27
PARCEL 28
PARCEL 29
PARCEL 30
PARCEL 31
PARCEL 32
PARCEL 33
PARCEL 34
PARCEL 35
PARCEL 36
PARCEL 37
PARCEL 39
PARCEL 40
PARCEL E-44
PARCEL E-44-A
PARCEL E-45

0 150 300 600
Scale in Feet

DATE	REVISIONS	BY
6/19	DELETED PARCELS 4-B & E-4-B	JS
6/18	ADDED PARCELS 4-B & E-4-B	JS
9/17	REVISED PARCEL 1	JS
8/16	DELETED PCL E-51; REVISED PCL E-53	JS
8/16	REVISED PCLS 41-44 TO E-44 & E-44-A	JS
10/15	DELETED PARCEL 11-B	JS
8/15	REVISED PARCELS E-45 & 46-50	JS

STATE OF ALASKA
DEPARTMENT OF TRANSPORTATION
&
PUBLIC FACILITIES

RIGHT OF WAY MAP
ALASKA PROJECT

0A15024/0A15033

State Project No. Z581040000/CFHWY00006

GLENN HIGHWAY MP 34-42
PARKS HWY TO OLD GLENN HWY

DRAWN	JHS	DATE	MARCH 2013	SCALE	1" = 300'
CHECKED	JRC	DATE	NOV 2021	SHEET	3 OF 67

PROJECT DESIGNATION	SHEET NO.	TOTAL SHEETS
0AI5024	R-4	R-67

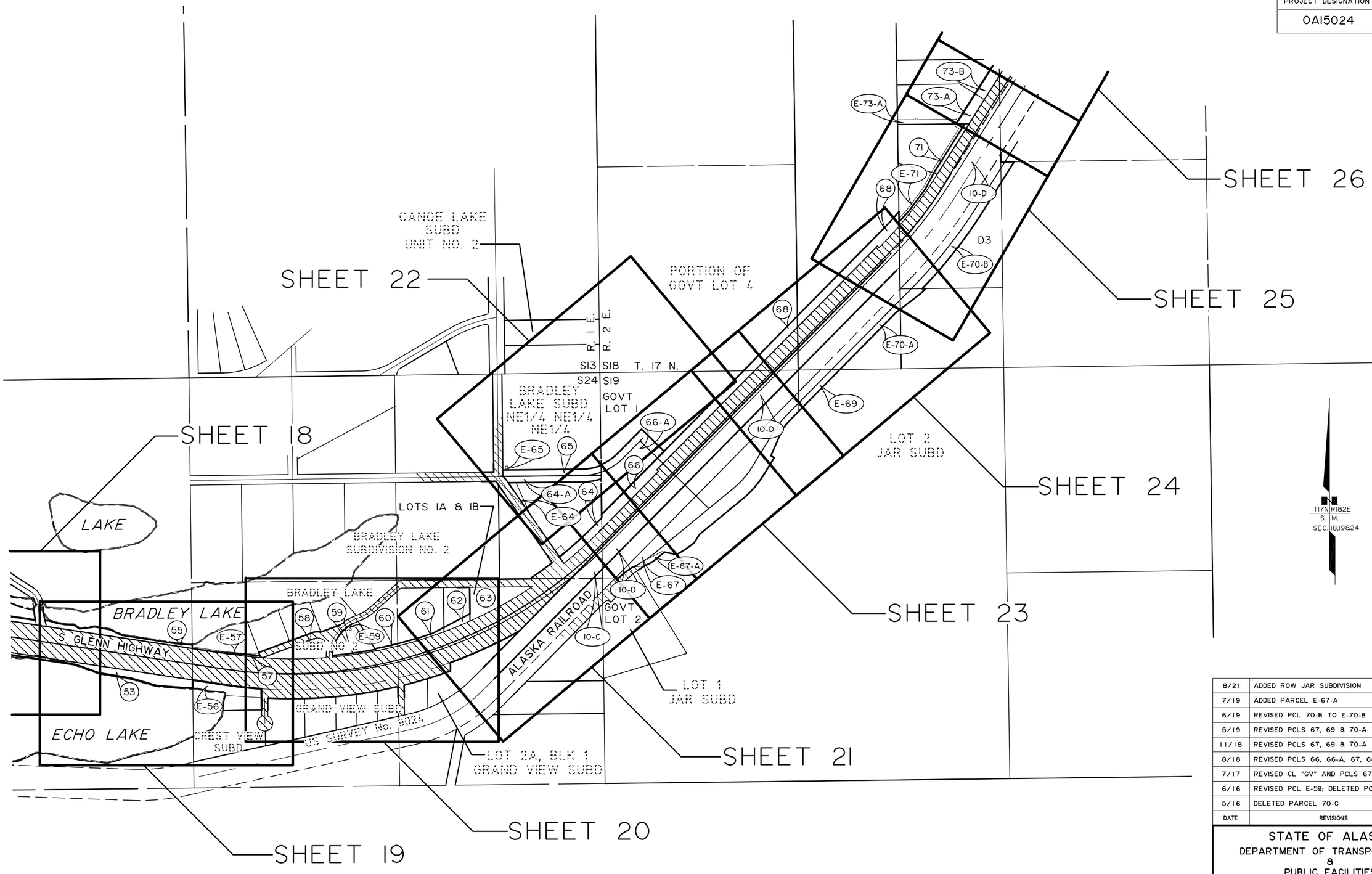

DATE	REVISIONS	BY
8/21	ADDED ROW JAR SUBDIVISION	JS
7/19	ADDED PARCEL E-67-A	JS
6/19	REVISED PCL 70-B TO E-70-B	JS
5/19	REVISED PCLS 67, 69 & 70-A TO EASEMENTS	JS
11/18	REVISED PCLS 67, 69 & 70-A	JS
8/18	REVISED PCLS 66, 66-A, 67, 68, 70-A & 70-B	JS
7/17	REVISED CL "GV" AND PCLS 67 & 69	JS
6/16	REVISED PCL E-59; DELETED PCL E-68	JS
5/16	DELETED PARCEL 70-C	JS

0 150 300 600
Scale in Feet

STATE OF ALASKA
DEPARTMENT OF TRANSPORTATION
&
PUBLIC FACILITIES

RIGHT OF WAY MAP
ALASKA PROJECT

0A15024/0A15033

State Project No. Z581040000/CFHWY00006

GLENN HIGHWAY MP 34-42
PARKS HWY TO OLD GLENN HWY

DRAWN	JHS	DATE	MARCH 2013	SCALE	1" = 300'
CHECKED	JRC	DATE	NOV 2021	SHEET	4 OF 68

PROJECT DESIGNATION	SHEET NO.	TOTAL SHEETS
0AI5024	R-5	R-67

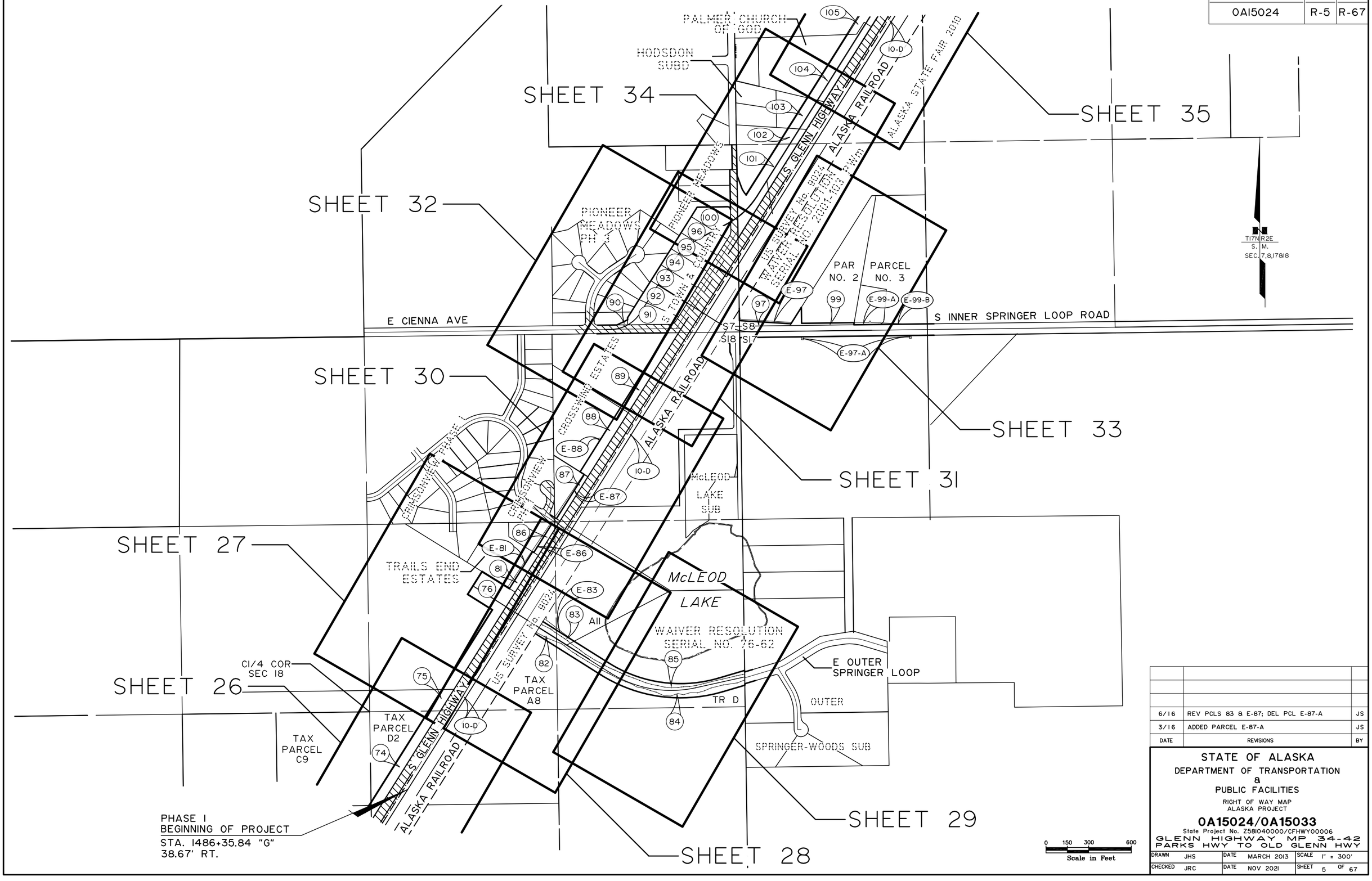

DATE	REVISIONS	BY
6/16	REV PCLS 83 & E-87; DEL PCL E-87-A	JS
3/16	ADDED PARCEL E-87-A	JS

STATE OF ALASKA
DEPARTMENT OF TRANSPORTATION
&
PUBLIC FACILITIES

RIGHT OF WAY MAP
ALASKA PROJECT

0A15024/0A15033

State Project No. Z581040000/CFHWY00006

GLENN HIGHWAY MP 34-42
PARKS HWY TO OLD GLENN HWY

DRAWN JHS	DATE MARCH 2013	SCALE 1" = 300'
CHECKED JRC	DATE NOV 2021	SHEET 5 OF 67

PROJECT DESIGNATION	SHEET NO.	TOTAL SHEETS
0AI5024	R-6	R-67

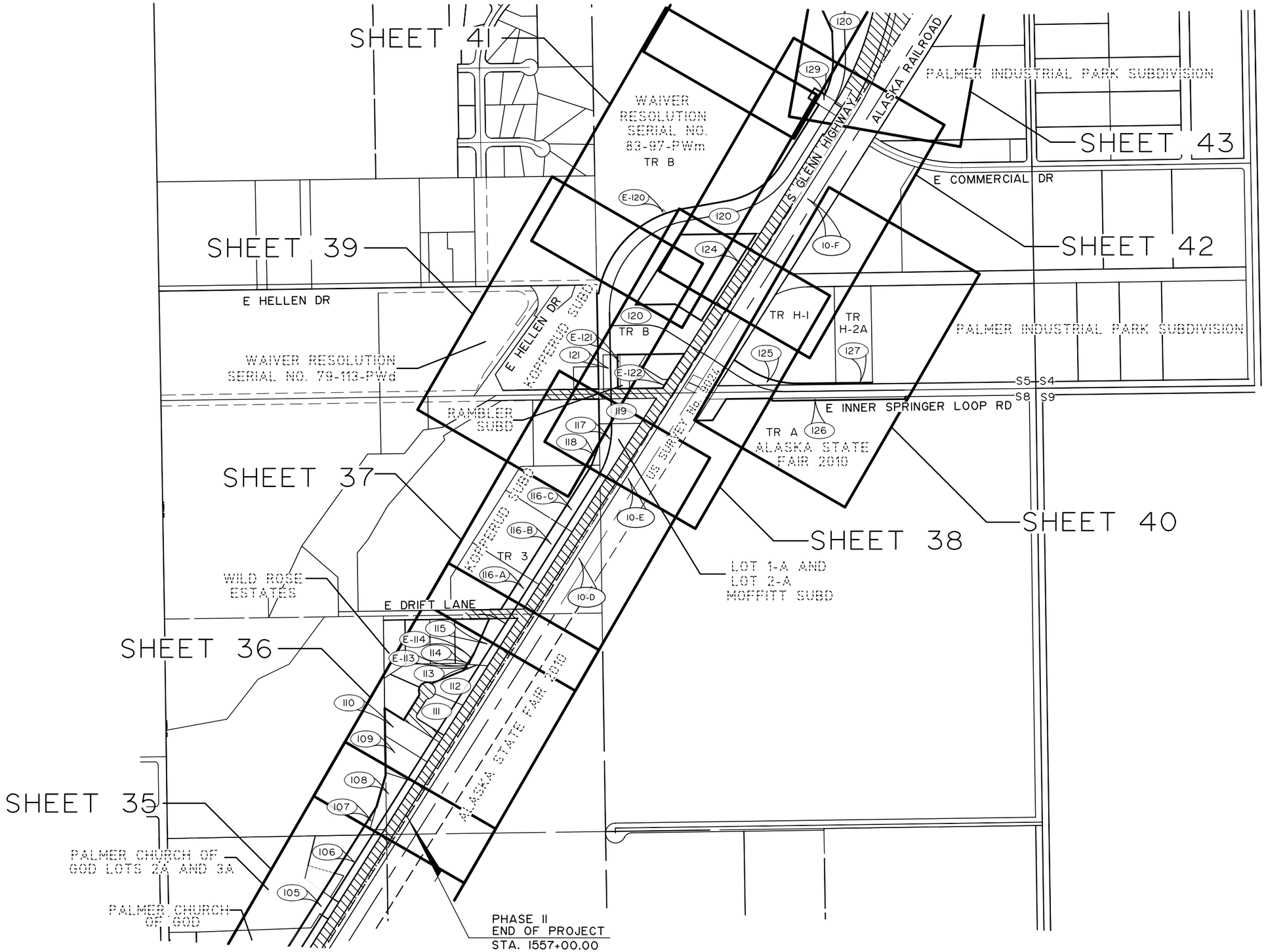

DATE	REVISIONS	BY
11/21	REVISED EOP PHASE II	JS
8/21	ADD PALMER CHURCH OF GOD LOTS 2A & 3A	JS
12/17	ADDED PARCEL E-120	JS
7/17	DELETED PARCEL E-123	JS
6/16	REVISED PCLS 125 & 127; DELETED PCL 128	JS
5/16	DELETED PARCEL E-107	JS
3/16	REV PCLS 122 & 123 CHGD TO E-122 & E-123	JS
2/16	REVISED PARCEL 120	JS

STATE OF ALASKA
DEPARTMENT OF TRANSPORTATION
&
PUBLIC FACILITIES

RIGHT OF WAY MAP
ALASKA PROJECT

0A15024/0A15033

State Project No. Z581040000/CFHWY00006

GLENN HIGHWAY MP 34-42
PARKS HWY TO OLD GLENN HWY

DRAWN JHS	DATE MARCH 2013	SCALE 1" = 300'
CHECKED JRC	DATE NOV 2021	SHEET 6 OF 67

PROJECT DESIGNATION	SHEET NO.	TOTAL SHEETS
0AI5024	R-7	R-67

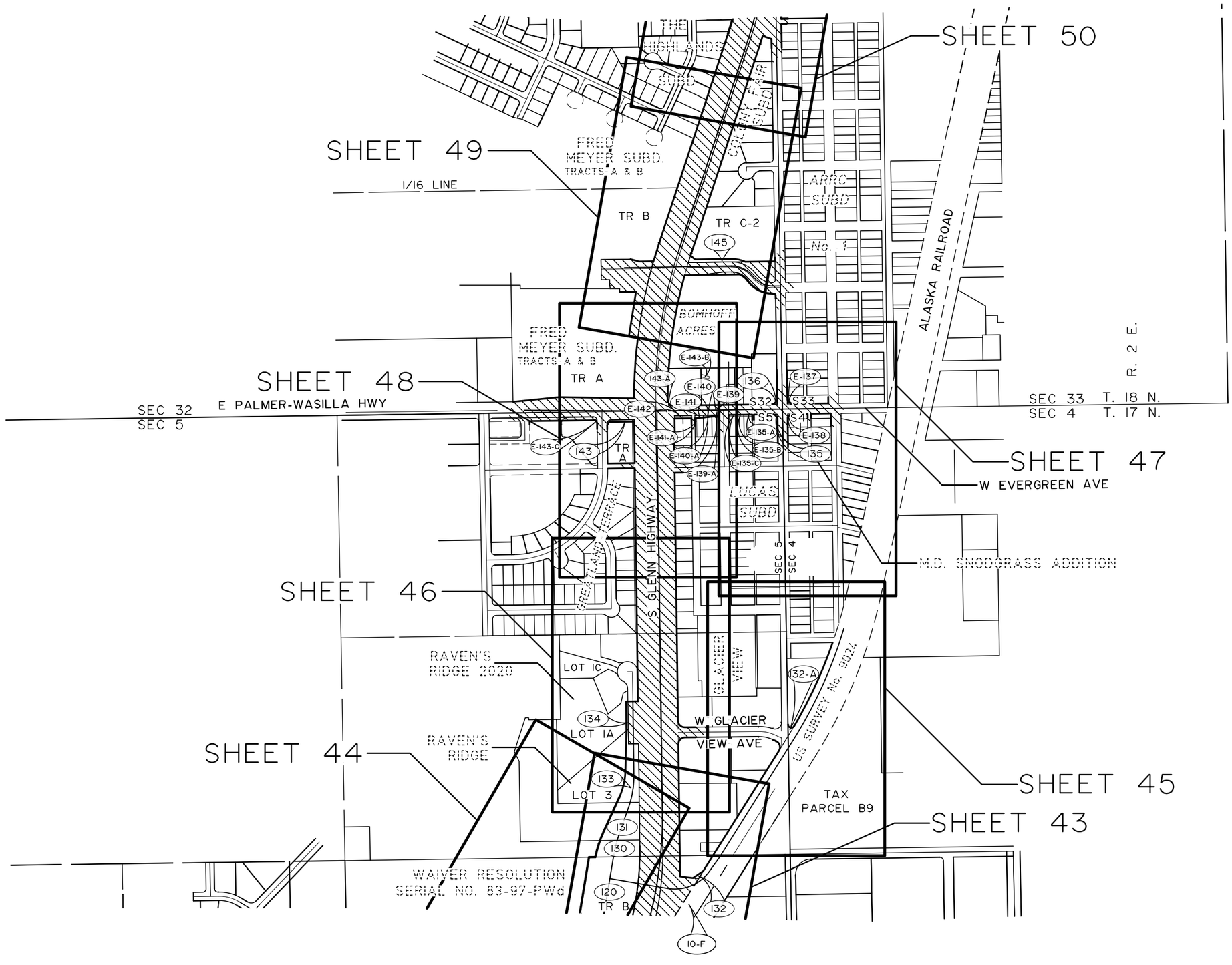

8/21	ADDED RAVEN'S RIDGE 2020	JS
7/18	REVISED PARCEL E-145 TO 145	JS
2/18	REVISED PARCEL 143-C TO E-143-C	JS
8/16	REVISED PARCEL E-145	JS
7/16	REVISED PARCEL 143-A	JS
5/16	REV PCLS E-139 THRU E-142	JS
5/16	ADD PCLS E-139-A - E-142-A; DEL PCL E-143-A	JS
4/16	ADD PCL 132-A; REV CL "G"	JS
12/15	REV PCLS E-139, E-140 & E-141 TO ESMTS	JS
DATE	REVISIONS	BY

STATE OF ALASKA
DEPARTMENT OF TRANSPORTATION
&
PUBLIC FACILITIES

RIGHT OF WAY MAP
ALASKA PROJECT

0A15024/0A15033

State Project No. Z581040000/CFHWY00006

GLENN HIGHWAY MP 34-42
PARKS HWY TO OLD GLENN HWY

DRAWN JHS	DATE MARCH 2013	SCALE 1" = 300'	
CHECKED JRC	DATE NOV 2021	SHEET 7	OF 67

PROJECT DESIGNATION	SHEET NO.	TOTAL SHEETS
0AI5024	R-8	R-67

T18N R2E
S. M.
SEC. 32 33

SHEET 52

SEC 29
SEC 32

S29 S28
S32 S33

SEC 28
SEC 33

W EAGLE AVE

T.A. SMITH SUBD

W DOLPHIN AVE

FRENCH HAVEN

SHEET 51

N BAILEY AVE

W CARIBOU AVE

A-13

T.A. SMITH SUBD

END OF PROJECT
STA. 1682+67.56

S GLENN HIGHWAY

W BEAVER AVE

ALASKA RAILROAD

SHEET 50

148

147

BLKS 3 & 4
T.A. SMITH
SUBD

E-146-A

E-146

E BOGARD RD

BUGGE'S HILL

THE HIGHLANDS SUBD

COLONY FARMS SUBD

SHEET 49

1/16 LINE

TR A

ARRC SUBD

0 150 300 600
Scale in Feet

DATE	REVISIONS	BY
4/16	REVISED CLS "G", "A" & "B"	JS
3/16	REVISED PARCEL E-146	JS

STATE OF ALASKA
DEPARTMENT OF TRANSPORTATION
&
PUBLIC FACILITIES

RIGHT OF WAY MAP
ALASKA PROJECT

0A15024/0A15033

State Project No. Z581040000/CFHWY00006

GLENN HIGHWAY MP 34-42
PARKS HWY TO OLD GLENN HWY

DRAWN	JHS	DATE	MARCH 2013	SCALE	1" = 300'
CHECKED	JRC	DATE	NOV 2021	SHEET	8 OF 67

PROJECT DESIGNATION	SHEET NO.	TOTAL SHEETS
0AI5024	R-9	R-67

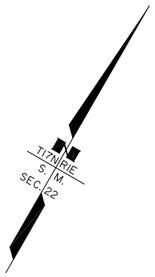

OWNED BY DOT&PF

LIMIT OF DOT&PF ROW FROM PLANS

E PARKS HIGHWAY

PHASE II
BEGINNING OF PROJECT
STA. 1319+00.00 "G"

SLOPE LIMITS

R=1400.00'
L=1408.78'
180P-PT

1320+00

PROJECT CENTERLINE "G"

S GLENN HIGHWAY

SLOPE LIMITS

PI 1326+70.54
Δ = 57°39'19"
D = 04°05'33"
T = 770.54'
L = 1408.78'
R = 1400.00'

MATCH LINE STA 1320+46.92 SHEET 10

HDL ENGINEERING CONSULTANTS, LLC
3335 ARCTIC BLVD, SUITE 100
ANCHORAGE, AK 99503
PHONE (907) 564-2120
REGISTRATION NO. AECL861

STATE OF ALASKA
49TH
JAMES H. SHARP
NO. 4015-S
REGISTERED PROFESSIONAL LAND SURVEYOR

CONSULTANT RIGHT-OF-WAY
SURVEYOR'S CERTIFICATE

0 25 50 100
Scale in Feet

DATE	REVISIONS	BY

STATE OF ALASKA
DEPARTMENT OF TRANSPORTATION & PUBLIC FACILITIES

RIGHT OF WAY MAP
ALASKA PROJECT

0A15024/0A15033

State Project No. Z581040000/CFHWY00006

GLENN HIGHWAY MP 34-42
PARKS HWY TO OLD GLENN HWY

DRAWN	JHS	DATE	MARCH 2013	SCALE	1" = 50'
CHECKED	JRC	DATE	NOV 2021	SHEET	9 OF 67

PROJECT DESIGNATION	SHEET NO.	TOTAL SHEETS
0A15024	R-10	R-67

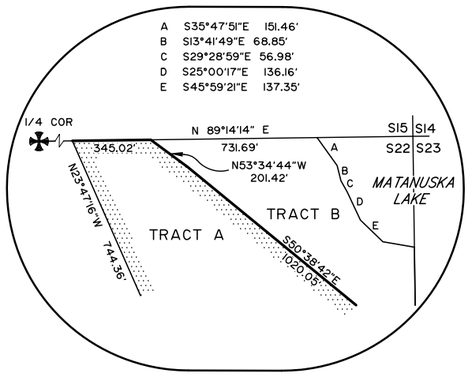

DETAIL
REMAINDER PARCELS 1 & 2
NTS

PARCEL NO.	INTEREST TO BE ACQUIRED	OWNER	LARGER PARCEL	TAKE INCLUDING EXISTING EASEMENT	NET TAKE	REMAINDER	RECORDED DOCUMENT NUMBER
PARCEL INFORMATION							
3		DELETED					
2	FEE	MICHAEL G AND JOANNE C McNAMARA	9.141 AC	0.265 AC	0.221 AC	8.876 AC	2017-027438-0
1	FEE	PARKS GLENN CORPORATION	10.283 AC	10.283 AC	10.283 AC	0	2017-016763-0

ACQUISITION FUNDING UNDER
PROJECT No. Z581040000
UNLESS OTHERWISE NOTED

T17N RIE
S. M.
SEC. 22

0 25 50 100
Scale in Feet

HDL ENGINEERING CONSULTANTS, LLC
3335 ARCTIC BLVD, SUITE 100
ANCHORAGE, AK 99503
PHONE (907) 564-2120
REGISTRATION NO. AECL861

STATE OF ALASKA
49TH
JAMES H. SHARP
NO. 4015-S
REGISTERED PROFESSIONAL LAND SURVEYOR

CONSULTANT RIGHT-OF-WAY
SURVEYOR'S CERTIFICATE

DATE	REVISIONS	BY
9/17	REVISED PARCEL 1	JS

STATE OF ALASKA
DEPARTMENT OF TRANSPORTATION
&
PUBLIC FACILITIES
RIGHT OF WAY MAP
ALASKA PROJECT

0A15024/0A15033

State Project No. Z581040000/CFHWY00006

GLENN HIGHWAY MP 34-42
PARKS HWY TO OLD GLENN HWY

DRAWN	JHS	DATE	MARCH 2013	SCALE	1" = 50'
CHECKED	JRC	DATE	NOV 2021	SHEET	10 OF 67

PROJECT DESIGNATION	SHEET NO.	TOTAL SHEETS
0A15024	R-11	R-67

MATANUSKA LAKE
61.17 AC±

MEANDER LINE FROM WD REC 2012-027755-0

MEANDER LINE FROM ORTHO PHOTO

S 42°52'32" E 126.78'

S 54°28'32" E 193.53'

S57°12'13"E 15.11'

S64°57'00"E 63.42'

S53°03'56"E 54.42'

S 40°57'22" E 118.29'

S42°21'39"E 31.41'

ENTRY 1917 - NO SECTION LINE ESMT

S 00°42'35" E 244.46'

365.76'

SECTION 23

SECTION 22

GOVT LOT 3

STA 1332+31.10 "G"
205.00' LT.

STA 1334+23.68 "G"
205.00' LT.

S 62°40'58" E 203.93'

N 00°42'35" W 119.30'

S 53°20'18" E 432.16'

STA 1338+50.92 "G"
140.00' LT.

PI 1352+72.88
Δ = 33°27'35"
D = 01°59'59"
T = 861.17'
L = 1673.11'
R = 2865.00'

VALLEY GATEWAY SUBDIVISION

PLAT NO. 2013-72

LOT 1

N 01°08'45" W 362.87'

310.60'

TITN RIE
S. M.
SEC. 23

5

L=80.01'
R=532.39'

Δ=39°43'42"
161.00'

RIGHT-OF-WAY LINE

S 61°59'20" E 515.74'

STA 1343+66.66 "G"
140.00' LT.

STA 1343+88.97 "G"
100.00' LT.

S61°59'20"E 31.10'

STA 1344+11.71 "G"
100.00' LT.

E-6

R=2750.00'
L=137.60'

17.18'

45.80'

22.73'

L=141.88'

L=1614.71'
R=2765.00'

15' ENSTAR ESMT REC 2006-025853-0

PC = 1344+11.7

STA 1344+89.61 SHEET 12

MATCH LINE STA 1333+31.00 SHEET 10

1031.91'

N 61°59'20" W 1054.64'

SLOPE LIMITS

1335.00 CONTROLLED ACCESS LINE

S 44°29'42" E 228.00'

END CA
STA 1337+27 "G"

BEGIN CA
STA 1338+87 "G"

S 61°59'20" E 1102.93' (PT-PC)

1340+00 PROJECT CENTERLINE "G"

CONTROLLED ACCESS LINE

STA 1337+38.15 "G"
115.00' RT.

STA 1336+88.66 "G"
100.00' RT.

10.10'

53.41'

8.33'

SLOPE LIMITS

L=1673.11'
R=2865.00'
(PC-PT)

S 61°59'20" E 292.50'

51.37'

4

72.71'

N 61°59'20" W 81.04'

203.54'

205.31'

51.71'

53.41'

S 61°59'20" E 723.05'

519.51'

468.25'

N 61°59'20" W 673.56'

N 61°59'20" W 246.27'

RIGHT-OF-WAY LINE

STA 1334+10.83 "G"
145.00' RT.

S28°00'40"W 30.00'

STA 1336+57.10 "G"
115.00' RT.

STA 1336+57.10 "G"
145.00' RT.

STA 1344+11.71 "G"
100.00' RT.

R=2965.00'
L=173.51'

L=80.56'

L=75.76'
R=2980.00'

15.88'
S45°37'14"W

SEE SHEET 13
FOR ADDITIONAL
TAKE AREA

ROW ESMT BK 1 PG 85

30'

S 45°40'42" E

30' WIDE MEA UTIL ESMT REC 2013-066628-0

N 45°07'32" W 713.97'

765.68'

E-4A

LOT 1

OLD MATANUSKA ROAD ROW

COMMON DRIVEWAY ESMT

S 45°37'14" W 288.30'

100' WIDE MEA UTIL ESMT REC 2013-066628-0 (APPROX LOCA)

25' MEA ESMT REC 2005-008454

S 00°49'29" E 2640.30'

ENTRY 1917 - NO SECTION LINE ESMT

TRACT A

HOMESTEAD RV PARK SUBDIVISION

PLAT No. 2005-222

1/4 COR

0 25 50 100
Scale in Feet

HDL ENGINEERING CONSULTANTS, LLC
3335 ARCTIC BLVD, SUITE 100
ANCHORAGE, AK 99503
PHONE (907) 564-2120
REGISTRATION NO. AECL861

STATE OF ALASKA
49TH
JAMES H. SHARP
NO. 4015-S
REGISTERED PROFESSIONAL LAND SURVEYOR

CONSULTANT RIGHT-OF-WAY SURVEYOR'S CERTIFICATE

PARCEL NO.	INTEREST TO BE ACQUIRED	OWNER	LARGER PARCEL	TAKE INCLUDING EXISTING EASEMENT	NET TAKE	REMAINDER	RECORDED DOCUMENT NUMBER
E-6	UTIL ESMT	RONALD AND ROBIN MACLURE		2,500 SF	2,500 SF		2018-006221-0
5	FEE	CC MORTON REV TR AND HERITAGE HOLDING CO, LLC	11.118 AC	1.616 AC	1.616 AC	9.502 AC	2017-023305-0
E-4A	UTIL ESMT	MATANUSKA-SUSITNA BOROUGH		11,647 SF	8,581 SF		2017-018706-0
4	FEE	MATANUSKA-SUSITNA BOROUGH	43.803 AC	0.806 AC	0.539 AC	42.997 AC	2017-018704-0

PARCEL INFORMATION

ACQUISITION FUNDING UNDER
PROJECT No. Z581040000
UNLESS OTHERWISE NOTED

DATE	REVISIONS	BY

STATE OF ALASKA
DEPARTMENT OF TRANSPORTATION
&
PUBLIC FACILITIES

RIGHT OF WAY MAP
ALASKA PROJECT

0A15024/0A15033

State Project No. Z581040000/CFHWY00006

GLENN HIGHWAY MP 34-42
PARKS HWY TO OLD GLENN HWY

DRAWN	JHS	DATE	MARCH 2013	SCALE	1" = 50'
CHECKED	JRC	DATE	NOV 2021	SHEET	11 OF 67

PROJECT DESIGNATION	SHEET NO.	TOTAL SHEETS
0AI5024	R-12	R-67

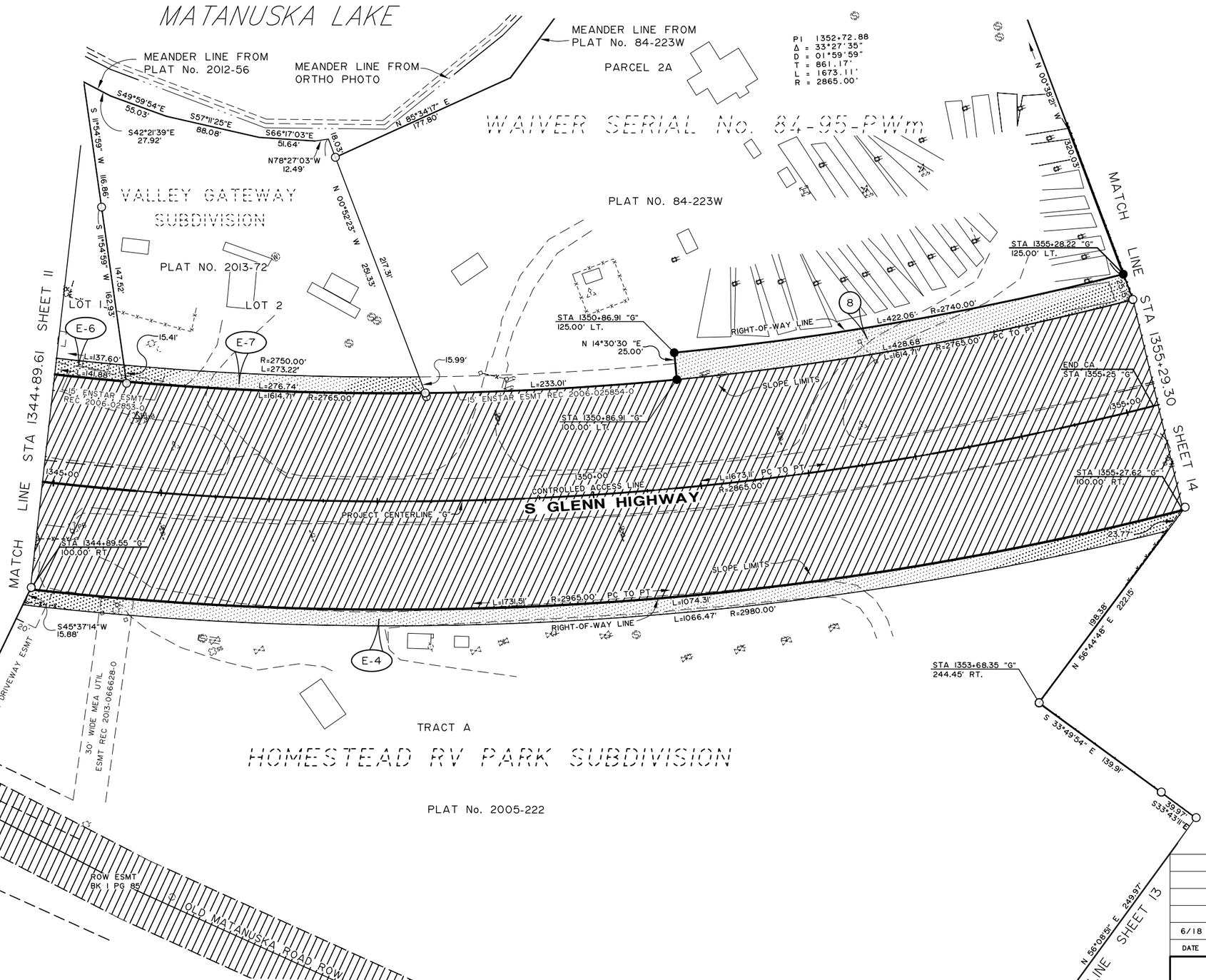

ACQUISITION FUNDING UNDER PROJECT No. Z581040000 UNLESS OTHERWISE NOTED

PARCEL NO.	INTEREST TO BE ACQUIRED	OWNER	LARGER PARCEL	TAKE INCLUDING EXISTING EASEMENT	NET TAKE	REMAINDER	RECORDED DOCUMENT NUMBER
PARCEL INFORMATION							
8	FEE	MYRA DESIREE OLSON	6.042 AC	0.244 AC	0.244 AC	5.798 AC	2017-027666-0
E-7	UTIL ESMT	RONALD AND ROBIN MACLURE		4,125 SF	4,125 SF		2018-006224-0
E-6	UTIL ESMT	RONALD AND ROBIN MACLURE		2,500 SF	2,500 SF		2018-006221-0
E-4-B		DELETED					———
4-B		DELETED					———
E-4	UTIL ESMT	MATANUSKA-SUSITNA BOROUGH		0.369 AC	0.369 AC		2017-018705-0

HDL ENGINEERING CONSULTANTS, LLC
3335 ARCTIC BLVD, SUITE 100
ANCHORAGE, AK 99503
PHONE (907) 564-2120
REGISTRATION NO. AECL861

STATE OF ALASKA 49TH
JAMES H. SHARP NO. 4015-S
REGISTERED PROFESSIONAL LAND SURVEYOR

CONSULTANT RIGHT-OF-WAY SURVEYOR'S CERTIFICATE

DATE	REVISIONS	BY
6/18	ADDED PARCELS 4-B & E-4-B	JS

STATE OF ALASKA
DEPARTMENT OF TRANSPORTATION & PUBLIC FACILITIES

RIGHT OF WAY MAP
ALASKA PROJECT

0A15024/0A15033

State Project No. Z581040000/CFHWY00006

GLENN HIGHWAY MP 34-42
PARKS HWY TO OLD GLENN HWY

DRAWN JHS	DATE MARCH 2013	SCALE 1" = 50'
CHECKED JRC	DATE NOV 2021	SHEET 12 OF 67

0 25 50 100
Scale in Feet

PROJECT DESIGNATION	SHEET NO.	TOTAL SHEETS
0A15024	R-13	R-67

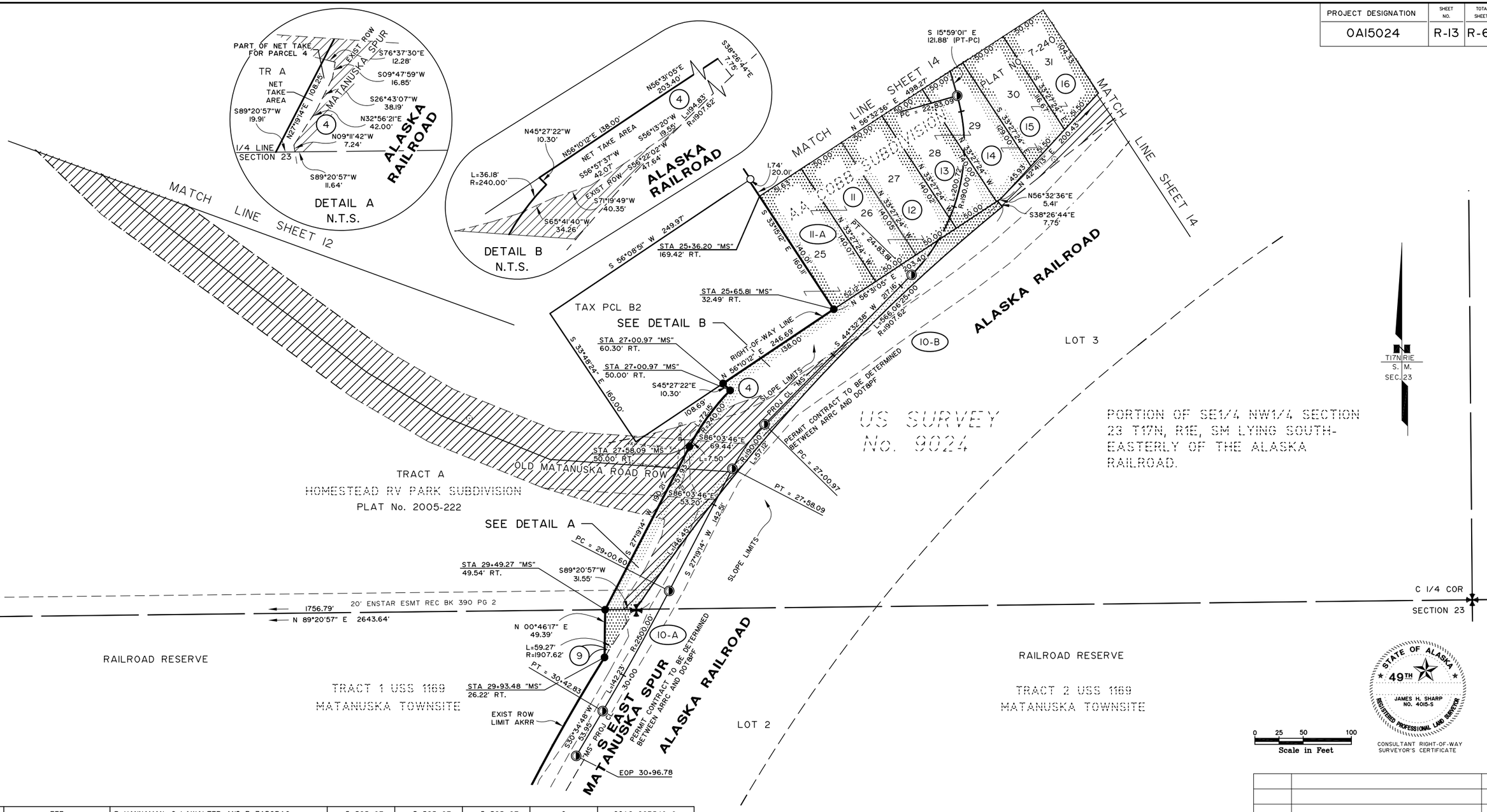

PARCEL NO.	INTEREST TO BE ACQUIRED	OWNER	LARGER PARCEL	TAKE INCLUDING EXISTING EASEMENT	NET TAKE	REMAINDER	RECORDED DOCUMENT NUMBER
PARCEL INFORMATION							
16	FEE	R HANNAMAN, G LAWALTER AND R ZABORAC	5,525 SF	5,525 SF	5,525 SF	0	2016-023549-0
15	FEE	R HANNAMAN, G LAWALTER AND R ZABORAC	6,142 SF	6,142 SF	6,142 SF	0	2016-023548-0
14	FEE	R HANNAMAN, G LAWALTER AND R ZABORAC	6,755 SF	6,755 SF	6,755 SF	0	2016-023547-0
13	FEE	R HANNAMAN, G LAWALTER AND R ZABORAC	7,001 SF	7,001 SF	7,001 SF	0	2016-023546-0
12	FEE	CAROL M STROUSE	7,002 SF	7,002 SF	7,002 SF	0	2016-025937-0
11-B		DELETED					———
11-A	FEE	CAROL M STROUSE	7,266 SF	7,266 SF	7,266 SF	0	2016-025936-0
11	FEE	CAROL M STROUSE	7,003 SF	7,003 SF	7,003 SF	0	2016-025935-0
10-B	PERMIT	ALASKA RAILROAD CORP		XX AC	XX AC		CONTRACT No. 9670
10-A	PERMIT	ALASKA RAILROAD CORP		XX AC	XX AC		CONTRACT No. 9670
9	PERMIT	ALASKA RAILROAD CORP		XX AC	XX AC		CONTRACT No. 9670
4	FEE	MATANUSKA-SUSITNA BOROUGH	43.803 AC	0.806 AC	0.539 AC	42.997 AC	2017-018704-0

ACQUISITION FUNDING UNDER PROJECT No. Z581040000 UNLESS OTHERWISE NOTED

HDL ENGINEERING CONSULTANTS, LLC
3335 ARCTIC BLVD, SUITE 100
ANCHORAGE, AK 99503
PHONE (907) 564-2120
REGISTRATION NO. AECL861

STATE OF ALASKA 49TH
JAMES H. SHARP NO. 4015-S
REGISTERED PROFESSIONAL LAND SURVEYOR
CONSULTANT RIGHT-OF-WAY SURVEYOR'S CERTIFICATE

DATE	REVISIONS	BY
10/15	DELETED PARCEL 11-B	JS

STATE OF ALASKA
DEPARTMENT OF TRANSPORTATION & PUBLIC FACILITIES
RIGHT OF WAY MAP
ALASKA PROJECT

0A15024/0A15033

State Project No. Z581040000/CFHWY00006
GLENN HIGHWAY MP 34-42
PARKS HWY TO OLD GLENN HWY

DRAWN JHS	DATE MARCH 2013	SCALE 1" = 50'	
CHECKED JRC	DATE NOV 2021	SHEET 13	OF 67

PROJECT DESIGNATION	SHEET NO.	TOTAL SHEETS
0A15024	R-14	R-67

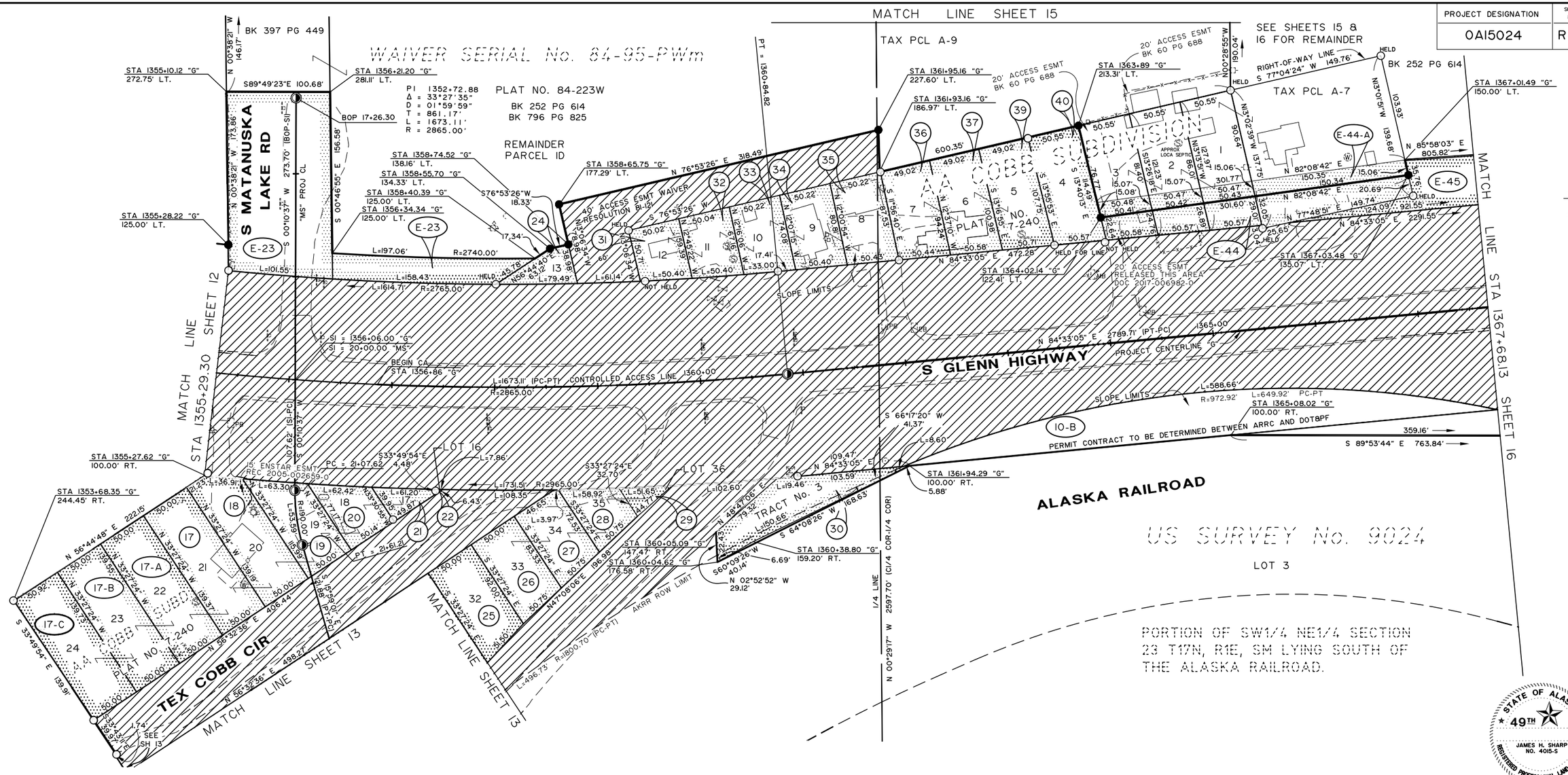

PARCEL NO	INTEREST TO BE ACQUIRED	OWNER	LARGER PARCEL	TAKE INCLUDING EXISTING EASEMENT	NET TAKE	REMAINDER	RECORDED DOCUMENT NUMBER
		PARCEL INFORMATION					
E-45	ROW ESMT	STATE OF ALASKA DNR		0.757 AC	0.757 AC		ADL 232742
E-44-A	UTIL ESMT	SCOTT R WELLS		4,525 SF	4,525 SF		2017-018709-0
E-44	ROW ESMT	SCOTT R WELLS		7,833 SF	7,833 SF		2017-018708-0
40	FEE	KATIE L ROUSEY	5,589 SF	5,589 SF	5,589 SF	0	2016-025934-0
39	FEE	KATHERINE L SEIM AND STEVEN C LOVE	5,178 AC	5,178 AC	5,178 AC	0	2016-018321-0
36-37	FEE	KATHERINE L SEIM AND STEVEN C LOVE	9,343 SF	9,343 SF	9,343 SF	0	2016-018322-0 2016-018323-0
34-35	FEE	JOHN J AND KAREN STUART	8,105 SF	8,105 SF	8,105 SF	0	2016-020697-0 2016-020693-0
33	FEE	JOHN J AND KAREN STUART	3,543 SF	3,543 SF	3,543 SF	0	2016-020696-0
31-32	FEE	JOHN J AND KAREN STUART	5,925 SF	5,925 SF	5,925 SF	0	2016-020694-0 2016-020695-0
30	FEE	KATIE DRYDEN ROUSEY	5,533 SF	5,533 SF	4,593 SF	0	2016-025933-0
26-29	FEE	REBECCA A HANNAMAN AND G A LAWALTER	11,675 SF	11,675 SF	11,675 SF	0	SEE NOTE 3
25	FEE	REBECCA A HANNAMAN AND G A LAWALTER	4,908 SF	4,908 SF	4,908 SF	0	2016-023550-0
24	FEE	REBECCA A HANNAMAN AND G A LAWALTER	1,727 SF	1,727 SF	1,727 SF	0	2016-021211-0
E-23	ROW ESMT	STATE OF ALASKA, DNR		22,407 SF	22,407 SF		ADL 232742
22	FEE	REBECCA A LAWALTER AND G A LAWALTER	14 SF	14 SF	14 SF	0	2016-025938-0
17-A-17-C	FEE	EUGENE R MOTTER, PERS REP FOR ESTATE	21,010 SF	21,010 SF	21,010 SF	0	SEE NOTE 2
17-21	FEE	EUGENE R MOTTER, PERS REP FOR ESTATE	22,438 SF	22,438 SF	22,438 SF	0	SEE NOTE 1
10-B	PERMIT	ALASKA RAILROAD CORP		XX AC	XX AC		CONTRACT No. 9670

NOTES:
1. 2016-016517-0
   2016-011652I-0
   2016-016522-0
   2016-016523-0
   2016-016524-0
2. 2016-016518-0
   2016-016519-0
   2016-01520-0
3. 2016-023551-0
   2016-023552-0
   2016-023553-0
   2016-023554-0

ACQUISITION FUNDING UNDER PROJECT No. Z581040000 UNLESS OTHERWISE NOTED

Scale in Feet: 0 25 50 100

CONSULTANT RIGHT-OF-WAY SURVEYOR'S CERTIFICATE

STATE OF ALASKA 49TH JAMES H. SHARP NO. 4015-S REGISTERED PROFESSIONAL LAND SURVEYOR

DATE	REVISIONS	BY
8/16	REVISED PCLS 41-44 TO E-44 & E-44-A	JS
8/15	REVISED PARCEL E-45	JS

STATE OF ALASKA
DEPARTMENT OF TRANSPORTATION & PUBLIC FACILITIES
RIGHT OF WAY MAP
ALASKA PROJECT

0A15024/0A15033

State Project No. Z581040000/CFHWY00006

GLENN HIGHWAY MP 34-42
PARKS HWY TO OLD GLENN HWY

DRAWN	JHS	DATE	MARCH 2013	SCALE	1" = 50'
CHECKED	JRC	DATE	NOV 2021	SHEET	14 OF 67

HDL ENGINEERING CONSULTANTS, LLC
3335 ARCTIC BLVD, SUITE 100
ANCHORAGE, AK 99503
PHONE (907) 564-2120
REGISTRATION NO. AECL861

PROJECT DESIGNATION	SHEET NO.	TOTAL SHEETS
0A15024	R-15	R-67

1/4 COR

SECTION 14
SECTION 23

1/4 LINE

N 00°29'17" W 2597.70' (C/4 COR-1/4 COR)

PLAT NO. 84-223W
PARCEL ID

N 88°20'47" E 349.62'

S39°57'32"E
10.77'

S 59°42'24" E 109.14'

S 76°18'29" E 161.35'

S 68°05'26" E
73.27'

S 54°53'47" E 371.64'

S67°07'00"E
58.62'

MEANDER LINE FROM
ORTHO PHOTO

KEPLER LAKE
46.33 AC±

WAIVER SERIAL No. 84-95-PWm

PLAT NO. 84-223W

BK 252 PG 614

(ORIGINALLY PORTION OF GOVT LOT 2 & PARCEL 1 OF WAIVER RESOLUTION 81-121)

PARCEL 1B

T17N RIE
S. M.
SEC. 23

1/16 LINE

N 00°37'55" W 1323.25' (1/16 COR-1/16 COR)

PATHWAY SLOPE LIMITS

LAKE

N00°29'17"W
2.68'±

N 88°23'17" E 1316.40'

N 89°41'33" W 343.72'

N 00°28'55" W 190.04'

TAX PCL A-9

WAIVER SERIAL No. 84-95-PWm

PARCEL 1C

PLAT NO. 84-223W

BK 252 PG 614

PARCEL 1C

MATCH LINE SHEET 16

MATCH LINE SHEET 14

0 25 50 100
Scale in Feet

STATE OF ALASKA
49TH
JAMES H. SHARP
NO. 4015-S
REGISTERED PROFESSIONAL LAND SURVEYOR

CONSULTANT RIGHT-OF-WAY
SURVEYOR'S CERTIFICATE

DATE	REVISIONS	BY

STATE OF ALASKA
DEPARTMENT OF TRANSPORTATION
&
PUBLIC FACILITIES

RIGHT OF WAY MAP
ALASKA PROJECT

0A15024/0A15033

State Project No. Z581040000/CFHWY00006

GLENN HIGHWAY MP 34-42
PARKS HWY TO OLD GLENN HWY

HDL ENGINEERING CONSULTANTS, LLC
3335 ARCTIC BLVD, SUITE 100
ANCHORAGE, AK 99503
PHONE (907) 564-2120
REGISTRATION NO. AECL861

DRAWN	JHS	DATE	MARCH 2013	SCALE	1" = 50'
CHECKED	JRC	DATE	NOV 2021	SHEET	15 OF 67

PROJECT DESIGNATION	SHEET NO.	TOTAL SHEETS
0AI5024	R-16	R-67

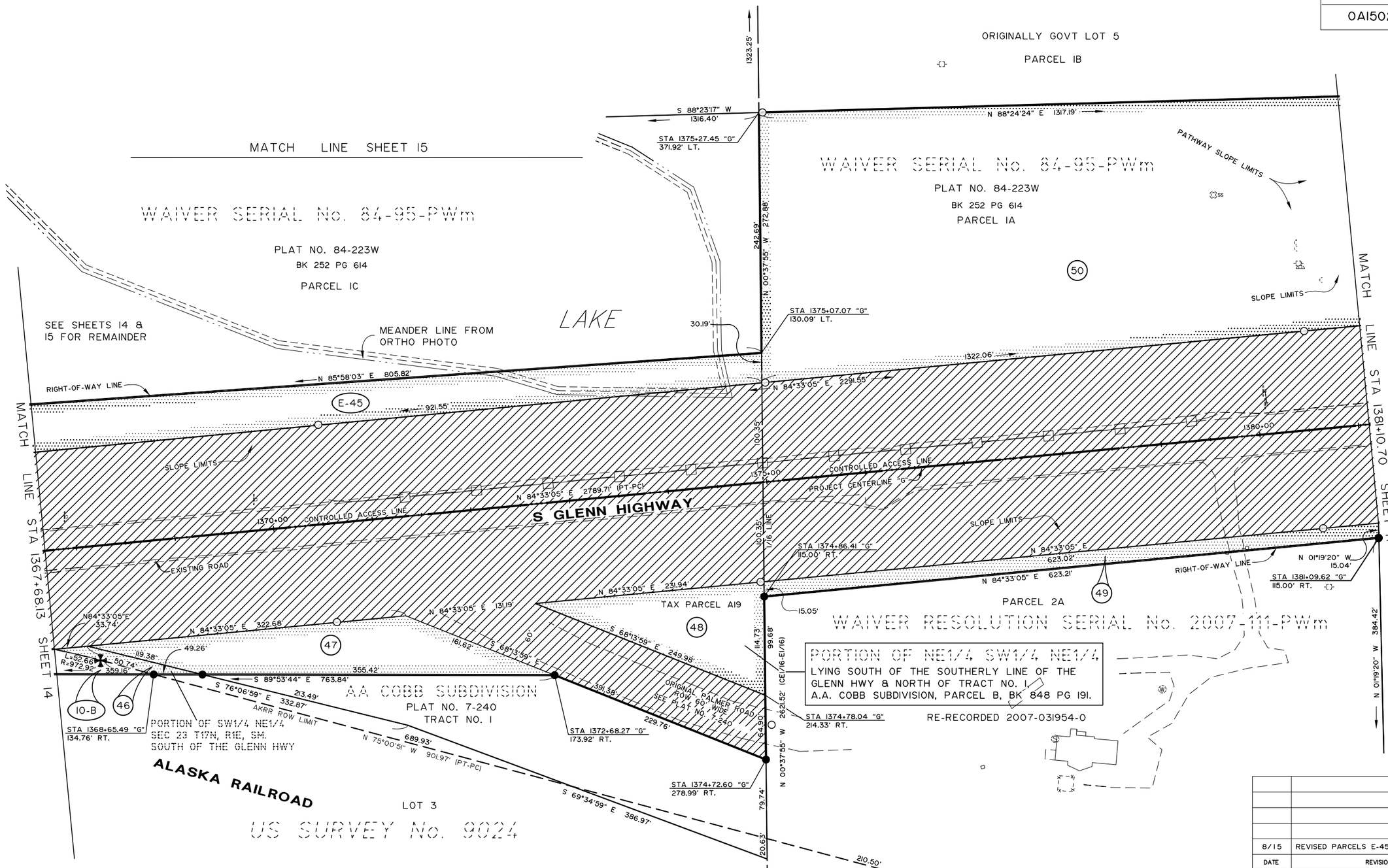

PARCEL NO.	INTEREST TO BE ACQUIRED	OWNER	LARGER PARCEL	TAKE INCLUDING EXISTING EASEMENT	NET TAKE	REMAINDER	RECORDED DOCUMENT NUMBER
50	FEE	CITY OF PALMER	6.908 AC	6.908 AC	6.908 AC	0	2017-027439-0
49	FEE	RICHARD A PAYNE	5.053 AC	0.215 AC	0.215 AC	4.838 AC	2017-022710-0
48	FEE	RICHARD A PAYNE	13,259 SF	13,259 SF	13,259 SF	0	2017-008693-0
47	FEE	SCOTT AND MARIANNE K WICK	55,848 SF	16,979 SF	16,979 SF	38,869 SF	2017-011839-0
46	FEE	G A AND R A LAWALTER AND C M STROUSE	1,238 SF	1,238 SF	1,238 SF	0	2016-025939-0
E-45	ROW ESMT	STATE OF ALASKA DNR		0.757 AC	0.757 AC		ADL 232742
10-B	PERMIT	ALASKA RAILROAD CORP		XX AC	XX AC		CONTRACT No. 9670

PARCEL INFORMATION

0 25 50 100
Scale in Feet

STATE OF ALASKA
49TH
JAMES H. SHARP
NO. 4015-S
REGISTERED PROFESSIONAL LAND SURVEYOR
CONSULTANT RIGHT-OF-WAY SURVEYOR'S CERTIFICATE

HDL ENGINEERING CONSULTANTS, LLC
3335 ARCTIC BLVD. SUITE 100
ANCHORAGE, AK 99503
PHONE (907) 564-2120
REGISTRATION NO. AECL861

ACQUISITION FUNDING UNDER PROJECT No. Z581040000 UNLESS OTHERWISE NOTED

DATE	REVISIONS	BY
8/15	REVISED PARCELS E-45 & 46-50	JS

STATE OF ALASKA
DEPARTMENT OF TRANSPORTATION
&
PUBLIC FACILITIES

RIGHT OF WAY MAP
ALASKA PROJECT

0A15024/0A15033

State Project No. Z581040000/CFHWY00006

GLENN HIGHWAY MP 34-42
PARKS HWY TO OLD GLENN HWY

DRAWN	JHS	DATE	MARCH 2013	SCALE	1" = 50'
CHECKED	JRC	DATE	NOV 2021	SHEET	16 OF 67

PROJECT DESIGNATION	SHEET NO.	TOTAL SHEETS
0AI5024	R-17	R-67

KEPLER LAKE

MEANDER LINE FROM PLAT No. 84-223W

N 82°47'22" E 617.06'

S 72°36'16" E 184.94'

3.20'

N 55°55'30" E 39.87'

S 88°02'45" E 74.20'

MEANDER LINE FROM ORTHO PHOTO

S 74°33'51" E 145.70'

N 88°17'02" E 115.63'

MEANDER LINE FROM PLAT No. 82-172

S 55°25'01" E 127.52'

189.69'

S 73°21'47" E

KEPLER SUBDIVISION NO.2

PLAT NO. 82-172

PARCEL B

THIS PORTION OF PCL A OVERLAPS PCL IB OF WAIVER 84-95-PWm

S 83°39'20" E 20.03'

N00°37'57"E 32.61'

RECOVERED CORS OUT OF POSITION 20'± WEST OF TRUE POS

104.89' ENTRY 1918 - NO SECTION LINE ESMT

ENTRY 1918 - NO SECTION LINE ESMT

ORIGINALLY GOVT LOT 5

PARCEL IB

N 88°24'25" E 20.67'

S 83°39'20" E 346.38'

N 78°59'24" W 402.16'

N 88°24'24" E 1317.19'

STA 1388+41.65 "G" 283.36' LT.

PARCEL A

WAIVER SERIAL NO. 84-95-PWm

PORTION OF SE1/4 NE1/4

LYING NORTH OF NORTHERLY ROW OF GLENN HIGHWAY.

PLAT NO. 84-223W

BK 252 PG 614

PARCEL IA

50

PATHWAY SLOPE LIMITS

S 00°45'15" E 321.89'

183.98'

160.00'

E-52

N01°01'24"E 10.00'

S88°58'36"E 10.00'

S01°01'24"W 10.00'

S84°48'20"E 307.85'

RIGHT-OF-WAY LINE

14.00'

N 86°51'07" E 420.32'

S84°48'20"E 312.81'

STA 1392+46.35 "G" 152.92' LT.

N 81°38'09" E 227.46'

S 88°20'44" E 199.37'

52

STA 1390+25.41 "G" 131.00' LT.

STA 1388+31.00 "G" 153.62' LT.

153.80'

15' MEA ESMT BK 5 PG 352

L=687.74'

R=5830.00'

47.94'

SLOPE LIMITS

1322.06'

N 84°33'05" E 2291.55'

200.68'

N 00°45'15" W 700.34'

END CA STA 1391+30 "G"

BEGIN CA STA 1392+90 "G"

1390+00

L=1401.36' (PC-PT)

R=5730.00'

MATCH LINE STA 1381+10.70 SHEET 16

1385+00

N 84°33'05" E 2789.71' (PT-PC)

PROJECT CENTERLINE "G"

CONTROLLED ACCESS LINE

S GLENN HIGHWAY

EXISTING ROAD

SLOPE LIMITS

R=5630.00' L=376.90'

N84°33'05"E 64.36'

L=1373.23' R=5615.00

RIGHT-OF-WAY LINE

15.05'

S84°33'05"W 34.29'

31.30'

5.87'

25' UTILITY EASEMENT RECORDED 2005-004832-0 (APPROXIMATE LOCATION)

53

N 84°33'05" E 699.47'

S 84°33'05" W 699.32'

N23°56'09"W 52.21'

S23°56'09"E 60.73'

32.00'

S66°08'51"W

STA 1388+74.53 "G" 115.00' RT.

PC = 1388+74.53

PORTION OF GOV'T LOT 2 & PORTION OF E1/2 NW1/4 LYING SOUTH OF GLENN HWY.

362.61'

N 00°45'15" W

140.85'

THE EXTENT OF THE REMAINING AREA IS NOT SHOWN.

E-53

PI 1395+78.73
Δ = 14°00'45"
D = 01°00'00"
T = 704.19'
L = 1401.36'
R = 5730.00'

NO1°19'20"W 15.04'

STA 1381+09.62 "G" 115.00' RT.

51

N 01°19'20" W 399.46'

PARCEL IA

WAIVER RESOLUTION SERIAL NO. 2007-111-PWm

RE-RECORDED 2007-031954-0

APPROX OLD PALMER-MATANUSKA ROAD ROW LIMIT 12'± FROM CL

SEE NOTE 10, SHEET 54

TAX PARCEL B8

ENTRY 1917 - NO SECTION LINE ESMT

SECTION 23

SECTION 24

200.84'

ENTRY 1918 - NO SECTION LINE ESMT

L=250.66'±

L=511.46'

R=672.89'

N 81°29'17" E 331.63'

ACQUISITION FUNDING UNDER PROJECT No. Z58104000O UNLESS OTHERWISE NOTED

MATCH LINE STA 1393+50.00 SHEET 18

T17N R1E S. M. SEC. 23&24

0 25 50 100

Scale in Feet

HDL ENGINEERING CONSULTANTS, LLC
3335 ARCTIC BLVD, SUITE 100
ANCHORAGE, AK 99503
PHONE (907) 5664-2120
REGISTRATION NO. AECL861

STATE OF ALASKA ★ 49TH ★ JAMES H. SHARP NO. 4015-S REGISTERED PROFESSIONAL LAND SURVEYOR

CONSULTANT RIGHT-OF-WAY SURVEYOR'S CERTIFICATE

8/16	DELETED PARCEL E-51; REVISED PARCEL E-53	JS
8/15	REVISED PARCEL 50	JS
DATE	REVISIONS	BY

PARCEL NO.	INTEREST TO BE ACQUIRED	OWNER	LARGER PARCEL	TAKE INCLUDING EXISTING EASEMENT	NET TAKE	REMAINDER	RECORDED DOCUMENT NUMBER
PARCEL INFORMATION							
E-53	UTIL ESMT	KEPLER INC		2,107 SF	2,107 SF		2017-027671-0
53	FEE	KEPLER INC	LARGE	1.544 AC	1.544 AC	LARGE	2017-027672-0
E-52	UTIL ESMT	KEPLER INC		12,270 SF	12,270 SF		2017-027669-0
52	FEE	KEPLER INC	104,320 SF	29,098 SF	29,098 SF	75,222 SF	2017-027670-0
E-51		DELETED					———
51	FEE	DANIEL S AND MARIE J PAYNE	6.084 AC	0.241 AC	0.241 AC	5.843 AC	2017-014609-0
50	FEE	CITY OF PALMER	6.908 AC	6.908 AC	6.908 AC	0	2017-027439-0

STATE OF ALASKA
DEPARTMENT OF TRANSPORTATION & PUBLIC FACILITIES
RIGHT OF WAY MAP
ALASKA PROJECT

0A15024/0A15033

State Project No. Z58104000O/CFHWY00006

GLENN HIGHWAY MP 34-42
PARKS HWY TO OLD GLENN HWY

DRAWN	JHS	DATE	MARCH 2013	SCALE	1" = 50'
CHECKED	JRC	DATE	NOV 2021	SHEET	17 OF 67

PROJECT DESIGNATION	SHEET NO.	TOTAL SHEETS
0A15024	R-18	R-67

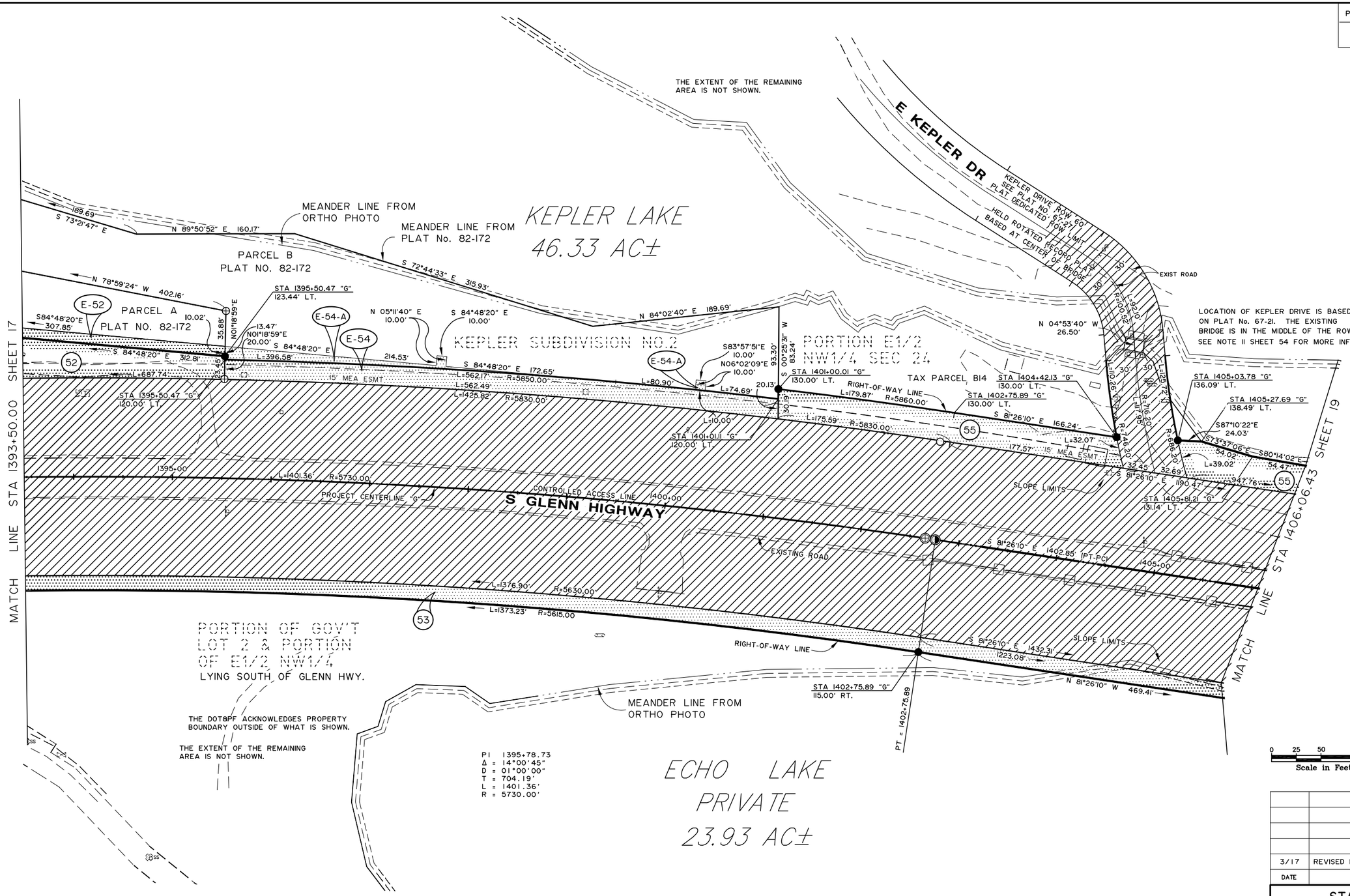

55	FEE	KEPLER INC	LARGE	34,473 SF	34,473 SF	LARGE	2017-027674-0
E-54-A	UTIL ESMT	STATE OF ALASKA DNR		0.043 AC	0.043 AC		ADL 232742
E-54	ROW ESMT	STATE OF ALASKA DNR		0.258 AC	0.258 AC		ADL 232742
53	FEE	KEPLER INC	LARGE	1.544 AC	1.544 AC	LARGE	2017-027672-0
E-52	UTIL ESMT	KEPLER INC		12,270 SF	12,270 SF		2017-027669-0
52	FEE	KEPLER INC	104,320 SF	29,098 SF	29,098 SF	75,222 SF	2017-027670-0
PARCEL NO.	INTEREST TO BE ACQUIRED	OWNER	LARGER PARCEL	TAKE INCLUDING EXISTING EASEMENT	NET TAKE	REMAINDER	RECORDED DOCUMENT NUMBER

PARCEL INFORMATION

ACQUISITION FUNDING UNDER PROJECT No. Z581040000 UNLESS OTHERWISE NOTED

0 25 50 100
Scale in Feet

HDL ENGINEERING CONSULTANTS, LLC
3335 ARCTIC BLVD, SUITE 100
ANCHORAGE, AK 99503
PHONE (907) 564-2120
REGISTRATION NO. AECL861

STATE OF ALASKA 49TH
JAMES H. SHARP NO. 4015-S
REGISTERED PROFESSIONAL LAND SURVEYOR
CONSULTANT RIGHT-OF-WAY SURVEYOR'S CERTIFICATE

DATE	REVISIONS	BY
3/17	REVISED PARCELS 52, E-52 & 55	JS

STATE OF ALASKA
DEPARTMENT OF TRANSPORTATION
&
PUBLIC FACILITIES

RIGHT OF WAY MAP
ALASKA PROJECT

0A15024/0A15033

State Project No. Z581040000/CFHWY00006

GLENN HIGHWAY MP 34-42
PARKS HWY TO OLD GLENN HWY

DRAWN JHS	DATE MARCH 2013	SCALE 1" = 50'	
CHECKED JRC	DATE NOV 2021	SHEET 18	OF 67

PROJECT DESIGNATION	SHEET NO.	TOTAL SHEETS
0AI5024	R-19	R-67

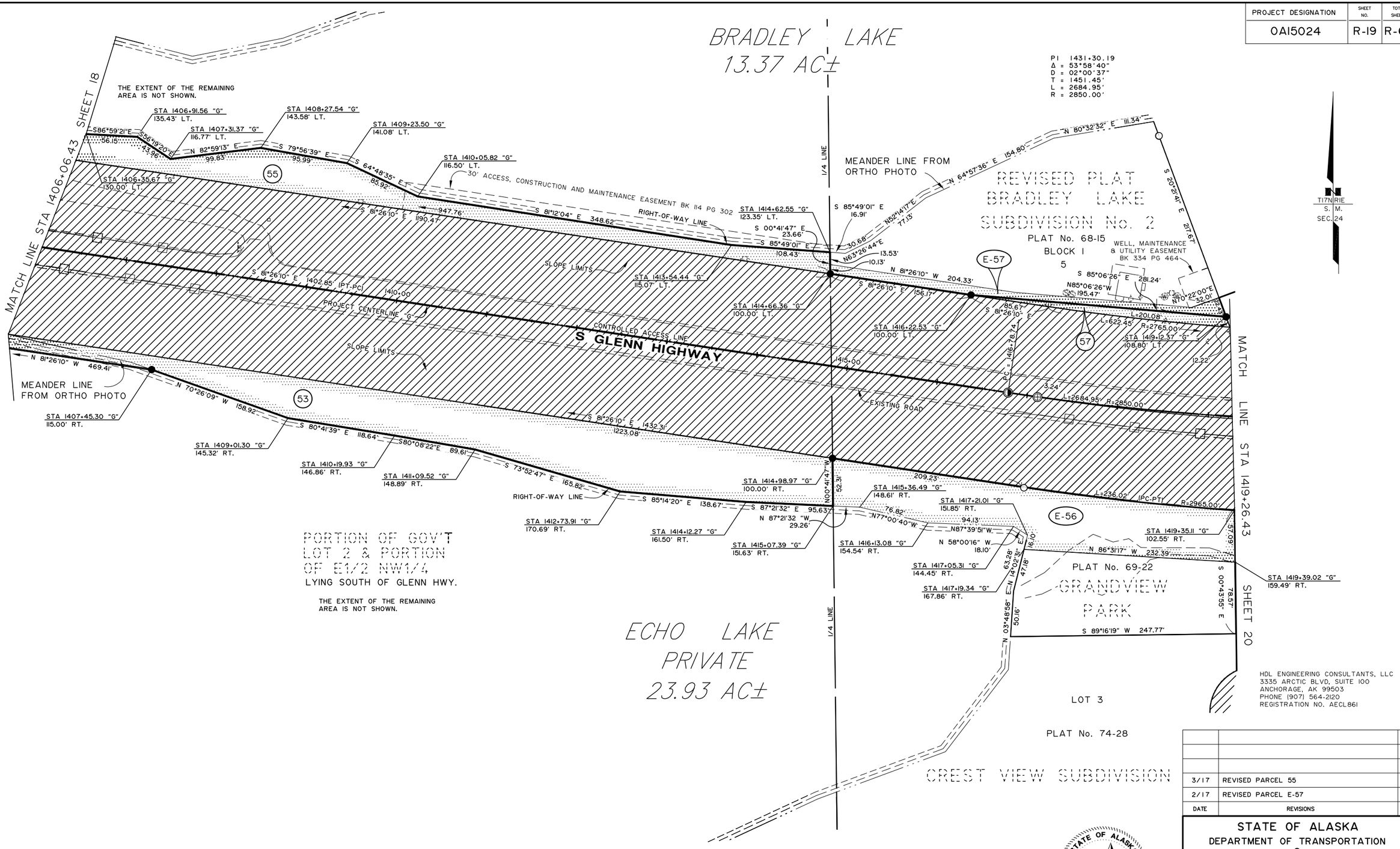

HDL ENGINEERING CONSULTANTS, LLC
3335 ARCTIC BLVD, SUITE 100
ANCHORAGE, AK 99503
PHONE (907) 564-2120
REGISTRATION NO. AECL861

PARCEL NO.	INTEREST TO BE ACQUIRED	OWNER	LARGER PARCEL	TAKE INCLUDING EXISTING EASEMENT	NET TAKE	REMAINDER	RECORDED DOCUMENT NUMBER
PARCEL INFORMATION							
E-57	UTIL ESMT	PAUL A MAGUIRE JR		3,830 SF	3,830 SF		2018-007515-0
57	FEE	PAUL A MAGUIRE JR	57,037 SF	2,113 SF	2,113 SF	54,924 SF	2018-007514-0
E-56	SLOPE UTIL MAINT ESMT	ALL OWNERS OF LOTS IN GRANDVIEW & CRESTVIEW		24,772 SF	24,772 SF		2019-002639-0
55	FEE	KEPLER INC	LARGE	34,473 SF	34,473 SF	LARGE	2017-027674-0
53	FEE	KEPLER INC	LARGE	1.544 AC	1.544 AC	LARGE	2017-027672-0

ACQUISITION FUNDING UNDER PROJECT No. Z58I040000 UNLESS OTHERWISE NOTED

0 25 50 100
Scale in Feet

STATE OF ALASKA 49TH
JAMES H. SHARP NO. 4015-S
REGISTERED PROFESSIONAL LAND SURVEYOR
CONSULTANT RIGHT-OF-WAY SURVEYOR'S CERTIFICATE

DATE	REVISIONS	BY
3/17	REVISED PARCEL 55	JS
2/17	REVISED PARCEL E-57	JS

STATE OF ALASKA
DEPARTMENT OF TRANSPORTATION
&
PUBLIC FACILITIES
RIGHT OF WAY MAP
ALASKA PROJECT

0A15024/0A15033

State Project No. Z58I040000/CFHWY00006

GLENN HIGHWAY MP 34-42
PARKS HWY TO OLD GLENN HWY

DRAWN JHS	DATE MARCH 2013	SCALE 1" = 50'	
CHECKED JRC	DATE NOV 2021	SHEET 19	OF 67

PROJECT DESIGNATION	SHEET NO.	TOTAL SHEETS
0AI5024	R-20	R-67

T17N RIE
S. M.
SEC. 24

1/16 LINE

BRADLEY LAKE

REVISED PLAT
BRADLEY LAKE
SUBDIVISION No. 2
PLAT No. 68-15
3

4

2

1
BLOCK 1

PI 1431+30.19
Δ = 53°58'40"
D = 02°00'37"
T = 1451.45'
L = 2684.95'
R = 2850.00'

15' POWER LINE ESMT

N 48°21'39" E 230.12'

N 48°21'39" E 34.74'

N 48°21'39" E 194.94'

E MAX DRIVE

L=111.70'
R=286.48'

L=119.43'
R=306.48'

L=0.82'
R=266.48'

L=111.70'
R=286.48'

L=6.25'
R=251.48'

L=61.36'
R=266.48'

L=103.07'
R=232.93'

L=200.20'

L=190.19'

L=218.81'
R=282.93'

S32°40'13"E
15.00'

S35°14'04"E
15.00'

N35°14'04"W
15.00'

S54°45'56"W
10.00'

E-59

L=1.78'

N41°15'24"W
15.00'

L=21.43'
R=251.48'

PLAT No. 68-15
4
BLOCK 2

S 31°06'32" E 229.63'
205.65'
20.98'

15' TELECOM EASEMENT
BK 982 PG 236

STA 1426+82.51 "G"
104.11' LT.

60

R=2750.00'

15.98'

L=150.80'

STA 1426+84.35 "G"
99.09' LT.

59

10.65'

L=142.56'

R=2755.00'

L=278.16'

R=2765.00'

L=283.81'

L=10.05'

STA 1423+96.02 "G"
102.38' LT.

STA 1423+63.13 "G"
147.98' LT.

58

N 69°38'19" E 354.73'

15' POWER LINE ESMT

STA 1422+83.42 "G"
220.89' LT.

R=60.00'

L=326.56'

S 20°29'41" E 206.29'

STA 1419+12.37 "G"
108.80' LT.

34.56'

6
BLOCK 1
PLAT No. 68-15

L=55.99'
R=273.23'

STA 1423+53.47 "G"
92.86' LT.

L=408.54'

L=622.45'
R=2765.00'

STA 1419+30.84 "G"
97.51' LT.

MATCH LINE STA 1419+26.43 SHEET 19

SLOPE LIMITS

PC
BEGIN CA
STA 1424+55 "G"

1425+00

CONTROLLED ACCESS LINE

END CA
STA 1422+95 "G"

1420+00

PROJECT CENTERLINE "G"

S GLENN HIGHWAY

N 89°20'05" E
273.46'

15' POWER LINE ESMT

REVISED PLAT
BRADLEY LAKE
SUBDIVISION No. 2
PLAT No. 68-15
2

S 00°38'42" E 254.98'

N 00°48'03" W 333.47'

15' POWER LINE ESMT

15' POWER LINE ESMT

STA 1431+66.75 "G"
109.66' LT.

27.82'

ENSTAR ROW
EASEMENT
BK 389 PG 988

STA 1430+81.09 "G"
99.50' LT.

N 62°29'34" E
193.14'

61

15.41'

L=233.56'

RIGHT-OF-WAY LINE

R=2750.00'

L=311.86'

R=2765.00'

MATCH LINE STA 1431+55.62 SHEET 21

1430+00

L=2684.95' (PC-PT)

R=2850.00'

EXISTING CENTERLINE

EXISTING ROAD

L=488.09'
R=2965.00'

STA 1431+24.36 "G"
116.02' RT.

STA 1431+06.73 "G"
167.55' RT.

S 00°34'09" E
542.73'

ORIGINALLY PRIVATE DRIVE
TITLE HAS ESCHEAT TO STATE

R=3005.00'

L=155.89'

15' POWER LINE ESMT

L=311.26'

E SHERROD DR

LOT 2A
LOT 2 A, BLOCK 1
GRAND VIEW SUBDIVISION
BLOCK 1
PLAT No. 95-108

3

S 00°34'09" E 196.88'

S 00°43'55" E

E SHERROD DRIVE

15' UTIL ESMT

L=236.67'

L=842.46'

L=200.57'

R=3005.00'

L=135.02'

L=134.92'

RIGHT-OF-WAY LINE

L=135.27'

15' POWER LINE ESMT

STA 1427+73.93 "G"
165.45' RT.

STA 1428+12.67 "G"
165.70' RT.

S SHERROD CIR

S VALEN-FELBERG CIR

N 00°51'56" W 192.07'

N 00°51'56" W 232.71'

CREST VIEW SUBDIVISION
PLAT No. 74-28
LOT 2

00°41'25" W 247.32'

LOT 1

GRAND VIEW SUBDIVISION
PLAT No. 69-22
3

N 00°35'36" W 213.93'

2
BLOCK 2

N 00°44'29" W 200.53'

N 00°54'19" W 192.86'

STA 1419+77.00 "G"
159.90' RT.

ALASKA RAILROAD

SHEET 21

HDL ENGINEERING CONSULTANTS, LLC
3335 ARCTIC BLVD, SUITE 100
ANCHORAGE, AK 99503
PHONE (907) 564-2120
REGISTRATION NO. AECL861

STATE OF ALASKA
49TH
JAMES H. SHARP
NO. 4015-S
REGISTERED PROFESSIONAL LAND SURVEYOR

CONSULTANT RIGHT-OF-WAY SURVEYOR'S CERTIFICATE

0 25 50 100
Scale in Feet

PARCEL NO.	INTEREST TO BE ACQUIRED	OWNER	LARGER PARCEL	TAKE INCLUDING EXISTING EASEMENT	NET TAKE	REMAINDER	RECORDED DOCUMENT NUMBER
61	FEE	WILLIAM R LOWE	98,554 SF	5,134 SF	5,134 SF	93,420 SF	2017-029690-0
60	FEE	MYRON C ROSENBERG	56,180 SF	2,200 SF	2,200 SF	53,980 SF	2017-011437-0
E-59	UTIL ESMT	MYRON C ROSENBERG		732 SF	732 SF		2017-011442-0
59	FEE	MYRON C ROSENBERG	38,532 SF	2,810 SF	2,810 SF	35,722 SF	2017-011439-0
58	FEE	MICHAEL D AND JACQUELINE L MILLER	31,683 SF	31,683 SF	31,683 SF	0	2016-021213-0

PARCEL INFORMATION

ACQUISITION FUNDING UNDER
PROJECT No. Z581040000
UNLESS OTHERWISE NOTED

DATE	REVISIONS	BY
6/16	REVISED PARCEL E-59	JS

STATE OF ALASKA
DEPARTMENT OF TRANSPORTATION
&
PUBLIC FACILITIES

RIGHT OF WAY MAP
ALASKA PROJECT

0A15024/0A15033

State Project No. Z581040000/CFHWY00006

GLENN HIGHWAY MP 34-42
PARKS HWY TO OLD GLENN HWY

DRAWN JHS	DATE MARCH 2013	SCALE 1" = 50'	
CHECKED JRC	DATE NOV 2021	SHEET 20	OF 67

PROJECT DESIGNATION	SHEET NO.	TOTAL SHEETS
0AI5024	R-21	R-67

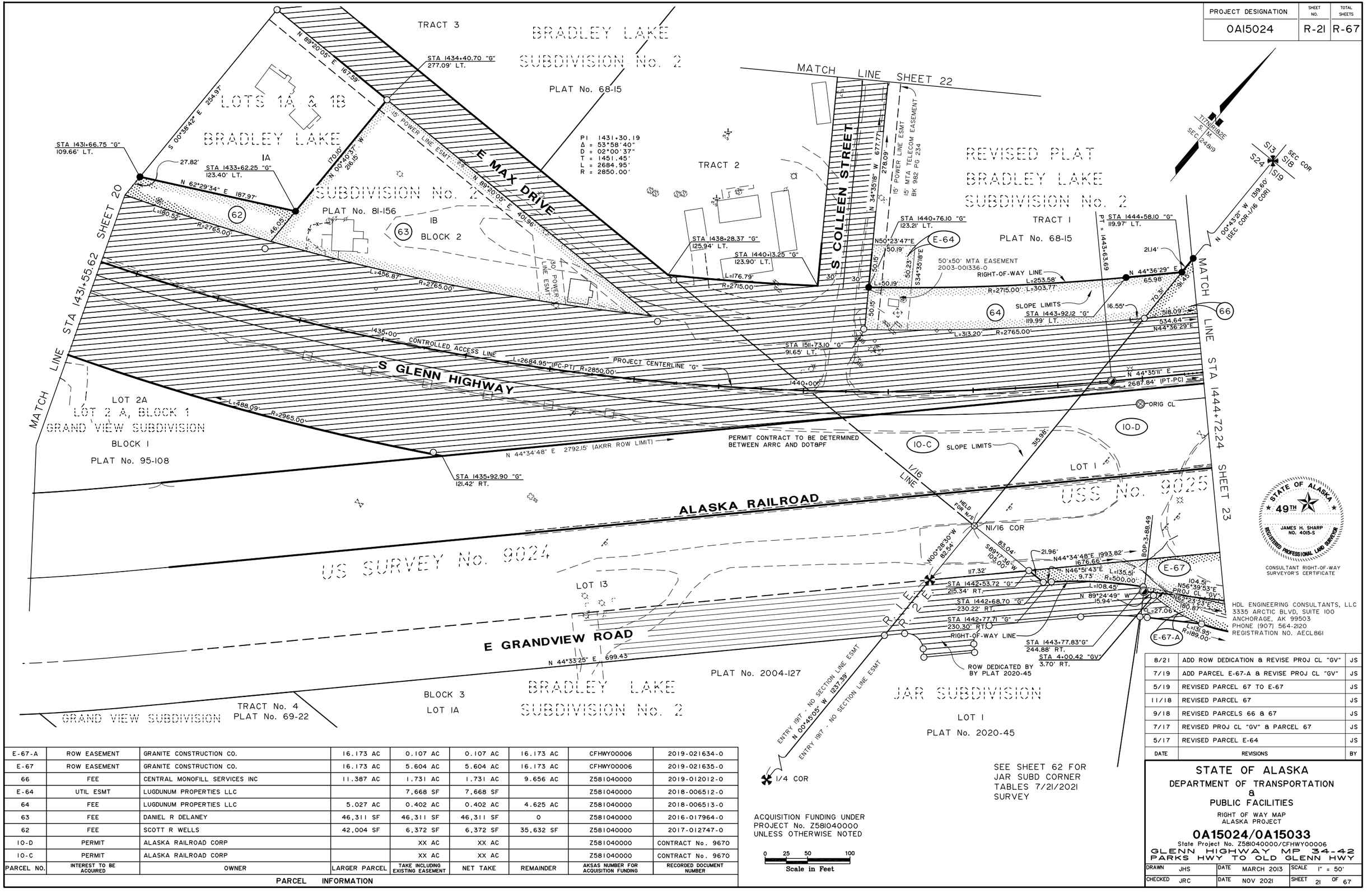

PARCEL NO.	INTEREST TO BE ACQUIRED	OWNER	LARGER PARCEL	TAKE INCLUDING EXISTING EASEMENT	NET TAKE	REMAINDER	AKSAS NUMBER FOR ACQUISITION FUNDING	RECORDED DOCUMENT NUMBER
E-67-A	ROW EASEMENT	GRANITE CONSTRUCTION CO.	16.173 AC	0.107 AC	0.107 AC	16.173 AC	CFHWY00006	2019-021634-0
E-67	ROW EASEMENT	GRANITE CONSTRUCTION CO.	16.173 AC	5.604 AC	5.604 AC	16.173 AC	CFHWY00006	2019-021635-0
66	FEE	CENTRAL MONOFILL SERVICES INC	11.387 AC	1.731 AC	1.731 AC	9.656 AC	Z581040000	2019-012012-0
E-64	UTIL ESMT	LUGDUNUM PROPERTIES LLC		7,668 SF	7,668 SF		Z581040000	2018-006512-0
64	FEE	LUGDUNUM PROPERTIES LLC	5.027 AC	0.402 AC	0.402 AC	4.625 AC	Z581040000	2018-006513-0
63	FEE	DANIEL R DELANEY	46,311 SF	46,311 SF	46,311 SF	0	Z581040000	2016-017964-0
62	FEE	SCOTT R WELLS	42,004 SF	6,372 SF	6,372 SF	35,632 SF	Z581040000	2017-012747-0
10-D	PERMIT	ALASKA RAILROAD CORP		XX AC	XX AC		Z581040000	CONTRACT No. 9670
10-C	PERMIT	ALASKA RAILROAD CORP		XX AC	XX AC		Z581040000	CONTRACT No. 9670

PARCEL INFORMATION

ACQUISITION FUNDING UNDER PROJECT No. Z581040000 UNLESS OTHERWISE NOTED

Scale in Feet: 0 25 50 100

DATE	REVISIONS	BY
8/21	ADD ROW DEDICATION & REVISE PROJ CL "GV"	JS
7/19	ADD PARCEL E-67-A & REVISE PROJ CL "GV"	JS
5/19	REVISED PARCEL 67 TO E-67	JS
11/18	REVISED PARCEL 67	JS
9/18	REVISED PARCELS 66 & 67	JS
7/17	REVISED PROJ CL "GV" & PARCEL 67	JS
5/17	REVISED PARCEL E-64	JS

STATE OF ALASKA
DEPARTMENT OF TRANSPORTATION & PUBLIC FACILITIES
RIGHT OF WAY MAP
ALASKA PROJECT

0A15024/0A15033

State Project No. Z581040000/CFHWY00006

GLENN HIGHWAY MP 34-42
PARKS HWY TO OLD GLENN HWY

DRAWN	JHS	DATE	MARCH 2013	SCALE	1" = 50'
CHECKED	JRC	DATE	NOV 2021	SHEET	21 OF 67

PROJECT DESIGNATION	SHEET NO.	TOTAL SHEETS
0A15024	R-22	R-67

PARCEL INFORMATION

PARCEL NO.	INTEREST TO BE ACQUIRED	OWNER	LARGER PARCEL	TAKE INCLUDING EXISTING EASEMENT	NET TAKE	REMAINDER	AKSAS NUMBER FOR ACQUISITION FUNDING	RECORDED DOCUMENT NUMBER
64-A	FEE	LUGDUNUM PROPERTIES LLC	4.625 AC	0.553 AC	0.553 AC	4.072 AC	CFHWY00006	2018-006514-0
E-64	UTIL ESMT	LUGDUNUM PROPERTIES LLC		7,668 SF	7,668 SF		Z581040000	2018-006512-0
65	FEE	LUGDUNUM PROPERTIES LLC	9.538 AC	0.620 AC	0.620 AC	8.918 AC	CFHWY00006	2018-006516-0
E-65	UTIL ESMT	LUGDUNUM PROPERTIES LLC		401 SF	401 SF		Z581040000	2018-006515-0

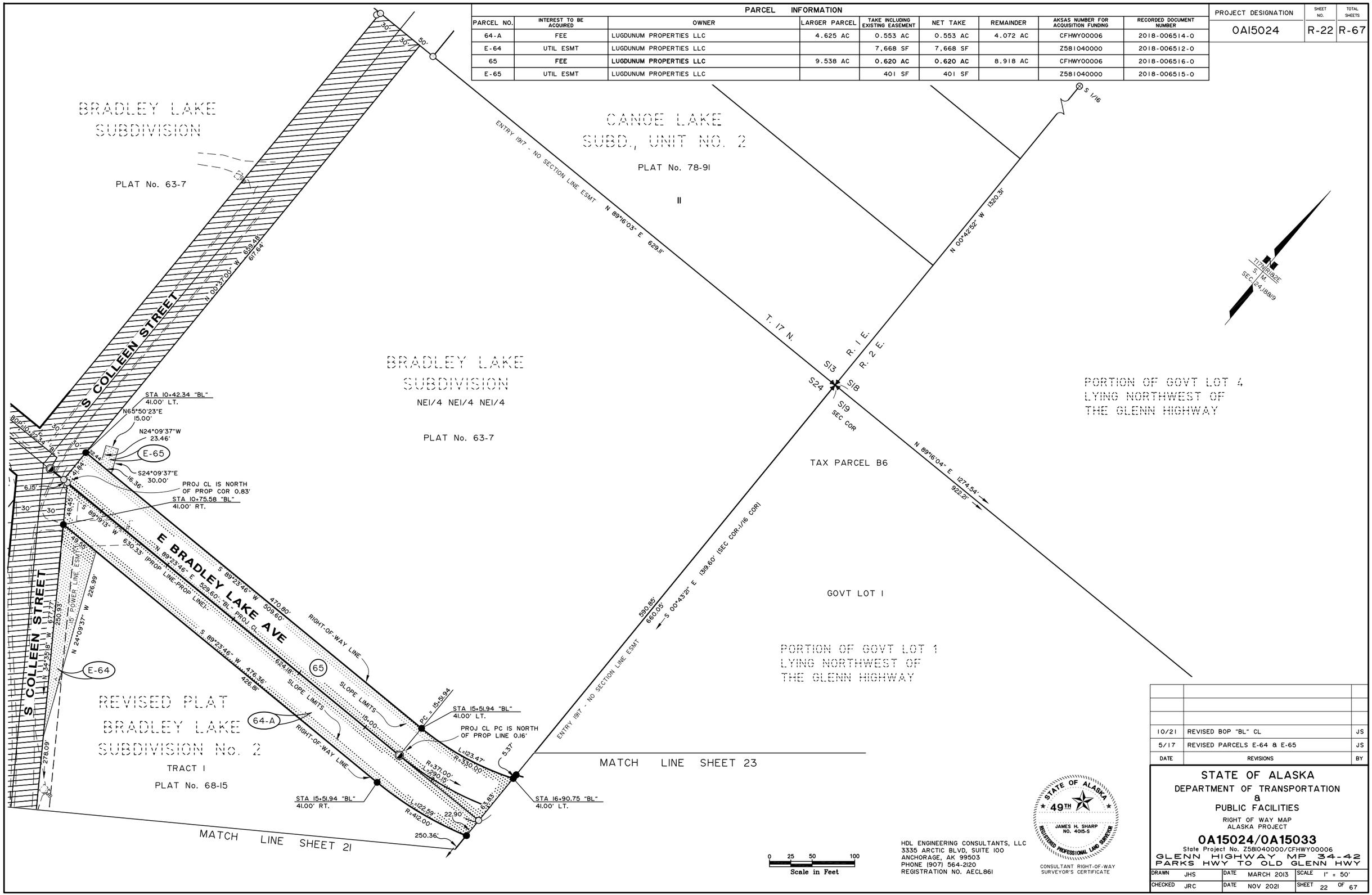

DATE	REVISIONS	BY
10/21	REVISED BOP "BL" CL	JS
5/17	REVISED PARCELS E-64 & E-65	JS

HDL ENGINEERING CONSULTANTS, LLC
3335 ARCTIC BLVD, SUITE 100
ANCHORAGE, AK 99503
PHONE (907) 564-2120
REGISTRATION NO. AECL861

STATE OF ALASKA 49TH JAMES H. SHARP NO. 4015-S REGISTERED PROFESSIONAL LAND SURVEYOR
CONSULTANT RIGHT-OF-WAY SURVEYOR'S CERTIFICATE

STATE OF ALASKA
DEPARTMENT OF TRANSPORTATION & PUBLIC FACILITIES
RIGHT OF WAY MAP
ALASKA PROJECT

0A15024/0A15033

State Project No. Z581040000/CFHWY00006
GLENN HIGHWAY MP 34-42
PARKS HWY TO OLD GLENN HWY

DRAWN	JHS	DATE	MARCH 2013	SCALE	1" = 50'
CHECKED	JRC	DATE	NOV 2021	SHEET	22 OF 67

PROJECT DESIGNATION	SHEET NO.	TOTAL SHEETS
0AI5024	R-23	R-67

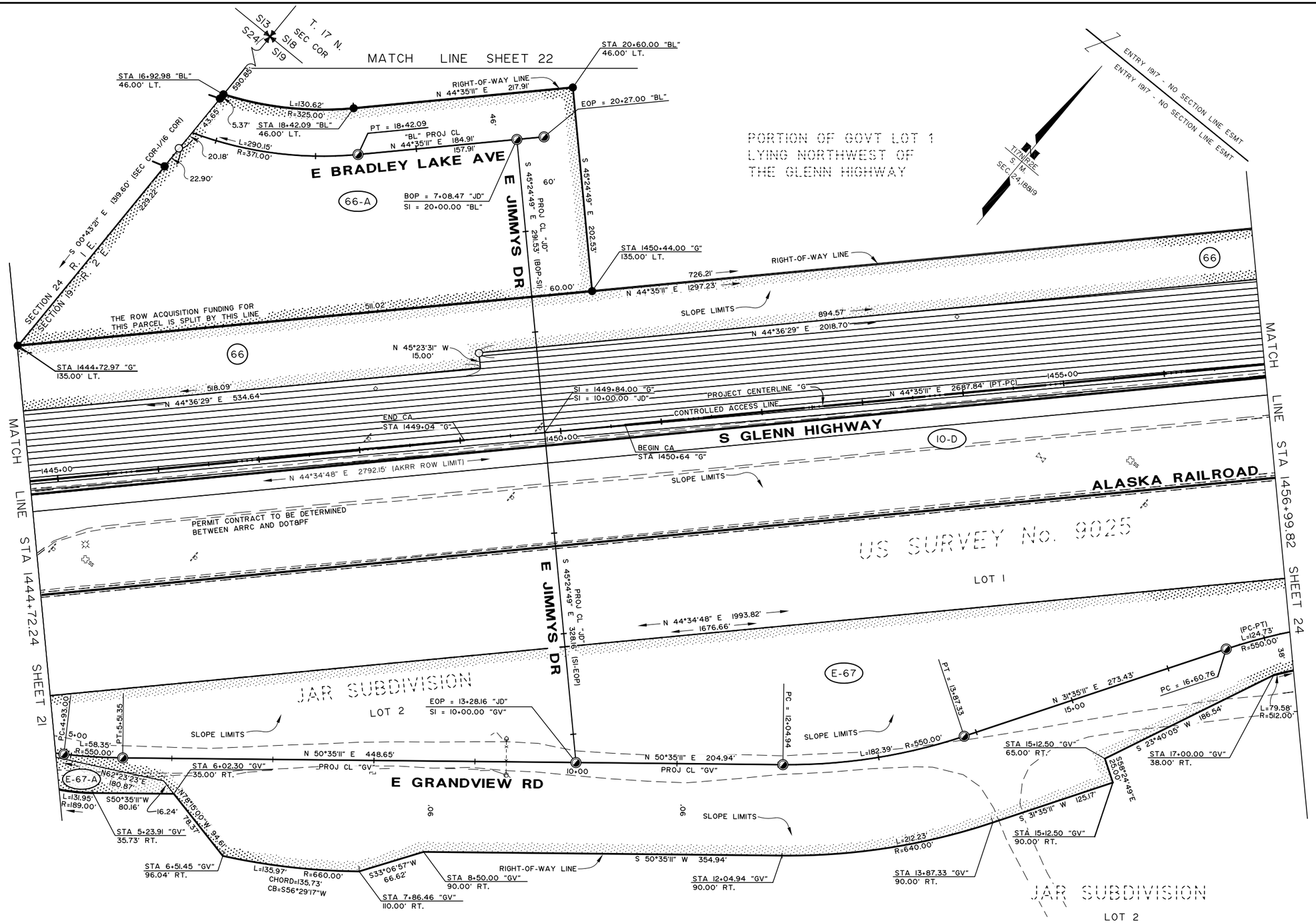

E-67-A	ROW EASEMENT	GRANITE CONSTRUCTION CO.	16.173 AC	0.107 AC	0.107 AC	16.173 AC	CFHWY00006	2019-021634-0
E-67	ROW EASEMENT	GRANITE CONSTRUCTION CO.	16.173 AC	5.604 AC	5.604 AC	16.173 AC	CFHWY00006	2019-021635-0
66-A	FEE	CENTRAL MONOFILL SERVICES INC	9.656 AC	2.222 AC	2.222 AC	7.434 AC	CFHWY00006	2019-012010-0
66	FEE	CENTRAL MONOFILL SERVICES INC	11.387 AC	1.731 AC	1.731 AC	9.656 AC	Z581040000	2019-012012-0
10-D	PERMIT	ALASKA RAILROAD CORP	LARGE	XX AC	XX AC	LARGE	Z581040000	CONTRACT No. 9670
PARCEL NO.	INTEREST TO BE ACQUIRED	OWNER	LARGER PARCEL	TAKE INCLUDING EXISTING EASEMENT	NET TAKE	REMAINDER	AKSAS NUMBER FOR ACQUISITION FUNDING	RECORDED DOCUMENT NUMBER

PARCEL INFORMATION

HDL ENGINEERING CONSULTANTS, LLC
3335 ARCTIC BLVD, SUITE 100
ANCHORAGE, AK 99503
PHONE (907) 564-2120
REGISTRATION NO. AECL861

STATE OF ALASKA
49TH
JAMES H. SHARP
NO. 4015-S
REGISTERED PROFESSIONAL LAND SURVEYOR

0 25 50 100
Scale in Feet

CONSULTANT RIGHT-OF-WAY SURVEYOR'S CERTIFICATE

8/21	REVISED PROJ CL "GV" & ADD JAR SUBD	JS
7/19	ADD PARCEL E-67-A & REVISE PROJ CL "GV"	JS
5/19	REVISED PARCEL 67 TO E-67	JS
11/18	REVISED PARCEL 67	JS
8/18	REVISED PARCELS 66, 66-A & 67	JS
7/17	REVISED PROJ CL "GV" & PARCEL 67	JS
DATE	REVISIONS	BY

STATE OF ALASKA
DEPARTMENT OF TRANSPORTATION & PUBLIC FACILITIES

RIGHT OF WAY MAP
ALASKA PROJECT

0A15024/0A15033

State Project No. Z581040000/CFHWY00006

GLENN HIGHWAY MP 34-42
PARKS HWY TO OLD GLENN HWY

DRAWN	JHS	DATE MARCH 2013	SCALE 1" = 50'
CHECKED	JRC	DATE NOV 2021	SHEET 23 OF 67

PROJECT DESIGNATION	SHEET NO.	TOTAL SHEETS
0AI5024	R-24	R-67

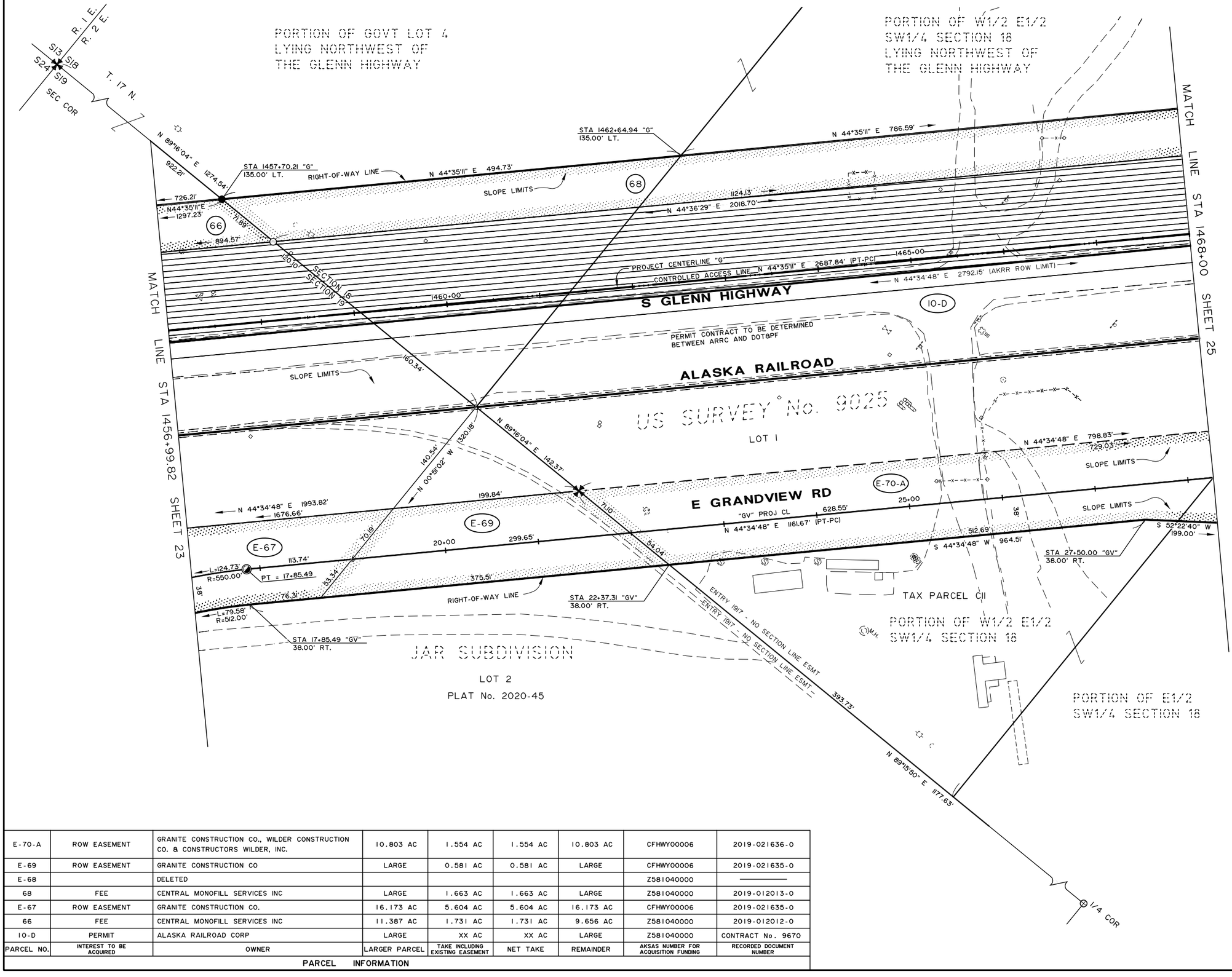

PARCEL NO.	INTEREST TO BE ACQUIRED	OWNER	LARGER PARCEL	TAKE INCLUDING EXISTING EASEMENT	NET TAKE	REMAINDER	AKSAS NUMBER FOR ACQUISITION FUNDING	RECORDED DOCUMENT NUMBER
PARCEL INFORMATION								
E-70-A	ROW EASEMENT	GRANITE CONSTRUCTION CO., WILDER CONSTRUCTION CO. & CONSTRUCTORS WILDER, INC.	10.803 AC	1.554 AC	1.554 AC	10.803 AC	CFHWY00006	2019-021636-0
E-69	ROW EASEMENT	GRANITE CONSTRUCTION CO	LARGE	0.581 AC	0.581 AC	LARGE	CFHWY00006	2019-021635-0
E-68		DELETED					Z581040000	———
68	FEE	CENTRAL MONOFILL SERVICES INC	LARGE	1.663 AC	1.663 AC	LARGE	Z581040000	2019-012013-0
E-67	ROW EASEMENT	GRANITE CONSTRUCTION CO.	16.173 AC	5.604 AC	5.604 AC	16.173 AC	CFHWY00006	2019-021635-0
66	FEE	CENTRAL MONOFILL SERVICES INC	11.387 AC	1.731 AC	1.731 AC	9.656 AC	Z581040000	2019-012012-0
10-D	PERMIT	ALASKA RAILROAD CORP	LARGE	XX AC	XX AC	LARGE	Z581040000	CONTRACT No. 9670

HDL ENGINEERING CONSULTANTS, LLC
3335 ARCTIC BLVD, SUITE 100
ANCHORAGE, AK 99503
PHONE (907) 564-2120
REGISTRATION NO. AECL861

STATE OF ALASKA 49TH
JAMES H. SHARP
NO. 4015-S
REGISTERED PROFESSIONAL LAND SURVEYOR

CONSULTANT RIGHT-OF-WAY SURVEYOR'S CERTIFICATE

0 25 50 100
Scale in Feet

DATE	REVISIONS	BY
8/21	ADDED JAR SUBD	JS
5/19	REV PCLS 67, 69 & 70-A TO E-67, E-69 & E-70-A	JS
11/18	REVISED PARCELS 67, 69 & 70-A	JS
8/18	REVISED PARCELS 66, 67, 68 & 70-A	JS
7/17	REVISED PROJ CL "GV" & PARCELS 67 & 69	JS
6/16	DELETED PARCEL E-68	JS

STATE OF ALASKA
DEPARTMENT OF TRANSPORTATION & PUBLIC FACILITIES

RIGHT OF WAY MAP
ALASKA PROJECT

0A15024/0A15033

State Project No. Z581040000/CFHWY00006

GLENN HIGHWAY MP 34-42
PARKS HWY TO OLD GLENN HWY

DRAWN JHS	DATE MARCH 2013	SCALE 1" = 50'	
CHECKED JRC	DATE NOV 2021	SHEET 24	OF 67

PROJECT DESIGNATION	SHEET NO.	TOTAL SHEETS
0AI5024	R-25	R-67

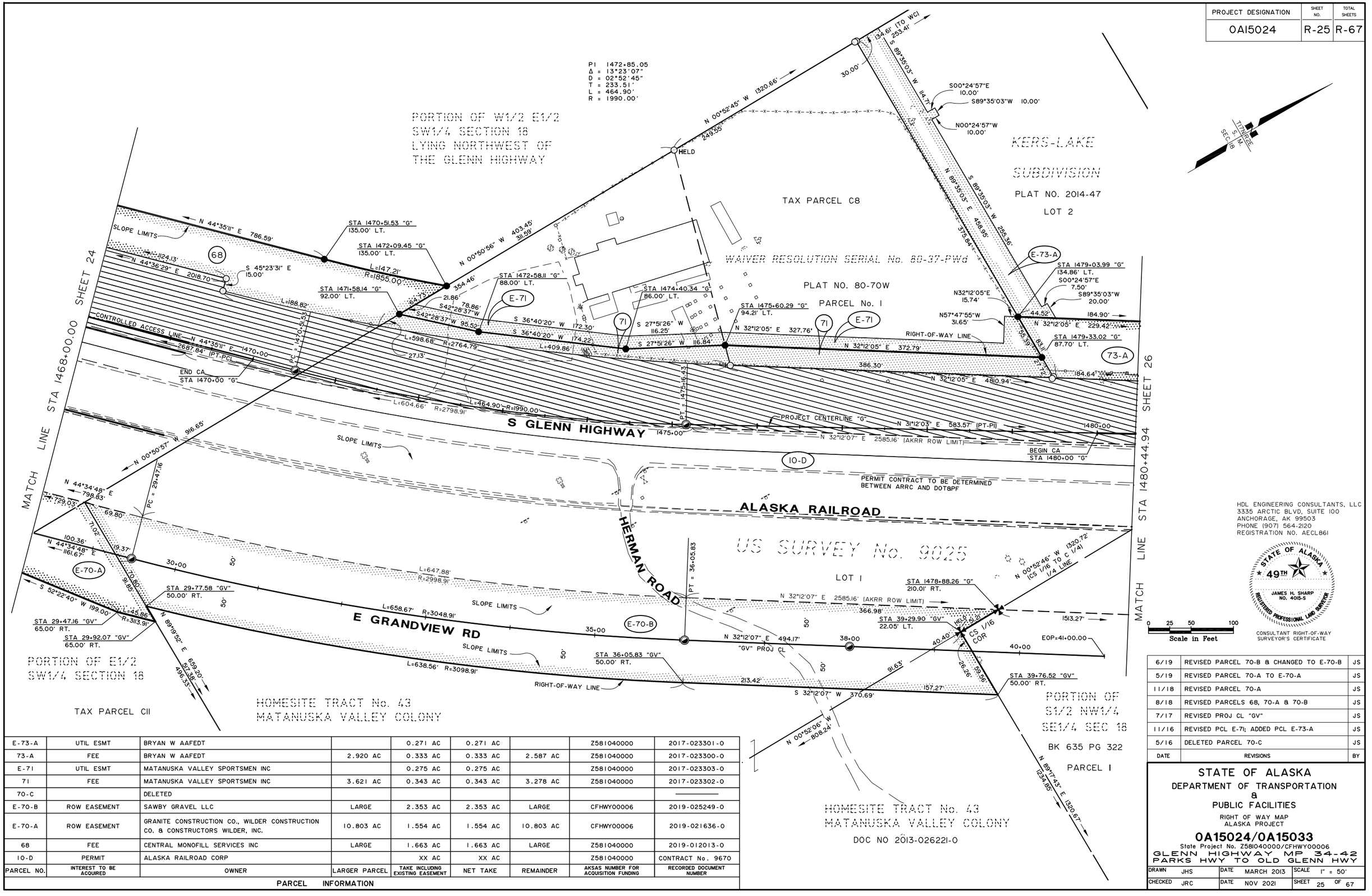

PARCEL NO.	INTEREST TO BE ACQUIRED	OWNER	LARGER PARCEL	TAKE INCLUDING EXISTING EASEMENT	NET TAKE	REMAINDER	AKSAS NUMBER FOR ACQUISITION FUNDING	RECORDED DOCUMENT NUMBER
PARCEL INFORMATION								
E-73-A	UTIL ESMT	BRYAN W AAFEDT		0.271 AC	0.271 AC		Z581040000	2017-023301-0
73-A	FEE	BRYAN W AAFEDT	2.920 AC	0.333 AC	0.333 AC	2.587 AC	Z581040000	2017-023300-0
E-71	UTIL ESMT	MATANUSKA VALLEY SPORTSMEN INC		0.275 AC	0.275 AC		Z581040000	2017-023303-0
71	FEE	MATANUSKA VALLEY SPORTSMEN INC	3.621 AC	0.343 AC	0.343 AC	3.278 AC	Z581040000	2017-023302-0
70-C		DELETED						
E-70-B	ROW EASEMENT	SAWBY GRAVEL LLC	LARGE	2.353 AC	2.353 AC	LARGE	CFHWY00006	2019-025249-0
E-70-A	ROW EASEMENT	GRANITE CONSTRUCTION CO., WILDER CONSTRUCTION CO. & CONSTRUCTORS WILDER, INC.	10.803 AC	1.554 AC	1.554 AC	10.803 AC	CFHWY00006	2019-021636-0
68	FEE	CENTRAL MONOFILL SERVICES INC	LARGE	1.663 AC	1.663 AC	LARGE	Z581040000	2019-012013-0
10-D	PERMIT	ALASKA RAILROAD CORP		XX AC	XX AC		Z581040000	CONTRACT No. 9670

DATE	REVISIONS	BY
6/19	REVISED PARCEL 70-B & CHANGED TO E-70-B	JS
5/19	REVISED PARCEL 70-A TO E-70-A	JS
11/18	REVISED PARCEL 70-A	JS
8/18	REVISED PARCELS 68, 70-A & 70-B	JS
7/17	REVISED PROJ CL "GV"	JS
11/16	REVISED PCL E-71; ADDED PCL E-73-A	JS
5/16	DELETED PARCEL 70-C	JS

HDL ENGINEERING CONSULTANTS, LLC
3335 ARCTIC BLVD, SUITE 100
ANCHORAGE, AK 99503
PHONE (907) 564-2120
REGISTRATION NO. AECL861

STATE OF ALASKA 49TH
JAMES H. SHARP NO. 4015-S
REGISTERED PROFESSIONAL LAND SURVEYOR

0 25 50 100
Scale in Feet

CONSULTANT RIGHT-OF-WAY SURVEYOR'S CERTIFICATE

STATE OF ALASKA
DEPARTMENT OF TRANSPORTATION & PUBLIC FACILITIES

RIGHT OF WAY MAP
ALASKA PROJECT

0A15024/0A15033

State Project No. Z581040000/CFHWY00006

GLENN HIGHWAY MP 34-42
PARKS HWY TO OLD GLENN HWY

DRAWN	JHS	DATE	MARCH 2013	SCALE	1" = 50'
CHECKED	JRC	DATE	NOV 2021	SHEET	25 OF 67

PROJECT DESIGNATION	SHEET NO.	TOTAL SHEETS
0AI5024	R-26	R-67

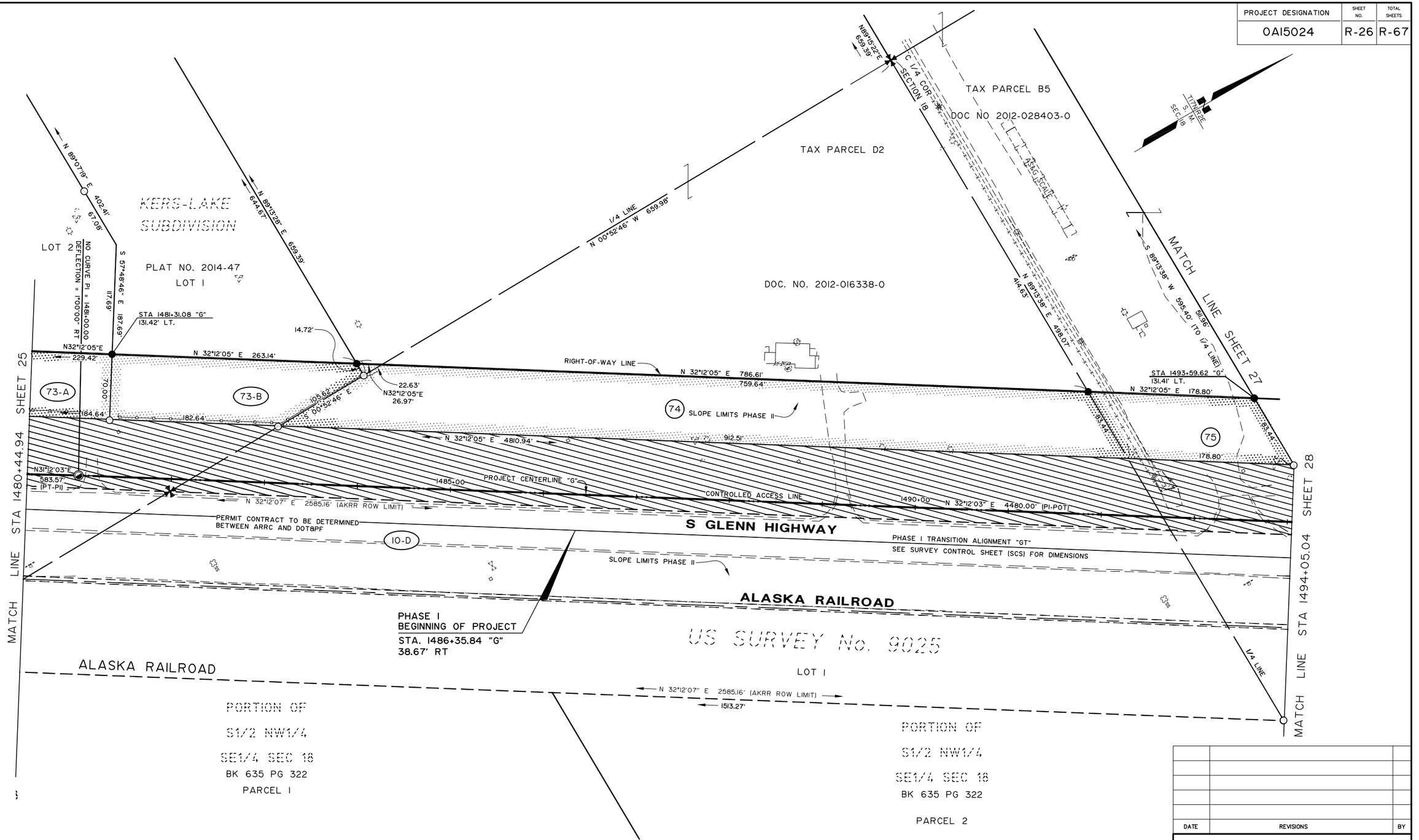

PARCEL NO.	INTEREST TO BE ACQUIRED	OWNER	LARGER PARCEL	TAKE INCLUDING EXISTING EASEMENT	NET TAKE	REMAINDER	RECORDED DOCUMENT NUMBER
75	FEE	ANCHORAGE SAND & GRAVEL COMPANY, INC	LARGE	12,516 SF	12,516 SF	LARGE	2018-020963-0
74	FEE	CITY OF PALMER	14.368 AC	1.347 AC	1.347 AC	13.021 AC	2017-013660-0
73-B	FEE	BRYAN W AAFEDT	2.618 AC	0.376 AC	0.376 AC	2.242 AC	2017-023299-0
73-A	FEE	BRYAN W AAFEDT	2.920 AC	0.333 AC	0.333 AC	2.587 AC	2017-023300-0
10-D	PERMIT	ALASKA RAILROAD CORP		XX AC	XX AC		CONTRACT No. 9670

PARCEL INFORMATION

ACQUISITION FUNDING UNDER PROJECT No. Z581040000 UNLESS OTHERWISE NOTED

0 25 50 100
Scale in Feet

HDL ENGINEERING CONSULTANTS, LLC
3335 ARCTIC BLVD, SUITE 100
ANCHORAGE, AK 99503
PHONE (907) 564-2120
REGISTRATION NO. AECL861

STATE OF ALASKA 49TH
JAMES H. SHARP NO. 4015-S
REGISTERED PROFESSIONAL LAND SURVEYOR
CONSULTANT RIGHT-OF-WAY SURVEYOR'S CERTIFICATE

DATE	REVISIONS	BY

STATE OF ALASKA
DEPARTMENT OF TRANSPORTATION
&
PUBLIC FACILITIES

RIGHT OF WAY MAP
ALASKA PROJECT

0A15024/0A15033

State Project No. Z581040000/CFHWY00006

GLENN HIGHWAY MP 34-42
PARKS HWY TO OLD GLENN HWY

DRAWN JHS	DATE MARCH 2013	SCALE 1" = 50'	
CHECKED JRC	DATE NOV 2021	SHEET 26 OF 67	

PROJECT DESIGNATION	SHEET NO.	TOTAL SHEETS
0A15024	R-27	R-67

PARCEL INFORMATION

PARCEL NO.	INTEREST TO BE ACQUIRED	OWNER	LARGER PARCEL	TAKE INCLUDING EXISTING EASEMENT	NET TAKE	REMAINDER	RECORDED DOCUMENT NUMBER
76	FEE	ANCHORAGE SAND & GRAVEL COMPANY, INC	55.489 AC	2.231 AC	2.231 AC	53.258 AC	2018-020964-0
81	FEE	BONNIE B GROVER REVOCABLE TRUST	2.998 AC	0.337 AC	0.337 AC	2.661 AC	2017-005312-0
E-81	UTIL ESMT	BONNIE B GROVER REVOCABLE TRUST		0.080 AC	0.080 AC		2017-005313-0

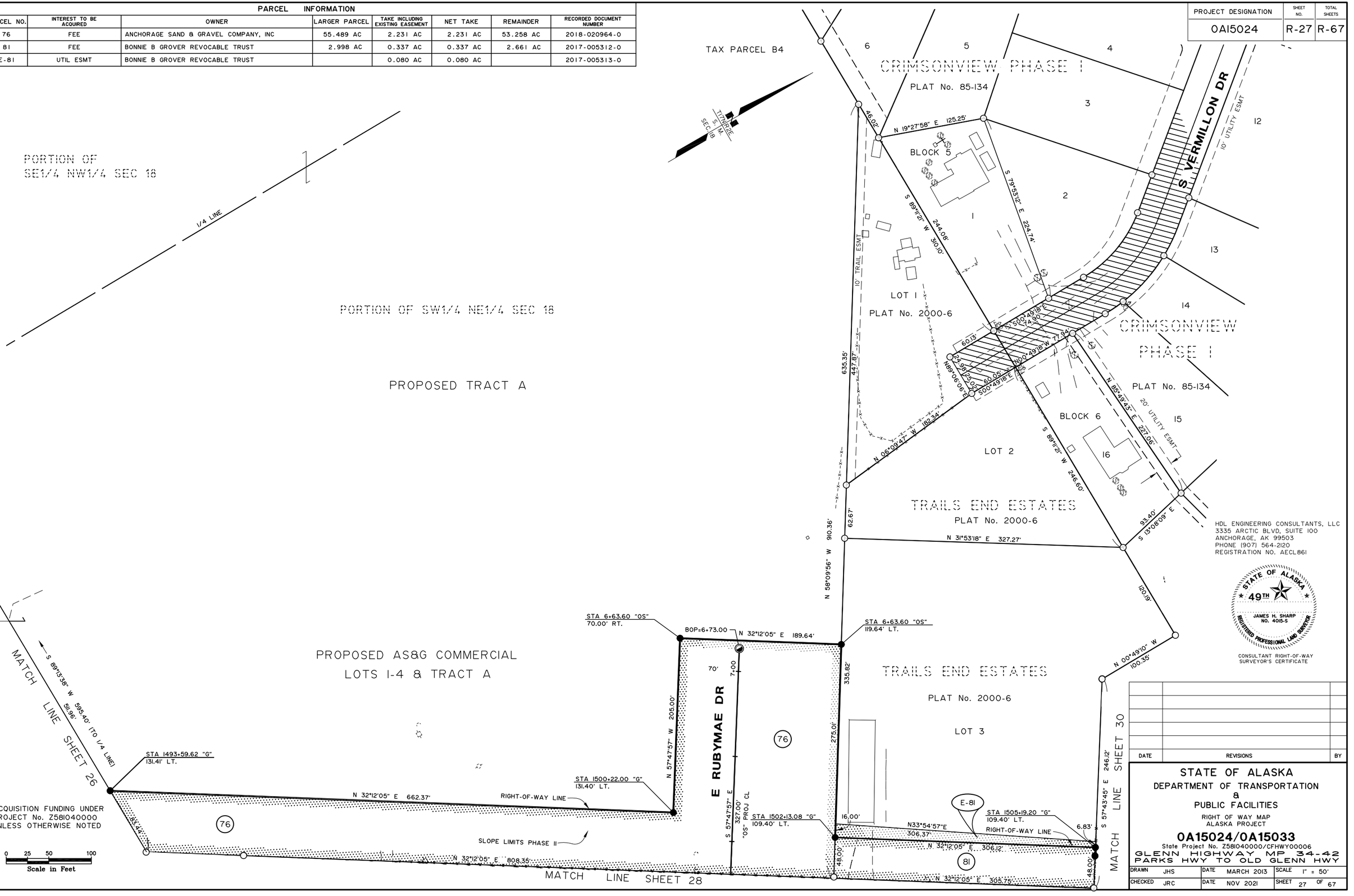

HDL ENGINEERING CONSULTANTS, LLC
3335 ARCTIC BLVD, SUITE 100
ANCHORAGE, AK 99503
PHONE (907) 564-2120
REGISTRATION NO. AECL861

STATE OF ALASKA 49TH
JAMES H. SHARP NO. 4015-S
REGISTERED PROFESSIONAL LAND SURVEYOR

CONSULTANT RIGHT-OF-WAY SURVEYOR'S CERTIFICATE

DATE	REVISIONS	BY

STATE OF ALASKA
DEPARTMENT OF TRANSPORTATION & PUBLIC FACILITIES

RIGHT OF WAY MAP
ALASKA PROJECT

0A15024/0A15033

State Project No. Z581040000/CFHWY00006

GLENN HIGHWAY MP 34-42
PARKS HWY TO OLD GLENN HWY

DRAWN	JHS	DATE	MARCH 2013	SCALE	1" = 50'
CHECKED	JRC	DATE	NOV 2021	SHEET	27 OF 67

PROJECT DESIGNATION	SHEET NO.	TOTAL SHEETS
0AI5024	R-28	R-67

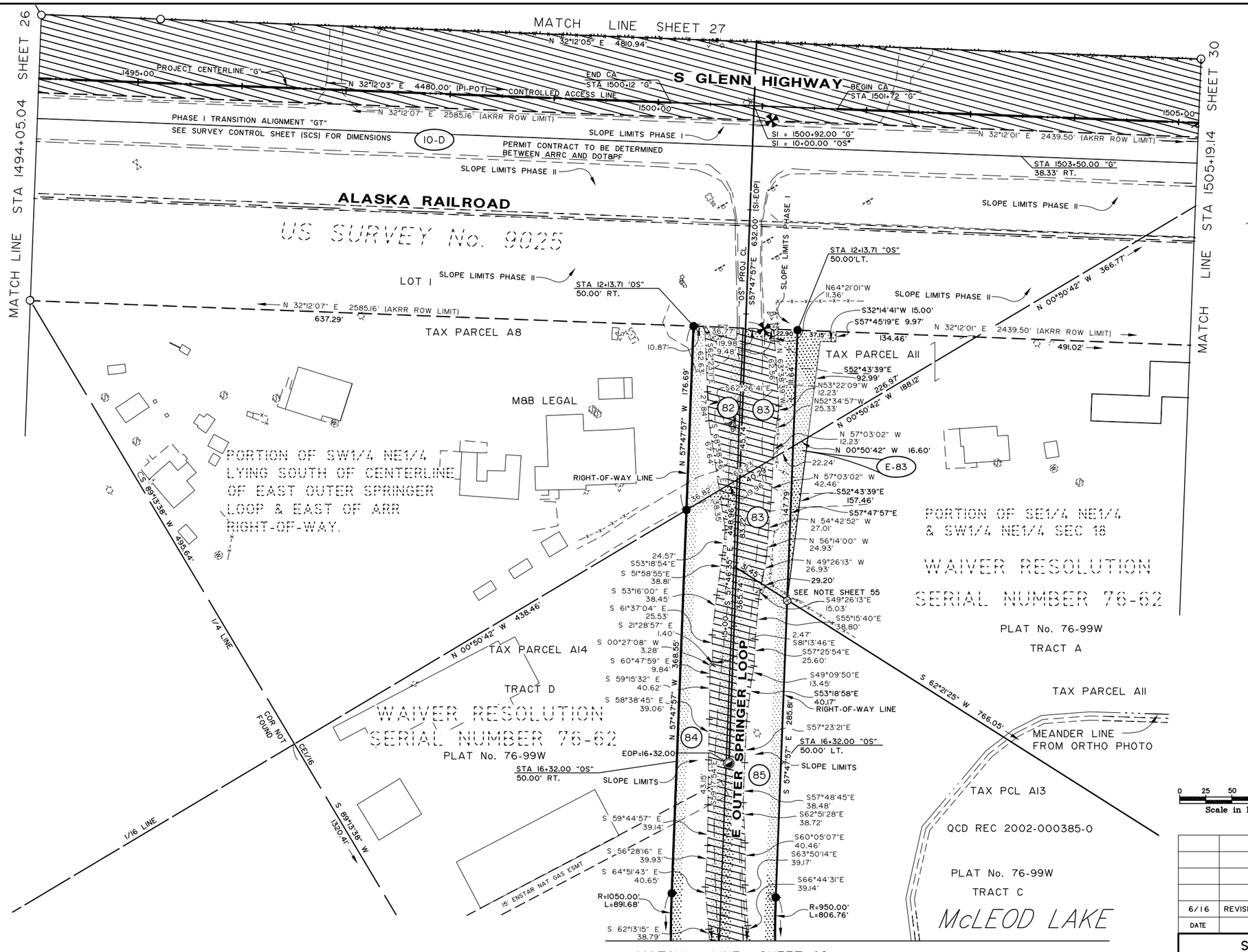

PARCEL NO.	INTEREST TO BE ACQUIRED	OWNER	LARGER PARCEL	TAKE INCLUDING EXISTING EASEMENT	NET TAKE	REMAINDER	RECORDED DOCUMENT NUMBER
85	FEE	LUGDUNUM PROPERTIES, LLC	14.525 AC	1.436 AC	0.701 AC	13.089 AC	2017-007719-0
84	FEE	LUGDUNUM PROPERTIES, LLC	6.712 AC	1.701 AC	1.053 AC	5.011 AC	2017-007718-0
E-83	UTIL ESMT	DREW KENDRICK MULLIN		0.072 AC	0.072 AC		2016-027323-0
83	FEE	DREW KENDRICK MULLIN	8.715 AC	0.294 AC	0.113 AC	8.421 AC	2016-027322-0
82	FEE	R C AND S F FRANTZICH AND CARL M FRANTZICH	3.963 AC	0.176 AC	0.074 AC	3.787 AC	2018-013295-0
10-D	PERMIT	ALASKA RAILROAD CORP		XX AC	XX AC		CONTRACT No. 9670

ACQUISITION FUNDING UNDER
PROJECT No. Z581040000
UNLESS OTHERWISE NOTED

HDL ENGINEERING CONSULTANTS, LLC
3335 ARCTIC BLVD, SUITE 100
ANCHORAGE, AK 99503
PHONE (907) 564-2120
REGISTRATION NO. AECL861

STATE OF ALASKA 49TH
JAMES H. SHARP NO. 4015-S
REGISTERED PROFESSIONAL LAND SURVEYOR

CONSULTANT RIGHT-OF-WAY SURVEYOR'S CERTIFICATE

0 25 50 100
Scale in Feet

DATE	REVISIONS	BY
6/16	REVISED PARCEL 83	JS

STATE OF ALASKA
DEPARTMENT OF TRANSPORTATION & PUBLIC FACILITIES
RIGHT OF WAY MAP
ALASKA PROJECT

0A15024/0A15033

State Project No. Z581040000/CFHWY00006
GLENN HIGHWAY MP 34-42
PARKS HWY TO OLD GLENN HWY

DRAWN JHS	DATE MARCH 2013	SCALE 1" = 50'	
CHECKED JRC	DATE NOV 2021	SHEET 28	OF 67

PROJECT DESIGNATION	SHEET NO.	TOTAL SHEETS
0AI5024	R-29	R-67

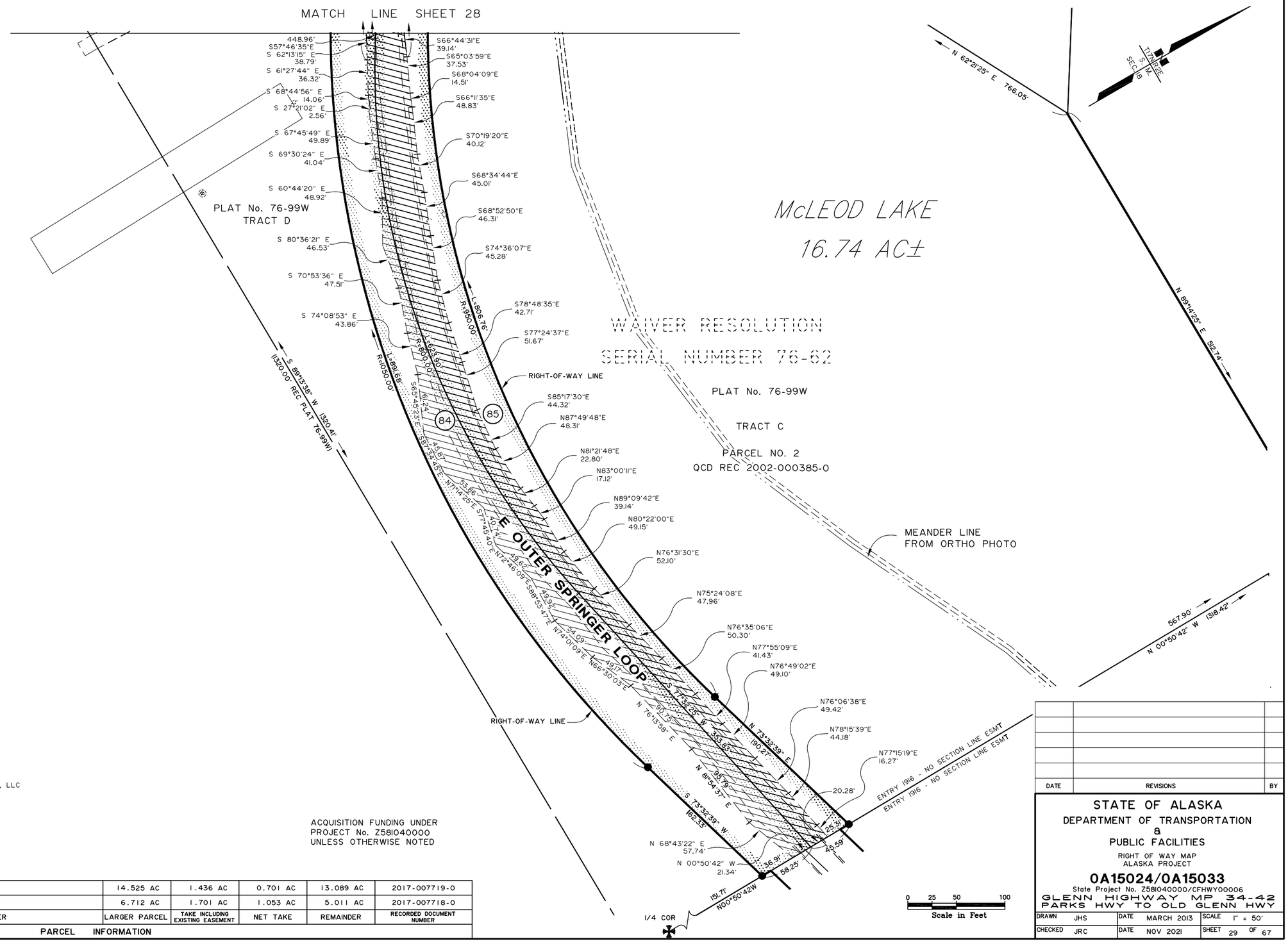

85	FEE	LUGDUNUM PROPERTIES, LLC	14.525 AC	1.436 AC	0.701 AC	13.089 AC	2017-007719-0
84	FEE	LUGDUNUM PROPERTIES, LLC	6.712 AC	1.701 AC	1.053 AC	5.011 AC	2017-007718-0
PARCEL NO.	INTEREST TO BE ACQUIRED	OWNER	LARGER PARCEL	TAKE INCLUDING EXISTING EASEMENT	NET TAKE	REMAINDER	RECORDED DOCUMENT NUMBER

PARCEL INFORMATION

STATE OF ALASKA
49TH
JAMES H. SHARP
NO. 4015-S
REGISTERED PROFESSIONAL LAND SURVEYOR

CONSULTANT RIGHT-OF-WAY SURVEYOR'S CERTIFICATE

HDL ENGINEERING CONSULTANTS, LLC
3335 ARCTIC BLVD, SUITE 100
ANCHORAGE, AK 99503
PHONE (907) 564-2120
REGISTRATION NO. AECL861

ACQUISITION FUNDING UNDER
PROJECT No. Z581040000
UNLESS OTHERWISE NOTED

DATE	REVISIONS	BY

STATE OF ALASKA
DEPARTMENT OF TRANSPORTATION
&
PUBLIC FACILITIES

RIGHT OF WAY MAP
ALASKA PROJECT

0A15024/0A15033

State Project No. Z581040000/CFHWY00006

GLENN HIGHWAY MP 34-42
PARKS HWY TO OLD GLENN HWY

DRAWN JHS	DATE MARCH 2013	SCALE 1" = 50'	
CHECKED JRC	DATE NOV 2021	SHEET 29	OF 67

PROJECT DESIGNATION	SHEET NO.	TOTAL SHEETS
0AI5024	R-30	R-67

CRIMSONVIEW PHASE I
PLAT No. 85-134

CRIMSONVIEW PHASE II
PLAT No. 85-134

TRAILS END ESTATES
PLAT No. 2000-6

CROSSWIND ESTATES
PLAT No. 85-33

BLOCK 2

LOT 1 | LOT 2 | LOT 3 | LOT 4

TR A

E. CRIMSONVIEW DRIVE

S. CRIMSON VIEW CT.

SEC 9 T15N R1E S.M.

N 89°11'12" E 1320.10'

N 00°49'10" W 100.35'

120.19'

N 00°51'45" W 635.69'

1/16 LINE

N 00°51'45" W 468.37'

L=87.82' R=200.00' N24°17'42"E 28.26' 148.97'

195.20'

60.30'

N 57°49'44" W 284.13'

219.13'

248.87'

S 57°43'45" E 246.12'

191.29'

S 57°49'30" E 630.95'

565.95'

STA 1505+19.19 "G" 99.40' LT.

STA 1508+05.44 "G" 91.66' LT.

PUBLIC USE EASEMENT BK 377 PG 210

STA 1511+73.08 "G" 126.39' LT.

E-86

E-87

E-88

SEE DETAIL

S57°45'05"E 19.27'

S57°45'05"E 9.76'

S57°45'05"E 25.67'

N33°54'57"E 236.35'

16.83'

N33°54'57"E 365.78'

N 32°12'05" E 236.26'

N 32°12'05" E 367.66'

N 32°12'05" E 532.89'

N 32°12'05" E 623.03'

258.41'

259.48'

RIGHT-OF-WAY LINE

N32°12'05"E 15.00'

N57°47'55"W 15.00'

S57°47'55"E 15.00'

5.00'

65.00'

30.26'

436.64'

367.70'

14.62'

2.42'

38.00'

25.00'

86

87

88

89

SLOPE LIMITS PHASE II

22.61'

217.33'

S 32°12'05" W

SLOPE LIMITS PHASE I

532.88'

50'X50' COMMON ACCESS ESMT

65.00'

S 32°12'05" W 665.11'

STA 1507+55.45 "G" 99.39' LT.

STA 1511+73.10 "G" 91.65' LT.

N 32°12'05" E 4810.94'

N00°50'42"W 366.71'

PUBLIC USE EASEMENT BK 377 PG 209

ENSTAR ROW EASEMENT BK 393 PG 034

N 32°12'01" E 183.67'

1510+00

N 32°12'03" E 4480.00' (PI-POT)

CONTROLLED ACCESS LINE

1515+00

PROJECT CENTERLINE "G"

N 32°12'01" E 2439.50' (AKRR ROW LIMIT)

S GLENN HIGHWAY

PERMIT CONTRACT TO BE DETERMINED BETWEEN ARRC AND DOT&PF

10-D

SEE SHEET 28 PARCEL 83

SLOPE LIMITS PHASE II

ALASKA RAILROAD

US SURVEY No. 9025

SLOPE LIMITS PHASE I & II

1/16 LINE

S 57°46'35" E 200.00'

WAIVER NO. 76-99W TRACT A

PORTION SE1/4 NE1/4 & SW1/4 NE1/4 SEC 18

N 32°12'01" E 491.02' (AKRR ROW LIMIT)

491.02'

SLOPE LIMITS PHASE II

LOT 1

N 32°12'01" E 2439.50' (AKRR ROW LIMIT)

1697.00'

PORTION TRACT B
WAIVER NO. 76-99W
2002-004677-0

AREA EXCEPTED FROM PARCEL I
QCD REC 2002-000385-0

N 89°16'14" E 1320.41'

WAIVER RESOLUTION SERIAL NO. 76-62

REMAINDER WAIVER NO. 76-99W
2013-007652-0

MATCH LINE STA 1505+19.14 SHEET 28

MATCH LINE STA 1518+80.24 SHEET 31

PART OF NET TAKE FOR PARCEL 87

S. GLENN HIGHWAY

S00°50'42"W 22.61'

18.94'

25.00'

S 32°12'05" W 436.84'

12.33'

25.67'

S57°45'05"E

29.84'

N00°50'42"W

TAX PARCEL AII

DETAIL-N.T.S.

PARCEL NO.	INTEREST TO BE ACQUIRED	OWNER	LARGER PARCEL	TAKE INCLUDING EXISTING EASEMENT	NET TAKE	REMAINDER	RECORDED DOCUMENT NUMBER
89	FEE	BERTON A GORE & PATRICA M GORE	7.022 AC	0.961 AC	0.961 AC	6.061 AC	2016-020700-0
E-88	UTIL ESMT	BERTON A & PATRICIA M GORE		225 SF	225 SF		2016-020698-0
88	FEE	BERTON A & PATRICIA M GORE	5.597 AC	0.795 AC	0.795 AC	4.802 AC	2016-020699-0
E-87-A		DELETED					———
E-87	UTIL ESMT	JOHN E & DEBRA L TUOMI OF TUOMI RT		3,860 SF	3,860 SF		2016-027319-0
87	FEE	JOHN E & DEBRA L TUOMI OF TUOMI RT	62,028 SF	12,674 SF	11,244 SF	49,354 SF	2016-027318-0
E-86	UTIL ESMT	BONNIE B GROVER REVOCABLE TRUST		3,142 SF	3,142 SF		2017-005309-0
86	FEE	BONNIE B GROVER REVOCABLE TRUST	51,547 SF	9,545 SF	8,861 SF	42,002 SF	2017-005308-0
10-D	PERMIT	ALASKA RAILROAD CORP		XX AC	XX AC		CONTRACT No. 9670

PARCEL INFORMATION

ACQUISITION FUNDING UNDER PROJECT No. Z581040000 UNLESS OTHERWISE NOTED

THE PARCEL DESCRIBED PER WARRANTY DEED RECORDED AS RECEPTION NO. 2003-003869-0

RECORD OF SURVEY No. 2003-12

HDL ENGINEERING CONSULTANTS, LLC
3335 ARCTIC BLVD, SUITE 100
ANCHORAGE, AK 99503
PHONE (907) 564-2120
REGISTRATION NO. AECL861

STATE OF ALASKA 49TH JAMES H. SHARP NO. 4015-S REGISTERED PROFESSIONAL LAND SURVEYOR

CONSULTANT RIGHT-OF-WAY SURVEYOR'S CERTIFICATE

0 25 50 100
Scale in Feet

DATE	REVISIONS	BY
6/16	DELETED PCL E-87-A; REVISED PCL E-87 & 83	JS
3/16	ADDED PARCEL E-87-A	JS

STATE OF ALASKA
DEPARTMENT OF TRANSPORTATION & PUBLIC FACILITIES
RIGHT OF WAY MAP
ALASKA PROJECT

0A15024/0A15033

State Project No. Z581040000/CFHWY00006

GLENN HIGHWAY MP 34-42
PARKS HWY TO OLD GLENN HWY

DRAWN	JHS	DATE	MARCH 2013	SCALE	1" = 50'
CHECKED	JRC	DATE	NOV 2021	SHEET	30 OF 67

PROJECT DESIGNATION	SHEET NO.	TOTAL SHEETS
0AI5024	R-31	R-67

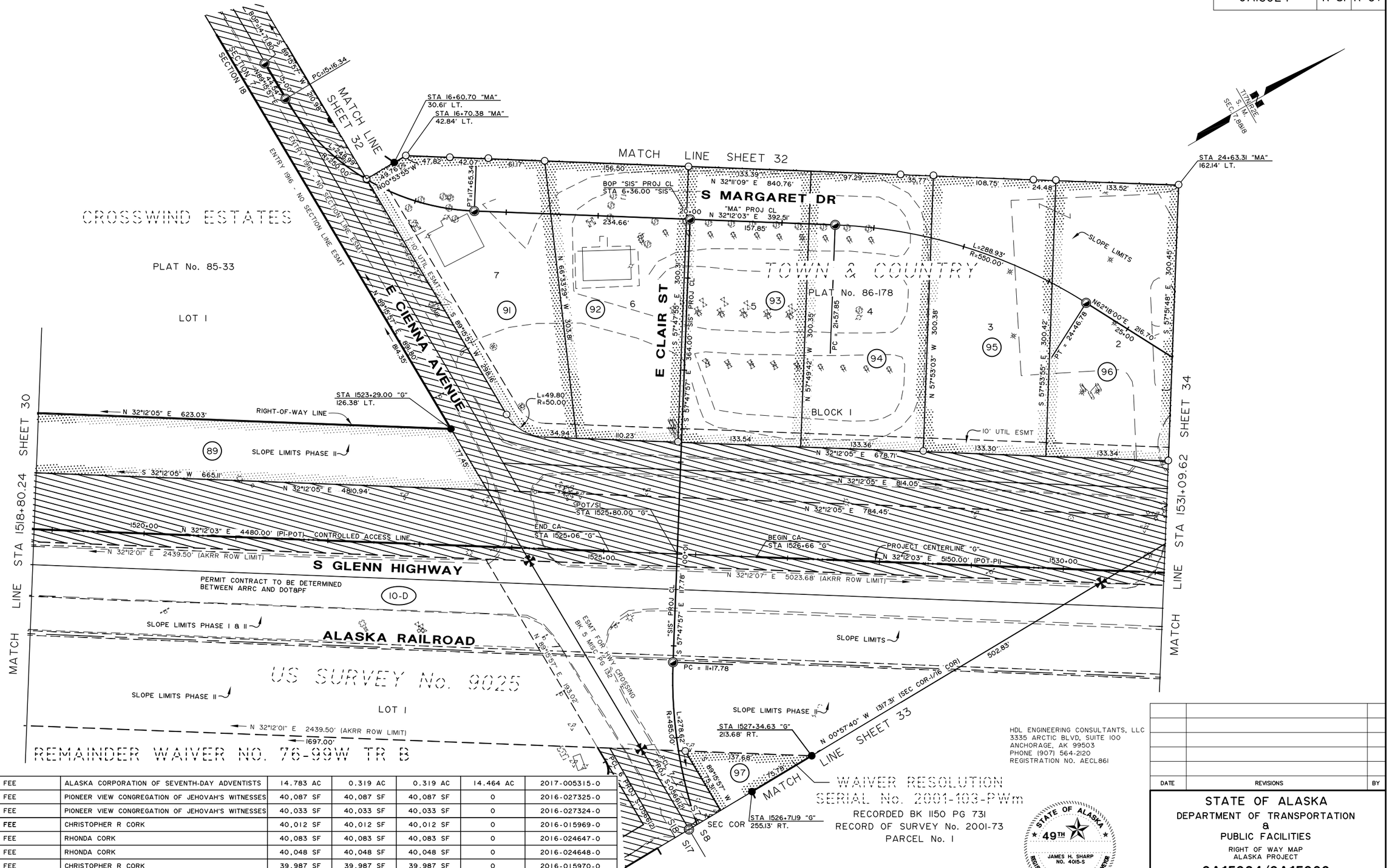
MATCH LINE SHEET 32
MATCH LINE SHEET 32
SECTION 18
SECTION 7
T17N R3E S.M.
SEC 7 8818
S 89°15'57" W 210.98'
PC=15+16.34
L=248.98'
R=250.00'
ENTRY 1916 - NO SECTION LINE ESMT
STA 16+60.70 "MA"
30.61' LT.
STA 16+70.38 "MA"
42.84' LT.
N 00°53'55" W
PT=17+65.34
BOP "SIS" PROJ CL
STA 6+36.00 "SIS"
"MA" PROJ CL
N 32°11'09" E 840.76'
N 32°12'03" E 392.51'
S MARGARET DR
STA 24+63.31 "MA"
162.14' LT.
CROSSWIND ESTATES
PLAT No. 85-33
LOT 1
E CIENNA AVENUE
E CLAIR ST
TOWN & COUNTRY
PLAT No. 86-178
BLOCK 1
SLOPE LIMITS
L=288.93'
R=550.00'
N62°18'00"E
216.70'
R=25.00
S 57°59'48" E 300.45'
S 57°53'55" E 300.42'
N 57°53'03" W 300.38'
N 57°49'42" W 300.35'
S 57°47'55" E 300.31'
N 89°15'57" E 814.35'
S 89°15'57" W 236.16'
N 89°33'29" W 303.18'
10' UTIL ESMT
L=49.80
R=50.00
STA 1523+29.00 "G"
126.38' LT.
RIGHT-OF-WAY LINE
N 32°12'05" E 623.03'
SLOPE LIMITS PHASE II
S 32°12'05" W 665.11'
N 32°12'05" E 4810.94'
POT/SI
STA 1525+80.00 "G"
END CA
STA 1525+06 "G"
BEGIN CA
STA 1526+66 "G"
PROJECT CENTERLINE "G"
N 32°12'03" E 5150.00' (POT-PI)
1520+00
1525+00
1530+00
N 32°12'03" E 4480.00' (PI-POT) CONTROLLED ACCESS LINE
N 32°12'01" E 2439.50' (AKRR ROW LIMIT)
N 32°12'07" E 5023.68' (AKRR ROW LIMIT)
S GLENN HIGHWAY
PERMIT CONTRACT TO BE DETERMINED BETWEEN ARRC AND DOT&PF
SLOPE LIMITS PHASE I & II
ALASKA RAILROAD
US SURVEY No. 9025
LOT 1
REMAINDER WAIVER NO. 76-99W TR B
ESMT FOR HWY CROSSING BK 5 MISC PG 132
"SIS" PROJ CL
S 57°47'57" E 117.78'
PC = 11+17.78
SLOPE LIMITS
502.83'
SLOPE LIMITS PHASE II
STA 1527+34.63 "G"
213.68' RT.
L=278.62'
R=485.00'
N 00°57'40" W 1317.31' (SEC COR 1/16 COR)
MATCH LINE SHEET 33
WAIVER RESOLUTION
SERIAL No. 2001-103-PWm
RECORDED BK 1150 PG 731
RECORD OF SURVEY No. 2001-73
PARCEL No. 1
STA 1526+71.19 "G"
SEC COR 255.13' RT.
MATCH LINE STA 1518+80.24 SHEET 30
MATCH LINE STA 1531+09.62 SHEET 34
89
10-D
91
92
93
94
95
96
97
SLOPE LIMITS PHASE II
10-D
ESMT FOR HWY CROSSING BK 5 MISC PG 132
PROJ CL
S 57°47'57" E 364.00' SIS PROJ CL
PC = 21+57.85
PT = 24+46.18
N 89°33'29" W 303.18'
S 89°15'57" W 193.02'
N 89°15'57" E 193.02'
S 57°47'57" E 117.78'
S 89°15'57" W 75.78'
S 57°47'57" E 137.68'
S 57°47'57" E 364.00'
S 57°47'57" E 300.31'
S 89°15'57" W 75.78'
S 57°47'57" E 137.68'
S 57°47'57" E 364.00'
S 57°47'57" E 300.31'
S8
S17
S18
S7
S8
S17
S18
S7
S8
S17
S18
S7

PROJECT DESIGNATION	SHEET NO.	TOTAL SHEETS
0AI5024	R-32	R-67

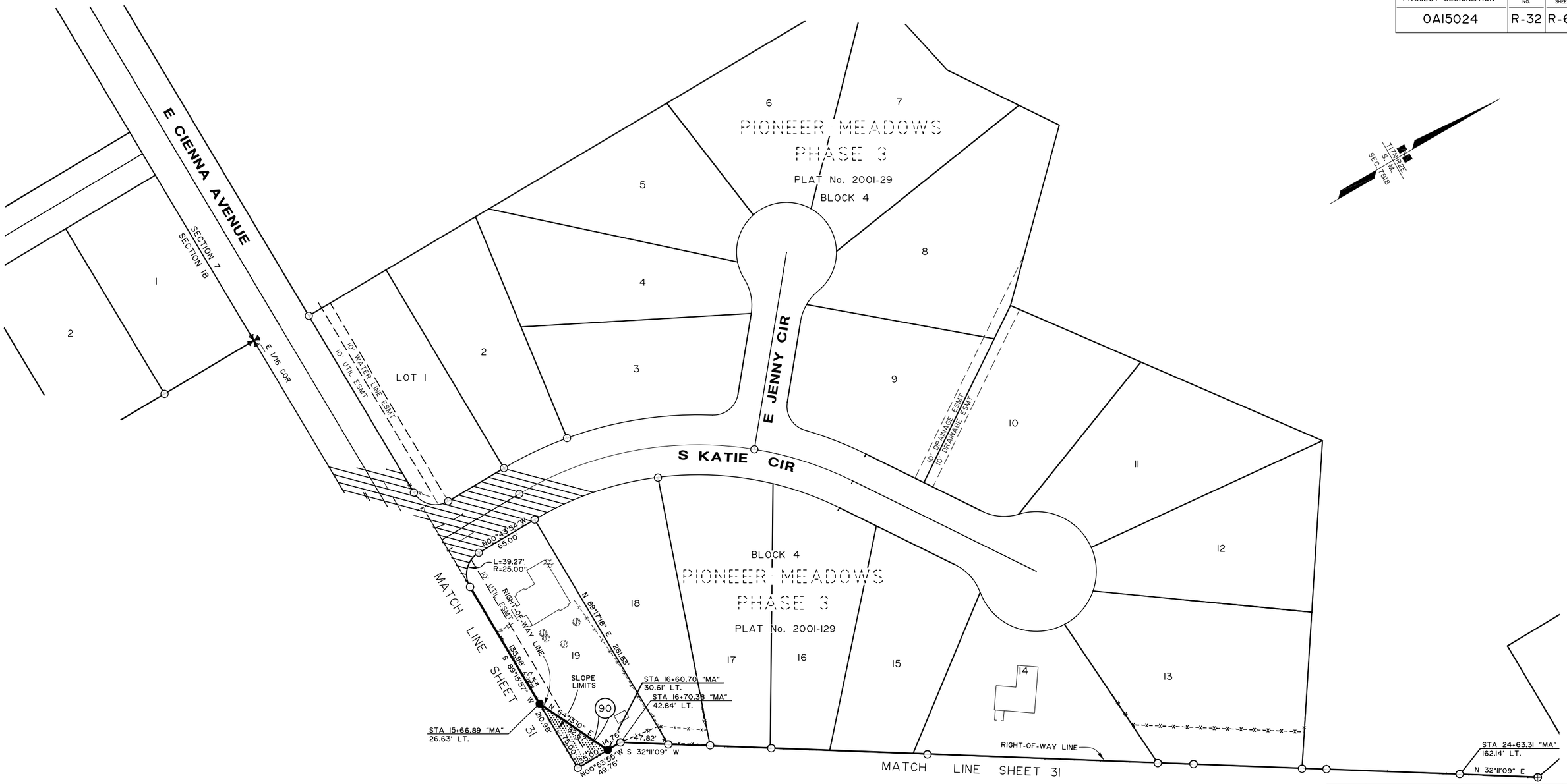

90	FEE	DOROTHY VAN ROTEN	21,607 SF	1,312 SF	1,312 SF	20,295 SF	2016-021212-0
PARCEL NO.	INTEREST TO BE ACQUIRED	OWNER	LARGER PARCEL	TAKE INCLUDING EXISTING EASEMENT	NET TAKE	REMAINDER	RECORDED DOCUMENT NUMBER
PARCEL INFORMATION							

ACQUISITION FUNDING UNDER
PROJECT No. Z581040000
UNLESS OTHERWISE NOTED

DATE	REVISIONS	BY

HDL ENGINEERING CONSULTANTS, LLC
3335 ARCTIC BLVD, SUITE 100
ANCHORAGE, AK 99503
PHONE (907) 564-2120
REGISTRATION NO. AECL861

STATE OF ALASKA
49TH
JAMES H. SHARP
NO. 4015-S
REGISTERED PROFESSIONAL LAND SURVEYOR

0 25 50 100
Scale in Feet

CONSULTANT RIGHT-OF-WAY SURVEYOR'S CERTIFICATE

STATE OF ALASKA
DEPARTMENT OF TRANSPORTATION & PUBLIC FACILITIES

RIGHT OF WAY MAP
ALASKA PROJECT

0A15024/0A15033

State Project No. Z581040000/CFHWY00006

GLENN HIGHWAY MP 34-42
PARKS HWY TO OLD GLENN HWY

DRAWN JHS	DATE MARCH 2013	SCALE 1" = 50'	
CHECKED JRC	DATE NOV 2021	SHEET 32 OF 67	

PROJECT DESIGNATION	SHEET NO.	TOTAL SHEETS
0AI5024	R-33	R-67

WAIVER RESOLUTION SERIAL No. 2001-103-PWm

RECORDED BK 1150 PG 731
RECORD OF SURVEY No. 2001-73
PARCEL No. 1

PARCEL No. 2

N 32°12'07" E 1523.26'

SHEET 31

55.19'

N88°57'11"E 5.08'

S01°02'49"E 10.37'

19.99'

STA 12+80.54 "SIS" 67.92' LT.

PT = 13+96.39

S 86°30'28" E 364.6'

97

S 86°30'28" E 363.47'

N 89°17'11" E 363.83'

E-97

STA 13+06.67 "SIS" 49.12' RT.

SIS CL

SEC COR

R=2760.40'

R=2785.00'

Δ=7°48'50"

ENTRY 1916 - NO SECTION LINE ESMT

15.00'

SLOPE LIMITS

S INNER SPRINGER LOOP ROAD

PARCEL 9 PROJECT S-0566(2)

434.21'

RIGHT-OF-WAY LINE

MATCH LINE

ENTRY 1916 - NO SECTION LINE ESMT. N 00°50'26" W 1319.98' (SEC COR TO 1/16 COR)

NW1/4 NW1/4 SEC 17

STA 16+60.20 "SIS" 53.11' LT.

15.62'

11.40'

152.26'

99

STA 17+34.46 "SIS" 167.80' LT.

112.81'

S 00°42'49" E

STA 17+34.46 "SIS" 55.00' LT.

N 89°17'11" E 370.02'

450.00'

N 89°17'11" E

N 89°17'11" E 1045.99'

SIS PROJ CL

20.00'

N 89°17'11" E 1350.90'

744.42' (TO UTIL ESMT)

SLOPE LIMITS

N00°42'49"W 20.00'

E-97-A

S89°17'11"W 15.00'

15.00'

S00°42'49"E 20.00'

DETAIL-N.T.S.

S INNER SPRINGER LP RD

744.42'

S00°42'49"E 20.00'

N 89°17'11" E 15.00'

112.26'

S89°17'11"W 15.00'

N00°42'49"W 20.00'

1/16 LINE

30.00'

N 89°12'12" E 346.51'

N 32°12'28" E 1081.13'

1054.11'

928.87'

N 09°44'54" E 922.91'

907.65'

T17N R2E S.M. SEC 18 & 17

N 00°54'34" W 908.07'

HOSKINS SUBDIVISION

LOT 1

PLAT No. 2009-92

LOT 2

269.28'

15.25'

STA 21+04.49 "SIS" 55.00' LT.

N00°42'49"W 10.00'

E-99-A

N89°17'11"E 10.00'

S00°42'49"E 10.00'

N 89°17'11" E 105.96'

STA 21+01.42 "SIS" 40.00' LT.

N 89°17'11" E 173.93'

S87°39'53"E 82.40'

STA 22+75.65 "SIS" 40.00' LT.

E-99-B

L=29.38'

L=29.77'

R=40.00'

226.42'

S 87°39'53" E 199.63'

116.85'

1/16 LINE

STA 22+75.65 "SIS" 40.00' RT.

SEE DETAIL

E-97-A

ACQUISITION FUNDING UNDER PROJECT No. Z581040000 UNLESS OTHERWISE NOTED

PARCEL NO.	INTEREST TO BE ACQUIRED	OWNER	LARGER PARCEL	TAKE INCLUDING EXISTING EASEMENT	NET TAKE	REMAINDER	RECORDED DOCUMENT NUMBER
PARCEL INFORMATION							
E-99-B	UTIL ESMT	JERRY HOSKINS		1,149 SF	1,149 SF		2017-003700-0
E-99-A	UTIL ESMT	JOSEY D HARMON AND CRISTY L HARMON		2,824 SF	2,824 SF		2016-027313-0
99	FEE	ROY A HOSKINS	5.000 AC	0.248 AC	0.248 AC	4.752 AC	2017-000341-0
E-97-A	UTIL ESMT	LUGDUNUM PROPERTIES LLC		600 SF	600 SF		2017-007720-0
E-97	UTIL ESMT	ALASKA CORPORATION OF SEVENTH-DAY ADVENTISTS		0.085 AC	0.085 AC		2017-005316-0
97	FEE	ALASKA CORPORATION OF SEVENTH-DAY ADVENTISTS	14.783 AC	0.319 AC	0.319 AC	14.464 AC	2017-005315-0

HDL ENGINEERING CONSULTANTS, LLC
3335 ARCTIC BLVD, SUITE 100
ANCHORAGE, AK 99503
PHONE (907) 564-2120
REGISTRATION NO. AECL861

STATE OF ALASKA 49TH
JAMES H. SHARP NO. 4015-S
REGISTERED PROFESSIONAL LAND SURVEYOR

CONSULTANT RIGHT-OF-WAY SURVEYOR'S CERTIFICATE

0 25 50 100
Scale in Feet

DATE	REVISIONS	BY

STATE OF ALASKA
DEPARTMENT OF TRANSPORTATION & PUBLIC FACILITIES

RIGHT OF WAY MAP
ALASKA PROJECT

0A15024/0A15033

State Project No. Z581040000/CFHWY00006

GLENN HIGHWAY MP 34-42
PARKS HWY TO OLD GLENN HWY

DRAWN JHS	DATE MARCH 2013	SCALE 1" = 50'	
CHECKED JRC	DATE NOV 2021	SHEET 33	OF 67

PROJECT DESIGNATION	SHEET NO.	TOTAL SHEETS
0AI5024	R-34	R-67

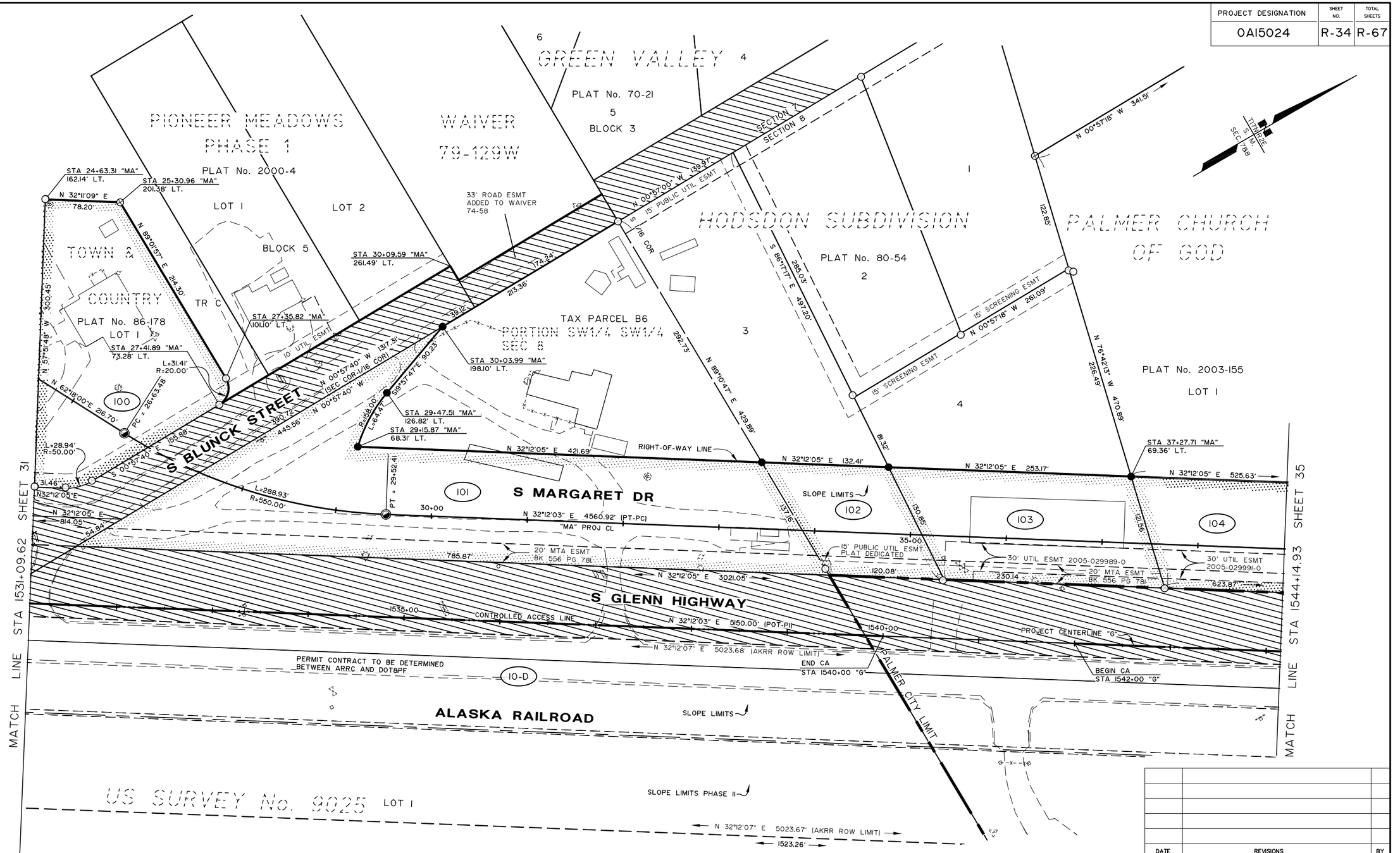

PARCEL NO.	INTEREST TO BE ACQUIRED	OWNER	LARGER PARCEL	TAKE INCLUDING EXISTING EASEMENT	NET TAKE	REMAINDER	RECORDED DOCUMENT NUMBER
		PARCEL INFORMATION					
104	FEE	MOUNTAIN VILLAGE LLC	5.997 AC	1.549 AC	1.549 AC	4.448 AC	2016-023543-0
103	FEE	SKYLINE HOLDING VENTURES LLC	65,495 SF	27,791 SF	27,791 SF	37,704 SF	2016-017902-0
102	FEE	MAX E AND RUTH A HODSDON	56,324 SF	14,519 SF	14,519 SF	41,805 SF	2016-016516-0
101	FEE	THE ESTATE OF GERALD W ALBRIGHT, ESTER M AHVAKANA	3.251 AC	1.895 AC	1.895 AC	1.356 AC	2017-001325-0
100	FEE	PIONEER VIEW CONGREGATION OF JEHOVAH'S WITNESSES	40,953 SF	40,953 SF	40,953 SF	0	2016-027326-0
10-D	PERMIT	ALASKA RAILROAD CORP		XX AC	XX AC		CONTRACT No. 9670

ACQUISITION FUNDING UNDER
PROJECT No. Z581040000
UNLESS OTHERWISE NOTED

HDL ENGINEERING CONSULTANTS, LLC
3335 ARCTIC BLVD, SUITE 100
ANCHORAGE, AK 99503
PHONE (907) 564-2120
REGISTRATION NO. AECL861

STATE OF ALASKA 49TH
JAMES H. SHARP
NO. 4015-S
REGISTERED PROFESSIONAL LAND SURVEYOR

0 25 50 100
Scale in Feet

CONSULTANT RIGHT-OF-WAY SURVEYOR'S CERTIFICATE

DATE	REVISIONS	BY

STATE OF ALASKA
DEPARTMENT OF TRANSPORTATION
&
PUBLIC FACILITIES

RIGHT OF WAY MAP
ALASKA PROJECT

0A15024/0A15033

State Project No. Z581040000/CFHWY00006

GLENN HIGHWAY MP 34-42
PARKS HWY TO OLD GLENN HWY

DRAWN JHS	DATE MARCH 2013	SCALE 1" = 50'	
CHECKED JRC	DATE NOV 2021	SHEET 34	OF 67

PROJECT DESIGNATION	SHEET NO.	TOTAL SHEETS
0AI5024	R-35	R-67

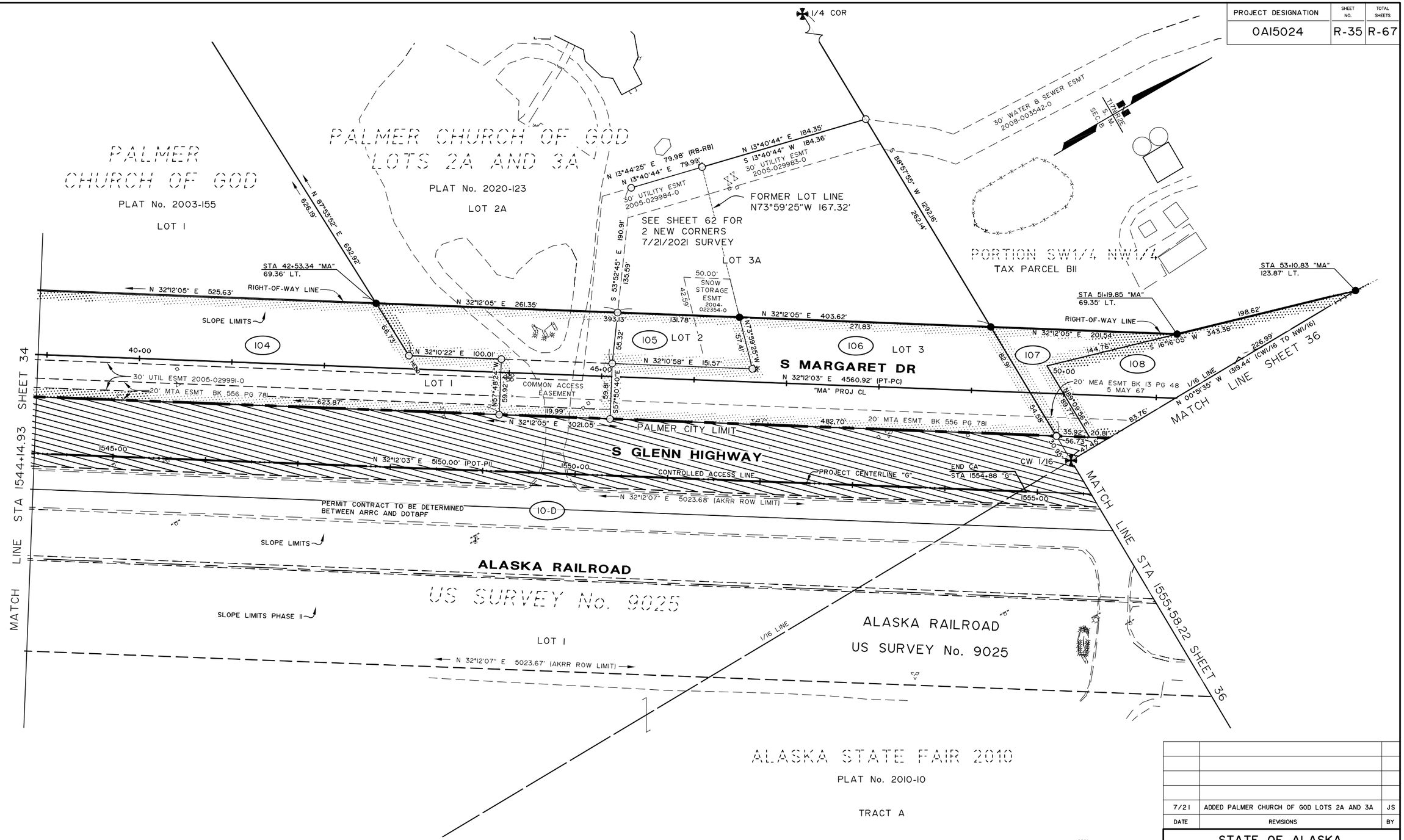

PARCEL NO.	INTEREST TO BE ACQUIRED	OWNER	LARGER PARCEL	TAKE INCLUDING EXISTING EASEMENT	NET TAKE	REMAINDER	RECORDED DOCUMENT NUMBER
108	FEE	ESTATE OF JIMMIE A MCNEESE	44,945 SF	44,945 SF	44,945 SF	0	2016-023545-0
107	FEE	MICHAEL P STEWART	30.043 AC	0.171 AC	0.171 AC	29.872 AC	2017-003081-0
106	FEE	VITO & HEIDI UNGARO LIVING TRUST	88,474 SF	43,262 SF	43,262 SF	45,212 SF	SEE NOTE 1
105	FEE	PALMER CHURCH OF GOD	12.159 AC	0.649 AC	0.649 AC	11.510 AC	SEE NOTE 2
104	FEE	MOUNTAIN VILLAGE LLC	5.997 AC	1.549 AC	1.549 AC	4.448 AC	2016-023543-0
10-D	PERMIT	ALASKA RAILROAD CORP		XX AC	XX AC		CONTRACT No. 9670

PARCEL INFORMATION

NOTES:
1. 2018-000335-0
   2019-007456-0
2. 2019-007454-0
   2019-007455-0
   2019-007456-0
   2019-007457-0

ACQUISITION FUNDING UNDER PROJECT No. Z581040000 UNLESS OTHERWISE NOTED

HDL ENGINEERING CONSULTANTS, LLC
3335 ARCTIC BLVD, SUITE 100
ANCHORAGE, AK 99503
PHONE (907) 564-2120
REGISTRATION NO. AECL861

STATE OF ALASKA 49TH JAMES H. SHARP NO. 4015-S REGISTERED PROFESSIONAL LAND SURVEYOR

CONSULTANT RIGHT-OF-WAY SURVEYOR'S CERTIFICATE

0 25 50 100
Scale in Feet

DATE	REVISIONS	BY
7/21	ADDED PALMER CHURCH OF GOD LOTS 2A AND 3A	JS

STATE OF ALASKA
DEPARTMENT OF TRANSPORTATION
&
PUBLIC FACILITIES

RIGHT OF WAY MAP
ALASKA PROJECT

0A15024/0A15033

State Project No. Z581040000/CFHWY00006

GLENN HIGHWAY MP 34-42
PARKS HWY TO OLD GLENN HWY

DRAWN	JHS	DATE	MARCH 2013	SCALE	1" = 50'
CHECKED	JRC	DATE	NOV 2021	SHEET	35 OF 67

PROJECT DESIGNATION	SHEET NO.	TOTAL SHEETS
0A15024	R-36	R-67

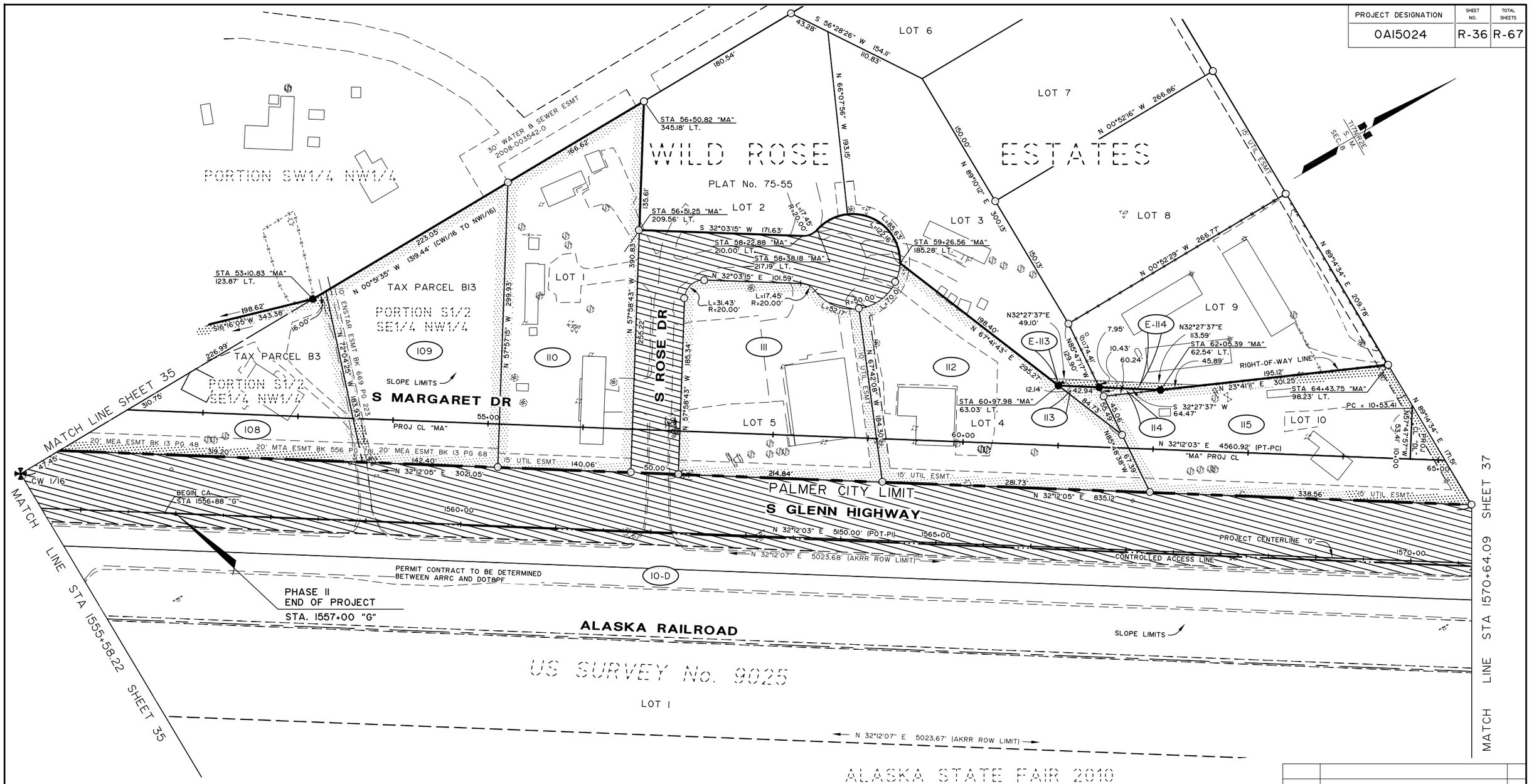

PARCEL NO.	INTEREST TO BE ACQUIRED		LARGER PARCEL	TAKE INCLUDING EXISTING EASEMENT	NET TAKE	REMAINDER	RECORDED DOCUMENT NUMBER
		PARCEL INFORMATION					
115	FEE	RONALD K AND LOUISE M CASTOR	40,326 SF	40,326 SF	40,326 SF	0	2016-004808-0
E-114	UTIL ESMT	SCOTT A AND MARDIE M ROBB		623 SF	623 SF		2016-012536-0
114	FEE	SCOTT A AND MARDIE M ROBB	40,022 SF	296 SF	296 SF	39,726 SF	2016-012535-0
E-113	UTIL ESMT	EARL ASHING		322 SF	322 SF		2016-013353-0
113	FEE	EARL ASHING	40,574 SF	1,049 SF	1,049 SF	39,525 SF	2016-013354-0
112	FEE	TODD HOUSTON	40,989 SF	40,989 SF	40,989 SF	0	2016-014321-0
111	FEE	E & J LIMITED LLC	39,515 SF	39,515 SF	39,515 SF	0	2016-016526-0
110	FEE	MELINDA D MILES-LINDBERG	48,349 SF	48,349 SF	48,349 SF	0	2016-015097-0
109	FEE	MICKEY R & S L STEELE & DALE A & LISA J GRAY	40,775 SF	40,775 SF	40,775 SF	0	2016-008228-0
108	FEE	ESTATE OF JIMMIE A MCNEESE	44,945 SF	44,945 SF	44,945 SF	0	2016-023545-0
E-107		DELETED					———
10-D	PERMIT	ALASKA RAILROAD CORP		XX AC	XX AC		CONTRACT No. 9670

ACQUISITION FUNDING UNDER PROJECT No. Z581040000 UNLESS OTHERWISE NOTED

HDL ENGINEERING CONSULTANTS, LLC
3335 ARCTIC BLVD, SUITE 100
ANCHORAGE, AK 99503
PHONE (907) 564-2120
REGISTRATION NO. AECL861

STATE OF ALASKA 49TH JAMES H. SHARP NO. 4015-S REGISTERED PROFESSIONAL LAND SURVEYOR

CONSULTANT RIGHT-OF-WAY SURVEYOR'S CERTIFICATE

0 25 50 100
Scale in Feet

DATE	REVISIONS	BY
11/21	REVISED EOP PHASE II	JS
5/16	DELETED PARCEL E-107	JS

STATE OF ALASKA
DEPARTMENT OF TRANSPORTATION
&
PUBLIC FACILITIES

RIGHT OF WAY MAP
ALASKA PROJECT

0A15024/0A15033

State Project No. Z581040000/CFHWY00006

GLENN HIGHWAY MP 34-42
PARKS HWY TO OLD GLENN HWY

DRAWN JHS	DATE MARCH 2013	SCALE 1" = 50'	
CHECKED JRC	DATE NOV 2021	SHEET 36	OF 67

PROJECT DESIGNATION	SHEET NO.	TOTAL SHEETS
0AI5024	R-37	R-68

TRACT A

N 00°47'40" W 196.47'

N 32°06'50" E 249.01'

N 32°11'51" E 375.06'

N 32°10'46" E 167.75'

N 89°22'26" E 79.78'

N 00°52'29" W 399.74'

TRANSEC IS M SEC 19

KOPPERUD COMMERCIAL PARK

PLAT No. 2014-95

LOT 3

LOT 2

LOT I

KOPPERUD SUBDIVISION

PLAT No. 2001-71

TRACT 5

359.70'

S 89°05'15" W 399.90'

20' MEA ESMT BK 39 PG 222

PT = 11+71.61

PROJ. CL

N 89°12'23" E 438.39'

S 89°12'23" W 37.14'

N 57°47'51" W 474.93'

359.93'

N 57°48'06" W 474.95'

359.95'

STA 65+28.61 "MA"
69.34' LT.

249.83

RIGHT-OF-WAY LINE

N 32°12'05" E 1028.65'

375.08'

STA 75+63.45 "MA"
67.32' LT.

403.74'

STA 77+25.93 "MA"
65.23' LT.

118

R=265.78'

384.61'

N 19°20'14" E 142.39'

N 00°51'47" W 133.58'

LOT 2-A

L=317.39'

R=550.00'

PLAT No. 95-102

49.20'

PC = 75+13.33

116-A

116-B

SLOPE LIMITS

S MARGARET DR

116-C

N 32°12'03" E 4560.92' (PT-PC)

"MA" PROJ CL

40'X40' COMMON ACCESS ESMT

75+00

S 00°51'47" E 135.25'

117

PALMER CITY LIMIT

LOT 1-A AND LOT 2-A

MOFFITT SUBDIVISION

APPROX LOCA

20' MEA UTIL ESMT

458.53'

S 32°12'05" W

30' DRIVEWAY ESMT
BK 1071 PG 747

317.26'

115.00'

70+00

175.17'

66.09'

20' MEA ESMT

375.09'

N 32°12'05" E 1504.57'

1575+00

5150.00' (POT-PI)

1580+00

N 32°46'26" E 800.00' (PI-PI)

PALMER CITY LIMIT

S GLENN HIGHWAY

N 32°12'03" E

CONTROLLED ACCESS LINE

N 32°12'07" E 5023.68' (AKRR ROW LIMIT)

PROJECT CENTERLINE "G"

N 32°11'43" E 1273.44' (AKRR ROW LIMIT

PERMIT CONTRACT TO BE DETERMINED
BETWEEN ARRC AND DOT&PF

10-D

10-E

ALASKA RAILROAD

SLOPE LIMITS

US SURVEY No. 9025

LOT I

N 32°12'07" E 5023.67' (AKRR ROW LIMIT)

N00°51'47"W
1068.82'

NO CURVE PI = 1577+30.00
DEFLECTION = 0°34'23" RT

US SURVEY No. 9025
ALASKA RAILROAD

US SURVEY No. 9025

LOT 2

N 32°11'43" E 1273.47' (AKRR ROW LIMIT)

ALASKA STATE FAIR 2010

PLAT No. 2010-10

MATCH LINE STA 1570+64.09 SHEET 36

MATCH LINE STA 1583+02.48 SHEET 38

PARCEL NO.	INTEREST TO BE ACQUIRED	OWNER	LARGER PARCEL	TAKE INCLUDING EXISTING EASEMENT	NET TAKE	REMAINDER	RECORDED DOCUMENT NUMBER
		PARCEL INFORMATION					
118	FEE	MOORE ROAD LEASING LLC	3.668 AC	0.075 AC	0.075 AC	3.593 AC	2017-003076-0
117	FEE	GUNER AND HOLLY S WILSON	48,109 SF	48,109 SF	48,109 SF	0	2016-013207-0
116-C	FEE	ROSS A KOPPERUD	3.394 AC	1.028 AC	1.028 AC	2.366 AC	2017-003079-0
116-B	FEE	NOEL H KOPPERUD	4.089 AC	0.990 AC	0.990 AC	3.099 AC	2017-003078-0
116-A	FEE	NOEL H KOPPERUD	3.300 AC	0.561 AC	0.561 AC	2.739 AC	2017-003077-0
10-E	PERMIT	ALASKA RAILROAD CORP	LARGE	XX AC	XX AC	LARGE	CONTRACT No. 9670
10-D	PERMIT	ALASKA RAILROAD CORP	LARGE	XX AC	XX AC	LARGE	CONTRACT No. 9670

ALSO SEE 2017-004656-0

ACQUISITION FUNDING UNDER
PROJECT No. Z581040000
UNLESS OTHERWISE NOTED

TRACT A

HDL ENGINEERING CONSULTANTS, LLC
3335 ARCTIC BLVD, SUITE 100
ANCHORAGE, AK 99503
PHONE (907) 564-2120
REGISTRATION NO. AECL861

STATE OF ALASKA
49TH
JAMES H. SHARP
NO. 4015-S
REGISTERED PROFESSIONAL LAND SURVEYOR

CONSULTANT RIGHT-OF-WAY
SURVEYOR'S CERTIFICATE

0 25 50 100
Scale in Feet

DATE	REVISIONS	BY

STATE OF ALASKA
DEPARTMENT OF TRANSPORTATION
&
PUBLIC FACILITIES

RIGHT OF WAY MAP
ALASKA PROJECT

0A15024/0A15033

State Project No. Z581040000/CFHWY00006

GLENN HIGHWAY MP 34-42
PARKS HWY TO OLD GLENN HWY

DRAWN JHS	DATE MARCH 2013	SCALE 1" = 50'	
CHECKED JRC	DATE NOV 2021	SHEET 37	OF 68

PROJECT DESIGNATION	SHEET NO.	TOTAL SHEETS
0AI5024	R-38	R-67

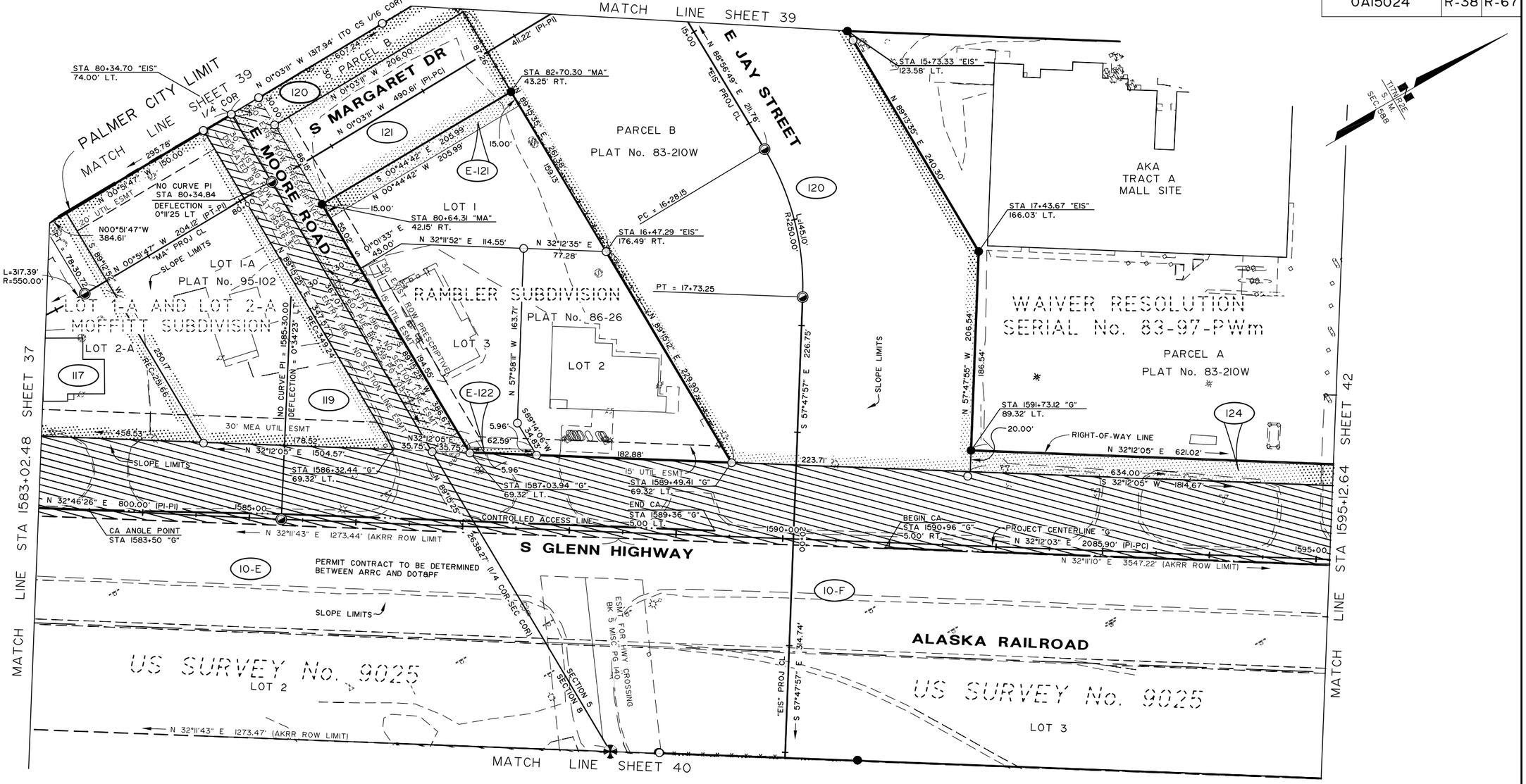

124	FEE	VALLEY FAIR MALL LLC	5.002 AC	0.288 AC	0.288 AC	4.714 AC	2018-002796-0
E-123		DELETED					———
E-122	SLOPE, UTIL & MAINT ESMT	GIFFORD W & GLENDA NAFUS		313 SF	313 SF		2017-003648-0
E-121	UTIL ESMT	GIFFORD W & GLENDA NAFUS		3,090 SF	3,090 SF		2017-003647-0
121	FEE	GIFFORD W & GLENDA NAFUS	40,639 SF	17,860 SF	17,860 SF	22,779 SF	2017-003645-0
120	FEE	EJ KERTTULA &/or AM KERTTULA J R TRUST	64.232 AC	16.877 AC	16.617 AC	47.355 AC	2018-014446-0
119	FEE	ARCTIC SALES AGENCY INC	44,798 SF	44,798 SF	44,798 SF	0	2016-011015-0
117	FEE	GUNER & HOLLY S WILSON	48,109 SF	48,109 SF	48,109 SF	0	2016-013207-0
10-F	PERMIT	ALASKA RAILROAD CORP		XX AC	XX AC		CONTRACT No. 9670
10-E	PERMIT	ALASKA RAILROAD CORP		XX AC	XX AC		CONTRACT No. 9670
PARCEL NO.	INTEREST TO BE ACQUIRED	OWNER	LARGER PARCEL	TAKE INCLUDING EXISTING EASEMENT	NET TAKE	REMAINDER	RECORDED DOCUMENT NUMBER

PARCEL INFORMATION

ACQUISITION FUNDING UNDER
PROJECT No. Z581040000
UNLESS OTHERWISE NOTED

HDL ENGINEERING CONSULTANTS, LLC
3335 ARCTIC BLVD, SUITE 100
ANCHORAGE, AK 99503
PHONE (907) 564-2120
REGISTRATION NO. AECL861

0 25 50 100
Scale in Feet

STATE OF ALASKA 49TH JAMES H. SHARP NO. 4015-S REGISTERED PROFESSIONAL LAND SURVEYOR

CONSULTANT RIGHT-OF-WAY SURVEYOR'S CERTIFICATE

7/17	DELETED PARCEL E-123	JS
3/17	REVISED PARCEL 120	JS
3/16	REV PCLS 122 & 123 CHGD TO E-122 & E-123	JS
2/16	REVISED PARCEL 120	JS
DATE	REVISIONS	BY

STATE OF ALASKA
DEPARTMENT OF TRANSPORTATION
&
PUBLIC FACILITIES

RIGHT OF WAY MAP
ALASKA PROJECT

0A15024/0A15033

State Project No. Z581040000/CFHWY00006

GLENN HIGHWAY MP 34-42
PARKS HWY TO OLD GLENN HWY

DRAWN JHS	DATE MARCH 2013	SCALE 1" = 50'	
CHECKED JRC	DATE NOV 2021	SHEET 38	OF 67

PARCEL INFORMATION								PROJECT DESIGNATION	SHEET NO.	TOTAL SHEETS
PARCEL NO.	INTEREST TO BE ACQUIRED	OWNER	LARGER PARCEL	TAKE INCLUDING EXISTING EASEMENT	NET TAKE	REMAINDER	RECORDED DOCUMENT NUMBER			
120	FEE	EJ KERTTULA &/or AM KERTTULA J R TRUST	64.232 AC	16.877 AC	16.617 AC	47.355 AC	2018-014446-0	0A15024	R-39	R-67

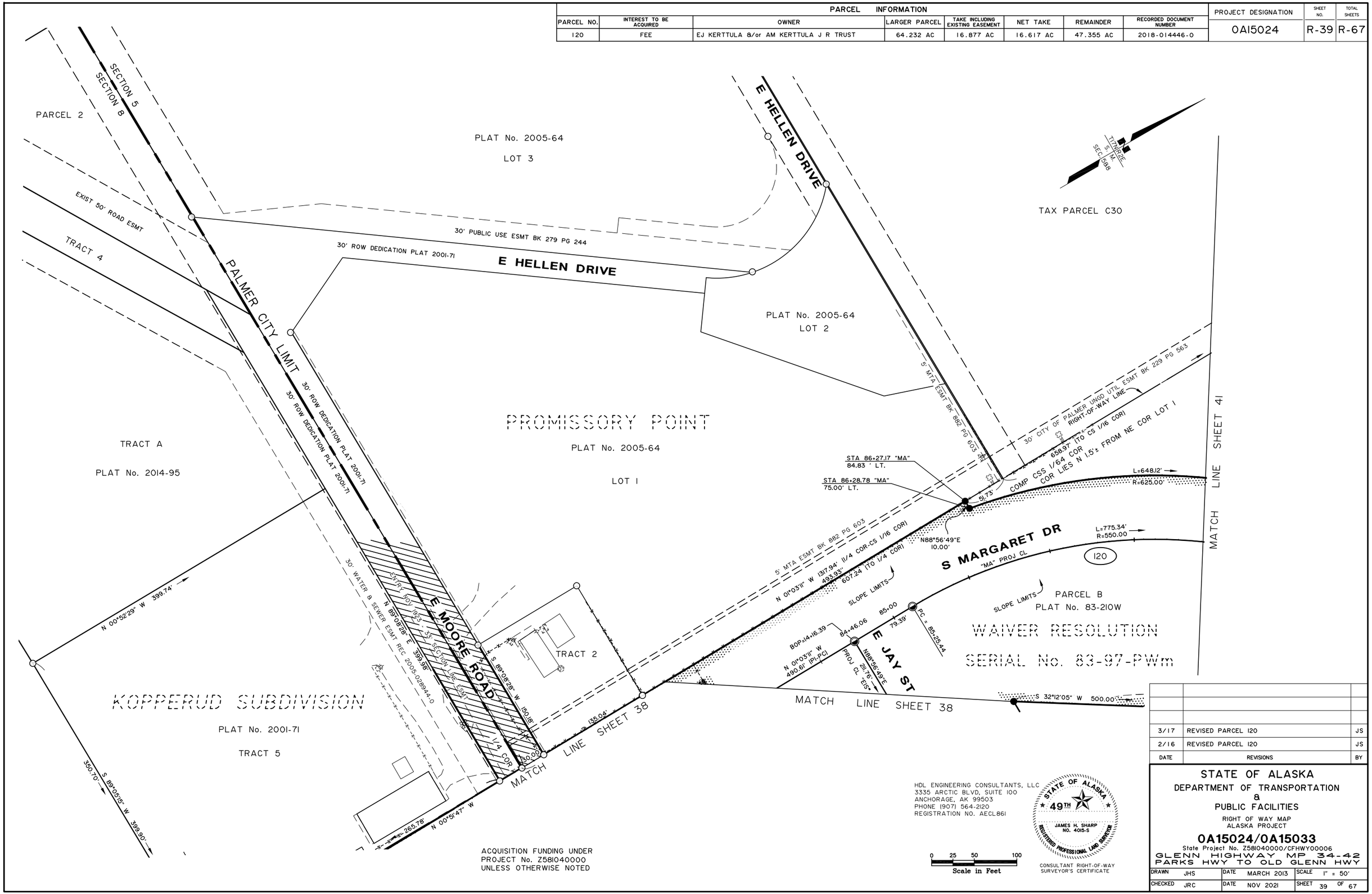

DATE	REVISIONS	BY
3/17	REVISED PARCEL 120	JS
2/16	REVISED PARCEL 120	JS

STATE OF ALASKA
DEPARTMENT OF TRANSPORTATION
&
PUBLIC FACILITIES

RIGHT OF WAY MAP
ALASKA PROJECT

0A15024/0A15033

State Project No. Z581040000/CFHWY00006

GLENN HIGHWAY MP 34-42
PARKS HWY TO OLD GLENN HWY

DRAWN	JHS	DATE	MARCH 2013	SCALE	1" = 50'
CHECKED	JRC	DATE	NOV 2021	SHEET	39 OF 67

PROJECT DESIGNATION	SHEET NO.	TOTAL SHEETS
0A15024	R-40	R-67

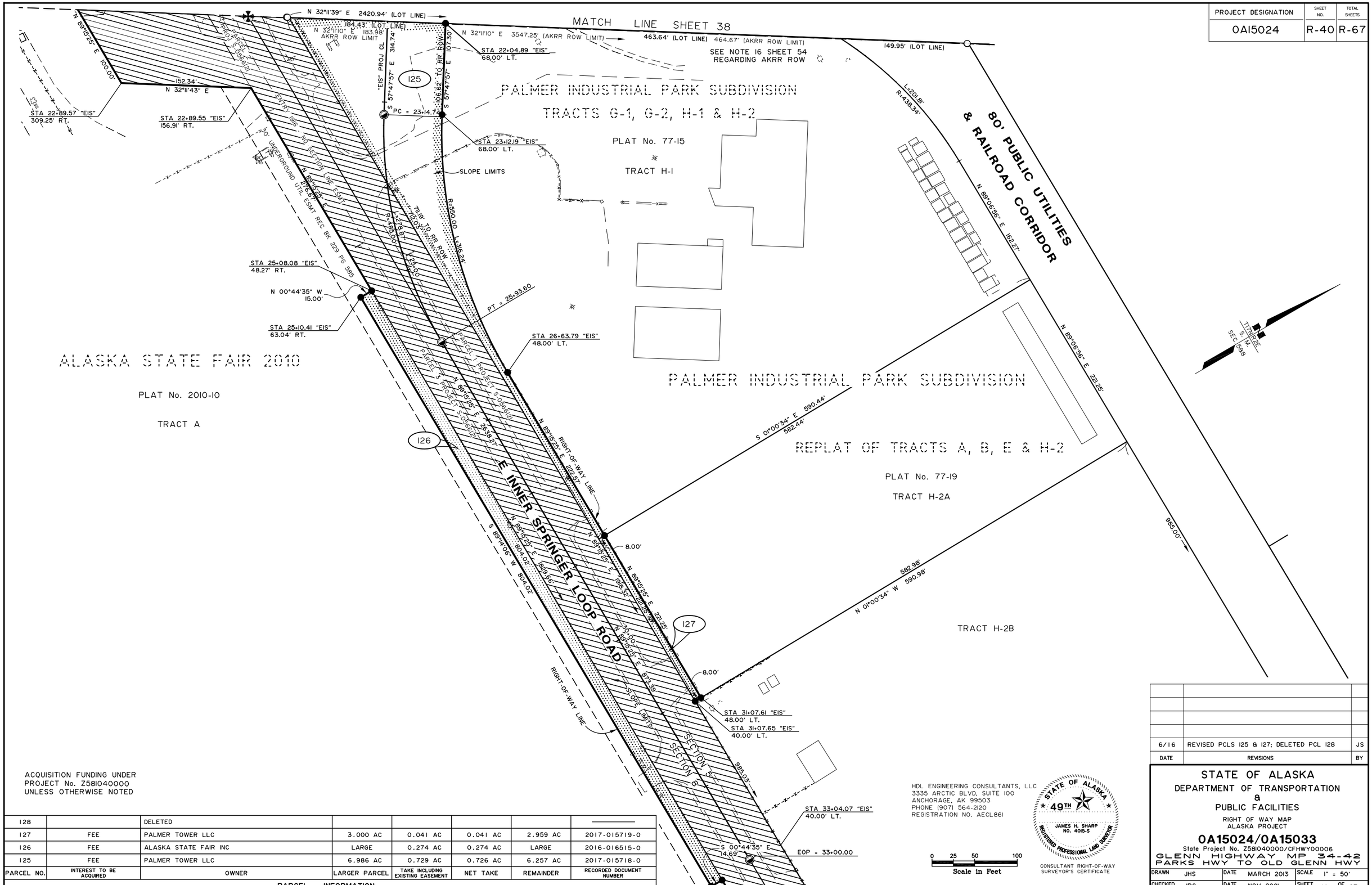

ACQUISITION FUNDING UNDER PROJECT No. Z581040000 UNLESS OTHERWISE NOTED

PARCEL NO.	INTEREST TO BE ACQUIRED	OWNER	LARGER PARCEL	TAKE INCLUDING EXISTING EASEMENT	NET TAKE	REMAINDER	RECORDED DOCUMENT NUMBER
128		DELETED					———
127	FEE	PALMER TOWER LLC	3.000 AC	0.041 AC	0.041 AC	2.959 AC	2017-015719-0
126	FEE	ALASKA STATE FAIR INC	LARGE	0.274 AC	0.274 AC	LARGE	2016-016515-0
125	FEE	PALMER TOWER LLC	6.986 AC	0.729 AC	0.726 AC	6.257 AC	2017-015718-0

PARCEL INFORMATION

HDL ENGINEERING CONSULTANTS, LLC
3335 ARCTIC BLVD, SUITE 100
ANCHORAGE, AK 99503
PHONE (907) 564-2120
REGISTRATION NO. AECL861

STATE OF ALASKA 49TH JAMES H. SHARP NO. 4015-S REGISTERED PROFESSIONAL LAND SURVEYOR

CONSULTANT RIGHT-OF-WAY SURVEYOR'S CERTIFICATE

DATE	REVISIONS	BY
6/16	REVISED PCLS 125 & 127; DELETED PCL 128	JS

STATE OF ALASKA
DEPARTMENT OF TRANSPORTATION & PUBLIC FACILITIES
RIGHT OF WAY MAP
ALASKA PROJECT

0A15024/0A15033

State Project No. Z581040000/CFHWY00006
GLENN HIGHWAY MP 34-42
PARKS HWY TO OLD GLENN HWY

DRAWN	JHS	DATE	MARCH 2013	SCALE	1" = 50'
CHECKED	JRC	DATE	NOV 2021	SHEET	40 OF 67

PROJECT DESIGNATION	SHEET NO.	TOTAL SHEETS
0AI5024	R-41	R-67

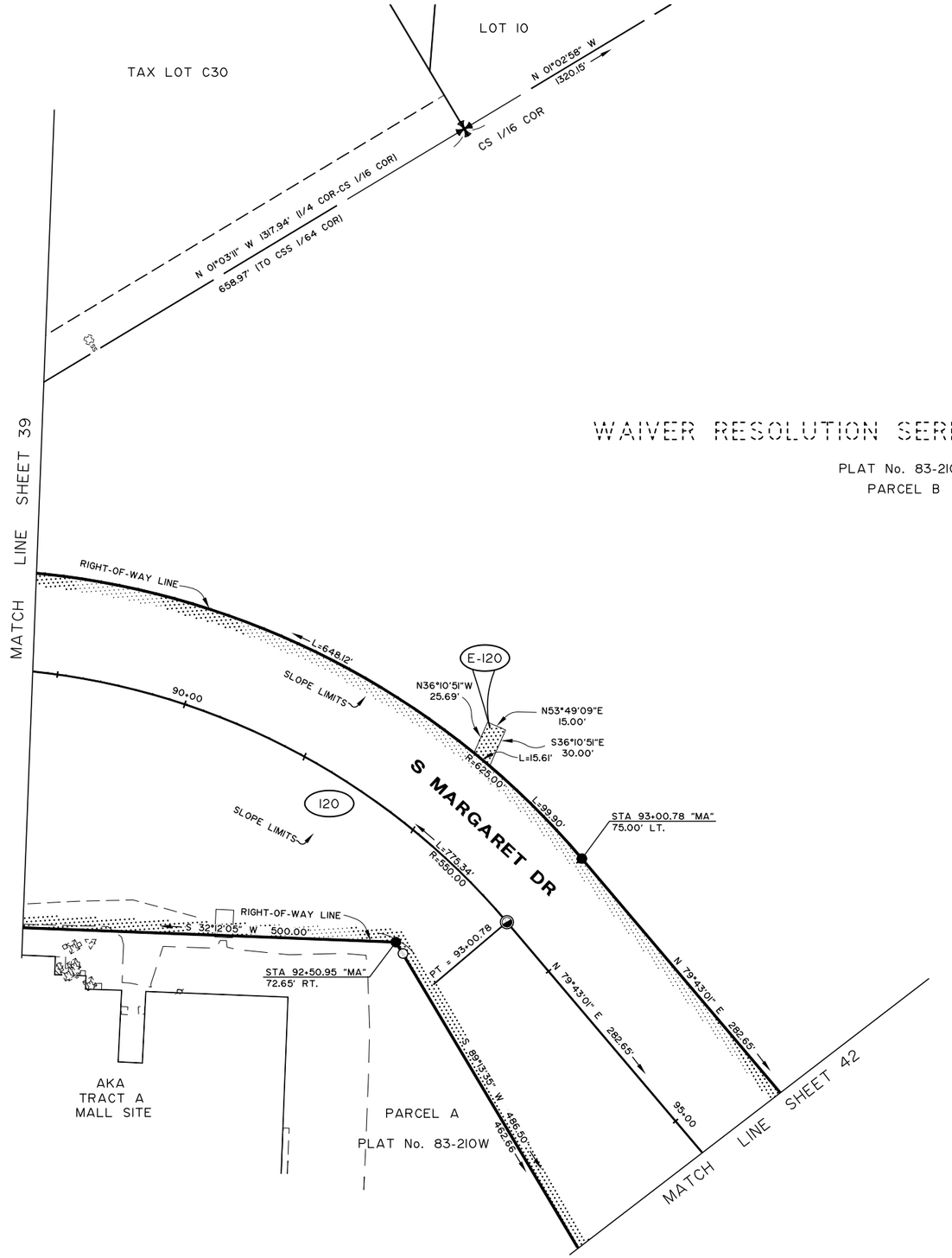

WAIVER RESOLUTION SERIAL No. 83-97-PWm

PLAT No. 83-210W
PARCEL B

PARCEL NO.	INTEREST TO BE ACQUIRED	OWNER	LARGER PARCEL	TAKE INCLUDING EXISTING EASEMENT	NET TAKE	REMAINDER	RECORDED DOCUMENT NUMBER
		PARCEL INFORMATION					
E-120	ANCHOR ESMT	EJ KERTTULA &/or AM KERTTULA J R TRUST		417 SF	417 SF		2018-014445-0
120	FEE	EJ KERTTULA &/or AM KERTTULA J R TRUST	64.232 AC	16.877 AC	16.617 AC	47.355 AC	2018-014446-0

ACQUISITION FUNDING UNDER
PROJECT No. Z581040000
UNLESS OTHERWISE NOTED

HDL ENGINEERING CONSULTANTS, LLC
3335 ARCTIC BLVD, SUITE 100
ANCHORAGE, AK 99503
PHONE (907) 564-2120
REGISTRATION NO. AECL861

0 25 50 100
Scale in Feet

STATE OF ALASKA
49TH
JAMES H. SHARP
NO. 4015-S
REGISTERED PROFESSIONAL LAND SURVEYOR

CONSULTANT RIGHT-OF-WAY SURVEYOR'S CERTIFICATE

DATE	REVISIONS	BY
12/17	ADDED PARCEL E-120	JS
3/17	REVISED PARCEL 120	JS
2/16	REVISED PARCEL 120	JS

STATE OF ALASKA
DEPARTMENT OF TRANSPORTATION
&
PUBLIC FACILITIES

RIGHT OF WAY MAP
ALASKA PROJECT

0A15024/0A15033

State Project No. Z581040000/CFHWY00006

GLENN HIGHWAY MP 34-42
PARKS HWY TO OLD GLENN HWY

DRAWN JHS	DATE MARCH 2013	SCALE 1" = 50'	
CHECKED JRC	DATE NOV 2021	SHEET 41	OF 67

PROJECT DESIGNATION	SHEET NO.	TOTAL SHEETS
0AI5024	R-42	R-67

MATCH LINE SHEET 41

N79°43'01"E 282.65'

STA 95+83.42 "MA"
75.00' LT.

PC = 95+83.42

PI 1613+26.32
Δ = 32°58'43"
D = 02°23'14"
T = 710.42'
L = 1381.40'
R = 2400.00'

T17N R2E
SEC. 5
M.

WAIVER RESOLUTION SERIAL No. 83-97-PWm

PLAT No. 83-210W
PARCEL B

STA 105+58.81 "MA"
147.58' LT.

STA 104+71.21 "MA"
150.09' LT.

S 32°03'11" W
70.40'

D-10

129

S 57°33'57" E
75.09'

STA 104+70.91 "MA"
75.00' LT.

S 57°33'57" W
199.94'

PC = 104+95.11

199.79'

124.70'

SLOPE LIMITS

L=393.92'
R=475.00'

SLOPE LIMITS

L=456.12'
R=550.00'

S 89°13'55" W 486.50'
462.66'

STA 100+39.54 "MA"
75.00' LT.

RIGHT-OF-WAY LINE

N 32°12'03" E 431.36'

PARCEL A

PLAT No. 83-210W

124

120

STA 1597+94.14 "G"
89.31' LT.

23.84'

RIGHT-OF-WAY LINE

N 32°12'05" E 621.02'

634.00'

S 32°12'05" W

PT = 100+39.54

100+00

75'

S MARGARET DR

N 32°12'03" E 455.57' (PT-PC)

"MA" PROJ CL

PC = 1606+15.90

103+00

N 57°33'57" W

L=328.45'
R=550.00'

S57°47'55"E
10.00'

135.27'

59.78'

711.49'

N 32°12'05" E 1814.67

SLOPE LIMITS

S GLENN HIGHWAY

N 32°12'05" E 195.05'

L=10.62'
R=1819.86'

1600+00

N 32°12'03" E 2085.90' (PI-PC)

CONTROLLED ACCESS LINE

N 32°11'10" E 3547.22' (AKRR ROW LIMIT)

PROJECT CENTERLINE "G"

1605+00

L=1381.40' (PC-PT)
R=2400.00'

PERMIT CONTRACT TO BE DETERMINED
BETWEEN ARRC AND DOT&PF

10-F

SLOPE LIMITS

ALASKA RAILROAD

MATCH LINE STA 1595+12.64 SHEET 38

MATCH LINE STA 1607+25.02 SHEET 43

US SURVEY No. 9025

US SURVEY No. 9025
LOT 3

N 32°11'39" E 149.95'
149.95' (LOT LINE)

N 32°11'39" E 2420.94' (LOT LINE)

N 32°11'10" E 3547.25' (AKRR ROW LIMIT)

SEE NOTE 16 SHEET 54
REGARDING AKRR ROW

STA 1606+06.85 "G"
204.71' RT.

STA 1606+62.84 "G"
205.20' RT.

S 58°15'18" E 390.37'

"CM" PROJ CL

915.27'

S57°47'43"E
211.7'

29.78'

30.22'

210.0'

S57°47'43"E

30'

30'

L=201.81'
R=438.34'

80' PUBLIC UTILITIES
& RAILROAD CORRIDOR

N 89°05'56" E 162.27'

AIR LIQUIDE INDUSTRIAL PARK

LOTS 1A & 2A

PLAT No. 2012-122

LOT 1A

E COMMERCIAL DR

L=569.03'
R=984.93'

LOT 2A

ACQUISITION FUNDING UNDER
PROJECT No. Z581040000
UNLESS OTHERWISE NOTED

PARCEL NO.	INTEREST TO BE ACQUIRED	OWNER	LARGER PARCEL	TAKE INCLUDING EXISTING EASEMENT	NET TAKE	REMAINDER	RECORDED DOCUMENT NUMBER
PARCEL INFORMATION							
129	FEE	KERTTULA JOINT REVOCABLE TRUST	14,072 SF	14,072 SF	14,072 SF	0	2017-011841-0
124	FEE	VALLEY FAIR MALL LLC	5.002 AC	0.288 AC	0.288 AC	4.714 AC	2018-002796-0
120	FEE	EJ KERTTULA &/or AM KERTTULA J R TRUST	64.232 AC	16.877 AC	16.617 AC	47.355 AC	2018-014446-0
10-F	PERMIT	ALASKA RAILROAD CORP		XX AC	XX AC		CONTRACT No. 9670

HDL ENGINEERING CONSULTANTS, LLC
3335 ARCTIC BLVD. SUITE 100
ANCHORAGE, AK 99503
PHONE (907) 564-2120
REGISTRATION NO. AECL861

0 25 50 100
Scale in Feet

STATE OF ALASKA
49TH
JAMES H. SHARP
NO. 4015-S
REGISTERED PROFESSIONAL LAND SURVEYOR

CONSULTANT RIGHT-OF-WAY
SURVEYOR'S CERTIFICATE

DATE	REVISIONS	BY
3/17	REVISED PARCEL 120	JS
2/16	REVISED PARCEL 120	JS

STATE OF ALASKA
DEPARTMENT OF TRANSPORTATION
&
PUBLIC FACILITIES

RIGHT OF WAY MAP
ALASKA PROJECT

0A15024/0A15033

State Project No. Z581040000/CFHWY00006

GLENN HIGHWAY MP 34-42
PARKS HWY TO OLD GLENN HWY

DRAWN	JHS	DATE	MARCH 2013	SCALE	1" = 50'
CHECKED	JRC	DATE	NOV 2021	SHEET	42 OF 67

PROJECT DESIGNATION	SHEET NO.	TOTAL SHEETS
0AI5024	R-43	R-67

MATCH LINE SHEET 44

MATCH LINE STA 1607+25.02 SHEET 42

MATCH LINE STA 1620+54.17 SHEET 46

MATCH LINE SHEET 45

WAIVER RESOLUTION SERIAL No. 83-97-PWm

WAIVER RESOLUTION SERIAL No. 2001-070-PWm
PARCEL 2
BK 1149 PG 287

WAIVER RESOLUTION SERIAL No. 1999-49-PWm

PARCEL 2
BK 1036 PG 343

PLAT No. 83-210W
PARCEL B

R-42-1-010-1

PLAT No. 74-19

TRACT D

PALMER INDUSTRIAL PARK SUBDIVISION

US SURVEY No. 9025
LOT 3

PLAT No. 2001-76
C-2A

PLAT No. 98-144
C-1

PALMER INDUSTRIAL PARK
LOT C-2A
LOT C-1, C-2 & C-3

LUCAS SUBSTATION SITE
PLAT No. 66-6
TR A
TR B
TR C

GLACIER VIEW
PLAT No. 96-27
LOT 2

S MARGARET DR
S MARGARET CT
E HAROLD STREET
S GLENN HIGHWAY
S COLONY WAY
ALASKA RAILROAD

SLOPE LIMITS
RIGHT-OF-WAY LINE
CONTROLLED ACCESS LINE
PROJECT CENTERLINE "G"
"C" PROJ CL
"MA" PROJ CL
BOUNDARY APPROX.

STA 111+01.15 "MA"
142.56' LT.
STA 114+22.99 "MA"
142.56' LT.
STA 114+29.82 "MA"
105.30' LT.
R=700.00'
STA 115+74.91 "MA"
92.19' LT.
STA 109+75.73 "MA"
75.00' LT.
STA 108+23.57 "MA"
75.00' LT.
STA 105+48.70 "MA"
75.00' LT.
PT = 108+23.57
PC = 117+60.11
PC = 114+74.30
PT = 115+66.42
PT = 111+31.77
PC = 110+20.35
BOP=7+19.24
PC = 10+68.69
BEGIN CA
STA 1616+20 "G"
5.00' RT.
END CA
STA 1614+60 "G"
5.00' LT.
STA 1616+31.19 "G"
129.37' RT.
STA 12+41.82 "C"
36.58' LT.
STA 13+25.79 "C"
29.39' LT.
STA 14+36.65 "C"
37.34' LT.
PT = 1619+97.30
PI 1613+26.32
Δ = 32°58'43"
D = 02°23'14"
T = 710.42'
L = 1381.40'
R = 2400.00'

S 24°23'25" E 157.89'
N 02°00'55" W 152.16'
L=237.38'
R=475.00'
N 02°00'55" W 196.78'
L=328.45'
R=550.00'
L=111.42'
R=550.00'
N 09°35'30" E 342.53'
N 09°24'19" E 329.75'
S 89°09'25" W 471.38'
N 89°11'28" E 301.66'
L=101.65'
R=700.00'
L=60.34'
N 24°35'04" E 185.90'
S 89°06'25" W 349.87'
L=92.12'
R=550.00'
N 19°11'17" E 193.69'
L=191.65'
R=550.00'
S 89°06'25" W 133.32'
N 57°33'53" W 126.92'
L=109.38'
R=819.86'
S61°34'36"E 46.09'
N 32°11'10" E 3541.22' (AKRR ROW LIMIT)
L=842.23'
L=904.05'
R=1773.86'
S 80°24'30" E 349.45'
223.55'
S 00°46'39" E
L=61.82'
35.82'
N 00°46'39" W 1038.03'
N 00°46'39" W 783.92'
278.00'
121.18'
N 63°16'30" W 109.13'
76.68'
R=250.00'
32°45'52.79"
N55°32'33"E 72.00'
S 32°11'10" W 108.68'
161.47'
N 36°59'33" E 105.25'
N 32°11'13" E 734.12'
180.08'
15.00'
N 32°10'42" E 819.23'
N 32°11'39" E 647.66'
N 32°11'10" E 3547.25' (AKRR ROW LIMIT)
384.75'
N 32°11'55" E 678.02'
293.27'
N32°12'59"E 401.03'

1610+00
1615+00
1620+00

SEE NOTE 16 SHEET 54
REGARDING AKRR ROW

BEARING BREAK COR HELD

ACQUISITION FUNDING UNDER
PROJECT AKSAS No. 58104
UNLESS OTHERWISE NOTED

PARCEL NO.	INTEREST TO BE ACQUIRED	OWNER	LARGER PARCEL	TAKE INCLUDING EXISTING EASEMENT	NET TAKE	REMAINDER	RECORDED DOCUMENT NUMBER
PARCEL INFORMATION							
132	FEE	MEA, INC	19,832 SF	773 SF	773 SF	19,059 SF	2017-001489-0
131	FEE	JOHN & JEANNE NOVOSAD	6.216 AC	0.955 AC	0.955 AC	5.261 AC	2016-016514-0
130	FEE	GRANITE CONSTRUCTION CO	24.042 AC	0.564 AC	0.564 AC	23.478 AC	2016-023544-0
120	FEE	EJ KERTTULA &/or AM KERTTULA J R TRUST	64.232 AC	16.877 AC	16.617 AC	47.355 AC	2018-014446-0
10-F	PERMIT	ALASKA RAILROAD CORP		XX AC	XX AC		CONTRACT No. 9670

DATE	REVISIONS	BY
2/18	REVISED ALIGNMENT "C"	JS
2/16	REVISED PARCEL 120	JS

HDL ENGINEERING CONSULTANTS, LLC
3335 ARCTIC BLVD, SUITE 100
ANCHORAGE, AK 99503
PHONE (907) 564-2120
REGISTRATION NO. AECL861

STATE OF ALASKA 49TH
JAMES H. SHARP
NO. 4015-S
REGISTERED PROFESSIONAL LAND SURVEYOR

CONSULTANT RIGHT-OF-WAY SURVEYOR'S CERTIFICATE

0 25 50 100
Scale in Feet

STATE OF ALASKA
DEPARTMENT OF TRANSPORTATION & PUBLIC FACILITIES

RIGHT OF WAY MAP
ALASKA PROJECT

0A15024/0A15033

State Project No. Z581040000/CFHWY00006

GLENN HIGHWAY MP 34-42
PARKS HWY TO OLD GLENN HWY

DRAWN JHS	DATE MARCH 2013	SCALE 1" = 50'
CHECKED JRC	DATE NOV 2021	SHEET 43 OF 67

PROJECT DESIGNATION	SHEET NO.	TOTAL SHEETS
0A15024	R-44	R-67

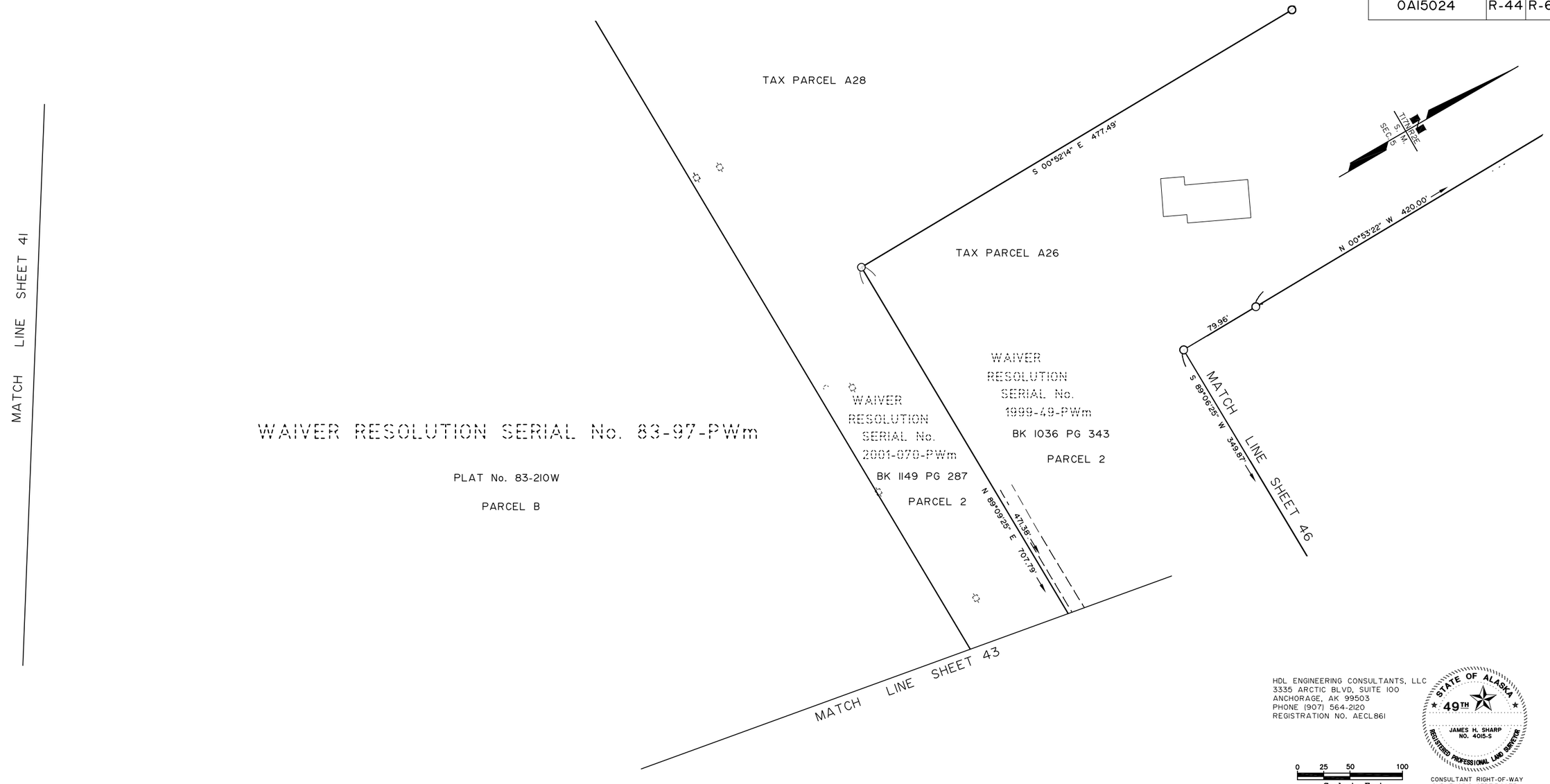

P I 1613+26.32
Δ = 32°58'43"
D = 02°23'14"
T = 710.42'
= 1381.40'
= 2400.00'

HDL ENGINEERING CONSULTANTS, LLC
3335 ARCTIC BLVD, SUITE 100
ANCHORAGE, AK 99503
PHONE (907) 564-2120
REGISTRATION NO. AECL861

STATE OF ALASKA 49TH
JAMES H. SHARP NO. 4015-S
REGISTERED PROFESSIONAL LAND SURVEYOR

CONSULTANT RIGHT-OF-WAY SURVEYOR'S CERTIFICATE

DATE	REVISIONS	BY

STATE OF ALASKA
DEPARTMENT OF TRANSPORTATION & PUBLIC FACILITIES

RIGHT OF WAY MAP
ALASKA PROJECT

0A15024/0A15033

State Project No. Z581040000/CFHWY00006

GLENN HIGHWAY MP 34-42
PARKS HWY TO OLD GLENN HWY

DRAWN	JHS	DATE	MARCH 2013	SCALE	1" = 50'
CHECKED	JRC	DATE	NOV 2021	SHEET	44 OF 67

PROJECT DESIGNATION	SHEET NO.	TOTAL SHEETS
0AI5024	R-45	R-67

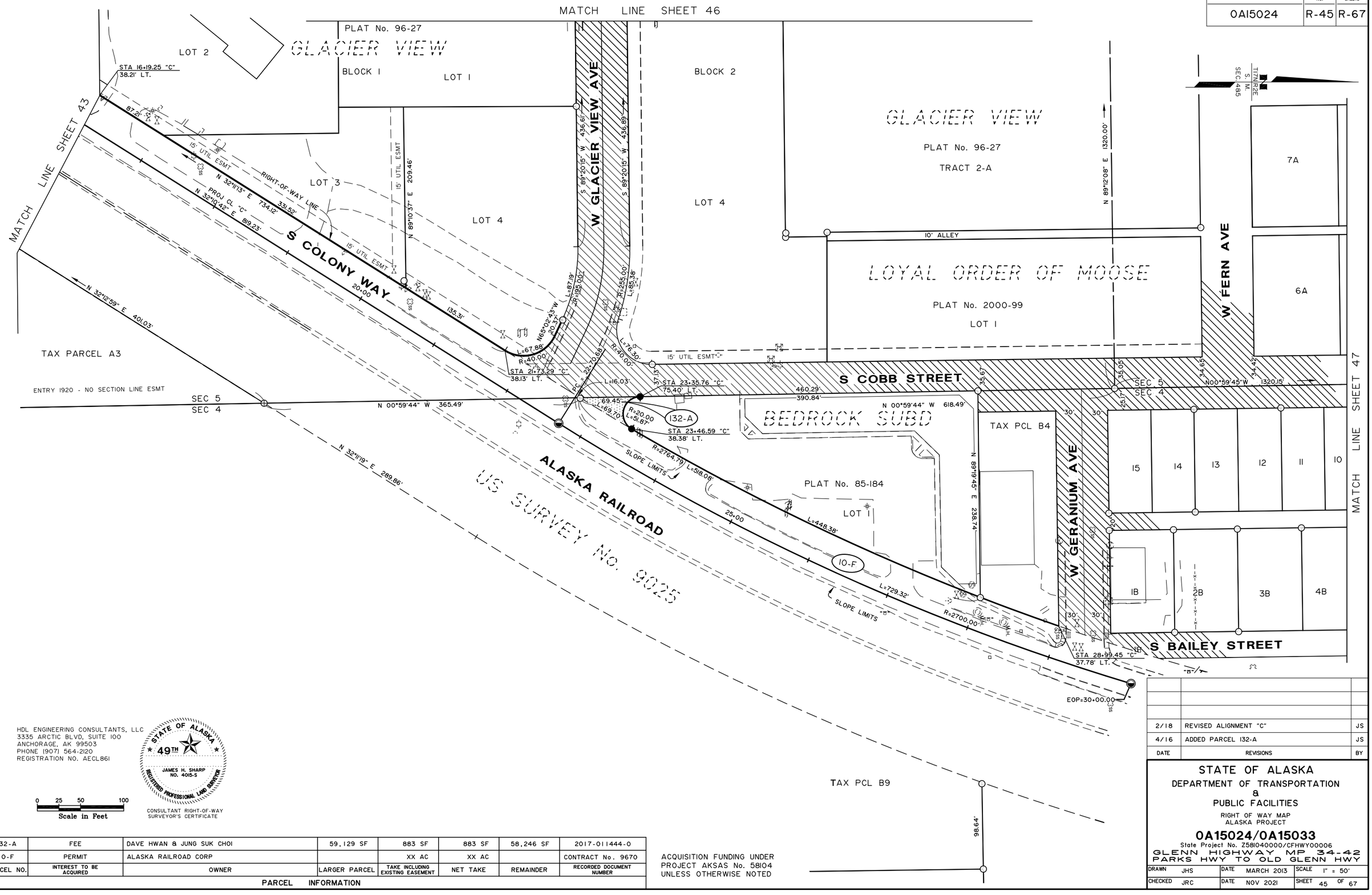

2/18	REVISED ALIGNMENT "C"	JS
4/16	ADDED PARCEL 132-A	JS
DATE	REVISIONS	BY

HDL ENGINEERING CONSULTANTS, LLC
3335 ARCTIC BLVD, SUITE 100
ANCHORAGE, AK 99503
PHONE (907) 564-2120
REGISTRATION NO. AECL861

STATE OF ALASKA 49TH
JAMES H. SHARP
NO. 4015-S
REGISTERED PROFESSIONAL LAND SURVEYOR

CONSULTANT RIGHT-OF-WAY SURVEYOR'S CERTIFICATE

0 25 50 100
Scale in Feet

PARCEL NO.	INTEREST TO BE ACQUIRED	OWNER	LARGER PARCEL	TAKE INCLUDING EXISTING EASEMENT	NET TAKE	REMAINDER	RECORDED DOCUMENT NUMBER
132-A	FEE	DAVE HWAN & JUNG SUK CHOI	59,129 SF	883 SF	883 SF	58,246 SF	2017-011444-0
10-F	PERMIT	ALASKA RAILROAD CORP		XX AC	XX AC		CONTRACT No. 9670

PARCEL INFORMATION

ACQUISITION FUNDING UNDER PROJECT AKSAS No. 58104 UNLESS OTHERWISE NOTED

STATE OF ALASKA
DEPARTMENT OF TRANSPORTATION
&
PUBLIC FACILITIES

RIGHT OF WAY MAP
ALASKA PROJECT

0A15024/0A15033

State Project No. Z581040000/CFHWY00006

GLENN HIGHWAY MP 34-42
PARKS HWY TO OLD GLENN HWY

DRAWN JHS	DATE MARCH 2013	SCALE 1" = 50'	
CHECKED JRC	DATE NOV 2021	SHEET 45	OF 67

PROJECT DESIGNATION	SHEET NO.	TOTAL SHEETS
0A15024	R-46	R-67

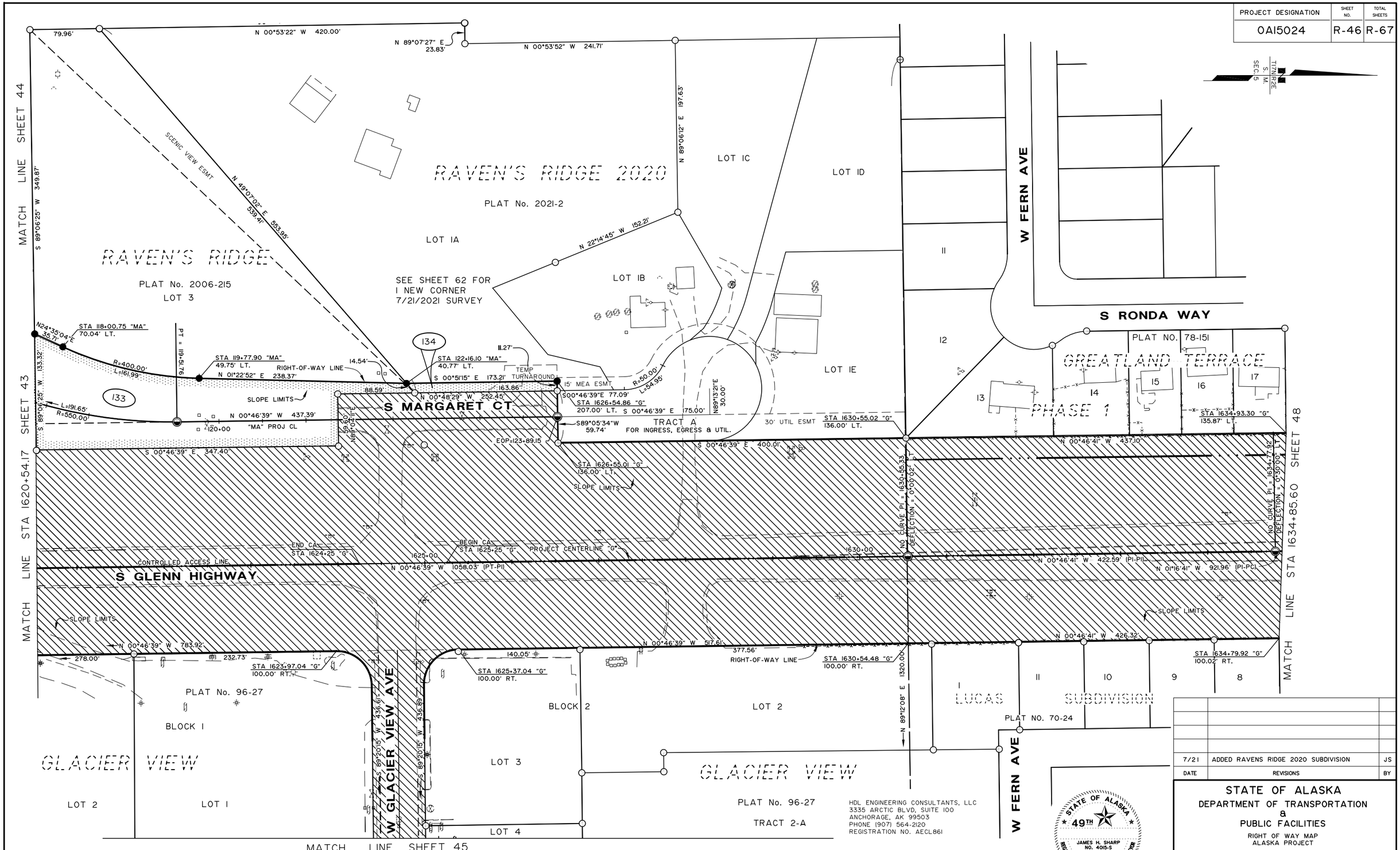

HDL ENGINEERING CONSULTANTS, LLC
3335 ARCTIC BLVD, SUITE 100
ANCHORAGE, AK 99503
PHONE (907) 564-2120
REGISTRATION NO. AECL861

0 25 50 100
Scale in Feet

STATE OF ALASKA
49TH
JAMES H. SHARP
NO. 4015-S
REGISTERED PROFESSIONAL LAND SURVEYOR

CONSULTANT RIGHT-OF-WAY SURVEYOR'S CERTIFICATE

DATE	REVISIONS	BY
7/21	ADDED RAVENS RIDGE 2020 SUBDIVISION	JS

PARCEL NO.	INTEREST TO BE ACQUIRED	OWNER	LARGER PARCEL	TAKE INCLUDING EXISTING EASEMENT	NET TAKE	REMAINDER	RECORDED DOCUMENT NUMBER
134	FEE	DANIEL T LUCAS	4.010 AC	0.043 AC	0.043 AC	3.967 AC	2017-001092-0
133	FEE	DANIEL T LUCAS AND SAM & ROBERTA KOPPENBERG	2.985 AC	0.732 AC	0.732 AC	2.253 AC	2017-005317-0

PARCEL INFORMATION

ACQUISITION FUNDING UNDER
PROJECT AKSAS No. 58104
UNLESS OTHERWISE NOTED

STATE OF ALASKA
DEPARTMENT OF TRANSPORTATION
&
PUBLIC FACILITIES

RIGHT OF WAY MAP
ALASKA PROJECT

0A15024/0A15033

State Project No. Z581040000/CFHWY00006

GLENN HIGHWAY MP 34-42
PARKS HWY TO OLD GLENN HWY

DRAWN	JHS	DATE	MARCH 2013	SCALE	1" = 50'
CHECKED	JRC	DATE	NOV 2021	SHEET	46 OF 67

PROJECT DESIGNATION	SHEET NO.	TOTAL SHEETS
0AI5024	R-47	R-67

MATCH LINE SHEET 48

MATCH LINE SHEET 45

LUCAS SUBD. PLAT NO. 5-65 BLOCK 7 — LOTS 7 8 9 10 11 12

PLAT NO 2015-113 BLOCK 6 — LOTS 7 8 9 10 11A

PLAT NO. 5-65 LUCAS SUBD BLOCK 6 — LOTS 5-1 4 3 2 1

SIDEWALK ESMT DOC NO 2009-001091-0

W EVERGREEN AVE

N 00°57'43" W 127.86'

AKA 3-1 4 — E-135-C — N00°55'25"W 128.05'

LUCAS SUBD 3 — E-135-B — N00°52'03"W 128.28'

PLAT NO. 5-65 BLOCK 2 — E-135-A — N 00°47'30" W 128.52'

N 89°10'59" E 350.06'

10' ALLEY ESMT S 00°47'30" E 168.41'

2005-01926-0

EVERGREEN CENTER SUBDIVISION

STA 57+01.72 "E" 30.00' RT.

PLAT NO. 2010-69 N45°48'05"W 28.28'

LOT 1 BLOCK 1 — 135 — STA 57+21.71 "E" 50.00' RT.

N 89°10'59" E 758.71' (BOP-PI)

BOP=7+92.04

N 00°47'09" W 168.43'

S COBB STREET

N00°49'01"W 207.96' "CB" PROJ CL

STA 57+81.82 "E" 50.00' RT.

N00°47'18"W 128.38'

SEE DETAIL "D"

M.D. SNODGRASS ADDITION — PLAT NO. 14-350A BLOCK 3 — LOTS 12 11 10 9 8 7

M.D. SNODGRASS ADDITION BLOCK 2 PLAT NO. 14-350A — AKA 7-2 — E-138 — STA 58+01.82 "E" 30.00' RT. — S44°12'47"W 28.28' — N 00°49'02" W 128.38'

AKA 7-1 — N 00°49'19" W 127.48' — N00°49'02"W 28.75'

M.D. SNODGRASS ADDITION BLOCK 3 PLAT NO. 14-350A — LOTS 1 2 3 4 5A

S 00°48'00" E 299.75'

N 89°04'58" E 118.59'

S 00°48'00" E

TAX PCL DI3 — STA 54+31.72 "E" 30.00' RT. — N 00°49'01" W 100.02'

TAX PCL D8 — N89°12'43"E 100.89'

RIGHT-OF-WAY LINE

TAX PCL D7 — STA 53+81.78 "E" 30.00' RT. — N 00°46'12" W 219.82'

N 00°49'40" W 79.97'

SEE DETAIL "C"

TR. A-1 — COLONY FAIR SUBD. PLAT NO. 84-204

SEE DETAIL "A"

136 — N44°07'49"E 31.08'

STA 53+58.32 "E" 34.97' RT. — 277.76'

10' UTIL ESMT

N 00°55'21" W 299.76'

343.12'

NO CURVE PI = 57+51.71

DEFLECTION = 0°02'05" RT

SEC 32 SEC 33

N00°49'01"W 207.96' "CB" PROJ CL

N 00°55'21" W 2283.61' (SEC COR-COP CIO)

SEE DETAIL "B"

EOP=12+07.96

N 00°55'21" W 150.00'

E-137 — PLAT NO. 3-124 — LOTS 8 9 10 11 12

S50°29'45"E 26.29'

S00°47'07"E 5.00'

BLOCK 12 — A.R.R.C.

AKA 11-1

S 00°55'21" E 150.00'

SUBDIVISION NO.1 — LOTS 6 5 4 3 2 1

AKA 3-1

LOT IA

TI 7S 8N R2E S M. SEC 4, 5, 32, 33

15' ENSTAR NATURAL GAS ESMT

ENTRY 1920 - NO SECTION LINE ESMT

SEC 5 SEC 4 ← N 00°59'45" W 1320.15'

S BAILEY STREET

US SURVEY No. 9025 ALASKA RAILROAD

S COLONY WAY

BLOCK 5 — LOTS 1 2 3

M.D. SNODGRASS ADDITION BLOCK 4 PLAT NO. 14-350A — LOTS 1 2 3 4 AKA 1-2 AKA 4-1 5 6

AKA 1-1 AKA 3-1 AKA 4-3 AKA 4-5 AKA 4-1

N 89°12'53" E (SECTION LINE) 2283.61'

DETAIL "C"-N.T.S.

W EVERGREEN AVE — AKA 3-1 4 — E-135-C — 10.00' 10.00' — N 00°57'43" W 50.00' — N89°10'59"E 50.00' — LUCAS SUBD 3 — E-135-B — 10.00' — BLK 1 PLAT NO. 5-65 2 — E-135-A — 10.00' — N 00°47'30" W — LOTS 6 1-1

DETAIL "A"-N.T.S.

STA 56+99.65 "E" 30.00' LT. — 1.96' — TR. A-1 N44°07'49"E 31.08' — L=31.45' R=20.00' — 1.96' — 136 — 20.04' 20.04' — ROW ESMT BK238 P0510 — S COBB STREET — STA 57+21.61 "E" 52.00' LT. — LOTS 10 9 4 — 32.74' 27.42'

DETAIL "B"-N.T.S.

ROW ESMT BK236 P0670 — S COBB STREET — E-137 — 14.96' 14.96' 5.04' — 28.00' — 7.04' — L=23.53' R=15.00' — 7 — STA 57+81.58 "E" 52.00' LT. — STA 58+01.63 "E" 35.00' LT. — S50°29'45"E 26.29' — S00°47'07"E 5.00' — 76.69' — STA 58+01.63 "E" 30.00' LT. — LOTS 4B 5C 5C — 20'

DETAIL "D"-N.T.S.

E-PROJ CL S32 S33 — 207.96' N00°49'01"E "CB" PROJ CL — SEC LINE — SEC LINE — S4 — SEC LINE — 207.96' — STA 10+00

PARCEL NO.	INTEREST TO BE ACQUIRED	OWNER	LARGER PARCEL	TAKE INCLUDING EXISTING EASEMENT	NET TAKE	REMAINDER	RECORDED DOCUMENT NUMBER
PARCEL INFORMATION							
E-138	ROW EASEMENT	PRINCESS PROPERTIES LLC		200 SF	200 SF		2016-027320-0
E-137	ROW EASEMENT	CITY OF PALMER, CITY HALL		222 SF	222 SF		2017-011840-0
136	FEE	FIRST NATIONAL BANK ALASKA	44,828 SF	242 SF	156 SF	44,586 SF	2016-016513-0
E-135-C	UTIL ESMT	SUBS PROPERTY LLC		200 SF	200 SF		2017-015417-0
E-135-B	UTIL ESMT	SUBS PROPERTY LLC		222 SF	222 SF		2017-015417-0
E-135-A	UTIL ESMT	CHRISTINE L HERBERGER		242 SF	156 SF		2017-023323-0
135	FEE	SNK PROPERTIES LLC	23,566 SF	200 SF	200 SF	23,366 SF	2017-001491-0

ACQUISITION FUNDING UNDER PROJECT AKSAS No. 58104 UNLESS OTHERWISE NOTED

HDL ENGINEERING CONSULTANTS, LLC
3335 ARCTIC BLVD, SUITE 100
ANCHORAGE, AK 99503
PHONE (907) 564-2120
REGISTRATION NO. AECL861

STATE OF ALASKA 49TH JAMES H. SHARP NO. 4015-S REGISTERED PROFESSIONAL LAND SURVEYOR

CONSULTANT RIGHT-OF-WAY SURVEYOR'S CERTIFICATE

0 25 50 100 Scale in Feet

DATE	REVISIONS	BY
7/17	ADDED COBB ST PROJ CL	JS
2/17	ADDED PARCELS E-135-A, E-135-B & E-135-C	JS
8/16	REVISED TAKE AREA PCL E-137	JS
12/15	REVISED PARCELS E-137 & E-138 TO ESMTS	JS

STATE OF ALASKA
DEPARTMENT OF TRANSPORTATION
&
PUBLIC FACILITIES

RIGHT OF WAY MAP
ALASKA PROJECT

0A15024/0A15033

State Project No. Z581040000/CFHWY00006

GLENN HIGHWAY MP 34-42
PARKS HWY TO OLD GLENN HWY

DRAWN	JHS	DATE	MARCH 2013	SCALE	1" = 50'
CHECKED	JRC	DATE	NOV 2021	SHEET	47 OF 67

PROJECT DESIGNATION	SHEET NO.	TOTAL SHEETS
0AI5024	R-48	R-67

T17S 18W R2E S.M. SEC 5&32

HDL ENGINEERING CONSULTANTS, LLC
3335 ARCTIC BLVD, SUITE 100
ANCHORAGE, AK 99503
PHONE (907) 564-2120
REGISTRATION NO. AECL861

STATE OF ALASKA ★ 49TH ★
JAMES H. SHARP NO. 4015-S
REGISTERED PROFESSIONAL LAND SURVEYOR

CONSULTANT RIGHT-OF-WAY SURVEYOR'S CERTIFICATE

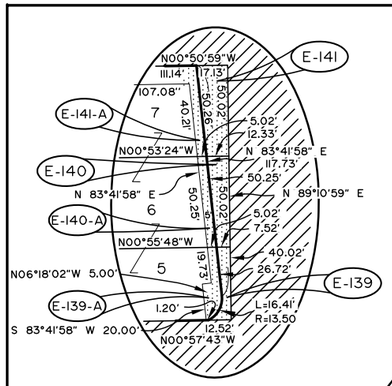

DETAIL "C"-N.T.S.

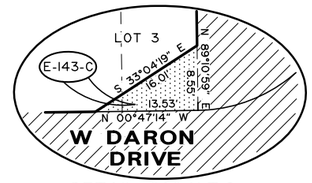

DETAIL "A"-N.T.S.

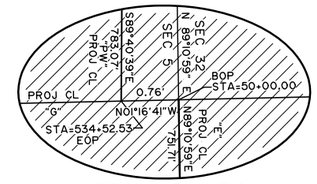

DETAIL "B"-N.T.S.

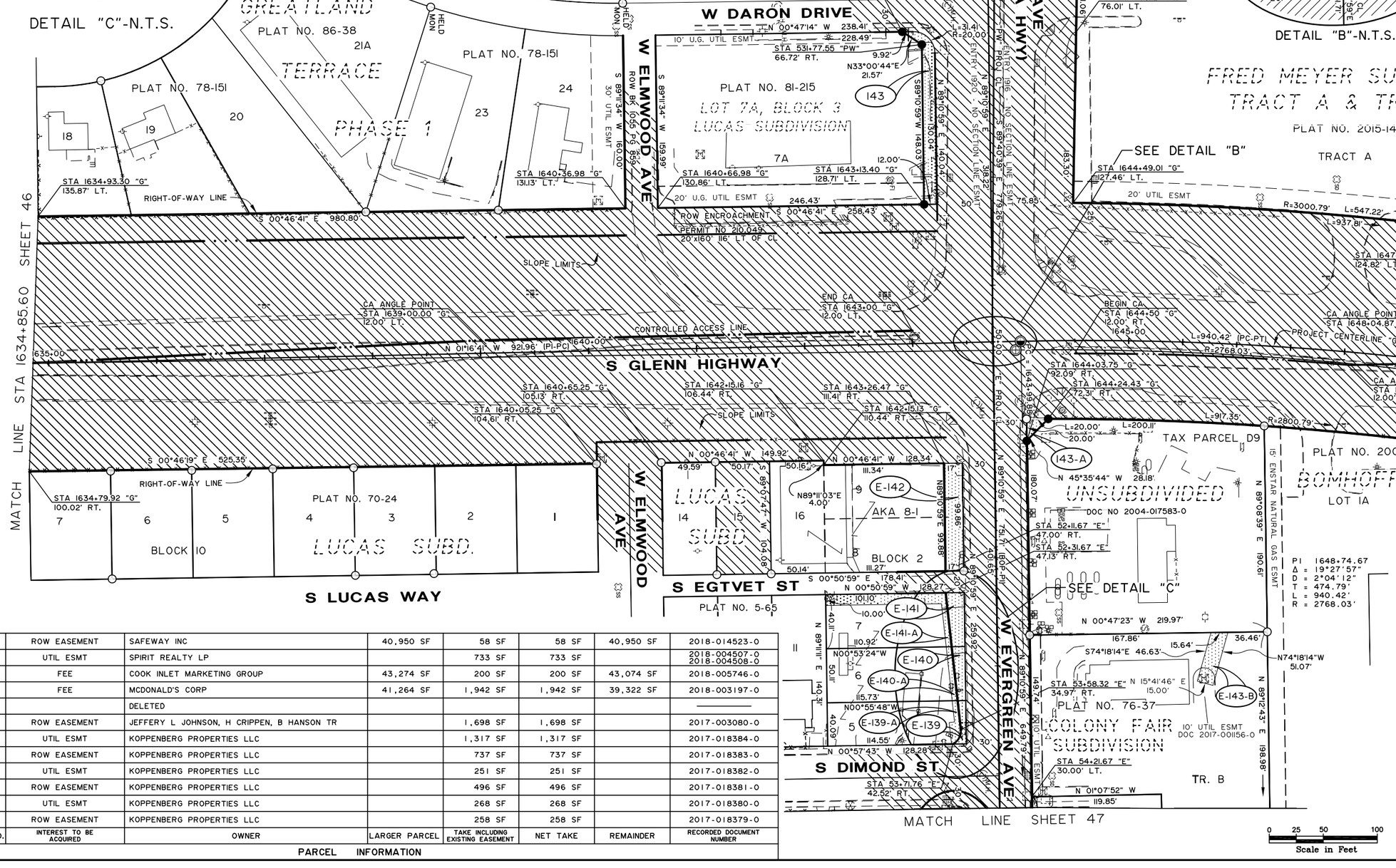

E-143-C	ROW EASEMENT	SAFEWAY INC	40,950 SF	58 SF	58 SF	40,950 SF	2018-014523-0
E-143-B	UTIL ESMT	SPIRIT REALTY LP		733 SF	733 SF		2018-004507-0 2018-004508-0
143-A	FEE	COOK INLET MARKETING GROUP	43,274 SF	200 SF	200 SF	43,074 SF	2018-005746-0
143	FEE	MCDONALD'S CORP	41,264 SF	1,942 SF	1,942 SF	39,322 SF	2018-003197-0
E-142-A		DELETED					———
E-142	ROW EASEMENT	JEFFERY L JOHNSON, H CRIPPEN, B HANSON TR		1,698 SF	1,698 SF		2017-003080-0
E-141-A	UTIL ESMT	KOPPENBERG PROPERTIES LLC		1,317 SF	1,317 SF		2017-018384-0
E-141	ROW EASEMENT	KOPPENBERG PROPERTIES LLC		737 SF	737 SF		2017-018383-0
E-140-A	UTIL ESMT	KOPPENBERG PROPERTIES LLC		251 SF	251 SF		2017-018382-0
E-140	ROW EASEMENT	KOPPENBERG PROPERTIES LLC		496 SF	496 SF		2017-018381-0
E-139-A	UTIL ESMT	KOPPENBERG PROPERTIES LLC		268 SF	268 SF		2017-018380-0
E-139	ROW EASEMENT	KOPPENBERG PROPERTIES LLC		258 SF	258 SF		2017-018379-0
PARCEL NO.	INTEREST TO BE ACQUIRED	OWNER	LARGER PARCEL	TAKE INCLUDING EXISTING EASEMENT	NET TAKE	REMAINDER	RECORDED DOCUMENT NUMBER

PARCEL INFORMATION

2/18	REVISED PARCEL 143-C TO E-143-C	JS
2/17	DELETED PARCEL E-142-A	JS
1/17	REVISED PCLS E-139-A, E-140-A & E-141-A	JS
11/16	REVISED PCL 143	JS
7/16	REVISED PCL 143-A	JS
5/16	REVISED PCLS E-139, E-140, E-141 & E-142	JS
5/16	ADD PCLS E-139-A, E-140-A, E-141-A & E-142-A	JS
5/16	DELETED PARCEL E-143-A	JS
4/16	REVISED CL "G" BEGINNING AT PC 1643+99.88	JS
12/15	REVISED PCLS E-139, E-140 & E-141 TO ESMTS	JS
DATE	REVISIONS	BY

0 25 50 100
Scale in Feet

STATE OF ALASKA
DEPARTMENT OF TRANSPORTATION & PUBLIC FACILITIES
RIGHT OF WAY MAP
ALASKA PROJECT

0A15024/0A15033
State Project No. Z581040000/CFHWY00006
GLENN HIGHWAY MP 34-42
PARKS HWY TO OLD GLENN HWY

DRAWN JHS	DATE MARCH 2013	SCALE 1" = 50'	
CHECKED JRC	DATE NOV 2021	SHEET 48	OF 67

PARCEL INFORMATION

PARCEL NO.	INTEREST TO BE ACQUIRED	OWNER	LARGER PARCEL	TAKE INCLUDING EXISTING EASEMENT	NET TAKE	REMAINDER	RECORDED DOCUMENT NUMBER
144		DELETED					
145	FEE	US POSTAL SERVICE	150,242 SF	5,925 SF	5,925 SF	144,317 SF	2019-000720-0

PROJECT DESIGNATION	SHEET NO.	TOTAL SHEETS
0AI5024	R-49	R-67

ACQUISITION FUNDING UNDER PROJECT AKSAS No. 58104 UNLESS OTHERWISE NOTED

TRACT A

25' SCREENING & BUFFER ESMT VACATED BY PLAT 2015-146

S 00°56'25" E 63.00'

S 00°56'25" E 34.91'

R=120.00' L=17.92'

N89°03'35"E 50.00'

S 89°03'35" W 175.00'

BOP=1+08.40

STA 1650+44.99 "G" 278.75' LT.

S89°59'44"E 57.38'

18.00'

S00°00'16"W

STA 1650+28.98 "G" 275.03' LT.

ROW VACATED BY PLAT 2015-146

S89°59'44"E 96.12'

STA 1650+47.33 "G" 180.99' LT.

N 08°56'45" E 176.94'

S08°59'08"W 90.52'

M&B WD RECORDED 2005-024274-0 OWNED BY THE CITY OF PALMER FOR ROW SEE PLAT 2013-108

W DOGWOOD AVE

FRED MEYER SUBDIVISION

TRACT A & TRACT B

PLAT NO. 2015-146

TRACT B

STA 1652+13.52 "G" 258.89' LT.

STA 1652+13.35 "G" 206.69' LT.

N 74°14'28" W 252.20'

N 89°03'40" E 650.67'

632.36'

S 89°03'35" W 86.52'

STA 1652+36.88 123.84' LT.

STA 1653+46.62 "G" 124.00' LT.

L=1114.37'

R=3000.79'

20' UTIL ESMT

652.44'

RIGHT-OF-WAY LINE

N 18°11'16" E 1307.28'

SLOPE LIMITS

L=276.22'

L=937.81'

STA 1648+83.15 SHEET 48

MATCH LINE

END CA STA 1651+50 "G" 5.00 LT.

L=940.42' (PC-PT)

1650+00

R=2768.03'

BEGIN CA STA 1652+85 "G" 6.00' RT

S GLENN HIGHWAY

1655+00

CONTROLLED ACCESS LINE

PROJECT CENTERLINE "G"

STA 1653+32.25 "G" 76.03' RT.

STA 1653+46.62 "G" 76.00' RT.

L=46.98'

L=917.35'

R=2800.79'

L=561.64'

STA 1652+07.36 "G" 76.18' RT.

L=43.03'

L=14.14' N49°33'20"W

L=31.45' 34.68'

STA 11+27.12 "D" 42.34' LT.

289.58'

RIGHT-OF-WAY LINE

N 18°11'16" E 1307.28'

222.23'

1660+00

N 18°11'16" E 1298.38' (PT-PC)

STA 1662+48.88 "G" 76.00' RT.

284.63'

105.82'

STA 1662+45.78 SHEET 50

MATCH LINE

PI 1648+74.67
Δ = 19°27'57"
D = 2°04'12"
T = 474.79'
L = 940.42'
R = 2768.03'

BOMHOFF ACRES

PLAT NO. 2004-95

LOT IA

145

W DOGWOOD AVE

2005-011539-0 ROW ESMT

N 89°12'25" E 120.08'

N 89°12'25" E 350.58'

S 89°12'25" W 215.62'

S 89°12'25" W 175.98'

COLONY FAIR SUBDIVISION

PLAT NO. 84-204

TRACT C-2

STA 14+14.83 "D" 38.61' RT.

STA 14+16.42 "D" 40.99' RT.

PC = 13+40.96

S00°47'35"E 2.67'

L=55.06' R=115.00'

STA 14+89.17 "D" 41.59' RT.

STA 13+42.37 "D" 41.80' LT.

R=198.00' L=85.08'

STA 14+09.73 "D" 42.02' LT.

PRC = 14+87.08

L=120.00' T=61.36' R=153.00' L=146.12' D=53°43'58"

L=73.85' R=185.07' D=22°51'50"

L=155.00' T=78.58' R=255.00' L=152.64' D=34°18'54"

L=141.58' R=220.01' D=36°51'10"

L=120.01' T=61.77' R=153.00' L=116.96' D=43°47'11"

PLAT NO. 2004-95 LOT 2A ROW ESMT 2005-011539-0

M.H.

SECTION 32

SECTION 33

N 00°55'21" W 627.96'

328.89'

30'

1/16 LINE

T18N R2E S. M. SEC 32&33

BLOCK 9

THE HIGHLANDS

18

18

17

25'

25'

S SILVER TIP DR

49.70'

79.80'

79.96'

80.09'

PLAT NO. 79-460

SUBDIVISION

189.58'

179.75'

169.92'

12

11

10

80.60'

80.49'

80.59'

20' UTIL ESMT

COLONY FAIR SUBDIVISION

PLAT NO. 76-37

3

4

90.16'

117.62'

10' UE

S 39°29'41" W 212.20'

L=65.73'

L=78.54'

N 19°42'01" W 105.63'

125.66'

234.58'

N 89°05'30" E 195.37'

400.68'

2A

PLAT NO. 91-103

25.00'

L=45.06' R=25.71'

L=20.11'

AKA 4-1

5

6

140.29'

200.58'

S 00°54'41" E 45.32'

104.62'

N 89°05'25" E 115.13'

192.66'

53.70'

IA

IB

115.15'

85.39'

10' UTIL ESMT

104.62'

10' UTIL ESMT 98.96'

100.00'

0 25 50 100

Scale in Feet

HDL ENGINEERING CONSULTANTS, LLC
3335 ARCTIC BLVD, SUITE 100
ANCHORAGE, AK 99503
PHONE (907) 564-2120
REGISTRATION NO. AECL861

STATE OF ALASKA 49TH JAMES H. SHARP NO. 4015-S REGISTERED PROFESSIONAL LAND SURVEYOR

CONSULTANT RIGHT-OF-WAY SURVEYOR'S CERTIFICATE

DATE	REVISIONS	BY
7/18	REVISED PARCEL E-145 TO 145	JS
2/17	DELETED PARCEL 144	JS
8/16	REVISED PARCEL 145 TO E-145	JS
4/16	REVISED CL "G" & CL "D"	JS

STATE OF ALASKA
DEPARTMENT OF TRANSPORTATION & PUBLIC FACILITIES

RIGHT OF WAY MAP
ALASKA PROJECT

0A15024/0A15033

State Project No. Z581040000/CFHWY00006

GLENN HIGHWAY MP 34-42
PARKS HWY TO OLD GLENN HWY

DRAWN JHS	DATE MARCH 2013	SCALE 1" = 50'	
CHECKED JRC	DATE NOV 2021	SHEET 49	OF 67

PROJECT DESIGNATION	SHEET NO.	TOTAL SHEETS
0AI5024	R-50	R-67

ACQUISITION FUNDING UNDER
PROJECT AKSAS No. 58104
UNLESS OTHERWISE NOTED

T18N R2E
S. M.
SEC 32 33

PI 1671+17.57
Δ = 19°05'58"
D = 2°00'46"
T = 478.88'
L = 948.87'
R = 2846.50'

PLAT NO. 79-460
THE HIGHLANDS
BLOCK 3
S SILVER TIP DR
PLAT NO. 79-460
SUBDIVISION
BLOCK 4
20' UTIL ESMT
10' UTIL ESMT

E BOGARD RD
1/16 COR
N 89°08'12" E 1320.54' 1/4 COR 1/16 COR
50' PUE BK 81 PG 842
70' ELEC ESMT BK 389 PG 269
S 00°51'45" W 1320.54'
ROW WD 2011-001846-0

PLAT NO. 96-42
HOMESITE
TRACT NO. 100
LOT 4

STA 1671+76.45 "G"
306.20' LT.
RIGHT-OF-WAY LINE
STA 1672+98.99 "G"
319.58' LT.
N 89°03'53" E
37.30'
STA 1673+03.20 "G"
282.47' LT.
N 00°51'55" W 109.88'
N 18°26'03" E 127.22'
N18°26'50"E
50.52'
STA 1674+38.78 "G"
249.56' LT.
STA 1674+91.62 "G"
234.88' LT.
STA 1674+92.32 "G"
214.16' LT.
N 89°12'48" E
20.73'
N89°14'14"E 94.95'

TAX PARCEL A-14
PORTION OF SE1/4
NE1/4 SECTION 32
WD 2011-024971-0
SLOPE LIMITS
147
BK 389 PG 993
10' R/W ESMT ENSTAR
L=278.71'
R=2728.79'

MATCH LINE STA 1675+18.19
SHEET 51

STA 1669+62.30 "G"
250.36' LT.
100' PUE
BK 81 PG 841
N 89°09'52" E 1320.54'
TAX PCL D-10
L=11.41'
L=73.70'
RIGHT-OF-WAY LINE
L=237.72'
R=2728.79'
L=322.96'
L=102.07'
BEGIN CA
END CA
STA 1669+92.00 "G"
122.11' LT.
N 89°15'10" E 254.30'
PROJ CL
STA 1666+54.59 "G"
123.96' LT.
N 18°11'16" E 1307.28'
N 18°11'16" E 1298.38' (PT-PC)
1665+00
1670+00
1675+00
S GLENN HIGHWAY
CONTROLLED ACCESS LINE
BEGIN CA
STA 1671+80 "G"
6.00' RT.
END CA
STA 1670+49 "G"
6.00' LT.
(PC=PT)
L=948.87'
R=2846.50'
N 89°15'10" E 1500.00'
1/4 COR
N 00°54'42" W 1319.41' (1/4 COR-1/16 COR)
STA 1675+32.60 "G"
80.96' RT.
L=60.03'
STA 1671+90.92 "G"
79.01' RT.
L=321.25'
R=2928.79'
L=160.16'
N89°15'10"E
15.07'
L=131.09'
S41°31'59"E 19.86'
L=30.00'
L=146.27'
R=2943.79'
E-146
S 41°31'59" E
30.00' 19.33'
E-146-A
STA 1671+65.96 "G"
108.52' RT.
TRACT I-A
PLAT NO. 2006-157
T.A. SMITH SUBDIVISION
TRACT 1-A
20' PUBLIC UTIL ESMT
N 89°15'10" W 144.79'
N 89°15'10" E 157.81'
COR #1 60.00'
N 89°15'10" E 187.51'
N 00°21'32" W
20.00'
N89°15'10"E
11.76'
S 00°43'57" E 159.81'
29.95'
N 89°15'10" E 635.01'
N 89°14'18" E 173.74'
BLOCK 3
8
T.A. SMITH
7
SUBD.
PLAT NO. 64-6
6
5
TRACT 3
PLAT NO. 71-87

SHEET 49
MATCH LINE STA 1662+45.78
STA 1662+40.74 "G"
124.00' LT.
70.56'
70.72'
106.95'
102.38'
62.55'
124.86'
N 18°11'16" E 1307.28'
STA 1671+90.92 "G"
79.01' RT.
SLOPE LIMITS
PROJECT CENTERLINE "G"
169.32'
RIGHT-OF-WAY LINE
159.58'
STA 1666+53.50 "G"
76.04' RT.
L=48.74'
R=2928.79'
STA 1667+00.97 "G"
76.29' RT.
STA 1667+00.18 "G"
131.11' RT.
159.03'
102.58'
54.83'
133.35'
10' UTIL ESMT
160.00'
N 00°55'21" W
117.99'
CITY OF PALMER
COR No. 10
N 00°57'51" W 358.97' (COP C10-1/4 COR)
N 00°57'51" W 258.96'
STA 1670+66.24 "G"
96.53' RT.
N 00°55'21" W 2283.61' (COP C10-SEC COR)
SECTION 32
SECTION 33
S COBB STREET
W BIRCH AVE
W BLUEBERRY AVE
W ARCTIC AVE
ROW WD 2010-000034-0
N 89°14'18" E 272.64'
ROW WD 2011-022948-0
S32
S33
S5
S4
SEC COR
BLOCK 3
A.R.R.C.
SUBDIVISION NO.1
PLAT NO. 3-124
10-1
12
13
15
16
17
18

PORTION OF NWI/4
SWI/4 SECTION 33
WARRANTY DEED
RECORDED
2009-003116-0

PARCEL NO.	INTEREST TO BE ACQUIRED	OWNER	LARGER PARCEL	TAKE INCLUDING EXISTING EASEMENT	NET TAKE	REMAINDER	RECORDED DOCUMENT NUMBER
147	FEE	LOUIS H BAIM	44,837 SF	44,837 SF	44,837 SF	0	2017-016805-0
E-146-A	UTIL ESMT	FISHER'S FUEL		2,080 SF	2,080 SF		2017-025922-0
E-146	ROW ESMT	FISHER'S FUEL		444 SF	444 SF		2017-025921-0

PARCEL INFORMATION

HDL ENGINEERING CONSULTANTS, LLC
3335 ARCTIC BLVD, SUITE 100
ANCHORAGE, AK 99503
PHONE (907) 564-2120
REGISTRATION NO. AECL861

STATE OF ALASKA
49TH
JAMES H. SHARP
NO. 4015-S
REGISTERED PROFESSIONAL LAND SURVEYOR

0 25 50 100
Scale in Feet

CONSULTANT RIGHT-OF-WAY SURVEYOR'S CERTIFICATE

DATE	REVISIONS	BY
2/17	REVISED PCL 147	JS
12/16	REV PCLS E-146 TO E-146-A & 146 TO E-146	JS
4/16	REVISED CL "G", CL "A" & CL "B"	JS
3/16	REVISED PCL E-146	JS

STATE OF ALASKA
DEPARTMENT OF TRANSPORTATION
&
PUBLIC FACILITIES
RIGHT OF WAY MAP
ALASKA PROJECT

0A15024/0A15033

State Project No. Z581040000/CFHWY00006
GLENN HIGHWAY MP 34-42
PARKS HWY TO OLD GLENN HWY

DRAWN JHS	DATE MARCH 2013	SCALE 1" = 50'	
CHECKED JRC	DATE NOV 2021	SHEET 50	OF 67

PROJECT DESIGNATION	SHEET NO.	TOTAL SHEETS
0A15024	R-51	R-67

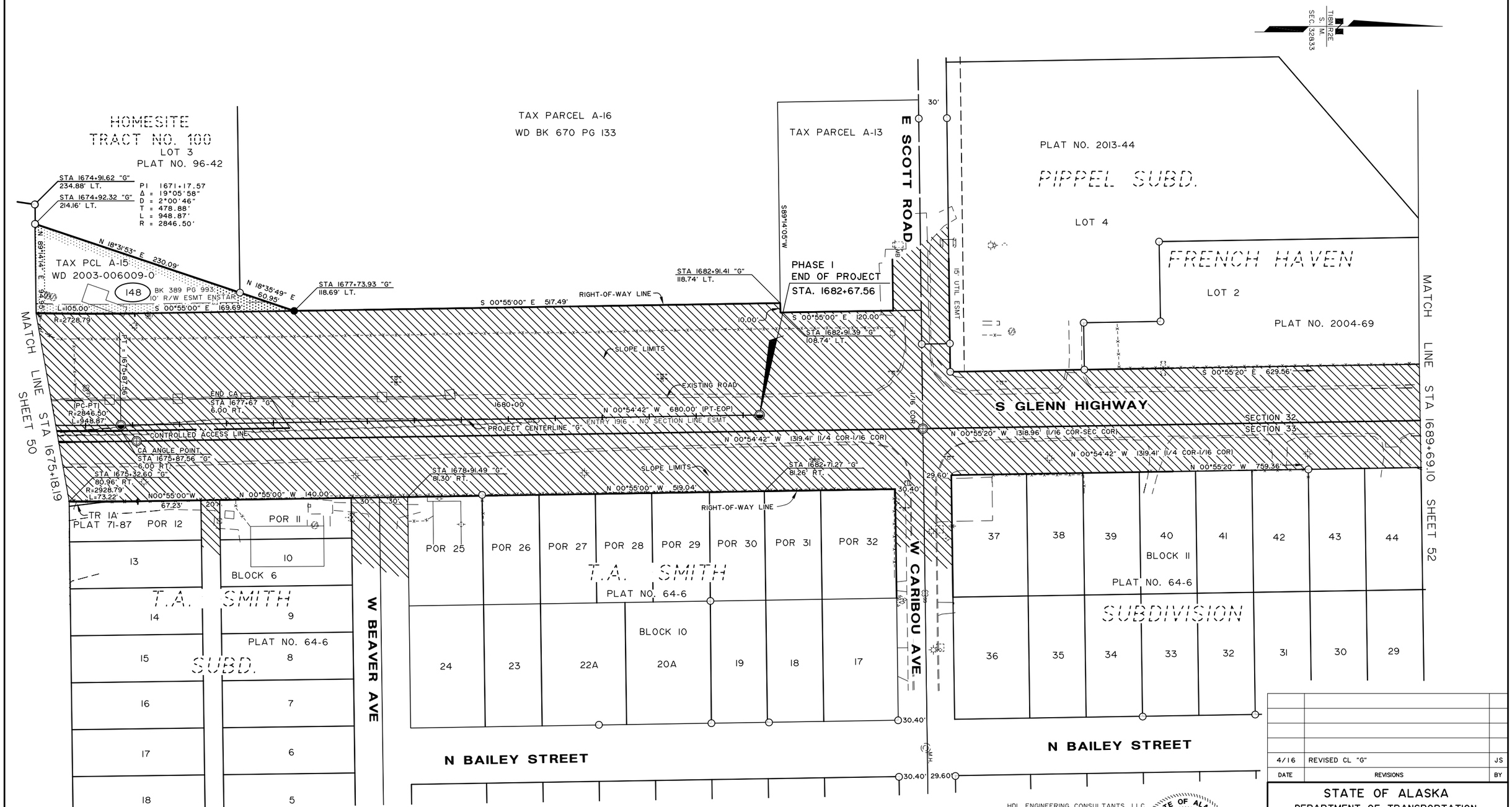

148	FEE	LOUIS H BAIM	13,254 SF	13,254 SF	13,254 SF	0	2017-016806-0
PARCEL NO.	INTEREST TO BE ACQUIRED	OWNER	LARGER PARCEL	TAKE INCLUDING EXISTING EASEMENT	NET TAKE	REMAINDER	RECORDED DOCUMENT NUMBER

PARCEL INFORMATION

HDL ENGINEERING CONSULTANTS, LLC
3335 ARCTIC BLVD, SUITE 100
ANCHORAGE, AK 99503
PHONE (907) 564-2120
REGISTRATION NO. AECL861

STATE OF ALASKA 49TH JAMES H. SHARP NO. 4015-S REGISTERED PROFESSIONAL LAND SURVEYOR

CONSULTANT RIGHT-OF-WAY SURVEYOR'S CERTIFICATE

0 25 50 100
Scale in Feet

DATE	REVISIONS	BY
4/16	REVISED CL "G"	JS

STATE OF ALASKA
DEPARTMENT OF TRANSPORTATION
&
PUBLIC FACILITIES
RIGHT OF WAY MAP
ALASKA PROJECT

0A15024/0A15033

State Project No. Z581040000/CFHWY00006
GLENN HIGHWAY MP 34-42
PARKS HWY TO OLD GLENN HWY

DRAWN	JHS	DATE	MARCH 2013	SCALE	1" = 50'
CHECKED	JRC	DATE	NOV 2021	SHEET	51 OF 67

PROJECT DESIGNATION	SHEET NO.	TOTAL SHEETS
0AI5024	R-52	R-67

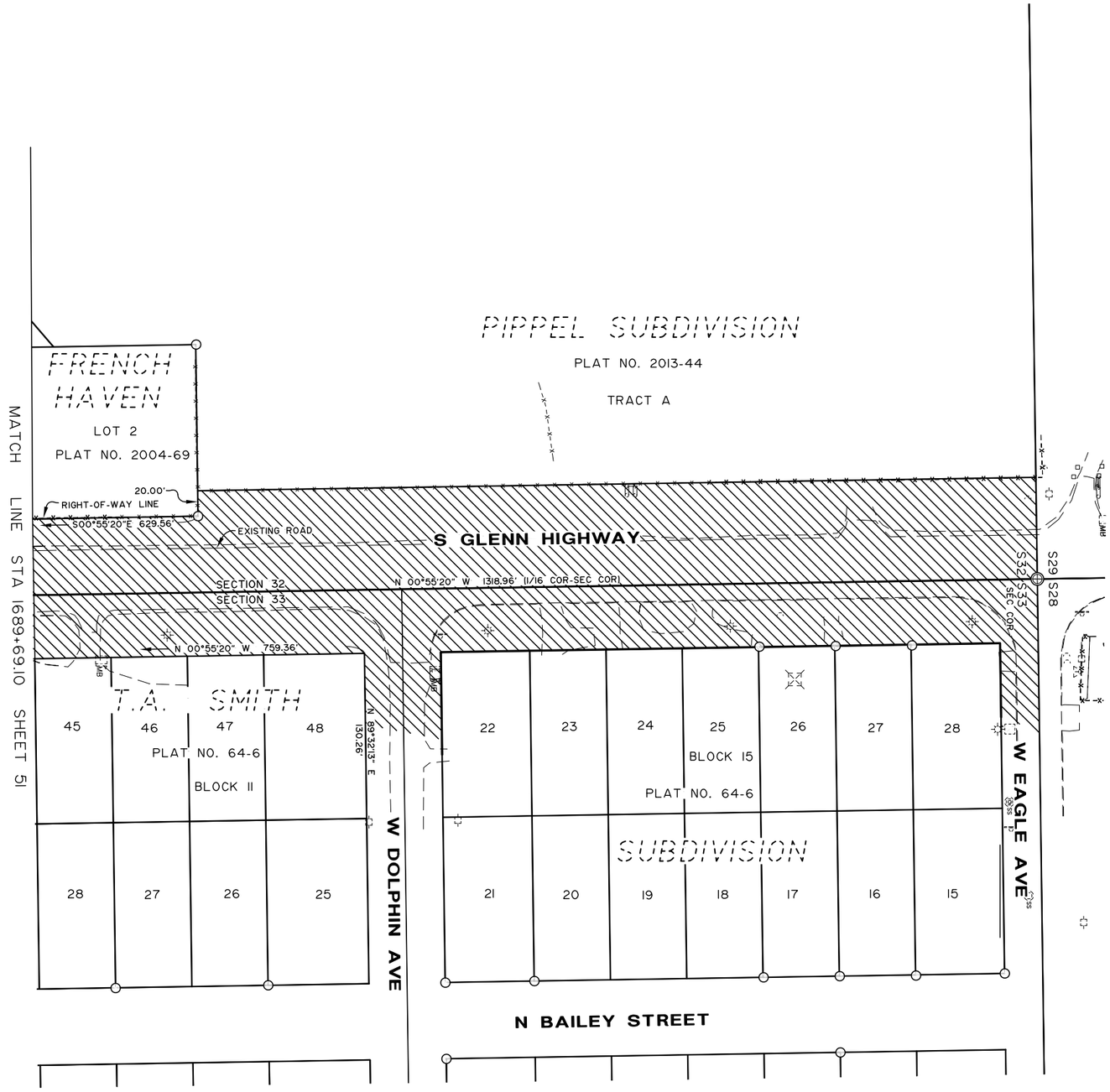

DATE	REVISIONS	BY

HDL ENGINEERING CONSULTANTS, LLC
3335 ARCTIC BLVD, SUITE 100
ANCHORAGE, AK 99503
PHONE (907) 564-2120
REGISTRATION NO. AECL861

0 25 50 100
Scale in Feet

STATE OF ALASKA
49TH
JAMES H. SHARP
NO. 4015-S
REGISTERED PROFESSIONAL LAND SURVEYOR

CONSULTANT RIGHT-OF-WAY SURVEYOR'S CERTIFICATE

STATE OF ALASKA
DEPARTMENT OF TRANSPORTATION
&
PUBLIC FACILITIES

RIGHT OF WAY MAP
ALASKA PROJECT

0A15024/0A15033

State Project No. Z581040000/CFHWY00006

GLENN HIGHWAY MP 34-42
PARKS HWY TO OLD GLENN HWY

DRAWN JHS	DATE MARCH 2013	SCALE 1" = 50'
CHECKED JRC	DATE NOV 2021	SHEET 52 OF 67

PROJECT DESIGNATION	SHEET NO.	TOTAL SHEETS
0A15024	R-53	R-67

BASIS OF COORDINATES AND BEARINGS

COORDINATE SYSTEM:
THIS PROJECT IS LOCATED ENTIRELY WITHIN THE MATANUSKA–SUSITNA VALLEY SV–1 CORS ADJUSTMENT, A NAD83 CORS96 BASED (EPOCH 2003.00) U.S. FOOT LOCAL SURFACE GRID COORDINATE SYSTEM DEVELOPED BY THE ALASKA DEPARTMENT OF TRANSPORTATION.

BASIS OF COORDINATES:
THE BASIS OF COORDINATES IS GPS PALM. GPS PALM IS A CONTINUOUSLY OPERATING REFERENCE STATION (CORS) MOUNTED ON THE DOT/PF MAINTENANCE BUILDING IN PALMER, ALASKA. THE GEODETIC COORDINATE USED FOR PALM FOR THIS SURVEY WAS N 61° 35' 08.60645" W 149° 07' 08.43473". THE LOCAL COORDINATE USED FOR PALM FOR THIS SURVEY WAS N 147896.4806 E 481573.6333.

BASIS OF BEARINGS:
THE BASIS OF BEARINGS IS A LOCAL GRID BEARING BETWEEN GPS PALM AND GPS S–1. THESE VALUES WERE ESTABLISHED BY STATIC GPS OBSERVATIONS. GPS S–1 IS A USC&GS BRASS CAP, WHICH IS LOCATED NEAR THE INTERSECTION OF THE PARKS HIGHWAY AND KNIK GOOSE BAY ROAD. THE GEODETIC COORDINATE USED FOR GPS S–1 FOR THIS SURVEY WAS N 61° 34' 49.75493" W 149° 26' 30.24349". THE LOCAL COORDINATES FOR GPS S–1 ARE N 145360.8065 E 425361.0406.

TRANSLATION PARAMETERS:
TO CONVERT THE LOCAL COORDINATES TO NAD83 (CORS96 EPOCH 2003) STATE PLANE U.S. FOOT COORDINATES, TRANSLATE USING +2624946.5706 FEET N, +1312508.8943 FEET E, AND SCALE USING 0.9998990458.

NOTES:

1. ALL DISTANCES SHOWN ARE HORIZONTAL GROUND DISTANCES IN U.S. SURVEY FEET.

2. THESE PLANS MAY BE USED FOR THE ESTABLISHMENT OF RIGHT OF WAY LIMITS ONLY. THESE DRAWINGS SHOULD NOT BE USED AS A BASIS FOR ESTABLISHING ADJOINING PROPERTY LINES AND CORNERS. ALL OF THE FIELD SURVEY DATA FOR THIS PROJECT WAS ACQUIRED FROM ADOT&PF. NO SURVEY DATA WAS ACQUIRED BY WHPACIFIC, INC OR HDL, LLC ON THIS PROJECT.

3. THE RIGHT–OF–WAY SURVEY FOR THIS PROJECT INCLUDES SURVEYS FROM THE FOLLOWING PROJECTS: GLENN HWY 34–42 ROW, TRUNK ROAD ROW, PALMER–WASILLA HWY ROW AND THE COUPLET SURVEY. THE PRIMARY FIELD SURVEYS RESPONSIBLE FOR THE MAJORITY OF THE CORNER POSITIONS DEPICTED ON THESE MAPS BEGAN APRIL 24, 2006. ADDITIONAL ROW TIES COMMENCED AUGUST 6, 2011 AND HAS CONTINUED INTO MARCH 2015. SUBMITTAL DATES FOR ADDITIONAL CORNERS WERE: 9/7/11, 3/12/12, 10/16/12, 1/22/13, 6/3/13, 6/11/13, 7/31/13, 1/16/15 AND 3/31/15.

4. THE FOLLOWING ADOT&PF FIELD BOOKS CONTAIN INFORMATION RELATING TO THE RECOVERED CORNERS FOR THIS PLAN SET: 2005.10.06, 2005.10.09, 2005.10.10 & 2005.10.12.

5. BRIEF HISTORY OF THE MAIN ROW CORRIDOR: DATING BACK TO THE FIRST QUARTER OF THE 1900'S THERE EXISTED A ROAD KNOWN AS THE PALMER ROAD CONNECTING PALMER TO THE TOWNSITE OF MATANUSKA. ANOTHER ROAD, KNOWN AS THE OLD MATANUSKA ROAD, CONNECTED THE TOWNSITE OF MATANUSKA WITH WASILLA. TWO PROJECTS WERE DESIGNED AND CONSTRUCTED IN THE 1960'S THAT MODIFIED THIS ACCESS. PROJECT F–042–1(17), PALMER, SOUTHWEST TO NORTH APPROACH OF KNIK, MATANUSKA BRIDGES MODIFIED THE GLENN HIGHWAY BY MOVING IT INTO THIS CORRIDOR. AT ABOUT THE SAME TIME THE PARKS HIGHWAY WAS CONSTRUCTED FROM MILEPOST 35 ON THE NEW GLENN HIGHWAY NORTH. THE ORIGINAL PALMER ROAD, WHICH BECAME KNOWN AS ROUTE S–570 WAS REPLACED BY THIS NEW HIGHWAY. RIGHT OF WAY (ROW) ACQUISITION PARCELS RANGING FROM PARCEL 7 TO PARCEL 62 WERE ACQUIRED AS PART PF PROJECT F–042–1(17) NOTED ABOVE. THIS SECTION RUNS FROM THE PARKS HIGHWAY INTERCHANGE TO SCOTT ROAD AND IS THE MAJOR SOURCE OF THE ROW FOR THIS PROJECT. IN THE 1990'S PROJECT GLENN HIGHWAY MILEPOST 35 TO 54, IR–0A1–5(5) WAS DESIGNED AND CONSTRUCTED. SOME ADDITIONAL ROW WAS ACQUIRED IN PALMER AND NORTH. OTHER PROJECTS AFFECTING INTERSECTING ROADS WERE: S–0555(2) AND S–0568(2) (INNER AND OUTER SPRINGER), F–1–0A1–5(1) (GLENN HIGHWAY, EKLUTNA TO PARKS PHASE 2), STP–044–1(2) (GLENN/PALMER–WASILLA INTERSECTION), S–0572(1) (WASILLA–PALMER), 59213 (BOGARD ROAD EAST EXTENSION) AND DOGWOOD/GLENN PROJECT 57871/IM–0AI–6(33). ALL OF THE RIGHTS ACQUIRED FOR THE ABOVE NOTED PROJECTS WERE DRAWN IN AUTOCAD AND INSERTED INTO THIS PROJECT'S DRAWING TO CONFIRM THEIR PRECISE LOCATION. THOSE RESULTS ARE PART OF THIS ROW PLAN SET.

NOTES: (CONTINUED ON SHEET 54)

EXISTING RIGHT OF WAY – SOURCE DOCUMENTS

THE EXISTING GLENN HIGHWAY CORRIDOR DEPICTED HEREIN
WAS DETERMINED FROM THE FOLLOWING PLANS AND DOCUMENTS

ROW PLAN SHEET NO.	PLAN OR DOCUMENT
9	ALL ROW ACQUIRED FOR PROJECT F–042–1(17): PCL 7 WD BK 55 PG 111; PCL 7A WD W/ACCESS BK 56 PG 293.
10	ARC ROW ESMT BK 4 PG 260 (6 OCT 1939); ROW ACQUIRED FOR PROJECT F–042–1(17): PCL 7 WD BK 55 PG 111; PCL 7A WD W/ACCESS BK 56 PG 293; ROW ACQUIRED FOR PROJ I–OA1–5(1) PCL 21 WD BK 759 PG 422.
11	ARC ROW ESMT BK1 PG 85 (6 APR 1940); ROW ACQUIRED FOR PROJECT F–042–1(17): PCL 10 WD BK 56 PG 69; PCL 11 WD BK 55 PG 181.
12	ROW ACQUIRED FOR PROJECT F–042–1(17): PCL 10 WD BK 56 PG 69; PCL 11 WD BK 55 PG 181.
13	60' ROW 1917 ACT; ARC ROW ESMT BK1 PG 85 (6 APR 1940); ROW CONSIDERED DEDICATED BY AA COBB SUBD PLAT No. 1949–7–240; PRESCRIPTIVE ROW.
14	60' ROW 1917 ACT; ROW DEDICATED BY AA COBB SUBD PLAT No. 1949–7–240, 1945–3–200 OR 1954–18–89; ROW ACQUIRED FOR PROJECT F–042–1(17): PCL 10 WD BK 56 PG 69; PCL 12 WD BK 55 PG 215; PCL 13 WD BK 55 PG 218; PCL 14 WD BK 55 PG 114.
15	NO EXISTING ROW.
16	ROW 1917 ACT; ROW DEDICATED BY AA COBB SUBD PLAT No. 1949–7–240, 1945–3–200 OR 1954–18–89; ROW ACQUIRED FOR PROJECT F–042–1(17): PCL 10 WD BK 56 PG 69; PCL 19 WD BK 55 PG 200; PCL 20 WD BK 56 PG 307.
17	ROW ACQUIRED FOR PROJECT F–042–1(17): PCL 20 WD BK 56 PG 307; PCL 21 WD BK 55 PG 298.
18	ROW DEDICATED BY KEPLER SUBD No. 1 PLAT No. 67–27; ROW ACQUIRED FOR PROJECT F–042–1(17): PCL 21 WD BK 55 PG 298.
19	ROW ACQUIRED FOR PROJECT F–042–1(17): PCL 21 WD BK 55 PG 298; PCL 22 WD BK 55 PG 227.
20	ROW DEDICATED BY REVISED PLAT BRADLEY LAKE SUBD No. 2 PLAT No. 68–15, BY GRAND VIEW SUBDIVISION PLAT No. 69–22 AND BY CREST VIEW SUBD PLAT No. 74–28; ROW ACQUIRED FOR PROJECT F–042–1(17): PCL 22 WD BK 55 PG 227.
21	ROW DEDICATED BY REVISED PLAT BRADLEY LAKE SUBD No. 2 PLAT No. 68–15; ROW ACQUIRED FOR PROJECT F–042–1(17): PCL 22 WD BK 55 PG 227.
22	ROW DEDICATED BY BRADLEY LAKE SUBD PLAT No. 63–7 AND REVISED PLAT BRADLEY LAKE SUBD No. 2 PLAT No. 68–15.
23	60' ROW 1917 ACT (FAS 570); ROW ACQUIRED FOR PROJECT F–042–1(17): PCL 23 WD BK 55 PG 178 AND PCL 24 WD BK 65D PG 117.
24	60' ROW 1917 ACT (FAS 570); ROW ACQUIRED FOR PROJECT F–042–1(17): PCL 23 WD BK 55 PG 178 AND PCL 24 WD BK 65D PG 117.

NOTE: REFERENCE IN THE TABLE TO A DISTANCE AND A PLAT NUMBER INDICATES THE DISTANCE FROM THE SECTION LINE/CENTERLINE IS EITHER DEDICATED BY THE PLAT OR SHOWS AS EXISTING.

SOURCE DOCUMENT TABLE LEGEND

WD	WARRANTY DEED
CWD	CORPORATION WARRANTY DEED
ROW	RIGHT OF WAY
ESMT	EASEMENT
SLA	SESSION LAWS OF ALASKA
SLE	SECTION LINE EASEMENT
DOT	DECLARATION OF TAKING
FJ	FINAL JUDGEMENT

HDL ENGINEERING CONSULTANTS, LLC
3335 ARCTIC BLVD, SUITE 100
ANCHORAGE, AK 99503
PHONE (907) 564-2120
REGISTRATION NO. AECL861

STATE OF ALASKA 49TH JAMES H. SHARP NO. 4015-S REGISTERED PROFESSIONAL LAND SURVEYOR

CONSULTANT RIGHT-OF-WAY SURVEYOR'S CERTIFICATE

DATE	REVISIONS	BY

STATE OF ALASKA
DEPARTMENT OF TRANSPORTATION
&
PUBLIC FACILITIES

RIGHT OF WAY MAP
ALASKA PROJECT

0A15024/0A15033
State Project No. Z581040000/CFHWY00006
GLENN HIGHWAY MP 34-42
PARKS HWY TO OLD GLENN HWY

DRAWN	JHS	DATE	MARCH 2013	SCALE	NTS
CHECKED	JRC	DATE	NOV 2021	SHEET	53 OF 67

PROJECT DESIGNATION	SHEET NO.	TOTAL SHEETS
0AI5024	R-54	R-67

NOTES: (CONTINUED FROM SHEET 53)

6. SHEETS 10 & 11: THE OLD MATANUSKA ROAD ROW WAS POSITIONED BY TAKING THE RECORD ALIGNMENT AND ALIGNING IT WITH WHAT APPEARED TO BE ORIGINAL REMAINS OF THE OLD ROAD.

7. SHEETS 11 THRU 21 EXCLUDING 13 & 15: SOME CONFUSION WITH THE EXISTING ROW WAS CREATED BY DESCRIBING AN EVEN RADIUS THAT CONFLICTS WITH THE DEGREE OF CURVE IN THE ORIGINAL ACQUISITION DOCUMENTS FOR A NUMBER OF PARCELS OF PROJECT F-042-1(17). IN SOME CASES THE EVEN RADIUS WAS JUSTIFIED BY AN UNEVEN DEGREE OF CURVE AND IN OTHER CASES THEY ARE IN CONFLICT. THIS PROJECT ACCEPTS THE EVEN RADIUS WHERE REASONABLE AS IT APPEARS TO BEST REFLECT THE INTENTION. THE DIFFERENCE ON THE GROUND IS SMALL. SOME SUBDIVISIONS IDENTIFIED THE RADIUS (DESCRIBED BY THE EVEN DEGREE OF CURVE) SHOWN ON THE NOTED PROJECT ROW PLANS. IT IS ASSUMED THAT THE INTENTION IS TO MATCH EXISTING AND THAT HAS BEEN DONE AS MUCH AS POSSIBLE.

8. SHEETS 13, 14 & 16: VERY LITTLE MONUMENTATION WAS RECOVERED FOR A.A. COBB SUBDIVISION. SEVERAL CORNERS WERE RECOVERED ALONG THE NORTH BOUNDARY (LOTS 1-12) AND A FEW CORNERS IN THE VICINITY OF LOT 24 WERE USED TO POSITION THE MAJORITY OF THE SUBDIVISION. THE PORTION OF THE SUBDIVISION THAT INCLUDED Tract No. 1 WAS ADJUSTED TO THE 1/16 LINE ON THE EAST AND REMNANTS OF THE OLD PALMER ROAD EMBANKMENT. THIS LOCATION WAS DETERMINED WITH COOPERATION FROM MAX SCHILLINGER, PLS WHO WAS COMPLETING A BOUNDARY SURVEY OF SAID TRACT No. 1.

9. SHEET 16: THERE INITIALLY WAS AN ATTEMPT TO HOLD EXISTING MONUMENTATION FOR ESTABLISHING THE E 1/16 LINE. UNFORTUNATELY NO RECOVERED CORNERS FELL ON THE TRUE LINE AND THE RECOVERED CORNERS WERE NOT IN HARMONY WITH ONE ANOTHER. TO THE SOUTH BOTH CONTROLLING 1/4 CORNERS WERE RECOVERED. TO THE NORTH A CONTROLLING 1/4 CORNER AND A WCMC WERE RECOVERED THUS ALLOWING FOR AN ACCURATE DETERMINATION OF THE TRUE LOCATION.

10. SHEET 17: TAX PARCEL B8 IS DESCRIBED BY A METES AND BOUNDS LEGAL DESCRIPTION. THE DISTANCE CALLS IN THE DESCRIPTION DO NOT FIT WELL. THE BOUNDARY CALLS IN THE DESCRIPTION ARE CLEAR WITHIN A REASONABLE TOLERANCE. THE ALIGNMENT OF THE OLD PALMER-MATANUSKA ROAD AND THE WIDTH OF THE ORIGINAL ROW HAVE NOT BEEN CLEARLY DETERMINED.

11. SHEET 18: THE KEPLER DR. ROW DEDICATED BY KEPLER SUBD. NO. 1, PLAT No. 67-27 LACKED POSITIVE EVIDENCE OF LOCATION IN THE VICINITY OF THE BRIDGE. NINE SUBDIVISION CORNERS WERE RECOVERED AND THE MONUMENTION FIT FAIRLY WELL. THE LOCATION OF THE RECORD ROW WAS POSITIONED FROM RECORD INFORMATION. THE RECORD LOCATION OF THE BRIDGE AND THE ROAD NORTH OF THE BRIDGE DOES NOT FIT RECORD. RECORD INFORMATION FOR THE ORIGINAL PLAT WAS HELD FROM CARLOW AVE NORTH AND FITTED TO RECOVERED CORNERS. AT THE BRIDGE THE RECORD ALIGNMENT WAS HELD CENTERED ON THE EXISTING BRIDGE AND ROTATED TO ABOUT 30' NORTH OF CARLOW AVE TO BEST FIT THE EXISTING ROAD. THE RECOVERED WELL IS 8.2' INTO THE EXISTING ROW.

12. SHEET 20: THE GLENN HIGHWAY ROW CORRIDOR WAS PURCHASED IN FEE IN THIS AREA PRIOR TO ANY SUBDIVISIONS. THE CONSTRUCTED HIGHWAY MATCHES THE ALIGNMENT DEPICTED ON THESE PLANS. THE DEED AND THE ROW PLANS MATCH AS DOES THE CONCLUSION BY THIS SURVEYOR AND GARY LoRUSSO, PLS. PLATS 68-15, 69-22, 74-28 AND 95-108 DEDICATE ROW AND SHOW THE EXISTING GLENN HIGHWAY ROW CORRIDOR APPROX. 10± FEET SOUTH FROM WHERE IT ACTUALLY IS. THE REAR LINES OF THE REFERENCED PLATS FIT MATHAMETICALLY AND MATCH ENOUGH RECOVERED MONUMENTATION AND OTHER BOUNDARIES TO CONCLUDE THEIR POSITIONS.

THE REVISED PLAT BRADLEY LAKE SUBDIVISION No. 2, PLAT No. 68-15 HAS GENERATED SOME CONFUSION RELATIVE TO BOTH THE POSITION OF THE LOTS AND THE GLENN HWY ROW. AN EXTENSIVE ANAYLSIS OF BOTH WAS UNDERTAKEN. CORNERS SET FOR LOT 4, BLOCK 2 BY LoRUSSO (NOTED ABOVE) WERE FOUND TO BE IN HARMONY WITH THESE PLANS. THE PROPERTY LINES IN THIS AREA SHOULD BE DEPICTED CORRECTLY.

GRAND VIEW SUBDIVISION (PLAT 69-22), CREST VIEW SUBDIVISION (PLAT 74-28) AND LOT 2A, BLOCK 1, GRANDVIEW SUBDIVISION (PLAT 95-108) ALL DEPICTED THE SAME GLENN HIGHWAY ALIGNMENT SHOWN ON PLAT 68-15. THE ROW IS ABOUT 10 FEET NORTH OF WHERE IT IS DEPICTED. THE RESULT IS GLENN HIGHWAY EXTENDS ABOUT 10± FEET INTO THE THE LOTS IN PLAT 68-15 ON THE NORTH SIDE. ON THE SOUTH SIDE BEGINNING AT PLATS 74-28 AND 69-22 THE ADDITIONAL ROW ATTACHES TO THE DEDICATED MARGINAL ACCESS ROAD. TO THE EAST OF THE 40' PUBLIC ROAD IS THE PRIVATE DRIVE TO LOTS 3-2-1 SHOWN ON PLAT 69-22. THE OWNERSHIP OF THE UNDERLYING FEE OF THIS AREA APPEARS TO HAVE BEEN WITHHELD FROM THE ADJOINING LOTS AND IS ASSUMED TO HAVE REMAINED WITH THE ORIGINAL SUBDIVIDER. TITLE TO THIS ARE HAS SINCE ESCHEATED TO THE STATE AND CAN NOW BE CONSIDERED ROW. THE ADDITIONAL 10'± ATTACHES TO THIS AREA. FURTHER TO THE EAST THE ADDITIONAL 10'± ATTACHES TO WAS LOT 1 BLOCK 1 OF PLAT 69-22 (NOW LOT 2A BLOCK 1 PLAT 95-108).

NOTES: (CONTINUED ON SHEET 55)

EXISTING RIGHT OF WAY – SOURCE DOCUMENTS

THE EXISTING GLENN HIGHWAY CORRIDOR DEPICTED HEREIN
WAS DETERMINED FROM THE FOLLOWING PLANS AND DOCUMENTS

ROW PLAN SHEET NO.	PLAN OR DOCUMENT
25	60' ROW 1917 ACT (FAS 570); ROW ACQUIRED FOR PROJECT F-042-1(17): PCL 23 WD BK 55 PG 178, PCL 24 WD BK 65D PG 117 AND PCL 25 QCD BK 65D PG 268 & 270.
26	60' ROW 1917 ACT (FAS 570); ROW ACQUIRED FOR PROJ F-042-1(17): PCL 25 QCD BK 65D PG 268 & 270 AND PCL 26 WD BK 65D PG 121.
27	ROW DEDICATED BY TRAILS END ESTATES PLAT No. 2000-6 AND CRIMSONVIEW PHASE 1 PLAT No. 85-134.
28	60' ROW 1917 ACT (FAS 570); PRESCRIPTIVE ROW OUTER SPRINGER LOOP; ROW ACQUIRED FOR PROJECT F-042-1(17): PCL 27 WD BK 67D PG 104 AND PCL 28 WD BK 65D PG 259.
29	PRESCRIPTIVE ROW OUTER SPRINGER LOOP.
30	ROW ACQUIRED FOR PROJECT F-042-1(17): PCL 28 WD BK 65D PG 259 AND PCL 29 WD BK 65D PG 236; ROW DEDICATED BY CRIMSONVIEW PH 1PLAT No. 85-134; 50' ROW ESMT BK 377 PG 209.
31	ROW ACQUIRED FOR PROJECT S-0566(2); PCLS 6 BK 50 PG 297 & 7 BK 52 PG 99; ROW ACQUIRED FOR PROJECT F-042-1(17): PCL 29 WD BK 65D PG 236 AND PCL 30 CONDEMNATION CA 68-1518 A; ROW DEDICATED BY TOWN & COUNTRY PLAT No. 86-178.
32	ROW DEDICATED BY TOWN & COUNTRY PLAT No. 86-178 AND PIONEER MEADOWS PH 3 PLAT No. 2001-129.
33	ROW ACQUIRED FOR PROJECT S-0566(2): PCLS 8 BK 49 PG 135 & 9 BK 50 PG 161.
34	ROW ACQUIRED FOR PROJECT F-042-1(17): PCL 31 WD BK 65D PG 238; ROW DEDICATED BY TOWN & COUNTRY PLAT No. 86-178.
35	ROW ACQUIRED FOR PROJECT F-042-1(17): PCL 31 WD BK 65D PG 238 AND PCL 33 QCD BK 65D PG 240 & 241.
36	ROW ACQUIRED FOR PROJECT F-042-1(17): PCL 34 WD BK 65D PG 113 AND PCL 35 WD BK 65D PG 111; ROW DEDICATED BY WILD ROSE ESTATES PLAT No. 75-55.
37	ROW ACQUIRED FOR PROJECT F-042-1(17): PCL 35 WD BK 65D PG 11, PCL 36 BK 65D PG 297 & 299 AND PCL 37 CONDEMNATION CA 68-1473 E; ROW DEDICATED BY: WILD ROSE ESTATES PLAT No. 75-55 AND KOPPERUD SUDB PLAT No. 2001-71.
38	ROW ACQUIRED FOR PROJECT F-042-1(17): PCL 37 CONDEMNATION CA 68-1473 E, PCL 38 CONDEMNATION CA 68-1439 B AND PCL 39 CONDEMNATION CA 68-745 A; ROW ASSUMED DEDICATED BY MOFFIT SUBD PLAT 1953-16-132 AND RAMBLER SUBD PLAT No. 86-26 (60' PUE BK 459 PG 705 EXISTED).
39	ROW DEDICATED BY: KOPPERUD SUDB PLAT No. 2001-71.
40	ROW ACQUIRED FOR PROJECT S-0266(2): PCLS 1 CONDEMNATION CA 64-708, 2 BK 52 PG 97 & 3 BK 51 PG 188.

NOTE: REFERENCE IN THE TABLE TO A DISTANCE AND A PLAT NUMBER INDICATES THE DISTANCE FROM THE SECTION LINE/CENTERLINE IS EITHER DEDICATED BY THE PLAT OR SHOWS AS EXISTING.

SOURCE DOCUMENT TABLE LEGEND

WD	WARRANTY DEED
CWD	CORPORATION WARRANTY DEED
ROW	RIGHT OF WAY
ESMT	EASEMENT
SLA	SESSION LAWS OF ALASKA
SLE	SECTION LINE EASEMENT
DOT	DECLARATION OF TAKING
FJ	FINAL JUDGEMENT

HDL ENGINEERING CONSULTANTS, LLC
3335 ARCTIC BLVD, SUITE 100
ANCHORAGE, AK 99503
PHONE (907) 564-2120
REGISTRATION NO. AECL861

STATE OF ALASKA 49TH JAMES H. SHARP NO. 4015-S REGISTERED PROFESSIONAL LAND SURVEYOR

CONSULTANT RIGHT-OF-WAY SURVEYOR'S CERTIFICATE

DATE	REVISIONS	BY

STATE OF ALASKA
DEPARTMENT OF TRANSPORTATION
&
PUBLIC FACILITIES

RIGHT OF WAY MAP
ALASKA PROJECT

0A15024/0A15033

State Project No. Z581040000/CFHWY00006

GLENN HIGHWAY MP 34-42
PARKS HWY TO OLD GLENN HWY

DRAWN	JHS	DATE	MARCH 2013	SCALE	NTS
CHECKED	JRC	DATE	NOV 2021	SHEET	54 OF 67

PROJECT DESIGNATION	SHEET NO.	TOTAL SHEETS
0AI5024	R-55	R-67

NOTES: (CONTINUED FROM SHEET 54)

13. SHEET 21: THE RANGE LINE BETWEEN R1E & R2E HAS A BEARING BREAK AT THE BLM RR ROW MONUMENT. THIS WAS DONE BECAUSE RECOVERED CORNERS NORTH & SOUTH OF BLM RR ROW MON APPEARED TO HAVE USED IT.

14. SHEET 25: THE PROPERTY LINE BETWEEN PARCEL No. 1, WAIVER RESOLUTION SERIAL No. 80-37-PWd AND LOT 2, KERS-LAKE SUBDIVISION, PLAT No. 2014-47 IS IN DISPUTE. CORNERS WERE SET FOR BOTH SURVEYS AND THEY CREATE A 2.5'± OVERLAP. THE PROPERTY PARCEL No. 1 CAME FROM WAS SENIOR AND ITS CALLS WERE HELD TO POSITION THE PROPERTY LINE SHOWN ON THESE PLANS WHICH DOESN'T FIT WITH ANY OF THE RECOVERED CORNERS.

15. SHEETS 28 & 29: THE EXISTENCE OF AN EASEMENT FOR OUTER SPRINGER LOOP COULD NOT BE CONFIRMED. A PRESCRIPTIVE USE SURVEY WAS CONDUCTED AND ADDITIONAL ROW IS BEING ACQUIRED TO CREATE A REASONABLE UNIFORM WIDTH ROADWAY CORRIDOR.

16. SHEET 28: INITIALLY NO INTERIOR CORNERS WERE RECOVERED FOR WAIVER RESOLUTION SERIAL NO. 76-62 (PLAT 76-99W). RECORD DIMENSIONS WERE HELD TO COMPUTE THE POSITIONS OF THE LOT LINES ALONG E OUTER SPRINGER LOOP. IN 2018 GARY LORUSSO, PLS BROUGHT ATTENTION TO USING PROPORTIONED POSITIONS TO BETTER REFLECT THE TRUE LOCATION OF TRACT A. THIS SURVEYOR AGREES WITH HIS CONCLUSIONS AND HAS SHOWN THE PRIMARY MONUMENT HE SET AT THE SE CORNER OF TRACT A. PARCELS 82 THRU 85 HAD ALREADY BEEN ACQUIRED TO PROVIDE A ROW FOR E OUTTER SPRINGER LOOP. THE ROAD ROW WAS DEVELOPED WITH THIS PROJECT IS UNAFFECTED BY THIS SMALL CHANGE. IT WAS DETERMINED NO CHANGES TO THE ACQUIRED PARCELS WOULD BE REQUIRED AS A RESULT OF THIS DISCOVERY.

17. SHEET 34: A NUMBER OF RECOVERED CORNERS IN HODSDON SUBDIVISION, PLAT No. 80-54 WERE NOT FOUND TO BE AT PROPERTY CORNERS. THEY COULD NOT BE IDENTIFIED AS ORIGINAL MONUMENTATION AND WERE NOT HELD.

18. SHEET 39: THE COMPUTED POSITION OF THE CSS 1/64 CORNER LIES NORTH 1.5'± FROM THE NE COR OF LOT 1, PROMISSORY POINT.

19. SHEET 40 (ALSO AFFECTING SHEETS 42, 43 & 45): PLAT 74-19 ESTABLISHED THE WESTERLY BOUNDARY AT 100' FROM THE CENTERLINE OF THE ALASKA RAILROAD. PORTIONS OF THIS SUBDIVISION HAVE BEEN RE-PLATTED TO THE WESTERLY BOUNDARY OF THE ORIGINAL SUBDIVISION. US SURVEY No. 9025 LOT 3 ESTABLISHED THEIR BOUNDARY EAST 0.70'± AT INNER SPRINGER LOOP ROAD AND AGREED AT THE PRIMARY MONUMENT CORNER 5 OF THE 1959 CITY OF PALMER BOUNDARY SURVEY. BOTH LINES ARE DEPICTED ON THIS ROW PLAN.

20. SHEET 42: TAX PARCEL D-10 (PARCEL 129 ON THESE PLANS) WAS ONLY IDENTIFIED BY LEGAL DESCRIPTION. NO CORNERS WERE RECOVERED SO ITS TRUE LOCATION IS DETERMINED BY THESE PLANS.

21. SHEET 46 & 48: MATANUSKA-SUSITNA BOROUGH PLATTING BOARD RESOLUTION SERIAL No. 78-91 APPROVED VACATION OF NAKAME SUBDIVISION, PLAT No. 71-41 AND GREATLAND TERRACE PHASE 1, PLAT No. 78-151 REPLATTED THE AREA. NAKAME SUBDIVISION ORIGINALLY REPLATTED THE ENTIRE VACATED ALLEY ALONG THE GLENN HIGHWAY. THIS SURVEYOR BELIEVES 1/2 OF THE VACATED ALLEY BELONGS TO THE STATE OF ALASKA, DOT&PF.

22. SHEET 48: THE TITLE REPORT DOESN'T SUPPORT THIS CONCLUSION BUT THIS SURVEYOR BELIEVES 1/2 OF THE VACATED ALLEY THAT WAS ADDED TO FORM LOT 7A, BLOCK 3, LUCAS SUBDIVISION, PLAT No. 81-215 BELONGS TO THE STATE OF ALASKA, DOT&PF. AT DOT&PF'S REQUEST IT IS NOT BEING HATCHED AS ROW. THIS SMALL AREA IS EXCLUDED FROM THE NET TAKE FOR PARCEL 143.

EXISTING RIGHT OF WAY – SOURCE DOCUMENTS

THE EXISTING GLENN HIGHWAY CORRIDOR DEPICTED HEREIN
WAS DETERMINED FROM THE FOLLOWING PLANS AND DOCUMENTS

ROW PLAN SHEET NO.	PLAN OR DOCUMENT
51	PORTION OF THE ORIGINAL GLENN HWY ROW RELINQUISHED AND TRACT 1A CREATED ? SEE RELINQUISHMENT CERT ON PLAT 242, PCL 54 WD BK 66D PG 142, PCL A-54 WD, PCL A-54B WD, PCL 56 WD BK 66D PG 136, PCL A-56 CA, PCL 57 WD BK 66D PG 138, PCL A-57 CA, PCL A-58 WD WITH CA BK 70D PG 106, PCL A-59 WD WITH CA PG 70D PG 308, PCL A-60 WD WITH CA BK 70D PG 242, PCL A-61 WD WITH CA BK 70D PG 101, CIVIL ACTION 68-1366 B FEE AND CA; ROW ACQUIRED FOR PROJECT IR-0A1-5(5) PCL 1; 30? ROW DEDICATED BY PLAT 2013-44.
52	ROW DEDICATED BY PLAT 64-6; ROW ACQUIRED FOR PROJECT IR-0A1-5(5) PCL 1 BK 644 PG 481, PCL 2 BK 645 PG 746.

EXISTING RIGHT OF WAY – SOURCE DOCUMENTS

THE EXISTING GLENN HIGHWAY CORRIDOR DEPICTED HEREIN
WAS DETERMINED FROM THE FOLLOWING PLANS AND DOCUMENTS

ROW PLAN SHEET NO.	PLAN OR DOCUMENT
41	NO EXISTING ROW.
42	ROW ACQUIRED FOR PROJECT F-042-1(17): PCL 39 CONDEMNATION CA 68-745 A.
43	ROW ACQUIRED FOR PROJECT F-042-1(17): PCL 39 CONDEMNATION CA 68-745 A, PCL 39-A WD BK 70D PG 9 AND PCL 40 WD BK 67D PG 54; ROW RELINQUISHED R-42-1-010-1.
44	NO EXISTING ROW.
45	ROW DEDICATED BY: GLACIER VIEW PLAT No.96-27.
46	ROW ACQUIRED FOR PROJECT F-042-1(17): PCL 40 WD BK 67D PG 54, PCL A-40 WD FOR ACCESS RIGHTS ONLY BK 70D PG 19, PCL 42 WD BK 65D PG 246, PCL 44 WD BK 65D PG 250, PCL 46 WD BK 65D PG 248, PCL A-46 WD FOR ACCESS RIGHTS ONLY BK 70D PG 21; ROW DEDICATED BY: GLACIER VIEW PLAT No.96-27, RAVEN'S RIDGE PLAT No. 2006-215 AND LUCAS SUBD PLAT No. 1948-5-65; POSSIBLE CLAIM TO ROW MSB VACATED: RES No. 78-91 WHERE 10' OF THE VACATED ALLEY SHOULD HAVE GONE BACK TO THE PROPERTY THAT IT CAME FROM WHICH IS OWNED BY THE DOT&PF (THIS AREA IS NOT BEING CLAIMED AS ROW AT THIS TIME).
47	ROW DEDICATED BY: A.R.R.C. SUBDIVISION No. 1 PLAT No. 1945-2-277 & REVISED PLAT No. 1945-3-124, LUCAS SUBD PLAT No. 1948-5-65 AND COLONY FAIR SUBD PLAT No. 76-37; ROW ESMTS. BK 238 PG 510 & BK 236 PG 670.
48	ROW ACQUIRED FOR PROJECT F-042-1(17): PCL 42 WD BK 65D PG 246, PCL 44 WD BK 65D PG 250, PCL 46 WD BK 65D PG 248, PCL A-46 WD FOR ACCESS RIGHTS ONLY BK 70D PG 21, PCL 47 WD BK 65D PG 244, PCL A-47 WD FOR ACCESS RIGHTS ONLY BK 70D PG 17, PCL 48 WD BK 65D PG 115, PCL 48-A WD BK 66D PG 58, PCL 48-B WD BK 65D PG 294, PCL 49 WD BK 65D PG 119, PCL A-50 CONDEMNATION CA 68-1365 A; ROW ACQUIRED FOR PROJECT No. S-0572(1) PCL 135A BK 229 PG 645 AND 136 BK 226 PG 904; ROW ACQUIRED FOR PROJECT STP-044-1(2): PCL 1 WD BK 1055 PG 859, PCL E-2 BK 1062 PG 644; ROW ESMT BK 1062 PG 644; ROW DEDICATED BY: LUCAS SUBD PLAT No. 1948-5-65, LOT 7A, BLOCK 3 LUCAS SUB PLAT No. 81-215, THE HIGHLANDS SUBD PLAT No. REFILE 79-460 (79-344); ROW ACQUIRED FOR PROJECT IR-0A1-5(5) PCL X-1A BK 639 PG 451; POSSIBLE CLAIM TO ROW MSB VACATED: RES No. 78-91 WHERE 10' OF THE VACATED ALLEY SHOULD HAVE GONE BACK TO THE PROPERTY THAT IT CAME FROM WHICH IS OWNED BY THE DOT&PF (THIS AREA IS NOT BEING CLAIMED AS ROW AT THIS TIME).
49	ROW ACQUIRED FOR PROJECT F-042-1(17): PCL A-50 CONDEMNATION CA 68-1365 A; ROW ACQUIRED FOR PROJECT STP-044-1(2): PCL E-2 BK 1062 PG 644; MAT SU BOROUGH WD REC 2005-024274-0 OWNED BY THE CITY OF PALMER; ROW ESMT REC 2005-011539-0; ROW DEDICATED BY BOMHOFF ACRES LOTS 1A AND 2A PLAT 2004-95.
50	ROW ACQUIRED FOR PROJECT F-042-1(17): PCL A-50 CONDEMNATION CA 68-1365 A, PCL 52 WD BK 66D PG 146, PCL 52A BK 65D PG 266, PCL A-53 CA 68-1367D, PCL 54 BK 66D PG 142, PCL 55 BK 66D PG 144, PCL A-55 CA 68-1519, PCL 56; MAT SU BOROUGH ACQUIRED WD REC 2011-001845-0, PCL 28 WD REC 2011-001846-0, PCL 29 WD REC 2011-022948-0, PCL 31 WD REC 2010-000034-0; ROW ROW FOR THE BOGARD RD PROJECT: PCL 27 DEDICATED BY PLAT 64-6 AND A PORTION OF THE ORIGINAL GLENN HWY ROW RELINQUISHED AND TRACTS 1-4 CREATED – SEE RELINQUISHMENT CERT ON PLAT 71-87, ALSO ROW DEDICATED BY THE SAME PLAT.

NOTE: REFERENCE IN THE TABLE TO A DISTANCE AND A PLAT NUMBER INDICATES THE DISTANCE FROM THE SECTION LINE/CENTERLINE IS EITHER DEDICATED BY THE PLAT OR SHOWS AS EXISTING.

SOURCE DOCUMENT TABLE LEGEND

WD	WARRANTY DEED
CWD	CORPORATION WARRANTY DEED
ROW	RIGHT OF WAY
ESMT	EASEMENT
SLA	SESSION LAWS OF ALASKA
SLE	SECTION LINE EASEMENT
DOT	DECLARATION OF TAKING
FJ	FINAL JUDGEMENT

HDL ENGINEERING CONSULTANTS, LLC
3335 ARCTIC BLVD, SUITE 100
ANCHORAGE, AK 99503
PHONE (907) 564-2120
REGISTRATION NO. AECL861

STATE OF ALASKA
49TH
JAMES H. SHARP
NO. 4015-S
REGISTERED PROFESSIONAL LAND SURVEYOR

CONSULTANT RIGHT-OF-WAY
SURVEYOR'S CERTIFICATE

DATE	REVISIONS	BY
8/18	ADDED NOTE 16	JS

STATE OF ALASKA
DEPARTMENT OF TRANSPORTATION
&
PUBLIC FACILITIES

RIGHT OF WAY MAP
ALASKA PROJECT

0A15024/0A15033

State Project No. Z581040000/CFHWY00006

GLENN HIGHWAY MP 34-42
PARKS HWY TO OLD GLENN HWY

DRAWN JHS	DATE MARCH 2013	SCALE NTS	
CHECKED JRC	DATE NOV 2021	SHEET 55 OF 67	

MONUMENT SUMMARY SHEET

PROJECT DESIGNATION	SHEET NO.	TOTAL SHEETS
0AI5024	R-56	R-67

RECOVERED CORNERS (SHEETS 10-16)

LOCATION	MONUMENT TYPE	NORTHING	EASTING	STATION	OFFSET
SHEET 10					
WC Sec Line S22|S23 T17N R1E SM	Fd BC[500]	136317.5204	460816.2299	1331+50.05	429.58' LT.
SHEET 11					
ROW Glenn Hwy Sec Line S22|S23	Fd BC[500]	135954.0946	460820.7324	1332+78.59	99.44' LT.
SW US Govt L3	Fd Rbr	135952.1019	460824.9955	1332+82.98	99.59' LT.
PT Glenn Highway	Fd IP/Bx[DOH]	135829.5047	460843.9468	1333+55.46	————
Glenn Highway ROW	Fd Conc ROW Mon	135918.3382	460891.4288	1333+55.65	100.73' LT.
Cor Homestead RV Park Subd	Fd Rbr PC[1634]	135587.3886	461088.4860	1336+85.06	98.91' RT.
WD NW L1 Valley Gateway	Fd Rbr	135798.5902	461798.3346	1342+12.56	420.93' LT.
NE US Govt L3	Fd Rbr	135791.8953	461796.1694	1342+13.79	414.00' LT.
SW L1 Valley Gateway	Fd Rbr	135436.0793	461801.4033	1343+85.52	102.33' LT.
SW L1 Valley Gateway	Fd AM[10615]	135432.1255	461803.3649	1343+89.11	99.76' LT.
Glenn Hwy ROW	Fd Conc ROW Mon	135244.4949	461731.0622	1344+13.34	99.85' RT.
Glenn Hwy ROW	FD CONC/ROW MON	135420.6922	461824.7249	1344+13.40	99.69' LT.
PC GLENN HWY	FD BC[DOH]	135332.5766	461778.0926	1344+13.55	————
SHEET 12					
Cor Homestead RV Park Subd	Fd Rbr PC[1634]	135044.5041	461633.7556	1344+20.43	322.13' RT.
Cor Homestead RV Park Subd	Fd Rbr/PC[1634]	135209.6213	461802.4884	1344+90.16	98.21' RT.
WD NW L2 W Line Valley Gateway	Fd Rbr/PC[10615]	135517.7572	461983.9851	1345+17.96	258.39' LT.
SW L2 Valley Gateway	Fd Rbr/PC[10615]	135356.8053	461950.0190	1345+59.09	98.48' LT.
WD NE L2 Valley Gateway	Fd Rbr	135487.0706	462202.8970	1347+54.80	317.66' LT.
SE L2 Valley Gateway	Fd Rbr/PC[10615]	135253.9860	462206.4484	1348+45.40	100.17' LT.
SE L2 Valley Gateway	Fd AM[10615]	135250.3362	462206.2851	1348+46.49	96.68' LT.
SHEET 13					
RR ROW	FD AM[BLM]	134194.2956	462623.9038	1354+25.74	837.19' RT.
C1/4 S23 T17N R1E SM	Fd BC[GLO]	134205.2710	463489.8100	1361+03.68	810.95' RT.
SHEET 14					
NW Lot 24 AA Cobb Subd	Fd Rbr	134790.6417	462642.0222	1353+68.35	244.45' RT.
SW Lot 24 AA Cobb Subd	Fd IP	134674.4225	462719.9172	1354+52.97	348.65' RT.
N Cor Tax Pcl B2	Fd IP	134641.1730	462742.1084	1354+76.09	378.97' RT.
NE Lot 20-1 AA Cobb Subd	Fd Rbr	134914.3722	462830.7184	1355+30.25	97.80' RT.
SW State Parks WD Bk 397 Pg 449	Fd Rbr	135111.3843	462850.9624	1355+31.06	100.24' LT.
SW L17 AA Cobb Subd	Fd Rbr	134869.4145	463010.7474	1357+05.94	130.48' RT.
SE L17 AA Cobb Subd	Fd Rbr	134897.2641	463052.1379	1357+44.89	101.38' RT.
NW L13 AA Cobb Subd	Fd Rbr	135097.9809	463110.7079	1358+00.67	100.13' LT.
NW L12 AA Cobb Subd	Fd IP	135150.2298	463239.5803	1359+36.48	149.86' LT.
SW L12 AA Cobb Subd	Fd Iron Spike	135100.9470	463255.6242	1359+50.88	99.89' LT.
Glenn Highway ROW	Fd Conc ROW Mon	135110.5451	463384.6848	1360+84.99	100.21' LT.
Glenn Hwy ROW	Fd Conc ROW Mon	134911.5249	463403.7167	1360+85.03	99.71' RT.
PT GLENN	FD BC/BX[DOH]	135010.8110	463394.4800	1360+85.27	————
NE L8 AA Cobb	Fd Rbr	135207.0500	463484.1562	1361+93.17	186.84' LT.
SE L8 AA Cobb	Fd Steel Bolt	135121.4241	463502.2696	1362+03.07	99.88' LT.
NW L4 AA Cobb	Fd IP	135239.7309	463627.2963	1363+38.77	205.78' LT.
NW L4 AA Cobb	Fd Steel Bolt	135239.6461	463627.5777	1363+39.04	205.67' LT.
SW L4 AA Cobb	Fd Steel Bolt	135136.0059	463653.2862	1363+54.79	100.06' LT.
SW L3 AA Cobb	Fd Rbr	135138.7414	463702.3653	1364+03.91	98.12' LT.
NW Tax Parcel A-7	Fd Rbr	135286.3967	463824.2808	1365+39.29	233.53' LT.
SW Tax Parcel A-7	Fd Rbr	135152.2025	463855.3707	1365+57.50	96.99' LT.
NW Tax Parcel A-7	Fd Rbr	135319.8979	463970.2411	1366+87.78	253.02' LT.
SE Tax Parcel A-7	Fd Rbr	135183.8102	464001.7367	1367+06.21	114.56' LT.
SHEET 15					
NE Waiver Parcel A9 No 84-95-PWm	Fd Rbr	135476.4346	463822.6823	1365+55.75	422.86' LT.
SHEET 16					
RR ROW; #926 Retie	Fd AM[BLM]	134964.7059	464130.3391	1368+13.42	115.77' RT.
Glenn Highway ROW	Fd Conc ROW Mon	135003.6008	464368.9085	1370+54.61	99.70' RT.
Glenn Highway ROW	Fd Conc ROW Mon	135202.7883	464350.0755	1370+54.77	100.37' LT.
POL W Line Tax Parcel A27	Fd Spike	134899.9521	464807.7144	1374+81.59	244.55' RT.
NW Waiver Pcl 2A No 2007-111-PWm	Fd Spike	135044.1791	464796.5219	1374+84.14	99.91' RT.
SE Waiver Parcel 1C No 84-95-PWm	Fd Rbr	135245.3751	464801.2674	1375+07.97	99.93' LT.
NE Waiver Parcel 1C No 84-95-PWm	Fd Rbr	135518.0926	464798.4107	1375+31.02	371.68' LT.
Glenn Highway ROW	Fd Conc ROW Mon	135297.3905	465345.1471	1380+54.33	100.07' LT.
Glenn Highway ROW	Fd Conc ROW Mon	135098.3427	465364.4256	1380+54.62	99.91' RT.

RECOVERED CORNERS (SHEETS 17-21)

LOCATION	MONUMENT TYPE	NORTHING	EASTING	STATION	OFFSET
SHEET 17					
RR ROW	FD AM[BLM]	134807.4190	466121.3400	1387+80.49	461.39' RT.
NE Pcl 1A Waiver 2007-111-PWm	Fd Spike	135169.6600	466116.6783	1388+10.25	100.35' RT.
N 1/16 S24 T17N R1E SM	Fd AM[AKDOP]	135554.0390	466090.8480	1388+21.03	284.75' LT.
NW Parcel A Kepler No 2	Fd AM[AKDOP]	135586.6440	466091.2080	1388+24.49	317.17' LT.
GLENN PC	FD BC/BX[DOH]	135275.1500	466165.8370	1388+69.20	————
N Parcel A Kepler No 2	Fd AM[AKDOP]	135546.1550	466455.3690	1391+70.37	250.26' LT.
SHEET 18					
SE Parcel A Kepler No 2	Fd AM[AKDOP]	135400.4030	466848.5440	1395+50.47	100.38' LT.
NE Parcel A Kepler No2	Fd AM[AKDOP]	135469.3500	466850.1285	1395+50.48	169.35' LT.
Glenn Hwy PT 1402+1158	Fd BC/Bx[DOH]	135239.1954	467558.2688	1402+65.55	0.01' LT.
Glenn Hwy ROW	FD CONC/ROW MON	135336.9133	467573.4024	1402+66.13	98.89' LT.
SHEET 19					
N AP GRANDVIEW PARK	Fd Rbr PC[1634-S]	134924.2642	468973.1065	1417+10.39	100.91' RT.
Glenn Hwy PC 1416+6450	Fd BC/Bx[DOH]	135023.8810	468988.0404	1417+11.44	0.19' RT.
NE L5 B1 Bradley Lk No 2	Fd Rbr	135310.7933	469121.5063	1418+15.13	300.67' LT.
SHEET 20					
NW L2 B2 Crestview Subd	Fd Rbr	134821.7610	469219.3930	1419+53.47	179.48' RT.
NW L1 B2 Crestview Subd	Fd Rbr	134837.1720	469481.8490	1422+01.03	161.52' RT.
N Bndy Pt L6 B2 Bradley Lake No 2	Fd Nail	135223.6404	469544.4675	1422+83.06	221.52' LT.
SW L2 B1 Bradley LK No2	Fd Rbr/PC[RPLS 7077]	135254.7722	469585.3725	1423+29.94	249.68' LT.
NW L3 B2 Grandview Subd	Fd Rbr	134848.1020	469682.0270	1423+90.70	164.03' RT.
SW L4 B2 Bradley Lake No 2	Fd Rbr/PC[7330]	135103.6466	469659.7107	1423+94.21	92.46' LT.
S Line PT L2 B1 Bradley Lake No 2	Fd Rbr/PC[RPLS 7077]	135307.0741	469711.2059	1424+74.17	288.61' LT.
NE L4 B2 Bradley Lk No 2	Fd Rbr/PC[7330]	135280.7916	469737.9284	1424+99.58	258.99' LT.
NW L2 B2 Grandview Subdivision	Fd Rbr	134864.5810	469816.1160	1425+18.45	164.10' RT.
NW L3 B2 Bradley Lake No 2	Fd Rbr/PC[7330]	135333.0622	469826.9240	1426+06.05	296.69' LT.
SW L1 B2 Grand View Sub	Fd IP	134695.3685	469952.2959	1426+16.58	353.13' RT.
NW Lot1 BK2 Grandview Subd	Fd Rbr/PC[2234-S]	134886.5870	469949.2740	1426+46.07	164.60' RT.
SE L4 B2 Bradley Lake No 2	Fd Rbr/PC[7330]	135143.8626	469941.0962	1426+87.92	89.29' LT.
PC N Line L3 B2 Bradley Lake No 2	Fd Rbr/PC[7330]	135393.2493	469929.2366	1427+32.20	335.58' LT.
SE L1 B2 Grand View Sub	Fd Rbr	134726.6678	470084.5070	1427+37.50	348.83' RT.
SW L3 B1 Grand View Sub	Fd Rbr	134733.7850	470121.7830	1427+71.28	350.32' RT.
NE L1 B2 Grandview Subdivision	Fd Rbr	134915.2000	470081.6590	1427+74.13	164.54' RT.
NW L3 B2 Grandview Subdivision	Fd Nail	134916.1040	470121.3640	1428+10.73	173.15' RT.
SW L2 B2 Bradley Lake No 2	Fd Rbr	135160.8150	470079.1670	1428+30.33	74.37' LT.
NE L3 B2 Bradley Lake No 2	Fd AM[7330]	135523.0007	470075.2501	1429+33.08	424.29' LT.
NE 1/16 S24 T17N R1E SM	Fd AM[7330]	135595.7250	470074.4365	1429+57.34	494.11' LT.
NE-E 1/16 S24 T17N R1E SM	Fd IP	135596.1760	470074.5080	1429+57.59	494.52' LT.
NE L3 B1 Grandview Subd	Fd IP	134972.1440	470271.2560	1429+61.41	159.78' RT.
NW L2 B 2 Bradley Lake No 2	Fd Rbr	135546.5880	470101.6030	1429+70.91	439.12' LT.
Glenn Hwy	Fd BC/Bx[DOH]	135140.0399	470318.9624	1430+56.20	15.13' RT.
NE Lot 2 BK1 Grandview Subdivision	Fd IP	135008.3080	470419.3520	1431+04.93	172.92' RT.
SE Lot 2 BK 2 Bradley Lake No 2	FD NAIL	135255.7540	470349.4530	1431+24.95	83.40' LT.
SHEET 21					
NW 1A BK 2 Bradley Lake No 2	FD RBR	135549.4720	470374.9270	1432+69.32	346.37' LT.
SW Lot 1B Bk2 Bradley Lake No 2	Fd Rbr/PC[7077]	135324.6190	470545.1920	1433+37.95	71.57' LT.

TABLE LEGEND

Fd	FOUND
BC	BRASS CAP MONUMENT
AM	ALUMINUM MONUMENT
Bx	MONUMENT CASE
Rbr	REBAR
AC	ALUMINUM CAP ON A REBAR
PC	PLASTIC CAP ON A REBAR
MLTC	Meadow Lakes Town Center

AKDOT&PF
4111 AVIATION AVENUE
ANCHORAGE, AK 99502
PHONE (907) 269-0700

STATE OF ALASKA 49TH
TRAVIS W. TEST
NO. LS-13324
REGISTERED PROFESSIONAL LAND SURVEYOR

DEPARTMENT LOCATIONS
SURVEYOR'S CERTIFICATE

DATE	REVISIONS	BY

STATE OF ALASKA
DEPARTMENT OF TRANSPORTATION
&
PUBLIC FACILITIES

RIGHT OF WAY MAP
ALASKA PROJECT

0A15024/0A15033

State Project No. Z581040000/CFHWY00006

GLENN HIGHWAY MP 34-42
PARKS HWY TO OLD GLENN HWY

DRAWN	JHS	DATE	MARCH 2013	SCALE	NTS
CHECKED	JRC	DATE	NOV 2021	SHEET	56 OF 67

MONUMENT SUMMARY SHEET

PROJECT DESIGNATION	SHEET NO.	TOTAL SHEETS
0AI5024	R-57	R-67

RECOVERED CORNERS (SHEETS 21-27)

LOCATION	MONUMENT TYPE	NORTHING	EASTING	STATION	OFFSET
SHEET 21 CONTINUED					
NW Lot 1B Bk 2 Bradley Lake No 2	FD RBR	135551.3900	470542.4390	1434+40.53	276.92' LT.
NW Lot 1B Bk 2 Bradley Lake No 2	FD IP	135551.4640	470542.5080	1434+40.63	276.96' LT.
Glenn Hwy ROW	FD CONC/ROW MON	135268.1750	470851.4507	1435+82.42	119.02' RT.
E Lot 1B B2 Bradley Lake Subd No 2	Fd Rbr/PC[7707]	135556.1250	470954.7170	1438+20.95	70.18' LT.
SS-BND Ang Pt TR 2 Bradley Lake No2	Fd Rbr	135605.8563	470937.9128	1438+35.91	120.65' LT.
SW TR1 Bradley Lake Subd	Fd Spike	135705.5349	471146.6183	1440+70.52	73.97' LT.
NE Lot 1A Bradley Lake No 2	Fd Rbr/PC[2234-8]	135444.5380	471397.3700	1440+95.36	287.04' RT.
RR ROW	Fd AM [BLM]	135528.9810	471396.2480	1441+44.94	222.12' RT.
N1/16 S24|S19 T17N R1|2E SM	Fd AM[7330]	135611.5180	471395.6635	1441+95.82	159.94' RT.
Glenn Hwy PT 1443+6049 Bk	Fd BC/Bx[DOH]	135847.4187	471453.0772	1443+94.81	30.01' RT.
Glenn Highway ROW	Fd AC	135927.7675	471391.7286	1444+08.97	70.09' LT.
SHEET 22					
SW TR1 Original Bradley Lk	Fd Rbr	136264.4955	470757.0457	1441+45.49	752.34' LT.
SW TR1 Original Bradley Lk	Fd Rbr	136264.3746	470762.5839	1441+51.05	748.60' LT.
Near NE Cor Bradley Lake Subd	Fd Rbr	136917.9608	470687.9135	1446+20.11	1266.44' LT.
NE Cor Bradley Lake Subd	Fd Rbr	136922.1170	470690.2193	1446+24.69	1267.71' LT.
SW L11 Canoe Lake	Fd Rbr	136923.0941	470769.8681	1446+81.30	1211.67' LT.
S13|S18/S18|S19 T17N R1|2E SM	Fd BC[GLO]	136931.0170	471378.9270	1451+14.49	783.47' LT.
SHEET 23					
SE Cor Bradley Lake Sub	FD MISC PIPE	136271.0100	471386.8980	1446+50.03	314.48' LT.
Glenn Hwy ROW	FD ROW CONC MON	136306.6160	471744.9720	1449+26.75	84.45' LT.
SHEET 24					
Glenn Highway ROW	Fd Conc ROW Mon	136943.1316	472372.5817	1458+20.65	84.30' LT.
NW Cor Lot B5 RR ROW	FD AM[BLM]	136949.1220	472795.7160	1461+21.95	212.85' RT.
SHEET 25					
Glenn Highway ROW	Fd Rbr/PC[7338]	137733.4585	473173.2598	1469+45.57	68.86' LT.
Glenn Highway ROW	Fd Rbr/PC[7338]	137744.1037	473162.6047	1469+45.68	83.92' LT.
W line MSB Asscociation Tax Pcl C8	"FD 1""IRON PIPE"	138275.7360	473294.9830	1474+91.47	322.25' LT.
E line MSB Asscociation Tax Pcl C8	FD RBR	138206.4580	473547.3390	1475+66.98	70.63' LT.
SW L2 Kers-Lake	Fd Rbr/AC[6504]	138523.3380	473291.1615	1477+05.32	453.91' LT.
SW L2 Kers-Lake; #1171 Retie	Fd Rbr/PC	138525.7891	473291.3238	1477+07.50	455.04' LT.
CS 1/16/S18 T17N R2E SM	FD BC[GLO]	138284.2360	473954.3290	1478+44.35	237.20' RT.
SW COR Lot D1 RR ROW	FD AM[BLM]	138335.8810	473953.8200	1478+88.26	210.01' RT.
SE L2 Kers-Lake	Fd Rbr/AC[6504]	138526.5833	473749.9427	1479+45.76	63.17' LT.
SE L2 Kers-Lake; #1170 Retie	Fd Rbr/PC	138529.0097	473748.8783	1479+47.28	65.34' LT.
SHEET 26					
WP NW L2 Kers-Lake	Fd Rbr/AC[6504]	138783.7826	473622.5662	1480+99.77	305.37' LT.
SE L1 Kers-Lake	Fd Rbr/AC[6504]	138684.3528	473849.2371	1481+31.10	60.52' LT.
RR ROW; #1261 Retie	Fd AM[BLM]	138702.3327	473948.0571	1481+98.97	13.51' RT.
SE Angle Point L1 Kers-Lake	Fd Rbr/AC[6504]	138837.7456	473945.7460	1483+12.32	60.60' LT.
NE L1 Kers-Lake; #1259 Retie	Fd IP	138944.9793	473944.3711	1484+02.33	118.91' LT.
C 1/4/S18 T17N R2E SM	FD AM[BLM]	139604.7970	473934.0560	1489+55.16	479.25' LT.
SHEET 27					
SW L6 B5 Crimsonview Phase 1	Fd Rbr	140925.6000	474098.4350	1501+60.40	1044.00' LT.
NW Trails End Estates	Fd Rbr/PC[1634]	140926.8840	474184.9150	1502+07.57	971.50' LT.
SW L2 Trails End Est	Fd Rbr/PC[1634S]	140690.6283	474565.2274	1502+10.32	523.79' LT.
SE L2 Trails End Est	Fd Rbr/PC[1634S]	140657.6552	474618.4211	1502+10.76	461.21' LT.
SW L1 B5 Crimsonview Phase 1	Fd Rbr	140927.5160	474230.6710	1502+32.49	933.12' LT.
E Bound Ang Pt L1 Trails End Est	Fd Rbr/PC[1634S]	140871.3850	474495.6889	1503+26.22	678.96' LT.
W Bound Ang Pt L2 Trails End Est	Fd Rbr/PC[1634S]	140872.0602	474545.6361	1503+53.40	637.05' LT.
NW L2 B5 Crimson View	Fd Rbr	141045.7533	474272.4614	1503+54.81	960.77' LT.
SE L1 B5 Crimsonview Phase 1	Fd Rbr	140931.3490	474494.7400	1503+76.45	711.71' LT.
SE L2 B5 Crimson View	Fd Rbr	141006.2406	474493.9879	1504+39.42	752.26' LT.
SW L15 B6 Crimson View	Fd Rbr	141010.0444	474543.7577	1504+69.16	712.17' LT.
SE PC E Line L2 B5 Crimson View	Fd Rbr	141054.0992	474493.1124	1504+79.45	778.50' LT.
NW PC N Line L15 B6 Crimson View	Fd Rbr	141054.7440	474542.9246	1505+06.54	736.70' LT.
SW L14 B6 Crimson View	Fd Rbr	141080.1654	474541.0461	1505+27.05	751.83' LT.
SW L1 B6 Crimsonview Phase 1	Fd Rbr	140935.5970	474791.3470	1505+38.10	462.99' LT.
NE PT E L L2 B5 Crimson View	Fd Rbr	141147.0519	474459.1153	1505+39.99	856.80' LT.
NE L2 B5 Crimson View	Fd Rbr	141183.8852	474429.0442	1505+55.13	901.88' LT.
SW L13 B6 Crimson View	Fd Rbr	141148.5507	474518.3069	1505+72.80	807.52' LT.
SW L12 B6 Crimson View	Fd Rbr	141207.9978	474474.0726	1505+99.53	876.63' LT.
SE L15 B6 Crimson View	Fd Rbr	141026.5533	474770.1208	1506+03.76	529.42' LT.

RECOVERED CORNERS (SHEETS 28-32)

LOCATION	MONUMENT TYPE	NORTHING	EASTING	STATION	OFFSET
SHEET 28					
NW Lot D1 ASG	FD AC	139615.7850	474759.5190	1494+04.34	213.39' RT.
Cor Plat 94-45RS Palmer Rec Dist	Fd Rbr/AC[2071-S]	139762.3110	474527.5389	1494+04.71	60.99' LT.
Glenn Hwy ROW	Fd Conc ROW Mon	139859.5050	474588.2570	1495+19.31	61.41' LT.
Lot B4 RR ROW	FD AM[BLM]	140318.9360	474966.1400	1501+09.44	13.53' RT.
RR ROW	FD AM[BLM]	140212.4110	475135.6250	1501+09.62	213.71' RT.
SW Tract A Plat 76-99W	Fd AM[7330]	140101.2861	475372.9265	1501+42.04	473.73' RT.
SL3 Trails End Subd	FD Rbr/PC[1634]	140447.5800	474956.9130	1502+13.38	62.83' LT.
SHEET 30					
SE L4 Trails End Estates	Fd Conc ROW Mon	140705.6950	475120.8310	1505+19.14	61.68' LT.
W Bnd Ang Pt L4 Trails End Est	Fd Rbr/PC[1634S]	140836.9563	474912.9625	1505+19.44	307.52' LT.
NW L4 Trails End Est	Fd Rbr/PC[1634S]	140937.2811	474911.5274	1506+03.57	362.20' LT.
NE L4 Trails End Estates	Fd Rbr/PC[1634]	140891.6050	475236.8530	1507+38.29	62.57' LT.
SE L1 B6 Crimsonview Subd	Fd Rbr/PC[7077]	140941.2320	475190.3980	1507+55.52	128.33' LT.
SE L2 B6 Crimsonview Subd	Fd Rbr	141085.1396	474988.9627	1507+69.95	375.46' LT.
SW L11 Crimsonview Ph 1	Fd Rbr	141075.8070	475070.6089	1508+05.56	301.40' LT.
SE AP L11 Crimsonview Ph 1	Fd Rbr	141058.3580	475170.4851	1508+44.02	207.59' LT.
SE AP Crimsonview Ph 1	Fd Rbr	141085.5608	475179.8076	1508+72.01	214.20' LT.
SW AP Tr 1 Crimsonview Ph 1	Fd Rbr	141123.2145	475233.5106	1509+32.49	188.82' LT.
SW AP L3 Tr 1 Crimsonview Ph 1	Fd Rbr	141183.4001	475232.5408	1509+82.90	221.71' LT.
NE L10 B1 Crimsonview Ph 1	Fd Rbr	141378.5650	475229.6640	1511+46.51	328.15' LT.
E L3 Crosswind Est	Fd Rbr	141258.6199	475470.0468	1511+73.11	60.82' LT.
Glenn Highway ROW	Fd Conc ROW Mon	141551.8806	475654.0550	1515+19.32	61.40' LT.
SE Cor Lot 1 Crosswind Est	FD RBR	141709.6960	475753.7660	1517+06.00	61.12' LT.
SHEET 31					
SW COR LOT 7 Town & Country	Fd Rbr/PC [LS 7830]	142328.0720	475749.2740	1522+26.86	394.45' LT.
TRACT A-1 Pioneer Meadows Subd	FD AM[7730-S]	142377.7990	475748.4940	1522+68.53	421.61' LT.
SE L18 B4Pioneer Meadows Ph 3	Fd Rbr	142418.2730	475774.0960	1523+16.42	421.51' LT.
SE L17 B4 Pioneer Meadows Ph 3	Fd Rbr	142454.0480	475795.8820	1523+58.30	422.14' LT.
SW PT L7 B1 Town & Country Subd	Fd Rbr	142331.8920	476047.1940	1523+88.86	144.39' LT.
NW L6 Town & Country	Fd Rbr	142505.6213	475829.0216	1524+19.60	421.58' LT.
AK RR ROW/S7 | S1 T17N R2E	FD AM[BLM]	142273.9490	476197.4430	1524+19.89	13.63' RT.
AK RR ROW	FD AM[BLM]	142276.6950	476435.5870	1525+49.12	213.68' RT.
NE L6 B1 Town & Country Subd	Fd Rbr	142478.3830	476165.9260	1525+76.09	121.98' LT.
SW L5 B1 Town and Country	Fd Rbr	142637.9825	475912.4998	1525+76.09	421.48' LT.
Cor Waiver 2001-103-PWm	Fd Rbr PC[7074-S]	142317.2017	476461.0581	1525+96.97	213.65' RT.
SE L13 B4 Pioneer Meadows Ph 3	Fd Rbr/PC[7330]	142833.3280	476035.2840	1528+06.82	421.68' LT.
SW L3 B1 Town & Country	Fd Rbr	142863.7556	476053.9996	1528+42.54	422.05' LT.
E L4 B1 Town & Country	Fd Rbr	142704.3472	476307.9612	1528+42.98	122.21' LT.
SE L13 B4 Pioneer Meadows Ph 3	Fd Rbr	142955.4990	476112.3790	1529+51.28	421.54' LT.
SW L2 B1 Town & Country	Fd Rbr	142976.4983	476124.9841	1529+75.77	422.07' LT.
RR ROW	FD AM[BLM]	142800.0450	476528.9560	1530+41.73	13.80' RT.
SHEET 32					
SE L1 B1 Crimsonview Phase 1	Fd Rbr	142157.1330	475217.8990	1517+99.05	753.00 LT.
E 1/16 Cor S7\S18 T17N R2E SM	Fd BC[GLO]	142261.2100	475216.2480	1518+86.24	809.86 LT.
SW L1Phase 3 Pioneer Meadows	Fd Rbr/PC[7330]	142321.3155	475222.3313	1519+40.34	836.74 LT.
SE PC L1 Ph 3 Pioneer Meadows	Fd Rbr/PC[7330]	142323.9071	475428.2999	1520+52.30	663.83 LT.

TABLE LEGEND

Fd	FOUND
BC	BRASS CAP MONUMENT
AM	ALUMINUM MONUMENT
Bx	MONUMENT CASE
Rbr	REBAR
AC	ALUMINUM CAP ON A REBAR
PC	PLASTIC CAP ON A REBAR
MLTC	Meadow Lakes Town Center

AKDOT&PF
4111 AVIATION AVENUE
ANCHORAGE, AK 99502
PHONE (907) 269-0700

STATE OF ALASKA 49TH
TRAVIS W. TEST
NO. LS-13324
REGISTERED PROFESSIONAL LAND SURVEYOR

DEPARTMENT LOCATIONS
SURVEYOR'S CERTIFICATE

DATE	REVISIONS	BY

STATE OF ALASKA
DEPARTMENT OF TRANSPORTATION
&
PUBLIC FACILITIES

RIGHT OF WAY MAP
ALASKA PROJECT

0A15024/0A15033

State Project No. Z581040000/CFHWY00006

GLENN HIGHWAY MP 34-42
PARKS HWY TO OLD GLENN HWY

DRAWN	JHS	DATE	MARCH 2013	SCALE	NTS
CHECKED	JRC	DATE	NOV 2021	SHEET	57 OF 67

MONUMENT SUMMARY SHEET

PROJECT DESIGNATION	SHEET NO.	TOTAL SHEETS
0AI5024	R-58	R-67

RECOVERED CORNERS (SHEETS 32-36)

LOCATION	MONUMENT TYPE	NORTHING	EASTING	STATION	OFFSET
SHEET 32 CONTINUED					
SE PC L1 Pioneer Meadows Ph 3	Fd Rbr/PC[7330]	142349.2902	475452.9952	1520+86.94	656.46' LT.
SW PC L19 B4 Pioneer Meadows Ph 3	FD RBR/PC[7330]	142325.3180	475538.2910	1521+12.10	571.51' LT.
SW PT L19 B4 Pioneer Meadows Ph 3	Fd Rbr/PC[7330]	142350.0190	475512.9680	1521+19.51	606.10' LT.
NE L1 Pioneer Meadows Ph 3	Fd Rbr/PC[7330]	142414.2287	475452.2126	1521+41.47	691.73' LT.
PC Katie Cr Pioneer Meadows Ph 3	Fd Rbr/PC[7330]	142414.6441	475482.1610	1521+57.78	666.61' LT.
SW L18 Pioneer Meadows Ph 3	Fd Rbr/PC[7330]	142415.0489	475512.1673	1521+74.11	641.43' LT.
SE L3Pioneer Meadows Ph 3	Fd Rbr/PC[7330]	142483.9372	475457.7245	1522+03.39	724.21' LT.
SW L16 Pioneer Meadows Ph 3	Fd Rbr	142543.0035	475537.4529	1522+95.86	688.22' LT.
SI Pioneer Meadows Subd	Fd Rbr/PC[7330]	142640.6675	475561.1895	1523+91.15	720.18' LT.
SHEET 33					
Sec Cor S7|S8\S18|S17 T17N R2E SM	Fd Iron Pin/Bxx	142278.1370	476537.0540	1526+04.41	298.77' RT.
NW (TAX MP C9)	Fd Rbr	143237.8905	477496.5757	1539+27.86	599.26' RT.
SHEET 34					
SW COR LOT1 Town & Country Subd	FD RBR	143089.5220	476196.0720	1531+09.29	422.14' LT.
SW L1 B1 Town & Country Subd	Fd Rbr	142929.9000	476450.1690	1531+09.62	122.07' LT.
PT L1 B1 Town & Country Subd	Fd Rbr	142957.3490	476467.1800	1531+41.91	122.30' LT.
PC L1 B1 Town & Country Subd	Fd Rbr	142984.7520	476474.8580	1531+69.19	130.41' LT.
NW Cor Lot 1 Town & Country Subd	Fd Rbr/AC[7330-S]	143155.5350	476237.9940	1531+87.49	421.85' LT.
NE PC E Line L1 B1 Town & Country	Fd Rbr/PC[7330]	143139.4889	476472.6134	1532+98.93	214.77' LT.
NE PC N Line L1 B1 Town& Country	Fd Rbr/PC[7330]	143159.1532	476452.2682	1533+04.73	242.46' LT.
S 1/16 S7|S8T17N R2E SM	Fd Rbr/AC	143595.2580	476514.9550	1537+07.16	421.81' LT.
SE L3 Hodsdon Sub	Fd Pipe	143601.3258	476937.0419	1539+37.22	67.88' LT.
SW L1 Hodsdon Subd	Fd Rbr	143890.3200	476510.9940	1539+54.73	582.40' LT.
SW L4 Hodsdon Sub	Fd Rbr	143716.5366	476794.3634	1539+58.68	250.01' LT.
SE L4 Hodsdon Subd	Fd Rbr/AC[S-9689]	143701.5325	477008.7088	1540+60.21	60.64' LT.
NE L2 Hodsdon Sub	Fd Rbr	143845.7586	476796.2229	1540+69.02	317.30' LT.
SW Cot Lot 1 Palmer Church of God	Fd Rbr/AC[7330]	144006.0670	476673.1650	1541+39.09	506.85' LT.
NE L1 Hodsdon Sub	Fd Rbr	143976.7261	476794.2325	1541+78.78	388.77' LT.
NE L1 (2) Hodsdon Sub	Fd Rbr	143980.4183	476797.8187	1541+83.81	387.71' LT.
SE L1 Palmer Church of God	Fd AM[LS 7330]	143897.7238	477131.6208	1542+91.72	61.18' LT.
SHEET 35					
SW L2 Palmer Church of God	Fd Rbr/PC[LS7330]	144372.9502	477359.9318	1548+15.51	121.23' LT.
NE L1 Palmer Church of God	Fd Rbr/PC[LS7330]	144425.5656	477464.0066	1549+15.50	61.20' LT.
N L1 Palmer Church of God	Fd Rbr/AC[S9689]	144457.6019	477413.1837	1549+15.52	121.28' LT.
SE L3 Palmer Church of God	Fd Rbr/AC[S9689]	144526.9766	477527.8554	1550+35.33	61.22' LT.
SW L3 Palmer Church of God	Fd Rbr/AC[S9689]	144559.0427	477477.1994	1550+35.47	121.17' LT.
LOT 3A Palmer Church of God	Fd Rbr/PC[7330]	144671.6210	477322.9110	1550+48.52	311.72' LT.
Ang Pt E L2 Palmer Church of God	Fd Rbr/PC[LS7330]	144749.3114	477341.9079	1551+24.38	337.04' LT.
Ang Pt W L3 Palmer Church of God	Fd Rbr/PC[LS7330]	144687.3283	477557.9309	1551+87.05	121.22' LT.
NE L2 Palmer Church of God	Fd Rbr/AC[S9689]	144928.4306	477385.5025	1552+99.18	395.60' LT.
NE Cor Lot 3Palmer Church of God	Fd Rbr/AC	144935.6370	477785.2670	1555+18.31	61.17' LT.
Glenn Hwy ROW	Fd Conc ROW Mon	144935.9340	477784.9710	1555+18.40	61.58' LT.
SHEET 36					
CW 1/16/S8 T17N R2E	FD BC[GLO]	144936.2220	477816.0150	1555+35.19	35.46' LT.
SW Wild Rose Estates	Fd Rbr/AC	145533.4640	477806.9630	1560+35.74	361.39' LT.
SE L1 Wild Rose Estates	FD RBR	145374.4930	478060.9170	1560+36.55	61.78' LT.
SE L2 Wild Rose Estates	Fd Spike	145627.7210	477919.2050	1561+75.31	316.64' LT.
NW L1 Wild Rose Estates	Fd Rbr	145699.9970	477804.5760	1561+75.39	452.15' LT.
NE L1 Wild Rose Estates	Fd Rbr	145493.0300	478135.5170	1561+76.61	61.82' LT.
SW PT L5 Wild Rose Estates	Fd Rbr	145633.0881	478005.1387	1562+25.65	246.78' LT.
SE L5 Wild Rose Estates	Fd Rbr	145535.2137	478162.3971	1562+26.63	61.56' LT.
SW PC L5 Wild Rose Estates	Fd Rbr	145660.7801	477999.2042	1562+45.92	266.56' LT.
SW L6 Wild Rose Estates	Fd Rbr	145880.2089	477801.7606	1563+26.38	550.57' LT.
NW L5 Wild Rose Estates	Fd Rbr/PC[2234-S]	145786.8736	478106.2960	1564+09.68	243.14' LT.
SE L4 Wild Rose Estates	FD RBR	145717.0800	478276.5580	1564+41.36	61.87' LT.
NW L4 Wild Rose Estates	Fd Rbr/PC[2234-S]	145833.8528	478101.1766	1564+46.71	272.50' LT.
Glenn Highway ROW	Fd Conc ROW Mon	145782.4073	478317.8291	1565+18.63	61.76' LT.
SW L8 Wild Rose Estates	Fd Rbr	145967.4643	478080.3091	1565+48.65	361.36' LT.
SW L9 Wild Rose Estates	Fd Rbr	145969.7337	478230.4234	1566+30.56	235.55' LT.
SW L10 Wild Rose Estates	Fd Rbr	145963.6223	478315.0893	1566+70.51	160.65' LT.
NE L4 Wild Rose Estates	Fd Rbr	145960.1863	478359.9586	1566+91.51	120.85' LT.
SE L10 Wild Rose Estates	FD RBR	145955.3140	478426.5780	1567+22.89	61.88' LT.
NW L8 Wild Rose Estates	Fd Rbr	146234.2610	478076.2530	1567+72.25	506.97' LT.
NW L9 Wild Rose Estates	Fd Rbr	146236.0121	478226.3589	1568+53.72	380.88' LT.

RECOVERED CORNERS (SHEETS 37-39)

LOCATION	MONUMENT TYPE	NORTHING	EASTING	STATION	OFFSET
SHEET 37					
NW L10 Wild Rose Estates	Fd Rbr	146239.3099	478436.0329	1569+68.24	205.22' LT.
Ang Pt W Line L3 Kopperud Comm Pk	Fd Rbr/PC[7330]	146488.0883	478201.9305	1570+54.00	535.88' LT.
NE L10 Wild Rose Estates	Fd Rbr	146241.7450	478607.2400	1570+61.54	61.64' LT.
CL E Drift Lane	Fd Rbr	146267.5551	478622.8922	1570+91.72	62.15' LT.
DE CAMP	Fd Rbr/PC[2071-S]	146297.6370	478642.1630	1571+27.44	61.87' LT.
SE L3 Kopperud Commercial Park	Fd Rbr/PC[7330]	146297.6779	478642.9408	1571+27.89	61.24' LT.
SE L2 Kopperud Commercial Park	Fd Rbr/PC[7330]	146445.8495	478736.2568	1573+03.00	61.23' LT.
NW L3 Kopperud Commercial Park	Fd Rbr/PC[7330]	146698.9967	478334.3043	1573+03.01	536.26' LT.
Glenn Hwy ROW	FD CONC/ROW MON	146628.5660	478850.8380	1575+18.67	61.65' LT.
S9025 L1 C3|L2 C4/S8 T17N R2E SM	FD AM[BLM]	146527.6080	479112.7170	1575+72.79	213.75' RT.
NW L2 Kopperud Commercial Park	Fd Rbr/PC[7330]	147016.3753	478534.1499	1576+78.07	536.28' LT.
SE L1 Kopperud Commercial Park	Fd Rbr/PC[7330]	146763.2597	478936.1149	1576+78.09	61.26' LT.
NW L1 Kopperud Commercial Park	Fd Rbr/PC[7330]	147158.3577	478623.4897	1578+40.45	537.48' LT.
SW Tr5 Kopperud Sub	Fd Rbr/PC[2071-S]	147160.6216	478703.2424	1578+85.53	471.64' LT.
SCor L2A Moffitt Subd	Fd Rbr	147029.4270	479104.8530	1579+92.62	62.95' LT.
SE Tr5 Kopperud Sub	Fd Rbr/PC[2071-S]	147166.9824	479102.5517	1581+07.03	139.34' LT.
SHEET 38					
NE Tract 5 Kopperud	Fd Rbr/PC[7330]	147566.3432	479097.0326	1584+39.83	360.17' LT.
NE L2A Moffitt Sub	Fd Rbr	147419.7657	479350.4411	1584+53.76	67.75' LT.
1/4 COR S5|S8 T17N R2E SM	FD NAIL	147596.3050	479096.6200	1584+64.80	376.73' LT.
SE Tract 2 Kopperud Subd	Fd PC[2071]	147626.2920	479095.9550	1584+89.65	393.53' LT.
SW L1 Rambler Subd	Fd IP	147626.4990	479125.6460	1585+05.90	368.67' LT.
NE TRACT 2 KOPPERUD SUBD	Fd Rbr PC[2071-S]	147761.3913	479093.6005	1586+06.65	467.90' LT.
ROW/INTERSECT SECT LINE SE L3	Fd Spike	147601.2990	479464.4440	1586+68.81	68.78' LT.
SE L3 Rambler Subd	Fd Nail	147631.2990	479483.2510	1587+04.21	68.85' LT.
NW L3 Rambler Subd	Fd Rbr/PC[7074]	147770.6440	479342.4510	1587+47.09	262.25' LT.
Angle NLine Rambler Subd	Fd Rbr/PC[7074]	147683.8150	479481.2430	1587+47.58	98.54' LT.
NE L3 Rambler Subd	Fd Rbr/PC	147684.2820	479516.2180	1587+66.61	69.19' LT.
NW L2 Rambler Subd	Fd Rbr/PC[7074]	147836.0310	479383.6430	1588+24.37	262.24' LT.
NE L2 Rambler Subd	Fd Rbr/PC[CLS]	147839.0300	479613.7390	1589+49.53	69.14' LT.
SW (TAX MP D11)	Fd Rbr	148135.2665	479327.9180	1590+47.89	468.85' LT.
SE (TAX MP D11)	Fd Spike	148024.1460	479735.1661	1591+70.88	65.03' LT.
SHEET 39					
Cor Promissory Point	Fd Rbr AC[2071-S]	147583.9049	478342.7208	1580+46.27	1003.91' LT.
SW AP TRACT 1 KOPPERUD SUBD	Fd Rbr	147616.7069	478518.1576	1581+68.82	874.16' LT.
SW TRACT 2 KOPPERUD SUBD	Fd Rbr	147623.7713	478945.9150	1584+06.31	518.32' LT.
NW TRACT 2 KOPPERUD SUBD	Fd Rbr	147758.8427	478943.4915	1585+18.57	593.47' LT.
HELEN RD	Fd Rbr PC[2234]	148121.6543	478727.5373	1587+16.43	969.63' LT.
HELEN RD	Fd Rbr PC[2234]	148217.0025	478599.0160	1587+28.63	1129.20' LT.
HELEN RD	Fd Rbr PC[2234]	148248.2172	478681.6903	1587+99.10	1075.87' LT.
SHEET 40					
RR ROW	FD AM[BLM]	147605.2610	479791.2290	1588+46.30	205.63' RT.
Glenn Hwy ROW	Fd Conc ROW Mon	147643.8590	479814.5550	1588+91.39	204.80' RT.
SW Tract H Palmer Industrial Park	Fd Rbr/AC	147644.5820	479815.1470	1588+92.32	204.91' RT.
SW Tract C Palmer Industrial Park	Fd Rbr/AC	148319.8630	480240.5410	1596+90.42	205.02' RT.

TABLE LEGEND

Fd	FOUND
BC	BRASS CAP MONUMENT
AM	ALUMINUM MONUMENT
Bx	MONUMENT CASE
Rbr	REBAR
AC	ALUMINUM CAP ON A REBAR
PC	PLASTIC CAP ON A REBAR
MLTC	Meadow Lakes Town Center

AKDOT&PF
4111 AVIATION AVENUE
ANCHORAGE, AK 99502
PHONE (907) 269-0700

STATE OF ALASKA 49TH
TRAVIS W. TEST
NO. LS-13324
REGISTERED PROFESSIONAL LAND SURVEYOR

DEPARTMENT LOCATIONS
SURVEYOR'S CERTIFICATE

DATE	REVISIONS	BY

STATE OF ALASKA
DEPARTMENT OF TRANSPORTATION
&
PUBLIC FACILITIES

RIGHT OF WAY MAP
ALASKA PROJECT

0A15024/0A15033

State Project No. Z581040000/CFHWY00006

GLENN HIGHWAY MP 34-42
PARKS HWY TO OLD GLENN HWY

DRAWN JHS	DATE MARCH 2013	SCALE NTS	
CHECKED JRC	DATE NOV 2021	SHEET 58	OF 67

MONUMENT SUMMARY SHEET

PROJECT DESIGNATION	SHEET NO.	TOTAL SHEETS
0AI5024	R-59	R-67

RECOVERED CORNERS (SHEETS 39-46)

LOCATION	MONUMENT TYPE	NORTHING	EASTING	STATION	OFFSET
SHEET 39 CONTINUED					
SW Tract B-3 Greatland Terrace	Fd Rbr	152121.7480	479914.9100	1636+17.58	991.30' LT.
SHEET 41					
NW (TAX MP D11)	Fd Rbr	148558.5702	479594.3548	1595+48.06	468.97' LT.
CS 1/16 Cor S5 T17N R2E	Fd BC[GLO]	148914.0230	479072.3980	1595+70.69	1100.06' LT.
SHEET 42					
Glenn Hwy ROW	FD ROW MON	149166.8560	480449.7440	1605+18.61	69.31' LT.
Glenn Hwy ROW	FD ROW MON	149161.5340	480458.2300	1605+18.63	59.29' LT.
PC Glenn Highway	Fd R/R Spike	149278.5274	480638.5183	1607+12.41	32.89' RT.
SHEET 43					
NW Tract D Palmer Industrial Park	Fd Rbr	149694.3560	481105.6670	1612+44.82	296.69' RT.
SW L C-1 Palmer Industrial Park	Fd Rbr	150019.6365	481310.3761	1615+61.62	420.68' RT.
Glenn Hwy ROW	FD CONC MON	150140.8587	481033.8404	1616+31.18	128.83' RT.
Glenn Hwy ROW	Fd Conc ROW Mon	150128.0880	481142.6870	1616+33.39	238.40' RT.
NW Lot C1 Palmer Industrial Park	Fd Rbr	150267.8380	481466.7890	1617+82.60	545.88' RT.
SE Tax Parcel A26	Fd Rbr/PC[2231]	150356.2620	480796.0662	1618+22.04	129.31' LT.
SHEET 44					
SW Tax Parcel A26	Fd Rbr/PC[2234]	150345.8382	480087.7170	1617+41.53	834.91' LT.
SW Ang Pt W Line Tax Parcel A26	Fd IP	150823.2768	480080.4633	1623+08.31	844.56' LT.
SHEET 45					
C/O PALMER/BOUND SUR S 2257	FD BC	150607.3820	481680.7480	1620+70.72	752.64' RT.
SW L1 B1 Glacier View	Fd Spike	150693.3886	481342.1285	1621+61.32	415.22' RT.
SE L4 B1 Glacier View Subd	Fd Spike	150769.1860	481539.2310	1622+34.43	613.33 RT.
PT NLine L4 B1 Glacier View Subd	Fd Rbr/PC	150952.7790	481584.4830	1624+17.40	661.07' RT.
SW L1 Bedrock	Fd Rbr	150973.0489	481675.0303	1624+36.43	751.89' RT.
NE L1 B1 Glacier View Subd	Fd Rbr	150968.5200	481337.5480	1624+36.49	414.38' RT.
PC E Line L4 B2 Glacier View	Fd Rbr	151056.3403	481635.8906	1625+20.25	713.88' RT.
SE Angle Point L4 B2 Glacier View	Fd Rbr/PC[2234]	151210.5917	481488.9607	1626+76.48	569.06' RT.
SW Tract 2-A B2 Glacier View	Fd Rbr/PC[2234]	151210.8196	481484.0211	1626+76.78	564.12' RT.
SE Ang Pt SE Line L4 B2 Glacier View	Fd Rbr	151258.6170	481483.2236	1627+24.58	563.97' RT.
NW Tax Parcel B9	Fd Rbr/AC[XXXX]	151437.6736	482120.5933	1628+94.97	1203.71' RT.
NE Tax Parcel B9	Fd Rbr	151439.3393	482219.2217	1628+95.30	1302.36' RT.
NE L1 Bedrock	Fd Rbr	151435.8389	481905.4540	1628+96.06	988.57' RT.
NW L1 Bedrock	Fd Rbr	151433.0411	481666.4757	1628+96.50	749.58' RT.
SE L15 B6 MD Snodgrass	Fd Rbr	151584.5029	481807.8500	1630+46.03	892.99' RT.
SW L1B B6 MD Snodgrass	Fd Rbr	151584.9901	481827.8093	1630+46.25	912.96' RT.
N 1/16 S5|S4 T17N R2E	Fd Spike	151591.2220	481663.6510	1630+54.71	748.90' RT.
SE L2B B6 MD Snodgrass	Fd Rbr	151660.7015	481945.5840	1631+20.34	1031.75' RT.
SW L2B B6 MD Snodgrass	Fd Rbr	151659.2391	481827.0268	1631+20.49	913.18' RT.
SE L13 B6 MD Snodgrass	Fd Rbr	151684.4876	481806.5060	1631+46.01	893.01' RT.
SW L13 B6 MD Snodgrass	Fd Rbr	151682.9385	481687.8290	1631+46.08	774.32' RT.
NE Tract 2-A B2 Glacier View	Fd Rbr	151690.7882	481477.7035	1631+56.78	564.32' RT.
NE L2B B6 MD Snodgrass	Fd Rbr	151734.6314	481944.7861	1631+94.28	1031.95' RT.
NW L2B B6 MD Snodgrass	Fd Rbr	151733.1298	481826.2183	1631+94.38	913.38' RT.
SW L11 B6 MD Snodgrass	Fd Rbr	151783.4768	481686.2326	1632+46.63	774.09' RT.
NW L3B B6 MD Snodgrass	Fd Rbr	151807.2474	481824.8391	1632+68.51	913.00' RT.
SHEET 46					
SW L3 Raven's Ridge	Fd Rbr/PC[2234]	150572.2466	480309.2697	1620+54.20	619.19' LT.
SE L3 Raven's Ridge	Fd Rbr/PC[2234]	150579.7860	480792.9510	1620+55.18	135.45' LT.
S L2 Raven's Ridge	Fd Rbr/PC[2234]	150652.2398	480308.0725	1621+34.20	619.30' LT.
NW L2 B1 Glacier View Subd	Fd Nail	150691.9290	481027.0070	1621+64.13	100.11' RT.
NE Angle Point L3 Raven's Ridge	Fd Rbr/PC[2234]	150926.1826	480728.0902	1624+02.42	195.60' LT.
NE L3 Raven's Ridge	Fd Rbr/PC[2234]	150927.1562	480788.0433	1624+02.58	135.64' LT.
NW L3 Raven's Ridge	Fd Rbr/PC[2234]	151014.7176	480726.7835	1624+90.97	195.71' LT.
SW L3 B2 Glacier View Subd	Fd PC[7326]	151027.5220	481224.5530	1624+97.02	302.19' RT.
Glenn Hwy ROW	Fd Conc ROW Mon	151025.6580	480786.6540	1625+01.09	135.69' LT.
SW L2 B2 Glacier View	Fd Rbr/PC[7727]	151064.8859	481024.0575	1625+37.10	102.22' RT.
E Ang Pt E Line L2 Raven's Ridge	Fd Rbr/PC[2234]	151072.4295	480325.3505	1625+54.12	596.32' LT.
W Ang Pt W Line L2 Raven's Ridge	Fd Rbr/PC[2234]	151072.1659	480301.5083	1625+54.18	620.16' LT.
E Ang Pt N Line L2 Raven's Ridge	Fd Rbr/PC[2234]	151176.4030	480576.7822	1626+54.67	343.50' LT.
NE L2 Raven's Ridge	Fd Rbr/PC[2234]	151178.6059	480724.5294	1626+54.87	195.74' LT.
SE L1 Raven's Ridge	Fd Rbr/PC[2234]	151179.5185	480784.4706	1626+54.97	135.79' LT.
NW L2 B2 Glacier View Subd	Fd Rbr	151204.6920	481021.9390	1626+76.92	102.00' RT.
NE L3 B2 Glacier View Subd	Fd PC[7326]	151207.4530	481221.8500	1626+76.97	301.93' RT.

RECOVERED CORNERS (SHEETS 46-48)

LOCATION	MONUMENT TYPE	NORTHING	EASTING	STATION	OFFSET
SHEET 46 CONTINUED					
SE L2 B2 Glacier View Subd	Fd PC[7326]	151206.8700	481163.6510	1626+77.17	243.73' RT.
E Ang Pt E Line L2 B2 Glacier View	Fd Rbr/PC[7074]	151301.1605	481162.3899	1627+71.47	243.75' RT.
W Ang Pt E Line L2 B2 Glacier View	Fd Rbr/PC[7074]	151300.9143	481140.4338	1627+71.52	221.79' RT.
NW L2 Raven's Ridge	Fd Rbr/PC[2234]	151314.1925	480321.5484	1627+95.91	596.84' LT.
W Ang Pt N Line L2 Raven's Ridge	Fd Rbr/PC[2234]	151317.2855	480519.1573	1627+96.32	399.21' LT.
NE 1/16 S5 T17N R2E	Fd BC[COP]	151572.8430	480343.7800	1630+54.24	571.10' LT.
SE L13 B1 Ph1 Greatland Terrace	Fd Rbr/PC[2234-S]	151579.5240	480778.7922	1630+55.02	136.04' LT.
POT 1630+5545	Fd BC/BX[DOT]	151581.6835	480914.8136	1630+55.33	————
SW L1 B2 Glacier View	Fd Rbr/PC[7074]	151608.9696	481015.6192	1630+81.24	101.17' RT.
SE L1 B2 Glacier View	Fd Rbr/PC[7074]	151611.0217	481137.1960	1630+81.64	222.76' RT.
E Ang Pt E Line L1 B2 Glacier View	Fd Rbr/PC[2071]	151686.7199	481136.4808	1631+57.35	223.07' RT.
NW L1 B2 Glacier View	Fd Rbr	151708.8992	481014.0338	1631+81.19	100.94' RT.
NE L1 B2 Glacier View	Fd Rbr/AC	151710.2671	481114.1011	1631+81.19	201.02' RT.
NW L13 B1 Greatland Terrace Ph 1	Fd Rbr	151747.7990	480672.2557	1632+24.72	240.28' LT.
SW L10 B10 Lucas Subd	Fd Rbr	151783.8803	481012.9798	1632+56.17	100.90' RT.
PT W L L14 Greatland Terrace Ph 1	Fd Spike	151787.2382	480655.7175	1632+64.38	256.28' LT.
SW L9 B10 Lucas	Fd Rbr	151859.0582	481011.5655	1633+31.36	100.51' RT.
SW L8 B10 Lucas Subd	Fd Rbr	151933.7914	481010.7796	1634+06.10	100.74' RT.
SW L18 B1 Ph1 Greatland Terrace	Fd Rbr	152015.0943	480652.5621	1634+94.50	256.21' LT.
SHEET 47					
NW L12 B2 Lucas	Fd IP	152653.2381	481674.6852	1641+09.68	779.90' RT.
SE L2 Evergreen Center	Fd AM[10352]	152652.3177	481614.2853	1641+10.11	719.49' RT.
SE L2 Evergreen Center	Fd Rbr/PC[10352]	152650.2932	481474.3233	1641+11.21	579.52' RT.
NE L2A B1 Lucas	Fd Rbr	152650.3038	481464.4526	1641+11.44	569.65' RT.
SE L1 Evergreen Center	Fd Rbr	152712.3400	481613.4624	1641+70.14	720.01' RT.
NE L3 B2 MD Snodgrass	Fd Rbr	152756.6537	481930.3240	1642+07.37	1037.78' RT.
NW L3 B2 MD Snodgrass	Fd Rbr	152754.7529	481811.6063	1642+08.12	919.05' RT.
SE L2 B1 Lucas	Fd Rbr/PC[7077]	152750.1032	481462.9356	1642+11.25	570.36' RT.
SW L3-1 B1 Lucas	Fd Rbr	152748.7669	481322.4981	1642+13.04	429.93' RT.
NE L1 Evergreen Center Subd	Fd AM[10352]	152880.7929	481611.1520	1643+38.60	721.45' RT.
NW L1 Evergreen Center	Fd Rbr/PC[10352]	152878.6727	481471.2334	1643+39.60	581.52' RT.
NW L2 B1 Lucas	Fd Rbr	152877.8729	481411.1894	1643+40.14	521.48' RT.
SI Evergreen/ S Colony Way	FD BC/BX	152919.6582	482262.0441	1643+62.94	1373.05' RT.
S32|S33/55|54 T18N R2E SM	Fd BC/BX	152911.1749	481640.7091	1643+68.31	751.68' RT.
SSE L1A Bomhoff Acres	Fd Rbr/AC	153158.4068	481457.3612	1646+76.12	562.92' RT.
NW Tr A-1 Colony Fair Subd	Fd Rbr	153238.3709	481456.2060	1647+75.71	554.15' RT.
NE Tract A1 Colony Fair Subd	Fd AM[6504]	153240.4610	481605.3310	1648+01.11	701.99' RT.
NW L1 B12 ARRC Subd No1	Fd Rbr	153243.3188	481782.1010	1648+36.92	876.93' RT.
SHEET 48					
NW L13 B1 Ph1 Greatland Terrace	Fd Rbr	152074.6829	480647.3674	1635+54.19	260.07' LT.
SE L6 B10 Lucas Subdivision	Fd Rbr	152085.1579	481108.5763	1635+54.37	201.26' RT.
SW L6 B10 Lucas Subd	Fd Rbr	152083.6818	481008.7409	1635+55.12	101.41' RT.
SW L5 B10 Lucas Subd	Fd Rbr	152158.7190	481007.9859	1636+30.16	102.33' RT.
SW L4 B10 Lucas Subd	Fd Rbr	152233.7716	481006.6597	1637+05.22	102.68' RT.
SE L3 B10 Lucas Subdivision	Fd Rbr	152310.2644	481105.2205	1637+79.50	202.92' RT.

TABLE LEGEND

Fd	FOUND
BC	BRASS CAP MONUMENT
AM	ALUMINUM MONUMENT
Bx	MONUMENT CASE
Rbr	REBAR
AC	ALUMINUM CAP ON A REBAR
PC	PLASTIC CAP ON A REBAR
MLTC	Meadow Lakes Town Center

AKDOT&PF
4111 AVIATION AVENUE
ANCHORAGE, AK 99502
PHONE (907) 269-0700

STATE OF ALASKA 49TH
TRAVIS W. TEST
NO. LS-13324
REGISTERED PROFESSIONAL LAND SURVEYOR

DEPARTMENT LOCATIONS
SURVEYOR'S CERTIFICATE

DATE	REVISIONS	BY

STATE OF ALASKA
DEPARTMENT OF TRANSPORTATION
&
PUBLIC FACILITIES

RIGHT OF WAY MAP
ALASKA PROJECT

0A15024/0A15033

State Project No. Z581040000/CFHWY00006

GLENN HIGHWAY MP 34-42
PARKS HWY TO OLD GLENN HWY

DRAWN	JHS	DATE	MARCH 2013	SCALE	NTS
CHECKED	JRC	DATE	NOV 2021	SHEET	59 OF 67

MONUMENT SUMMARY SHEET

PROJECT DESIGNATION	SHEET NO.	TOTAL SHEETS
0AI5024	R-60	R-67

RECOVERED CORNERS (SHEETS 48-50)

LOCATION	MONUMENT TYPE	NORTHING	EASTING	STATION	OFFSET
SHEET 48 CONTINUED					
Sw L3 B10 Lucas	Fd Rbr	152308.6047	481005.6331	1637+80.06	103.32' RT.
NE L21A B1 Greatland Terrace Ph1	Fd IP	152319.9061	480768.7822	1637+96.64	133.22' LT.
SE L2 B10 Lucas Subdivision	Fd Nail	152383.0082	481103.6241	1638+52.26	202.95' RT.
N L21-A B1 Greatland Terrace Ph 1	Fd Rbr	152379.9570	480579.0955	1638+60.91	321.52' LT.
NE L23 B1 Greatland Terrace Ph1	Fd IP	152442.5446	480767.0768	1639+19.29	132.19' LT.
NW L1 B10 Lucas Subd	Fd Rbr	152533.3537	481002.2090	1640+04.83	104.91' RT.
C/L Daron Dr Greatland Terrace Ph III	Fd PK Nail	152557.6590	480575.5420	1640+38.65	321.11' LT.
E Tract B3 Greatland Terrace Phase III	Fd Rbr/PC	152557.1790	480545.5540	1640+38.83	351.10' LT.
SW L14 B2 Lucas Sub	Fd Rbr	152593.3344	481000.8316	1640+64.83	104.87' RT.
NE L14 B2 Lucas Subd	Fd Rbr	152644.8795	481104.5400	1641+14.04	209.71' RT.
NW L14 B2 Lucas Subd	Fd Rbr	152643.3430	481000.2515	1641+14.83	105.41' RT.
NE L15 B2 Lucas Subd	Fd Rbr	152695.0924	481103.8479	1641+64.26	210.13' RT.
NE PT Tr B-3 Greatland Terrace Ph III	Fd Rbr	152845.5270	480541.6440	1643+27.20	348.57' LT.
NE L8-1 B2 Lucas Subd	Fd Rbr	152873.3913	481101.1507	1643+42.58	211.42' RT.
PC 1643+9468	Fd BC/BX	152921.4819	480896.6173	1643+95.22	8.01' RT.
SE L D9	Fd Rbr/AC[8535]	152934.3350	481160.5504	1644+02.43	272.16' RT.
SW L D9	Fd Rbr/AC[8535]	152931.4212	480960.4935	1644+03.83	72.08' RT.
SW L1A Bomhoff Acres Subd	Fd Rbr	153151.4347	480966.8742	1646+29.96	74.07' RT.
NW Tract B Colony Fair Subd	Fd Rbr	153154.2826	481157.5181	1646+45.91	264.15' RT.
PC W Line L1A Bomhoff Acres	Fd Rbr/PC[6584]	153321.3091	480983.6855	1648+05.42	75.12' RT.
SHEET 49					
NW L1A Bomhoff Acres	Fd Rbr/PC[8535]	153704.6480	481061.2520	1652+07.87	76.20' RT.
SW Tr C-2 Colony Fair Subd	Fd Rbr/PC	153779.4831	481083.0165	1652+88.01	76.12' RT.
N PT L1A Bomhoff Acres	Fd Rbr/AC[8535]	153722.9730	481338.9810	1653+12.24	337.29' RT.
C/L PTPC WDogwood Ave	Fd Rbr/AC[8535]	153691.6470	481461.6690	1653+20.95	463.69' RT.
Dogwood and Fred Meyer Ent	Fd Rbr/AC[DOT]	153749.6772	481341.4735	1653+41.81	331.45' RT.
C/L PT Dogwood Ave	Fd Rbr/AC[8535]	153753.0160	481338.5400	1653+44.07	327.62' RT.
PC WLine TrC-2 Colony Fair Subd	Fd AC	153831.6736	481099.3710	1653+44.14	75.85' RT.
PT 1653+4317 BK	Fd BC/BX	153853.8730	481039.4624	1653+46.53	12.00' RT.
SE L3 Colony Fair Sub	Fd Rbr	154110.5287	481280.5572	1656+65.62	160.94' RT.
SW L2A Colony Fair Sub	Fd Rbr/PC[4588]	154110.5156	481280.8530	1656+65.70	161.22' RT.
SE L2A Colony Fair	Fd Rbr	154113.4977	481476.2898	1657+29.53	345.97' RT.
NE L3 Colony Fair Subd	Fd Rbr/AC[9689]	154274.3108	481415.7470	1658+63.41	238.25' RT.
NE L1A Colony Fair Subd	Fd Rbr	154220.0440	481589.7000	1658+66.16	420.45' RT.
NW L1 Colony Fair Subd	Fd Rbr	154307.6972	481478.1877	1659+14.62	287.15' RT.
W PC N Line L1 Colony Fair Subd	Fd Rbr/PC[4588]	154324.1741	481514.6493	1659+41.66	316.65' RT.
NE L1B Colony Fair Subd	Fd Rbr	154305.2980	481588.3550	1659+46.73	392.57' RT.
E PC N Line L1 Colony Fair Subd	Fd Rbr	154325.1812	481567.9553	1659+59.25	366.98' RT.
SE Silver Tip Dr ROW Highlands Subd	Fd Rbr	154552.0269	480921.5058	1659+72.99	317.98' LT.
SE L18 B9 The Highlands Subd	Fd Rbr	154573.4660	480876.4764	1659+79.30	367.45' LT.
SE L12 B4 The Highland Sub	Fd Rbr/AC[4588]	154516.4774	481114.3591	1659+99.41	123.66' LT.
E PC S Line L5 Colony Fair Subd	Fd Rbr	154375.0917	481567.0231	1660+06.38	350.51' RT.
SW L12 B4 The Highlands Subd	Fd Rbr	154597.0334	480942.5778	1660+22.32	312.01' LT.
SR L1 B4 Highland Sub	Fd Rbr	154592.7401	481139.2626	1660+79.63	123.81' LT.
NW L12 B4 The Highlands Subd	Fd Rbr	154669.3486	480976.3150	1661+01.55	302.53' LT.
SE L10 B4 The Highlands Subd	Fd Rbr	154669.2995	481164.1831	1661+60.15	124.03' LT.
SW L10 B4 The Highlands Subd	Fd Rbr	154741.6533	481010.4567	1661+80.90	292.66' LT.
SHEET 50					
SE L9 B4 The Highlands Subd	FD Rbr	154745.9222	481189.2206	1662+40.76	124.16' LT.
SW L8 Colony Fair	Fd Rbr/PC[7071]	154691.2323	481381.9891	1662+48.97	76.05' RT.
NW L6 B4 The Highlands Subd	Fd Rbr	154814.1029	481044.5959	1662+60.39	282.84' LT.
SE L8 B4 The Highlands Subd	Fd Rbr/PC[2234]	154812.9432	481211.2672	1663+11.31	124.14' LT.
SE L8 Colony Fair	Fd Rbr/PC[7071]	154694.0952	481582.1680	1663+14.17	265.33' RT.
SW L8 B4 The Highlands Subd	Fd Rbr	154880.0318	481071.3204	1663+31.37	278.03' LT.
SE L7 B4 The Highlands Subd	Fd Rbr/PC[2234]	154880.0290	481233.5496	1663+82.00	123.91' LT.
SE L9 Colony Fair Subd	Fd Rbr	154812.3040	481579.8970	1664+25.77	226.28' RT.
SE L6 B4 The Highlands Subd	FD Rbr/PC[638]	154981.6415	481267.0448	1664+88.99	123.80' LT.
PC W Line L6 B4 The Highlands Subd	Fd Rbr/PC	155044.7817	481130.8360	1665+06.46	272.91' LT.
NW L6 B4 The Highlands Subd	Fd Rbr/PC	155076.3573	481130.2448	1665+36.27	283.33' LT.
SE L5 B4 The Highlands Subd	FD Rbr/PC[638]	155078.9424	481298.8916	1665+91.37	123.92' LT.
Box PC 1666+5058 AKS 57121	FD BC/BX	155095.2752	481447.3218	1666+53.16	12.04' RT.
SE L3 B4 The Highlands Subd	Fd Rbr/PC[7074]	155218.2221	481273.1652	1667+21.20	190.71' LT.
NE L4 B4 The Highlands Subd	Fd Rbr	155219.6241	481343.6605	1667+43.57	123.45' LT.

RECOVERED CORNERS (SHEETS 50-51)

LOCATION	MONUMENT TYPE	NORTHING	EASTING	STATION	OFFSET
SHEET 50 CONTINUED					
NW L3 B4 The Highlands Subd	Fd Rbr	155291.0992	481126.8228	1667+53.42	351.58' LT.
Cor 10 City Of Palmer	Fd BC/BX	155194.4922	481603.9375	1667+89.34	134.00' RT.
SW L1 B4 The Highlands Subd	Fd Rbr	155366.2203	481125.7812	1668+36.22	372.09' LT.
SE L1 B4 The Highlands Subd	Fd Rbr	155368.2004	481270.8090	1668+77.07	231.72' LT.
PC W Line L1 B4 The Highlands Subd	Fd Rbr	155426.2382	481124.8992	1669+03.31	387.00' LT.
PC N Line L1 B4 The Highlands Subd	Fd Rbr	155446.6653	481144.4926	1669+31.24	372.32' LT.
NE L1 B4 The Highlands Subd	Fd Rbr/PC[7074]	155448.5147	481269.5347	1669+62.43	250.39' LT.
SW L4 Homesite Tract No100	Fd Rbr/PC[7074]	155594.5234	481007.0604	1670+73.17	535.22' LT.
NW Tax Parcel C15 S33 T18N R2E SM	Fd Rbr/AC[7524]	155523.8008	481628.3056	1671+04.34	89.38' RT.
SE L4 Homesite Tract No100	Fd Rbr	155598.0177	481247.0501	1671+21.01	298.70' LT.
1\4 S32|S33 T18N R2E SM	Fd BC/BX	155553.4128	481597.8970	1671+28.48	54.90' RT.
RCM OGH 185 MP	Fd AM[4489]	155594.0301	481432.9739	1671+45.46	114.12' LT.
Cor Tr 2 TA Smith Subd	FD PK\WASH[LS 5081]	155583.7680	481627.6510	1671+61.88	80.14' RT.
SW TRACT 1 TA SMITH	FD PC[5081]	155591.4310	481627.5490	1671+69.26	79.03' RT.
SE Tr 1 TA SMITH	FD RBR	155586.2880	481813.8320	1671+86.87	264.45' RT.
Ang Pt ELine L4 Homesite Tr 100	Fd Pipe	155757.9978	481244.7927	1672+98.99	319.58' LT.
Ang Pt ELine L4 Homesite Tr 100	Fd Steel Rod	155758.6062	481245.2172	1672+99.71	319.21' LT.
Ang Pt ELine L4 Homesite Tr 100	Fd Pipe	155758.6067	481282.0910	1673+03.20	282.47' LT.
NW Tr 3 TA Smith Subd	Fd Rbr/PC[5081]	155746.0820	481811.7890	1673+32.61	246.58' RT.
Angle Pt Tr 1 TA SMITH	Fd Rbr/PC[5081]	155765.7360	481799.9070	1673+49.92	233.34' RT.
SE Tr 1 TA Smith Sub	Fd Rbr/PC[5081]	155765.9290	481811.6650	1673+50.82	245.05' RT.
NE L4 Homesite Tract No100	Fd Rbr/PC[7074]	155879.3025	481322.3211	1674+38.78	249.56' LT.
NW Tr 1 TA Smith Subd	Fd Rbr/PC[5081]	155903.7320	481653.4080	1674+74.22	80.64' RT.
SHEET 51					
Angle Pt ELine L3 Homesite Tr 100	Fd Pipe	155927.2303	481338.3085	1674+91.62	234.88' LT.
Ang Pt ELine L3 Homesite Tract 100	Fd Rbr/PC[7074}	155927.5148	481359.0321	1674+92.32	214.16' LT.
PT 1677+2545 AHD 1676+0612 BK	BC/BX[DOH]	156035.6621	481590.2996	1676+03.96	17.32' RT.
NE L3 Homesite Tract No100	Fd Rbr/PC[7074]	156145.6744	481432.1602	1677+16.47	139.05' LT.
NW L25 B10 TASmith Subd	Fd Rbr	156403.4982	481647.4799	1679+70.84	80.35' RT.
NE L22 B10 TA Smith Sub	Fd Rbr	156527.8441	481892.2207	1680+91.28	327.04' RT.
SE L19 B10 TA Smith Subd	Fd Rbr	156647.5970	481890.5220	1682+11.04	327.24' RT.
NW L20 B10 TA Smith Sub	Fd Rbr	156646.4969	481760.3828	1682+12.01	197.10' RT.
SE L18 B10 TA Smith Subd	Fd Rbr	156708.9120	481889.6550		
NW L16 B10/TASMITH	FD RBR	156847.2660	481947.6060		
NE L17 B10 TA Smith Subd	Fd Rbr	156846.3760	481887.4250		
N 1/16 S32|S33 T18N R2E	Fd BC/BX[COP]	156872.6602	481576.9056		
French Haven Row Easmt South	Fd Rbr/PC[1511]	156871.4966	481486.9432		
CL Scott Rd	NAIL SHANK	156868.2994	481246.8544		
SW L13 B11 TASmith Subd	Fd Rbr	156907.3220	481946.7300		
SE L1 French Haven	Fd Rbr/PC[DOT]	156901.8526	481516.4433		
S Line Easmt Point French Haven	Fd Rbr/PC[1511]	156901.4386	481486.3227		
SW L1 French Haven	Rbr/PC[1511]	156898.2734	481246.4091		
SE L2 French Haven	Fd Rbr/PC[1511]	157044.6064	481514.1553		
SW Ang Pt L2 French Haven	Fd Rbr/PC[1511]	157043.8586	481464.2143		
SE L33 B11 TA Smith Subd	Fd Spike	157106.6896	481883.4548		

TABLE LEGEND

Fd	FOUND
BC	BRASS CAP MONUMENT
AM	ALUMINUM MONUMENT
Bx	MONUMENT CASE
Rbr	REBAR
AC	ALUMINUM CAP ON A REBAR
PC	PLASTIC CAP ON A REBAR
MLTC	Meadow Lakes Town Center

AKDOT&PF
4111 AVIATION AVENUE
ANCHORAGE, AK 99502
PHONE (907) 269-0700

STATE OF ALASKA 49TH
TRAVIS W. TEST
NO. LS-13324
REGISTERED PROFESSIONAL LAND SURVEYOR

DEPARTMENT LOCATIONS
SURVEYOR'S CERTIFICATE

DATE	REVISIONS	BY

STATE OF ALASKA
DEPARTMENT OF TRANSPORTATION
&
PUBLIC FACILITIES

RIGHT OF WAY MAP
ALASKA PROJECT

0A15024/0A15033

State Project No. Z581040000/CFHWY00006

GLENN HIGHWAY MP 34-42
PARKS HWY TO OLD GLENN HWY

DRAWN	JHS	DATE	MARCH 2013	SCALE	NTS
CHECKED	JRC	DATE	NOV 2021	SHEET	60 OF 67

RECOVERED CORNERS (SHEET 5I-OTHER CORNERS)

LOCATION	MONUMENT TYPE	NORTHING	EASTING	STATION	OFFSET
SHEET 51 CONTINUED					
SW Ang Pt L2 French Haven Sub	Fd Rbr/PC[1511]	157124.1332	481377.8780		
SW Ang Pt French Haven	Fd RbrPC[1511]	157125.6471	481462.7690		
SE L31 B11 TA Smith Subd	Fd Rbr	157226.4820	481881.2900		
SW L43 B11 TA Smith	Fd Rbr	157283.0642	481620.3771		
SHEET 52					
SE L27 B11 TA Smith Subd	Fd Rbr	157466.5020	481877.5100		
NE L2 French Haven	Fd Rbr/PC[DOT]	157531.3354	481506.2854		
NW L1 French Haven Sub	Fd Rbr/PC[1511]	157527.6526	481236.3749		
NW L2 French Haven Sub	Fd Rbr/PC[1511]	157529.8387	481371.2582		
SE L25 B11 TA Smith Subd	Fd Rbr	157586.5270	481875.3290		
SW L8 B15/TASMITH	FD RBR	157726.6870	481933.2130		
SE L21 B15 TA Smith Subd	Fd Rbr/PC[7074]	157725.8750	481873.2510		
NE L21 B15 TA Smith Subd	Fd Rbr	157795.9070	481872.0120		
NE L18 B15 TA Smith Subd	Fd Rbr	157976.1350	481869.1080		
NW L25 B15 TASmith Subd	Fd Rbr	157972.8613	481608.9784		
NW L12 B15 TASmith Subd	Fd Rbr/PC[7330]	158036.5910	481928.1760		
NE L17 B15/TASMITH SUBD	FD RBR	158036.0390	481868.1620		
SW L27 B15 TA Smith	Fd Rbr	158032.8253	481608.4145		
SE L15 B15 TA Smith	Fd Rbr	158096.0229	481867.6755		
NW L27 B15 TASmith Subd	Fd Rbr	158092.8617	481607.9278		
NE L15 B15 TA Smith	Fd Rbr	158165.8409	481866.0182		
Sec Cor 29|28\32|33 T18N R2E	Fd BC/BX	158191.4513	481555.6741		
OTHER RECOVERED CORNERS					
1\4 S15|S22 T18N R2E	Fd BC/BX	136780.0548	458165.8216	1315+87.31	1533.21' LT.
S1/16 S15|S14 T17N R1E	Fd BC[GLO]	138134.8167	460793.3403	1328+79.29	2178.57' LT.
NW US Govt L3	Fd Rbr	136316.6632	460819.6639	1331+52.74	430.04' LT.
1/4 S22|S23 T17N R1E SM	Fd 3.25 AC[BLM]	134175.2370	460846.3360	1341+34.48	1459.36' RT.
Cor USS 9024	Fd 3/4 Dr Rod	133759.5870	460851.0670	1343+33.87	1824.10' RT.
USS 9024 L4 C1|L2 C2	Fd AC[BLM]	133550.2560	460853.5380	1344+25.03	2007.80' RT.
S22|S23/S27|S26 T17N R1E SM	Fd BC[GLO]	131534.3150	460877.6200	1348+35.96	3849.70' RT.
1/4 S27|S26 T17N R1E SM	Fd AM[7537]	128890.6705	460914.7353	1351+21.27	6374.67' RT.
C2 L1 USS 9024	Fd AM[BLM]	128896.4186	461459.8012	1352+87.22	6254.17' RT.
CC S23/S26 T17N R1E SM USS 9024	Fd Al Pipe	131546.5433	461961.1989	1352+91.66	3557.06' RT.
CC S23/S26 T17N R1E SM USS 9024	Fd Al Drive Rod	131546.5847	461963.1885	1352+92.53	3556.66' RT.
C3 L1 USS 9024	Fd AM[BLM]	128898.6105	461663.5591	1353+50.30	6217.08' RT.
CC L2 USS 9024|S23/S26	Fd AM[BLM]	131548.8811	462160.9467	1353+79.61	3521.67' RT.
SW USS 1169	Fd BC[GLO]	128900.7859	461815.2675	1353+97.56	6191.80' RT.
SW Ang Pt W Line State Parks	Fd Rbr	135431.1525	462847.3951	1354+90.20	417.87' LT.
NW USS 1169	Fd BC[GLO]	132872.7661	462568.4997	1354+95.88	2155.66' RT.
C 1/4 S26 T17N R1E SM	Fd BC[GLO]	128920.4299	463554.0068	1359+50.67	6087.82' RT.
1/4 S23/S26 T17N R1E SM	Fd Rbr/PC[ASCG]	131569.3781	463510.9578	1359+89.22	3440.45' RT.
CS 1\16 S23 T17N R1E SM	Fd BC[GLO]	132884.7431	463505.7421	1360+32.79	2127.85' RT.
1/4 S14|S23 T17N R1E SM	Fd BC[GLO]	136802.8734	463467.6841	1363+28.30	1777.01' LT.
E 1\16 S23/S26 T17N R1E SM	Fd IP	131578.4986	464843.1578	1372+01.50	3554.36' RT.
SE 1\16 S23 T17N R1E SM	Fd BC[GLO]	132898.9393	464827.1706	1373+10.96	2238.37' RT.
MCS14|S23 T17N R1E SM	Fd BC[GLO]	136859.4432	465406.9762	1382+64.20	1649.19' LT.
1/4 S23|S24 T17N R1E SM	Fd BC[GLO]	134234.3320	466128.4770	1387+33.18	1032.57' RT.
WP S23|S24 T17N R1E SM	Fd AM[BLM]	136553.9646	466098.3530	1389+14.52	1279.62' LT.
SW Tract 3 Kepler No 1	Fd IP	136522.6963	466430.4490	1391+84.82	1226.98' LT.
NW Tract 1 Kepler No 1	Fd IP	136871.2444	466425.9996	1391+92.52	1575.43' LT.
WP S13/S24 T17N R1E SM	Fd BC[GLO/BLM]	136870.4249	466444.7847	1392+07.22	1573.89' LT.
NE Tract 1 Kepler No 1	Fd IP	136874.0958	466754.5951	1394+50.32	1572.66' LT.
SE Tract 3 Kepler No 1	Fd Spike	136570.1380	466763.7027	1394+59.12	1268.76' LT.
NW Tract 4 Kepler No 1	Fd IP	136215.0923	466761.5116	1394+59.35	913.71' LT.
NE Tract 4 Kepler No 1	Fd IP	136219.6085	467095.8807	1397+47.17	928.95' LT.
SE Tract 4 Kepler No 1	Fd IP	135815.7973	467100.9363	1397+72.93	526.15' LT.
W1/16 S13/S24 T17N R1E SM	Fd IP	136881.4371	467418.2053	1399+68.79	1613.62' LT.
CN 1/16 S12|S13 T18N R2E SM	Fd BC[GLO]	139540.6323	468700.7270	1407+54.72	4423.60' LT.
SE Lot 15 BK1 Canoe Lake Subd	Fd Rbr	136928.2920	468944.6550	1413+84.95	1876.72' LT.
SW PC Lot 15 BK1 Canoe Lake Subd	Fd Rbr	136929.1150	468959.1760	1413+99.18	1879.69' LT.
SE Lot 14 BK1 Canoe Lake Subd	Fd Rbr	136949.1390	469099.3060	1415+34.77	1920.36' LT.
RR ROW	FD AM[BLM]	134429.2300	468770.0695	1415+84.45	620.48' RT.

RECOVERED CORNERS (OTHER CORNERS)

LOCATION	MONUMENT TYPE	NORTHING	EASTING	STATION	OFFSET
OTHER CORNERS CONTINUED					
C 1/4 S24 T17N R1E SM	Fd AC[BLM]	134262.5810	468771.4840	1416+10.67	785.06' RT.
SW PT Lot 13 BK 1 Canoe Lake	Fd Rbr	137009.1330	469236.7110	1416+61.71	2000.15' LT.
SW\AP Lot 2 Crest View Subd	Fd Rbr PC[12312]	134628.4326	469230.1329	1419+72.02	372.03' RT.
SW Lot 2 Crest View Subd	Fd Rbr PC[12312]	134533.6747	469231.5662	1419+77.04	466.63' RT.
SW L1 B1 Crest View Sub	Fd Rbr	134590.7257	469484.8178	1421+96.34	407.93' RT.
SW L3 B2 Grand View Sub	Fd Rbr	134635.1789	469684.2323	1423+73.79	376.16' RT.
SW L2 B2 Grand View Sub	Fd Rbr	134670.2523	469818.6306	1424+95.68	356.85' RT.
C-E 1/16 S24 T17N R1E SM	Fd Rbr	134273.0490	470093.0040	1426+65.86	794.33' RT.
1/4 S24|S19 T17N R1|2E SM	Fd BC[GLO]	134291.6973	471412.4722	1435+84.77	1245.18' RT.
SE Lot 1A GRANDVIEW SUBD	Fd Rbr	134951.4253	471403.8258	1438+43.21	682.65' RT.
E 1/16 S13/24 T17N R1E SM SM	Fd IP	136914.1450	470059.3990	1438+98.54	1696.05' LT.
SW L1 B3 Canoe Lake	Fd Rbr	136919.0012	470470.2840	1444+68.08	1422.16' LT.
S 1/16 S13 |S18	FD BC	138251.2260	471362.4660	1460+43.18	1721.95' LT.
1/4 S18/S19 T17N R2E SM	Fd Rbr/AC[6702]	136964.2500	473973.2520	1469+59.33	1040.87' RT.
NE TR B TARA DELLS ADD1	Fd Rbr	139571.5656	471342.2558	1469+69.33	2663.20' LT.
NE Lot C11	FD RBR	137476.0857	473966.5789	1472+50.58	690.21' RT.
WP NW L2 Kers-Lake	Fd Rbr/AC[6504]	138659.8590	473289.0872	1478+21.02	526.41' LT.
Sec Cor 18|17\19|20 T17N R2E SM	Fd AM[5202]	136997.7230	476615.7830	1481+78.16	3179.27' RT.
NW L1 B1 Sky Ranch Ph2	Fd Rbr	136998.7170	476695.9120	1482+21.70	3246.55' RT.
W 1/16 S18/T17N R2E	FD BC[GLO]	139587.6770	472615.3870	1482+37.97	1585.96' LT.
1/4 Cor S12\S13 T17N R2E SM	Fd BC[GLO]	142182.0674	468662.6397	1483+26.92	6313.24' LT.
Cor Plat 94-45RS Palmer Rec Dist	Fd Rbr/AC[2071-S]	139737.6587	472613.0540	1483+63.64	1667.86' LT.
NE L1 B1 Sky Ranch Ph2	Fd Rbr	137003.0780	477006.6990	1483+91.01	3507.21' RT.
SE 1/16/S18 T17N R2E SM	FD BC[GLO]	138300.4820	475274.9010	1485+65.99	1350.41' RT.
E 1/16 S18|S17 T17N R2E SM	FD BC[GLO]	138318.2920	476596.5130	1492+85.34	2459.25' RT.
SW(TAX MAP A3) AS&G GRAVIL PIT	Fd Rbr	142204.5612	470652.7738	1494+06.48	4641.21' LT.
CN 1/16 S18 T17N R2E SM	Fd BC [GLO]	140923.2100	473916.1390	1500+61.23	1196.98' LT.
1/4 Cor S18|S17 T17N R2E SM	Fd BC[GLO]	139640.4260	476575.8570	1503+93.10	1737.22' RT.
NE PC L4 B5 Crimson View	Fd Rbr	141328.1492	474310.7038	1506+14.15	1078.89' LT.
NW PC W Line L12 B6 Crimson View	Fd Rbr	141359.9252	474349.2233	1506+61.56	1063.23' LT.
1/4 Cor S7\S18 T17N R2E SM	Fd BC[GLO]	142244.0350	473894.6360	1511+67.44	1919.03' LT.
SE TRACT1 MCLEOD LAKE SUBD	Fd IP	140162.5426	477278.8240	1512+09.51	2053.82' RT.
SW MCLEOD LAKE SUBD	Fd Rbr PC[6925]	140951.9346	476321.5594	1513+67.36	823.14' RT.
SW L1 MCLEOD LAKE SUBD	Fd Rbr PC[8925]	140772.6433	476617.4590	1513+73.33	1169.07' RT.
SE Lot 3 MCLEOD LAKE SUBD	Fd Rbr PC[1511]	140408.1836	477275.7540	1514+15.73	1920.33' RT.
SE L5 B1 Crimsonview Phase 1	Fd Rbr	141710.7560	475224.5750	1514+24.89	509.48' LT.
N 1/16S18|S17 T17N R2E SM	FD BC[GLO]	140958.7010	476556.4120	1514+98.24	1018.27' RT.
NW ANGLE PT MCLEOD LAKE SUBD	Fd Rbr PC[6925]	141160.8539	476318.4110	1515+42.47	709.15' RT.
SW\AP Lot 2 CREST VIEW SUBD	Fd Rbr PC[12312]	140595.0729	477273.1180	1515+72.47	1818.50' RT.
NW TRACT1 MCLEOD LAKE SUBD	Fd Rbr PC[8925]	141255.5000	476383.9440	1516+57.48	714.16' RT.
SW L1 Crosswind Estates	Fd Rbr	142045.4621	475219.8030	1517+05.57	691.88' LT.
SE L2 B1 Crimsonview Phase 1	Fd Rbr	142053.7910	475217.3980	1517+11.34	698.35' LT.
NE L1 MCLEOD LAKE SUBD	Fd RR Spike	140781.8358	477270.8318	1517+29.29	1717.05' RT.
NE L1 MCLEOD LAKE SUBD	Fd IP	140968.3020	477268.4103	1518+85.78	1615.63' RT.

TABLE LEGEND

Fd	FOUND
BC	BRASS CAP MONUMENT
AM	ALUMINUM MONUMENT
Bx	MONUMENT CASE
Rbr	REBAR
AC	ALUMINUM CAP ON A REBAR
PC	PLASTIC CAP ON A REBAR
MLTC	Meadow Lakes Town Center

AKDOT&PF
4111 AVIATION AVENUE
ANCHORAGE, AK 99502
PHONE (907) 269-0700

STATE OF ALASKA 49TH
TRAVIS W. TEST
NO. LS-13324
REGISTERED PROFESSIONAL LAND SURVEYOR

DEPARTMENT LOCATIONS
SURVEYOR'S CERTIFICATE

DATE	REVISIONS	BY

STATE OF ALASKA
DEPARTMENT OF TRANSPORTATION
&
PUBLIC FACILITIES

RIGHT OF WAY MAP
ALASKA PROJECT

0A15024/0A15033

State Project No. Z581040000/CFHWY00006

GLENN HIGHWAY MP 34-42
PARKS HWY TO OLD GLENN HWY

DRAWN JHS	DATE MARCH 2013	SCALE NTS	
CHECKED JRC	DATE NOV 2021	SHEET 6I	OF 67

MONUMENT SUMMARY SHEET

PROJECT DESIGNATION	SHEET NO.	TOTAL SHEETS
0AI5024	R-62	R-67

RECOVERED CORNERS (OTHER CORNERS)

LOCATION	MONUMENT TYPE	NORTHING	EASTING	STATION	OFFSET
OTHER CORNERS CONTINUED					
1/4 Cor S8\S17 T17N R2E SM	Fd Iron Pin/Bx	142311.0440	479178.6400	1540+39.93	2516.50' RT.
NW L1 Hodsdon Subd	Fd Rbr	144045.5140	476507.4640	1540+84.17	668.09' LT.
NE (TAX MP C9)	Fd Rbr	143242.6540	477842.9213	1541+16.45	889.79' RT.
SW WP L2 Palmer Church of God	Fd Rbr/PC[LS7330]	144345.1843	476505.5030	1543+36.70	829.44' LT.
NW L1 Palmer Church Of God Subd	Fd Rbr/PC[7330]	144347.5310	476667.4730	1544+25.00	693.63' LT.
NE (TAX MP C7)	Fd Rbr	143614.2294	477836.9943	1544+27.72	686.77' RT.
1/4 Cor S7\S8 T17N R2E SM	FD BC[GLO]	144912.3270	476493.1160	1548+10.01	1142.15' LT.
NE B5 Green Valley Sub	Fd Rbr	145406.2630	476485.7819	1552+24.06	1411.56' LT.
Sec Cor S8\S9/S17\S16 T17N R2E SM	Fd IP/BX	142347.8354	481814.0893	1554+75.47	4726.97' RT.
N 1/16 S7\S8 T17N R2E SM	Fd IP	146237.2220	476475.7120	1559+21.84	1862.90' LT.
SE A7 Alaska State Fair grounds	Fd Spike	144970.1150	479166.1630	1562+83.35	1088.95' RT.
SE Tr A Valley Crest	Fd Rbr/AC	146251.7940	477525.9620	1564+93.84	981.96' LT.
SW TR3 Kopperud Sub	Fd Rbr/AC[S-9689]	146283.5209	477644.6345	1565+83.92	898.44' LT.
NW L6 Wild Rose Estates	Fd Rbr	146237.7300	477797.4110	1566+26.59	744.77' LT.
NW 1/16 S8 T17N R2E SM	Fd Rbr	146256.0350	477796.6920	1566+41.69	755.13' LT.
Ang Pt W Bound TR3 Kopperud Sub	Fd Rbr/PC[2071-S]	146636.9491	477638.9644	1568+79.97	1091.58' LT.
SW L3 Kopperud Commercial Park	Fd Rbr/PC[7330]	146291.6381	478204.6544	1568+89.22	428.89' LT.
Ang Pt W Bound TR3 Kopperud Sub	Fd Rbr/PC[2071-S]	146720.1540	477705.3049	1569+85.73	1079.78' LT.
SecCor S6\S5\S7\S8 T17N R2E SM	Fd BC[GLO]	147556.6880	476454.1180	1570+26.84	2584.30' LT.
Ang Pt W Bound TR3 Kopperud Sub	Fd Rbr/PC[2071-S]	146922.0751	477823.2875	1572+19.46	1087.55' LT.
S8\S9 T17N R2E SM	Fd Rbr/AC	144991.3940	481774.0710	1576+91.08	3284.38' RT.
Ang Pt W Bound TR3 Kopperud Sub	Fd Rbr/PC[2071-S]	147319.1286	478166.5737	1577+33.34	1008.69' LT.
NW (TAX MP C5) HELEN RD	Fd Rbr PC[9106]	148205.4872	477762.8773	1582+55.02	1827.93' LT.
Sec Cor S5\S4/S8\S9 T17N R2E SM	Fd Rbr/AC[LS 7330]	147630.5253	481734.6721	1599+03.32	1836.67' RT.
W 1\16 S 4\5 T17N R2E SM	Fd IP	147646.5390	483055.0520	1606+17.96	2945.43' RT.
N PC Tract G1 Palmer Ind Park	Fd Rbr/AC	148932.4040	481286.3690	1607+29.72	767.13' RT.
C 1/4 S5 T17N R2E	Fd BC[GLO]	150233.9500	479048.2210	1608+60.07	1820.90' LT.
NE Tract G Palmer Ind Park	Fd Rbr	148939.1740	481711.6780	1608+75.70	1140.58' RT.
S 1/16 S5\S4 T17N R2E SM	Fd BC[GLO]	148951.0025	481711.3470	1608+82.82	1135.11' RT.
PC E Line Tr E Palmer Ind Park	Fd Rbr/AC	149018.8670	481680.0140	1609+15.56	1077.66' RT.
NE TRACT E Palmer Ind Park	Fd Rbr/AC	149136.0970	481677.8060	1609+89.28	1027.65' RT.
SE Tax Parcel A26	Fd Rbr/AC[7727]	150235.9335	479198.0373	1610+89.53	1684.29' LT.
NE Tract D Palmer Ind Park	Fd Rbr/AC	149701.9220	481667.2420	1613+73.33	835.59' RT.
SW L B-2 Palmer Ind Park	Fd Rbr/PC[XXXX]	149827.0432	481724.9544	1614+72.93	863.85' RT.
SE L C-1 Palmer Ind Park	Fd Rbr/PC[XXXX]	150024.7786	481661.5678	1616+09.96	766.71' RT.
SW L B-1 Palmer Ind Park	Fd Rbr/PC[XXXX]	150033.9128	481721.4110	1616+23.24	824.61' RT.
NW Tax Parcel A26	Fd Rbr/PC[7727]	150434.0437	479044.6715	1616+99.68	1881.56' LT.
NE Tax Parcel A26	Fd Rbr/PC[7727]	150436.0033	479194.4151	1617+66.05	1732.69' LT.
NW PC L B-1 Palmer Ind Park	Fd Rbr/PC[XXXX]	150242.6778	481807.6111	1617+83.15	887.62' RT.
NE Tract C1 Palmer Ind Park	Fd Rbr/AC	150270.7760	481656.7560	1617+95.86	735.12' RT.
NE L B-1 Palmer Ind Park	Fd AM[7330]	150247.9944	482164.9885	1618+04.43	1243.72' RT.
SW L2 ARRC 1996	Fd Rbr	150310.8312	482361.2031	1618+51.85	1436.05' RT.
C-W 1/16 S4 T17N R2E SM	FD AM/BX	150289.9670	483008.2670	1618+56.98	2083.39' RT.
SE Tax Parcel B9/PMC Fd Rbr	Fd Rbr	150753.8522	482228.6735	1622+09.75	1302.51' RT.
NW L2 ARRC 1996	Fd Rbr	150755.6039	482355.0898	1622+09.78	1428.93' RT.
NW Ang Pt W Line Tax PCI A26	Fd Rbr/PC[2234]	150880.7340	480051.9852	1623+66.15	872.26' LT.
NW Ang Pt N Line Tax PCI A26	Fd Rbr/PC[2234]	151069.6385	480137.2176	1625+53.88	784.47' LT.
NE Ang Pt N Line Tax PCI A26	Fd Rbr/AC[7727]	151234.1978	479718.4136	1627+24.11	1201.01' LT.
SE L8 B10 Lucas Subdivision	Fd Rbr	151935.2730	481110.9392	1634+06.22	200.91' RT.
NW PC Greatland Terrace Ph3	FD RBR	152836.4940	479902.2330	1643+32.43	988.03' LT.
E 1/16 S35/S2 T18/17N R2E SM	FD BC/BX[DOH]	152892.3570	480320.8700	1643+78.94	568.25' LT.
1/4 Cor S32/S5 T18/17N R2ESM	Fd BC/BX[DOH]	152873.8592	479001.2631	1643+89.88	1887.94' LT.
Proj CL Palmer-Wasilla Hwy	Fd IP	152903.0340	479950.6930	1643+97.87	938.10' LT.
S Cor S31\S32/S6\S5	FD BC/BX[DOH]	152837.2185	476359.5046	1644+04.54	4529.87' LT.
WNW Tr C-1 Highlands Subd OOP	Fd Rbr	153323.8419	480035.5720	1647+17.90	867.82' LT.
S 1/16 S31\S32 T18N R2E SM	Fd AM/BX	154159.1464	476339.5735	1649+01.10	4641.44' LT.
SW 1/16 S32/T18N R2E	FD BC[GLO]	154170.1460	477659.5230	1650+00.55	3343.77' LT.
C/L PC WDogwood Ave	Fd Rbr/AC[8535]	153630.2770	481584.8040	1652+94.38	599.59' RT.
C/L W Dogwood Ave	Fd Rbr/AC[8535]	153630.4990	481598.9720	1653+00.04	613.05' RT.
SE Tract C-2 Colony Fair Subd	Fd AM[613]	153786.5890	481596.4280	1654+56.46	562.14' RT.
SE L7 Colony Fair Subd	Fd Rbr	154594.3460	481583.6170	1662+19.86	297.84' RT.
C 1\4 S32 T18N R2E	Fd BC/BX	155511.9958	478958.0239	1662+72.13	2483.00' LT.
E Cent 1/16 COR S32 T18E R2E SM	FD BC/BX	155533.5170	480277.5040	1667+54.83	1234.82' LT.

RECOVERED CORNERS (OTHER CORNERS)

LOCATION	MONUMENT TYPE	NORTHING	EASTING	STATION	OFFSET
OTHER CORNERS CONTINUED					
SW L3 Homesite Tract No100	Fd Rbr/PC[7074]	155589.0507	480642.6653	1669+78.19	892.70' LT.
SI Arctic	Fd Rbr/AC[4469S]	155561.7931	482232.7846	1672+09.34	683.30' RT.
NCPI 752+0616	Fd Rbr/AC[4469S]	155566.5883	482592.7430	1672+43.59	1040.52' RT.
NCPI 757+7701	Fd Rbr/AC[4469S]	155570.3480	483021.9549	1672+75.72	1467.25' RT.
NCPI 758+8749	Fd Rbr/AC[4469S]	155571.3023	483411.4256	1672+98.35	1855.08' RT.
SI Arctic/Gulkana	Fd Rbr/AC[4469S]	155583.3757	484240.9789	1673+41.10	2681.18' RT.
NCPI 745+5704	Fd Rbr/AC[4469S]	155584.5609	484241.8246	1673+41.74	2681.94' RT.
C1/4 S33 T18N R2E SM	Fd Rbr/AC[4469S]	155587.7033	484239.4925	1673+43.27	2679.39' RT.
NE Tr 1 TA Smith Subd	Fd Rbr/PC[5081]	155905.4900	481798.1710	1674+79.06	225.33' RT.
NE 1/16 S32 T18N R2E	Fd AC	156855.0163	480255.8854		
SE L12A B11/TASMITH	FD RBR	156910.4150	482185.0970		
SE L30 B11 TA Smith Subd	Fd Rbr	157286.5230	481880.2690		
NW Tr 4-1 Sherrod Park	Fd AM[6291]	158228.0300	484225.2810		
1/4 S28/S33 T17N R1E SM	Fd Rbr/AC	158227.5691	484195.2836		
S30\S29/S31\S32 T17N R1E SM	Fd BC[GLO]	158116.5779	476278.4359		

RECOVERED CORNERS (ADDITIONAL CORNERS 7/21/2021)

LOCATION	MONUMENT TYPE	NORTHING	EASTING	STATION	OFFSET
SW Cor L1 Jar Subd	Fd Rbr/PC[12039]	134967.8961	471403.6114	1438+50.71	669.04' RT.
ROW Dedication Jar Subd	Fd Rbr/PC[12039]	135461.6230	471414.1598	1441+17.04	284.85' RT.
ROW Dedication Jar Subd	Fd Rbr/PC[12039]	135461.8462	471442.4659	1441+36.64	303.12' RT.
ROW Dedication Jar Subd	Fd Rbr/PC[12039]	135454.7890	471449.5445	1441+37.31	313.09' RT.
ROW Dedication Jar Subd	Fd Rbr/PC[12039]	135504.5604	471484.5314	1441+90.73	298.89' RT.
ROW Dedication Jar Subd	Fd Rbr/PC[12039]	135497.4707	471491.6591	1441+91.24	308.93' RT.
ROW Dedication Jar Subd	Fd Rbr/PC[12039]	135532.7422	471484.3514	1442+07.77	277.86' RT.
ROW Dedication Jar Subd	Fd Rbr/PC[12039]	135612.5039	471478.5416	1442+53.66	215.34' RT.
SE Cor L1 Jar Subd	Fd Rbr/PC[12039]	135127.0119	471937.4439	1442+55.32	883.39' RT.
ROW Dedication Jar Subd	Fd Rbr/PC[12039]	135612.8418	471500.4924	1442+68.68	230.16' RT.
ROW Dedication Jar Subd	Fd Rbr/PC[12039]	135619.4223	471507.5629	1442+77.62	230.70' RT.
ROW Dedication Jar Subd	Fd Rbr/PC[12039]	135610.0186	471560.4801	1443+06.61	273.78' RT.
ROW Dedication Jar Subd	Fd Rbr/PC[12039]	135654.9376	471613.8757	1443+70.60	279.65' RT.
ROW Dedication Jar Subd	Fd Rbr/PC[12039]	135684.5520	471594.1631	1443+77.86	244.82' RT.
ROW Dedication Jar Subd	Fd Rbr/PC[12039]	135659.7563	471621.0165	1443+79.05	281.35' RT.
ROW Dedication Jar Subd	Fd Rbr/PC[12039]	135684.4268	471610.0369	1443+88.91	256.21' RT.
ROW Dedication Jar Subd	Fd Rbr/PC[12039]	135695.1186	471674.9505	1444+42.09	294.94' RT.
SE Cor L3A Palmer CoG	Fd Rbr/PC[12312]	144591.5499	477432.3728	1550+39.09	176.42' LT.
SW Cor L3A Palmer CoG	Fd Rbr/PC[12312]	144671.7148	477322.9675	1550+48.62	311.72' LT.
SE Ang Pt L1A RR 2020	Fd Rbr/PC[7330]	151178.4541	480713.2777	1626+54.87	206.99' LT.

TABLE LEGEND

Fd	FOUND
BC	BRASS CAP MONUMENT
AM	ALUMINUM MONUMENT
Bx	MONUMENT CASE
Rbr	REBAR
AC	ALUMINUM CAP ON A REBAR
PC	PLASTIC CAP ON A REBAR
MLTC	Meadow Lakes Town Center

AKDOT&PF
4111 AVIATION AVENUE
ANCHORAGE, AK 99502
PHONE (907) 269-0700

STATE OF ALASKA 49TH TRAVIS W. TEST NO. LS-13324 REGISTERED PROFESSIONAL LAND SURVEYOR

DEPARTMENT LOCATIONS
SURVEYOR'S CERTIFICATE

DATE	REVISIONS	BY
9/21	ADDED ADDITIONAL CORNERS 7/21/2021 TABLE	JS

STATE OF ALASKA
DEPARTMENT OF TRANSPORTATION
&
PUBLIC FACILITIES

RIGHT OF WAY MAP
ALASKA PROJECT

0A15024/0A15033

State Project No. Z581040000/CFHWY00006

GLENN HIGHWAY MP 34-42
PARKS HWY TO OLD GLENN HWY

DRAWN	JHS	DATE	MARCH 2013	SCALE	NTS
CHECKED	JRC	DATE	NOV 2021	SHEET	62 OF 67

MONUMENT SUMMARY SHEET

PROJECT DESIGNATION	SHEET NO.	TOTAL SHEETS
0AI5024	R-63	R-67

PARCEL ROW CORNERS SET THIS SURVEY

LOCATION	MONUMENT TYPE	NORTHING	EASTING	STATION	OFFSET
BRADELY LAKE AVE. "BL" CENTERLINE ROW CORNERS					
NW COR PARCEL 65	SECONDARY	136305.3685	470756.5150	10+42.34	41.00' LT.
SW COR PARCEL 64-A	SECONDARY	136223.7233	470790.6152	10+75.58	41.00' RT.
PC PARCEL 65	SECONDARY	136310.7390	471266.0822	15+51.94	41.00' LT.
PC PARCEL 64-A	SECONDARY	136228.7435	471266.9464	15+51.94	41.00' RT.
SE COR PARCEL 64-A	SECONDARY	136248.1193	471387.5373	16+62.33	41.00' RT.
NE COR PARCEL 65	SECONDARY	136334.8387	471386.4439	16+90.75	41.00' LT.
NW COR PARCEL 66-A	SECONDARY	136340.2118	471386.3761	16+92.98	46.00' LT.
PC PARCEL 66-A	SECONDARY	136412.5761	471494.0673	18+42.09	46.00' LT.
NE COR PARCEL 66-A	SECONDARY	136567.7699	471647.0362	20+60.00	46.00' LT.
COLONY WAY "C" CENTERLINE ROW CORNERS					
SW COR PARCEL 132	SECONDARY	150131.8605	481110.5330	12+41.82	36.58' LT.
NE COR PARCEL 132	SECONDARY	150172.7553	481170.8797	13+25.79	29.39' LT.
NW COR PARCEL 132-A	SECONDARY	151042.2594	481673.1908	23+35.76	75.40' LT.
NE COR PARCEL 132-A	SECONDARY	151032.4827	481710.4359	23+46.59	38.38' LT.
DOGWOOD AVE. 'D" CENTERLINE ROW CORNERS					
COR PARCEL 145	SECONDARY	153798.0286	481122.3052	11+27.12	42.34' LT.
PC PARCEL 145	SECONDARY	153801.0126	481337.9034	13+42.37	41.80' LT.
SE COR PARCEL 145	SECONDARY	153784.1559	481420.6309	14+09.73	42.02' LT.
EVERGREEN AVE. "E" CENTERLINE ROW CORNERS					
SW COR PARCEL 136	SECONDARY	152940.4297	481588.2313	56+99.65	30.00' LT.
NW COR PARCEL 135	SECONDARY	152880.4653	481591.1546	57+01.72	30.00' RT.
NE COR PARCEL 136	SECONDARY	152962.7405	481609.8748	57+21.61	52.00' LT.
SE COR PARCEL 135	SECONDARY	152860.7523	481611.4268	57+21.71	50.00' RT.
E INNER SPRINGER LOOP RD. "E1S" CENTERLINE ROW CORNERS					
NW COR PARCEL 125	SECONDARY	147801.7120	479914.0750	22+04.89	68.00' LT.
PC PARCEL 125	SECONDARY	147744.5346	480004.8679	23+12.19	68.00' LT.
NW COR PARCEL 126	SECONDARY	147569.8661	480142.5100	25+08.08	48.27' RT.
SW COR PARCEL 126	SECONDARY	147554.8674	480142.7045	25+10.41	63.04' RT.
PC PARCEL 125	SECONDARY	147659.9821	480305.0902	26+63.79	48.00' LT.
NE COR PARCEL 125	SECONDARY	147662.8684	480527.6410	28+86.36	48.00' LT.
NE COR PARCEL 127	SECONDARY	147665.7377	480748.8748	31+07.61	48.00' LT.
SE COR PARCEL 127	SECONDARY	147657.7429	480749.0157	31+07.65	40.00' LT.
NE COR PARCEL 126	SECONDARY	147580.2929	480946.4611	POINT IS NOT ADJ TO ALIGN	
SE COR PARCEL 126	SECONDARY	147565.6020	480946.6517	POINT IS NOT ADJ TO ALIGN	
GLENN HWY. (MAINLINE) "G" CENTERLINE ROW CORNERS					
NW COR PARCEL 2	SECONDARY	136072.6222	460559.9344	1330+12.50	115.05' LT.
COR PARCEL 2	SECONDARY	136028.3141	460703.4075	1331+51.07	119.15' LT.
NE COR PARCEL 2	SECONDARY	136072.0342	460819.2712	1332+31.10	205.00' LT.
SW COR PARCEL 4	SECONDARY	135675.4821	460824.7403	1334+10.83	145.00' RT.
COR PARCEL 5	SECONDARY	135978.4496	461000.4550	1334+23.68	205.00' LT.
COR PARCEL 4	SECONDARY	135559.8227	461042.1615	1336+57.10	145.00' RT.
COR PARCEL 4	SECONDARY	135586.3084	461056.2508	1336+57.10	115.00' RT.
SE COR PARCEL 4	SECONDARY	135548.2477	461127.7988	1337+38.15	115.00' RT.
COR PARCEL 5	SECONDARY	135720.4112	461347.1234	1338+50.92	140.00' LT.
NE COR PARCEL 5	SECONDARY	135478.1992	461802.4434	1343+66.66	140.00' LT.
SW COR PARCEL 8	SECONDARY	135185.9950	462429.3116	1350+86.91	100.00' LT.
NW COR PARCEL 8	SECONDARY	135210.1978	462435.5746	1350+86.91	125.00' LT.
COR PARCEL 24	SECONDARY	135132.4633	463163.2910	1358+55.70	134.33' LT.
NW COR ACCESS ESMT	SECONDARY	135175.5785	463172.0715	1358+65.75	177.29' LT.
NE COR PARCEL 24	SECONDARY	135136.6210	463181.1440	1358+74.52	138.16' LT.
NE COR ACCESS ESMT	SECONDARY	135247.8165	463482.2612	1361+95.16	227.60' LT.
NE COR PARCEL 40	SECONDARY	135252.0015	463676.5878	1363+89.00	213.31' LT.
NW COR PARCEL E-44	SECONDARY	135162.7510	463698.2957	1364+02.14	122.41' LT.
NE COR PARCEL E-44	SECONDARY	135203.9709	463997.0708	1367+03.48	135.07' LT.
SW COR PARCEL 46	SECONDARY	134950.7482	464183.9746	1368+65.49	134.76' RT.
SW COR PARCEL 47	SECONDARY	134950.6584	464233.2305	1369+14.52	139.52' RT.
SE COR PARCEL 47	SECONDARY	134950.0097	464588.6521	1372+68.27	173.92' RT.
S BNDRY PALMER RD ROW	SECONDARY	134864.8068	464802.0305	1374+72.60	278.99' RT.
SW COR PARCEL 49	SECONDARY	135029.1705	464798.1067	1374+86.41	115.00' RT.
SW COR PARCEL 51	SECONDARY	135088.5460	465420.6053	1381+09.62	115.00' RT.

PARCEL ROW CORNERS SET THIS SURVEY

LOCATION	MONUMENT TYPE	NORTHING	EASTING	STATION	OFFSET
GLENN HWY. (MAINLINE) "G" CENTERLINE ROW CORNERS (CONTINUED)					
SW COR PARCEL 53	SECONDARY	135154.9475	466116.7660	1388+08.94	115.00' RT.
NW COR PARCEL 52	SECONDARY	135424.4493	466113.2190	1388+31.00	153.62' LT.
NE COR PARCEL 50	SECONDARY	135554.6136	466111.5059	1388+41.65	283.36' LT.
PC PARCEL 53	SECONDARY	135161.1755	466182.0605	1388+74.53	115.00' RT.
COR PARCEL 52	SECONDARY	135418.6935	466312.5077	1390+25.41	131.00' LT.
COR PARCEL 52	SECONDARY	135451.7800	466537.5460	1392+46.35	152.92' LT.
NE COR PARCEL 52	SECONDARY	135423.4588	466849.0739	1395+50.47	123.44' LT.
NW COR PARCEL 55	SECONDARY	135390.2575	467409.6060	1401+00.01	130.00' LT.
PC PARCEL 53	SECONDARY	135123.9379	467551.3683	1402+75.89	115.00' RT.
COR PARCEL 55	SECONDARY	135341.4506	467752.2391	1404+42.13	130.00' LT.
COR PARCEL 55	SECONDARY	135338.2908	467814.1120	1405+03.78	136.09' LT.
COR PARCEL 53	SECONDARY	135054.0354	468015.5482	1407+45.30	115.00' RT.
SE COR PARCEL 55	SECONDARY	135159.2620	468760.5844	1414+66.36	100.00' LT.
NE COR PARCEL 53	SECONDARY	134956.6359	468763.0474	1414+98.97	100.00' RT.
NW COR PARCEL 57	SECONDARY	135136.0057	468915.0150	1416+22.53	100.00' LT.
NE COR PARCEL 57	SECONDARY	135112.0182	469195.2338	1419+12.37	108.80' LT.
NW COR PARCEL 59	SECONDARY	135113.6914	469660.4440	1423+96.02	102.38' LT.
NW COR PARCEL 60	SECONDARY	135157.3191	469932.9758	1426+82.51	104.11' LT.
NE COR PARCEL 59	SECONDARY	135152.7588	469935.7277	1426+84.35	99.09' LT.
NE COR PARCEL 60	SECONDARY	135189.9653	470080.2004	1428+38.98	102.31' LT.
COR PARCEL 61	SECONDARY	135256.3023	470304.0533	1430+81.09	99.50' LT.
NE COR PARCEL 61	SECONDARY	135294.7020	470377.7957	1431+66.75	109.66' LT.
NE COR PARCEL 62	SECONDARY	135381.5101	470544.5013	1433+62.23	123.40' LT.
NW COR PARCEL 64	SECONDARY	135746.9156	471119.3998	1440+76.10	123.21' LT.
PC PARCEL 64	SECONDARY	135950.8010	471344.3590	1443+92.12	119.99' LT.
NE COR PARCEL 64	SECONDARY	135997.7740	471390.6937	1444+58.10	119.97' LT.
SE COR PARCEL 66-A	SECONDARY	136425.5987	471791.2752	1450+44.00	135.00' LT.
PC PARCEL 68	SECONDARY	137855.3496	473200.5288	1470+51.53	135.00' LT.
NW COR PARCEL 71	SECONDARY	137899.4590	473300.5591	1471+58.14	92.00' LT.
NE COR PARCEL 68	SECONDARY	137964.1782	473299.6000	1472+09.45	135.00' LT.
COR PARCEL 71	SECONDARY	137969.9094	473365.0628	1472+58.11	88.00' LT.
COR PARCEL 71	SECONDARY	138109.6465	473469.1140	1474+40.34	86.00' LT.
COR PARCEL 71	SECONDARY	138212.9449	473523.7093	1475+60.29	94.21' LT.
SW COR PARCEL 73-A	SECONDARY	138527.9890	473666.9834	1479+03.99	134.86' LT.
NE COR PARCEL 71	SECONDARY	138528.3911	473722.3678	1479+33.02	87.70' LT.
SW COR PARCEL 73-B	SECONDARY	138722.1167	473789.2392	1481+31.08	131.42' LT.
NW COR PARCEL 73-B	SECONDARY	138944.7775	473929.4642	1483+94.22	131.42' LT.
SW COR PARCEL 75	SECONDARY	139610.3884	474348.6461	1491+80.82	131.41' LT.
SW COR PARCEL 76	SECONDARY	139761.6871	474443.9294	1493+59.62	131.41' LT.
COR PARCEL 76	SECONDARY	140322.1715	474796.9057	1500+22.00	131.40' LT.
SW COR PARCEL 81	SECONDARY	140472.1419	474917.3521	1502+13.08	109.40' LT.
SW COR PARCEL 86	SECONDARY	140725.8345	475088.9376	1505+19.19	99.40' LT.
NW COR PARCEL 81	SECONDARY	140731.1736	475080.4825	1505+19.20	109.40' LT.
NW COR PARCEL 86	SECONDARY	140925.7522	475214.8398	1507+55.45	99.39' LT.
SW COR PARCEL 87	SECONDARY	140963.9321	475248.0292	1508+05.44	91.66' LT.
SW COR PARCEL 88	SECONDARY	141293.5307	475414.5475	1511+73.08	126.39' LT.
NW COR PARCEL 87	SECONDARY	141275.0343	475443.9521	1511+73.10	91.65' LT.
NW COR PARCEL 88	SECONDARY	141744.4506	475698.5233	1517+05.97	126.39' LT.

AKDOT&PF
4111 AVIATION AVENUE
ANCHORAGE, AK 99502
PHONE (907) 269-0700

STATE OF ALASKA
49TH
TRAVIS W. TEST
NO. LS-13324
REGISTERED PROFESSIONAL LAND SURVEYOR

DEPARTMENT LOCATIONS
SURVEYOR'S CERTIFICATE

DATE	REVISIONS	BY

STATE OF ALASKA
DEPARTMENT OF TRANSPORTATION
&
PUBLIC FACILITIES

RIGHT OF WAY MAP
ALASKA PROJECT

0A15024/0A15033

State Project No. Z581040000/CFHWY00006

GLENN HIGHWAY MP 34-42
PARKS HWY TO OLD GLENN HWY

DRAWN	JHS	DATE	MARCH 2013	SCALE	NTS
CHECKED	JRC	DATE	NOV 2021	SHEET	63 OF 67

MONUMENT SUMMARY SHEET

PROJECT DESIGNATION	SHEET NO.	TOTAL SHEETS
0AI5024	R-64	R-67

PARCEL ROW CORNERS SET THIS SURVEY

LOCATION	MONUMENT TYPE	NORTHING	EASTING	STATION	OFFSET
GLENN HWY. (MAINLINE) "G" CENTERLINE ROW CORNERS (CONTINUED)					
NW COR PARCEL 89	SECONDARY	142271.6456	476030.5350	1523+29.00	126.38' LT.
COR PARCEL 120	SECONDARY	148138.3918	479557.9673	1591+73.12	275.86' LT.
SW COR PARCEL 124	SECONDARY	148038.9854	479715.8129	1591+73.12	89.32' LT.
NW COR PARCEL 124	SECONDARY	148564.4833	480046.7557	1597+94.14	89.31' LT.
SE COR PARCEL 143	SECONDARY	152836.6367	480761.7571	1643+13.40	128.71' LT.
SE COR PARCEL 143-A	SECONDARY	152931.7649	480980.5006	1644+03.75	92.09' RT.
NW COR PARCEL 143-A	SECONDARY	152951.4793	480960.3721	1644+24.43	72.31' RT.
NW COR PARCEL 145	SECONDARY	153820.5278	481095.9102	1653+32.25	76.03' RT.
NE COR PARCEL 148	SECONDARY	156203.4409	481451.5973	1677+73.92	118.69' LT.
MARGARET DR. "MA" CENTERLINE ROW CORNERS					
SW COR PARCEL 90	SECONDARY	142327.0849	475674.2806	15+66.89	26.63' LT.
NE COR PARCEL 90	SECONDARY	142363.0417	475748.7255	16+60.70	30.61' LT.
COR PARCEL 101	SECONDARY	143242.6201	476582.9365	29+15.87	68.31' LT.
PC PARCEL 101	SECONDARY	143297.1197	476549.3394	29+47.51	126.82' LT.
NW COR PARCEL 101	SECONDARY	143381.9263	476518.5343	30+03.99	198.10' LT.
SW COR PARCEL 102	SECONDARY	143599.4491	476807.6567	33+42.13	69.37' LT.
SW COR PARCEL 103	SECONDARY	143711.4960	476878.2204	34+74.54	69.36' LT.
SW COR PARCEL 104	SECONDARY	143925.7246	477013.1352	37+27.71	69.36' LT.
SW COR PARCEL 105	SECONDARY	144370.5021	477293.2428	42+53.34	69.36' LT.
NW COR PARCEL 105	SECONDARY	144703.1633	477502.7428	46+46.48	69.35' LT.
SW COR PARCEL 107	SECONDARY	144933.1800	477647.6004	49+18.31	69.35' LT.
N COR PARCEL 107	SECONDARY	145103.7189	477755.0007	51+19.85	69.35' LT.
NE COR PARCEL 108	SECONDARY	145294.3857	477810.6406	53+10.83	123.87' LT.
SW COR PARCEL 113	SECONDARY	145928.0365	478281.5873	60+97.98	63.03' LT.
NW COR PARCEL 113	SECONDARY	145964.2683	478304.6343	61+40.92	62.84' LT.
NE COR PARCEL 114	SECONDARY	146018.6678	478339.2376	62+05.39	62.54' LT.
SW COR PARCEL 116-A	SECONDARY	146295.7871	478505.7295	65+28.61	69.34' LT.
SW COR PARCEL 116-B	SECONDARY	146507.1874	478638.8631	67+78.44	69.33' LT.
SW COR PARCEL 116-C	SECONDARY	146824.5740	478838.7436	71+53.52	69.33' LT.
SW COR PARCEL 118	SECONDARY	147166.2073	479053.8941	75+63.45	67.32' LT.
NE COR PARCEL 118	SECONDARY	147300.5566	479101.0746	77+25.93	65.23' LT.
SE COR PARCEL 121	SECONDARY	147627.8064	479212.2076	80+64.31	42.15' RT.
NE COR PARCEL 121	SECONDARY	147833.7816	479209.5293	82+70.30	43.25' RT.
COR PARCEL 120	SECONDARY	148135.1478	479317.6892	85+87.02	154.46' RT.
COR PARCEL 120	SECONDARY	148203.4461	479085.4597	86+27.17	84.83' LT.
COR PARCEL 120	SECONDARY	148203.6299	479095.4580	86+28.78	75.00' LT.
COR PARCEL 120	SECONDARY	148558.2375	479584.1384	92+50.95	72.65' RT.
PC PARCEL 120	SECONDARY	148713.1518	479599.9289	93+00.78	75.00' LT.
PC PARCEL 120	SECONDARY	148763.6079	479878.0349	95+83.42	75.00' LT.
PC PARCEL 120	SECONDARY	148977.8551	480195.1785	100+39.54	75.00' LT.
COR PARCEL 120	SECONDARY	149342.8682	480425.0481	104+70.91	75.00' LT.
SW COR PARCEL 129	SECONDARY	149383.1425	480361.6698	104+71.21	150.09' LT.
COR PARCEL 120	SECONDARY	149403.6493	480460.6632	105+48.70	75.00' LT.
NW COR PARCEL 129	SECONDARY	149442.8129	480399.0328	105+58.81	147.58' LT.
PC PARCEL 120	SECONDARY	149633.1778	480510.7153	108+23.57	75.00' LT.
COR PARCEL 120	SECONDARY	149785.2463	480505.3641	109+75.73	75.00' LT.
COR PARCEL 120	SECONDARY	149929.0464	480440.1628	111+01.15	142.56' LT.
NW COR PARCEL 120	SECONDARY	150254.3628	480494.0487	114+22.99	142.56' LT.
SW COR PARCEL 130	SECONDARY	150254.8977	480531.9330	114+29.82	105.30' LT.
SW COR PARCEL 131	SECONDARY	150352.7742	480559.0502	115+22.41	97.34' LT.
PC PARCEL 131	SECONDARY	150408.6547	480581.7581	115+74.91	92.19' LT.
SW COR PARCEL 133	SECONDARY	150577.6996	480659.0976	117+59.99	74.71' LT.
PC PARCEL 133	SECONDARY	150610.1754	480673.9556	118+00.75	70.04' LT.
PC PARCEL 133	SECONDARY	150766.9473	480710.0998	119+77.90	49.75' LT.
NW COR PARCEL 133	SECONDARY	151005.2488	480715.8458	122+16.10	40.77' LT.
NW COR PARCEL 134	SECONDARY	151178.4379	480713.2635	POINT IS NOT ADJ TO ALIGN	
MATANUSKA SPUR "MS" CENTERLINE ROW CORNERS					
NE COR PARCEL 8	SECONDARY	135136.2895	462850.6846	18+69.17	65.52' RT.
SW COR PARCEL 11-A	SECONDARY	134506.3154	462828.4586	25+65.81	32.49' RT.
COR PARCEL 4	SECONDARY	134429.4867	462713.8227	27+00.97	60.30' RT.
COR PARCEL 4	SECONDARY	134422.2590	462721.1665	27+00.97	50.00' RT.
PC PARCEL 4	SECONDARY	134364.0608	462678.9883	27+58.09	50.00' RT.
COR PARCEL 4	SECONDARY	134195.0669	462591.6876	29+49.27	49.54' RT.
SW COR PARCEL 9	SECONDARY	134145.6790	462591.0226	29+93.48	26.22' RT.

PARCEL ROW CORNERS SET THIS SURVEY

LOCATION	MONUMENT TYPE	NORTHING	EASTING	STATION	OFFSET
OUTTER SPRINGER LOOP "OS" CENTERLINE ROW CORNERS					
NW COR PARCEL 76	SECONDARY	140591.8798	474724.4944	6+63.60	119.64' LT.
COR PARCEL 76	SECONDARY	140431.4141	474623.4380	6+63.60	70.00' LT.
NW COR PARCEL 83	SECONDARY	140239.8084	475152.8782	12+13.71	50.00' LT.
SW COR PARCEL 82	SECONDARY	140155.1904	475099.5885	12+13.71	50.00' RT.
SW COR PARCEL 84	SECONDARY	140061.0323	475249.1034	13+90.40	50.00' RT.
PC PARCEL 84	SECONDARY	139864.6353	475560.9649	POINT IS NOT ADJ TO ALIGN	
PC PARCEL 85	SECONDARY	139949.2537	475614.2540	POINT IS NOT ADJ TO ALIGN	
SE COR PARCEL 84	SECONDARY	139792.1224	476573.6194	POINT IS NOT ADJ TO ALIGN	
NE COR PARCEL 85	SECONDARY	139895.9412	476572.0881	POINT IS NOT ADJ TO ALIGN	
PC PARCEL 84	SECONDARY	139746.1387	476417.9412	POINT IS NOT ADJ TO ALIGN	
PC PARCEL 85	SECONDARY	139842.0425	476389.6135	POINT IS NOT ADJ TO ALIGN	
PALMER WASILLA HWY. "PW" CENTERLINE ROW CORNERS					
SW COR PARCEL 143	SECONDARY	152816.4374	480601.9895	531+65.90	84.88' RT.
COR PARCEL 143	SECONDARY	152834.5264	480613.7421	531+77.55	66.72' RT.
S INNER SPRINGER LOOP RD. "SIS" CENTERLINE ROW CORNERS					
NW COR PARCEL 97	SECONDARY	142357.8954	476535.7158	12+80.54	67.92' LT.
NE COR PARCEL 97	SECONDARY	142335.7561	476898.5117	16+60.20	53.11' LT.
COR PARCEL 99	SECONDARY	142338.5688	476972.7423	17+34.46	55.00' LT.
NW COR PARCEL 99	SECONDARY	142451.3660	476971.3372	17+34.46	167.80' LT.
NE COR PARCEL 99	SECONDARY	142343.1779	477342.7339	21+04.49	55.00' LT.

AKDOT&PF
4111 AVIATION AVENUE
ANCHORAGE, AK 99502
PHONE (907) 269-0700

STATE OF ALASKA 49TH
TRAVIS W. TEST
NO. LS-13324
REGISTERED PROFESSIONAL LAND SURVEYOR

DEPARTMENT LOCATIONS
SURVEYOR'S CERTIFICATE

DATE	REVISIONS	BY

STATE OF ALASKA
DEPARTMENT OF TRANSPORTATION
&
PUBLIC FACILITIES

RIGHT OF WAY MAP
ALASKA PROJECT

0A15024/0A15033

State Project No. Z581040000/CFHWY00006

GLENN HIGHWAY MP 34-42
PARKS HWY TO OLD GLENN HWY

DRAWN	JHS	DATE	MARCH 2013	SCALE	NTS
CHECKED	JRC	DATE	NOV 2021	SHEET	64 OF 67

MONUMENT SUMMARY SHEET

PROJECT DESIGNATION	SHEET NO.	TOTAL SHEETS
0AI5024	R-65	R-67

PROJECT CENTERLINE MONUMENTS SET THIS SURVEY

LOCATION	MONUMENT TYPE	NORTHING	EASTING	STATION
GLENN HIGHWAY MAIN LINE "G"				
SHEET 9				
BOP	SECONDARY	135832.1882	459452.7825	1319+00.00
SHEET 10				
PT	SECONDARY	135851.4258	460802.7387	1333+08.78
SHEET 11				
PC	SECONDARY	135333.4417	461776.4663	1344+11.71
SHEET 14				
PT	SECONDARY	135010.7683	463394.0324	1360+84.82
SHEET 17				
PC	SECONDARY	135275.6559	466171.1411	1388+74.53
SHEET 18				
PT	SECONDARY	135237.6556	467568.4934	1402+75.89
SHEET 19				
PC	SECONDARY	135028.7512	468955.7006	1416+78.74
SHEET 21				
PT	SECONDARY	135846.3217	471409.8582	1443+63.69
SHEET 25				
PC	SECONDARY	137760.5819	473296.6749	1470+51.53
PT	SECONDARY	138126.6260	473581.5673	1475+16.43
SHEET 26				
NO CURVE PI	SECONDARY	138625.7833	473883.8793	1481+00.00
SHEET 31				
SI	NO MON	142416.6884	476271.2290	1525+80.00
SHEET 37				
NO CURVE PI	SECONDARY	146774.5368	479015.6155	1577+30.00
SHEET 38				
NO CURVE PI	SECONDARY	147447.1872	479448.6761	1585+30.00
SHEET 42				
PC	SECONDARY	149212.2445	480560.2336	1606+15.90
SHEET 43				
PT	SECONDARY	150523.7489	480929.1707	1619+97.30
SHEET 46				
NO CURVE PI	SECONDARY	151581.6835	480914.8136	1630+55.33
NO CURVE PI	SECONDARY	152004.2359	480909.0748	1634+77.92
SHEET 48				
PC	SECONDARY	152925.9648	480888.5102	1643+99.88
SHEET 49				
PT	SECONDARY	153851.6997	481026.1164	1653+40.31
SHEET 50				
PC	SECONDARY	155085.2151	481431.3846	1666+38.69
SHEET 51				
PT	SECONDARY	156018.9875	481573.2397	1675+87.56
EOP	SECONDARY	156698.9010	481562.4211	1682+67.56
MATANUSKA LAKE RD - EAST MATANUSKA SPUR RD "MS"				
SHEET 14				
BOP	SECONDARY	135278.9524	462916.6446	17+26.30
SI	NO MON	135005.2537	462915.7992	20+00.00
PC	SECONDARY	134897.6326	462915.4669	21+07.62
PT	SECONDARY	134844.7268	462922.8113	21+61.21
SHEET 13				
PC	SECONDARY	134727.5577	462956.3728	22+83.09
PT	SECONDARY	134541.9617	462909.1333	24+83.81
PC	SECONDARY	134387.1861	462756.8021	27+00.97
PT	SECONDARY	134341.1130	462723.4112	27+58.09
PC	SECONDARY	134214.4956	462658.0018	29+00.60
PT	SECONDARY	134090.0556	462589.1648	30+42.83
EOP	SECONDARY	134043.6108	462561.7191	30+96.78

PROJECT CENTERLINE MONUMENTS SET THIS SURVEY

LOCATION	MONUMENT TYPE	NORTHING	EASTING	STATION
BRADLEY LAKE AVE "BL"				
SHEET 22				
BOP	SECONDARY	136264.1599	470736.9446	10+22.34
PC	SECONDARY	136269.7412	471266.5143	15+51.94
SHEET 23				
PT	SECONDARY	136380.2849	471526.8282	18+42.09
SI	SECONDARY	136492.7470	471637.6780	20+00.00
EOP	SECONDARY	136511.9763	471656.6316	20+27.00
JIMMYS DR "JD"				
SHEET 23				
BOP/SI	SECONDARY	136492.7470	471637.6780	7+08.47
SI	NO MON	136288.0994	471845.3024	10+00.00
EOP/SI	SECONDARY	136057.7375	472079.0148	13+28.16
GRANDVIEW ROAD "GV"				
SHEET 21				
BOP	SECONDARY	135680.8631	471598.1241	3+88.49
SHEET 23				
PC	SECONDARY	135738.2757	471687.1993	4+93.00
PT	SECONDARY	135772.8814	471732.3938	5+51.35
SI	SECONDARY	136057.7375	472079.0148	10+00.00
PC	SECONDARY	136187.8570	472237.3479	12+04.94
PT	SECONDARY	136324.6967	472356.6633	13+87.33
PC	SECONDARY	136557.6192	472499.8816	16+60.76
SHEET 24				
PT	SECONDARY	136655.5856	472576.6505	17+85.49
SHEET 25				
PC	SECONDARY	137483.0114	473392.0315	29+47.16
PT	SECONDARY	137998.2706	473800.2885	36+05.83
POT	SECONDARY	138162.5699	473903.7612	38+00.00
EOP	NO MON	138416.4234	474063.6336	41+00.00
RUBYMAE DR - OUTER SPRINGER LOOP "OS"				
SHEET 27				
BOP	SECONDARY	140485.6374	474668.6951	6+73.00
SHEET 28				
SI	NO MON	140311.3822	474945.3973	10+00.00
EOP	SECONDARY	139974.5954	475480.1857	16+32.00

AKDOT&PF
4111 AVIATION AVENUE
ANCHORAGE, AK 99502
PHONE (907) 269-0700

STATE OF ALASKA 49TH
TRAVIS W. TEST
NO. LS-13324
REGISTERED PROFESSIONAL LAND SURVEYOR

DEPARTMENT LOCATIONS
SURVEYOR'S CERTIFICATE

DATE	REVISIONS	BY

STATE OF ALASKA
DEPARTMENT OF TRANSPORTATION
&
PUBLIC FACILITIES

RIGHT OF WAY MAP
ALASKA PROJECT

0A15024/0A15033

State Project No. Z581040000/CFHWY00006

GLENN HIGHWAY MP 34-42
PARKS HWY TO OLD GLENN HWY

DRAWN	JHS	DATE	MARCH 2013	SCALE	NTS
CHECKED	JRC	DATE	NOV 2021	SHEET	65 OF 67

MONUMENT SUMMARY SHEET

PROJECT DESIGNATION	SHEET NO.	TOTAL SHEETS
0AI5024	R-66	R-67

PROJECT CENTERLINE MONUMENTS SET THIS SURVEY

LOCATION	MONUMENT TYPE	NORTHING	EASTING	STATION
MARGARET DRIVE "MA"				
SHEET 31				
BOP	SECONDARY	142294.7640	475585.2851	14+71.80
PC	SECONDARY	142295.3348	475629.8254	15+16.34
PT	SECONDARY	142412.0916	475838.1677	17+65.34
SI	SECONDARY	142610.6606	475963.2180	20+00.00
PC	SECONDARY	142744.2327	476047.3360	21+57.85
PT	SECONDARY	142938.1097	476257.0747	24+46.78
SHEET 34				
PC	SECONDARY	143038.8415	476448.9411	26+63.48
PT	SECONDARY	143232.7151	476658.6777	29+52.41
SHEET 37				
PC	SECONDARY	147092.0907	479089.1473	75+13.33
SHEET 38				
PT	SECONDARY	147393.4638	479173.6836	78+30.72
NO CURVE PI	SECONDARY	147597.5591	479170.6094	80+34.84
SHEET 39				
SI	SECONDARY	148008.7093	479163.0518	84+46.06
PC	SECONDARY	148088.0826	479161.5928	85+25.44
SHEET 41				
PT	SECONDARY	148639.3564	479613.3175	93+00.78
SHEET 42				
PC	SECONDARY	148689.8126	479891.4234	95+83.42
PT	SECONDARY	148937.8884	480258.6423	100+39.54
PC	SECONDARY	149323.3832	480501.4105	104+95.11
SHEET 43				
PT	SECONDARY	149635.8154	480585.6689	108+23.57
PC	SECONDARY	149832.4778	480578.7485	110+20.35
PT	SECONDARY	149943.4630	480586.0969	111+31.77
SI	SECONDARY	150128.2471	480617.3228	113+19.17
PC	SECONDARY	150281.2076	480643.1709	114+74.30
PT	SECONDARY	150370.3323	480666.0373	115+66.42
PC	SECONDARY	150553.2592	480729.6961	117+60.11
SHEET 46				
PT	SECONDARY	150741.4900	480760.2005	119+51.76
EOP	SECONDARY	151178.8407	480754.2652	123+89.15
CLAIR LANE-INNER SPRINGER LOOP ROAD "SIS"				
SHEET 31				
BOP	SECONDARY	142610.6606	475963.2180	6+36.00
SI	NO MON	142416.6884	476271.2290	10+00.00
PC	SECONDARY	142353.9272	476370.8884	11+17.78
SHEET 33				
PT	SECONDARY	142279.3641	476635.3817	13+96.39
EOP	SECONDARY	142289.7104	477465.9244	22+27.00
JAY STREET-INNER SPRINGER LOOP ROAD "EIS"				
SHEET 39				
BOP/SI	SECONDARY	148008.7093	479163.0518	14+16.39
SHEET 38				
PC	SECONDARY	148012.6011	479374.7727	16+28.15
PT	SECONDARY	147974.1893	479512.5900	17+73.25
SI	NO MON	147853.3556	479704.4635	20+00.00
SHEET 40				
PC	SECONDARY	147685.6358	479970.7881	23+14.74
PT	SECONDARY	147611.0759	480235.5296	25+93.60
EOP	SECONDARY	147620.2367	480941.8686	33+00.00
HAROLD STREET-COLONY WAY "C"				
SHEET 43				
BOP	SECONDARY	150128.2471	480617.3228	7+19.24
SI	NO MON	150081.4655	480894.1606	10+00.00
PC	SECONDARY	150070.0195	480961.8941	10+68.69
PT	SECONDARY	150169.6048	481205.8234	13+46.20
NO CURVE PI	SECONDARY	150254.7667	481267.6801	14+51.45

PROJECT CENTERLINE MONUMENTS SET THIS SURVEY

LOCATION	MONUMENT TYPE	NORTHING	EASTING	STATION
HAROLD STREET-COLONY WAY "C" CONTINUED				
SHEET 45				
PC	SECONDARY	150948.1536	481703.9645	22+70.68
EOP	SECONDARY	151610.1079	482004.7986	30+00.00
PALMER WASILLA HWY "PW"				
OFF SHEET				
BOP	NO MON	152904.0888	480109.8474	526+73.27
SHEET 48				
EOP/SI	NO MON	152899.7009	480889.0961	534+52.53
EVERGREEN AVE "E"				
SHEET 48				
BOP	NO MON	152900.4584	480889.0792	50+00.00
SHEET 47				
NO CURVE PI/SECTION CORNER	PRIMARY MON	152911.1749	481640.7091	57+51.71
EOP	NO MON	152914.9500	481917.2088	60+28.23
COBB STREET "CB"				
SHEET 47				
BOP	NO MON	152703.2385	481643.6738	7+92.04
CL INTX/SECTION CORNER	PRIMARY MON	152911.1749	481640.7091	10+00.00
EOP	NO MON	153119.1120	481637.7444	12+07.96
DOGWOOD AVE "D"				
SHEET 49				
BOP	SECONDARY	153748.8368	480704.3285	7+08.40
SI	NO MON	153753.6144	480995.8936	10+00.00
PC	SECONDARY	153759.2006	481336.8059	13+40.96
PRC	SECONDARY	153698.9006	481464.3346	14+87.08
OFF SHEET				
PT	NO MON	153640.2956	481587.8503	16+28.67
EOP	NO MON	153640.8621	481629.1804	16+70.00
BOGARD RD "B"				
SHEET 50				
BOP	SECONDARY	155557.5918	481289.2317	7+45.70
EOP	NO MON	155560.9080	481543.5098	10+00.00
ARCTIC AVE "A"				
SHEET 50				
BOP	NO MON	155560.9080	481543.5098	10+00.00
OFF SHEET				
EOP	SECONDARY	155562.8640	481693.4970	11+50.00

AKDOT&PF
4111 AVIATION AVENUE
ANCHORAGE, AK 99502
PHONE (907) 269-0700

STATE OF ALASKA 49TH
TRAVIS W. TEST
NO. LS-13324
REGISTERED PROFESSIONAL LAND SURVEYOR

DEPARTMENT LOCATIONS
SURVEYOR'S CERTIFICATE

DATE	REVISIONS	BY

STATE OF ALASKA
DEPARTMENT OF TRANSPORTATION
&
PUBLIC FACILITIES

RIGHT OF WAY MAP
ALASKA PROJECT

0A15024/0A15033

State Project No. Z581040000/CFHWY00006

GLENN HIGHWAY MP 34-42
PARKS HWY TO OLD GLENN HWY

DRAWN JHS	DATE MARCH 2013	SCALE NTS	
CHECKED JRC	DATE NOV 2021	SHEET 66 OF 67	

MONUMENT SUMMARY SHEET

PROJECT DESIGNATION	SHEET NO.	TOTAL SHEETS
0AI5024	R-67	R-67

PRIMARY RANDOM CONTROL MONUMENTS SET THIS SURVEY

LOCATION	MONUMENT TYPE	NORTHING	EASTING	STATION	OFFSET
LOCATION OF THESE MONUMENTS TO BE DETERMINED AFTER CONSTRUCTION					

PRIMARY RANDOM CONTROL MONUMENTS SET THIS SURVEY

LOCATION	MONUMENT TYPE	NORTHING	EASTING	STATION	OFFSET
LOCATION OF THESE MONUMENTS TO BE DETERMINED AFTER CONSTRUCTION					

AKDOT&PF
4111 AVIATION AVENUE
ANCHORAGE, AK 99502
PHONE (907) 269-0700

STATE OF ALASKA
49TH
TRAVIS W. TEST
No. LS-13324
REGISTERED PROFESSIONAL LAND SURVEYOR

DEPARTMENT LOCATIONS
SURVEYOR'S CERTIFICATE

DATE	REVISIONS	BY

STATE OF ALASKA
DEPARTMENT OF TRANSPORTATION
&
PUBLIC FACILITIES

RIGHT OF WAY MAP
ALASKA PROJECT

0A15024/0A15033

State Project No. Z581040000/CFHWY00006

GLENN HIGHWAY MP 34-42
PARKS HWY TO OLD GLENN HWY

DRAWN JHS	DATE MARCH 2013	SCALE NTS	
CHECKED JRC	DATE NOV 2021	SHEET 67 OF 67	

NO.	DATE	REVISION

STATE	PROJECT DESIGNATION	YEAR	SHEET NO.	TOTAL SHEETS
ALASKA	0A15037/CFHWY00431 0A15038/CFHWY00432 0A15033/CFHWY00006	2021	S1	S6

DESIGNED BY CAB
CHECKED BY DRL
DRAFTED BY CDB

SCALE 1" = 3'

DATE TIME 11/12/2021 11:20 AM

DRAWING LOCATION
H:\JOBS\08-016 GLENN HIGHWAY 34-42 (DOT)\09 - PS&E\CAD_PH2\DRAWINGS\08016_P2_S01.DWG

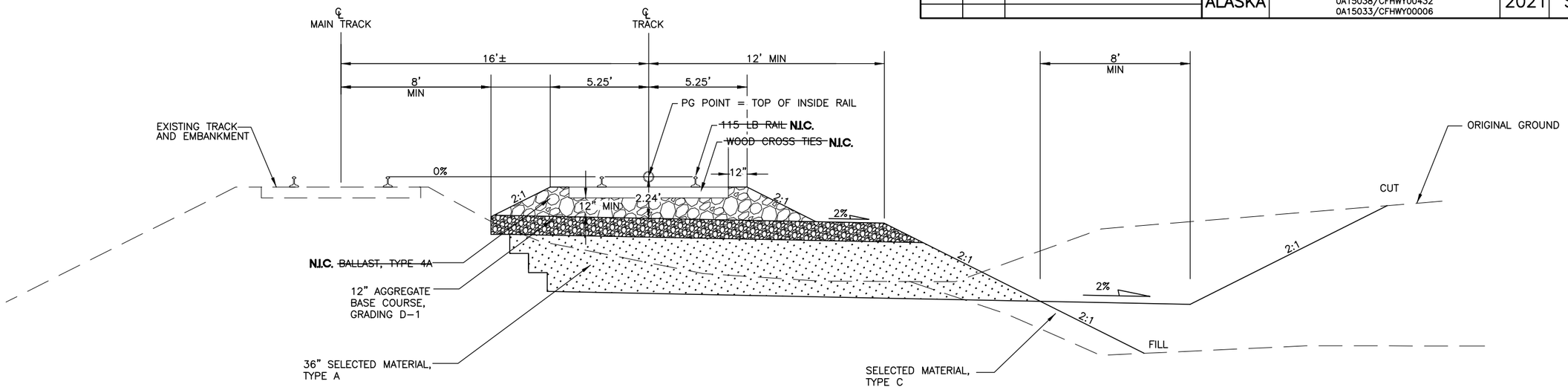

RAILROAD SIDING - TANGENT

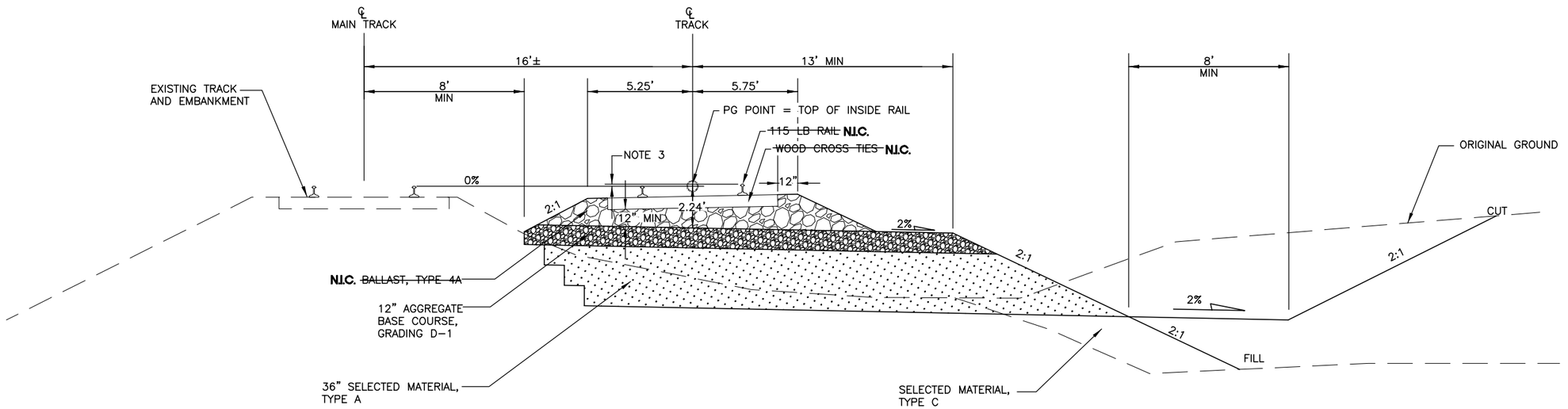

RAILROAD SIDING - CURVED

NOTES:

1. TRACKSIDE DITCHES SHALL BE GRADED TO MAINTAIN LONGITUDINAL FLOW OF SURFACE WATER TO A LOCATION THAT DIRECTS WATER AWAY FROM THE RAIL. IN NO CASE SHALL DITCHING BE LESS THAN 1 FOOT BELOW FREE DRAINING EMBANKMENT MATERIAL.
2. DIMENSIONS SHOWN MAY BE DECREASED ONLY AT THE DISCRETION OF THE ENGINEER WHERE CONDITIONS MERIT.
3. SUPERELEVATION IS OBTAINED BY RAISING THE OUTSIDE RAIL THROUGH THE CURVE.

CERTIFICATION SET
NOVEMBER 2021

STATE OF ALASKA
49TH
DENNIS R. LINNELL
CE-7649
REGISTERED PROFESSIONAL ENGINEER

HDL ENGINEERING CONSULTANTS, LLC
3335 ARCTIC BOULEVARD, STE 100
ANCHORAGE, AK 99503
(907) 564-2120
AECL861

STATE OF ALASKA
DEPARTMENT OF TRANSPORTATION
AND PUBLIC FACILITIES

GLENN HWY: PARKS HWY TO S. INNER SPRINGER LP. (PHASE II)

RAILROAD TYPICAL SECTIONS

DRAWING LOCATION
H:\JOBS\08-016 GLENN HIGHWAY 34-42 (DOT)\09 - PS&E\CAD_PH2\DRAWINGS\08016_P2_S02-S06_RAILROAD_SIDING.DWG

DESIGNED BY	CAB
CHECKED BY	DRL
DRAFTED BY	CDB
SCALE	1" = 100'
DATE	11/12/2021
TIME	11:21 AM

ROW
SB GLENN HWY
NB GLENN HWY
E RUBYMAE D
E OUTER SPRINGER LP
ARRC ROW
MATCH LINE "RR" STA 21+00
FLANGER SIGN (TYP) N.I.C.
PER ARRC STANDARD PLAN 30.131-04
"RR" 13+00
17' RT
"RR" 14+16
25' RT
"RR" 15+16
26' RT
"RR" 16+71
19' RT
ADDITIONAL CLEARING LIMIT
88' RAILROAD CROSSING MODULAR N.I.C.
PS = "RR" 9+60.40
N = 139819.5613
E = 474769.3293
PI = "RR" 10+00.00
N = 139853.0713
E = 474790.4299
Δ = 5°12'18"
PC = "RR" 11+24.27
N = 139951.7858
E = 474865.9108
PT = "RR" 12+28.40
N = 140037.2648
E = 474925.3211
PI = "RR" 11+76.37
N = 139993.1751
E = 474897.5586
Δ = 5°12'18"
Dc = 5°00'00"
R = 1146.28
T = 52.10
L = 104.13
S = 1"
RUNOFF = 100'

OVERHEAD WIRE
ELEV. UNKNOWN
FINISHED GRADE
(SEE NOTE 1)
ORIGINAL GROUND
VPI "RR" 9+60.40
ELEV. 132.51±
0.51%
VPC "RR" 11+78.40
ELEV. 133.63
VPI "RR" 12+28.40
ELEV. 133.89
100' VC
VPT "RR" 12+78.40
ELEV. 134.15
0.53%
0.53%
VPC "RR" 18+20.70
ELEV. 137.03
VPI "RR" 18+70.70
ELEV. 137.29
100' VC
VPT "RR" 19+20.70
ELEV. 137.61
0.63%

NOTE:

1. ARRC REPLACED TIES AND RESURFACED THE TRACK IN JUNE, 2021. THE PROFILE SHOWN IS BASED ON PRE-SURFACING CONDITIONS AND NEEDS TO BE ADJUSTED IN THE FIELD TO MATCH CURRENT TRACK ELEVATIONS.

RAILROAD SIDING "RR"

SHEET NO.	TOTAL SHEETS
S2	S6
STATE	YEAR
ALASKA	2021

PROJECT DESIGNATION
0A15037/CFHWY00431
0A15038/CFHWY00432
0A15033/CFHWY00006

NO.	REVISION
DATE	
NO.	REVISION
DATE	
NO.	REVISION
DATE	

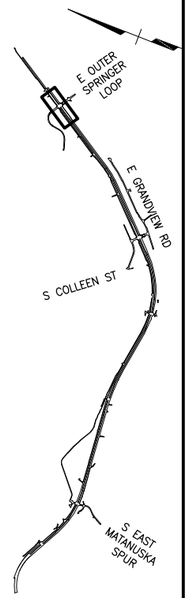

CERTIFICATION SET
NOVEMBER 2021

STATE OF ALASKA
49TH
DENNIS R. LINNELL
CE-7649
REGISTERED PROFESSIONAL ENGINEER

HDL ENGINEERING CONSULTANTS, LLC
3335 ARCTIC BOULEVARD, STE 100
ANCHORAGE, AK 99503
(907) 564-2120
AECL861

STATE OF ALASKA
DEPARTMENT OF TRANSPORTATION AND PUBLIC FACILITIES

GLENN HWY: PARKS HWY TO S. INNER SPRINGER LP. (PHASE II)

RAILROAD SIDING
PLAN & PROFILE
9+60.4 TO 21+00

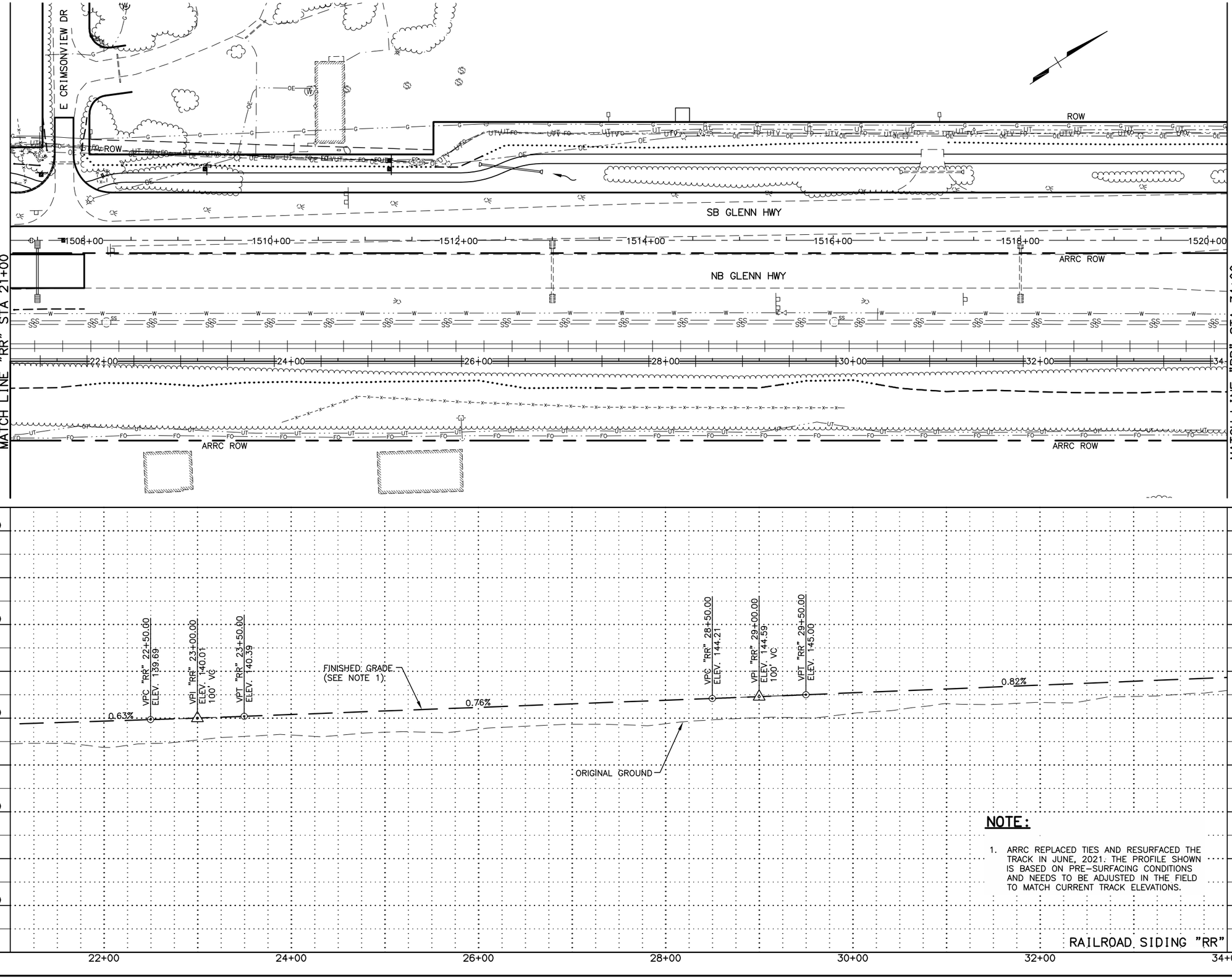

NOTE:

1. ARRC REPLACED TIES AND RESURFACED THE TRACK IN JUNE, 2021. THE PROFILE SHOWN IS BASED ON PRE-SURFACING CONDITIONS AND NEEDS TO BE ADJUSTED IN THE FIELD TO MATCH CURRENT TRACK ELEVATIONS.

SHEET NO.	TOTAL SHEETS
S3	S6
STATE	YEAR
ALASKA	2021

PROJECT DESIGNATION

0A15037/CFHWY00431
0A15038/CFHWY00432
0A15033/CFHWY00006

NO.	REVISION
DATE	
NO.	REVISION
DATE	
NO.	REVISION
DATE	

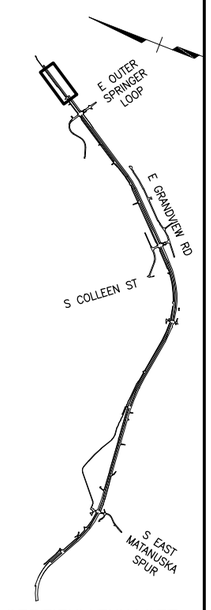

CERTIFICATION SET
NOVEMBER 2021

STATE OF ALASKA
49TH
DENNIS R. LINNELL
CE-7649
REGISTERED PROFESSIONAL ENGINEER

HDL ENGINEERING CONSULTANTS, LLC
3335 ARCTIC BOULEVARD, STE 100
ANCHORAGE, AK 99503
(907) 564-2120
AECL861

STATE OF ALASKA
DEPARTMENT OF TRANSPORTATION AND PUBLIC FACILITIES

GLENN HWY: PARKS HWY TO S. INNER SPRINGER LP. (PHASE II)

RAILROAD SIDING
PLAN & PROFILE
21+00 TO 34+00

DESIGNED BY CAB
CHECKED BY DRL
DRAFTED BY CDB
SCALE 1" = 100'
DATE 11/12/2021 TIME 11:21 AM
DRAWING LOCATION
H:\JOBS\08-016 GLENN HIGHWAY 34-42 (DOT)\09 - PS&E\CAD_PH2\DRAWINGS\08016_P2_S02-S06_RAILROAD_SIDING.DWG

DRAWING LOCATION
H:\JOBS\08-016 GLENN HIGHWAY 34-42 (DOT)\09 - PS&E\CAD_PH2\DRAWINGS\08016_P2_S02-S06_RAILROAD_SIDING.DWG

DESIGNED BY	CAB
CHECKED BY	DRL
DRAFTED BY	CDB

SCALE 1" = 100'

DATE TIME
11/12/2021 11:21 AM

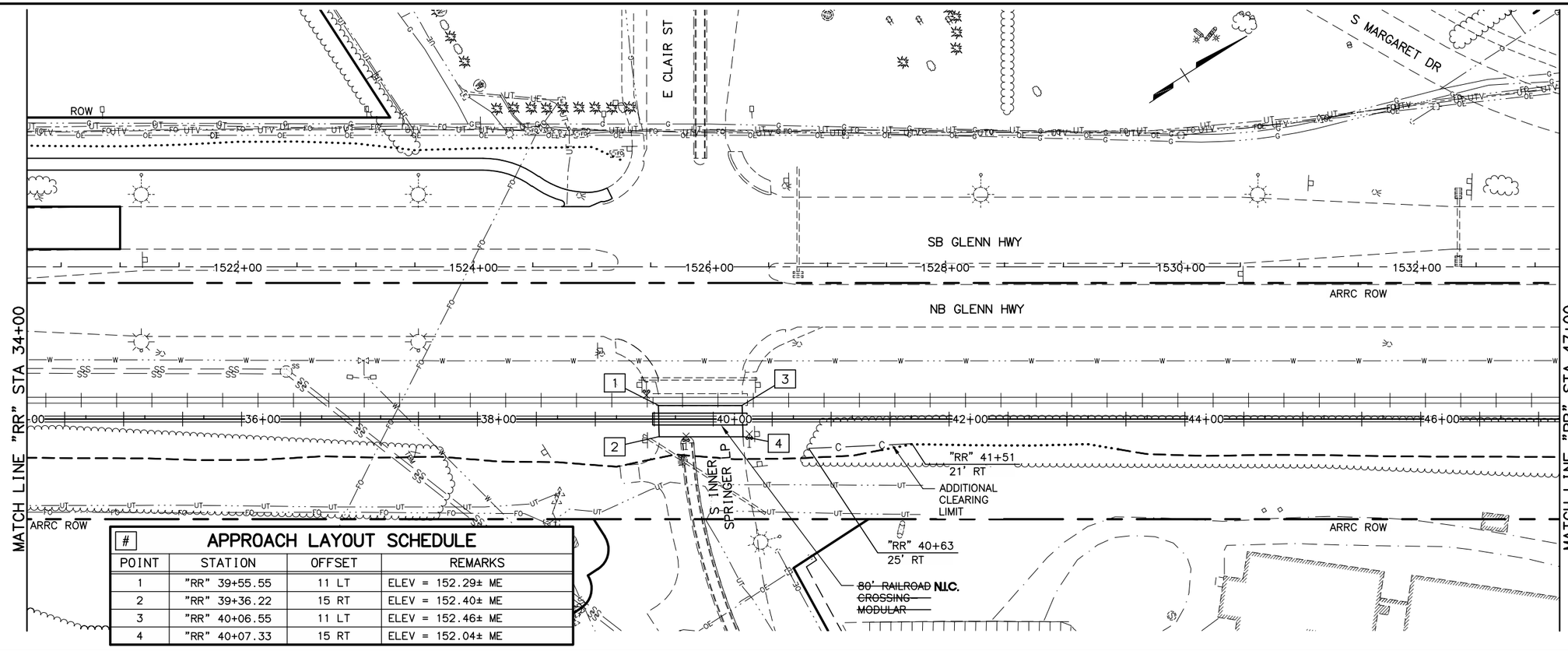

#	APPROACH LAYOUT SCHEDULE		
POINT	STATION	OFFSET	REMARKS
1	"RR" 39+55.55	11 LT	ELEV = 152.29± ME
2	"RR" 39+36.22	15 RT	ELEV = 152.40± ME
3	"RR" 40+06.55	11 LT	ELEV = 152.46± ME
4	"RR" 40+07.33	15 RT	ELEV = 152.04± ME

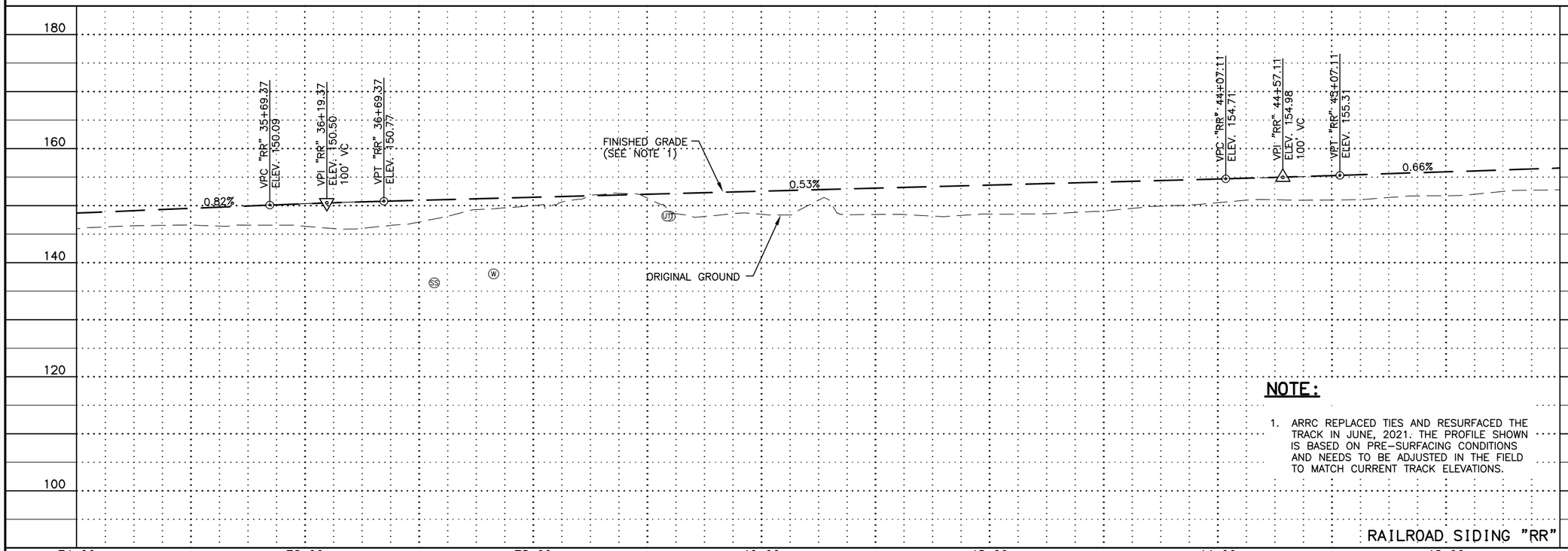

NOTE:

1. ARRC REPLACED TIES AND RESURFACED THE TRACK IN JUNE, 2021. THE PROFILE SHOWN IS BASED ON PRE-SURFACING CONDITIONS AND NEEDS TO BE ADJUSTED IN THE FIELD TO MATCH CURRENT TRACK ELEVATIONS.

RAILROAD SIDING "RR"

SHEET NO.	TOTAL SHEETS
S4	S6
STATE	YEAR
ALASKA	2021

PROJECT DESIGNATION
0A15037/CFHWY00431
0A15038/CFHWY00432
0A15033/CFHWY00006

NO.	REVISION
DATE	
NO.	REVISION
DATE	
NO.	REVISION
DATE	

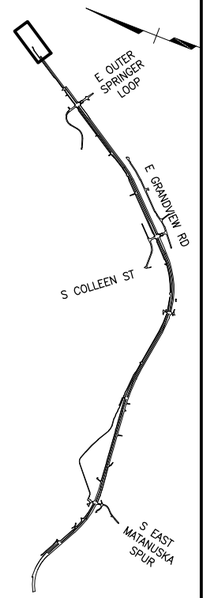

CERTIFICATION SET
NOVEMBER 2021

STATE OF ALASKA
49TH
DENNIS R. LINNELL
CE-7649
REGISTERED PROFESSIONAL ENGINEER

HDL ENGINEERING CONSULTANTS, LLC
3335 ARCTIC BOULEVARD, STE 100
ANCHORAGE, AK 99503
(907) 564-2120
AECL861

STATE OF ALASKA
DEPARTMENT OF TRANSPORTATION
AND PUBLIC FACILITIES

GLENN HWY: PARKS HWY TO S. INNER SPRINGER LP. (PHASE II)

RAILROAD SIDING
PLAN & PROFILE
34+00 TO 47+00

CAB	
DRL	
CDB	

DESIGNED BY	
CHECKED BY	
DRAFTED BY	

SCALE	
1" = 100'	

DATE	TIME
11/12/2021	11:21 AM

DRAWING LOCATION
H:\JOBS\08-016 GLENN HIGHWAY 34-42 (DOT)\09 - PS&E\CAD_PH2\DRAWINGS\08016_P2_S02-S06_RAILROAD_SIDING.DWG

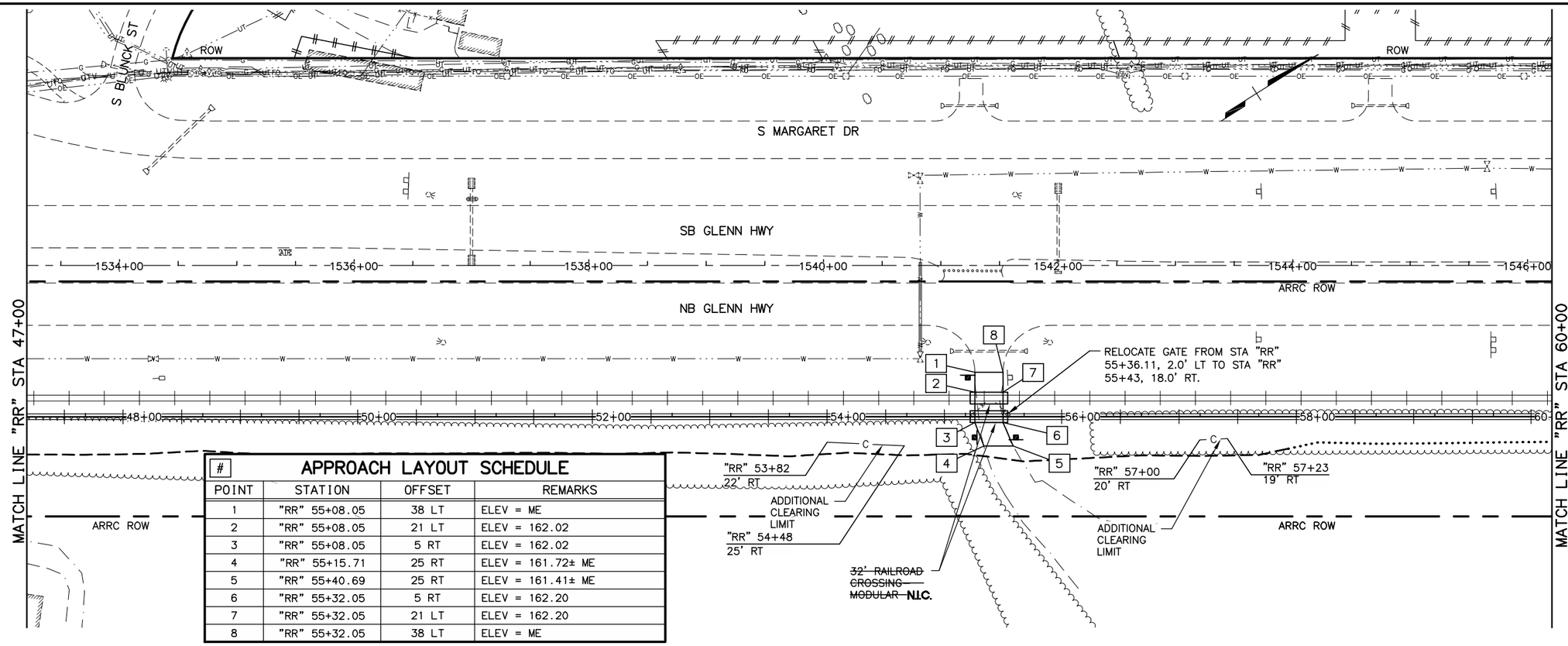

#	APPROACH LAYOUT SCHEDULE		
POINT	STATION	OFFSET	REMARKS
1	"RR" 55+08.05	38 LT	ELEV = ME
2	"RR" 55+08.05	21 LT	ELEV = 162.02
3	"RR" 55+08.05	5 RT	ELEV = 162.02
4	"RR" 55+15.71	25 RT	ELEV = 161.72± ME
5	"RR" 55+40.69	25 RT	ELEV = 161.41± ME
6	"RR" 55+32.05	5 RT	ELEV = 162.20
7	"RR" 55+32.05	21 LT	ELEV = 162.20
8	"RR" 55+32.05	38 LT	ELEV = ME

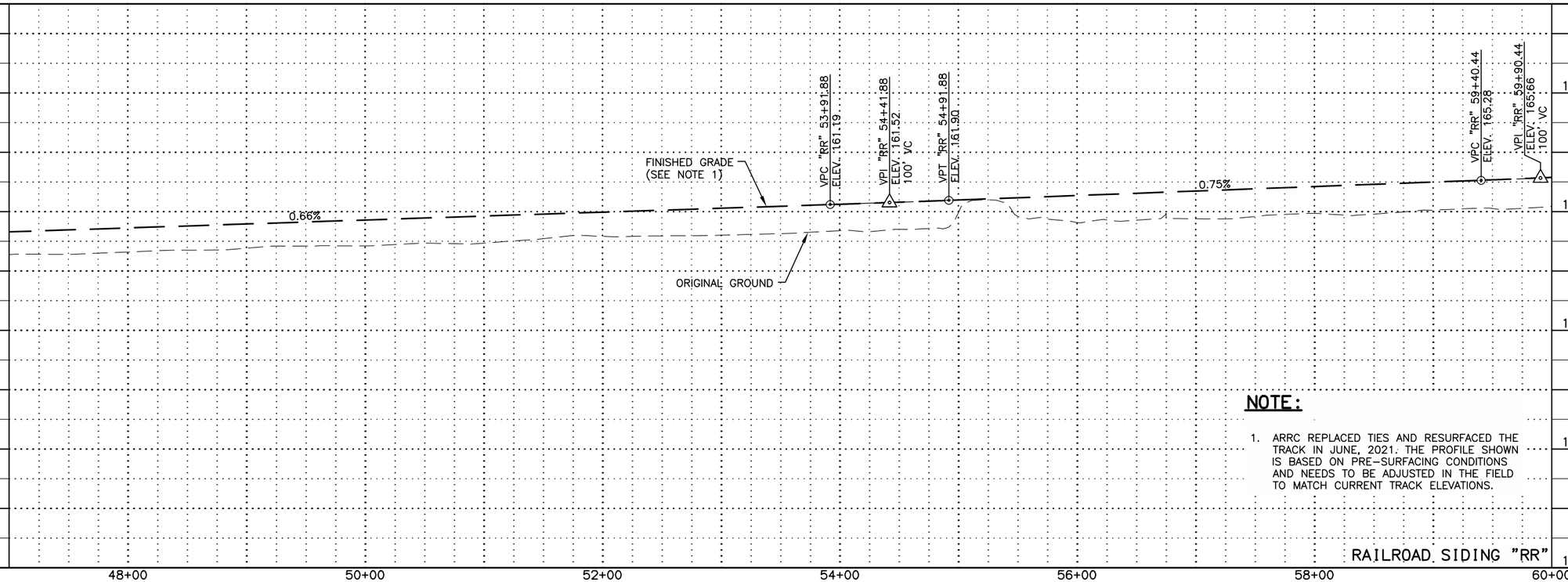

NOTE:

1. ARRC REPLACED TIES AND RESURFACED THE TRACK IN JUNE, 2021. THE PROFILE SHOWN IS BASED ON PRE-SURFACING CONDITIONS AND NEEDS TO BE ADJUSTED IN THE FIELD TO MATCH CURRENT TRACK ELEVATIONS.

RAILROAD SIDING "RR"

SHEET NO.	TOTAL SHEETS
S5	S6
STATE	YEAR
ALASKA	2021

PROJECT DESIGNATION
0A15037/CFHWY00431
0A15038/CFHWY00432
0A15033/CFHWY00006

NO.	REVISION
DATE	
NO.	REVISION
DATE	
NO.	REVISION
DATE	

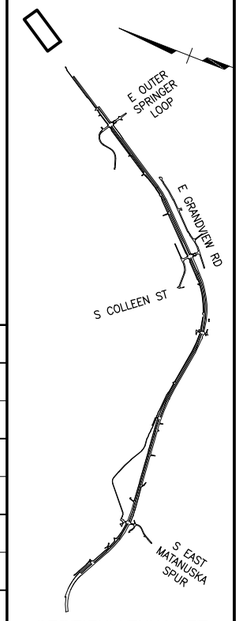

CERTIFICATION SET
NOVEMBER 2021

STATE OF ALASKA
49TH
DENNIS R. LINNELL
CE-7649
REGISTERED PROFESSIONAL ENGINEER

HDL ENGINEERING CONSULTANTS, LLC
3335 ARCTIC BOULEVARD, STE 100
ANCHORAGE, AK 99503
(907) 564-2120
AECL861

STATE OF ALASKA
DEPARTMENT OF TRANSPORTATION AND PUBLIC FACILITIES

GLENN HWY: PARKS HWY TO S. INNER SPRINGER LP. (PHASE II)

RAILROAD SIDING
PLAN & PROFILE
47+00 TO 60+00

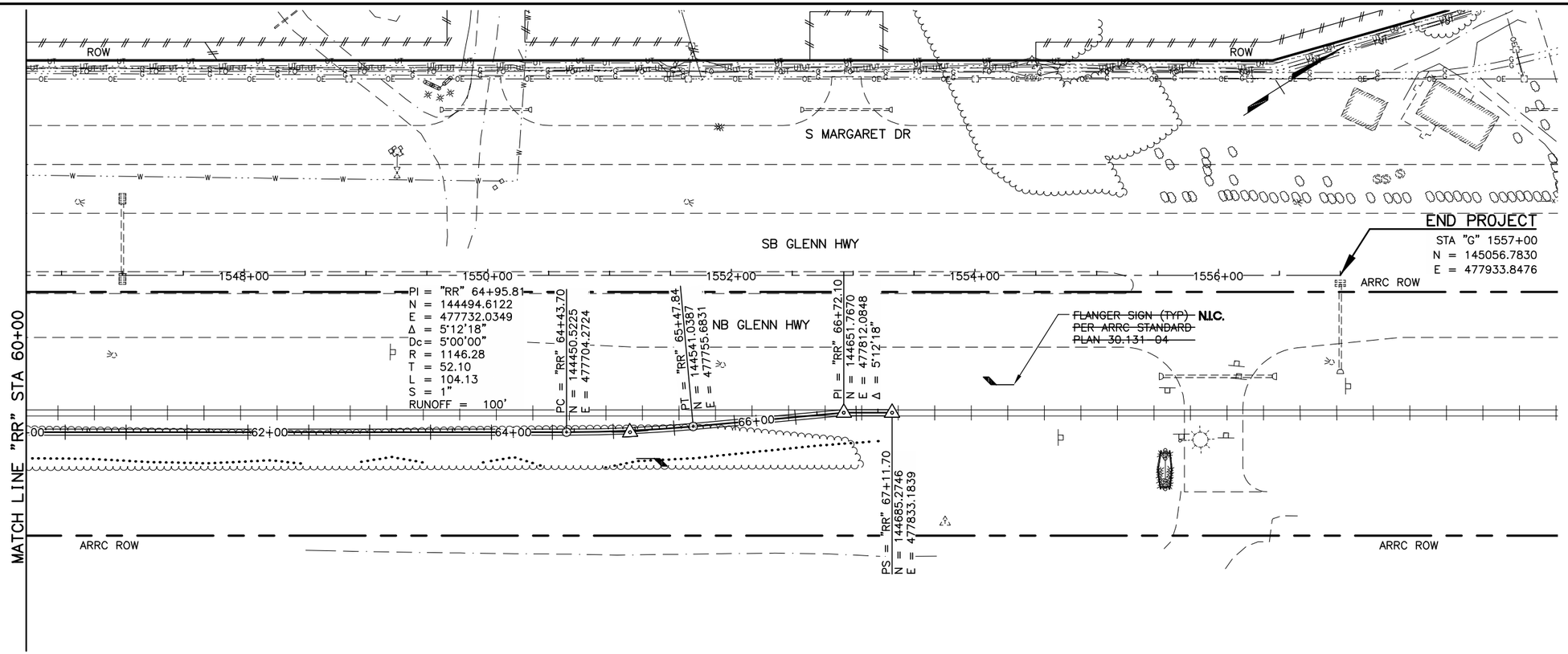

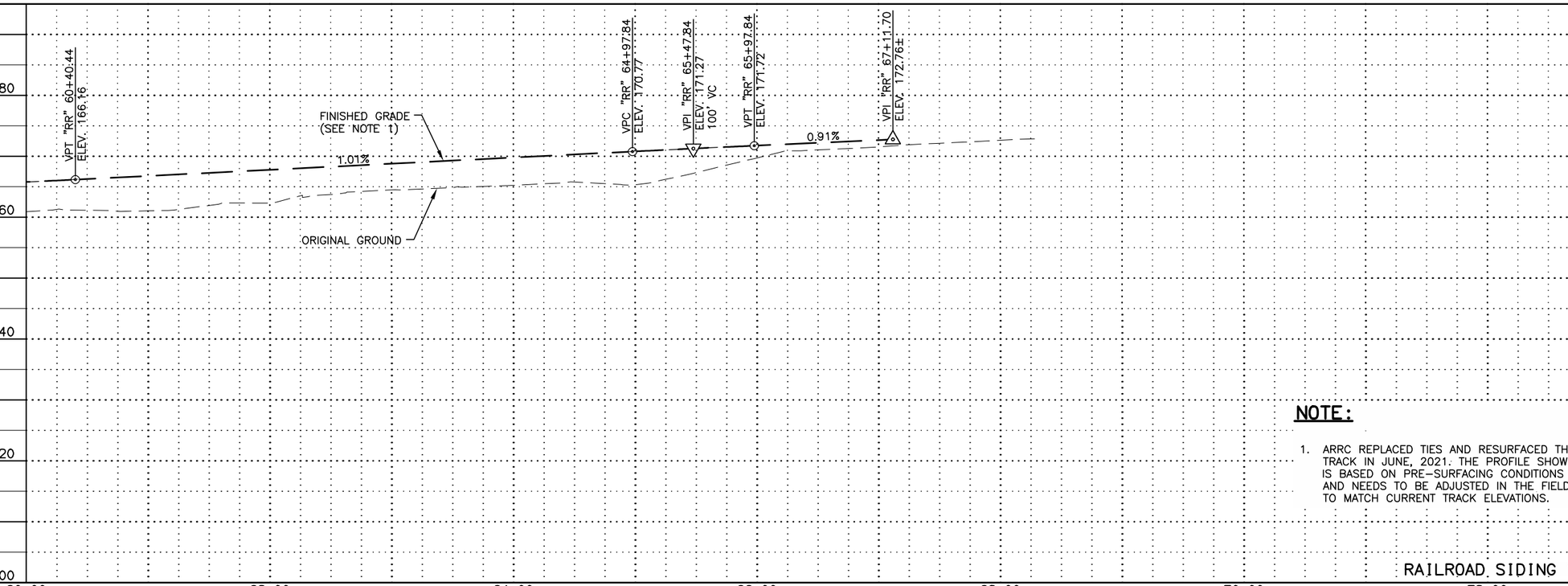

NOTE:

1. ARRC REPLACED TIES AND RESURFACED THE TRACK IN JUNE, 2021. THE PROFILE SHOWN IS BASED ON PRE-SURFACING CONDITIONS AND NEEDS TO BE ADJUSTED IN THE FIELD TO MATCH CURRENT TRACK ELEVATIONS.

RAILROAD SIDING "RR"

SHEET NO.	TOTAL SHEETS
S6	S6
STATE	YEAR
ALASKA	2021

PROJECT DESIGNATION

0A15037/CFHWY00431
0A15038/CFHWY00432
0A15033/CFHWY00006

NO.	REVISION
DATE	
NO.	REVISION
DATE	
NO.	REVISION
DATE	

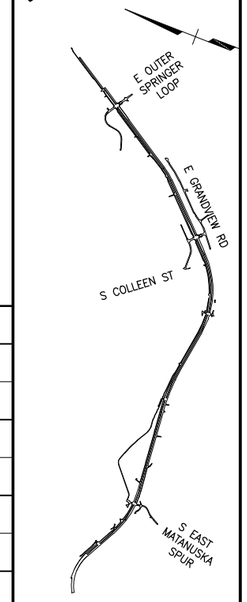

CERTIFICATION SET
NOVEMBER 2021

STATE OF ALASKA
49TH
DENNIS R. LINNELL
CE-7649
REGISTERED PROFESSIONAL ENGINEER

HDL ENGINEERING CONSULTANTS, LLC
3335 ARCTIC BOULEVARD, STE 100
ANCHORAGE, AK 99503
(907) 564-2120
AECL861

STATE OF ALASKA
DEPARTMENT OF TRANSPORTATION
AND PUBLIC FACILITIES

GLENN HWY: PARKS HWY TO
S. INNER SPRINGER LP.
(PHASE II)

RAILROAD SIDING
PLAN & PROFILE
60+00 TO 67+11.7

DESIGNED BY CAB
CHECKED BY DRL
DRAFTED BY CDB

SCALE 1" = 100'

DATE TIME
11/12/2021 11:22 AM

DRAWING LOCATION
H:\JOBS\08-016 GLENN HIGHWAY 34-42 (DOT)\09 - PS&E\CAD_PH2\DRAWINGS\08016_P2_S02-S06_RAILROAD_SIDING.DWG

NO.	DATE	REVISION

STATE	PROJECT DESIGNATION	YEAR	SHEET NO.	TOTAL SHEETS
ALASKA	0A15037/CFHWY00431 0A15038/CFHWY00432 0A15033/CFHWY00006	2021	UW1	UW13

GENERAL UTILITY NOTES:

1. ALL STATIONING IS ALONG WATER OR SEWER LINE, UNLESS NOTED OTHERWISE. PIPE LENGTHS ARE PLAN VIEW LENGTHS ALONG PIPE.
2. CONTRACTOR SHALL VERIFY ALL DIMENSIONS AND LAYOUT PRIOR TO PROCEEDING WITH THE WORK. ANY DISCREPANCY IN THE PLANS SHALL BE BROUGHT TO THE ATTENTION OF THE ENGINEER PRIOR TO PROCEEDING WITH THE WORK.
3. EXISTING BURIED UTILITIES ARE SHOWN IN THEIR APPROXIMATE LOCATIONS BASED ON FIELD SURVEY AND RECORD INFORMATION AVAILABLE TO THE ENGINEER. NOT ALL UTILITY LOCATIONS HAVE BEEN FIELD VERIFIED AND NO GUARANTEE IS MADE AS TO THE ACCURACY OR COMPLETENESS OF THE UTILITY INFORMATION AS SHOWN. THE CONTRACTOR SHALL CONTACT THE LOCATE CALL CENTER OF ALASKA, AS WELL AS ANY NON-PARTICIPATING UTILITIES, TO FIELD LOCATE ALL UTILITIES PRIOR TO DIGGING.
4. NO USER SHALL BE WITHOUT WATER OR SEWER SERVICE FOR LONGER THAN 4 HOURS WITHIN EACH 24 HOUR PERIOD. ALL AFFECTED PARTIES SHALL BE NOTIFIED OF PLANNED INTERRUPTION OF SERVICE AT LEAST 24 HOURS IN ADVANCE. AN APPROVED "TEMPORARY WATER SERVICE PLAN" IS REQUIRED. SEE SPECIAL PROVISIONS FOR ADDITIONAL REQUIREMENTS.
5. TIE-IN ELEVATIONS ARE ESTIMATED BASED ON RECORD INFORMATION. CONTRACTOR SHALL FIELD VERIFY TIE-IN ELEVATIONS PRIOR TO BEGINNING CONSTRUCTION AND MAKE ANY NECESSARY ADJUSTMENTS. CHANGES SHALL BE APPROVED BY THE ENGINEER.

WATER SYSTEM NOTES:

1. GRADE BREAKS AND ANGLE POINTS NOT UTILIZING A FITTING MAY BE MADE BY BENDING THE PIPE IN A RADIUS NO SMALLER THAN THE PIPE MANUFACTURER'S RECOMMENDED MINIMUM BENDING RADIUS, PROVIDED THAT THE MINIMUM COVER IS MAINTAINED OVER THE PIPE AND THE PIPE REMAINS IN THE RIGHT-OF-WAY.
2. ALL WATER SYSTEM CONSTRUCTION, FLUSHING, PRESSURE TESTING AND DISINFECTION SHALL BE CONDUCTED SO AS TO MINIMIZE INTERRUPTION OF EXISTING SERVICE.
3. LOCATION OF VALVES ARE TO CENTER OF TEE OR CROSS TO WHICH THEY ARE ATTACHED.
4. REMOVAL OF EXISTING WATER PIPE, SERVICES, VALVES, TEES, AND OTHER APPURTENANCES TO FACILITATE NEW PIPE INSTALLATION SHALL BE SUBSIDIARY, UNLESS NOTED OTHERWISE.
5. PROVIDE 4" THICK X 4' WIDE RIGID INSULATION (INSULATION BOARD) WHERE SHOWN ON THE PLANS AND WHERE LESS THAN 10' OF COVER OVER PIPE.
6. RESTRAINED JOINTS SHALL BE INSTALLED WHERE THE WATER PIPE TERMINATES, BRANCHES, OR CHANGES ALIGNMENT UTILIZING A FITTING FOR THE LENGTH INDICATED ON THE PLANS. THE ENTIRE LENGTH OF HYDRANT LEGS SHALL BE RESTRAINED.

SEWER SYSTEM NOTES:

1. LOCATION OF MANHOLES ARE TO CENTER OF STRUCTURE.
2. GRADE BREAKS AND ANGLE POINTS NOT UTILIZING A FITTING MAY BE MADE BY BENDING THE PIPE IN A RADIUS NO SMALLER THAN THE PIPE MANUFACTURER'S RECOMMENDED MINIMUM BENDING RADIUS, PROVIDED THAT THE MINIMUM COVER IS MAINTAINED OVER THE PIPE AND THE PIPE REMAINS IN THE RIGHT OF WAY.
3. PAY LENGTHS FOR SANITARY SEWER CONDUIT ARE FROM CENTER OF STRUCTURE TO CENTER OF STRUCTURE.

UTILITY LEGEND:

	EXISTING	PROPOSED
WATER SYSTEM	W	W
SANITARY SEWER SYSTEM	SS	SS
SANITARY SEWER MANHOLE	SS	SS
PIPE CASING		
FIRE HYDRANT		
FLUSHING HYDRANT		
VALVE, VALVE BOX		
END CAP		
WATER SERVICE AND KEY BOX		
AIR RELIEF VALVE		
REDUCER		
4" RIGID INSULATION		

UTILITY SYSTEM ABBREVIATIONS:

AB	ABANDONED
BFG	BELOW FINISHED GRADE
BOP	BOTTOM OF PIPE
CL	CLASS
DIA	DIAMETER
DIP	DUCTILE IRON PIPE
EL	ELEVATION
GV	GATE VALVE
HDPE	HIGH DENSITY POLYETHYLENE
INV	INVERT
ME	MATCH EXISTING
MJ	MECHANICAL JOINT
OD	OUTSIDE DIAMETER
SCH	SCHEDULE
SSMH	SANITARY SEWER MANHOLE
TB	THRUST BLOCK
VB	VALVE BOX
W/	WITH

SHEET INDEX

SHEET NO.	DESCRIPTION
UW1	INDEX, UTILITY NOTES, AND ABBREVIATIONS
UW2	PROJECT LAYOUT
UW3-UW4	SUMMARY SHEET
UW5-UW7	WATER AND SEWER SYSTEM DETAIL SHEETS
UW9-UW11	WATER SYSTEM PLAN AND PROFILE SHEETS
UW11-UW13	SEWER SYSTEM PLAN AND PROFILE SHEETS

CERTIFICATION SET
NOVEMBER 2021

STATE OF ALASKA
49TH
CHRISTOPHER J. BOWMAN
CE-13377
REGISTERED PROFESSIONAL ENGINEER

HDL ENGINEERING CONSULTANTS, LLC
3335 ARCTIC BOULEVARD, STE 100
ANCHORAGE, AK 99503
(907) 564-2120
AECL861

STATE OF ALASKA
DEPARTMENT OF TRANSPORTATION
AND PUBLIC FACILITIES

GLENN HWY: PARKS HWY TO S. INNER SPRINGER LP. (PHASE II)

WATER AND SEWER SYSTEM NOTES, LEGEND, AND ABBREVIATIONS

FILE | H:\JOBS\08-016 GLENN HIGHWAY 34-42 (DOT)\09 - PS&E\CAD_UW - PH2\DRAWINGS\08016_P2_UW01_LEGEND.DWG by cburtburger | DATE/TIME | 11/19/2021 12:34 PM | LAYOUT | U1 | DESIGNED | CHECKED | DRAFTED

NO.	DATE	REVISION

STATE	PROJECT DESIGNATION	YEAR	SHEET NO.	TOTAL SHEETS
ALASKA	0A15037/CFHWY00431 0A15038/CFHWY00432 0A15033/CFHWY00006	2021	UW2	UW13

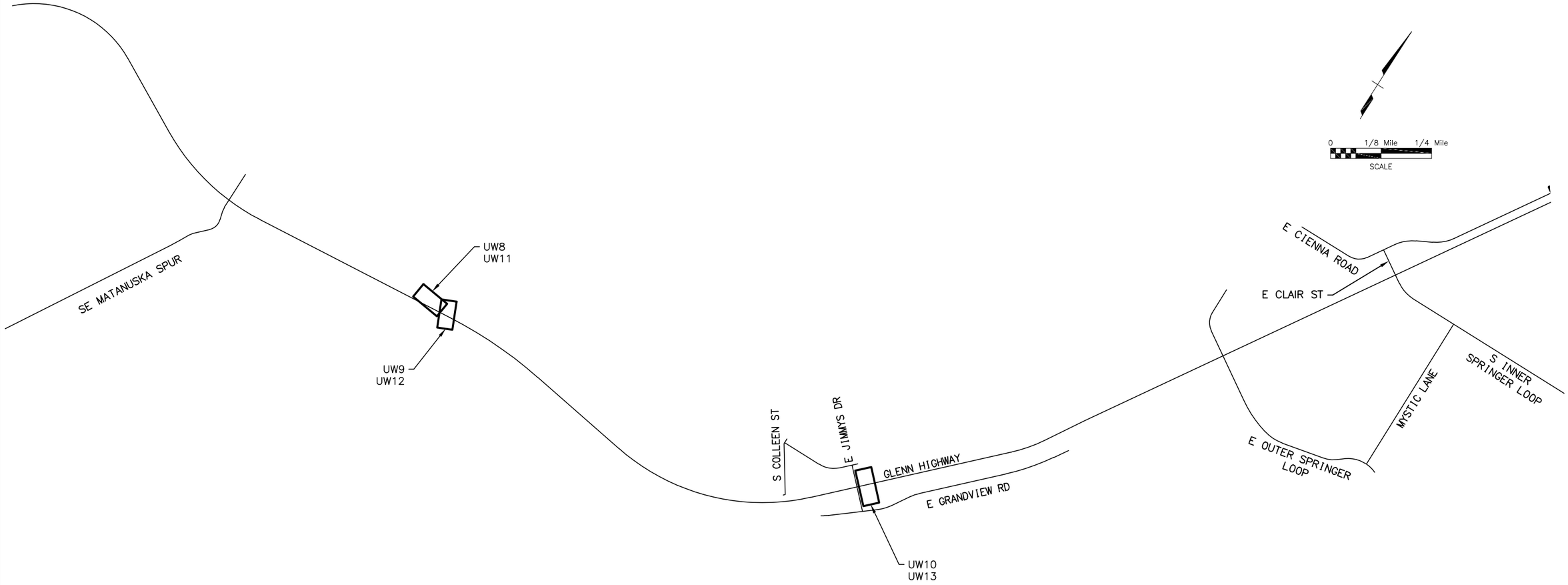

CERTIFICATION SET
NOVEMBER 2021

STATE OF ALASKA
49TH
CHRISTOPHER J. BOWMAN
CE-13377
REGISTERED PROFESSIONAL ENGINEER

HDL ENGINEERING CONSULTANTS, LLC
3335 ARCTIC BOULEVARD, STE 100
ANCHORAGE, AK 99503
(907) 564-2120
AECL861

STATE OF ALASKA
DEPARTMENT OF TRANSPORTATION
AND PUBLIC FACILITIES

GLENN HWY: PARKS HWY TO S. INNER SPRINGER LP. (PHASE II)

PROJECT LAYOUT

FILE | H:\JOBS\08-016 GLENN HIGHWAY 34-42 (DOT)\09 - PS&E\CAD_UW - PH2\DRAWINGS\08016_P2_UW02_INDEX.DWG by cburtburger
DATE/TIME | 11/19/2021 12:33 PM | LAYOUT | INDEX | DESIGNED | NMY | CHECKED | CJB | DRAFTED | NMY

NO.	DATE	REVISION	STATE	PROJECT DESIGNATION	YEAR	SHEET NO.	TOTAL SHEETS
			ALASKA	0A15037/CFHWY00431 0A15038/CFHWY00432 0A15033/CFHWY00006	2021	UW3	UW13

202.0006.0000 - REMOVAL OF MANHOLE, SANITARY SEWER

SHEET	STATION	OFFSET	REMARKS
UW11	"S" 1+50.0	0 LT	REPLACE WITH NEW SSMH
	"S" 3+00.3	24.9 RT	
UW12	"S" 4+77.2	0 LT	
TOTAL: 3			
PAY ITEM QUANTITY: 3			

603.0017.0024 - PIPE 24 INCH, CASING

SHEET	INLET			OUTLET			SLOPE	LENGTH	REMARKS
	STATION	OFFSET	BOP	STATION	OFFSET	BOP			
UW10	"WC" 0+57.00	0.00	92.62	"WC" 2+22.00	0.00	92.62	0.00%	165.0	FUTURE WATER
UW13	"SC" 0+58.00	0.00	96.23	"SC" 2+28.00	0.00	96.23	0.00%	170.0	FUTURE SEWER
TOTAL: 335.0									
PAY ITEM QUANTITY: 335									

604.0002.0000 - SANITARY SEWER MANHOLE, TYPE A

SHEET	STATION	OFFSET	REMARKS
UW11	"S" 1+50.00	0.00	REPLACE EXISTING SSMH AND CONNECT TO EXISTING SS
	"S" 3+20.09	0.00	
UW12	"S" 4+37.92	0.00	PERFORM EXFILTRATION TEST
TOTAL: 3			
PAY ITEM QUANTITY: 3			

604.0004.0000 - ADJUST EXISTING MANHOLE, SANITARY SEWER

SHEET	STATION	OFFSET	REMARKS
F12	"G" 1445+19.6	81.9 RT	SSMH
F13	"G" 1465+68.4	82.4 RT	SSMH
F14	"G" 1471+51.1	79.0 RT	SSMH
	"G" 1473+74.1	74.2 RT	SSMH
F15	"G" 1482+48.5	88.6 RT	SSMH
F16	"G" 1500+52.3	89.3 RT	SSMH
TOTAL: 6			
PAY ITEM QUANTITY: 6			

626.2008.0024 - SANITARY SEWER CONDUIT, 24-INCH, HDPE, SDR 17

SHEET	INLET			OUTLET			SLOPE	LENGTH	REMARKS
	STATION	OFFSET	INV	STATION	OFFSET	INV			
UW11	"S" 1+50.00	0.00	104.22	"S" 3+20.09	0.00	102.57	−1.00%	170.1	
	"S" 3+20.09	0.00	102.24	"S" 4+37.92	0.00	88.62	−12.07%	117.8	CONTINUED ON UW12
UW12	"S" 4+37.92	0.00	88.25	"S" 6+21.91	0.00	83.42	−2.66%	184.0	
	"S" 6+21.91	0.00	83.42	"S" 6+56.44	0.00	83.4±, ME	−0.17%	34.5	CONNECT TO EXISTING SSMH
TOTAL: 506.4									
PAY ITEM QUANTITY: 510									

626.2009.0000 - SANITARY SEWER PIPE CASING, 30-INCH, STEEL, SCHEDULE 20

SHEET	INLET			OUTLET			SLOPE	LENGTH	REMARKS
	STATION	OFFSET	INV	STATION	OFFSET	INV			
UW12	"S" 4+50.82	0.00	87.98	"S" 5+01.82	0.00	86.3±, ME	−2.7%, ME	51.0	
	"S" 5+91.82	0.00	84.2±, ME	"S" 6+18.91	0.00	83.50	−2.7%, ME	27.1	
TOTAL: 78.1									
PAY ITEM QUANTITY: 79									

CERTIFICATION SET
NOVEMBER 2021

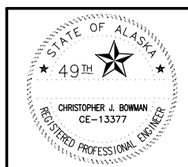

HDL ENGINEERING CONSULTANTS, LLC
3335 ARCTIC BOULEVARD, STE 100
ANCHORAGE, AK 99503
(907) 564-2120
AECL861

STATE OF ALASKA
DEPARTMENT OF TRANSPORTATION
AND PUBLIC FACILITIES

GLENN HWY: PARKS HWY TO S. INNER SPRINGER LP. (PHASE II)

SUMMARY SHEETS

FILE | H:\JOBS\08-016 GLENN HIGHWAY 34-42 (DOT)\09 - PS&E\CAD_UW - PH2\DRAWINGS\08016_P2_UW03-UW04_SUMMARY.DWG by cburtburger | DATE/TIME | 11/19/2021 12:41 PM | LAYOUT | MODEL | DESIGNED | CHECKED | DRAFTED

NO.	DATE	REVISION

STATE	PROJECT DESIGNATION	YEAR	SHEET NO.	TOTAL SHEETS
ALASKA	0A15037/CFHWY00431 0A15038/CFHWY00432 0A15033/CFHWY00006	2021	UW4	UW13

627.0005.0000 - FIRE HYDRANT INSTALLATION

SHEET	STATION	OFFSET	REMARKS
UW8	"W" 2+30.00	10.00 LT	
UW9	"W" 7+54.00	10.00 LT	
	TOTAL: 2		
	PAY ITEM QUANTITY: 2		

627.0007.0000 - FIRE HYDRANT REMOVAL

SHEET	STATION	OFFSET	REMARKS
UW8	"W" 2+30.00	12.00 RT	FLUSHING HYDRANT SALVAGE AND RETURN TO CITY OF PALMER
UW9	"W" 7+40.00	12.00 RT	
	TOTAL: 2		
	PAY ITEM QUANTITY: 2		

627.0009.0018 - GATE VALVE, 18 INCH

SHEET	STATION	OFFSET	REMARKS
UW8	"W" 1+39.44	0.00	
UW9	"W" 8+26.00	0.00	
	TOTAL: 2		
	PAY ITEM QUANTITY: 2		

627.0010.0000 - ADJUSTMENT OF VALVE BOX

SHEET	STATION	OFFSET	REMARKS
F11	"G" 1444+62.6	72.7 RT	
F12	"G" 1454+70.7	71.0 RT	
F13	"G" 1464+67.2	71.9 RT	
F14	"G" 1474+69.8	66.5 RT	
F15	"G" 1485+48.0	80.0 RT	
F16	"G" 1495+02.1	79.1 RT	
	TOTAL: 6		
	PAY ITEM QUANTITY: 6		

627.2007.0000 - REMOVE VALVE BOX

SHEET	STATION	OFFSET	REMARKS
UW8	"W" 1+39.4	3.1 RT	
	"W" 1+45.0	0 RT	
UW9	"W" 5+64.2	0 LT	
	"W" 5+71.1	1.8 RT	
	TOTAL: 4		
	PAY ITEM QUANTITY: 4		

627.2012.0018 - HDPE WATER CONDUIT, 18-INCH, SDR 11

SHEET	INLET			OUTLET			SLOPE	LENGTH	REMARKS
	STATION	OFFSET	BOP	STATION	OFFSET	BOP			
UW8	"W" 1+39.44	0.00	111.3±, ME	"W" 1+60.00	0.00	111.30	0.00%	20.0	
	"W" 1+60.00	0.00	111.30	"W" 2+54.36	0.00	111.30	0.00%	94.4	
	"W" 2+54.36	0.00	111.30	"W" 4+96.09	0.00	111.30	0.00%	241.7	CONT'D ON UW9
UW9	"W" 4+96.09	0.00	111.30	"W" 5+08.69	0.00	106.08	−41.42%	12.6	
	"W" 5+08.69	0.00	106.08	"W" 5+51.75	0.00	88.23	−41.42%	43.1	
	"W" 5+51.75	0.00	88.23	"W" 7+66.45	0.00	83.77	−2.08%	214.7	
	"W" 7+66.45	0.00	83.77	"W" 8+26.00	0.00	83.2±, ME	−0.96%	59.6	
							TOTAL:	686.1	
							PAY ITEM QUANTITY:	690	

627.2021.0000 - WATER PIPE CASING, 24-INCH, STEEL, SCHEDULE 20

SHEET	INLET			OUTLET			SLOPE	LENGTH	REMARKS
	STATION	OFFSET	BOP	STATION	OFFSET	BOP			
UW9	"W" 5+60.00	0.00	87.95	"W" 6+05.00	0.00	86.9±, ME	−2.08%, ME	45.0	
	"W" 6+85.00	0.00	85.4±, ME	"W" 7+48.00	0.00	84.00	−2.08%, ME	63.0	
							TOTAL:	108	
							PAY ITEM QUANTITY:	108	

CERTIFICATION SET
NOVEMBER 2021

STATE OF ALASKA
49TH
CHRISTOPHER J. BOWMAN
CE-13377
REGISTERED PROFESSIONAL ENGINEER

HDL ENGINEERING CONSULTANTS, LLC
3335 ARCTIC BOULEVARD, STE 100
ANCHORAGE, AK 99503
(907) 564-2120
AECL861

STATE OF ALASKA
DEPARTMENT OF TRANSPORTATION
AND PUBLIC FACILITIES

GLENN HWY: PARKS HWY TO S. INNER SPRINGER LP. (PHASE II)

SUMMARY SHEETS

FILE | H:\JOBS\08-016 GLENN HIGHWAY 34-42 (DOT)\09 - PS&E\CAD_UW - PH2\DRAWINGS\08016_P2_UW03-UW04_SUMMARY.DWG by cburtburger | DATE/TIME | 11/19/2021 12:41 PM | LAYOUT | MODEL | DESIGNED | CHECKED | DRAFTED

NO.	DATE	REVISION	STATE	PROJECT DESIGNATION	YEAR	SHEET NO.	TOTAL SHEETS
			ALASKA	0A15037/CFHWY00431 0A15038/CFHWY00432 0A15033/CFHWY00006	2021	UW5	UW13

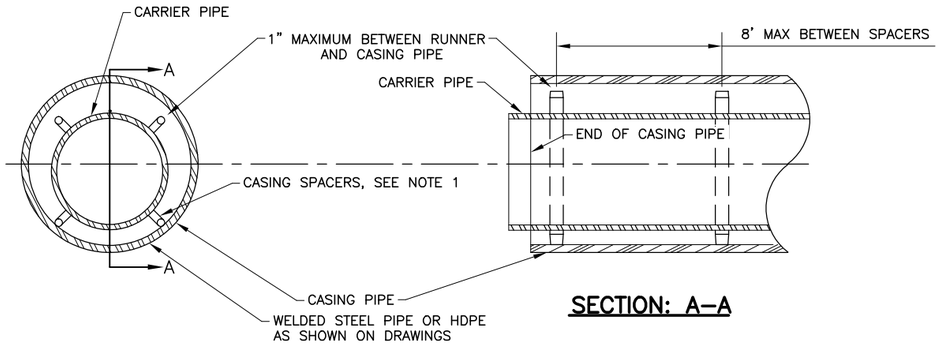

SECTION: A–A

PIPE CASING

NTS

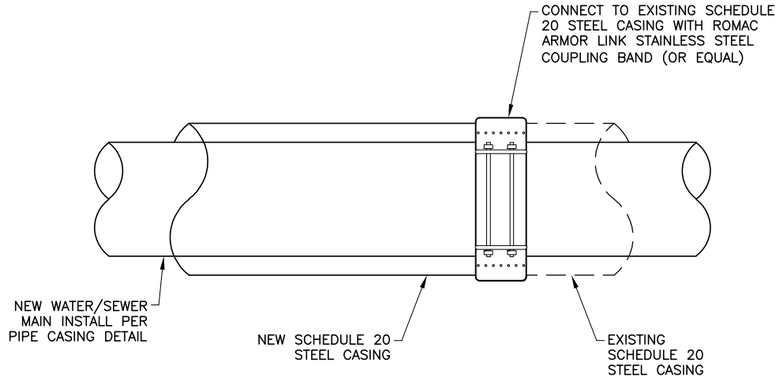

CONNECT TO EXISTING STEEL PIPE CASING

NTS

NOTES:

1. INSTALL CASING SPACERS A MAXIMUM OF ONE FOOT (1') FROM EACH SIDE OF EACH PIPE JOINT. CASING SPACERS SHALL BE CASCADE WATERWORKS MFG. STAINLESS STEEL WITH POLYETHYLENE RUNNERS OR APPROVED EQUAL, INSTALL PER MANUFACTURER'S RECOMMENDATIONS.
2. ENDS OF CASING PIPE SHALL BE SEALED WITH SYNTHETIC RUBBER SEAL WITH STAINLESS STEEL BANDS. CASING SHALL BE WATERTIGHT.
3. CARRIER PIPE SHALL BE CONSTRUCTED WITH RESTRAINED JOINTS INSTALLED ENTIRE LENGTH OF CASING PIPE AND AT CONNECTIONS BETWEEN EXISTING AND NEW PIPE.
4. PERFORM LAMP TESTINGS TO VERIFY PROPER CASING ALIGNMENT AFTER CASING PIPE IS BACKFILLED A MINIMUM OF 2 FEET AND PRIOR TO CARRIER PIPE INSTALLATION.

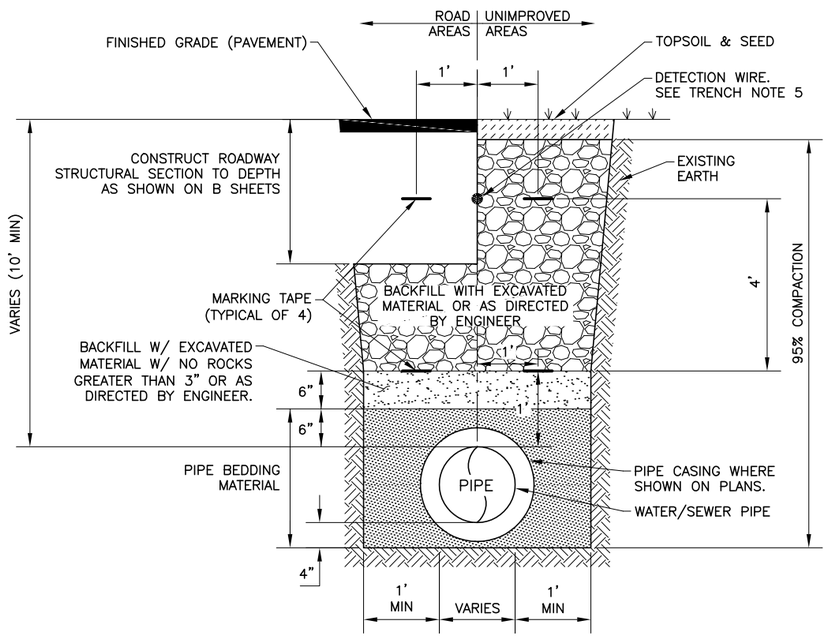

TYPICAL TRENCH SECTION

NTS

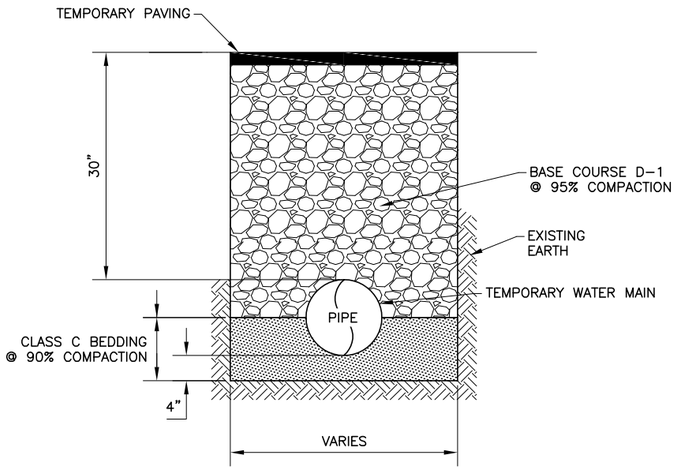

TEMPORARY WATER CROSSING AT GLENN

NTS

TRENCH NOTES:

1. TRENCH WALLS SHALL BE SLOPED OR SHORED AS REQUIRED FOR SAFETY.
2. ALL BEDDING, BACKFILL AND SURFACING SHALL BE COMPACTED TO THE SPECIFIED PERCENTAGE OF MAXIMUM DRY DENSITY AS DETERMINED BY ASTM D1557 METHOD D, UNLESS NOTED OTHERWISE.
3. ANY EXCESS TRENCH EXCAVATION SHALL BE REMOVED BY CONTRACTOR AT NO ADDITIONAL COST.
4. NO ORGANIC MATERIAL WILL BE ALLOWED IN TRENCH BACKFILL.
5. PROVIDE #10 SOLID COPPER DETECTION WIRE OVER HDPE PIPING, CENTERED ON PIPE AND BURIED TO MATCH DEPTH OF EXISTING DETECTION WIRE. SPLICE WITH EXISTING DETECTION WIRE USING SOLDER AND WRAP WITH HEAT SHRINK TAPE.

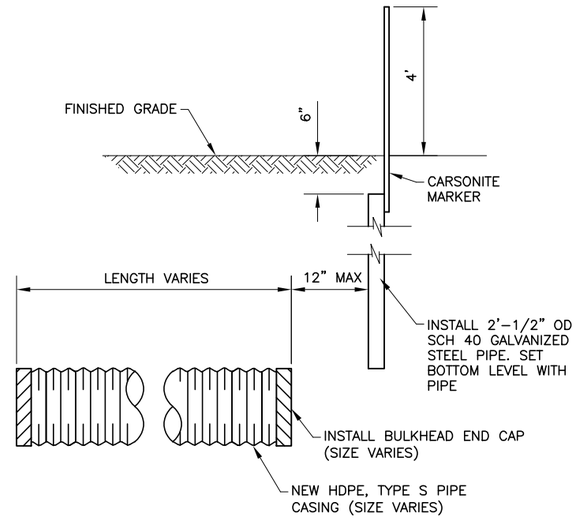

INSTALL NEW HDPE PIPE CASING (FOR FUTURE USE)

NTS

CERTIFICATION SET
NOVEMBER 2021

STATE OF ALASKA
49TH
CHRISTOPHER J. BOWMAN
CE-13377
REGISTERED PROFESSIONAL ENGINEER

HDL ENGINEERING CONSULTANTS, LLC
3335 ARCTIC BOULEVARD, STE 100
ANCHORAGE, AK 99503
(907) 564-2120
AECL861

STATE OF ALASKA
DEPARTMENT OF TRANSPORTATION
AND PUBLIC FACILITIES

GLENN HWY: PARKS HWY TO S. INNER SPRINGER LP. (PHASE II)

TRENCH SECTIONS AND PIPE CASING DETAILS

FILE | H:\JOBS\08-016 GLENN HIGHWAY 34-42 (DOT)\09 - PS&E\CAD\DRAWINGS\08016_P2_UW05-UW07_DETAILS.DWG by cburtburger | DATE/TIME | 11/19/2021 12:37 PM | LAYOUT | U7-U11 | DESIGNED | NMY | CHECKED | CJB | DRAFTED | NMY
H:\Jobs\08-016 Glenn Highway 34-42 (DOT)\09 - PS&E\CAD\DRAWINGS\08016_00_E01. 1=1. 10/06/16 at 11:55 by BCY
LAYOUT: main
XREF: 08016_00_BDY
XDWG: E1-1_08016, E1-2_UFP, E1-3_UMP15, E1-4_UW16, E1-5_UCP, E1-6_UTP16

NO.	DATE	REVISION	STATE	PROJECT DESIGNATION	YEAR	SHEET NO.	TOTAL SHEETS
			ALASKA	0A15037/CFHWY00431 0A15038/CFHWY00432 0A15033/CFHWY00006	2021	UW6	UW13

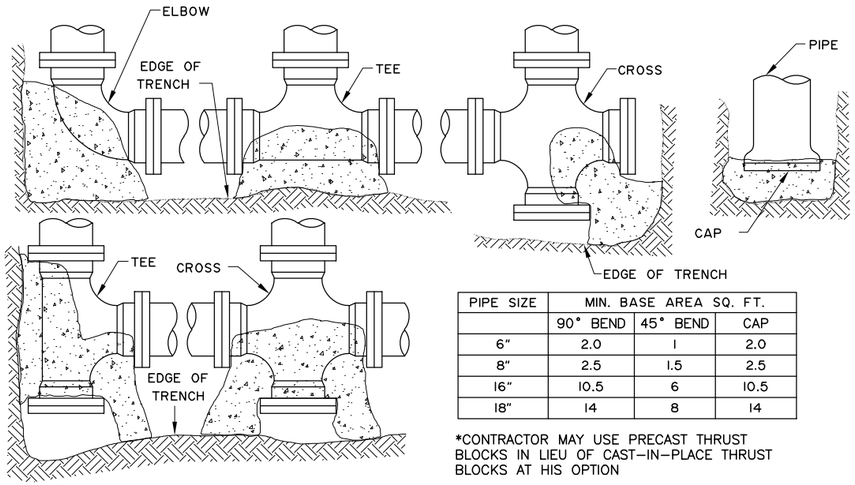

PIPE SIZE	MIN. BASE AREA SQ. FT.		
	90° BEND	45° BEND	CAP
6"	2.0	1	2.0
8"	2.5	1.5	2.5
16"	10.5	6	10.5
18"	14	8	14

*CONTRACTOR MAY USE PRECAST THRUST BLOCKS IN LIEU OF CAST-IN-PLACE THRUST BLOCKS AT HIS OPTION

THRUST BLOCKS
NTS

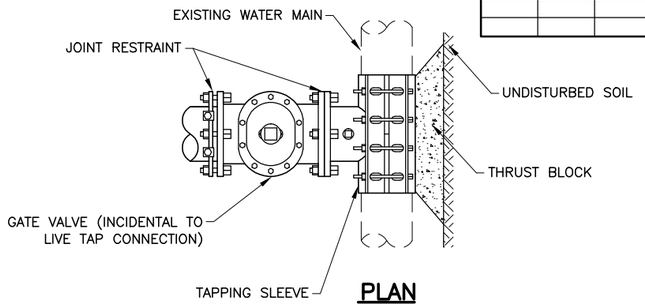

PLAN

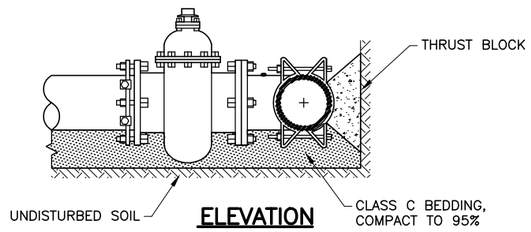

ELEVATION

TYPICAL LIVE TAP
NTS

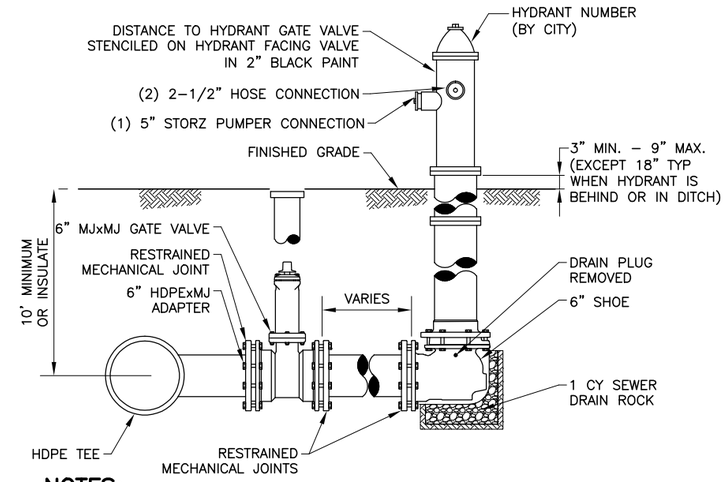

NOTES:

1. HYDRANT BARREL MUST BE INSTALLED PLUMB AND THE LEG MUST BE INSTALLED LEVEL.
2. DRAIN PLUGS TO BE REMOVED BY CONTRACTOR, UNLESS HYDRANT SHOE IS INSTALLED WITHIN 2' OF WATER TABLE. DELIVER REMOVED PLUGS TO WATER UTILITY.
3. LOCATION SHALL BE AS SHOWN ON PLANS.
4. ALL HYDRANTS SHALL BE PAINTED CATERPILLAR YELLOW.
5. AUXILIARY GATE VALVE BOX TO BE INSTALLED ACCORDING TO DETAIL FOR TYPICAL VALVE BOX.
6. ALL JOINTS SHALL BE RESTRAINED.
7. PROVIDE 4" x 4' WIDE RIGID INSULATION WHERE 10.0' COVER IS NOT POSSIBLE.
8. HYDRANTS SHALL BE LEFT-HAND (COUNTERCLOCKWISE) OPENING.
9. ADJUSTMENT OF HYDRANT TO REQUIRED ELEVATION SHALL BE BY CONTRACTOR AT NO ADDITIONAL COST, INCLUDING BARREL EXTENSIONS AS NECESSARY.

FIRE HYDRANT INSTALLATION
NTS

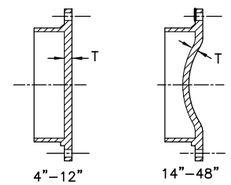

MJ CAP

NOTES:

1. MECHANICAL JOINT RESTRAINT EBAA IRON MEGALUG OR EQUAL.
2. COST OF THIS FITTING TO BE INCLUDED IN BID PRICE OF PIPE.
3. T = THICKNESS PER AWWA C110 STANDARDS.

MJ CAP
NTS

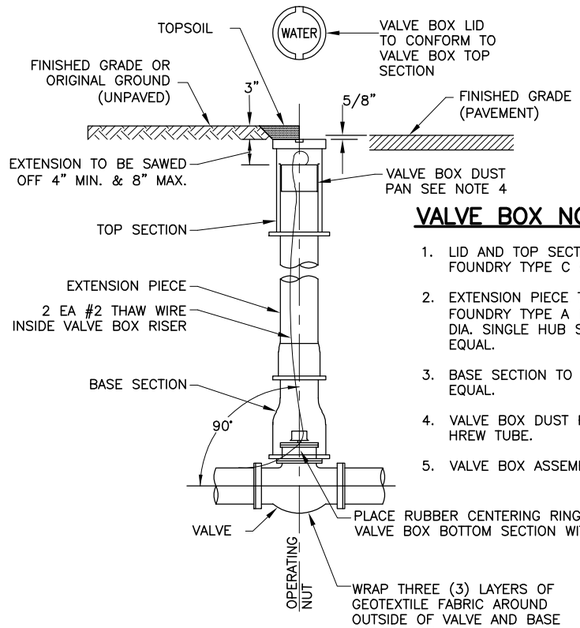

VALVE BOX NOTES:

1. LID AND TOP SECTION TO BE OLYMPIC FOUNDRY TYPE C OR EQUAL.
2. EXTENSION PIECE TO BE OLYMPIC FOUNDRY TYPE A 10 FOOT SECTION OR 5" DIA. SINGLE HUB SOIL PIPE OR APPROVED EQUAL.
3. BASE SECTION TO BE OLYMPIC TYPE B OR EQUAL.
4. VALVE BOX DUST PAN MADE OF 14 GAUGE HREW TUBE.
5. VALVE BOX ASSEMBLY IS TO BE PLUMB.

TYPICAL VALVE BOX
NTS

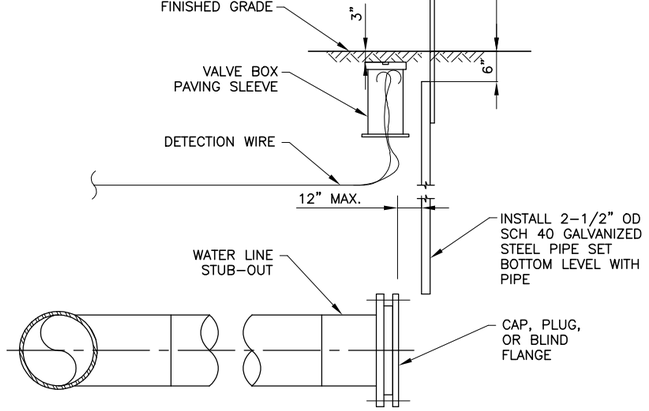

END OF PIPE MARKER DETAIL
NTS

CERTIFICATION SET
NOVEMBER 2021

STATE OF ALASKA
49TH
CHRISTOPHER J. BOWMAN
CE-13377
REGISTERED PROFESSIONAL ENGINEER

HDL ENGINEERING CONSULTANTS, LLC
3335 ARCTIC BOULEVARD, STE 100
ANCHORAGE, AK 99503
(907) 564-2120
AECL861

STATE OF ALASKA
DEPARTMENT OF TRANSPORTATION AND PUBLIC FACILITIES

GLENN HWY: PARKS HWY TO S. INNER SPRINGER LP. (PHASE II)

WATER DETAILS

FILE | H:\JOBS\08-016 GLENN HIGHWAY 34-42 (DOT)\09 - PS&E\CAD\DRAWINGS\08016_P2_UW05-UW07_DETAILS.DWG by cburtburger | DATE/TIME | 11/19/2021 12:37 PM | LAYOUT | U7-U11 | DESIGNED | NMY | CHECKED | CJB | DRAFTED | NMY
H:\Jobs\08-016 Glenn Highway 34-42 (DOT)\09 - PS&E\CAD\DRAWINGS\08016_00_E01, 1=1, 10/06/16 at 11:55 by BCY

NO.	DATE	REVISION	STATE	PROJECT DESIGNATION	YEAR	SHEET NO.	TOTAL SHEETS
			ALASKA	0A15037/CFHWY00431 0A15038/CFHWY00432 0A15033/CFHWY00006	2021	UW7	UW13

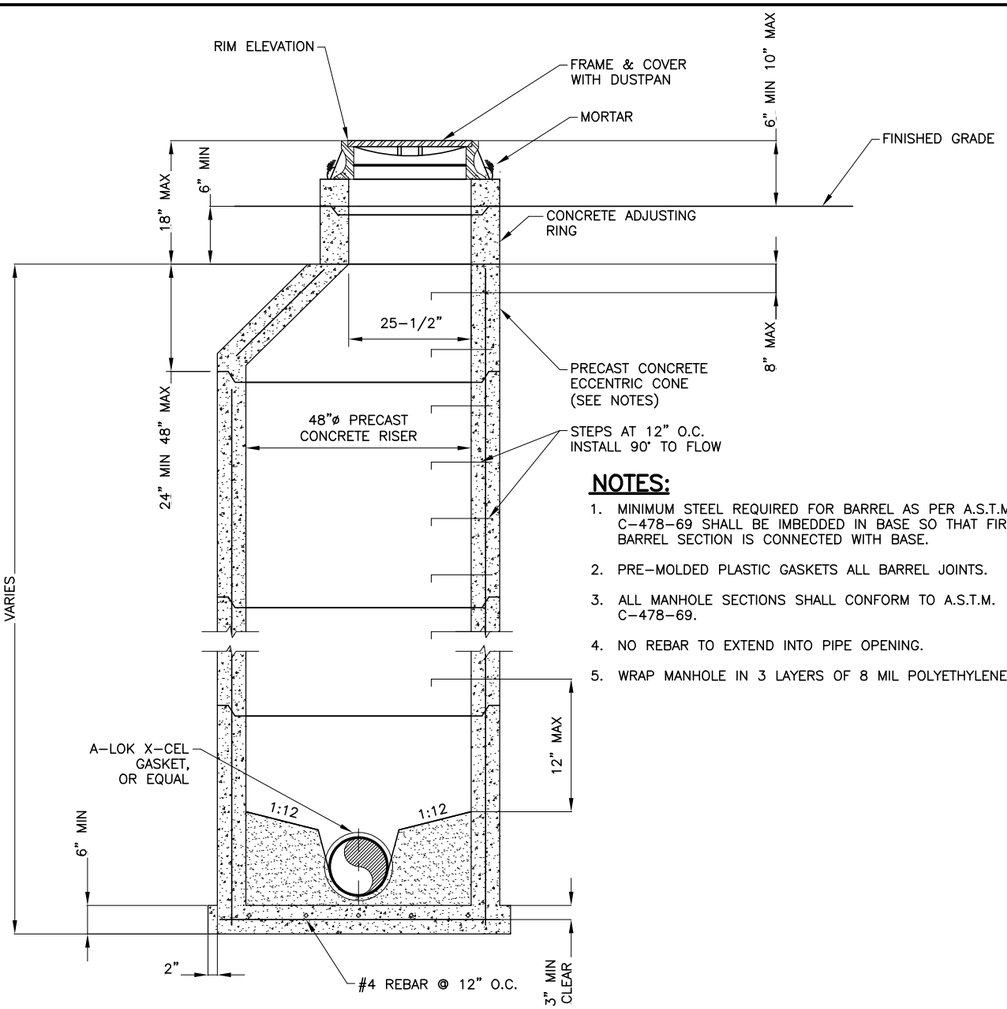

NOTES:

1. MINIMUM STEEL REQUIRED FOR BARREL AS PER A.S.T.M. C–478–69 SHALL BE IMBEDDED IN BASE SO THAT FIRST BARREL SECTION IS CONNECTED WITH BASE.
2. PRE–MOLDED PLASTIC GASKETS ALL BARREL JOINTS.
3. ALL MANHOLE SECTIONS SHALL CONFORM TO A.S.T.M. C–478–69.
4. NO REBAR TO EXTEND INTO PIPE OPENING.
5. WRAP MANHOLE IN 3 LAYERS OF 8 MIL POLYETHYLENE

TYPE A MANHOLE SECTION

NTS

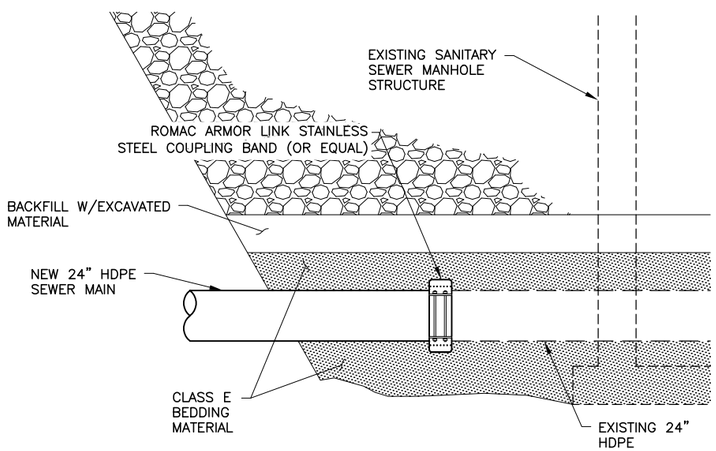

CONNECT TO EXISTING 24" SEWER

NTS

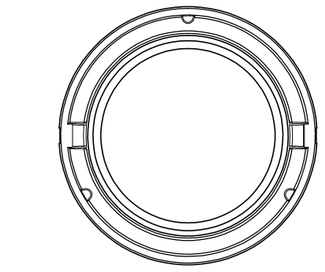

STANDARD MANHOLE FRAME

NTS

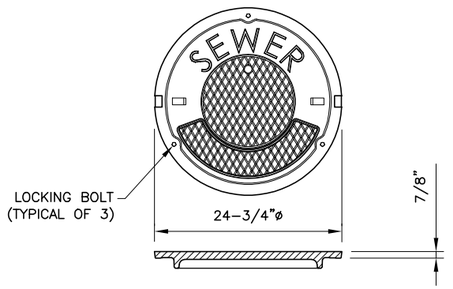

STANDARD LOCKING MANHOLE COVER

NTS

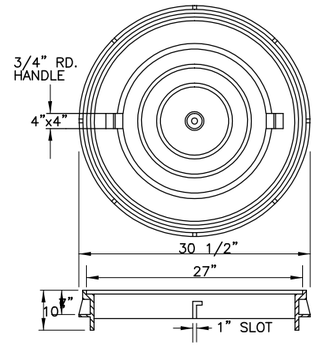

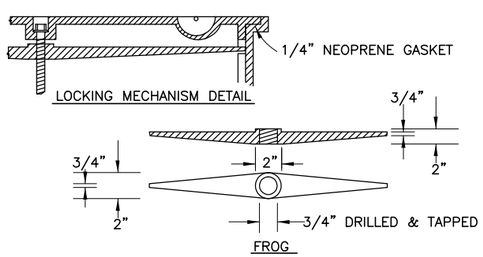

STANDARD WATER TIGHT MANHOLE

NTS

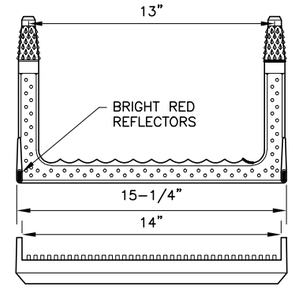

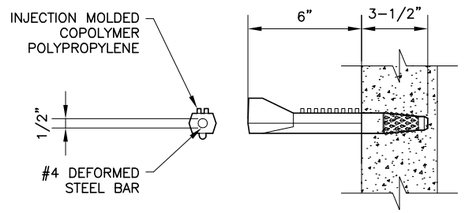

NOTES:

1. DRIVE RUNG INTO PREFORMED OR DRILLED HOLES WITH A 6 TO 10 POUND SLEDGE HAMMER AFTER CONCRETE IS CURED TO 3000 PSI MINIMUM.
2. THE INSTALLED STEP SHALL RESIST A PULLOUT FORCE OF 1500 POUNDS.

MANHOLE STEPS

NTS

CERTIFICATION SET
NOVEMBER 2021

STATE OF ALASKA
49TH
CHRISTOPHER J. BOWMAN
CE–13377
REGISTERED PROFESSIONAL ENGINEER

HDL ENGINEERING CONSULTANTS, LLC
3335 ARCTIC BOULEVARD, STE 100
ANCHORAGE, AK 99503
(907) 564–2120
AECL861

STATE OF ALASKA
DEPARTMENT OF TRANSPORTATION AND PUBLIC FACILITIES

GLENN HWY: PARKS HWY TO S. INNER SPRINGER LP. (PHASE II)

SEWER DETAILS

FILE H:\JOBS\08-016 GLENN HIGHWAY 34-42 (DOT)\09 - PS&E\CAD_UW - PH2\DRAWINGS\08016_P2_UW05-UW07_DETAILS.DWG by cburtburger | DATE/TIME 11/19/2021 12:37 PM | LAYOUT U7-U11 | DESIGNED NMY | CHECKED CJB | DRAFTED NMY

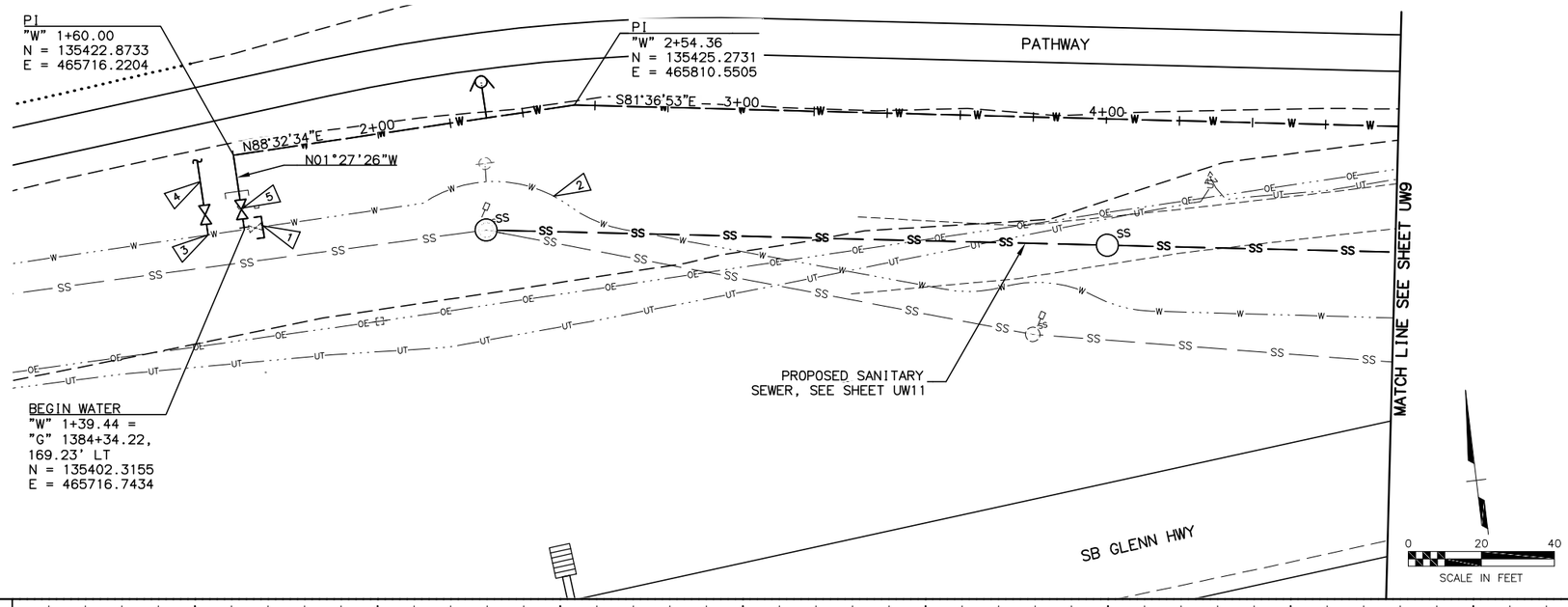

1. REMOVE EXISTING VALVE AND VALVE BOX, INSTALL BLIND FLANGE AT EXISTING TEE.
2. REMOVE EXISTING 18" HDPE WATER MAIN (SUBSIDIARY TO HDPE WATER CONDUIT INSTALLATION) APPROX 637 LF TOTAL.
3. INSTALL 18" X 8" LIVE TAP FOR TEMPORARY WATER SYSTEM. CLOSE VALVE, CAP OPEN END, AND ABANDON IN PLACE UPON COMPLETION OF PERMANENT WATER SYSTEM.
4. 8" SDR 11 HDPE TEMPORARY WATER MAIN. ROUTE AS REQUIRED FOR CONSTRUCTION.
5. REMOVE EXISTING VALVE AND VALVE BOX.

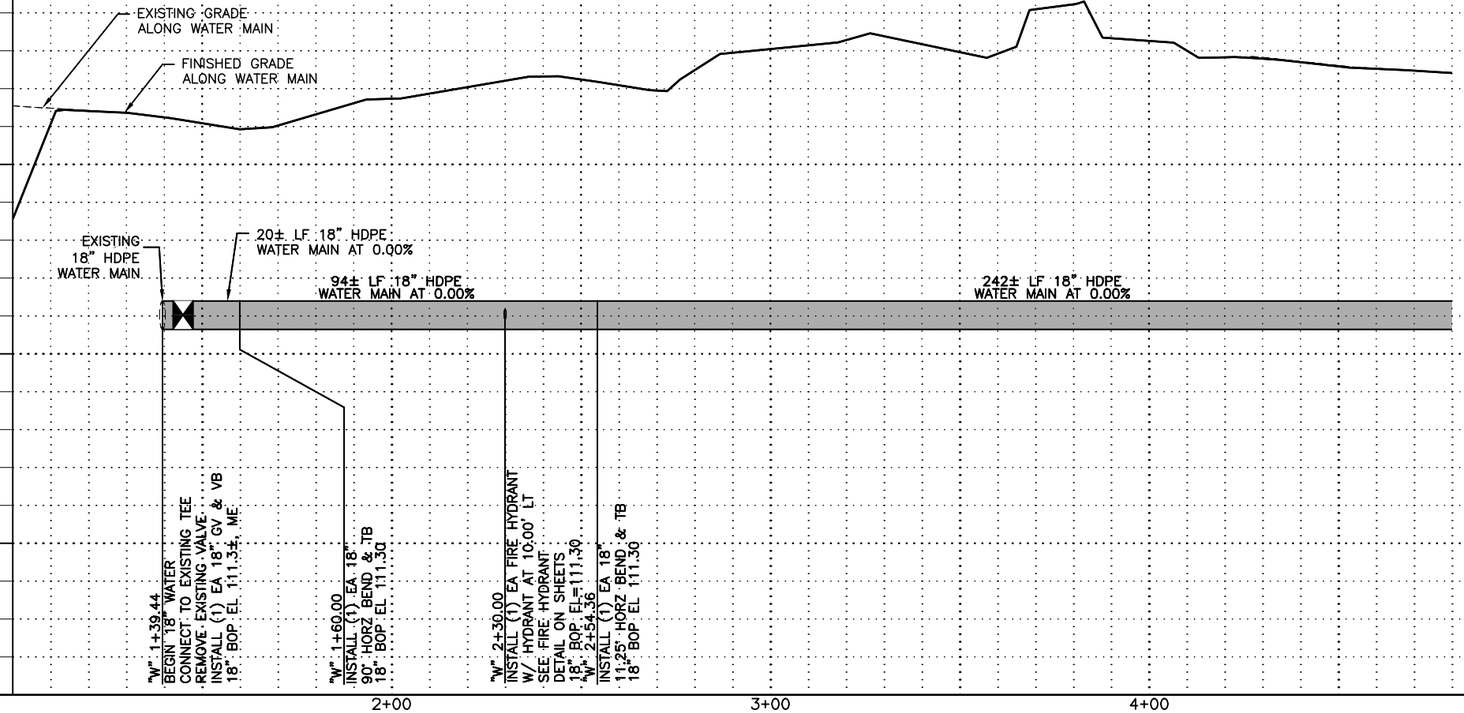

SHEET NO.	TOTAL SHEETS
UW8	UW13
STATE	YEAR
ALASKA	2021

PROJECT DESIGNATION

0A15037/CFHWY00431
0A15038/CFHWY00432
0A15033/CFHWY00006

NO.	REVISION
DATE	
NO.	REVISION
DATE	
NO.	REVISION
DATE	

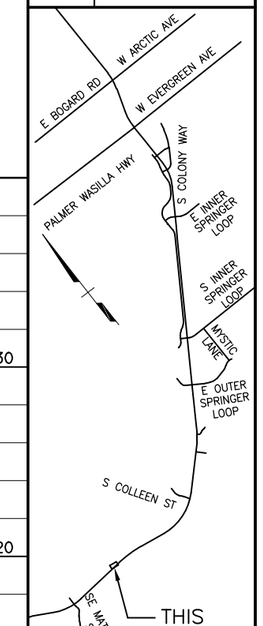

CERTIFICATION SET
NOVEMBER 2021

STATE OF ALASKA
49TH
CHRISTOPHER J. BOWMAN
CE-13377
REGISTERED PROFESSIONAL ENGINEER

HDL ENGINEERING CONSULTANTS, LLC
3335 ARCTIC BOULEVARD, STE 100
ANCHORAGE, AK 99503
(907) 564-2120
AECL861

STATE OF ALASKA
DEPARTMENT OF TRANSPORTATION
AND PUBLIC FACILITIES

GLENN HWY: PARKS HWY TO
S. INNER SPRINGER LP.
(PHASE II)

UTILITY
PLAN & PROFILE
WATER

FILE: H:\JOBS\08-016 GLENN HIGHWAY 34-42 (DOT)\09 - PS&E\CAD_UW - PH2\DRAWINGS\08016_P2_UW08-UW13_P&P.DWG by cburtburger
DATE/TIME 11/19/2021 12:32 PM | LAYOUT AREAS1-3 | DESIGNED | CHECKED | DRAFTED

FILE: H:\JOBS\08-016 GLENN HIGHWAY 34-42 (DOT)\09 - PS&E\CAD_UW - PH2\DRAWINGS\08016_P2_UW08-UW13_P&P.DWG by cburtburger | DATE/TIME: 11/19/2021 12:32 PM | LAYOUT: AREAS1-3 | DESIGNED: | CHECKED: | DRAFTED:

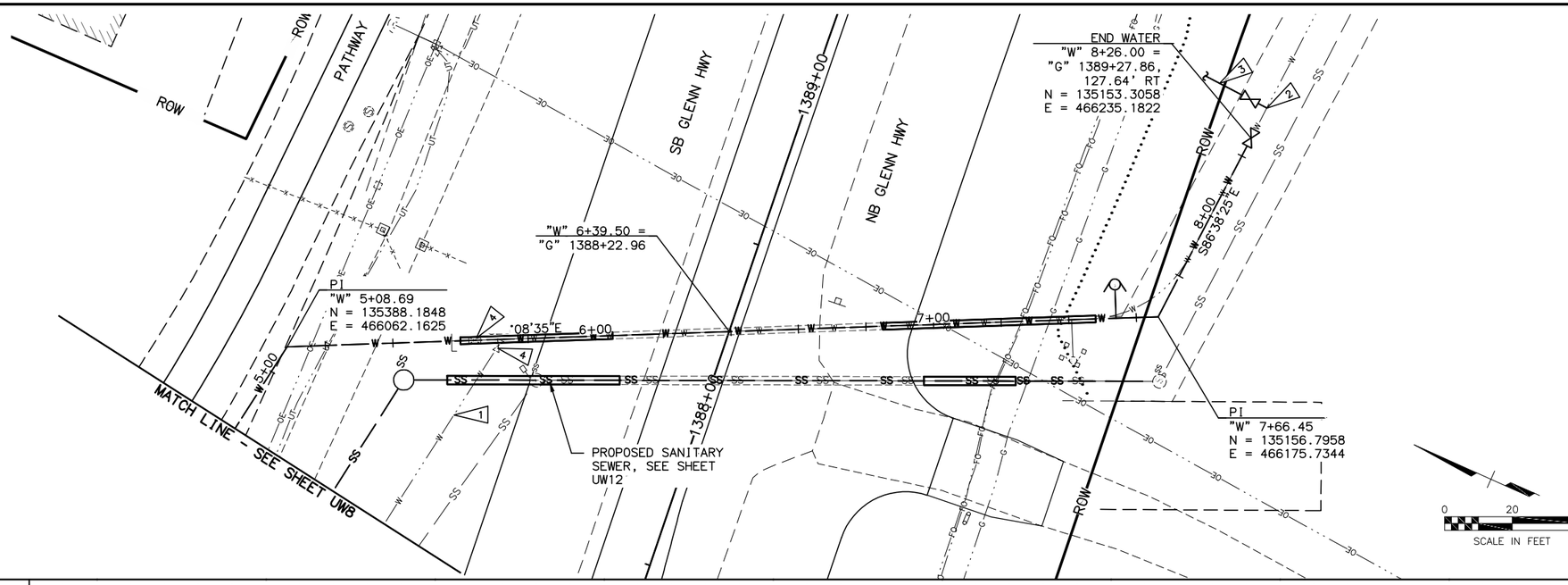

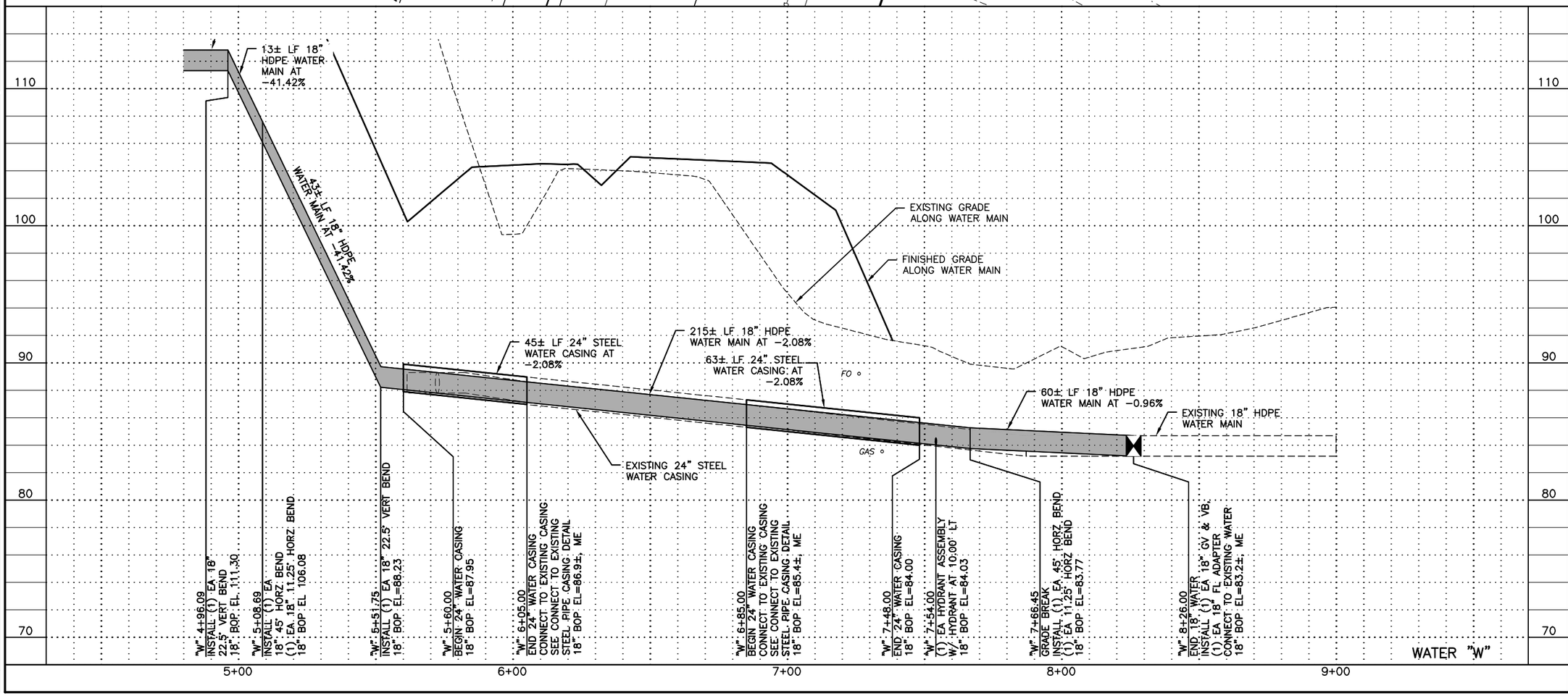

SHEET NO.	TOTAL SHEETS
UW9	UW13
STATE	YEAR
ALASKA	2021

PROJECT DESIGNATION

0A15037/CFHWY00431
0A15038/CFHWY00432
0A15033/CFHWY00006

NO.	REVISION
DATE	
NO.	REVISION
DATE	
NO.	REVISION
DATE	

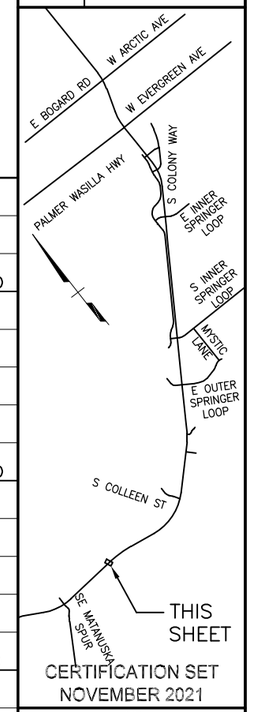

CERTIFICATION SET
NOVEMBER 2021

STATE OF ALASKA
49TH
CHRISTOPHER J. BOWMAN
CE-13377
REGISTERED PROFESSIONAL ENGINEER

HDL ENGINEERING CONSULTANTS, LLC
3335 ARCTIC BOULEVARD, STE 100
ANCHORAGE, AK 99503
(907) 564-2120
AECL861

STATE OF ALASKA
DEPARTMENT OF TRANSPORTATION AND PUBLIC FACILITIES

GLENN HWY: PARKS HWY TO S. INNER SPRINGER LP. (PHASE II)

UTILITY
PLAN & PROFILE
WATER

FILE |H:\JOBS\08-016 GLENN HIGHWAY 34-42 (DOT)\09 - PS&E\CAD_UW - PH2\DRAWINGS\08016_P2_UW08-UW13_P&P.DWG by cburtburger | DATE/TIME |11/19/2021 12:32 PM | LAYOUT | AREAS1-3 | DESIGNED | CHECKED | DRAFTED |

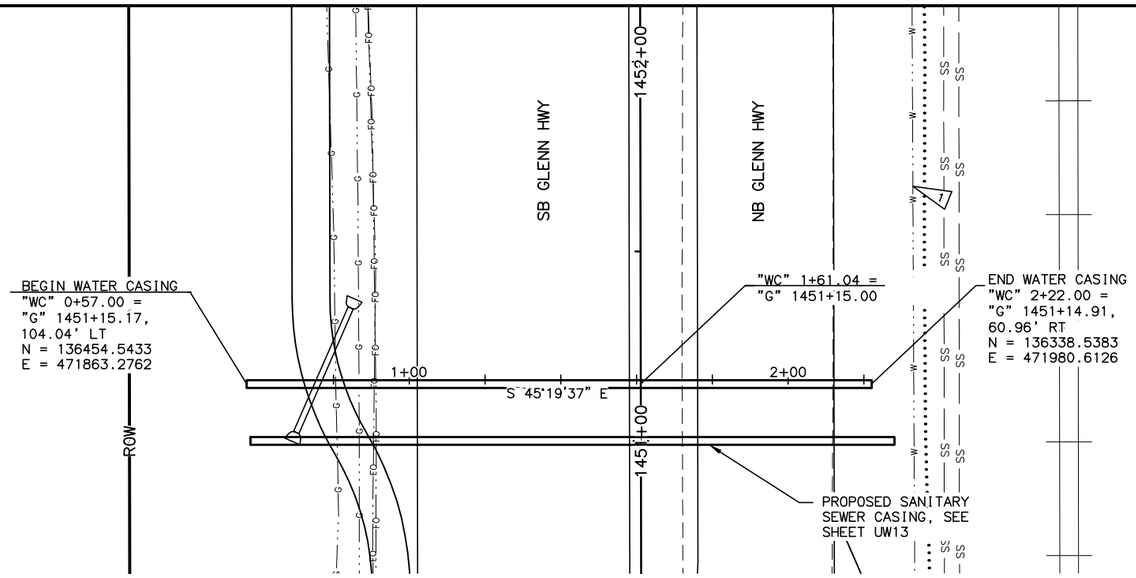

1 POTHOLE EXISTING WATER MAIN TO VERIFY ELEVATION.

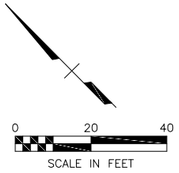

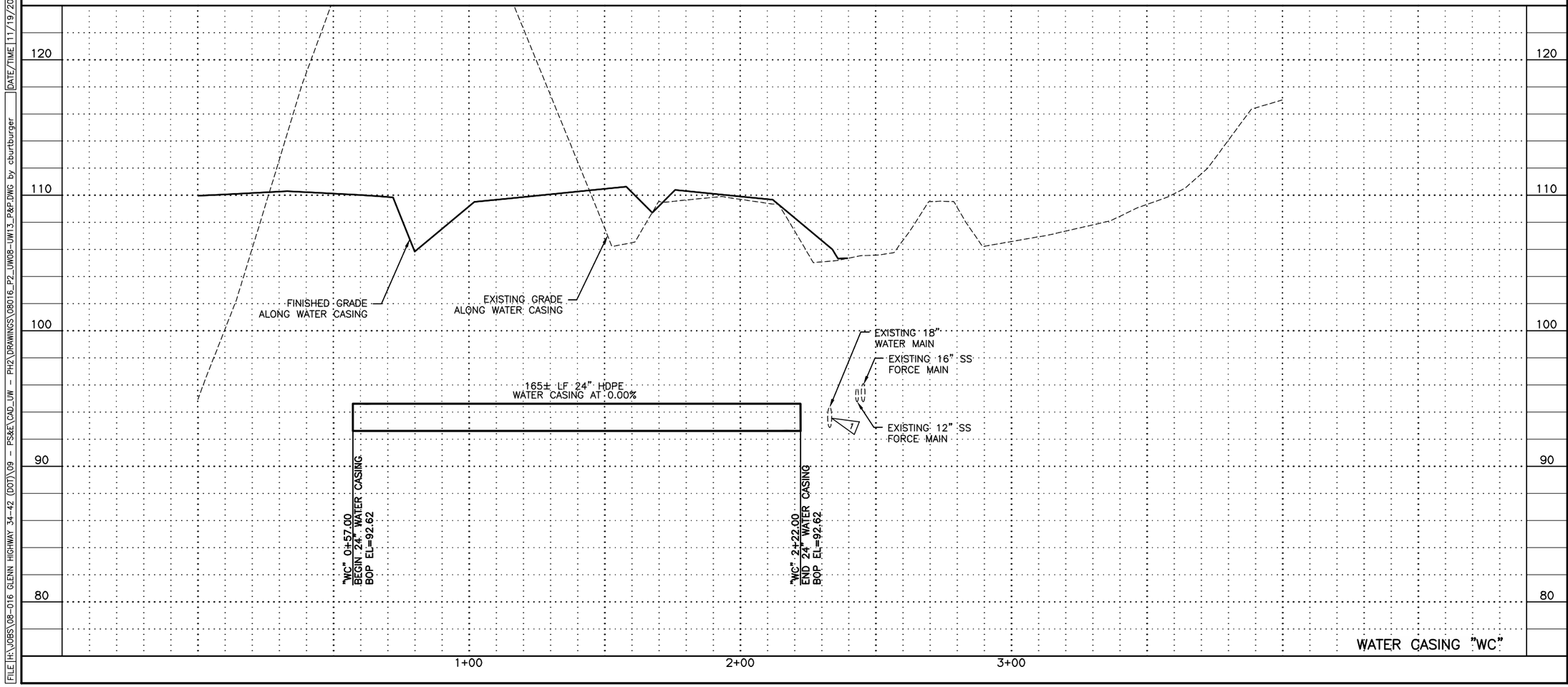

SHEET NO.	TOTAL SHEETS
UW10	UW13
STATE	YEAR
ALASKA	2021

PROJECT DESIGNATION

0A15037/CFHWY00431
0A15038/CFHWY00432
0A15033/CFHWY00006

NO.	REVISION
DATE	
NO.	REVISION
DATE	
NO.	REVISION
DATE	

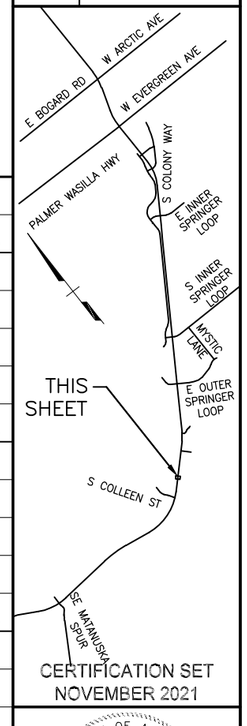

CERTIFICATION SET
NOVEMBER 2021

STATE OF ALASKA
49TH
CHRISTOPHER J. BOWMAN
CE-13377
REGISTERED PROFESSIONAL ENGINEER

HDL ENGINEERING CONSULTANTS, LLC
3335 ARCTIC BOULEVARD, STE 100
ANCHORAGE, AK 99503
(907) 564-2120
AECL861

STATE OF ALASKA
DEPARTMENT OF TRANSPORTATION
AND PUBLIC FACILITIES

GLENN HWY: PARKS HWY TO
S. INNER SPRINGER LP.
(PHASE II)

UTILITY
PLAN & PROFILE
WATER

FILE: H:\JOBS\08-016 GLENN HIGHWAY 34-42 (DOT)\09 - PS&E\CAD_UW - PH2\DRAWINGS\08016_P2_UW08-UW13_P&P.DWG by cburtburger | DATE/TIME: 11/19/2021 4:35 PM | LAYOUT: AREAS1-3 | DESIGNED: | CHECKED: | DRAFTED:

PROPOSED WATER, SEE SHEET UW8

PATHWAY

S81°42'15"E

2+00

3+00

4+00

PI, BEGIN SEWER
"S" 1+50.00 =
"G" 1384+98.85
154.97' LT
N = 135394.2573
E = 465782.4407

SB GLENN HWY

MATCH LINE SEE SHEET UW12

1 REMOVE EXISTING 24" HDPE SEWER MAIN (SUBSIDIARY TO SANITARY SEWER CONDUIT INSTALLATION) APPROX 311 LF TOTAL.

2 REMOVE EXISTING SANITARY SEWER MANHOLE.

0 20 40
SCALE IN FEET

EXISTING GRADE ALONG SEWER MAIN

FINISHED GRADE ALONG SEWER MAIN

170± LF 24" HDPE SEWER MAIN AT -1.00%

118± LF 24" HDPE SEWER MAIN AT -12.07%

"S" 1+50
SSMH 01, TYPE "A"
START 24" SEWER
24" E INV EL=104.32±, ME
24" W INV EL=104.22
RIM EL=123.70

"S" 3+20.09
SSMH 02, TYPE "A"
24" W INV EL=102.57
24" E INV EL = 102.24
RIM EL=119.01

SEWER "S"

SHEET NO.	TOTAL SHEETS
UW11	UW13
STATE	YEAR
ALASKA	2021

PROJECT DESIGNATION
0A15037/CFHWY00431
0A15038/CFHWY00432
0A15033/CFHWY00006

NO.	REVISION
DATE	
NO.	REVISION
DATE	
NO.	REVISION
DATE	

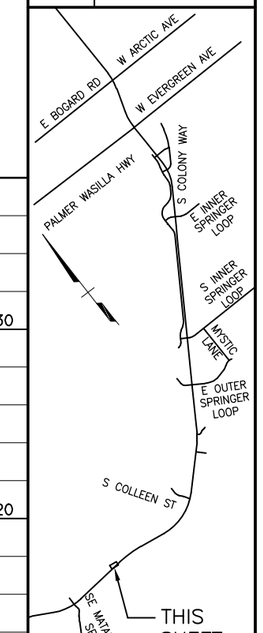

CERTIFICATION SET
NOVEMBER 2021

STATE OF ALASKA
49TH
CHRISTOPHER J. BOWMAN
CE-13377
REGISTERED PROFESSIONAL ENGINEER

HDL ENGINEERING CONSULTANTS, LLC
3335 ARCTIC BOULEVARD, STE 100
ANCHORAGE, AK 99503
(907) 564-2120
AECL861

STATE OF ALASKA
DEPARTMENT OF TRANSPORTATION AND PUBLIC FACILITIES

GLENN HWY: PARKS HWY TO S. INNER SPRINGER LP. (PHASE II)

UTILITY PLAN & PROFILE SEWER

FILE: H:\JOBS\08-016 GLENN HIGHWAY 34-42 (DOT)\09 - PS&E\CAD_UW - PH2\DRAWINGS\08016_P2_UW08-UW13_P&P.DWG by cburtburger | DATE/TIME: 11/19/2021 4:37 PM | LAYOUT: AREAS1-3 | DESIGNED: | CHECKED: | DRAFTED:

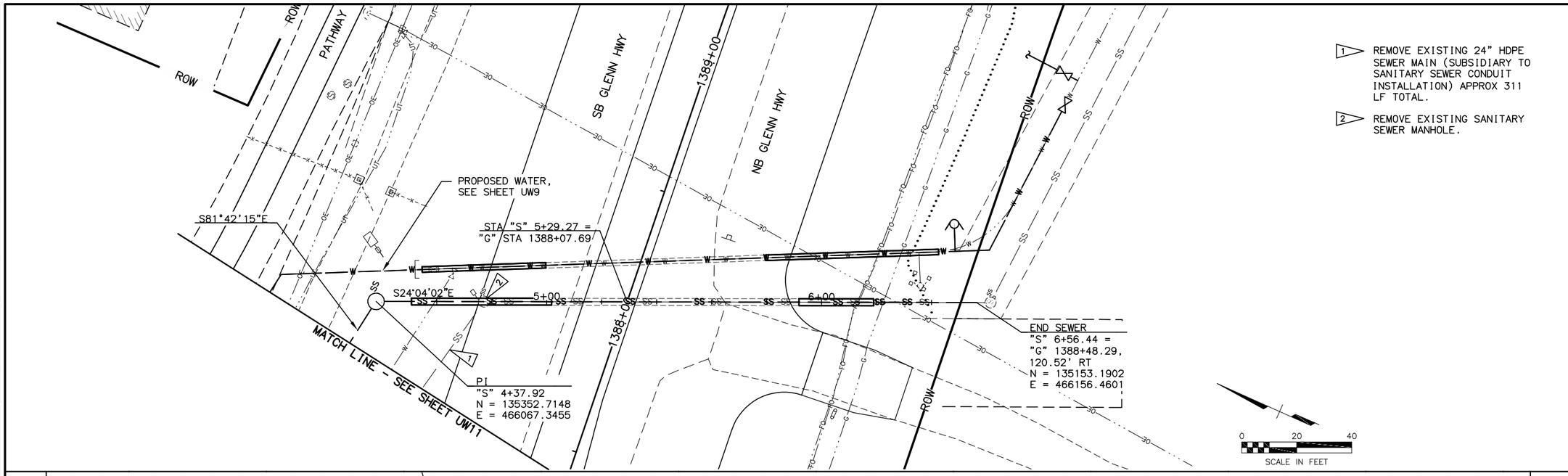

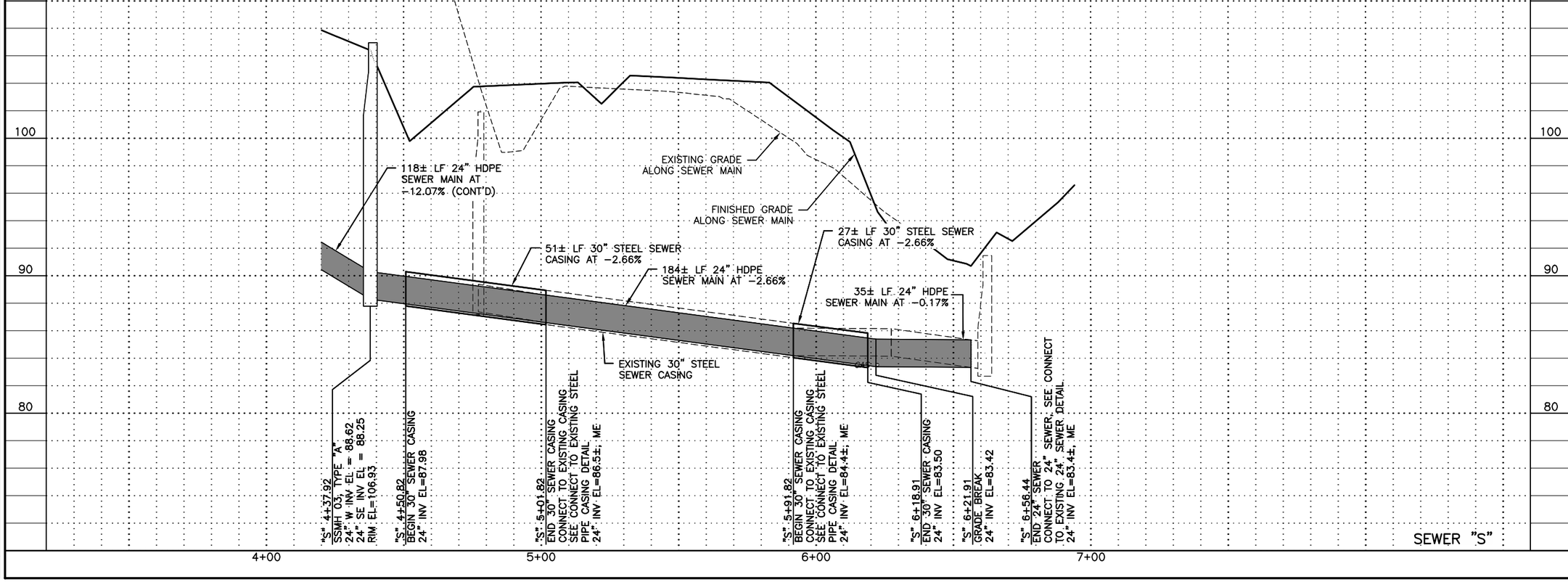

SHEET NO.	TOTAL SHEETS
UW12	UW13
STATE	YEAR
ALASKA	2021

PROJECT DESIGNATION

0A15037/CFHWY00431
0A15038/CFHWY00432
0A15033/CFHWY00006

NO.	REVISION
DATE	
NO.	REVISION
DATE	
NO.	REVISION
DATE	

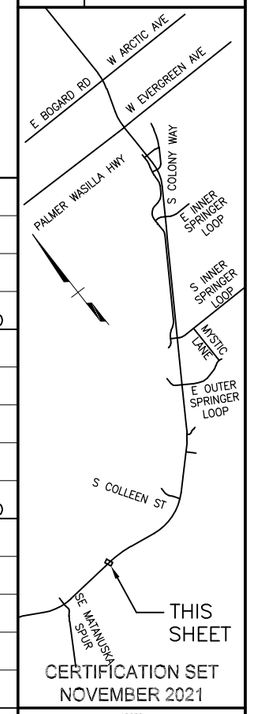

CERTIFICATION SET
NOVEMBER 2021

STATE OF ALASKA
49TH
CHRISTOPHER J. BOWMAN
CE-13377
REGISTERED PROFESSIONAL ENGINEER

HDL ENGINEERING CONSULTANTS, LLC
3335 ARCTIC BOULEVARD, STE 100
ANCHORAGE, AK 99503
(907) 564-2120
AECL861

STATE OF ALASKA
DEPARTMENT OF TRANSPORTATION AND PUBLIC FACILITIES

GLENN HWY: PARKS HWY TO S. INNER SPRINGER LP. (PHASE II)

UTILITY
PLAN & PROFILE
SEWER

FILE [H:\JOBS\08-016 GLENN HIGHWAY 34-42 (DOT)\09 - PS&E\CAD_UW - PH2\DRAWINGS\08016_P2_UW08-UW13_P&P.DWG by cburtburger | DATE/TIME 11/19/2021 12:33 PM | LAYOUT | AREAS1-3 | DESIGNED | CHECKED | DRAFTED

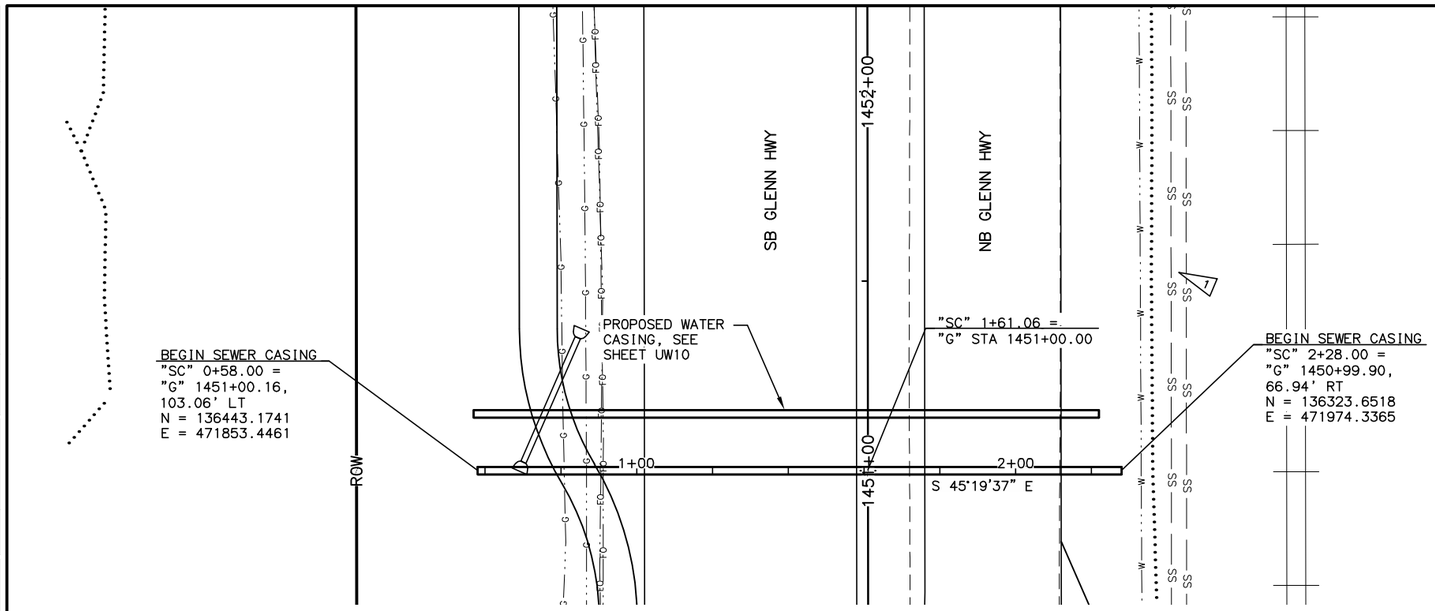

1 POTHOLE EXISTING SEWER MAIN TO VERIFY ELEVATION.

0 20 40
SCALE IN FEET

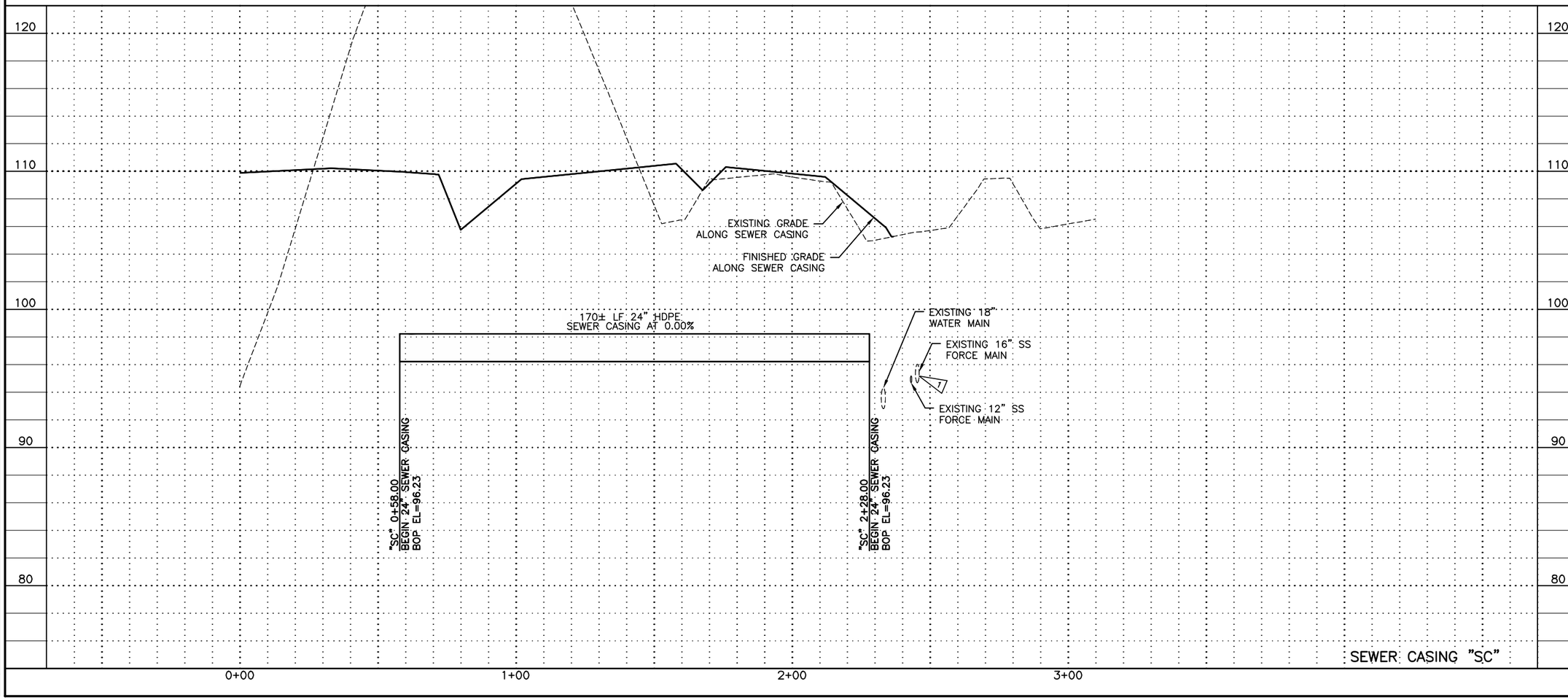

SEWER CASING "SC"

SHEET NO.	TOTAL SHEETS
UW13	UW13
STATE	YEAR
ALASKA	2021

PROJECT DESIGNATION

0A15037/CFHWY00431
0A15038/CFHWY00432
0A15033/CFHWY00006

NO.	REVISION
DATE	

NO.	REVISION
DATE	

NO.	REVISION
DATE	

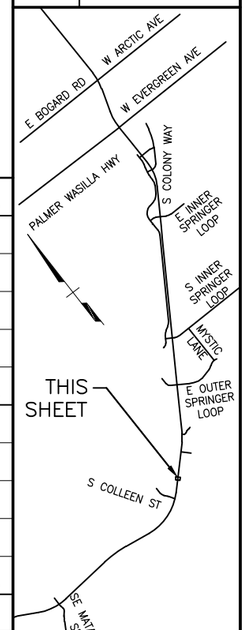

CERTIFICATION SET
NOVEMBER 2021

STATE OF ALASKA
49TH
CHRISTOPHER J. BOWMAN
CE-13377
REGISTERED PROFESSIONAL ENGINEER

HDL ENGINEERING CONSULTANTS, LLC
3335 ARCTIC BOULEVARD, STE 100
ANCHORAGE, AK 99503
(907) 564-2120
AECL861

STATE OF ALASKA
DEPARTMENT OF TRANSPORTATION
AND PUBLIC FACILITIES

GLENN HWY: PARKS HWY TO
S. INNER SPRINGER LP.
(PHASE II)

UTILITY
PLAN & PROFILE
SEWER