# STATE OF ALASKA
## DEPARTMENT OF NATURAL RESOURCES
### DIVISION OF PARKS AND OUTDOOR RECREATION

# KENAI BRIDGE ACCESS ROAD PAVEMENT PRESERVATION AND IMPROVEMENTS

## PROJECT NO. CFHWY00830

In Cooperation with the Alaska Department of Transportation & Public Facilities

Vicinity Map

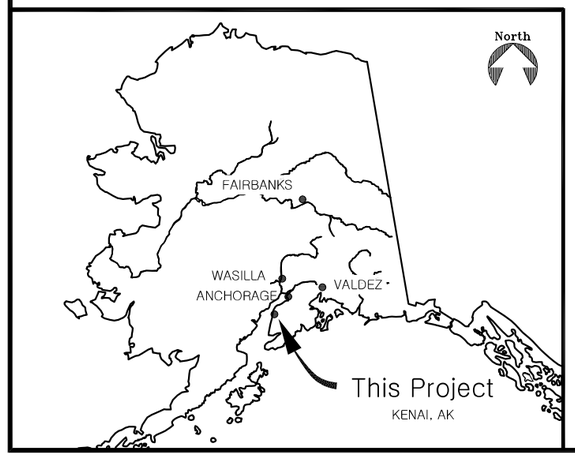


## INDEX



The following Division of Parks & Outdoor Rec. standard drawings apply to this project:
The following D.O.T.(Highways) standard drawings apply to this project:


**Plans developed by:**
STATE OF ALASKA
**Department of Natural Resources**
**Division of Parks & Outdoor Recreation**
**550 W 7th Ave. Suite 1340, Anchorage, AK 99501**


*Recommended:*

Rys Miranda, P.E. — Date
Chief, Design and Construction

*Approved:*

Placeholder Name — Date
Director, Alaska DOT&PF

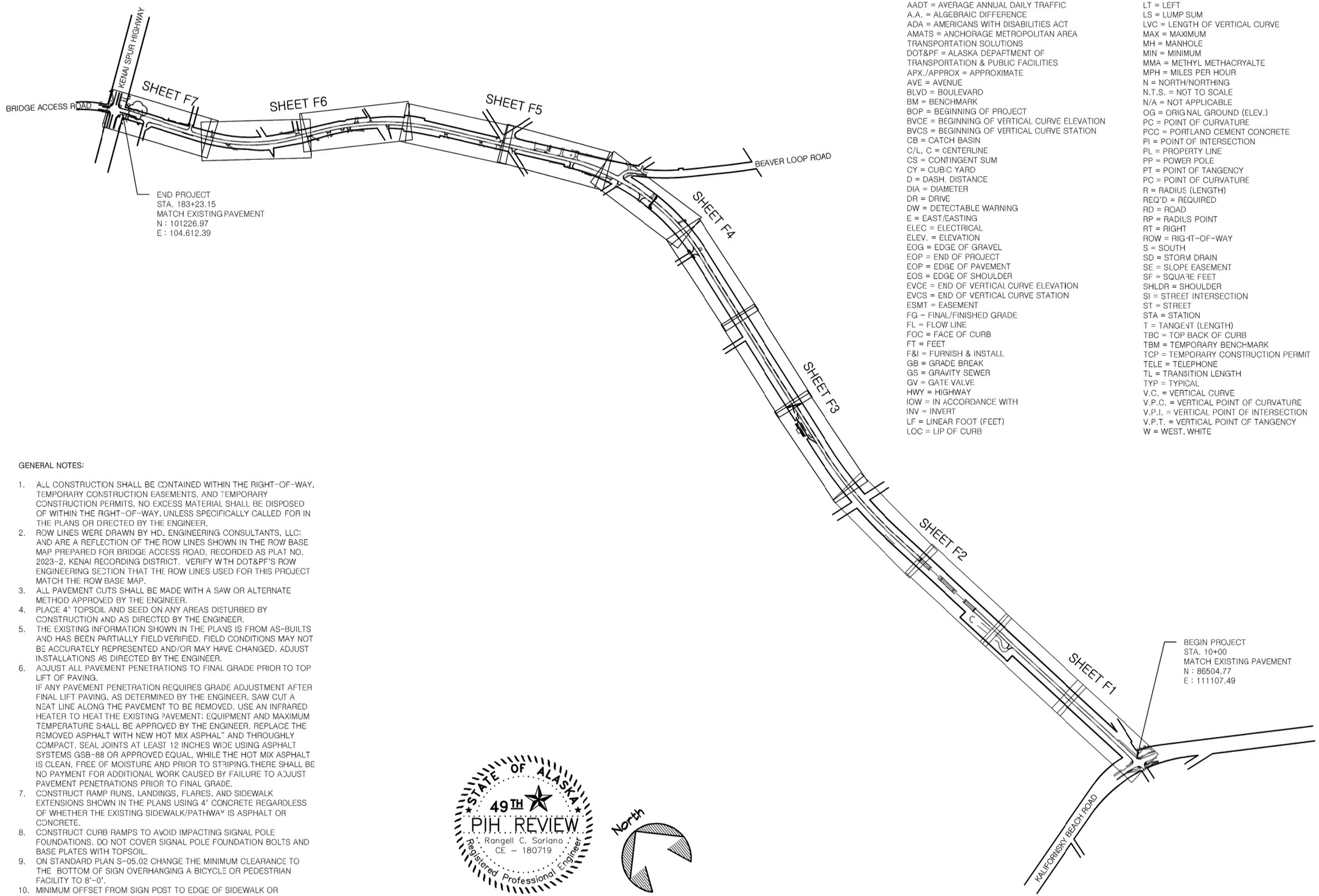


ABBREVIATIONS:

AADT = AVERAGE ANNUAL DAILY TRAFFIC
A.A. = ALGEBRAIC DIFFERENCE
ADA = AMERICANS WITH DISABILITIES ACT
AMATS = ANCHORAGE METROPOLITAN AREA TRANSPORTATION SOLUTIONS
DOT&PF = ALASKA DEPARTMENT OF TRANSPORTATION & PUBLIC FACILITIES
APX./APPROX = APPROXIMATE
AVE = AVENUE
BLVD = BOULEVARD
BM = BENCHMARK
BOP = BEGINNING OF PROJECT
BVCE = BEGINNING OF VERTICAL CURVE ELEVATION
BVCS = BEGINNING OF VERTICAL CURVE STATION
CB = CATCH BASIN
C/L, C = CENTERLINE
CS = CONTINGENT SUM
CY = CUBIC YARD
D = DASH. DISTANCE
DIA = DIAMETER
DR = DRIVE
DW = DETECTABLE WARNING
E = EAST/EASTING
ELEC = ELECTRICAL
ELEV. = ELEVATION
EOG = EDGE OF GRAVEL
EOP = END OF PROJECT
EOP = EDGE OF PAVEMENT
EOS = EDGE OF SHOULDER
EVCE = END OF VERTICAL CURVE ELEVATION
EVCS = END OF VERTICAL CURVE STATION
ESMT = EASEMENT
FG - FINAL/FINISHED GRADE
FL = FLOW LINE
FOC = FACE OF CURB
FT = FEET
F&I = FURNISH & INSTALL
GB = GRADE BREAK
GS = GRAVITY SEWER
GV = GATE VALVE
HWY = HIGHWAY
IOW = IN ACCORDANCE WITH
INV = INVERT
LF = LINEAR FOOT (FEET)
LOC = LIP OF CURB
LT = LEFT
LS = LUMP SUM
LVC = LENGTH OF VERTICAL CURVE
MAX = MAXIMUM
MH = MANHOLE
MIN = MINIMUM
MMA = METHYL METHACRYALTE
MPH = MILES PER HOUR
N = NORTH/NORTHING
N.T.S. = NOT TO SCALE
N/A = NOT APPLICABLE
OG = ORIGINAL GROUND (ELEV.)
PC = POINT OF CURVATURE
PCC = PORTLAND CEMENT CONCRETE
PI = POINT OF INTERSECTION
PL = PROPERTY LINE
PP = POWER POLE
PT = POINT OF TANGENCY
PC = POINT OF CURVATURE
R = RADIUS (LENGTH)
REQ'D = REQUIRED
RD = ROAD
RP = RADIUS POINT
RT = RIGHT
ROW = RIGHT-OF-WAY
S = SOUTH
SD = STORM DRAIN
SE = SLOPE EASEMENT
SF = SQUARE FEET
SHLDR = SHOULDER
SI = STREET INTERSECTION
ST = STREET
STA = STATION
T = TANGENT (LENGTH)
TBC = TOP BACK OF CURB
TBM = TEMPORARY BENCHMARK
TCP = TEMPORARY CONSTRUCTION PERMIT
TELE = TELEPHONE
TL = TRANSITION LENGTH
TYP = TYPICAL
V.C. = VERTICAL CURVE
V.P.C. = VERTICAL POINT OF CURVATURE
V.P.I. = VERTICAL POINT OF INTERSECTION
V.P.T. = VERTICAL POINT OF TANGENCY
W = WEST, WHITE

GENERAL NOTES:

1. ALL CONSTRUCTION SHALL BE CONTAINED WITHIN THE RIGHT-OF-WAY, TEMPORARY CONSTRUCTION EASEMENTS, AND TEMPORARY CONSTRUCTION PERMITS. NO EXCESS MATERIAL SHALL BE DISPOSED OF WITHIN THE RIGHT-OF-WAY, UNLESS SPECIFICALLY CALLED FOR IN THE PLANS OR DIRECTED BY THE ENGINEER.
2. ROW LINES WERE DRAWN BY HDL ENGINEERING CONSULTANTS, LLC: AND ARE A REFLECTION OF THE ROW LINES SHOWN IN THE ROW BASE MAP PREPARED FOR BRIDGE ACCESS ROAD, RECORDED AS PLAT NO. 2023-2, KENAI RECORDING DISTRICT. VERIFY WITH DOT&PF'S ROW ENGINEERING SECTION THAT THE ROW LINES USED FOR THIS PROJECT MATCH THE ROW BASE MAP.
3. ALL PAVEMENT CUTS SHALL BE MADE WITH A SAW OR ALTERNATE METHOD APPROVED BY THE ENGINEER.
4. PLACE 4" TOPSOIL AND SEED ON ANY AREAS DISTURBED BY CONSTRUCTION AND AS DIRECTED BY THE ENGINEER.
5. THE EXISTING INFORMATION SHOWN IN THE PLANS IS FROM AS-BUILTS AND HAS BEEN PARTIALLY FIELD VERIFIED. FIELD CONDITIONS MAY NOT BE ACCURATELY REPRESENTED AND/OR MAY HAVE CHANGED. ADJUST INSTALLATIONS AS DIRECTED BY THE ENGINEER.
6. ADJUST ALL PAVEMENT PENETRATIONS TO FINAL GRADE PRIOR TO TOP LIFT OF PAVING.
   IF ANY PAVEMENT PENETRATION REQUIRES GRADE ADJUSTMENT AFTER FINAL LIFT PAVING, AS DETERMINED BY THE ENGINEER, SAW CUT A NEAT LINE ALONG THE PAVEMENT TO BE REMOVED. USE AN INFRARED HEATER TO HEAT THE EXISTING PAVEMENT: EQUIPMENT AND MAXIMUM TEMPERATURE SHALL BE APPROVED BY THE ENGINEER. REPLACE THE REMOVED ASPHALT WITH NEW HOT MIX ASPHALT AND THROUGHLY COMPACT. SEAL JOINTS AT LEAST 12 INCHES WIDE USING ASPHALT SYSTEMS GSB-88 OR APPROVED EQUAL. WHILE THE HOT MIX ASPHALT IS CLEAN, FREE OF MOISTURE AND PRIOR TO STRIPING.THERE SHALL BE NO PAYMENT FOR ADDITIONAL WORK CAUSED BY FAILURE TO ADJUST PAVEMENT PENETRATIONS PRIOR TO FINAL GRADE.
7. CONSTRUCT RAMP RUNS, LANDINGS, FLARES, AND SIDEWALK EXTENSIONS SHOWN IN THE PLANS USING 4" CONCRETE REGARDLESS OF WHETHER THE EXISTING SIDEWALK/PATHWAY IS ASPHALT OR CONCRETE.
8. CONSTRUCT CURB RAMPS TO AVOID IMPACTING SIGNAL POLE FOUNDATIONS. DO NOT COVER SIGNAL POLE FOUNDATION BOLTS AND BASE PLATES WITH TOPSOIL.
9. ON STANDARD PLAN S-05.02 CHANGE THE MINIMUM CLEARANCE TO THE BOTTOM OF SIGN OVERHANGING A BICYCLE OR PEDESTRIAN FACILITY TO 8'-0".
10. MINIMUM OFFSET FROM SIGN POST TO EDGE OF SIDEWALK OR PATHWAY SHALL BE 1'6".

STATE OF ALASKA
49TH
PIH REVIEW
Rangell C. Soriano
CE - 180719
Registered Professional Engineer

**STATE OF ALASKA, DEPARTMENT OF NATURAL RESOURCES**
**PLANS DEVELOPED BY: DIVISION OF PARKS AND OUTDOOR RECREATION**
**550 W 7TH AVE. SUITE 1340, ANCHORAGE, AK 99501 - 907.269.8731**

ABBREVIATIONS, SHEET LAYOUT AND GENERAL NOTES

KENAI BRIDGE ACCESS ROAD PAVEMENT PRESERVATION AND IMPROVEMENTS
PROJECT No. CFHWY00689

PREPARED: RCS
DRAWN: D&C
REVIEWED: D&C
DATE: JULY 2025

SHEET
A2
OF XX SHEETS

## ROADWAY

| | EXISTING | PROPOSED |
|---|---|---|
| EDGE OF PAVEMENT | | |
| LIMIT OF CUT SLOPE & FILL SLOPE | | CUT FILL |
| GRAVEL EDGE | | |
| SIDEWALK AND PATH/TRAIL | | PM |
| CONCRETE CURB & GUTTER | | |
| CONCRETE CURB CUT | | |
| PARALLEL CURB RAMP<br>PERPENDICULAR CURB RAMP | | |
| UNIDIRECTIONAL CURB RAMP &<br>MID-BLOCK CURB RAMP | | |
| DETECTABLE WARNING TILE | | |
| BRIDGE | | |
| TUNNEL | | |
| GUARDRAIL | | |
| END & PARALLEL END SECTIONS | | |
| ROADWAY OBLITERATION | | |
| FENCE | — X — X — | — X — X — |
| STONE FENCE | | |
| NOISE BARRIER | ====X====X | ====X====X |
| RETAINING WALL | | |
| HEADWALL & WINGWALL | | |
| BOTTOM OF DITCH | | |
| SPECIAL DITCH | | |
| FLAT BOTTOM DITCH | | |
| BERM | | |
| RIPRAP | | |
| BOULDER OR BOULDERS | | |
| PRIVATE SIGN, MAILBOX | MB | MB |
| POST, BOLLARD | | |

## UTILITIES

| | EXISTING | PROPOSED |
|---|---|---|
| STORM DRAIN | SD | |
| STORM DRAIN MANHOLE, CLEANOUT | SD CO | SD CO |
| CURB INLET CATCH BASIN<br>FIELD INLET CATCH BASIN | F1 | F1 |
| PIPE CULVERT WITH END SECTION | | |
| SANITARY SEWER | SS | SS |
| SANITARY SEWER MANHOLE, CLEANOUT | SS CO | SS CO |
| SEPTIC VENT, SEWER SERVICE CONNECTION | S | |
| WATER | W | W |
| FIRE HYDRANT, VALVE OR RISER | | |
| WELL, WATER SERVICE CONNECTION | W | |
| NATURAL GAS | G G | |
| OIL OR GASOLINE PIPELINE | O O | |
| TANKS (ABOVE GROUND, UNDERGROUND) | | U |
| ELECTRIC | OE (OVERHEAD)<br>UE (UNDERGROUND)<br>OE&OT (OVERHEAD) | |
| UTILITY POLE, POLE WITH LUMINAIRE | | |
| GUY POLE, GUY WIRE ANCHOR | GP | |
| TRANSMISSION TOWER (WOOD, STEEL) | | |
| ELECTRIC PEDESTAL, TRANSFORMER | | E |
| ELECTRIC MANHOLE, METER | E | |
| ELECTRIC OUTLET, LANDSCAPE LIGHT | | |
| TELEPHONE | OT (OVERHEAD)<br>UT (UNDERGROUND)<br>UT&TV (UNDERGROUND) | |
| TELEPHONE MANHOLE, PEDESTAL | T | |
| FIBER OPTIC | FO | |
| FIBER OPTIC MANHOLE | FO | |
| CABLE TV | OTV (OVERHEAD)<br>UTV (UNDERGROUND) | |
| CABLE TV PEDESTAL, SATELLITE DISH | | |
| UNDERGROUND DUCT, UTILIDOR<br>(ELECTRIC, TELEPHONE, FIBER OPTIC) | | |
| VENT | | |

## TOPOGRAPHY

| | EXISTING | | EXISTING | PROPOSED |
|---|---|---|---|---|
| LAKE OR POND, WETLANDS | LAKE/POND | | CONTOUR, MAJOR OR MINOR | 520 | 520 |
| TREE (CONIFER/DECIDUOUS)<br>TREELINE (EDGE OF VEGETATION) | | | DRAINAGE FLOW | | |
| PLANTER | P | | CREEK (CENTERLINE) | | |
| BUILDING OR FOUNDATION | | | RIVER (EDGE OF WATER) | | |

## TRAFFIC

| | EXISTING | PROPOSED |
|---|---|---|
| LOAD CENTER | | |
| STATE TRAFFIC, MOA TRAFFIC, &<br>BEACON CONTROLLER<br>ARROW INDICATES DOOR LOCATION | | |
| TYPE 1A, II, III, IV JUNCTION BOX | 15 26 57 48 | 60 |
| FIBER OPTIC VAULT | F/O 59 | F/O |
| ELECTROLIER | 30 59 | 21 |
| HIGHTOWER | HT# | HT# |
| SIGNAL POLE WITH MASTARM | 49 | 14 |
| PEDESTRIAN PUSH BUTTON & SIGNAL | 56 12 | 56 12 |
| VEHICULAR SIGNAL | 4 | 4 |
| VEHICULAR SIGNAL LEFT & RIGHT | 65 24 | 12 17 |
| OPTICAL, CAMERA, RADAR, AND GPS DETECTOR | CAM RAD GPS | CAM RAD GPS |
| LOOP DETECTOR | 555 | 735 |
| COMMUNICATION ANTENNA | | |
| MASTARM BEACON | A B C D | A B C D |
| RURAL & SCHOOL ZONE BEACON | 75 77 74 55 | 75 55 73 43 |
| LOOP DETECTOR CONDUIT | | |
| SIGNAL CONDUIT | | TR |
| LIGHTING CONDUIT | LTG | LTG |
| SIGNAL & LIGHTING CONDUIT | T/L | T/L |
| CONDUIT BORING | | |
| CONDUIT SIZE IN INCHES | 2" -3C4 | 2" 1-3C4<br>CKT BA12<br>CKT BA13 |
| INTERCONNECT | I/C | I/C |
| SIGN POST | | 22 |

## PAVEMENT MARKINGS

| | PROPOSED | |
|---|---|---|
| TRAFFIC PROJECT CENTERLINE | | |
| 8" & 4" WHITE SOLID STRIPE | 8"W | 4"W |
| 4" WHITE SKIP STRIPE<br>10' STRIPES AND 30' SPACES | | 4"W SKIP |
| 8" WHITE LANE GUIDE SKIP<br>LANE CONTINUATION OR TURN SKIP<br>1' STRIPES AND 3' SPACES | 8"W, GUIDE SKIP | |
| 8" & 4" YELLOW SOLID STRIPE | 8"Y | 4"Y |
| 4" YELLOW SKIP STRIPE<br>10' STRIPES AND 30' SPACES | | 4"Y SKIP |
| STRIPING CHANGE STATION INTERVAL | +20 | |
| 2' CROSSWALK OR STOPBAR | 24"W (TYP) | |
| LADDER CROSSWALK LAYOUT<br>2' WIDE RUNGS WITH 2' SPACES<br>ALIGNED TO AVOID TIRE PATHS | 3' 6' 3' | |
| TYPICAL PAINTED MEDIAN | 12' (2)-4"Y 3" APART VARIES 18"Y @ 45° | |

## RIGHT-OF-WAY

| | RECOVERED | SET THIS PROJECT |
|---|---|---|
| FEDERAL GOV'T SURVEY MONUMENT | | |
| GOV'T CONTROL STATION | | |
| PRIMARY MONUMENT (BRASS/AL CAP) | | |
| MISC SECONDARY CORNER | | |
| PRIMARY CENTERLINE MONUMENT | | |
| SECONDARY CENTERLINE MONUMENT | | |
| RANDOM CONTROL MONUMENT | RCM | |
| PRIMARY GPS CONTROL POINT | GPS | |
| HORIZONTAL CONTROL POINT | | |
| SECONDARY CONTROL POINT | SCP | |
| VERTICAL BENCHMARK | BM | |
| TEMPORARY BENCHMARK | TBM | |
| TOWNSHIP AND RANGE LINES | T13N T12N R3W ROW | |
| SECTION LINE | | |
| 1/4 SECTION LINE | | |
| 1/16 SECTION LINE | | |
| CORPORATE or CITY LIMITS | | |
| EXISTING RIGHT-OF-WAY | | |
| RIGHT-OF-WAY OR EASEMENT REQUIRED | | |
| PROJECT RIGHT-OF-WAY LINE | | |
| EXISTING RIGHT-OF-WAY EASEMENT | | |
| EXISTING PROPERTY LINE | | |
| CONTROLLED ACCESS LINE | | |
| EXISTING UTILITY EASEMENT | | |
| PROPOSED UTILITY EASEMENT | | |
| EXISTING CENTERLINE | | |
| RAILROAD CENTERLINE | | |
| TEMPORARY CONSTRUCTION EASEMENT | | |
| TEMPORARY CONSTRUCTION PERMIT | | |

STATE OF ALASKA 49TH PS&E REVIEW Soriano Registered Professional Engineer

**STATE OF ALASKA, DEPARTMENT OF NATURAL RESOURCES**
**PLANS DEVELOPED BY: DIVISION OF PARKS AND OUTDOOR RECREATION**
**550 W 7TH AVE. SUITE 1340, ANCHORAGE, AK 99501 - 907.269.8731**

LEGEND

KENAI BRIDGE ACCESS ROAD PAVEMENT PRESERVATION AND IMPROVEMENTS
PROJECT No. CFHWY00689

PREPARED: RCS
DRAWN: D&C
REVIEWED: D&C
DATE: APRIL 2025

SHEET A3
OF XX SHEETS

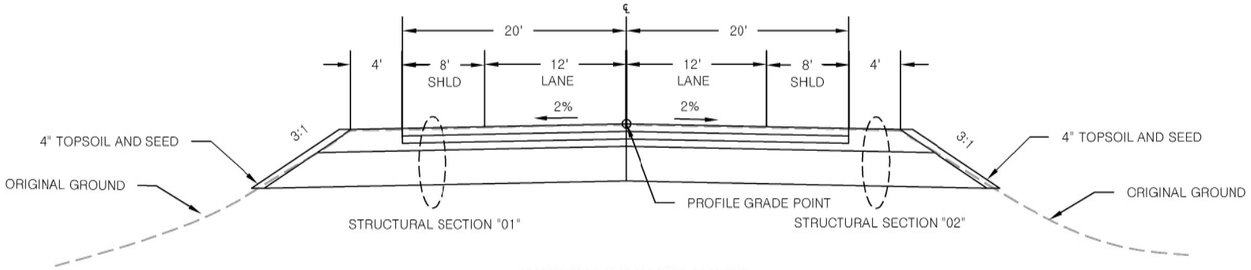


BRIDGE ACCESS ROAD

STA. 16+00 TO 39+85
STA. 173+00 TO 177+00

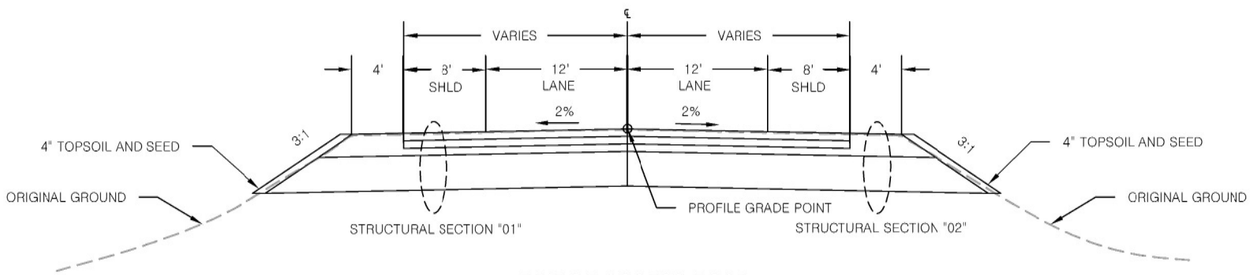


BRIDGE ACCESS ROAD

STA. 10+00 TO 16+00
STA. 177+00 TO 183+25

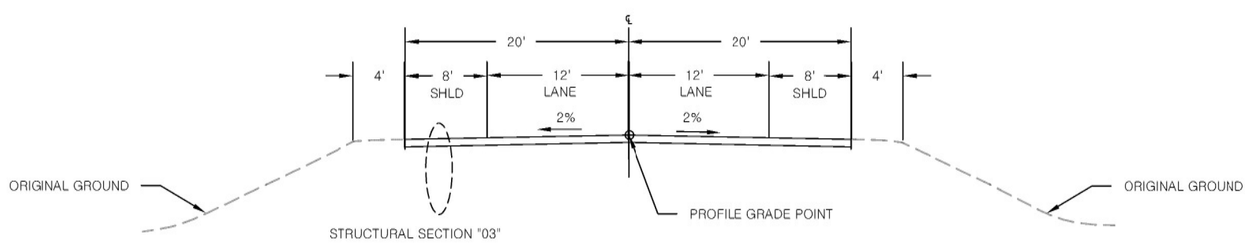


BRIDGE ACCESS ROAD

STA. 49+67 TO 109+00
STA. 121+50 TO 173+00

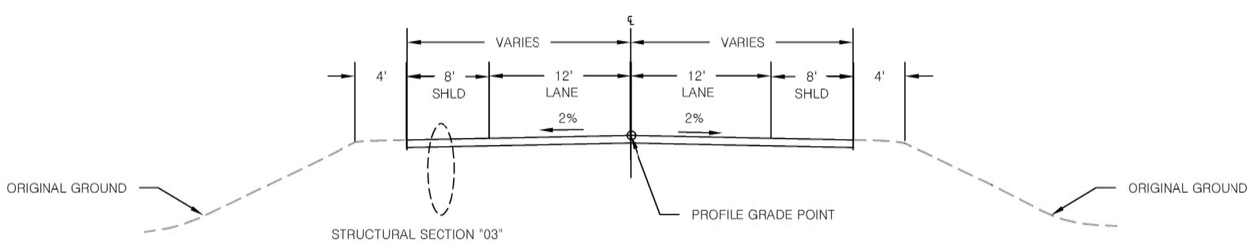


BRIDGE ACCESS ROAD

STA. 109+00 TO 121+50

NOTES:

1. CONDUCT PRECONSTRUCTION SURVEY TO IDENTIFY EXISTING ROAD ELEVATIONS PRIOR TO DISTURBING ROADWAY TO CONSTRUCT TYPICAL SECTIONS.
2. FINISHED ROADWAY CROSS SLOPES SHALL MATCH EXISTING AND BE CONSISTEND ACROSS THE ROADWAYS HALF WIDTH IN SUPERELEVATED SECTIONS, CROWNED AT 2% IN TANGENT SECTIONS.

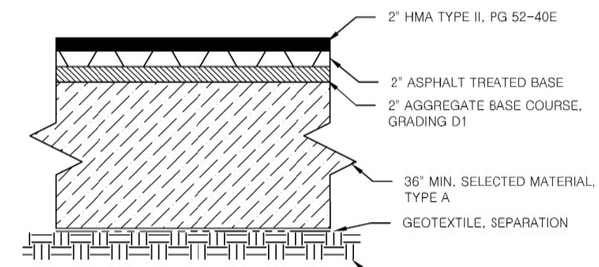


01/B2 STRUCTURAL SECTION "01"
DETAIL - PREVENTATIVE MAINTENANCE

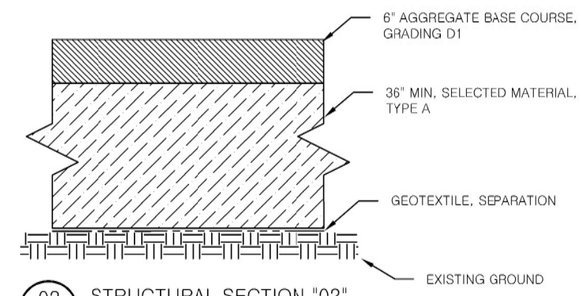


02/B2 STRUCTURAL SECTION "02"
DETAIL - PREVENTATIVE MAINTENANCE

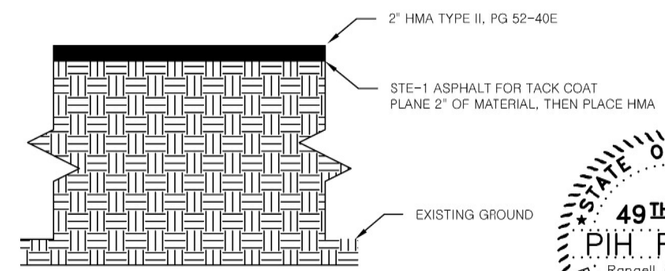


03/B2 STRUCTURAL SECTION "03"
PLANNING STRUCTURAL SECTION

STATE OF ALASKA
49TH
PIH REVIEW
Rangell C. Soriano
CE - 18C719
Registered Professional Engineer

**STATE OF ALASKA, DEPARTMENT OF NATURAL RESOURCES**
**PLANS DEVELOPED BY: DIVISION OF PARKS AND OUTDOOR RECREATION**
**550 W 7TH AVE. SUITE 1340, ANCHORAGE, AK 99501 - 907.269.8731**

TYPICAL SECTIONS AND STRUCTURAL SECTIONS

KENAI BRIDGE ACCESS ROAD PAVEMENT PRESERVATION AND IMPROVEMENTS
PROJECT No. CFHWY00689

PREPARED: RCS
DRAWN: D&C
REVIEWED: D&C
DATE: JULY 2025

SHEET
B1
OF XX SHEETS

## ESTIMATE OF QUANTITIES

| ITEM NO. | ITEM DESCRIPTION | PAY UNIT | TOTAL QUANTITY |
|---|---|---|---|
| 201.0007.0000 | CLEARING AND GRUBBING | LS | ALL REQ'D |
| 202.0002.0000 | REMOVAL OF PAVEMENT | SY | 77462 |
| 202.0004.0000 | REMOVAL OF CULVERT PIPE | LF | 256 |
| 203.0003.0000 | UNCLASSIFIED EXCAVATION | CY | 35610 |
| 203.0006.000A | BORROW, TYPE A | TON | 15425 |
| 205.0007.0000 | POROUS BACKFILL MATERIAL | TON | 175 |
| | | | |
| 301.0001.00D1 | AGGREGATE BASE COURSE, GRADING D1 | TON | 2254 |
| 304.0001.000F | SUBBASE GRADING F | TON | 750 |
| 308.0001.0000 | CRUSHED ASPHALT BASE COURSE | SY | 12584 |
| | | | |
| 401.0001.00A2 | HMA, TYPE II: CLASS A | TON | 9247 |
| 401.0015.0000 | ASPHALT MATERIAL PRICE ADJUSTMENT | CS | ALL REQ'D |
| | | | |
| 501.2007.0000 | HEADWALL | EACH | 4 |
| | | | |
| 602.0001.0132 | STRUCTURAL PLATE PIPE 132" DIAMETER, 10 GAGE | LF | 142 |
| 603.0002.0000 | CSP ARCH 81X59 INCH | LF | 64 |
| 603.0009.0096 | CORRUGATED ALUMINUM PIP 96 INCH | LF | 115 |
| 603.2005.0000 | DEADMAN | EACH | 2 |
| 603.0001.0072 | 10 GAGE ALUMINUM PIPE 72" | LF | 110 |
| 610.0002.0000 | DITCH LINING | TON | 95 |
| 610.0002.0001 | RIPRAP, CLASS I | TON | 80 |
| 618.0002.0000 | SEEDING | POUND | 275 |
| 620.0001.0000 | TOPSOIL | SY | 20501 |
| 630.0001.0001 | GEOTEXTILE SEPARATION, CLASS I | SY | 1650 |
| 630.0001.0003 | GEOTEXTILE SEPARATION, CLASS III | SY | 38543 |
| 634.0002.0000 | GEOGRID, REINFORCEMENT, CLASS I | SY | 105 |
| 640.0001.0000 | MOBILIZATION AND DEMOBILIZATION | LS | ALL REQ'D |
| 640.0004.0000 | WORKER MEALS AND LODGING, OR PER DIEM | LS | ALL REQ'D |

## ESTIMATE OF QUANTITIES

| ITEM NO. | ITEM DESCRIPTION | PAY UNIT | TOTAL QUANTITY |
|---|---|---|---|
| 641.0001.0000 | EROSION, SEDIMENT, AND POLLUTION CONTROL ADMINISTRATION | LS | ALL REQ'D |
| 641.0002.0000 | TEMPORARY EROSION, SEDIMENT, AND POLLUTION CONTROL | CS | ALL REQ'D |
| 641.0006.0000 | WITHHOLDING | CS | ALL REQ'D |
| 641.0007.0000 | SWPPP MANAGER | LS | ALL REQ'D |
| 642.0001.0000 | CONSTRUCTION SURVEYING | LS | ALL REQ'D |
| 642.0003.0000 | THREE PERSON SURVEY PARTY | HR | 10 |
| 643.0002.0000 | TRAFFIC MAINTENANCE | LS | ALL REQ'D |
| 643.0003.0000 | PERMANENT CONSTRUCTION SIGNS | LS | ALL REQ'D |
| 643.0023.0000 | TRAFFIC PRICE ADJUSTMENT | CS | ALL REQ'D |
| 643.0025.0000 | TRAFFIC CONTROL | CS | ALL REQ'D |
| 643.0032.0000 | FLAGGING | CS | ALL REQ'D |
| 644.0001.0000 | FIELD OFFICE | LS | ALL REQ'D |
| 644.2004.0000 | ENGINEERING COMMUNICATIONS | CS | ALL REQ'D |
| 646.0001.0000 | CPM SCHEDULING | LS | ALL REQ'D |
| 647.2002.0000 | BACKHOE, 4WD, 1CY BUCKET, 75 HP MINIMUM, 15 FT DEPTH | CS | ALL REQ'D |
| 670.0010.0000 | MMA PAVEMENT MARKINGS | LS | ALL REQ'D |
| 682.2000.0000 | VAC-TRUCK POTHOLE | CS | ALL REQ'D |
| 690.2001.0000 | WATERWAY BED FILL | LF | 245 |
| 690.2003.0000 | WATERWAY BANK REVEGETATION AND PROTECTION | LF | 395 |
| | | | |

## ESTIMATING FACTORS

| ITEM NO. | ITEM DESCRIPTION | ESTIMATING FACTOR |
|---|---|---|
| 203.0006.000A | BORROW, TYPE A | 144 LB/C.F. |
| 301.0001.00D1 | AGGREGATE BASE COURSE, GRADING D-1 | 144 LB/C.F. |
| 608.2002.0000 | ASPHALT PATHWAY | 151 LB/C.F. |

STATE OF ALASKA
49TH
PIH REVIEW
Rangell C. Soriano
CE – 180719
Registered Professional Engineer


**STATE OF ALASKA, DEPARTMENT OF NATURAL RESOURCES**
**PLANS DEVELOPED BY: DIVISION OF PARKS AND OUTDOOR RECREATION**
**550 W 7TH AVE. SUITE 1340, ANCHORAGE, AK 99501 - 907.269.8731**


KENAI BRIDGE ACCESS ROAD PAVEMENT PRESERVATION AND IMPROVEMENTS
PROJECT No. CFHWY00689

ESTIMATE OF QUANTITIES

ALASKA STATE PARKS

PREPARED: RCS
DRAWN: D&C
REVIEWED: D&C
DATE: JULY 2025

SHEET
C1
OF XX SHEETS

## ITEM NO. 202.0002.0000 REMOVAL OF PAVEMENT

| SHEET | FROM | | TO | | | | |
|---|---|---|---|---|---|---|---|
| | STATION | OFFSET | STATION | OFFSET | AREA (S.F.) | AREA (S.Y.) | REMARKS |
| F1 | 10+00 | CL | 16+00 | CL | 30534 | 3393 | |
| F1 | 16+00 | CL | 36+00 | CL | 81068 | 9008 | |
| F2 | 36+00 | CL | 39+85 | CL | 12042 | 1338 | |
| F2 | 49+67 | CL | 63+00 | CL | 53586 | 5954 | |
| F3 | 63+00 | CL | 90+00 | CL | 106704 | 11856 | |
| F4 | 90+00 | CL | 109+00 | CL | 77064 | 8562 | |
| F4 | 109+00 | CL | 117+00 | CL | 39696 | 4410 | |
| F5 | 117+00 | CL | 121+50 | CL | 21528 | 2392 | |
| F5 | 121+50 | CL | 144+00 | CL | 89559 | 9951 | |
| F6 | 144+00 | CL | 170+00 | CL | 104546 | 11616 | |
| F7 | 170+00 | CL | 173+00 | CL | 12063 | 1340 | |
| F7 | 173+00 | CL | 177+00 | CL | 19424 | 2158 | |
| F7 | 177+00 | CL | 183+25 | CL | 40867 | 4540 | |
| | | | | | TOTAL | 76518 | |

## ITEM NO. 639.2000.0000 APPROACH

| SHEET | FROM | | TO | | | |
|---|---|---|---|---|---|---|
| | STATION | OFFSET | STATION | OFFSET | QUANTITY | REMARKS |
| F1 | 32+65 | CL | 33+38 | CL | TBD | KENAI FLATS |
| F7 | 178+21 | CL | 179+36 | CL | TBD | FRONTAGE ROAD |
| | | | | | | |

## 670(10F) MMA PAVEMENT MARKINGS, TRANSVERSE AND GORE INLAID

| SHEET | STATION | OFFSET | LENGTH (L.F.) | REMARKS |
|---|---|---|---|---|
| | | | | TBD |
| | | | | |

## ITEM NO. 603.0003.0024 CSP 24 INCH

| SHEET | FROM | | TO | | LENGTH (L.F.) | REMARKS |
|---|---|---|---|---|---|---|
| | STATION | OFFSET | STATION | OFFSET | | |
| F8 | 27+18 | L | 27+18 | R | 17 | CULVERT ENDS |
| | | | | TOTAL | 17 | |

## ITEM NO. 202.0009.0000 REMOVAL OF CURB AND GUTTER

| SHEET | FROM | | TO | | | |
|---|---|---|---|---|---|---|
| | STATION | OFFSET | STATION | OFFSET | LENGTH (L.F.) | REMARKS |
| F7 | 178+10.55 | 31 L | 178+60 | 101 L | 105.50 | |
| F7 | 179+02 | 103 L | 182+77 | 238 L | 601.40 | |
| F7 | 180+20 | 8 L | 182+45 | 8 L | 225 | |
| | | | | TOTAL | 931.90 | |

## ITEM NO. 202.0004.0000 REMOVAL OF CULVERT PIPE

| SHEET | STATION | CULVERT SIZE | QUANTITY (L.F.) | REMARKS |
|---|---|---|---|---|
| F1 | 19+00 | 36" | 62 | |
| F3 | 60+50 | 24" | 87 | |
| F3 | 76+08 | 40" X 65" | 95 | |
| F4 | 108+76 | 40" X 65" | 100 | |
| F5 | 130+81 | 18" | 70 | |
| F6 | 151+34 | 30" | 60 | |
| F6 | 152+27 | 30" | 55 | |
| F6 | 169+93 | 24" | 35 | |
| | | TOTAL | 564 | |

STATE OF ALASKA
49TH
PIH REVIEW
Rangell C. Soriano
CE – 180719
Registered Professional Engineer


**STATE OF ALASKA, DEPARTMENT OF NATURAL RESOURCES**
PLANS DEVELOPED BY: DIVISION OF PARKS AND OUTDOOR RECREATION
550 W 7TH AVE. SUITE 1340, ANCHORAGE, AK 99501 - 907.269.8731


SUMMARY TABLE

KENAI BRIDGE ACCESS ROAD PAVEMENT PRESERVATION AND IMPROVEMENTS
PROJECT No. CFHWY00689

ALASKA STATE PARKS

PREPARED: RCS
DRAWN: D&C
REVIEWED: D&C
DATE: JULY 2025

SHEET
D1
OF XX SHEETS

| NO. | DATE | REVISION |
|---|---|---|
| | | |
| | | |
| | | |

| STATE | PROJECT DESIGNATION | YEAR | SHEET NO. | TOTAL SHEETS |
|---|---|---|---|---|
| ALASKA | 0463021/CFHWY00830 | 2026 | E01 | E07 |

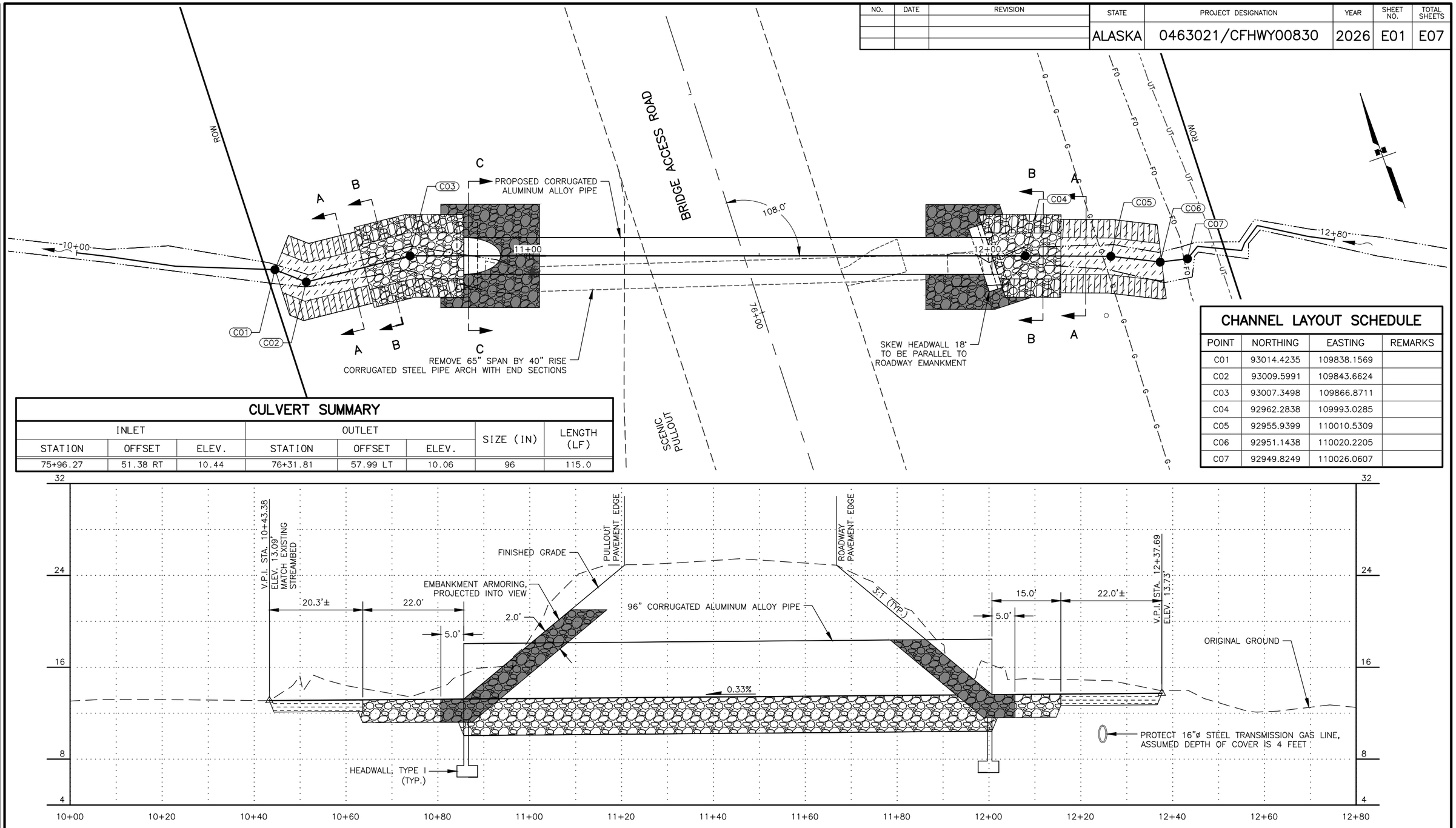


## CHANNEL LAYOUT SCHEDULE

| POINT | NORTHING | EASTING | REMARKS |
|---|---|---|---|
| C01 | 93014.4235 | 109838.1569 | |
| C02 | 93009.5991 | 109843.6624 | |
| C03 | 93007.3498 | 109866.8711 | |
| C04 | 92962.2838 | 109993.0285 | |
| C05 | 92955.9399 | 110010.5309 | |
| C06 | 92951.1438 | 110020.2205 | |
| C07 | 92949.8249 | 110026.0607 | |

## CULVERT SUMMARY

| INLET | | | OUTLET | | | SIZE (IN) | LENGTH (LF) |
|---|---|---|---|---|---|---|---|
| STATION | OFFSET | ELEV. | STATION | OFFSET | ELEV. | | |
| 75+96.27 | 51.38 RT | 10.44 | 76+31.81 | 57.99 LT | 10.06 | 96 | 115.0 |




## HYDROLOGIC AND HYDRAULIC SUMMARY

| | | | |
|---|---|---|---|
| DRAINAGE AREA = 0.7 SQUARE MILES | | | |
| ANNUAL EXCEEDANCE PROBABILITY (AEP) | 2% AEP | 1% AEP (DESIGN EVENT) | REGULATORY FLOOD |
| RETURN PERIOD | 50 YEAR ($Q_{50}$) | 100 YEAR ($Q_{100}$) | N/A |
| DESIGN DISCHARGE | 64 CFS | 78 CFS | N/A |
| DESIGN HIGH WATER ELEVATION | 19.7 FEET | 20.6 FEET | N/A |
| OVERTOPPING FLOOD DISCHARGE = 250 CFS | | | |
| ANTICIPATED ADDITIONAL BACKWATER AT 1% AEP = 0.0 FEET | | | |

## GENERAL LARGE-DIAMETER CULVERT NOTES:

1. FIELD ADJUST ARMORED CHANNELS TO ENSURE A SMOOTH TRANSITION INTO EXISTING CREEK CHANNELS.
2. DO NOT USE EROSION CONTROL MATERIAL CONTAINING PLASTIC OR NYLON WITHIN OR ADJACENT TO THE PROPOSED STREAM IMPROVEMENTS.

STATE OF ALASKA
PROJECT ENGINEER
REGISTERED PROFESSIONAL ENGINEER
PRELIMINARY

STATE OF ALASKA DOT&PF
4111 AVIATION AVENUE
ANCHORAGE, AK 99502
(907) 269-0555

STATE OF ALASKA
DEPARTMENT OF TRANSPORTATION
AND PUBLIC FACILITIES

# BRIDGE ACCESS ROAD PAVEMENT PRESERVATION

## SITE NO.1 CULVERT DESIGN

| DATE | TIME | SCALE | DESIGNED BY | CHECKED BY | DRAFTED BY |
|---|---|---|---|---|---|
| 7/11/2025 | 8:24 AM | 1" = 10' | EJS | | EJS |

DRAWING LOCATION
W:\HYDRO\HYDRO PROJECTS\BRIDGE ACCESS ROAD PAVEMENT PRESERVATION\CIV3D\PLANS\00830 CULVERT DETAILS.DWG

| NO. | DATE | REVISION |
|---|---|---|
| | | |
| | | |
| | | |

| STATE | PROJECT DESIGNATION | YEAR | SHEET NO. | TOTAL SHEETS |
|---|---|---|---|---|
| ALASKA | 0463021/CFHWY00830 | 2026 | E02 | E07 |

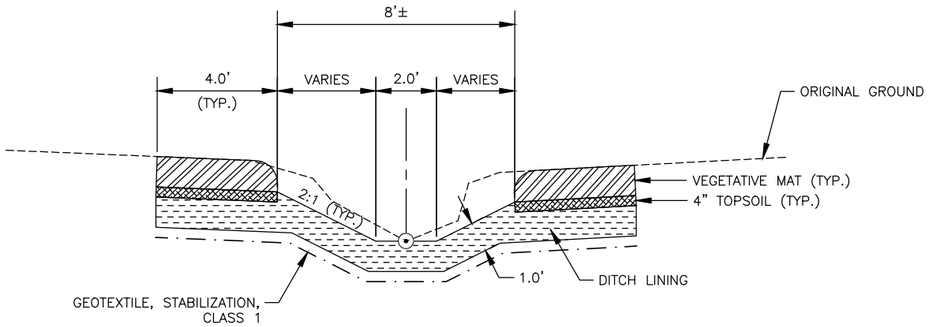


## STREAM RECONSTRUCTION

SECTION A–A

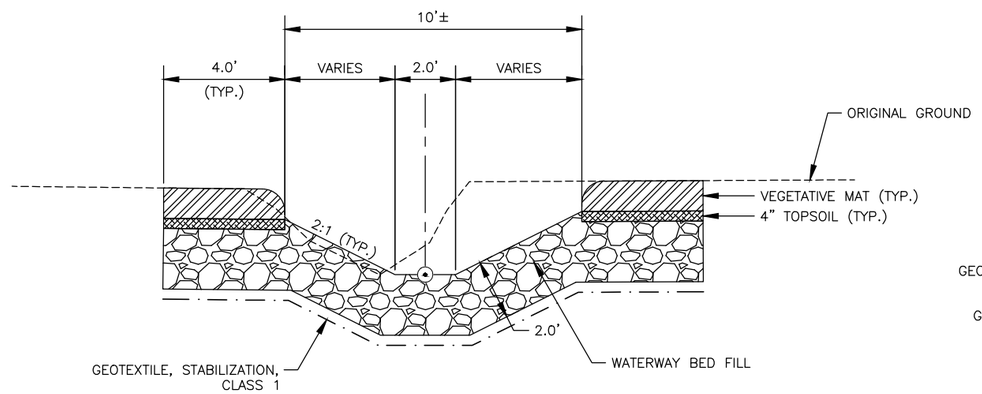


## RIPRAP APRON

SECTION B–B

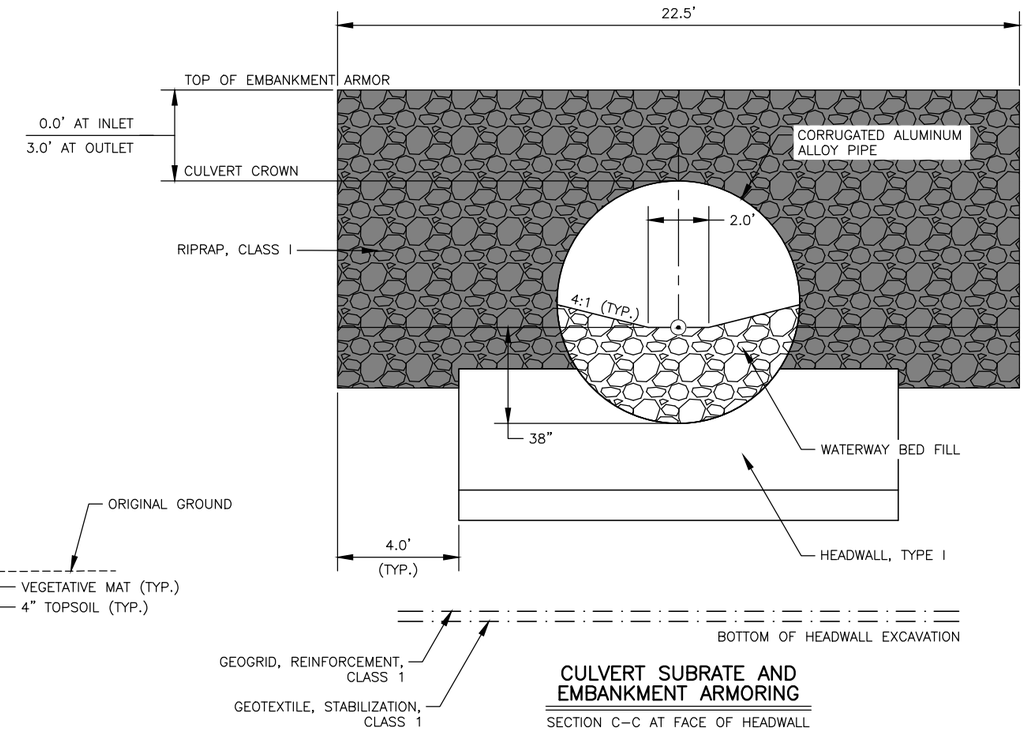


## CULVERT SUBRATE AND EMBANKMENT ARMORING

SECTION C–C AT FACE OF HEADWALL

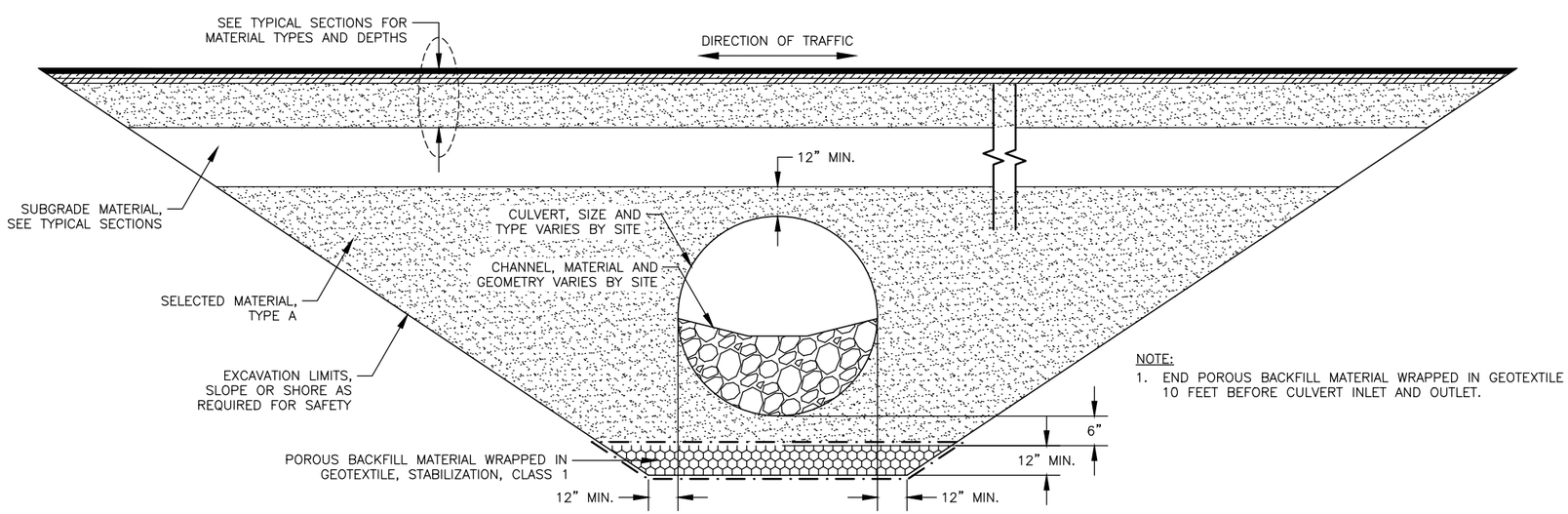


NOTE:

1. END POROUS BACKFILL MATERIAL WRAPPED IN GEOTEXTILE 10 FEET BEFORE CULVERT INLET AND OUTLET.

## TYPICAL CULVERT CROSS SECTION FOR SITE NO.1, NO.2, AND NO.3

STATE OF ALASKA
PROFESSIONAL ENGINEER
PROJECT NUMBER
REVIEWED

STATE OF ALASKA DOT&PF
4111 AVIATION AVENUE
ANCHORAGE, AK 99502
(907) 269–0555

STATE OF ALASKA
DEPARTMENT OF TRANSPORTATION
AND PUBLIC FACILITIES

BRIDGE ACCESS ROAD
PAVEMENT PRESERVATION

SITE NO.1 CULVERT
DESIGN SECTIONS AND
DETAILS

| DESIGNED BY | EJS |
|---|---|
| CHECKED BY | |
| DRAFTED BY | EJS |

| SCALE | DATE | TIME |
|---|---|---|
| 1" = 10' | 7/11/2025 | 8:25 AM |

DRAWING LOCATION
W:\HYDRO\HYDRO PROJECTS\BRIDGE ACCESS ROAD PAVEMENT PRESERVATION\CIV3D\PLANS\00830 CULVERT DETAILS.DWG

| NO. | DATE | REVISION |
|---|---|---|
| | | |
| | | |
| | | |

| STATE | PROJECT DESIGNATION | YEAR | SHEET NO. | TOTAL SHEETS |
|---|---|---|---|---|
| ALASKA | 0463021/CFHWY00830 | 2026 | E03 | E07 |

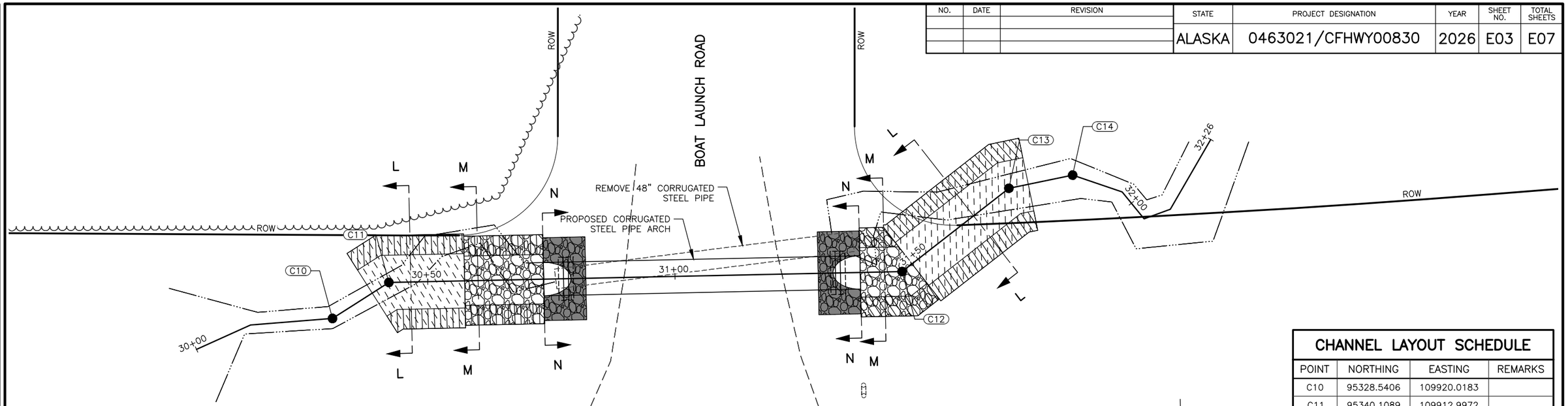


## CULVERT SUMMARY

| INLET | | | OUTLET | | | SIZE | LENGTH |
|---|---|---|---|---|---|---|---|
| STATION | OFFSET | ELEV. | STATION | OFFSET | ELEV. | SPAN (IN) BY RISE (IN) | (LF) |
| 100+67.25 | 91.17 LT | 19.95 | 100+01.14 | 91.07 RT | 19.75 | 81 BY 59 | 64.0 |

## CHANNEL LAYOUT SCHEDULE

| POINT | NORTHING | EASTING | REMARKS |
|---|---|---|---|
| C10 | 95328.5406 | 109920.0183 | |
| C11 | 95340.1089 | 109912.9972 | |
| C12 | 95443.9061 | 109913.1689 | |
| C13 | 95465.8661 | 109896.8376 | |
| C14 | 95478.8113 | 109894.4804 | |

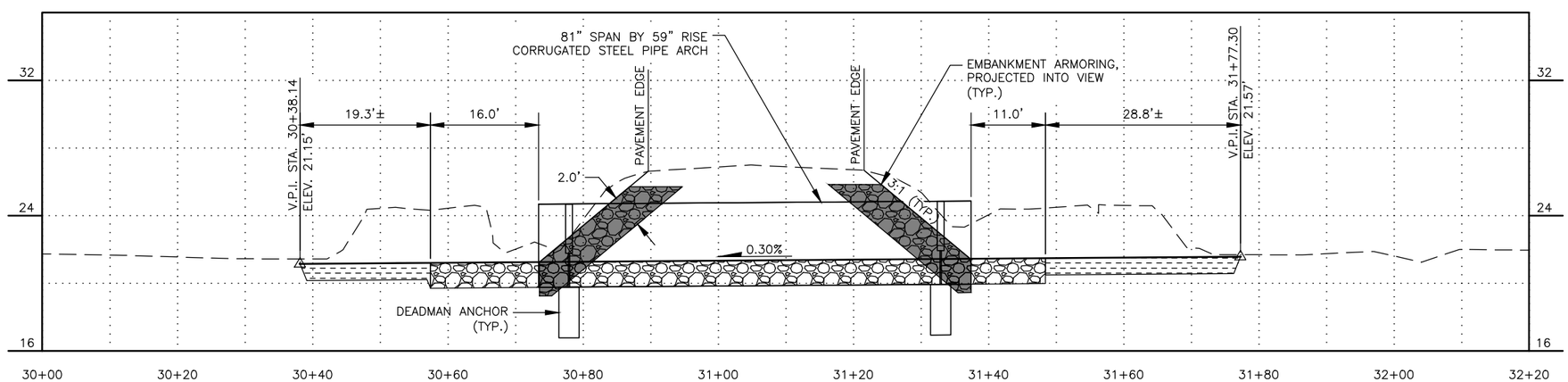


STATE OF ALASKA
PROJECT ENGINEER
REGISTERED PROFESSIONAL ENGINEER
PIN REVIEW

STATE OF ALASKA DOT&PF
4111 AVIATION AVENUE
ANCHORAGE, AK 99502
(907) 269-0555

STATE OF ALASKA
DEPARTMENT OF TRANSPORTATION
AND PUBLIC FACILITIES

# BRIDGE ACCESS ROAD PAVEMENT PRESERVATION

## SITE NO.2 CULVERT DESIGN

| DATE | TIME | SCALE | DESIGNED BY | CHECKED BY | DRAFTED BY |
|---|---|---|---|---|---|
| 7/11/2025 | 8:25 AM | 1" = 10' | EJS | | EJS |

DRAWING LOCATION
W:\HYDRO\HYDRO PROJECTS\BRIDGE ACCESS ROAD PAVEMENT PRESERVATION\CIV3D\PLANS\00830 CULVERT DETAILS.DWG

| NO. | DATE | REVISION |
|---|---|---|
| | | |
| | | |
| | | |

| STATE | PROJECT DESIGNATION | YEAR | SHEET NO. | TOTAL SHEETS |
|---|---|---|---|---|
| ALASKA | 0463021/CFHWY00830 | 2026 | E04 | E07 |

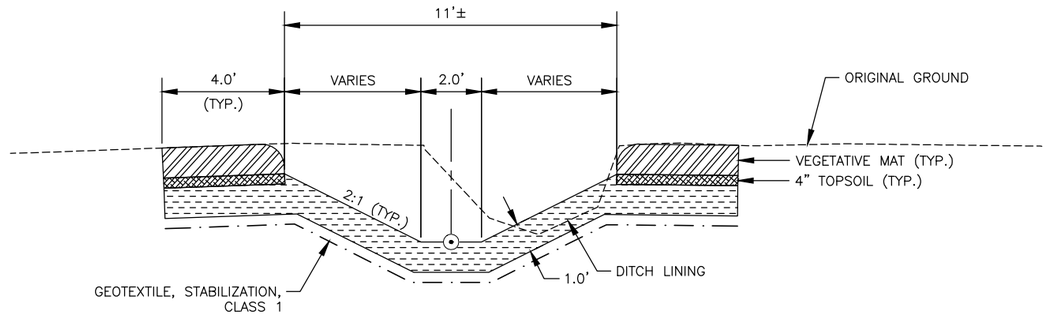


## STREAM RECONSTRUCTION

SECTION L–L

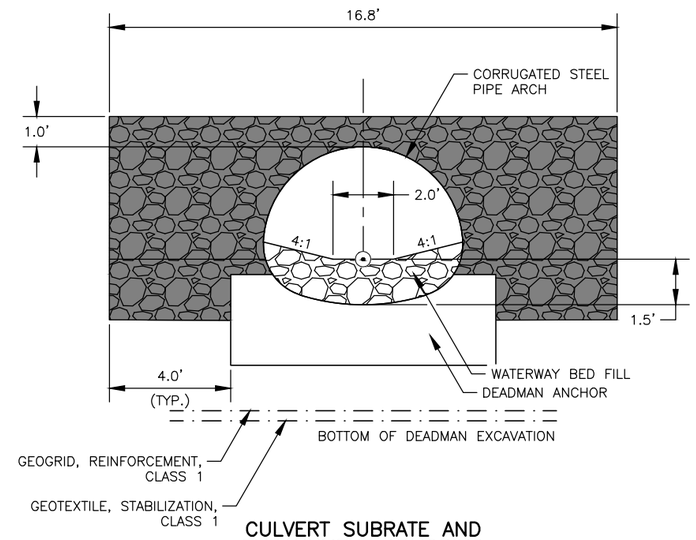


## CULVERT SUBRATE AND EMBANKMENT ARMORING

SECTION N–N AT CULVERT END

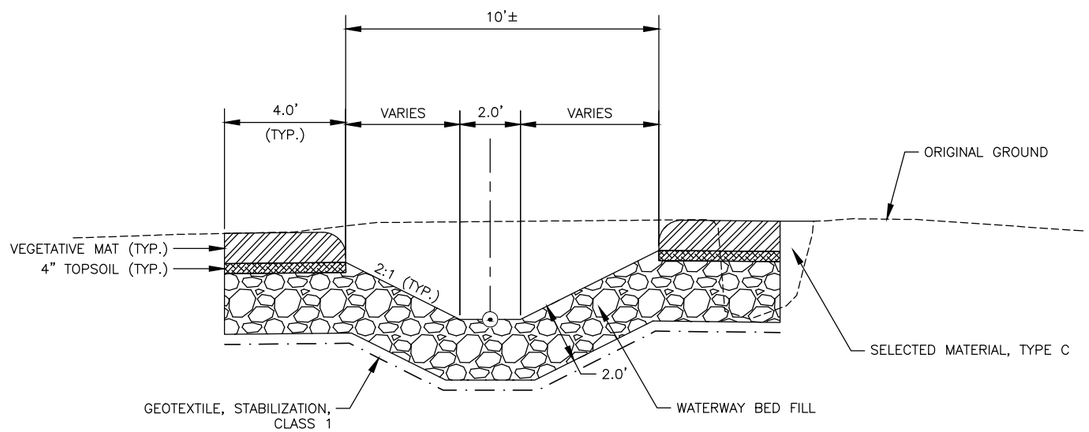


## RIPRAP APRON

SECTION M–M

STATE OF ALASKA
DEPARTMENT OF TRANSPORTATION
AND PUBLIC FACILITIES

STATE OF ALASKA DOT&PF
4111 AVIATION AVENUE
ANCHORAGE, AK 99502
(907) 269–0555

# BRIDGE ACCESS ROAD PAVEMENT PRESERVATION

## SITE NO.2 CULVERT DESIGN SECTIONS

| DRAWING LOCATION | DATE | TIME | SCALE | DESIGNED BY | CHECKED BY | DRAFTED BY |
|---|---|---|---|---|---|---|
| W:\HYDRO\HYDRO PROJECTS\BRIDGE ACCESS ROAD PAVEMENT PRESERVATION\CIV3D\PLANS\00830 CULVERT DETAILS.DWG | 7/11/2025 | 8:25 AM | 1" = 10' | EJS | | EJS |

| NO. | DATE | REVISION |
|---|---|---|
| | | |
| | | |
| | | |

| STATE | PROJECT DESIGNATION | YEAR | SHEET NO. | TOTAL SHEETS |
|---|---|---|---|---|
| ALASKA | 0463021/CFHWY00830 | 2026 | E05 | E07 |

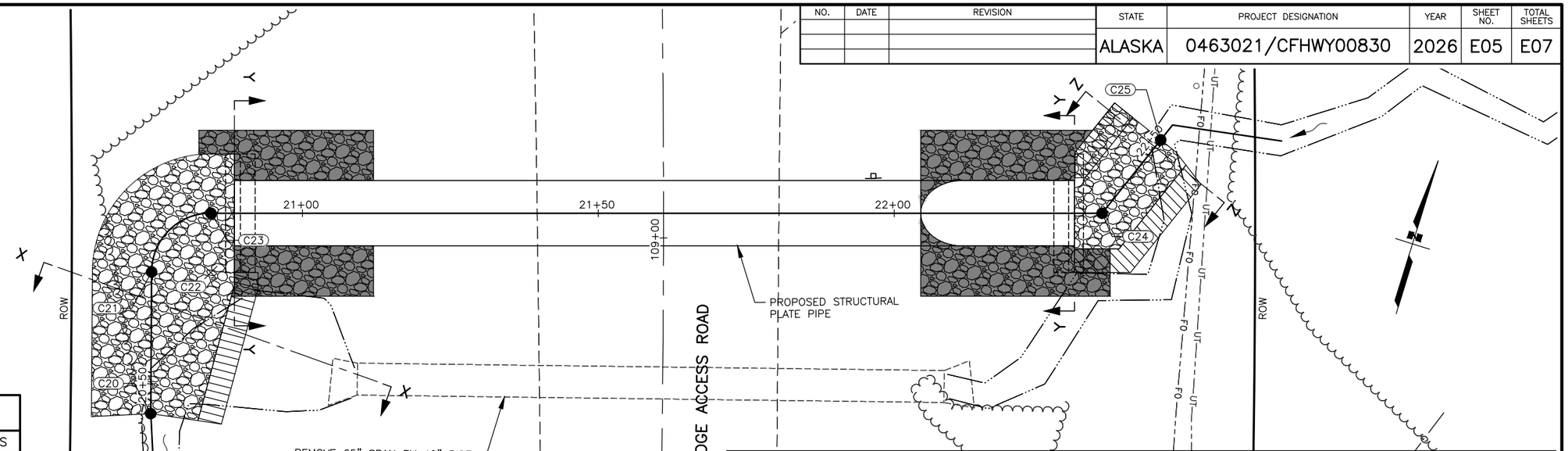


## CHANNEL LAYOUT SCHEDULE

| POINT | NORTHING | EASTING | REMARKS |
|---|---|---|---|
| C20 | 96202.2529 | 109803.2522 | |
| C21 | 96225.1273 | 109796.3330 | PC |
| C22 | 96228.0226 | 109805.9047 | RP, R:10.0' |
| C23 | 96237.5744 | 109802.9446 | PT |
| C24 | 96282.1662 | 109946.8341 | |
| C25 | 96296.9207 | 109952.6361 | |

## HYDROLOGIC AND HYDRAULIC SUMMARY

| DRAINAGE AREA = 4.9 SQUARE MILES | | | |
|---|---|---|---|
| ANNUAL EXCEEDANCE PROBABILITY (AEP) | 2% AEP (DESIGN EVENT) | 1% AEP | REGULATORY FLOOD |
| RETURN PERIOD | 50 YEAR ($Q_{50}$) | 100 YEAR ($Q_{100}$) | N/A |
| DESIGN DISCHARGE | 266 CFS | 318 CFS | N/A |
| DESIGN HIGH WATER ELEVATION | 31.5 FEET | 32.2 FEET | N/A |
| OVERTOPPING FLOOD DISCHARGE = 586 CFS | | | |
| ANTICIPATED ADDITIONAL BACKWATER AT 1% AEP = 0.0 FEET | | | |

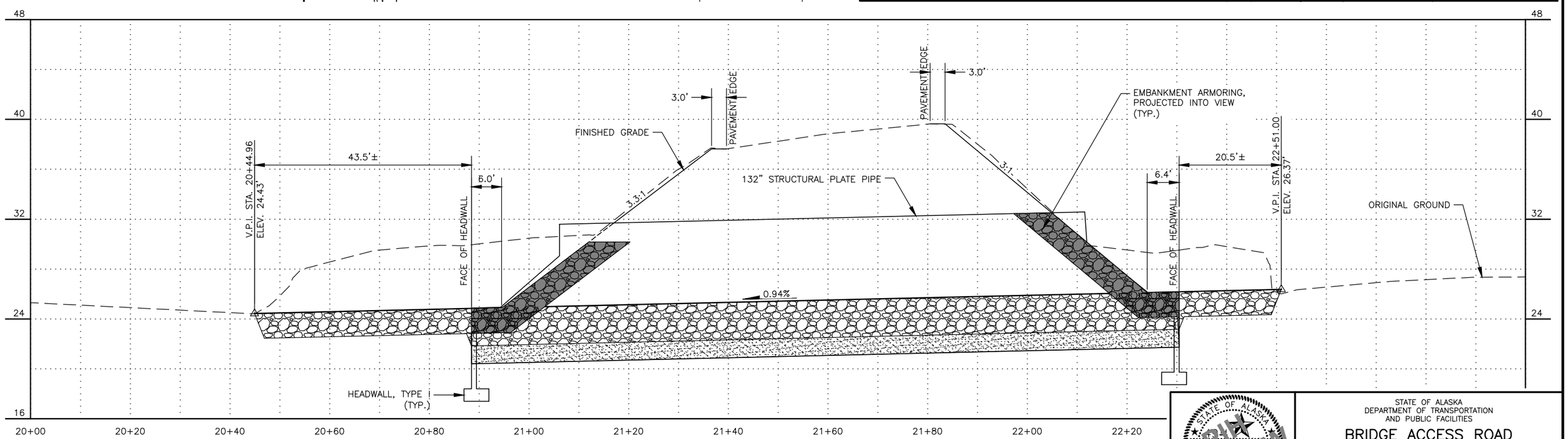


## CULVERT SUMMARY

| INLET | | | OUTLET | | | SIZE (IN) | LENGTH (LF) |
|---|---|---|---|---|---|---|---|
| STATION | OFFSET | ELEV. | STATION | OFFSET | ELEV. | | |
| 109+04.18 | 69.47 RT | 21.74 | 109+04.18 | 72.53 LT | 20.41 | 132 | 142.0 |

## NOTES:

1. BEVEL CULVERT ENDS ACCORDING TO ALASKA STANDARD PLAN D-7.00. FABRICATE BEVEL GEOMETRY CORRESPONDING TO 3:1 EMBANKMENT FORESLOPES.
2. LOCATE BRIDGE NUMBER PLATE ON THE RIGHT HAND SIDE OF EACH CULVERT END (INSIDE) WHEN FACING INSIDE THE CULVERT. MOUNT THE BRIDGE NUMBER PLATE AT THE 2 O'CLOCK POSITION.

STATE OF ALASKA
REGISTERED PROFESSIONAL ENGINEER
PROJECT NUMBER
PIN REVIEW

STATE OF ALASKA DOT&PF
4111 AVIATION AVENUE
ANCHORAGE, AK 99502
(907) 269-0555

STATE OF ALASKA
DEPARTMENT OF TRANSPORTATION
AND PUBLIC FACILITIES

# BRIDGE ACCESS ROAD PAVEMENT PRESERVATION

## SITE NO.3 CULVERT DESIGN

| DATE | TIME | SCALE | DESIGNED BY | CHECKED BY | DRAFTED BY |
|---|---|---|---|---|---|
| 7/11/2025 | 8:26 AM | 1" = 10' | EJS | | EJS |

DRAWING LOCATION
W:\HYDRO\HYDRO PROJECTS\BRIDGE ACCESS ROAD PAVEMENT PRESERVATION\CIV3D\PLANS\00830 CULVERT DETAILS.DWG

| NO. | DATE | REVISION |
|---|---|---|
| | | |
| | | |
| | | |

| STATE | PROJECT DESIGNATION | YEAR | SHEET NO. | TOTAL SHEETS |
|---|---|---|---|---|
| ALASKA | 0463021/CFHWY00830 | 2026 | E06 | E07 |

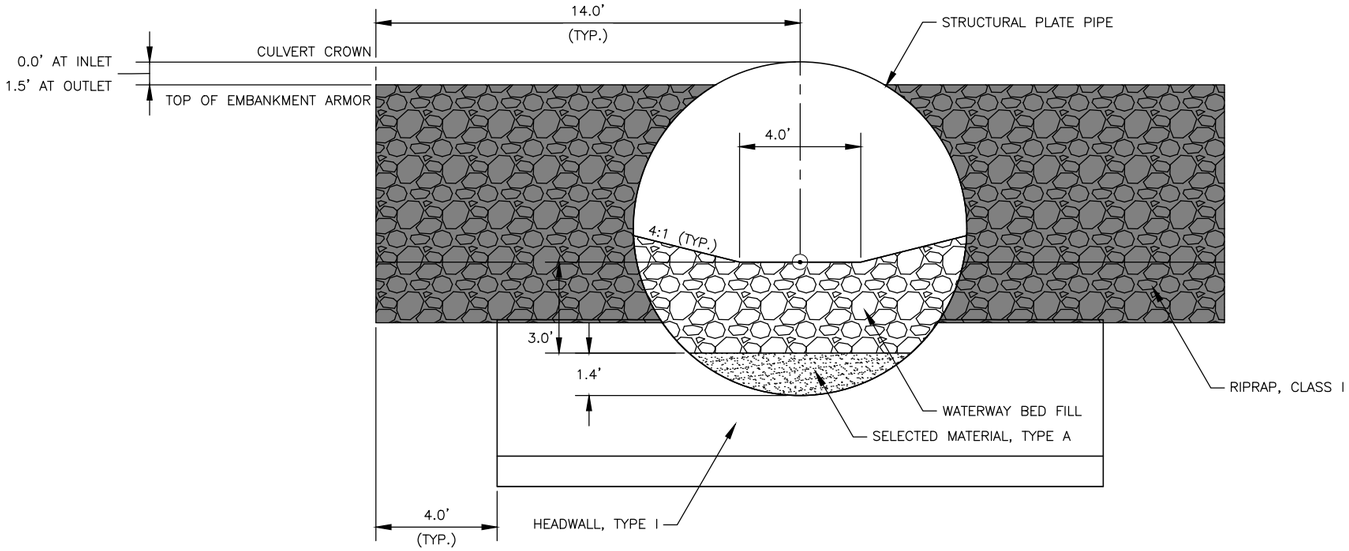


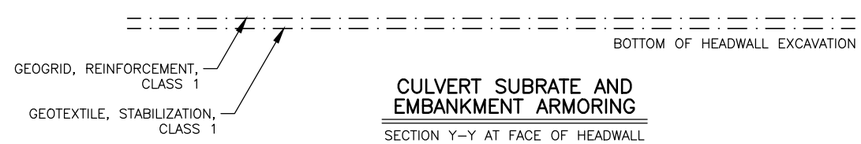


## CULVERT SUBRATE AND EMBANKMENT ARMORING

SECTION Y–Y AT FACE OF HEADWALL

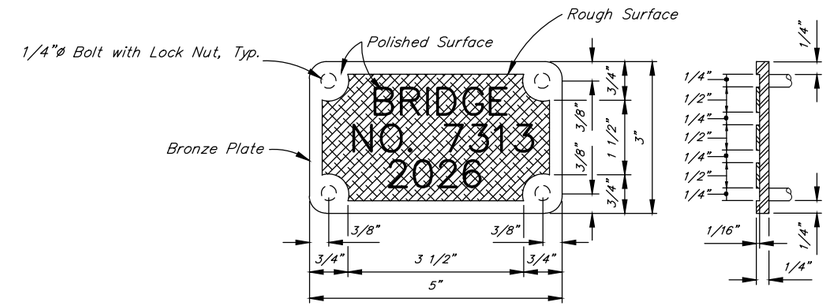


## BRONZE BRIDGE NO. PLATE

BRONZE BRIDGE NO. PLATE NOTES:

1. LOCATE BRIDGE NUMBER PLATES AS SHOWN ON SHEET TBD.
2. USE "CENTURY" TYPE STYLE LETTERING.
3. USE FASTENERS THAT CONFORM TO UNS C65100 OR C65500.

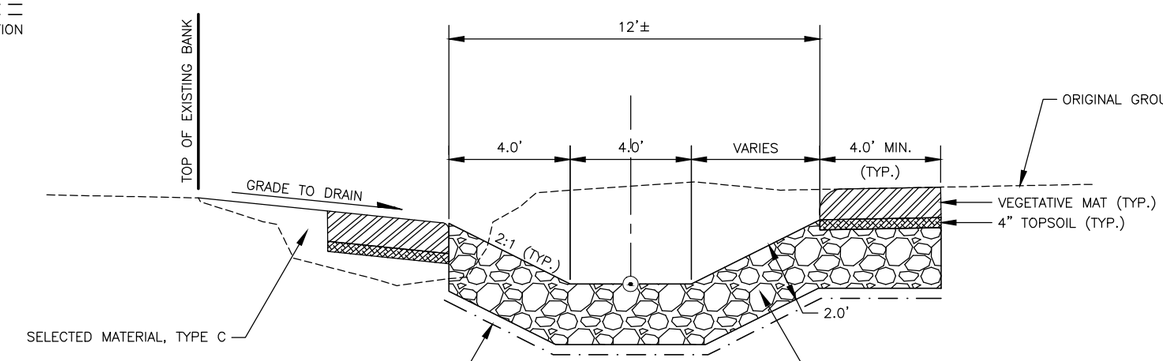


## UPSTREAM RIPRAP APRON

SECTION Z–Z

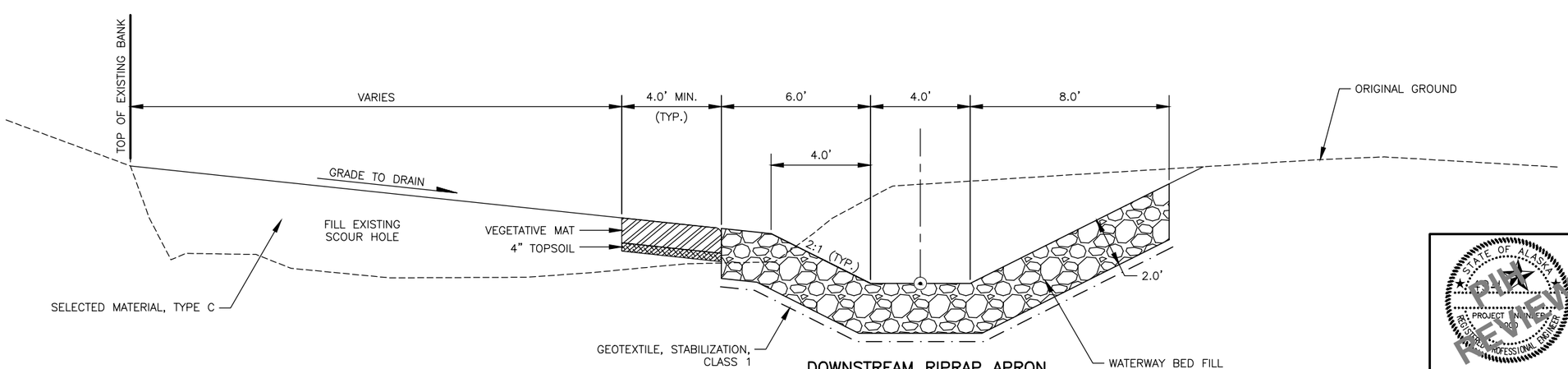


## DOWNSTREAM RIPRAP APRON

SECTION X–X

STATE OF ALASKA
PROJECT NUMBER
REGISTERED PROFESSIONAL ENGINEER
PRELIMINARY

STATE OF ALASKA DOT&PF
4111 AVIATION AVENUE
ANCHORAGE, AK 99502
(907) 269–0555

STATE OF ALASKA
DEPARTMENT OF TRANSPORTATION
AND PUBLIC FACILITIES

BRIDGE ACCESS ROAD
PAVEMENT PRESERVATION

SITE NO.3
CULVERT DESIGN
SECTIONS

| DATE | TIME | SCALE | DESIGNED BY | CHECKED BY | DRAFTED BY |
|---|---|---|---|---|---|
| 7/11/2025 | 8:26 AM | 1" = 10' | EJS | | EJS |

DRAWING LOCATION
W:\HYDRO\HYDRO PROJECTS\BRIDGE ACCESS ROAD PAVEMENT PRESERVATION\CIV3D\PLANS\00830 CULVERT DETAILS.DWG

| NO. | DATE | REVISION |
|---|---|---|
| | | |
| | | |
| | | |

| STATE | PROJECT DESIGNATION | YEAR | SHEET NO. | TOTAL SHEETS |
|---|---|---|---|---|
| ALASKA | 0463021/CFHWY00830 | 2026 | E07 | E07 |

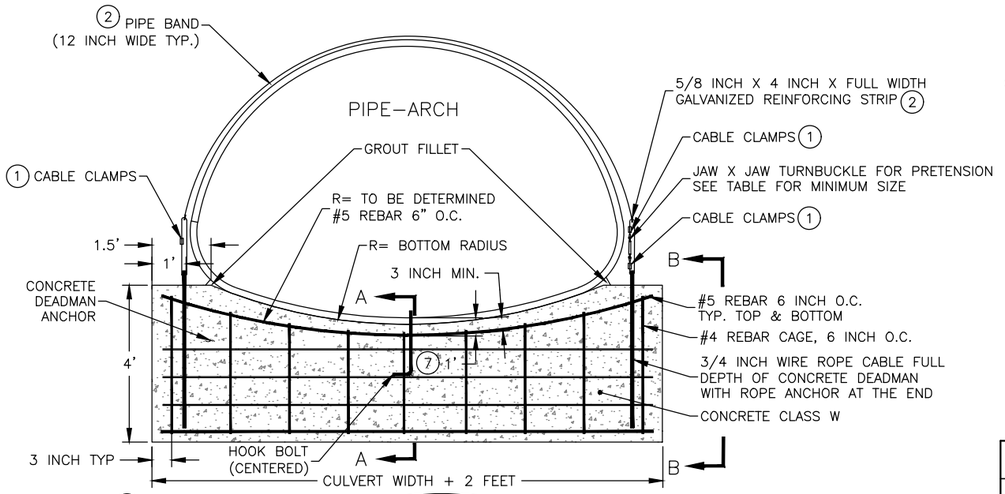


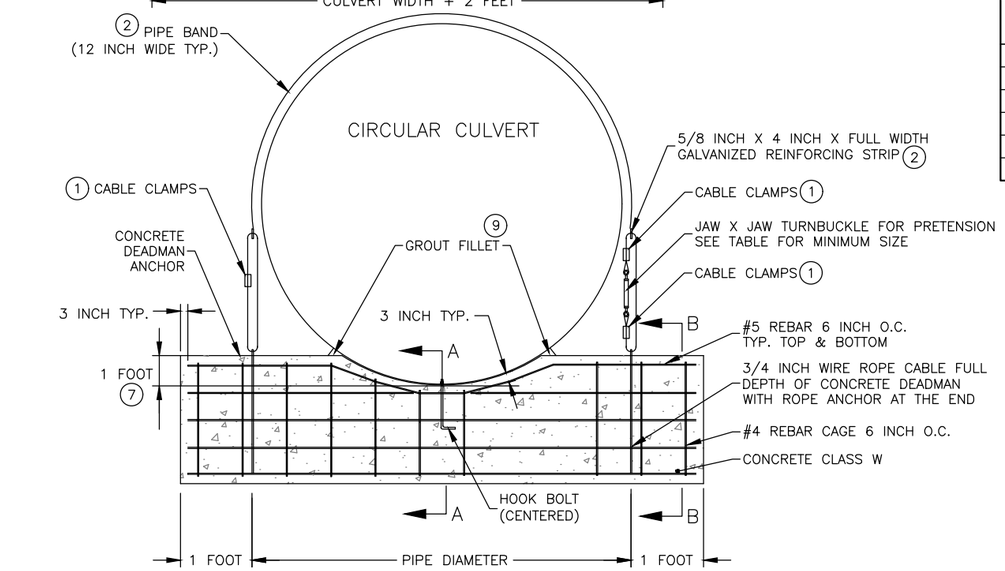


DEADMAN DETAIL

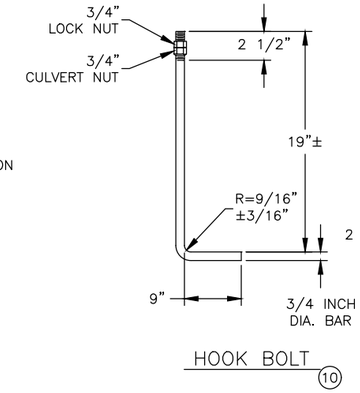


HOOK BOLT (10)

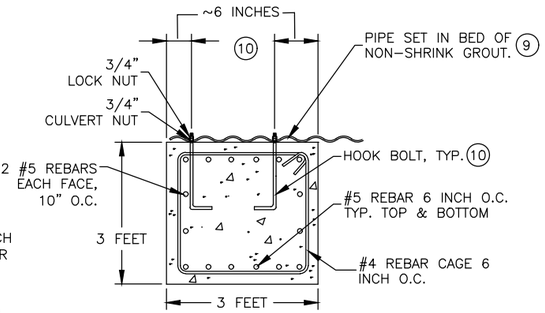


SECTION A–A

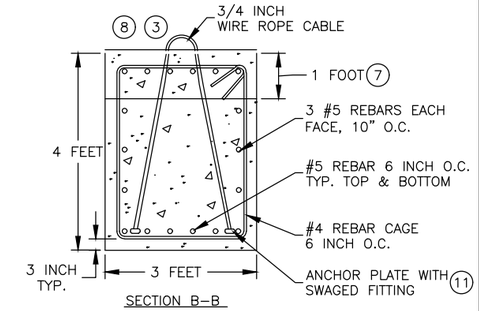


SECTION B–B

CONCRETE DEADMAN ANCHOR DETAILS

NOTE: REBAR SIZES ARE MINIMUMS.

TABLE 1: MINIMUM HARDWARE SIZE

| CULVERT DIA./SPAN (FT) | WIRE ROPE DIA. (IN) | TURNBUCKLE DIA. (IN) | MINIMUM WIRE ROPE TURNBACK/SPLICE (IN) | U–BOLT NUT TORQUE (FT–LB) |
|---|---|---|---|---|
| 3.00 TO 3.50 | 1/4 | 5/8 | 4 3/4 | 15 |
| 3.51 TO 4.00 | 1/4 | 3/4 | 4 3/4 | 15 |
| 4.01 TO 6.00 | 5/16 | 7/8 | 5 1/2 | 30 |
| 6.01 TO 10.00 | 3/8 | 1 | 6 1/4 | 45 |
| 10.01 TO 16.00 | 7/16 | 1 1/4 | 7 | 65 |
| 16.01 TO 19.99 | 1/2 | 1 1/2 | 11 | 65 |

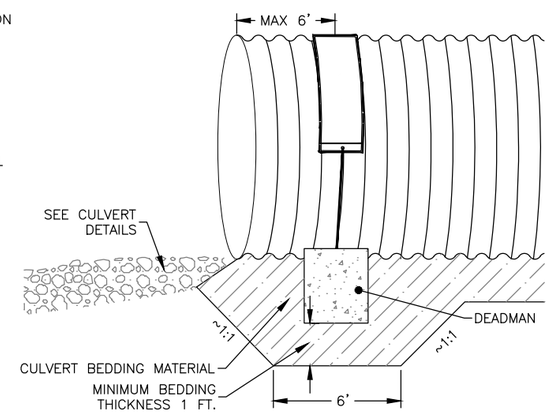


DEADMAN BEDDING DETAIL

## NOTES:

(1) IF DROP FORGED U–BOLT TYPE CLAMPS ARE USED, THEY SHOULD BE INSTALLED USING THE FOLLOWING:

LENGTH OF WIRE ROPE TO TURN BACK OR SPLICE: SEE TABLE.
TORQUE REQUIRED TO REACH HOLDING POWER: SEE TABLE.
SPACING: DIAMETER OF THE ROPE (INCHES) TIMES 6. THE BASE OF THE CLAMPS AND NUTS MUST BE ON THE LIVE END OF THE WIRE. INSTALL THIMBLE.

(2) THE LENGTH OF THE PIPE BANDS SHALL BE A MINIMUM OF HALF THE CIRCUMFERENCE OF THE ROUND CULVERT OR SHALL EXTEND TO WITHIN 6" OF THE SPRINGLINE ON PIPE ARCH CULVERT. THE PIPE BANDS SHALL BE A MINIMUM THICKNESS OF 1/16" GALVANIZED ASTM A1011 SS GRADE 36 OR MINIMUM THICKNESS 0.109" GALVANIZED AASHTO M218. THE REINFORCING STRIP SHALL BE GALVANIZED ASTM A36.

(3) WIRE ROPE SHALL BE 6X19 IWRC, EIPS & GALVANIZED AND MEET AASHTO M30 TYPE II REQUIREMENTS OR APPROVED EQUAL.

(4) ALL HARDWARE SHALL BE GALVANIZED TO MEET AASHTO M232.

(5) CLASS W CONCRETE SHALL BE USED TO CONSTRUCT THE CONCRETE DEADMAN ANCHOR. REINFORCEMENT SHALL BE ASTM A615 GRADE 40.

(6) ALL WORK AND MATERIALS REQUIRED FOR THE CONSTRUCTION AND INSTALLATION OF THE DEADMAN SHALL NOT BE MEASURED OR PAID FOR DIRECTLY, BUT SHALL BE CONSIDERED SUBSIDIARY TO OTHER ITEMS.

(7) CONCRETE DEADMAN SHALL BE CAST TO CONFORM TO THE OUTER RADIUS OF THE CULVERT.

(8) USE A SPREADER BEAM/BAR WHEN LIFTING DEADMAN TO AVOID BENDING OF TIE–DOWN/LIFTING LOOP.

(9) THE PIPE SHALL BE SET IN A BED OF NON–SHRINK GROUT OF SUFFICIENT THICKNESS TO FULLY FILL THE CORRUGATIONS AFTER TENSIONING OF THE ANCHOR BOLTS AND TIE–DOWN BAND. THE DEADMAN SURFACE SHALL BE PROPERLY PREPARED FOR BEST BONDING WITH GROUT – CLEAN, DUST FREE, SATURATED SURFACE DRY (SSD) CONDITION. BOTTOM OF PIPE SHALL BE AS CLEAN AND DUST FREE AS PRACTICABLE. GROUT SHALL BE FILLETED/CROWNED ALONG SIDES OF PIPE AT THE DEADMAN/PIPE SEAM IN ORDER TO REDUCE WATER INFILTRATION INTO THE GROUTED AREA.

(10) PENETRATE CULVERT INVERT HOOK BOLTS IN A CORRUGATION VALLEY TO PROTECT NUT. ANCHOR BOLT HOLES SHALL BE DRILLED, NOT CUT WITH A TORCH, AND COATED WITH APPROPRIATE ZINC RICH PAINT PRIOR TO INSTALLATION. AFTER INSTALLATION AND ANCHOR BOLT NUTS HAVE BEEN TIGHTENED, COAT THE ANCHOR BOLT AND SURROUNDING AREA WITH ZINC RICH PAINT.

(11) USE CRT HARDWARE DETAILS, FROM ALASKA STANDARD PLAN G–00.05 SHEET 4, FOR WIRE ROPE ANCHOR.

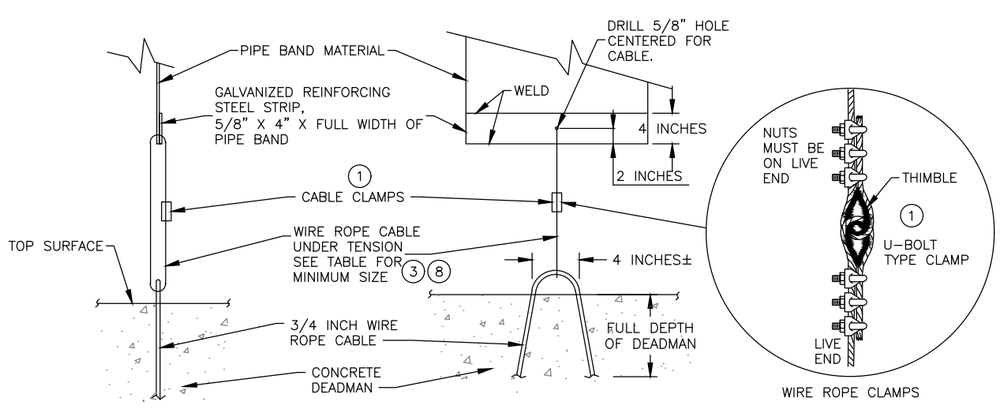


PIPE BAND DETAILS

ENLARGED VIEW

STATE OF ALASKA
DEPARTMENT OF TRANSPORTATION AND PUBLIC FACILITIES

BRIDGE ACCESS ROAD PAVEMENT PRESERVATION

CULVERT DEADMAN DETAILS

STATE OF ALASKA DOT&PF
4111 AVIATION AVENUE
ANCHORAGE, AK 99502
(907) 269–0555

DRAWING LOCATION
W:\HYDRO\HYDRO PROJECTS\BRIDGE ACCESS ROAD PAVEMENT PRESERVATION\CIV3D\PLANS\00830 DEADMAN DETAIL.DWG

DATE 7/11/2025 TIME 8:36 AM
SCALE ---
DESIGNED BY ---
CHECKED BY ---
DRAFTED BY ---

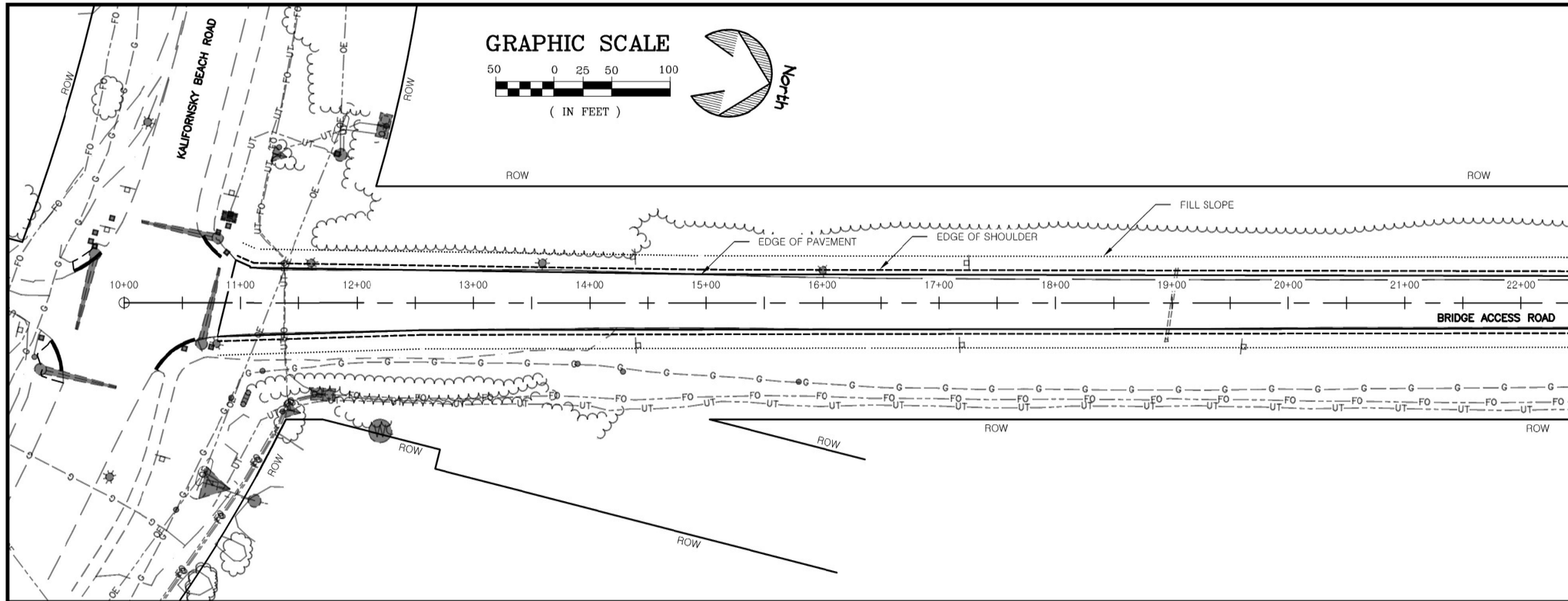


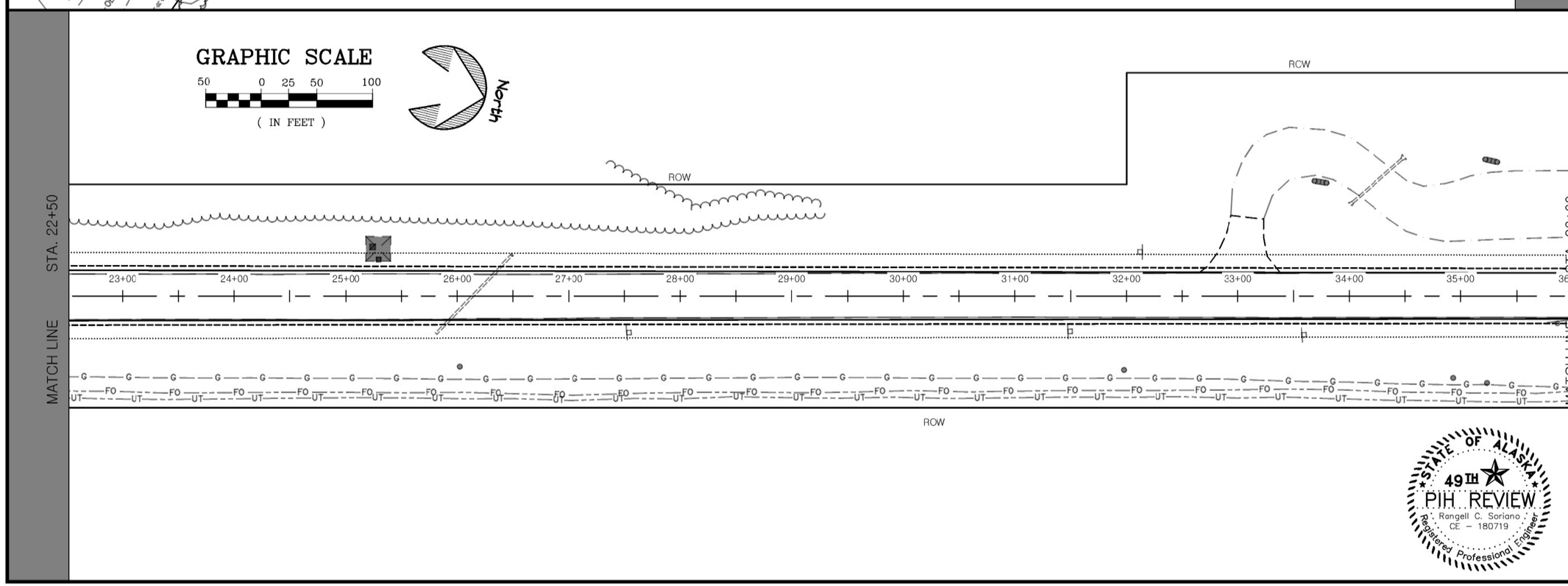


STATE OF ALASKA
49TH
PIH REVIEW
Rangell C. Soriano
CE – 180719
Registered Professional Engineer

**STATE OF ALASKA, DEPARTMENT OF NATURAL RESOURCES**
**PLANS DEVELOPED BY: DIVISION OF PARKS AND OUTDOOR RECREATION**
**550 W 7TH AVE. SUITE 1340, ANCHORAGE, AK 99501 - 907.269.8731**

KENAI BRIDGE ACCESS ROAD PAVEMENT
PRESERVATION AND IMPROVEMENTS
PROJECT No. CFHWY00689

STA. 10+00 TO STA. 36+00

PREPARED: RCS
DRAWN: D&C
REVIEWED: D&C
DATE: JULY 2025

SHEET
F1
OF XX SHEETS

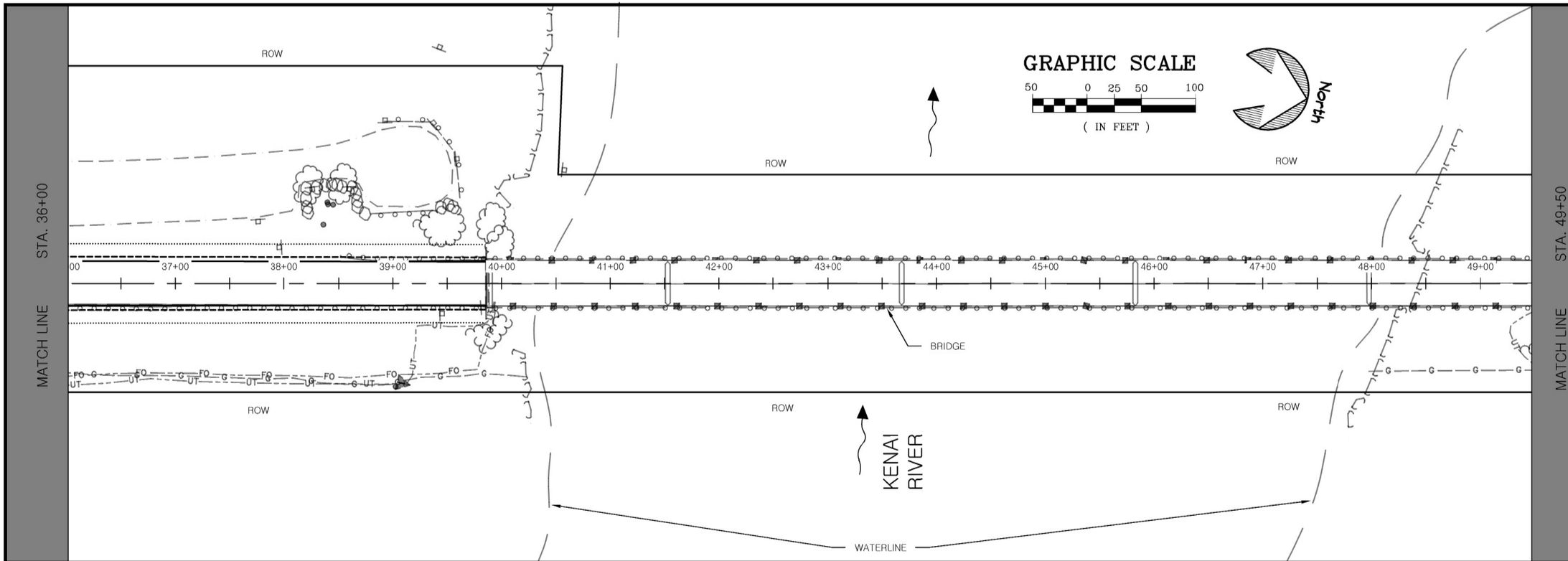


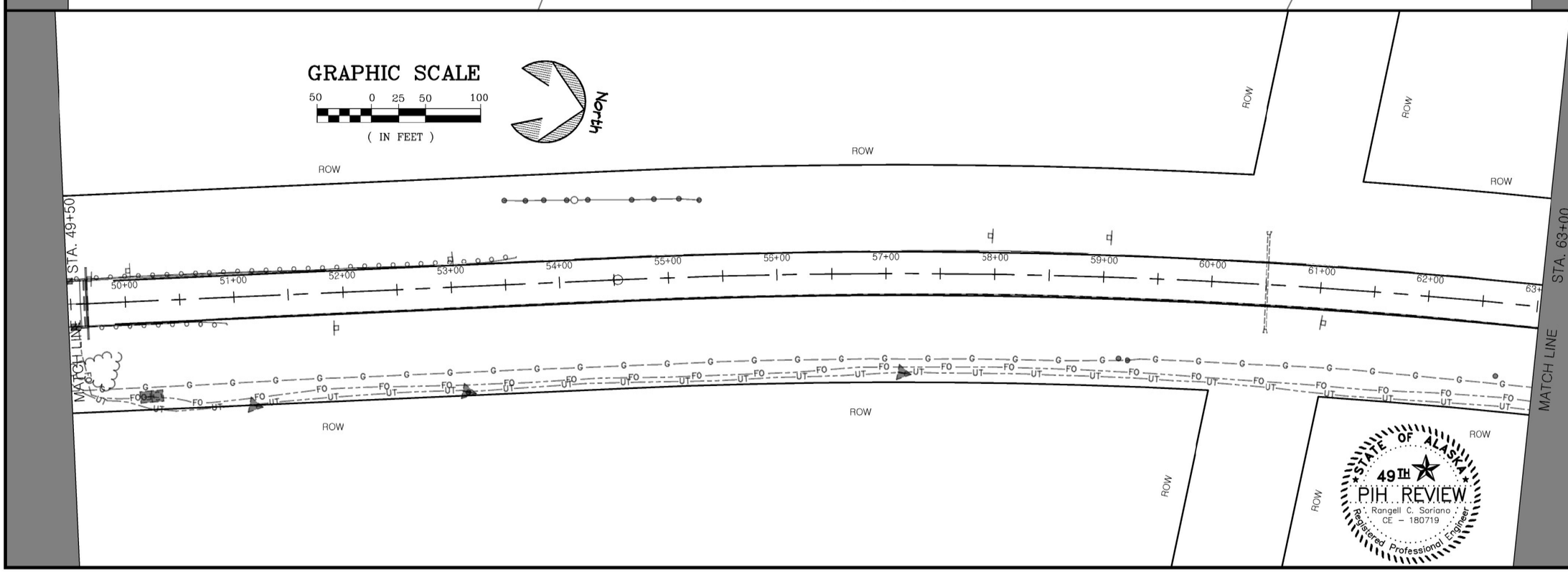


**STATE OF ALASKA, DEPARTMENT OF NATURAL RESOURCES**
**PLANS DEVELOPED BY: DIVISION OF PARKS AND OUTDOOR RECREATION**
**550 W 7TH AVE. SUITE 1340, ANCHORAGE, AK 99501 - 907.269.8731**

KENAI BRIDGE ACCESS ROAD PAVEMENT PRESERVATION AND IMPROVEMENTS
PROJECT No. CFHWY00689

STA. 36+00 TO STA. 63+00

PREPARED: RCS
DRAWN: D&C
REVIEWED: D&C
DATE: JULY 2025

SHEET
F2
OF XX SHEETS

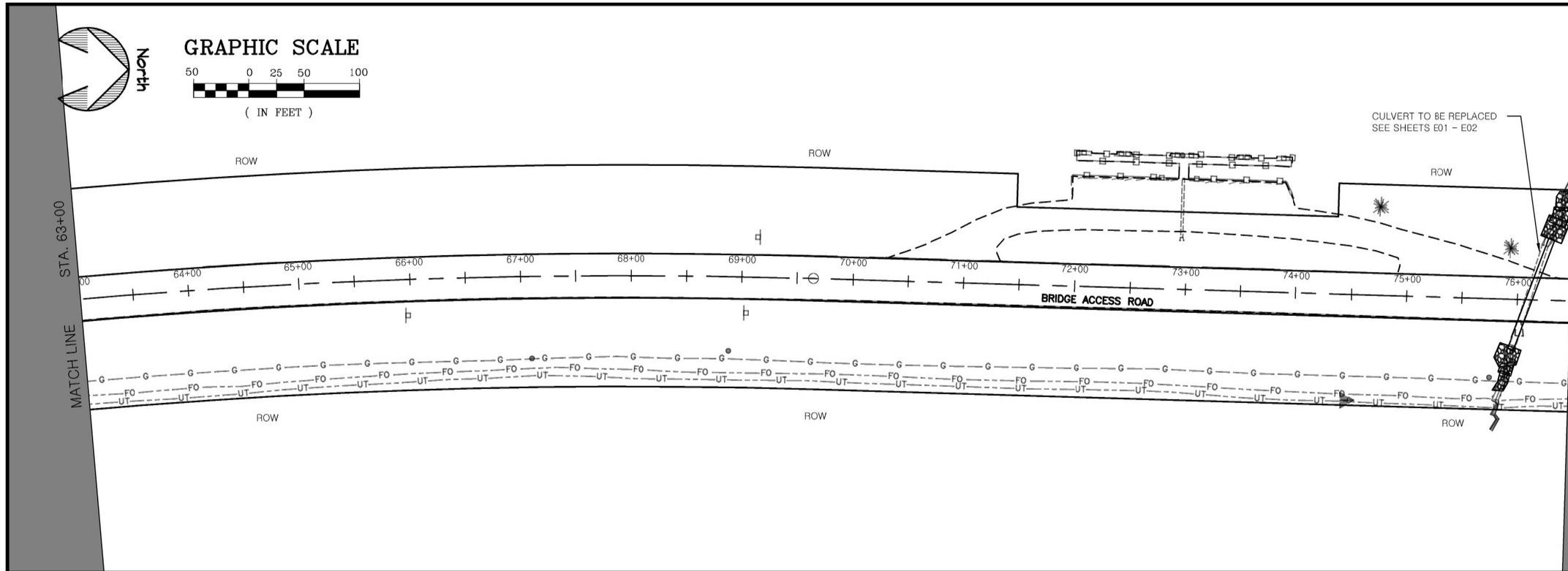


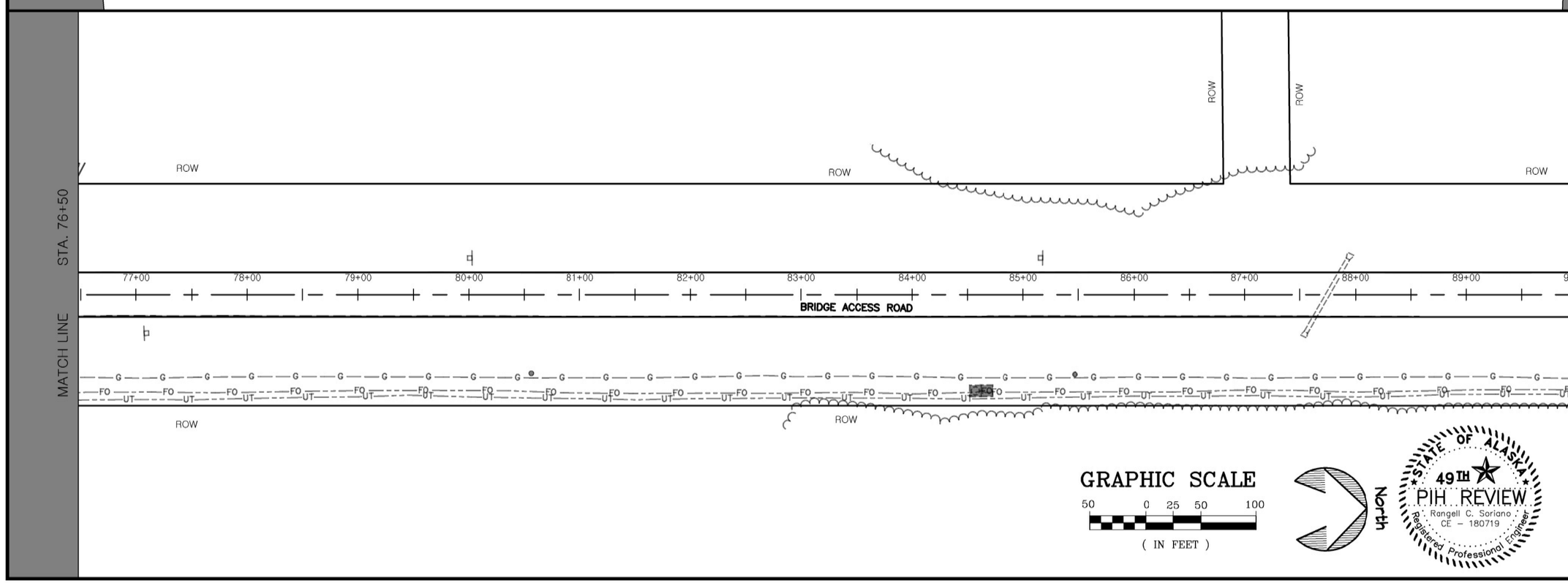


**STATE OF ALASKA, DEPARTMENT OF NATURAL RESOURCES**
**PLANS DEVELOPED BY: DIVISION OF PARKS AND OUTDOOR RECREATION**
**550 W 7TH AVE. SUITE 1340, ANCHORAGE, AK 99501 - 907.269.8731**

STA. 63+00 TO STA. 90+00

KENAI BRIDGE ACCESS ROAD PAVEMENT
PRESERVATION AND IMPROVEMENTS
PROJECT No. CFHWY00689

PREPARED: RCS
DRAWN: D&C
REVIEWED: D&C
DATE: JULY 2025

SHEET
F3
OF XX SHEETS

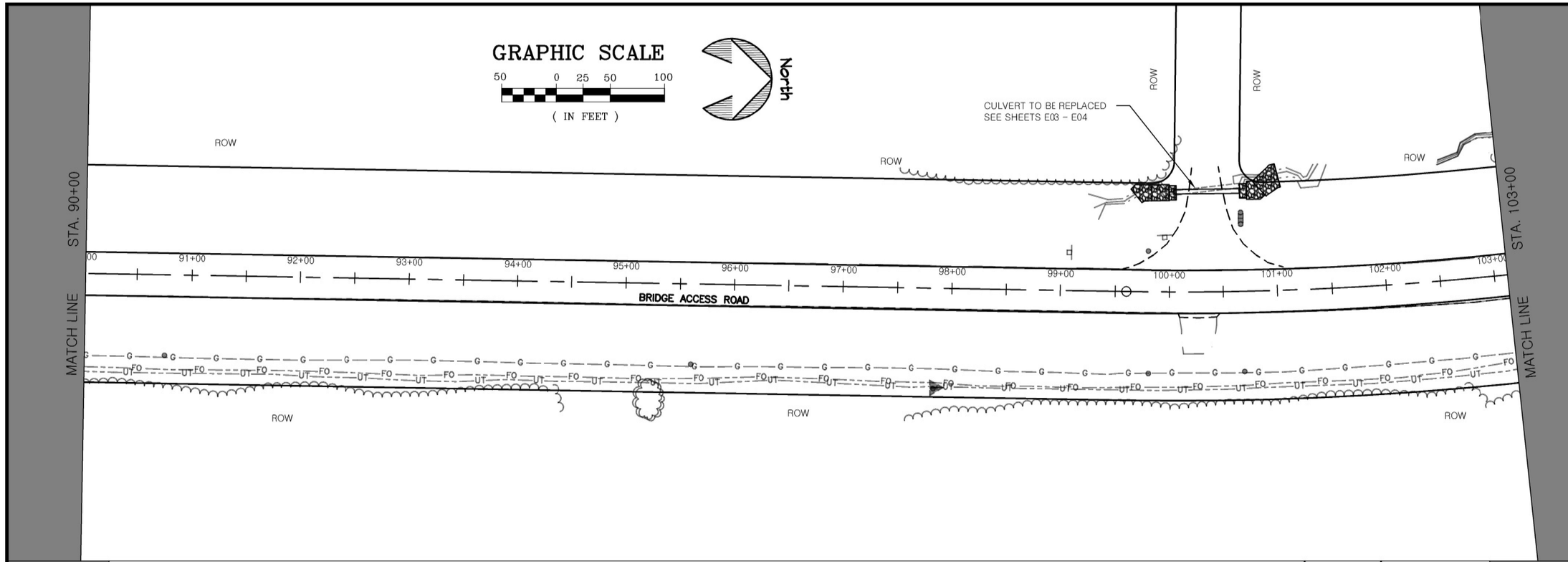


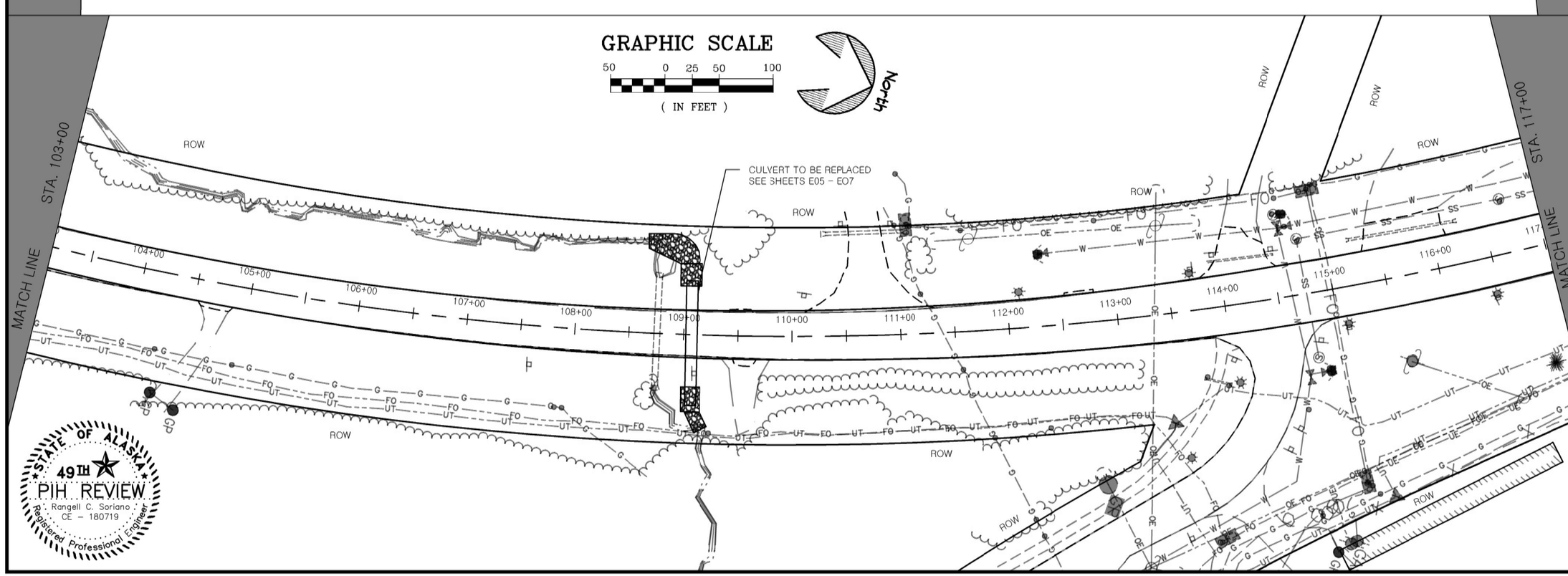


STATE OF ALASKA
49TH
PIH REVIEW
Rangell C. Soriano
CE - 180719
Registered Professional Engineer

**STATE OF ALASKA, DEPARTMENT OF NATURAL RESOURCES**
PLANS DEVELOPED BY: DIVISION OF PARKS AND OUTDOOR RECREATION
550 W 7TH AVE. SUITE 1340, ANCHORAGE, AK 99501 - 907.269.8731

STA. 90+00 TO STA. 117+00

KENAI BRIDGE ACCESS ROAD PAVEMENT
PRESERVATION AND IMPROVEMENTS
PROJECT No. CFHWY00689

PREPARED: RCS
DRAWN: D&C
REVIEWED: D&C
DATE: JULY 2025

SHEET
F4
OF XX SHEETS

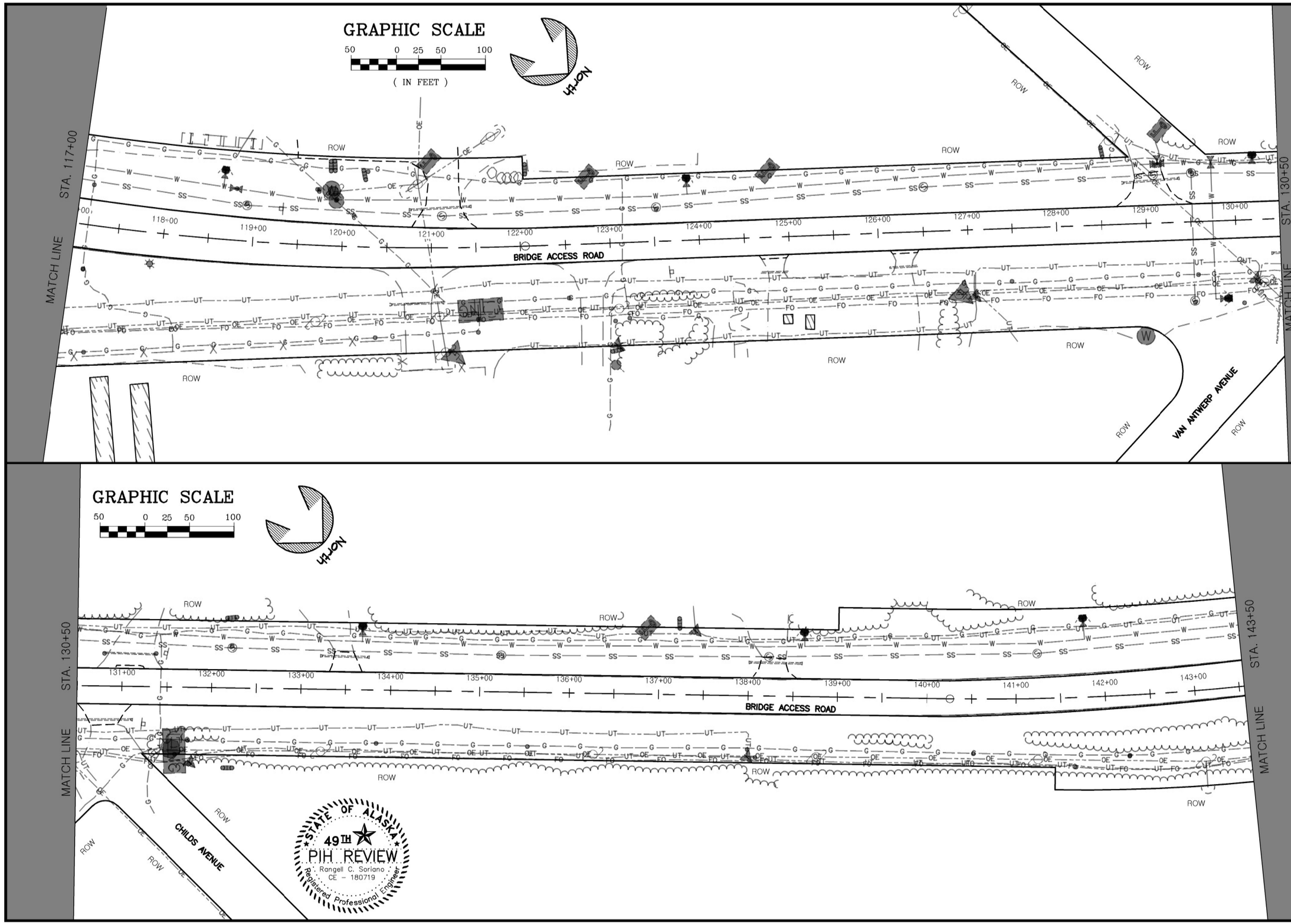


**STATE OF ALASKA, DEPARTMENT OF NATURAL RESOURCES**
**PLANS DEVELOPED BY: DIVISION OF PARKS AND OUTDOOR RECREATION**
**550 W 7TH AVE. SUITE 1340, ANCHORAGE, AK 99501 - 907.269.8731**

KENAI BRIDGE ACCESS ROAD PAVEMENT
PRESERVATION AND IMPROVEMENTS
PROJECT No. CFHWY00689

STA. 117+00 TO STA. 143+50

PREPARED: RCS
DRAWN: D&C
REVIEWED: D&C
DATE: JULY 2025

SHEET
F5
OF XX SHEETS

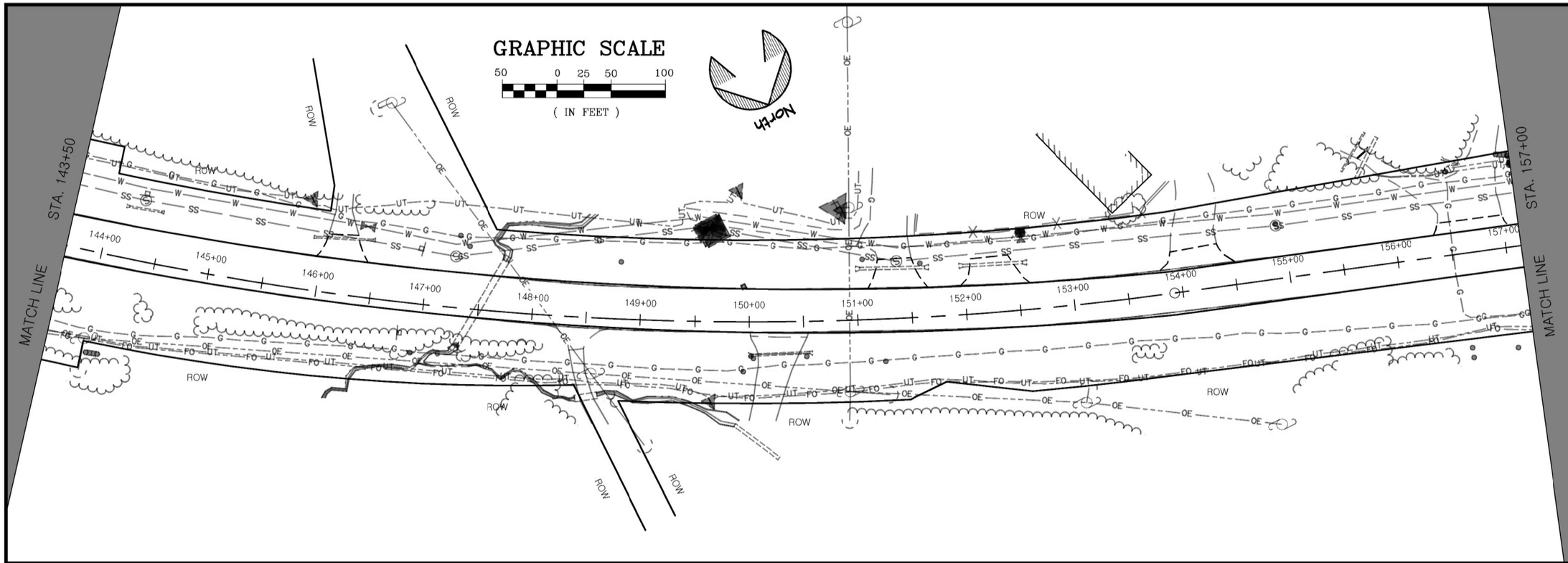


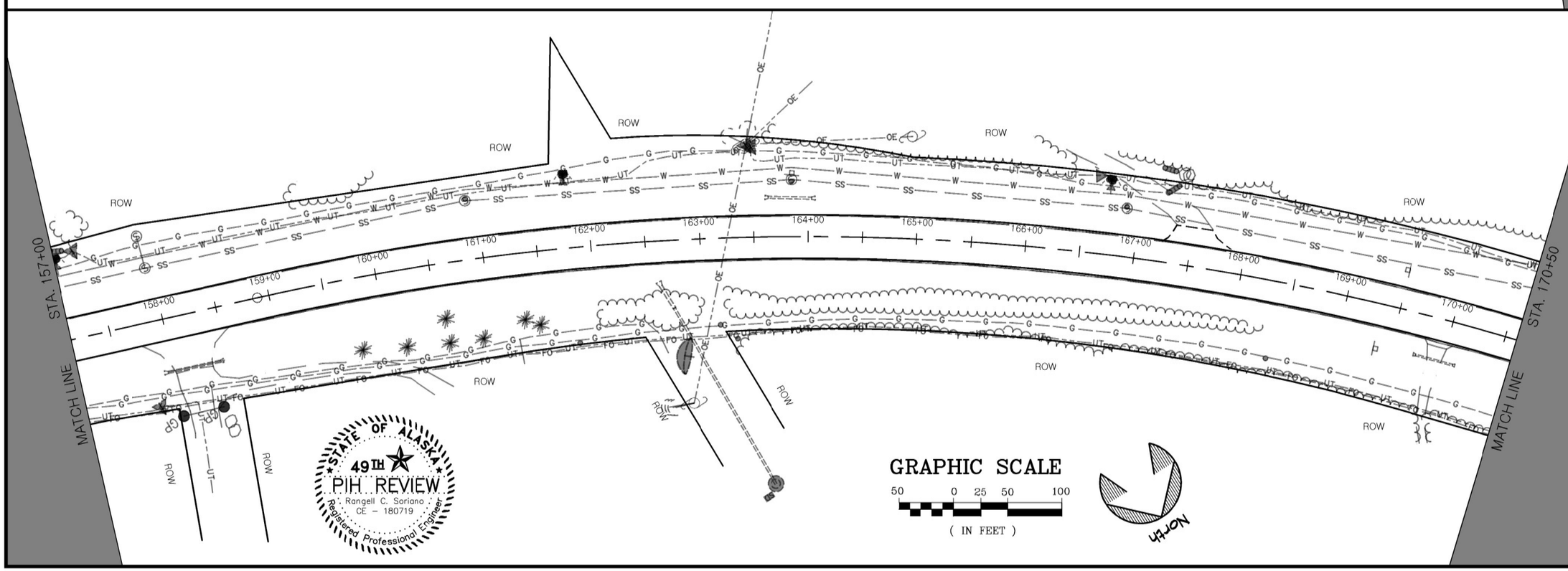


**STATE OF ALASKA, DEPARTMENT OF NATURAL RESOURCES**

**PLANS DEVELOPED BY: DIVISION OF PARKS AND OUTDOOR RECREATION**

**550 W 7TH AVE. SUITE 1340, ANCHORAGE, AK 99501 - 907.269.8731**

STA. 143+50 TO STA. 170+50

KENAI BRIDGE ACCESS ROAD PAVEMENT PRESERVATION AND IMPROVEMENTS

PROJECT No. CFHWY00689

PREPARED: RCS
DRAWN: D&C
REVIEWED: D&C
DATE: JULY 2025

SHEET

F6

OF XX SHEETS

GRAPHIC SCALE

50 0 25 50 100

( IN FEET )

NORTH

STATE OF ALASKA
49TH
PIH REVIEW
Rangell C. Soriano
CE - 180719
Registered Professional Engineer

**STATE OF ALASKA, DEPARTMENT OF NATURAL RESOURCES**

**PLANS DEVELOPED BY: DIVISION OF PARKS AND OUTDOOR RECREATION**

**550 W 7TH AVE. SUITE 1340, ANCHORAGE, AK 99501 - 907.269.8731**

KENAI BRIDGE ACCESS ROAD PAVEMENT
PRESERVATION AND IMPROVEMENTS
PROJECT No. CFHWY00689

STA. 170+50 TO STA. 183+23.15

ALASKA STATE PARKS

PREPARED: RCS
DRAWN: D&C
REVIEWED: D&C
DATE: JULY 2025

SHEET

F7

OF XX SHEETS

SIGNING & STRIPING NOTES:

1. ALL STATION LOCATIONS FOR SIGN INSTALLATION ARE APPROXIMATE. INSTALL SIGNS AT LOCATIONS AS DIRECTED BY THE ENGINEER.
2. USE THE FOLLOWING DEFINITIONS TO DECIPHER THE ABBREVIATED SIGN POST TYPES IN THE SIGN SUMMARY SHEETS.
   A. PST MEANS A PERFORATED STEEL TUBE.
   B. T MEANS A SQUARE STEEL TUBE.
   C. P MEANS A ROUND STEEL PIPE.
   D. W MEANS A WIDE FLANGE BEAM.
   E. POPL MEANS A POLE PLATE INSTALLED PER ITS ALASKA STANDARD PLAN S-23.
3. FABRICATE ALL SIGNS FROM 0.125" THICK ALUMINUM SHEETING, UNLESS STATED ELSEWHERE, WITH TYPE IX REFLECTIVE SHEETING.
4. FOR PERFORATED STEEL TUBE SIGNPOSTS, INSTALL THE CONCRETE FOUNDATION OPTION SHOWN ON STANDARD PLAN S-30. TRIM EACH PT POST TO LIMIT THE LENGTH INSERTED INTO THE FOUNDATION TO 12 INCHES.
5. ERECT NEW SIGNS BEFORE REMOVAL OF EXISTING SIGNS WITH SIMILAR MESSAGE. NOTIFY THE ENGINEER A MINIMUM OF 14 DAYS PRIOR TO BEGINNING SIGN REMOVAL AND SALVAGE OR DISPOSAL ACTIVITIES.
6. SELECTIVE AND HAND CLEARING SHALL BE PERFORMED AT THE DISCRETION OF THE ENGINEER, IN ACCORDANCE WITH SECTION 201, UPSTREAM OF ALL SIGN INSTALLATION LOCATIONS TO ACHIEVE MINIMUM SIGN VISIBILITY REQUIREMENTS. IF NOT INCLUDED AS A SEPARATE ITEM, THIS WORK SHALL BE SUBSIDIARY TO THE SIGN INSTALLATION ITEMS AND WORK.
7. FOR ALL FINAL PAVEMENT MARKINGS USE METHYLMETHACRYLATE MATERIALS. ALL STRIPING AND MARKINGS SHALL BE INLAID AND 125 MILS.
8. DIMENSIONS REFER TO THE CENTER OF STRIPE AND THE EDGE OF PAVEMENT OR FACE OF CURB WHEN PRESENT.
9. IF THE NEW AND EXISTING PAVEMENT MARKINGS ARE NOT ALIGNED AT MATCH LINE, TRANSITION BETWEEN THE TWO USING A 100:1 TAPER ON THE NEW PAVEMENT.

STATE OF ALASKA
49TH
PIH REVIEW
Rangell C. Soriano
CE - 180719
Registered Professional Engineer

## SIGN SUMMARY TABLE

| SHEET | POST NO. | STATION | OFFSET | TYPE | LEGEND | SIZE (IN) WIDTH | SIZE (IN) HEIGHT | AREA (SF) | SIGN FACES | POST: NO., SIZE & TYPE | FRAMED? YES | FRAMED? NO | SALVAGE SIGN (EACH) | REMARKS |
|---|---|---|---|---|---|---|---|---|---|---|---|---|---|---|
| H1 | 1 | 14+41 | 36 RT | W11-104 |  | 30 | 30 | 6.25 | S | 1 - 2" PT | | X | | |
| H1 | 2 | 14+37 | 39 LT | D3-1C | ← Soldatna / Homer → | 180 | 66 | 82.50 | N | 2 - 2.5" PT | | X | | |
| | | | | CS-1 | KENAI PENINSULA COLLEGE ← | 24 | 30 | 5.00 | N | | | X | | |
| H1 | 3 | 17+20 | 35 RT | R2-1 | SPEED LIMIT 55 | 24 | 30 | 5.00 | S | 1 - 2" PT | | X | | |
| | | | | CS-2 | Kenai A Wildlife Conservation Community | 24 | 18 | 3.00 | S | | | X | | |
| H1 | 4 | 17+23 | 34 LT | W3-3 | 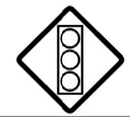 | 30 | 30 | 6.25 | N | 2 - 2" PT | | X | | |
| H1 | 5 | 19+61 | 37 RT | CS-3 | ENTERING KENAI RIVER SPECIAL MANAGEMENT AREA | 94.50 | 29.50 | 19.36 | S | 2 - 3.5" PT | X | | | |
| H1 | 6 | 27+54 | 33 RT | D9-14 | P | 30 | 30 | 6.25 | S | 1 - 2.5" PT | | X | | |
| | | | | D9-L | ← | 24 | 6 | 1.00 | S | | | X | | |
| H1 | 7 | 31+50 | 32 RT | R4-1 | DO NOT PASS | 24 | 30 | 5.00 | S | 1 - 2.5" PT | | X | | |
| H1 | 8 | 32+12 | 39 LT | D11-1 | BIKE ROUTE | 24 | 18 | 3.00 | N | 1 - 2.5" PT | | X | | |
| H1 | 9 | 33+60 | 35 RT | D11-1 | BIKE ROUTE | 24 | 18 | 3.00 | S | 1 - 2.5" PT | | X | | |

STATE OF ALASKA, DEPARTMENT OF NATURAL RESOURCES
PLANS DEVELOPED BY: DIVISION OF PARKS AND OUTDOOR RECREATION
550 W 7TH AVE. SUITE 1340, ANCHORAGE, AK 99501 - 907.269.8731

SIGN SUMMARY AND NOTES

KENAI BRIDGE ACCESS ROAD
PATHWAY
PROJECT No. CFHWY00689

ALASKA STATE PARKS

PREPARED: RCS
DRAWN: D&C
REVIEWED: D&C
DATE: JULY 2025

SHEET
H1
OF XX SHEETS

SIGNING & STRIPING NOTES:

1. ALL STATION LOCATIONS FOR SIGN INSTALLATION ARE APPROXIMATE. INSTALL SIGNS AT LOCATIONS AS DIRECTED BY THE ENGINEER.
2. USE THE FOLLOWING DEFINITIONS TO DECIPHER THE ABBREVIATED SIGN POST TYPES IN THE SIGN SUMMARY SHEETS.
   A. PST MEANS A PERFORATED STEEL TUBE.
   B. T MEANS A SQUARE STEEL TUBE.
   C. P MEANS A ROUND STEEL PIPE.
   D. W MEANS A WIDE FLANGE BEAM.
   E. POPL MEANS A POLE PLATE INSTALLED PER ITS ALASKA STANDARD PLAN S-23.
3. FABRICATE ALL SIGNS FROM 0.125" THICK ALUMINUM SHEETING, UNLESS STATED ELSEWHERE, WITH TYPE IX REFLECTIVE SHEETING.
4. FOR PERFORATED STEEL TUBE SIGNPOSTS, INSTALL THE CONCRETE FOUNDATION OPTION SHOWN ON STANDARD PLAN S-30. TRIM EACH PT POST TO LIMIT THE LENGTH INSERTED INTO THE FOUNDATION TO 12 INCHES.
5. ERECT NEW SIGNS BEFORE REMOVAL OF EXISTING SIGNS WITH SIMILAR MESSAGE. NOTIFY THE ENGINEER A MINIMUM OF 14 DAYS PRIOR TO BEGINNING SIGN REMOVAL AND SALVAGE OR DISPOSAL ACTIVITIES.
6. SELECTIVE AND HAND CLEARING SHALL BE PERFORMED AT THE DISCRETION OF THE ENGINEER, IN ACCORDANCE WITH SECTION 201, UPSTREAM OF ALL SIGN INSTALLATION LOCATIONS TO ACHIEVE MINIMUM SIGN VISIBILITY REQUIREMENTS. IF NOT INCLUDED AS A SEPARATE ITEM, THIS WORK SHALL BE SUBSIDIARY TO THE SIGN INSTALLATION ITEMS AND WORK.
7. FOR ALL FINAL PAVEMENT MARKINGS USE METHYLMETHACRYLATE MATERIALS. ALL STRIPING AND MARKINGS SHALL BE INLAID AND 125 MILS.
8. DIMENSIONS REFER TO THE CENTER OF STRIPE AND THE EDGE OF PAVEMENT OR FACE OF CURB WHEN PRESENT.
9. IF THE NEW AND EXISTING PAVEMENT MARKINGS ARE NOT ALIGNED AT MATCH LINE, TRANSITION BETWEEN THE TWO USING A 100:1 TAPER ON THE NEW PAVEMENT.

STATE OF ALASKA
49TH
PIH REVIEW
Rangell C. Soriano
CE - 180719
Registered Professional Engineer

SIGN SUMMARY TABLE

| SHEET | POST NO. | STATION | OFFSET | TYPE | LEGEND | SIZE (IN) WIDTH | SIZE (IN) HEIGHT | AREA (SF) | SIGN FACES | POST: NO., SIZE & TYPE | FRAMED? YES | FRAMED? NO | SALVAGE SIGN (EACH) | REMARKS |
|---|---|---|---|---|---|---|---|---|---|---|---|---|---|---|
| H2 | 10 | 37+96 | 33 LT | D9-14 | P | 30 | 30 | 6.25 | N | 1 - 2.5" PT | | X | | |
| | | | | D9-R | → | 24 | 6 | 1.00 | N | | | X | | |
| H2 | 11 | 39+45 | 27 RT | CS-4 | Kenai River Warren Ames Memorial Bridge | 94.50 | 35.50 | 23.30 | S | 2 - 3" PT | X | | | |
| H2 | 12 | 39+82 | 23 RT | OM-3R | | 12 | 36 | 3.00 | S | 1 - 2" PT | | X | | |
| H2 | 13 | 49+68 | 24 LT | OM-3R | | 12 | 36 | 3.00 | N | 1 - 2" PT | | X | | |
| H2 | 14 | 50+05 | 29 LT | CS-4 | Kenai River Warren Ames Memorial Bridge | 94.50 | 35.50 | 23.30 | N | 2 - 3" PT | X | | | |
| H2 | 15 | 51+92 | 33 RT | CS-5 | ADOPT A HIGHWAY | 30 | 24 | 5.00 | S | 1 - 2.5" PT | | X | | |
| H2 | 16 | 53+00 | 26 LT | D9-14 | P | 30 | 30 | 6.25 | N | 1 - 2.5" PT | | X | | |
| | | | | D9-B | 2000 FT | 24 | 6 | 1.00 | N | | | X | | |
| H2 | 17 | 57+96 | 36 LT | | | | | | | | | X | | UNUSED POST |
| H2 | 18 | 59+03 | 36 LT | CS-3 | ENTERING KENAI RIVER SPECIAL MANAGEMENT AREA | 94.50 | 29.50 | 19.36 | N | 2 - 3" PT | X | | | |


STATE OF ALASKA, DEPARTMENT OF NATURAL RESOURCES
PLANS DEVELOPED BY: DIVISION OF PARKS AND OUTDOOR RECREATION
550 W 7TH AVE. SUITE 1340, ANCHORAGE, AK 99501 - 907.269.8731


SIGN SUMMARY AND NOTES

KENAI BRIDGE ACCESS ROAD
PATHWAY
PROJECT No. CFHWY00689

ALASKA STATE PARKS

PREPARED: RCS
DRAWN: D&C
REVIEWED: D&C
DATE: JULY 2025

SHEET
H2
OF XX SHEETS

SIGNING & STRIPING NOTES:

1. ALL STATION LOCATIONS FOR SIGN INSTALLATION ARE APPROXIMATE. INSTALL SIGNS AT LOCATIONS AS DIRECTED BY THE ENGINEER.
2. USE THE FOLLOWING DEFINITIONS TO DECIPHER THE ABBREVIATED SIGN POST TYPES IN THE SIGN SUMMARY SHEETS.
   A. PST MEANS A PERFORATED STEEL TUBE.
   B. T MEANS A SQUARE STEEL TUBE.
   C. P MEANS A ROUND STEEL PIPE.
   D. W MEANS A WIDE FLANGE BEAM.
   E. POPL MEANS A POLE PLATE INSTALLED PER ITS ALASKA STANDARD PLAN S-23.
3. FABRICATE ALL SIGNS FROM 0.125" THICK ALUMINUM SHEETING, UNLESS STATED ELSEWHERE, WITH TYPE IX REFLECTIVE SHEETING.
4. FOR PERFORATED STEEL TUBE SIGNPOSTS, INSTALL THE CONCRETE FOUNDATION OPTION SHOWN ON STANDARD PLAN S-30. TRIM EACH PT POST TO LIMIT THE LENGTH INSERTED INTO THE FOUNDATION TO 12 INCHES.
5. ERECT NEW SIGNS BEFORE REMOVAL OF EXISTING SIGNS WITH SIMILAR MESSAGE. NOTIFY THE ENGINEER A MINIMUM OF 14 DAYS PRIOR TO BEGINNING SIGN REMOVAL AND SALVAGE OR DISPOSAL ACTIVITIES.
6. SELECTIVE AND HAND CLEARING SHALL BE PERFORMED AT THE DISCRETION OF THE ENGINEER, IN ACCORDANCE WITH SECTION 201, UPSTREAM OF ALL SIGN INSTALLATION LOCATIONS TO ACHIEVE MINIMUM SIGN VISIBILITY REQUIREMENTS. IF NOT INCLUDED AS A SEPARATE ITEM, THIS WORK SHALL BE SUBSIDIARY TO THE SIGN INSTALLATION ITEMS AND WORK.
7. FOR ALL FINAL PAVEMENT MARKINGS USE METHYLMETHACRYLATE MATERIALS. ALL STRIPING AND MARKINGS SHALL BE INLAID AND 125 MILS.
8. DIMENSIONS REFER TO THE CENTER OF STRIPE AND THE EDGE OF PAVEMENT OR FACE OF CURB WHEN PRESENT.
9. IF THE NEW AND EXISTING PAVEMENT MARKINGS ARE NOT ALIGNED AT MATCH LINE, TRANSITION BETWEEN THE TWO USING A 100:1 TAPER ON THE NEW PAVEMENT.

STATE OF ALASKA
49TH
PIH REVIEW
Rangell C. Soriano
CE - 180719
Registered Professional Engineer

## SIGN SUMMARY TABLE

| SHEET | POST NO. | STATION | OFFSET | TYPE | LEGEND | SIZE (IN) WIDTH | SIZE (IN) HEIGHT | AREA (SF) | SIGN FACES | POST: NO., SIZE & TYPE | FRAMED? YES | FRAMED? NO | SALVAGE SIGN (EACH) | REMARKS |
|---|---|---|---|---|---|---|---|---|---|---|---|---|---|---|
| H3 | 19 | 61+04 | 32 RT | D9-14 | P | 30 | 30 | 6.25 | S | 1 - 2.5" PT | | X | | |
| | | | | D9-B | 1000 FT | 24 | 6 | 1.00 | S | | | X | | |
| H3 | 20 | 65+97 | 32 RT | D9-14 | P | 30 | 30 | 6.25 | S | 1 - 2.5" PT | | X | | |
| | | | | D9-L | ← | 24 | 6 | 1.00 | S | | | X | | |
| H3 | 21 | 69+04 | 32 RT | W11-21 | | 30 | 30 | 6.25 | S | 1 - 2.5" PT | | X | | |
| | | | | W7-3A | NEXT 2 MILES | 24 | 18 | 3.00 | S | | | X | | |
| H3 | 22 | 69+13 | 36 LT | D11-1 | BIKE ROUTE | 24 | 18 | 3.00 | N | 1 - 2.5" PT | | X | | |
| H3 | 23 | 77+09 | 34 RT | D11-1 | BIKE ROUTE | 24 | 18 | 3.00 | S | 1 - 2.5" PT | | X | | |
| H3 | 24 | 80+00 | 33 LT | D9-14 | P | 30 | 30 | 6.25 | N | 1 - 2.5" PT | | X | | |
| | | | | D9-R | → | 24 | 6 | 1.00 | N | | | X | | |

STATE OF ALASKA, DEPARTMENT OF NATURAL RESOURCES
PLANS DEVELOPED BY: DIVISION OF PARKS AND OUTDOOR RECREATION
550 W 7TH AVE. SUITE 1340, ANCHORAGE, AK 99501 - 907.269.8731

SIGN SUMMARY AND NOTES

KENAI BRIDGE ACCESS ROAD
PATHWAY
PROJECT No. CFHWY00689

ALASKA STATE PARKS

PREPARED: RCS
DRAWN: D&C
REVIEWED: D&C
DATE: JULY 2025

SHEET
H3
OF XX SHEETS

SIGNING & STRIPING NOTES:

1. ALL STATION LOCATIONS FOR SIGN INSTALLATION ARE APPROXIMATE. INSTALL SIGNS AT LOCATIONS AS DIRECTED BY THE ENGINEER.
2. USE THE FOLLOWING DEFINITIONS TO DECIPHER THE ABBREVIATED SIGN POST TYPES IN THE SIGN SUMMARY SHEETS.
   A. PST MEANS A PERFORATED STEEL TUBE.
   B. T MEANS A SQUARE STEEL TUBE.
   C. P MEANS A ROUND STEEL PIPE.
   D. W MEANS A WIDE FLANGE BEAM.
   E. POPL MEANS A POLE PLATE INSTALLED PER ITS ALASKA STANDARD PLAN S-23.
3. FABRICATE ALL SIGNS FROM 0.125" THICK ALUMINUM SHEETING, UNLESS STATED ELSEWHERE, WITH TYPE IX REFLECTIVE SHEETING.
4. FOR PERFORATED STEEL TUBE SIGNPOSTS, INSTALL THE CONCRETE FOUNDATION OPTION SHOWN ON STANDARD PLAN S-30. TRIM EACH PT POST TO LIMIT THE LENGTH INSERTED INTO THE FOUNDATION TO 12 INCHES.
5. ERECT NEW SIGNS BEFORE REMOVAL OF EXISTING SIGNS WITH SIMILAR MESSAGE. NOTIFY THE ENGINEER A MINIMUM OF 14 DAYS PRIOR TO BEGINNING SIGN REMOVAL AND SALVAGE OR DISPOSAL ACTIVITIES.
6. SELECTIVE AND HAND CLEARING SHALL BE PERFORMED AT THE DISCRETION OF THE ENGINEER, IN ACCORDANCE WITH SECTION 201, UPSTREAM OF ALL SIGN INSTALLATION LOCATIONS TO ACHIEVE MINIMUM SIGN VISIBILITY REQUIREMENTS. IF NOT INCLUDED AS A SEPARATE ITEM, THIS WORK SHALL BE SUBSIDIARY TO THE SIGN INSTALLATION ITEMS AND WORK.
7. FOR ALL FINAL PAVEMENT MARKINGS USE METHYLMETHACRYLATE MATERIALS. ALL STRIPING AND MARKINGS SHALL BE INLAID AND 125 MILS.
8. DIMENSIONS REFER TO THE CENTER OF STRIPE AND THE EDGE OF PAVEMENT OR FACE OF CURB WHEN PRESENT.
9. IF THE NEW AND EXISTING PAVEMENT MARKINGS ARE NOT ALIGNED AT MATCH LINE, TRANSITION BETWEEN THE TWO USING A 100:1 TAPER ON THE NEW PAVEMENT.

STATE OF ALASKA 49TH
PIH REVIEW
Rangell C. Soriano
CE - 180719
Registered Professional Engineer

## SIGN SUMMARY TABLE

| SHEET | POST NO. | STATION | OFFSET | TYPE | LEGEND | SIZE (IN) WIDTH | SIZE (IN) HEIGHT | AREA (SF) | SIGN FACES | POST: NO., SIZE & TYPE | FRAMED? YES | FRAMED? NO | SALVAGE SIGN (EACH) | REMARKS |
|---|---|---|---|---|---|---|---|---|---|---|---|---|---|---|
| H4 | 25 | 85+16 | 33 LT | D9-14 | P | 30 | 30 | 6.25 | N | 1 - 2.5" PT | | X | | |
| | | | | D9-B | 1000 FT | 24 | 6 | 1.00 | N | | | X | | |
| | | | | Rs-76 | | 30 | 30 | 6.25 | N | | | X | | |
| H4 | 26 | 99+95 | 50 LT | D3-1B | BOAT LAUNCH Rd | 48 | 8 | 2.67 | N | 1 - 2.5" PT | | X | | |
| | | | | D3-1B | BOAT LAUNCH Rd | 48 | 8 | 2.67 | S | | | X | | |
| | | | | R1-1 | STOP | 30 | 30 | 6.25 | W | | | X | | |
| H4 | 27 | 107+60 | 36 RT | CS-6 | J Hi-Lo Charters 1.8 | 100 | 20 | 13.89 | S | 2 - 3" PT | | X | | |
| H4 | 28 | 109+10 | 35 RT | D3-2R | Beaver Lp | 100 | 24 | 16.67 | S | 2 - 2.5" PT | X | | | |
| H4 | 29 | 110+11 | 38 LT | R1-1 | STOP | 30 | 30 | 6.25 | W | 1 - 2.5" PT | | X | | |
| H4 | 30 | 113+71 | 38 LT | D11-1 | BIKE ROUTE | 24 | 18 | 3.00 | N | 1 - 2.5" PT | | X | | |
| | | | | CS-5 | ADOPT A HIGHWAY | 30 | 24 | 5.00 | N | | | X | | |

**STATE OF ALASKA, DEPARTMENT OF NATURAL RESOURCES**
PLANS DEVELOPED BY: DIVISION OF PARKS AND OUTDOOR RECREATION
550 W 7TH AVE. SUITE 1340, ANCHORAGE, AK 99501 - 907.269.8731

SIGN SUMMARY AND NOTES

KENAI BRIDGE ACCESS ROAD
PATHWAY
PROJECT No. CFHWY00689

ALASKA STATE PARKS

PREPARED: RCS
DRAWN: D&C
REVIEWED: D&C
DATE: JULY 2025

SHEET
H4
OF XX SHEETS

SIGNING & STRIPING NOTES:

1. ALL STATION LOCATIONS FOR SIGN INSTALLATION ARE APPROXIMATE. INSTALL SIGNS AT LOCATIONS AS DIRECTED BY THE ENGINEER.
2. USE THE FOLLOWING DEFINITIONS TO DECIPHER THE ABBREVIATED SIGN POST TYPES IN THE SIGN SUMMARY SHEETS.
   A. PST MEANS A PERFORATED STEEL TUBE.
   B. T MEANS A SQUARE STEEL TUBE.
   C. P MEANS A ROUND STEEL PIPE.
   D. W MEANS A WIDE FLANGE BEAM.
   E. POPL MEANS A POLE PLATE INSTALLED PER ITS ALASKA STANDARD PLAN S-23.
3. FABRICATE ALL SIGNS FROM 0.125" THICK ALUMINUM SHEETING, UNLESS STATED ELSEWHERE, WITH TYPE IX REFLECTIVE SHEETING.
4. FOR PERFORATED STEEL TUBE SIGNPOSTS, INSTALL THE CONCRETE FOUNDATION OPTION SHOWN ON STANDARD PLAN S-30. TRIM EACH PT POST TO LIMIT THE LENGTH INSERTED INTO THE FOUNDATION TO 12 INCHES.
5. ERECT NEW SIGNS BEFORE REMOVAL OF EXISTING SIGNS WITH SIMILAR MESSAGE. NOTIFY THE ENGINEER A MINIMUM OF 14 DAYS PRIOR TO BEGINNING SIGN REMOVAL AND SALVAGE OR DISPOSAL ACTIVITIES.
6. SELECTIVE AND HAND CLEARING SHALL BE PERFORMED AT THE DISCRETION OF THE ENGINEER, IN ACCORDANCE WITH SECTION 201, UPSTREAM OF ALL SIGN INSTALLATION LOCATIONS TO ACHIEVE MINIMUM SIGN VISIBILITY REQUIREMENTS. IF NOT INCLUDED AS A SEPARATE ITEM, THIS WORK SHALL BE SUBSIDIARY TO THE SIGN INSTALLATION ITEMS AND WORK.
7. FOR ALL FINAL PAVEMENT MARKINGS USE METHYLMETHACRYLATE MATERIALS. ALL STRIPING AND MARKINGS SHALL BE INLAID AND 125 MILS.
8. DIMENSIONS REFER TO THE CENTER OF STRIPE AND THE EDGE OF PAVEMENT OR FACE OF CURB WHEN PRESENT.
9. IF THE NEW AND EXISTING PAVEMENT MARKINGS ARE NOT ALIGNED AT MATCH LINE, TRANSITION BETWEEN THE TWO USING A 100:1 TAPER ON THE NEW PAVEMENT.

STATE OF ALASKA
49TH
PIH REVIEW
Rangell C. Soriano
CE - 180719
Registered Professional Engineer

## SIGN SUMMARY TABLE

| SHEET | POST NO. | STATION | OFFSET | TYPE | LEGEND | SIZE (IN) WIDTH | SIZE (IN) HEIGHT | AREA (SF) | SIGN FACES | POST: NO., SIZE & TYPE | FRAMED? YES | FRAMED? NO | SALVAGE SIGN (EACH) | REMARKS |
|---|---|---|---|---|---|---|---|---|---|---|---|---|---|---|
| H5 | 31 | 113+93 | 48 LT | R6-1L | ONE WAY | 36 | 12 | 3.00 | N | 1 - 2.5" PT | | X | | |
| | | | | R5-1 | DO NOT ENTER | 30 | 30 | 6.25 | E | | | X | | |
| | | | | R1-1 | STOP | 30 | 30 | 6.25 | W | | | X | | |
| | | | | R7-101 | NO PARKING ANY TIME | 12 | 18 | 1.50 | N | | | X | | |
| | | | | D9-R | | 24 | 6 | 1.00 | N | | | X | | |
| H5 | 32 | 114+49 | 46 LT | R6-1L | ONE WAY | 36 | 12 | 3.00 | N | 1 - 2.5" PT | | X | | |
| | | | | CW1-7 | | 48 | 24 | 8.00 | E | | | X | | |
| | | | | R5-1 | DO NOT ENTER | 30 | 30 | 6.25 | E | | | X | | |
| | | | | R1-1 | STOP | 30 | 30 | 6.25 | W | | | X | | |

STATE OF ALASKA, DEPARTMENT OF NATURAL RESOURCES
PLANS DEVELOPED BY: DIVISION OF PARKS AND OUTDOOR RECREATION
550 W 7TH AVE. SUITE 1340, ANCHORAGE, AK 99501 - 907.269.8731

SIGN SUMMARY AND NOTES

KENAI BRIDGE ACCESS ROAD
PATHWAY
PROJECT No. CFHWY00689

ALASKA STATE PARKS

PREPARED: RCS
DRAWN: D&C
REVIEWED: D&C
DATE: JULY 2025

SHEET
H5
OF XX SHEETS

SIGNING & STRIPING NOTES:

1. ALL STATION LOCATIONS FOR SIGN INSTALLATION ARE APPROXIMATE. INSTALL SIGNS AT LOCATIONS AS DIRECTED BY THE ENGINEER.
2. USE THE FOLLOWING DEFINITIONS TO DECIPHER THE ABBREVIATED SIGN POST TYPES IN THE SIGN SUMMARY SHEETS.
   A. PST MEANS A PERFORATED STEEL TUBE.
   B. T MEANS A SQUARE STEEL TUBE.
   C. P MEANS A ROUND STEEL PIPE.
   D. W MEANS A WIDE FLANGE BEAM.
   E. POPL MEANS A POLE PLATE INSTALLED PER ITS ALASKA STANDARD PLAN S-23.
3. FABRICATE ALL SIGNS FROM 0.125" THICK ALUMINUM SHEETING, UNLESS STATED ELSEWHERE, WITH TYPE IX REFLECTIVE SHEETING.
4. FOR PERFORATED STEEL TUBE SIGNPOSTS, INSTALL THE CONCRETE FOUNDATION OPTION SHOWN ON STANDARD PLAN S-30. TRIM EACH PT POST TO LIMIT THE LENGTH INSERTED INTO THE FOUNDATION TO 12 INCHES.
5. ERECT NEW SIGNS BEFORE REMOVAL OF EXISTING SIGNS WITH SIMILAR MESSAGE. NOTIFY THE ENGINEER A MINIMUM OF 14 DAYS PRIOR TO BEGINNING SIGN REMOVAL AND SALVAGE OR DISPOSAL ACTIVITIES.
6. SELECTIVE AND HAND CLEARING SHALL BE PERFORMED AT THE DISCRETION OF THE ENGINEER, IN ACCORDANCE WITH SECTION 201, UPSTREAM OF ALL SIGN INSTALLATION LOCATIONS TO ACHIEVE MINIMUM SIGN VISIBILITY REQUIREMENTS. IF NOT INCLUDED AS A SEPARATE ITEM, THIS WORK SHALL BE SUBSIDIARY TO THE SIGN INSTALLATION ITEMS AND WORK.
7. FOR ALL FINAL PAVEMENT MARKINGS USE METHYLMETHACRYLATE MATERIALS. ALL STRIPING AND MARKINGS SHALL BE INLAID AND 125 MILS.
8. DIMENSIONS REFER TO THE CENTER OF STRIPE AND THE EDGE OF PAVEMENT OR FACE OF CURB WHEN PRESENT.
9. IF THE NEW AND EXISTING PAVEMENT MARKINGS ARE NOT ALIGNED AT MATCH LINE, TRANSITION BETWEEN THE TWO USING A 100:1 TAPER ON THE NEW PAVEMENT.

STATE OF ALASKA
49TH
PIH REVIEW
Rangell C. Soriano
CE - 180719
Registered Professional Engineer

## SIGN SUMMARY TABLE

| SHEET | POST NO. | STATION | OFFSET | TYPE | LEGEND | SIZE (IN) WIDTH | SIZE (IN) HEIGHT | AREA (SF) | SIGN FACES | POST: NO., SIZE & TYPE | FRAMED? YES | FRAMED? NO | SALVAGE SIGN (EACH) | REMARKS |
|---|---|---|---|---|---|---|---|---|---|---|---|---|---|---|
| H6 | 33 | 114+82 | 44 RT | D3-1B | Bridge Access Rd | 48 | 8 | 2.67 | E | 1 - 2.5" PT | | X | | |
| | | | | D3-1B | Bridge Access Rd | 48 | 8 | 2.67 | W | | | X | | |
| | | | | D3-1B | Beaver Loop Rd | 48 | 8 | 2.67 | S | | | X | | |
| | | | | D3-1B | Beaver Loop Rd | 48 | 8 | 2.67 | N | | | X | | |
| | | | | R1-1 | STOP | 30 | 30 | 6.25 | E | | | X | | |
| H6 | 34 | 115+09 | 37 RT | CS-5 | ADOPT A HIGHWAY | 30 | 24 | 5.00 | SE | 1 - 2.5" PT | | X | | |
| H6 | 35 | 116+47 | 38 RT | D11-1 | BIKE ROUTE | 24 | 18 | 3.00 | SE | 1 - 2.5" PT | | X | | |
| H6 | 36 | 119+29 | 39 LT | D3-2L | ← Beaver Lp | 100 | 24 | 16.67 | NW | 2 - 2.5" PT | X | | | |
| H6 | 37 | 131+36 | 73 RT | R2-1 | SPEED LIMIT 45 | 24 | 30 | 5.00 | SE | 1 - 2.5" PT | | X | | |
| H6 | 38 | 131+47 | 37 LT | R2-1 | SPEED LIMIT 55 | 24 | 30 | 5.00 | NW | 1 - 2.5" PT | | X | | |
| H6 | 39 | 146+80 | 28 RT | D11-1 | BIKE ROUTE | 24 | 18 | 3.00 | SE | 1 - 2.5" PT | | X | | |

STATE OF ALASKA, DEPARTMENT OF NATURAL RESOURCES
PLANS DEVELOPED BY: DIVISION OF PARKS AND OUTDOOR RECREATION
550 W 7TH AVE. SUITE 1340, ANCHORAGE, AK 99501 - 907.269.8731

SIGN SUMMARY AND NOTES

KENAI BRIDGE ACCESS ROAD
PATHWAY
PROJECT No. CFHWY00689

ALASKA STATE PARKS

PREPARED: RCS
DRAWN: D&C
REVIEWED: D&C
DATE: JULY 2025

SHEET
H6
OF XX SHEETS

SIGNING & STRIPING NOTES:

1. ALL STATION LOCATIONS FOR SIGN INSTALLATION ARE APPROXIMATE. INSTALL SIGNS AT LOCATIONS AS DIRECTED BY THE ENGINEER.
2. USE THE FOLLOWING DEFINITIONS TO DECIPHER THE ABBREVIATED SIGN POST TYPES IN THE SIGN SUMMARY SHEETS.
   A. PST MEANS A PERFORATED STEEL TUBE.
   B. T MEANS A SQUARE STEEL TUBE.
   C. P MEANS A ROUND STEEL PIPE.
   D. W MEANS A WIDE FLANGE BEAM.
   E. POPL MEANS A POLE PLATE INSTALLED PER ITS ALASKA STANDARD PLAN S-23.
3. FABRICATE ALL SIGNS FROM 0.125" THICK ALUMINUM SHEETING, UNLESS STATED ELSEWHERE, WITH TYPE IX REFLECTIVE SHEETING.
4. FOR PERFORATED STEEL TUBE SIGNPOSTS, INSTALL THE CONCRETE FOUNDATION OPTION SHOWN ON STANDARD PLAN S-30. TRIM EACH PT POST TO LIMIT THE LENGTH INSERTED INTO THE FOUNDATION TO 12 INCHES.
5. ERECT NEW SIGNS BEFORE REMOVAL OF EXISTING SIGNS WITH SIMILAR MESSAGE. NOTIFY THE ENGINEER A MINIMUM OF 14 DAYS PRIOR TO BEGINNING SIGN REMOVAL AND SALVAGE OR DISPOSAL ACTIVITIES.
6. SELECTIVE AND HAND CLEARING SHALL BE PERFORMED AT THE DISCRETION OF THE ENGINEER, IN ACCORDANCE WITH SECTION 201, UPSTREAM OF ALL SIGN INSTALLATION LOCATIONS TO ACHIEVE MINIMUM SIGN VISIBILITY REQUIREMENTS. IF NOT INCLUDED AS A SEPARATE ITEM, THIS WORK SHALL BE SUBSIDIARY TO THE SIGN INSTALLATION ITEMS AND WORK.
7. FOR ALL FINAL PAVEMENT MARKINGS USE METHYLMETHACRYLATE MATERIALS. ALL STRIPING AND MARKINGS SHALL BE INLAID AND 125 MILS.
8. DIMENSIONS REFER TO THE CENTER OF STRIPE AND THE EDGE OF PAVEMENT OR FACE OF CURB WHEN PRESENT.
9. IF THE NEW AND EXISTING PAVEMENT MARKINGS ARE NOT ALIGNED AT MATCH LINE, TRANSITION BETWEEN THE TWO USING A 100:1 TAPER ON THE NEW PAVEMENT.

STATE OF ALASKA
49TH
PIH REVIEW
Rangell C. Soriano
CE - 180719
Registered Professional Engineer

## SIGN SUMMARY TABLE

| SHEET | POST NO. | STATION | OFFSET | TYPE | LEGEND | SIZE (IN) WIDTH | SIZE (IN) HEIGHT | AREA (SF) | SIGN FACES | POST: NO., SIZE & TYPE | FRAMED? YES | FRAMED? NO | SALVAGE SIGN (EACH) | REMARKS |
|---|---|---|---|---|---|---|---|---|---|---|---|---|---|---|
| H7 | 40 | 146+93 | 50 LT | D11-1 | BIKE ROUTE | 24 | 18 | 3.00 | NW | 1 - 2.5" PT | | X | | |
| H7 | 41 | 169+36 | 41 RT | R2-5A | REDUCED SPEED AHEAD | 24 | 30 | 5.00 | SE | 1 - 2.5" PT | | X | | |
| H7 | 42 | 169+48 | 36 LT | R2-1 | SPEED LIMIT 45 | 24 | 30 | 5.00 | NW | 1 - 2.5" PT | | X | | |
| H7 | 43 | 141+64 | 37 LT | W11-21 | | 48 | 48 | 16.00 | NW | 1 - 2.5" PT | | X | | |
| | | | | W7-3A | NEXT 2 MILES | 24 | 18 | 3.00 | NW | | | X | | |
| H7 | 44 | 143.19 | 56 RT | D3-1B | W TERN AVE | 48 | 12 | 4.00 | SE | 1 - 2.5" PT | | X | | |
| | | | | D3-1B | W TERN AVE | 48 | 12 | 4.00 | NW | | | X | | |
| | | | | R1-1 | STOP | 30 | 30 | 6.25 | NE | | | X | | |
| H7 | 45 | 147+53 | 33 RT | R2-1 | SPEED LIMIT 35 | 24 | 30 | 5.00 | SE | 1 - 2.5" PT | | X | | |
| H7 | 46 | 177+00 | 37 RT | CS-7 | SENIOR CITIZENS COMMUNITY CENTER ← | 24 | 20 | 3.33 | SE | 1 - 2.5" PT | | X | | |
| H7 | | | | CS-8 | SENIOR CITIZENS COMMUNITY CENTER → | 24 | 20 | 3.33 | NW | | | X | | |
| H7 | 47 | 177+24 | 40 LT | D11-1 | BIKE ROUTE | 24 | 18 | 3.00 | NW | 1 - 2.5" PT | | X | | |

STATE OF ALASKA, DEPARTMENT OF NATURAL RESOURCES
PLANS DEVELOPED BY: DIVISION OF PARKS AND OUTDOOR RECREATION
550 W 7TH AVE. SUITE 1340, ANCHORAGE, AK 99501 - 907.269.8731

SIGN SUMMARY AND NOTES

KENAI BRIDGE ACCESS ROAD
PATHWAY
PROJECT No. CFHWY00689

ALASKA STATE PARKS

PREPARED: RCS
DRAWN: D&C
REVIEWED: D&C
DATE: JULY 2025

SHEET
H7
OF XX SHEETS

SIGNING & STRIPING NOTES:

1. ALL STATION LOCATIONS FOR SIGN INSTALLATION ARE APPROXIMATE. INSTALL SIGNS AT LOCATIONS AS DIRECTED BY THE ENGINEER.
2. USE THE FOLLOWING DEFINITIONS TO DECIPHER THE ABBREVIATED SIGN POST TYPES IN THE SIGN SUMMARY SHEETS.
   A. PST MEANS A PERFORATED STEEL TUBE.
   B. T MEANS A SQUARE STEEL TUBE.
   C. P MEANS A ROUND STEEL PIPE.
   D. W MEANS A WIDE FLANGE BEAM.
   E. POPL MEANS A POLE PLATE INSTALLED PER ITS ALASKA STANDARD PLAN S-23.
3. FABRICATE ALL SIGNS FROM 0.125" THICK ALUMINUM SHEETING, UNLESS STATED ELSEWHERE, WITH TYPE IX REFLECTIVE SHEETING.
4. FOR PERFORATED STEEL TUBE SIGNPOSTS, INSTALL THE CONCRETE FOUNDATION OPTION SHOWN ON STANDARD PLAN S-30. TRIM EACH PT POST TO LIMIT THE LENGTH INSERTED INTO THE FOUNDATION TO 12 INCHES.
5. ERECT NEW SIGNS BEFORE REMOVAL OF EXISTING SIGNS WITH SIMILAR MESSAGE. NOTIFY THE ENGINEER A MINIMUM OF 14 DAYS PRIOR TO BEGINNING SIGN REMOVAL AND SALVAGE OR DISPOSAL ACTIVITIES.
6. SELECTIVE AND HAND CLEARING SHALL BE PERFORMED AT THE DISCRETION OF THE ENGINEER, IN ACCORDANCE WITH SECTION 201, UPSTREAM OF ALL SIGN INSTALLATION LOCATIONS TO ACHIEVE MINIMUM SIGN VISIBILITY REQUIREMENTS. IF NOT INCLUDED AS A SEPARATE ITEM, THIS WORK SHALL BE SUBSIDIARY TO THE SIGN INSTALLATION ITEMS AND WORK.
7. FOR ALL FINAL PAVEMENT MARKINGS USE METHYLMETHACRYLATE MATERIALS. ALL STRIPING AND MARKINGS SHALL BE INLAID AND 125 MILS.
8. DIMENSIONS REFER TO THE CENTER OF STRIPE AND THE EDGE OF PAVEMENT OR FACE OF CURB WHEN PRESENT.
9. IF THE NEW AND EXISTING PAVEMENT MARKINGS ARE NOT ALIGNED AT MATCH LINE, TRANSITION BETWEEN THE TWO USING A 100:1 TAPER ON THE NEW PAVEMENT.

STATE OF ALASKA 49TH
PIH REVIEW
Rangell C. Soriano
CE - 180719
Registered Professional Engineer

## SIGN SUMMARY TABLE

| SHEET | POST NO. | STATION | OFFSET | TYPE | LEGEND | SIZE (IN) WIDTH | SIZE (IN) HEIGHT | AREA (SF) | SIGN FACES | POST: NO., SIZE & TYPE | FRAMED? YES | FRAMED? NO | SALVAGE SIGN (EACH) | REMARKS |
|---|---|---|---|---|---|---|---|---|---|---|---|---|---|---|
| H8 | 48 | 178+46 | 43 RT | CS-10 | CITY OF KENAI<br>LIBRARY<br>FIRE DEPT<br>POLICE DEPT | 24 | 30 | 5.00 | SE | 1 - 2.5" PT | | X | | |
| | | | | CS-11 | WELCOME TO THE PURPLE HEART COMMUNITY | 24 | 30 | 5.00 | SE | | | X | | |
| H8 | 49 | 178+50 | 56 LT | D3-1B | FRONTAGE Rd | 48 | 12 | 4.00 | SE | 1 - 2.5" PT | | X | | |
| | | | | D3-1B | FRONTAGE Rd | 48 | 12 | 4.00 | NW | | | X | | |
| | | | | R1-1 | STOP | 30 | 30 | 6.25 | SW | | | X | | |
| H8 | 50 | 179+73 | 41 LT | CS-5 | ADOPT A HIGHWAY | 30 | 24 | 5.00 | NW | 1 - 2.5" PT | | X | | |
| H8 | 51 | 175+95 | 36 LT | R2-1 | SPEED LIMIT 35 | 24 | 30 | 5.00 | NW | 1 - 2.5" PT | | X | | |
| H8 | 52 | 180+26 | 10 LT | R4-7 | | 24 | 30 | 5.00 | SE | 1 - 2.5" PT | | X | | |
| | | | | OM1-3 | | 30 | 30 | 6.25 | SE | | | X | | |
| H8 | 53 | 180+42 | 60 RT | D3-1C | ← Kenai<br>Soldatna → | 180 | 66 | 82.50 | SE | 2 - 2.5" PT | | X | | |
| | | | | CS-12 | H HOSPITAL → | 18 | 24 | 3.00 | SE | | | X | | |
| | | | | CS-13 | OLD TOWN KENAI ← | 18 | 24 | 3.00 | SE | | | X | | |
| | | | | | | | TOTAL | 634.95 | | | | | | |

STATE OF ALASKA, DEPARTMENT OF NATURAL RESOURCES
PLANS DEVELOPED BY: DIVISION OF PARKS AND OUTDOOR RECREATION
550 W 7TH AVE. SUITE 1340, ANCHORAGE, AK 99501 - 907.269.8731

SIGN SUMMARY AND NOTES

KENAI BRIDGE ACCESS ROAD
PATHWAY
PROJECT No. CFHWY00689

ALASKA STATE PARKS

PREPARED: RCS
DRAWN: D&C
REVIEWED: D&C
DATE: JULY 2025

SHEET
H8
OF XX SHEETS

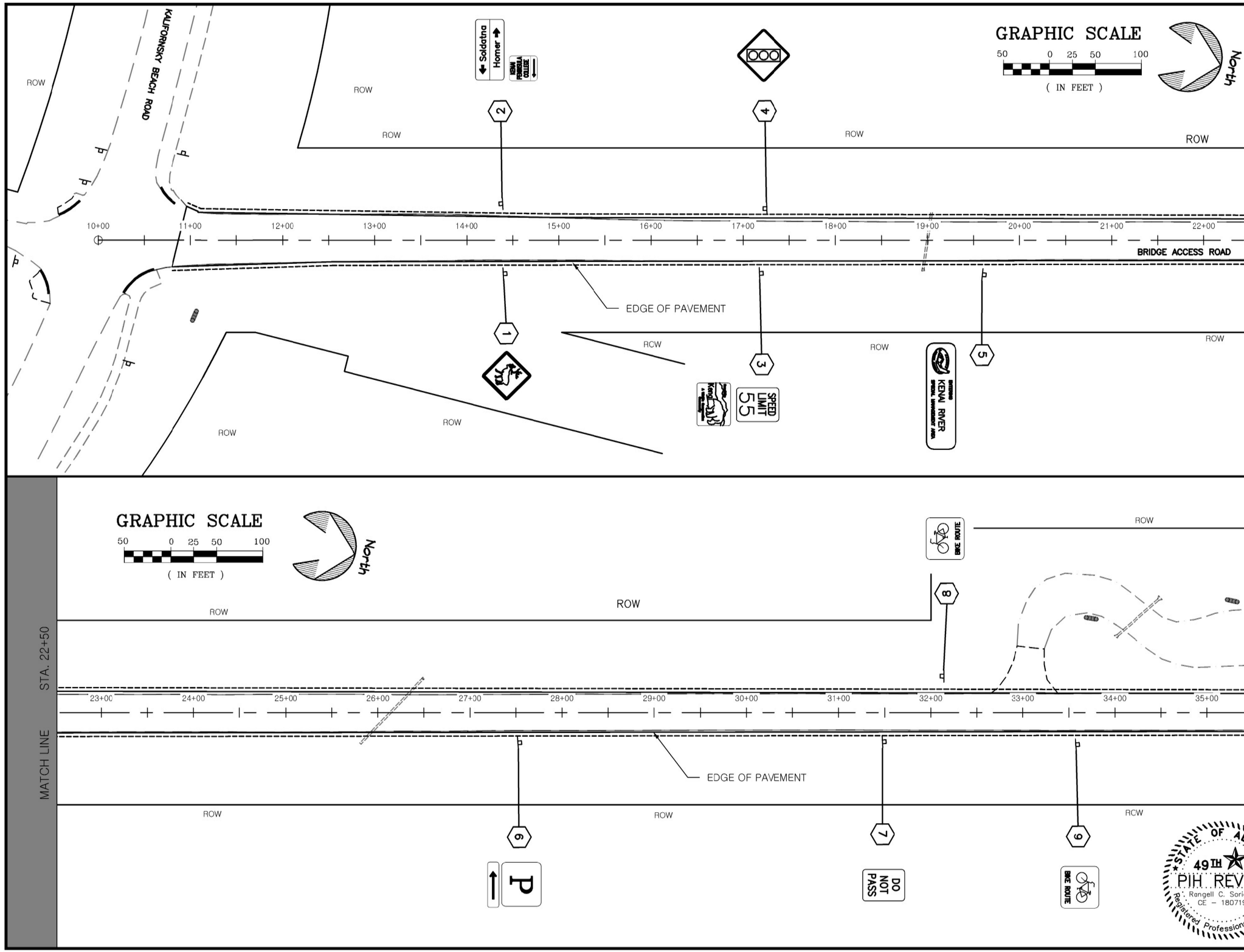


STATE OF ALASKA, DEPARTMENT OF NATURAL RESOURCES
PLANS DEVELOPED BY: DIVISION OF PARKS AND OUTDOOR RECREATION
550 W 7TH AVE. SUITE 1340, ANCHORAGE, AK 99501 - 907.269.8731

KENAI BRIDGE ACCESS ROAD PAVEMENT PRESERVATION AND IMPROVEMENTS
PROJECT No. CFHWY00689

STA. 10+00 TO STA. 36+00

PREPARED: RCS
DRAWN: D&C
REVIEWED: D&C
DATE: JULY 2025

SHEET
H9
OF XX SHEETS

STATE OF ALASKA 49TH PIH REVIEW Rangell C. Soriano CE - 180719 Registered Professional Engineer

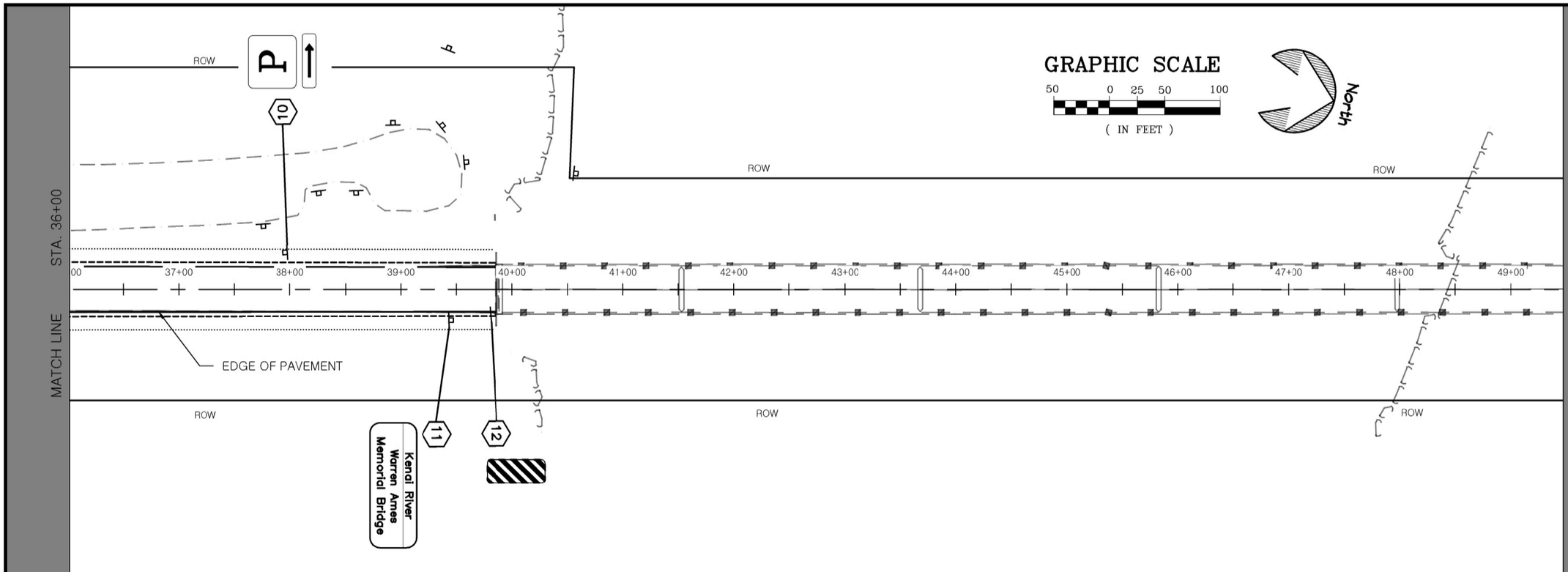


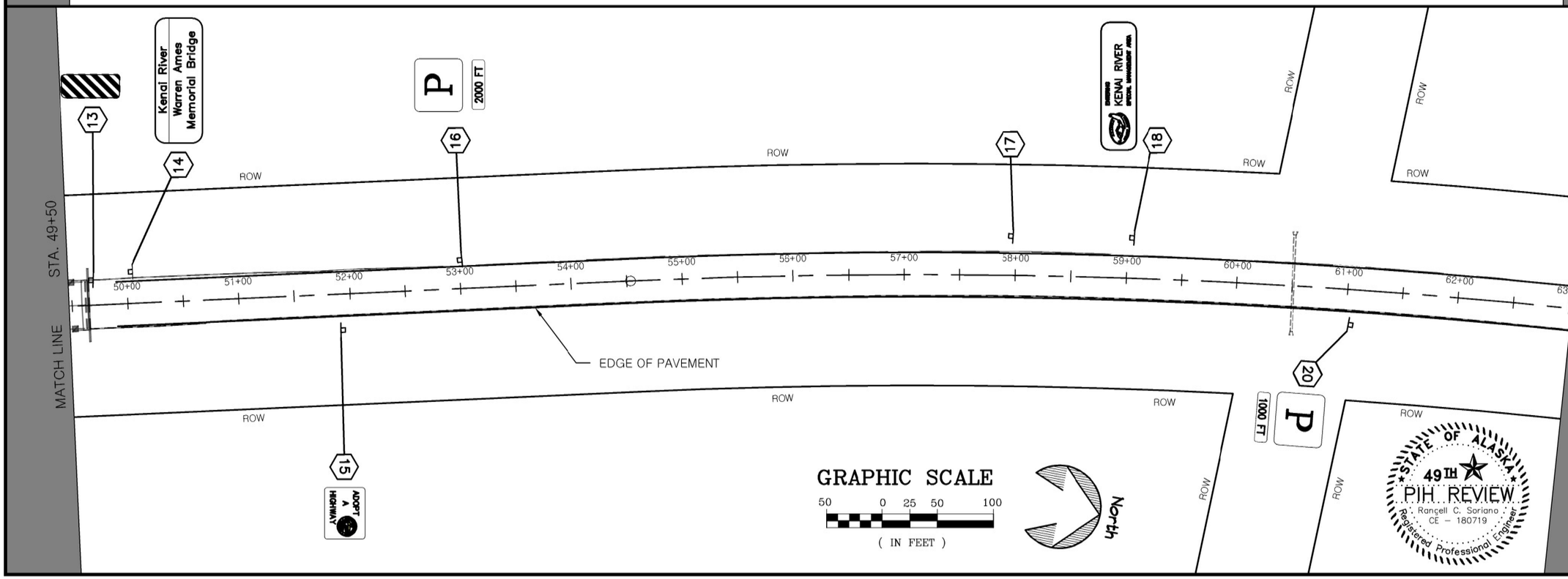


**STATE OF ALASKA, DEPARTMENT OF NATURAL RESOURCES**
**PLANS DEVELOPED BY: DIVISION OF PARKS AND OUTDOOR RECREATION**
**550 W 7TH AVE. SUITE 1340, ANCHORAGE, AK 99501 - 907.269.8731**

KENAI BRIDGE ACCESS ROAD PAVEMENT
PRESERVATION AND IMPROVEMENTS
PROJECT No. CFHWY00689

STA. 36+00 TO STA. 63+00

PREPARED: RCS
DRAWN: D&C
REVIEWED: D&C
DATE: JULY 2025

SHEET
H10
OF XX SHEETS

**STATE OF ALASKA, DEPARTMENT OF NATURAL RESOURCES**

**PLANS DEVELOPED BY: DIVISION OF PARKS AND OUTDOOR RECREATION**

**550 W 7TH AVE. SUITE 1340, ANCHORAGE, AK 99501 - 907.269.8731**

STA. 63+00 TO STA. 90+00

KENAI BRIDGE ACCESS ROAD PAVEMENT PRESERVATION AND IMPROVEMENTS

PROJECT No. CFHWY00689

PREPARED: RCS

DRAWN: D&C

REVIEWED: D&C

DATE: JULY 2025

SHEET

H11

OF XX SHEETS

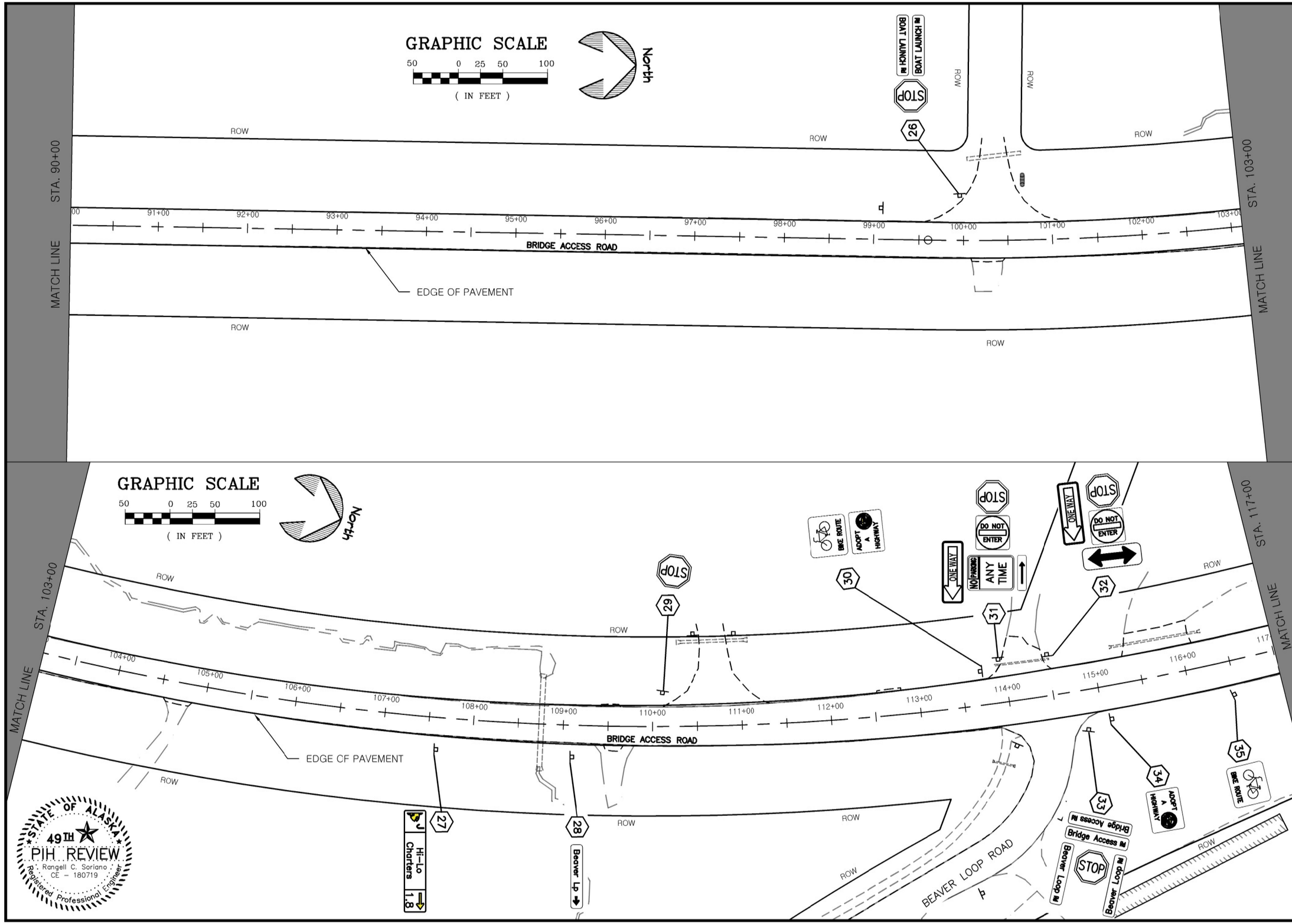


**STATE OF ALASKA, DEPARTMENT OF NATURAL RESOURCES**
PLANS DEVELOPED BY: DIVISION OF PARKS AND OUTDOOR RECREATION
550 W 7TH AVE. SUITE 1340, ANCHORAGE, AK 99501 - 907.269.8731

STA. 90+00 TO STA. 117+00

KENAI BRIDGE ACCESS ROAD PAVEMENT PRESERVATION AND IMPROVEMENTS
PROJECT No. CFHWY00689

PREPARED: RCS
DRAWN: D&C
REVIEWED: D&C
DATE: JULY 2025

SHEET
H12
OF XX SHEETS

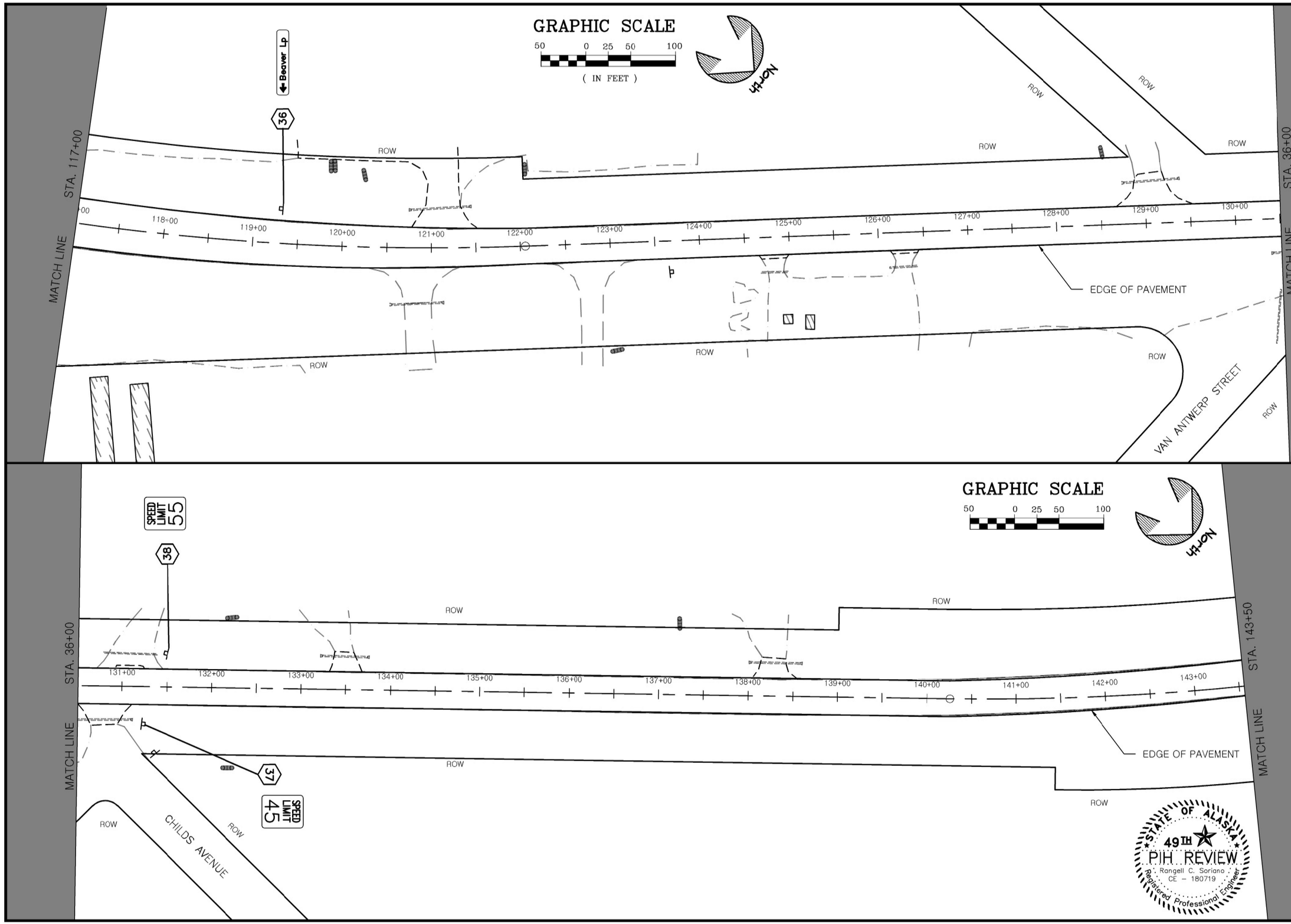


STATE OF ALASKA, 49TH PIH REVIEW
Rangell C. Soriano
CE - 180719
Registered Professional Engineer

**STATE OF ALASKA, DEPARTMENT OF NATURAL RESOURCES**
**PLANS DEVELOPED BY: DIVISION OF PARKS AND OUTDOOR RECREATION**
**550 W 7TH AVE. SUITE 1340, ANCHORAGE, AK 99501 - 907.269.8731**

KENAI BRIDGE ACCESS ROAD PAVEMENT PRESERVATION AND IMPROVEMENTS
PROJECT No. CFHWY00689

STA. 117+00 TO STA. 144+50

PREPARED: RCS
DRAWN: D&C
REVIEWED: D&C
DATE: JULY 2025

SHEET
H13
OF XX SHEETS

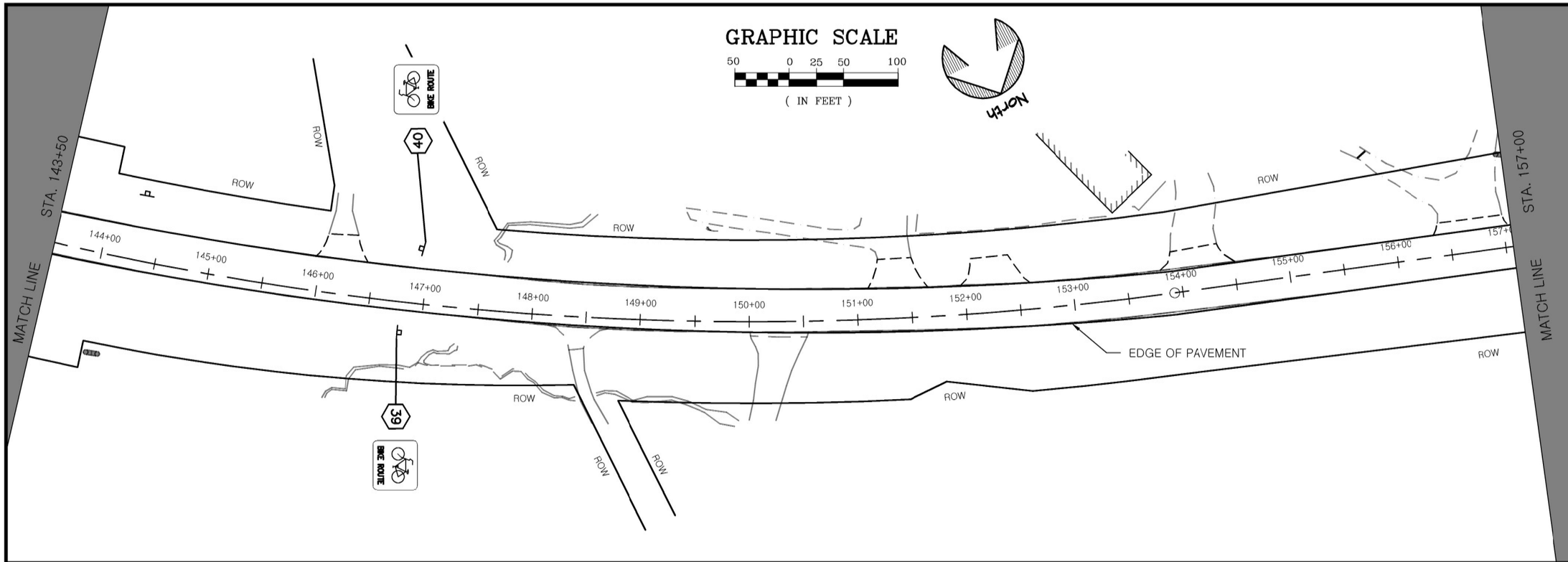


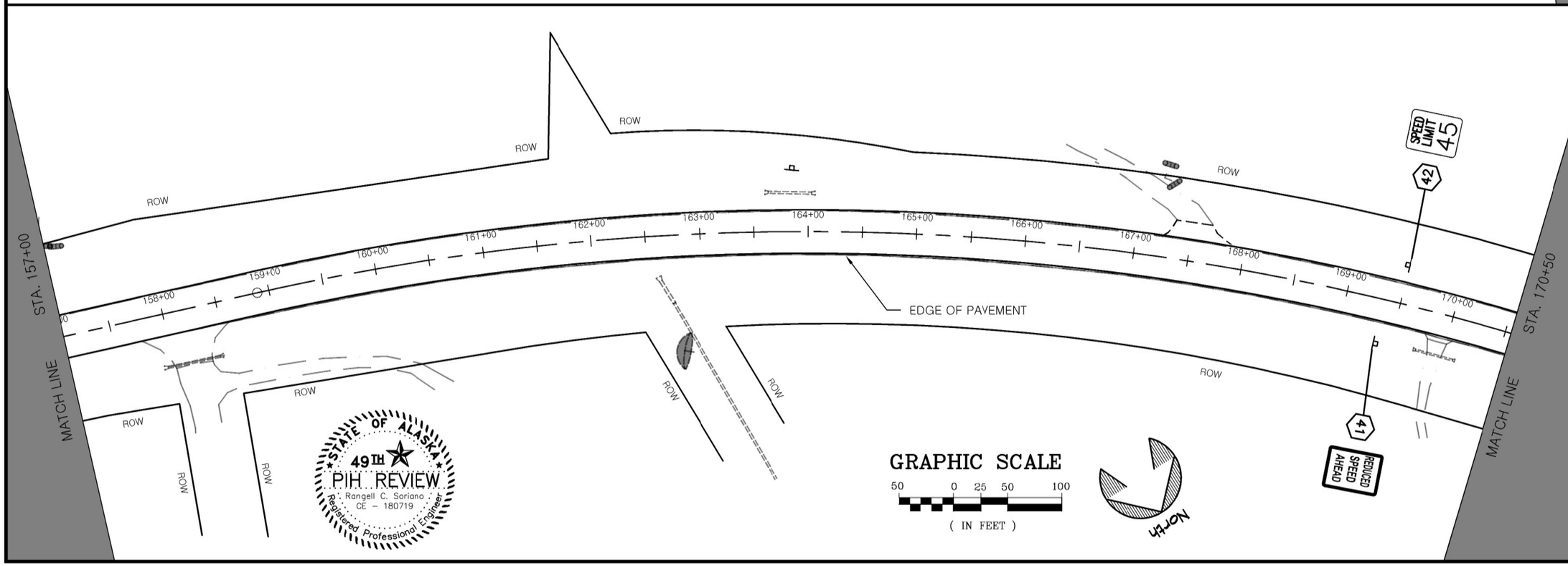


**STATE OF ALASKA, DEPARTMENT OF NATURAL RESOURCES**
**PLANS DEVELOPED BY: DIVISION OF PARKS AND OUTDOOR RECREATION**
**550 W 7TH AVE. SUITE 1340, ANCHORAGE, AK 99501 - 907.269.8731**

STA. 144+00 TO STA. 170+50

KENAI BRIDGE ACCESS ROAD PAVEMENT PRESERVATION AND IMPROVEMENTS
PROJECT No. CFHWY00689

PREPARED: RCS
DRAWN: D&C
REVIEWED: D&C
DATE: JULY 2025

SHEET
H14
OF XX SHEETS

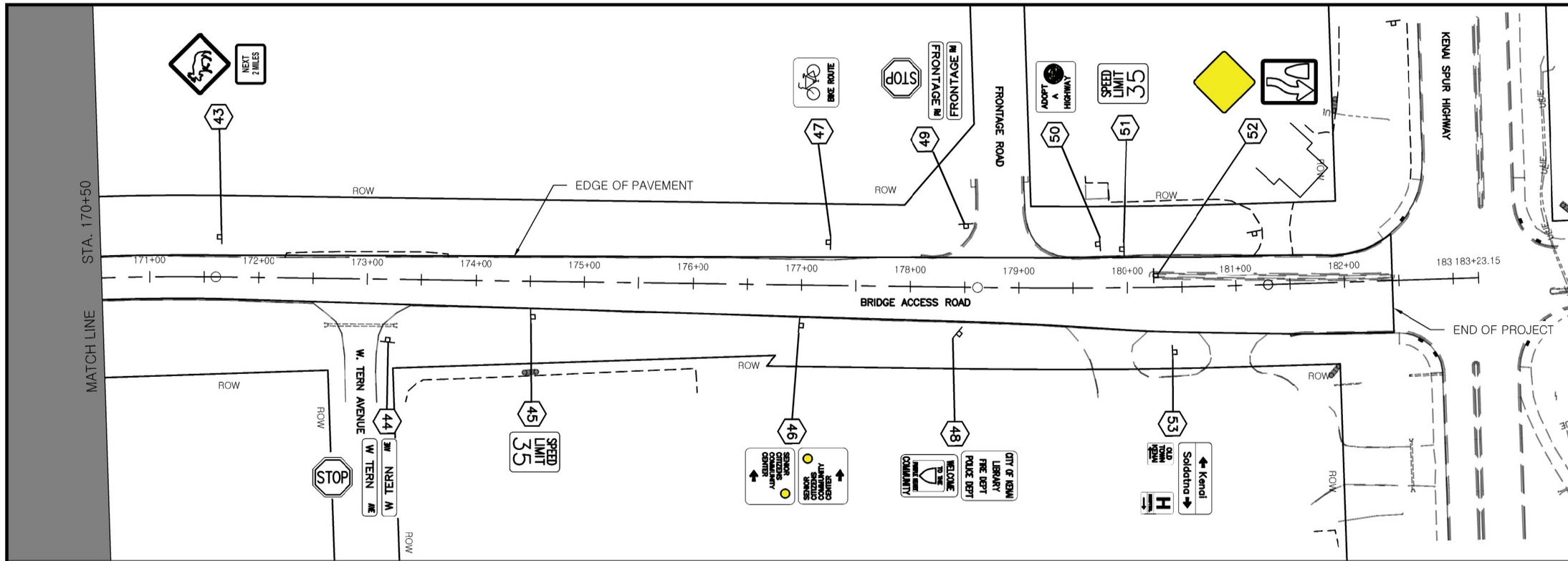


GRAPHIC SCALE

50 0 25 50 100

( IN FEET )

NORTH

STATE OF ALASKA
49TH
PIH REVIEW
Rangell C. Soriano
CE - 180719
Registered Professional Engineer

**STATE OF ALASKA, DEPARTMENT OF NATURAL RESOURCES**

**PLANS DEVELOPED BY: DIVISION OF PARKS AND OUTDOOR RECREATION**

**550 W 7TH AVE. SUITE 1340, ANCHORAGE, AK 99501 - 907.269.8731**

KENAI BRIDGE ACCESS ROAD PAVEMENT PRESERVATION AND IMPROVEMENTS

PROJECT No. CFHWY00689

STA. 170+50 TO STA. 183+23.15

ALASKA STATE PARKS

PREPARED: RCS

DRAWN: D&C

REVIEWED: D&C

DATE: JULY 2025

SHEET

H15

OF XX SHEETS

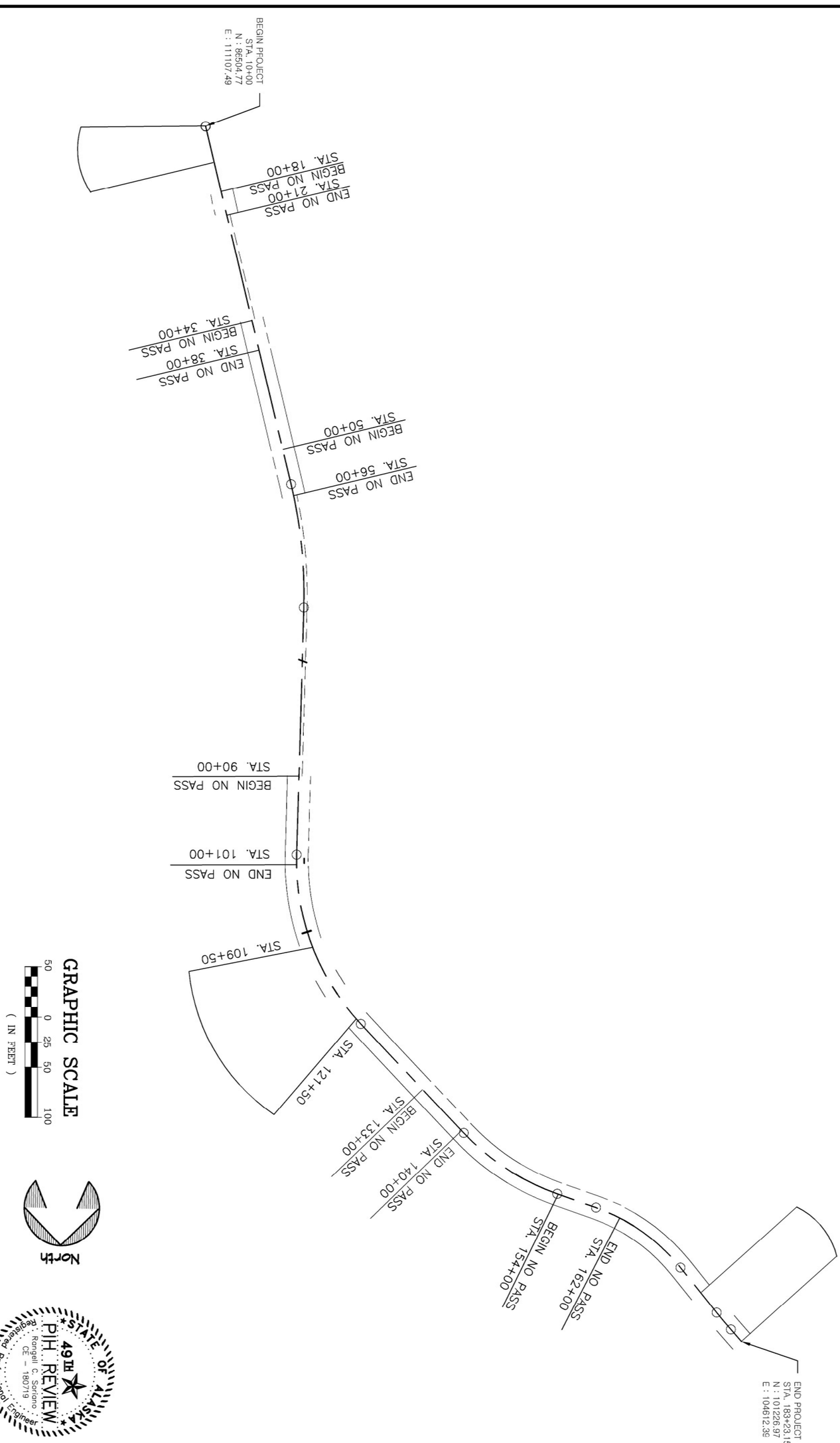


**STATE OF ALASKA, DEPARTMENT OF NATURAL RESOURCES**

**PLANS DEVELOPED BY: DIVISION OF PARKS AND OUTDOOR RECREATION**

**550 W 7TH AVE. SUITE 1340, ANCHORAGE, AK 99501 - 907.269.8731**

KENAI BRIDGE ACCESS ROAD PAVEMENT PRESERVATION AND IMPROVEMENTS
PROJECT No. CFHWY00689

STRIPING DETAILS

PREPARED: RCS
DRAWN: D&C
REVIEWED: D&C
DATE: JULY 2025

SHEET H16 OF XX SHEETS

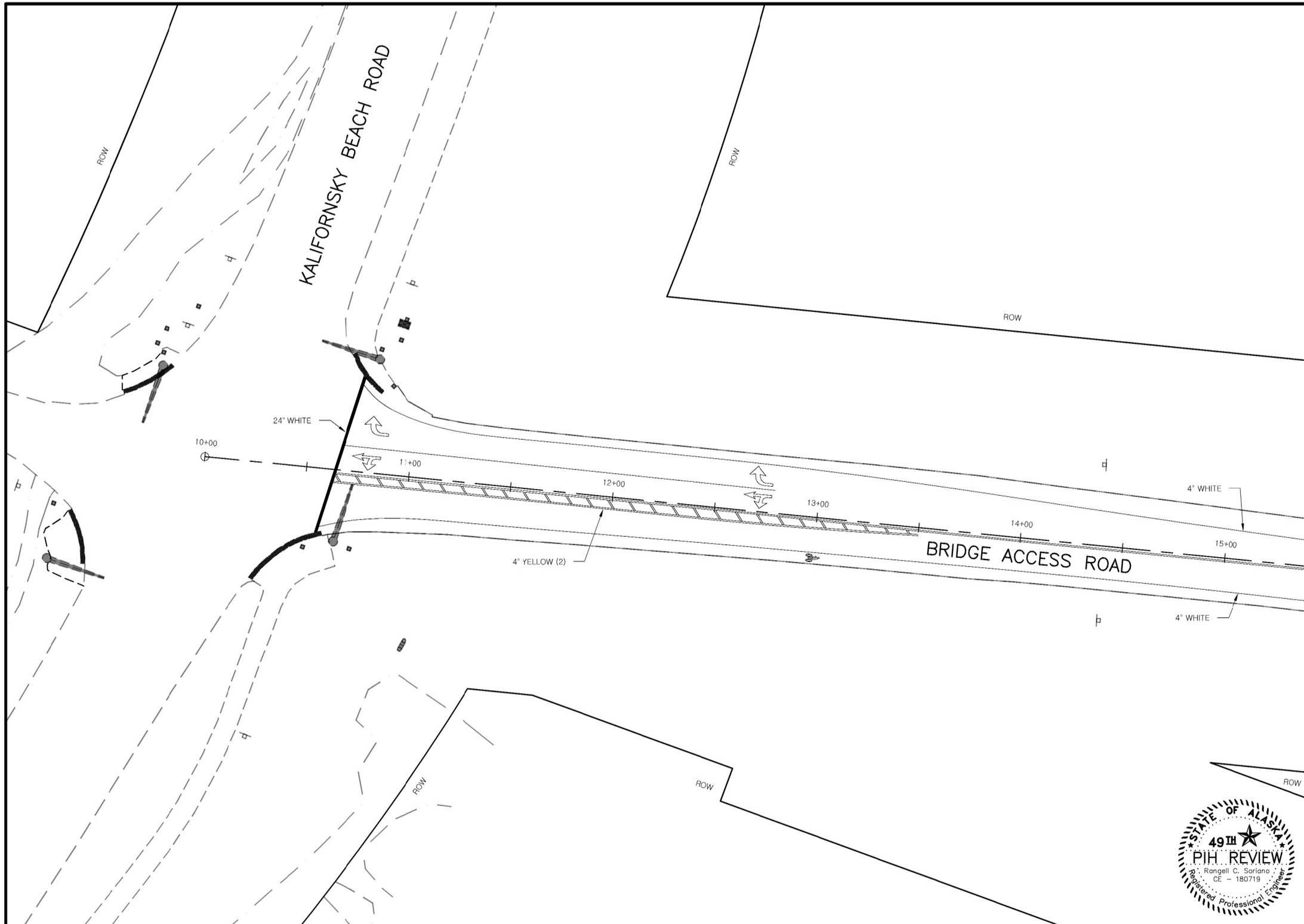


**STATE OF ALASKA, DEPARTMENT OF NATURAL RESOURCES**
**PLANS DEVELOPED BY: DIVISION OF PARKS AND OUTDOOR RECREATION**
**550 W 7TH AVE. SUITE 1340, ANCHORAGE, AK 99501 - 907.269.8731**

KENAI BRIDGE ACCESS ROAD PAVEMENT PRESERVATION AND IMPROVEMENTS
PROJECT No. CFHWY00689

STRIPING PLANS
STA.10+00 TO STA. 15+00

ALASKA STATE PARKS

STATE OF ALASKA 49TH PIH REVIEW Rangell C. Soriano CE – 180719 Registered Professional Engineer

PREPARED: RCS
DRAWN: D&C
REVIEWED: D&C
DATE: JULY 2025

SHEET
H17
OF XX SHEETS

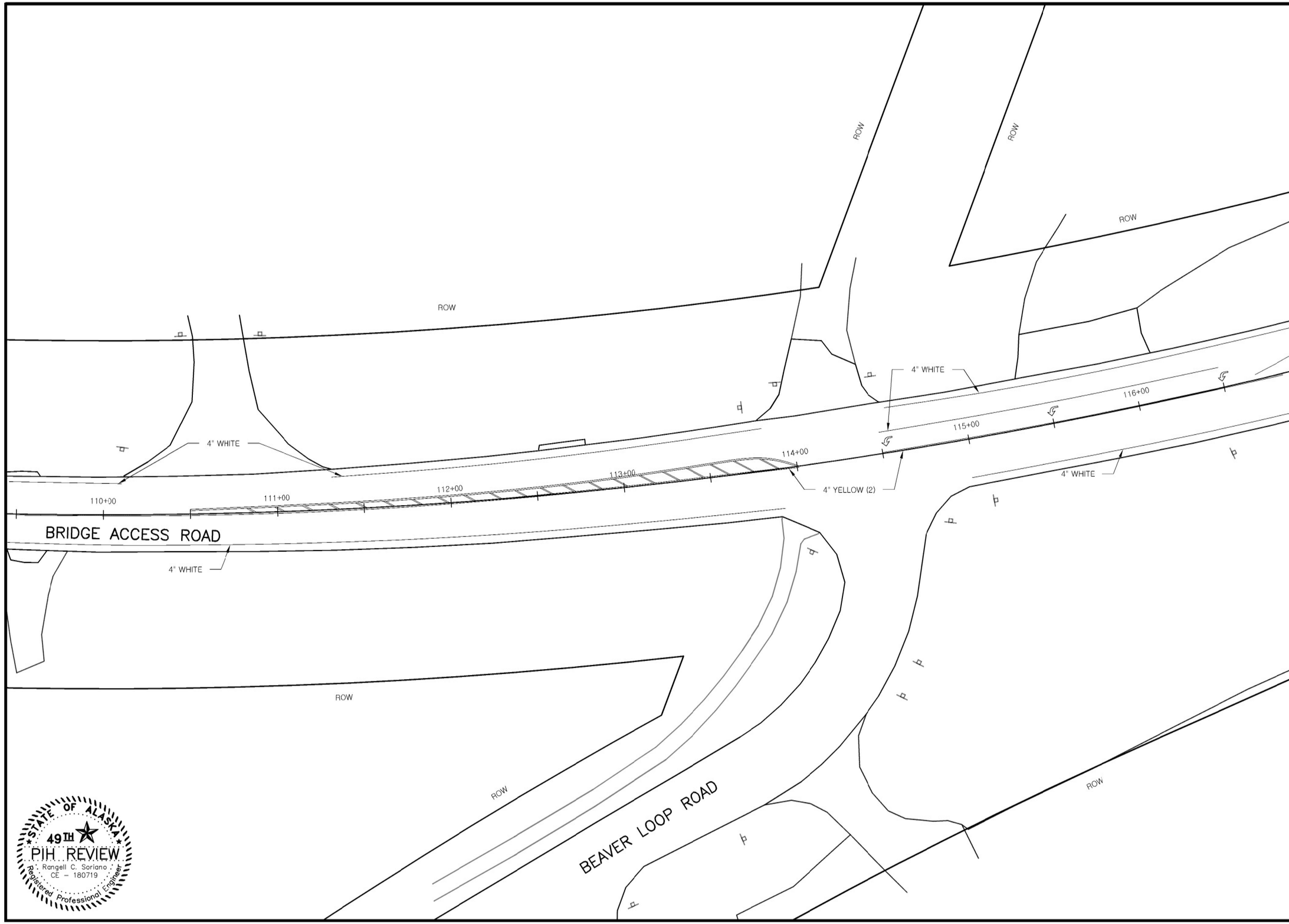


STATE OF ALASKA
49TH
PIH REVIEW
Rangell C. Soriano
CE - 180719
Registered Professional Engineer

**STATE OF ALASKA, DEPARTMENT OF NATURAL RESOURCES**
PLANS DEVELOPED BY: DIVISION OF PARKS AND OUTDOOR RECREATION
550 W 7TH AVE. SUITE 1340, ANCHORAGE, AK 99501 - 907.269.8731

KENAI BRIDGE ACCESS ROAD PAVEMENT
PRESERVATION AND IMPROVEMENTS
PROJECT No. CFHWY00689

STRIPING PLANS
STA. 109+50 TO STA. 116+50

ALASKA STATE PARKS

PREPARED: RCS
DRAWN: D&C
REVIEWED: D&C
DATE: JULY 2025

SHEET
H18
OF XX SHEETS

STATE OF ALASKA
49TH
PIH REVIEW
Rangell C. Soriano
CE – 180719
Registered Professional Engineer

**STATE OF ALASKA, DEPARTMENT OF NATURAL RESOURCES**
**PLANS DEVELOPED BY: DIVISION OF PARKS AND OUTDOOR RECREATION**
**550 W 7TH AVE. SUITE 1340, ANCHORAGE, AK 99501 - 907.269.8731**

KENAI BRIDGE ACCESS ROAD PAVEMENT
PRESERVATION AND IMPROVEMENTS
PROJECT No. CFHWY00689

STRIPING PLANS
STA. 115+50 TO STA. 123+00

ALASKA STATE PARKS

PREPARED: RCS
DRAWN: D&C
REVIEWED: D&C
DATE: JULY 2025

SHEET
H19
OF XX SHEETS

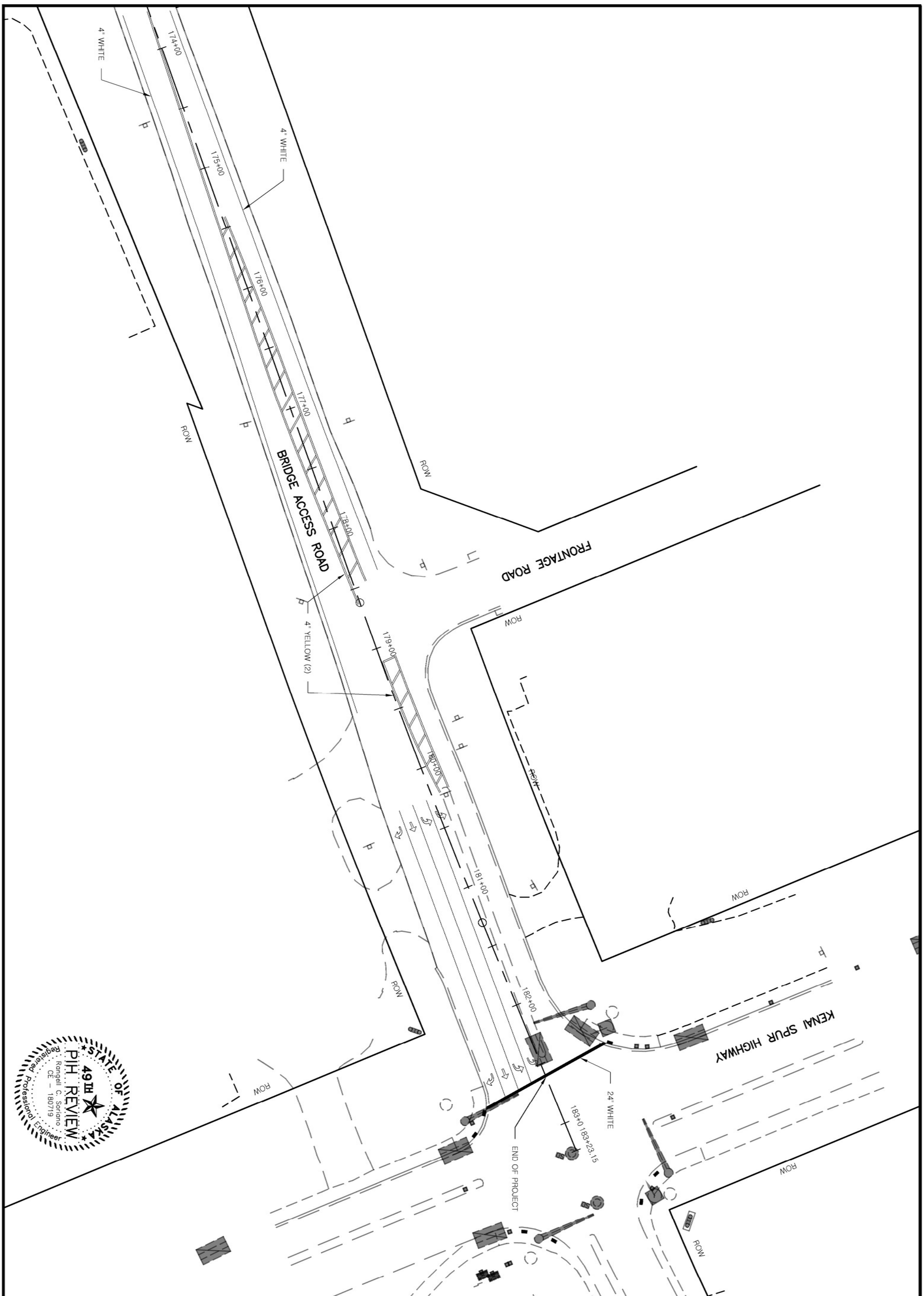


PREPARED: RCS
DRAWN: D&C
REVIEWED: D&C
DATE: JULY 2025

SHEET H20 OF XX SHEETS

**STATE OF ALASKA, DEPARTMENT OF NATURAL RESOURCES**
**PLANS DEVELOPED BY: DIVISION OF PARKS AND OUTDOOR RECREATION**
**550 W 7TH AVE. SUITE 1340, ANCHORAGE, AK 99501 - 907.269.8731**

KENAI BRIDGE ACCESS ROAD PAVEMENT PRESERVATION AND IMPROVEMENTS
PROJECT No. CFHWY00689

STRIPING PLANS
STA. 174+00 TO STA. 183+23.15