CONSTRUCTION PLANS
TED STEVENS
ANCHORAGE INTERNATIONAL AIRPORT
ANCHORAGE, ALASKA
ANC TAXIWAY Z IMPROVEMENTS WEST - PHASE 1
PROJECT No. CFAPT00465
AIRPORT IMPROVEMENT PROGRAM
No. 3-02-0016-XXX-2022

PRE-PS&E
OCTOBER 2021

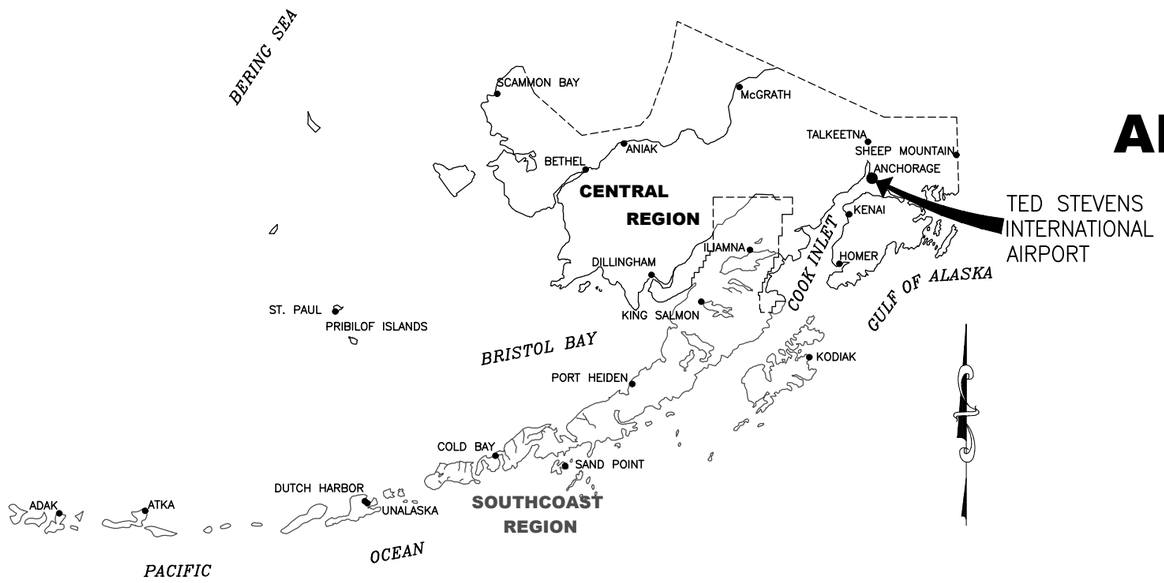

ALASKA CENTRAL REGION
LOCATION MAP

NOT TO SCALE

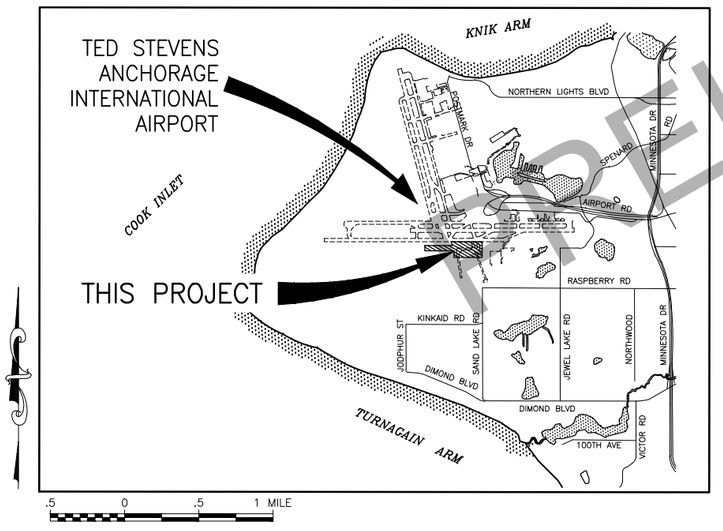

VICINITY MAP

T 12 N, R 4 W SEC. 3, 4, 5, & 6
T 13 N, R 4 W,
SEC. 21, 22, 27, 28, 31, 32, 34, & 35 SEWARD MERIDIAN
U.S.G.S. ANCHORAGE (A–8), ALASKA

PRELIMINARY

CONCUR	**DATE**
JOEL G. ST. AUBIN, P.E.	**REGIONAL CONSTRUCTION ENGINEER**
APPROVED	**DATE**
LUKE BOWLAND, P.E.	**REGIONAL PRECONSTRUCTION ENGINEER**
APPROVED	**DATE**
JENELLE BRINKMAN, P.E.	**AVIATION DESIGN GROUP CHIEF**
APPROVED	**DATE**
PHIL CHEASEBRO, P.E.	**PROJECT MANAGER**

BY	DATE	REVISION

STATE OF ALASKA
DEPARTMENT OF TRANSPORTATION AND PUBLIC FACILITIES
CENTRAL REGION
4111 AVIATION AVE., ANCHORAGE ALASKA 99502
PHONE (907) 269-0590

TED STEVENS ANCHORAGE
ANCHORAGE, ALASKA
ANC TAXIWAY Z IMPROVEMENTS WEST – PHASE 1
PROJECT No. CFAPT00465
AIP No. 3-02-0016-XXX-2022
TITLE, SIGNATURES, LOCATION MAP, & VICINITY MAP

DATE: 10/14/2021
SHEET: 1 OF 78

Designed By: TAD
Drawn By: RJB
Checked By: TAD
Date Revised:
Layout Name: 10/14/2021, 12:13 PM Cover
File Path and Name: W:\Projects\ANA Ted Stevens\ANA TW Z Ext 00465\Final Drawings\00465-AIA-Cover-Index-Est Quantities.dwg

INDEX

SHEET TITLE	SHEET No.
TITLE, SIGNATURE, LOCATION MAP, & VICINITY MAP	1
INDEX	2
ABBREVIATIONS	3
LEGEND	4
ESTIMATED QUANTITIES	5
SUMMARY TABLES	6 – 8
PROJECT LAYOUT PLAN	9 – 10
DEMO OVERVIEW	11
DEMO DETAIL	12 – 16
SITE PLAN OVERVIEW	17
SITE PLAN	18–23
SITE PLAN POINT TABLE	24
SITE SECTIONS	25 – 29
PAVING DETAILS	30 –31
PLAN & PROFILE KEY MAP	32
SERVICE ROAD PLAN & PROFILE	33 – 36
FAA ROAD PLAN & PROFILE	37
TAXIWAY Z PLAN & PROFILE	38 – 39
TAXIWAY R & TAXILANE R PLAN & PROFILE	40
TAXIWAY E PLAN & PROFILE	41
TAXILANE E PLAN & PROFILE	42
GRADING PLAN	43 – 48
GRADING POINT TABLES	49 – 54
DRAINAGE PLAN	55 – 60
WATER SYSTEM PLAN	61
STORM DRAIN DETAILS	62 – 64
FENCE DETAILS	65 – 67
MARKING PLAN	68 – 73
MARKING TABLES	74 – 75
MARKING DETAILS	76 – 78
ELECTRICAL LEGEND AND NOTES	E1
ELECTRICAL DEMOLITION PLAN	E2 – E5
ELECTRICAL NEW WORK PLAN	E6 – E11
ELECTRICAL DETAILS	E12 – E19

SHEET TITLE	SHEET No.
REGULATOR VAULT PLAN	E20
SENSOR SYSTEM DETAILS	E21
LOAD CENTER DETAILS	E22
ARC FLASH LABEL	E23
ELECTRICAL DEMOLITION SCHEDULE	E24
TAXIWAY EDGE LIGHT SCHEDULE	E25
TAXIWAY CENTERLINE LIGHT SCHEDULE	E26
ELECTRICAL SCHEDULES	E27 – E28

STANDARD DRAWINGS

SHEET TITLE	SHEET No.
CULVERT END SECTIONS	D–06.10
MANHOLE, FRAME AND COVER	D–20.05
SIGN FRAMING	S–00.12
BRACING FOR SIGNS MOUNTED ON SINGLE POST	S–01.02
SIGN TO SIGN POST CONNECTION	S–20.10
LIGHT SIGN STRUCTURE POST EMBEDMENT	S–30.05

APPENDIX DRAWINGS

SHEET TITLE	SHEET No.
SURVEY CONTROL (NOT INCLUDED THIS REVIEW)	AA1 – AA3
CONSTRUCTION SAFETY AND PHASING PLAN	AC1 – AC14
DISPOSAL AREA GRADING PLAN	G1

REFERENCE DRAWINGS

SHEET TITLE	SHEET No.

ANCILLARY DRAWINGS

SHEET TITLE	SHEET No.

PRELIMINARY

BY	DATE	REVISION

STATE OF ALASKA
DEPARTMENT OF TRANSPORTATION AND PUBLIC FACILITIES
CENTRAL REGION
4111 AVIATION AVE., ANCHORAGE ALASKA 99502
PHONE (907) 269-0590

TED STEVENS ANCHORAGE
ANCHORAGE, ALASKA
ANC TAXIWAY Z IMPROVEMENTS WEST – PHASE 1
PROJECT No. CFAPT00465
AIP No. 3-02-0016-XXX-2022
INDEX

DATE: 10/14/2021

SHEET: 2 OF 78

Designed By: TAD
Drawn By: RJB
Checked By: TAD

Date Revised:
Layout Name: Index
File Path and Name: W:\Projects\AIA Ted Stevens\AIA TW Z Ext 00465\Final Drawings\00465-AIA-Cover-Index-Est Quantities.dwg
10/14/2021, 2:51 PM

ABBREVIATIONS

ABN	ABANDONED	ESCP	EROSION AND SEDIMENT CONTROL PLAN	OC	ON CENTER
AC	ASPHALT CEMENT, ACRE	EVCE	END VERTICAL CURVE ELEVATION	OG	ORIGINAL GROUND
ACS	ALASKA COMMUNICATIONS SYSTEM	EVCS	END VERTICAL CURVE STATION	PC	POINT OF CURVE
AIP	AIRPORT IMPROVEMENT PROGRAM	FAA	FEDERAL AVIATION ADMINISTRATION	PCC	PORTLAND CEMENT CONCRETE
ANC	ANCHORAGE INTERNATIONAL AIRPORT	FF	FINISH FLOOR	PE	POLYETHYLENE
AOA	AIR OPERATIONS AREA	FG	FINISHED GRADE	PFAS	PER–AND POLYFLUOROALKYL
ATB	ASPHALT TREATED BASE	FI	FIELD INLET	PI	POINT OF INTERSECTION
ATCT	AIR TRAFFIC CONTROL TOWER	FO	FIBER OPTIC (UNDERGROUND)	PT	POINT OF TANGENT
ATM	ALASKA TEST METHOD	FT	FOOT	PVI	POINT OF VERTICAL INTERSECTION
AWG	AVERAGE WIRE GAUGE	GA	GAUGE	R	RADIUS
BOP	BEGINNING OF PROJECT	GAL	GALLON	RAP	RECYCLED ASPHALT PAVEMENT
BRL	BUILDING RESTRICTION LINE	GB	GRADE BREAK	REQ'D	REQUIRED
BVCE	BEGIN VERTICAL CURVE ELEVATION	GCI	GENERAL COMMUNICATION INC.	ROFA	RUNWAY OBJECT FREE AREA
BVCS	BEGIN VERTICAL CURVE STATION	GRO	GASOLINE RANGE ORGANICS	RSA	RUNWAY SAFETY AREA
CABC	CRUSHED AGGREGATE BASE COURSE	HDG	HOT DIP GALVANIZED	RT	RIGHT
CASC	CRUSHED AGGREGATE SURFACE COURSE	HDPE	HIGH DENSITY POLYETHYLENE PIPE	RW	RUNWAY
CL, ℄	CENTERLINE	HMA	HOT MIX ASPHALT	SD	STORM DRAIN
CMP	CORRUGATED METAL PIPE	ID	INSIDE DIAMETER	SDMH	STORM DRAIN MANHOLE
COMM	COMMUNICATION	kV	KILOVOLT	SF	SQUARE FEET
CPE	CORRUGATED POLYETHYLENE PIPE	LB	POUND	SS	SANITARY SEWER LINE (UNDERGROUND)
CPM	CRITICAL PATH METHOD	LF	LINEAR FOOT	SSMH	SANITARY SEWER MANHOLE
CS	CONTINGENT SUM	LS	LUMP SUM	STA	STATION
CSPP	CONSTRUCTION SAFETY & PHASING PLAN	LT	LEFT	SY	SQUARE YARD
CTAF	COMMON TRAFFIC ADVISORY FREQUENCY	MAINT	MAINTENANCE	TL	TAXILANE
CY	CUBIC YARD	MAX	MAXIMUM	TOFA	TAXIWAY/TAXILANE OBJECT FREE AREA
DIA	DIAMETER	ME	MATCH EXISTING	TSA	TAXIWAY SAFETY AREA
DOT&PF	STATE OF ALASKA DEPARTMENT OF TRANSPORTATION & PUBLIC FACILITIES	M–GAL	THOUSAND GALLONS	TW	TAXIWAY
		MH	MANHOLE	TYP	TYPICAL
DRO	DIESEL RANGE ORGANICS	N	NORTHING, NORTH	UE	ELECTRIC LINE (UNDERGROUND)
DWPA	DRINKING WATER PROTECTION AREA	NAD	NORTH AMERICAN DATUM	UCOM	COMMUNICATION LINE (UNDERGROUND)
E	EASTING, EAST	NAVAIDS	NAVIGATIONAL AIDS	UD	UNDERDRAIN
EA	EACH	NAVD	NORTH AMERICAN VERTICAL DATUM	V	VOLTS
ELEV	ELEVATION	NIC	NOT IN CONTRACT	W/	WITH
EOP	END OF PROJECT	NTS	NOT TO SCALE		

PRELIMINARY

Designed By:	TAD	
Drawn By:	RJB	
Checked By:	TAD	

Date Revised:	10/14/2021, 12:13 PM	
Layout Name:	Abbev	
File Path and Name:	W:\Projects\ANA Ted Stevens\ANA TW Z Ext 00465\Final Drawings\00465–AIA–Cover–Index–Est Quantities.dwg	

BY	DATE	REVISION

STATE OF ALASKA
DEPARTMENT OF TRANSPORTATION AND PUBLIC FACILITIES
CENTRAL REGION
4111 AVIATION AVE., ANCHORAGE ALASKA 99502
PHONE (907) 269-0590

TED STEVENS ANCHORAGE
ANCHORAGE, ALASKA
ANC TAXIWAY Z IMPROVEMENTS WEST – PHASE 1
PROJECT No. CFAPT00465
AIP No. 3-02-0016-XXX-2022
ABBREVIATIONS

DATE: 10/14/2021

SHEET: 3 OF 78

LEGEND

DESCRIPTION	EXISTING	PROPOSED
AIRPORT PROPERTY BOUNDARY		
BUILDING		
CENTERLINE (RUNWAY/TAXIWAY)		
CLEANOUT NUMBER		CO–#
COMMUNICATION LINE (ABANDONED UNDERGROUND)	ABN–UCOM	
COMMUNICATION LINE (UNDERGROUND)	UCOM	
CONTAMINATED SOIL SEPARATION LINER		
CONTOURS	100	100
CULVERT WITH AND WITHOUT END SECTIONS		
DETAIL CALLOUT		
DITCH/SWALE		
ELECTRICAL LINE (UNDERGROUND)	UE	UE
ELECTRICAL HANDHOLE	E	E
ELECTRICAL MANHOLE	E	E
ELECTRICAL TYPE II JUNCTION BOX		
FENCE	x	x
FENCE GATE (WIRE STRAND)	x	x
FIRE HYDRANT		
FIBER OPTIC (UNDERGROUND)	FO	
FUEL LINE (UNDERGROUND)	F	
GAS LINE (UNDERGROUND)	G	
GEOTEXTILE, SEPARATION		
GRADE BREAK	GB	GB
GRAVEL EDGE		
HAUL ROUTE (TWO WAY)		
IDENTIFICATION BUBBLE		1
LIGHTING (EXISTING)		
LIGHT (TAXIWAY EDGE, OMNI–DIRECTIONAL)		
LIGHT (FLUSH TAXIWAY EDGE, OMNI–DIRECTIONAL)		
LIGHT POLE		
OBJECT FREE AREA	OFA	OFA
PAINT STRIPE		
PAVEMENT/SHOULDER (EDGE)		
PIPE NUMBER		P–#
POINTS		1001
ROADWAYS / SHOULDER (EDGE, GRAVEL)		
RUNWAY SAFETY AREA	RSA	RSA
RUNWAY OBJECT FREE AREA		ROFA
SANITARY SEWER LINE (UNDERGROUND)	SS	
SANITARY SEWER STRUCTURE		
SIGN POST		
SIGN (LIGHTED AIRPORT SIGN)		
SPOT ELEVATION		60.0

LEGEND

DESCRIPTION	EXISTING	PROPOSED
SLOPE WITH GRADE		0%
STORM DRAIN LINE (UNDERGROUND)	SD	SD
STORM DRAIN MANHOLE / INLET		
STRUCTURAL EDGE		
STRUCTURE NUMBER		S–#
SURVEY MONUMENT		
TAXIWAY/TAXILANE SAFETY AREA	TSA	TSA
TAXIWAY/TAXILANE OBJECT FREE AREA		TOFA
TELEPHONE PEDESTAL		
UNDERDRAIN PIPE	UD	UD
UNDERDRAIN PIPE NUMBER		U–#
CUT SLOPE LIMITS		
FILL SLOPE LIMITS		
WATER LINE (UNDERGROUND)	W	W
WATER VALVE		

LEGEND

DESCRIPTION	EXISTING	PROPOSED

PRELIMINARY

Designed By: TAD
Drawn By: RJB
Checked By: TAD

Date Revised: 10/14/2021, 12:13 PM
Layout Name: Legend
File Path and Name: W:\Projects\AIA Ted Stevens\AIA TW Z Ext 00465\Final Drawings\00465-AIA-Cover-Index-Est Quantities.dwg

BY	DATE	REVISION

STATE OF ALASKA
DEPARTMENT OF TRANSPORTATION AND PUBLIC FACILITIES
CENTRAL REGION
4111 AVIATION AVE., ANCHORAGE ALASKA 99502
PHONE (907) 269-0590

TED STEVENS ANCHORAGE
ANCHORAGE, ALASKA
ANC TAXIWAY Z IMPROVEMENTS WEST - PHASE 1
PROJECT No. CFAPT00465
AIP No. 3-02-0016-XXX-2022
LEGEND

DATE: 10/14/2021
SHEET: 4 OF 78

ESTIMATED QUANTITIES

No.	ITEM	UNIT	QUANTITY
D701.010.0024	CS PIPE, 24–INCH	LF	56
D701.020.0018	CPE PIPE, 18–INCH	LF	32
D701.020.0024	CPE PIPE, 24–INCH	LF	90
D701.020.0036	CPE PIPE, 36–INCH	LF	90
D701.020.0048	CPE PIPE, 48–INCH	LF	3250
D705.020.2012	UNDERDRAIN, CPE PIPE, TYPE S, 12–INCH	LF	2050
D705.020.4008	UNDERDRAIN, CPE PIPE, TYPE SP, 8–INCH	LF	6050
D705.070.0000	CLEANOUT	EA	25
D751.010.0048	MANHOLE, TYPE I, 48–INCH	EA	13
D751.010.0072	MANHOLE, TYPE II, 72–INCH	EA	2
D751.010.0096	MANHOLE, TYPE III, 96–INCH	EA	15
D751.020.0000	CATCH BASINS	EA	1
D751.100.0000	ADJUST MANHOLE	EA	1
D760.010.0030	THAW PIPE, 1.5–INCH	LF	56
F162.010.0008	8–FEET CHAIN–LINK FENCE	LF	3650
F162.040.0020	DOUBLE SWING GATE, 20–FEET WIDE	EA	1
F162.040.0024	DOUBLE SWING GATE, 24–FEET WIDE	EA	1
F162.040.0030	DOUBLE SWING GATE, 30–FEET WIDE	EA	3
F162.090.0000	TEMPORARY SECURITY FENCE	LF	4100
F162.170.0000	REMOVE GATE	EA	4
F162.190.0000	REMOVE FENCE	LF	4750
G100.010.0000	MOBILIZATION AND DEMOBILIZATION	LS	ALL REQ'D
G135.010.0000	CONSTRUCTION SURVEYING BY THE CONTRACTOR	LS	ALL REQ'D
G135.020.0000	EXTRA THREE PERSON SURVEY PARTY	HOUR	115
G135.050.0000	CONTRACTOR FURNISHED ENGINEERING TOOLS	CS	ALL REQ'D
G135.060.0000	CONTRACTOR FURNISHED COMPUTATIONS	LS	ALL REQ'D
G150.010.0075	EQUIPMENT RENTAL, DOZER 75–HP MINIMUM	HOUR	200
G150.030.0000	EQUIPMENT RENTAL, VAC–TRUCK	CS	ALL REQ'D
G200.010.0000	CONTRACTOR QUALITY CONTROL PROGRAM	LS	ALL REQ'D
G300.010.0000	CPM SCHEDULING	LS	ALL REQ'D
G700.010.0000	AIRPORT FLAGGER	CS	ALL REQ'D
G700.020.0000	AIRPORT PILOT CAR	HOUR	2900
G705.010.0000	WATERING FOR DUST CONTROL	M–GAL	7200
L108.010.2006	UNDERGROUND CABLE #6 AWG, COPPER, 5KV FAA TYPE C, L–824	LF	600
L108.010.2008	UNDERGROUND CABLE #8 AWG, COPPER, 5KV FAA TYPE C, L–824	LF	61300
L108.030.0006	#6 BARE COPPER GROUND CONDUCTOR	LF	25600
L108.070.0000	GROUND ROD	EACH	32
L108.180.0000	TEMPORARY JUMPER	LF	20000
L110.080.1002	HDPE CONDUIT, 2–INCH	LF	9160
L110.115.1002	PE CONDUIT, 2–INCH, CONCRETE ENCASED	LF	11450
L110.130.0004	MULTI–WAY DUCT IN CONCRETE (4 CONDUITS)	LF	1560
L110.210.0000	ELECTRICAL MANHOLE, TYPE AIA	EACH	4
L110.240.0000	DRYWELL	EACH	16
L125.020.0010	REGULATOR, L–829	EACH	2
L125.025.0000	HIGH INTENSITY RUNWAY EDGE AND THRESHOLD LIGHT, L–862 AND L–862E	EACH	1
L125.040.0000	TAXIWAY EDGE LIGHT, L–861T	EACH	133
L125.060.0000	PRIMARY HANDHOLE, L–868, SIZE B	EACH	62
L125.070.0000	REMOVE RUNWAY AND TAXIWAY LIGHT	EACH	203
L125.095.0000	FLUSH TAXIWAY LIGHT, L–852C, L–852D, L–852F, L–852G, L–852K, OR L–852T	EACH	217
L125.100.0000	FLUSH RUNWAY EDGE LIGHT, L–850C	EACH	2
L125.120.0000	RUNWAY GUARD LIGHT, L–804	EACH	4
L125.130.0000	AIRPORT SIGN, L–858	EACH	14
L125.150.0000	HANDHOLE, L–867, SIZE B	EACH	11
L125.170.0000	SPARE PARTS	CS	ALL REQ'D
L125.210.0000	ADJUST RUNWAY AND TAXIWAY LIGHT	EACH	2
L125.390.0000	AIRPORT SIGN FOUNDATION	EACH	2
L125.500.0000	MISCELLANEOUS AIRPORT ELECTRICAL WORK	CS	ALL REQ'D
L130.010.0000	SURFACE SENSOR SYSTEM	LS	ALL REQ'D
L160.020.0000	LOAD CENTER, TYPE 1A	EA	1
P151.030.0000	CLEARING AND GRUBBING	ACRE	35
P152.010.0000	UNCLASSIFIED EXCAVATION	CY	783000
P152.190.0000	BORROW	CY	40900
P154.020.0000	SUBBASE COURSE	TON	266000
P161.020.0000	RECYCLED ASPHALT PAVEMENT	CY	12000
P165.010.0000	REMOVAL OF STRUCTURES	LS	ALL REQ'D
P165.040.0000	REMOVAL OF STORM DRAIN PIPE	LS	ALL REQ'D
P165.050.0010	REMOVAL OF STORM DRAIN MANHOLE	EA	1
P170.020.0000*	SOIL TESTING PROGRAM*	CS	ALL REQ'D
P170.040.0000*	SUPPLEMENTAL LABORATORY TEST*	CS	ALL REQ'D
P170.080.0000*	"HOT" MATERIAL OFFSITE TRANSPORTATION AND DISPOSAL*	CS	ALL REQ'D
P171.010.0000*	TEMPORARY CONTAMINATED SOIL STOCKPILE*	CS	ALL REQ'D
P190.010.0000	INSULATION BOARD	SF	4850
P209.020.0000	CRUSHED AGGREGATE BASE COURSE	TON	23700
P401.010.0030	HOT MIX ASPHALT TYPE II, CLASS A	TON	28700
P401.010.0065	HOT MIX ASPHALT TYPE V, CLASS S	TON	13400
P401.020.6440	ASPHALT BINDER, PG 64–40	TON	2350
P401.090.0000*	ASPHALT MATERIAL PRICE ADJUSTMENT*	CS	ALL REQ'D
P401.130.0000	HMA COMBINED PRICE ADJUSTMENT	CS	ALL REQ'D
P411.010.0000	INTELLIGENT COMPACTION FOR HOT MIX ASPHALT PAVEMENT	LS	ALL REQ'D
P603.010.0010	TACK COAT, STE–1	TON	97
P620.010.0000	RUNWAY AND TAXIWAY PAINTING	SF	36700
P620.050.0000	PAINTED MARKING REMOVAL	SF	3850
P620.070.0000	TEMPORARY RUNWAY & TAXIWAY PAINTING	LS	ALL REQ'D
P621.010.0000	SAW–CUT GROOVES	SY	5600
P641.010.0000	EROSION, SEDIMENT AND POLLUTION CONTROL ADMINISTRATION	LS	ALL REQ'D
P641.020.0000	TEMPORARY EROSION, SEDIMENT AND POLLUTION CONTROL	CS	ALL REQ'D
P641.060.0000	WITHHOLDING	CS	ALL REQ'D
P641.070.0000	SWPPP MANAGER	LS	ALL REQ'D
P661.010.0000	STANDARD SIGN	SF	140
P670.010.0000	HAZARD MARKER BARRIER, PLASTIC	EA	380
P671.020.0000	RUNWAY CLOSURE MARKER, ILLUMINATED	EA	2
P671.040.0000	TAXIWAY CLOSURE MARKER, VINYL	EA	2
P681.010.0000	GEOTEXTILE, SEPARATION	SY	108000
T901.020.0000	SEEDING	LB	19400
T905.010.0010	TOPSOILING, CLASS A	SY	416000
U100.010.0000	WATER SYSTEM	LS	ALL REQ'D
U700.020.0000	UTILITY COORDINATION	LS	ALL REQ'D

* = NON–AIP

ESTIMATING FACTORS

No.	ITEM	FACTOR
P154.020.0000	SUBBASE COURSE	2.00 TON/CY
P209.020.0000	CRUSHED AGGREGATE BASE COURSE	2.00 TON/CY
P401.010.0030	HOT MIX ASPHALT TYPE II, CLASS A	2.05 TON/CY
P401.010.0065	HOT MIX ASPHALT TYPE V, CLASS S	2.05 TON/CY
P401.040.5834	ASPHALT BINDER, PG 58–34E	5.5% OF P401
P603.010.0010	TACK COAT, STE–1	0.8416 LB/SY
T901.020.0000	SEEDING	5 LB/1,000 SF

PRELIMINARY

BY	DATE	REVISION

STATE OF ALASKA
DEPARTMENT OF TRANSPORTATION AND PUBLIC FACILITIES
CENTRAL REGION
4111 AVIATION AVE., ANCHORAGE ALASKA 99502
PHONE (907) 269-0590

TED STEVENS ANCHORAGE
ANCHORAGE, ALASKA
ANC TAXIWAY Z IMPROVEMENTS WEST – PHASE 1
PROJECT No. CFAPT00465
AIP No. 3-02-0016-XXX-2022
ESTIMATED QUANTITIES

DATE: 10/14/2021

SHEET: 5 OF 78

Designed By: TAD
Drawn By: RJB
Checked By: TAD

Date Revised:
Layout Name: Est Quantities
File Path and Name: W:\Projects\AIA Ted Stevens\AIA TW Z Ext 00465\Final Drawings\00465-AIA-Cover-Index-Est Quantities.dwg
10/14/2021, 3:53 PM

D701.020.00XX PIPE SUMMARY

PIPE		INLET			OUTLET			LENGTH (FT)	SLOPE	MATERIAL	END SECTIONS	REMARKS
NUMBER	SIZE (IN)	STATION	OFFSET (FT)	ELEVATION	STATION	OFFSET (FT)	ELEVATION					
P-1	48	82+17.50	221.70 LT	86.93	79+96.49	214.03 LT	85.50	222	0.65%	CPE TYPE S	2	
P-2	48	S-1		98.13	93+50.03	80.43 RT	97.84	163	0.18%	CPE TYPE S	1	
P-3	48	S-3		93.73	S-4		93.57	120	0.18%	CPE TYPE S	0	
P-4	48	S-5		93.47	S-4		92.97	276	0.18%	CPE TYPE S	0	
P-5	48	S-6		92.87	S-5		92.61	143	0.18%	CPE TYPE S	0	CAUTION: UNDERGROUND FIBER OPTIC, TELEPHONE, ELECTRIC UTILITY CROSSING
P-6	48	S-2		92.10	102+50.96	288.53 LT	91.89	115	0.18%	CPE TYPE S	1	
P-7	48	S-6		92.41	S-2		92.20	90	0.18%	CPE TYPE S	0	
P-8	48	S-7		92.80	S-6		92.51	162	0.18%	CPE TYPE S	0	
P-9	24	106+13.38	278.60 LT	96.82	S-7		96.71	39	0.28%	CPE TYPE S	0	EXTEND AS REQUIRED TO CONNECT TO EXISTING 24" CPE PIPE
P-10	48	S-8		93.09	S-7		92.90	107	0.18%	CPE TYPE S	0	
P-11	48	S-9		93.73	S-8		93.19	90	0.18%	CPE TYPE S	0	
P-12	48	S-10		94.24	S-9		93.93	172	0.18%	CPE TYPE S	0	CAUTION: UNDERGROUND FIBER OPTIC, TELEPHONE, ELECTRIC UTILITY CROSSING
P-13	48	S-11		94.73	S-10		94.34	219	0.18%	CPE TYPE S	0	
P-14	48	S-12		94.94	S-11		94.83	61	0.18%	CPE TYPE S	0	
P-15	36	S-13		95.26	S-12		95.04	301	0.25%	CPE TYPE S	0	
P-16	48	113+18.77	240.50 LT	94.37	S-9		93.83	39	0.18%	CPE TYPE S	1	
P-17	24	112+81.92	209.50 RT	104.97	112+43.37	209.50 RT	104.77	301	0.52%	CPE TYPE S	2	
P-18	18	112+39.13	273.71 RT	108.34	112+42.28	259.03 RT	107.58	15	5.10%	CPE TYPE S	2	
P-19	18	112+74.04	273.72 RT	107.96	112+76.72	258.88 RT	107.32	16	4.20%	CPE TYPE S	2	
P-20	24	S-14		107.51	117+67.79	209.50 RT	107.40	16	0.50%	CMP	1	
P-21	24	118+03.21	239.72 RT	107.93	S-14		107.75	33	0.54%	CMP	0	CONNECT TO EXISTING 24" CMP
P-22	48	S-15		96.41	119+13.45	240.50 LT	96.15	146	0.18%	CPE TYPE S	1	CAUTION: UNDERGROUND FIBER OPTIC UTILITY CROSSING
P-23	48	S-16		97.00	S-15		96.51	271	0.18%	CPE TYPE S	0	CAUTION: WATER MAIN CROSSING
P-24	48	S-17		97.19	S-16		97.10	49	0.18%	CPE TYPE S	0	
P-25	48	S-18		97.67	S-17		97.29	213	0.18%	CPE TYPE S	0	CAUTION: UNDERGROUND TELEPHONE, ELECTRIC UTILITY CROSSING
P-26	24	125+32.00	91.59 LT	97.44	125+32.00	141.64 LT	96.94	51	1%	CPE TYPE S	2	

PRELIMINARY

NOTE: ALL STATION AND OFFSET REFERENCES ARE TO TW Z

BY	DATE	REVISION

STATE OF ALASKA
DEPARTMENT OF TRANSPORTATION AND PUBLIC FACILITIES
CENTRAL REGION
4111 AVIATION AVE., ANCHORAGE ALASKA 99502
PHONE (907) 269-0590

TED STEVENS ANCHORAGE
ANCHORAGE, ALASKA
ANC TAXIWAY Z IMPROVEMENTS WEST - PHASE 1
PROJECT No. CFAPT00465
AIP No. 3-02-0016-XXX-2022
SUMMARY TABLES

DATE: 10/14/2021

Designed By: TAD
Drawn By: RJB
Checked By: TAD

Date Revised: 10/14/2021, 12:13 PM
Layout Name: SUMMARY TABLES 1
File Path and Name: W:\Projects\ANA Ted Stevens\ANA TW Z Ext 00465\Final Drawings\00465-ANA-Summary Tables.dwg

D705.020.30XX UNDERDRAIN SUMMARY

PIPE		INLET			OUTLET			LENGTH (FT)	SLOPE	MATERIAL	REMARKS
NUMBER	SIZE (IN)	BEGIN STATION	OFFSET (FT)	ELEVATION	BEGIN STATION	OFFSET (FT)	ELEVATION				
U-1	8	102+99.78	53.66 LT	98.58	104+57.10	87.11 LT	98.34	161	0.15%	CPP TYPE SP	
U-2	8	104+57.10	87.11 LT	98.34	104+94.97	130.3 LT	98.25	58	0.16%	CPP TYPE SP	
U-3	8	105+08.47	301.9 LT	97.99	104+94.97	130.3 LT	98.25	173	0.15%	CPP TYPE SP	CAUTION: UNDERGROUND FIBER OPTIC, TELEPHONE, ELECTRIC UTILITY CROSSING
U-4	8	105+04.58	339.74 LT	97.93	105+08.47	301.9 LT	97.99	39	0.16%	CPP TYPE SP	
U-5	8	105+00.82	362.98 LT	97.89	105+04.58	339.74 LT	97.93	24	0.17%	CPP TYPE SP	
U-6	8	S-20		97.70	105+00.82	362.98 LT	97.89	129	0.15%	CPP TYPE SP	
U-7	8	104+42.39	518.71 LT	97.76	S-20		97.70	39	0.15%	CPP TYPE SP	
U-8	12	106+00.00	462.12 LT	98.15	106+10.15	488.37 LT	98.15	50	0.01%	CPP TYPE S	FURNISH AND INSTALL 45 DEGREE ELBOW AND CLEANOUT AS REQUIRED TO TIE INTO EXISTING UNDERDRAIN PIPE
U-9	8	106+00.00	493.29 LT	98.51	106+00.00	462.12 LT	98.45	34	0.15%	CPP TYPE SP	
U-10	8	106+00.00	462.12 LT	98.45	106+00.00	284.19 LT	98.72	179	0.15%	CPP TYPE SP	
U-11	8	106+00.00	284.19 LT	98.72	106+00.00	276.49 LT	98.73	8	0.13%	CPP TYPE SP	
U-12	8	106+00.00	276.49 LT	98.73	106+00.00	253.52 LT	98.77	24	0.17%	CPP TYPE SP	
U-13	8	106+00.00	253.52 LT	98.77	106+70.78	92.12 LT	99.04	183	0.15%	CPP TYPE SP	CAUTION: UNDERGROUND FIBER OPTIC, TELEPHONE, ELECTRIC UTILITY CROSSING
U-14	8	106+70.68	92.12 LT	99.04	108+48.15	50.96 LT	99.31	183	0.15%	CPP TYPE SP	
U-15	8	108+49.04	50.90 LT	98.77	112+38.27	39.50 LT	98.18	390	0.15%	CPP TYPE SP	CAUTION: UNDERGROUND FIBER OPTIC, TELEPHONE, ELECTRIC UTILITY CROSSING
U-16	8	112+38.27	39.5 LT	98.18	113+50.00	39.50 LT	98.01	112	0.15%	CPP TYPE SP	
U-17	8	114+45.33	39.5 LT	97.87	113+50.00	39.50 LT	98.01	96	0.15%	CPP TYPE SP	
U-18	8	114+63.31	40.02 LT	97.84	114+45.33	39.50 LT	97.87	18	0.15%	CPP TYPE SP	
U-19	8	118+32.34	50.66 LT	98.47	114+63.31	40.02 LT	97.92	370	0.15%	CPP TYPE SP	
U-20	8	119+57.28	79.33 LT	98.74	118+32.34	50.66 LT	98.47	129	0.21%	CPP TYPE SP	
U-21	8	120+44.02	141.17 LT	94.72	120+06.89	90.67 LT	94.72	63	0.00%	CPP TYPE SP	
U-22	8	120+06.89	90.67 LT	94.72	119+63.87	80.81 LT	94.79	45	0.15%	CPP TYPE SP	
U-23	8	120+22.11	321.02 LT	94.45	120+44.02	141.17 LT	94.72	182	0.15%	CPP TYPE S	CAUTION: UNDERGROUND FIBER OPTIC UTILITY CROSSING
U-24	8	120+14.58	343.89 LT	94.41	120+22.11	321.02 LT	94.45	25	0.17%	CPP TYPE SP	
U-25	8	120+09.46	356.88 LT	94.38	120+14.58	343.89 LT	94.41	14	0.21%	CPP TYPE SP	
U-26	8	119+44.68	460.03 LT	94.20	120+09.46	356.88 LT	94.38	122	0.15%	CPP TYPE SP	CAUTION: UNDERGROUND COMMUNICATION UTILITY CROSSING, STATUS UNKNOWN

D705.020.30XX UNDERDRAIN SUMMARY

PIPE		INLET			OUTLET			LENGTH (FT)	SLOPE	MATERIAL	REMARKS
NUMBER	SIZE (IN)	BEGIN STATION	OFFSET (FT)	ELEVATION	BEGIN STATION	OFFSET (FT)	ELEVATION				
U-27	8	119+23.87	493.17 LT	94.26	119+44.68	460.03 LT	94.20	40	0.15%	CPP TYPE SP	
U-28	8	121+34.58	493.85 LT	92.95	121+23.00	459.9 LT	92.90	36	0.17%	CPP TYPE SP	
U-29	8	121+45.03	278.98 LT	93.17	121+23.00	459.9 LT	92.90	183	0.14%	CPP TYPE SP	CAUTION: UNDERGROUND COMMUNICATION UTILITY, STATUS UNKNOWN
U-30	8	121+52.56	256.12 LT	93.21	121+45.03	278.98 LT	93.17	25	0.15%	CPP TYPE SP	
U-31	8	121+57.67	243.12 LT	93.23	121+52.56	256.12 LT	93.21	14	0.15%	CPP TYPE SP	
U-32	8	122+54.46	89.00 LT	93.50	121+57.67	243.12 LT	93.23	182	0.15%	CPP TYPE SP	CAUTION: UNDERGROUND FIBER OPTIC UTILITY CROSSING
U-33	8	124+32.31	50.36 LT	93.77	122+54.46	89.00 LT	93.50	182	0.15%	CPP TYPE SP	
U-34	8	125+20.06	47.87 LT	93.90	124+32.31	50.36 LT	93.77	88	0.15%	CPP TYPE SP	CAUTION: UNDERGROUND FIBER OPTIC, TELEPHONE, ELECTRIC UTILITY CROSSING
U-35	8	124+14.06	39.5 RT	93.94	125+20.00	39.5 RT	94.10	106	0.15%	CPP TYPE SP	CAUTION: UNDERGROUND FIBER OPTIC, TELEPHONE, ELECTRIC UTILITY CROSSING
U-36	8	122+54.46	44.16 RT	93.70	124+14.06	39.5 RT	93.94	160	0.15%	CPP TYPE SP	
U-37	8	122+54.46	44.16 RT	93.70	122+54.46	89.00 LT	93.50	134	0.15%	CPP TYPE SP	
U-38	8	103+00.11	39.65 RT	98.83	104+90.72	42.01 RT	98.54	191	0.15%	CPP TYPE SP	
U-39	8	104+90.72	42.01 RT	98.54	104+99.02	87.11 LT	98.34	134	0.15%	CPP TYPE SP	
U-40	8	104+99.02	42.62 RT	99.36	107+65.40	39.5 RT	98.96	261	0.15%	CPP TYPE SP	
U-41	8	107+65.4	39.5 RT	98.96	110+64.42	39.5 RT	98.51	300	0.15%	CPP TYPE SP	
U-42	8	110+64.42	39.5 RT	98.51	113+61.19	39.5 RT	98.51	297	0.15%	CPP TYPE SP	CAUTION: UNDERGROUND FIBER OPTIC, TELEPHONE, ELECTRIC UTILITY CROSSING
U-43	8	113+61.19	39.5 RT	98.07	114+63.31	42.66 RT	97.92	103	0.15%	CPP TYPE SP	
U-44	8	114+63.31	42.66 RT	96.32	116+46.40	48.32 RT	96.59	184	0.15%	CPP TYPE SP	
U-45	8	116+46.4	48.32 RT	96.59	120+01.35	47.49 RT	97.12	356	0.15%	CPP TYPE SP	
U-46	8	120+09.56	72.34 RT	94.08	121+30.95	47.84 RT	95.89	124	0.15%	CPP TYPE SP	
U-47	8	121+30.95	47.84 RT	93.89	122+54.46	44.16 RT	93.70	124	0.15%	CPP TYPE SP	
OF-1	12	104+55.85	482.97 LT	97.58	106+00.00	462.12 LT	97.06	175	0.30%	CPP TYPE S	
OF-2	12	106+00.00	462.12 LT	97.06	114+63.31	450 LT	94.38	895	0.30%	CPP TYPE S	
OF-3	12	114+63.31	40.02 LT	96.00	114+63.31	40.02 LT	95.59	83	0.50%	CPP TYPE S	
OF-4	12	114+63.31	100.97 LT	95.59	114+63.28	100.97 LT	95.29	61	0.49%	CPP TYPE S	
OF-5	12	118+63.31	100.97 LT	93.48	114+63.28	100.97 LT	95.29	401	0.45%	CPP TYPE S	
OF-6	12	118+63.31	460.00 LT	93.48	118+63.31	460 LT	92.40	460	0.30%	CPP TYPE S	CONNECT TO EXISTING STORM DRAIN STRUCTURE

D705.070.0000 CLEANOUT

STRUCTURE	STATION	OFFSET (FT)	ELEVATION
CO-1	102+99.78	55.66 LT	99.33
CO-2	104+94.97	130.30 LT	99.00
CO-3	105+08.47	301.90 LT	98.74
CO-4	104+42.39	518.71 LT	98.51
CO-5	106+00.00	493.29 LT	99.26
CO-6	106+00.00	253.52 LT	99.52
CO-7	106+70.68	92.12 LT	99.79
CO-8	108+48.15	50.96 LT	100.06
CO-9	108+49.04	50.90 LT	99.52
CO-10	112+38.27	39.50 LT	98.93
CO-11	118+32.34	50.66 LT	99.22
CO-12	119+57.28	79.33 LT	99.49
CO-13	119+63.87	80.81 LT	95.54
CO-14	120+44.02	141.17 LT	95.47
CO-15	119+23.87	493.17 LT	95.01
CO-16	121+34.58	493.85 LT	93.70
CO-17	121+45.03	278.98 LT	93.92
CO-18	125+20.06	47.87 LT	94.65
CO-19	103+00.11	39.65 RT	99.58
CO-20	104+99.02	42.62 RT	100.11
CO-21	107+65.40	39.50 RT	99.71
CO-22	120+01.35	73.99 RT	97.87
CO-23	120+09.56	72.34 RT	94.83
CO-24	121+30.95	47.84 RT	94.64
CO-25	125+20.00	39.50 RT	94.85

NOTE: ALL STATION AND OFFSET REFERENCES ARE TO TW Z

PRELIMINARY

BY	DATE	REVISION

STATE OF ALASKA
DEPARTMENT OF TRANSPORTATION AND PUBLIC FACILITIES
CENTRAL REGION
4111 AVIATION AVE., ANCHORAGE ALASKA 99502
PHONE (907) 269-0590

TED STEVENS ANCHORAGE
ANCHORAGE, ALASKA
ANC TAXIWAY Z IMPROVEMENTS WEST - PHASE 1
PROJECT No. CFAPT00465
AIP No. 3-02-0016-XXX-2022
SUMMARY TABLES

DATE: 10/14/2021

Designed By: TAD
Drawn By: RJB
Checked By: TAD

Date Revised:
Layout Name: 10/14/2021, 12:13 PM
File Path and Name: SUMMARY TABLES_2
W:\Projects\AIA Ted Stevens\AIA TW Z Ext 00465\Final Drawings\00465-AIA-Summary Tables.dwg

D751.XXX.00XX MANHOLE SCHEDULE

STRUCTURE	STATION	OFFSET (FT)	ELEVATION	DIAMETER (IN)	STRUCTURE TYPE	CASTING TYPE	REMARKS
S-1	93+50.03	242.77 RT	105.67	96	SDMH TYPE III	FIELD INLET	
S-2	103+69.40	272.93 LT	100.2	96	SDMH TYPE III	FIELD INLET	
S-3	105+21.02	243.99 RT	102.57	96	SDMH TYPE III	FIELD INLET	
S-4	105+18.34	154.49 RT	105.66	96	SDMH TYPE III	FIELD INLET	
S-5	104+64.61	116.20 LT	109.3	96	SDMH TYPE III	24" ROUND, SOLID	
S-6	104+83.25	257.95 LT	106.73	96	SDMH TYPE III	24" ROUND, SOLID	
S-7	106+12.15	240.50 LT	106.86	96	SDMH TYPE III	24" ROUND, SOLID	
S-8	107+18.77	240.50 LT	101.01	96	SDMH TYPE III	FIELD INLET	
S-9	110+18.77	240.50 LT	101.58	96	SDMH TYPE III	FIELD INLET	
S-10	110+18.76	69.13 LT	108.1	72	SDMH TYPE II	24" ROUND, SOLID	
S-11	110+18.77	149.25 RT	102.39	96	SDMH TYPE III	FIELD INLET	
S-12	110+18.77	209.50 RT	103.65	96	SDMH TYPE III	FIELD INLET	
S-13	109+29.58	209.50 RT	102.7	72	SDMH TYPE II	FIELD INLET	
S-14	117+89.79	209.50 RT	110.25	48	TYPE A INLET BOX	24" ROUND INLET, SLOTTED	18" SUMP
S-15	119+54.94	100.98 LT	106.4	96	SDMH TYPE III	24" ROUND, SOLID	
S-16	120+30.55	158.50 RT	104.8	96	SDMH TYPE III	FIELD INLET	
S-17	120+37.75	206.50 RT	105	96	SDMH TYPE III	FIELD INLET	
S-18	120+95.06	411.64 RT	108.35	96	SDMH TYPE III	FIELD INLET	
S-19	104+57.10	87.11 LT	110	48	SDMH TYPE I	24" ROUND, SOLID	
S-20	104+55.85	482.97 LT	108.26	48	SDMH TYPE I	24" ROUND, SOLID	
S-21	106+00.00	462.12 LT	107.38	48	SDMH TYPE I	24" ROUND, SOLID	
S-22	114+63.31	450.00 LT	103.93	48	SDMH TYPE I	24" ROUND, SOLID	
S-23	114+63.31	40.02 LT	106.91	48	SDMH TYPE I	24" ROUND, SOLID	
S-24	114+63.28	100.97 LT	105.68	48	SDMH TYPE I	24" ROUND, SOLID	
S-25	118+63.31	100.97 LT	105.95	48	SDMH TYPE I	24" ROUND, SOLID	
S-26	119+44.68	460.03 LT	102.44	48	SDMH TYPE I	24" ROUND, SOLID	REMOVE EXISTING UNDERDRAIN TRUNK LINE AS REQUIRED
S-27	121+23.00	459.90 LT	102.18	48	SDMH TYPE I	24" ROUND, SOLID	REMOVE EXISTING UNDERDRAIN TRUNK LINE AS REQUIRED
S-28	122+54.46	89.00 LT	105.34	48	SDMH TYPE I	24" ROUND, SOLID	
S-29	122+54.46	44.16 RT	105.39	48	SDMH TYPE I	24" ROUND, SOLID	
S-30	114+63.31	42.66 RT	106.87	48	SDMH TYPE I	24" ROUND, SOLID	
S-31	104+90.72	42.01 RT	110.86	48	SDMH TYPE I	24" ROUND, SOLID	
S-10E	118+63.31	460 LT	102.5	48	SDMH TYPE I		ADJUST MANHOLE TO FINISHED GRADE. REMOVE DEMOLISHED CONDUIT AND UNDERDRAINS, AND GROUT HOLES.

P165.040.0000 REMOVAL OF STORM DRAIN PIPE

BEGIN STATION	OFFSET (FT)	END STATION	OFFSET (FT)	LENGTH (FT)	REMARKS
79+58.78	276.23 LT	79+61.24	233.7 LT	42.68	12 INCH PIPE, SERVICE ROAD TIE IN
81+35.71	218.24 LT	80+71.61	216.26 LT	64.14	36 INCH PIPE, SERVICE ROAD REALIGNMENT
103+46.45	290.82 LT	102+85.95	297.49 LT	60.87	30 INCH PIPE
103+01.78	202.74 LT	103+16.39	234.93 LT	35.4	12 INCH PIPE
106+05.66	266.51 LT	105+56.17	269.60 LT	77.06	24 INCH PIPE, TW R NEW CONSTRUCTION
106+05.74	264.09 LT	105+56.20	266.32 LT	76.95	24 INCH PIPE, TW R NEW CONSTRUCTION
106+09.81	496 LT	106+09.79	262.48 LT	233.52	12 INCH PIPE, RW 7 RT/25 LT SUBDRAIN, OUTLET FALLS IN PROPOSED TW R TSA
106+13.31	860.5 LT	106+13.31	279.07 LT	581.43	30 INCH PIPE, TW R NEW CONSTRUCTION, P94
106+48.54	80.48 LT	105+98.63	53.47 LT	60.53	30 INCH PIPE, TW R NEW CONSTRUCTION
110+36.91	277.6 LT	111+54.03	277.9 LT	117.12	30 INCH PIPE, INFIELD
111+43.42	85.04 LT	111+90.61	75.05 RT	166.9	36 INCH PIPE, TW Z NEW CONSTRUCTION
113+86.89	76.14 RT	112+17.90	82.69 RT	169.12	36 INCH PIPE, TW Z NEW CONSTRUCTION
113+98.46	85.49 RT	114+09.61	125.04 RT	41.12	24 INCH PIPE
117+47.57	87.48 RT	117+60.56	125.01 RT	39.71	24 INCH PIPE
120+56.58	306.31 RT	122+27.91	187.73 RT	208.36	18 INCH PIPE
117+40.16	78.57 LT	117+43.96	105.60 LT	27.3	6 INCH PIPE, TW F SUBDRAIN
117+43.96	105.6 LT	117+01.96	249.24 LT	149.66	6 INCH PIPE, TW F SUBDRAIN
117+01.96	249.24 LT	116+31.63	442.98 LT	206.12	6 INCH PIPE, TW F SUBDRAIN
116+31.63	442.98 LT	115+63.31	496.00 LT	86.48	6 INCH PIPE, TW F SUBDRAIN, BLOCK OR STUB OUT
118+57.25	58.84 LT	117+38.12	387.02 LT	349.15	6 INCH PIPE, TW F SUBDRAIN
117+38.12	387.02 LT	117+51.22	466.29 LT	80.35	6 INCH PIPE, TW F SUBDRAIN
120+60.55	135.5 LT	120+49.52	298.01 LT	162.89	6 INCH PIPE, TW E SUBDRAIN
120+49.52	298.01 LT	120+22.10	374.09 LT	80.87	6 INCH PIPE, TW E SUBDRAIN
120+22.10	374.09 LT	119+79.93	490.28 LT	123.61	6 INCH PIPE, TW E SUBDRAIN
120+22.10	374.09 LT	118+63.31	460.00 LT	180.56	12 INCH PIPE, TW E SUBDRAIN OUTFALL
121+80.09	178.85 LT	120+92.55	421.92 LT	258.37	6 INCH PIPE, TW E SUBDRAIN
120+92.55	421.92 LT	120+94.06	438.78 LT	16.93	6 INCH PIPE, TW E SUBDRAIN
120+94.06	438.78 LT	121+13.31	460.00 LT	28.65	6 INCH PIPE, TW E SUBDRAIN
122+15.34	278.27 LT	119+11.73	349.51 LT	311.86	24 INCH PIPE, TW E NEW CONSTRUCTION
122+56.16	293.86 LT	122+61.56	318.34 LT	25.07	24 INCH PIPE
123+39.12	76.95 LT	123+21.93	121.45 LT	47.74	24 INCH PIPE
124+61.98	89.2 LT	124+47.72	89.34 LT	14.26	6 INCH PIPE

P165.050.0010 REMOVAL OF STORM DRAIN MANHOLE

STATION	OFFSET (FT)	ELEVATION
119+11.73	350 LT	TYPE I SDMH

F162.010.0008 8-FEET CHAIN LINK FENCE

BEGIN STATION	OFFSET (FT)	END STATION	OFFSET (FT)	LENGTH (FT)
79+77.26	312 RT	80+39.74	307 RT	62.7
80+06.56	264 RT	80+10.99	255 RT	10
80+24.27	228 RT	80+28.70	219 RT	10
80+68.85	300 RT	99+42.32	300 RT	1873.5
99+62	300 RT	104+44.82	302 RT	521.5
104+44.82	302 RT	104+52.36	104 RT	473
108+92.28	266 RT	112+45.33	266 RT	353
112+69.33	266 RT	112+91.44	296 RT	46.4
124+67.86	263 RT	125+23.04	280 RT	85.6
124+91.37	192 RT	125+75.19	144 RT	131.1

F162.170.0000 REMOVE GATE

STATION	OFFSET	REMARKS
81+11.68	140 LT	DOUBLE SWING GATE, 30-FEET WIDE
103+03.09	63 LT	DOUBLE SWING GATE, 20-FEET WIDE
104+48.76	551 RT	DOUBLE SWING GATE, 30-FEET WIDE
112+51.44	149 RT	DOUBLE SWING GATE, 30-FEET WIDE

U100.010.0000 WATER SYSTEM

STATION	OFFSET	REMARKS
120+21.54	128 RT	RELOCATE WATER MAIN

P661.010.0000 SIGN SUMMARY

SIGN NO.	STATION	OFFSET	ASDS CODE	WIDTH (IN)	HEIGHT (IN)	AREA (SF)	SIGN FACE DIRECTION	POST SIZE TYPE	REMARKS
301	80+83.60	247 LT	R5-1	30	30	6.25	W	2.5"PST	DO NOT ENTER
302	104+85.50	204 RT	R1-1 R3-2 W16-106	30 24 30	30 24 30	5.5 4.0 6.25	W	2.5"PST	STOP SIGN NO LEFT TURN AIRCRAFT CROSSING
303	109+85.05	164 RT	R1-1 R3-1 W16-106	30 24 30	30 24 30	5.5 4.0 6.25	E	2.5"PST	STOP SIGN NO RIGHT TURN AIRCRAFT CROSSING
304	114+35.48	164 RT	W16-109	30	30	6.25	E	2.5"PST	END JET BLAST AREA
305	114+35.48	201 RT	W16-108	30	30	6.25	W	2.5"PST	JET BLAST AREA
306	117+61.74	201 RT	R1-1 R3-2 W16-106	30 24 30	30 24 30	5.5 4.0 6.25	W	2.5"PST	STOP SIGN NO LEFT TURN AIRCRAFT CROSSING
307	120+42.74	164 RT	R1-1 R3-1 W16-106	30 24 30	30 24 30	5.5 4.0 6.25	E	2.5"PST	STOP SIGN NO RIGHT TURN AIRCRAFT CROSSING
308	121+33.74	184 RT	R1-1 R3-2 W16-106	30 24 30	30 24 30	5.5 4.0 6.25	SW	2.5"PST	STOP SIGN NO LEFT TURN AIRCRAFT CROSSING
309	125+20.75	135 LT	R1-1 R3-1 W16-106	30 24 30	30 24 30	5.5 4.0 6.25	NE	2.5"PST	STOP SIGN NO RIGHT TURN AIRCRAFT CROSSING
310	125+62.12	134 LT	W16-108	30	30	6.25	E	2.5"PST	JET BLAST AREA
311	125+60.62	97 LT	W16-109	30	30	6.25	W	2.5"PST	END JET BLAST AREA
312	126+73.85	93 LT	R1-1	30	30	5.5	W	2.5"PST	STOP SIGN

F162.040.0000 GATE SUMMARY

STATION	OFFSET (FT)	REMARKS
80+17.63	241 RT	DOUBLE SWING GATE, 30-FEET WIDE
80+54.29	303 RT	DOUBLE SWING GATE, 30-FEET WIDE
99+52.32	300 RT	DOUBLE SWING GATE, 20-FEET WIDE
104+48.76	551 RT	DOUBLE SWING GATE, 30-FEET WIDE
112+57.33	266 RT	DOUBLE SWING GATE, 24-FEET WIDE

F162.190.0000 REMOVE FENCE

BEGIN STATION	OFFSET (FT)	END STATION	OFFSET (FT)	LENGTH (FT)	REMARKS
80+06.56	264 RT	80+28.70	219 RT	50	
80+52.79	134 LT	104+44.82	302 RT	2684.9	
99+86.14	547 RT	104+41.13	82 RT	747.82	
104+44.82	302 RT	104+52.36	804 RT	473	
108+92.28	267 RT	112+91.44	296 RT	564	
124+91.37	192 RT	125+75.19	144 RT	151	

P190.010.0000 INSULATION BOARD

STATION	OFFSET	THICKNESS	AREA (SF)	REMARKS
TBD	TBD	4"	960	SEE WATER SYSTEM PLAN
TBD	TBD	4"	3432	SEE WATER SYSTEM PLAN
TBD	TBD	4"	288	SEE WATER SYSTEM PLAN
118+63.31	240.5 LT	4"	128	SEE DRAINAGE PLAN

F165.010.0000 REMOVAL OF STRUCTURES

STATION	OFFSET	REMARKS
114+33.41	95 RT	REMOVE OF STANDARD SIGN
117+53.65	128 RT	REMOVE OF STANDARD SIGN
122+42.70	87 LT	REMOVE OF STANDARD SIGN
123+38.94	77 LT	REMOVE SLUICE GATE VALVE
123+50	50 RT	REMOVE CONCRETE PAD
126+71.76	91 LT	REMOVE OF STANDARD SIGN

NOTE: ALL STATION AND OFFSET REFERENCES ARE TO TW Z

PRELIMINARY

BY	DATE	REVISION

STATE OF ALASKA
DEPARTMENT OF TRANSPORTATION AND PUBLIC FACILITIES
CENTRAL REGION
4111 AVIATION AVE., ANCHORAGE ALASKA 99502
PHONE (907) 269-0590

TED STEVENS ANCHORAGE
ANCHORAGE, ALASKA
ANC TAXIWAY Z IMPROVEMENTS WEST - PHASE 1
PROJECT No. CFAPT00465
AIP No. 3-02-0016-XXX-2022
SUMMARY TABLES

DATE: 10/14/2021

Designed By: TAD
Drawn By: RJB
Checked By: TAD

Date Revised:
Layout Name: SUMMARY TABLES 3
File Path and Name: W:\Projects\AIA Ted Stevens\AIA TW Z Ext 00465\Final Drawings\00465-AIA-Summary Tables.dwg
10/14/2021, 12:13 PM

LEGEND

- PROJECT AREA
- PROPOSED HAUL ROUTE
- ACCESS GATE
- CONTRACTOR STAGING / PARKING AREA
- SOIL DISPOSAL SITE (UNCONTAMINATED MATERIAL)
- SOIL DISPOSAL SITE (FUEL CONTAMINATED MATERIAL)
- RAP STOCKPILE SITE
- SOIL DISPOSAL SITE (PFAS/PFOS CONTAMINATED MATERIAL)

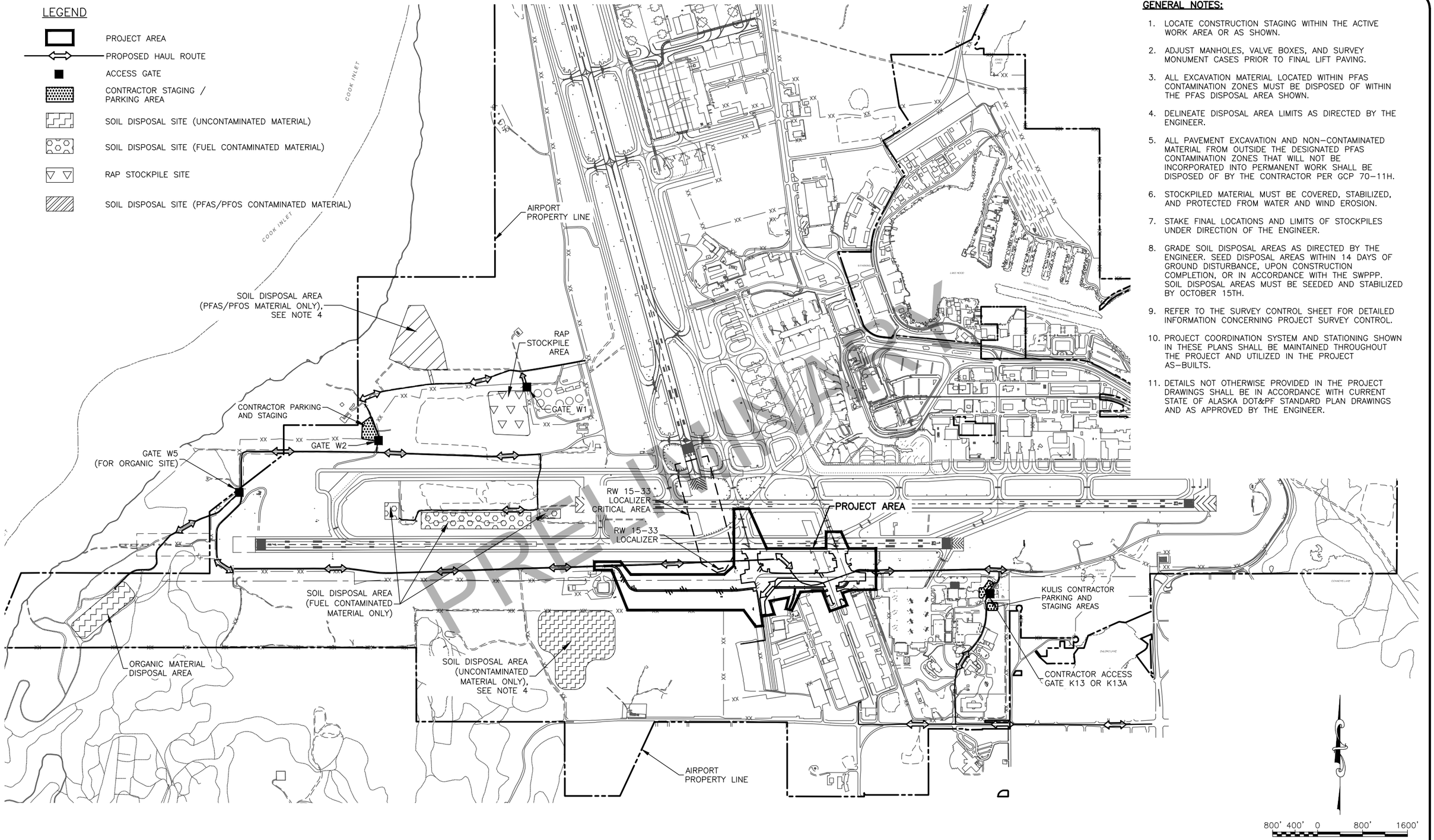

GENERAL NOTES:

1. LOCATE CONSTRUCTION STAGING WITHIN THE ACTIVE WORK AREA OR AS SHOWN.
2. ADJUST MANHOLES, VALVE BOXES, AND SURVEY MONUMENT CASES PRIOR TO FINAL LIFT PAVING.
3. ALL EXCAVATION MATERIAL LOCATED WITHIN PFAS CONTAMINATION ZONES MUST BE DISPOSED OF WITHIN THE PFAS DISPOSAL AREA SHOWN.
4. DELINEATE DISPOSAL AREA LIMITS AS DIRECTED BY THE ENGINEER.
5. ALL PAVEMENT EXCAVATION AND NON-CONTAMINATED MATERIAL FROM OUTSIDE THE DESIGNATED PFAS CONTAMINATION ZONES THAT WILL NOT BE INCORPORATED INTO PERMANENT WORK SHALL BE DISPOSED OF BY THE CONTRACTOR PER GCP 70-11H.
6. STOCKPILED MATERIAL MUST BE COVERED, STABILIZED, AND PROTECTED FROM WATER AND WIND EROSION.
7. STAKE FINAL LOCATIONS AND LIMITS OF STOCKPILES UNDER DIRECTION OF THE ENGINEER.
8. GRADE SOIL DISPOSAL AREAS AS DIRECTED BY THE ENGINEER. SEED DISPOSAL AREAS WITHIN 14 DAYS OF GROUND DISTURBANCE, UPON CONSTRUCTION COMPLETION, OR IN ACCORDANCE WITH THE SWPPP. SOIL DISPOSAL AREAS MUST BE SEEDED AND STABILIZED BY OCTOBER 15TH.
9. REFER TO THE SURVEY CONTROL SHEET FOR DETAILED INFORMATION CONCERNING PROJECT SURVEY CONTROL.
10. PROJECT COORDINATION SYSTEM AND STATIONING SHOWN IN THESE PLANS SHALL BE MAINTAINED THROUGHOUT THE PROJECT AND UTILIZED IN THE PROJECT AS-BUILTS.
11. DETAILS NOT OTHERWISE PROVIDED IN THE PROJECT DRAWINGS SHALL BE IN ACCORDANCE WITH CURRENT STATE OF ALASKA DOT&PF STANDARD PLAN DRAWINGS AND AS APPROVED BY THE ENGINEER.

PRELIMINARY

Designed By:	TAD	
Drawn By:	RJB	
Checked By:	TAD	
Date Revised:	10/14/2021, 12:14 PM	
Layout Name:	PLP OVERVIEW	
File Path and Names:	W:\Projects\AIA Ted Stevens\AIA TW Z Ext 00465\Final Drawings\00465-AIA-PLP.dwg	

BY	DATE	REVISION

STATE OF ALASKA
DEPARTMENT OF TRANSPORTATION AND PUBLIC FACILITIES
CENTRAL REGION
4111 AVIATION AVE., ANCHORAGE ALASKA 99502
PHONE (907) 269-0590

TED STEVENS ANCHORAGE
ANCHORAGE, ALASKA
ANC TAXIWAY Z IMPROVEMENTS WEST - PHASE 1
PROJECT No. CFAPT00465
AIP No. 3-02-0016-XXX-2022
PROJECT LAYOUT PLAN - OVERVIEW

DATE: 10/14/2021

SHEET: 9 OF 78

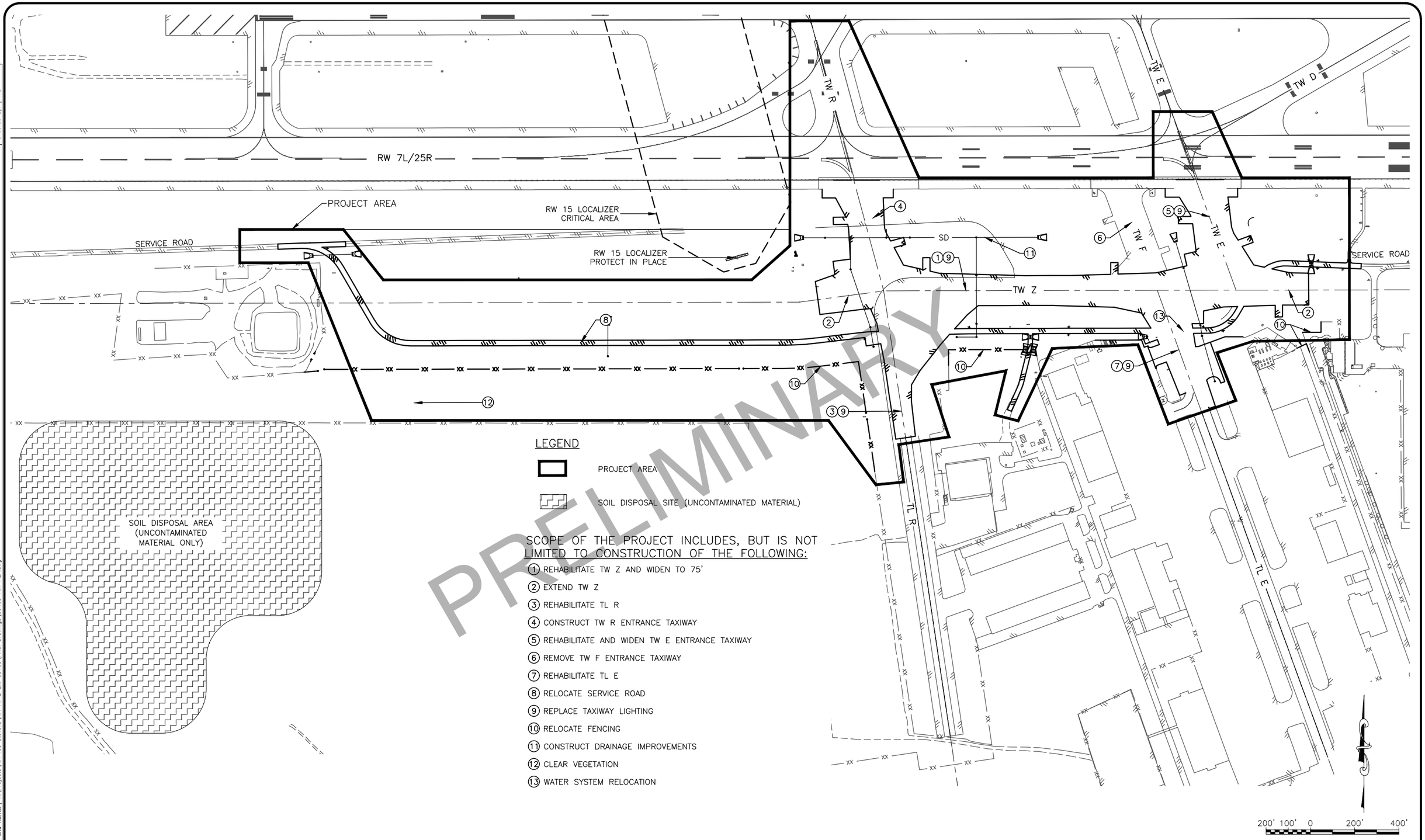

PRELIMINARY

LEGEND

PROJECT AREA

SOIL DISPOSAL SITE (UNCONTAMINATED MATERIAL)

SCOPE OF THE PROJECT INCLUDES, BUT IS NOT LIMITED TO CONSTRUCTION OF THE FOLLOWING:

1. REHABILITATE TW Z AND WIDEN TO 75'
2. EXTEND TW Z
3. REHABILITATE TL R
4. CONSTRUCT TW R ENTRANCE TAXIWAY
5. REHABILITATE AND WIDEN TW E ENTRANCE TAXIWAY
6. REMOVE TW F ENTRANCE TAXIWAY
7. REHABILITATE TL E
8. RELOCATE SERVICE ROAD
9. REPLACE TAXIWAY LIGHTING
10. RELOCATE FENCING
11. CONSTRUCT DRAINAGE IMPROVEMENTS
12. CLEAR VEGETATION
13. WATER SYSTEM RELOCATION

BY	DATE	REVISION

STATE OF ALASKA
DEPARTMENT OF TRANSPORTATION AND PUBLIC FACILITIES
CENTRAL REGION
4111 AVIATION AVE., ANCHORAGE ALASKA 99502
PHONE (907) 269-0590

TED STEVENS ANCHORAGE
ANCHORAGE, ALASKA
ANC TAXIWAY Z IMPROVEMENTS WEST - PHASE 1
PROJECT No. CFAPT00465
AIP No. 3-02-0016-XXX-2022
PROJECT LAYOUT PLAN - DETAILED VIEW

DATE: 10/14/2021

SHEET: 10 OF 78

Designed By: TAD
Drawn By: RJB
Checked By: TAD

Date Revised: 10/14/2021, 12:14 PM
Layout Name: PLP DETAILED VIEW
File Path and Name: W:\Projects\AIA Ted Stevens\AIA TW Z Ext 00465\Final Drawings\00465-AIA-PLP.dwg

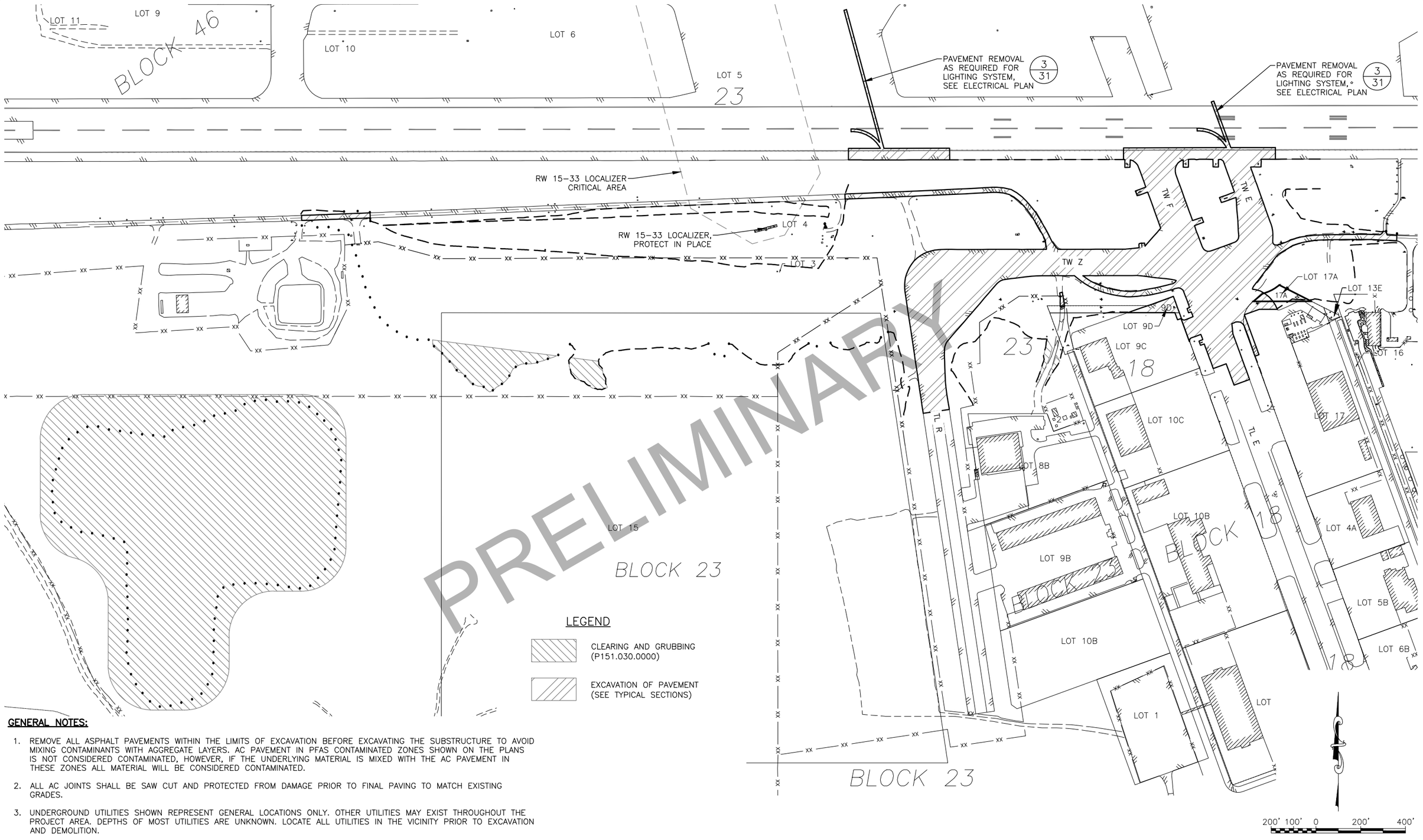

PRELIMINARY

GENERAL NOTES:

1. REMOVE ALL ASPHALT PAVEMENTS WITHIN THE LIMITS OF EXCAVATION BEFORE EXCAVATING THE SUBSTRUCTURE TO AVOID MIXING CONTAMINANTS WITH AGGREGATE LAYERS. AC PAVEMENT IN PFAS CONTAMINATED ZONES SHOWN ON THE PLANS IS NOT CONSIDERED CONTAMINATED, HOWEVER, IF THE UNDERLYING MATERIAL IS MIXED WITH THE AC PAVEMENT IN THESE ZONES ALL MATERIAL WILL BE CONSIDERED CONTAMINATED.
2. ALL AC JOINTS SHALL BE SAW CUT AND PROTECTED FROM DAMAGE PRIOR TO FINAL PAVING TO MATCH EXISTING GRADES.
3. UNDERGROUND UTILITIES SHOWN REPRESENT GENERAL LOCATIONS ONLY. OTHER UTILITIES MAY EXIST THROUGHOUT THE PROJECT AREA. DEPTHS OF MOST UTILITIES ARE UNKNOWN. LOCATE ALL UTILITIES IN THE VICINITY PRIOR TO EXCAVATION AND DEMOLITION.
4. REFER TO ELECTRICAL PLANS FOR ELECTRICAL DEMOLITION.
5. PROTECT IN PLACE ALL UTILITIES AND STORM DRAIN SYSTEMS UNLESS OTHERWISE INDICATED.
6. REINSTALL ALL REMOVED FENCING FABRIC AND BARBED WIRE PRIOR TO ENDING DAILY WORK. PROVIDE TEMPORARY FENCING PER THE CSPP AS NECESSARY. A SECURED AOA MUST BE MAINTAINED AT ALL TIMES.
7. CLEARING AND GRUBBING LIMITS SHOWN ARE APPROXIMATE. COORDINATE THE LIMITS OF CLEARING AND GRUBBING WITH THE PROPOSED SITE PLAN.

BY	DATE	REVISION

STATE OF ALASKA
DEPARTMENT OF TRANSPORTATION AND PUBLIC FACILITIES
CENTRAL REGION
4111 AVIATION AVE., ANCHORAGE ALASKA 99502
PHONE (907) 269-0590

TED STEVENS ANCHORAGE
ANCHORAGE, ALASKA
ANC TAXIWAY Z IMPROVEMENTS WEST - PHASE 1
PROJECT No. CFAPT00465
AIP No. 3-02-0016-XXX-2022
DEMO OVERVIEW

DATE: 10/14/2021
SHEET: 11 OF 78

Designed By: TAD
Drawn By: RJB
Checked By: TAD

Date Revised:
Layout Name: 10/14/2021, 12:16 PM DEMO_OVERVIEW
File Path and Name: W:\Projects\AIA Ted Stevens\AIA TW Z Ext 00465\Final Drawings\00465-AIA-Demo Plan.dwg

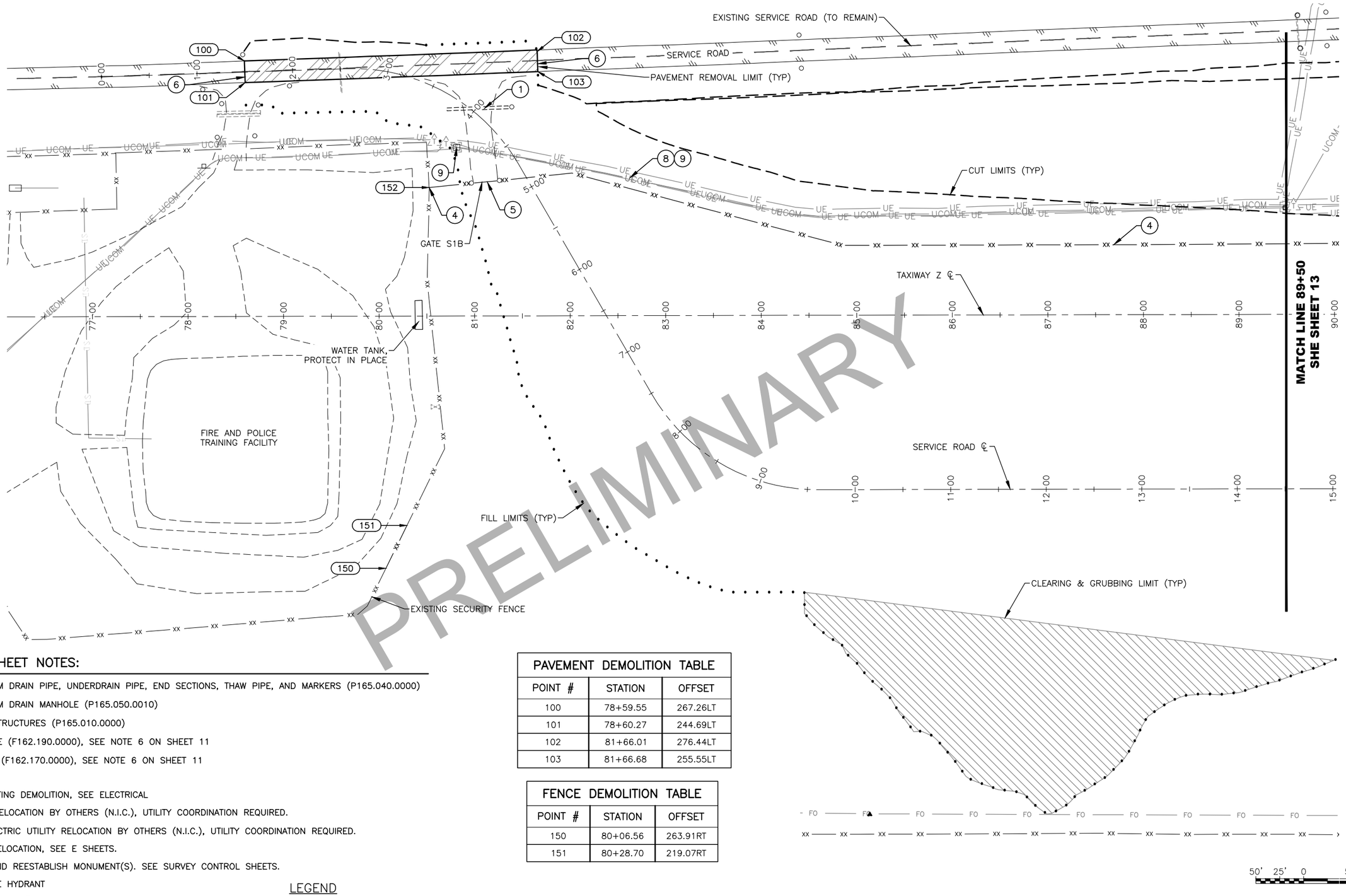

PRELIMINARY

DEMOLITION SHEET NOTES:

1. REMOVE STORM DRAIN PIPE, UNDERDRAIN PIPE, END SECTIONS, THAW PIPE, AND MARKERS (P165.040.0000)
2. REMOVE STORM DRAIN MANHOLE (P165.050.0010)
3. REMOVE OF STRUCTURES (P165.010.0000)
4. REMOVE FENCE (F162.190.0000), SEE NOTE 6 ON SHEET 11
5. REMOVE GATE (F162.170.0000), SEE NOTE 6 ON SHEET 11
6. SAWCUT LIMIT
7. AIRFIELD LIGHTING DEMOLITION, SEE ELECTRICAL
8. ACS UTILITY RELOCATION BY OTHERS (N.I.C.), UTILITY COORDINATION REQUIRED.
9. CHUGACH ELECTRIC UTILITY RELOCATION BY OTHERS (N.I.C.), UTILITY COORDINATION REQUIRED.
10. FAA UTILITY RELOCATION, SEE E SHEETS.
11. REFERENCE AND REESTABLISH MONUMENT(S). SEE SURVEY CONTROL SHEETS.
12. RELOCATE FIRE HYDRANT
13. ADJUST WATER VALVE
14. RELOCATE WATER MAIN
15. REMOVE TRAFFIC SIGN
16. ADJUST MANHOLE

PAVEMENT DEMOLITION TABLE		
POINT #	STATION	OFFSET
100	78+59.55	267.26LT
101	78+60.27	244.69LT
102	81+66.01	276.44LT
103	81+66.68	255.55LT

FENCE DEMOLITION TABLE		
POINT #	STATION	OFFSET
150	80+06.56	263.91RT
151	80+28.70	219.07RT

LEGEND

CLEARING AND GRUBBING (P151.030.0000)

EXCAVATION OF PAVEMENT (P152.010.0000)

BY	DATE	REVISION

STATE OF ALASKA
DEPARTMENT OF TRANSPORTATION AND PUBLIC FACILITIES
CENTRAL REGION
4111 AVIATION AVE., ANCHORAGE ALASKA 99502
PHONE (907) 269-0590

TED STEVENS ANCHORAGE
ANCHORAGE, ALASKA
ANC TAXIWAY Z IMPROVEMENTS WEST - PHASE 1
PROJECT No. CFAPT00465
AIP No. 3-02-0016-XXX-2022
DEMO DETAIL

DATE: 10/14/2021

SHEET: 12 OF 78

Designed By: TAD
Drawn By: RJB
Checked By: TAD

Date Revised: 10/14/2021, 12:16 PM
Layout Name: DEMO 1
File Path and Name: W:\Projects\ANA Ted Stevens\ANA TW Z Ext 00465\Final Drawings\00465-AIA-Demo Plan.dwg

EXISTING SERVICE ROAD (TO REMAIN)

PROTECT EXISTING DRAINAGE OUTLETS (TYP)

PROTECT EXISTING DRAINAGE OUTLETS (TYP)

SEE GRADING PLAN FOR DRAINAGE DITCH WORK

COMM MH, PROTECT IN PLACE

LOCALIZER CRITICAL AREA

RW 15 LOCALIZER, PROTECT IN PLACE

MATCH LINE 89+50 SEE SHEET 12

MATCH LINE 102+50 SEE SHEET 14

TAXIWAY Z ℄

SERVICE ROAD ℄

CLEARING & GRUBBING LIMIT (TYP)

CUT LIMITS (TYP)

FILL LIMITS (TYP)

PRELIMINARY

LEGEND

CLEARING AND GRUBBING (P151.030.0000)

EXCAVATION OF PAVEMENT (P152.010.0000)

FENCE DEMOLITION TABLE		
POINT #	STATION	OFFSET
154	99+86.14	546.21RT

50' 25' 0 50' 100'

BY	DATE	REVISION

STATE OF ALASKA
DEPARTMENT OF TRANSPORTATION AND PUBLIC FACILITIES
CENTRAL REGION
4111 AVIATION AVE., ANCHORAGE ALASKA 99502
PHONE (907) 269-0590

TED STEVENS ANCHORAGE
ANCHORAGE, ALASKA
ANC TAXIWAY Z IMPROVEMENTS WEST - PHASE 1
PROJECT No. CFAPT00465
AIP No. 3-02-0016-XXX-2022
DEMO DETAIL

DATE: 10/14/2021

SHEET: 13 OF 78

Designed By: TAD
Drawn By: RJB
Checked By: TAD

Date Revised:
Layout Name: DEMO_2
File Path and Name: W:\Projects\AIA Ted Stevens\AIA TW Z Ext 00465\Final Drawings\00465-AIA-Demo Plan.dwg
10/14/2021, 12:17 PM

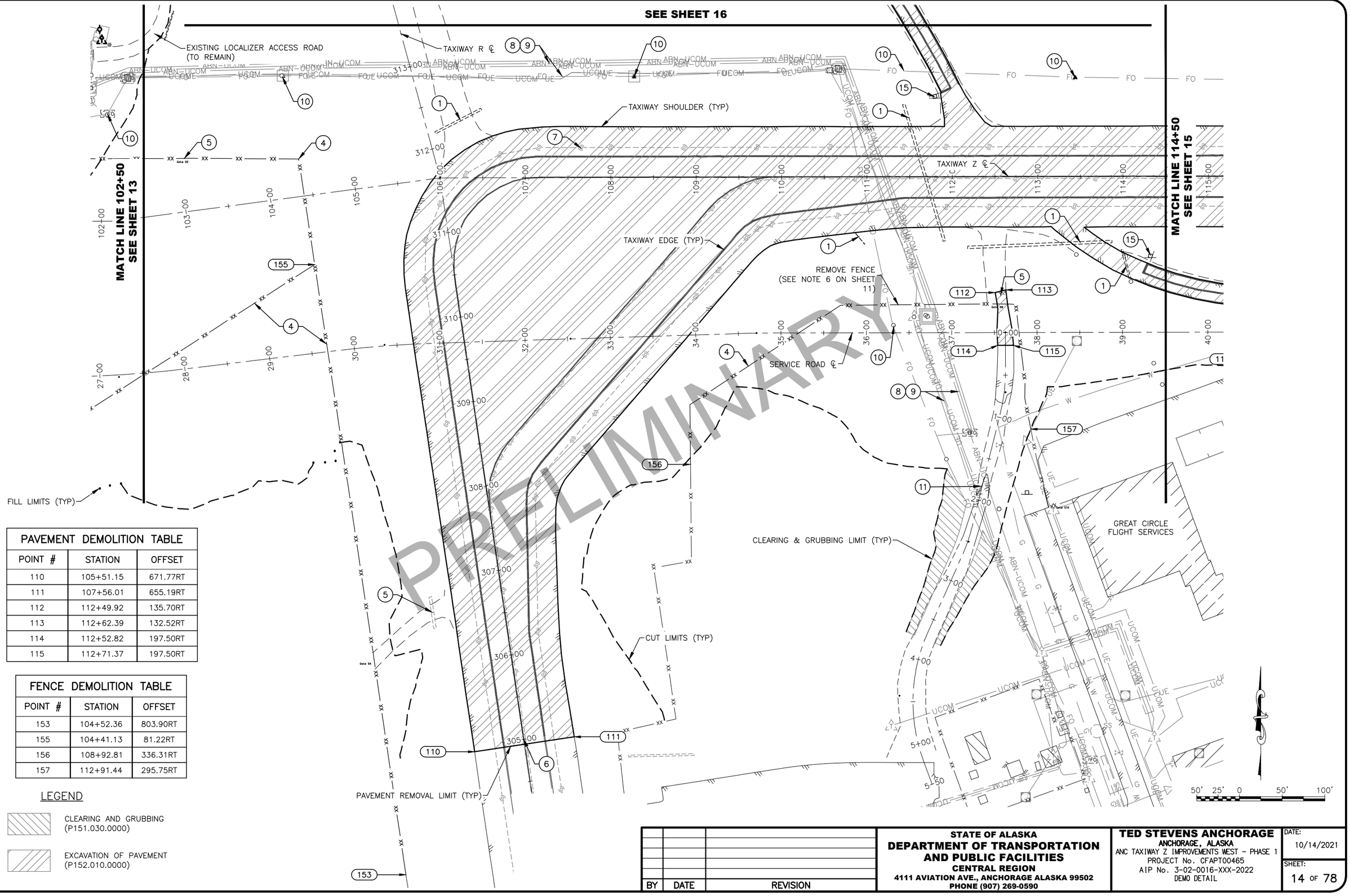

PAVEMENT DEMOLITION TABLE		
POINT #	STATION	OFFSET
110	105+51.15	671.77RT
111	107+56.01	655.19RT
112	112+49.92	135.70RT
113	112+62.39	132.52RT
114	112+52.82	197.50RT
115	112+71.37	197.50RT

FENCE DEMOLITION TABLE		
POINT #	STATION	OFFSET
153	104+52.36	803.90RT
155	104+41.13	81.22RT
156	108+92.81	336.31RT
157	112+91.44	295.75RT

LEGEND

CLEARING AND GRUBBING (P151.030.0000)

EXCAVATION OF PAVEMENT (P152.010.0000)

BY	DATE	REVISION

STATE OF ALASKA
DEPARTMENT OF TRANSPORTATION AND PUBLIC FACILITIES
CENTRAL REGION
4111 AVIATION AVE., ANCHORAGE ALASKA 99502
PHONE (907) 269-0590

TED STEVENS ANCHORAGE
ANCHORAGE, ALASKA
ANC TAXIWAY Z IMPROVEMENTS WEST - PHASE 1
PROJECT No. CFAPT00465
AIP No. 3-02-0016-XXX-2022
DEMO DETAIL

DATE: 10/14/2021

SHEET: 14 OF 78

Designed By: TAD
Drawn By: RJB
Checked By: TAD

Date Revised: 10/14/2021, 12:17 PM
Layout Name: DEMO 3
File Path and Name: W:\Projects\AIA Ted Stevens\AIA TW Z Ext 00465\Final Drawings\00465-AIA-Demo Plan.dwg

SEE SHEET 16

MATCH LINE 114+50
SEE SHEET 14

TAXIWAY Z ℄

TAXILANE E ℄

SERVICE ROAD ℄

SERVICE ROAD

CUT LIMITS (TYP)

FENCE REMOVAL LIMIT

UNKNOWN DEBRIS

UTILITY VAULT, OWNER TBD. UNKNOWN UTILITIES IN VICINITY

FUEL PUMP STATION, DO NOT DISTURB

RELOCATE EMERGENCY FUEL SHUT-OFF, SEE SHEET E7

GREAT CIRCLE FLIGHT SERVICES

FIELD ADJUST DEMOLITION LIMITS ALONG CROWN AS REQUIRED TO MAINTAIN EXISTING GRADE BREAK

ROSS AVIATION

PRELIMINARY

PAVEMENT DEMOLITION TABLE		
POINT #	STATION	OFFSET
116	115+54.70	224.50RT
117	117+64.66	224.50RT
118	117+76.43	256.95RT
119	117+91.78	251.38RT
120	118+28.97	353.84RT
121	118+30.35	353.34RT
122	119+35.68	474.58RT
123	119+93.74	453.51RT
124	120+28.40	548.99RT
125	120+98.02	523.71RT
126	121+22.49	419.64RT
127	121+39.96	413.29RT
128	120+75.18	234.81RT
129	121+41.92	210.59RT
130	122+22.37	210.59RT
131	127+56.61	94.92LT
132	127+57.59	118.35LT
133	127+09.34	136.41LT
134	126+97.20	136.92LT

FENCE DEMOLITION TABLE		
POINT #	STATION	OFFSET
158	124+91.37	191.28RT
159	125+75.19	143.99RT
160	124+80.89	255.98RT
161	125+23.04	279.97RT

LEGEND

CLEARING AND GRUBBING (P151.030.0000)

EXCAVATION OF PAVEMENT (P152.010.0000)

50' 25' 0 50' 100'

BY	DATE	REVISION

STATE OF ALASKA
DEPARTMENT OF TRANSPORTATION AND PUBLIC FACILITIES
CENTRAL REGION
4111 AVIATION AVE., ANCHORAGE ALASKA 99502
PHONE (907) 269-0590

TED STEVENS ANCHORAGE
ANCHORAGE, ALASKA
ANC TAXIWAY Z IMPROVEMENTS WEST - PHASE 1
PROJECT No. CFAPT00465
AIP No. 3-02-0016-XXX-2022
DEMO DETAIL

DATE: 10/14/2021
SHEET: 15 OF 78

Designed By: TAD
Drawn By: RJB
Checked By: TAD

Date Revised: 10/14/2021, 12:17 PM
Layout Name: DEMO 4
File Path and Names: W:\Projects\AIA Ted Stevens\AIA TW Z Ext 00465\Final Drawings\00465-AIA-Demo Plan.dwg

PRELIMINARY

PAVEMENT REMOVAL AS REQUIRED FOR LIGHTING SYSTEM, SEE ELECTRICAL PLAN (3/31)

TAXIWAY F ℄

TAXIWAY E ℄

TAXIWAY R ℄

CUT LIMIT (TYP)

CUT BACK AS REQUIRED, 24" CPE AND 12" UNDERDRAIN PIPE OUTLET ENDS

SEE SHEET 15

SEE SHEET 14

PAVEMENT DEMOLITION TABLE		
POINT #	STATION	OFFSET
104	103+69.96	494.81LT
105	103+76.67	545.82LT
106	107+59.80	512.00LT
107	107+59.80	459.88LT
108	103+34.17	345.71LT
109	103+32.30	323.39LT
135	122+15.11	460.00LT
136	122+15.11	512.00LT
137	115+36.66	512.00LT
138	115+36.65	459.85LT

LEGEND

CLEARING AND GRUBBING (P151.030.0000)

EXCAVATION OF PAVEMENT (P152.010.0000)

50' 25' 0 50' 100'

Designed By:	TAD
Drawn By:	RJB
Checked By:	TAD

Date Revised: 10/14/2021, 12:18 PM
Layout Name: DEMO 5
File Path and Name: W:\Projects\AIA Ted Stevens\AIA TW Z Ext 00465\Final Drawings\00465-AIA-Demo Plan.dwg

BY	DATE	REVISION

STATE OF ALASKA
DEPARTMENT OF TRANSPORTATION AND PUBLIC FACILITIES
CENTRAL REGION
4111 AVIATION AVE., ANCHORAGE ALASKA 99502
PHONE (907) 269-0590

TED STEVENS ANCHORAGE
ANCHORAGE, ALASKA
ANC TAXIWAY Z IMPROVEMENTS WEST - PHASE 1
PROJECT No. CFAPT00465
AIP No. 3-02-0016-XXX-2022
DEMO DETAIL

DATE: 10/14/2021

SHEET: 16 OF 78

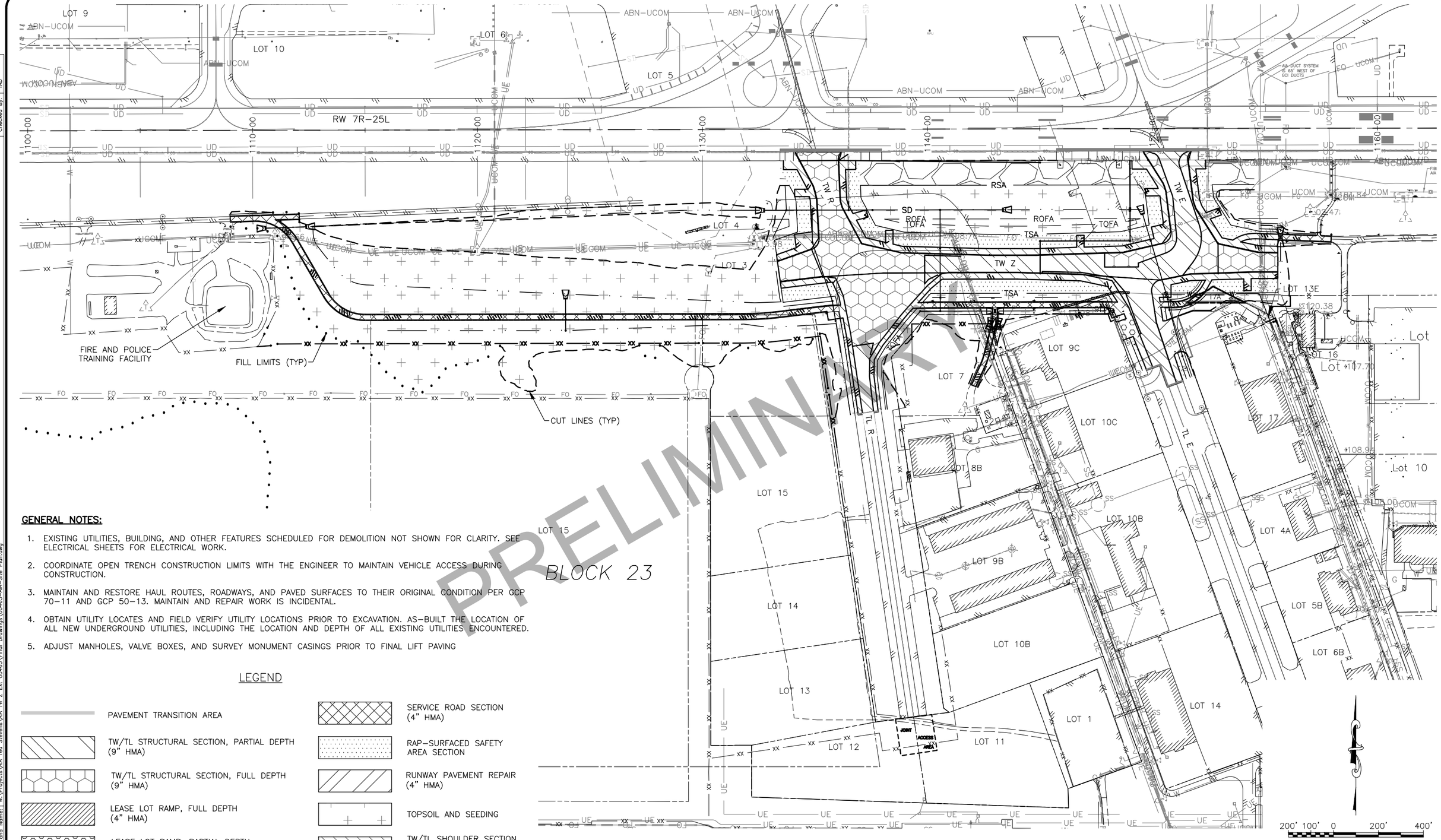

PRELIMINARY

GENERAL NOTES:

1. EXISTING UTILITIES, BUILDING, AND OTHER FEATURES SCHEDULED FOR DEMOLITION NOT SHOWN FOR CLARITY. SEE ELECTRICAL SHEETS FOR ELECTRICAL WORK.
2. COORDINATE OPEN TRENCH CONSTRUCTION LIMITS WITH THE ENGINEER TO MAINTAIN VEHICLE ACCESS DURING CONSTRUCTION.
3. MAINTAIN AND RESTORE HAUL ROUTES, ROADWAYS, AND PAVED SURFACES TO THEIR ORIGINAL CONDITION PER GCP 70-11 AND GCP 50-13. MAINTAIN AND REPAIR WORK IS INCIDENTAL.
4. OBTAIN UTILITY LOCATES AND FIELD VERIFY UTILITY LOCATIONS PRIOR TO EXCAVATION. AS-BUILT THE LOCATION OF ALL NEW UNDERGROUND UTILITIES, INCLUDING THE LOCATION AND DEPTH OF ALL EXISTING UTILITIES ENCOUNTERED.
5. ADJUST MANHOLES, VALVE BOXES, AND SURVEY MONUMENT CASINGS PRIOR TO FINAL LIFT PAVING

LEGEND

- PAVEMENT TRANSITION AREA
- TW/TL STRUCTURAL SECTION, PARTIAL DEPTH (9" HMA)
- TW/TL STRUCTURAL SECTION, FULL DEPTH (9" HMA)
- LEASE LOT RAMP, FULL DEPTH (4" HMA)
- LEASE LOT RAMP, PARTIAL DEPTH (4" HMA)
- SERVICE ROAD SECTION (4" HMA)
- RAP-SURFACED SAFETY AREA SECTION
- RUNWAY PAVEMENT REPAIR (4" HMA)
- TOPSOIL AND SEEDING
- TW/TL SHOULDER SECTION, FULL DEPTH (4" HMA)
- RUNWAY SHOULDER SECTION (4"HMA)

NOTE:

1. REFER TO SITE SECTIONS (SHEETS 25-29) FOR MORE INFO.

BY	DATE	REVISION

STATE OF ALASKA
DEPARTMENT OF TRANSPORTATION AND PUBLIC FACILITIES
CENTRAL REGION
4111 AVIATION AVE., ANCHORAGE ALASKA 99502
PHONE (907) 269-0590

TED STEVENS ANCHORAGE
ANCHORAGE, ALASKA
ANC TAXIWAY Z IMPROVEMENTS WEST - PHASE 1
PROJECT No. CFAPT00465
AIP No. 3-02-0016-XXX-2022
SITE PLAN OVERVIEW

DATE: 10/14/2021
SHEET: 17 OF 78

Designed By: TAD
Drawn By: RJB
Checked By: TAD
Date Revised: 10/14/2021, 12:21 PM
Layout Name: SITE OVERVIEW
File Path and Name: W:\Projects\AIA Ted Stevens\AIA TW Z Ext 00465\Final Drawings\00465-AIA-Site Plan.dwg

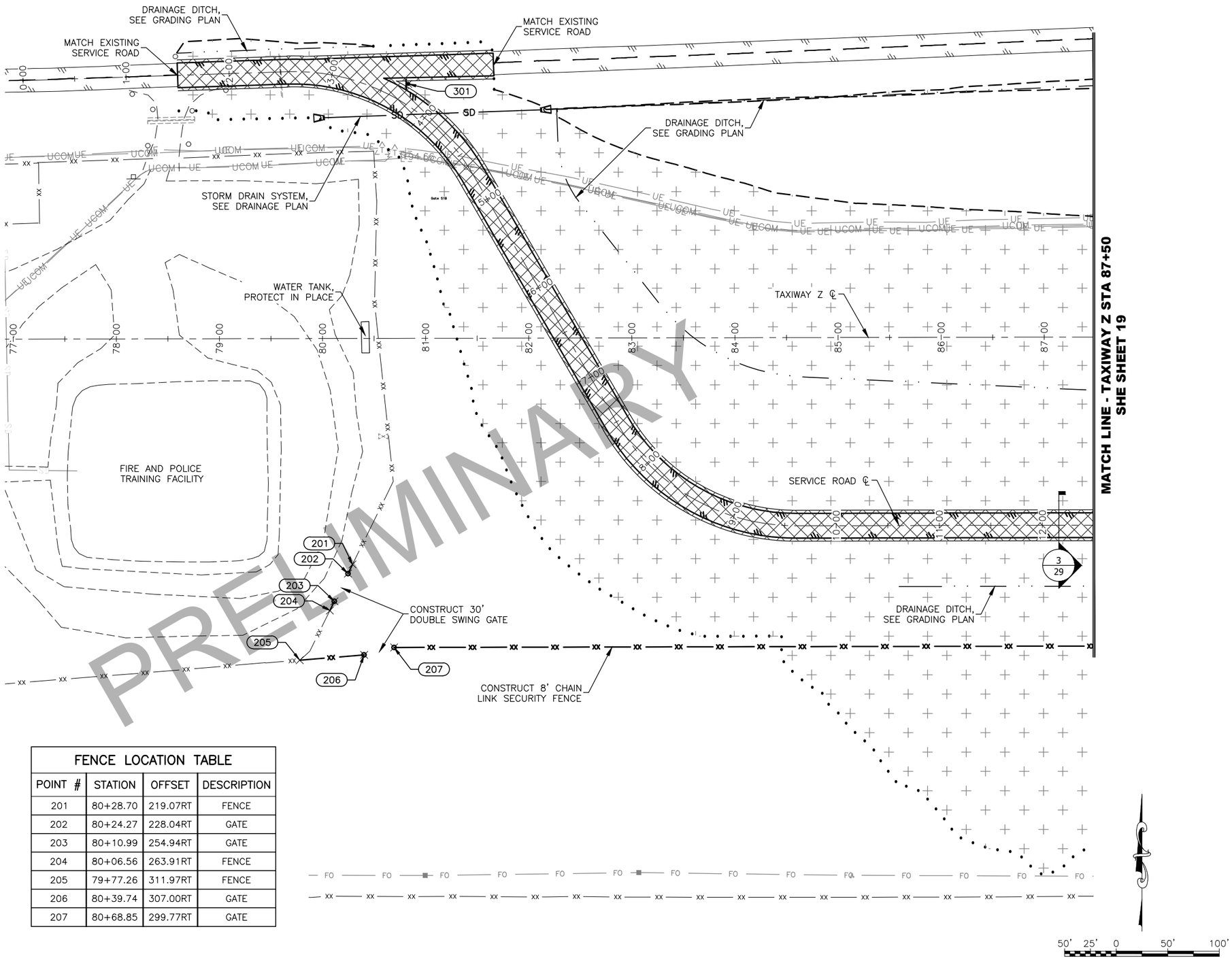

FENCE LOCATION TABLE			
POINT #	STATION	OFFSET	DESCRIPTION
201	80+28.70	219.07RT	FENCE
202	80+24.27	228.04RT	GATE
203	80+10.99	254.94RT	GATE
204	80+06.56	263.91RT	FENCE
205	79+77.26	311.97RT	FENCE
206	80+39.74	307.00RT	GATE
207	80+68.85	299.77RT	GATE

NOTE:

1. REFER TO SITE SECTIONS (SHEETS 25–29) FOR MORE INFO.

PRELIMINARY

Designed By:	TAD
Drawn By:	RJB
Checked By:	TAD
Date Revised:	10/14/2021, 12:21 PM
Layout Name:	SITE 1
File Path and Name:	W:\Projects\AIA Ted Stevens\AIA TW Z Ext 00465\Final Drawings\00465-AIA-Site Plan.dwg

BY	DATE	REVISION

STATE OF ALASKA
DEPARTMENT OF TRANSPORTATION AND PUBLIC FACILITIES
CENTRAL REGION
4111 AVIATION AVE., ANCHORAGE ALASKA 99502
PHONE (907) 269-0590

TED STEVENS ANCHORAGE
ANCHORAGE, ALASKA
ANC TAXIWAY Z IMPROVEMENTS WEST – PHASE 1
PROJECT No. CFAPT00465
AIP No. 3-02-0016-XXX-2022
SITE PLAN

DATE: 10/14/2021

SHEET: 18 OF 78

Designed By:	TAD
Drawn By:	RJB
Checked By:	TAD

Date Revised:	10/14/2021, 12:22 PM
Layout Name:	SITE 2
File Path and Name:	W:\Projects\AIA Ted Stevens\AIA TW Z Ext 00465\Final Drawings\00465-AIA-Site Plan.dwg

MATCH LINE - TAXIWAY Z STA 87+50
SEE SHEET 18

MATCH LINE - TAXIWAY Z STA 102+50
SEE SHEET 20

DRAINAGE DITCH, SEE GRADING PLAN

RW 15 LOCALIZER, PROTECT IN PLACE

TAXIWAY Z ℄

STORM DRAIN SYSTEM, SEE DRAINAGE PLAN

SERVICE ROAD ℄

DRAINAGE DITCH, SEE GRADING PLAN

CONSTRUCT 8' CHAIN LINK SECURITY FENCE

CONSTRUCT 20' DOUBLE SWING GATE

PRELIMINARY

FENCE LOCATION TABLE			
POINT #	STATION	OFFSET	DESCRIPTION
209	99+62.32	299.77RT	GATE
208	99+42.32	299.77RT	GATE
210	101+41.27	299.77RT	FENCE

50' 25' 0 50' 100'

NOTE:

1. REFER TO SITE SECTIONS (SHEETS 25-29) FOR MORE INFO.

BY	DATE	REVISION

STATE OF ALASKA
DEPARTMENT OF TRANSPORTATION AND PUBLIC FACILITIES
CENTRAL REGION
4111 AVIATION AVE., ANCHORAGE ALASKA 99502
PHONE (907) 269-0590

TED STEVENS ANCHORAGE
ANCHORAGE, ALASKA
ANC TAXIWAY Z IMPROVEMENTS WEST - PHASE 1
PROJECT No. CFAPT00465
AIP No. 3-02-0016-XXX-2022
SITE PLAN

DATE: 10/14/2021

SHEET: 19 OF 78

MATCH LINE - TAXIWAY R
SEE SHEET 22

MATCH LINE - TAXIWAY Z STA 102+50
SEE SHEET 19

MATCH LINE - TAXIWAY Z STA 114+00
SEE SHEET 21

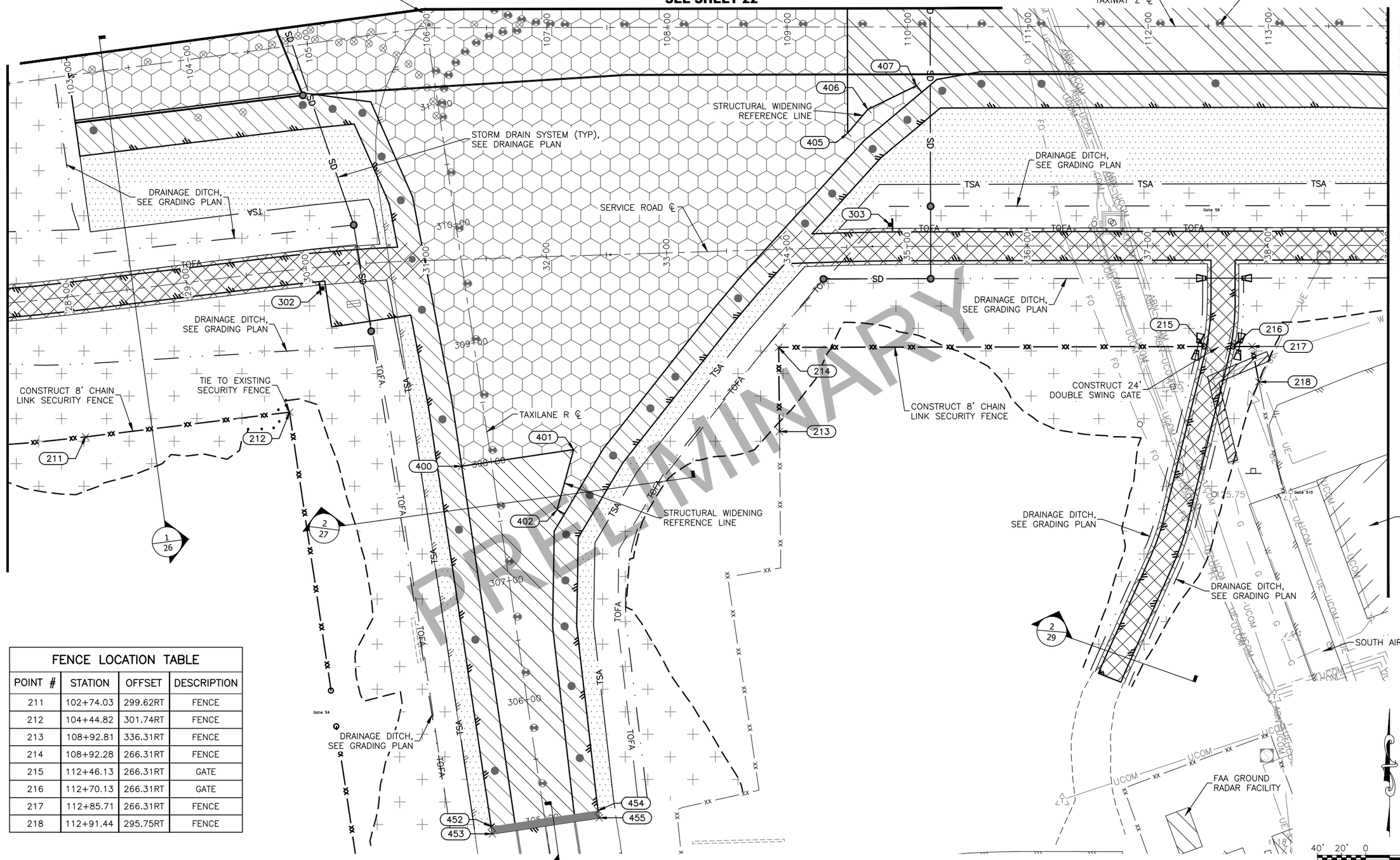

PRELIMINARY

FENCE LOCATION TABLE

POINT #	STATION	OFFSET	DESCRIPTION
211	102+74.03	299.62RT	FENCE
212	104+44.82	301.74RT	FENCE
213	108+92.81	336.31RT	FENCE
214	108+92.28	266.31RT	FENCE
215	112+46.13	266.31RT	GATE
216	112+70.13	266.31RT	GATE
217	112+85.71	266.31RT	FENCE
218	112+91.44	295.75RT	FENCE

NOTE:

1. REFER TO SITE SECTIONS (SHEETS 25–29) FOR MORE INFO.

BY	DATE	REVISION

STATE OF ALASKA
DEPARTMENT OF TRANSPORTATION AND PUBLIC FACILITIES
CENTRAL REGION
4111 AVIATION AVE., ANCHORAGE ALASKA 99502
PHONE (907) 269-0590

TED STEVENS ANCHORAGE
ANCHORAGE, ALASKA
ANC TAXIWAY Z IMPROVEMENTS WEST - PHASE 1
PROJECT No. CFAPT00465
AIP No. 3-02-0016-XXX-2022
SITE PLAN

DATE: 10/14/2021
SHEET: 20 OF 78

Designed By: TAD
Drawn By: RJB
Checked By: TAD
Date Revised:
Layout Name: SITE 3
File Path and Name: W:\Projects\AIA Ted Stevens\AIA TW Z Ext 00465\Final Drawings\00465-AIA-Site Plan.dwg
10/14/2021, 12:22 PM

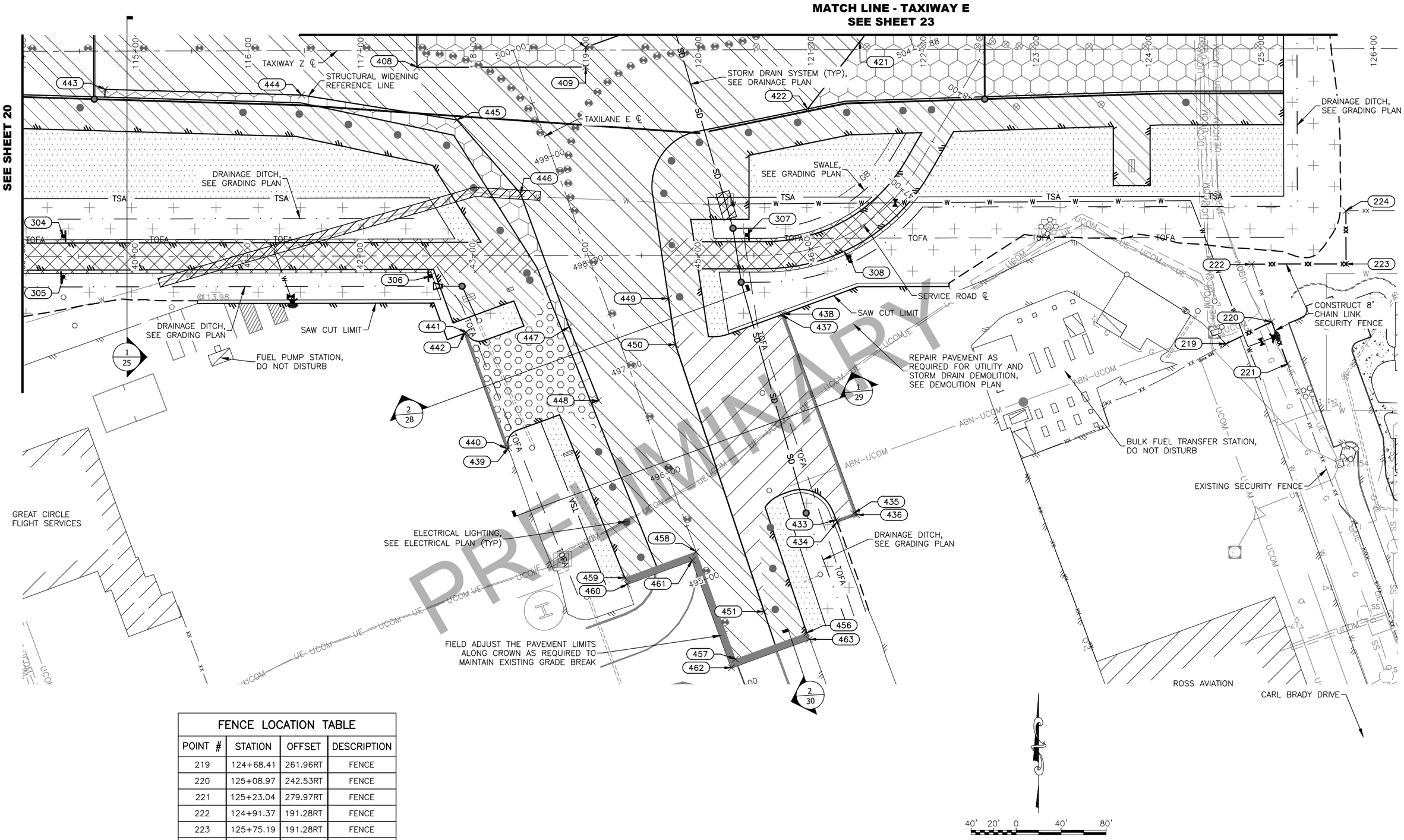

FENCE LOCATION TABLE			
POINT #	STATION	OFFSET	DESCRIPTION
219	124+68.41	261.96RT	FENCE
220	125+08.97	242.53RT	FENCE
221	125+23.04	279.97RT	FENCE
222	124+91.37	191.28RT	FENCE
223	125+75.19	191.28RT	FENCE
224	125+75.19	143.99RT	FENCE

NOTE:

1. REFER TO SITE SECTIONS (SHEETS 25–29) FOR MORE INFO.

BY	DATE	REVISION

STATE OF ALASKA
DEPARTMENT OF TRANSPORTATION AND PUBLIC FACILITIES
CENTRAL REGION
4111 AVIATION AVE., ANCHORAGE ALASKA 99502
PHONE (907) 269-0590

TED STEVENS ANCHORAGE
ANCHORAGE, ALASKA
ANC TAXIWAY Z IMPROVEMENTS WEST - PHASE 1
PROJECT No. CFAPT00465
AIP No. 3-02-0016-XXX-2022
SITE PLAN

DATE: 10/14/2021

SHEET: 21 OF 78

Designed By: TAD
Drawn By: RJB
Checked By: TAD
Date Revised: 10/14/2021, 12:22 PM
Layout Name: SITE 4
File Path and Name: W:\Projects\AIA Ted Stevens\AIA TW Z Ext 00465\Final Drawings\00465-AIA-Site Plan.dwg

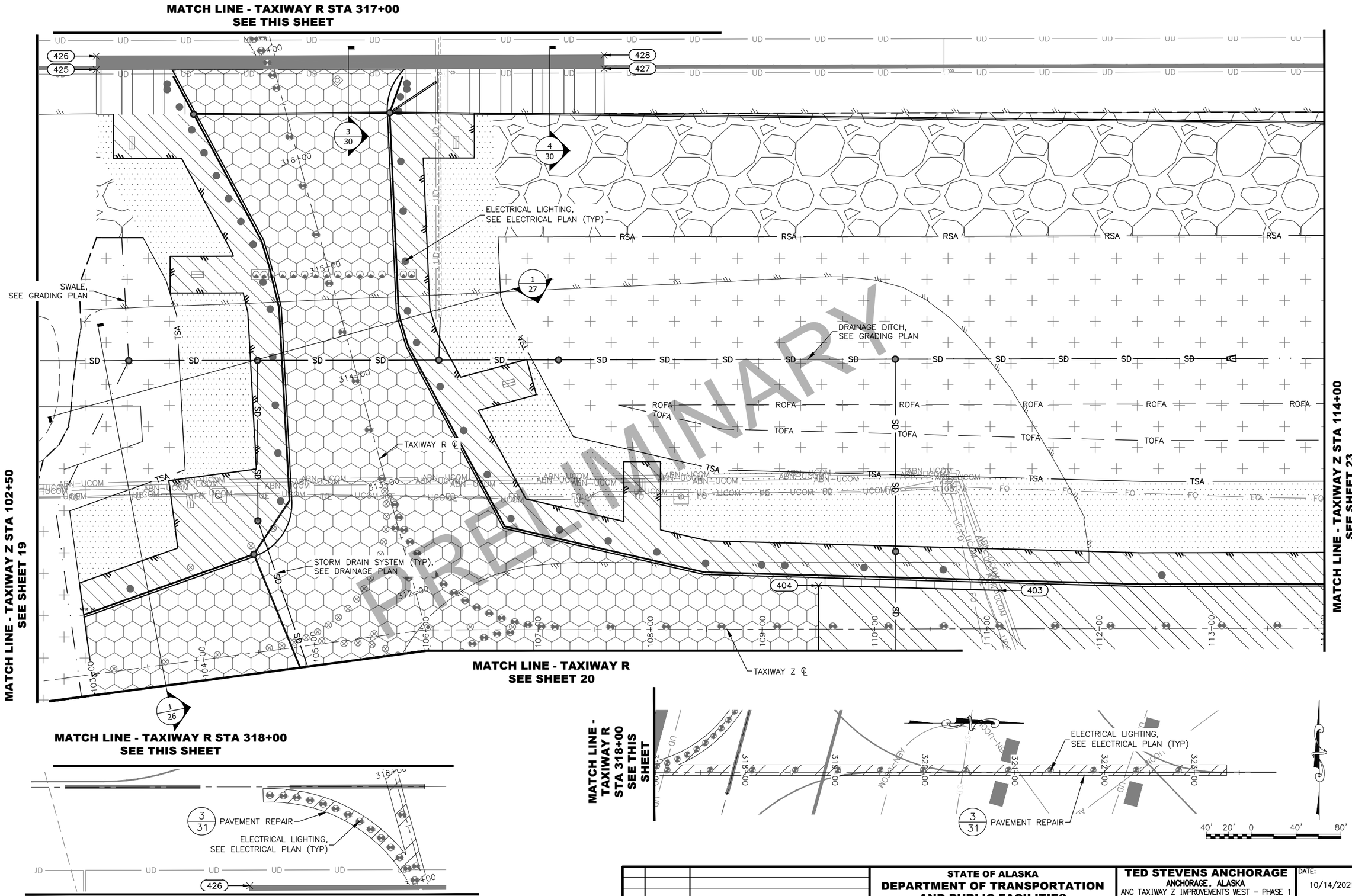

NOTE:

1. REFER TO SITE SECTIONS (SHEETS 25–29) FOR MORE INFO.

BY	DATE	REVISION

STATE OF ALASKA
DEPARTMENT OF TRANSPORTATION AND PUBLIC FACILITIES
CENTRAL REGION
4111 AVIATION AVE., ANCHORAGE ALASKA 99502
PHONE (907) 269-0590

TED STEVENS ANCHORAGE
ANCHORAGE, ALASKA
ANC TAXIWAY Z IMPROVEMENTS WEST - PHASE 1
PROJECT No. CFAPT00465
AIP No. 3-02-0016-XXX-2022
SITE PLAN

DATE: 10/14/2021

SHEET: 22 OF 78

Designed By: TAD
Drawn By: RJB
Checked By: TAD

Date Revised: 10/14/2021, 12:23 PM
Layout Name: SITE 5
File Path and Name: W:\Projects\AIA Ted Stevens\AIA TW Z Ext 00465\Final Drawings\00465-AIA-Site Plan.dwg

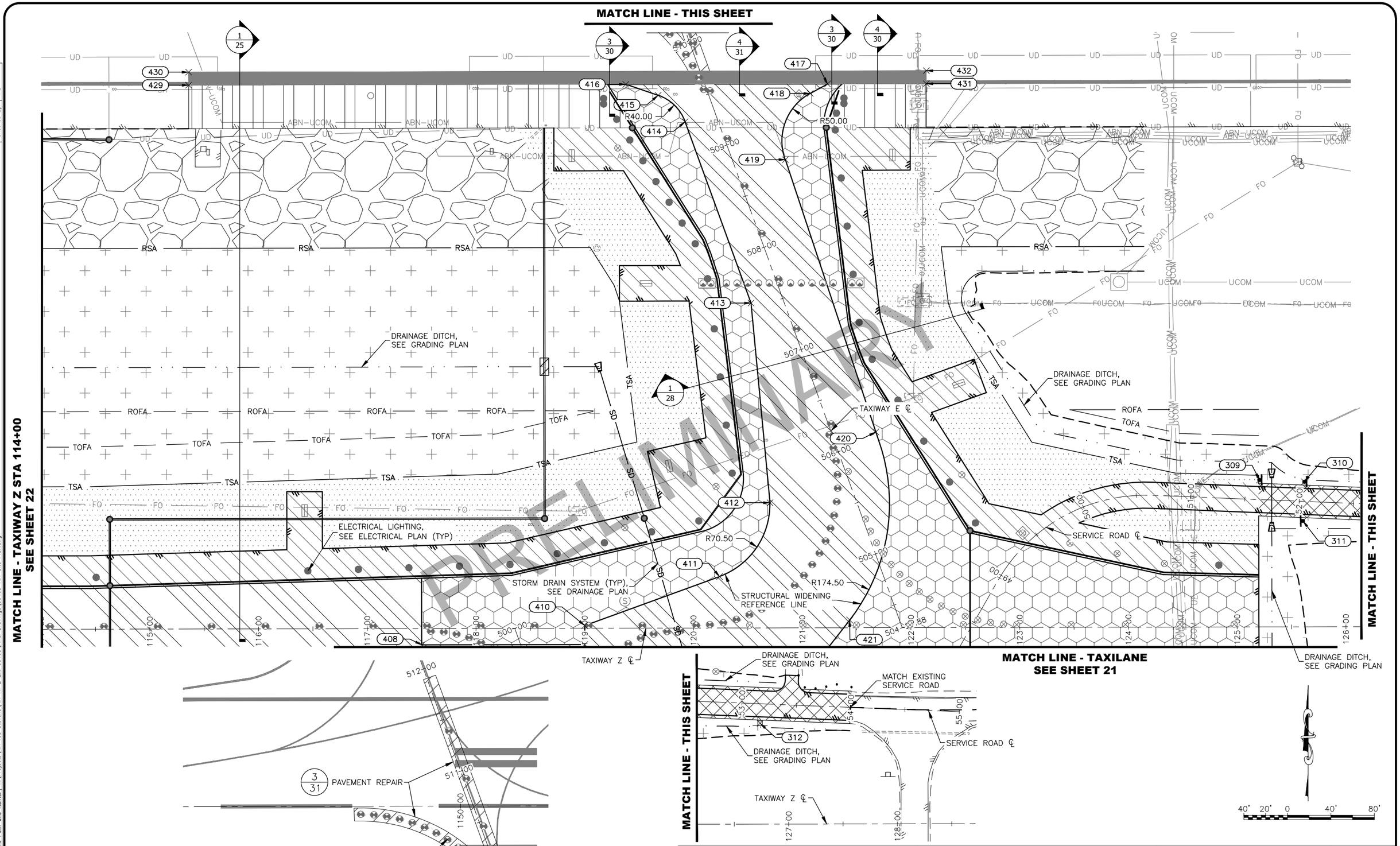

NOTE:

1. REFER TO SITE SECTIONS (SHEETS 25–29) FOR MORE INFO.

BY	DATE	REVISION

STATE OF ALASKA
DEPARTMENT OF TRANSPORTATION AND PUBLIC FACILITIES
CENTRAL REGION
4111 AVIATION AVE., ANCHORAGE ALASKA 99502
PHONE (907) 269-0590

TED STEVENS ANCHORAGE
ANCHORAGE, ALASKA
ANC TAXIWAY Z IMPROVEMENTS WEST – PHASE 1
PROJECT No. CFAPT00465
AIP No. 3-02-0016-XXX-2022
SITE PLAN

DATE: 10/14/2021
SHEET: 23 OF 78

Designed By: TAD
Drawn By: RJB
Checked By: TAD
Date Revised: 10/14/2021, 12:24 PM
Layout Name: SITE 6
File Path and Name: W:\Projects\AIA Ted Stevens\AIA TW Z Ext 00465\Final Drawings\00465-AIA-Site Plan.dwg

Designed By:	TAD
Drawn By:	RJB
Checked By:	TAD

Date Revised:	10/14/2021, 12:24 PM
Layout Name:	SITE POINT TABLE
File Path and Name:	W:\Projects\AIA Ted Stevens\AIA TW Z Ext 00465\Final Drawings\00465-AIA-Site Plan.dwg

SITE POINT LOCATION TABLE

POINT #	STATION	OFFSET	DESCRIPTION
401	107+21.59	350.95RT	PI STRUCTURAL WIDENING REFERENCE
457	120+31.99	541.30RT	BEGIN PAVEMENT TRANSITION
458	119+97.33	445.82RT	BEGIN PAVEMENT TRANSITION
459	119+33.87	468.86RT	BEGIN PAVEMENT TRANSITION
460	119+35.92	474.50RT	END PAVEMENT TRANSITION
461	119+93.74	453.51RT	PAVEMENT TRANSITION LIMIT FIELD VERIFY
462	120+28.40	548.99RT	PAVEMENT TRANSITION LIMIT FIELD VERIFY
463	120+97.50	523.90RT	END PAVEMENT TRANSITION
400	106+28.50	364.68RT	PI STRUCTURAL SECTION TRANSITION
402	107+07.88	400.92RT	PI STRUCTURAL WIDENING REFERENCE
403	111+10.95	34.22LT	PI STRUCTURAL WIDENING REFERENCE
404	109+50.00	38.94LT	PI STRUCTURAL WIDENING REFERENCE
405	109+50.00	88.25RT	PI STRUCTURAL WIDENING REFERENCE
406	109+66.89	68.65RT	PI STRUCTURAL WIDENING REFERENCE
407	110+07.20	48.96RT	PI STRUCTURAL WIDENING REFERENCE
408	117+50.00	15.00RT	PI STRUCTURAL WIDENING REFERENCE
409	118+99.97	15.00RT	PI STRUCTURAL WIDENING REFERENCE
410	119+00.01	2.50LT	PI STRUCTURAL WIDENING REFERENCE
411	120+24.03	47.25LT	PC STRUCTURAL WIDENING REFERENCE
412	120+70.55	115.09LT	PT STRUCTURAL WIDENING REFERENCE
413	120+53.43	298.68LT	PI STRUCTURAL WIDENING REFERENCE
414	119+93.17	465.50LT	PC STRUCTURAL WIDENING REFERENCE
415	119+68.45	489.86LT	PT STRUCTURAL WIDENING REFERENCE
416	119+38.77	500.00LT	PI STRUCTURAL WIDENING REFERENCE
449	119+73.17	220.87RT	PI STRUCTURAL REFERENCE ROSS RAMP
450	119+79.32	261.85RT	PI STRUCTURAL REFERENCE ROSS RAMP
451	120+57.55	499.13RT	PI STRUCTURAL REFERENCE ROSS RAMP
452	106+52.47	664.39RT	BEGIN PAVEMENT TRANSITION
453	106+53.34	670.32RT	END PAVEMENT TRANSITION
454	107+41.50	651.26RT	BEGIN PAVEMENT TRANSITION
455	107+42.38	657.20RT	END PAVEMENT TRANSITION

SITE POINT LOCATION TABLE

POINT #	STATION	OFFSET	DESCRIPTION
456	120+95.45	518.26RT	BEGIN PAVEMENT TRANSITION
417	121+24.21	500.00LT	PI STRUCTURAL WIDENING REFERENCE
418	121+08.31	491.28LT	PC STRUCTURAL WIDENING REFERENCE
419	120+85.33	430.45LT	PT STRUCTURAL WIDENING REFERENCE
420	121+67.99	180.01LT	PC STRUCTURAL WIDENING REFERENCE
421	121+43.65	7.07LT	PT STRUCTURAL WIDENING REFERENCE
422	120+97.17	52.61RT	PI STRUCTURAL WIDENING REFERENCE
425	103+75.11	533.92LT	BEGIN PAVEMENT TRANSITION
426	103+76.67	545.82LT	END PAVEMENT TRANSITION
427	107+59.80	500.00LT	BEGIN PAVEMENT TRANSITION
428	107+59.80	512.00LT	END PAVEMENT TRANSITION
429	115+36.66	500.00LT	BEGIN PAVEMENT TRANSITION
430	115+36.66	512.00LT	END PAVEMENT TRANSITION
431	122+15.11	500.00LT	BEGIN PAVEMENT TRANSITION
432	122+15.13	512.00LT	END PAVEMENT TRANSITION
433	121+21.74	417.78RT	BEGIN PAVEMENT TRANSITION
434	121+22.49	419.64RT	END PAVEMENT TRANSITION
435	121+37.40	412.10RT	BEGIN PAVEMENT TRANSITION
436	121+39.96	413.29RT	END PAVEMENT TRANSITION
437	120+73.30	235.50RT	BEGIN PAVEMENT TRANSITION
438	120+75.18	234.81RT	END PAVEMENT TRANSITION
439	118+30.85	353.15RT	BEGIN PAVEMENT TRANSITION
440	118+28.97	353.84RT	END PAVEMENT TRANSITION
441	117+93.66	250.69RT	BEGIN PAVEMENT TRANSITION
442	117+91.78	251.38RT	END PAVEMENT TRANSITION
443	114+72.88	33.95RT	PI STRUCTURAL WIDENING REFERENCE
444	116+47.49	39.35RT	PI STRUCTURAL WIDENING REFERENCE
445	117+85.56	61.84RT	PI STRUCTURAL WIDENING REFERENCE
446	118+41.81	127.26RT	PI STRUCTURAL WIDENING REFERENCE
447	118+84.79	245.66RT	PI STRUCTURAL WIDENING REFERENCE
448	119+10.94	311.32RT	PI STRUCTURAL WIDENING REFERENCE

PRELIMINARY

BY	DATE	REVISION

STATE OF ALASKA
DEPARTMENT OF TRANSPORTATION AND PUBLIC FACILITIES
CENTRAL REGION
4111 AVIATION AVE., ANCHORAGE ALASKA 99502
PHONE (907) 269-0590

TED STEVENS ANCHORAGE
ANCHORAGE, ALASKA
ANC TAXIWAY Z IMPROVEMENTS WEST - PHASE 1
PROJECT No. CFAPT00465
AIP No. 3-02-0016-XXX-2022
SITE PLAN POINT TABLE

DATE: 10/14/2021

SHEET: 24 OF 78

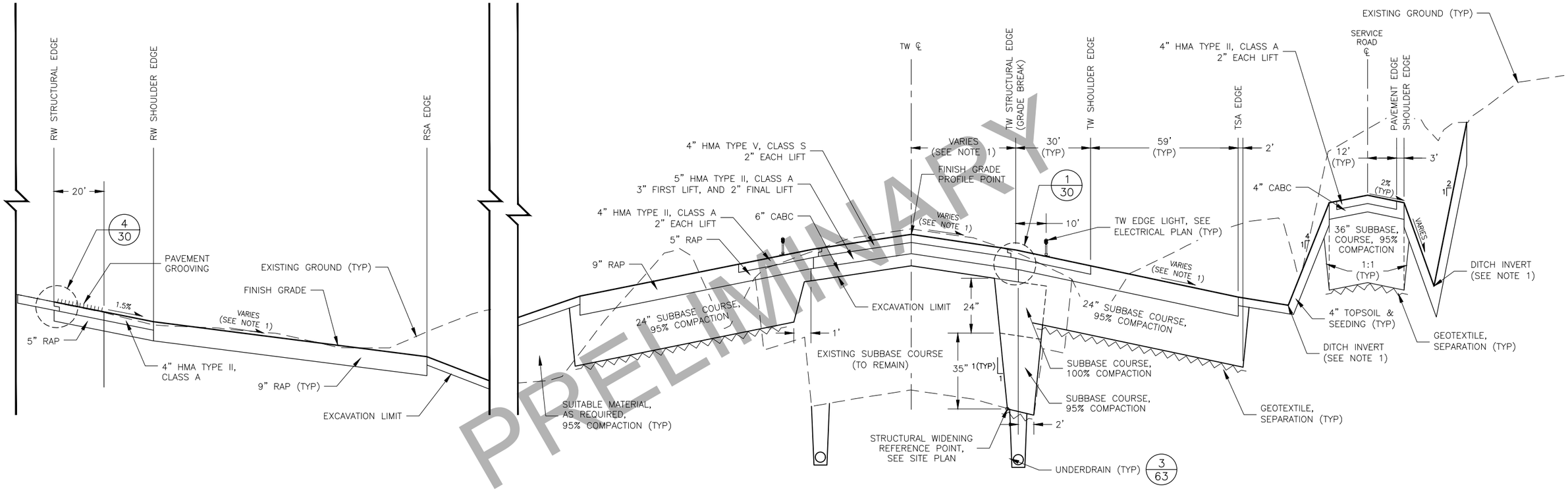

1/25 TAXIWAY Z SITE SECTION – WIDENING

SCALE: NTS

PRELIMINARY

GENERAL NOTES:

1. GRADES AND DIMENSIONS VARY, SEE GRADING PLAN.
2. PROVIDE TACK COAT BETWEEN ALL LIFTS AND LAYERS OF HOT MIX ASPHALT.
3. REGRADE AND SEED ALL DISTURBED AREAS.

BY	DATE	REVISION

STATE OF ALASKA
DEPARTMENT OF TRANSPORTATION AND PUBLIC FACILITIES
CENTRAL REGION
4111 AVIATION AVE., ANCHORAGE ALASKA 99502
PHONE (907) 269-0590

TED STEVENS ANCHORAGE
ANCHORAGE, ALASKA
ANC TAXIWAY Z IMPROVEMENTS WEST - PHASE 1
PROJECT No. CFAPT00465
AIP No. 3-02-0016-XXX-2022
SITE SECTIONS

DATE: 10/14/2021

SHEET: 25 OF 78

Designed By: TAD
Drawn By: RJB
Checked By: TAD

Date Revised: 10/14/2021, 12:24 PM
Layout Name: SITE SECTIONS_1
File Path and Name: W:\Projects\AIA Ted Stevens\AIA TW Z Ext 00465\Final Drawings\00465-AIA-Typical Sections.dwg

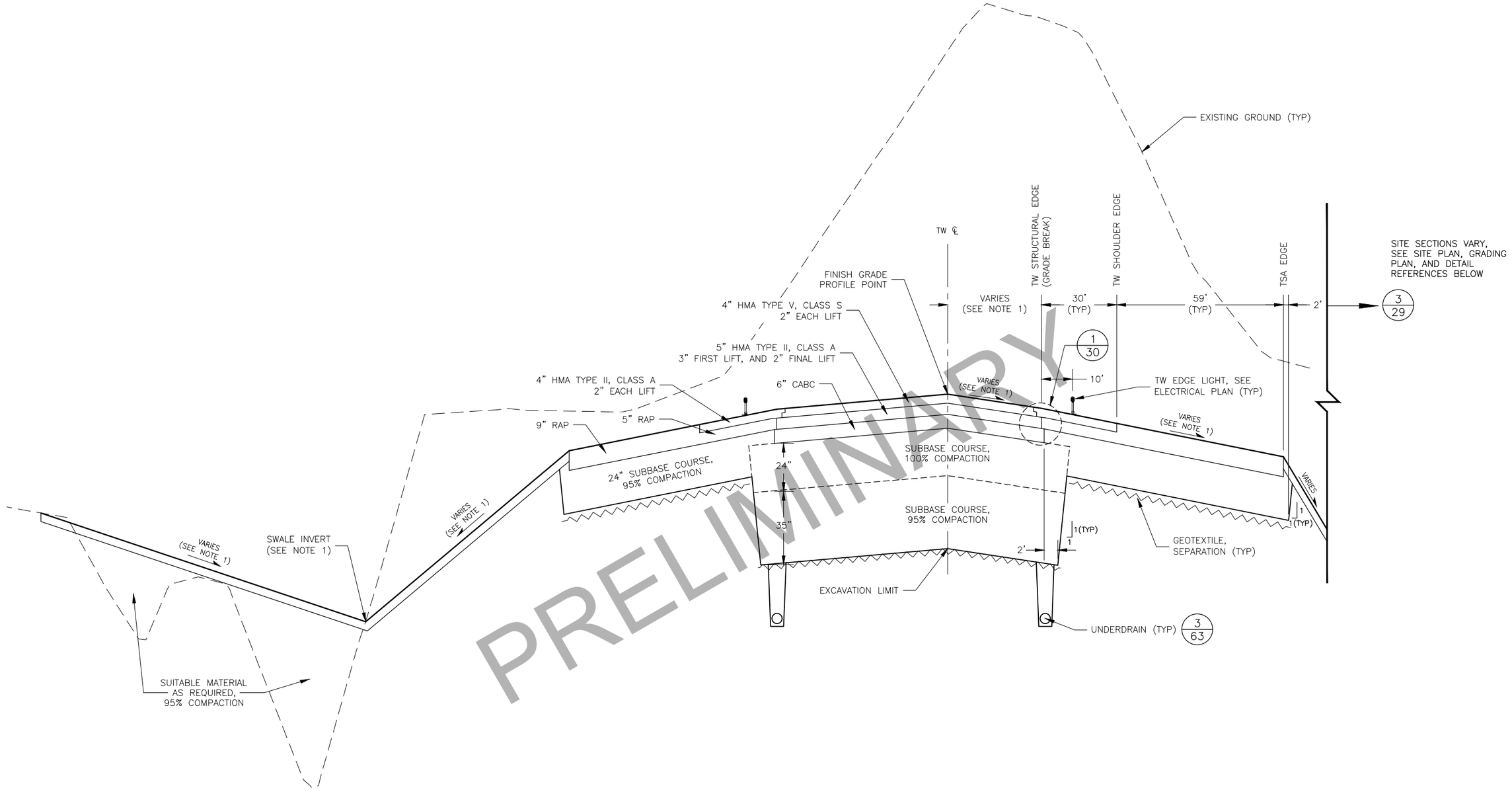

1/26 TAXIWAY Z SITE SECTION – FULL WIDTH CONSTRUCTION

SCALE: NTS

PRELIMINARY

GENERAL NOTES:

1. GRADES AND DIMENSIONS VARY, SEE GRADING PLAN.
2. PROVIDE TACK COAT BETWEEN ALL LIFTS AND LAYERS OF HOT MIX ASPHALT.
3. REGRADE AND SEED ALL DISTURBED AREAS.

BY	DATE	REVISION

STATE OF ALASKA
DEPARTMENT OF TRANSPORTATION AND PUBLIC FACILITIES
CENTRAL REGION
4111 AVIATION AVE., ANCHORAGE ALASKA 99502
PHONE (907) 269-0590

TED STEVENS ANCHORAGE
ANCHORAGE, ALASKA
ANC TAXIWAY Z IMPROVEMENTS WEST – PHASE 1
PROJECT No. CFAPT00465
AIP No. 3-02-0016-XXX-2022
SITE SECTIONS

DATE: 10/14/2021
SHEET: 26 OF 78

Designed By: TAD
Drawn By: RJB
Checked By: TAD

Date Revised:
Layout Name: 10/14/2021, 12:24 PM SITE SECTIONS 2
File Path and Name: W:\Projects\AIA Ted Stevens\AIA TW Z Ext 00465\Final Drawings\00465-AIA-Typical Sections.dwg

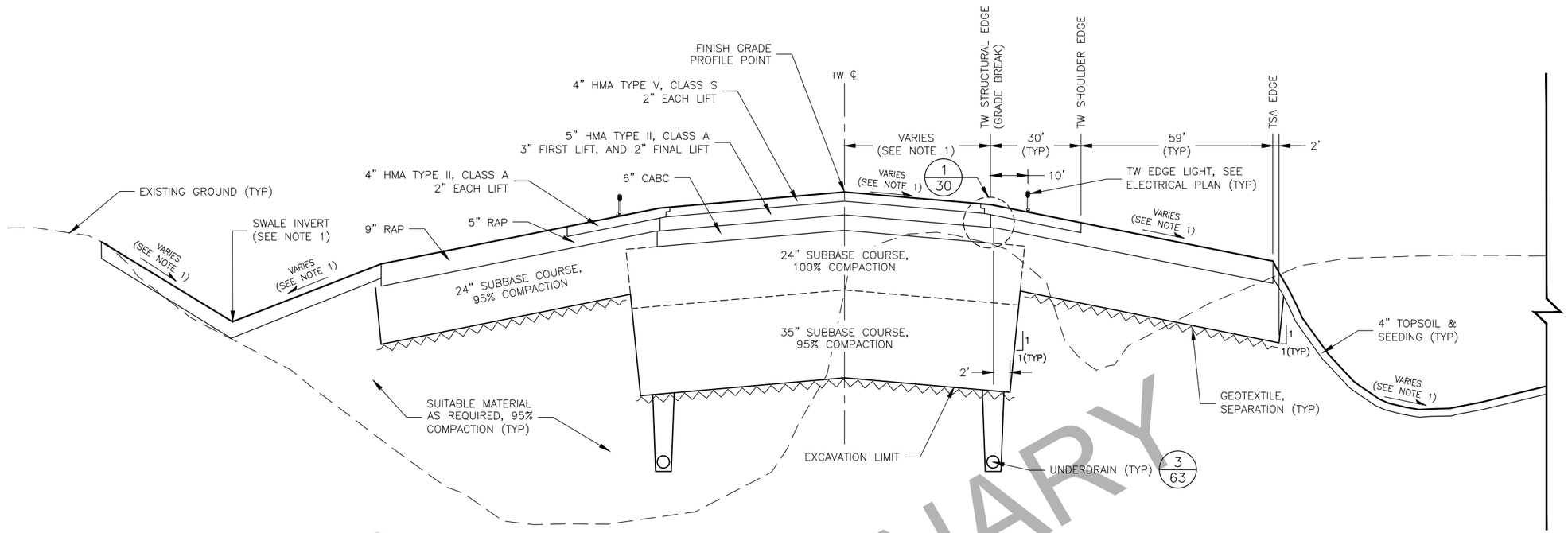

1/27 TW R SITE SECTION – FULL WIDTH CONSTRUCTION

SCALE: NTS

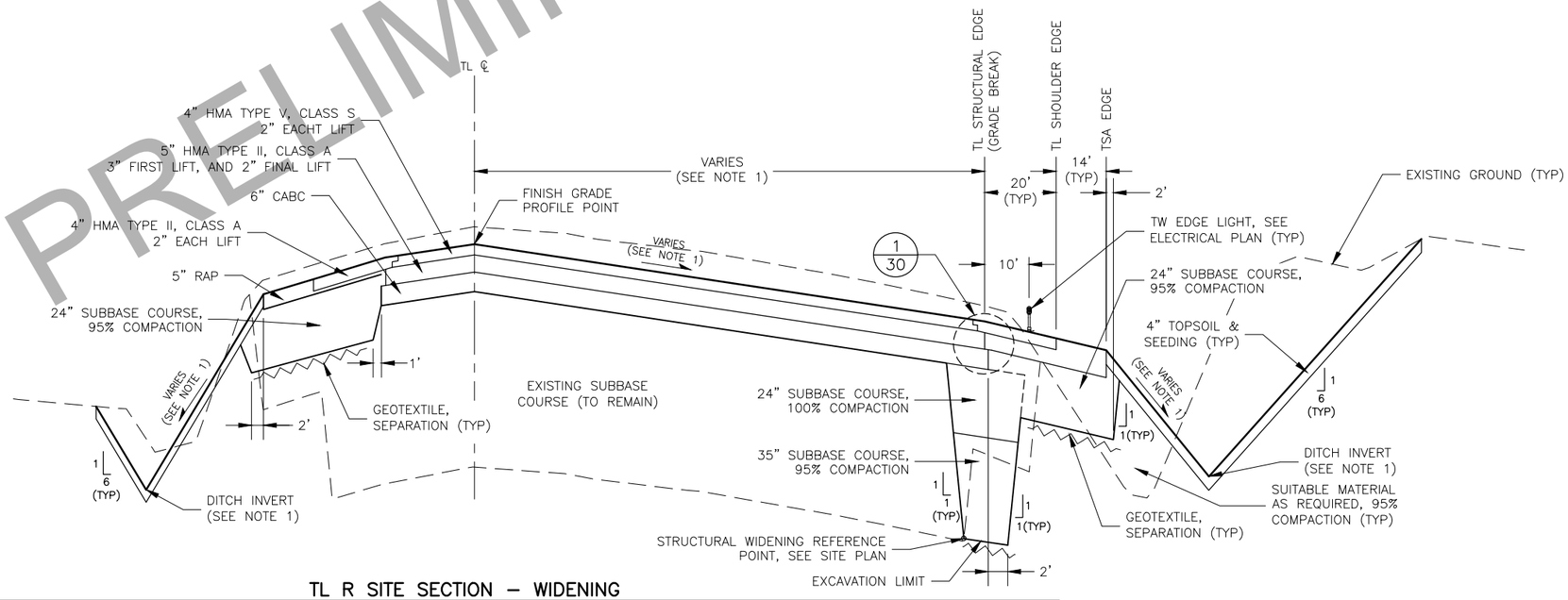

2/27 TL R SITE SECTION – WIDENING

SCALE: NTS

PRELIMINARY

GENERAL NOTES:

1. GRADE AND DIMENSIONS VARY, SEE GRADING PLAN.
2. PROVIDE TACK COAT BETWEEN ALL LIFTS AND LAYERS OF HOT MIX ASPHALT.
3. REGRADE AND SEED ALL DISTURBED AREAS.

BY	DATE	REVISION

STATE OF ALASKA
DEPARTMENT OF TRANSPORTATION AND PUBLIC FACILITIES
CENTRAL REGION
4111 AVIATION AVE., ANCHORAGE ALASKA 99502
PHONE (907) 269-0590

TED STEVENS ANCHORAGE
ANCHORAGE, ALASKA
ANC TAXIWAY Z IMPROVEMENTS WEST – PHASE 1
PROJECT No. CFAPT00465
AIP No. 3-02-0016-XXX-2022
SITE SECTIONS

DATE: 10/14/2021

SHEET: 27 OF 78

Designed By: TAD
Drawn By: RJB
Checked By: TAD

Date Revised:
Layout Name: SITE SECTIONS_3
File Path and Name: W:\Projects\ANA Ted Stevens\ANA TW Z Ext 00465\Final Drawings\00465-AIA-Typical Sections.dwg
10/14/2021, 12:24 PM

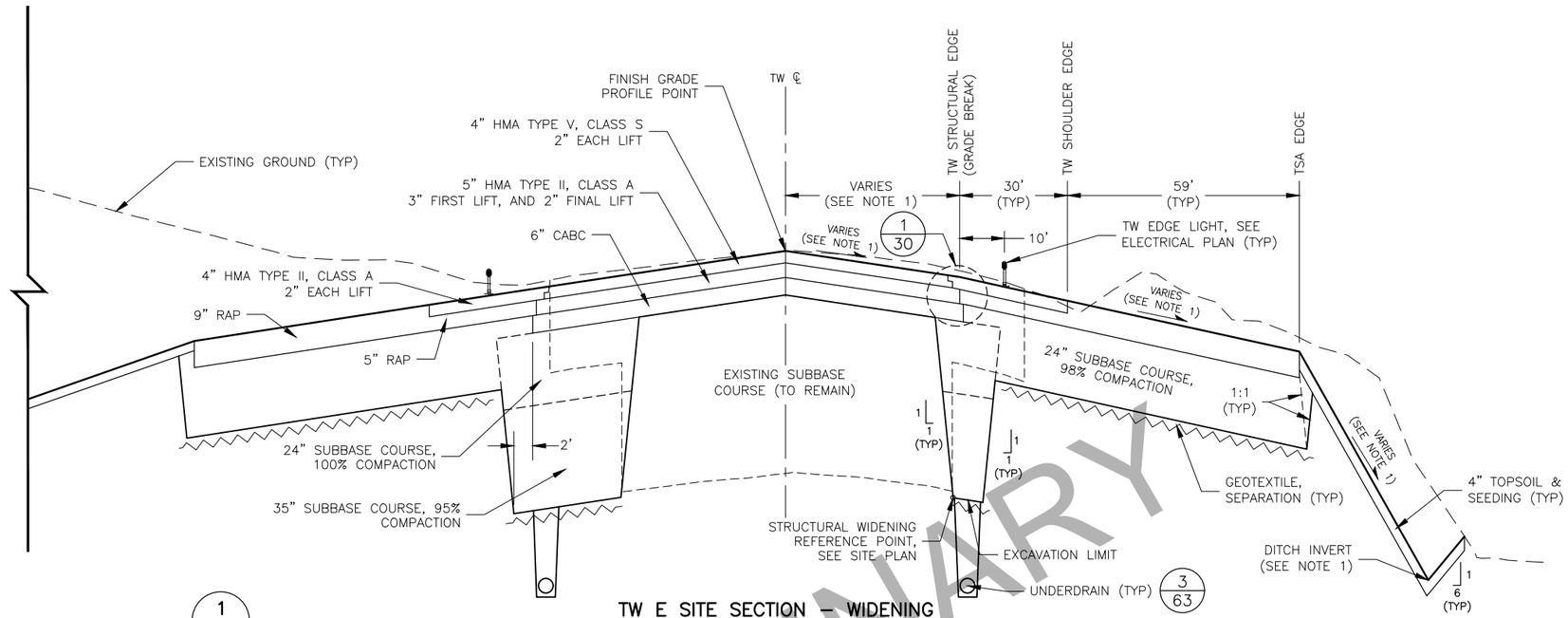

1/28 TW E SITE SECTION – WIDENING

SCALE: NTS

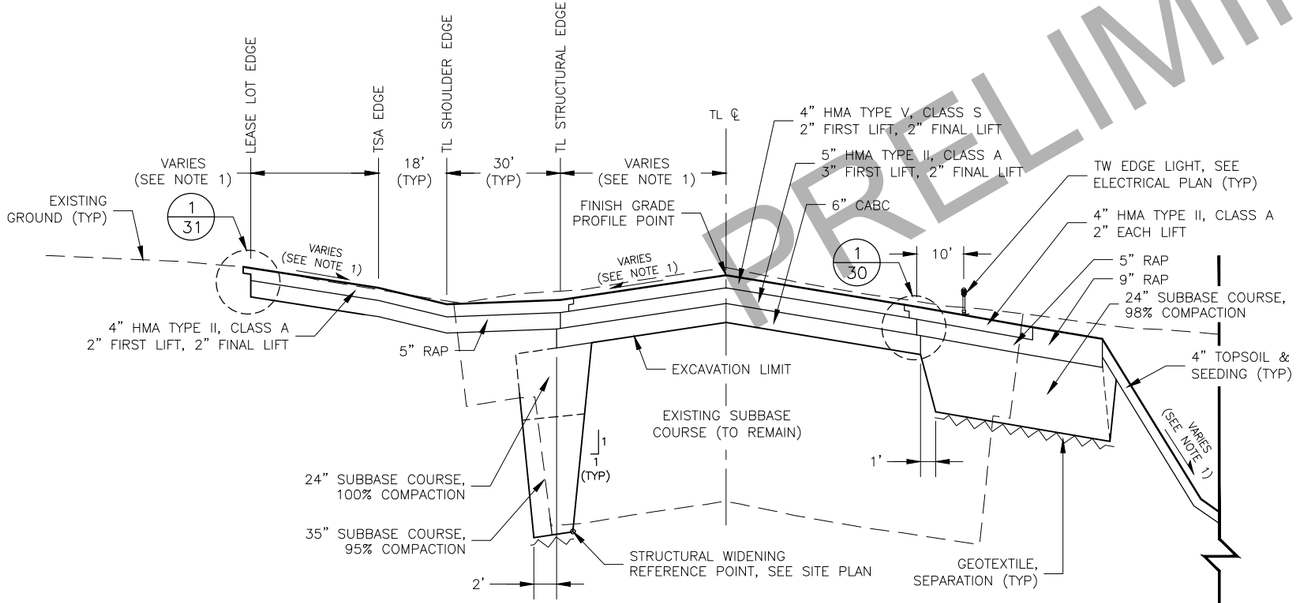

2/28 TL E SITE SECTION – WIDENING

SCALE: NTS

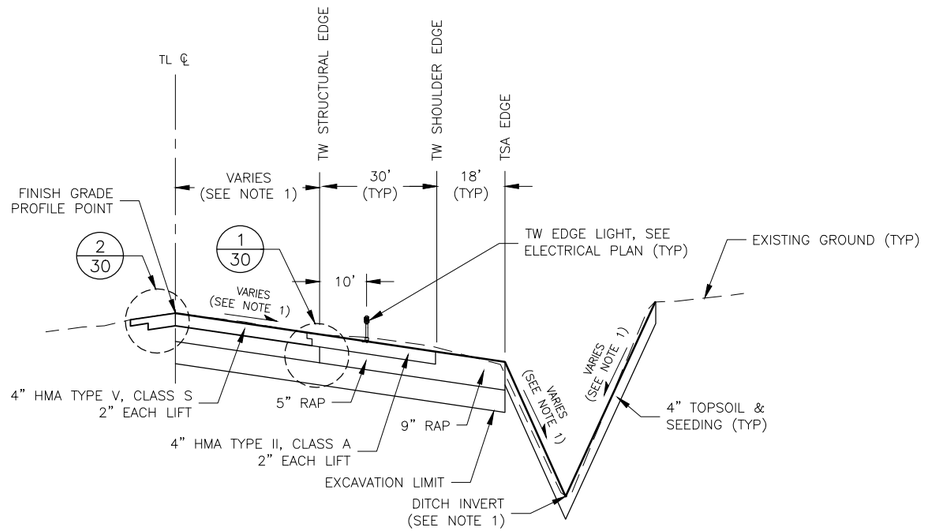

3/28 TL E SITE SECTION – MATCH EXISTING

SCALE: NTS

GENERAL NOTES:

1. GRADE AND DIMENSIONS VARY, SEE GRADING PLAN.
2. PROVIDE TACK COAT BETWEEN ALL LIFTS AND LAYERS OF HOT MIX ASPHALT.
3. REGRADE AND SEED ALL DISTURBED AREAS.

PRELIMINARY

BY	DATE	REVISION

STATE OF ALASKA
DEPARTMENT OF TRANSPORTATION AND PUBLIC FACILITIES
CENTRAL REGION
4111 AVIATION AVE., ANCHORAGE ALASKA 99502
PHONE (907) 269-0590

TED STEVENS ANCHORAGE
ANCHORAGE, ALASKA
ANC TAXIWAY Z IMPROVEMENTS WEST – PHASE 1
PROJECT No. CFAPT00465
AIP No. 3-02-0016-XXX-2022
SITE SECTIONS

DATE: 10/14/2021
SHEET: 28 OF 78

Designed By: TAD
Drawn By: RJB
Checked By: TAD
Date Revised:
Layout Name: SITE_SECTIONS 4
File Path and Names: W:\Projects\AIA Ted Stevens\AIA TW Z Ext 00465\Final Drawings\00465-AIA-Typical Sections.dwg
10/14/2021, 12:24 PM

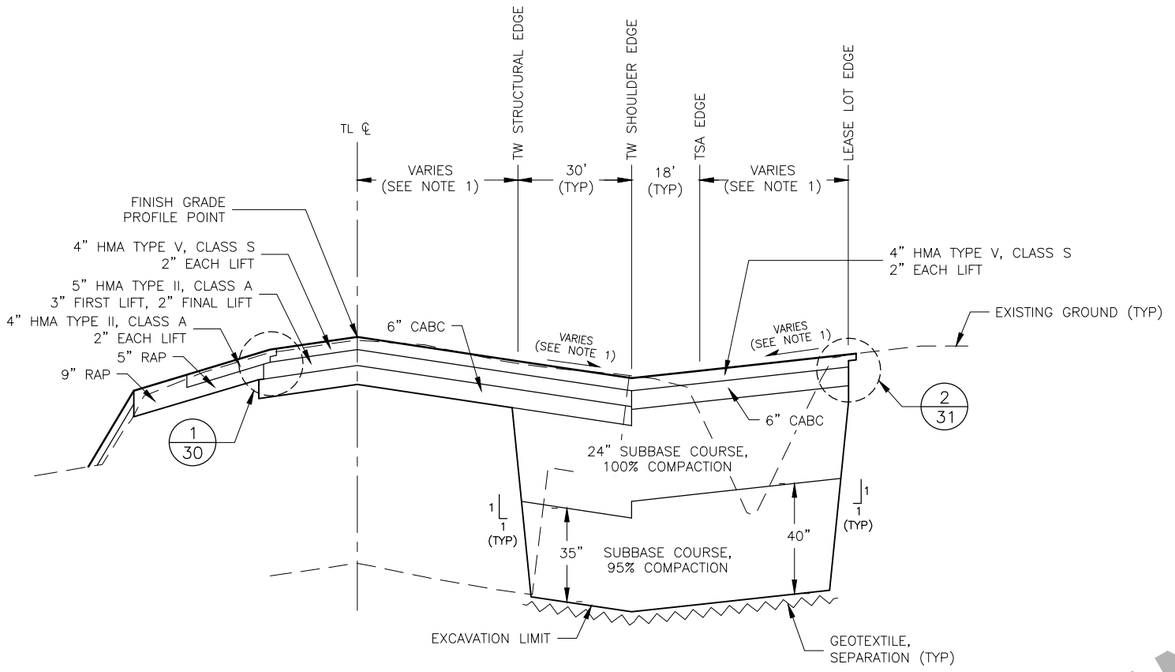

1/29 PRIVATE APPROACH SITE SECTION – ROSS AVIATION

SCALE: NTS

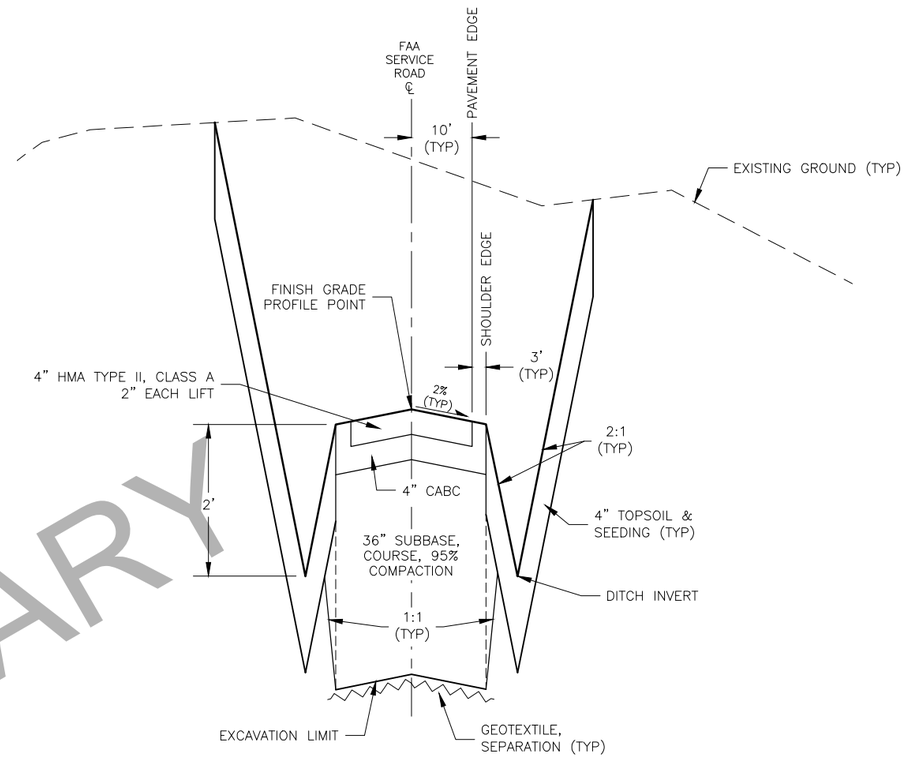

2/29 FAA SERVICE ROAD SITE SECTION

SCALE: NTS

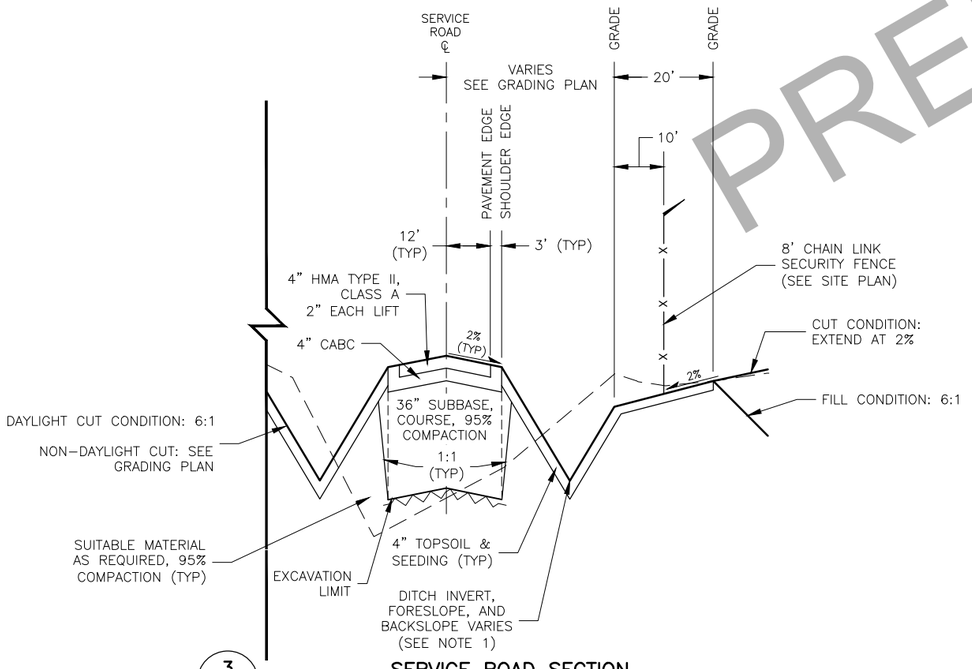

3/29 SERVICE ROAD SECTION

SCALE: NTS

PRELIMINARY

GENERAL NOTES:

1. GRADE AND DIMENSIONS VARY, SEE GRADING PLAN.
2. PROVIDE TACK COAT BETWEEN ALL LIFTS AND LAYERS OF HOT MIX ASPHALT.
3. REGRADE AND SEED ALL DISTURBED AREAS.

BY	DATE	REVISION

STATE OF ALASKA
DEPARTMENT OF TRANSPORTATION AND PUBLIC FACILITIES
CENTRAL REGION
4111 AVIATION AVE., ANCHORAGE ALASKA 99502
PHONE (907) 269-0590

TED STEVENS ANCHORAGE
ANCHORAGE, ALASKA
ANC TAXIWAY Z IMPROVEMENTS WEST - PHASE 1
PROJECT No. CFAPT00465
AIP No. 3-02-0016-XXX-2022
SITE SECTIONS

DATE: 10/14/2021
SHEET: 29 OF 78

Designed By: TAD
Drawn By: RJB
Checked By: TAD

Date Revised: 10/14/2021, 12:24 PM
Layout Name: SITE SECTIONS_5
File Path and Name: W:\Projects\AIA Ted Stevens\AIA TW Z Ext 00465\Final Drawings\00465-AIA-Typical Sections.dwg

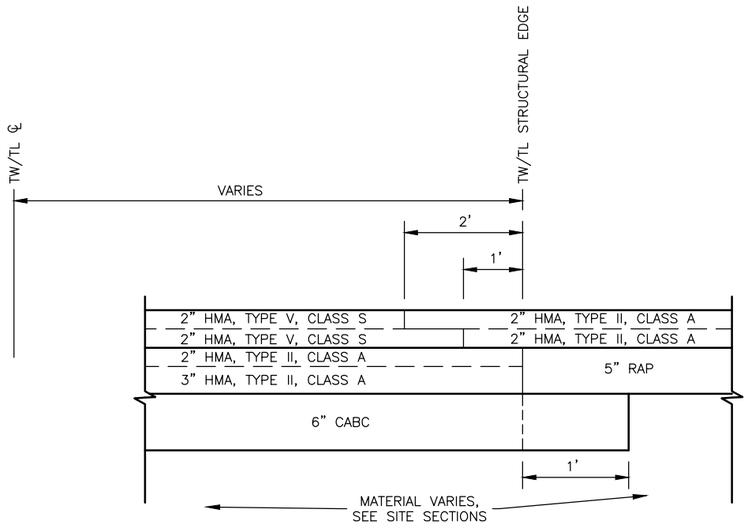

1/30 TW/TL SHOULDER/STRUCTURAL TRANSITION DETAIL

SCALE: NTS

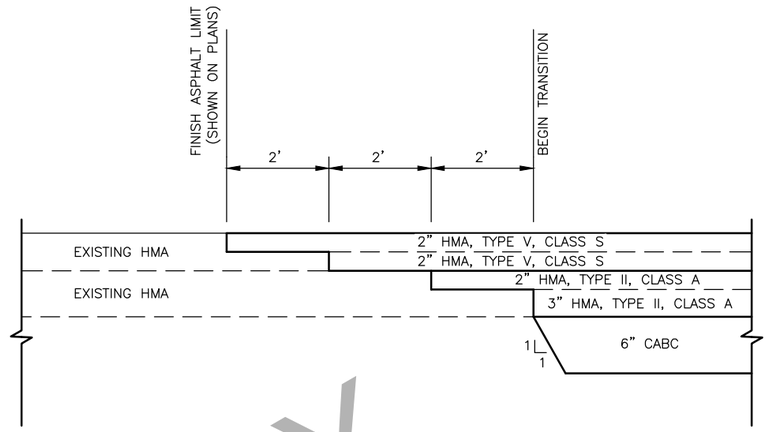

2/30 TL STRUCTURAL/EXISTING TRANSITION DETAIL

SCALE: NTS

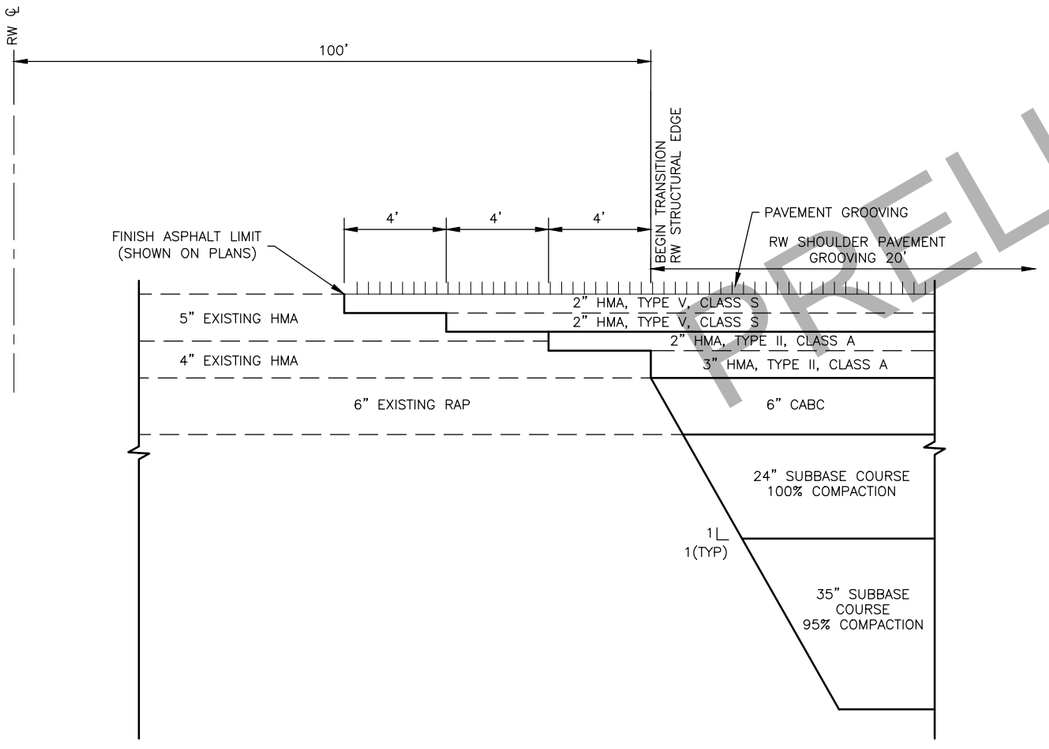

3/30 RW/TW RECONSTRUCTION TRANSITION DETAIL

SCALE: NTS

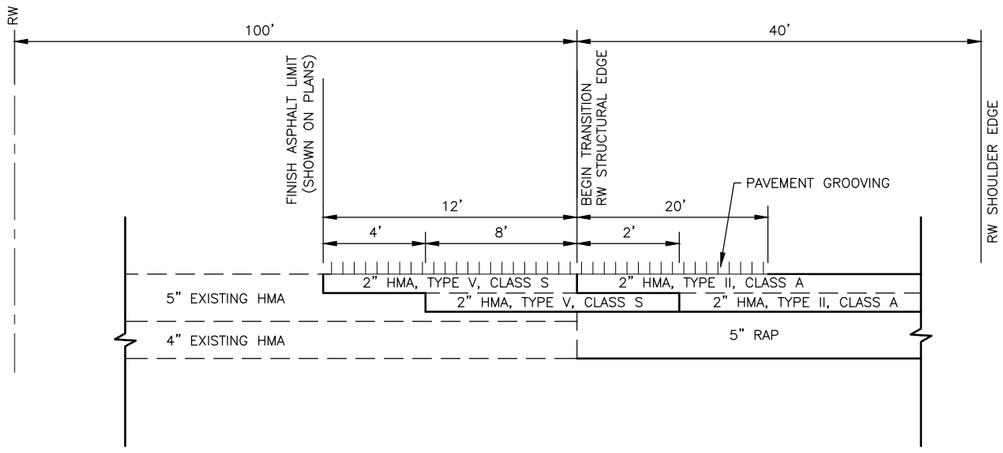

4/30 RW SHOULDER TRANSITION DETAIL

SCALE: NTS

PRELIMINARY

Designed By:	TAD	
Drawn By:	RJB	
Checked By:	TAD	
Date Revised:	10/14/2021, 12:24 PM	
Layout Name:	PAVING DETAILS 1	
File Path and Name:	W:\Projects\ANA_Ted Stevens\ANA TW Z Ext 00465\Final Drawings\00465-AIA-Typical Sections.dwg	

BY	DATE	REVISION

STATE OF ALASKA
DEPARTMENT OF TRANSPORTATION AND PUBLIC FACILITIES
CENTRAL REGION
4111 AVIATION AVE., ANCHORAGE ALASKA 99502
PHONE (907) 269-0590

TED STEVENS ANCHORAGE
ANCHORAGE, ALASKA
ANC TAXIWAY Z IMPROVEMENTS WEST - PHASE 1
PROJECT No. CFAPT00465
AIP No. 3-02-0016-XXX-2022
PAVING DETAILS

DATE: 10/14/2021

SHEET: 30 OF 78

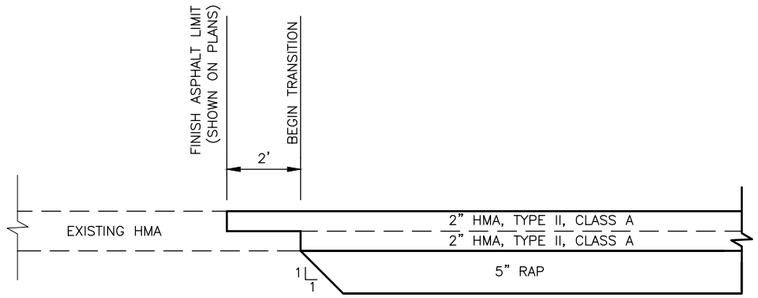

1/31 GREAT CIRCLE APPROACH LEASE LOT & SHOULDER TRANSITION DETAIL

SCALE: NTS

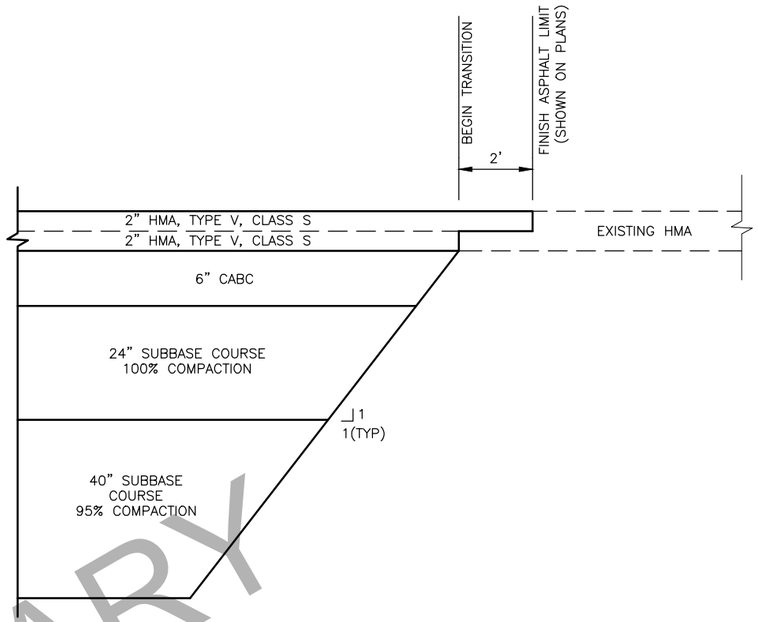

2/31 ROSS AVIATION APPROACH DETAIL

SCALE: NTS

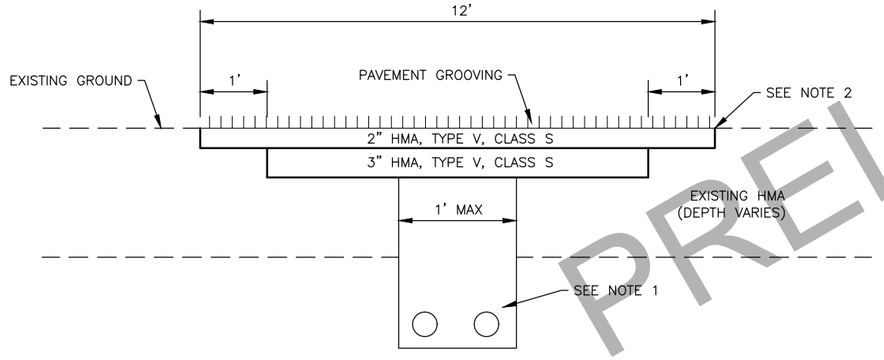

3/31 RUNWAY ASPHALT REPAIR DETAIL

SCALE: NTS

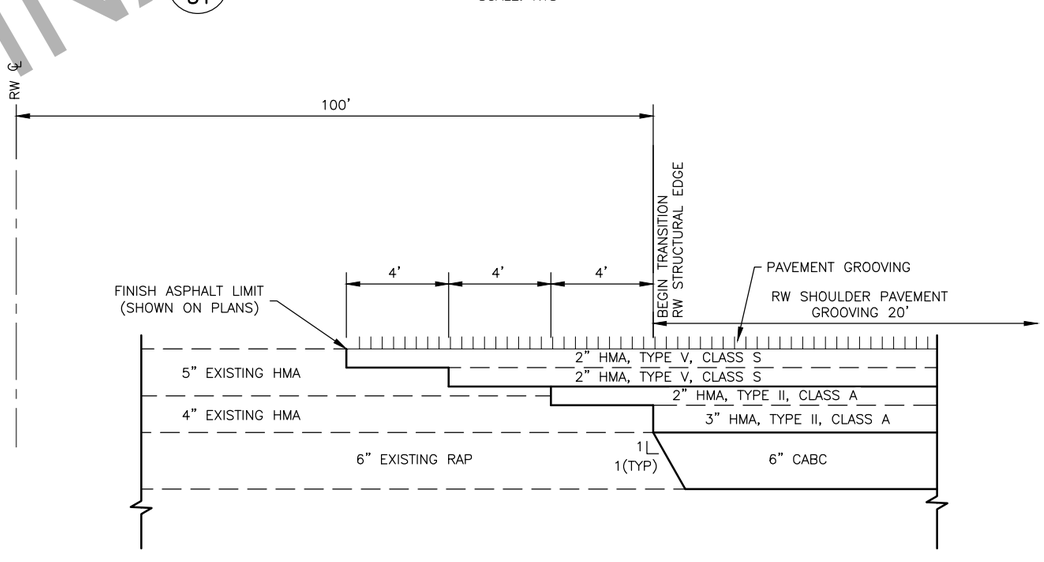

4/31 RW/TW REHABILITATION TRANSITION DETAIL

SCALE: NTS

ASPHALT REPAIR NOTES:

1. SEE ELECTRICAL PLANS FOR TRENCH DETAILS AND DEMOLITION REQUIREMENTS.
2. APPLY TACK COAT BETWEEN ALL LIFTS OF HMA. APPLY JOINT ADHESIVE ON ALL TOP LIFT COLD JOINTS, AND SEAL WITH JOINT SEALANT.
3. CENTER ASPHALT REMOVAL ON ELECTRICAL TRENCH.
4. STAKE OUT ASPHALT REMOVAL LIMITS FOR APPROVAL BY THE ENGINEER PRIOR TO REMOVAL.
5. METHOD OF PAVEMENT REMOVAL SHALL ENSURE THAT EXISTING GRADES, GRADE BREAKS AND CROWNS ARE PRESERVED.
6. PAVEMENT REPAIR SHALL CONFORM TO THE SMOOTHNESS REQUIREMENTS OF P401. DO NOT PERFORM PAVEMENT GROOVING, APPLY JOINT SEALANT, OR INSTALL LIGHT CAN TOP SECTIONS UNTIL SMOOTHNESS TESTING HAS BEEN PERFORMED AS DESCRIBED IN SUBSECTION P401-5.3, AND ALL TEST RESULTS HAVE BEEN APPROVED BY THE ENGINEER.

PRELIMINARY

BY	DATE	REVISION

STATE OF ALASKA
DEPARTMENT OF TRANSPORTATION AND PUBLIC FACILITIES
CENTRAL REGION
4111 AVIATION AVE., ANCHORAGE ALASKA 99502
PHONE (907) 269-0590

TED STEVENS ANCHORAGE
ANCHORAGE, ALASKA
ANC TAXIWAY Z IMPROVEMENTS WEST - PHASE 1
PROJECT No. CFAPT00465
AIP No. 3-02-0016-XXX-2022
PAVING DETAILS

DATE: 10/14/2021
SHEET: 31 OF 78

Designed By: TAD
Drawn By: RJB
Checked By: TAD
Date Revised:
Layout Name: 10/14/2021, 12:24 PM
PAVING DETAILS 2
File Path and Name: W:\Projects\ANA Ted Stevens\ANA TW Z Ext 00465\Final Drawings\00465-AIA-Typical Sections.dwg

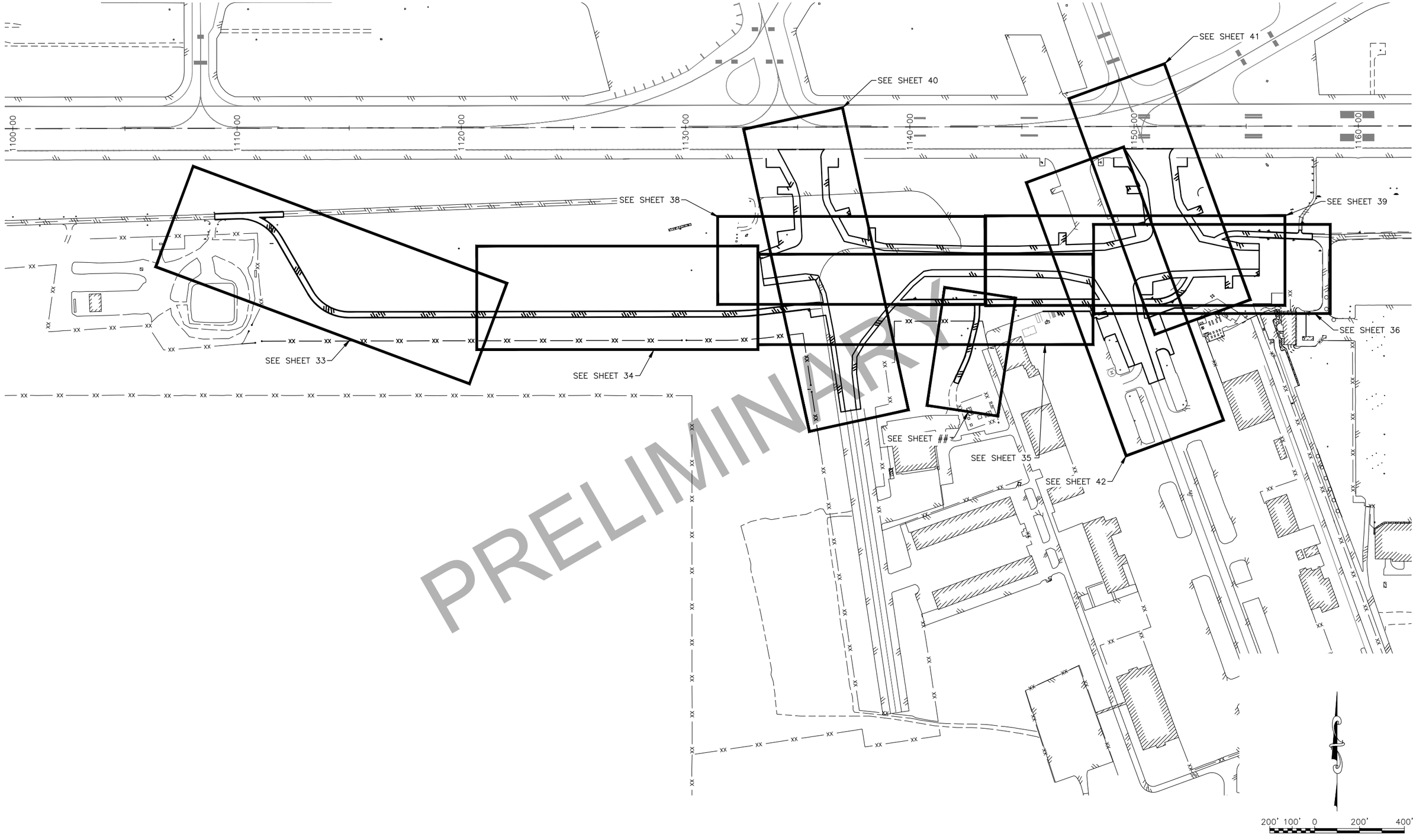

PRELIMINARY

Designed By:	TAD
Drawn By:	RJB
Checked By:	TAD

Date Revised:	10/14/2021, 12:30 PM
Layout Name:	P&P KEY MAP
File Path and Name:	W:\Projects\AIA Ted Stevens\AIA TW Z Ext 00465\Final Drawings\00465-AIA-Plan & Profiles.dwg

BY	DATE	REVISION

STATE OF ALASKA
DEPARTMENT OF TRANSPORTATION AND PUBLIC FACILITIES
CENTRAL REGION
4111 AVIATION AVE., ANCHORAGE ALASKA 99502
PHONE (907) 269-0590

TED STEVENS ANCHORAGE
ANCHORAGE, ALASKA
ANC TAXIWAY Z IMPROVEMENTS WEST - PHASE 1
PROJECT No. CFAPT00465
AIP No. 3-02-0016-XXX-2022
PLAN & PROFILE KEY MAP

DATE: 10/14/2021

SHEET: 32 OF 78

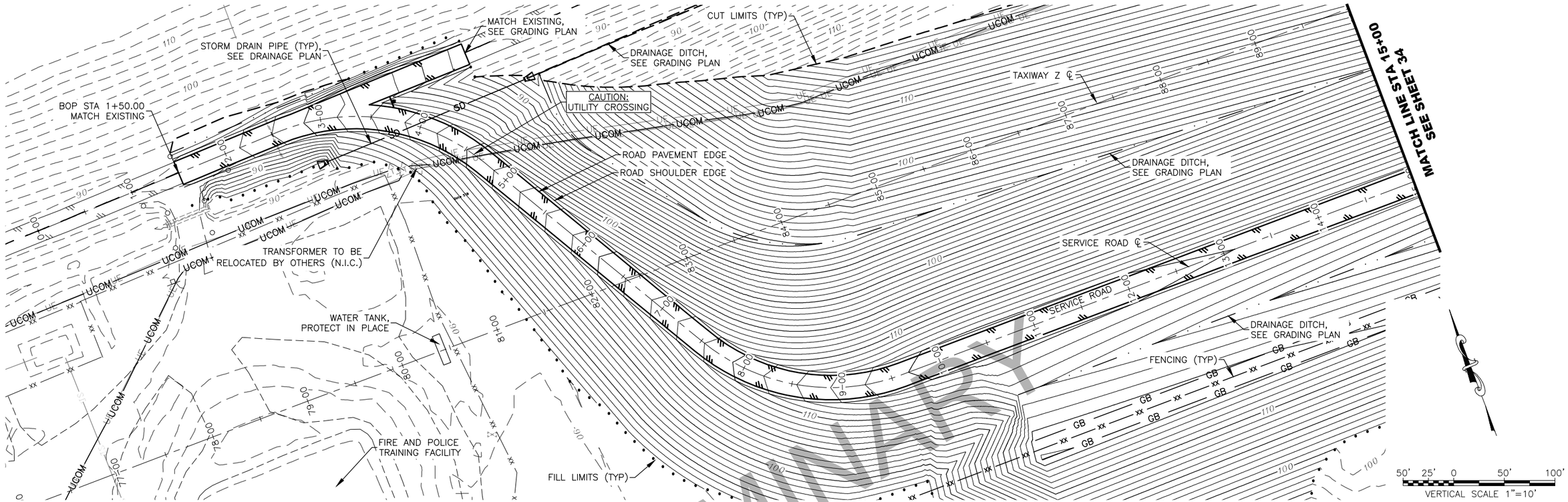

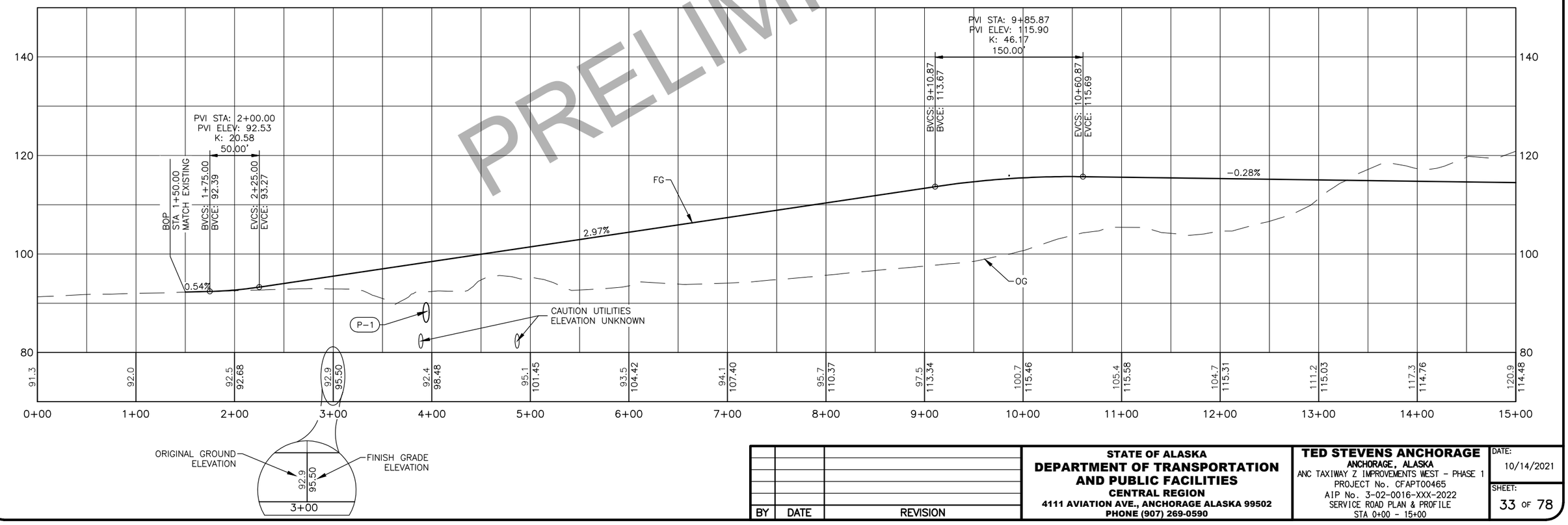

PRELIMINARY

Designed By:	TAD	
Drawn By:	RJB	
Checked By:	TAD	
Date Revised:	10/14/2021, 12:30 PM	
Layout Name:	P&P SR 1	
File Path and Name:	W:\Projects\ANA Ted Stevens\ANA TW Z Ext 00465\Final Drawings\00465-AIA-Plan & Profiles.dwg	

BY	DATE	REVISION

STATE OF ALASKA
DEPARTMENT OF TRANSPORTATION AND PUBLIC FACILITIES
CENTRAL REGION
4111 AVIATION AVE., ANCHORAGE ALASKA 99502
PHONE (907) 269-0590

TED STEVENS ANCHORAGE
ANCHORAGE, ALASKA
ANC TAXIWAY Z IMPROVEMENTS WEST - PHASE 1
PROJECT No. CFAPT00465
AIP No. 3-02-0016-XXX-2022
SERVICE ROAD PLAN & PROFILE
STA 0+00 - 15+00

DATE: 10/14/2021
SHEET: 33 OF 78

PRELIMINARY

Date Revised:	10/14/2021, 12:31 PM
Layout Name:	P&P SR 2
File Path and Name:	W:\Projects\AIA Ted Stevens\AIA TW Z Ext 00465\Final Drawings\00465-AIA-Plan & Profiles.dwg

Designed By:	TAD
Drawn By:	RJB
Checked By:	TAD

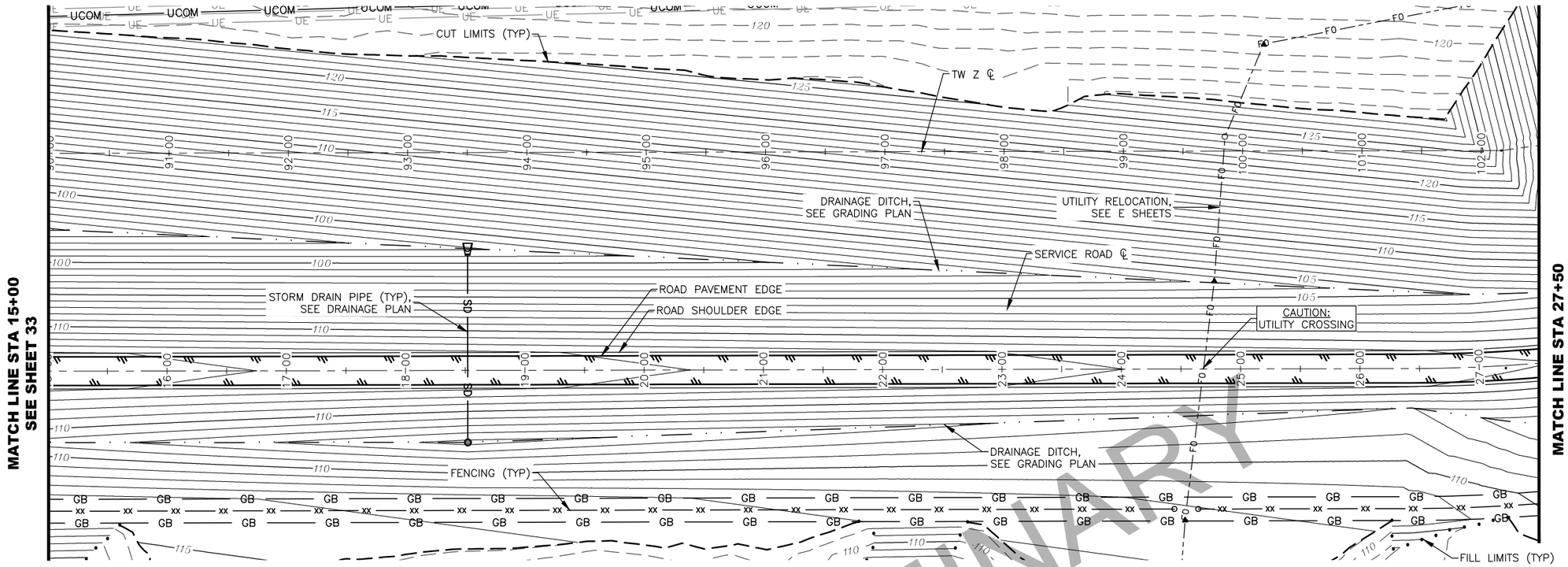

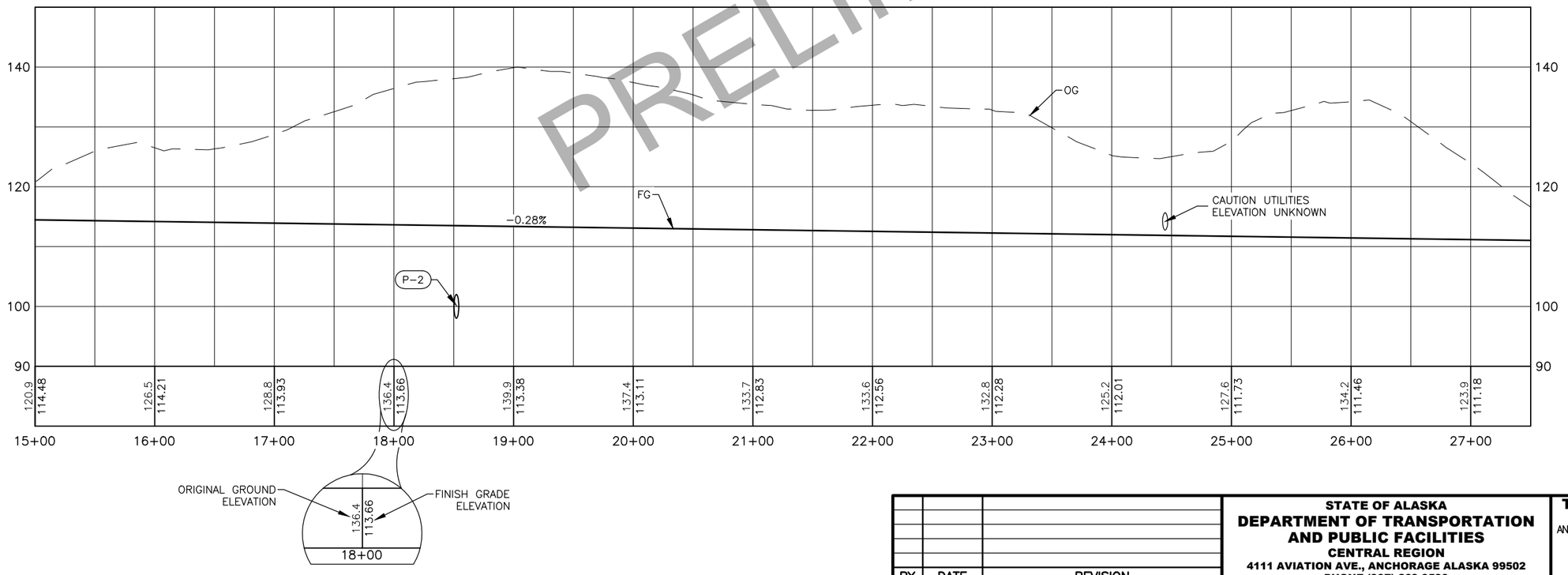

BY	DATE	REVISION

STATE OF ALASKA
DEPARTMENT OF TRANSPORTATION AND PUBLIC FACILITIES
CENTRAL REGION
4111 AVIATION AVE., ANCHORAGE ALASKA 99502
PHONE (907) 269-0590

TED STEVENS ANCHORAGE
ANCHORAGE, ALASKA
ANC TAXIWAY Z IMPROVEMENTS WEST - PHASE 1
PROJECT No. CFAPT00465
AIP No. 3-02-0016-XXX-2022
SERVICE ROAD PLAN & PROFILE
STA 15+00 - 27+50

DATE: 10/14/2021

SHEET: 34 OF 78

Designed By:	TAD
Drawn By:	RJB
Checked By:	TAD
Date Revised:	10/14/2021, 12:31 PM
Layout Name:	P&P SR 3
File Path and Name:	W:\Projects\AIA Ted Stevens\AIA TW Z Ext 00465\Final Drawings\00465-AIA-Plan & Profiles.dwg

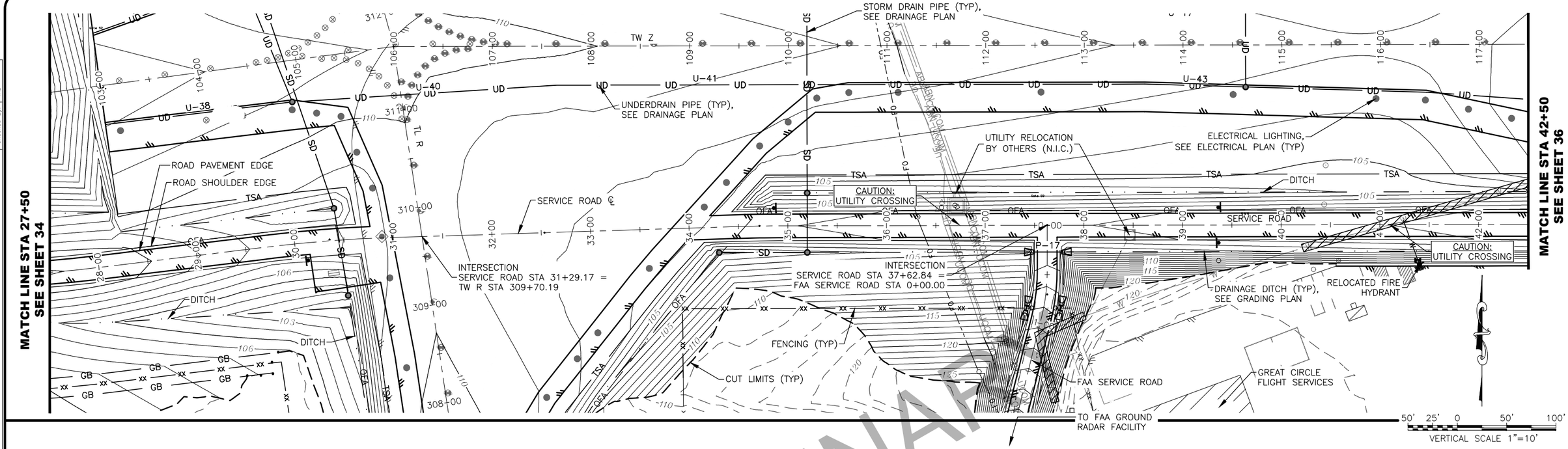

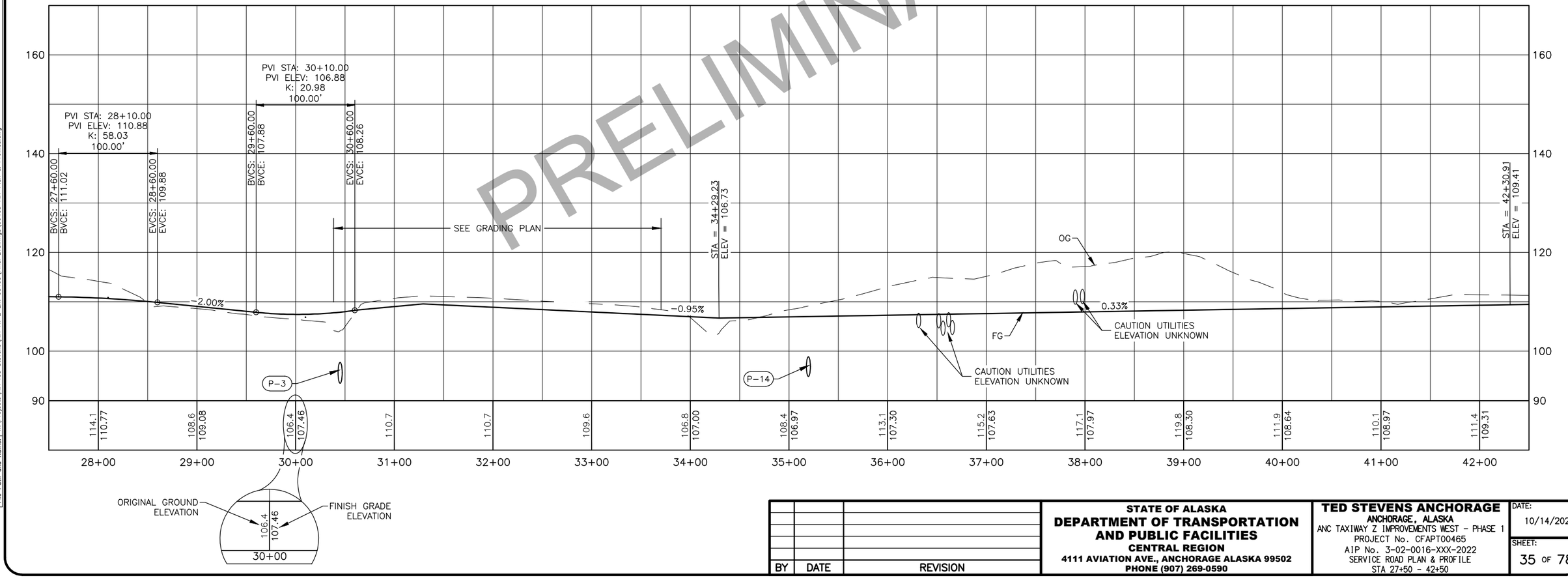

PRELIMINARY

BY	DATE	REVISION

STATE OF ALASKA
DEPARTMENT OF TRANSPORTATION AND PUBLIC FACILITIES
CENTRAL REGION
4111 AVIATION AVE., ANCHORAGE ALASKA 99502
PHONE (907) 269-0590

TED STEVENS ANCHORAGE
ANCHORAGE, ALASKA
ANC TAXIWAY Z IMPROVEMENTS WEST - PHASE 1
PROJECT No. CFAPT00465
AIP No. 3-02-0016-XXX-2022
SERVICE ROAD PLAN & PROFILE
STA 27+50 - 42+50

DATE: 10/14/2021

SHEET: 35 OF 78

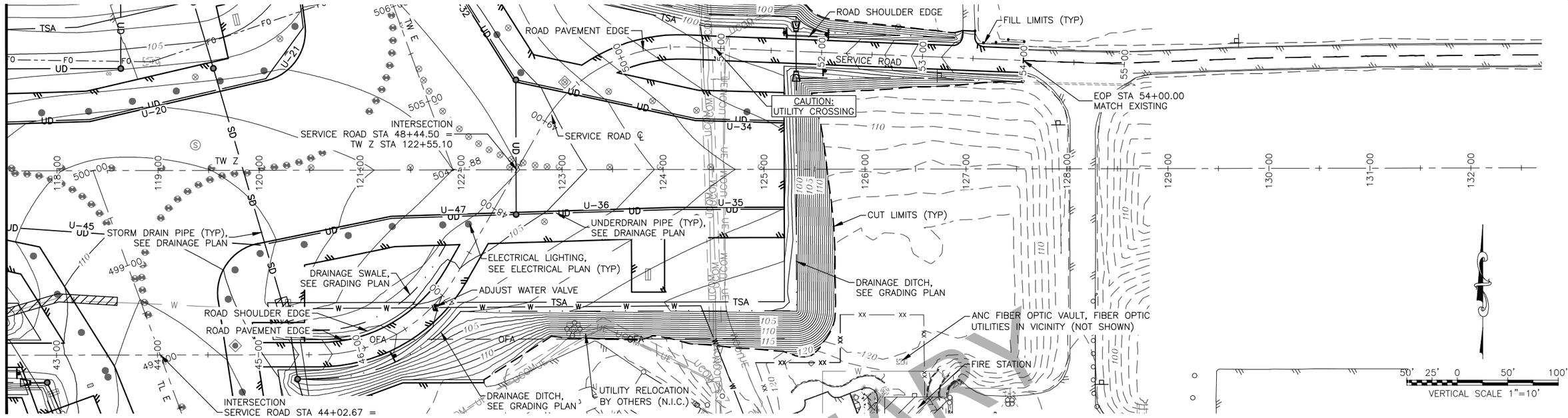

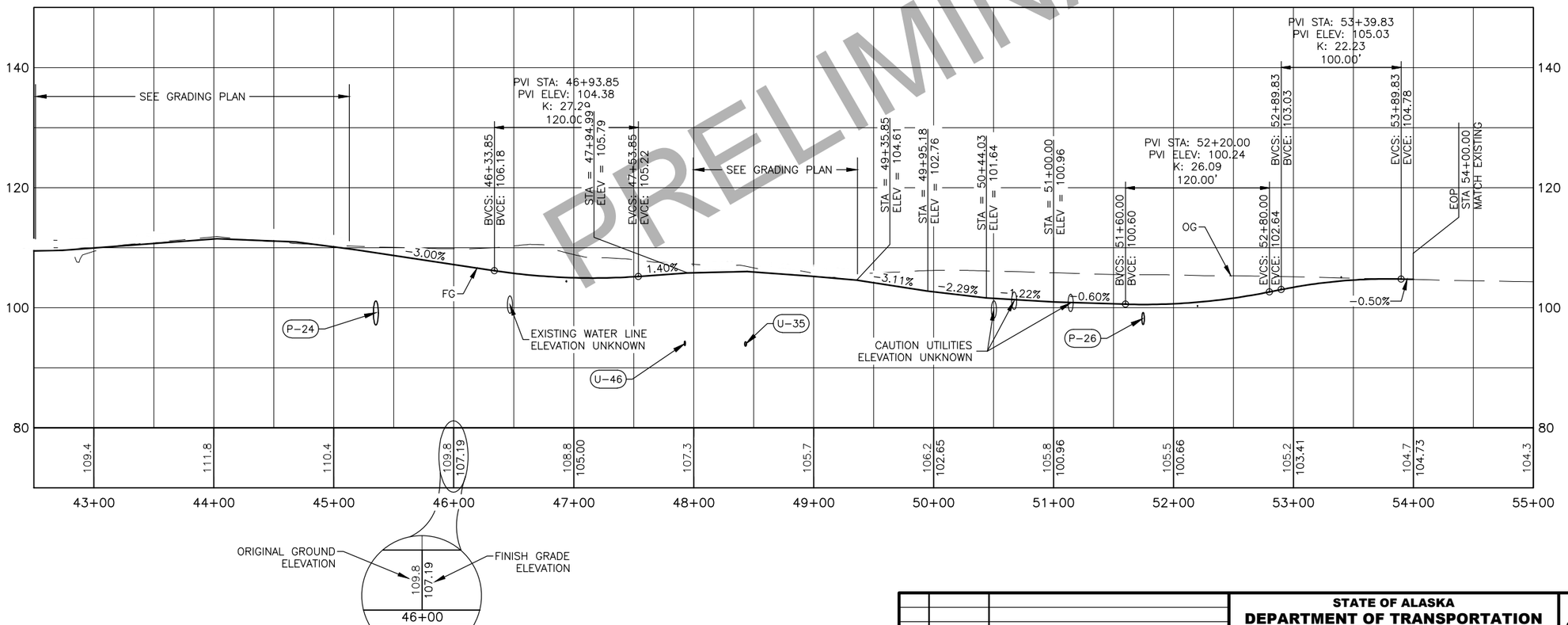

BY	DATE	REVISION

STATE OF ALASKA
DEPARTMENT OF TRANSPORTATION AND PUBLIC FACILITIES
CENTRAL REGION
4111 AVIATION AVE., ANCHORAGE ALASKA 99502
PHONE (907) 269-0590

TED STEVENS ANCHORAGE
ANCHORAGE, ALASKA
ANC TAXIWAY Z IMPROVEMENTS WEST - PHASE 1
PROJECT No. CFAPT00465
AIP No. 3-02-0016-XXX-2022
SERVICE ROAD PLAN & PROFILE
STA 42+50 - 55+00

DATE: 10/14/2021
SHEET: 36 OF 78

Designed By: TAD
Drawn By: RJB
Checked By: TAD
Date Revised: 10/14/2021, 12:32 PM
Layout Name: P&P SR 4
File Path and Name: W:\Projects\AIA Ted Stevens\AIA TW Z Ext 00465\Final Drawings\00465-AIA-Plan & Profiles.dwg

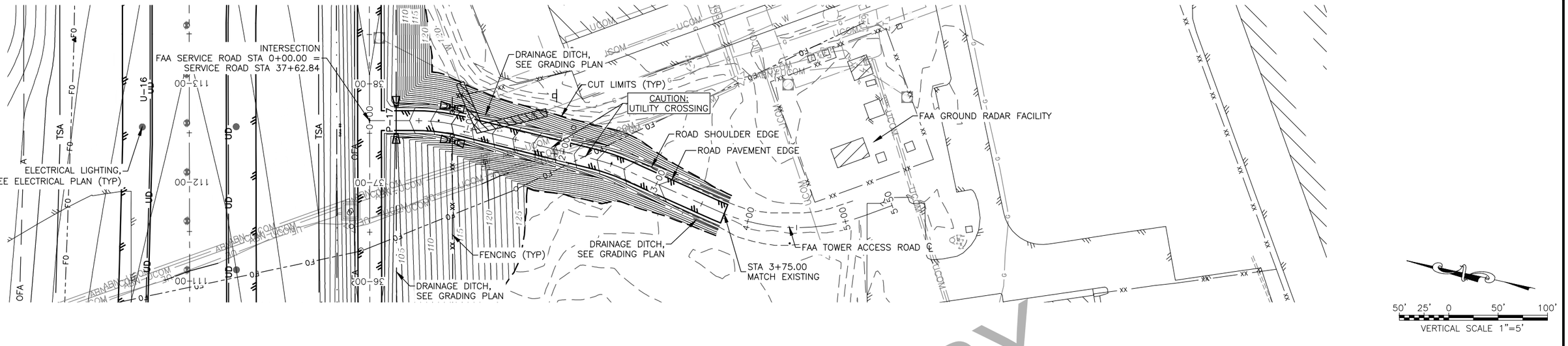

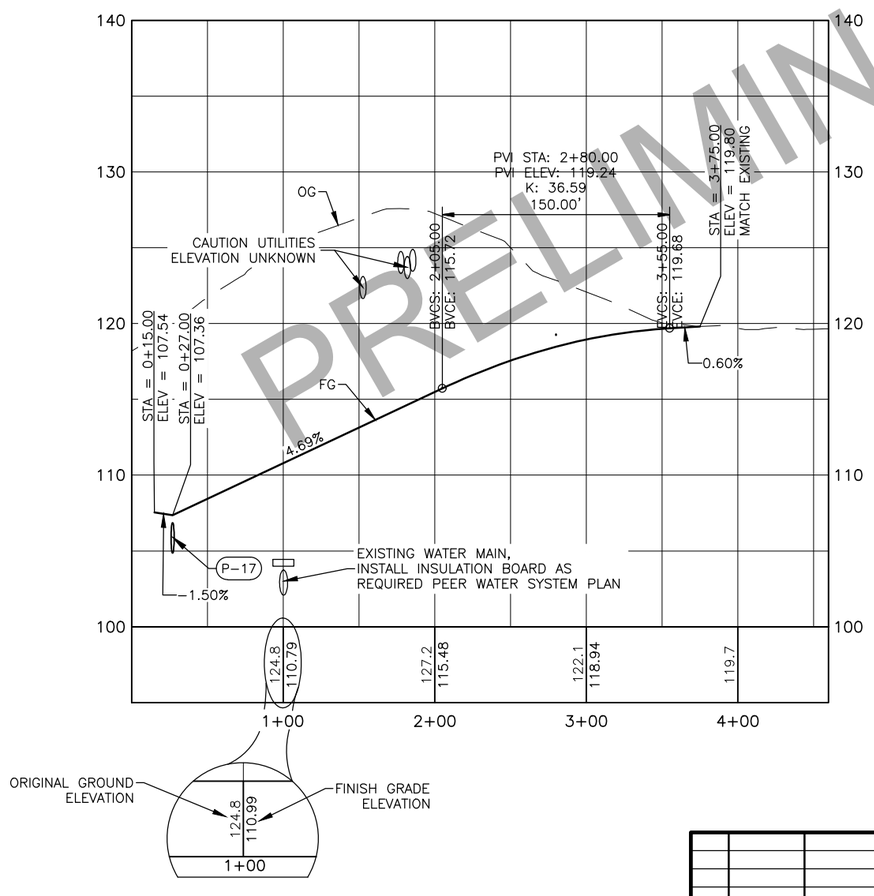

PRELIMINARY

Designed By:	TAD
Drawn By:	RJB
Checked By:	TAD
Date Revised:	10/14/2021, 12:32 PM
Layout Name:	P&P FAA SR 1
File Path and Name:	W:\Projects\AIA Ted Stevens\AIA TW Z Ext 00465\Final Drawings\00465-AIA-Plan & Profiles.dwg

BY	DATE	REVISION

STATE OF ALASKA
DEPARTMENT OF TRANSPORTATION AND PUBLIC FACILITIES
CENTRAL REGION
4111 AVIATION AVE., ANCHORAGE ALASKA 99502
PHONE (907) 269-0590

TED STEVENS ANCHORAGE
ANCHORAGE, ALASKA
ANC TAXIWAY Z IMPROVEMENTS WEST - PHASE 1
PROJECT No. CFAPT00465
AIP No. 3-02-0016-XXX-2022
FAA SERVICE ROAD PLAN & PROFILE

DATE: 10/14/2021

SHEET: 37 OF 78

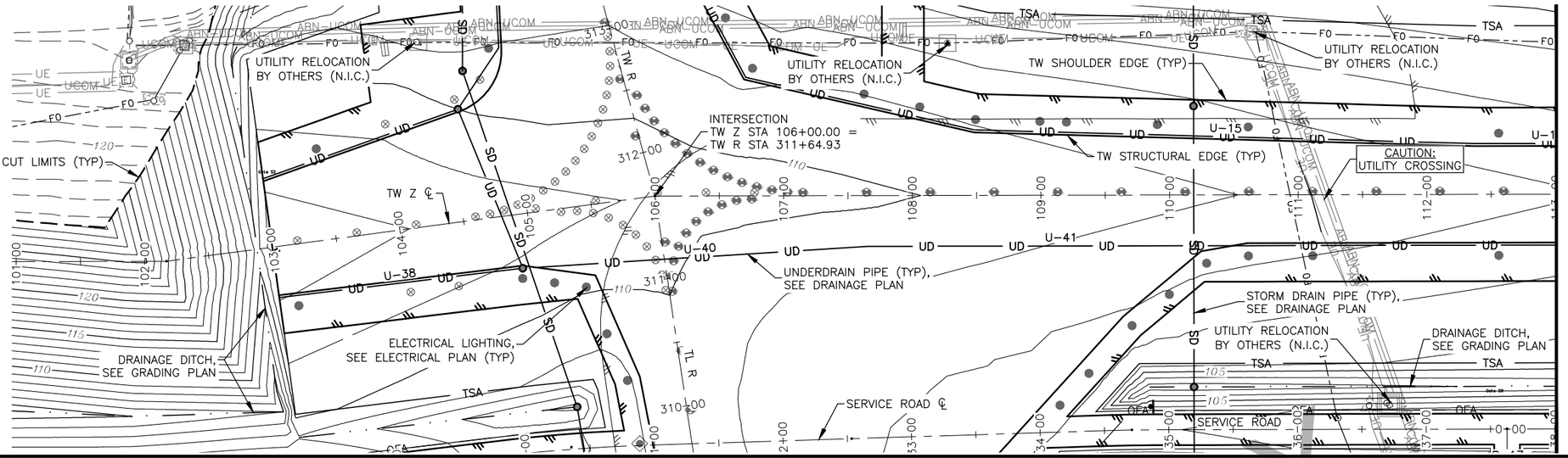

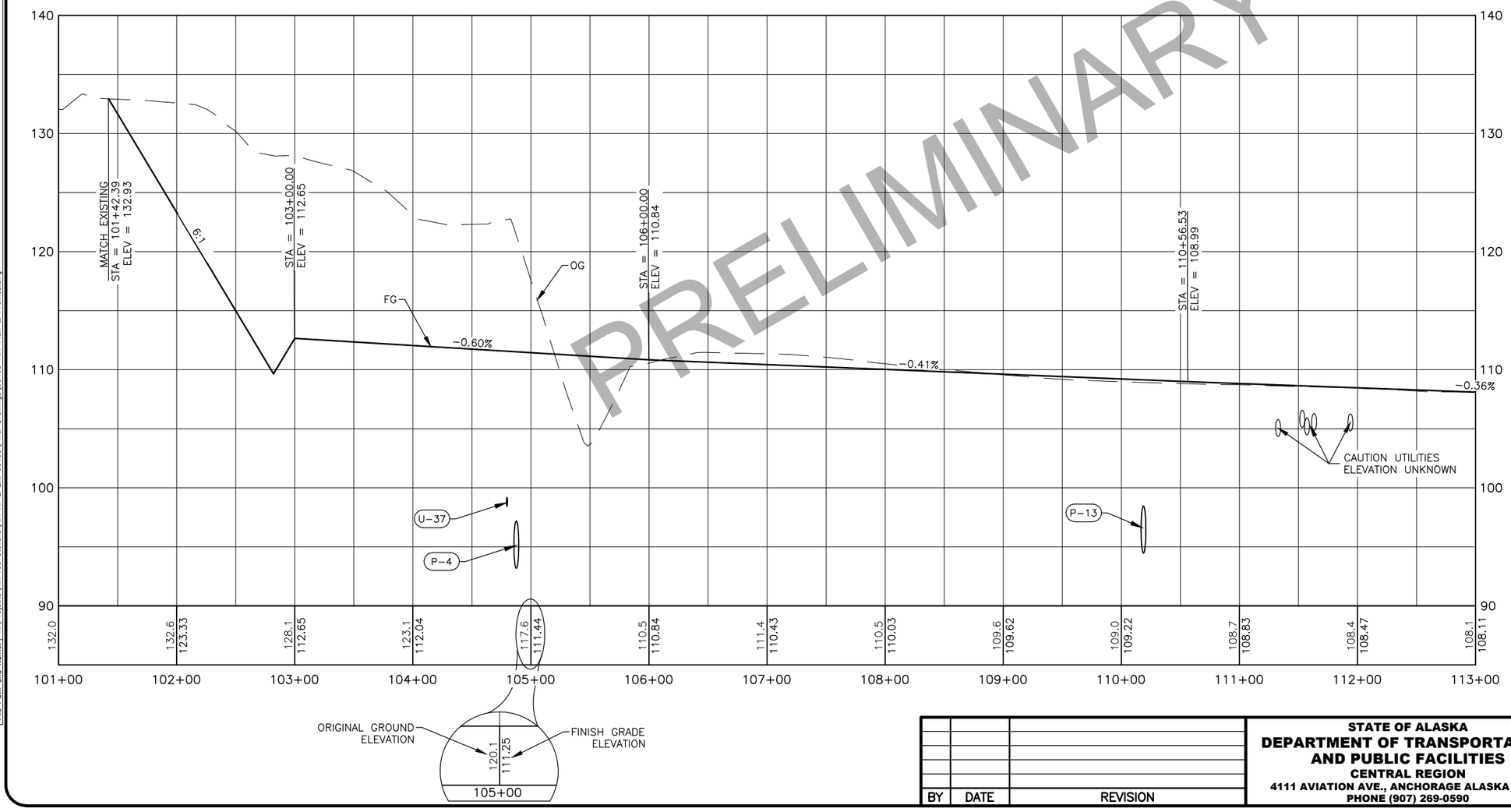

PRELIMINARY

Designed By:	TAD
Drawn By:	RJB
Checked By:	TAD
Date Revised:	10/14/2021, 12:33 PM
Layout Name:	P&P TW_Z_1
File Path and Name:	W:\Projects\AIA Ted Stevens\AIA TW Z Ext 00465\Final Drawings\00465-AIA-Plan & Profiles.dwg

BY	DATE	REVISION

STATE OF ALASKA
DEPARTMENT OF TRANSPORTATION AND PUBLIC FACILITIES
CENTRAL REGION
4111 AVIATION AVE., ANCHORAGE ALASKA 99502
PHONE (907) 269-0590

TED STEVENS ANCHORAGE
ANCHORAGE, ALASKA
ANC TAXIWAY Z IMPROVEMENTS WEST - PHASE 1
PROJECT No. CFAPT00465
AIP No. 3-02-0016-XXX-2022
TAXIWAY Z PLAN & PROFILE
STA 101+00.00 - 113+00.00

DATE: 10/14/2021

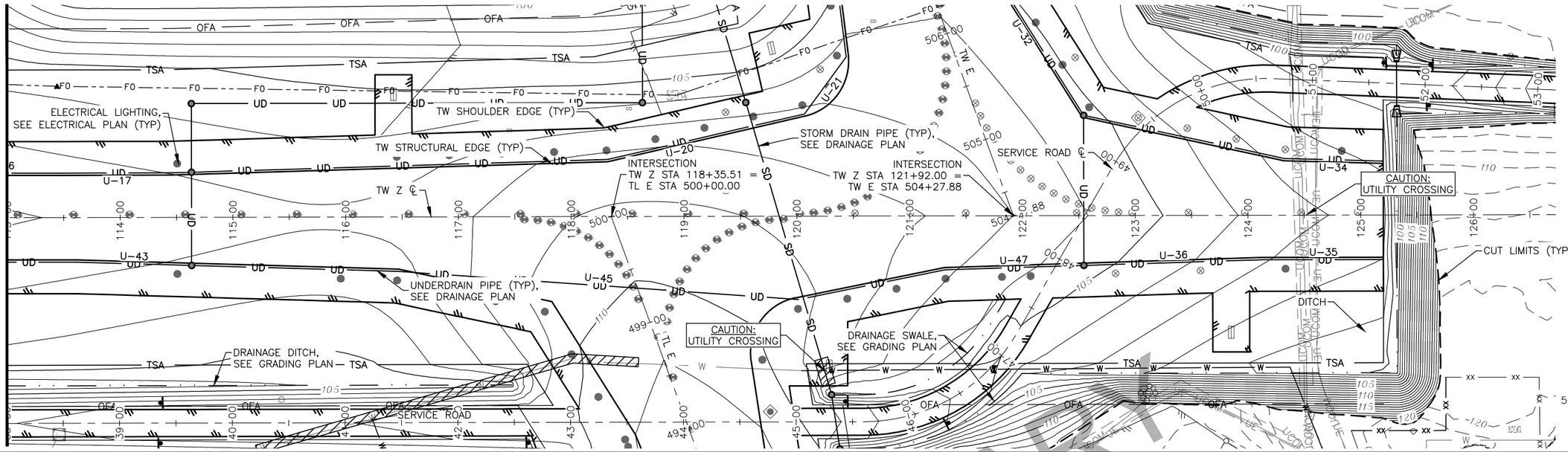

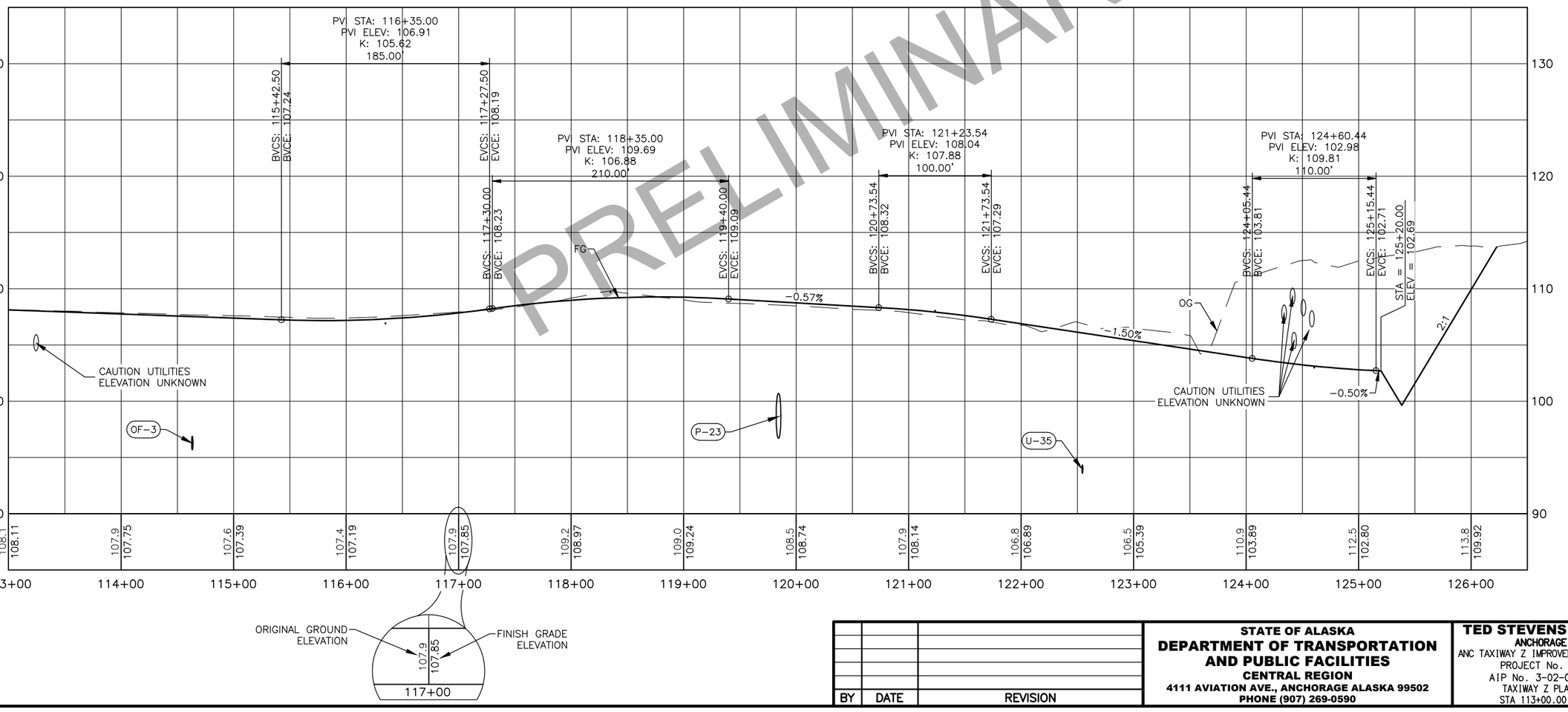

PRELIMINARY

Designed By:	TAD	
Drawn By:	RJB	
Checked By:	TAD	
Date Revised:	10/14/2021, 12:33 PM	
Layout Name:	P&P TW Z_2	
File Path and Name:	W:\Projects\AIA Ted Stevens\AIA TW Z Ext 00465\Final Drawings\00465-AIA-Plan & Profiles.dwg	

BY	DATE	REVISION

STATE OF ALASKA
DEPARTMENT OF TRANSPORTATION AND PUBLIC FACILITIES
CENTRAL REGION
4111 AVIATION AVE., ANCHORAGE ALASKA 99502
PHONE (907) 269-0590

TED STEVENS ANCHORAGE
ANCHORAGE, ALASKA
ANC TAXIWAY Z IMPROVEMENTS WEST - PHASE 1
PROJECT No. CFAPT00465
AIP No. 3-02-0016-XXX-2022
TAXIWAY Z PLAN & PROFILE
STA 113+00.00 - 126+50.00

DATE: 10/14/2021

SHEET: 39 OF 78

PRELIMINARY

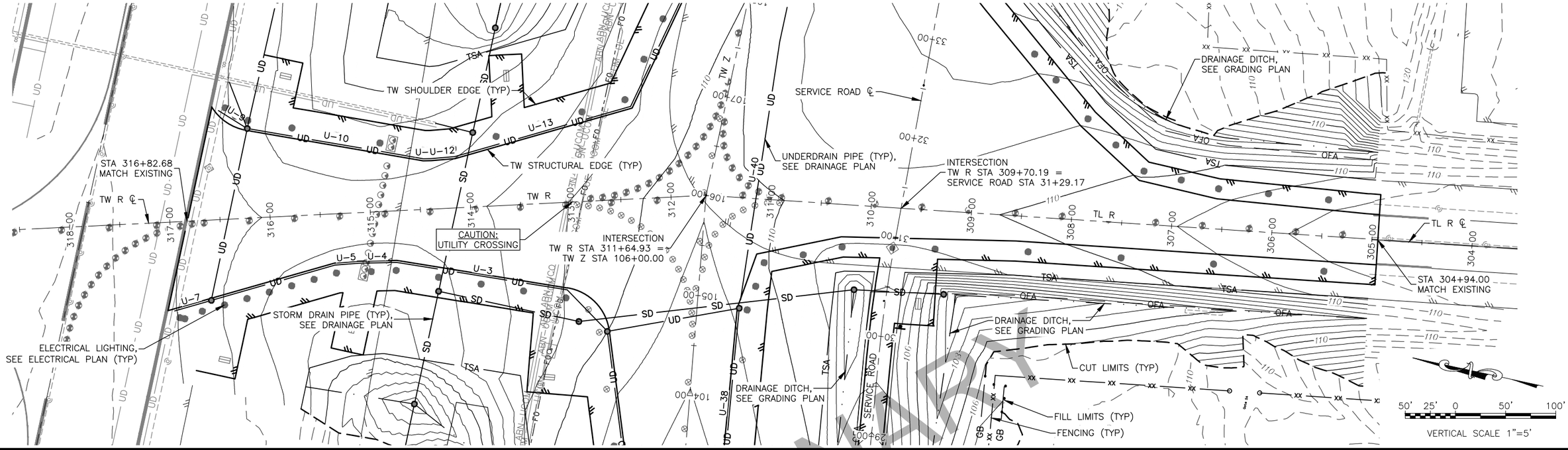

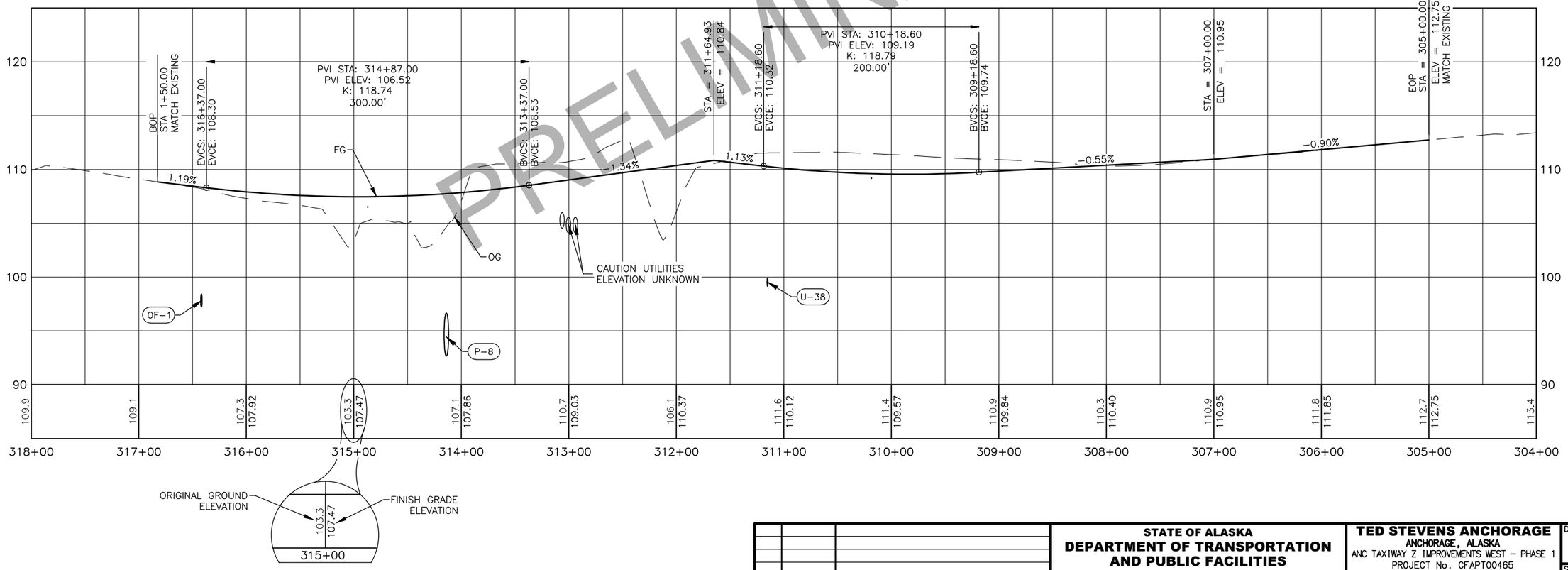

BY	DATE	REVISION

STATE OF ALASKA
DEPARTMENT OF TRANSPORTATION AND PUBLIC FACILITIES
CENTRAL REGION
4111 AVIATION AVE., ANCHORAGE ALASKA 99502
PHONE (907) 269-0590

TED STEVENS ANCHORAGE
ANCHORAGE, ALASKA
ANC TAXIWAY Z IMPROVEMENTS WEST - PHASE 1
PROJECT No. CFAPT00465
AIP No. 3-02-0016-XXX-2022
TAXIWAY R & TAXILANE R PLAN & PROFILE
STA 304+00.00 - 318+00.00

DATE: 10/14/2021
SHEET: 40 OF 78

Designed By:	TAD
Drawn By:	RJB
Checked By:	TAD
Date Revised:	10/14/2021, 12:34 PM
Layout Name:	P&P TW R 1
File Path and Name:	W:\Projects\AIA Ted Stevens\AIA TW Z Ext 00465\Final Drawings\00465-AIA-Plan & Profiles.dwg

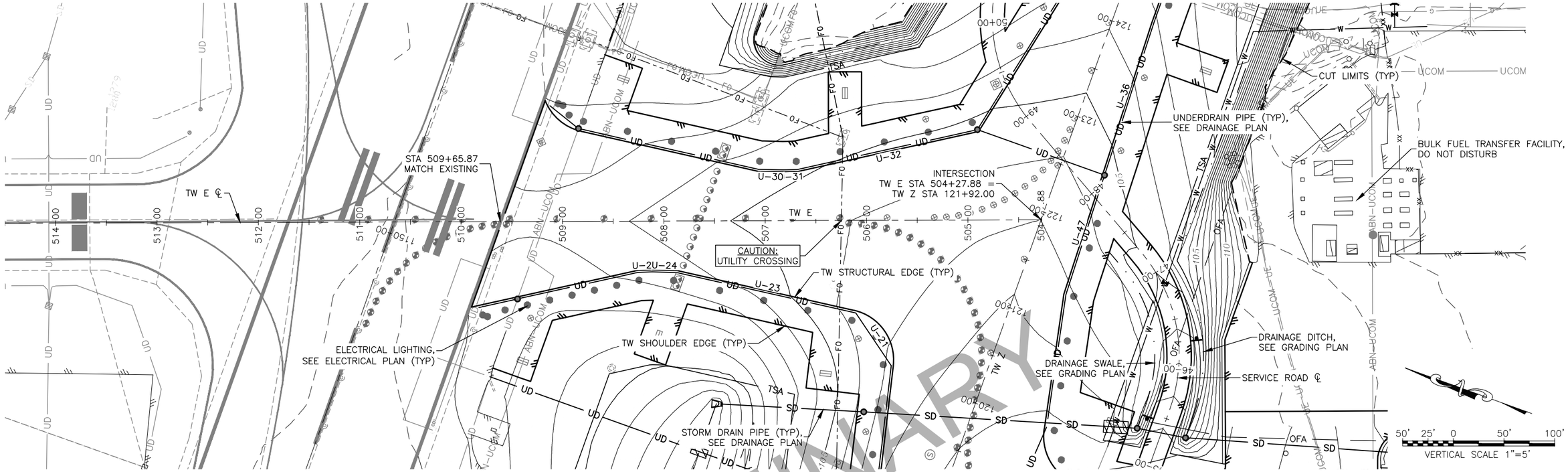

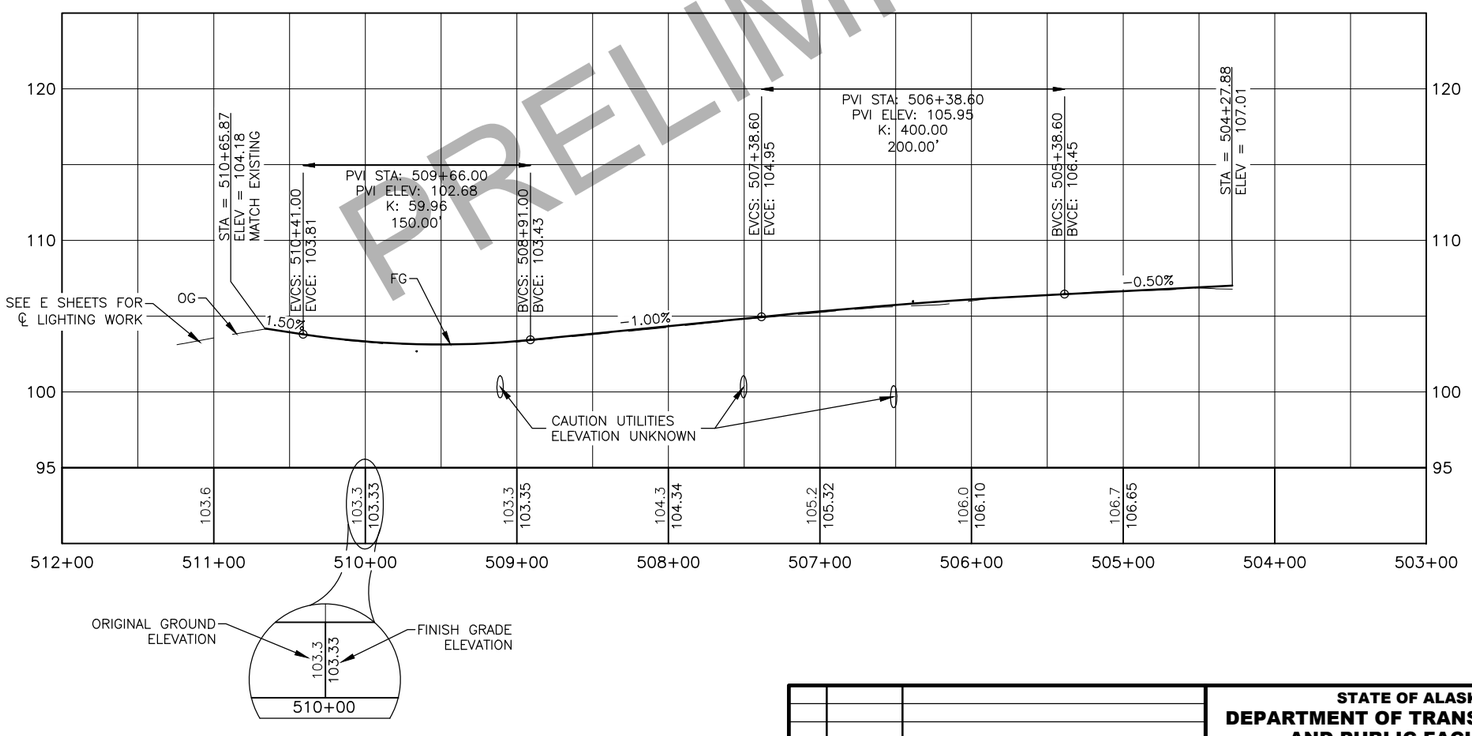

PRELIMINARY

Designed By:	TAD	
Drawn By:	RJB	
Checked By:	TAD	
Date Revised:	10/14/2021, 12:34 PM	
Layout Name:	P&P TW E 1	
File Path and Name:	W:\Projects\AIA Ted Stevens\AIA TW Z Ext 00465\Final Drawings\00465-AIA-Plan & Profiles.dwg	

BY	DATE	REVISION

STATE OF ALASKA
DEPARTMENT OF TRANSPORTATION AND PUBLIC FACILITIES
CENTRAL REGION
4111 AVIATION AVE., ANCHORAGE ALASKA 99502
PHONE (907) 269-0590

TED STEVENS ANCHORAGE
ANCHORAGE, ALASKA
ANC TAXIWAY Z IMPROVEMENTS WEST - PHASE 1
PROJECT No. CFAPT00465
AIP No. 3-02-0016-XXX-2022
TAXIWAY E PLAN & PROFILE
STA 503+00.00 - 512+00.00

DATE: 10/14/2021

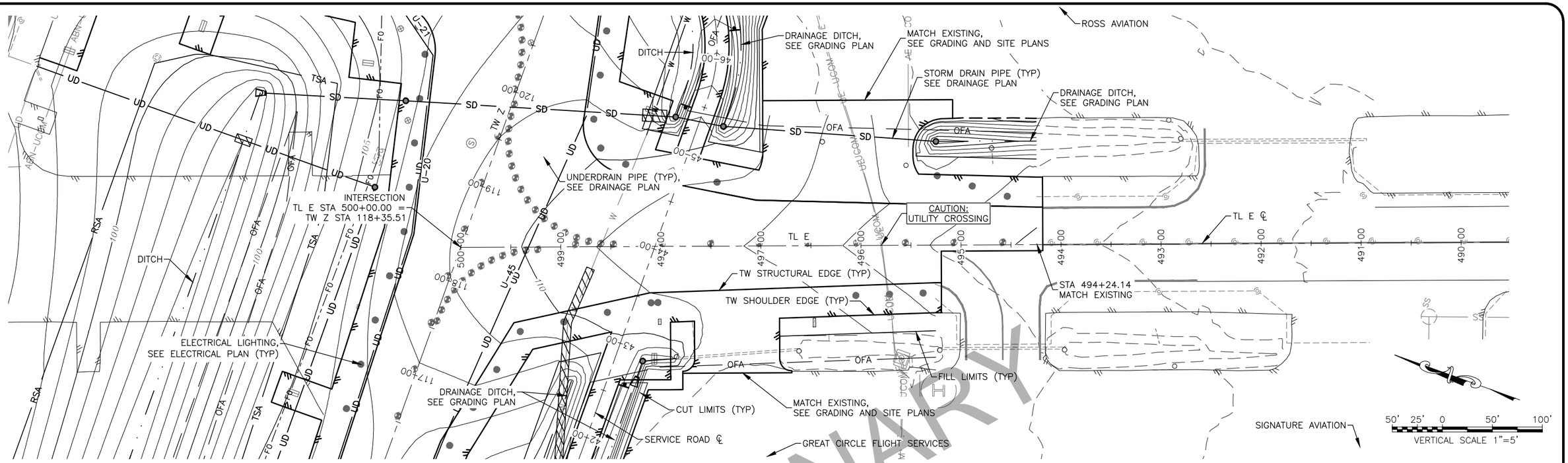

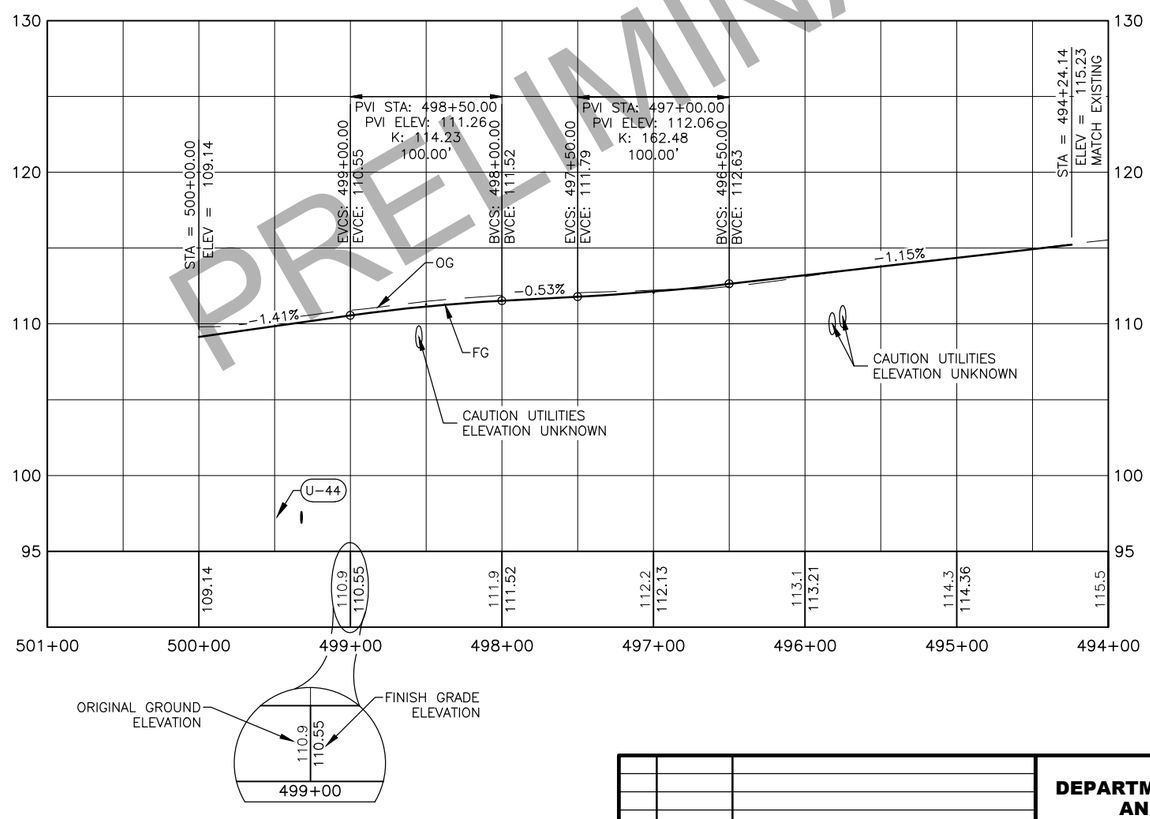

PRELIMINARY

Designed By:	TAD	
Drawn By:	RJB	
Checked By:	TAD	
Date Revised:	10/14/2021, 12:34 PM	
Layout Name:	P&P TL E 1	
File Path and Name:	W:\Projects\AIA Ted Stevens\AIA TW Z Ext 00465\Final Drawings\00465-AIA-Plan & Profiles.dwg	

BY	DATE	REVISION

STATE OF ALASKA
DEPARTMENT OF TRANSPORTATION AND PUBLIC FACILITIES
CENTRAL REGION
4111 AVIATION AVE., ANCHORAGE ALASKA 99502
PHONE (907) 269-0590

TED STEVENS ANCHORAGE
ANCHORAGE, ALASKA
ANC TAXIWAY Z IMPROVEMENTS WEST - PHASE 1
PROJECT No. CFAPT00465
AIP No. 3-02-0016-XXX-2022
TAXILANE E PLAN & PROFILE
STA 494+00.00 - 501+00.00

DATE: 10/14/2021

SHEET: 42 OF 78

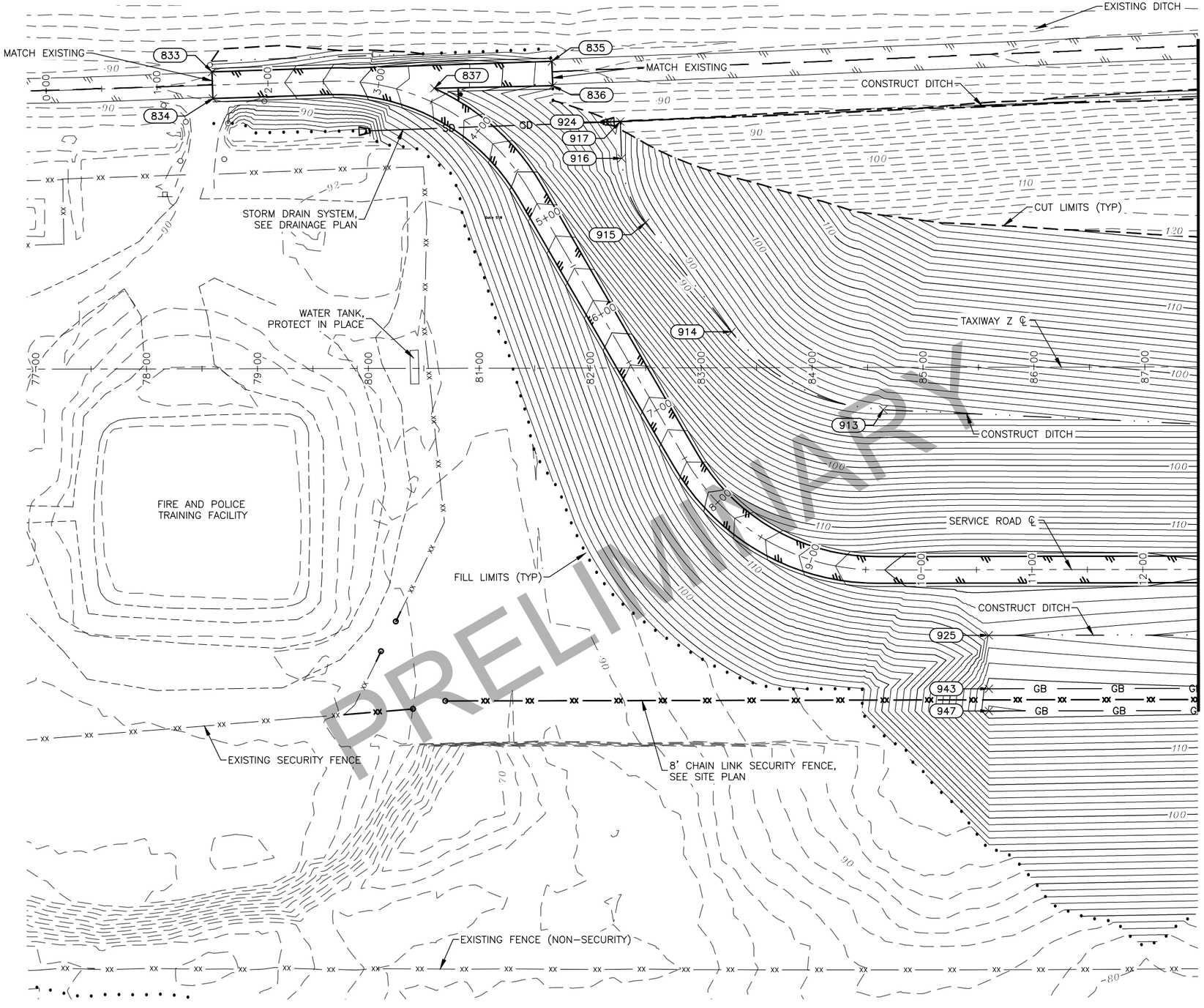

MATCH LINE - TAXIWAY Z STA 87+50
SHE SHEET 44

PRELIMINARY

GRADING NOTES:

1. ELEVATIONS SHOWN ARE FINISHED GRADE.
2. CONSTRUCT TEMPORARY DRAINAGE DITCHES, SWALES, OR BERMS AS NEEDED TO MAINTAIN DRAINAGE. THIS WORK IS INCIDENTAL TO THE WORK AND WILL NOT BE MEASURED FOR PAYMENT.
3. UTILITIES NOT SHOWN FOR CLARITY.
4. SEE SITE PLAN FOR SITE SECTIONS

50' 25' 0 50' 100'

BY	DATE	REVISION

STATE OF ALASKA
DEPARTMENT OF TRANSPORTATION AND PUBLIC FACILITIES
CENTRAL REGION
4111 AVIATION AVE., ANCHORAGE ALASKA 99502
PHONE (907) 269-0590

TED STEVENS ANCHORAGE
ANCHORAGE, ALASKA
ANC TAXIWAY Z IMPROVEMENTS WEST - PHASE 1
PROJECT No. CFAPT00465
AIP No. 3-02-0016-XXX-2022
GRADING PLAN

DATE: 10/14/2021
SHEET: 43 OF 78

Designed By: TAD
Drawn By: RJB
Checked By: TAD
Date Revised:
Layout Name: GRADING 1
File Path and Name: W:\Projects\AIA Ted Stevens\AIA TW Z Ext 00465\Final Drawings\00465-AIA-Grading Plan.dwg
10/14/2021, 12:35 PM

Designed By:	TAD
Drawn By:	RJB
Checked By:	TAD

Date Revised:	10/14/2021, 12:35 PM
Layout Name:	GRADING 2
File Path and Name:	W:\Projects\AIA Ted Stevens\AIA TW Z Ext 00465\Final Drawings\00465-AIA-Grading Plan.dwg

MATCH LINE - TAXIWAY Z STA 87+50
SEE SHEET 43

MATCH LINE - TAXIWAY Z STA 102+50
SEE SHEET 45

EXISTING SERVICE ROAD

CONSTRUCT DITCH

RW 15 LOCALIZER CRITICAL AREA

RW 15 LOCALIZER, PROTECT IN PLACE

CUT LIMITS (TYP)

TAXIWAY Z ℄

STORM DRAIN SYSTEM, SEE DRAINAGE PLAN

SERVICE ROAD ℄

CONSTRUCT DITCH

CONSTRUCT DITCH

8' CHAIN LINK SECURITY FENCE, SEE SITE PLAN

FILL LIMITS (TYP)

EXISTING FENCE (NON-SECURITY)

EXTEND CUT LIMITS TO DAYLIGHTS

EXTEND CUT LIMITS TO DAYLIGHTS

912 922 923 926 927 928 942 946

50' 25' 0 50' 100'

PRELIMINARY

BY	DATE	REVISION

STATE OF ALASKA
DEPARTMENT OF TRANSPORTATION AND PUBLIC FACILITIES
CENTRAL REGION
4111 AVIATION AVE., ANCHORAGE ALASKA 99502
PHONE (907) 269-0590

TED STEVENS ANCHORAGE
ANCHORAGE, ALASKA
ANC TAXIWAY Z IMPROVEMENTS WEST - PHASE 1
PROJECT No. CFAPT00465
AIP No. 3-02-0016-XXX-2022
GRADING PLAN

DATE: 10/14/2021

SHEET: 44 OF 78

MATCH LINE - TAXIWAY R
SEE SHEET 47

MATCH LINE - TAXIWAY Z STA 102+50
SEE SHEET 44

MATCH LINE - TAXIWAY Z STA 114+00
SEE SHEET 46

TW Z, 30' SHOULDER (TYP)

TAXIWAY Z ℄

TL R, 20' SHOULDER (TYP)

STORM DRAIN SYSTEM, SEE DRAINAGE PLAN

CONSTRUCT DITCH

SERVICE ROAD ℄

TAXILANE R ℄

8' CHAIN LINK SECURITY FENCE, SEE SITE PLAN

EXISTING SECURITY FENCE

CUT LIMITS (TYP)

EXISTING DITCH

MATCH EXISTING

TSA

TOFA

SD

UD

GB

PRELIMINARY

40' 20' 0 40' 80'

BY	DATE	REVISION

STATE OF ALASKA
DEPARTMENT OF TRANSPORTATION AND PUBLIC FACILITIES
CENTRAL REGION
4111 AVIATION AVE., ANCHORAGE ALASKA 99502
PHONE (907) 269-0590

TED STEVENS ANCHORAGE
ANCHORAGE, ALASKA
ANC TAXIWAY Z IMPROVEMENTS WEST - PHASE 1
PROJECT No. CFAPT00465
AIP No. 3-02-0016-XXX-2022
GRADING PLAN

DATE: 10/14/2021

SHEET: 45 OF 78

Designed By:	TAD
Drawn By:	RJB
Checked By:	TAD
Date Revised:	10/14/2021, 12:35 PM
Layout Name:	GRADING 3
File Path and Name:	W:\Projects\AIA Ted Stevens\AIA TW Z Ext 00465\Final Drawings\00465-AIA-Grading Plan.dwg

MATCH LINE - TAXIWAY Z STA 114+00
SEE SHEET 45

MATCH LINE - TAXIWAY E
SEE SHEET 48

STORM DRAIN SYSTEM, SEE DRAINAGE PLAN

TW Z, 30' SHOULDER (TYP)

TAXIWAY Z ℄

TAXILANE E ℄

TSA

TOFA

CONSTRUCT DITCH

CONSTRUCT SWALE

SERVICE ROAD ℄

CUT LIMITS (TYP)

8' CHAIN LINK SECURITY FENCE, SEE SITE PLAN

EXISTING SECURITY FENCE

BULK FUEL TRANSFER STATION, DO NOT DISTURB

MATCH EXISTING

GREAT CIRCLE FLIGHT SERVICES

ROSS AVIATION

CARL BRADY DRIVE

50' 25' 0 50' 100'

PRELIMINARY

Designed By:	TAD	
Drawn By:	RJB	
Checked By:	TAD	
Date Revised:	10/14/2021, 12:35 PM	
Layout Name:	GRADING 4	
File Path and Name:	W:\Projects\ANA Ted Stevens\ANA TW Z Ext 00465\Final Drawings\00465-AIA-Grading Plan.dwg	

BY	DATE	REVISION

STATE OF ALASKA
DEPARTMENT OF TRANSPORTATION AND PUBLIC FACILITIES
CENTRAL REGION
4111 AVIATION AVE., ANCHORAGE ALASKA 99502
PHONE (907) 269-0590

TED STEVENS ANCHORAGE
ANCHORAGE, ALASKA
ANC TAXIWAY Z IMPROVEMENTS WEST - PHASE 1
PROJECT No. CFAPT00465
AIP No. 3-02-0016-XXX-2022
GRADING PLAN

DATE: 10/14/2021

SHEET: 46 OF 78

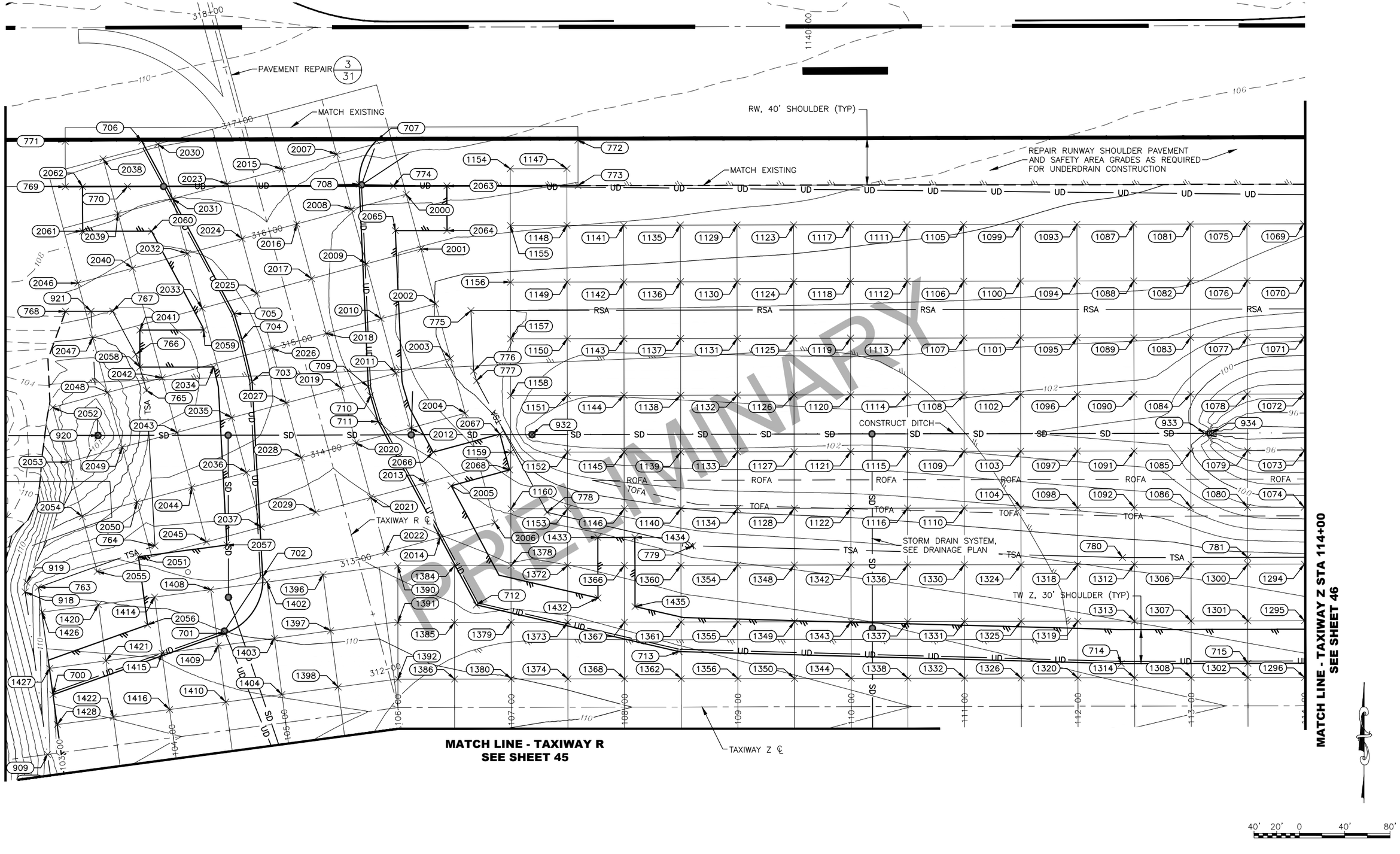

PRELIMINARY

Designed By:	TAD
Drawn By:	RJB
Checked By:	TAD
Date Revised:	10/14/2021, 12:35 PM
Layout Name:	GRADING 5
File Path and Name:	W:\Projects\AIA Ted Stevens\AIA TW Z Ext 00465\Final Drawings\00465-AIA-Grading Plan.dwg

BY	DATE	REVISION

STATE OF ALASKA
DEPARTMENT OF TRANSPORTATION AND PUBLIC FACILITIES
CENTRAL REGION
4111 AVIATION AVE., ANCHORAGE ALASKA 99502
PHONE (907) 269-0590

TED STEVENS ANCHORAGE
ANCHORAGE, ALASKA
ANC TAXIWAY Z IMPROVEMENTS WEST – PHASE 1
PROJECT No. CFAPT00465
AIP No. 3-02-0016-XXX-2022
GRADING PLAN

DATE: 10/14/2021

SHEET: 47 OF 78

REPAIR RUNWAY SHOULDER PAVEMENT AND SAFETY AREA GRADES AS REQUIRED FOR UNDERDRAIN CONSTRUCTION

RW, 40' SHOULDER (TYP)

PAVEMENT REPAIR 3/31

MATCH EXISTING

MATCH EXISTING

EXISTING DITCH

CUT LIMITS (TYP)

CONSTRUCT DITCH

CONSTRUCT DITCH

STORM DRAIN SYSTEM, SEE DRAINAGE PLAN

TW Z, 30' SHOULDER (TYP)

TAXIWAY E ℄

SERVICE ROAD ℄

TAXIWAY Z ℄

MATCH EXISTING

SERVICE ROAD ℄

TAXIWAY Z ℄

RSA

ROFA

TOFA

TSA

UD

SD

MATCH LINE - TAXIWAY Z STA 114+00
SEE SHEET 46

MATCH LINE - THIS SHEET

MATCH LINE - TAXILANE
SEE SHEET 46

MATCH LINE - THIS SHEET

PRELIMINARY

Designed By:	TAD
Drawn By:	RJB
Checked By:	TAD
Date Revised:	10/14/2021, 12:36 PM
Layout Name:	GRADING 6
File Path and Name:	W:\Projects\AIA Ted Stevens\AIA TW Z Ext 00465\Final Drawings\00465-AIA-Grading Plan.dwg

BY	DATE	REVISION

STATE OF ALASKA
DEPARTMENT OF TRANSPORTATION AND PUBLIC FACILITIES
CENTRAL REGION
4111 AVIATION AVE., ANCHORAGE ALASKA 99502
PHONE (907) 269-0590

TED STEVENS ANCHORAGE
ANCHORAGE, ALASKA
ANC TAXIWAY Z IMPROVEMENTS WEST - PHASE 1
PROJECT No. CFAPT00465
AIP No. 3-02-0016-XXX-2022
GRADING PLAN

DATE: 10/14/2021

SHEET: 48 OF 78

GENERAL GRADING POINTS TABLE

POINT #	STATION	OFFSET	ELEVATION	DESCRIPTION
700	102+99.79	51.62LT	111.88	PI EDGE STRUCTURAL
701	104+57.52	85.15LT	110.04	PC EDGE STRUCTURAL
702	104+96.96	130.14LT	109.06	PT EDGE STRUCTURAL
703	105+10.48	301.92LT	106.74	PI EDGE STRUCTURAL
704	105+06.56	340.00LT	106.76	PI EDGE STRUCTURAL
705	105+02.77	363.49LT	106.80	PI EDGE STRUCTURAL
706	104+42.15	525.10LT	109.18	PI EDGE STRUCTURAL
707	316+52.49	112.28RT	108.38	PC EDGE STRUCTURAL
708	316+19.47	87.41RT	107.39	PT EDGE STRUCTURAL
709	314+44.85	48.45RT	106.83	PI EDGE STRUCTURAL
710	314+36.83	48.23RT	106.87	PI EDGE STRUCTURAL
711	314+13.04	48.92RT	107.00	PI EDGE STRUCTURAL
712	106+69.34	90.38LT	108.85	PI EDGE STRUCTURAL
713	108+48.10	48.92LT	109.08	PI EDGE STRUCTURAL
714	112+38.24	37.50LT	107.74	PI EDGE STRUCTURAL
715	113+50.00	37.50LT	107.36	PI EDGE STRUCTURAL
716	114+45.36	37.50LT	107.02	PI EDGE STRUCTURAL
717	118+32.60	48.66LT	108.41	PI EDGE STRUCTURAL
718	120+07.34	88.71LT	107.30	PC EDGE STRUCTURAL
719	120+45.79	143.51LT	106.38	PT EDGE STRUCTURAL
720	120+24.07	321.45LT	103.74	PI EDGE STRUCTURAL
721	120+16.46	344.56LT	103.50	PI EDGE STRUCTURAL
722	120+11.26	357.78LT	103.36	PI EDGE STRUCTURAL
723	119+21.94	500.00LT	102.97	PI EDGE STRUCTURAL
724	121+37.85	500.00LT	102.03	PC EDGE STRUCTURAL
725	121+21.34	456.49LT	102.20	PT EDGE STRUCTURAL
726	121+43.06	278.54LT	104.53	PI EDGE STRUCTURAL
727	121+50.59	255.66LT	104.76	PI EDGE STRUCTURAL
728	121+55.89	242.22LT	104.87	PI EDGE STRUCTURAL
729	122+53.22	87.22LT	105.39	PI EDGE STRUCTURAL
730	124+32.07	48.37LT	102.70	PI EDGE STRUCTURAL
731	125+20.00	45.87LT	101.88	PI EDGE STRUCTURAL
732	125+20.00	37.50RT	102.02	PI EDGE STRUCTURAL
733	124+11.37	37.50RT	103.16	PI EDGE STRUCTURAL
734	121+30.72	45.84RT	107.16	PI EDGE STRUCTURAL
735	119+98.91	72.44RT	109.29	PC EDGE STRUCTURAL
736	119+59.36	128.88RT	110.50	PT EDGE STRUCTURAL
737	119+79.32	261.85RT	111.63	PI EDGE STRUCTURAL
738	120+67.24	528.50RT	114.67	PI EDGE STRUCTURAL
739	120+31.99	541.30RT	115.27	PI EDGE STRUCTURAL
740	119+97.33	445.82RT	114.06	PI EDGE STRUCTURAL
741	119+62.08	458.62RT	113.42	PI EDGE STRUCTURAL
742	118+56.41	193.34RT	111.00	PI EDGE STRUCTURAL
743	117+82.63	75.45RT	109.50	PI EDGE STRUCTURAL
744	116+46.65	46.32RT	106.68	PI EDGE STRUCTURAL
745	113+61.24	37.50RT	107.32	PI EDGE STRUCTURAL
746	110+60.36	37.50RT	108.40	PI EDGE STRUCTURAL
747	110+24.38	43.75RT	108.44	PI EDGE STRUCTURAL

GENERAL GRADING POINTS TABLE

POINT #	STATION	OFFSET	ELEVATION	DESCRIPTION
748	109+63.78	94.27RT	107.92	PI EDGE STRUCTURAL
749	108+61.48	206.71RT	107.43	PI EDGE STRUCTURAL
750	108+39.45	232.66RT	107.40	PI EDGE STRUCTURAL
751	107+46.27	350.32RT	109.01	PI EDGE STRUCTURAL
752	107+05.40	418.72RT	110.11	PI EDGE STRUCTURAL
753	107+03.90	498.38RT	110.87	PI EDGE STRUCTURAL
754	107+20.74	647.52RT	112.32	PI EDGE STRUCTURAL
755	107+21.72	654.18RT	112.38	PI EDGE STRUCTURAL
756	106+72.25	661.47RT		PI EDGE STRUCTURAL
757	106+35.22	410.29RT	110.28	PI EDGE STRUCTURAL
758	106+20.63	311.36RT	109.72	PI EDGE STRUCTURAL
759	105+69.79	137.65RT	109.14	PI EDGE STRUCTURAL
760	105+45.88	54.97RT	110.18	PI EDGE STRUCTURAL
761	104+91.00	40.01RT	110.89	PI EDGE STRUCTURAL
762	103+00.13	37.65RT	112.08	PI EDGE STRUCTURAL
763	102+99.42	147.13LT	109.83	PI EDGE TSA
764	104+06.30	169.85LT	108.39	PI EDGE TSA
765	104+17.07	306.78LT	105.34	PI EDGE TSA
766	104+11.95	339.38LT	105.43	PI EDGE TSA
767	103+96.80	379.77LT	105.94	PI EDGE TSA
768	103+55.53	385.21LT	106.66	PI EDGE RSA
769	103+69.89	494.26LT	108.85	PI EDGE RW SHOULDER
770	104+24.36	487.09LT	108.53	PI RW SHOULDER
771	103+75.11	533.92LT	109.47	PI EDGE RW MATCH EXISTING
772	107+59.80	500.00LT	107.69	PI EDGE RW MATCH EXISTING
773	107+59.80	460.00LT	106.94	PI RW SHOULDER
774	316+10.07	116.05RT	107.41	PI RW SHOULDER
775	106+65.07	350.00LT	104.01	PI EDGE RSA
776	106+67.33	296.68LT	104.45	PI EDGE TSA
777	106+69.91	288.07LT	104.61	PI EDGE TSA
778	107+31.86	171.86LT	106.72	PI EDGE TSA
779	108+60.15	142.11LT	106.69	PI EDGE TSA
780	112+39.61	131.00LT	105.76	PI EDGE TSA
781	113+50.00	131.00LT	105.49	PI EDGE TSA
782	114+44.01	131.00LT	105.15	PI EDGE TSA
783	118+20.69	141.85LT	103.71	PI EDGE TSA
784	119+48.23	171.09LT	102.78	PI EDGE TSA
785	119+32.38	300.98LT	100.05	PI EDGE TSA
786	119+28.49	312.79LT	100.13	PI EDGE TSA
787	119+27.45	315.42LT	100.15	PI EDGE TSA
788	119+05.74	350.00LT	100.41	PI RSA EDGE
789	115+36.66	460.00LT	103.52	PI EDGE RW SHOULDER
790	115+36.66	500.00LT	104.62	PI EDGE RW MATCH EXISTING
791	122+15.11	500.00LT	101.56	PI EDGE RW MATCH EXISTING
792	122+15.11	460.00LT	101.07	PI EDGE RW SHOULDER
793	121+51.14	460.00LT	101.96	PI EDGE RW SHOULDER
794	119+11.64	460.00LT	102.39	PI EDGE RW SHOULDER
795	124+15.14	460.00LT	99.93	PI RW EDGE MATCH EXISTING

GENERAL GRADING POINTS TABLE

POINT #	STATION	OFFSET	ELEVATION	DESCRIPTION
796	124+14.93	350.00LT	98.04	PI EDGE RSA
797	122+28.53	350.00LT	100.52	PI EDGE RSA
798	122+34.76	299.02LT	102.34	PI EDGE TSA
799	122+38.57	287.43LT	102.78	PI EDGE TSA
800	122+39.70	284.58LT	102.83	PI EDGE TSA
801	123+11.49	170.24LT	102.20	PI EDGE TSA
802	124+43.42	141.58LT	100.58	PI EDGE TSA
803	125+20.00	139.41LT	100.11	PI EDGE TSA
804	125+20.00	131.00RT	100.23	PI EDGE TSA
805	120+08.21	131.00RT	108.92	PI EDGE TSA
806	120+13.70	167.50RT	109.48	PI EDGE TSA
807	120+18.20	197.50RT	109.90	PI TSA EDGE
808	120+26.19	250.69RT	110.80	PI TSA EDGE
809	121+12.38	512.12RT	113.71	PI TSA EDGE
810	119+16.94	475.00RT	112.46	PI EDGE TSA
811	118+13.42	215.13RT	109.84	PI EDGE TSA
812	118+02.39	197.50RT	109.69	PI EDGE TSA
813	117+83.61	167.50RT	109.50	PI EDGE TSA
814	117+60.77	131.00RT	107.94	PI EDGE TSA
815	109+76.33	131.00RT	106.54	PI EDGE TSA
816	109+42.37	168.33RT	106.73	PI EDGE TSA
817	109+14.30	199.17RT	106.73	PI EDGE TSA
818	108+87.00	235.70RT	105.97	PI EDGE TSA
819	108+65.75	254.22RT	106.73	PI EDGE TSA
820	107+74.31	369.68RT	108.24	PI EDGE TSA
821	107+39.22	428.40RT	109.06	PI EDGE TSA
822	107+37.94	496.79RT	109.97	PI EDGE TSA
823	107+54.46	643.13RT	111.27	PI EDGE TSA
824	107+55.35	649.22RT	111.33	PI EDGE TSA
825	105+51.30	665.77RT	111.31	PI EDGE TSA
826	105+47.37	411.90RT	109.60	PI EDGE TSA
827	105+45.83	312.63RT	109.03	PI EDGE TSA
828	105+39.54	203.63RT	108.48	PI EDGE TSA
829	105+37.80	173.40RT	108.48	PI EDGE TSA
830	105+36.07	143.43RT	108.63	PI EDGE TSA
831	105+33.62	134.97RT	108.62	PI EDGE TSA
832	103+00.49	131.16RT	110.20	PI EDGE TSA
833	78+59.54	267.55LT	92.02	PI EDGE ROAD MATCH EXISTING
834	78+60.31	243.56LT	92.02	PI EDGE ROAD MATCH EXISTING
835	81+66.01	276.44LT	93.49	PI EDGE ROAD MATCH EXISTING
836	81+66.71	254.56LT	93.41	PI EDGE ROAD MATCH EXISTING
837	80+59.94	252.35LT	96.68	PI EDGE ROAD
838	105+52.06	177.59RT	108.73	PI EDGE ROAD
839	105+53.46	201.82RT	108.75	PI EDGE ROAD
840	109+20.11	171.99RT	107.05	PI EDGE ROAD
841	108+97.65	196.67RT	107.03	PI EDGE ROAD
842	112+51.91	194.50RT	107.57	PI EDGE ROAD
843	112+71.91	194.50RT	107.64	PI EDGE ROAD

GENERAL GRADING POINTS TABLE

POINT #	STATION	OFFSET	ELEVATION	DESCRIPTION
844	118+06.72	170.50RT	110.02	PI EDGE ROAD
845	118+21.74	194.50RT	110.17	PI EDGE ROAD
846	119+95.94	170.50RT	110.01	PI EDGE ROAD
847	119+99.55	194.50RT	110.30	PI EDGE ROAD
848	121+98.61	73.84RT	105.54	PI EDGE ROAD
849	122+26.81	73.00RT	105.16	PI EDGE ROAD
850	123+19.83	103.45LT	103.62	PI EDGE ROAD
851	123+54.75	95.87LT	103.09	PI EDGE ROAD
852	126+86.64	122.14LT	104.01	PC EDGE ROAD
853	126+97.05	131.72LT	104.02	PT EDGE ROAD
854	126+97.27	136.91LT	104.00	PI EDGE ROAD MATCH EXISTING
855	127+09.26	136.41LT	103.91	PI EDGE ROAD MATCH EXISTING
856	127+09.04	131.21LT	104.06	PC EDGE ROAD
857	127+18.62	120.80LT	104.49	PT EDGE ROAD
858	127+57.62	119.17LT	104.49	PI EDGE ROAD MATCH EXISTING
859	127+56.62	95.19LT	104.49	PI EDGE ROAD MATCH EXISTING
860	126+88.68	129.85LT	101.56	PI BEGIN DITCH
861	125+66.71	134.96LT	98.04	PC DITCH
862	125+32.00	151.08LT	96.91	PI DITCH
863	125+32.00	141.64LT	96.94	PI DITCH
864	124+44.88	153.55LT	96.67	PI DITCH
865	123+18.97	180.90LT	96.31	PI DITCH
866	122+50.92	289.27LT	95.96	PC DITCH
867	122+72.14	327.57LT	95.81	PT DITCH
868	124+14.88	327.29LT	95.42	PI END DITCH
869	120+37.75	206.50RT	105.00	PI BEGIN DITCH
870	120+59.09	206.50RT	104.77	PC DITCH
871	121+99.27	140.00RT	103.08	PI DITCH
872	125+32.00	140.65RT	100.08	PI DITCH
873	125+32.00	90.19LT	97.45	PI DITCH
874	125+32.00	91.59LT	97.44	PI END DITCH
875	126+48.98	90.19LT	99.81	PI DITCH
876	127+56.22	85.70LT	101.97	PI BEGIN DITCH
877	121+29.30	505.98RT	110.36	PI BEGIN DITCH
878	120+95.06	411.64RT	108.35	PI END DITCH
879	121+84.51	74.26RT	105.77	PI BEGIN SWALE
880	121+74.27	92.00RT	105.66	PC SWALE
881	120+59.09	158.50RT	104.95	PT SWALE
882	120+30.55	158.50RT	104.80	PI END SWALE
883	120+08.59	254.72RT	111.10	PC EDGE RAMP
884	120+26.75	252.39RT	111.01	PT EDGE RAMP
885	120+60.92	239.99RT	110.86	PI EDGE RAMP MATCH EXISTING
886	121+22.01	408.28RT	114.37	PI EDGE RAMP MATCH EXISTING
887	121+18.46	409.57RT	114.37	PC EDGE RAMP
888	120+80.37	392.51RT	113.74	PT EDGE RAMP
889	120+73.07	395.16RT	113.64	PC EDGE RAMP
890	120+58.57	406.38RT	113.41	PI EDGE RAMP
891	117+93.66	250.69RT	111.61	PC EDGE RAMP MATCH EXISTING

PRELIMINARY

Designed By:	TAD
Drawn By:	RJB
Checked By:	TAD

Date Revised:	10/14/2021, 12:36 PM
Layout Name:	GRADING TABLE G1
File Path and Name:	W:\Projects\AIA Ted Stevens\AIA TW Z Ext 00465\Final Drawings\00465-AIA-Grading Plan.dwg

BY	DATE	REVISION

STATE OF ALASKA
DEPARTMENT OF TRANSPORTATION AND PUBLIC FACILITIES
CENTRAL REGION
4111 AVIATION AVE., ANCHORAGE ALASKA 99502
PHONE (907) 269-0590

TED STEVENS ANCHORAGE
ANCHORAGE, ALASKA
ANC TAXIWAY Z IMPROVEMENTS WEST - PHASE 1
PROJECT No. CFAPT00465
AIP No. 3-02-0016-XXX-2022
GENERAL GRADING POINT TABLES

DATE: 10/14/2021

SHEET: 49 OF 78

Designed By:	TAD
Drawn By:	RJB
Checked By:	TAD

Date Revised:	10/14/2021, 12:36 PM
Layout Name:	GRADING TABLE G2
File Path and Name:	W:\Projects\ANA Ted Stevens\ANA TW Z Ext 00465\Final Drawings\00465-AIA-Grading Plan.dwg

GENERAL GRADING POINTS TABLE

POINT #	STATION	OFFSET	ELEVATION	DESCRIPTION
892	118+09.03	257.88RT	111.55	PT EDGE RAMP
893	118+44.67	244.94RT	110.82	PI EDGE RAMP
894	118+76.14	323.95RT	111.38	PI EDGE RAMP
895	118+38.03	337.78RT	111.69	PC EDGE RAMP
896	118+30.85	353.15RT	112.12	PI EDGE RAMP MATCH EXISTING
899	112+78.90	209.50RT	105.45	PI END DITCH
900	112+44.90	209.50RT	105.44	PI BEGIN DITCH
901	109+29.58	209.50RT	102.70	PI END DITCH
902	108+11.03	351.40RT	104.21	PC DITCH
903	107+65.91	503.18RT	105.55	PT DITCH
904	107+82.79	645.48RT		PI BEGIN DITCH
905	105+31.30	666.08RT	106.97	PI BEGIN DITCH
906	105+20.33	215.70RT	106.29	PI END DITCH
907	105+18.34	154.49RT	105.65	PI END DITCH
908	103+00.90	149.42RT	108.92	PI BEGIN DITCH
909	102+87.99	0.00RT	110.64	PI BEGIN DITCH
910	102+88.42	111.01RT	106.63	PI DITCH
911	102+91.48	128.01RT	106.00	PI DITCH
912	101+90.71	120.62RT	105.01	PI DITCH
913	84+64.08	38.08RT	90.31	PC DITCH
914	83+27.49	32.36LT	88.96	PT DITCH
915	82+50.04	130.86LT	87.88	PC DITCH
916	82+28.71	188.97LT	87.34	PT DITCH
917	82+27.49	222.07LT	86.98	PI DITCH
918	102+87.43	144.64LT	107.92	PC DITCH
919	102+89.93	152.99LT	107.76	PT DITCH
920	103+69.40	272.93LT	100.20	PI END SWALE
921	103+77.84	382.27LT	106.27	PI BEGIN SWALE
922	102+50.96	288.53LT	91.89	PI BEGIN DITCH
923	98+68.60	290.50LT	91.03	PI DITCH
924	82+17.50	221.70LT	86.93	PI END DITCH
925	85+58.80	241.59RT	112.19	PI BEGIN DITCH
926	93+50.03	242.77RT	105.67	PI END DITCH
927	101+41.26	215.47RT	108.04	PI BEGIN DITCH
928	102+08.26	225.00RT	106.85	PC DITCH
929	102+78.28	239.07RT	105.09	PT DITCH
930	104+99.38	254.54RT	101.20	PC DITCH
931	105+20.77	234.11RT	103.92	PT DITCH
932	107+18.77	240.50LT	101.00	BEGIN SWALE
933	113+12.27	240.50LT	100.40	END SWALE
934	113+18.77	240.50LT	94.37	END SWALE
935	119+13.45	240.50LT	96.15	BEGIN SWALE
936	111+51.13	535.22RT		PI BEGIN DITCH
937	111+82.73	547.78RT		PI BEGIN DITCH
938	117+46.98	149.25RT	104.57	PI BEGIN DITCH
939	109+84.40	149.25RT	102.49	PI END DITCH
940	104+34.64	291.61RT	106.38	PI GRADE BREAK
941	102+73.20	289.55RT	108.80	PC GRADE BREAK

GENERAL GRADING POINTS TABLE

POINT #	STATION	OFFSET	ELEVATION	DESCRIPTION
942	101+40.80	289.77RT	111.34	PT GRADE BREAK
943	85+58.80	289.77RT	115.69	PI GRADE BREAK
944	104+34.39	311.60RT	106.79	PI GRADE BREAK
945	102+72.95	309.55RT	109.20	PC GRADE BREAK
946	101+40.80	309.77RT	111.74	PT GRADE BREAK
947	85+58.80	309.77RT	116.09	PI GRADE BREAK

PRELIMINARY

BY	DATE	REVISION

STATE OF ALASKA
DEPARTMENT OF TRANSPORTATION AND PUBLIC FACILITIES
CENTRAL REGION
4111 AVIATION AVE., ANCHORAGE ALASKA 99502
PHONE (907) 269-0590

TED STEVENS ANCHORAGE
ANCHORAGE, ALASKA
ANC TAXIWAY Z IMPROVEMENTS WEST - PHASE 1
PROJECT No. CFAPT00465
AIP No. 3-02-0016-XXX-2022
GENERAL GRADING POINT TABLES

DATE: 10/14/2021

TAXIWAY Z GRADING POINTS TABLE			
POINT #	STATION	OFFSET	ELEVATION
1000	119+50.00	275.00LT	100.50
1001	119+50.00	225.00LT	100.69
1002	119+50.00	175.00LT	102.68
1003	119+00.00	375.00LT	100.88
1004	119+00.00	325.00LT	99.84
1005	119+00.00	275.00LT	98.08
1006	119+00.00	225.00LT	97.64
1007	119+00.00	175.00LT	101.91
1008	118+50.00	475.00LT	102.69
1009	118+50.00	425.00LT	101.76
1010	118+50.00	375.00LT	100.76
1011	118+50.00	325.00LT	99.33
1012	118+50.00	275.00LT	97.37
1013	118+50.00	225.00LT	97.25
1014	118+50.00	175.00LT	101.35
1015	118+00.00	475.00LT	103.20
1016	118+00.00	425.00LT	102.19
1017	118+00.00	375.00LT	101.05
1018	118+00.00	325.00LT	99.41
1019	118+00.00	275.00LT	97.28
1020	118+00.00	225.00LT	97.06
1021	118+00.00	175.00LT	101.10
1022	117+50.00	475.00LT	103.80
1023	117+50.00	425.00LT	102.69
1024	117+50.00	375.00LT	101.44
1025	117+50.00	325.00LT	99.64
1026	117+50.00	275.00LT	97.29
1027	117+50.00	225.00LT	96.94
1028	117+50.00	175.00LT	101.08
1029	117+00.00	475.00LT	104.28
1030	117+00.00	425.00LT	103.13
1031	117+00.00	375.00LT	101.81
1032	117+00.00	325.00LT	99.87
1033	117+00.00	275.00LT	97.29
1034	117+00.00	225.00LT	96.83
1035	117+00.00	175.00LT	101.07
1036	116+50.00	475.00LT	104.61
1037	116+50.00	425.00LT	103.42
1038	116+50.00	375.00LT	102.14
1039	116+50.00	325.00LT	100.10
1040	116+50.00	275.00LT	97.30
1041	116+50.00	225.00LT	96.71
1042	116+50.00	175.00LT	101.06
1043	116+00.00	475.00LT	104.34
1044	116+00.00	425.00LT	103.38
1045	116+00.00	375.00LT	102.36
1046	116+00.00	325.00LT	100.33
1047	116+00.00	275.00LT	97.30

TAXIWAY Z GRADING POINTS TABLE			
POINT #	STATION	OFFSET	ELEVATION
1048	116+00.00	225.00LT	96.59
1049	116+00.00	175.00LT	101.05
1050	115+50.00	475.00LT	104.02
1051	115+50.00	425.00LT	103.23
1052	115+50.00	375.00LT	102.53
1053	115+50.00	325.00LT	100.56
1054	115+50.00	275.00LT	97.31
1055	115+50.00	225.00LT	96.47
1056	115+50.00	175.00LT	101.02
1057	115+00.00	425.00LT	103.39
1058	115+00.00	375.00LT	102.82
1059	115+00.00	325.00LT	100.79
1060	115+00.00	275.00LT	97.31
1061	115+00.00	225.00LT	96.35
1062	115+00.00	175.00LT	100.99
1063	114+50.00	425.00LT	103.76
1064	114+50.00	375.00LT	103.17
1065	114+50.00	325.00LT	101.02
1066	114+50.00	275.00LT	97.32
1067	114+50.00	225.00LT	96.23
1068	114+50.00	175.00LT	100.98
1069	114+00.00	425.00LT	104.14
1070	114+00.00	375.00LT	103.53
1071	114+00.00	325.00LT	101.25
1072	114+00.00	275.00LT	97.32
1073	114+00.00	225.00LT	96.13
1074	114+00.00	175.00LT	101.01
1075	113+50.00	425.00LT	104.31
1076	113+50.00	375.00LT	103.81
1077	113+50.00	325.00LT	101.55
1078	113+50.00	275.00LT	97.61
1079	113+50.00	225.00LT	96.09
1080	113+50.00	175.00LT	101.26
1081	113+00.00	425.00LT	104.52
1082	113+00.00	375.00LT	104.03
1083	113+00.00	325.00LT	102.66
1084	113+00.00	275.00LT	100.36
1085	113+00.00	225.00LT	100.14
1086	113+00.00	175.00LT	102.85
1087	112+50.00	425.00LT	104.68
1088	112+50.00	375.00LT	104.10
1089	112+50.00	325.00LT	103.09
1090	112+50.00	275.00LT	101.65
1091	112+50.00	225.00LT	101.37
1092	112+50.00	175.00LT	103.70
1093	112+00.00	425.00LT	104.77
1094	112+00.00	375.00LT	104.14
1095	112+00.00	325.00LT	103.15

TAXIWAY Z GRADING POINTS TABLE			
POINT #	STATION	OFFSET	ELEVATION
1096	112+00.00	275.00LT	101.79
1097	112+00.00	225.00LT	101.57
1098	112+00.00	175.00LT	103.88
1099	111+50.00	425.00LT	104.92
1100	111+50.00	375.00LT	104.20
1101	111+50.00	325.00LT	103.21
1102	111+50.00	275.00LT	101.93
1103	111+50.00	225.00LT	101.76
1104	111+50.00	175.00LT	104.07
1105	111+00.00	425.00LT	105.12
1106	111+00.00	375.00LT	104.28
1107	111+00.00	325.00LT	103.27
1108	111+00.00	275.00LT	102.07
1109	111+00.00	225.00LT	101.96
1110	111+00.00	175.00LT	104.26
1111	110+50.00	425.00LT	105.25
1112	110+50.00	375.00LT	104.34
1113	110+50.00	325.00LT	103.32
1114	110+50.00	275.00LT	102.21
1115	110+50.00	225.00LT	102.16
1116	110+50.00	175.00LT	104.46
1117	110+00.00	425.00LT	105.39
1118	110+00.00	375.00LT	104.39
1119	110+00.00	325.00LT	103.36
1120	110+00.00	275.00LT	102.27
1121	110+00.00	225.00LT	102.26
1122	110+00.00	175.00LT	104.61
1123	109+50.00	425.00LT	105.56
1124	109+50.00	375.00LT	104.46
1125	109+50.00	325.00LT	103.35
1126	109+50.00	275.00LT	102.22
1127	109+50.00	225.00LT	102.22
1128	109+50.00	175.00LT	104.71
1129	109+00.00	425.00LT	105.66
1130	109+00.00	375.00LT	104.51
1131	109+00.00	325.00LT	103.34
1132	109+00.00	275.00LT	102.16
1133	109+00.00	225.00LT	102.17
1134	109+00.00	175.00LT	104.80
1135	108+50.00	425.00LT	105.79
1136	108+50.00	375.00LT	104.56
1137	108+50.00	325.00LT	103.33
1138	108+50.00	275.00LT	102.10
1139	108+50.00	225.00LT	102.16
1140	108+50.00	175.00LT	105.04
1141	108+00.00	425.00LT	105.91
1142	108+00.00	375.00LT	104.61
1143	108+00.00	325.00LT	103.32

TAXIWAY Z GRADING POINTS TABLE			
POINT #	STATION	OFFSET	ELEVATION
1144	108+00.00	275.00LT	102.04
1145	108+00.00	225.00LT	102.21
1146	108+00.00	175.00LT	105.54
1147	107+50.00	475.00LT	107.26
1148	107+50.00	425.00LT	106.02
1149	107+50.00	375.00LT	104.66
1150	107+50.00	325.00LT	103.42
1151	107+50.00	275.00LT	102.18
1152	107+50.00	225.00LT	102.48
1153	107+50.00	175.00LT	106.26
1154	107+00.00	475.00LT	107.49
1155	107+00.00	425.00LT	106.17
1156	107+00.00	375.00LT	104.73
1157	107+00.00	325.00LT	104.03
1158	107+00.00	275.00LT	103.63
1159	107+00.00	225.00LT	105.39
1160	107+00.00	175.00LT	106.84
1161	108+46.65	130.35RT	108.05
1162	125+00.00	125.00LT	100.50
1163	125+00.00	75.00LT	101.50
1164	125+00.00	25.00LT	102.39
1165	125+00.00	25.00RT	102.40
1166	125+00.00	75.00RT	101.45
1167	125+00.00	125.00RT	100.45
1168	124+50.00	125.00LT	100.87
1169	124+50.00	75.00LT	101.95
1170	124+50.00	25.00LT	102.84
1171	124+50.00	25.00RT	102.85
1172	124+50.00	75.00RT	101.85
1173	124+50.00	125.00RT	100.72
1174	124+00.00	125.00LT	101.56
1175	124+00.00	75.00LT	102.74
1176	124+00.00	25.00LT	103.56
1177	124+00.00	25.00RT	103.51
1178	124+00.00	75.00RT	102.41
1179	124+00.00	125.00RT	101.16
1180	123+50.00	125.00LT	102.45
1181	123+50.00	75.00LT	103.71
1182	123+50.00	25.00LT	104.36
1183	123+50.00	25.00RT	104.26
1184	123+50.00	75.00RT	103.14
1185	123+50.00	125.00RT	101.85
1186	123+00.00	125.00LT	103.55
1187	123+00.00	75.00LT	104.71
1188	123+00.00	25.00LT	105.15
1189	123+00.00	25.00RT	105.01
1190	123+00.00	75.00RT	103.91
1191	123+00.00	125.00RT	102.64

TAXIWAY Z GRADING POINTS TABLE			
POINT #	STATION	OFFSET	ELEVATION
1192	122+50.00	125.00LT	104.79
1193	122+50.00	75.00LT	105.52
1194	122+50.00	25.00LT	105.92
1195	122+50.00	25.00RT	105.76
1196	122+50.00	75.00RT	104.72
1197	122+50.00	125.00RT	103.43
1198	122+00.00	125.00LT	105.68
1199	122+00.00	75.00LT	106.17
1200	122+00.00	25.00LT	106.63
1201	122+00.00	25.00RT	106.51
1202	122+00.00	75.00RT	105.48
1203	122+00.00	125.00RT	104.60
1204	121+50.00	125.00LT	106.30
1205	121+50.00	75.00LT	106.75
1206	121+50.00	25.00LT	107.31
1207	121+50.00	25.00RT	107.23
1208	121+50.00	75.00RT	106.47
1209	121+50.00	125.00RT	105.35
1210	121+00.00	125.00LT	106.47
1211	121+00.00	75.00LT	107.06
1212	121+00.00	25.00LT	107.75
1213	121+00.00	25.00RT	107.88
1214	121+00.00	75.00RT	107.28
1215	121+00.00	125.00RT	106.43
1216	120+50.00	125.00LT	106.60
1217	120+50.00	75.00LT	107.29
1218	120+50.00	25.00LT	108.05
1219	120+50.00	25.00RT	108.44
1220	120+50.00	75.00RT	108.31
1221	120+50.00	125.00RT	107.78
1222	120+00.00	125.00LT	105.90
1223	120+00.00	75.00LT	107.53
1224	120+00.00	25.00LT	108.32
1225	120+00.00	25.00RT	108.90
1226	120+00.00	75.00RT	109.27
1227	120+00.00	125.00RT	109.18
1228	119+50.00	125.00LT	105.17
1229	119+50.00	75.00LT	107.67
1230	119+50.00	25.00LT	108.56
1231	119+50.00	25.00RT	109.26
1232	119+50.00	75.00RT	109.81
1233	119+50.00	125.00RT	110.48
1234	119+00.00	125.00LT	104.91
1235	119+00.00	75.00LT	107.43
1236	119+00.00	25.00LT	108.74
1237	119+00.00	25.00RT	109.51
1238	119+00.00	75.00RT	110.11
1239	119+00.00	125.00RT	110.83

PRELIMINARY

Designed By: TAD
Drawn By: RJB
Checked By: TAD

Date Revised: 10/14/2021, 12:36 PM
Layout Name: GRADING TABLE Z1
File Path and Name: W:\Projects\AIA Ted Stevens\AIA TW Z Ext 00465\Final Drawings\00465-AIA-Grading Plan.dwg

BY	DATE	REVISION

STATE OF ALASKA
DEPARTMENT OF TRANSPORTATION AND PUBLIC FACILITIES
CENTRAL REGION
4111 AVIATION AVE., ANCHORAGE ALASKA 99502
PHONE (907) 269-0590

TED STEVENS ANCHORAGE
ANCHORAGE, ALASKA
ANC TAXIWAY Z IMPROVEMENTS WEST - PHASE 1
PROJECT No. CFAPT00465
AIP No. 3-02-0016-XXX-2022
TAXIWAY Z GRADING POINT TABLES

DATE: 10/14/2021

Designed By:	TAD
Drawn By:	RJB
Checked By:	TAD

Date Revised:	10/14/2021, 12:36 PM
Layout Name:	GRADING TABLE Z2
File Path and Name:	W:\Projects\AIA Ted Stevens\AIA TW Z Ext 00465\Final Drawings\00465-AIA-Grading Plan.dwg

TAXIWAY Z GRADING POINTS TABLE

POINT #	STATION	OFFSET	ELEVATION
1240	118+50.00	125.00LT	104.68
1241	118+50.00	75.00LT	107.18
1242	118+50.00	25.00LT	108.78
1243	118+50.00	25.00RT	109.53
1244	118+50.00	75.00RT	110.12
1245	118+50.00	125.00RT	110.56
1246	118+00.00	125.00LT	104.57
1247	118+00.00	75.00LT	106.94
1248	118+00.00	25.00LT	108.58
1249	118+00.00	25.00RT	109.18
1250	118+00.00	75.00RT	109.64
1251	118+00.00	125.00RT	109.68
1252	117+50.00	125.00LT	104.60
1253	117+50.00	75.00LT	106.62
1254	117+50.00	25.00LT	108.11
1255	117+50.00	25.00RT	108.59
1256	117+50.00	75.00RT	108.71
1257	117+50.00	125.00RT	107.79
1258	117+00.00	125.00LT	104.62
1259	117+00.00	75.00LT	106.23
1260	117+00.00	25.00LT	107.48
1261	117+00.00	25.00RT	107.81
1262	117+00.00	75.00RT	107.50
1263	117+00.00	125.00RT	106.63
1264	116+50.00	125.00LT	104.68
1265	116+50.00	75.00LT	105.97
1266	116+50.00	25.00LT	107.03
1267	116+50.00	25.00RT	107.07
1268	116+50.00	75.00RT	106.41
1269	116+50.00	125.00RT	105.57
1270	116+00.00	125.00LT	104.80
1271	116+00.00	75.00LT	105.87
1272	116+00.00	25.00LT	106.81
1273	116+00.00	25.00RT	106.81
1274	116+00.00	75.00RT	105.93
1275	116+00.00	125.00RT	104.91
1276	115+50.00	125.00LT	104.91
1277	115+50.00	75.00LT	105.92
1278	115+50.00	25.00LT	106.84
1279	115+50.00	25.00RT	106.84
1280	115+50.00	75.00RT	105.90
1281	115+50.00	125.00RT	104.83
1282	115+00.00	125.00LT	105.07
1283	115+00.00	75.00LT	106.08
1284	115+00.00	25.00LT	107.01
1285	115+00.00	25.00RT	107.01
1286	115+00.00	75.00RT	106.06
1287	115+00.00	125.00RT	105.00

TAXIWAY Z GRADING POINTS TABLE

POINT #	STATION	OFFSET	ELEVATION
1288	114+50.00	125.00LT	105.25
1289	114+50.00	75.00LT	106.25
1290	114+50.00	25.00LT	107.19
1291	114+50.00	25.00RT	107.19
1292	114+50.00	75.00RT	106.24
1293	114+50.00	125.00RT	105.21
1294	114+00.00	125.00LT	105.43
1295	114+00.00	75.00LT	106.43
1296	114+00.00	25.00LT	107.37
1297	114+00.00	25.00RT	107.37
1298	114+00.00	75.00RT	106.43
1299	114+00.00	125.00RT	105.42
1300	113+50.00	125.00LT	105.61
1301	113+50.00	75.00LT	106.61
1302	113+50.00	25.00LT	107.54
1303	113+50.00	25.00RT	107.54
1304	113+50.00	75.00RT	106.61
1305	113+50.00	125.00RT	105.61
1306	113+00.00	125.00LT	105.74
1307	113+00.00	75.00LT	106.79
1308	113+00.00	25.00LT	107.72
1309	113+00.00	25.00RT	107.73
1310	113+00.00	75.00RT	106.77
1311	113+00.00	125.00RT	105.75
1312	112+50.00	125.00LT	105.87
1313	112+50.00	75.00LT	106.97
1314	112+50.00	25.00LT	107.90
1315	112+50.00	25.00RT	107.91
1316	112+50.00	75.00RT	106.93
1317	112+50.00	125.00RT	105.89
1318	112+00.00	125.00LT	106.02
1319	112+00.00	75.00LT	107.18
1320	112+00.00	25.00LT	108.08
1321	112+00.00	25.00RT	108.09
1322	112+00.00	75.00RT	107.10
1323	112+00.00	125.00RT	106.03
1324	111+50.00	125.00LT	106.19
1325	111+50.00	75.00LT	107.40
1326	111+50.00	25.00LT	108.27
1327	111+50.00	25.00RT	108.27
1328	111+50.00	75.00RT	107.26
1329	111+50.00	125.00RT	106.17
1330	111+00.00	125.00LT	106.36
1331	111+00.00	75.00LT	107.62
1332	111+00.00	25.00LT	108.46
1333	111+00.00	25.00RT	108.45
1334	111+00.00	75.00RT	107.42
1335	111+00.00	125.00RT	106.31

TAXIWAY Z GRADING POINTS TABLE

POINT #	STATION	OFFSET	ELEVATION
1336	110+50.00	125.00LT	106.53
1337	110+50.00	75.00LT	107.85
1338	110+50.00	25.00LT	108.65
1339	110+50.00	25.00RT	108.63
1340	110+50.00	75.00RT	107.60
1341	110+50.00	125.00RT	106.46
1342	110+00.00	125.00LT	106.70
1343	110+00.00	75.00LT	108.08
1344	110+00.00	25.00LT	108.85
1345	110+00.00	25.00RT	108.82
1346	110+00.00	75.00RT	107.96
1347	110+00.00	125.00RT	106.62
1348	109+50.00	125.00LT	106.88
1349	109+50.00	75.00LT	108.29
1350	109+50.00	25.00LT	109.04
1351	109+50.00	25.00RT	109.03
1352	109+50.00	75.00RT	108.27
1353	109+50.00	125.00RT	107.35
1354	109+00.00	125.00LT	107.06
1355	109+00.00	75.00LT	108.49
1356	109+00.00	25.00LT	109.24
1357	109+00.00	25.00RT	109.23
1358	109+00.00	75.00RT	108.49
1359	109+00.00	125.00RT	107.89
1360	108+50.00	125.00LT	107.28
1361	108+50.00	75.00LT	108.68
1362	108+50.00	25.00LT	109.44
1363	108+50.00	25.00RT	109.44
1364	108+50.00	75.00RT	108.68
1365	108+50.00	125.00RT	108.10
1366	108+00.00	125.00LT	107.67
1367	108+00.00	75.00LT	108.90
1368	108+00.00	25.00LT	109.65
1369	108+00.00	25.00RT	109.64
1370	108+00.00	75.00RT	108.81
1371	108+00.00	125.00RT	108.23
1372	107+50.00	125.00LT	108.01
1373	107+50.00	75.00LT	109.09
1374	107+50.00	25.00LT	109.85
1375	107+50.00	25.00RT	109.73
1376	107+50.00	75.00RT	108.91
1377	107+50.00	125.00RT	108.48
1378	107+00.00	125.00LT	108.08
1379	107+00.00	75.00LT	109.20
1380	107+00.00	25.00LT	110.02
1381	107+00.00	25.00RT	109.83
1382	107+00.00	75.00RT	109.02
1383	107+00.00	125.00RT	108.77

TAXIWAY Z GRADING POINTS TABLE

POINT #	STATION	OFFSET	ELEVATION
1384	106+50.00	125.00LT	108.41
1385	106+50.00	75.00LT	109.25
1386	106+50.00	25.00LT	110.16
1387	106+50.00	25.00RT	110.07
1388	106+50.00	75.00RT	109.39
1389	106+50.00	125.00RT	109.20
1390	106+00.00	125.00LT	108.81
1391	106+00.00	75.00LT	109.65
1392	106+00.00	25.00LT	110.44
1393	105+95.80	24.79RT	110.56
1394	105+89.27	74.36RT	109.99
1395	105+82.74	123.93RT	109.41
1396	105+50.00	125.00LT	109.15
1397	105+50.00	75.00LT	109.86
1398	105+50.00	25.00LT	110.65
1399	105+50.00	25.00RT	110.69
1400	105+50.00	75.00RT	109.87
1401	105+50.00	125.00RT	108.89
1402	105+00.00	125.00LT	109.14
1403	105+00.00	75.00LT	109.97
1404	105+00.00	25.00LT	110.94
1405	105+00.00	25.00RT	111.05
1406	105+00.00	75.00RT	110.13
1407	105+00.00	125.00RT	108.99
1408	104+50.00	125.00LT	109.19
1409	104+50.00	75.00LT	110.32
1410	104+50.00	25.00LT	111.28
1411	104+50.00	25.00RT	111.37
1412	104+50.00	75.00RT	110.43
1413	104+50.00	125.00RT	109.38
1414	104+00.00	125.00LT	109.74
1415	104+00.00	75.00LT	110.89
1416	104+00.00	25.00LT	111.67
1417	104+00.00	25.00RT	111.67
1418	104+00.00	75.00RT	110.73
1419	104+00.00	125.00RT	109.72
1420	103+50.00	125.00LT	110.07
1421	103+50.00	75.00LT	111.14
1422	103+50.00	25.00LT	111.97
1423	103+50.00	25.00RT	111.97
1424	103+50.00	75.00RT	111.03
1425	103+50.00	125.00RT	110.03
1426	103+00.00	125.00LT	110.30
1427	103+00.00	75.00LT	111.37
1428	103+00.00	25.00LT	112.27
1429	103+00.00	25.00RT	112.04
1430	103+00.00	75.00RT	111.25
1431	103+00.00	125.00RT	110.10

TAXIWAY Z GRADING POINTS TABLE

POINT #	STATION	OFFSET	ELEVATION
1432	107+76.65	96.29LT	108.67
1433	107+76.65	149.69LT	107.12
1434	108+09.35	149.69LT	106.88
1435	108+09.35	88.71LT	108.66
1436	116+26.16	72.72LT	105.95
1437	116+26.16	126.11LT	104.71
1438	116+58.86	126.11LT	104.64
1439	116+58.86	73.66LT	106.03

PRELIMINARY

BY	DATE	REVISION

STATE OF ALASKA
DEPARTMENT OF TRANSPORTATION AND PUBLIC FACILITIES
CENTRAL REGION
4111 AVIATION AVE., ANCHORAGE ALASKA 99502
PHONE (907) 269-0590

TED STEVENS ANCHORAGE
ANCHORAGE, ALASKA
ANC TAXIWAY Z IMPROVEMENTS WEST - PHASE 1
PROJECT No. CFAPT00465
AIP No. 3-02-0016-XXX-2022
TAXIWAY Z GRADING POINT TABLES

DATE: 10/14/2021

SHEET: 52 OF 78

Designed By:	TAD
Drawn By:	RJB
Checked By:	TAD

Date Revised:	10/14/2021, 12:36 PM
Layout Name:	GRADING TABLE R
File Path and Name:	W:\Projects\ANA Ted Stevens\ANA TW Z Ext 00465\Final Drawings\00465-ANA-Grading Plan.dwg

TAXIWAY R GRADING POINTS TABLE

POINT #	STATION	OFFSET	ELEVATION
2000	316+00.00	125.00RT	107.17
2001	315+50.00	125.00RT	105.94
2002	315+00.00	125.00RT	104.97
2003	314+50.00	125.00RT	104.86
2004	314+00.00	125.00RT	105.53
2005	313+41.57	96.29RT	107.21
2006	313+00.00	125.00RT	107.35
2007	316+50.00	75.00RT	108.17
2008	316+00.00	75.00RT	107.07
2009	315+50.00	75.00RT	106.51
2010	315+00.00	75.00RT	106.27
2011	314+50.00	75.00RT	106.37
2012	314+00.00	75.00RT	106.79
2013	313+50.00	75.00RT	107.38
2014	313+00.00	75.00RT	108.04
2015	316+50.00	25.00RT	108.32
2016	316+00.00	25.00RT	107.61
2017	315+50.00	25.00RT	107.23
2018	315+00.00	25.00RT	107.10
2019	314+50.00	25.00RT	107.17
2020	314+00.00	25.00RT	107.48
2021	313+50.00	25.00RT	108.03
2022	313+00.00	25.00RT	108.70
2023	316+50.00	25.00LT	108.29
2024	316+00.00	25.00LT	107.57
2025	315+50.00	25.00LT	107.22
2026	315+00.00	25.00LT	107.09
2027	314+50.00	25.00LT	107.20
2028	314+00.00	25.00LT	107.69
2029	313+50.00	25.00LT	108.35
2030	317+00.00	75.00LT	109.06
2031	316+50.00	75.00LT	108.00
2032	316+00.00	75.00LT	106.95
2033	315+50.00	75.00LT	106.42
2034	314+97.30	78.72LT	106.19
2035	314+50.00	75.00LT	106.53
2036	314+00.00	75.00LT	107.43
2037	313+50.00	75.00LT	108.36
2038	317+00.00	125.00LT	109.06
2039	316+50.00	125.00LT	108.08
2040	316+00.00	125.00LT	106.72
2041	315+45.74	133.13LT	105.70
2042	315+00.00	125.00LT	105.54
2043	314+50.00	125.00LT	106.26
2044	314+00.00	125.00LT	107.30
2045	313+50.00	125.00LT	108.36
2046	316+00.00	175.00LT	107.09
2047	315+50.00	175.00LT	104.98

TAXIWAY R GRADING POINTS TABLE

POINT #	STATION	OFFSET	ELEVATION
2048	315+00.00	175.00LT	103.03
2049	314+50.00	175.00LT	103.45
2050	314+00.00	175.00LT	106.72
2051	313+53.04	186.38LT	108.82
2052	315+00.00	225.00LT	103.34
2053	314+50.00	225.00LT	103.39
2054	314+00.00	225.00LT	105.09
2055	313+50.00	225.00LT	109.41
2056	312+93.02	194.29LT	110.38
2057	313+42.76	108.31LT	108.43
2058	315+14.15	141.60LT	105.37
2059	315+31.16	78.73LT	106.20
2060	316+27.30	100.43LT	107.35
2061	316+43.01	159.04LT	107.98
2062	316+81.07	148.84LT	108.76
2063	315+97.84	161.66RT	107.38
2064	315+59.78	151.46RT	106.23
2065	315+71.58	107.46RT	106.38
2066	313+74.27	88.71RT	106.91
2067	313+74.27	149.70RT	105.25
2068	313+41.57	149.70RT	105.81

TAXILANE R GRADING POINTS TABLE

POINT #	STATION	OFFSET	ELEVATION
3000	309+50.00	275.00RT	107.31
3001	309+50.00	225.00RT	107.63
3002	310+00.00	175.00RT	108.16
3003	309+50.00	175.00RT	107.85
3004	310+00.00	125.00RT	108.39
3005	309+50.00	125.00RT	108.18
3008	309+00.00	225.00RT	107.12
3009	309+00.00	175.00RT	107.55
3010	308+50.00	175.00RT	107.38
3011	309+00.00	125.00RT	108.05
3012	308+50.00	125.00RT	108.23
3013	308+00.00	125.00RT	108.26
3014	310+00.00	75.00RT	108.73
3015	309+50.00	75.00RT	108.61
3016	309+00.00	75.00RT	108.72
3017	308+50.00	75.00RT	108.99
3018	308+00.00	75.00RT	109.27
3019	307+50.00	75.00RT	109.27
3020	310+00.00	25.00RT	109.19
3021	309+50.00	25.00RT	109.23
3022	309+00.00	25.00RT	109.47
3023	308+50.00	25.00RT	109.74
3024	308+00.00	25.00RT	110.02
3025	307+50.00	25.00RT	110.30
3026	307+00.00	25.00RT	110.61
3027	306+50.00	25.00RT	111.02
3028	306+00.00	25.00RT	111.48
3029	305+50.00	25.00RT	111.93
3030	310+00.00	25.00LT	109.21
3031	309+50.00	25.00LT	109.24
3032	309+00.00	25.00LT	109.47
3033	308+50.00	25.00LT	109.74
3034	308+00.00	25.00LT	110.02
3035	307+50.00	25.00LT	110.30
3036	307+00.00	25.00LT	110.61
3037	306+50.00	25.00LT	111.02
3038	306+00.00	25.00LT	111.47
3039	305+50.00	25.00LT	111.92
3040	309+69.18	114.78LT	107.51
3041	309+30.59	114.78LT	103.43
3042	309+30.59	48.25LT	108.86

PRELIMINARY

BY	DATE	REVISION

STATE OF ALASKA
DEPARTMENT OF TRANSPORTATION AND PUBLIC FACILITIES
CENTRAL REGION
4111 AVIATION AVE., ANCHORAGE ALASKA 99502
PHONE (907) 269-0590

TED STEVENS ANCHORAGE
ANCHORAGE, ALASKA
ANC TAXIWAY Z IMPROVEMENTS WEST - PHASE 1
PROJECT No. CFAPT00465
AIP No. 3-02-0016-XXX-2022
TAXIWAY R & TAXILANE R
GRADING POINT TABLES

DATE: 10/14/2021

Designed By:	TAD
Drawn By:	RJB
Checked By:	TAD

Date Revised:	10/14/2021, 12:36 PM
Layout Name:	GRADING TABLE E
File Path and Name:	W:\Projects\AIA Ted Stevens\AIA TW Z Ext 00465\Final Drawings\00465-AIA-Grading Plan.dwg

TAXIWAY E GRADING POINTS TABLE

POINT #	STATION	OFFSET	ELEVATION
4000	507+50.00	325.00RT	99.36
4001	507+00.00	325.00RT	98.45
4002	508+00.00	275.00RT	100.27
4003	507+50.00	275.00RT	99.58
4004	508+00.00	225.00RT	100.47
4005	507+50.00	225.00RT	99.90
4006	508+50.00	175.00RT	101.09
4007	508+00.00	175.00RT	100.75
4008	507+50.00	175.00RT	100.32
4009	509+00.00	125.00RT	101.92
4010	508+50.00	125.00RT	101.84
4011	508+00.00	125.00RT	101.77
4012	507+50.00	125.00RT	101.76
4013	507+00.00	125.00RT	102.66
4014	506+37.23	146.40RT	103.00
4015	506+04.53	146.40RT	103.19
4016	505+50.00	125.00RT	103.81
4017	509+00.00	75.00RT	102.44
4018	508+50.00	75.00RT	102.72
4019	508+00.00	75.00RT	103.14
4020	507+50.00	75.00RT	103.42
4021	507+00.00	75.00RT	103.95
4022	506+50.00	75.00RT	104.47
4023	506+00.00	75.00RT	104.88
4024	505+50.00	75.00RT	105.26
4025	509+50.00	25.00RT	103.06
4026	509+00.00	25.00RT	103.10
4027	508+50.00	25.00RT	103.47
4028	508+00.00	25.00RT	103.96
4029	507+50.00	25.00RT	104.46
4030	507+00.00	25.00RT	104.94
4031	506+50.00	25.00RT	105.36
4032	506+00.00	25.00RT	105.72
4033	509+50.00	25.00LT	102.93
4034	509+00.00	25.00LT	102.99
4035	508+50.00	25.00LT	103.46
4036	508+00.00	25.00LT	103.96
4037	507+50.00	25.00LT	104.46
4038	507+00.00	25.00LT	105.00
4039	506+50.00	25.00LT	105.65
4040	506+00.00	25.00LT	106.19
4041	509+50.00	75.00LT	102.52
4042	509+00.00	75.00LT	102.20
4043	508+50.00	75.00LT	102.38
4044	508+29.60	130.77LT	100.66
4045	507+50.00	75.00LT	103.23
4046	507+00.00	75.00LT	104.23
4047	506+50.00	75.00LT	105.56

TAXIWAY E GRADING POINTS TABLE

POINT #	STATION	OFFSET	ELEVATION
4048	506+00.00	75.00LT	106.43
4049	510+00.00	125.00LT	103.06
4050	509+50.00	125.00LT	102.18
4051	509+00.00	125.00LT	101.48
4052	508+50.00	125.00LT	100.99
4053	507+98.84	141.88LT	100.05
4054	507+50.00	125.00LT	101.09
4055	507+00.00	125.00LT	102.57
4056	506+53.52	110.10LT	104.72
4057	506+07.70	171.32LT	106.04
4058	506+60.21	164.91LT	103.46
4059	507+77.12	81.77LT	102.62
4060	508+10.53	78.01LT	102.46
4061	509+10.32	97.43LT	101.93
4062	509+32.06	157.58LT	101.64
4063	509+69.12	144.19LT	102.38
4064	508+57.72	164.02RT	101.31
4065	508+20.67	150.63RT	101.29
4066	508+35.69	109.06RT	102.14
4067	506+37.23	85.75RT	104.35
4068	506+04.53	92.85RT	104.43

TAXILANE E GRADING POINTS TABLE

POINT #	STATION	OFFSET	ELEVATION
5000	498+00.00	75.00RT	110.50
5001	497+50.00	75.00RT	110.71
5002	497+00.00	75.00RT	111.13
5003	496+50.00	75.00RT	111.99
5004	496+00.00	75.00RT	112.72
5005	495+50.00	75.00RT	113.43
5006	495+00.00	75.00RT	113.22
5007	494+50.00	75.00RT	113.81
5008	498+50.00	25.00RT	110.86
5009	498+00.00	25.00RT	111.25
5010	497+50.00	25.00RT	111.54
5011	497+00.00	25.00RT	111.89
5012	496+50.00	25.00RT	112.38
5013	496+00.00	25.00RT	112.91
5014	495+50.00	25.00RT	113.43
5015	495+00.00	25.00RT	113.98
5016	494+50.00	25.00RT	114.56
5017	498+50.00	25.00LT	110.88
5018	498+00.00	25.00LT	111.27
5019	497+50.00	25.00LT	111.53
5020	497+00.00	25.00LT	111.82
5021	496+50.00	25.00LT	112.26
5022	496+00.00	25.00LT	112.83
5023	495+50.00	25.00LT	113.40
5024	498+50.00	75.00LT	110.19
5025	497+90.65	75.70LT	110.43
5026	497+50.00	75.00LT	111.19
5027	497+00.00	75.00LT	111.49
5028	496+50.00	75.00LT	111.50
5029	496+00.00	75.00LT	112.07
5030	495+50.00	75.00LT	112.63
5031	498+41.43	133.20LT	109.29
5032	497+90.65	133.20LT	
5033	498+04.74	96.62RT	109.77
5034	497+87.03	145.41RT	105.74
5035	498+40.42	164.79RT	108.22

PRELIMINARY

BY	DATE	REVISION

STATE OF ALASKA
DEPARTMENT OF TRANSPORTATION AND PUBLIC FACILITIES
CENTRAL REGION
4111 AVIATION AVE., ANCHORAGE ALASKA 99502
PHONE (907) 269-0590

TED STEVENS ANCHORAGE
ANCHORAGE, ALASKA
ANC TAXIWAY Z IMPROVEMENTS WEST - PHASE 1
PROJECT No. CFAPT00465
AIP No. 3-02-0016-XXX-2022
TAXIWAY E & TAXILANE E
GRADING POINT TABLES

DATE: 10/14/2021

Designed By:	TAD
Drawn By:	RJB
Checked By:	TAD

Date Revised:	10/14/2021, 12:41 PM
Layout Name:	DRAINAGE 1
File Path and Name:	W:\Projects\ANA Ted Stevens\ANA TW Z Ext 00465\Final Drawings\00465-ANA-Drainage Plan.dwg

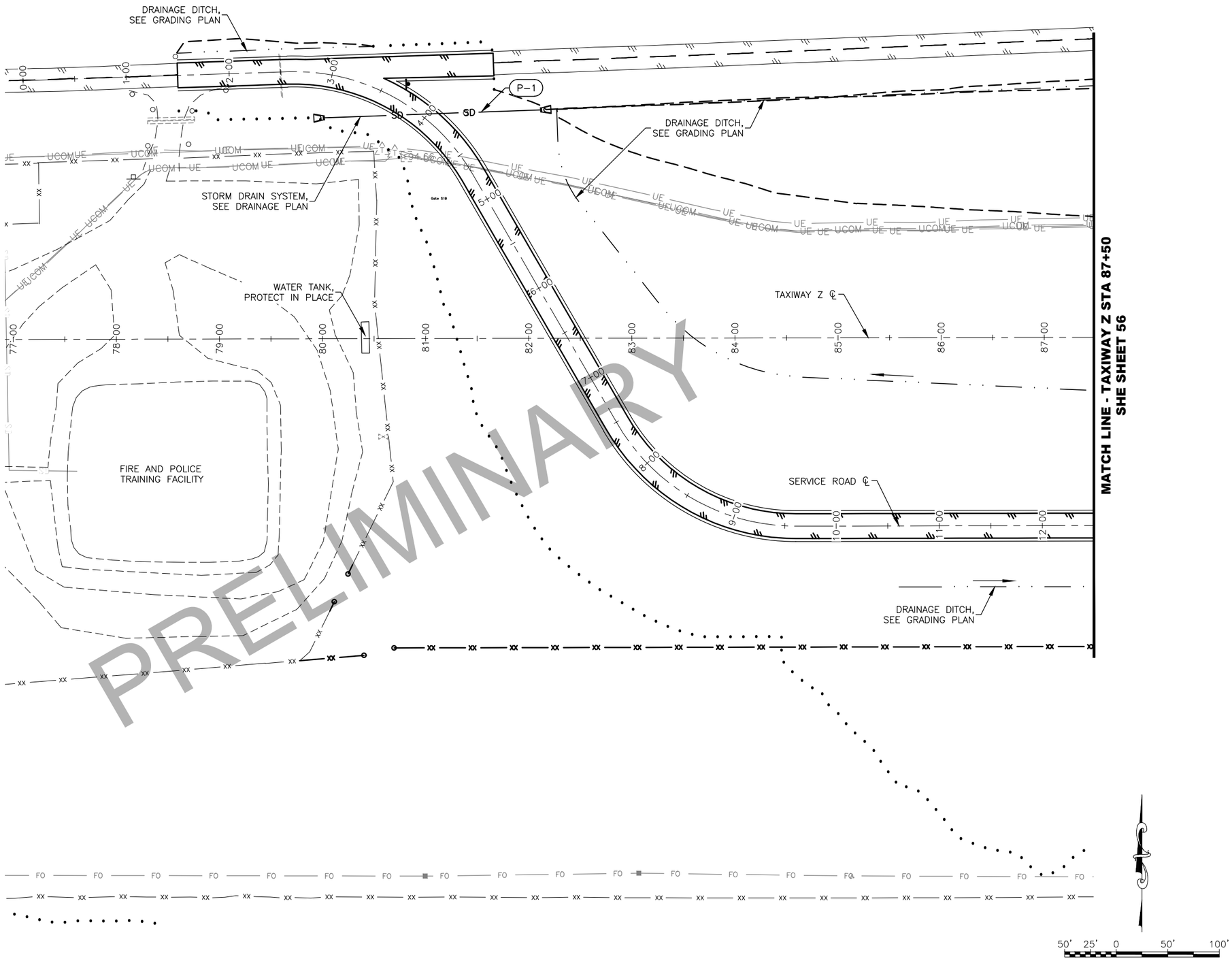

PRELIMINARY

BY	DATE	REVISION

STATE OF ALASKA
DEPARTMENT OF TRANSPORTATION AND PUBLIC FACILITIES
CENTRAL REGION
4111 AVIATION AVE., ANCHORAGE ALASKA 99502
PHONE (907) 269-0590

TED STEVENS ANCHORAGE
ANCHORAGE, ALASKA
ANC TAXIWAY Z IMPROVEMENTS WEST - PHASE 1
PROJECT No. CFAPT00465
AIP No. 3-02-0016-XXX-2022
DRAINAGE PLAN

DATE: 10/14/2021

SHEET: 55 OF 78

PRELIMINARY

MATCH LINE - TAXIWAY Z STA 87+50
SEE SHEET 55

MATCH LINE - TAXIWAY Z STA 102+50
SEE SHEET 57

DRAINAGE DITCH, SEE GRADING PLAN

RW 15 LOCALIZER, PROTECT IN PLACE

TAXIWAY Z ℄

STORM DRAIN SYSTEM, SEE DRAINAGE PLAN

P-2

SERVICE ROAD ℄

S-1

88+00 89+00 90+00 91+00 92+00 93+00 94+00 95+00 96+00 97+00 98+00 99+00 100+00 101+00 102+00

13+00 14+00 15+00 16+00 17+00 18+00 19+00 20+00 21+00 22+00 23+00 24+00 25+00 26+00 27+00

50' 25' 0 50' 100'

Designed By:	TAD
Drawn By:	RJB
Checked By:	TAD

Date Revised:	10/14/2021, 12:42 PM
Layout Name:	DRAINAGE 2
File Path and Name:	W:\Projects\AIA Ted Stevens\AIA TW Z Ext 00465\Final Drawings\00465-AIA-Drainage Plan.dwg

BY	DATE	REVISION

STATE OF ALASKA
DEPARTMENT OF TRANSPORTATION AND PUBLIC FACILITIES
CENTRAL REGION
4111 AVIATION AVE., ANCHORAGE ALASKA 99502
PHONE (907) 269-0590

TED STEVENS ANCHORAGE
ANCHORAGE, ALASKA
ANC TAXIWAY Z IMPROVEMENTS WEST - PHASE 1
PROJECT No. CFAPT00465
AIP No. 3-02-0016-XXX-2022
DRAINAGE PLAN

DATE: 10/14/2021

SHEET: 56 OF 78

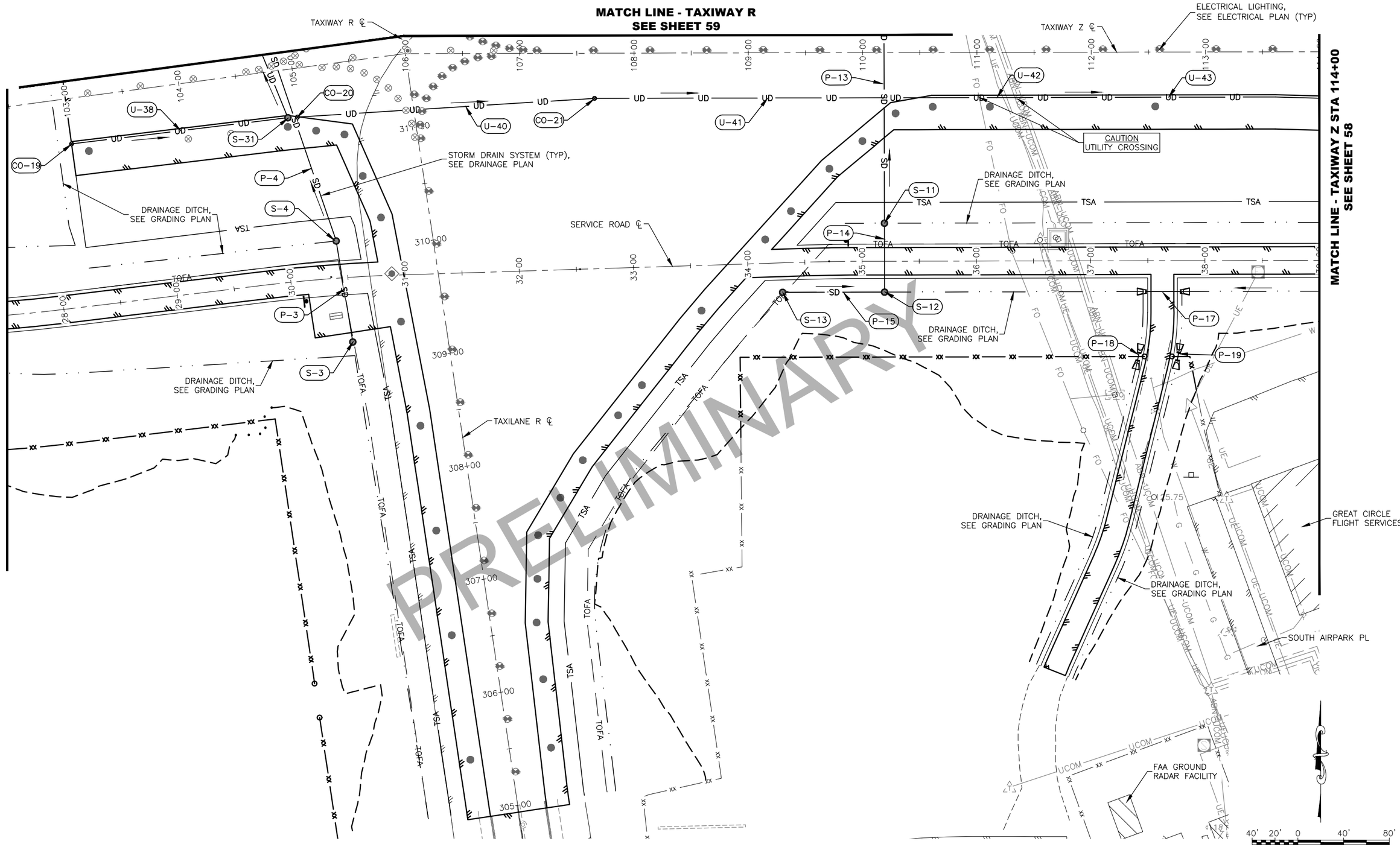

BY	DATE	REVISION

STATE OF ALASKA
DEPARTMENT OF TRANSPORTATION AND PUBLIC FACILITIES
CENTRAL REGION
4111 AVIATION AVE., ANCHORAGE ALASKA 99502
PHONE (907) 269-0590

TED STEVENS ANCHORAGE
ANCHORAGE, ALASKA
ANC TAXIWAY Z IMPROVEMENTS WEST - PHASE 1
PROJECT No. CFAPT00465
AIP No. 3-02-0016-XXX-2022
DRAINAGE PLAN

DATE: 10/14/2021
SHEET: 57 OF 78

Designed By: TAD
Drawn By: RJB
Checked By: TAD

Date Revised: 10/14/2021, 12:42 PM
Layout Name: DRAINAGE 3
File Path and Name: W:\Projects\AIA Ted Stevens\AIA TW Z Ext 00465\Final Drawings\00465-AIA-Drainage Plan.dwg

Designed By:	TAD
Drawn By:	RJB
Checked By:	TAD

Date Revised:	10/14/2021, 12:42 PM
Layout Name:	DRAINAGE 4
File Path and Name:	W:\Projects\AIA Ted Stevens\AIA TW Z Ext 00465\Final Drawings\00465-AIA-Drainage Plan.dwg

MATCH LINE - TAXIWAY Z STA 114+00
SEE SHEET 57

MATCH LINE - TAXIWAY E
SEE SHEET 60

STORM DRAIN SYSTEM (TYP), SEE DRAINAGE PLAN

TAXIWAY Z ℄

TAXILANE E ℄

DRAINAGE DITCH, SEE GRADING PLAN

SWALE, SEE GRADING PLAN

SERVICE ROAD ℄

FUEL PUMP STATION, DO NOT DISTURB

CONNECT NEW SD TO EXISTING CULVERT

REPAIR PAVEMENT AS REQUIRED FOR UTILITY AND STORM DRAIN DEMOLITION, SEE DEMOLITION PLAN

CAUTION UTILITY CROSSING

BULK FUEL TRANSFER STATION, DO NOT DISTURB

GREAT CIRCLE FLIGHT SERVICES

ELECTRICAL LIGHTING, SEE ELECTRICAL PLAN (TYP)

ROSS AVIATION

CARL BRADY DRIVE

40' 20' 0 40' 80'

PRELIMINARY

BY	DATE	REVISION

STATE OF ALASKA
DEPARTMENT OF TRANSPORTATION AND PUBLIC FACILITIES
CENTRAL REGION
4111 AVIATION AVE., ANCHORAGE ALASKA 99502
PHONE (907) 269-0590

TED STEVENS ANCHORAGE
ANCHORAGE, ALASKA
ANC TAXIWAY Z IMPROVEMENTS WEST - PHASE 1
PROJECT No. CFAPT00465
AIP No. 3-02-0016-XXX-2022
DRAINAGE PLAN

DATE: 10/14/2021

SHEET: 58 OF 78

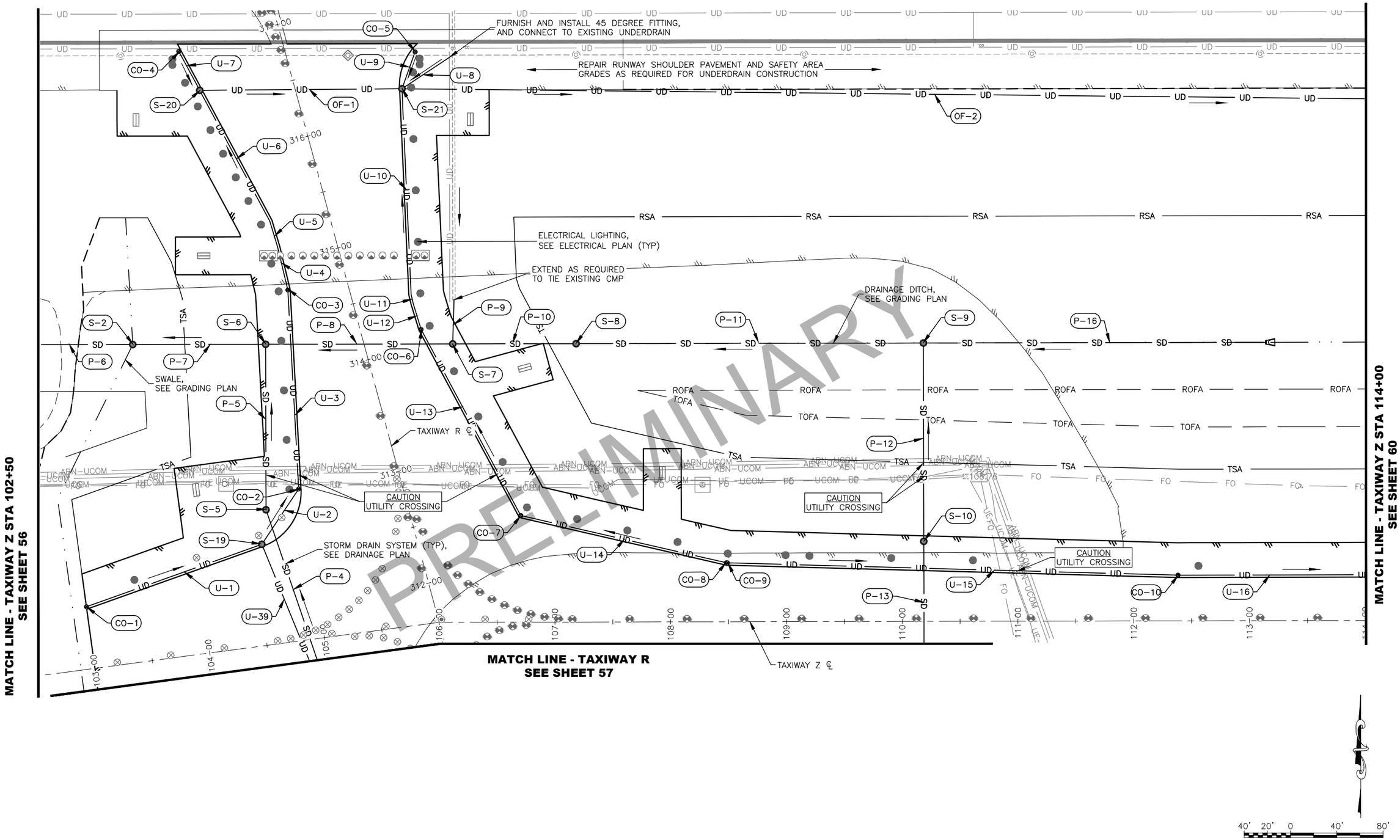

BY	DATE	REVISION

STATE OF ALASKA
DEPARTMENT OF TRANSPORTATION AND PUBLIC FACILITIES
CENTRAL REGION
4111 AVIATION AVE., ANCHORAGE ALASKA 99502
PHONE (907) 269-0590

TED STEVENS ANCHORAGE
ANCHORAGE, ALASKA
ANC TAXIWAY Z IMPROVEMENTS WEST - PHASE 1
PROJECT No. CFAPT00465
AIP No. 3-02-0016-XXX-2022
DRAINAGE PLAN

DATE: 10/14/2021
SHEET: 59 OF 78

Designed By: TAD
Drawn By: RJB
Checked By: TAD
Date Revised: 10/14/2021, 12:43 PM
Layout Name: DRAINAGE 5
File Path and Name: W:\Projects\AIA Ted Stevens\AIA TW Z Ext 00465\Final Drawings\00465-AIA-Drainage Plan.dwg

REPAIR RUNWAY SHOULDER PAVEMENT AND SAFETY AREA GRADES AS REQUIRED FOR UNDERDRAIN CONSTRUCTION

KNOCKOUT AND TIE INTO EXISTING UNDERDRAIN STRUCTURE AS REQUIRED

EXISTING 12" CPEP, TYPE S

S-OR19

FURNISH AND INSTALL PIPING AS REQUIRED TO TIE EXISTING PIPING TO NEW STRUCTURE

FURNISH AND INSTALL PIPING AS REQUIRED TO TIE EXISTING PIPING TO NEW STRUCTURE

EXISTING 12" CPEP, TYPE S

TAXIWAY E ℄

DRAINAGE DITCH, SEE GRADING PLAN

CAUTION UTILITY CROSSING

CAUTION UTILITY CROSSING

ELECTRICAL LIGHTING, SEE ELECTRICAL PLAN (TYP)

STORM DRAIN SYSTEM (TYP), SEE DRAINAGE PLAN

SERVICE ROAD ℄

DRAINAGE DITCH, SEE GRADING PLAN

TAXIWAY Z ℄

MATCH LINE - TAXIWAY Z STA 114+00 SEE SHEET 59

MATCH LINE - TAXILANE SEE SHEET 58

PRELIMINARY

40' 20' 0 40' 80'

BY	DATE	REVISION

STATE OF ALASKA
DEPARTMENT OF TRANSPORTATION AND PUBLIC FACILITIES
CENTRAL REGION
4111 AVIATION AVE., ANCHORAGE ALASKA 99502
PHONE (907) 269-0590

TED STEVENS ANCHORAGE
ANCHORAGE, ALASKA
ANC TAXIWAY Z IMPROVEMENTS WEST - PHASE 1
PROJECT No. CFAPT00465
AIP No. 3-02-0016-XXX-2022
DRAINAGE PLAN

DATE: 10/14/2021

SHEET: 60 OF 78

Designed By: TAD
Drawn By: RJB
Checked By: TAD

Date Revised:
Layout Name: 10/14/2021, 12:43 PM DRAINAGE_6
File Path and Name: W:\Projects\AIA Ted Stevens\AIA TW Z Ext 00465\Final Drawings\00465-AIA-Drainage Plan.dwg

TAXIWAY Z ℄

TAXILANE E ℄

4" INSULATION BOARD, 8'X350' AS REQUIRED FOR REDUCED GROUND COVER

4" INSULATION BOARD, 12'X24' AT STORM CROSSING

RELOCATE 16" CL52 DIP WATER MAIN, ~600'

FURNISH AND INSTALL VALVE BOX

SERVICE ROAD ℄

RECONSTRUCT SECURITY FENCE AS REQUIRED FOR UTILITY RELOCATION WORK, SEE SITE PLAN

4" INSULATION BOARD, 8'X120' AS REQUIRED FOR REDUCED GROUND COVER

RELOCATE FIRE HYDRANT, F&I VALVE BOX

FUEL PUMP STATION, DO NOT DISTURB

ADJUST VALVE BOX

BULK FUEL TRANSFER FACILITY

RELOCATE FIRE HYDRANT, F&I VALVE BOX

CARL BRADY DRIVE

GREAT CIRCLE FLIGHT SERVICES

ROSS AVIATION

40' 20' 0 40' 80'

PRELIMINARY

NOTE TO REVIEWERS:
WATER SYSTEM WORK SHOWN IS CONCEPTUAL. FINAL WATER SYSTEM DESIGN WILL BE COMPLETED PENDING SIGNED UTILITY AGREEMENTS WITH AWWU.

BY	DATE	REVISION

STATE OF ALASKA
DEPARTMENT OF TRANSPORTATION AND PUBLIC FACILITIES
CENTRAL REGION
4111 AVIATION AVE., ANCHORAGE ALASKA 99502
PHONE (907) 269-0590

TED STEVENS ANCHORAGE
ANCHORAGE, ALASKA
ANC TAXIWAY Z IMPROVEMENTS WEST - PHASE 1
PROJECT No. CFAPT00465
AIP No. 3-02-0016-XXX-2022
WATER SYSTEM PLAN

DATE: 10/14/2021
SHEET: 61 OF 78

Designed By: TAD
Drawn By: RJB
Checked By: TAD
Date Revised:
Layout Name: WATER SYSTEM PLAN
File Path and Name: W:\Projects\AIA Ted Stevens\AIA TW Z Ext 00465\Final Drawings\00465-AIA-Water Plan.dwg
10/14/2021, 12:45 PM

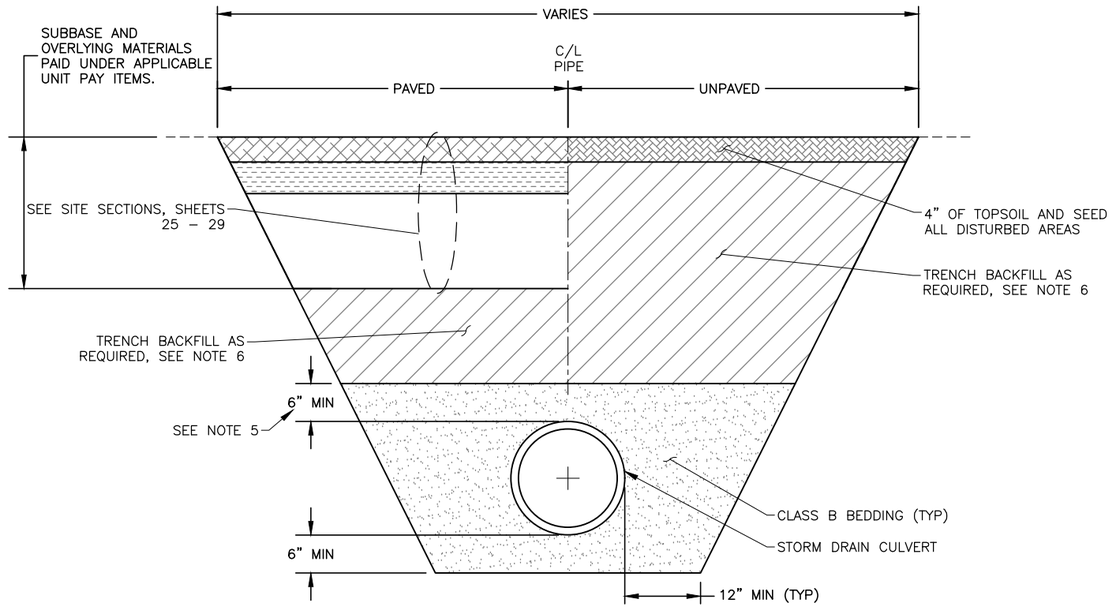

TRENCH SECTION NOTES:

1. TRENCH WALL SLOPES WILL VARY WITH SOIL STRENGTH AND CHARACTER. SLOPES SHALL CONFORM WITH ALL LOCAL, STATE, AND OSHA REGULATIONS AND REQUIREMENTS.
2. IN UNPAVED AREAS, TRENCH BACKFILL SHALL BE SUITABLE MATERIALS COMPACTED TO 95% MAX. DENSITY WITH 4" TOPSOIL AND SEED PLACED OVER COMPACTED MATERIAL. IN PAVED AREAS, REFER TO SITE SECTIONS ON SHEETS 25 – 29. TRENCH BACKFILL BENEATH STRUCTURAL SECTIONS SHALL BE SUBBASE COURSE AND COMPACTED TO 95% MAX. DENSITY MINIMUM, OR AS SPECIFIED IN TYPICAL SECTIONS.
3. IN PREPARATION FOR AND IMMEDIATELY PRIOR TO PAVING, CONTRACTOR SHALL SAW CUT AND REMOVE AN ADDITIONAL 12 INCHES FROM EXISTING PAVEMENT EDGE. THE ENGINEER MAY REQUIRE MORE THAN A 12–INCH ADDITIONAL CUT IF THE EXISTING PAVEMENT HAS BEEN LIFTED IN THE REMOVAL PROCESS, IF THE JOINT DOES NOT OCCUR ON UNDISTURBED MATERIAL, OR IF THE JOINT IS LOCATED WITHIN THE TRAVEL LANE. CUTS SHALL BE MADE WITH A SAW.
4. FOR PIPES C2, C9, & C11, REDUCE BEDDING ABOVE CULVERT AS NEEDED TO MAINTAIN PAVEMENT & CABC AS SHOWN IN THE SITE SECTIONS ON SHEETS 25 – 29
5. USE SUITABLE MATERIAL FOR TRENCH BACKFILL MATERIAL BELOW STRUCTURAL SECTION (PAVED AREAS) OR BELOW TOPSOIL (UNPAVED AREAS).

1/62 CULVERT PIPE TRENCH SECTION

SCALE: NTS

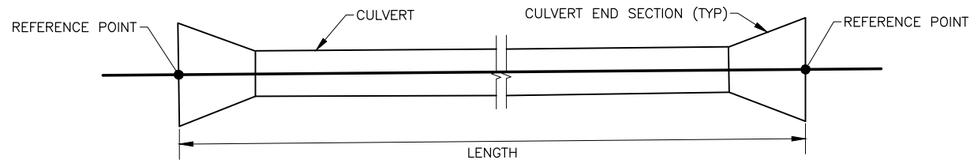

PLAN VIEW

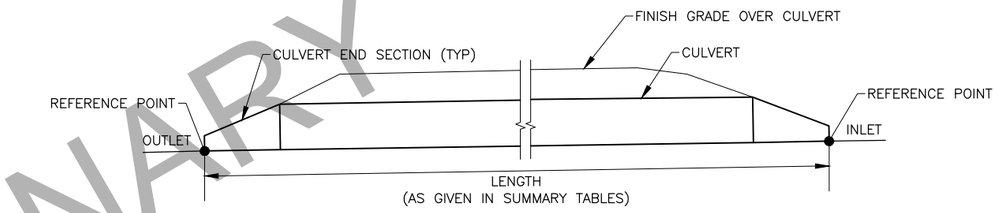

SECTION VIEW

2/62 CULVERT REFERENCE DETAIL

SCALE: NTS

PRELIMINARY

BY	DATE	REVISION

STATE OF ALASKA
DEPARTMENT OF TRANSPORTATION AND PUBLIC FACILITIES
CENTRAL REGION
4111 AVIATION AVE., ANCHORAGE ALASKA 99502
PHONE (907) 269-0590

TED STEVENS ANCHORAGE
ANCHORAGE, ALASKA
ANC TAXIWAY Z IMPROVEMENTS WEST – PHASE 1
PROJECT No. CFAPT00465
AIP No. 3-02-0016-XXX-2022
STORM DRAIN DETAILS

DATE: 10/14/2021
SHEET: 62 OF 78

Designed By: TAD
Drawn By: RJB
Checked By: TAD

Date Revised:
Layout Name: 10/14/2021, 12:45 PM
File Path and Name: STORM DRAIN DETAILS 1
W:\Projects\ANA Ted Stevens\ANA TW Z Ext 00465\Final Drawings\00465-AA-Details.dwg

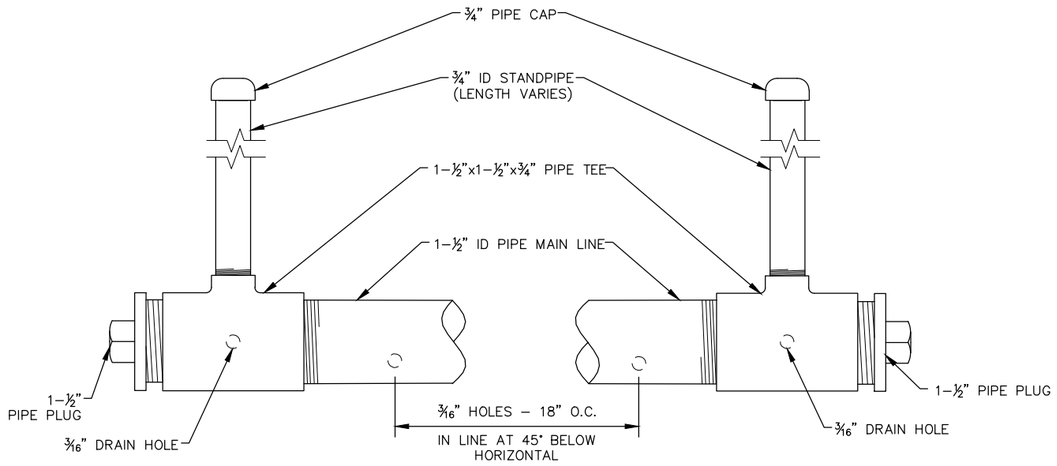

PLAN VIEW

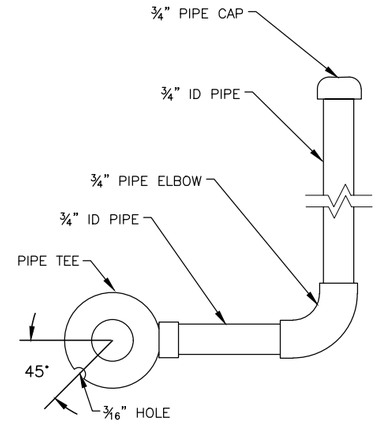

END SECTION

1/63 STANDARD SINGLE THAW PIPE DETAIL

SCALE: NTS

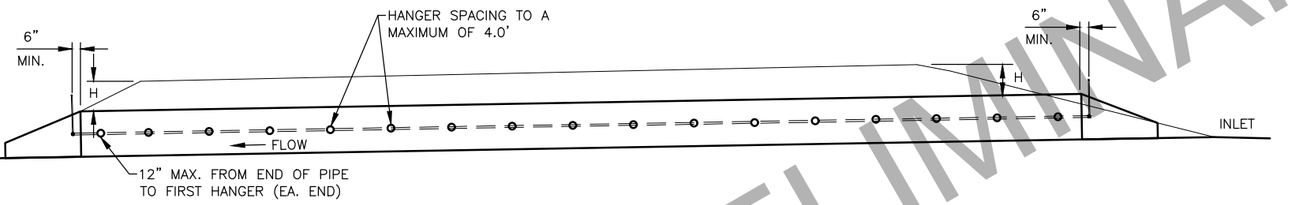

2/63 CULVERT THAW PIPE DETAIL

SCALE: NTS

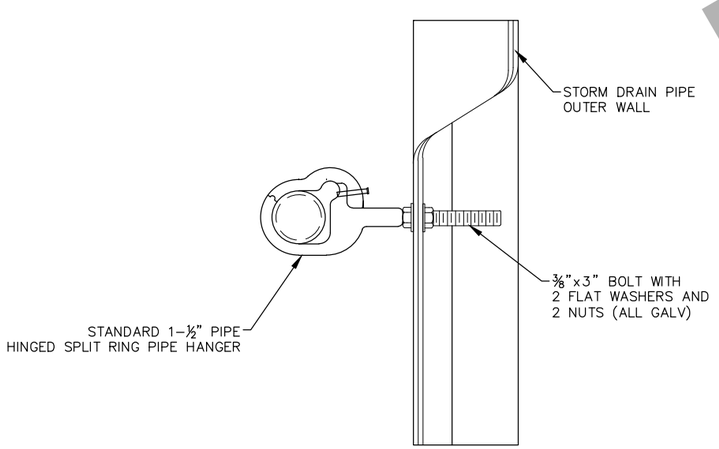

3/63 THAW PIPE HANGER DETAIL

SCALE: NTS

NOTES:

1. HEIGHT OF ALL STANDPIPES TO BE ½ THE HEIGHT OF CULVERT COVER OR 5' WHICHEVER IS LESS.
2. USE PRESSURE TREATED SUPPORT POSTS OF HEM–FIR, NO. 2 OR BETTER. USE AMMONIACAL COPPER ZINC ARSENATE (ACZA) OR CHROMATED COPPER ARSENATE (CCA) PRESERVATIVES ON SUPPORT POSTS. PRESSURE TREAT IN ACCORDANCE WITH AASHTO M133.
3. FASTEN STAND PIPE TO SUPPORT POSTS WITH GALVANIZED RIGID CONDUIT STRAPS AND 3" LONG GALVANIZED LAG SCREWS AT MAX. 12" CENTERS, IF MORE THAN ONE IS REQUIRED.

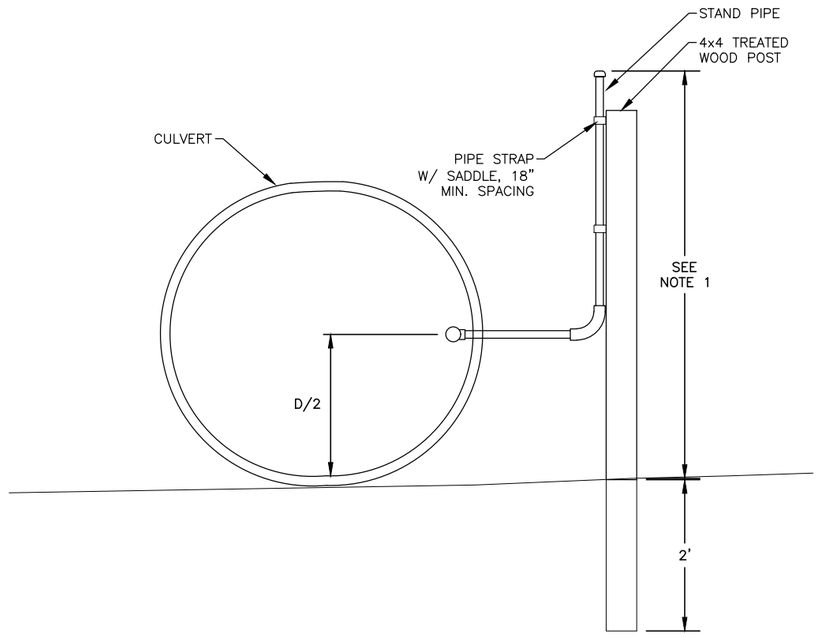

4/63 STANDARD BRACE

SCALE: NTS

PRELIMINARY

BY	DATE	REVISION

STATE OF ALASKA
DEPARTMENT OF TRANSPORTATION AND PUBLIC FACILITIES
CENTRAL REGION
4111 AVIATION AVE., ANCHORAGE ALASKA 99502
PHONE (907) 269-0590

TED STEVENS ANCHORAGE
ANCHORAGE, ALASKA
ANC TAXIWAY Z IMPROVEMENTS WEST – PHASE 1
PROJECT No. CFAPT00465
AIP No. 3-02-0016-XXX-2022
STORM DRAIN DETAILS

DATE: 10/14/2021

SHEET: 63 OF 78

Designed By: TAD
Drawn By: RJB
Checked By: TAD

Date Revised: 10/14/2021, 12:45 PM
Layout Name: STORM DRAIN DETAILS 2
File Path and Name: W:\Projects\ANA Ted Stevens\ANA TW Z Ext 00465\Final Drawings\00465-AIA-Details.dwg

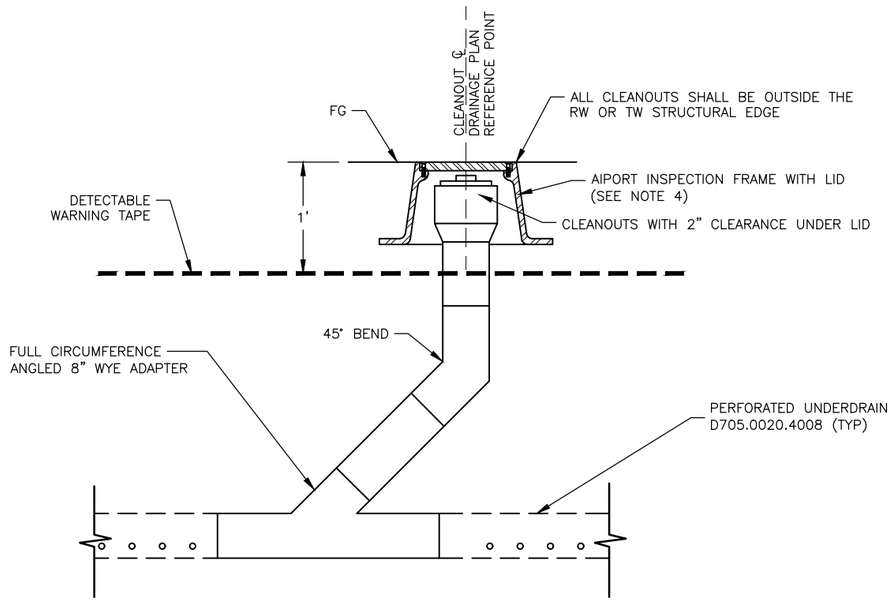

1/63 UNDERDRAIN CLEANOUT DETAIL

SCALE: NTS

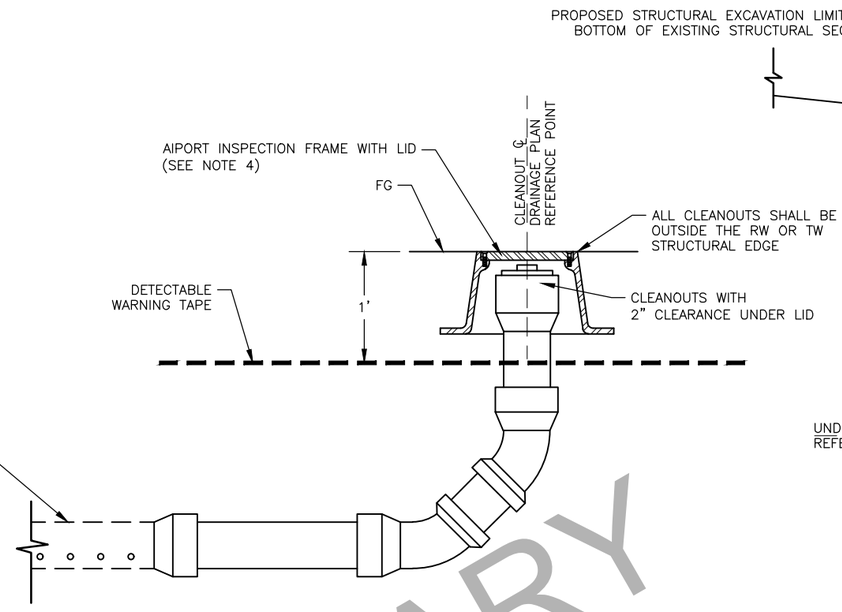

2/63 UNDERDRAIN CLEANOUT DETAIL

SCALE: NTS

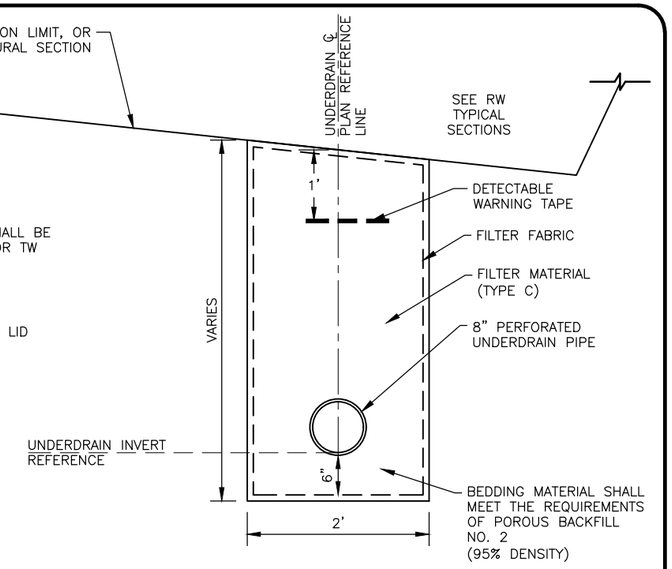

3/63 PERFORATED CPE UNDERDRAIN PIPE

SCALE: NTS

PRELIMINARY

NOTES:

1. TRENCH WALL SLOPES WILL VARY WITH SOIL STRENGTH AND CHARACTER. SLOPES SHALL CONFORM TO OSHA SAFETY STANDARDS.
2. HAND DIG OR VACUUM EXCAVATE UNDERDRAIN TRENCH WITHIN 3' OF ALL UTILITIES SHOWN ON THE PLANS AND UTILITIES LOCATED IN THE FIELD.
3. EXCAVATION, BEDDING, BACKFILL, AND FILTER MATERIAL OF STORM AND UNDERDRAIN PIPES IS SUBSIDIARY TO THE RESPECTIVE ITEM OF WORK. SEE SPECIFICATION D-701 AND D-705.
4. UNDERDRAIN CLEANOUT LID MUST BE CERTIFIED BY THE MANUFACTURER TO WITHSTAND AIRCRAFT LOADING PER D-751.
5. CLEANOUT PIPING SHALL BE 8" CPEP, TYPE S, AND FITTINGS SHALL BE COMPATIBLE WITH ALL PIPING AND INSTALLED IN ACCORDANCE WITH MANUFACTURER'S RECOMMENDATIONS.

BY	DATE	REVISION

STATE OF ALASKA
DEPARTMENT OF TRANSPORTATION AND PUBLIC FACILITIES
CENTRAL REGION
4111 AVIATION AVE., ANCHORAGE ALASKA 99502
PHONE (907) 269-0590

TED STEVENS ANCHORAGE
ANCHORAGE, ALASKA
ANC TAXIWAY Z IMPROVEMENTS WEST - PHASE 1
PROJECT No. CFAPT00465
AIP No. 3-02-0016-XXX-2022
UNDERDRAIN DETAILS

DATE: 10/14/2021

SHEET: 63 OF 78

Designed By: TAD
Drawn By: RJB
Checked By: TAD

Date Revised: 10/14/2021, 12:45 PM
Layout Name: UNDERDRAIN DETAILS 1
File Path and Name: W:\Projects\ANA Ted Stevens\ANA TW Z Ext 00465\Final Drawings\00465-ANA-Details.dwg

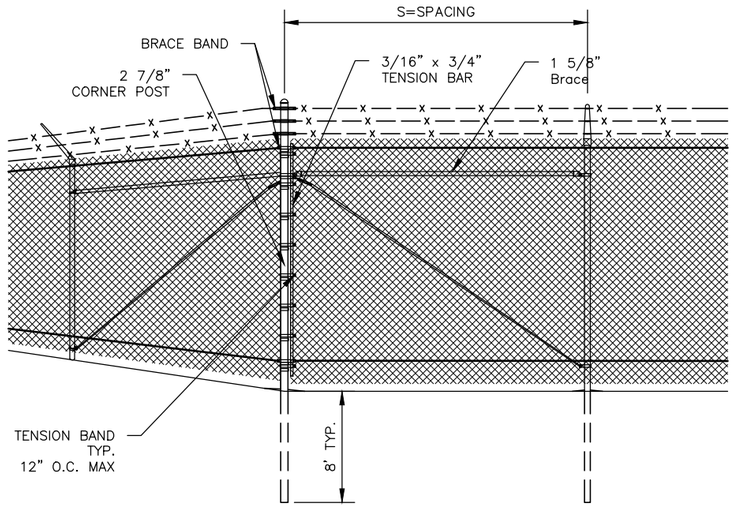

1
64

TYPICAL FENCE CORNER

SCALE: NTS

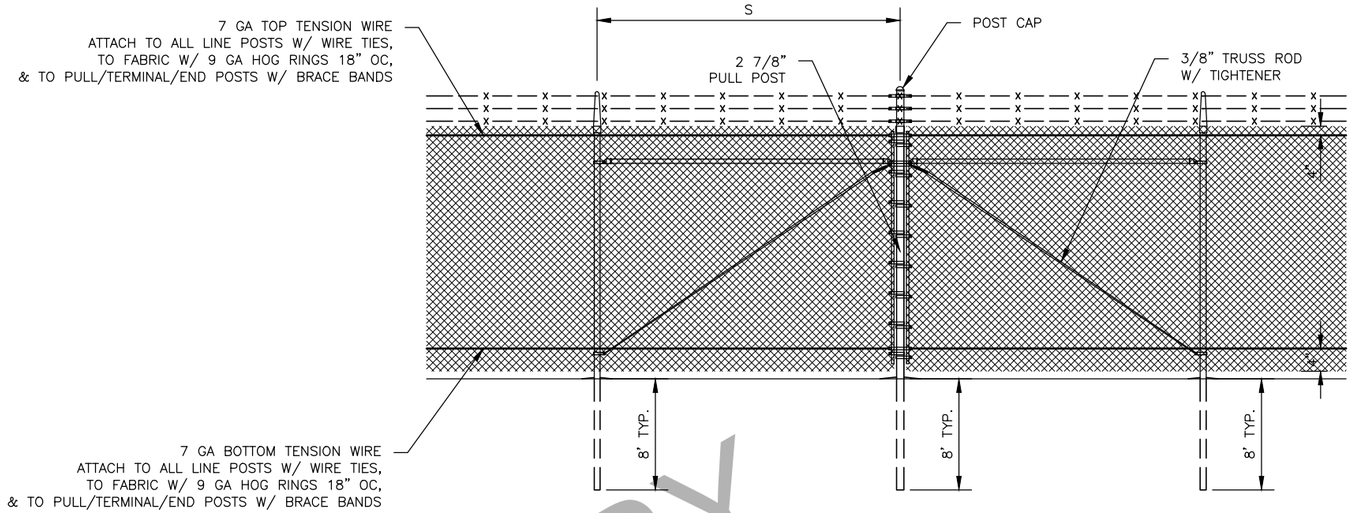

2
64

TYPICAL FENCE PULL

SCALE: NTS

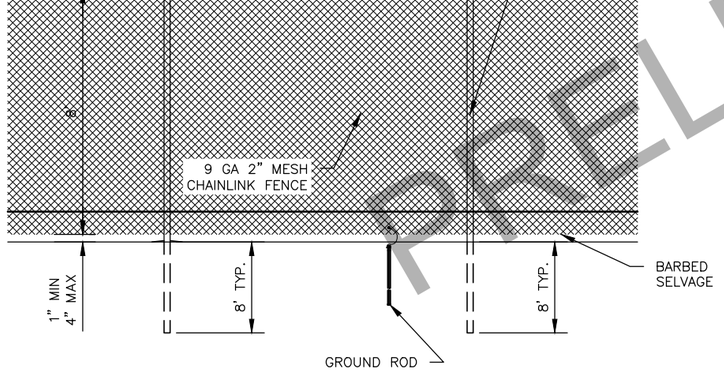

3
64

TYPICAL FENCE

SCALE: NTS

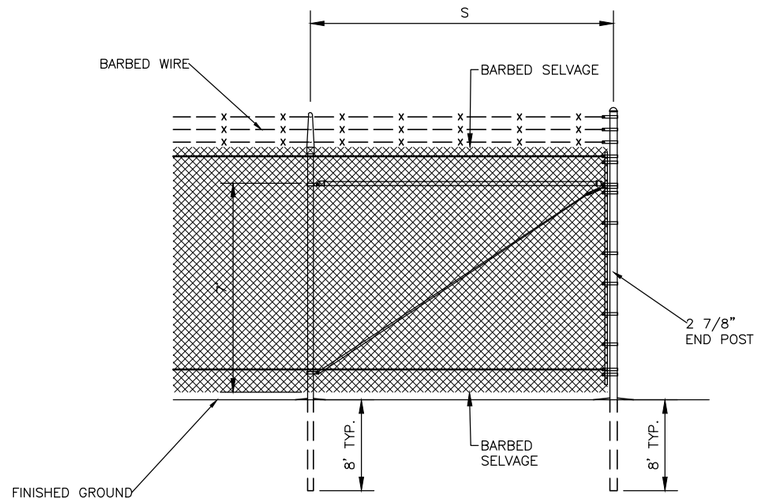

4
64

TYPICAL FENCE TERMINATION

SCALE: NTS

GENERAL FENCE NOTES:

1. USE EQUAL POLE SPACING (S). MAXIMUM POLE SPACING IS 10 FEET.
2. PULL POSTS SHALL HAVE A MAXIMUM SPACING OF 250 FEET.
3. ALL FENCE COMPONENTS SHALL BE ASSEMBLED WITH CORRECTLY SIZED BANDS, CAPS, AND FIXTURES.
4. ALL FABRIC TERMINATIONS SHALL BE MADE WITH TENSION BARS AND BANDS.
5. INSTALL POST CAPS ON ALL POSTS AND UPRIGHTS WITHOUT BARBED WIRE ARMS.
6. CONNECT NEW FENCE TO EXISTING FENCE AT AN EXISTING PULL POST, OR INSTALL A NEW PULL POST IN THE EXITING FENCE LINE. INSTALL FABRIC PER SPECIFICATION F-162.

PRELIMINARY

BY	DATE	REVISION

STATE OF ALASKA
DEPARTMENT OF TRANSPORTATION AND PUBLIC FACILITIES
CENTRAL REGION
4111 AVIATION AVE., ANCHORAGE ALASKA 99502
PHONE (907) 269-0590

TED STEVENS ANCHORAGE
ANCHORAGE, ALASKA
ANC TAXIWAY Z IMPROVEMENTS WEST - PHASE 1
PROJECT No. CFAPT00465
AIP No. 3-02-0016-XXX-2022
FENCE DETAILS

DATE: 10/14/2021
SHEET: 64 OF 78

Designed By: TAD
Drawn By: RJB
Checked By: TAD
Date Revised: 10/14/2021, 12:45 PM
Layout Name: FENCE DETAILS 1
File Path and Name: W:\Projects\AIA Ted Stevens\AIA TW Z Ext 00465\Final Drawings\00465-AIA-Details.dwg

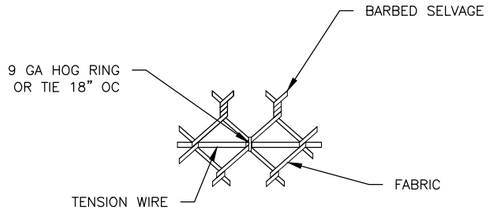

1/66 FABRIC TO TENSION WIRE FASTENERS
SCALE: NTS

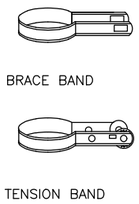

2/66 TENSION/BRACE BAND
SCALE: NTS

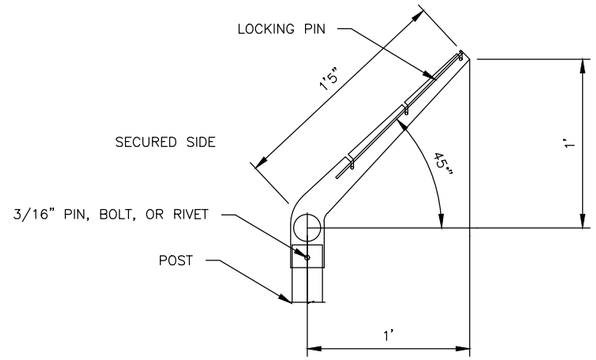

3/66 LINE POST BARBED WIRE ARM
SCALE: NTS

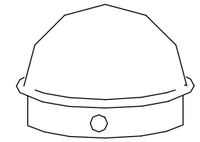

4/66 POST CAP FOR PULL/CORNER/END/GATE POSTS
SCALE: NTS

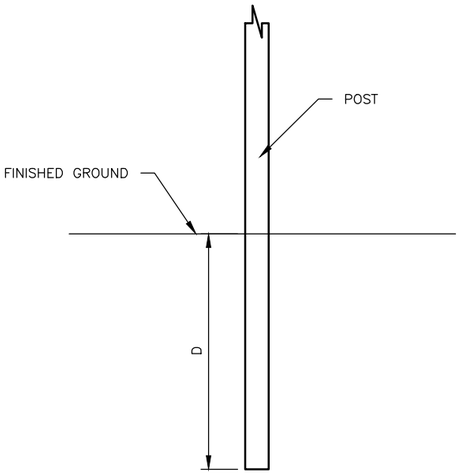

D = 14' FOR GATE POSTS
D = 8' FOR ALL OTHER POSTS

5/66 POST FOUNDATIONS
SCALE: NTS

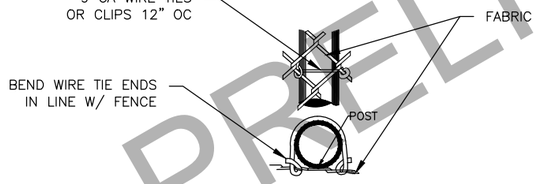

6/66 FABRIC TO POST FASTENERS
SCALE: NTS

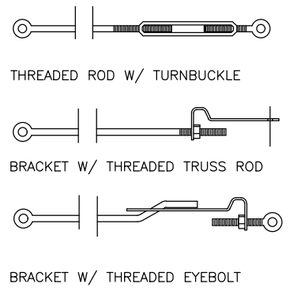

7/66 TRUSS ROD W/TIGHTENER
SCALE: NTS

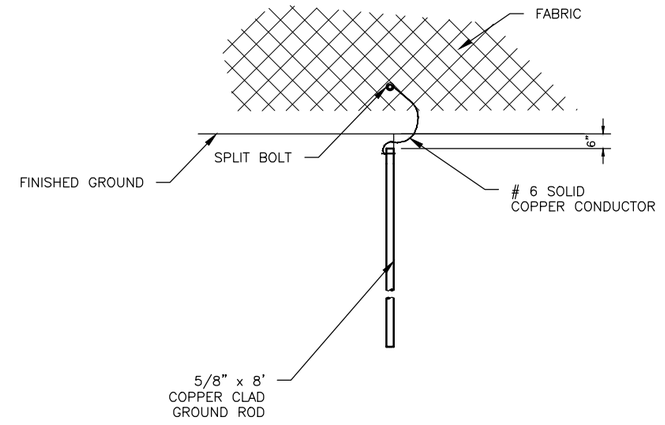

8/66 GROUND ROD
SCALE: NTS

PRELIMINARY

GENERAL FENCE NOTES:

1. ELECTRICAL GROUNDS SHALL BE INSTALLED ALONG THE FENCE WITH A MAXIMUM SPACING OF 500 FEET AND DIRECTLY BELOW ANY OVERHEAD ELECTRICAL LINE CROSSINGS. INSTALL AT LEAST ONE GROUND ROD FOR EACH STRAIGHT FENCE SECTION AND ON EACH SIDE OF ANY GATES.
2. ATTACH TRUSS ROD & TIGHTENER TO POSTS WITH BRACE BANDS

BY	DATE	REVISION

STATE OF ALASKA
DEPARTMENT OF TRANSPORTATION AND PUBLIC FACILITIES
CENTRAL REGION
4111 AVIATION AVE., ANCHORAGE ALASKA 99502
PHONE (907) 269-0590

TED STEVENS ANCHORAGE
ANCHORAGE, ALASKA
ANC TAXIWAY Z IMPROVEMENTS WEST - PHASE 1
PROJECT No. CFAPT00465
AIP No. 3-02-0016-XXX-2022
FENCE DETAILS

DATE: 10/14/2021
SHEET: 66 OF 78

Designed By: TAD
Drawn By: RJB
Checked By: TAD
Date Revised:
Layout Name: 10/14/2021, 12:45 PM
File Path and Name: FENCE DETAILS 2
W:\Projects\AIA Ted Stevens\AIA TW Z Ext 00465\Final Drawings\00465-AIA-Details.dwg

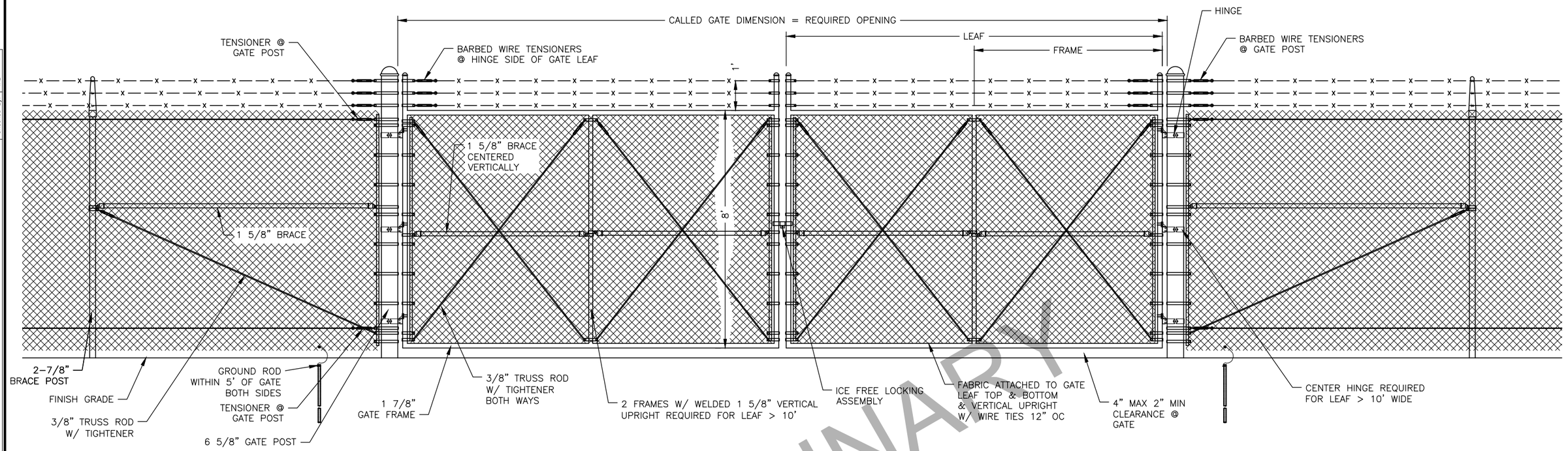

1
67

DOUBLE SWING GATE

SCALE: NTS

PRELIMINARY

GATE NOTES:

1. DOUBLE GATES SHALL BE SYMMETRICAL @ CENTERLINE.
2. GATE LEAVES SHALL BE COMPLETELY ASSEMBLED BEFORE FABRIC IS APPLIED.
3. LEAVES SHALL BE WELDED CONSTRUCTION & HOT DIPPED GALVANIZED AFTER FABRICATION.
4. GAPS @ HINGES AND LATCHES SHALL BE THE OPTIMUM REQUIRED FOR PROPER OPERATION.
5. GATE HINGES SHALL BE INSTALLED, PINNED OR RIVETED TO RESIST LIFTING THE LEAF WHEN THE GATE IS CLOSED.
6. HINGES SHALL PIVOT WITHIN THE HINGE ASSEMBLY & NOT AT THE GATE LEAF UPRIGHT.
7. GATE LEAVES SHALL SWING THROUGH AN ARC > 110° TO EITHER SIDE OF FENCE LINE.
8. ALL HARDWARE SHALL BE MALLEABLE AND HOT DIPPED GALVANIZED.
9. INSTALL POST CAPS ON ALL POSTS AND UPRIGHTS WITHOUT BARBED WIRE ARMS.
10. ALL GATE POSTS SHALL BE EMBEDDED IN CONCRETE FOUNDATIONS.

BY	DATE	REVISION

STATE OF ALASKA
DEPARTMENT OF TRANSPORTATION AND PUBLIC FACILITIES
CENTRAL REGION
4111 AVIATION AVE., ANCHORAGE ALASKA 99502
PHONE (907) 269-0590

TED STEVENS ANCHORAGE
ANCHORAGE, ALASKA
ANC TAXIWAY Z IMPROVEMENTS WEST - PHASE 1
PROJECT No. CFAPT00465
AIP No. 3-02-0016-XXX-2022
GATE DETAILS

DATE: 10/14/2021

SHEET: 67 OF 78

Designed By: TAD
Drawn By: RJB
Checked By: TAD

Date Revised: 10/14/2021, 12:45 PM
Layout Name: GATE DETAILS 1
File Path and Name: W:\Projects\ANA Ted Stevens\ANA TW Z Ext 00465\Final Drawings\00465-ANA-Details.dwg

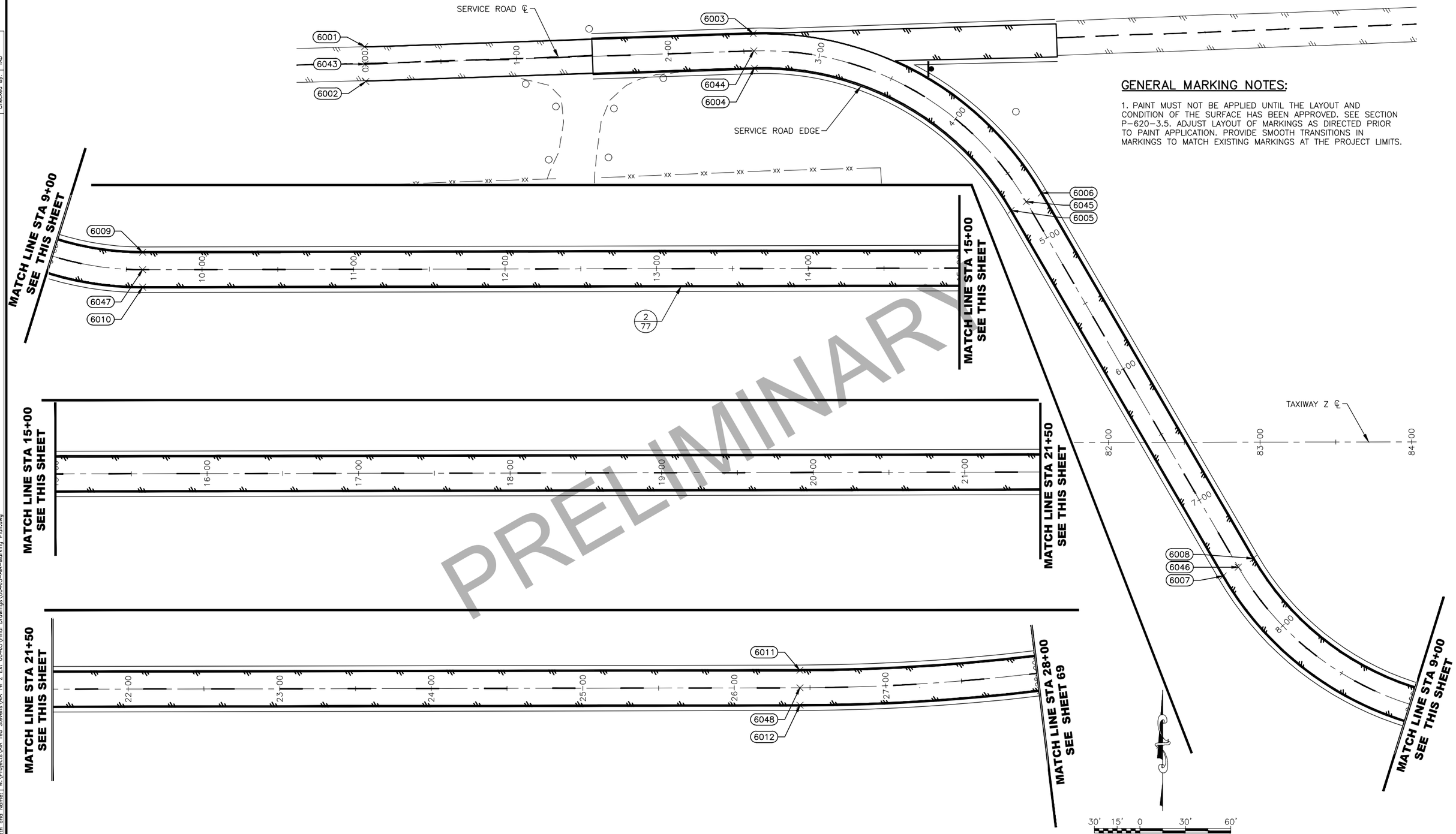

GENERAL MARKING NOTES:

1. PAINT MUST NOT BE APPLIED UNTIL THE LAYOUT AND CONDITION OF THE SURFACE HAS BEEN APPROVED. SEE SECTION P-620-3.5. ADJUST LAYOUT OF MARKINGS AS DIRECTED PRIOR TO PAINT APPLICATION. PROVIDE SMOOTH TRANSITIONS IN MARKINGS TO MATCH EXISTING MARKINGS AT THE PROJECT LIMITS.

PRELIMINARY

Designed By:	TAD
Drawn By:	RJB
Checked By:	TAD
Date Revised:	10/14/2021, 12:45 PM
Layout Name:	MARKING 1
File Path and Name:	W:\Projects\AIA Ted Stevens\AIA TW Z Ext 00465\Final Drawings\00465-AIA-Marking Plan.dwg

BY	DATE	REVISION

STATE OF ALASKA
DEPARTMENT OF TRANSPORTATION AND PUBLIC FACILITIES
CENTRAL REGION
4111 AVIATION AVE., ANCHORAGE ALASKA 99502
PHONE (907) 269-0590

TED STEVENS ANCHORAGE
ANCHORAGE, ALASKA
ANC TAXIWAY Z IMPROVEMENTS WEST - PHASE 1
PROJECT No. CFAPT00465
AIP No. 3-02-0016-XXX-2022
MARKING PLAN

DATE: 10/14/2021

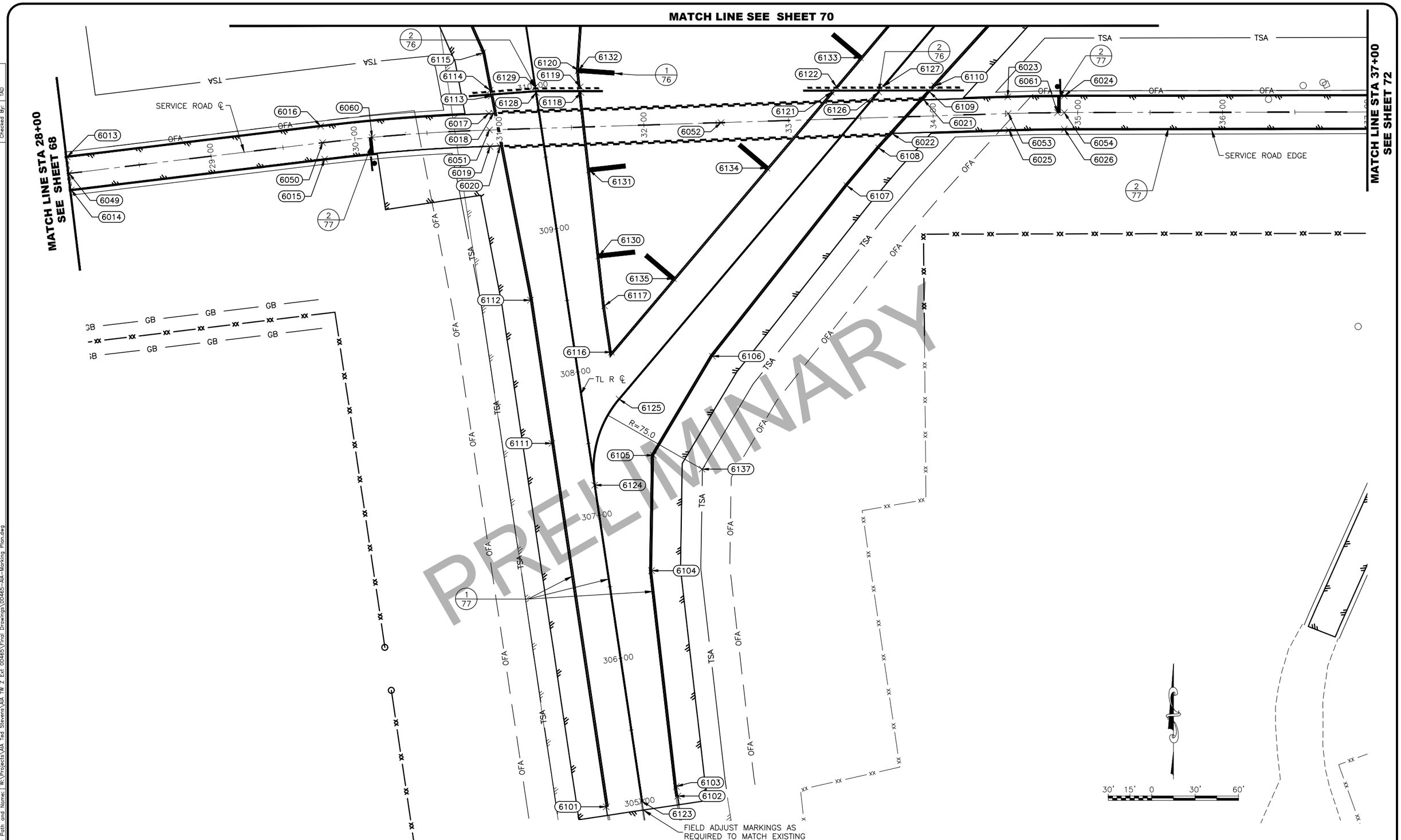

BY	DATE	REVISION

STATE OF ALASKA
DEPARTMENT OF TRANSPORTATION AND PUBLIC FACILITIES
CENTRAL REGION
4111 AVIATION AVE., ANCHORAGE ALASKA 99502
PHONE (907) 269-0590

TED STEVENS ANCHORAGE
ANCHORAGE, ALASKA
ANC TAXIWAY Z IMPROVEMENTS WEST - PHASE 1
PROJECT No. CFAPT00465
AIP No. 3-02-0016-XXX-2022
MARKING PLAN

DATE: 10/14/2021
SHEET: 69 OF 78

Designed By: TAD
Drawn By: RJB
Checked By: TAD
Date Revised: 10/14/2021, 12:46 PM
Layout Name: MARKING 2
File Path and Name: W:\Projects\AIA Ted Stevens\AIA TW Z Ext 00465\Final Drawings\00465-AIA-Marking Plan.dwg

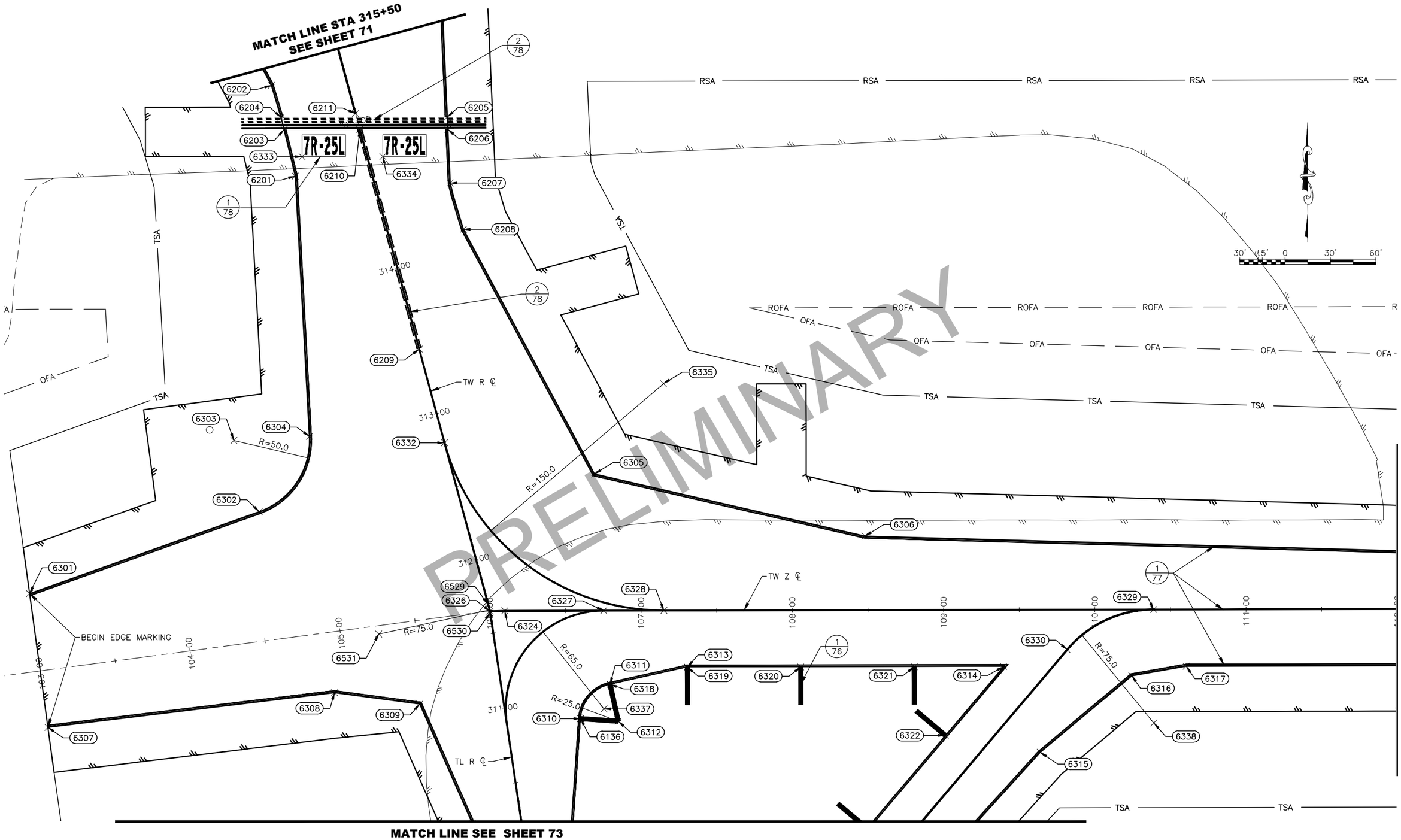

BY	DATE	REVISION

STATE OF ALASKA
DEPARTMENT OF TRANSPORTATION AND PUBLIC FACILITIES
CENTRAL REGION
4111 AVIATION AVE., ANCHORAGE ALASKA 99502
PHONE (907) 269-0590

TED STEVENS ANCHORAGE
ANCHORAGE, ALASKA
ANC TAXIWAY Z IMPROVEMENTS WEST - PHASE 1
PROJECT No. CFAPT00465
AIP No. 3-02-0016-XXX-2022
MARKING PLAN

DATE: 10/14/2021
SHEET: 70 OF 78

Designed By: TAD
Drawn By: RJB
Checked By: TAD
Date Revised: 10/14/2021, 12:46 PM
Layout Name: MARKING 3
File Path and Name: W:\Projects\AIA Ted Stevens\AIA TW Z Ext 00465\Final Drawings\00465-AIA-Marking Plan.dwg

MATCH LINE STA 321+00
SEE THIS SHEET

RE-PAINT EXISTING TAXIWAY & HOLD POSITION MARKINGS AS REQUIRED

320+00

TW R ℄

319+00

RE-PAINT EXISTING RUNWAY MARKINGS AS REQUIRED

318+00

6222

FIELD ADJUST AS REQUIRED TO MATCH EXISTING

323+00

RE-PAINT EXISTING TAXIWAY & HOLD POSITION MARKINGS AS REQUIRED

322+00

MATCH LINE STA 321+00
SEE THIS SHEET

RW 7R/25L ℄

1140+00

6219

6218

6220

6221

R=150.0

317+00

6212

6217

R=130.0

6213

R=50.0

6215

6214

6138

6139

1
77

6216

316+00

TW R ℄

MATCH LINE STA 315+50
SEE SHEET 70

30' 15' 0 30' 60'

PRELIMINARY

BY	DATE	REVISION

STATE OF ALASKA
DEPARTMENT OF TRANSPORTATION AND PUBLIC FACILITIES
CENTRAL REGION
4111 AVIATION AVE., ANCHORAGE ALASKA 99502
PHONE (907) 269-0590

TED STEVENS ANCHORAGE
ANCHORAGE, ALASKA
ANC TAXIWAY Z IMPROVEMENTS WEST - PHASE 1
PROJECT No. CFAPT00465
AIP No. 3-02-0016-XXX-2022
MARKING PLAN

DATE: 10/14/2021

SHEET: 71 OF 78

Designed By: TAD
Drawn By: RJB
Checked By: TAD

Date Revised:
Layout Name: 10/14/2021, 12:46 PM MARKING 4
File Path and Name: W:\Projects\AIA Ted Stevens\AIA TW Z Ext 00465\Final Drawings\00465-AIA-Marking Plan.dwg

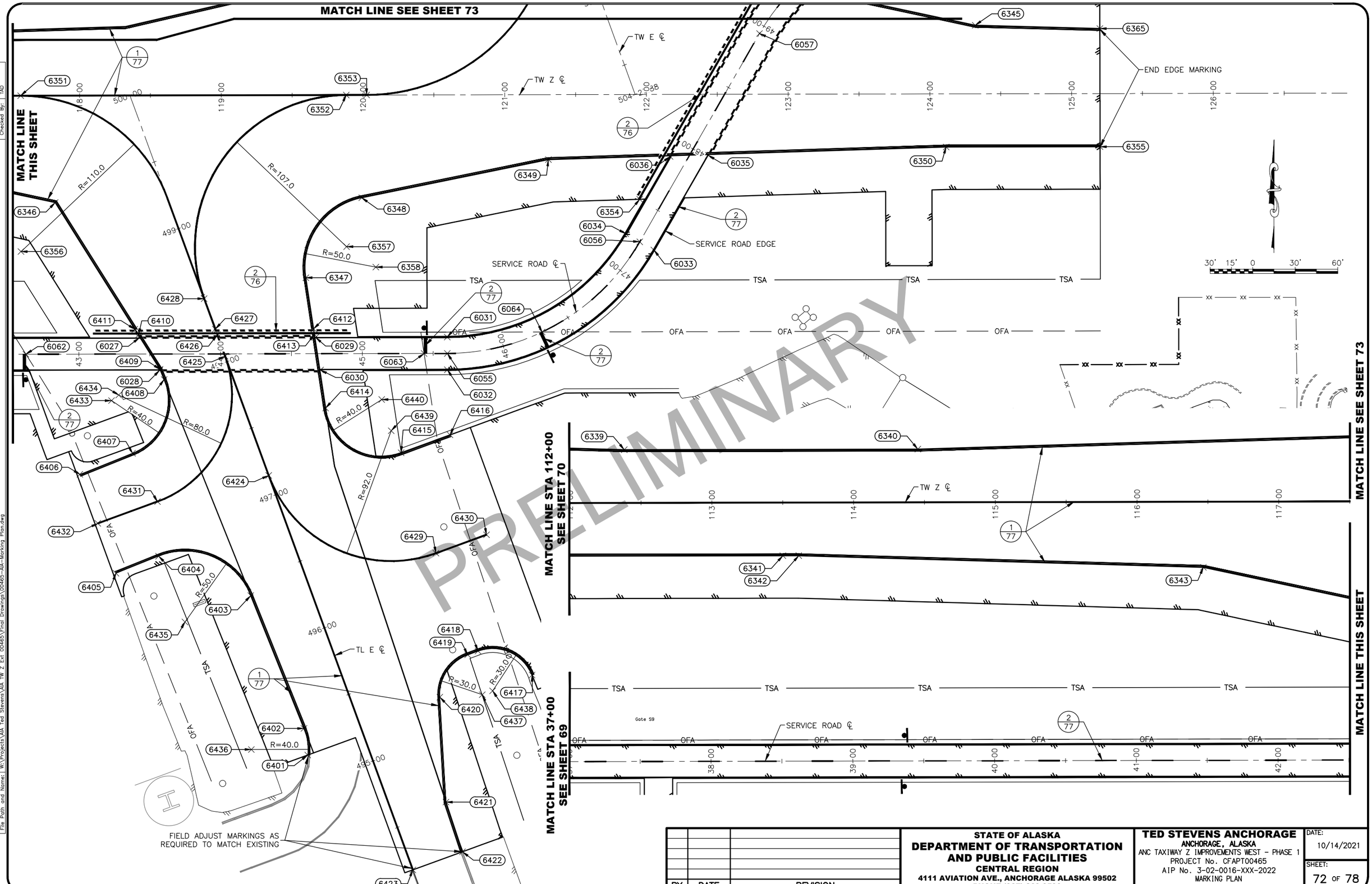

Designed By:	TAD
Drawn By:	RJB
Checked By:	TAD
Date Revised:	10/14/2021, 12:46 PM
Layout Name:	MARKING 5
File Path and Name:	W:\Projects\AIA Ted Stevens\AIA TW Z Ext 00465\Final Drawings\00465-AIA-Marking Plan.dwg

BY	DATE	REVISION

STATE OF ALASKA
DEPARTMENT OF TRANSPORTATION AND PUBLIC FACILITIES
CENTRAL REGION
4111 AVIATION AVE., ANCHORAGE ALASKA 99502
PHONE (907) 269-0590

TED STEVENS ANCHORAGE
ANCHORAGE, ALASKA
ANC TAXIWAY Z IMPROVEMENTS WEST - PHASE 1
PROJECT No. CFAPT00465
AIP No. 3-02-0016-XXX-2022
MARKING PLAN

DATE: 10/14/2021

SHEET: 72 OF 78

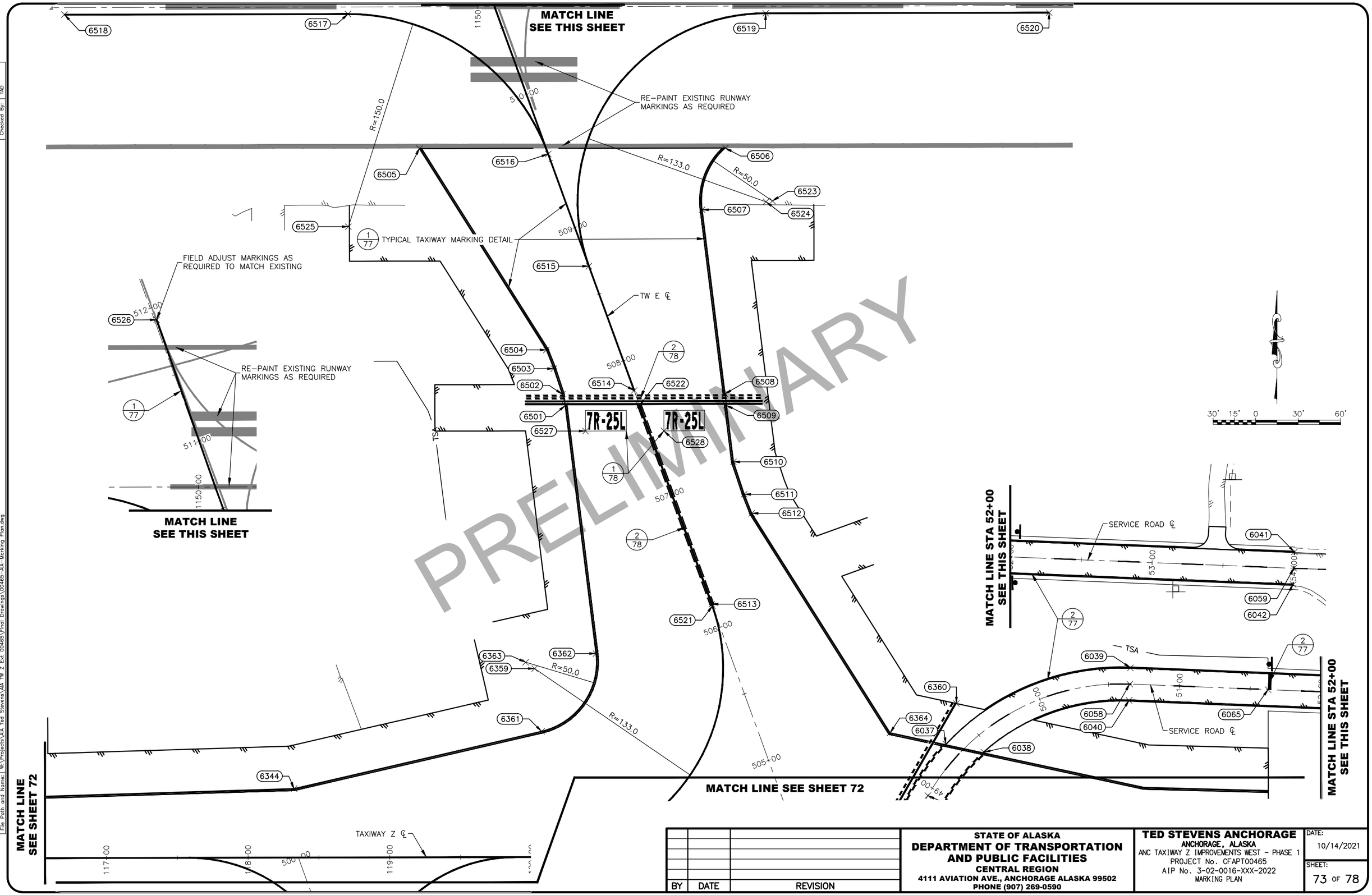

BY	DATE	REVISION

STATE OF ALASKA
DEPARTMENT OF TRANSPORTATION AND PUBLIC FACILITIES
CENTRAL REGION
4111 AVIATION AVE., ANCHORAGE ALASKA 99502
PHONE (907) 269-0590

TED STEVENS ANCHORAGE
ANCHORAGE, ALASKA
ANC TAXIWAY Z IMPROVEMENTS WEST - PHASE 1
PROJECT No. CFAPT00465
AIP No. 3-02-0016-XXX-2022
MARKING PLAN

DATE: 10/14/2021
SHEET: 73 OF 78

Designed By: TAD
Drawn By: RJB
Checked By: TAD
Date Revised: 10/14/2021, 12:47 PM
Layout Name: MARKING 6
File Path and Name: W:\Projects\AIA Ted Stevens\AIA TW Z Ext 00465\Final Drawings\00465-AIA-Marking Plan.dwg

Designed By:	TAD
Drawn By:	RJB
Checked By:	TAD

Date Revised:	10/14/2021, 12:47 PM
Layout Name:	MARKING TABLE 1
File Path and Name:	W:\Projects\ANA Ted Stevens\ANA TW Z Ext 00465\Final Drawings\00465-AIA-Marking Plan.dwg

SERVICE ROAD MARKING TABLE

POINT #	STATION	OFFSET	DESCRIPTION
6001	0+00.00	11.50LT	SR EDGE
6002	0+00.00	11.50RT	SR EDGE
6003	2+56.59	11.50LT	SR EDGE
6004	2+56.59	11.50RT	SR EDGE
6005	4+72.42	11.50RT	SR EDGE
6006	4+72.42	11.50LT	SR EDGE
6007	7+51.36	11.50RT	SR EDGE
6008	7+51.36	11.50LT	SR EDGE
6009	9+60.79	11.50LT	SR EDGE
6010	9+60.79	11.50RT	SR EDGE
6011	26+43.33	11.50LT	SR EDGE
6012	26+43.33	11.50RT	SR EDGE
6013	28+01.22	11.50LT	SR EDGE
6014	28+01.22	11.50RT	SR EDGE
6015	29+77.64	11.50RT	SR EDGE
6016	29+77.64	11.50LT	SR EDGE
6017	30+93.28	11.50LT	SR EDGE
6018	30+96.56	11.50LT	SR EDGE
6019	30+93.28	11.50RT	SR EDGE
6020	31+00.25	11.50RT	SR EDGE
6021	33+93.77	11.50LT	SR EDGE
6022	33+71.56	11.50RT	SR EDGE
6023	34+51.95	11.50LT	SR EDGE
6024	34+90.64	11.50LT	SR EDGE
6025	34+51.95	11.50RT	SR EDGE
6026	34+90.64	11.50RT	SR EDGE
6027	43+42.75	11.50LT	SR EDGE
6028	43+57.05	11.50RT	SR EDGE
6029	44+67.10	11.50LT	SR EDGE
6030	44+70.56	11.50RT	SR EDGE
6031	45+60.00	11.50LT	SR EDGE
6032	45+60.00	11.50RT	SR EDGE
6033	47+24.41	11.50RT	SR EDGE
6034	47+24.41	11.50LT	SR EDGE
6035	48+01.50	11.50RT	SR EDGE
6036	47+87.30	11.50LT	SR EDGE
6037	49+29.52	11.50LT	SR EDGE
6038	49+44.72	11.50RT	SR EDGE
6039	50+64.97	11.50LT	SR EDGE
6040	50+64.97	11.50RT	SR EDGE
6041	54+00.00	11.50LT	SR EDGE
6042	54+00.00	11.50RT	SR EDGE
6043	0+00.00	0.00RT	SR CL
6044	2+56.59	0.00RT	SR CL
6045	4+72.42	0.00RT	SR CL
6046	7+51.36	0.00RT	SR CL
6047	9+60.79	0.00RT	SR CL
6048	26+43.33	0.00RT	SR CL

SERVICE ROAD MARKING TABLE

POINT #	STATION	OFFSET	DESCRIPTION
6049	28+01.22	0.00RT	SR CL
6050	29+77.64	0.00RT	SR CL
6051	30+93.28	0.00RT	SR CL
6052	32+53.36	0.00RT	SR CL
6053	34+51.95	0.00RT	SR CL
6054	34+90.64	0.00RT	SR CL
6055	45+60.00	0.00RT	SR CL
6056	47+24.41	0.00RT	SR CL
6057	48+93.98	0.00RT	SR CL
6058	50+64.97	0.00RT	SR CL
6059	54+00.00	0.00RT	SR CL
6060	30+11.95	0.00RT	STOP BAR
6061	34+85.97	0.00LT	STOP BAR
6062	42+62.65	0.00RT	STOP BAR
6063	45+43.66	0.00RT	STOP BAR
6064	46+29.19	0.00RT	STOP BAR
6065	51+62.67	0.00RT	STOP BAR

TAXILANE R MARKING TABLE

POINT #	STATION	OFFSET	DESCRIPTION
6101	305+00.00	25.00LT	TL EDGE
6102	305+00.00	25.00RT	TL EDGE
6103	305+06.73	25.00RT	TL EDGE
6104	306+56.73	30.10RT	TL EDGE
6105	307+35.32	43.20RT	TL EDGE
6106	307+97.02	93.61RT	TL EDGE
6107	308+99.84	202.96RT	TL EDGE
6108	309+22.30	228.53RT	TL EDGE
6109	309+55.45	269.02RT	TL EDGE
6110	309+58.88	273.20RT	TL EDGE
6111	307+53.89	25.00LT	TL EDGE
6112	308+53.89	25.00LT	TL EDGE
6113	309+97.39	31.05LT	TL EDGE
6114	310+01.42	31.22LT	TL EDGE
6115	310+27.77	32.33LT	TL EDGE
6116	308+10.10	25.00RT	TL EDGE
6117	308+42.45	25.00RT	TL EDGE
6118	309+90.60	30.64RT	TL EDGE
6119	309+94.62	30.79RT	TL EDGE
6120	310+05.90	31.22RT	TL EDGE
6121	309+65.37	201.80RT	TL EDGE
6122	309+68.82	205.74RT	TL EDGE
6123	305+00.00	0.00RT	TL CL
6124	307+20.92	0.00RT	TL CL
6125	307+77.28	25.51RT	TL CL
6126	309+60.58	234.24RT	TL CL
6127	309+64.04	238.18RT	TL CL
6128	309+95.12	0.02LT	TL CL
6129	309+99.16	0.00RT	TL CL
6130	308+77.08	26.32RT	TL SHLD MARK
6131	309+36.84	28.59RT	TL SHLD MARK
6132	310+05.90	31.22RT	TL SHLD MARK
6133	309+85.93	225.22RT	TL SHLD MARK
6134	309+19.95	150.08RT	TL SHLD MARK
6135	308+53.96	74.94RT	TL SHLD MARK
6136	310+85.56	48.76RT	TL SHLD MARK
6137	307+20.92	75.00RT	RADIUS
6138	316+11.50	130.00RT	RADIUS
6139	316+65.85	150.00LT	RADIUS

TAXIWAY R MARKING TABLE

POINT #	STATION	OFFSET	DESCRIPTION
6201	314+75.96	49.32LT	TW EDGE
6202	315+38.01	48.92LT	TW EDGE
6203	315+07.65	48.41LT	TW EDGE
6204	315+15.91	48.27LT	TW EDGE
6205	314+87.43	57.95RT	TW EDGE
6206	314+79.61	56.21RT	TW EDGE
6207	314+44.85	48.45RT	TW EDGE
6208	314+13.04	48.92RT	TW EDGE
6209	313+44.18	0.00RT	ENHANCED TW CL
6210	314+94.68	0.00RT	ENHANCED TW CL
6211	315+05.55	0.00RT	TW CL
6212	317+06.15	87.92LT	TW EDGE
6213	316+52.49	112.28RT	TW EDGE
6214	316+19.47	87.41RT	TW EDGE
6215	316+08.59	136.21RT	RADIUS
6216	316+11.50	0.00RT	TW CL
6217	316+65.85	0.00RT	TW CL
6218	318+10.74	111.16LT	TW CL
6219	318+62.52	304.34LT	TW CL
6220	317+37.07	163.66RT	TW CL
6221	316+85.29	356.84RT	TW CL
6222	323+36.00	0.00RT	TW CL

PRELIMINARY

BY	DATE	REVISION

STATE OF ALASKA
DEPARTMENT OF TRANSPORTATION AND PUBLIC FACILITIES
CENTRAL REGION
4111 AVIATION AVE., ANCHORAGE ALASKA 99502
PHONE (907) 269-0590

TED STEVENS ANCHORAGE
ANCHORAGE, ALASKA
ANC TAXIWAY Z IMPROVEMENTS WEST - PHASE 1
PROJECT No. CFAPT00465
AIP No. 3-02-0016-XXX-2022
MARKING TABLES

DATE: 10/14/2021

Designed By:	TAD
Drawn By:	RJB
Checked By:	TAD

Date Revised:	10/14/2021, 12:47 PM
Layout Name:	MARKING TABLE 2
File Path and Name:	W:\Projects\ANA Ted Stevens\ANA TW Z Ext 00465\Final Drawings\00465-AIA-Marking Plan.dwg

TAXIWAY Z MARKING TABLE

POINT #	STATION	OFFSET	DESCRIPTION
6301	102+99.79	51.62LT	TW EDGE
6302	104+57.52	85.15LT	TW EDGE
6303	104+47.12	134.06LT	RADIUS
6304	104+96.96	130.14LT	TW EDGE
6305	106+69.34	90.38LT	TW EDGE
6306	108+48.10	48.92LT	TW EDGE
6307	103+00.13	37.65RT	TW EDGE
6308	104+91.00	40.01RT	TW EDGE
6309	105+45.88	54.97RT	TW EDGE
6310	106+59.81	71.42RT	TW EDGE
6311	106+79.38	48.76RT	TW EDGE
6312	106+84.75	73.17RT	RADIUS
6313	107+30.51	37.50RT	TW EDGE
6314	109+39.51	37.50RT	TW EDGE
6315	109+63.78	94.27RT	TL EDGE
6316	110+24.38	43.75RT	TW EDGE
6317	110+60.36	37.50RT	TW EDGE
6318	106+79.38	48.76RT	TL SHLD MARK
6319	107+30.51	37.50RT	TL SHLD MARK
6320	108+05.51	37.50RT	TL SHLD MARK
6321	108+80.51	37.50RT	TL SHLD MARK
6322	109+00.91	82.98RT	TL SHLD MARK
6324	106+09.83	0.00RT	TW CL
6326	105+99.98	0.32RT	TW CL
6327	106+75.29	0.00RT	TW CL
6328	107+15.09	0.00RT	TW CL
6329	110+38.85	0.00RT	TW CL
6330	109+81.67	26.47RT	TW CL
6332	105+84.97	114.10LT	TW CL
6333	105+16.69	314.06LT	HOLD POSTION SIGN
6334	105+69.63	307.09LT	HOLD POSTION SIGN
6335	107+15.09	150.00LT	RADIUS
6337	106+75.30	65.01RT	RADIUS
6338	110+38.85	75.00RT	RADIUS
6339	112+38.24	37.50LT	TW EDGE
6340	114+45.36	37.50LT	TW EDGE
6341	113+50.00	37.50RT	TW EDGE
6342	113+61.23	37.50RT	TW EDGE
6343	116+46.65	46.32RT	TW EDGE
6344	118+32.60	48.66LT	TW EDGE
6345	124+32.07	48.37LT	TW EDGE
6346	117+82.63	75.45RT	TW EDGE
6347	119+59.36	128.88RT	TW EDGE
6348	119+98.91	72.44RT	TW EDGE
6349	121+30.72	45.84RT	TW EDGE
6350	124+11.37	37.50RT	TW EDGE
6351	117+58.41	0.00RT	TW CL
6352	119+88.18	0.00RT	TW CL

TAXIWAY Z MARKING TABLE

POINT #	STATION	OFFSET	DESCRIPTION
6353	120+02.51	0.00RT	TW CL
6354	121+95.09	73.94RT	TW CL
6355	125+20.00	37.50RT	TW EDGE
6356	117+58.41	110.00RT	RADIUS
6357	119+88.18	107.00RT	RADIUS
6358	120+08.80	121.46RT	RADIUS
6359	120+02.51	133.00LT	RADIUS
6360	122+99.99	107.76LT	NON MOVEMENT
6361	120+07.34	88.71LT	TW EDGE
6362	120+45.79	143.51LT	TW EDGE
6363	119+96.16	137.45LT	RADIUS
6364	122+53.22	87.22LT	TW EDGE
6365	125+20.00	45.87LT	TW EDGE

TAXILANE E MARKING TABLE

POINT #	STATION	OFFSET	DESCRIPTION
6401	495+19.72	41.82LT	TL EDGE
6402	495+38.29	37.89LT	TL EDGE
6403	496+39.20	41.01LT	TL EDGE
6404	496+87.64	92.53LT	TL EDGE
6405	496+86.64	124.88LT	TL EDGE
6406	497+60.96	124.88LT	TL EDGE
6407	497+62.20	84.83LT	TL EDGE
6408	498+03.41	46.08LT	TL EDGE
6409	498+11.14	46.32LT	TL EDGE
6410	498+39.21	52.34LT	TL EDGE
6411	498+43.82	53.32LT	TL EDGE
6412	498+00.79	65.22RT	TL EDGE
6413	497+96.83	64.42RT	TL EDGE
6414	497+45.41	54.04RT	TL EDGE
6415	496+97.50	93.25RT	TL EDGE
6416	496+97.50	130.00RT	TL EDGE
6417	495+18.47	126.23RT	TL EDGE
6418	495+47.50	96.24RT	TL EDGE
6419	495+47.50	88.48RT	TL EDGE
6420	495+26.12	59.74RT	TL EDGE
6421	494+55.06	38.42RT	TL EDGE
6422	494+18.14	37.32RT	TL EDGE
6423	494+18.14	0.00RT	TL CL
6424	497+14.50	0.00RT	TL CL
6425	498+04.13	0.00RT	TL CL
6426	498+20.21	0.00RT	TL CL
6427	498+24.46	0.00RT	TL CL
6428	498+47.33	0.00RT	TL CL
6429	496+22.50	92.00RT	TL CL
6430	496+22.50	130.00RT	TL CL
6431	497+24.13	80.00LT	TL EDGE
6432	497+24.13	124.88LT	TL EDGE
6433	498+02.18	86.07LT	RADIUS
6434	498+04.13	80.00LT	RADIUS
6435	496+37.66	90.98LT	RADIUS
6436	495+37.05	77.87LT	RADIUS
6437	495+17.50	88.48RT	RADIUS
6438	495+17.50	96.24RT	RADIUS
6439	497+14.50	92.00RT	RADIUS
6440	497+37.50	93.25RT	RADIUS

TAXIWAY E MARKING TABLE

POINT #	STATION	OFFSET	DESCRIPTION
6501	507+84.37	49.33LT	TW EDGE
6502	507+92.58	48.51LT	TW EDGE
6503	508+11.59	47.96LT	TW EDGE
6504	508+25.79	48.37LT	TW EDGE
6505	509+89.90	84.02LT	TW EDGE
6506	509+16.52	119.03RT	TW EDGE
6507	508+81.20	88.71RT	TW EDGE
6508	507+53.56	59.45RT	TW EDGE
6509	507+45.71	57.65RT	TW EDGE
6510	507+06.47	48.66RT	TW EDGE
6511	506+82.39	47.96RT	TW EDGE
6512	506+67.95	48.37RT	TW EDGE
6513	506+17.37	0.00RT	TW CL
6514	507+77.71	0.00RT	TW CL
6515	508+71.06	0.00RT	TW CL
6516	509+55.27	0.00RT	TW CL
6517	510+96.34	99.01LT	TW CL
6518	511+64.32	287.11LT	TW CL
6519	509+96.14	178.21RT	TW CL
6520	509+28.16	366.30RT	TW CL
6521	506+16.04	0.01LT	ENHANCE TW CL
6522	507+66.54	0.00RT	ENHANCE TW CL
6523	508+70.03	137.45RT	RADIUS
6524	508+71.06	133.00RT	RADIUS
6525	509+55.27	150.00LT	RADIUS
6526	511+90.80	1.48RT	TW CL
6527	507+62.59	42.01LT	HOLD POSTION SIGN
6528	507+43.79	10.00RT	HOLD POSTION SIGN
6529	314+75.96	49.32LT	TW EDGE
6530	314+75.96	49.32LT	TW EDGE
6531	314+75.96	49.32LT	TW EDGE

PRELIMINARY

BY	DATE	REVISION

STATE OF ALASKA
DEPARTMENT OF TRANSPORTATION AND PUBLIC FACILITIES
CENTRAL REGION
4111 AVIATION AVE., ANCHORAGE ALASKA 99502
PHONE (907) 269-0590

TED STEVENS ANCHORAGE
ANCHORAGE, ALASKA
ANC TAXIWAY Z IMPROVEMENTS WEST - PHASE 1
PROJECT No. CFAPT00465
AIP No. 3-02-0016-XXX-2022
MARKING TABLES

DATE: 10/14/2021

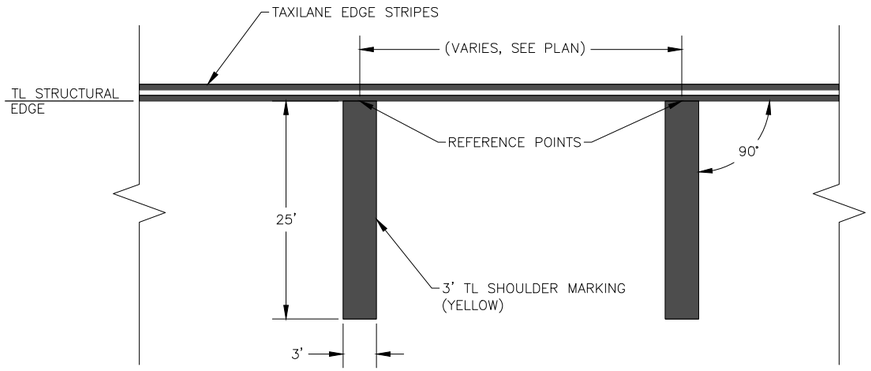

1/76 TAXIWAY/TAXILANE SHOULDER MARKING

SCALE: NTS

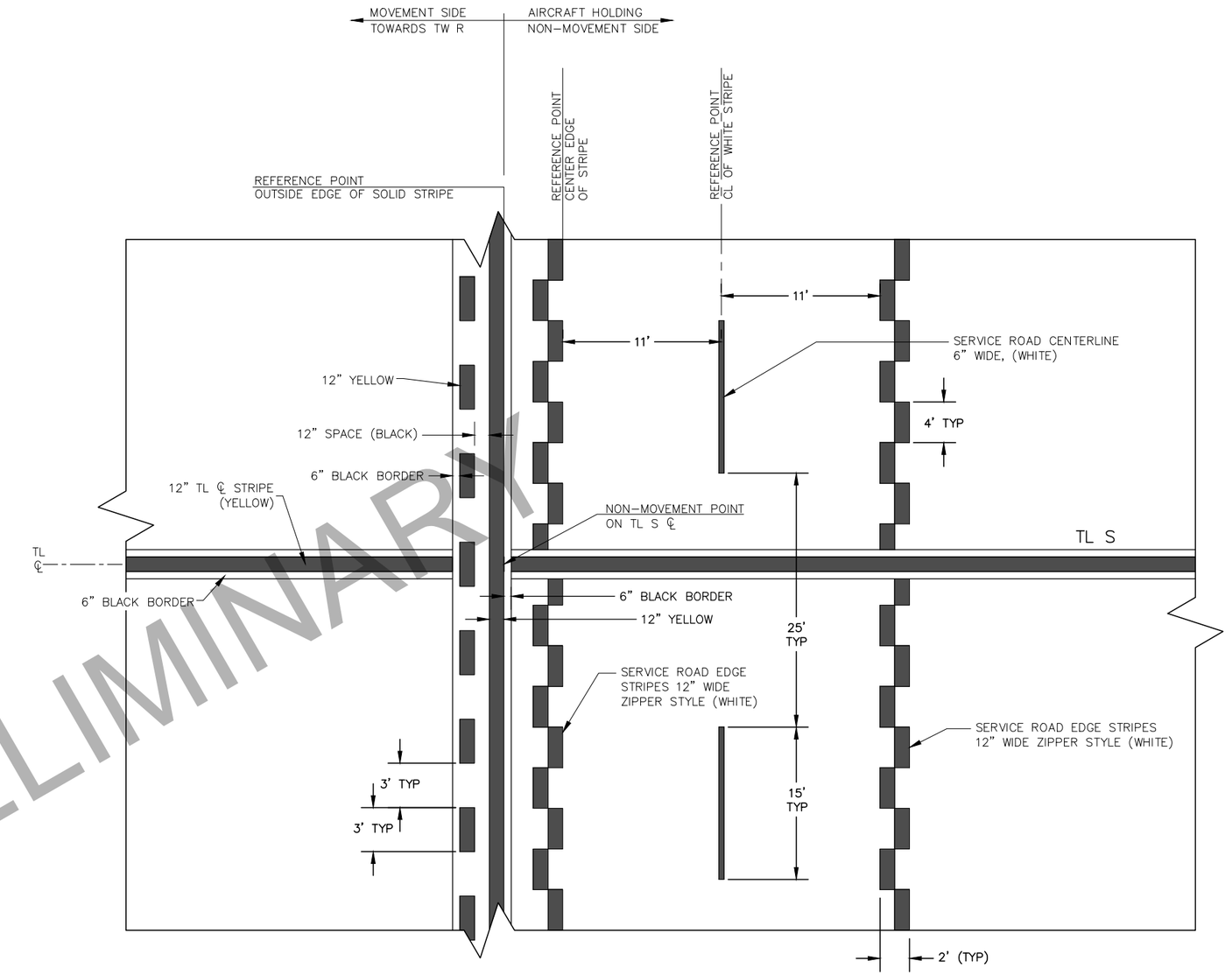

NOTES:

1. GLASS BEADS ARE APPLIED TO ALL MARKINGS EXCEPT THE BLACK OUTLINE.

2/76 NON-MOVEMENT AREA MARKING & ZIPPER STYLE SERVICE ROAD MARKING DETAIL

SCALE: NTS

PRELIMINARY

Designed By:	TAD
Drawn By:	RJB
Checked By:	TAD

Date Revised:	10/14/2021, 12:47 PM
Layout Name:	MARKING DETAILS 1
File Path and Names:	W:\Projects\AIA Ted Stevens\AIA TW Z Ext 00465\Final Drawings\00465-AIA-Details.dwg

BY	DATE	REVISION

STATE OF ALASKA
DEPARTMENT OF TRANSPORTATION AND PUBLIC FACILITIES
CENTRAL REGION
4111 AVIATION AVE., ANCHORAGE ALASKA 99502
PHONE (907) 269-0590

TED STEVENS ANCHORAGE
ANCHORAGE, ALASKA
ANC TAXIWAY Z IMPROVEMENTS WEST - PHASE 1
PROJECT No. CFAPT00465
AIP No. 3-02-0016-XXX-2022
MARKING DETAILS

DATE: 10/14/2021

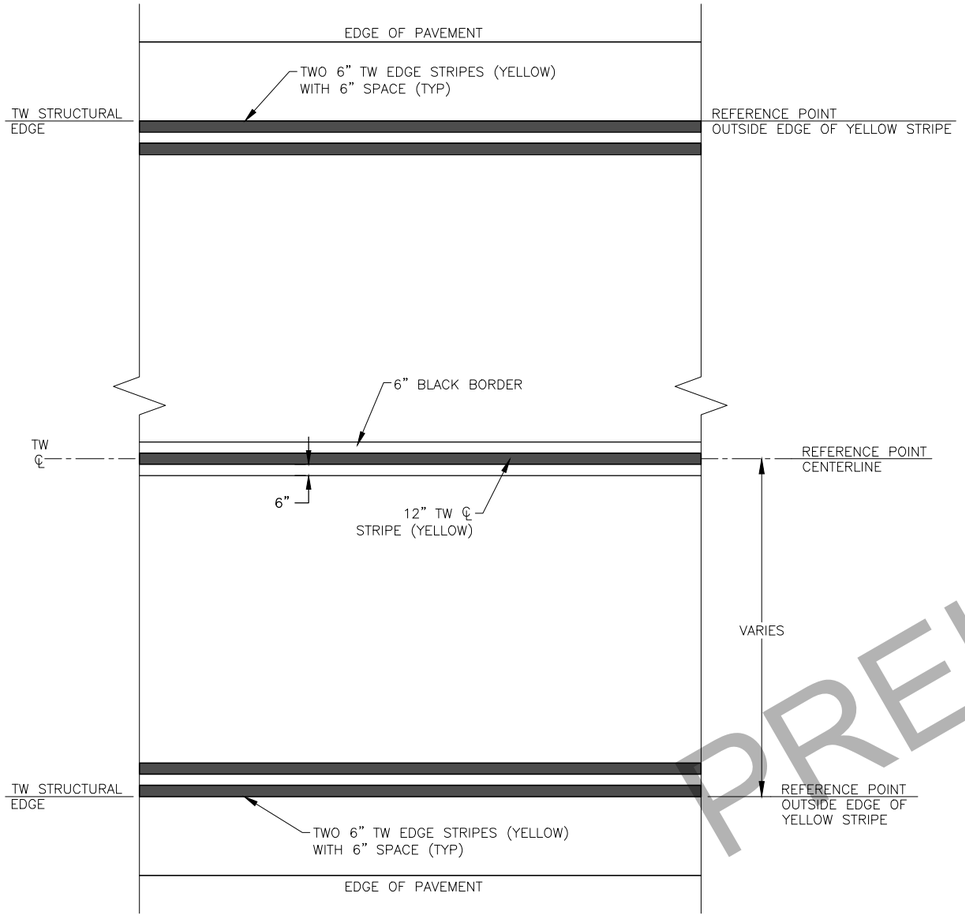

NOTES:

1. TAXIWAY CENTERLINE STRIPES ARE DIMENSIONED TO CENTERLINE OF STRIPES.
2. GLASS BEADS ARE APPLIED TO ALL MARKINGS EXCEPT THE BLACK OUTLINE.

1/77 TYPICAL TAXIWAY & TAXILANE MARKING DETAIL

SCALE: NTS

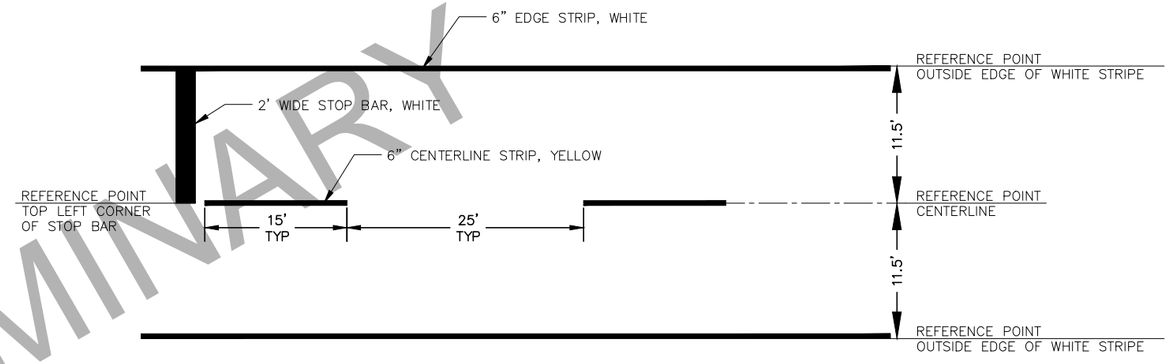

2/77 SERVICE ROAD MARKING DETAIL

SCALE: NTS

PRELIMINARY

Designed By:	TAD
Drawn By:	RJB
Checked By:	TAD

Date Revised:	10/14/2021, 12:47 PM
Layout Name:	MARKING DETAILS 2
File Path and Name:	W:\Projects\ANA Ted Stevens\ANA TW Z Ext 00465\Final Drawings\00465-ANA-Details.dwg

BY	DATE	REVISION

STATE OF ALASKA
DEPARTMENT OF TRANSPORTATION AND PUBLIC FACILITIES
CENTRAL REGION
4111 AVIATION AVE., ANCHORAGE ALASKA 99502
PHONE (907) 269-0590

TED STEVENS ANCHORAGE
ANCHORAGE, ALASKA
ANC TAXIWAY Z IMPROVEMENTS WEST - PHASE 1
PROJECT No. CFAPT00465
AIP No. 3-02-0016-XXX-2022
MARKING DETAILS

DATE: 10/14/2021

SHEET: 77 OF 78



1/78 SURFACE PAINTED HOLDING POSITION SIGN DETAIL

SCALE: NTS

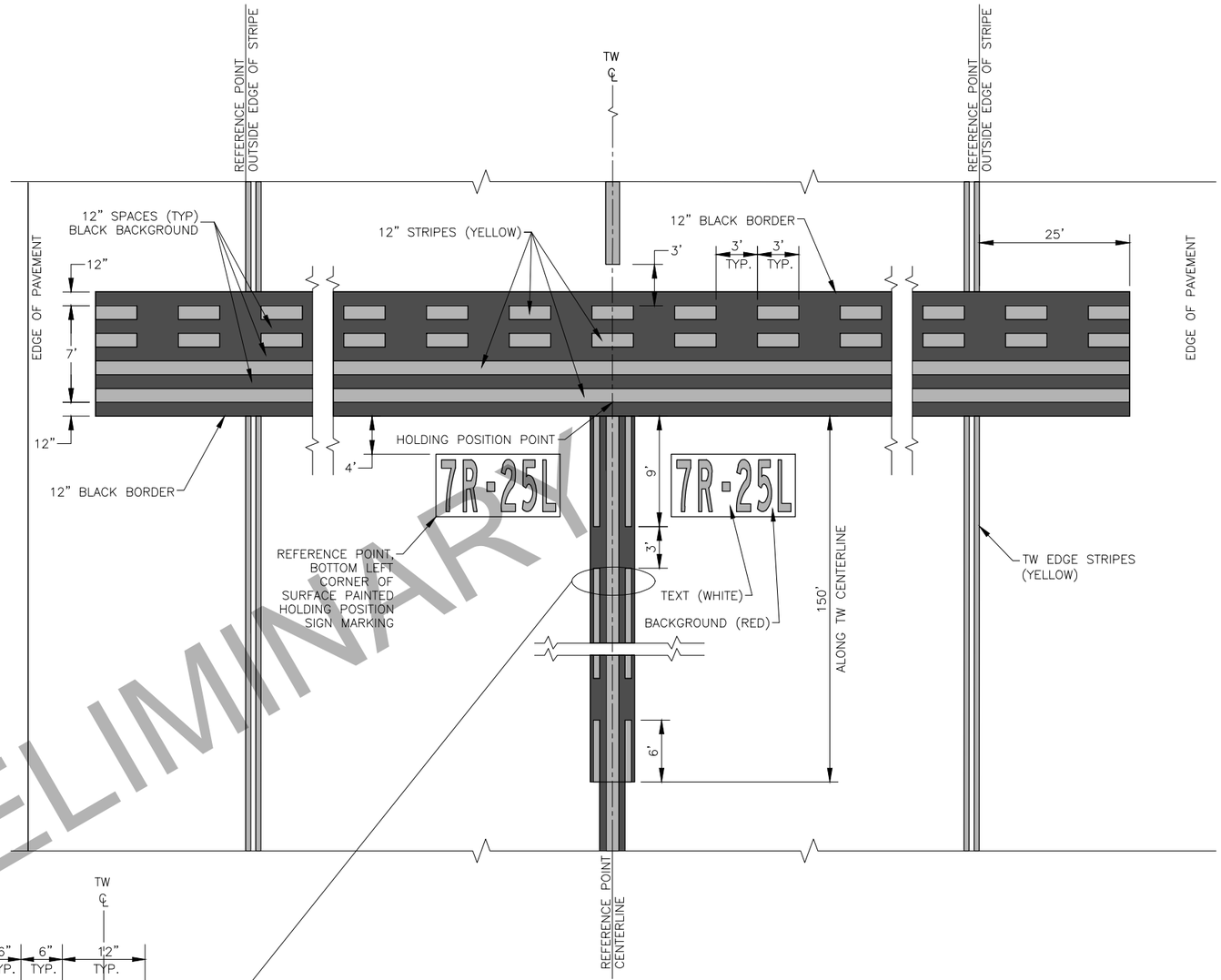

2/78 ENHANCED TAXIWAY CENTERLINE & ENHANCED HOLD POSITION MARKING DETAIL

SCALE: NTS

PRELIMINARY

NOTES:

1. RUNWAY HOLD POSITION MARKINGS ARE LAID OUT PARALLEL WITH RUNWAY CENTERLINE.
2. RUNWAY HOLDING POSITION POINT IS 281' PERPENDICULAR FROM RW CENTERLINE.
3. GLASS BEADS ARE APPLIED TO ALL ENHANCED MARKINGS EXCEPT THE BLACK OUTLINE.
4. REFER TO SURFACE PAINTED HOLDING POSITION SIGN DETAIL FOR SPECIFIC TAXIWAY APPLICATION.

Designed By:	TAD
Drawn By:	RJB
Checked By:	TAD

Date Revised:	10/14/2021, 12:47 PM
Layout Name:	MARKING DETAILS 3
File Path and Name:	W:\Projects\AIA Ted Stevens\AIA TW Z Ext 00465\Final Drawings\00465-AIA-Details.dwg

BY	DATE	REVISION

STATE OF ALASKA
DEPARTMENT OF TRANSPORTATION AND PUBLIC FACILITIES
CENTRAL REGION
4111 AVIATION AVE., ANCHORAGE ALASKA 99502
PHONE (907) 269-0590

TED STEVENS ANCHORAGE
ANCHORAGE, ALASKA
ANC TAXIWAY Z IMPROVEMENTS WEST - PHASE 1
PROJECT No. CFAPT00465
AIP No. 3-02-0016-XXX-2022
MARKING DETAILS

DATE: 10/14/2021

SHEET: 78 OF 78

DEMOLITION NOTES:

1. REMOVE LIGHTS AND SIGNS AS INDICATED ON DEMOLITION PLANS. REMOVAL INCLUDES ALL ASSOCIATED CONDUIT, CONDUCTORS, LIGHT BASES, TRANSFORMERS, CONTROLLERS, DRAIN CONDUITS, FOUNDATIONS, AND CONCRETE, UNLESS OTHERWISE INDICATED. OFFER ALL REMOVED LIGHTS, SIGNS, TRANSFORMERS, AND CONTROLLERS IN SERVICEABLE CONDITION TO AIRPORT MAINTENANCE. DELIVER ALL REMOVED CONDUCTORS TO A DUMPSTER PROVIDED BY AIRPORT MAINTENANCE FOR DISPOSAL. DISPOSAL OF LIGHTING EQUIPMENT DEEMED NON-SALVAGABLE BY AIRPORT MAINTENANCE AND REMOVED CONDUIT, LIGHT BASES, CONCRETE, AND OTHER MATERIAL IS THE RESPONSIBILITY OF THE CONTRACTOR. DISPOSE OF MATERIAL AT AN APPROVED SITE OFF OF AIRPORT PROPERTY IN ACCORDANCE WITH FEDERAL AND STATE REGULATIONS. DISPOSAL COSTS ARE SUBSIDIARY TO THE CONTRACT.

2. REMOVE ALL UNUSED AND DECOMMISSIONED CONDUCTORS FROM DUCT BANKS UNLESS OTHERWISE INDICATED. THIS WORK IS SUBSIDIARY TO L108 ITEMS AND NO SEPARATE PAYMENT WILL BE MADE.

3. WHEN REMOVING CONDUCTORS FROM EXISTING CONDUIT TO REMAIN, INSTALL A PULL ROPE FOR FUTURE USE PER SPECIFICATION L-108.

4. CONDUITS SHOWN TO BE REMOVED THAT WILL NOT BE DISTURBED BY EXCAVATION ASSOCIATED WITH THIS PROJECT MAY BE ABANDONED IN PLACE UNLESS OTHERWISE DIRECTED BY THE ENGINEER. REMOVE ALL CONDUCTORS FROM ABANDONED CONDUITS. REMOVE ALL LIGHT BASES UNLESS OTHERWISE INDICATED.

5. REMOVAL OF EXISTING LIGHTED SIGNS IS SUBSIDIARY TO INSTALLATION OF NEW SIGNS.

LIGHTING NOTES:

1. COORDINATE ALL LIGHTING OUTAGES CAUSED BY DISCONNECTIONS, CIRCUIT CHANGES, OR OTHER WORK WITH THE PROJECT ENGINEER PER GCP 50 AND GCP 80. SCHEDULE INSTALLATION OF CONDUCTORS AND OTHER EQUIPMENT TO MINIMIZE QUANTITY AND DURATION OF OUTAGES. PROVIDE A MINIMUM OF 48 HOURS NOTICE FOR REQUIRED LOCKOUTS TO ALLOW AIRPORT MAINTENANCE TO ENSURE PERSONNEL ARE AVAILABLE.

2. LIGHTING CIRCUITS ON OPERATIONAL AREAS THAT HAVE BEEN LOCKED OUT FOR CONSTRUCTION MUST BE RETURNED TO ATCT CONTROL NO LATER THAN TWO HOURS BEFORE SUNSET AS POSTED BY THE UNITED STATES NAVAL OBSERVATORY.

3. REGULATORS R-4, T-4, T-12, AND T-31 ARE EXISTING TO REMAIN, FERRORESONANT ADB SWITCHGEAR REGULATORS. PROVIDE NEW REGULATORS FOR CIRCUITS T-16 AND T-24. SEE SHEET E20 FOR ADDITIONAL INFORMATION. COORDINATE ALL WORK IN THE REGULATOR VAULT WITH AIRPORT MAINTENANCE.

4. EXISTING DUCT BANKS AND UNDERGROUND UTILITIES TO REMAIN MUST BE PROTECTED AND REMAIN IN SERVICE DURING CONSTRUCTION UNLESS OTHERWISE INDICATED.

5. COMPLETE ALL EXCAVATION, TRENCHING, AND BACKFILL PRIOR TO THE TYPE V, CLASS S (STRUCTURAL SECTIONS) OR TYPE II, CLASS A (NON-STRUCTURAL SECTIONS) HOT MIX ASPHALT PAVEMENT BEING PLACED.

6. ALL AIRFIELD LIGHTING CONDUCTORS MUST BE FAA TYPE C. RUNWAY (R-) CIRCUIT CONDUCTORS MUST BE 6 AWG. TAXIWAY (T-) CIRCUIT CONDUCTORS MUST BE 8 AWG. COLOR-CODE CONDUCTOR INSULATION BASED ON FUNCTION. SEE SPECIFICATION L-108 FOR MORE INFORMATION.
   EDGE LIGHTING, SEE DETAIL 3/E14
      POWER FEED: BLACK
      RETURN/LOOP: RED
   CENTERLINE LIGHTING, SEE DETAIL 1/E14
      POWER FEED, PRIMARY: BLACK
      POWER FEED, LOW-VIS SECONDARY: BLUE
      RETURN/LOOP, PRIMARY: RED
      RETURN/LOOP, LOW-VIS SECONDARY: YELLOW
   RUNWAY GUARD LIGHTING, SEE DETAIL 2/E14
      POWER FEED: BLACK
      RETURN/LOOP: RED

7. INSTALL A #6 BARE COPPER GROUNDING CONDUCTOR WITH ALL LIGHTING AND SIGN CIRCUIT CONDUCTORS.

SHEET NOTES: (X) (APPLY TO PLAN SHEETS E2-E11)

1. REMOVE CONDUCTORS TO EXISTING LIGHT BASE OR MANHOLE TO REMAIN. REMOVE CONDUIT TO EXISTING LIGHT BASE OR MANHOLE OR AS FAR AS REQUIRED FOR EXCAVATION OF CURRENT PROJECT AND INSTALLATION OF NEW COUPLING TO NEW CONDUIT. PLUG AND PROTECT EXISTING CONDUIT OR LIGHT BASE CONDUIT HUB DURING EXCAVATION. SEE SHEET NOTE 2 FOR CONNECTION OF NEW WORK.

2. CONNECT NEW CONDUIT TO EXISTING CONDUIT OR LIGHT BASE. INSTALL NEW CONDUCTORS AND CONNECT TO EXISTING WIRING AND TRANSFORMER IN EXISTING LIGHT BASE. WIRING CONNECTIONS ARE SUBSIDIARY TO L108 ITEMS.

3. NEW DRYWELL, SEE DETAIL 3/E19. PROVIDE DRAIN CONDUIT(S) FROM LIGHT BASES AS INDICATED. SLOPE CONDUITS TO DRAIN TO DRYWELL. LOCATION OF DRAIN CONDUIT(S) AND DRYWELL MAY BE FIELD ADJUSTED BY THE ENGINEER.

4. REMOVE CIRCUITS T-4, T-16, AND T-31 BACK TO EMH-21. HOMERUN CONDUCTORS FROM EMH-21 BACK TO REGULATOR VAULT ARE EXISTING TO REMAIN.

5. STUB CONDUIT OUT TO PROJECT LIMITS AND CAP FOR FUTURE EXTENSION.

6. LIGHTED SIGN NOT IN CONTRACT, SHOWN FOR REFERENCE ONLY. INSTALL SIGN FOUNDATION IN ACCORDANCE WITH DETAIL 3/E17 TO SUPPORT FUTURE SIGN INSTALLATION.

7. PROVIDE DRAIN CONDUIT(S) FROM LIGHT BASES TO EXISTING STORM DRAIN STRUCTURE AS INDICATED. SLOPE CONDUITS TO DRAIN TO STORM DRAIN. LOCATION OF DRAIN CONDUIT(S) MAY BE FIELD ADJUSTED BY THE ENGINEER. CORE DRILL STORM DRAIN STRUCTURE FOR CONDUIT ENTRY AND GROUT WATERTIGHT. TERMINATE CONDUIT WITH RUBBER BLACKFLOW PREVENTER INSIDE STRUCTURE.

8. REMOVE EXISTING FIXTURE, TRANSFORMER, AND CONDUCTORS. EXISTING LIGHT BASE ASSEMBLY TO REMAIN.

9. INSTALL NEW ELEVATED LIGHT ON EXISTING L-868 LIGHT BASE ASSEMBLY. PROVIDE WITH HEAVY BASEPLATE WITH L-868 BOLT PATTERN.

10. CONNECT TO EXISTING CIRCUIT T-4, T-16, AND T-31 HOMERUNS IN EMH-21. INSTALL NEW CIRCUIT T-24 HOMERUN FROM EMH-21 TO REGULATOR VAULT THROUGH EXISTING DUCTBANK AND MANHOLES, APPROXIMATELY 6500'.

11. APPROXIMATE STATION OF NEW SURFACE SENSOR, PLACE 25FT FROM TAXIWAY CENTERLINE. INSTALL 1" RIGID STEEL CONDUIT AND INTEGRAL SENSOR LEAD CABLE FROM SURFACE SENSOR TO HANDHOLE. SEE DETAIL 2/E21. SPLICE TO SENSOR EXTENSION CABLE IN HANDHOLE AND EXTEND TO NEW RPU-6 IN CONDUIT AS SHOWN. ALL LABOR AND MATERIALS ASSOCIATED WITH INSTALLATION OF SENSOR SYSTEM ARE SUBSIDIARY TO ITEM L130.010.0000, INCLUDING CONDUIT, CABLE, HANDHOLES, AND RPU.

12. STAKE CENTER POINT OF CURVE FOR EDGE OR CENTERLINE LIGHTS.

13. WHERE CROSSING EXISTING CONCRETE-ENCASED CONDUITS, SAW CUT AND REMOVE EXISTING CONCRETE TO APPROXIMATELY 1-2" ABOVE EXISTING CONDUIT. SLOPE OR OFFSET NEW CONDUIT TO ROUTE OVER EXISTING CONDUIT.

14. AREA OF ASPHALT TO BE MILLED AND REPLACED TO ALLOW INSTALLATION OF NEW LIGHT BASES AND CONDUIT. SEE CIVIL PLANS AND DETAIL 4/E19.

15. RELOCATE EXISTING FUEL SHUTOFF PUSHBUTTON AND SUPPORT POST. REROUTE/EXTEND UNDERGROUND CONDUIT TO NEW LOCATION. REMOVE CONDUCTORS BACK TO SOURCE OR PREVIOUS DEVICE ON CIRCUIT AND INSTALL NEW CONDUCTORS TO RELOCATED PUSHBUTTON. MATCH EXISTING CONDUIT AND CONDUCTOR SIZES AND TYPES. TEST RELOCATED PUSHBUTTON FOR PROPER OPERATION. COORDINATE ALL WORK WITH GREAT CIRCLE FLIGHT SERVICES THROUGH THE ENGINEER. WORK IS SUBSIDIARY TO THE CONTRACT AND NO SEPARATE PAYMENT WILL BE MADE.

16. DRILL EXISTING LIGHT BASE AND INSTALL NEW RUBBER GROMMET TO CONNECT NEW CONDUIT TO LIGHT BASE. REMOVE AND REPLACE CONCRETE SURROUNDING LIGHT BASE AS REQUIRED TO CONNECT NEW CONDUIT. INSTALL NEW CONDUCTORS AND CONNECT TO EXISTING WIRING AND TRANSFORMER IN EXISTING LIGHT BASE (WHERE REQUIRED). CONNECTIONS ARE SUBSIDIARY TO L108 AND L110 ITEMS.

ELECTRICAL PLAN LEGEND

EXISTING TO REMAIN (DEMO/NEW PLANS)	DEMOLITION (DEMO PLANS)	NEW WORK (NEW PLANS)	
			EXISTING LIGHT
			EXISTING LIGHT TO BE MODIFIED, SEE NOTES AND/OR SCHEDULES FOR WORK TO BE PERFORMED
			RUNWAY EDGE LIGHT, OMNI-DIRECTIONAL
			RUNWAY EDGE LIGHT, BI-DIRECTIONAL
			FLUSH RUNWAY EDGE LIGHT, BI-DIRECTIONAL
			FLUSH RUNWAY EDGE LIGHT, BI-DIRECTIONAL, 2-COLOR
			TAXIWAY EDGE LIGHT, OMNI-DIRECTIONAL
			FLUSH TAXIWAY EDGE LIGHT, OMNI-DIRECTIONAL
			FLUSH CENTERLINE LIGHT, UNI- OR BI-DIRECTIONAL
			FLUSH CENTERLINE LIGHT, OMNI-DIRECTIONAL
			FLUSH RUNWAY GUARD LIGHT, UNI-DIRECTIONAL
			ELEVATED RUNWAY GUARD LIGHT
			LIGHTED AIRPORT SIGN
			SERIES LIGHTING CIRCUIT, TICK MARKS INDICATE NUMBER OF 5KV SERIES CONDUCTORS IN HDPE CONDUIT (2 SHOWN), INCLUDE GROUND CONDUCTOR (NOT SHOWN), TICK MARKS NOT SHOWN ON SHORT SEGMENTS OR IN CONGESTED AREAS FOR CLARITY
			SERIES LIGHTING CIRCUIT, TICK MARKS INDICATE NUMBER OF 5KV SERIES CONDUCTORS IN CONCRETE ENCASED HDPE CONDUIT (2 SHOWN), INCLUDE GROUND CONDUCTOR (NOT SHOWN), TICK MARKS NOT SHOWN ON SHORT SEGMENTS OR IN CONGESTED AREAS FOR CLARITY
			ELECTRICAL CONDUIT
			GROUND ROD, 3/4"x10' TYPICAL
			L-867 HANDHOLE, TYPE I (LIGHT BASE WITH BLANK COVER)
			L-868 HANDHOLE, TYPE I (LIGHT BASE WITH BLANK COVER)
			SURFACE SENSOR
			DRYWELL
			STORM DRAIN MANHOLE OR CATCH BASIN
			ELECTRICAL MANHOLE
			COMMUNICATIONS MANHOLE
			ELECTRICAL TYPE II JUNCTION BOX
			COMMUNICATIONS TYPE II JUNCTION BOX
			DUCT BANK, USE/TYPE AS SHOWN
			PRIMARY UNDERGROUND ELECTRICAL LINE
			UNDERGROUND COMMUNICATIONS LINE
			TEMPORARY JUMPER
			SURFACE/WEATHER SENSOR SYSTEM RPU

ALCMS	AIRPORT LIGHTING CONTROL AND MONITORING SYSTEM
ATCT	AIR TRAFFIC CONTROL TOWER
BC	BARE COPPER
BOP	BEGINNING OF PROJECT
C	CONDUIT
CEA	CHUGACH ELECTRIC ASSOCIATION
ø	DIAMETER
EOP	END OF PROJECT
EMH	ELECTRICAL MANHOLE
EMT	ELECTRICAL METALLIC TUBING
FAA	FEDERAL AVIATION ADMINISTRATION
GRD	GROUND
HDPE	HIGH DENSITY POLYETHYLENE
HMA	HOT MIX ASPHALT
LFMC	LIQUIDTIGHT FLEXIBLE METALLIC CONDUIT
LFNC	LIQUIDTIGHT FLEXIBLE NONMETALLIC CONDUIT
PAPI	PRECISION APPROACH PATH INDICATOR
PVC	POLYVINYL CHLORIDE
REIL	RUNWAY END IDENTIFER LIGHT
RMC	RIGID METALLIC CONDUIT (GALVANIZED STEEL)
RPU	REMOTE PROCESSING UNIT
SS	STAINLESS STEEL
TP	TEST POINT
TYP	TYPICAL
UON	UNLESS OTHERWISE NOTED
T-1(2)	TAXIWAY CIRCUIT NUMBER, LETTERS IN PARENTHESIS INDICATES CONDUCTORS INCLUDED (P=POWER FEED, R=RETURN, L=LOOP), NO PARENTHESIS INDICATES ONE POWER FEED CONDUCTOR ONLY
R-1(2)	RUNWAY CIRCUIT NUMBER, LETTERS IN PARENTHESIS INDICATES CONDUCTORS INCLUDED (P=POWER FEED, R=RETURN, L=LOOP), NO PARENTHESIS INDICATES ONE POWER FEED CONDUCTOR ONLY

EQUIPMENT NUMBER, SEE SCHEDULES ON SHEETS E24-E28

DX	DEMOLITION ITEM
CX	TAXIWAY CENTERLINE LIGHT
EX	TAXIWAY EDGE LIGHT
HX	RUNWAY GUARD LIGHT
RX	RUNWAY EDGE LIGHT
JBX	JUNCTION BOX
HHX	HANDHOLE
MHX	MANHOLE
SX	LIGHTED SIGN
XX	EXISTING LIGHT

(X) REFERENCE TO SHEET NOTE

LIGHT COLORS AND DISTRIBUTIONS

B	BLUE
Y	YELLOW
G	GREEN
R	RED
W	WHITE
O	OBSCURED
BI	BI-DIRECTIONAL
UNI	UNI-DIRECTIONAL
OMNI	OMNI-DIRECTIONAL

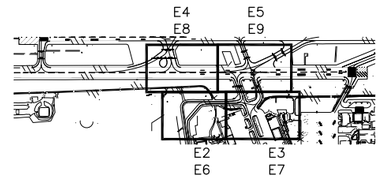

KEYPLAN

PRELIMINARY

STATE OF ALASKA 49TH
LUCAS SCHNELLER
EE-11399
REGISTERED PROFESSIONAL ENGINEER

BY	DATE	REVISION

STATE OF ALASKA
DEPARTMENT OF TRANSPORTATION AND PUBLIC FACILITIES
CENTRAL REGION
4111 AVIATION AVE., ANCHORAGE ALASKA 99502
PHONE (907) 269-0590

TED STEVENS ANCHORAGE
ANCHORAGE, ALASKA
ANC TAXIWAY Z IMPROVEMENTS WEST - PHASE 1
PROJECT No. CFAPT00465
AIP No. 3-02-0016-XXX-2022
ELECTRICAL LEGEND AND NOTES

DATE: 10/1/2021

SHEET: E1 OF 28

Designed By: LPS/MXS1R
Drawn By: UCA/MXS
Checked By: LPS/MXS

Date Revised: 10/01/2021, 3:46 PM
Layout Name: Layout1
File Path and Name: U:\2045306300\drawing\e\sheets\00465-ANC-E01-LEGEND.dwg

MATCH LINE STA. 314+00, SEE SHEET E4

MATCH LINE STA. 114+40
SEE SHEET E3



PRELIMINARY

50' 25' 0 50' 100'
SCALE

STATE OF ALASKA
49 TH
LUCAS SCHNELLER
EE-11399
REGISTERED PROFESSIONAL ENGINEER

BY	DATE	REVISION

STATE OF ALASKA
DEPARTMENT OF TRANSPORTATION AND PUBLIC FACILITIES
CENTRAL REGION
4111 AVIATION AVE., ANCHORAGE ALASKA 99502
PHONE (907) 269-0590

TED STEVENS ANCHORAGE
ANCHORAGE, ALASKA
ANC TAXIWAY Z IMPROVEMENTS WEST - PHASE 1
PROJECT No. CFAPT00465
AIP No. 3-02-0016-XXX-2022
ELECTRICAL DEMOLITION PLAN
STA 102+00 TO 114+50

DATE: 10/1/2021

SHEET: E2 OF 28

Designed By:	LPS/MXS1R
Drawn By:	UCA/MXS
Checked By:	LPS/MXS
Date Revised:	10/01/2021, 3:46 PM
Layout Name:	1
File Path and Name:	U:\20453063000\drawing\e1\sheets\00465-ANC-E02-E05-PLAN-DEMO.dwg

MATCH LINE STA. 506+35, SEE SHEET E5

MATCH LINE STA. 114+40
SEE SHEET E2

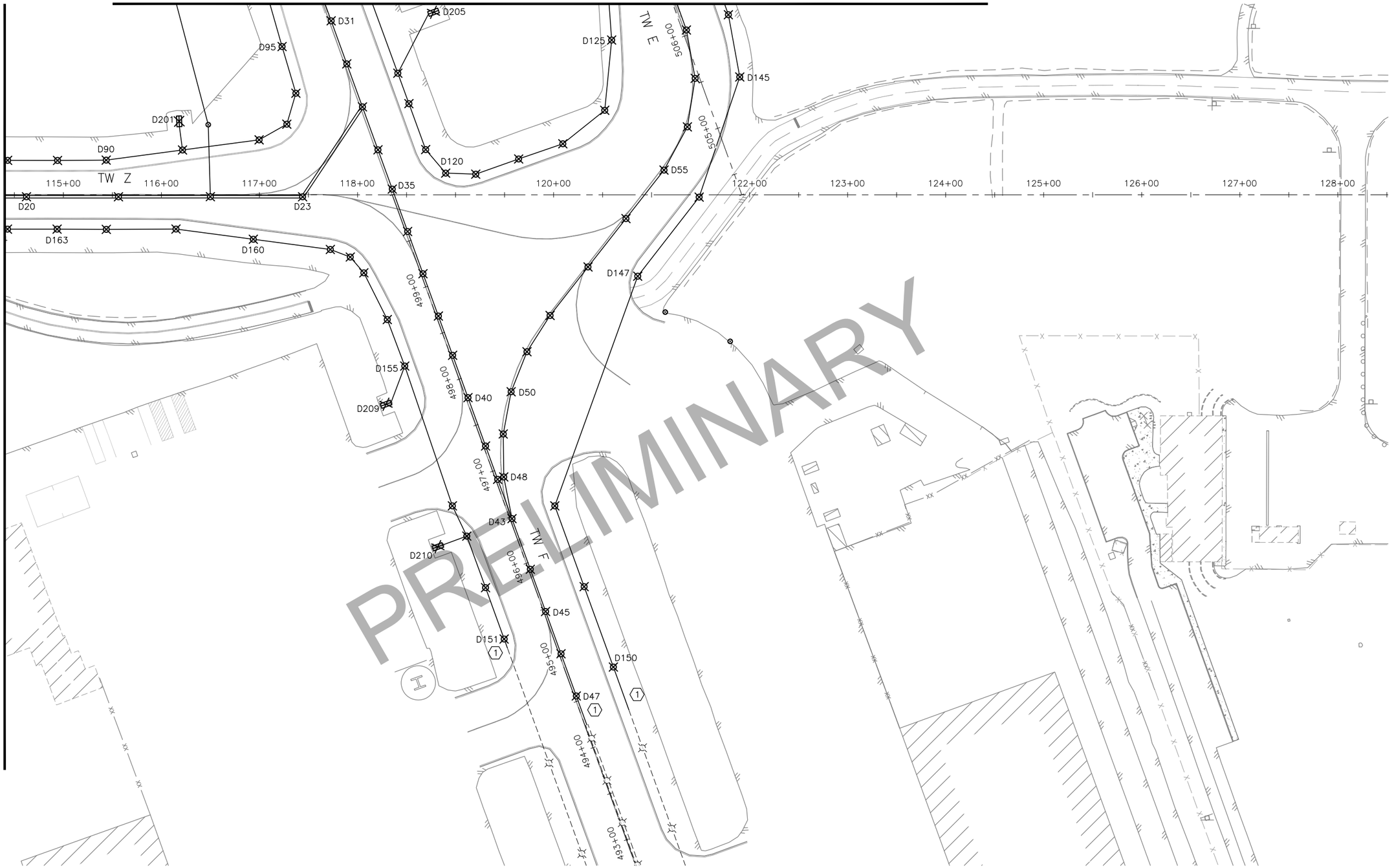

50' 25' 0 50' 100'
SCALE

STATE OF ALASKA
49 TH
LUCAS SCHNELLER
EE-11399
REGISTERED PROFESSIONAL ENGINEER

BY	DATE	REVISION

STATE OF ALASKA
DEPARTMENT OF TRANSPORTATION AND PUBLIC FACILITIES
CENTRAL REGION
4111 AVIATION AVE., ANCHORAGE ALASKA 99502
PHONE (907) 269-0590

TED STEVENS ANCHORAGE
ANCHORAGE, ALASKA
ANC TAXIWAY Z IMPROVEMENTS WEST - PHASE 1
PROJECT No. CFAPT00465
AIP No. 3-02-0016-XXX-2022
ELECTRICAL DEMOLITION PLAN
STA 114+50 TO 506+50

DATE: 10/1/2021
SHEET: E3 OF 28

Designed By: LPS/MXS1R
Drawn By: UCX/MXS
Checked By: LPS/MXS

Date Revised:
Layout Name: 2
File Path and Name: U:\2045306300\drawing\e\sheets\00465-ANC-E02-E05-PLAN-DEMO.dwg
10/01/2021, 3:47 PM

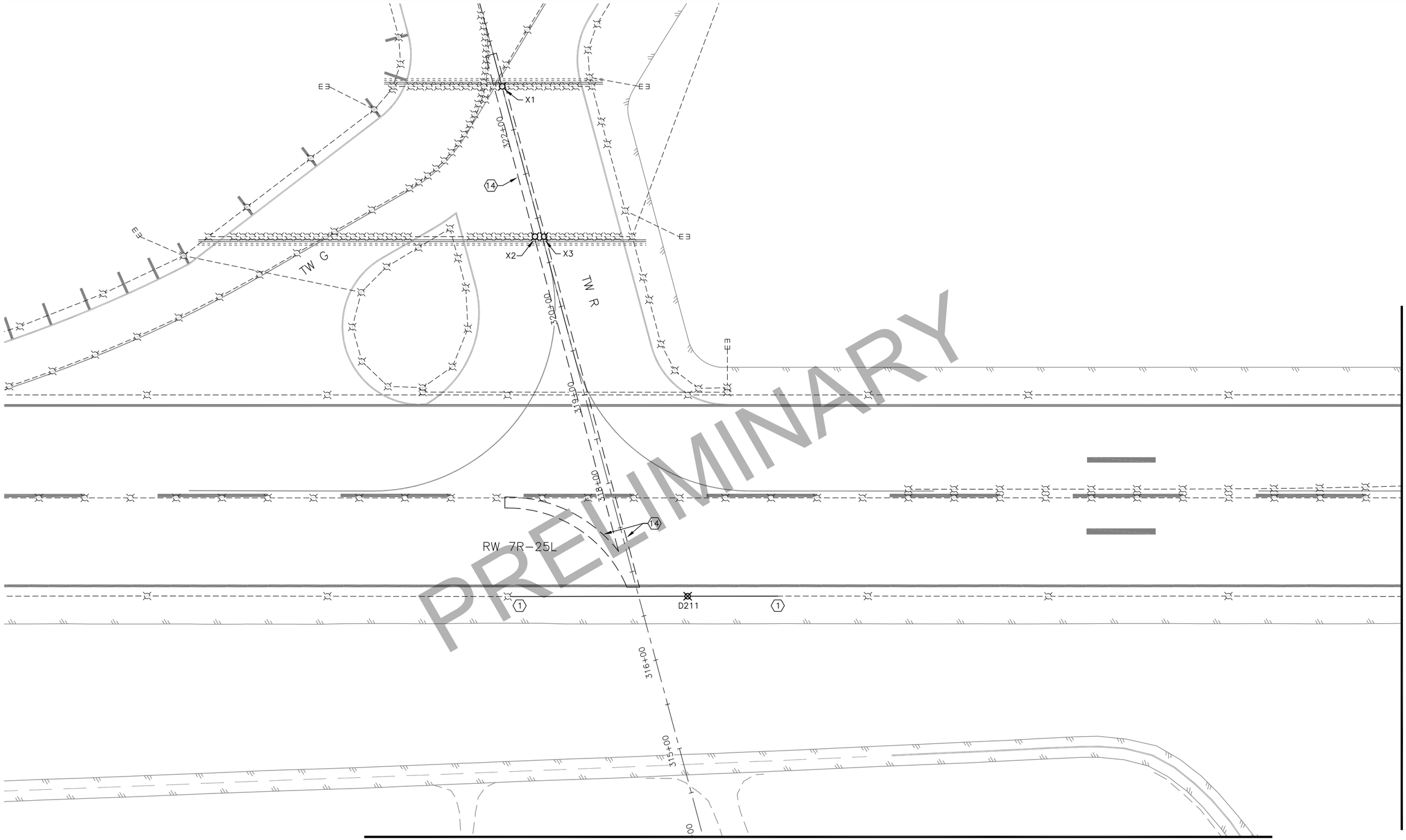

Designed By:	LPS/MXS\R
Drawn By:	UCA/MXS
Checked By:	LPS/MXS
Date Revised:	10/01/2021, 3:47 PM
Layout Name:	3
File Path and Name:	U:\2045306300\drawing\e\sheets\00465-ANC-E02-E05-PLAN-DEMO.dwg

STATE OF ALASKA
49TH
LUCAS SCHNELLER
EE-11399
REGISTERED PROFESSIONAL ENGINEER

BY	DATE	REVISION

STATE OF ALASKA
DEPARTMENT OF TRANSPORTATION AND PUBLIC FACILITIES
CENTRAL REGION
4111 AVIATION AVE., ANCHORAGE ALASKA 99502
PHONE (907) 269-0590

TED STEVENS ANCHORAGE
ANCHORAGE, ALASKA
ANC TAXIWAY Z IMPROVEMENTS WEST - PHASE 1
PROJECT No. CFAPT00465
AIP No. 3-02-0016-XXX-2022
ELECTRICAL DEMOLITION PLAN
STA 314+50 TO 323+00

DATE: 10/1/2021

SHEET: E4 OF 28

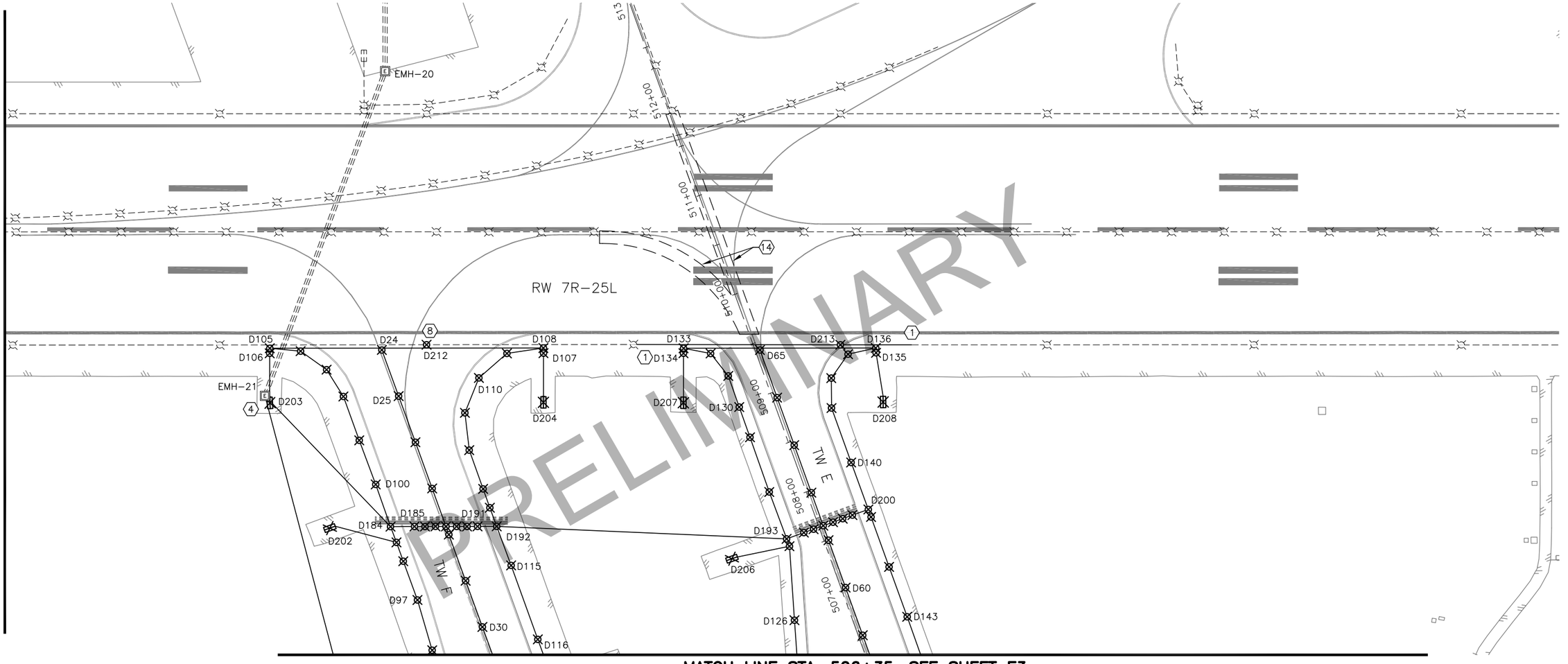

50' 25' 0 50' 100'
SCALE

STATE OF ALASKA
49 TH
LUCAS SCHNELLER
EE-11399
REGISTERED PROFESSIONAL ENGINEER

BY	DATE	REVISION

STATE OF ALASKA
DEPARTMENT OF TRANSPORTATION AND PUBLIC FACILITIES
CENTRAL REGION
4111 AVIATION AVE., ANCHORAGE ALASKA 99502
PHONE (907) 269-0590

TED STEVENS ANCHORAGE
ANCHORAGE, ALASKA
ANC TAXIWAY Z IMPROVEMENTS WEST - PHASE 1
PROJECT No. CFAPT00465
AIP No. 3-02-0016-XXX-2022
ELECTRICAL DEMOLITION PLAN
STA 506+50 TO 512+50

DATE: 10/1/2021
SHEET: E5 OF 28

Designed By: LPS/MXS\R
Drawn By: UCA/MXS
Checked By: LPS/MXS
Date Revised: 10/01/2021, 3:47 PM
Layout Name: 4
File Path and Name: U:\2045306300\drawing\e\sheets\00465-ANC-E02-E05-PLAN-DEMO.dwg

MATCH LINE STA. 314+10, SEE SHEET E8

MATCH LINE STA. 114+40
SEE SHEET E7

PRELIMINARY

Designed By:	LPS/MXS1R
Drawn By:	UCA/MXS
Checked By:	LPS/MXS
Date Revised:	10/11/2021, 6:41 AM
Layout Name:	1
File Path and Name:	U:\2045306300\drawing\e\sheets\00465-ANC-E06-E09-PLAN-NEW.dwg

50' 25' 0 50' 100'
SCALE

STATE OF ALASKA 49TH
LUCAS SCHNELLER
EE-11399
REGISTERED PROFESSIONAL ENGINEER

BY	DATE	REVISION

STATE OF ALASKA
DEPARTMENT OF TRANSPORTATION AND PUBLIC FACILITIES
CENTRAL REGION
4111 AVIATION AVE., ANCHORAGE ALASKA 99502
PHONE (907) 269-0590

TED STEVENS ANCHORAGE
ANCHORAGE, ALASKA
ANC TAXIWAY Z IMPROVEMENTS WEST - PHASE 1
PROJECT No. CFAPT00465
AIP No. 3-02-0016-XXX-2022
ELECTRICAL NEW WORK PLAN
STA 102+00 TO 114+50

DATE: 10/1/2021

SHEET: E6 OF 28

MATCH LINE STA. 506+35, SEE SHEET E9

MATCH LINE STA. 114+40
SEE SHEET E6

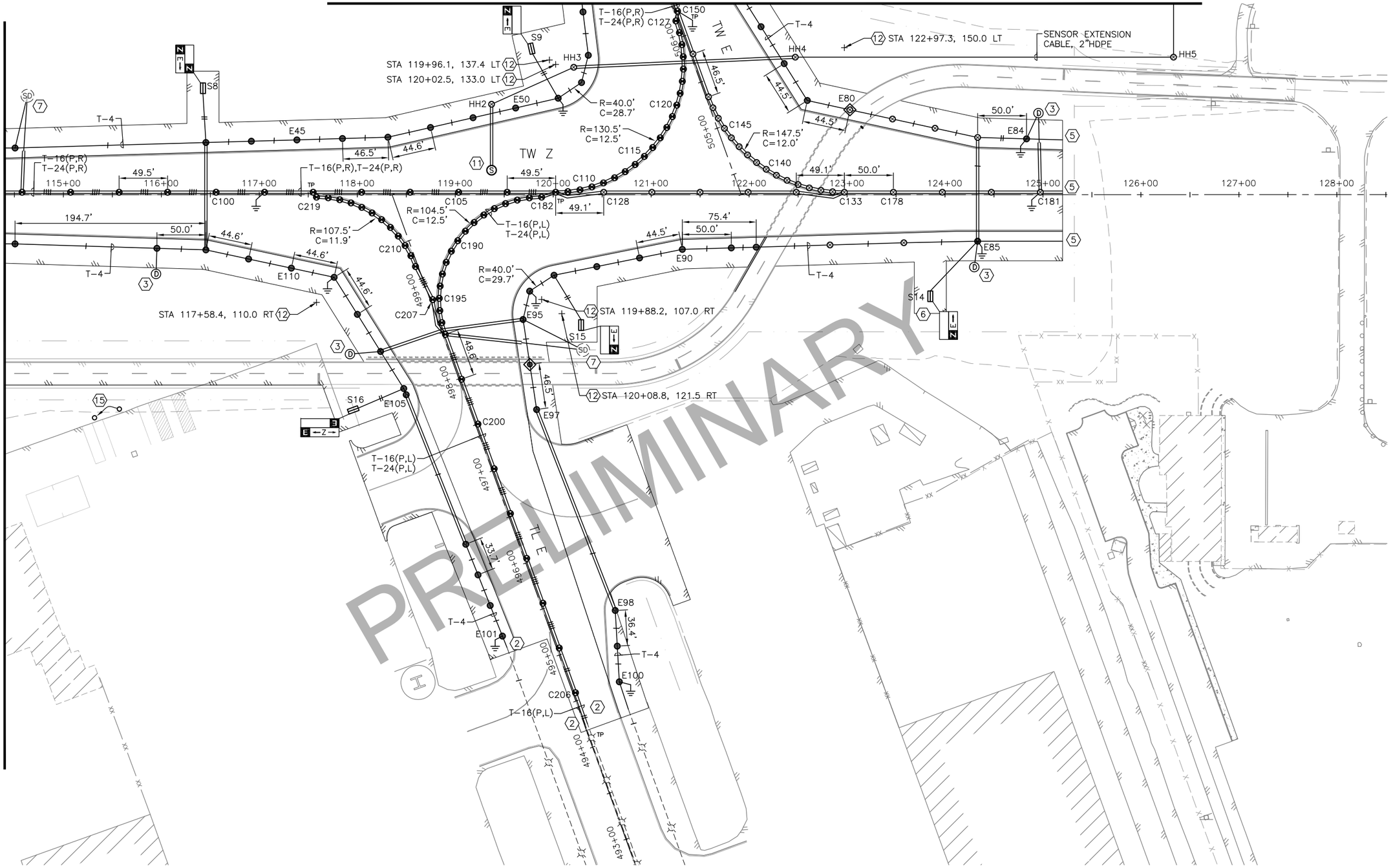

PRELIMINARY

50' 25' 0 50' 100'
SCALE

STATE OF ALASKA 49TH
LUCAS SCHNELLER
EE-11399
REGISTERED PROFESSIONAL ENGINEER

BY	DATE	REVISION

STATE OF ALASKA
DEPARTMENT OF TRANSPORTATION AND PUBLIC FACILITIES
CENTRAL REGION
4111 AVIATION AVE., ANCHORAGE ALASKA 99502
PHONE (907) 269-0590

TED STEVENS ANCHORAGE
ANCHORAGE, ALASKA
ANC TAXIWAY Z IMPROVEMENTS WEST - PHASE 1
PROJECT No. CFAPT00465
AIP No. 3-02-0016-XXX-2022
ELECTRICAL NEW WORK PLAN
STA 114+50 TO 506+50

DATE: 10/1/2021

SHEET: E7 OF 28

Designed By: LPS/MXS-NR
Drawn By: UCA/MXS
Checked By: LPS/MXS

Date Revised: 10/01/2021, 3:47 PM
Layout Name: 2
File Path and Name: U:\20453063\00\drawing\e\sheets\00465-ANC-E06-E09-PLAN-NEW.dwg

Designed By: LPS/MXS1R
Drawn By: UCA/MXS
Checked By: LPS/MXS

Date Revised: 10/01/2021, 3:47 PM
Layout Name: 3
File Path and Name: U:\2045306300\drawing\e\sheets\00465-ANC-E06-E09-PLAN-NEW.dwg

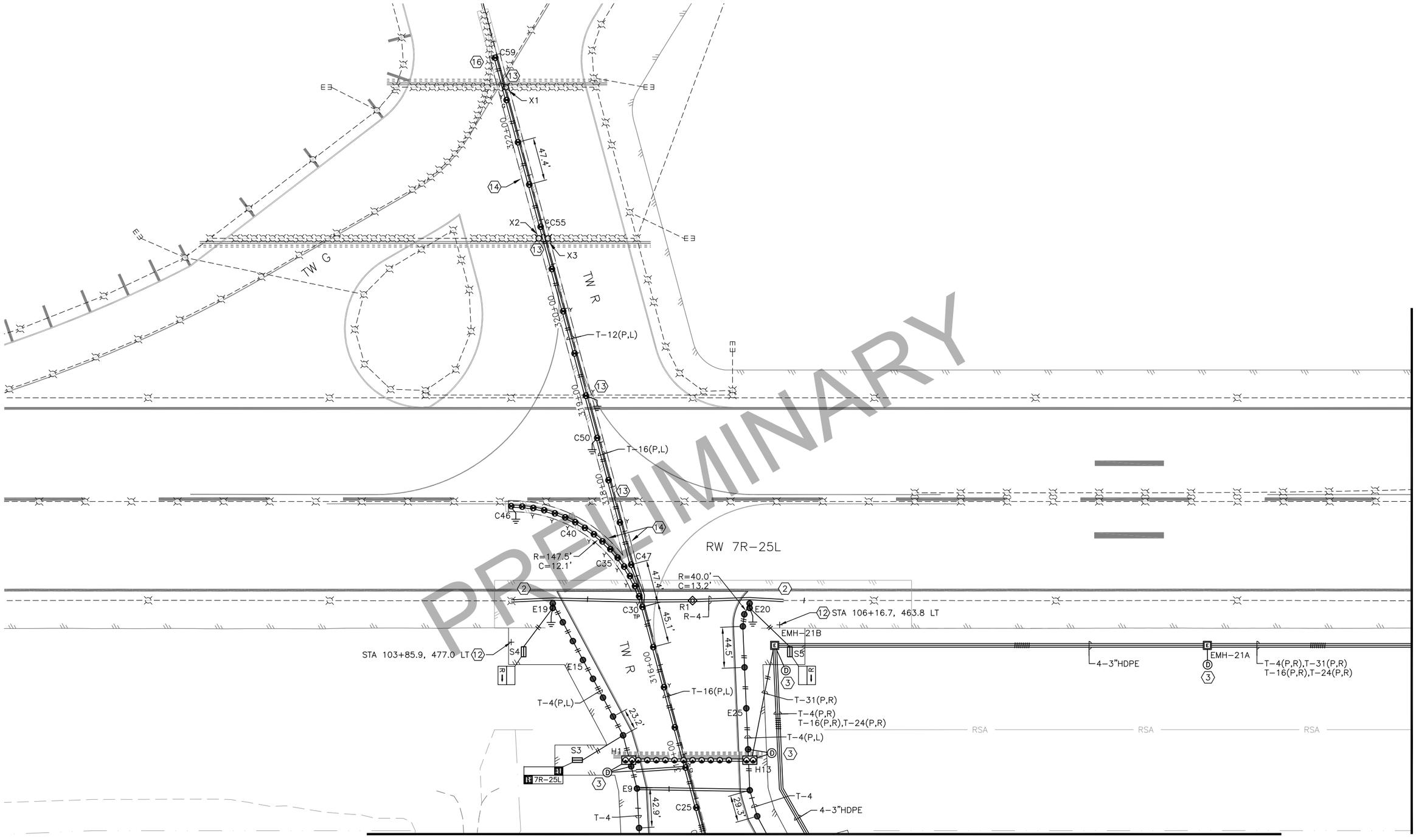

MATCH LINE STA. 314+10, SEE SHEET E6

MATCH LINE STA. 323+00, SEE SHEET E9

PRELIMINARY

50' 25' 0 50' 100'
SCALE

STATE OF ALASKA 49TH
LUCAS SCHNELLER
EE-11399
REGISTERED PROFESSIONAL ENGINEER

BY	DATE	REVISION

STATE OF ALASKA
DEPARTMENT OF TRANSPORTATION AND PUBLIC FACILITIES
CENTRAL REGION
4111 AVIATION AVE., ANCHORAGE ALASKA 99502
PHONE (907) 269-0590

TED STEVENS ANCHORAGE
ANCHORAGE, ALASKA
ANC TAXIWAY Z IMPROVEMENTS WEST - PHASE 1
PROJECT No. CFAPT00465
AIP No. 3-02-0016-XXX-2022
ELECTRICAL NEW WORK PLAN
STA 314+10 TO 323+00

DATE: 10/1/2021
SHEET: E8 OF 28

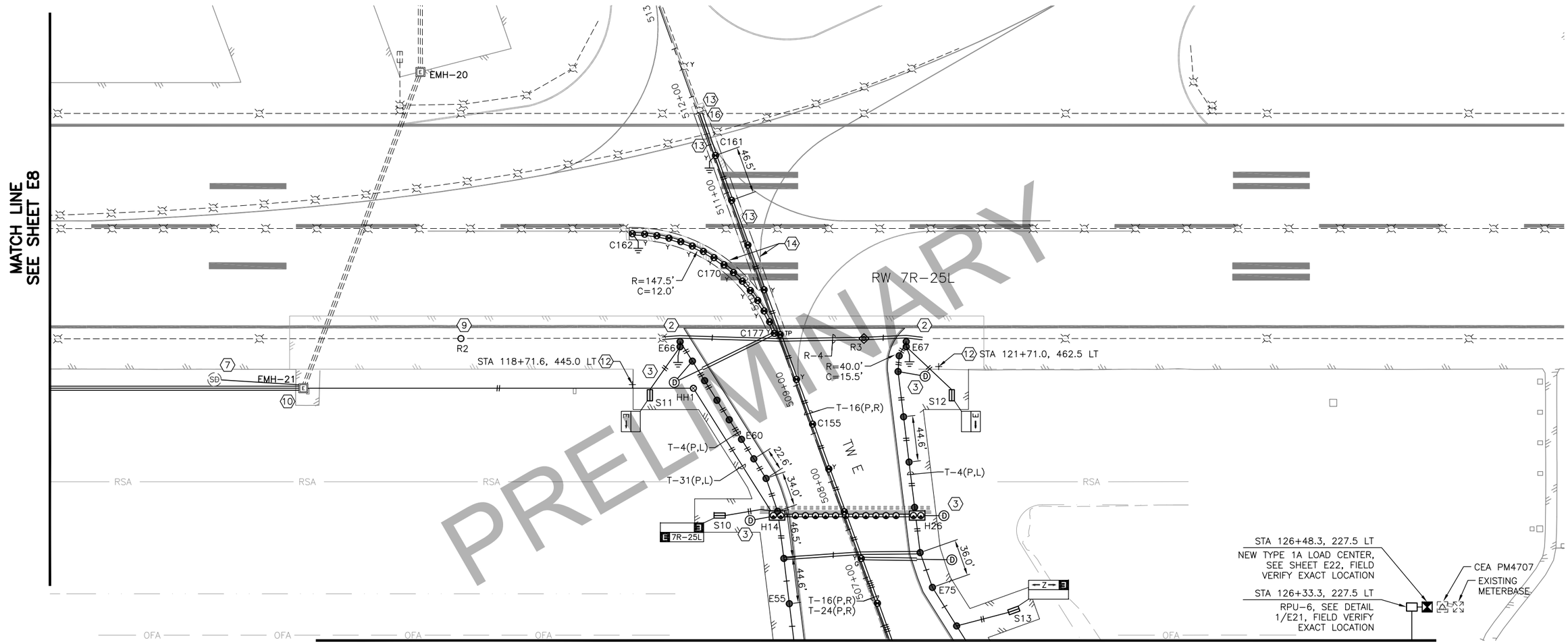

50' 25' 0 50' 100'
SCALE

STATE OF ALASKA
49 TH
LUCAS SCHNELLER
EE-11399
REGISTERED PROFESSIONAL ENGINEER

BY	DATE	REVISION

STATE OF ALASKA
DEPARTMENT OF TRANSPORTATION AND PUBLIC FACILITIES
CENTRAL REGION
4111 AVIATION AVE., ANCHORAGE ALASKA 99502
PHONE (907) 269-0590

TED STEVENS ANCHORAGE
ANCHORAGE, ALASKA
ANC TAXIWAY Z IMPROVEMENTS WEST - PHASE 1
PROJECT No. CFAPT00465
AIP No. 3-02-0016-XXX-2022
ELECTRICAL NEW WORK PLAN
STA 506+35 TO 512+50

DATE: 10/1/2021
SHEET: E9 OF 28

Designed By: LPS/MXS\R
Drawn By: UCA/MXS
Checked By: LPS/MXS
Date Revised: 10/01/2021, 3:48 PM
Layout Name: 4
File Path and Name: U:\2045306300\drawing\e\sheets\00465-ANC-E06-E09-PLAN-NEW.dwg

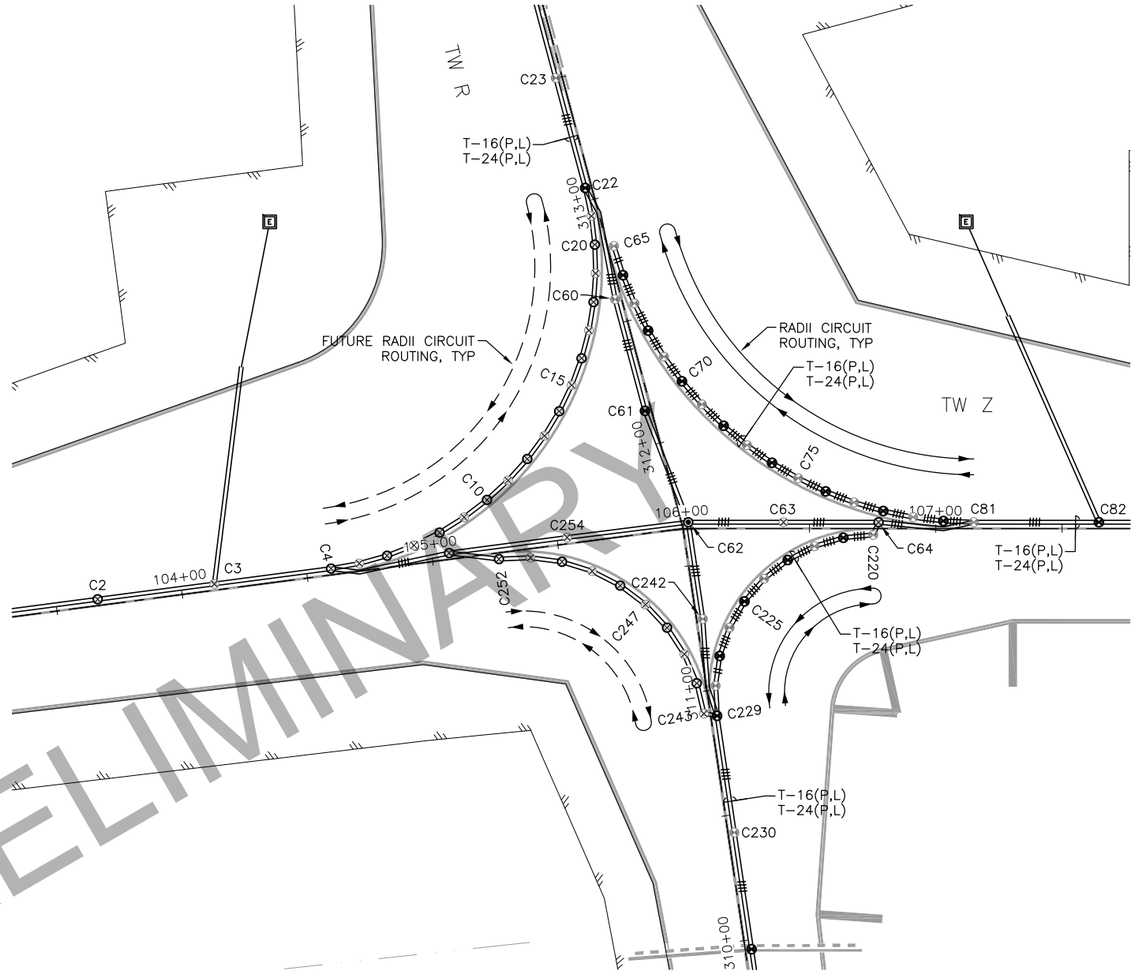

PRELIMINARY

LOW-VIS ALTERNATING CIRCUIT LEGEND

- PRIMARY CIRCUIT
- SECONDARY CIRCUIT

30' 15' 0 30' 60'
SCALE

STATE OF ALASKA
49 TH
LUCAS SCHNELLER
EE-11399
REGISTERED PROFESSIONAL ENGINEER

BY	DATE	REVISION

STATE OF ALASKA
DEPARTMENT OF TRANSPORTATION AND PUBLIC FACILITIES
CENTRAL REGION
4111 AVIATION AVE., ANCHORAGE ALASKA 99502
PHONE (907) 269-0590

TED STEVENS ANCHORAGE
ANCHORAGE, ALASKA
ANC TAXIWAY Z IMPROVEMENTS WEST - PHASE 1
PROJECT No. CFAPT00465
AIP No. 3-02-0016-XXX-2022
ELECTRICAL NEW WORK
ENLARGED PLAN TAXIWAY 1

DATE: 10/1/2021

SHEET: E10 OF 28

Designed By: LPS/MXS1R
Drawn By: UCA/MXS
Checked By: LPS/MXS

Date Revised: 10/01/2021, 3:48 PM
Layout Name: 1 - ENLARGED
File Path and Name: U:\20453063300\drawing\e\sheets\00465-ANC-E10-E11-PLAN-NEW-ENLRG.dwg

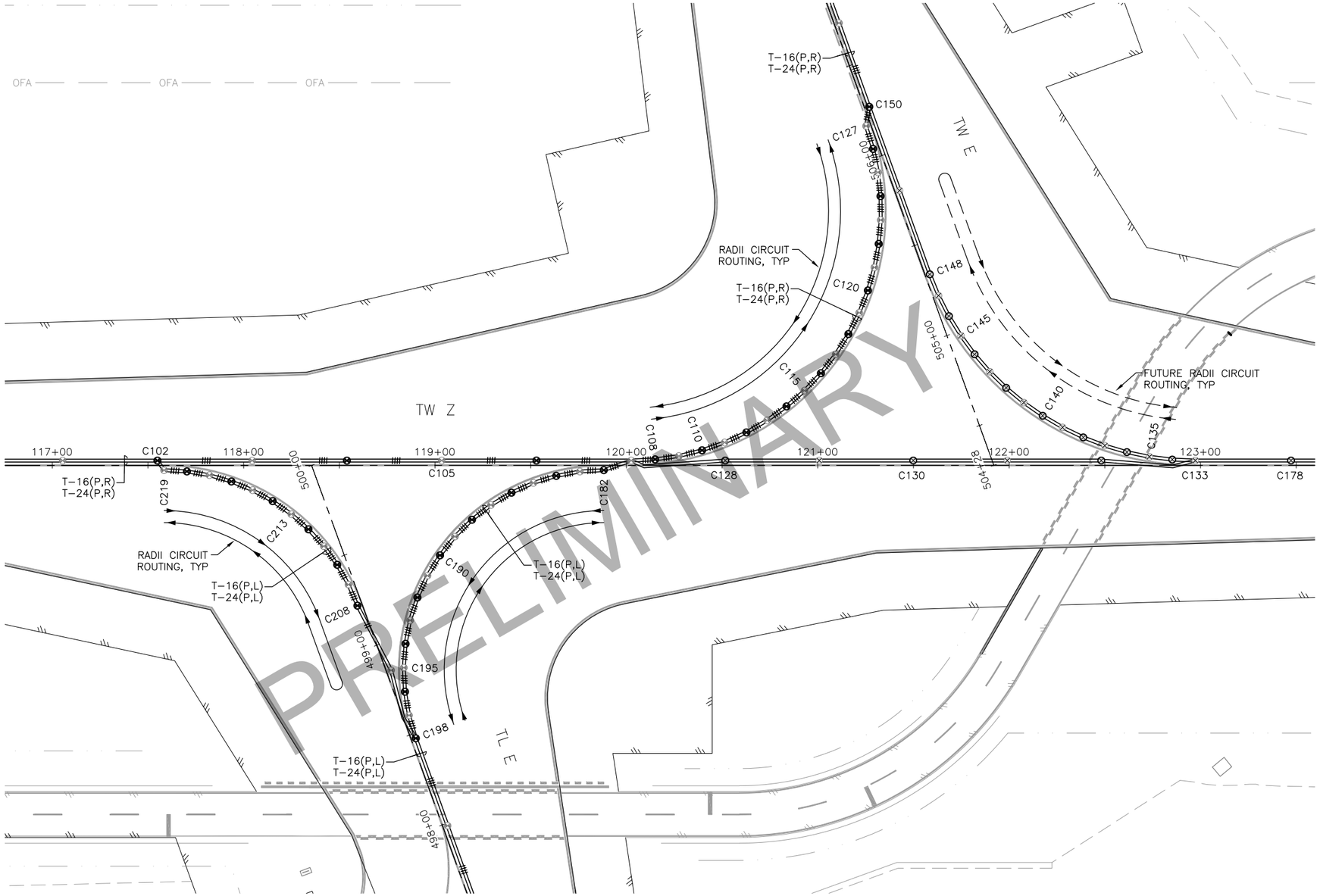

PRELIMINARY

BY	DATE	REVISION

STATE OF ALASKA
DEPARTMENT OF TRANSPORTATION AND PUBLIC FACILITIES
CENTRAL REGION
4111 AVIATION AVE., ANCHORAGE ALASKA 99502
PHONE (907) 269-0590

TED STEVENS ANCHORAGE
ANCHORAGE, ALASKA
ANC TAXIWAY Z IMPROVEMENTS WEST - PHASE 1
PROJECT No. CFAPT00465
AIP No. 3-02-0016-XXX-2022
ELECTRICAL NEW WORK
ENLARGED PLAN TAXIWAY 2

DATE: 10/1/2021

SHEET: E11 OF 28

Designed By:	LPS/MXS1R
Drawn By:	UCA/MXS
Checked By:	LPS/MXS
Date Revised:	10/01/2021, 3:48 PM
Layout Name:	2 - ENLARGED
File Path and Name:	U:\204530630\drawing\e\sheets\00465-ANC-E10-E11-PLAN-NEW-ENLRG.dwg

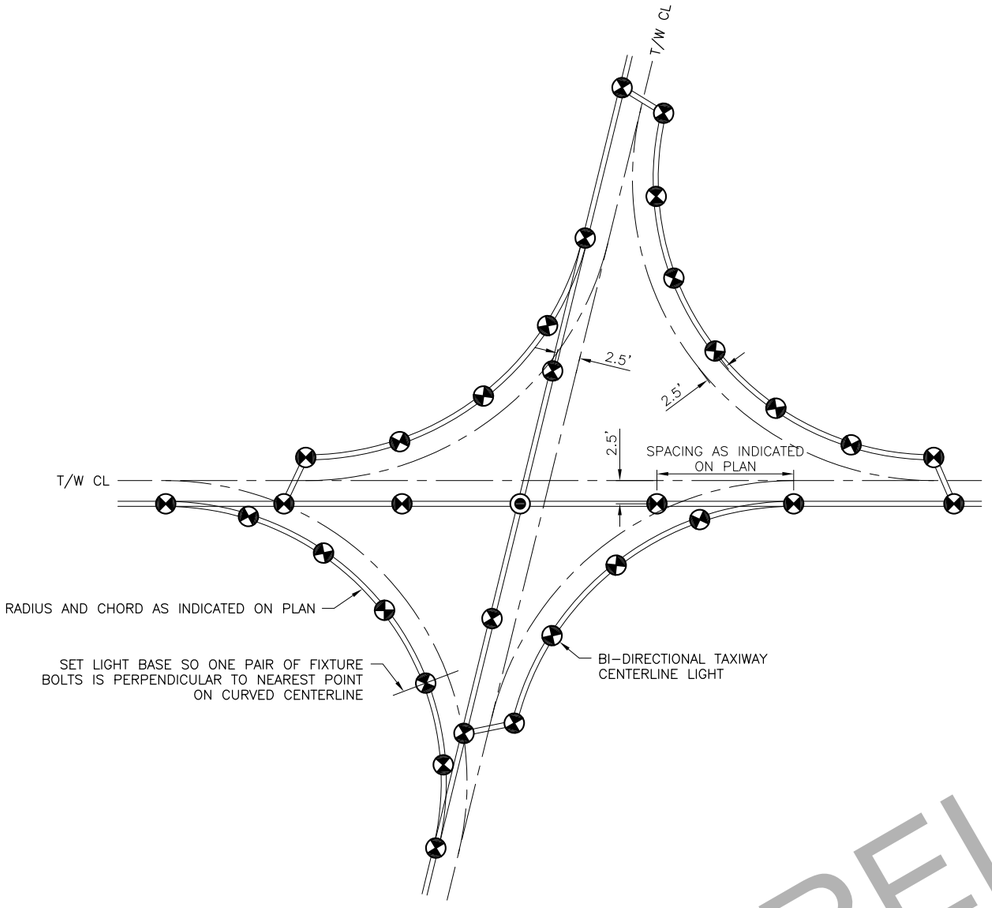

1 E12 TYPICAL TAXIWAY INTERSECTION CENTERLINE LIGHTING
NTS

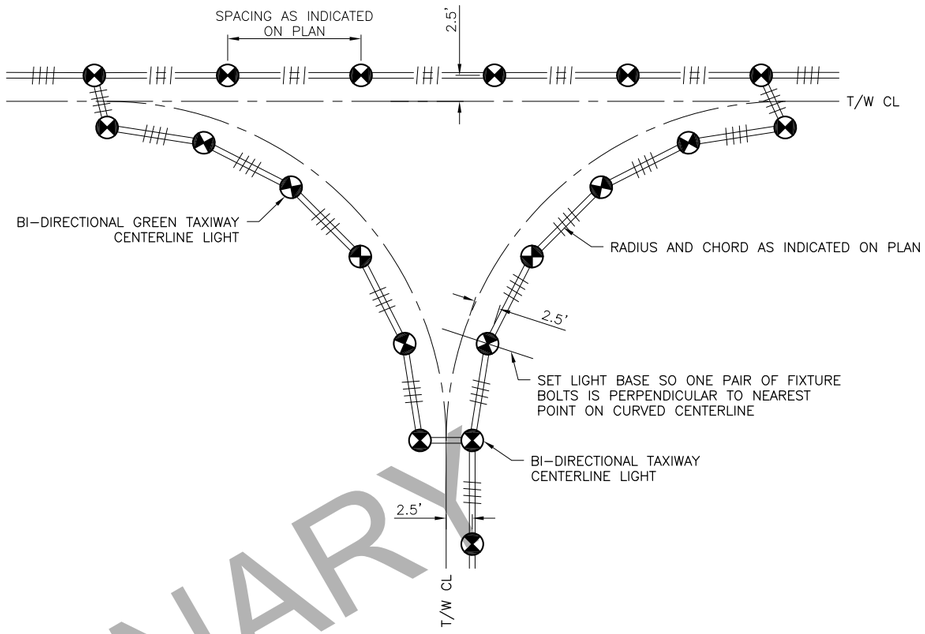

2 E12 TYPICAL TAXIWAY INTERSECTION CENTERLINE LIGHTING
NTS

NOTES:

1. DETAILS ARE TYPICAL, SEE PLANS AND ENLARGED PLANS FOR SPECIFIC APPLICATIONS AND CIRCUITING.

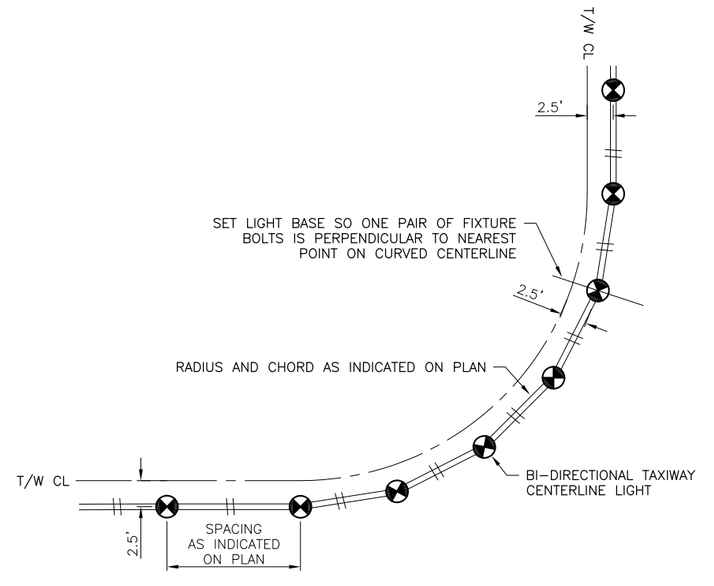

3 E12 TYPICAL CURVE CENTERLINE LIGHTING
NTS

PRELIMINARY

STATE OF ALASKA 49TH
LUCAS SCHNELLER
EE-11399
REGISTERED PROFESSIONAL ENGINEER

BY	DATE	REVISION

STATE OF ALASKA
DEPARTMENT OF TRANSPORTATION AND PUBLIC FACILITIES
CENTRAL REGION
4111 AVIATION AVE., ANCHORAGE ALASKA 99502
PHONE (907) 269-0590

TED STEVENS ANCHORAGE
ANCHORAGE, ALASKA
ANC TAXIWAY Z IMPROVEMENTS WEST - PHASE 1
PROJECT No. CFAPT00465
AIP No. 3-02-0016-XXX-2022
ELECTRICAL DETAILS 1

DATE: 10/1/2021
SHEET: E12 OF 28

Designed By: LPS/MXS1R
Drawn By: UCA/MXS
Checked By: LPS/MXS

Date Revised: 10/01/2021, 3:49 PM
Layout Name: ELECTRICAL DETAILS 1
File Path and Name: U:\20453063001\drawing\e\sheets\00465-ANC-E12-E23_DETAILS.dwg

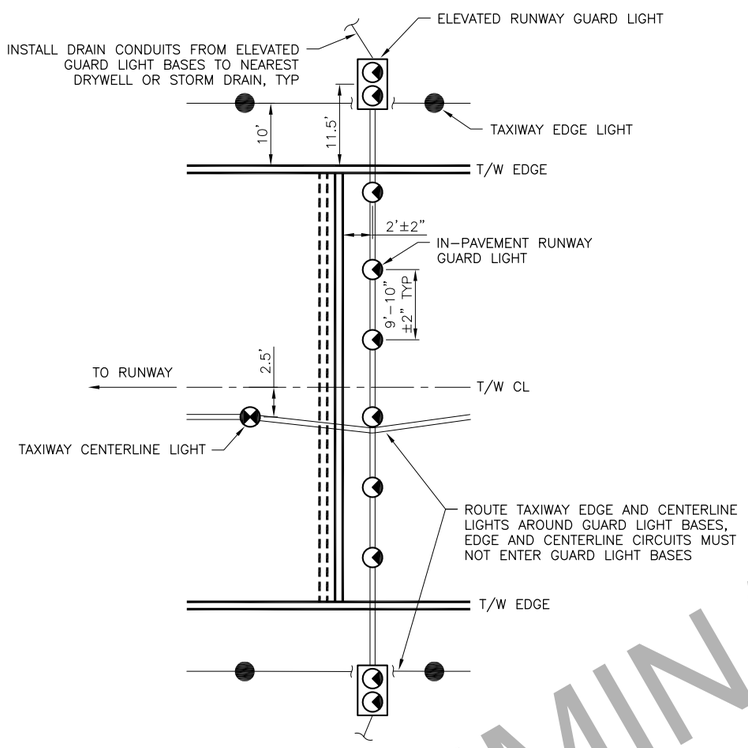

1 / E13 RUNWAY GUARD LIGHTING/STOP BAR DETAIL
NTS

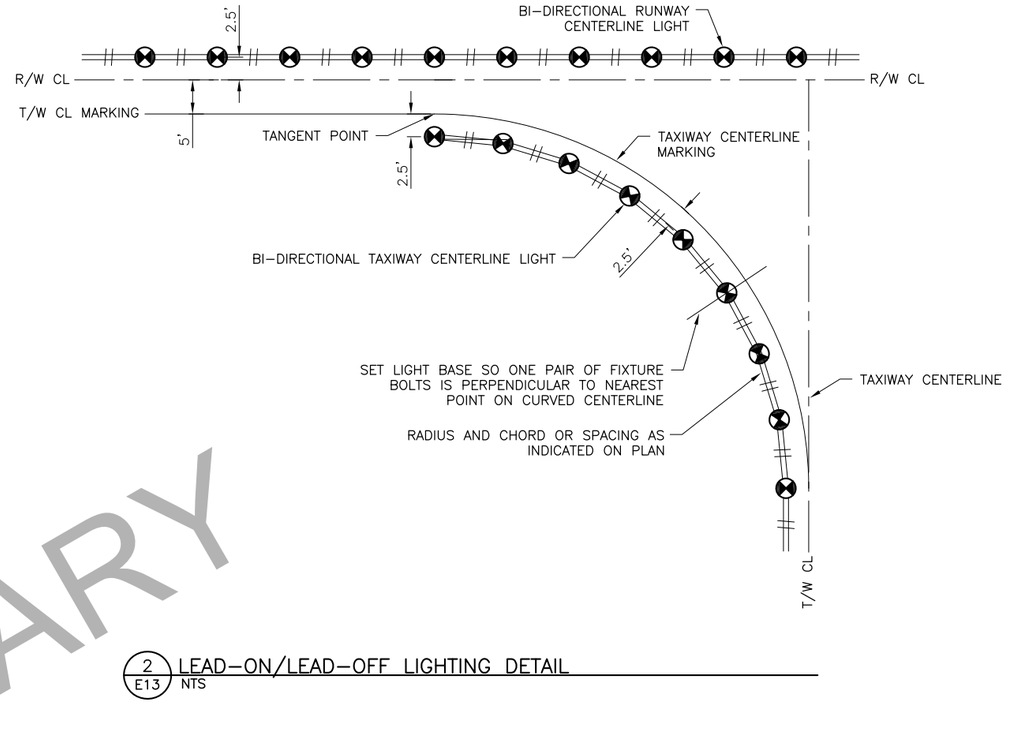

2 / E13 LEAD-ON/LEAD-OFF LIGHTING DETAIL
NTS

PRELIMINARY

NOTES:

1. DETAILS ARE TYPICAL, SEE PLANS AND ENLARGED PLANS FOR SPECIFIC APPLICATIONS AND CIRCUITING.
2. DIMENSIONS SHOWN TO CENTERLINE MARKINGS ARE TO CENTER OF MARKING. DIMENSIONS SHOWN TO EDGE OR HOLD MARKINGS ARE TO EDGE OF MARKING. SEE MARKING PLANS FOR DIMENSIONS OF MARKINGS.

Designed By: LPS/MXS1R
Drawn By: UCA/MXS
Checked By: LPS/MXS

Date Revised: 10/01/2021, 3:49 PM
Layout Name: DETAILS 2
File Path and Name: U:\2045306300\drawing\e\sheets\00465-ANC-E12-E23_DETAILS.dwg

STATE OF ALASKA 49TH · LUCAS SCHNELLER · EE-11399 · REGISTERED PROFESSIONAL ENGINEER

BY	DATE	REVISION

STATE OF ALASKA
DEPARTMENT OF TRANSPORTATION AND PUBLIC FACILITIES
CENTRAL REGION
4111 AVIATION AVE., ANCHORAGE ALASKA 99502
PHONE (907) 269-0590

TED STEVENS ANCHORAGE
ANCHORAGE, ALASKA
ANC TAXIWAY Z IMPROVEMENTS WEST - PHASE 1
PROJECT No. CFAPT00465
AIP No. 3-02-0016-XXX-2022
ELECTRICAL DETAILS 2

DATE: 10/1/2021
SHEET: E13 OF 28

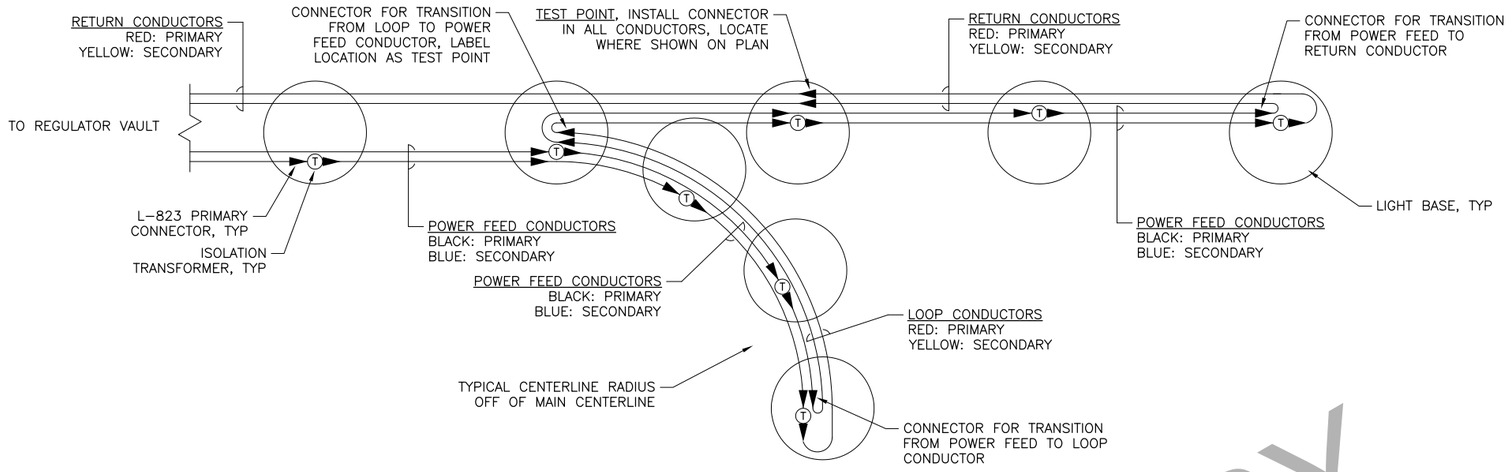

1 / E14 TYPICAL TAXIWAY CENTERLINE RADIUS CONDUCTOR DIAGRAM
NTS

NOTES:

1. DIAGRAMS ARE TYPICAL. NOT ALL CIRCUITS WILL BE PRESENT AT ALL LOCATIONS AND IN ALL LIGHT BASES. SEE PLANS AND ENLARGED PLANS FOR SPECIFIC LOCATIONS.
2. ALL TRANSFORMERS MUST BE SERVED FROM POWER FEED CONDUCTORS. THE RETURN AND LOOP CONDUCTORS MUST CONTAIN NO TRANSFORMERS.
3. LABEL POWER FEED CONDUCTORS WITH CIRCUIT NUMBER AND DIRECTION OF TRAVEL ON EACH SIDE OF ALL SPLICES AND TRANSFORMERS.
4. LABEL RETURN CONDUCTORS WITH CIRCUIT NUMBER, DIRECTION OF TRAVEL, AND "RETURN" ON EACH SIDE OF ALL SPLICES AND TRANSFORMERS.
5. LABEL LOOP CONDUCTORS WITH CIRCUIT NUMBER, DIRECTION OF TRAVEL, AND "LOOP" ON EACH SIDE OF ALL SPLICES AND TRANSFORMERS.
6. LABEL TEST POINT LOCATIONS AT CENTERLINE LIGHTS IN ACCORDANCE WITH DETAIL 1/E16.

PRELIMINARY

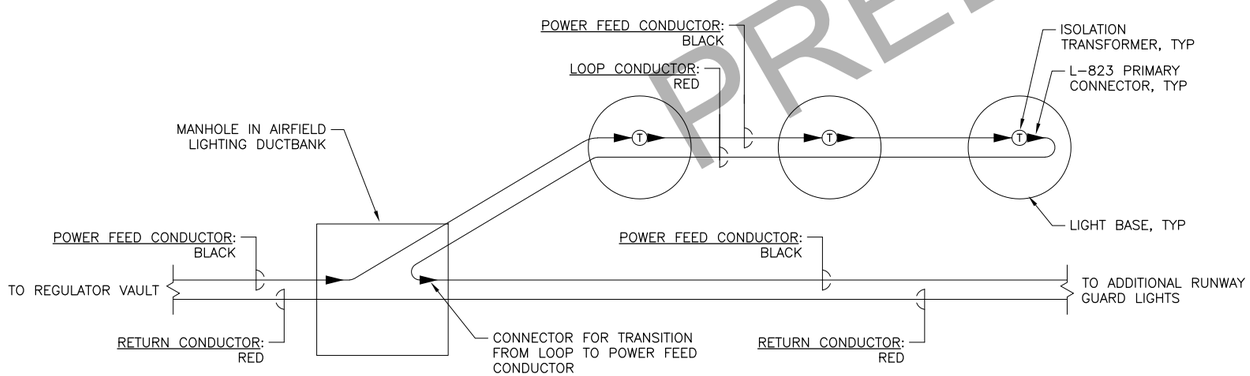

2 / E14 TYPICAL RUNWAY GUARD LIGHT CONDUCTOR DIAGRAM
NTS

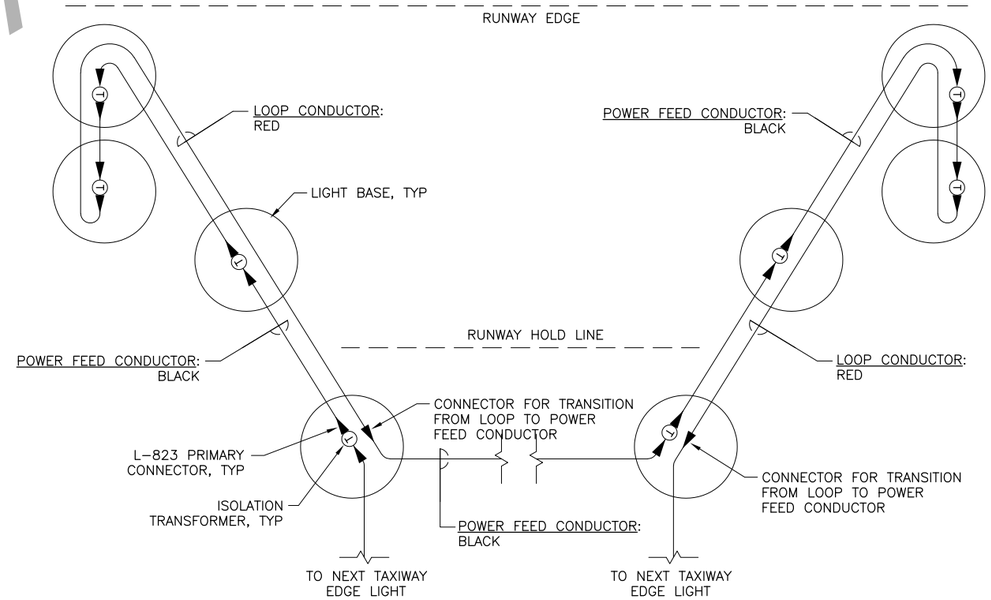

3 / E14 TYPICAL TAXIWAY/RUNWAY INTERSECTION CONDUCTOR DIAGRAM
NTS

STATE OF ALASKA 49TH
LUCAS SCHNELLER
EE-11399
REGISTERED PROFESSIONAL ENGINEER

BY	DATE	REVISION

STATE OF ALASKA
DEPARTMENT OF TRANSPORTATION AND PUBLIC FACILITIES
CENTRAL REGION
4111 AVIATION AVE., ANCHORAGE ALASKA 99502
PHONE (907) 269-0590

TED STEVENS ANCHORAGE
ANCHORAGE, ALASKA
ANC TAXIWAY Z IMPROVEMENTS WEST - PHASE 1
PROJECT No. CFAPT00465
AIP No. 3-02-0016-XXX-2022
ELECTRICAL DETAILS 3

DATE: 10/1/2021
SHEET: E14 OF 28

Designed By: LPS/MXS1R
Drawn By: UCA/MXS
Checked By: LPS/MXS
Date Revised:
Layout Name: 10/01/2021, 3:49 PM
File Path and Name: DETAILS 3
U:\204530630O\drawing\e\sheets\00465-ANC-E12-E23_DETAILS.dwg

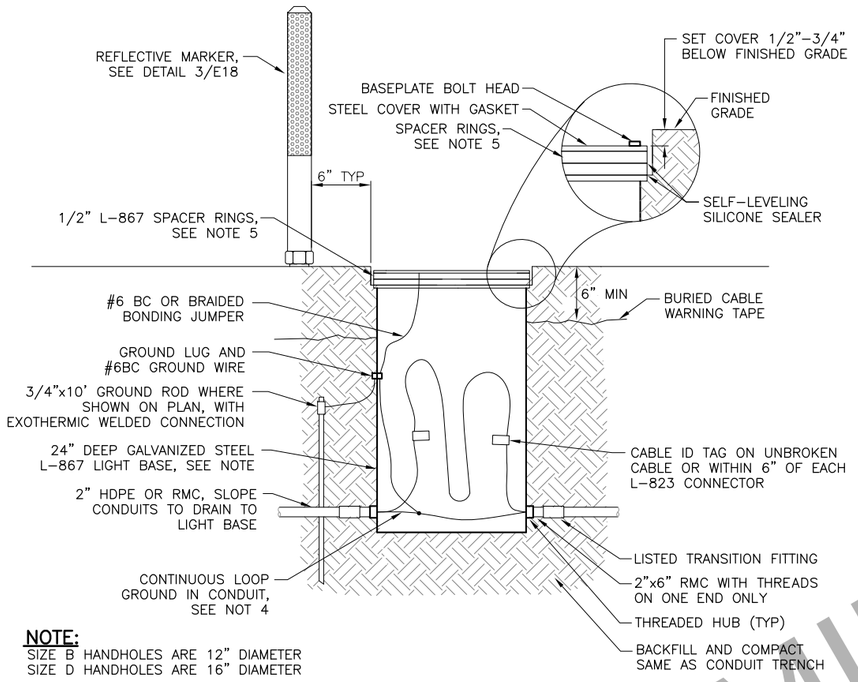

NOTE:
SIZE B HANDHOLES ARE 12" DIAMETER
SIZE D HANDHOLES ARE 16" DIAMETER

1 / E15 HANDHOLE, TYPE I DETAIL
NTS

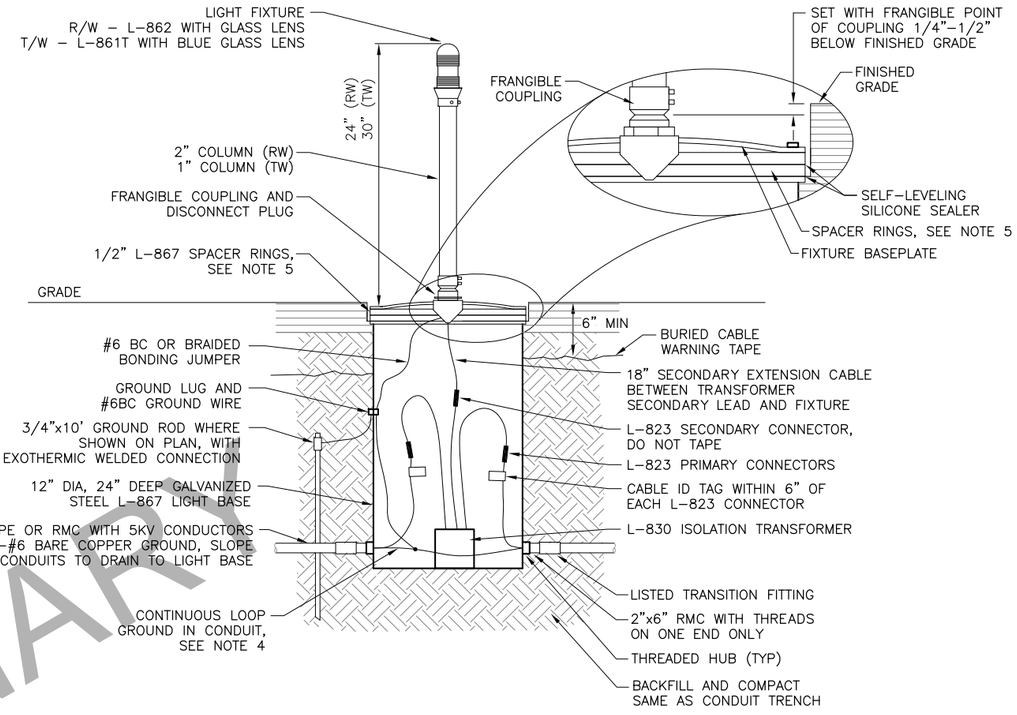

2 / E15 BASE MOUNTED LIGHT DETAIL
NTS

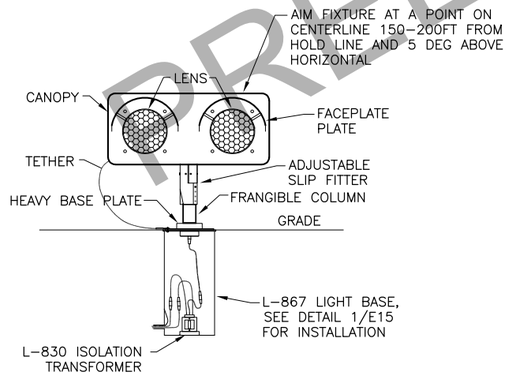

3 / E15 ELEVATED GUARD LIGHT DETAIL
NTS

NOTES:

1. SELF–LEVELING SILICONE SEALER MUST BE MOMENTIVE RTV118 OR APPROVED EQUAL.
2. INSTALL CONDUIT SYSTEM AT THE SAME GRADE AS THE RUNWAY OR TAXIWAY AND SLOPED TO DRAIN TO THE LOW SPOTS AND DRAINS WHERE SHOWN.
3. PROVIDE LIGHT BASES WITH THEADED HUBS (NO DRILLED AND GROMMET CONNECTIONS). PROVIDE ADDITIONAL HUBS FOR CONDUIT DRAINS AND/OR SIGN CONNECTIONS WHERE SHOWN ON PLANS.
4. CIRCUIT GROUND WIRE ROUTED IN CONDUIT MUST BE CONTINUOUS THROUGH LIGHT BASE OR JOINED USING IRREVERSIBLE COMPRESSION CONNECTORS AND MUST NOT RELY ON LIGHT BASE GROUND LUG FOR CONTINUITY.
5. PROVIDE A MINIMUM OF TWO 1/2" SPACER RINGS BELOW BASEPLATE FOR COMPLETED INSTALLATION OF ELEVATED EDGE LIGHTS AND HANDHOLES . ADDITIONAL SPACER RINGS REQUIRED DURING SET UP FOR PAVING ARE SUBSIDIARY.
6. LEAVE SUFFICIENT SLACK IN POWER FEED CONDUCTORS TO MAKE CONNECTIONS 2 FEET ABOVE GRADE. LEAVE SUFFICIENT SLACK IN RETURN AND LOOP CONDUCTORS TO REACH 2 FEET ABOVE GRADE WITH CENTER OF SLACK CONDUCTOR.
7. WHERE INDICATED ON THE PLANS AND SCHEDULES, INSTALL LIGHT BASE ASSEMBLY WITHOUT FIXTURE, BASEPLATE, TRANSFORMER, OR CONDUCTORS. ASSEMBLE SPACER RINGS FOR ELEVATION AS DETAILED AS IF A FIXTURE WILL BE INSTALLED, BUT INSTALL A 3/8" BLANK STEEL COVER IN PLACE OF THE FIXTURE AND BASEPLATE.

PRELIMINARY

STATE OF ALASKA 49TH
LUCAS SCHNELLER
EE-11399
REGISTERED PROFESSIONAL ENGINEER

BY	DATE	REVISION

STATE OF ALASKA
DEPARTMENT OF TRANSPORTATION AND PUBLIC FACILITIES
CENTRAL REGION
4111 AVIATION AVE., ANCHORAGE ALASKA 99502
PHONE (907) 269-0590

TED STEVENS ANCHORAGE
ANCHORAGE, ALASKA
ANC TAXIWAY Z IMPROVEMENTS WEST – PHASE 1
PROJECT No. CFAPT00465
AIP No. 3-02-0016-XXX-2022
ELECTRICAL DETAILS 4

DATE: 10/1/2021
SHEET: E15 OF 28

Designed By: LPS/MXS1R
Drawn By: UCA/MXS
Checked By: LPS/MXS

Date Revised: 10/01/2021, 3:49 PM
Layout Name: DETAILS 4
File Path and Name: U:\2045306300\drawing\e\sheets\00465-ANC-E12-E23_DETAILS.dwg

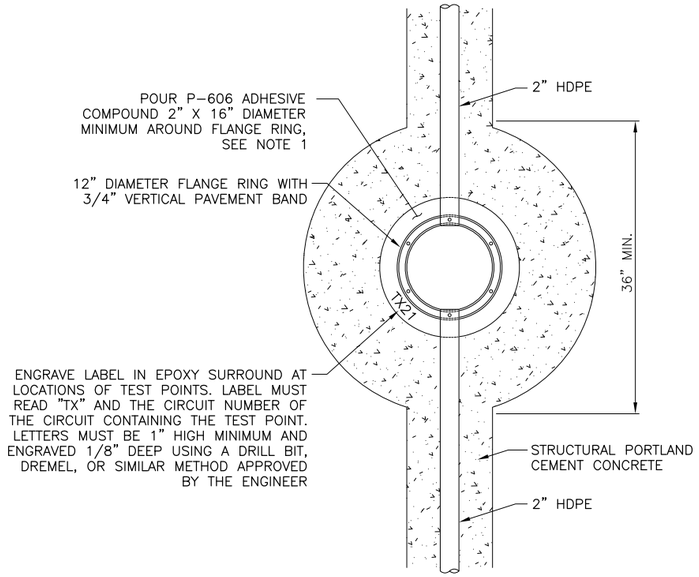

1 E16 RECESSED LIGHT – PLAN VIEW
NTS

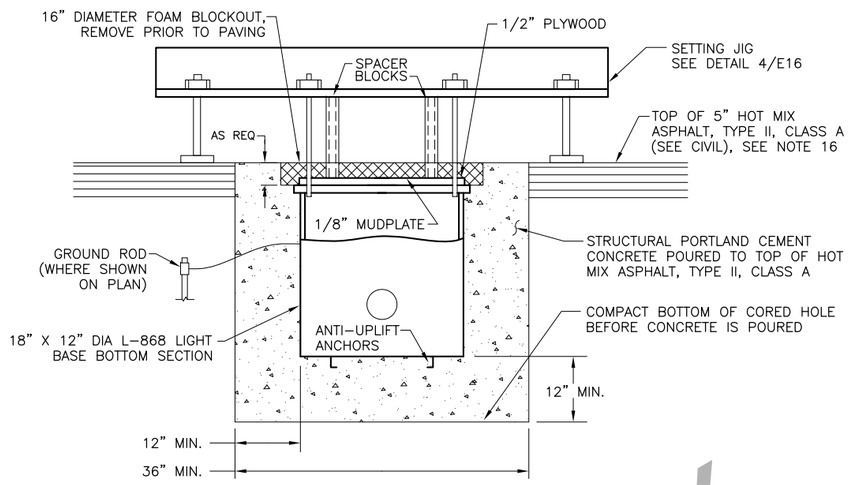

2 E16 RECESSED LIGHT BASE INSTALLATION
NTS

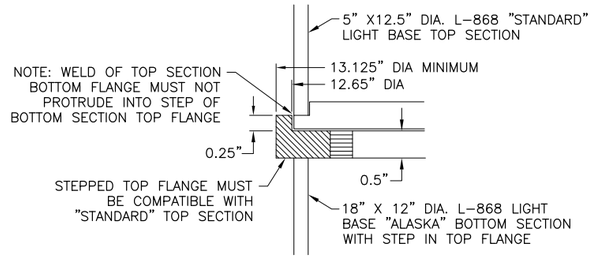

3 E16 BASE FLANGE DETAIL
NTS

NOTES:

1. P-606 ADHESIVE COMPOUND MUST MEET FED SPEC P-606. ANNULUS MUST BE CLEAN AND DRY PRIOR TO POURING PRODUCT. MIX AND APPLY USING MANUFACTURER EQUIPMENT AND PROCEDURES.
2. SELF-LEVELING SILICONE SEALER MUST BE MOMENTIVE RTV118 OR APPROVED EQUAL. DO NOT INSTALL SELF-LEVELING SILICONE SEALER BETWEEN TOP FLANGE OF TOP SECTION, SPACER RINGS, AND FLANGE RING.
3. FIXTURE MUST BE A SEMI-FLUSH MOUNT MODEL AND INSTALLATION MUST BE A DRY TYPE SYSTEM.
4. INSTALL CONDUIT SYSTEM AT THE SAME GRADE AS THE RUNWAY OR TAXIWAY AND SLOPED TO DRAIN TO THE LOW SPOTS AND DRAINS WHERE SHOWN.
5. COMPACT BOTTOM OF CORED HOLE TO THE SATISFACTION OF THE ENGINEER BEFORE CONCRETE IS POURED.
6. PROVIDE A THIRD HUB FOR A CONDUIT DRAIN WHERE SHOWN ON PLANS.
7. SETTING JIG FOR FIXTURE MUST BE FROM JAQUITH INDUSTRIES INC. OR APPROVED EQUAL AND IS SUBSIDIARY TO THE CONTRACT.
8. STRUCTURAL PORTLAND CEMENT CONCRETE MUST MEET THE REQUIREMENTS OF SECTION P-610. APPLY A SURFACE SEALER TO ALL STRUCTURAL PORTLAND CEMENT CONCRETE IN ACCORDANCE WITH THE REQUIREMENTS OF SECTION P-610.
9. INSTALL ALL CONDUIT AND NEW FIXTURE BOTTOM SECTIONS BEFORE INSTALLATION OF FIRST LIFT OF SURFACE ASPHALT.
10. FIXTURE BOLTS FOR RECESSED LIGHTS MUST BE FLUOROPOLYMER COATED, A MAXIMUM OF 3.5" LONG. DO NOT APPLY ANTI-SIEZE TO COATED BOLTS.
11. CIRCUIT GROUND WIRE ROUTED IN CONDUIT MUST BE CONTINUOUS THROUGH LIGHT BASE OR JOINED USING IRREVERSIBLE COMPRESSION CONNECTORS AND MUST NOT RELY ON LIGHT BASE GROUND LUG FOR CONTINUITY.
12. BASIS OF DESIGN IS 3/4" THICK FLANGE RING AND SPACER RING. WHEN APPROVED BY THE ENGINEER, THINNER RINGS MAY BE USED IF REQUIRED TO MEET SPECIFIED FIXTURE ELEVATION.
13. LEAVE SUFFICIENT SLACK IN POWER FEED CONDUCTORS TO MAKE CONNECTIONS 2 FEET ABOVE GRADE. LEAVE SUFFICIENT SLACK IN RETURN AND LOOP CONDUCTORS TO REACH 2 FEET ABOVE GRADE WITH CENTER OF SLACK CONDUCTOR.
14. PROVIDE SPACER RING WITH "O" RING ABOVE FLANGE RING FOR FIXTURES OUTSIDE THE LIMITS OF THE RUNWAY EDGE. PROVIDE STANDARD SPACER RING BELOW FLANGE RING FOR FIXTURES INSIDE THE LIMITS OF THE RUNWAY EDGE.
15. WHERE INDICATED ON THE PLANS AND SCHEDULES, INSTALL LIGHT BASE ASSEMBLY WITHOUT FIXTURE, TRANSFORMER, OR CONDUCTORS. ASSEMBLE SPACER AND FLANGE RINGS TO ELEVATION AS DETAILED AS IF A FIXTURE WILL BE INSTALLED, BUT INSTALL A 3/4" BLANK STEEL COVER IN PLACE OF THE FIXTURE.
16. TOP OF HOT MIX ASPHALT, TYPE II, CLASS A INDICATED IN THIS DETAIL WILL BE THE TOP OF EXISTING ASPHALT AFTER MILLING IN AREAS WITHIN AND NORTH OF RUNWAY 7R-25L AS SHOWN ON THE PLANS. SEE DETAIL 4/E19 FOR MILLING DETAIL ALONG CONDUIT TRENCH OF LIGHT LINE.

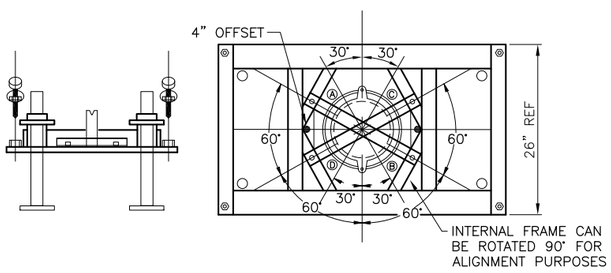

4 E16 SETTING JIG DETAILS
NTS

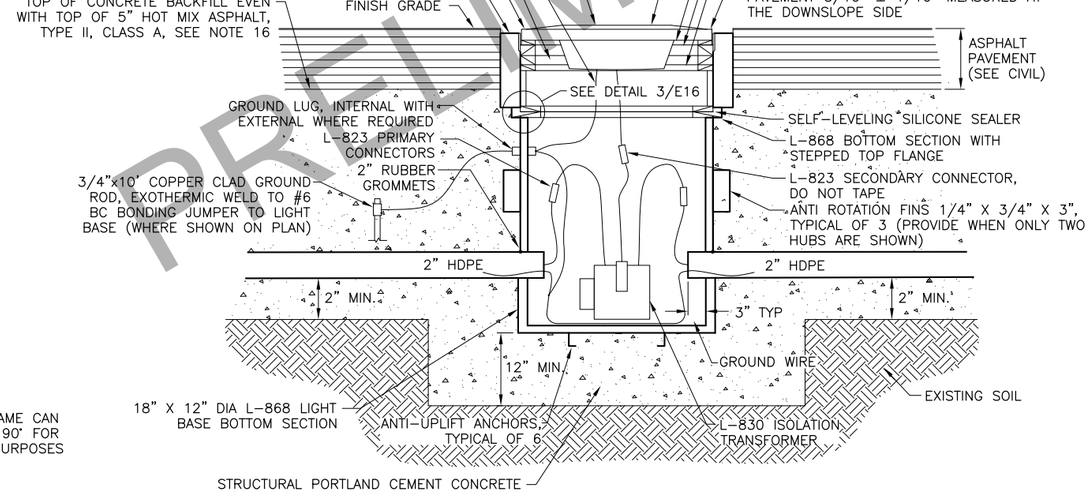

5 E16 RECESSED LIGHT – SECTION VIEW
NTS

PRELIMINARY

STATE OF ALASKA 49TH LUCAS SCHNELLER EE-11399 REGISTERED PROFESSIONAL ENGINEER

BY	DATE	REVISION

STATE OF ALASKA
DEPARTMENT OF TRANSPORTATION AND PUBLIC FACILITIES
CENTRAL REGION
4111 AVIATION AVE., ANCHORAGE ALASKA 99502
PHONE (907) 269-0590

TED STEVENS ANCHORAGE
ANCHORAGE, ALASKA
ANC TAXIWAY Z IMPROVEMENTS WEST - PHASE 1
PROJECT No. CFAPT00465
AIP No. 3-02-0016-XXX-2022
ELECTRICAL DETAILS 5

DATE: 10/1/2021
SHEET: E16 OF 28

Designed By: LPS/MXS1R
Drawn By: UCA/MXS
Checked By: LPS/MXS

Date Revised:
Layout Name: 10/11/2021, 6:41 AM
File Path and Name: DETAILS 5
U:\20453063OO\drawing\e\sheets\00465-ANC-E12-E23_DETAILS.dwg

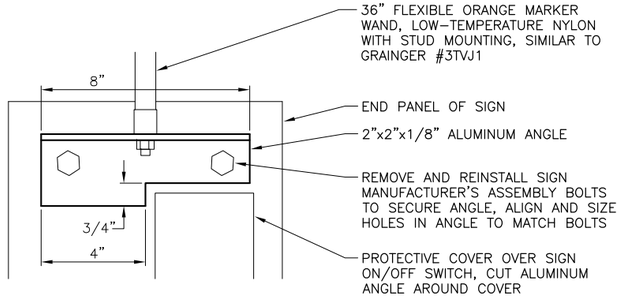

NOTE:
PROVIDE TWO SIGN MARKERS PER SIGN. SIGN MARKERS ARE SUBSIDIARY TO THE ASSOCIATED SIGN AND NO SEPARATE PAYMENT WILL BE MADE.

1 / E17 SIGN MARKER DETAIL
NTS

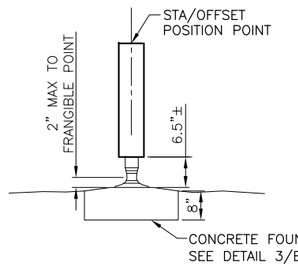

SIDE VIEW

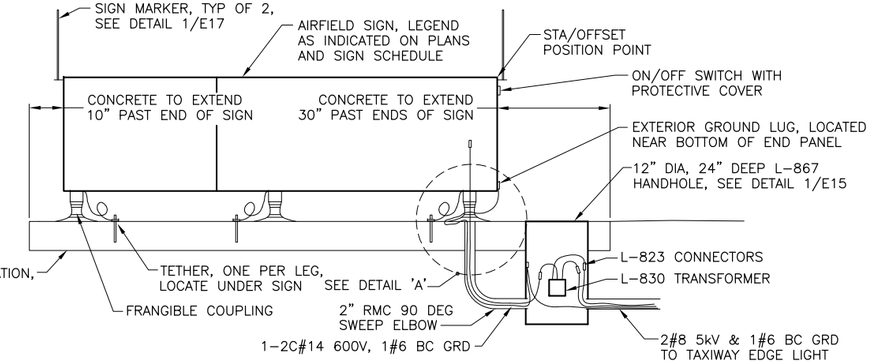

FRONT VIEW

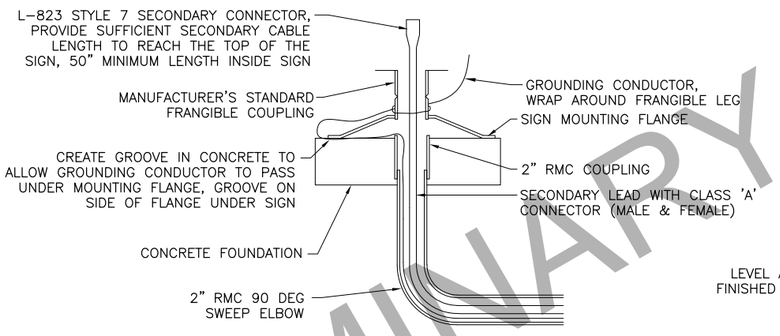

DETAIL 'A'

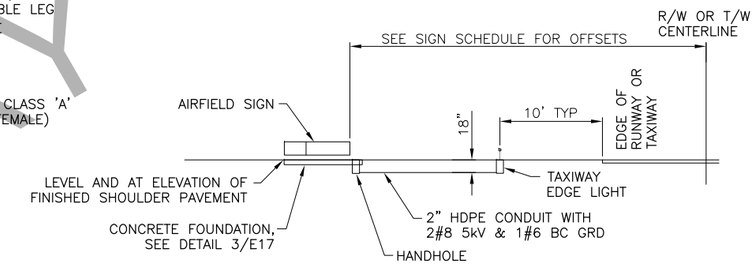

ELEVATION VIEW

2 / E17 AIRFIELD SIGN DETAILS
NTS

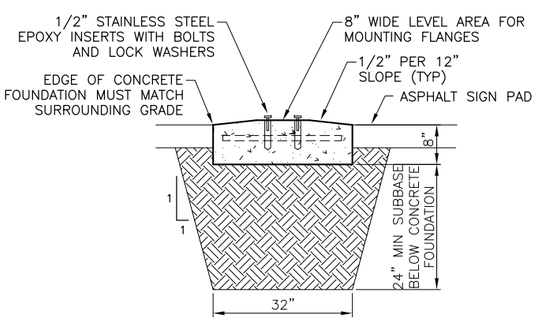

END VIEW

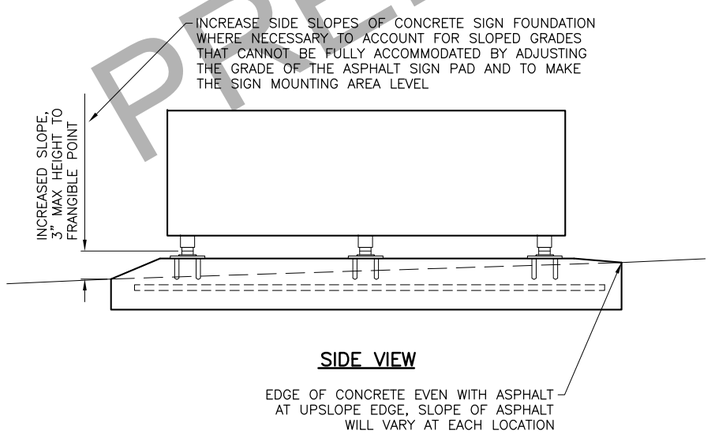

SIDE VIEW

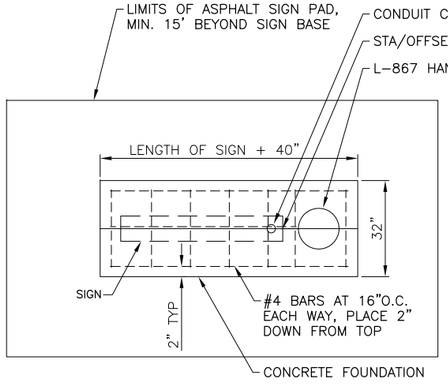

PLAN VIEW

NOTES:

1. MINOR GRADING OR FILL WILL BE REQUIRED AT ALL SIGN LOCATIONS. THE GRADING AND EARTHWORK IS SUBSIDIARY TO THE CONTRACT AND NO SEPARATE PAYMENT WILL BE MADE.
2. ATTACH SIGNS TO CONCRETE BASE USING STAINLESS STEEL EPOXY THREADED INSERTS, SIMILAR TO HILTI HIS-RN, INSTALLED IN ACCORDANCE WITH MANUFACTURER'S INSTRUCTIONS. INSTALL INSERTS AFTER CONCRETE HAS REACHED FULL DESIGN STRENGTH. PROVIDE STAINLESS STEEL BOLTS WITH SPLIT LOCK WASHERS TO SECURE SIGNS TO INSERTS.
3. STRUCTURAL PORTLAND CEMENT CONCRETE MUST MEET THE REQUIREMENTS OF SECTION P-610. APPLY A SURFACE SEALER TO ALL STRUCTURAL PORTLAND CEMENT CONCRETE IN ACCORDANCE WITH THE REQUIREMENTS OF SECTION P-610.
4. SET FOUNDATION TO MATCH SHOULDER PAVEMENT ELEVATION AT END CLOSET TO RUNWAY OR TAXIWAY EDGE. CENTER OF FOUNDATION MUST BE LEVEL TO SUPPORT SIGN MOUNTING FLANGES. ADJUST ASPHALT SIGN PAD PAVEMENT TO MEET EDGE OF OTHER SIDES OF FOUNDATION.

3 / E17 CONCRETE SIGN FOUNDATION DETAILS
NTS

PRELIMINARY

STATE OF ALASKA 49TH
LUCAS SCHNELLER
EE-11399
REGISTERED PROFESSIONAL ENGINEER

BY	DATE	REVISION

STATE OF ALASKA
DEPARTMENT OF TRANSPORTATION AND PUBLIC FACILITIES
CENTRAL REGION
4111 AVIATION AVE., ANCHORAGE ALASKA 99502
PHONE (907) 269-0590

TED STEVENS ANCHORAGE
ANCHORAGE, ALASKA
ANC TAXIWAY Z IMPROVEMENTS WEST - PHASE 1
PROJECT No. CFAPT00465
AIP No. 3-02-0016-XXX-2022
ELECTRICAL DETAILS 6

DATE: 10/1/2021
SHEET: E17 OF 28

Designed By: LPS/MXS1R
Drawn By: UCA/MXS
Checked By: LPS/MXS
Date Revised: 10/11/2021, 6:41 AM
Layout Name: DETAILS 6
File Path and Name: U:\2045306300\drawing\e\sheets\00465-ANC-E12-E23_DETAILS.dwg

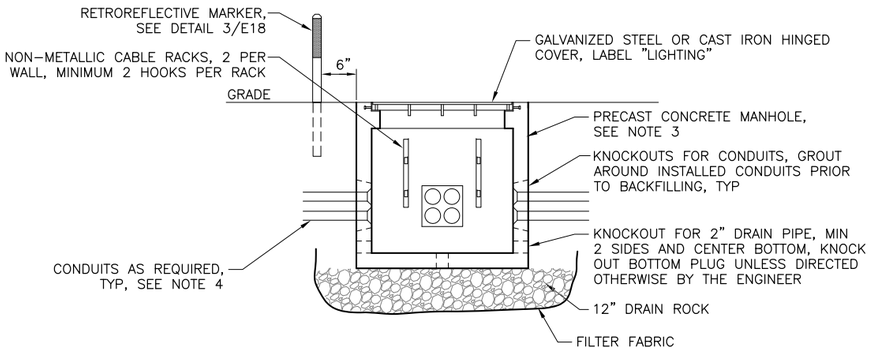

NOTES:

1. PRECAST MANHOLE, LID, FRAME, AND COVER MUST BE RATED FOR WHEEL LOADING BASED ON LOCATION. CONCRETE TOP SECTION WITH COVER MAY BE OVERSIZED IF REQUIRED TO MEET LOADING REQUIREMENTS.

   AIRCRAFT AREA (WITHIN RSA AND TSA) – 100,000 LB. LOAD
   NON-AIRCRAFT AREA – H-20 WHEEL LOADING

2. PROVIDE COVERS WITH STAINLESS STEEL BOLTS TO SECURE LID IN THE CLOSED POSITION. PROVIDE CAST IRON HINGED COVERS WITH SPRING ASSIST MECHANISM.

3. MANHOLES MUST HAVE INSIDE DIMENSIONS AS INDICATED IN THE MANHOLE SCHEDULE ON SHEET E28. MANHOLE FLOOR MUST BE 48" MAXIMUM BELOW GRADE. MANHOLE COVERS MUST BE 36"x36" MINIMUM.

4. EXTEND METALLIC CONDUIT 2" INTO MANHOLE AND TERMINATE WITH AN INSULATED GROUNDING BUSHING BONDED TO THE CIRCUIT GROUNDS WITH #6 BC. TERMINATE NON-METALLIC CONDUIT AT TERMINATION FITTINGS CAST INTO THE MANHOLE WALL OR EXTEND 2" INTO MANHOLE AND REAM ENDS TO PREVENT CONDUCTOR INSULATION DAMAGE.

1/E18 ELECTRICAL MANHOLE DETAIL
NTS

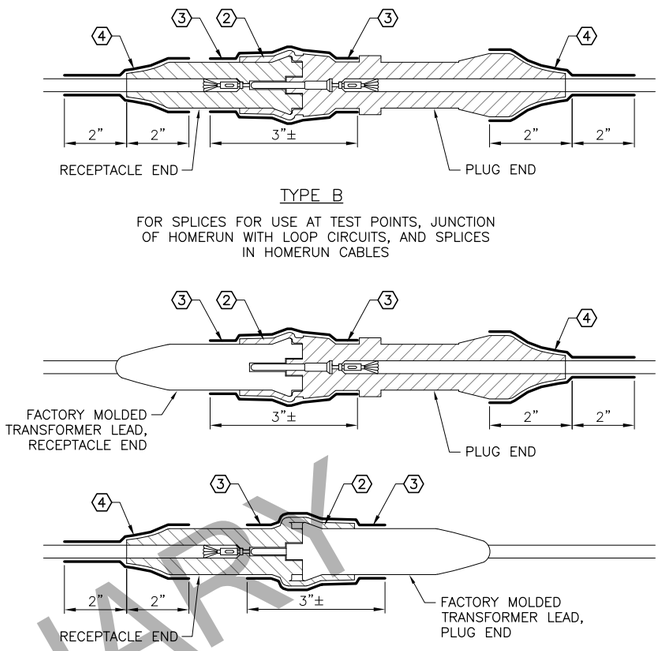

NOTES:

1. CABLE MUST MEET SPECIFICATION L-824. INSIDE DIAMETER OF CONNECTOR MUST PROPERLY MATCH THE OUTSIDE DIAMETER OF CABLE. CONNECTOR MUST BE SUPPLIED TO MATCH CABLE PER MANUFACTURER'S INSTRUCTIONS.

2. L-823 CONNECTOR MUST HAVE FACTORY-MOLDED SEALING FLAP. PULL SEALING FLAP ACROSS CONNECTOR INTERFACE. REMOVE SEALING FLAP FROM RECEPTACLE CONNECTOR FOR TYPE B CONNECTIONS.

3. WRAP CONNECTOR INTERFACE WITH A MINIMUM OF ONE LAYER RUBBER TAPE AND ONE LAYER PLASTIC TAPE, EACH LAYER ONE-HALF LAPPED. EXTEND TAPE TO A FLAT SECTION OF CONNECTOR BODY TO ACHIEVE A GOOD CONTACT SEAL, APPROXIMATELY 3" OF TOTAL WRAP AREA.

4. L-823 CONNECTOR MUST HAVE TAPERED STRAIN RELIEF AT CABLE ENTRY. WRAP CABLE ENTRY POINT OF FIELD-INSTALLED CONNECTOR WITH A MINIMUM OF ONE LAYER RUBBER TAPE AND ONE LAYER PLASTIC TAPE, EACH LAYER ONE-HALF LAPPED, EXTENDING AT LEAST 2" ONTO CABLE AND CONNECTOR.

2/E18 TYPICAL SPLICE DETAILS
NTS

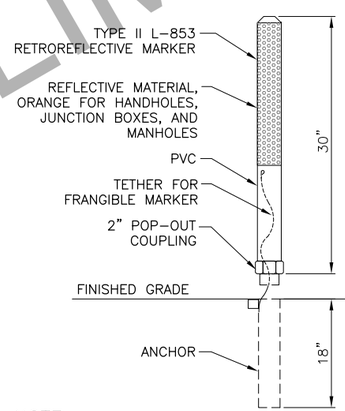

NOTE:

INSTALL RETROREFLECTIVE MARKERS 6" FROM EACH HANDHOLE, J-BOX, OR MANHOLE AS INDICATED. MARKERS ARE SUBSIDIARY TO THE HANDHOLE, JUNCTION BOX, OR MANHOLE PAY ITEM AND NO SEPARATE PAYMENT WILL BE MADE. MARKER MUST BE TYPE II PER SPEC P-660.

3/E18 RETROREFLECTIVE MARKER DETAIL
NTS

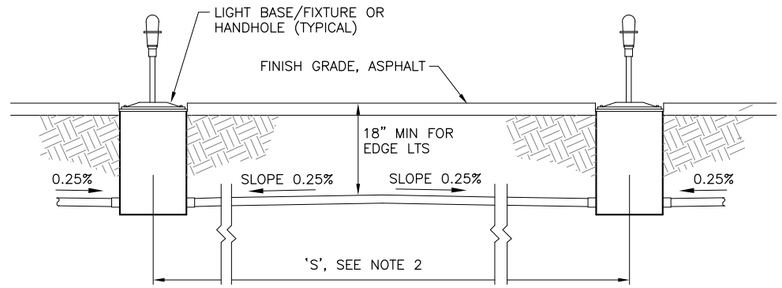

NOTES:

1. CONDUIT MUST BE INSTALLED WITH CROWN TO DRAIN TO LIGHT BASES AS SHOWN.

2. IF 'S' IS LESS THAN 20', OR IF 0.25% SLOPE CAN BE MAINTAINED IN ONE DIRECTION DUE TO SLOPE OF GRADE, LAY CONDUIT STRAIGHT WITHOUT CROWN BETWEEN BASES/HANDHOLES.

3. PROVIDE ADDITIONAL HUBS FOR CONDUIT DRAINS WHERE SHOWN ON PLANS.

4. INSTALL ALL CONDUIT, LIGHT BASES, AND HANDHOLES BEFORE INSTALLATION OF SURFACE ASPHALT PAVEMENT.

4/E18 TYPICAL INTERCONNECTION DETAIL
NTS

PRELIMINARY

STATE OF ALASKA 49TH — LUCAS SCHNELLER EE-11399 — REGISTERED PROFESSIONAL ENGINEER

BY	DATE	REVISION

STATE OF ALASKA
DEPARTMENT OF TRANSPORTATION AND PUBLIC FACILITIES
CENTRAL REGION
4111 AVIATION AVE., ANCHORAGE ALASKA 99502
PHONE (907) 269-0590

TED STEVENS ANCHORAGE
ANCHORAGE, ALASKA
ANC TAXIWAY Z IMPROVEMENTS WEST - PHASE 1
PROJECT No. CFAPT00465
AIP No. 3-02-0016-XXX-2022
ELECTRICAL DETAILS 7

DATE: 10/1/2021
SHEET: E18 OF 28

Designed By: LPS/MXS1R
Drawn By: UCA/MXS
Checked By: LPS/MXS

Date Revised:
Layout Name: 10/01/2021, 3:50 PM DETAILS 7
File Path and Name: U:\2045306300\drawing\e\sheets\00465-ANC-E12-E23_DETAILS.dwg

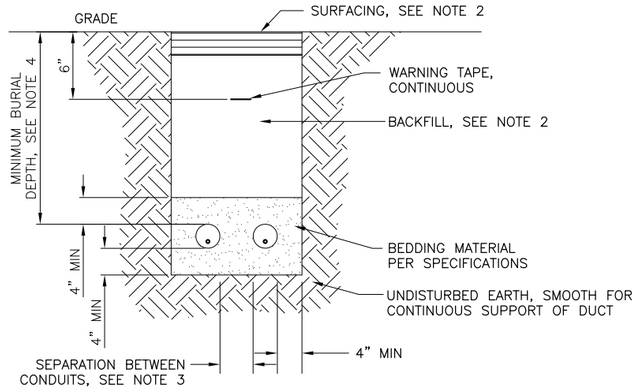

NOTES:

1. WIDTH OF TRENCH AND NUMBER OF CONDUITS PER TRENCH TO BE DETERMINED IN FIELD (2 SHOWN).
2. IN AREAS OF NEW CONSTRUCTION, SEE CIVIL FOR SURFACING AND BACKFILL. IN EXISTING AREAS, MATCH EXISTING SURFACING AND BACKFILL.
3. USE COMMERCIALLY MANUFACTURED DUCT SPACERS IN COMMON DUCTBANKS WITH PARALLEL CONDUITS SPACED EVERY 5' O.C. TO MAINTAIN SEPARATION. SEPARATION BETWEEN CONDUITS MUST BE AS FOLLOWS:
   –CONDUITS OF SAME TYPE (POWER OR SIGNAL) UNDER SAME OWNERSHIP – 2"
   –AIRPORT LIGHTING AND FAA CONDUITS – 12" MIN
   –PRIMARY POWER AND ANY OTHER CONDUIT – 18" MIN.
   –TELECOM SERVICE AND ANY OTHER CONDUIT – 18" MIN
4. MINIMUM BURIAL DEPTH MUST BE AS FOLLOWS, UNLESS OTHERWISE INDICATED:
   –AIRPORT LIGHTING CONDUITS – 18"

1 E19 TYPICAL CONDUIT TRENCH DETAIL
NTS

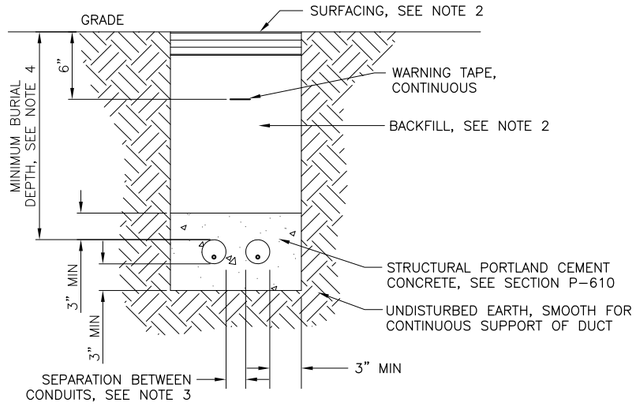

NOTES:

1. WIDTH OF TRENCH AND NUMBER OF CONDUITS PER TRENCH TO BE DETERMINED IN FIELD (2 SHOWN).
2. IN AREAS OF NEW CONSTRUCTION, SEE CIVIL FOR SURFACING AND BACKFILL. IN EXISTING AREAS, MATCH EXISTING SURFACING AND BACKFILL. CONDUIT BETWEEN SEMI–FLUSH LIGHTS MUST BE BACKFILLED WITH CONCRETE AS SHOWN ON THE LIGHT BASE INSTALLATION DETAILS.
3. USE COMMERCIALLY MANUFACTURED DUCT SPACERS IN COMMON DUCTBANKS WITH PARALLEL CONDUITS SPACED EVERY 5' O.C. TO MAINTAIN SEPARATION. SEPARATION BETWEEN CONDUITS MUST BE AS FOLLOWS:
   –CONDUITS OF SAME TYPE (POWER OR SIGNAL) UNDER SAME OWNERSHIP – 1 1/2"
   –AIRPORT LIGHTING AND FAA CONDUITS – 12" MIN
   –PRIMARY POWER AND ANY OTHER CONDUIT – 18" MIN
   –TELECOM SERVICE AND ANY OTHER CONDUIT – 18" MIN
4. MINIMUM BURIAL DEPTH MUST BE AS FOLLOWS, UNLESS OTHERWISE INDICATED:
   –AIRPORT LIGHTING CONDUITS – 18"
   –AIRPORT LIGHTING DUCTBANKS – 24"

2 E19 CONCRETE ENCASED CONDUIT DETAIL
NTS

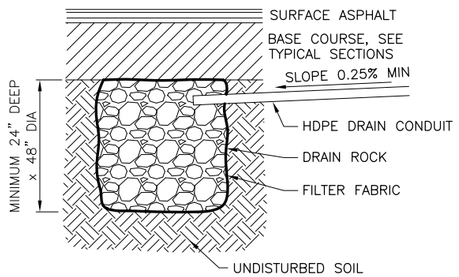

3 E19 DRYWELL DETAIL
NTS

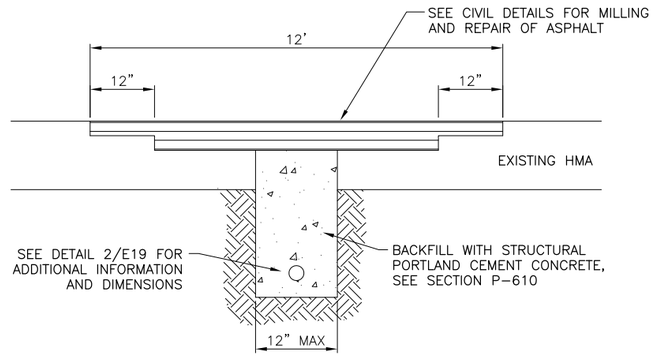

4 E19 CONDUIT TRENCH DETAIL UNDER EXISTING STRUCTURAL PAVEMENT
NTS

PRELIMINARY

STATE OF ALASKA 49TH
LUCAS SCHNELLER
EE-11399
REGISTERED PROFESSIONAL ENGINEER

BY	DATE	REVISION

STATE OF ALASKA
DEPARTMENT OF TRANSPORTATION AND PUBLIC FACILITIES
CENTRAL REGION
4111 AVIATION AVE., ANCHORAGE ALASKA 99502
PHONE (907) 269-0590

TED STEVENS ANCHORAGE
ANCHORAGE, ALASKA
ANC TAXIWAY Z IMPROVEMENTS WEST – PHASE 1
PROJECT No. CFAPT00465
AIP No. 3-02-0016-XXX-2022
ELECTRICAL DETAILS 8

DATE: 10/1/2021
SHEET: E19 OF 28

Designed By: LPS/MXS kR
Drawn By: UCA/MXS
Checked By: LPS/MXS
Date Revised: 10/01/2021, 3:50 PM
Layout Name: DETAILS 8
File Path and Name: U:\20453063000\drawing\e\sheets\00465-ANC-E12-E23_DETAILS.dwg

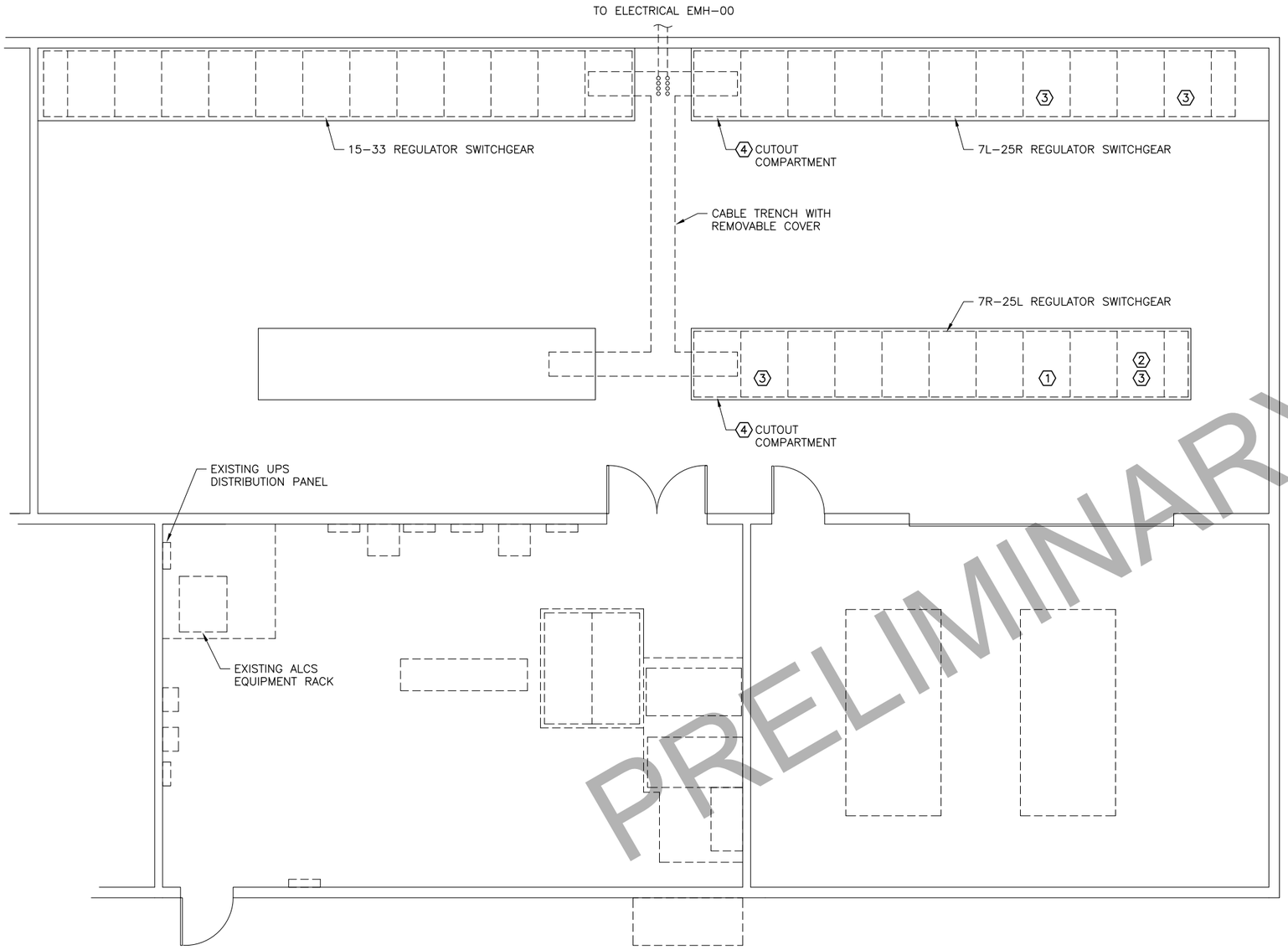

1 E20 REGULATOR VAULT PARTIAL FLOOR PLAN
1/4" = 4'-0"

RUNWAY 15-33 REGULATOR SWITCHGEAR									
SPARE 70kW	R-2 50kW	SPARE 50kW	T-8 10kW	T-30 15kW	T-17 30kW	T-20 30kW	T-22 30kW	SPARE 30kW	SPARE 30kW	SPARE 30kW
			T-14 30kW	T-14 30kW	R-7 15kW	T-21 30kW	T-23 30kW	FUTURE –	T-27 15kW	T-29 15kW

RUNWAY 7L-25R REGULATOR SWITCHGEAR									
SPARE 50kW	SPARE 50kW	SPARE 50kW	R-1 50kW	R-3 15kW	R-8 10kW	T-5 15kW	T-26 30kW	T-32 30kW	FUTURE –
				SPARE 30kW	T-2 15kW	T-4 30kW (3)	T-7 30kW	T-34 30kW	T-12 30kW (3)

RUNWAY 7R-25L REGULATOR SWITCHGEAR								
R-4 50kW (3)	R-5 70kW	R-6 70kW	SPARE 70kW	FUTURE –	T-18 30kW	**T-24 30kW** (1)	T-33 10kW	T-16 **30kW** (2)
					T-19 30kW	T-9 20kW	T-3 30kW	T-31 10kW (3)

2 E20 REGULATOR SWITCHGEAR DIAGRAM
NTS

SHEET NOTES: (X) (THIS SHEET ONLY)

1. REMOVE EXISTING SPARE 10kW REGULATOR AND RELOCATE AS DIRECTED BY AIRPORT MAINTENANCE. INSTALL NEW 30kW, 3-STEP REGULATOR. ACTIVATE REGULATOR CONTROL FOR NEW CIRCUIT IN ALCMS IN ACCORDANCE WITH SPECIFICATION L-125. LABEL REGULATOR WITH NEW CIRCUIT NUMBER.
2. REMOVE EXISTING 15kW REGULATOR AND RELOCATE AS DIRECTED BY AIRPORT MAINTENANCE. INSTALL NEW 30KW, 3-STEP REGULATOR. EXISTING REGULATOR CONTROL THROUGH ALCMS TO REMAIN.
3. EXISTING REGULATOR TO REMAIN.
4. REMOVE EXISTING CIRCUITS AS SHOWN ON PLANS BACK TO SERIES CUTOUTS IN CUTOUT COMPARTMENTS. CONNECT NEW CIRCUITS AS SHOWN ON PLANS TO EXISTING CUTOUTS IN CUTOUT COMPARTMENTS. CUTOUTS AND CABLING BETWEEN CUTOUTS AND REGULATORS ARE EXISTING TO REMAIN.

PRELIMINARY

STATE OF ALASKA 49TH LUCAS SCHNELLER EE-11399 REGISTERED PROFESSIONAL ENGINEER

BY	DATE	REVISION

STATE OF ALASKA
DEPARTMENT OF TRANSPORTATION AND PUBLIC FACILITIES
CENTRAL REGION
4111 AVIATION AVE., ANCHORAGE ALASKA 99502
PHONE (907) 269-0590

TED STEVENS ANCHORAGE
ANCHORAGE, ALASKA
ANC TAXIWAY Z IMPROVEMENTS WEST - PHASE 1
PROJECT No. CFAPT00465
AIP No. 3-02-0016-XXX-2022
REGULATOR VAULT PLAN

DATE: 10/1/2021
SHEET: E20 OF 28

Designed By: LPS/MXS/AR
Drawn By: UCA/MXS
Checked By: LPS/MXS

Date Revised: 10/01/2021, 3:50 PM
Layout Name: DETAILS 9
File Path and Name: U:\2045306300\drawing\e\sheets\00465-ANC-E12-E23_DETAILS.dwg

NOTES:

1. SUPPORT STRUCTURE CONFIGURATION SHOWN IS TYPICAL FOR FIELD-CONSTRUCTED STRUCTURES FOR BIDDING PURPOSES. ACTUAL SUPPORT STRUCTURE WILL BE PROVIDED BY SYSTEM SUPPLIER. COORDINATE CONFIGURATION AND CONSTRUCTION OF SUPPORT STRUCTURE WITH SUPPLIER.
2. COORDINATE MOUNTING OF THE RPU, RADIO ANTENNA, AND WEATHER SENSORS WITH THE FACTORY REPRESENTATIVE.
3. ALL SENSORS AND ANTENNAS MUST BE CONNECTED BY THE FACTORY REPRESENTATIVE.

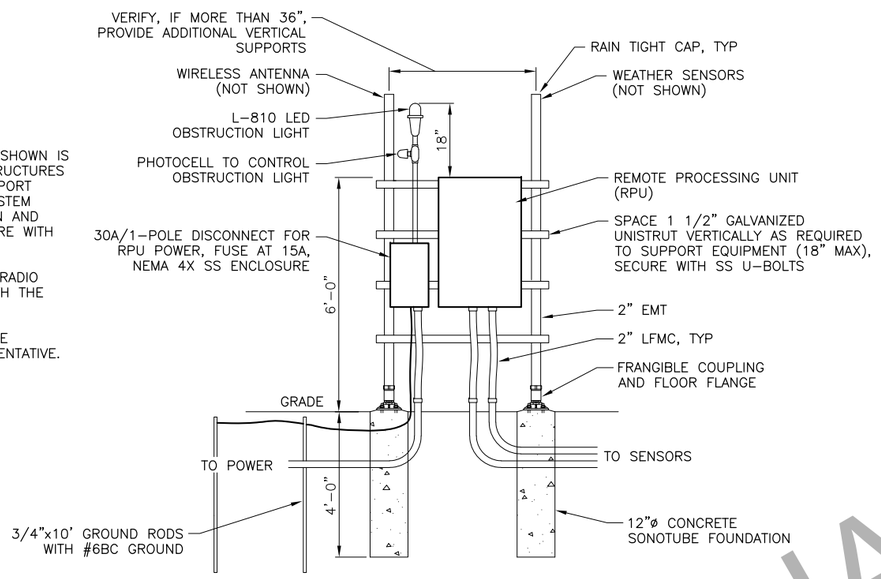

1 E21 RPU MOUNTING DETAIL
NTS

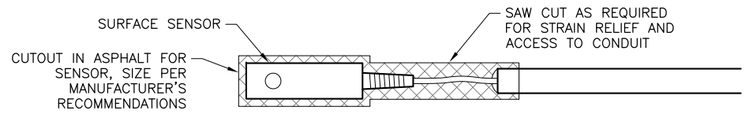

PLAN VIEW

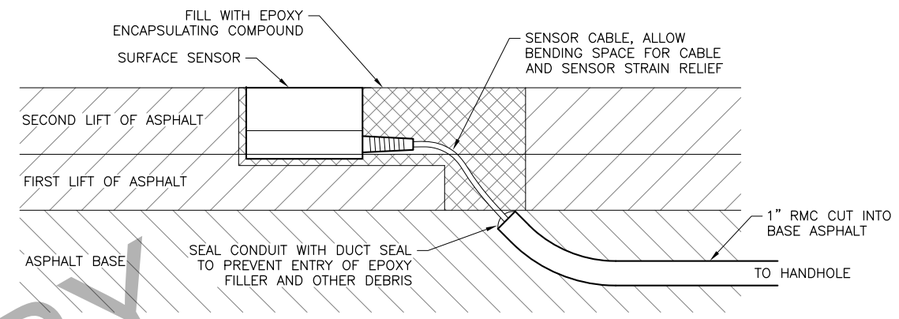

SECTION VIEW

NOTE:
VERIFY DIMENSIONS, MATERIALS, AND INSTALLATION METHODS WITH MANUFACTURER'S RECOMMENDATIONS.

2 E21 SURFACE SENSOR INSTALLATION DETAIL
NTS

PRELIMINARY

STATE OF ALASKA 49TH · LUCAS SCHNELLER · EE-11399 · REGISTERED PROFESSIONAL ENGINEER

BY	DATE	REVISION

STATE OF ALASKA
DEPARTMENT OF TRANSPORTATION AND PUBLIC FACILITIES
CENTRAL REGION
4111 AVIATION AVE., ANCHORAGE ALASKA 99502
PHONE (907) 269-0590

TED STEVENS ANCHORAGE
ANCHORAGE, ALASKA
ANC TAXIWAY Z IMPROVEMENTS WEST - PHASE 1
PROJECT No. CFAPT00465
AIP No. 3-02-0016-XXX-2022
SENSOR SYSTEM DETAILS

DATE: 10/1/2021
SHEET: E21 OF 28

Designed By: LPS/MXS
Drawn By: UCA/MXS
Checked By: LPS/MXS

Date Revised: 10/01/2021, 3:50 PM
Layout Name: DETAILS 10
File Path and Name: U:\2045306300\drawing\e\sheets\00465-ANC-E12-E23_DETAILS.dwg

EQUIPMENT LEGEND/DESCRIPTION

1. METERING SECTION
2. LOAD SECTION
3. UTILITY CONNECTION SECTION
4. METER READING WINDOW (8"X8")
5. METER SOCKET WITH TEST-BYPASS/ DISCONNECT BLOCK AND SAFTY SOCKET
6. FACILITIES
7. LIFT AWAY METER SECTION COVER
8. DEADFRONT
9. STAINLESS STEEL PIN HINGE PADLOCKING PROVISIONS
10. DISTRIBUTION PANEL WITH MAIN BREAKER
11. ACCESSORY EQUIPMENT MOUNTING AREA FOR TERMINAL STRIPS, ETC.
12. SERVICE PULL SECTION

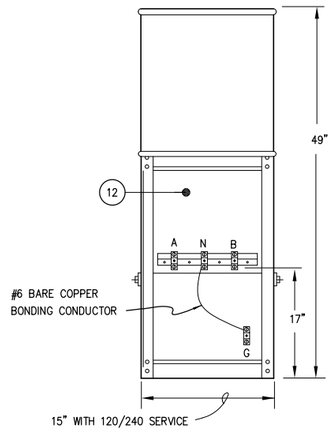

REAR VIEW
(W/ DOOR REMOVED)

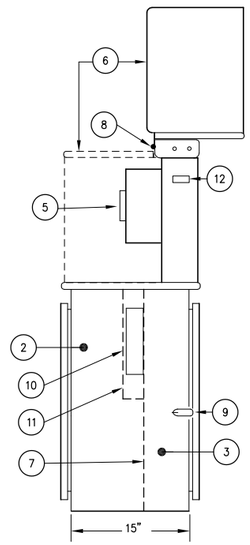

RIGHT SIDE VIEW
(W/ METER SECTION OPEN)

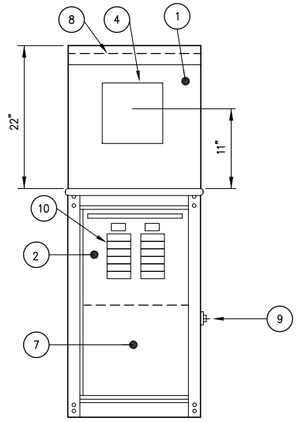

FRONT VIEW
(W/ DOOR REMOVED)

1 E22 TYPE 1A CABINET DETAILS
NTS

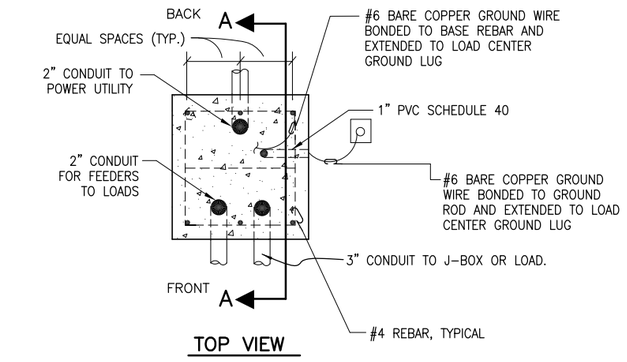

TOP VIEW

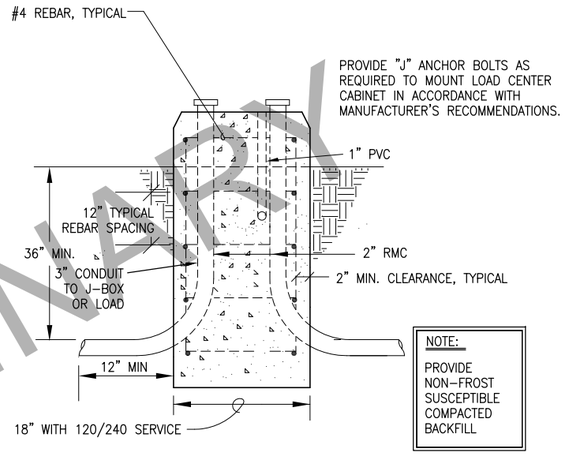

SECTION A-A

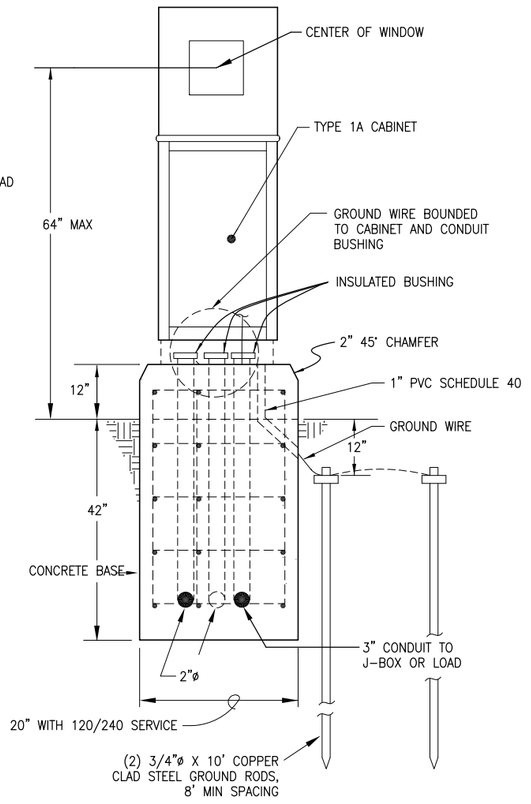

FRONT VIEW

2 E22 FOUNDATION DETAILS
NTS

WIRING NOTES:

1. FURNISH ALL EQUIPMENT NOTED IN THE LOAD CENTER SUMMARY, PLUS TWO 20-AMP 2-POLE SPARE CIRCUIT BREAKERS, AND SPACE FOR A MINIMUM OF TWO ADDITIONAL 2-POLE CIRCUIT BREAKERS IN EACH LOAD PANEL. SEE THE LOAD CENTER SUMMARIES FOR LOAD PANEL VOLTAGES, CURRENT RATINGS, AND THE NAME OF THE SERVING UTILITY.
2. INSTALL GROUNDING HUBS THIRD PARTY CERTIFIED FOR WET LOCATIONS (MYERS TYPE), WHEN ATTACHING CONDUITS TO THE LOAD CENTER ENCLOSURE.
3. LABEL ALL CIRCUIT BREAKERS AS TO FUNCTION AND POSITION.
4. METER BASES SHALL NOT BE MOUNTED ON MOVABLE PANELS OR DOORS.
5. THE LENGTH AND TYPE OF SERVICE ENTRANCE CONDUIT INSTALLED BY THE CONTRACTOR VARIES BY UTILITY. REGARDLESS OF ITS LENGTH, INSTALL A PULL ROPE IN THE SERVICE CONDUIT AND A CAP ON THE BURIED END: MARK THE BURIED END WITH A 2"X 6" STAKE. SEE THE LOAD CENTER SUMMARIES FOR THE FOLLOWING INFORMATION.

   STATION AND OFFSET OF THE LOAD CENTER AND POWER SOURCE.

   WHERE THE CONTRACTOR TERMINATES THE SERVICE ENTRANCE CONDUIT.

   THE TYPE OF SERVICE ENTRANCE CONDUIT (SUCH AS RIGID METAL CONDUIT OR LIQUID-TIGHT FLEXIBLE METAL CONDUIT).

6. STORE A SCHEMATIC DIAGRAM, A CIRCUIT DIRECTORY, AND A MATERIALS LIST THAT INCLUDES THE MANUFACTURER'S NAME AND PART/CATALOG NUMBERS, ALL LAMINATED IN PLASTIC, IN A METAL POCKET ATTACHED TO THE INSIDE OF THE LOAD CENTER. INSTALL THE POCKET ON THE LOAD CENTER DOOR, PROVIDING DRAIN HOLES TO PREVENT WATER ACCUMULATION.

FOUNDATION NOTES:

1. GRADE AWAY FROM THE BASE WITH A MINIMUM SLOPE OF 3%. USE A PRE-MOULDED BITUMINOUS JOINT BETWEEN THE BASE AND CONCRETE SIDEWALK OR PAVING, WHEN ADJACENT TO A SIDEWALK OR PATHWAY.
2. PROVIDE ANCHOR BOLTS OR EXPANSION ANCHORS IN THE BASE FOR MOUNTING THE CABINET PER THE MANUFACTURER'S SHOP DRAWINGS. ANCHOR BOLTS, NUTS, AND WASHERS SHALL CONFORM TO EITHER ASTM A307 OR A449 AND SHALL BE GALVANIZED IN ACCORDANCE WITH ASTM A153.
3. STRUCTURAL PORTLAND CEMENT CONCRETE AND REINFORCING STEEL MUST MEET THE REQUIREMENTS OF SECTION P-610.
4. IF THE BASE IS PRECAST, INSTALL TWO 3/4" FERRULE LOOP INSERTS IN TWO SIDES OPPOSITE ONE ANOTHER FOR LIFTING.

PRELIMINARY

STATE OF ALASKA 49TH
LUCAS SCHNELLER
EE-11399
REGISTERED PROFESSIONAL ENGINEER

BY	DATE	REVISION

STATE OF ALASKA
DEPARTMENT OF TRANSPORTATION AND PUBLIC FACILITIES
CENTRAL REGION
4111 AVIATION AVE., ANCHORAGE ALASKA 99502
PHONE (907) 269-0590

TED STEVENS ANCHORAGE
ANCHORAGE, ALASKA
ANC TAXIWAY Z IMPROVEMENTS WEST - PHASE 1
PROJECT No. CFAPT00465
AIP No. 3-02-0016-XXX-2022
LOAD CENTER DETAILS

DATE: 10/1/2021
SHEET: E22 OF 28

Designed By: LPS/MXS1R
Drawn By: UCA/MXS
Checked By: LPS/MXS
Date Revised: 10/01/2021, 3:50 PM
Layout Name: DETAILS 11
File Path and Name: U:\2045306300\drawing\e\sheets\00465-ANC-E12-E23_DETAILS.dwg

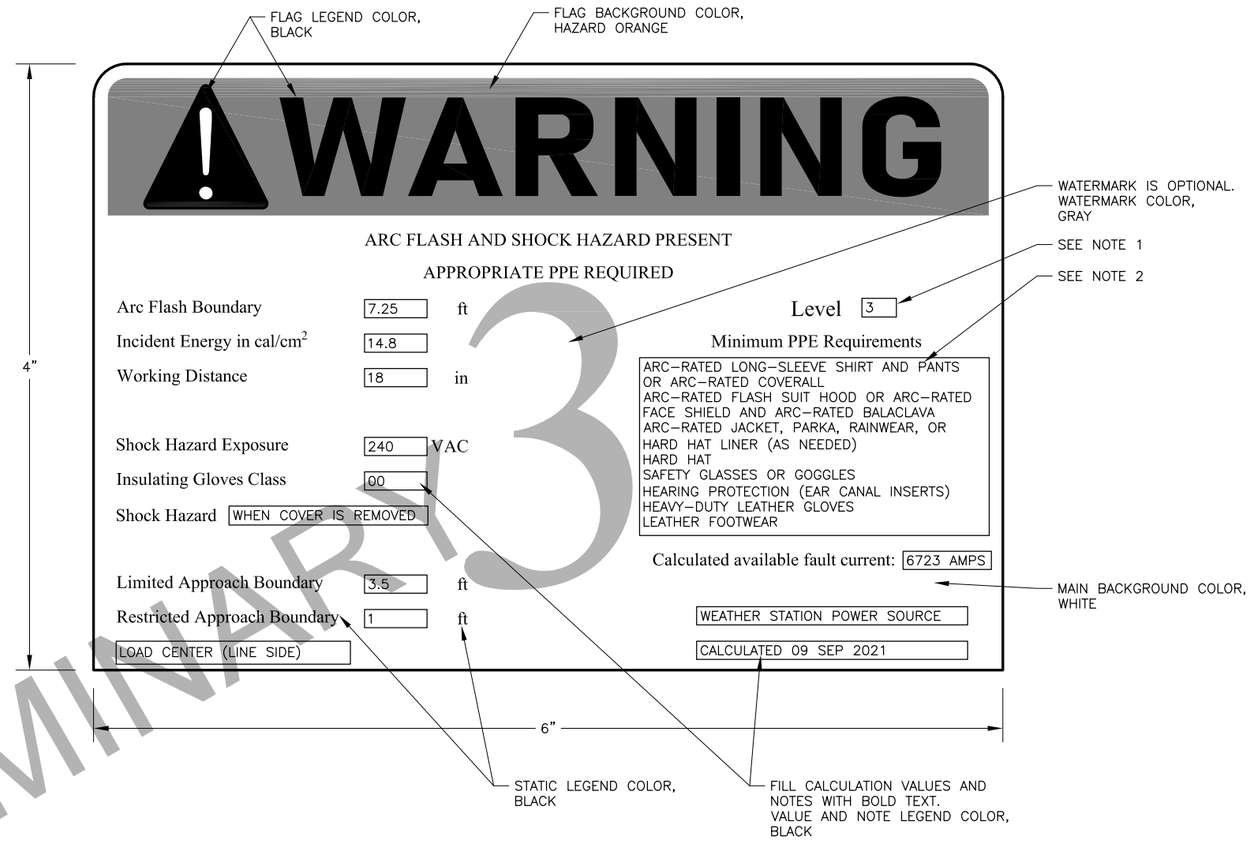

1 / E23 ARC FLASH LABELS
NTS

PRELIMINARY 3

NOTES:

1. APPLICABLE STATE OF ALASKA DOT&PF ELECTRICAL EQUIPMENT MUST BE LABELED WITH DOT&PF-DEFINED SITE-SPECIFIC PPE LEVELS, AS DEFINED IN NFPA 70E 130.5(H)(3)(c). THE LEVELS ARE: LEVEL 1 (0 TO 4 CAL/CM^2), 2 (4.1 TO 8.0 CAL/CM^2), 3 (8.1 TO 25.0 CAL/CM^2), 4 (25.1 TO 39.9 CAL/CM^2), OR WP (WORK PROHIBITED, FOR EQUIPMENT IN WHICH THE CALCULATED ARC FLASH INCIDENT ENERGY IS ≥ 40 CAL/CM^2).
2. MINIMUM PPE REQUIREMENTS FOR EACH PPE LEVEL DESCRIBED IN NOTE 1 ARE THE SAME REQUIREMENTS AS DESCRIBED IN NFPA 70E TABLE 130.7(C)(15)(c). THESE PPE REQUIREMENTS ARE TO BE USED AS THE SITE-SPECIFIC PPE LEVELS.
3. APPLY WEATHERPROOF SELF-ADHESIVE LABELS TO INTERIOR DEAD FRONT OF EQUIPMENT INDICATED.
4. LOAD CENTER IS SERVED FROM CEA TRANSFORMER #PM4707. CALCULATIONS ARE BASED ON A 25KVA TRANSFORMER WITH AN IMPEDANCE OF 1.2%.

STATE OF ALASKA 49 TH
LUCAS SCHNELLER EE-11399
REGISTERED PROFESSIONAL ENGINEER

BY	DATE	REVISION

STATE OF ALASKA
DEPARTMENT OF TRANSPORTATION AND PUBLIC FACILITIES
CENTRAL REGION
4111 AVIATION AVE., ANCHORAGE ALASKA 99502
PHONE (907) 269-0590

TED STEVENS ANCHORAGE
ANCHORAGE, ALASKA
ANC TAXIWAY Z IMPROVEMENTS WEST - PHASE 1
PROJECT No. CFAPT00465
AIP No. 3-02-0016-XXX-2022
ARC FLASH LABEL

DATE: 10/1/2021
SHEET: E23 OF 28

Designed By:	LPS/MXS1R
Drawn By:	UCA/MXS
Checked By:	LPS/MXS
Date Revised:	10/01/2021, 3:50 PM
Layout Name:	DETAILS 12
File Path and Name:	U:\2045306300\drawing\e\sheets\00465-ANC-E12-E23_DETAILS.dwg

DEMOLITION SCHEDULE

NUM	STATION	OFFSET		REMARKS
D1	106+87.4	579.2	RT	TW CL LT
D2	106+73.3	483.7	RT	TW CL LT
D3	106+59.2	388.2	RT	TW CL LT
D4	106+58.4	367.2	RT	TW CL LT
D5	106+62.0	346.6	RT	TW CL LT
D6	106+70.1	327.2	RT	TW CL LT
D7	106+81.9	309.9	RT	TW CL LT
D8	107+41.2	241.3	RT	TW CL LT
D9	108+00.3	172.9	RT	TW CL LT
D10	108+59.5	104.3	RT	TW CL LT
D11	109+18.6	36.0	RT	TW CL LT
D12	109+33.9	21.5	RT	TW CL LT
D13	109+52.0	10.8	RT	TW CL LT
D14	109+71.9	4.2	RT	TW CL LT
D15	109+92.8	1.9	RT	TW CL LT
D16	110+86.6	1.9	RT	TW CL LT
D17	111+80.6	1.9	RT	TW CL LT
D18	112+74.3	2.0	RT	TW CL LT
D19	113+68.3	2.0	RT	TW CL LT
D20	114+62.3	2.0	RT	TW CL LT
D21	115+56.1	2.0	RT	TW CL LT
D22	116+49.9	1.9	RT	TW CL LT
D23	117+44.0	2.0	RT	TW CL LT
D24	116+61.5	485.1	LT	TW CL LT
D25	116+77.5	441.2	LT	TW CL LT
D26	116+93.4	397.2	LT	TW CL LT
D27	117+09.4	353.3	LT	TW CL LT
D28	117+25.3	309.4	LT	TW CL LT
D29	117+41.2	265.4	LT	TW CL LT
D30	117+57.2	221.4	LT	TW CL LT
D31	117+73.1	177.5	LT	TW CL LT
D32	117+89.0	133.6	LT	TW CL LT
D33	118+05.0	89.7	LT	TW CL LT
D34	118+20.9	45.9	LT	TW CL LT
D35	118+35.5	5.8	LT	TW CL LT
D36	118+51.1	37.4	RT	TW CL LT
D37	118+66.8	80.5	RT	TW CL LT
D38	118+82.5	123.7	RT	TW CL LT
D39	118+97.0	163.7	RT	TW CL LT
D40	119+12.7	206.9	RT	TW CL LT
D41	119+30.6	256.3	RT	TW CL LT
D42	119+43.0	290.3	RT	TW CL LT
D43	119+57.6	330.4	RT	TW CL LT
D44	119+76.3	382.0	RT	TW CL LT
D45	119+91.8	425.1	RT	TW CL LT
D46	120+07.6	468.2	RT	TW CL LT
D47	120+23.2	511.3	RT	TW CL LT
D48	119+49.2	287.9	RT	TW CL LT
D49	119+48.7	244.0	RT	TW CL LT
D50	119+56.7	200.9	RT	TW CL LT
D51	119+72.9	160.1	RT	TW CL LT
D52	119+96.4	123.1	RT	TW CL LT
D53	120+35.1	73.6	RT	TW CL LT
D54	120+73.9	24.3	RT	TW CL LT
D55	121+12.6	25.2	LT	TW CL LT
D56	121+36.5	69.3	LT	TW CL LT
D57	121+44.5	118.8	LT	TW CL LT
D58	121+35.6	168.2	LT	TW CL LT
D59	121+19.2	213.5	LT	TW CL LT
D60	121+02.9	258.9	LT	TW CL LT

DEMOLITION SCHEDULE (CONT)

NUM	STATION	OFFSET		REMARKS
D61	120+86.7	304.0	LT	TW CL LT
D62	120+70.3	349.2	LT	TW CL LT
D63	120+54.0	394.5	LT	TW CL LT
D64	120+37.7	439.7	LT	TW CL LT
D65	120+21.4	485.1	LT	TW CL LT
D66	106+51.9	591.6	RT	TW EDGE LT
D67	106+44.5	542.2	RT	TW EDGE LT
D68	106+32.1	457.1	RT	TW EDGE LT
D69	105+70.5	372.3	RT	TW EDGE LT
D70	105+69.5	286.5	RT	TW EDGE LT
D71	105+68.1	201.3	RT	TW EDGE LT
D72	105+67.7	166.1	RT	TW EDGE LT
D73	105+66.9	116.2	RT	TW EDGE LT
D74	105+73.7	70.0	RT	TW EDGE LT
D75	105+96.2	29.8	RT	TW EDGE LT
D76	106+30.3	4.7	LT	TW EDGE LT
D77	106+70.3	27.3	LT	TW EDGE LT
D78	107+15.8	35.2	LT	TW EDGE LT
D79	107+65.7	35.0	LT	TW EDGE LT
D80	108+00.1	35.4	LT	TW EDGE LT
D81	108+86.0	35.2	LT	TW EDGE LT
D82	109+71.6	35.0	LT	TW EDGE LT
D83	110+57.1	35.3	LT	TW EDGE LT
D84	111+42.8	35.3	LT	TW EDGE LT
D85	111+92.6	35.2	LT	TW EDGE LT
D86	112+43.3	35.1	LT	TW EDGE LT
D87	113+43.2	35.1	LT	TW EDGE LT
D88	114+43.1	35.2	LT	TW EDGE LT
D89	114+94.0	35.0	LT	TW EDGE LT
D90	115+43.6	35.4	LT	TW EDGE LT
D91	116+21.5	45.7	LT	TW EDGE LT
D92	116+99.7	56.1	LT	TW EDGE LT
D93	117+27.9	72.0	LT	TW EDGE LT
D94	117+37.1	103.6	LT	TW EDGE LT
D95	117+23.1	151.2	LT	TW EDGE LT
D96	117+09.4	199.2	LT	TW EDGE LT
D97	116+95.3	247.1	LT	TW EDGE LT
D98	116+81.9	284.0	LT	TW EDGE LT
D99	116+75.4	301.9	LT	TW EDGE LT
D100	116+55.6	357.1	LT	TW EDGE LT
D101	116+39.9	399.1	LT	TW EDGE LT
D102	116+24.9	440.8	LT	TW EDGE LT
D103	116+08.8	466.4	LT	TW EDGE LT
D104	115+84.2	484.0	LT	TW EDGE LT
D105	115+54.8	486.8	LT	TW EDGE LT
D106	115+54.7	481.9	LT	TW EDGE LT
D107	118+15.3	482.1	LT	TW EDGE LT
D108	118+15.2	487.0	LT	TW EDGE LT
D109	117+80.5	481.8	LT	TW EDGE LT
D110	117+53.9	458.5	LT	TW EDGE LT
D111	117+40.6	425.2	LT	TW EDGE LT
D112	117+44.7	389.7	LT	TW EDGE LT
D113	117+57.9	352.8	LT	TW EDGE LT
D114	117+64.3	334.9	LT	TW EDGE LT
D115	117+84.5	280.0	LT	TW EDGE LT
D116	118+09.9	209.6	LT	TW EDGE LT
D117	118+41.1	124.1	LT	TW EDGE LT
D118	118+52.4	93.0	LT	TW EDGE LT
D119	118+69.6	46.2	LT	TW EDGE LT
D120	118+89.9	22.1	LT	TW EDGE LT

DEMOLITION SCHEDULE (CONT)

NUM	STATION	OFFSET		REMARKS
D121	119+20.6	21.1	LT	TW EDGE LT
D122	119+64.4	36.5	LT	TW EDGE LT
D123	120+09.4	52.0	LT	TW EDGE LT
D124	120+52.2	86.2	LT	TW EDGE LT
D125	120+59.2	157.9	LT	TW EDGE LT
D126	120+54.3	227.8	LT	TW EDGE LT
D127	120+49.5	298.3	LT	TW EDGE LT
D128	120+30.3	349.9	LT	TW EDGE LT
D129	120+11.9	401.9	LT	TW EDGE LT
D130	120+01.7	430.8	LT	TW EDGE LT
D131	119+91.3	460.4	LT	TW EDGE LT
D132	119+74.4	481.8	LT	TW EDGE LT
D133	119+48.7	486.7	LT	TW EDGE LT
D134	119+48.6	482.0	LT	TW EDGE LT
D135	121+32.0	482.4	LT	TW EDGE LT
D136	121+31.7	486.9	LT	TW EDGE LT
D137	121+05.3	481.1	LT	TW EDGE LT
D138	120+89.3	458.3	LT	TW EDGE LT
D139	120+89.6	429.8	LT	TW EDGE LT
D140	121+08.2	377.9	LT	TW EDGE LT
D141	121+27.1	326.1	LT	TW EDGE LT
D142	121+44.4	278.5	LT	TW EDGE LT
D143	121+61.6	231.1	LT	TW EDGE LT
D144	121+78.3	183.7	LT	TW EDGE LT
D145	121+89.9	120.2	LT	TW EDGE LT
D146	121+48.5	2.4	RT	TW EDGE LT
D147	120+85.8	83.1	RT	TW EDGE LT
D148	120+01.3	317.4	RT	TW EDGE LT
D149	120+31.2	399.8	RT	TW EDGE LT
D150	120+61.0	481.7	RT	TW EDGE LT
D151	119+49.6	453.2	RT	TW EDGE LT
D152	119+30.6	400.8	RT	TW EDGE LT
D153	119+11.5	348.2	RT	TW EDGE LT
D154	118+96.8	317.3	RT	TW EDGE LT
D155	118+48.2	174.7	RT	TW EDGE LT
D156	118+30.4	127.2	RT	TW EDGE LT
D157	118+06.5	79.6	RT	TW EDGE LT
D158	117+92.6	63.5	RT	TW EDGE LT
D159	117+72.3	55.7	RT	TW EDGE LT
D160	116+93.7	45.3	RT	TW EDGE LT
D161	116+14.8	34.9	RT	TW EDGE LT
D162	115+43.7	35.2	RT	TW EDGE LT
D163	114+93.5	35.0	RT	TW EDGE LT
D164	114+42.9	35.0	RT	TW EDGE LT
D165	113+43.2	35.0	RT	TW EDGE LT
D166	112+43.1	35.1	RT	TW EDGE LT
D167	111+93.0	35.2	RT	TW EDGE LT
D168	111+43.0	35.1	RT	TW EDGE LT
D169	110+65.6	45.4	RT	TW EDGE LT
D170	109+88.5	55.1	RT	TW EDGE LT
D171	109+72.0	60.2	RT	TW EDGE LT
D172	109+59.0	70.5	RT	TW EDGE LT
D173	109+26.3	108.5	RT	TW EDGE LT
D174	108+99.6	139.2	RT	TW EDGE LT
D175	108+40.3	207.4	RT	TW EDGE LT
D176	107+81.4	275.9	RT	TW EDGE LT
D177	107+55.1	306.7	RT	TW EDGE LT
D178	107+22.3	344.5	RT	TW EDGE LT
D179	107+13.9	358.5	RT	TW EDGE LT
D180	107+11.0	374.6	RT	TW EDGE LT

DEMOLITION SCHEDULE (CONT)

NUM	STATION	OFFSET		REMARKS
D181	107+12.5	453.1	RT	TW EDGE LT
D182	107+13.7	531.8	RT	TW EDGE LT
D183	107+21.0	581.4	RT	TW EDGE LT
D184	116+69.7	316.9	LT	ELEV GUARD LT
D185	116+92.5	317.1	LT	FLUSH GUARD LT
D186	117+02.5	317.0	LT	FLUSH GUARD LT
D187	117+12.5	317.1	LT	FLUSH GUARD LT
D188	117+22.5	317.1	LT	FLUSH GUARD LT
D189	117+32.6	317.1	LT	FLUSH GUARD LT
D190	117+42.5	317.0	LT	FLUSH GUARD LT
D191	117+52.5	317.1	LT	FLUSH GUARD LT
D192	117+70.8	317.2	LT	ELEV GUARD LT
D193	120+46.8	305.2	LT	ELEV GUARD LT
D194	120+63.2	311.2	LT	FLUSH GUARD LT
D195	120+72.4	314.4	LT	FLUSH GUARD LT
D196	120+81.7	317.8	LT	FLUSH GUARD LT
D197	120+91.0	321.2	LT	FLUSH GUARD LT
D198	121+00.2	324.5	LT	FLUSH GUARD LT
D199	121+09.4	327.9	LT	FLUSH GUARD LT
D200	121+24.6	333.2	LT	ELEV GUARD LT
D201	116+18.3	69.6	LT	LIGHTED SIGN
D202	116+17.1	317.3	LT	LIGHTED SIGN
D203	115+54.6	440.2	LT	LIGHTED SIGN
D204	118+15.3	440.7	LT	LIGHTED SIGN
D205	118+72.4	184.4	LT	LIGHTED SIGN
D206	119+99.9	288.2	LT	LIGHTED SIGN
D207	119+48.6	440.3	LT	LIGHTED SIGN
D208	121+38.6	441.0	LT	LIGHTED SIGN
D209	118+34.2	211.8	RT	LIGHTED SIGN
D210	118+87.0	357.2	RT	LIGHTED SIGN
D211	105+86.8	496.0	LT	RW EDGE LT
D212	117+04.0	490.1	LT	SEE NOTE 1
D213	120+98.0	490.0	LT	FLUSH RW EDGE LT

NOTE 1: FLUSH RW EDGE LT. REMOVE FIXTURE, TRANSFORMER, AND CONDUCTORS. LIGHT BASE ASSEMBLY TO REMAIN.

PRELIMINARY

Designed By: LPS/MXS kR
Drawn By: UCA/MXS
Checked By: LPS/MXS

Date Revised: 10/01/2021, 3:51 PM
Layout Name: SCHEDULES 1
File Path and Name: U:\2045306300\drawing\e\sheets\00465-ANC-E24-E28_SCHEDULES.dwg

STATE OF ALASKA
49 TH
LUCAS SCHNELLER
EE-11399
REGISTERED PROFESSIONAL ENGINEER

BY	DATE	REVISION

STATE OF ALASKA
DEPARTMENT OF TRANSPORTATION AND PUBLIC FACILITIES
CENTRAL REGION
4111 AVIATION AVE., ANCHORAGE ALASKA 99502
PHONE (907) 269-0590

TED STEVENS ANCHORAGE
ANCHORAGE, ALASKA
ANC TAXIWAY Z IMPROVEMENTS WEST - PHASE 1
PROJECT No. CFAPT00465
AIP No. 3-02-0016-XXX-2022
ELECTRICAL DEMOLITION SCHEDULE

DATE: 10/1/2021

SHEET: E24 OF 28

TAXIWAY EDGE LIGHT SCHEDULE

NUM	LENS COLOR	TYPE	WATTAGE LAMP	WATTAGE XFMR	STATION	OFFSET	REMARKS
E1	R	L-861T	30	30/45	103+43.9	71.2 LT	
E2	–	–	–	–	103+99.7	83.1 LT	SEE NOTE 1
E3	–	–	–	–	104+55.4	94.9 LT	SEE NOTE 1
E4	–	–	–	–	104+77.2	107.7 LT	SEE NOTE 1
E5	B	L-861T	30	30/45	104+87.0	130.9 LT	
E6	B	L-861T	30	30/45	104+90.4	173.6 LT	
E7	B	L-861T	30	30/45	104+93.7	216.4 LT	
E8	B	L-861T	30	30/45	104+97.1	259.1 LT	
E9	B	L-861T	30	30/45	105+00.4	301.8 LT	
E10	B	L-861T	30	30/45	104+97.4	326.4 LT	
E11	B	L-861T	30	30/45	104+93.1	360.9 LT	
E12	B	L-861T	30	30/45	104+84.9	382.6 LT	
E13	B	L-861T	30	30/45	104+76.8	404.3 LT	
E14	B	L-861T	30	30/45	104+68.6	426.0 LT	
E15	B	L-861T	30	30/45	104+60.5	447.7 LT	
E16	B	L-861T	30	30/45	104+52.4	469.4 LT	
E17	B	L-861T	30	30/45	104+44.2	491.1 LT	
E18	B	L-861T	30	30/45	104+36.1	512.8 LT	
E19	B	L-861T	30	30/45	104+35.4	507.8 LT	
E20	B	L-861T	30	30/45	N322069.5	E329428.9	
E21	B	L-861T	30	30/45	N322074.5	E329428.9	
E22	B	L-861T	30	30/45	N322062.6	E329423.1	
E23	B	L-861T	30	30/45	N322049.5	E329421.5	
E24	B	L-861T	30	30/45	N322005.1	E329423.5	
E25	B	L-861T	30	30/45	N321960.6	E329425.5	
E26	B	L-861T	30	30/45	N321916.2	E329427.4	
E27	B	L-861T	30	30/45	N321871.8	E329429.4	
E28	B	L-861T	30	30/45	N321843.6	E329437.5	
E29	B	L-861T	30	30/45	106+13.2	216.9 LT	
E30	B	L-861T	30	30/45	106+34.2	177.6 LT	
E31	B	L-861T	30	30/45	106+55.1	138.4 LT	
E32	B	L-861T	30	30/45	106+76.0	99.1 LT	
E33	B	L-861T	30	30/45	107+19.4	89.0 LT	
E34	B	L-861T	30	30/45	107+62.7	79.0 LT	
E35	B	L-861T	30	30/45	108+06.1	68.9 LT	
E36	B	L-861T	30	30/45	108+49.4	58.9 LT	
E37	B	L-861T	30	30/45	108+99.4	57.4 LT	
E38	B	L-861T	30	30/45	109+20.0	56.8 LT	
E39	B	L-861T	30	30/45	109+90.6	54.8 LT	
E40	B	L-861T	30	30/45	110+61.2	52.7 LT	
E41	B	L-861T	30	30/45	112+56.0	47.5 LT	
E42	B	L-861T	30	30/45	114+50.7	47.7 LT	
E43	B	L-861T	30	30/45	116+45.4	53.3 LT	
E44	B	L-861T	30	30/45	116+91.9	54.6 LT	
E45	B	L-861T	30	30/45	117+38.4	55.9 LT	
E46	B	L-861T	30	30/45	117+84.9	57.3 LT	
E47	B	L-861T	30	30/45	118+31.3	58.6 LT	
E48	B	L-861T	30	30/45	118+74.8	68.6 LT	
E49	B	L-861T	30	30/45	119+18.2	78.5 LT	
E50	B	L-861T	30	30/45	119+61.7	88.5 LT	
E51	B	L-861T	30	30/45	120+05.1	98.5 LT	
E52	B	L-861T	30	30/45	120+28.9	114.5 LT	
E53	B	L-861T	30	30/45	120+35.9	142.3 LT	
E54	B	L-861T	30	30/45	120+30.5	186.5 LT	
E55	B	L-861T	30	30/45	120+25.1	230.8 LT	
E56	B	L-861T	30	30/45	120+19.7	275.0 LT	
E57	B	L-861T	30	30/45	120+13.6	321.2 LT	
E58	B	L-861T	30	30/45	120+02.3	353.3 LT	
E59	B	L-861T	30	30/45	119+90.3	372.4 LT	
E60	B	L-861T	30	30/45	119+78.3	391.5 LT	

TAXIWAY EDGE LIGHT SCHEDULE (CONT)

NUM	LENS COLOR	TYPE	WATTAGE LAMP	WATTAGE XFMR	STATION	OFFSET	REMARKS
E61	B	L-861T	30	30/45	119+66.3	410.6 LT	
E62	B	L-861T	30	30/45	119+54.3	429.7 LT	
E63	B	L-861T	30	30/45	119+42.3	448.8 LT	
E64	B	L-861T	30	30/45	119+30.3	467.9 LT	
E65	B	L-861T	30	30/45	119+18.3	487.0 LT	
E66	B	L-861T	30	30/45	119+18.3	482.0 LT	
E67	B	L-861T	30	30/45	121+39.3	482.0 LT	
E68	B	L-861T	30	30/45	121+39.3	487.0 LT	
E69	B	L-861T	30	30/45	121+32.4	473.1 LT	
E70	B	L-861T	30	30/45	121+31.3	457.7 LT	
E71	B	L-861T	30	30/45	121+36.7	413.5 LT	
E72	B	L-861T	30	30/45	121+42.1	369.2 LT	
E73	B	L-861T	30	30/45	121+47.5	325.0 LT	
E74	B	L-861T	30	30/45	121+52.9	280.7 LT	
E75	B	L-861T	30	30/45	121+64.9	246.8 LT	
E76	B	L-861T	30	30/45	121+88.5	209.1 LT	
E77	B	L-861T	30	30/45	122+12.2	171.4 LT	
E78	B	L-861T	30	30/45	122+35.8	133.8 LT	
E79	B	L-861T	30	30/45	122+59.5	96.1 LT	
E80	–	–	–	–	123+02.9	86.7 LT	SEE NOTE 2
E81	–	–	–	–	123+46.4	77.2 LT	SEE NOTE 1
E82	–	–	–	–	123+89.8	67.8 LT	SEE NOTE 1
E83	–	–	–	–	124+33.3	58.3 LT	SEE NOTE 1
E84	R	L-861T	30	30/45	124+83.3	56.9 LT	
E85	R	L-861T	30	30/45	124+33.3	47.5 RT	
E86	–	–	–	–	123+57.9	49.1 RT	SEE NOTE 1
E87	–	–	–	–	122+82.6	51.3 RT	SEE NOTE 1
E88	B	L-861T	30	30/45	122+07.2	53.6 RT	
E89	B	L-861T	30	30/45	121+81.8	54.3 RT	
E90	B	L-861T	30	30/45	121+31.9	55.8 RT	
E91	B	L-861T	30	30/45	120+88.2	64.6 RT	
E92	B	L-861T	30	30/45	120+44.6	73.4 RT	
E93	B	L-861T	30	30/45	120+00.9	82.2 RT	
E94	B	L-861T	30	30/45	119+76.1	98.5 RT	
E95	B	L-861T	30	30/45	119+69.3	127.4 RT	
E96	B	L-852T	LED	30/45	119+76.2	173.4 RT	
E97	B	L-861T	30	30/45	119+83.1	219.4 RT	
E98	B	L-861T	30	30/45	120+63.3	424.5 RT	
E99	B	L-861T	30	30/45	120+65.4	460.9 RT	
E100	B	L-861T	30	30/45	120+67.5	497.2 RT	
E101	B	L-861T	30	30/45	119+48.1	450.6 RT	
E102	B	L-861T	30	30/45	119+35.7	419.4 RT	
E103	B	L-861T	30	30/45	119+23.2	388.1 RT	
E104	B	L-861T	30	30/45	119+10.8	356.8 RT	
E105	B	L-861T	30	30/45	118+50.0	204.2 RT	
E106	B	L-861T	30	30/45	118+47.5	197.9 RT	
E107	B	L-861T	30	30/45	118+23.8	160.0 RT	
E108	B	L-861T	30	30/45	118+00.1	122.2 RT	
E109	B	L-861T	30	30/45	117+76.4	84.3 RT	
E110	B	L-861T	30	30/45	117+32.7	75.0 RT	
E111	B	L-861T	30	30/45	116+89.1	65.6 RT	
E112	B	L-861T	30	30/45	116+45.4	56.3 RT	
E113	B	L-861T	30	30/45	115+95.5	54.7 RT	
E114	B	L-861T	30	30/45	114+50.7	50.3 RT	
E115	B	L-861T	30	30/45	112+56.0	47.5 RT	
E116	B	L-861T	30	30/45	111+11.2	47.5 RT	
E117	B	L-861T	30	30/45	110+61.2	47.5 RT	
E118	B	L-861T	30	30/45	110+28.7	53.1 RT	
E119	B	L-861T	30	30/45	109+99.7	77.3 RT	
E120	B	L-861T	30	30/45	109+70.7	101.5 RT	

TAXIWAY EDGE LIGHT SCHEDULE (CONT)

NUM	LENS COLOR	TYPE	WATTAGE LAMP	WATTAGE XFMR	STATION	OFFSET	REMARKS
E121	B	L-861T	30	30/45	109+37.1	138.5 RT	
E122	B	L-861T	30	30/45	109+14.5	163.3 RT	
E123	B	L-861T	30	30/45	108+58.7	225.4 RT	
E124	B	L-861T	30	30/45	108+06.4	290.5 RT	
E125	B	L-861T	30	30/45	107+85.6	316.8 RT	
E126	B	L-861T	30	30/45	107+54.5	356.0 RT	
E127	B	L-861T	30	30/45	107+34.9	388.8 RT	
E128	B	L-861T	30	30/45	107+15.3	421.6 RT	
E129	B	L-861T	30	30/45	107+14.6	459.7 RT	
E130	B	L-861T	30	30/45	107+13.9	497.9 RT	
E131	B	L-861T	30	30/45	107+19.5	547.6 RT	
E132	B	L-861T	30	30/45	107+26.3	607.4 RT	
E133	B	L-861T	30	30/45	106+55.7	617.8 RT	
E134	B	L-861T	30	30/45	106+39.7	508.9 RT	
E135	B	L-861T	30	30/45	105+71.5	417.2 RT	
E136	B	L-861T	30	30/45	105+70.0	324.5 RT	
E137	B	L-861T	30	30/45	105+65.2	231.9 RT	
E138	B	L-852T	LED	30/45	105+62.8	189.3 RT	
E139	B	L-861T	30	30/45	105+59.9	139.4 RT	
E140	B	L-861T	30	30/45	105+48.9	101.2 RT	
E141	B	L-861T	30	30/45	105+37.8	63.1 RT	
E142	B	L-861T	30	30/45	105+13.7	56.6 RT	
E143	B	L-861T	30	30/45	104+89.6	50.0 RT	
E144	–	–	–	–	104+39.6	49.4 RT	SEE NOTE 1
E145	–	–	–	–	104+02.0	48.9 RT	SEE NOTE 1
E146	R	L-861T	30	30/45	103+14.4	47.8 RT	

NOTE 1: LIGHT BASE WITH BLANK COVER ONLY. NO FIXTURE OR TRANSFORMER. PAID UNDER L125.150.0000. SET LIGHT BASE TO PROPER ELEVATION FOR FIXTURE INSTALLATION PER DETAIL 2/E15.

NOTE 2: LIGHT BASE WITH BLANK COVER ONLY. NO FIXTURE OR TRANSFORMER. PAID UNDER L125.060.0000. SET LIGHT BASE TO PROPER ELEVATION FOR FIXTURE INSTALLATION PER SHEET E16.

PRELIMINARY

Designed By: LPS/MXS1R
Drawn By: UCA/MXS
Checked By: LPS/MXS

Date Revised:
Layout Name: 10/01/2021, 3:51 PM SCHEDULES 2
File Path and Name: U:\20453063001\drawing\e\sheets\00465-ANC-E24-E28_SCHEDULES.dwg

STATE OF ALASKA 49TH LUCAS SCHNELLER EE-11399 REGISTERED PROFESSIONAL ENGINEER

BY	DATE	REVISION

STATE OF ALASKA
DEPARTMENT OF TRANSPORTATION AND PUBLIC FACILITIES
CENTRAL REGION
4111 AVIATION AVE., ANCHORAGE ALASKA 99502
PHONE (907) 269-0590

TED STEVENS ANCHORAGE
ANCHORAGE, ALASKA
ANC TAXIWAY Z IMPROVEMENTS WEST - PHASE 1
PROJECT No. CFAPT00465
AIP No. 3-02-0016-XXX-2022
TAXIWAY EDGE LIGHT SCHEDULE

DATE: 10/1/2021
SHEET: E25 OF 28

TAXIWAY CENTERLINE LIGHT SCHEDULE

NUM	LENS COLOR	TYPE	WATTAGE LAMP	WATTAGE XFMR	CKT	STATION	OFFSET	REMARKS
C1	–	–	–	–	–	103+20.0	2.5 LT	SEE NOTE 1
C2	–	–	–	–	–	103+66.5	2.5 LT	SEE NOTE 1
C3	–	–	–	–	–	104+13.1	2.5 LT	SEE NOTE 1
C4	–	–	–	–	–	104+59.7	2.5 LT	SEE NOTE 1
C5	–	–	–	–	–	104+71.1	3.0 LT	SEE NOTE 1
C6	–	–	–	–	–	104+82.4	4.6 LT	SEE NOTE 1
C7	–	–	–	–	–	104+93.5	7.3 LT	SEE NOTE 1
C8	–	–	–	–	–	105+04.2	11.0 LT	SEE NOTE 1
C9	–	–	–	–	–	105+14.6	15.7 LT	SEE NOTE 1
C10	–	–	–	–	–	105+24.5	21.4 LT	SEE NOTE 1
C11	–	–	–	–	–	105+33.8	27.9 LT	SEE NOTE 1
C12	–	–	–	–	–	105+42.4	35.4 LT	SEE NOTE 1
C13	–	–	–	–	–	105+50.3	43.6 LT	SEE NOTE 1
C14	–	–	–	–	–	105+57.4	52.5 LT	SEE NOTE 1
C15	–	–	–	–	–	105+63.7	62.0 LT	SEE NOTE 1
C16	–	–	–	–	–	105+68.9	72.1 LT	SEE NOTE 1
C17	–	–	–	–	–	105+73.3	82.6 LT	SEE NOTE 1
C18	–	–	–	–	–	105+76.6	93.5 LT	SEE NOTE 1
C19	–	–	–	–	–	105+78.8	104.7 LT	SEE NOTE 1
C20	–	–	–	–	–	105+80.0	116.0 LT	SEE NOTE 1
C21	–	–	–	–	–	105+80.2	127.4 LT	SEE NOTE 1
C22	G/G	L-852D	(2) 30	65	T-16	105+79.2	138.7 LT	
C23	G/G	L-852C	(2) 30	65	T-24	105+73.3	183.4 LT	
C24	G/G	L-852D	(2) 30	65	T-16	105+67.4	228.1 LT	
C25	G/G	L-852D	(2) 30	65	T-24	105+61.5	272.8 LT	
C26	G/Y	L-852D	(2) 30	65	T-16	105+55.7	317.5 LT	YELLOW FACES RW
C27	G/G	L-852D	(2) 30	65	T-16	105+49.8	362.2 LT	
C28	Y/Y	L-852D	(2) 30	65	T-16	105+43.9	406.9 LT	
C29	G/G	L-852D	(2) 30	65	T-16	105+38.0	451.6 LT	
C30	Y/Y	L-852D	(2) 30	65	T-16	105+32.1	496.3 LT	
C31	O/G	L-852D	30	30/45	T-16	105+30.0	508.2 LT	COLOR FACES RW
C32	O/Y	L-852D	30	30/45	T-16	105+27.0	519.9 LT	COLOR FACES RW
C33	O/G	L-852D	30	30/45	T-16	105+23.0	531.3 LT	COLOR FACES RW
C34	O/Y	L-852D	30	30/45	T-16	105+18.1	542.3 LT	COLOR FACES RW
C35	O/G	L-852D	30	30/45	T-16	105+12.4	552.9 LT	COLOR FACES RW
C36	O/Y	L-852D	30	30/45	T-16	105+05.8	563.0 LT	COLOR FACES RW
C37	O/G	L-852D	30	30/45	T-16	104+98.3	572.5 LT	COLOR FACES RW
C38	O/Y	L-852D	30	30/45	T-16	104+90.2	581.3 LT	COLOR FACES RW
C39	O/G	L-852D	30	30/45	T-16	104+81.3	589.5 LT	COLOR FACES RW
C40	O/Y	L-852D	30	30/45	T-16	104+71.8	596.9 LT	COLOR FACES RW
C41	O/G	L-852D	30	30/45	T-16	104+61.7	603.5 LT	COLOR FACES RW
C42	O/Y	L-852D	30	30/45	T-16	104+51.1	609.3 LT	COLOR FACES RW
C43	O/G	L-852D	30	30/45	T-16	104+40.1	614.2 LT	COLOR FACES RW
C44	O/Y	L-852D	30	30/45	T-16	104+28.7	618.2 LT	COLOR FACES RW
C45	O/G	L-852D	30	30/45	T-16	104+17.0	621.2 LT	COLOR FACES RW
C46	O/G	L-852D	30	30/45	T-16	104+05.1	623.3 LT	COLOR FACES RW
C47	G/G	L-852D	(2) 30	65	T-16	105+25.9	543.3 LT	
C48	Y/Y	L-852D	(2) 30	65	T-16	105+19.7	590.4 LT	
C49	G/G	L-852D	(2) 30	65	T-16	105+13.5	637.4 LT	
C50	G/G	L-852D	(2) 30	65	T-16	105+07.3	684.4 LT	
C51	Y/Y	L-852D	(2) 30	65	T-12	105+01.1	731.5 LT	
C52	G/G	L-852D	(2) 30	65	T-12	104+94.9	778.5 LT	
C53	Y/Y	L-852D	(2) 30	65	T-12	104+88.7	825.5 LT	
C54	G/G	L-852D	(2) 30	65	T-12	104+82.5	872.6 LT	
C55	Y/G	L-852D	(2) 30	65	T-12	104+76.3	919.6 LT	YELLOW FACES RW
C56	G/G	L-852D	(2) 30	65	T-12	104+70.1	966.6 LT	
C57	G/G	L-852D	(2) 30	65	T-12	104+63.9	1013.7 LT	
C58	G/Y	L-852D	(2) 30	65	T-12	104+57.7	1060.7 LT	YELLOW FACES RW
C59	G/G	L-852D	(2) 30	65	T-12	104+51.5	1107.7 LT	
C60	G/G	L-852C	(2) 30	65	T-24	105+85.2	93.5 LT	

TAXIWAY CENTERLINE LIGHT SCHEDULE (CONT)

NUM	LENS COLOR	TYPE	WATTAGE LAMP	WATTAGE XFMR	CKT	STATION	OFFSET	REMARKS
C61	G/G	L-852C	(2) 30	65	T-16	105+91.1	48.2 LT	
C62	Y	L-852F	150	150	T-16	106+02.0	2.5 LT	
C63	–	–	–	–	–	106+39.7	2.5 LT	SEE NOTE 1
C64	–	–	–	–	–	106+77.4	2.5 LT	SEE NOTE 1
C65	G/G	L-852D	(2) 30	65	T-24	105+87.4	114.4 LT	
C66	G/G	L-852D	(2) 30	65	T-16	105+89.5	102.5 LT	
C67	G/G	L-852D	(2) 30	65	T-24	105+92.5	90.9 LT	
C68	G/G	L-852D	(2) 30	65	T-16	105+96.5	79.5 LT	
C69	G/G	L-852D	(2) 30	65	T-24	N321655.5	E329438.0	
C70	G/G	L-852D	(2) 30	65	T-16	N321645.8	E329445.1	
C71	G/G	L-852D	(2) 30	65	T-24	106+07.4	49.2 LT	
C72	G/G	L-852D	(2) 30	65	T-16	106+16.0	40.7 LT	
C73	G/G	L-852D	(2) 30	65	T-24	106+25.3	33.0 LT	
C74	G/G	L-852D	(2) 30	65	T-16	106+35.2	26.0 LT	
C75	G/G	L-852D	(2) 30	65	T-24	106+45.6	19.9 LT	
C76	G/G	L-852D	(2) 30	65	T-16	106+56.4	14.7 LT	
C77	G/G	L-852D	(2) 30	65	T-24	106+67.7	10.3 LT	
C78	G/G	L-852D	(2) 30	65	T-16	106+79.3	6.9 LT	
C79	G/G	L-852D	(2) 30	65	T-24	106+91.1	4.5 LT	
C80	G/G	L-852D	(2) 30	65	T-16	107+03.0	3.0 LT	
C81	G/G	L-852D	(2) 30	65	T-24	107+15.1	2.5 LT	
C82	G/G	L-852C	(2) 30	65	T-16	107+64.6	2.5 LT	
C83	G/G	L-852C	(2) 30	65	T-24	108+14.1	2.5 LT	
C84	G/G	L-852C	(2) 30	65	T-16	108+63.6	2.5 LT	
C85	G/G	L-852C	(2) 30	65	T-24	109+13.2	2.5 LT	
C86	G/G	L-852C	(2) 30	65	T-16	109+62.7	2.5 LT	
C87	G/G	L-852C	(2) 30	65	T-24	110+12.2	2.5 LT	
C88	G/G	L-852C	(2) 30	65	T-16	110+61.7	2.5 LT	
C89	G/G	L-852C	(2) 30	65	T-24	111+11.2	2.5 LT	
C90	G/G	L-852C	(2) 30	65	T-16	111+60.7	2.5 LT	
C91	G/G	L-852C	(2) 30	65	T-24	112+10.3	2.5 LT	
C92	G/G	L-852C	(2) 30	65	T-16	112+59.8	2.5 LT	
C93	G/G	L-852C	(2) 30	65	T-24	113+09.3	2.5 LT	
C94	G/G	L-852C	(2) 30	65	T-16	113+58.8	2.5 LT	
C95	G/G	L-852C	(2) 30	65	T-24	114+08.3	2.5 LT	
C96	G/G	L-852C	(2) 30	65	T-16	114+57.8	2.5 LT	
C97	G/G	L-852C	(2) 30	65	T-24	115+07.4	2.5 LT	
C98	G/G	L-852C	(2) 30	65	T-16	115+56.9	2.5 LT	
C99	G/G	L-852C	(2) 30	65	T-24	116+06.4	2.5 LT	
C100	G/G	L-852C	(2) 30	65	T-16	116+55.9	2.5 LT	
C101	G/G	L-852C	(2) 30	65	T-24	117+05.4	2.5 LT	
C102	G/G	L-852C	(2) 30	65	T-16	117+54.9	2.5 LT	
C103	G/G	L-852C	(2) 30	65	T-24	118+04.4	2.5 LT	
C104	G/G	L-852C	(2) 30	65	T-16	118+54.0	2.5 LT	
C105	G/G	L-852C	(2) 30	65	T-24	119+03.5	2.5 LT	
C106	G/G	L-852C	(2) 30	65	T-16	119+53.0	2.5 LT	
C107	G/G	L-852D	(2) 30	65	T-24	120+02.5	2.5 LT	
C108	G/G	L-852D	(2) 30	65	T-16	120+15.0	3.1 LT	
C109	G/G	L-852D	(2) 30	65	T-24	120+27.4	4.9 LT	
C110	G/G	L-852D	(2) 30	65	T-16	120+39.5	7.9 LT	
C111	G/G	L-852D	(2) 30	65	T-24	120+51.3	12.0 LT	
C112	G/G	L-852D	(2) 30	65	T-16	120+62.7	17.2 LT	
C113	G/G	L-852D	(2) 30	65	T-24	120+73.5	23.5 LT	
C114	G/G	L-852D	(2) 30	65	T-16	120+83.7	30.8 LT	
C115	G/G	L-852D	(2) 30	65	T-24	120+93.1	39.0 LT	
C116	G/G	L-852D	(2) 30	65	T-16	121+01.7	48.1 LT	
C117	G/G	L-852D	(2) 30	65	T-24	121+09.3	58.0 LT	
C118	G/G	L-852D	(2) 30	65	T-16	121+16.0	68.6 LT	
C119	G/G	L-852D	(2) 30	65	T-24	121+21.7	79.8 LT	
C120	G/G	L-852D	(2) 30	65	T-16	121+26.2	91.4 LT	

TAXIWAY CENTERLINE LIGHT SCHEDULE (CONT)

NUM	LENS COLOR	TYPE	WATTAGE LAMP	WATTAGE XFMR	CKT	STATION	OFFSET	REMARKS
C121	G/G	L-852D	(2) 30	65	T-24	121+29.6	103.4 LT	
C122	G/G	L-852D	(2) 30	65	T-16	121+31.9	115.7 LT	
C123	G/G	L-852D	(2) 30	65	T-24	121+32.9	128.2 LT	
C124	G/G	L-852D	(2) 30	65	T-16	121+32.8	140.7 LT	
C125	G/G	L-852D	(2) 30	65	T-24	121+31.4	153.2 LT	
C126	G/G	L-852D	(2) 30	65	T-16	121+28.9	165.4 LT	
C127	G/G	L-852D	(2) 30	65	T-24	121+25.2	177.4 LT	
C128	–	–	–	–	–	120+51.6	2.5 LT	SEE NOTE 1
C129	–	–	–	–	–	121+00.8	2.5 LT	SEE NOTE 1
C130	–	–	–	–	–	121+49.9	2.5 LT	SEE NOTE 1
C131	–	–	–	–	–	121+99.0	2.5 LT	SEE NOTE 1
C132	–	–	–	–	–	122+48.2	2.5 LT	SEE NOTE 1
C133	–	–	–	–	–	122+97.3	2.5 LT	SEE NOTE 1
C134	–	–	–	–	–	122+85.3	3.0 LT	SEE NOTE 1
C135	–	–	–	–	–	122+73.3	4.5 LT	SEE NOTE 1
C136	–	–	–	–	–	122+61.5	6.9 LT	SEE NOTE 1
C137	–	–	–	–	–	122+50.0	10.3 LT	SEE NOTE 1
C138	–	–	–	–	–	122+38.8	14.6 LT	SEE NOTE 1
C139	–	–	–	–	–	122+27.9	19.8 LT	SEE NOTE 1
C140	–	–	–	–	–	122+17.5	25.9 LT	SEE NOTE 1
C141	–	–	–	–	–	122+07.7	32.8 LT	SEE NOTE 1
C142	–	–	–	–	–	121+98.4	40.5 LT	SEE NOTE 1
C143	–	–	–	–	–	121+89.8	48.9 LT	SEE NOTE 1
C144	–	–	–	–	–	121+82.0	58.0 LT	SEE NOTE 1
C145	–	–	–	–	–	121+74.9	67.7 LT	SEE NOTE 1
C146	–	–	–	–	–	121+68.6	78.0 LT	SEE NOTE 1
C147	–	–	–	–	–	121+63.1	88.7 LT	SEE NOTE 1
C148	–	–	–	–	–	121+58.6	99.9 LT	SEE NOTE 1
C149	–	–	–	–	–	121+42.7	143.6 LT	SEE NOTE 1
C150	G/G	L-852C	(2) 30	65	T-16	121+26.9	187.4 LT	
C151	G/G	L-852D	(2) 30	65	T-24	121+11.1	231.2 LT	
C152	G/Y	L-852D	(2) 30	65	T-16	120+95.3	275.0 LT	YELLOW FACES RW
C153	G/G	L-852D	(2) 30	65	T-16	120+78.8	320.6 LT	
C154	Y/Y	L-852D	(2) 30	65	T-16	120+63.6	362.5 LT	
C155	G/G	L-852D	(2) 30	65	T-16	120+47.8	406.3 LT	
C156	Y/Y	L-852D	(2) 30	65	T-16	120+32.0	450.1 LT	
C157	G/G	L-852D	(2) 30	65	T-16	120+16.2	493.8 LT	
C158	Y/Y	L-852D	(2) 30	65	T-16	120+00.4	537.6 LT	
C159	G/G	L-852D	(2) 30	65	T-16	119+84.5	581.4 LT	
C160	G/G	L-852D	(2) 30	65	T-16	119+68.7	625.2 LT	
C161	Y/Y	L-852D	(2) 30	65	T-16	119+52.9	668.9 LT	
C162	O/G	L-852D	30	30/45	T-16	118+71.7	592.5 LT	COLOR FACES RW
C163	O/Y	L-852D	30	30/45	T-16	118+83.7	592.0 LT	COLOR FACES RW
C164	O/G	L-852D	30	30/45	T-16	118+95.6	590.5 LT	COLOR FACES RW
C165	O/Y	L-852D	30	30/45	T-16	119+07.4	588.1 LT	COLOR FACES RW
C166	O/G	L-852D	30	30/45	T-16	119+19.0	584.7 LT	COLOR FACES RW
C167	O/Y	L-852D	30	30/45	T-16	119+30.2	580.4 LT	COLOR FACES RW
C168	O/G	L-852D	30	30/45	T-16	119+41.0	575.2 LT	COLOR FACES RW
C169	O/Y	L-852D	30	30/45	T-16	119+51.4	569.1 LT	COLOR FACES RW
C170	O/G	L-852D	30	30/45	T-16	119+61.3	562.2 LT	COLOR FACES RW
C171	O/Y	L-852D	30	30/45	T-16	119+70.5	554.5 LT	COLOR FACES RW
C172	O/G	L-852D	30	30/45	T-16	119+79.1	546.1 LT	COLOR FACES RW
C173	O/Y	L-852D	30	30/45	T-16	119+87.0	537.0 LT	COLOR FACES RW
C174	O/G	L-852D	30	30/45	T-16	119+94.1	527.3 LT	COLOR FACES RW
C175	O/Y	L-852D	30	30/45	T-16	120+00.4	517.0 LT	COLOR FACES RW
C176	O/G	L-852D	30	30/45	T-16	120+05.8	506.3 LT	COLOR FACES RW
C177	O/Y	L-852D	30	30/45	T-16	120+10.4	495.1 LT	COLOR FACES RW
C178	–	–	–	–	–	123+47.3	2.5 LT	SEE NOTE 1
C179	–	–	–	–	–	123+97.3	2.5 LT	SEE NOTE 1
C180	–	–	–	–	–	124+47.3	2.5 LT	SEE NOTE 1

NOTE 1: LIGHT BASE WITH BLANK COVER. NO FIXTURE OR TRANSFORMER. PAID UNDER L125.060.0000.
SET LIGHT BASE TO PROPER ELEVATION FOR FIXTURE INSTALLATION PER SHEET E16.

PRELIMINARY

STATE OF ALASKA 49TH
LUCAS SCHNELLER EE-11399 REGISTERED PROFESSIONAL ENGINEER

BY	DATE	REVISION

STATE OF ALASKA
DEPARTMENT OF TRANSPORTATION AND PUBLIC FACILITIES
CENTRAL REGION
4111 AVIATION AVE., ANCHORAGE ALASKA 99502
PHONE (907) 269-0590

TED STEVENS ANCHORAGE
ANCHORAGE, ALASKA
ANC TAXIWAY Z IMPROVEMENTS WEST - PHASE 1
PROJECT No. CFAPT00465
AIP No. 3-02-0016-XXX-2022
TAXIWAY CENTERLINE
LIGHT SCHEDULE

DATE: 10/1/2021
SHEET: E26 OF 28

Designed By: LPS/MXS1R
Drawn By: UCA/MXS
Checked By: LPS/MXS

Date Revised: 10/01/2021, 3:51 PM
Layout Name: SCHEDULES 3
File Path and Name: U:\204530630O\drawing\e\sheets\00465-ANC-E24-E28_SCHEDULES.dwg

RUNWAY GUARD LIGHT SCHEDULE

NUM	LENS COLOR	TYPE	WATTAGE LAMP	WATTAGE XFMR	STATION	OFFSET	REMARKS
H1	Y	L-804	LED	30/45	104+95.7	333.5 LT	
H2	Y	L-852G	LED	30/45	105+05.8	332.1 LT	
H3	Y	L-852G	LED	30/45	105+15.6	330.9 LT	
H4	Y	L-852G	LED	30/45	105+25.3	329.6 LT	
H5	Y	L-852G	LED	30/45	105+35.1	328.3 LT	
H6	Y	L-852G	LED	30/45	105+44.8	327.0 LT	
H7	Y	L-852G	LED	30/45	105+54.6	325.7 LT	
H8	Y	L-852G	LED	30/45	105+64.3	324.4 LT	
H9	Y	L-852G	LED	30/45	105+74.1	323.2 LT	
H10	Y	L-852G	LED	30/45	105+83.8	321.9 LT	
H11	Y	L-852G	LED	30/45	105+93.6	320.6 LT	
H12	Y	L-852G	LED	30/45	N321904.4	E329406.7	
H13	Y	L-804	LED	30/45	N321904.5	E329429.5	
H14	Y	L-804	LED	30/45	120+13.0	317.0 LT	
H15	Y	L-852G	LED	30/45	120+30.9	317.0 LT	
H16	Y	L-852G	LED	30/45	120+40.8	317.0 LT	
H17	Y	L-852G	LED	30/45	120+50.6	317.0 LT	
H18	Y	L-852G	LED	30/45	120+60.4	317.0 LT	
H19	Y	L-852G	LED	30/45	120+70.3	317.0 LT	
H20	Y	L-852G	LED	30/45	120+80.1	317.0 LT	
H21	Y	L-852G	LED	30/45	120+89.9	317.0 LT	
H22	Y	L-852G	LED	30/45	120+99.8	317.0 LT	
H23	Y	L-852G	LED	30/45	121+09.6	317.0 LT	
H24	Y	L-852G	LED	30/45	121+19.4	317.0 LT	
H25	Y	L-852G	LED	30/45	121+29.3	317.0 LT	
H26	Y	L-804	LED	30/45	121+50.0	317.0 LT	

TAXIWAY CENTERLINE LIGHT SCHEDULE (CONT)

NUM	LENS COLOR	TYPE	WATTAGE LAMP	WATTAGE XFMR	CKT	STATION	OFFSET	REMARKS
C181	–	–	–	–	–	124+97.3	2.5 LT	SEE NOTE 1
C182	G/G	L-852D	(2) 30	65	T-16	119+88.2	2.5 RT	
C183	G/G	L-852D	(2) 30	65	T-24	119+75.7	3.3 RT	
C184	G/G	L-852D	(2) 30	65	T-16	119+63.4	5.5 RT	
C185	G/G	L-852D	(2) 30	65	T-24	119+51.4	9.2 RT	
C186	G/G	L-852D	(2) 30	65	T-16	119+40.0	14.3 RT	
C187	G/G	L-852D	(2) 30	65	T-24	119+29.2	20.7 RT	
C188	G/G	L-852D	(2) 30	65	T-16	119+19.3	28.4 RT	
C189	G/G	L-852D	(2) 30	65	T-24	119+10.4	37.2 RT	
C190	G/G	L-852D	(2) 30	65	T-16	119+02.6	47.0 RT	
C191	G/G	L-852D	(2) 30	65	T-24	118+96.0	57.7 RT	
C192	G/G	L-852D	(2) 30	65	T-16	118+90.8	69.1 RT	
C193	G/G	L-852D	(2) 30	65	T-24	118+87.0	81.0 RT	
C194	G/G	L-852D	(2) 30	65	T-16	118+84.6	93.3 RT	
C195	G/G	L-852D	(2) 30	65	T-24	118+83.7	105.8 RT	
C196	G/G	L-852D	(2) 30	65	T-16	118+84.3	118.3 RT	
C197	G/G	L-852D	(2) 30	65	T-24	118+86.4	130.6 RT	
C198	G/G	L-852D	(2) 30	65	T-16	118+90.0	142.7 RT	
C199	G/G	L-852C	LED	65	T-24	119+06.6	188.4 RT	
C200	G/G	L-852C	LED	65	T-16	119+23.2	234.1 RT	
C201	G/G	L-852C	LED	65	T-24	119+39.8	279.8 RT	
C202	G/G	L-852C	LED	65	T-16	119+56.3	325.6 RT	
C203	G/G	L-852C	LED	65	T-24	119+72.9	371.3 RT	
C204	G/G	L-852C	LED	65	T-16	119+89.5	417.0 RT	
C205	G/G	L-852C	LED	65	T-24	120+06.1	462.8 RT	
C206	G/G	L-852C	LED	65	T-16	120+22.7	508.5 RT	
C207	G/G	L-852C	(2) 30	65	T-24	118+77.1	107.1 RT	
C208	G/G	L-852D	(2) 30	65	T-16	118+59.5	73.3 RT	
C209	G/G	L-852D	(2) 30	65	T-24	118+54.8	62.3 RT	
C210	G/G	L-852D	(2) 30	65	T-16	118+48.9	51.9 RT	
C211	G/G	L-852D	(2) 30	65	T-24	118+41.9	42.3 RT	
C212	G/G	L-852D	(2) 30	65	T-16	118+33.9	33.4 RT	
C213	G/G	L-852D	(2) 30	65	T-24	118+24.9	25.5 RT	
C214	G/G	L-852D	(2) 30	65	T-16	118+15.1	18.7 RT	
C215	G/G	L-852D	(2) 30	65	T-24	118+04.7	13.0 RT	
C216	G/G	L-852D	(2) 30	65	T-16	117+93.6	8.4 RT	
C217	G/G	L-852D	(2) 30	65	T-24	117+82.1	5.1 RT	
C218	G/G	L-852D	(2) 30	65	T-16	117+70.3	3.2 RT	
C219	G/G	L-852D	(2) 30	65	T-24	117+58.4	2.5 RT	
C220	G/G	L-852D	(2) 30	65	T-24	106+75.3	2.5 RT	
C221	G/G	L-852D	(2) 30	65	T-16	106+63.4	3.6 RT	
C222	G/G	L-852D	(2) 30	65	T-24	106+52.0	7.0 RT	
C223	G/G	L-852D	(2) 30	65	T-16	106+41.4	12.5 RT	
C224	G/G	L-852D	(2) 30	65	T-24	106+32.1	19.8 RT	
C225	G/G	L-852D	(2) 30	65	T-16	106+24.3	28.9 RT	
C226	G/G	L-852D	(2) 30	65	T-24	106+18.4	39.2 RT	
C227	G/G	L-852D	(2) 30	65	T-16	106+14.5	50.4 RT	
C228	G/G	L-852D	(2) 30	65	T-24	106+12.9	62.2 RT	
C229	G/G	L-852D	(2) 30	65	T-16	106+13.5	74.1 RT	
C230	G/G	L-852C	(2) 30	65	T-24	106+20.3	120.3 RT	
C231	G/G	L-852C	(2) 30	65	T-16	106+27.1	166.5 RT	
C232	G/G	L-852C	(2) 30	65	T-24	106+33.9	212.7 RT	
C233	G/G	L-852C	(2) 30	65	T-16	106+40.7	258.9 RT	
C234	G/G	L-852C	(2) 30	65	T-24	106+47.5	305.1 RT	
C235	G/G	L-852C	(2) 30	65	T-16	106+54.3	351.3 RT	
C236	G/G	L-852C	(2) 30	65	T-24	106+61.1	397.5 RT	
C237	G/G	L-852C	(2) 30	65	T-16	106+67.9	443.7 RT	
C238	G/G	L-852C	(2) 30	65	T-24	106+74.8	489.9 RT	
C239	G/G	L-852C	(2) 30	65	T-16	106+81.6	536.0 RT	
C240	G/G	L-852C	(2) 30	65	T-24	106+88.4	582.2 RT	

TAXIWAY CENTERLINE LIGHT SCHEDULE (CONT)

NUM	LENS COLOR	TYPE	WATTAGE LAMP	WATTAGE XFMR	CKT	STATION	OFFSET	REMARKS
C241	G/G	L-852C	(2) 30	65	T-16	106+95.2	628.4 RT	
C242	G/G	L-852C	(2) 30	65	T-24	106+07.8	35.8 RT	
C243	–	–	–	–	–	106+08.3	73.2 RT	SEE NOTE 1
C244	–	–	–	–	–	106+05.4	61.2 RT	SEE NOTE 1
C245	–	–	–	–	–	105+94.0	49.4 RT	SEE NOTE 1
C246	–	–	–	–	–	105+88.6	38.1 RT	SEE NOTE 1
C247	–	–	–	–	–	105+81.3	27.9 RT	SEE NOTE 1
C248	–	–	–	–	–	105+72.4	19.1 RT	SEE NOTE 1
C249	–	–	–	–	–	105+62.1	12.0 RT	SEE NOTE 1
C250	–	–	–	–	–	105+50.7	6.8 RT	SEE NOTE 1
C251	–	–	–	–	–	105+38.6	3.6 RT	SEE NOTE 1
C252	–	–	–	–	–	105+26.2	2.5 RT	SEE NOTE 1
C253	–	–	–	–	–	105+06.9	2.5 LT	SEE NOTE 1
C254	–	–	–	–	–	105+54.0	2.5 LT	SEE NOTE 1

NOTE 1: LIGHT BASE WITH BLANK COVER ONLY. NO FIXTURE OR TRANSFORMER. PAID UNDER L125.060.0000. SET LIGHT BASE TO PROPER ELEVATION FOR FIXTURE INSTALLATION PER SHEET E16.

PRELIMINARY

Designed By: LPS/MXS1R
Drawn By: UCA/MXS
Checked By: LPS/MXS

Date Revised: 10/01/2021, 3:51 PM
Layout Name: SCHEDULES 4
File Path and Name: U:\20453063000\drawing\e\sheets\00465-ANC-E24-E28_SCHEDULES.dwg

STATE OF ALASKA 49TH LUCAS SCHNELLER EE-11399 REGISTERED PROFESSIONAL ENGINEER

BY	DATE	REVISION

STATE OF ALASKA
DEPARTMENT OF TRANSPORTATION AND PUBLIC FACILITIES
CENTRAL REGION
4111 AVIATION AVE., ANCHORAGE ALASKA 99502
PHONE (907) 269-0590

TED STEVENS ANCHORAGE
ANCHORAGE, ALASKA
ANC TAXIWAY Z IMPROVEMENTS WEST - PHASE 1
PROJECT No. CFAPT00465
AIP No. 3-02-0016-XXX-2022
ELECTRICAL SCHEDULES

DATE: 10/1/2021
SHEET: E27 OF 28

RUNWAY EDGE LIGHT SCHEDULE

NUM	LENS COLOR	TYPE	WATTAGE LAMP	WATTAGE XFMR	STATION	OFFSET	REMARKS
R1	W	L-850C	(2)105	200	105+86.9	496.0 LT	
R2	W	L-862E	150	150	117+04.1	490.0 LT	SEE NOTE 1
R3	Y/W	L-850C	(2)105	200	120+98.0	490.0 LT	

NOTE 1: INSTALL NEW FIXTURE WITH HEAVY BASEPLATE AND NEW TRANSFORMER ON EXISTING L-868 LIGHT BASE.

EXISTING LIGHT SCHEDULE

NUM	LENS COLOR	TYPE	WATTAGE LAMP	WATTAGE XFMR	CKT	STATION	OFFSET	WORK SCOPE	REMARKS
X1	Y	L-852G	EXST	EXST	T-31	322+48.9	0.3 RT	A	
X2	Y	L-852G	EXST	EXST	T-31	320+81.2	7.7 LT	A	
X3	Y	L-852G	EXST	EXST	T-31	320+78.6	2.0 RT	A	

WORK SCOPE

A: REMOVE EXISTING FIXTURE, FLANGE RING, SPACER RINGS, AND TOP SECTION. INSTALL SHORTING CAP ON TRANSFORMER SECONDARY. INSTALL PLYWOOD COVER AND MUDPLATE FOR PAVING. AFTER ASPHALT WORK IS COMPLETE, REINSTALL EXISTING 3" TOP SECTION AND FIXTURE WITH NEW SPACER RINGS AND FLANGE RING IN ACCORDANCE WITH DETAILS FOR A NEW INSTALLATION. WORK IS PAID FOR UNDER L125.210.0000.

HANDHOLE SCHEDULE

NUM	TYPE	SIZE	STATION	OFFSET	REMARKS
HH1	I	B	119+31.3	441.4	
HH2	I	D	119+37.1	92.3	PAID UNDER L-130
HH3	I	B	120+21.0	130.0	PAID UNDER L-130
HH4	I	B	12247.17	140.4	PAID UNDER L-130
HH5	I	B	12633.33	140.34	PAID UNDER L-130

NOTES:

1. LOCATIONS ARE APPROXIMATE, FIELD LOCATE HANDHOLES AND JUNCTION BOXES.

ELECTRICAL MANHOLE SCHEDULE

NUM	LOAD RATING	SIZE	SYSTEM/LEGEND	STATION	OFFSET	REMARKS
EMH-21A	100K	4'x4'	LIGHTING	110+80.7	441.4	
EMH-21B	100K	4'x4'	LIGHTING	106+11.3	441.5	
EMH-21C	100K	4'x4'	LIGHTING	107+12.1	121.4	
EMH-21D	100K	4'x4'	LIGHTING	104+53.6	141.7	

NOTES:

1. LOCATIONS ARE APPROXIMATE, FIELD LOCATE NEW MANHOLES BASED ON FIELD CONDITIONS.

SIGN SCHEDULE

NUM	SIDE	PANEL	LEGEND	TYPE	LEGEND COLOR	FACE COLOR	STATION	OFFSET	SIZE	STYLE	CLASS	MODE	REMARKS
S1	1	1	R	L-858L	YELLOW	BLACK	105+15.0	219.3 RT	3	2	2	3	RIGHT ARROW ONLY
		2	←Z→	L-858Y	BLACK	YELLOW							SEE NOTE 1
	2	1	R	L-858L	YELLOW	BLACK							
S2	1	1	Z	L-858L	YELLOW	BLACK	104+07.0	135.8 LT	3	2	2	3	SEE NOTE 2
		2	←R→	L-858Y	BLACK	YELLOW							
	2	1	Z	L-858L	YELLOW	BLACK							
S3	1	1	R	L-858L	YELLOW	BLACK	104+45.8	340.0 LT	3	2	2	3	
		2	7R-25L	L-858R	WHITE	RED							
	2	1	R	L-858L	YELLOW	BLACK							
S4	1	1	R →	L-858Y	BLACK	YELLOW	103+98.6	470.3 LT	3	2	2	3	
	2	1	–	–	–	–							
S5	1	1	–	–	–	–	106+27.7	440.0 LT	3	2	2	3	
	2	1	← R	L-858Y	BLACK	YELLOW							
S6	1	1	–	–	–	–	106+69.1	218.3 LT	3	2	2	3	LEFT ARROW ONLY
	2	1	R	L-858L	YELLOW	BLACK							SEE NOTE 1
		2	←Z→	L-858Y	BLACK	YELLOW							
S7	1	1	Z	L-858L	YELLOW	BLACK	107+93.0	123.3 LT	3	2	2	3	
	2	1	←R→	L-858Y	BLACK	YELLOW							
		2	Z	L-858L	YELLOW	BLACK							
S8	1	1	Z	L-858L	YELLOW	BLACK	116+42.5	103.2 LT	3	2	2	3	
		2	E →	L-858Y	BLACK	YELLOW							
	2	1	Z	L-858L	YELLOW	BLACK							
S9	1	1	Z	L-858L	YELLOW	BLACK	119+79.0	143.8 LT	3	2	2	3	
		2	← E	L-858Y	BLACK	YELLOW							
	2	1	–	–	–	–							
S10	1	1	E	L-858L	YELLOW	BLACK	119+62.4	317.0 LT	3	2	2	3	
		2	7R-25L	L-858R	WHITE	RED							
	2	1	E	L-858L	YELLOW	BLACK							
S11	1	1	E →	L-858Y	BLACK	YELLOW	118+88.8	440.0 LT	3	2	2	3	
	2	1	–	–	–	–							
S12	1	1	–	–	–	–	121+83.8	440.0 LT	3	2	2	3	
	2	1	← E	L-858Y	BLACK	YELLOW							
S13	1	1	–	–	–	–	122+39.3	222.3 LT	3	2	2	3	RIGHT ARROW ONLY
	2	1	E	L-858L	YELLOW	BLACK							SEE NOTE 1
		2	←Z→	L-858Y	BLACK	YELLOW							
S14	1	1	–	–	–	–	123+85.0	98.3 RT	3	2	2	3	SEE NOTE 2
	2	1	Z	L-858L	YELLOW	BLACK							
		2	E →	L-858Y	BLACK	YELLOW							
S15	1	1	–	–	–	–	120+28.5	127.7 RT	3	2	2	3	
	2	1	Z	L-858L	YELLOW	BLACK							
		2	← E	L-858Y	BLACK	YELLOW							
S16	1	1	E	L-858L	YELLOW	BLACK	118+01.0	217.9 RT	3	2	2	3	
		2	←Z→	L-858Y	BLACK	YELLOW							
	2	1	E	L-858L	YELLOW	BLACK							

NOTE 1: ONLY INCLUDE DIRECTIONAL ARROW INDICATED. SIZE SIGN FOR FUTURE INSTALLATION OF PANEL WITH BOTH ARROWS. PROVIDE ADDITIONAL BLANK PANELS AS REQUIRED.

NOTE 2: SIGN NOT IN CONTRACT, SHOWN FOR REFERENCE ONLY. INSTALL FOUNDATION AND CONDUIT TO SUPPORT FUTURE SIGN INSTALLATION. INSTALL THREADED PLUG IN SIGN BASE CONDUIT COUPLING. APPLY THREAD SEALANT TO PLUG THREADS.

PRELIMINARY

Designed By: LPS/MXS1R
Drawn By: UCA/MXS
Checked By: LPS/MXS

Date Revised: 10/01/2021, 3:51 PM
Layout Name: SCHEDULES 5
File Path and Name: U:\2045306300\drawing\e\sheets\00465-ANC-E24-E28_SCHEDULES.dwg

STATE OF ALASKA 49TH
LUCAS SCHNELLER
EE-11399
REGISTERED PROFESSIONAL ENGINEER

BY	DATE	REVISION

STATE OF ALASKA
DEPARTMENT OF TRANSPORTATION AND PUBLIC FACILITIES
CENTRAL REGION
4111 AVIATION AVE., ANCHORAGE ALASKA 99502
PHONE (907) 269-0590

TED STEVENS ANCHORAGE
ANCHORAGE, ALASKA
ANC TAXIWAY Z IMPROVEMENTS WEST - PHASE 1
PROJECT No. CFAPT00465
AIP No. 3-02-0016-XXX-2022
ELECTRICAL SCHEDULES

DATE: 10/1/2021

SHEET: E28 OF 28

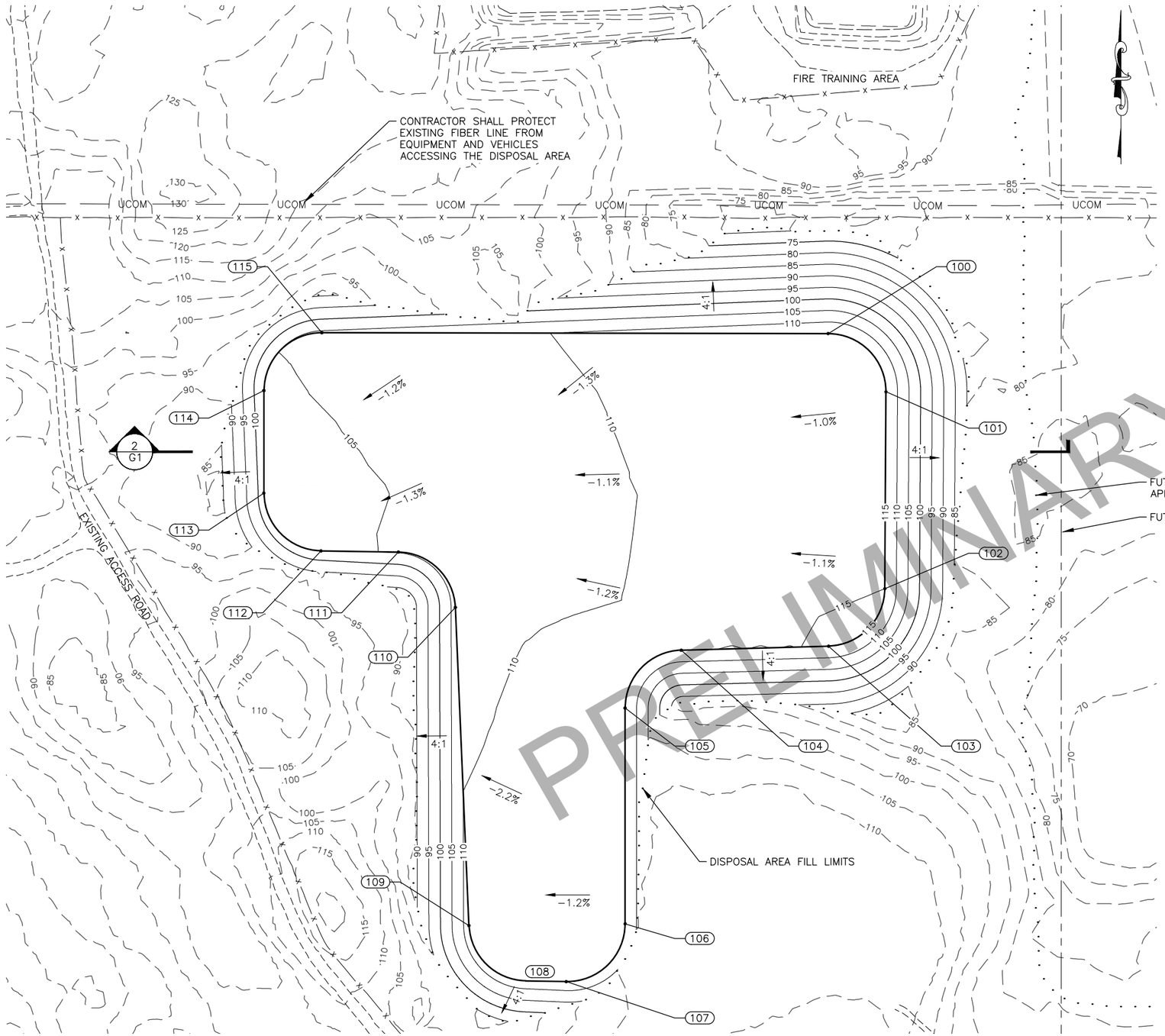

1
G1

DISPOSAL AREA GRADING PLAN

SCALE: GRAPHIC

GRADING POINTS				
POINT	NORTHING	EASTING	ELEVATION	DESCRIPTION
100	320790.49	326643.99	115.00	PC, R=100'
101	320689.92	326743.83	115.00	PT
102	320349.42	326741.88	115.00	PC, R=100'
103	320250.03	326644.58	115.00	PT
104	320243.16	326390.04	115.00	PC, R=100'
105	320143.19	326292.74	115.00	PT
106	319770.18	326292.74	115.00	PC, R=100'
107	319670.20	326191.06	113.87	PT
108	319671.38	326120.99	113.37	PC, R=100'
109	319767.12	326022.76	112.30	PT
110	320317.09	325999.41	106.84	PC, R=100'
111	320412.84	325900.87	105.34	PT
112	320414.68	325766.95	104.02	PC, R=100'
113	320514.67	325668.33	102.47	PT
114	320691.89	325668.33	104.25	PC, R=100'
115	320791.89	325768.49	105.88	PT

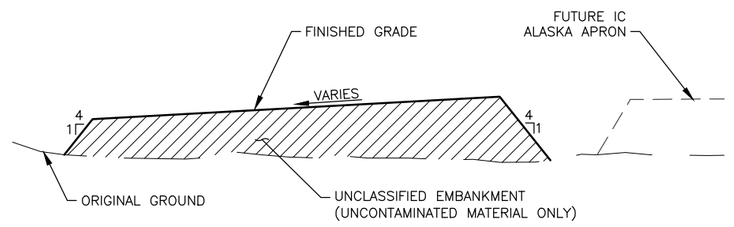

2
G1

DISPOSAL AREA SECTION

SCALE: NTS

100' 50' 0 100' 200'

PRELIMINARY

STATE OF ALASKA 49TH
Robert W. Burdick
CE-123959
REGISTERED PROFESSIONAL ENGINEER

PLANS DEVELOPED BY:
CRW ENGINEERING GROUP, LLC
3940 ARCTIC BLVD. SUITE 300
ANCHORAGE, ALASKA 99503
(907) 562-3252
#AECL882-AK

BY	DATE	REVISION

STATE OF ALASKA
DEPARTMENT OF TRANSPORTATION AND PUBLIC FACILITIES
CENTRAL REGION
4111 AVIATION AVE., ANCHORAGE ALASKA 99502
PHONE (907) 269-0590

TED STEVENS ANCHORAGE
ANCHORAGE, ALASKA
ANC TAXIWAY Z IMPROVEMENTS WEST – PHASE 1
PROJECT No. CFAPT00465
AIP No. 3-02-0016-XXX-2022
DISPOSAL AREA GRADING PLAN

DATE: 10/11/2021
SHEET: G1 OF G1

Designed By: ####
Drawn By: ####
Checked By: ####

Date Revised:
Layout Name: G1
File Path and Name: J:\JobsData\30207.32 ANC TW Z West Phase 1 Environmental\00 CADD 2019\01 Working Set\01 Civil\00465-ANC-Disposal Site.dwg
10/7/2021 2:35 PM

LEGEND

- PROJECT AREA
- PROPOSED HAUL ROUTE
- ACCESS GATE
- CONTRACTOR STAGING / PARKING AREA
- SOIL DISPOSAL SITE (UNCONTAMINATED MATERIAL)
- SOIL DISPOSAL SITE (FUEL CONTAMINATED MATERIAL)
- RAP STOCKPILE SITE
- SOIL DISPOSAL SITE (PFAS/PFOS CONTAMINATED MATERIAL)

GENERAL SAFETY REQUIREMENTS

1. SEE APPENDIX C OF THE SPECIFICATIONS FOR THE CONSTRUCTION SAFETY AND PHASING PLAN (CSPP) REQUIREMENTS. THE CONTRACTOR SHALL COMPLY WITH THE SAFETY REQUIREMENTS AS REQUIRED IN THE CSPP. ALL SAFETY RELATED WORK SHALL BE SUBSIDIARY TO THE CONTRACT AND NO ADDITIONAL PAYMENT WILL BE MADE.
2. THE CONTRACTOR SHALL SUBMIT A SAFETY PLAN COMPLIANCE DOCUMENT, PER FAA AC 150/5370-2G, TO THE ENGINEER FOR REVIEW AND APPROVAL PRIOR TO ISSUANCE OF A NOTICE TO PROCEED. IF THE CONSTRUCTION PHASING PLAN DIFFERS FROM WHAT IS SHOWN OR IF SUBSEQUENT CHANGES ARE MADE, SUBMIT A REVISION TO THE ENGINEER FOR REVIEW AND APPROVAL
3. CONSTRUCTION SHALL BE PLANNED TO MINIMIZE DISTURBANCE TO AIRCRAFT OPERATIONS. COORDINATE TAXILANE CLOSURES WITH AIRPORT OPERATIONS AND THE ENGINEER.
4. ALL CONSTRUCTION VEHICLES AND EQUIPMENT SHALL OPERATE A FLASHING YELLOW BEACON WHEN WORKING ON THE AIRPORT.
5. KEEP ACTIVE TAXIWAY SAFETY AREA (TSA) LIMITS CLEAR OF CONSTRUCTION MATERIALS. REMOVE ANY DEBRIS FROM THESE AREAS WITHIN 15 MINUTES OF VERBAL NOTICE FROM THE ENGINEER OR ENGINEER'S REPRESENTATIVE.
6. CLEAR SAFETY AREAS AND OBJECT FREE AREAS AT ANYTIME DIRECTED BY THE ENGINEER.
7. CONSTRUCTION ACTIVITIES THAT REQUIRE WORK IN AN ACTIVE TOFA ARE SUBJECT TO THE FOLLOWING RESTRICTIONS:
   - A. NOTAMS HAVE BEEN ISSUED ADVISING TAXIING PILOTS OF HAZARD AND RECOMMENDING REDUCED TAXIING SPEEDS ON THE TAXIWAY OF 10 MPH OR LESS.
   - B. INSTALL MARKING AND LIGHTING PER THIS CSPP AND THE PROVISIONS OF SECTIONS 2.18 AND 2.20 OF AC 150/5370-2G PRIOR TO THE COMMENCEMENT OF WORK IN THE AREA.
   - C. MAINTAIN FIVE FOOT CLEARANCE BETWEEN EQUIPMENT AND MATERIALS AND ANY PART OF AN AIRCRAFT. IF SUCH CLEARANCE CAN NOT BE MAINTAINED WHEN THE AIRCRAFT HAS FULL USE OF THE ENTIRE TAXIWAY WIDTH, THEN IT WILL BE NECESSARY TO MOVE PERSONNEL AND EQUIPMENT FOR THE PASSAGE OF THAT AIRCRAFT.
   - D. FLAGGERS FURNISHED BY THE CONTRACTOR MUST BE USED TO DIRECT AND CONTROL CONSTRUCTION EQUIPMENT AND PERSONNEL TO A PRE-ESTABLISHED SETBACK DISTANCE FOR SAFE PASSAGE OF AIRCRAFT.
   - E. AIRLINE PERSONNEL MUST BE USED TO DIRECT TAXIING AIRCRAFT WHEN WORK IS OCCURRING WITHIN THE ADJACENT TOFA.
   - F. REMOVE MATERIAL STOCKPILES AND EQUIPMENT FROM OBJECT FREE AREAS DURING NON-WORK HOURS.
8. PROVIDE AIRPORT FLAGGERS WHERE CONSTRUCTION ACTIVITY IS CONDUCTED IN CLOSE PROXIMITY TO OPERATING AIRCRAFT AND WHERE THE ENGINEER OR AIRPORT OPERATIONS DETERMINES A FLAGGER IS NECESSARY.
9. CONTRACTOR HAULING OPERATIONS ARE LIMITED TO THE HAUL ROUTES SHOWN ON THE PLANS. FOLLOWING CONSTRUCTION COMPLETION, THE CONTRACTOR IS REQUIRED TO RESTORE THE HAUL ROUTE TO ITS ORIGINAL CONDITION.
10. THE CONTRACTOR MUST REPORT ANY SAFETY ISSUES TO THE ENGINEER AND AIRPORT OPERATIONS UPON DISCOVERY. THE CONTRACTOR MUST TAKE IMMEDIATE ACTION TO RESOLVE SAFETY ISSUES AS DIRECTED.
11. IMMEDIATELY REMOVE ALL FOREIGN OBJECT DEBRIS (FOD) FROM ACTIVE SURFACES UPON DISCOVERY OR NOTIFICATION. FAILURE TO REMOVE FOD MAY BE CONSIDERED A SAFETY VIOLATION AS DETERMINED BY THE ENGINEER. STATION ADEQUATE CLEANING EQUIPMENT AT THE JOB SITE FOR IMMEDIATE CLEANUP OF ANY MATERIAL SPILLS ON ALL ACTIVE TAXIWAY, AND APRON SURFACES.
12. NO CONSTRUCTION TRAFFIC WILL BE PERMITTED ON POSTMARK DRIVE DURING THE FOLLOWING EVENTS:
   - A. GREAT ALASKA AVIATION GATHERING
14. USE RAP FROM RAP STOCKPILE AT THE DISCRETION OF THE ENGINEER.
15. FOLLOW THE REQUIREMENTS FOR A DRINKING WATER PROTECTION AREA (DWPA) PER THE ACGP.
16. NO CONSTRUCTION ACTIVITY IS ALLOWED WITHIN THE RUNWAY SAFETY AREA (RSA) WHILE THE RUNWAY IS OPEN TO AIRCRAFT OPERATIONS.
17. THIS PROJECT INCLUDES WORK IN CLOSE PROXIMITY TO CRITICAL ELECTRONIC NAVIGATION AIDS (NAVAIDS) THAT ARE OWNED AND MAINTAINED BY THE FAA, AND SECURITY COMMUNICATIONS THAT ARE OWNED AND MAINTAINED BY ANC OR OTHER PARTIES. PROTECTION OF THESE SYSTEMS IS ESSENTIAL TO AIRPORT SAFETY. THE ENGINEER MAY DIRECT SURVEYED MARKING OF THESE AREAS AS REQUIRED TO ENSURE THAT CONTRACTOR PERSONNEL ARE AWARE OF THE CRITICAL AREA BOUNDARIES.

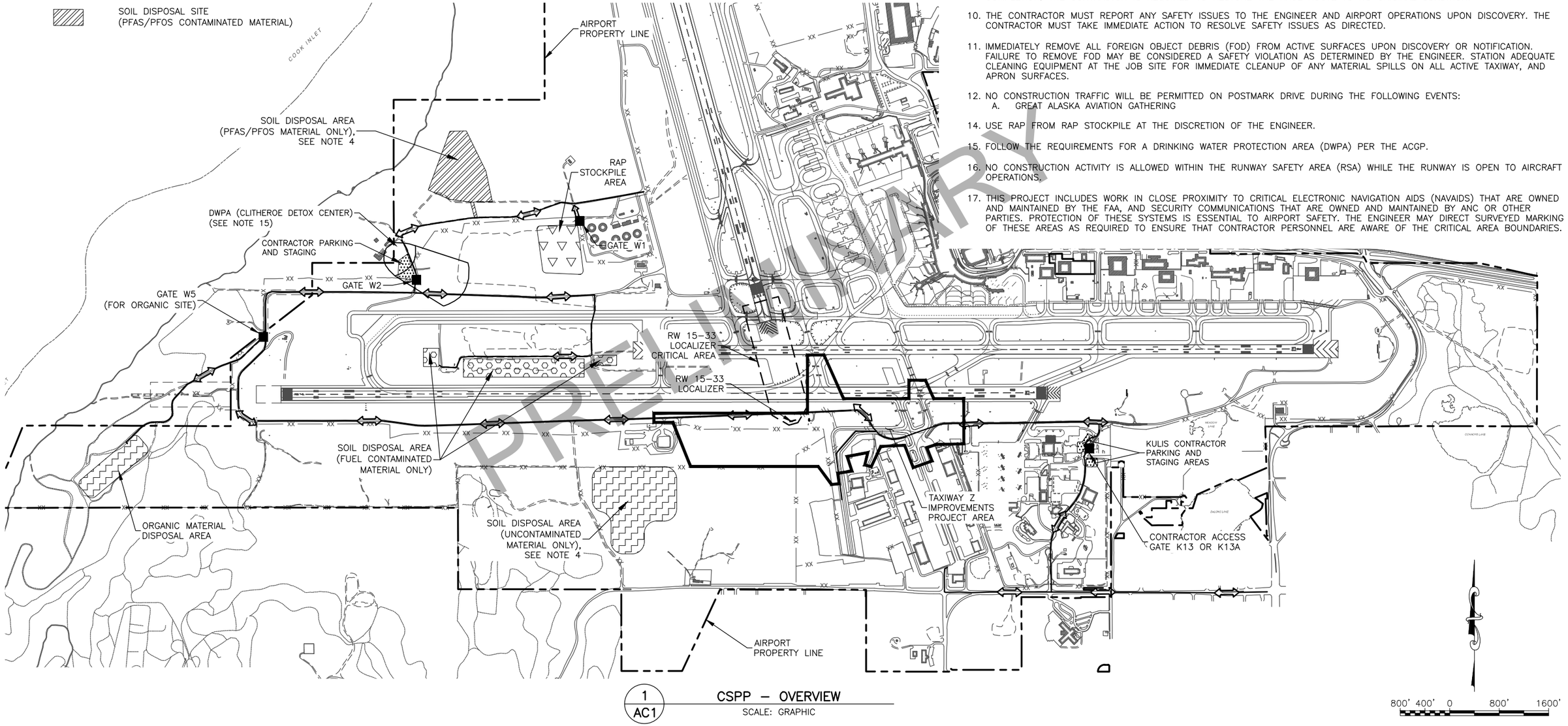

1 / AC1 CSPP – OVERVIEW
SCALE: GRAPHIC

PRELIMINARY

BY	DATE	REVISION

STATE OF ALASKA
DEPARTMENT OF TRANSPORTATION AND PUBLIC FACILITIES
CENTRAL REGION
4111 AVIATION AVE., ANCHORAGE ALASKA 99502
PHONE (907) 269-0590

TED STEVENS ANCHORAGE
ANCHORAGE, ALASKA
ANC TAXIWAY Z IMPROVEMENTS WEST - PHASE 1
PROJECT No. CFAPT00465
AIP No. 3-02-0016-XXX-2022
CSPP OVERVIEW

DATE: 10/14/2021
SHEET: AC1 OF AC14

Designed By: BAG
Drawn By: RJB
Checked By: TAD
Date Revised:
Layout Name: CSPP OVERVIEW
File Path and Names: W:\Projects\AIA Ted Stevens\AIA TW Z Ext 00465\Final Drawings\00465-AIA-CSPP.dwg
10/14/2021, 10:04 AM

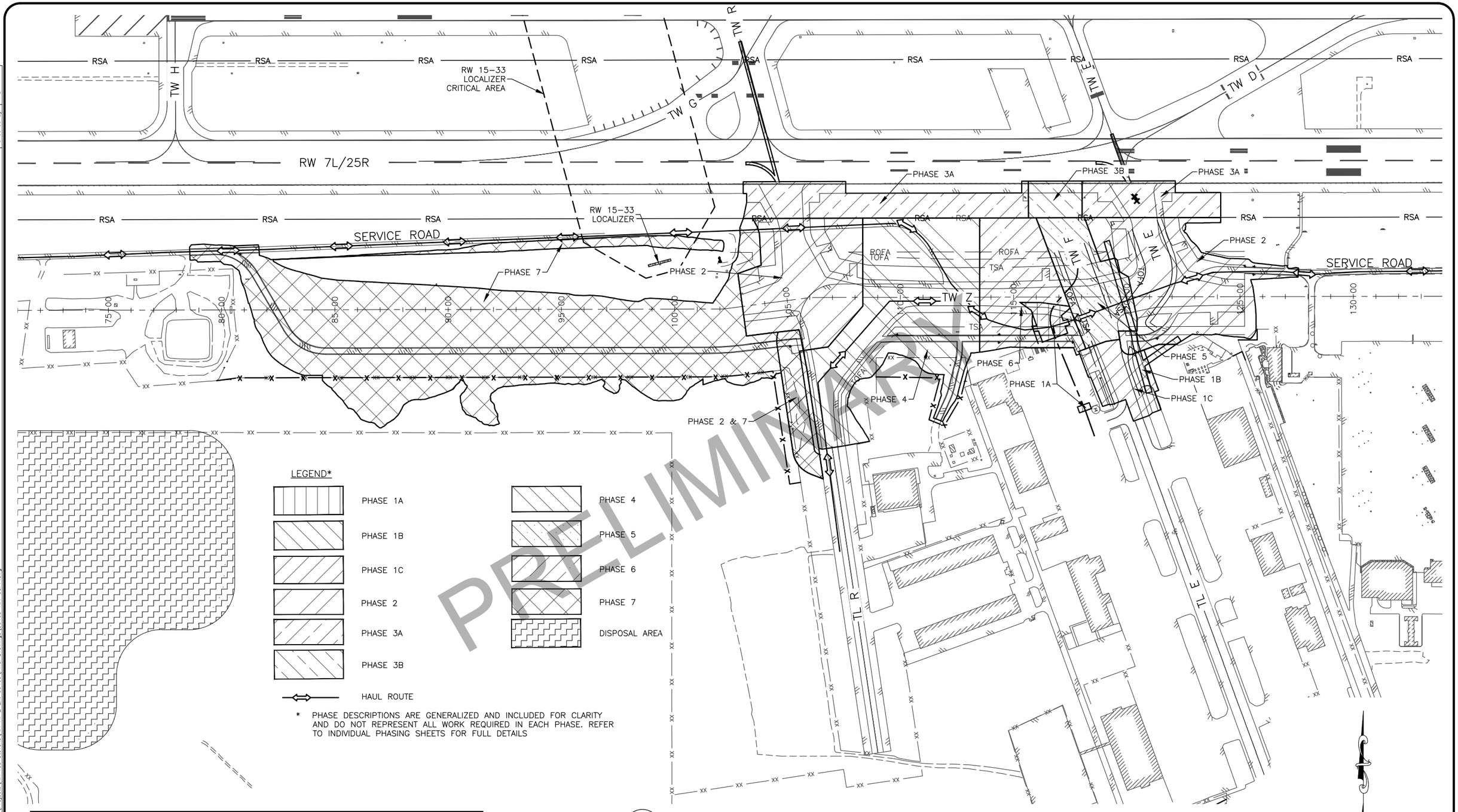

* PHASE DESCRIPTIONS ARE GENERALIZED AND INCLUDED FOR CLARITY AND DO NOT REPRESENT ALL WORK REQUIRED IN EACH PHASE. REFER TO INDIVIDUAL PHASING SHEETS FOR FULL DETAILS

PRELIMINARY

CONSTRUCTION PHASING SCHEDULE

PHASE	DURATION NOT TO EXCEED	ALLOWABLE CONCURRENT PHASE	PROJECT COMPLETION DATE
1	XX DAYS	NONE	X/XX/202X
2	XX DAYS	NONE	
3	XX DAYS	NONE	
4	XX DAYS	NONE	
5	XX DAYS	NONE	

1 / AC2 PROJECT LAYOUT PLAN

SCALE: GRAPHIC

BY	DATE	REVISION

STATE OF ALASKA
DEPARTMENT OF TRANSPORTATION AND PUBLIC FACILITIES
CENTRAL REGION
4111 AVIATION AVE., ANCHORAGE ALASKA 99502
PHONE (907) 269-0590

TED STEVENS ANCHORAGE
ANCHORAGE, ALASKA
ANC TAXIWAY Z IMPROVEMENTS WEST – PHASE 1
PROJECT No. CFAPT00465
AIP No. 3-02-0016-XXX-2022
CONSTRUCTION PHASING PLAN AND SCHEDULE

DATE: 10/14/2021

SHEET: AC2 OF AC14

Designed By: BAG
Drawn By: RJB
Checked By: TAD

Date Revised:
Layout Name: 10/14/2021, 10:04 AM
CSPP CONSTRUCTION PHASING
File Path and Names: W:\Projects\AIA Ted Stevens\AIA TW Z Ext 00465\Final Drawings\00465-AIA-CSPP.dwg

COMPLETE THE FOLLOWING PRIOR TO PHASE 1A CONSTRUCTION:

- COORDINATE THROUGH THE ENGINEER TO ISSUE A NOTAM FOR THE CLOSURE OF TL R & TW Z
- INSTALL HAZARD MARKER BARRIERS
- INSTALL APPROPRIATE BEST MANAGEMENT PRACTICES (BMPS) PER CONTRACTORS APPROVED STORM WATER POLLUTION PREVENTION PLAN (SWPPP) AS DEFINED IN CONTRACT SPECIFICATION P-641
- REMOVE TAXIWAY EDGE LIGHT STEMS FOR EDGE LIGHTS LOCATED WITHIN THE TEMPORARY TAXILANE CONSTRUCTION AREA AND BLIND FLANGE

COMPLETE THE FOLLOWING DURING PHASE 1A CONSTRUCTION:

- CLEARING AND GRUBBING
- INSTALL TEMPORARY TAXILANE BETWEEN GREAT CIRCLE FLIGHT SERVICES APRON AND TW Z

COMPLETE THE FOLLOWING AFTER PHASE 1A CONSTRUCTION:

- INSTALL TEMPORARY CENTERLINE MARKINGS
- REMOVE HAZARD MARKER BARRIERS
- REMOVE BMP□S

NOTES:

1. 14 DAYS PRIOR TO THE BEGINNING OF EACH PHASE, NOTIFY AIRPORT OPERATIONS THROUGH THE ENGINEER.
2. ALL WORK IN PHASE 1A MUST BE COMPLETED BEFORE CLOSING AREA FOR PHASE 1C IN ORDER TO MAINTAIN AIRCRAFT ACCESS.
3. ONCE COMPLETED, EACH PHASE SHALL REMAIN OPEN TO AUTHORIZED PERSONNEL AND TENANTS FOR THE DURATION OF THE PROJECT.
4. A PORTION OF PHASE 1A CONSTRUCTION OCCURS WITHIN THE TSA FOR ADG III AIRCRAFT OPERATING ON TW Z. NO CONSTRUCTION MAY OCCUR WITHIN THE TSA WHILE TW Z IS OPEN FOR ADG III AIRCRAFT OPERATIONS. REFER TO NOTES 5 AND 6 ON SHEET AC1.
5. THE TEMPORARY TAXILANE CONSTRUCTION AT THE TIE IN TO TW Z OCCURS WITHIN THE ACTIVE TOFA FOR ADG III AIRCRAFT OPERATING ON TW Z. GENERAL SAFETY REQUIREMENTS NOTE 7 ON SHEET AC1 DESCRIBES CONSTRUCTION REQUIREMENTS FOR WORK OCCURRING WITHIN AN ACTIVE TOFA.
6. ALL WORK ASSOCIATED WITH SIGN REMOVAL AND REINSTALLATION IS INCIDENTAL TO THE PROJECT.
7. ANTICIPATED DURATION FOR PHASE 1A IS 1 DAY.

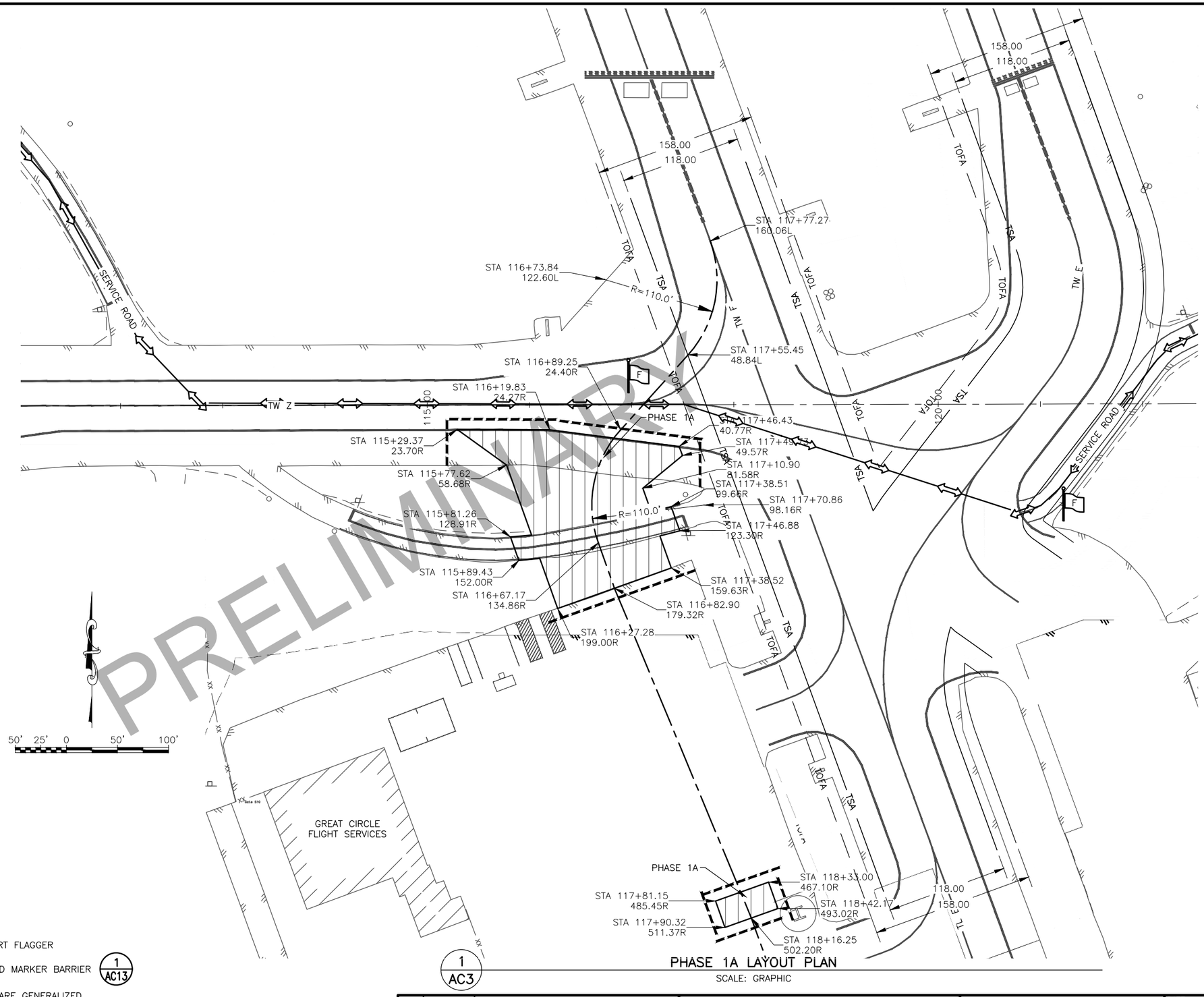

PHASE 1A LAYOUT PLAN

SCALE: GRAPHIC

1 / AC3

LEGEND*

- PHASE 1A
- HAUL ROUTE
- AIRPORT FLAGGER
- HAZARD MARKER BARRIER (1 / AC13)

* PHASE DESCRIPTIONS ARE GENERALIZED AND INCLUDED FOR CLARITY AND DO NOT REPRESENT ALL WORK REQUIRED IN EACH PHASE. REFER TO INDIVIDUAL PHASING SHEETS FOR FULL DETAILS

PRELIMINARY

BY	DATE	REVISION

STATE OF ALASKA
DEPARTMENT OF TRANSPORTATION AND PUBLIC FACILITIES
CENTRAL REGION
4111 AVIATION AVE., ANCHORAGE ALASKA 99502
PHONE (907) 269-0590

TED STEVENS ANCHORAGE
ANCHORAGE, ALASKA
ANC TAXIWAY Z IMPROVEMENTS WEST - PHASE 1
PROJECT No. CFAPT00465
AIP No. 3-02-0016-XXX-2022
CSPP PHASE 1A

DATE: 10/14/2021

SHEET: AC3 OF AC14

Designed By: BAG
Drawn By: RJB
Checked By: TAD

Date Revised:
Layout Name: CSPP PHASE 1A
File Path and Name: W:\Projects\ANA Ted Stevens\ANA TW Z Ext 00465\Final Drawings\00465-AIA-CSPP.dwg
10/14/2021, 10:04 AM

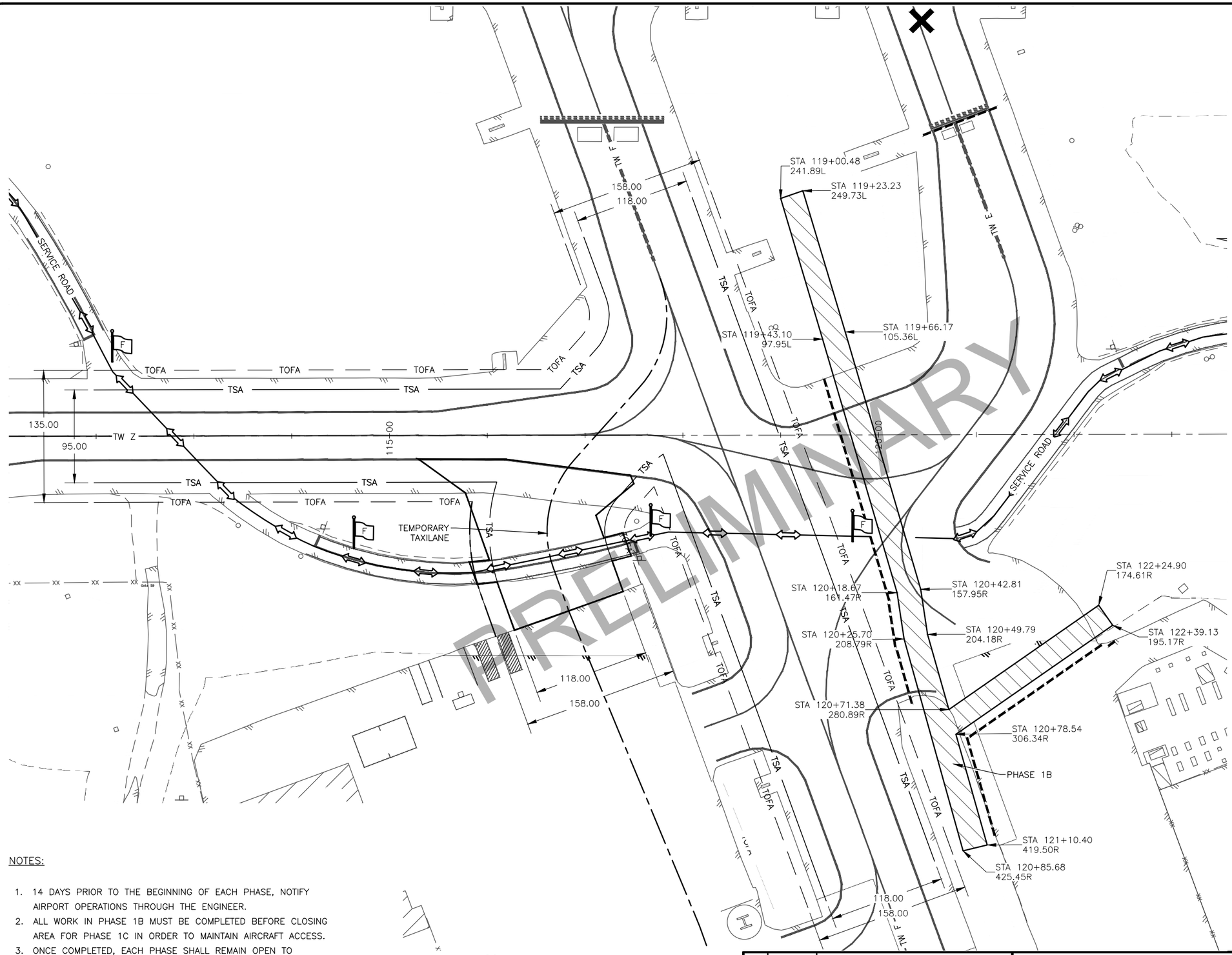

LEGEND*

PHASE 1A

HAUL ROUTE

AIRPORT FLAGGER

HAZARD MARKER BARRIER

1 / AC13

* PHASE DESCRIPTIONS ARE GENERALIZED AND INCLUDED FOR CLARITY AND DO NOT REPRESENT ALL WORK REQUIRED IN EACH PHASE. REFER TO INDIVIDUAL PHASING SHEETS FOR FULL DETAILS

COMPLETE THE FOLLOWING PRIOR TO PHASE 1B CONSTRUCTION:

- COORDINATE THROUGH THE ENGINEER TO ISSUE A NOTAM FOR THE CLOSURE OF TW E
- INSTALL HAZARD MARKER BARRIERS
- INSTALL TAXIWAY CLOSURE MARKER AT TW E
- INSTALL BMP'S PER CONTRACTOR APPROVED SWPPP

COMPLETE THE FOLLOWING DURING PHASE 1B CONSTRUCTION:

- CLEARING AND GRUBBING
- REMOVE TAXIWAY EDGE AND TAXIWAY CENTERLINE LIGHTS WITHIN PHASE 1B LIMITS
- REMOVE STORM DRAIN PIPE, UNDERDRAIN PIPE, END SECTIONS, THAW PIPE, AND MARKERS
- INSTALL STORM DRAIN, STRUCTURES, UNDERDRAINS, AND OTHER DRAINAGE IMPROVEMENTS WITHIN PHASE 1B LIMITS

COMPLETE THE FOLLOWING AFTER PHASE 1B CONSTRUCTION:

- REMOVE HAZARD MARKER BARRIERS
- REMOVE TAXIWAY CLOSURE MARKER
- REMOVE BMP'S

NOTES:

1. 14 DAYS PRIOR TO THE BEGINNING OF EACH PHASE, NOTIFY AIRPORT OPERATIONS THROUGH THE ENGINEER.
2. ALL WORK IN PHASE 1B MUST BE COMPLETED BEFORE CLOSING AREA FOR PHASE 1C IN ORDER TO MAINTAIN AIRCRAFT ACCESS.
3. ONCE COMPLETED, EACH PHASE SHALL REMAIN OPEN TO AUTHORIZED PERSONNEL AND TENANTS FOR THE DURATION OF THE PROJECT.
4. ANTICIPATED DURATION FOR PHASE 1B IS 7 DAYS.

1 / AC4 PHASE 1B LAYOUT PLAN

SCALE: GRAPHIC

BY	DATE	REVISION

STATE OF ALASKA
DEPARTMENT OF TRANSPORTATION AND PUBLIC FACILITIES
CENTRAL REGION
4111 AVIATION AVE., ANCHORAGE ALASKA 99502
PHONE (907) 269-0590

TED STEVENS ANCHORAGE
ANCHORAGE, ALASKA
ANC TAXIWAY Z IMPROVEMENTS WEST - PHASE 1
PROJECT No. CFAPT00465
AIP No. 3-02-0016-XXX-2022
CSPP PHASE 1B

DATE: 10/14/2021

SHEET: AC4 OF AC14

Designed By: BAG
Drawn By: RJB
Checked By: TAD

Date Revised: 10/14/2021, 10:04 AM
Layout Name: CSPP PHASE 1B
File Path and Name: W:\Projects\AIA Ted Stevens\AIA TW Z Ext 00465\Final Drawings\00465-AIA-CSPP.dwg

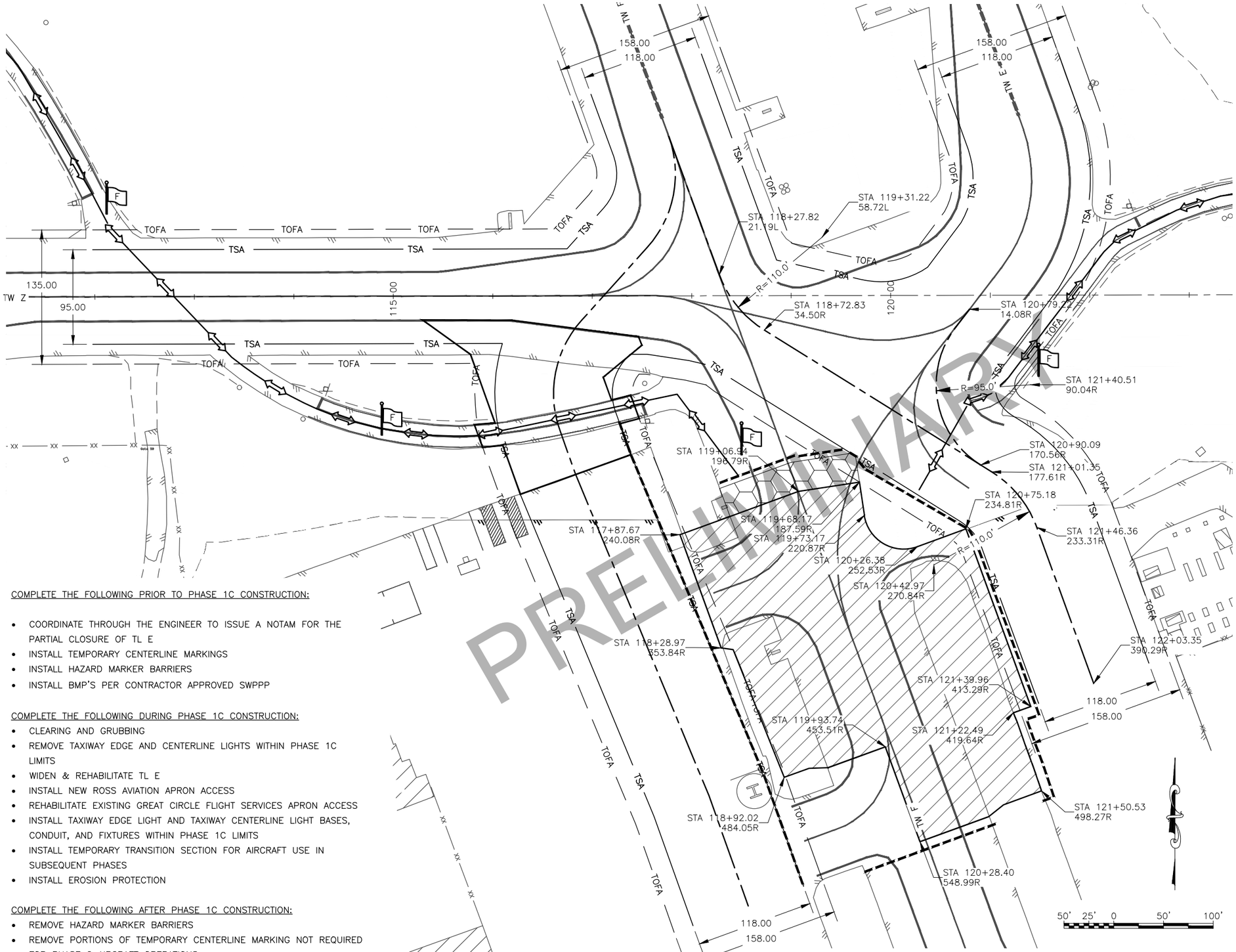

PRELIMINARY

LEGEND*

- PHASE 1C
- TEMPORARY TRANSITION
- HAUL ROUTE
- AIRPORT FLAGGER
- HAZARD MARKER BARRIER (1 / AC13)

* PHASE DESCRIPTIONS ARE GENERALIZED AND INCLUDED FOR CLARITY AND DO NOT REPRESENT ALL WORK REQUIRED IN EACH PHASE. REFER TO INDIVIDUAL PHASING SHEETS FOR FULL DETAILS

NOTES:

1. 14 DAYS PRIOR TO THE BEGINNING OF EACH PHASE, NOTIFY AIRPORT OPERATIONS THROUGH THE ENGINEER.
2. ALL WORK IN PHASE 1C MUST BE COMPLETED BEFORE CLOSING AREA FOR PHASE 2 IN ORDER TO MAINTAIN AIRCRAFT ACCESS.
3. ONCE COMPLETED, EACH PHASE SHALL REMAIN OPEN TO AUTHORIZED PERSONNEL AND TENANTS FOR THE DURATION OF THE PROJECT.
4. PHASE 1C TEMPORARY TAXILANE TO THE EAST AND WEST ARE DESIGNED FOR ADG III AND BELOW. ADG IV OR GREATER AIRCRAFT ARE NOT PERMITTED TO USE THE TEMPORARY TAXILANE DURING PHASE 1C CONSTRUCTION.
5. A PORTION OF PHASE 1C CONSTRUCTION OCCURS WITHIN THE ACTIVE TOFA FOR ADG III AIRCRAFT OPERATING AT THE ROSS AVIATION APRON ACCESS AND AT TL E. GENERAL SAFETY REQUIREMENTS NOTE 7 ON SHEET AC1 DESCRIBES CONSTRUCTION REQUIREMENTS FOR WORK OCCURRING WITHIN AN ACTIVE TOFA.
6. ANTICIPATED DURATION FOR PHASE 1C IS 7 DAYS.

COMPLETE THE FOLLOWING PRIOR TO PHASE 1C CONSTRUCTION:

- COORDINATE THROUGH THE ENGINEER TO ISSUE A NOTAM FOR THE PARTIAL CLOSURE OF TL E
- INSTALL TEMPORARY CENTERLINE MARKINGS
- INSTALL HAZARD MARKER BARRIERS
- INSTALL BMP'S PER CONTRACTOR APPROVED SWPPP

COMPLETE THE FOLLOWING DURING PHASE 1C CONSTRUCTION:

- CLEARING AND GRUBBING
- REMOVE TAXIWAY EDGE AND CENTERLINE LIGHTS WITHIN PHASE 1C LIMITS
- WIDEN & REHABILITATE TL E
- INSTALL NEW ROSS AVIATION APRON ACCESS
- REHABILITATE EXISTING GREAT CIRCLE FLIGHT SERVICES APRON ACCESS
- INSTALL TAXIWAY EDGE LIGHT AND TAXIWAY CENTERLINE LIGHT BASES, CONDUIT, AND FIXTURES WITHIN PHASE 1C LIMITS
- INSTALL TEMPORARY TRANSITION SECTION FOR AIRCRAFT USE IN SUBSEQUENT PHASES
- INSTALL EROSION PROTECTION

COMPLETE THE FOLLOWING AFTER PHASE 1C CONSTRUCTION:

- REMOVE HAZARD MARKER BARRIERS
- REMOVE PORTIONS OF TEMPORARY CENTERLINE MARKING NOT REQUIRED FOR PHASE 2 AIRCRAFT OPERATIONS
- REMOVE BMP'S

1 / AC5 PHASE 1C LAYOUT PLAN
SCALE: GRAPHIC

BY	DATE	REVISION

STATE OF ALASKA
DEPARTMENT OF TRANSPORTATION AND PUBLIC FACILITIES
CENTRAL REGION
4111 AVIATION AVE., ANCHORAGE ALASKA 99502
PHONE (907) 269-0590

TED STEVENS ANCHORAGE
ANCHORAGE, ALASKA
ANC TAXIWAY Z IMPROVEMENTS WEST - PHASE 1
PROJECT No. CFAPT00465
AIP No. 3-02-0016-XXX-2022
CSPP PHASE 1C

DATE: 10/14/2021
SHEET: AC5 OF AC14

Designed By: BAG
Drawn By: RJB
Checked By: TAD

Date Revised: 10/14/2021, 10:04 AM
Layout Name: CSPP PHASE 1C
File Path and Name: W:\Projects\AIA Ted Stevens\AIA TW Z Ext 00465\Final Drawings\00465-AIA-CSPP.dwg

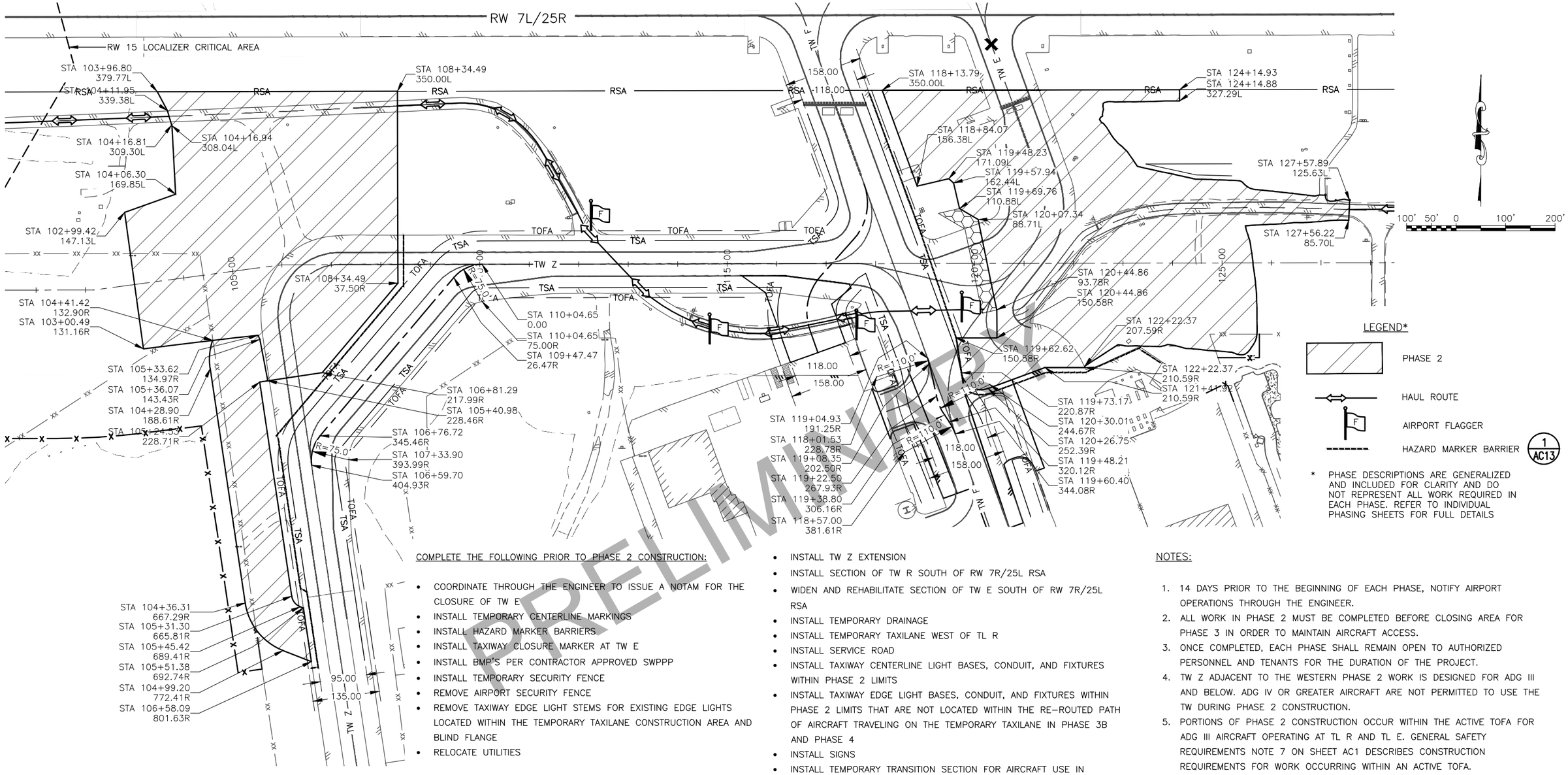

* PHASE DESCRIPTIONS ARE GENERALIZED AND INCLUDED FOR CLARITY AND DO NOT REPRESENT ALL WORK REQUIRED IN EACH PHASE. REFER TO INDIVIDUAL PHASING SHEETS FOR FULL DETAILS

1 AC6 **PHASE 2 LAYOUT PLAN**

SCALE: GRAPHIC

PRELIMINARY

COMPLETE THE FOLLOWING PRIOR TO PHASE 2 CONSTRUCTION:

- COORDINATE THROUGH THE ENGINEER TO ISSUE A NOTAM FOR THE CLOSURE OF TW E
- INSTALL TEMPORARY CENTERLINE MARKINGS
- INSTALL HAZARD MARKER BARRIERS
- INSTALL TAXIWAY CLOSURE MARKER AT TW E
- INSTALL BMP'S PER CONTRACTOR APPROVED SWPPP
- INSTALL TEMPORARY SECURITY FENCE
- REMOVE AIRPORT SECURITY FENCE
- REMOVE TAXIWAY EDGE LIGHT STEMS FOR EXISTING EDGE LIGHTS LOCATED WITHIN THE TEMPORARY TAXILANE CONSTRUCTION AREA AND BLIND FLANGE
- RELOCATE UTILITIES

COMPLETE THE FOLLOWING DURING PHASE 2 CONSTRUCTION:

- CLEARING AND GRUBBING
- REMOVE TAXIWAY EDGE AND TAXIWAY CENTERLINE LIGHTS WITHIN PHASE 2 LIMITS
- REMOVE STORM DRAIN PIPE, UNDERDRAIN PIPE, END SECTIONS, THAW PIPE, AND MARKERS WITHIN PHASE 2 LIMITS
- REMOVE STORM DRAIN MANHOLE
- REMOVE EXISTING ROSS AVIATION APRON ACCESS
- INSTALL STORM DRAIN, STRUCTURES, UNDERDRAINS, AND OTHER DRAINAGE IMPROVEMENTS WITHIN PHASE 2 LIMITS
- INSTALL TW Z EXTENSION
- INSTALL SECTION OF TW R SOUTH OF RW 7R/25L RSA
- WIDEN AND REHABILITATE SECTION OF TW E SOUTH OF RW 7R/25L RSA
- INSTALL TEMPORARY DRAINAGE
- INSTALL TEMPORARY TAXILANE WEST OF TL R
- INSTALL SERVICE ROAD
- INSTALL TAXIWAY CENTERLINE LIGHT BASES, CONDUIT, AND FIXTURES WITHIN PHASE 2 LIMITS
- INSTALL TAXIWAY EDGE LIGHT BASES, CONDUIT, AND FIXTURES WITHIN PHASE 2 LIMITS THAT ARE NOT LOCATED WITHIN THE RE-ROUTED PATH OF AIRCRAFT TRAVELING ON THE TEMPORARY TAXILANE IN PHASE 3B AND PHASE 4
- INSTALL SIGNS
- INSTALL TEMPORARY TRANSITION SECTION FOR AIRCRAFT USE IN SUBSEQUENT PHASES
- INSTALL EROSION PROTECTION

COMPLETE THE FOLLOWING AFTER PHASE 2 CONSTRUCTION:

- REMOVE HAZARD MARKER BARRIERS
- REMOVE TAXIWAY CLOSURE MARKER
- REMOVE PORTIONS OF TEMPORARY CENTERLINE MARKING NOT REQUIRED FOR PHASE 3A AIRCRAFT OPERATIONS
- REMOVE BMP'S

NOTES:

1. 14 DAYS PRIOR TO THE BEGINNING OF EACH PHASE, NOTIFY AIRPORT OPERATIONS THROUGH THE ENGINEER.
2. ALL WORK IN PHASE 2 MUST BE COMPLETED BEFORE CLOSING AREA FOR PHASE 3 IN ORDER TO MAINTAIN AIRCRAFT ACCESS.
3. ONCE COMPLETED, EACH PHASE SHALL REMAIN OPEN TO AUTHORIZED PERSONNEL AND TENANTS FOR THE DURATION OF THE PROJECT.
4. TW Z ADJACENT TO THE WESTERN PHASE 2 WORK IS DESIGNED FOR ADG III AND BELOW. ADG IV OR GREATER AIRCRAFT ARE NOT PERMITTED TO USE THE TW DURING PHASE 2 CONSTRUCTION.
5. PORTIONS OF PHASE 2 CONSTRUCTION OCCUR WITHIN THE ACTIVE TOFA FOR ADG III AIRCRAFT OPERATING AT TL R AND TL E. GENERAL SAFETY REQUIREMENTS NOTE 7 ON SHEET AC1 DESCRIBES CONSTRUCTION REQUIREMENTS FOR WORK OCCURRING WITHIN AN ACTIVE TOFA.
6. THE CONTRACTOR MUST NOTIFY THE ENGINEER FOR APPROVAL PRIOR TO OPENING FENCE. CONTRACTOR MUST REINSTALL ANY REMOVED FENCING FABRIC AND BARBED WIRE PRIOR TO LEAVING AT THE END OF DAILY WORK. CONTRACTOR MUST NOTIFY THE ENGINEER FOR APPROVAL PRIOR TO LEAVING AT THE END OF DAILY WORK. A SECURED AOA MUST BE MAINTAINED AT ALL TIMES.
7. ANTICIPATED DURATION FOR PHASE 2 IS 60 DAYS.

BY	DATE	REVISION

STATE OF ALASKA
DEPARTMENT OF TRANSPORTATION AND PUBLIC FACILITIES
CENTRAL REGION
4111 AVIATION AVE., ANCHORAGE ALASKA 99502
PHONE (907) 269-0590

TED STEVENS ANCHORAGE
ANCHORAGE, ALASKA
ANC TAXIWAY Z IMPROVEMENTS WEST - PHASE 1
PROJECT No. CFAPT00465
AIP No. 3-02-0016-XXX-2022
CSPP PHASE 2

DATE: 10/14/2021

SHEET: AC6 OF AC14

Designed By: BAG
Drawn By: RJB
Checked By: TAD

Date Revised:
Layout Name: 10/14/2021, 10:04 AM CSPP PHASE 2
File Path and Name: W:\Projects\ANA Ted Stevens\ANA TW Z Ext 00465\Final Drawings\00465-AAA-CSPP.dwg

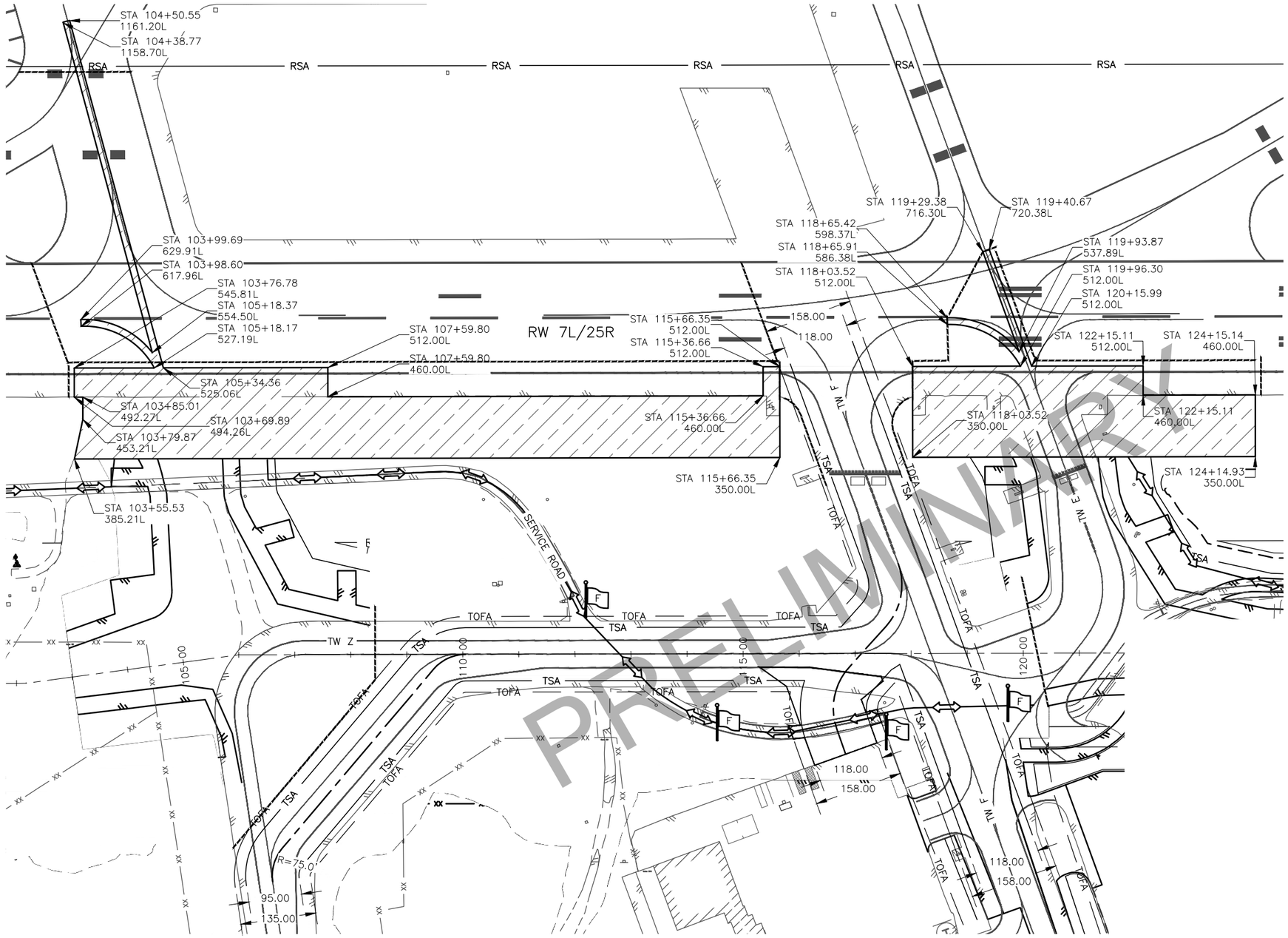

LEGEND*

PHASE 4

HAUL ROUTE

AIRPORT FLAGGER

HAZARD MARKER BARRIER (1 / AC13)

100' 50' 0 100' 200'

* PHASE DESCRIPTIONS ARE GENERALIZED AND INCLUDED FOR CLARITY AND DO NOT REPRESENT ALL WORK REQUIRED IN EACH PHASE. REFER TO INDIVIDUAL PHASING SHEETS FOR FULL DETAILS

1 / AC7 PHASE 3A LAYOUT PLAN

SCALE: GRAPHIC

PRELIMINARY

COMPLETE THE FOLLOWING PRIOR TO PHASE 3A CONSTRUCTION:

- COORDINATE THROUGH THE ENGINEER TO ISSUE A NOTAM FOR THE CLOSURE OF RW 7R/25L AND TW E
- INSTALL HAZARD MARKER BARRIERS
- INSTALL RUNWAY CLOSURE MARKERS AT EITHER END OF RW 7R/25L
- INSTALL BMP'S PER CONTRACTOR APPROVED SWPPP

COMPLETE THE FOLLOWING DURING PHASE 3A CONSTRUCTION:

- CLEARING AND GRUBBING
- REMOVE RUNWAY EDGE LIGHTS, TAXIWAY EDGE LIGHTS, TAXIWAY CENTERLINE LIGHTS, AND LEAD-OFF LIGHTS WITHIN PHASE 3A LIMITS
- REMOVE STORM DRAIN PIPE, UNDERDRAIN PIPE, END SECTIONS, THAW PIPE, AND MARKERS WITHIN PHASE 3A LIMITS
- INSTALL SECTION OF TW R AT RW 7R/25L INTERSECTION
- WIDEN AND REHABILITATE SECTION OF TW E AT RW 7R/25L INTERSECTION
- INSTALL RUNWAY SHOULDER AND RSA
- INSTALL RUNWAY EDGE LIGHT, TAXIWAY EDGE LIGHT, TAXIWAY CENTERLINE LIGHT, AND LEAD-OFF LIGHT BASES, CONDUIT, AND FIXTURES WITHIN PHASE 3A LIMITS
- INSTALL SIGNS

COMPLETE THE FOLLOWING AFTER PHASE 3A CONSTRUCTION:

- REMOVE HAZARD MARKER BARRIERS
- REMOVE TEMPORARY CENTERLINE MARKINGS
- REMOVE BMP'S

NOTES:

1. 14 DAYS PRIOR TO THE BEGINNING OF EACH PHASE, NOTIFY AIRPORT OPERATIONS THROUGH THE ENGINEER.
2. ALL WORK IN PHASE 3A MUST BE COMPLETED BEFORE CLOSING AREA FOR PHASE 3B IN ORDER TO MAINTAIN AIRCRAFT ACCESS.
2. ALL WORK IN PHASES 3A AND 3B MUST BE COMPLETED BEFORE RW 7R\25L CAN BE RE-OPENED.
3. LIGHTING WORK LOCATED WITHIN THE RSA OF RW 7L/25R CAN NOT OCCUR WHILE RW 7L/25R IS OPEN FOR AIRCRAFT OPERATIONS.
4. ONCE COMPLETED, EACH PHASE SHALL REMAIN OPEN TO AUTHORIZED PERSONNEL AND TENANTS FOR THE DURATION OF THE PROJECT.
5. TW F IS DESIGNED FOR ADG III AND BELOW. ADG IV OR GREATER AIRCRAFT ARE NOT PERMITTED TO USE THE TW DURING PHASE 3A CONSTRUCTION.
6. ANTICIPATED DURATION FOR PHASE 3A IS 30 DAYS.

Designed By:	BAG	
Drawn By:	RJB	
Checked By:	TAD	
Date Revised:	10/14/2021, 10:05 AM	
Layout Name:	CSPP PHASE 3A	
File Path and Name:	W:\Projects\ANA Ted Stevens\ANA TW Z Ext 00465\Final Drawings\00465-AIA-CSPP.dwg	

BY	DATE	REVISION

STATE OF ALASKA
DEPARTMENT OF TRANSPORTATION AND PUBLIC FACILITIES
CENTRAL REGION
4111 AVIATION AVE., ANCHORAGE ALASKA 99502
PHONE (907) 269-0590

TED STEVENS ANCHORAGE
ANCHORAGE, ALASKA
ANC TAXIWAY Z IMPROVEMENTS WEST - PHASE 1
PROJECT No. CFAPT00465
AIP No. 3-02-0016-XXX-2022
CSPP PHASE 3A

DATE: 10/14/2021

SHEET: AC7 OF AC14

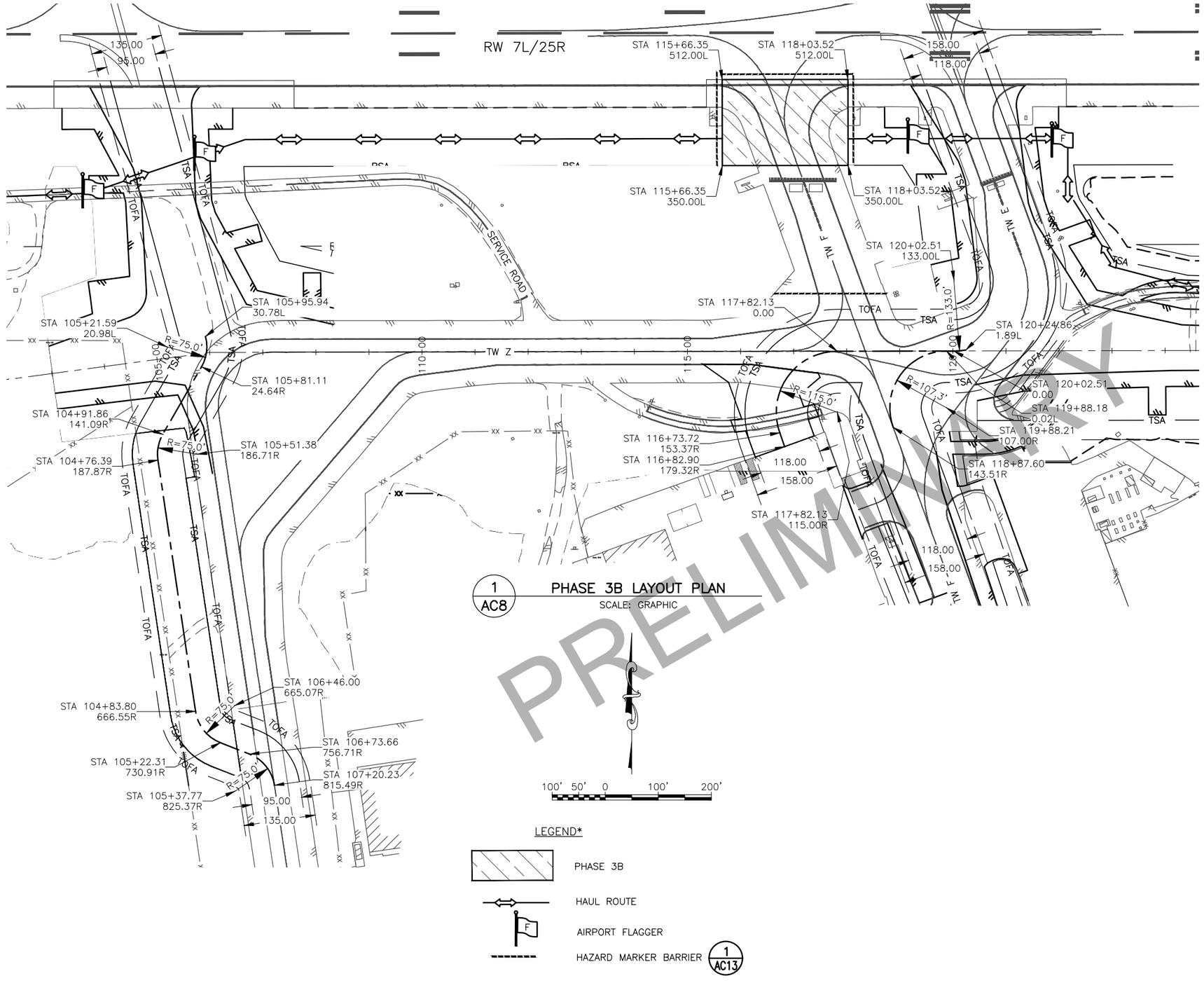

1 AC8 PHASE 3B LAYOUT PLAN

SCALE: GRAPHIC

100' 50' 0 100' 200'

LEGEND*

- PHASE 3B
- HAUL ROUTE
- AIRPORT FLAGGER
- HAZARD MARKER BARRIER (1 AC13)

* PHASE DESCRIPTIONS ARE GENERALIZED AND INCLUDED FOR CLARITY AND DO NOT REPRESENT ALL WORK REQUIRED IN EACH PHASE. REFER TO INDIVIDUAL PHASING SHEETS FOR FULL DETAILS

PRELIMINARY

COMPLETE THE FOLLOWING PRIOR TO PHASE 3B CONSTRUCTION:

- COORDINATE THROUGH THE ENGINEER TO ISSUE A NOTAM FOR THE PERMANENT CLOSURE OF TW F
- INSTALL TEMPORARY CENTERLINE MARKINGS
- INSTALL HAZARD MARKER BARRIERS
- INSTALL BMPS PER CONTRACTOR APPROVED SWPPP

COMPLETE THE FOLLOWING DURING PHASE 3B CONSTRUCTION:

- CLEARING AND GRUBBING
- REMOVE RUNWAY EDGE LIGHTS, TAXIWAY EDGE LIGHTS, AND TAXIWAY CENTERLINE LIGHTS WITHIN PHASE 3B LIMITS
- REMOVE STORM DRAIN PIPE, UNDERDRAIN PIPE, END SECTIONS, THAW PIPE, AND MARKERS WITHIN PHASE 3B LIMITS
- REMOVE SECTION OF TW F AT RW 7R/25L INTERSECTION
- INSTALL RUNWAY SHOULDER AND RSA
- INSTALL RUNWAY EDGE LIGHT BASES, CONDUIT, AND FIXTURES WITHIN PHASE 3B LIMITS

COMPLETE THE FOLLOWING AFTER PHASE 3B CONSTRUCTION:

- REMOVE HAZARD MARKER BARRIERS
- REMOVE RUNWAY CLOSURE MARKERS
- REMOVE BMP'S

NOTES:

1. 14 DAYS PRIOR TO THE BEGINNING OF EACH PHASE, NOTIFY AIRPORT OPERATIONS THROUGH THE ENGINEER.
2. EITHER TW E OR TW R MUST BE OPEN AND OPERATIONAL BEFORE CLOSING AREA FOR PHASE 3B IN ORDER TO MAINTAIN AIRCRAFT ACCESS.
2. ALL WORK IN PHASES 3A AND 3B MUST BE COMPLETED BEFORE RW 7R/25L CAN BE RE-OPENED.
3. ONCE COMPLETED, EACH PHASE SHALL REMAIN OPEN TO AUTHORIZED PERSONNEL AND TENANTS FOR THE DURATION OF THE PROJECT.
4. TW E AND TEMPORARY TAXILANE R ARE DESIGNED FOR ADG III AND BELOW. ADG IV OR GREATER AIRCRAFT ARE NOT PERMITTED TO USE THESE AREAS DURING PHASE 3B CONSTRUCTION.
5. ANTICIPATED DURATION FOR PHASE 3B IS 14 DAYS.

Designed By:	BAG	
Drawn By:	RJB	
Checked By:	TAD	
Date Revised:	10/14/2021, 10:05 AM	
Layout Name:	CSPP PHASE 3B	
File Path and Name:	W:\Projects\ANA Ted Stevens\ANA TW Z Ext 00465\Final Drawings\00465-AIA-CSPP.dwg	

BY	DATE	REVISION

STATE OF ALASKA
DEPARTMENT OF TRANSPORTATION AND PUBLIC FACILITIES
CENTRAL REGION
4111 AVIATION AVE., ANCHORAGE ALASKA 99502
PHONE (907) 269-0590

TED STEVENS ANCHORAGE
ANCHORAGE, ALASKA
ANC TAXIWAY Z IMPROVEMENTS WEST - PHASE 1
PROJECT No. CFAPT00465
AIP No. 3-02-0016-XXX-2022
CSPP PHASE 3B

DATE: 10/14/2021

SHEET: AC8 OF AC14

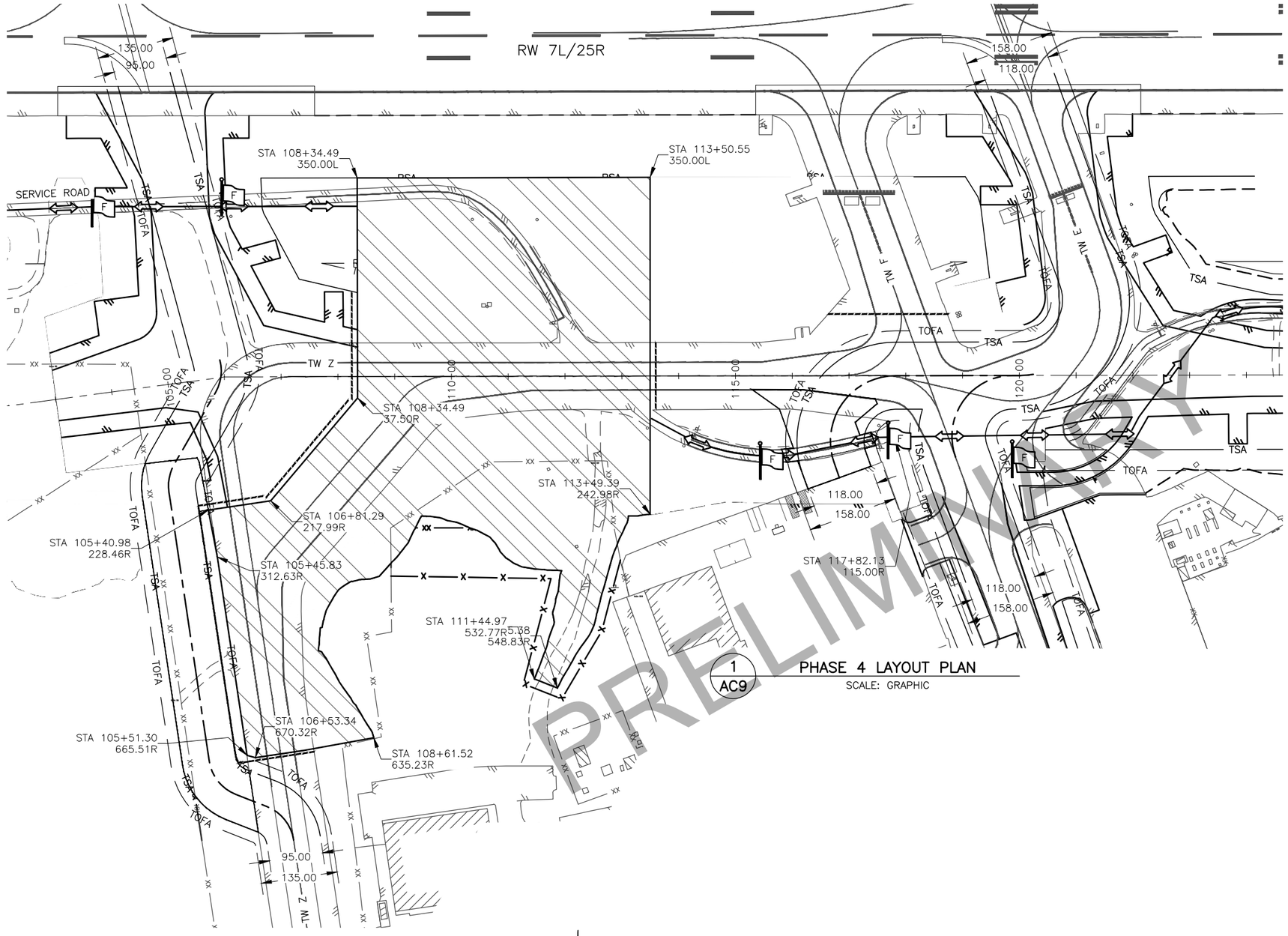

PHASE 4 LAYOUT PLAN

1 / AC9

SCALE: GRAPHIC

LEGEND*

- PHASE 4
- HAUL ROUTE
- AIRPORT FLAGGER
- HAZARD MARKER BARRIER (1 / AC13)

100' 50' 0 100' 200'

* PHASE DESCRIPTIONS ARE GENERALIZED AND INCLUDED FOR CLARITY AND DO NOT REPRESENT ALL WORK REQUIRED IN EACH PHASE. REFER TO INDIVIDUAL PHASING SHEETS FOR FULL DETAILS

COMPLETE THE FOLLOWING PRIOR TO PHASE 4 CONSTRUCTION:

- COORDINATE THROUGH THE ENGINEER TO ISSUE A NOTAM FOR THE PARTIAL CLOSURE OF TW Z
- INSTALL HAZARD MARKER BARRIERS
- INSTALL BMPS PER CONTRACTOR APPROVED SWPPP
- INSTALL TEMPORARY SECURITY FENCE AND GATE
- REMOVE AIRPORT SECURITY FENCE AND GATE
- RELOCATE UTILITIES

COMPLETE THE FOLLOWING DURING PHASE 4 CONSTRUCTION:

- CLEARING AND GRUBBING
- REMOVE TAXIWAY EDGE AND TAXIWAY CENTERLINE LIGHTS WITHIN PHASE 4 LIMITS
- REMOVE STORM DRAIN PIPE, UNDERDRAIN PIPE, END SECTIONS, THAW PIPE, AND MARKERS WITHIN PHASE 4 LIMITS
- INSTALL STORM DRAIN, STRUCTURES, UNDERDRAINS, AND OTHER DRAINAGE IMPROVEMENTS WITHIN PHASE 4 LIMITS
- REHABILITATE TL R
- WIDEN AND REHABILITATE TW Z
- INSTALL SERVICE ROAD
- INSTALL TAXIWAY CENTERLINE AND TAXIWAY EDGE LIGHT BASES, CONDUIT, AND FIXTURES WITHIN PHASE 4 LIMITS
- INSTALL SIGNS
- INSTALL EROSION PROTECTION

COMPLETE THE FOLLOWING AFTER PHASE 4 CONSTRUCTION:

- INSTALL PERMANENT AIRPORT SECURITY FENCE AND GATE
- REMOVE TEMPORARY SECURITY FENCE AND GATE
- REMOVE HAZARD MARKER BARRIERS
- REMOVE TEMPORARY CENTERLINE MARKINGS
- REMOVE BMP'S

NOTES:

1. 14 DAYS PRIOR TO THE BEGINNING OF EACH PHASE, NOTIFY AIRPORT OPERATIONS THROUGH THE ENGINEER.
2. ALL WORK IN PHASE 4 MUST BE COMPLETED BEFORE CLOSING AREA FOR PHASE 5 IN ORDER TO MAINTAIN AIRCRAFT ACCESS.
3. ONCE COMPLETED, EACH PHASE SHALL REMAIN OPEN TO AUTHORIZED PERSONNEL AND TENANTS FOR THE DURATION OF THE PROJECT.
4. TEMPORARY TAXILANE R IS DESIGNED FOR ADG III AND BELOW. ADG IV OR GREATER AIRCRAFT ARE NOT PERMITTED TO TEMPORARY TAXILANE R DURING PHASE 4 CONSTRUCTION.
5. A PORTION OF PHASE 4 CONSTRUCTION OCCURS WITHIN THE ACTIVE TOFA FOR ADG III AIRCRAFT OPERATING ON TEMPORARY TAXILANE R. GENERAL SAFETY REQUIREMENTS NOTE 7 ON SHEET AC1 DESCRIBES CONSTRUCTION REQUIREMENTS FOR WORK OCCURRING WITHIN AN ACTIVE TOFA.
6. THE CONTRACTOR MUST NOTIFY THE ENGINEER FOR APPROVAL PRIOR TO OPENING FENCE. CONTRACTOR MUST REINSTALL ANY REMOVED FENCING FABRIC AND BARBED WIRE PRIOR TO LEAVING AT THE END OF DAILY WORK. CONTRACTOR MUST NOTIFY THE ENGINEER FOR APPROVAL PRIOR TO LEAVING AT THE END OF DAILY WORK. A SECURED AOA MUST BE MAINTAINED AT ALL TIMES.
7. ANTICIPATED DURATION FOR PHASE 4 IS 60 DAYS.

PRELIMINARY

Designed By:	BAG
Drawn By:	RJB
Checked By:	TAD
Date Revised:	10/14/2021, 10:05 AM
Layout Name:	CSPP PHASE 4
File Path and Name:	W:\Projects\AIA Ted Stevens\AIA TW Z Ext 00465\Final Drawings\00465-AIA-CSPP.dwg

BY	DATE	REVISION

STATE OF ALASKA
DEPARTMENT OF TRANSPORTATION AND PUBLIC FACILITIES
CENTRAL REGION
4111 AVIATION AVE., ANCHORAGE ALASKA 99502
PHONE (907) 269-0590

TED STEVENS ANCHORAGE
ANCHORAGE, ALASKA
ANC TAXIWAY Z IMPROVEMENTS WEST – PHASE 1
PROJECT No. CFAPT00465
AIP No. 3-02-0016-XXX-2022
CSPP PHASE 4

DATE: 10/14/2021

SHEET: AC9 OF AC14

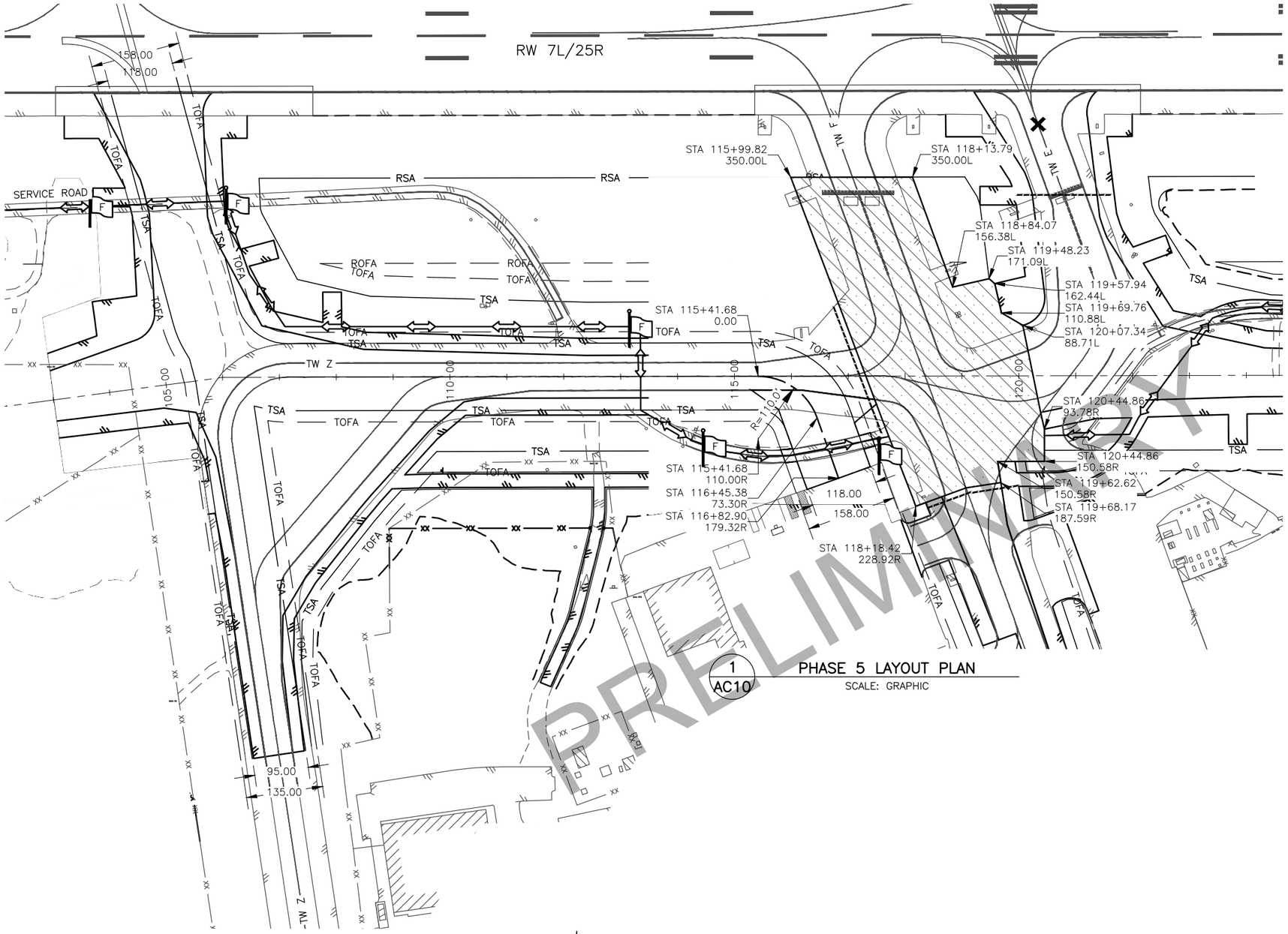

1 AC10 PHASE 5 LAYOUT PLAN

SCALE: GRAPHIC

LEGEND*

- PHASE 5
- HAUL ROUTE
- AIRPORT FLAGGER
- HAZARD MARKER BARRIER (1 AC13)

100' 50' 0 100' 200'

* PHASE DESCRIPTIONS ARE GENERALIZED AND INCLUDED FOR CLARITY AND DO NOT REPRESENT ALL WORK REQUIRED IN EACH PHASE. REFER TO INDIVIDUAL PHASING SHEETS FOR FULL DETAILS

COMPLETE THE FOLLOWING PRIOR TO PHASE 5 CONSTRUCTION:

- COORDINATE THROUGH THE ENGINEER TO ISSUE A NOTAM FOR THE CLOSURE OF TW E AND PARTIAL CLOSURE OF TL E AND TW Z
- INSTALL HAZARD MARKER BARRIERS
- INSTALL TAXIWAY CLOSURE MARKER AT TW E
- INSTALL BMPS PER CONTRACTOR APPROVED SWPPP
- RELOCATE UTILITIES

COMPLETE THE FOLLOWING DURING PHASE 5 CONSTRUCTION:

- CLEARING AND GRUBBING
- REMOVE TAXIWAY EDGE AND TAXIWAY CENTERLINE LIGHTS WITHIN PHASE 5 LIMITS
- REMOVE STORM DRAIN PIPE, UNDERDRAIN PIPE, END SECTIONS, THAW PIPE, AND MARKERS WITHIN PHASE 5 LIMITS
- INSTALL STORM DRAIN, STRUCTURES, UNDERDRAINS, AND OTHER DRAINAGE IMPROVEMENTS WITHIN PHASE 5 LIMITS
- WIDEN & REHABILITATE TL E INTERSECTION WITH TW Z
- WIDEN AND REHABILITATE TW E INTERSECTION WITH TW Z
- WIDEN AND REHABILITATE TW Z
- REMOVE THE REMAINING SECTION OF TW F
- INSTALL TAXIWAY CENTERLINE AND TAXIWAY EDGE LIGHT BASES, CONDUIT, AND FIXTURES WITHIN PHASE 5 LIMITS
- INSTALL SIGNS
- INSTALL EROSION PROTECTION

COMPLETE THE FOLLOWING AFTER PHASE 5 CONSTRUCTION:

- REMOVE HAZARD MARKER BARRIERS
- REMOVE TAXIWAY CLOSURE MARKER
- REMOVE BMP'S

NOTES:

1. 14 DAYS PRIOR TO THE BEGINNING OF EACH PHASE, NOTIFY AIRPORT OPERATIONS THROUGH THE ENGINEER.
2. ALL WORK IN PHASE 5 MUST BE COMPLETED BEFORE CLOSING AREA FOR PHASE 6 IN ORDER TO MAINTAIN AIRCRAFT ACCESS.
3. ONCE COMPLETED, EACH PHASE SHALL REMAIN OPEN TO AUTHORIZED PERSONNEL AND TENANTS FOR THE DURATION OF THE PROJECT.
4. TEMPORARY TAXILANE WEST OF PHASE 5 IS DESIGNED FOR ADG III AND BELOW. ADG IV OR GREATER AIRCRAFT ARE NOT PERMITTED TO USE THE TEMPORARY TAXILANE DURING PHASE 5 CONSTRUCTION.
5. ANTICIPATED DURATION FOR PHASE 5 IS 30 DAYS.

Designed By:	BAG
Drawn By:	RJB
Checked By:	TAD
Date Revised:	10/14/2021, 10:05 AM
Layout Name:	CSPP PHASE 5
File Path and Name:	W:\Projects\ANA Ted Stevens\ANA TW Z Ext 00465\Final Drawings\00465-AIA-CSPP.dwg

BY	DATE	REVISION

STATE OF ALASKA
DEPARTMENT OF TRANSPORTATION AND PUBLIC FACILITIES
CENTRAL REGION
4111 AVIATION AVE., ANCHORAGE ALASKA 99502
PHONE (907) 269-0590

TED STEVENS ANCHORAGE
ANCHORAGE, ALASKA
ANC TAXIWAY Z IMPROVEMENTS WEST - PHASE 1
PROJECT No. CFAPT00465
AIP No. 3-02-0016-XXX-2022
CSPP PHASE 5

DATE: 10/14/2021

SHEET: AC10 OF AC14

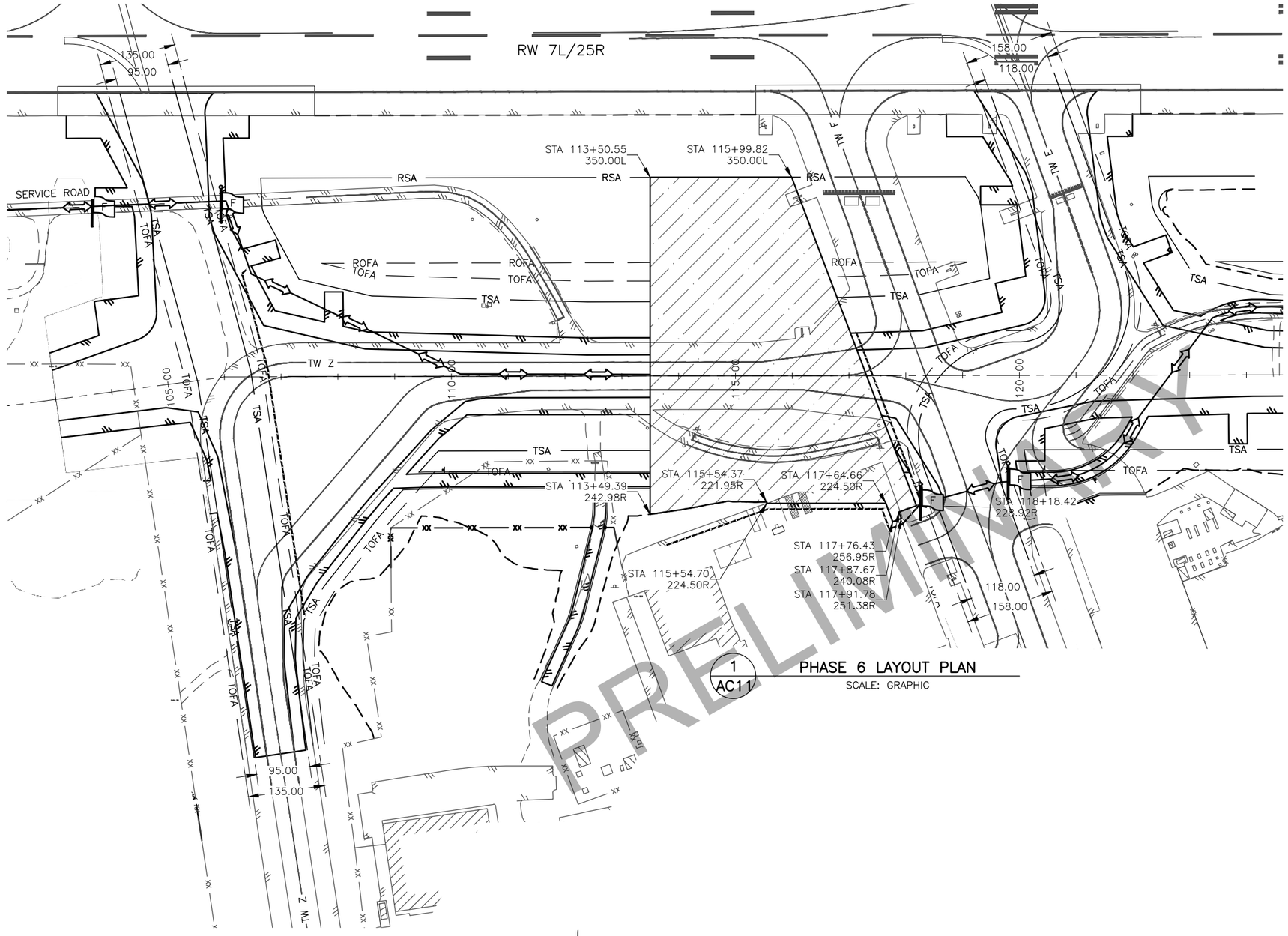

1 AC11 PHASE 6 LAYOUT PLAN

SCALE: GRAPHIC

PRELIMINARY

LEGEND*

- PHASE 5
- HAUL ROUTE
- AIRPORT FLAGGER
- HAZARD MARKER BARRIER (1 / AC13)

100' 50' 0 100' 200'

* PHASE DESCRIPTIONS ARE GENERALIZED AND INCLUDED FOR CLARITY AND DO NOT REPRESENT ALL WORK REQUIRED IN EACH PHASE. REFER TO INDIVIDUAL PHASING SHEETS FOR FULL DETAILS

COMPLETE THE FOLLOWING PRIOR TO PHASE 6 CONSTRUCTION:

- COORDINATE THROUGH THE ENGINEER TO ISSUE A NOTAM FOR THE PARTIAL CLOSURE TW Z
- INSTALL HAZARD MARKER BARRIERS
- INSTALL BMPS PER CONTRACTOR APPROVED SWPPP
- RELOCATE UTILITIES

COMPLETE THE FOLLOWING DURING PHASE 6 CONSTRUCTION:

- CLEARING AND GRUBBING
- REMOVE TEMPORARY TAXILANE WITHIN PHASE 6 LIMITS
- REMOVE TAXIWAY EDGE AND TAXIWAY CENTERLINE LIGHTS WITHIN PHASE 6 LIMITS
- REMOVE STORM DRAIN PIPE, UNDERDRAIN PIPE, END SECTIONS, THAW PIPE, AND MARKERS WITHIN PHASE 6 LIMITS
- INSTALL STORM DRAIN, STRUCTURES, UNDERDRAINS, AND OTHER DRAINAGE IMPROVEMENTS WITHIN PHASE 6 LIMITS
- WIDEN AND REHABILITATE TW Z
- INSTALL TAXIWAY CENTERLINE AND TAXIWAY EDGE LIGHT BASES, CONDUIT, AND FIXTURES WITHIN PHASE 6 LIMITS
- INSTALL SERVICE ROAD
- INSTALL SIGNS
- INSTALL EROSION PROTECTION

COMPLETE THE FOLLOWING AFTER PHASE 6 CONSTRUCTION:

- INSTALL ALL REMAINING TAXIWAY EDGE LIGHT BASES, CONDUIT, AND FIXTURES
- INSTALL PERMANENT PAVEMENT MARKINGS
- REMOVE HAZARD MARKER BARRIERS
- REMOVE BMP'S

NOTES:

1. 14 DAYS PRIOR TO THE BEGINNING OF EACH PHASE, NOTIFY AIRPORT OPERATIONS THROUGH THE ENGINEER.
2. ALL WORK IN PHASE 6 MUST BE COMPLETED BEFORE OPENING TW E AND TW Z TO ADG IV OR GREATER OPERATIONS.
3. ONCE COMPLETED, EACH PHASE SHALL REMAIN OPEN TO AUTHORIZED PERSONNEL AND TENANTS FOR THE DURATION OF THE PROJECT.
4. TL E IS DESIGNED FOR ADG III AND BELOW. ADG IV OR GREATER AIRCRAFT ARE NOT PERMITTED TO TEMPORARY TL E DURING PHASE 6 CONSTRUCTION.
5. ANTICIPATED DURATION FOR PHASE 6 IS 30 DAYS.

Designed By:	BAG	
Drawn By:	RJB	
Checked By:	TAD	
Date Revised:	10/14/2021, 10:05 AM	
Layout Name:	CSPP PHASE 6	
File Path and Name:	W:\Projects\ANA Ted Stevens\ANA TW Z Ext 00465\Final Drawings\00465-ANA-CSPP.dwg	

BY	DATE	REVISION

STATE OF ALASKA
DEPARTMENT OF TRANSPORTATION AND PUBLIC FACILITIES
CENTRAL REGION
4111 AVIATION AVE., ANCHORAGE ALASKA 99502
PHONE (907) 269-0590

TED STEVENS ANCHORAGE
ANCHORAGE, ALASKA
ANC TAXIWAY Z IMPROVEMENTS WEST – PHASE 1
PROJECT No. CFAPT00465
AIP No. 3-02-0016-XXX-2022
CSPP PHASE 6

DATE: 10/14/2021

SHEET: AC11 OF AC14

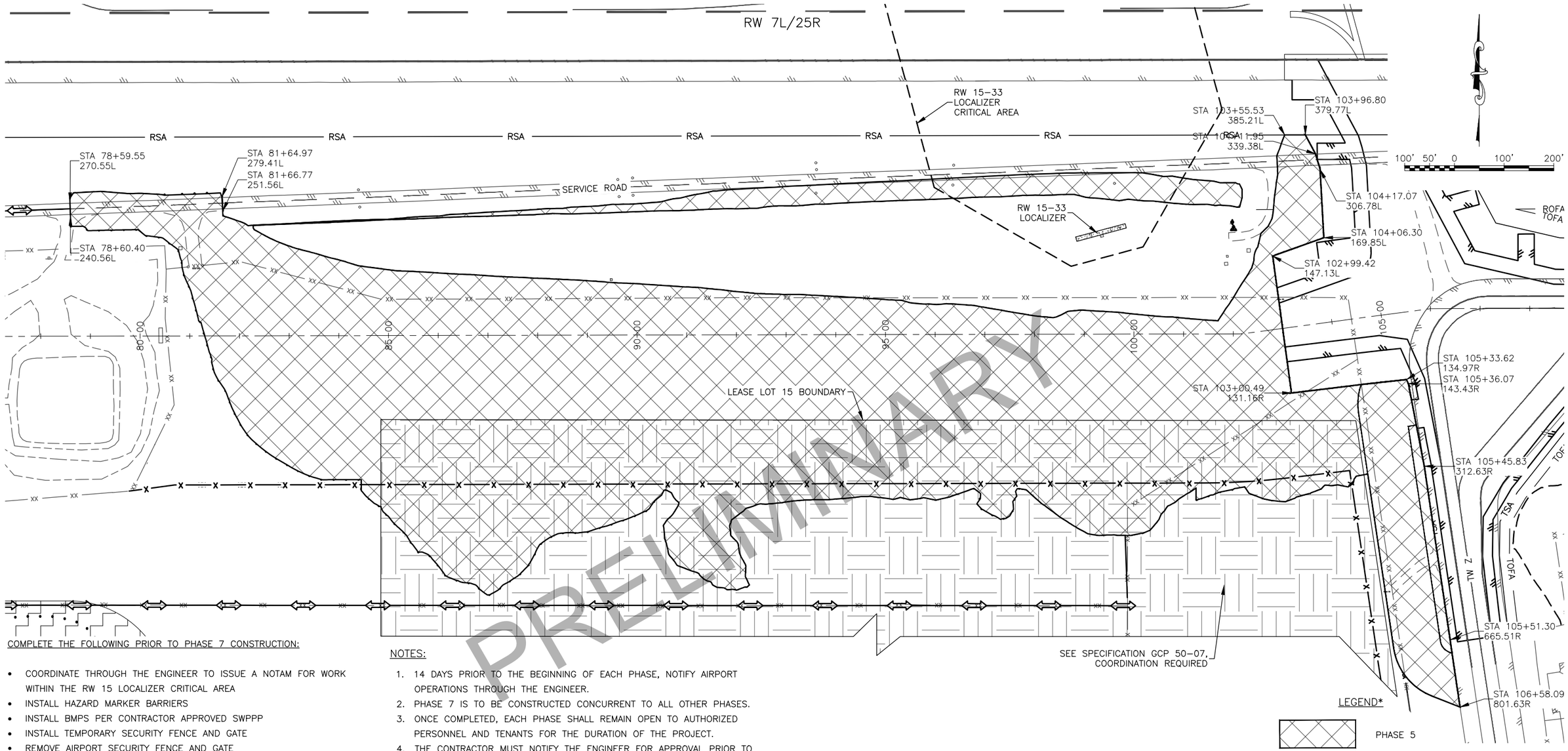

COMPLETE THE FOLLOWING PRIOR TO PHASE 7 CONSTRUCTION:

- COORDINATE THROUGH THE ENGINEER TO ISSUE A NOTAM FOR WORK WITHIN THE RW 15 LOCALIZER CRITICAL AREA
- INSTALL HAZARD MARKER BARRIERS
- INSTALL BMPS PER CONTRACTOR APPROVED SWPPP
- INSTALL TEMPORARY SECURITY FENCE AND GATE
- REMOVE AIRPORT SECURITY FENCE AND GATE
- RELOCATE UTILITIES

COMPLETE THE FOLLOWING DURING PHASE 7 CONSTRUCTION:

- CLEARING AND GRUBBING
- REMOVE STORM DRAIN PIPE, UNDERDRAIN PIPE, END SECTIONS, THAW PIPE, AND MARKERS
- REMOVE TEMPORARY TAXILANE WEST OF TL R
- INSTALL STORM DRAIN, STRUCTURES, UNDERDRAINS, AND OTHER DRAINAGE IMPROVEMENTS WITHIN PHASE 7 LIMITS
- INSTALL SERVICE ROAD
- INSTALL SIGNS
- INSTALL EROSION PROTECTION

COMPLETE THE FOLLOWING AFTER PHASE 7 CONSTRUCTION:

- REMOVE HAZARD MARKER BARRIERS
- REMOVE BMP'S
- INSTALL PERMANENT AIRPORT SECURITY FENCE AND GATE
- REMOVE TEMPORARY SECURITY FENCE AND GATE

NOTES:

1. 14 DAYS PRIOR TO THE BEGINNING OF EACH PHASE, NOTIFY AIRPORT OPERATIONS THROUGH THE ENGINEER.
2. PHASE 7 IS TO BE CONSTRUCTED CONCURRENT TO ALL OTHER PHASES.
3. ONCE COMPLETED, EACH PHASE SHALL REMAIN OPEN TO AUTHORIZED PERSONNEL AND TENANTS FOR THE DURATION OF THE PROJECT.
4. THE CONTRACTOR MUST NOTIFY THE ENGINEER FOR APPROVAL PRIOR TO OPENING FENCE. CONTRACTOR MUST REINSTALL ANY REMOVED FENCING FABRIC AND BARBED WIRE PRIOR TO LEAVING AT THE END OF DAILY WORK. CONTRACTOR MUST NOTIFY THE ENGINEER FOR APPROVAL PRIOR TO LEAVING AT THE END OF DAILY WORK. A SECURED AOA MUST BE MAINTAINED AT ALL TIMES.
5. COORDINATE WORK WITHIN THE RW 15 LOCALIZER CRITICAL AREA WITH THE ENGINEER 45 DAYS PRIOR TO CONSTRUCTION.
6. ANTICIPATED DURATION FOR PHASE 7 IS 240 DAYS.

LEGEND*

- PHASE 5
- DISPOSAL AREA
- HAUL ROUTE
- AIRPORT FLAGGER
- HAZARD MARKER BARRIER (1 / AC13)

* PHASE DESCRIPTIONS ARE GENERALIZED AND INCLUDED FOR CLARITY AND DO NOT REPRESENT ALL WORK REQUIRED IN EACH PHASE. REFER TO INDIVIDUAL PHASING SHEETS FOR FULL DETAILS

PRELIMINARY

BY	DATE	REVISION

STATE OF ALASKA
DEPARTMENT OF TRANSPORTATION AND PUBLIC FACILITIES
CENTRAL REGION
4111 AVIATION AVE., ANCHORAGE ALASKA 99502
PHONE (907) 269-0590

TED STEVENS ANCHORAGE
ANCHORAGE, ALASKA
ANC TAXIWAY Z IMPROVEMENTS WEST – PHASE 1
PROJECT No. CFAPT00465
AIP No. 3-02-0016-XXX-2022
CSPP PHASE 7

DATE: 10/14/2021

SHEET: AC12 OF AC14

Designed By: BAG
Drawn By: RJB
Checked By: TAD

Date Revised: 10/14/2021, 10:05 AM
Layout Name: CSPP PHASE 7
File Path and Name: W:\Projects\AIA Ted Stevens\AIA TW Z Ext 00465\Final Drawings\00465-AIA-CSPP.dwg

PRELIMINARY

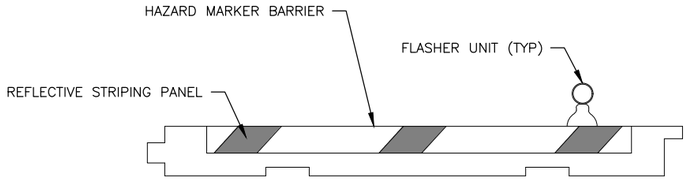

1 AC13 CONSTRUCTION CLOSURE HAZARD MARKER BARRIER DETAIL

SCALE: NTS

HAZARD MARKER BARRIER NOTES:

1. PLACE BARRIERS TO SEPARATE CONSTRUCTION AREAS FROM OPEN PORTIONS OF THE AIRPORT.
2. DISTANCE BETWEEN BARRIERS CAN BE ADJUSTED FOR CONSTRUCTION TRAFFIC.
3. BARRIERS MUST BE LOCATED OUTSIDE THE SAFETY AREA OF ACTIVE TAXIWAYS AND TAXILANES.
4. RED FLASHERS MUST BE USED FOR HAZARD MARKER BARRIERS.
5. FILL AND MAINTAIN BARRIERS PER SPECIFICATION P-670-3.1.b.

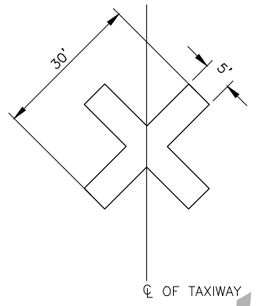

NOTES:

1. TAXIWAY CLOSURE MARKERS WILL BE POSITIONED TO DENOTE A TEMPORARY CLOSED TAXIWAY, OR AS DIRECTED.
2. TAXIWAY CLOSURE MARKERS WILL BE CONSTRUCTED USING MATERIAL SUCH AS PLY WOOD, PLASTIC, OR ANCHORED FABRIC, AND WILL BE YELLOW IN COLOR.
3. DO NOT USE SAND BAGS TO SECURE CLOSURE MARKERS PLACED WITHIN RUNWAY SAFETY AREAS.

2 AC13 TAXIWAY CLOSURE MARKER

SCALE: NTS

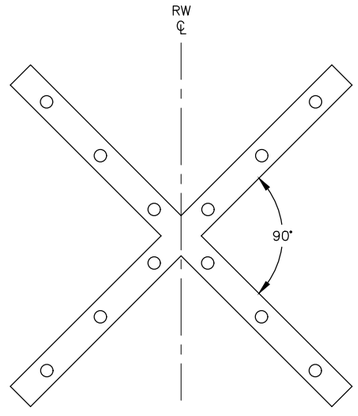

NOTES:

1. RW CLOSURE MARKER WILL BE LIGHTED.
2. INSTALL RW CLOSURE MARKER NEAR THRESHOLD OF THE CLOSED RW.
3. ILLUMINATED RUNWAY CLOSURE MARKER WILL BE PROVIDED BY ANC. THE CONTRACTOR SHALL COORDINATE WITH ANC AIRFIELD MAINTENANCE THROUGH THE ENGINEER TO OBTAIN THE ILLUMINATED RUNWAY CLOSURE MARKERS. FURTHER REQUIREMENTS ARE DESCRIBED IN SPECIFICATION P-671.

3 AC13 ILLUMINATED RUNWAY CLOSURE MARKER DETAIL

SCALE: NTS

BY	DATE	REVISION

STATE OF ALASKA
DEPARTMENT OF TRANSPORTATION AND PUBLIC FACILITIES
CENTRAL REGION
4111 AVIATION AVE., ANCHORAGE ALASKA 99502
PHONE (907) 269-0590

TED STEVENS ANCHORAGE
ANCHORAGE, ALASKA
ANC TAXIWAY Z IMPROVEMENTS WEST - PHASE 1
PROJECT No. CFAPT00465
AIP No. 3-02-0016-XXX-2022
CSPP DETAILS

DATE: 10/14/2021

SHEET: AC13 OF AC14

Designed By: BAG
Drawn By: RJB
Checked By: TAD

Date Revised: 10/14/2021, 10:05 AM
Layout Name: CSPP DETAILS
File Path and Name: W:\Projects\ANA Ted Stevens\ANA TW Z Ext 00465\Final Drawings\00465-AIA-CSPP.dwg

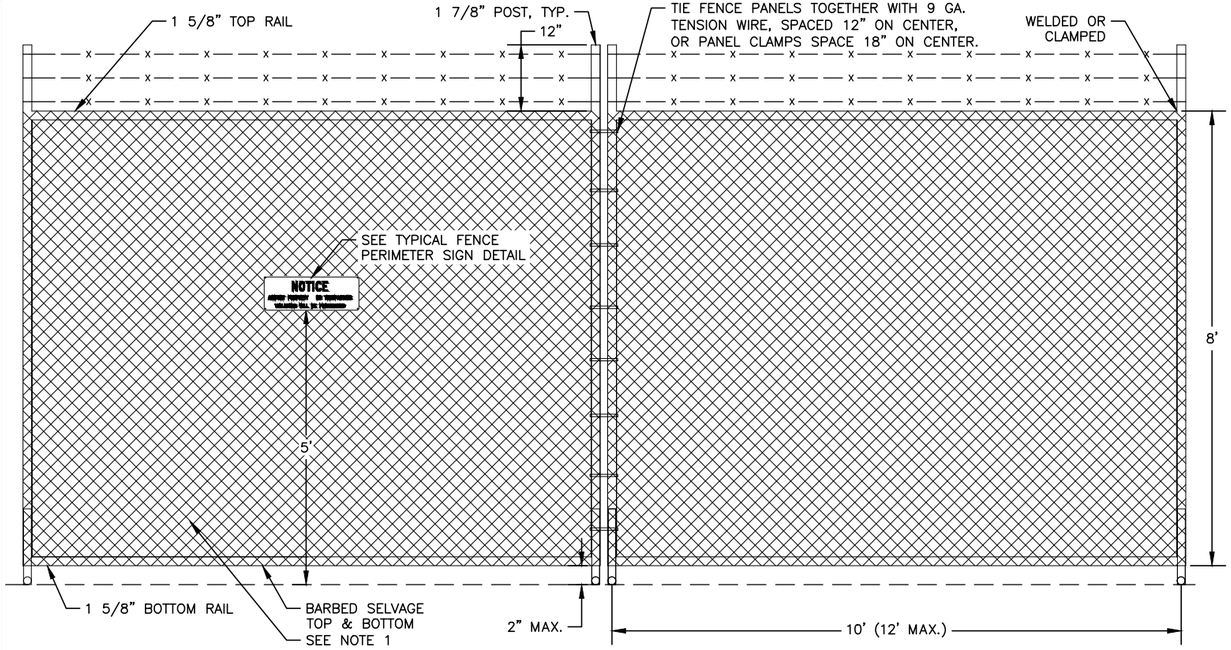

TYPICAL TEMPORARY FENCE PANEL

NTS

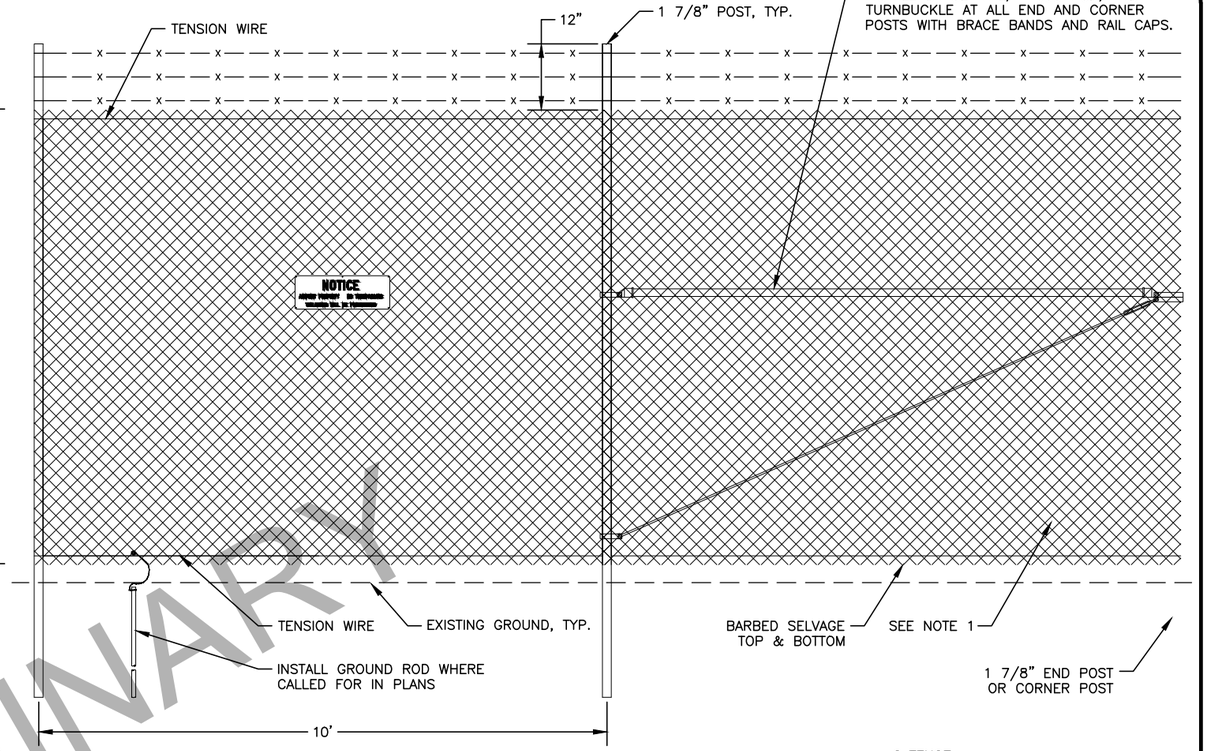

TYPICAL TEMPORARY FENCE WITH DRIVEN POSTS

NTS

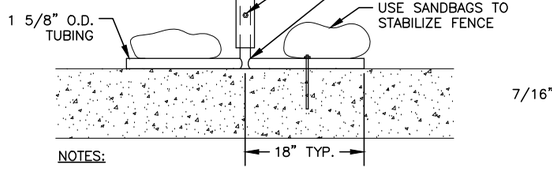

NOTES:

1. CORE HOLE FOR CONCRETE SCREWS AS REQUIRED BY THE MANUFACTURER.
2. PATCH HOLES IMMEDIATELY AFTER REMOVAL WITH EPOXY GROUT.

TYPICAL PANEL SUPPORT

NTS

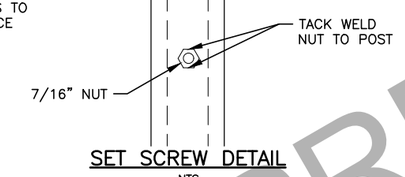

SET SCREW DETAIL

NTS

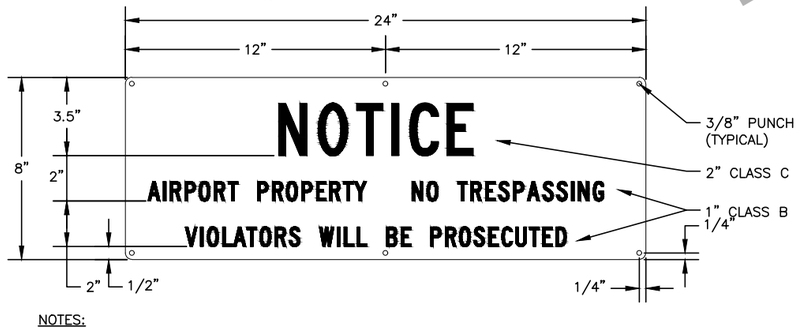

NOTES:

1. "NOTICE" SIGN PLATES SHALL HAVE WHITE REFLECTIVE SHEETING BACKGROUND WITH RED LETTERING. CENTER LETTERS ON PLATE.
2. THE "NOTICE" SIGN PLATES SHALL BE PLACED EVERY 300 FEET AND ON ALL SHORTER FENCE SECTIONS.
3. EXISTING SIGNS ON THE EXISTING FENCE TO BE REMOVED MAY BE USED ON THE TEMPORARY FENCE.

TYPICAL FENCE PERIMETER SIGN DETAIL

NTS

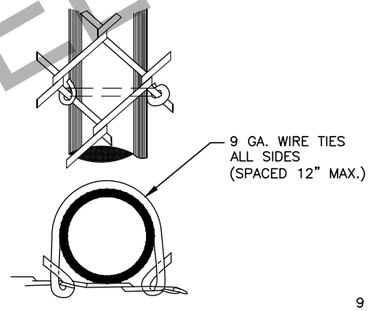

TYPICAL METHOD OF TYING FABRIC TO TUBULAR POSTS

NTS

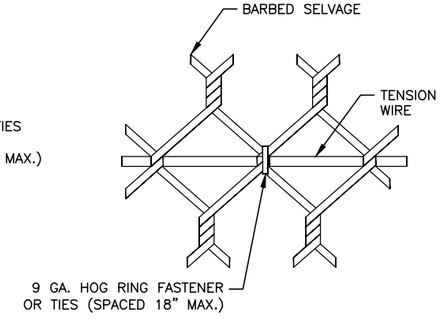

TYPICAL METHOD OF TYING FABRIC TO TENSION WIRE

NTS

GENERAL NOTES:

1. INSTALL FENCE FABRIC AND BARBED WIRE TAUT ON PANELS. SECURE FABRIC TO POSTS AND RAILS EVERY 12". SECURE FABRIC TO TENSION WIRES WITH HOG RING FASTENERS EVERY 18" ON CENTER.
2. PROTECT WELDS AND AREAS OF GALVANIZATION DAMAGE BY FABRICATION BY HOT DIP GALVANIZING PANELS AFTER FABRICATION, OR APPLYING HIGH ZINC DUST CONTENT PAINT PER ASTM A-780 TO THE AFFECTED AREAS.

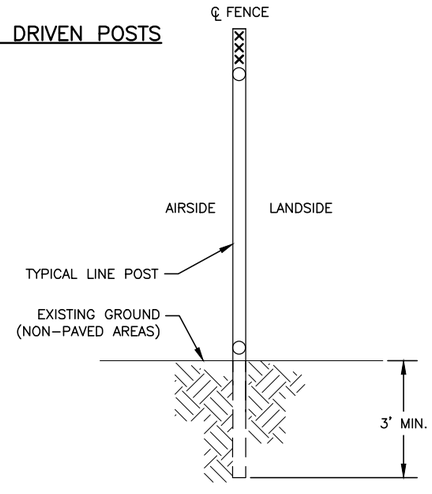

TYPICAL LINE POST DETAIL

NTS

PRELIMINARY

Designed By:	BAG
Drawn By:	RJB
Checked By:	TAD

Date Revised: 10/14/2021, 10:05 AM
Layout Name: TEMP FENCE DETAILS
File Path and Name: W:\Projects\AIA Ted Stevens\AIA TW Z Ext 00465\Final Drawings\00465-AIA-CSPP.dwg

BY	DATE	REVISION

STATE OF ALASKA
DEPARTMENT OF TRANSPORTATION AND PUBLIC FACILITIES
CENTRAL REGION
4111 AVIATION AVE., ANCHORAGE ALASKA 99502
PHONE (907) 269-0590

TED STEVENS ANCHORAGE
ANCHORAGE, ALASKA
ANC TAXIWAY Z IMPROVEMENTS WEST - PHASE 1
PROJECT No. CFAPT00465
AIP No. 3-02-0016-XXX-2022
TEMPORARY FENCE DETAILS

DATE: 10/14/2021
SHEET: AC14 OF AC14