CONSTRUCTION PLANS

BETHEL AIRPORT

BETHEL, ALASKA
MAIN RUNWAY RECONSTRUCTION
PROJECT No. CFAPT00430
AIRPORT IMPROVEMENT PROGRAM
No. 3-02-0029-0XX-20XX
2021

PRE-PS&E
JANUARY 2021

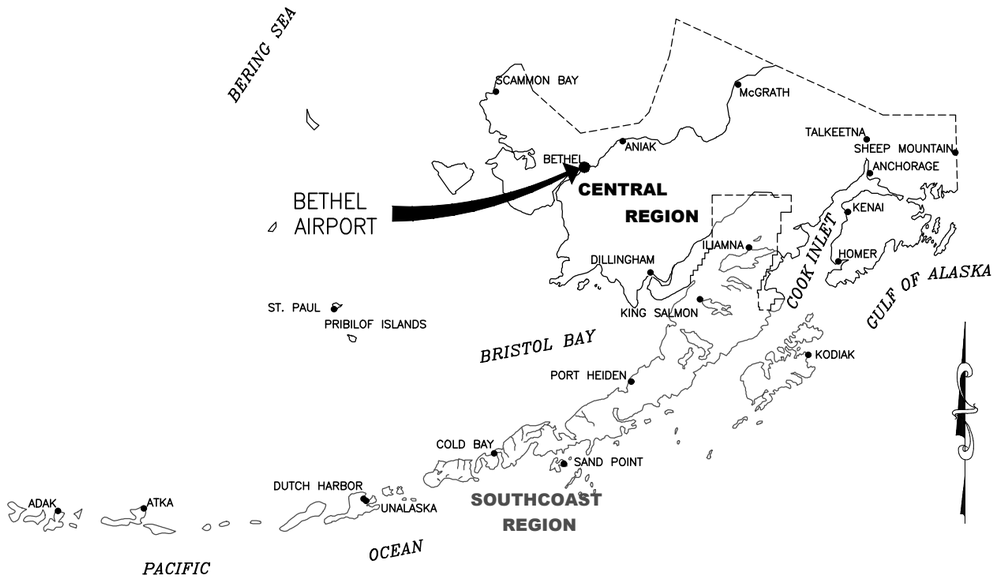

ALASKA CENTRAL REGION LOCATION MAP

NOT TO SCALE

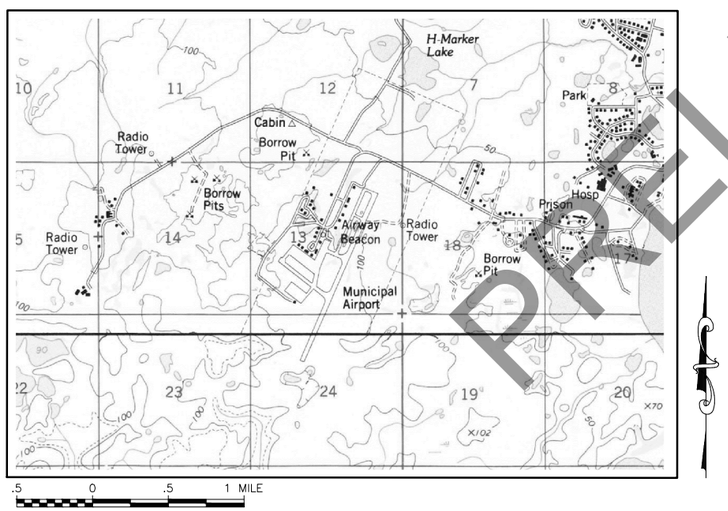

VICINITY MAP

SCALE 1"= 1/2 MILE
T 8 N, R 71 W & R 72 W
SEWARD MERIDIAN
U.S.G.S. BETHEL D-8

Designed By:	CJB
Drawn By:	JSC/RLC
Checked By:	MF
Date Revised:	1/07/2021, 9:41 AM
Layout Name:	Cover
File Path and Name:	Z:\project\2690.02 DOT_C BET Main RW Reconstruction\Civil\ACAD\00430-BET-Cover-Index-Est Quantities.dwg

PLANS DEVELOPED BY:
R&M CONSULTANTS, INC.
9101 VANGUARD DR.
ANCHORAGE, AK 99507
(907) 522-1707
CERT. OF AUTH. NO. AECC111

BY	DATE	REVISION

STATE OF ALASKA
DEPARTMENT OF TRANSPORTATION AND PUBLIC FACILITIES
CENTRAL REGION
4111 AVIATION AVE., ANCHORAGE ALASKA 99502
PHONE (907) 269-0590

BETHEL AIRPORT
BETHEL, ALASKA
MAIN RUNWAY RECONSTRUCTION
PROJECT No. CFAPT00430
AIP No. 3-02-0029-0XX-20XX
COVER

DATE: 1/7/2021

INDEX

INDEX

APPENDIX DRAWINGS

STANDARD PLANS

REFERENCE DRAWINGS

PLANS DEVELOPED BY:
R&M CONSULTANTS, INC.
9101 VANGUARD DR.
ANCHORAGE, AK 99507
(907) 522-1707
CERT. OF AUTH. NO. AECC111

BY	DATE	REVISION

STATE OF ALASKA
DEPARTMENT OF TRANSPORTATION AND PUBLIC FACILITIES
CENTRAL REGION
4111 AVIATION AVE., ANCHORAGE ALASKA 99502
PHONE (907) 269-0590

BETHEL AIRPORT
BETHEL, ALASKA
MAIN RUNWAY RECONSTRUCTION
PROJECT No. CFAPT00430
AIP No. 3-02-0029-0XX-20XX
INDEX

DATE: 1/7/2021

Designed By: CJB
Drawn By: JSC/RLC
Checked By: MF

Date Revised: 1/07/2021, 9:08 AM
Layout Name: Index Legend Abbrv
File Path and Name: Z:\project\2690.02 DOT_C BET Main RW Reconstruction\Civil\ACAD\00430-BET-Cover-Index-Est Quantities.dwg

LEGEND

DESCRIPTION	EXISTING	PROPOSED
AIRPORT PROPERTY BOUNDARY		
BOREHOLE		
BUILDING		
CENTERLINE		
CONTOURS	100	100
CULVERT		
DETAIL CALLOUT		DETAIL NUMBER 1 / SHEET NUMBER XXX
DITCH LINE		
ELECTRICAL HAND HOLE		
ELECTRICAL JUNCTION BOX	E	
ELECTRICAL PEDESTAL	E	
FENCE	x x x x	
GRADE BREAK		GB GB
GRAVEL EDGE		
HAUL ROUTE (TWO WAY)		
HIRL		W
NAVAID CRITICAL AREA	NCA NCA	
OBJECT FREE AREA	ROFA	ROFA
OBSTACLE FREE ZONE	OFZ	OFZ
PAVEMENT/SHOULDER EDGE		
PRECISION OBSTACLE FREE ZONE	POFZ	
RUNWAY APPROACH LIGHTING		
RUNWAY PROTECTION ZONE	RPZ	
RUNWAY SAFETY AREA	RSA	RSA
RUNWAY/TAXIWAY SIGN		
SEGMENTED CIRCLE WITH WIND CONE		
SIGN POST		
SURVEY MONUMENT		
TAXIWAY LIGHTING		
TAXIWAY OBJECT FREE AREA	TOFA	TOFA
TAXIWAY SAFETY AREA	TSA	TSA
TESTPIT		
THRESHOLD MARKERS		
TOP OF CUT SLOPE		
TOE OF FILL SLOPE		
UNDERGROUND ELECTRIC	UE UE	UE UE
UNDERGROUND FAA ELECTRIC	FAA	
UNDERGROUND TELEPHONE	T	
VASI		
WIND CONE		

LEGEND

DESCRIPTION	EXISTING	PROPOSED

ABBREVIATIONS

ABN	ABANDONED
AC	ADVISORY CIRCULAR/ACRE
AOA	AIR OPERATIONS AREA
ARFF	AIRPORT RESCUE AND FIRE FIGHTING
AWG	AMERICAN WIRE GAUGE
AWOS	AUTOMATED WEATHER OBSERVING SYSTEM
BET	BETHEL AIRPORT
BMP	BEST MANAGEMENT PRACTICE
CPM	CRITICAL PATH METHOD
CTSBC	CEMENT TREATED SOIL BASE COURSE
℄	CENTERLINE
CMP	CORRUGATED METAL PIPE
CS	CONTINGENT SUM/CORRUGATED STEEL
CSPP	CONSTRUCTION SAFETY & PHASING PLAN
CY	CUBIC YARD
DEMO	DEMOLITION
DIA	DIAMETER
DOT&PF	DEPARTMENT OF TRANSPORTATION AND PUBLIC FACILITIES
E	EASTING
EA	EACH
EEB	ELECTRICAL ENCLOSURE BUILDING
ELEV	ELEVATION
ESCP	EROSION AND SEDIMENT CONTROL PLAN
FAA	FEDERAL AVIATION ADMINISTRATION
FASBC	FOAMED ASPHALT STABILIZED BASE COURSE
FG	FINISH GRADE
FOD	FOREIGN OBJECT DEBRIS
FT	FEET
GAL	GALLON
GALV	GALVANIZED
GB	GRADE BREAK
HDPE	HIGH DENSITY POLYETHYLENE PIPE
HIRL	HIGH INTENSITY RUNWAY LIGHTING
HMA	HOT MIX ASPHALT
HP	HORSE POWER
HR	HOUR
IN	INCH
kV	KILOVOLT
LB	POUND
LF	LINEAR FOOT
LS	LUMP SUM
LT	LEFT
MALSR	MEDIUM INTENSITY APPROACH LIGHTING SYSTEM WITH RUNWAY ALIGNMENT INDICATOR LIGHTS
MGAL	ONE THOUSAND GALLONS
MIN	MINIMUM
MITL	MEDIUM INTENSITY TAXIWAY LIGHTING
N	NORTHING
NAVAID	NAVIGATION AID
NCA	NAVAID CRITICAL AREA
NOTAM	NOTICES TO AIRMEN
NTS	NOT TO SCALE
OFA	OBJECT FREE AREA
OFZ	OBSTACLE FREE ZONE
OG	ORIGINAL GROUND
PC	POINT OF CURVATURE
PCF	POUNDS PER CUBIC FOOT
POFZ	PRECISION OBSTACLE FREE ZONE
PT	POINT OF TANGENCY
QTY	QUANTITY
R	RADIUS
RAP	RECYCLED ASPHALT PAVEMENT
REQ'D	REQUIRED
RP	RADIUS POINT
RPZ	RUNWAY PROTECTION ZONE
RSA	RUNWAY SAFETY AREA
RSC	RIGID STEEL CONDUIT
RT	RIGHT
RW	RUNWAY
SF	SQUARE FEET
SPCD	SAFETY PLAN COMPLIANCE DOCUMENT
STA	STATION
SWPPP	STORM WATER POLLUTION PREVENTION PLAN
SY	SQUARE YARD
TOFA	TAXIWAY OBJECT FREE AREA
TON	TONNAGE
TSA	TAXIWAY SAFETY AREA
TW	TAXIWAY
TYP	TYPICAL
UE	UNDERGROUND ELECTRIC
VASI	VISUAL APPROACH SLOPE INDICATOR

PLANS DEVELOPED BY:
R&M CONSULTANTS, INC.
9101 VANGUARD DR.
ANCHORAGE, AK 99507
(907) 522-1707
CERT. OF AUTH. NO. AECC111

BY	DATE	REVISION

STATE OF ALASKA
DEPARTMENT OF TRANSPORTATION AND PUBLIC FACILITIES
CENTRAL REGION
4111 AVIATION AVE., ANCHORAGE ALASKA 99502
PHONE (907) 269-0590

BETHEL AIRPORT
BETHEL, ALASKA
MAIN RUNWAY RECONSTRUCTION
PROJECT No. CFAPT00430
AIP No. 3-02-0029-0XX-20XX
LEGEND & ABBREVIATIONS

DATE: 1/7/2021

Designed By: CJB
Drawn By: JSC/RLC
Checked By: MF
Date Revised: 1/07/2021, 9:12 AM
Layout Name: Index_Legend Abbrv (2)
File Path and Name: Z:\project\2690.02 DOT_C BET Main RW Reconstruction\Civil\ACAD\00430-BET-Cover-Index-Est Quantities.dwg

ESTIMATED QUANTITIES

No.	ITEM	UNIT	QUANTITY
D701.010.0024	CS PIPE, 24-INCH	LF	243
D701.010.0036	CS PIPE, 36-INCH	LF	410
D701.010.0042	CS PIPE, 42-INCH	LF	882
D701.010.0072	CS PIPE, 72-INCH	LF	411
D760.010.0030	THAW PIPE, 1.5-INCH	LF	1,635
G100.010.0000	MOBILIZATION AND DEMOBILIZATION	LS	ALL REQ'D
G115.010.0000	WORKERS MEALS AND LODGING, OR PER DIEM	LS	ALL REQ'D
G130.010.0000	FIELD OFFICE	LS	ALL REQ'D
G130.020.0000	FIELD LABORATORY	LS	ALL REQ'D
G130.060.0000	NUCLEAR TESTING EQUIPMENT STORAGE SHED	EA	1
G130.110.0000	FIELD COMMUNICATIONS	CS	ALL REQ'D
G131.010.0000	ENGINEERING TRANSPORTATION (TRUCK)	EA	4
G135.010.0000	CONSTRUCTION SURVEYING BY THE CONTRACTOR	LS	ALL REQ'D
G135.020.0000	EXTRA THREE PERSON SURVEY PARTY	HR	84
G135.050.0000	CONTRACTOR FURNISHED ENGINEERING TOOLS	CS	ALL REQ'D
G150.010.0070	EQUIPMENT RENTAL, DOZER 70-HP MINIMUM	HR	50
G150.030.0000	EQUIPMENT RENTAL, VAC-TRUCK	CS	ALL REQ'D
G300.010.0000	CPM SCHEDULING	LS	ALL REQ'D
G700.010.0000	AIRPORT FLAGGER	CS	ALL REQ'D
G700.040.0000	TRAFFIC CONTROL FOR AIRPORTS	CS	ALL REQ'D
G705.010.0000	WATERING FOR DUST CONTROL	MGAL	1,700
L107.010.0008	8-FEET LIGHTED WIND CONE, IN PLACE	EA	1
L108.010.2008	UNDERGROUND CABLE #8 AWG, COPPER, 5KV FAA TYPE C, L-824	LF	45,690
L108.030.0006	#6 BARE COPPER GROUND CONDUCTOR	LF	67,861
L108.070.0000	GROUND ROD	EA	96
L109.030.0000	ELECTRICAL ENCLOSURE AND FOUNDATION IN PLACE	EA	1
L109.050.0000	INSTALLATION OF ELECTRICAL EQUIPMENT IN NEW OR EXISTING STRUCTURE	LS	ALL REQ'D
L110.030.1002	RIGID STEEL CONDUIT, 2-INCH	LF	3,068
L110.080.1002	HDPE CONDUIT, 2-INCH	LF	28,722
L125.020.0000	REGULATOR, L-828	EA	4
L125.025.0000	HIGH INTENSITY RUNWAY EDGE AND THRESHOLD LIGHT, L-862 AND L-862E	EA	76
L125.040.0000	TAXIWAY EDGE LIGHT, L-861T	EA	269
L125.070.0000	REMOVE RUNWAY AND TAXIWAY LIGHT	EA	276
L125.100.0000	FLUSH RUNWAY EDGE LIGHT, L-850C	EA	4
L125.110.0000	RELOCATE EXISTING AIRPORT SIGN, TYPE L-858	EA	26
L125.130.0000	AIRPORT SIGN, L-858	EA	11
L125.150.0000	HANDHOLE, L-867, SIZE B	EA	4
L125.170.0000	SPARE PARTS	CS	ALL REQ'D
L125.180.0000	TEMPORARY RUNWAY LIGHTING SYSTEM	LS	ALL REQ'D
L125.250.0000	REMOVE AIRPORT SIGN	EA	33
L145.010.0000	STANDBY GENERATOR AND ENCLOSURE	LS	ALL REQ'D
L145.030.0000	REMOVE GENERATOR BUILDING	LS	ALL REQ'D
P152.010.0000	UNCLASSIFIED EXCAVATION	CY	11,600
P152.200.0000	BORROW	TON	26,240
P152.390.0000	DITCH LINING	TON	460
P161.010.0000	RECYCLED ASPHALT PAVEMENT	SY	152,670
P165.010.0000	REMOVAL OF STRUCTURES	LS	ALL REQ'D
P170.020.0000	SOIL TESTING PROGRAM	CS	ALL REQ'D
P170.080.0000	"HOT" MATERIAL OFFSITE TRANSPORTATION AND DISPOSAL	CS	ALL REQ'D
P171.010.0000	TEMPORARY CONTAMINATED SOIL STOCKPILE	CS	ALL REQ'D
P209.020.0000	CRUSHED AGGREGATE BASE COURSE	TON	294
P220.010.0000	CEMENT TREATED SOIL BASE COURSE	SY	37,450
P220.020.0000	PORTLAND CEMENT	TON	536
P318.020.0000	FOAMED ASPHALT STABILIZED BASE COURSE	SY	66,240
P318.040.0000	ASPHALT BINDER	TON	810
P318.050.0000	PORTLAND CEMENT	TON	486
P401.010.0030	HOT MIX ASPHALT TYPE II, CLASS A	TON	57,880
P401.030.5240	ASPHALT BINDER, PG 52-40V	TON	3,305
P401.080.0000	HOT MIX ASPHALT PRICE ADJUSTMENT	CS	ALL REQ'D
*P401.090.0000	ASPHALT MATERIAL PRICE ADJUSTMENT	CS	ALL REQ'D
P401.160.0010	HOT MIX ASPHALT TYPE II, CLASS A, LEVELING COURSE	TON	2,200
P603.010.0010	TACK COAT, STE-1	TON	156
P620.020.0000	RUNWAY & TAXIWAY PAINTING	LS	ALL REQ'D
P620.060.0000	PAINTED MARKING REMOVAL	LS	ALL REQ'D
P620.070.0000	TEMPORARY RUNWAY & TAXIWAY PAINTING	LS	ALL REQ'D
P621.010.0000	SAW-CUT GROOVES	SY	92,445
P640.020.0000	SEGMENTED CIRCLE (PANEL-TYPE)	LS	ALL REQ'D
P641.010.0000	EROSION, SEDIMENT, AND POLLUTION CONTROL ADMINISTRATION	LS	ALL REQ'D
P641.020.0000	TEMPORARY EROSION, SEDIMENT, AND POLLUTION CONTROL	CS	ALL REQ'D
P641.060.0000	WITHHOLDING	CS	ALL REQ'D
P641.070.0000	SWPPP MANAGER	LS	ALL REQ'D
P670.030.0000	FLASHER UNIT FOR PLASTIC BARRIER	EA	23
P671.010.0000	RUNWAY CLOSURE MARKER, VINYL MESH	EA	7
P671.020.0000	RUNWAY CLOSURE MARKER, ILLUMINATED	EA	4
P671.040.0000	TAXIWAY CLOSURE MARKER, VINYL	EA	6
P683.010.0000	PAVING FABRIC	SY	4,170
T901.010.0000	SEEDING	ACRE	5.8
T905.010.0020	TOPSOILING, CLASS B	SY	28,072
T908.010.0000	MULCHING	SY	28,072

*NON-PARTICIPATING ITEM

ESTIMATED QUANTITIES FOR SELECT LUMP SUM ITEMS

ITEM NO	PAY ITEM	QUANTITY
P620.020.0000	RUNWAY AND TAXIWAY PAINTING	160,810 SF
P620.060.0000	PAINTED MARKING REMOVAL	6,427 SF
P620.070.0000	TEMPORARY RUNWAY & TAXIWAY PAINTING	101,150 SF

EARTHWORK SUMMARY

EXCAVATION		FILL	
UNCLASSIFIED EXCAVATION	11,600 CY	UNCLASSIFIED EXCAVATION	11,600 CY
		BORROW	16,193 CY
TOTAL EXCAVATION	11,600 CY	TOTAL FILL	27,793 CY

ESTIMATING FACTORS

No.	ITEM	FACTOR
G705.010.0000	WATERING FOR DUST CONTROL	40 GAL/SY
P152.200.0000	BORROW	120 PCF
P152.390.0000	DITCH LINING	1.8 T/CY
P209.020.0000	CRUSHED AGGREGATE BASE COURSE	145 PCF
P220.010.0000	CEMENT TREATED SOIL BASE COURSE	120 PCF
P220.020.0000	PORTLAND CEMENT	8% BY WEIGHT
P318.020.0000	FOAMED ASPHALT STABILIZED BASE COURSE	140 PCF
P318.040.0000	ASPHALT BINDER	2.5% BY WEIGHT
P318.050.0000	PORTLAND CEMENT	1.5% BY WEIGHT
P401.010.0030	HOT MIX ASPHALT TYPE II, CLASS A	150 PCF
P401.030.5240	ASPHALT BINDER, PG 52-40V	5.5% BY WEIGHT

PLANS DEVELOPED BY:
R&M CONSULTANTS, INC.
9101 VANGUARD DR.
ANCHORAGE, AK 99507
(907) 522-1707
CERT. OF AUTH. NO. AECC111

BY	DATE	REVISION

STATE OF ALASKA
DEPARTMENT OF TRANSPORTATION AND PUBLIC FACILITIES
CENTRAL REGION
4111 AVIATION AVE., ANCHORAGE ALASKA 99502
PHONE (907) 269-0590

BETHEL AIRPORT
BETHEL, ALASKA
MAIN RUNWAY RECONSTRUCTION
PROJECT No. CFAPT00430
AIP No. 3-02-0029-0XX-20XX
ESTIMATE OF QUANTITIES

DATE: 1/7/2021

Designed By: CJB
Drawn By: JSC/RLC
Checked By: MF
Date Revised: 1/07/2021, 9:12 AM
Layout Name: Est Quantities
File Path and Name: Z:\project\2690.02 DOT_C BET Main RW Reconstruction\Civil\ACAD\00430-BET-Cover-Index-Est Quantities.dwg

1. RECONSTRUCT TAXIWAYS A, C, D, AND G AND REGRADE TSA
2. RECONSTRUCT RUNWAY 1L–19R AND REGRADE RSA
3. REPLACE TAXIWAY LIGHTING AND SIGNAGE
4. REPLACE RUNWAY LIGHTING AND SIGNAGE
5. REPLACE CULVERTS
6. REPLACE SEGMENTED CIRCLE AND WIND CONE
7. CONSTRUCT DITCH
8. REPLACE ELECTRICAL ENCLOSURE BUILDING AND STANDBY GENERATOR/BUILDING
9. APPLY EROSION CONTROL TO DISTURBED EMBANKMENTS

LEGEND:

- CONTRACTOR STAGING AREA
- RAP STOCKPILE
- WASTE AREA
- WORK AREA
- HAUL ROUTE

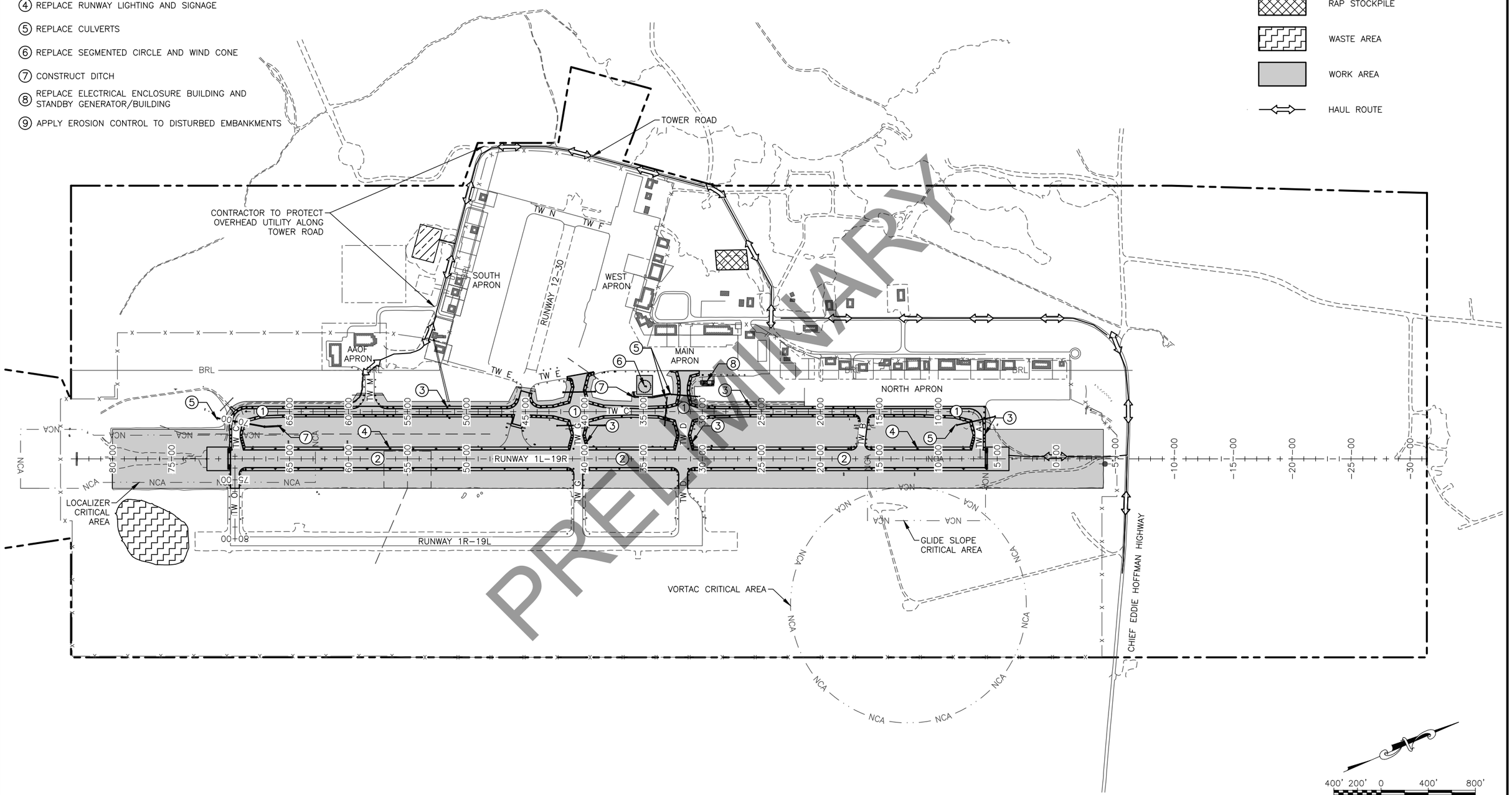

Date Revised:	1/07/2021, 9:13 AM
Layout Name:	4 PROJECT LAYOUT PLAN
File Path and Name:	Z:\project\2690.02 DOT_C BET Main RW Reconstruction\Civil\ACAD\00430-BET-LAYOUT PLAN.dwg

Designed By:	CJB
Drawn By:	JSC/RLC
Checked By:	MF

PLANS DEVELOPED BY:
R&M CONSULTANTS, INC.
9101 VANGUARD DR.
ANCHORAGE, AK 99507
(907) 522-1707
CERT. OF AUTH. NO. AECC111

BY	DATE	REVISION

STATE OF ALASKA
DEPARTMENT OF TRANSPORTATION AND PUBLIC FACILITIES
CENTRAL REGION
4111 AVIATION AVE., ANCHORAGE ALASKA 99502
PHONE (907) 269-0590

BETHEL AIRPORT
BETHEL, ALASKA
MAIN RUNWAY RECONSTRUCTION
PROJECT No. CFAPT00430
AIP No. 3-02-0029-0XX-20XX
PROJECT LAYOUT PLAN

DATE: 1/7/2021

SHEET: 5 OF 79

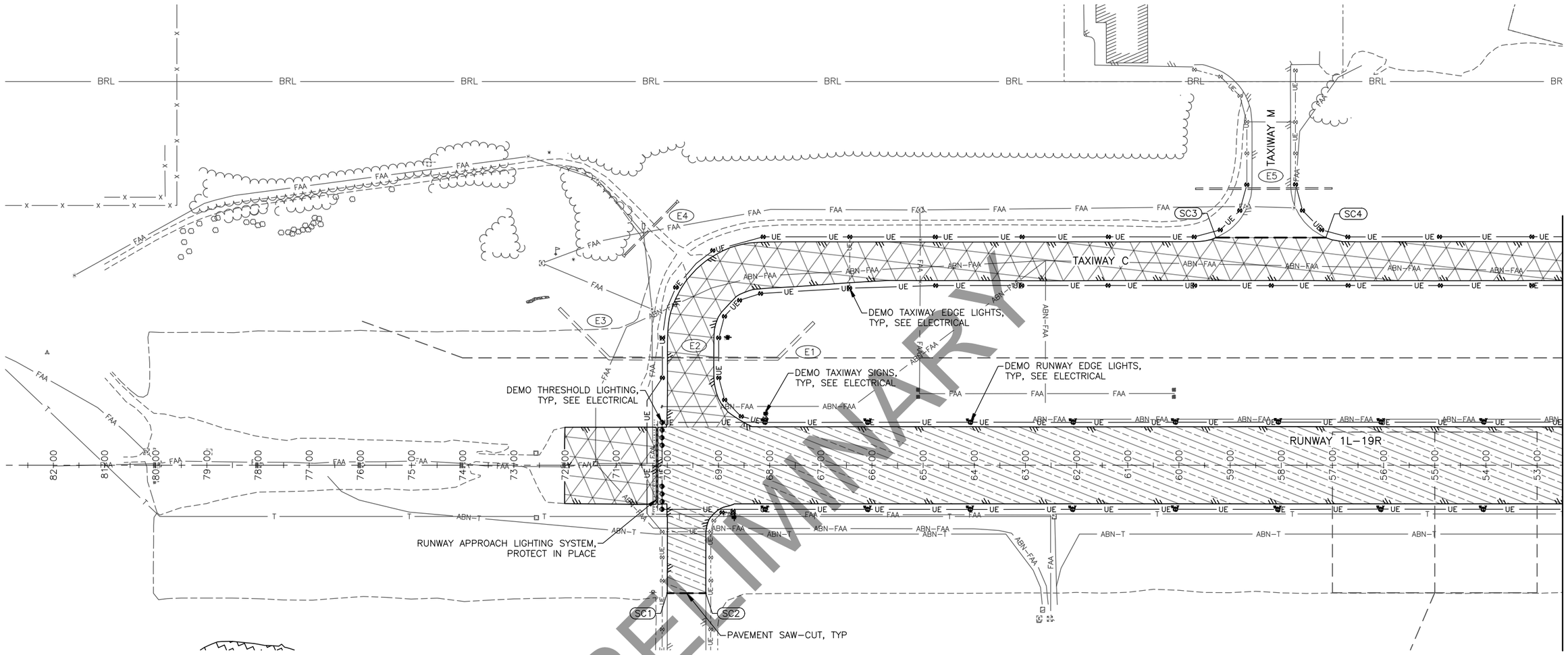

SAW–CUT SCHEDULE

#	STATION	OFFSET
SC1	70+00.1	250.0' LT
SC2	69+24.8	250.0' LT
SC3	59+27.5	445.0' RT
SC4	57+13.0	445.0' RT

PIPE SUMMARY TABLE

ID	TYPE	DIA.	LENGTH	INLET	ELEV.	OUTLET	ELEV.	DISPOSITION
E1	CORRUGATED STEEL	72"	101'	STA 67+14, 279' RT	108.10'	STA 67+85, 208' RT	100.49'	TO REMOVE
E2	CORRUGATED STEEL	72"	329'	STA 67+85, 208' RT	100.49'	STA 71+14, 209' RT	97.31'	TO REMOVE
E3	CORRUGATED STEEL	72"	138'	STA 71+14, 209' RT	97.31'	STA 72+11, 307' RT	95.10'	TO REMOVE
E4	CORRUGATED STEEL	36"	143'	STA 70+82, 412' RT	98.80'	STA 69+82, 513' RT	98.60'	TO REMAIN
E5	CORRUGATED STEEL	36"	267'	STA 57+01, 541' RT	109.90'	STA 59+68, 540' RT	107.60'	TO REMAIN

NOTES:

1. REFERENCE THE GEOTECHNICAL REPORT FOR EXISTING PAVEMENT THICKNESS.
2. UTILITIES SHOWN ARE FROM AS–BUILT INFORMATION. LOCATIONS ARE APPROXIMATE AND DEPTHS ARE UNKNOWN. OBTAIN FIELD LOCATES PRIOR TO EXCAVATION. POTHOLE FOR UTILITIES WHERE IMPACTS MAY OCCUR.
3. SEE ELECTRICAL SHEETS FOR ELECTRICAL SYSTEMS DEMOLITION.
4. STATIONS AND OFFSETS REFERENCES RUNWAY 1L–19R ALIGNMENT.

LEGEND:

PAVEMENT REMOVAL

PAVEMENT PLANING

CALL BEFORE YOU DIG

The Contractor shall notify all area utility companies prior to commencment of excavation.

Alaska Digline, Inc.
Statewide Toll Free 1-800-478-3121

100' 50' 0 100' 200'

PLANS DEVELOPED BY:
R&M CONSULTANTS, INC.
9101 VANGUARD DR.
ANCHORAGE, AK 99507
(907) 522-1707
CERT. OF AUTH. NO. AECC111

BY	DATE	REVISION

STATE OF ALASKA
DEPARTMENT OF TRANSPORTATION AND PUBLIC FACILITIES
CENTRAL REGION
4111 AVIATION AVE., ANCHORAGE ALASKA 99502
PHONE (907) 269-0590

BETHEL AIRPORT
BETHEL, ALASKA
MAIN RUNWAY RECONSTRUCTION
PROJECT No. CFAPT00430
AIP No. 3-02-0029-0XX-20XX
DEMOLITION PLAN STA 52+50 TO 72+00

DATE: 1/7/2021

SHEET: 6 OF 79

Designed By: CJB
Drawn By: JSC/RLC
Checked By: MF

Date Revised: 1/07/2021, 9:14 AM
Layout Name: DEMOLITION PLAN
File Path and Name: Z:\project\2690.02 DOT_C BET Main RW Reconstruction\Civil\ACAD\00430-BET-DEMOLITION.dwg

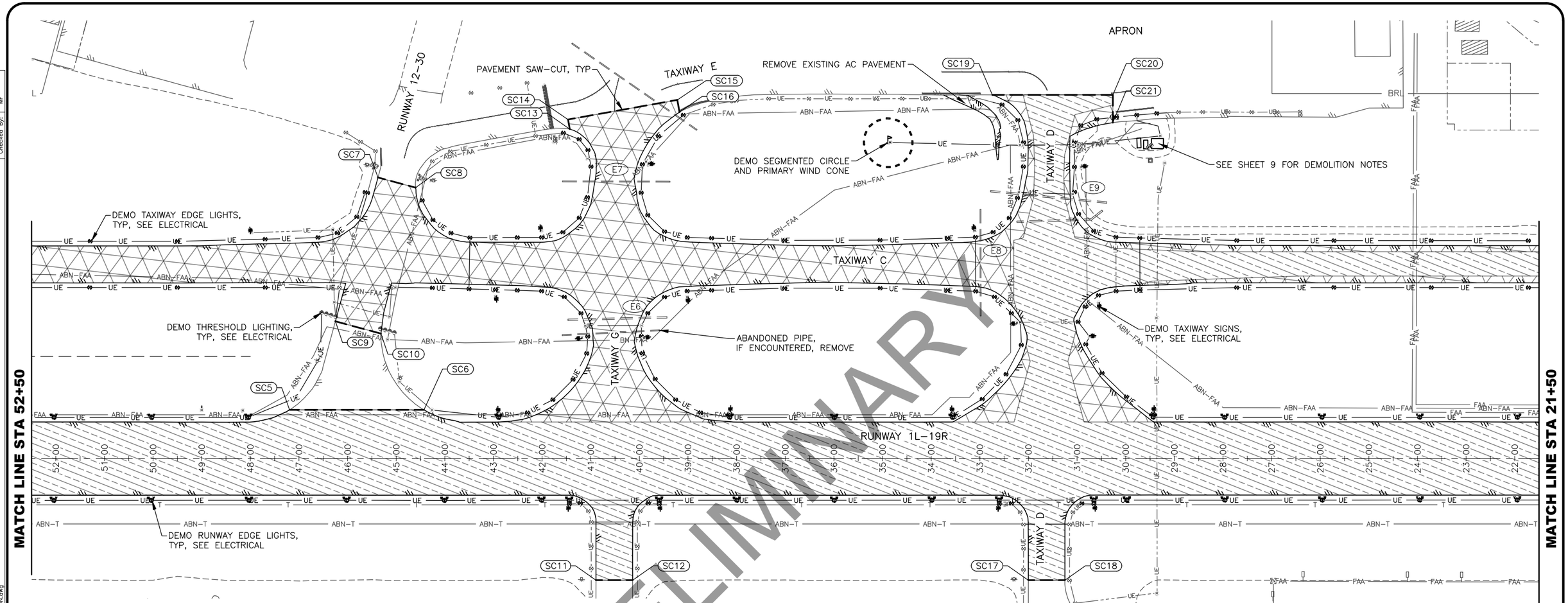

SAW-CUT SCHEDULE		
#	STATION	OFFSET
SC5	47+19.4	100.0' RT
SC6	44+43.1	100.0' RT
SC7	45+37.6	577.6' RT
SC8	44+60.2	556.8' RT
SC9	46+25.2	282.0' RT
SC10	45+31.6	256.8' RT
SC11	40+89.3	250.0' LT
SC12	40+13.9	250.0' LT
SC13	41+43.3	677.0' RT
SC14	41+46.8	696.7' RT
SC15	39+22.0	736.9' RT
SC16	39+17.6	711.9' RT

SAW-CUT SCHEDULE		
#	STATION	OFFSET
SC17	32+00.3	250.0' LT
SC18	31+25.1	250.0' LT
SC19	32+74.2	747.3' RT
SC20	30+26.5	747.3' RT
SC21	30+26.5	690.3' RT

PIPE SUMMARY TABLE								
ID	TYPE	DIA.	LENGTH	INLET	ELEV.	OUTLET	ELEV.	DISPOSITION
E6	CORRUGATED STEEL	36"	204'	STA 41+47, 285' RT	112.50'	STA 39+43, 290' RT	110.50'	TO REMOVE
E7	CORRUGATED STEEL	24"	221'	STA 41+58, 569' RT	112.80'	STA 39+37, 569' RT	109.20'	TO REMOVE
E8	CORRUGATED STEEL	24"	219'	STA 32+98, 293' RT	105.00'	STA 32+99, 512' RT	103.10'	TO REMOVE
E9	CORRUGATED STEEL	36"	241'	STA 32+78, 549' RT	102.90'	STA 30+39, 526' RT	100.40'	TO REMOVE

NOTES:

1. REFERENCE THE GEOTECHNICAL REPORT FOR EXISTING PAVEMENT THICKNESS.
2. UTILITIES SHOWN ARE FROM AS-BUILT INFORMATION. LOCATIONS ARE APPROXIMATE AND DEPTHS ARE UNKNOWN. OBTAIN FIELD LOCATES PRIOR TO EXCAVATION. POTHOLE FOR UTILITIES WHERE IMPACTS MAY OCCUR.
3. SEE ELECTRICAL SHEETS FOR ELECTRICAL SYSTEMS DEMOLITION.
4. STATIONS AND OFFSETS REFERENCES RUNWAY 1L-19R ALIGNMENT.

LEGEND:

PAVEMENT REMOVAL

PAVEMENT PLANING

CALL BEFORE YOU DIG

The Contractor shall notify all area utility companies prior to commencment of excavation.

Alaska Digline, Inc.
Statewide Toll Free 1-800-478-3121

100' 50' 0 100' 200'

PLANS DEVELOPED BY:
R&M CONSULTANTS, INC.
9101 VANGUARD DR.
ANCHORAGE, AK 99507
(907) 522-1707
CERT. OF AUTH. NO. AECC111

BY	DATE	REVISION

STATE OF ALASKA
DEPARTMENT OF TRANSPORTATION AND PUBLIC FACILITIES
CENTRAL REGION
4111 AVIATION AVE., ANCHORAGE ALASKA 99502
PHONE (907) 269-0590

BETHEL AIRPORT
BETHEL, ALASKA
MAIN RUNWAY RECONSTRUCTION
PROJECT No. CFAPT00430
AIP No. 3-02-0029-0XX-20XX
DEMOLITION PLAN STA 21+50 TO 52+50

DATE: 1/7/2021

SHEET: 7 OF 79

Date Revised: 1/07/2021, 9:14 AM
Layout Name: DEMOLITION PLAN (2)
File Path and Name: Z:\project\2690.02 DOT_C BET Main RW Reconstruction\Civil\ACAD\00430-BET-DEMOLITION.dwg
Designed By: CJB
Drawn By: JSC/RLC
Checked By: MF

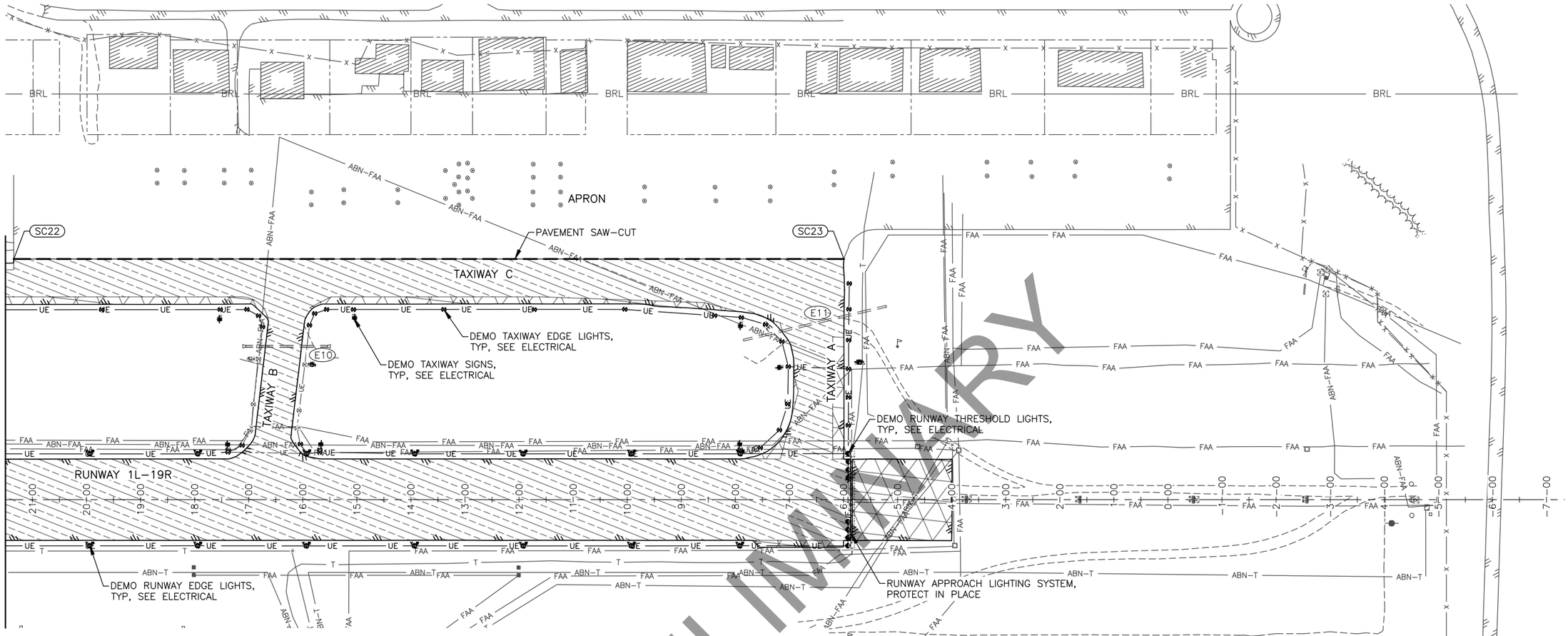

SAW-CUT SCHEDULE		
#	STATION	OFFSET
SC22	21+34.6	445.0' RT
SC23	5+99.2	445.0' RT

PIPE SUMMARY TABLE								
ID	TYPE	DIA.	LENGTH	INLET	ELEV.	OUTLET	ELEV.	DISPOSITION
E10	CORRUGATED STEEL	42"	152'	STA 17+06, 284' RT	93.00'	STA 15+54, 284' RT	91.20'	TO REMAIN
E11	CORRUGATED STEEL	42"	272'	STA 7+85, 295' RT	84.50'	STA 5+21, 358' RT	82.70'	TO REMOVE

NOTES:

1. REFERENCE GEOTECHNICAL REPORT FOR EXISTING PAVEMENT THICKNESS.
2. UTILITIES SHOWN ARE FROM AS-BUILT INFORMATION. LOCATIONS ARE APPROXIMATE AND DEPTHS ARE UNKNOWN. OBTAIN FIELD LOCATES PRIOR TO EXCAVATION. POTHOLE FOR UTILITIES WHERE IMPACTS MAY OCCUR.
3. SEE ELECTRICAL SHEETS FOR ELECTRICAL SYSTEMS DEMOLITION.
4. STATIONS AND OFFSETS REFERENCES RUNWAY 1L-19R ALIGNMENT.

LEGEND:

PAVEMENT REMOVAL

PAVEMENT PLANING

CALL BEFORE YOU DIG

The Contractor shall notify all area utility companies prior to commencment of excavation.

Alaska Digline, Inc.
Statewide Toll Free 1-800-478-3121

100' 50' 0 100' 200'

PLANS DEVELOPED BY:
R&M CONSULTANTS, INC.
9101 VANGUARD DR.
ANCHORAGE, AK 99507
(907) 522-1707
CERT. OF AUTH. NO. AECC111

BY	DATE	REVISION

STATE OF ALASKA
DEPARTMENT OF TRANSPORTATION AND PUBLIC FACILITIES
CENTRAL REGION
4111 AVIATION AVE., ANCHORAGE ALASKA 99502
PHONE (907) 269-0590

BETHEL AIRPORT
BETHEL, ALASKA
MAIN RUNWAY RECONSTRUCTION
PROJECT No. CFAPT00430
AIP No. 3-02-0029-0XX-20XX
DEMOLITION PLAN STA 4+00 TO 21+50

DATE: 1/7/2021

SHEET: 8 OF 79

Designed By: CJB
Drawn By: JSC/RLC
Checked By: MF

Date Revised: 1/07/2021, 9:14 AM
Layout Name: DEMOLITION PLAN (3)
File Path and Name: Z:\project\2690.02 DOT_C BET Main RW Reconstruction\Civil\ACAD\00430-BET-DEMOLITION.dwg

1/9 ELECTRICAL EQUIPMENT BUILDINGS
NTS

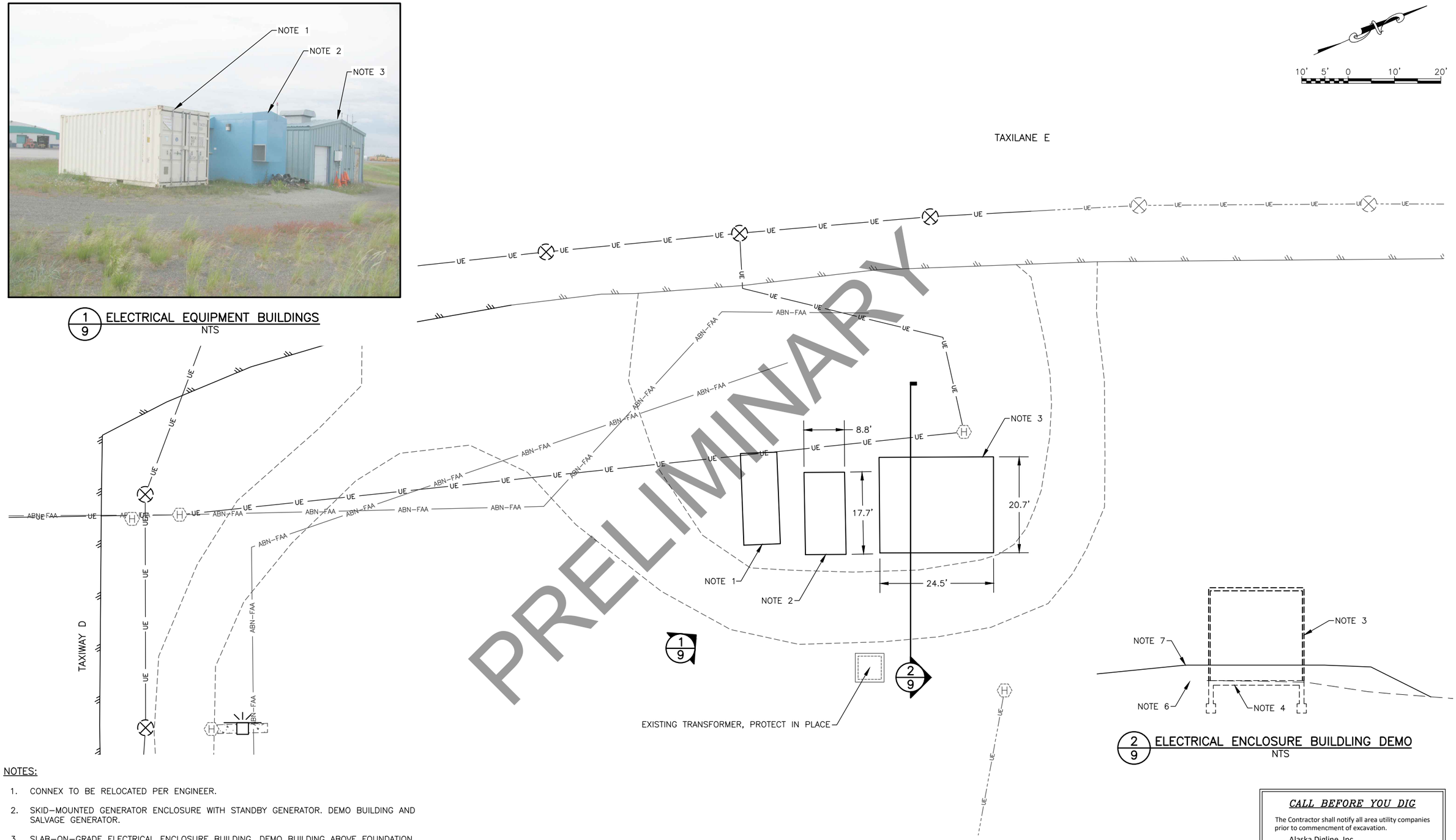

2/9 ELECTRICAL ENCLOSURE BUILDLING DEMO
NTS

NOTES:

1. CONNEX TO BE RELOCATED PER ENGINEER.
2. SKID-MOUNTED GENERATOR ENCLOSURE WITH STANDBY GENERATOR. DEMO BUILDING AND SALVAGE GENERATOR.
3. SLAB-ON-GRADE ELECTRICAL ENCLOSURE BUILDING. DEMO BUILDING ABOVE FOUNDATION.
4. EXISTING CONCRETE FOUNDATION TO REMAIN IN PLACE.
5. UTILITIES SHOWN ARE FROM AS-BUILT INFORMATION. LOCATIONS ARE APPROXIMATE AND DEPTHS ARE UNKNOWN. OBTAIN FIELD LOCATES PRIOR TO EXCAVATION. POTHOLE FOR UTILITIES WHERE IMPACTS MAY OCCUR.
6. INSUFFICIENT SURFACE DATA AVAILABLE IN THIS LOCATION.
7. FINISHED GRADE PROPOSED BUILDING PAD. SEE SHEET 40.

CALL BEFORE YOU DIG

The Contractor shall notify all area utility companies prior to commencment of excavation.
Alaska Digline, Inc.
Statewide Toll Free 1-800-478-3121

Designed By:	CJB
Drawn By:	JSC/RLC
Checked By:	MF

Date Revised:	1/07/2021, 9:14 AM
Layout Name:	DEMOLITION PLAN (4)
File Path and Name:	Z:\project\2690.02 DOT_C BET Main RW Reconstruction\Civil\ACAD\00430-BET-DEMOLITION.dwg

PLANS DEVELOPED BY:
R&M CONSULTANTS, INC.
9101 VANGUARD DR.
ANCHORAGE, AK 99507
(907) 522-1707
CERT. OF AUTH. NO. AECC111

BY	DATE	REVISION

STATE OF ALASKA
DEPARTMENT OF TRANSPORTATION AND PUBLIC FACILITIES
CENTRAL REGION
4111 AVIATION AVE., ANCHORAGE ALASKA 99502
PHONE (907) 269-0590

BETHEL AIRPORT
BETHEL, ALASKA
MAIN RUNWAY RECONSTRUCTION
PROJECT No. CFAPT00430
AIP No. 3-02-0029-0XX-20XX
DEMOLITION PLAN ELECTRICAL ENCLOSURE BUILDING & GENERATOR

DATE: 1/7/2021
SHEET: 9 OF 79

RUNWAY SHOULDER SLOPE SCHEDULE			
LEFT		RIGHT	
STATION RANGE	SLOPE	STATION RANGE	SLOPE
6+00 – 31+14	1.5%	6+00 – 7+60	SEE TW A P&P
31+14 – 32+11	SEE RW P&P	7+60 – 16+14	3.0%
32+11 – 40+05	1.5%	16+14 – 16+94	SEE RW P&P
40+05 – 40+98	SEE RW P&P	16+94 – 17+40	3.0%
40+98 – 48+20	1.5%	17+40 – 22+80	4.0%
48+20 – 53+70	3.0%	22+80 – 27+80	3.0%
53+70 – 56+40	4.0%	27+80 – 30+65	1.5%
56+40 – 58+80	3.0%	30+65 – 32+60	SEE TW D P&P
58+80 – 69+16	1.5%	32+60 – 39+59	1.5%
69+16 – 70+00	SEE RW P&P	39+59 – 41+60	SEE TW G P&P
		41+60 – 44+49	1.5%
		44+49 – 47+24	SEE RW P&P
		47+24 – 53+70	3.0%
		53+70 – 58+80	4.0%
		58+80 – 68+70	3.0%
		68+70 – 70+00	SEE TW C P&P

*TRANSITION FROM VARYING SLOPES OVER A MINIMUM DISTANCE OF 25'

RSA SLOPE SCHEDULE			
LEFT		RIGHT	
STATION RANGE	RSA SLOPE	STATION RANGE	RSA SLOPE
−4+00 – −2+70	1.9%	−4+00 – −2+70	1.7%
−2+70 – 1+45	1.6%	−2+70 – 1+45	1.5%
1+45 – 1+75	1.6%	1+45 – 1+75	1.7%
1+75 – 4+00	1.5%	1+75 – 4+00	1.7%
4+00 – 6+00	1.5%	4+00 – 6+00	2.0%
6+00 – 7+60	2.0%	6+00 – 7+60	SEE TW A P&P
7+60 – 19+50	1.5%	7+60 – 16+14	2.5%
19+50 – 24+50	2.0%	16+14 – 16+94	SEE RW P&P
24+50 – 31+14	1.5%	16+94 – 26+00	2.5%
31+14 – 32+11	SEE RW P&P	26+00 – 30+65	2.0%
32+11 – 40+05	1.5%	30+65 – 32+60	SEE TW D P&P
40+05 – 40+98	SEE RW P&P	32+60 – 39+59	1.5%
40+98 – 43+50	1.5%	39+59 – 41+60	SEE TW G P&P
43+50 – 45+50	2.0%	41+60 – 44+49	1.5%
45+50 – 50+00	2.5%	44+49 – 47+24	SEE RW P&P
50+00 – 51+50	2.0%	47+24 – 50+00	1.5%
51+50 – 56+30	2.5%	50+00 – 53+60	2.0%
56+30 – 60+50	2.0%	53+60 – 68+70	2.5%
60+50 – 69+16	1.5%	68+70 – 70+00	SEE TW C P&P
69+16 – 70+00	SEE RW P&P	70+00 – 70+80	2.0%
70+00 – 70+80	2.0%	70+80 – 71+05	2.5%
70+80 – 71+05	2.0%	71+05 – 71+55	2.5%
71+05 – 71+55	2.5%	71+55 – 72+00	2.7%
71+55 – 72+00	2.5%	72+00 – 73+60	2.7%
72+00 – 73+60	2.5%	73+60 – 76+15	2.5%
73+60 – 76+15	2.5%	76+15 – 77+75	2.5%
76+15 – 77+75	3.0%	77+75 – 80+00	3.0%
77+75 – 80+00	3.0%		

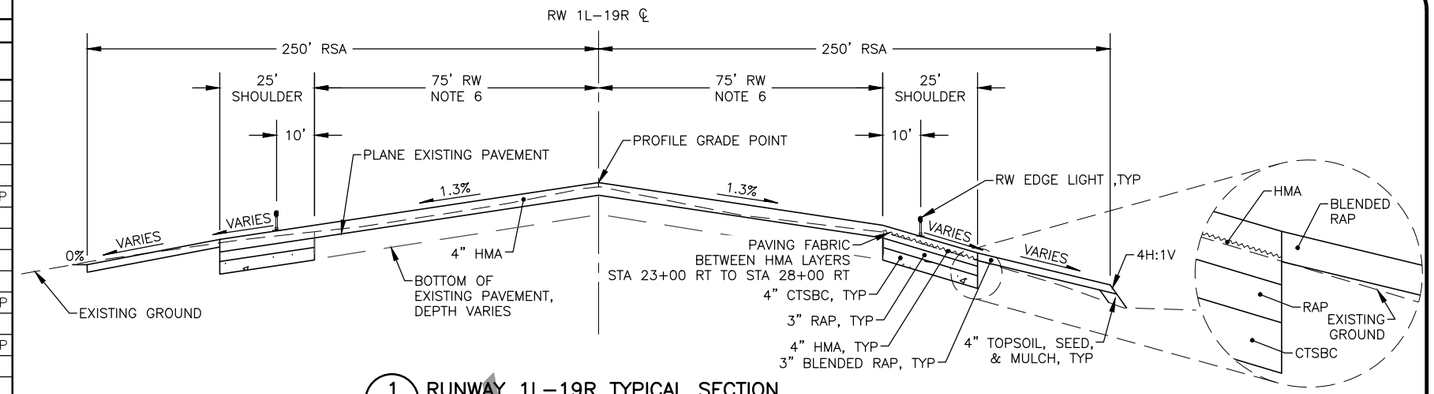

1/10 RUNWAY 1L–19R TYPICAL SECTION
NTS
STA 6+00 TO 70+00

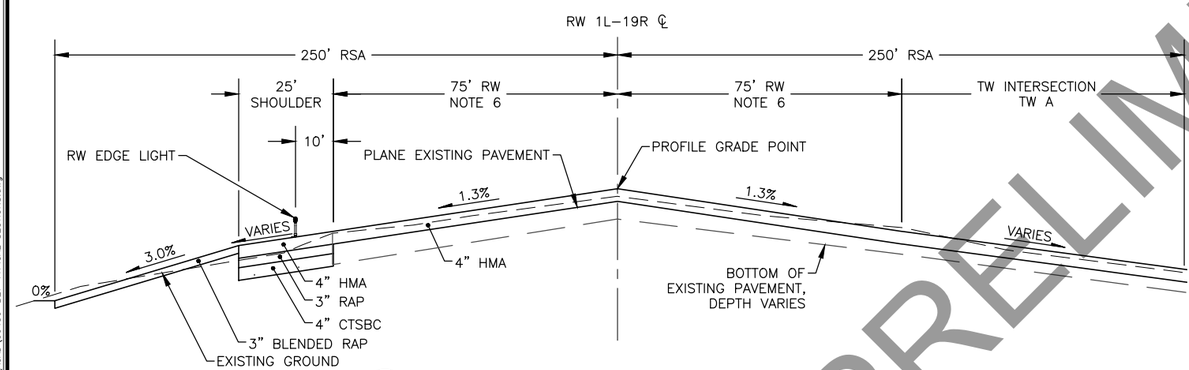

2/10 TAXIWAY INTERSECTION TYPICAL SECTION
NTS
TAXIWAY INTERSECTION A

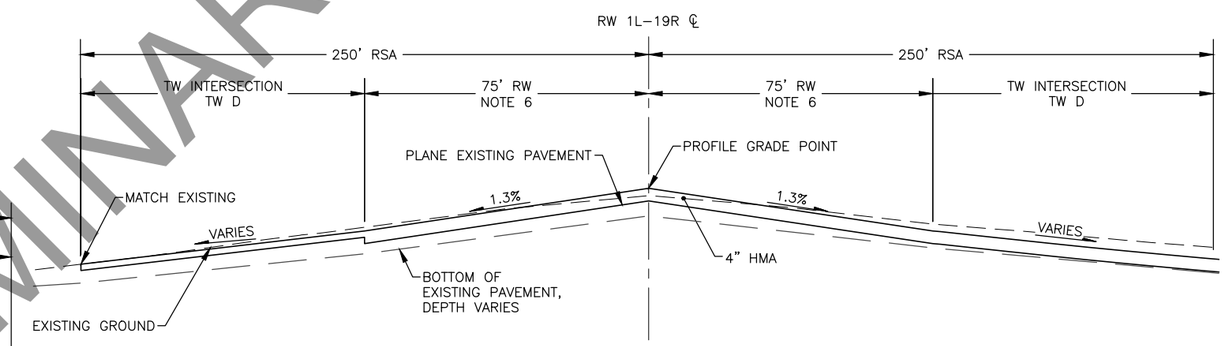

3/10 TAXIWAY INTERSECTION TYPICAL SECTION
NTS
TAXIWAY INTERSECTION D

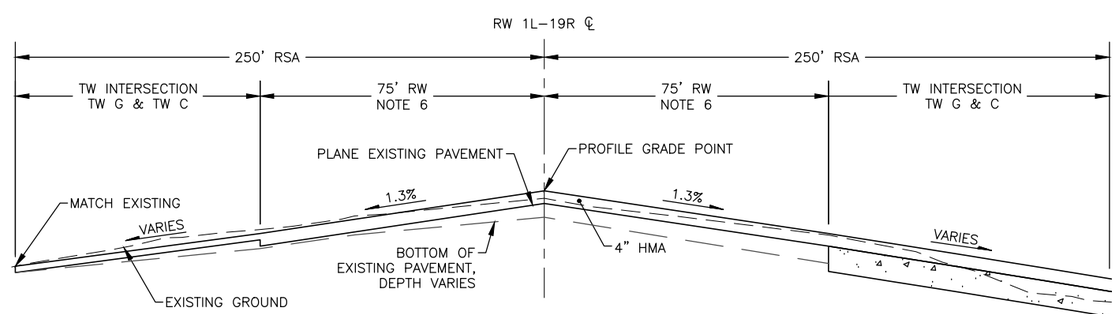

4/10 TAXIWAY INTERSECTION TYPICAL SECTION
NTS
TAXIWAY INTERSECTION G & C

NOTES:

1. APPLY TACK COAT BETWEEN EXISTING PAVEMENT AND NEW HMA PAVEMENT AND BETWEEN FASBC AND HMA. APPLY TACK COAT BETWEEN ALL LIFTS OF HMA.
2. GRADING BEYOND THE SHOULDER PAVEMENT INTO THE RSA IS A MINIMUM 1.5% AND MAXIMUM 3%.
3. SEE PAVING PLAN FOR TAXIWAY INTERSECTION PAVEMENT THICKNESSES.
4. ALL AREAS TO RECEIVE LEVELING COURSE OR HMA MUST BE FREE OF GROOVES. SEE DETAIL 2, SHEET 11. MILL TO REMOVE GROOVES.
5. APPLY PAVEMENT GROOVING 95' LEFT AND 95' RIGHT OF RUNWAY CENTERLINE.
6. EXISTING RUNWAY PAVEMENT WIDTH VARIES BY AS MUCH AS ±2'. CONTRACTOR SHALL REESTABLISH A 75' WIDTH FROM CENTERLINE IN AREAS OF REDUCED EXISTING WIDTH BY EXTENDING THE SHOULDER SECTION TO THE EXISTING PAVEMENT EDGE.
7. UNIFORMLY BLEND RAP WITH COARSE SURFACING MATERIAL SALVAGED FROM THE EXISTING RSA SUCH THAT THE RESULTING BLEND IS 50% RAP AND 50% SALVAGED COARSE SURFACING MATERIAL BY VOLUME
8. IF THE SUPPLY OF RAP FOR BLENDING IS EXHAUSTED, USE CABC AS REQUIRED.

PLANS DEVELOPED BY:
R&M CONSULTANTS, INC.
9101 VANGUARD DR.
ANCHORAGE, AK 99507
(907) 522-1707
CERT. OF AUTH. NO. AECC111

BY	DATE	REVISION

STATE OF ALASKA
DEPARTMENT OF TRANSPORTATION AND PUBLIC FACILITIES
CENTRAL REGION
4111 AVIATION AVE., ANCHORAGE ALASKA 99502
PHONE (907) 269-0590

BETHEL AIRPORT
BETHEL, ALASKA
MAIN RUNWAY RECONSTRUCTION
PROJECT No. CFAPT00430
AIP No. 3-02-0029-0XX-20XX
TYPICAL SECTIONS

DATE: 1/7/2021
SHEET: 10 OF 79

Designed By: CJB
Drawn By: JSC/RLC
Checked By: MF
Date Revised: 1/07/2021, 9:14 AM
Layout Name: TYPICAL SECTIONS
File Path and Name: Z:\project\2690.02 DOT_C BET Main RW Reconstruction\Civil\ACAD\00430-BET-TYPICAL SECTIONS.dwg

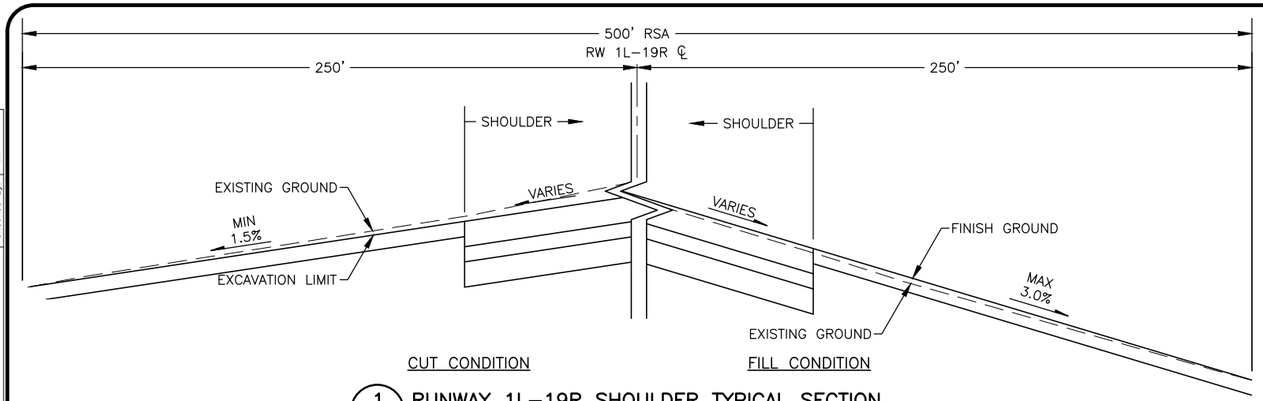

1/11 RUNWAY 1L–19R SHOULDER TYPICAL SECTION
NTS

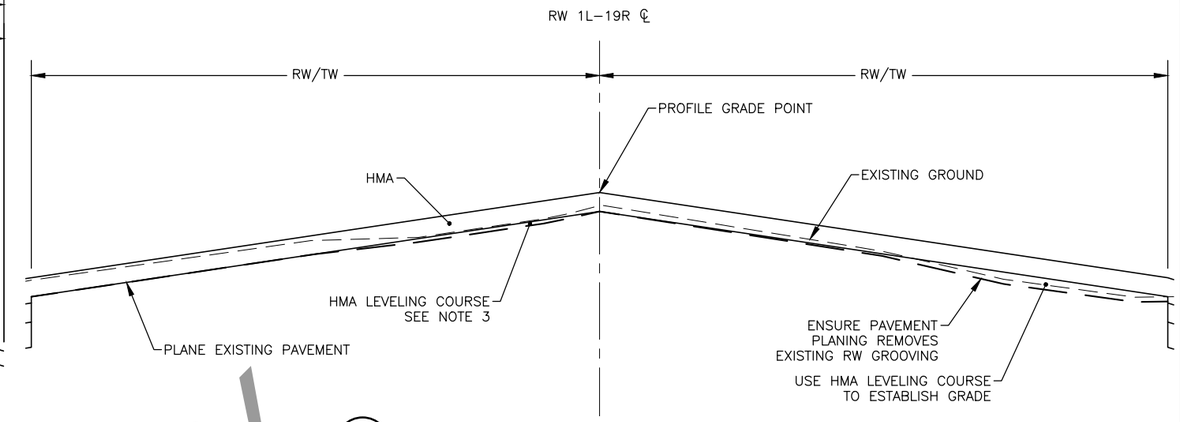

2/11 HMA LEVELING COURSE TYPICAL SECTION
NTS

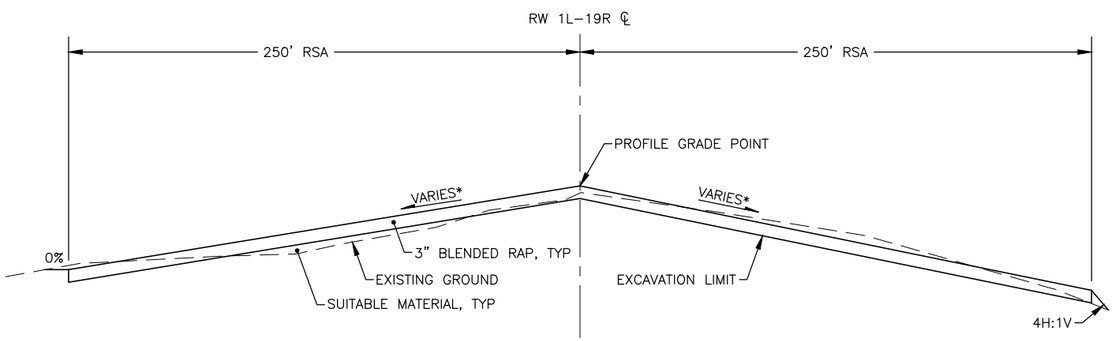

3/11 RUNWAY 1L–19R RSA TYPICAL SECTION
NTS
STA –4+00 TO 6+00
STA 70+00 TO STA 80+00
*SEE SLOPE SCHEDULES ON SHEET 10

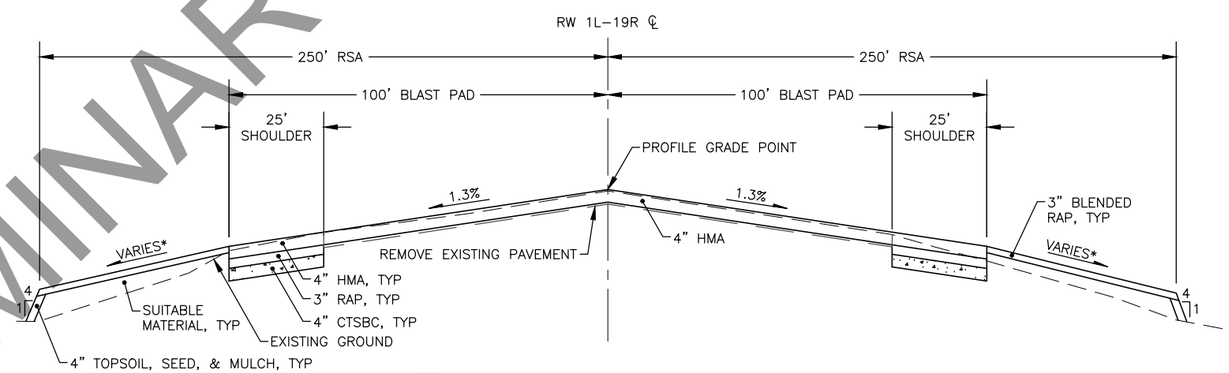

4/11 BLAST PAD TYPICAL SECTION
NTS
STA 70+00 TO 72+00
*SEE SLOPE SCHEDULES ON SHEET 10

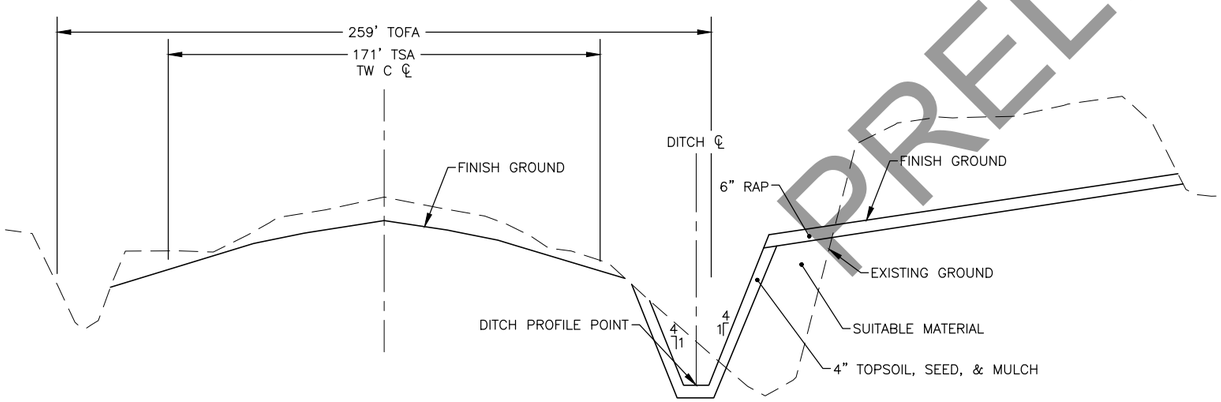

5/11 SEGMENTED CIRCLE PAD & DRAINAGE DITCH TYPICAL
NTS

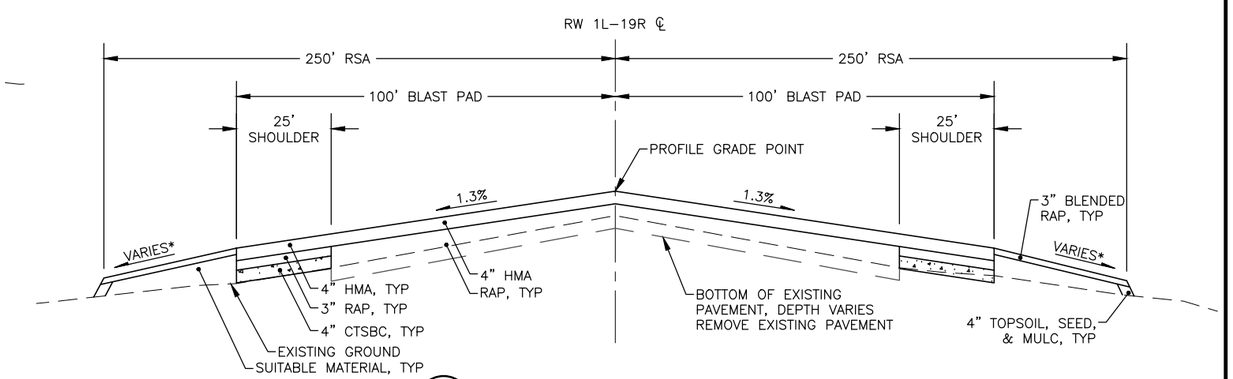

6/11 BLAST PAD TYPICAL SECTION
NTS
STA 4+00 TO 6+00
*SEE SLOPE SCHEDULES ON SHEET 10

NOTES:

1. APPLY TACK COAT BETWEEN EXISTING PAVEMENT AND NEW HMA PAVEMENT AND BETWEEN FASBC AND HMA. APPLY TACK COAT BETWEEN ALL LIFTS OF HMA.
2. TAXIWAY DIMENSIONS SHOWN ON TYPICALS ARE MINIMUM REQUIREMENTS. SEE TAXIWAY PLAN AND PROFILE SHEETS FOR LAYOUT OF TAXIWAY GEOMETRY.
3. ALL AREAS TO RECEIVE LEVELING COURSE OR HMA MUST BE FREE OF GROOVES.
4. SEE SEGMENTED CIRCLE AND DRAINAGE DITCH LAYOUT SHEET FOR GRADING INFORMATION AND ADDITIONAL LAYOUT.
5. IF MORE THAN 1.5 INCHES OF LEVELING COURSE IS REQUIRED, USE HMA.

PLANS DEVELOPED BY:
R&M CONSULTANTS, INC.
9101 VANGUARD DR.
ANCHORAGE, AK 99507
(907) 522-1707
CERT. OF AUTH. NO. AECC111

BY	DATE	REVISION

STATE OF ALASKA
DEPARTMENT OF TRANSPORTATION AND PUBLIC FACILITIES
CENTRAL REGION
4111 AVIATION AVE., ANCHORAGE ALASKA 99502
PHONE (907) 269-0590

BETHEL AIRPORT
BETHEL, ALASKA
MAIN RUNWAY RECONSTRUCTION
PROJECT No. CFAPT00430
AIP No. 3-02-0029-0XX-20XX
TYPICAL SECTIONS

DATE: 1/7/2021

Designed By: CJB
Drawn By: JSC/RLC
Checked By: MF
Date Revised: 1/07/2021, 9:14 AM
Layout Name: TYPICAL SECTIONS (3)
File Path and Name: Z:\project\2690.02 DOT_C BET Main RW Reconstruction\Civil\ACAD\00430-BET-TYPICAL SECTIONS.dwg

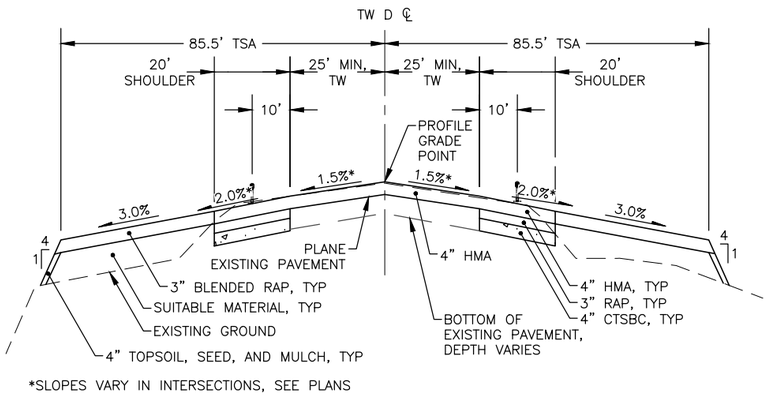

*SLOPES VARY IN INTERSECTIONS, SEE PLANS

1/12 TAXIWAY D TYPICAL SECTION
NTS
TW D STA 400+75 TO STA 407+47

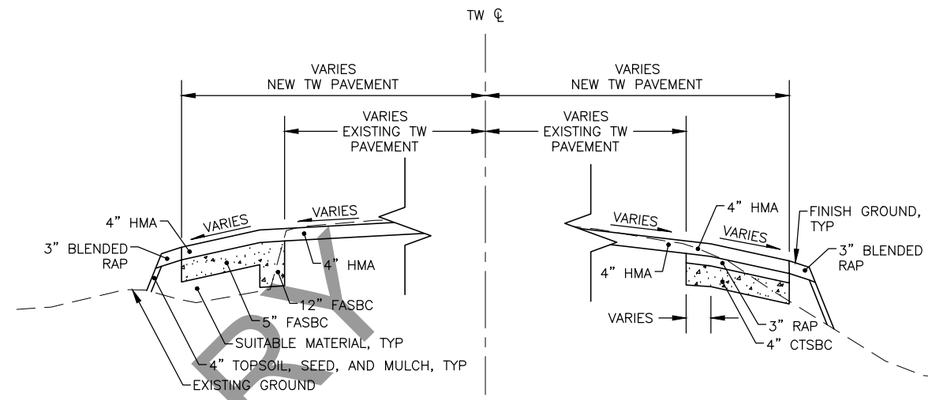

2/12 TAXIWAY STRUCTURAL SECTION EXPANSION TYPICAL
NTS
FASBC / CTSBC
SEE PAVING PLAN

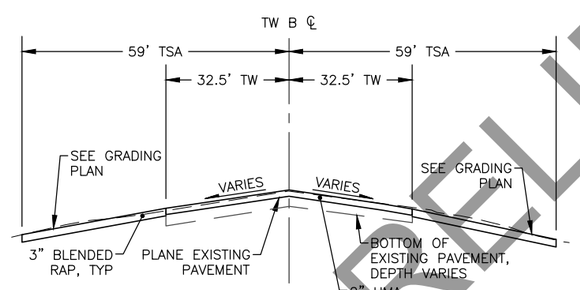

3/12 TAXIWAY MILLING TYPICAL SECTION
NTS
TW B STA 300+80 TO STA 304+00

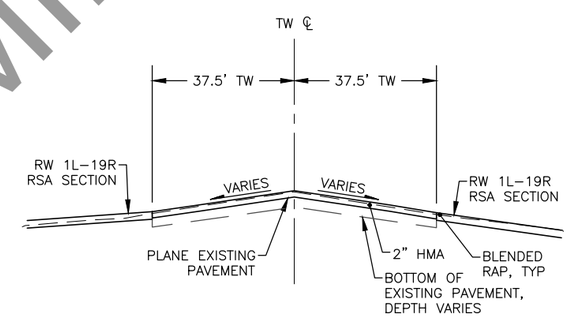

4/12 TAXIWAY MILLING TYPICAL SECTION
NTS
TW C EAST, TW D EAST, TW G EAST
RW1L-19R 100' LT TO 250' LT

NOTES:

1. APPLY TACK COAT BETWEEN EXISTING PAVEMENT AND NEW HMA PAVEMENT, BETWEEN ALL LIFTS OF HMA, AND BETWEEN FASBC AND HMA.
2. TAXIWAY DIMENSIONS SHOWN ON TYPICALS ARE MINIMUM REQUIREMENTS. SEE TAXIWAY PLAN AND PROFILE SHEETS FOR LAYOUT OF TAXIWAY GEOMETRY.
3. ALL AREAS TO RECEIVE LEVELING COURSE OR HMA MUST BE FREE OF GROOVES. SEE DETAIL 2, SHEET 11.

Designed By: CJB
Drawn By: JSC/RLC
Checked By: MF
Date Revised: 1/07/2021, 9:14 AM
Layout Name: TYPICAL SECTIONS (2)
File Path and Name: Z:\project\2690.02 DOT_C BET Main RW Reconstruction\Civil\ACAD\00430-BET-TYPICAL SECTIONS.dwg

PLANS DEVELOPED BY:
R&M CONSULTANTS, INC.
9101 VANGUARD DR.
ANCHORAGE, AK 99507
(907) 522-1707
CERT. OF AUTH. NO. AECC111

BY	DATE	REVISION

STATE OF ALASKA
DEPARTMENT OF TRANSPORTATION AND PUBLIC FACILITIES
CENTRAL REGION
4111 AVIATION AVE., ANCHORAGE ALASKA 99502
PHONE (907) 269-0590

BETHEL AIRPORT
BETHEL, ALASKA
MAIN RUNWAY RECONSTRUCTION
PROJECT No. CFAPT00430
AIP No. 3-02-0029-0XX-20XX
TYPICAL SECTIONS

DATE: 1/7/2021
SHEET: 12 OF 79

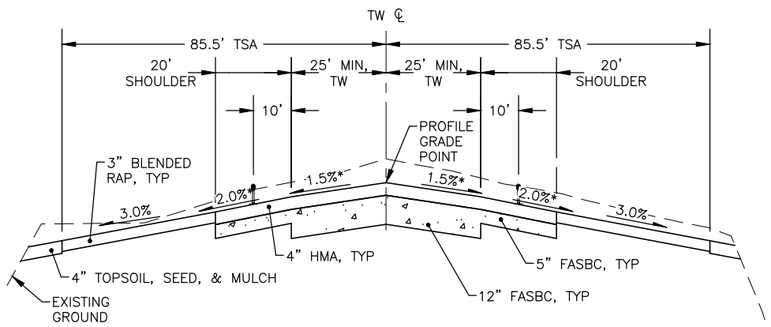

*SLOPES VARY IN INTERSECTIONS, SEE PLANS

1/13 TAXIWAY TYPICAL CUT SECTION

NTS

TW G STA 308+85 TO STA 310+28
TW C SOUTH STA 32+30 TO STA 44+71

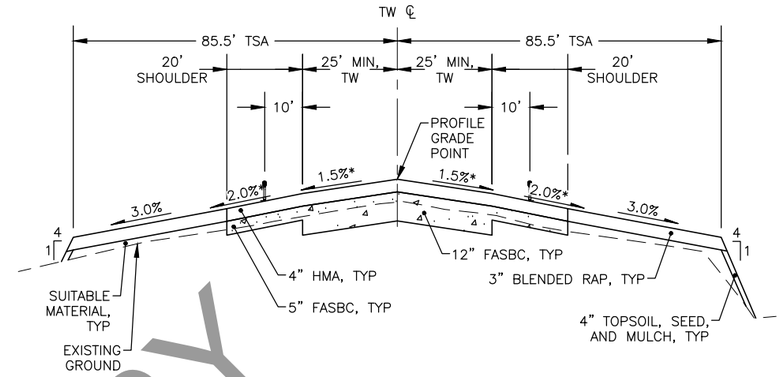

*SLOPES VARY IN INTERSECTIONS, SEE PLANS

2/13 TAXIWAY TYPICAL FILL SECTION

NTS

TW C SOUTH STA 44+71 TO STA 72+00
TW G 307+75 TO STA 308+85 & STA 311+73 TO STA 314+14

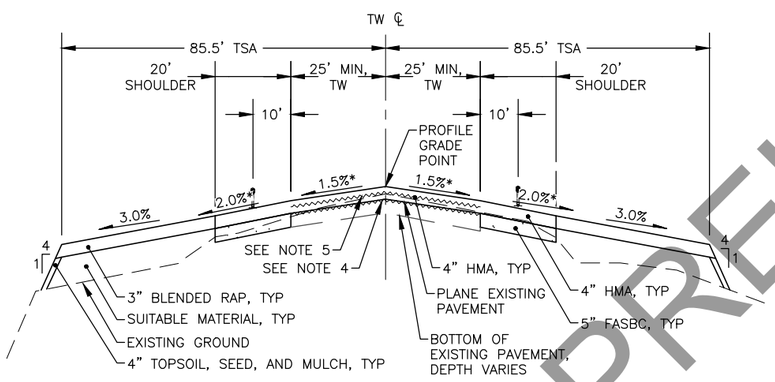

*SLOPES VARY IN INTERSECTIONS, SEE PLANS

3/13 TAXIWAY TYPICAL SECTION

NTS

TW A STA 3+61 TO STA 6+00
TW C NORTH STA 21+35 TO STA 32+30

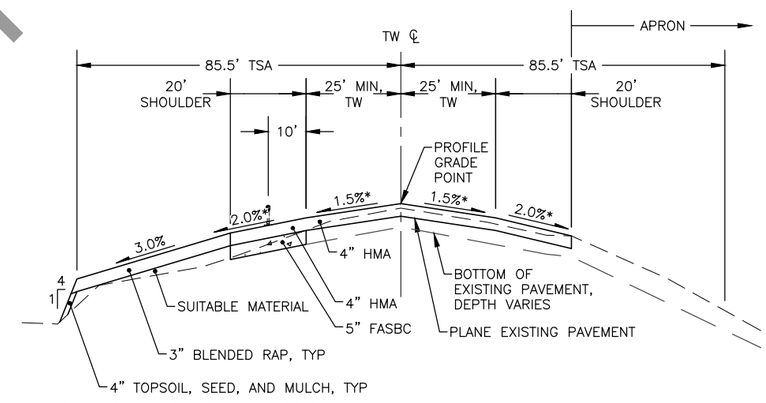

*SLOPES VARY IN INTERSECTIONS, SEE PLANS

4/13 TAXIWAY TYPICAL SECTION

NTS

TW C STA 6+00 TO STA 21+35

NOTES:

1. APPLY TACK COAT BETWEEN EXISTING PAVEMENT AND NEW HMA PAVEMENT, BETWEEN ALL LIFTS OF HMA, AND BETWEEN FASBC AND HMA.
2. TAXIWAY DIMENSIONS SHOWN ON TYPICALS ARE MINIMUM REQUIREMENTS. SEE TAXIWAY PLAN AND PROFILE SHEETS FOR LAYOUT OF TAXIWAY GEOMETRY.
3. ALL AREAS TO RECEIVE LEVELING COURSE OR HMA MUST BE FREE OF GROOVES. SEE DETAIL 2, SHEET 11.
4. PLACE PAVING FABRIC FROM STA 22+00 TO STA 24+50 BETWEEN THE MILLED SURFACE AND THE FIRST LAYER OF HMA.
5. PLACE PAVING FABRIC FROM STA 24+50 TO STA 27+00 BETWEEN THE FIRST LAYER OF HMA AND THE SECOND LAYER OF HMA.

Designed By: CJB
Drawn By: JSC/RLC
Checked By: MF
Date Revised: 1/07/2021, 9:14 AM
Layout Name: TYPICAL SECTIONS (4)
File Path and Name: Z:\project\2690.02 DOT_C BET Main RW Reconstruction\Civil\ACAD\00430-BET-TYPICAL SECTIONS.dwg

PLANS DEVELOPED BY:
R&M CONSULTANTS, INC.
9101 VANGUARD DR.
ANCHORAGE, AK 99507
(907) 522-1707
CERT. OF AUTH. NO. AECC111

BY	DATE	REVISION

STATE OF ALASKA
DEPARTMENT OF TRANSPORTATION AND PUBLIC FACILITIES
CENTRAL REGION
4111 AVIATION AVE., ANCHORAGE ALASKA 99502
PHONE (907) 269-0590

BETHEL AIRPORT
BETHEL, ALASKA
MAIN RUNWAY RECONSTRUCTION
PROJECT No. CFAPT00430
AIP No. 3-02-0029-0XX-20XX
TYPICAL SECTIONS

DATE: 1/7/2021

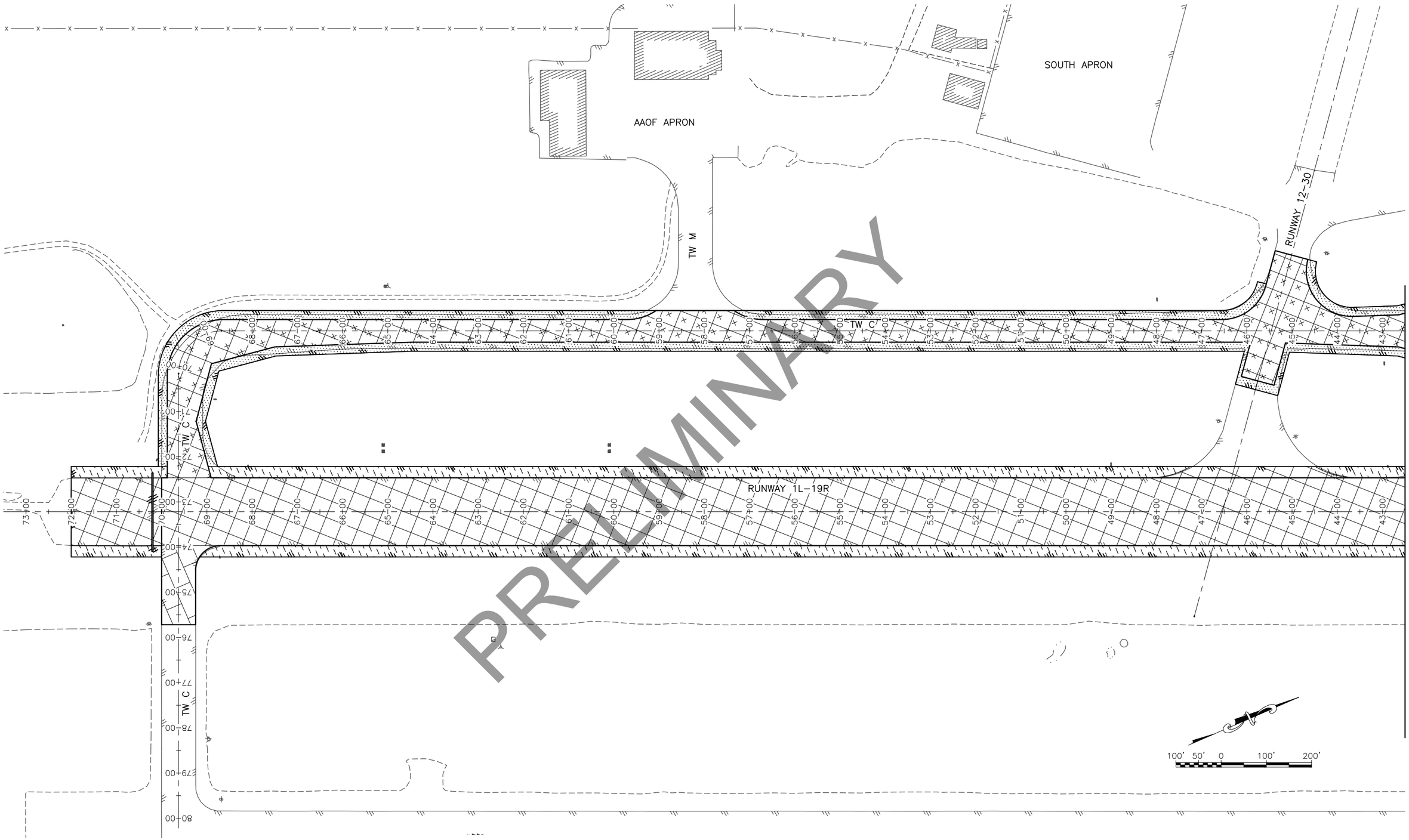

LEGEND:

- 12" FASBC
- 5" FASBC
- 4" HMA OVERLAY
- 2" HMA OVERLAY
- 4" CTSBC

Designed By:	CJB
Drawn By:	JSC/RLC
Checked By:	MF
Date Revised:	1/07/2021, 9:15 AM
Layout Name:	72+00 - 58+00
File Path and Name:	Z:\project\2690.02 DOT_C BET Main RW Reconstruction\Civil\ACAD\00430-BET-PAVEMENT PLAN.dwg

PLANS DEVELOPED BY:
R&M CONSULTANTS, INC.
9101 VANGUARD DR.
ANCHORAGE, AK 99507
(907) 522-1707
CERT. OF AUTH. NO. AECC111

BY	DATE	REVISION

STATE OF ALASKA
DEPARTMENT OF TRANSPORTATION AND PUBLIC FACILITIES
CENTRAL REGION
4111 AVIATION AVE., ANCHORAGE ALASKA 99502
PHONE (907) 269-0590

BETHEL AIRPORT
BETHEL, ALASKA
MAIN RUNWAY RECONSTRUCTION
PROJECT No. CFAPT00430
AIP No. 3-02-0029-0XX-20XX
PAVING PLAN STA 42+50 TO 72+00

DATE: 1/7/2021

SHEET: 14 OF 79

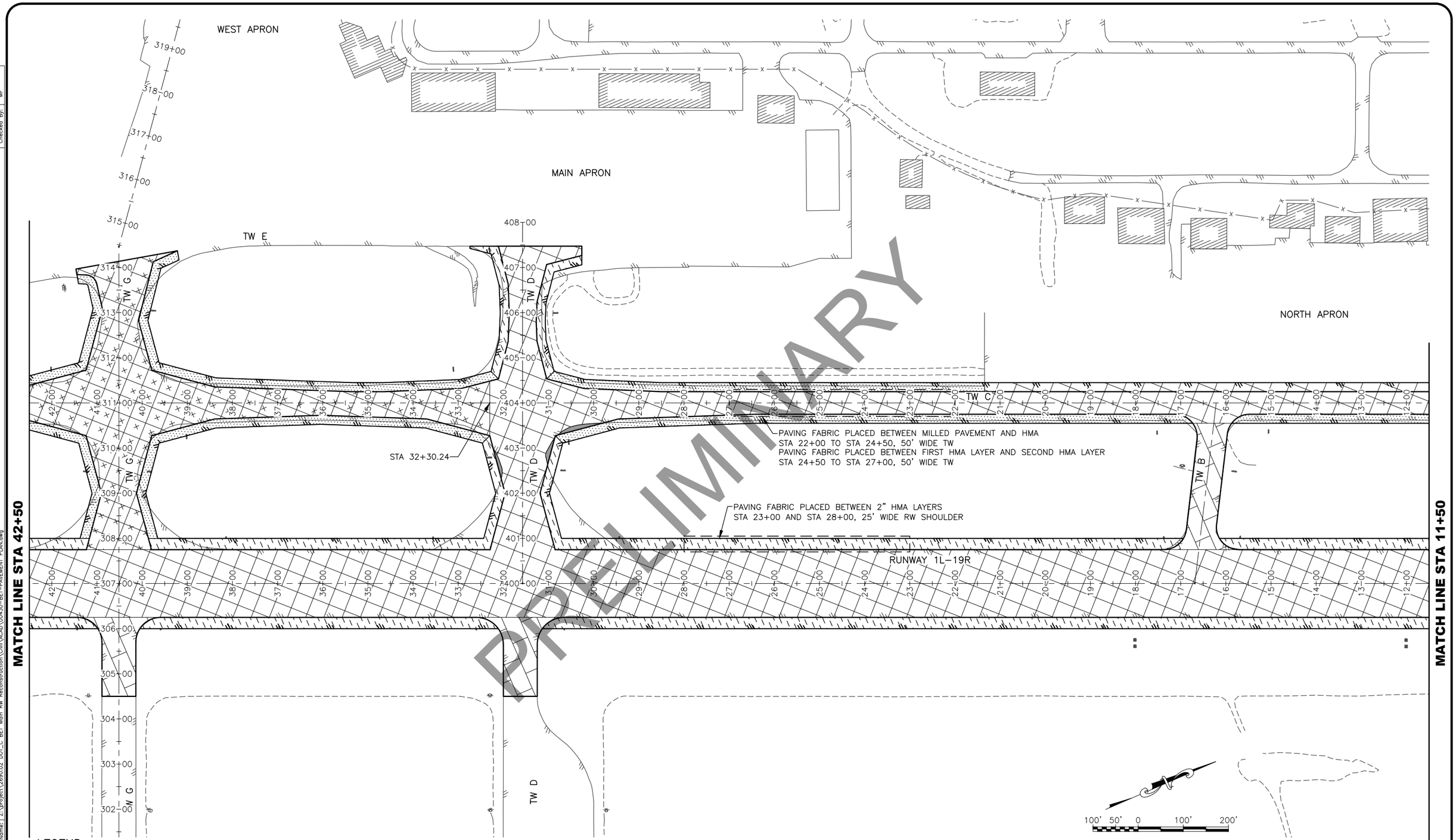

LEGEND:

- 12" FASBC
- 5" FASBC
- STRUCTURAL SECTION EXPANSION
- 4" HMA OVERLAY
- 2" HMA OVERLAY
- PAVING FABRIC
- 4" CTSBC

PLANS DEVELOPED BY:
R&M CONSULTANTS, INC.
9101 VANGUARD DR.
ANCHORAGE, AK 99507
(907) 522-1707
CERT. OF AUTH. NO. AECC111

BY	DATE	REVISION

STATE OF ALASKA
DEPARTMENT OF TRANSPORTATION AND PUBLIC FACILITIES
CENTRAL REGION
4111 AVIATION AVE., ANCHORAGE ALASKA 99502
PHONE (907) 269-0590

BETHEL AIRPORT
BETHEL, ALASKA
MAIN RUNWAY RECONSTRUCTION
PROJECT No. CFAPT00430
AIP No. 3-02-0029-0XX-20XX
PAVING PLAN STA 11+50 TO 42+50

DATE: 1/7/2021

Designed By:	CJB
Drawn By:	JSC/RLC
Checked By:	MF
Date Revised:	1/07/2021, 9:15 AM
Layout Name:	42+50 - 27+00
File Path and Name:	Z:\project\2690.02 DOT_C BET Main RW Reconstruction\Civil\ACAD\00430-BET-PAVEMENT PLAN.dwg

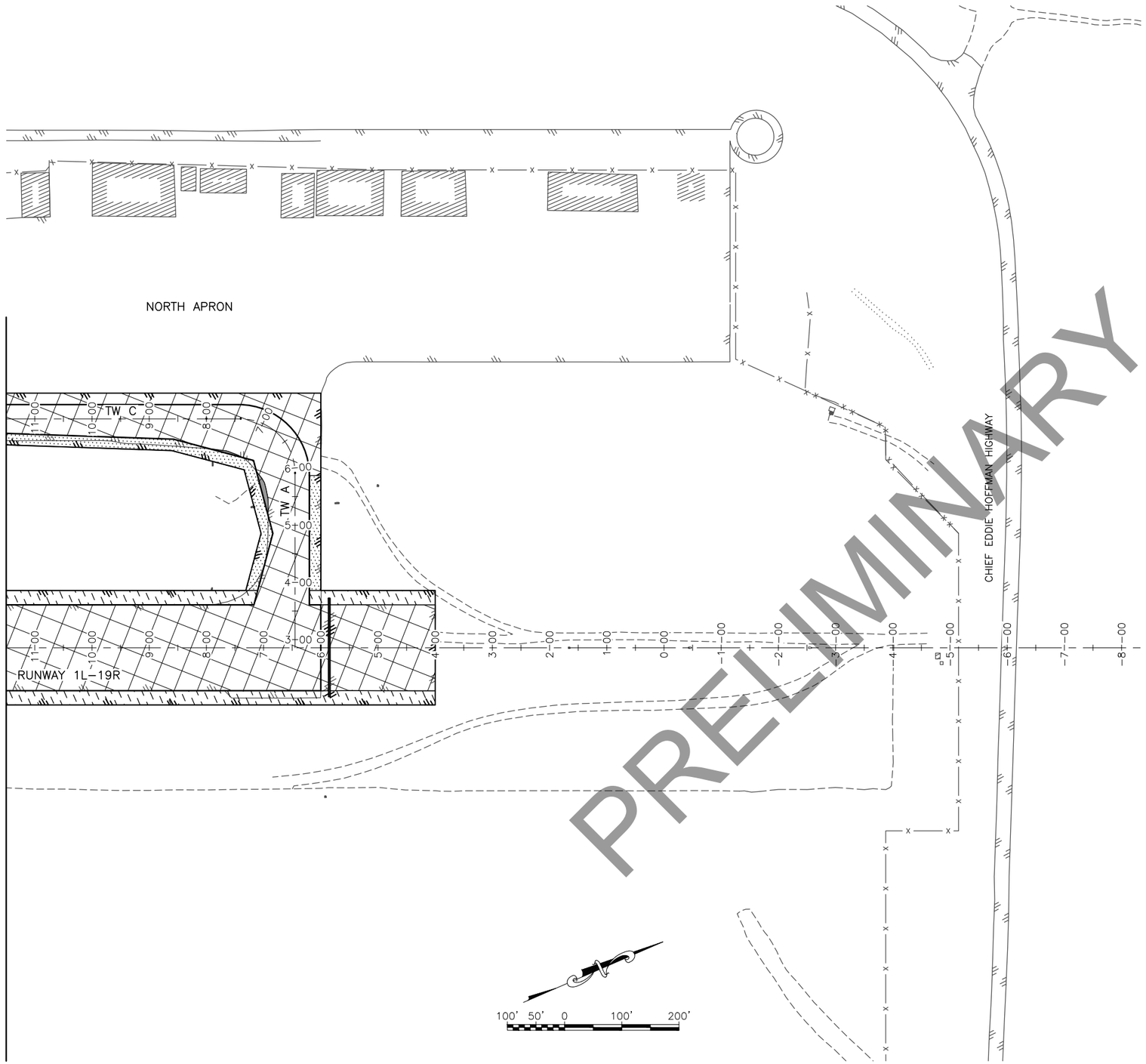

Designed By:	CJB
Drawn By:	JSC/RLC
Checked By:	MF
Date Revised:	1/07/2021, 9:15 AM
Layout Name:	11+50 – 4+00
File Path and Name:	Z:\project\2690.02 DOT_C BET Main RW Reconstruction\Civil\ACAD\00430-BET-PAVEMENT PLAN.dwg

LEGEND:

- 5" FASBC
- STRUCTURAL SECTION EXPANSION
- 4" HMA OVERLAY
- 4" CTSBC

PLANS DEVELOPED BY:
R&M CONSULTANTS, INC.
9101 VANGUARD DR.
ANCHORAGE, AK 99507
(907) 522-1707
CERT. OF AUTH. NO. AECC111

BY	DATE	REVISION

STATE OF ALASKA
DEPARTMENT OF TRANSPORTATION AND PUBLIC FACILITIES
CENTRAL REGION
4111 AVIATION AVE., ANCHORAGE ALASKA 99502
PHONE (907) 269-0590

BETHEL AIRPORT
BETHEL, ALASKA
MAIN RUNWAY RECONSTRUCTION
PROJECT No. CFAPT00430
AIP No. 3-02-0029-0XX-20XX
PAVING PLAN STA 4+00 TO 11+50

DATE: 1/7/2021

SHEET: 16 OF 79

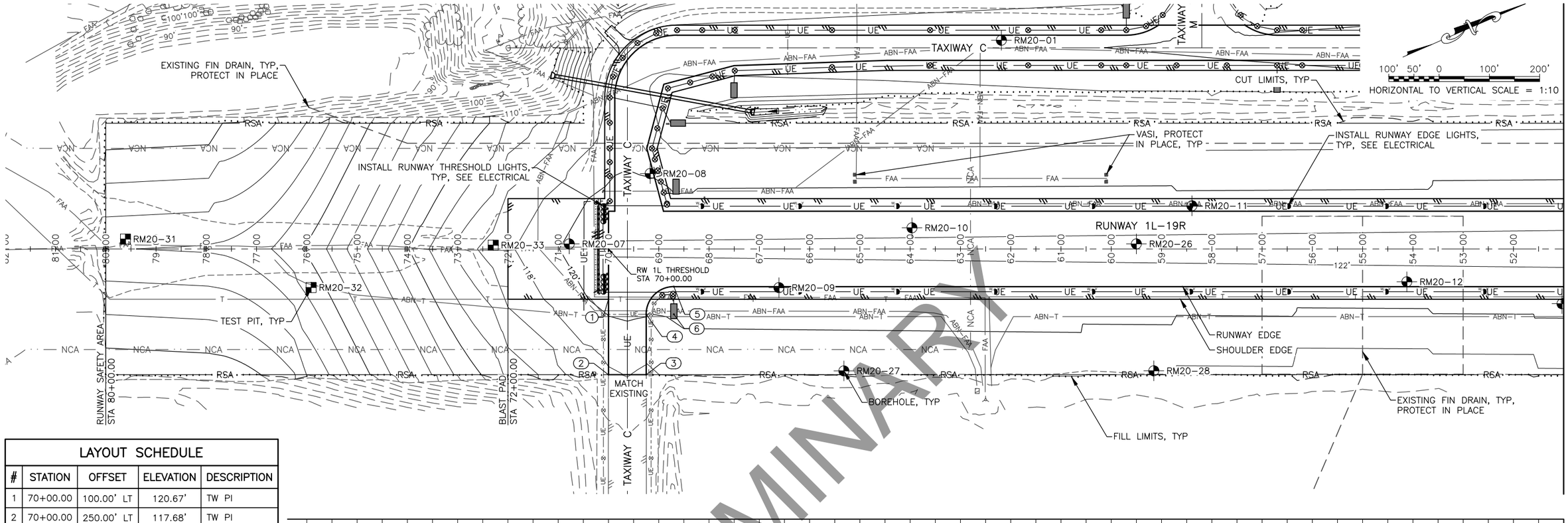

LAYOUT SCHEDULE				
#	STATION	OFFSET	ELEVATION	DESCRIPTION
1	70+00.00	100.00' LT	120.67'	TW PI
2	70+00.00	250.00' LT	117.68'	TW PI
3	69+24.97	250.00' LT	117.58'	TW PI
4	69+24.97	130.00' LT	120.10'	TW PC
5	68+69.97	75.00' LT	121.25'	TW PT
6	68+69.97	130.00' LT	–	TW RP, R=55'

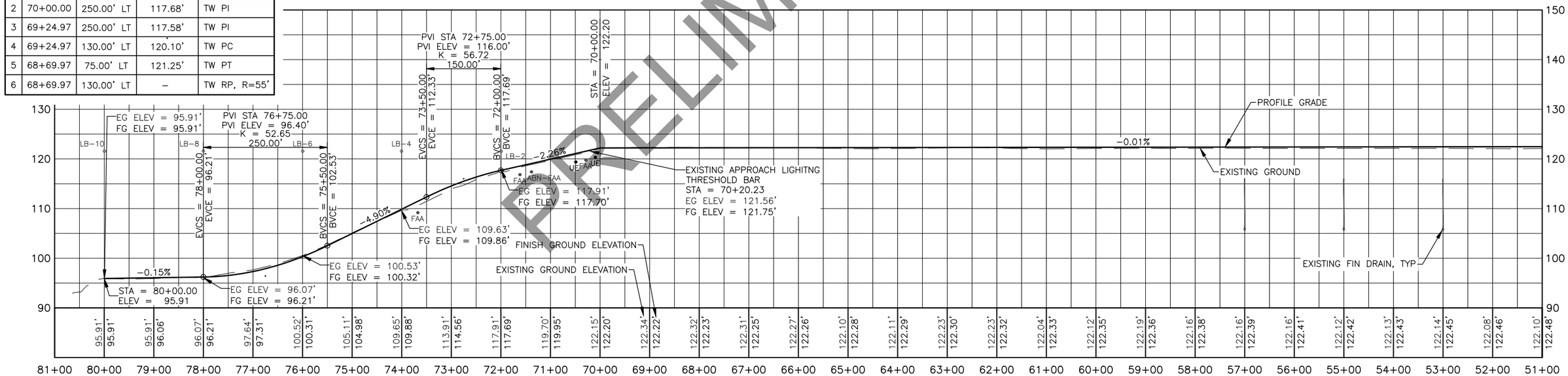

NOTES:

1. SEE ELECTRICAL PLANS FOR NEW LIGHTING LAYOUT.
2. MATCH EXISTING PAVEMENT ELEVATION ALONG EXISTING TAXIWAY.
3. STATIONS AND OFFSETS REFERENCE RUNWAY 1L–19R ALIGNMENT.
4. SEE TAXIWAY C PLAN & PROFILE STA 72+62 TO 67+50 SHEET FOR TAXIWAY C INTERSECTION LAYOUT.
5. SEE TAXIWAY PLAN AND PROFILE SHEETS FOR CULVERT INFORMATION.

PLANS DEVELOPED BY:
R&M CONSULTANTS, INC.
9101 VANGUARD DR.
ANCHORAGE, AK 99507
(907) 522-1707
CERT. OF AUTH. NO. AECC111

BY	DATE	REVISION

STATE OF ALASKA
DEPARTMENT OF TRANSPORTATION AND PUBLIC FACILITIES
CENTRAL REGION
4111 AVIATION AVE., ANCHORAGE ALASKA 99502
PHONE (907) 269-0590

BETHEL AIRPORT
BETHEL, ALASKA
MAIN RUNWAY RECONSTRUCTION
PROJECT No. CFAPT00430
AIP No. 3-02-0029-0XX-20XX
RUNWAY PLAN & PROFILE STA 51+00 TO 72+00
MATCHED THRESHOLDS

DATE: 1/7/2021
SHEET: 17 OF 79

Designed By: CJB
Drawn By: JSC/RLC
Checked By: MF
Date Revised: 1/07/2021, 9:17 AM
Layout Name: STA 51+00 TO 70+00
File Path and Name: Z:\project\2690.02 DOT_C BET Main RW Reconstruction\Civil\ACAD\00430-BET-RW PLAN AND PROFILE.dwg

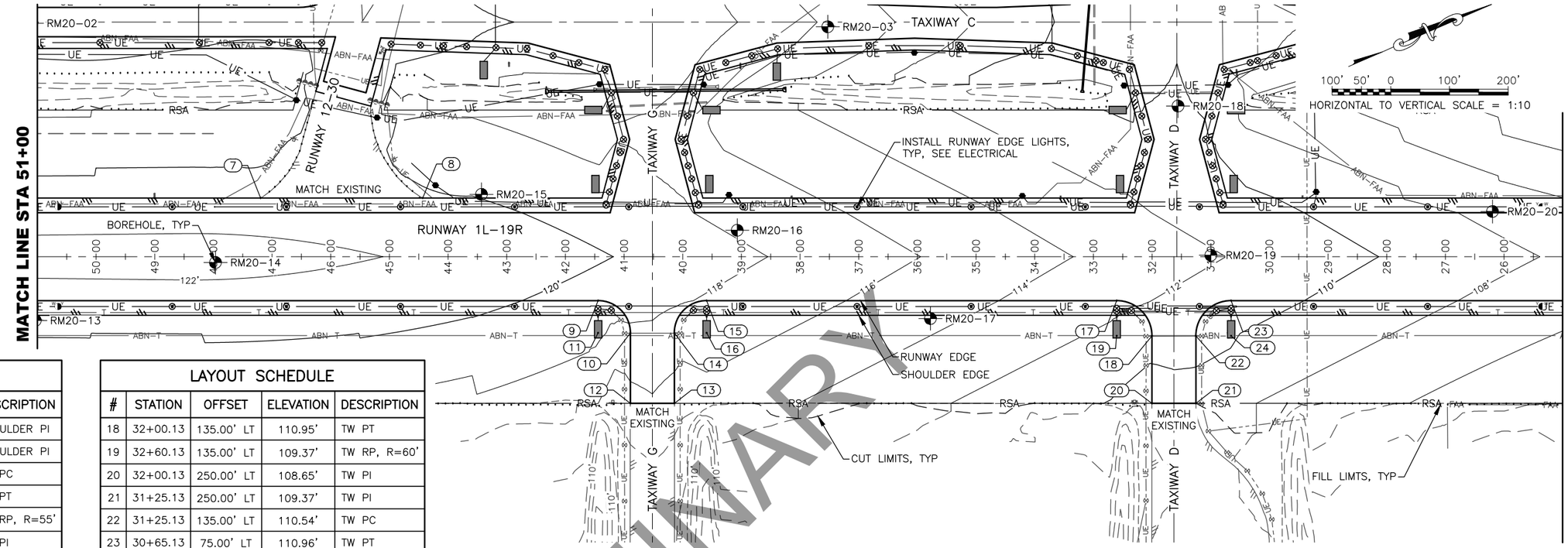

LAYOUT SCHEDULE				
#	STATION	OFFSET	ELEVATION	DESCRIPTION
7	47+19.36	100.00' RT	120.81'	SHOULDER PI
8	44+43.13	100.00' RT	120.30'	SHOULDER PI
9	41+44.09	75.00' LT	119.20'	TW PC
10	40+89.09	130.00' LT	117.66'	TW PT
11	41+44.09	130.00' LT	–	TW RP, R=55'
12	40+89.09	250.00' LT	115.26'	TW PI
13	40+14.09	250.00' LT	114.91'	TW PI
14	40+14.09	130.00' LT	117.13'	TW PC
15	39+59.09	75.00' LT	117.82'	TW PT
16	39+59.09	130.00' LT	–	TW RP, R=55'
17	32+60.13	75.00' LT	112.45'	TW PC

LAYOUT SCHEDULE				
#	STATION	OFFSET	ELEVATION	DESCRIPTION
18	32+00.13	135.00' LT	110.95'	TW PT
19	32+60.13	135.00' LT	109.37'	TW RP, R=60'
20	32+00.13	250.00' LT	108.65'	TW PI
21	31+25.13	250.00' LT	109.37'	TW PI
22	31+25.13	135.00' LT	110.54'	TW PC
23	30+65.13	75.00' LT	110.96'	TW PT
24	30+65.13	135.00' LT	–	TW RP, R=60'

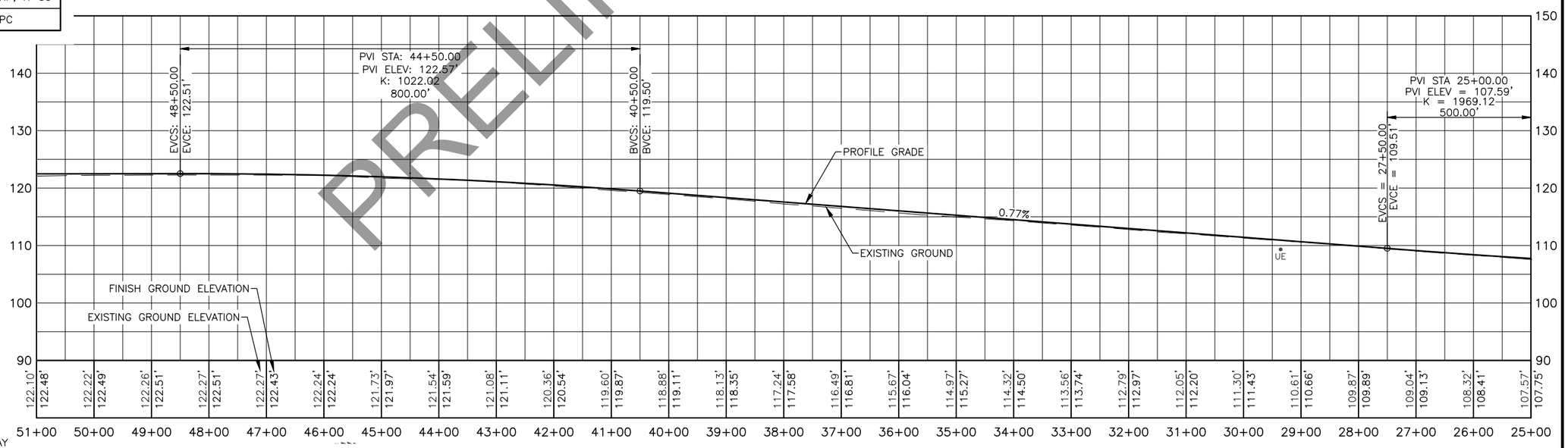

NOTES:

1. SEE ELECTRICAL PLANS FOR NEW LIGHTING LAYOUT.
2. MATCH EXISTING PAVEMENT ELEVATION ALONG EXISTING RUNWAY AND TAXIWAYS.
3. STATIONS AND OFFSETS REFERENCE RUNWAY 1L–19R ALIGNMENT.
4. SEE TAXIWAY G PLAN & PROFILE SHEET FOR COMPLETE TAXIWAY G LAYOUT.
5. SEE TAXIWAY D PLAN & PROFILE SHEET FOR COMPLETE TAXIWAY D LAYOUT.

PLANS DEVELOPED BY:
R&M CONSULTANTS, INC.
9101 VANGUARD DR.
ANCHORAGE, AK 99507
(907) 522-1707
CERT. OF AUTH. NO. AECC111

BY	DATE	REVISION

STATE OF ALASKA
DEPARTMENT OF TRANSPORTATION AND PUBLIC FACILITIES
CENTRAL REGION
4111 AVIATION AVE., ANCHORAGE ALASKA 99502
PHONE (907) 269-0590

BETHEL AIRPORT
BETHEL, ALASKA
MAIN RUNWAY RECONSTRUCTION
PROJECT No. CFAPT00430
AIP No. 3-02-0029-0XX-20XX
RUNWAY PLAN & PROFILE STA 25+00 TO 51+00
MATCHED THRESHOLDS

DATE: 1/7/2021

Designed By: CJB
Drawn By: JSC/RLC
Checked By: MF

Date Revised: 1/07/2021, 9:17 AM
Layout Name: STA 25+00 TO 51+00
File Path and Name: Z:\project\2690.02 DOT_C BET Main RW Reconstruction\Civil\ACAD\00430-BET-RW PLAN AND PROFILE.dwg

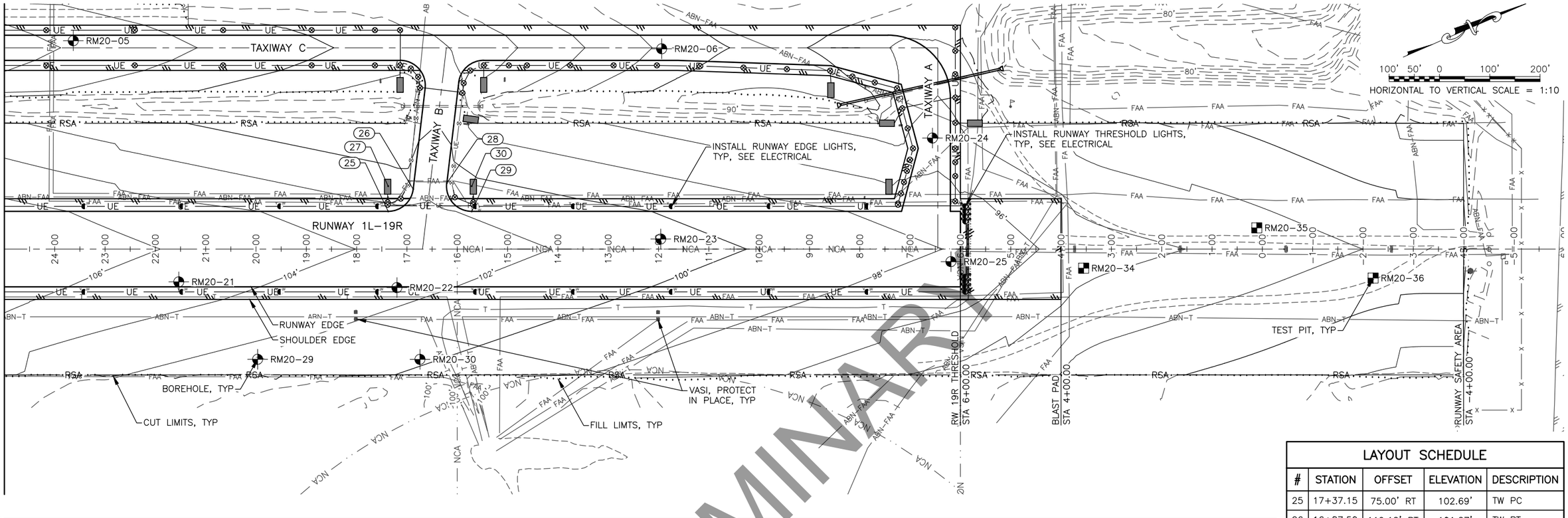

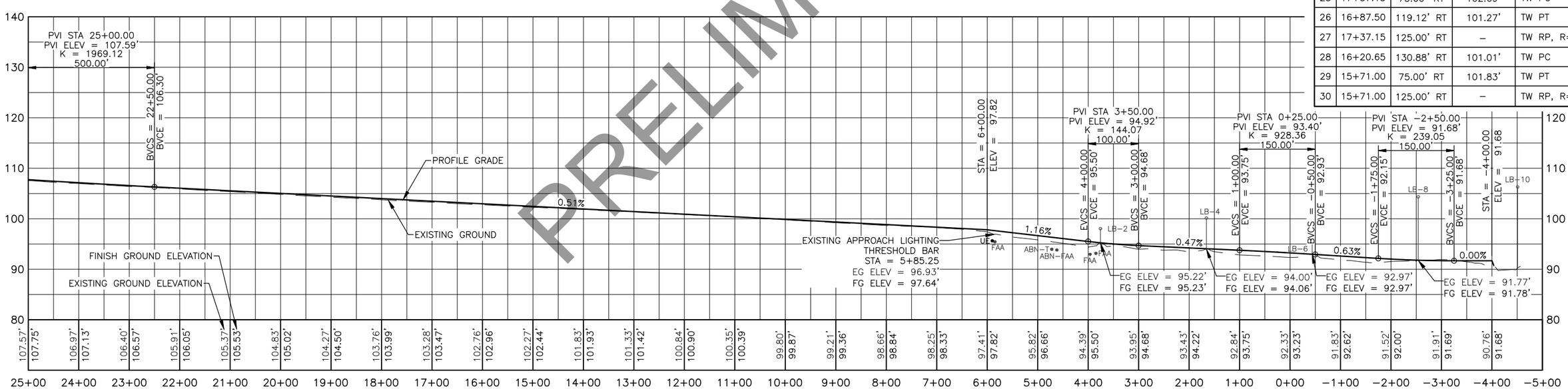

LAYOUT SCHEDULE				
#	STATION	OFFSET	ELEVATION	DESCRIPTION
25	17+37.15	75.00' RT	102.69'	TW PC
26	16+87.50	119.12' RT	101.27'	TW PT
27	17+37.15	125.00' RT	–	TW RP, R=50'
28	16+20.65	130.88' RT	101.01'	TW PC
29	15+71.00	75.00' RT	101.83'	TW PT
30	15+71.00	125.00' RT	–	TW RP, R=50'

NOTES:

1. SEE ELECTRICAL PLANS FOR NEW LIGHTING LAYOUT.
2. MATCH EXISTING PAVEMENT ELEVATION ALONG EXISTING TAXIWAY.
3. STATIONS AND OFFSETS REFERENCE RUNWAY 1L–19R ALIGNMENT.
4. SEE TAXIWAY A PLAN & PROFILE SHEET FOR TAXIWAY A LAYOUT.

PLANS DEVELOPED BY:
R&M CONSULTANTS, INC.
9101 VANGUARD DR.
ANCHORAGE, AK 99507
(907) 522-1707
CERT. OF AUTH. NO. AECC111

BY	DATE	REVISION

STATE OF ALASKA
DEPARTMENT OF TRANSPORTATION AND PUBLIC FACILITIES
CENTRAL REGION
4111 AVIATION AVE., ANCHORAGE ALASKA 99502
PHONE (907) 269-0590

BETHEL AIRPORT
BETHEL, ALASKA
MAIN RUNWAY RECONSTRUCTION
PROJECT No. CFAPT00430
AIP No. 3-02-0029-0XX-20XX
RUNWAY PLAN & PROFILE STA 4+00 TO 25+00
MATCHED THRESHOLDS

DATE: 1/7/2021
SHEET: 19 OF 79

Designed By: CJB
Drawn By: JSC/RLC
Checked By: MF
Date Revised: 1/07/2021, 9:17 AM
Layout Name: STA 4+00 TO 25+00
File Path and Name: Z:\project\2690.02 DOT_C BET Main RW Reconstruction\Civil\ACAD\00430-BET-RW PLAN AND PROFILE.dwg

LAYOUT SCHEDULE				
#	STATION	OFFSET	ELEVATION	DESCRIPTION
31	72+46.73	25.00' RT	121.23'	TW PI
32	72+21.73	45.00' RT	120.69'	SHOULDER PI
33	70+71.73	85.50' RT	116.60'	TSA PI
34	70+20.73	25.00' RT	118.32'	TW PC
35	68+63.50	25.00' RT	118.42'	TW PT
36	68+63.50	99.00' LT	–	TW RP, R=124'
37	70+20.73	45.00' RT	117.92'	SHOULDER PC
38	68+63.50	45.00' RT	118.02'	SHOULDER PT
39	68+63.50	99.00' LT	–	SHOULDER RP, R=144'
40	70+20.73	85.50' RT	116.71'	TSA PC
41	68+63.50	85.50' RT	116.80'	TSA PT
42	68+63.50	99.00' LT	–	TSA RP, R=185'
43	72+46.73	71.97' LT	121.24'	TW PI
44	72+21.73	86.03' LT	120.49'	SHOULDER PI
45	71+21.73	38.78' LT	118.85'	TW PI
46	71+21.73	59.48' LT	118.45'	SHOULDER PI
47	70+71.73	114.66' LT	???'	TSA PI
48	69+42.11	63.33' LT	117.73'	TW PI
49	69+42.11	86.46' LT	117.29'	SHOULDER PI
50	68+40.43	122.07' LT	116.24'	TSA PI
51	67+50.26	35.53' LT	118.42'	TW PI
52	69+60.43	43.44' RT	117.90'	ROAD PC
53	69+48.34	60.92' RT	117.40'	ROAD PT
54	69+60.34	63.44' RT	–	ROAD RP, R=20'
55	69+47.31	92.93' RT	116.39'	ROAD PI
56	69+37.20	92.95' RT	116.31'	ROAD PI
57	69+36.14	60.88' RT	117.41'	ROAD PT
58	69+24.06	43.44' RT	117.96'	ROAD PC
59	69+24.14	63.44' RT	–	ROAD RP, R=20'

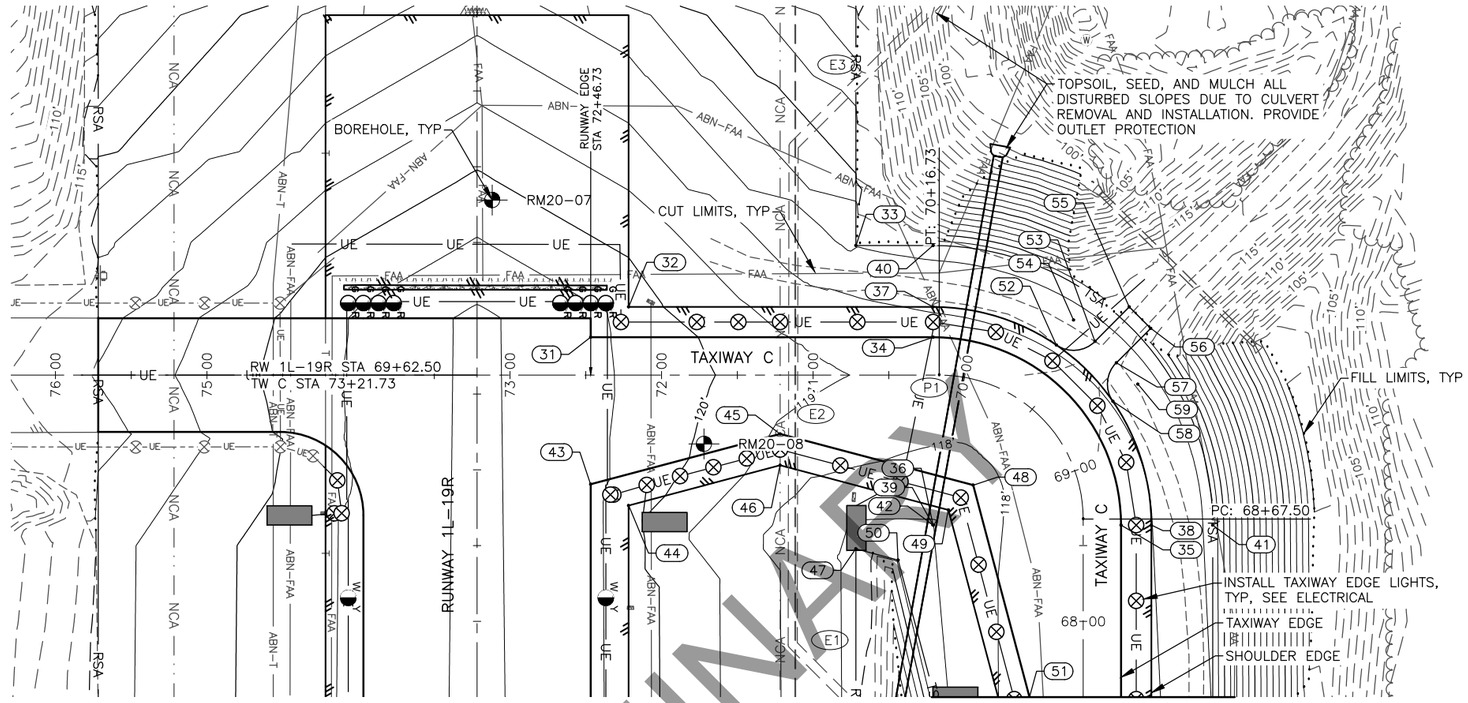

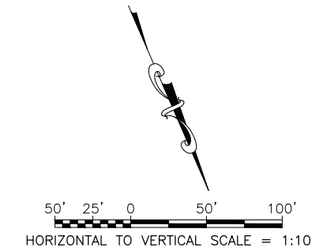

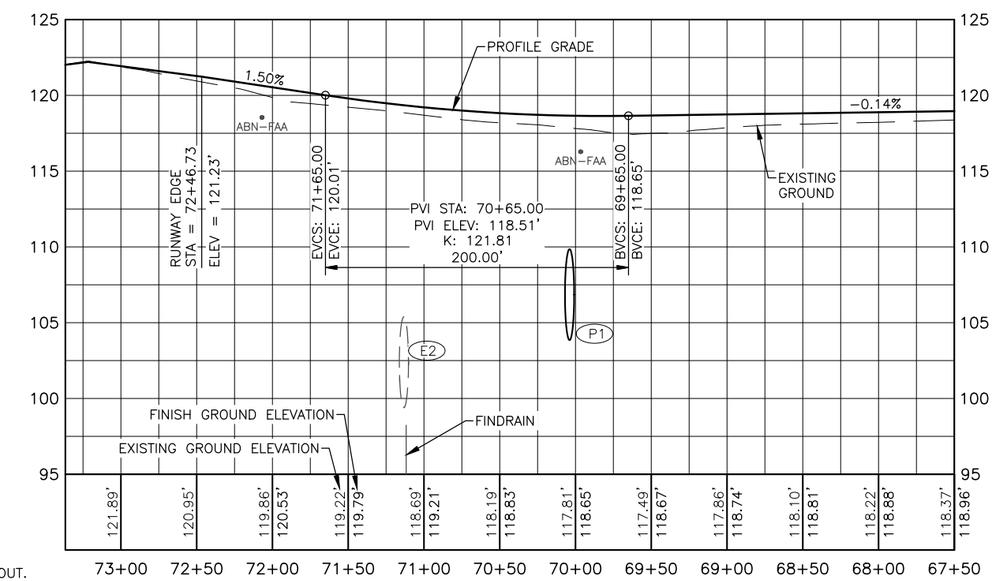

PIPE SUMMARY TABLE									
ID	TYPE	DIA.	LENGTH	INLET	ELEV.	OUTLET	ELEV.	END SECTIONS	THAW PIPE
P1	CORRUGATED STEEL	72"	411'	STA 67+17.3, 126.4' LT	109.50'	STA 70+01.4, 147.3' RT	100.50'	YES	NO

HYDROLOGIC AND HYDRAULIC SUMMARY			
DRAINAGE AREA = 21.7 AC			
EXCEEDANCE PROBABILITY	2%	1%	REGULATORY DISCHARGE
RETURN PERIOD	50 YEAR (Q_{50})	100 YEAR (Q_{100})	N/A
DESIGN DISCHARGE	6.1 CFS	6.8 CFS	N/A
DESIGN HIGH WATER ELEVATION	110.4 FT	110.5 FT	N/A
ANTICIPATED ADDITIONAL BACKWATER AT 1% AEP = 0.0 FEET			
OVERTOPPING FLOW = 270 CFS			
HW/D @ Q_{50} = 0.2			

NOTES:

1. SEE ELECTRICAL PLANS FOR NEW LIGHTING AND SIGN LAYOUT.
2. STATIONS AND OFFSETS REFERENCE TAXIWAY C ALIGNMENT.

PLANS DEVELOPED BY:
R&M CONSULTANTS, INC.
9101 VANGUARD DR.
ANCHORAGE, AK 99507
(907) 522-1707
CERT. OF AUTH. NO. AECC111

BY	DATE	REVISION

STATE OF ALASKA
DEPARTMENT OF TRANSPORTATION AND PUBLIC FACILITIES
CENTRAL REGION
4111 AVIATION AVE., ANCHORAGE ALASKA 99502
PHONE (907) 269-0590

BETHEL AIRPORT
BETHEL, ALASKA
MAIN RUNWAY RECONSTRUCTION
PROJECT No. CFAPT00430
AIP No. 3-02-0029-0XX-20XX
TAXIWAY C PLAN & PROFILE
STA 72+62 TO 67+50

DATE: 1/7/2021

Designed By: CJB
Drawn By: JSC/RLC
Checked By: MF
Date Revised: 1/07/2021, 9:18 AM
Layout Name: TW STA 72+46 TO 67+50
File Path and Name: Z:\project\2690.02 DOT_C BET Main RW Reconstruction\Civil\ACAD\00430-BET-TW C PLAN AND PROFILE.dwg

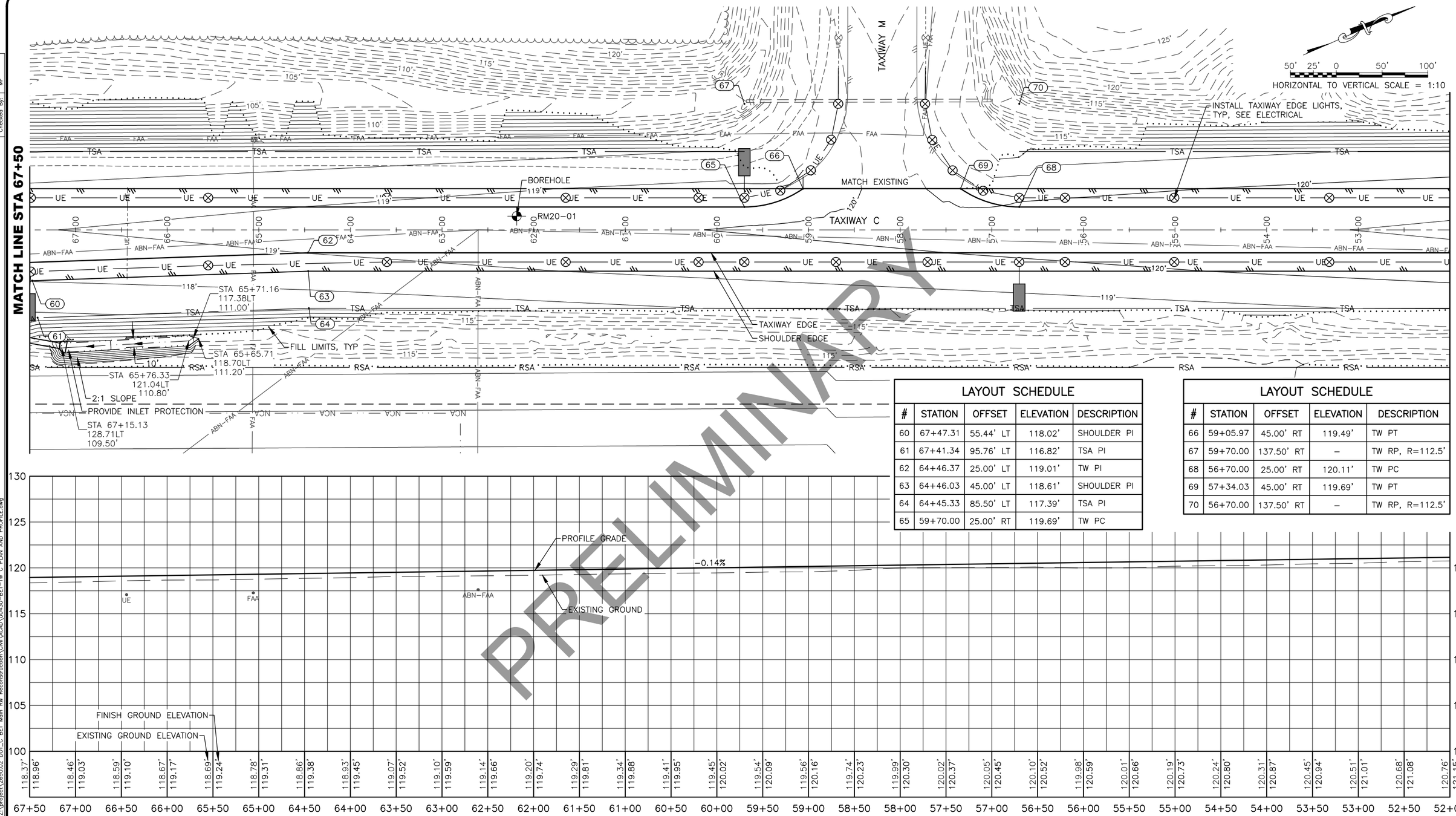

LAYOUT SCHEDULE				
#	STATION	OFFSET	ELEVATION	DESCRIPTION
60	67+47.31	55.44' LT	118.02'	SHOULDER PI
61	67+41.34	95.76' LT	116.82'	TSA PI
62	64+46.37	25.00' LT	119.01'	TW PI
63	64+46.03	45.00' LT	118.61'	SHOULDER PI
64	64+45.33	85.50' LT	117.39'	TSA PI
65	59+70.00	25.00' RT	119.69'	TW PC

LAYOUT SCHEDULE				
#	STATION	OFFSET	ELEVATION	DESCRIPTION
66	59+05.97	45.00' RT	119.49'	TW PT
67	59+70.00	137.50' RT	–	TW RP, R=112.5'
68	56+70.00	25.00' RT	120.11'	TW PC
69	57+34.03	45.00' RT	119.69'	TW PT
70	56+70.00	137.50' RT	–	TW RP, R=112.5'

FINISH GROUND ELEVATION	EXISTING GROUND ELEVATION
118.37'	118.96'
118.46'	119.03'
118.59'	119.10'
118.67'	119.17'
118.69'	119.24'
118.78'	119.31'
118.86'	119.38'
118.93'	119.45'
119.07'	119.52'
119.10'	119.59'
119.14'	119.66'
119.20'	119.74'
119.29'	119.81'
119.34'	119.88'
119.41'	119.95'
119.45'	120.02'
119.54'	120.09'
119.56'	120.16'
119.74'	120.23'
119.99'	120.30'
120.02'	120.37'
120.05'	120.45'
120.10'	120.52'
119.98'	120.59'
120.01'	120.66'
120.19'	120.73'
120.24'	120.80'
120.31'	120.87'
120.45'	120.94'
120.51'	121.01'
120.68'	121.08'
120.76'	121.15'

NOTES:

1. SEE ELECTRICAL PLANS FOR NEW LIGHTING AND SIGN LAYOUT.
2. MATCH EXISTING PAVEMENT ELEVATION ALONG EXISTING TAXIWAY.
3. STATIONS AND OFFSETS REFERENCE TAXIWAY C ALIGNMENT.

PLANS DEVELOPED BY:
R&M CONSULTANTS, INC.
9101 VANGUARD DR.
ANCHORAGE, AK 99507
(907) 522-1707
CERT. OF AUTH. NO. AECC111

BY	DATE	REVISION

STATE OF ALASKA
DEPARTMENT OF TRANSPORTATION AND PUBLIC FACILITIES
CENTRAL REGION
4111 AVIATION AVE., ANCHORAGE ALASKA 99502
PHONE (907) 269-0590

BETHEL AIRPORT
BETHEL, ALASKA
MAIN RUNWAY RECONSTRUCTION
PROJECT No. CFAPT00430
AIP No. 3-02-0029-0XX-20XX
TAXIWAY C PLAN & PROFILE
STA 67+50 TO 52+00

DATE: 1/7/2021

Designed By: CJB
Drawn By: JSC/RLC
Checked By: MF

Date Revised: 1/07/2021, 9:19 AM
Layout Name: TW STA 67+50 TO 52+00
File Path and Name: Z:\project\2690.02 DOT_C BET Main RW Reconstruction\Civil\ACAD\00430-BET-TW C PLAN AND PROFILE.dwg

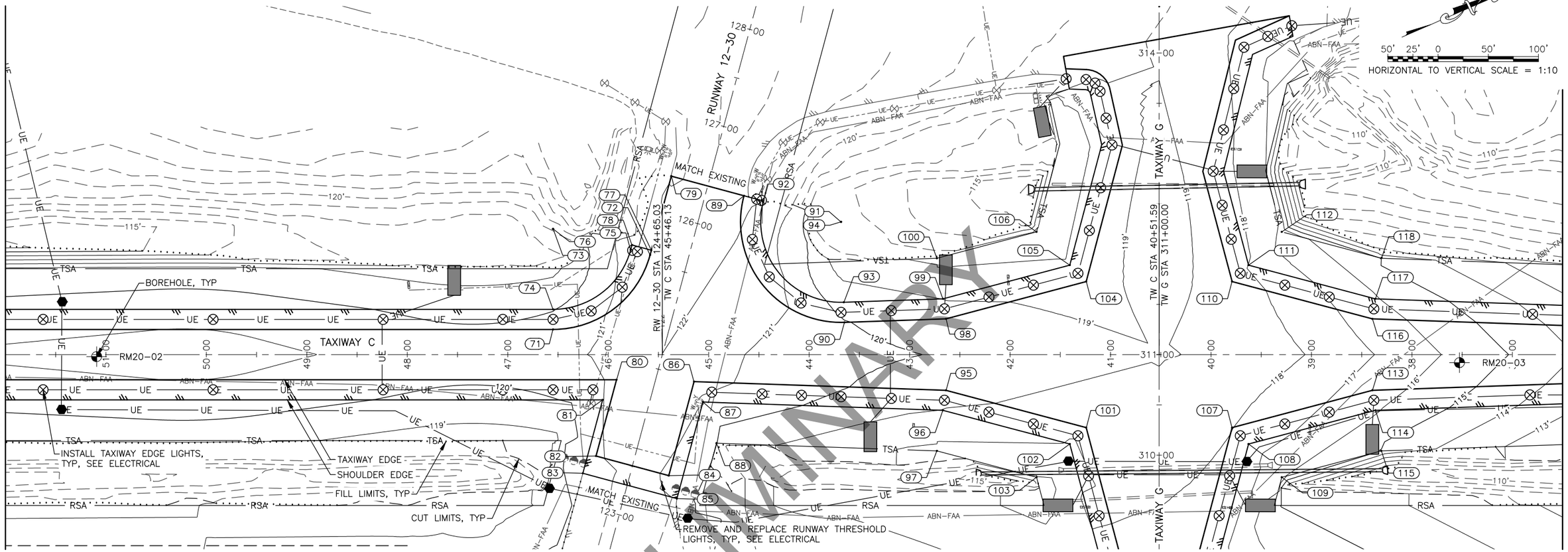

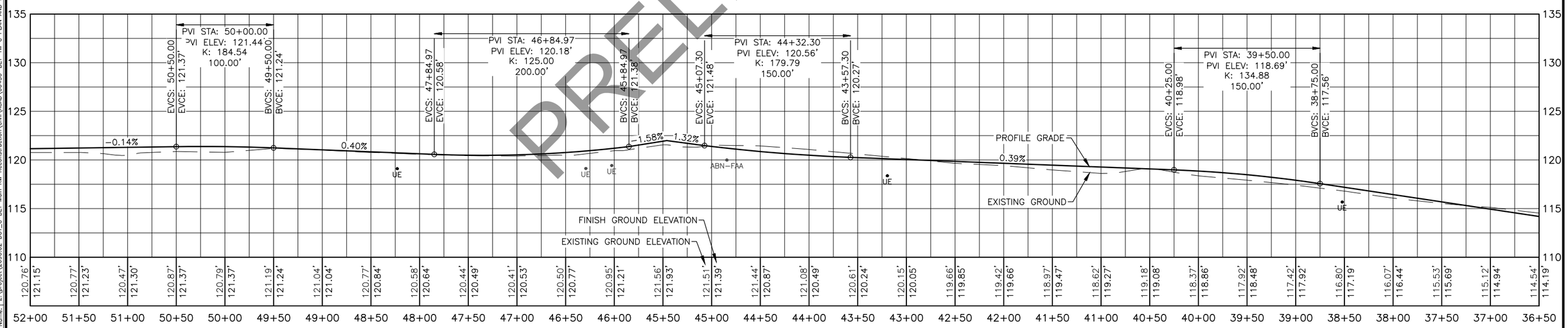

NOTES:

1. SEE ELECTRICAL PLANS FOR NEW LIGHTING AND SIGN LAYOUT.
2. MATCH EXISTING PAVEMENT ELEVATION ALONG EXISTING RUNWAY AND TAXIWAY.
3. STATIONS AND OFFSETS REFERENCE TAXIWAY C ALIGNMENT.
4. SEE TAXIWAY G PLAN & PROFILE SHEET FOR COMPLETE TAXIWAY INTERSECTION LAYOUT.

Designed By:	CJB
Drawn By:	JSC/RLC
Checked By:	MF

Date Revised: 1/07/2021, 9:19 AM
Layout Name: TW STA 52+00 TO 36+50
File Path and Name: Z:\project\2690.02 DOT_C BET Main RW Reconstruction\Civil\ACAD\0430-BET-TW C PLAN AND PROFILE.dwg

PLANS DEVELOPED BY:
R&M CONSULTANTS, INC.
9101 VANGUARD DR.
ANCHORAGE, AK 99507
(907) 522-1707
CERT. OF AUTH. NO. AECC111

BY	DATE	REVISION

STATE OF ALASKA
DEPARTMENT OF TRANSPORTATION AND PUBLIC FACILITIES
CENTRAL REGION
4111 AVIATION AVE., ANCHORAGE ALASKA 99502
PHONE (907) 269-0590

BETHEL AIRPORT
BETHEL, ALASKA
MAIN RUNWAY RECONSTRUCTION
PROJECT No. CFAPT00430
AIP No. 3-02-0029-0XX-20XX
TAXIWAY C PLAN & PROFILE
STA 52+00 TO 36+50

DATE: 1/7/2021
SHEET: 22 OF 79

LAYOUT SCHEDULE

#	STATION	OFFSET	ELEVATION	DESCRIPTION
71	46+54.87	25.00' RT	120.36'	TW PC
72	45+58.31	98.99' RT	121.88'	TW PT
73	46+54.87	125.00' RT	–	TW RP, R=100'
74	46+54.87	45.00' RT	119.96'	SHOULDER PC
75	45+77.62	104.20' RT	121.48'	SHOULDER PT
76	46+54.87	125.00' RT	–	SHOULDER RP, R=80'
77	45+57.01	103.82' RT	121.90'	SHOULDER PI
78	45+76.32	109.02' RT	121.50'	SHOULDER PI
79	45+37.17	177.49' RT	121.66'	RW PI
80	45+91.70	25.00' LT	121.25'	TW PI
81	46+05.55	45.00' LT	120.98'	SHOULDER PI
82	46+12.13	100.84' LT	120.87'	RW PI
83	46+25.22	118.03' LT	120.61'	SHOULDER PI
84	45+39.71	120.35' LT	120.87'	RW PI
85	45+31.62	143.24' LT	120.89'	SHOULDER PI
86	45+14.53	26.84' LT	121.34'	TW PI
87	45+05.75	47.16' LT	120.87'	SHOULDER PI
88	44+92.20	88.15' LT	120.09'	TSA PI
89	44+64.75	157.98' RT	122.28'	TW PC
90	43+64.73	32.04' RT	120.04'	TW PT
91	43+68.19	131.98' RT	–	TW RP, R=100'
92	44+45.44	152.78' RT	121.88'	SHOULDER PC
93	43+65.42	52.02' RT	119.64'	SHOULDER PT
94	43+68.19	131.98' RT	–	SHOULDER RP, R=80'
95	42+63.83	35.53' LT	119.37'	TW PI
96	42+66.78	55.44' LT	118.98'	SHOULDER PI
97	42+72.75	95.76' LT	117.71'	TSA PI
98	42+63.83	35.53' RT	119.37'	TW PI
99	42+66.78	55.44' RT	118.99'	SHOULDER PI
100	42+72.75	95.76' RT	117.73'	TSA PI
101	41+24.20	72.61' LT	118.30'	TW PI
102	41+40.55	88.96' LT	117.86'	SHOULDER PI
103	41+73.66	122.07' LT	116.93'	TSA PI
104	41+24.20	72.61' RT	118.55'	TW PI
105	41+40.55	88.96' RT	118.19'	SHOULDER PI
106	41+73.66	122.07' RT	117.13'	TSA PI
107	39+78.98	72.61' LT	118.02'	TW PI
108	39+62.63	88.96' LT	117.56'	SHOULDER PI
109	39+29.52	122.07' LT	116.20'	TSA PI
110	39+78.98	72.61' RT	118.48'	TW PI

LAYOUT SCHEDULE

#	STATION	OFFSET	ELEVATION	DESCRIPTION
111	39+62.63	88.96' RT	117.98'	SHOULDER PI
112	39+29.52	122.07' RT	116.81'	TSA PI
113	38+39.35	35.53' LT	116.50'	TW PI
114	38+36.40	55.44' LT	116.10'	SHOULDER PI
115	38+30.43	95.76' LT	114.95'	TSA PI
116	38+39.35	35.53' RT	116.50'	TW PI
117	38+36.40	55.44' RT	116.10'	SHOULDER PI
118	38+30.18	96.19' RT	114.67'	TSA PI

NOTE:

1. STATIONS AND OFFSETS REFERENCE TAXIWAY C ALIGNMENT.

Designed By: CJB
Drawn By: JSC/RLC
Checked By: MF
Date Revised: 1/07/2021, 9:19 AM
Layout Name: TW STA 52+00 TO 36+50 (2)
File Path and Name: Z:\project\2690.02 DOT_C BET Main RW Reconstruction\Civil\ACAD\00430-BET-TW C PLAN AND PROFILE.dwg

PLANS DEVELOPED BY:
R&M CONSULTANTS, INC.
9101 VANGUARD DR.
ANCHORAGE, AK 99507
(907) 522-1707
CERT. OF AUTH. NO. AECC111

BY	DATE	REVISION

STATE OF ALASKA
DEPARTMENT OF TRANSPORTATION AND PUBLIC FACILITIES
CENTRAL REGION
4111 AVIATION AVE., ANCHORAGE ALASKA 99502
PHONE (907) 269-0590

BETHEL AIRPORT
BETHEL, ALASKA
MAIN RUNWAY RECONSTRUCTION
PROJECT No. CFAPT00430
AIP No. 3-02-0029-0XX-20XX
TAXIWAY C STA 52+00 TO 36+50
LAYOUT SCHEDULE

DATE: 1/7/2021

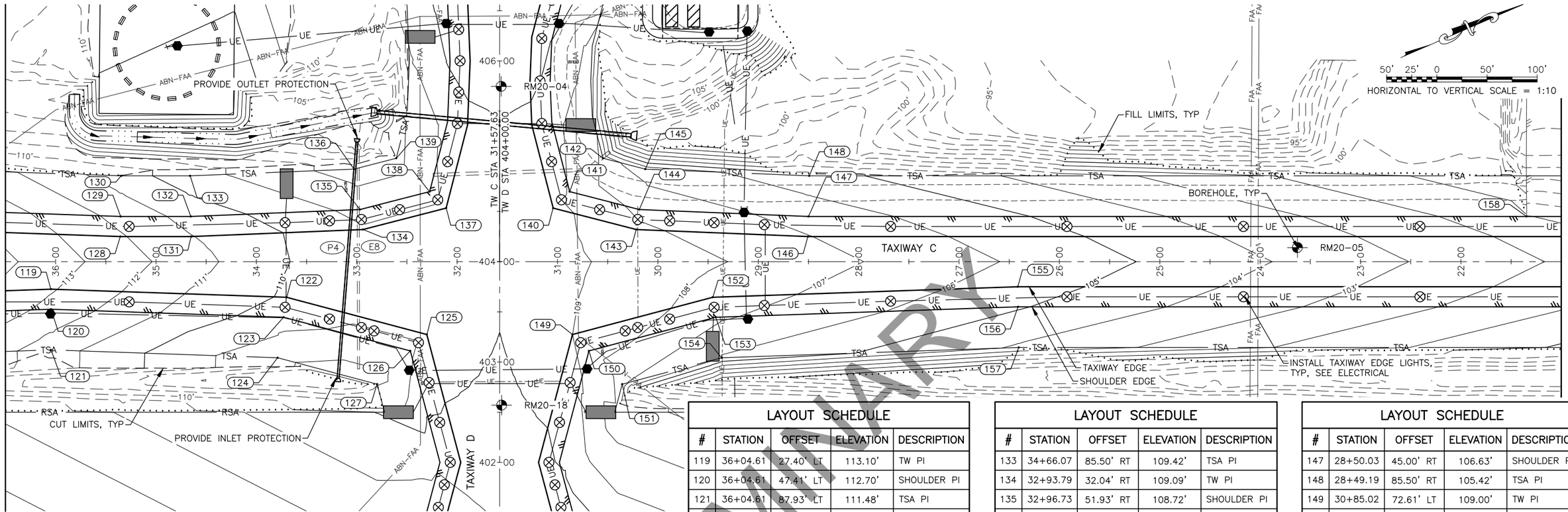

PIPE SUMMARY TABLE

ID	TYPE	DIA.	LENGTH	INLET	ELEV.	OUTLET	ELEV.	END SECTIONS	THAW PIPE
P4	CORRUGATED STEEL	24"	243'	STA 33+18.5, 116.1' LT	106.00'	STA 32+99.8, 119.0' RT	103.90'	YES	YES

LAYOUT SCHEDULE

#	STATION	OFFSET	ELEVATION	DESCRIPTION
119	36+04.61	27.40' LT	113.10'	TW PI
120	36+04.61	47.41' LT	112.70'	SHOULDER PI
121	36+04.61	87.93' LT	111.48'	TSA PI
122	33+69.87	35.53' LT	109.86'	TW PI
123	33+72.82	55.44' LT	109.48'	SHOULDER PI
124	33+78.79	95.76' LT	108.18'	TSA PI
125	32+30.24	72.61' LT	109.17'	TW PI
126	32+46.59	88.96' LT	108.86'	SHOULDER PI
127	32+79.70	122.07' LT	107.55'	TSA PI
128	35+35.46	25.00' RT	112.10'	TW PI
129	35+35.12	45.00' RT	111.70'	SHOULDER PI
130	35+34.42	85.50' RT	110.48'	TSA PI
131	34+64.82	25.00' RT	111.04'	TW PI
132	34+65.23	45.00' RT	110.64'	SHOULDER PI

LAYOUT SCHEDULE

#	STATION	OFFSET	ELEVATION	DESCRIPTION
133	34+66.07	85.50' RT	109.42'	TSA PI
134	32+93.79	32.04' RT	109.09'	TW PI
135	32+96.73	51.93' RT	108.72'	SHOULDER PI
136	33+02.68	92.22' RT	107.48'	TSA PI
137	32+10.98	53.35' RT	109.13'	TW PI
138	32+27.41	69.78' RT	108.73'	SHOULDER PI
139	32+60.67	103.04' RT	107.75'	TSA PI
140	31+04.28	53.35' RT	109.27'	TW PI
141	30+87.85	69.78' RT	108.92'	SHOULDER PI
142	30+54.59	103.04' RT	107.80'	TSA PI
143	30+21.47	32.04' RT	108.19'	TW PI
144	30+18.53	51.93' RT	107.81'	SHOULDER PI
145	30+12.58	92.22' RT	106.66'	TSA PI
146	28+50.44	25.00' RT	107.03'	TW PI

LAYOUT SCHEDULE

#	STATION	OFFSET	ELEVATION	DESCRIPTION
147	28+50.03	45.00' RT	106.63'	SHOULDER PI
148	28+49.19	85.50' RT	105.42'	TSA PI
149	30+85.02	72.61' LT	109.00'	TW PI
150	30+68.67	88.96' LT	108.66'	SHOULDER PI
151	30+35.56	122.07' LT	107.70'	TSA PI
152	29+45.39	35.53' LT	107.58'	TW PI
153	29+42.44	55.44' LT	107.20'	SHOULDER PI
154	29+36.47	95.76' LT	106.03'	TSA PI
155	26+41.50	25.00' LT	105.49'	TW PI
156	26+41.16	45.00' LT	105.09'	SHOULDER PI
157	26+40.46	85.50' LT	103.88'	TSA PI
158	21+34.63	45.00' RT	101.05'	SHOULDER PI

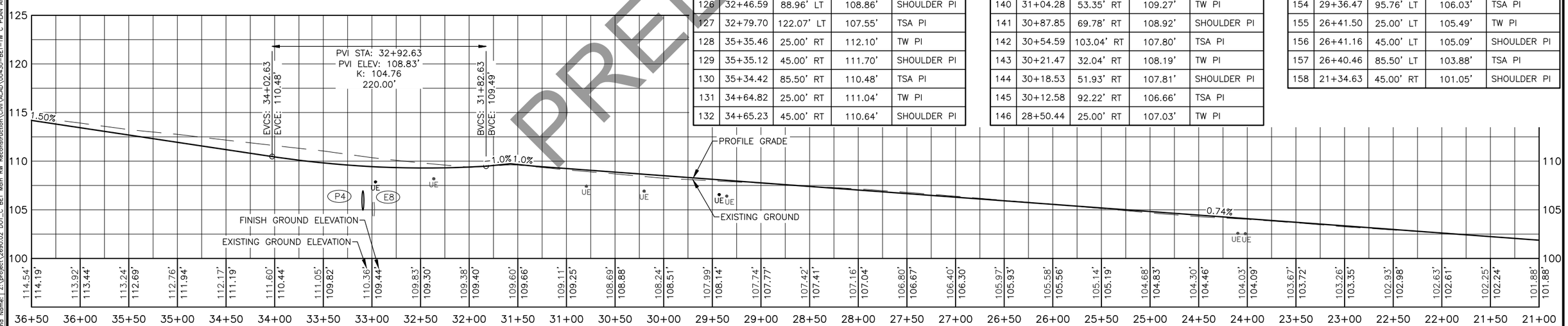

NOTES:

1. SEE ELECTRICAL PLANS FOR NEW LIGHTING AND SIGN LAYOUT.
2. STATIONS AND OFFSETS REFERENCE TAXIWAY C ALIGNMENT.
3. SEE TAXIWAY D PLAN & PROFILE SHEET FOR COMPLETE TAXIWAY INTERSECTION LAYOUT.

PLANS DEVELOPED BY:
R&M CONSULTANTS, INC.
9101 VANGUARD DR.
ANCHORAGE, AK 99507
(907) 522-1707
CERT. OF AUTH. NO. AECC111

BY	DATE	REVISION

STATE OF ALASKA
DEPARTMENT OF TRANSPORTATION AND PUBLIC FACILITIES
CENTRAL REGION
4111 AVIATION AVE., ANCHORAGE ALASKA 99502
PHONE (907) 269-0590

BETHEL AIRPORT
BETHEL, ALASKA
MAIN RUNWAY RECONSTRUCTION
PROJECT No. CFAPT00430
AIP No. 3-02-0029-0XX-20XX
TAXIWAY C PLAN & PROFILE
STA 36+50 TO 21+00

DATE: 1/7/2021

Designed By: CJB
Drawn By: JSC/RLC
Checked By: MF

Date Revised: 1/07/2021, 9:19 AM
Layout Name: TW STA 36+50 TO 21+00
File Path and Name: Z:\project\2690.02 DOT_C BET Main RW Reconstruction\Civil\ACAD\00430-BET-TW C PLAN AND PROFILE.dwg

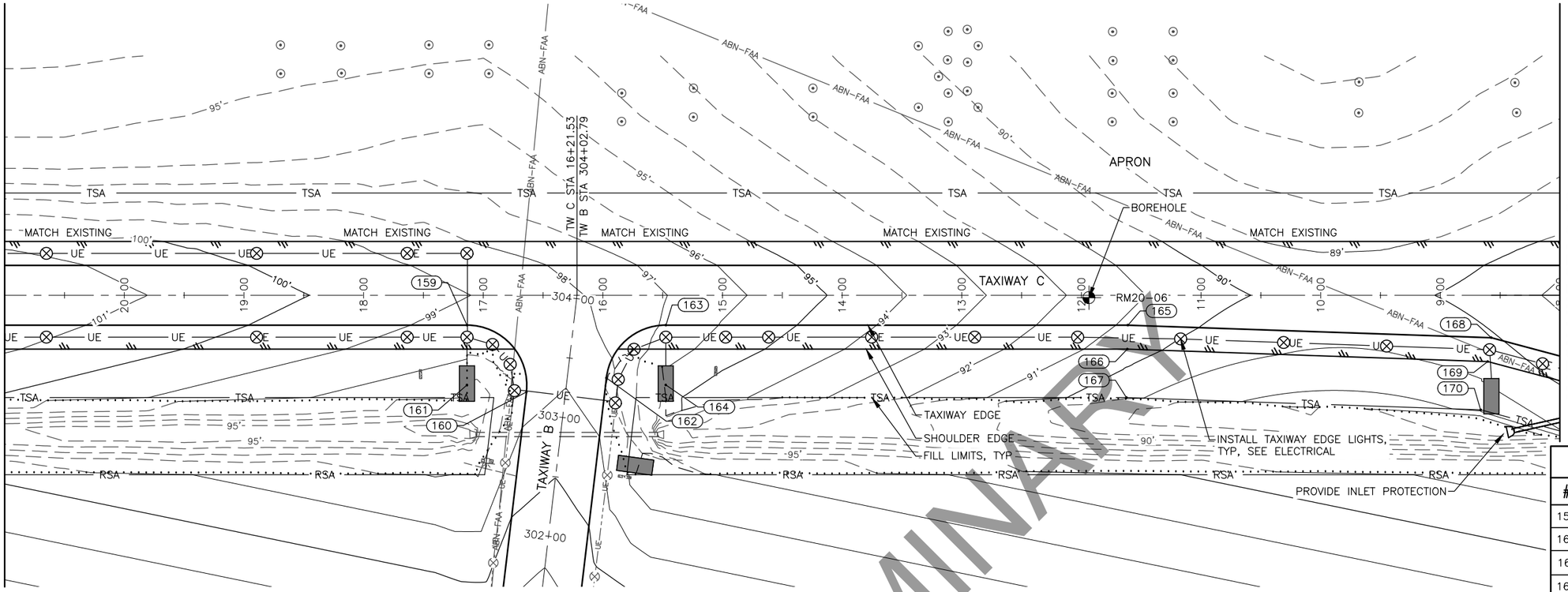

LAYOUT SCHEDULE				
#	STATION	OFFSET	ELEVATION	DESCRIPTION
159	17+13.48	25.00' LT	98.65'	TW PC
160	16+63.83	80.88' LT	98.60'	TW PT
161	17+13.48	75.00' LT	–	TW RP, R=50'
162	15+96.98	69.12' LT	98.35'	TW PT
163	15+47.33	25.00' LT	96.89'	TW PC
164	15+47.33	75.00' LT	–	TW RP, R=50'
165	11+61.13	25.00' LT	90.85'	TW PI
166	11+61.47	45.00' LT	90.45'	SHOULDER PI
167	11+62.17	85.50' LT	89.23'	TSA PI
168	8+57.24	35.53' LT	89.91'	TW PI
169	8+60.19	55.44' LT	89.53'	SHOULDER PI
170	8+66.16	95.76' LT	88.35'	TSA PI

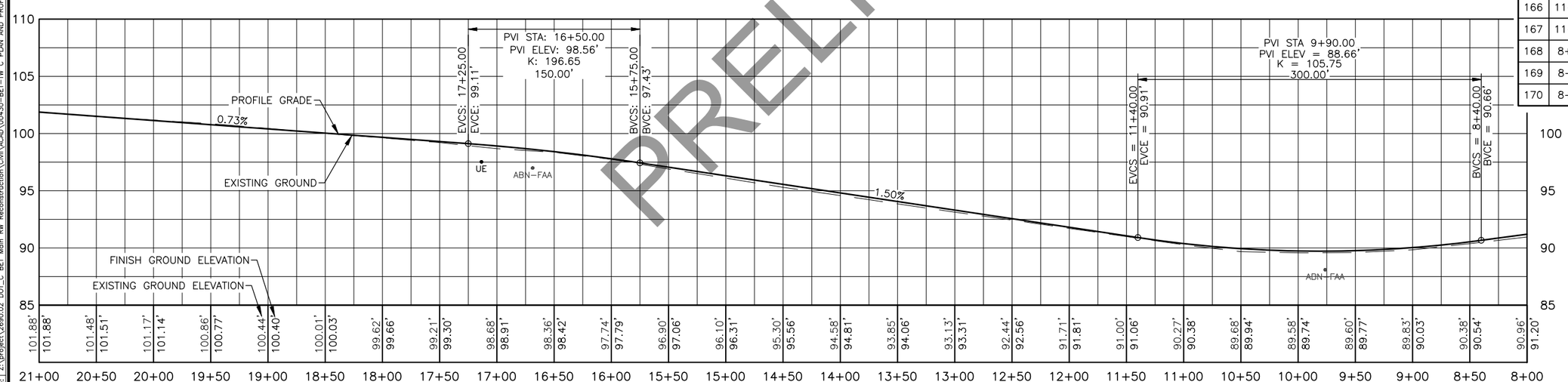

NOTES:

1. SEE ELECTRICAL PLANS FOR NEW LIGHTING AND SIGN LAYOUT.
2. MATCH EXISTING PAVEMENT ELEVATION ALONG EXISTING TAXIWAY AND APRON.
3. STATIONS AND OFFSETS REFERENCE TAXIWAY C ALIGNMENT.

PLANS DEVELOPED BY:
R&M CONSULTANTS, INC.
9101 VANGUARD DR.
ANCHORAGE, AK 99507
(907) 522-1707
CERT. OF AUTH. NO. AECC111

BY	DATE	REVISION

STATE OF ALASKA
DEPARTMENT OF TRANSPORTATION AND PUBLIC FACILITIES
CENTRAL REGION
4111 AVIATION AVE., ANCHORAGE ALASKA 99502
PHONE (907) 269-0590

BETHEL AIRPORT
BETHEL, ALASKA
MAIN RUNWAY RECONSTRUCTION
PROJECT No. CFAPT00430
AIP No. 3-02-0029-0XX-20XX
TAXIWAY C PLAN & PROFILE
STA 21+00 TO 8+00

DATE: 1/7/2021

Designed By: CJB
Drawn By: JSC/RLC
Checked By: MF
Date Revised: 1/07/2021, 9:19 AM
Layout Name: TW STA 21+00 TO 8+00
File Path and Name: Z:\project\2690.02 DOT_C BET Main RW Reconstruction\Civil\ACAD\00430-BET-TW C PLAN AND PROFILE.dwg

LAYOUT SCHEDULE				
#	STATION	OFFSET	ELEVATION	DESCRIPTION
171	6+65.39	63.33' LT	92.14'	TW PI
172	6+65.39	86.46' LT	92.03'	SHOULDER PI
173	7+67.07	122.07' LT	89.60'	TSA PI
174	5+35.77	114.66' LT	92.07'	TSA PI
175	4+85.77	38.78' LT	94.82'	TW PI
176	4+85.77	59.48' LT	94.47'	SHOULDER PI
177	3+60.77	71.97' LT	97.44'	TW PI
178	3+85.77	86.03' LT	96.83'	SHOULDER PI
179	7+44.00	25.00' RT	91.57'	TW PC
180	5+86.77	25.00' RT	93.67'	TW PT
181	7+44.00	99.00' LT	–	TW RP, R=124'
182	6+65.39	102.99' RT	91.44'	SHOULDER PI
183	6+54.60	83.88' RT	91.58'	TSA PC
184	5+86.77	85.50' RT	92.06'	TSA PT
185	7+44.00	99.00' LT	–	TSA RP, R=185'
186	5+35.77	85.50' RT	93.05'	TSA PI
187	3+60.77	25.00' RT	96.94'	TW PI
188	3+85.77	45.00' RT	96.16'	SHOULDER PI

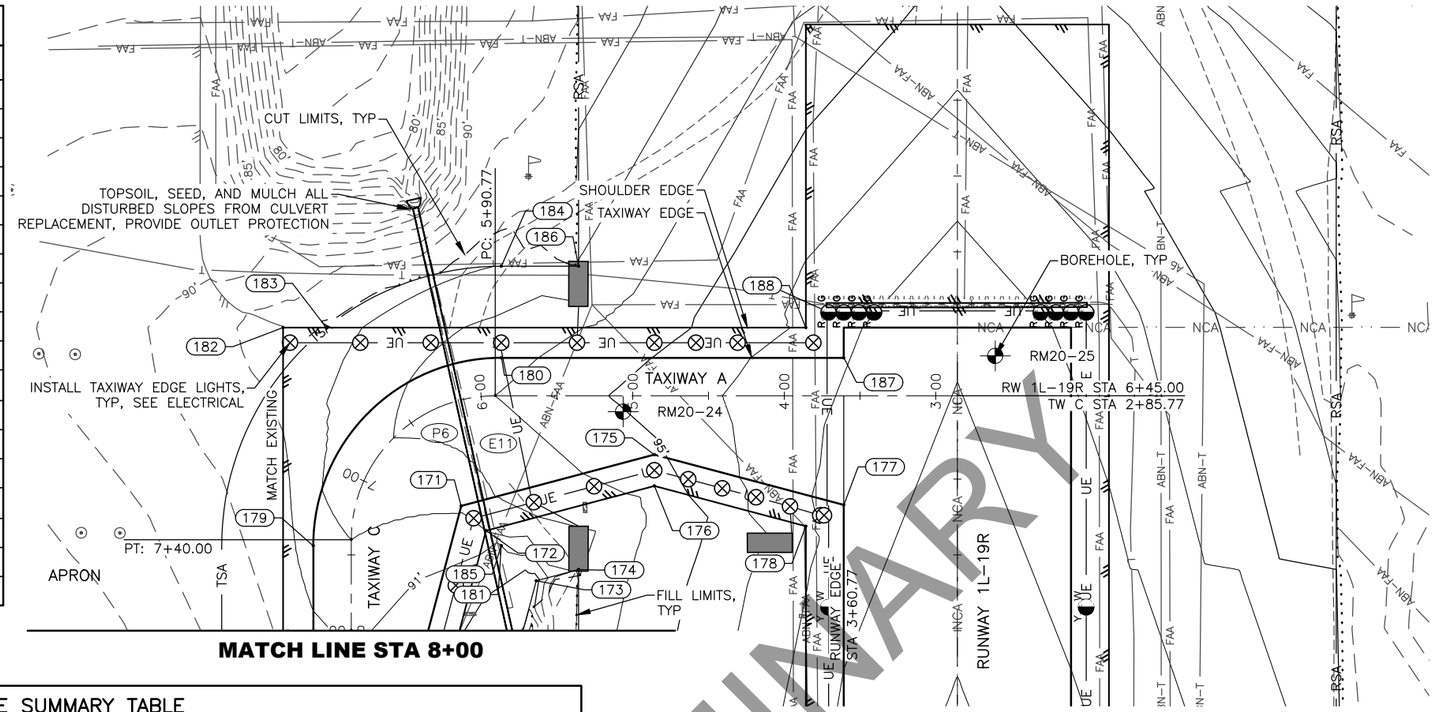

MATCH LINE STA 8+00

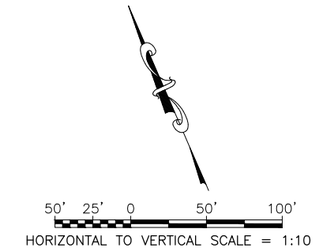

PIPE SUMMARY TABLE									
ID	TYPE	DIA.	LENGTH	INLET	ELEV.	OUTLET	ELEV.	END SECTIONS	THAW PIPE
P6	CORRUGATED STEEL	42"	338'	STA 8+38.3, 113.0' LT	86.20'	STA 6+13.2, 130.2' RT	82.70'	YES	YES

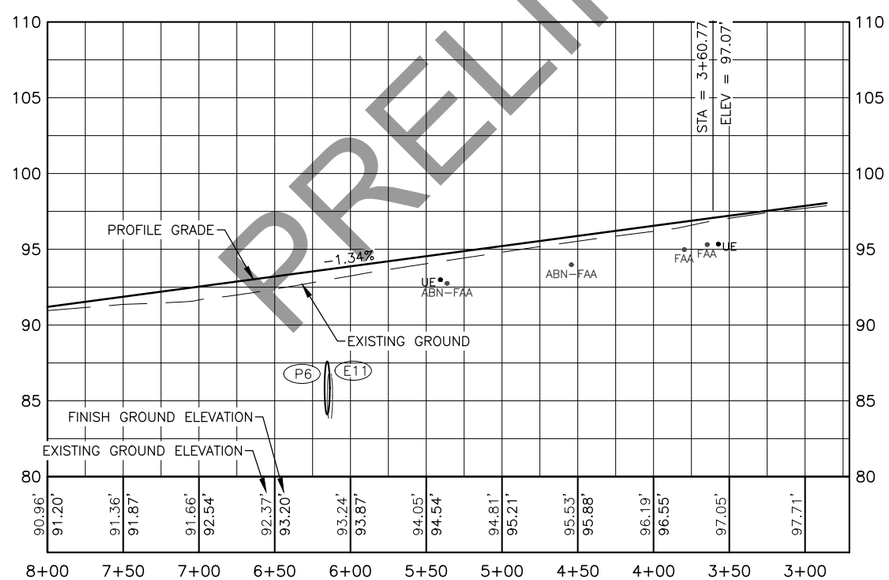

NOTES:

1. SEE ELECTRICAL PLANS FOR NEW LIGHTING AND SIGN LAYOUT.
2. MATCH EXISTING PAVEMENT ELEVATION ALONG EXISTING APRON.
3. STATIONING SHOWN ALONG TAXIWAY A IS AN EXTENSION OF TAXIWAY C STATIONING.
4. STATIONS AND OFFSETS REFERENCE TAXIWAY C.

Designed By: CJB
Drawn By: JSC/RLC
Checked By: MF
Date Revised: 1/07/2021, 9:19 AM
Layout Name: TW STA 8+50 TO 3+00
File Path and Name: Z:\project\2690.02 DOT_C BET Main RW Reconstruction\Civil\ACAD\06430-BET-TW C PLAN AND PROFILE.dwg

PLANS DEVELOPED BY:
R&M CONSULTANTS, INC.
9101 VANGUARD DR.
ANCHORAGE, AK 99507
(907) 522-1707
CERT. OF AUTH. NO. AECC111

BY	DATE	REVISION

STATE OF ALASKA
DEPARTMENT OF TRANSPORTATION AND PUBLIC FACILITIES
CENTRAL REGION
4111 AVIATION AVE., ANCHORAGE ALASKA 99502
PHONE (907) 269-0590

BETHEL AIRPORT
BETHEL, ALASKA
MAIN RUNWAY RECONSTRUCTION
PROJECT No. CFAPT00430
AIP No. 3-02-0029-0XX-20XX
TAXIWAY A PLAN & PROFILE

DATE: 1/7/2021

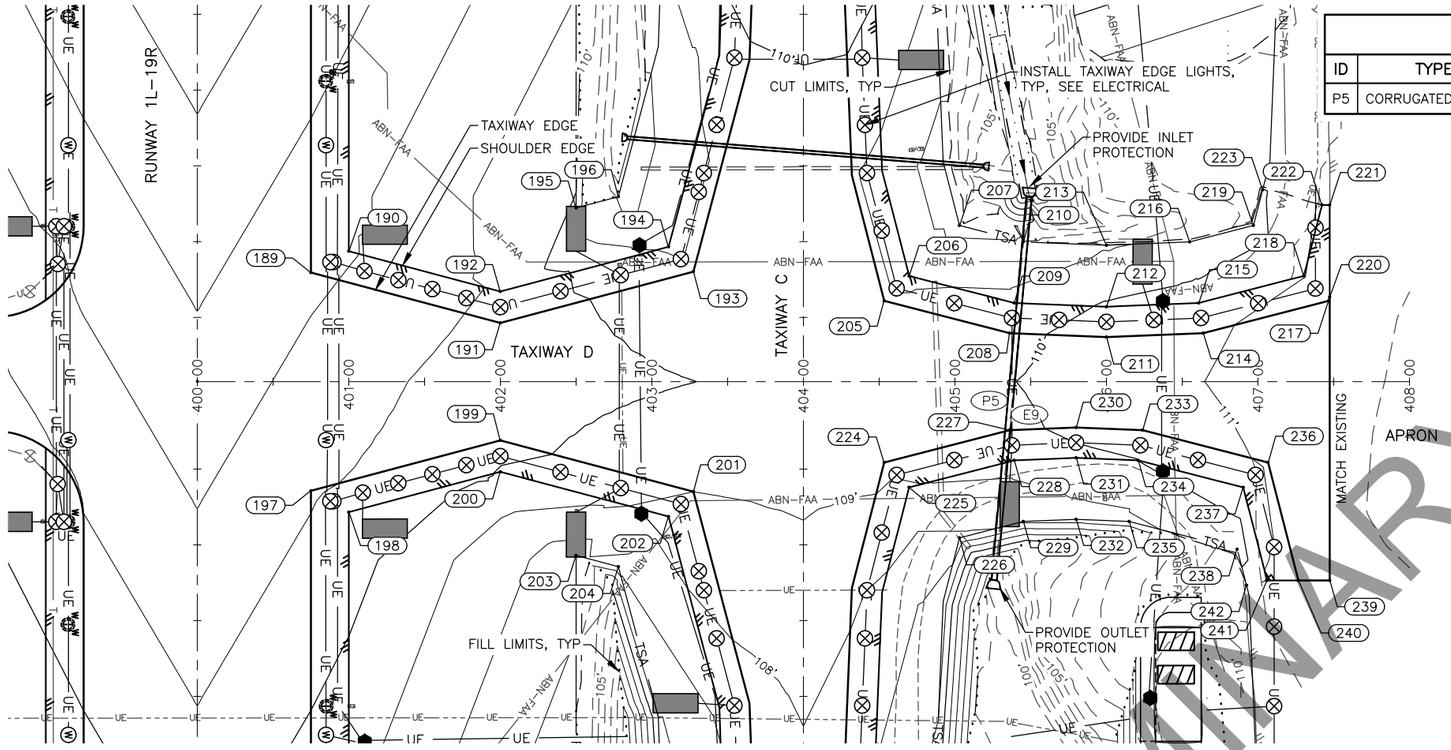

PIPE SUMMARY TABLE

ID	TYPE	DIA.	LENGTH	INLET	ELEV.	OUTLET	ELEV.	END SECTIONS	THAW PIPE
P5	CORRUGATED STEEL	42"	267'	STA 32+79.6, 148.9' RT	103.20'	STA 30+26.8, 125.9' RT	100.30'	YES	YES

LAYOUT SCHEDULE

#	STATION	OFFSET	ELEVATION	DESCRIPTION
189	400+75.00	71.97' LT	112.22'	TW PI
190	401+00.00	86.03' LT	112.08'	SHOULDER PI
191	402+00.00	38.78' LT	110.72'	TW PI
192	402+00.00	59.48' LT	110.88'	SHOULDER PI
193	403+27.39	72.61' LT	109.17'	TW PI
194	403+11.04	88.96' LT	108.84'	SHOULDER PI
195	402+50.00	114.66' LT	109.83'	TSA PI
196	402+77.93	122.07' LT	107.55'	TSA PI
197	400+75.00	71.97' RT	111.11'	TW PI
198	401+00.00	86.03' RT	110.59'	SHOULDER PI
199	402+00.00	38.78' RT	110.37'	TW PI
200	402+00.00	59.48' RT	109.93'	SHOULDER PI
201	403+27.39	72.61' RT	109.00'	TW PI
202	403+11.04	88.96' RT	108.63'	SHOULDER PI
203	402+50.00	114.66' RT	107.52'	TSA PI
204	402+77.93	122.07' RT	107.70'	TSA PI
205	404+53.35	53.35' LT	109.13'	TW PI
206	404+69.78	69.78' LT	108.73'	SHOULDER PI
207	405+03.04	103.04' LT	107.75'	TSA PI
208	405+36.16	32.04' LT	109.69'	TW PI
209	405+39.10	51.93' LT	109.31'	SHOULDER PI
210	405+45.05	92.22' LT	108.15'	TSA PI
211	406+00.00	29.41' LT	110.52'	TW PI
212	406+00.00	49.43' LT	110.11'	SHOULDER PI
213	406+00.00	89.96' LT	108.92'	TSA PI
214	406+63.84	32.04' LT	110.85'	TW PI
215	406+60.90	51.93' LT	110.46'	SHOULDER PI
216	406+54.95	92.22' LT	109.20'	TSA PI
217	407+46.65	53.35' LT	111.46'	TW PI
218	407+30.22	69.78' LT	110.97'	SHOULDER PI
219	406+96.96	103.04' LT	109.59'	TSA PI
220	407+47.31	55.95' LT	111.45'	TW PI
221	407+47.31	116.56' LT	111.18'	SHOULDER PI
222	407+42.27	116.56' LT	111.10'	SHOULDER PI
223	407+03.04	126.66' LT	109.90'	TSA PI
224	404+53.35	53.35' RT	109.27'	TW PI
225	404+69.78	69.78' RT	108.88'	SHOULDER PI

LAYOUT SCHEDULE

#	STATION	OFFSET	ELEVATION	DESCRIPTION
226	405+03.04	103.04' RT	107.80'	TSA PI
227	405+36.16	32.04' RT	109.76'	TW PI
228	405+39.10	51.93' RT	109.38'	SHOULDER PI
229	405+45.05	92.22' RT	108.21'	TSA PI
230	405+80.00	30.23' RT	110.21'	TW PI
231	405+80.00	50.25' RT	109.81'	SHOULDER PI
232	405+80.00	90.78' RT	108.58'	TSA PI
233	406+23.84	32.04' RT	110.39'	TW PI
234	406+20.90	51.93' RT	110.00'	SHOULDER PI
235	406+14.95	92.22' RT	108.83'	TSA PI
236	407+06.65	53.35' RT	111.09'	TW PI
237	406+90.22	69.78' RT	110.59'	SHOULDER PI
238	406+86.27	110.58' RT	109.41'	TSA PI
239	407+47.31	131.16' RT	111.65'	TW PI
240	407+26.68	131.16' RT	111.34'	TW PI
241	407+06.03	131.16' RT	111.05'	SHOULDER PI
242	406+92.37	134.28' RT	110.61'	TSA PI

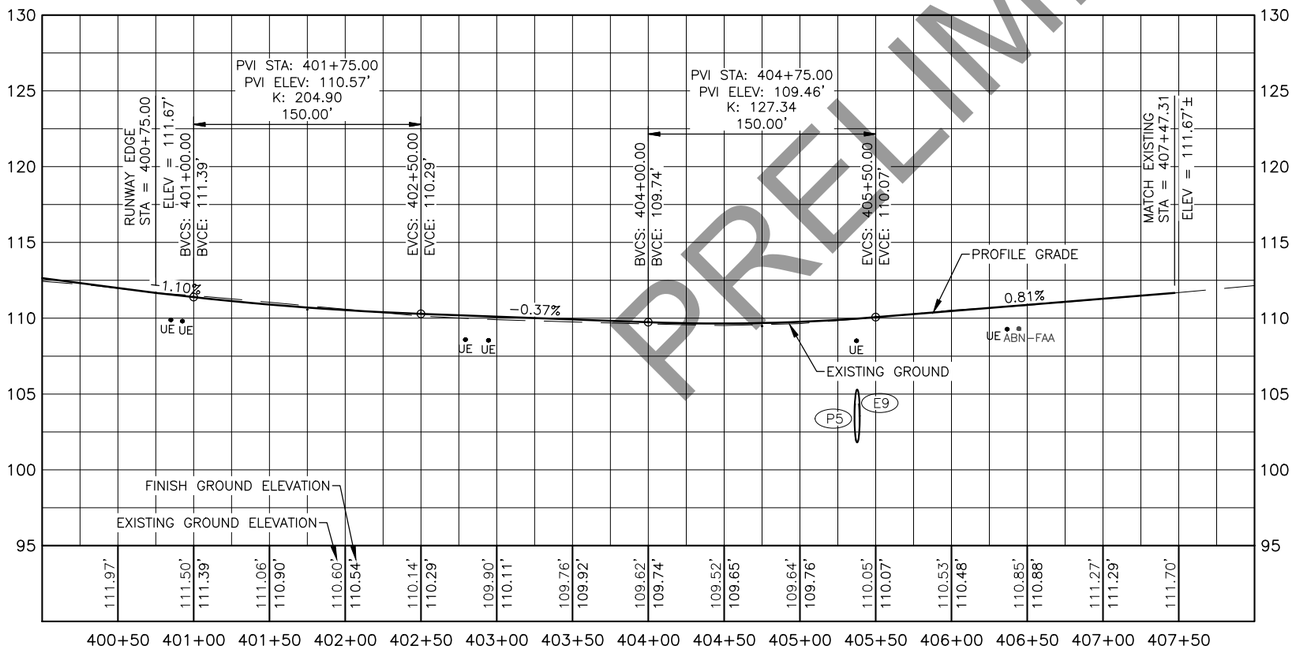

NOTES:

1. SEE ELECTRICAL PLANS FOR NEW LIGHTING AND SIGN LAYOUT.
2. MATCH EXISTING PAVEMENT ELEVATION ALONG EXISTING APRON.
3. STATIONS AND OFFSETS REFERENCE TAXIWAY D ALIGNMENT.

50' 25' 0 50' 100'
HORIZONTAL TO VERTICAL SCALE = 1:10

PLANS DEVELOPED BY:
R&M CONSULTANTS, INC.
9101 VANGUARD DR.
ANCHORAGE, AK 99507
(907) 522-1707
CERT. OF AUTH. NO. AECC111

BY	DATE	REVISION

STATE OF ALASKA
DEPARTMENT OF TRANSPORTATION AND PUBLIC FACILITIES
CENTRAL REGION
4111 AVIATION AVE., ANCHORAGE ALASKA 99502
PHONE (907) 269-0590

BETHEL AIRPORT
BETHEL, ALASKA
MAIN RUNWAY RECONSTRUCTION
PROJECT No. CFAPT00430
AIP No. 3-02-0029-0XX-20XX
TAXIWAY D PLAN & PROFILE

DATE: 1/7/2021
SHEET: 27 OF 79

Designed By: CJB
Drawn By: JSC/RLC
Checked By: MF
Date Revised: 1/07/2021, 9:20 AM
Layout Name: TW D
File Path and Name: Z:\project\2690.02 DOT_C BET Main RW Reconstruction\Civil\ACAD\00430-BET-TW D PLAN AND PROFILE.dwg

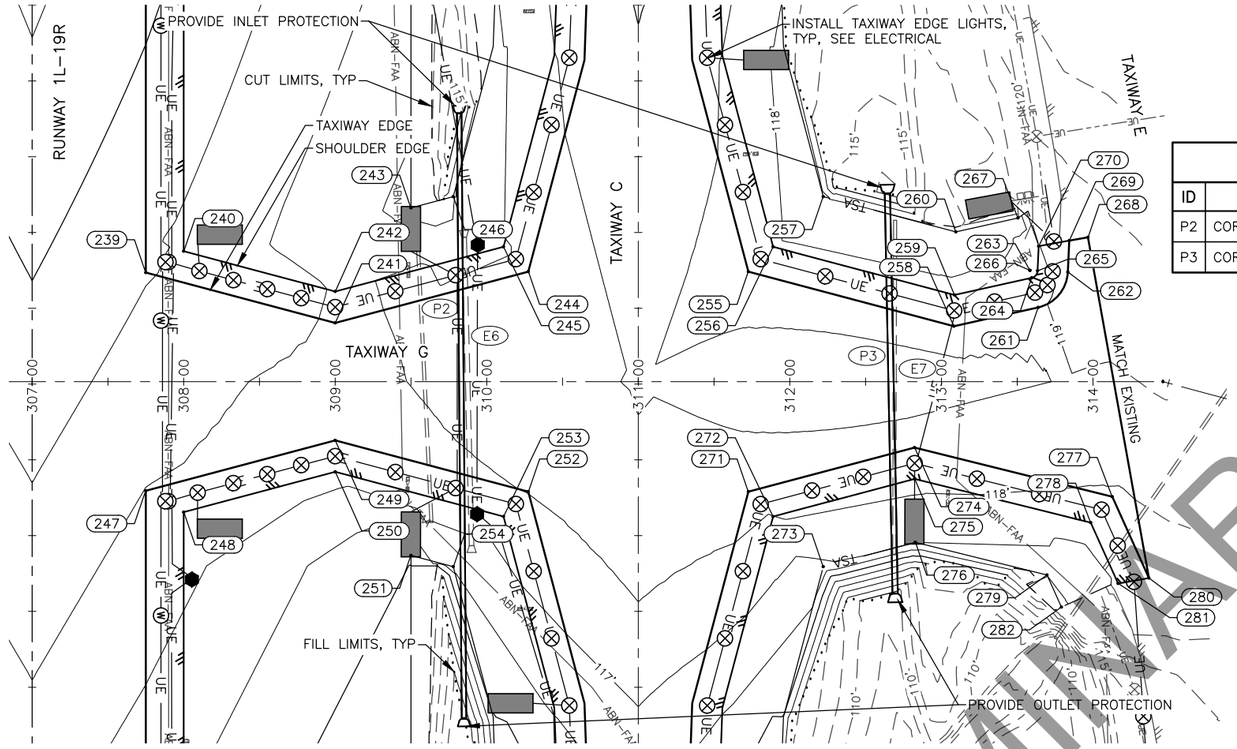

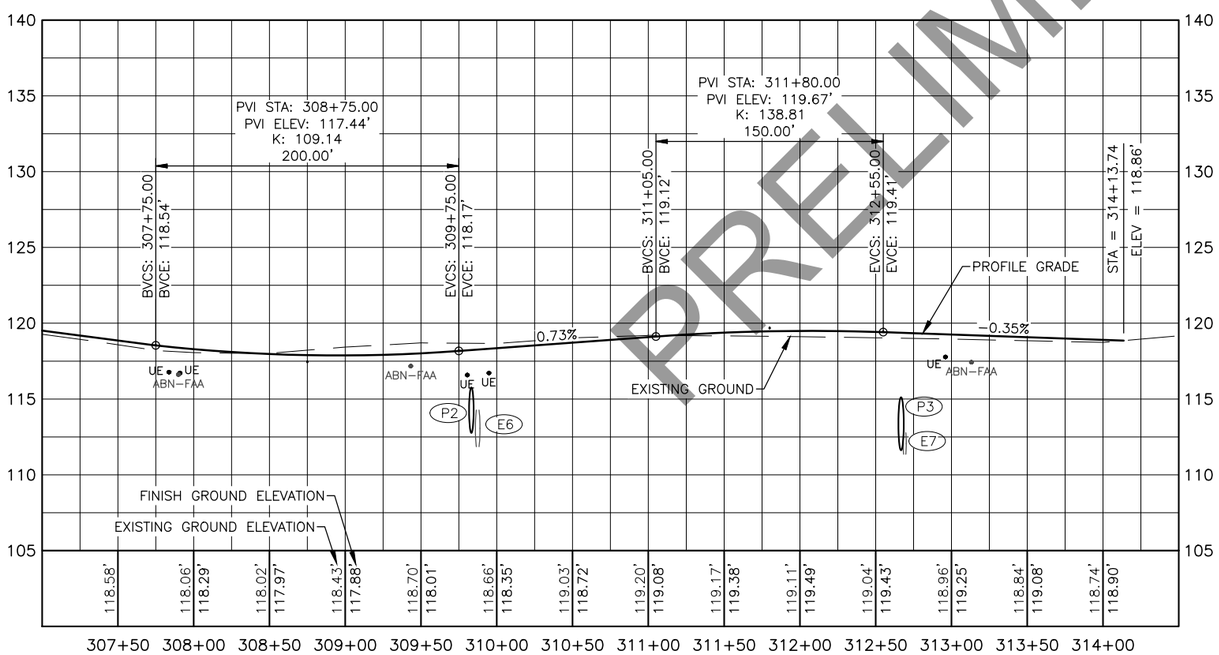

PIPE SUMMARY TABLE

ID	TYPE	DIA.	LENGTH	INLET	ELEV.	OUTLET	ELEV.	END SECTIONS	THAW PIPE
P2	CORRUGATED STEEL	36"	410'	STA 42+28.6, 118.2' LT	114.75'	STA 38+29.2, 115.0' LT	110.27'	YES	YES
P3	CORRUGATED STEEL	42"	277'	STA 41+75.8, 164.4' RT	113.50'	STA 39+11.8, 169.4' RT	109.50'	YES	YES

LAYOUT SCHEDULE

#	STATION	OFFSET	ELEVATION	DESCRIPTION
239	307+75.00	71.97' LT	119.06'	TW PI
240	308+00.00	86.03' LT	118.88'	SHOULDER PI
241	309+00.00	38.78' LT	117.90'	TW PI
242	309+00.00	59.48' LT	117.92'	SHOULDER PI
243	309+50.00	114.66' LT	116.84'	TSA PI
244	310+27.39	72.61' LT	118.30'	TW PI
245	310+11.04	88.96' LT	117.86'	SHOULDER PI
246	309+77.93	122.07' LT	116.93'	TSA PI
247	307+75.00	71.97' RT	117.98'	TW PI
248	308+00.00	86.03' RT	117.57'	SHOULDER PI
249	309+00.00	38.78' RT	117.63'	TW PI
250	309+00.00	59.48' RT	117.37'	SHOULDER PI
251	309+50.00	114.66' RT	115.33'	TSA PI
252	310+27.39	72.61' RT	118.02'	TW PI
253	310+11.04	88.96' RT	117.56'	SHOULDER PI
254	309+77.93	122.07' RT	116.20'	TSA PI
255	311+72.61	72.61' LT	118.55'	TW PI
256	311+88.96	88.96' LT	118.19'	SHOULDER PI
257	312+22.07	122.07' LT	117.13'	TSA PI
258	313+08.27	36.59' LT	118.72'	TW PI
259	313+08.68	57.17' LT	118.35'	SHOULDER PI
260	313+09.52	98.85' LT	117.16'	TSA PI
261	313+63.93	48.99' LT	118.94'	TW PC
262	313+83.47	72.34' LT	119.25'	TW PT
263	313+58.49	73.39' LT	–	TW RP, R=25'
264	313+59.58	68.51' LT	118.54'	SHOULDER PC
265	313+63.49	73.18' LT	118.85'	SHOULDER PT
266	313+58.49	73.39' LT	–	SHOULDER RP, R=5'
267	313+50.50	107.98' LT	117.33'	TSA PI
268	313+96.68	95.24' LT	119.63'	TW PI
269	313+84.34	93.03' LT	119.41'	TW PI
270	313+64.17	89.42' LT	118.98'	SHOULDER PI
271	311+72.61	72.61' RT	118.48'	TW PI
272	311+88.96	88.96' RT	117.98'	SHOULDER PI
273	312+22.07	122.07' RT	116.81'	TSA PI

LAYOUT SCHEDULE

#	STATION	OFFSET	ELEVATION	DESCRIPTION
274	312+82.25	43.50' RT	118.72'	TW PI
275	312+82.42	64.15' RT	118.31'	SHOULDER PI
276	312+82.75	105.96' RT	117.05'	TSA PI
277	314+12.81	75.94' RT	117.83'	TW PI
278	313+98.56	93.00' RT	117.36'	SHOULDER PI
279	313+69.70	127.57' RT	116.01'	TSA PI
280	314+70.95	127.49' RT	117.41'	TW PI
281	314+16.65	133.18' RT	117.16'	SHOULDER PI
282	313+79.22	148.71' RT	115.84'	TSA PI

50' 25' 0 50' 100'

HORIZONTAL TO VERTICAL SCALE = 1:10

NOTES:

1. SEE ELECTRICAL PLANS FOR NEW LIGHTING AND SIGN LAYOUT.
2. MATCH EXISTING PAVEMENT ELEVATION ALONG EXISTING APRON.
3. STATIONS AND OFFSETS REFERENCE TAXIWAY G ALIGNMENT.

PLANS DEVELOPED BY:
R&M CONSULTANTS, INC.
9101 VANGUARD DR.
ANCHORAGE, AK 99507
(907) 522-1707
CERT. OF AUTH. NO. AECC111

BY	DATE	REVISION

STATE OF ALASKA
DEPARTMENT OF TRANSPORTATION AND PUBLIC FACILITIES
CENTRAL REGION
4111 AVIATION AVE., ANCHORAGE ALASKA 99502
PHONE (907) 269-0590

BETHEL AIRPORT
BETHEL, ALASKA
MAIN RUNWAY RECONSTRUCTION
PROJECT No. CFAPT00430
AIP No. 3-02-0029-0XX-20XX
TAXIWAY G PLAN & PROFILE

DATE: 1/7/2021

Designed By: CJB
Drawn By: JSC/RLC
Checked By: MF

Date Revised: 1/07/2021, 9:21 AM
Layout Name: TW G
File Path and Name: Z:\project\2690.02 DOT_C BET Main RW Reconstruction\Civil\ACAD\00430-BET-TW G PLAN AND PROFILE.dwg

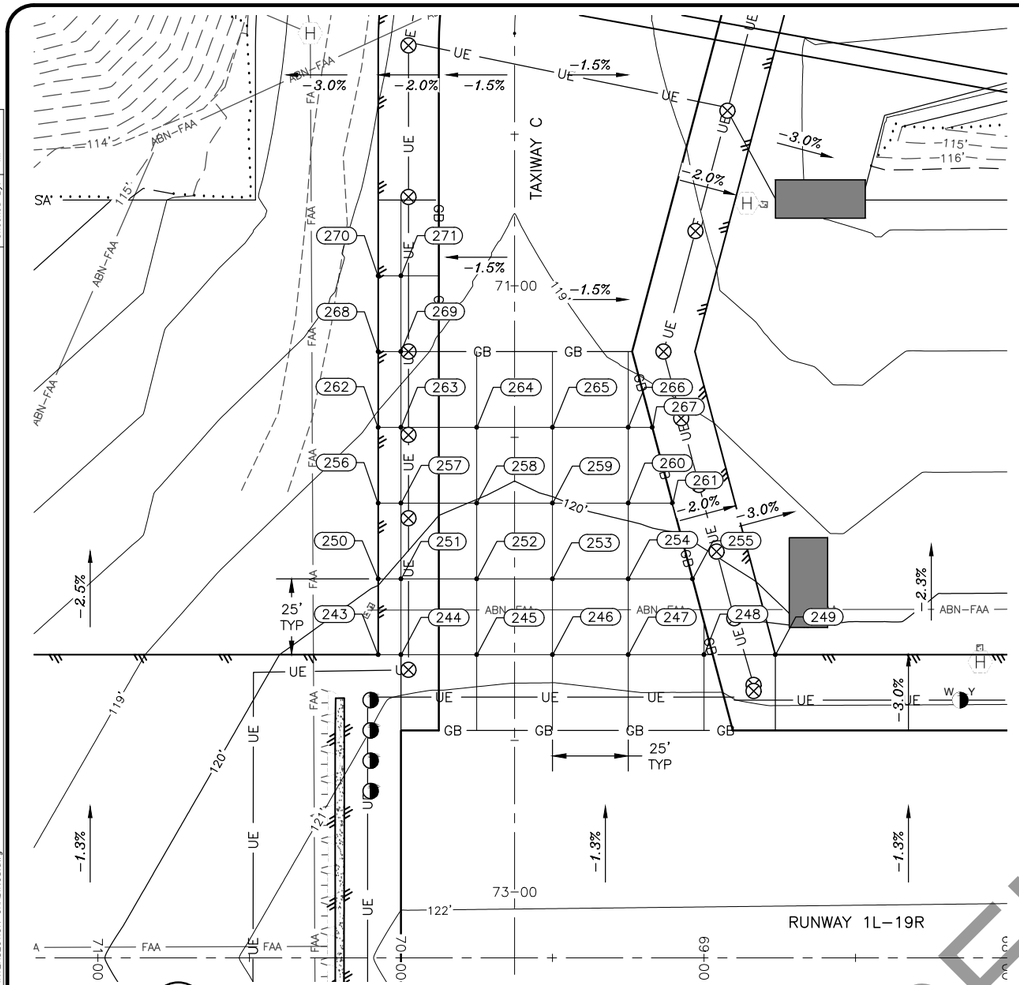

1/29 RUNWAY 1L–19R & TAXIWAY C INTERSECTION GRADING PLAN

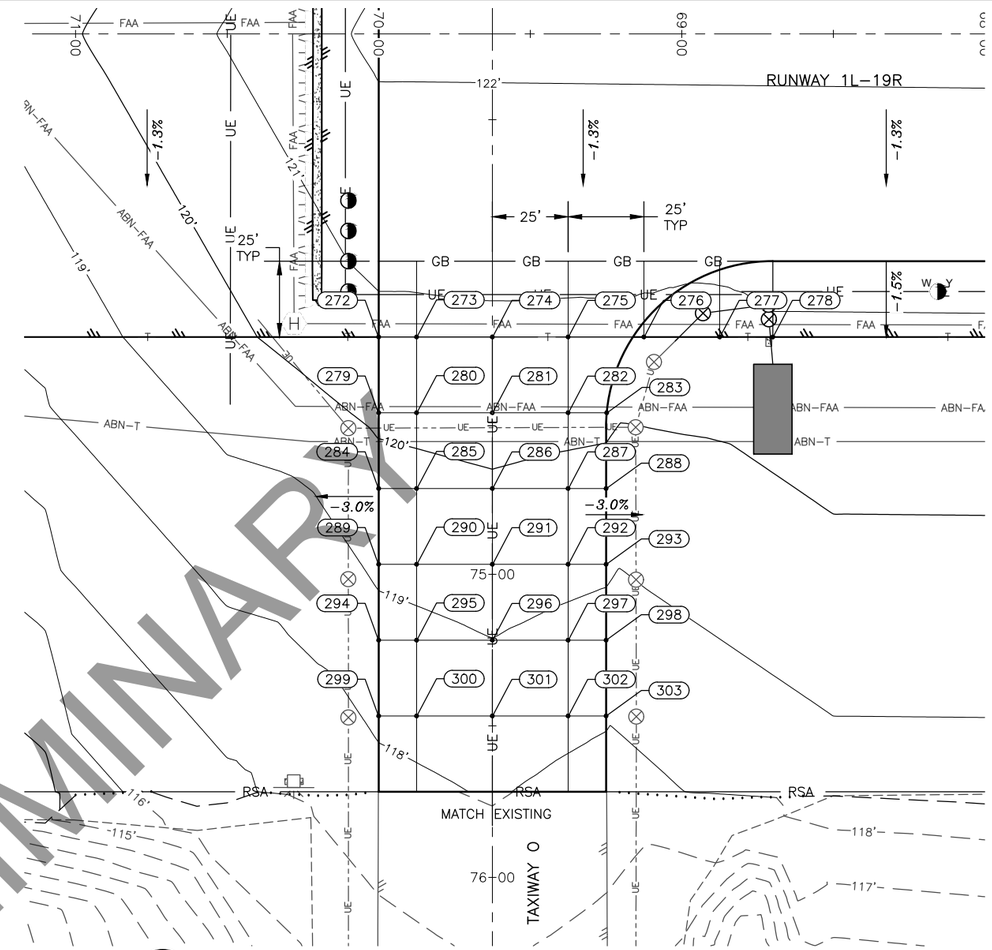

2/29 RUNWAY 1L–19R & TAXIWAY O INTERSECTION GRADING PLAN

GRADING SCHEDULE			
#	STATION	OFFSET	ELEVATION
243	70+07.50	100.00' RT	120.69'
244	70+00.00	100.00' RT	120.73'
245	69+75.00	100.00' RT	120.83'
246	69+50.00	100.00' RT	120.84'
247	69+25.00	100.00' RT	120.79'
248	69+00.00	100.00' RT	120.76'
249	68+76.47	100.00' RT	120.49'
250	70+07.50	125.00' RT	119.96'
251	70+00.00	125.00' RT	120.11'
252	69+75.00	125.00' RT	120.42'
253	69+50.00	125.00' RT	120.43'

GRADING SCHEDULE			
#	STATION	OFFSET	ELEVATION
254	69+25.00	125.00' RT	120.35'
255	69+03.80	125.00' RT	120.29'
256	70+07.50	150.00' RT	119.53'
257	70+00.00	150.00' RT	119.68'
258	69+75.00	150.00' RT	120.02'
259	69+50.00	150.00' RT	120.03'
260	69+25.00	150.00' RT	119.88'
261	69+10.44	150.00' RT	119.81'
262	70+07.50	175.00' RT	119.10'
263	70+00.00	175.00' RT	119.25'
264	69+75.00	175.00' RT	119.62'

GRADING SCHEDULE			
#	STATION	OFFSET	ELEVATION
265	69+50.00	175.00' RT	119.62'
266	69+25.00	175.00' RT	119.40'
267	69+17.08	175.00' RT	119.33'
268	70+07.50	200.00' RT	118.66'
269	70+00.02	200.00' RT	118.81'
270	70+07.50	225.00' RT	118.43'
271	70+00.00	225.00' RT	118.57'
272	70+00.00	100.00' LT	120.67'
273	69+87.50	100.00' LT	120.71'
274	69+62.50	100.00' LT	120.78'
275	69+37.50	100.00' LT	120.75'

GRADING SCHEDULE			
#	STATION	OFFSET	ELEVATION
276	69+12.50	100.00' LT	120.75'
277	68+87.50	100.00' LT	120.69'
278	68+69.97	100.00' LT	120.87'
279	70+00.00	125.00' LT	120.17'
280	69+87.50	125.00' LT	120.23'
281	69+62.50	125.00' LT	120.33'
282	69+37.50	125.00' LT	120.25'
283	69+24.74	125.00' LT	120.21'
284	70+00.00	150.00' LT	119.67'
285	69+87.50	150.00' LT	119.75'
286	69+62.50	150.00' LT	119.89'

GRADING SCHEDULE			
#	STATION	OFFSET	ELEVATION
287	69+37.50	150.00' LT	119.75'
288	69+24.97	150.00' LT	119.68'
289	70+00.00	175.00' LT	119.17'
290	69+87.50	175.00' LT	119.26'
291	69+62.50	175.00' LT	119.44'
292	69+37.50	175.00' LT	119.25'
293	69+24.97	175.00' LT	119.16'
294	70+00.00	200.00' LT	118.67'
295	69+87.50	200.00' LT	118.78'
296	69+62.50	200.00' LT	118.99'
297	69+37.50	200.00' LT	118.74'

GRADING SCHEDULE			
#	STATION	OFFSET	ELEVATION
298	69+24.97	200.00' LT	118.63'
299	70+00.00	225.00' LT	118.17'
300	69+87.50	225.00' LT	118.30'
301	69+62.50	225.00' LT	118.54'
302	69+37.50	225.00' LT	118.25'
303	69+24.97	225.00' LT	118.11'

NOTES:

1. SEE RUNWAY PLAN AND PROFILE AND TAXIWAY C PLAN AND PROFILE SHEETS FOR ELEVATIONS AT CENTERLINE.
2. PROVIDE SMOOTH TRANSITIONS BETWEEN ALL FINISH GRADE ELEVATIONS.
3. THE BASIS OF THE SPOT ELEVATION GRID IS 25' LATERAL OFFSET INCREMENTS OF RUNWAY 1L–19R CENTERLINE.
4. STATIONS AND OFFSETS REFERENCE RUNWAY 1L–19R ALIGNMENT.

PLANS DEVELOPED BY:
R&M CONSULTANTS, INC.
9101 VANGUARD DR.
ANCHORAGE, AK 99507
(907) 522-1707
CERT. OF AUTH. NO. AECC111

BY	DATE	REVISION

STATE OF ALASKA
DEPARTMENT OF TRANSPORTATION AND PUBLIC FACILITIES
CENTRAL REGION
4111 AVIATION AVE., ANCHORAGE ALASKA 99502
PHONE (907) 269-0590

BETHEL AIRPORT
BETHEL, ALASKA
MAIN RUNWAY RECONSTRUCTION
PROJECT No. CFAPT00430
AIP No. 3-02-0029-0XX-20XX
GRADING PLAN RUNWAY 1L-19R & TAXIWAY C

DATE: 1/7/2021
SHEET: 29 OF 79

Designed By: CJB
Drawn By: JSC/RLC
Checked By: MF
Date Revised: 1/07/2021, 9:22 AM
Layout Name: 00430-BET-RW 1L Grading
File Path and Name: Z:\project\2690.02 DOT_C BET Main RW Reconstruction\Civil\ACAD\00430-BET-INTERSECTION GRADINGS.dwg

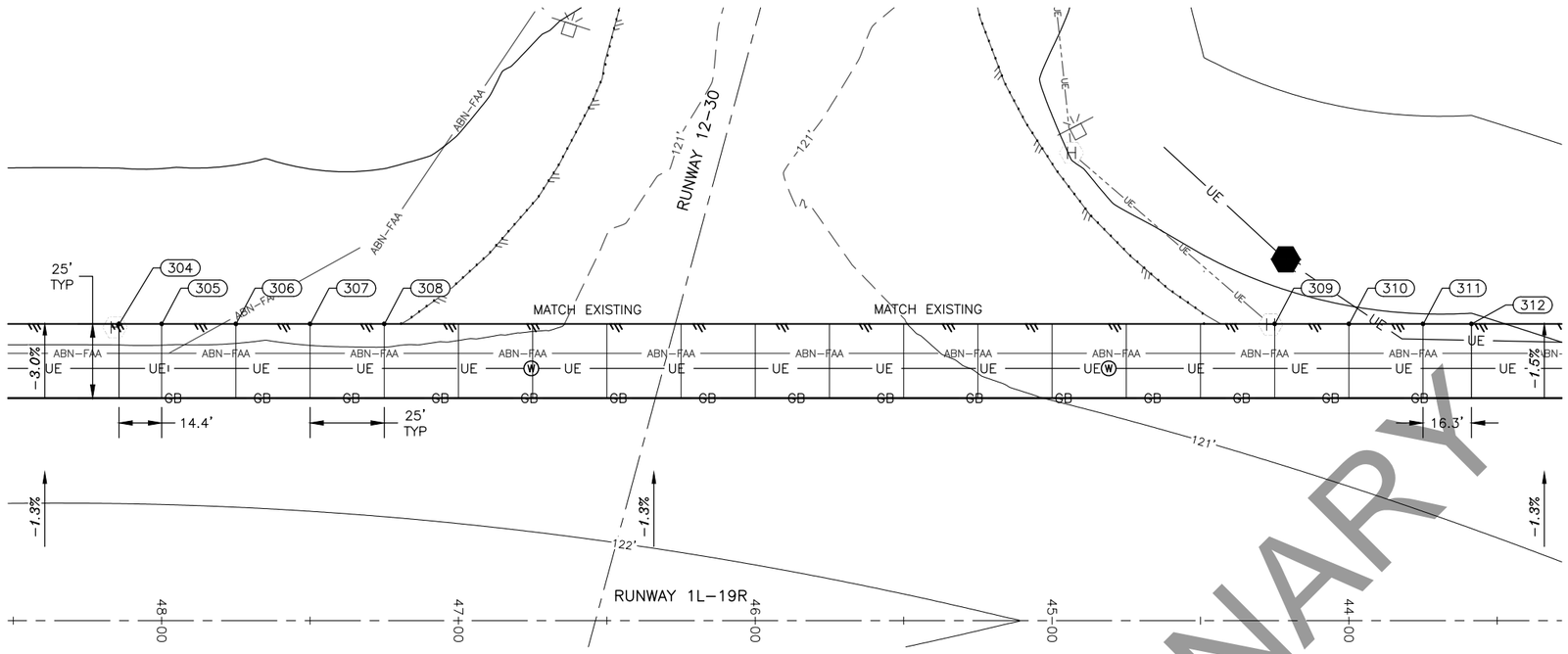

1/30 RUNWAY 1L-19R & RUNWAY 12-30 INTERSECTION GRADING PLAN

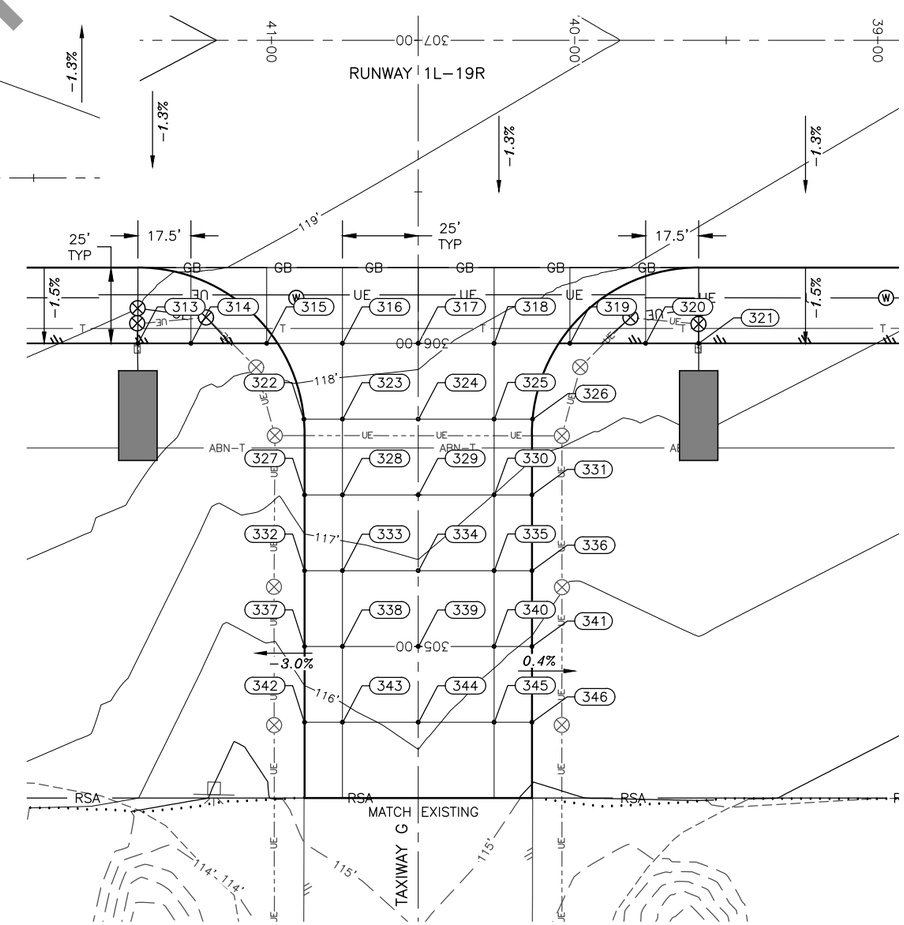

2/30 RUNWAY 1L-19R & TAXIWAY G EAST INTERSECTION GRADING PLAN

GRADING SCHEDULE			
#	STATION	OFFSET	ELEVATION
304	48+14.37	100.00' RT	120.79'
305	48+00.00	100.00' RT	120.79'
306	47+75.00	100.00' RT	120.80'
307	47+50.00	100.00' RT	120.78'
308	47+25.00	100.00' RT	120.78'
309	44+25.00	100.00' RT	120.19'
310	44+00.00	100.00' RT	120.09'
311	43+75.00	100.00' RT	120.05'
312	43+58.69	100.00' RT	120.05'
313	41+44.09	100.00' LT	118.83'
314	41+26.59	100.00' LT	118.42'
315	41+01.59	100.00' LT	118.28'
316	40+76.59	100.00' LT	118.21'
317	40+51.59	100.00' LT	118.14'
318	40+26.59	100.00' LT	117.83'

GRADING SCHEDULE			
#	STATION	OFFSET	ELEVATION
319	40+01.59	100.00' LT	117.57'
320	39+76.59	100.00' LT	117.41'
321	39+59.09	100.00' LT	117.45'
322	40+89.32	125.00' LT	117.76'
323	40+76.59	125.00' LT	117.75'
324	40+51.59	125.00' LT	117.74'
325	40+26.59	125.00' LT	117.39'
326	40+13.86	125.00' LT	117.21'
327	40+89.09	150.00' LT	117.26'
328	40+76.59	150.00' LT	117.28'
329	40+51.59	150.00' LT	117.34'
330	40+26.59	150.00' LT	117.00'
331	40+14.09	150.00' LT	116.82'
332	40+89.09	175.00' LT	116.76'
333	40+76.59	175.00' LT	116.82'

GRADING SCHEDULE			
#	STATION	OFFSET	ELEVATION
334	40+51.59	175.00' LT	116.94'
335	40+26.59	175.00' LT	116.61'
336	40+14.09	175.00' LT	116.44'
337	40+89.09	200.00' LT	116.26'
338	40+76.59	200.00' LT	116.35'
339	40+51.59	200.00' LT	116.54'
340	40+26.59	200.00' LT	116.13'
341	40+14.09	200.00' LT	115.93'
342	40+89.09	225.00' LT	115.76'
343	40+76.59	225.00' LT	115.88'
344	40+51.59	225.00' LT	116.14'
345	40+26.59	225.00' LT	115.66'
346	40+14.09	225.00' LT	115.42'

NOTES:

1. SEE RUNWAY PLAN AND PROFILE SHEET FOR ELEVATIONS AT CENTERLINE.
2. PROVIDE SMOOTH TRANSITIONS BETWEEN ALL FINISH GRADE ELEVATIONS.
3. THE BASIS OF THE SPOT ELEVATION GRID IS 25' LATERAL OFFSET INCREMENTS OF RUNWAY 1L-19R CENTERLINE.

PLANS DEVELOPED BY:
R&M CONSULTANTS, INC.
9101 VANGUARD DR.
ANCHORAGE, AK 99507
(907) 522-1707
CERT. OF AUTH. NO. AECC111

BY	DATE	REVISION

STATE OF ALASKA
DEPARTMENT OF TRANSPORTATION AND PUBLIC FACILITIES
CENTRAL REGION
4111 AVIATION AVE., ANCHORAGE ALASKA 99502
PHONE (907) 269-0590

BETHEL AIRPORT
BETHEL, ALASKA
MAIN RUNWAY RECONSTRUCTION
PROJECT No. CFAPT00430
AIP No. 3-02-0029-0XX-20XX
GRADING PLAN RUNWAY 1L-19R & RUNWAY 12-30

DATE: 1/7/2021
SHEET: 30 OF 79

Designed By: CJB
Drawn By: JSC/RLC
Checked By: MF
Date Revised: 1/07/2021, 9:23 AM
Layout Name: 00430-BET-RW RW Grading
File Path and Name: Z:\project\2690.02 DOT_C BET Main RW Reconstruction\Civil\ACAD\00430-BET-INTERSECTION GRADINGS.dwg

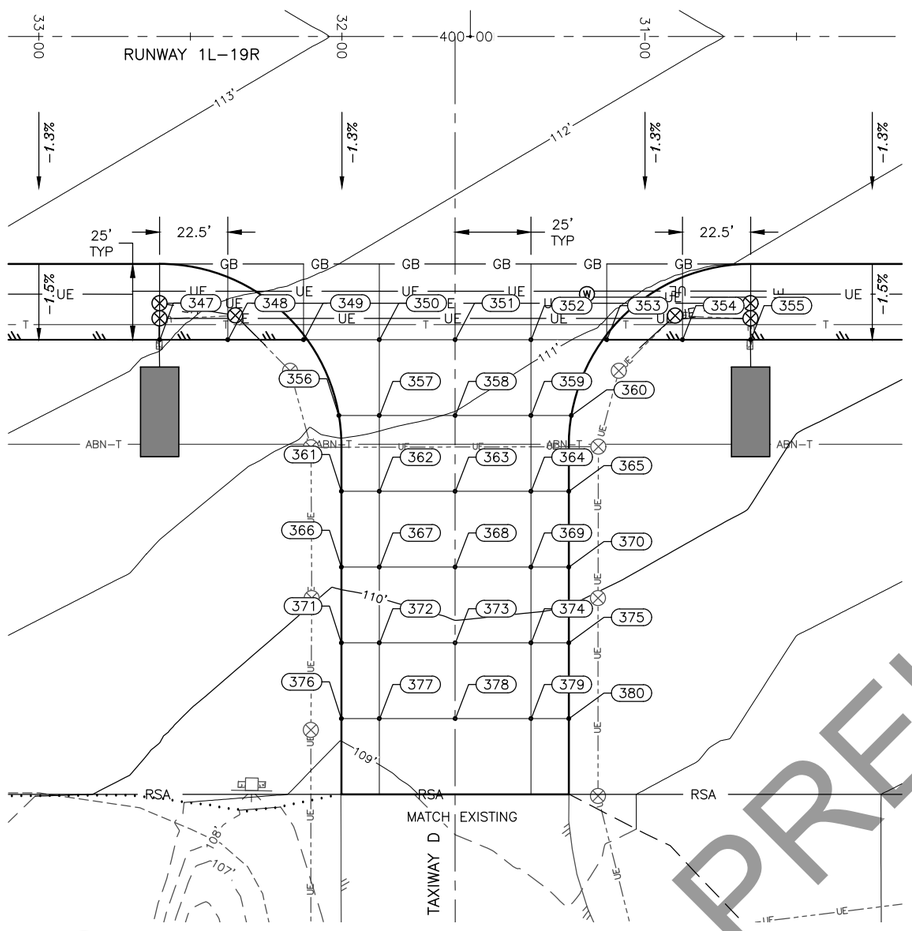

1/31 RUNWAY 1L–19R & TAXIWAY D EAST INTERSECTION GRADING PLAN

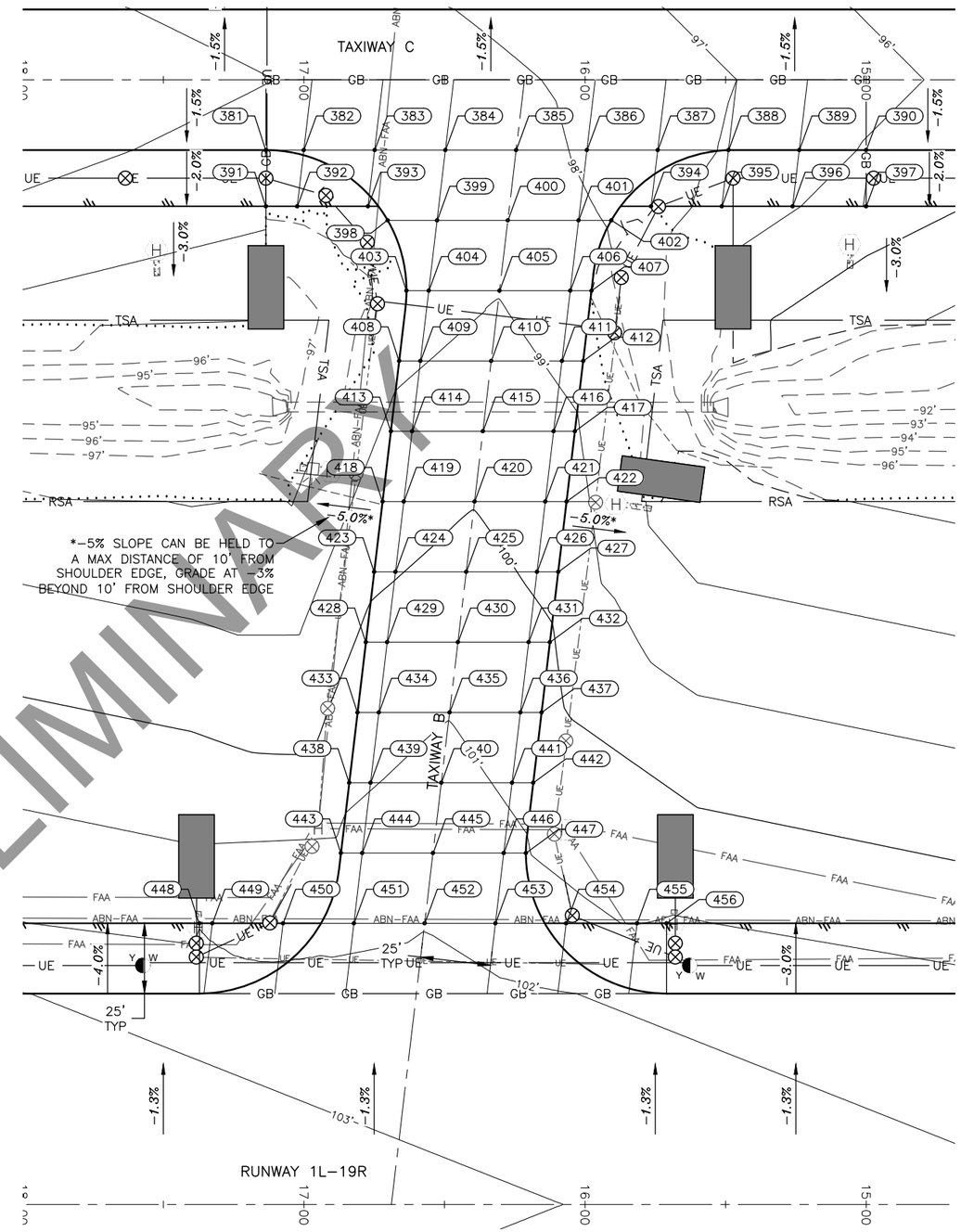

2/31 TAXIWAY B GRADING PLAN

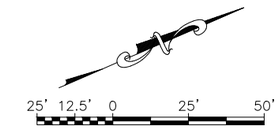

PRELIMINARY

NOTES:

1. SEE RUNWAY PLAN AND PROFILE SHEET AND TAXIWAY C PLAN AND PROFILE SHEET FOR ELEVATIONS AT CENTERLINES.
2. PROVIDE SMOOTH TRANSITIONS BETWEEN ALL FINISH GRADE ELEVATIONS.
3. THE BASIS OF THE SPOT ELEVATION GRID IS 25' LATERAL OFFSET INCREMENTS OF RUNWAY 1L–19R CENTERLINE.

Designed By:	CJB
Drawn By:	JSC/RLC
Checked By:	MF
Date Revised:	1/07/2021, 9:23 AM
Layout Name:	00430–BET–RW TW Grading
File Path and Name:	Z:\project\2690.02 DOT_C BET Main RW Reconstruction\Civil\ACAD\00430–BET–INTERSECTION GRADINGS.dwg

PLANS DEVELOPED BY:
R&M CONSULTANTS, INC.
9101 VANGUARD DR.
ANCHORAGE, AK 99507
(907) 522-1707
CERT. OF AUTH. NO. AECC111

BY	DATE	REVISION

STATE OF ALASKA
DEPARTMENT OF TRANSPORTATION AND PUBLIC FACILITIES
CENTRAL REGION
4111 AVIATION AVE., ANCHORAGE ALASKA 99502
PHONE (907) 269-0590

BETHEL AIRPORT
BETHEL, ALASKA
MAIN RUNWAY RECONSTRUCTION
PROJECT No. CFAPT00430
AIP No. 3-02-0029-0XX-20XX
GRADING PLAN RUNWAY 1L-19R & TAXIWAYS B & D

DATE: 1/7/2021

SHEET: 31 OF 79

GRADING SCHEDULE

#	STATION	OFFSET	ELEVATION
347	32+60.13	100.00' LT	112.08'
348	32+37.63	100.00' LT	111.72'
349	32+12.63	100.00' LT	111.69'
350	31+87.63	100.00' LT	111.51'
351	31+62.63	100.00' LT	111.34'
352	31+37.63	100.00' LT	111.12'
353	31+12.63	100.00' LT	110.91'
354	30+87.63	100.00' LT	110.66'
355	30+65.13	100.00' LT	110.58'
356	32+00.97	125.00' LT	111.15'
357	31+87.63	125.00' LT	111.09'
358	31+62.63	125.00' LT	110.98'
359	31+37.63	125.00' LT	110.76'
360	31+24.29	125.00' LT	110.64'
361	32+00.13	150.00' LT	110.65'
362	31+87.63	150.00' LT	110.64'
363	31+62.63	150.00' LT	110.62'
364	31+37.63	150.00' LT	110.47'
365	31+25.13	150.00' LT	110.39'
366	32+00.13	175.00' LT	110.15'
367	31+87.63	175.00' LT	110.18'
368	31+62.63	175.00' LT	110.26'
369	31+37.63	175.00' LT	110.17'
370	31+25.13	175.00' LT	110.13'
371	32+00.13	200.00' LT	109.65'
372	31+87.63	200.00' LT	109.73'
373	31+62.63	200.00' LT	109.89'
374	31+37.63	200.00' LT	109.88'
375	31+25.13	200.00' LT	109.88'
376	32+00.13	225.00' LT	109.15'
377	31+87.63	225.00' LT	109.28'
378	31+62.63	225.00' LT	109.53'
379	31+37.63	225.00' LT	109.59'
380	31+25.13	225.00' LT	109.62'
381	17+13.48	375.00' RT	98.65'
382	17+00.01	375.00' RT	98.66'
383	16+74.84	375.00' RT	98.61'
384	16+49.66	375.00' RT	98.48'
385	16+24.49	375.00' RT	98.35'
386	15+99.31	375.00' RT	97.89'
387	15+74.14	375.00' RT	97.43'
388	15+48.97	375.00' RT	96.92'
389	15+23.79	375.00' RT	96.41'
390	15+00.00	375.00' RT	95.93'
391	17+13.48	355.00' RT	98.25'

GRADING SCHEDULE

#	STATION	OFFSET	ELEVATION
392	17+02.38	355.00' RT	98.28'
393	16+77.20	355.00' RT	98.57'
394	15+76.51	355.00' RT	97.50'
395	15+51.33	355.00' RT	96.62'
396	15+26.16	355.00' RT	96.06'
397	15+00.00	355.00' RT	95.53'
398	16+70.18	350.00' RT	98.62'
399	16+52.62	350.00' RT	98.61'
400	16+27.45	350.00' RT	98.63'
401	16+02.27	350.00' RT	98.16'
402	15+90.63	350.00' RT	97.94'
403	16+63.48	325.00' RT	98.61'
404	16+55.58	325.00' RT	98.70'
405	16+30.41	325.00' RT	98.96'
406	16+05.23	325.00' RT	98.55'
407	15+97.68	325.00' RT	98.42'
408	16+66.09	300.00' RT	98.86'
409	16+58.54	300.00' RT	98.96'
410	16+33.36	300.00' RT	99.30'
411	16+08.19	300.00' RT	98.88'
412	16+00.64	300.00' RT	98.76'
413	16+69.05	275.00' RT	99.19'
414	16+61.50	275.00' RT	99.29'
415	16+36.32	275.00' RT	99.63'
416	16+11.15	275.00' RT	99.21'
417	16+03.60	275.00' RT	99.09'
418	16+72.01	250.00' RT	99.52'
419	16+64.46	250.00' RT	99.63'
420	16+39.28	250.00' RT	99.96'
421	16+14.11	250.00' RT	99.55'
422	16+06.56	250.00' RT	99.42'
423	16+74.97	225.00' RT	99.86'
424	16+67.42	225.00' RT	99.96'
425	16+42.24	225.00' RT	100.29'
426	16+17.07	225.00' RT	99.88'
427	16+09.51	225.00' RT	99.76'
428	16+77.93	200.00' RT	100.19'
429	16+70.37	200.00' RT	100.29'
430	16+45.20	200.00' RT	100.63'
431	16+20.03	200.00' RT	100.21'
432	16+12.47	200.00' RT	100.09'
433	16+80.89	175.00' RT	100.52'
434	16+73.33	175.00' RT	100.62'
435	16+48.16	175.00' RT	100.96'
436	16+22.98	175.00' RT	100.55'

GRADING SCHEDULE

#	STATION	OFFSET	ELEVATION
437	16+15.43	175.00' RT	100.42'
438	16+83.84	150.00' RT	100.86'
439	16+76.29	150.00' RT	100.96'
440	16+51.12	150.00' RT	101.29'
441	16+25.94	150.00' RT	100.88'
442	16+18.39	150.00' RT	100.76'
443	16+86.80	125.00' RT	101.19'
444	16+79.25	125.00' RT	101.29'
445	16+54.08	125.00' RT	101.63'
446	16+28.90	125.00' RT	101.22'
447	16+21.00	125.00' RT	101.09'
448	17+37.15	100.00' RT	101.94'
449	17+32.56	100.00' RT	101.77'
450	17+07.38	100.00' RT	101.50'
451	16+82.21	100.00' RT	101.72'
452	16+57.04	100.00' RT	101.96'
453	16+31.86	100.00' RT	101.64'
454	16+06.69	100.00' RT	101.26'
455	15+81.51	100.00' RT	100.99'
456	15+71.00	100.00' RT	101.08'

NOTES:

1. STATIONS AND OFFSETS REFERENCE RUNWAY 1L–19R ALIGNMENT.
2. SEE PREVIOUS SHEET FOR GRADING SCHEDULE.

PLANS DEVELOPED BY:
R&M CONSULTANTS, INC.
9101 VANGUARD DR.
ANCHORAGE, AK 99507
(907) 522-1707
CERT. OF AUTH. NO. AECC111

BY	DATE	REVISION

STATE OF ALASKA
DEPARTMENT OF TRANSPORTATION AND PUBLIC FACILITIES
CENTRAL REGION
4111 AVIATION AVE., ANCHORAGE ALASKA 99502
PHONE (907) 269-0590

BETHEL AIRPORT
BETHEL, ALASKA
MAIN RUNWAY RECONSTRUCTION
PROJECT No. CFAPT00430
AIP No. 3-02-0029-0XX-20XX
GRADING PLAN SCHEDULE RUNWAY 1L-19R & TAXIWAYS B & D

DATE: 1/7/2021

Designed By: CJB
Drawn By: JSC/RLC
Checked By: MF
Date Revised: 1/07/2021, 9:23 AM
Layout Name: 00430-BET-RW TW Grading Table
File Path and Name: Z:\project\2690.02 DOT_C BET Main RW Reconstruction\Civil\ACAD\00430-BET-INTERSECTION GRADINGS.dwg

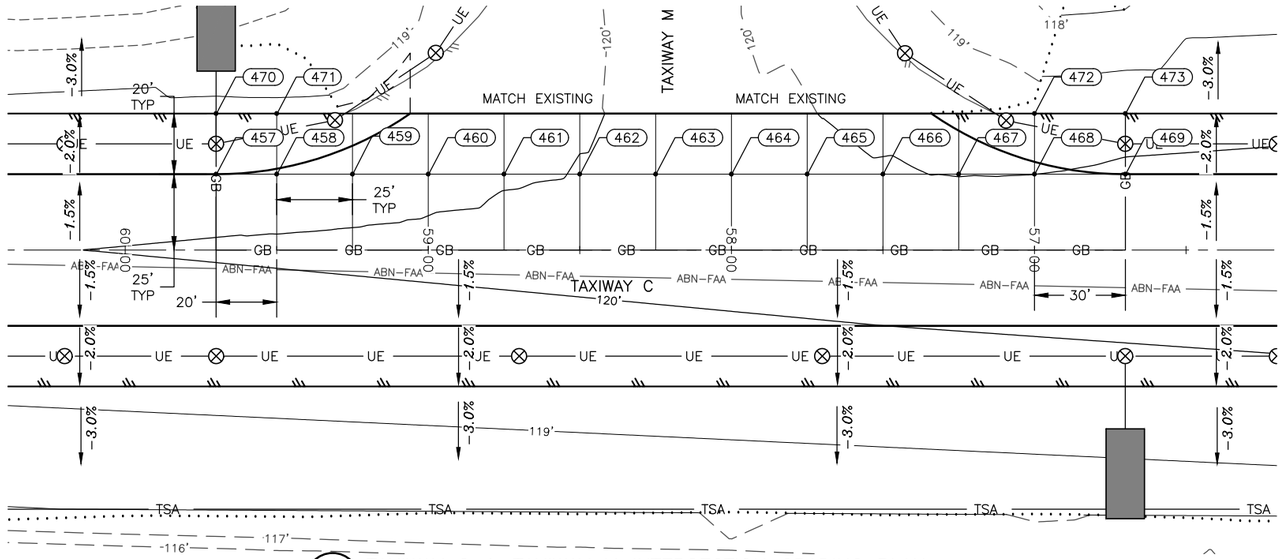

1/33 TAXIWAY C & TAXIWAY M INTERSECTION GRADING PLAN

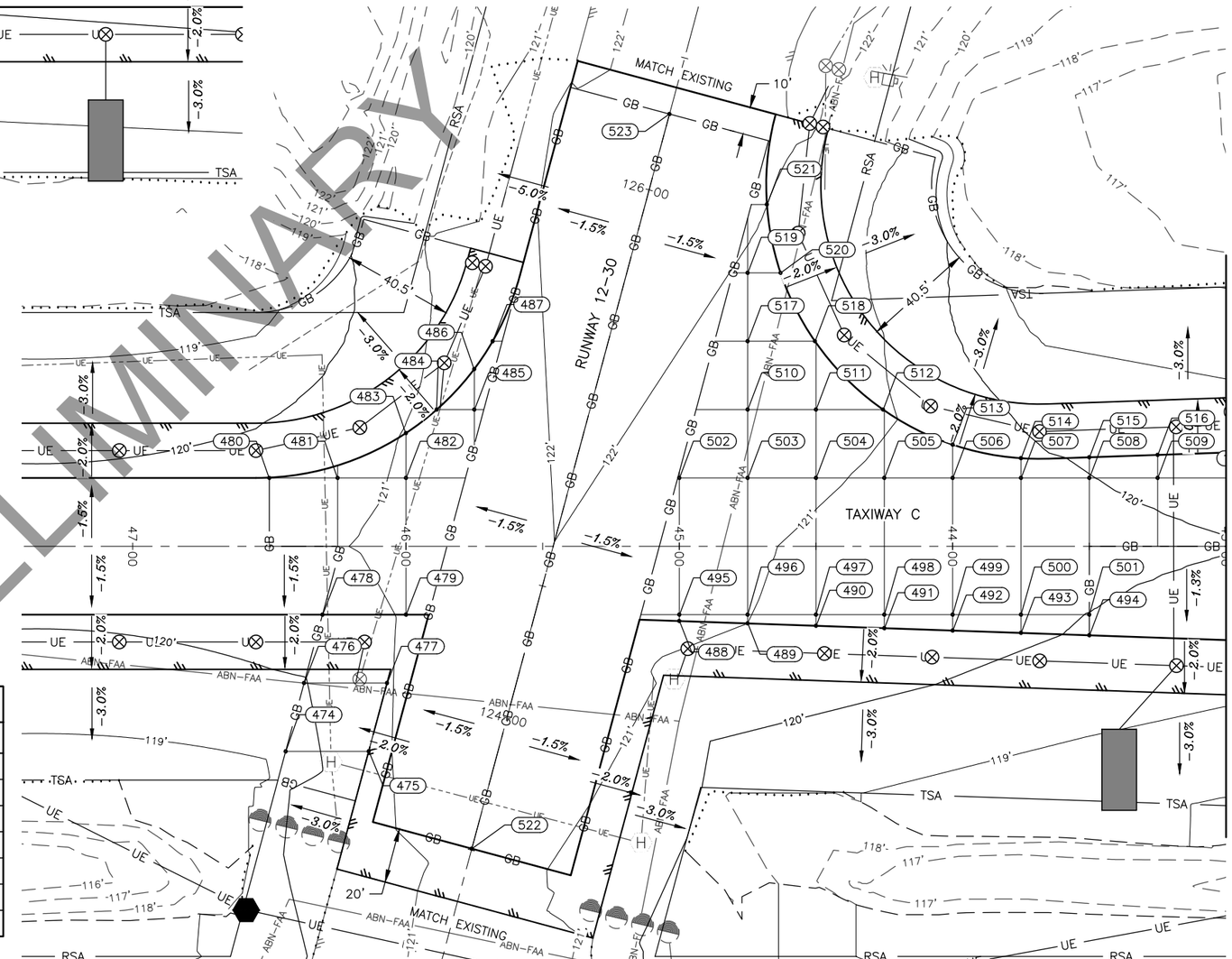

2/33 TAXIWAY C & RUNWAY 12-30 INTERSECTION GRADING PLAN

NOTES:

1. SEE TAXIWAY C PLAN AND PROFILE SHEET FOR ELEVATIONS AT CENTERLINE.
2. PROVIDE SMOOTH TRANSITIONS BETWEEN ALL FINISH GRADE ELEVATIONS.
3. THE BASIS OF THE SPOT ELEVATION GRID IS 25' INCREMENTS OF TAXIWAY C STATIONING.
4. STATIONS AND OFFSETS REFERENCE TAXIWAY C ALIGNMENT.

25' 12.5' 0 25' 50'

MATCH LINE STA 43+00 SHEET 37

GRADING SCHEDULE			
#	STATION	OFFSET	ELEVATION
457	59+70.00	25.00' RT	119.69'
458	59+50.00	25.00' RT	119.66'
459	59+25.00	25.00' RT	119.71'
460	59+00.00	25.00' RT	119.80'
461	58+75.00	25.00' RT	119.94'
462	58+50.00	25.00' RT	120.05'
463	58+25.00	25.00' RT	120.25'
464	58+00.00	25.00' RT	120.17'
465	57+75.00	25.00' RT	120.19'
466	57+50.00	25.00' RT	120.07'
467	57+25.00	25.00' RT	119.99'
468	57+00.00	25.00' RT	120.00'

GRADING SCHEDULE			
#	STATION	OFFSET	ELEVATION
469	56+70.00	25.00' RT	120.11'
470	59+70.00	45.00' RT	119.29'
471	59+50.00	45.00' RT	119.26'
472	57+00.00	45.00' RT	119.61'
473	56+70.00	45.00' RT	119.71'
474	46+44.01	75.00' LT	119.38'
475	46+13.63	75.00' LT	120.83'
476	46+37.27	50.00' LT	119.94'
477	46+06.90	50.00' LT	120.95'
478	46+30.54	25.00' LT	120.54'
479	46+00.00	25.00' LT	121.08'
480	46+50.00	25.00' RT	120.42'

GRADING SCHEDULE			
#	STATION	OFFSET	ELEVATION
481	46+25.00	25.00' RT	120.75'
482	46+00.00	25.00' RT	121.11'
483	46+00.00	41.40' RT	121.04'
484	45+88.73	50.00' RT	121.20'
485	45+75.00	50.00' RT	121.53'
486	45+75.00	64.83' RT	121.44'
487	45+68.27	75.00' RT	121.58'
488	45+00.00	27.35' LT	121.22'
489	44+75.00	28.21' LT	121.00'
490	44+50.00	29.08' LT	120.78'
491	44+25.00	29.95' LT	120.57'
492	44+00.00	30.81' LT	120.35'

GRADING SCHEDULE			
#	STATION	OFFSET	ELEVATION
493	43+75.00	31.68' LT	120.13'
494	43+50.00	32.55' LT	119.92'
495	45+00.00	25.00' LT	121.23'
496	44+75.00	25.00' LT	121.01'
497	44+50.00	25.00' LT	120.79'
498	44+25.00	25.00' LT	120.58'
499	44+00.00	25.00' LT	120.37'
500	43+75.00	25.00' LT	120.18'
501	43+50.00	25.00' LT	119.99'
502	45+00.00	25.00' RT	121.60'
503	44+75.00	25.00' RT	121.34'
504	44+50.00	25.00' RT	121.13'

GRADING SCHEDULE			
#	STATION	OFFSET	ELEVATION
505	44+25.00	25.00' RT	120.86'
506	44+00.00	25.00' RT	120.57'
507	43+75.00	25.00' RT	120.24'
508	43+50.00	25.00' RT	120.01'
509	43+25.00	25.00' RT	119.87'
510	44+75.00	50.00' RT	121.59'
511	44+50.00	50.00' RT	121.38'
512	44+25.46	50.00' RT	121.11'
513	44+00.00	37.17' RT	120.63'
514	43+75.00	32.21' RT	120.21'
515	43+50.00	32.55' RT	119.94'
516	43+25.00	33.41' RT	119.78'

GRADING SCHEDULE			
#	STATION	OFFSET	ELEVATION
517	44+75.00	75.00' RT	121.76'
518	44+50.37	75.00' RT	121.56'
519	44+75.00	100.00' RT	121.93'
520	44+62.94	100.00' RT	121.79'
521	44+67.95	125.00' RT	122.00'
522	45+75.92	110.59' LT	121.43'
523	45+03.56	158.08' RT	122.79'

Designed By: CJB
Drawn By: JSC/RLC
Checked By: MF

Date Revised: 1/07/2021, 9:23 AM
Layout Name: 00430-BET-TW TW Grading
File Path and Name: Z:\project\2690.02 DOT_C BET Main RW Reconstruction\Civil\ACAD\00430-BET-INTERSECTION GRADINGS.dwg

PLANS DEVELOPED BY:
R&M CONSULTANTS, INC.
9101 VANGUARD DR.
ANCHORAGE, AK 99507
(907) 522-1707
CERT. OF AUTH. NO. AECC111

BY	DATE	REVISION

STATE OF ALASKA
DEPARTMENT OF TRANSPORTATION AND PUBLIC FACILITIES
CENTRAL REGION
4111 AVIATION AVE., ANCHORAGE ALASKA 99502
PHONE (907) 269-0590

BETHEL AIRPORT
BETHEL, ALASKA
MAIN RUNWAY RECONSTRUCTION
PROJECT No. CFAPT00430
AIP No. 3-02-0029-0XX-20XX
GRADING PLAN TAXIWAY C & TAXIWAY M & RUNWAY 12-30

DATE: 1/7/2021
SHEET: 33 OF 79

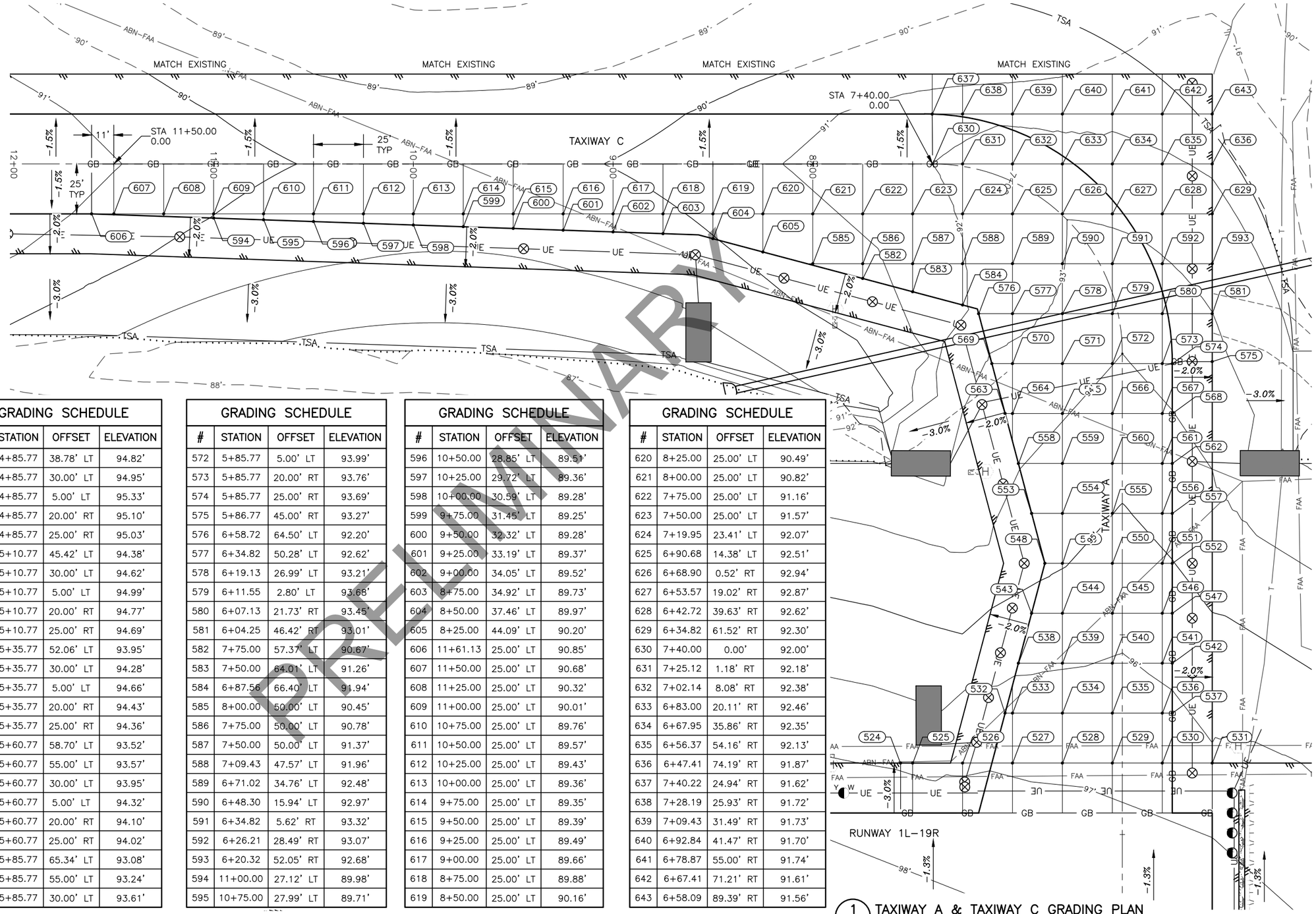

1 / 34 TAXIWAY A & TAXIWAY C GRADING PLAN

GRADING SCHEDULE			
#	STATION	OFFSET	ELEVATION
524	3+85.77	111.03' LT	96.87'
525	3+85.77	105.00' LT	96.81'
526	3+85.77	80.00' LT	96.85'
527	3+85.77	55.00' LT	96.86'
528	3+85.77	30.00' LT	96.81'
529	3+85.77	5.00' LT	96.76'
530	3+85.77	20.00' RT	96.60'
531	3+85.77	45.00' RT	96.16'
532	4+10.77	58.70' LT	96.39'
533	4+10.77	55.00' LT	96.39'
534	4+10.77	30.00' LT	96.39'
535	4+10.77	5.00' LT	96.40'
536	4+10.77	20.00' RT	96.22'
537	4+10.77	25.00' RT	96.18'
538	4+35.77	52.06' LT	95.87'
539	4+35.77	30.00' LT	95.93'
540	4+35.77	5.00' LT	96.04'
541	4+35.77	20.00' RT	95.85'
542	4+35.77	25.00' RT	95.79'
543	4+60.77	45.42' LT	95.34'
544	4+60.77	30.00' LT	95.47'
545	4+60.77	5.00' LT	95.68'
546	4+60.77	20.00' RT	95.47'
547	4+60.77	25.00' RT	95.41'

GRADING SCHEDULE			
#	STATION	OFFSET	ELEVATION
548	4+85.77	38.78' LT	94.82'
549	4+85.77	30.00' LT	94.95'
550	4+85.77	5.00' LT	95.33'
551	4+85.77	20.00' RT	95.10'
552	4+85.77	25.00' RT	95.03'
553	5+10.77	45.42' LT	94.38'
554	5+10.77	30.00' LT	94.62'
555	5+10.77	5.00' LT	94.99'
556	5+10.77	20.00' RT	94.77'
557	5+10.77	25.00' RT	94.69'
558	5+35.77	52.06' LT	93.95'
559	5+35.77	30.00' LT	94.28'
560	5+35.77	5.00' LT	94.66'
561	5+35.77	20.00' RT	94.43'
562	5+35.77	25.00' RT	94.36'
563	5+60.77	58.70' LT	93.52'
564	5+60.77	55.00' LT	93.57'
565	5+60.77	30.00' LT	93.95'
566	5+60.77	5.00' LT	94.32'
567	5+60.77	20.00' RT	94.10'
568	5+60.77	25.00' RT	94.02'
569	5+85.77	65.34' LT	93.08'
570	5+85.77	55.00' LT	93.24'
571	5+85.77	30.00' LT	93.61'

GRADING SCHEDULE			
#	STATION	OFFSET	ELEVATION
572	5+85.77	5.00' LT	93.99'
573	5+85.77	20.00' RT	93.76'
574	5+85.77	25.00' RT	93.69'
575	5+86.77	45.00' RT	93.27'
576	6+58.72	64.50' LT	92.20'
577	6+34.82	50.28' LT	92.62'
578	6+19.13	26.99' LT	93.21'
579	6+11.55	2.80' LT	93.68'
580	6+07.13	21.73' RT	93.45'
581	6+04.25	46.42' RT	93.01'
582	7+75.00	57.37' LT	90.67'
583	7+50.00	64.01' LT	91.26'
584	6+87.56	66.40' LT	91.94'
585	8+00.00	50.00' LT	90.45'
586	7+75.00	50.00' LT	90.78'
587	7+50.00	50.00' LT	91.37'
588	7+09.43	47.57' LT	91.96'
589	6+71.02	34.76' LT	92.48'
590	6+48.30	15.94' LT	92.97'
591	6+34.82	5.62' RT	93.32'
592	6+26.21	28.49' RT	93.07'
593	6+20.32	52.05' RT	92.68'
594	11+00.00	27.12' LT	89.98'
595	10+75.00	27.99' LT	89.71'

GRADING SCHEDULE			
#	STATION	OFFSET	ELEVATION
596	10+50.00	28.85' LT	89.51'
597	10+25.00	29.72' LT	89.36'
598	10+00.00	30.59' LT	89.28'
599	9+75.00	31.45' LT	89.25'
600	9+50.00	32.32' LT	89.28'
601	9+25.00	33.19' LT	89.37'
602	9+00.00	34.05' LT	89.52'
603	8+75.00	34.92' LT	89.73'
604	8+50.00	37.46' LT	89.97'
605	8+25.00	44.09' LT	90.20'
606	11+61.13	25.00' LT	90.85'
607	11+50.00	25.00' LT	90.68'
608	11+25.00	25.00' LT	90.32'
609	11+00.00	25.00' LT	90.01'
610	10+75.00	25.00' LT	89.76'
611	10+50.00	25.00' LT	89.57'
612	10+25.00	25.00' LT	89.43'
613	10+00.00	25.00' LT	89.36'
614	9+75.00	25.00' LT	89.35'
615	9+50.00	25.00' LT	89.39'
616	9+25.00	25.00' LT	89.49'
617	9+00.00	25.00' LT	89.66'
618	8+75.00	25.00' LT	89.88'
619	8+50.00	25.00' LT	90.16'

GRADING SCHEDULE			
#	STATION	OFFSET	ELEVATION
620	8+25.00	25.00' LT	90.49'
621	8+00.00	25.00' LT	90.82'
622	7+75.00	25.00' LT	91.16'
623	7+50.00	25.00' LT	91.57'
624	7+19.95	23.41' LT	92.07'
625	6+90.68	14.38' LT	92.51'
626	6+68.90	0.52' RT	92.94'
627	6+53.57	19.02' RT	92.87'
628	6+42.72	39.63' RT	92.62'
629	6+34.82	61.52' RT	92.30'
630	7+40.00	0.00'	92.00'
631	7+25.12	1.18' RT	92.18'
632	7+02.14	8.08' RT	92.38'
633	6+83.00	20.11' RT	92.46'
634	6+67.95	35.86' RT	92.35'
635	6+56.37	54.16' RT	92.13'
636	6+47.41	74.19' RT	91.87'
637	7+40.22	24.94' RT	91.62'
638	7+28.19	25.93' RT	91.72'
639	7+09.43	31.49' RT	91.73'
640	6+92.84	41.47' RT	91.70'
641	6+78.87	55.00' RT	91.74'
642	6+67.41	71.21' RT	91.61'
643	6+58.09	89.39' RT	91.56'

NOTES:

1. SEE TAXIWAY C PLAN AND PROFILE SHEET FOR ELEVATIONS AT CENTERLINE.
2. PROVIDE SMOOTH TRANSITIONS BETWEEN ALL FINISH GRADE ELEVATIONS.
3. STATIONS AND OFFSETS REFERENCE TAXIWAY C ALIGNMENT.

PLANS DEVELOPED BY:
R&M CONSULTANTS, INC.
9101 VANGUARD DR.
ANCHORAGE, AK 99507
(907) 522-1707
CERT. OF AUTH. NO. AECC111

BY	DATE	REVISION

STATE OF ALASKA
DEPARTMENT OF TRANSPORTATION AND PUBLIC FACILITIES
CENTRAL REGION
4111 AVIATION AVE., ANCHORAGE ALASKA 99502
PHONE (907) 269-0590

BETHEL AIRPORT
BETHEL, ALASKA
MAIN RUNWAY RECONSTRUCTION
PROJECT No. CFAPT00430
AIP No. 3-02-0029-0XX-20XX
GRADING PLAN TAXIWAY C & TAXIWAY A

DATE: 1/7/2021

SHEET: 34 OF 79

Date Revised: 1/07/2021, 9:23 AM
Layout Name: 00430-BET-TW TW Grading (2)
File Path and Name: Z:\project\2690.02 DOT_C BET Main RW Reconstruction\Civil\ACAD\00430-BET-INTERSECTION GRADINGS.dwg
Designed By: CJB
Drawn By: JSC/RLC
Checked By: MF

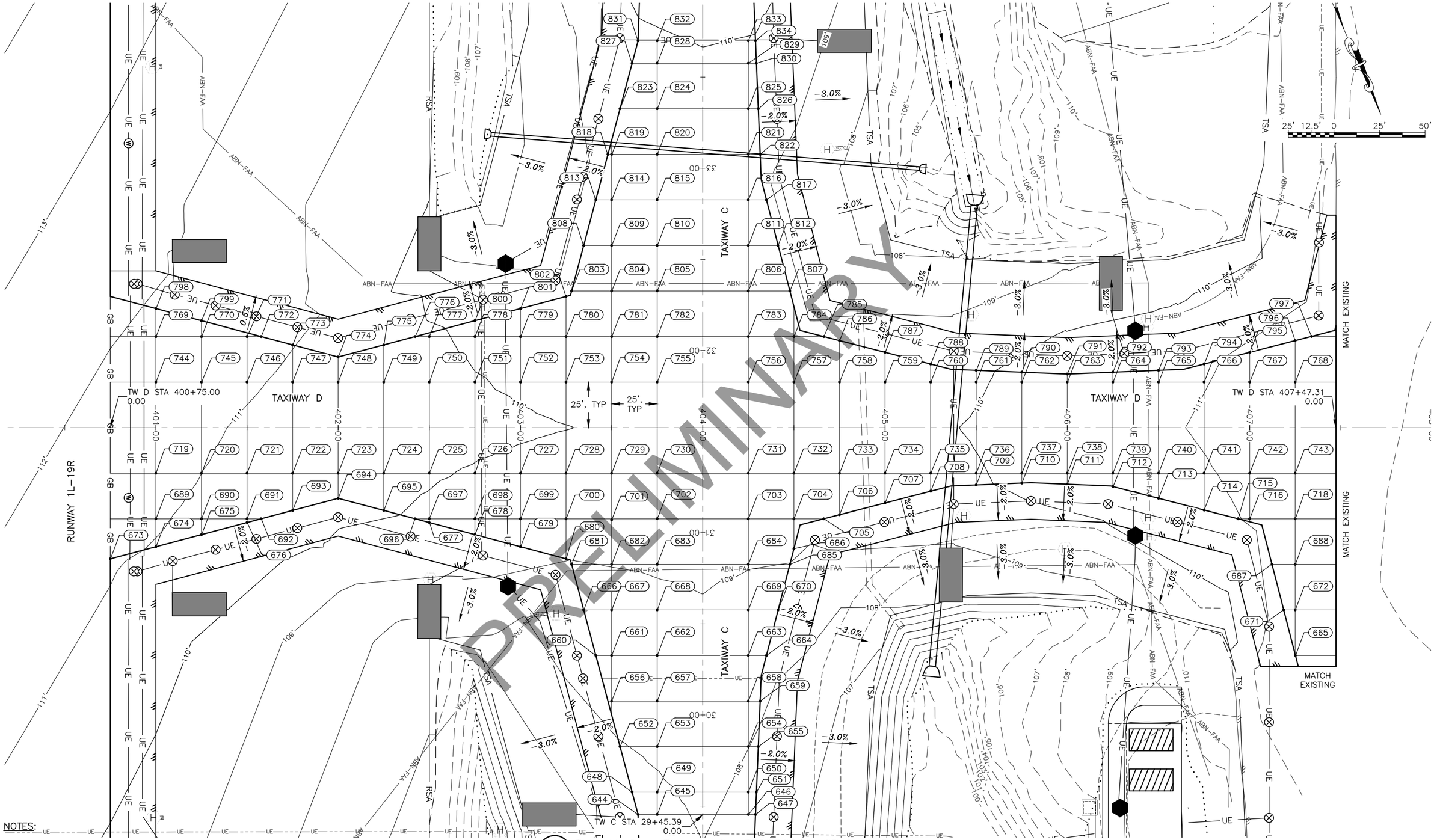

NOTES:

1. SEE TAXIWAY C PLAN AND PROFILE SHEET AND TAXIWAY D PLAN AND PROFILE SHEET FOR ELEVATIONS AT CENTERLINE.
2. PROVIDE SMOOTH TRANSITIONS BETWEEN ALL FINISH GRADE ELEVATIONS.
3. SEE NEXT SHEET FOR GRADING SCHEDULE.
4. THE BASIS OF THE SPOT ELEVATION GRID IS 25' LATERAL OFFSET INCREMENTS OF TAXIWAY D CENTERLINE AND 25' INCREMENTS OF TAXIWAY D STATIONING.

1/35 TAXIWAY D & TAXIWAY C INTERSECTION GRADING PLAN

Designed By:	CJB
Drawn By:	JSC/RLC
Checked By:	MF
Date Revised:	1/07/2021, 9:23 AM
Layout Name:	00430-BET-TW D Grading
File Path and Name:	Z:\project\2690.02 DOT_C BET Main RW Reconstruction\Civil\ACAD\00430-BET-INTERSECTION GRADINGS.dwg

PLANS DEVELOPED BY:
R&M CONSULTANTS, INC.
9101 VANGUARD DR.
ANCHORAGE, AK 99507
(907) 522-1707
CERT. OF AUTH. NO. AECC111

BY	DATE	REVISION

STATE OF ALASKA
DEPARTMENT OF TRANSPORTATION AND PUBLIC FACILITIES
CENTRAL REGION
4111 AVIATION AVE., ANCHORAGE ALASKA 99502
PHONE (907) 269-0590

BETHEL AIRPORT
BETHEL, ALASKA
MAIN RUNWAY RECONSTRUCTION
PROJECT No. CFAPT00430
AIP No. 3-02-0029-0XX-20XX
GRADING PLAN TAXIWAY C & TAXIWAY D

DATE: 1/7/2021

GRADING SCHEDULE

#	STATION	OFFSET	ELEVATION
644	403+64.47	212.24' RT	107.58'
645	403+75.00	212.24' RT	107.73'
646	404+25.00	212.24' RT	107.73'
647	404+28.91	212.24' RT	107.68'
648	403+61.22	200.00' RT	107.70'
649	403+75.00	200.00' RT	107.86'
650	404+25.00	200.00' RT	107.82'
651	404+29.41	200.00' RT	107.76'
652	403+54.58	175.00' RT	107.96'
653	403+75.00	175.00' RT	108.14'
654	404+25.00	175.00' RT	108.01'
655	404+30.44	175.00' RT	107.93'
656	403+50.00	150.00' RT	108.22'
657	403+75.00	150.00' RT	108.39'
658	404+25.00	150.00' RT	108.19'
659	404+31.47	150.00' RT	108.10'
660	403+41.30	125.00' RT	108.47'
661	403+50.00	125.00' RT	108.51'
662	403+75.00	125.00' RT	108.62'
663	404+25.00	125.00' RT	108.44'
664	404+34.91	125.00' RT	108.34'
665	407+25.09	125.00' RT	111.32'
666	403+34.66	100.00' RT	108.72'
667	403+50.00	100.00' RT	108.76'
668	403+75.00	100.00' RT	108.84'
669	404+25.00	100.00' RT	108.76'
670	404+41.35	100.00' RT	108.66'
671	407+18.65	100.00' RT	111.24'
672	407+25.00	100.00' RT	111.36'
673	400+75.00	71.97' RT	111.11'
674	401+00.00	65.34' RT	110.96'
675	401+25.00	58.70' RT	110.81'
676	401+50.00	52.06' RT	110.66'
677	402+50.00	52.06' RT	109.83'
678	402+75.00	58.70' RT	109.56'
679	403+00.00	65.34' RT	109.29'
680	403+25.00	71.97' RT	109.03'
681	403+28.03	75.00' RT	108.98'
682	403+50.00	75.00' RT	109.01'
683	403+75.00	75.00' RT	109.06'
684	404+25.00	75.00' RT	109.04'
685	404+47.78	75.00' RT	108.99'
686	404+50.00	66.38' RT	109.10'
687	407+12.22	75.00' RT	111.16'
688	407+25.00	75.00' RT	111.38'

GRADING SCHEDULE

#	STATION	OFFSET	ELEVATION
689	401+00.00	50.00' RT	111.08'
690	401+25.00	50.00' RT	110.86'
691	401+50.00	50.00' RT	110.67'
692	401+57.76	50.00' RT	110.62'
693	401+75.00	45.42' RT	110.52'
694	402+00.00	38.78' RT	110.37'
695	402+25.00	45.42' RT	110.10'
696	402+42.24	50.00' RT	109.91'
697	402+50.00	50.00' RT	109.85'
698	402+75.00	50.00' RT	109.66'
699	403+00.00	50.00' RT	109.49'
700	403+25.00	50.00' RT	109.33'
701	403+50.00	50.57' RT	109.22'
702	403+75.00	50.00' RT	109.26'
703	404+25.00	50.00' RT	109.30'
704	404+50.00	50.00' RT	109.30'
705	404+66.38	50.00' RT	109.35'
706	404+75.00	47.78' RT	109.40'
707	405+00.00	41.35' RT	109.55'
708	405+25.00	34.91' RT	109.70'
709	405+50.00	31.47' RT	109.90'
710	405+75.00	30.44' RT	110.16'
711	406+00.00	31.05' RT	110.29'
712	406+25.00	32.33' RT	110.40'
713	406+50.00	38.77' RT	110.61'
714	406+75.00	45.21' RT	110.83'
715	406+93.62	50.00' RT	110.98'
716	407+00.00	50.00' RT	111.04'
718	407+25.00	50.00' RT	111.38'
719	401+00.00	25.00' RT	111.23'
720	401+25.00	25.00' RT	111.00'
721	401+50.00	25.00' RT	110.79'
722	401+75.00	25.00' RT	110.60'
723	402+00.00	25.00' RT	110.43'
724	402+25.00	25.00' RT	110.24'
725	402+50.00	25.00' RT	110.08'
726	402+75.00	25.00' RT	109.93'
727	403+00.00	25.00' RT	109.81'
728	403+25.00	25.00' RT	109.68'
729	403+50.00	25.00' RT	109.58'
730	403+75.00	25.00' RT	109.48'
731	404+25.00	25.00' RT	109.52'
732	404+50.00	25.00' RT	109.47'
733	404+75.00	25.00' RT	109.54'
734	405+00.00	25.00' RT	109.63'

GRADING SCHEDULE

#	STATION	OFFSET	ELEVATION
735	405+25.00	25.00' RT	109.75'
736	405+50.00	25.00' RT	109.94'
737	405+75.00	25.00' RT	110.18'
738	406+00.00	25.00' RT	110.33'
739	406+25.00	25.00' RT	110.46'
740	406+50.00	25.00' RT	110.71'
741	406+75.00	25.00' RT	110.94'
742	407+00.00	25.00' RT	111.16'
743	407+25.00	25.00' RT	111.43'
744	401+00.00	25.00' LT	111.59'
745	401+25.00	25.00' LT	111.34'
746	401+50.00	25.00' LT	111.10'
747	401+75.00	25.00' LT	110.87'
748	402+00.00	25.00' LT	110.65'
749	402+25.00	25.00' LT	110.41'
750	402+50.00	25.00' LT	110.23'
751	402+75.00	25.00' LT	110.04'
752	403+00.00	25.00' LT	109.89'
753	403+25.00	25.00' LT	109.75'
754	403+50.00	25.00' LT	109.63'
755	403+75.00	25.00' LT	109.54'
756	404+25.00	25.00' LT	109.45'
757	404+50.00	25.00' LT	109.41'
758	404+75.00	25.00' LT	109.48'
759	405+00.00	25.00' LT	109.57'
760	405+25.00	25.00' LT	109.69'
761	405+50.00	25.00' LT	109.91'
762	405+75.00	25.00' LT	110.21'
763	406+00.00	25.00' LT	110.51'
764	406+25.00	25.00' LT	110.65'
765	406+50.00	25.00' LT	110.80'
766	406+75.00	25.00' LT	110.97'
767	407+00.00	25.00' LT	111.18'
768	407+25.00	25.00' LT	111.39'
769	401+00.00	50.00' LT	111.80'
770	401+25.00	50.00' LT	111.55'
771	401+50.00	50.00' LT	111.30'
772	401+57.76	50.00' LT	111.22'
773	401+75.00	45.42' LT	111.02'
774	402+00.00	38.78' LT	110.72'
775	402+25.00	45.42' LT	110.41'
776	402+42.24	50.00' LT	110.20'
777	402+50.00	50.00' LT	110.12'
778	402+75.00	50.00' LT	109.88'
779	403+00.00	50.00' LT	109.65'

GRADING SCHEDULE

#	STATION	OFFSET	ELEVATION
780	403+25.00	50.00' LT	109.46'
781	403+50.00	50.00' LT	109.35'
782	403+75.00	50.00' LT	109.33'
783	404+25.00	50.00' LT	109.26'
784	404+50.00	50.00' LT	109.17'
785	404+66.38	50.00' LT	109.22'
786	404+75.00	47.78' LT	109.27'
787	405+00.00	41.35' LT	109.44'
788	405+25.00	34.91' LT	109.61'
789	405+50.00	31.47' LT	109.87'
790	405+75.00	30.44' LT	110.19'
791	406+00.00	29.41' LT	110.52'
792	406+25.00	30.44' LT	110.65'
793	406+50.00	31.47' LT	110.78'
794	406+75.00	34.91' LT	110.93'
795	407+00.00	41.35' LT	111.12'
796	407+25.00	47.78' LT	111.30'
797	407+33.97	50.09' LT	111.37'
798	401+00.00	65.34' LT	111.92'
799	401+25.00	58.70' LT	111.62'
800	402+75.00	58.70' LT	109.80'
801	403+00.00	65.34' LT	109.50'
802	403+25.00	71.97' LT	109.20'
803	403+28.03	75.00' LT	109.17'
804	403+50.00	75.00' LT	109.21'
805	403+75.00	75.00' LT	109.26'
806	404+25.00	75.00' LT	109.21'
807	404+47.78	75.00' LT	109.12'
808	403+34.66	100.00' LT	109.17'
809	403+50.00	100.00' LT	109.20'
810	403+75.00	100.00' LT	109.25'
811	404+25.00	100.00' LT	109.18'
812	404+41.23	100.00' LT	109.11'
813	403+41.30	125.00' LT	109.17'
814	403+50.00	125.00' LT	109.20'
815	403+75.00	125.00' LT	109.28'
816	404+25.00	125.00' LT	109.17'
817	404+34.91	125.00' LT	109.10'
818	403+47.94	150.00' LT	109.23'
819	403+50.00	150.00' LT	109.24'
820	403+75.00	150.00' LT	109.37'
821	404+25.00	150.00' LT	109.30'
822	404+31.47	150.00' LT	109.25'
823	403+54.58	175.00' LT	109.49'
824	403+75.00	175.00' LT	109.57'

GRADING SCHEDULE

#	STATION	OFFSET	ELEVATION
825	404+25.00	175.00' LT	109.55'
826	404+30.44	175.00' LT	109.53'
827	403+61.22	200.00' LT	109.74'
828	403+75.00	200.00' LT	109.79'
829	404+25.00	200.00' LT	109.83'
830	404+29.41	200.00' LT	109.82'
831	403+64.47	212.24' LT	109.86'
832	403+75.00	212.24' LT	109.91'
833	404+25.00	212.24' LT	109.97'
834	404+28.91	212.24' LT	109.96'

NOTES:

1. STATIONS AND OFFSETS REFERENCE TAXIWAY D ALIGNMENT.
2. SEE PREVIOUS SHEET FOR GRADING SCHEDULE.

PLANS DEVELOPED BY:
R&M CONSULTANTS, INC.
9101 VANGUARD DR.
ANCHORAGE, AK 99507
(907) 522-1707
CERT. OF AUTH. NO. AECC111

BY	DATE	REVISION

STATE OF ALASKA
DEPARTMENT OF TRANSPORTATION AND PUBLIC FACILITIES
CENTRAL REGION
4111 AVIATION AVE., ANCHORAGE ALASKA 99502
PHONE (907) 269-0590

BETHEL AIRPORT
BETHEL, ALASKA
MAIN RUNWAY RECONSTRUCTION
PROJECT No. CFAPT00430
AIP No. 3-02-0029-0XX-20XX
GRADING PLAN SCHEDULE TAXIWAY C & TAXIWAY D

DATE: 1/7/2021

Designed By: CJB
Drawn By: JSC/RLC
Checked By: MF
Date Revised: 1/07/2021, 9:23 AM
Layout Name: 00430-BET-TW D Grading Table
File Path and Name: Z:\project\2690.02 DOT_C BET Main RW Reconstruction\Civil\ACAD\00430-BET-INTERSECTION GRADINGS.dwg

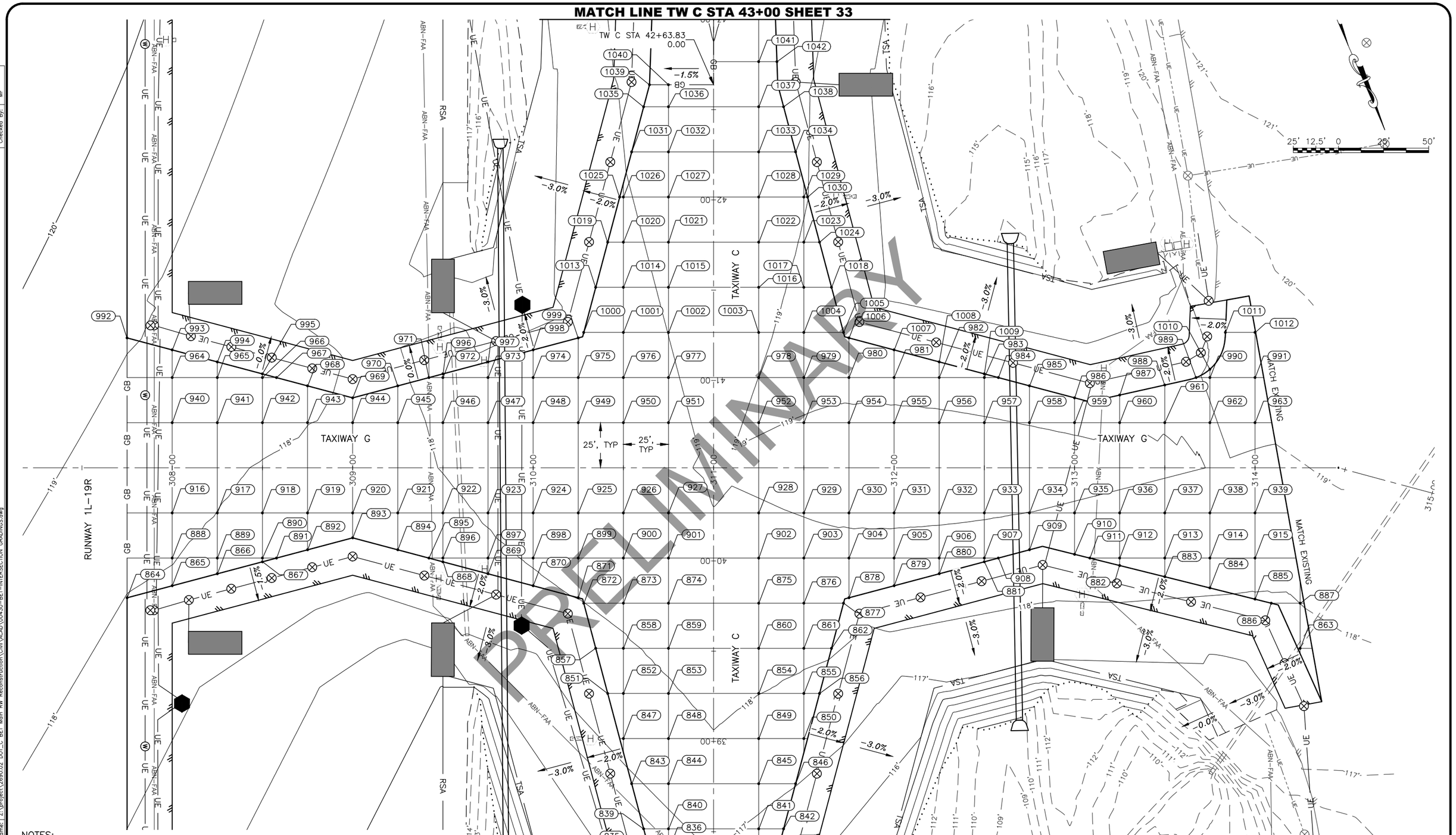

1 / 37 TAXIWAY G & TAXIWAY C INTERSECTION GRADING PLAN

NOTES:

1. SEE TAXIWAY C PLAN AND PROFILE SHEET AND TAXIWAY G PLAN AND PROFILE SHEET FOR ELEVATIONS AT CENTERLINE.
2. PROVIDE SMOOTH TRANSITIONS BETWEEN ALL FINISH GRADE ELEVATIONS.
3. SEE NEXT SHEET FOR GRADING SCHEDULE.
4. THE BASIS OF THE SPOT ELEVATION GRID IS 25' LATERAL OFFSET INCREMENTS OF TAXIWAY G CENTERLINE AND 25' INCREMENTS OF TAXIWAY G STATIONING.

Designed By:	CJB
Drawn By:	JSC/RLC
Checked By:	MF
Date Revised:	1/07/2021, 9:23 AM
Layout Name:	00430-BET-TW G Grading
File Path and Name:	Z:\project\2690.02 DOT_C BET Main RW Reconstruction\Civil\ACAD\00430-BET-INTERSECTION GRADINGS.dwg

PLANS DEVELOPED BY:
R&M CONSULTANTS, INC.
9101 VANGUARD DR.
ANCHORAGE, AK 99507
(907) 522-1707
CERT. OF AUTH. NO. AECC111

BY	DATE	REVISION

STATE OF ALASKA
DEPARTMENT OF TRANSPORTATION AND PUBLIC FACILITIES
CENTRAL REGION
4111 AVIATION AVE., ANCHORAGE ALASKA 99502
PHONE (907) 269-0590

BETHEL AIRPORT
BETHEL, ALASKA
MAIN RUNWAY RECONSTRUCTION
PROJECT No. CFAPT00430
AIP No. 3-02-0029-0XX-20XX
GRADING PLAN TAXIWAY C & TAXIWAY G

DATE: 1/7/2021

SHEET: 37 OF 79

GRADING SCHEDULE

#	STATION	OFFSET	ELEVATION
835	310+64.47	212.24' RT	116.50'
836	310+75.00	212.24' RT	116.65'
837	311+25.00	212.24' RT	116.65'
838	311+35.53	212.24' RT	116.50'
839	310+61.22	200.00' RT	116.63'
840	310+75.00	200.00' RT	116.84'
841	311+25.00	200.00' RT	116.86'
842	311+38.78	200.00' RT	116.67'
843	310+54.58	175.00' RT	116.90'
844	310+75.00	175.00' RT	117.21'
845	311+25.00	175.00' RT	117.28'
846	311+45.42	175.00' RT	117.03'
847	310+50.00	150.00' RT	117.21'
848	310+75.00	150.00' RT	117.57'
849	311+25.00	150.00' RT	117.66'
850	311+50.00	150.00' RT	117.40'
851	310+41.30	125.00' RT	117.45'
852	310+50.00	125.00' RT	117.56'
853	310+75.00	125.00' RT	117.89'
854	311+25.00	125.00' RT	118.01'
855	311+50.00	125.00' RT	117.81'
856	311+58.70	125.00' RT	117.74'
857	310+34.66	100.00' RT	117.72'
858	310+50.00	100.00' RT	117.89'
859	310+75.00	100.00' RT	118.19'
860	311+25.00	100.00' RT	118.33'
861	311+50.00	100.00' RT	118.17'
862	311+65.34	100.00' RT	118.09'
863	314+25.00	100.00' RT	117.66'
864	307+75.00	71.97' RT	117.98'
865	308+00.00	65.34' RT	117.91'
866	308+25.00	58.70' RT	117.84'
867	308+50.00	52.06' RT	117.77'
868	309+50.00	52.06' RT	117.79'
869	309+75.00	58.70' RT	117.86'
870	310+00.00	65.34' RT	117.94'
871	310+25.00	71.97' RT	118.01'
872	310+28.03	75.00' RT	117.99'
873	310+50.00	75.00' RT	118.20'
874	310+75.00	75.00' RT	118.45'
875	311+25.00	75.00' RT	118.59'
876	311+50.00	75.00' RT	118.51'
877	311+71.97	75.00' RT	118.45'
878	311+75.00	71.97' RT	118.49'
879	312+00.00	65.34' RT	118.54'

GRADING SCHEDULE

#	STATION	OFFSET	ELEVATION
880	312+25.00	58.70' RT	118.59'
881	312+50.00	52.06' RT	118.65'
882	313+25.00	54.12' RT	118.43'
883	313+50.00	60.33' RT	118.26'
884	313+75.00	66.54' RT	118.09'
885	314+00.00	72.75' RT	117.92'
886	314+09.04	75.00' RT	117.86'
887	314+25.00	75.00' RT	118.00'
888	308+00.00	50.00' RT	118.02'
889	308+25.00	50.00' RT	117.88'
890	308+50.00	50.00' RT	117.78'
891	308+57.76	50.00' RT	117.75'
892	308+75.00	45.42' RT	117.70'
893	309+00.00	38.78' RT	117.63'
894	309+25.00	45.42' RT	117.71'
895	309+42.24	50.00' RT	117.76'
896	309+50.00	50.00' RT	117.80'
897	309+75.00	50.00' RT	117.91'
898	310+00.00	50.00' RT	118.04'
899	310+25.00	50.00' RT	118.18'
900	310+50.00	50.00' RT	118.35'
901	310+75.00	50.00' RT	118.62'
902	311+25.00	50.00' RT	118.77'
903	311+50.00	50.00' RT	118.67'
904	311+75.00	50.00' RT	118.77'
905	312+00.00	50.00' RT	118.76'
906	312+25.00	50.00' RT	118.72'
907	312+50.00	50.00' RT	118.68'
908	312+57.76	50.00' RT	118.67'
909	312+75.00	45.42' RT	118.70'
910	313+00.00	47.91' RT	118.60'
911	313+08.43	50.00' RT	118.54'
912	313+25.00	50.00' RT	118.49'
913	313+50.00	50.00' RT	118.40'
914	313+75.00	50.00' RT	118.31'
915	314+00.00	50.00' RT	118.30'
916	308+00.00	25.00' RT	118.15'
917	308+25.00	25.00' RT	117.99'
918	308+50.00	25.00' RT	117.87'
919	308+75.00	25.00' RT	117.79'
920	309+00.00	25.00' RT	117.72'
921	309+25.00	25.00' RT	117.80'
922	309+50.00	25.00' RT	117.91'
923	309+75.00	25.00' RT	118.04'
924	310+00.00	25.00' RT	118.20'

GRADING SCHEDULE

#	STATION	OFFSET	ELEVATION
925	310+25.00	25.00' RT	118.36'
926	310+50.00	25.00' RT	118.53'
927	310+75.00	25.00' RT	118.72'
928	311+25.00	25.00' RT	118.88'
929	311+50.00	25.00' RT	119.03'
930	311+75.00	25.00' RT	119.11'
931	312+00.00	25.00' RT	119.12'
932	312+25.00	25.00' RT	119.10'
933	312+50.00	25.00' RT	119.06'
934	312+75.00	25.00' RT	118.99'
935	313+00.00	25.00' RT	118.91'
936	313+25.00	25.00' RT	118.83'
937	313+50.00	25.00' RT	118.74'
938	313+75.00	25.00' RT	118.65'
939	314+00.00	25.00' RT	118.63'
940	308+00.00	25.00' LT	118.50'
941	308+25.00	25.00' LT	118.31'
942	308+50.00	25.00' LT	118.16'
943	308+75.00	25.00' LT	118.01'
944	309+00.00	25.00' LT	117.89'
945	309+25.00	25.00' LT	117.95'
946	309+50.00	25.00' LT	118.04'
947	309+75.00	25.00' LT	118.16'
948	310+00.00	25.00' LT	118.30'
949	310+25.00	25.00' LT	118.46'
950	310+50.00	25.00' LT	118.63'
951	310+75.00	25.00' LT	118.81'
952	311+25.00	25.00' LT	118.90'
953	311+50.00	25.00' LT	119.06'
954	311+75.00	25.00' LT	119.13'
955	312+00.00	25.00' LT	119.14'
956	312+25.00	25.00' LT	119.11'
957	312+50.00	25.00' LT	119.05'
958	312+75.00	25.00' LT	118.98'
959	313+00.00	25.00' LT	118.90'
960	313+25.00	25.00' LT	118.92'
961	313+50.00	25.00' LT	118.97'
962	313+75.00	25.00' LT	118.98'
963	314+00.00	25.00' LT	119.10'
964	308+00.00	50.00' LT	118.72'
965	308+25.00	50.00' LT	118.52'
966	308+50.00	50.00' LT	118.35'
967	308+57.76	50.00' LT	118.29'
968	308+75.00	45.42' LT	118.13'
969	309+00.00	38.78' LT	117.90'

GRADING SCHEDULE

#	STATION	OFFSET	ELEVATION
970	309+25.00	45.42' LT	117.98'
971	309+42.24	50.00' LT	118.03'
972	309+50.00	50.00' LT	118.06'
973	309+75.00	50.00' LT	118.14'
974	310+00.00	50.00' LT	118.25'
975	310+25.00	50.00' LT	118.37'
976	310+50.00	50.00' LT	118.54'
977	310+75.00	50.00' LT	118.91'
978	311+25.00	50.00' LT	119.00'
979	311+50.00	50.00' LT	118.72'
980	311+75.00	50.00' LT	118.82'
981	312+00.00	50.00' LT	118.79'
982	312+25.00	50.00' LT	118.74'
983	312+50.00	50.00' LT	118.68'
984	312+57.76	50.00' LT	118.66'
985	312+75.00	45.42' LT	118.68'
986	313+00.00	38.78' LT	118.71'
987	313+25.00	40.32' LT	118.79'
988	313+50.00	45.88' LT	118.89'
989	313+67.32	50.00' LT	118.97'
990	313+75.00	50.00' LT	119.03'
991	314+00.00	50.00' LT	119.26'
992	307+75.00	71.97' LT	119.06'
993	308+00.00	65.34' LT	118.83'
994	308+25.00	58.70' LT	118.60'
995	308+50.00	52.06' LT	118.36'
996	309+50.00	52.06' LT	118.06'
997	309+75.00	58.70' LT	118.14'
998	310+00.00	65.34' LT	118.21'
999	310+25.00	71.97' LT	118.29'
1000	310+28.03	75.00' LT	118.32'
1001	310+50.00	75.00' LT	118.64'
1002	310+75.00	75.00' LT	119.01'
1003	311+25.00	75.00' LT	119.09'
1004	311+50.00	75.00' LT	118.81'
1005	311+71.97	75.00' LT	118.56'
1006	311+75.00	71.97' LT	118.55'
1007	312+00.00	65.34' LT	118.58'
1008	312+25.00	58.70' LT	118.62'
1009	312+50.00	52.06' LT	118.65'
1010	313+75.00	54.61' LT	119.06'
1011	313+83.58	75.00' LT	119.27'
1012	314+00.00	75.00' LT	119.49'
1013	310+34.66	100.00' LT	118.51'
1014	310+50.00	100.00' LT	118.74'

GRADING SCHEDULE

#	STATION	OFFSET	ELEVATION
1015	310+75.00	100.00' LT	119.10'
1016	311+25.00	100.00' LT	119.18'
1017	311+50.00	100.00' LT	118.89'
1018	311+65.34	100.00' LT	118.71'
1019	310+41.30	125.00' LT	118.70'
1020	310+50.00	125.00' LT	118.83'
1021	310+75.00	125.00' LT	119.20'
1022	311+25.00	125.00' LT	119.26'
1023	311+50.00	125.00' LT	118.96'
1024	311+58.70	125.00' LT	118.86'
1025	310+47.94	150.00' LT	118.90'
1026	310+50.00	150.00' LT	118.93'
1027	310+75.00	150.00' LT	119.30'
1028	311+25.00	150.00' LT	119.35'
1029	311+50.00	150.00' LT	119.03'
1030	311+52.06	150.00' LT	119.01'
1031	310+54.58	175.00' LT	119.09'
1032	310+75.00	175.00' LT	119.39'
1033	311+25.00	175.00' LT	119.43'
1034	311+45.42	175.00' LT	119.15'
1035	310+61.22	200.00' LT	119.28'
1036	310+75.00	200.00' LT	119.49'
1037	311+25.00	200.00' LT	119.50'
1038	311+38.78	200.00' LT	119.30'
1039	310+64.47	212.24' LT	119.37'
1040	310+75.00	212.24' LT	119.53'
1041	311+25.00	225.00' LT	119.60'
1042	311+35.09	225.00' LT	119.46'

NOTES:

1. STATIONS AND OFFSETS REFERENCE TAXIWAY G ALIGNMENT.
2. SEE PREVIOUS SHEET FOR GRADING SCHEDULE.

PLANS DEVELOPED BY:
R&M CONSULTANTS, INC.
9101 VANGUARD DR.
ANCHORAGE, AK 99507
(907) 522-1707
CERT. OF AUTH. NO. AECC111

BY	DATE	REVISION

STATE OF ALASKA
DEPARTMENT OF TRANSPORTATION AND PUBLIC FACILITIES
CENTRAL REGION
4111 AVIATION AVE., ANCHORAGE ALASKA 99502
PHONE (907) 269-0590

BETHEL AIRPORT
BETHEL, ALASKA
MAIN RUNWAY RECONSTRUCTION
PROJECT No. CFAPT00430
AIP No. 3-02-0029-0XX-20XX
GRADING PLAN SCHEDULE TAXIWAY C & TAXIWAY G

DATE: 1/7/2021

Date Revised: 1/07/2021, 9:23 AM
Layout Name: 00430-BET-TW G Grading Table
File Path and Name: Z:\project\2690.02 DOT_C BET Main RW Reconstruction\Civil\ACAD\00430-BET-INTERSECTION GRADINGS.dwg
Designed By: CJB
Drawn By: JSC/RLC
Checked By: MF

LAYOUT SCHEDULE				
#	STATION	OFFSET	ELEVATION	DESCRIPTION
1043	35+55.50	307.00' RT	111.19'	PAD
1044	34+21.51	307.00' RT	110.58'	PAD
1045	34+22.51	175.72' RT	109.27'	PAD
1046	34+22.79	146.37' RT	108.97'	PAD, R=32'
1047	35+56.79	147.65' RT	109.60'	PAD, R=25'
1048	35+56.44	183.87' RT	109.96'	PAD
1049	35+81.14	166.54' RT	105.70'	DITCH CL
1050	35+81.29	150.13' RT	105.58'	DITCH PC
1051	35+57.57	125.41' RT	105.29'	DITCH PT
1052	34+23.24	121.71' RT	104.28'	DITCH PC
1053	34+15.10	122.53' RT	104.22'	DITCH PT
1054	32+79.61	149.05' RT	103.20'	DITCH CL
1055	34+89.15	214.01' RT	109.96'	WINDCONE

NOTES:

1. STATIONS AND OFFSET REFERENCE TAXIWAY C CENTERLINE.
2. PROVIDE SMOOTH TRANSITIONS BETWEEN ALL FINISH GRADE ELEVATIONS.

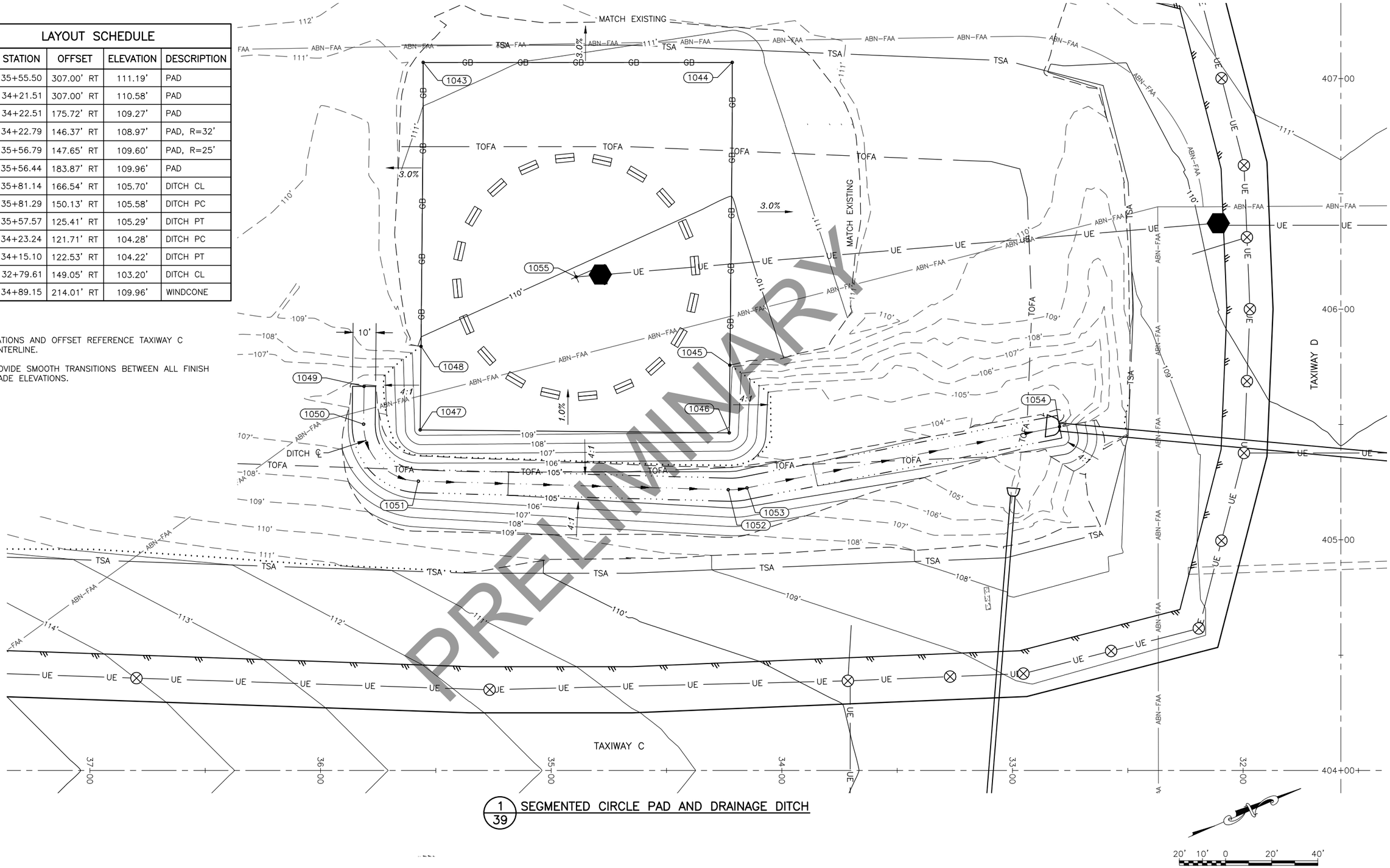

1/39 SEGMENTED CIRCLE PAD AND DRAINAGE DITCH

Designed By:	CJB
Drawn By:	JSC/RLC
Checked By:	MF

Date Revised:	1/07/2021, 9:24 AM
Layout Name:	00430-BET-PAD GRADING
File Path and Name:	Z:\project\2690.02 DOT_C BET Main RW Reconstruction\Civil\ACAD\00430-BET-SEG PAD GRADING.dwg

PLANS DEVELOPED BY:
R&M CONSULTANTS, INC.
9101 VANGUARD DR.
ANCHORAGE, AK 99507
(907) 522-1707
CERT. OF AUTH. NO. AECC111

BY	DATE	REVISION

STATE OF ALASKA
DEPARTMENT OF TRANSPORTATION AND PUBLIC FACILITIES
CENTRAL REGION
4111 AVIATION AVE., ANCHORAGE ALASKA 99502
PHONE (907) 269-0590

BETHEL AIRPORT
BETHEL, ALASKA
MAIN RUNWAY RECONSTRUCTION
PROJECT No. CFAPT00430
AIP No. 3-02-0029-0XX-20XX
SEGMENTED CIRCLE AND DITCH LAYOUT

DATE: 1/7/2021

SHEET: 39 OF 79

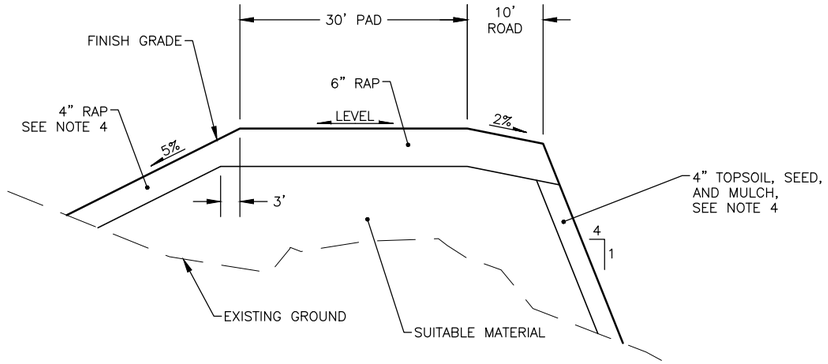

1/40 ELECTRICAL BUILDING PAD TYPICAL
NTS

NOTES:

1. STATIONS AND OFFSET REFERENCE TAXIWAY C CENTERLINE.
2. PROVIDE SMOOTH TRANSITIONS BETWEEN ALL FINISH GRADE ELEVATIONS.
3. INSUFFICIENT SURFACE DATA AVAILABLE IN THIS LOCATION. MIRROR GRADING FROM OPPOSITE END. DO NOT EXCEED 4:1 FILL SLOPE. ENGINEER MUST APPROVE GRADING BEFORE CONSTRUCTION OF PAD BEGINS. ENSURE POSITIVE DRAINAGE.
4. SLOPES 5% OR LESS RECEIVE 4" RAP, SLOPES GREATER THAN 5% RECEIVE 4" TOPSOIL, SEED, AND MULCH.

LAYOUT SCHEDULE				
#	STATION	OFFSET	ELEVATION	DESCRIPTION
1056	29+95.33	262.51' RT	110.00'	PAD
1057	29+20.33	262.51' RT	110.00'	PAD
1058	29+20.33	232.51' RT	110.00'	PAD, ROAD PC
1059	29+95.33	232.51' RT	110.00'	PAD, ROAD PT
1060	29+95.33	222.51' RT	109.80'	ROAD PT
1061	29+20.33	222.51' RT	109.80'	ROAD PC
1062	30+15.33	262.51' RT	109.93'	ROAD PI
1063	30+05.33	262.51' RT	109.89'	ROAD PI
1064	30+15.33	242.51' RT	109.79'	ROAD PC
1065	30+05.33	242.51' RT	109.89'	ROAD PC
1066	29+10.33	262.51' RT	109.29'	ROAD PI
1067	29+10.33	242.51' RT	109.29'	ROAD PT
1068	29+00.33	242.51' RT	109.09'	ROAD PT
1069	29+00.33	262.51' RT	109.09'	ROAD PI

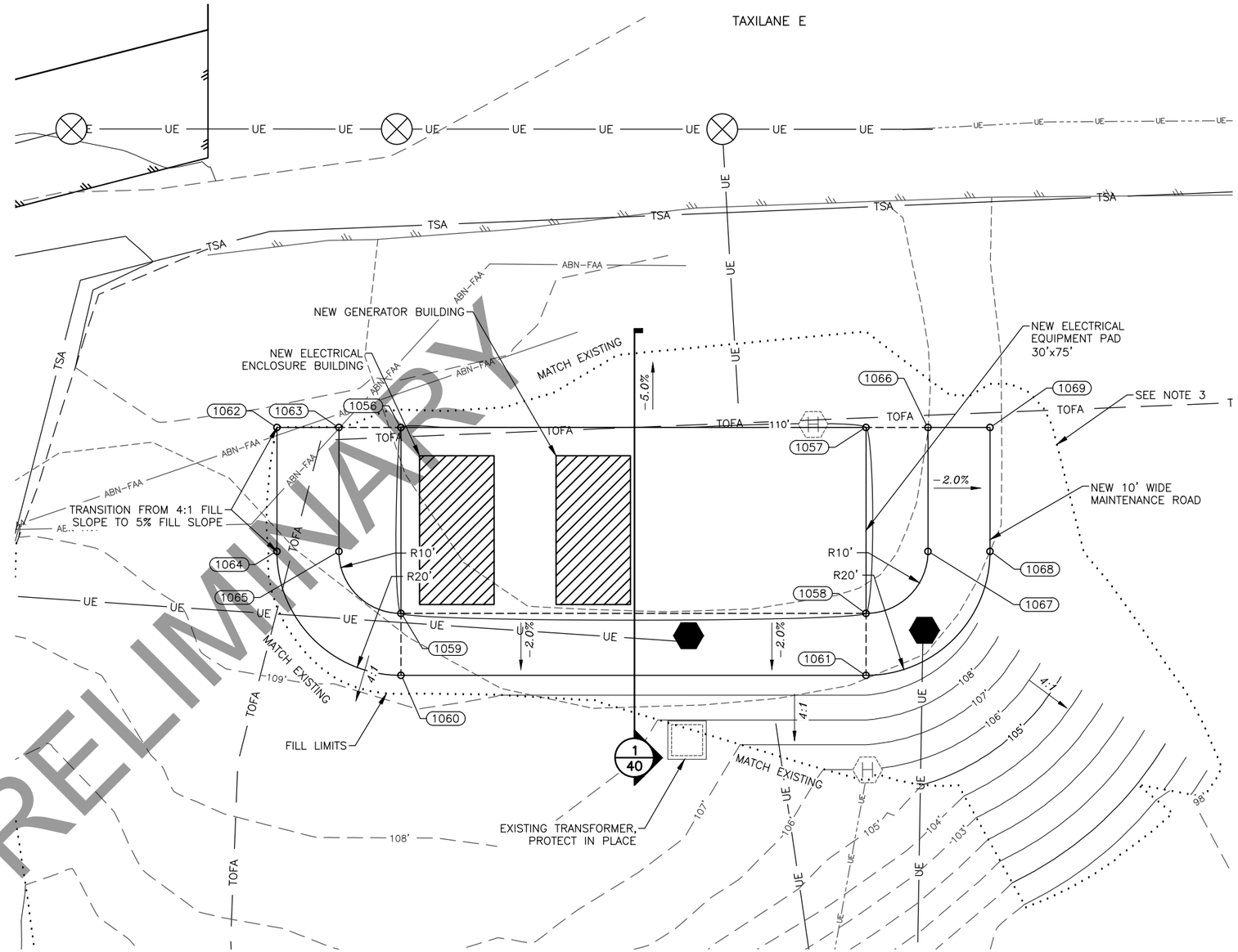

2/40 ELECTRICAL BUILDING PAD

10' 5' 0 10' 20'

Designed By:	CJB
Drawn By:	JSC/RLC
Checked By:	MF
Date Revised:	1/07/2021, 9:25 AM
Layout Name:	00430-BET-EEB
File Path and Name:	Z:\project\2690.02 DOT_C BET Main RW Reconstruction\Civil\ACAD\00430-BET-SEG PAD GRADING.dwg

PLANS DEVELOPED BY:
R&M CONSULTANTS, INC.
9101 VANGUARD DR.
ANCHORAGE, AK 99507
(907) 522-1707
CERT. OF AUTH. NO. AECC111

BY	DATE	REVISION

STATE OF ALASKA
DEPARTMENT OF TRANSPORTATION AND PUBLIC FACILITIES
CENTRAL REGION
4111 AVIATION AVE., ANCHORAGE ALASKA 99502
PHONE (907) 269-0590

BETHEL AIRPORT
BETHEL, ALASKA
MAIN RUNWAY RECONSTRUCTION
PROJECT No. CFAPT00430
AIP No. 3-02-0029-0XX-20XX
ELECTRICAL BUILDING PAD PLAN

DATE: 1/7/2021

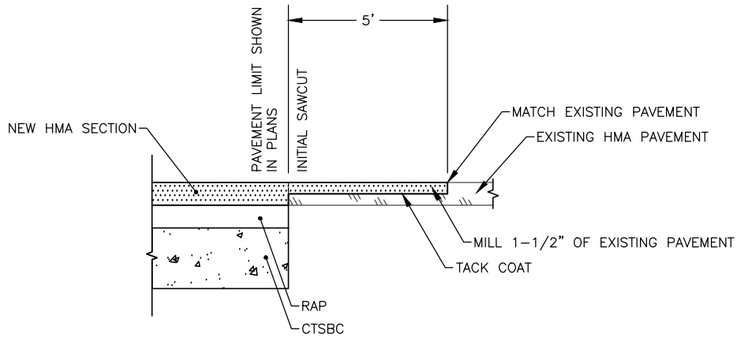

1/41 PAVEMENT CUT–MATCH DETAIL
NTS

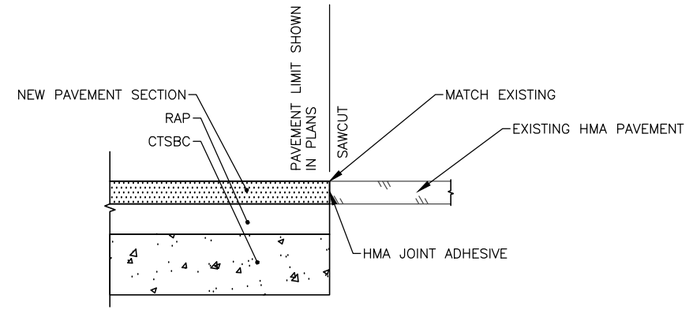

2/41 SHOULDER PAVEMENT CUT–MATCH DETAIL
NTS

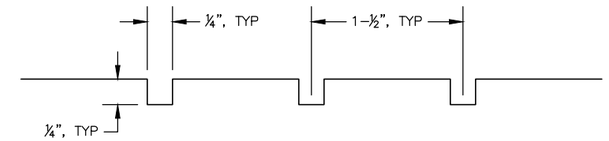

NOTE: CUT GROOVING PERPENDICULAR TO RUNWAY CENTERLINE

3/41 GROOVING DETAIL
NTS

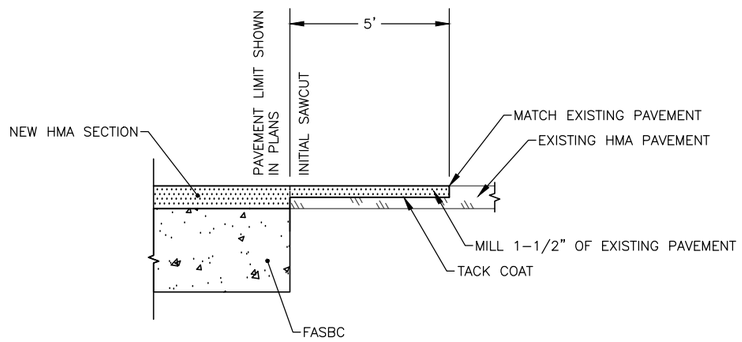

4/41 PAVEMENT CUT–MATCH DETAIL
NTS

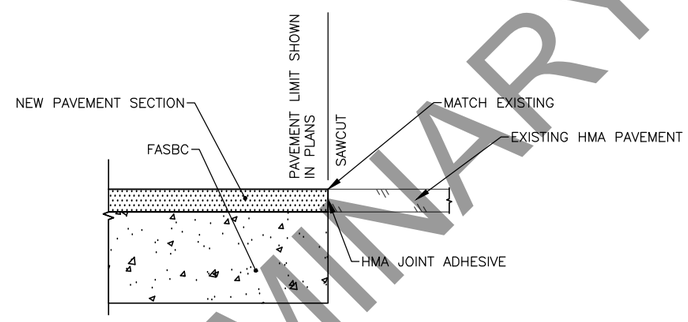

5/41 SHOULDER PAVEMENT CUT–MATCH DETAIL
NTS

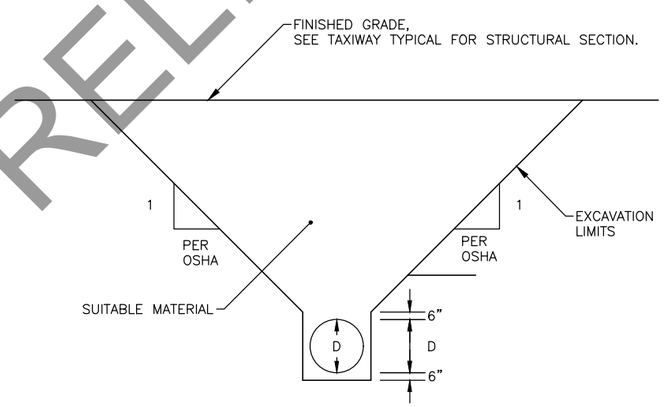

6/41 CULVERT TRENCH
NTS

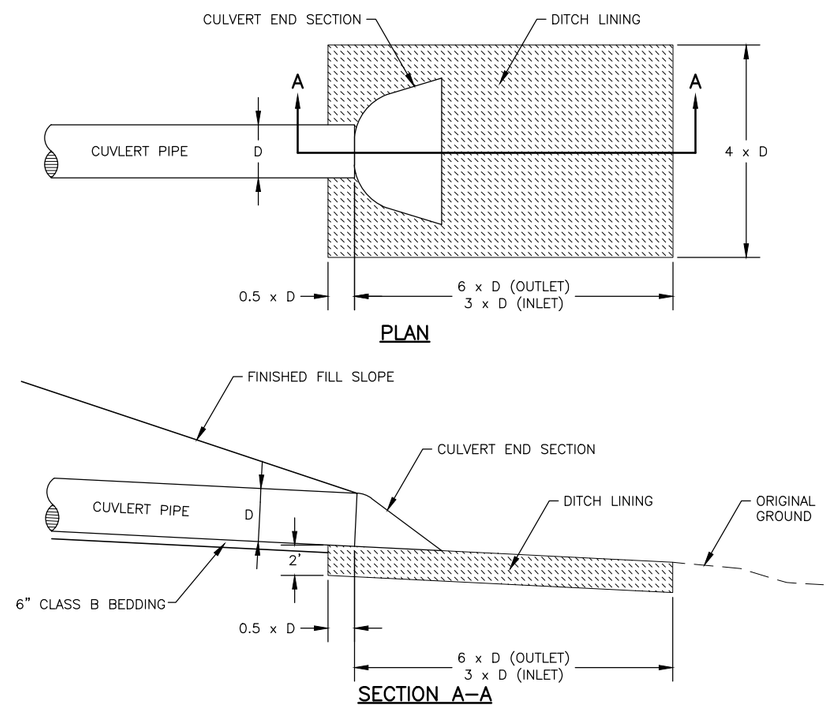

7/41 CULVERT INLET/OUTLET PROTECTION
NTS

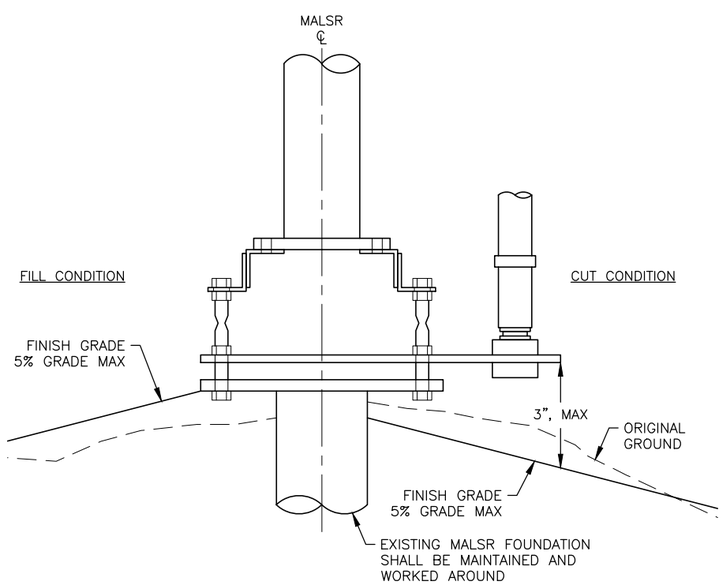

8/41 MEDIUM INTENSITY APPROACH LIGHTING SYSTEM (MALSR) PADS
NTS

Date Revised:	1/07/2021, 2:53 PM
Layout Name:	CIVIL DETAILS
File Path and Name:	Z:\project\2690.02 DOT_C BET Main RW Reconstruction\Civil\ACAD\00430-BET-CIVIL DETAILS.dwg

Designed By:	CJB
Drawn By:	JSC/RLC
Checked By:	MF

PLANS DEVELOPED BY:
R&M CONSULTANTS, INC.
9101 VANGUARD DR.
ANCHORAGE, AK 99507
(907) 522-1707
CERT. OF AUTH. NO. AECC111

BY	DATE	REVISION

STATE OF ALASKA
DEPARTMENT OF TRANSPORTATION AND PUBLIC FACILITIES
CENTRAL REGION
4111 AVIATION AVE., ANCHORAGE ALASKA 99502
PHONE (907) 269-0590

BETHEL AIRPORT
BETHEL, ALASKA
MAIN RUNWAY RECONSTRUCTION
PROJECT No. CFAPT00430
AIP No. 3-02-0029-0XX-20XX
CIVIL DETAILS

DATE: 1/7/2021

SEGMENTED CIRCLE NOTES:

1. ALL STRUCTURAL MEMBERS OF PANEL ASSEMBLY ARE GS–PST (GALVANIZED SQUARE – PERFORATED STEEL TUBING), SIZE AS INDICATED IN DRAWING, IN CONFORMANCE WITH SECTION P–640.
2. ALL BOLTS, NUTS, AND WASHERS SHALL CONFORM TO FASTENER SPECIFICATION TABLE INCLUDED IN THIS PLAN SET. ALL BOLTS USED IN PANEL ASSEMBLY SHALL BE ⅜" DIA. C LENGTH CALLED OUT IN PLANS, UNLESS OTHERWISE NOTED. FOR EACH BOLT INCLUDE 1 EA ⅜" WASHERS (7/16" ID X 1" OD) – ONE AT THE BOLT HEAD AND ONE AT THE NUT.
3. GUSSET PLATES SHALL CONFORM TO AIRPORT SPECIFICATION P–640 INCLUDE WITH THIS PLAN SET.
4. FINISH HEIGHT OF ALL INSTALLED PANEL ASSEMBLIES COMPRISING A SINGLE SEGMENTED CIRCLE SHALL BE UNIFORM WITH A MAXIMUM VARIANCE OF 6" THROUGHOUT CIRCLE LAYOUT, UNLESS OTHERWISE APPROVED BY THE ENGINEER.
5. PANEL ASSEMBLIES ARE TO BE REMOVABLE FROM EMBEDMENT TUBES FOR MAINTENANCE PURPOSES.
6. DIMENSIONS LABELED "(REF)" ARE FOR INFORMATIONAL PURPOSES ONLY.
7. INSTALLATION OF POSTS MAY REQUIRE MINOR TENCHING IF OCCASIONAL ROCK IS ENCOUNTERED IN THE PAD BORROW EMBANKMENT. BACKFILL EXCAVATED MATERIAL AND RESTORE LEVEL SURFACE. THIS WORK IS SUBSIDIARY TO THE RESPECTIVE P–640 PAY ITEM AT EACH LOCATION.

FASTENER SPECIFICATION TABLE	
FASTENER TYPE	STEEL HOT DIPPED GALVANIZED
BOLTS	ASTM A 307
NUTS	ASTM A 563
WASHERS	ASTM F 844

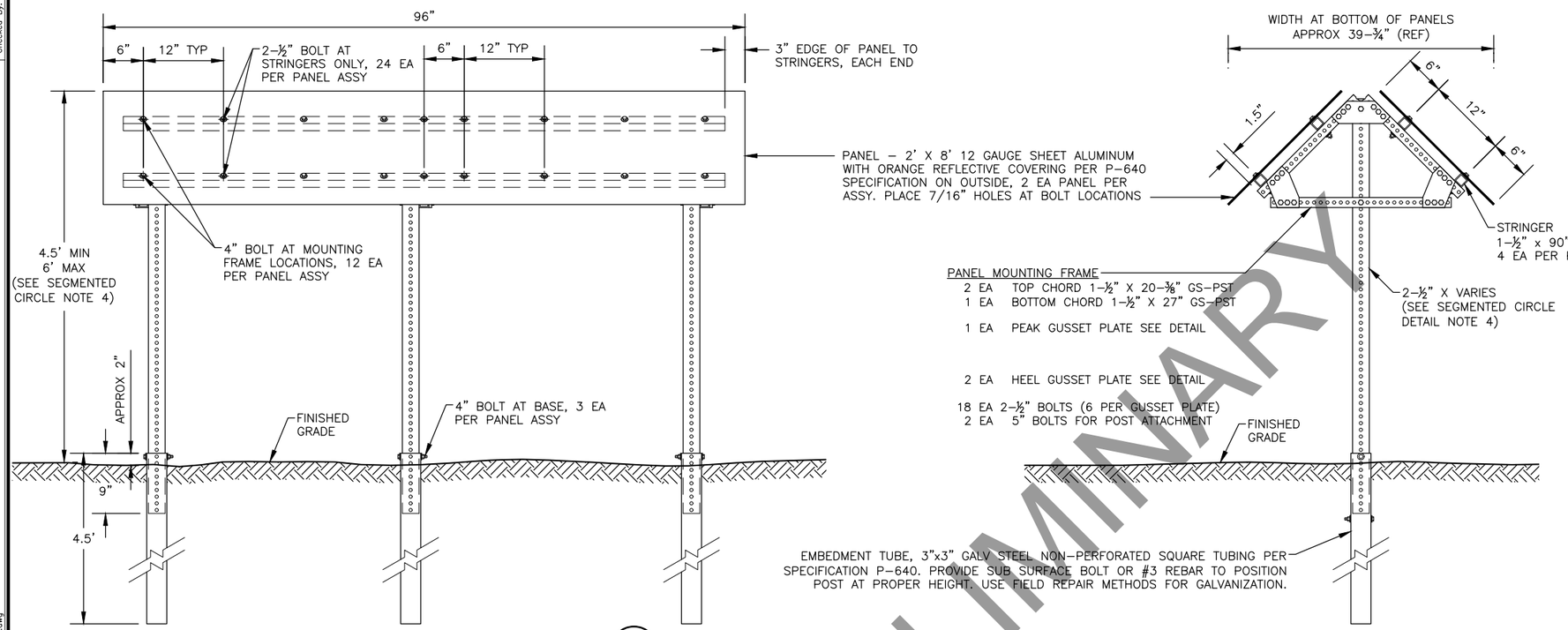

1/42 SEGMENTED CIRCLE PANEL ASSEMBLY
NTS

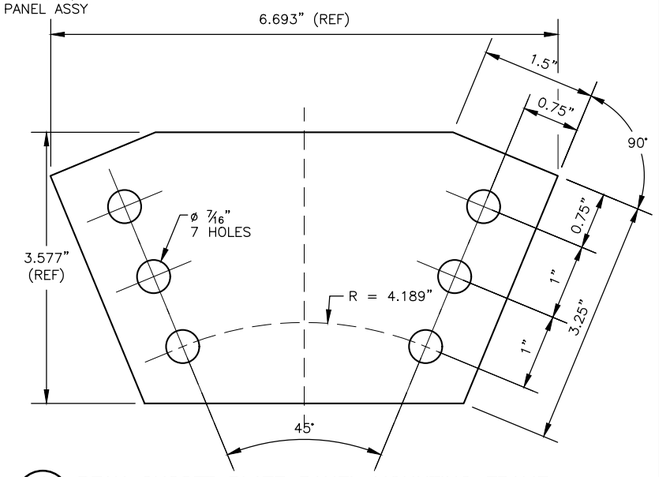

4/42 PEAK GUSSET PLATE PANEL MOUNTING FRAME
NTS

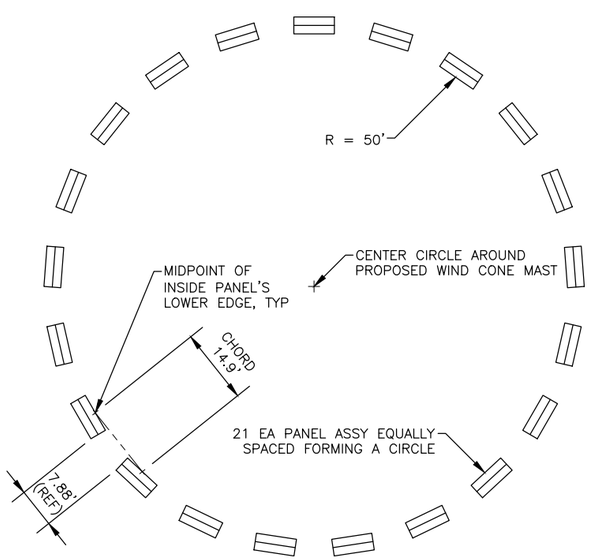

2/42 SEGMENTED CIRCLE LAYOUT
NTS

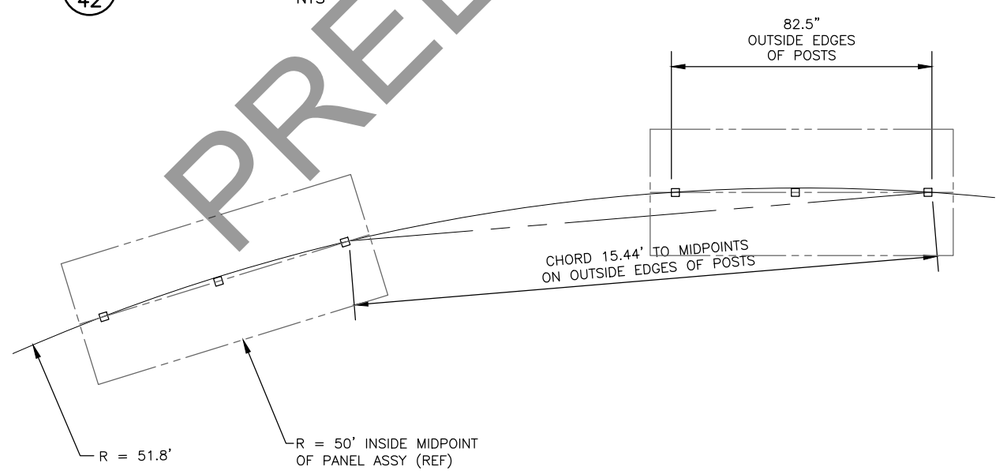

3/42 POST PLACEMENT LAYOUT
NTS

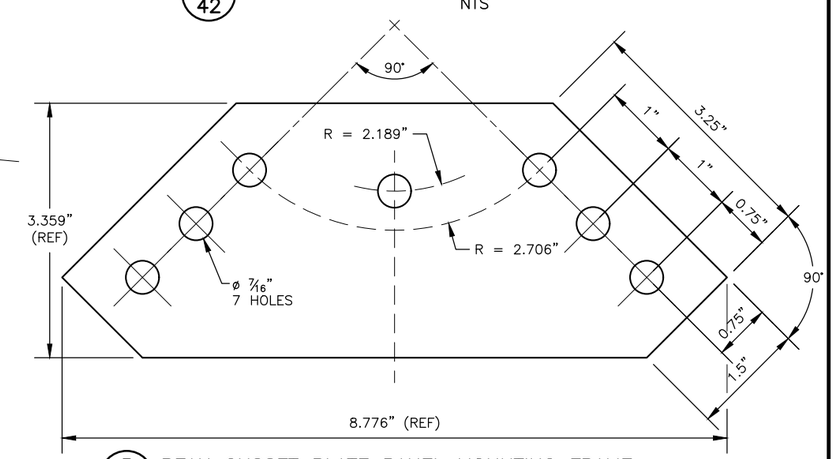

5/42 PEAK GUSSET PLATE PANEL MOUNTING FRAME
NTS

Designed By:	CJB
Drawn By:	JSC/RLC
Checked By:	MF

Date Revised:	1/07/2021, 9:25 AM
Layout Name:	Segmented Circle
File Path and Name:	Z:\project\2690.02 DOT_C BET Main RW Reconstruction\Civil\ACAD\00430-BET-SEGMENTED CIRCLE.dwg

PLANS DEVELOPED BY:
R&M CONSULTANTS, INC.
9101 VANGUARD DR.
ANCHORAGE, AK 99507
(907) 522-1707
CERT. OF AUTH. NO. AECC111

BY	DATE	REVISION

STATE OF ALASKA
DEPARTMENT OF TRANSPORTATION AND PUBLIC FACILITIES
CENTRAL REGION
4111 AVIATION AVE., ANCHORAGE ALASKA 99502
PHONE (907) 269-0590

BETHEL AIRPORT
BETHEL, ALASKA
MAIN RUNWAY RECONSTRUCTION
PROJECT No. CFAPT00430
AIP No. 3-02-0029-0XX-20XX
SEGMENTED CIRCLE PANEL

DATE: 1/7/2021

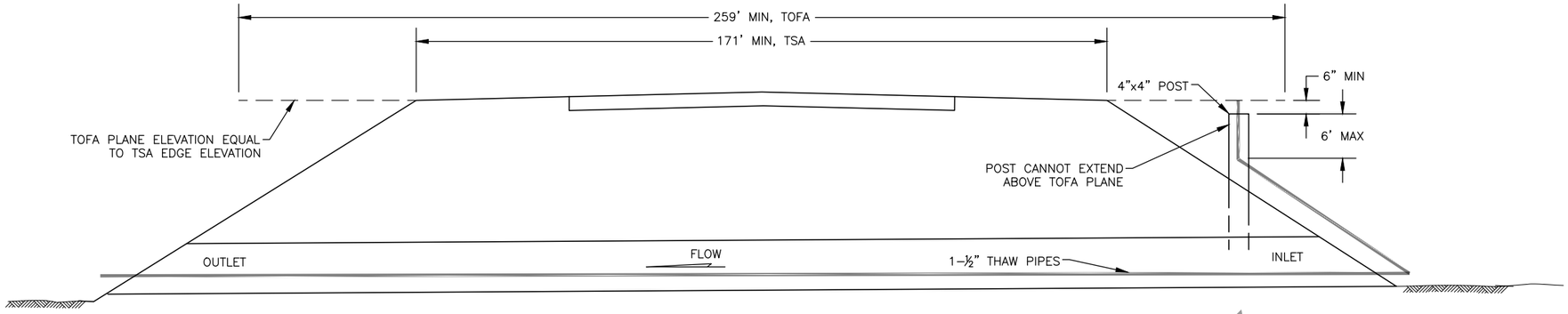

CROSS-SECTION

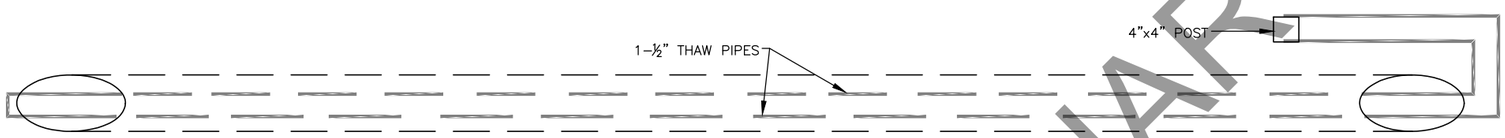

PLAN VIEW

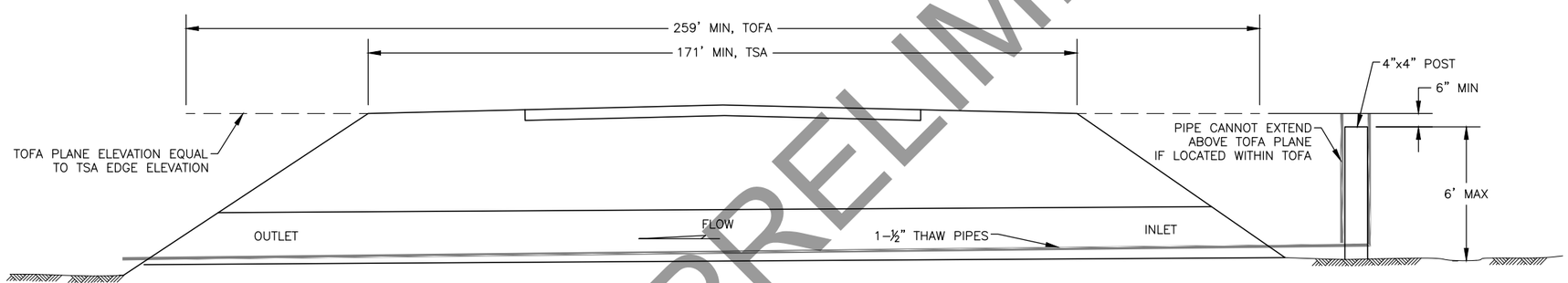

CROSS-SECTION

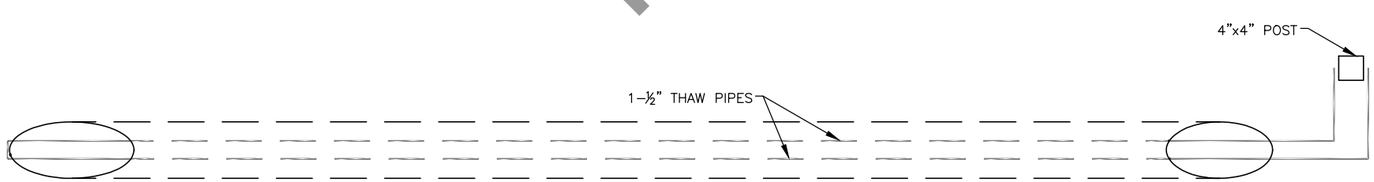

PLAN VIEW

GENERAL NOTES:

1. 1-½" MAIN LINE AND STANDPIPES TO BE LIQUID TIGHT AND FILLED WITH 50-50 ANTIFREEZE.
2. STANDPIPE SUPPORT POSTS TO BE INSTALLED NOT MORE THAN 6'-0" BELOW SHOULDER.
3. THAW PIPES TO BE ATTACHED TO CULVERT AT INLET AND OUTLET ENDS AND TO POST.

Designed By: CJB
Drawn By: JSC/RLC
Checked By: MF
Date Revised: 1/07/2021, 9:25 AM
Layout Name: Thaw Pipe
File Path and Name: Z:\project\2690.02 DOT_C BET Main RW Reconstruction\Civil\ACAD\00430-BET-THAW PIPE.dwg

PLANS DEVELOPED BY:
R&M CONSULTANTS, INC.
9101 VANGUARD DR.
ANCHORAGE, AK 99507
(907) 522-1707
CERT. OF AUTH. NO. AECC111

BY	DATE	REVISION

STATE OF ALASKA
DEPARTMENT OF TRANSPORTATION AND PUBLIC FACILITIES
CENTRAL REGION
4111 AVIATION AVE., ANCHORAGE ALASKA 99502
PHONE (907) 269-0590

BETHEL AIRPORT
BETHEL, ALASKA
MAIN RUNWAY RECONSTRUCTION
PROJECT No. CFAPT00430
AIP No. 3-02-0029-0XX-20XX
CULVERT CIRCULATING THAW PIPE

DATE: 1/7/2021

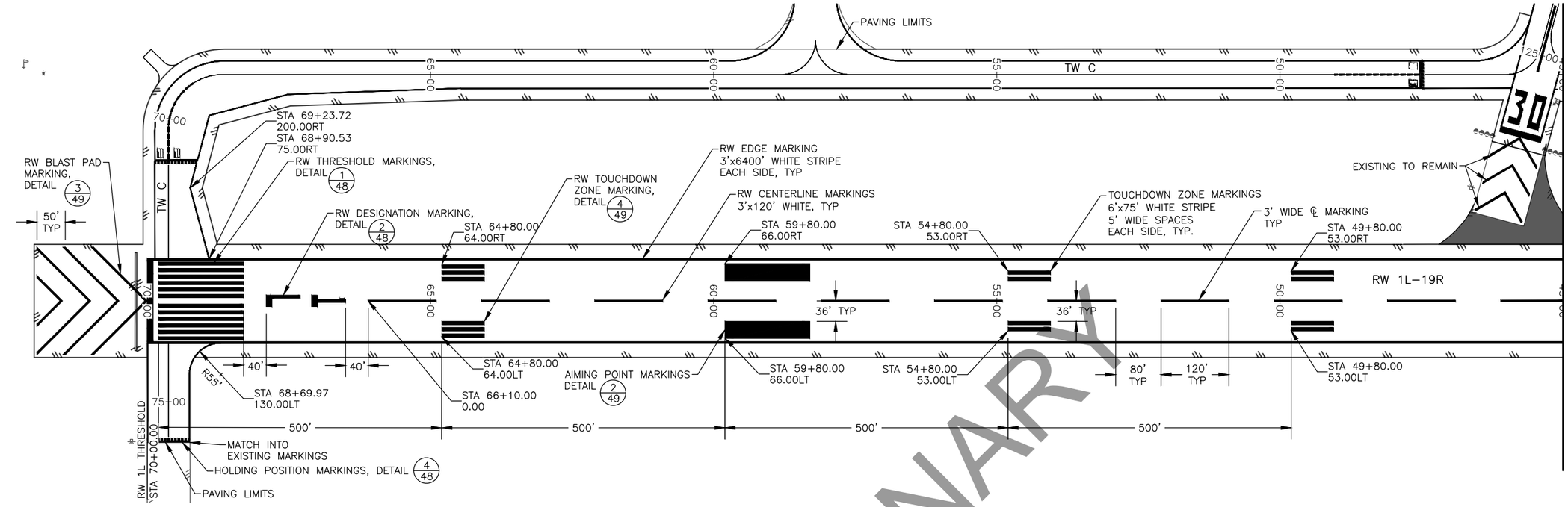

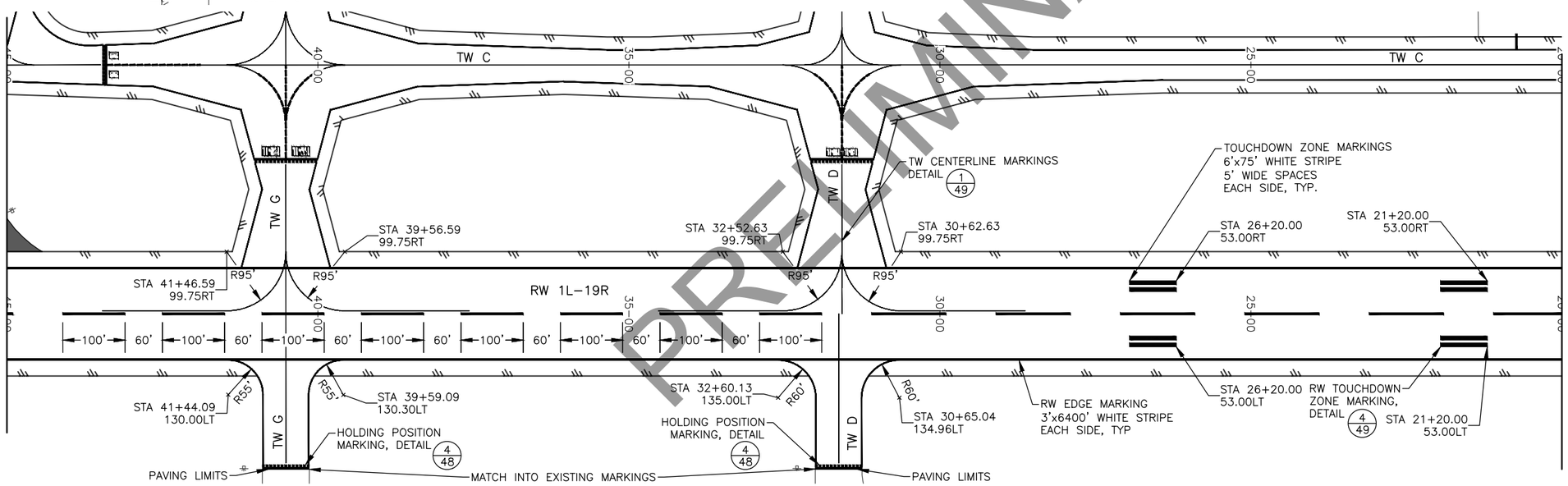

NOTES:

1. ENSURE ALL MARKINGS CONFORM TO FAA AC 150/5340–1M AND 150/5300–13A, OR CURRENT EDITIONS.
2. ALL CENTERLINE MARKINGS ARE MEASURED TO THE CENTER OF THE STRIPE, EDGE MARKINGS ARE TO THE OUTSIDE EDGE OF THE OUTER MOST STRIPE.
3. ALL RUNWAY MARKINGS ARE WHITE, UNLESS OTHERWISE SPECIFIED.
4. USE GLASS BEADS IN ALL PERMANENT MARKINGS. EXCEPT FOR GREEN PAINTED MARKINGS.
5. STATIONS AND OFFSETS REFERENCE RUNWAY 1L–19R CENTERLINE.

100' 50' 0 100' 200'

Designed By:	CJB
Drawn By:	JSC/RLC
Checked By:	MF
Date Revised:	1/07/2021, 9:26 AM
Layout Name:	SIGNING AND MARKING PLAN RW 1
File Path and Name:	Z:\project\2690.02 DOT_C BET Main RW Reconstruction\Civil\ACAD\00430-BET-SIGNING AND MARKING.dwg

PLANS DEVELOPED BY:
R&M CONSULTANTS, INC.
9101 VANGUARD DR.
ANCHORAGE, AK 99507
(907) 522-1707
CERT. OF AUTH. NO. AECC111

BY	DATE	REVISION

STATE OF ALASKA
DEPARTMENT OF TRANSPORTATION AND PUBLIC FACILITIES
CENTRAL REGION
4111 AVIATION AVE., ANCHORAGE ALASKA 99502
PHONE (907) 269-0590

BETHEL AIRPORT
BETHEL, ALASKA
MAIN RUNWAY RECONSTRUCTION
PROJECT No. CFAPT00430
AIP No. 3-02-0029-0XX-20XX
SIGNING AND MARKING PLAN
RUNWAY STA 20+00 TO 72+00

DATE: 1/7/2021

SHEET: 44 OF 79

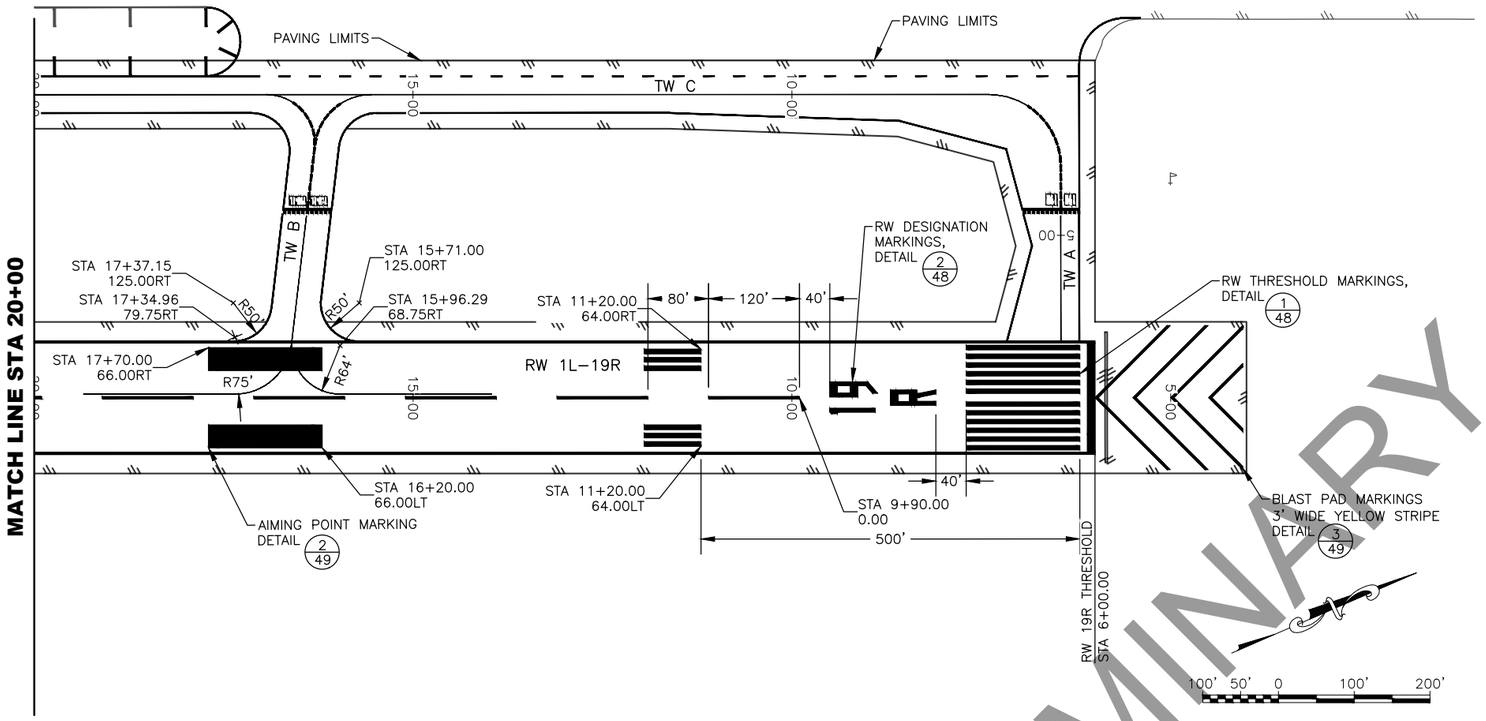

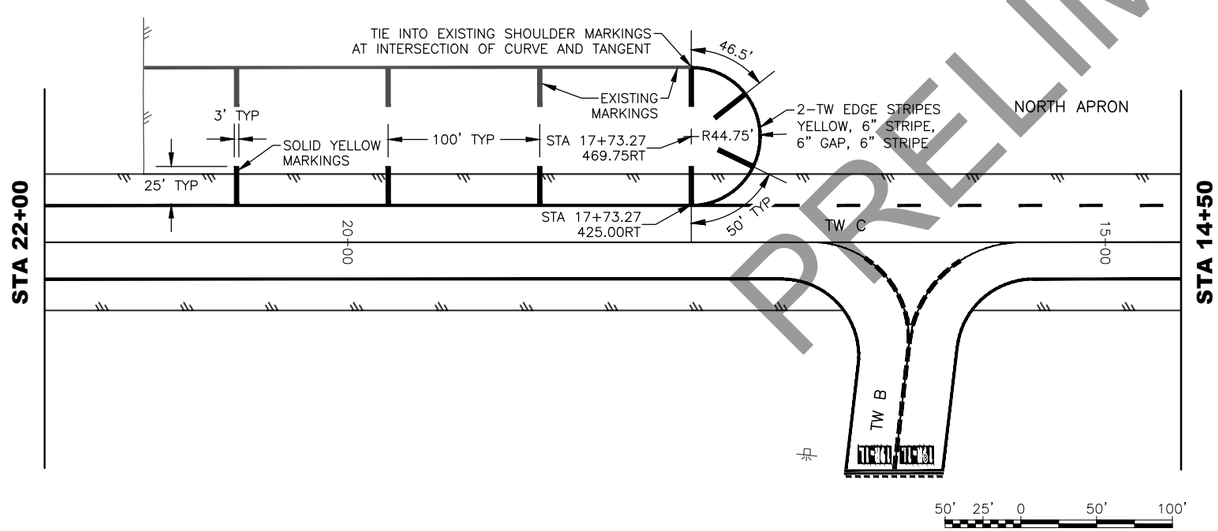

NOTES:

1. ENSURE ALL MARKINGS CONFORM TO FAA AC 150/5340–1M AND 150/5300–13A, OR CURRENT EDITIONS.
2. ALL CENTERLINE MARKINGS ARE MEASURED TO THE CENTER OF THE STRIPE, EDGE MARKINGS ARE TO THE OUTSIDE EDGE OF THE OUTER MOST STRIPE.
3. ALL RUNWAY MARKINGS ARE WHITE, UNLESS OTHERWISE SPECIFIED.
4. USE GLASS BEADS IN ALL PERMANENT MARKINGS, EXCEPT FOR PAINTED GREEN MARKINGS.
5. STATIONS AND OFFSETS REFERENCE RUNWAY 1L–19R CENTERLINE.

PLANS DEVELOPED BY:
R&M CONSULTANTS, INC.
9101 VANGUARD DR.
ANCHORAGE, AK 99507
(907) 522-1707
CERT. OF AUTH. NO. AECC111

BY	DATE	REVISION

STATE OF ALASKA
DEPARTMENT OF TRANSPORTATION AND PUBLIC FACILITIES
CENTRAL REGION
4111 AVIATION AVE., ANCHORAGE ALASKA 99502
PHONE (907) 269-0590

BETHEL AIRPORT
BETHEL, ALASKA
MAIN RUNWAY RECONSTRUCTION
PROJECT No. CFAPT00430
AIP No. 3-02-0029-0XX-20XX
SIGNING AND MARKING PLAN
RUNWAY STA 4+00 TO 20+00

DATE: 1/7/2021

Designed By: CJB
Drawn By: JSC/RLC
Checked By: MF

Date Revised: 1/07/2021, 9:26 AM
Layout Name: SIGNING AND MARKING PLAN RW 2
File Path and Name: Z:\project\2690.02 DOT_C BET Main RW Reconstruction\Civil\ACAD\00430-BET-SIGNING AND MARKING.dwg

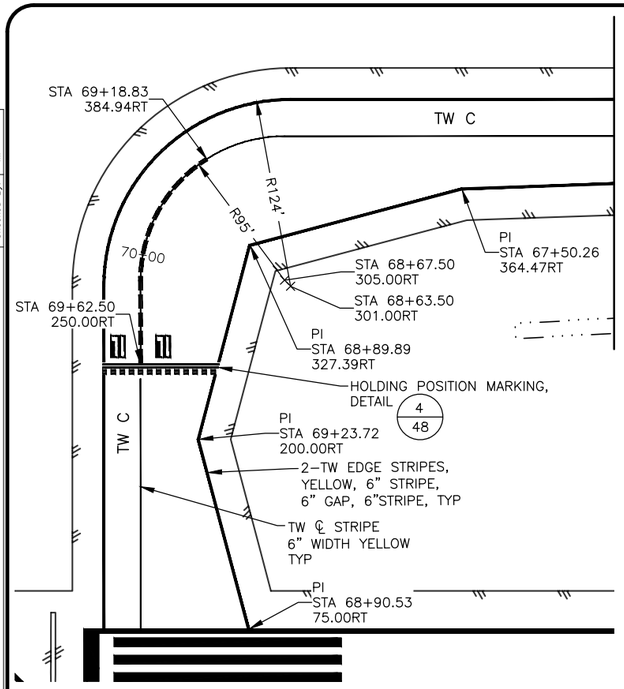

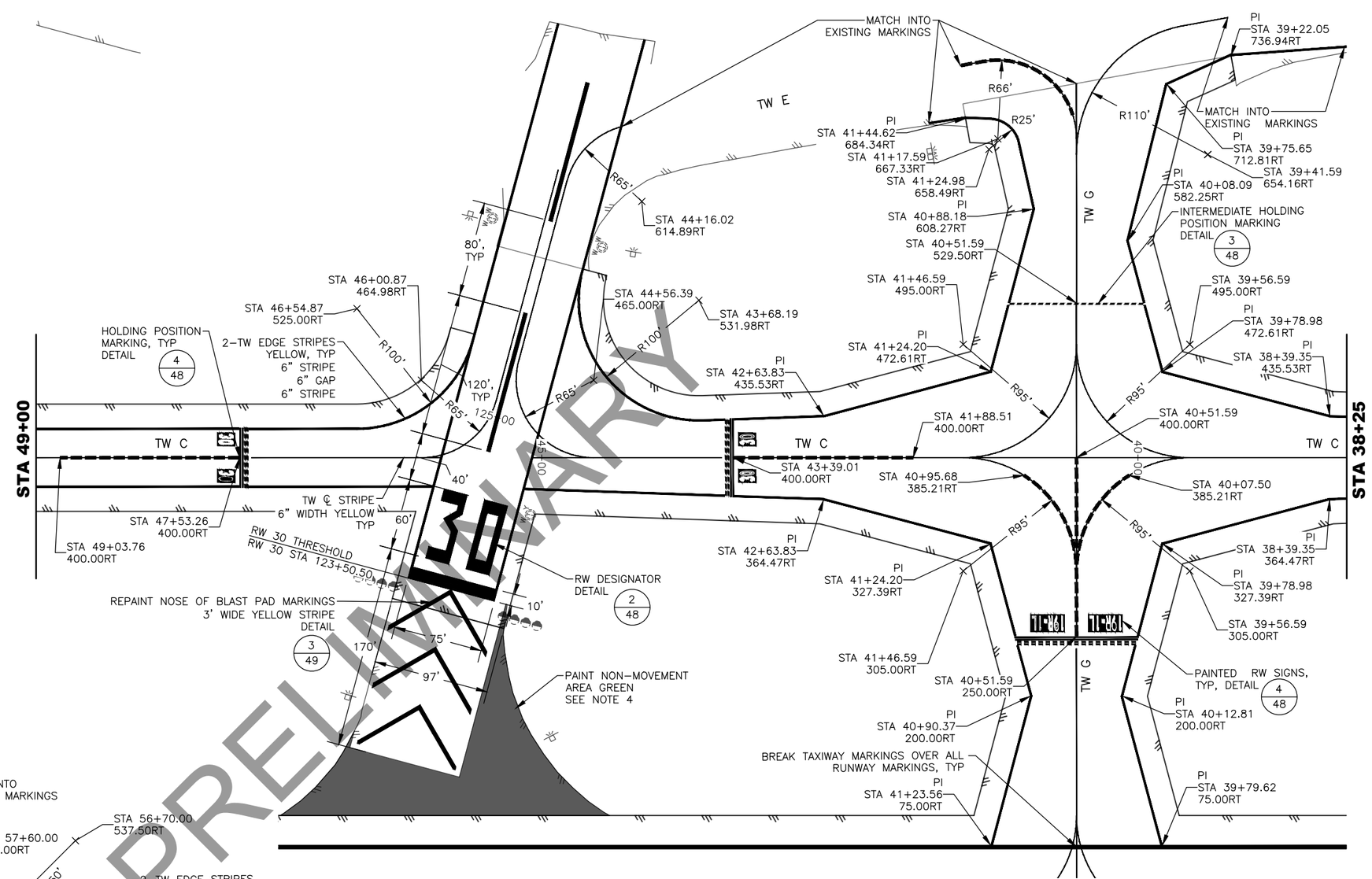

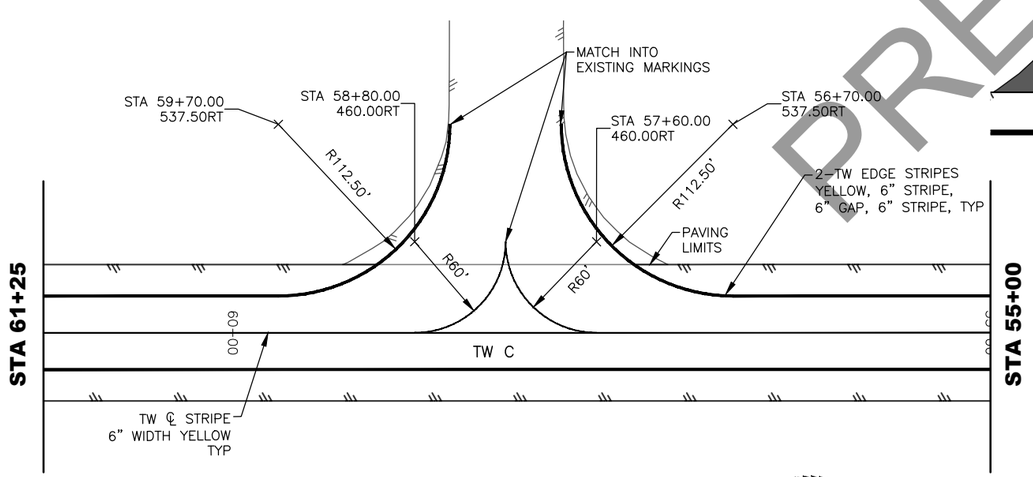

NOTES:

1. ENSURE ALL MARKINGS CONFORM TO FAA AC 150/5340-1M AND 150/5300-13A, OR CURRENT EDITIONS.
2. ALL CENTERLINE MARKINGS ARE MEASURED TO THE CENTER OF THE STRIPE, EDGE MARKINGS ARE TO THE OUTSIDE EDGE OF THE OUTER MOST STRIPE.
3. ALL RUNWAY MARKINGS ARE WHITE, UNLESS OTHERWISE SPECIFIED.
4. USE GLASS BEADS IN ALL PERMANENT MARKINGS, EXCEPT FOR PAINTED GREEN MARKINGS.
5. STATIONS AND OFFSETS REFERENCE RUNWAY 1L-19R CENTERLINE, UNLESS OTHERWISE SPECIFIED.
6. MARKINGS BETWEEN MATCHLINE GAPS SHALL BE CONTINUED AS SHOWN ALONG THE ADJACENT SEGMENTS.

50' 25' 0 50' 100'

Designed By:	CJB
Drawn By:	JSC/RLC
Checked By:	MF
Date Revised:	1/07/2021, 9:26 AM
Layout Name:	SIGNING AND MARKING PLAN TW 1
File Path and Name:	Z:\project\2690.02 DOT_C BET Main RW Reconstruction\Civil\ACAD\00430-BET-SIGNING AND MARKING.dwg

PLANS DEVELOPED BY:
R&M CONSULTANTS, INC.
9101 VANGUARD DR.
ANCHORAGE, AK 99507
(907) 522-1707
CERT. OF AUTH. NO. AECC111

BY	DATE	REVISION

STATE OF ALASKA
DEPARTMENT OF TRANSPORTATION AND PUBLIC FACILITIES
CENTRAL REGION
4111 AVIATION AVE., ANCHORAGE ALASKA 99502
PHONE (907) 269-0590

BETHEL AIRPORT
BETHEL, ALASKA
MAIN RUNWAY RECONSTRUCTION
PROJECT No. CFAPT00430
AIP No. 3-02-0029-0XX-20XX
SIGNING AND MARKING PLAN
TAXIWAYS

DATE: 1/7/2021

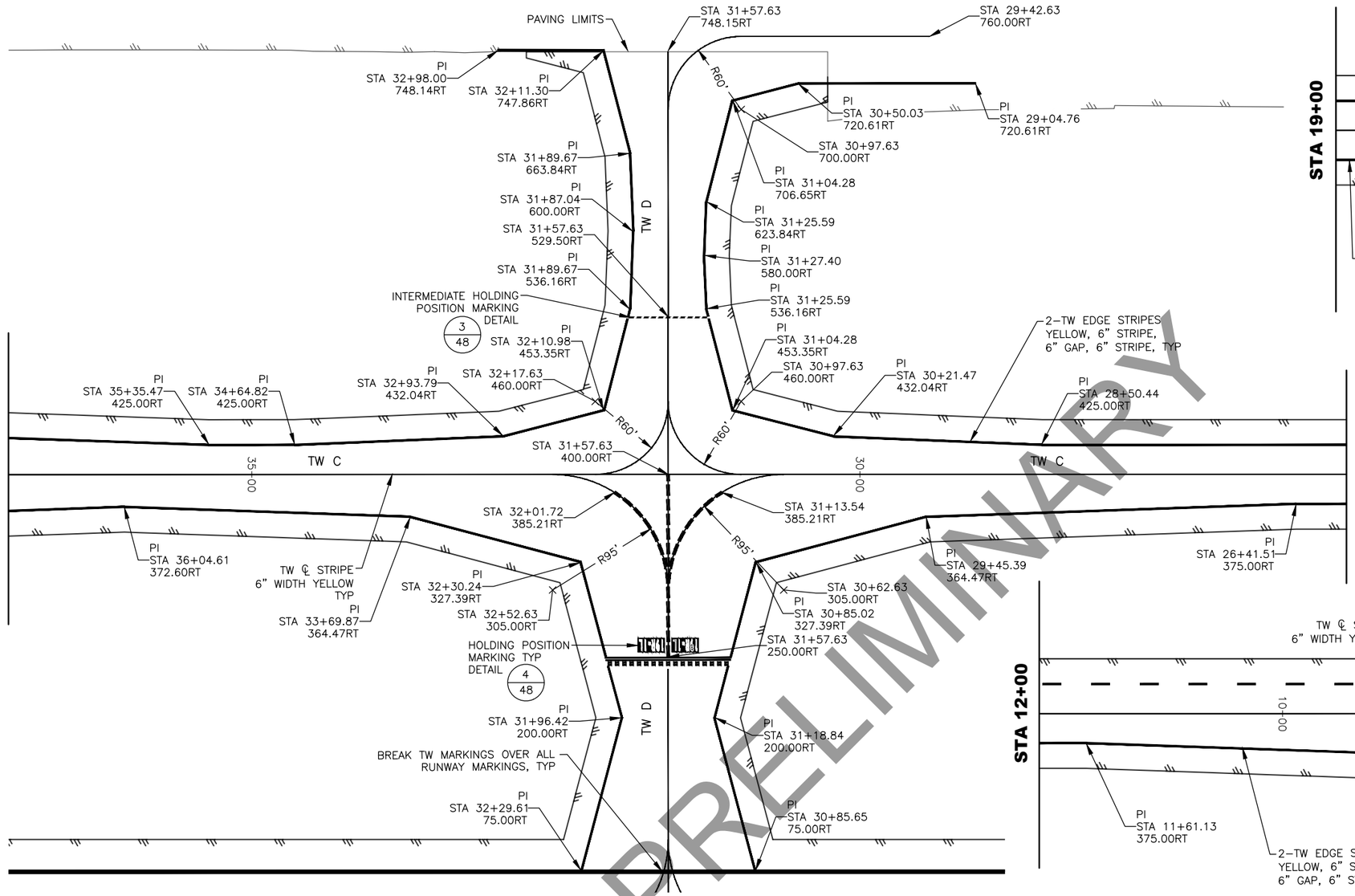

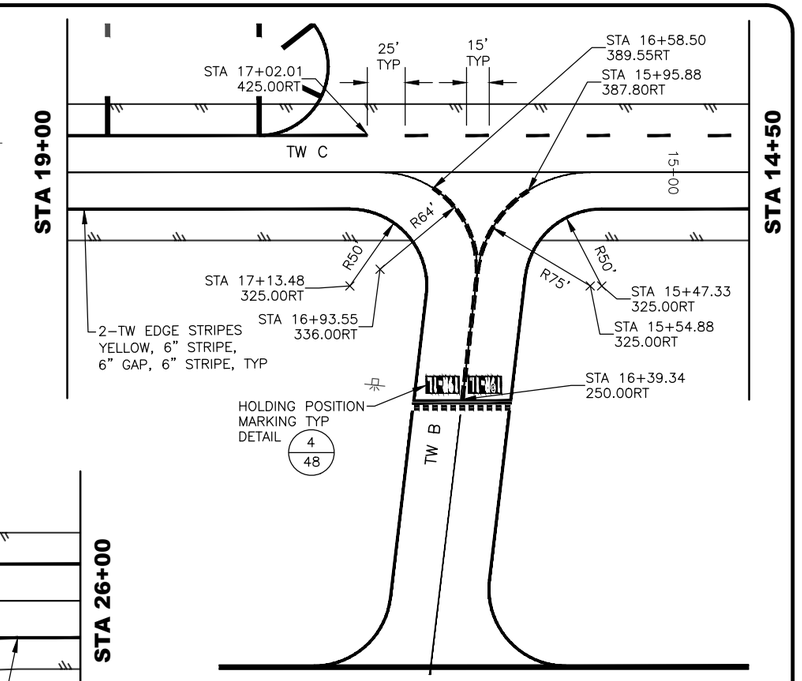

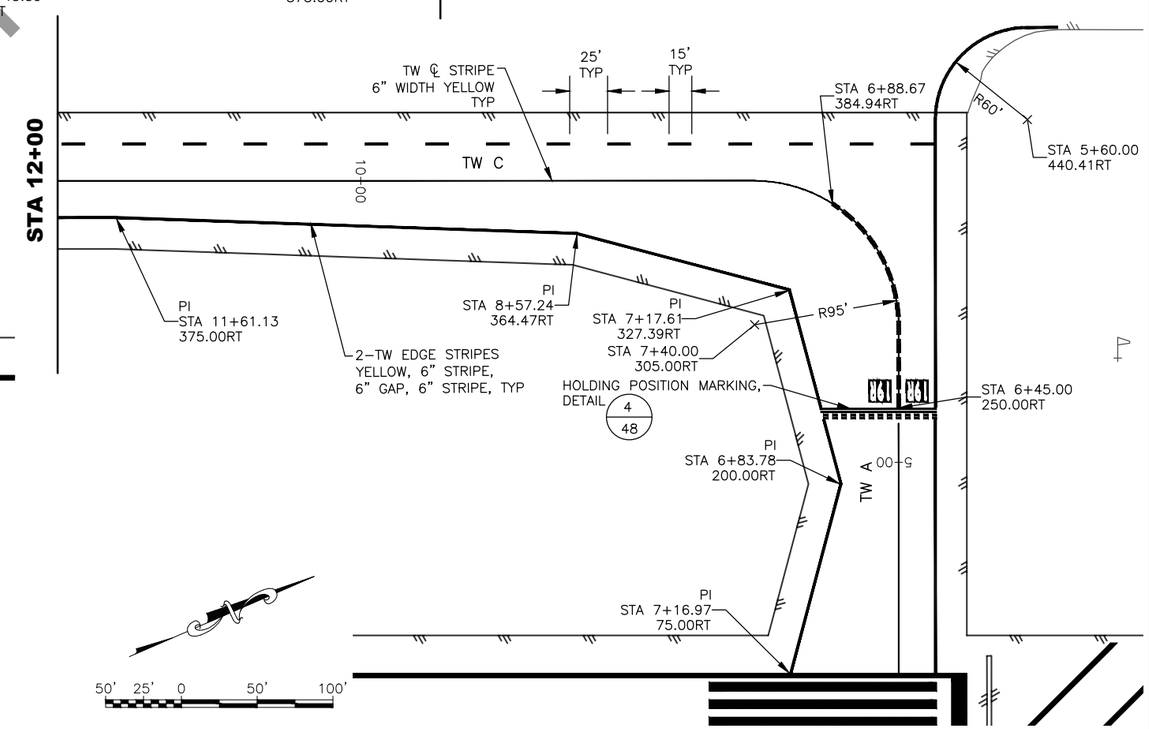

NOTES:

1. ENSURE ALL MARKINGS CONFORM TO FAA AC 150/5340-1M AND 150/5300-13A, OR CURRENT EDITIONS.
2. ALL CENTERLINE MARKINGS ARE MEASURED TO THE CENTER OF THE STRIPE, EDGE MARKINGS ARE TO THE OUTSIDE EDGE OF THE OUTER MOST STRIPE.
3. USE GLASS BEADS IN ALL PERMANENT MARKINGS, EXCEPT FOR PAINTED GREEN MARKINGS.
4. STATIONS AND OFFSETS REFERENCE RUNWAY 1L-19R CENTERLINE, UNLESS OTHERWISE SPECIFIED.
5. MARKINGS BETWEEN MATCHLINE GAPS SHALL BE CONTINUED AS SHOWN ALONG THE ADJACENT SEGMENTS.

Designed By: CJB
Drawn By: JSC/RLC
Checked By: MF
Date Revised: 1/07/2021, 9:27 AM
Layout Name: SIGNING AND MARKING PLAN TW 2
File Path and Name: Z:\project\2690.02 DOT_C BET Main RW Reconstruction\Civil\ACAD\00430-BET-SIGNING AND MARKING.dwg

PLANS DEVELOPED BY:
R&M CONSULTANTS, INC.
9101 VANGUARD DR.
ANCHORAGE, AK 99507
(907) 522-1707
CERT. OF AUTH. NO. AECC111

BY	DATE	REVISION

STATE OF ALASKA
DEPARTMENT OF TRANSPORTATION AND PUBLIC FACILITIES
CENTRAL REGION
4111 AVIATION AVE., ANCHORAGE ALASKA 99502
PHONE (907) 269-0590

BETHEL AIRPORT
BETHEL, ALASKA
MAIN RUNWAY RECONSTRUCTION
PROJECT No. CFAPT00430
AIP No. 3-02-0029-0XX-20XX
SIGNING AND MARKING PLAN
TAXIWAYS

DATE: 1/7/2021

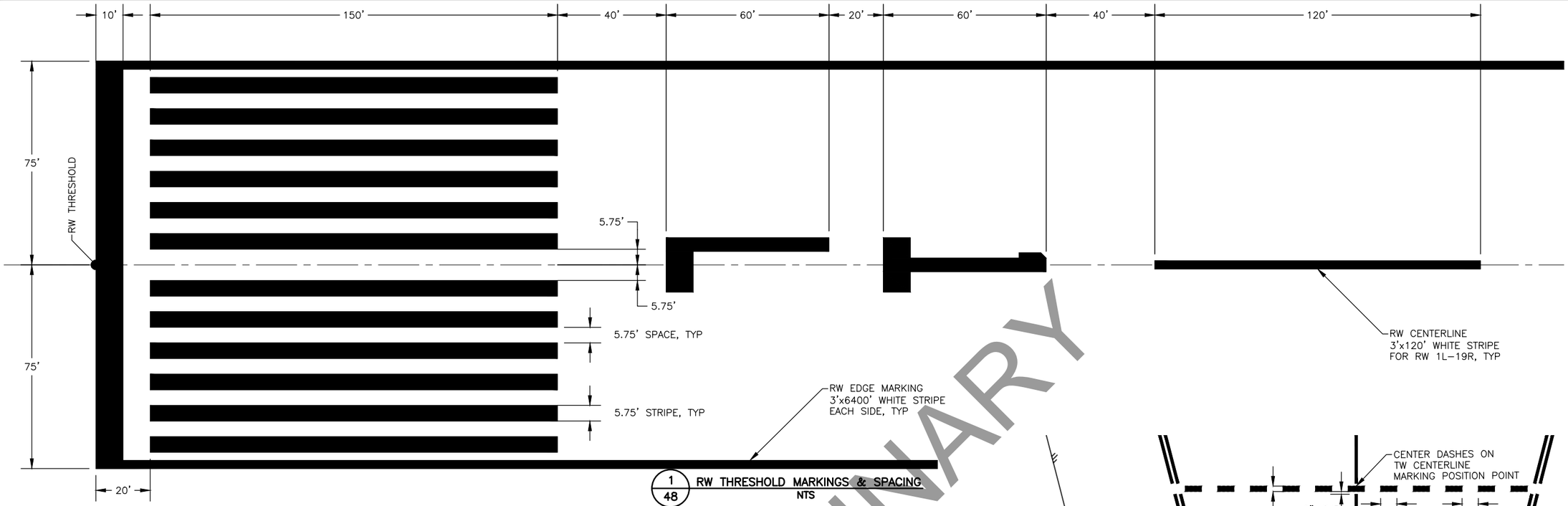

1/48 RW THRESHOLD MARKINGS & SPACING
NTS

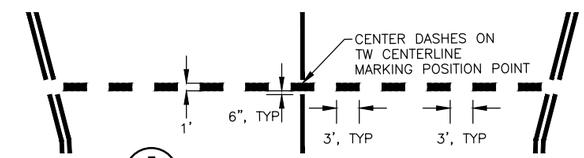

3/48 INTERMEDIATE HOLDING POSITION MARKING
NTS

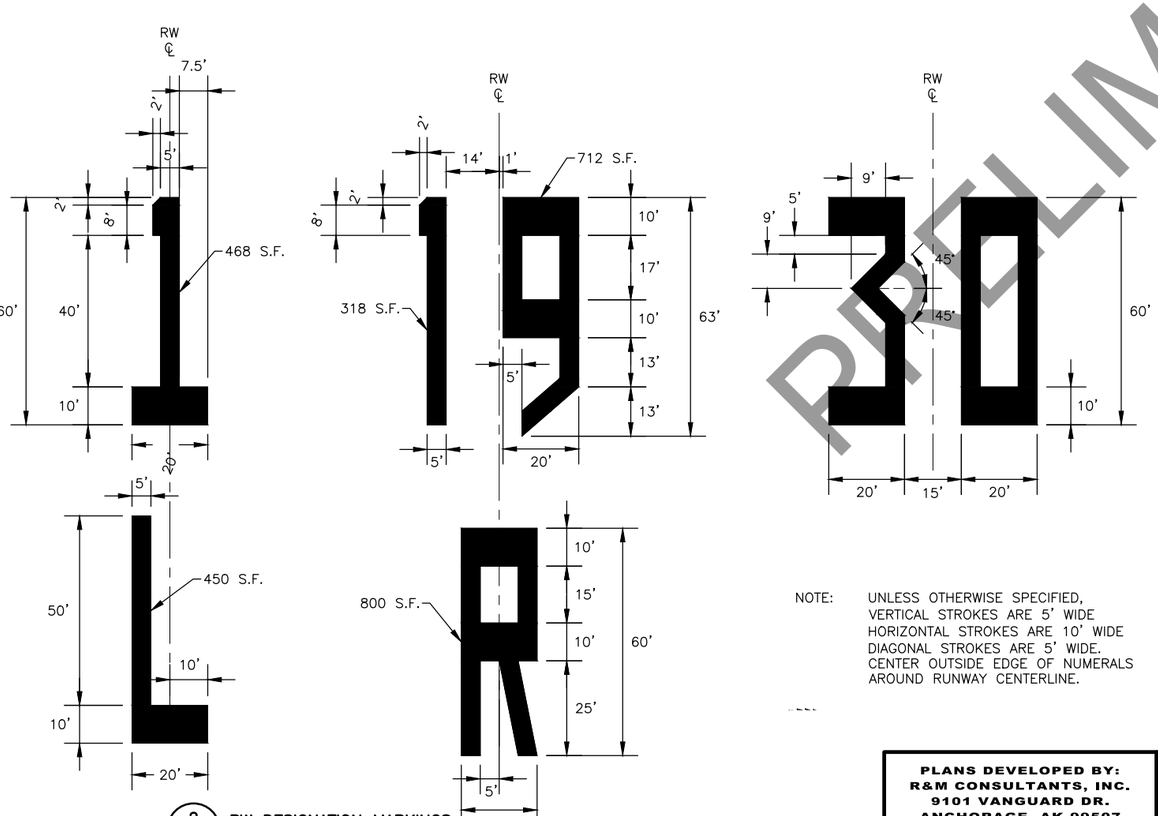

2/48 RW DESIGNATION MARKINGS
NTS

NOTE: UNLESS OTHERWISE SPECIFIED, VERTICAL STROKES ARE 5' WIDE HORIZONTAL STROKES ARE 10' WIDE DIAGONAL STROKES ARE 5' WIDE. CENTER OUTSIDE EDGE OF NUMERALS AROUND RUNWAY CENTERLINE.

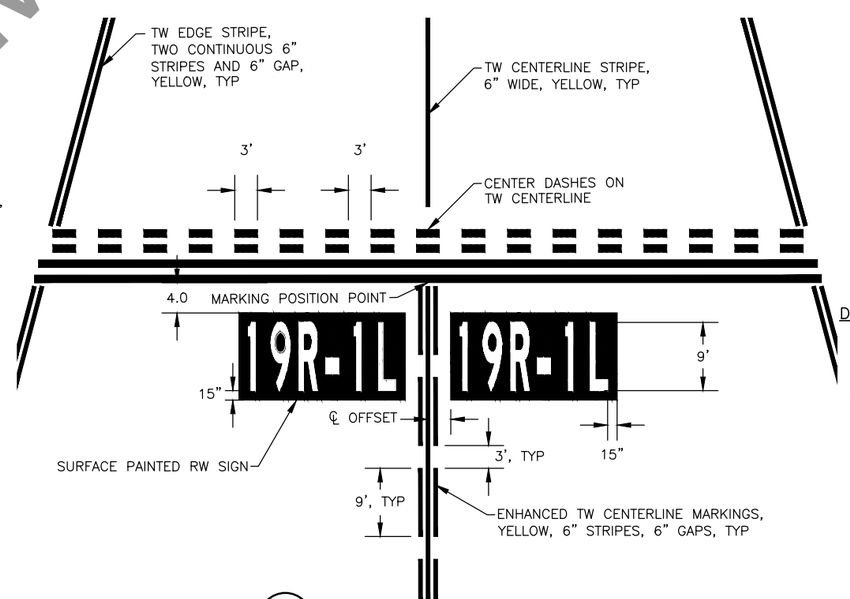

4/48 HOLDING POSITION MARKING
NTS

TW PAINTED SIGN TABLE		
TW	℄ OFFSET	INSCRIPTION
A	5'	19R
B	3'	19R-1L
D	3'	19R-1L
G	10'	19R-1L
C	10'	1L

DETAIL NOTES:

1. HOLDING POSITION MARKING SHALL BE PAINTED YELLOW.
2. SURFACE PAINTED RUNWAY SIGN SHALL HAVE A RED BACKGROUND WITH A WHITE INSCRIPTION.
3. SURFACE PAINTED RUNWAY SIGN SHALL HAVE A TEXT HEIGHT OF 9'.
4. SURFACE PAINTED RUNWAY SIGN SHALL BE AT LEAST 2' FROM THE EDGE OF THE INSIDE TAXIWAY EDGE MARKING. TEXT HEIGHT SHALL BE MODIFIED TO ACCOMMODATE THIS CRITERIA SHOULD THE 9' STANDARD TEXT HEIGHT PENETRATE THIS 2' ENVELOPE. THE ENGINEER SHALL REVIEW AND APPROVE THE STENCIL PRIOR TO PAINTING.
5. PROVIDE REFLECTIVE MEDIA (GLASS BEADS) WITH ALL MARKINGS, EXCEPT FOR GREEN PAINTED MARKINGS.

PLANS DEVELOPED BY:
R&M CONSULTANTS, INC.
9101 VANGUARD DR.
ANCHORAGE, AK 99507
(907) 522-1707
CERT. OF AUTH. NO. AECC111

BY	DATE	REVISION

STATE OF ALASKA
DEPARTMENT OF TRANSPORTATION AND PUBLIC FACILITIES
CENTRAL REGION
4111 AVIATION AVE., ANCHORAGE ALASKA 99502
PHONE (907) 269-0590

BETHEL AIRPORT
BETHEL, ALASKA
MAIN RUNWAY RECONSTRUCTION
PROJECT No. CFAPT00430
AIP No. 3-02-0029-0XX-20XX
SIGNING AND MARKING DETAILS

DATE: 1/7/2021

Designed By: CJB
Drawn By: JSC/RLC
Checked By: MF
Date Revised: 1/07/2021, 9:27 AM
Layout Name: SIGNING AND MARKING DETAILS
File Path and Name: Z:\project\2690.02 DOT_C BET Main RW Reconstruction\Civil\ACAD\00430-BET-SIGNING AND MARKING.dwg

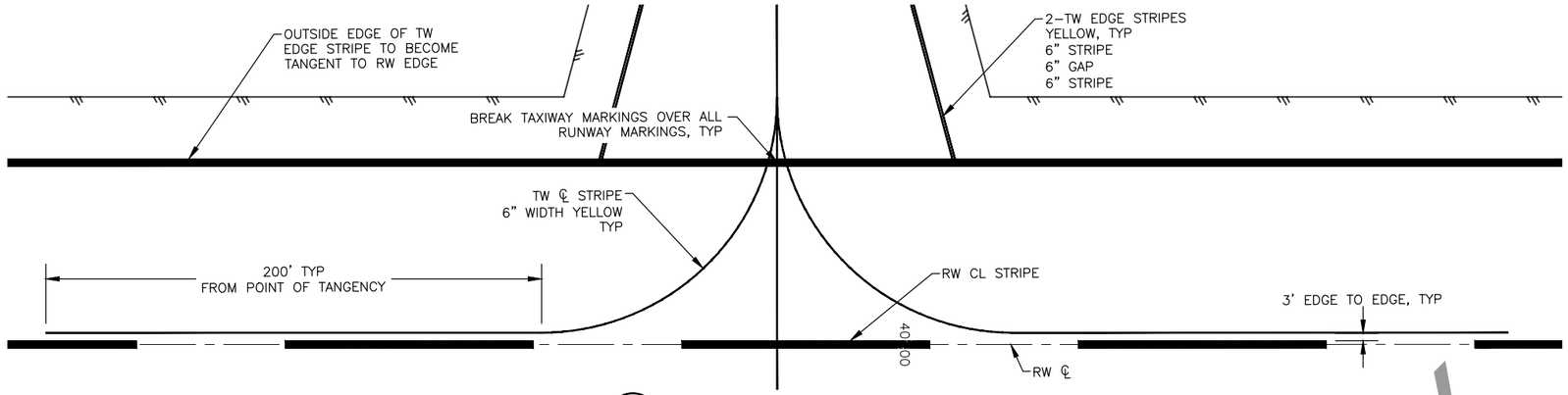

1 / 49 TAXIWAY CENTERLINE MARKINGS
NTS

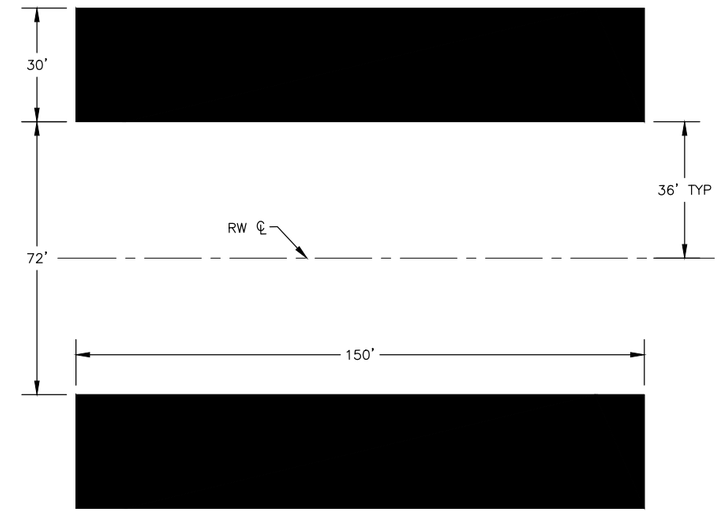

2 / 49 RUNWAY AIMING POINT MARKINGS
NTS

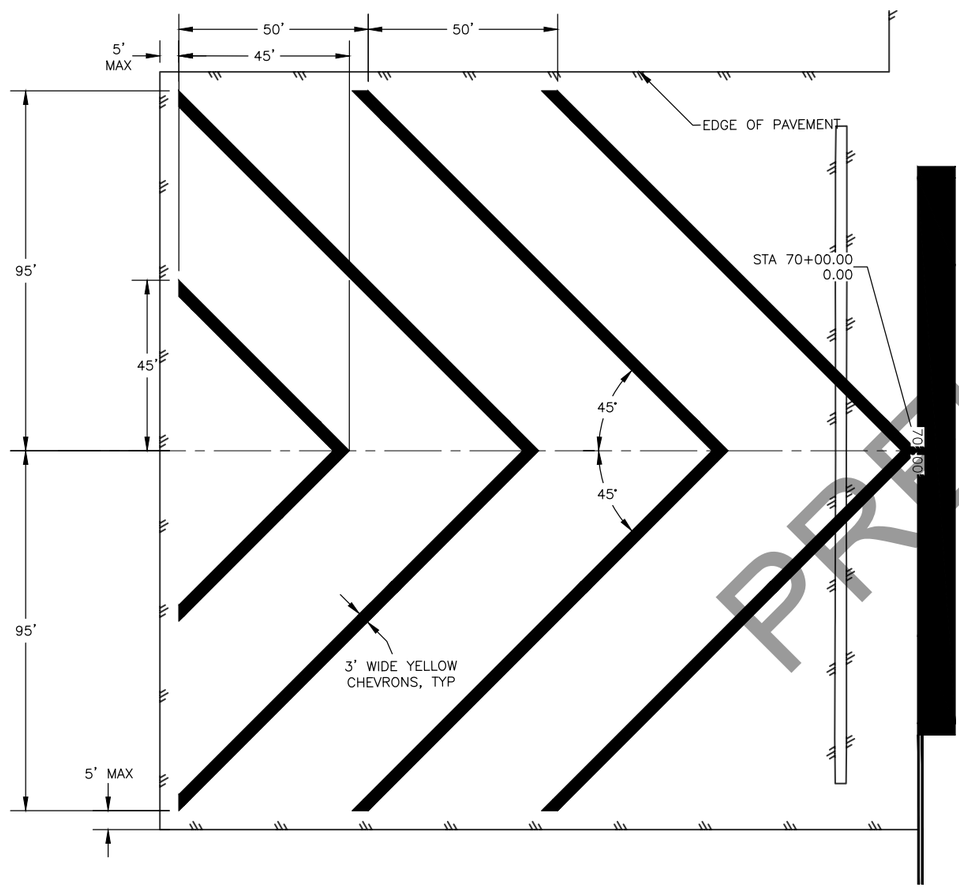

3 / 49 RUNWAY 1L BLAST PAD MARKING
NTS

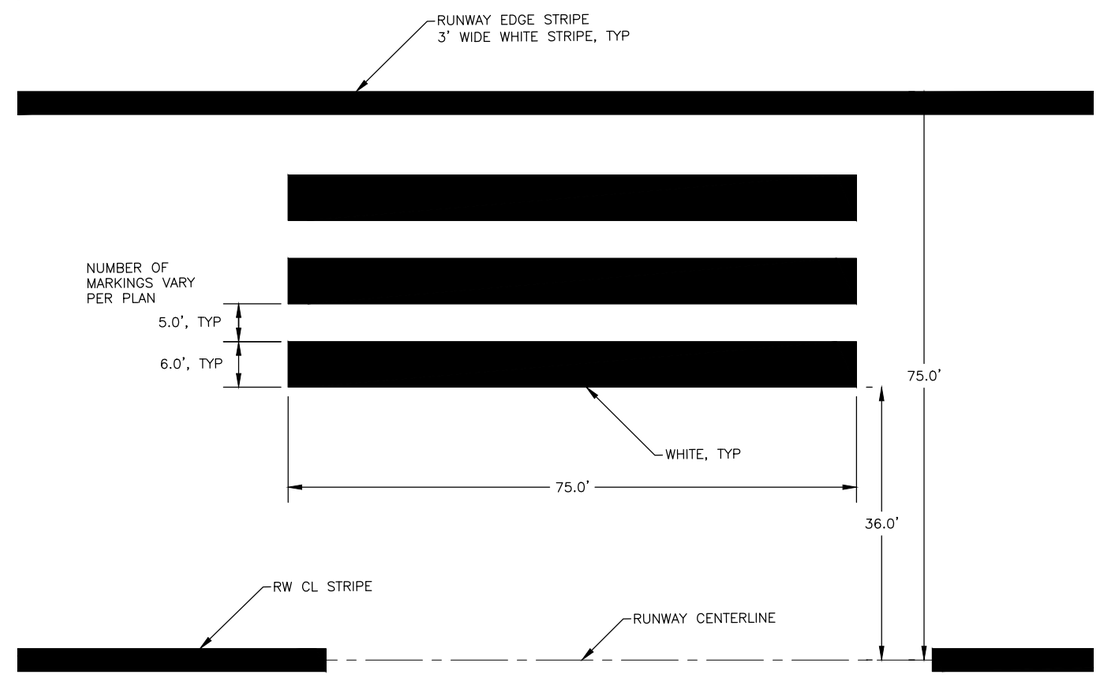

4 / 49 RUNWAY TOUCHDOWN ZONE MARKINGS
NTS

Designed By:	CJB
Drawn By:	JSC/RLC
Checked By:	MF
Date Revised:	1/07/2021, 9:27 AM
Layout Name:	SIGNING AND MARKING DETAILS (2)
File Path and Name:	Z:\project\2690.02 DOT_C BET Main RW Reconstruction\Civil\ACAD\00430-BET-SIGNING AND MARKING.dwg

PLANS DEVELOPED BY:
R&M CONSULTANTS, INC.
9101 VANGUARD DR.
ANCHORAGE, AK 99507
(907) 522-1707
CERT. OF AUTH. NO. AECC111

BY	DATE	REVISION

STATE OF ALASKA
DEPARTMENT OF TRANSPORTATION
AND PUBLIC FACILITIES
CENTRAL REGION
4111 AVIATION AVE., ANCHORAGE ALASKA 99502
PHONE (907) 269-0590

BETHEL AIRPORT
BETHEL, ALASKA
MAIN RUNWAY RECONSTRUCTION
PROJECT No. CFAPT00430
AIP No. 3-02-0029-0XX-20XX
SIGNING AND MARKING DETAILS

DATE: 1/7/2021

DEMOLITION GENERAL NOTES:

1. DECOMMISSIONED CONDUCTORS AND GROUND WIRES IN RACEWAY SHALL BE REMOVED. DECOMMISSIONED CONDUIT SHALL BE REMOVED. ABANDONED WIRING AND CONDUIT RUNS EXPOSED DURING EXCAVATION SHALL BE REMOVED AND DISPOSED OF BY THE CONTRACTOR. THIS WORK SHALL BE SUBSIDIARY TO EXCAVATION AND NO SEPARATE PAYMENT WILL BE MADE.
2. THE CONTRACTOR SHALL RESTORE GRADE AND FINISH SURFACES DISTURBED BY THE REMOVAL OF STRUCTURES. THIS WORK SHALL BE SUBSIDIARY TO THE CONTRACT AND NO SEPARATE PAYMENT WILL BE MADE.
3. DEMOLISHED SIGNS, FIXTURES, AND TRANSFORMERS SHALL BE SALVAGED AND OFFERED TO DOT MAINTENANCE. EQUIPMENT DEEMED OF NO SALVAGE VALUE BY DOT MAINTENANCE PERSONNEL, AND ALL OTHER EQUIPMENT AND MATERIALS NOT LISTED ABOVE, INCLUDING LIGHT BASES, HANDHOLES, SIGN BASES, WIRE, AND RACEWAYS, SHALL BECOME THE PROPERTY OF THE CONTRACTOR AND SHALL BE DISPOSED OF IN ACCORDANCE WITH FEDERAL, STATE, AND LOCAL STATUTES.
4. REMOVAL OF EXISTING CONDUCTORS AND GROUND WIRE SHALL BE SUBSIDIARY TO THE REMOVAL OF THE ASSOCIATED EQUIPMENT AND NO SEPARATE PAYMENT WILL BE MADE.
5. LOCATE EXISTING UNDERGROUND UTILITIES PRIOR TO COMMENCING WORK.

TEMPORARY LIGHTING NOTES:

1. TEMPORARY AIRFIELD LIGHTING AND JUMPERS TO BE PROVIDED AND MAINTAINED TO PROVIDE A FULLY OPERATIONAL SYSTEM TO THE SATISFACTION OF THE ENGINEER, REVISE AS NECESSARY TO COORDINATE WITH PROJECT PHASING. TEMPORARY LIGHTING SYSTEM SHALL MEET THE REQUIREMENTS OF A MEDIUM INTENSITY LIGHTING SYSTEM PER AC 150/5340-30J. PAID FOR UNDER L125.180.0000.
2. RESTORE AIRFIELD LIGHTING POWER AND CONTROL CIRCUITS ONE HOUR PRIOR TO ANY SCHEDULED FLIGHT, OR AS DIRECTED BY THE PROJECT ENGINEER.
3. WHEN TEMPORARY LIGHTING IS NO LONGER NEEDED, REMOVE UNUSED COMPONENTS, CONDUIT AND WIRING.
4. TEMPORARY JUMPERS SHALL BE #8 AWG, 5KV, TYPE 'C' AIRPORT CABLE. RUN JUMPERS IN HDPE CONDUIT, 1-1/4IN MINIMUM, AND 50 LBS SAND BAG EVERY 10 FT ON CENTER. ELECTRICAL CONNECTORS SHALL BE FIELD ATTACHED PLUG-IN SPLICES PER SECTION L-108. TEMPORARY JUMPERS SHALL BE SUBSIDIARY TO ITEM L125.180.0000 AND NO SEPARATE PAYMENT WILL BE MADE.
5. TEMPORARY LIGHT BASES SHALL BE CONSTRUCTED OF STEEL CHANNEL. BOLT THE FIXTURE BASE PLATE TO THE CHANNEL AND SECURE IN PLACE WITH SAND BAGS. AT THE CONTRACTOR'S OPTION, A SELF-CONTAINED TEMPORARY LIGHTING SYSTEM MAY BE PROVIDED. SECURE THE LIGHTS IN PLACE PER THE MANUFACTURER'S INSTRUCTIONS.
6. PROVIDE 1/2IN BLANK STEEL COVERS PER SAFETY PLAN OR AS DIRECTED BY THE ENGINEER AND SECURE TO LIGHT BASES.
7. TEMPORARY LIGHTING LAYOUT WILL BE SHOWN ON SHEETS E02 THROUGH E06.
8. REMOVE EDGE LIGHTS THAT CONFLICT WITH CONSTRUCTION ACTIVITIES AND PROVIDE MEANS OF BLANKING OUT EXISTING TAXIWAY EDGE LIGHTS AND SIGNS ON CLOSED PORTIONS OF TAXIWAYS AND APRON AS INDICATED IN THE PHASING PLANS AND AS DIRECTED BY THE ENGINEER. THIS MAY BE ACCOMPLISHED BY REMOVING THE FIXTURES AND PROVIDING SHORTING CAPS, OR BY BAGGING THE FIXTURES AND SIGNS. IF FIXTURES ARE REMOVED, PROVIDE STEEL COVER PLATES. THE CONTRACTOR SHALL PROVIDE SAFE STORAGE AND RE-INSTALL THE FIXTURES OR REMOVE BAGS, AND CLEAN EACH FIXTURE AT THE END OF EACH PHASE. THIS WORK SHALL BE PAID UNDER ITEM L125.180.0000 AND NO SEPARATE PAYMENT WILL BE MADE.

DEMOLITION SHEET NOTES:

1. REMOVE RUNWAY EDGE LIGHTS, THRESHOLD LIGHTS, OR TAXIWAY LIGHTS, TRANSFORMERS, AND UNUSED WIRING.
2. DISCONNECT AND REMOVE EXISTING CONDUCTORS BACK TO NEAREST LIGHT BASE OR PULL BOX OUTSIDE OF THE EXCAVATION LIMITS.
3. REMOVE SIGN, SIGN BASE, ADJACENT HANDHOLE, TRANSFORMER, UNUSED WIRING AND CONDUIT.
4. REMOVE TAXIWAY EDGE LIGHT, LIGHT BASE, WIRE AND TRANSFORMER TO ACCOMMODATE EXCAVATION. CONTRACTOR TO SURVEY AND RECORD LOCATION OF LIGHT BASE PRIOR TO REMOVAL. THIS WORK SHALL BE SUBSIDIARY TO PAY ITEM L125.070.0000 AND NO SEPARATE PAYMENT SHALL BE MADE.
5. EXISTING TO BE MAINTAINED AND WORKED AROUND.
6. CAP ENDS OF CONDUIT AND ABANDON IN-PLACE WHERE RUN UNDER TAXIWAY.
7. REMOVE EXISTING RUNWAY CONDUCTOR(S) FROM THIS LIGHT BASE BACK TO REGULATOR BUILDING.
8. SALVAGE LIGHTS, BASE PLATES, AND TRANSFORMERS FOR REINSTALLATION.
9. REMOVE SIGN, STORE AND PROTECT FOR REINSTALLATION. REMOVE SIGN BASE, ADJACENT HANDHOLE, TRANSFORMER, UNUSED WIRE AND CONDUIT.
10. REMOVE CONDUCTORS FROM CONDUITS AND LIGHT BASES. SALVAGE TRANSFORMER, BASE PLATE, AND LIGHT FIXTURE FOR REINSTALLATION.

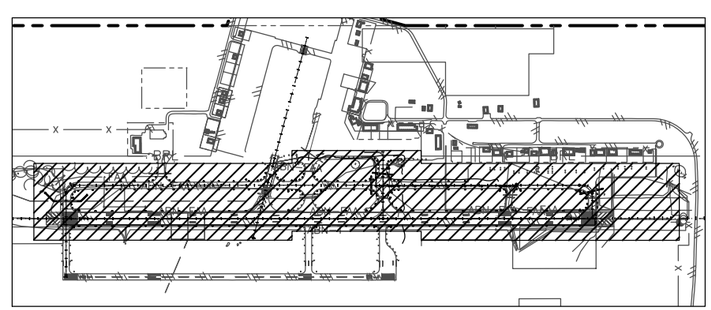

KEY PLAN:

DEMOLITION LEGEND:

R-1 – RW 01L-19R CIRCUIT, NUMBER INDICATES CIRCUIT NUMBER
T-1 – TW A, B, C, D, E, F, AND G CIRCUIT, NUMBER INDICATED CIRCUIT NUMBER.

- EXISTING UNDERGROUND CONDUIT (TO REMAIN)
- EXISTING UNDERGROUND CONDUIT (TO BE REMOVED)
- EXISTING RUNWAY OR TAXIWAY LIGHT AND BASE (TO BE REMOVED) (1)
- EXISTING TAXIWAY LIGHT (TO REMAIN)
- EXISTING RUNWAY EDGE LIGHT (TO REMAIN)
- EXISTING HANDHOLE (TO REMAIN)
- EXISTING AIRPORT SIGN (TO REMAIN)
- EXISTING WIND CONE (TO REMAIN)
- EXISTING VASI (TO REMAIN)
- EXISTING WIND CONE (TO BE REMOVED)
- EXISTING AIRPORT SIGN AND BASE (TO BE REMOVED)
- EXISTING HANDHOLE OR J-BOX (TO BE REMOVED)
- TEMPORARY TAXIWAY EDGE LIGHT
- TEMPORARY RUNWAY THRESHOLD LIGHT
- TEMPORARY RUNWAY EDGE LIGHT

ABBREVIATIONS:

AWG	AMERICAN WIRE GAUGE
BCU	BARE COPPER GROUND
C	CONDUIT
CBAC	CRUSHED BASE AGGREGATE COURSE
CCR	CONSTANT CURRENT REGULATOR
CSPP	CONSTRUCTION SAFETY AND PHASING PLAN
CTSBC	CEMENT TREATED SOIL BASE COURSE
CU	COPPER
DEB	DIRECT EARTH BURY
DEG	DEGREES
EEB	ELECTRICAL EQUIPMENT BUILDING
ETR	EXISTING TO REMAIN
FAA	FEDERAL AVIATION ADMINISTRATION
FT	FOOT
HDPE	HIGH DENSITY POLYETHYLENE
HIRL	HIGH INTENSITY RUNWAY LIGHTING
IN	INCH
KV	KILOVOLT
KW	KILOWATT
LED	LIGHT EMITTING DIODE
LFMC	LIQUIDTIGHT FLEXIBLE METAL CONDUIT
NRTL	NATIONALLY RECOGNIZED TESTING LABORATORY
MAX	MAXIMUM
MIN	MINIMUM
OC	ON CENTER
UON	UNLESS OTHERWISE NOTED
PCT	PERCENT
PRI	PRIMARY
REIL	RUNWAY END IDENTIFIER LIGHT
RSC	RIGID STEEL CONDUIT
RW	RUNWAY
RW(X)	RW CIRCUIT, NUMBER IN () INDICATES # OF CONDUCTORS
SCO	SERIES CUT OUT
STA	STATION
TH	THRESHOLD
TOC	TOP OF CONCRETE
TW(X)	TW CIRCUIT, NUMBER IN () INDICATES # OF CONDUCTORS
TW	TAXIWAY
TYP	TYPICAL
VASI	VISUAL APPROACH SLOPE INDICATOR
XFMR	TRANSFORMER

PLANS DEVELOPED BY:
MBA CONSULTING ENGINEERS, INC.
3812 SPENARD RD.
ANCHORAGE, AK 99517
(907) 274-2622
CERT. OF AUTH. NO. AECC578

BY	DATE	REVISION

STATE OF ALASKA
DEPARTMENT OF TRANSPORTATION AND PUBLIC FACILITIES
CENTRAL REGION
4111 AVIATION AVE., ANCHORAGE ALASKA 99502
PHONE (907) 269-0590

BETHEL AIRPORT
BETHEL, ALASKA
MAIN RUNWAY RECONSTRUCTION
PROJECT No. CFAPT00430
AIP No. 3-02-0029-0XX-20XX
LIGHTING DEMOLITION PLAN
LEGEND AND NOTES

DATE: 11/24/2020
SHEET: E01 OF 79

Designed By: JBM
Drawn By: JBM/SNS/PDO
Checked By: EWC
Date Revised: 11/24/2020, 9:58 AM
Layout Name: E01-LEGEND
File Path and Name: Z:\20007BAR - Bethel Airport Main Runway\E-Working\Drawings\20007-BET-DEMO PLANS.dwg

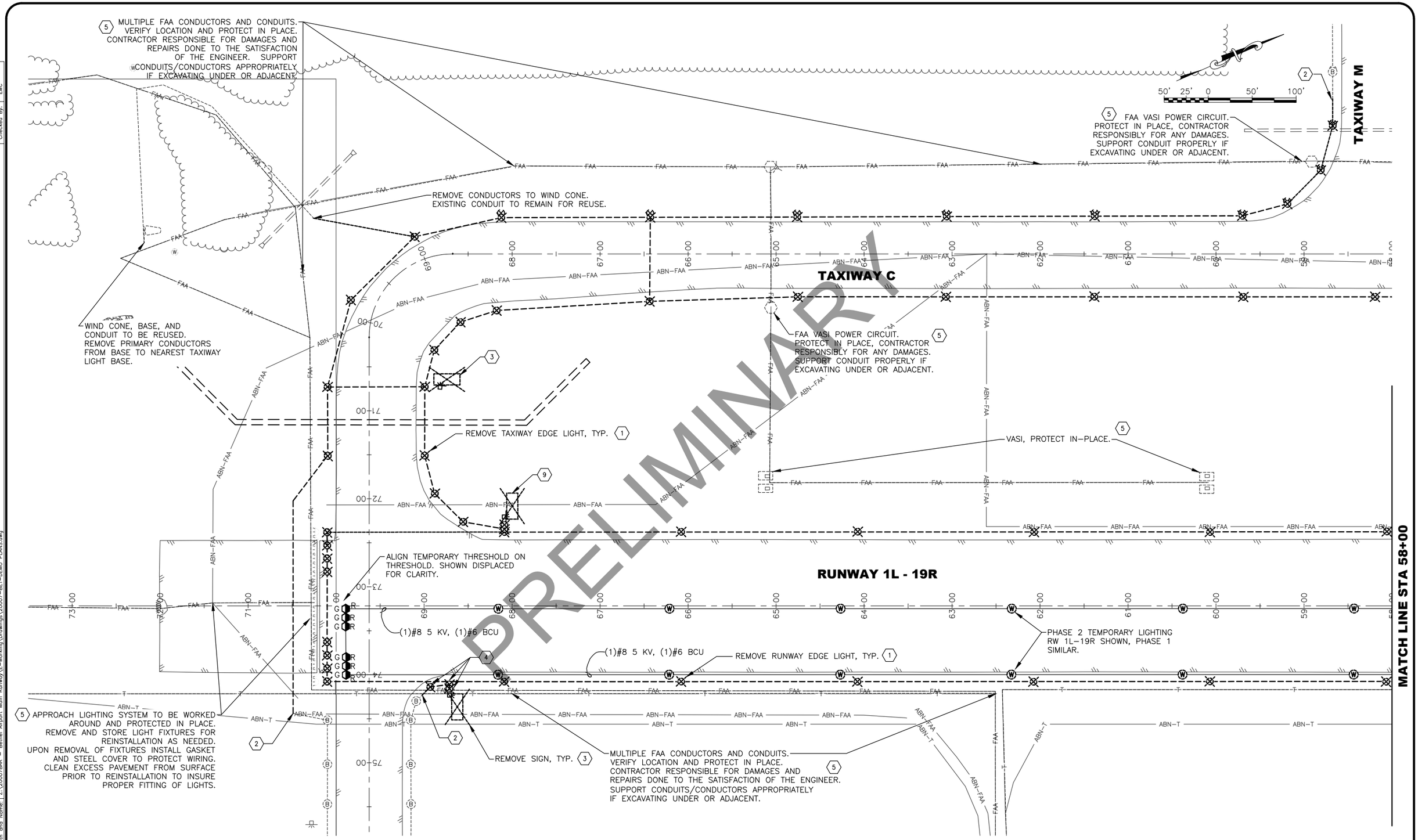

Date Revised:	11/24/2020, 9:58 AM
Layout Name:	E02 72+00 - 58+00
File Path and Name:	Z:\20007BAR - Bethel Airport Main Runway\E-Working\Drawings\20007-BET-DEMO PLANS.dwg
Designed By:	JBM
Drawn By:	JBM/SNS/PDO
Checked By:	EWC

PLANS DEVELOPED BY:
MBA CONSULTING ENGINEERS, INC.
3812 SPENARD RD.
ANCHORAGE, AK 99517
(907) 274-2622
CERT. OF AUTH. NO. AECC578

BY	DATE	REVISION

STATE OF ALASKA
DEPARTMENT OF TRANSPORTATION AND PUBLIC FACILITIES
CENTRAL REGION
4111 AVIATION AVE., ANCHORAGE ALASKA 99502
PHONE (907) 269-0590

BETHEL AIRPORT
BETHEL, ALASKA
MAIN RUNWAY RECONSTRUCTION
PROJECT No. CFAPT00430
AIP No. 3-02-0029-0XX-20XX
LIGHTING DEMOLITION PLAN
72+00 TO 58+00

DATE: 11/24/2020

SHEET: E02 OF 79

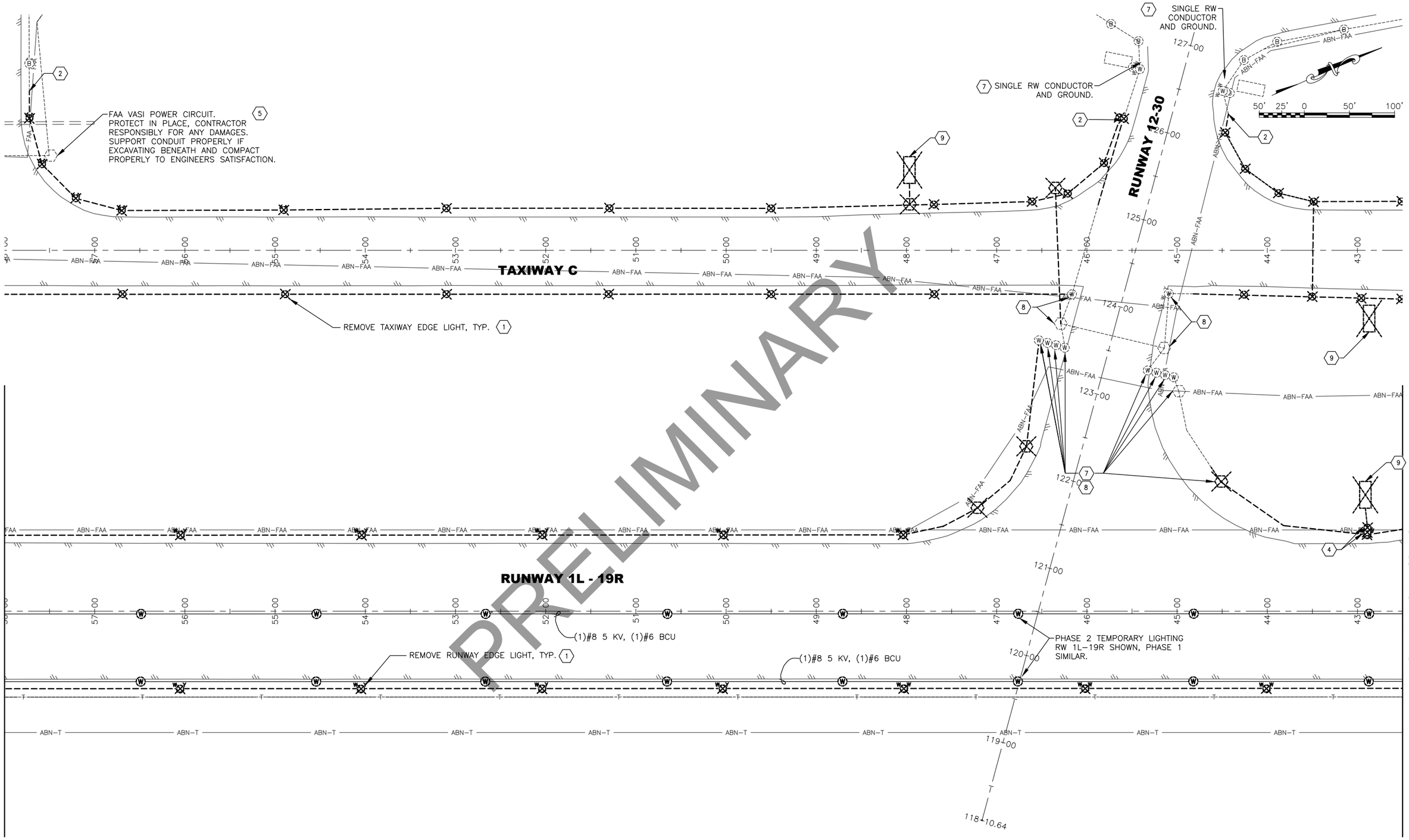

Designed By:	JBM
Drawn By:	JBM/SNS/PDO
Checked By:	EWC
Date Revised:	11/24/2020, 9:58 AM
Layout Name:	E03 58+00 – 42+50
File Path and Name:	Z:\20007BAR – Bethel Airport Main Runway\E-Working\Drawings\20007-BET-DEMO PLANS.dwg

PLANS DEVELOPED BY:
MBA CONSULTING ENGINEERS, INC.
3812 SPENARD RD.
ANCHORAGE, AK 99517
(907) 274-2622
CERT. OF AUTH. NO. AECC578

BY	DATE	REVISION

STATE OF ALASKA
DEPARTMENT OF TRANSPORTATION AND PUBLIC FACILITIES
CENTRAL REGION
4111 AVIATION AVE., ANCHORAGE ALASKA 99502
PHONE (907) 269-0590

BETHEL AIRPORT
BETHEL, ALASKA
MAIN RUNWAY RECONSTRUCTION
PROJECT No. CFAPT00430
AIP No. 3-02-0029-0XX-20XX
LIGHTING DEMOLITION PLAN
58+00 TO 42+50

DATE: 11/24/2020

SHEET: E03 OF 79

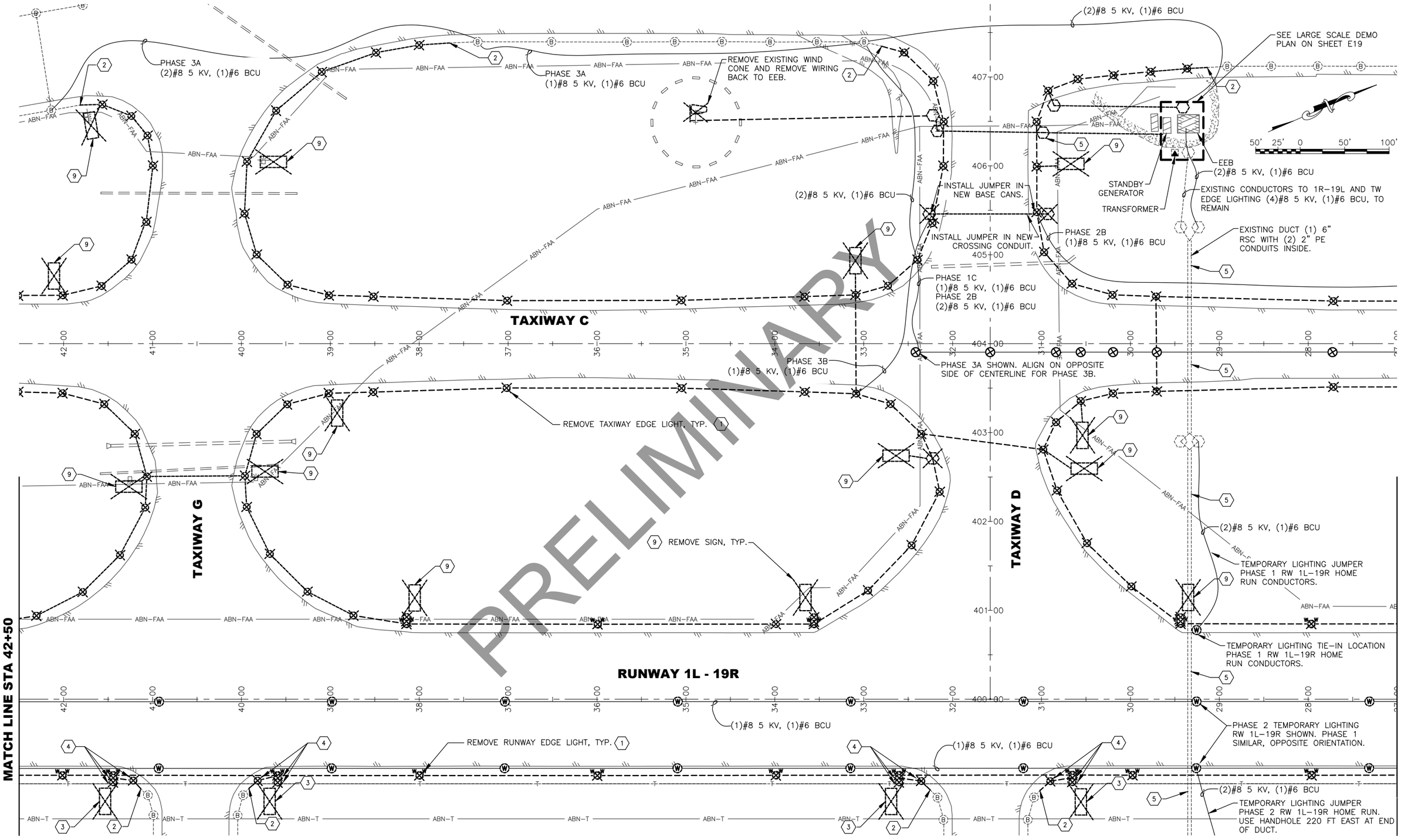

Designed By:	JBM
Drawn By:	JBM/SNS/PDO
Checked By:	EWC
Date Revised:	11/24/2020, 9:58 AM
Layout Name:	E04 42+50 - 27+00
File Path and Name:	Z:\20007BAR - Bethel Airport Main Runway\E-Working\Drawings\20007-BET-DEMO PLANS.dwg

PLANS DEVELOPED BY:
MBA CONSULTING ENGINEERS, INC.
3812 SPENARD RD.
ANCHORAGE, AK 99517
(907) 274-2622
CERT. OF AUTH. NO. AECC578

BY	DATE	REVISION

STATE OF ALASKA
DEPARTMENT OF TRANSPORTATION AND PUBLIC FACILITIES
CENTRAL REGION
4111 AVIATION AVE., ANCHORAGE ALASKA 99502
PHONE (907) 269-0590

BETHEL AIRPORT
BETHEL, ALASKA
MAIN RUNWAY RECONSTRUCTION
PROJECT No. CFAPT00430
AIP No. 3-02-0029-0XX-20XX
LIGHTING DEMOLITION PLAN
42+50 TO 27+00

DATE: 11/24/2020

SHEET: E04 OF 79

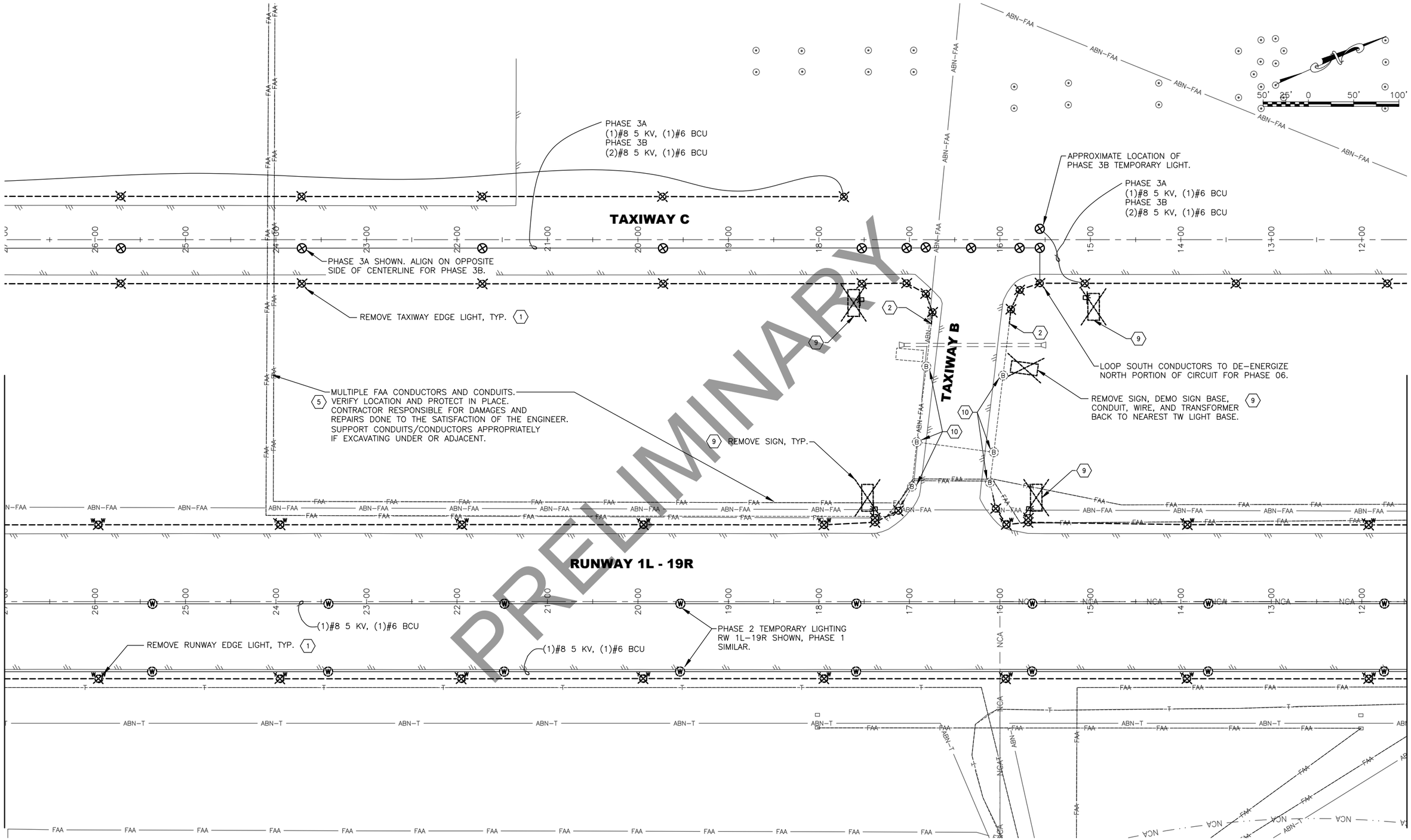

Designed By:	JBM
Drawn By:	JBM/SNS/PDO
Checked By:	EWC
Date Revised:	11/24/2020, 9:58 AM
Layout Name:	E05 27+00 - 11+50
File Path and Name:	Z:\20007BAR - Bethel Airport Main Runway\E-Working\Drawings\20007-BET-DEMO PLANS.dwg

PLANS DEVELOPED BY:
MBA CONSULTING ENGINEERS, INC.
3812 SPENARD RD.
ANCHORAGE, AK 99517
(907) 274-2622
CERT. OF AUTH. NO. AECC578

BY	DATE	REVISION

STATE OF ALASKA
DEPARTMENT OF TRANSPORTATION AND PUBLIC FACILITIES
CENTRAL REGION
4111 AVIATION AVE., ANCHORAGE ALASKA 99502
PHONE (907) 269-0590

BETHEL AIRPORT
BETHEL, ALASKA
MAIN RUNWAY RECONSTRUCTION
PROJECT No. CFAPT00430
AIP No. 3-02-0029-0XX-20XX
LIGHTING DEMOLITION PLAN
27+00 TO 11+50

DATE: 11/24/2020

SHEET: E05 OF 79

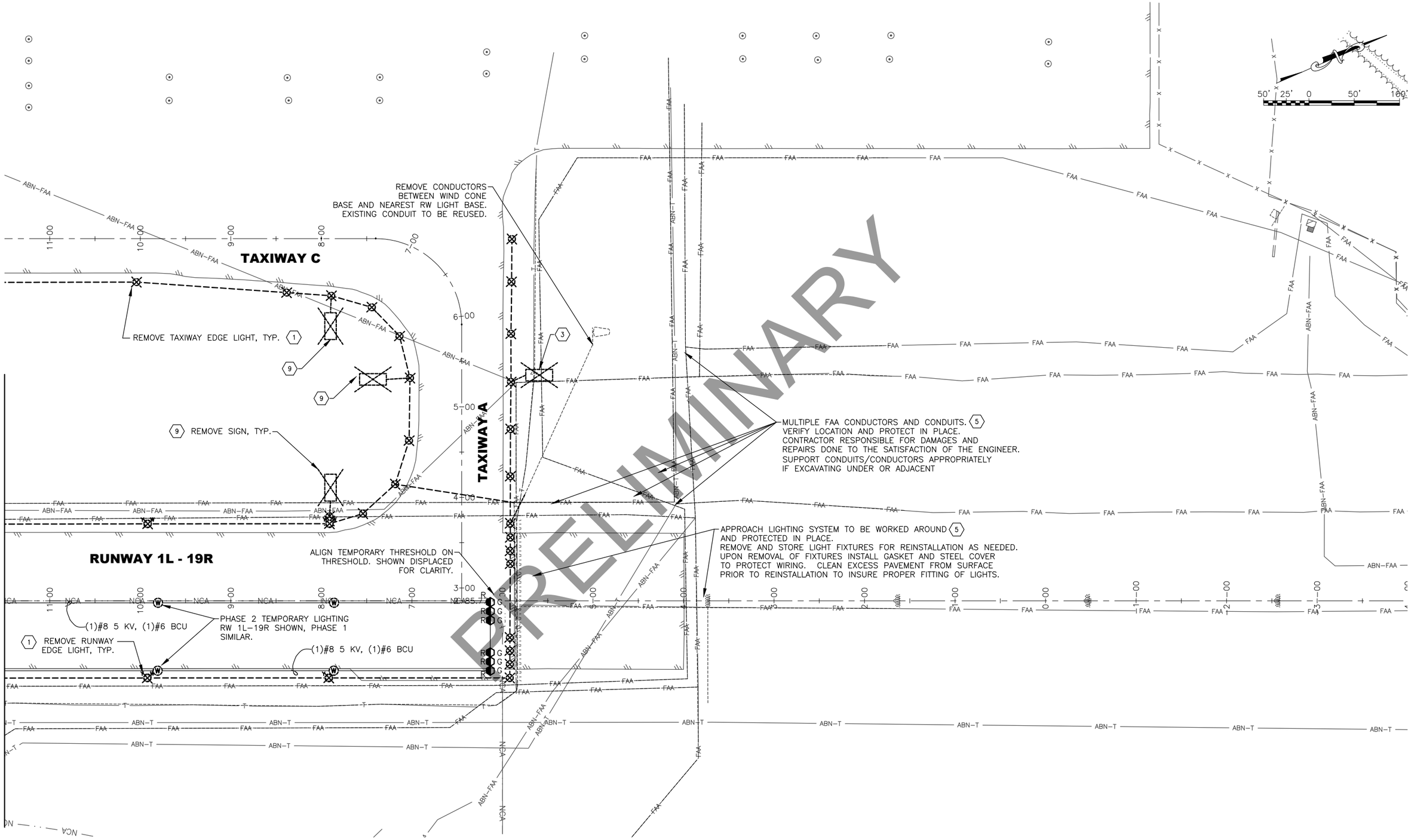

Designed By:	JBM
Drawn By:	JBM/SNS/PDO
Checked By:	EWC
Date Revised:	11/24/2020, 9:58 AM
Layout Name:	E06 11+50 - 4+00
File Path and Name:	Z:\20007BAR - Bethel Airport Main Runway\E-Working\Drawings\20007-BET-DEMO PLANS.dwg

PLANS DEVELOPED BY:
MBA CONSULTING ENGINEERS, INC.
3812 SPENARD RD.
ANCHORAGE, AK 99517
(907) 274-2622
CERT. OF AUTH. NO. AECC578

BY	DATE	REVISION

STATE OF ALASKA
DEPARTMENT OF TRANSPORTATION AND PUBLIC FACILITIES
CENTRAL REGION
4111 AVIATION AVE., ANCHORAGE ALASKA 99502
PHONE (907) 269-0590

BETHEL AIRPORT
BETHEL, ALASKA
MAIN RUNWAY RECONSTRUCTION
PROJECT No. CFAPT00430
AIP No. 3-02-0029-0XX-20XX
LIGHTING DEMOLITION PLAN
11+50 TO 4+00

DATE: 11/24/2020

SHEET: E06 OF 79

GENERAL NOTES:

1. CONDUITS AND LIGHT BASES SHALL BE INSTALLED PRIOR TO PLACEMENT OF FINISH COURSE.
2. REMOVE POWER FROM TAXIWAY LIGHTING CIRCUIT DURING ASSOCIATED WORK, RESTORE POWER WHEN WORK IS COMPLETE.
3. AIRFIELD LIGHTING CABLE SHALL BE #8 AWG, 5kV, FAA TYPE "C" AIRPORT CABLE.
4. CONNECT HDPE CONDUIT TO DISSIMILAR CONDUIT USING A LISTED TRANSITION FITTING.
5. PROVIDE LIGHT BASES WITH HUB CONFIGURATIONS TO ACCOMMODATE THE LAYOUT AS SHOWN IN THE PLANS. ROUTE CONDUIT FROM POINT TO POINT, IN A STRAIGHT LINE, EXCEPT AS REQUIRED TO AVOID AN OBSTRUCTION.
6. ALL BOLTS, NUTS, AND THREADED SURFACES SHALL BE COATED WITH ANTI-SEIZE LUBRICANT PER SPECIFICATIONS.
7. ARRANGE THE LIGHTING CIRCUIT TO FLOW CLOCKWISE AROUND THE RUNWAY AND TAXIWAY WITH THE FEMALE CONNECTOR ON THE REGULATOR SIDE OF THE TRANSFORMER. SEE SHEET E17.
8. ALL TRANSFORMER CONNECTIONS SHALL BE MADE ON THE FEED SIDE OF THE SERIES LOOP. RETURN AND LOOP CONDUCTORS SHALL BE CONTINUOUS AND UNSPLICED.
9. HAND HOLE LOCATIONS MAY BE FIELD ADJUSTED AS APPROVED BY THE ENGINEER.
10. CONDUIT ROUTING SHOWN FOR CLARITY. ROUTE CONDUITS ON SHOULDER. CONDUITS THAT RUN IN CLOSE PROXIMITY MAY BE INSTALLED IN SAME TRENCH.
11. CONTRACTOR SHALL PROVIDE A LIST OF PROPOSED SPARE PARTS AND THE COST FOR EACH CATEGORY TO THE ENGINEER FOR REVIEW PRIOR TO PLACING THE ORDER FOR THE PARTS. QUANTITIES SHALL BE REDUCED IF NECESSARY UNTIL THE COSTS ARE WITHIN THE LIMITS OF THE FAA REQUIREMENTS. SEE SECTION L-125 FOR ADDITIONAL INFORMATION.
12. EDGE LIGHTS TO REMAIN IN SERVICE OUTSIDE CONSTRUCTION LIMITS, SEE CONSTRUCTION SAFETY AND PHASING PLANS. PROVIDE AND MAINTAIN TEMPORARY JUMPERS AS REQUIRED: #8, 5KV AIRPORT CABLE IN HDPE CONDUIT. SAND BAG 10 FEET ON CENTER WITH 50 LB SAND BAGS.
13. SLOPE CONDUITS TO DRAIN TO LOW SPOT. INSTALL 2" CONDUIT DRAIN FROM LIGHT BASE OR HANDHOLE TO DESIGNATED DRAIN LOCATION, VERIFY LOCATION.
14. CONDUCTORS OF SEPARATE CIRCUITS SHALL BE IDENTIFIED BY COLORABLE INSULATION. THE COLORS GREEN AND WHITE SHALL NOT BE USED TO IDENTIFY SERIES CIRCUITS. RW (R-1) CIRCUIT = RED, RW (R-3) CIRCUIT = ORANGE, TW (T-1) = BLUE.

LIGHTING PLAN SHEET NOTES:

1. CONNECT NEW CONDUIT TO EXISTING JUNCTION BOX, LIGHT BASE, HANDHOLE OR CONDUIT USING LISTED DEVICES.
2. CONNECT NEW #8 5KV AIRPORT CABLES AND #6 BCU TO EXISTING CONDUCTORS FOR CONTINUATION OF THE CIRCUIT. PROVIDE NEW NEOPRENE GASKET AND SEAL WASHERS.
3. PROVIDE NEW 7.5 KW AIRFIELD REGULATOR AND SCO IN EEB FOR RUNWAY 12-30. PROVIDE ALL NEW ELECTRICAL COMPONENTS TO INSTALL, POWER, AND CONTROL REGULATOR. REFER TO E19 FOR DETAILS.
4. INSTALL NEW CONDUCTORS IN LIGHT BASE. REINSTALL LIGHT FIXTURE AND TRANSFORMER. INSTALL NEW GASKET AND SEAL WASHERS FOR LIGHT BASE LID.
5. INSTALL NEW CONDUCTORS IN EXISTING HANDHOLES. PROVIDE NEW COVERS, GASKETS, AND BOLTS.
6. HANDHOLES 1, 2, 3, AND 4 SUPPLY RW 12-30 HOME RUN CONDUCTORS. ROUTE CONDUITS IN SAME TRENCH AS MAIN RW 1L-19R EDGE LIGHT CONDUITS. PLACE HANDHOLES OUTSIDE OF PAVED SHOULDER. RUN HOME RUN CONDUIT HANDHOLE TO HANDHOLE, DO NOT CONNECT TO TAXIWAY BASES.
7. SEE SIGN SCHEDULE FOR PANEL IDENTIFICATION AND STATIONING.
8. REINSTALL EXISTING SIGN. PROVIDE NEW BASE, WIRING, AND TRANSFORMER.
9. PROVIDE NEW LOCATION PANEL AND SIGN DIVIDER AS REQUIRED.
10. PROVIDE NEW SIGN, BASE, TRANSFORMER AND WIRING.

LEGEND:

R-1 – RW 1L-19R CIRCUIT, NUMBER INDICATES CIRCUIT NUMBER
R-3 – RW 12-30 CIRCUIT, NUMBER INDICATES CIRCUIT NUMBER
T-1 – TW A, TW B, TW C, TW D, TW E, TW F, TW G, AND TW M CIRCUIT, NUMBER INDICATES CIRCUIT NUMBER

EXISTING UNDERGROUND WIRE AND CONDUIT (TO BE MAINTAINED). HASH MARKS INDICATE NUMBER OF NEW #8 AWG. 5KV AIRPORT CABLES TYPE "C" PLUS ONE #6 BARE COPPER GROUND CONDUCTOR.
NEW 2" HDPE CONDUIT. HASH MARKS INDICATE NUMBER OF NEW #8 AWG. 5KV AIRPORT CABLES TYPE "C" PLUS ONE #6 BARE COPPER GROUND CONDUCTOR.
NEW 2" RSC CONDUIT. HASH MARKS INDICATE NUMBER OF NEW #8 AWG. 5KV AIRPORT CABLES TYPE "C" PLUS ONE #6 BARE COPPER GROUND CONDUCTOR.
NEW RUNWAY THRESHOLD LIGHT – HIGH INTENSITY
NEW RUNWAY EDGE LIGHT – HIGH INTENSITY
NEW RUNWAY IN-PAVEMENT EDGE LIGHT – HIGH INTENSITY
NEW LED TAXIWAY EDGE LIGHT – MEDIUM INTENSITY
EXISTING TAXIWAY LIGHT (TO REMAIN)
EXISTING HANDHOLE (TO REMAIN)
NEW HANDHOLE, L-867B
NEW 3/4" X 10' GROUND ROD
TXX LIGHT OR HANDHOLE NUMBER "X" – SEE SCHEDULE
EXISTING AIRPORT SIGN (TO REMAIN)
NEW LIGHTED AIRPORT SIGN
SIGN NUMBER "X" – SEE SCHEDULE
EXISTING WIND CONE (TO REMAIN)
EXISTING VASI (TO REMAIN)
NEW WIND CONE

ABBREVIATIONS:

AWG	AMERICAN WIRE GAUGE
BCU	BARE COPPER GROUND
C	CONDUIT
CABC	CRUSHED AGGREGATE BASE COURSE
CCR	CONSTANT CURRENT REGULATOR
CSPP	CONSTRUCTION SAFETY AND PHASING PLAN
CTSBC	CEMENT TREATED SOIL BASE COURSE
CU	COPPER
DEB	DIRECT EARTH BURY
DEG	DEGREES
ETR	EXISTING TO REMAIN
EEB	ELECTRICAL EQUIPMENT BUILDING
FAA	FEDERAL AVIATION ADMINISTRATION
FT	FOOT
HDPE	HIGH DENSITY POLYETHYLENE
HIRL	HIGH INTENSITY RUNWAY LIGHTING
IN	INCH
KV	KILOVOLT
KW	KILOWATT
LED	LIGHT EMITTING DIODE
LFMC	LIQUIDTIGHT FLEXIBLE METAL CONDUIT
NRTL	NATIONALLY RECOGNIZED TESTING LABORATORY
MAX	MAXIMUM
MIN	MINIMUM
OC	ON CENTER
UON	UNLESS OTHERWISE NOTED
PCT	PERCENT
PRI	PRIMARY
REIL	RUNWAY END IDENTIFIER LIGHT
RSC	RIGID STEEL CONDUIT
RW	RUNWAY
RW(X)	RW CIRCUIT, NUMBER IN () INDICATES # OF CONDUCTORS
SCO	SERIES CUT OUT
STA	STATION
TH	THRESHOLD
TOC	TOP OF CONCRETE
TW(X)	TW CIRCUIT, NUMBER IN () INDICATES # OF CONDUCTORS
TW	TAXIWAY
TYP	TYPICAL
VASI	VISUAL APPROACH SLOPE INDICATOR
XFMR	TRANSFORMER

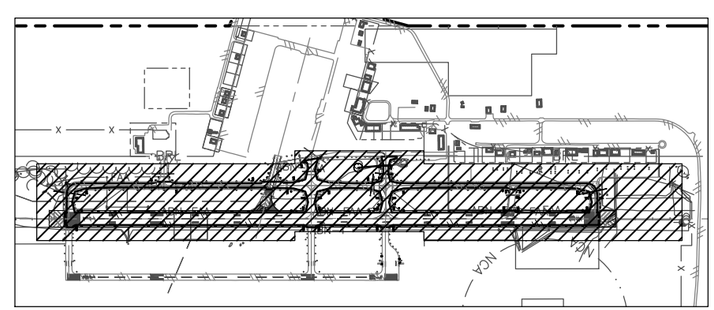

KEY PLAN:

PLANS DEVELOPED BY:
MBA CONSULTING ENGINEERS, INC.
3812 SPENARD RD.
ANCHORAGE, AK 99517
(907) 274-2622
CERT. OF AUTH. NO. AECC578

BY	DATE	REVISION

STATE OF ALASKA
DEPARTMENT OF TRANSPORTATION AND PUBLIC FACILITIES
CENTRAL REGION
4111 AVIATION AVE., ANCHORAGE ALASKA 99502
PHONE (907) 269-0590

BETHEL AIRPORT
BETHEL, ALASKA
MAIN RUNWAY RECONSTRUCTION
PROJECT No. CFAPT00430
AIP No. 3-02-0029-0XX-20XX
LIGHTING PLAN
LEGEND AND NOTES

DATE: 11/24/2020
SHEET: E07 OF 79

Designed By: JBM
Drawn By: JBM/SNS/PDO
Checked By: EWC
Date Revised: 11/24/2020, 9:58 AM
Layout Name: E07 LEGNED AND NOTES-NEW
File Path and Name: Z:\20007BAR - Bethel Airport Main Runway\E-Working\Drawings\20007-BET-NEW PLANS.dwg

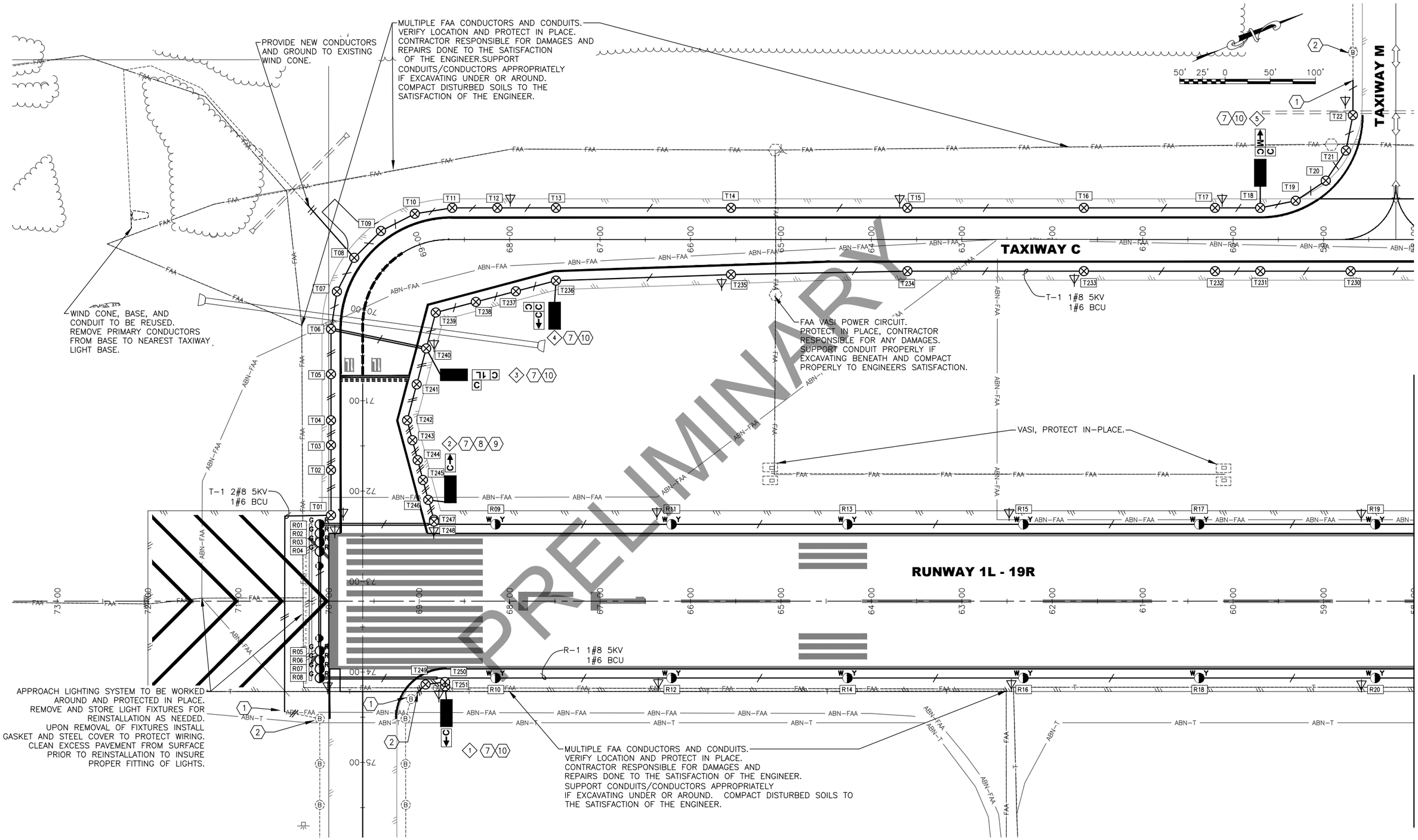

Designed By:	JBM
Drawn By:	JBM/SNS/PDO
Checked By:	EWC
Date Revised:	11/24/2020, 9:58 AM
Layout Name:	E08 72+00 - 58+00
File Path and Name:	Z:\20007BAR - Bethel Airport Main Runway\E-Working\Drawings\20007-BET-NEW PLANS.dwg

PLANS DEVELOPED BY: MBA CONSULTING ENGINEERS, INC. 3812 SPENARD RD. ANCHORAGE, AK 99517 (907) 274-2622 CERT. OF AUTH. NO. AECC578	BY	DATE	REVISION

STATE OF ALASKA
DEPARTMENT OF TRANSPORTATION AND PUBLIC FACILITIES
CENTRAL REGION
4111 AVIATION AVE., ANCHORAGE ALASKA 99502
PHONE (907) 269-0590

BETHEL AIRPORT
BETHEL, ALASKA
MAIN RUNWAY RECONSTRUCTION
PROJECT No. CFAPT00430
AIP No. 3-02-0029-0XX-20XX
LIGHTING PLAN
72+00 TO 58+00

DATE: 11/24/2020

SHEET: E08 OF 79

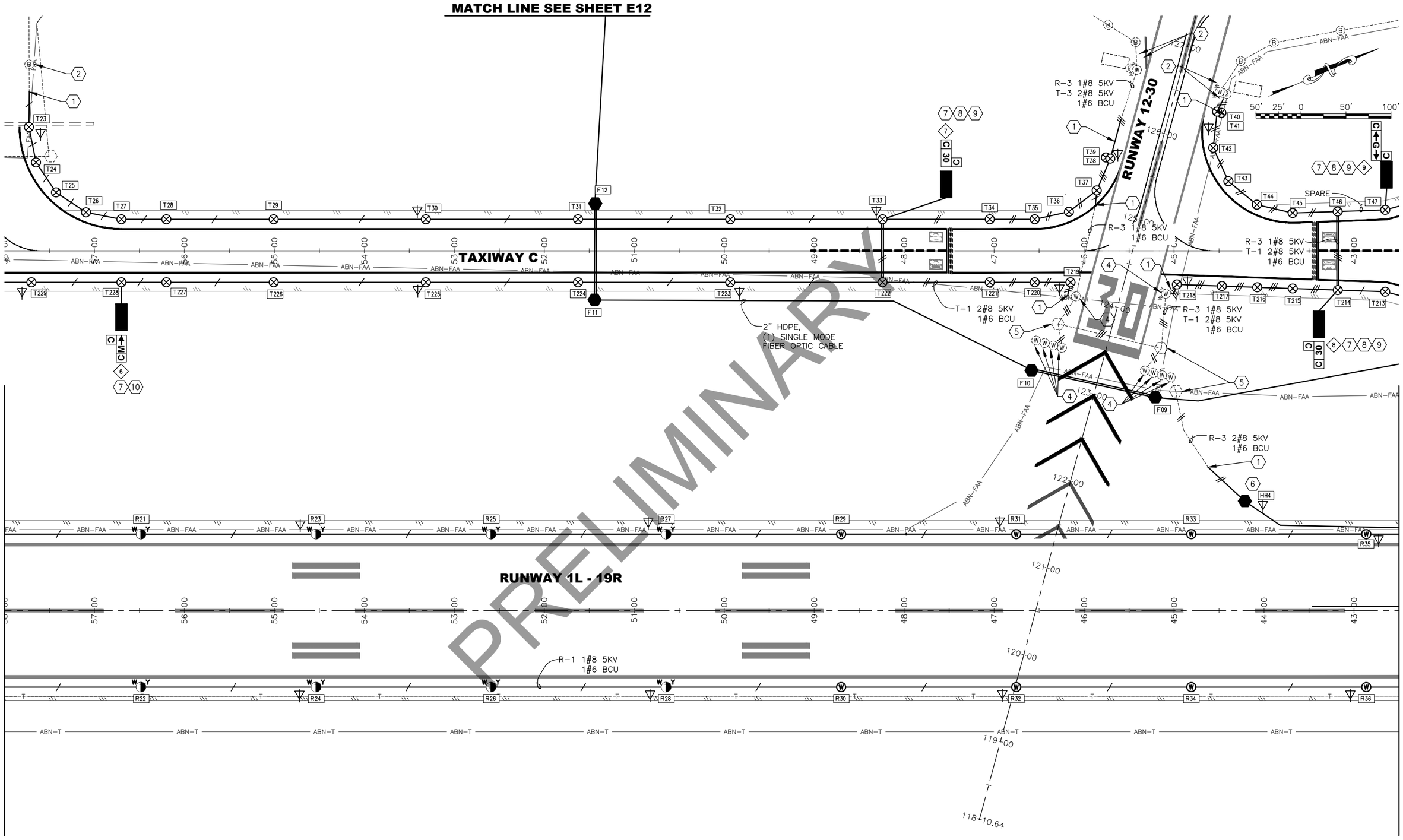

Designed By:	JBM
Drawn By:	JBM/SNS/PDO
Checked By:	EWC
Date Revised:	11/24/2020, 9:58 AM
Layout Name:	E09 58+00 - 42+50
File Path and Name:	Z:\20007BAR - Bethel Airport Main Runway\E-Working\Drawings\20007-BET-NEW PLANS.dwg

PLANS DEVELOPED BY: MBA CONSULTING ENGINEERS, INC. 3812 SPENARD RD. ANCHORAGE, AK 99517 (907) 274-2622 CERT. OF AUTH. NO. AECC578	BY	DATE	REVISION

STATE OF ALASKA
DEPARTMENT OF TRANSPORTATION AND PUBLIC FACILITIES
CENTRAL REGION
4111 AVIATION AVE., ANCHORAGE ALASKA 99502
PHONE (907) 269-0590

BETHEL AIRPORT
BETHEL, ALASKA
MAIN RUNWAY RECONSTRUCTION
PROJECT No. CFAPT00430
AIP No. 3-02-0029-0XX-20XX
LIGHTING PLAN
58+00 TO 42+50

DATE: 11/24/2020

SHEET: E09 OF 79

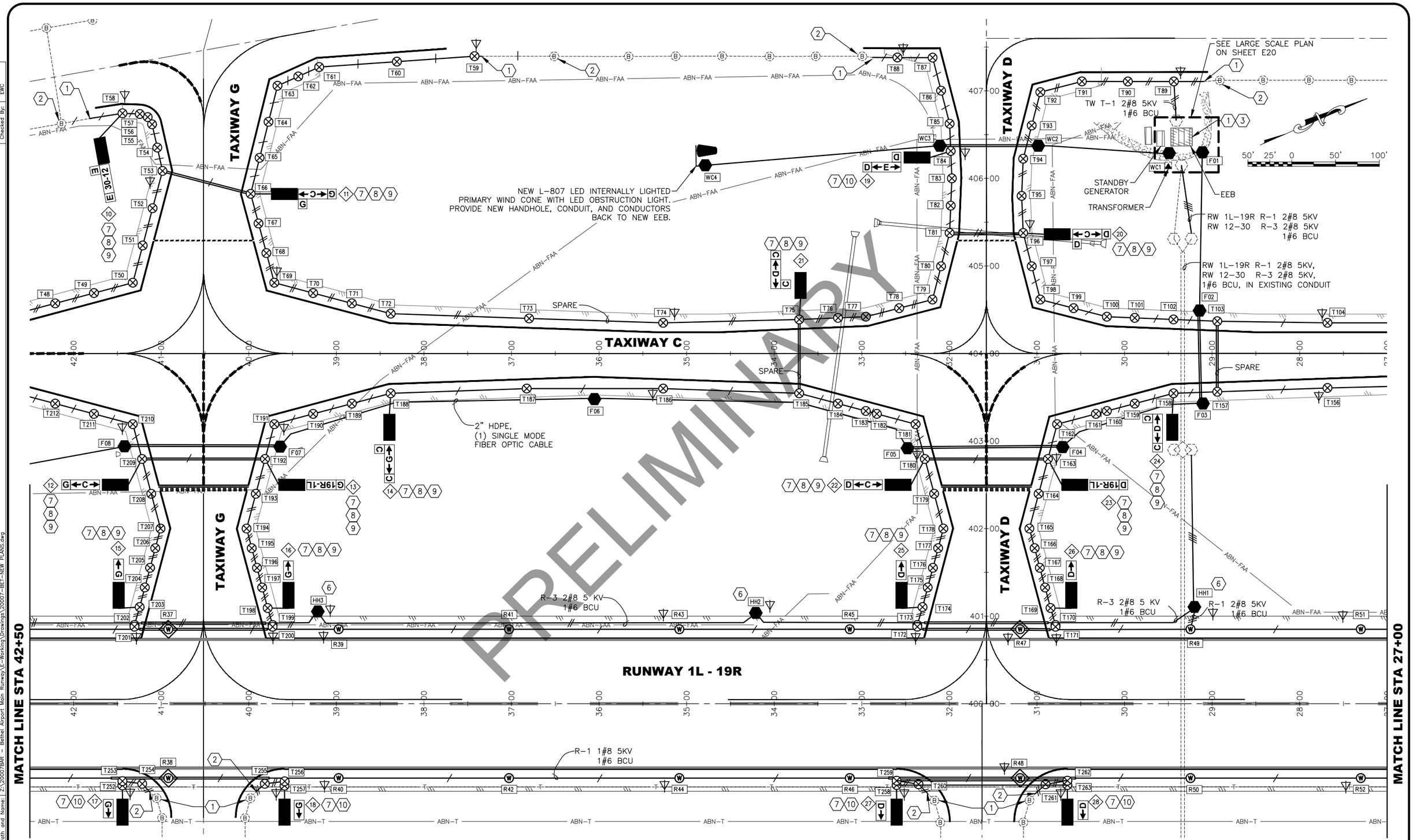

Date Revised:	11/24/2020, 9:59 AM
Layout Name:	E10 42+50 - 27+00
File Path and Name:	Z:\20007BAR - Bethel Airport Main Runway\E-Working\Drawings\20007-BET-NEW PLANS.dwg

Designed By:	JBM
Drawn By:	JBM/SNS/PDO
Checked By:	EWC

PLANS DEVELOPED BY:
MBA CONSULTING ENGINEERS, INC.
3812 SPENARD RD.
ANCHORAGE, AK 99517
(907) 274-2622
CERT. OF AUTH. NO. AECC578

BY	DATE	REVISION

STATE OF ALASKA
DEPARTMENT OF TRANSPORTATION AND PUBLIC FACILITIES
CENTRAL REGION
4111 AVIATION AVE., ANCHORAGE ALASKA 99502
PHONE (907) 269-0590

BETHEL AIRPORT
BETHEL, ALASKA
MAIN RUNWAY RECONSTRUCTION
PROJECT No. CFAPT00430
AIP No. 3-02-0029-0XX-20XX
LIGHTING PLAN
42+50 TO 27+00

DATE: 11/24/2020

SHEET: E10 OF 79

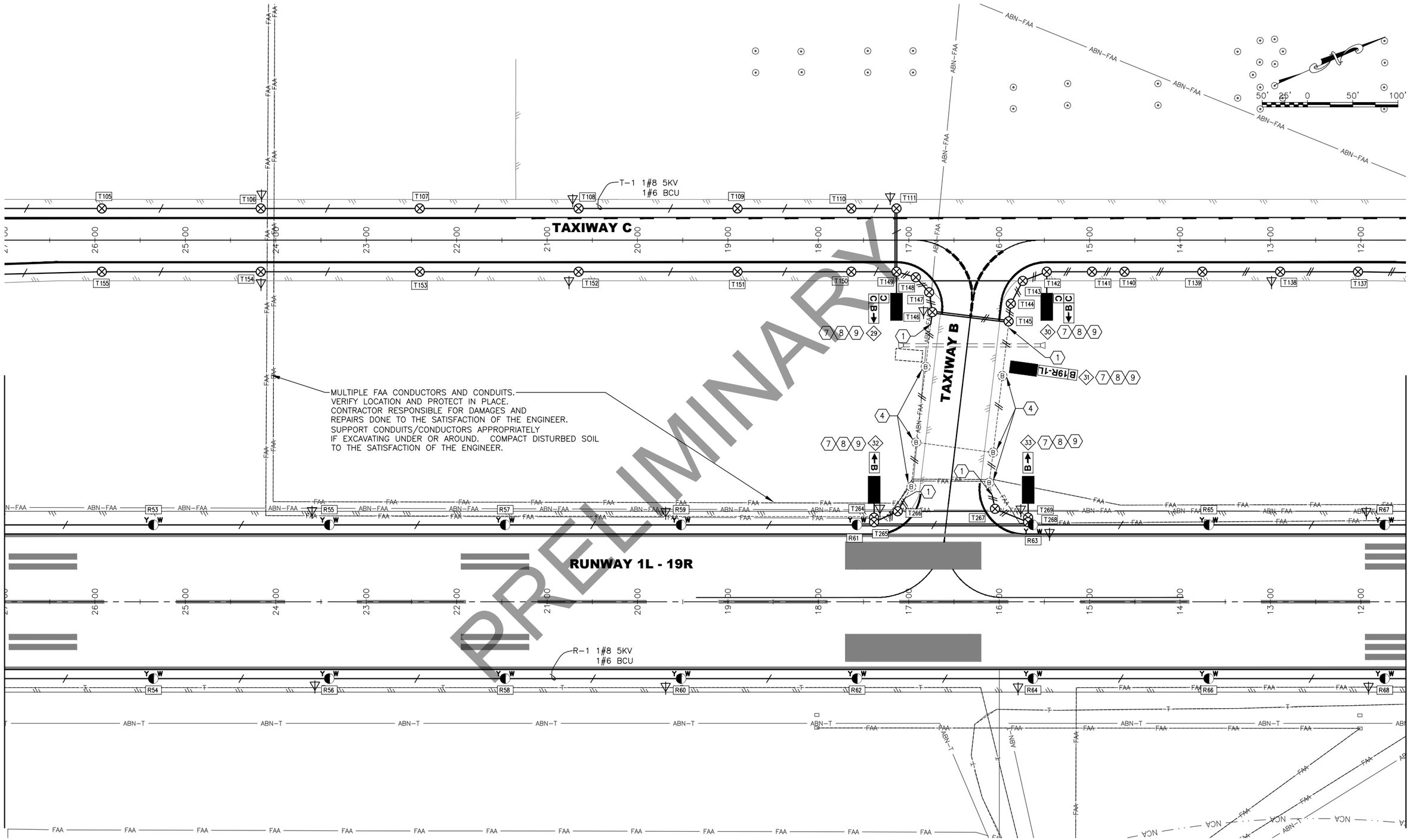

Designed By:	JBM
Drawn By:	JBM/SNS/PDO
Checked By:	EWC
Date Revised:	11/24/2020, 9:59 AM
Layout Name:	E11 27+00 - 11+50
File Path and Name:	Z:\20007BAR - Bethel Airport Main Runway\E-Working\Drawings\20007-BET-NEW PLANS.dwg

PLANS DEVELOPED BY:
MBA CONSULTING ENGINEERS, INC.
3812 SPENARD RD.
ANCHORAGE, AK 99517
(907) 274-2622
CERT. OF AUTH. NO. AECC578

BY	DATE	REVISION

STATE OF ALASKA
DEPARTMENT OF TRANSPORTATION AND PUBLIC FACILITIES
CENTRAL REGION
4111 AVIATION AVE., ANCHORAGE ALASKA 99502
PHONE (907) 269-0590

BETHEL AIRPORT
BETHEL, ALASKA
MAIN RUNWAY RECONSTRUCTION
PROJECT No. CFAPT00430
AIP No. 3-02-0029-0XX-20XX
LIGHTING PLAN
27+00 TO 11+50

DATE: 11/24/2020

SHEET: E11 OF 79

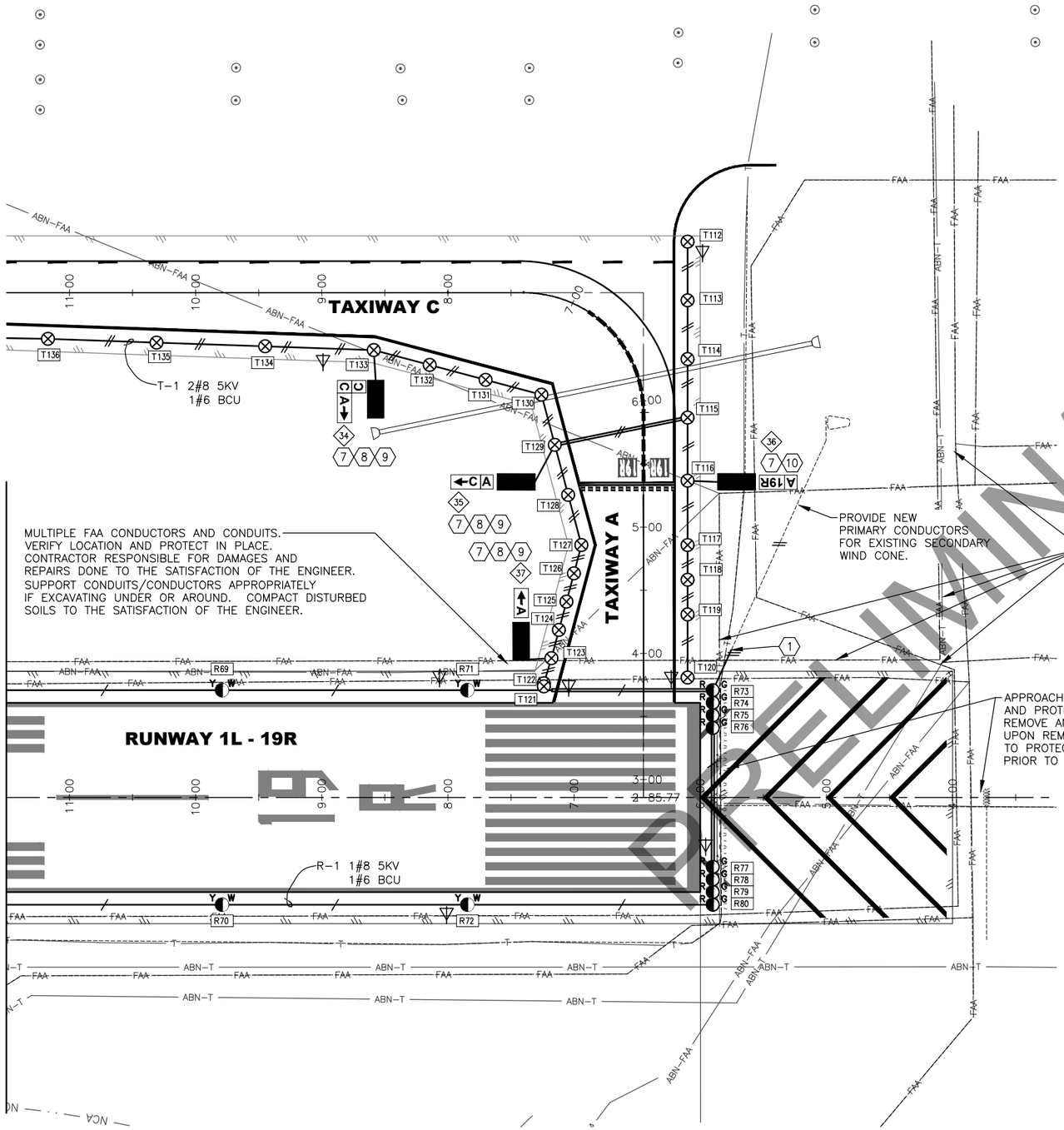

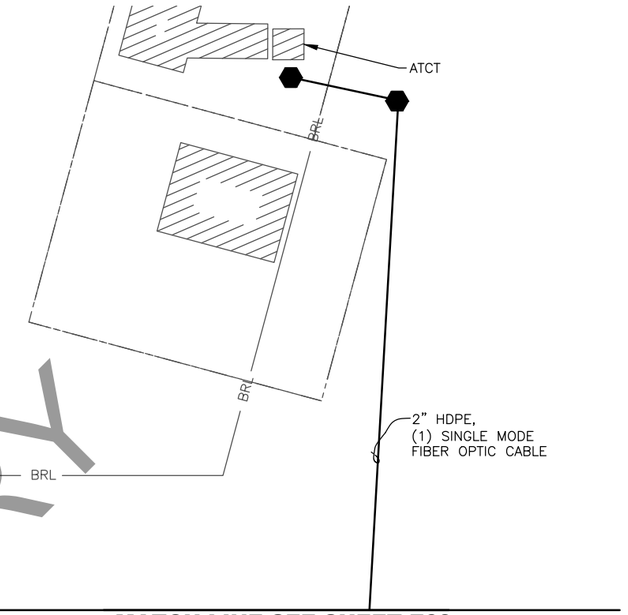

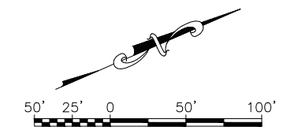

Designed By:	JBM
Drawn By:	JBM/SNS/PDO
Checked By:	EWC
Date Revised:	11/24/2020, 9:59 AM
Layout Name:	E12 11+50 - 4+00
File Path and Name:	Z:\20007BAR - Bethel Airport Main Runway\E-Working\Drawings\20007-BET-NEW PLANS.dwg

PLANS DEVELOPED BY: MBA CONSULTING ENGINEERS, INC. 3812 SPENARD RD. ANCHORAGE, AK 99517 (907) 274-2622 CERT. OF AUTH. NO. AECC578	BY	DATE	REVISION

STATE OF ALASKA
DEPARTMENT OF TRANSPORTATION AND PUBLIC FACILITIES
CENTRAL REGION
4111 AVIATION AVE., ANCHORAGE ALASKA 99502
PHONE (907) 269-0590

BETHEL AIRPORT
BETHEL, ALASKA
MAIN RUNWAY RECONSTRUCTION
PROJECT No. CFAPT00430
AIP No. 3-02-0029-0XX-20XX
LIGHTING PLAN
11+50 TO 4+00

DATE: 11/24/2020

SHEET: E12 OF 79

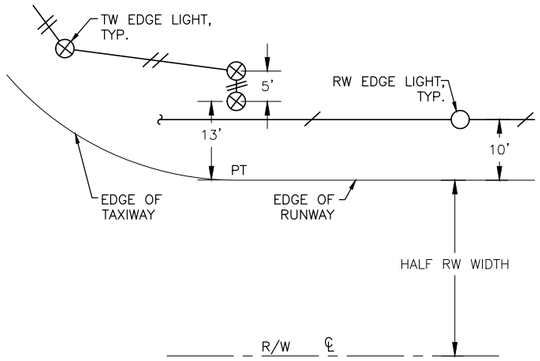

1 E13 TW ENTRANCE/EXIT RADIUS LIGHT DETAIL
NTS

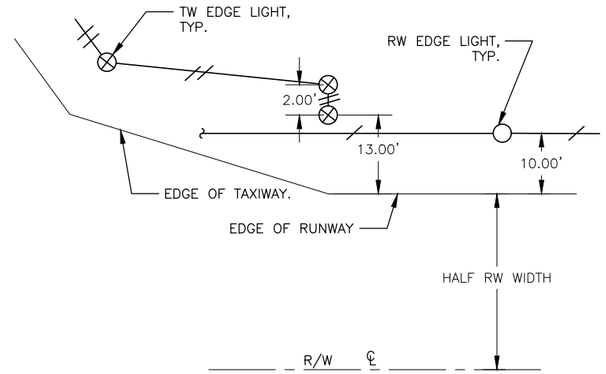

2 E13 TW ENTRANCE/EXIT FILLET LIGHT DETAIL
NTS

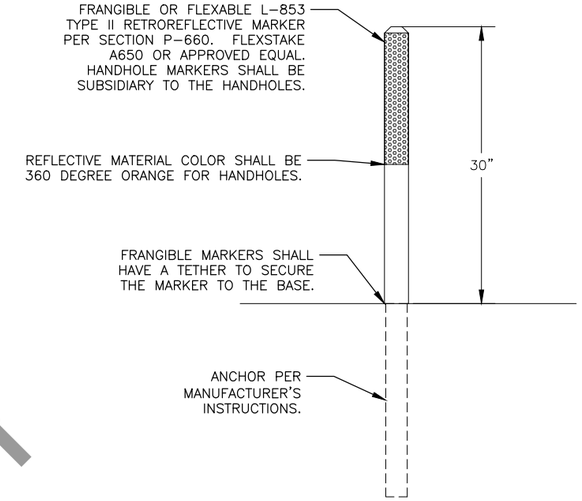

3 E13 RETROREFLECTIVE MARKER DETAIL
NTS

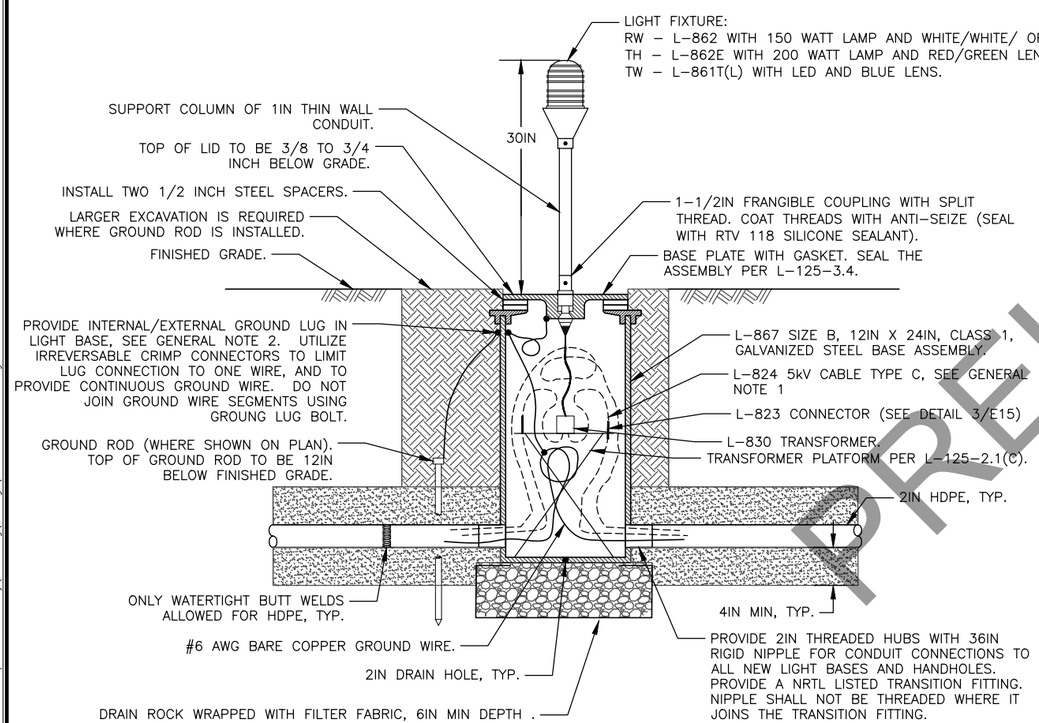

4 E13 L-867 BASE MOUNTED LIGHT DETAIL
NTS

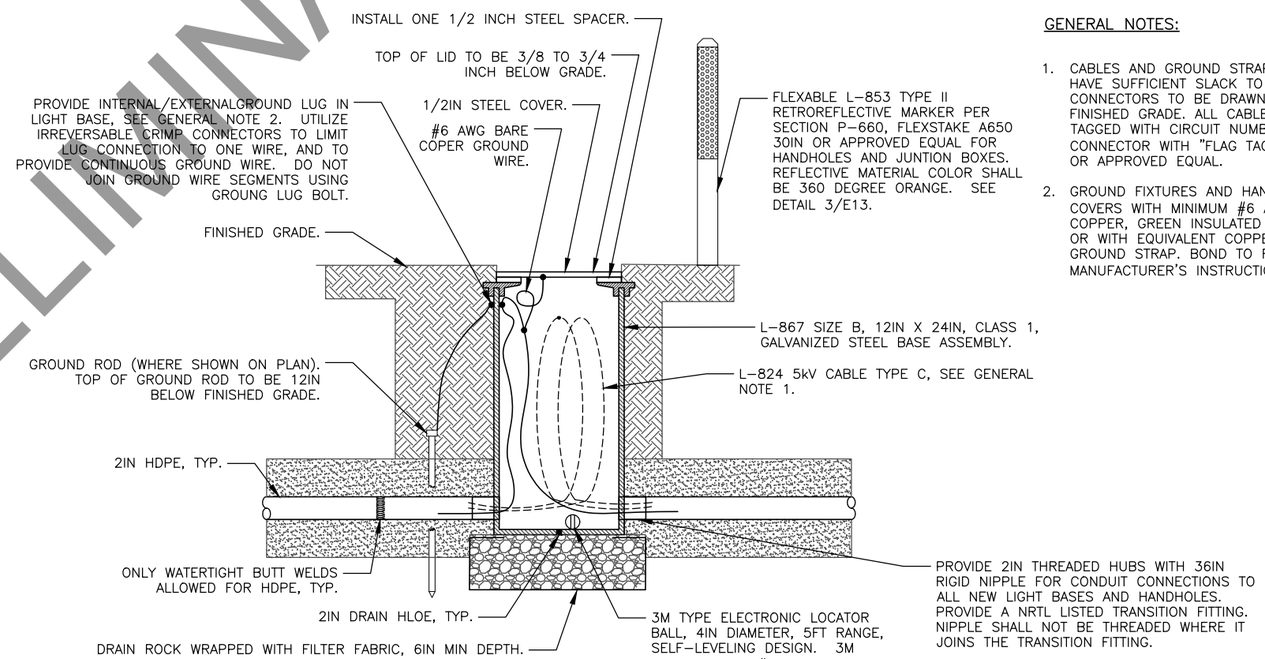

5 E13 L-867 HANDHOLE DETAIL
NTS

GENERAL NOTES:

1. CABLES AND GROUND STRAPS SHALL HAVE SUFFICIENT SLACK TO ALLOW CONNECTORS TO BE DRAWN 36IN ABOVE FINISHED GRADE. ALL CABLES SHALL BE TAGGED WITH CIRCUIT NUMBER 6IN FROM CONNECTOR WITH "FLAG TAG" MARKERS OR APPROVED EQUAL.
2. GROUND FIXTURES AND HANDHOLE COVERS WITH MINIMUM #6 AWG STRANDED COPPER, GREEN INSULATED CONDUCTOR OR WITH EQUIVALENT COPPER BRAIDED GROUND STRAP. BOND TO FIXTURE PER MANUFACTURER'S INSTRUCTIONS.

Designed By:	JBM
Drawn By:	JBM/SNS/PDO
Checked By:	EWC
Date Revised:	11/24/2020, 9:59 AM
Layout Name:	E13
File Path and Name:	Z:\20007BAR - Bethel Airport Main Runway\E-Working\Drawings\20007-BET-DETAILS.dwg

PLANS DEVELOPED BY:
MBA CONSULTING ENGINEERS, INC.
3812 SPENARD RD.
ANCHORAGE, AK 99517
(907) 274-2622
CERT. OF AUTH. NO. AECC578

BY	DATE	REVISION

STATE OF ALASKA
DEPARTMENT OF TRANSPORTATION AND PUBLIC FACILITIES
CENTRAL REGION
4111 AVIATION AVE., ANCHORAGE ALASKA 99502
PHONE (907) 269-0590

BETHEL AIRPORT
BETHEL, ALASKA
MAIN RUNWAY RECONSTRUCTION
PROJECT No. CFAPT00430
AIP No. 3-02-0029-0XX-20XX

LIGHTING DETAILS #1

DATE: 11/24/2020

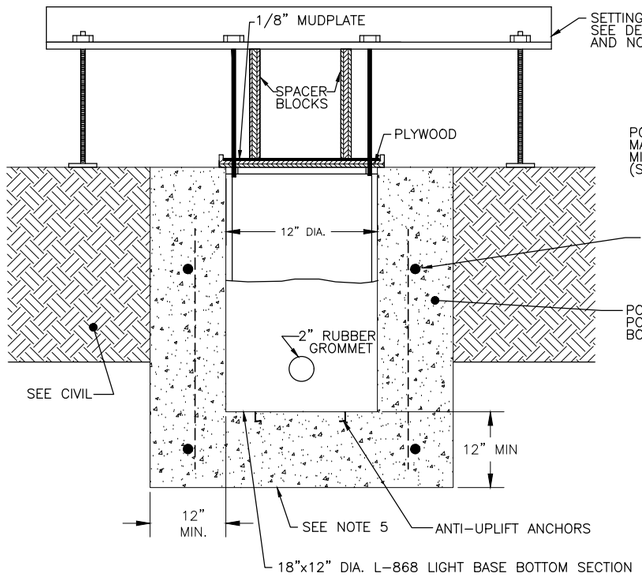

1 E14 NEW LIGHT BASE INSTALLATION – SECTION
NTS

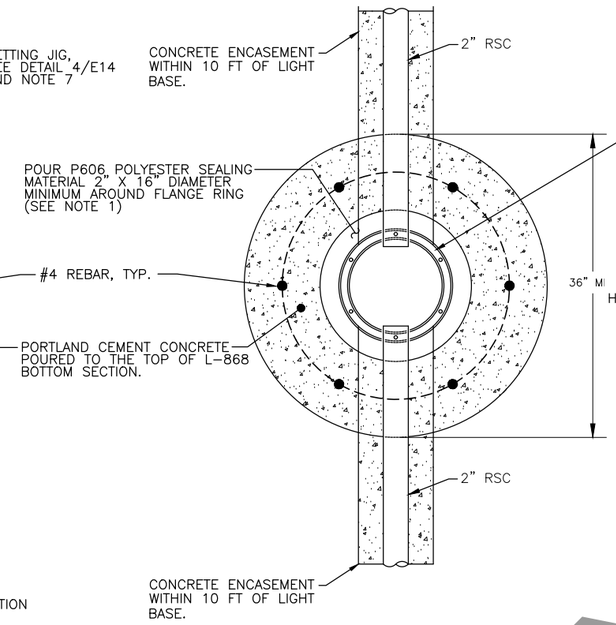

2 E14 NEW LIGHT BASE INSTALLATION – PLAN VIEW
NTS

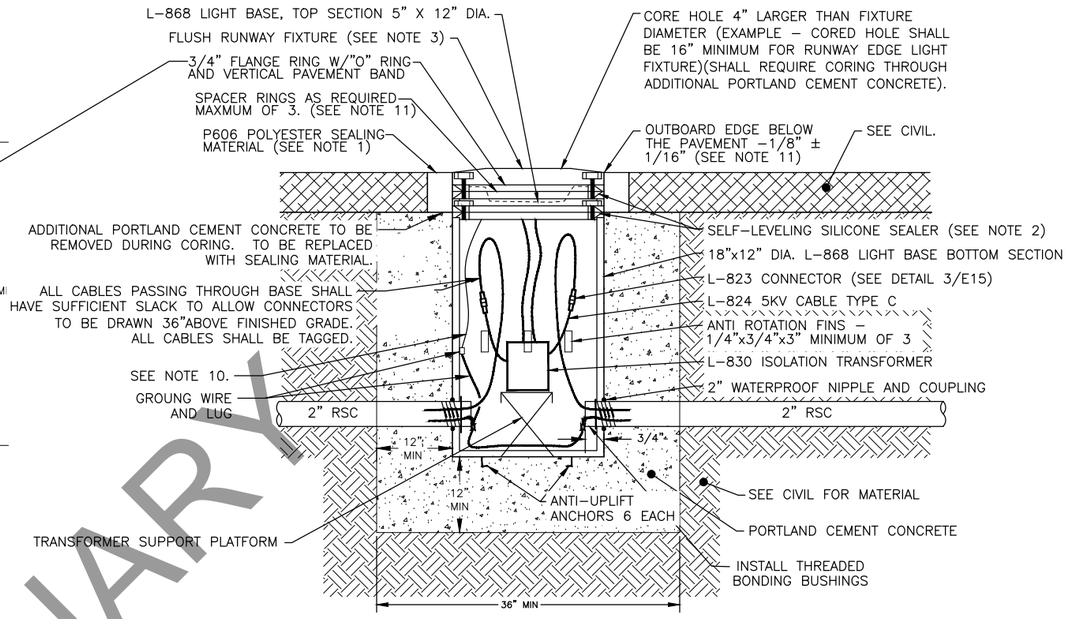

3 E14 NEW FLUSH LIGHT BASE ASSEMBLY
NTS

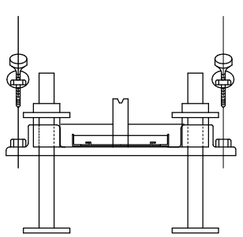

END VIEW

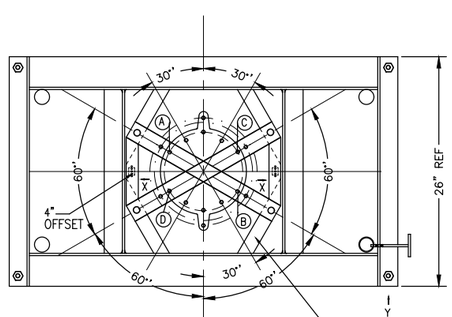

SETTING JIG DETAIL

INTERNAL FRAME CAN BE ROTATED 90° FOR ALIGNMENT PURPOSES

4 E14 SETTING JIG
NTS

NOTES:

1. POLYESTER SEALING MATERIAL SHALL MEET THE REQUIREMENTS OF ITEM P-606. SURFACE SHALL BE COMPLETELY CLEAN AND DRY BEFORE INSTALLING.
2. SELF-LEVELING SILICONE SEALER SHALL BE GE BRAND RTV 118 OR APPROVED EQUAL.
3. FIXTURE SHALL BE A FLUSH MOUNT MODEL.
4. CONDUIT SYSTEM SHALL BE INSTALLED AT THE SAME GRADE AS THE ADJACENT TAXIWAY OR RUNWAY CONDUITS AND SLOPED TO DRAIN TO THE LOW SPOTS AND DRAINS WHERE SHOWN.
5. BOTTOM OF CORED HOLE SHALL BE COMPACTED BEFORE CONCRETE IS POURED.
6. A THIRD HUB FOR A CONDUIT DRAIN SHALL BE PROVIDED WHERE SHOWN ON PLANS.
7. SETTING JIG FOR FIXTURE SHALL BE FROM JAQUITH INDUSTRIES INC. OR APPROVED EQUAL AND SHALL BE SUBSIDIARY TO THE CONTRACT.
8. CONCRETE SHALL MEET THE REQUIREMENTS FOR STRUCTURAL CONCRETE (ITEM P-610).
9. ALL CONDUIT SHALL BE INSTALLED BEFORE FINAL PAVING OPERATION BEGINS.
10. GROUND FIXTURE WITH MINIMUM #6 AWG STRANDED COPPER INSULATED CONDUCTOR (GREEN) OR WITH EQUIVALENT COPPER BRAIDED GROUND STRAP. BOND TO FIXTURE PER MANUFACTURER'S INSTRUCTIONS.
11. CONTRACTOR SHALL INSTALL ONE 1/2" SPACER RING FOR FUTURE ADJUSTMENT AND ANY OTHER SPACER RINGS AS REQUIRED TO MEET FINAL ELEVATION. THESE RINGS ARE SUBSIDIARY TO THE CONTRACT AND NO SEPARATE PAYMENT WILL BE MADE.
12. ALIGN LIGHT BASE TO ALLOW FIXTURE AIMING PER MANUFACTURER'S INSTRUCTIONS.

PLANS DEVELOPED BY:
MBA CONSULTING ENGINEERS, INC.
3812 SPENARD RD.
ANCHORAGE, AK 99517
(907) 274-2622
CERT. OF AUTH. NO. AECC578

BY	DATE	REVISION

STATE OF ALASKA
DEPARTMENT OF TRANSPORTATION AND PUBLIC FACILITIES
CENTRAL REGION
4111 AVIATION AVE., ANCHORAGE ALASKA 99502
PHONE (907) 269-0590

BETHEL AIRPORT
BETHEL, ALASKA
MAIN RUNWAY RECONSTRUCTION
PROJECT No. CFAPT00430
AIP No. 3-02-0029-0XX-20XX

LIGHTING DETAILS #2

DATE: 11/24/2020
SHEET: E14 OF 79

Designed By: JBM
Drawn By: JBM/SNS/PDO
Checked By: EWC
Date Revised: 11/24/2020, 9:59 AM
Layout Name: E14
File Path and Name: Z:\20007BAR - Bethel Airport Main Runway\E-Working\Drawings\20007-BET-DETAILS.dwg

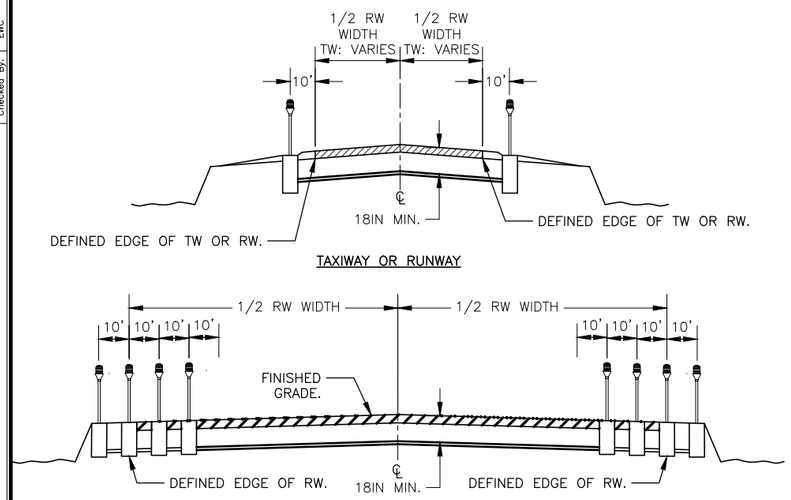

1 TYPICAL LIGHTING SECTIONS
E15 NTS

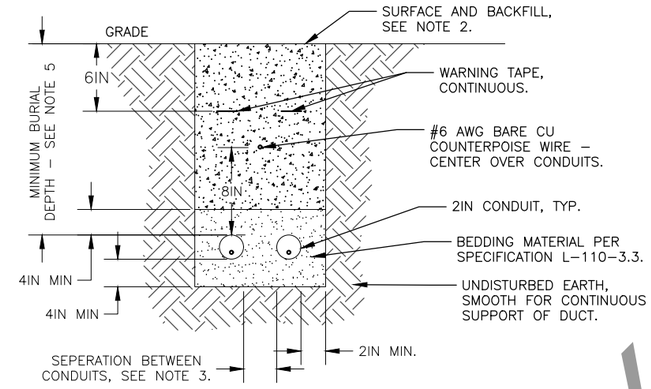

DETAIL NOTES:

1. WIDTH OF TRENCH AND NUMBER OF CONDUITS PER TRENCH TO BE DETERMINED IN FIELD (2 SHOWN).
2. INSTALL NEW LIGHT BASES AND CONDUITS PRIOR TO PLACEMENT OF CTSBC.
3. IN AREAS OF NEW CONSTRUCTION, SEE CIVIL FOR SURFACING AND BACKFILL. IN EXISTING AREAS, MATCH EXISTING SURFACE AND BACKFILL.
4. SEPARATION BETWEEN CONDUITS SHALL BE 4IN MINIMUM FOR LIGHTING SYSTEMS.
5. 12IN MINIMUM SEPARATION BETWEEN LIGHTING AND FAA SYSTEMS.
6. MINIMUM BURIAL DEPTH SHALL BE AS FOLLOWS:
   A) AIRPORT LIGHTING CONDUITS: 18IN
   B) ALL OTHER CONDUITS: 30IN OR AS INDICATED

2 TRENCH DETAIL
E15 NTS

DETAIL NOTES:

1. CABLE SHALL MEET SPECIFICATION L–824. INSIDE DIAMETER OF CONNECTOR SHALL PROPERLY MATCH THE OUTSIDE DIAMETER OF CABLE. CONNECTOR SHALL BE SUPPLIED TO MATCH CABLE PER MANUFACTURER'S INSTRUCTIONS.
2. 5 kV CONDUCTORS SHALL BE PENCILED USING A PENCILING TOOL MANUFACTURED FOR USE ON #8 AWG, 5 kV, TYPE C AIRPORT CABLE, RIPLEY WS 49 OR APPROVED EQUAL.
3. CONNECTORS SHALL BE CRIMPED USING A RATCHET TYPE CRIMPING TOOL PER MANUFACTURER'S RECOMMENDATION. EACH CRIMP SHALL BE MADE WITH TWO CRIMPS, ROTATED 90DEG.

(4) WRAP WITH A MINIMUM OF ONE LAYER OF RUBBER OR SYNTHETIC RUBBER TAPE AND ONE LAYER OF PLASTIC TAPE, ONE–HALF LAPPED, EXTENDING AT LEAST 1.5IN ON EACH SIDE OF JOINT. COVER WITH HEAT SHRINK, SEE NOTE 5.

(5) HEAT SHRINKABLE TUBING SHALL BE 16IN LONG, HAVE INTERNAL ADHESIVE FULL LENGTH, AND APPLIED FULL LENGTH TO CONNECTORS & CABLE TO HAVE A COMPLETE SEAL.

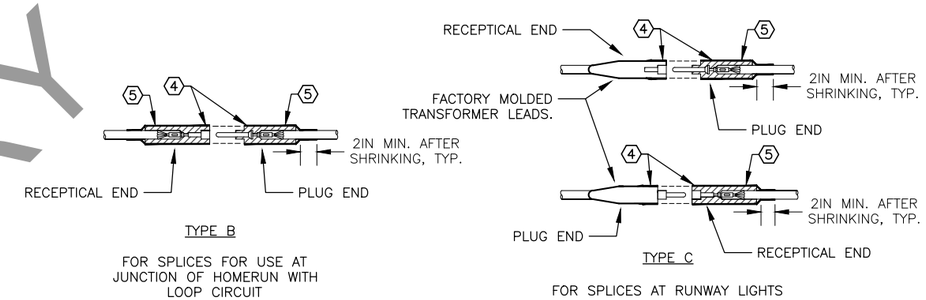

3 L–823 CONNECTOR DETAILS
E15 NTS

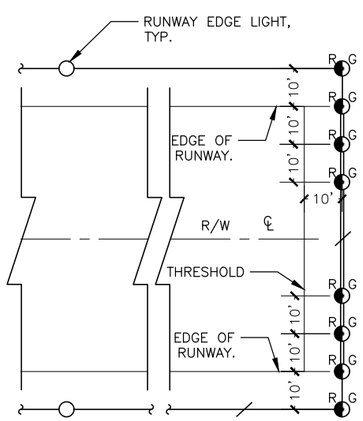

4 THRESHOLD LIGHT DETAIL
E15 NTS

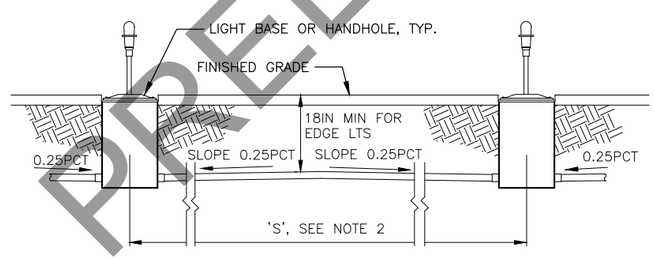

DETAIL NOTES:

1. CONDUIT SHALL BE INSTALLED WITH CROWN TO DRAIN TO LIGHT BASES AS SHOWN.
2. IF 'S' IS LESS THAN 20FT, OR IF 0.25PCT SLOPE CAN BE MAINTAINED IN ONE DIRECTION DUE TO SLOPE OF GRADE, LAY CONDUIT STRAIGHT WITHOUT CROWN BETWEEN BASES/HANDHOLES.

5 TYPICAL INTERCONNECTION DETAIL
E15 NTS

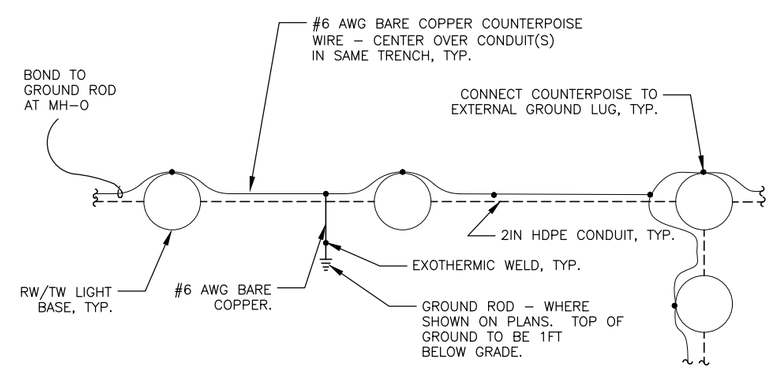

6 AIRFIELD LIGHTING COUNTERPOISE TYPICAL LAYOUT PLAN
E15 NTS

Designed By:	JBM
Drawn By:	JBM/SNS/PDO
Checked By:	EWC
Date Revised:	11/24/2020, 9:59 AM
Layout Name:	E15
File Path and Name:	Z:\20007BAR – Bethel Airport Main Runway\E–Working\Drawings\20007–BET–DETAILS.dwg

PLANS DEVELOPED BY:
MBA CONSULTING ENGINEERS, INC.
3812 SPENARD RD.
ANCHORAGE, AK 99517
(907) 274-2622
CERT. OF AUTH. NO. AECC578

BY	DATE	REVISION

STATE OF ALASKA
DEPARTMENT OF TRANSPORTATION AND PUBLIC FACILITIES
CENTRAL REGION
4111 AVIATION AVE., ANCHORAGE ALASKA 99502
PHONE (907) 269-0590

BETHEL AIRPORT
BETHEL, ALASKA
MAIN RUNWAY RECONSTRUCTION
PROJECT No. CFAPT00430
AIP No. 3-02-0029-0XX-20XX

LIGHTING DETAILS #3

DATE: 11/24/2020

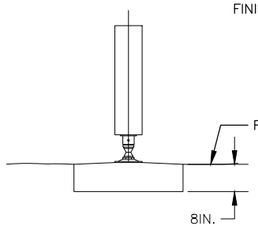

1 E16 SIDE VIEW
NTS

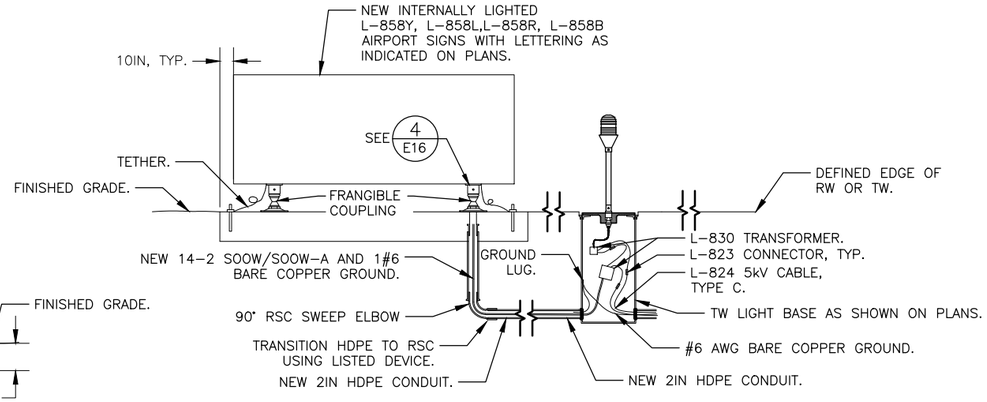

2 E16 FRONT VIEW
NTS

L-858 SIGN DETAILS

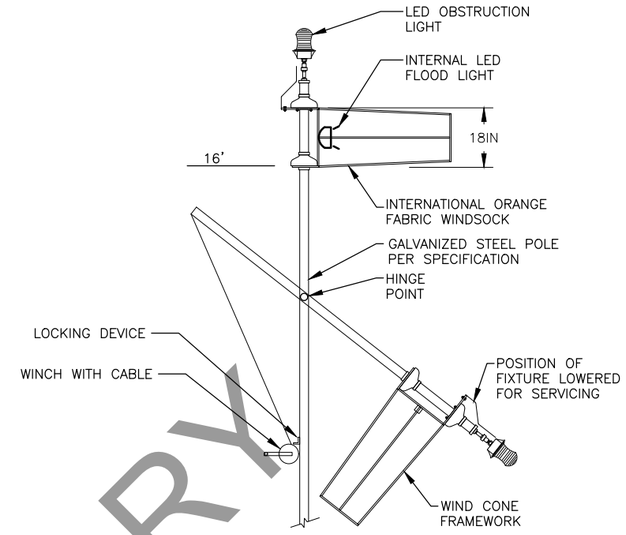

1. FAA SIZE 1, STYLE I-B INTERNALLY ILLUMINATED L-807 WIND CONE.
2. ALL HANDHOLES, CONDUIT, AND WIRING SHALL BE SUBSIDIARY TO L107.010.0008.

6 E16 PRIMARY WIND CONE DETAIL
NTS

SIGN NOTES:

1. ALL NEW SIGNS – LED, SIZE 2, STYLE 3, CLASS 2, MODE 2.
2. ALL CIRCUITS 6.6 A
3. PROVIDE NEW TRANSFORMERS, SECONDARY WIRING, AND GROUNDING. TRANSFORMER WATTAGE SIZE PER MANUFACTURER'S SPECIFICATION.
4. ATTACH SIGNS TO CONCRETE BASE IN ACCORDANCE WITH MANUFACTURER'S INSTRUCTIONS.
5. THE CONTRACTOR SHALL CERTIFY THE CONCRETE BASE IS CONSTRUCTED TO MEET SPECIFICATION P610. CONCRETE BASE SHALL BE LEVEL AND PERPENDICULAR TO RW OR TW CENTERLINE.
6. CONDUIT SHALL MEET SPECIFICATION L-110.
7. CABLE AND CONDUCTORS SHALL MEET SPECIFICATION L-108.
8. BEDDING, BACK FILL AND FINISH GRADE RESTORATION SHALL BE SUBSIDIARY TO THE CONTRACT AND NO SEPARATE PAYMENT WILL BE MADE.
9. ALL CABLES PASSING THROUGH BASE SHALL HAVE SUFFICIENT SLACK TO ALLOW CONNECTORS TO BE DRAWN 3' ABOVE FINISHED GRADE. ALL CABLES SHALL BE TAGGED.
10. SIGNS TO BE INSTALLED SO THAT THE FACE IS PERPENDICULAR TO THE CENTERLINE OF RUNWAY OR TAXIWAY.
11. STATION AND OFFSET REFER TO THE EDGE OF THE SIGN NEAREST THE RUNWAY OR TAXIWAY. SEE SCHEDULE.
12. OFFSETS LISTED IN THE SIGN SCHEDULE ARE FROM THE CENTERLINE OF THE RUNWAY OR TAXIWAY.
13. SIGN PANELS ARE NUMBERED STARTING WITH THE PANEL CLOSEST TO THE RUNWAY OR TAXIWAY EDGE.

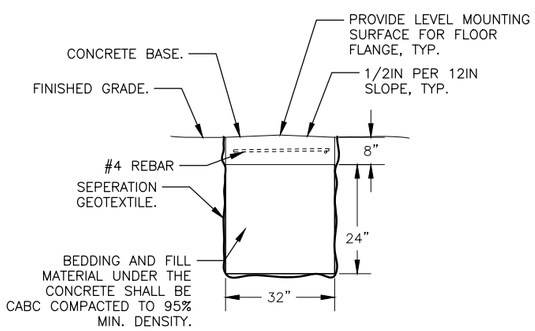

3 E16 CONCRETE BASE SIDE VIEW
NTS

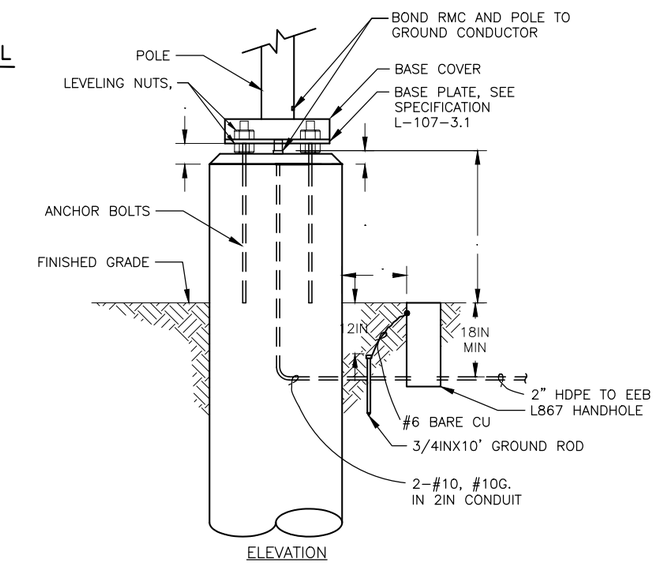

NOTES:

1. PROVIDE STRUCTURAL FOUNDATION PER SECTION L-107.
2. VERIFY ANCHOR BOLT SIZE, BOLT CIRCLE, AND FOUNDATION SIZE WITH MANUFACTURER'S SHOP DRAWINGS.

7 E16 WIND CONE FOUNDATION DETAIL
NTS

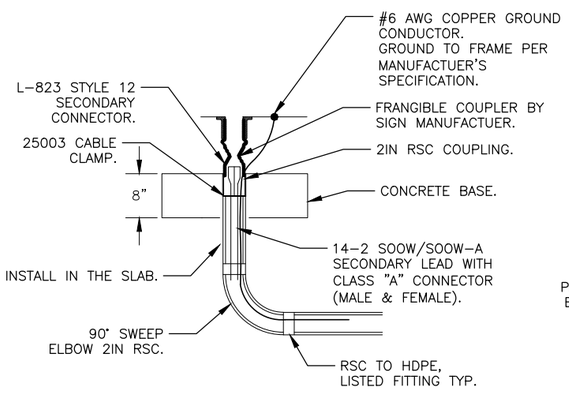

4 E16 ELECTRICAL CONNECTION DETAIL
NTS

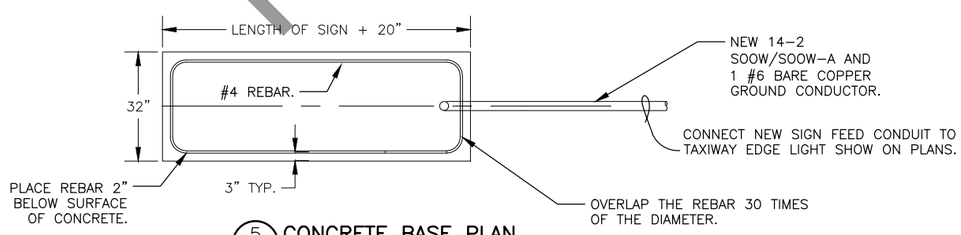

5 E16 CONCRETE BASE PLAN
NTS

Designed By: JBM
Drawn By: JBM/SNS/PDO
Checked By: EWC
Date Revised: 11/24/2020, 9:59 AM
Layout Name: E16
File Path and Name: Z:\20007BAR - Bethel Airport Main Runway\E-Working\Drawings\20007-BET-DETAILS.dwg

PLANS DEVELOPED BY: MBA CONSULTING ENGINEERS, INC. 3812 SPENARD RD. ANCHORAGE, AK 99517 (907) 274-2622 CERT. OF AUTH. NO. AECC578	BY	DATE	REVISION

STATE OF ALASKA
DEPARTMENT OF TRANSPORTATION AND PUBLIC FACILITIES
CENTRAL REGION
4111 AVIATION AVE., ANCHORAGE ALASKA 99502
PHONE (907) 269-0590

BETHEL AIRPORT
BETHEL, ALASKA
MAIN RUNWAY RECONSTRUCTION
PROJECT No. CFAPT00430
AIP No. 3-02-0029-0XX-20XX

SIGN DETAILS

DATE: 11/24/2020
SHEET: E16 OF 79

SHEET NOTES:

1. ARRANGE THE LIGHTING CIRCUIT TO FLOW CLOCKWISE AROUND THE RUNWAY AND TAXIWAY WITH THE FEMALE CONNECTOR ON THE REGULATOR SIDE OF THE TRANSFORMER.
2. ALL TRANSFORMER CONNECTIONS SHALL BE MADE ON THE FEED SIDE OF THE SERIES LOOP. RETURN AND LOOP CONDUCTORS SHALL BE CONTINUOUS AND UNSPLICED.

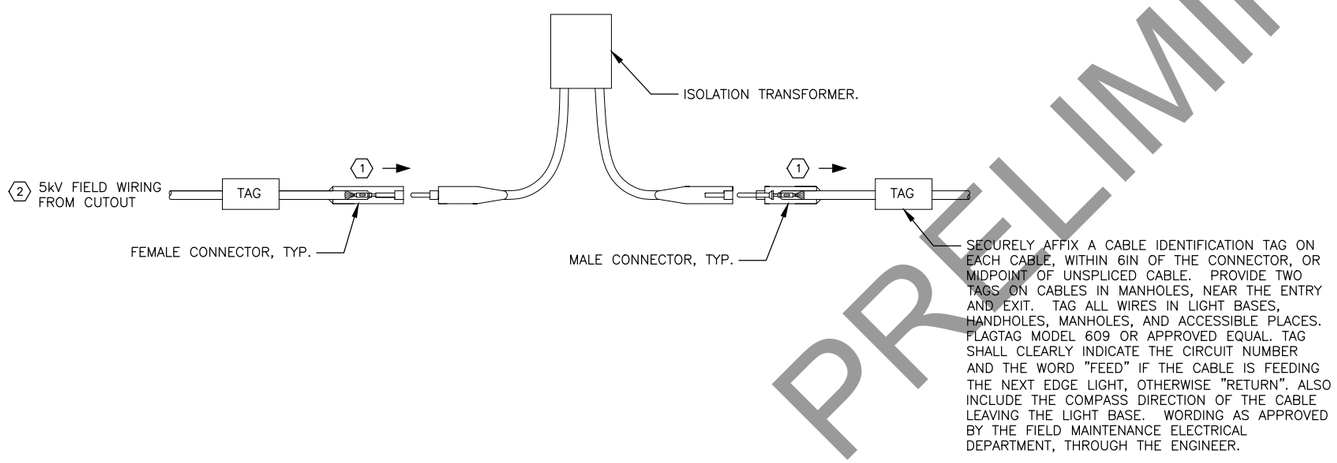

1 E17 CONNECTOR ORIENTATION DETAIL
NTS

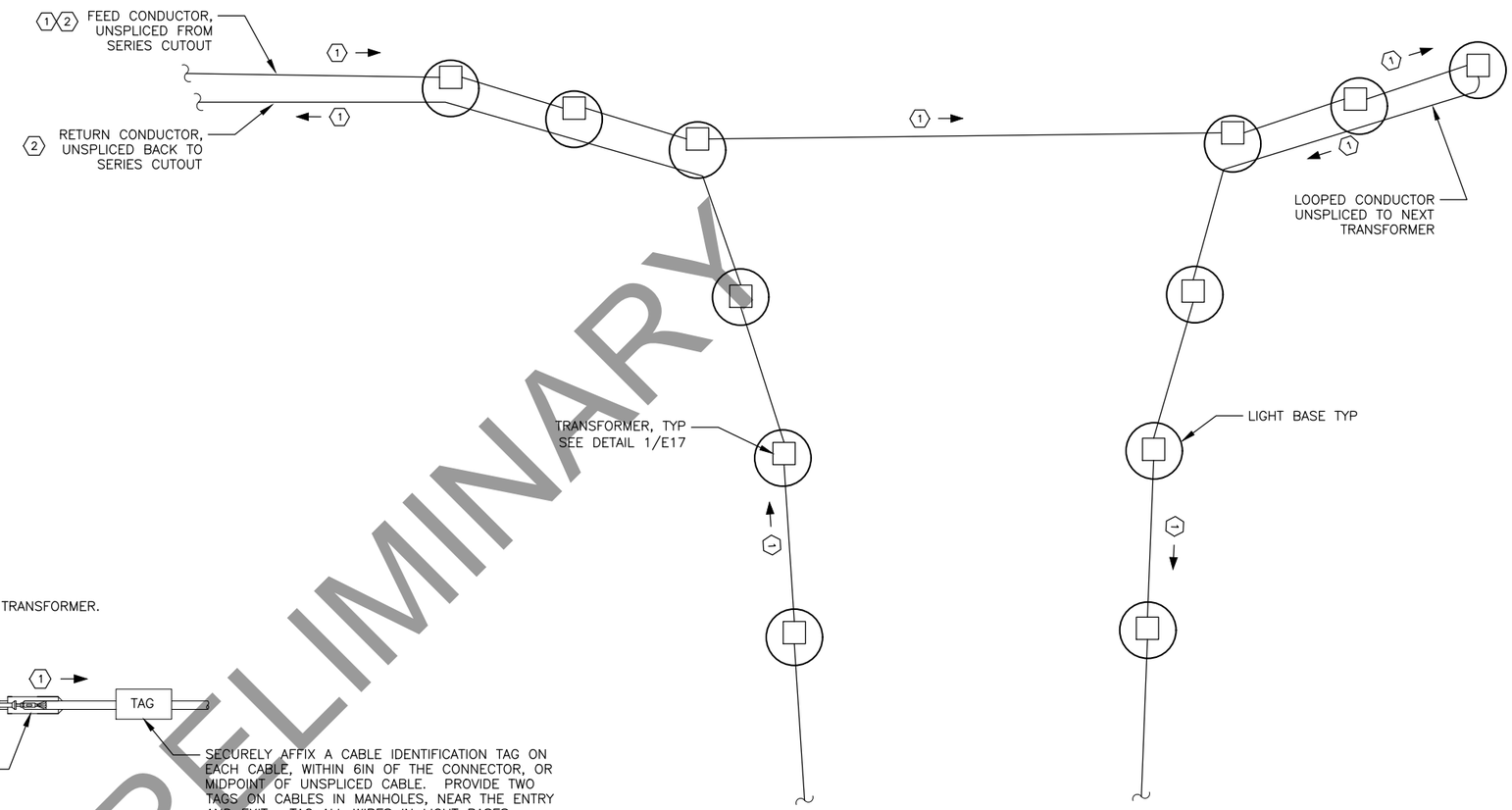

2 E17 FIELD WIRING SCHEMATIC
NTS

Designed By: JBM
Drawn By: JBM/SNS/PDO
Checked By: EWC

Date Revised: 11/24/2020, 9:59 AM
Layout Name: E17
File Path and Name: Z:\20007BAR - Bethel Airport Main Runway\E-Working\Drawings\20007-BET-DETAILS.dwg

PLANS DEVELOPED BY:
MBA CONSULTING ENGINEERS, INC.
3812 SPENARD RD.
ANCHORAGE, AK 99517
(907) 274-2622
CERT. OF AUTH. NO. AECC578

BY	DATE	REVISION

STATE OF ALASKA
DEPARTMENT OF TRANSPORTATION AND PUBLIC FACILITIES
CENTRAL REGION
4111 AVIATION AVE., ANCHORAGE ALASKA 99502
PHONE (907) 269-0590

BETHEL AIRPORT
BETHEL, ALASKA
MAIN RUNWAY RECONSTRUCTION
PROJECT No. CFAPT00430
AIP No. 3-02-0029-0XX-20XX

WIRING DETAIL

DATE: 11/24/2020

SHEET: E17 OF 79

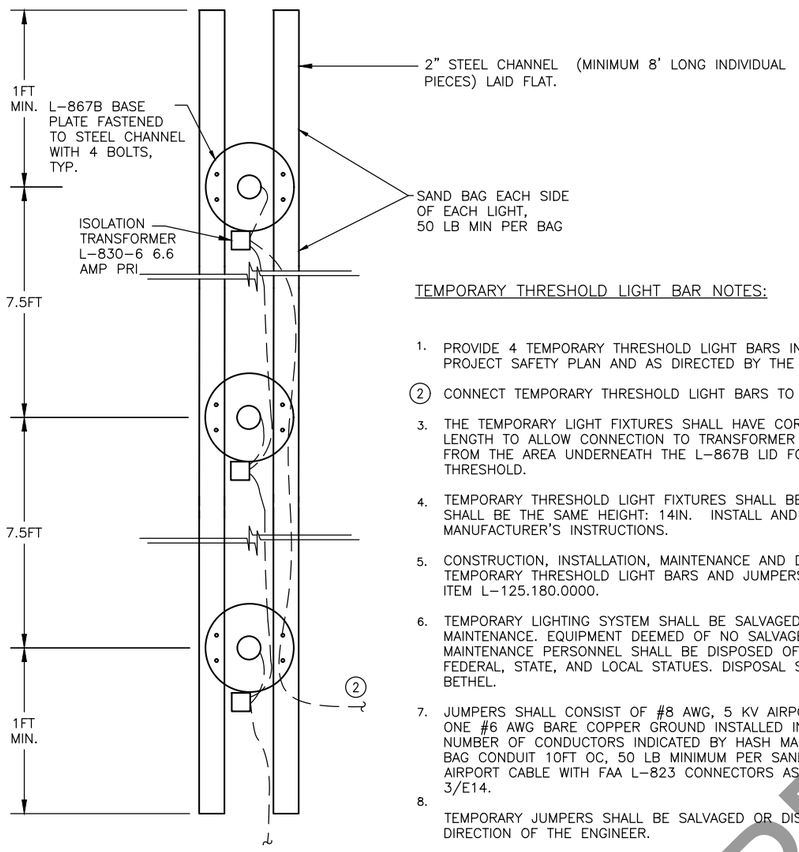

1 E18 TEMPORARY THRESHOLD LIGHT BAR
NTS

TEMPORARY THRESHOLD LIGHT BAR NOTES:

1. PROVIDE 4 TEMPORARY THRESHOLD LIGHT BARS IN ACCORDANCE WITH THE PROJECT SAFETY PLAN AND AS DIRECTED BY THE ENGINEER.
2. CONNECT TEMPORARY THRESHOLD LIGHT BARS TO TEMPORARY EDGE LIGHTS
3. THE TEMPORARY LIGHT FIXTURES SHALL HAVE CORD SETS OF SUFFICIENT LENGTH TO ALLOW CONNECTION TO TRANSFORMER SECONDARY REMOTE FROM THE AREA UNDERNEATH THE L-867B LID FOR THE TEMPORARY THRESHOLD.
4. TEMPORARY THRESHOLD LIGHT FIXTURES SHALL BE L-861SE (150W) AND SHALL BE THE SAME HEIGHT: 14IN. INSTALL AND AIM PER MANUFACTURER'S INSTRUCTIONS.
5. CONSTRUCTION, INSTALLATION, MAINTENANCE AND DEMOLITION OF THE TEMPORARY THRESHOLD LIGHT BARS AND JUMPERS IS SUBSIDIARY TO PAY ITEM L-125.180.0000.
6. TEMPORARY LIGHTING SYSTEM SHALL BE SALVAGED AND OFFERED TO DOT MAINTENANCE. EQUIPMENT DEEMED OF NO SALVAGE VALUE BY DOT MAINTENANCE PERSONNEL SHALL BE DISPOSED OF IN ACCORDANCE WITH FEDERAL, STATE, AND LOCAL STATUES. DISPOSAL SHALL NOT TAKE PLACE IN BETHEL.
7. JUMPERS SHALL CONSIST OF #8 AWG, 5 KV AIRPORT CABLE, TYPE C, PLUS ONE #6 AWG BARE COPPER GROUND INSTALLED IN HDPE CONDUIT. NUMBER OF CONDUCTORS INDICATED BY HASH MARKS ON PLANS. SAND BAG CONDUIT 10FT OC, 50 LB MINIMUM PER SAND BAG. CONNECT 5 KV AIRPORT CABLE WITH FAA L-823 CONNECTORS AS SHOWN IN DETAIL 3/E14.
8. TEMPORARY JUMPERS SHALL BE SALVAGED OR DISPOSED OF AT THE DIRECTION OF THE ENGINEER.

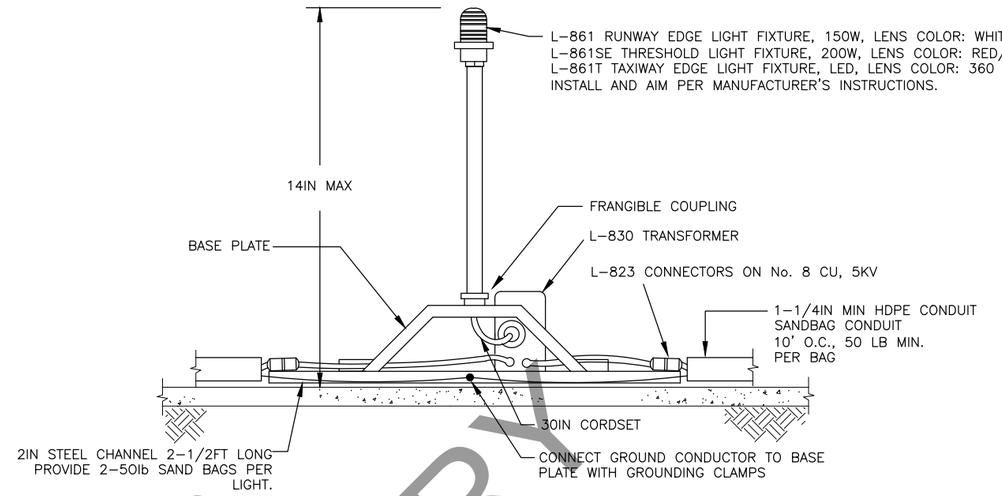

2 E18 TEMPORARY RUNWAY EDGE LIGHT DETAIL
NTS

* CONSTRUCTION, INSTALLATION, MAINTENANCE AND DEMOLITION OF TEMPORARY EDGE LIGHTS, THRESHOLD LIGHTS AND JUMPERS ARE SUBSIDIARY TO PAY ITEM L-125.180.0000
* TEMPORARY EDGE LIGHTS SHALL BE LAID OUT SYMMETRICAL TO EDGE LIGHTS ON OPPOSITE SIDE OF RUNWAY. MAINTAIN A STRAIGHT LINE. MATCH EXISTING LENS COLOR.

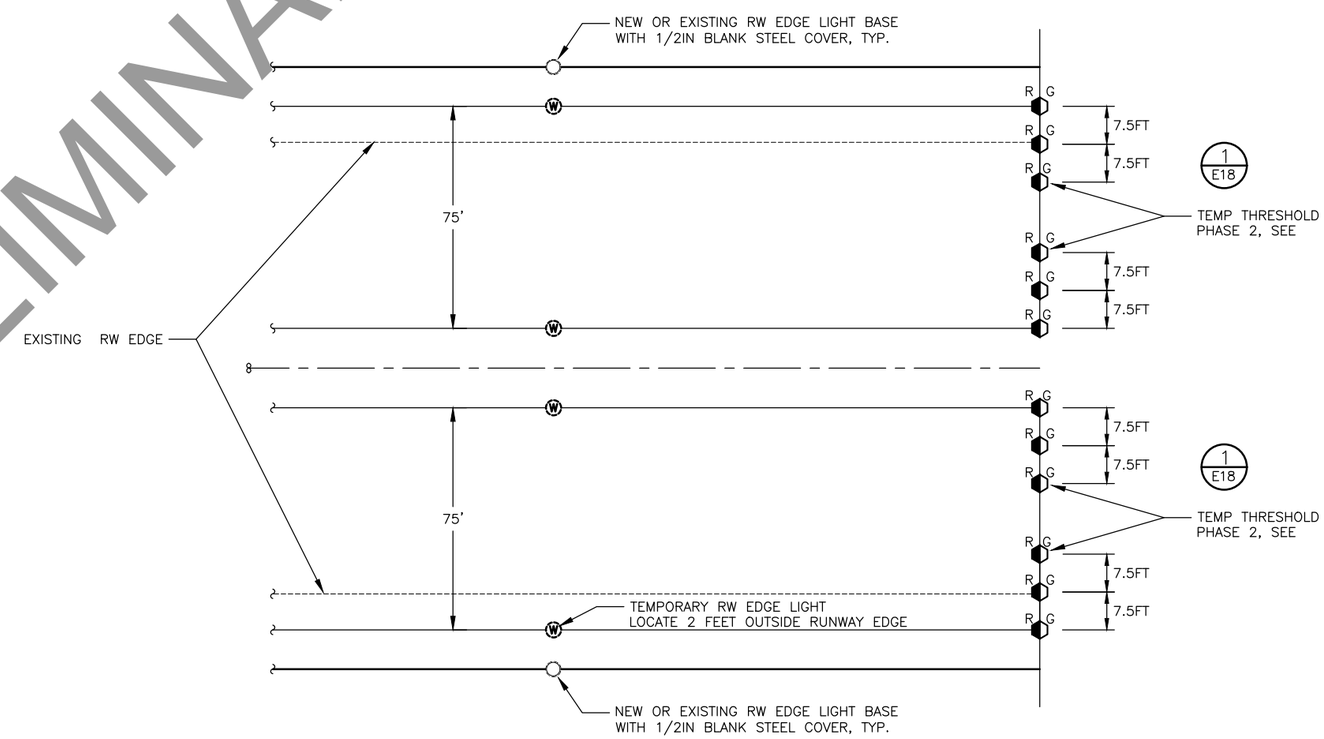

3 E18 TEMPORARY THRESHOLD LIGHTING DETAIL, PHASE 1 & 2
NTS
NOTE: PHASE 1 & 2 SHOWN. NOT TO BE CONCURRENT. LAYOUT DURING INDICATED PHASE.

Designed By: JBM
Drawn By: JBM/SNS/PDO
Checked By: EWC
Date Revised: 11/24/2020, 9:59 AM
Layout Name: E18
File Path and Name: Z:\20007BAR - Bethel Airport Main Runway\E-Working\Drawings\20007-BET-DETAILS.dwg

PLANS DEVELOPED BY:
MBA CONSULTING ENGINEERS, INC.
3812 SPENARD RD.
ANCHORAGE, AK 99517
(907) 274-2622
CERT. OF AUTH. NO. AECC578

BY	DATE	REVISION

STATE OF ALASKA
DEPARTMENT OF TRANSPORTATION AND PUBLIC FACILITIES
CENTRAL REGION
4111 AVIATION AVE., ANCHORAGE ALASKA 99502
PHONE (907) 269-0590

BETHEL AIRPORT
BETHEL, ALASKA
MAIN RUNWAY RECONSTRUCTION
PROJECT No. CFAPT00430
AIP No. 3-02-0029-0XX-20XX

TEMPORARY LIGHTING DETAIL

DATE: 11/24/2020

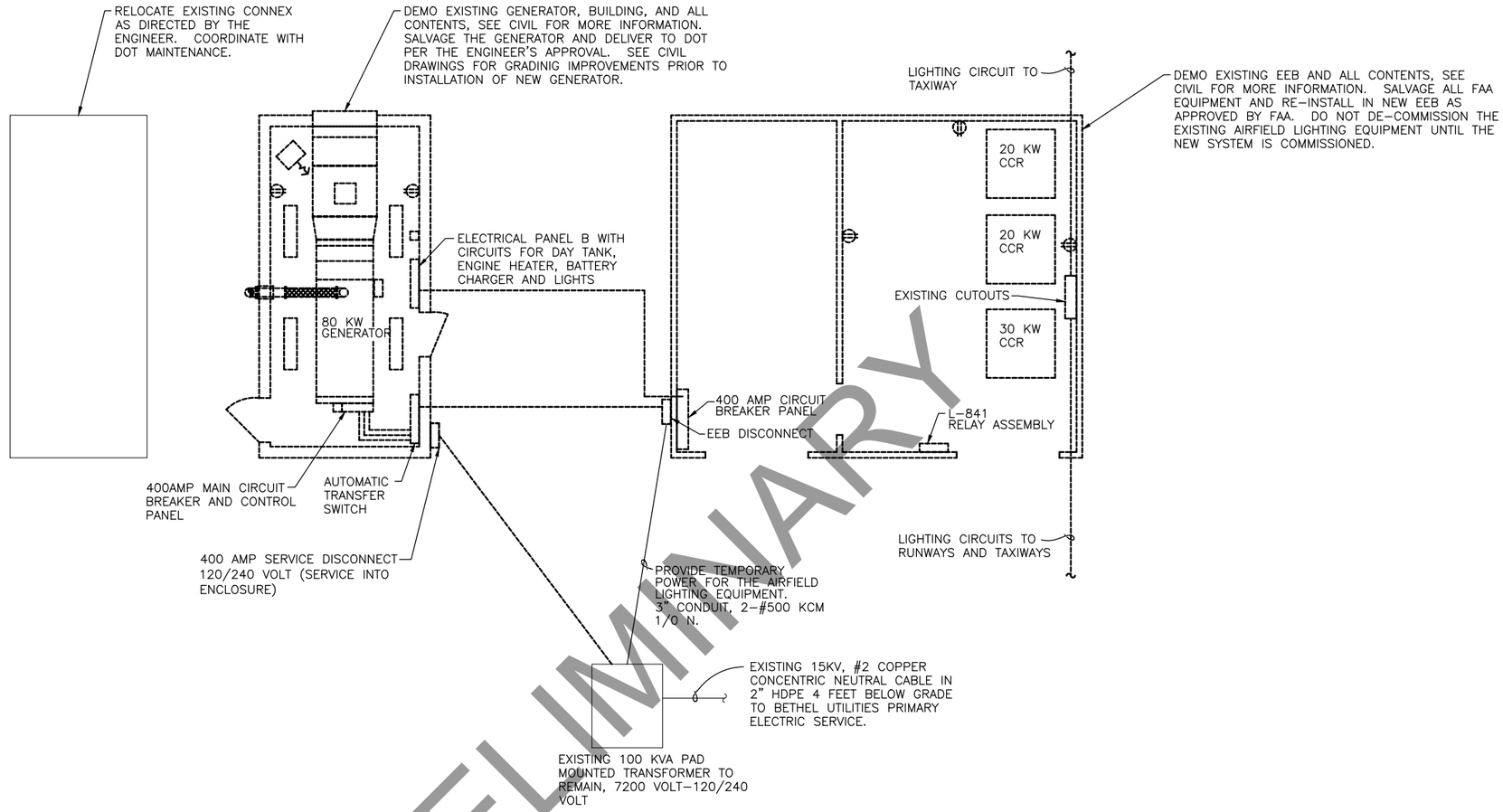

1 / E19 REGULATOR BUILDING (EEB) AND GENERATOR SITE DEMO PLAN

Designed By:	JBM
Drawn By:	JBM/SNS/PDO
Checked By:	EWC
Date Revised:	11/24/2020, 9:59 AM
Layout Name:	E19
File Path and Name:	Z:\20007BAR - Bethel Airport Main Runway\E-Working\Drawings\20007-BET-DETAILS.dwg

PLANS DEVELOPED BY:
MBA CONSULTING ENGINEERS, INC.
3812 SPENARD RD.
ANCHORAGE, AK 99517
(907) 274-2622
CERT. OF AUTH. NO. AECC578

BY	DATE	REVISION

STATE OF ALASKA
DEPARTMENT OF TRANSPORTATION AND PUBLIC FACILITIES
CENTRAL REGION
4111 AVIATION AVE., ANCHORAGE ALASKA 99502
PHONE (907) 269-0590

BETHEL AIRPORT
BETHEL, ALASKA
MAIN RUNWAY RECONSTRUCTION
PROJECT No. CFAPT00430
AIP No. 3-02-0029-0XX-20XX

EEB AND GENERATOR DEMO PLAN

DATE: 11/24/2020

SHEET: E19 OF 79

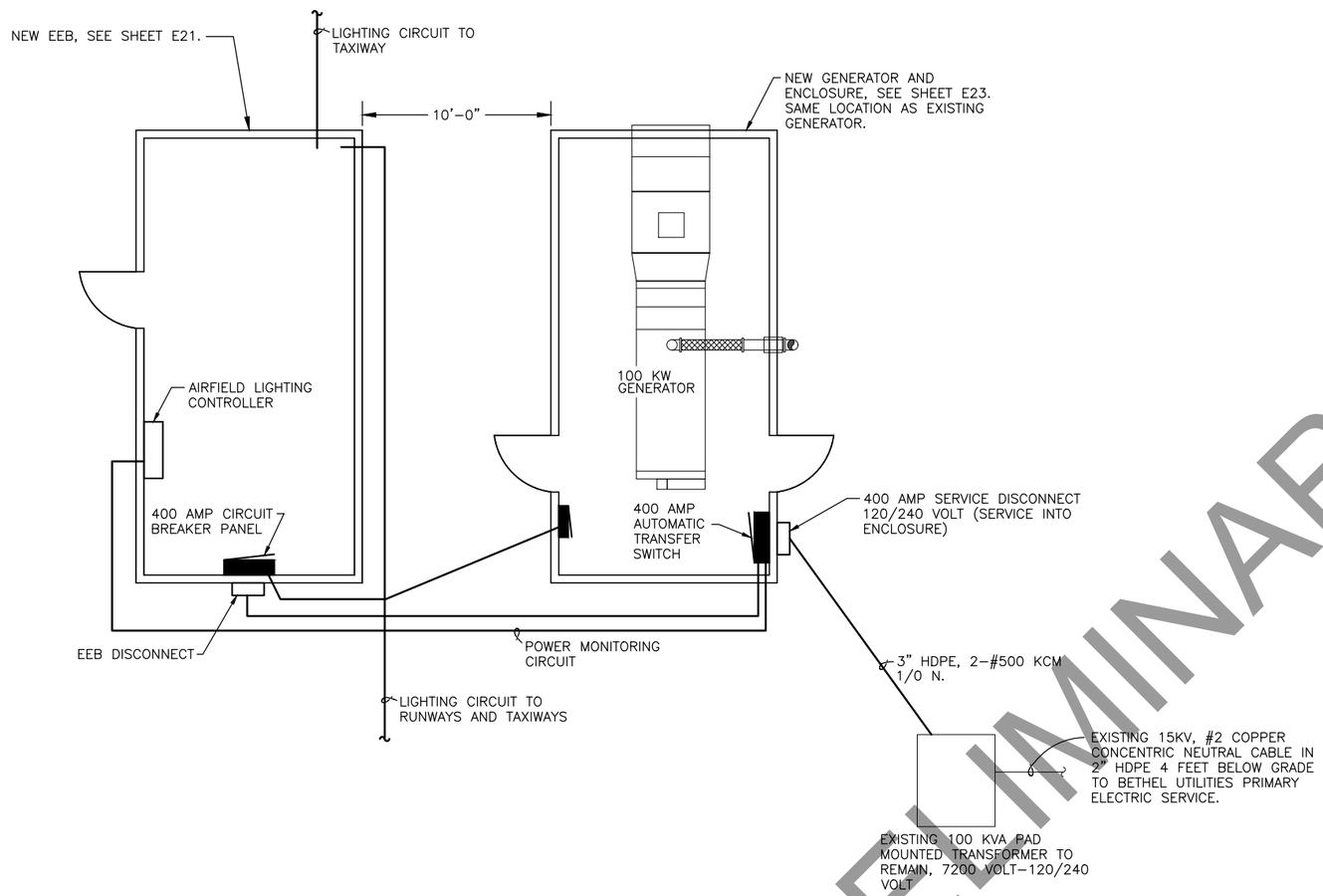

1 E20 REGULATOR BUILDING (EEB) AND GENERATOR SITE PLAN

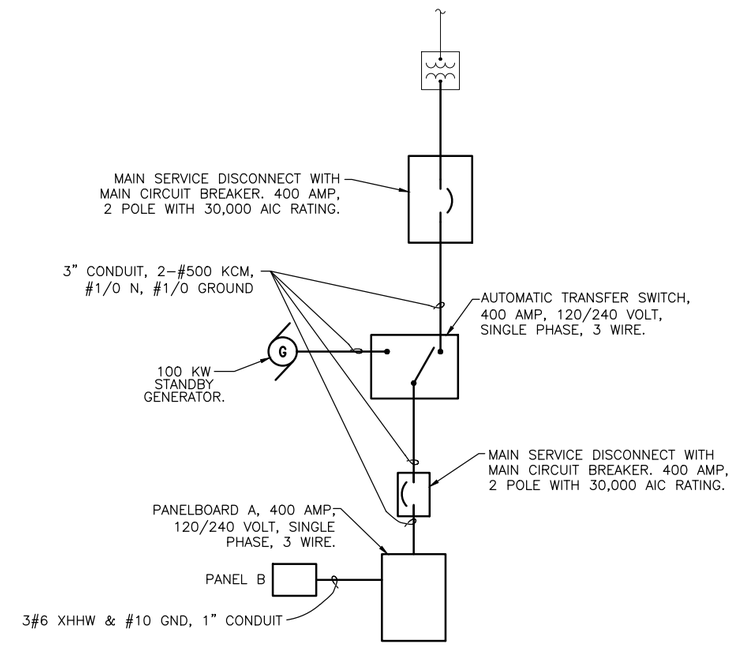

2 E20 ONE-LINE DIAGRAM
NTS

Designed By:	JBM
Drawn By:	JBM/SNS/PDO
Checked By:	EWC
Date Revised:	11/24/2020, 9:59 AM
Layout Name:	E20
File Path and Name:	Z:\20007BAR - Bethel Airport Main Runway\E-Working\Drawings\20007-BET-DETAILS.dwg

PLANS DEVELOPED BY:
MBA CONSULTING ENGINEERS, INC.
3812 SPENARD RD.
ANCHORAGE, AK 99517
(907) 274-2622
CERT. OF AUTH. NO. AECC578

BY	DATE	REVISION

STATE OF ALASKA
DEPARTMENT OF TRANSPORTATION AND PUBLIC FACILITIES
CENTRAL REGION
4111 AVIATION AVE., ANCHORAGE ALASKA 99502
PHONE (907) 269-0590

BETHEL AIRPORT
BETHEL, ALASKA
MAIN RUNWAY RECONSTRUCTION
PROJECT No. CFAPT00430
AIP No. 3-02-0029-0XX-20XX
EEB AND GENERATOR SITE PLAN AND ONE-LINE DIAGRAM

DATE: 11/24/2020

SHEET: E20 OF 79

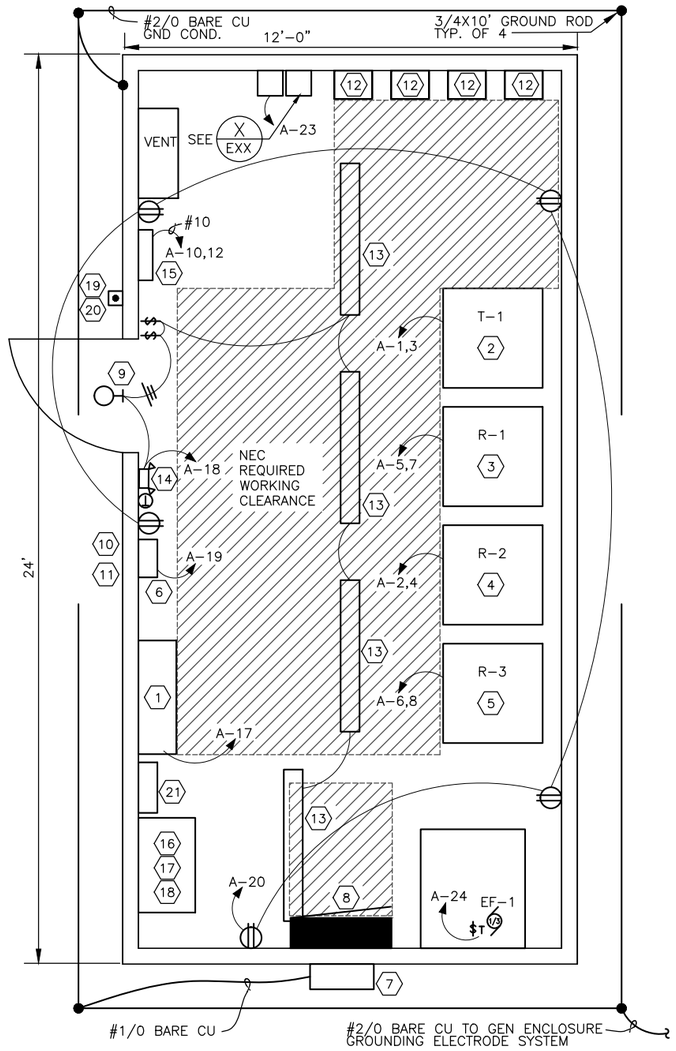

1 E21 EEB FLOOR PLAN
1/2"=1'-0"

SHEET NOTES:

1. ALL PENETRATIONS SHALL BE SEALED WITH SILICONE SEALANT. NO ROOF PENETRATIONS WILL BE ALLOWED.
2. EMT TUBING MAY BE USED AS THE RACEWAY SYSTEM INSIDE THE ENCLOSURE. LIQUID TIGHT FLEXIBLE METAL CONDUIT OR RIGID STEEL CONDUIT ARE TO BE USED FOR OUTDOOR LOCATION. TRANSITION LFMC TO HDPE USING LISTED FITTING.
3. PROVIDE MINIMUM 18 INCH LIQUIDTIGHT FLEXIBLE METAL CONDUIT SLACK LOOP AT ALL CONDUIT TRANSITIONS FROM UNDERGROUND TO ABOVE GROUND TO ACCOMMODATE DIFFERENTIAL MOVEMENT.

EQUIPMENT LIST

1. L-821 CONTROL PANEL, SEE SPECS.
2. CONSTANT CURRENT REGULATOR, TYPE L-828, 30 KW, CLASS 1, STYLE 2, FERRORESONANT TYPE. CIRCUIT T-1, TAXIWAY. PAID UNDER ITEM L125.020.0000.
3. CONSTANT CURRENT REGULATOR, TYPE L-828, 20 KW, CLASS 1, STYLE 2, FERRORESONANT TYPE. CIRCUIT R-1, RW 1L-19R. PAID UNDER ITEM L125.020.0000.
4. CONSTANT CURRENT REGULATOR, TYPE L-828, 15 KW, CLASS 1, STYLE 2, FERRORESONANT TYPE. CIRCUIT R-2, RW 1R-19L. PAID UNDER ITEM L125.020.0000.
5. CONSTANT CURRENT REGULATOR, TYPE L-828, 7.5 KW, CLASS 1, STYLE 2, FERRORESONANT TYPE. CIRCUIT R-3, RW 12-30. PAID UNDER ITEM L125.020.0000.
6. NEW RADIO CONTROLLER, FREQUENCY 123.6 MHZ.
7. DISCONNECT, 3 POLE, 400A CIRCUIT BREAKER, 22,000 AIC, WEATHERPRROF.
8. CIRCUIT BREAKER PANEL BOARD (PANEL A) SEE SPECS.
9. EXTERIOR WALL PACK WITH LED LAMP, -40°, PHOTOCELL CONTROL.
10. RADIO CONTROL ANTENNA, AV-1 OR APPROVED EQUAL.
11. PHOTOELECTRIC CONTROL, SEE SPECS.
12. PLUG CUTOUT - 5KV, MOUNTED IN 14"x12"x8" NEMA 1 ENCLOSURE WITH HINGED COVER.
13. 4 FT LONG GENERAL PURPOSE STRIP LIGHTING FIXTURE WITH WIRE GUARD. LED, 120V, SEE SPECS.
14. EMERGENCY LIGHT, 2 HEADS, WITH NI-CAD BATTERIES, 90 MIN. RATING, LED LAMPS. INDUSTRIAL RATED, SEE SPECS.
15. 4000-WATT 240 VOLT WALL MOUNTED FAN-FORCED ELECTRIC HEATER, SURFACE MOUNT.
16. METAL WALL DESK MCMASTER-CARR CATALOG NO. 4796T15 20x17x15 IN SLOPE TOP WITH PIGEON HOLE SHELVES, OR NO. 4808T15 34.5x30x32.5 IN DESK WITH LOCKING DRAWER MOUNT DESK TOP AT 43 IN AFF, (ELBOW HEIGHT WHEN STANDING) OR APPROVED EQUAL.
17. METAL CHAIR (ADJUSTABLE LEGS) WITH BACK SUPPORT FOR DESK: MCMASTER-CARR MODEL 4826T24 OR APPROVED EQUAL.
18. METAL WALL CABINET (LOCKABLE) WITH TWO SHELVES MCMASTER-CARR MODEL 4312T1 30X12X30 IN OR APPROVED EQUAL.
19. PUSH BUTTON STATION - GENERAL ELECTRIC NO. CR2943AJ301B OR APPROVED EQUAL.
20. SIGN TO READ: PUSH TO TURN RUNWAY LIGHTS ON. AUTO OFF IN 15 MIN.
21. FIBER OPTIC PATCH PANEL.
22. UNINTERRUPTIBLE POWER SUPPLY. MINIMUM 15 MINUTE BACKUP. PROVIDE FOR CORD CONNECTION OF RADIO CONTROLLER.
23. CONTACTOR, 30A, NUMBER OF POLES AS INDICATED, GE CR305 OR APPROVED EQUAL IN NEMA 1 ENCLOSURE.

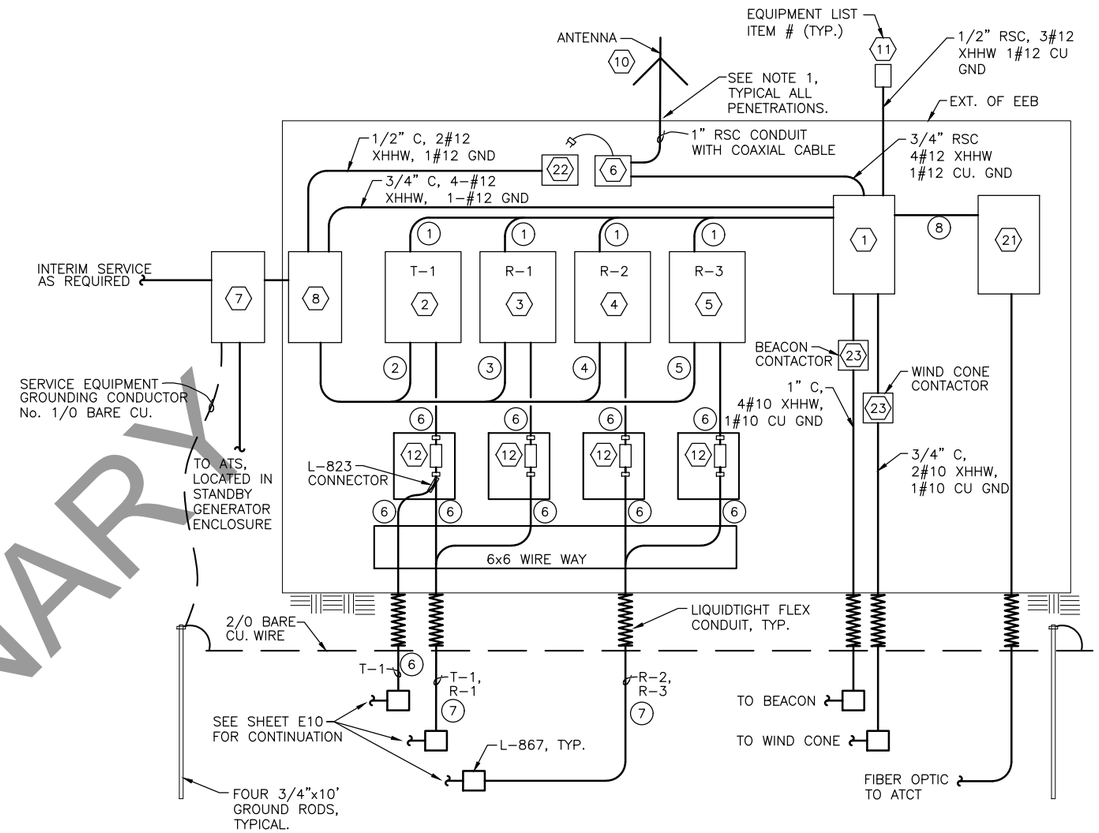

2 E21 EEB ONE LINE DIAGRAM
NTS

CONDUIT & CONDUCTOR SCHEDULE

1. 5 #12 XHHW-2
   1 #12 GRD
   3/4" C
2. 2 #4/0 XHHW-2
   1 #4 GRD
   2" C
3. 2 #1/0 XHHW-2
   1 #6 GRD
   1-1/2" C
4. 2 #2 XHHW-2
   1 #6 GRD
   1-1/4" C
5. 2 #6 XHHW-2
   1 #10 GRD
   3/4" C
6. 2 #8, 5KV AIRPORT CABLE
   1 #6 BARE CU GRD
   2" C
7. 4 #8, 5KV AIRPORT CABLE
   1 #6 BARE CU GRD
   2" C
8. FIBER OPTIC PATCH CABLE

Designed By:	JBM
Drawn By:	JBM/SNS/PDO
Checked By:	EWC

Date Revised:	11/24/2020, 9:59 AM
Layout Name:	E21
File Path and Name:	Z:\20007BAR - Bethel Airport Main Runway\E-Working\Drawings\20007-BET-DETAILS.dwg

PLANS DEVELOPED BY:
MBA CONSULTING ENGINEERS, INC.
3812 SPENARD RD.
ANCHORAGE, AK 99517
(907) 274-2622
CERT. OF AUTH. NO. AECC578

BY	DATE	REVISION

STATE OF ALASKA
DEPARTMENT OF TRANSPORTATION AND PUBLIC FACILITIES
CENTRAL REGION
4111 AVIATION AVE., ANCHORAGE ALASKA 99502
PHONE (907) 269-0590

BETHEL AIRPORT
BETHEL, ALASKA
MAIN RUNWAY RECONSTRUCTION
PROJECT No. CFAPT00430
AIP No. 3-02-0029-0XX-20XX
EEB PLAN, ONE-LINE DIAGRAM, AND EQUIPMENT LIST

DATE: 11/24/2020
SHEET: E21 OF 79

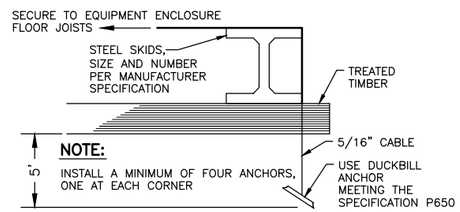

1 / E22 EEB AND GENERATOR ENCLOSURE TIE DOWN DETAIL
NTS

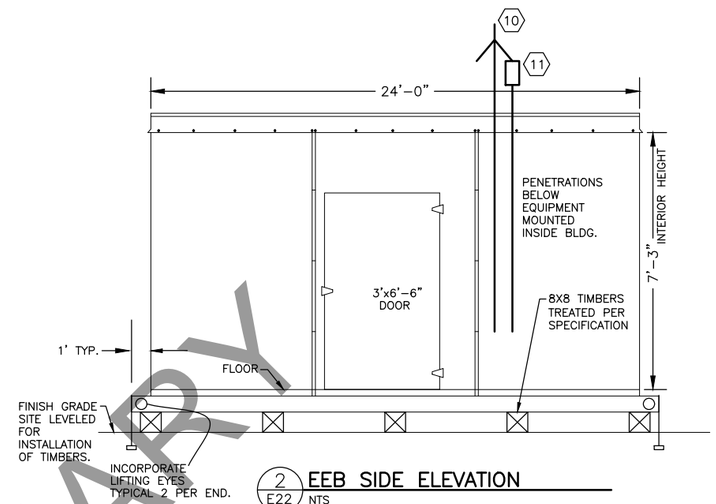

2 / E22 EEB SIDE ELEVATION
NTS

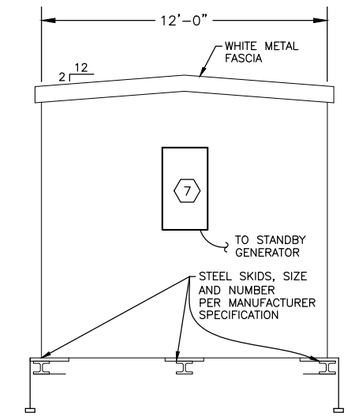

3 / E22 EEB END ELEVATION
NTS

Designed By:	JBM
Drawn By:	JBM/SNS/PDO
Checked By:	EWC
Date Revised:	11/24/2020, 9:59 AM
Layout Name:	E22
File Path and Name:	Z:\20007BAR - Bethel Airport Main Runway\E-Working\Drawings\20007-BET-DETAILS.dwg

PLANS DEVELOPED BY:
MBA CONSULTING ENGINEERS, INC.
3812 SPENARD RD.
ANCHORAGE, AK 99517
(907) 274-2622
CERT. OF AUTH. NO. AECC578

BY	DATE	REVISION

STATE OF ALASKA
DEPARTMENT OF TRANSPORTATION AND PUBLIC FACILITIES
CENTRAL REGION
4111 AVIATION AVE., ANCHORAGE ALASKA 99502
PHONE (907) 269-0590

BETHEL AIRPORT
BETHEL, ALASKA
MAIN RUNWAY RECONSTRUCTION
PROJECT No. CFAPT00430
AIP No. 3-02-0029-0XX-20XX
GENERATOR AND EEB
ELEVATIONS AND DETAILS

DATE: 11/24/2020

SHEET: E22 OF 79

PANEL: GP

PROJECT: BETHEL AIRPORT

LUGS ☐ CB ■ | SURF ■ FLSH ☐ | THRUFEED LGS ☐ SHNT TRP ☐ SBFD LGS ☐ | SUBFEED BKR ☐ ISO GRND BAR ☐ SOLID NEUTRAL ■

120/240 VOLTS — 1 PH — 3 WIRE — 100 AMP — 22000 AIC

CIRCUIT DESCRIPTION	KVA	AMP	CKT	CKT	AMP	KVA	CIRCUIT DESCRIPTION
SPARE		20/1	1	2	20/1	0.3	INTERIOR LIGHTS
BATTERY BLANKET	0.5	20/1	3	4	20/1	0.2	EXTERIOR LIGHTS
BATTERY CHARGER	0.5	20/1	5	6	20/1	0.6	RECEPTACLES
ENGINE COOLANT HEATER	1.0	20/1	7	8	20/1	0.1	EXTERIOR ALARM STROBE
BUILDING HEATER	4.0	30/	9	10	20/1		SPARE
		/2	11	12			SPACE
SPACE			13	14			SPACE
SPACE			15	16			SPACE
SPACE			17	18			SPACE
SPACE			19	20			SPACE

CONNECTED LOAD:	7.2 KVA	30 A	REMARKS:
DEMAND + CONT.	8.9 KVA	37 A	BOLT-ON CBS, 60/3 MAIN CB.
DATE:			
REV:			

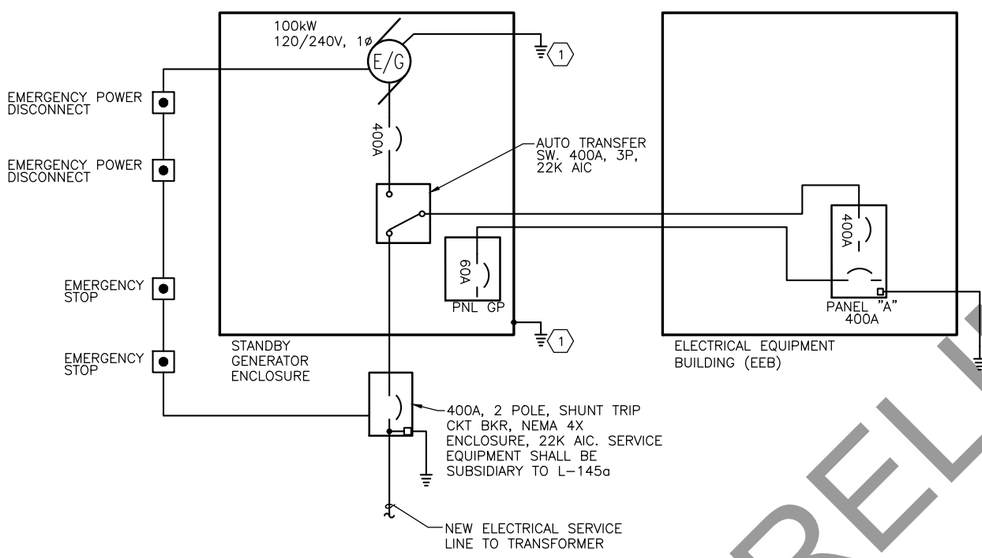

1 / E23 GENERATOR ONE-LINE DIAGRAM
SCALE: NTS

NOTES:

1. BOND GENERATOR NEUTRAL, GENERATOR FRAME AND GENERATOR ENCLOSURE FRAME TO GROUNDING ELECTRODE SYSTEM.
2. CONDUCTOR AND CONDUIT SIZES ARE BASED ON USING CU, 75°C XHHW-2 CONDUCTORS AND RIGID STEEL CONDUIT.
3. PAY ITEM L145.010.0000.
4. CONNECT EMERGENCY POWER DISCONNECT TO OPERATE SHUNT TRIP CIRCUIT BREAKER AND SHUT DOWN GENERATOR. CONNECT EMERGENCY STOP PUSHBUTTON TO SHUT DOWN GENERATOR ONLY.

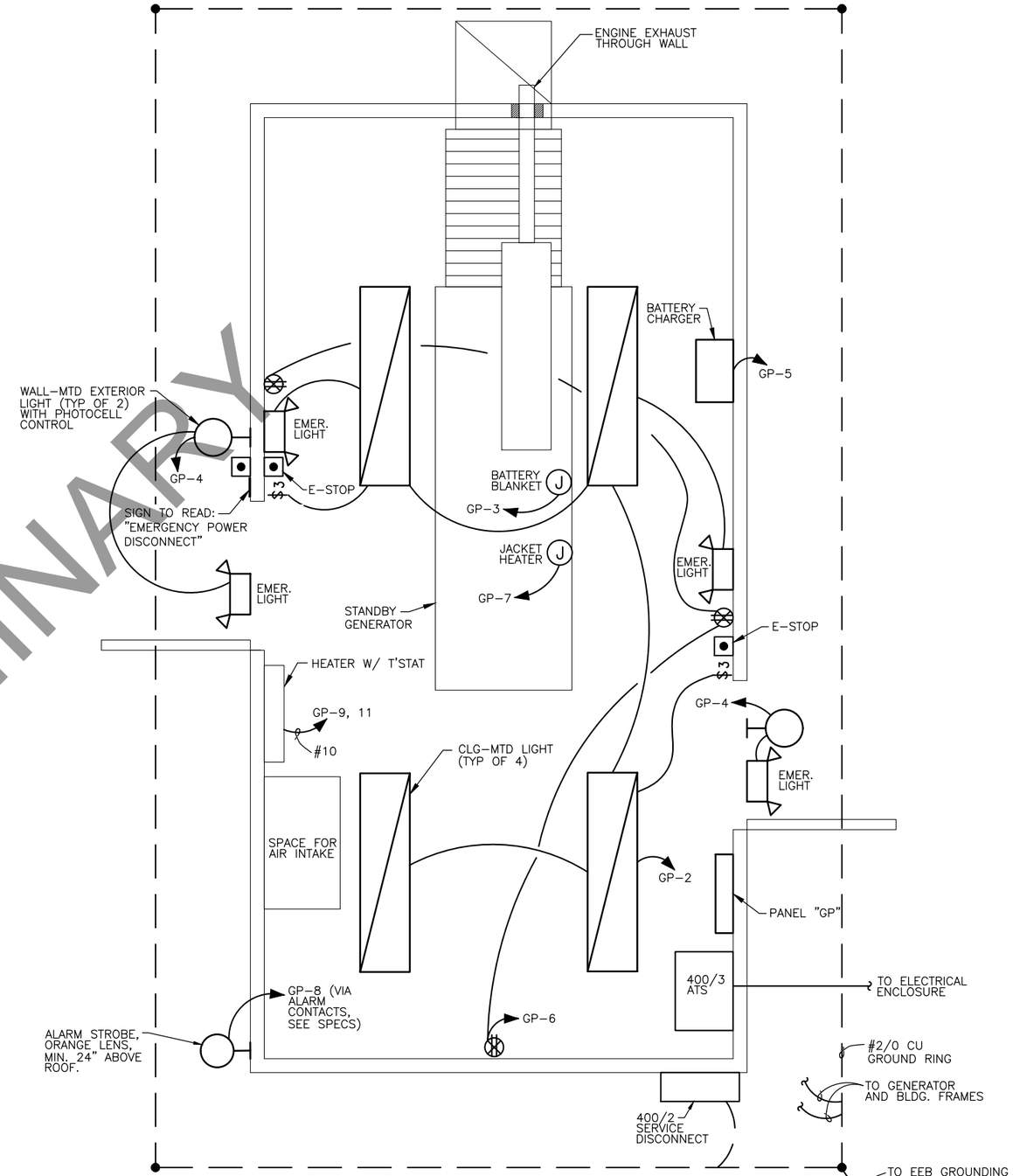

2 / E23 STANDBY GENERATOR ENCLOSURE
NTS

Designed By: JBM
Drawn By: JBM/SNS/PDO
Checked By: EWC
Date Revised: 12/22/2020, 11:56 AM
Layout Name: E23
File Path and Name: Z:\20007BAR - Bethel Airport Main Runway\E-Working\Drawings\20007-BET-DETAILS.dwg

PLANS DEVELOPED BY:
MBA CONSULTING ENGINEERS, INC.
3812 SPENARD RD.
ANCHORAGE, AK 99517
(907) 274-2622
CERT. OF AUTH. NO. AECC578

BY	DATE	REVISION

STATE OF ALASKA
DEPARTMENT OF TRANSPORTATION AND PUBLIC FACILITIES
CENTRAL REGION
4111 AVIATION AVE., ANCHORAGE ALASKA 99502
PHONE (907) 269-0590

BETHEL AIRPORT
BETHEL, ALASKA
MAIN RUNWAY RECONSTRUCTION
PROJECT No. CFAPT00430
AIP No. 3-02-0029-0XX-20XX

GENERATOR BUILDING PLAN

DATE: 11/24/2020
SHEET: E23 OF 79

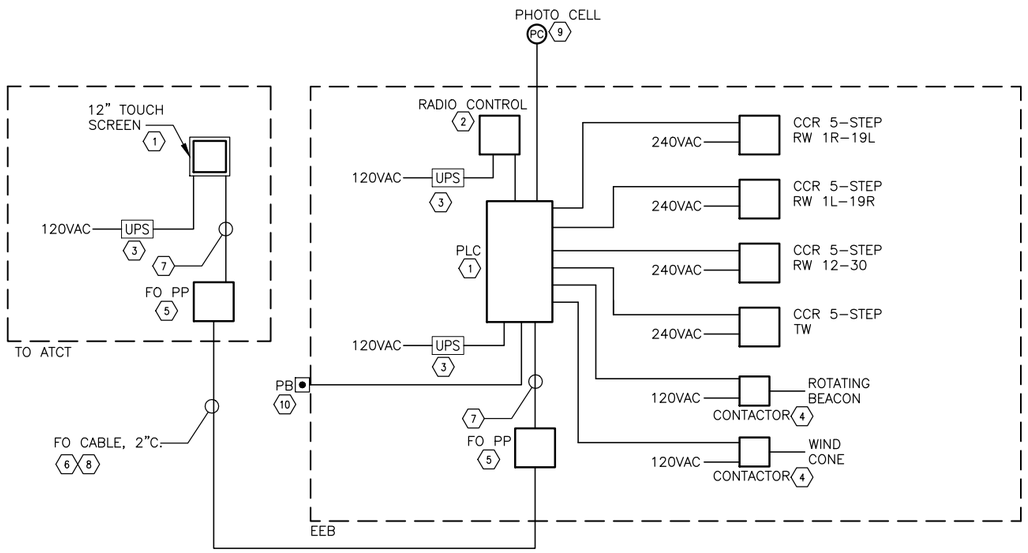

1 / E24 AIRFIELD LIGHTING CONTROL 1-LINE DIAGRAM
NTS

NOTES; (AIRFIELD LTG CTRL DIAGRAM)

1. L-821 TYPE III STYLE 3 AIRPORT LIGHTING CONTROL SYSTEM. ADB NAVIGATOR OR APPROVED EQUAL.
2. L-854 TYPE I RADIO CONTROLLER.
3. UNINTERRUPTIBLE POWER SUPPLY. MINIMUM 15 MINUTE BACKUP.
4. CONTACTOR WITH HOA SWITCH.
5. FIBER OPTIC PATCH PANEL, WALL MOUNT, 12 ST-COMPATIBLE CONNECTORS, LOCKING DOOR. CORNING WIC-02P WITH TWO CCH-CP-06-19T CONNECTOR PANELS OR APPROVED EQUAL
6. FIBER OPTIC CABLE, SINGLE MODE (OS2), 12 STRAND, LOOSE TUBE, GEL FREE, SINGLE JACKET, SINGLE ARMOR. CORNING CABLING SYSTEMS OR APPROVED EQUAL.
7. FIBER OPTIC PATCH CABLE, SINGLE MODE, ST CONNECTORS.
8. 2" CONDUIT, RSC UNDER PAVED AREAS AND AT BUILDING ENTRANCES, HDPE ELSEWHERE. PROVIDE PULLBOXES AT TOWER AND EEB, AND AT MAXIMUM 500 FEET INTERVALS BETWEEN TOWER AND EEB.
9. PHOTOCELL, MOUNTED ON EEB EXTERIOR.
10. PUSH BUTTON SWITCH, MOMENTARY CONTACT, NEMA 4X ENCLOSURE, MOUNTED ON BUILDING EXTERIOR. OPERATION OF PUSH BUTTON TURNS ON ALL AIRFIELD LIGHTING FOR 15 MINUTES.

Designed By:	JBM		
Drawn By:	JBM/SNS/PDO		
Checked By:	EWC		
Date Revised:	11/24/2020, 9:59 AM		
Layout Name:	E24		
File Path and Name:	Z:\20007BAR - Bethel Airport Main Runway\E-Working\Drawings\20007-BET-DETAILS.dwg		

PLANS DEVELOPED BY:
MBA CONSULTING ENGINEERS, INC.
3812 SPENARD RD.
ANCHORAGE, AK 99517
(907) 274-2622
CERT. OF AUTH. NO. AECC578

BY	DATE	REVISION

STATE OF ALASKA
DEPARTMENT OF TRANSPORTATION AND PUBLIC FACILITIES
CENTRAL REGION
4111 AVIATION AVE., ANCHORAGE ALASKA 99502
PHONE (907) 269-0590

BETHEL AIRPORT
BETHEL, ALASKA
MAIN RUNWAY RECONSTRUCTION
PROJECT No. CFAPT00430
AIP No. 3-02-0029-0XX-20XX

LIGHTING CONTROL DIAGRAM

DATE: 11/24/2020

SHEET: E24 OF 79

BETHEL AIRPORT RUNWAY 1L-19R EDGE LIGHT SCHEDULE

UNIT #	COLOR	TYPE	USED	WATTS	XFMR	ALIGNMENT	STATION	OFFSET	NOTES
R1	R/G	L-862E	THSLD	200	200	RW 1L-19R	70+10.00	85.00'R	
R2	R/G	L-862E	THSLD	200	200	RW 1L-19R	70+10.00	75.00'R	
R3	R/G	L-862E	THSLD	200	200	RW 1L-19R	70+10.00	65.00'R	
R4	R/G	L-862E	THSLD	200	200	RW 1L-19R	70+10.00	55.00'R	
R5	R/G	L-862E	THSLD	200	200	RW 1L-19R	70+10.00	55.00'L	
R6	R/G	L-862E	THSLD	200	200	RW 1L-19R	70+10.00	65.00'L	
R7	R/G	L-862E	THSLD	200	200	RW 1L-19R	70+10.00	75.00'L	
R8	R/G	L-862E	THSLD	200	200	RW 1L-19R	70+10.00	85.00'L	
R9	W/Y	L-862	RW	150	150	RW 1L-19R	68+15.45	85.00'R	
R10	W/Y	L-862	RW	150	150	RW 1L-19R	68+15.45	85.00'L	
R11	W/Y	L-862	RW	150	150	RW 1L-19R	66+20.91	85.00'R	
R12	W/Y	L-862	RW	150	150	RW 1L-19R	66+20.91	85.00'L	
R13	W/Y	L-862	RW	150	150	RW 1L-19R	64+26.36	85.00'R	
R14	W/Y	L-862	RW	150	150	RW 1L-19R	64+26.36	85.00'L	
R15	W/Y	L-862	RW	150	150	RW 1L-19R	62+31.82	85.00'R	
R16	W/Y	L-862	RW	150	150	RW 1L-19R	62+31.82	85.00'L	
R17	W/Y	L-862	RW	150	150	RW 1L-19R	60+37.27	85.00'R	
R18	W/Y	L-862	RW	150	150	RW 1L-19R	60+37.27	85.00'L	
R19	W/Y	L-862	RW	150	150	RW 1L-19R	58+42.73	85.00'R	
R20	W/Y	L-862	RW	150	150	RW 1L-19R	58+42.73	85.00'L	
R21	W/Y	L-862	RW	150	150	RW 1L-19R	56+48.18	85.00'R	
R22	W/Y	L-862	RW	150	150	RW 1L-19R	56+48.18	85.00'L	
R23	W/Y	L-862	RW	150	150	RW 1L-19R	54+53.64	85.00'R	
R24	W/Y	L-862	RW	150	150	RW 1L-19R	54+53.64	85.00'L	
R25	W/Y	L-862	RW	150	150	RW 1L-19R	52+59.09	85.00'R	
R26	W/Y	L-862	RW	150	150	RW 1L-19R	52+59.09	85.00'L	
R27	W/Y	L-862	RW	150	150	RW 1L-19R	50+64.55	85.00'R	
R28	W/Y	L-862	RW	150	150	RW 1L-19R	50+64.55	85.00'L	
R29	W	L-862	RW	150	150	RW 1L-19R	48+70.00	85.00'R	
R30	W	L-862	RW	150	150	RW 1L-19R	48+70.00	85.00'L	
R31	W	L-862	RW	150	150	RW 1L-19R	46+75.45	85.00'R	
R32	W	L-862	RW	150	150	RW 1L-19R	46+75.45	85.00'L	
R33	W	L-862	RW	150	150	RW 1L-19R	44+80.91	85.00'R	
R34	W	L-862	RW	150	150	RW 1L-19R	44+80.91	85.00'L	
R35	W	L-862	RW	150	150	RW 1L-19R	42+86.37	85.00'R	
R36	W	L-862	RW	150	150	RW 1L-19R	42+86.37	85.00'L	
R37	W	L-850C	RW	2(105)	200	RW 1L-19R	40+91.82	85.00'R	FLUSH
R38	W	L-850C	RW	2(105)	200	RW 1L-19R	40+91.82	85.00'L	FLUSH
R39	W	L-862	RW	150	200	RW 1L-19R	38+97.27	85.00'R	
R40	W	L-862	RW	150	150	RW 1L-19R	38+97.27	85.00'L	
R41	W	L-862	RW	150	150	RW 1L-19R	37+02.73	85.00'R	
R42	W	L-862	RW	150	150	RW 1L-19R	37+02.73	85.00'L	
R43	W	L-862	RW	150	150	RW 1L-19R	35+08.18	85.00'R	
R44	W	L-862	RW	150	150	RW 1L-19R	35+08.18	85.00'L	
R45	W	L-862	RW	150	150	RW 1L-19R	33+13.64	85.00'R	
R46	W	L-862	RW	150	150	RW 1L-19R	33+13.64	85.00'L	
R47	W	L-850C	RW	2(105)	200	RW 1L-19R	31+19.09	85.00'R	FLUSH
R48	W	L-850C	RW	2(105)	200	RW 1L-19R	31+19.09	85.00'L	FLUSH
R49	W	L-862	RW	150	150	RW 1L-19R	29+24.55	85.00'R	
R50	W	L-862	RW	150	150	RW 1L-19R	29+24.55	85.00'L	
R51	W	L-862	RW	150	150	RW 1L-19R	27+30.00	85.00'R	
R52	W	L-862	RW	150	150	RW 1L-19R	27+30.00	85.00'L	
R53	W/Y	L-862	RW	150	150	RW 1L-19R	25+35.45	85.00'R	
R54	W/Y	L-862	RW	150	150	RW 1L-19R	25+35.45	85.00'L	
R55	W/Y	L-862	RW	150	150	RW 1L-19R	23+40.91	85.00'R	
R56	W/Y	L-862	RW	150	150	RW 1L-19R	23+40.91	85.00'L	
R57	W/Y	L-862	RW	150	150	RW 1L-19R	21+46.36	85.00'R	
R58	W/Y	L-862	RW	150	150	RW 1L-19R	21+46.36	85.00'L	
R59	W/Y	L-862	RW	150	150	RW 1L-19R	19+51.82	85.00'R	
R60	W/Y	L-862	RW	150	150	RW 1L-19R	19+51.82	85.00'L	

BETHEL AIRPORT RUNWAY 1L-19R EDGE LIGHT SCHEDULE CONTINUED

UNIT #	COLOR	TYPE	USED	WATTS	XFMR	ALIGNMENT	STATION	OFFSET	NOTES
R61	W/Y	L-862	RW	150	150	RW 1L-19R	17+57.27	85.00'R	
R62	W/Y	L-862	RW	150	150	RW 1L-19R	17+57.27	85.00'L	
R63	W/Y	L-862	RW	150	150	RW 1L-19R	15+62.73	85.00'R	
R64	W/Y	L-862	RW	150	150	RW 1L-19R	15+62.73	85.00'L	
R65	W/Y	L-862	RW	150	150	RW 1L-19R	13+68.18	85.00'R	
R66	W/Y	L-862	RW	150	150	RW 1L-19R	13+68.18	85.00'L	
R67	W/Y	L-862	RW	150	150	RW 1L-19R	11+73.64	85.00'R	
R68	W/Y	L-862	RW	150	150	RW 1L-19R	11+73.64	85.00'L	
R69	W/Y	L-862	RW	150	150	RW 1L-19R	9+79.09	85.00'R	
R70	W/Y	L-862	RW	150	150	RW 1L-19R	9+79.09	85.00'L	
R71	W/Y	L-862	RW	150	150	RW 1L-19R	7+84.55	85.00'R	
R72	W/Y	L-862	RW	150	150	RW 1L-19R	7+84.55	85.00'L	
R73	R/G	L-862E	THSLD	200	200	RW 1L-19R	5+90.00	85.00'R	
R74	R/G	L-862E	THSLD	200	200	RW 1L-19R	5+90.00	75.00'R	
R75	R/G	L-862E	THSLD	200	200	RW 1L-19R	5+90.00	65.00'R	
R76	R/G	L-862E	THSLD	200	200	RW 1L-19R	5+90.00	55.00'R	
R77	R/G	L-862E	THSLD	200	200	RW 1L-19R	5+90.00	55.00'L	
R78	R/G	L-862E	THSLD	200	200	RW 1L-19R	5+90.00	65.00L	
R79	R/G	L-862E	THSLD	200	200	RW 1L-19R	5+90.00	75.00'L	
R80	R/G	L-862E	THSLD	200	200	RW 1L-19R	5+90.00	85.00'L	

Designed By: JBM
Drawn By: JBM/SNS/PDO
Checked By: EWC
Date Revised: 11/24/2020, 9:59 AM
Layout Name: E25
File Path and Name: Z:\20007BAR - Bethel Airport Main Runway\E-Working\Drawings\20007-BET-DETAILS.dwg

PLANS DEVELOPED BY:
MBA CONSULTING ENGINEERS, INC.
3812 SPENARD RD.
ANCHORAGE, AK 99517
(907) 274-2622
CERT. OF AUTH. NO. AECC578

BY	DATE	REVISION

STATE OF ALASKA
DEPARTMENT OF TRANSPORTATION AND PUBLIC FACILITIES
CENTRAL REGION
4111 AVIATION AVE., ANCHORAGE ALASKA 99502
PHONE (907) 269-0590

BETHEL AIRPORT
BETHEL, ALASKA
MAIN RUNWAY RECONSTRUCTION
PROJECT No. CFAPT00430
AIP No. 3-02-0029-0XX-20XX
BETHEL RUNWAY LIGHTING SCHEDULE

DATE: 11/24/2020

BETHEL AIRPORT TAXIWAY EDGE LIGHT SCHEDULE

LIGHT #	COLOR	TYPE	LAMP	XFMR	TAXIWAY NAME	ALIGNMENT	STATION	OFFSET	NOTES
T01	BLUE	L861T	LED	10/15	TAXIWAY C	TW C	72+26.73	35.00'R	
T02	BLUE	L861T	LED	10/15	TAXIWAY C	TW C	71+76.73	35.00'R	
T03	BLUE	L861T	LED	10/15	TAXIWAY C	TW C	71+49.23	35.00'R	
T04	BLUE	L861T	LED	10/15	TAXIWAY C	TW C	71+21.73	35.00'R	
T05	BLUE	L861T	LED	10/15	TAXIWAY C	TW C	70+70.73	35.00'R	
T06	BLUE	L861T	LED	10/15	TAXIWAY C	TW C	70+20.73	35.00'R	
T07	BLUE	L861T	LED	10/15	TAXIWAY C	TW C	69+88.78	33.99'R	
T08	BLUE	L861T	LED	10/15	TAXIWAY C	TW C	69+57.69	33.42'R	
T09	BLUE	L861T	LED	10/15	TAXIWAY C	TW C	69+26.54	33.42'R	
T10	BLUE	L861T	LED	10/15	TAXIWAY C	TW C	68+95.45	33.98'R	
T11	BLUE	L861T	LED	10/15	TAXIWAY C	TW C	68+63.5	35.00'R	
T12	BLUE	L861T	LED	10/15	TAXIWAY C	TW C	68+13.5	35.00'R	
T13	BLUE	L861T	LED	10/15	TAXIWAY C	TW C	67+48.78	35.00'R	
T14	BLUE	L861T	LED	10/15	TAXIWAY C	TW C	65+55.19	35.00'R	
T15	BLUE	L861T	LED	10/15	TAXIWAY C	TW C	63+60.13	35.00'R	
T16	BLUE	L861T	LED	10/15	TAXIWAY C	TW C	61+65.06	35.00'R	
T17	BLUE	L861T	LED	10/15	TAXIWAY C	TW C	60+20.00	35.00'R	
T18	BLUE	L861T	LED	10/15	TAXIWAY M	TW C	59+70.00	35.00'R	
T19	BLUE	L861T	LED	10/15	TAXIWAY M	TW C	59+30.78	42.80'R	
T20	BLUE	L861T	LED	10/15	TAXIWAY M	TW C	58+97.52	65.02'R	
T21	BLUE	L861T	LED	10/15	TAXIWAY M	TW C	58+75.30	98.28'R	
T22	BLUE	L861T	LED	10/15	TAXIWAY M	TW C	58+67.5	137.50'R	
T23	BLUE	L861T	LED	10/15	TAXIWAY M	TW C	57+72.75	137.49'R	
T24	BLUE	L861T	LED	10/15	TAXIWAY M	TW C	57+64.97	98.19'R	
T25	BLUE	L861T	LED	10/15	TAXIWAY M	TW C	57+42.69	64.89'R	
T26	BLUE	L861T	LED	10/15	TAXIWAY M	TW C	57+09.34	42.69'R	
T27	BLUE	L861T	LED	10/15	TAXIWAY M	TW C	56+70.02	35.00'R	
T28	BLUE	L861T	LED	10/15	TAXIWAY C	TW C	56+20.02	35.00'R	
T29	BLUE	L861T	LED	10/15	TAXIWAY C	TW C	55+00.83	35.00'R	
T30	BLUE	L861T	LED	10/15	TAXIWAY C	TW C	53+31.64	35.00'R	
T31	BLUE	L861T	LED	10/15	TAXIWAY C	TW C	51+62.45	35.00'R	
T32	BLUE	L861T	LED	10/15	TAXIWAY C	TW C	49+93.26	35.00'R	
T33	BLUE	L861T	LED	10/15	TAXIWAY C	TW C	48+24.07	35.00'R	
T34	BLUE	L861T	LED	10/15	TAXIWAY C	TW C	47+04.88	35.00'R	
T35	BLUE	L861T	LED	10/15	TAXIWAY C	TW C	46+54.88	35.00'R	
T36	BLUE	L861T	LED	10/15	TAXIWAY C	TW C	46+16.86	43.41'R	
T37	BLUE	L861T	LED	10/15	TAXIWAY C	TW C	45+85.97	67.09'R	
T38	BLUE	L861T	LED	10/15	TAXIWAY C	TW C	45+70.86	102.38'R	
T39	BLUE	L861T	LED	10/15	TAXIWAY C	TW C	45+75.70	103.68'R	
T40	BLUE	L861T	LED	10/15	TAXIWAY C	TW C	44+47.39	153.30'R	
T41	BLUE	L861T	LED	10/15	TAXIWAY C	TW C	44+52.22	154.60'R	
T42	BLUE	L861T	LED	10/15	TAXIWAY C	TW C	44+56.50	114.50'R	
T43	BLUE	L861T	LED	10/15	TAXIWAY C	TW C	44+39.65	77.23'R	
T44	BLUE	L861T	LED	10/15	TAXIWAY C	TW C	44+08.04	51.26'R	
T45	BLUE	L861T	LED	10/15	TAXIWAY C	TW C	43+68.20	41.97'R	
T46	BLUE	L861T	LED	10/15	TAXIWAY C	TW C	43+19.20	43.68'R	
T47	BLUE	L861T	LED	10/15	TAXIWAY C	TW C	42+65.31	45.49'R	
T48	BLUE	L861T	LED	10/15	TAXIWAY C	TW C	42+21.00	57.25'R	
T49	BLUE	L861T	LED	10/15	TAXIWAY C	TW C	41+76.68	69.02'R	
T50	BLUE	L861T	LED	10/15	TAXIWAY C	TW C	41+32.37	80.78'R	
T51	BLUE	L861T	LED	10/15	TAXIWAY C	TW C	41+21.07	123.35'R	
T52	BLUE	L861T	LED	10/15	TAXIWAY C	TW C	41+09.78	165.91'R	
T53	BLUE	L861T	LED	10/15	TAXIWAY C	TW C	40+98.47	208.47'R	
T54	BLUE	L861T	LED	10/15	TAXIWAY C	TW C	41+04.40	235.11'R	
T55	BLUE	L861T	LED	10/15	TAXIWAY C	TW C	41+10.34	261.76'R	
T56	BLUE	L861T	LED	10/15	TAXIWAY C	TW C	41+15.35	270.00'R	
T57	BLUE	L861T	LED	10/15	TAXIWAY C	TW C	41+24.35	273.48'R	
T58	BLUE	L861T	LED	10/15	TAXIWAY C	TW C	41+44.09	274.31'R	

BETHEL AIRPORT TAXIWAY EDGE LIGHT SCHEDULE

LIGHT #	COLOR	TYPE	LAMP	XFMR	TAXIWAY NAME	ALIGNMENT	STATION	OFFSET	NOTES
T59	BLUE	L861T	LED	10/15	TAXIWAY C	TW C	37+42.09	339.52'R	
T60	BLUE	L861T	LED	10/15	TAXIWAY C	TW C	39+30.83	333.30'R	
T61	BLUE	L861T	LED	10/15	TAXIWAY C	TW C	39+19.57	327.09'R	
T62	BLUE	L861T	LED	10/15	TAXIWAY C	TW C	39+43.34	316.38'R	
T63	BLUE	L861T	LED	10/15	TAXIWAY C	TW C	39+67.12	305.68'R	
T64	BLUE	L861T	LED	10/15	TAXIWAY C	TW C	39+77.34	264.56'R	
T65	BLUE	L861T	LED	10/15	TAXIWAY C	TW C	39+87.55	223.45'R	
T66	BLUE	L861T	LED	10/15	TAXIWAY C	TW C	39+97.77	182.33'R	
T67	BLUE	L861T	LED	10/15	TAXIWAY C	TW C	39+88.78	148.48'R	
T68	BLUE	L861T	LED	10/15	TAXIWAY C	TW C	39+79.79	114.63'R	
T69	BLUE	L861T	LED	10/15	TAXIWAY C	TW C	39+70.81	80.78'R	
T70	BLUE	L861T	LED	10/15	TAXIWAY C	TW C	39+26.50	69.02'R	
T71	BLUE	L861T	LED	10/15	TAXIWAY C	TW C	38+82.18	57.25'R	
T72	BLUE	L861T	LED	10/15	TAXIWAY C	TW C	38+37.87	45.49'R	
T73	BLUE	L861T	LED	10/15	TAXIWAY C	TW C	36+79.78	40.01'R	
T74	BLUE	L861T	LED	10/15	TAXIWAY C	TW C	35+26.68	35.00'R	
T75	BLUE	L861T	LED	10/15	TAXIWAY C	TW C	33+71.36	38.85'R	
T76	BLUE	L861T	LED	10/15	TAXIWAY C	TW C	33+27.05	40.67'R	
T77	BLUE	L861T	LED	10/15	TAXIWAY C	TW C	32+95.27	41.98'R	
T78	BLUE	L861T	LED	10/15	TAXIWAY C	TW C	32+57.24	51.77'R	
T79	BLUE	L861T	LED	10/15	TAXIWAY C	TW C	32+19.21	61.57'R	
T80	BLUE	L861T	LED	10/15	TAXIWAY D	TW D	404+99.60	51.77'L	
T81	BLUE	L861T	LED	10/15	TAXIWAY D	TW D	405+37.64	42.01'L	
T82	BLUE	L861T	LED	10/15	TAXIWAY D	TW D	405+68.82	40.70'L	
T83	BLUE	L861T	LED	10/15	TAXIWAY D	TW D	406+00.00	39.42'L	
T84	BLUE	L861T	LED	10/15	TAXIWAY D	TW D	406+31.19	40.70'L	
T85	BLUE	L861T	LED	10/15	TAXIWAY D	TW D	406+62.37	41.98'L	
T86	BLUE	L861T	LED	10/15	TAXIWAY D	TW D	407+00.07	51.70'L	
T87	BLUE	L861T	LED	10/15	TAXIWAY D	TW D	407+37.89	61.43'L	
T88	BLUE	L861T	LED	10/15	TAXIWAY D	TW D	407+38.02	101.59'L	
T89	BLUE	L861T	LED	10/15	TAXIWAY D	TW D	407+10.64	214.13'R	
T90	BLUE	L861T	LED	10/15	TAXIWAY D	TW D	407+10.66	161.63'R	
T91	BLUE	L861T	LED	10/15	TAXIWAY D	TW D	407+10.68	109.13'R	
T92	BLUE	L861T	LED	10/15	TAXIWAY D	TW D	406+98.44	61.57'R	
T93	BLUE	L861T	LED	10/15	TAXIWAY D	TW D	406+60.40	51.77'R	
T94	BLUE	L861T	LED	10/15	TAXIWAY D	TW D	406+22.37	41.99'R	
T95	BLUE	L861T	LED	10/15	TAXIWAY D	TW D	405+80.00	40.24'R	
T96	BLUE	L861T	LED	10/15	TAXIWAY D	TW D	405+37.64	41.98'R	
T97	BLUE	L861T	LED	10/15	TAXIWAY D	TW D	404+99.60	51.77'R	
T98	BLUE	L861T	LED	10/15	TAXIWAY C	TW C	30+96.07	61.57'R	
T99	BLUE	L861T	LED	10/15	TAXIWAY C	TW C	30+58.04	51.77'R	
T100	BLUE	L861T	LED	10/15	TAXIWAY C	TW C	30+20.01	41.98'R	
T101	BLUE	L861T	LED	10/15	TAXIWAY C	TW C	29+88.24	40.68'R	
T102	BLUE	L861T	LED	10/15	TAXIWAY C	TW C	29+43.93	38.85'R	
T103	BLUE	L861T	LED	10/15	TAXIWAY C	TW C	28+93.93	36.80'R	
T104	BLUE	L861T	LED	10/15	TAXIWAY C	TW C	27+68.15	35.00'R	
T105	BLUE	L861T	LED	10/15	TAXIWAY C	TW C	25+92.37	35.00'R	
T106	BLUE	L861T	LED	10/15	TAXIWAY C	TW C	24+16.60	35.00'R	
T107	BLUE	L861T	LED	10/15	TAXIWAY C	TW C	22+40.82	35.00'R	
T108	BLUE	L861T	LED	10/15	TAXIWAY C	TW C	20+65.05	35.00'R	
T109	BLUE	L861T	LED	10/15	TAXIWAY C	TW C	18+89.27	35.00'R	
T110	BLUE	L861T	LED	10/15	TAXIWAY C	TW C	17+63.50	35.00'R	
T111	BLUE	L861T	LED	10/15	TAXIWAY C	TW C	17+13.50	35.00'R	
T112	BLUE	L861T	LED	10/15	TAXIWAY C	TW C	5+67.35	92.71'R	
T113	BLUE	L861T	LED	10/15	TAXIWAY C	TW C	6+48.27	62.50'R	
T114	BLUE	L861T	LED	10/15	TAXIWAY C	TW C	6+20.77	41.77'R	
T115	BLUE	L861T	LED	10/15	TAXIWAY C	TW C	5+86.77	35.00'R	
T116	BLUE	L861T	LED	10/15	TAXIWAY C	TW C	5+36.77	35.02'R	

PLANS DEVELOPED BY:
MBA CONSULTING ENGINEERS, INC.
3812 SPENARD RD.
ANCHORAGE, AK 99517
(907) 274-2622
CERT. OF AUTH. NO. AECC578

BY	DATE	REVISION

STATE OF ALASKA
DEPARTMENT OF TRANSPORTATION AND PUBLIC FACILITIES
CENTRAL REGION
4111 AVIATION AVE., ANCHORAGE ALASKA 99502
PHONE (907) 269-0590

BETHEL AIRPORT
BETHEL, ALASKA
MAIN RUNWAY RECONSTRUCTION
PROJECT No. CFAPT00430
AIP No. 3-02-0029-0XX-20XX
BETHEL TAXIWAY LIGHTING
SCHEDULE #1

DATE: 11/24/2020

Designed By: JBM
Drawn By: JBM/SNS/PDO
Checked By: EWC
Date Revised: 11/24/2020, 9:59 AM
Layout Name: E26
File Path and Name: Z:\20007BAR - Bethel Airport Main Runway\E-Working\Drawings\20007-BET-DETAILS.dwg

BETHEL AIRPORT TAXIWAY EDGE LIGHT SCHEDULE

LIGHT #	COLOR	TYPE	LAMP	XFMR	TAXIWAY NAME	ALIGNMENT	STATION	OFFSET	NOTES
T117	BLUE	L861T	LED	10/15	TAXIWAY C	TW C	4+85.78	35.00'R	
T118	BLUE	L861T	LED	10/15	TAXIWAY C	TW C	4+58.28	35.00'R	
T119	BLUE	L861T	LED	10/15	TAXIWAY C	TW C	4+30.77	35.00'R	
T120	BLUE	L861T	LED	10/15	TAXIWAY C	TW C	3+80.77	35.00'R	
T121	BLUE	L861T	LED	10/15	TAXIWAY C	TW C	3+73.77	78.87'L	
T122	BLUE	L861T	LED	10/15	TAXIWAY C	TW C	3+76.27	78.90'L	
T123	BLUE	L861T	LED	10/15	TAXIWAY C	TW C	3+96.18	72.94'L	
T124	BLUE	L861T	LED	10/15	TAXIWAY C	TW C	4+18.58	66.97'L	
T125	BLUE	L861T	LED	10/15	TAXIWAY C	TW C	4+40.98	61.03'L	
T126	BLUE	L861T	LED	10/15	TAXIWAY C	TW C	4+63.38	55.08'L	
T127	BLUE	L861T	LED	10/15	TAXIWAY C	TW C	4+85.78	49.15'L	
T128	BLUE	L861T	LED	10/15	TAXIWAY C	TW C	5+25.52	59.68'L	
T129	BLUE	L861T	LED	10/15	TAXIWAY C	TW C	5+65.26	70.25'L	
T130	BLUE	L861T	LED	10/15	TAXIWAY C	TW C	6+65.40	74.90'L	
T131	BLUE	L861T	LED	10/15	TAXIWAY C	TW C	7+70.16	69.02'L	
T132	BLUE	L861T	LED	10/15	TAXIWAY C	TW C	8+14.37	57.25'L	
T133	BLUE	L861T	LED	10/15	TAXIWAY C	TW C	8+58.68	45.48'L	
T134	BLUE	L861T	LED	10/15	TAXIWAY C	TW C	9+44.80	42.50'L	
T135	BLUE	L861T	LED	10/15	TAXIWAY C	TW C	10+30.88	39.52'L	
T136	BLUE	L861T	LED	10/15	TAXIWAY C	TW C	11+16.95	36.53'L	
T137	BLUE	L861T	LED	10/15	TAXIWAY C	TW C	12+03.03	35.00'L	
T138	BLUE	L861T	LED	10/15	TAXIWAY C	TW C	12+89.10	35.00'L	
T139	BLUE	L861T	LED	10/15	TAXIWAY C	TW C	13+75.18	35.00'L	
T140	BLUE	L861T	LED	10/15	TAXIWAY C	TW C	14+61.25	35.00'L	
T141	BLUE	L861T	LED	10/15	TAXIWAY C	TW C	14+97.33	35.00'L	
T142	BLUE	L861T	LED	10/15	TAXIWAY C	TW C	15+47.33	35.00'L	
T143	BLUE	L861T	LED	10/15	TAXIWAY C	TW C	15+73.88	45.16'L	
T144	BLUE	L861T	LED	10/15	TAXIWAY C	TW C	15+87.07	70.33'L	
T145	BLUE	L861T	LED	10/15	TAXIWAY C	TW C	15+89.47	89.95'L	
T146	BLUE	L861T	LED	10/15	TAXIWAY C	TW C	16+73.77	79.70'L	
T147	BLUE	L861T	LED	10/15	TAXIWAY C	TW C	16+77.40	57.77'L	
T148	BLUE	L861T	LED	10/15	TAXIWAY C	TW C	16+92.15	41.17'L	
T149	BLUE	L861T	LED	10/15	TAXIWAY C	TW C	17+13.50	35.00'L	
T150	BLUE	L861T	LED	10/15	TAXIWAY C	TW C	17+63.50	35.00'L	
T151	BLUE	L861T	LED	10/15	TAXIWAY C	TW C	18+89.27	35.00'L	
T152	BLUE	L861T	LED	10/15	TAXIWAY C	TW C	20+65.05	35.00'L	
T153	BLUE	L861T	LED	10/15	TAXIWAY C	TW C	22+40.82	35.00'L	
T154	BLUE	L861T	LED	10/15	TAXIWAY C	TW C	24+16.60	35.00'L	
T155	BLUE	L861T	LED	10/15	TAXIWAY C	TW C	25+92.37	35.00'L	
T156	BLUE	L861T	LED	10/15	TAXIWAY C	TW C	27+68.15	39.40'L	
T157	BLUE	L861T	LED	10/15	TAXIWAY C	TW C	28+93.93	43.76'L	
T158	BLUE	L861T	LED	10/15	TAXIWAY C	TW C	29+43.93	45.49'L	
T159	BLUE	L861T	LED	10/15	TAXIWAY C	TW C	29+88.24	57.25'L	
T160	BLUE	L861T	LED	10/15	TAXIWAY C	TW C	30+20.01	65.69'L	
T161	BLUE	L861T	LED	10/15	TAXIWAY C	TW C	30+32.55	69.02'L	
T162	BLUE	L861T	LED	10/15	TAXIWAY C	TWC	30+76.86	80.78'L	
T163	BLUE	L861T	LED	10/15	TAXIWAY D	TW D	402+79.48	70.23'R	
T164	BLUE	L861T	LED	10/15	TAXIWAY D	TW D	402+39.74	59.69'R	
T165	BLUE	L861T	LED	10/15	TAXIWAY D	TW D	402.00.00	49.14'R	
T166	BLUE	L861T	LED	10/15	TAXIWAY D	TW D	401+77.58	55.09'R	
T167	BLUE	L861T	LED	10/15	TAXIWAY D	TW D	401+55.15	61.05'R	
T168	BLUE	L861T	LED	10/15	TAXIWAY D	TW D	401+32.72	67.00'R	
T169	BLUE	L861T	LED	10/15	TAXIWAY D	TW D	401+09.25	73.24'R	
T170	BLUE	L861T	LED	10/15	TAXIWAY D	TW D	400+89.87	78.91'R	
T171	BLUE	L861T	LED	10/15	TAXIWAY D	TW D	400+87.87	78.91'R	
T172	BLUE	L861T	LED	10/15	TAXIWAY D	TW D	400+87.97	78.89'L	
T173	BLUE	L861T	LED	10/15	TAXIWAY D	TW D	400+89.97	78.89'L	
T174	BLUE	L861T	LED	10/15	TAXIWAY D	TW D	401+10.37	72.94'L	

BETHEL AIRPORT TAXIWAY EDGE LIGHT SCHEDULE

LIGHT #	COLOR	TYPE	LAMP	XFMR	TAXIWAY NAME	ALIGNMENT	STATION	OFFSET	NOTES
T175	BLUE	L861T	LED	10/15	TAXIWAY D	TW D	401+32.78	66.99'L	
T176	BLUE	L861T	LED	10/15	TAXIWAY D	TW D	401+55.19	61.04'L	
T177	BLUE	L861T	LED	10/15	TAXIWAY D	TW D	401+77.60	55.09'L	
T178	BLUE	L861T	LED	10/15	TAXIWAY D	TW D	402+00.00	49.14'L	
T179	BLUE	L861T	LED	10/15	TAXIWAY D	TW D	402+39.74	59.67'L	
T180	BLUE	L861T	LED	10/15	TAXIWAY D	TW D	402+79.48	70.22'L	
T181	BLUE	L861T	LED	10/15	TAXIWAY C	TW C	32+38.43	80.78'L	
T182	BLUE	L861T	LED	10/15	TAXIWAY C	TW C	32+82.74	69.02'L	
T183	BLUE	L861T	LED	10/15	TAXIWAY C	TW C	32+95.27	65.69'L	
T184	BLUE	L861T	LED	10/15	TAXIWAY C	TW C	33+27.64	57.25'L	
T185	BLUE	L861T	LED	10/15	TAXIWAY C	TW C	33+71.36	45.49'L	
T186	BLUE	L861T	LED	10/15	TAXIWAY C	TW C	35+26.68	40.11'L	
T187	BLUE	L861T	LED	10/15	TAXIWAY C	TW C	36+82.55	40.11'L	
T188	BLUE	L861T	LED	10/15	TAXIWAY C	TW C	38+37.87	45.49'L	
T189	BLUE	L861T	LED	10/15	TAXIWAY C	TW C	38+82.18	57.26'L	
T190	BLUE	L861T	LED	10/15	TAXIWAY C	TW C	39+26.50	69.02'L	
T191	BLUE	L861T	LED	10/15	TAXIWAY C	TW C	39+70.81	80.78'L	
T192	BLUE	L861T	LED	10/15	TAXIWAY C	TW C	39+81.36	120.53'L	
T193	BLUE	L861T	LED	10/15	TAXIWAY C	TW C	39+91.91	160.26'L	
T194	BLUE	L861T	LED	10/15	TAXIWAY C	TW C	40+02.46	200.00'L	
T195	BLUE	L861T	LED	10/15	TAXIWAY C	TW C	35+96.51	222.43'L	
T196	BLUE	L861T	LED	10/15	TAXIWAY C	TW C	39+90.55	244.85'L	
T197	BLUE	L861T	LED	10/15	TAXIWAY C	TW C	39+84.60	267.28'L	
T198	BLUE	L861T	LED	10/15	TAXIWAY C	TW C	39+78.36	290.76'L	
T199	BLUE	L861T	LED	10/15	TAXIWAY C	TW C	39+72.69	310.14'L	
T200	BLUE	L861T	LED	10/15	TAXIWAY C	TW C	39+72.69	312.14'L	
T201	BLUE	L861T	LED	10/15	TAXIWAY C	TW C	41+30.49	312.04'L	
T202	BLUE	L861T	LED	10/15	TAXIWAY C	TW C	41+30.49	310.04'L	
T203	BLUE	L861T	LED	10/15	TAXIWAY C	TW C	41+24.54	289.63'L	
T204	BLUE	L861T	LED	10/15	TAXIWAY C	TW C	41+18.59	267.22'L	
T205	BLUE	L861T	LED	10/15	TAXIWAY C	TW C	41+12.64	244.81'L	
T206	BLUE	L861T	LED	10/15	TAXIWAY C	TW C	41+06.69	222.41'L	
T207	BLUE	L861T	LED	10/15	TAXIWAY C	TW C	41+00.74	200.00'L	
T208	BLUE	L861T	LED	10/15	TAXIWAY C	TW C	41+11.27	160.34'L	
T209	BLUE	L861T	LED	10/15	TAXIWAY C	TW C	41+21.82	120.53'L	
T210	BLUE	L861T	LED	10/15	TAXIWAY C	TW C	41+32.39	80.78'L	
T211	BLUE	L861T	LED	10/15	TAXIWAY C	TW C	41+76.68	69.02'L	
T212	BLUE	L861T	LED	10/15	TAXIWAY C	TW C	42+21.00	56.26'L	
T213	BLUE	L861T	LED	10/15	TAXIWAY C	TW C	42+65.31	45.49'L	
T214	BLUE	L861T	LED	10/15	TAXIWAY C	TW C	43+18.08	43.66'L	
T215	BLUE	L861T	LED	10/15	TAXIWAY C	TW C	43+68.12	41.93'L	
T216	BLUE	L861T	LED	10/15	TAXIWAY C	TW C	44+07.51	40.56'L	
T217	BLUE	L861T	LED	10/15	TAXIWAY C	TW C	44+46.89	39.20'L	
T218	BLUE	L861T	LED	10/15	TAXIWAY C	TW C	44+96.86	37.46'L	
T219	BLUE	L861T	LED	10/15	TAXIWAY C	TW C	46+15.11	35.00'L	
T220	BLUE	L861T	LED	10/15	TAXIWAY C	TW C	46+54.88	35.00'L	
T221	BLUE	L861T	LED	10/15	TAXIWAY C	TW C	47+04.88	35.00'L	
T222	BLUE	L861T	LED	10/15	TAXIWAY C	TW C	48+24.07	35.00'L	
T223	BLUE	L861T	LED	10/15	TAXIWAY C	TW C	49+93.26	35.00'L	
T224	BLUE	L861T	LED	10/15	TAXIWAY C	TW C	51+62.45	35.00'L	
T225	BLUE	L861T	LED	10/15	TAXIWAY C	TW C	53+31.64	35.00'L	
T226	BLUE	L861T	LED	10/15	TAXIWAY C	TW C	55+00.83	35.00'L	
T227	BLUE	L861T	LED	10/15	TAXIWAY C	TW C	56+20.02	35.00'L	
T228	BLUE	L861T	LED	10/15	TAXIWAY C	TW C	56+70.02	35.00'L	
T229	BLUE	L861T	LED	10/15	TAXIWAY C	TW C	57+70.01	35.00'L	
T230	BLUE	L861T	LED	10/15	TAXIWAY C	TW C	58+70.00	35.00'L	
T231	BLUE	L861T	LED	10/15	TAXIWAY C	TW C	59+70.00	35.00'L	
T232	BLUE	L861T	LED	10/15	TAXIWAY C	TW C	60+20.00	35.00'L	

Designed By: JBM
Drawn By: JBM/SNS/PDO
Checked By: EWC

Date Revised: 11/24/2020, 9:59 AM
Layout Name: E27
File Path and Name: Z:\20007BAR - Bethel Airport Main Runway\E-Working\Drawings\20007-BET-DETAILS.dwg

PLANS DEVELOPED BY:
MBA CONSULTING ENGINEERS, INC.
3812 SPENARD RD.
ANCHORAGE, AK 99517
(907) 274-2622
CERT. OF AUTH. NO. AECC578

BY	DATE	REVISION

STATE OF ALASKA
DEPARTMENT OF TRANSPORTATION AND PUBLIC FACILITIES
CENTRAL REGION
4111 AVIATION AVE., ANCHORAGE ALASKA 99502
PHONE (907) 269-0590

BETHEL AIRPORT
BETHEL, ALASKA
MAIN RUNWAY RECONSTRUCTION
PROJECT No. CFAPT00430
AIP No. 3-02-0029-0XX-20XX
BETHEL TAXIWAY LIGHTING
SCHEDULE #2

DATE: 11/24/2020

BETHEL AIRPORT TAXIWAY EDGE LIGHT SCHEDULE

LIGHT #	COLOR	TYPE	LAMP	XFMR	TAXIWAY NAME	ALIGNMENT	STATION	OFFSET	NOTES
T233	BLUE	L861T	LED	10/15	TAXIWAY C	TW C	61+65.06	35.00'L	
T234	BLUE	L861T	LED	10/15	TAXIWAY C	TW C	63+60.13	35.00'L	
T235	BLUE	L861T	LED	10/15	TAXIWAY C	TW C	65+55.19	38.78'L	
T236	BLUE	L861T	LED	10/15	TAXIWAY C	TW C	67+48.78	45.49'L	
T237	BLUE	L861T	LED	10/15	TAXIWAY C	TW C	67+93.09	57.25'L	
T238	BLUE	L861T	LED	10/15	TAXIWAY C	TW C	68+37.41	69.02'L	
T239	BLUE	L861T	LED	10/15	TAXIWAY C	TW C	69+42.13	74.90'L	
T240	BLUE	L861T	LED	10/15	TAXIWAY C	TW C	70+42.25	70.23'L	
T241	BLUE	L861T	LED	10/15	TAXIWAY C	TW C	70+81.99	59.68'L	
T242	BLUE	L861T	LED	10/15	TAXIWAY C	TW C	71+21.73	49.13'L	
T243	BLUE	L861T	LED	10/15	TAXIWAY C	TW C	71+43.73	54.97'L	
T244	BLUE	L861T	LED	10/15	TAXIWAY C	TW C	71+65.73	60.81'L	
T245	BLUE	L861T	LED	10/15	TAXIWAY C	TW C	71+87.73	66.65'L	
T246	BLUE	L861T	LED	10/15	TAXIWAY C	TW C	72+09.73	72.50'L	
T247	BLUE	L861T	LED	10/15	TAXIWAY C	TW C	72+31.73	78.87'L	
T248	BLUE	L861T	LED	10/15	TAXIWAY C	TW C	72+33.73	78.87'L	
T249	BLUE	L861T	LED	10/15	TAXIWAY G	RW 1L-19R	68+92.95	92.14'L	
T250	BLUE	L861T	LED	10/15	TAXIWAY G	RW 1L-19R	68+71.37	88.35'L	
T251	BLUE	L861T	LED	10/15	TAXIWAY C	RW 1L-19R	68+71.37	94.17'L	
T252	BLUE	L861T	LED	10/15	TAXIWAY C	RW 1L-19R	41+44.18	93.36'L	
T253	BLUE	L861T	LED	10/15	TAXIWAY C	RW 1L-19R	39+81.59	88.43'L	
T254	BLUE	L861T	LED	10/15	TAXIWAY C	RW 1L-19R	41+21.60	91.44'L	
T255	BLUE	L861T	LED	10/15	TAXIWAY C	RW 1L-19R	39+81.59	91.44'L	
T256	BLUE	L861T	LED	10/15	TAXIWAY C	RW 1L-19R	39+58.93	88.61'L	
T257	BLUE	L861T	LED	10/15	TAXIWAY C	RW 1L-19R	39+59.05	93.64'L	
T258	BLUE	L861T	LED	10/15	TAXIWAY C	RW 1L-19R	32+60.14	93.00'L	
T259	BLUE	L861T	LED	10/15	TAXIWAY C	RW 1L-19R	32+60.14	88.00'L	
T260	BLUE	L861T	LED	10/15	TAXIWAY C	RW 1L-19R	32+35.16	92.00'L	
T261	BLUE	L861T	LED	10/15	TAXIWAY C	RW 1L-19R	30+90.03	92.06'L	
T262	BLUE	L861T	LED	10/15	TAXIWAY C	RW 1L-19R	30+65.14	88.00'L	
T263	BLUE	L861T	LED	10/15	TAXIWAY C	RW 1L-19R	30+65.14	93.00'L	
T264	BLUE	L861T	LED	10/15	TAXIWAY C	RW 1L-19R	17+38.25	92.91'R	
T265	BLUE	L861T	LED	10/15	TAXIWAY C	RW 1L-19R	17+38.25	88.00'R	
T266	BLUE	L861T	LED	10/15	TAXIWAY C	RW 1L-19R	17+12.06	100.13'R	
T267	BLUE	L861T	LED	10/15	TAXIWAY C	RW 1L-19R	16+04.51	102.77'R	
T268	BLUE	L861T	LED	10/15	TAXIWAY C	RW 1L-19R	15+67.86	88.00'R	
T269	BLUE	L861T	LED	10/15	TAXIWAY C	RW 1L-19R	15+67.86	92.91'R	

BETHEL SIGN SCHEDULE

SIGN NUMBER	STATUS	SIDE	TYPE	PURPOSE	POWER STYLE	LEGEND	LEGEND COLOR	FACE COLOR	ALIGNMENT	STATION	OFFSET
1	NEW	NORTH	L-858Y(L)	TAXWIWAY DIRECTIONAL SIGN	STYLE 3	<-C	BLACK	YELLOW	RW 1L-19R	68+69.97	L 109
		SOUTH				BLANK		BLACK			
2	USED	NORTH	L-858Y(L)	TAXIWAY DIRECTIONAL SIGN	STYLE 3	C->	BLACK	YELLOW	RW 1L-19R	68+65.55	R 109
		SOUTH				BLANK		BLACK			
3	NEW	EAST	L-858L(L)	TAXIWAY LOCATION SIGN	STYLE 3	C	YELLOW	BLACK	TW C	70+71.40	L 86.06
						BLANK		BLACK			
		EAST	L-858Y(L)	TAXIWAY LOCATION SIGN		C	YELLOW	BLACK			
			L-858R(L)	MANDATORY INSTRUCTION SIGN		1L	WHITE	RED			
4	NEW	NORTH	L-858Y(L)	TAXIWAY DIRECTIONAL SIGN	STYLE 3	<-C	BLACK	YELLOW	TW C	67+50.26	L 69.54
			L-858L(L)	TAXIWAY LOCATION SIGN		C	YELLOW	BLACK			
		SOUTH	L-858L(L)	TAXIWAY LOCATION SIGN		C	YELLOW	BLACK			
						BLANK		BLACK			
5	NEW	NORTH	L-858L(L)	TAXIWAY LOCATION SIGN	STYLE 3	C	YELLOW	BLACK	TW C	59+70.00	R 59.00
						BLANK		BLACK			
		SOUTH	L-858Y(L)	TAXIWAY DIRECTIONAL SIGN		<-M	BLACK	YELLOW			
			L-858L(L)	TAXIWAY LOCATION SIGN		C	YELLOW	BLACK			
6	NEW	NORTH	L-858L(L)	TAXIWAY LOCATION SIGN	STYLE 3	C	YELLOW	BLACK	TW C	56+70.02	L 59.00
			L-858Y(L)	TAXIWAY DIRECTIONAL SIGN		M->	BLACK	YELLOW			
		SOUTH	L-858L(L)	TAXIWAY LOCATION SIGN		C	YELLOW	BLACK			
						BLANK		BLACK			
7	USED	NORTH	L-858L(L)	TAXIWAY LOCATION SIGN (NEW)	STYLE 3	C	YELLOW	BLACK	TW C	47+53.27	R 59.00
						BLANK		BLACK			
		SOUTH	L-858L(L)	TAXIWAY LOCATION SIGN		C	YELLOW	BLACK			
			L-858R(L)	MANDATORY INSTRUCTION SIGN		30	WHITE	RED			
8	USED	NORTH	L-858L(L)	TAXIWAY LOCATION SIGN	STYLE 3	C	YELLOW	BLACK	TW C	43+39.02	L 66.93
			L-858R(L)	MANDATORY INSTRUCTION SIGN		30	WHITE	RED			
		SOUTH	L-858L(L)	TAXIWAY LOCATION SIGN (NEW)		C	YELLOW	BLACK			
						BLANK		BLACK			
9	USED	NORTH	L-858L(L)	TAXIWAY LOCATION SIGN (NEW)	STYLE 3	C	YELLOW	BLACK	TW C	42+63.83	R 69.53
						BLANK		BLACK			
		SOUTH	L-858L(L)	TAXIWAY LOCATION SIGN		C	YELLOW	BLACK			
			L-858Y(L)	TAXIWAY DIRECTIONAL SIGN		<-G->	BLACK	YELLOW			
10	USED	NORTH	L-858L(L)	TAXIWAY LOCATION SIGN	STYLE 3	E	YELLOW	BLACK	TW C	41+70.50	R 246.13
			L-858R(L)	MANDATORY INSTRUCTION SIGN		30-12	WHITE	RED			
		SOUTH	L-858L(L)	TAXIWAY LOCATION SIGN (NEW)		E	YELLOW	BLACK			
						BLANK		BLACK			
11	USED	EAST	L-858L(L)	TAXIWAY LOCATION SIGN (NEW)	STYLE 3	G	YELLOW	BLACK	TW C	39+74.10	R 182.25
						BLANK		BLACK			
		WEST	L-858L(L)	TAXIWAY LOCATION SIGN		G	YELLOW	BLACK			
			L-858Y(L)	TAXIWAY DIRECTIONAL SIGN		<-C->	BLACK	YELLOW			
12	USED	EAST	L-858L(L)	TAXIWAY LOCATION SIGN	STYLE 3	G	YELLOW	BLACK	TW C	41+37.54	L 150.00
			L-858Y(L)	TAXIWAY DIRECTIONAL SIGN		<-C->	BLACK	YELLOW			
		WEST				BLANK		BLACK			
13	USED	EAST			STYLE 3	BLANK		BLACK	TW C	39+65.66	L 150.00
						BLANK		BLACK			
		WEST	L-858L(L)	TAXIWAY LOCATION SIGN		G	YELLOW	BLACK			
			L-858R(L)	MANDATORY INSTRUCTION SIGN		19R-1L	WHITE	RED			

Designed By: JBM
Drawn By: JBM/SNS/PDO
Checked By: EWC

Date Revised: 11/24/2020, 9:59 AM
Layout Name: E28
File Path and Name: Z:\20007BAR - Bethel Airport Main Runway\E-Working\Drawings\20007-BET-DETAILS.dwg

PLANS DEVELOPED BY:
MBA CONSULTING ENGINEERS, INC.
3812 SPENARD RD.
ANCHORAGE, AK 99517
(907) 274-2622
CERT. OF AUTH. NO. AECC578

BY	DATE	REVISION

STATE OF ALASKA
DEPARTMENT OF TRANSPORTATION AND PUBLIC FACILITIES
CENTRAL REGION
4111 AVIATION AVE., ANCHORAGE ALASKA 99502
PHONE (907) 269-0590

BETHEL AIRPORT
BETHEL, ALASKA
MAIN RUNWAY RECONSTRUCTION
PROJECT No. CFAPT00430
AIP No. 3-02-0029-0XX-20XX
BETHEL SIGN SCHEDULE #1

DATE: 11/24/2020

BETHEL SIGN SCHEDULE CONTINUED

SIGN NUMBER	STATUS	SIDE NUMBER	TYPE	PURPOSE	POWER STYLE	LEGEND	LEGEND COLOR	FACE COLOR	ALIGNMENT	STATION	OFFSET
14	USED	NORTH	L-858L(L)	TAXIWAY LOCATION SIGN	STYLE 3	C	YELLOW	BLACK	TW C	38+39.35	L 69.54
			L-858Y(L)	TAXIWAY DIRECTIONAL SIGN		<-G->	BLACK	YELLOW			
		SOUTH	L-858L(L)	TAXIWAY LOCATION SIGN (NEW)		C	YELLOW	BLACK			
						BLANK		BLACK			
15	USED	NORTH			STYLE 3	BLANK		BLACK	RW 1L-19R	41+48.54	R 109.00
		EAST	L-858Y(L)	TAXIWAY DIRECTIONAL SIGN		<-G	BLACK	YELLOW			
16	USED	NORTH	L-858Y(L)	TAXIWAY DIRECTIONAL SIGN	STYLE 3	G->	BLACK	YELLOW	RW 1L-19R	39+54.64	R 109.00
		SOUTH				BLANK		BLACK			
17	NEW	NORTH			STYLE 3	BLANK		BLACK	RW 1L-19R	41+44.09	L 109.00
		SOUTH	L-858Y(L)	TAXIWAY DIRECTIONAL SIGN		G->	BLACK	YELLOW			
18	NEW	NORTH	L-858Y(L)	TAXIWAY DIRECTIONAL SIGN	STYLE 3	<-G	BLACK	YELLOW	RW 1L-19R	39+59.09	L 109.00
		SOUTH				BLANK		BLACK			
19	NEW	EAST	L-858L(L)	TAXIWAY LOCATION SIGN	STYLE 3	D	YELLOW	BLACK	TW D	406+23.84	R 64.38
			L-858Y(L)	TAXIWAY DIRECTIONAL SIGN		<-E->	BLACK	YELLOW			
		WEST	L-858L(L)	TAXIWAY LOCATION SIGN		D	YELLOW	BLACK			
						BLANK		BLACK			
20	USED	EAST	L-858L(L)	TAXIWAY LOCATION SIGN (NEW)	STYLE 3	D	YELLOW	BLACK	TW D	405+33.16	R 66.05
						BLANK		BLACK			
		WEST	L-858L(L)	TAXIWAY LOCATION SIGN		D	YELLOW	BLACK			
			L-858Y(L)	TAXIWAY DIRECTIONAL SIGN		<-C->	BLACK	YELLOW			
21	USED	NORTH	L-858L(L)	TAXIWAY LOCATION SIGN (NEW)	STYLE 3	C	YELLOW	BLACK	TW C	33+69.88	R 62.90
						BLANK		BLACK			
		SOUTH	L-858L(L)	TAXIWAY LOCATION SIGN		C	YELLOW	BLACK			
			L-858Y(L)	TAXIWAY DIRECTIONAL SIGN		<-D->	BLACK	YELLOW			
22	USED	EAST	L-858L(L)	TAXIWAY LOCATION SIGN	STYLE 3	D	YELLOW	BLACK	TW D	402+50.00	L 86.05
			L-858Y(L)	TAXIWAY DIRECTIONAL SIGN		<-C->	BLACK	YELLOW			
		WEST				BLANK		BLACK			
						BLANK		BLACK			
23	USED	EAST			STYLE 3	BLANK		BLACK	TW D	402+50.00	R 86.07
						BLANK		BLACK			
		WEST	L-858L(L)	TAXIWAY LOCATION SIGN		D	YELLOW	BLACK			
			L-858R(L)	MANDATORY INSTRUCTION SIGN		19R-1L	WHITE	RED			
24	USED	NORTH	L-858L(L)	TAXIWAY LOCATION SIGN	STYLE 3	C	YELLOW	BLACK	TW C	29+45.39	L 69.54
			L-858Y(L)	TAXIWAY DIRECTIONAL SIGN		<-D->	BLACK	YELLOW			
		SOUTH	L-858L(L)	TAXIWAY LOCATION SIGN (NEW)		C	YELLOW	BLACK			
						BLANK		BLACK			

Designed By: JBM
Drawn By: JBM/SNS/PDO
Checked By: EWC
Date Revised: 11/24/2020, 9:59 AM
Layout Name: E29
File Path and Name: Z:\20007BAR - Bethel Airport Main Runway\E-Working\Drawings\20007-BET-DETAILS.dwg

PLANS DEVELOPED BY:
MBA CONSULTING ENGINEERS, INC.
3812 SPENARD RD.
ANCHORAGE, AK 99517
(907) 274-2622
CERT. OF AUTH. NO. AECC578

BY	DATE	REVISION

STATE OF ALASKA
DEPARTMENT OF TRANSPORTATION AND PUBLIC FACILITIES
CENTRAL REGION
4111 AVIATION AVE., ANCHORAGE ALASKA 99502
PHONE (907) 269-0590

BETHEL AIRPORT
BETHEL, ALASKA
MAIN RUNWAY RECONSTRUCTION
PROJECT No. CFAPT00430
AIP No. 3-02-0029-0XX-20XX
BETHEL SIGN SCHEDULE #2

DATE: 11/24/2020

BETHEL SIGN SCHEDULE CONTINUED

SIGN NUMBER	STATUS	SIDE NUMBER	TYPE	PURPOSE	POWER STYLE	LEGEND	LEGEND COLOR	FACE COLOR	ALIGNMENT	STATION	OFFSET
25	USED	NORTH			STYLE 3	BLANK		BLACK	RW 1L-19R	32+54.57	R 109.00
		SOUTH	L-858Y(L)	TAXIWAY DIRECTIONAL SIGN		<-D	BLACK	YELLOW			
26	USED	NORTH	L-858Y(L)	TAXIWAY DIRECTIONAL SIGN	STYLE 3	D->	BLACK	YELLOW	RW 1L-19R	30+60.69	R 109.00
		SOUTH				BLANK		BLACK			
27	NEW	NORTH			STYLE 3	BLANK		BLACK	RW 1L-19R	32+60.13	L 109.00
		SOUTH	L-858Y(L)	TAXIWAY DIRECTIONAL SIGN		D->	BLACK	YELLOW			
28	NEW	NORTH	L-858Y(L)	TAXIWAY DIRECTIONAL SIGN	STYLE 3	<-D	BLACK	YELLOW	RW 1L-19R	30+65.13	L 109.00
		SOUTH				BLANK		BLACK			
29	USED	NORTH	L-858L(L)	TAXIWAY LOCATION SIGN (NEW)	STYLE 3	C	YELLOW	BLACK	TW C	17+13.48	L 59.00
						BLANK		BLACK			
		SOUTH	L-858L(L)	TAXIWAY LOCATION SIGN		C	YELLOW	BLACK			
			L-858Y(L)	TAXIWAY DIRECTIONAL SIGN		B->	BLACK	YELLOW			
30	USED	NORTH	L-858Y(L)	TAXIWAY DIRECTIONAL SIGN	STYLE 3	<-B	BLACK	YELLOW	TW C	15+47.33	L 59.00
			L-858L(L)	TAXIWAY LOCATION SIGN		C	YELLOW	BLACK			
		SOUTH	L-858L(L)	TAXIWAY LOCATION SIGN (NEW)		C	YELLOW	BLACK			
						BLANK		BLACK			
31	USED	EAST			STYLE 3	BLANK		BLACK	SURVEY	AS-BUILT	
						BLANK		BLACK			
		WEST	L-858L(L)	TAXIWAY LOCATION SIGN		B	YELLOW	BLACK			
			L-858R(L)	MANDATORY INSTRUCTION SIGN		19R-1L	WHITE	RED			
32	USED	NORTH			STYLE 3	BLANK		BLACK	RW 1L-19R	17+38.17	R 109.00
		SOUTH	L-858Y(L)	TAXIWAY DIRECTIONAL SIGN		<-B	BLACK	YELLOW			
33	USED	NORTH	L-858Y(L)	TAXIWAY DIRECTIONAL SIGN	STYLE 3	B->	BLACK	YELLOW	RW 1L-19R	15+67.86	R 109.00
		SOUTH				BLANK		BLACK			
34	USED	NORTH	L-858L(L)	TAXIWAY LOCATION SIGN (NEW)	STYLE 3	C	YELLOW	BLACK	TW C	8+57.24	L 69.55
						BLANK		BLACK			
		SOUTH	L-858L(L)	TAXIWAY LOCATION SIGN		C	YELLOW	BLACK			
			L-858Y(L)	TAXIWAY DIRECTIONAL SIGN		A->	BLACK	YELLOW			
35	USED	EAST	L-858Y(L)	TAXIWAY DIRECTIONAL SIGN	STYLE 3	<-C	BLACK	YELLOW	TW C	5+35.77	L 86.10
			L-858L(L)	TAXIWAY LOCATION SIGN		A	YELLOW	BLACK			
		WEST				BLANK		BLACK			
36	NEW	EAST			STYLE 3	BLANK		BLACK	TW C	5+35.96	R 59.00
						BLANK		BLACK			
		WEST	L-858Y(L)	TAXIWAY LOCATION SIGN		A	YELLOW	BLACK			
			L-858R(L)	MANDATORY INSTRUCTION SIGN		19R	WHITE	RED			
37	USED	NORTH				BLANK		BLACK	RW 1L-19R	7+41.95	R 109.00
		SOUTH	L-858Y(L)	TAXIWAY DIRECTIONAL SIGN		<-A	BLACK	YELLOW			

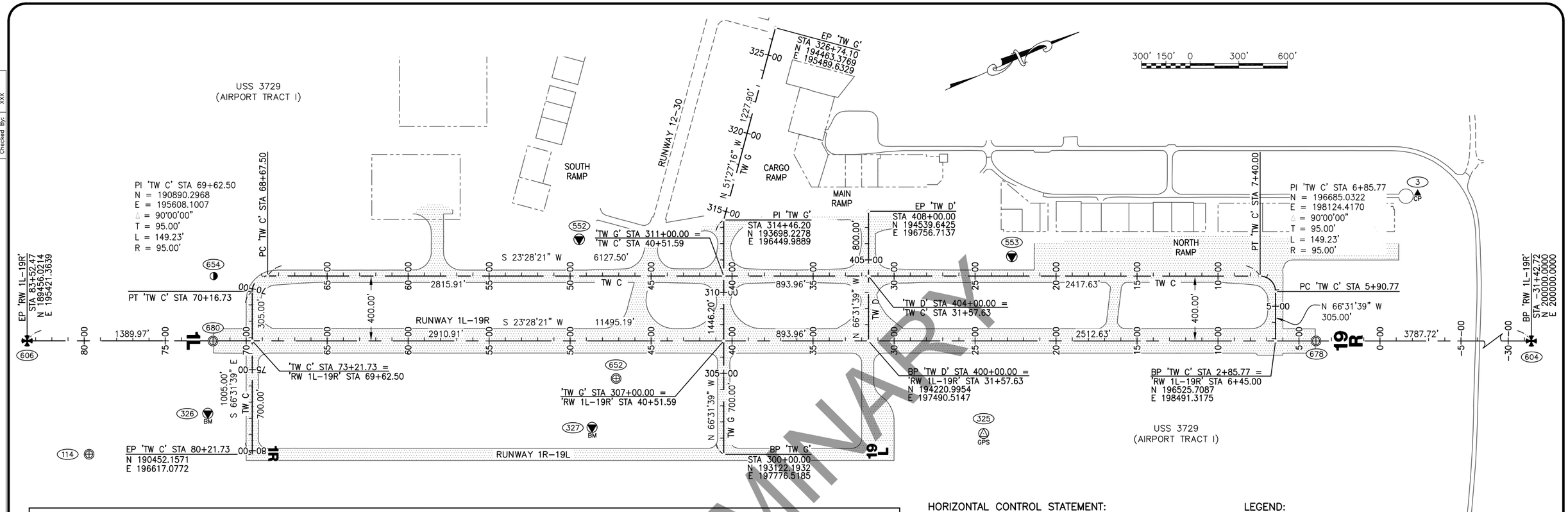

CONTROL TABLE

POINT	RUNWAY 1L–19R		TAXIWAY C		TAXIWAY D		TAXIWAY G		LOCAL BET AIRPORT		ELEVATION	DESCRIPTION
	STATION	OFFSET	STATION	OFFSET	STATION	OFFSET	STATION	OFFSET	NORTHING	EASTING		
604	−31+42.72	0.00 RT							200000.0000	200000.0000		FND BC[BLM]: WP S3729
1	−3+71.40	1874.33 LT							196711.4414	200615.3877		FND RBR/AC[7843–S]: CP 1
3	−2+32.24	910.75 RT							197693.1205	198005.3394		SET RBR/AC[11797–S]: CP 3
678	3+94.87	0.02 LT							196755.1363	198590.9648		FND AM/BX[4725–S]: 3+95
553	22+73.41	522.12 RT	22+73.41	122.12 RT	405+22.12	884.22 RT	316+92.24	1775.27 RT	195240.0092	197363.7966	99.90	FND BC[NGS]: PACS BET C
325	24+46.87	571.41 LT	24+46.87	971.41 LT			301+28.59	1604.72 RT	194645.3422	198297.7469		FND SS ROD: BM–C
652	47+16.31	231.88 LT	47+16.31	631.88 LT			304+68.12	664.72 LT	192698.9362	197082.3720		FND BC[7843–S]: 118+10.64 X–Wind
327	48+64.52	533.63 LT	48+64.52	933.63 LT			301+66.37	812.93 LT	192442.8008	197300.1167	115.62	FND SS ROD: BM–B
552	49+44.31	626.66 RT	49+44.31	226.66 RT	406+26.66	1786.68 LT	313+26.66	892.72 LT	192831.7691	196204.0626		FND BC[NGS]: SACS BET B
654	72+00.97	399.92 RT	69+90.38	251.71 RT					190671.5306	195513.1936		FND RBR/AC[7537–S]: T/W C
680	72+04.93	1.11 LT	73+22.84	242.43 RT					190508.1654	195879.4600		FND AM/BX[4725–S]: 72+05
326	72+36.97	447.50 LT	77+69.23	274.47 RT					190300.9718	196276.1474	97.17	FND SS ROD: BM–A
114	79+70.00	700.00 LT	80+21.73	1007.50 RT					189528.0263	196215.7810		FND BC[7843–S]: RW 1R–19L
606	83+52.47	0.00 RT	73+21.73	1389.97 RT					189456.0245	195421.3653		FND BC[BLM]: WP S3729

HORIZONTAL CONTROL STATEMENT:

COORDINATE SYSTEM:
THIS PROJECT IS LOCATED ENTIRELY WITHIN THE BETHEL AIRPORT COORDINATE SYSTEM, A U.S. FOOT LOCAL SURFACE GRID SYSTEM AS SHOWN ON RECORD OF SURVEY PLAT 2010–2, RECORDED IN THE BETHEL RECORDING DISTRICT.

BASIS OF COORDINATES:
THE BASIS OF LOCAL COORDINATES IS RUNWAY 1L–19R CENTERLINE STATION −31+42.72, POINT NO. 604. SAID STATION HAS LOCAL BETHEL AIRPORT COORDINATES OF 200,000.0000 N, 200,000.0000 E.

BASIS OF BEARINGS:
PROJECT BEARINGS ARE LOCAL BEARINGS ORIENTED TO THE RECORD NAD83 MEAN GEODETIC BEARING OF THE CENTERLINE OF RUNWAY 1L–19R PER RECORD OF SURVEY PLAT 2000–16, RECORDED IN THE BETHEL RECORDING DISTRICT.

TRANSLATION PARAMETERS:
TO CONVERT THE LOCAL BETHEL AIRPORT COORDINATES TO NAD83 (1992) ALASKA STATE PLANE ZONE 7 COORDINATES, U.S. SURVEY FEET:

1. ROTATE AT POINT NO. 604, COUNTERCLOCKWISE 00°08'26.66"
2. TRANSLATE USING +2,283,588.422 N, +1,472,585.411 E
3. SCALE USING 0.99989471

VERTICAL CONTROL STATEMENT:

THE PROJECT VERTICAL DATUM IS NAVD88 PER PACS "BET C", NGS PID DF3624, HAVING A PUBLISHED ORTHOMETRIC HEIGHT OF 99.90 FEET. PROJECT ELEVATIONS WERE ESTABLISHED AND VERIFIED BY A SERIES OF BALANCED AND CLOSED DIFFERENTIAL LEVEL LINES UTILIZING A LEICA DNA10 DIGITAL LEVEL AND BARCODE ROD. THE DIGITAL LEVEL WAS CHECKED AND ADJUSTED PRIOR TO USE BY A DIGITAL PEG TEST. ALL LEVEL LINES MET 3RD ORDER ACCURACY SPECIFICATIONS.

LEGEND:

- PRIMARY FEDERAL CONTROL STATION
- GPS — PRIMARY HORIZONTAL CONTROL
- PRIMARY CENTERLINE MONUMENT
- PRIMARY BLM MONUMENT
- BM — PRIMARY BENCH MARK
- SECONDARY CENTERLINE MONUMENT
- CP — SECONDARY CONTROL MONUMENT (1) CP
- (123) CONTROL POINT NUMBER

NOTES:

1. THE INFORMATION SHOWN HEREON IS BASED ON A FIELD SURVEY PERFORMED BY R & M CONSULTANTS, INC. (R&M) JUNE 2, 2020 THRU JUNE 20, 2020, AND JUNE 28, 2020 FIELD SURVEY INFORMATION CAN BE FOUND IN R&M FIELD BOOK NO. 2653.01, PAGES 1 THRU 70.
2. HORIZONTAL POSITIONS OF CONTROL POINTS WERE DETERMINED BY A CONSTRAINED LEAST–SQUARES ADJUSTED GNSS NETWORK UTILIZING TRIMBLE R10 AND JAVAD TRIUMPH–1 MULTI–FREQUENCY GNSS RECEIVERS, PROCESSED AND ADJUSTED IN TRIMBLE BUSINESS CENTER VERSION 4.10.
3. ALL DIMENSIONS AND COORDINATES SHOWN HEREON ARE EXPRESSED IN U.S. SURVEY FEET, UNLESS OTHERWISE NOTED, AND SHOULD BE VERIFIED BEFORE USE.
4. BACKGROUND INFORMATION SHOWN HEREON IS FOR INFORMATIONAL PURPOSES ONLY.
5. WHETHER LISTED OR NOT, ALL MONUMENTS OR PROPERTY MARKERS, CORNERS, OR ACCESSORIES, WHICH WILL BE DISTURBED OR BURIED, SHALL BE REFERENCED AND RE–ESTABLISHED IN THEIR ORIGINAL POSITION AND RECORDED (A.S. 34.65.040).

PLANS DEVELOPED BY:
R&M CONSULTANTS, INC.
9101 VANGUARD DR.
ANCHORAGE, AK 99507
(907) 522-1707
CERT. OF AUTH. NO. AECC111

BY	DATE	REVISION

STATE OF ALASKA
DEPARTMENT OF TRANSPORTATION AND PUBLIC FACILITIES
CENTRAL REGION
4111 AVIATION AVE., ANCHORAGE ALASKA 99502
PHONE (907) 269-0590

BETHEL AIRPORT
BETHEL, ALASKA
MAIN RUNWAY RECONSTRUCTION
PROJECT No. CFAPT00430
AIP No. 3-02-0029-0XX-20XX

SURVEY CONTROL SHEET

DATE: 11/09/2020
SHEET: AA1 OF AA1

Designed By: XXX
Drawn By: XXX
Checked By: XXX

Date Revised: 11/09/2020, 10:50 AM
Layout Name: AA1
File Path and Name: Z:\project\2690.02 DOT_C BET Main RW Reconstruction\Survey\ACAD\00430 BET SCS.dwg

NOTES:

1. BASEMAP AND EXISTING GROUND DATA ARE FROM FIELD SURVEYS PERFORMED BY R&M CONSULTANTS, INC. BETWEEN 2003 AND 2020, AND AS-BUILTS.
2. EXISTING DIMENSIONS IN THE RUNWAY AND TAXIWAY SAFETY AREAS TABLES ARE FROM THE 2017 BETHEL AIRPORT LAYOUT PLAN.

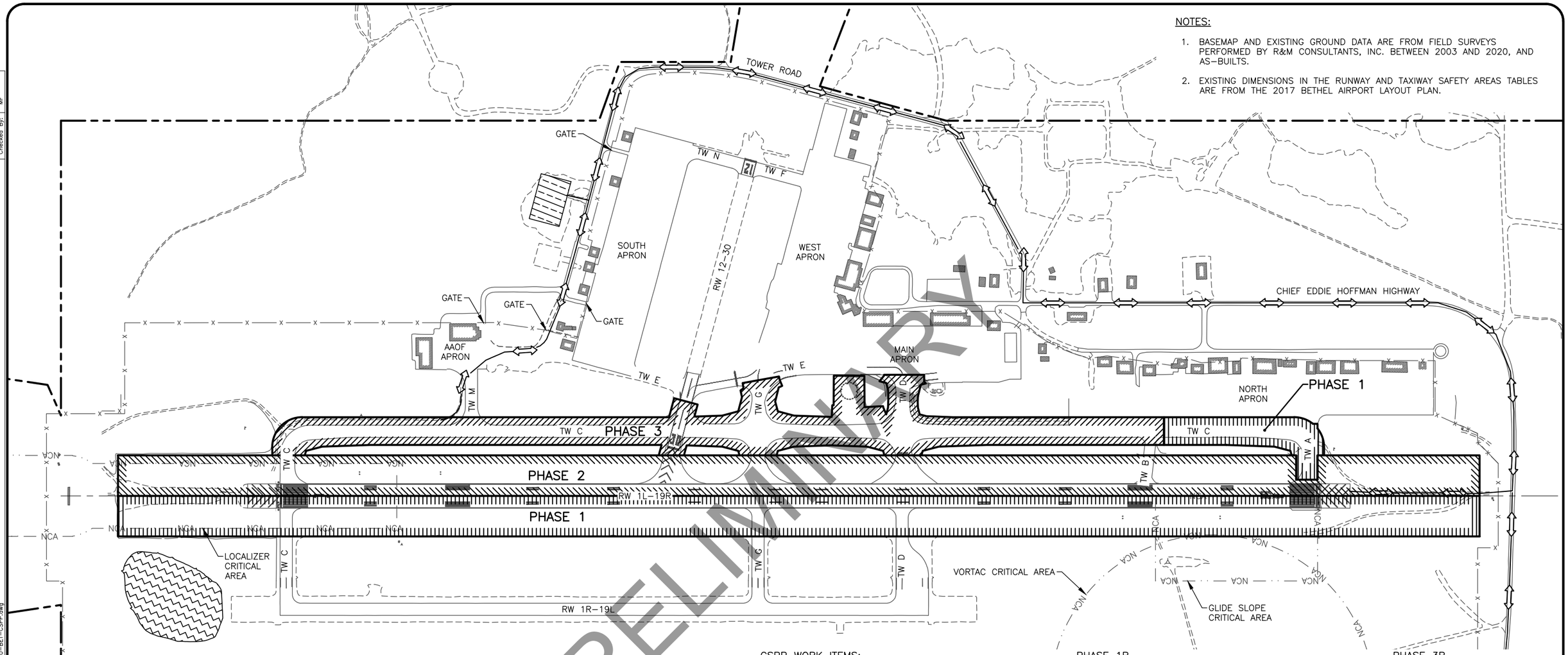

CONSTRUCTION PHASING SCHEDULE

CONSTRUCTION PHASE	WORK AREA	DURATION	MAY BE PERFORMED CONCURRENT WITH	RW CLOSURES		HAZARD MARKER BARRIER QUANTITY	PROJECT SCHEDULE
				DAY	NIGHT		
1A	EAST HALF RW 1L-19R	49 DAYS	1B	RW 1L-19R: HALF WIDTH RW 12-30: OPEN	RW 1L-19R: CLOSED RW 12-30: CLOSED	0	SUMMER 2021
1B	TW A & C NORTHEAST	13 DAYS	1A	RW 1L-19R: HALF WIDTH RW 12-30: OPEN	RW 1L-19R: CLOSED RW 12-30: CLOSED	0	SUMMER 2021
2A	WEST HALF RW 1L-19R & TW B	73 DAYS	2B	RW 1L-19R: HALF WIDTH RW 12-30: OPEN	RW 1L-19R: CLOSED RW 12-30: CLOSED	23	SUMMER 2021
2B	RW 30 BLAST PAD	11 DAYS	2A	RW 1L-19R: HALF WIDTH RW 12-30: CLOSED	RW 1L-19R: CLOSED RW 12-30: CLOSED	0	SUMMER 2021
3A	TW C NORTHEAST & TW D EAST	12 DAYS	3C, 3E	RW 1L-19R: OPEN RW 12-30: OPEN	RW 1L-19R: CLOSED RW 12-30: OPEN	0	SUMMER 2022
3B	TW C NORTHWEST & TW D WEST	12 DAYS	3A, 3C, 3D, 3E	RW 1L-19R: OPEN RW 12-30: OPEN	RW 1L-19R: OPEN RW 12-30: OPEN	0	SUMMER 2022
3C	TW C SOUTH	93 DAYS	3A, 3B, 3D	RW 1L-19R: OPEN RW 12-30: OPEN	RW 1L-19R: CLOSED RW 12-30: CLOSED	0	SUMMER 2022
3D	TW G	15 DAYS	3B, 3C, 3E	RW 1L-19R: OPEN RW 12-30: OPEN	RW 1L-19R: CLOSED RW 12-30: CLOSED	0	SUMMER 2022
3E	RW 12-30	15 DAYS	3D	RW 1L-19R: OPEN RW 12-30: CLOSED	RW 1L-19R: CLOSED RW 12-30: CLOSED	0	SUMMER 2022

CSPP WORK ITEMS:

ALL PHASES REQUIRE THE FOLLOWING ITEMS BEFORE BEGINNING CONSTRUCTION:

1. ISSUE NOTAM.
2. DISABLE RW AND TW LIGHTING AND APPLICABLE NAVAIDS.
3. APPLY TEMPORARY RW AND TW CLOSURE SIGNAGE.
4. APPLY TEMPORARY MARKING AND LIGHTING FOR TEMPORARY RW AND TWs.
5. NO EXISTING PAVEMENT WILL BE REMOVED UNTIL THE JOB MIX DESIGN IS APPROVED BY THE DEPARTMENT.

PHASE 1A

- CLOSE RW 1L-19R (EAST) HALF WIDTH.
- CLOSE RW 12-30 AT NIGHT.
- PROVIDE ACCESS FOR AIRCRAFT TO AND FROM RW 1R-19L THROUGH TWs C AND D.
- PROVIDE TURNAROUND ON NORTH END OF RW.
- MILL EAST HALF RW 1L-19R, CONSTRUCT RW SHOULDERS, AND REGRADE RSA.
- RESURFACE TWs C, D, AND G EAST OF RW 1L-19R.
- REPLACE LIGHTING WITH PERMANENT LIGHTING.
- PAVE EAST HALF RW 1L-19R.
- APPLY TEMPORARY MARKINGS AND LIGHTING FOR HALF-WIDTH OPERATIONS.

PHASE 1B

- CONSTRUCT TW A AND TW C.

PHASE 2A

- OPEN RW 1L-19R (EAST) FOR HALF WIDTH OPERATIONS.
- CLOSE RW 1L-19R (WEST) HALF WIDTH.
- CLOSE RW 12-30 AT NIGHT.
- PROVIDE ACCESS FOR AIRCRAFT TO AND FROM RW 1R-19L THROUGH TWs C AND D.
- RECLAIM WEST HALF RW 1L-19R.
- BUILD WEST SIDE RW SHOULDERS AND REGRADE RSA.
- REPLACE LIGHTING WITH PERMANENT LIGHTING.
- PAVE WEST HALF RW 1L-19R.
- ALLOW 30 DAYS FOR PAVEMENT TO CURE BEFORE GROOVING.
- GROOVE ENTIRE RW WIDTH AT NIGHT.
- APPLY PERMANENT MARKINGS AT NIGHT.

PHASE 2B

- CLOSE RW 12-30.
- APPLY PERMANENT MARKINGS TO RW 30 BLAST PAD WITHIN RW 1L-19R RSA.

PHASE 3A

- CONSTRUCT EAST HALF TW C.
- CONSTRUCT EAST HALF TW D.

PHASE 3B

- CONSTRUCT WEST HALF TW C.
- CONSTRUCT WEST HALF TW D.

PHASE 3C

- CONSTRUCT TW C SOUTH.

PHASE 3D

- CONSTRUCT TW G.

PHASE 3E

- CLOSE RW 12-30.
- CONSTRUCT RW 30 END

300' 150' 0 300' 600'

LEGEND

- STAGING AREA
- HAUL ROUTE
- WASTE DISPOSAL
- NCA — NAVAID CRITICAL AREA

PLANS DEVELOPED BY:
R&M CONSULTANTS, INC.
9101 VANGUARD DR.
ANCHORAGE, AK 99507
(907) 522-1707
CERT. OF AUTH. NO. AECC111

BY	DATE	REVISION

STATE OF ALASKA
DEPARTMENT OF TRANSPORTATION AND PUBLIC FACILITIES
CENTRAL REGION
4111 AVIATION AVE., ANCHORAGE ALASKA 99502
PHONE (907) 269-0590

BETHEL AIRPORT
BETHEL, ALASKA
MAIN RUNWAY RECONSTRUCTION
PROJECT No. CFAPT00430
AIP No. 3-02-0029-0XX-20XX
CONSTRUCTION SAFETY AND PHASING PLAN OVERVIEW

DATE: 1/7/2021

SHEET: AC1 OF AC11

Designed By: CJB
Drawn By: JSC/RLC
Checked By: MF
Date Revised: 1/07/2021, 9:28 AM
Layout Name: CSPP
File Path and Name: Z:\project\2690.02 DOT_C BET Main RW Reconstruction\Civil\ACAD\00430-BET-CSPP.dwg

CSPP NOTES:

1. REFER TO THE CONSTRUCTION SAFETY AND PHASING PLAN NARRATIVE (SPECIFICATIONS APPENDIX C) AND GENERAL CONTRACT PROVISIONS (GCP)–80 FOR ADDITIONAL CONSTRUCTION PHASING AND SEQUENCING INFORMATION AND FOR LIMITATIONS ON CONSTRUCTION. PHASE CONSTRUCTION ACTIVITIES TO COMPLY WITH ALL CONDITIONS OF THE SAFETY PLAN AND PROJECT PERMITS STIPULATIONS.

2. SUBMIT A SAFETY PLAN COMPLIANCE DOCUMENT (SPCD) TO THE ENGINEER FOR REVIEW PER FAA AC 150/5370–2G. DO NOT BEGIN CONSTRUCTION ACTIVITIES UNTIL THE ENGINEER APPROVES THE SPCD IN WRITING. ALLOW 30 DAYS FOR REVIEW. INCLUDE CONSTRUCTION SEQUENCING. IF PLAN DIFFERS FROM WHAT IS SHOWN OR IF SUBSEQUENT CHANGES ARE MADE, SUBMIT A REVISION TO THE ENGINEER FOR REVIEW AND APPROVAL. ALLOW 10 DAYS FOR REVIEW OF REVISED SAFETY AND SEQUENCING PLANS.

3. WHENEVER THE PLANS OR SPECIFICATIONS CALL FOR COORDINATION, NOTIFICATION, CONTACT, OR OTHER INTERACTION WITH FAA, TSA, AIRPORT MANAGEMENT, MAINTENANCE AND OPERATIONS, AIR CARRIERS, AIRPORT TENANTS, AIRPORT USERS, ANY LOCAL, STATE, OR FEDERAL AGENCY, GROUP, OR ASSOCIATION, OR THE GENERAL PUBLIC, SUCH ACTIVITY SHALL BE DONE THROUGH, IN THE PRESENCE OF, OR WITH THE WRITTEN APPROVAL OF THE ENGINEER. ALLOW SUFFICIENT TIME FOR COORDINATION AND APPROVALS WITHIN PROPOSED WORK SCHEDULES.

4. MAINTAIN AIRCRAFT ACCESS FOR CARGO AND PASSENGER OPERATIONS DURING NORMAL FLIGHT HOURS (GENERALLY 6:00AM TO 10:00PM). DO NOT ENTER THE ACTIVE RSA. THE CONTRACTOR IS RESPONSIBLE FOR VERIFYING AND WORKING AROUND ALL SCHEDULED OPERATIONS.

5. PROVIDE AN ACCESS PLAN FOR APPROVAL BY THE ENGINEER. APPROVAL OF ACCESS PLAN IS REQUIRED PRIOR TO BEGINNING OF WORK. ACCESS PLAN SHALL INCLUDE, BUT IS NOT LIMITED TO, SCHEDULING WORK, SEPARATION OF AIRCRAFT AND PASSENGERS FROM ACTIVE CONSTRUCTION, TRAFFIC CONTROL DEVICES REQUIRED, AND HAZARD MARKER BARRIER LOCATIONS. SEE GCP–80 AND APPENDIX C FOR DETAILS.

6. THE PROJECT WILL REQUIRE TEMPORARY HALF–WIDTH CLOSURES OF RUNWAY 1L–19R AND TAXIWAYS. COORDINATE THROUGH THE ENGINEER PRIOR TO OPENING OR CLOSING AREAS TO AIRCRAFT OPERATIONS AND/OR ADVANCING TO THE NEXT WORK AREA. ALLOW FOR ISSUANCE OF NOTAMS BY AIRPORT MANAGEMENT TO KEEP ALL AIRPORT USERS INFORMED OF CLOSED AREAS AND APRON, TAXIWAY, AND RUNWAY STATUS.

7. RUNWAY AND TAXIWAY CLOSURES CAN BE PROPOSED AND PUT INTO AFFECT ONLY WITH THE APPROVAL OF THE ENGINEER. NIGHT CLOSURES OF RUNWAY 1L–19R ARE ANTICIPATED FOR PAVEMENT REMOVAL, PAVING, GROOVING, AND PERMANENT MARKING PLACEMENT. NIGHTLY CLOSURES ARE ALSO ANTICIPATED FOR TAXIWAY CONSTRUCTION WITHIN THE RUNWAY SAFETY AREA.

8. PROVIDE WEEKLY NOTIFICATIONS OF ACTIVE AIRPORT AREAS AND CONSTRUCTION ACTIVITIES TO THE CONTACTS LISTED IN THE CONSTRUCTION SAFETY AND PHASING PLAN AND/OR SPECIFICATIONS. CARRYOUT CONTINUING COORDINATION THROUGH THE ENGINEER USING WEEKLY BRIEFINGS WITH AIRPORT OPERATIONS, AIRPORT MAINTENANCE, ARFF PERSONNEL, AND AIRPORT USERS TO KEEP EVERYONE AWARE OF THE STATUS AND CHANGES OF AIRPORT SURFACES IN RELATION TO GROUND TRAFFIC. PROVIDE DETAILED DRAWINGS INDICATING TRAFFIC ROUTES FOR GROUND TRAFFIC. INDICATE CLOSED AREAS AND PROVIDE UPDATED DRAWINGS AS CONSTRUCTION PROCEEDS.

9. PLACE HAZARD MARKER BARRIERS WHERE SHOWN ON THE PLANS OR AS DIRECTED BY THE ENGINEER FOR EACH PHASE. HAZARD MARKER BARRIERS ARE SHOWN AT APPROXIMATE LOCATIONS. ADDITIONAL LOCATIONS OR ADJUSTMENTS MAY BE REQUIRED. MODIFY HAZARD MARKER BARRIER PLACEMENT TO ALLOW AIRCRAFT TAXI ALONG TEMPORARY TAXIWAYS THROUGH CLOSED RUNWAYS. PLACE HAZARD MARKER BARRIERS IN ACCORDANCE WITH ITEM P–670, THE CONSTRUCTION SAFETY AND PHASING PLAN, AND AS APPROVED BY THE ENGINEER. THE ENGINEER MAY DIRECT THE PLACEMENT OF ADDITIONAL BARRIERS AS DEEMED NECESSARY. MONITOR HAZARD MARKER BARRIERS FREQUENTLY. CORRECT DEFICIENCIES IMMEDIATELY.

10. THE CONTRACTOR MUST REPORT ANY SAFETY ISSUES TO THE ENGINEER AND AIRPORT MANAGER UPON DISCOVERY. THE CONTRACTOR MUST TAKE IMMEDIATE ACTION TO RESOLVE SAFETY ISSUES AS DIRECTED.

11. NO PERSONNEL OR EQUIPMENT MAY BE IN THE RSA DURING AIRCRAFT OPERATIONS. CLEAR EQUIPMENT FROM WORK AREAS WHEN REQUESTED BY THE ENGINEER. NO EQUIPMENT OR MATERIAL STOCKPILES MAY REMAIN IN CRITICAL AREAS; RUNWAY OBJECT FREE AREAS; TAXIWAY OBJECT FREE AREAS; OR ON CLOSED RUNWAYS, TAXIWAYS, OR APRONS DURING NON–WORK HOURS.

12. COORDINATE THROUGH THE ENGINEER FOR THE SHUTDOWN OF ONLY THOSE FAA FACILITIES OUTLINED IN THE CSPP NARRATIVE AND THE CONTRACTOR'S APPROVED SPCD, ALL OTHER FAA FACILITIES MUST REMAIN IN OPERATION. REMAIN CLEAR OF ALL NAVAID CRITICAL AREAS DURING AIRCRAFT OPERATIONS. SEE THE PLAN VIEW FOR LOCATION OF THE CRITICAL AREAS. DAMAGE TO FAA FACILITIES, INCLUDING POWER DISTRIBUTION, MUST BE IMMEDIATELY REPAIRED IN A MANNER ACCEPTABLE TO FAA AT THE CONTRACTOR'S EXPENSE.

13. FIELD VERIFY SUITABILITY OF HAUL ROUTES AND STAGING AREAS SHOWN. HAUL ROUTES AND STAGING AREAS AS SHOWN MUST BE APPROVED BY THE ENGINEER. PROVIDE MAINTENANCE PER SPECIFICATIONS. PROVIDE FLAGGERS TO CONTROL ACCESS ONTO THE AIRPORT OPERATIONS AREA (AOA). FLAGGERS SHALL CONTACT TOWER/FLIGHT SERVICE STATION (FSS) FOR CURRENT TRAFFIC ADVISORIES PRIOR TO EACH TRANSIT. HAUL ACCESS ACROSS CLOSED PORTIONS OF THE RUNWAY WILL BE AT THE DISCRETION OF THE ENGINEER AND IS SUBJECT TO RUNWAY CLOSURE AND REOPENING REQUIREMENTS IN THE SPECIFICATIONS.

14. KEEP ALL ACTIVE HAUL ROUTES AND AIRPORT SURFACES CLEAN OF MATERIAL. REMOVE SPILLED OR TRACKED MATERIALS IMMEDIATELY TO AVOID DAMAGING AIRCRAFT. REPAIR ANY HAUL ROUTE DAMAGE TO PRECONSTRUCTION CONDITIONS. AN APPROVED FOD INSPECTION AND RUNWAY/TAXIWAY/APRON CLEANING IS REQUIRED PRIOR TO THE END OF EVERY SHIFT. CLEANING IS SUBSIDIARY TO P641.020.0000 TEMPORARY EROSION, SEDIMENT, AND POLLUTION CONTROL.

15. PROVIDE AN AIRPORT FLAGGER WHERE CONSTRUCTION ACTIVITY IS CONDUCTED WITHIN 125' OF AN OPEN RUNWAY; WHERE CONSTRUCTION ACTIVITY IS CONDUCTED IN CLOSE PROXIMITY TO OPERATING AIRCRAFT; WHERE ACCESS GATES TO THE AOA ARE LEFT OPEN FOR HAUL OPERATIONS; AND WHERE THE ENGINEER OR AIRPORT PERSONNEL DETERMINES A FLAGGER IS NECESSARY.

16. MARK OPEN TRENCHES OR EXCAVATIONS WITH HAZARD AREA BARRIERS. LIGHT WITH RED LIGHTS DURING HOURS OF RESTRICTED VISIBILITY OR DARKNESS. SEE CSPP REGARDING RESTRICTIONS FOR TRENCH AND EXCAVATION LOCATIONS. NO OPEN TRENCHES WITHIN THE SAFETY AREAS ARE ALLOWED DURING AIRCRAFT OPERATIONS. BACKFILL ALL TRENCHES AT THE END OF EACH CONSTRUCTION SHIFT, PRIOR TO THE AIRPORT OPERATIONS AREA BEING OPENED. PAVEMENT LIPS MAY NOT EXCEED 3 INCHES. WHERE VERTICAL DROPS IN AIRCRAFT MOVEMENT AREAS EXCEED 1 INCH, INSTALL A 30:1 TRANSITION WEDGE.

17. VEHICLES AND EQUIPMENT MUST HAVE BEACONS AND COMPANY RADIOS. TRAFFIC CONTROL MUST HAVE AIRCRAFT AND COMPANY RADIOS. REFER TO THE CSPP FOR FURTHER VEHICLE REQUIREMENTS.

18. WHEN USING EQUIPMENT TALLER THAN 20 FEET FOLLOW CSPP. DO NOT EXCEED STOCKPILE HEIGHTS OF 20 FEET.

19. ARFF VEHICLES MUST HAVE CONTINUOUS ACCESS TO THE ENTIRE AIRPORT FOR EMERGENCIES. MAINTAIN SUITABLE CORRIDORS AND COORDINATE ACCESS WITH ARFF PERSONNEL THROUGH THE ENGINEER AS REQUIRED. KEEP ARFF INFORMED OF WORK AREAS, CLOSURES, AND ALL FENCE GATES THAT ARE ADDED TO SERVICE OR OUT OF SERVICE FOR WORK. CONTRACTOR MUST BE PREPARED TO OPEN THE AIRPORT FOR MEDEVAC AND OTHER EMERGENCY LANDINGS AT ALL TIMES. THE WORK AREA MUST BE CLEARED OF EQUIPMENT, PERSONNEL, CLOSURE MARKERS, BARRICADES, AND ANY OTHER OBSTRUCTIONS GIVEN EXTREMELY SHORT NOTICE (15 MINUTES OR LESS). A PORTION OF THE RUNWAY SURFACE MUST BE MAINTAINED AND SUITABLE FOR AIRCRAFT OPERATIONS AT ALL TIMES.

20. LOCATE BURIED FAA ELECTRICAL LINES AND PLACE STEEL PLATES (OR EQUIVALENT PROTECTION, AS APPROVED BY THE ENGINEER) OVER UTILITY LINE CROSSING LOCATIONS.

21. REFER TO FAA ADVISORY CIRCULAR (AC) 150/5370–2 FOR ADDITIONAL GUIDANCE ON PREPARING SAFETY PLANS. REFER TO AC 150/5300–13 CHAPTER 3 FOR CLEARANCE STANDARDS RELATED TO THE OFA, OFZ, AND RSA. THE MOST RESTRICTIVE CRITERIA GOVERNS.

22. REFER TO FAA ALASKA REGION AIRPORTS DIVISION – RUNWAY HALF WIDTH OPERATION CONSTRUCTION GUIDANCE.

RUNWAY SAFETY AREAS

RUNWAY	RW 1L–19R	TEMPORARY RW	
	EXISTING	PHASE 1	PHASE 2
RDC	D–IV–2400	D–IV–5000	D–IV–5000
APPROACH TYPE	NPI/PREC	NPI [RNAV(GPS)]	NPI [RNAV(GPS)]
RUNWAY DIMENSIONS	150'x6,400'	75'x6,400'[2]	75'x6,400'[2]
RUNWAY SAFETY AREA	500'x8,400'	250'x8,400'[2]	250'x8,400'[2]
RUNWAY OBJECT FREE AREA	800'x8,400'	400'x8,400'[2]	400'x8,400'[2]
RUNWAY OBSTACLE FREE ZONE	400'x6,800'	400'x6,800'	400'x6,800'
RUNWAY PROTECTION ZONE	1,000'x1,750'x2,500'	500'x1,010'x1,700'	500'x1,010'x1,700'
PRIMARY SURFACE WIDTH	1,000'	500'	500'

TAXIWAY SAFETY AREAS

TAXIWAY	WIDTH		SHOULDER		TSA		TOFA	
	STANDARD	TEMPORARY	STANDARD	TEMPORARY	STANDARD	TEMPORARY	STANDARD	TEMPORARY
A	50'	35'[2]	20'	0'[2]	118'	118'	186'	118'[2]
C	50'	35'[2]	20'	0'[2]	118'	118'	186'	118'[2]
D	50'	35'[2]	20'	0'[2]	118'	118'	186'	118'[2]
G	50'	35'[2]	20'	0'[2]	118'	118'	186'	118'[2]

SAFETY AREA TABLE NOTES:

1. MINIMUM TURNING RADIUS NEEDED = 73.8' TO ACCOMMODATE THE MOST DEMANDING AIRCRAFT, THE MD–82/83.

2. DIMENSIONS REDUCED FROM AC 150/5300–13A, CHANGE 1 STANDARDS.

3. RSA, ROFA, AND ROFZ ARE CENTERED ABOUT RUNWAY CENTERLINE. ADDITIONAL SAFETY AREA DIMENSIONS, INCLUDING LENGTHS BEYOND RUNWAY ENDS, TSA, AND TOFA DIMENSIONS, ARE AVAILABLE IN THE CSPP.

NAVAIDS STATUS

NAVAID	STANDARD OPERATIONS	CONSTRUCTION OPERATIONS		
	PHASE 1	PHASE 1	PHASE 2	PHASE 3
VASI	ACTIVE	ACTIVE	ACTIVE	ACTIVE
MALSR	ACTIVE	INACTIVE	INACTIVE	ACTIVE
LOC/DME/GS	ACTIVE	INACTIVE	INACTIVE	ACTIVE

Designed By: CJB
Drawn By: JSC/RLC
Checked By: MF
Date Revised: 1/07/2021, 9:28 AM
Layout Name: CSPP (8)
File Path and Name: Z:\project\2690.02 DOT_C BET Main RW Reconstruction\Civil\ACAD\00430-BET-CSPP.dwg

PLANS DEVELOPED BY:
R&M CONSULTANTS, INC.
9101 VANGUARD DR.
ANCHORAGE, AK 99507
(907) 522-1707
CERT. OF AUTH. NO. AECC111

BY	DATE	REVISION

STATE OF ALASKA
DEPARTMENT OF TRANSPORTATION AND PUBLIC FACILITIES
CENTRAL REGION
4111 AVIATION AVE., ANCHORAGE ALASKA 99502
PHONE (907) 269-0590

BETHEL AIRPORT
BETHEL, ALASKA
MAIN RUNWAY RECONSTRUCTION
PROJECT No. CFAPT00430
AIP No. 3-02-0029-0XX-20XX
CONSTRUCTION SAFETY AND PHASING PLAN NOTES

DATE: 1/7/2021
SHEET: AC2 OF AC11

LEGEND

- PHASE 1A
- MAINTAIN 35' TAXIWAY ACCESS
- STAGING AREA
- WASTE DISPOSAL AREA
- RW CLOSURE MARKER [VINYL MESH PANEL]
- RW CLOSURE MARKER [ILLUMINATED PANEL]
- NCA — NAVAID CRITICAL AREA
- HAUL ROUTE

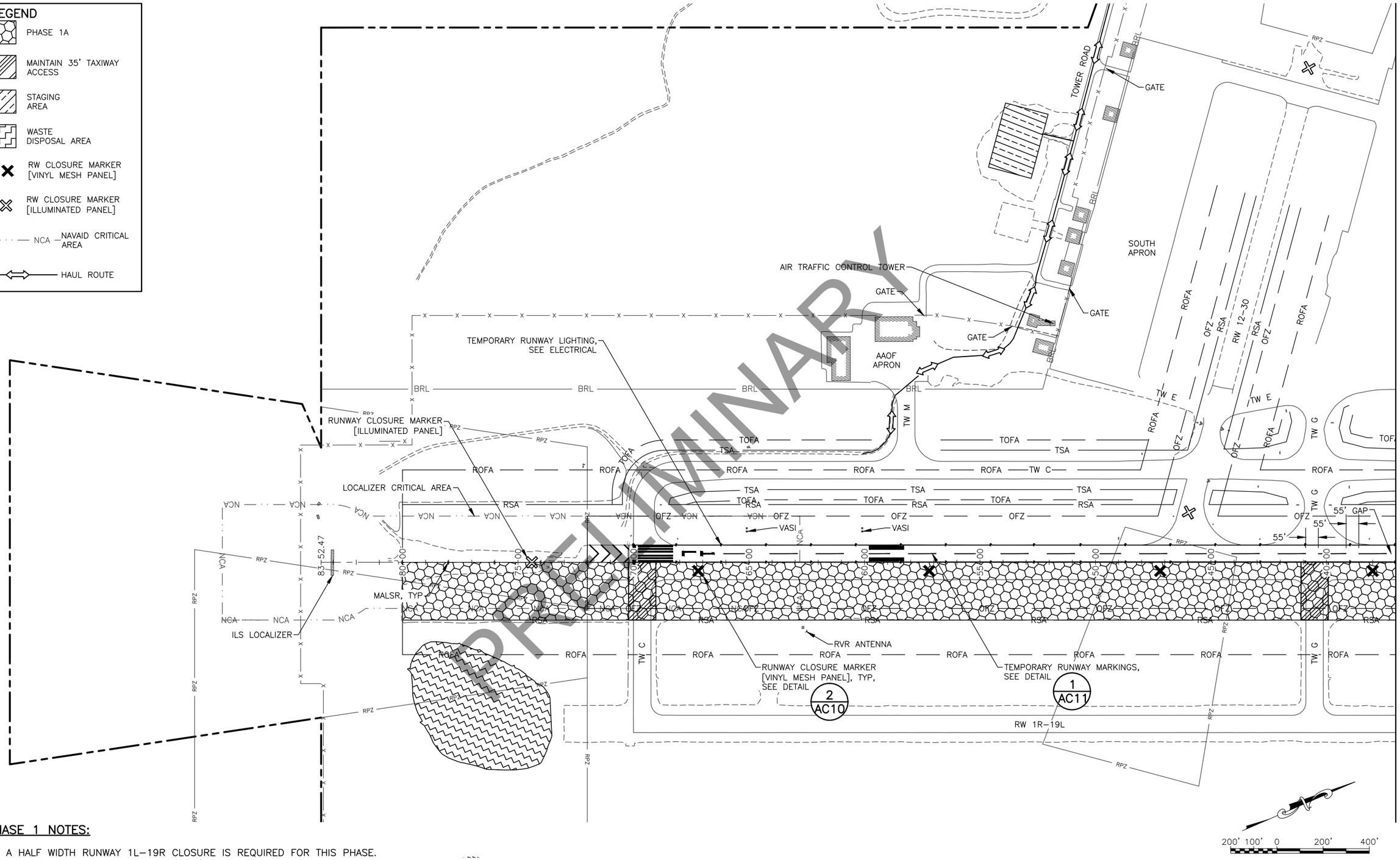

PHASE 1 NOTES:

1. A HALF WIDTH RUNWAY 1L–19R CLOSURE IS REQUIRED FOR THIS PHASE. THE TEMPORARY RUNWAY WIDTH IS 75'.
2. WORK MUST BE PERFORMED AT NIGHT WHEN THE RUNWAY IS CLOSED.
3. USE ILLUMINATED RUNWAY CLOSURE MARKER DURING NIGHT RUNWAY CLOSURE ONLY. REMOVE DURING DAYTIME HALF WIDTH OPERATIONS AND FOR ANY EMERGENCY LANDINGS.

Designed By:	CJB
Drawn By:	JSC/RLC
Checked By:	MF

Date Revised:	1/07/2021, 9:28 AM
Layout Name:	CSPP (2)
File Path and Name:	Z:\project\2690.02 DOT_C BET Main RW Reconstruction\Civil\ACAD\06430-BET-CSPP.dwg

PLANS DEVELOPED BY:
R&M CONSULTANTS, INC.
9101 VANGUARD DR.
ANCHORAGE, AK 99507
(907) 522-1707
CERT. OF AUTH. NO. AECC111

BY	DATE	REVISION

STATE OF ALASKA
DEPARTMENT OF TRANSPORTATION AND PUBLIC FACILITIES
CENTRAL REGION
4111 AVIATION AVE., ANCHORAGE ALASKA 99502
PHONE (907) 269-0590

BETHEL AIRPORT
BETHEL, ALASKA
MAIN RUNWAY RECONSTRUCTION
PROJECT No. CFAPT00430
AIP No. 3-02-0029-0XX-20XX
CONSTRUCTION SAFETY AND PHASING PLAN
PHASE 1A

DATE: 1/7/2021

SHEET: AC3 OF AC11

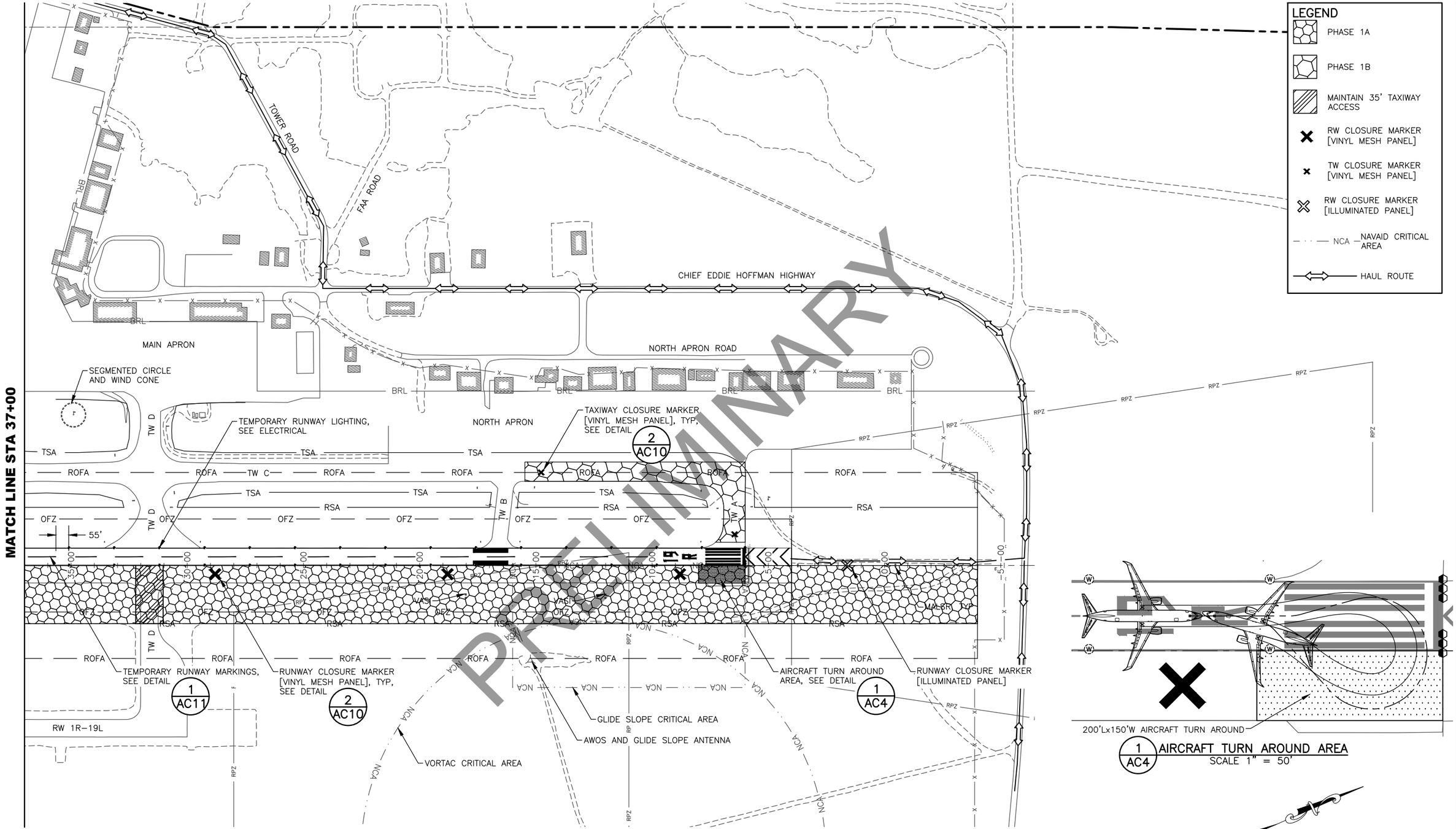

PHASE 1 NOTES:

1. A HALF WIDTH RUNWAY 1L–19R CLOSURE IS REQUIRED FOR THIS PHASE. THE TEMPORARY RUNWAY WIDTH IS 75'.
2. WORK MUST BE PERFORMED AT NIGHT WHEN THE RUNWAY IS CLOSED.
3. USE ILLUMINATED RUNWAY CLOSURE MARKER DURING NIGHT RUNWAY CLOSURE ONLY. REMOVE DURING DAYTIME HALF WIDTH OPERATIONS AND FOR ANY EMERGENCY LANDINGS.

PLANS DEVELOPED BY:
R&M CONSULTANTS, INC.
9101 VANGUARD DR.
ANCHORAGE, AK 99507
(907) 522-1707
CERT. OF AUTH. NO. AECC111

BY	DATE	REVISION

STATE OF ALASKA
DEPARTMENT OF TRANSPORTATION AND PUBLIC FACILITIES
CENTRAL REGION
4111 AVIATION AVE., ANCHORAGE ALASKA 99502
PHONE (907) 269-0590

BETHEL AIRPORT
BETHEL, ALASKA
MAIN RUNWAY RECONSTRUCTION
PROJECT No. CFAPT00430
AIP No. 3-02-0029-0XX-20XX
CONSTRUCTION SAFETY AND PHASING PLAN
PHASE 1A & 1B

DATE: 1/7/2021
SHEET: AC4 OF AC11

Designed By:	CJB
Drawn By:	JSC/RLC
Checked By:	MF
Date Revised:	1/07/2021, 9:28 AM
Layout Name:	CSPP (3)
File Path and Name:	Z:\project\2690.02 DOT_C BET Main RW Reconstruction\Civil\ACAD\0430-BET-CSPP.dwg

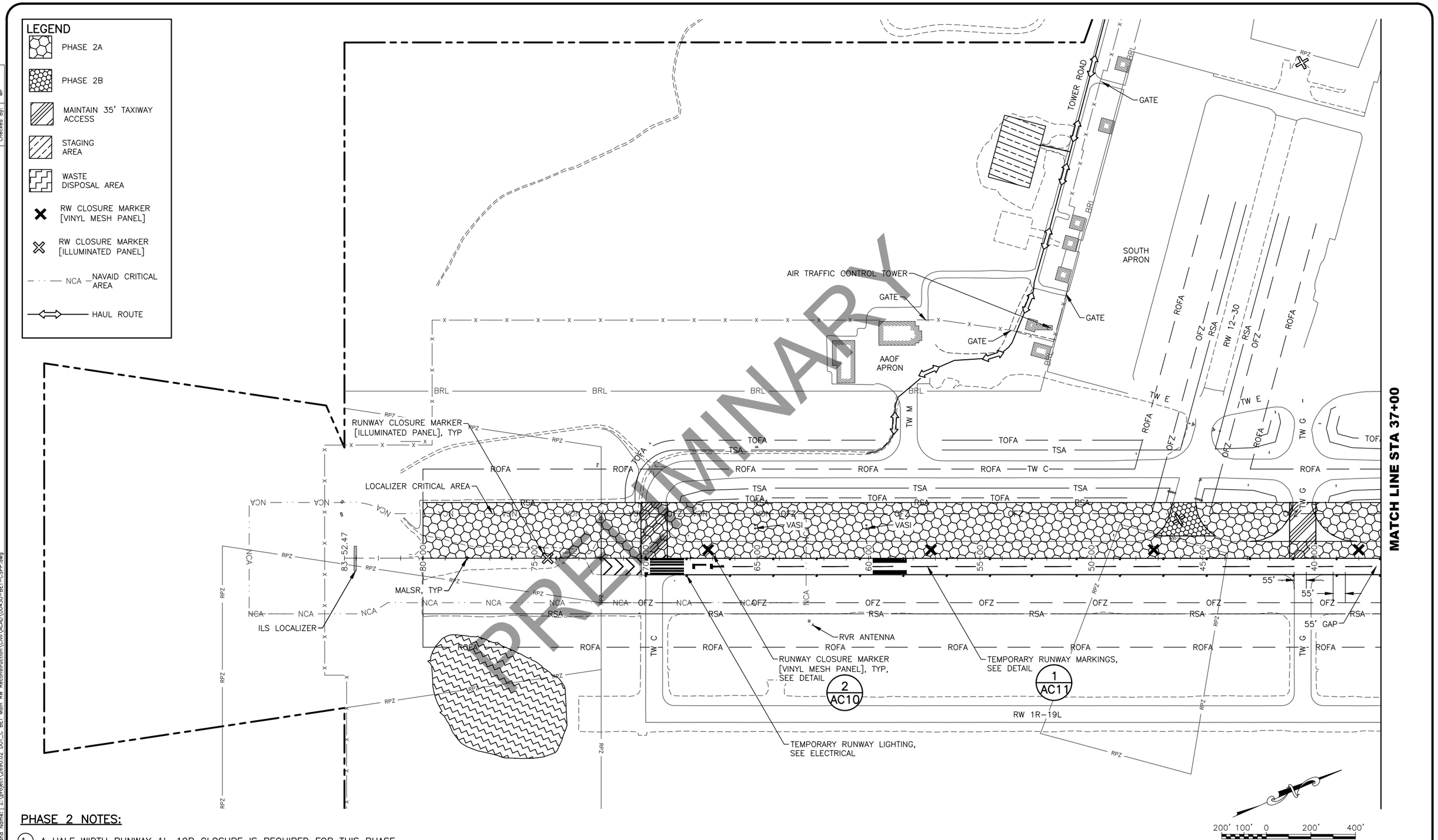

PHASE 2 NOTES:

1. A HALF WIDTH RUNWAY 1L–19R CLOSURE IS REQUIRED FOR THIS PHASE. THE TEMPORARY RUNWAY WIDTH IS 75'.
2. WORK MUST BE PERFORMED AT NIGHT WHEN THE RUNWAY IS CLOSED.
3. USE ILLUMINATED RUNWAY CLOSURE MARKER DURING NIGHT RUNWAY CLOSURE ONLY. REMOVE DURING DAYTIME HALF WIDTH OPERATIONS AND FOR ANY EMERGENCY LANDINGS.

Designed By:	CJB
Drawn By:	JSC/RLC
Checked By:	MF
Date Revised:	1/07/2021, 9:28 AM
Layout Name:	CSPP (4)
File Path and Name:	Z:\project\2690.02 DOT_C BET Main RW Reconstruction\Civil\ACAD\06430-BET-CSPP.dwg

PLANS DEVELOPED BY:
R&M CONSULTANTS, INC.
9101 VANGUARD DR.
ANCHORAGE, AK 99507
(907) 522-1707
CERT. OF AUTH. NO. AECC111

BY	DATE	REVISION

STATE OF ALASKA
DEPARTMENT OF TRANSPORTATION AND PUBLIC FACILITIES
CENTRAL REGION
4111 AVIATION AVE., ANCHORAGE ALASKA 99502
PHONE (907) 269-0590

BETHEL AIRPORT
BETHEL, ALASKA
MAIN RUNWAY RECONSTRUCTION
PROJECT No. CFAPT00430
AIP No. 3-02-0029-0XX-20XX
CONSTRUCTION SAFETY AND PHASING PLAN
PHASE 2A & 2B

DATE: 1/7/2021
SHEET: AC5 OF AC11

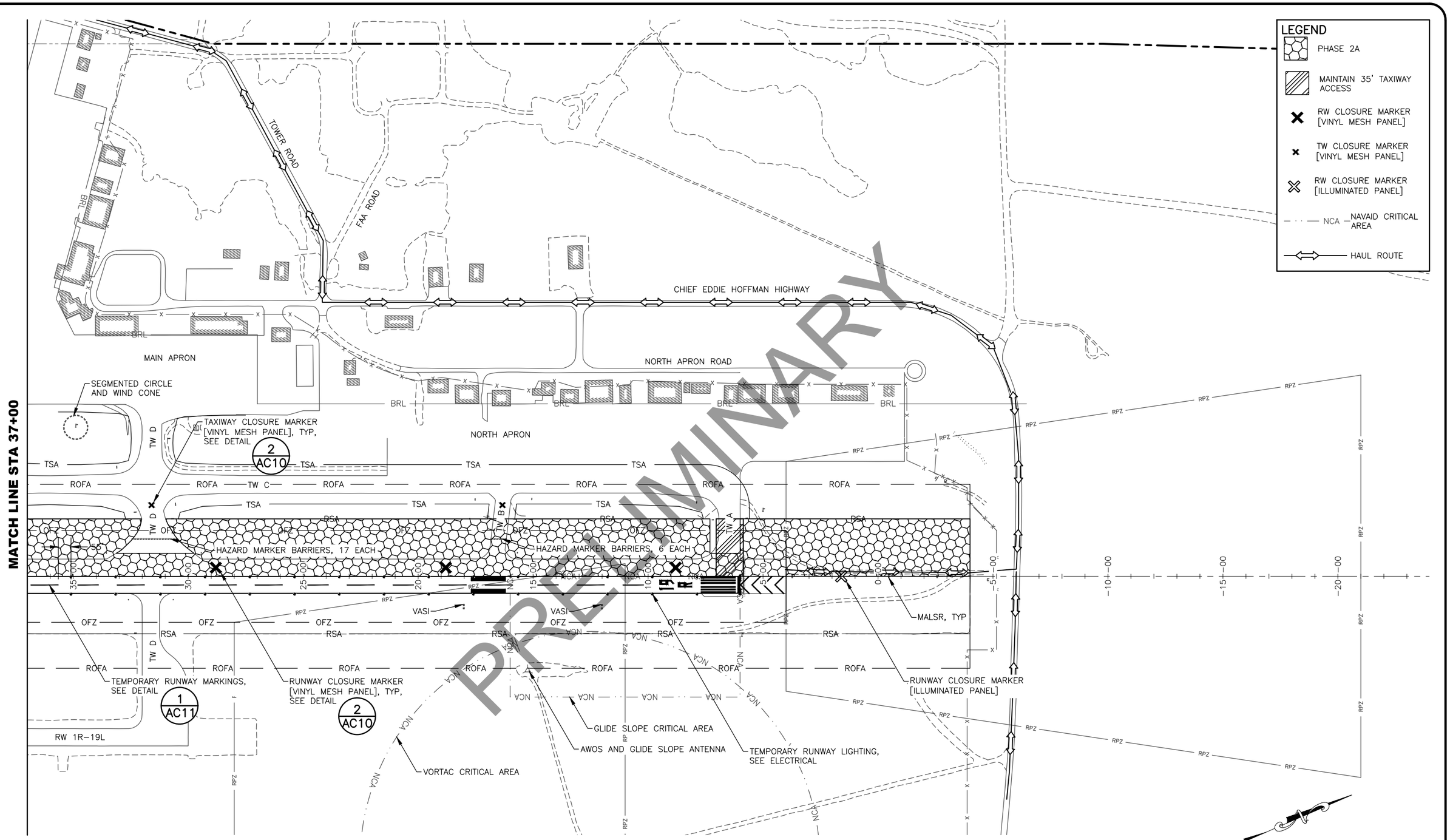

PHASE 2 NOTES:

1. A HALF WIDTH RUNWAY 1L–19R CLOSURE IS REQUIRED FOR THIS PHASE. THE TEMPORARY RUNWAY WIDTH IS 75'.
2. WORK MUST BE PERFORMED AT NIGHT WHEN THE RUNWAY IS CLOSED.
3. USE ILLUMINATED RUNWAY CLOSURE MARKER DURING NIGHT RUNWAY CLOSURE ONLY. REMOVE DURING DAYTIME HALF WIDTH OPERATIONS AND FOR ANY EMERGENCY LANDINGS.

PLANS DEVELOPED BY:
R&M CONSULTANTS, INC.
9101 VANGUARD DR.
ANCHORAGE, AK 99507
(907) 522-1707
CERT. OF AUTH. NO. AECC111

BY	DATE	REVISION

STATE OF ALASKA
DEPARTMENT OF TRANSPORTATION AND PUBLIC FACILITIES
CENTRAL REGION
4111 AVIATION AVE., ANCHORAGE ALASKA 99502
PHONE (907) 269-0590

BETHEL AIRPORT
BETHEL, ALASKA
MAIN RUNWAY RECONSTRUCTION
PROJECT No. CFAPT00430
AIP No. 3-02-0029-0XX-20XX
CONSTRUCTION SAFETY AND PHASING PLAN
PHASE 2A

DATE: 1/7/2021
SHEET: AC6 OF AC11

Designed By:	CJB
Drawn By:	JSC/RLC
Checked By:	MF
Date Revised:	1/07/2021, 9:28 AM
Layout Name:	CSPP (5)
File Path and Name:	Z:\project\2690.02 DOT_C BET Main RW Reconstruction\Civil\ACAD\00430-BET-CSPP.dwg

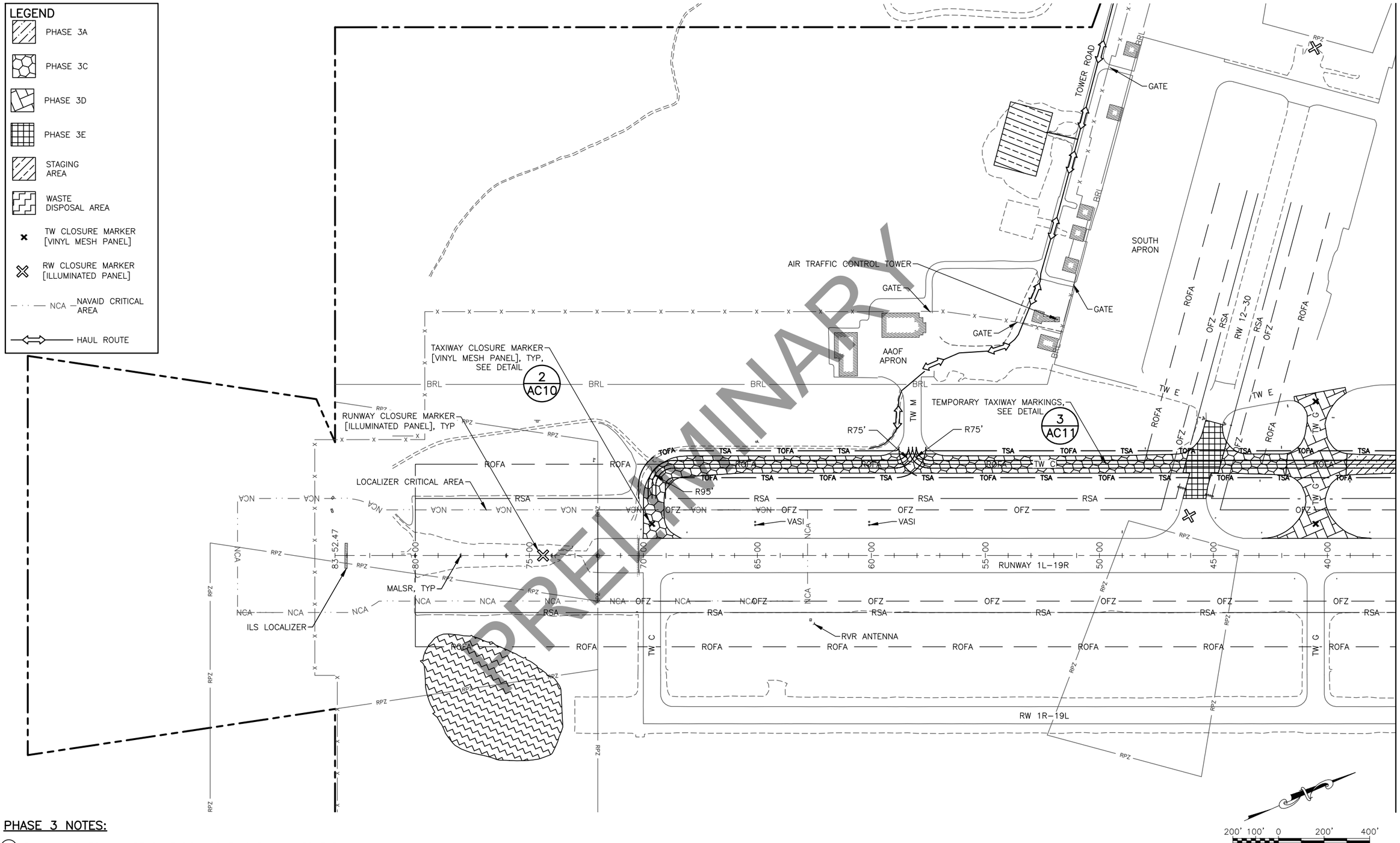

PHASE 3 NOTES:

1. RUNWAY 12-30 WILL BE SHUT DOWN DURING RUNWAY 30 END CONSTRUCTION.
2. ACCESS TO AND FROM TAXIWAY M WILL BE PROVIDED AT ALL TIMES. PHASE CONSTRUCTION AS NECESSARY TO ACCOMMODATE AIRCRAFT OPERATIONS.
3. WORK WITHIN RUNWAY 1L-19R SAFETY AREA TO OCCUR AT NIGHT WHEN RUNWAY IS SHUT DOWN.

Designed By:	CJB
Drawn By:	JSC/RLC
Checked By:	MF
Date Revised:	1/07/2021, 9:28 AM
Layout Name:	CSPP (6)
File Path and Name:	Z:\project\2690.02 DOT_C BET Main RW Reconstruction\Civil\ACAD\00430-BET-CSPP.dwg

PLANS DEVELOPED BY:
R&M CONSULTANTS, INC.
9101 VANGUARD DR.
ANCHORAGE, AK 99507
(907) 522-1707
CERT. OF AUTH. NO. AECC111

BY	DATE	REVISION

STATE OF ALASKA
DEPARTMENT OF TRANSPORTATION AND PUBLIC FACILITIES
CENTRAL REGION
4111 AVIATION AVE., ANCHORAGE ALASKA 99502
PHONE (907) 269-0590

BETHEL AIRPORT
BETHEL, ALASKA
MAIN RUNWAY RECONSTRUCTION
PROJECT No. CFAPT00430
AIP No. 3-02-0029-0XX-20XX
CONSTRUCTION SAFETY AND PHASING PLAN
PHASE 3B, 3C, 3D, & 3E

DATE: 1/7/2021

SHEET: AC7 OF AC11

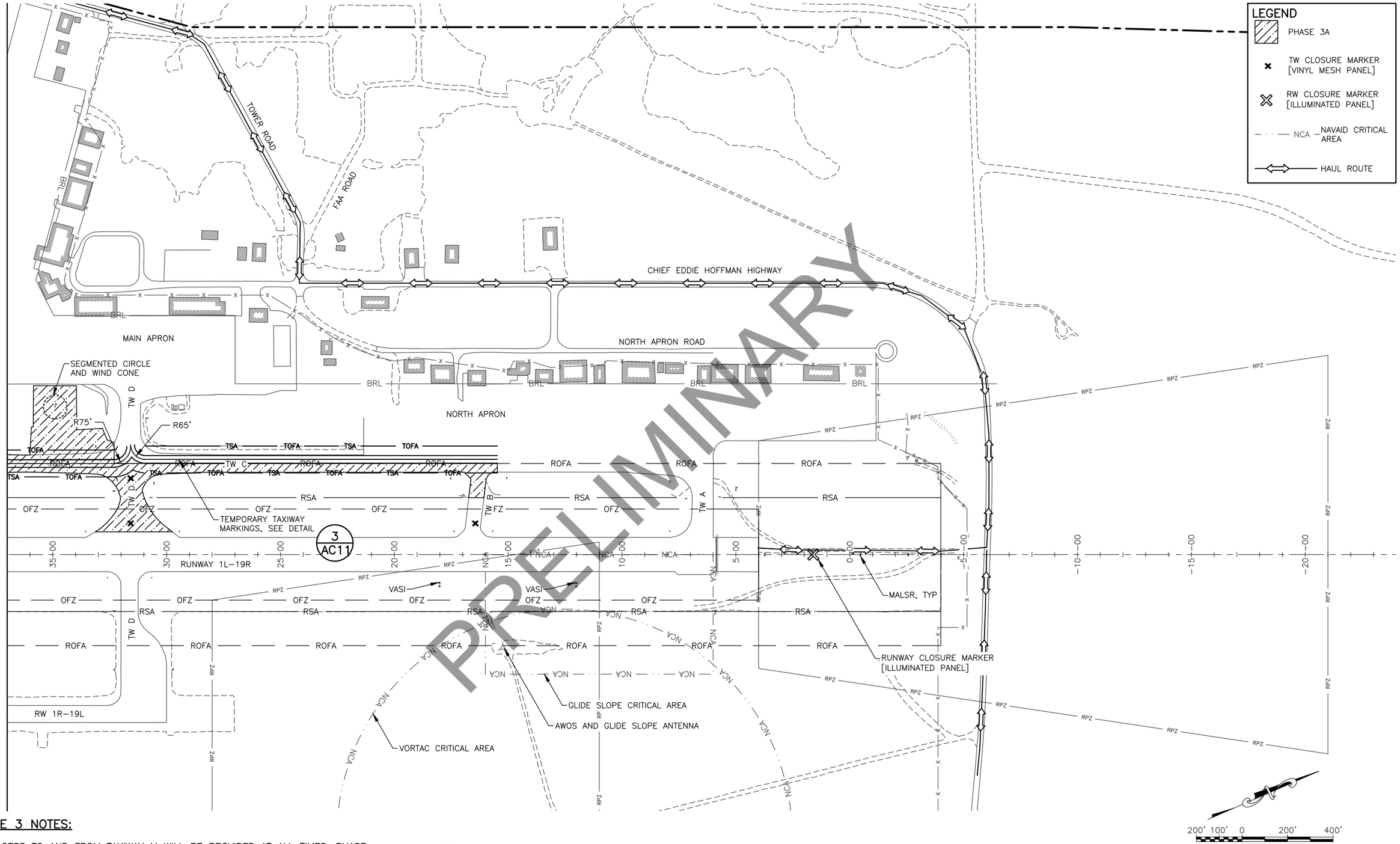

PHASE 3 NOTES:

1. ACCESS TO AND FROM TAXIWAY M WILL BE PROVIDED AT ALL TIMES. PHASE CONSTRUCTION AS NECESSARY TO ACCOMMODATE AIRCRAFT OPERATIONS.
2. WORK WITHIN RSA MUST BE DONE AT NIGHT WHEN RUNWAY 1L-19R IS CLOSED FOR TAXIWAY D WORK.

Designed By:	CJB
Drawn By:	JSC/RLC
Checked By:	MF
Date Revised:	1/07/2021, 9:28 AM
Layout Name:	CSPP (7)
File Path and Name:	Z:\project\2690.02 DOT_C BET Main RW Reconstruction\Civil\ACAD\00430-BET-CSPP.dwg

PLANS DEVELOPED BY:
R&M CONSULTANTS, INC.
9101 VANGUARD DR.
ANCHORAGE, AK 99507
(907) 522-1707
CERT. OF AUTH. NO. AECC111

BY	DATE	REVISION

STATE OF ALASKA
DEPARTMENT OF TRANSPORTATION AND PUBLIC FACILITIES
CENTRAL REGION
4111 AVIATION AVE., ANCHORAGE ALASKA 99502
PHONE (907) 269-0590

BETHEL AIRPORT
BETHEL, ALASKA
MAIN RUNWAY RECONSTRUCTION
PROJECT No. CFAPT00430
AIP No. 3-02-0029-0XX-20XX
CONSTRUCTION SAFETY AND PHASING PLAN
PHASE 3A

DATE: 1/7/2021

SHEET: AC8 OF AC11

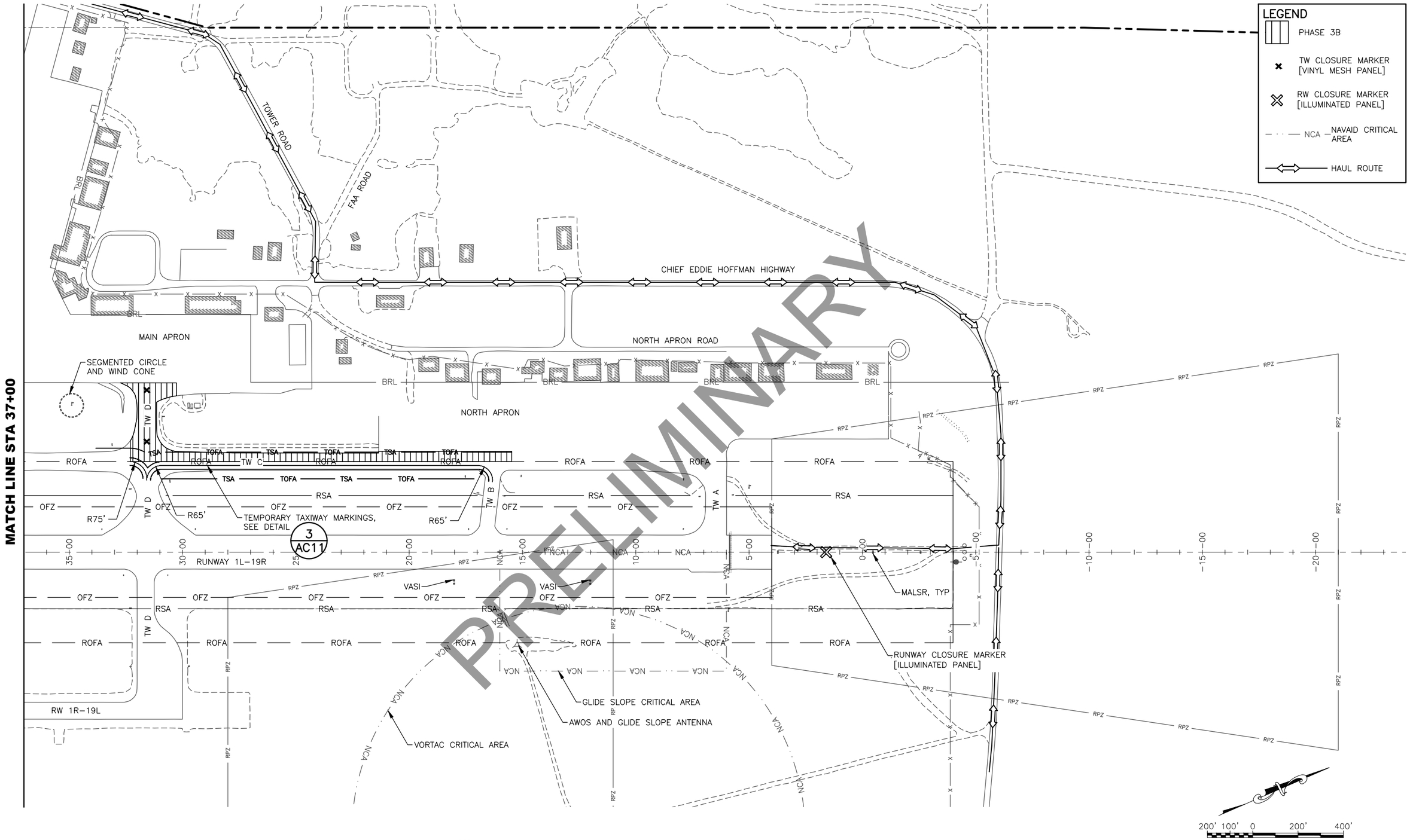

Designed By:	CJB
Drawn By:	JSC/RLC
Checked By:	MF
Date Revised:	1/07/2021, 9:28 AM
Layout Name:	CSPP (11)
File Path and Name:	Z:\project\2690.02 DOT_C BET Main RW Reconstruction\Civil\ACAD\00430-BET-CSPP.dwg

PLANS DEVELOPED BY:
R&M CONSULTANTS, INC.
9101 VANGUARD DR.
ANCHORAGE, AK 99507
(907) 522-1707
CERT. OF AUTH. NO. AECC111

BY	DATE	REVISION

STATE OF ALASKA
DEPARTMENT OF TRANSPORTATION AND PUBLIC FACILITIES
CENTRAL REGION
4111 AVIATION AVE., ANCHORAGE ALASKA 99502
PHONE (907) 269-0590

BETHEL AIRPORT
BETHEL, ALASKA
MAIN RUNWAY RECONSTRUCTION
PROJECT No. CFAPT00430
AIP No. 3-02-0029-0XX-20XX
CONSTRUCTION SAFETY AND PHASING PLAN
PHASE 3B

DATE: 1/7/2021

SHEET: AC9 OF AC11

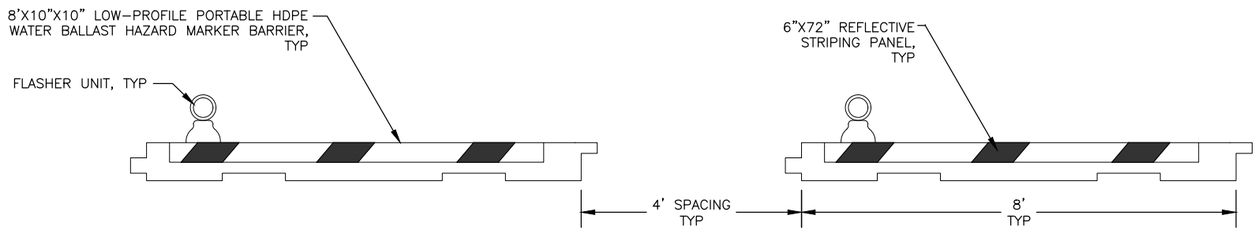

1 / AC10 HAZARD MARKER BARRIER DETAIL
NTS

HAZARD MARKER BARRIER NOTES:

1. PLACE BARRIERS TO LIMIT ACCESS TO THE CLOSED RUNWAY. USE LOW STYLE BARRIERS (LESS THAN 12 INCHES HIGH) WHEN ADJACENT TO AN ACTIVE MOVEMENT AREA.
2. HAZARD AREA BARRIERS ARE NOT TO BE PLACED WITHIN THE OFZ OF THE ACTIVE RUNWAY. CONSIDER JET BLAST WHEN PLACING BARRIERS.
3. SEE CSPP SECTION 16 FOR SPACING REQUIREMENTS.
4. ALTERNATE BETWEEN WHITE AND ORANGE HAZARD MARKER BARRIERS.

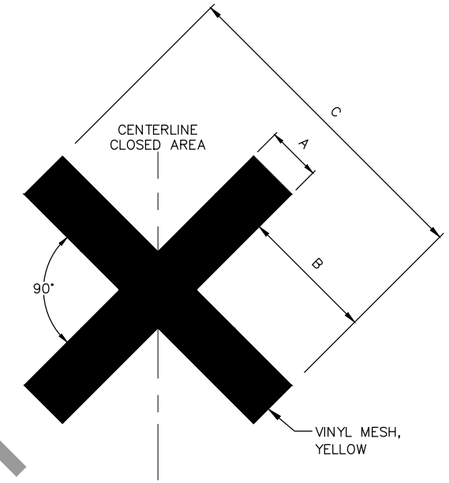

2 / AC10 RUNWAY & TAXIWAY CLOSURE MARKER DETAIL
NTS

DIMENSION	A (FT)	B (FT)	C (FT)
RUNWAY CLOSURE MARKER	10	25	60
TAXIWAY CLOSURE MARKER	5	12.5	30

CLOSURE MARKER NOTES:

1. PLACE AND MAINTAIN CLOSURE MARKERS AS CONSTRUCTION ALLOWS. MARKERS MUST BE IN-PLACE DURING NON WORK HOURS.

Designed By: CJB
Drawn By: JSC/RLC
Checked By: MF
Date Revised: 1/07/2021, 9:28 AM
Layout Name: CSPP (9)
File Path and Name: Z:\project\2690.02 DOT_C BET Main RW Reconstruction\Civil\ACAD\00430-BET-CSPP.dwg

PLANS DEVELOPED BY:
R&M CONSULTANTS, INC.
9101 VANGUARD DR.
ANCHORAGE, AK 99507
(907) 522-1707
CERT. OF AUTH. NO. AECC111

BY	DATE	REVISION

STATE OF ALASKA
DEPARTMENT OF TRANSPORTATION AND PUBLIC FACILITIES
CENTRAL REGION
4111 AVIATION AVE., ANCHORAGE ALASKA 99502
PHONE (907) 269-0590

BETHEL AIRPORT
BETHEL, ALASKA
MAIN RUNWAY RECONSTRUCTION
PROJECT No. CFAPT00430
AIP No. 3-02-0029-0XX-20XX
CONSTRUCTION SAFETY AND PHASING PLAN DETAILS

DATE: 1/7/2021
SHEET: AC10 OF AC11

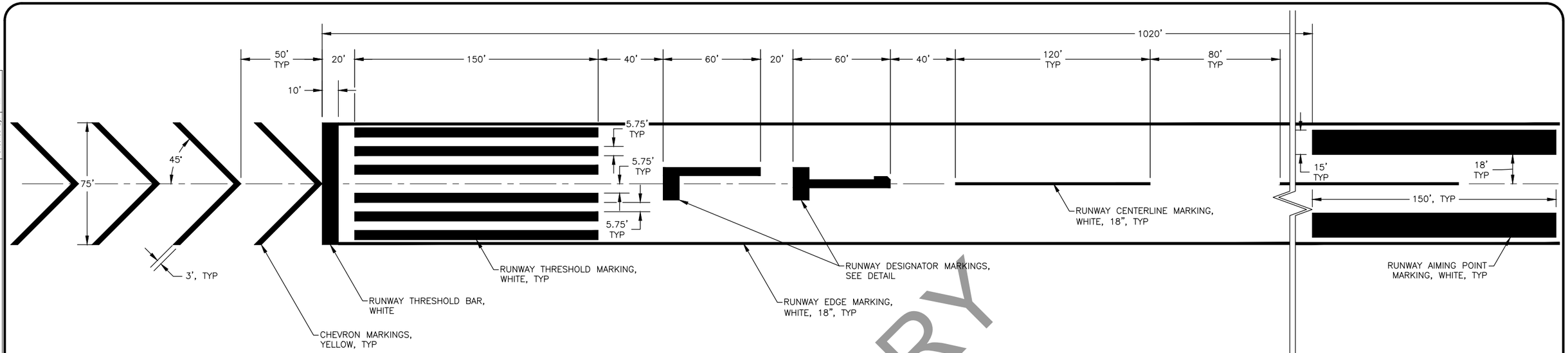

1 AC11 TEMPORARY RUNWAY MARKINGS
NTS

TEMPORARY RUNWAY MARKING NOTES:

1. TEMPORARY RUNWAY CENTERLINE MARKINGS ARE TYPICAL 120' STRIPES WITH 80' GAPS. SEE PLAN VIEW FOR NON-STANDARD GAP DIMENSIONS.
2. TEMPORARY LIGHTING FIXTURES TO BE EVENLY SPACED AT A MAXIMUM DISTANCE OF 200'. SEE ELECTRICAL DRAWINGS.
3. TEMPORARY RUNWAY SURFACE MARKINGS PAID UNDER ITEM P620.070.0000.
4. TEMPORARY RUNWAY LIGHTING PAID UNDER ITEM L.125.180.0000.

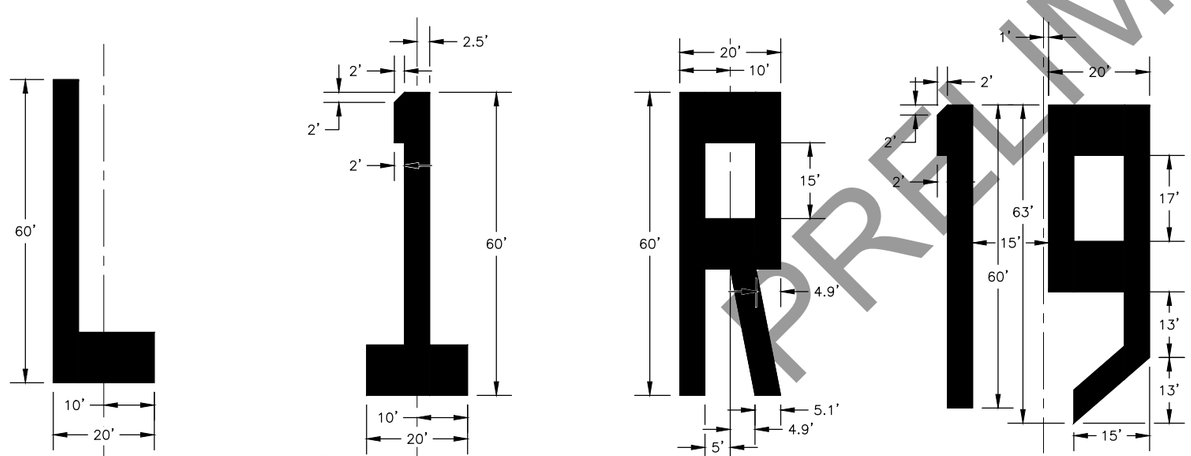

2 AC11 TEMPORARY RUNWAY DESIGNATION MARKINGS
NTS

TEMPORARY RUNWAY DESIGNATION MARKING NOTES:

1. ALL CHARACTERS HAVE THESE CHARACTERISTICS UNLESS OTHERWISE SPECIFIED;
   1.1. VERTICAL STROKE OF 5'
   1.2. HORIZONTAL STROKE OF 10'
   1.3. DIAGONAL STROKE OF 5'
2. IGNORE 3' FOOT TIP OF NUMERAL '9' WHEN MEASURING SEPARATION OF RUNWAY DESIGNATION MARKING AND RUNWAY THRESHOLD MARKING.
3. TEMPORARY RUNWAY SURFACE MARKINGS PAID UNDER ITEM P620.070.0000.
4. REFER TO AC 150/5340-1M FOR ADDITIONAL MARKING INFORMATION.

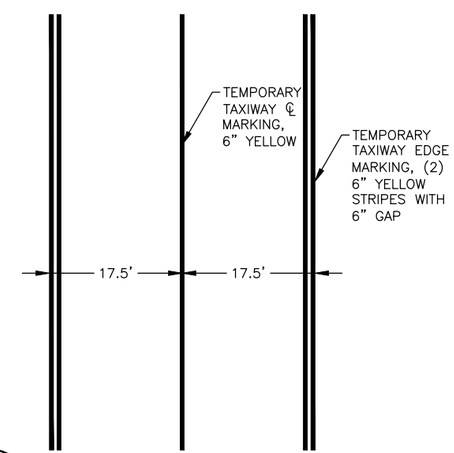

3 AC11 TEMPORARY TAXIWAY MARKINGS
NTS

Designed By:	CJB
Drawn By:	JSC/RLC
Checked By:	MF
Date Revised:	1/07/2021, 9:28 AM
Layout Name:	CSPP (10)
File Path and Name:	Z:\project\2690.02 DOT_C BET Main RW Reconstruction\Civil\ACAD\00430-BET-CSPP.dwg

PLANS DEVELOPED BY:
R&M CONSULTANTS, INC.
9101 VANGUARD DR.
ANCHORAGE, AK 99507
(907) 522-1707
CERT. OF AUTH. NO. AECC111

BY	DATE	REVISION

STATE OF ALASKA
DEPARTMENT OF TRANSPORTATION AND PUBLIC FACILITIES
CENTRAL REGION
4111 AVIATION AVE., ANCHORAGE ALASKA 99502
PHONE (907) 269-0590

BETHEL AIRPORT
BETHEL, ALASKA
MAIN RUNWAY RECONSTRUCTION
PROJECT No. CFAPT00430
AIP No. 3-02-0029-0XX-20XX
CONSTRUCTION SAFETY AND PHASING PLAN DETAILS

DATE: 1/7/2021

SHEET: AC11 OF AC11