USER NAME: lkeller DATE: 9/24/2004 TIME: 2:00:02 PM PLOT DRIVER:
SCALE: $SCALE$
DRAWING NAME: \\SEA-300SVA\PROJECTS\014827\13.0_CAD_Drawings\BRIDGES\(DWG or DGN)\CG_WCB-S101.dgn

STATE	PROJECT DESIGNATION	YEAR	SHEET NO.	DATE
ALASKA		2004		09-27-04

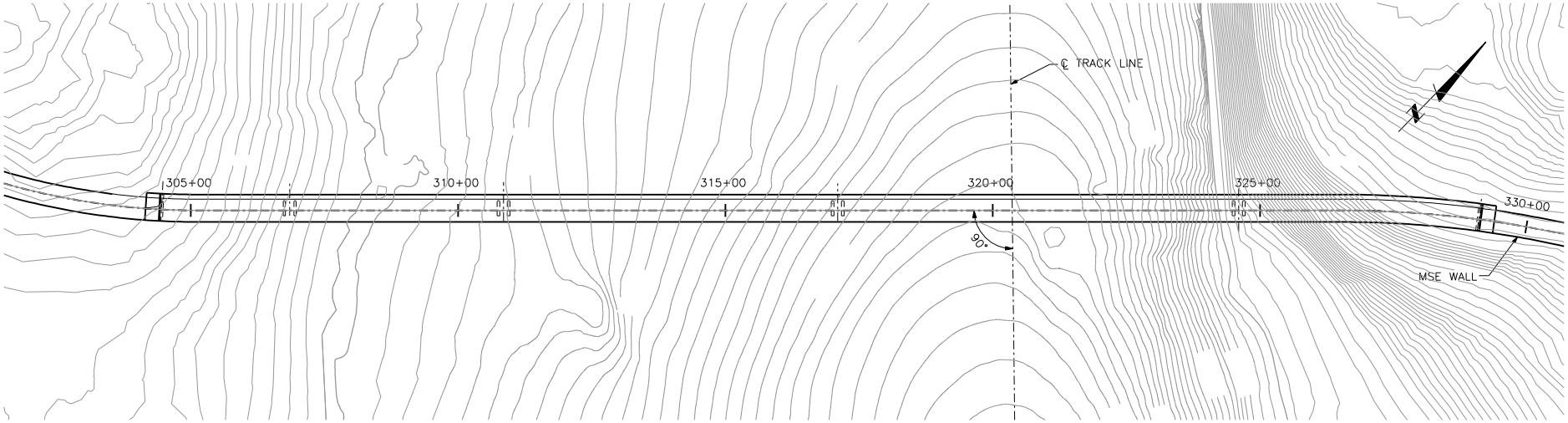

NOTE:
STATIONING AND ELEVATIONS SHOWN ARE IN US CUSTOMARY SYSTEM OF MEASUREMENT.

PLAN

0 100 200
(30.48m) (60.96m)
SCALE IN FEET/METERS

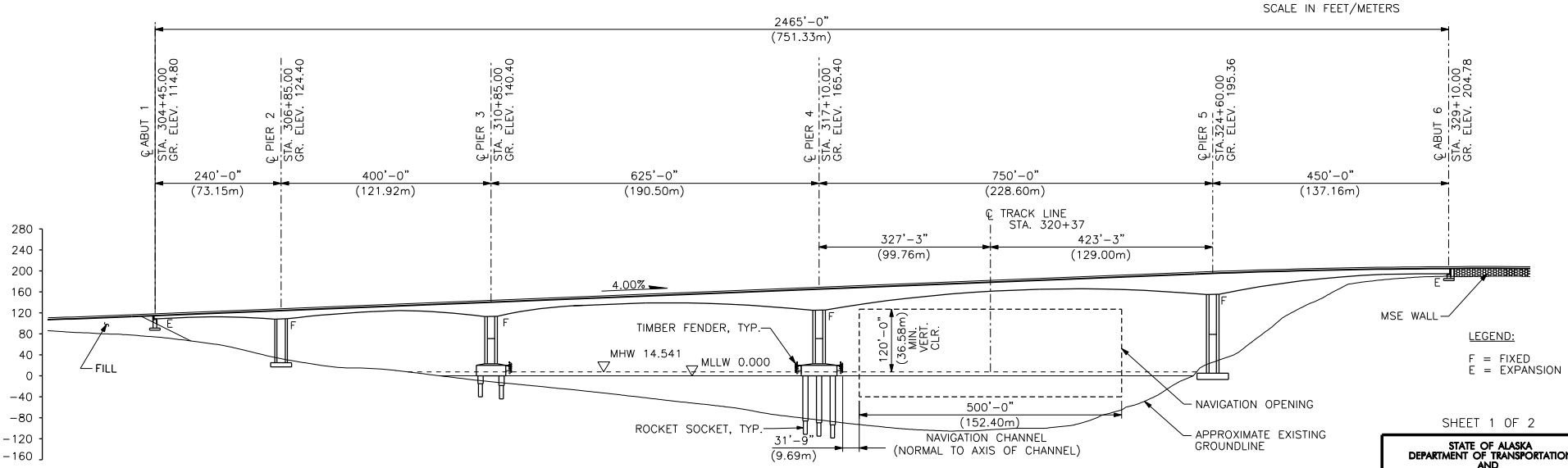

ELEVATION

SHEET 1 OF 2

HDR Alaska, Inc.

STATE OF ALASKA
DEPARTMENT OF TRANSPORTATION AND PUBLIC FACILITIES

TONGASS NARROWS BRIDGE WEST CHANNEL

PLAN AND ELEVATION