Auke Bay

Corridor Study

Draft
Condition and Needs Assessment

Prepared by USKH, Inc. for
The Alaska Department of Transportation & Public Facilities

February 18, 2003

Table of Contents

1 Introduction....1
1.1 Project Background....1
1.2 Previous Study Activity....2
1.3 Purpose of This Project....2
1.4 Summary of Public Participation....3
1.5 Study Area....4
2 Existing Conditions....5
2.1 Existing Planning Data....5
2.2 Zoning Information....6
2.3 Property Records....6
2.4 Topographic Data....6
2.5 Preliminary Analysis of the Affected Environment....6
2.6 Traffic Volume Data....7
2.6.1 Segments....7
2.6.2 Intersections....7
2.7 Origin-Destination Study....7
2.8 Speed Statistics....8
2.9 Collision Discussion....8
2.9.1 Collision Overview....8
2.9.2 Conflict Study....8
2.10 Geometric Analysis....9
2.11 Bicycles and Pedestrians....10
3 System Assessment....11
3.1 Capacity Analyses of Existing Conditions....11
3.1.1 Traffic Volume Forecasts....11
3.1.1.1 Methodology....11
3.1.1.2 Accuracy....12
3.1.2 Current and Future Capacity of Existing System....13
3.1.2.1 Intersections....13
3.1.2.1.1 Intersection Traffic Forecasts....13
3.1.2.1.2 Operational Performance....15
3.1.3 Intersection Evaluation....15
3.1.4 Segment Evaluation....17
3.1.5 Conclusions....21
3.2 Safety Analyses....21
3.2.1 Collisions....21
3.2.2 Conflicts....22
3.2.3 Geometry....22
3.2.4 Bicycle & Pedestrian Facilities....22
3.3 Goals & Objectives....22
3.3.1 CBJ's Area Wide Transportation Plan....23
3.3.2 ABCor's Project Goals and Objectives and Performance Measures....23

Appendices

Appendix A ..... Public Involvement Plan

Appendix B ..... Zoning Map

Appendix C ..... Property Ownership Map

Appendix D ..... Preliminary Analysis of the Affected Environment

Appendix E ..... Traffic Data

Appendix F ..... Origin-Destination Study Appendix

Appendix G ..... Conflict Study / Collision Overview

Appendix H ..... Project Design Criteria / Geometric Analysis

Appendix I ..... Traffic Volume Forecasts

Appendix J ..... Turning Movement Counts

Appendix K ..... Turning Movement MOE Summaries

Appendix L ..... Measures of Effectiveness

Auke Bay

Corridor Study

1 Introduction

1.1 Project Background

Glacier Highway, along with Egan Drive, comprises the major transportation corridor between the Juneau downtown core, the Mendenhall Valley residential and commercial areas, the University of Alaska Southeast (UAS) campus, the Auke Bay Harbor, and "out-the-road" residential areas. The corridor also comprises part of the primary route between the Juneau downtown core and the alternative transportation hubs consisting of the Juneau International Airport and the Alaska Marine Highway System's Auke Bay (AMHS) terminal. The Alaska Department of Transportation and Public Facilities (DOT&PF) classifies this corridor as an Urban Principal Arterial. Glacier Highway north of Auke Bay was named Veterans Memorial Highway in 1989 to honor Juneau veterans; however, for simplicity the highway will be called Glacier Highway in this report.

The project limits includes that portion of the Glacier Highway between Fritz Cove Road and the AMHS terminal. This portion of highway is essentially a two lane paved arterial with shoulders and, along some sections, adjoining sidewalks. There are three major intersections: Fritz Cove Road, the UAS south entrance, and Mendenhall (Back) Loop Road. None of the intersections are signalized. The route is further characterized by a sweeping spiral curve by the NOAA research facility that is substandard and a series of horizontal and vertical curves in the Auke Nu Creek area. Traffic volumes on Glacier Highway have remained fairly stable within the study area over the past several years.

Glacier Highway has exhibited a wide variety of problems that need attention. These include deteriorating pavement surfaces, inadequate pedestrian and bicycle facilities, substandard geometrics and sight distance, and sparse illumination. Fritz Cove Road, the UAS south entrance, and the Back Loop Road intersections have geometry and sight distance deficiencies. The Back Loop Road intersection is a known high accident location. The footings of the bridge/culvert across Waydelich Creek need to be replaced to prevent further embankment erosion. Icy conditions prevail in shaded areas throughout the route.

The Auke Bay community is concerned about increased traffic volumes and speeds if the highway is improved and the curves reduced. Many residents feel that alternative alignments should be considered that would protect the "bedroom" community environment of Auke Bay. Residents have also requested pedestrian facilities that would connect Auke Bay School to the Auke Bay Harbor and better separate vehicle and pedestrian traffic through the Auke Bay area.

Despite recent flat traffic volumes, growth is expected in the commercial, industrial, academic, and residential sectors in the vicinity of Auke Bay that will challenge the operational and safety characteristics of the existing roadway. The university is currently updating its Master Plan and expects to see continued growth. The Auke Bay Harbor is a popular destination and its use is expected to grow. Planning for the future of the Auke Bay segment is as much a function of access to these facilities and other neighboring areas as it is a function of providing for through trips to and from outlying areas reached via the Glacier Highway.

The project study area, identified and defined in Section 1.5, will be referred to in this report as the Auke Bay Corridor – abbreviated as ABCor.

1.2 Previous Study Activity

DOT&PF did a preliminary traffic and engineering study within the project limits but not to the level of a reconnaissance report. No formal investigations for previously proposed alternative alignments have been completed. DOT&PF has some topographic and boundary survey information along the existing right of way corridor and the City and Borough of Juneau recently completed aerial LIDAR (LIght Detection And Ranging) mapping of the area that may be useful.

1.3 Purpose of This Project

DOT&PF contracted with USKH, Inc. (USKH) to define the study area and identify alternatives that provide a safer, more efficient, multi-modal transportation system for the area served. USKH will complete the following principal tasks:

- Evaluate the existing and future transportation system;
- Evaluate the existing and future environmental and socioeconomic conditions;
- Address anticipated land and marine development, traffic flows, and the ultimate access needs of public, commercial, and residential users in and near the study area;
- Determine whether the existing corridor can support future traffic volumes and maintain its role as an uncontrolled access arterial, or are there constructible and practical alternative alignments that bypass through-traffic around Auke Bay;
- Actively involve local planning authorities and the public to provide input on potential improvements;
- Determine existing and future traffic problems within the study area and present alternative solutions; and

- Provide an environmental analysis of all potential socioeconomic and environmental impacts of alternatives.

This Existing Conditions and System Assessment report summarizes activities and results of work completed as of February 2003 in support of the Auke Bay Corridor Study. This section of the report introduces the project. Section 2 presents the inventory and data gathering portion of the effort. Section 3 presents an assessment of the existing conditions. Section 4 presents project goals and objectives, a preliminary purpose and need statement, and the measures of effectiveness that will be used to evaluate the alternatives developed in later stages of the study.

1.4 Summary of Public Participation

An important part of the inventory effort was the development and implementation of a public involvement plan. The purpose of the public involvement effort is to for DOT&PF to get to know people who may potentially be affected by this project, to gather information and to solicit issues and concerns. The final public involvement plan can be found in Appendix A.

The key components of the public involvement program are:

- Project Website
- Citizen's Advisory Committee (CAC)
- Project Newsletter
- Public and CAC Meetings
- Project Steering Committee (PSC)

The project website and the PSC are being headed up by DOT&PF. The project website presents information about the project. For example, it presents the project time line, documents produced during the course of the project, public involvement information, maps and photos and provides a way for the public to comment directly to DOT&PF.

The PSC membership includes representatives from DOT&PF, UAS, and the CBJ. This purpose of this committee is to focus on corridor needs and evaluated alternatives on the policy level, rather than the user/provider level.

The CAC is a valuable information source. This is an advisory group that shares their ideas, concerns and issues from a user's perspective. However, the CAC has the opportunity to voice their opinions to DOT&PF prior to any decision making. The CAC will meet five times during the study.

To date, we have held two Citizen's Advisory Committee and one Project Steering Committee meeting. A list of CAC members, agendas, meeting notes, copies of presentations and a memo to the CAC can be found in Appendix A.

1.5 Study Area

A project kickoff meeting was held in September 2002 to discuss the study limits. Important considerations we derived from the discussion were to ensure that:

- Investments are coordinated,
- The limits facilitate future development,
- The limits will be acceptable to the public, and
- The limits are rational end points for environmental impact analysis.

The participants agreed to set the eastern limit of the study area along the western side of Montana Creek from Back Loop Road to Glacier Highway to fully develop and evaluate a bypass alternative for the corridor. The eastern limit includes the intersection of Glacier Highway and Industrial Boulevard. The western limit is along Glacier Highway just past the Alaska Marine Highway System (AMHS) terminal. The AMHS terminal is a logical location for the western boundary of the study area because traffic volumes drop sharply past the terminal. The northern boundary includes all of Auke Lake and the UAS Auke Lake campus, which is a major traffic generator in the area. The southern boundary includes a portion of Auke Bay in order to evaluate a water-crossing alternative.

We show the proposed study area in Figure 1, Study Area Map.

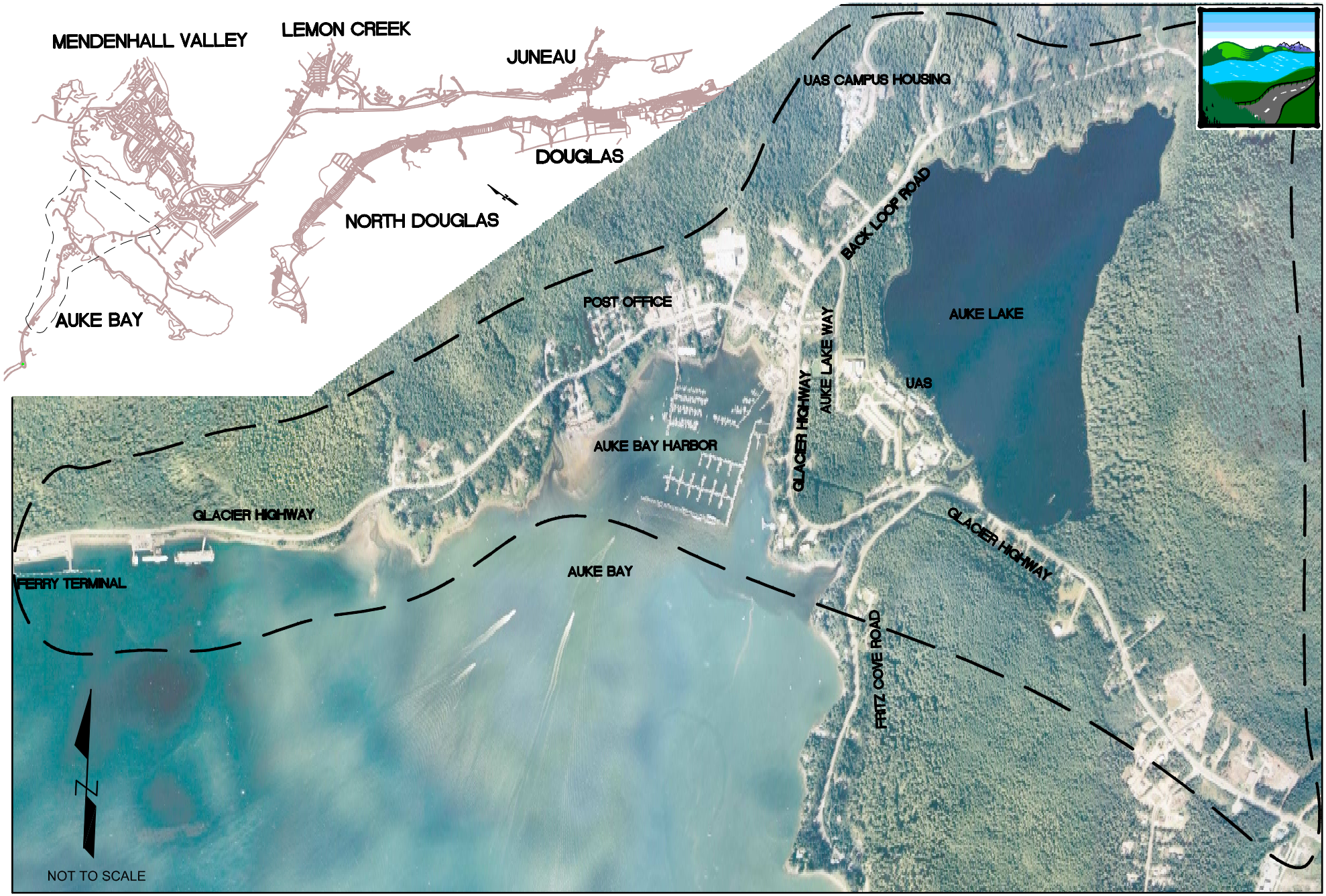

GLACIER HIGHWAY
RECONNASSIANCE STUDY

AUKE BAY CORRIDOR
STUDY AREA MAP

FIGURE-1

2 Existing Conditions

2.1 Existing Planning Data

The following section lists plans in the project area developed by the CBJ and other landowners.

According to the December 1993 **Department of Natural Resources, Juneau State Land Plan**, Auke Lake will be managed to support the high public values of the lake including research, water quality, habitat restoration, fisheries management, summer and winter recreation, and landings by aircraft.

According to the July 1996**, City and Borough of Juneau, Juneau Parks and Recreation Comprehensive Plan**, a master plan should be developed for the area around Auke Lake. This report also recommends a trail corridor between UAS student housing and Auke Bay School to be considered for bicycle and skiing use. Furthermore, the report recommends the reservation of a trail corridor between the Auke Bay Elementary School and the Spaulding Meadows trail so Auke Bay school parking lot could provide the necessary overflow parking for the trailhead.

According to the CBJ Areawide Transportation Plan of July, 2001 the forecast transportation deficiencies relating to Auke Bay are that the Glacier Highway is the only arterial through the area as well as the “main street” of the sub-area. Within a relatively congested area, there is a significant difference in travel speeds between motorized vehicles making local or through trips and pedestrians and bicyclists traveling along or across the highway. According to the plan, this area must be designed to adequately serve pedestrians, bicyclists, and local vehicle trips and through vehicle trips.

Further the plan suggests that improvements for Auke Bay could be traffic calming and the construction of a roundabout or traffic signal at the Back Loop Road intersection. This would integrate the intersection with main street/traffic calming treatments through Auke Bay. Traffic calming treatments used may include landscaping, sidewalks on both sides of the street, access management, pedestrian level lighting, bus pullout/shelter, curb extensions and bicycle lanes. A roundabout could serve as a gateway treatment and a traffic-calming device in the school area. The plan also suggests including pedestrian crossing amenities between University of Alaska campus facilities that are separated by the highway.

The CBJ 1995 Update to the Comprehensive Plan suggests undertaking transportation improvements within Auke Bay to accommodate additional demand resulting from the

construction of the AMHS terminal, boat marina, and other facilities, as well as the expansion of the University of Alaska. The plan suggests that the proposed corridor should follow the division between low and medium density residential uses where possible.

The plan also suggests evaluating a corridor realignment of Glacier Highway from its intersection with UAS to Auke Bay and encouraging a new entrance for UAS that avoids the Auke Lake Wayside and minimizes adverse traffic impacts.

Finally, the plan suggests sidewalks and bicycle paths or lanes along existing or newly constructed arterial and collector streets, where appropriate, to provide safe and efficient access and recreation and to reduce pedestrian/automobile conflicts.

The **UAS Final Draft Executive Summary Campus Facilities Master Plan, February 2002** presents three site concept options. Option 1 would establish the north entrance off Back Loop Road as the only public entrance to the core area of the campus. The existing entrance from Glacier Highway would be used for access to the Church property and emergency/service access for the campus. Options 2 and 2B would develop a new primary entrance off of Glacier Highway to the south of the existing entrance. A bridge would be required over Auke Creek. Option 3 would realign the existing primary entry drive off Glacier Highway and relocates this road within the campus.

2.2 Zoning Information

We obtained zoning information for the project area City and Borough of Juneau (CBJ). In general the zoning is a mixture of residential, commercial, waterfront commercial and rural reserve. Map of the zoning information can be found in Appendix B.

2.3 Property Records

We also obtained property ownership information from the CBJ. Owners in the project area are private parties, CBJ, UAS, State of Alaska Division of Mental Health, State of Alaska Department of Natural Resources, U.S. Forest Service, and U.S. National Oceanic Atmospheric Administration. We prepared a map depicting ownership in the project area. The map can be found in Appendix C.

2.4 Topographic Data

We compiled DOT&PF topographic surveys and CBJ LIDAR information to create a two-dimensional base map and a three-dimensional surface.

2.5 Preliminary Analysis of the Affected Environment

We collected existing environmental documents and reports to determine if additional field data needed to be collected to complete a socioeconomic and environmental impact analysis. We also researched existing data, previous reports, web sites, databases, existing aerial photography and made brief site visits to gather

environmental and socioeconomic information that could influence alternative development. The complete Preliminary Analysis of the Affected Environment can be found in Appendix D.

2.6 Traffic Volume Data

2.6.1 Segments

DOT&PF provided the study team with the most current traffic volume maps that show annual average daily traffic (AADT) on highway segments in the study area. In conjunction with the origin-destination study described below, DOT&PF collected through traffic volumes on Glacier Highway and Back Loop Road.

2.6.2 Intersections

USKH conducted intersection morning and evening turning movement counts in October 2002 at the Fritz Cove/UAS south entrance intersection with Glacier Highway, the Back Loop Road and Glacier Highway intersection, and the north UAS entrance intersection with Back Loop Road. We summarize the peak hour counts in Appendix E. The Back Loop Road and Glacier Highway intersection is complex and is presented in three components.

2.7 Origin-Destination Study

Origin-destination studies define travel patterns. When counting cars at a single point, we can't determine where the driver started the trip, or where it will end. In order to do that, we set up a series of observation stations that track vehicles through a system. In this study, we used license plate observations as the tracking tool. A map showing the location of observation stations is located in Appendix F.

The results of the study have been applied to volume forecasting, and will be applied to future improvements traffic distribution and assignments. The results of the study will be used to forecast volumes on a new by-pass corridor, for example.

2.8 Speed Statistics

DOT&PF provided the study team with speed data. Table 1 below summarizes the data we used during the assessment.

Table-1

Segment	Posted	Average of Mean Speeds	Average of 85th Percentile Speeds
BOP to NOAA Labs	45 MPH	45 MPH	49 MPH
NOAA to Waydelich Creek	35 MPH	37 MPH	42 MPH
Waydelich to Ferry Terminal	45 MPH	51 MPH	56 MPH
Ferry Terminal to EOP	50 MPH	51 MPH	56 MPH

2.9 Collision Discussion

2.9.1 Collision Overview

We obtained the collision record summaries for the project area for collisions that occurred between 1996 and 2000. There were 67 collisions recorded during the 5-year study period. As there are usually more collisions than reported. This number is probably low.

There were some interesting overall trends in the data. There was a pedestrian fatality, 4 people that sustained major injuries, and 37 people suffered minor injuries. There are four classifications of collision severity: fatality, major injury, minor injury, and property damage only. We classify a collision based on the most severe injury that had occurred, for example an collision that had 2 major injuries and 1 minor injury, and 3 people with no injuries is classified as major injury.

ABCor had 1 fatality collision (1.5% of total), 4 major injury collisions (6.0% of total), 25 minor injury collisions (37.3%), and 37 property damage only collisions (55.2%).

2.9.2 Conflict Study

We performed a conflict study of the Fritz Cove Road-UAS Access and Glacier Highway intersection. We heard anecdotally about this intersection being dangerous, but were unable to prove that in our accident studies. The frequency and rate were not abnormally high.

The intersection has high skew angles and is located midway on a horizontal curve. Sight distance is restricted by guardrail and the tree/brush line, and may not be adequate for the approach speeds.

A conflict study observes traffic and records each type of conflict that occurs. A conflict is an event that in absence of avoidance or evading actions would result in a collision. We record a conflict when there is a pending collision (without action), and the vehicles take action, usually a braking action or maneuver. We record secondary conflicts when the conflict prompts upstream vehicles to take action as well, but only one secondary conflict is recorded, even when a large platoon takes action.

Levels of conflicts can be statistically determined with a degree of confidence. But the analysis is probably just as valuable on a judgment basis.

We observed conflicts on Glacier Highway for outbound and inbound traffic during the morning and evening peak hours. The conflicts are summarized in Appendix G.

2.10 Geometric Analysis

The purpose of this analysis is to evaluate the geometric conditions on Glacier Highway and Mendenhall (Back) Loop Road within the project limits. The analysis will determine if each element meets current design criteria and standards. We considered horizontal curve radii, vertical grades and curves, cross section, clear zone, and intersection sight distance and layout.

We established design criteria using DOT&PF's *Highway Preconstruction Manual* and the American Association of State Highway and Transportation Officials (AASHTO) *A Policy on Geometric Design of Highways and Streets, Fourth Edition* (2001). We decided that improvement alternatives on the existing alignments would use a design speed of 40 MPH between Fritz Cove Road and Waydelich Creek and 50 MPH from Waydelich Creek to the AMHS Terminal. Alternatives involving new routes would be designed to 50 MPH.

Four horizontal curves on Glacier Highway have radii that are less than the minimum radii for both the posted and design speeds. The existing alignment employs spiral transition curves, reverse curves and compound curves – all features that may be unexpected by drivers. Vertical grades and curves throughout the project area meet or exceed standards.

Pavement (lane and shoulder) widths throughout the corridor meet standards. Existing sidewalks meet minimum standards and the operating width on the shoulders meets standards for bicyclists. Clear zones appear to be generally adequate, with guardrail in areas of steeper side slopes. The guardrail is damaged in many areas and does not appear to meet current standards in many areas.

All intersections meet the minimum standards for sight distance, but several intersections provide less than desirable standards. We observed potential sight distance problems at the DeHart's exit due to parked vehicles. The Back Loop Road

intersection with Glacier Highway has a less than desirable layout. Skew angles on both right and left turn lanes impact the driver's ability to take full advantage of the available sight distance. Auke Nu Drive also has an undesirable skew angle.

2.11 Bicycles and Pedestrians

There are two schools (Auke Bay Elementary School and the University of Alaska Southeast) located in the project corridor. The corridor is a popular boating and recreation center. Bicyclists and pedestrians commute to school and work, and many others walk and bike for recreation. Many other pedestrians in the area are marina users who walk from remote parking areas to the harbor.

3 System Assessment

3.1 Capacity Analyses of Existing Conditions

3.1.1 Traffic Volume Forecasts

This section presents traffic forecasts for the Auke Bay Corridor.

Forecasts in General
Traffic volume forecasts usually are within two forms. The first form is on a daily basis, that is, the number of vehicles on the road during a day. This is usually expressed as average annual daily traffic (AADT). The second form is in an hourly basis, which is generally one of the higher peak hours during a year.

We are most interested in the volumes that the road will carry in a design life of 20 years. By designing for those future volumes, we are assured that the roadway will operate safely and efficiently for a reasonably long duration, and we won't have to do interim improvements.

Future traffic forecasts provide the basis of design for the project. We determine design standards and criteria based on daily or hourly volumes. The size of the roadway and intersections is determined from a future design hour, usually the 30th highest hour that is forecast to occur during the design year (first year plus the design life).

For this project, we're assuming that the first year of the project will be in 2009, and that average annual daily traffic and design hour volumes needed for design would occur in 2029.

3.1.1.1 Methodology

We use a combination of looking at past traffic growth and projecting it into the future, forecasts using the relationships between traffic and demographics and economic trends, and forecasts based on land use changes and development. We've developed a set of simple and complex models using these approaches to forecast the future traffic. In addition, we've tried to anticipate the traffic that would occur with improved ferry service, the Juneau Access Road, and improvements brought about by University of Alaska Southeast (UAS's) master planning.

In this section, we develop average annual daily traffic (AADT). AADT can be further refined by factors into hourly volumes of concern (done later). We develop 2009, 2019,

and 2029 AADT for four segments within the project corridor between the AMHS terminal and Fritz Cove Road.

Table 2 shows the results of our work.

Table-2

Year	ADT Element	➔ Between ➔	Auke Bay AMHS Terminal / Auke Nu Drive	Auke Nu Drive / Harbor Drive/ Auke Bay Float Road	Harbor Drive/ Auke Bay Float Road / Fritz Cove Road	Fritz Cove Road / Engineers Cut-Off Road
2009	Base		4,300	4,400	8,900	13,400
	Juneau Access		700	700	700	700
	Ferry		350	350	350	350
	Development		370	370	60	100
	UAS		100	100	500	500
	2009 Total AADT		**5,820**	**5,920**	**10,510**	**15,050**
2019	Base		4,400	4,900	10,100	15,300
	Juneau Access		850	850	850	850
	Ferry		350	350	350	350
	Development		480	480	310	590
	UAS		100	100	800	800
	2019 Total AADT		**6,180**	**6,680**	**12,410**	**17,890**
2029	Base		4,800	6,100	13,000	19,800
	Juneau Access		1,000	1,000	1,000	1,000
	Ferry		350	350	350	350
	Development		590	590	560	1,060
	UAS		100	100	800	800
	2029 Total AADT		**6,840**	**8,140**	**15,710**	**23,010**

3.1.1.2 Accuracy

We've forecasted traffic that will occur 26-27 years in the future.
The usefulness in the model is that in building it, we formed a thought process that addresses most of the intricacies of the corridor. We're also reasonably sure that our forecasts are good estimates with a reasonable range of error. If we were off by a couple of thousand vehicles either way on the road, it wouldn't matter much. For

example, on the Harbor Road to Fritz Cove Road segment, a range of 13,000 to 17,000 vehicles would have the same lane requirements.

In closing, the models should provide good forecasts and enable us to plan for a future road. For those interested in the technical evaluation of the forecasts, please refer to Appendix I**.**

3.1.2 Current and Future Capacity of Existing System

3.1.2.1 Intersections

This section presents traffic forecasts at the key project intersections. The traffic forecasts are on an hourly basis, and are derived from current intersection turning movement volumes and the future Annual Average Daily Traffic (AADT) presented in the previous section.

Intersection turning movement traffic volumes were prepared for 2002, 2009, 2019, and 2029, coinciding with this projects current, construction, mid-life, and design years, respectively. The movement volumes included morning and evening peak hours of concern. These forecasted turning movements would occur during the peak times at the intersections if no other system links were provided.

In addition, this memorandum presents future operational performance of the existing project intersections with the forecasted traffic. The results serve as a consideration for project Purpose and Need. The operational performance measures uses for this analysis are levels of service, control delay, and volume to capacity ratio. These were proposed as criteria and performance measures in Technical Memorandum 3 under ***Goal 2: To Balance Accessibility and Mobility, Objective 2-1: Improve travel efficiency for local and through traffic.***

3.1.2.1.1 Intersection Traffic Forecasts

We've developed current and future intersection turning movements for the key project intersections. The forecast time frame coincides with the Project's life milestones, 2009 construction, 2019 mid-life, and 2029 design year. We developed a morning peak hour case based on an average morning volume, and an evening peak hour case based upon the 30th highest hour that would occur during the year.

In September 2002, we performed weekday turning movement counts between 7:00 AM and 9:00 AM, and 4:00 PM and 6:00 PM peak commuting times at six study intersections. The six intersections are:

- Glacier Highway and Fritz Cove Road / South Entrance to University Alaska Southeast (UAS)
- Glacier Highway and Harbor Road
- Glacier Highway and Mendenhall Loop Road
- Glacier Highway and Mendenhall Loop Wye

- Mendenhall Loop Road and Mendenhall Loop Wye
- Mendenhall Loop Road and UAS North Entrance.

Glacier Highway and Harbor Road, Glacier Highway and Mendenhall Loop Road, Glacier Highway and Mendenhall Loop Wye, and Mendenhall Loop Road and Mendenhall Loop Wye are one system of intersections, but are evaluated individually.

From the counts, we determined a system wide AM and PM peak hour. Permanent Traffic Recorder (PTR) data from stations along Glacier Highway (3 Mile Egan, 16 Mile Glacier, and Riverside) revealed that the AM peak hour varied from 6 to 7% of AADT, and the PM peak hour ranged from 8.5 to 10% AADT. The 30th highest hour, usually the design hour or condition of concern, ranged from 13 to 15.4% AADT and occurred near the PM peak.

We had AADT information for 2001. From the AADTs developed for years 2009, 2019, and 2029, we interpolated AADTs for each corridor segment for the year 2002. We found that the sum of 2002 AM peak turning movements on the main street approaches of each intersection fell within the target range of 7% of the estimated 2002 AADTs on the approach links. For example, at the intersection of Glacier Hwy and Fritz Cove, the sum of movements entering and leaving the eastbound approach is 602 vehicles. The sum of movements entering and leaving the westbound approach is 669 vehicles. The interpolated AADT for the Glacier Hwy between Harbor Drive and Fritz Cove is 8294 vehicles and 7% of that value is 580 vehicles. For the Glacier Hwy between Fritz Cove and Engineer's Cutoff, the estimated 2002 ADT is 12,393 vehicles, and 7% of that is 867 vehicles. The sums of counted turning movements, 602 and 669, fall in the range of 7% AADT, 580 to 867. In a similar methodology, we factored the 2002 PM turning movement counts to represent a 30th highest for the year.

Once we had established 2002 peak hour turning movements, we multiplied each intersection approach turning movement by the percentage of estimated traffic volume growth on each approach link to determine future year turning movement counts. For instance, to establish year 2009 eastbound through and right turn movements at Glacier Hwy and Fritz Cove Road, the 2002 eastbound through and right at Glacier Hwy and Fritz Cove Road were multiplied by 1.27, the anticipated rate of growth on the segment of Glacier Hwy between Harbor Road and Fritz Cove Road from year 2002 to year 2009. The 2002 Eastbound left, turning into UAS, was multiplied by the anticipated rate of growth in UAS traffic between year 2002 and year 2009. We assumed the University traffic would remain the same at the south entrance, and increased the traffic volumes at the north entrance to match the south, as a worst-case scenario. That way, we could determine levels of service for the north entrance if the University is successful in diverting most of the traffic to the north, and levels of service at the south entrance in case they are not successful. We also assumed that the northbound left turn at Mendenhall Loop and UAS entrance would be the dominant movement on that approach, using roughly a two-thirds split.

Appendix J presents future turning movement volumes for the intersections. These volumes reflect current directional distribution traffic patterns and circulation changes discussed in the forecast section. In conclusion, these forecasted turning movements would occur during the peak times, an average morning peak and a 30th highest evening peak, at the intersections if no other system links are provided.

3.1.2.1.2 Operational Performance

We use capacity analysis to determine operational performance. The capacity analysis was performed in accordance with the procedures outlined in Transportation Research Board Highway Capacity Manual 2000 (HCM), and employed Highway Capacity Software 2000 (HCS) and Synchro/SimTraffic software. Both of these software packages are true to the methodology in HCM.

In urban and suburban areas, the capacity of a system is generally constrained by the capacity of the system's intersections and uninterrupted capacity methods generally do not apply. However, Glacier Highway through the Auke Bay Corridor has no control constraints of an interrupted facility. Therefore, this is a hybrid of uninterrupted and interrupted facilities and we evaluate intersection capacity and segment performance.

3.1.3 Intersection Evaluation

Capacity analysis for a facility yields operational performance that is defined as level of service (LOS). For signalized and unsignalized intersections, LOS relates to the control delay of a vehicle. Control delay includes initial deceleration delay, queue move-up time, stopped delay, and final acceleration delay.

The methodology for unsignalized intersections only computes LOS for the minor movements of the intersection, which include the minor street approaches under sign control, or major movements that must yield to oncoming traffic, such as left-turning traffic. Unsignalized LOS is defined as follows (HCM Exhibit 17-2):

LOS A: =10 seconds of control delay per vehicle
LOS B: >10 and =15 seconds of control delay per vehicle
LOS C: >15 and =25 seconds of control delay per vehicle
LOS D: >25 and =35 seconds of control delay per vehicle
LOS E: >35 and =50 seconds of control delay per vehicle
LOS F: >50 seconds of control delay per vehicle

The operational performance measures uses for this analysis are levels of service, control delay, and volume to capacity ratio. Technical Memo 3 established the upper volume to capacity ratio (v/c) value at 0.85, or 85% of capacity. This upper value represents good design practice, in that there is some reserve capacity to absorb surges in volumes or flow turbulence.

Other performance measures that were proposed in Technical Memorandum 3 included queuing penalty and average network speed. These are more meaningful when used in comparing build alternatives to one another or to the no-build alternative. Since we're only evaluating the no-build alternative at this point, we don't use queuing penalty and average network speed.

The American Association of State Highway and Transportation Officials (AASHTO) A Policy on the Geometric Design of Streets and Highways (Exhibit 2-32) recommends that urban and suburban arterial, similar to Glacier Highway, should be designed to operate at a LOS C or better. However, within the Chapter VII, Rural and Urban Arterials, AASHTO states "Heavily developed sections of metropolitan areas may necessitate the use of level of service D."

Table 4 summarizes intersection level of service by movement. This would represent the no-build performance of the project intersections with future traffic volumes. Detailed performance measures, LOS, v/c, and delay, are presented in Appendix K.

Table-4

Auke Bay Corridor Turning Movement LOS Summary						
Intersection	Approach	Year	2002	2009	2019	2029
Glacier Hwy/ Fritz Cove / UAS South Entrance	eastbound left	AM	A	A	A	A
		PM	*B*	*B*	*B*	*C*
	westbound left	AM	A	A	A	B
		PM	*A*	*A*	*A*	*B*
	northbound left/through/right	AM	B	C	C	F
		PM	*E*	*F*	*F*	*F*
	southbound left	AM	C	C	D	E
		PM	*F*	*F*	*F*	*F*
Glacier Hwy/ Harbor Rd	northbound left/through	AM	A	A	A	A
		PM	*A*	*A*	*A*	*A*
	eastbound left/right	AM	B	B	B	B
		PM	*C*	*C*	*D*	*F*
Glacier Hwy/ Mendenhall Lp.	southbound-inbound (modeled as westbound left)	AM	B	B	C	C
		PM	*C*	*D*	*F*	*F*
Glacier Hwy/ Mendenhall Lp Wye	eastbound left/ through (inbound)	AM	*A*	*A*	*A*	*A*
		PM	*A*	*A*	*A*	*B*
	southbound right	AM	A	A	A	A
		PM	B	B	C	C
Mendenhall Lp/ Mendenhall Lp Wye	eastbound left	AM	A	B	B	B
		PM	*B*	*B*	*C*	*C*
Mendenhall Lp/ UAS North Entrance	westbound left	AM	A	A	A	A
		PM	*A*	*A*	*A*	*A*
	northbound left/ right	AM	A	B	B	B
		PM	*B*	*B*	*C*	*D*

Table 4 points to several areas of concern. The minor, cross-street approaches on the Glacier Highway-Fritz Cove Road-UAS South Entrance intersection have poor LOS, which continues through the life of the project.

The southbound-inbound movement of the Glacier-Mendenhall Loop intersection will not functional at acceptable levels of service (LOS "F") by 2019, mid-life of the project analysis period. This movement will have long delays and unacceptably long queues will develop. It is likely that the queue spillback would impact the Wye operations as well, and lead to other operational problems at this intersection. The Harbor Road leg of the system intersection also will operate at an unacceptable level of service.

3.1.4 Segment Evaluation

The Glacier Highway through movement is not controlled by signals or signs. It theoretically is in a free flow condition, but nonetheless affected by flow dynamics. The HCM has no tool specifically tailored for lower speed suburban arterial roadways without signals, which is the situation found from Fritz Cove Road to Auke Nu Drive (HCM arterial analysis method requires signalized intersections). Within this segment of the project, there are numerous driveways and significant landside development. This is expected to increase substantially in the future.

However, between Auke Nu and AMHS terminal, the roadway adopts a rural highway character in appearance and in function and fits HCM's two-lane highway model very well. The methods for this analysis are found in Chapters 12 and 20 in the HCM. HCM provides two levels of service (LOS) descriptions for two lane highways according to its class. We determined that Glacier fits the Class II description since it is a users expect moderate speed, arterial, with a significant access function. The LOS for two-lane, Class II highways is defined as follows (from Exhibit 20-4 of the HCM).

LOS A: =40 Percent Time Following
LOS B: >40 and =55 Percent Time Following
LOS C: >55 and =70 Percent Time Following
LOS D: >70 and =85 Percent Time Following
LOS E: >85 Percent Time Following

We applied the two-lane methodology to the Fritz Cove to Auke Nu segment as well. The LOS measure doesn't adequately describe operations for this segment because of the suburban character; however, HCM and HCS two-lane method also provides an estimate of travel speed and v/c ratios. The speed and v/c ratios are indicators of segment performance. As with the intersections, v/c ratios should be 0.85 or less.

HCM's arterial evaluation method gives LOS based upon travel speed. The Fritz Cove to Auke Nu segment most closely represents the HCM's Suburban Principal Arterial functional category (HCM Exhibits 10-3 and 10-4). This is classified as a Class II

(Average Free-Flow Speed of 40 miles per hour) and Exhibit 15-2 provides the following LOS assignment based upon average travel speed.

LOS A: >35 mph
LOS B: >28-35 mph
LOS C: >22-28 mph
LOS D: >17-22 mph
LOS E: >13-17 mph
LOS F: =13 mph

The following tables summarizes 2009, 2019, and 2029 PM peak hour performance measures for the Fritz Cove Road to Auke Nu Drive segment and Auke Nu Drive to AMHS Terminal segment.

Table-5

Begin	**Fritz Cove Road**	**Auke Nu Dr.**
End	**Auke Nu Dr.**	**AMHS Terminal**
Length	**1.4 mile**	**1 mile**
ADT	10,510	5,820
DHV	1,550	870
PHF	0.95	0.95
Computed DHV Factor	+/ -15%	+/ -15%
Directional Distribution Percent	70/30	70/30
Percent Recreational Vehicles	N/A	N/A
Percent Commercial Trucks	4%	4%
Lane Width	12 feet	12 feet
Paved Shoulder	8 feet	8 feet
Terrain	Level	Rolling
Estimated No-Passing Zones	100%	50%
Free Flow (85th reading)	42 mph	56 mph
Average of Mean Speed S_{FM}	37 mph	51 mph
Percent Time Following	82%	68%
Volume/Capacity Ratio	0.51	0.32
Average Travel Speed	27 mph (close to posted speed of 35 mph)	45 mph
Levels of Service	D	C

Table-6

Begin	**Fritz Cove Road**	**Auke Nu Dr.**
End	**Auke Nu Dr.**	**AMHS Terminal**
Length	**1.4 mile**	**1 mile**
ADT	12,410	6,180
DHV	1,850	930
PHF	0.95	0.95
Computed DHV Factor	+/ -15%	+/ -15%
Directional Distribution Percent	70/30	70/30
Percent Recreational Vehicles	N/A	N/A
Percent Commercial Trucks	4%	4%
Lane Width	12 feet	12 feet
Paved Shoulder	8 feet	8 feet
Terrain	Level	Rolling
Estimated No-Passing Zones	100%	50%
Free Flow (85th reading)	42 mph	56 mph
Average of Mean Speed S_{FM}	37 mph	51 mph
Percent Time Following	86%	70%
Volume/Capacity Ratio	0.61	0.34
Average Travel Speed	25 mph	44 mph
Levels of Service	E	D

Table-7

Begin	**Fritz Cove Road**	**Auke Nu Dr.**
End	**Auke Nu Dr.**	**AMHS Terminal**
Length	**1.4 mile**	**1 mile**
ADT	15,710	6,840
DHV	2,250	1,100
PHF	0.95	0.95
Computed DHV Factor	+/ -15%	+/ -15%
Directional Distribution Percent	70/30	70/30
Percent Recreational Vehicles	N/A	N/A
Percent Commercial Trucks	4%	4%
Lane Width	12 feet	12 feet
Paved Shoulder	8 feet	8 feet
Terrain	Level	Rolling
Estimated No-Passing Zones	100%	50%
Free Flow (85th reading)	42 mph	56 mph
Average of Mean Speed S_{FM}	37 mph	51 mph
Percent Time Following	87%	73%
Volume/Capacity Ratio	0.74	0.37
Average Travel Speed	21 mph	44 mph
Levels of Service	E (may be meaningless)	D

Table 5 shows that in the near term, 2009, the performance measures are satisfactory for both segments. However, Tables 6 and 7 show that the Fritz Cove to Auke Nu segment will have a high v/c and low travel speeds developing in 2019 and continuing through 2029. Applying the arterial measures (average speed) to the data in table, we find that the LOS for the Fritz Cove to Auke Nu Drive segment would be “C” in 2009 and 2019, then “D” in 2019.

Although this may be acceptable in a developed urban situation, the high v/c ratio indicates that any turbulence in traffic flows, for example caused by vehicles slowing or stopped to make mid-block driveway or intersection turns, probably will result in stop and go traffic with long delays and queues. We do not have turning volumes at the driveways and minor street intersections along this segment, but level of development and activity is expected to increase so that mid-block turns may become significant.

To estimate the impact of driveway and mid-block turns on this segment, we developed a simulation model of the 2029 corridor using Synchro/SimTraffic. In the model we inserted several driveways with low (10 vph) to moderate (50 vph) turning volumes. Simulations show the average corridor speed to be between 21 and 22 mph, but that the segment between the Fish Lab and the Post Office would have speeds on the order of 17 to 18 mph. Based on that data, level of service declines to D/E. Furthermore, simulations demonstrate the impact of left-turns at driveways. Several long inbound queues (4 to 7 vehicles) often form behind an inbound left-turning vehicle that awaits gaps in the outbound (heavier) traffic stream. As the outbound v/c ratio approaches 1, as does in outbound evening peak hour, the flow becomes uniform and there are fewer opportunities for platoons to form. The absence of platoons will result in fewer acceptable turning gaps. The simulation model clearly reflects this outcome.

The above discussion centers entirely upon Glacier Highway operations. Simulations also show that Mendenhall Loop Road will back up to the north access in the UAS. Similarly, long queues form on Fritz Cove and the south UAS entrance approaches as well. This is unacceptable, and action will have to be taken to resolve the poor operations.

Steps to solve that intersection operation congestion will likely transform the predominately uninterrupted flow model to the interrupted flow model. As that happens, the segment capacity will become limited by the approach capacity, which may be much lower as in the case of an approach to a signalized intersection. If the same number of through lanes is maintained, the v/c ratio must increase, and left-turns into driveways will have an even greater impact on operations than discussed above. On the other hand, interrupted traffic flow may provide more platoons and more gaps for turning traffic and queues behind left-turning vehicles will form less often. However, we don’t expect that the mid-block queue issue would be solved with signalization of the major intersections.

Lastly, we'd expect that with the volumes and queues that we observe in the simulations, there will be an increased likelihood of rear-end accidents at any driveway with moderate turning traffic.

3.1.5 Conclusions

Morning average and evening 30th highest peak hours were evaluated at the project intersections for the years 2002, 2009, 2019, and 2029.

The southbound, inbound approach of Mendenhall Loop Road intersection with Glacier Highway will have an evening peak hour level of service "F" by the year 2019. The Harbor Road approach of its intersection with Glacier Highway will have an evening level of service "F" by 2029. The Fritz Cove and UAS South Entrance approaches to their intersection with Glacier Highway currently have evening peak hour levels of service of "E/F", and will decline to "F" by 2009.

These locations will experience long delays and long queues.

Deterministic HCM methods show that Glacier Highway (evaluated as a two-lane highway) will begin to have operational problems by 2019. Within the Fritz Cove Road to Auke Nu Drive Segment, these operational issues will be exacerbated by mid-block and intersection turning vehicles. Microscopic simulation shows that in 2029, long queues develop behind turning vehicles along Fritz to Auke Nu, and the inbound traffic has an average travel speed of 17 to 18 mph in the evening travel time.

The performance and function of Glacier Highway may be degraded further once steps are taken to solve the intersection issues. Since the roadway is already at a high v/c ratio, it is likely any improvements to intersections will decrease the capacity of the Glacier Highway approaches, which then become the controlling factor in the segment capacity. As such, improvements must be considered on a system basis rather than individual spot locations.

3.2 Safety Analyses

3.2.1 Collisions

The collision severity in Auke Bay Corridor is higher than the statewide average. Furthermore, statistical significance tests indicate that the minor injury collisions are much higher than average. The following trends were identified and warrant attention.

- The Mendenhall Loop Road and Glacier Highway intersection has a high collision rate, with a significant rear-end collision frequency.
- The Auke Nu Drive to AMHS Terminal segment on Glacier Highway has a high collision rate. Contributing factors include road surface conditions and speed.

- Mendenhall Loop Road, between University Drive and the UAS entrance, has a high collision rate. Of particular concern at this location were two pedestrian collisions – one of which resulted in a fatality

- The conflict analysis at Fritz Cove Road and Glacier Highway shows a high number of conflicts between outbound right-turns into UAS and through vehicles.

3.2.2 Conflicts

The conflict analysis at Fritz Cove Road and Glacier Highway shows a high number of conflicts between outbound right-turns into UAS and the through vehicles, but these are expected with large turning volumes. Nonetheless, a right-turn lane would improve the intersection because of the restricted sight-distance and higher approach speeds.

3.2.3 Geometry

It is DOT&PF policy follow AASHTO standards as modified by the *Preconstruction Manual*. Horizontal and vertical alignment, cross section features and intersection configuration should meet the standards established for this project. We identify several substandard geometric elements in the existing conditions section. These substandard features should be addressed in the improvement alternatives. Improvement alternatives that involve new alignments or new sections of roadway should comply with standards. However, strictly applying standards must be tempered with good engineering judgement. The *Preconstruction Manual* includes provisions for waivers from design criteria in situations where it may be necessary to use less than minimum values.

3.2.4 Bicycle & Pedestrian Facilities

Glacier Highway has a sidewalk on the uphill side from Fritz Cove Road to Seaview Drive. According to the Institute of Transportation Engineers (ITE) Technical Council Committee 5A-5 Design and Safety of Pedestrian Facilities (1994), all commercial and industrial streets and residential areas along major arterials should have sidewalks on both sides of the street. Further, the guide states that children walking to school should not cross major arterials without some intersection controls in place.

Glacier Highway and Mendenhall Loop Road have 8-foot shoulders on both sides of the road. The operating width on the shoulders is more than sufficient for bicyclists. The AASHTO Guide for the Development of Bicycle Facilities (1999), recommends a four-foot minimum width with a five-foot width being desirable. The typical riders are children and young adults riding to school and adult recreational riders.

3.3 Goals & Objectives

Goals and Objectives provide a framework for project development. Goals are broad statements that are directed towards desires, attitudes, and ideals. Objectives are specifically related to goals and are measurable with criteria, an attribute with numeric

units (minimum radius, lane width), or as a binary outcome (yes or no, meets or fails). Criteria determine if an alternative satisfies objectives and will serve as this Project 's Performance Measures.

In a sense, the goals and objectives developed by CBJ and the DOT&PF provide big picture, area wide guidance. The ABCor goals and objectives focus on the local community needs. This project's goals and objectives are compatible with City and Borough of Juneau (CBJ) and DOT&PF policies, goals, and objectives.

CBJ's Area Wide Transportation Plan is discussed below.

3.3.1 CBJ's Area Wide Transportation Plan

CBJ's goals and objectives can be found in the Mission Statement of their 2001 Area Wide Transportation Plan. Preparation of the Area Wide Transportation Plan was a collaborative effort involving the CBJ Transportation Steering Committee, staff from the City and Borough of Juneau, staff from the DOT&PF, and the consultant, Kittelson & Associates, Inc. The stated principals that guided the Plan were presented in the Mission Statement. Those principals shown below have particular application and priority for ABCor alternative development.

Public safety is of paramount concern.
Previous land use planning provides the starting point.
Our community can offer an excellent quality of life to its residents.
Surface transportation relies on interconnected modes of travel.
The community's transportation system must provide people with more transportation choices.
Efficiency in the system can be improved.
Balancing transportation needs and environmental concerns is achievable.
Vehicles require facilities that work efficiently.
Bicycles provide a low-cost alternative to vehicles.
Travel by foot needs to be safe and convenient.
Public transit has a significant role in moving people.
Improving the transportation system can be costly.

3.3.2 ABCor's Project Goals and Objectives and Performance Measures

Figure 2 illustrates the ABCor goals and objectives.

ABCor Goals and Objectives are consistent and compatible with CBJ's AWTP Mission Statement, DOT&PF's Transportation Policies, and SATP Goals. We present the project performance measures in Appendix L.

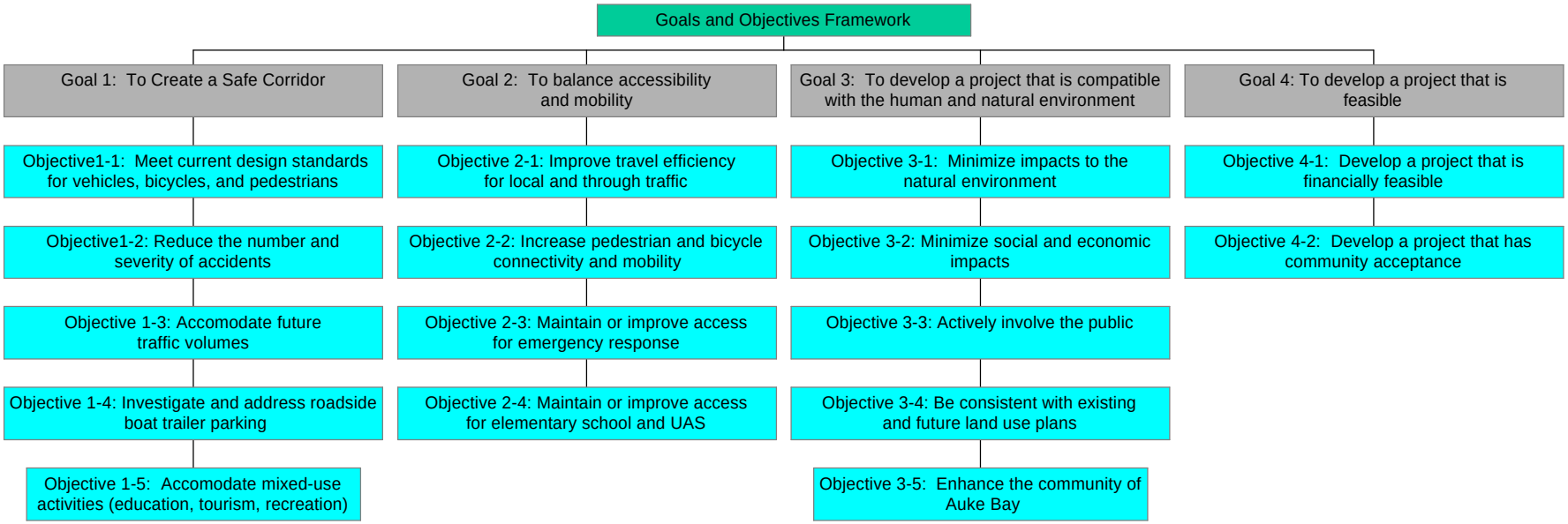

Figure 2 – Goals and Objectives Framework

Auke Bay Corridor Reconnaissance Study
Public Involvement Plan

In order for public involvement to be effective, it must begin with clearly defined, project-related goals that focus on the specific issues to be addressed, the particular kinds of input needed and the "public" that needs to be involved. This document describes the goals of our public involvement plan and the implementation.

Goals:

- Verify the basis for the project
- Establish the legitimacy of our problem solving and decision making process
- Get to know the Potentially Affected Interests (PAI's)
- Identify and understand problems
- Generate alternative solutions
- Articulate and clarify key issues
- Facilitate two-way information exchange
- Primary goal is to obtain community input into and acceptance of our eventual preferred alternative.

Implementation:

1. Citizens Advisory Committee (CAC)
2. Public Meetings
3. Introductory Newsletter
4. Project Mailing List
4. Media strategy
5. Displays

1. CAC

The CAC is a valuable information source. We want to hear their ideas, concerns and how they see the issues from a users perspective. This is an advisory group and the Department is the final decision making authority. However, the CAC will have the opportunity to voice their opinions to the Department prior to any decision making.

The committee will have about 15-20 members. USKH will develop a list of potential members and seek DOT&PF approval. USKH and DOT&PF will together contact potential members and ask for their participation and give them information about the first meeting. The committee will meet five times.

Following is a schedule and listing of meeting objectives:

Wednesday, November 13, 2002 from 7:00 to 9:00 p.m.
CAC Meeting #1 – Introduce goals and objectives
Introduction of project staff and committee members
Background information on the project
Solicitation of information on key issues in the project area

Wednesday, January 8, 2003
CAC Meeting #2- Presentation of condition and needs assessment findings
Discussion of draft preliminary purpose and need statement
Goals and Objectives Ranking Exercise

Wednesday, April 1, 2003
CAC Meeting #3- Discussion of results from first public meeting
Preliminary purpose and need statement revisited
Presentation and discussion of alternatives
Confirmation of details for next day's Public Meeting #1

Tentative date: Wednesday May 14, 2003
CAC Meeting #4- Preliminary purpose and need statement revisited
Presentation and discussion of short list of alternatives

Tentative date: Wednesday July 9, 2003
CAC Meeting #5- Discussion of results from second public meeting
Preliminary purpose and need statement revisited
Presentation and discussion of summary of recommendations
Draft implementation plan discussion
Confirmation of details for next day's Public Meeting #2

Refreshments will be provided at each meeting.

2. Public meetings

The purpose of the public meetings is to:

- Provide timely and adequate opportunities for public participation;
- Exchange information with a wide variety of people in the community; and
- Give DOT&PF a chance to monitor community reactions to agency policy, proposals and progress.

The format for the public meetings will be flexible to allow interested parties a chance to attend the public meeting at a time that is convenient for them and in a format of their liking. The public meetings will start at 4:30 p.m. in the afternoon with an open house format. Staff starting at 6:00 p.m will give a half hour presentation. The meeting will again revert to an open house format until the closing time of 8:00 p.m.

Following is a public meeting schedule and a listing of meeting objectives:

Public Meeting #1- Introductions of project staff
Presentation of project goals and objectives

Solicitation of information on key issues in the project area
Presentation of condition and needs assessment findings
Presentation of draft preliminary purpose and need statement
Presentation of alternatives
Solicitation of reactions to presentations

Public Meeting #2- Presentation of changes of preliminary purpose and need
Presentation of short list and preferred alternative
Discussion

All public meetings to be held on the Thursday evenings, after the CAC meetings preferably at the same location

3. Introductory Newsletter

The purpose of the newsletter is to introduce the project, solicit public participation, and provide information about our project development process. It is intended to target a broad public beyond those who attend public meetings. It will present how to get involved in the project development process and contact the project development team.

The newsletter will be written in plain English. The newsletter format will be eye catching, interesting and fun. The newsletter will include project contacts, our web site address, and date, time and location of the first public meeting and an explanation on how to get put on our project mailing list. It may include project maps, photos, history, fast facts.

The newsletter will be sent to local government, resource agencies, the media, special interest groups and our mailing list. It will also be sent to the Mendenhall Station, the Auke Bay Station and Rural Routes 15, 19 and 20. Route 15 covers Glacier Highway and out the road. Route 19 covers Fritz Cove Road. Route 20 covers Back Loop Road.

4. Project Mailing List

USKH has assembled a preliminary project mailing list. Individuals and groups on the list currently include:

- City and Borough of Juneau
- Central Council of Tlingit and Haida
- Local businesses
- Local residents
- Local schools
- Local churches
- Environmental groups
- Recreation groups
- Capital City Weekly
- Juneau Empire
- Radio stations
- Federal and State resource agencies

- Freight companies

Individuals and groups on the mailing list will be notified by postcard of upcoming public meetings one week prior to every meeting. Persons may be added or deleted from the list at any time with a request to USKH.

5. Media strategy

The purpose of our media strategy is for DOT&PF take an active role in disseminating information and proactively form our message about our project. DOT&PF will invite reporters to be briefed before each public meeting. Reporters will be provided with in-depth background on our project, which will prepare them to analyze our approach and other project issues.

Public service announcements (PSA's) will be prepared for all radio stations to advertise the public meetings. Where possible, DOT&PF staff will record the PSA's in their own voices and personally invite the public to attend meetings.

Two weeks prior to the public meeting, advertisements will be published in the Juneau Empire Sunday and Wednesday editions. Sunday, two days prior, and the day before meeting an advertisement will be run on the local cable television information channel.

Flyers will be posted in public locations along the project corridor by USKH one week prior to the public meeting.

6. Displays

Two sets of displays will be assembled for each public meeting. One set will be used for meetings and one set will be displayed in local public areas. The display set at the meetings will have a supply of sticky notes in order for meeting participants to stick comments on the displays. The traveling set of displays will be set up in the local shopping malls, the University of Alaska Southeast library, the Auke Bay Post Office or Auke Bay Elementary School. The traveling set of displays will have comment forms and contact information if people would like to mail us a comment of contact us personally.

ABCor
CAC Members

Name	Home Phone Number	Another Phone Number	Fax	email	Address	
Dick Deems	789-7401		790-3531	dickd@ptialaska.net	Box 210196	Auke Bay, AK 99821
Rick Wolfenberger	789-7312				Box 210627	Auke Bay, AK 99821
Steve Ignell	789-6029		789-6094	steve.ignell@noaa.gov	11305 Glacier Hwy.	Juneau, AK 99801
Tom Satre	789-6362				2266 Industrial Blvd	Juneau, AK 99801
Don Reid	463-9329		463-3298	dreid@aml.lynden.com	100 Mt. Roberts St.	Juneau, AK 99801
David Newton, ABES Site Council	463-1775		463-1751	newtond@jsd.k12.ak.us	10014 Crazy Horse Drive	Juneau, AK 99801
Paul Kraft	465-6461		465-1715	Paul.Kraft@uas.alaska.edu	11120 Glacier Highway	Juneau, AK 99801
Mark Graves	465-6517		465-6328	jsmfg@uas.alaska.edu	11120 Glacier Highway	Juneau, AK 99801
Ron Klaudt	789-0433	463-2416	463-2416	rklaudt@gci.net	Box 211322	Auke Bay, AK 99821
Gary Jenkins	789-9621		780-6303	gjenkins@gci.net	Box 210194	Auke Bay, AK 99821
Ron Flint	789-0839	789-0956	789-3635	ron@nuggetoutfitter.com	12070 Cross Street	Juneau AK 99801
Gary "Pepper" McCallon	789-9267				Box 210162	Auke Bay, AK 99821
Bill Cole	789-2811				Box 211047	Auke Bay, AK 99821
Jeff Pilcher	789-3226		789-3105	pilcher@gci.net	12020 Glacier Highway #3	Juneau, AK 99801
Nancy Lehnhart	789-5421			lehnhart@gci.net	11755 Glacier Highway	Juneau, AK 99801
Wendy Wolf	586-1961		790-4062	wwolf@alaska.net	924 C Street	Juneau, AK 99801
Keith Kelton	789-1377			kakelton@aol.com	1040 Fritz Cove Rd	Juneau, AK 99801
Dick Rountree	789-5170		790-2961	leasing@gci.net	Box 33183	Juneau, AK 99803
Eric Twelker	789-9895	789-6800	789-3742	twelker@alaska.net	10430 Dock Street	Juneau, AK 99801

Auke Bay Corridor Reconnaissance Study
Citizen Advisory Committee Meeting
Wednesday, November 13, 2002
7:00 to 9:00 p.m.
UAS, Hendrickson Annex, Room 104

Agenda

7:00 – 7:30 p.m.	Introductions of project staff and committee members (Julianne Hanson)
7:30 – 7:35 p.m.	Purpose of the CAC (Chris Morrow)
7:35 – 7:45 p.m.	Project – past present and future (Chris Morrow)
7:45 – 8:45 p.m.	Draft goals and objectives (Lance Mearig)
8:45 – 9:00 p.m.	Public testimony
9:00 p.m.	Adjourn

Auke Bay Corridor Reconnaissance Study
Citizen Advisory Committee Meeting
Wednesday, November 13, 2002
7:00 to 9:00 p.m.
UAS, Hendrickson Annex, Room 104
NOTES

(*note: CAC Member comments and questions underlined and italicized)

Start time: 7:05pm
CAC Members Present:

Dick Deems
Rick Wolfenberger
Tom Satre
Don Reid
Ed Engquist (for Paul Kraft)
Mark Graves
Ron Klaudt
Gary Jenkins
Ron Flint
Juanita McCallon (for Pepper McCallon)
Bill Cole
Jeff Pilcher
Nancy Lehnhart
Keith Kelton
Dick Rountree
Eric Twelker

Project Staff Present:

Chris Morrow, P.E. – DOT SE Region Preliminary Design Group Chief
Pat Carroll, P.E. – DOT SE Region Reconnaissance Engineer
Lance Mearig, P.E. – USKH Inc. Project Manager
Julianne Hanson, P.E. – USKH Meeting Facilitator
Randy Kinney, P.E. – Kinney Engineering Traffic Engineer
Kathy Peterson – USKH Recorder
Dustin Johnson – USKH Staff Engineer

Introduction and Welcome – Julianne Hanson
What would you like this project to accomplish? What are your concerns?

- *Getting in and out of Caroline is a problem at times.*
- *Fritz Cove Road and Glacier Highway intersection is bad, especially for left turns onto Glacier Highway.*

- *Why is DOT considering building new roads when not maintaining existing roads?*
- *Line of sight is bad at Fritz Cove Road and at DeHart's*
- *Concern for pedestrians, especially children also that improvement be aesthetically pleasing.*
- *Delivery trucks come to Auke Bay, egress/ingress at Marina is a problem.*
- *Accessibility to student building along the corridor is a concern.*
- *General concerns after 25 years living in Auke Bay.*
- *Left-turn lane into NOAA, Lab- pedestrians on shoulder when there is not a trail*
- *No action for 5-6 years concerns me.*
- *Kids at Auke Bay School need to be considered, traffic really grown over the last three years.*

Purpose of the CAC – Chris Morrow
Why we're doing this - want to do better than in the past, need public input. There will be public meetings, newsletters, check the website! www.dot.state.ak.us → Project Information Index → Auke Bay Corridor (ABCor) Study

What is the CAC? Representatives of the users of the corridor. Role is as an informed advisory so you can help make key decisions, let others know what's going on.

What you're not: we won't be voting, not a democracy.

There will be 5 meetings total and we will get the info to members at least a week in advance.

We want the public's input.

Project Past, Present, Future – Chris Morrow
History: Glacier Hwy built in 1920 gravel roadway, then extended to Tee Harbor and beyond. Paved in 1950, Ferry terminal built in the early 60's plus several reconstructions

Auke Nu Drive reconstruction – was once a log corduroy road

Paved to Tee Harbor in 1959

This project has been sidetracked in the past. Public Meeting 5 to 6 years ago, then 2 to 3 years ago to begin Reconnaissance Study.

1980 to 1982 another study looked at realignment through UAS campus. UAS chancellor was favorable to the realignment at that time but nothing happened.

Back in 1982-83 CBJ & DOT had plans to build marina facilities from Auke Bay to the Ferry Terminal. Are there still plans? Is this project the first step toward fulfillment of the earlier plans?

Future STIP – plan document – construction 2009 is what we're shooting for. If we work through environmental process, get the project ready and work for 11 million dollar estimate according to STIP (statewide transportation improvement plan or process)
Pointed out the project area and what would be included.
Public involvement plan
Gathering information & prep data.
Goals and Objectives – we're in that stage now
Purpose and need phase will be next
Alternative Ideas stage to come up with a preferred solution
Study will be complete in 1 year

What can the money used for?

Federal highway administration funding is for capital improvements. Can be used for design, acquisition, construction process, and administrative

Draft Goals and Objectives - Lance
This is a work in progress – started planning in September
Took this graph to Steering Committee meeting yesterday and they added some comments.
The goals and objectives will become the basis for the purpose and need – the basis for environmental documentation
Go over the goals and people need to speak up.

Goal 1 – to create a safe corridor – one change brought up by project steering committee was to clarify – meet current design standards for all modes (including pedestrians and bicyclists).

What are DOT's concerns?

Chris says we'll work up to it.

Are we fixing the existing road or creating a new one?

We do not know yet.

Reduce the number of accidents and make it safer.

We will add this to the objectives list as we progress.

Goal 2 – We want to balance accessibility and mobility, improve efficiency of local and tier traffic. Increase pedestrian and bike accessibility or mobility. Also emergency response should be reasonable.

Goal 3 – To develop a project that is compatible for both human and natural development

Minimize impact to natural environment as well as social and economic impacts. Actively involve the public. Be consistent with future land use plans e.g.: commercial loading dock facility.

Goal 4 – Needs to be feasible, then financial feasibility, community acceptance were added.

Do we already have an idea of what we're going to do?

We know of some problems and based on the number there are a range of possibilities.

Project should anticipate future traffic growth and be designed to accommodate it. Should future traffic be under Goal 1 (Create a safe corridor)?

Safety addresses the control of the traffic flow. We will address the traffic in the next 20 years.

Will fast ferry change the traffic conditions?

There is a lot of traffic to and from the Greens Creek Mine Ferry; makes it hard to get out from side streets.

Is this area residential? Is it coastal development?

Add to goal 3 (Develop a project that is compatible with the human and natural environment) – not just about function – we want to keep it residential-ish and mesh with the businesses. What ever is done it needs to look and feel nice. It needs to fit in to the Auke Bay area.

History of Auke Bay – once saw a plan from 1982 that showed all commercial development along the highway and no residences. It was a DOT plan that was not favorable. Make sure this is NOT going to happen.
Wants to see public access to the water.
Says DOT has not been truthful in the past. Skeptical.

Auke Bay is a beautiful and special area. We should consider developing a park in the area as part of this project.

Can we handle future volume of traffic with existing facility?

We don't know yet.

Would like to put the school into the graph somewhere.

Keep things aesthetically pleasing. Make it a special category.

Will DOT take property if needed?

Yes.

Add access to Auke Bay School and UAS as separate sections.

There are dangerous spots in the corridor. The corner by NOAA has killed many people as has the corner by the flower nursery.

Randy spoke about the Y section as hazardous. The traffic records do not indicate the actual hazards one perceives as when one drives the road.

Tourism hasn't been brought up – bike tours operate on Fritz Cove Road, UAS area, and Back Loop. Need to add to objectives.

There is a new mini-park located across the road from the Thai Restaurant. Project should include access to mini-park.

What is the plan for UAS and how will that affect this project?

Yes, we will coordinate with the university's plan.

CBJ Areawide Transportation Plan (AWTP) ideas should be considered in this project.

Yes, we will consider ideas from AWTP as well as other plans.

There are several planned developments that will be accessed through the project area (NMFS facility at Lena, Fish processing plant by ferry terminal). Need to account for traffic from these future developments.

Parking of trailers is tearing up the shoulder of road and is a safety concern. They block site distance when pulling out of Caroline Street.

Add to Goal 1 – projections of future traffic
Add to Goal 2 – improve access to school and UAS
Add to Goal 4 – area enhancement, make sure it fits in and looks good.
Add a new goal? – tourism issues need to be addressed

Add trailer-parking issues.

Is UAS going to add parking?

Who owns the property in the area?

Will roundabouts be considered?

Yes.

Next CAC meeting will be held in January.

Auke Bay Corridor Reconnaissance Study
Citizen Advisory Committee Meeting
Wednesday, January 8, 2003
7:00 to 9:00 p.m.
Smith Hall, Chapel by the Lake

Agenda

7:00 – 7:05 p.m.	Re- introductions of project staff and committee members, brief summary of last meeting (Julianne Hanson)
7:05 – 7:15 p.m.	Goals and Objectives – Evaluation Exercise (Julianne Hanson)
7:15 – 8:15 p.m.	Condition and Needs Assessment – Presentation of Findings (Randy Kinney and Lance Mearig)

- Collision Data
- Intersection Conflict Analysis
- Origin-Destination Study
- Geometric Analysis
- Traffic Forecasts

8:30 – 8:45 p.m.	Evaluation Exercise Results
8:45 – 9:00 p.m.	Public testimony
9:00 p.m.	Adjourn

Auke Bay Corridor Reconnaissance Study
Citizen Advisory Committee Meeting #2
Wednesday, January 8, 2003
7:00 to 9:00 p.m.
Chapel By the Lake, Smith Hall

NOTES

(Note: CAC Member comments and questions *underlined and italicized*)

CAC Members present:

Nancy Lehnhart
Tom Satre
Keith Kelton
Richard Rountree
Eric Twelker
Ron Flint
Ron Klaudt
Bill Cole
Steve Ignell
Don Reid
David Newton
Dick Deems
Pepper McCallon
Gary Jenkins
Paul Kraft

Members of the public in attendance:
Bob Millard
Chip Morris
Nathan Bishop, CBJ Community Development Department

Project Staff present:

DOT&PF Southeast Region
Chris Morrow, P.E., Preliminary Design Group Chief
Michael Lukshin, P.E., Regional Traffic Engineer, Project Manager

USKH, Inc.
Lance Mearig, P.E., Project Manager
Julianne Hanson, P.E., Meeting Facilitator
Dustin Johnson, Staff Engineer

Kinney Engineering
Randy Kinney, P.E., Traffic Engineer

7:05pm **Introduction and Welcome** – Julianne Hanson

Summary of last meeting with a description of the objectives.

Chris Morrow introduced Mike Lukshin to the CAC and explained that Mike would be taking over the project management responsibilities for him for the Auke Bay Corridor Study.

Goals and Objectives Ranking Exercise

A questionnaire containing several goals and objectives that were discussed in the previous meeting was given to the CAC members. Members ranked each objective on how important they felt it was to the project. The questionnaires would be tallied and the results would be presented later in the meeting.

7:16pm **Condition and Needs Assessment**

Collision Data – Randy Kinney
Sixty-seven accidents have occurred in the study area from 1996 to 2000. A possible geometric solution is to flatten curves (larger radii).
If the curves are flattened could speeds increase in those areas?

Intersection Conflict Analysis – Randy Kinney
Conflict studies are used to verify collision potential at locations where accident history isn't conclusive.
Drivers turning left out of Fritz Cove Road (FCR) are currently patient but as volumes pick up they may become impatient and conflicts could increase.

The city bus pullout hinders sight distance with the FCR intersection.

Origin Destination Study
Traffic patterns were observed during morning and evening commuting hours.
It would be useful to know the traffic patterns of the pedestrians in the Auke Bay area.

Geometric Analysis – Lance Mearig
The following geometric elements were evaluated for compliance with current design standards:
–Highway curvature
–Highway grades
–Cross section (lane/shoulder/sidewalk width)

–Intersection sight distance

The beginning of project (BOP) needs to extend back to Engineers Cutoff Road. Chris Morrow said that Planning set the limits but some alternatives may extend the project limits.

This study must address the current and future traffic volumes. Traffic volumes fluctuate drastically with the seasons in Auke Bay. What is the variance from school traffic in the fall versus the boat traffic that occurs in the summer?

Concern was raised over the design speed in the area of the school and post office. 40 mph is too fast for that area.

Currently pedestrians and bicyclists already use their own paths and the paths are not always the sidewalks. The only crosswalk within the whole project is by the school. Future plans need to include pedestrian crosswalks at locations people want to cross (near the college). Bicycle traffic often do not stop when coming down the (Backloop) hill.

Traffic Forecasts – Randy Kinney

Future forecasted traffic volumes will help dictate what type of design suits Auke Bay the best.

UAS intends to close the south UAS entrance to all but delivery traffic. This will drastically change the traffic patterns at that intersection and increase traffic at the Y intersection.

Is there a definite relationship between volume versus risk (safety)? How does the season affect accidents? The data shows that there are more accidents in the winter.

What is the ideal capacity of a two lane road? Randy Kinney answered: The capacity varies greatly depending on character of the road (rural versus urban). The number of intersections and driveways affects capacity.

It was requested for the next meeting a map displaying right of way so people can get an idea of where the right of way is and give them a chance to review the information. People would also like to see who owns what land within the corridor.

8:23pm **Break**

8:34pm **Discussion of Goals and Objectives Ranking Exercise** – Julianne Hanson

The results from the Goals and Objectives Ranking Exercise was shared with the CAC (See summary of results). Members were most concerned with safety and

meeting current design standards. Members were least concerned with the boat trailer problem. The question regarding being consistent with existing and future land use plans had the highest standard deviation, which may indicate that this objective is confusing.

Concerned was raised about the future land use plans because people own a lot of land along the Corridor.

We should not get hung up on zoning but on the actual land use patterns. It was also said that objective 3-4 (future land use plans) was too vague. Its hard to know what the statement means.

The boat trailer issue shouldn't be overlooked. It isn't possible to fix everything in finding the best solution.

About 10 percent of the people who work at the fish lab have been involved in an accident. The majority of these accidents are rear-ends when somebody is turning into the fish lab and the accidents often go unreported.

It may be a better approach if the money spent on this project were spent on the problem areas like the fish lab turning lane and the "Y" intersection and leave the good areas alone. This would concentrate funds for the problem areas and prevent wasting money in areas that currently work fine.

It may be interesting to see how scores may change over the course of the project as more information becomes available. It may be beneficial to group some of these objectives together.

8:49pm **Public comment**

Bob Millard had no comment. He was there on behalf of Chapel by the Lake and is interested in alternatives that impact the Chapel.

Chip Morris stated that the design should not be driven by what people want to drive. Safety and data gathered today is pushing DOT to use the 85th percentile speed which would mean a by-pass. There are only two bypass routes, so Chip will also save his comments until there are some alternatives.

Nathan Bishop- CBJ Planner was in attendance for the second half of the meeting. At the conclusion of the meeting Nathan said they should protect land use patterns. Nathan also mentioned he couldn't find the meeting site and requested the next meeting be posted better.

Future CAC meetings and Involvement- Julianne Hanson

The next CAC meeting will be April 1st at the Chapel by the Lake in the Smith Hall (same place).

There will also be a public meeting on April 3rd also in Smith Hall at the Chapel by the Lake.

Auke Bay Corridor Study

An Interim Report on Traffic Issues to the Citizens Advisory Committee

DOT&PF Southeast Region

Prepared by USKH / Kinney Engineering

Auke Bay Corridor Study

Accident Study

- Work to date
  - Collected accidents for 5 most recent years
  - Past speed studies
  - Analysis/additional studies
  - Discussion paper
- 67 Accidents in the study area between 1996 and 2000

Auke Bay Corridor Study

Speeds

Segment	Posted	Average of Mean Speeds	Average of 85th Percentile Speeds
BOP to NOAA Labs	45 MPH	45 MPH	49 MPH
NOAA to Waydelich Creek	35 MPH	37 MPH	42 MPH
Waydelich to Ferry Terminal	45 MPH	51 MPH	56 MPH
Ferry Terminal to EOP	50 MPH	51 MPH	56 MPH

Auke Bay Corridor Study

As a result of speed, the severity of accidents on ABCor are higher than expected

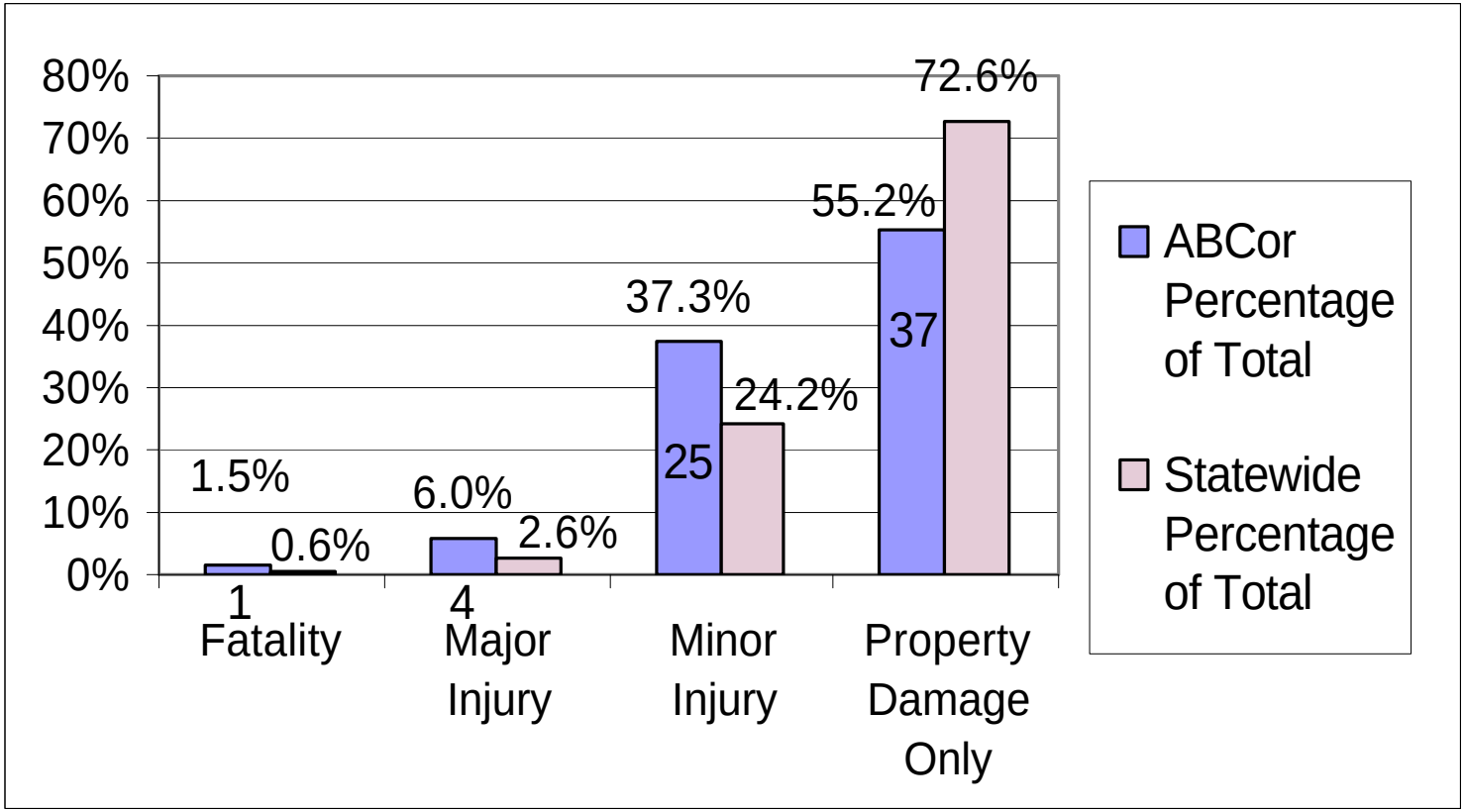

Auke Bay Corridor Study

Methods

- Accident studies:
  - Look for abnormal collision patterns
  - Seek causes or contributing factors
  - Propose countermeasures

Auke Bay Corridor Study

Abnormal Collision Patterns

- Statistical approach
  - Compare based on traffic volume
    - Rates (accidents/million entering vehicles for intersections, accidents/million vehicle miles for segments)
  - Compare accident types and contributing factors to known populations.
- Cluster analyses- Accident frequency (number of accidents) and location

Auke Bay Corridor Study

Accidents at Intersections

Intersection	Guardrail	Head On	Head On Sideswipe	Left Turn	Overtaking Sideswipe	Parked	Rear End	Right Angle	U turn	Int. Total	Accident Rate (Acc/MEV)	Rate >UCL and Significant?	Accident Type(s) Needing Attention?
Ferry Terminal Access and Glacier Highway	1						4	2		7	0.95	No	
Mendenhall Loop Wye, Mendenhall Loop Rd, Harbor, and Glacier Hwy		**1**	**1**	**2**		**1**	**10**	**3**		**18**	**1.19**	**Yes**	**Rear-Ends are statistically significant**
Fritz Cove, UAS South Access, Glacier Hwy	1		1		1		2	3	1	9	0.44	No	
Mendenhall Loop Rd and UAS North Access							1			1	0.24	No	
Accident Type Totals	2	1	1	2	1	1	17	9	1				

Auke Bay Corridor Study

Wye Collision Diagram Cluster Analysis

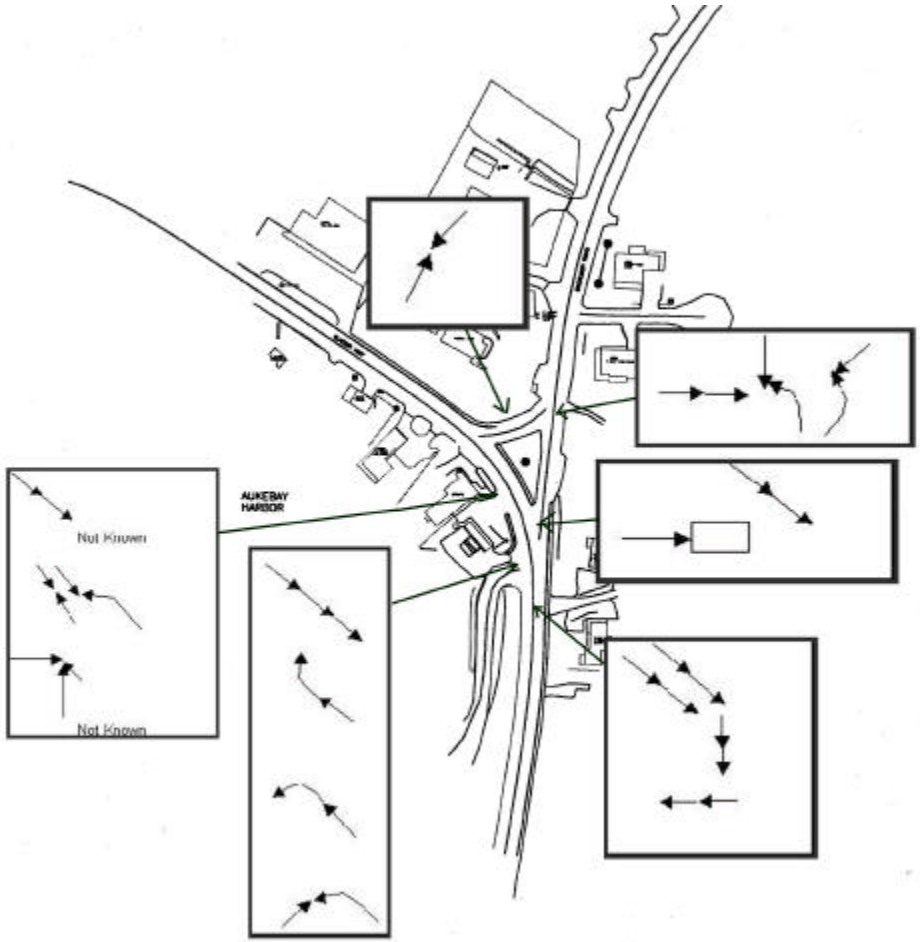

High Rate, Significant Rear Ends Contributing Factors at the Wye

Contributing Factors:

- Sight distance on curve, inbound can't see because of development
- Speed on curve
  - >40 mph actual
  - designed for 30 mph
- Intersection configuration: skewed with overlapping conflicts
- No turn lanes

Auke Bay Corridor Study

Reconfiguration Alternatives

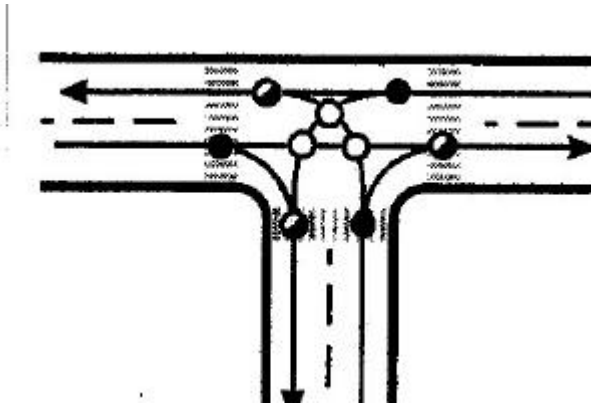

Realign into 2 “Tee” intersections, would include turn lanes

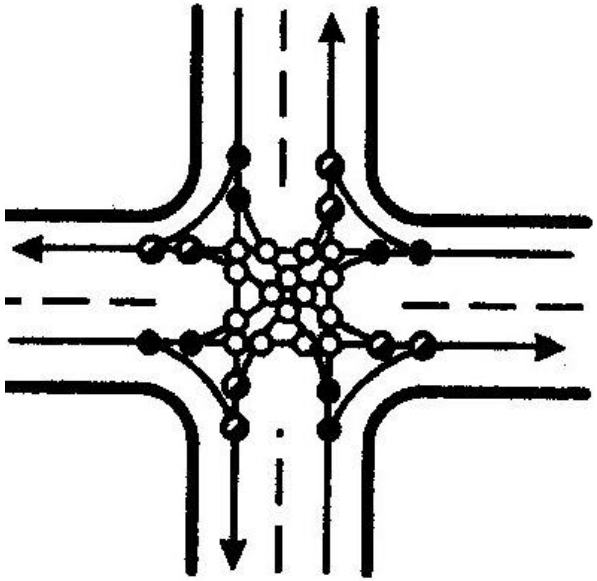

Realign into a 4-way intersection, include turn lanes, significant impacts.

Tee intersection has 9 conflict points (total 18 with 2). A standard 4-way intersection has 32 conflict points.

Auke Bay Corridor Study

Modern Roundabout

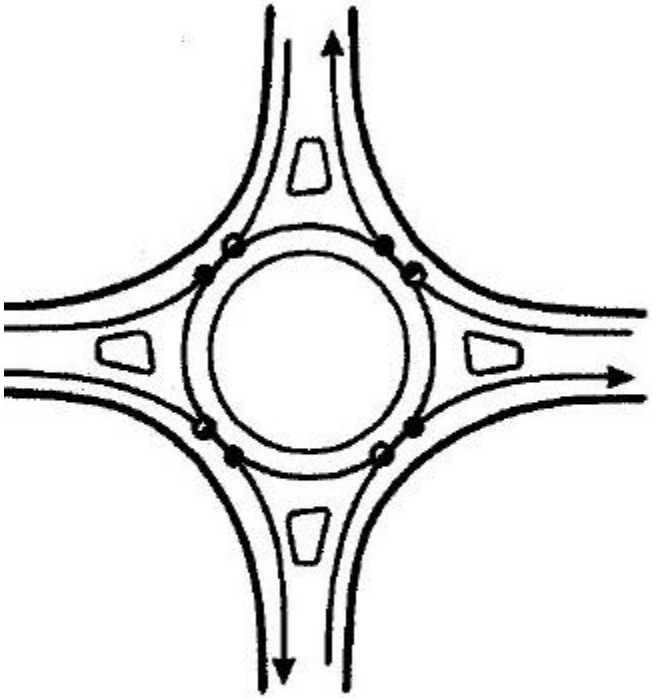

- 8 conflict points vs. 18 for the pair of "Tee" or 32 for 4 – way.
- Would slow traffic in corridor (15 to 20 mph)
- May be constrained by topography or right of way.

Auke Bay Corridor Study

Highway Segments

Segment	Ditch	Embankment	Guardrail	Head On	Other	Overturn	Parked	Pedestrian	Rear End	Right Angle	Tree	Segment Total	Accident Rate (Acc/MVM)	Rate >UCL and Significant?	Accident Type(s) Needing Attention?
Glacier Hwy, Ferry to Auk Nu Dr.	**4**	**2**		**1**		**2**			**1**			**10**	**2.45**	**Yes**	**9 Single Vehicle Loss of Control, 1 Head On.**
Glacier Hwy, Auk Nu Dr. to Harbor			2		1	1			2	1		7	0.87	No	
Glacier Hwy, Harbor to Fritz Cove Road			2			1	1		3			7	0.85	No	
Mendenhall Loop Rd, University Drive to UAS North Access	**2**						**2**	**2**		**1**	**1**	**8**	**7.98**	**Yes**	**2 Pedestrian, 5 Single Vehicle Loss of Control.**
Mendenhall Loop Rd, UAS North Access to Glacier Hwy															
Accident Type Totals	6	2	4	1	1	4	3	2	6	2	1				

Auke Bay Corridor Study

Auke Nu to the Ferry Terminal

- 10 accidents (loss of control) and 4 injuries, significant
- Speeds are >55 mph, but posted at 45 mph
- Some curves along the section are designed for 40 mph to 50 mph ➔
- 9 of the 10 accidents happened in snow and ice surface conditions
- **<u>Solution?</u>** Realign road to match speed?

Auke Bay Corridor Study

Mendenhall Loop, University to UAS Access

- 8 accidents, intersection has a high accident rate
- Most of the accidents occurred under poor road surface conditions (7 of 8)
- Most at night (5 of 8)
- There were more severe accidents here on a percentage basis than found in the statewide population (1 fatal, 1 major injury, 3 minor injuries)

Auke Bay Corridor Study

Mendenhall Loop, University to UAS Access

- High pedestrian activity, provide pathways and better crossings?
- Crest of vertical alignment may restrict sight lines?
- Warrant illumination?

Auke Bay Corridor Study

Conflict Study

- Conflict studies are used to verify collision potential at location where accident history isn't conclusive
- In response to CAC Meeting #1, we did a study of the Fritz Cove / UAS Access Intersection
- Counted conflicts over 2 days, 2 hours in morning, 2 hours in evening on both days

Auke Bay Corridor Study

Fritz Cove Conflicts

- Lots of right-turn conflicts caused by traffic slowing and turning into UAS. (20/hour in AM, 40/hour in PM)
- Sight distance restricted didn't seem to cause many conflicts ➔

Auke Bay

Corridor Study

Origin-Destination Study

- Looked at travel patterns for morning and evening traffic
- Useful in determining where traffic would go if other routes were provided
- Also very useful in determining future traffic volumes

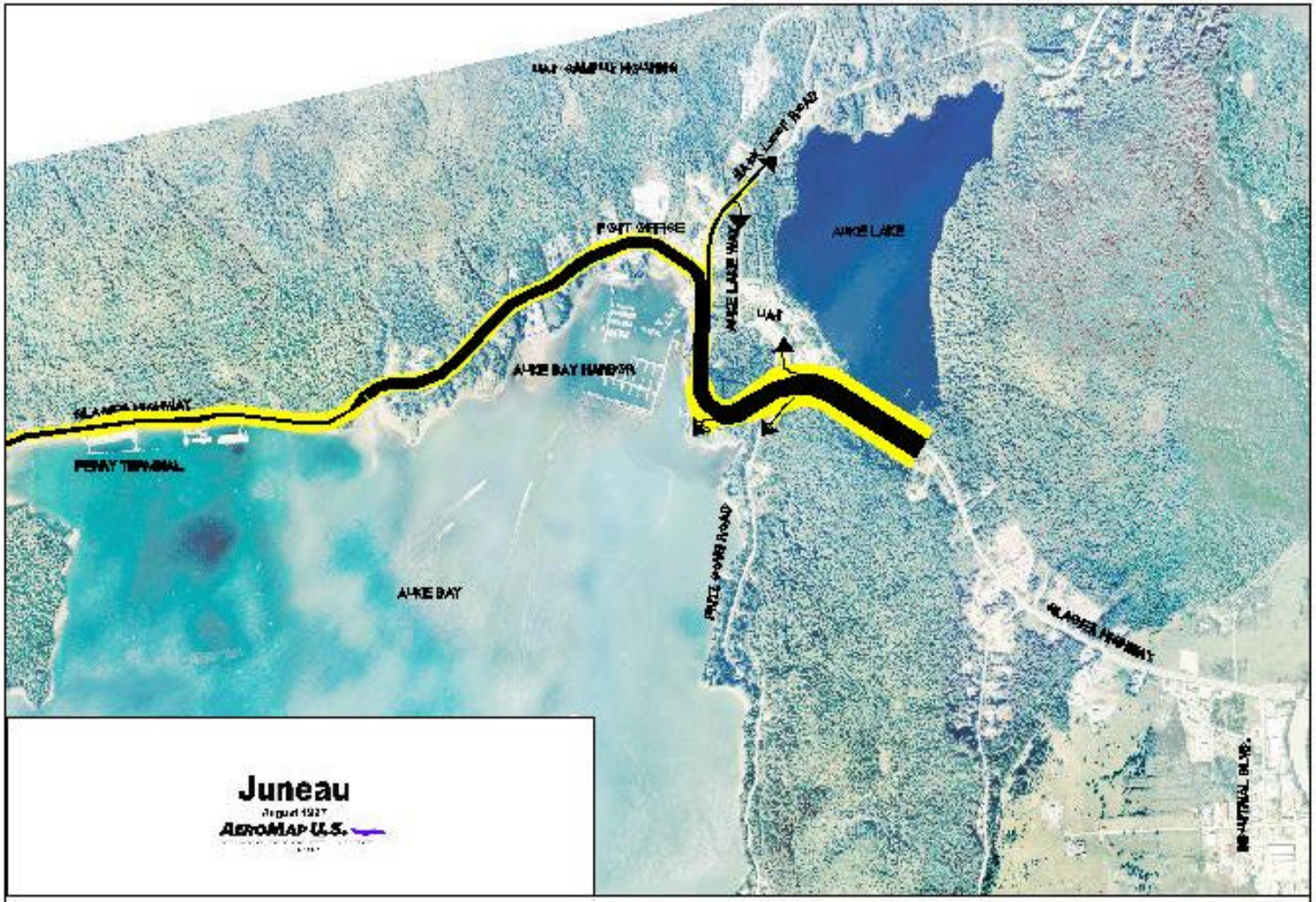

GLACIER HIGHWAY
RECONNAISSANCE STUDY

TRAVEL PATTERNS & DISTRIBUTION
NORTH BOUND GLACIER HIGHWAY

Auke Bay Corridor Study

O-D Study

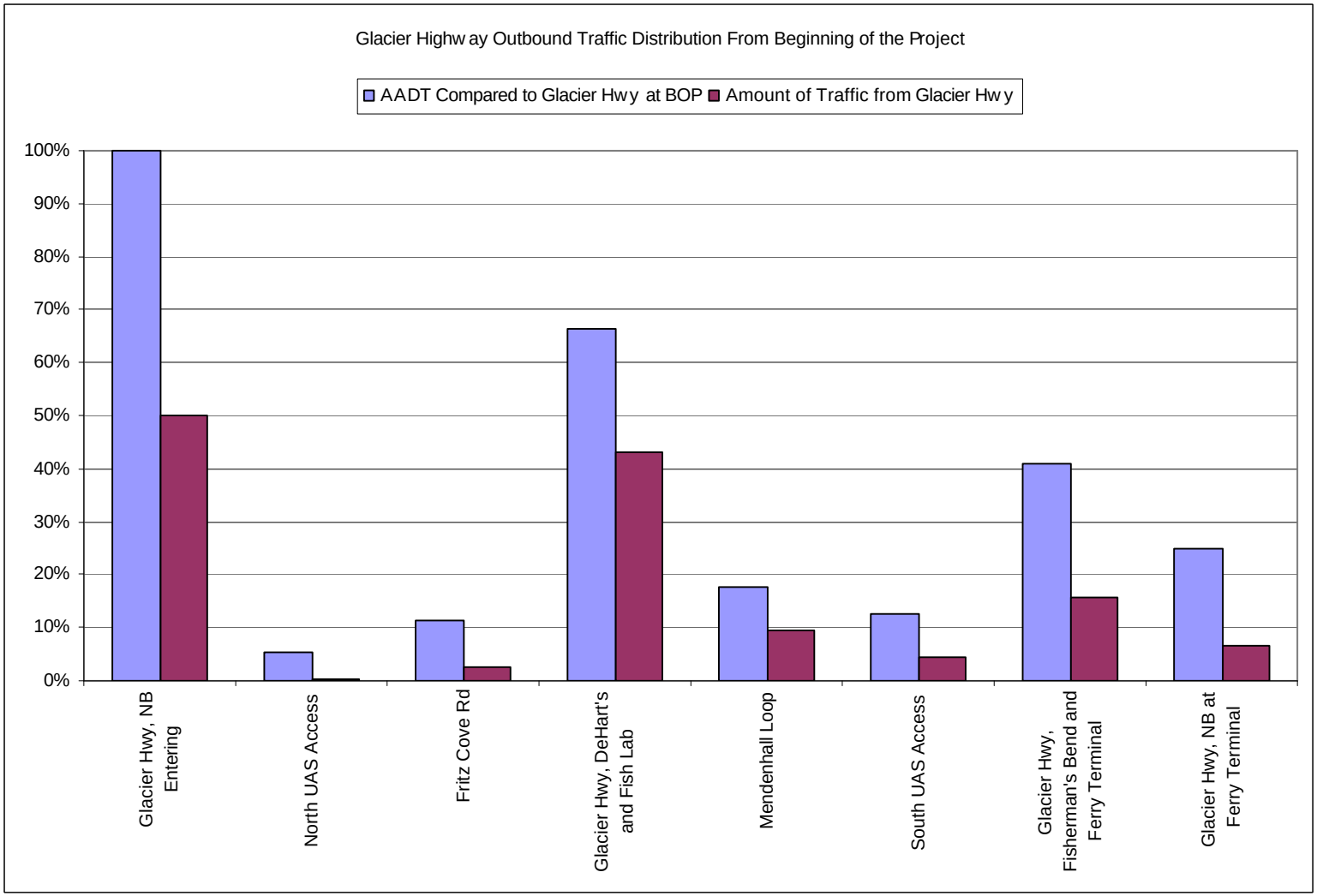

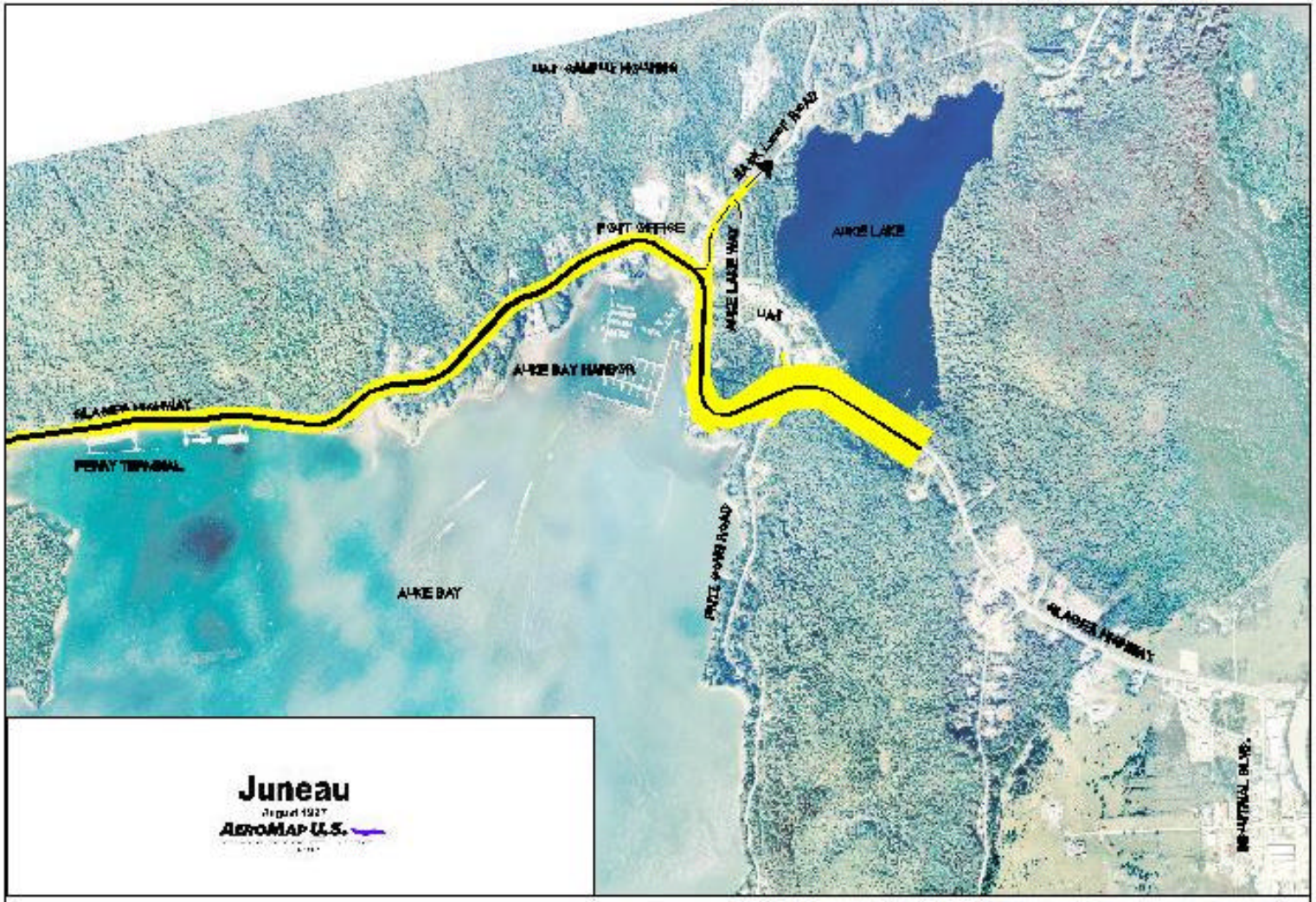

GLACIER HIGHWAY
RECONNAISSANCE STUDY

TRAVEL PATTERNS & DISTRIBUTION
SOUTH BOUND GLACIER HIGHWAY

Auke Bay Corridor Study

O-D Study

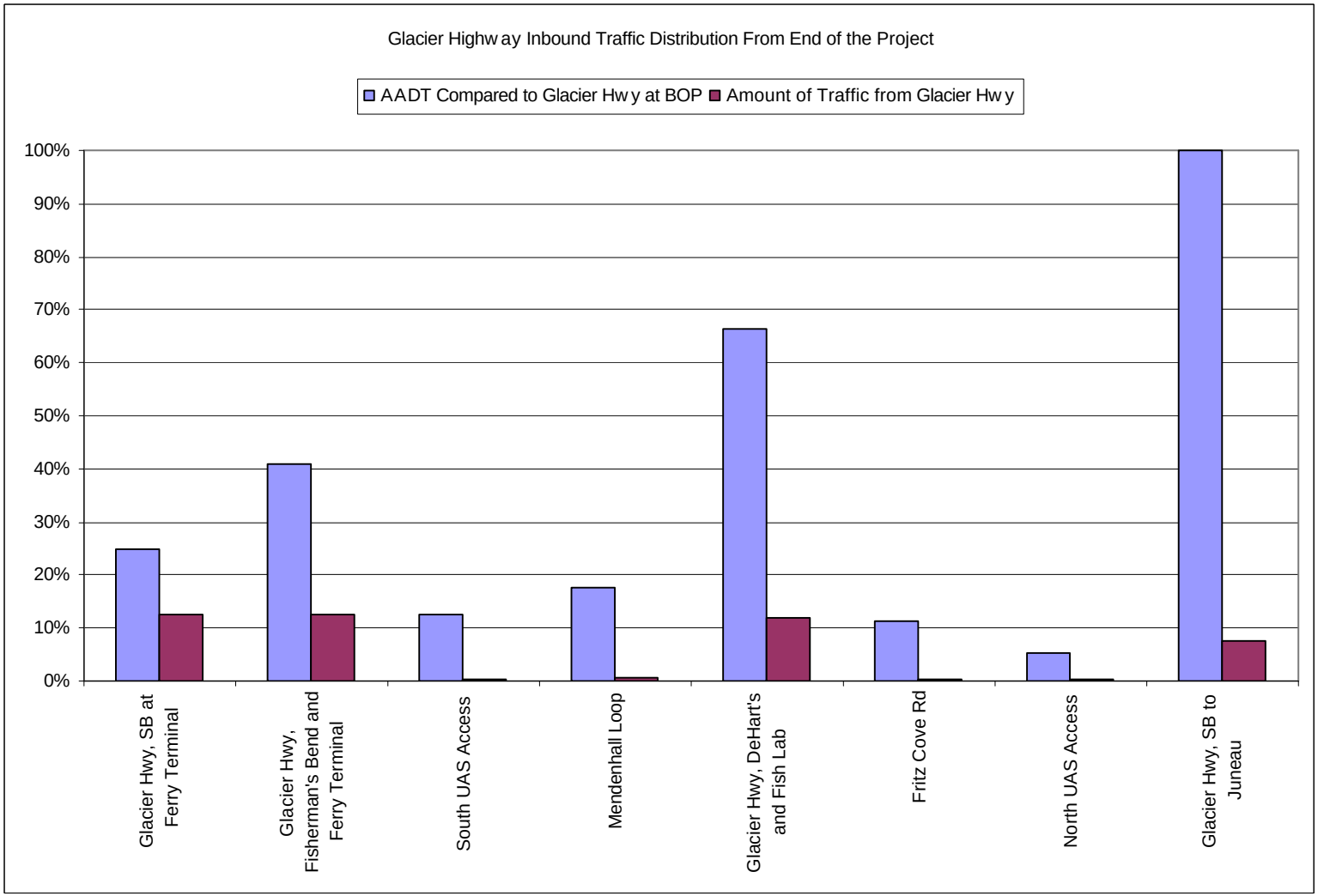

Auke Bay Corridor Study

Geometric Analysis

- We evaluated the following geometric elements for compliance with current design standards:
  - Highway curvature
  - Highway grades
  - Cross section (lane/shoulder/sidewalk width)
  - Intersection sight distance
- We used the following design speeds for analysis:
  - 40 MPH - Fritz Cove Road to Waydelich Creek
  - 50 MPH – Waydelich Creek to the ferry terminal

Auke Bay Corridor Study

Geometric Analysis

- Three horizontal curves do not meet standards:
  - Near Auke Bay Lab (33 MPH vs. 40 MPH)
  - Near Post Office (35 MPH vs. 40 MPH)
  - Near Waydelich Creek (35 MPH vs. 40 MPH)
- Grades meet standards.

Auke Bay Corridor Study

Geometric Analysis

- Cross sections meet minimum standards, with the exception of some accessibility issues.

- Bicycle and pedestrian standards are open to more interpretation, but additional features are likely warranted.

Auke Bay Corridor Study

Geometric Analysis

- Intersection sight distance meets minimum standards throughout the corridor.
- Several intersections have less than desirable sight distance:
  - Fritz Cove Road
  - Harbor Access Road
  - DeHart's Driveway

Auke Bay Corridor Study

Geometric Analysis

- Several locations within the corridor experience limited sight distance due to temporary obstructions (i.e., parked vehicles):
  - DeHart's Driveway
  - Caroline Street

Auke Bay Corridor Study

Traffic Volume Forecasts

- We've developed 2009, 2019, and 2029 Average Annual Daily Traffic (AADT) for four segments within the project corridor
- AADT can be further refined into hourly volumes and intersection turn movements
- Use volumes to select applicable design standards and criteria

Auke Bay Corridor Study

Forecast Methods

- Develop models that:
  - Look at past traffic growth and project that trend into the future
  - Forecasts using the relationships between traffic and demographics and economic trends
  - Forecasts based on land use changes and development
- Our model combines all three approaches. We also added or adjusted traffic for some extraordinary events outside of the model. (e.g. the Road to Skagway, Lena Pt. Development, etc.)

Auke Bay Corridor Study

Past Traffic

Year	➔ Between ➔	Auke Bay Ferry Terminal	Auke Nu Drive	Harbor Drive/ Auke Bay Float Road	Fritz Cove Road
		Auke Nu Drive	Harbor Drive/ Auke Bay Float Road	Fritz Cove Road	Engineers Cut-Off Road
1994		3,900	5,200	8,000	10,000
1995		4,010	5,390	8,320	10,200
1996		4,010	5,360	8,420	10,240
1997		4,014	5,485	9,096	11,640
1998		4,126	5,590	7,804	11,853
1999		3,986	5,460	7,684	11,743
2000		4,097	5,612	7,863	11,743
2001		4,117	5,668	7,977	12,013

Auke Bay Corridor Study

Crossroads

Year	Fritz Cove Road Approach To Glacier Highway	College Road- UAS South Entrance	College Road- UAS North Entrance	Mendenhall Loop Road- Glacier Highway To UAS Entrance	Mendenhall Loop Road, East Of UAS Entrance	Harbor Drive/ Auke Bay Float Road
1994	1,300	1,700	700	no data	1,700	1,400
1995	1,320	1,220	540	no data	1,510	2,540
1996	1,320	790	540	1,650	1,790	850
1997	1,316	1,728	543	2,121	1,955	850
1998	1,316	1,728	661	2,121	1,955	850
1999	1,316	1,728	661	2,121	1,915	850
2000	1,352	1,525	661	2,121	2,048	850
2001	1,352	1,525	661	2,121	2,352	850

Auke Bay Corridor Study

Traffic Forecasts

Year	ADT Element	➔ Between ➔	Auke Bay Ferry Terminal	Auke Nu Drive	Harbor Drive/ Auke Bay Float Road	Fritz Cove Road
			Auke Nu Drive	Harbor Drive/ Auke Bay Float Road	Fritz Cove Road	Engineers Cut-Off Road
2009	Base		4,300	4,400	8,900	13,400
	Juneau Access		700	700	700	700
	Ferry		350	350	350	350
	Development		370	370	60	100
	UAS		100	100	500	500
	2009 AADT		**5,820**	**5,920**	**10,510**	**15,050**
2019	Base		4,400	4,900	10,100	15,300
	Juneau Access		850	850	850	850
	Ferry		350	350	350	350
	Development		480	480	310	590
	UAS		100	100	800	800
	2019 AADT		**6,180**	**6,680**	**12,410**	**17,890**
2029	Base		4,800	6,100	13,000	19,800
	Juneau Access		1,000	1,000	1,000	1,000
	Ferry		350	350	350	350
	Development		590	590	560	1,060
	UAS		100	100	800	800
	2029 AADT		**6,840**	**8,140**	**15,710**	**23,010**

Hanging issues from the CAC No. 2 meeting.

Thank you for your thoughtful questions at our last CAC meeting. During our de-brief meeting that followed the CAC meeting, the project team realized that there were several questions that we didn't answer very well. Some questions were unexpected at this stage of the project (you're ahead of us) and would have been answered further down the road. Quite honestly, some of the questions weren't answered well because we just didn't know.

Here are some of the issues left hanging that we've identified. Please let us know if there are others, and thanks for the thoughtful participation.

If we improve the curves, won't speeds increase?

This good question came up a couple of times during the presentation. We wouldn't expect speed to increase if we improve the curves that are substandard because speeds are really being set by the rest of the alignment. Speeds are already higher than the posted speed limit signs. One of the big problems with the corridor is that most of the alignment can handle the higher speeds. The problem with intermediate sub-standard curves in the alignment is that drivers expect the alignment to be consistent. If most of the alignment tells the driver that 55 mph is okay, (even though the signs say differently) then they don't expect the 40 or 45 mph curve, and loss of control can result. This is even worse when the weather is inclement or the road surface is slick. Speeds in built-up areas can be reduced through thoughtful design and/or traffic calming measures. Examples of these could be reducing lane widths and roadside landscaping/furniture. Simply lowering speed limits does not work without geometric changes that make lower speeds seem reasonable. In summary, correcting the curves probably won't cause speeds to increase, but will make the alignment more consistent and safer.

What are the "Extraordinary Developments" and how do they affect future traffic?

We used the term "extraordinary" to describe development that isn't currently in the corridor, or is of such a scale that it couldn't be forecasted with our base model. Our base model uses population growth to predict traffic growth. We examined potential developments that would not fit into the population-traffic model and estimated the impact on corridor traffic. We called these "extra-ordinary" developments. Included as extraordinary were the Juneau Access Road, Lena Point Subdivision, Increased Ferry Service, UAS enrollment projections and circulation changes, and other major subdivisions.

What did those yellow and black lines mean?

The important thing to know is that of the outbound traffic entering the project near Fritz Cove Road, only about 15% will go to the Ferry Terminal and beyond. Of the inbound traffic at the Ferry Terminal, roughly 65% will continue past Fritz Cove Road into Juneau.

How much traffic will the road carry?

A two-lane road can handle about 1,800 vehicles per hour in each direction at full capacity. As a rule of thumb, the peak hour of the day has about 10% of the daily volume, so that in the year 2029, the 16,000 average daily traffic volume would yield about 1,600 cars per hour for both directions of flow, or about 800 per hour in one direction. Therefore, the roadway would be about ½ of its capacity. However, the roadway doesn't control capacity in urbanized areas. The intersections and driveways interrupt traffic flow and reduce the amount of traffic the roadway can actually carry. We'll provide appropriate traffic control measures and turning lanes at the Wye and Fritz Cove Road intersections to ensure that they will adequately pass the predicted volumes. We also think that a continuous-center-two-way-left-turn land may be appropriate throughout the built-up areas between Fritz Cove Road and Auke Nu Drive. This will greatly enhance capacity because turning vehicles wouldn't block through vehicles, and these lanes have been shown to decrease accident potential in developed areas as well.

ZONING MAP

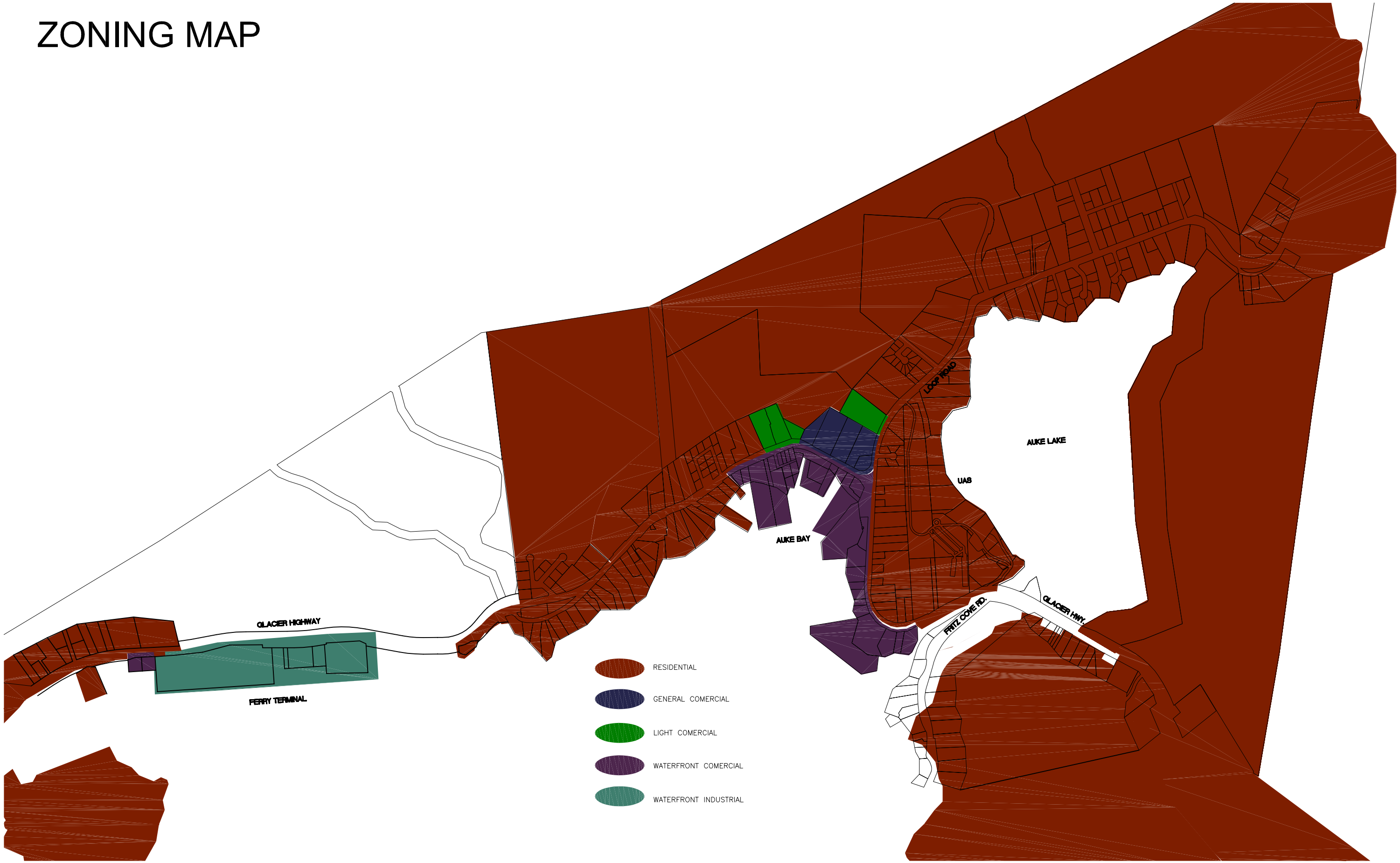
LOOP ROAD
AUKE LAKE
UAS
AUKE BAY
GLACIER HIGHWAY
FRITZ COVE RD.
GLACIER HWY.
FERRY TERMINAL
RESIDENTIAL
GENERAL COMERCIAL
LIGHT COMERCIAL
WATERFRONT COMERCIAL
WATERFRONT INDUSTRIAL

PROPERTY OWNERSHIP MAP

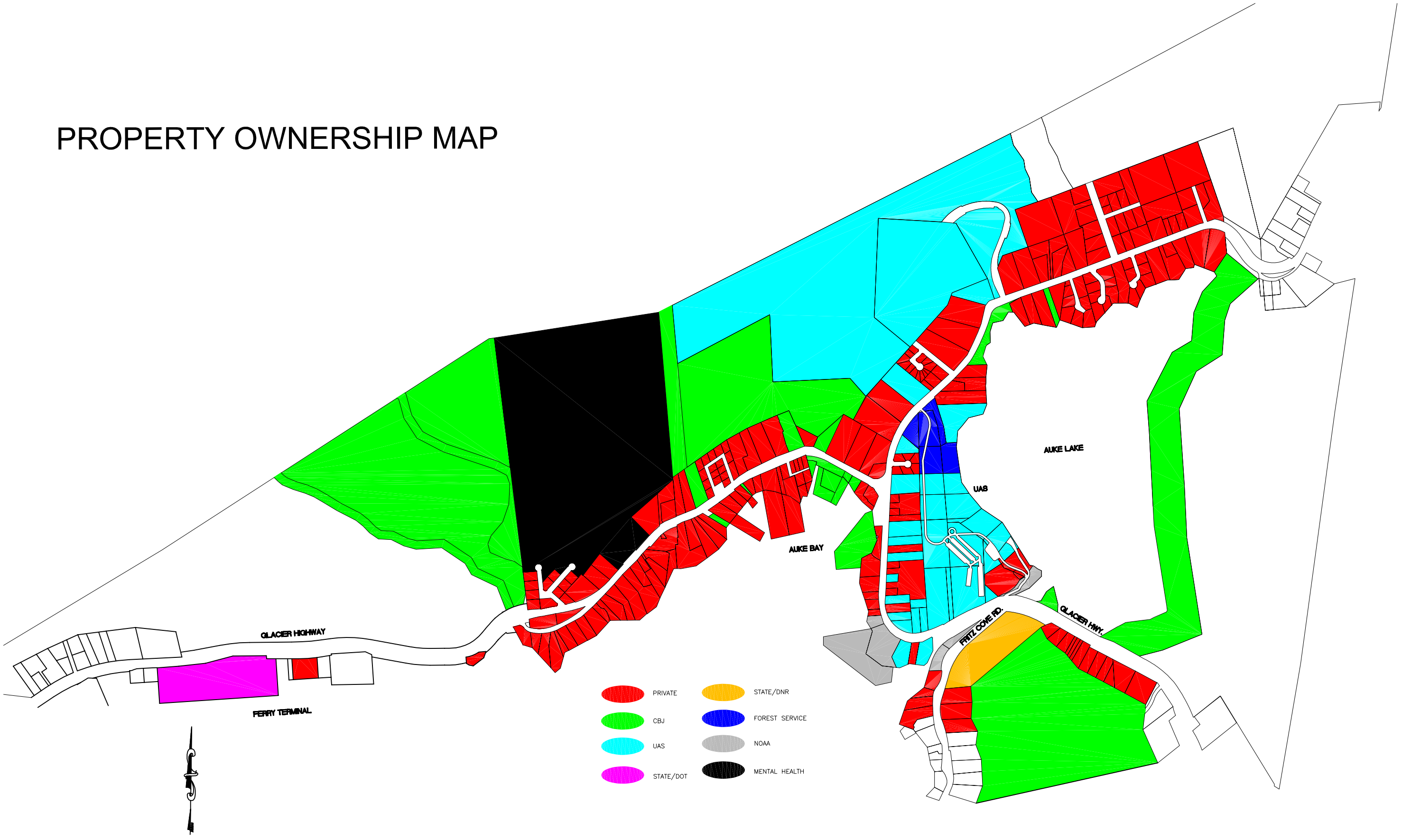

NOT TO SCALE

Auke Bay Corridor
Preliminary Analysis of the Affected Environment

Right of Way

The proposed alternatives will need to be evaluated to determine if temporary or permanent easements, land transfers or relocations would be required. The existing right of way width along Glacier Highway varies but is around 100 feet wide. It is adequate for minor widening and realignment.

Social

Social impacts include adverse impacts to traffic patterns and accessibility, affects to school districts, recreational areas, churches, businesses and emergency services, and affects to special interest groups, minorities and economically disadvantaged.

The University of Alaska Southeast (UAS) and Auke Bay Elementary School are both located along the project corridor. Parking for the Spaulding Meadows trail is located just off Glacier Highway. Boating, bicycling, hiking and kayaking are popular recreational activities in Auke Bay. Chapel by the Lake and Auke Bay Bible Church are also located along the project corridor. The figure on following page shows the locations of schools, parks, churches, businesses and emergency services.

Economic

Auke Bay supports a variety of public, private, commercial and institutional developments. Fisherman's Bend Marina is built on state leased and private tidelands and has boat stalls, a boatlift, fuel dock, marine repair shop, and both covered and uncovered dry boat storage. Fishermen's Bend also includes an office, boating/fishing supply/convenience/liquor store and auto gas pumps on private uplands. DeHart's Marina is on state leased and private tidelands some of which are filled. The marina includes boat stalls, a boatlift, fuel dock, dry storage, and repair yard. On private uplands there is a small/grocery/convenience/liquor store and auto gas pumps. On the uplands side of Glacier Highway there is a building that houses a bar and restaurant, another restaurant and a hair salon.

Auke Bay Corridor Study
Locations of Social and Economic Importance

Local Land Use and Transportation Plans

According to the December 1993 **Department of Natural Resources, Juneau State Land Plan**, Auke Lake will be managed to support the high public values of the lake including research, water quality, habitat restoration, fisheries management, summer and winter recreation, and landings by aircraft.

According to the July 1996**, City and Borough of Juneau, Juneau Parks and Recreation Comprehensive Plan**, a master plan should be developed for the area around Auke Lake. This report also recommends a trail corridor between UAS student housing and Auke Bay School to be considered for bicycle and skiing use. Furthermore, the report recommends the reservation of a trail corridor between the Auke Bay Elementary School and the Spaulding Meadows trail so Auke Bay school parking lot could provide the necessary overflow parking for the trailhead.

According to the **CBJ Areawide Transportation Plan of July, 2001** the forecast transportation deficiencies relating to Auke Bay are that the Glacier Highway is the only arterial through the area as well as the “main street” of the sub-area. Within a relatively congested area, there is a significant difference in travel speeds between motorized vehicles making local or through trips and pedestrians and bicyclists traveling along or across the highway. This area must be designed to adequately serve pedestrians, bicyclists, and local vehicle trips and through vehicle trips.

Further the plan suggests that improvements for Auke Bay could be traffic calming and the construction of a roundabout or traffic signal at the Back Loop Road intersection. This would integrate the intersection with main street/traffic calming treatments through Auke Bay. Traffic calming treatments used may include landscaping, sidewalks on both sides of the street, access management, pedestrian level lighting, bus pullout/shelter, curb extensions and bicycle lanes. A roundabout could serve as a gateway treatment and a traffic-calming device in the school area. The plan also suggests including pedestrian crossing amenities between University of Alaska campus facilities that are separated by the highway.

The **CBJ 1995 Update to Comprehensive Plan** suggests undertaking transportation improvements within Auke Bay to accommodate additional demand resulting from the construction of the ferry terminal, boat marina, and other facilities, as well as the expansion of the University of Alaska. The plan suggests that the proposed corridor should follow the division between low and medium density residential uses where possible.

The plan also suggests evaluating a corridor realignment of Glacier Highway from its intersection with UAS to Auke Bay and encouraging a new driveway for UAS that avoids the Auke Lake Wayside and minimizes adverse traffic impacts.

Finally the plan suggest requiring sidewalks and bicycle paths or lanes along existing or newly constructed arterial and collector streets, where appropriate, to provide safe and efficient access and recreation and to reduce pedestrian/automobile conflicts.

The **UAS Final Draft Executive Summary Campus Facilities Master Plan, February 2002** presents three site concept options. Option 1 would establish the north entrance off Back Loop Road as the only public entrance to the core area of the campus. The existing entrance from Glacier Highway would be used for access to the Church property and emergency/service access for the campus. Options 2 and 2B would develop a new primary entrance off of Glacier Highway to the south of the existing entrance. A bridge would be required over Auke Creek. Option 3 would realign the existing primary entry drive of Glacier Highway and relocates this road within the campus.

According to **Steve Gilbertson, CBJ Lands and Resources Manager**, there is a proposed subdivision in the Pederson Hill area. The proposal calls for the development of 350 lots. There are also an additional 330 lots on the Mendenhall Peninsula that could be developed.

Cultural Resources

Charles M. Mobley and Associates conducted a cultural resource investigation for NMFS in 1996. In his report he investigated the area near Auke Cape (outside of our study limits), the existing NMFS facility, and an undeveloped parcel southeast of the Fritz Cove Road's intersection with the Glacier Highway, about one-half mile east of the present laboratory.

At the existing NMFS facility site he documented two cannery sites and a midden that he felt would be eligible for the National Register. The two canneries were the Auke Bay Salmon Canning Company and the John L. Carlson Canning Company. The canneries were owned and operated by John L. Carlson and his three sons between the years 1916 and 1923. The historic midden from the John L. Carlson cannery is located on the bluff on the UAS lot immediately adjacent to Auke Creek.

At the parcel southeast of the Fritz Cove Road and Glacier Highway intersection he documented eleven culturally modified trees and the Winn Prospect. The Winn prospect was a deposit located in 1882 at the same time gold was discovered in Montana Basin. John Winn and his father Col. William Winn restaked it in 1909. The father-son team employed ten men for an un-recorded length of time. The rock forming the north end of Pederson Hill is mineralized with other ores besides gold, according to local residents and state assays, but a commercial deposit has not been identified. According to Mobley, the Winn Prospect is not likely to be eligible for inclusion of the National Register.

The photograph below was taken by the USFS about 1920. The red arrows point to the Auke Bay cannery on the left John L. Carlson cannery on the right. The green arrow points to the approximate location of the Winn Prospect.

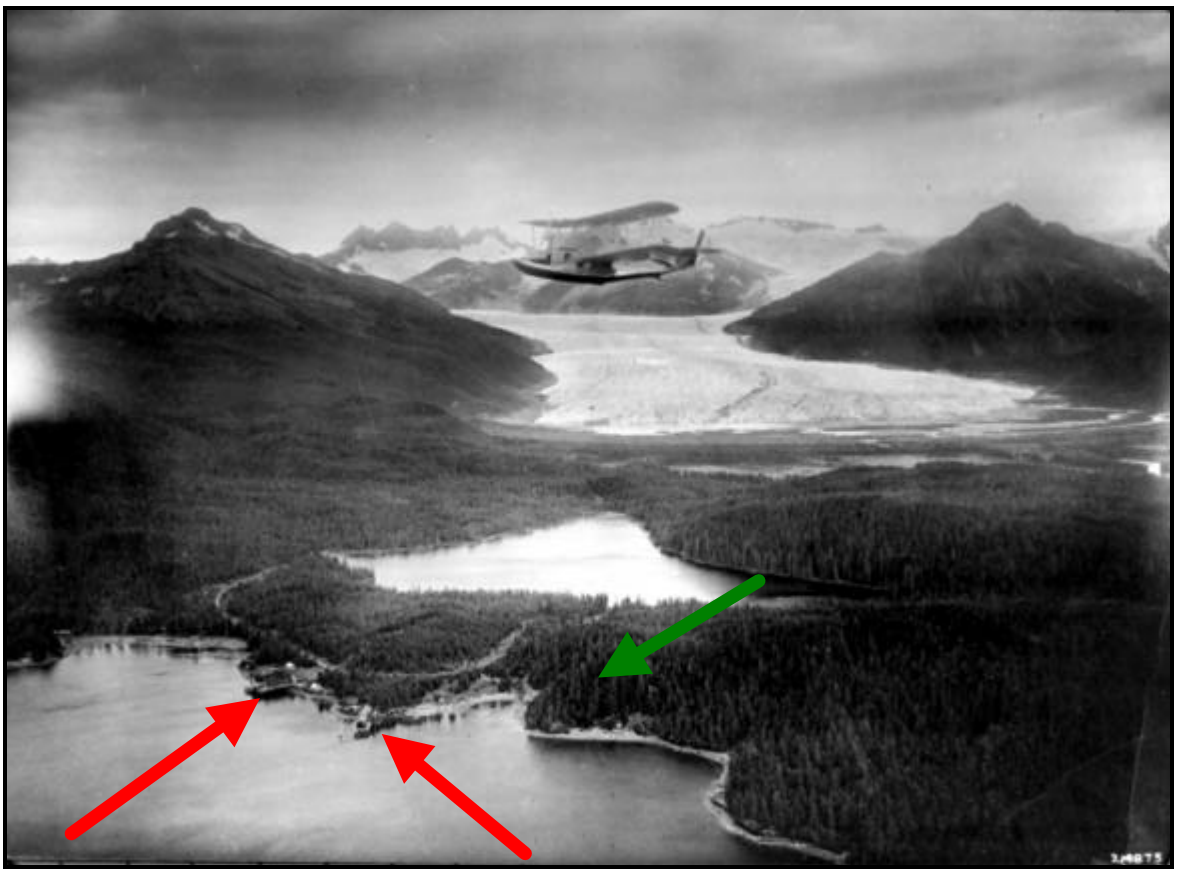

Figure 1 - PCA 207-36-17, Alaska State Library USFS collection

Wetlands

The Juneau Wetlands Management Plan was updated in May 1994. A map from the plan has been reproduced and is presented on the following page. It presents locations of wetlands, wetland categories and stream locations. It does not present Cowardin classification.

Tidelands with dispersed eelgrass beds are also present in the project area. Eelgrass is a marine underwater plant that roots in the sediments of our bays and estuaries, forming meadows in coastal waters. Eelgrass is designated as Essential Fish Habitat under the Magnuson-Stevens Fishery Conservation and Management Act.

The three-dimensional habitat of a healthy eelgrass meadow supports part of the life cycle of herring, mussels, scallops, and crabs. Eelgrass also contributes to the productivity of coastal waters by stabilizing bottom sediments, filtering nutrients and particles out of the water, and by providing sheltered nursery areas for young fish and shellfish. Dead eelgrass decomposes into a detrital "chowder" that is an essential part of the marine food web.

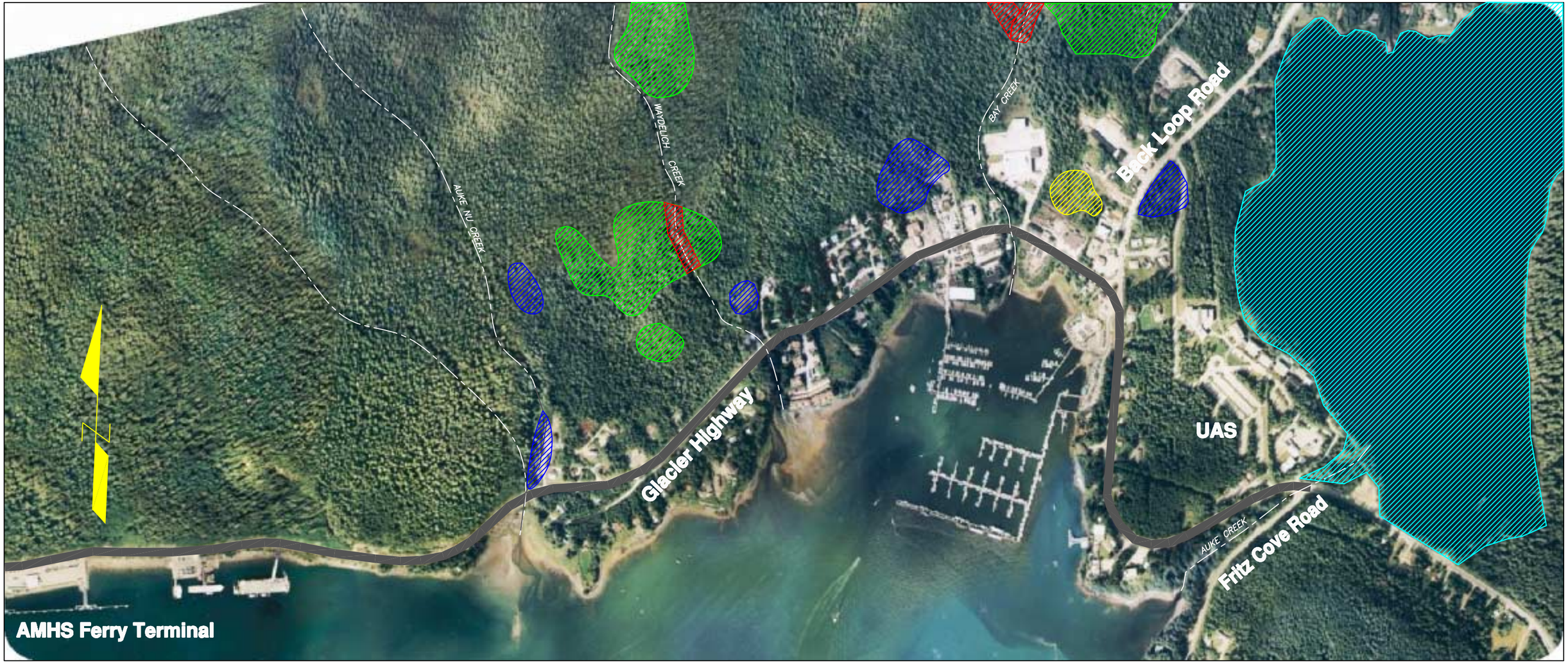

JUNEAU WETLANDS MANAGEMENT PLAN

LEGEND:

- A — ONE ENVIRONMENTAL FUNCTION CANNOT BE SUBSTITUTED FOR ANOTHER. MAINTAIN ALL INDIVIDUAL FUNCTIONAL VALUES IN THE WETLAND UNIT.
- B — MAINTAIN ALL AGGREGATE FUNCTIONAL VALUES IN THE WETLAND UNIT. ONE ENVIRONMENTAL FUNCTION CAN BE SUBSTITUTED FOR ANOTHER.
- C — MAINTAIN OVERALL FUNCTIONAL VALUE ON ROADED SYSTEM. NO NET LOSS OF AGGREGATE VALUE TO REGION.
- D — MINIMIZE ADVERSE IMPACTS TO FUNCTIONAL VALUES
- EP — ENHANCEMENT POTENTIAL
- R — WETLANDS GENERALLY RESTRUCTED DUE TO LAND OWNERSHIP OR MANAGEMENT STATUS.

(s) INDICATES THAT A MORE RESTRICTIVE, CATEGORY A STREAM CORRIDOR

(r) INDICATES THAT A LESS RESTRICTIVE, CATEGORY C, RESIDENTIAL ROAD CORRIDOR DESIGNATION APPLIES TO A PORTION FO THE WETLAND UNIT.

I:\72210\DWGS\WETLANDS.DWG

Water Bodies in Project Area

Auke Bay is a large open bay 14 miles north of downtown Juneau supporting a wide variety of public, private, commercial and institutional developments. Auke Bay is a site of heavy recreational and commercial boating use, containing one public and two private marinas and a public boat launch ramp. The bay is also the source of salt water for research conducted at the National Marine Fisheries Service (NMFS) laboratory and UAS research facilities. The bay has high scenic values and provides habitat for aquatic life.

Auke Lake is state-owned. It is about one mile long and ¾ mile wide with a surface area of 175 acres. Auke Lake has high values for habitat and recreation because of the adjoining UAS facilities, five anadromous stream mouths, and public use. The lake is used for fisheries research, sport fishing (including winter ice-fishing), supply water for the hatchery at the mouth of Auke Creek, boating, water skiing, jet skiing, floatplanes, and cross country skiing. The Chapel by the Lake and the UAS campus located on adjacent uplands are tourist destinations partially because of the views of Auke Lake and the Mendenhall Glacier. CBJ has an undeveloped small boat launch and parking area on the south end of the lake off the Glacier Highway. CBJ has established a trailhead at the south end of the lake and a trail along the east shore. Private homes are located along the north and northwest shores. Auke Lake is also an important area for waterfowl habitat and provides resting area for migrating birds.

Auke Creek drains an area of around 3 ½ square miles. The streambed substrate is mostly gravel with some bedrock. A weir has been operated at Auke Creek since 1963. The weir is located above the mean tide line about 400 yards downstream from the outlet of Auke Lake. The weir is cooperatively funded and operated by the Department of Fish and Game, Division of Sport Fish, the National Marine Fisheries Service and the University of Alaska, Fairbanks. The weir is a two-way permanent structure that has the ability to capture all fish returning to and leaving from Auke Lake.

Bay Creek is located approximately 11 miles northwest of Juneau and is crossed by Glacier Highway immediately above tidewater. It enters the northernmost end of Auke Bay between DeHart's and Fishermen's Bend Marinas.

Waydelich Creek flows in a southerly direction for approximately two miles before entering saltwater on the west side of Auke Bay. The stream drains a watershed of approximately one square mile.

Auke Nu Creek drains a watershed of about 1 square mile and flows in a southeasterly direction. A tributary to the southwest joins it before entering a wooden box culvert under Glacier Highway.

Anadromous and Resident Fish Streams

Information in this section is from the Alaska Department of Fish and Game's 1993 Juneau Fish Habitat Assessment and field visits.

Auke Creek

Anadromous Stream Catalog Number: 111-40-10420
Auke Creek flows about 0.3 miles from Auke Lake to salt water in Auke Bay. Auke Creek has runs of coho, pink, chum and sockeye salmon, Dolly Varden, and cutthroat and rainbow trout. Auke Creek provides the primary spawning habitat in the Auke Lake drainage. Most salmon spawning is known to occur in the lower 2000 feet of the stream. Dolly Varden and cutthroat trout use habitat further upstream.

Figure 2 – Start of Auke Creek

Figure 3 – Auke Creek leaves Auke Lake

The creek flows under Glacier Highway through three, 6 foot by 6 foot, concrete box culverts 36 feet in length. Gravel, cobbles and riffle boards are present on the bottom of the westernmost box culvert. During the field visits cracks and patched cracks were visible in the concrete.

Figure 4 – Auke Creek entering structure under Glacier Highway

Figure 5 – Auke Creek exiting structure under Glacier Highway

Bay Creek

Anadromous Stream Catalog Number: 111-40-10390

Bay Creek supports both pink and Coho salmon and Dolly Varden. The creek provides spawning habitat for pink salmon in the lower 50 yards of the stream and the intertidal area. The stream has numerous pools, overhanging banks, logs and dense overhead cover which provide excellent habitat for rearing for Coho salmon.

There is currently no development in this tideland area. On the adjacent uplands to the west of Bay Creek are an 18-unit condominium and the Auke Bay Waste Water Treatment Plant. On adjacent tidelands to the east is undeveloped fill on state-leased tidelands. The 1993 Juneau Fish Habitat Assessment recommended an opportunity to improve spawning habitat below Glacier Highway. The enhancement could consist of excavating a pool at the downstream end of the existing highway culvert along with the importation and stabilization of high quality spawning gravel downstream of the pool for approximately 100 feet.

The University of Alaska has agreed to make some improvements to fish passage through the Bay Creek culvert. The work is being done as mitigation for wetlands fills at the proposed UAS/National Guard Joint Use Facility, and is scheduled to be completed this summer. The University will build some step pools below the culvert to help fish get access to the culvert. The culvert will be retrofitted with some baffles to break up flow and retain sediment. The habitat in the reach directly above the culvert is also at a very high gradient, and could benefit from some small step pools to help fish gain access to lower gradient areas farther upstream.

Figure 6 - Bay Creek Draining into Auke Bay

Figure 7 - Bay Creek just before entering culvert under Glacier Highway

Bay Creek flows under Glacier Highway through a 5-foot diameter corrugated metal pipe. There was no gravel in the bottom of the pipe. The culvert has minor amount of rust on the surface. A 2-foot culvert drains directly from an inlet on Glacier Highway into the Bay Creek Culvert. Please refer to Figures 8 and 9 below.

Figure 8 - Bay Creek entering culvert under Glacier Highway

Figure 9 - Glacier Highway Inlet

Figure 10 - Bay Creek exiting culvert under Glacier Highway

Figure 11 - Bay Creek culvert with algae growth on bottom of pipe

Waydelich Creek (pronounced wah-de-lay)

Anadromous Stream Catalog Number: 111-40-10370

Waydelich Creek runs in a southerly direction for about two miles before entering salt water on the west side of Auke Bay. The creek supports pink and chum salmon and Dolly Varden trout. It provides spawning habitat for both species of salmon. This stream has a partial barrier to fish migration at the head of tidewater.

In 1983 a water reservoir for a streamside condominium complex was constructed near the site of a barrier falls. As mitigation for constructing the dams, the

developers were required to enhance the spawning area downstream from the dam. The enhanced area has been scoured by heavy stream flows. The Juneau Fish Habitat Assessment recommends re-establishing the spawning area by replacing the spawning substrate that has been washed out.

Figure 12 – Waydelich Creek before entering culvert under Glacier Highway

Figure 13 – Waydelich Creek after exiting culvert under Glacier Highway as seen from Glacier Highway

Waydelich Creek flows under Glacier Highway in a 10-foot diameter corrugated metal pipe culvert. There was no gravel observed in the bottom of the culvert. The inside of the pipe has a minimal amount of surface rust. The culvert is perched. Please refer to Figure 15 below.

Figure 14 – Waydelich Creek entering culvert under Glacier Highway

Figure 15 – Waydelich Creek exiting culvert under Glacier Highway

Auke Nu Creek

Anadromous Stream Catalog Number: 111-40-10350

This stream has provides spawning habitat for pink salmon. Only the east fork of the stream is a catalogued fish stream. There is good intertidal spawning area below Glacier Highway.

Figure 16 - Auke Nu Creek before entering culvert under Glacier Highway

Figure 17 - Auke Nu Creek entering culvert under Glacier Highway

Figure 18 – Auke Nu Creek exiting culvert under Glacier Highway

Figure 19 – Auke Nu Creek exiting culvert under Glacier Highway

Essential Fish Habitat

Essential Fish Habitat is defined as those waters and substrate necessary to fish managed by the North Pacific Fisheries Management Council (NPFMC) for spawning, breeding, feeding or growth to maturity. The Council has primary responsibility for anadromous fish, commercial fish and its prey.

For the purpose of interpreting the definition of essential fish habitat: "Waters" include aquatic areas and their associated physical, chemical, and biological properties that are used by fish and may include aquatic areas historically used by fish where appropriate; "substrate" includes sediment, hard bottom, structures underlying the waters, and associated biological communities; "necessary" means the habitat required to support a sustainable fishery and the managed species' contribution to a healthy ecosystem; and "spawning, breeding, feeding, or growth to maturity" covers a species' full life cycle.

There are several anadromous fish streams within the project study area. Intertidal and subtidal areas could also be affected. An Essential Fish Habitat Assessment will be required for any alternatives that affect these areas.

Wildlife Resources

The Alaska Department of Fish and Game, Wildlife Conservation Division could not identify any species of special concern in the immediate project area.

Bald Eagles

A location map of eagle trees along the project corridor follows this page. There are four eagle trees (nos. 105,163 202, and 204) located along Glacier Highway. According to Mike Jacobsen of the U.S. Fish and Wildlife Service, tree nos. 54, 180, and 199 are eagle trees with eagles no longer present.

Alaska Coastal Management Program

The project study area is in the jurisdiction of the Juneau Coastal Management Plan. These areas are also categorized as Auke Bay Areas Meriting Special Attention. A consistency review will need to be conducted for the preferred alternative.

Hazardous Waste

There are no documented or suspected areas of hazardous waste with the project study area.

Air Quality Conformity

The project is not within a non-attainment area. The project area is in an area of good circulation. Also the roads within the project area are paved.

Floodplains

There are no floodways delineated in the study area according to the Flood Insurance Study written by FEMA in 1990.

Noise

No noise impacts are anticipated, as this project will not create a new traffic demand. However, if road widening or realignment is proposed, noise impacts will need to be addressed. The locations of sensitive noise receivers (schools, parks, libraries) are presented on the Social and Economic map.

LOCATION OF EAGLE NESTS

Water Quality

There are no impaired water bodies within the project limits. Drinking water is supplied by the city and not obtained within the project limits. Other than the instance of road runoff draining directly off of Glacier Highway and into Bay and Creek, the normal amount of non-point pollution from street traffic is expected in the ara.

References

Adamus Resource Assessment, Inc. and the City and Borough of Juneau, Alaska, Department of Community Development, Juneau Wetlands Functions and Values, September 1987.

Bethers, Munk, Seifert, Alaska Department of Fish and Game, Division of Sport Fish, Juneau Fish Habitat Assessment, March 1993.

City and Borough of Juneau, Juneau Parks and Recreation Comprehensive Plan, July 1996.

City and Borough of Juneau, CBJ Areawide Transportation Plan, July, 2001.

City and Borough of Juneau, Community Development Department, Juneau Wetlands Management Plan and Atlas, February 1997.

Federal Emergency Management Agency, City and Borough of Juneau, Alaska Flood Insurance Study, September 1990.

Mobley, Charles M, Cultural Resource Investigations at Auke Bay, Juneau, Alaska for National Marine Fisheries Service, National Oceanic and Atmospheric Administration, 1996.

State of Alaska, Department of Natural Resources, Juneau State Land Plan, December 1993.

Schrader, Carl, Department of Fish and Game, email, 12/12/02.

University of Alaska, Final Draft Campus Facilities Master Plan, February 2002.

LOCATION: **Glacier Hwy., Fritz Cove Rd., UAS entrance 4-way intersection**
PERIOD: **AM Peak**

PEAK HOUR VOLUMES				
DIRECTION	LEFT	THRU	RIGHT	TOTAL
Northbound on Fritz Cove Rd.	23	3	35	61
Southbound on UAS	6	1	13	20
Eastbound on Glacier Hwy.	7	413	7	427
Westbound on Glacier Hwy.	56	146	6	208
TOTAL	92	563	61	716

LOCATION: **Glacier Hwy., Fritz Cove Rd., UAS entrance 4-way intersection**
PERIOD: **PM Peak**

PEAK HOUR VOLUMES				
DIRECTION	LEFT	THRU	RIGHT	TOTAL
Northbound on Fritz Cove Rd.	20	4	26	50
Southbound on UAS	15	2	89	106
Eastbound on Glacier Hwy.	14	368	34	416
Westbound on Glacier Hwy.	173	842	83	1098
TOTAL	222	1216	232	1670

LOCATION: **Glacier Hwy. and Auke Bay Harbor Road**
PERIOD: **AM Peak**

PEAK HOUR VOLUMES					
DIRECTION		LEFT	THRU	RIGHT	TOTAL
Northbound on Glacier Hwy.		39	686		725
Southbound on Glacier Hwy.			329	17	346
Eastbound on Auke Bay Harbor Rd.		17		32	49
	TOTAL	56	1015	49	1120

LOCATION: **Glacier Hwy. and Auke Bay Harbor Road**
PERIOD: **PM Peak**

PEAK HOUR VOLUMES					
DIRECTION		LEFT	THRU	RIGHT	TOTAL
Northbound on Glacier Hwy.		14	112		126
Southbound on Glacier Hwy.			427	11	438
Eastbound on Auke Bay Harbor Rd.		10		16	26
	TOTAL	24	539	27	590

LOCATION: **Glacier Hwy. and Mendenhall Lp Rd**
PERIOD: **AM Peak**

PEAK HOUR VOLUMES					
DIRECTION		LEFT	THRU	RIGHT	TOTAL
Northwestbound on Glacier Hwy.			90	32	122
Southeastbound on Glacier Hwy.			317		317
Southbound on Mendenhall Lp. Rd.				121	121
	TOTAL	0	407	153	560

LOCATION: **Glacier Hwy. and Mendenhall Lp. Rd.**
PERIOD: **PM Peak**

PEAK HOUR VOLUMES					
DIRECTION		LEFT	THRU	RIGHT	TOTAL
Northwestbound on Glacier Hwy.			512	191	703
Southeastbound on Glacier Hwy.			242		242
Southbound on Mendenhall Lp. Rd.				104	104
	TOTAL	0	754	295	1049

LOCATION: **Glacier Hwy. and Mendenhall Lp Wye**
PERIOD: **AM Peak**

PEAK HOUR VOLUMES					
DIRECTION		LEFT	THRU	RIGHT	TOTAL
Northwestbound on Glacier Hwy.			90		90
Southeastbound on Glacier Hwy.		30	317		347
Southwestbound on Mendenhall Lp. Wye.				34	34
	TOTAL	30	407	34	471

LOCATION: **Glacier Hwy. and Mendenhall Lp. Wye.**
PERIOD: **PM Peak**

PEAK HOUR VOLUMES					
DIRECTION		LEFT	THRU	RIGHT	TOTAL
Northwestbound on Glacier Hwy.			512		512
Southeastbound on Glacier Hwy.		63	242		305
Southwestbound on Mendenhall Lp. Wye.				79	79
	TOTAL	63	754	79	896

LOCATION: **Mendenhall Lp. Rd. and Mendenhall Lp Wye**
PERIOD: **AM Peak**

PEAK HOUR VOLUMES					
DIRECTION		LEFT	THRU	RIGHT	TOTAL
Northeastbound on Mendenhall Lp. Wye.		30			30
Southbound on Mendenhall Lp. Rd.			121	34	155
Northbound on Mendenhall Lp. Rd.			32		32
	TOTAL	30	153	34	217

LOCATION: **Mendenhall Lp. Rd. and Mendenhall Lp. Wye.**
PERIOD: **PM Peak**

PEAK HOUR VOLUMES					
DIRECTION		LEFT	THRU	RIGHT	TOTAL
Northeastbound on Mendenhall Lp. Wye.		63			63
Southbound on Mendenhall Lp. Rd.			104	79	183
Northbound on Mendenhall Lp. Rd.			191		191
	TOTAL	63	295	79	437

LOCATION: **Mendenhall Lp. Rd. and UAS North Entrance**
PERIOD: **AM Peak**

PEAK HOUR VOLUMES					
DIRECTION		LEFT	THRU	RIGHT	TOTAL
Northeastbound on Mendenhall Lp. Rd.			46	14	60
Southwestbound on Mendenhall Lp. Rd.		37	124		161
Northbound on UAS North Entrance		3		3	6
	TOTAL	40	170	17	227

LOCATION: **Mendenhall Lp. Rd. and Mendenhall Lp. Wye.**
PERIOD: **PM Peak**

PEAK HOUR VOLUMES					
DIRECTION		LEFT	THRU	RIGHT	TOTAL
Northeastbound on Mendenhall Lp. Rd.			173	16	189
Southwestbound on Mendenhall Lp. Rd.		43	120		163
Northbound on UAS North Entrance		20		42	62
	TOTAL	63	293	58	414

Auke Bay Corridor Study

A Discussion on Origin-Destination Studies
February 12, 2003

USKH Inc. / Kinney Engineering

Origin-Destination Studies will define travel patterns. When counting cars at a single point, we can't determine where the driver started the trip, or where it will end. In order to do that, we set up a series of observation stations that track vehicles through a system. In this study, we used license plate observations as the tracking tool. A map showing the location of observations stations is located at the end of this memorandum.

The results of the study have been applied to volume forecasting, and will be applied to future improvements traffic distribution and assignments. The results of the study will be used to forecast volumes on a new by-pass corridor, for example.

Studies were conducted on Monday September 23, 2002 and Tuesday September 24, 2002. Observations were performed for 2 hours in the morning and 2 hours in the evening that coincided with the peak hour commutes. UAS classes typically have Monday-Wednesday or Tuesday-Thursday meetings, so we selected one day from each pair to ascertain if travel patterns could be affected by class schedules.

Stations were manned by one or two persons. At Fritz Cove Road (station 3), the UAS South Entrance (station 4), and the UAS North Entrance (station 11), traffic was light enough so that only one person was required to observe and record license plates in both directions of travel (inbound and outbound). Stations 9 (inbound) and 10 (outbound) on Mendenhall Loop Road, and stations 12 (outbound) and 13 (inbound) required one person per station direction of travel. All other stations required two persons, one acting as an observer and one as the recorder.

The study used citizens to do the work. They attended training on the afternoon of September 20 to familiarize themselves with objectives and procedures, and to obtain their assignments. They were briefed on safety and issued equipment.

The data was collected and entered into spreadsheets. It was then entered into a several step algorithm in which observations were linked into a trip chains. These were combined into aggregate classes from which system origin and destinations could be determined.

The following table presents the summary of observations for the four periods.

	Monday		Tuesday	
	7 to 9 AM	4 to 6 PM	7 to 9 AM	4 to 6 PM
Total Plates Observed	2,347	2,375	2,106	2,500
Number of Plates with Single Observation	1,194	991	995	1,015
Number of Plates that Form a Trip Chain	1,153	1,384	1,111	1,485

Those plates with only a single observation are assumed to be improperly entered in the field or in the office. There were many observations that were not fully recorded because speeds, leading vehicles blocking views of following vehicles, or lack of plates. It is likely that the vast majority of those were part a trip chain, rather that truly a single observation.

The remaining observable trip chains are assumed to represent patterns by the whole population.

The following tables summarize the results.

Evening Results

			MONDAY		TUESDAY	
Trip Description	**Origin Station**	**Destination Station**	**Observed Trip Ends**	**PM % of Total Origin Traffic**	**Observed Trip Ends**	**PM % of Total Origin Traffic**
Mendenhall Lp to Juneau	9	2	77	35%	89	47%
Mendenhall Lp to Fritz Cove Road	9	3.2	8	4%	2	1%
Mendenhall Lp to North of Ferry Terminal	9	12	15	7%	12	6%
Mendenhall Lp to North UAS North Access	9	11.1	49	22%	46	24%
Mendenhall Lp to North of UAS South Access	9	4.1	16	7%	8	4%
Mendenhall Lp to Fisherman's Bend and Ferry Terminal	9	7	38	17%	25	13%
Mendenhall Lp to DeHart's and Fish Lab	9	6	18	8%	9	5%
			221	100%	191	100%

Trip Description	Origin Station	Destination Station	MONDAY Observed Trip Ends	MONDAY PM % of Total Origin Traffic	TUESDAY Observed Trip Ends	TUESDAY PM % of Total Origin Traffic
Glacier Hwy NB (from JNU) to Mendenhall Lp	1	10	108	19%	75	15%
Glacier Hwy NB (from JNU) to Fritz Cove Rd	1	3.2	40	7%	41	8%
Glacier Hwy NB (from JNU) to North of Ferry Terminal	1	12	102	18%	96	20%
Glacier Hwy NB (from JNU) to North UAS Access	1	11.1	10	2%	14	3%
Glacier Hwy NB (from JNU) to South UAS Access	1	4.1	39	7%	59	12%
Glacier Hwy NB (from JNU) to Fisherman's Bend and Ferry Terminal	1	7	194	35%	152	31%
Glacier Hwy NB (from JNU) to DeHart's and Fish Lab	1	5	67	12%	55	11%
			560	100%	492	100%

Trip Description	Origin Station	Destination Station	MONDAY Observed Trip Ends	MONDAY PM % of Total Origin Traffic	TUESDAY Observed Trip Ends	TUESDAY PM % of Total Origin Traffic
Fritz Cove Road to Mendenhall Lp	3.1	10	5	12%	3	6%
Fritz Cove Road to JNU	3.1	2	22	54%	31	66%
Fritz Cove Road to Glacier Hwy North of Ferry Terminal	3.1	12	3	7%	2	4%
Fritz Cove Rd to North UAS Access	3.1	11.1	0	0%	0	0%
Fritz Cove Road to South UAS Access	3.1	4.1	4	10%	2	4%
Fritz Cove Road to Fisherman's Bend and Ferry Terminal	3.1	7	3	7%	8	17%
Fritz Cove Rd to DeHart's and Fish Lab	3.1	5	4	10%	1	2%
			41	100%	47	100%

Trip Description	Origin Station	Destination Station	MONDAY Observed Trip Ends	MONDAY PM % of Total Origin Traffic	TUESDAY Observed Trip Ends	TUESDAY PM % of Total Origin Traffic
Glacier Hwy SB to JNU	13	2	86	65%	40	60%
Glacier Hwy SB to Fritz Cove Rd	13	3.2	7	5%	5	7%
Glacier Hwy SB to Mendenhall Lp	13	10	17	13%	8	12%
Glacier Hwy SB to UAS North Access	13	11.1	5	4%	1	1%
Glacier Hwy SB to UAS South Access	13	4.1	4	3%	4	6%
Glacier Hwy SB to DeHart's and Fish Lab	13	6	8	6%	3	4%
Glacier Hwy SB to Fisherman's Bend Area	13	8	5	4%	6	9%
			132	100%	67	100%

Trip Description	Origin Station	Destination Station	MONDAY Observed Trip Ends	MONDAY PM % of Total Origin Traffic	TUESDAY Observed Trip Ends	TUESDAY PM % of Total Origin Traffic
UAS South Access to JNU	4.2	2	29	63%	100	86%
UAS South Access to Mendenhall Lp	4.2	10	8	17%	4	3%
UAS South Access to Fritz Cove Road	4.2	3.2	3	7%	5	4%
UAS South Access to Glacier Hwy North of Ferry Terminal	4.2	12	3	7%	5	4%
UAS South Access to Fisherman's Bend and Ferry Terminal	4.2	7	3	7%	1	1%
UAS North Access to DeHart's and Fish Lab	4.2	5	0	0%	1	1%
			46	100%	116	100%

Trip Description	Origin Station	Destination Station	MONDAY Observed Trip Ends	MONDAY PM % of Total Origin Traffic	TUESDAY Observed Trip Ends	TUESDAY PM % of Total Origin Traffic
UAS North Access to JNU	11.2	2	26	30%	17	26%
UAS North Access to Mendenhall Lp	11.2	10	45	52%	37	57%
UAS North Access to Fritz Cove Road	11.2	3.2	2	2%	1	2%
UAS North Access to Glacier Hwy North of Ferry Terminal	11.2	12	5	6%	2	3%
UAS North Access to Fisherman's Bend and Ferry Terminal	11.2	8	5	6%	1	2%
UAS North Access to DeHart's and Fish Lab	11.2	6	4	5%	7	11%
			87	100%	65	100%

Trip Description	Origin Station	Destination Station	MONDAY Observed Trip Ends	MONDAY PM % of Total Origin Traffic	TUESDAY Observed Trip Ends	TUESDAY PM % of Total Origin Traffic
Fisherman Bend to JNU	8	2	109	46%	176	60%
Fisherman's Bend to Fritz Cove	8	3.2	21	9%	18	6%
Fisherman Bend to Mendenhall Lp	8	10	60	26%	48	16%
Fisherman's Bend to UAS North Access	8	11.1	8	3%	11	4%
Fisherman's Bend to UAS South Access	8	4.1	6	3%	13	4%
Fisherman's Bend to Dehart's-Fish Lab	8	6	16	7%	10	3%
Fisherman's Bend to North of Ferry Terminal	7	12	15	6%	15	5%
			235	100%	291	100%

Trip Description	Origin Station	Destination Station	MONDAY Observed Trip Ends	MONDAY PM % of Total Origin Traffic	TUESDAY Observed Trip Ends	TUESDAY PM % of Total Origin Traffic
DeHart's-Fish Lab to JNU	6	2	87	28%	147	29%
DeHart's-Fish Lab to Fritz Cove	6	3.2	9	3%	17	3%
DeHart's-Fish Lab to Mendenhall Lp	5	10	45	15%	54	11%
DeHart's-Fish Lab to UAS North Access	5	11.1	4	1%	6	1%
DeHart's-Fish Lab to UAS South Access	6	4.1	2	1%	8	2%
DeHart's-Fish Lab to Fisherman's Bend-Ferry Terminal	5	7	119	39%	206	41%
DeHart's-Fish Lab to North of Ferry Terminal	5	12	40	13%	68	13%
			306	100%	506	100%

Morning Results

Trip Description	Origin Station	Destination Station	MONDAY Observed Trip Ends	MONDAY AM % of Total Origin Traffic	TUESDAY Observed Trip Ends	TUESDAY AM % of Total Origin Traffic
Mendenhall Lp to JNU	9	2	87	41%	110	48%
Mendenhall Lp to Fritz Cove Road	9	3.2	2	1%	4	2%
Mendenhall Lp to North of Ferry Terminal	9	12	7	3%	6	3%
Mendenhall Lp to North UAS North Access	9	11.1	44	21%	27	12%
Mendenhall Lp to North of UAS South Access	9	4.1	5	2%	4	2%
Mendenhall Lp to Fisherman's Bend and Ferry Terminal	9	7	46	22%	43	19%
Mendenhall Lp to DeHart's and Fish Lab	9	6	20	9%	35	15%
			211	100%	229	100%

Trip Description	Origin Station	Destination Station	MONDAY Observed Trip Ends	MONDAY AM % of Total Origin Traffic	TUESDAY Observed Trip Ends	TUESDAY AM % of Total Origin Traffic
Glacier Hwy NB (from JNU) to Mendenhall Lp	1	10	19	7%	23	9%
Glacier Hwy NB (from JNU) to Fritz Cove Rd	1	3.2	7	2%	14	5%
Glacier Hwy NB (from JNU) to North of Ferry Terminal	1	12	18	6%	36	14%
Glacier Hwy NB (from JNU) to North UAS Access	1	11.1	2	1%	3	1%
Glacier Hwy NB (from JNU) to South UAS Access	1	4.1	93	33%	65	25%
Glacier Hwy NB (from JNU) to Fisherman's Bend and Ferry Terminal	1	7	108	38%	77	30%
Glacier Hwy NB (from JNU) to DeHart's and Fish Lab	1	5	36	13%	37	15%
			283	100%	255	100%

Trip Description	Origin Station	Destination Station	MONDAY Observed Trip Ends	MONDAY AM % of Total Origin Traffic	TUESDAY Observed Trip Ends	TUESDAY AM % of Total Origin Traffic
Fritz Cove Road to Mendenhall Lp	3.1	10	4	6%	5	7%
Fritz Cove Road to JNU	3.1	2	46	68%	54	73%
Fritz Cove Road to Glacier Hwy North of Ferry Terminal	3.1	12	1	1%	2	3%
Fritz Cove Rd to North UAS Access	3.1	11.1	0	0%	0	0%
Fritz Cove Road to South UAS Access	3.1	4.1	6	9%	4	5%
Fritz Cove Road to Fisherman's Bend and Ferry Terminal	3.1	7	10	15%	8	11%
Fritz Cove Rd to DeHart's and Fish Lab	3.1	5	1	1%	1	1%
			68	100%	74	100%

Trip Description	Origin Station	Destination Station	MONDAY Observed Trip Ends	MONDAY AM % of Total Origin Traffic	TUESDAY Observed Trip Ends	TUESDAY AM % of Total Origin Traffic
Glacier Hwy SB to JNU	13	2	130	71%	76	59%
Glacier Hwy SB to Fritz Cove Rd	13	3.2	2	1%	1	1%
Glacier Hwy SB to Mendenhall Lp	13	10	9	5%	10	8%
Glacier Hwy SB to UAS North Access	13	11.1	8	4%	3	2%
Glacier Hwy SB to UAS South Access	13	4.1	2	1%	4	3%
Glacier Hwy SB to DeHart's and Fish Lab	13	6	23	13%	16	13%
Glacier Hwy SB to Fisherman's Bend Area	13	8	10	5%	18	14%
			184	100%	128	100%

Trip Description	Origin Station	Destination Station	MONDAY Observed Trip Ends	MONDAY AM % of Total Origin Traffic	TUESDAY Observed Trip Ends	TUESDAY AM % of Total Origin Traffic
UAS South Access to JNU	4.2	2	14	61%	16	76%
UAS South Access to Mendenhall Lp	4.2	10	4	17%	1	5%
UAS South Access to Fritz Cove Road	4.2	3.2	1	4%	0	0%
UAS South Access to Glacier Hwy North of Ferry Terminal	4.2	12	0	0%	2	10%
UAS South Access to Fisherman's Bend and Ferry Terminal	4.2	7	1	4%	2	10%
UAS North Access to DeHart's and Fish Lab	4.2	5	3	13%	0	0%
			23	100%	21	100%

Trip Description	Origin Station	Destination Station	MONDAY Observed Trip Ends	MONDAY AM % of Total Origin Traffic	TUESDAY Observed Trip Ends	TUESDAY AM % of Total Origin Traffic
UAS North Access to JNU	11.2	2	4	36%	2	25%
UAS North Access to Mendenhall Lp	11.2	10	4	36%	4	50%
UAS North Access to Fritz Cove Road	11.2	3.2	1	9%	0	0%
UAS North Access to Glacier Hwy North of Ferry Terminal	11.2	12	0	0%	1	13%
UAS North Access to Fisherman's Bend and Ferry Terminal	11.2	8	0	0%	1	13%
UAS North Access to DeHart's and Fish Lab	11.2	6	2	18%	0	0%
			11	100%	8	100%

Trip Description	Origin Station	Destination Station	MONDAY Observed Trip Ends	MONDAY AM % of Total Origin Traffic	TUESDAY Observed Trip Ends	TUESDAY AM % of Total Origin Traffic
Fisherman Bend to JNU	8	2	171	67%	201	70%
Fisherman's Bend to Fritz Cove	8	3.2	9	4%	6	2%
Fisherman Bend to Mendenhall Lp	8	10	29	11%	27	9%
Fisherman's Bend to UAS North Access	8	11.1	13	5%	9	3%
Fisherman's Bend to UAS South Access	8	4.1	7	3%	5	2%
Fisherman's Bend to Dehart's-Fish Lab	8	6	20	8%	35	12%
Fisherman's Bend to North of Ferry Terminal	7	12	5	2%	3	1%
			254	100%	286	100%

Trip Description	Origin Station	Destination Station	MONDAY Observed Trip Ends	MONDAY AM % of Total Origin Traffic	TUESDAY Observed Trip Ends	TUESDAY AM % of Total Origin Traffic
DeHart's-Fish Lab to JNU	6	2	93	49%	135	59%
DeHart's-Fish Lab to Fritz Cove	6	3.2	5	3%	3	1%
DeHart's-Fish Lab to Mendenhall Lp	5	10	20	10%	16	7%
DeHart's-Fish Lab to UAS North Access	5	11.1	7	4%	6	3%
DeHart's-Fish Lab to UAS South Access	6	4.1	4	2%	4	2%
DeHart's-Fish Lab to Fisherman's Bend-Ferry Terminal	5	7	58	30%	52	23%
DeHart's-Fish Lab to North of Ferry Terminal	5	12	4	2%	11	5%
			191	100%	227	100%

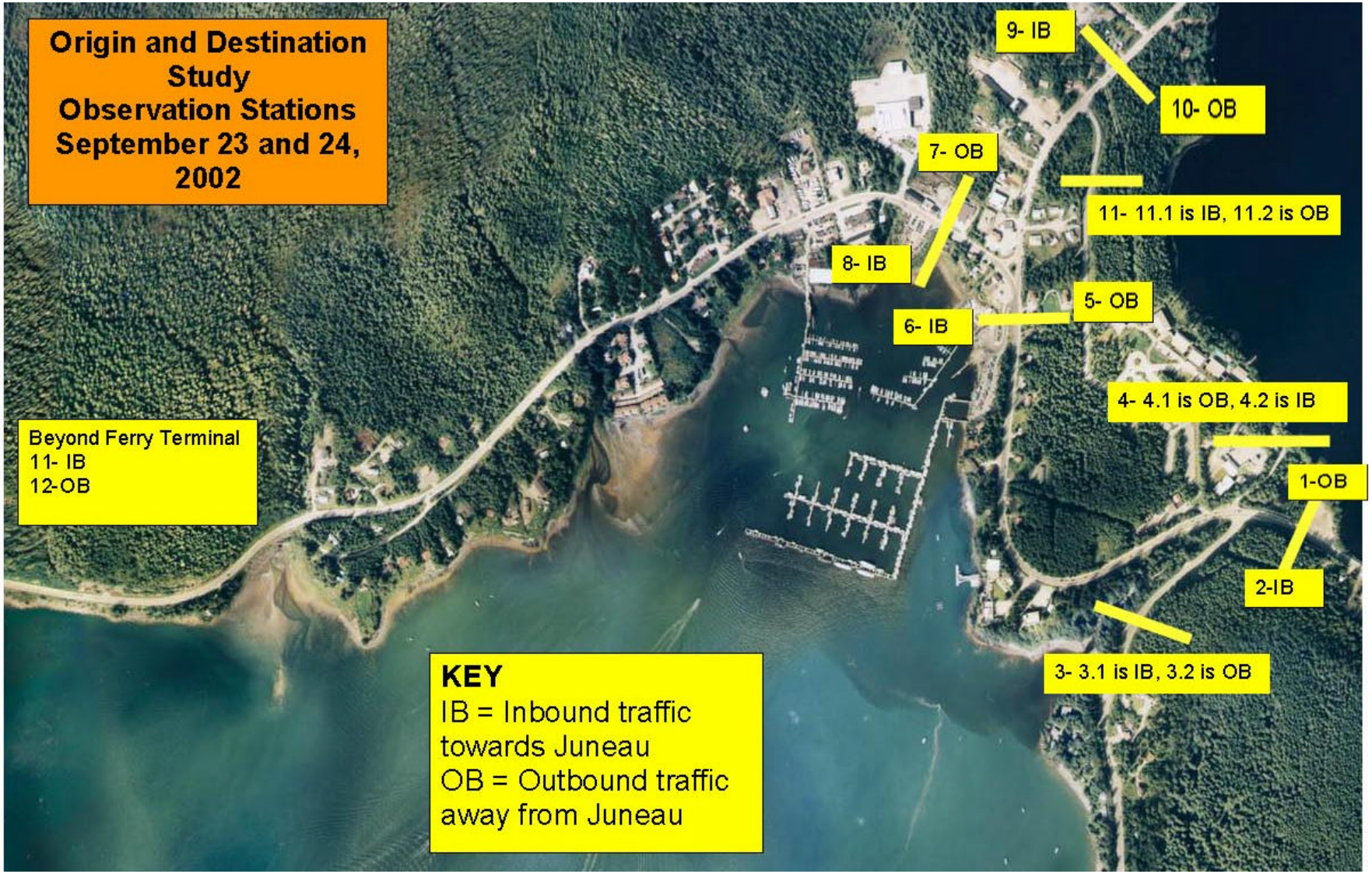
Origin and Destination Study
Observation Stations
September 23 and 24, 2002
9- IB
10- OB
7- OB
11- 11.1 is IB, 11.2 is OB
8- IB
5- OB
6- IB
4- 4.1 is OB, 4.2 is IB
Beyond Ferry Terminal
11- IB
12-OB
1-OB
2-IB
3- 3.1 is IB, 3.2 is OB
KEY
IB = Inbound traffic towards Juneau
OB = Outbound traffic away from Juneau

Conflict Study Appendix

Diagram	Frequency	Conflict /Hour	Significant?	Comments
Left Turn Same Direction	4	2	No	
Rt Turn Same Direction	40	20	Yes	Predominately Northbound into UAS Entrance
Slow Vehicle Same	7	4	No	
Opposing Left Turn	0	0	No	
Rt Turn Cross from Rt	2	1	No	
Lt Turn Cross From Right	1	1	No	
Lt Turn Cross from Lt	3	2	No	

Diagram	Frequency	Conflict /Hour	Significant?	Comments
Left Turn Same Direction	7	4	No	
Rt Turn Same Direction	71	36	Yes	Predominately Northbound into UAS Entrance
Slow Vehicle Same	6	3	No	
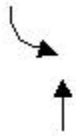 Opposing Left Turn	2	1	No	
Rt Turn Cross from Rt	2	1	No	
Lt Turn Cross From Right	4	2	No	
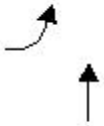 Lt Turn Cross from Lt	8	4	No	

The tables demonstrate that the high-volume of right-turns into the UAS entrance have an expected high number of conflicts. Although this normally is not an issue, the high approach speeds may warrant a right-turn lane to eliminate the conflict.

Intersections and Roadway Segments

Accidents are random events. Given the amount of traffic that passes over a road each year, usually millions of vehicles, the collisions or accidents are very rare, and involved motorists are very small in number. Nonetheless, accidents happen, and its up to us to find if collision pattern is less due to chance and more due to a set of contributing factors.

We try to evaluate the data from two perspectives. We look at the frequency of accidents at a location over the study period, that is the number that occurred during the 5 years of the study. We draw up the accidents in a diagram where we have a visual representation of the accidents. We can often use our engineering judgment (a powerful tool!) to spot clusters or trends that need remediation.

We also like to look at rates. Rate analysis is useful because it defines accidents based on exposure to the number of vehicles using the facility. Roadway segment accident rates are calculated using the following formula:

$$R = \frac{1{,}000{,}000 \times A}{365 \times N \times V \times L} \quad \text{(Eq. 1)}$$

The variables in this equation are:

R= Accident rate for the roadway section expressed as accidents per million vehicle miles (MVM),
A= Frequency of accidents in the study period,
N= Number of years of data,
V= Traffic volumes per day, the segment Average Annual Daily Traffic (AADT),
L= Length of roadway section.

Intersection accident rates are calculated with the following formula:

$$R = \frac{1{,}000{,}000 \times A}{365 \times N \times V} \quad \text{(Eq. 2)}$$

The variables in this equation are:

R= Accident rate for the intersection expressed as accidents per million entering vehicles (MEV),
A= Frequency of accidents in the study period,
N= Number of years of data,
V= Traffic volumes entering the intersection daily, usually ½ of the sum of the Average Annual Daily Traffic (AADT) volumes on the intersection's legs for two way approaches, or the sum of entering AADT volumes on one-way approaches.

Rate analysis is especially useful when there is a population of facilities to which we can compare the study area. DOT/PF has developed populations for segments and

intersections, and provided this data to us. However, by only comparing the rate of the facility under analysis to an average, we may erroneously infer that those facilities with higher than average rates are problem areas.

Instead we would like to establish an upper limit for the rate that is our threshold of concern. The Rate Quality Control Method establishes an upper control limit (UCL) to determine if the facility's accident rate, as calculated in Equations 1or 2, is significantly higher than accident rates in facilities with similar characteristics. The UCL is determined statistically as a function of the statewide average accident rate for the facility category (i.e., highway or intersection) and the vehicle exposure at the location being considered. UCL is calculated with the following equation:

$$UCL = Ra + Z \times \sqrt{\frac{Ra}{M}} + \frac{1}{2 \times M}, \quad \text{(Eq. 3)}$$

The variables in this equation are:

- $Ra=$ Average Accident Rate for the population in accidents per MEV or accidents per MVM;
- $M=$ Facility Exposure in MEV for the intersections or MVM for roadway section**;**
- $Z=$ Normal Distribution Transformation Variable, in this case Z = 1.28 for 90% UCL, single tail. We're say that we're 90% sure an accident rate above this level is because the intersection or segment is truly a problem and not due to chance. Using a higher UCL might eliminate some accident areas that we shouldn't overlook, and using a low UCL would cause us to examine some intersections where randomness is more of a factor and there are no real underlying causes or contributing factors.

The following Tables 3 and 4 show the intersection and segment accident types, rates, and average population rates. We also indicate where the Upper Control limit is exceeded.

Collision Overview Appendix

Using statewide severities for the last 10 years, we can establish a comparative population for each severity type in ABCor on a percentage basis. Figure 1 shows the corridor severity on a percentage basis, the number of collisions of each severity, and the corresponding statewide severity population percentages from 1990 to 2000.

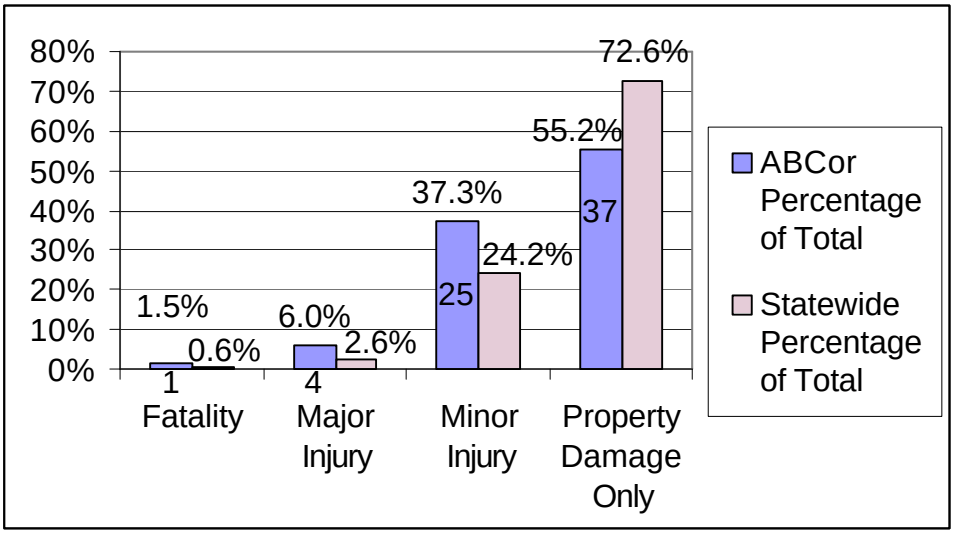

Figure 1 - ABCor Severities (1996 to 2000) and State of Alaska (1990 to 2000) Severities, Percent of Total

Figure 1 presents that the collision severity in ABCor is higher than the statewide populations. Furthermore, statistical significance tests indicate that the Minor Injury collisions are much higher than the population.

It is not surprising that the corridor has more severe collisions than average. All parts of the corridor have higher average and 85th percentile speeds than posted. Also most of the speeds exceed or are close to 45 MPH, which is the break between low speed and high-speed roads (according to our design guides and standards). As severity is theoretically a function of the speed squared, or V^2, so severity increases geometrically, not linearly, with an increase of V. To illustrate further, if a car is involved in an collision in the Waydelich to AMHS Terminal segment at the 85th percentile speed of 56 mph, the increase in speed is only 24% more than the posted speed limit, but the collision, based on energy and force, is 55% more severe.

Most collisions, about 47 (or 70%) occurred in daylight, and this was significantly more of a percentage during the daytime than the comparative statewide population. This leads us to conclude that night collisions are not abnormal and that night lighting or illumination, although always desirable, may not be needed to correct a current collision trend.

We have also examined the collisions as they relate to road surface. We found that the snow and ice surface collisions and dry surface collisions don't vary from the statewide percentages at all. However, the wet surface collisions (20% of total) were about double the statewide population percentage.

In conclusion, we found more injuries than the comparable statewide average, found no relationship between collisions and night condition, and found that there are more wet surface collisions here than in the statewide population percentage. However, this is the overall snapshot. In the analysis below some of these conclusions don't hold when we examine intersections and roadway segments.

Intersections and Roadway Segments

Roadway segment collision rates and intersection collision rates and the Rate Qualit7y Control Method were used to analyze the project area. For more information about the equations used or the method, please refer to the equations.

The following Tables show the intersection and segment collision types, rates, and average population rates. We also indicate where the Upper Control limit is exceeded.

	Guardrail	Head On	Head On Sideswipe	Left Turn	Overtaking Sideswipe	Parked	Rear End	Right Angle	U turn	Int. Total	Collision Rate (Acc/MEV)	Rate >UCL and Significant?	Collision Type(s) Needing Attention?
AMHS Terminal Access and Glacier Highway	1						4	2		7	0.95	No	
Mendenhall Loop Wye, Mendenhall Loop Rd, Harbor, and Glacier Hwy		1	1	2		1	10	3		18	1.19	Yes	Rear-Ends are statistically significant
Fritz Cove, UAS South Access, Glacier Hwy	1		1		1		2	3	1	9	0.44	No	
Mendenhall Loop Rd and UAS North Access							1			1	0.24	No	
Collision Type Totals	2	1	1	2	1	1	17	9	1				

Segment	Ditch	Embankment	Guardrail	Head On	Other	Overturn	Parked	Pedestrian	Rear End	Right Angle	Tree	Segment Total	Collision Rate (Acc/MVM)	Rate >UCL and Significant?	Collision Type(s) Needing Attention?
Glacier Hwy, Ferry to Auk Nu Dr.	4	2		1		2			1			10	2.45	Yes	9 Single Vehicle Loss of Control, 1 Head On.
Glacier Hwy, Auk Nu Dr. to Harbor			2		1	1			2	1		7	0.87	No	
Glacier Hwy, Harbor to Fritz Cove Road			2			1	1		3			7	0.85	No	
Mendenhall Loop Rd, University Drive to UAS North Access	2						2	2		1	1	8	7.98	Yes	2 Pedestrian, 5 Single Vehicle Loss of Control.
Mendenhall Loop Rd, UAS North Access to Glacier Hwy															
Collision Type Totals	6	2	4	1	1	4	3	2	6	2	1				

The only intersection with a significant collision rate is the Mendenhall Wye-Harbor Drive intersection with Glacier Highway. It consists of 5 closely spaced intersections (Mendenhall Loop Road, Mendenhall Wye, Glacier Highway, Harbor Drive and DeHart's Driveway). In this analysis we treat this intersection as a single system because each component has an effect on others.

The following figure shows the collision diagram for the intersection. These are plotted at the location stated on the collision record, which may not be the actual location of the collision. Two of the collisions didn't have enough information to determine the vehicle orientation and are noted as "Not Known". Although the about 40% of the collisions were a Minor Injury Collision, and above the statewide average percentage of 26%, this wasn't significant statistically. We found that the collisions at the intersection are fairly close to the statewide averages for surface conditions and for lighting (actually most happened in daylight).

We think there are three contributing factors to the collisions here. First, the layout is complex. There are many overlapping conflicts, because the vertexes are in close proximity to one another. The skew angles are far flatter than the 90 degrees and it makes visibility of other vehicles and judgment of approach speeds difficult. We see a collision pattern that would be reduced with a left-turn lane on Glacier Highway. We expect that almost all of the rear end collisions are initiated by a vehicle stopped in the throughway waiting for gaps in the oncoming traffic stream. A-left-turn lane would provide the waiting vehicle a refuge space and remove the conflict. Lastly, the approach sight distance is less than desirable, because of the sharp radius and because sight lines are blocked by the abutting development. This in combination of higher than desired approach speeds means that a vehicle wouldn't have time to see, react and stop prior to colliding with a stopped vehicle waiting to slowing down to turn. This especially applies to the southbound approach.

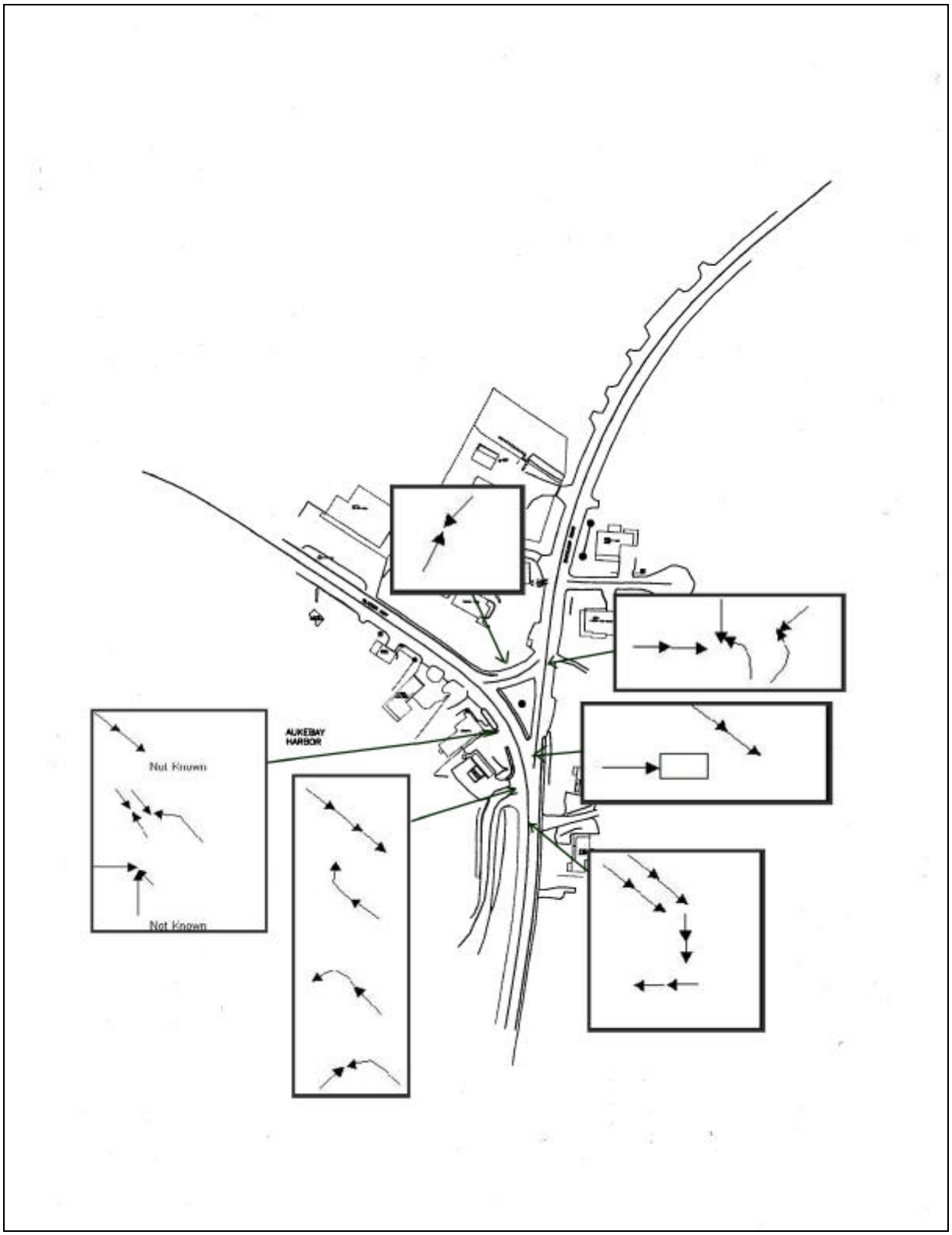

The segment of Glacier Highway between Auke Nu Drive and the AMHS terminal had 10 collisions in the 5-year study period. It is important to note that an interim

safety project has improved drainage in this area. Poor drainage may have contributed to loss of control collisions.

The collision rate indicates that this segment is significantly higher than the population, and that there may be contributing factors other than chance. All of the collisions except one involved a single vehicle running off the road, and the remaining one was a head on collision.

We also find that the severity on the segment, 4 of 10, was significantly higher than the statewide population. If we look at the speeds, we find the speeds are higher than posted (51 MPH average, 56 MPH 85th percentile). Therefore we shouldn't be surprised by the higher severity of collisions.

Nine collisions happened during snow and ice surface conditions, and one occurred during wet pavement conditions. Most collisions happened during daylight hours.

We know that 6 of the 10 collisions occurred near Auke Nu Drive within horizontal and vertical curves that are designed for speeds between 40 MPH to 50 MPH and not the 85th percentile speeds of over 55 MPH. However the road lane and shoulder widths meet standards.

To summarize this area, the collisions are all loss of control collisions, probably due to unsafe speeds on poor road conditions. At least six collisions occurred within horizontal and vertical curves that aren't designed for the prevailing speeds. Lastly, these collisions had a severity that was higher than the population.

University Drive to the UAS entrance on Mendenhall Loop Road had 8 collisions with a high collision rate. Most of the collisions occurred under poor road surface conditions, most at night, and there were more severe collision here on a percentage basis than found in the statewide population. There was one pedestrian fatality here, and a second minor injury pedestrian collision.

This segment has more pedestrian activity than elsewhere because of the student dormitories. The lack of pathways and good crossings probably contribute to these collision patterns. In addition, the vertical curvature may not be adequate for the approach speed.

PROJECT DESIGN CRITERIA

Project	**JNU- Waydelich Creek to Ferry Terminal**
Project Funding (Primary, Secondary, 3R, etc.)	
Functional Classification	**Urban Principal Arterial**
Design Year (Usually 5-year increment at least 20 years after construction)	**20-year (2026?)**
Present ADT (& year)	
Design Year ADT (& year)	
Mid Design Period ADT (& yr.)	
DHV (%)	**%**
Directional Split (%D)	/
Trucks (PTT)	**%**
Equivalent Single Axle Load (ESAL)	**00,000**
Pavement Design Year (Construction Year + n)	
Design Vehicle (Usually AASHTO WB-50)	**AASHTO WB-50**
Design Speed	**50mph**
Stopping sight Distance	**400' (PCM 1120-5), 425' (GB pg 449)**
Passing Sight Distance	**1800' (PCM 1120-5), 1835' (GB pg 449)**
Maximum Allowable Grade	**5% Rolling (PCM 1120-5), 7% Rolling, (GB page 476)**
Minimum Allowable Grade	**0.3% (GB page 242)**
Minimum Allowable Degree of Curvature	**R=840' (PCM1120-5), @ e=6% R=835' (GB page 145)**
Minimum K-value for Vertical Curves: Sag	**96 (GB page 280)** Crest **84 (GB page 274)**
Number of Roadways	**1**
Width of Traveled Way	**10'-12' (GB page 476)**
Width of Shoulders: Outside	**0'min w/o ROW (GB 477) 8' w ROW (GB 452)** Inside **N/A**
Surface Treatment: T/W	**Asphalt Concrete** Shoulders **Asphalt Concrete**
Side Slope Ratios: Foreslopes	**1:6 to 1:4 within Clear Zone (PCM Table 1130-8)** Backslopes **1:6 withing CZ, 1:1.5 outside CZ, 1:0.33 Rock**
Degree of Access Control	**Partial (GB page 486)**
Median Treatment (if applicable)	
Illumination	
Curb Usage and Type	**None**
Bicycle Provisions	**4'-8' shoulder (PCM 1170-2)**
Pedestrian Provisions	**Shoulder (GB pg477, pg489)**
Miscellaneous Criteria	
Designer/Consultant	

Submission By

Proposed by _____ Date _____ Recommended by _____ Date _____

Designer (Consultant or Staff) Engineering Manager

Accepted by _____

Regional Preconstruction Engineer

PROJECT DESIGN CRITERIA

Project	**JNU-Fritz Cove Road to Waydelich Creek (Existing Alignment)**
Project Funding (Primary, Secondary, 3R, etc.)	
Functional Classification	**Urban Principal Arterial**
Design Year (Usually 5-year increment at least 20 years after construction)	**20-year (2026?)**
Present ADT (& year)	
Design Year ADT (& year)	
Mid Design Period ADT (& yr.)	
DHV (%)	**%**
Directional Split (%D)	**/**
Trucks (PTT)	**%**
Equivalent Single Axle Load (ESAL)	**00,000**
Pavement Design Year (Construction Year + n)	
Design Vehicle (Usually AASHTO WB-50)	**AASHTO WB-50**
Design Speed	**40 mph**
Stopping sight Distance	**275' (PCM 1120-5), 305' (GB pg 449)**
Passing Sight Distance	**1500' (PCM 1120-5), 1470' (GB pg 449)**
Maximum Allowable Grade	**5% Rolling (PCM 1120-5), 8% Rolling, (GB page 476)**
Minimum Allowable Grade	**0.3% (GB page 242)**
Minimum Allowable Degree of Curvature	**R=535' (PCM1120-5), @ e=6% R=510' (GB page 145)**
Minimum K-value for Vertical Curves: Sag	**64 (GB page 280)** Crest **44 (GB page 274)**
Number of Roadways	**1**
Width of Traveled Way	**10'-12' (GB page 476)**
Width of Shoulders: Outside	**0' min w/o ROW (GB 477) 8' w ROW (GB 452)** Inside **N/A**
Surface Treatment: T/W	**Asphalt Concrete** Shoulders **Asphalt Concrete**
Side Slope Ratios: Foreslopes	**1:6 to 1:4 within Clear Zone (PCM Table 1130-8)** Backslopes **1:6 withing CZ, 1:1.5 outside CZ, 1:0.33 Rock**
Degree of Access Control	**Partial (GB page 486)**
Median Treatment (if applicable)	
Illumination	
Curb Usage and Type	**None**
Bicycle Provisions	**4'-8' shoulder (PCM 1170-2)**
Pedestrian Provisions	**Shoulder (GB pg477, pg489)**
Miscellaneous Criteria	
Designer/Consultant	

Submission By

Proposed by _____ Date _____ Recommended by _____ Date _____

Designer (Consultant or Staff) Engineering Manager

Accepted by _____

Regional Preconstruction Engineer

Auke Bay Corridor Study
Geometric Analysis
February 18, 2003

USKH, Inc.

Geometric Analysis

The purpose of this analysis is to evaluate the geometric conditions on Glacier Highway and Mendenhall (Back) Loop Road within the project limits. The analysis will determine if each element meets current design criteria and standards. We considered the following geometric elements:

- Horizontal Curve Radii
- Vertical Grades and Curves
- Cross Section/Clear Zone
- Intersection Sight Distance/Layout

We established design criteria earlier in the study using DOT&PF's *Highway Preconstruction Manual* and the American Association of State Highway and Transportation Officials (AASHTO) *A Policy on Geometric Design of Highways and Streets, Fourth Edition* (2001) as references. Design criteria sheets for the urban (40 MPH – Fritz Cove Road to Waydelich Creek) and rural (50 MPH – Waydelich Creek to the AMHS Terminal) portions of the corridor are appended to this memo. We based our analysis on as-built plans and topographic surveys provided by DOT&PF and on visual observations and measurements we made in the field. Designers should confirm locations and dimensions of geometric elements if a construction alternative is advanced to the design stage.

Horizontal Curve Radii

Safe and continuous operation on curvilinear highway alignments requires proper use and placement of horizontal curves. Design standards dictate appropriate curve radii based on the speed drivers are likely to observe on a given roadway segment and the superelevation used to counteract lateral acceleration, or centripetal force. We evaluated the horizontal alignment against the posted speeds and the project design criteria.

Four horizontal curves on Glacier Highway have radii that are less than the minimum radii for both the posted and design speeds – (1) near the NMFS Auke Bay Lab, (2) at the intersection with Back Loop Road, (3) near the Auke Bay post office, and (4) at Stabler's Point.

Figure 1 - Fish lab curve looking toward Auke Bay

Figure 2 - Fish lab curve looking toward Juneau

The curve near the Auke Bay Lab has a tight radius with lead-in transition, or spiral, curves. Transition curves were often used to introduce a circular curve in a natural manner. A spiral curve has a constantly changing radius and approximates the path of a vehicle entering a circular curve, gradually introducing the lateral acceleration associated with changes in the highway alignment. DOT&PF does not use spiral curves in the design of new highway construction and current practice is to replace spiral curves on reconstruction projects.

A few characteristics of this particular curve make it unusual. The entrance and exit spiral curve length are unequal and are longer than typically used at the time the roadway was originally designed. At current design standards the circular curve radius yields an operating speed of 33 mph in an area where the 85th percentile speed is about 49 mph. Also, during a past reconstruction project, the superelevation was flattened to 4 percent. The original design likely called for 8 to 10 percent superelevation and current standards for this type of road recommend 6 percent. These characteristics contribute to the discomfort experienced by drivers on this curve.

The curve at Back Loop Road is also a spiral curve, but is part of a compound curve which drivers do not usually expect. It appears that a reconstruction project flattened a portion of this curve. The substandard curve near the post office includes spirals. Two curves just before Wadelich Creek have more than adequate radii, but are reversing curves, which is a condition that drivers do not expect. These curves are in an area of slower traffic speeds.

The last substandard curve, at Stabler's Point, is part of a series of three curves that are located in a speed zone change area. All three curves have spiral transitions, and although the curves are not reversing, tangent lengths between the curves are shorter than drivers may expect.

Vertical Grades and Curves

Vertical alignment is a function of the topography a highway traverses. Steep grades affect the performance of vehicles and the comfort of non-motorized users. Vertical

curves transition between grades in opposite directions and provide the required sight distance along the highway. Vertical grades and curves throughout the project area meet or exceed standards.

Cross Section/Clear Zone

The cross section refers to lane, shoulder and sidewalk widths, curbs, ditches and cut or fill slopes. The clear zone is the traversable area beyond the travel way that allows drivers of errant vehicles some recovery room. The pavement width throughout the corridor is typically 40.5 feet wide. The pavement widens to 52 feet near the AMHS terminal to allow a center turn lane. Glacier Highway and Mendenhall Loop Road have 8-foot shoulders on both sides of the road. The operating width on the shoulders meets standards for bicyclists. A 5.5-foot sidewalk runs on the right side of the road (facing outbound) from the UAS south entrance to Seaview Drive. There is a short stretch of sidewalk on the left side in front of the DeHart's parking lot.

Clear zones appear to be generally adequate, with guardrail in areas of steeper side slopes. The guardrail is damaged in many areas and guardrail end treatments do not meet current standards between Fritz Cove Road and Wadelich Creek. The height of guardrail above the roadway appears to be substandard in many areas along this same segment.

Figure 3 - Pedestrians on one side, sidewalk on other

Intersection Sight Distance/Layout

Sight distance and intersection control are factors that affect conflicts at intersections. All intersections with Glacier Highway are stop-controlled on the side street. Except the Glacier Highway intersection, all intersections with Back Loop Road are stop-controlled on the side street. We measured sight distance at all public street and commercial driveway intersections. All intersections meet the minimum standards for sight distance, but several intersections provide less than desirable standards.

Residents report Fritz Cove Road as an intersection with sight distance concerns, especially the inbound traffic on Glacier Highway. The guardrail, or seasonal brush growth, may contribute to feelings of discomfort at this location. We also observed potential sight distance problems at the DeHart's exit. Vehicles parking next to the DeHart's building and in parking spaces along the road can severely restrict sight distance in the direction of inbound traffic.

The Back Loop Road intersection with Glacier Highway has a less than desirable layout. Skew angles on both right and left turn lanes impact the driver's ability to take full advantage of the available sight distance. Auke Nu Drive also has an undesirable skew angle. The ideal intersection layout is to have the minor streets intersect at 90 degree angles.

Figure 4 - Fritz Cove Road – inbound traffic

Figure 5 - DeHart's Exit – inbound traffic

GLACIER HIGHWAY

HORIZONTAL CURVES

As-Built Sheet #	PS or PC sta.	PSC	PCS	PT Sta. End	Degree of Curvature	Direction of Curve	Radius (ft)	Length (ft)	Superelevation (%)	Max. Oper. Speed (MPH)	Posted Speed	Design Speed	Operating < Posted	Operating < Design
16	83+94.71	86+94.71	91+55.85	94+55.85	-7.7	Lt	749.5	461.14	4.0%	46	40		No	No
17	97+72.05	100+72.05	105+02.05	110+02.05	14.9	Rt	386.9	430.00	4.0%	33	40		Yes	Yes
17	**110+02.05**			**138+66.31**	**station equation**									
18	145+42.2	146+42.2		148+84.7	-4.0	Lt	1432.4	242.50	4.0%	64	35		No	No
18	148+84.7		150+01.9	152+01.9	-20.0	Lt	286.5	117.20	6.0%	30	35	**40**	Yes	Yes
19	**152+01.9**			**152+10.65**	**station equation**									
19	156+08.01	159+08.01	159+52.74	162+52.74	-15.0	Lt	383.1	44.73	6.0%	35	35		Yes	Yes
20	166+18.88			168+19.18	-7.0	Lt	819.0	200.30	6.0%	51	35		No	No
20	172+08.62			176+55.84	4.2	Rt	1370.0	447.22	6.0%	66	35		No	No
21	176+55.84			180+48.87	-7.0	Lt	819.0	393.03	6.0%	51	35		No	No
22	187+77.43	189+77.43	195+19.6	197+19.6	6.0	Rt	955.4	542.17	6.0%	55	35		No	No
22	197+69.17	199+19.17	202+49.04	203+99.04	-10.0	Lt	573.7	329.87	use 6%	43	45		Yes	Yes
	204+93.62			209+39.33	1.8	Rt	3246.8	445.71	use 6%	101	45		No	No
	212+24.2			217+22.77	-4.0	Lt	1450.1	498.57	use 6%	68	45	**50**	No	No
8	225+16.88			227+79.08	3.8	Rt	1519.3	262.20	4.0%	66	50		No	No
9	232+62.73			237+73.26	-2.3	Lt	2549.1	510.53	4.0%	85	50		No	No
10	239+36.63			242+42.79	3.0	Rt	1919.7	306.16	4.0%	74	50		No	No

GLACIER HIGHWAY

VERTICAL CURVES

52+00.00		0.00	NA	4.850%	
53+00.00		0.00	4.850%	4.990%	0.14
54+00.00		0.00	4.990%	4.240%	0.75
55+25.00		0.00	4.624%	5.185%	0.56
56+22.07	59+03.93	281.86	5.185%	2.780%	2.41
59+03.93		0.00	2.780%	3.210%	0.43
59+03.93	65+98.07	694.14	3.210%	-2.541%	5.75
65+98.07		0.00	-2.541%	-1.899%	0.64
65+98.07	69+69.93	371.86	-1.899%	-5.291%	3.39
70+25.00		0.00	-5.291%	-5.280%	0.01
72+25.00		0.00	-5.280%	-5.650%	0.37
73+25.00		0.00	-5.650%	-5.451%	0.20
73+42.55	76+53.45	310.90	-5.451%	-1.819%	3.63
77+25.00		0.00	-1.819%	-1.612%	0.21
76+01.27	79+95.00	393.73	-1.612%	1.219%	2.83
80+50.00		0.00	1.219%	1.200%	0.02
81+75.00		0.00	1.200%	1.184%	0.02
83+00.00		0.00	1.184%	1.300%	0.12
84+00.00		0.00	1.300%	1.144%	0.16
85+75.00		0.00	1.144%	1.030%	0.11
89+96.00	94+52.00	456.00	1.030%	-3.023%	4.05
97+66.00	101+44.00	378.00	-3.023%	-0.190%	2.83
139+40.00	144+84.00	544.00	-0.190%	-3.420%	3.23
145+86.00	148+86.00	300.00	-3.420%	-0.581%	2.84
155+45.00	160+19.00	474.00	-0.581%	0.850%	1.43
166+05.00	169+05.00	300.00	0.850%	4.060%	3.21
171+25.00	176+25.00	500.00	4.060%	-0.660%	4.72
185+50.00	188+26.00	276.00	-0.660%	0.260%	0.92
195+54.00	199+14.00	360.00	0.260%	-4.160%	4.42

Intersection with Glacier Hwy.	looking inbound (feet)	looking outbound (feet)	Speed Limit (MPH)	Desirable Sight Distance (feet)	Minimum Sight Distance (feet)
Fritz Cove Road	420	380	40	750	275
UAS Entrance	650	420	40	750	275
Fish Lab	375	450	40	750	275
Harbor Road	750	285	35	580	225
Deharts Exit	700	385	35	580	225
Back Loop to Inbound GH	900	850	35	580	225
Back Loop to Outbound GH	900	850	35	580	225
Auke Bay School Entrance	805	450	35	580	225
Baywiew Street	650	800	35	580	225
Seaview Street	900	570	35	580	225
Condos near Waydellich	950	350	35	580	225
Auke Nu	900	750	45	950	325
Spartan Dr.	420	650	45	950	325
On the right after Spartan	580	950	45	950	325
with Back Loop Rd.					
Caroline Street	400	550	35	580	225
UAS North Entrance	400	700	35	580	225

Posted Speed Limits

From	To	Speed
BOP	Auke Bay Harbor Rd.	40 MPH
Auke Bay Harbor Rd.	Waydelich Creek	35 MPH
Waydelich Creek	Allen Marine	45 MPH
Allen Marine	EOP	50 MPH

Note: Advisory plates for curves and pedestrian crossings exist

SI Stationing

Glacier Hwy	Fritz Cove Rd	89+66.
Glacier Hwy	Harbor Rd	148+24.
Glacier Hwy	Back Loop Rd	151+09.

Introduction

The purpose of this memo is to establish traffic volume forecasts for the major roadways within the Auke Bay Corridor Study. The study area includes Glacier Highway between the Ferry Terminal and Fritz Cove Road, Mendenhall Loop Road from Glacier Highway to past the University of Alaska Southeast entrance, and approaches of minor cross-streets within the project study limits.

The Design Year is 2029 for this study.

Past Work and References

- Table A1, Appendix A, of the *Juneau Access Environmental Impact Statement*, State of Alaska Department of Transportation and Public Facilities (DOT&PF), (copy of table provided by DOT&PF);
- *Southeast Area Transportation Plan* (SATP), 1999, KJS and Associates for DOT&PF;
- *Juneau Area Wide Transportation Plan* (AWTP), 2001, Kittelson and Associates for City and Borough of Juneau (CBJ);
- *Southeast Region Traffic and Report* and web-based AADT maps for years 1994 to 2001;
- *Managerial Statistics,* Albright-Winston-Zappe, Duxbury, 2000;
- *Trip Generation, 6th Edition,* Institute of Transportation Engineers;
- Unpublished work on the Port of Anchorage Intermodal Marine Facility;
- DOT&PF, Department of Labor, Department of Community and Economic Development web sites;
- *University of Alaska Southeast Campus Facilities Master Plan*, February 2002, Cunningham Group for UAS; and
- U.S. Census web site.

Past Traffic Volumes

The Department has published AADT maps for the Juneau area. The most current 5 years between 1997 and 2001 are posted on their web site. The project team obtained 1994 to 1996 AADT maps from the Department's Southeast Region Offices. Table 2 summarizes past Glacier Highway AADT within the project study area.

Year	➔ Between ➔	Auke Bay Ferry Terminal	Auke Nu Drive	Harbor Drive/ Auke Bay Float Road	Fritz Cove Road
		Auke Nu Drive	Harbor Drive/ Auke Bay Float Road	Fritz Cove Road	Engineers Cut-Off Road
1994		3,900	5,200	8,000	10,000
1995		4,010	5,390	8,320	10,200
1996		4,010	5,360	8,420	10,240
1997		4,014	5,485	9,096	11,640
1998		4,126	5,590	7,804	11,853
1999		3,986	5,460	7,684	11,743
2000		4,097	5,612	7,863	11,743
2001		4,117	5,668	7,977	12,013
1994 to 2001 Growth Rate (%/Year)		0.78%	1.24%	-0.04%	2.65%
Weighted Average		1.40%			

Table 2 - Glacier Highway 1994 to 2001 AADT

Table 3 summarizes other significant roadway AADT within the study area.

Year	Fritz Cove Road Approach To Glacier Highway	College Road- UAS South Entrance	College Road- UAS North Entrance	Mendenhall Loop Road- Glacier Highway To UAS Entrance	Mendenhall Loop Road, East Of UAS Entrance	Harbor Drive/ Auke Bay Float Road
1994	1,300	1,700	700	no data	1,700	1,400
1995	1,320	1,220	540	no data	1,510	2,540
1996	1,320	790	540	1,650	1,790	850
1997	1,316	1,728	543	2,121	1,955	850
1998	1,316	1,728	661	2,121	1,955	850
1999	1,316	1,728	661	2,121	1,915	850
2000	1,352	1,525	661	2,121	2,048	850
2001	1,352	1,525	661	2,121	2,352	850
1994 to 2001 Growth Rate (%/Year)						
	0.56%	-1.54%	-0.82%	5.15%	4.75%	-6.88%
Weighted Average		1.59%				

Table 3 - Study Area Roadway AADT, 1994 to 2001

Vehicle classification observations in the 1990s show about 4% trucks within the project limits. There are permanent traffic recorders at 16 Mile Glacier Highway, and 3 Mile Egan Drive that show the average peak hour to be about 9% of the AADT volumes (1999 *Southeast Region Traffic and Safety Report*). The 30th highest volume, normally the time of concern for design, was about 15% of the 1999 AADT. Since Table 2 shows slow growth in segment volumes,

these peak hour and design hour percentages would probably hold through 2001, and should be valid for future growth as well.

Results of Past Studies and Plans

The SATP did not address area AADT. The AWTP prepared evening peak hour forecasts for Juneau, which were presented in Figures 9A, 9B, and 9C of the plan. The AWTP documents that were downloaded from the CBJ web site did not have these figures included. A progress document, titled No Build Analysis was found on the consultant's web site, www.kittelson.com/juneauawtp/fid.htm, which contained 2020 evening peak hour volumes. These were forecasted using a 1.5% per year growth rate based on a two-decade trend area traffic growth of 2% per year, and population growth of 1% per year. This is a valid approach for the CBJ as a whole (the subject matter of the plan), and agrees very well with the compound growth rates for roadway segments shown in Tables 2 and 3 (weighted averages). In summary, the No Build Analysis memo shows:

- Ferry Terminal to Mendenhall Loop Road forecasts a 2020 pm peak volume of about 400 vehicles per hour (vph).
- Between Mendenhall Loop Road and Fritz Cove Road, the pm peak hour volume in 2020 is shown to be about 1,500 vph.
- Between Fritz Cove Road and Engineer's Cutoff Road , the forecasted 2020 pm peak hour is about 1,800 vph.
- Mendenhall Loop Road to the north of the UAS north entrance (College Road) has a 2020 pm peak hour volume of about 1,000 vph.
- The peak hour splits (inbound vs. outbound) is about 70/30 for the Glacier Highway segment between Mendenhall Loop Road and the Ferry Terminal, about 55/45 for the Glacier Highway segment between Mendenhall Loop and Engineer's Cutoff, and about 60/40 for Mendenhall Loop Road.
- An area-wide growth rate of 1.5% per year.

Method of Study

Two methods of forecasting are used for this study.

- Time Series Forecast - This method establishes the past trend for growth over time and extrapolates that trend line into the future.
- Multiple Variable Regression - In this method, traffic growth is determined from other demographic and economic variables. Several of the variables have future forecasts developed. Functional relationships of AADT, as the dependent variable, and employment, population, and university enrollment are determined through multiple variable stepwise regressions. Stepwise regression will eliminate independent variables that have insignificant influence on AADT. Future AADT can be computed by inputting the forecasted demographic and economic values into the regression equation.

Extraordinary development or traffic patterns that would be outside of the forecast relationships are considered separately. An example of this is the traffic generated by a road connection from Juneau to Skagway.

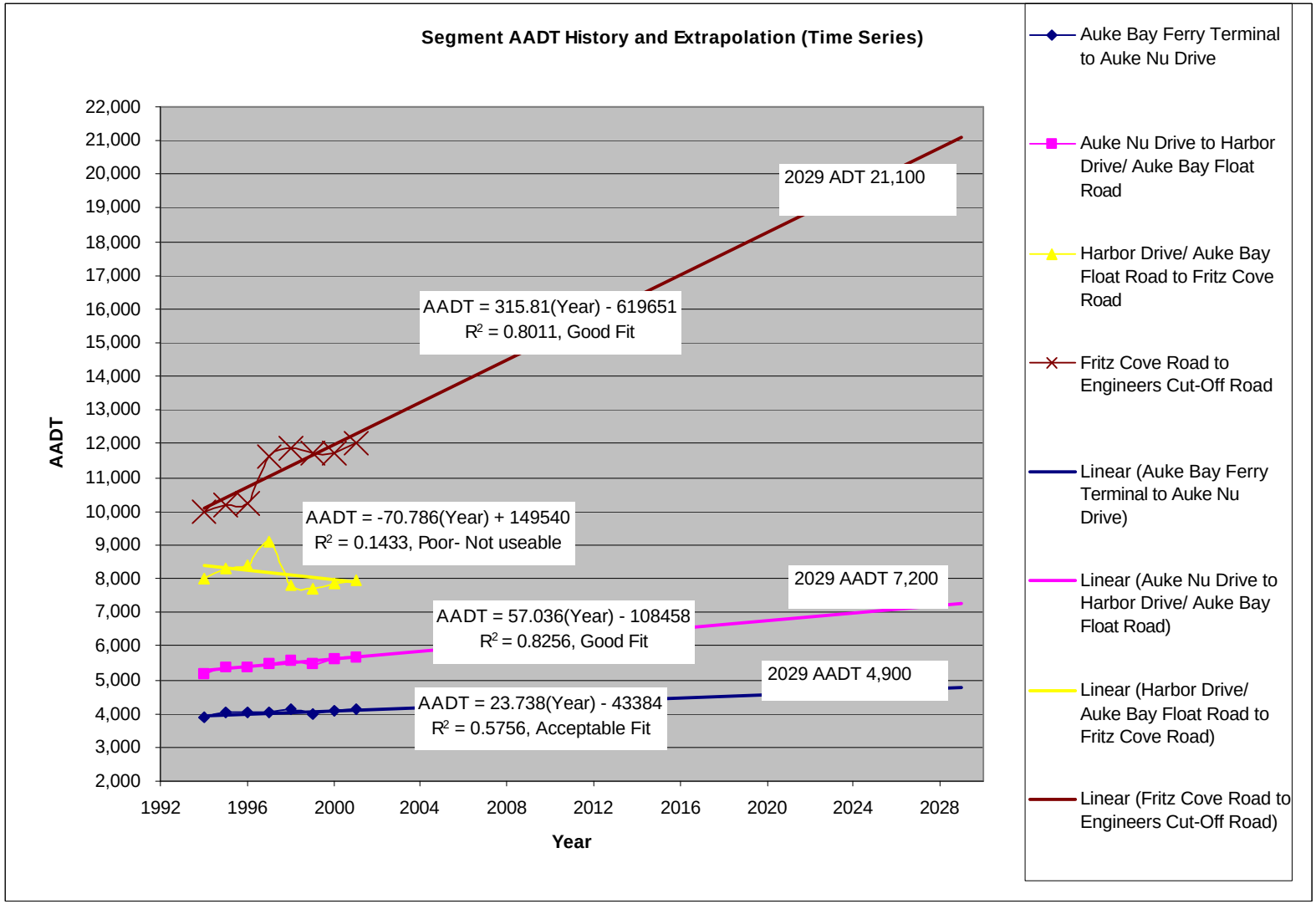

Figure 1 - AADT Time Series Forecasts

Time Series Forecast Method

Figure 1 presents the time series trend lines for segments within the project area. The trend lines shown are the best-fit relationships of those reviewed, including straight line, power, exponential, and polynomial functions.

The roadway segment between Harbor Drive/Auk Bay Float Road to Fritz Cove Road has a negative sloping trend line between 1994 and 2001, whereas the other segments show a increase in traffic over the past 8 years. This is not explained well by those data, the area it serves, nor the adjoining roadway segments. As such, it appears that these data may be erroneous and would not be applicable in this segment forecast.

The graph shows that the trend line extrapolation for the segments yields a 2029 AADT of 4,900 for the Ferry Terminal to Auke Nu Drive segment, 7,200 for the Auke Nu Drive to Harbor Drive/Auke Bay Float Road, and 21,100 for the Fritz Cove Road to Engineer's Cut-Off Road. The Harbor Drive/Auke Bay Float Road to Fritz Cove Road segment is not defined by a time-series extrapolation model, but is estimated to be about the average of the adjoining segments, or a 2029 AADT of 14,000.

Figure 1 shows than the past traffic growth trend line is best represented in a straight line, or as a uniform gradient (a constant increase in AADT per year), rather than the geometric growth (% per year increase). With the geometric growth model, using the 1.5% per year growth rate recommended by AWTP applied to the 2001 AADT, 2029 segment AADT would be computed with the following formula:

$$AADT_{2029} = AADT_{2001} \times (1.015)^{28} \text{ (Equation 1).}$$

Segment AADT volumes computed by the growth rate would be:

- 6,200 AADT for the Ferry Terminal to Auke Nu Drive Segment (significantly higher than straight line estimate of 4,900);
- 8,600 AADT for the Auke Nu Drive to Harbor Drive / Auke Bay Float Road Segment (higher than straight line estimate of 7,200);
- 12,100 AADT for the Harbor Drive / Auke Bay Float Road to Fritz Cove Road Segment (lower than the straight line estimate of 14,000); and
- 18,300 AADT for the Fritz Cove to Engineer's Cutoff Road segment (lower than the straight line estimate of 21,100).

Multiple Variable Regression Forecast Method

Five demographic and economic characteristics were selected as possible independent variables for an AADT regression model. These include:

- CBJ population;
- Immediate area population corresponding to the CBJ Service Areas 4 and 8 (pre-1997) and Geographic Areas of West Mendenhall Valley-Mendenhall Peninsula-Auke Bay and Glacier Highway Waydelich Creek to the End of Road (1997 to 2001);
- CBJ Employment;
- Immediate area employment corresponding to the 1990 Census BN 9770 and 2000 Census employment information from U.S. Census Bureau, 2000 Census of Population

& Housing, Summary File 3, Alaska Department of Labor & Workforce Development, Research & Analysis, Census & Geographic Information Network; and

- University of Alaska Southeast Enrollment, as Full-Time Equivalent Students.

Table 4 presents past population provided by CBJ, and the 2018 population forecasts prepared by the Alaska Department of Labor & Workforce Development, Research & Analysis Section.

Year	Population
1991	28,965
1992	29,251
1993	28,791
1994	29,078
1995	29,755
1996	30,093
1997	30,396
1998	30,684
2000	30,711
2001	30,903
2018 Low	33,120
2018 Medium	34,447
2018 High	37,248

Table 4 - CBJ Population by Year (No Information for 1999), with DOLForecasts for 2018

Figure 2 presents the trend line and extrapolation to year 2029 for each growth scenario (Low, Medium, High). Several forms of the trend line were reviewed and the straight line was found to be a good fit of the three growth scenarios. The model presents that the low, medium, and high population projections for CBJ in 2029 are 35,000, 37,000, and 40,000, respectively.

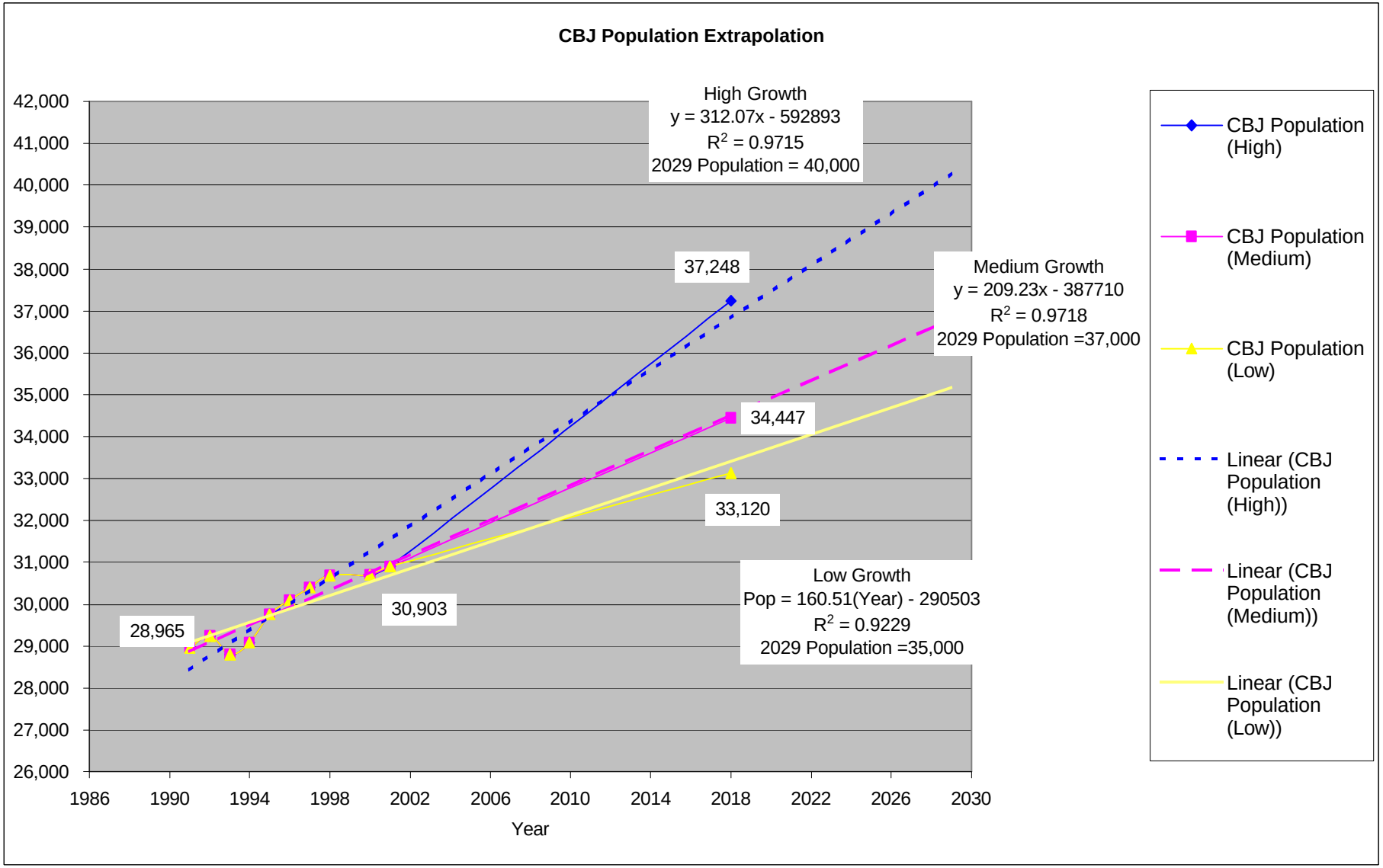

Figure 2 - CBJ Population, Past with Future Growth Scenarios

CBJ provided sub-area population information. Prior to 1997, CBJ tracked population by service areas, of which Service Areas 4 and 8 comprise the areas that are immediately served by this road project. From 1997 forward, the sub-areas were reconfigured to geographic areas of which the West Mendenhall Valley-Mendenhall Peninsula-Auke Bay Geographic Area and Glacier Highway Waydelich Creek to the End of Road Geographic Area are of interest, and approximately coincide with the service area system.

The Department of Labor tracks employment for CBJ. Sub-area employment for CBJ Service Areas 4 and 8 (Pre-1997), and the West Mendenhall Valley-Mendenhall Peninsula-Auke Bay Geographic and Glacier Highway Waydelich Creek to the End of Road Geographic Areas is available from census data. These areas approximately coincided with 1990 census area BNA 9770 and 2000 Census Tract 1 (U.S. Census Bureau, 2000 Census of Population & Housing, Summary File 3).

UAS tracks enrollment as full-time equivalent students and publishes the data within an annual report titled University of Alaska in Review. *University of Alaska Southeast Campus Facilities Master Plan, February 2002,* provided a 2012 forecast of enrollment for their planning purposes

Table 5 presents past employment, population, and enrollment parameters. Empty cells indicate that data were either not available or not obtained

Year	CBJ Employment	Immediate Sub-Area Population	Immediate Sub-Area Employment	UAS Full Time Equivalents
1990	14,425		2,067	
1991	14,385	4,051		
1992	14,974	4,046		1,042
1993	15,363	3,995		935
1994	15,419	4,074		1,059
1995	15,718	4,207		1,108
1996	16,196	4,616		1,018
1997	16,289	4,565		1,091
1998	16,178	4,566		1,037
1999	16,354			1,039
2000	16,295	4,500	2,760	1,067
2001	16,051	4,468		1,110
2012				1,870

Table 5 - Employment, Population, UAS Enrollment

Figure 3 presents the data in time-series graphical form, as well as the best-fit trend line for each parameter, and an extrapolation of the values to 2029.

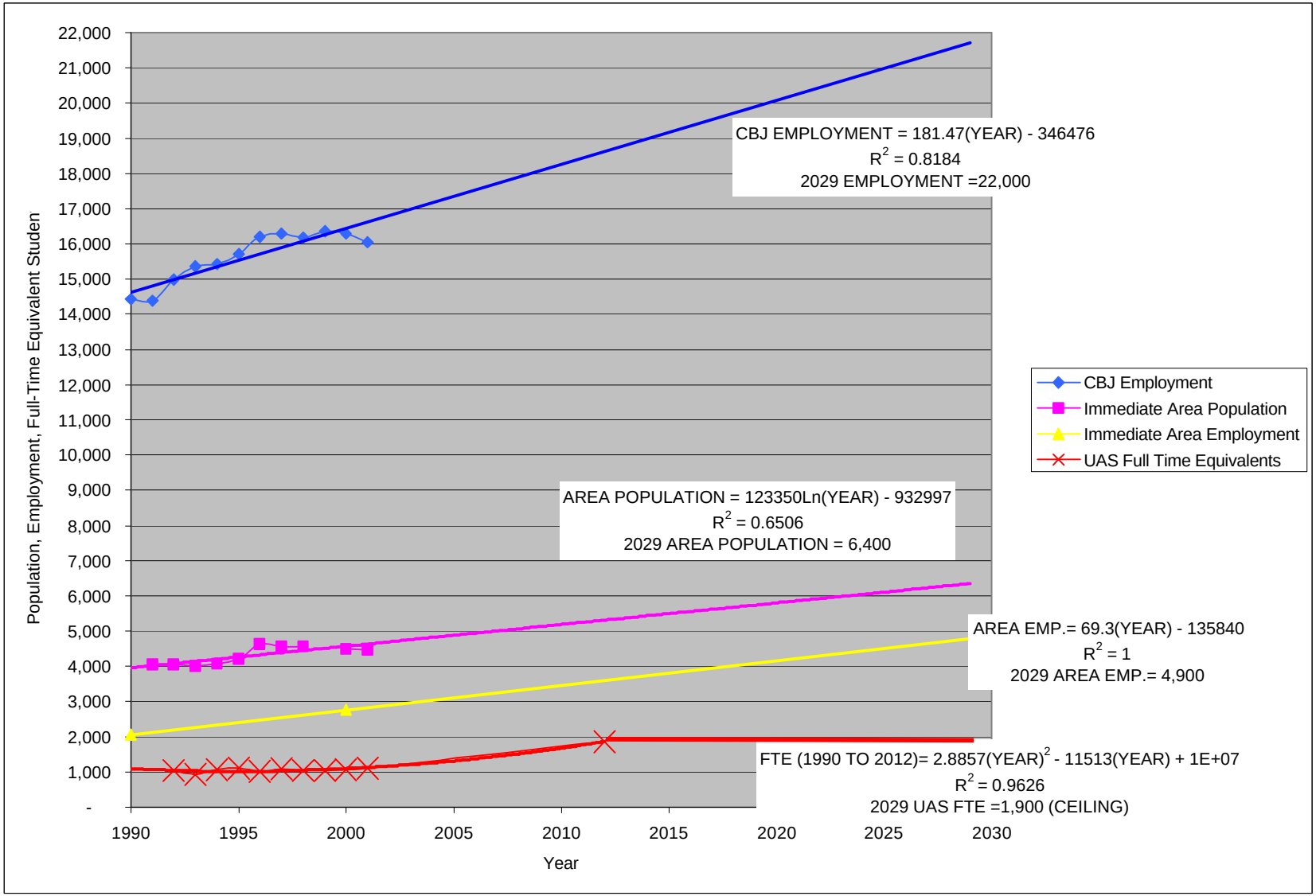

Figure 3 - Population, Employment, Enrollment Trend Lines, and Extrapolations

The demographic and economic variables were evaluated with a step-wise regression EXCEL add-in routine to determine which ones are meaningful factors in determining AADT for each roadway segment except the Harbor to Fritz Cove segment. Only CBJ Population and CBJ Employment were meaningful variables. Sub-area employment and population, and UAS enrollment were not significant in the regression function.

The regression function for the roadway between the Ferry Terminal and Auke Nu Drive is:

$AADT = 0.1014 \times CBJPopulation + 962$, (Equation 2) $R^2 = 0.62$ (reasonably good fit).

The regression function for the roadway between Auke Nu Drive and Harbor Drive/Auke Bay Float Road is:

$AADT = 0.3404 \times CBJPopulation - 0.2423 \times CBJEmployment - 947$, (Equation 3) $R^2 = 0.90$ (excellent fit).

The regression function for the roadway between Fritz Cove Road and the Engineer's Cutoff is:

$AADT = 1.2799 \times CBJPopulation - 27{,}588$, (Equation 4) $R^2 = 0.81$ (good fit).

The segment of roadway between Harbor Drive/Auke Bay Float Road cannot be estimated with a regression relationship, and therefore will be estimated as an average of the two adjoining segments.

Table 6 presents the results of these regression equations for 2029, where the CBJ Population assumes low, medium, and high growth values. These AADT presented in this table are developed from the above equations, and do not consider extraordinary development or traffic patterns. Tables 7 and 8 present construction year (2009) and mid-life (2019) AADT using the above equations.

CBJ Population Growth Scenario	➔ Between ➔	Auke Bay Ferry Terminal	Auke Nu Drive	Harbor Drive/ Auke Bay Float Road	Fritz Cove Road
		Auke Nu Drive	Harbor Drive/ Auke Bay Float Road	Fritz Cove Road	Engineers Cut-Off Road
Low		4,600	5,400	11,400	17,300
Medium		4,800	6,100	13,000	19,800
High		5,100	7,100	15,400	23,700
		Time Series Results (as comparisons)			
Uniform Gradient Time Series Forecasts		4,900	7,200	14,200	21,100
Geometric Gradient (1.5%/Year) Time Series Forecasts Using 2001 as Base		6,200	8,600	12,100	18,200

Table 6 - 2029 (Design Year) AADT Forecasts, General Demographic and Economic Factors Only

CBJ Population Growth Scenario	➔ Between ➔	Auke Bay Ferry Terminal	Auke Nu Drive	Harbor Drive/ Auke Bay Float Road	Fritz Cove Road
		Auke Nu Drive	Harbor Drive/ Auke Bay Float Road	Fritz Cove Road	Engineers Cut-Off Road
Low		4,300	***4,400***	8,900	13,400
Medium		4,300	***4,600***	9,400	14,200
High		4,500	***5,100***	10,600	16,000
		Time Series Results (as comparisons)			
Uniform Gradient Time Series Forecasts		4,300	6,100	10,500	14,800
Geometric Gradient (1.5%/Year) Time Series Forecasts Using 2001 as Base		4,600	6,400	9,400	13,600

Table 7 - 2009 (Construction Year) AADT Forecasts, General Demographic and Economic Factors Only

CBJ Population Growth Scenario	➔ Between ➔	Auke Bay Ferry Terminal	Auke Nu Drive	Harbor Drive/ Auke Bay Float Road	Fritz Cove Road
		Auke Nu Drive	Harbor Drive/ Auke Bay Float Road	Fritz Cove Road	Engineers Cut-Off Road
Low		4,400	***4,900***	10,100	15,300
Medium		4,500	***5,300***	11,100	16,900
High		4,800	6,200	13,200	20,200
		Time Series Results (as comparisons)			
Uniform Gradient Time Series Forecasts		4,600	6,700	12,200	18,000
Geometric Gradient (1.5%/Year) Time Series Forecasts Using 2001 as Base		5,400	7,400	10,500	15,700

Table 8 - 2019 (Mid-Life Year) AADT Forecasts, General Demographic and Economic Factors Only

The bold, italicized numbers in Tables 7 and 8 show that the future AADT predicted by the regression model for the Auke Nu Drive to Harbor Drive segment is actually less than the volume recorded in 2001 (5,668, Table 1). Although design year volumes predicted by the model are good, the model is weak for early life volumes. As such, the uniform growth time series is adopted for this segment as representative of future AADT growth.

The medium CBJ population growth scenario is reasonably consistent with uniform growth and geometric growth for the Ferry Terminal to Auke Nu Drive segment and Fritz Cove Road to Engineer's Cutoff Road Segment, and should be used in the growth model.

Table 9 summarizes proposed AADT volumes for the project segments based upon the above discussions.

	➔ Between ➔	Auke Bay Ferry Terminal	Auke Nu Drive	Harbor Drive/ Auke Bay Float Road	Fritz Cove Road
		Auke Nu Drive	Harbor Drive/ Auke Bay Float Road	Fritz Cove Road	Engineers Cut-Off Road
Method of Computation ➔ / **Year**		Equation 2, Medium CBJ Growth Scenario	Uniform Time Series Figure 1	Average of Segments ←➔	Equation 4, Medium CBJ Growth Scenario
2009		4,300	6,100	10,200	14,200
2019		4,500	6,700	11,800	16,900
2029		4,800	7,200	13,500	19,800

Table 9 - Traffic Forecasts for 2009, 2019, and 2029; Demographic and Economic Factors Only

The permanent traffic recorders at 16 Mile Glacier Highway (CDS MP 27.86) and 3 Mile Egan Drive (CDS MP 40.80) show that June is the highest monthly average daily traffic, at about 115% of the AADT (weighted average). In addition, the 30th highest hour volume for this area is about 15% of the AADT.

Extraordinary Traffic Generators and Traffic Patterns

We expect that the traffic yielded by the above models addresses the expansion of businesses, residential areas, institutions, and other activities within the context of current growth patterns and development. However, there are several potential developments, anticipated facilities, or transportation improvements, which are well outside of the above models and are significant traffic generators or would change circulation. These include:

- Juneau Access Road
- Regional and Community Ferry Service as described for Zone 2 of the Southeast Area Transportation Plan (SATP);
- Mendenhall Peninsula Development (330 lots potential development);
- Pedersen Hill Development (330 lots potential development);
- Lena Point Development (NOAA Facility Relocation, 100 lots); and
- University Expansion (Master Plan).

The volumes generated by these developments would overlay the base traffic forecast shown in Table 9. Each of these generators is discussed in more detail below. Other potential developments considered, but not considered extraordinary, include:

- Auke Bay Commercial Loading Facility - This was not considered because the overall context of the facility would fit within expected development patterns and area growth.
- Alaska Marine Highway Traffic Mainline Service - Additional “fast” ferries are a part of the SATP, and would be brought on-line during this project’s life. The M/V Kennicott and M/V Matanuska class mainline service would add one mainline vessel, increasing the mainline arrivals and departures to once per week. Any related traffic growth is within the model.
- Seafood Processing Plant - This facility will employ about 20 people, and will fit within the expected growth and development patterns.

- Tourism Increase - The SATP would increase ferry-oriented tourism travel. In addition, cruise-oriented tourism is expected to grow as well. However, tourism traffic growth is within the model.

Juneau Access Road

The Juneau Access Draft Environmental Impact Statement (EIS) shows that the East Lynn Canal Alternative would have a 2005 AADT of 618, and a 2025 AADT of 918. Summer peak 2005 AADT would be 1,429 and summer peak 2025 AADT would be 2,123. Other alternatives would have less impact on volumes.

For this analysis, the East Lynn Canal route is the condition of concern. The impact of the Access Road would increase AADT on all segments by 700 in 2009, 850 in 2019, and 1,000 in 2029.

Regional and Community Ferry Service

The SATP calls for regional routes and point-to-point community routes, in addition to the main line service that is now provided.

The regional route would be an Aurora class ferry (250 passengers, 34 vehicles). The plan shows one arrival and departure daily at the Auke Bay Terminal during the summer.

Community service would be provided by T-Class ferries (30 vehicles, 150 passengers), and Fast Passenger Ferries (FPF, 150 passengers). The SATP shows a summer service schedule that would have six T-Class arrivals and departures per week, and six FPF arrivals and departures per week.

The summer service is expected to extend from May to September. Winter service levels are expected to be about 40% of the summer service. Each ferry arrival and departure would require support and service. A study for the Port of Anchorage (by Kinney Engineering and Tryck Nyman Hayes) used 10 support vehicles per cruise ship docking (20 trip ends). If each vehicle carried three passengers, the number of passengers that would require surface transportation could be computed as the difference of the total passengers less the product of the number of vehicles by 3. About 50% of the passengers requiring surface transportation to or from the ferry terminal are expected to use buses, with the remainder in taxis or private automobiles (occupancy of 3 with driver). Each ferry-borne vehicle generates one trip end or one AADT. Service vehicles and passenger-transportation vehicles would generate two trip ends or 2 AADT each per arrival and departure.

Table 10 summarizes AADT that would be added to the project roadway segments with the implementation of regional and community service. The values shown apply to the entire design life.

Event	Summer Daily Frequency Arrival and Departures	Ferry Borne Vehicles	Passengers	Summer Daily Traffic (5 months)	Winter Daily Traffic (40% of Summer)	Additional AADT (Weighted Average of Summer and Winter)
Regional (Aurora Class)	2	34	250	216	86	150
T-Class	0.86	30	150	144	58	100
Fast Passenger Ferry	0.86	0	150	148	59	100
Total Ferry Oriented AADT for 2009 through 2029 for All Project Segments						**350**

Table 10 - Regional and Community Ferry-Oriented AADT

Residential / NOAA Development

Seven-hundred-sixty lots are proposed as potential development that would affect AADT on the project. The Department of Community and Economic Development web site shows in a community profile that the average family size per household is 3.1 residents. If that current occupancy is applied to the proposed potential development, then 2,400 new residents would fill the new residential areas.

The medium CBJ population growth scenario forecast shows that Juneau will have 37,000 residents in 2029, about 6,000 more than today. As such, the new development would fit within the medium growth patterns for the community.

From another perspective, Figure 3 shows that the immediate area population will grow from its current level of 4,500 to about 6,400 in 2029. The predicted growth by the existing trend line is about 1,900 trips. Therefore, only a population of 500 (total 2,400 less 1,900) should be considered as outside of the regression model limits.

The number of lots and trips generated by the developments that should be considered as extraordinary to normal development trends is proportional to the population that is considered extraordinary to population trends. By dividing 500 by 2,400, we arrive at a value of 21%.

Single-family detached dwellings generate about 9.57 trips per household daily (ITE *Trip Generation*).

The development would be phased, and is assumed 10% full in 2009, 55% full in 2019, and 100% full in 2029.

<u>Mendenhall Peninsula Development</u>

The proposed 330 lots would generate about 3,100 trips daily. At full development, about 3,100 trip ends use the roadway system, of which, 21% or 670 trips are considered outside of the above models. This subdivision would use Fritz Cove Road and Engineers Cutoff Road for access. The origin-destination study shows 65% of Fritz Cove Road traffic travels towards Juneau, 28% would travel the Harbor Road-Fritz Cove Road Segment, and 8% would travel the Ferry Terminal to Harbor Segment. Total 2029 additional AADT on this corridor would be:

- Auke Bay Ferry Terminal to Harbor Drive segment - 0, 10 and 20 trips for 2009, 2019, and 2029, respectively;

- Harbor Drive to Fritz Cove Road - 20, 100, and 180 trips for 2009, 2019, and 2029, respectively; and
- Fritz Cove Road to Engineer's Cutoff and to town - 40, 240, and 430 trips for 2009, 2019, and 2029, respectively.

Pedersen Hill Development

Pedersen Hill Development has the same trip generation and travel pattern characteristics as the Mendenhall Peninsula Development. Total 2029 additional AADT on this corridor would be:

- Auke Bay Ferry Terminal to Harbor Drive segment - 0, 10 and 20 trips for 2009, 2019, and 2029, respectively;
- Harbor Drive to Fritz Cove Road - 20, 100, and 180 trips for 2009, 2019, and 2029, respectively; and
- Fritz Cove Road to Engineer's Cutoff and to town - 40, 240, and 430 trips for 2009, 2019, and 2029, respectively.

Lena Point Residential Development

The proposed 100 lots would generate about 960 trips daily. About 21%, or 200 trips are considered outside the model. 2009, 2019, and 2029 AADT contributions to all segments of the project corridor are 20, 110 and 200, respectively, from the Lena Point Development.

Lena Point NOAA Development

The Lena Point facility is planned for 107 NOAA employees. About 95 are currently located in downtown Juneau, and 100 are currently located in the Auke Bay facility and currently use the existing corridor. The additional traffic generated by the increase in employees is insignificant and addressed within the regression models. However, since the facility will be located beyond the end of the project, the Ferry Terminal to Harbor Road segment will carry volumes that it wouldn't have if the facility was not relocated. Office employees generate about 3.32 trips per employee (ITE *Trip Generation*). Therefore, the net increase of AADT on the project segments between the Ferry Terminal and Harbor Road will be the product of 107 employees by 3.32 trips/employee or about 350 AADT. This development is expected to be on-line by 2009 and not change significantly throughout the project life.

Development Summary

Table 11 summarizes the Development Impact on AADT for all segments.

Year	Development	Between	Auke Bay Ferry Terminal	Auke Nu Drive	Harbor Drive/ Auke Bay Float Road	Fritz Cove Road
			Auke Nu Drive	Harbor Drive/ Auke Bay Float Road	Fritz Cove Road	Engineers Cut-Off Road
2009	Mendenhall Peninsula		-	-	20	40
	Pedersen Hill		-	-	20	40
	Lena Point Residential		20	20	20	20
	Lena Point NOAA		350	350		
	2009 Total AADT		**370**	**370**	**60**	**100**
2019	Mendenhall Peninsula		10	10	100	240
	Pedersen Hill		10	10	100	240
	Lena Point Residential		110	110	110	110
	Lena Point NOAA		350	350		
	2019 Total AADT		**480**	**480**	**310**	**590**
2029	Mendenhall Peninsula		20	20	180	430
	Pedersen Hill		20	20	180	430
	Lena Point Residential		200	200	200	200
	Lena Point NOAA		350	350		
	2029 Total AADT		**590**	**590**	**560**	**1,060**

Table 11 - Development-Oriented AADT

University of Alaska Southeast Campus Facilities Master Plan

As Figure 1 shows, the enrollment has been around 1,100 full time equivalent (FTE) students between 1990 and 2001, and wasn't a significant independent variable in the step-wise regression models for determining AADT. However, the UAS Master Plan forecasts a significant increase in enrollment to about 1,900 FTE by 2012, a 73% increase, which cannot be adequately addressed in the regression or time-series models. The 2009 enrollment interpolates to about 1,600 FTEs.

College Road North UAS Access off of Mendenhall Loop Road has an AADT of 661 and College Road South UAS Access has an AADT of 1,525 (Table 3). The total trips into and out of the campus at both entrances is 2,200 per day on the average, with 30% using the north entrance (off Mendenhall Loop) and 70 percent using the south entrance (off Glacier).

On the high side, the future UAS-oriented AADT is expected to increase proportionally with the 73% increase in enrollment. If so, then the south access would increase 73% and have an additional 1,100 trips added to the current AADT, and the north access would have an additional 500 trips. There is no increase projected beyond 2,012 because that is the planning horizon for the master plan.

Using similar methods, the 2009 UAS-oriented AADT would be about 45% or 1,000 trips over the current AADT.

In addition, the master plan shows that the primary campus entrance would be off Mendenhall Loop Road (scheduled for 2004). Because the primary entrance is a longer trip for most of the traffic, a strict inverse change from its current patterns would probably not be reasonable. Instead, we estimate that the new primary north entrance would have 60% of UAS trips, and the south access would have 40% trips. Table 12 presents the additional AADT on project segments that would result from the explosive enrollment increases and the traffic redistribution by the change in primary entrances. We estimated the traffic circulation patterns using the origin-destination study.

Year	➔ Between ➔	Auke Bay Ferry Terminal	Auke Nu Drive	Harbor Drive/ Auke Bay Float Road	Fritz Cove Road
		Auke Nu Drive	Harbor Drive/ Auke Bay Float Road	Fritz Cove Road	Engineers Cut-Off Road
2009		100	100	500	500
2019		100	100	800	800
2029		100	100	800	800

Table 12 - UAS-Oriented Additional AADT, By Enrollment Increases and Circulation Changes

Proposed Annual Average Daily Traffic Summary

Table 13 presents the combined AADT summary for the project segments.

Year	ADT Element	➔ Between ➔	Auke Bay Ferry Terminal	Auke Nu Drive	Harbor Drive/ Auke Bay Float Road	Fritz Cove Road
			Auke Nu Drive	Harbor Drive/ Auke Bay Float Road	Fritz Cove Road	Engineers Cut-Off Road
2009	Base		4,300	4,400	8,900	13,400
	Juneau Access		700	700	700	700
	Ferry		350	350	350	350
	Development		370	370	60	100
	UAS		100	100	500	500
	2009 Total AADT		**5,820**	**5,920**	**10,510**	**15,050**
2019	Base		4,400	4,900	10,100	15,300
	Juneau Access		850	850	850	850
	Ferry		350	350	350	350
	Development		480	480	310	590
	UAS		100	100	800	800
	2019 Total AADT		**6,180**	**6,680**	**12,410**	**17,890**
2029	Base		4,800	6,100	13,000	19,800
	Juneau Access		1,000	1,000	1,000	1,000
	Ferry		350	350	350	350
	Development		590	590	560	1,060
	UAS		100	100	800	800
	2029 Total AADT		**6,840**	**8,140**	**15,710**	**23,010**

Table 13 - 2009, 2019, and 2029 AADT

Auke Bay Corridor Turning Movement Counts, 2002 AM Peak

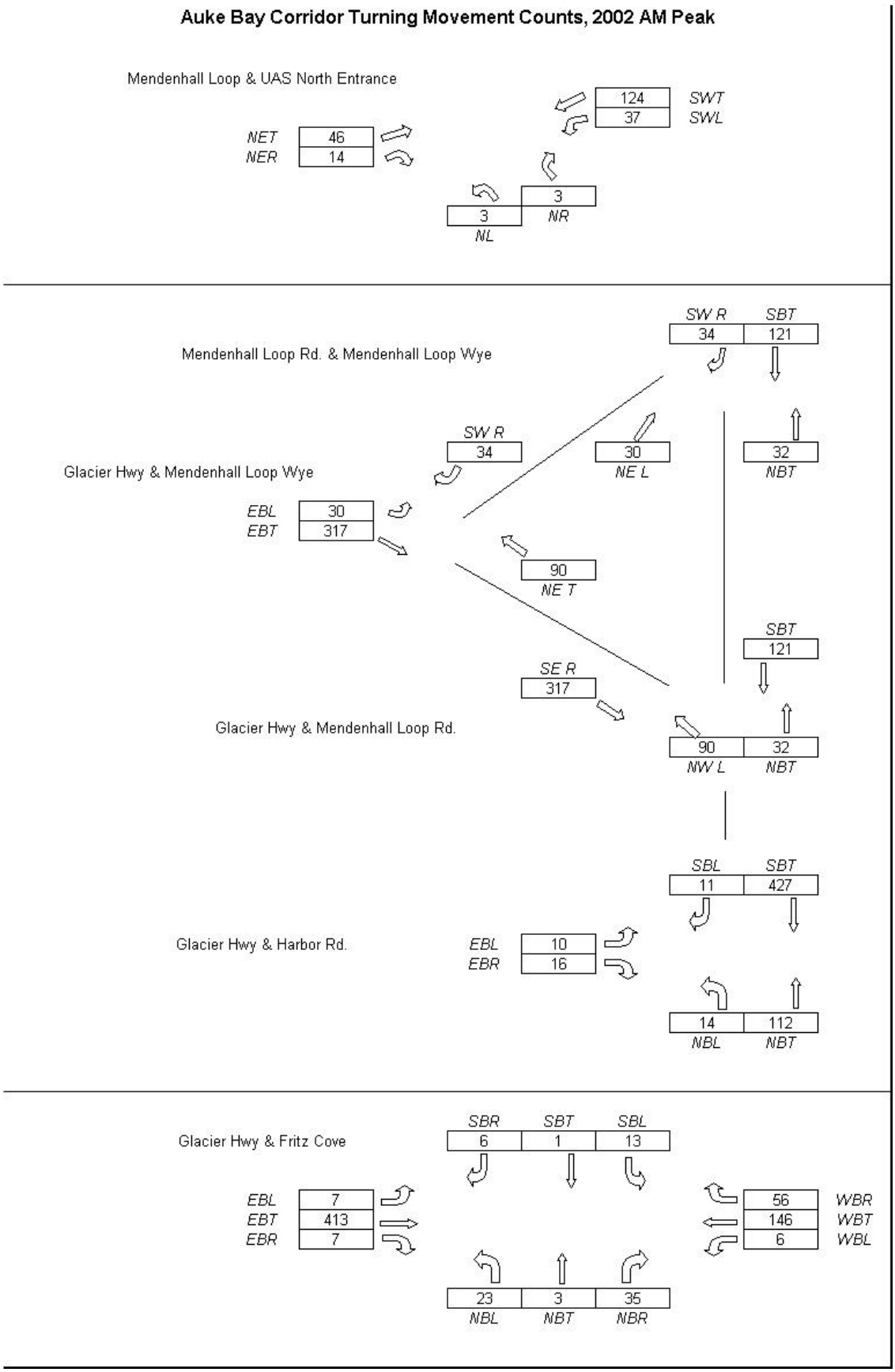

Auke Bay Corridor Turning Movement Counts, 2002 PM Peak

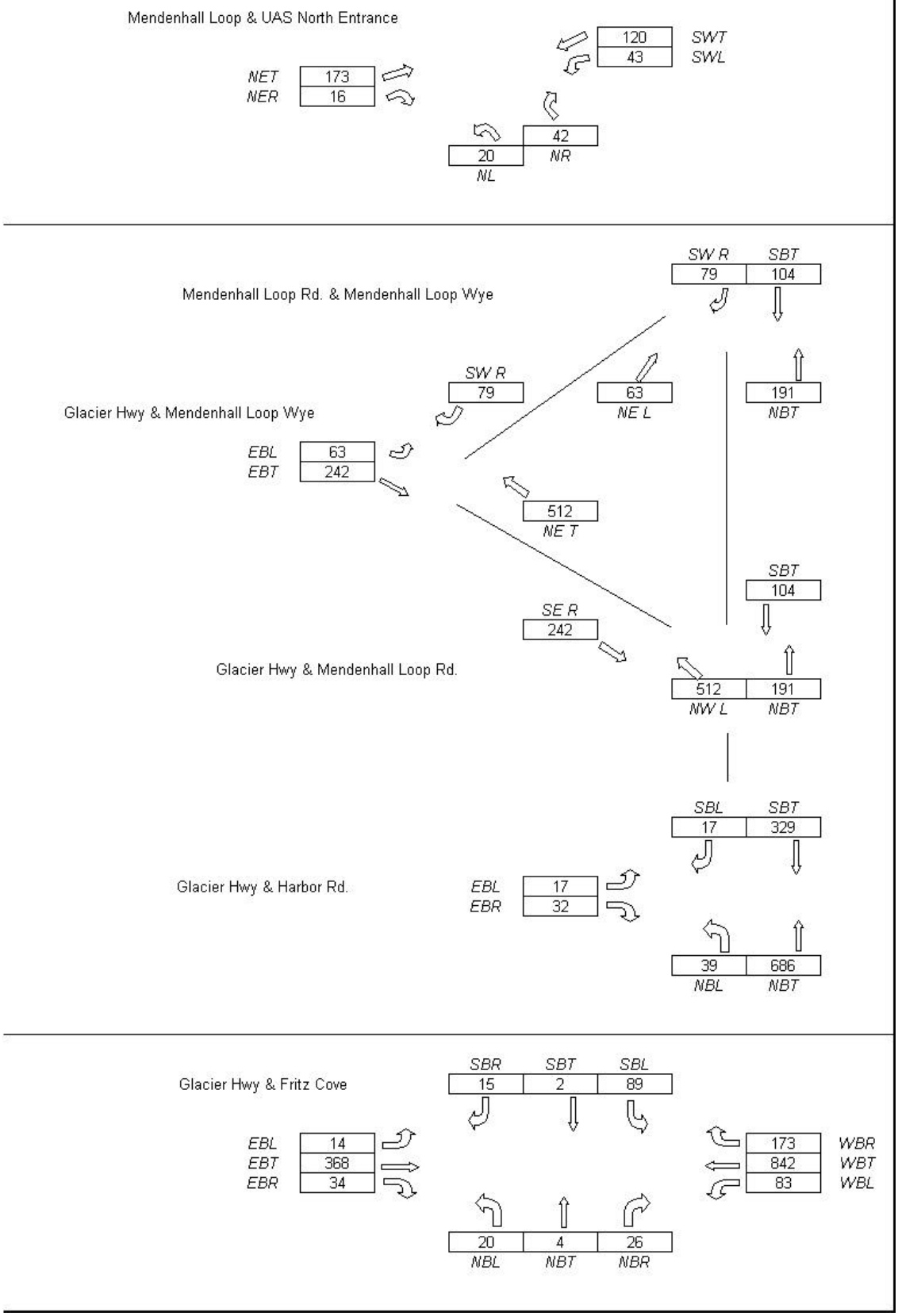

Auke Bay Corridor Turning Movement Counts, 2009 AM Peak

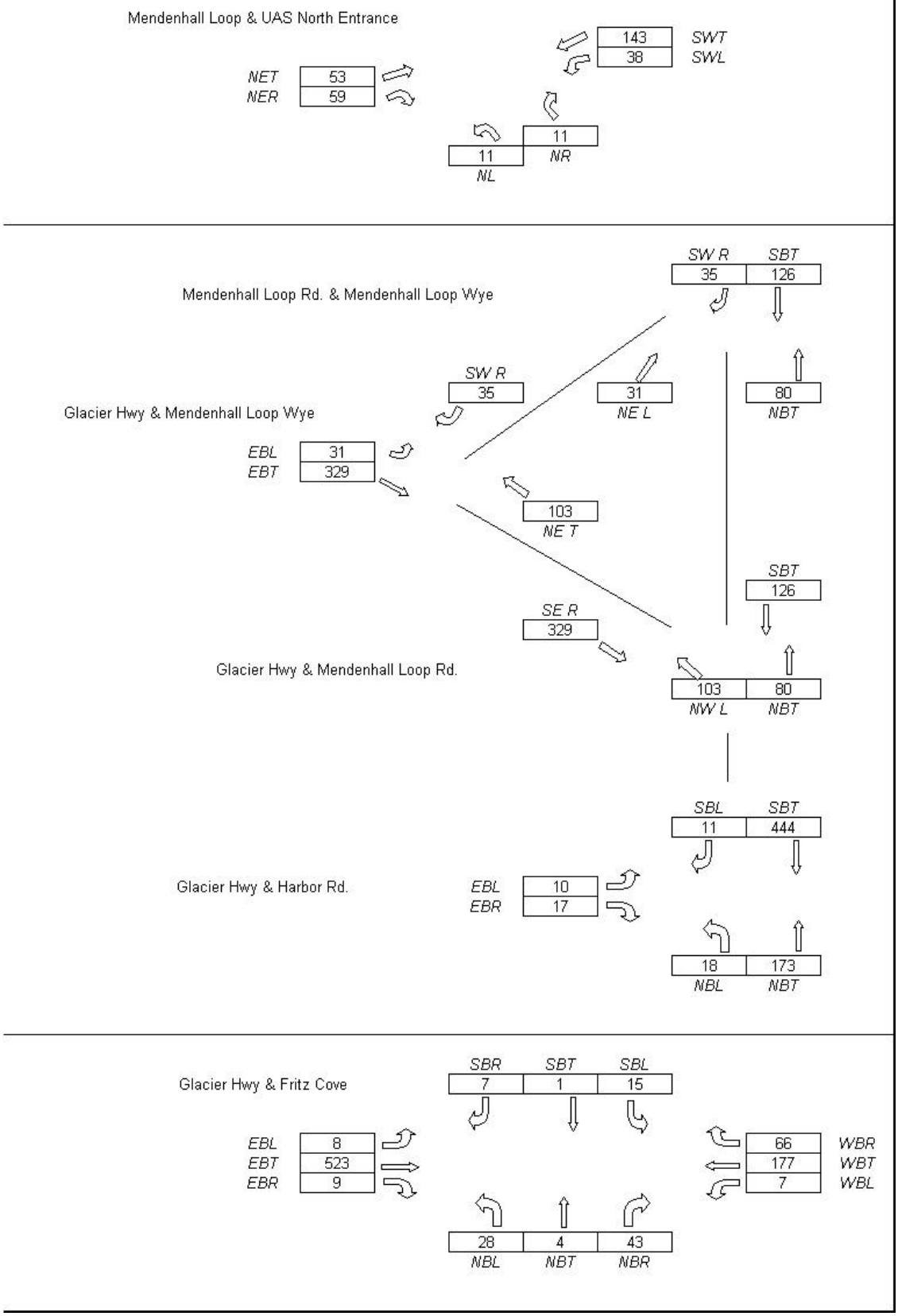

Auke Bay Corridor Turning Movement Counts, 2009 PM Peak

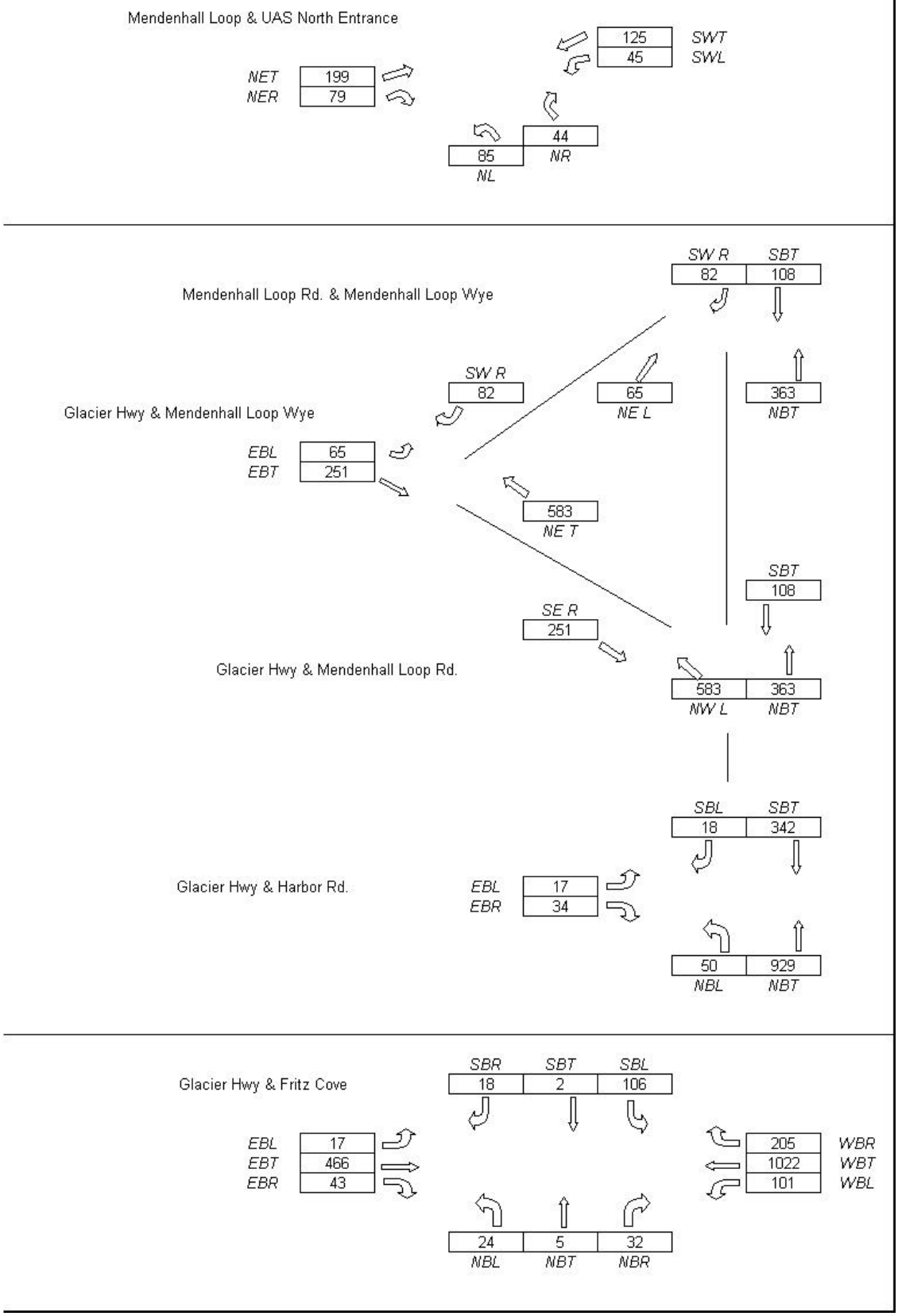

Auke Bay Corridor Turning Movement Counts, 2019 AM Peak

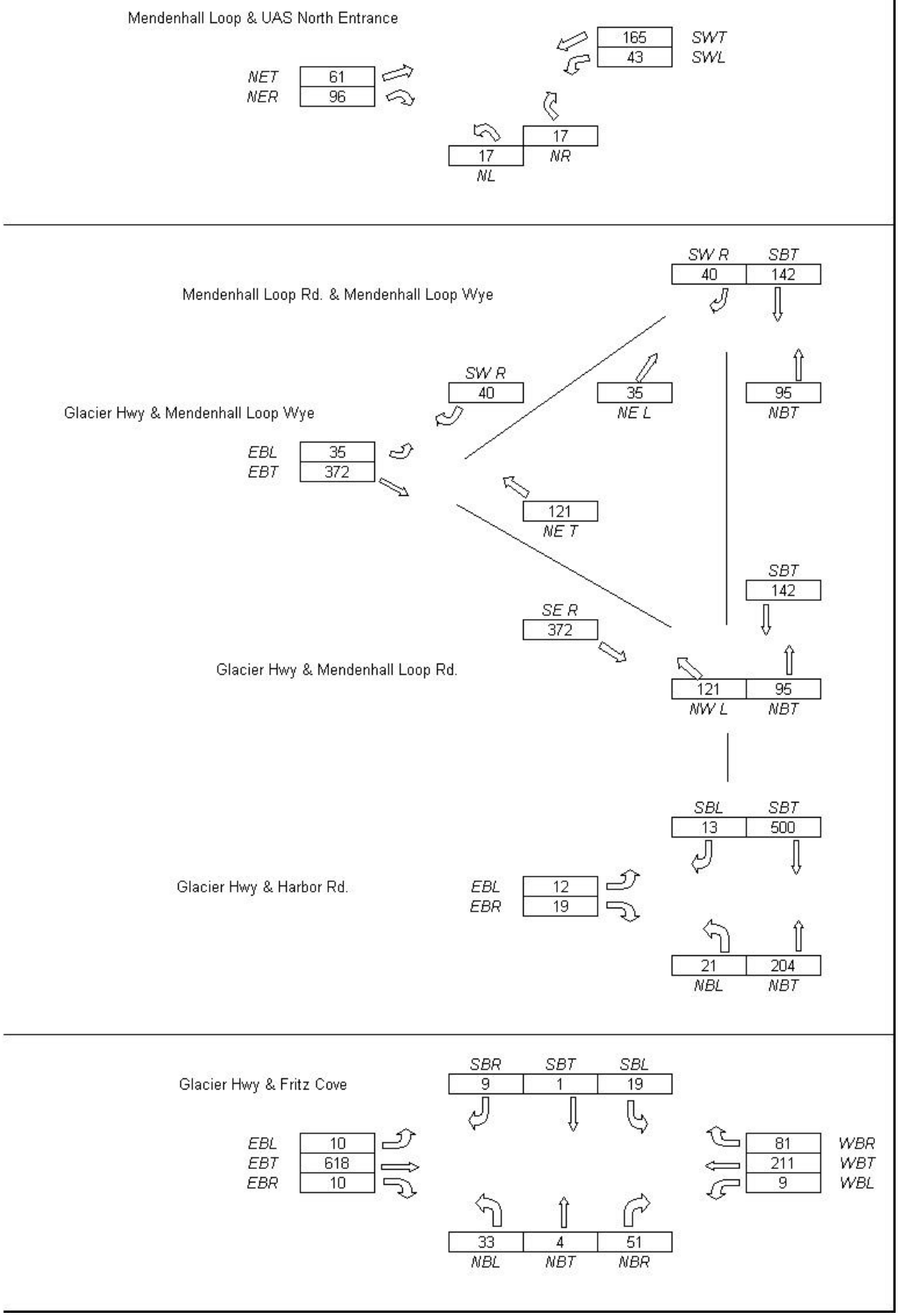

Auke Bay Corridor Turning Movement Counts, 2019 PM Peak

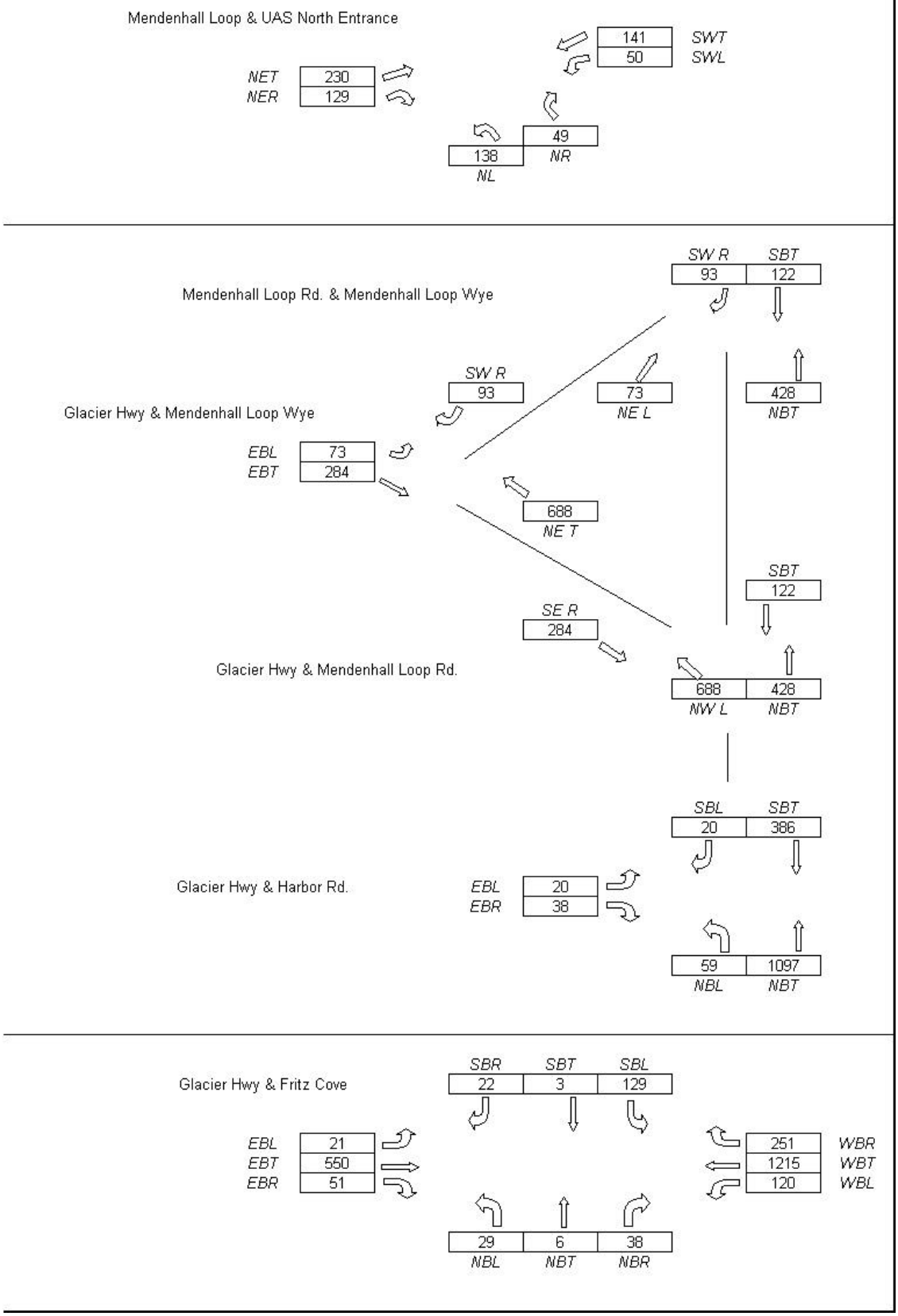

Auke Bay Corridor Turning Movement Counts, 2029 AM Peak

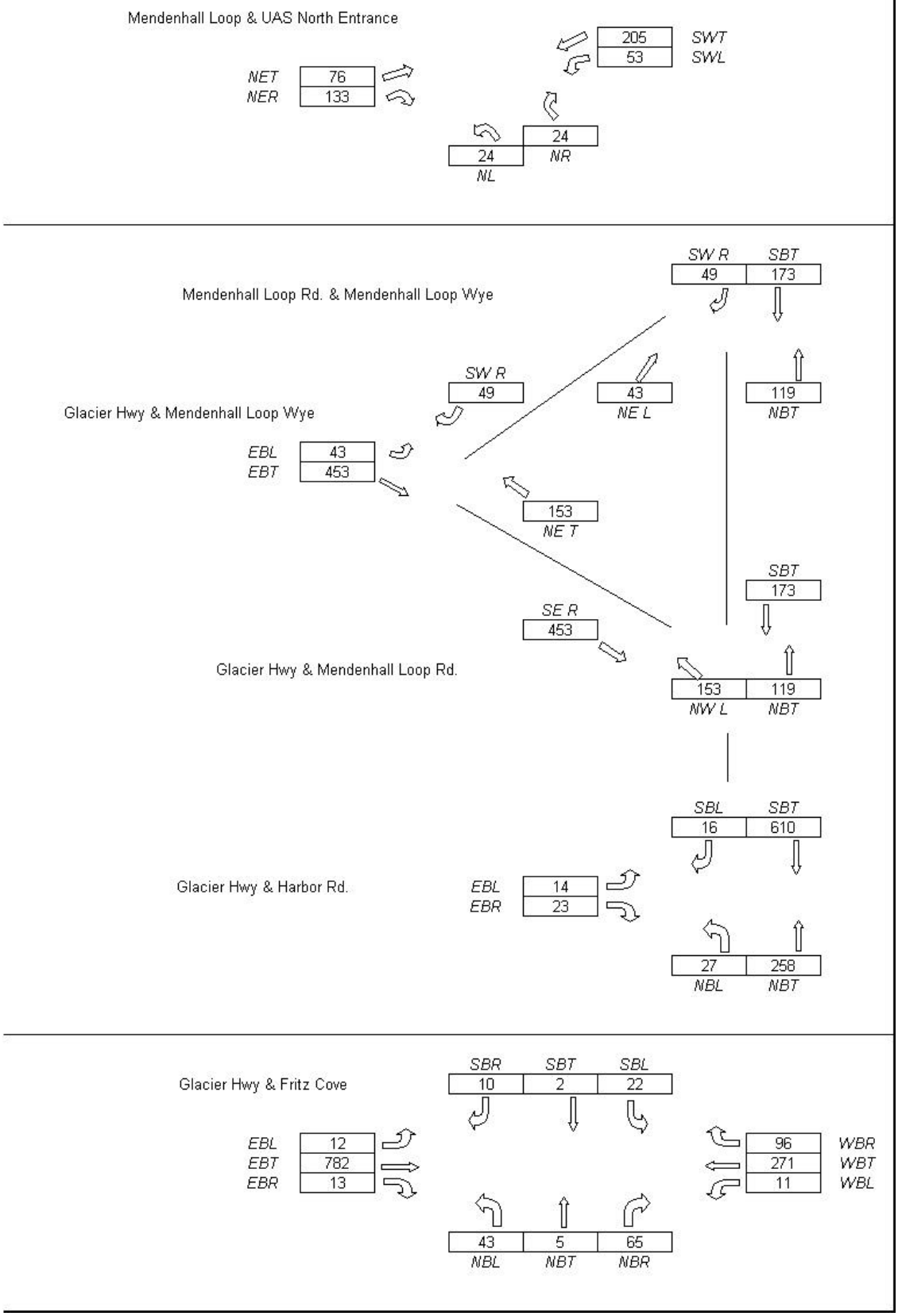

Auke Bay Corridor Turning Movement Counts, 2029 PM Peak

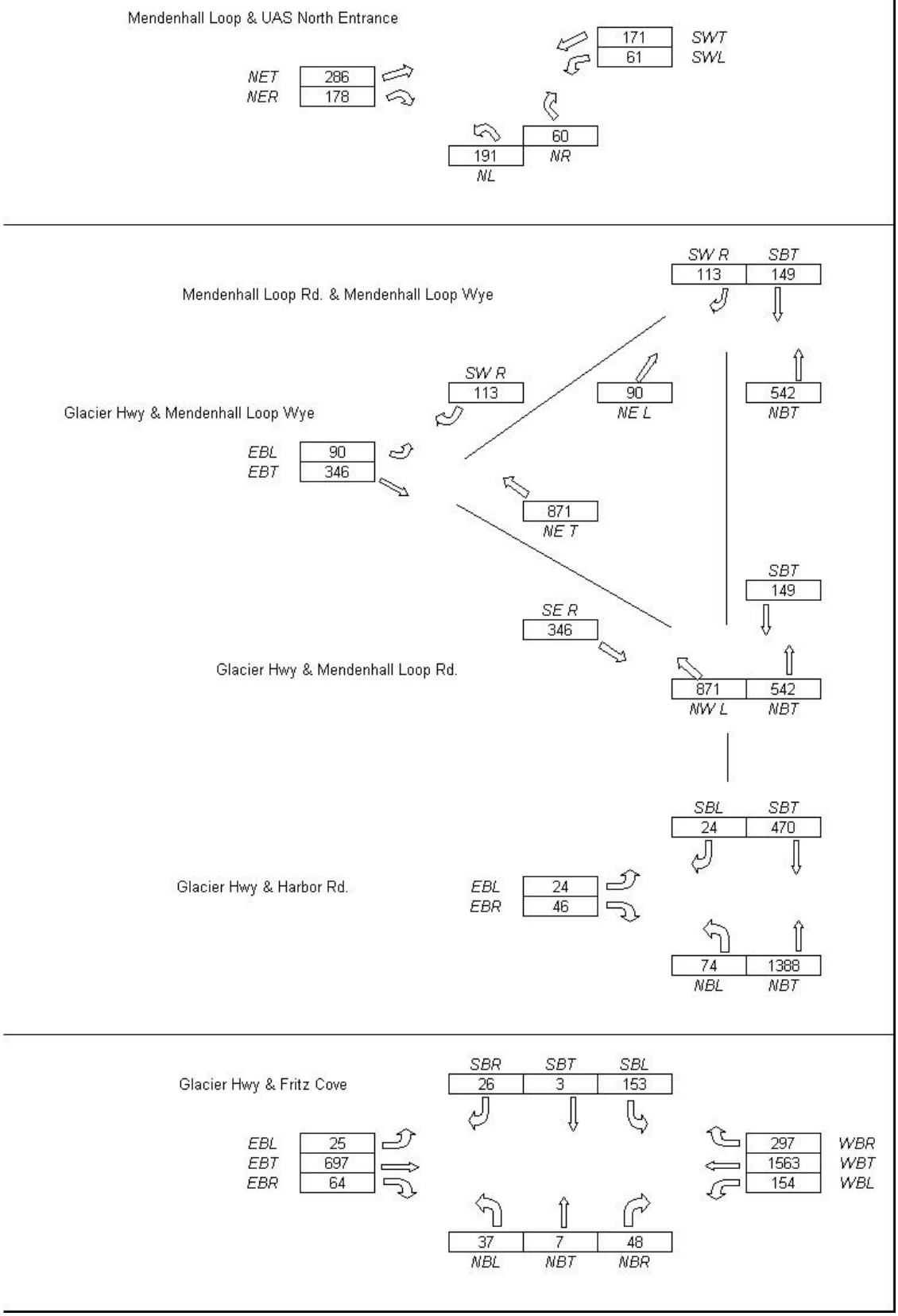

Glacier Hwy & Fritz Cove Intersection AM Turning Movement MOE Summary						
	Approach		Yr 2002	Yr 2009	Yr 2019	Yr 2029
Glacier Hwy/ Fritz Cove, AM peak	eastbound left	LOS	A	A	A	A
		v/c	0.01	0.01	0.01	0.01
		Control Delay	7.7	7.7	8	8.3
	westbound left	LOS	A	A	A	B
		v/c	0.01	0.01	0.01	0.02
		Control Delay	8.4	8.8	9.2	10
	northbound left/through/right	LOS	B	C	C	F
		v/c	0.39	0.86	0.36	0.69
		Control Delay	14.7	18	24.8	57.2
	southbound left	LOS	C	C	D	E
		v/c	0.06	0.09	0.16	0.32
		Control Delay	15.1	18.2	25.3	48.3

Glacier Hwy & Fritz Cove Intersection PM Turning Movement MOE Summary						
	Approach	MOE	Yr 2002	Yr 2009	Yr 2019	Yr 2029
Glacier Hwy/ Fritz Cove, PM peak	eastbound left	LOS	B	B	B	C
		v/c	0.02	0.03	0.05	0.09
		Control Delay	10.8	12.2	14.2	19.1
	westbound left	LOS	A	A	A	B
		v/c	0.08	0.11	0.14	0.21
		Control Delay	8.5	9	9.5	10.6
	northbound left/through/right	LOS	E	F	F	F
		v/c	0.39	0.86	2.26	13.86
		Control Delay	48.5	164.2	830	*
	southbound left	LOS	F	F	F	F
		v/c	1.45	3.44	9.65	194
		Control Delay	352.8	*	*	*

Glacier Hwy & Harbor Road Intersection AM Turning Movement MOE Summary						
	Approach	MOE	Yr 2002	Yr 2009	Yr 2019	Yr 2029
Glacier Hwy/ Harbor Road, AM peak	northbound left/through	LOS	A	A	A	A
		v/c	0.01	0.02	0.02	0.03
		Control Delay	8.5	8.6	8.8	9.3
	eastbound left/right	LOS	B	B	B	B
		v/c	0.04	0.05	0.06	0.08
		Control Delay	10.4	10.8	11.3	12.4

Glacier Hwy & Harbor Road Intersection PM Turning Movement MOE Summary						
	Approach	MOE	Yr 2002	Yr 2009	Yr 2019	Yr 2029
Glacier Hwy/ Harbor Road, PM peak	northbound left/through	LOS	A	A	A	A
		v/c	0.03	0.05	0.06	0.08
		Control Delay	8.2	8.2	8.4	8.8
	eastbound left/right	LOS	C	C	D	F
		v/c	0.14	0.19	0.29	0.59
		Control Delay	16	20.3	28.5	70

Glacier Hwy/ Mendenhall Lp Intersection AM Turning Movement MOE Summary						
	Approach	MOE	Yr 2002	Yr 2009	Yr 2019	Yr 2029
Glacier Hwy/ Mendenhall Lp., AM peak	westbound left	LOS	B	B	C	C
		v/c	0.23	0.26	0.33	0.48
		Control Delay	13.8	14.9	17.1	23.9

Glacier Hwy/ Mendenhall Lp Intersection PM Turning Movement MOE Summary						
	Approach	MOE	Yr 2002	Yr 2009	Yr 2019	Yr 2029
Glacier Hwy/ Mendenhall Lp., PM peak	westbound left	LOS	C	D	F	F
		v/c	0.36	0.48	0.69	1.34
		Control Delay	23.3	33.1	59.3	267.3

Glacier Hwy & Mendenhall Lp Wye Intersection AM Turning Movement MOE Summary						
	Approach	MOE	Yr 2002	Yr 2009	Yr 2019	Yr 2029
Glacier Hwy/ Mendenhall Lp Wye, AM peak	eastbound left/ through	LOS	A	A	A	A
		v/c	0.02	0.02	0.03	0.04
		Control Delay	7.5	7.5	7.6	7.7
	southbound right	LOS	A	A	A	A
		v/c	0.04	0.04	0.05	0.07
		Control Delay	8.9	9.1	9.2	9.5

Glacier Hwy & Mendenhall Lp Wye Intersection PM Turning Movement MOE Summary						
	Approach	MOE	Yr 2002	Yr 2009	Yr 2019	Yr 2029
Glacier Hwy/ Mendenhall Lp Wye, PM peak	eastbound left/ through	LOS	A	A	A	B
		v/c	0.06	0.07	0.08	0.12
		Control Delay	8.7	8.9	9.4	10.3
	southbound right	LOS	B	B	C	C
		v/c	0.14	0.16	0.21	0.32
		Control Delay	12.4	13.3	15.1	19.9

Mendenhall Lp/Mendenhall Lp Wye Intersection AM Turning Movement MOE Summary						
	Approach	MOE	Yr 2002	Yr 2009	Yr 2019	Yr 2029
Mendenhall Lp/ Mendenhall Lp Wye, AM peak	eastbound left	LOS	A	B	B	B
		v/c	0.04	0.05	0.06	0.08
		Control Delay	9.8	10.2	10.6	11.2

Mendenhall Lp/Mendenhall Lp Wye Intersection PM Turning Movement MOE Summary						
	Approach	MOE	Yr 2002	Yr 2009	Yr 2019	Yr 2029
Mendenhall Lp/ Mendenhall Lp Wye, PM peak	eastbound left	LOS	B	B	C	C
		v/c	0.11	0.14	0.18	0.28
		Control Delay	11.4	13.6	15.2	19.4

Mendenhall Lp/UAS North Entrance Intersection AM Turning Movement MOE Summary						
	Approach	MOE	Yr 2002	Yr 2009	Yr 2019	Yr 2029
Mendenhall Lp/ UAS North Entrance, AM peak	westbound left	LOS	A	A	A	A
		v/c	0.03	0.04	0.05	0.06
		Control Delay	7.5	7.7	7.8	8.1
	northbound left/ right	LOS	A	B	B	B
		v/c	0.01	0.03	0.06	0.1
		Control Delay	9.8	10.3	11	12.3

Mendenhall Lp/UAS North Entrance Intersection PM Turning Movement MOE Summary						
	Approach	MOE	Yr 2002	Yr 2009	Yr 2019	Yr 2029
Mendenhall Lp/ UAS North Entrance, PM peak	westbound left	LOS	A	A	A	A
		v/c	0.03	0.04	0.05	0.06
		Control Delay	7.8	8	8.3	8.7
	northbound left/ right	LOS	B	B	C	D
		v/c	0.09	0.24	0.41	0.68
		Control Delay	10.4	13.2	17.1	30.6

Measures of Effectiveness

Table-8

Goals	Objectives	Criterion / Performance Measures	Standards (Values or Practice)	Alternative Comparison Performance Measure
Goal 1: To Create a Safe Corridor	1-1 Meet current design standards for vehicles, bicycles, and pedestrians	Establish Reasonable and Defensible Traffic Volume Forecasts and Design Speeds	Design Year AADT and Peak Hour Movements, Arterial Design Speeds	-
		Roadway minimum criteria values	Individual Design Criteria Values from PCM and AASHTO (Radius, Length VC, Lane and Shoulder)	-
		% of alignment elements exceed minimum (maximum) requirements	Design Criteria Values	Comparative %
		Intersection Criteria and Guidelines (PCM, AASHTO, ITE, TRB, FHWA)	Design Year 95th Queues, Bay Tapers and Lanes for Auxiliary Lanes, Roundabouts	Number of Intersections that meet Criteria and Guidelines
		Bicycle and Pedestrian Criteria and Guidelines	Individual Design Criteria Values (Radius, Length VC, Lane and Shoulder)	-

Goals	Objectives	Criterion / Performance Measures	Standards (Values or Practice)	Alternative Comparison Performance Measure
	1-2 Reduce the number and severity of accidents	Meet minimum criteria values for all design elements	Design Criteria Values (stated in Criteria for Objective 1-1)	-
		Provide countermeasures that would predictively reduce accident rates at intersections and segments to be equal or less than the population rate	Average Rates Per HSIP	Comparative Accident Reduction of Alternatives
		Where feasible, provide countermeasures to reduce conflicts (as measured in conflict studies) at intersections that are perceived as hazardous by the public	Reduce conflicts by 25%	Comparative Conflict Reduction of the Alternative
		Average Speed	85th Percentile Speed Less than or equal to Posted Speed	Closest Travel Speed to Anticipated Posted Speed Limit
	1-3 Accommodate future traffic volumes	Meet minimum criteria values for all design elements	Design Criteria Values (stated in Criteria for Objective 1-1)	-

Goals	Objectives		Criterion / Performance Measures	Standards (Values or Practice)	Alternative Comparison Performance Measure
			Select appropriate major intersection control and configurations for traffic and pedestrians	Signal Warrants per MUTCD	-
				Future Signalization per Cal Trans Warrants	-
				Roundabout warrants/guidelines per FHWA	-
				Intersection Geometrics per AASHTO, TRB, and ITE references	-
			Access compatible with land use, road function	Medians, Auxiliary Lanes, or Center Two-Way Left Turn Lane per AASHTO, TRB, and ITE Guidelines	-
			Roadway Illumination	Per AASHTO Guidelines	-
	1-4 Investigate and address roadside boat trailer parking		Identify potential off-road separate parking areas	-	Can Alternative Provide?

Goals	Objectives	Criterion / Performance Measures	Standards (Values or Practice)	Alternative Comparison Performance Measure
	1-5 Accommodate mixed-use activities (education, tourism, recreation, etc.)	Provide at least one parking area turnout for tourists, recreation	-	Can Alternative Provide?
		Bicycle Path and Sidewalks along network	-	% of Network served by Pathways and Sidewalks
Goal 2: To Balance Accessibility and Mobility	2-1 Improve travel efficiency for local and through traffic	Intersection Level of Service	"C" or better for Design Year	Comparative LOS for intersections
		Intersection Control Delay	-	Comparative Network delay control for each intersection (Lower is Favorable)
		Intersection Volume to Capacity Ratio	V/c < 0.85	Comparative Network v/c for each intersection (Lower is Favorable)
		Intersection Queuing Penalty (product of volume affected by queue blocks by percent of time blocked)	QP = 0	Comparative Network Queuing Penalty (Lower is Favorable)

Goals	Objectives		Criterion / Performance Measures	Standards (Values or Practice)	Alternative Comparison Performance Measure
			Network Average Travel Speed	-	Difference between Travel Speed and Anticipated Posted Speed Limit (The less the difference, the more favorable)
	2-2 Increase pedestrian and bicycle connectivity and mobility		Bicycle Path and Sidewalks along network	Meets current PCM and AASHTO guidelines for path and sidewalk placement	% of Network served by Pathways and Sidewalks
			Safe Crossing Points	1/4-mile spacing, and at major generators	Alternative meets or exceeds maximum spacing?
	2-3 Maintain or improve access for emergency response		Intersections	Accommodate Turning Movements	% of Intersections that accommodate EMS vehicles
			Mobility	-	Does Alternative have shoulders or CTWLTL to allow vehicles to pull over and EMS vehicles to pass?

Goals	Objectives	Criterion / Performance Measures	Standards (Values or Practice)	Alternative Comparison Performance Measure
	2-4 Maintain or improve access for elementary school and UAS	Roadway Improvements consistent with UAS Master Plan Change of Access	-	Alternative Consistent?
		Roadway Improvements consistent with CBJ SD Long Range Plans	Consider Access, Circulation, need for pedestrian Crossings, additional auxiliary lanes	Alternative Consistent?
Goal 3: To Develop a project that is Compatible with the Human and Natural Environment	3-1 Minimize impacts to the natural environment	Estimate CO and N0x Emission	-	Comparative emissions
		Natural areas that are disturbed	-	Area of Land disturbed by Alternative
	3-2 Minimize social and economic impacts	Right-of-way	-	Area of Land required by alternative

Goals	Objectives		Criterion / Performance Measures	Standards (Values or Practice)	Alternative Comparison Performance Measure
			Access	-	Number of Vehicles redirected by access reconfigurations
			Parking	Existing or CBJ standards	Parking Spaces Lost
	3-3 Actively involve the public		Consistent Communications	Public involvement Plan	Which alternative preferred by public?
	3-4 Be consistent with existing and future land use plans		Traffic Volume Forecasts consistent with CBJ zoning, future development, and future extension of JNU Access Road?	-	Are Volumes used for Alternatives consistent?
			Roadway Improvements consistent with CBJ zoning, future development, future extension of JNU Access Road?	-	Are Alternatives consistent?
	3-5 Enhance the community of Auke		Gateways	-	Does Alternative have a gateway?

Goals	Objectives	Criterion / Performance Measures	Standards (Values or Practice)	Alternative Comparison Performance Measure
	Bay.	Amenities and Beautification	-	Does the Alternative have pedestrian amenities, rest areas, scale lighting, landscaping, beautification?
Goal 4: To Develop a Project That is Feasible	4-1 To develop a project that is Financially Feasible	Project Budget	-	Is Alternative within budget?
	4-2 Develop a project that has community acceptance	Community Acceptance	-	Is Alternative accepted by Community?