Repair of Reinforced Concrete Bridge Columns via Plastic Hinge Relocation

Volume 3: Design Guide

Prepared By:
Zachary F. Krish, Ph.D.
Mervyn J. Kowalsky, Professor, Ph.D.
James M. Nau, Professor, Ph.D.
Rudolf Seracino, Professor, Ph.D.

Prepared For:
Alaska Department of Transportation & Public Facilities
Research, Development, and Technology Transfer
P.O. Box 112500
3132 Channel Drive
Juneau, Alaska 99811-2500

and

Federal Highway Administration
P.O. Box 21648
709 West 9th Street
Juneau, Alaska 99802-1648

REPORT DOCUMENTATION PAGE

Form approved OMB No.

Public reporting for this collection of information is estimated to average 1 hour per response, including the time for reviewing instructions, searching existing data sources, gathering and maintaining the data needed, and completing and reviewing the collection of information. Send comments regarding this burden estimate or any other aspect of this collection of information, including suggestion for reducing this burden to Washington Headquarters Services, Directorate for Information Operations and Reports, 1215 Jefferson Davis Highway, Suite 1204, Arlington, VA 22202-4302, and to the Office of Management and Budget, Paperwork Reduction Project (0704-1833), Washington, DC 20503

1. AGENCY USE ONLY (LEAVE BLANK)	2. REPORT DATE	3. REPORT TYPE AND DATES COVERED
4000(142)	September 30, 2018	Final Report, May 2015 through September 2018

4. TITLE AND SUBTITLE

Repair of Reinforced Concrete Bridge Columns via Plastic Hinge Relocation
Volume 3: Design Guide

5. FUNDING NUMBERS
Federal #: 4000(142)
IRIS #: Z839740000

6. AUTHOR(S)
Zachary F. Krish, Ph.D.
Mervyn J. Kowalsky, Professor, Ph.D.
James M. Nau, Professor, Ph.D.
Rudolf Seracino, Professor, Ph.D.

7. PERFORMING ORGANIZATION NAME(S) AND ADDRESS(ES)
Alaska Department of Transportation and Public Facilities
Research, Development & Technology Transfer
3132 Channel Drive
Juneau, Alaska 99811-2500

8. PERFORMING ORGANIZATION REPORT NUMBER
4000(142)

9. SPONSORING/MONITORING AGENCY NAME(S) AND ADDRESS(ES)
State of Alaska, Alaska Dept. of Transportation and Public Facilities
Research and Technology Transfer
3132 Channel Drive
Juneau, AK 99801-7898

10. SPONSORING/MONITORING AGENCY REPORT NUMBER
4000(142)

11. SUPPLEMENTARY NOTES

12a. DISTRIBUTION / AVAILABILITY STATEMENT
Copies available online at http://www.dot.alaska.gov/stwddes/research/search_lib.shtml

12b. DISTRIBUTION CODE

13. ABSTRACT (Maximum 200 words)
This document is meant to act as a standalone design guide for implementation of the plastic hinge relocation repair method for reinforced concrete bridge columns presented in Volume I of this report.

14- KEYWORDS :
Reinforced concrete bridges, Repairing, Earthquake resistant design, Plastic hinge relocation, Buckled reinforcement, Fractured reinforcement

15. NUMBER OF PAGES
71

16. PRICE CODE
N/A

17. SECURITY CLASSIFICATION OF REPORT	18. SECURITY CLASSIFICATION OF THIS PAGE	19. SECURITY CLASSIFICATION OF ABSTRACT	20. LIMITATION OF ABSTRACT
Unclassified	Unclassified	Unclassified	None

Notice

This document is disseminated under the sponsorship of the U.S. Department of Transportation in the interest of information exchange. The U.S. Government assumes no liability for the use of the information contained in this document.

The U.S. Government does not endorse products or manufacturers. Trademarks or manufacturers' names appear in this report only because they are considered essential to the objective of the document.

Quality Assurance Statement

The Federal Highway Administration (FHWA) provides high-quality information to serve Government, industry, and the public in a manner that promotes public understanding. Standards and policies are used to ensure and maximize the quality, objectivity, utility, and integrity of its information. FHWA periodically reviews quality issues and adjusts its programs and processes to ensure continuous quality improvement.

Author's Disclaimer

Opinions and conclusions expressed or implied in the report are those of the author. They are not necessarily those of the Alaska DOT&PF or funding agencies.

SI* (MODERN METRIC) CONVERSION FACTORS

APPROXIMATE CONVERSIONS TO SI UNITS

Symbol	When You Know	Multiply By	To Find	Symbol
		LENGTH		
in	inches	25.4	millimeters	mm
ft	feet	0.305	meters	m
yd	yards	0.914	meters	m
mi	miles	1.61	kilometers	km
		AREA		
in^2	square inches	645.2	square millimeters	mm^2
ft^2	square feet	0.093	square meters	m^2
yd^2	square yard	0.836	square meters	m^2
ac	acres	0.405	hectares	ha
mi^2	square miles	2.59	square kilometers	km2
		VOLUME		
fl oz	fluid ounces	29.57	milliliters	mL
gal	gallons	3.785	liters	L
ft^3	cubic feet	0.028	cubic meters	m^3
yd^3	cubic yards	0.765	cubic meters	m^3
		NOTE: volumes greater than 1000 L shall be shown in m^3		
		MASS		
oz	ounces	28.35	grams	g
lb	pounds	0.454	kilograms	kg
T	short tons (2000 lb)	0.907	megagrams (or "metric ton")	Mg (or "t")
		TEMPERATURE (exact degrees)		
°F	Fahrenheit	5 (F-32)/9 or (F-32)/1.8	Celsius	°C
		ILLUMINATION		
fc	foot-candles	10.76	lux	lx
fl	foot-Lamberts	3.426	candela/m^2	cd/m^2
		FORCE and PRESSURE or STRESS		
lbf	poundforce	4.45	newtons	N
lbf/in^2	poundforce per square inch	6.89	kilopascals	kPa

APPROXIMATE CONVERSIONS FROM SI UNITS

Symbol	When You Know	Multiply By	To Find	Symbol
		LENGTH		
mm	millimeters	0.039	inches	in
m	meters	3.28	feet	ft
m	meters	1.09	yards	yd
km	kilometers	0.621	miles	mi
		AREA		
mm^2	square millimeters	0.0016	square inches	in2
m^2	square meters	10.764	square feet	ft^2
m^2	square meters	1.195	square yards	yd^2
ha	hectares	2.47	acres	ac
km^2	square kilometers	0.386	square miles	mi^2
		VOLUME		
mL	milliliters	0.034	fluid ounces	fl oz
L	liters	0.264	gallons	gal
m^3	cubic meters	35.314	cubic feet	ft^3 m^3
	cubic meters	1.307	cubic yards	yd^3
		MASS		
g	grams	0.035	ounces	oz
kg	kilograms	2.202	pounds	lb
Mg (or "t")	megagrams (or "metric ton")	1.103	short tons (2000 lb)	T
		TEMPERATURE (exact degrees)		
°C	Celsius	1.8C+32	Fahrenheit	°F
		ILLUMINATION		
lx	lux	0.0929	foot-candles	fc
cd/m^2	candela/m^2	0.2919	foot-Lamberts	fl
		FORCE and PRESSURE or STRESS		
N	newtons	0.225	poundforce	lbf
kPa	kilopascals	0.145	poundforce per square inch	lbf/in^2

*SI is the symbol for the International System of Units. Appropriate rounding should be made to comply with Section 4 of ASTM E380.
(Revised March 2003)

TABLE OF CONTENTS

LIST OF TABLES iii
LIST OF FIGURES iv
DEFINITION OF NOTATIONS v
Chapter 1: Introduction 1
Chapter 2: Structural Assessment 2
2.1 Scope 2
2.2 Determine Structural Adequacy 2
2.3 Assess Repairability of Damaged Bridge 3
2.3.1 Local member assessment 3
2.3.2 Global structure assessment 4
Chapter 3: Repair Design Procedure 15
3.1 Annulus with conventional RC materials 15
3.1.1 Design Procedure 16
Chapter 4: Material Specifications 30
4.1 Annulus with conventional RC materials 30
4.1.1 Grout 30
4.1.2 Concrete 31
4.1.3 Steel 33
4.1.4 Welding 34
4.1.5 Epoxy 34
Chapter 5: Repair Installation Procedure 36
5.1 Annulus with conventional RC materials 36
Chapter 6: Design Example 47
6.1 Example #1 – Column with Buckled Bars 47
6.1.1 Problem Description 47
6.1.2 Structural Assessment 48
6.1.3 Repair Design Procedure 52
6.1.4 Check displacement capacity of repaired column 54
6.2 Example #2 – Column with Fractured Bars 57
6.2.1 Problem Description 57

6.2.2 Structural Assessment 57
6.2.3 Repair Design Procedure 57
6.2.4 Check displacement capacity of repaired column 58
REFERENCES 59

LIST OF TABLES

Table 2.1: Ductile RC column performance descriptions; adapted from (Hose, 2001) 4
Table 2.2: Bounding probabilities for example calculation 10
Table 2.3: Bounding probabilities for example calculation after interpolation of residual drift 10
Table 2.4: Bounding probabilities for example calculation after interpolation of L/D ratio 10
Table 2.5: Residual drift fragility parameters for $\varepsilon_t = 0.01$. 11
Table 2.6: Residual drift fragility parameters for $\varepsilon_t = 0.02$. 12
Table 2.7: Residual drift fragility parameters for $\varepsilon_t = 0.03$. 13
Table 2.8: Residual drift fragility parameters for $\varepsilon_t = 0.04$. 14
Table 3.1: Quantities required from moment-curvature analysis of full cross section 18
Table 4.1: Grout specification; adapted from (Matsumoto 2001) 31
Table 4.2: Prequalified chemical adhesive chart (Provided by AKDOT) 35
Table 6.1: Example 1 probability of exceedance for defined strain limit states 50
Table 6.2: Example 1 fragility calculations at each strain limit state 51
Table 6.3: Example 1 moment curvature quantities.....52

LIST OF FIGURES

Figure 2.1: Elastic stiffness of cracked reinforced concrete sections; reproduced from (Priestley, Seible, & Calvi, 1996). 5
Figure 2.2: Excerpt of fragility parameter table for example calculation 9
Figure 3.1: Examples of annulus repair with conventional RC materials using (a) steel sleeve; and (b) discrete transverse hoops 15
Figure 3.2: Overstrength material properties for moment-curvature analysis 17
Figure 3.3: Expected strength moment-curvature material property considerations for displacement response predictions 18
Figure 3.4: Idealized force transfer from column to repair 20
Figure 3.5: Bilinear Force vs. Displacement approximation for repaired column 27
Figure 3.6: Bilinear Force vs. Displacement approximation for repaired column with ruptured longitudinal bars not restrained against debonding 27
Figure 5.1: Existing plastic hinge (a) before and; (b) after crushed core removal 37
Figure 5.2: Repair bar drilling to avoid J-Hooks in specimen footing 38
Figure 5.3: Setup for (a) core drilling and; (b) hammer drilling 38
Figure 5.4: Redhead two-part epoxy application system 39
Figure 5.5: Final installation of repair bars with epoxy 40
Figure 5.6: Installation of two-part epoxy into footing 40
Figure 5.7: Installation of patch grout on top of footing 41
Figure 5.8: Tack welds along seam to hold sleeve and backer bar in place 42
Figure 5.9: Welding the two halves of steel sleeve 42
Figure 5.10: Completed butt weld on steel sleeve 43
Figure 5.11: Steel sleeve with threaded rod spacers bearing against column 43
Figure 5.12: Completed rebar cage for annular repair technique 44
Figure 5.13: Completed rebar splice groove weld 45
Figure 6.1: Example 1 structural configuration. 47
Figure 6.2: Example 1 site hazard. 48
Figure 6.3: Example 1 plot of fragility curves. 52
Figure 6.4: Example 2 structural configuration 57

DEFINITION OF NOTATIONS

$A_{g,c}$	Gross cross sectional area of original column
$A_{g,r}$	Gross cross sectional area of repair annulus
$A_{h,r}$	Area of transverse steel reinforcement in repair (taken as t_j if steel sleeve is used)
$A_{s,r}$	Total area of longitudinal steel in repair annulus
$c_{o,r}$	Cover to centroid of transverse steel in repair annulus
$d_{bl,c}$	Diameter of longitudinal repair bar
$d_{bl,r}$	Diameter of longitudinal bar in original column
D_c	Outer diameter of original column
D_r	Outer diameter of repair annulus
E_{conc}	Elastic modulus of repair concrete
E_{grout}	Elastic modulus of repair grout
$E_{s,c}$	Modulus of longitudinal steel in original column
$E_{sh,c}$	Modulus of transverse steel in original column (~29,000ksi, 400MPa)
$E_{s,r}$	Modulus of longitudinal steel in repair (~29,000ksi, 400MPa)
$E_{sh,r}$	Modulus of transverse steel in repair (~29,000ksi, 400MPa)
EI_{eff}	Effective section stiffness of repaired column
$f'_{c,c}$	Nominal unconfined concrete strength in original column
$f'_{c,r}$	Nominal unconfined concrete strength in repair
$f'_{cc,c}$	Nominal confined concrete strength in original column
$f'_{ce,c}$	Expected unconfined concrete strength in original column
$f'_{co,c}$	Overstrength concrete strength in original column (~$1.7f'_{c,c}$)
$f'_{ce,c}$	Expected concrete strength in original column (~$1.3f'_{c,c}$)
$f_{u,c}$	Nominal ultimate stress of column longitudinal bars
$f_{y,c}$	Nominal yield stress of column longitudinal bars
$f_{y,r}$	Nominal yield stress of repair longitudinal bars
$f_{ye,c}$	Expected yield stress of longitudinal steel in original column
$f_{yhe,c}$	Expected yield stress of transverse steel in original column
$f_{yh,r}$	Nominal yield stress of transverse steel in repair
$f_{yo,c}$	Overstrength yield stress of longitudinal steel in original column

I_e	Effective moment of inertia of column cross section
I_g	Gross moment of inertia of column cross section
$I_{g,r}$	Gross moment of inertia of repair annulus
L_c	Overall clear length of original column
L_{eff}	Effective length of column above repair
L_{pt}	Rectangular tension based plastic hinge length
L_{prt}	Triangular tension based plastic hinge length
L_r	Length of repair
$L_{sp,c}$	Strain penetration length of column longitudinal reinforcement
$L_{sp,r}$	Strain penetration length of repair longitudinal reinforcement
$M_{b,r}$	Proportion of total base moment demand distributed to the repair
$M_{ue,c}$	Expected ultimate moment at critical column cross section
$M_{ue,rup}$	Expected ultimate moment at critical column cross section with ruptured longitudinal bars
$M_{uo,c}$	Overstrength ultimate moment at critical column cross section
$M_{uo,rup}$	Overstrength ultimate moment at critical column cross section with ruptured longitudinal bars
$M_{ye,c}$	Expected yield moment at critical column cross section
$M_{ye,rup}$	Expected yield moment at critical column cross section with ruptured longitudinal bars
$M_{y,r}$	Yield moment of repair annulus
P	Axial load
s_r	Spacing of transverse steel in repair (taken as 1.0 if steel sleeve is used)
V_C	Concrete component of shear strength
V_S	Steel component of shear strength
$V_{cap,r}$	Shear capacity of repair annulus
V_r	Repair shear demand
$\Delta_{e,c}$	Elastic component of displacement due to column flexure above repair
$\Delta_{e,r}$	Elastic component of displacement due to column rotation within the repair
$\Delta_{e,sp}$	Elastic component of displacement due to column strain penetration
$\Delta_{e,rr}$	Elastic component of displacement due to rigid repair rotation

$\Delta_{e,rr,rup}$	Elastic component of displacement due to rigid repair rotation considering column with ruptured longitudinal bars
$\Delta_{p,c}$	Plastic component of displacement due to column flexure above repair
$\Delta_{p,r}$	Plastic component of displacement due to column rotation within the repair
$\Delta_{p,sp}$	Plastic component of displacement due to column strain penetration
$\Delta_{p,rr}$	Plastic component of displacement due to rigid repair rotation
$\Delta_{p,rr,rup}$	Plastic component of displacement due to rigid repair rotation considering column with ruptured longitudinal bars
Δ'_y	Total yield displacement of repaired member
Δ_u	Total ultimate displacement of repaired member
ε_{bb}	Max tension strain prior to longitudinal bar buckling
ε_y	Nominal yield strain of longitudinal steel
ε_{ye}	Expected effective yield strain of longitudinal steel
$\rho_{l,r}$	Longitudinal steel ratio in repair annulus ($A_{s,r}$ / $A_{g,r}$)
$\rho_{s,c}$	Volumetric ratio of transverse steel in original column
$\rho_{s,r}$	Volumetric ratio of transverse steel in repair
$\phi_{ue,c}$	Expected ultimate curvature of original column cross section
$\phi'_{ye,c}$	Expected yield curvature of original column cross section
ϕ_f	Flexural strength reduction factor
ϕ_s	Shear strength reduction factor

Greek Alphabet

Α	α	Alpha
Β	β	Beta
Γ	γ	Gamma
Δ	δ	Delta
Ε	ε	Epsilon
Ζ	ζ	Zeta
Η	η	Eta
Θ	θ	Theta
Ι	ι	Iota
Κ	κ	Kappa
Λ	λ	Lambda
Μ	μ	Mu
Ν	ν	Nu
Ξ	ξ	Xi
Ο	o	Omicron
Π	π	Pi
Ρ	ρ	Rho
Σ	σ	Sigma
Τ	τ	Tau
Υ	υ	Upsilon
Φ	ϕ	Phi
Χ	χ	Chi
Ψ	ψ	Psi
Ω	ω	Omega

Chapter 1: Introduction

This document is meant to act as a stand-alone design manual to aid in the decision making, design, and implementation processes associated with the plastic hinge relocation repair techniques presented in Volumes I and II of this report. The recommendations provided herein are prescriptive in nature and are limited only to those necessary to analyze the in-place system, design the required repair, and install the final system. The intent is to provide guidance that can be quickly and easily understood and implemented during a crisis situation. Where applicable, references are provided to the relevant volume and sections to which the reader should consult if further information is desired. The remainder of the document is divided into the following chapters:

Chapter 2: Structural Assessment – This chapter provides guidelines for the initial assessment of the damaged structure and recommendations for whether the plastic hinge relocation repair method is appropriate. Consideration is also given to the global state of the structure with regards to residual deformations present following the initial damage.

Chapter 3: Repair Design Procedure – This chapter outlines the procedure an engineer should follow when designing the plastic hinge relocation repair.

Chapter 4: Material Specifications – This chapter provides supplemental material specifications that are relevant to the plastic hinge relocation repair. These specifications are to be used along with those already presented in the AKDOT Standard Specifications for Highway Construction.

Chapter 5: Repair Installation Procedure – This chapter outlines the repair installation procedure, and provides commentary on potential issues that could arise during the construction process.

Chapter 6: Design Examples – This chapter provides detailed design examples in which the plastic hinge relocation repair is applied to varies structural configurations and damage conditions.

Chapter 2: Structural Assessment

2.1 Scope

This chapter provides guidance on the initial decision-making process of whether the damaged structure is a candidate for the plastic hinge relocation repair method proposed in this report. The major factors affecting this decision are the details of the original bridge structure and the level of damage present following the initial seismic event. Post-earthquake assessment of structures is not a new topic and much research has focused on the quantification of structural capacity following these events. The Caltrans research report titled *"Visual Inspection & Capacity Assessment of Earthquake Damaged Reinforced Concrete Bridge Elements"* (Caltrans, 2008) specifically addresses many of the issues related to the types of bridges to which the plastic hinge relocation repair is meant to be applicable, and will therefore provide the basis of the assessment process outlined in the following sections.

2.2 Determine Structural Adequacy

The nature of a plastic hinge relocation repair requires that damage to the original structure be limited to localized flexural damage within the plastic hinge regions. This requires that the structure is designed with modern capacity protection design principles, which ensure that undesirable modes of failure do not occur. Therefore, the details of the bridge must first be checked to ensure the structure meets these requirements.

Modern, well-designed reinforced concrete bridges are expected to behave in a ductile manner, developing local plastic hinges as a means to dissipate earthquake forces. Earlier bridge designs do not have adequate detailing to develop these characteristics, and therefore should not be considered for a plastic hinge relocation repair. Caltrans (2008) defines structures as behaving on three distinct performance curves: Ductile, Strength Degrading, and Brittle. A ductile structure is desirable, whereas a strength degrading or brittle structure would not perform as intended with

a plastic hinge relocation repair application. Thus, assuming the design details of the original member provide adequate ductile response to sustain the deformation demands, and the rest of the structure remains capacity protected under the repaired configuration, the structure is considered suitable for this type of repair.

2.3 Assess Repairability of Damaged Bridge

The next step of the assessment process is to determine whether the damage to the structure falls within an appropriate range for this repair method. Damage is first evaluated at the local member level, followed by the global system level.

2.3.1 Local member assessment

Damage states to reinforced concrete members typically follow the well-defined progression outlined in Table 2.1. Existing repair methods, such as restoration of the existing cross section and additional confinement via steel jacketing (Chai, Priestley, & Seible, 1991) or FRP wraps (Vosooghi & Saiidi, 2013), have been shown to be adequate for damage states corresponding to Damage Level IV or lower. Given that these methods are far less extensive from a design and implementation perspective, it is recommended that Damage Level V represent a lower bound of local member damage requiring plastic hinge relocation. Assuming that the structure has not reached a fully collapsed state (i.e. Damage Level VI), it is assumed from experimental results that the plastic hinge relocation method is capable of restoring the functionality of the structure. Therefore, the upper bound of repairable damage is not limited by the local damage of the individual member, but by the global state of the structure, as defined in the following section.

Table 2.1: Ductile RC column performance descriptions; adapted from (Hose, 2001)

Damage Level	Performance Level	Qualitative Performance Description	Quantitative Performance Description
I	Cracking	Onset of hairline cracks	Barely visible residual cracks
II	Yielding	Theoretical first yield of longitudinal reinforcement	Residual crack width ~0.008 in
III	Initiation of Plastic Hinge	Initiation of inelastic deformation. Onset of concrete cover spalling.	Residual crack width 0.04 in – 0.08 in. Length of spalled region > 1/10 cross section depth.
IV	Full Development of Plastic Hinge	Wide crack widths / cover spalling over full plastic hinge region	Residual crack width > 0.08 in. Diagonal cracks extend over 2/3 cross section depth. Length of spalled region > 1/2 cross section depth.
V	Strength Degradation	Buckling/fracture of main reinforcement. Rupture of transverse reinforcement. Crushing of core concrete.	Lateral capacity below 85% of maximum. Measurable dilation > 5% of original member dimension.
VI	Collapse	Complete collapse of structure.	Complete loss of lateral and vertical load carrying capacity.

2.3.2 Global structure assessment

As stated previously, it is assumed that the bridge has been designed to modern standards, and therefore damage to the superstructure and capacity protected elements should be minimal. However, the displacements expected during a large magnitude event will likely result in some level of residual drift in the structure leaving it vulnerable to instability and collapse in a future earthquake. Current code-based residual drift limits are prescriptive in nature and typically do not account for the specific structural type or repair application considered. As a consequence, these recommendations are often overly conservative when considering the availability of a repair that can effectively restore the initial stiffness and performance of the original member.

To address this shortcoming, a study was conducted considering the performance of structures with varying levels of residual drift when repaired using the plastic hinge relocation method and subjected to a second earthquake. The details of this study are presented in Chapter 7 of Volume I of this report; however, the methodology to assess the future performance of such a structure is outlined as follows. Note the current study is limited to the response of single cantilever reinforced concrete columns. These results can be extrapolated to other systems; however, the behavior of these systems have not been directly investigated as of yet.

<u>Step 1:</u> Determine the effective first mode period of the structure

The effective first mode period of the structure is calculated based on the repaired structural geometry and considers the effects of the softening of the column due to the initial loading. While the fragility study considers only single cantilever columns, the effective first mode period can be determined for any bent configuration assuming the stiffness is calculated considering the same principles outlined below.

1. *<u>Effective stiffness of relocated hinge cross section</u>*

   The effective stiffness of the column cross section is determined using any rational analysis technique, considering the material properties and configuration of the repaired column. Figure 2.1 provides an example of a graphical method by which the effective stiffness can be obtained. Note that this figure refers to the undamaged column, and the resulting value should be reduced to account for softening of the steel due to prior loading. It is recommended that the elastic stiffness ratio be reduced by 0.5 if obtained from this, or a similar design method. The effective section stiffness, EI_{eff}, is simply that defined by Equation 2-1. A direct moment-curvature analysis can also be used to obtain the effective section stiffness where the steel properties can be directly modified to account for reduced stiffness. In this case, no reduction is required.

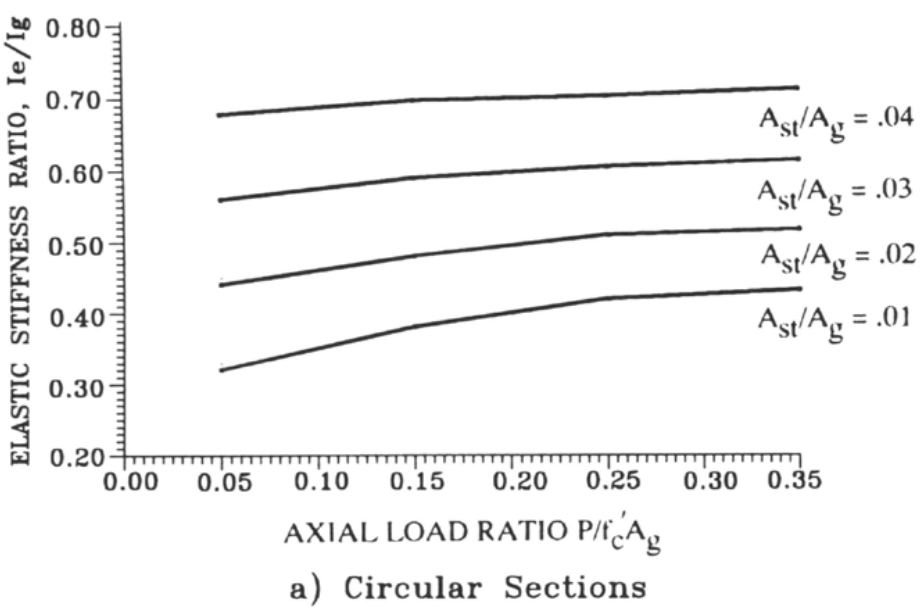

Figure 2.1: Elastic stiffness of cracked reinforced concrete sections; reproduced from (Priestley, Seible, & Calvi, 1996).

$$EI_{eff} = 0.5E_c\left(I_e/I_g\right) \qquad \textit{Equation 2-1}$$

Where,

$$E_c = \begin{cases} 57,000\sqrt{f'_c} & (psi) \\ 4,700\sqrt{f'_c} & (MPa) \end{cases} \qquad \textit{Equation 2-2}$$

2. <u>*Nominal moment strength of relocated hinge section*</u>

   The nominal moment strength of the relocated hinge will be equal to that of the original column, given that all of the original bars remain. However, if the cross section has been modified, or if the original moment strength is unknown, the nominal strength of the section can be estimated from the effective stiffness and expected yield curvature, as shown in Equation 2-3 and Equation 2-4.

$$\phi_{ye,c} = \frac{2.25\varepsilon_{ye}}{D_{col}} \quad \textit{Where:} \quad \varepsilon_{ye} = 2\varepsilon_y \qquad \textit{Equation 2-3}$$

$$M_n = EI_{eff}\phi_{ye,c} \qquad \textit{Equation 2-4}$$

3. <u>*Stiffness reduction due to residual drift*</u>

   The initial residual drift in the system will result in a reduced effective stiffness due to geometric nonlinearity. This reduction is assumed to be directly proportional to the ratio of the P-Delta moment induced by the nonlinearity to the overall nominal moment capacity of the cross section, M_n. A stiffness reduction factor, λ, is introduced to account for this and is calculated from Equation 2-5 below, where P is the total axial load in the column and Δ_r is the actual residual drift distance (not the % drift).

$$\lambda = 1 - \frac{P\Delta_r}{M_n} \qquad \textit{Equation 2-5}$$

4. *Determine the bent stiffness*

   The effective bent stiffness is then calculated using the same stiffness equations as would be used for a new design analysis. The equation for a single bending column is presented in Equation 2-6. Note that L_c is used, which corresponds the overall clear span of the column, and not the effective repaired length, L_{eff}. This is to account for the additional flexibility introduced by strain penetration in the repair.

$$k_{eff} = \lambda \frac{3EI_{eff}}{L_c^{\,3}} \qquad \textit{Equation 2-6}$$

5. *Calculate the effective first mode period*

   Finally, with the effective stiffness of the column, the effective first mode period can be found using Equation 2-7.

$$T_{1eff} = 2\pi\sqrt{\frac{P/g}{k_{eff}}} \qquad \textit{Equation 2-7}$$

Step 2: Determine the design hazard level

The hazard intensity measure on which the fragility curves are developed is the spectral displacement at the effective first mode period, Sd_{T1}. This was the parameter which most closely correlated with the prediction of strain limit states which will be used to determine structural performance. However, most design codes today utilize acceleration response spectra, as opposed to displacement response spectra. Therefore, the design spectral acceleration is obtained as it would be for a typical design and converted to a spectral displacement demand using Equation 2-8.

$$Sd_{T1} = \frac{Sa_{T1}}{\omega^2} = \frac{Sa_{T1}\left(T_1^2\right)}{4\pi^2} \qquad \textit{Equation 2-8}$$

Step 3: Use fragility functions to calculate probability of exceeding limit state

The fragility functions are developed to consider a range of structural configurations, residual drifts, and potential limit states. Table 2.5 through Table 2.8 provide the median (θ) and standard deviation of the natural log of Sd_{T1} (β) that results in exceedance of the specified limit

state for each combination. Each table corresponds to a single limit state, ranging from $\varepsilon_t = 0.01$ to $\varepsilon_t = 0.04$. With these values, along with the hazard demand calculated in Step 2, the probability of exceedance can be calculated from the cumulative distribution function (CDF) of a lognormal distribution considering these parameters. The CDF value can be found using any statistical or spreadsheet software (i.e. Excel). To calculate the probability of exceedance using Excel, the command presented in Equation 2-9 is used.

$$=\text{NORM.DIST}(x, \mu, \beta, \text{TRUE})$$

Where,

$$x = \ln(Sd_{T1})$$

$$\mu = \ln(\theta)$$

Equation 2-9

The tables are arranged by rows of nominal residual drift (Δ_r *Nom*), longitudinal steel ratio (*LS Ratio*), and axial load ratio (*ALR*) and four columns of varying slenderness ratios (*L/D*). Note that the *L/D* considered in these tables corresponds the effective repaired column length, L_{eff}, as opposed to the total clear height, L_c, used in the period calculation. The nominal residual drift refers to that which was initially specified in the geometry of the analysis model. With the consideration of geometric nonlinearities, the application of axial load results in additional deformation prior to the nonlinear time-history analysis (NLTHA). The measured drift following the application of axial load is considered the actual residual drift value (Δ_r *Actual*) and should be used when calculating the fragilities.

To illustrate how these tables are used, consider a structure with the following parameters:

$$L/D = 4.5$$

$$ALR = 7\%$$

$$LS\ Ratio = 2.5\%$$

$$\Delta_R = 2.5\%$$

$$Sd_{T1} = 14in$$

and assume that the probability of exceeding peak tension strains of $\varepsilon_t = 0.02$ should be limited to 20%. This limit state is not meant to be an actual recommendation but is provided for demonstration. Limit states should be defined based on acceptable levels of risk, and will vary depending on application and user.

Note that the specified parameters do not precisely correspond to the tabulated values. In this case it is first necessary to find all possible bounding solutions to determine the probability of exceeding the limit state. Table 2.6 is used to determine the fragility parameters θ and β, an excerpt of which is presented in Figure 2.2 with the bounding parameters highlighted. Calculating the probabilities of each bounding case using Equation 2-9 results in the range of probabilities presented in Table 2.2. Since the allowable limit falls within the range of bounding probabilities, it is necessary to interpolate the results. Probabilities are always first interpolated based on the actual residual drift level such that all results represent the observed value, Δ_r *Actual* = 2.5%, as shown in Table 2.3. Since the resulting probabilities still bound the acceptable limit, the probabilities are then interpolated based on *L/D* ratio, as shown in Table 2.4. This results in a 45-55% probability of exceeding the defined strain limit state, which is greater than the allowable 20% probability of exceedance. Therefore, the damage to the structure would be considered too great, and repair should not be considered.

			L/D = 2			L/D = 4			L/D = 6			L/D = 8		
Δ_R Nom	LS Ratio	ALR	Δ_R Actual	θ	β	Δ_R Actual	θ	β	Δ_R Actual	θ	β	Δ_R Actual	θ	β
2.0%	1.0%	5%	2.0%	3.9	0.23	2.0%	10.1	0.24	2.1%	17.9	0.42	2.2%	24.9	0.33
		10%	2.0%	4.3	0.22	2.1%	10.6	0.25	2.2%	15.7	0.30	2.4%	16.5	0.27
		15%	2.1%	4.2	0.24	2.2%	9.3	0.28	2.3%	12.8	0.24	2.8%	9.1	0.27
		20%	2.1%	4.5	0.21	2.2%	8.5	0.29	2.5%	9.5	0.26	--	--	--
	2.5%	5%	2.0%	5.0	0.26	2.0%	13.1	0.27	2.1%	24.2	0.30	2.1%	34.1	0.23
		10%	2.0%	5.0	0.17	2.1%	12.5	0.21	2.2%	22.1	0.26	2.3%	29.5	0.28
		15%	2.0%	5.2	0.24	2.1%	12.3	0.26	2.3%	20.0	0.26	2.5%	21.7	0.23
		20%	2.1%	5.4	0.19	2.2%	12.6	0.28	2.4%	18.3	0.31	2.8%	16.3	0.18
	4.0%	5%	2.0%	5.2	0.02	2.0%	15.3	0.29	2.1%	23.7	0.13	2.1%	43.0	0.29
		10%	2.0%	5.4	0.11	2.1%	14.1	0.17	2.1%	26.4	0.24	2.2%	36.1	0.35
		15%	2.0%	6.0	0.24	2.1%	14.1	0.23	2.2%	24.2	0.20	2.4%	30.5	0.27
		20%	2.1%	6.3	0.24	2.2%	14.8	0.22	2.3%	22.9	0.20	2.6%	24.1	0.24
3.0%	1.0%	5%	3.0%	3.9	0.19	3.1%	10.0	0.27	3.2%	16.9	0.38	3.3%	21.8	0.20
		10%	3.1%	4.1	0.18	3.2%	9.1	0.27	3.4%	12.1	0.24	3.9%	10.6	0.18
		15%	3.1%	4.0	0.19	3.3%	8.3	0.27	3.7%	9.0	0.24	--	--	--
		20%	3.1%	4.3	0.24	3.4%	7.9	0.26	--	--	--	--	--	--
	2.5%	5%	3.0%	5.0	0.27	3.1%	13.2	0.31	3.1%	23.0	0.31	3.2%	32.2	0.21
		10%	3.0%	5.1	0.19	3.1%	12.3	0.20	3.3%	21.1	0.30	3.5%	24.6	0.16
		15%	3.1%	4.9	0.24	3.2%	12.3	0.26	3.5%	17.1	0.24	4.0%	17.7	0.18
		20%	3.1%	5.2	0.19	3.3%	11.7	0.26	3.7%	13.5	0.17	--	--	--
	4.0%	5%	3.0%	5.2	0.02	3.1%	14.8	0.29	3.1%	25.8	0.21	3.2%	40.7	0.22
		10%	3.0%	5.4	0.14	3.1%	13.6	0.14	3.2%	24.9	0.30	3.4%	31.7	0.29
		15%	3.1%	5.8	0.24	3.2%	13.4	0.20	3.4%	23.4	0.18	3.7%	23.9	0.19
		20%	3.1%	6.0	0.27	3.2%	14.1	0.24	3.5%	19.6	0.24	4.1%	20.4	0.20

Figure 2.2: Excerpt of fragility parameter table for example calculation

Table 2.2: Bounding probabilities for example calculation

LS Ratio	L/D	ALR	Δ_r Actual	θ	β	Probability of Exceedance
2.5%	4	5%	2.0%	13.1	0.27	60%
			3.1%	13.2	0.31	58%
		10%	2.1%	12.5	0.21	71%
			3.1%	12.3	0.20	74%
	6	5%	2.1%	24.2	0.30	3%
			3.1%	23.0	0.31	5%
		10%	2.2%	22.1	0.26	4%
			3.3%	21.1	0.30	9%

Table 2.3: Bounding probabilities for example calculation after interpolation of residual drift

LS Ratio	Δ_r Actual	L/D	ALR	Probability of Exceedance
2.5%	2.5%	4	5%	59%
			10%	72%
		6	5%	4%
			10%	5%

Table 2.4: Bounding probabilities for example calculation after interpolation of L/D ratio

LS Ratio	Δ_r Actual	L/D	ALR	Probability of Exceedance
2.5%	2.5%	4.5	5%	45%
			10%	55%

Note that the tabulated parameters presented here provide a more precise means of calculating the associated probabilities for a given system; however, each fragility function is also shown in graphical form in Appendix B of Volume I of this report.

Table 2.5: Residual drift fragility parameters for ε_t = 0.01.

			L/D = 2			L/D = 4			L/D = 6			L/D = 8		
Δ_R Nom	LS Ratio	ALR	Δ_R Actual	θ	β	Δ_R Actual	θ	β	Δ_R Actual	θ	β	Δ_R Actual	θ	β
0.5%	1.0%	5%	0.5%	2.3	0.13	0.5%	5.4	0.24	0.5%	9.8	0.27	0.5%	15.3	0.25
		10%	0.5%	2.3	0.28	0.5%	5.9	0.27	0.6%	10.7	0.25	0.6%	16.2	0.21
		15%	0.5%	2.5	0.19	0.5%	6.2	0.21	0.6%	11.9	0.28	0.6%	16.8	0.21
		20%	0.5%	2.8	0.25	0.6%	6.5	0.21	0.6%	12.5	0.25	0.7%	16.6	0.30
	2.5%	5%	0.5%	2.8	0.17	0.5%	6.4	0.19	0.5%	11.6	0.10	0.5%	19.2	0.16
		10%	0.5%	3.0	0.16	0.5%	7.3	0.12	0.5%	12.5	0.25	0.6%	20.3	0.20
		15%	0.5%	3.1	0.18	0.5%	7.2	0.24	0.6%	13.9	0.21	0.6%	21.6	0.21
		20%	0.5%	3.3	0.16	0.5%	7.6	0.22	0.6%	15.0	0.22	0.7%	20.8	0.27
	4.0%	5%	0.5%	3.0	0.13	0.5%	7.3	0.14	0.5%	13.0	0.17	0.5%	22.1	0.21
		10%	0.5%	3.3	0.16	0.5%	8.3	0.15	0.5%	14.8	0.16	0.6%	23.1	0.14
		15%	0.5%	3.3	0.17	0.5%	7.9	0.13	0.6%	15.2	0.19	0.6%	22.7	0.23
		20%	0.5%	3.6	0.18	0.5%	8.8	0.25	0.6%	15.7	0.12	0.6%	22.7	0.20
1.0%	1.0%	5%	1.0%	2.3	0.13	1.0%	5.4	0.29	1.0%	9.5	0.28	1.1%	14.6	0.26
		10%	1.0%	2.3	0.30	1.1%	5.5	0.26	1.1%	10.5	0.22	1.2%	14.2	0.23
		15%	1.0%	2.4	0.23	1.1%	6.1	0.24	1.2%	10.0	0.20	1.3%	14.7	0.26
		20%	1.0%	2.6	0.30	1.1%	6.1	0.29	1.2%	10.2	0.25	1.5%	11.0	0.29
	2.5%	5%	1.0%	2.7	0.19	1.0%	6.4	0.18	1.0%	11.8	0.11	1.1%	18.9	0.17
		10%	1.0%	3.0	0.16	1.0%	7.4	0.14	1.1%	11.8	0.26	1.1%	19.2	0.17
		15%	1.0%	3.0	0.21	1.1%	7.1	0.23	1.1%	12.4	0.24	1.2%	19.2	0.25
		20%	1.0%	3.3	0.18	1.1%	7.5	0.24	1.2%	13.1	0.24	1.3%	18.7	0.22
	4.0%	5%	1.0%	2.9	0.13	1.0%	7.3	0.13	1.0%	13.4	0.19	1.1%	22.1	0.20
		10%	1.0%	3.2	0.17	1.0%	8.2	0.15	1.1%	14.6	0.10	1.1%	21.7	0.16
		15%	1.0%	3.4	0.16	1.1%	8.1	0.13	1.1%	14.7	0.18	1.2%	21.4	0.20
		20%	1.0%	3.6	0.17	1.1%	8.5	0.23	1.2%	14.8	0.22	1.3%	22.8	0.25
2.0%	1.0%	5%	2.0%	2.3	0.12	2.0%	5.0	0.25	2.1%	8.7	0.29	2.2%	13.0	0.20
		10%	2.0%	2.2	0.34	2.1%	5.2	0.30	2.2%	8.9	0.23	2.4%	11.7	0.19
		15%	2.1%	2.2	0.24	2.2%	5.4	0.26	2.3%	8.1	0.26	2.8%	9.1	0.27
		20%	2.1%	2.3	0.37	2.2%	5.4	0.25	2.5%	7.6	0.28	--	--	--
	2.5%	5%	2.0%	2.8	0.20	2.0%	6.3	0.15	2.1%	11.3	0.13	2.1%	17.8	0.14
		10%	2.0%	3.0	0.20	2.1%	6.5	0.20	2.2%	11.4	0.26	2.3%	17.1	0.21
		15%	2.0%	3.0	0.23	2.1%	6.9	0.22	2.3%	10.8	0.18	2.5%	15.6	0.20
		20%	2.1%	3.1	0.22	2.2%	6.5	0.33	2.4%	10.5	0.20	2.8%	13.6	0.18
	4.0%	5%	2.0%	3.0	0.10	2.0%	7.3	0.16	2.1%	13.4	0.16	2.1%	20.6	0.16
		10%	2.0%	3.2	0.22	2.1%	7.8	0.14	2.1%	13.3	0.21	2.2%	20.3	0.15
		15%	2.0%	3.3	0.20	2.1%	8.2	0.18	2.2%	13.3	0.26	2.4%	18.5	0.25
		20%	2.1%	3.5	0.16	2.2%	7.6	0.21	2.3%	12.3	0.21	2.6%	17.8	0.18
3.0%	1.0%	5%	3.0%	2.3	0.17	3.1%	4.6	0.26	3.2%	8.5	0.24	3.3%	11.5	0.19
		10%	3.1%	2.0	0.31	3.2%	4.6	0.28	3.4%	7.5	0.23	3.9%	9.7	0.15
		15%	3.1%	2.1	0.30	3.3%	4.7	0.30	3.7%	6.7	0.26	--	--	--
		20%	3.1%	2.2	0.42	3.4%	4.9	0.30	--	--	--	--	--	--
	2.5%	5%	3.0%	2.8	0.20	3.1%	6.3	0.09	3.1%	11.3	0.17	3.2%	17.4	0.18
		10%	3.0%	2.8	0.19	3.1%	6.1	0.23	3.3%	10.7	0.20	3.5%	14.2	0.20
		15%	3.1%	2.9	0.27	3.2%	6.3	0.26	3.5%	10.2	0.14	4.0%	12.9	0.15
		20%	3.1%	2.9	0.30	3.3%	6.2	0.32	3.7%	8.8	0.19	--	--	--
	4.0%	5%	3.0%	3.0	0.12	3.1%	7.2	0.16	3.1%	12.6	0.17	3.2%	19.6	0.14
		10%	3.0%	3.1	0.24	3.1%	7.9	0.15	3.2%	11.8	0.24	3.4%	19.0	0.17
		15%	3.1%	3.2	0.21	3.2%	7.3	0.20	3.4%	12.1	0.19	3.7%	15.5	0.17
		20%	3.1%	3.4	0.21	3.2%	7.1	0.19	3.5%	10.8	0.23	4.1%	15.3	0.16
4.0%	1.0%	5%	4.0%	2.0	0.27	4.1%	4.3	0.26	4.3%	7.7	0.27	4.6%	10.8	0.19
		10%	4.1%	1.8	0.33	4.2%	4.2	0.26	4.7%	6.9	0.21	--	--	--
		15%	4.1%	1.9	0.34	4.4%	4.4	0.33	5.3%	5.6	0.20	--	--	--
		20%	4.2%	1.9	0.40	4.6%	4.4	0.32	--	--	--	--	--	--
	2.5%	5%	4.0%	2.7	0.21	4.1%	6.3	0.14	4.2%	10.6	0.21	4.4%	16.2	0.19
		10%	4.1%	2.6	0.23	4.2%	5.8	0.26	4.4%	9.6	0.26	4.8%	12.4	0.19
		15%	4.1%	2.7	0.30	4.3%	5.9	0.28	4.7%	9.1	0.13	5.5%	11.2	0.14
		20%	4.1%	2.6	0.35	4.4%	6.0	0.27	5.1%	8.0	0.21	--	--	--
	4.0%	5%	4.0%	2.9	0.14	4.1%	7.0	0.17	4.2%	12.2	0.14	4.3%	19.3	0.15
		10%	4.1%	3.1	0.24	4.2%	7.3	0.19	4.3%	10.8	0.27	4.6%	17.1	0.19
		15%	4.1%	3.1	0.25	4.2%	6.7	0.27	4.5%	11.3	0.16	5.0%	13.7	0.22
		20%	4.1%	3.3	0.27	4.3%	6.9	0.20	4.8%	10.1	0.19	5.6%	12.2	0.18
5.0%	1.0%	5%	5.0%	1.9	0.28	5.2%	4.1	0.20	5.4%	7.2	0.22	5.9%	10.3	0.17
		10%	5.1%	1.8	0.37	5.3%	4.0	0.34	6.0%	6.0	0.17	--	--	--
		15%	5.1%	1.8	0.38	5.6%	4.1	0.29	--	--	--	--	--	--
		20%	5.2%	1.7	0.45	5.9%	3.4	0.30	--	--	--	--	--	--
	2.5%	5%	5.0%	2.7	0.22	5.1%	6.0	0.18	5.3%	9.7	0.25	5.5%	15.3	0.21
		10%	5.1%	2.5	0.26	5.3%	5.2	0.26	5.6%	9.2	0.21	6.2%	11.6	0.21
		15%	5.1%	2.5	0.33	5.4%	5.4	0.28	6.0%	8.1	0.17	--	--	--
		20%	5.2%	2.4	0.31	5.6%	5.5	0.28	6.5%	6.3	0.23	--	--	--
	4.0%	5%	5.0%	2.8	0.16	5.1%	7.1	0.18	5.2%	12.1	0.16	5.4%	18.2	0.14
		10%	5.1%	2.9	0.28	5.2%	7.1	0.21	5.5%	10.5	0.27	5.8%	16.1	0.17
		15%	5.1%	3.0	0.27	5.3%	6.6	0.25	5.7%	10.4	0.23	6.4%	11.9	0.23
		20%	5.1%	3.1	0.32	5.5%	6.6	0.29	6.1%	8.9	0.21	7.2%	9.2	0.11

Table 2.6: Residual drift fragility parameters for ε_t = 0.02.

			L/D = 2			L/D = 4			L/D = 6			L/D = 8		
Δ_R Nom	LS Ratio	ALR	Δ_R Actual	θ	β	Δ_R Actual	θ	β	Δ_R Actual	θ	β	Δ_R Actual	θ	β
0.5%	1.0%	5%	0.5%	3.7	0.21	0.5%	10.6	0.22	0.5%	19.8	0.27	0.5%	28.1	0.30
		10%	0.5%	4.4	0.26	0.5%	11.2	0.27	0.6%	21.9	0.40	0.6%	28.9	0.46
		15%	0.5%	4.7	0.21	0.5%	12.4	0.36	0.6%	20.8	0.30	0.6%	23.2	0.39
		20%	0.5%	4.7	0.27	0.6%	11.6	0.39	0.6%	19.0	0.34	0.7%	18.7	0.40
	2.5%	5%	0.5%	5.0	0.27	0.5%	14.2	0.33	0.5%	25.4	0.30	0.5%	39.4	0.26
		10%	0.5%	5.1	0.16	0.5%	12.6	0.23	0.5%	23.7	0.25	0.6%	31.8	0.30
		15%	0.5%	5.3	0.23	0.5%	13.1	0.30	0.6%	25.4	0.29	0.6%	33.4	0.32
		20%	0.5%	5.6	0.22	0.5%	14.7	0.28	0.6%	23.7	0.27	0.7%	31.4	0.33
	4.0%	5%	0.5%	5.1	0.01	0.5%	17.0	0.36	0.5%	24.1	0.09	0.5%	48.2	0.35
		10%	0.5%	5.4	0.10	0.5%	14.2	0.15	0.5%	29.1	0.31	0.6%	53.6	0.53
		15%	0.5%	6.1	0.22	0.5%	14.2	0.21	0.6%	27.7	0.33	0.6%	35.4	0.30
		20%	0.5%	6.1	0.32	0.5%	14.8	0.33	0.6%	27.2	0.31	0.6%	35.3	0.30
1.0%	1.0%	5%	1.0%	3.8	0.21	1.0%	10.4	0.24	1.0%	20.3	0.38	1.1%	26.7	0.31
		10%	1.0%	4.4	0.21	1.1%	11.2	0.25	1.1%	18.7	0.37	1.2%	22.9	0.32
		15%	1.0%	4.8	0.22	1.1%	11.2	0.32	1.2%	18.4	0.33	1.3%	17.8	0.29
		20%	1.0%	4.7	0.26	1.1%	10.4	0.39	1.2%	15.1	0.36	1.5%	11.1	0.30
	2.5%	5%	1.0%	5.1	0.27	1.0%	13.3	0.27	1.0%	25.7	0.31	1.1%	36.4	0.23
		10%	1.0%	5.0	0.18	1.0%	12.6	0.23	1.1%	23.3	0.27	1.1%	32.8	0.32
		15%	1.0%	5.3	0.22	1.1%	13.0	0.25	1.1%	24.6	0.25	1.2%	29.8	0.27
		20%	1.0%	5.6	0.21	1.1%	14.4	0.25	1.2%	23.6	0.32	1.3%	23.8	0.37
	4.0%	5%	1.0%	5.1	0.02	1.0%	16.2	0.34	1.0%	23.6	0.14	1.1%	44.2	0.33
		10%	1.0%	5.4	0.09	1.0%	14.1	0.16	1.1%	28.5	0.26	1.1%	39.5	0.34
		15%	1.0%	6.1	0.22	1.1%	14.0	0.21	1.1%	26.6	0.31	1.2%	35.0	0.27
		20%	1.0%	6.1	0.29	1.1%	14.8	0.31	1.2%	27.1	0.31	1.3%	31.8	0.23
2.0%	1.0%	5%	2.0%	3.9	0.23	2.0%	10.1	0.24	2.1%	17.9	0.42	2.2%	24.9	0.33
		10%	2.0%	4.3	0.22	2.1%	10.6	0.25	2.2%	15.7	0.30	2.4%	16.5	0.27
		15%	2.1%	4.2	0.24	2.2%	9.3	0.28	2.3%	12.8	0.24	2.8%	9.1	0.27
		20%	2.1%	4.5	0.21	2.2%	8.5	0.29	2.5%	9.5	0.26	--	--	--
	2.5%	5%	2.0%	5.0	0.26	2.0%	13.1	0.27	2.1%	24.2	0.30	2.1%	34.1	0.23
		10%	2.0%	5.0	0.17	2.1%	12.5	0.21	2.2%	22.1	0.26	2.3%	29.5	0.28
		15%	2.0%	5.2	0.24	2.1%	12.3	0.26	2.3%	20.0	0.26	2.5%	21.7	0.23
		20%	2.1%	5.4	0.19	2.2%	12.6	0.28	2.4%	18.3	0.31	2.8%	16.3	0.18
	4.0%	5%	2.0%	5.2	0.02	2.0%	15.3	0.29	2.1%	23.7	0.13	2.1%	43.0	0.29
		10%	2.0%	5.4	0.11	2.1%	14.1	0.17	2.1%	26.4	0.24	2.2%	36.1	0.35
		15%	2.0%	6.0	0.24	2.1%	14.1	0.23	2.2%	24.2	0.20	2.4%	30.5	0.27
		20%	2.1%	6.3	0.24	2.2%	14.8	0.22	2.3%	22.9	0.20	2.6%	24.1	0.24
3.0%	1.0%	5%	3.0%	3.9	0.19	3.1%	10.0	0.27	3.2%	16.9	0.38	3.3%	21.8	0.20
		10%	3.1%	4.1	0.18	3.2%	9.1	0.27	3.4%	12.1	0.24	3.9%	10.6	0.18
		15%	3.1%	4.0	0.19	3.3%	8.3	0.27	3.7%	9.0	0.24	--	--	--
		20%	3.1%	4.3	0.24	3.4%	7.9	0.26	--	--	--	--	--	--
	2.5%	5%	3.0%	5.0	0.27	3.1%	13.2	0.31	3.1%	23.0	0.31	3.2%	32.2	0.21
		10%	3.0%	5.1	0.19	3.1%	12.3	0.20	3.3%	21.1	0.30	3.5%	24.6	0.16
		15%	3.1%	4.9	0.24	3.2%	12.3	0.26	3.5%	17.1	0.24	4.0%	17.7	0.18
		20%	3.1%	5.2	0.19	3.3%	11.7	0.26	3.7%	13.5	0.17	--	--	--
	4.0%	5%	3.0%	5.2	0.02	3.1%	14.8	0.29	3.1%	25.8	0.21	3.2%	40.7	0.22
		10%	3.0%	5.4	0.14	3.1%	13.6	0.14	3.2%	24.9	0.30	3.4%	31.7	0.29
		15%	3.1%	5.8	0.24	3.2%	13.4	0.20	3.4%	23.4	0.18	3.7%	23.9	0.19
		20%	3.1%	6.0	0.27	3.2%	14.1	0.24	3.5%	19.6	0.24	4.1%	20.4	0.20
4.0%	1.0%	5%	4.0%	3.8	0.23	4.1%	9.4	0.31	4.3%	15.1	0.29	4.6%	18.1	0.23
		10%	4.1%	3.9	0.17	4.2%	8.2	0.21	4.7%	11.2	0.17	--	--	--
		15%	4.1%	3.8	0.24	4.4%	7.4	0.24	5.3%	6.1	0.23	--	--	--
		20%	4.2%	4.0	0.27	4.6%	6.5	0.30	--	--	--	--	--	--
	2.5%	5%	4.0%	4.9	0.22	4.1%	12.8	0.29	4.2%	20.0	0.28	4.4%	30.4	0.20
		10%	4.1%	5.1	0.20	4.2%	11.8	0.21	4.4%	19.6	0.24	4.8%	20.6	0.15
		15%	4.1%	4.6	0.16	4.3%	10.6	0.20	4.7%	14.6	0.21	5.5%	13.3	0.21
		20%	4.1%	5.0	0.23	4.4%	10.1	0.28	5.1%	10.6	0.18	--	--	--
	4.0%	5%	4.0%	5.3	0.02	4.1%	14.5	0.31	4.2%	27.0	0.30	4.3%	38.5	0.19
		10%	4.1%	5.4	0.15	4.2%	13.9	0.19	4.3%	21.8	0.21	4.6%	28.7	0.20
		15%	4.1%	5.5	0.22	4.2%	13.3	0.24	4.5%	20.9	0.21	5.0%	21.0	0.14
		20%	4.1%	5.7	0.25	4.3%	13.0	0.23	4.8%	17.0	0.13	5.6%	14.9	0.23
5.0%	1.0%	5%	5.0%	3.7	0.22	5.2%	8.8	0.28	5.4%	13.9	0.26	5.9%	15.3	0.21
		10%	5.1%	3.7	0.15	5.3%	7.9	0.29	6.0%	8.7	0.24	--	--	--
		15%	5.1%	3.5	0.23	5.6%	6.6	0.24	--	--	--	--	--	--
		20%	5.2%	3.4	0.19	5.9%	5.1	0.21	--	--	--	--	--	--
	2.5%	5%	5.0%	4.7	0.20	5.1%	12.0	0.27	5.3%	19.2	0.20	5.5%	28.7	0.18
		10%	5.1%	5.1	0.20	5.3%	10.9	0.22	5.6%	17.3	0.17	6.2%	18.9	0.18
		15%	5.1%	4.5	0.19	5.4%	10.3	0.25	6.0%	12.2	0.23	--	--	--
		20%	5.2%	4.7	0.26	5.6%	9.4	0.28	6.5%	8.0	0.16	--	--	--
	4.0%	5%	5.0%	5.3	0.02	5.1%	13.8	0.26	5.2%	23.4	0.22	5.4%	34.2	0.19
		10%	5.1%	5.6	0.21	5.2%	13.5	0.19	5.5%	21.0	0.18	5.8%	27.5	0.20
		15%	5.1%	5.4	0.21	5.3%	12.5	0.22	5.7%	18.6	0.21	6.4%	19.7	0.14
		20%	5.1%	5.3	0.25	5.5%	11.6	0.23	6.1%	13.4	0.24	7.2%	10.2	0.10

Table 2.7: Residual drift fragility parameters for ε_t = 0.03.

			L/D = 2			L/D = 4			L/D = 6			L/D = 8		
Δ_R Nom	LS Ratio	ALR	Δ_R Actual	θ	β	Δ_R Actual	θ	β	Δ_R Actual	θ	β	Δ_R Actual	θ	β
0.5%	1.0%	5%	0.5%	5.6	0.29	0.5%	14.1	0.30	0.5%	26.7	0.38	0.5%	35.8	0.40
		10%	0.5%	5.8	0.44	0.5%	16.5	0.44	0.6%	28.4	0.38	0.6%	31.4	0.42
		15%	0.5%	6.1	0.21	0.5%	17.6	0.46	0.6%	23.1	0.31	0.6%	23.2	0.39
		20%	0.5%	6.0	0.29	0.6%	17.9	0.51	0.6%	22.1	0.46	0.7%	19.0	0.38
	2.5%	5%	0.5%	6.7	0.18	0.5%	18.0	0.25	0.5%	29.2	0.21	0.5%	43.4	0.10
		10%	0.5%	6.7	0.21	0.5%	18.2	0.30	0.5%	39.0	0.47	0.6%	38.9	0.38
		15%	0.5%	7.2	0.29	0.5%	18.8	0.42	0.6%	31.8	0.39	0.6%	35.4	0.33
		20%	0.5%	7.7	0.35	0.5%	20.3	0.40	0.6%	28.6	0.33	0.7%	31.4	0.33
	4.0%	5%	0.5%	26.3	0.18	0.5%	34.7	0.05	0.5%	49.5	0.05	0.5%	193.6	0.15
		10%	0.5%	6.6	0.20	0.5%	17.9	0.19	0.5%	56.1	0.41	0.6%	60.6	0.45
		15%	0.5%	7.5	0.26	0.5%	21.8	0.27	0.6%	52.8	0.63	0.6%	39.8	0.33
		20%	0.5%	8.7	0.38	0.5%	21.1	0.40	0.6%	35.1	0.42	0.6%	38.1	0.39
1.0%	1.0%	5%	1.0%	5.6	0.30	1.0%	14.1	0.28	1.0%	29.6	0.45	1.1%	34.4	0.36
		10%	1.0%	5.9	0.41	1.1%	15.7	0.40	1.1%	27.3	0.46	1.2%	23.9	0.37
		15%	1.0%	5.9	0.25	1.1%	15.3	0.41	1.2%	22.0	0.40	1.3%	17.8	0.29
		20%	1.0%	5.9	0.30	1.1%	14.7	0.46	1.2%	15.8	0.44	1.5%	11.3	0.31
	2.5%	5%	1.0%	6.7	0.17	1.0%	17.8	0.26	1.0%	29.4	0.20	1.1%	44.6	0.13
		10%	1.0%	6.7	0.22	1.0%	17.7	0.33	1.1%	35.8	0.43	1.1%	41.1	0.39
		15%	1.0%	7.0	0.27	1.1%	18.5	0.42	1.1%	31.6	0.40	1.2%	32.5	0.33
		20%	1.0%	7.9	0.34	1.1%	20.3	0.37	1.2%	27.0	0.36	1.3%	25.5	0.48
	4.0%	5%	1.0%	26.4	0.18	1.0%	34.8	0.05	1.0%	49.6	0.05	1.1%	194.3	0.15
		10%	1.0%	6.5	0.19	1.0%	17.9	0.18	1.1%	51.2	0.41	1.1%	60.0	0.38
		15%	1.0%	7.9	0.28	1.1%	21.3	0.35	1.1%	44.2	0.52	1.2%	41.0	0.38
		20%	1.0%	8.5	0.36	1.1%	22.4	0.41	1.2%	32.1	0.39	1.3%	36.5	0.33
2.0%	1.0%	5%	2.0%	5.4	0.28	2.0%	13.6	0.29	2.1%	25.8	0.36	2.2%	30.6	0.36
		10%	2.0%	5.9	0.35	2.1%	14.5	0.33	2.2%	19.2	0.31	2.4%	16.5	0.27
		15%	2.1%	5.8	0.27	2.2%	13.8	0.41	2.3%	12.8	0.24	2.8%	9.2	0.27
		20%	2.1%	5.9	0.32	2.2%	10.8	0.39	2.5%	9.5	0.26	--	--	--
	2.5%	5%	2.0%	6.8	0.17	2.0%	17.6	0.25	2.1%	29.7	0.20	2.1%	53.5	0.21
		10%	2.0%	6.9	0.24	2.1%	17.2	0.33	2.2%	30.8	0.34	2.3%	36.2	0.34
		15%	2.0%	6.8	0.28	2.1%	17.1	0.36	2.3%	27.8	0.35	2.5%	23.2	0.29
		20%	2.1%	7.4	0.24	2.2%	18.5	0.31	2.4%	20.2	0.33	2.8%	16.3	0.18
	4.0%	5%	2.0%	26.6	0.18	2.0%	54.2	0.69	2.1%	49.8	0.05	2.1%	195.6	0.15
		10%	2.0%	6.6	0.20	2.1%	18.3	0.16	2.1%	44.7	0.34	2.2%	58.4	0.51
		15%	2.0%	7.4	0.23	2.1%	20.4	0.33	2.2%	32.1	0.27	2.4%	38.4	0.37
		20%	2.1%	8.2	0.27	2.2%	21.0	0.41	2.3%	27.9	0.30	2.6%	25.3	0.28
3.0%	1.0%	5%	3.0%	5.1	0.27	3.1%	12.7	0.28	3.2%	24.5	0.34	3.3%	23.8	0.19
		10%	3.1%	5.7	0.30	3.2%	12.8	0.29	3.4%	13.8	0.20	3.9%	10.7	0.18
		15%	3.1%	5.6	0.28	3.3%	10.8	0.30	3.7%	9.0	0.24	--	--	--
		20%	3.1%	5.9	0.31	3.4%	8.9	0.25	--	--	--	--	--	--
	2.5%	5%	3.0%	7.6	0.30	3.1%	17.7	0.23	3.1%	30.9	0.18	3.2%	45.3	0.19
		10%	3.0%	6.8	0.20	3.1%	14.8	0.25	3.3%	26.6	0.25	3.5%	28.5	0.23
		15%	3.1%	6.9	0.29	3.2%	15.9	0.28	3.5%	20.6	0.29	4.0%	17.9	0.18
		20%	3.1%	7.4	0.30	3.3%	15.4	0.31	3.7%	14.6	0.21	--	--	--
	4.0%	5%	3.0%	26.9	0.18	3.1%	53.1	0.68	3.1%	50.0	0.05	3.2%	52.3	0.25
		10%	3.0%	6.7	0.20	3.1%	18.3	0.17	3.2%	40.4	0.32	3.4%	46.1	0.40
		15%	3.1%	7.5	0.21	3.2%	19.6	0.36	3.4%	27.4	0.17	3.7%	28.4	0.24
		20%	3.1%	7.7	0.22	3.2%	17.7	0.31	3.5%	24.2	0.32	4.1%	20.4	0.20
4.0%	1.0%	5%	4.0%	5.1	0.26	4.1%	12.6	0.27	4.3%	21.1	0.38	4.6%	20.3	0.21
		10%	4.1%	5.4	0.21	4.2%	11.5	0.32	4.7%	11.6	0.18	--	--	--
		15%	4.1%	5.1	0.26	4.4%	8.6	0.32	5.3%	6.1	0.23	--	--	--
		20%	4.2%	5.3	0.28	4.6%	6.9	0.32	--	--	--	--	--	--
	2.5%	5%	4.0%	7.7	0.33	4.1%	18.0	0.27	4.2%	31.5	0.18	4.4%	41.4	0.18
		10%	4.1%	6.7	0.21	4.2%	15.4	0.27	4.4%	25.2	0.19	4.8%	22.8	0.16
		15%	4.1%	6.8	0.29	4.3%	14.8	0.25	4.7%	16.8	0.16	5.5%	13.3	0.21
		20%	4.1%	6.8	0.29	4.4%	13.3	0.27	5.1%	10.6	0.18	--	--	--
	4.0%	5%	4.0%	27.1	0.18	4.1%	51.2	0.66	4.2%	32.3	0.22	4.3%	45.7	0.15
		10%	4.1%	6.5	0.16	4.2%	18.4	0.24	4.3%	33.3	0.33	4.6%	37.0	0.30
		15%	4.1%	7.6	0.18	4.2%	17.1	0.29	4.5%	26.3	0.23	5.0%	23.6	0.17
		20%	4.1%	7.8	0.23	4.3%	17.4	0.27	4.8%	18.5	0.15	5.6%	14.9	0.23
5.0%	1.0%	5%	5.0%	4.8	0.23	5.2%	12.6	0.29	5.4%	17.5	0.32	5.9%	17.7	0.21
		10%	5.1%	5.1	0.22	5.3%	10.0	0.29	6.0%	8.9	0.24	--	--	--
		15%	5.1%	4.9	0.27	5.6%	7.5	0.30	--	--	--	--	--	--
		20%	5.2%	4.8	0.21	5.9%	5.1	0.23	--	--	--	--	--	--
	2.5%	5%	5.0%	7.9	0.37	5.1%	18.1	0.28	5.3%	34.7	0.42	5.5%	39.6	0.24
		10%	5.1%	6.8	0.27	5.3%	14.9	0.25	5.6%	22.0	0.24	6.2%	20.4	0.14
		15%	5.1%	6.7	0.29	5.4%	14.2	0.23	6.0%	14.0	0.20	--	--	--
		20%	5.2%	6.6	0.26	5.6%	11.7	0.24	6.5%	8.2	0.15	--	--	--
	4.0%	5%	5.0%	27.3	0.18	5.1%	29.7	0.46	5.2%	32.1	0.21	5.4%	44.4	0.19
		10%	5.1%	6.8	0.19	5.2%	19.3	0.29	5.5%	29.7	0.25	5.8%	31.8	0.23
		15%	5.1%	7.6	0.18	5.3%	16.0	0.30	5.7%	23.8	0.21	6.4%	20.7	0.13
		20%	5.1%	7.6	0.28	5.5%	16.2	0.25	6.1%	15.8	0.19	7.2%	10.2	0.10

Table 2.8: Residual drift fragility parameters for ε_t = 0.04.

			L/D = 2			L/D = 4			L/D = 6			L/D = 8		
Δ_R Nom	LS Ratio	ALR	Δ_R Actual	θ	β	Δ_R Actual	θ	β	Δ_R Actual	θ	β	Δ_R Actual	θ	β
0.5%	1.0%	5%	0.5%	6.2	0.31	0.5%	17.8	0.29	0.5%	48.3	0.62	0.5%	39.1	0.46
		10%	0.5%	7.3	0.49	0.5%	21.0	0.58	0.6%	29.9	0.40	0.6%	31.4	0.42
		15%	0.5%	7.9	0.32	0.5%	24.5	0.61	0.6%	23.3	0.31	0.6%	23.2	0.39
		20%	0.5%	8.2	0.41	0.6%	22.3	0.55	0.6%	22.1	0.46	0.7%	19.0	0.38
	2.5%	5%	0.5%	33.4	0.18	0.5%	21.4	0.34	0.5%	39.2	0.28	0.5%	208.3	0.15
		10%	0.5%	8.5	0.33	0.5%	21.5	0.21	0.5%	50.8	0.41	0.6%	43.5	0.39
		15%	0.5%	9.9	0.49	0.5%	33.6	0.66	0.6%	33.7	0.42	0.6%	35.4	0.33
		20%	0.5%	10.0	0.42	0.5%	26.1	0.45	0.6%	28.9	0.32	0.7%	31.4	0.33
	4.0%	5%	0.5%	26.3	0.18	0.5%	34.7	0.05	0.5%	49.5	0.05	0.5%	193.6	0.15
		10%	0.5%	12.0	0.47	0.5%	25.2	0.27	0.5%	56.1	0.41	0.6%	64.2	0.28
		15%	0.5%	11.2	0.46	0.5%	26.8	0.30	0.6%	44.7	0.13	0.6%	39.8	0.33
		20%	0.5%	11.7	0.48	0.5%	46.4	0.63	0.6%	38.8	0.47	0.6%	38.1	0.39
1.0%	1.0%	5%	1.0%	6.3	0.31	1.0%	18.3	0.32	1.0%	41.2	0.54	1.1%	39.5	0.43
		10%	1.0%	7.1	0.44	1.1%	20.7	0.53	1.1%	28.2	0.39	1.2%	23.9	0.37
		15%	1.0%	7.7	0.33	1.1%	20.8	0.56	1.2%	22.5	0.43	1.3%	17.8	0.29
		20%	1.0%	8.2	0.37	1.1%	18.2	0.54	1.2%	15.8	0.44	1.5%	11.3	0.31
	2.5%	5%	1.0%	33.6	0.18	1.0%	21.0	0.32	1.0%	39.7	0.28	1.1%	209.6	0.15
		10%	1.0%	8.4	0.32	1.0%	22.0	0.24	1.1%	48.4	0.45	1.1%	44.9	0.40
		15%	1.0%	9.6	0.44	1.1%	30.3	0.57	1.1%	34.0	0.44	1.2%	32.5	0.33
		20%	1.0%	10.0	0.39	1.1%	22.6	0.36	1.2%	27.5	0.37	1.3%	26.5	0.54
	4.0%	5%	1.0%	26.4	0.18	1.0%	34.8	0.05	1.0%	49.6	0.05	1.1%	194.3	0.15
		10%	1.0%	12.1	0.47	1.0%	24.3	0.26	1.1%	54.2	0.38	1.1%	63.6	0.27
		15%	1.0%	10.8	0.44	1.1%	26.1	0.29	1.1%	63.1	0.59	1.2%	47.5	0.44
		20%	1.0%	12.2	0.49	1.1%	50.8	0.80	1.2%	36.2	0.46	1.3%	36.5	0.33
2.0%	1.0%	5%	2.0%	6.4	0.31	2.0%	18.9	0.42	2.1%	35.5	0.46	2.2%	32.6	0.38
		10%	2.0%	7.1	0.46	2.1%	18.6	0.41	2.2%	19.5	0.34	2.4%	16.5	0.27
		15%	2.1%	7.7	0.36	2.2%	16.0	0.44	2.3%	12.8	0.24	2.8%	9.2	0.27
		20%	2.1%	7.5	0.32	2.2%	11.2	0.37	2.5%	9.5	0.26	--	--	--
	2.5%	5%	2.0%	33.9	0.18	2.0%	22.2	0.27	2.1%	40.8	0.29	2.1%	53.5	0.21
		10%	2.0%	8.4	0.30	2.1%	21.8	0.30	2.2%	36.3	0.39	2.3%	40.0	0.37
		15%	2.0%	9.3	0.38	2.1%	26.3	0.55	2.3%	27.9	0.31	2.5%	23.6	0.31
		20%	2.1%	9.2	0.35	2.2%	20.8	0.37	2.4%	20.8	0.36	2.8%	16.5	0.19
	4.0%	5%	2.0%	26.6	0.18	2.0%	35.1	0.05	2.1%	49.8	0.05	2.1%	195.6	0.15
		10%	2.0%	9.0	0.31	2.1%	27.2	0.37	2.1%	61.8	0.37	2.2%	58.4	0.51
		15%	2.0%	10.0	0.34	2.1%	25.1	0.34	2.2%	42.6	0.43	2.4%	40.5	0.35
		20%	2.1%	11.3	0.43	2.2%	30.7	0.50	2.3%	32.2	0.39	2.6%	25.3	0.28
3.0%	1.0%	5%	3.0%	6.3	0.32	3.1%	16.7	0.32	3.2%	29.5	0.36	3.3%	25.7	0.24
		10%	3.1%	7.0	0.41	3.2%	15.4	0.36	3.4%	14.3	0.25	3.9%	10.7	0.18
		15%	3.1%	7.3	0.40	3.3%	12.1	0.38	3.7%	9.0	0.24	--	--	--
		20%	3.1%	7.2	0.36	3.4%	9.0	0.25	--	--	--	--	--	--
	2.5%	5%	3.0%	7.7	0.19	3.1%	24.3	0.29	3.1%	42.2	0.29	3.2%	58.2	0.26
		10%	3.0%	7.9	0.22	3.1%	26.0	0.49	3.3%	31.6	0.28	3.5%	30.2	0.27
		15%	3.1%	8.5	0.35	3.2%	19.4	0.38	3.5%	22.8	0.33	4.0%	17.9	0.18
		20%	3.1%	9.0	0.34	3.3%	18.5	0.35	3.7%	14.6	0.21	--	--	--
	4.0%	5%	3.0%	26.9	0.18	3.1%	35.3	0.05	3.1%	50.0	0.05	3.2%	197.0	0.15
		10%	3.0%	7.7	0.22	3.1%	27.3	0.36	3.2%	52.4	0.34	3.4%	55.1	0.45
		15%	3.1%	10.3	0.32	3.2%	27.8	0.50	3.4%	31.7	0.24	3.7%	29.7	0.24
		20%	3.1%	11.0	0.46	3.2%	23.2	0.36	3.5%	26.0	0.38	4.1%	20.7	0.23
4.0%	1.0%	5%	4.0%	6.3	0.29	4.1%	15.3	0.33	4.3%	25.0	0.34	4.6%	22.1	0.27
		10%	4.1%	6.8	0.36	4.2%	13.8	0.34	4.7%	11.7	0.22	--	--	--
		15%	4.1%	6.7	0.37	4.4%	9.1	0.31	5.3%	6.1	0.23	--	--	--
		20%	4.2%	6.6	0.31	4.6%	6.9	0.32	--	--	--	--	--	--
	2.5%	5%	4.0%	6.9	0.16	4.1%	21.4	0.19	4.2%	37.1	0.28	4.4%	62.5	0.30
		10%	4.1%	8.4	0.25	4.2%	21.4	0.39	4.4%	27.0	0.18	4.8%	24.3	0.20
		15%	4.1%	8.1	0.30	4.3%	17.6	0.29	4.7%	17.4	0.15	5.5%	13.3	0.21
		20%	4.1%	8.6	0.32	4.4%	15.0	0.35	5.1%	10.6	0.18	--	--	--
	4.0%	5%	4.0%	27.1	0.18	4.1%	35.6	0.05	4.2%	50.4	0.05	4.3%	198.3	0.15
		10%	4.1%	7.7	0.20	4.2%	27.2	0.35	4.3%	41.9	0.25	4.6%	44.1	0.31
		15%	4.1%	9.3	0.24	4.2%	25.9	0.44	4.5%	28.1	0.21	5.0%	23.6	0.17
		20%	4.1%	10.4	0.38	4.3%	19.6	0.28	4.8%	19.4	0.14	5.6%	14.9	0.23
5.0%	1.0%	5%	5.0%	6.3	0.27	5.2%	14.0	0.31	5.4%	21.4	0.35	5.9%	18.1	0.21
		10%	5.1%	6.6	0.36	5.3%	11.6	0.32	6.0%	8.9	0.24	--	--	--
		15%	5.1%	6.0	0.32	5.6%	7.6	0.31	--	--	--	--	--	--
		20%	5.2%	5.9	0.29	5.9%	5.1	0.23	--	--	--	--	--	--
	2.5%	5%	5.0%	7.0	0.15	5.1%	20.4	0.23	5.3%	37.2	0.27	5.5%	48.4	0.15
		10%	5.1%	8.5	0.32	5.3%	19.7	0.39	5.6%	25.6	0.14	6.2%	20.8	0.16
		15%	5.1%	7.8	0.31	5.4%	16.9	0.28	6.0%	14.3	0.19	--	--	--
		20%	5.2%	8.4	0.33	5.6%	12.4	0.27	6.5%	8.2	0.15	--	--	--
	4.0%	5%	5.0%	27.3	0.18	5.1%	35.9	0.05	5.2%	50.8	0.05	5.4%	199.7	0.15
		10%	5.1%	7.6	0.18	5.2%	26.1	0.34	5.5%	34.5	0.25	5.8%	37.0	0.31
		15%	5.1%	9.3	0.25	5.3%	21.3	0.35	5.7%	26.1	0.24	6.4%	20.7	0.13
		20%	5.1%	9.5	0.33	5.5%	18.5	0.26	6.1%	16.1	0.20	7.2%	10.3	0.14

Chapter 3: Repair Design Procedure

This chapter addresses the design procedures applicable to each repair method presented in this report. Each method produces similar results; however, the decision of which to use will depend on the level of damage in the member, geometric constraints of the system, availability of materials, and expertise of the available workforce.

3.1 Annulus with conventional RC materials

This repair technique involves installation of a reinforced concrete annulus to strengthen the existing plastic hinge. The repair can be constructed using a steel sleeve which acts as a stay-in-place formwork, as shown in Figure 3.1 (a), or traditional rebar hoops, as shown in Figure 3.1 (b). This section discusses the design procedure to be followed when considering this type of repair.

(a) **(b)**

Figure 3.1: Examples of annulus repair with conventional RC materials using (a) steel sleeve; and (b) discrete transverse hoops

Benefits

This repair method can be quickly designed and applied to a severely damaged RC column that does or does not contain ruptured longitudinal reinforcement. The system utilizes widely available materials which can be substituted as needed depending on availability or installation conditions. The installation methods do not require special training and should be familiar to anyone with experience with reinforced concrete.

Drawbacks

The footprint of this repair creates an enlarged cross section which requires additional space around the base of the column. This might not be feasible in certain configurations where there is insufficient area to locate the repair bars, or impractical where clearance for traffic is of concern. The ideal application for this repair configuration is that of a footing supported column where there is adequate space to install the repair. It may also be possible for hinges which form at the interface between a column and oversized shaft, although that specific application has not been studied thus far.

3.1.1 Design Procedure

3.1.1.1 Moment-Curvature analysis of the original column cross section

Overstrength moment capacity at plastic hinge

The design capacity of the repair shall be calculated assuming the ultimate strength of the original column develops at the relocated hinge region considering overstrength material properties, as illustrated in Figure 3.2. Note, the modulus of the longitudinal steel should be reduced by a factor of one half to account for softening during prior loading. This analysis considers the effect of **all** reinforcing bars at the relocated hinge cross section, even if they are fractured at the base.

If ruptured bars are present: A second analysis shall be carried out with the fractured bars removed from the cross section entirely. It is critical that the analysis software used is capable of modeling the locations of the remaining bars in their actual locations, as opposed to equally distributing the reduced bar count around the cross section. The cross section shall be oriented such that the moment is taken about its weakest direction (i.e. the ruptured bars located on the extreme tension face).

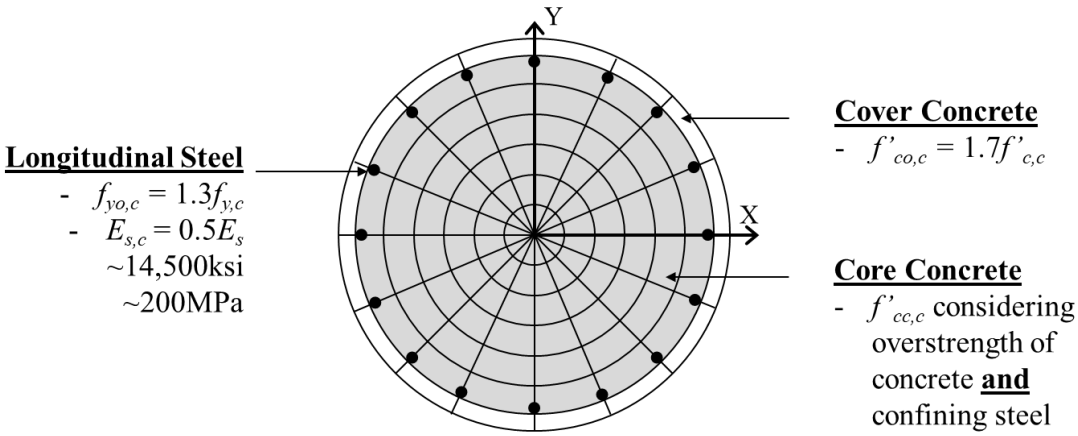

Figure 3.2: Overstrength material properties for moment-curvature analysis

The recommended strain limit at which to define the ultimate moment is the tension based bar buckling strain in the longitudinal steel, defined by Equation 3-1.

$$\varepsilon_{bb} = 0.03 + 700\rho_{s,c}\frac{f_{yhe,c}}{E_{sh,c}} - 0.1\frac{P}{f'_{ce,c}A_{g,c}} \qquad \textit{Equation 3-1}$$

The ultimate overstrength moment of the full cross section, $M_{uo,c}$, shall be taken as that at which the strain limit in the extreme fiber longitudinal bar is reached.

If ruptured bars are present: The ultimate overstrength moment of the reduced cross section without ruptured bars, $M_{uo,rup}$, shall be taken as the moment corresponding to the curvature at which $M_{uo,c}$ develops in the first analysis.

Expected strength moment-curvature analysis

The column response considering expected material properties shall be used when checking the displacement capacity of the repaired system. Typical values of expected material properties are defined in Figure 3.3 below. This analysis also considers the effect of **all** reinforcing bars at the relocated hinge cross section, even if they are fractured at the base.

If ruptured bars are present: A second analysis shall again be carried out with the fractured bars removed from the cross section entirely. The cross section shall be oriented such that the moment is taken about its weakest direction (i.e. the ruptured bars located on the extreme tension face).

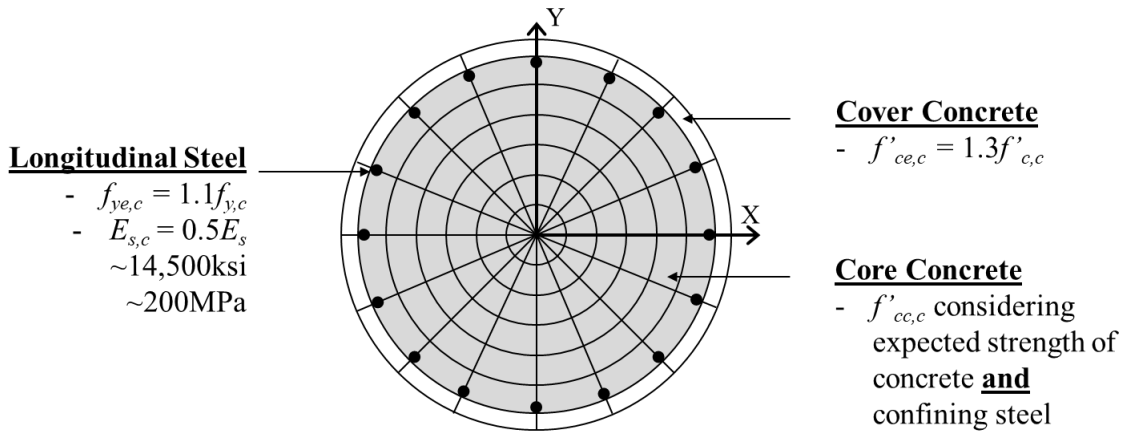

Figure 3.3: Expected strength moment-curvature material property considerations for displacement response predictions

The required design quantities to be obtained from the analysis considering all longitudinal bars are outlined in Table 3.1 below.

Table 3.1: Quantities required from moment-curvature analysis of full cross section

	Moment	Curvature	Strain Limit
Yield	$M_{ye,c}$	$\phi'_{ye,c}$	$\varepsilon_y = f_{ye,c} / E_{s,c}$
Ultimate	$M_{ue,c}$	$\phi_{ue,c}$	ε_{bb} = *Equation 3-1*

If ruptured bars are present: The expected yield and ultimate moments of the reduced cross section without ruptured bars, $M_{ye,rup}$ and $M_{ue,rup}$ respectively, shall be taken as the moments corresponding to $\phi'_{ye,c}$ and $\phi_{ue,c}$ respectively.

3.1.1.2 Determine the height of the repair

The height of the repair is to be determined from Equation 3-2. The first term checks the development length of the bars used in the repair, the second term checks the anticipated strain history and corresponding damage level of the reinforcement at the new hinge location, and the third term sets a minimum bound for the length of the repair to that used in the experimental program of this report. For further discussion, reference Volume I, Section 5.5.1.

$$L_r = \left[\frac{0.022 d_{bl,r} f_{y,r}}{\sqrt{f'_{c,r}}} + 3\right] \geq \left[L_{prt}\left(1 - \frac{0.02}{1.25\varepsilon_{bb}}\right)\right] \geq 0.9D_c \qquad \text{(lbs, in)} \qquad \text{Equation 3-2}$$

Where,

$$L_{prt} = 2kL_c + \beta D_c \qquad \textit{Equation 3-3}$$

$$k = 0.2\left(\frac{f_{u,c}}{f_{y,c}} - 1\right) \leq 0.08 \qquad \textit{Equation 3-4}$$

$$\beta = \begin{cases} 0.66 & \textit{bidirectional} \\ 0.8 & \textit{unidirectional} \end{cases}$$

3.1.1.3 *Calculate the repair moment and shear demand*

When ruptured bars are not present, the repair moment demand, $M_{b,r}$, is found from Equation 3-5, whereas if the column does contain ruptured bars the moment demand is found from Equation 3-6. For discussion on the derivation of the below equations, refer to Volume I, Section 5.2.3.

$$M_{b,r} = M_{uo,c}\left(\frac{2L_r}{L_{eff}}\right) \qquad \textbf{No Ruptured Bars} \qquad \textit{Equation 3-5}$$

$$M_{b,r} = M_{uo,c}\left(\frac{L_c}{L_{eff}}\right) - M_{uo,rup}\left(\frac{L_{eff} - L_r}{L_{eff}}\right) \qquad \textbf{Ruptured Bars} \qquad \textit{Equation 3-6}$$

The column is assumed to bear against the inside wall of the repair such that a triangular distribution of force results as shown in Figure 3.4. The resultant shear force, V_r, can thus be found from statics of the repaired system as shown in Equation 3-7. Note that the increased moment demand in the repair due to ruptured longitudinal bars is a consequence of direct flexural transfer from the development of these bars over the length of the repair. Therefore, the shear demand in the repair is not affected by the presence of ruptured longitudinal bars and should be calculated using the base moment from Equation 3-5.

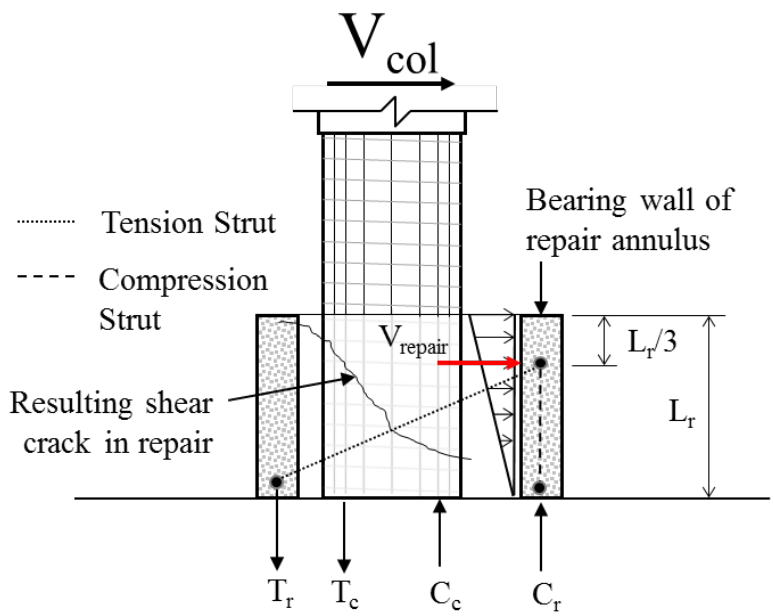

Figure 3.4: Idealized force transfer from column to repair

$$V_r = \frac{3M_{b,r}}{2L_r}$$

Equation 3-7

Where,

$M_{b,r}$ *is calculated from Equation 3-5*

3.1.1.4 *Design the repair cross section*

The repair cross section must resist the ultimate moment demand elastically, and therefore should be designed such that strains in the longitudinal bars do not exceed yield. A moment-curvature analysis should be performed on the considered repair annulus cross section and checked to ensure that the elastic moment capacity, $M_{y,r}$, exceeds the demand moment, considering strength reduction factors as outlined in Equation 3-8. A linear-elastic material model is sufficient to represent the longitudinal steel. Confined concrete properties are applicable for the repair backfill material since the repair annulus is restrained on both sides by the column and steel sleeve.

$$M_{b,r} \leq \phi_f M_{y,r}$$ *Equation 3-8*

Where,

$$\phi_f = 0.9$$

3.1.1.5 *Design the repair transverse steel*

The recommended procedure for design of the repair transverse reinforcement is the Modified UCSD Model (Priestley et al., 1996). Note that only the concrete and steel strength components are considered in Equation 3-9, as the axial load from the column is not transferred into the repair.

$$V_r \leq \phi_s V_{cap,r} = \phi_s \left(V_C + V_S \right)$$ *Equation 3-9*

Where,

$$\phi_s = 0.85$$

The concrete strength component, V_C, is calculated from Equation 3-10 below.

$$V_C = \alpha\beta\gamma\sqrt{f'_{c,r}} \cdot \left(0.8A_{g,r}\right)$$ *Equation 3-10*

Where,

$$1.0 \leq \alpha = 3 - \frac{M_{b,r}}{V_r D_r} \leq 1.5$$

$$\beta = 0.5 + 20\rho_{l,r} \leq 1.0$$

$$\gamma = 0.25 \ \textit{(MPa) or} \ \gamma = 3.0 \ \textit{(psi)}$$

The steel strength component, V_S, is calculated from Equation 3-11 below. If a steel jacket is used, $A_{h,r}$ is taken as the thickness of the material and s_r is taken as 1.0.

$$V_S = \frac{\pi}{2} \cdot \frac{A_{h,r} f_{yh,r} \left(0.8D_r - c_{o,r}\right) \cdot \cot\left(35\right)}{s_r} \qquad \textit{Equation 3-11}$$

For further discussion on the considerations of shear design of the repair, refer to Volume I, Section 5.5.3.

3.1.1.6 Check the displacement capacity of repaired member

Once the repair has been designed, the response of the full system should be checked to ensure there is adequate displacement capacity to reach the expected design displacement. The method developed in Section 5.2 of Volume 1 of this report should be used to accurately assess the system response. The applicable equations are presented below in condensed form; however, additional discussion on the derivation of the methodology is available in Volume 1 of the report. There are a total of four mechanisms which contribute to the overall displacement, each of which are separated into their respective elastic and plastic components in the steps below.

Calculate displacement due to column flexure above repair

This component of deformation is calculated using the modified plastic hinge method developed by (Goodnight, Kowalsky, & Nau, 2015) considering the effective length of the column. The tension hinge length is used, as both limit states are based on tension strains in the longitudinal steel. The rectangular plastic hinge length is calculated from Equation 3-12 and Equation 3-13 below. Note that strain penetration terms are not considered.

$$L_{pt} = kL_{eff} + \gamma D_c \qquad \textit{Equation 3-12}$$

$$k = 0.2\left(\frac{f_{uc}}{f_{yc}} - 1\right) \leq 0.08 \qquad \textit{Equation 3-13}$$

$$\gamma = \begin{cases} 0.33 & \textit{bidirectional} \\ 0.4 & \textit{unidirectional} \end{cases}$$

The resulting displacements are then calculated from Equation 3-14 and Equation 3-15 below

$$\Delta_{e,c} = \frac{\phi'_{ye,c} L_{eff}^2}{3} \qquad \textit{Equation 3-14}$$

$$\Delta_{p,c} = \left(\phi_{ue,c} - \phi'_{ye,c}\right) L_{pt} \left(L_{eff} - 0.5 L_{pt}\right) \qquad \textit{Equation 3-15}$$

Calculate displacement due to column rotation within the repair

This component of deformation accounts for the column rotation at the top of the repair resulting from strains in column bars within the repair. The plasticity in the column above the top of the repair is assumed to be mirrored below; however, the full extent of plasticity will likely be truncated by the top of the footing. The resulting rotations are calculated by integrating an idealized triangular curvature distribution that is truncated at the top of the footing. The triangular plastic hinge length, which is simply double that of the rectangular hinge length found above, is used to describe the extent of plasticity.

$$L_{prt} = 2 L_{pt} \qquad \textit{Equation 3-16}$$

The resulting displacements are then calculated from Equation 3-17 and Equation 3-18 below.

$$\Delta_{e,r} = \frac{\phi'_{ye,c}}{2}\left(1 + \frac{L_{eff} - L_r}{L_{eff}}\right) L_r \cdot L_{eff} \qquad \textit{Equation 3-17}$$

$$\Delta_{p,r} = \frac{\left(\phi_{ue,c} - \phi'_{ye,c}\right)}{2}\left(1 + \frac{L_{prt} - L_r}{L_{prt}}\right) L_r \cdot L_{eff} \quad \textit{if} \quad L_{prt} > L_r \qquad \textit{Equation 3-18}$$

Otherwise,

$$\Delta_{p,r} = \left(\phi_{ue,c} - \phi'_{ye,c}\right) L_{prt} \cdot L_{eff}$$

Calculate displacement due to column strain penetration into the footing

Additional rotation results from strain penetration into the footing. The traditional strain penetration length is used to account for this; however, the curvature to which this length is applied is that at the top of the footing. The resulting displacements are calculated from Equation 3-19 through Equation 3-21 below.

$$L_{sp,c} = \begin{cases} 0.022 f_{ye,c} d_{bl,c} & (MPa) \\ 0.15 f_{ye,c} d_{bl,c} & (ksi) \end{cases} \qquad \textit{Equation 3-19}$$

$$\Delta_{e,sp} = \phi'_{ye,c} \left(\frac{L_{eff} - L_r}{L_{eff}} \right) L_{sp,c} \cdot L_{eff} \qquad \textit{Equation 3-20}$$

$$\Delta_{p,sp} = \left(\phi_{ue,c} - \phi'_{ye,c} \right) \left(\frac{L_{prt} - L_r}{L_{prt}} \right) L_{sp,c} \cdot L_{eff} \;\; if \; L_{prt} > L_r \qquad \textit{Equation 3-21}$$

Otherwise,

$$\Delta_{p,sp} = 0$$

Calculate displacement due to rigid body rotation of the repair

The repair is assumed to rotate as a rigid body at the interface of the footing, where rotation is defined by strain penetration of the longitudinal repair bars into the repair and footing. The resulting rotation is a function of the repair strain penetration length, the moment demand, and assumed section and material properties.

$$L_{sp,r} = \begin{cases} 0.044 f_{ye,r} d_{bl,r} & (MPa) \\ 0.30 f_{ye,r} d_{bl,r} & (ksi) \end{cases} \qquad \textit{Equation 3-22}$$

$$I_{g,r} = \frac{\pi \left(D_r^{\,4} - D_c^{\,4} \right)}{64} \qquad \textit{Equation 3-23}$$

$$E_{grout} = 500 f'_c \qquad \textit{Equation 3-24}$$

$$E_{conc} = \begin{cases} 57,000\sqrt{f'_c} & (psi) \\ 4,700\sqrt{f'_c} & (MPa) \end{cases} \qquad \textit{Equation 3-25}$$

Since the moment demand in the repair is different depending on whether ruptured bars are present or not, the resulting displacement equations. When ruptured longitudinal bars are present, the moment demand increases resulting in

$$\Delta_{e,rr} = \frac{M_{ye,c}\left(\frac{2L_r}{L_{eff}}\right)}{0.35EI_{g,r}} L_{sp,r} \cdot L_c \qquad \textit{Equation 3-26}$$

$$\Delta_{p,rr} = \frac{\left(M_{ue,c} - M_{ye,c}\right)\left(\frac{2L_r}{L_{eff}}\right)}{0.35EI_{g,r}} L_{sp,r} L_c \qquad \textit{Equation 3-27}$$

$$\Delta_{e,rr,rup} = \frac{\left[M_{ye,c}\left(\frac{L_c}{L_{eff}}\right) - M_{ye,rup}\left(\frac{L_{eff} - L_r}{L_{eff}}\right)\right]}{0.35EI_{g,r}} L_{sp,r} \cdot L_c \qquad \textit{Equation 3-28}$$

$$\Delta_{p,rr,rup} = \frac{\left[\left(M_{ue,c} - M_{ye,c}\right)\left(\frac{L_c}{L_{eff}}\right) - \left(M_{ue,rup} - M_{ye,rup}\right)\left(\frac{L_{eff} - L_r}{L_{eff}}\right)\right]}{0.35EI_{g,r}} L_{sp,r} \cdot L_c \qquad \textit{Equation 3-29}$$

Combine individual components to obtain total member displacements

$$\Delta'_y = \Delta_{e,c} + \Delta_{e,r} + \Delta_{e,sp} + \Delta_{e,rr} \qquad \textit{Equation 3-30}$$

$$\Delta_u = \Delta'_y + \Delta_{p,c} + \Delta_{p,r} + \Delta_{p,sp} + \Delta_{p,rr} \qquad \textit{Equation 3-31}$$

3.1.1.7 Approximate Force-Displacement response

The above calculations are sufficient to develop an approximate bilinear force-displacement curve for the repaired system. The yield and ultimate forces are calculated from Equation 3-32 and Equation 3-33 respectively. The general form of this curve is similar to that of any other system, as shown in Figure 3.5.

$$F'_y = \frac{M_{ye,c}}{L_{eff}} \qquad \textit{Equation 3-32}$$

$$F_u = \frac{M_{ue,c}}{L_{eff}} \qquad \textit{Equation 3-33}$$

If ruptured bars are present in the original column, and considerations are not made to ensure they remain bonded within the repair, the calculations above represent an upper bound solution of the repaired system. A second analysis should be conducted considering **only** the ruptured cross section. This will represent a lower bound solution where all of the ruptured longitudinal bars have debonded. The yield and ultimate demands in this analysis should be taken as those where the strain limits are reached at what becomes the extreme tension bar when the ruptured bars are removed from the cross section. The resulting system is that presented in Figure 3.6, where the actual member performance is expected to fall within the solution space bounded by the upper and lower curves. The final displacement capacity of the system shall be taken as the lower of the two systems.

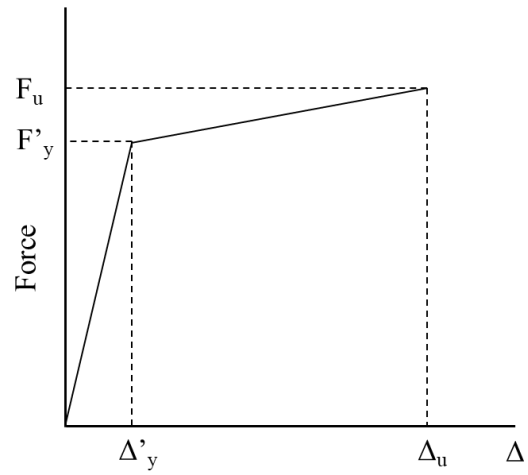

Figure 3.5: Bilinear Force vs. Displacement approximation for repaired column

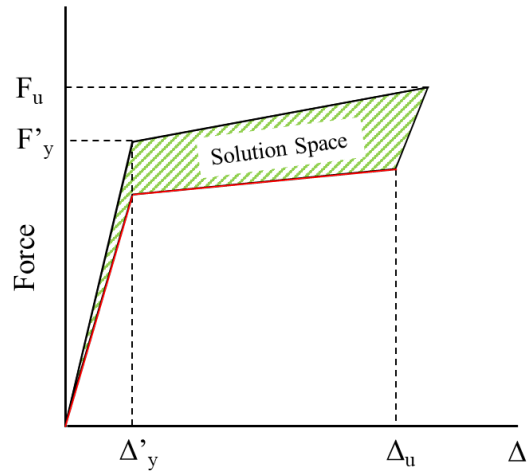

Figure 3.6: Bilinear Force vs. Displacement approximation for repaired column with ruptured longitudinal bars not restrained against debonding

If the calculated displacement capacity of the repaired system is insufficient to meet that of the displacement demand, the following solutions are recommended:

1. Provide additional confinement to the relocated hinge region via external CFRP wrapping or a steel sleeve installed prior to the repair to increase the allowable tension strains. This method will add additional cost and time to the overall repair of the structure; however, the initial service level of the bridge would be preserved.
2. Reduce the displacement demand to a value below that of the calculated capacity of the system by designing to a less severe ground motion. This approach would involve either reducing the service level of the bridge or accepting greater risk in

the event of a design level event. However, should this repair be required, it is assumed that a major event with a very long return period has just occurred. Therefore, it is reasonable to assume that an equally large magnitude event would not occur in the near future. Nonetheless, this approach should only be considered in circumstances where it is absolutely essential that the structure be repaired and returned to service in an emergency. It is also recommended that the repair not be considered as a permanent solution in this case, and that the bridge only be opened for as long as necessary to construct a replacement.

3.1.1.8 Check P-Delta moment of the repaired system

The calculated displacement capacity of the system does not include any impact of P-Delta effects, which should be considered. These impacts will be greatest in a system with ruptured bars that are not restrained against debonding, as the reduced stiffness resulting from the weaker cross section is more susceptible to instability. Furthermore, the P-Delta moment should be considered with an initial value resulting from the residual drift present in the system and the calculated ultimate displacement capacity should be reduced accordingly.

3.1.1.9 Check capacity protected elements

Once the repair has been designed, the remaining structure is to be checked to ensure capacity protected elements have sufficient margin to remain elastic considering the increased overstrength demand of the relocated plastic hinge. In the event that an element falls short of the required capacity, measures are to be taken to either reduce the forces on the system or increase the strength of the element. The following options are available:

1. Retrofit the deficient element to increase the load capacity such that it is sufficient to resist the overstrength force demands of the system. This approach will result in a more robust system, but will add time and cost to the overall repair of the structure.
2. Cut longitudinal bars in the relocated plastic hinge region such that the overall force is sufficiently reduced to ensure elastic behavior in the rest of the system. This is the most expedient and cost effective method; however, the resulting system is likely to have a displacement capacity less than that predicted by the above

calculations. Should this approach be used, the following considerations are recommended:

- The longitudinal bars should be cut 12 inches **below** the top of the repair.
- The calculated ultimate displacement capacity of the repaired system should be reduced by a value equal to Δ'_y.

Chapter 4: Material Specifications

4.1 Annulus with conventional RC materials

All specifications for this repair should be consistent with those provided by the Alaska DOT Standard Specifications for Highway Construction (AKDOT, 2017), here forth referred to as the "Standard Specification". Specific items relevant to the repair are outlined in the sections below, with discussion and modifications provided where applicable.

4.1.1 Grout

It is recommended to supplement the requirements of Section 701-2.03 of the Standard Specification with those of Table 4.1, developed by Matsumoto et al (2001). This supplemental specification was developed as part of an experimental program in which grouted pocket connections were used to assemble a precast bent system using Accelerated Bridge Construction (ABC) techniques. The configuration and construction requirements of the grouted pocket connection resemble those of the annular plastic hinge relocation repair, therefore it is reasonable to assume similar material behavior between the two systems.

Note the 28-day compressive strength is reduced from 9,000 psi to 7,000 psi. Since additional water is required to obtain a fluid consistency, a corresponding reduction in strength is necessary. A value of 7,000 psi is recommended as this represents the minimum observed strength during testing of the repairs. It is also recommended to obtain compressive strength from 4 in x 8 in cylinders per ASTM C-31 as opposed to 2 in cubes per ASTM C-109. The testing of 2 in cubes was found to be highly inconsistent and largely dependent on small imperfections in the cube composition. The larger cylinders are easier to fabricate and result in far less variation between results.

Table 4.1: Grout specification; adapted from (Matsumoto 2001)

Property	Values	
Mechanical	Age	Compressive strength (psi)
Compressive strength (ASTM C-31, 4x8" cylinder)	1 day 3 days 7 days 28 days	2500 4000 5000 7000
Compatibility		
Expansion requirements (ASTM C 827 & ASTM C 1090)	Grade B or C – expansion per ASTM C 1107	
Modulus of elasticity (ASTM C-469)	$3.0\text{-}5.0\times10^{6}$ psi	
Coefficient of thermal expansion (ASTM C-531)	$3.0\text{-}10.0\times10^{-6}$/deg F	
Constructability		
Flowability (ASTM C-939)	fluid consistency efflux time: 10-30 seconds	
Set Time (ASTM C-191) Initial Final	 3-5 hrs 5-8 hrs	
Durability (as necessary)		
Freeze Thaw (ASTM C-666) Sulfate Resistance (ASTM C-1012)	300 cycles, RDF 80% expansion at 26 weeks < 0.1%	

4.1.2 Concrete

4.1.2.1 Class of concrete

It is recommended that all concrete used in the repair be of **Class A-A**, as defined in Section 501-1.01 of the Standard Specification, to provide improved strength and durability.

4.1.2.2 Composition of mixture

Water-Cement ratio (w/c)

Table 501-1 of the Standard Specification states the maximum w/c of Class A-A concrete to be 0.40, with cementitious materials defined as Portland cement, blended hydraulic cement, fly ash, ground granulated blast-furnace slag, and silica fume. **However, it is recommended that a w/c of 0.40 is maintained considering only Portland cement and excluding contributions from pozzolanic materials**.

This recommendation is based on the outcome of a small number of tests that were conducted to measure the freeze-thaw durability of concrete samples created from the design mix used in Repair #4, which contained a combination of Portland cement and fly ash resulting in a w/c of 0.46. The samples were tested in accordance with ASTM C-666, which measures early age durability of the concrete when subjected to rapid freeze-thaw. Results indicate generally poor performance of the mix design, with none of the samples meeting the criteria specified by the test method. While these results support the reduction of the w/c to 0.40, it is recognized that an improvement in performance would only come as a result of the addition of Portland cement when samples are subjected to the requirements of ASTM C-666. The remaining cementitious materials act through pozzolanic reactions which require more time to develop their durability enhancing properties than the test allows. Therefore, pending further investigation, it is recommended to neglect the contribution of pozzolanic materials from the calculation of w/c if ASTM C-666 is considered as the standard from which freeze-thaw durability is defined.

Aggregate gradations

To aid in flowability and consolidation of the repair mix into the damaged column, it is recommended to use #78M coarse aggregate (i.e. 3/8 in pea gravel) as opposed to the typically specified #57 or #67.

Air content

Per ACI 318 recommendations for concrete exposed to severe conditions with a nominal maximum aggregate size of 3/8 in, it is recommended that the air content of the mix design be specified as 7.5%.

Slump

To aid in flowability and consolidation of the repair mix into the damaged column, it is recommended that a high-range water reducing add mixture be used with a specified slump of 7 in +/-1 in.

Specified compressive strength

The specified compressive strength (f'_c) for Class A-A concrete of 5,000 psi, as listed in Table 501-5 of the Standard Specification, is adequate for use in the repair.

4.1.3 Steel

4.1.3.1 Longitudinal repair bars

Material

It is recommended that the longitudinal repair bars meet the requirements of ASTM A706, Grade 60, as referenced in Section 709-2.01 of the Standard Specification.

Adjoining member embedment length

The embedment length of the longitudinal bars into the footing shall meet or exceed that recommended by the epoxy manufacturer.

Repair embedment length

The repair bars shall extend the full height of the repair minus the depth of concrete cover. The repair height shall be determined accounting for the minimum bar development length based on the provisions of Section 3.1.1.2 of this guide. The development length of the repair bars and corresponding repair height **shall not** be calculated considering lapped splice lengths presented in Table 503-2 of the Standard Specification.

4.1.3.2 Transverse steel

Rebar hoops

It is recommended that rebar hoops meet the requirements of ASTM A706, Grade 60, as referenced in Section 709-2.01 of the Standard Specification.

Steel Sleeve

It is recommended that steel sleeve be fabricated from hot rolled steel sheets conforming to ASTM A36 standards and meet the general requirements of Section 716-2.02 of the Standard Specification. Per Caltrans seismic retrofit guidelines (Caltrans, 2009), it is recommended that steel sleeves are to be a minimum of 1/4 in thick when D_r is less than or equal to 52 in, and 3/8 in thick when D_r is greater than 52 in.

4.1.4 Welding

All welding shall be conducted by a certified welder with proper Welder Performance Qualification Records (WPQR) documenting applicable current weld certifications. All welds shall be supervised and inspected by a Certified Weld Inspector (CWI) according to AWS D1.4. A completed welding plan shall be submitted and signed by the CWI prior to beginning work.

Splicing rebar hoops

Splicing of individual rebar hoops shall meet the requirements for welded lap splicing listed in section 503-3.05 of the Standard Specification. The lap welds are to be staggered in orientation over the height of the repair so as not to create a potentially weak direction.

Welding steel sleeve seam

The steel sleeve shall be welded and fabricated in accordance with section 504-3.01 of the Standard Specification. Backing plates shall be the same thickness of the steel sleeve up to a maximum 1/2 in, per the Caltrans bridge retrofit specification (Caltrans, 2009).

4.1.5 Epoxy

The epoxy for bonding the longitudinal rebar shall meet the requirements of Section 712-2.21 of the Standard Specification. A list of prequalified adhesives is provided in Table 4.2 below. The selected epoxy shall be certified for seismic applications.

Table 4.2: Prequalified chemical adhesive chart (Provided by AKDOT)

Manufacturer or Brand Name	Product Name	Threaded Rod			Reinforcing Bar (Gr. 60)	Concrete temp. at time of installation		Installation time at 25 °C [a]	
		ASTM A 307	ASTM A 449 (T1)	F 593		Min (°C)	Max (°C)	Set (hrs)	Cure (hrs)
Hilti (415) 507-1690	HTE 50	Yes	Yes	Yes	Yes	2	43	0.25	24.0
	RE500	Yes	Yes	Yes	Yes	-5	43	2.0	12.0
Adhesives Technology Corporation (800) 892-1880	Ultrabond HS200	Yes	Yes	Yes	Yes	2	43	0.25	24.0
	Ultrabond 365	No	Yes	No	Yes	-18	43	0.1	0.5
Unitex (816) 231-7700	Pro-Poxy 300 Fast [b]	No	Yes	No	No	5	43	2.5	24.0
Powers Fasteners (800) 659-1069	T308+ [b]	No	Yes	No	No	5	43	2.5	24.0
US Mix (303) 778-7227	US SPEC Gelbond NS Fast [b]	No	Yes	No	No	5	43	2.5	24.0
ITW Redhead (800) 368-9724	Acrylic 7	No	Yes	No	Yes	-18	43	0.1	0.5
Simpson Strong Tie (510) 460-9912	SET22 & SET56	No	Yes	No	Yes	5	43	1.0	24.0
Covert Operations / USP - (800) 328-5934	CIA Gel 7000	No	Yes	No	Yes	4	43	4.0	36.0

a. The installation times are based on information in the Manufacturer's product literature. Set time is the minimum time needed for the adhesive to harden and support the anchor; cure time is the minimum time required before the anchor may be loaded.

b. A 30-element mixing nozzle shall be used to place the chemical adhesive.

Chapter 5: Repair Installation Procedure

This chapter discusses the installation procedures for the plastic hinge relocation techniques described in this report. Each procedure is broken into a step-by-step process that describes the general methodology that is to be used; however, field conditions will certainly vary. Therefore, this discussion is meant to act as a guide as opposed to a prescriptive installation procedure.

5.1 Annulus with conventional RC materials

This repair method is intended to be rapidly deployable and require minimal preparation and installation time. Construction is conceptually straight forward; however, it was found that some difficulties could arise during field implementation requiring additional consideration. This section provides a detailed procedure for a typical installation, as well as a discussion of potential challenges and recommendations for each step.

Step 1: Straighten column if residual drift exceeds allowable limits

Following a major seismic event, it is likely that there will be some level of residual deformation due to large displacements of the structure. If the structure is found to exceed the acceptable limits, as defined in Section 2.3, it should be adjusted to as close to plumb as possible prior to installation of the repair. The means and methods of accomplishing this will vary in each situation and are therefore not included in the scope of this guide.

Step 2: Remove loose concrete from existing plastic hinge

The cover concrete should be completely spalled from the face of the column in the plastic hinge region and will not require much effort to remove. However, the core concrete will likely be crushed to some extent, but still largely intact. To maximize the effectiveness of the backfill inside of the repair, all the loose concrete must be removed from the core. This is achieved with light

hand chiseling, removing only relatively loose concrete exhibiting large visible cracks. Once solid concrete is reached the removal process should be stopped so as to limit the reduction of vertical load capacity during the repair construction process. An example of a test specimen before and after removal of crushed core concrete is shown in Figure 5.1.

There is also likely to be substantial spalling of the footing concrete directly adjacent to the column which should also be removed. From past experience, it is recommended to remove the cover concrete from the footing in the region where the repair is to be installed. This exposes the existing reinforcement making it easier to locate the repair bars.

(a) **(b)**

Figure 5.1: Existing plastic hinge (a) before and; (b) after crushed core removal

<u>Step 3:</u> Drill holes for new bars into footing

Once the core is clear of loose concrete, holes are hammer drilled into the footing for the repair bars. The diameter and depth of the holes depends on the size of bar to be installed as well as the manufacturer's specifications for bond development of the epoxy. Since the top surface of the footing is likely to be cracked or spalled, it is recommended to measure the hole depth from the top of sound concrete, which should be just at or below the top mat of reinforcing steel.

Due to the heterogeneous nature of reinforced concrete and the inability to exactly locate reinforcing steel, the drilling of holes is likely to be the most labor intensive and potentially problematic step of installation. Although the spacing and layout of the steel should be known from design drawings, the exact location of bars, shear ties, and other miscellaneous inclusions will almost certainly require relocation of holes by some amount. It is recommended to provide an envelope tolerance of +/- 1 bar diameter such that the bars can be relocated in the field as needed.

Where footing reinforcement is unavoidable during the drilling process, it may be necessary to core drill through the steel before returning to the hammer drill process once concrete is reached. Typically, the longitudinal bars in a footing are easily avoided; however, auxiliary steel

such as the J-hooks shown in Figure 5.2, can be more dispersed and problematic during this phase of installation, potentially requiring removal. **NOTE: Reinforcing steel should only be cut after consulting with the project engineer to ensure the reduced steel is acceptable.**

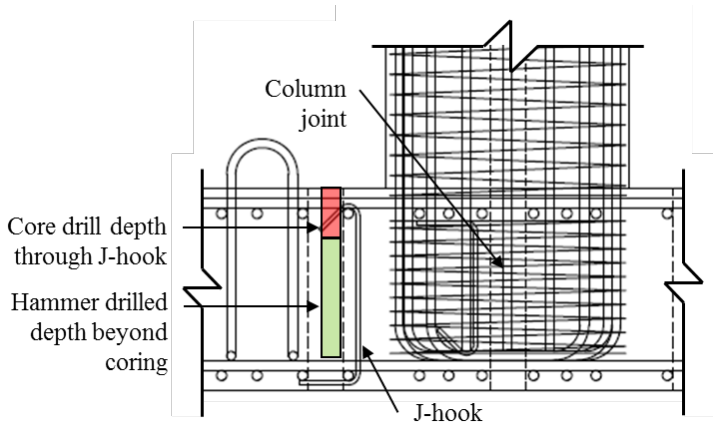

Figure 5.2: Repair bar drilling to avoid J-Hooks in specimen footing

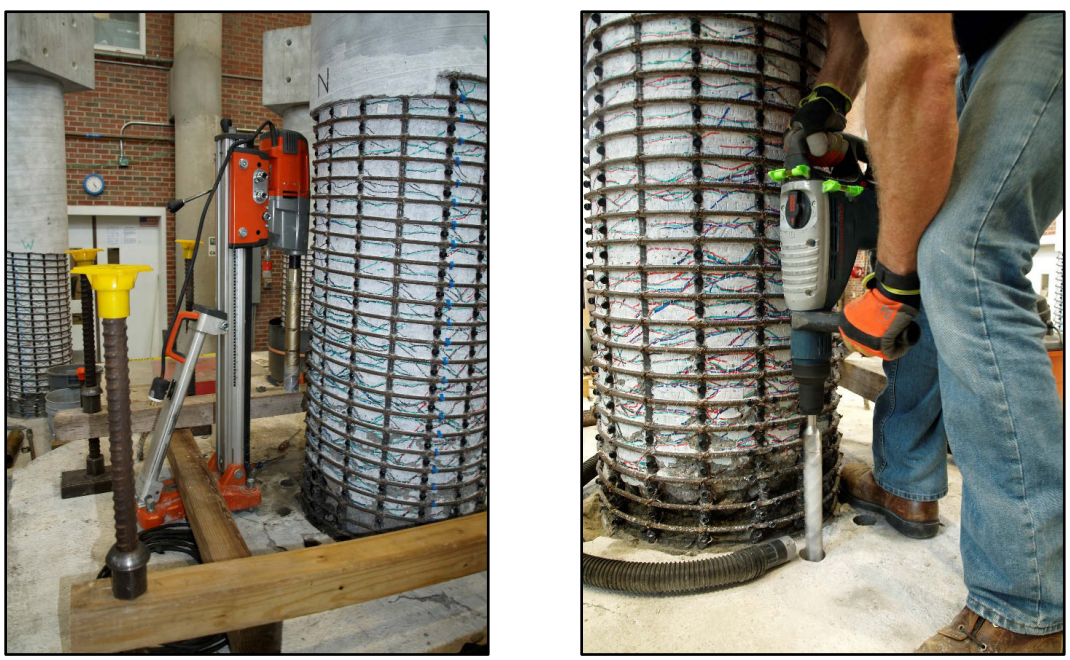

(a) **(b)**

Figure 5.3: Setup for (a) core drilling and; (b) hammer drilling

<u>Step 4:</u> Install two-part epoxy and place repair bars into drilled holes

Once the holes are drilled into the footing the bars are then set with a two-part acrylic epoxy. The selected product should meet the specification requirements outlined in Section 4.1.5. This material has a straight forward installation procedure that does not require much effort; however, the set time at normal temperatures is typically only 6-7 minutes. Therefore, it is essential

to work quickly and efficiently, and once the installation process begins it should continue through completion without interruption. The procedure outlined in the following paragraphs is typical for most two-part epoxy applications; however, manufacturer instructions should be followed.

1. First, prepare the holes to maximize the bond of the epoxy. It is recommended to complete the following steps for **all** holes prior to beginning the epoxy installation process. Once cleaned, the holes should be sealed with a cloth to prevent debris from re-entering.
    - Clear with compressed air to remove any loose debris from drilling
    - Roughen the hole surface with a wire brush
    - Clear again with compressed air
    - Run vacuum hose into hole to ensure it is completely clean
2. Prepare the epoxy installation system that is to be used, an example of which is shown in Figure 5.4 below. A mechanical hand system was used during testing, but it is recommended to use an automatic system if available for field applications to reduce the time and effort required for dispensing.

Figure 5.4: Redhead two-part epoxy application system

3. Fill a single hole to approximately ½ to ¾ of the total depth with epoxy.
4. Insert the reinforcing bar into the hole by pushing downward and twisting to ensure that any air voids are removed as the bar is placed. A small amount of excess epoxy should escape from the hole indicating that it is adequately filled, as indicated in Figure 5.5. If this does not occur, the bar should be removed and more epoxy added until the hole is adequately filled.

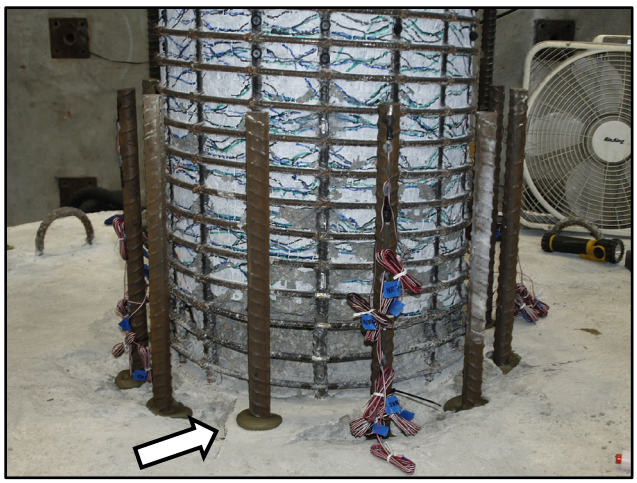

Figure 5.5: Final installation of repair bars with epoxy

5. Once the bar is placed, it should be checked to ensure it is vertical, as shown in Figure 5.6. The epoxy should be viscous enough to hold the bar in place as it sets, without any additional support.

Figure 5.6: Installation of two-part epoxy into footing

6. Repeat steps 3 through 5 until each repair bar has been set. The initial set time should be approximately 30 minutes, with a total cure time of 24 hours. Note that the repair installation process does not require final cure, but can be continued once the initial set has been reached.

<u>Step 5:</u> Patch footing to level

A rapid set grout should be used to level the surface of the footing after the repair bars are set. BASF Masterflow® 928 grout was used when installing the repair for testing, which has an initial and final set time of 3 and 5 hours respectively. Products with shorter set durations are

available should that be required. It is not necessary to wait until the grout has fully cured to continue with the installation of the repair, but only until the grout has reached sufficient stiffness to support the weight of the steel sleeve or other formwork. An example of the patched footing is shown in Figure 5.7 below.

Figure 5.7: Installation of patch grout on top of footing

Step 6: Install transverse steel

Once the footing patch has set, the transverse steel is installed around the repair bars. This reinforcement can be either a steel sleeve or individual rebar hoops. The installation procedure varies depending on which reinforcement system is selected, therefore the procedure for each is outlined separately below.

Steel Sleeve Installation

The steel sleeve is to be installed as two separate halves which are placed around the damaged region of the column and joined together via a continuous butt weld. The sleeve sections should be fabricated to the required curvature and dimensions prior to arriving on site for installation. Each half is initially positioned with a ⅛ in gap and a backer bar is placed on the inside face of the seam. This configuration is secured in place with vice grips until tack welds can be placed to hold the sleeve in place, as shown in Figure 5.8.

Figure 5.8: Tack welds along seam to hold sleeve and backer bar in place

Once secured, the remainder of the seam is butt welded along the entire height creating a continuous ring around the column, as shown in Figure 5.9 and Figure 5.10.

Figure 5.9: Welding the two halves of steel sleeve

Figure 5.10: Completed butt weld on steel sleeve

Once the sleeve has been welded, it must be positioned to ensure a consistent and stable spacing around the circumference of the column. The means of doing so can vary so long as the sleeve is secured during placing of the backfill concrete. The steel sleeves installed on the test specimens contained an array of holes around the perimeter of the repair with threaded rods installed through each hole. Bolts and washers were placed on either side of the holes, which could then be adjusted and tightened such that the rods bear against the existing column. This allows the sleeve to be positioned uniformly around the perimeter of the column and to be held secure. The threaded rods can be seen in Figure 5.10 on the outside of the steel sleeve prior to being positioned, and in place in Figure 5.11.

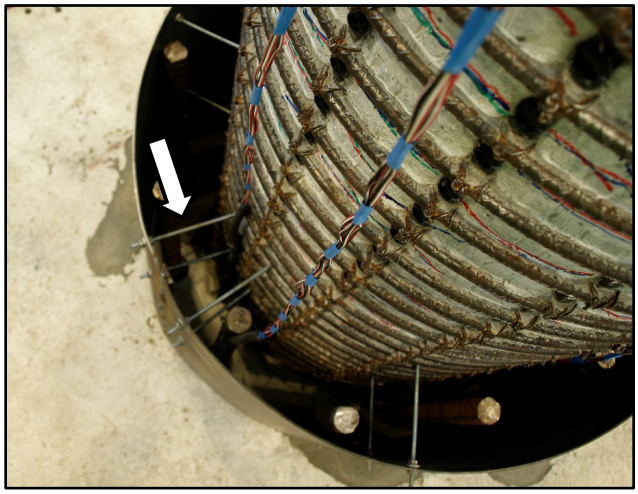

Figure 5.11: Steel sleeve with threaded rod spacers bearing against column

Rebar Hoop Installation

When using traditional rebar for transverse reinforcement of the repair, it is not practical or feasible to use continuous spirals since the column and superstructure are already in place. Therefore, individual hoops are placed in layers over the height of the repair at the prescribed spacing. Each hoop consists of two arcs with lengths equal to half of the circumference of the repair plus an additional length to provide necessary overlap for two splice welds on either side. The hoops are placed and tied to the longitudinal steel with the locations of splices staggered on each layer to prevent a potential weak direction. Note that the longitudinal steel will likely not be placed in a precisely circular pattern, and therefore the hoops may not be in contact with all of the bars. This should not affect the performance of the repair, so long as measures are taken to ensure the spacing of the hoops remains consistent. An example of a completed repair cage is shown in Figure 5.12 where a splice overlap is highlighted.

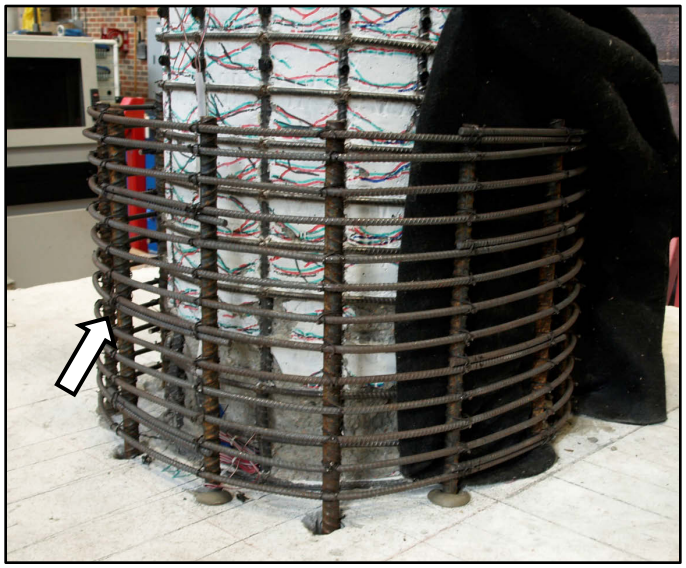

Figure 5.12: Completed rebar cage for annular repair technique

Once the bars are tied, the lap splices are welded in place using the single sided groove weld specified in Section 4.1.4. An example of this weld is shown in Figure 5.13.

Figure 5.13: Completed rebar splice groove weld

<u>Step 7:</u> Provide watertight seal at form base

A silicone sealant should be used around the base of the formwork to ensure the backfill is contained within the repair annulus when placed. The recommended cure time for this type of sealant is typically 24 hours; however, in a field application it is likely acceptable to place backfill once the silicone has reached initial set, which is approximately 1-2 hours. Where the steel sleeve is used, the silicone should be placed directly at the base of the sleeve. If rebar hoops are used, a supplemental formwork such as a Sonotube is required and should be sealed accordingly.

<u>Step 8:</u> Place backfill into annular void to complete repair

Once the steel sleeve is set with the seal at the base, the backfill material is placed into the void space between the sleeve and the column. Specific considerations for concrete and grout applications are outlined below.

<u>Prepackaged grout installation</u>

1. The grout is to be mixed to the proportions defined by the manufacturer to produce a fluid mixture.
2. Multiple batches may be required when a prepackaged grout is used due to mixing constraints; however, the material must not be allowed to set between individual placements.
3. The grout should be installed in 6 in lifts, with each lift being rodded through its depth to penetrate the lift below (similar to the molding of concrete cylinders).

4. A mechanical vibrator should **not** be used to consolidate neat grout mixtures, as this will cause the water and fine aggregates to separate from the mixture.
5. Once fully placed, the outer form should be tapped with a hammer to further consolidate the mixture.

Ready-mix concrete installation

1. Concrete should be placed in lifts similar to that described for the grout mixture.
2. A mechanical vibrator is preferred for consolidation of the concrete mixture, as it is likely to be stiffer than that of the fluid grout mix.
3. The vibrator should extend through the current lift and penetrate into the lift below to ensure adequate consolidation.

Chapter 6: Design Example

6.1 Example #1 – Column with Buckled Bars

6.1.1 Problem Description

Consider the bridge column presented in Figure 6.1 below. In this scenario, the bridge has been subjected to an earthquake resulting in the formation of a plastic hinge at the column-footing interface. All the longitudinal bars have buckled, and the concrete core has begun to crush leaving the structure susceptible to collapse in a future earthquake. Furthermore, each column in the bridge has a residual drift of approximately 1.5%. The bridge is located in a region of high seismicity, with site hazard parameters defined in Figure 6.2.

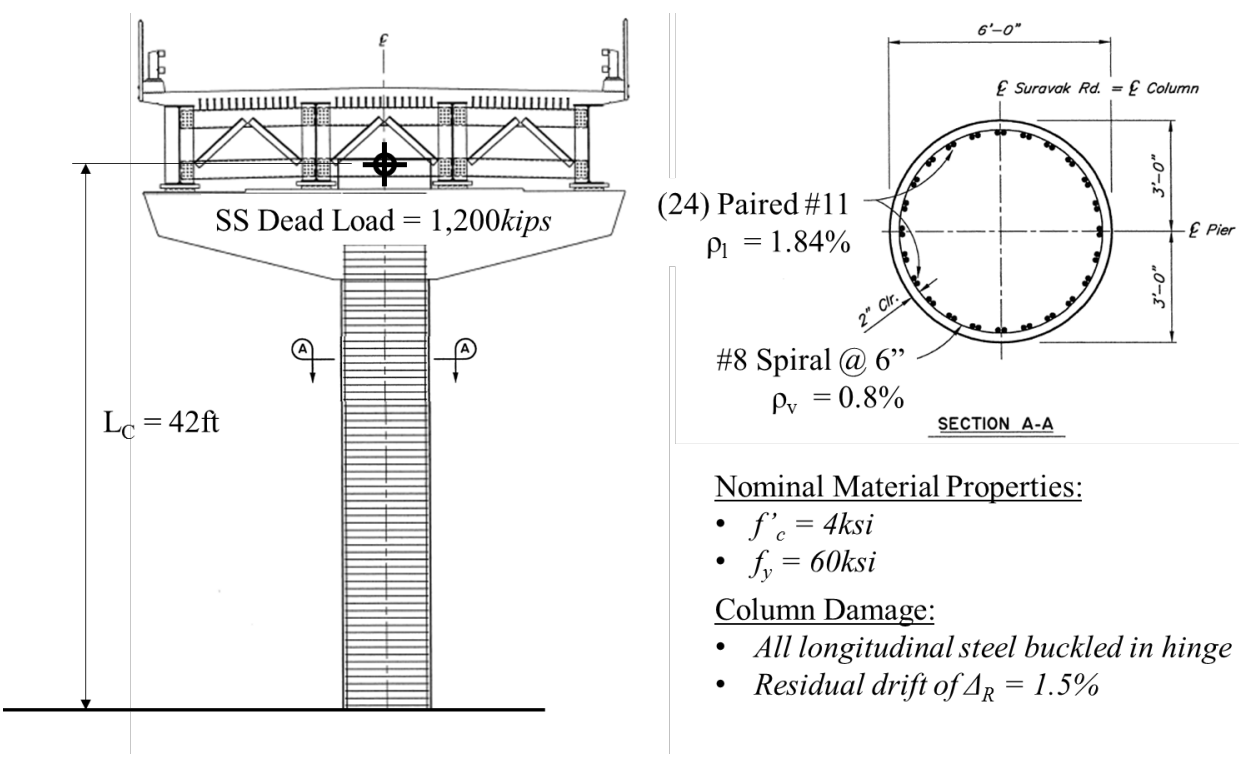

Figure 6.1: Example 1 structural configuration.

Building Code Reference Document 2009 AASHTO Guide Specifications for LRFD Seismic Bridge Design
(which utilizes USGS hazard data available in 2002)

Site Coordinates 63.457°N, 148.804°W

Site Soil Classification Site Class B – "Rock"

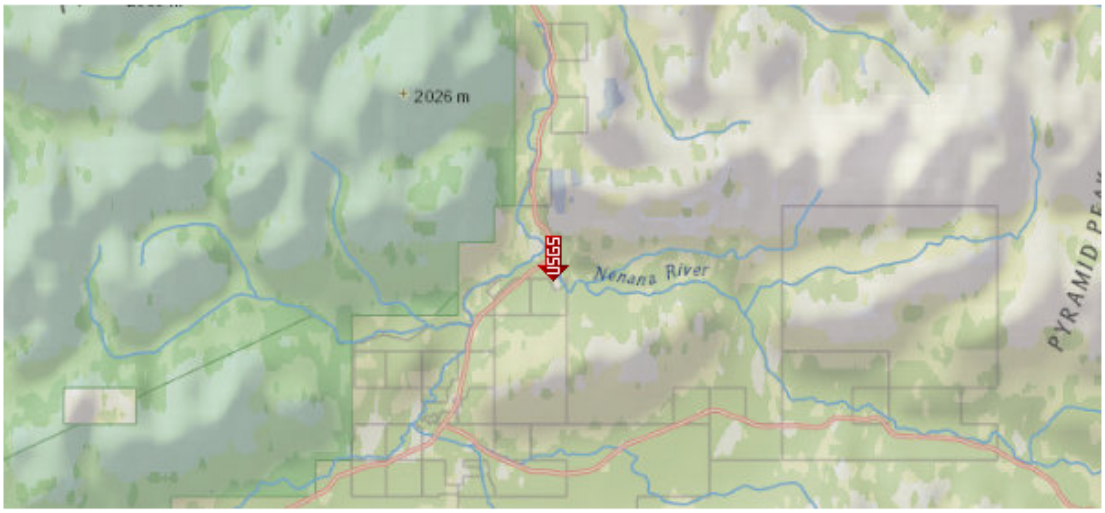

USGS–Provided Output

PGA =	0.625 g	**A_s =**	0.625 g
S_s =	1.411 g	**S_{DS} =**	1.411 g
S_1 =	0.597 g	**S_{D1} =**	0.597 g

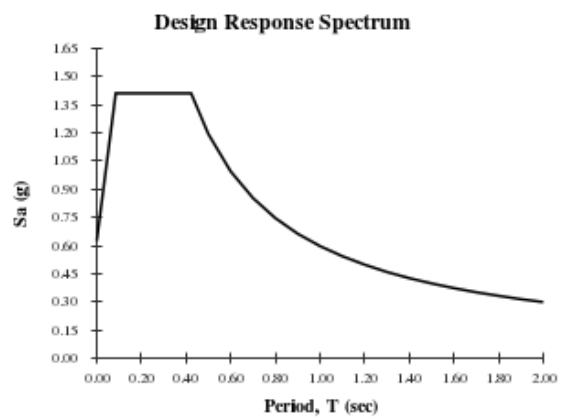

Figure 6.2: Example 1 site hazard.

6.1.2 Structural Assessment

The structure is a modern, well designed reinforced concrete bridge column with sufficient confinement and proper detailing for ductile response. It is assumed that capacity design principles are followed in the design of the bridge, and that damage has localized within the plastic hinge region. The level of sustained damage exceeds that of conventional repair, as the longitudinal steel has buckled, thus reducing the future strain capacity and stiffness of the column and placing the bridge in damage category V, as defined in Table 2.1. Therefore, the structure is considered suitable for the plastic hinge relocation repair method. However, before proceeding with the repair,

we must first determine whether the residual drift is beyond allowable limits. While explicit limits are not defined within the scope of this report, the following procedure is used to determine the fragility of the column based on specified tension strain limit states. This information can then be used to make informed decisions on the repairability of the structure.

Following the procedure laid out in Section 2.3.2, the first step is to determine the effective first mode period of the repaired structure.

Calculation	Corresponding Reference
$\left(I_e/I_g\right)=0.43 \quad (ALR \sim 6\%)$	*Figure 2.1*
$I_e=0.43\dfrac{\pi\left(72in\right)^4}{64}=570{,}000in^4$	
$E_c=57{,}000\sqrt{4{,}000\cdot 1.3}=4{,}110ksi$	*Equation 2-2*
$EI_{eff}=0.5\left(4{,}110ksi\right)\left(570{,}000in^4\right)=1.17\times 10^9\,kip\cdot in^2$	*Equation 2-1*
$\phi_{ye,c}=\dfrac{2.25\left(0.004\cdot 1.1\right)}{72in}=0.00014\,{}^{1}\!/_{in}$	*Equation 2-3*
$M_n=\left(1.17\times 10^9\right)\left(0.00014\,{}^{1}\!/_{in}\right)=163{,}800kip\cdot in$	*Equation 2-4*
$\lambda=1-\dfrac{\left(1{,}200kip\right)\left(0.015\times 42\,ft\times 12\,{}^{in}\!/_{ft}\right)}{\left(163{,}800kip\cdot in\right)}=0.95$	*Equation 2-5*
$k_{eff}=0.95\dfrac{3\left(1.17\times 10^9\,kip\cdot in^2\right)}{\left(42\,ft\times 12\,{}^{in}\!/_{ft}\right)^3}=26.0\,{}^{kip}\!/_{in}$	*Equation 2-6*

Calculation	Corresponding Reference
$T_{1eff} = 2\pi\sqrt{\dfrac{(1,200kip)/\left(386\,{}^{in}\!/_{s^2}\right)}{26.0\,{}^{kip}\!/_{in}}} = 2.2s$	*Equation 2-7*

With the effective first mode period, the applicable site hazard is determined using code-based design response spectra:

Calculation	Corresponding Reference
$Sa_{T1} = 0.27g$	*Figure 6.2*
$Sd_{T1} = \dfrac{\left(0.27\times 386\,{}^{in}\!/_{s^2}\right)(2.2s)^2}{4\pi^2} = 12.8in$	*Equation 6-1*

Finally, with the structural properties and site hazard information, the repaired fragility can be determined using Table 2.5 through Table 2.8. Alternatively, a repair fragility tool spreadsheet has been developed, which is included with this report. Table 6.2 outlines the calculations for the fragility parameters associated with each predefined limit state, and the target limit state would then be interpolated as needed. The resulting probabilities of exceedance for each limit state are shown below in Table 6.1. For the case of this example, these probabilities are assumed adequate to proceed with the repair.

Table 6.1: Example 1 probability of exceedance for defined strain limit states

Strain Limit State	Probability of Exceedance
0.01	75%
0.02	6%
0.03	2%
0.04	1%

Table 6.2: Example 1 fragility calculations at each strain limit state

Strain Limit	L/D	Lsratio	ALR	Drifts	All Bounding Functions θ	All Bounding Functions β	Interpolate Drifts θ	Interpolate Drifts β	Interpolate ALRs θ	Interpolate ALRs β	Interpolate LS Ratios θ	Interpolate LS Ratios β	Interpolate L/D Ratios θ	Interpolate L/D Ratios β
0.01	6	0.01	0.1	0.011	10.54	0.22	9.94	0.22	9.94	0.22	10.85	0.24	10.85	0.24
				0.022	8.90	0.23								
	6	0.01	0.15	0.012	10.02	0.20	9.50	0.22						
				0.023	8.12	0.26								
	6	0.025	0.1	0.011	11.79	0.26	11.65	0.26	11.65	0.26				
				0.022	11.42	0.26								
	6	0.025	0.15	0.011	12.42	0.24	11.89	0.22						
				0.023	10.82	0.18								
	8	0.01	0.1	0.012	14.21	0.23	13.59	0.22	13.59	0.22	16.22	0.20		
				0.024	11.74	0.19								
	8	0.01	0.15	0.013	14.71	0.26	13.97	0.26						
				0.028	9.14	0.27								
	8	0.025	0.1	0.011	19.21	0.17	18.51	0.18	18.51	0.18				
				0.023	17.11	0.21								
	8	0.025	0.15	0.012	19.17	0.25	18.34	0.24						
				0.025	15.59	0.20								
0.02	6	0.01	0.1	0.011	18.69	0.37	17.61	0.34	17.61	0.34	20.39	0.30	20.39	0.30
				0.022	15.71	0.30								
	6	0.01	0.15	0.012	18.37	0.33	16.86	0.30						
				0.023	12.84	0.24								
	6	0.025	0.1	0.011	23.25	0.27	22.82	0.27	22.82	0.27				
				0.022	22.08	0.26								
	6	0.025	0.15	0.011	24.57	0.25	23.04	0.25						
				0.023	20.00	0.26								
	8	0.01	0.1	0.012	22.88	0.32	21.29	0.31	21.29	0.31	26.82	0.31		
				0.024	16.50	0.27								
	8	0.01	0.15	0.013	17.77	0.29	16.62	0.28						
				0.028	9.14	0.27								
	8	0.025	0.1	0.011	32.75	0.32	31.67	0.31	31.67	0.31				
				0.023	29.49	0.28								
	8	0.025	0.15	0.012	29.78	0.27	27.90	0.26						
				0.025	21.65	0.23								
0.03	6	0.01	0.1	0.011	27.26	0.46	24.32	0.41	24.32	0.41	29.46	0.40	29.46	0.40
				0.022	19.18	0.31								
	6	0.01	0.15	0.012	21.97	0.40	19.48	0.36						
				0.023	12.84	0.24								
	6	0.025	0.1	0.011	35.76	0.43	33.96	0.39	33.96	0.39				
				0.022	30.81	0.34								
	6	0.025	0.15	0.011	31.56	0.40	30.29	0.39						
				0.023	27.77	0.35								
	8	0.01	0.1	0.012	23.87	0.37	22.03	0.34	22.03	0.34	31.33	0.36		
				0.024	16.50	0.27								
	8	0.01	0.15	0.013	17.77	0.29	16.63	0.28						
				0.028	9.24	0.27								
	8	0.025	0.1	0.011	41.09	0.39	39.47	0.37	39.47	0.37				
				0.023	36.24	0.34								
	8	0.025	0.15	0.012	32.50	0.33	30.36	0.32						
				0.025	23.24	0.29								
0.04	6	0.01	0.1	0.011	28.17	0.39	25.03	0.37	25.03	0.37	35.13	0.40	35.13	0.40
				0.022	19.53	0.34								
	6	0.01	0.15	0.012	22.53	0.43	19.89	0.38						
				0.023	12.84	0.24								
	6	0.025	0.1	0.011	48.37	0.45	43.98	0.43	43.98	0.43				
				0.022	36.28	0.39								
	6	0.025	0.15	0.011	34.04	0.44	31.98	0.39						
				0.023	27.86	0.31								
	8	0.01	0.1	0.012	23.87	0.37	22.03	0.34	22.03	0.34	33.36	0.37		
				0.024	16.50	0.27								
	8	0.01	0.15	0.013	17.77	0.29	16.63	0.28						
				0.028	9.24	0.27								
	8	0.025	0.1	0.011	44.88	0.40	43.26	0.39	43.26	0.39				
				0.023	40.04	0.37								
	8	0.025	0.15	0.012	32.50	0.33	30.45	0.33						
				0.025	23.60	0.31								

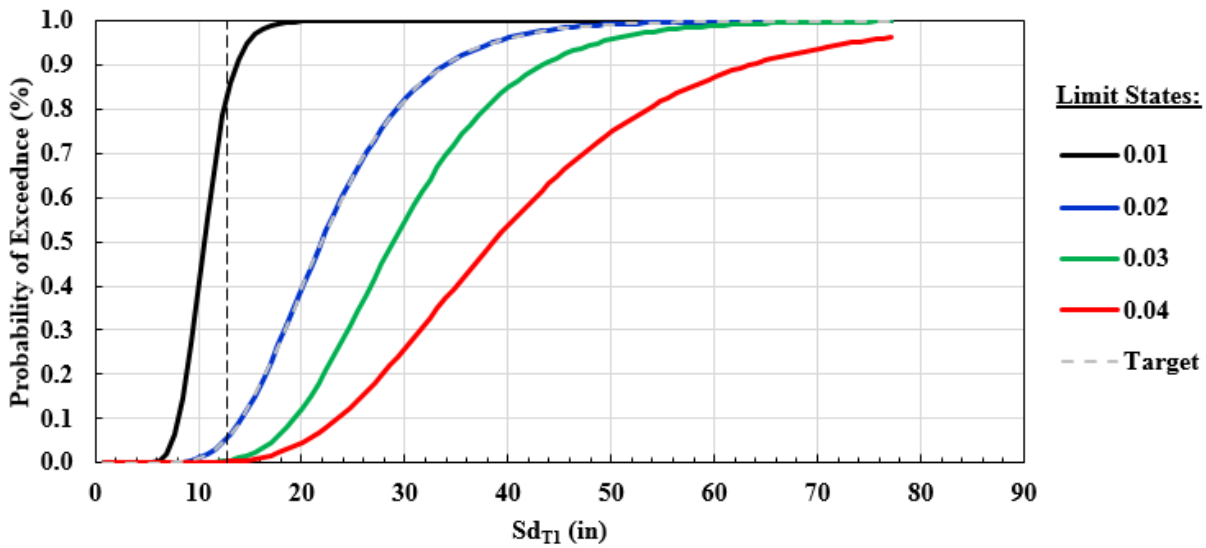

Figure 6.3: Example 1 plot of fragility curves.

6.1.3 Repair Design Procedure

The repair is now designed using the process laid out in Section 3.1.1. First, the overstrength moment capacity of the original column is determined using a moment-curvature analysis or similar rational analysis method. This analysis uses overstrength factors on each material.

$$M_{uo,c} = 11,800 kip \cdot ft$$

A second moment-curvature analysis is also performed using expected values for material properties for use in determining the displacement capacity and response envelope of the repaired system. The necessary values are described in Table 3.1, and calculated for this example in Table 6.3 below. The ultimate strain limit is defined by Equation 3-1.

Table 6.3: Example 1 moment curvature quantities

	Moment	Curvature	Strain Limit
Yield	*6,700 kip-ft*	*8.1x10^{-5} 1/in*	$\varepsilon_y = 0.0044$
Ultimate	*9,700 kip-ft*	7.1x*10^{-4} 1/in*	$\varepsilon_{bb} = 0.04$

The minimum repair height is determined next using Equation 3-2. For the design of the repair, we will assume the use of #11 longitudinal bars and 4ksi concrete.

Calculation	Corresponding Reference
$L_r = \left[\frac{0.022(1.41in)(60,000psi)}{\sqrt{4,000psi}} + 3\right] \geq \left[82in\left(1 - \frac{0.02}{1.25(0.04)}\right)\right] \geq 0.9(72in)$ $L_r = 32.5in \geq 49in \geq 65in$ $L_r = 65in$	*Equation 3-2*

Using the calculated repair height shown above, the design moment demand on the repair cross section is determined from Equation 3-5, and the shear demand from Equation 3-7.

Calculation	Corresponding Reference
$M_{b,r} = 11,800kip \cdot ft\left(\frac{2(5.2ft)}{(42ft - 5.2ft)}\right) = 3,400kip \cdot ft$	*Equation 3-5*
$V_r = \frac{3(3,400kip \cdot ft)}{2(5.2ft)} = 980kips$	*Equation 3-7*

The repair cross section is then designed using moment-curvature analysis to determine an adequate number of repair bars and an appropriate annular configuration. This analysis is conducted such that the longitudinal steel in the repair remains elastic. Equation 3-8 must also be satisfied to account for strength reduction factors. A repair cross section 92in in diameter (i.e. 10in annular ring), with (40) #11 bars is found to have sufficient moment strength to remain elastic.

Lastly, the steel sleeve of the repair is designed to resist the shear demand from the bearing of the column against the repair annulus. The concrete contribution to shear strength is calculated from Equation 3-10, shown below.

Calculation	Corresponding Reference
$V_C = (1.5)(0.98)(3.0)\sqrt{4,000psi} \cdot \left[0.8\left(2,580in^2\right)\right] = 575kips$	*Equation 3-10*

Where,

$$1.0 \le \alpha = 3 - \frac{3{,}400kip \cdot ft \times 12\,{}^{in}\!/_{ft}}{(980kip)(92in)} \le 1.5 = 1.5$$

$$\beta = 0.5 + 20(0.024) \le 1.0 = 0.98$$

$$\gamma = 3.0$$

The steel component of shear strength is then found such that Equation 3-9 is satisfied. For a steel sleeve configuration, $A_{h,r}$ is taken as the thickness of the sleeve and s_r is equal to *1.0*.

Calculation	Corresponding Reference
$V_S \ge \frac{V_r}{\phi_s} - V_C = \frac{980kip}{0.85} - 575kip = 580kip$	*Equation 3-9*
$t_{h,r} = \frac{2}{\pi} \cdot \frac{V_S s_r}{f_{yh,r}\left(0.8D_r - c_{o,r}\right) \cdot \cot(35)}$ $t_{h,r} = \frac{2}{\pi} \cdot \frac{(580kip)(1in)}{(36ksi)\left[(0.8)(92in) - 0in\right] \cdot \cot(35)} = 0.05in$	*Equation 3-11*

The required thickness of the steel sleeve is found to be 0.05in, which is understandable since this column is reasonably slender and thus has a low shear demand. Although a very thin steel sheet would be sufficient, it is recommended to use a 1/4in minimum thickness for constructability. Therefore, a steel plate of 1/4in will be used for the construction of the repair. This completes the design of the repair itself.

6.1.4 Check displacement capacity of repaired column

First, each component of column deformation is calculated individually, as described in Section 3.1.1.6.

Calculation	Reference
$\Delta_{e,c} = \frac{\left(0.000081\,{}^{1}\!/_{in}\right)\left(442in\right)^{2}}{3} = 5.3in$	*Equation 3-14*
$\Delta_{p,c} = \left(0.00071\,{}^{1}\!/_{in} - 0.000081\,{}^{1}\!/_{in}\right)\left(62in\right)\left[442in - 0.5\left(62in\right)\right] = 16.0in$	*Equation 3-15*
$\Delta_{e,r} = \frac{0.000081\,{}^{1}\!/_{in}}{2}\left(1 + \frac{442in - 65in}{442in}\right)\left(65in\right)\left(442in\right) = 2.2in$	*Equation 3-17*
$\Delta_{p,r} = \frac{\left(0.00071\,{}^{1}\!/_{in} - 0.000081\,{}^{1}\!/_{in}\right)}{2}\left(1 + \frac{124in - 65in}{124in}\right)\left(65in\right)\left(422in\right) = 12.7in$	*Equation 3-18*
$\Delta_{e,sp} = \left(0.000081\,{}^{1}\!/_{in}\right)\left(\frac{422in - 65in}{422in}\right)\left(12.7in\right)\cdot\left(422in\right) = 0.37in$	*Equation 3-20*
$\Delta_{p,sp} = \left(0.00071\,{}^{1}\!/_{in} - 0.000081\,{}^{1}\!/_{in}\right)\left(\frac{124in - 65in}{124in}\right)\left(12.7in\right)\left(422in\right) = 1.6in$	*Equation 3-21*

Next, the deformation from rigid repair rotation is calculated.

Calculation	Corresponding Reference
$L_{sp,r} = 0.30\left(60ksi\right)\left(1.41\right) = 25.4in$	*Equation 3-22*
$I_{g,r} = \frac{\pi\left(92in^{4} - 72in^{4}\right)}{64} = 2.2\times10^{6}\,in^{4}$	*Equation 3-23*
$E_{conc} = 57,000\sqrt{4,000\,psi} = 3,600ksi$	*Equation 3-25*

Calculation	Corresponding Reference
$\Delta_{e,rr} = \dfrac{80,400kip \cdot in\left(\dfrac{2(65in)}{422in}\right)}{0.35(3,600ksi)(2.2\times10^6 in^4)}(25.4in)(504in) = 0.11in$	*Equation 3-26*
$\Delta_{p,rr} = \dfrac{(116,400kip \cdot in - 80,400kip \cdot in)\left(\dfrac{2(65in)}{422in}\right)}{0.35(3,600ksi)(2.2\times10^6 in^4)}(25.4in)(504in) = 0.05in$	*Equation 3-27*

Finally, the full displacement response of the system is calculated.

Calculation	Corresponding Reference
$\Delta'_{y,rep} = 5.3in + 2.2in + 0.37in + 0.11in = 8.0in$	*Equation 3-30*
$\Delta_{u,rep} = 8.0in + 16.0in + 12.7in + 1.6in + 0.05in = 38.35in$	*Equation 3-31*

Checking these values against that of the original column, it is found that the displacement capacity of the repaired system is actually larger than that of the original column, as shown in the calculations below. Therefore, the repair is deemed satisfactory from both a strength and performance standpoint.

$$\Delta_y = \frac{\phi_y L_c^2}{3} = \frac{\left[\dfrac{2.25(0.002)}{72in}\right](504in)^2}{3} = 5.3in$$

$$\Delta_u = \Delta_y + (\phi_u - \phi_y)L_{pt}\left(L_c + \frac{L_{pt}}{2}\right) + \phi_u L_{sp} L_c$$

$$\Delta_u = 5.3in + \left(0.00071\,{}^{1}\!/_{in} - 0.000081\,{}^{1}\!/_{in}\right)(66.6in)\left(504in - \frac{66.6in}{2}\right) + \left(0.00071\,{}^{1}\!/_{in}\right)(12.7in)(504in)$$

$$\Delta_u = 30in$$

6.2 Example #2 – Column with Fractured Bars

6.2.1 Problem Description

Consider the same problem from Example #1, except this time several of the longitudinal bars have fractured during the initial loading, as indicated in Figure 6.4. Assume that considerations are made to anchor the fractured bars into the repair and that debonding is not an issue.

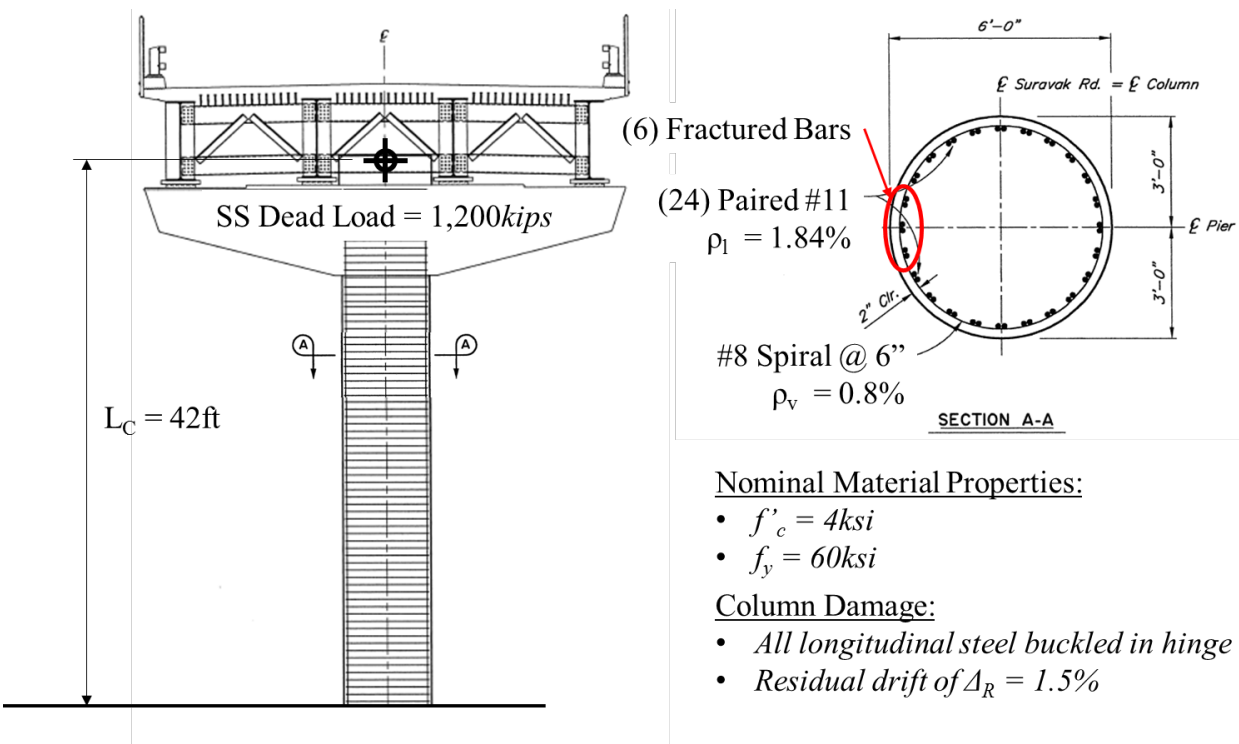

Figure 6.4: Example 2 structural configuration

6.2.2 Structural Assessment

The structure remains the same as discussed in the previous example, and the damage is more extensive. Therefore, the column remains a good candidate for the plastic hinge relocation repair. Also, since the fractured bars have been anchored in the repair, there is no effect on the residual drift considerations from the initial analysis.

6.2.3 Repair Design Procedure

In the repair design procedure, the only difference resulting from fractured longitudinal bars is that of the design of the flexural cross section of the repair. In addition to the original

column overstrength moment, a second moment-curvature analysis must be completed to determine the reduced moment capacity of the cross section with fractured bars. The moment-curvature analysis is carried out such that the fractured bars are located in the most severe direction of the cross section.

$$M_{uo,c} = 11,800 kip \cdot ft$$

$$M_{uo,rup} = 8,150 kip \cdot ft$$

The repair moment demand is now calculated from Equation 3-6 to determine the increased flexural demand on the repair annulus.

$$M_{b,r} = 11,800 kip \cdot ft \left(\frac{42 ft}{36.8 ft} \right) - 8,150 kip \cdot ft \left(\frac{36.8 ft - 5.2 ft}{36.8 ft} \right) = 6,470 kip \cdot ft \qquad \textit{Equation 3-6}$$

The same sectional analysis from the previous example is then used to determine the cross section of the repair annulus. In this case, a total of 76 repair bars are required to meet the increased moment demand imparted by the fractured longitudinal bars in the original column. Note that this analysis assumes the repair bars are uniformly spaced around the perimeter of the column. In this case, there are only fractured bars on one face of the column. Therefore, another possible solution could be to concentrate additional steel only in the areas surrounding the fractured bars, thus reducing the additional steel content in other areas of the repair.

The increased demand on the repair is due to the direct flexure loading from the development of the fractured bars. Therefore, no increase in shear demand is experience in the repair and the calculations from Example #1 are sufficient.

6.2.4 Check displacement capacity of repaired column

Fractured bars will only affect the deformation of the repaired system if they are allowed to debond. Since the fractured bars in this example have been specified to be anchored in to the repair, there is assumed to be no appreciable difference in the displacement response of the column. There will be some additional deformation from rigid rotation of the repair; however, as seen in Example #1, this component is negligible to the overall deformation in this column.

REFERENCES

AKDOT. (2017). *Standard Specifications for Highway Construction*. Juneau, AK: Alaska Department of Transportation and Public Facilities.

Caltrans. (2008). *Visual Inspection & Capacity Assessment of Earthquake Damaged Reinforced Concrete Bridge Elements*. Sacramento, CA: California Department of Transportation.

Caltrans. (2009). *Bridge Design Details: Section 18 - Bridge Seismic Retrofit and Strengthening*. Sacramento, CA: California Department of Transportation.

Chai, Y. H., Priestley, M., & Seible, F. (1991). Seismic retrofit of circular bridge columns for enchanced flexural performance. *ACI Structural Journal*, **88**(88), 572–584.

FEMA. (2012). *Seismic Performance Assessment of Buildings – Methodology (Vol. 1)*. (FEMA P-58-1). Washington, DC: Federal Emergency Management Agency.

Goodnight, J. C., Kowalsky, M. J., & Nau, J. M. (2015). The Effects of Load History and Design Variables on Performance Limit Stats of Circular Bridge Columns, *AKDOT Report No. 4000(072)*, Department of Civil Engineering, North Carolina State University, Raleigh, NC.

Hose, Y. D. (2001). *Seismic Performance and Failure Behavior of Plastic Hinge Regions in Flexural Bridge Columns*. PhD Dissertation. University of California, San Diego, CA.

Matsumoto, E. E., Waggoner, M. C., Sumen, G., Kreger, M. E., Wood, S. L., and Breen, J. E. (2001). Development of a Precast Bent Cap System, *FHWA Report No. TX-0-1748-2*, Center for Transportation Research, The University of Texas, Austin, TX.

Priestley, M. J. N., Seible, F. and Calvi, G. M. (1996). *Seismic Design and Retrofit of Bridges*, John Wiley & Sons, Inc., New York, NY.

Vosooghi, A., & Saiidi, M. S. (2013). Design Guidelines for Rapid Repair of Earthquake-Damaged Circular RC Bridge Columns Using CFRP. *Journal of Bridge Engineering*, **18**(9), 120725052316002.