BMP 04.00. Compost Berm

DESIGN CONSIDERATIONS

Objectives

Compost Berms are intended to intercept and slow sheet flow runoff, allowing suspended sediments to settle or be filtered out by the compost material.

Description

Compost Berms are composed of trapezoidal shaped berms made with compost. The berms can be temporary or permanent installations.

Other Names

Filtration Berm

Applicability

Compost Berms can be used in place of sediment (silt) fences and fiber rolls. They can be a good choice near streams since compost is an organic, biodegradable, renewable material and is not required to be removed at the end of a project. Removal of other types of best management practices (BMPs) can disturb soil by dislodging vegetation and exposing soil. Compost Berms can also be easily reshaped if they become damaged. However, repeated damage may require replacement or the addition of more compost material. Compost Berms are not intended to be installed in areas with concentrated flow.

Selection Considerations

Compost used for berms needs to be stable and mature. It should consist of both small and larger particle sizes, which will affect the filtration performance and longevity. Coarser grade compost is better for filtration and is less likely to be disturbed by rainfall or runoff. Finer grade compost is better for vegetation establishment. For Compost Berms, the ratio of coarse to fine grades should be 1:1. No compost should have particle sizes larger than 3 inches. All permanent compost berm installations should be seeded (see BMP 53, Permanent Seeding). All compost used should conform to U.S. Composting Council (USCC) standards.

Design

Compost Berms can be installed on slopes 2H:1V or flatter. Compost Berms should be installed no less than 1 to 2 feet high with a 4- to 6-foot wide base, the specified height and width depend on the slope (see table on the drawing BMP – 04.00). For maximum filtration, install berms with a 4- to 6-foot wide base and a 2- to 3-foot wide top. Larger berms can be constructed if they are required on steeper slopes. The general shape for any compost berm should be that the base is twice as wide as the height of the berm. Providing seeding or plantings in conjunction with the compost helps to break up sediments and creates root pathways for storm water to penetrate into the compost. This helps to prevent the compost from becoming plugged with sediment.

Relationship to Other Erosion and Sediment Control Measures

Compost Berms can be used in place of sediment fences, and fiber rolls. Compost filters sediment and allows the runoff to pass through relatively more easily than silt fence, which acts as a dam to create ponding and settling. Tackifiers can be applied to compost installations to enhance performance if needed.

Common Failures or Misuses

Common failures are generally due to faulty application and maintenance. These failures include:

- Non-certified compost used.
- Can become plugged with fines and sediments.
- Inadequate shape and size of berms constructed.
- Used in highly concentrated flow areas.
- Damaged by construction-related activities.
- Ends of berms are not pointed upwards towards the top of the slope.

SPECIFICATIONS

Drawing

- BMP-04.00 – Compost Berm

Standard Specification

- 659 – Compost Berm
- 750 – Compost

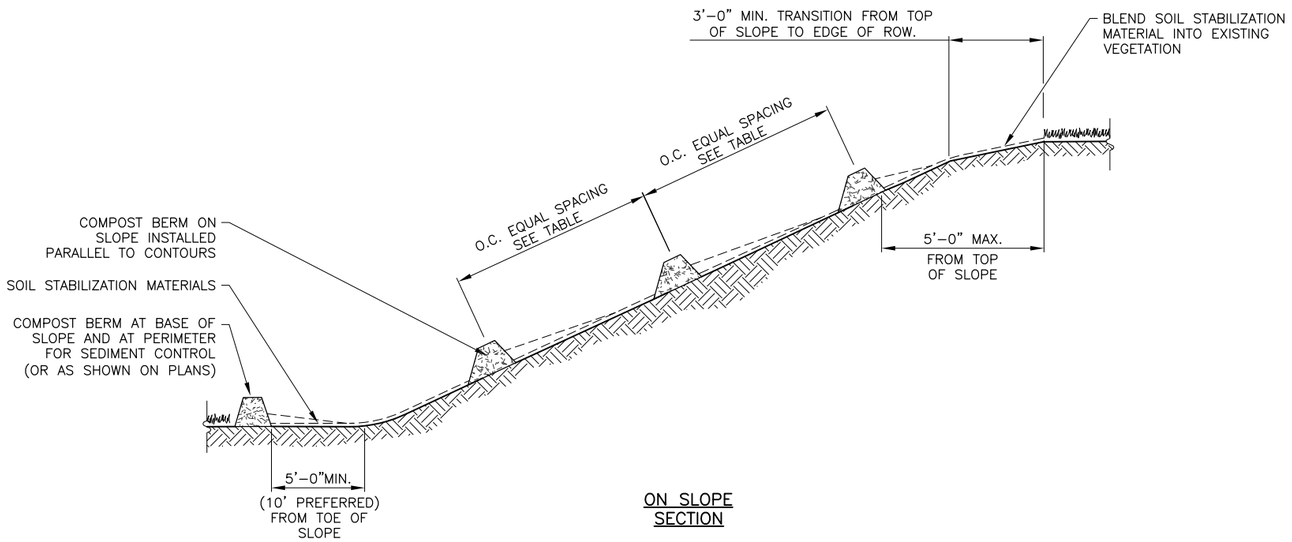

ON SLOPE SECTION

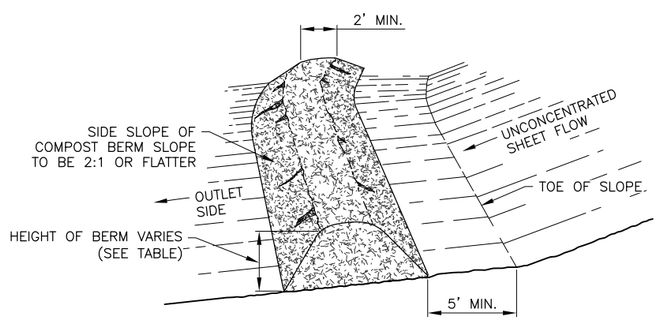

PERSPECTIVE

COMPOST BERM

NOT TO SCALE

COMPOST BERM NOTES:

MATERIALS

COMPOST PER SECTION 750

INSTALLATION

1. INSTALL COMPOST BERMS AS SPECIFIED IN THE TABLE.
2. CONSTRUCT LARGER BERMS WHEN REQUIRED ON STEEPER SLOPES.
3. SHAPE ANY COMPOST BERM SO THE BASE IS TWICE AS WIDE AS THE HEIGHT OF THE BERM.
4. PROVIDE PERMANENT SEEDING FOR PERMANENT BERMS THAT ARE NOT BLADED SMOOTH.
5. SOIL STABILIZTION MATERIALS INCLUDE ROLLED EROSION CONTROL PRODUCTS, MULCH OR OTHER TEMPORARY GROUND COVER TO STABILIZE UNTIL VEGETATION IS ESTABLISHED.

INSPECTION

1. INSPECT FOR DAMAGE, CHANGES IN PRESCRIBED DIMENSIONS, SEDIMENT DEPTH, UNDERMINING, AND/OR OVERTOPPING.

MAINTENANCE

1. RESHAPE OR ADD ADDITIONAL COMPOST TO DAMAGED SECTIONS OF BERM TO PRESCRIBED DIMENSIONS.
2. REMOVE ACCUMULATED SEDIMENT BEFORE IT REACHES ONE-HALF OF THE BERM HEIGHT OR ONE-THIRD OF THE AVAILABLE STORAGE IF PROTECTING A WATER BODY OR STORM DRAIN INLET.
3. REPAIR DAMAGE DUE TO AND CORRECT FOR UNDERMINING AND OVERTOPPING.

REMOVAL

1. BLADE SMOOTH AND SEED ALL BERMS TO PREVENT POOLING UPON COMPLETION OF THE PROJECT. UNLESS THE CONTRACT OR ENGINEER DIRECTS THEY MAY BE LEFT AS PERMANENT BERMS.

COMPOST BERM DIMENSIONS AND SPACING BASED ON SLOPE

SLOPE (H:V)	BERM O.C. SPACING	BERM DIMENSIONS		
		HEIGHT	BOTTOM WIDTH	TOP WIDTH
5:1 – 2:1	50 FT	1.3 FT	5.5 FT (MIN.)	2 FT
> 2:1	25 FT	1.5 FT	6 FT (MIN.)	2 FT

REVISIONS		
Date	Description	By

State of Alaska DOT&PF

COMPOST BERM

APPROVED

Date 12/2015 X/XX/XX

BMP 05.00. Compost Sock

DESIGN CONSIDERATIONS

Objectives

Compost Socks are intended to intercept and slow sheet flow runoff, allowing suspended sediments to settle or be filtered out by the compost material.

Description

Compost Socks are biodegradable (or photodegradable) mesh tubes/socks filled with compost. The socks can be temporary or permanent installations.

Other Names

Filter Socks

Applicability

Compost Socks can be used in place of sediment (silt) fences and fiber rolls. They can sometimes be the most economical solution because compost does not require any special trenching or construction. This is especially important near streams since compost is an organic, biodegradable, renewable material and is not required to be removed at the end of a project. Removal of other types of best management practices (BMPs) can disturb soil by dislodging vegetation and exposing soil. Compost Socks can also be easily repaired if they become damaged. Compost Socks are not intended to be installed in areas with concentrated flow.

Selection Considerations

Compost used in socks needs to be stable and mature. It should consist of both small and larger particle sizes, which will affect the filtration performance and longevity. Coarser grade compost is better for filtration and is less likely to be disturbed by rainfall or runoff. Finer grade compost is better for vegetation establishment. For socks, the ratio of coarse to fine grades should be 1:1. No compost should have particle sizes larger than 3 inches. All compost used should conform to U.S. Composting Council (USCC) standards

Design

Compost Socks should be constructed of 8-inch to 12-inch diameter, or larger, biodegradable (or photodegradable) mesh tubes/socks. Compost Socks can be placed on any slope but they need to be anchored appropriately. Compost Socks should be placed no closer than 5 feet from the toe of slopes to allow runoff to pool. They should be installed parallel with the contours of the slope with the ends of the socks pointed towards the upslope. This enables runoff to pond within the extent of the sock and allows suspended sediments to settle.

For long-run applications, the ends of Compost Socks should be laced together or be overlapped to form a continuous length. Wood stakes should be used to secure compost socks in place if installed on slopes. The drawing says to stake per the manufacturer's recommendations, but generally stakes are needed if 3:1 or steeper. To provide extra support for staked Compost Socks, rope can be used to lash the stakes together. However, if stakes and rope are used they are required to be removed after a project is completed. The contents of Compost Socks can remain after a project is completed but the all netting (or mesh) is required to be removed after a project is completed.

Relationship to Other Erosion and Sediment Control Measures

Compost Socks can be used in place of sediment fences, and fiber rolls. Compost filters sediment and allows the runoff to pass through relatively more easily than silt fence, which acts as a dam to create ponding and settling. Tackifiers can be applied to compost installations to enhance performance if needed.

Common Failures or Misuses

Common failures are generally due to faulty application and maintenance. These failures include:

- Non-certified compost used.
- Non-biodegradable mesh tubes used.
- Can become plugged with fines and sediments.
- Used in highly concentrated flow areas.
- Damaged by construction-related activities.
- Ends of socks are not pointed upwards towards the top of the slope.
- Socks must be in uniform contact with the ground for maximum effectiveness.

- 12-inch diameter socks can become heavy and sag when installed on slopes steeper than 3:1

SPECIFICATIONS

Drawing

- BMP-05.00 -- Compost Sock

Standard Specification

- 664 – Compost Sock
- 750 – Compost

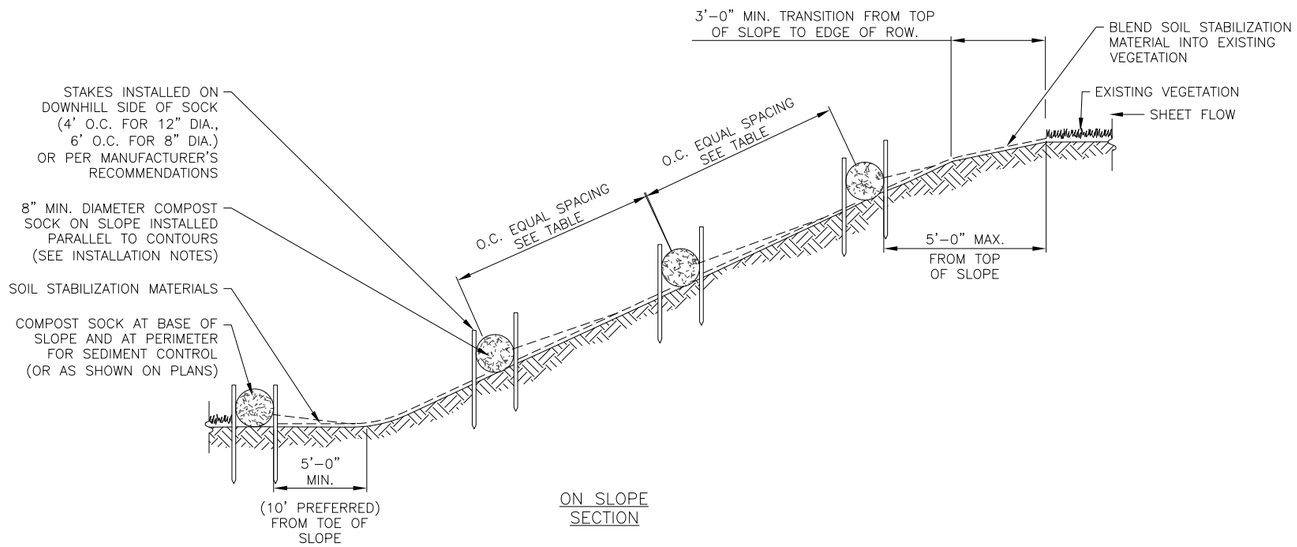

ON SLOPE SECTION

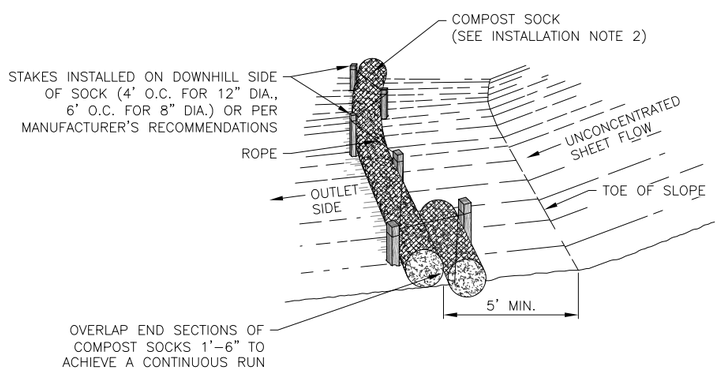

PERSPECTIVE

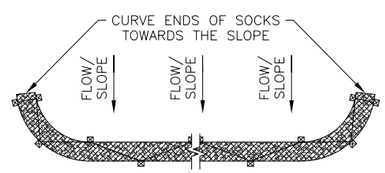

PLAN

COMPOST SOCK

NOT TO SCALE

COMPOST SOCK NOTES:

MATERIALS

COMPOST PER SECTION 750
COMPOST SOCKS: 8", 12", 18", 24" NOMINAL
STAKES: NON-TREATED WOOD.

INSTALLATION

1. INSTALL STAKES PER MANUFACTURER'S RECOMMENDATIONS.
2. PLACE COMPOST SOCKS NO CLOSER THAN 5 FEET FROM THE TOE OF SLOPES TO ALLOW RUNOFF TO POOL.
3. INSTALL PARALLEL WITH THE CONTOURS OF THE SLOPE WITH THE ENDS OF THE SOCKS POINTED TOWARDS THE UPSLOPE.
4. LACE TOGETHER AND OR OVERLAP FOR LONG-RUN APPLICATIONS TO FORM A CONTINOUS LENGTH.
5. USE WOOD STAKES TO SECURE COMPOST SOCKS IN PLACE IF INSTALLED ON SLOPES.
6. SOIL STABILIZTION MATERIALS INCLUDE ROLLED EROSION CONTROL PRODUCTS, MULCH, OR OTHER TEMPORARY GROUND COVER TO STABILIZE UNTIL VEGETATION IS ESTABLISHED.

INSPECTION

1. INSPECT FOR DAMAGE, DISPLACEMENT, SEDIMENT DEPTH, UNDERMINING, AND/OR OVERTOPPING.

MAINTENANCE

1. REPAIR OR REPLACE DAMAGED OR DISPLACED COMPOST SOCKS.
2. REMOVE ACCUMULATED SEDIMENT BEFORE IT REACHES ONE-HALF OF THE SOCK HEIGHT OR ONE-THIRD OF THE AVAILABLE STORAGE IF PROTECTING A WATER BODY OR STORM DRAIN INLET.

REMOVAL

1. REMOVE MESH/TUBES FOR PERMANENT COMPOST SOCKS AND THE CONTENTS MAY REMAIN. ALL STAKES AND ROPE, IF USED, SHOULD BE REMOVED FROM THE PROJECT AND DISCARDED.

COMPOST SOCK SPACING BASED ON SLOPE

SLOPE (H:V)	SOCK O.C. SPACING
5:1 – 2:1	50 FT
> 2:1	25 FT

REVISIONS

Date	Description	By

State of Alaska DOT&PF

COMPOST SOCK

APPROVED

Date 12/2015 x/xx/xx

BMP-05.00

BMP 06.00. Concrete Washout

DESIGN CONSIDERATIONS

Objectives

Concrete Washout Containment prevents the discharge of concrete waste pollutants to stormwater by providing on-site washout containment in a designated and contained area.

Description

Concrete Washout Containment contains concrete and fluids from the chutes of concrete mixers and hoppers of concrete pumps when they are rinsed out after delivery. Containment areas allow for easier disposal of consolidated solids and prevent pollution from run-off or infiltration to groundwater. A washout facility can consist of a pre-fabricated container or self-installed (fabricated on-site) lined containment area, which can be above- or below-grade. Containment areas require sufficient volume to completely contain all liquid and waste concrete materials.

Applicability

Concrete Washout Containment is required on projects where concrete, stucco, mortar, grout, and/or cement are used as construction materials.

Selection Considerations

The number and size of containment areas provided should be based on the expected demand for storage capacity.

- *Pre-fabricated Washout Containers:* Pre-fabricated washout containments can be any watertight unit that can contain all liquids and solid waste generated by washout operations. When available, pre-fabricated containers are delivered to the site and minimize installation efforts. They are also resistant to damage and protect against spills and leaks. Some companies will also offer complete service with their product, such as providing maintenance and regular disposal of waste materials. Such full-service options could relieve the superintendent of these responsibilities. However, when a contractor selects a company that provides such an option, they must also ensure that the company is properly disposing of materials and it would be prudent to give preference to companies that recycle collected materials.

- *Below-grade Containment:* Use of below-grade containment areas helps prevent breaches and reduces the likelihood of run-off. This option is recommended for projects expecting extensive concrete work or for airport projects. However, this option is not recommended for areas with high water tables or shallow groundwater; such as near natural drainages, springs, or wetlands.

- *Above-grade Containment:* Above-grade containment areas must be sized and installed correctly, and diligently maintained in order to be effective. However, particularly if a pre-fabricated container is unavailable, this option is better suited in areas with potentially high water tables to prevent leaching of wash water into groundwater, or in areas where excavation is not practical.

Design

Location: Concrete Washout Containment should be placed in a location that provides convenient access for concrete trucks, preferably near the area where the concrete is being poured. Place Concrete Washout Containment a minimum of 50 feet from storm drains, open ditches, or waterbodies, or provide secondary containment for the Concrete Washout Containment.

Number of Containments: Larger sites with extensive concrete work should have Concrete Washout Containment at multiple locations for ease of use. Multiple Washout Containments are also required if a single containment unit is not adequate for the volume of waste material generated before the containment structure is cleaned.

Capacity: Concrete Washout Containment should provide sufficient capacity to handle the expected volume of solids, wash water, and rainfall to prevent overflow and allow 12 inches of freeboard. To estimate capacity, assume 7 gallons of wash water and solids are generated from washing one truck chute, and 50 gallons are generated in washing out the hopper of a concrete ready-mix or pump truck. Estimate the number of trucks based on the total volume of concrete in the project, the hopper capacity of each concrete pump truck, the expected number of loads, and the planned maintenance interval.

Containment Area: For larger sites, it is recommended that self-installed containment (both above- and below-grade) areas be at least 10 feet wide with sufficient length and depth to provide the required capacity. Above-grade self-installed containment areas shall be limited to a size and capacity for which the selected outside barrier is designed to remain structurally sound when filled with waste materials.

Cover: A temporary cover should be provided to prevent rain or other precipitation from filling the containment area and causing wash water overflow. The cover should be a secure, non-collapsing, non-water collecting cover.

Signage: Each on-site facility must have highly visible signage to indicate washout containment locations. Signs should be at least 48 by 24 inches and have 6-inch high contrasting letters, placed at a height of at least 3 feet above ground level and within 30 feet of the facility.

Relationship to Other Erosion and Sediment Control Measures

Operator Education: Use of Concrete Washout Containment as a best management practice (BMP) is only successful if concrete truck operators utilize them. Operators need to be made aware of the presence of these containments. All concrete truck operators, including those of subcontractors, should be trained on the importance of managing concrete waste, washout procedures, and washout locations.

Common Failures or Misuses

- Overflow and discharge of waste when the containment area is not covered prior to anticipated rainfall and/or when accumulated liquid wastes have not been removed.
- Leaking resulting from torn or damaged liners going unnoticed or not being replaced, with consequent discharge of washout liquid or slurry to waterways, storm drains, or directly onto the ground.
- Lack of communication to truck drivers of the necessity of using the containment area for washout.
- Compromised structural integrity due to miscalculated capacity and installation, particularly for self-installed, above-grade containment.
- Insufficient quantity and/or size to contain all liquid and concrete waste generated by washout operations.

SPECIFICATIONS

Standard Specification

- 665 – Concrete Washout

Drawing

- BMP – 06.00 Concrete Washout, Sheets 1 & 2

CONCRETE WASHOUT GENERAL NOTES:

MATERIALS

PRE-FABRICATED CONTAINERS: MADE OF STURDY MATERIALS THAT ARE WATER TIGHT.

FABRICATED ON-SITE CONTAINMENT:

1. BARRIER/SIDEWALLS: MAKE SIDEWALLS OF AN ABOVE-GRADE CONTAINMENT AREA FROM EARTHEN BERMS, BARRIER WALLS, WOOD PLANKS, OR OTHER MATERIALS THAT WILL BE STRUCTURALLY SOUND WHEN FILLED WITH WASTE MATERIALS.
2. LINER: IMPERMEABLE PLASTIC SHEETING OF AT LEAST 10 MIL THICKNESS, AND FREE OF HOLES, TEARS, AND OTHER DEFECTS THAT COMPROMISE THE IMPERMEABILITY OF THE MATERIAL.
3. ANCHORS: SECURE THE LINER FOR ABOVE-GRADE CONTAINMENT AREAS AND SIDEWALL MATERIALS OTHER THAN BERMS WITH ANCHORS. USE SANDBAGS, 6-INCH WIRE STAPLES, AND WOOD OR METAL STAKES AS ANCHORS, BUT NOT LIMITED TO ONLY THEM.

SIGNS: DURABLE, RIGID MATERIAL WITH 6-INCH HIGH CONTRASTING LETTERS, PLACED AT A HEIGHT OF AT LEAST 3 FEET ABOVE GROUND LEVEL.

RAIN COVER: SECURE, NON-COLLAPSING, NON-WATER COLLECTING RAIN COVER, REQUIRED PRIOR TO PREDICTED WET WEATHER TO PREVENT ACCUMULATION AND OVERFLOW OF PRECIPITATION.

INSTALLATION

1. INSTALL SIGNS WITHIN 30 FEET OF THE WASHOUT.
2. IF THE WASHOUT IS LOCATED ON UNDEVELOPED PROPERTY OR OFF-PAVEMENT, PROVIDE A STABILIZED CONSTRUCTION EXIT.
3. PLACE CONCRETE WASHOUT CONTAINMENT A MINIMUM OF 50 FEET FROM STORM DRAINS, OPEN DITCHES, OR WATERBODIES, OR PROVIDE SECONDARY CONTAINMENT FOR THE WASHOUT.
4. PROVIDE SUFFICIENT CAPACITY TO HANDLE THE EXPECTED VOLUME OF SOLIDS AND WASH WATER AT 50% MAX CAPACITY AND ALLOW 12 INCHES MINIMUM OF FREEBOARD.
5. PRE-FABRICATED WASHOUT CONTAINERS ARE USUALLY DELIVERED ASSEMBLED. IF ASSEMBLY IS REQUIRED, FOLLOW MANUFACTURER'S INSTRUCTIONS.
6. SELF-INSTALLED CONTAINMENT:
   a. ABOVE-GRADE WASHOUT: CONSTRUCT THE SIDEWALLS TO THE DIMENSIONS SHOWN ON THE DRAWINGS. IF NOT USING AN EARTHEN BERM FOR THIS PURPOSE, ENSURE THAT THE SIDEWALL MATERIAL IS SECURE AND EACH UNIT IS BUTTED TIGHTLY END TO END. LINE THE ENTIRE AREA WITH THE LINING MATERIAL, BRINGING THE SHEETING UP OVER THE SIDEWALLS AND SECURING THE ENDS WITH SANDBAGS, STAPLES OR OTHER APPROPRIATE ANCHORS.
   b. BELOW-GRADE WASHOUT: EXCAVATE A FLAT, SUBSURFACE PIT TO THE DESIRED SIZE AND CAPACITY FOR THE CONTAINMENT AREA. THE RESULTING SIDEWALL SHOULD NOT EXCEED 3:1 SLOPES. PREVENT DAMAGE TO THE LINER BY KEEPING THE BASE OF THE PIT FREE OF ROCKS AND DEBRIS. USE THE EXCAVATED MATERIAL TO CREATE A BERM ALONG THREE SIDES OF THE PIT, LEAVING THE SIDE PROVIDING ACCESS RELATIVELY FLAT. IT IS RECOMMENDED THAT THE BERM BE AT LEAST 1-FOOT HIGHER THAN EXISTING GROUND. LINE THE ENTIRE AREA WITH THE LINING MATERIAL, BRINGING THE SHEETING UP OVER THE SIDEWALLS AND BERM, AND SECURING THE ENDS WITH SANDBAGS OR OTHER APPROPRIATE ANCHORS.

INSPECTION

1. INSPECT AND VERIFY THAT CONCRETE WASHOUT BMPS ARE IN PLACE PRIOR TO THE COMMENCEMENT OF CONCRETE WORK.
2. DETERMINE IF THE CONCRETE WASHOUT IS FILLED TO 50 PERCENT CAPACITY.
3. FOR SELF-INSTALLED CONTAINMENT:
   a. INSPECT THE PLASTIC LINER TO ENSURE IT IS SECURELY ANCHORED AND INTACT.
   b. INSPECT THE SIDEWALLS FOR LEAKS. ENSURE THE CONSTRUCTION DOESN'T DAMAGE THE SIDEWALLS.
4. FOR PRE-FABRICATED CONTAINMENT, INSPECT THE UNIT FOR LEAKS AND POTENTIAL DAMAGE.
5. CHECK TO ENSURE THAT EACH WASHOUT SIGN IS STILL SECURE AND VISIBLE.
6. IF THERE IS EVIDENCE THAT WASHOUTS ARE OCCURRING IN LOCATIONS OTHER THAN THE DESIGNATED WASHOUT: IMPROVE EXISTING SIGNAGE, INSTALL ADDITIONAL SIGNAGE, INCREASE COMMUNICATION WITH CONCRETE TRUCK DRIVERS, AND PROVIDE CONCRETE TRUCK DRIVERS WITH MAPS OF WASHOUT LOCATIONS WITH RESPECT TO POUR LOCATIONS.

MAINTENANCE

1. CLEAN EXISTING WASHOUTS BEFORE THE WASHOUT IS 50 PERCENT FULL. SOLIDIFY WITH BAGGED GROUT, VACUUM AND DISPOSE OF LIQUIDS IN AN APPROVED MANNER, OR ALLOW FOR EVAPORATION (CHECK WITH THE LOCAL SANITARY SEWER AUTHORITY TO DETERMINE IF THERE ARE SPECIAL DISPOSAL REQUIREMENTS FOR CONCRETE WASH WATER).
2. IF NECESSARY, PROVIDE AN ALTERNATE WASHOUT DURING EXISTING WASHOUT CLEANING.
3. RELINE SELF-INSTALLED CONTAINERS AFTER EACH CLEANING, BECAUSE EQUIPMENT CAN DAMAGE THE LINER. BEFORE RELINING, INSPECT THE CONTAINMENT STRUCTURE FOR SIGNS OF WEAKENING OR DAMAGE AND MAKE ANY NECESSARY REPAIRS. THEN LINE THE STRUCTURE WITH NEW PLASTIC SHEETING, CHECKING THAT IT IS FREE OF HOLES, TEARS, AND OTHER DAMAGE.
4. REPAIR DAMAGED WASHOUTS BEFORE THE NEXT CONCRETE POUR. IF NECESSARY, PROVIDE NEW WASHOUTS UNTIL THE EXISTING WASHOUTS ARE OPERATIONAL.
5. CONTAIN ANY SPILL OR DISCHARGE OF CONCRETE WASTE MATERIALS.
6. REPLACE OR INSTALL NEW SIGNAGE AS NEEDED.

REMOVAL

1. AN OPERATIONAL CONCRETE WASHOUT SHOULD REMAIN IN PLACE UNTIL ALL CONCRETE FOR THE PROJECT (OR PHASE OF THE PROJECT) IS POURED. WHEN THE CONCRETE WASHOUT IS NO LONGER NEEDED, THE LIQUID MUST BE EVAPORATED OR VACUUMED FOR DISPOSAL AND THE HARDENED SOLIDS MUST BE BROKEN UP, REMOVED, AND PROPERLY DISPOSED OF. DISPOSAL LOCATION TO BE APPROVED BY ENGINEER.
2. REMOVE FROM THE SITE PRE-FABRICATED WASHOUTS AND MATERIALS USED TO CONSTRUCT ABOVE-GRADE CONTAINMENT AREA AND PROPERLY DISPOSE OF THEM.
3. BACKFILL AND STABILIZE HOLES, DEPRESSIONS OR OTHER GROUND DISTURBANCE CAUSED BY THE CREATION OR REMOVAL OF THE WASHOUT WITH AN APPROVED BMP.

REVISIONS

Date	Description	By

State of Alaska DOT&PF

CONCRETE WASHOUT (NOTES)

APPROVED

Date 12/2015 X/XX/XX

BMP-6.00

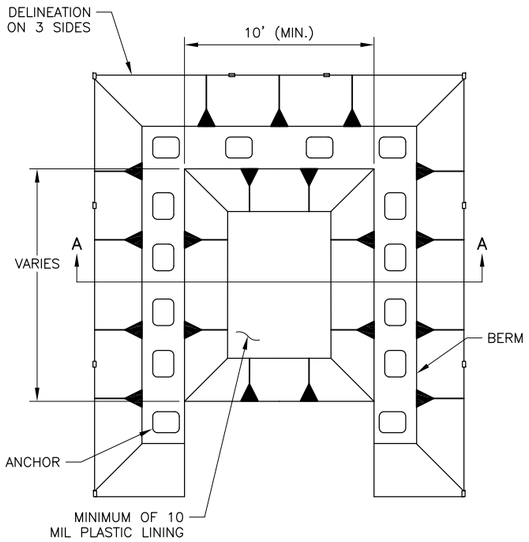

PLAN

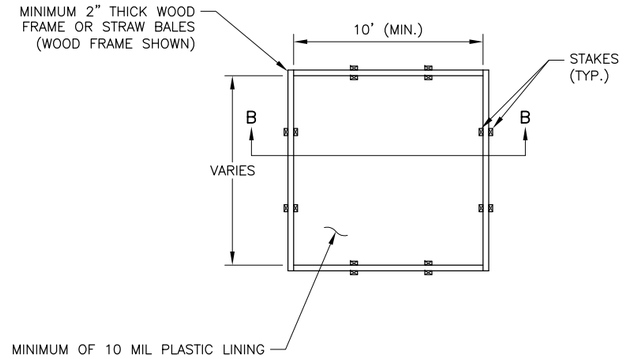

PLAN

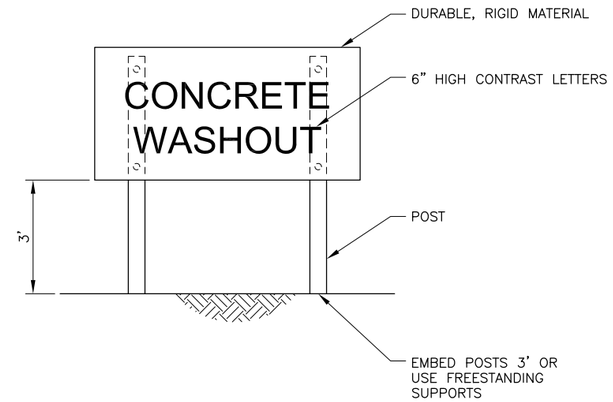

WASHOUT SIGN

NOT TO SCALE

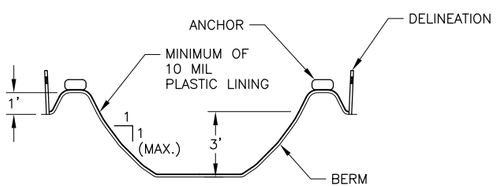

SECTION A–A

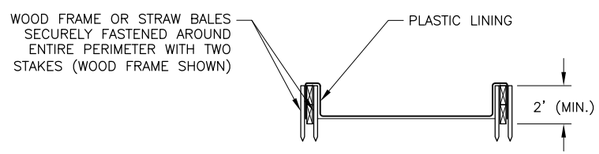

SECTION B–B

BELOW–GRADE CONCRETE WASHOUT
FABRICATED ON–SITE

NOT TO SCALE

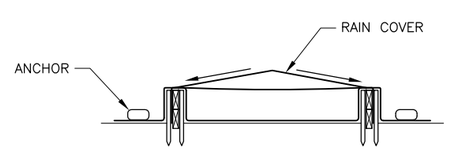

SECTION B–B
WITH PLASTIC RAIN COVER

ABOVE GRADE CONCRETE WASHOUT
FABRICATED ON–SITE

NOT TO SCALE

REVISIONS		
Date	Description	By

State of Alaska DOT&PF

CONCRETE WASHOUT
(FABRICATED ON–SITE)

APPROVED

Date X/XX/XX

BMP–06.00

BMP 07.00. Contained Silt Control System

DESIGN CONSIDERATIONS

Objectives

The purpose of a Contained Silt Control System is to trap sediment in construction site water and prevent it from being transported out of the project area to another area, or to a water body, while allowing water to flow through the geotextile fabric.

Description

A Contained Silt Control System is a bag made of non-woven geotextile fabric that is attached to a dewatering hose. Construction site water is intercepted, diverted, and pumped or gravity fed into one side of the filtration bag; gravel, sand, silt, and fines are collected in the bag while filtered water percolates through the bag.

Other Names

Gravity Bag Filter, Sediment Filter Bag, Filter Bag, Dirt Bag, Silt Bag, Dewatering Tube, Dewatering Bag

Applicability

Contained Silt Control Systems are applicable for treating sediment-laden water at a construction site. They are often used during excavation dewatering. The filtration bag causes minimal damage to the ground where it is located and requires a small footprint when compared to sedimentation basins.

Selection Considerations

- Contained Silt Control Systems are temporary filtration systems.
- Filtration bags are designed for one-time use.
- Filtration bags are available in an array of sizes and materials depending on site specifics.
- Filtration bags require less space and cause less damage to existing vegetation than sedimentation basins.
- Discharge rates on the filtration bags decrease as the bag collects sediment.
- An equipment access route and space for Contained Silt Control System installation, maintenance, and removal must be available without encroaching into sensitive areas or off the project limits.

Design

Use manufacturer's specifications to determine the size of the filtration bag appropriate for the flow rate and expected volume. Place the filtration bag on a level, well-drained surface and provide high-flow bypass for the system. If the soil does not allow percolation, provide a non-erodible bed constructed from rock, straw, or other non-erodible material.

After water has percolated through the filtration bag, the filtration bag filled with sediment can be removed and disposed of off-site, or the bag can be cut open and the sediment can be mixed with the on-site soil and seeded for stabilization. The designer should indicate the conditions or restrictions that will be required for locating and removing the bag depending on the project and site.

Relationship to Other Erosion and Sediment Control Measures

Secondary barriers, such as silt fence or fiber rolls, may be placed around the filtration bag to provide additional sediment trapping. When there is limited space available, Contained Silt Control Systems can be used in place of sedimentation basins.

Common Failures or Misuses

- The bag becomes too heavy to remove with available equipment.
- The bag becomes too full to contain silt.
- Improperly sized mesh openings in the bag for the site soils and flow rate.
- Placement on a slope or uneven ground.
- Improperly sized bag for the flow rate.
- Overfilling the filtration bag with sediment.
- Use as a permanent filtration system.
- Reusing a filtration bag.

SPECIFICATIONS

Standard Specification

- 666 – Contained Silt Control System

Drawing

- BMP-07.00 Contained Silt Control System

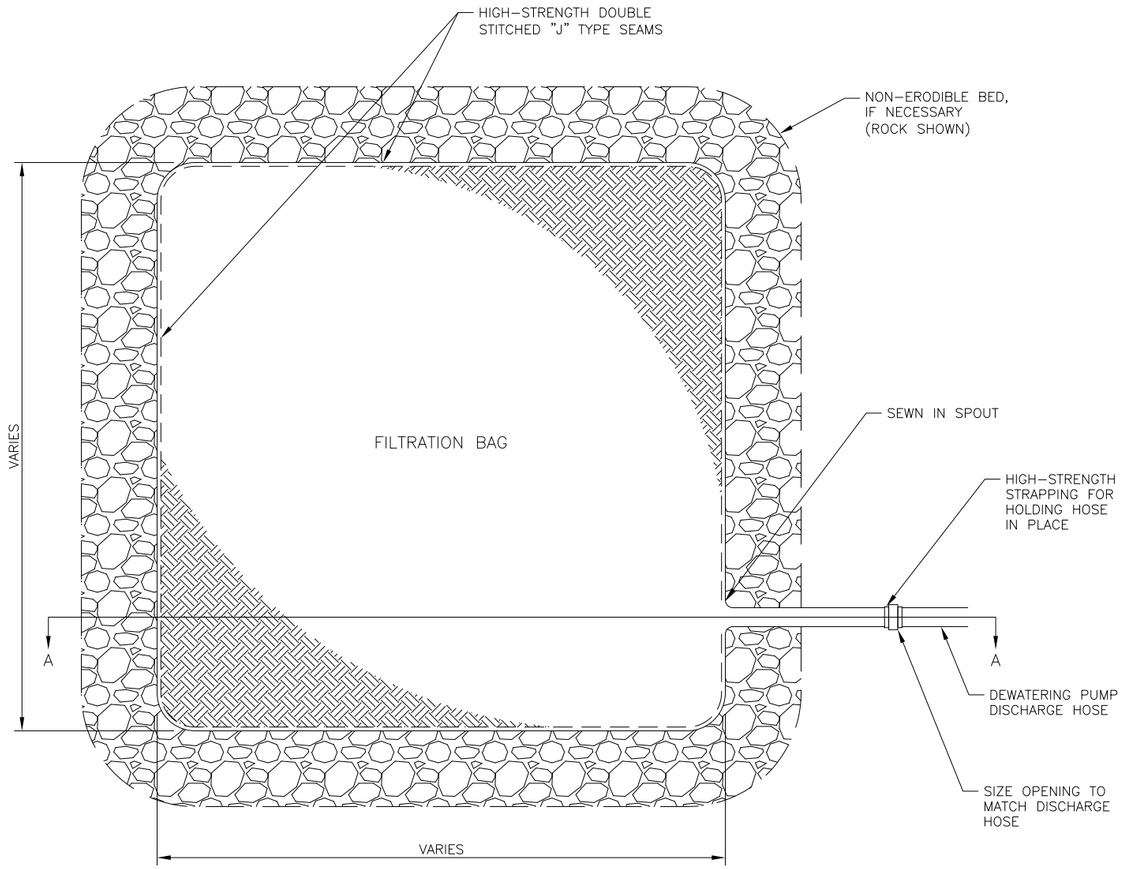

PLAN

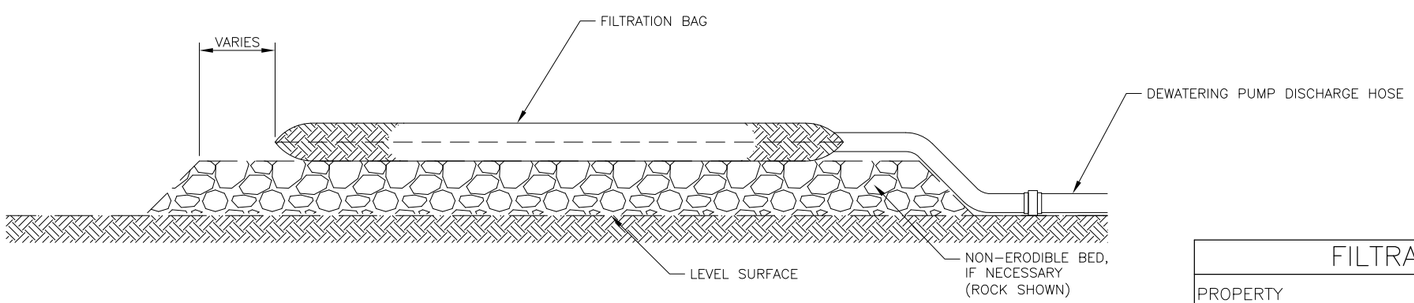

SECTION A–A

PUMPED SILT CONTROL SYSTEM

NOT TO SCALE

CONTAINED SILT CONTROL SYSTEM NOTES:

MATERIALS

FILTRATION BAG: SEE FILTRATION BAG REQUIREMENTS TABLE.

DISCHARGE HOSE

STRAPPING: HIGH–STRENGTH STRAPPING TO HOLD HOSE IN PLACE.

NON–ERODIBLE BED: WELL GRADED CLEAN 4–INCH MINUS ROCK, STRAW, OR OTHER NON–ERODIBLE BARRIER.

INSTALLATION

1. PROVIDE A LEVEL AREA SUCH THAT THE DISCHARGE WILL NOT CAUSE EROSION.
2. IF NECESSARY, PLACE A NON–ERODIBLE BED WITH AN APRON ON ALL SIDES OF THE FILTRATION BAG.
3. ENSURE THE AREA DOES NOT HAVE MATERIAL THAT MIGHT PUNCTURE THE FILTRATION BAG.
4. LAY FILTRATION BAG FLAT ON THE GROUND OR BED.
5. SECURE THE DISCHARGE HOSE WITH HIGH–STRENGTH STRAPPING.
6. CONNECT THE DISCHARGE HOSE TO THE FILTRATION BAG.

INSPECTION

3. INSPECT FABRIC FOR TEARS, PUNCTURES, FRAYING, WEATHERING, AND COMPROMISED INTEGRITY.
4. CHECK FOR FABRIC BLOCKAGE, BLINDING OR A REDUCTION IN THE AMOUNT OF CLEAN WATER BEING DISCHARGED.
5. CONFIRM THAT THE HOSE IS SECURE.
6. CHECK FOR SIGNS OF EXCESSIVE LEAKAGE AROUND THE DISCHARGE HOSE.
7. LOOK FOR EVIDENCE OF SEDIMENT OR EROSION AROUND THE SYSTEM.
8. LOOK FOR SIGNS OF INADEQUATE PROTECTION OF OFF–SITE SENSITIVE AREAS DUE TO DISCHARGES FROM THE FILTRATION BAG.
9. CHECK FOR CHANNEL FORMATION AROUND THE SYSTEM.
10. INSPECT THE CAPACITY OF THE FILTRATION BAG.

MAINTENANCE

1. REPLACE DAMAGED FILTRATION BAGS.
2. REPLACE BAG WHEN IT NO LONGER FILTERS SEDIMENT OR PASSES WATER AT A REASONABLE RATE.
3. REPLACE BAG WHEN IT BLINDS OUT AND CLEAN DISCHARGE IS REDUCED BY AN ESTIMATED 50% TO MINIMIZE POTENTIAL FOR PRODUCT FAILURE AND UNPLANNED DISCHARGE.
4. REPAIR EROSION AND CHANNELS AND CORRECT THE SITUATION CAUSING THESE TO OCCUR.

REMOVAL

1. PLACE AN ENERGY DISSIPATION DEVICE PRIOR TO DISCONNECTING THE HOSE.
2. ALLOW THE FILTRATION BAG TO DRAIN AND ENSURE THE PRESSURE HAS DROPPED BEFORE DISCONNECTING INTAKE AND DISCHARE HOSES AFTER THE DISTURBED AREA IS PERMANENTLY STABILIZED, EXCAVATION DEWATERING HAS CEASED, OR THE PUMPED SILT CONTROL SYSTEM IS NO LONGER NEEDED.
3. EITHER REMOVE THE SEDIMENT LADEN BAG AND DISPOSE OF PROPERLY, OR OPEN THE FILTRATION BAG, SPREAD THE SEDIMENT MIX WITH ON–SITE SOIL AND SEED, AS DIRECTED BY THE PLANS.
4. REGRADE AND SEED OR PERMANENTLY STABILIZE REMAINING DISTURBED AREAS.
5. AVOID DAMAGE TO SENSITIVE AREAS (E.G. WETLAND OR WATERS OF THE U.S.).

FILTRATION BAG REQUIREMENTS

PROPERTY	TEST	VALUE
GRAB BREAKING LOAD, LB, 1–INCH GRIP MINIMUM, IN EACH DIRECTION.	ASTM D 4632	255
WATER FLOW RATE, GAL PER MINUTE/SQ FT MINIMUM AND MAXIMUM AVERAGE ROLL VALUE.	ASTM D 4491	80–200
PERMITTIVITY, SEC–1 MINIMUM.	ASTM D 4491	1
APPARENT OPENING SIZE, INCHES MAXIMUM AVERAGE ROLL VALUE.	ASTM D 4751	0.0083
ULTRAVIOLET RESISTANCE, PERCENT MINIMUM RETAINED GRAB BREAKING LOAD, 500 HOURS.	ASTM D 4355	70

REVISIONS

Date	Description	By

State of Alaska DOT&PF

CONTAINED SILT CONTROL SYSTEM

APPROVED

Date 12/2015 X/XX/XX

BMP–07.00

BMP 08.00. Culvert Inlet Protection

DESIGN CONSIDERATIONS

Objectives

Culvert Inlet Protection is used to trap sediment and reduce the amount of sediment entering a culvert.

Description

Culvert Inlet Protection is a low barrier, similar to a check dam, placed up-gradient of a culvert inlet to temporarily impound water and trap sediment while still allowing flow to enter the culvert. There are several types of temporary barriers applicable for different conditions:

- Geotextile-wrapped foam barriers
- Sand bags or gravel-filled sand bags
- Fiber rolls
- Geotextile-wrapped wire cage barrier

Other Names

Filter Inlet.

Applicability

Culvert Inlet Protection is applicable when there is potential for sediment to be transported to and through the culvert. Placement in the flowline is applicable for culverts conveying runoff or project drainage that must remain operational before permanent stabilization of the disturbed area. Placement above (all the way around) a culvert inlet is applicable when earth disturbing activities are occurring upslope of the inlet, to prevent sediment and runoff from entering the culvert inlet from above. Culvert Inlet Protection is not generally placed in the flowline of culverts conveying stream flow, since the purpose of the best management practice (BMP) is to treat run-off before it reaches receiving waterbodies such as streams. If placement in the flowline of streams is required, applicable permits must be obtained.

Selection Considerations

- Culvert Inlet Protection should be sited and constructed in a manner that will facilitate cleanout and disposal of trapped sediment.
- Culvert Inlet Protection should be constructed in a manner that will allow flow to pass and minimize ponding after the run-off has ceased.
- Blocking the inlet can cause flooding affecting streets and the construction area. Where flooding would cause a hazard, consider where overflow will go in extreme events and provide emergency overflows with additional treatment.
- Slope Gradient: The slope of the ditch discharging to the culvert inlet should not exceed 5 percent or flow velocity exceeding 2.5 to 3 cubic feet per second. The steeper the slope or the higher the velocity and shear stress, the larger the particle diameter that can be transported. The flatter the slope and the slower the flow, the longer the travel distance and time behind the barrier, allowing for sediment to settle. If Culvert Inlet Protection is required on steeper grades, consider using a series of barriers or a widened channel to provide velocity reduction or barriers of greater depth to lengthen the settling distance.
- Inlet protection should extend all the way around the inlet when upgradient slopes are not stabilized.
- Consider the effects if the barrier were to fail when water is ponded. Provide additional downstream protection if warranted.

Design

Drainage Area: The area of the construction drainage area to the culvert inlet should not exceed 1-acre. The total drainage area to the inlet may be larger than 1-acre, provided that the additional area is vegetated and/or permanently stabilized and that the spillway and ponding area is sized to adequately treat, impound, and convey the runoff from the tributary area.

Depth: Provide a temporary minimum ponding depth of 6 to 8 inches. The design must specify fiber rolls of adequate diameter, foam barriers, or sandbags of adequate thickness to provide the minimum ponding depth, and spillways with minimum elevations and width must be provided to limit the maximum ponding depth.

Relationship to Other Erosion and Sediment Control Measures

Erosion control measures in the contributing areas must be in place to minimize the amount of sediment that must be treated at inlets. Culvert Inlet Protection is installed as a secondary measure to remove residual sediment that was not removed by other measures such as check dams, grassed swales, and sediment traps.

Common Failures or Misuses

- Sediment accumulation resulting in reduced settling capacity.
- Improper installation, resulting in sediment bypassing filter and entering the culvert.
- Tearing, undermining, or collapsing of the barrier, resulting in sediment entering the culvert.

SPECIFICATIONS

Standard Specification

- 667 – Culvert Inlet Protection

Drawing

- BMP – 08.00 Culvert Inlet Protection

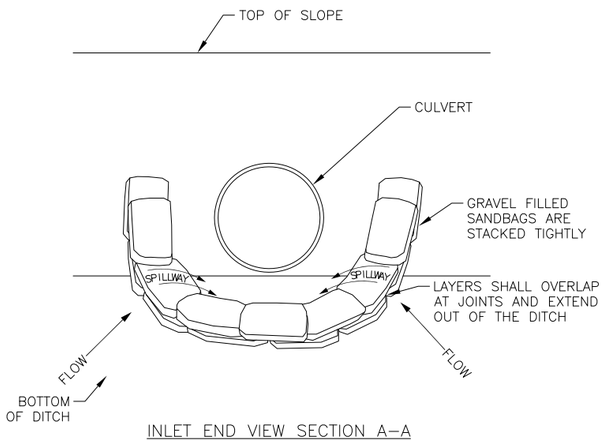

INLET END VIEW SECTION A–A
TYPICAL SANDBAG INSTALLATION SHOWN

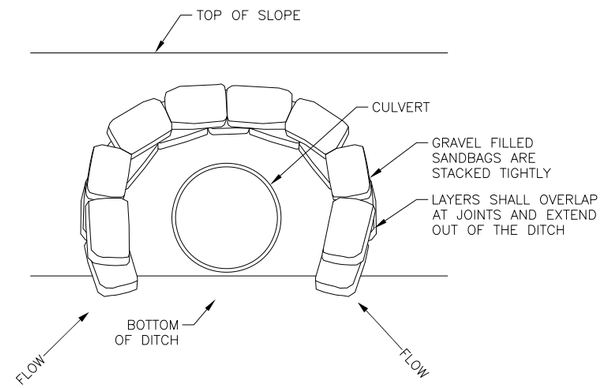

INLET END VIEW SECTION B–B
TYPICAL SANDBAG INSTALLATION SHOWN

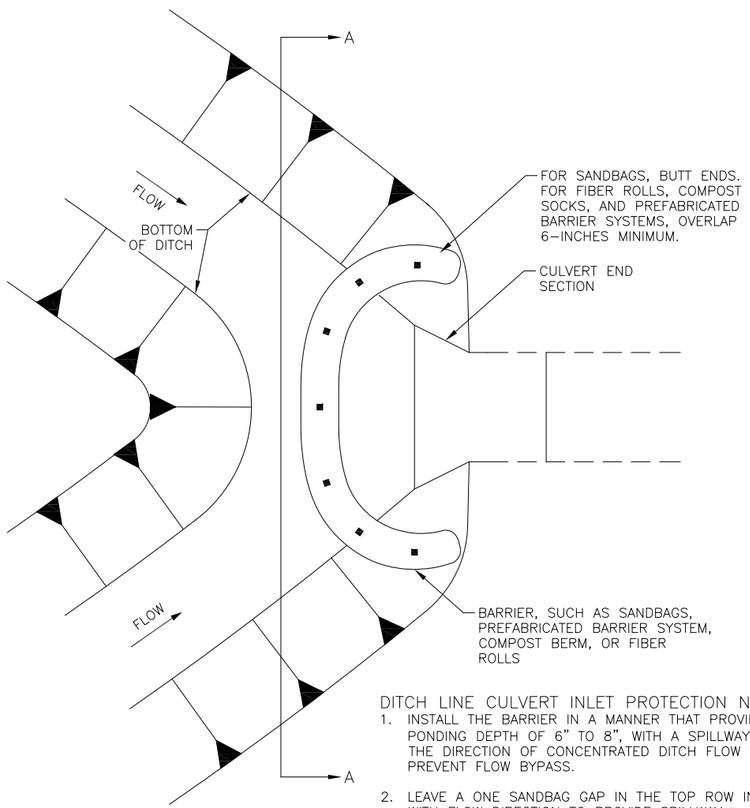

DITCH LINE CULVERT INLET PROTECTION NOTES:

1. INSTALL THE BARRIER IN A MANNER THAT PROVIDES PONDING DEPTH OF 6" TO 8", WITH A SPILLWAY IN THE DIRECTION OF CONCENTRATED DITCH FLOW TO PREVENT FLOW BYPASS.
2. LEAVE A ONE SANDBAG GAP IN THE TOP ROW IN LINE WITH FLOW DIRECTION TO PROVIDE SPILLWAY.

PLAN VIEW

DITCH LINE CULVERT INLET PROTECTION
NOT TO SCALE

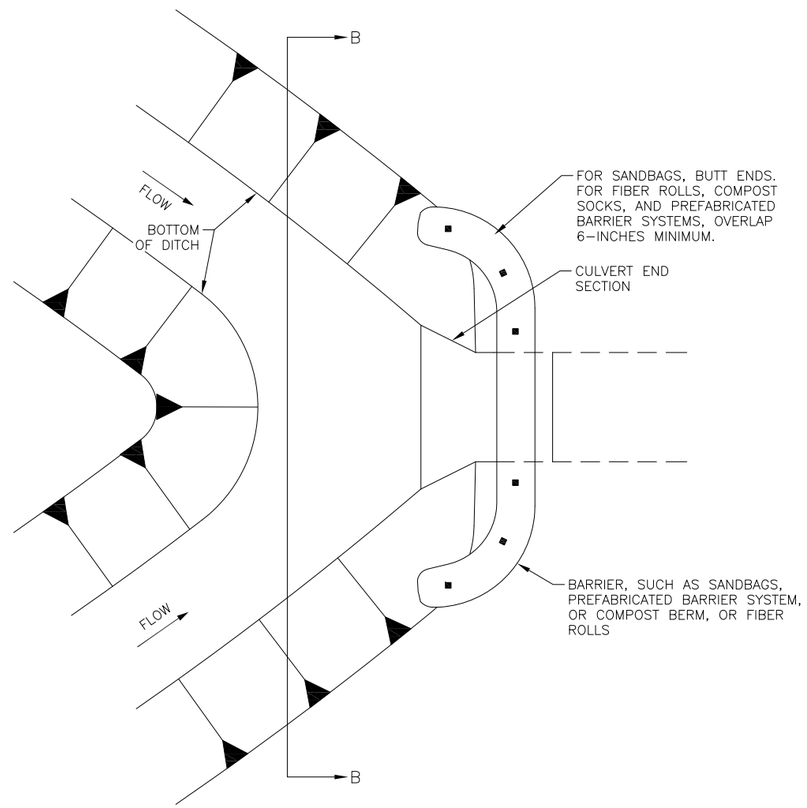

PLAN VIEW

TOP OF PIPE CULVERT INLET PROTECTION
NOT TO SCALE

CULVERT INLET PROTECTION NOTES:

MATERIALS

BARRIER MATERIALS:

1. PREFABRICATED BARRIER SYSTEM, AS SHOWN ON DRAWING BMP–13.00.
2. SANDBAG BARRIER, CONSISTING OF TIGHTLY WOVEN BURLAP OR WOVEN GEOTEXTILE BAG MATERIAL SUFFICIENTLY DURABLE TO REMAIN INTACT FOR THE TIME INTENDED. BAGS 2/3 FULL OF GRAVEL OR SAND WITH A GRADATION SUCH THAT NO FINE SEDIMENT PASSES THROUGH THE BAG. IF THE SANDBAGS ARE NEEDED FOR MORE THAN ONE SUMMER SEASON, PROVIDE BAG MATERIAL THAT HAS ULTRVIOLET STABILITY OF AT LEAST 70% IN CONFORMANCE WITH ASTM D4355 REQUIREMENTS. SECURELY CLOSE THE SANBAGS.
3. FIBER ROLL, AS SHOWN ON DRAWING BMP–10.00, 8 INCHES MINIMUM DIAMETER.
4. COMPOST SOCK, AS SHOWN ON DRAWING BMP–05.00.

INSTALLATION

1. INSTALL WHERE INDICATED IN THE PLANS OR WHERE APPROVED BY THE ENGINEER.
2. ASSURE THAT BARRIER MAKES FULL CONTACT WITH SOIL ALL AROUND THE INLET.
3. IF PROTECTING BOTH DITCHLINE AND TOP OF PIPE, THE PROTECTION BARRIER CAN BE A SINGLE CONTINOUS CIRCLE.
4. IN ADDITION:
   a. PREFABRICATED BARRIER SYSTEM – ANCHOR WITH WIRE STAPLES ON SOIL, OR ADHESIVE ON PAVEMENT. OVERLAP 6 INCHES.
   b. SANDBAG BARRIER – LAYER AND OVERLAP AT JOINTS.
   c. FIBER ROLL – TRENCH A MINIMUM OF 2 INCHES. SEE STAKING REQUIREMENTS ON DRAWING BMP–10.00.
   d. COMPOST SOCK – SEE STAKING REQUIREMENTS ON DRAWING BMP–05.00. STAKING REQUIRED REQUIRED WHEN PLACED WITHIN FLOWLINE/DITCH.

INSPECTION

1. CONFIRM THAT BARRIERS ARE IN FULL CONTACT WITH THE SOIL AND THAT BYPASS ROUTES ARE NOT PRESENT.
2. INSPECT FOR SEDIMENT ACCUMULATION, DISPLACEMENT, AND STRUCTURAL DAMAGE.

MAINTENANCE

1. REMOVE ACCUMULATED SEDIMENT BEFORE IT REACHES ONE–THIRD OF THE DESIGN DEPTH OF SPILLWAY.
2. RESTORE STRUCTURE TO ITS ORIGINAL DIMENSIONS AND FULL CONTACT WITH SOIL AROUND THE INLET AS SOON AS PRACTICABLE.
3. REPAIR ANY STRUCTURAL DAMAGE, INCLUDING REPLACING DAMAGED SANDBAGS, AS SOON AS PRACTICABLE.

REVISIONS

Date	Description	By

State of Alaska DOT&PF

CULVERT INLET PROTECTION

APPROVED

Date 12/2015 X/XX/XX

BMP–08.00

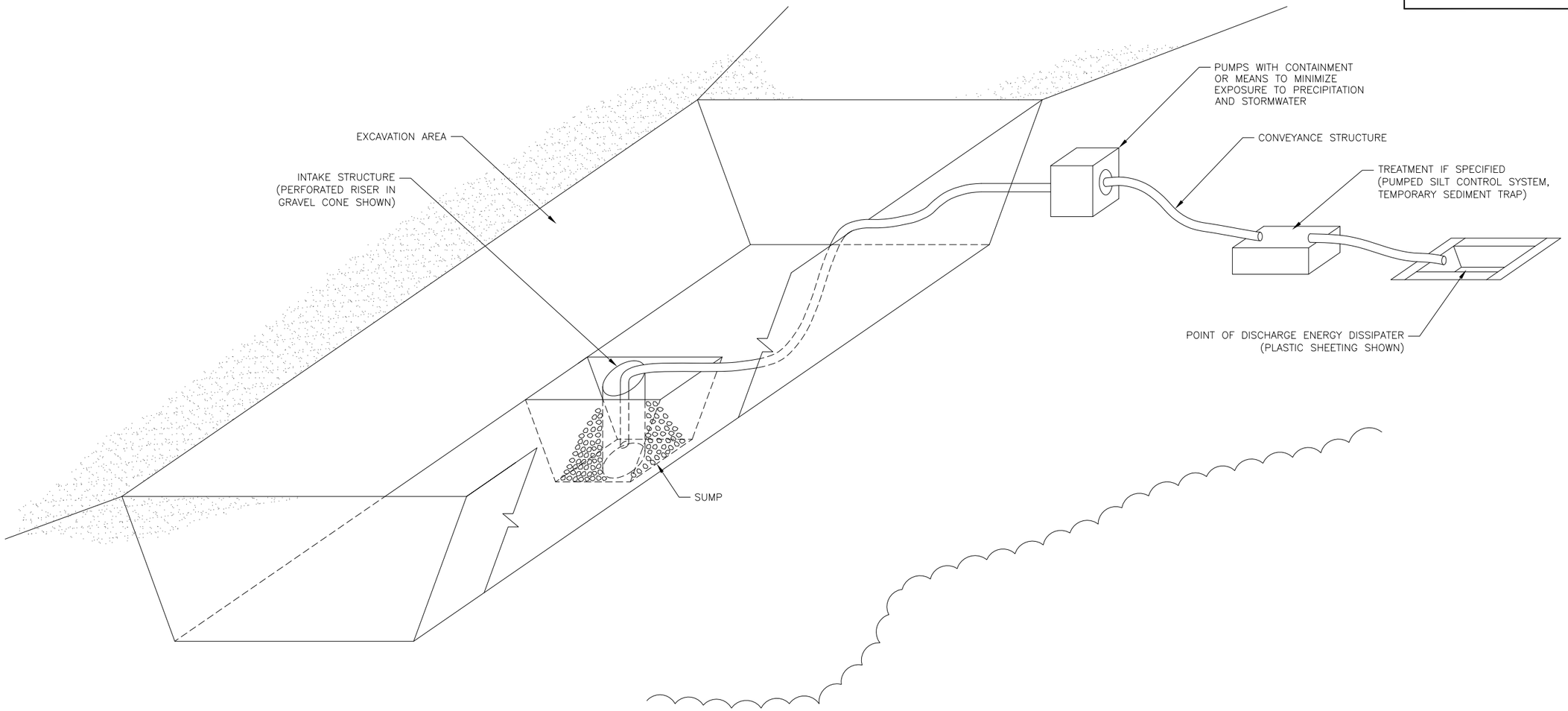

EXCAVATION DEWATERING
NOT TO SCALE

EXCAVATION DEWATERING NOTES:

MATERIALS

PUMP: SIZED FOR DESIGN FLOW IN CONTRACT, INTAKE LINE, FITTINGS, AND NOZZLES.

INTAKE STRUCTURES: RISERS, SCREENS, GRAVEL CONES, GRAVEL FILTER BERMS, GEOTEXTILE, OR EQUIVALENT,

CONVEYANCE SYSTEM: FLEXIBLE HOSE, WITH PROPER FITTINGS OR EQUIVALENT.

ENERGY DISSIPATER: PLASTIC SHEETING, RIPRAP, SANDBAGS, T-BAR SPREADER, OR EQUIVALENT.

TREATMENT: UPLAND VEGETATIVE AREA, PUMPED SILT CONTROL SYSTEM, OR TEMPORARY SEDIMENT TRAP.

INSTALLATION

1. INSTALL THE CONVEYANCE STRUCTURE. FOR PIPED CONVEYANCE, ENSURE THAT IT IS ADEQUATELY SECURED AGAINST MOVEMENT DURING PUMPING.
2. PLACE THE PUMP IN AN AREA DESIGNED FOR ITS USE AND OPERATION.
3. INSTALL SPILL PREVENTION BMPS PRIOR TO OPERATION.
4. INSTALL THE ENERGY DISSIPATER.
5. CONNECT THE CONVEYANCE STRUCTURE TO THE DOWNSTREAM DISCHARGE POINT.

INSPECTION

1. WHEN PUMPING, MONITOR PUMPS AND INTAKE AND DISCHARGE POINTS.
2. INSPECT THE CONVEYANCE STRUCTURE FOR LEAKS, EROSION, OR OTHER DEFECTS.
3. INSPECT THE TREATMENT CONTROLS FOR BYPASS, CLOGGING, AND SIGNS OF INADEQUATE TREATMENT.
4. INSPECT DISCHARGE POINT FOR EROSION OR FAILURE OF THE ENERGY DISSIPATION MATERIAL.
5. INSPECT THE EQUIPMENT AREA FOR PROPERLY STORED FUEL AND OTHER POTENTIALLY HAZARDOUS SUBSTANCES.

MAINTENANCE

1. REINFORCE, REPAIR, OR RESTORE ANY PORTION OF THE TREATMENT CONTROLS, CONVEYANCE SYSTEM, OR ENERGY DISSIPATER.

REMOVAL

1. REMOVE THE INTAKE HOSE.
2. REMOVE THE ENERGY DISSIPATER AND TREATMENT CONTROLS, IF THEY ARE NOT PART OF THE PERMANENT SITE FEATURES.
3. REMOVE THE CONVEYANCE SYSTEM.
4. AS REQUIRED, BACKFILL OR REGRADE THE CONVEYANCE SYSTEM ALIGNMENT AND TREATMENT AREA AND RESTORE TO ORIGINAL CONTOURS.
5. REGRADE AND SEED OR PERMANENTLY STABILIZE ALL DISTURBED AREAS.

REVISIONS

Date	Description	By

State of Alaska DOT&PF

EXCAVATION DEWATERING

APPROVED

Date 12/2015 X/XX/XX

BMP-09.00

BMP 10.00.a. Fiber Rolls for Erosion Control

DESIGN CONSIDERATIONS

Objectives

The purpose of Fiber Rolls for Erosion Control is to shorten the slope and help to slow, filter, and spread overland flows. They capture sediment, organic matter, and seeds that might otherwise be washed downslope.

Description

Fiber Rolls are long rolls of material such as wood excelsior, rice or wheat straw, flax, coconut fibers, or compost, which is rolled or bound in a tight tubular roll and wrapped in plastic or biodegradable netting. They are typically about 8 inches in diameter and under 30 feet long.

They may come pre-fabricated or they can be fabricated on-site.

Other Names

Wattles, Straw Wattles, Straw Rolls, Coir Logs, Excelsior Log, Straw Log, Filter Logs, Fiber Logs.

Applicability

Fiber Rolls can be applied to steep or long slopes and slopes that are susceptible to freeze/thaw activity, sheet and rill erosion, or dry ravel. They can be placed along the toe, top, face, and at grade-breaks on disturbed or erodible slopes. They can be used as a temporary berm to direct flow around exposed soils or to a sediment trap and as a check dam in unlined ditches. They can be used at other locations at the project site for sediment control.

Selection Considerations

- Use in areas of low shear stress.
- Avoid use on slopes that could build up ice; for instance, where seepage occurs.
- They are effective for one to two seasons.
- Fiber Rolls can be staked to the ground using willow cuttings to increase the revegetation effort. Since the fiber roll will retain moisture, it will provide a good site for the willow cuttings to root. The Alaska Department of Fish and Game (ADF&G) has prepared guidance for willow cuttings and dormant cuttings in the *Streambank Revegetation and Protection: A Guide for Alaska* at: http://www.adfg.alaska.gov/index.cfm?adfg=streambankprotection.staking

  and http://www.adfg.alaska.gov/index.cfm?adfg=streambankprotection.cuttings
- The quantity of sediment that a roll can capture prior to maintenance is limited to one-half the exposed height of the roll.
- Rolls will be difficult to move once they are saturated. Determine whether Fiber Rolls must be removed at the end of the project based on the use of the area. If removal is required, specify in the plan set and require removal of netting upon final stabilization.

Relationship to Other Erosion and Sediment Control Measures

Fiber Rolls are best used in combination with seeding, mulch, hydraulic erosion control products (HECPs), and/or rolled erosion control products (RECPs). They can be used to stabilize slopes until the permanent vegetation becomes established.

Common Failures or Misuses

- Unless they are placed in a trench, run-off can flow underneath Fiber Rolls and cause failure.
- Unless they are properly staked, Fiber Rolls can be transported by high flows.
- Water can flow between Fiber Rolls if they are not overlapped.
- Fiber Rolls must be placed perpendicular to flow (parallel to the slope contour).
- Fiber Rolls will not work if the slope is slumping, creeping, or sliding.

SPECIFICATIONS

Standard Specification

- 669 – Fiber Rolls for Erosion and Sediment Control

Drawings

- BMP-10.00 Fiber Rolls for Erosion and Sediment Control
- BMPs -31.00, 32.00 and 33.00 Temporary Check Dam

BMP 10.00.b. Fiber Rolls for Sediment Control

DESIGN CONSIDERATIONS

Objectives

The purpose of Fiber Rolls for Sediment Control is to trap sediment and prevent it from being transported out of the project area, to another area, or to waters of the U.S.

Description

Fiber Rolls are long rolls of material such as wood excelsior, rice or wheat straw, flax, coconut fibers, or compost, which is rolled or bound in a tight tubular roll and wrapped in plastic or biodegradable netting. They are typically about 8 inches in diameter and under 30 feet long.

They may come pre-fabricated or they can be fabricated on-site.

Other Names

Wattles, Straw Wattles, Straw Rolls, Coir Logs, Excelsior Log, Straw Log, Filter Logs, Fiber Logs.

Applicability

Fiber Rolls can be placed at the perimeter of a project, below the toe of exposed and erodible slopes, and around temporary stockpiles. They may also be used for inlet protection. They can be used at other locations at the project site for erosion control.

Selection Considerations

- Use in areas of low shear stress.
- Avoid use on slopes that could build up ice; for instance, where seepage occurs.
- They are effective for one to two seasons.
- Fiber Rolls can be staked to the ground using willow cuttings to increase revegetation efforts. Since the Fiber Roll will retain moisture, it will provide a good site for the willow cuttings to root. The Alaska Department of Fish and Game has prepared guidance for willow cuttings and dormant cuttings in the *Streambank Revegetation and Protection: A Guide for Alaska* at: http://www.adfg.alaska.gov/index.cfm?adfg=streambankprotection.staking and http://www.adfg.alaska.gov/index.cfm?adfg=streambankprotection.cuttings
- The quantity of sediment that a roll can capture prior to maintenance is limited to one-half the exposed height of the roll.
- Rolls will be difficult to move once they are saturated. Determine whether Fiber Rolls must be removed at the end of the project based on the use of the area. If removal is required, specify in the plan set and require removal of netting upon final stabilization.

Relationship to Other Erosion and Sediment Control Measures

Fiber Rolls are best used in combination with seeding, mulch, hydraulic erosion control products (HECPs), and/or rolled erosion control products (RECPs).

- Fiber Rolls can be used in place of silt fence. The advantage of fiber rolls over silt fence is that installation is much easier, they do not have to be removed, and hydroseeding can be done after their installation.
- Compost socks can be used in place of Fiber Rolls and do not require trenching. Compost socks are also heavy enough that they can be placed on paved surfaces.
- A prefabricated barrier system can be used in place of fiber rolls and requires a smaller trench. A prefabricated barrier system can also be adhered to paved surfaces.

Common Failures or Misuses

- Unless they are placed in a trench and have tamped backfill in the trench on the uphill side, runoff can flow underneath Fiber Rolls and cause failure.
- Unless they are properly staked, Fiber Rolls can be transported by high flows.
- Water can flow between Fiber Rolls if they are not overlapped.

- Fiber Rolls must be placed perpendicular to flow (parallel to the slope contour).
- Fiber Rolls will not work if the slope is slumping, creeping, or sliding.

SPECIFICATIONS

Standard Specification

- 669 – Fiber Rolls for Erosion and Sediment Control

Drawings

- BMP-10.00 Fiber Rolls for Erosion and Sediment Control
- BMP-08.00 Culvert Inlet Protection
- BMPs -25.00, 26.00, 27.00, 28.00 and 29.00 Storm Drain Inlet Sediment Protection

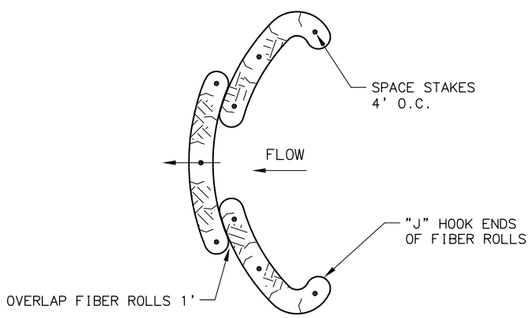

PLAN

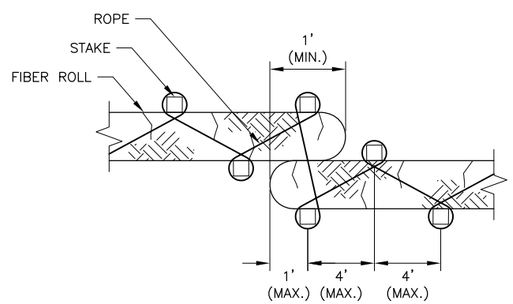

PLAN

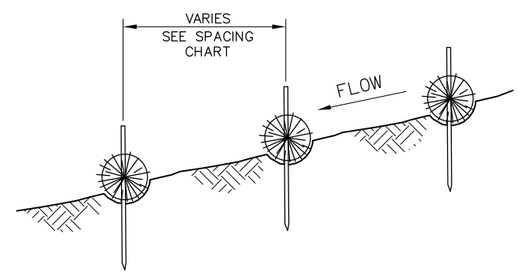

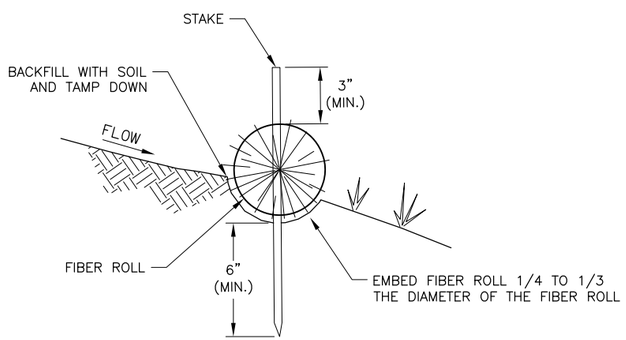

SECTION

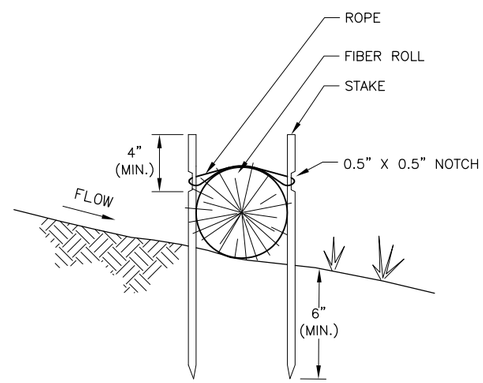

SECTION

TRENCHED INSTALLATION

NOT TO SCALE

ROPE INSTALLATION

NOT TO SCALE

SLOPE INSTALLATION

NOT TO SCALE

TYPICAL SPACING CHART	
SLOPE	SPACING (FEET)
1:1	10
2:1	20
3:1	30

TRENCHED INSTALLATION NOTES:

1. DIG TRENCHES AND PLACE FIBER ROLLS IN THE TRENCHES.
2. CURVE BACK THE UPSLOPE END OF THE FIBER ROLL IN A "J" HOOK.
3. SPREAD EXCAVATED MATERIAL EVENLY ALONG THE UPHILL SLOPE AND COMPACT USING HAND TAMPING OR OTHER METHODS.
4. STAKE THE ROLL EVERY 4 FEET AND WITHIN 1-FOOT OF THE ENDS. LEAVE 3 INCHES OF THE STAKE ABOVE THE ROLL.
5. DRIVE STAKES THROUGH THE MIDDLE OF THE FIBER ROLL.
6. IF REQUIRED, PILOT HOLES FOR THE STAKES MAY BE CREATED BY DRIVING A STRAIGHT BAR THROUGH THE ROLL.

SLOPE INSTALLATION NOTES:

1. INSTALL ON A SLOPE TO SHORTEN THE SLOPE LENGTH.
2. START INSTALLATION DOWNSLOPE.
3. SPACE ROLLS ACCORDING TO THE SPACING CHART AND DECREASE SPACING ON MORE ERODIBLE SOILS AND INCREASE SPACING ON ROCKY SOILS.

FIBER ROLL GENERAL NOTES:

MATERIALS

FIBER ROLLS: THE NETTING MAY BE UV-DEGRADABLE POLYPROPYLENE, BIODEGRADABLE BURLAP, JUTE OR COIR. THE FILLINGS MAY BE STRAW, FLAX, RICE, OR COCONUT-FIBER. MINIMUM DIAMETER OF 6 INCHES.

STAKES: 1-INCH BY 1-INCH WOODEN STAKES 24 INCHES LONG (18 INCHES IF SOILS ARE ROCKY) OR ⅜-INCH REBAR WITH SAFETY CAPS OR ¾-INCH TO 1 ½-INCH DIAMETER LIVE WILLOW CUTTINGS. IF USING LIVE WILLOW CUTTINGS, DO NOT INSTALL ROPE.

INSTALLATION

1. PLACE FIBER ROLLS PERPENDICULAR TO FLOW AND PARALLEL TO THE SLOPE CONTOUR.
2. AT THE END OF THE ROLL, TURN THE END UPSLOPE TO PREVENT RUN-OFF FROM GOING AROUND THE ROLL END.

INSPECTION

1. ENSURE THAT THE ROLLS ARE IN CONTACT WITH THE SOIL AND THOROUGHLY ENTRENCHED.
2. LOOK FOR SCOURING UNDERNEATH THE ROLLS.
3. LOOK FOR SPLIT, TORN, UNRAVELING, OR SLUMPING FIBER ROLLS.
4. ENSURE EQUIPMENT HAS NOT DRIVEN OVER THE INSTALLED FIBER ROLLS.

MAINTENANCE

1. REPLACE DAMAGED SECTIONS OF FIBER ROLL.
2. REMOVE ACCUMULATED SEDIMENT UPSLOPE OF THE ROLL BEFORE IT REACHES ONE-HALF THE DISTANCE BETWEEN THE TOP OF THE FIBER ROLL AND THE GROUND SURFACE. WHEN PROTECTING A WATER BODY OR STORM DRAIN INLET, REMOVE ACCUMULATED SEDIMENT UPSLPE OF THE ROLL WHEN IT REACHES ONE-THIRD OF THE DISTANCE BETWEEN THE TOP OF THE FIEBER ROLL AND THE GROUND SURFACE.

REMOVAL

1. REMOVE FIBER ROLLS WHEN THE AREA IS STABILIZED OR WHEN THEY ARE NO LONGER NECESSARY.
2. COLLECT AND DISPOSE OF THE ACCUMULATED SEDIMENT.
3. REMOVE AND DISPOSE OF FIBER ROLLS.
4. FILL THE TRENCHES AND STAKE HOLES TO BLEND WITH THE ADJACENT GROUND AND REVEGETATE AS NECESSARY.

RETENTION

1. LEAVE FIBER ROLLS IN PLACE WHEN THE AREA IS STABILIZED OR WHEN THEY ARE NOT NECESSARY.
2. COLLECT AND DISPOSE OF THE ACCUMULATED SEDIMENT.
3. REMOVE AND DISPOSE OF THE NETTING, STAKES, AND ROPE.

REVISIONS		
Date	Description	By

State of Alaska DOT&PF

FIBER ROLLS FOR EROSION AND SEDIMENT CONTROL

APPROVED

Date 12/2015 X/XX/XX

BMP-10.00

BMP 11.00. Interception Ditch

DESIGN CONSIDERATIONS

Objectives

The purpose of an Interception Ditch is to intercept run-on and direct it to a stabilized area where it can be safely discharged.

Description

An Interception Ditch is a berm of compacted soil or an excavated swale, or combination berm and swale constructed across a slope.

Other Names

Interceptor Ditch, Crown Ditch, Interceptor Swale, Interceptor Dike, Water Bar.

Applicability

This measure should be used in construction areas where run-off can be intercepted and disposed of properly to control erosion, sedimentation, or flood damage. Interception Ditches may be either temporary or permanent and are used in variety of situations to provide storm water protection. When used above disturbed existing slopes or above cut or fill slopes, an Interception Ditch prevents run-off over the slope. Across unprotected slopes, it acts as slope breaks to reduce slope length. When used below slopes, it diverts excess run-off to stabilized outlets. It can also be used to divert sediment-laden water to sediment traps, to divert water around buildings or areas that are subject to damage from run-off, and at or near the perimeter of the construction area to prevent sediment from leaving the site. Prior to stabilization of disturbed areas, an Interception Ditch diverts water around the area to prevent erosion and maintain acceptable working conditions. Along paved surfaces, it conveys run-off to an appropriate discharge location.

Selection Considerations

- Berms to intercept and divert run-off should not be used where the drainage area exceeds 10 acres.
- Interception Ditches should be carefully designed where longitudinal ditch slopes are steeper than 10 percent.
- Provide check dams or riprap in ditches with steep slopes to decrease the velocity of stormwater.
- Provide energy dissipation measures at ditch outfalls.
- Ditches that become sediment laden may need supplemental BMPs, such as a sediment trap.
- The ditch must be sloped to provide positive drainage to the outlet.

Design

The location of the Interception Ditch should be determined by considering outlet conditions, topography, land use, soil type, and length of slope. The ditch should be designed for a minimum freeboard of 0.3 feet to one foot with the capacity of the 10-year peak run-off storm for a permanent structure and the 2-year, 24-hour peak run-off storm for a temporary structure.

Relationship to Other Erosion and Sediment Control Measures

Intercepted run-off should outlet to a stabilized area such as a sediment basin, detention or retention basin, or stabilized outlet, which should be established prior to introducing run-off from the Interception Ditch. An Interception Ditch can direct stormwater to a slope drain to convey water to a stabilized outlet. This measure is different from Temporary Diversion Conveyance because it is not for concentrated or stream flow.

Common Failures or Misuses

- Berm not properly compacted during construction, resulting in uneven settling.
- Ditch not properly sloped to the outlet.
- Construction traffic damage to the ditch.
- Sediment accumulation against berm/channel not removed periodically, resulting in berm not functioning properly.
- Excessively steep, unlined ditches resulting in erosion.

SPECIFICATIONS

Standard Specification

- 673 – Interception Ditch

Drawing

- BMP-11.00 Interception Ditch

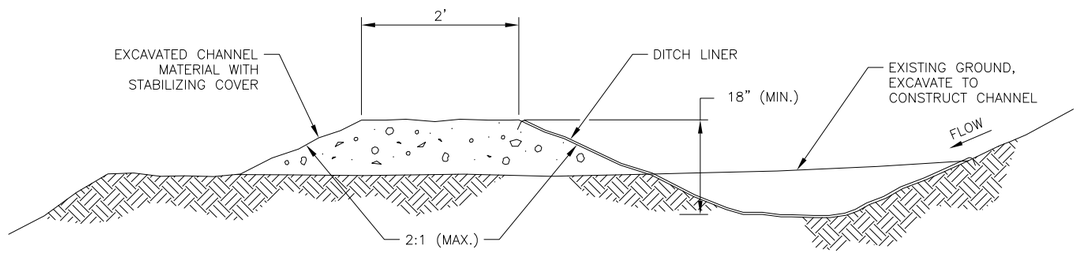

INTERCEPTION DITCH
NOT TO SCALE

INTERCEPTION DITCH NOTES:

MATERIALS

DITCH LINER: AS SPECIFIED IN THE PLANS OR USE PLASTIC LINING.

BERM: SANDBAGS, COMPACTED SOIL, OR EQUIVALENT MATERIAL.

ENERGY DISSIPATER: RIPRAP OR SANDBAGS.

INSTALLATION

1. REMOVE AND PROPERLY DISPOSE OF ALL TREES, BRUSH, STUMPS, OR OTHER OBJECTIONABLE MATERIAL.
2. FILL AND COMPACT ALL DITCHES, SWALES, OR GULLIES THAT WILL BE CROSSED TO NATURAL GROUND LEVEL.
3. EXCAVATE, SHAPE, AND STABILIZE THE DITCH TO LINE, GRADE, AND CROSS SECTION AS REQUIRED IN THE PLANS.
4. COMPACT THE BERM TO PREVENT UNEQUAL SETTLEMENT AND TO PROVIDE STABILITY AGAINST SEEPAGE.
5. STABILIZE THE DITCH AND BERM AFTER INSTALLATION.
6. INSTALL ENERGY DISSIPATER.

INSPECTION

1. INSPECT DITCH FOR EROSION.
2. INSPECT DITCH FOR SEDIMENT ACCUMULATION AND DEBRIS.
3. INSPECT FOR WASHOUTS.

MAINTENANCE

1. REMOVE ANY SEDIMENT OR OTHER OBSTRUCTIONS FROM THE INTERCEPTION DITCH.
2. REPLACE RIPRAP AND DAMAGED LININGS AS NEEDED.
3. CHECK OUTLETS AND MAKE REPAIRS AS NECESSARY.

REMOVAL

1. AFTER DISTURBED AREA IS STABILIZED OR INTERCEPTION OF STORM WATER IS NO LONGER NEEDED, RESTORE THE DITCH TO EXISTING OR CONSTRUCTED GRADE FOR TEMPORARY INSTALLATIONS.
2. SEED AND MULCH DISTURBED AREA.

REVISIONS

Date	Description	By

State of Alaska DOT&PF

INTERCEPTION DITCH

APPROVED

Date 12/2015 X/XX/XX

BMP-11.00

BMP 12.00. Plastic Covering

DESIGN CONSIDERATIONS

Objectives

Plastic covering is used to temporarily protect soils, slopes, and stockpiles from erosion by wind or water.

Description

Plastic sheeting covers surfaces that are susceptible to erosion to provide temporary protection from the elements. The sheeting is keyed in at the top, overlapped at seams, and fastened or weighted down in a grid pattern.

Other Names

Visqueen, plastic sheeting.

Applicability

The applicability of plastic sheeting is limited to covering stockpiles or very small graded areas for urgent, short-term protective treatment (such as through one imminent storm event or for overwintering disturbed slopes) until alternative measures, such as seeding and mulching, can be installed. It is not recommended as cover for seeded slopes for more than two days. This temporary measure should only be used in conjunction with a sediment control (perimeter control) BMP.

Selection Considerations

Select plastic sheeting based on the expected functional longevity required to protect the stockpile or soil. Evaluate given the following limitations:

- Plastic sheeting is easily vandalized and torn, is subject to photo degradation, and must be disposed of in a landfill.
- Freezing temperatures weaken the sheeting and make it prone to tearing.
- Plastic sheeting results in 100% runoff, which may cause serious erosion problems in the areas receiving the runoff.
- Plastic prevents infiltration and soil saturation.

Relationship to Other ESC Measures

Plastic sheeting may be used temporarily before other stabilization measures, such as hydraulic erosion control products (HECPs) or rolled erosion control products (RECPs).

Common Failures or Misuses

- Improper installation is a common problem with plastic sheeting. Plastic sheeting must be keyed in at the top of the slope to prevent undercutting.
- Installation upslope of steep and/or unstable slopes can lead to adverse effects from concentrated runoff.
- Allowing it to remain in place longer than its useful life. Plastic becomes brittle over time due to photo degradation and develops holes and tears.
- Improper weighting or too-wide spacing between weights can cause it to be blown off in the wind.

SPECIFICATIONS

Standard Specification

- 674 – Plastic Covering

Drawing

- BMP-12.00 – Plastic Covering

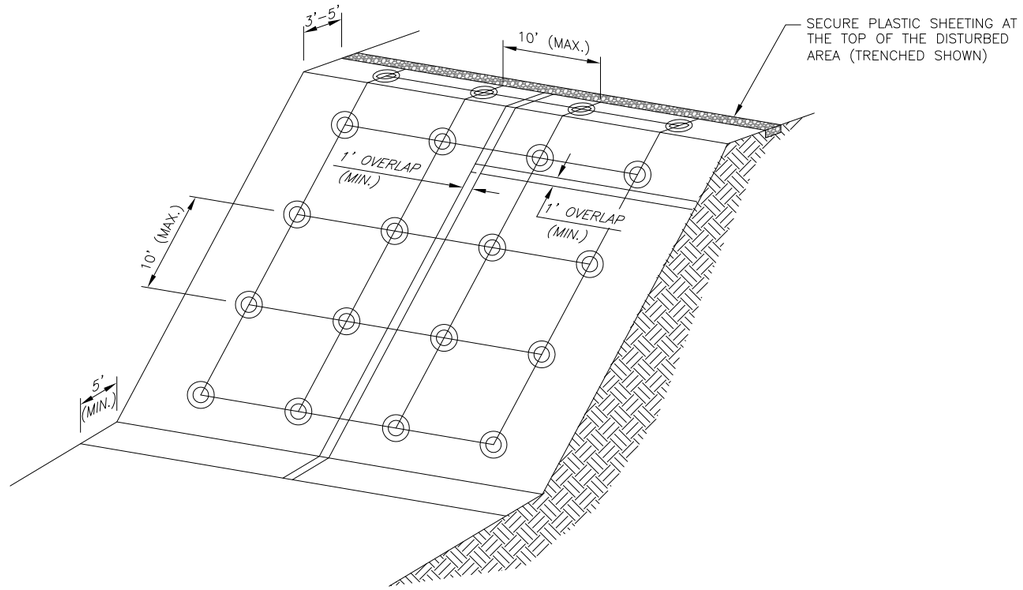

PERSPECTIVE

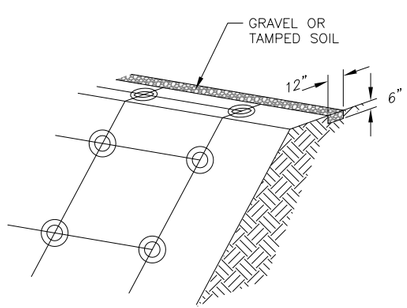

TRENCHED DETAIL

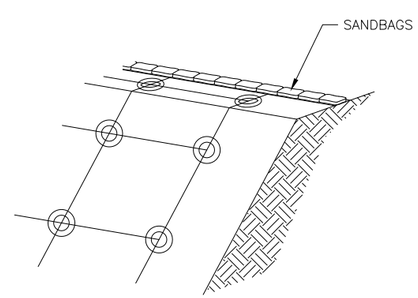

WEIGHTED DETAIL

PLASTIC COVERING
NOT TO SCALE

PLASTIC COVERING NOTES:

MATERIALS

PLASTIC COVERING: PLASTIC COVERING SHALL MEET THE REQUIREMENTS OF ASTM D 4397 FOR POLYETHYLENE SHEETING HAVING A MINIMUM THICKNESS OF 6 MIL.

FASTENERS OR WEIGHTS: FASTENERS OR WEIGHTING OBJECTS, SUCH AS SANDBAGS, TIRES, OR OTHER SIMILAR MATERIALS.

INSTALLATION

1. INSTALL PLASTIC PARALLEL WITH THE SLOPE, NOT PERPENDICULAR. PLASTIC MAY BE INSTALLED PERPENDICULAR TO A SLOPE IF THE SLOPE LENGTH IS LESS THAN 10 FEET. OVERLAP UPHILL SHEET OVER DOWNHILL SHEET A MINIMUM OF 1-FOOT.
2. SECURE THE PLASTIC SHEETING AT THE TOP OF THE SLOPE BY KEYING INTO A TRENCH OR WEIGHT WITH A CONTINUOUS LINE OF SANDBAGS SO THAT NO WATER CAN FLOW UNDERNEATH.
3. INSTALL WEIGHTS ON ROPES OR FASTENERS IN A 10-FOOT MAXIMUM GRID, TO SECURE THE PLASTIC TIGHTLY AGAINST THE SOIL.
4. INSPECT WEIGHTS TO MAKE SURE THEY ARE STILL IN PLACE, REPLACE AS NEEDED OR ADD ADDITIONAL WEIGHT IF THERE IS NOT A SUFFICIENT AMOUNT ON THE SLOPE.
5. TAPE, FASTEN, OR WEIGHT SEAMS ALONG THEIR ENTIRE LENGTH WITH A MINIMUM OF 1-FOOT OF OVERLAP AT ALL SEAMS.
6. SECURE EDGES TO PREVENT WATER FROM ERODING GROUND UNDERNEATH AND WIND FROM LIFTING THE COVER.

INSPECTION

1. INSPECT SHEETING AFTER INSTALLATION AND ACCORDING TO ESTABLISHED SCHEDULES.
2. CHECK FOR EROSION, UNDERMINING, ANCHORAGE (KEYING AND EMBEDDING) FAILURE, TORN SHEETS, AND DETERIORATION.

MAINTENANCE

1. REPAIR FAILURES AS SOON AS PRACTICABLE.
2. IF WASHOUT OR BREAKAGES OCCUR, REPAIR DAMAGE TO THE SLOPE AND REINSTALL THE MATERIAL AS SOON AS PRACTICABLE.

REMOVAL

1. REMOVE PLASTIC SHEETING AND WEIGHTS PRIOR TO STABILIZING THE AREA OR WHEN CONSTRUCTION ACTIVITY IS COMPLETED.
2. AFTER REMOVAL, FILL TRENCHES TO BLEND WITH THE ADJACENT GROUND AND REVEGETATE, AS NECESSARY.

REVISIONS

Date	Description	By

State of Alaska DOT&PF

PLASTIC COVERING

APPROVED

Date 12/2015 X/XX/XX

BMP-12.00

BMP 13.00. Prefabricated Barrier System

DESIGN CONSIDERATIONS

Objectives

The purpose of a Prefabricated Barrier System is to slow and spread overland flows and to trap sediment and prevent it from being transported out of the project area to another area or to waters of the U.S.

Description

Prefabricated Barrier Systems are prefabricated devices with a foam core enclosed in woven geotextile fabric. Each unit is a minimum of 5 inches tall after installation and at least 4 feet in length. They have an apron that extends beyond both sides of the base of the foam core. The sleeve at one end allows attachment of additional sections as needed.

Other Names

Foam Logs, Geotextile Encased Check Dam, Geotextile Triangular Dam.

Applicability

Prefabricated Barrier Systems can be placed at the perimeter of a project, below the toe of exposed and erodible slopes, and around temporary stockpiles. They can be applied to steep or long slopes and slopes that are susceptible to freeze/thaw activity, sheet and rill erosion, or dry ravel. They can be placed along the toe, top, face, and at grade-breaks on disturbed or erodible slopes. They can be used as a temporary berm to direct flow around exposed soils, or to a sediment trap. They can be used as a check dam in unlined ditches, or as storm drain inlet protection.

Selection Considerations

- Flexibility of the materials in Prefabricated Barrier Systems allows them to conform to all channel configurations.
- Prefabricated Barrier Systems have the ability to interlock to form longer barriers without water flowing between the individual units.
- Prefabricated Barrier Systems can be secured using a combination of nails, solvent-free adhesives, or gravel-filled bags depending on the surface.
- When used below disturbed areas subject to sheet and rill erosion drainage, the area must be no greater than 0.25-acre per 100 lineal feet of barrier.
- Slope behind the barrier should be no steeper than 2H:1V.
- Prefabricated Barrier Systems can be reused depending on the amount of wear.
- The quantity of sediment that a barrier can capture is limited.

Design

Show precisely where to place this type of barrier on the plan sheets. Be cautious about the concentrated flow that develops at the end of the barrier. Do not place them where the concentrated flow will do damage and include provisions for energy dissipation or treatment, as appropriate.

Relationship to Other Erosion and Sediment Control Measures

Prefabricated Barrier System can be used in combination with other barriers.

- Prefabricated Barrier Systems can be used in place of silt fence. The advantage of Prefabricated Barrier Systems over silt fence is that installation may be easier and may be less damaging to existing vegetation.
- Compost socks can be used in place of Prefabricated Barrier Systems and are heavy enough that they can be placed on paved surfaces without the use of adhesive products.
- A Prefabricated Barrier System can be used in place of fiber rolls and requires a smaller trench. A Prefabricated Barrier System can also be adhered to paved surfaces.

Common Failures or Misuses

- Use where flow volume or velocity inhibit best management practice (BMP) function.
- Use as a filter.
- Piercing the barrier's core with nails or stakes.

- Unless properly secured to the ground, runoff can flow underneath the barrier and cause failure.
- Unless properly secured, barriers can be dislodged or transported by high flows.
- Prefabricated Barrier System must be placed perpendicular to flow (parallel to the slope contour).

SPECIFICATIONS

Standard Specifications

- 675 – Prefabricated Barrier System

Drawings

- BMP-13.00 Prefabricated Barrier System
- BMP-31.00, BMP-32.00, BMP-33.00 Temporary Check Dam
- BMP-21.00, BMP-22.00 Slope Drain
- BMP-10.00 Fiber Rolls for Erosion and Sediment Control
- BMP-25.00, BMP-26.00, BMP-27.00, BMP-28.00, BMP-29.00 Storm Drain Inlet Sediment Protection

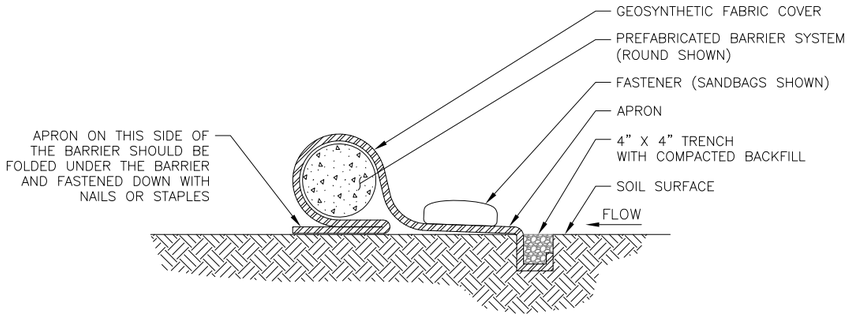

SECTION

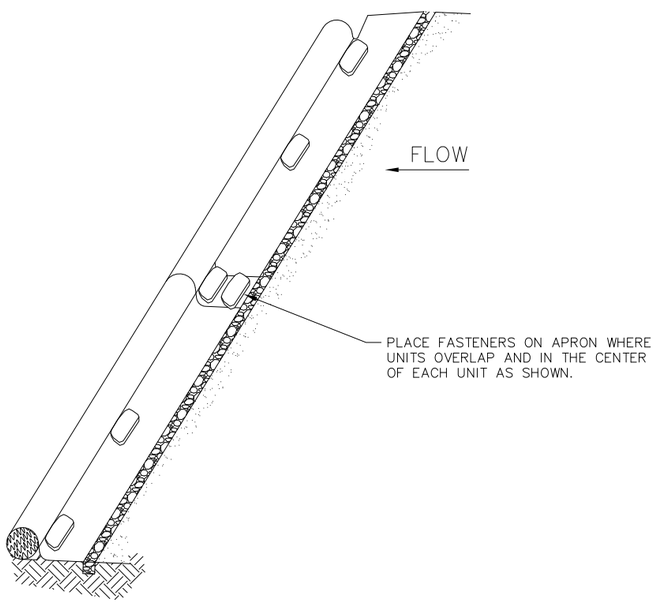

PLAN

SOIL INSTALLATION

NOT TO SCALE

SOIL NOTES:

INSTALLATION

1. INSTALL BARRIER ALONG CONTOURS.
2. SECURE THE BARRIER WITH FASTENERS A MAXIMUM OF 4 FEET APART.
3. INSTALL WITH 2 FASTENERS AT CONNECTION POINTS WHERE BARRIERS OVERLAP.

INSPECTION

1. LOOK FOR SCOURING UNDERNEATH AND AT THE ENDS OF THE BARRIER.

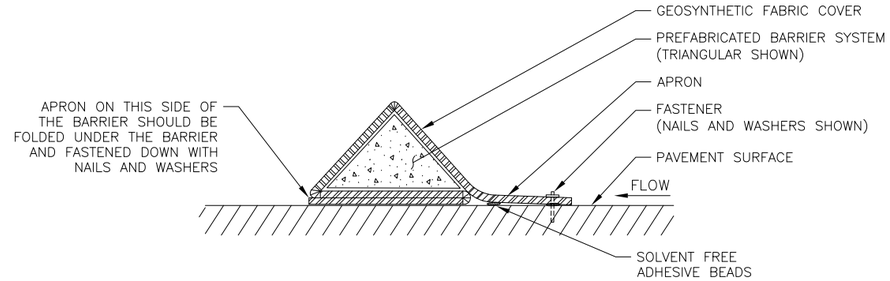

SECTION

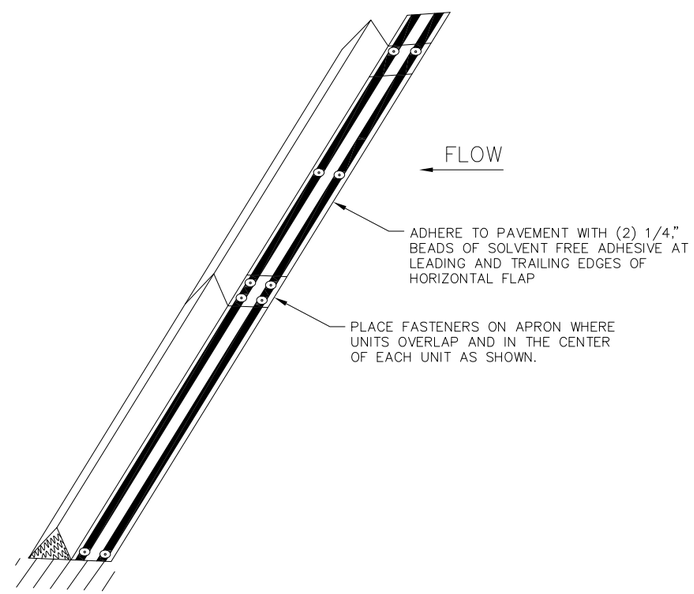

PLAN

PAVEMENT INSTALLATION

NOT TO SCALE

PAVEMENT NOTES:

INSTALLATION

1. INSTALL THE HORIZONTAL FLAP ON THE UPSLOPE SIDE.
2. SECURE THE BARRIER WITH 1-INCH NAILS A MAXIMUM OF 4 FEET APART OR USE SANDBAGS.
3. INSTALL WITH 2 FASTENERS AT CONNECTION POINTS WHERE BARRIERS OVERLAP.
4. USE SOLVENT-FREE ADHESIVE TO ENSURE A TIGHT CONNECTION WITH THE PAVEMENT.

PREFABRICATED BARRIER SYSTEM GENERAL NOTES:

MATERIALS

BARRIER: PREFABRICATED FOAM CORE ENCLOSED IN WOVEN GEOSYNTHETIC FABRIC.

FASTENERS: 1-INCH OR 6-INCH NAILS, 1-INCH WASHERS, SOLVENT-FREE ADHESIVE, 6-INCH TO 8-INCH STAPLES, SAND BAGS, AND/OR GRAVEL-FILLED BAGS.

INSPECTION

1. ENSURE THAT THE BARRIERS ARE IN WATER TIGHT CONTACT WITH SOIL OR PAVEMENT.
2. LOOK FOR SPLIT, TORN, UNRAVELLING, OR SLUMPING BARRIERS.
3. ENSURE EQUIPMENT DOESN'T DRIVE OVER INSTALLED BARRIERS.

MAINTENANCE

1. REPLACE DAMAGED SECTIONS OF BARRIER.
2. REMOVE ACCUMULATED SEDIMENT UPSLOPE OF THE BARRIER BEFORE IT REACHES ONE-HALF OF THE DISTANCE BETWEEN THE TOP OF THE BARRIER AND THE GROUND SURFACE OR ONE-THIRD THE AVAILABLE STORAGE IF PROTECTING A WATER BODY OR STORM DRAIN INLET.

REMOVAL

1. REMOVE AND DISPOSE OF THE ACCUMULATED SEDIMENT THEN REMOVE THE BARRIER.
2. AFTER REMOVAL FILL TRENCHES AND NAIL HOLES TO BLEND WITH THE ADJACENT GROUND AND REVEGETATE AS NECESSARY.

REVISIONS

Date	Description	By

State of Alaska DOT&PF

PREFABRICATED BARRIER SYSTEM

APPROVED

Date 12/2015 X/XX/XX

BMP-13.00

BMP 14.00. Prefabricated Driving Ground Protection Mat

DESIGN CONSIDERATIONS

Objectives

The purpose of a Prefabricated Driving Ground Protection Mat is to prevent rutting, minimize sediment tracking, protect wetlands from equipment damage, and avoid equipment getting stuck when driving through soft or muddy ground.

Description

Prefabricated Ground Protection Mats are flexible, sturdy fabric mats with ribs, or solid or flexible plastic mats or tiles.

Other Names

Mud Mats, Tundra Mats, Portable Access Mats, Temporary Roadway System.

Applicability

Prefabricated Driving Ground Protection Mats can be used to protect the ground surface from eroding when equipment is driving on it or to protect sensitive areas.

Selection Considerations

Prefabricated Driving Ground Protection Mats come in light- and heavy-duty grades. The grade of the mat needed should be determined based on the size and type of equipment that will use the mat, the frequency of use, and the type of ground the mat is protecting. Mats that are placed over a ground surface that requires preservation may require a heavier grade than mats placed on dirt surfaces without vegetation.

Prefabricated Driving Ground Protection Mats surfaces can be smooth or cleated to provide traction for vehicular traffic or pedestrians. When placed with the cleated side down, the cleats provide additional protection for solid surfaces such as concrete or asphalt surfaces.

- Prefabricated Driving Ground Protection Mats have the ability to interlock to form custom sizes.
- Ground pressure from vehicles may be reduced, causing minimal ground disturbance.
- Prefabricated Driving Ground Protection Mats can be rolled up or stacked for easy transport, storage, and reuse.
- Prefabricated Driving Ground Protection Mats can be washed and reused depending on the amount of wear.

Common Failures or Misuses

- Placement of reinforcing ribs in fabric mats parallel to the direction of traffic.
- Unless properly secured, mats can be dislodged or transported by traffic or high winds.

SPECIFICATIONS

Standard Specification

- 676 – Prefabricated Driving Ground Protection Mat

Drawing

- BMP-14.00 Prefabricated Driving Ground Protection Mat

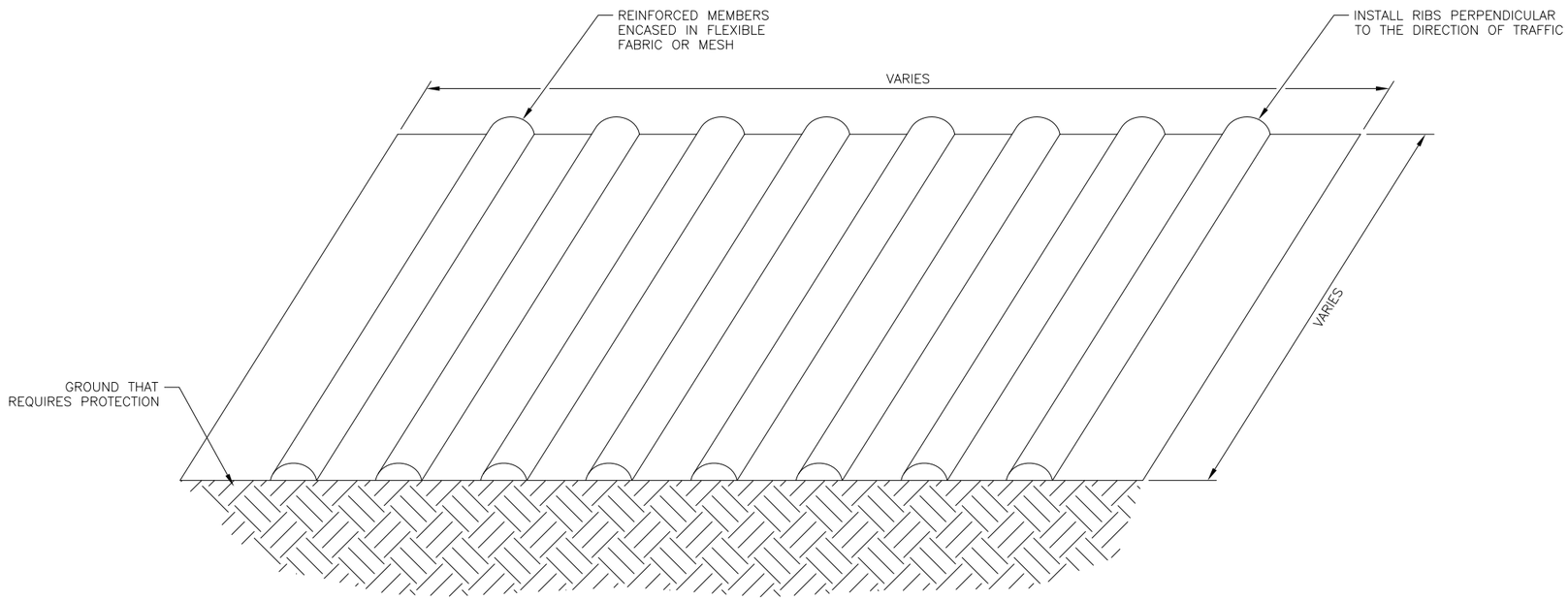

FABRIC MATS
NOT TO SCALE

PREFABRICATED DRIVING GROUND PROTECTION MAT NOTES:

MATERIALS
PREFABRICATED GROUND PROTECTION MAT

INSTALLATION
1. ENSURE THAT THE GROUND IS CLEAR OF LARGE ROCKS OR OBJECTS.
2. LAY THE MAT FLAT ONTO SURFACE.
3. INTERLOCK MULTIPLE MATS TO COVER AREAS THAT REQUIRE PROTECTION.
4. CONNECT THE MATS ACCORDING TO MANUFACTURER'S SPECIFICATIONS.

INSPECTION
1. LOOK FOR SPLIT, TORN, OR UNRAVELLING FABRIC OR BROKEN UNITS.
2. ENSURE THAT THE MATS ARE COVERING AREAS THAT REQUIRE PROTECTION.
3. ENSURE VEHICLES DO NOT DRIVE ON SURFACES OUTSIDE OF THE MATS.
4. INSPECT FOR TRACKOUT.

MAINTENANCE
1. REPLACE DAMAGED MATS.
2. REMOVE SEDIMENT THAT ACCUMULATES ON THE MATS.
3. CLEAN OR REPLACE MATS IF THERE IS EVIDENCE OF TRACKOUT.

REMOVAL
1. REMOVE AND DISPOSE OF THE ACCUMULATED SEDIMENT THEN REMOVE THE MAT.
2. AFTER REMOVAL OF THE MAT AND IF NOT IN WETLANDS, FILL DISTURBED GROUND TO BLEND WITH THE ADJACENT GROUND AND REVEGETATE AS NECESSARY.

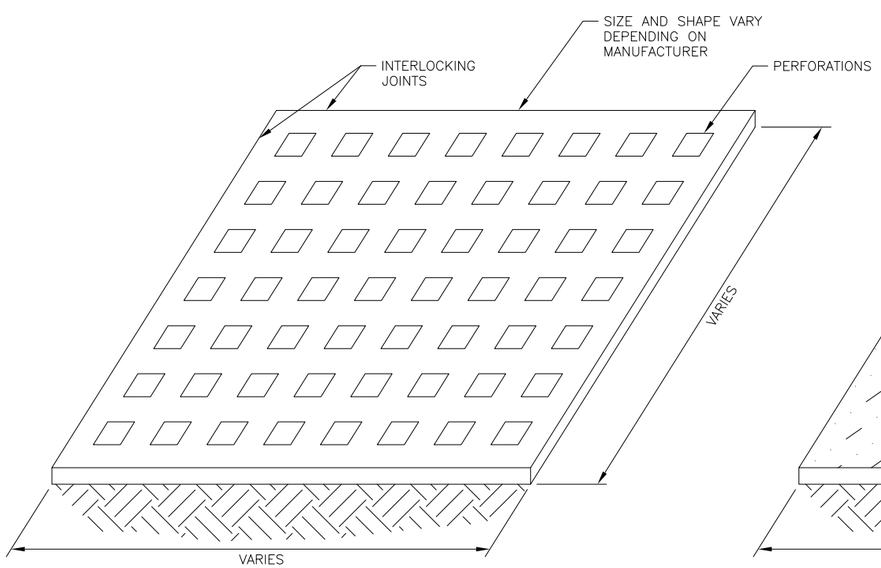

PERFORATED PLASTIC MATS
NOT TO SCALE

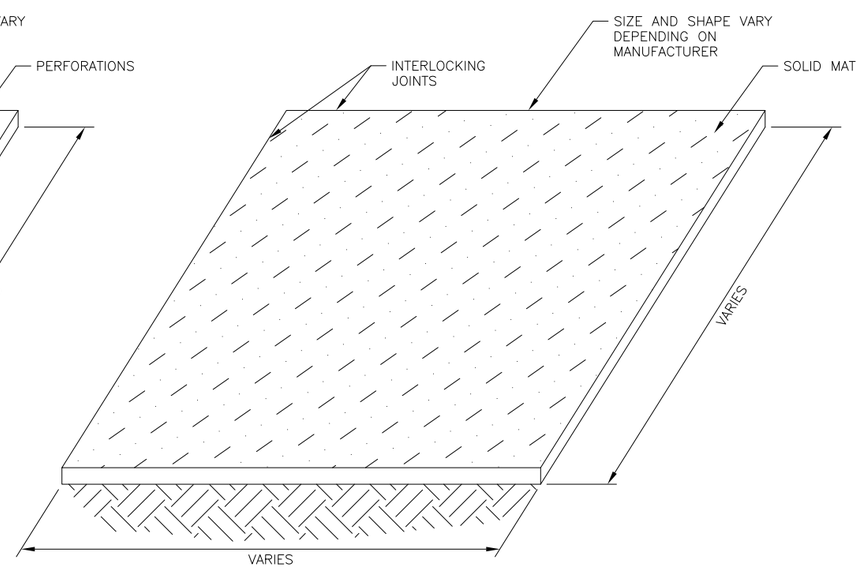

NON-PERFORATED PLASTIC MATS
NOT TO SCALE

REVISIONS		
Date	Description	By

State of Alaska DOT&PF

PREFABRICATED DRIVING GROUND PROTECTION MAT

APPROVED

Date 12/2015 X/XX/XX

BMP-14.00

BMP 15.00. Pumped Stream Diversion

DESIGN CONSIDERATIONS

Objectives

The primary purpose of all temporary diversion methods is to protect water quality by passing upstream flows around the active construction zone. Pumped Stream Diversion also allows in-water construction activities to take place under no-flow conditions, which may allow more efficient construction in a shorter time period.

Description

Pumped Stream Diversion is a temporary bypass system. Temporary dams are constructed upstream and downstream of the work area and water is pumped from a sump above the upstream dam. The water is conveyed around the work area and discharged back into the stream or river downstream of the downstream dam. The conveyance structure may be a pipe, flume, or bermed or excavated channel.

Other Names

Pump-Around, Temporary Diversion, Clear Water Diversion, Stream Diversion.

Applicability

Pumped Stream Diversion is often required during in-stream work that must be done under no-flow conditions and where the existing grade or physical setting is not sufficient for diverting the flow by gravity. For instance, during a culvert replacement, diverted water may need to be piped over the roadway from upstream to downstream. If the roadway crown is higher than the intake point, the grade would not be sufficient for gravity flow and Pumped Stream Diversion might be considered.

Selection Considerations

The designer should have a realistic estimation of project duration and time of year during which the construction activity will take place. If possible, the diversion should be limited to periods of low flow.

The designer must have a reliable estimate of base flow and potential peak flows during the construction period.

The design should consider whether the temporary diversion will cause greater environmental impacts than if the project is constructed without temporary diversion. Factors such as the duration of the project, the sensitivity of the water body, the available area for pumps and bypass channel, the anticipated flow, and the season when the construction work will take place should all be considered.

Additional specific permit requirements including allowable work time periods or mitigation measures may be required by agencies, such as the U.S. Army Corps of Engineers, Alaska Department of Environmental Conservation, Alaska Department of Fish and Game, and Alaska Department of Natural Resources. The designer should allow adequate time to apply for and receive permits, and be cognizant of permit requirements in order to design a system that will meet permit conditions. Permits may dictate the design or layout decisions.

Require that spill prevention and control measures for pumps be provided.

Design

Consider having the Regional Hydraulics Engineer review the design. In addition to the Pumped Stream Diversion plan sheet, include the Temporary Diversion Conveyance plan sheet in the contract.

Flow Rate: Size the system for base flow plus estimated flow from a 2-year 24 hour rainfall event including runoff from drainage area during the anticipated time of construction. Consider tributary area and seasonal rainfall patterns. If there are large paved areas upslope, consider a larger sized system. Specify the flow rate, which will be used by the contractor to properly size the pump.

Pump Sizing: Pump capacity must be sufficient for the design flow, topographic relief, length of discharge line, and other system head losses.

Fish Streams: Consider type and placement of screens or fish proof fences, if necessary in fish-bearing streams.

Temporary Bypass and Dams: Design a diversion conveyance system that is appropriate for the project area. See BMP-34 and BMP-35 Temporary Diversion Conveyance.

Relationship to Other Erosion and Sediment Control Measures

Pumped Stream Diversions may be used when Temporary Diversion Conveyance is not adequate; see BMP-15. Additional dewatering within the work area may be required; see BMP-7 Contained Silt Control System and BMP-9 Excavation Dewatering.

Common Failures or Misuses

- Improper dam and pump sizing for potential high flow events.
- Inadequate energy dissipater at point of discharge into the waterway.
- Conducting diversion activities without confirming local, state, and federal permitting and design requirements.

SPECIFICATIONS

Standard Specification

- 677 – Pumped Stream Diversion

Drawing

- BMP-15.00 Pumped Stream Diversion
- BMP-34.00 and BMP-35.00 Temporary Diversion Conveyance
- BMP-07.00 Contained Silt Control System
- BMP-09.00 Excavation Dewatering

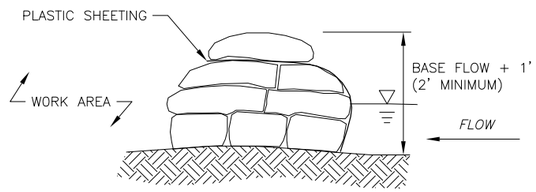

SECTION A–A

SANDBAG DAM
NOT TO SCALE

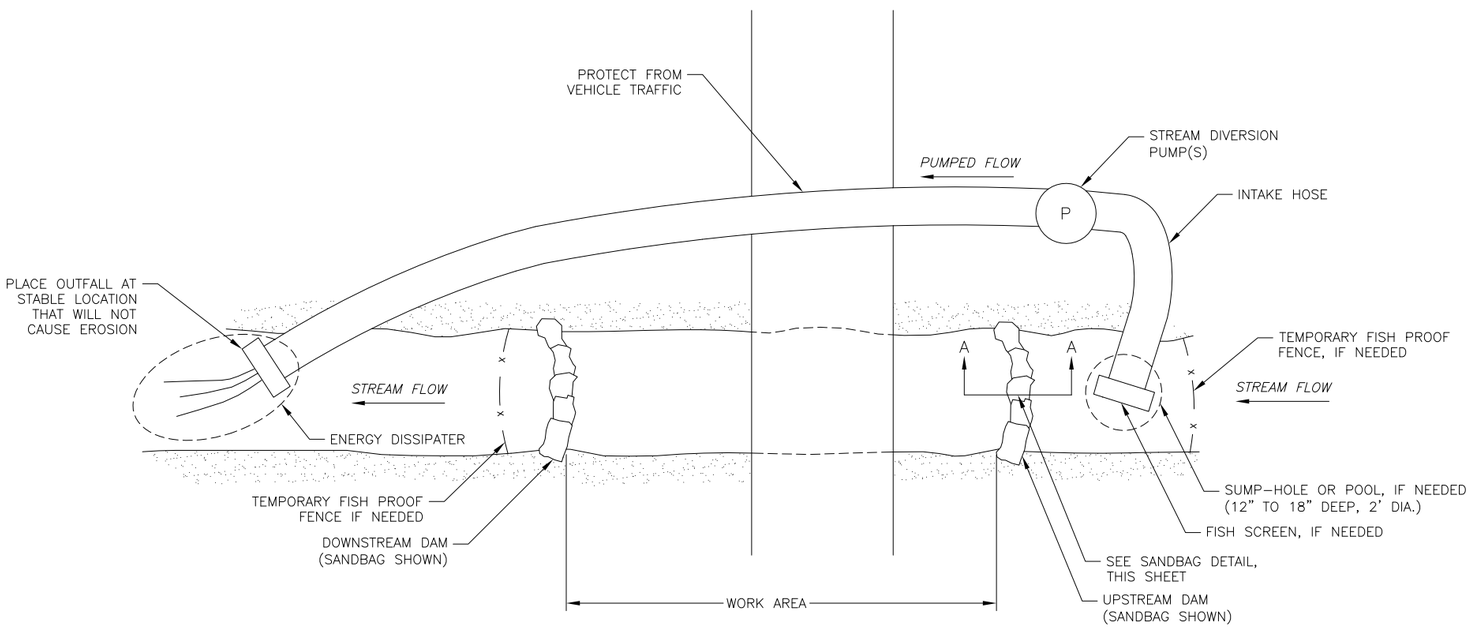

PLAN

PUMPED STREAM DIVERSION
NOT TO SCALE

PUMPED STREAM DIVERSION NOTES:

MATERIALS

DAM MATERIAL: SANDBAGS COVERED WITH PLASTIC SHEETING (30 MIL OR 2 OR MORE LAYERS OF 10 MIL), RIPRAP, STEEL PIPE PLATE, SHEETPILE, INFLATABLE BLADDERS, OR EQUIVALENT.

PUMP: SIZED FOR DESIGN FLOW IN CONTRACT, WITH INTAKE LINE, FITTINGS, AND NOZZLES.

ENERGY DISSIPATER: RIPRAP, SANDBAGS, T–BAR SPREADER, OR EQUIVALENT.

FISH BARRIER: FENCE OR SCREEN, IF NEEDED.

SPILL PREVENTION BMPS.

INSTALLATION

1. COORDINATE WITH DEPARTMENT FOR INSTALLATION OF FISH FENCE, IF NEEDED.
2. INSTALL A CONVEYANCE, SUMP (IF NEEDED), AND INTAKE HOSE.
3. INSTALL THE UPSTREAM AND DOWNSTREAM DAM.
4. PLACE THE PUMP IN AN AREA DESIGNED FOR ITS USE AND OPERATION WITH SPILL PREVENTION MEASURES.
5. INSTALL THE ENERGY DISSIPATER.

INSPECTION

1. WHEN PUMPING, MONITOR PUMPS, INTAKE AND DISCHARGE POINTS. ENSURE THAT PUMPS ARE ADEQUATELY SIZED.
2. INSPECT UPSTREAM AND DOWNSTREAM DAMS FOR OVERTOPPING, BYPASS, UNDERCUTTING, OR OTHER DEFECTS.
3. INSPECT THE CONVEYANCE STRUCTURE FOR LEAKS, EROSION, OR OTHER DEFECTS.
4. INSPECT DISCHARGE POINT FOR EROSION OR FAILURE OF THE ENERGY DISSIPATION MATERIAL.
5. INSPECT THE EQUIPMENT AREA FOR PROPERLY STORED FUEL AND OTHER POTENTIALLY HAZARDOUS SUBSTANCES.

MAINTENANCE

1. REINFORCE OR RESTORE ANY PORTION OF THE DAMS, CONVEYANCE STRUCTURE, OR ENERGY DISSIPATER.

REMOVAL

1. ENSURE STREAM BANKS AND SUMP ARE STABLE BEFORE REMOVAL
2. REMOVE THE DOWNSTREAM DAM FIRST, THEN THE UPSTREAM DAM.
3. REMOVE THE ENERGY DISSIPATER.
4. REMOVE THE INTAKE HOSE.
5. REMOVE THE TEMPORARY CONVEYANCE STRUCTURE. BACKFILL OR REGRADE AND RESTORE TO ORIGINAL CONTOURS.
6. REGRADE AND SEED OR PERMANENTLY STABILIZE ALL DISTURBED AREAS.

REVISIONS

Date	Description	By

State of Alaska DOT&PF

PUMPED STREAM DIVERSION

APPROVED

Date 12/2015 X/XX/XX

BMP–15.00

BMP 16.00. Rock Filter Berm

DESIGN CONSIDERATIONS

Objectives

A Rock Filter Berm is a perimeter sediment control device designed to prevent sediment in silt-laden sheet flow from leaving the construction site. A properly installed berm intercepts sheet drainage, contains sediment on-site, and does not permit spillover or bypass.

Description

A Rock Filter Berm is a gravel berm placed down slope from erosion-susceptible terrain to trap sheet flow run-off before it exits the project site. Intercepted sheet flow pools along the uphill side of the Rock Filter Berm and standing water promotes settling sediment out of suspension. The Rock Filter Berm blocks suspended particles and restricts water exfiltration.

Other Names

Gravel Filter Berm.

Applicability

Rock Filter Berms are applicable where temporary measures are necessary to retain sediment from sheet flow.

Selection Considerations

Barrier locations are chosen based on site features and conditions (e.g., soil types, climate, terrain features, sensitive areas, etc.), design plans, existing and anticipated drainage courses, and other available erosion and sediment controls. Typical barrier sites are at the toe of fill or on side slopes above waterways or drainage channels.

Rock Filter Berms may be difficult to remove when construction is complete. They may be incorporated into stabilized rock embankments or other permanent stabilized features.

Use of this sediment control measure and the level of effort should be commensurate to the potential problem. A Rock Filter Berm is not to be used solely as a project delineator.

Allow room for equipment access during installation, maintenance, and removal that will avoid encroachment on sensitive areas such as wetlands.

Design

Berm Placement: Berms should be placed on level contours at the toe of slope. Provide sufficient area for ponded water on the upgradient side of the berm.

The standard drawing includes a rock type that is typically sufficient and is intended to keep fine soil particles from migrating through the berm.

Relationship to Other ESC Measures

Sediment control measures are secondary to erosion prevention or soil stabilization measures. Rock Filter Berms may be used as part of a sequential system with other temporary or permanent measures such as soil stabilization or revegetation.

Common Failures or Misuses

- Incidents in which berm height is affected, such as vehicular traffic over the berm.
- Berm wash-out due to high levels of impounded water or sediment.
- Berm function impairment due to sediment build-up or other lack of maintenance.
- Release of sediment-laden water through a bypass or gap in the Rock Filter Berm.

SPECIFICATIONS

Standard Specification

- 678 – Rock Filter Berm

Drawing

- BMP-16.00 -- Rock Filter Berm

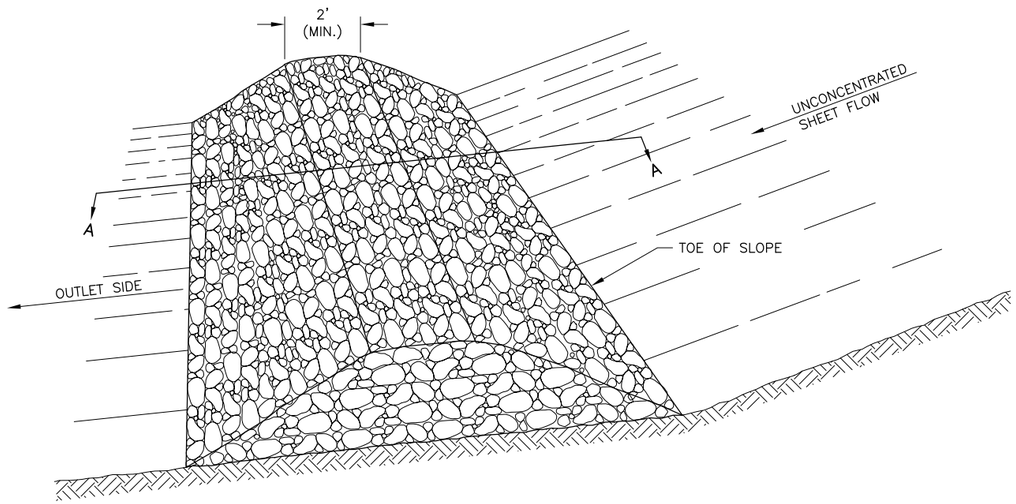

PLAN
NOT TO SCALE

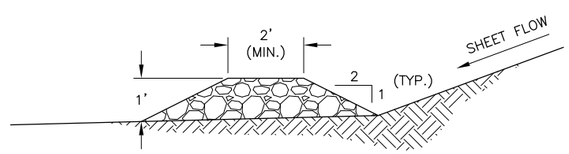

SECTION A–A
NOT TO SCALE

ROCK FILTER BERM NOTES:

MATERIALS
ROCK: WELL GRADED 3–INCH MINUS THAT WILL NOT RELEASE SEDIMENT AND HAS LESS THAN 5 PERCENT PASSING THE #200 SIEVE.

INSTALLATION
1. PLACE THE ROCK BERM AS SHOWN ON THE PLANS WITHIN 24 HOURS AFTER GRUBBING.

INSPECTION
1. OBSERVE FOR BERM CONTINUITY INCLUDING COLLAPSE, DAMAGE, COMPROMISED INTEGRITY, OR OTHER FUNCTIONAL INADEQUACIES.
2. LOOK FOR EVIDENCE OF SEDIMENT FLOW OR EROSION ON THE DOWNHILL EDGE OF THE BERM.
3. NOTE DEPTH OF SEDIMENT BEHIND BERM TO SEE IF SEDIMENT IS CLOSE TO ONE–HALF THE BERM HEIGHT.
4. LOOK TO SEE IF THE BERM IS FILTERING OR WHETHER IT HAS BECOME CLOGGED OR OTHERWISE NON–FUNCTIONING.

MAINTENANCE
1. REPAIR OR RESTORE ANY BERM DISCONTINUITIES, DAMAGE, OR POINTS OF FAILURE.
2. REMOVE ACCUMULATED SEDIMENT BEFORE IT REACHES ONE–HALF OF THE BERM HEIGHT OR ONE–THIRD OF THE AVAILABLE STORAGE IF PROTECTING A WATER BODY OR STORM DRAIN INLET.

REMOVAL
1. INCORPORATE THE ROCK BERM INTO THE SLOPE, UNLESS DIRECTED OTHERWISE. STABILIZE BARE GROUND AND THE FILL SLOPE.

REVISIONS

Date	Description	By

State of Alaska ADOT&PF

ROCK FILTER BERM

APPROVED

Date 12/2015 X/XX/XX

BMP–16.00

BMP 17.00. Rock Slope Armor

DESIGN CONSIDERATIONS

Objectives

The primary purpose of Rock Slope Armor is to protect slopes with erodible or ice-rich soils from wind and water erosion, including rainfall, sheet flow run-on, or seepage. Rock Slope Armor may temporarily stabilize slopes until final stabilization is achieved, or may serve as final non-vegetative permanent stabilization on slopes when implemented in accordance with the Alaska Construction General Permit (Alaska CGP).

Description

Rock Slope Armor is a layer of rock, such as ditch lining rock, cobble rock, concrete rubble, or riprap, which is hand or mechanically placed on an erodible soil slope.

Other Names

Rock Slope Protection.

Applicability

Rock Slope Armor is applicable to:

- Slopes where unanticipated flows are encountered. On a cut slope, this could be due to run-on. A temporary diversion should be installed to allow construction of the cut slope, but the rock slope armor provides permanent stabilization.
- Fill slopes around the inlet and outlet of culverts.
- On bridge abutments above the design water elevation and at points where bridge scuppers discharge near or on abutments.
- The downside of roadway superelevations where the ground surface slopes away from the roadway (foreslopes).
- On slopes where groundwater seeps or springs occur.
- On cut slopes into ice-rich soils or that seep permafrost melt.

Selection Considerations

The designer must have information about the slope length, steepness, embankment or cut slope soil type and gradation, groundwater seepage, and potential for melting permafrost. The ditch may also need to be lined.

This best management practice (BMP) is not intended for stream banks, channel bottoms, the side slopes of waterbodies below the design high water surface elevation, or for shorelines subject to wave action, because these situations require more design.

Geotechnical expertise is required when using this BMP for embankments over 20 feet in height, embankments on soft or ice-rich soils or potentially unstable ground, embankments that could impact adjacent structures, if there is a potential for a significant groundwater gradient beneath the cut slope or embankment, or if surface water levels are significantly higher on one side of the embankment than the other.

Rock size and range of sizes should be considered. A well graded mix, with rocks in a range of sizes, should be selected. Rocks of uniform rock size, or a rock mix with very large and very small rocks with few intermediate-sized rocks (a "gap-graded" mixture), is more likely to become dislodged causing the armor to fail.

Rock shape should be considered. Angular or sub-angular rocks have better performance than round rocks because they are less likely to become dislodged. Round rock should not be used on slopes steeper than 2:1. Soundness and durability should be indicated.

The designer may specify whether rock is hand placed or spread mechanically. When placing by hand, rocks should be placed so that the longitudinal axis is perpendicular to the slope face and fall line. Rocks may also be dumped and spread in layers using a bulldozer or other means, in which case care should be taken not to damage underlying filter material (if specified). In either case, the larger rocks should be placed in the footing trench, segregation by rock size should be minimized, and rocks should be placed so there is a minimum of voids.

When considering rock for bridge scuppers or downspout energy dissipaters, consider whether downspout extenders to route water to vegetated or stabilized areas could be used instead.

Design

Slope of Area to be Protected: Slopes between 1.5:1 and 3:1. Flatter slopes should be seeded or revegetated; or, if in a location where vegetation cannot be established (such as areas shaded by bridges), consider a pea gravel layer. Steeper slopes require geotechnical engineering and a specification for angular rock.

Rock Properties: Specify rock properties or criteria, such as durability, wear (for instance, per AASHTO T 96), minimal clay lumps and friable particles (for instance, per AASHTO T 112), or shape.

Armor Rock Size: When used on a slope, specify a rock size based on steepness of slope, soil type, and expected seepage pore water pressure. Specify whether a key-in trench is required at the toe of the slope and, if so, the key-in dimensions.

Size rock for bridge scuppers or downspout energy dissipaters based on expected flow velocity.

Rock Gradation: Design particle size distribution of the armor rock mix. Once a size range has been designed, the designer can reference an Alaska Department of Transportation & Public Facilities (ADOT&PF) riprap, rock, ditch lining, or aggregate specification (e.g. ADOT&PF's Standard Specification for Highways or Standard Specifications for Airport Construction) if one is available or create a specification for the project's bid documents.

Rock Layer Thickness: Unless rip rap is specified, the designer needs to specify the thickness. If using riprap, the layer thickness will be defined by the riprap classification. Typically, only one layer is needed.

Rock Layer Height and Length: The designer needs to specify this on the plans.

Filter Fabric or Layer: A filter fabric or filter layer should be specified if either of the following apply:

$$\frac{D_{15}\ rock\ armor\ layer}{D_{85}\ fill\ or\ cut\ slope\ soil} > 5$$

or

$$\frac{D_{15}\ rock\ armor\ layer}{D_{15}\ fill\ or\ cut\ slope\ soil} > 40$$

Other Designer Responsibilities: The designer needs to add slope preparation and run-on diversion, as appropriate.

Relationship to Other Erosion and Sediment Control Measures

This should be a BMP of last resort, except in ice-rich permafrost slopes, where it is the preferred treatment. Install upgradient controls to divert water from the slope shoulder where possible. Other temporary or permanent stabilization methods should be considered, including: Rolled Erosion Control Product (RECP), Hydraulic Erosion Control Product, (HECP), Compost Blanket, Temporary Seeding, and Permanent Seeding.

Rock Slope Armor is different from Slope Drain in that it is used to stabilize a slope in response to dispersed or minimally concentrated flow; whereas a Slope Drain is used to convey concentrated flows down a slope to an appropriate discharge location.

Common Failures or Misuses

- Slope too steep for rock size results in rock displacement and downslope movement of rocks.
- Failure to install up-gradient stormwater controls.
- Rock not properly graded results in downslope movement of rocks.

SPECIFICATIONS

Standard Specifications

- 679 – Rock Slope Armor
- 610-2.01 Ditch Lining (0-50 percent less than 3-inch; up to 8-inch maximum)
- 611-2.01 Riprap
- 703-2.10 Porous Backfill (3-inch minus rock)

Drawing

- BMP-17.00 Rock Slope Armor

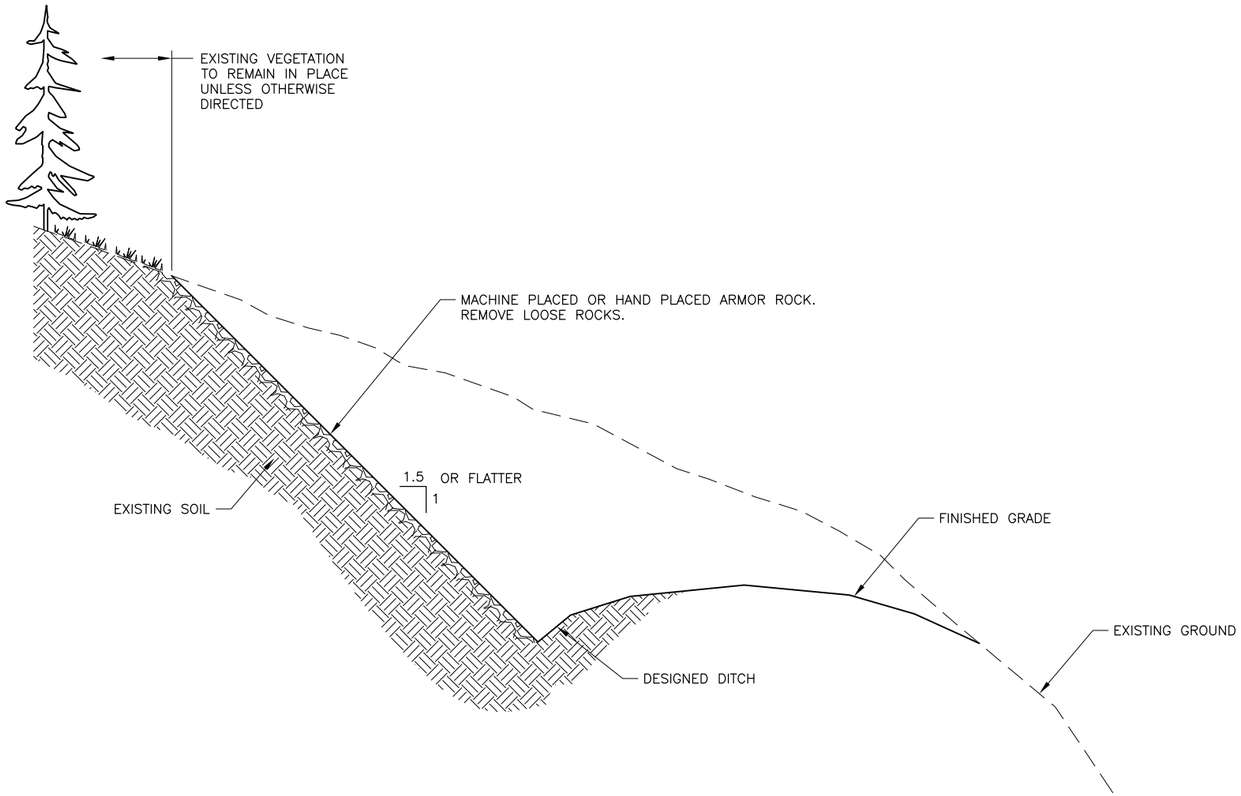

PROFILE

ROCK SLOPE ARMOR

NOT TO SCALE

ROCK SLOPE ARMOR NOTES:

MATERIALS

ROCK: COBBLE, GRAVEL, CRUSHED GRAVEL, CRUSHED ROCK, OR ANY COMBINATION OF THESE, MEETING SPECIFICATIONS AT 610–2.01 (DITCH LINING), 611–2.01 (RIPRAP), OR 703–2.10 (POROUS BACKFILL). USE ANGULAR ROCK ON SLOPES STEEPER THAN 2:1.

INSTALLATION

1. PREPARE THE SLOPE AS DESCRIBED IN THE CONTRACT OR AS DIRECTED BY THE ENGINEER.
2. MINIMIZE CONCENTRATED RUN–ON FROM CROSS–GRADIENT AND UP–GRADIENT SOURCES BY SITE GRADING AND/OR DIRECTING OR DIVERTING RUN–ON OR RUN–OFF AWAY FROM THE SLOPE FACE.
3. IF SPECIFIED ON THE PLANS OR DIRECTED BY THE ENGINEER, INSTALL THE FILTER FABRIC OR FILTER LAYER. AFTER CLEARING DEBRIS FROM SLOPE INSTALL FILTER FABRIC ACCORDING TO MANUFACTURER'S RECOMMENDATIONS.
4. INSTALL THE ROCK STARTING AT THE BOTTOM OF THE SLOPE AND PROCEEDING IN HORIZONTAL LIFTS UPWARDS.
5. PLACE STONES TO THE THICKNESS, HEIGHT, AND LENGTH SHOWN ON THE PLANS. DUMP SMALL ROCKS AND SPREAD BY BULLDOZER OR OTHER SUITABLE EQUIPMENT. DURING SPREADING, DO NOT CRACK THE ROCK.

INSPECTION

1. INSPECT FOR DAMAGE TO THE ROCK ARMOR, INCLUDING DISPLACED STONES, SLUMPING, AND EROSION AT EDGES, ESPECIALLY DOWNSLOPE.

MAINTENANCE

1. REPAIR DAMAGED ROCK ARMOR SLOPE OR EDGES AS SOON AS PRACTICABLE AND BEFORE FURTHER DAMAGE CAN OCCUR.

REVISIONS

Date	Description	By

State of Alaska DOT&PF

ROCK SLOPE ARMOR

APPROVED

Date 12/2015 X/XX/XX

BMP-17.00

BMP 18.00. Rolled Erosion Control Products for Slopes

DESIGN CONSIDERATIONS

Objectives

Rolled erosion control products (RECPs) are installed on slopes to provide erosion control and soil stabilization.

Description

RECPs are manufactured mats or coverings that are unrolled and anchored to unvegetated soil.

The Erosion Control Technology Council (ECTC) (www.ectc.org) defines subcategories depending on the materials used in the manufacturing and the intended purpose of the product. The following describes the various types of RECPs:

- Temporary Degradable RECPs – These products can be expected to last from between three months and three years depending on their composite materials and site climate conditions. Commonly called blankets, the materials typically used in the manufacture of temporary degradable RECPs consist of various fibers, straw, flax, coconut (coir), and wood shavings (excelsior) sewn to or between netting made of photodegradable plastics or biodegradable netting. Alternatively, the product may consist of natural fibers (such as jute or coir) woven into mats that have varied weights per square yard. Typically the greater the weight per unit of area the stronger the product and the longer it will last.

- Turf Reinforcement Mats (TRMs) – Permanent, non-degradable, UV-resistant materials designed to resist erosion in areas exposed to high shear stresses. TRMs can be used to convey concentrated flows while supporting the establishment of vegetation. Applications include the replacement of conventional riprap for down-drains and at culvert outlets.

Other Names

- Erosion control geotextile, erosion control blankets (ECB), erosion control mat.

Applicability

RECPs are used where seeding and mulching alone are inadequate to stabilize soil. RECPs offer greater assurance where mulch must be anchored and other methods, such as crimping or tackifiers, are unfeasible. Applications range from coverings for temporarily inactive construction sites to long term permanent protection of steep slopes.

Selection Considerations

The designer must select the type of RECP based on site conditions, climate conditions, timing of installation, and field conditions in the areas of installation for access and anchor placement.

- All RECPs must be selected based on the expected functional longevity required to protect the seedbed and prevent erosion during the vegetation establishment period and for the expected shear stress the product will be exposed to. Evaluate the following:
  - *Duration of need, temporary (e.g. 3 months up to 2 years) vs. permanent (2-10 years)*
  - *Slope length*
  - *Slope gradient (e.g. flatter than 3:1, 2:1, or 1:1 or steeper)*
  - *Soil type and erodibility*
  - *Seasonal temperature and weather patterns; regional precipitation distribution*
  - *Vegetation needs, especially where germination conditions are not optimal*

- In general, the longer the product must last the greater the shear stress resistance is needed. The time required for vegetation establishment should be exceeded by the product's functional longevity. Selecting RECP strength is a function of the expected duration and velocity of any surface flows over the blanket and is decided by considering the shear stress resistance in the RECP specification.

- Details regarding product longevity and applications for slopes with consideration for expected shear stresses and slope steepness are available from the ECTC specifications at www.ectc.org. Use the design selection tables to select the product type based on the required longevity to ensure vegetation establishment and

the necessary strength to resist the expected shear stress to which the RECP will be exposed. ECTC has four charts for degradable RECPs: Ultra Short-Term; Short-Term; Extended-Term; and Long-Term. To use these charts, you will need to know the maximum slope gradient and the C-Factor. The C-Factor is the cover management factor in the Revised Universal Soil Loss Equation (RUSLE). C-Factors can be determined from tables and are a function of the mulch application rate and type of the seeding. From the ECTC charts for degradable RECPs, determine the maximum shear stress and minimum tensile strength to require for the RECP and add these to the specification. Also add the RECP to the Materials Certification List.

- Coordinate with the regional environmental section to determine if there are wildlife or fish concerns that would influence the selection of the type of RECP netting. Natural fiber netting may be preferable to synthetic based on installation location and wildlife entanglement concerns.

- Anchors: The designer must consider the type and number of anchors needed for each site. Manufacturer's specifications are a minimum standard to be used for guidance. Designers may increase the length and numbers of anchors based on site conditions. Specification 754-2.02 calls for anchors that are applicable in typical situations. Designers must consider soil cohesion with regard to anchor length. Sandy soils will require longer anchors as the soil is less cohesive. Designers should also call for more anchors or longer anchors if the location is windy. Designers should consider whether the site will be mowed and if so, may not want to specify metal anchors. Site topography may require more anchors than indicated in standard drawings to ensure complete contact with the soil surface.

- Installations that may be exposed to lateral flow, wave action, or free-board water movement and forces require trenching of the exposed edges to ensure product effectiveness.

- Proper installation is critical to the effectiveness of RECPs. Runoff must be prevented from concentrating under the RECP and causing erosion under the product. Note that typical details are for illustration only and all RECPs must be installed per manufacturer's guidelines as a minimum and in conformance with the project specifications.

- If there is a situation in which the RECP would be removed, it should be specified on the drawing. Otherwise, it is assumed that both temporary and permanent RECPs will remain and not be removed at the end of construction.

Relationship to Other ESC Measures

RECPs can complement seeding and revegetation. Byproducts of RECP decomposition add mulch benefits and soil enhancement. RECPs can be used in conjunction with benching or other runoff velocity slowing or redirecting measures. RECPs aid in dust control.

Common Failures or Misuses

- Improper installation is the most common problem with RECPs. Many installations do not trench-in the RECP at the top of the slope, allowing surface flows to get under the RECP and resulting in seed and soil washing away.

- Improper anchoring is also found to be a common cause of RECP failure. Inspectors must verify that the RECP has been properly anchored according to the specifications for the particular slope steepness, soil cohesion, and expected sheer stress. Anchoring must ensure that the product is in complete contact with the soil surface.

SPECIFICATIONS

Standard Specifications

- 654 – Rolled Erosion Control Product for Slopes
- 754 – Rolled Erosion Control Products

Drawing

- BMP-18.00 – Rolled Erosion Control for Slopes

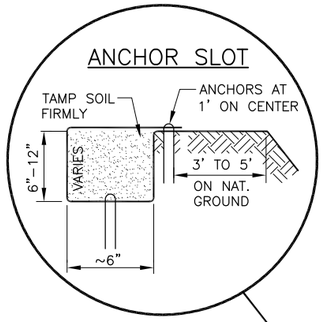

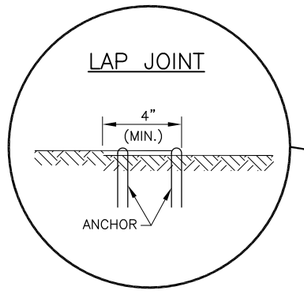

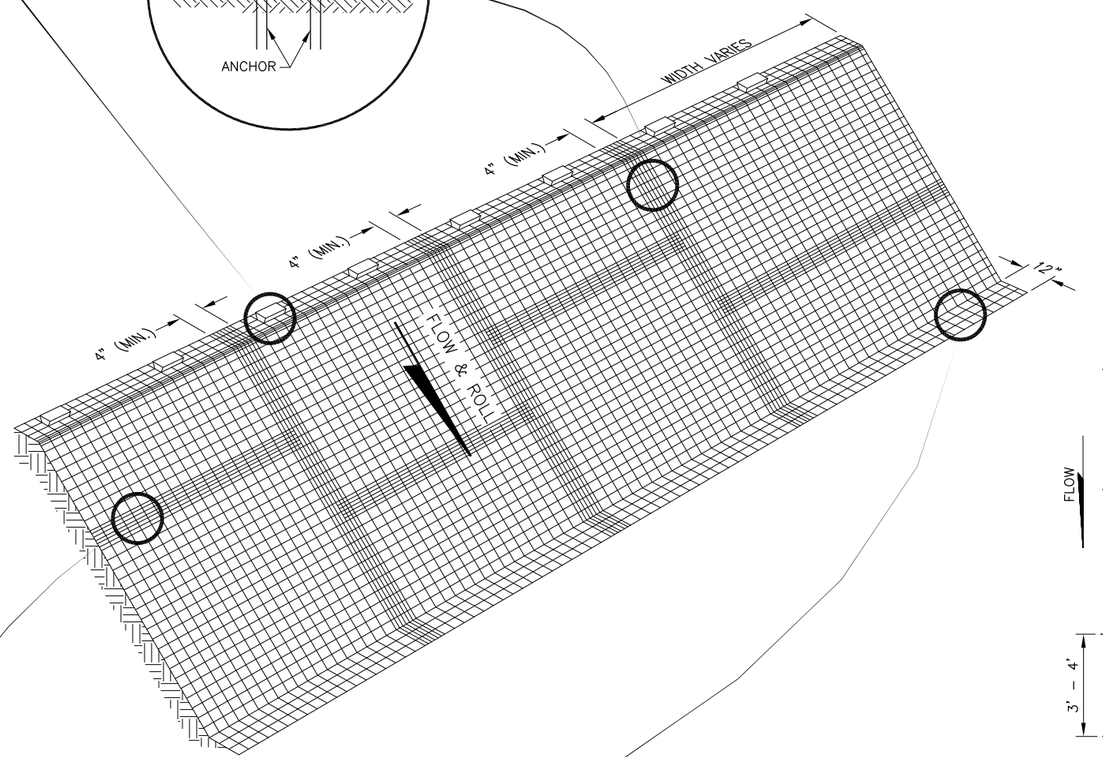

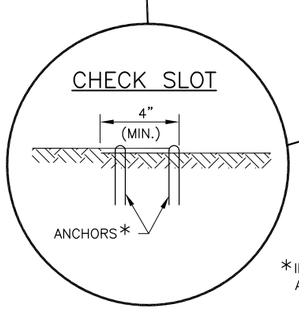

MATERIALS USED N CHECK SLOT SHALL OVERLAP 4"

*INSTALL WITH TWO ROWS OF STAGGERED ANCHORS 4" APART AND 4" ON CENTER.

NOTES

1. INSTALL AND ANCHOR IN ACCORDANCE WITH THE MANUFACTURER'S SPECIFICATIONS AND RECOMMENDATIONS OR AS APPROVED BY THE ENGINEER.
2. SMOOTH SOIL UNDER RECP AS MUCH AS POSSIBLE TO ENSURE INTIMATE CONTACT BETWEEN THE RECP AND THE SOIL.
3. INSTALL TO ENSURE THE RECP MAKES INTIMATE, CONTINUOUS CONTACT WITH THE GROUND SURFACE.

CHECK SLOT SPACINGS

SLOPE	SPACING
LESS THAN 4%	75'
4% OR MORE	50'

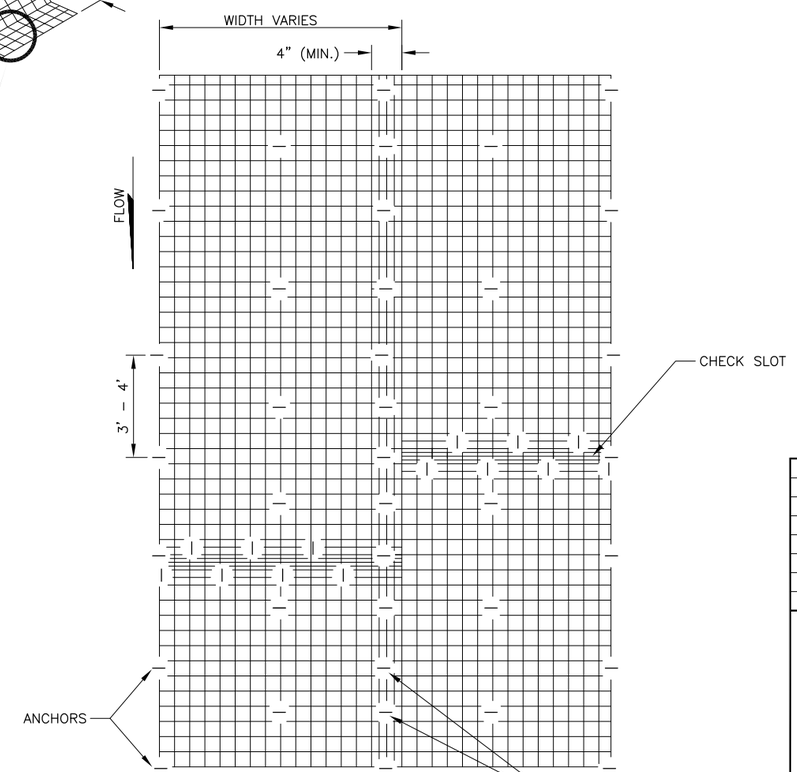

PLAN VIEW
ANCHORING DIAGRAM

NOT TO SCALE

REVISIONS		
Date	Description	By

State of Alaska
Department of Transportation
& Public Facilities

ROLLED EROSION CONTROL FOR SLOPES

APPROVED

Date 12/2015 X/XX/XX

BMP-18.00

BMP 19.00. Silt Curtain

DESIGN CONSIDERATIONS

Objectives

Silt Curtains are used to isolate work areas within or adjacent to water bodies. When properly installed silt curtains function as a floating silt fence and retain sediment within their boundaries limiting the sediment discharged to the water body.

Description

Silt Curtains are barriers constructed of geotextile fabric of varying length and fabricated with floats sufficient to maintain buoyancy, and weights to keep the fabric skirt held in place below the water level. The floats are encased in or attached to the geotextile or membrane material. The skirt may be manufactured to any depth sufficient to provide the desired barrier for the work area. As the length of material is increased, the depth of isolation increases; however, the float sizing and weights must be increased accordingly. Typically the weight is constructed of metal anchor chain sewn into the bottom of the skirt. The anchor chain must be heavy enough to resist displacement by tides and flowing water. Anchor points to secure the curtain in place are usually necessary.

Other Names

Flotation Silt Curtain, Turbidity Curtain.

Applicability

Silt Curtains can be used to isolate in-water work by surrounding work areas or water intake structures. They are most common for shoreline work that will involve the disturbance of soil down to or below the waterline. When installed from bank to bank along a water body and properly anchored, a Silt Curtain will reduce the release of sediments from the permitted work area.

Selection Considerations

- When designing for work area isolation, the required depth must first be considered. If the required depth and 0.5 feet of freeboard can be attained with Silt Fence, Silt Fence may be used.
- The anchor weight or chain, if in contact with the water body bottom, may cause damage to near shore habitat. Wave action, tidal influences, and wind can create motion of the weights or chain impacting areas that should be protected.
- With the desired depth selected, the float sizing and appropriate weight can then be designed to keep the Silt Curtain in a vertical position with regard to the installation location. The standard drawing does not specify the gap dimension, so the designer needs to add it. The designer should also specify the anchor chain length.
- Anchor positions to secure the Silt Curtain may be designated when the desired installation location is identified.
- Silt Curtains should not be placed across the flow as this will reduce the effectiveness of the barrier. The floats can be pulled down below the surface or the weights can be pushed aside by the flow and result in the release of sediments to the water body.
- If the area within the Silt Curtain boundary is also habitat for plants and animals, the concentration of sediment in these areas could cause negative impacts. Consider permit conditions and environmental commitments in the design.

Design

Designers must specify the depth, length, and location of the curtain to allow for the effective retention of sediment and completion of the work. Designers must also specify whether the curtain fabric must be pervious or impervious.

In determining the depth of the Silt Curtain, consider whether the water body is still water or subject to tide, wave, or wake disturbance or fluctuating river levels, as well as the substrate and nature of the aquatic habitat. Based on these considerations, specify a gap dimension for the distance between the bottom of the Silt Curtain and the sea floor or water body bottom to reduce damage to the floor or bottom and to near shore habitat.

The fabric may be specified to allow for more or less flow to pass through the fabric. Membrane material may be used in the construction to create an impermeable barrier that will isolate an area completely.

Floats should have high visibility color markings.

Relationship to Other Erosion and Sediment Control Measures

Silt Curtains can complement dewatering activities and in-water work activities.

SPECIFICATIONS

Standard Specification

- 680 – Silt Curtain

Drawing

- BMP-19.00 Silt Curtain

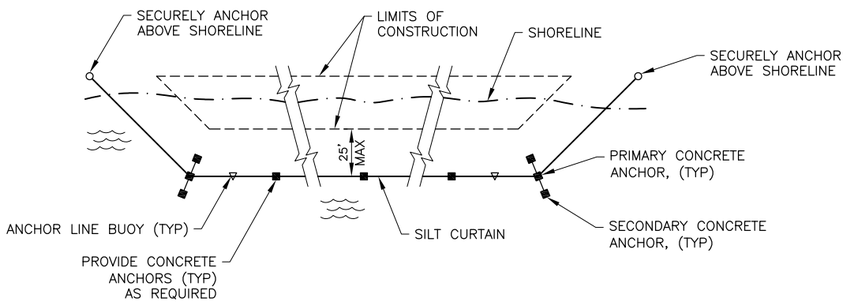

PLAN

NOTES:
1. ALL EXPOSED AND DISTURBED SHORELINE SHALL BE ENCLOSED WITH SILT CURTAIN.
2. SECONDARY ANCHORS SHALL BE PLACED ON ALL CORNERS AS REQUIRED TO SECURE SILT CURTAIN IN PLACE.

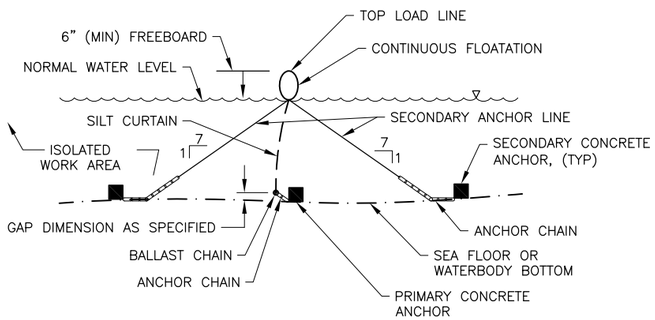

SECTION

TYPICAL SILT CURTAIN
NOT TO SCALE

SILT CURTAIN NOTES:

MATERIALS

FLOTATION SILT CURTAIN:
1. PROVIDE COMMERCIAL MANUFACTURED SILT CURTAIN, WITH DEMONSTRATED ABILITY TO TRAP AND HOLD SEDIMENT AND DEBRIS WITHIN THE DEFINED WORK AREA, AND WITH ANCHOR LINES, BALLAST, AND FLOATS THAT ARE ATTACHED TO THE SILT CURTAIN AT REINFORCED ATTACHMENT POINTS PROVIDED BY THE MANUFACTURER.
2. OBTAIN APPROVAL OF PROPOSED FLOTATION SILT CURTAIN PRIOR TO SHIPMENT TO THE PROJECT SITE. PROVIDE SUBMITTALS THAT INCLUDE CERTIFICATES OF MATERIALS TESTING, MANUFACTURER'S PRINTED INSTRUCTIONS AND/OR SHOP DRAWINGS, AND PROPOSED INSTALLATION/REMOVAL PROCEDURES.
3. CURTAIN FABRIC SHALL BE PERVIOUS GEOTEXTILE MEETING AASHTO M 288 FOR TEMPORARY SILT FENCE OR IMPERVIOUS COATED FABRIC SUCH AS NYLON REINFORCED POLYVINYL CHLORIDE, TREATED POLYPROPYLENE/POLYESTER FABRIC, OR APPROVED EQUAL, SEE CONTRACT.
4. PROVIDE A CURTAIN TALL ENOUGH TO EXTEND FROM THE BOTTOM OF THE WATER COLUMN TO THE WATER SURFACE, LESS THE GAP DIMENSION SPECIFIED IN THE PLANS. CONSIDER THE PREDICTED TIDE FLUCTUATIONS OR RIVER FLOWS WHEN DETERMINING THE HEIGHT OF THE CURTAIN.

FLOTATION:
1. PROVIDE FLOTATION CONSISTING OF RIGID, CLOSED CELL EXPANDED POLYSTYRENE, ETHAFOAM, OR POLYETHYLENE FLOATS ATTACHED TO THE TOP OF THE SILT CURTAIN ALONG ITS ENTIRE LENGTH. PROVIDE FLOTATION MATERIAL WITH PROTECTION FROM MECHANICAL DAMAGE AND DETERIORATION THAT WOULD CAUSE POLLUTION.
2. EMPLOY FLOTATION THAT PROVIDES THE CURTAIN WITH A MINIMUM OF FREEBOARD WITHOUT GAPS. ENSURE THAT THE BUOYANCY RATIO (WEIGHT OF DISPLACED FLUID TO BARRIER WEIGHT) IS GREATER THAN 3:1.
3. PROVIDE HIGH VISIBILITY COLOR MARKING FOR THE FLOTATION DEVICES.
4. PROVIDE MANUFACTURER-INSTALLED GROMMETS OR EQUIVALENT TO REINFORCE STRESS POINTS AND PROVIDE ATTACHMENT POINTS TO ENSURE PROPER ANCHORING.

LINES: PROVIDE ANCHOR LINES AND TOP AND BOTTOM LOAD LINES, AS REQUIRED, THAT ARE MINIMUM 1/2-INCH DIAMETER NYLON ROPE.

ANCHORS: PROVIDE CONCRETE ANCHORS IN THE SIZE AND NUMBER REQUIRED TO MAINTAIN THE CURTAIN IN POSITION FOR PROPER AND CONTINUOUS OPERATION ONCE DEPLOYED.

BALLAST: PROVIDE BALLAST CHAIN OF MINIMUM 1/2-INCH DIAMETER GALVANIZED STEEL WITH BALLAST CHAIN SEWN INTO A HEM AT THE BOTTOM OF THE CURTAIN AND SECURED TO THE MATERIAL OF THE HEM TO PREVENT SHIFTING OR ACCIDENTAL REMOVAL.

HANDLING AND INSTALLATION

1. SILT CURTAIN PLAN:
   a. SUBMIT A SILT CURTAIN PLAN FOR DEPARTMENT REVIEW AND APPROVAL.
   b. THE SILT CURTAIN PLAN MUST USE MANUFACTURER'S SPECIFICATIONS AND RECOMMENDATIONS.
   c. THE SILT CURTAIN MUST BE ANCHORED AND SECURED SUFFICIENTLY TO WITHSTAND WIND, WAVES, PROPELLER WASH, RIVERINE FLOW, AND TIDAL FORCES REASONABLY EXPECTED AT THE SITE.
2. JOINING PANELS/SECTIONS:
   a. CONNECT OR SEW INDIVIDUAL PANELS/SECTIONS OR SEW TOGETHER IN THE FIELD, FOR EASE OF HANDLING AND TRANSPORTATION.
   b. DO NOT USE HEAT WELDING METHODS TO JOIN PANELS.
   c. JOIN THE PANELS IN A MANNER THAT WILL PREVENT SILT, SEDIMENT, DEBRIS, OR TURBIDITY TO MIGRATE FROM THE WORK AREA.
   d. IF JOINTS ARE SEWN TOGETHER, USE POLYESTER TWINE THREAD HAVING A TENSILE STRENGTH OF 350 LBS, AS DETERMINED BY ASTM 4268, TO MAKE DOUBLE ROW OF STITCHES THAT WILL NOT UNRAVEL IF BROKEN.
3. INSTALL SILT CURTAIN PRIOR TO STARTING IN-WATER WORK AS SPECIFIED IN THE ENVIRONMENTAL PERMITS.
4. ENSURE THAT THE FLOTATION IS SECURED TO THE BOOM TO PREVENT SHIFTING OR SLIPPING OF THE CURTAIN.
5. WEIGHT THE BASE OF THE CURTAIN WITH BALLAST SO THAT IT WILL REMAIN IN A VERTICAL POSITION.
6. PROVIDE ANCHORS IN THE SIZE AND NUMBER REQUIRED TO MAINTAIN THE CURTAIN IN POSITION FOR PROPER AND CONTINUOUS OPERATION ONCE DEPLOYED.
7. ATTACH ANCHOR CHAINS BETWEEN THE ANCHOR LINE AND ANCHOR TO PREVENT LINE FOULING, TO LOWER THE ANGLE OF LOAD PULLING ON THE ANCHOR, AND TO ACT AS A SHOCK ABSORBER.
8. EMPLOY ANCHOR LINE BUOYS TO HELP PREVENT LINE ENTANGLEMENT AND STRESS ON THE BOOM, IF NEEDED.

INSPECTION

1. INSPECT FOR VISIBILITY ABOVE THE WATER SURFACE ALONG THE ENTIRE LENGTH OF THE SILT CURTAIN.
2. INSPECT FOR 0.5 FEET OF FREEBOARD ABOVE THE WATER SURFACE DURING CALM CONDITIONS.

MAINTENANCE

1. MAINTAIN THE SILT CURTAIN AS REQUIRED IN THE INSTALLATION NOTES.
2. ADJUST FLOTATION TO MAINTAIN VISIBILITY AND FREEBOARD ABOVE WATER SURFACE.

REMOVAL

1. THE ENGINEER MUST APPROVE REMOVAL.
2. PREVENT RE-SUSPENSION OF SEDIMENT INTO THE WATER WHEN REMOVING THE CURTAIN. CONDUCT THE REMOVAL DURING PERIODS OF CALM WEATHER. REMOVE THE CURTAIN CAREFULLY TO MINIMIZE THE RELEASE OF TRAPPED SEDIMENT AND DEBRIS. DO NOT DRAG THE CURTAIN WHILE IN CONTACT WITH THE SEA FLOOR OR WATERBODY BOTTOM.

REVISIONS

Date	Description	By

State of Alaska DOT&PF

SILT CURTAIN

APPROVED

Date 12/2015 X/XX/XX

BMP-19.00

BMP 20.00. Silt Fence

DESIGN CONSIDERATIONS

Objectives

The purpose of Silt Fence is to trap sediment and prevent it from being transported out of the project area to another area, or to a water body.

Description

Silt Fence is geotextile fabric secured to posts and secured in a trench, and/or with sandbags or drain rock.

Other Names

Geotextile for Sediment Control, Sediment Barrier.

Applicability

Silt Fence is used downslope from erosion-susceptible terrain to trap sheet flow run-off before the drainage exits the project site. Adequate space must be provided for pooled water on the uphill side of the fence.

Barrier locations are chosen based on site features and conditions (e.g. soil types, climate, terrain features, sensitive areas, etc.), design plans, existing and anticipated drainage courses, and other available erosion and sediment controls. Typical barrier sites are catchpoints beyond the toe of fill, or on sideslopes above waterways or drainage channels.

Although drainage in contact with the fence is to some degree filtered by the geotextile, the fabric's small pores not only block larger-sized eroded particles but also severely restrict water exfiltration rates and behaves like a dam. For this reason, Silt Fences are not to be used for concentrated flows in continuous flow streams or ditches; or as check dams.

Silt Fence can be installed in standing water to provide time for particles to settle.

Silt Fences are used to encircle stockpiled erodible material to prevent off-site sediment transport.

Since Silt Fence installation can cause significant damage, alternative best management practices (BMPs) should be considered for installation instead of Silt Fence. Use Fiber Rolls, compost socks, brush bundles to filter small amounts of sediment in shallow gullies or ditches. Temporary settlement basins, gravel berms, or foam barriers can be used as alternatives to Silt Fence.

Do not use Silt Fence on airport runways, taxiways, aprons, or within the Runway Safety Areas.

Selection Considerations

Use of sediment control measures and the level of effort should be commensurate with the potential problem. Silt Fence is not to be used solely as a project delineator (see Site Delineation, BMP-55).

- Use of a Silt Fence sediment control measure is usually more complex, expensive, and maintenance-prone than other sediment control measures.
- Consider impacts of the fence installation, maintenance, and removal on sensitive areas needing protection (e.g. avoid equipment encroachment on wetlands).
- Consider potential undesirable effects of fence placement (e.g. a trench in ground that will not readily "heal" after fence removal; undesirable effects of extent or depth of ponded water, etc.)
- An equipment access route and space for fence installation, maintenance, and removal must be available without encroaching into sensitive areas or off the project limits.
- Wire reinforcement can be used with Silt Fence by backing the geotextile fabric with chain link, polymeric mesh, or welded wire fencing. Below is a list of considerations for adding wire reinforcement to Silt Fence installation:
    - Consider using wire reinforcement and longer posts to resist overturn.
    - Consider using wire reinforcement in areas of high wind.
    - Consider using wire reinforcement for standing water installations.

Types of Silt Fence for Purchase:

- *With Pockets:* Sewn-in pocket Silt Fence is geotextile that has factory-sewn pockets for the posts and does not require post fasteners.
- *Without Pockets:* Silt Fence without pockets is geotextile fabric that requires fasteners to attach

the fabric to the posts or Silt Fence that is available with posts pre-attached.

- *Wire Reinforcement:* When Silt Fence is wire reinforced, the geotextile fabric is backed with chain link or welded wire fencing.

Methods of Installation:

- *Trenchless:* Drive support posts into the ground, attach geotextile on the upslope side of the line of stakes with a portion lying flat on the ground, and place clean rock or sandbags on the geotextile. Using sandbags to anchor the fence bottom is a less desirable method because of the tendency for undermining. Require removal of the rock or sandbags when the fence is removed.
- *Trench Key:* Drive support posts into the ground, excavate a trench on the uphill side along the line of the stakes, attach geotextile, and bury fence bottom. Use soil to backfill trench and compact to secure fence bottom. Compacted soil is preferred to gravel fill.
- *Machine Slice:* This method requires a Silt Fence installation machine or attachment. The machine utilizes a blade that plows or slices the fabric directly into the soil minimizing soil disturbance. Displaced soil must be manually backfilled into the slice before the tractor is used to mechanically compact the soil.

Design

Locate Silt Fence at a distance from the base of the slope or pile such that there is space for temporary storage of potential accumulated material. Consider a space of 4 feet for worker access if feasible. The grade and length of slope as well as soil erodibility must be considered when specifying silt fence. If the slope is steep or long, consider intermediate slope breaks.

Below are design considerations for Silt Fence that is not wire-reinforced:

- *Design Life*: 1 season (6 months) or less.
- *Contributing Sheet Flow Drainage Area*: Not to exceed 0.25 acres/100 ft. of fence.
- Maximum Height of Ponding Water: 18 in.

Guidelines for Maximum Slope Length for Silt Fence:

Slope (H:V)	Length of Slope Above Fence, Assumes 30 In High Fence
10:1	150 ft.
6:1	85 ft.
5:1	70 ft.
4:1	55 ft.
3:1	40 ft.
2:1	25 ft.
1:1	15 ft.

Relationship to Other Erosion and Sediment Control Measures

Sediment control measures are secondary to erosion prevention or soil stabilizing measures. Silt Fence may be used as part of a sequential system with other temporary or permanent measures such as vegetation, check dams, settling ponds, etc. Occasional flow velocity increases may be offset using corrective measures such as rock berms or other redirecting energy absorbers.

Common Failures or Misuses

- Inappropriate for intended function (e.g. used for check dam, flow diversion, diversion dam, etc.).
- Installation of Silt Fence in streams or concentrated flow.
- Use as a mid-slope protection on slopes greater than 4:1.
- Use as a perimeter control in high flow areas.
- Field-sewn seams.
- Use of incorrect type of fabric.
- Loose or sagging fabric between posts.
- Fence improperly attached or fastened to posts.
- Posts not driven deep enough into the ground.
- Posts spaced too far apart.
- Posts installed on incorrect side of fence.
- Placement of overlapped joints across pooled drainage areas.
- Fence allows spillover or bypass.
- Soil is not compacted next to fence after backfilling trench, allowing water to flow underneath.

- Trenches are too shallow to anchor the Silt Fence below ground or trenchless construction failure.
- Slope erosion occurs below the fenceline due to drainage that bypasses the barrier end, or water build-up that “blows out” a poorly-secured fence bottom.
- Fence function impairment due to sediment build-up, maintenance neglect, etc.
- Fence topples due to poor installation and/or high levels of impounded backup water or sediment.
- Uneven distribution of pooled drainage along non-level fenceline surface reduces efficiency.
- End of fence is not “J-hooked” upslope allowing water to run around the end.
- Poor support system (e.g. soil too rocky to secure posts, fabric stapled to trees, etc.).
- Installation of Silt Fence in a long continuous run.

SPECIFICATIONS

Standard Specification

- 633 – Silt Fence
- 729-2.04 - Geosynthetics

Drawing

- BMP-20.00 Silt Fence (Sheets 1 and 2)

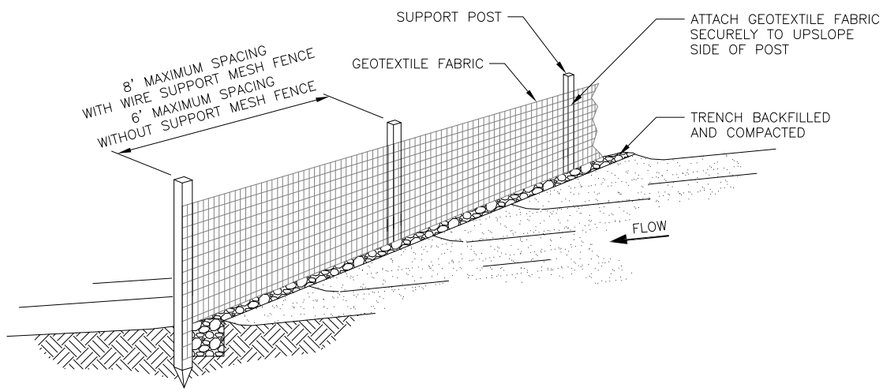

GENERAL INSTALLATION
NOT TO SCALE

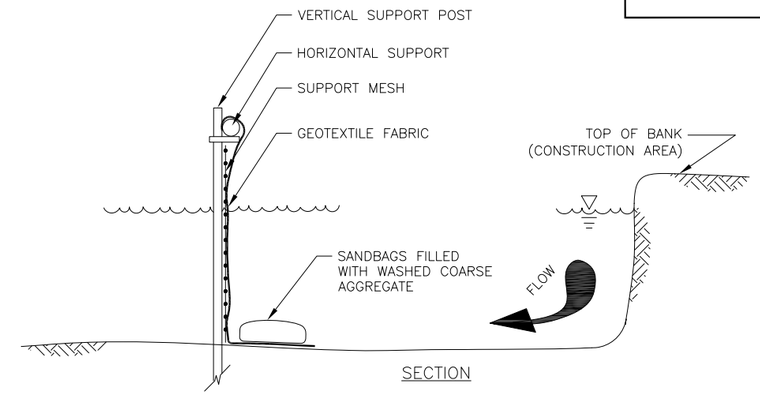

SECTION

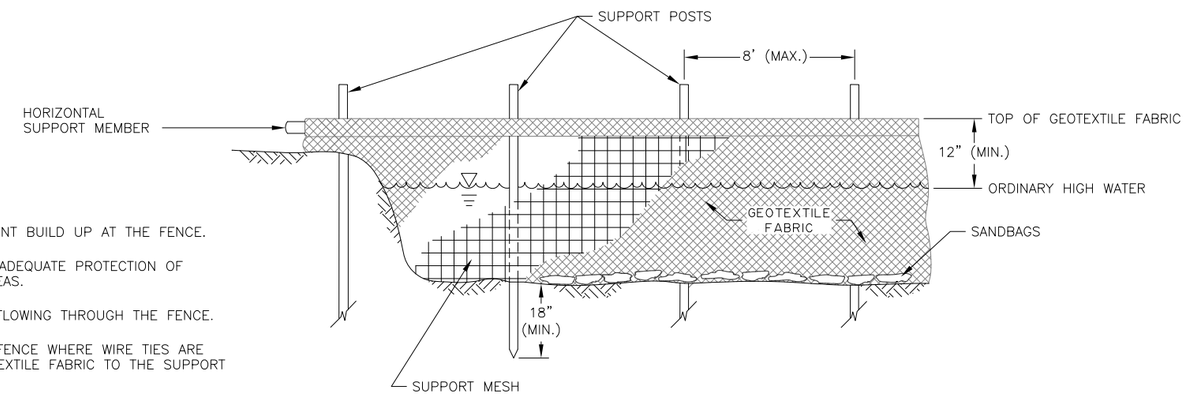

PROFILE

STANDING WATER INSTALLATION
NOT TO SCALE

SILT FENCE GENERAL NOTES:

MATERIALS

SILT FENCE: SEE SPECIFICATION SECTION 633, SILT FENCE.

INSTALLATION

1. INSTALL FENCELINE ALONG A LEVEL CONTOUR AND PERPENDICULAR TO ANTICIPATED SHEET FLOW DRAINAGE PATH(S).
2. ORIENT END SECTIONS UPHILL SLIGHTLY IN A J–HOOK TO PREVENT WATER FROM GOING AROUND THE SILT FENCE.
3. DO NOT EXCEED 100 FEET FOR EACH 1/4–ACRE OF DRAINAGE AREA AND DO NOT EXCEED 500 FEET REGARDLESS OF DRAINAGE AREA.
4. THE DIFFERENCE IN ELEVATION BETWEEN THE HIGHEST AND LOWEST POINT ALONG THE TOP OF THE SEDIMENT FENCE SHALL NOT EXCEED ONE–THIRD THE FENCE HEIGHT.
5. WHERE GROUND SURFACES ARE UNEVEN, INSTALL SHORTER FENCES FOLLOWING CONTOURS (RATHER THAN INSTALLING ONE LONG, CONTOUR–CROSSING FENCE THAT DIRECTS DRAINAGE TO ACCUMULATE IN LOW SPOTS).
6. LOCATE FENCE 3 TO 10 FEET BEYOND TOE OF FILL TO LEAVE ROOM FOR A BROAD, SHALLOW SEDIMENTATION POOL AND FOR EQUIPMENT ACCESS DURING FENCE MAINTENANCE AND REMOVAL.
7. IF FEASIBLE, LEAVE A MINIMUM OF 3.5–FOOT BUFFER BETWEEN FENCING AND SENSITIVE RECEIVING AREAS.
8. PLACE GEOTEXTILE ON THE UPSLOPE SIDE OF POSTS OR, WHEN USING SILT FENCE WITH SEWN–IN POCKETS, PLACE POCKETS ON THE UPSLOPE SIDE OF THE FENCE.
9. EXCAVATE TRENCHES NOT WIDER OR DEEPER THAN NECESSARY FOR PROPER INSTALLATION OF THE SILT FENCE. DO NOT EXCAVATE TRENCHES IN PERMAFROST.
10. AT JOINTS, ROLL ENOUGH OF THE ENDS OF SECTIONS TOGETHER AT SUPPORT POST SUCH THAT THE JOINT PREVENTS SILT–LADEN WATER FROM ESCAPING THROUGH THE FENCE.
11. IF USING THE FRONT WHEEL OF A TRACTOR OR ROLLER, COMPACT THE UPSTREAM SIDE FIRST, THEN EACH SIDE TWICE (A TOTAL OF FOUR TRIPS).
12. KEEP FENCE FABRIC TAUT.
13. WHEN USING SUPPORT MESH, ATTACH GEOTEXTILE TO THE SUPPORT MESH WITH FASTENERS SPACED EVERY 24 INCHES AT THE TOP AND MIDSECTION.

MACHINE SLICE INSTALLATION (NOT IN PERMAFROST)

1. USE A SILT FENCE INSTALLATION MACHINE OR ATTACHMENT TO PLOW OR SLICE THE FABRIC DIRECTLY INTO THE SOIL.
2. BACKFILL SOIL LOOSENED BY THE BLADE INTO THE SLICE AND USE THE TRACTOR TO MECHANICALLY COMPACT THE SOIL.
3. TUCK FABRIC DEEPER INTO THE GROUND WHERE NECESSARY.
4. INSTALL SUPPORT POSTS ALONG THE LENGTH OF THE FENCE FOLLOWING SIMILAR PROCEDURES FOR THE TRENCH METHOD.

WINTER INSTALLATION (NOT IN PERMAFROST)

1. DIG A TRENCH.
2. BACKFILL TRENCH WITH THE LOOSENED SOIL AND COMPACT SOIL PRIOR TO POST INSTALLATION.
3. MOISTEN THE BACKFILLED SOIL SO IT WILL FREEZE UP AND GRIP THE SILT FENCE FABRIC IN PLACE.
4. DO NOT LEAVE LARGE FROST CHUNKS AS THE BACKFILL.

INSPECTION

1. INSPECT FENCELINE FOR CONTINUITY, COLLAPSE, UNDERMINED AREAS, AND DAMAGE. DO NOT EXCAVATE TRENCHES IN PERMAFROST.
2. INSPECT FABRIC FOR TEARS, PUNCTURES, FRAYING, WEATHERING, AND COMPROMISED INTEGRITY.
3. CONFIRM THAT THE FENCE POSTS ARE SECURE.
4. ENSURE THE FENCE IS KEYED IN AND THAT THERE IS NO UNDERCUTTING.
5. LOOK FOR EVIDENCE OF SEDIMENT OR EROSION FLOW LEADING OFF THE DOWNHILL EDGE OF THE FENCE. (THIS MAY BE AN INDICATOR OF DRAINAGE BYPASS OR FENCE UNDERMINE.)
6. NOTE DEPTH OF SEDIMENT BUILD UP AT THE FENCE.
7. LOOK FOR SIGNS OF INADEQUATE PROTECTION OF OFF–SITE SENSITIVE AREAS.
8. CHECK FOR SEDIMENT FLOWING THROUGH THE FENCE.
9. CHECK FOR HOLES IN FENCE WHERE WIRE TIES ARE USED TO SECURE GEOTEXTILE FABRIC TO THE SUPPORT POST.

MAINTENANCE

1. INSTALL ALTERNATE OR ADDITIONAL BMPS AS NEEDED TO PREVENT UNDESIRABLE SEDIMENTATION OF SENSITIVE AREAS.
2. REPLACE DAMAGED FABRIC.
3. REMEDY FENCE SAGS AS NEEDED.
4. REMOVE ACCUMULATED SEDIMENT BEFORE IT ACCUMULATES TO ONE–HALF THE CAPACITY, OR ONE–THIRD OF THE AVAILABLE STORAGE IF PROTECTING A WATER BODY OR STORM DRAIN INLET.
5. DISPOSE OF SILT WASTE IN APPROVED MANNER/LOCATION (TYPICALLY IN A NON–EROSION AREA).
6. IF THERE IS EVIDENCE OF EXCESSIVE SEDIMENTATION AGAINST THE SILT FENCE, PROVIDE INCREASED EROSION CONTROL UPSLOPE.

REMOVAL

1. WHEN DISTURBED AREAS ARE PERMANENTLY STABILIZED OR SEDIMENT PROTECTION IS NO LONGER NEEDED, COLLECT AND PROPERLY DISPOSE OF ACCUMULATED SEDIMENT OR SEED IN PLACE.
2. CUT FABRIC AT GROUND LEVEL AND REMOVE SUPPORTS.
3. DISCARD FILTER FENCE AS APPROVED. AVOID DAMAGE TO SENSITIVE AREAS (E.G. WETLAND OR SURFACE WATER).

STANDING WATER NOTES:

INSTALLATION

1. DRIVE SUPPORT POSTS INTO THE GROUND AND ATTACH A HORIZONTAL SUPPORT MEMBER.
2. ATTACH SUPPORT MESH AND GEOTEXTILE ON THE UPSLOPE SIDE OF THE STAKES, EXTEND GEOTEXTILE ON THE GROUND UPSLOPE OF THE FENCE, AND ANCHOR THE GEOTEXTILE WITH SANDBAGS OR EQUIVALENT TO PREVENT GAPS.
3. SPACE SUPPORT POSTS A MAXIMUM OF 8 FEET APART.
4. KEEP FENCE FABRIC TAUT.

REVISIONS

Date	Description	By

State of Alaska DOT&PF

SILT FENCE (NOTES, GENERAL INSTALLATION, & STANDING WATER INSTALLATION)

APPROVED

Date 12/2015 X/XX/XX

BMP–20.00

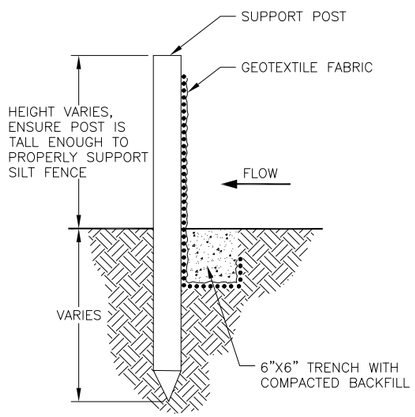

TRENCH DETAIL
NOT TO SCALE

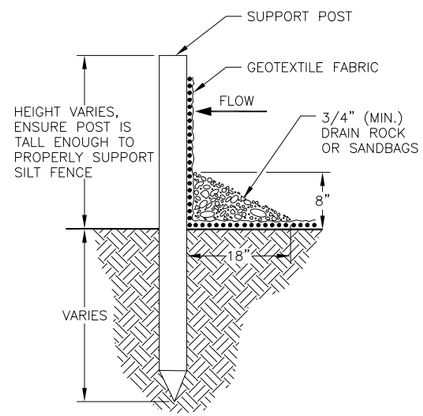

TRENCHLESS DETAIL
NOT TO SCALE

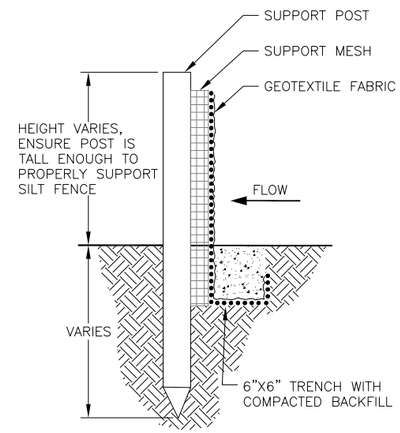

SUPPORT MESH REINFORCED FABRIC DETAIL
NOT TO SCALE

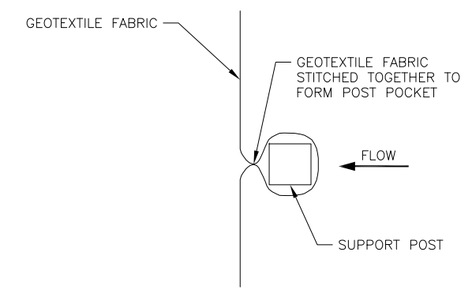

SEWN-IN POCKET DETAIL
NOT TO SCALE

TRENCH NOTES:
INSTALLATION
1. DRIVE SUPPORT POSTS INTO THE GROUND.
2. FOLLOW MANUFACTURER'S SPECIFICATIONS FOR POST BURIAL DEPTH.
3. EXCAVATE A TRENCH ON THE UPHILL SIDE ALONG THE LINE OF THE STAKES.
4. ATTACH GEOTEXTILE TO STAKES AND BURY GEOTEXTILE BOTTOM.
5. BACKFILL TRENCH AND COMPACT TO SECURE FENCE BOTTOM.

TRENCHLESS NOTES:
MATERIALS
CLEAN ROCK OR SANDBAGS.

INSTALLATION
1. DRIVE SUPPORT POSTS INTO THE GROUND.
2. ATTACH GEOTEXTILE ON THE UPHILL SIDE ALONG THE LINE OF THE STAKES.
3. EXTEND GEOTEXTILE ON THE GROUND UPHILL OF THE FENCE.
4. PLACE DRAIN ROCK ON GEOTEXTILE.

REMOVAL
1. WHEN SILT FENCE IS LOCATED IN WETLANDS OR SENSITIVE AREAS, REMOVE CLEAN ROCK OR SANDBAGS WHEN THE SILT FENCE IS REMOVED.

SUPPORT MESH REINFORCED FABRIC NOTES:
INSTALLATION
1. DRIVE SUPPORT POSTS INTO THE GROUND.
2. EXCAVATE A TRENCH ON THE UPHILL SIDE ALONG THE LINE OF THE STAKES. DO NOT EXCAVATE TRENCHES IN PERMAFROST.
3. EXTEND SUPPORT MESH A MINIMUM OF 3 INCHES INTO THE TRENCH.
4. ATTACH GEOTEXTILE TO STAKES AND BURY GEOTEXTILE BOTTOM.
5. BACKFILL TRENCH AND COMPACT TO SECURE FENCE BOTTOM.

REVISIONS

Date	Description	By

State of Alaska DOT&PF

SILT FENCE
(DETAILS)

APPROVED

Date X/XX/XX

BMP-20.00

BMP 21.00 & 22.00. Slope Drain

DESIGN CONSIDERATIONS

Objectives

The purpose of a Slope Drain is to temporarily or permanently conduct concentrated stormwater run-off safely down the face of a cut or fill slope without causing erosion on or below the slope.

Description

A Slope Drain is a pipe, flexible tubing, channel created with barriers and lining, or a rock flume that extends from the top to the bottom of a cut or fill slope to prevent gullies, channel erosion, and saturation of slide-prone or erodible soils on exposed soil slopes. With the exception of a rock flume, these are temporary measures.

- *Piped*: The pipe material is typically corrugated plastic or flexible tubing.
- *Barrier*: Barriers placed parallel to the slope to form a temporary channel directing water down a geotextile lined slope. Rock may be added to the flume to provide added protection and to slow the velocity of water.
- *Rock Flume*: A riprap-lined channel to convey water down a relatively steep slope without causing erosion problems on or below the slope.

Other Names

Downdrain, Drop Pipe, Pipe Slope Drain, Rock Chute, Rock Downdrain, Rock Flume.

Applicability

Slope Drains are temporary measures that are used during grading operations until the permanent drainage structures are installed, and until the slopes are permanently stabilized. They can also be used to drain water collected from aquifers, divert small seasonal streams, and in connection with down spouts and roof drains are used to divert flows from the construction area. Slope Drains allow clean water to be kept separate from sediment-laden water. Slope Drains are used in conjunction with temporary diversion dikes along the top edge of newly constructed slopes that function to direct stormwater run-off into the Slope Drain. Energy dissipation is required at the bottom of the slope to prevent erosion at the outlet of the Slope Drain.

Rock Flume Slope Drains are permanent structures. If there is a need for the Permanent Slope Drain, it needs to be included in the plans stamped by the designer.

Selection Considerations

- Divert stormwater to the Slope Drain using foam barriers, compost berms or socks, sandbags, diversion ditches, or equivalent diversion materials.
- Slope Drains should be used in conjunction with diversion berms to convey run-off from the drainage area.
- Provide both inlet and outlet protection to minimize erosion at these locations.
- Provide sediment trapping facilities for Slope Drains conveying sediment-laden water.
- Adjust the length of the Slope Drain when the cut and fill slopes are extended.
- Thrust blocks should be installed anytime 90 degree bends are utilized. Depending on size of pipe and flow, these can be constructed with sandbags, fence posts and wire, or similar sturdy temporary devices.

Design

Design Life: One (1) season (6 months) or less

Contributing Sheet Flow: Use a configuration appropriate for the anticipated flow.

Capacity: Peak run-off from a 2-year 24-hour storm, with area cover considered; or the design discharge of the up-gradient water conveyance structure, whichever is greater. Rock flumes with a drainage area between 5 and 10 acres are lined with Class II Riprap, while rock flumes with a drainage area less than 5 acres can be lined with Class I Riprap.

Diversion Barrier Height: Minimum 12 inches higher than the top of the drain pipe and greater than or equal to the height of the barrier for the Slope Drain.

Outlet section: Stormwater discharge energy must be dissipated to prevent scour and erosion at the outlet. Silt control bags, temporary lining of the discharge

area (e.g., plastic sheeting or riprap), or dispersal pipes are some of the methods that may be used.

Relationship to Other Erosion and Sediment Control Measures

Slope Drains are used with temporary diversion dikes to facilitate channeling of run-off into the structure. Slope Drains can be used in conjunction with an Interception Ditch to transport stormwater that has been redirected around a surface that is susceptible to erosion. Inlet and outlet protection are required to minimize erosion and scour.

Common Failures or Misuses

General

- Piping of water through the berm at the entrance area.
- Incorrectly locating the Slope Drain for the flow that is actually occurring.
- Materials placed on, or construction traffic across Slope Drain, resulting in damage to the structure.

Piped

- Failure to compact soil around and under the pipe entrance, resulting in undercutting.
- Slope Drain sections not securely fastened together; fittings not water tight, resulting in leakage.
- Slope Drain sections not securely anchored to the slope, resulting in displacement of the structure.
- Under-sizing the pipe for the contributing area.

Barrier

- Unless properly secured to the ground, run-off can flow underneath the barrier and cause failure.
- Unless properly secured, barriers can be dislodged or transported by high flows.

Rock Flume

- Using rounded rock
- Sloughing.
- Stone size too small or backslope too steep, resulting in stone displacement.
- Sediment accumulation in flume channel, resulting in reduced capacity.
- Channel width too narrow, resulting in over topping and erosion.

SPECIFICATIONS

Standard Specification

- 681 – Slope Drain

Drawings

- BMP-21.00 Slope Drain (Rock Flume)
- BMP-22.00 Slope Drain (Pipe)

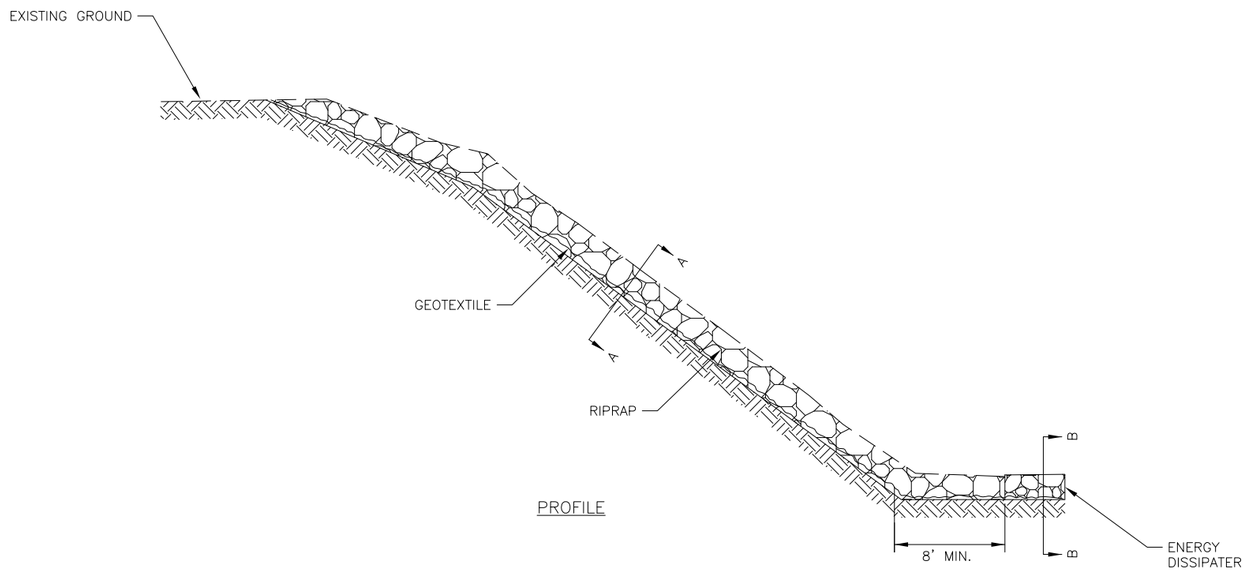

PROFILE

ROCK FLUME SLOPE DRAIN NOTES:

MATERIALS

RIPRAP: RIPRAP, CLASS I OR CLASS II, (SECTION 611)

GEOTEXTILE: GEOTEXTILE LINER (SECTION 631 AND 729–2.02).

ENERGY DISSIPATOR: PIPE TEE, RIPRAP PAD, OR EQUIVALENT PIPE DISSIPATION.

INSTALLATION

1. EXCAVATE TO PLACE ROCK SO THAT THE TOP OF FLUME SIDES ARE AT ORIGINAL GROUND.
2. IF ROCK IS ENCOUNTERED DURING FLUME CONSTRUCTION, ROCK SHALL BE EXCAVATED TO FINISHED FLUME LEVEL AND NO RIPRAP OR GEOTEXTILE SHALL BE REQUIRED.
3. SHAPE THE CHANNEL TO PROPER GRADE AND CROSS–SECTION AS SHOWN IN THE PLANS, WITH NO ABRUPT DEVIATIONS FROM DESIGN GRADE OR HORIZONTAL ALIGNMENT.
4. PLACE GEOTEXTILE PRIOR TO PLACEMENT OF RIPRAP.
5. INSTALL PERPENDICULAR TO SLOPE CONTOURS.
6. EXTEND THE DRAIN BEYOND THE TOE OF THE SLOPE AND PROVIDE RIPRAP OR GEOTEXTILE OUTLET PROTECTION.
7. DISCHARGE TO A STABILIZED WATERCOURSE, SEDIMENT RETENTION FACILITY, OR STABILIZED OUTLET.

RIPRAP TYPE	DIMENSIONS	
	A	B
CLASS I	1.5'	5'
CLASS II	3.0'	8'

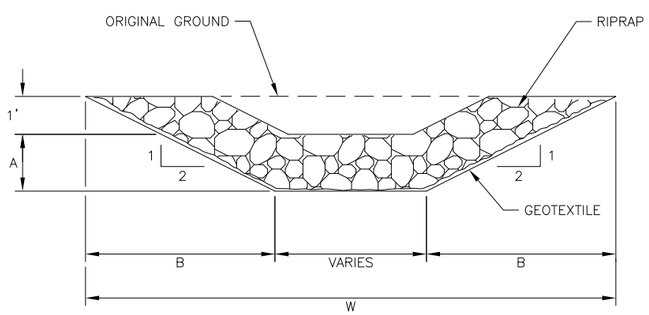

SECTION A–A

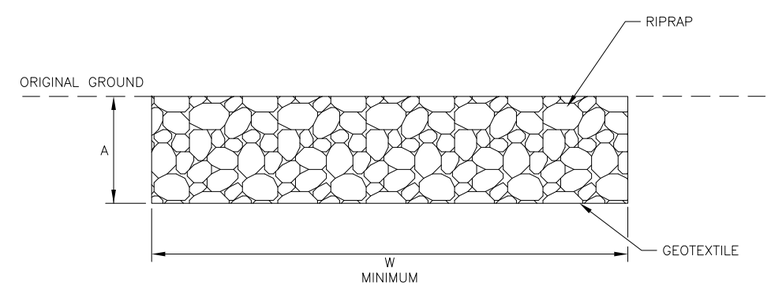

SECTION B–B

ROCK FLUME SLOPE DRAIN

NOT TO SCALE

REVISIONS		
Date	Description	By

State of Alaska DOT&PF

SLOPE DRAIN
(ROCK FLUME)

APPROVED

Date 12/2015 X/XX/XX

BMP–21.00

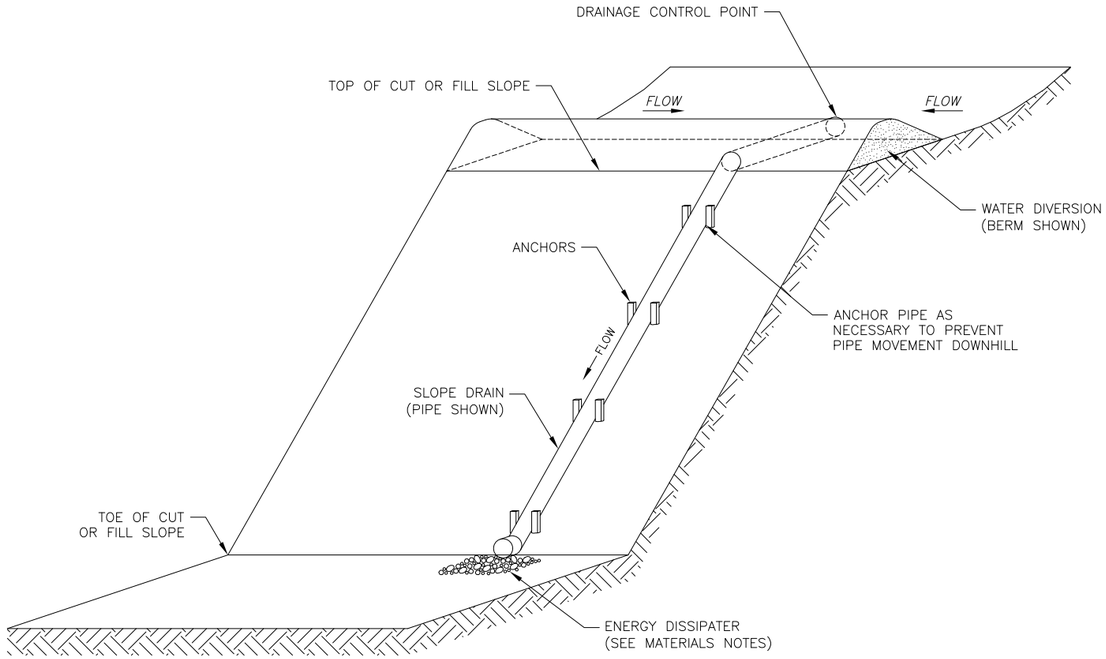

PERSPECTIVE

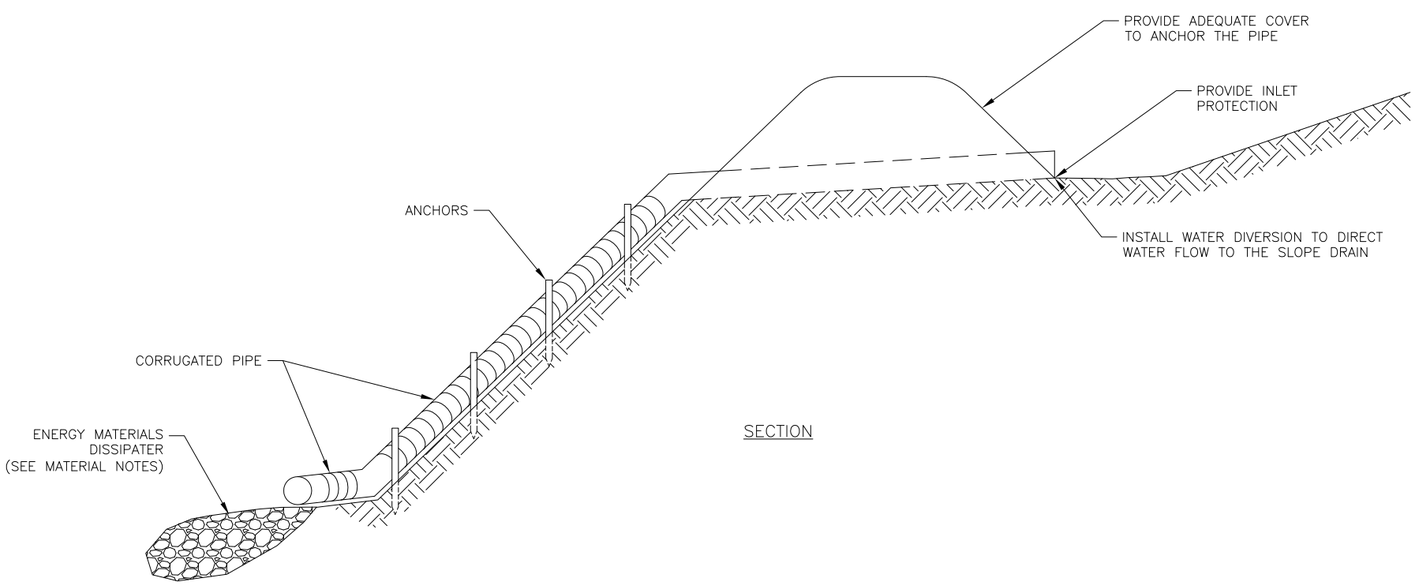

SECTION

PIPE SLOPE DRAIN
NOT TO SCALE

PIPE SLOPE DRAIN NOTES:

MATERIALS

WATER DIVERSION: EARTHEN BERM, FIBER ROLL, PREFABRICATED BARRIER SYSTEM, OR EQUIVALENT.

ENERGY DISSIPATER: PIPE TEE, RIPRAP PAD, OR EQUIVALENT ENERGY DISSIPATION.

SLOPE DRAIN: HEAVY DUTY FLEXIBLE MATERIAL, SUCH AS CORRUGATED PLASTIC PIPE OR PLASTIC TUBING. AS AN ALTERNATIVE, TWO BARRIERS WITH A CHANNEL LINING BETWEEN THEM TRENCHED AT THE TOP OF THE SLOPE CAN BE USED. SEE PREFABRICATED BARRIER SYSTEM BMP–13.00, COMPOST SOCK BMP–05.00, OR EQUIVALENT BARRIER.

INLET SECTION: STANDARD FLARED END SECTION FOR METAL PIPE CULVERTS, OR GEOTEXTILE FOR INLET PROTECTION.

ANCHORS: GROMMETS, STAKES, ANCHORS, OR EQUIVALENT FASTENERS.

INSTALLATION

1. PLACE SLOPE DRAINS ON UNDISTURBED GROUND OR WELL–COMPACTED FILL AT LOCATIONS SPECIFIED ON THE PLANS.
2. ENSURE THE DRAINAGE CONTROL POINT AT THE TOP OF THE SLOPE IS AT THE LOWEST POINT ALONG THE BARRIER.
3. INSTALL PERPENDICULAR TO SLOPE CONTOURS.
4. EXTEND THE DRAIN BEYOND THE TOE OF THE SLOPE AND PROVIDE RIPRAP OR GEOTEXTILE OUTLET PROTECTION.
5. CONSTRUCT THE TOP OF THE DIVERSION BERM 12 INCHES ABOVE THE TOP OF THE SLOPE DRAIN ENTRANCE.
6. DISCHARGE TO A STABILIZED WATERCOURSE, SEDIMENT RETENTION FACILITY, OR STABILIZED OUTLET.
7. INSTALL INLET PROTECTION USING END SECTION FOR PIPES OR GEOTEXTILE.
8. USE WATERTIGHT FITTINGS AT ALL SLOPE DRAIN CONNECTIONS.
9. SECURELY ANCHOR THE EXPOSED SECTION OF THE PIPE AT 10–FOOT SPACING.
10. ANCHOR INLET SECURELY WITH BERM OR SANDBAGS.

INSPECTION

1. INSPECT THE PIPE FOR BREAKS OR BLOCKAGE.
2. CHECK FOR ANY DAMAGED OR DISPLACED ANCHORS.
3. INSPECT FOR EROSION AROUND THE INLET AND OUTLET THAT COULD RESULT IN UNDERCUTTING OR BYPASSING.

MAINTENANCE

1. INSTALL A HEADWALL IF NECESSARY TO CONTROL EROSION AROUND THE INLET.
2. REPAIR ANY BREAKS IN THE PIPE.
3. TIGHTEN FITTINGS AT LEAKING CONNECTION POINTS.
4. CLEAR ANY CLOGS, DEBRIS, OR BLOCKAGE THAT REDUCE FLOW THROUGH THE PIPE.
5. REPAIR ANY EROSION AROUND THE INLET OR OUTLET; INSTALL RIPRAP OR SANDBAGS IF NECESSARY.

REMOVAL

1. AFTER THE SLOPE IS PERMANENTLY STABILIZED AND THE PERMANENT DRAINAGE SYSTEM IS INSTALLED, REMOVE THE SLOPE DRAINS AND PERMANENTLY STABILIZE THE REMAINING DISTURBED AREAS.

REVISIONS

Date	Description	By

State of Alaska DOT&PF

SLOPE DRAIN
(PIPE)

APPROVED

Date 12/2015 X/XX/XX

BMP–22.00

BMP 23.00 & 24.00. Stabilized Construction Exit

DESIGN CONSIDERATIONS

Objectives

Stabilized Construction Exits are used to clean mud and sediment from vehicle tires, minimizing the amounts transported off-site from construction projects.

Description

A Stabilized Construction Exit provides a stabilized rock area or pad underlined with a geotextile and located where traffic exits the construction site.

Other Names

Vehicle Tracking Exit/ Entrance, Construction Exit, Construction Entrance

Applicability

Stabilized Construction Exits are necessary for projects where sediment or mud can be tracked off-site. Stabilized Construction Exits are also applicable for projects adjacent to waters of the U.S., where poor soils have been encountered, or where dust is a problem during dry weather conditions.

Selection Considerations

Stabilized Construction Exits should be installed at project access points prior to commencing major grading operations.

- Limit exits to the project.
- Avoid exits that have steep grades or are located where sight distance may be a problem.
- Slope exit towards the project where possible to retain sediment on-site.
- Provide drainage to carry water to sediment trap or other suitable outlet.
- Design exit for heaviest/longest vehicles and equipment to be used on-site.
- Exit shall be a minimum length to provide for three complete revolutions of the largest vehicle tires and 12 feet wide.
- Use fencing as necessary to direct traffic to the exit.
- Construct exit on a firm compacted subgrade when practicable.
- Avoid crossing sidewalks or back-of-walk drains.
- Avoid constructing exits at curves in public roads.
- Separation geotextile may be placed under the Stabilized Construction Exit to prevent fine sediment from pumping up into the exit structure.
- If project conditions determine the need for Stabilized Construction Exits at specific locations, provide the location on the plans.

Relationship to Other Erosion and Sediment Control Measures

Stabilized Construction Exits may be used in combination with street sweeping and tire washing to minimize the amount of sediment transported off-site.

Common Failures or Misuses

- Failure to periodically “top dress” (provide additional rock) when sediment accumulates on the surface.
- Failure to repair and/or clean out any structures used to trap sediment.
- Failure to provide adequate depth and length of rock.
- Not having a Stabilized Construction Exit and using street sweeping as a substitute.
- Use of asphalt concrete grindings, crushed concrete, cement, or calcium chloride resulting in an increase in pH levels in stormwater.

SPECIFICATIONS

Standard Specification

- 682 – Stabilized Construction Exit

Drawing:

- BMP-23.00 Stabilized Construction Exit (Sheets 1 of 2)
- BMP-24.00 Stabilized Construction Exit (Metal Plate, Sheet 2 of 2)

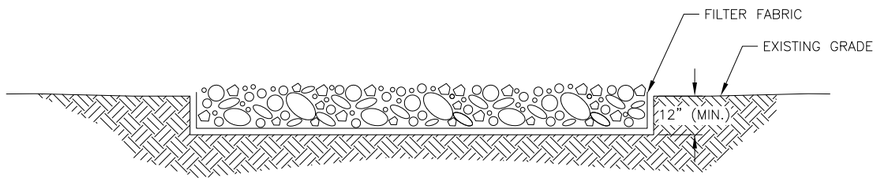

SECTION A–A

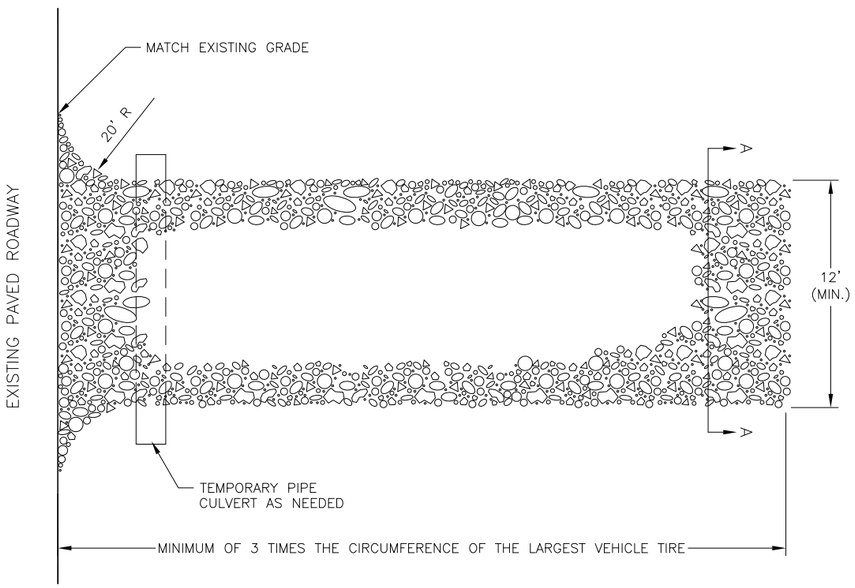

PLAN

ROCK CONSTRUCTION EXIT

NOT TO SCALE

ROCK CONSTRUCTION EXIT NOTES:

MATERIALS

ROCK: 2– TO 3–INCH COARSE AGGREGATE OR 3– TO 6–INCH QUARRY SPALL OR ANGULAR ROCK, WHICHEVER IS APPROPRIATE TO THE PROJECT FLEET.

INSTALLATION

1. PLACE THE FILTER FABRIC AND ROCK TO THE SPECIFIC GRADE SHOWN ON THE PLANS.

MAINTENANCE

1. REMOVE ACCUMULATED SEDIMENT OR MUD.
2. REPLACE ROCK MATERIAL WHEN SURFACE VOIDS ARE FILLED WITH SEDIMENT. REPLACE FABRIC AS NEEDED.
3. TOP DRESS WITH 2 TO 3 INCHES OF COARSE AGGREGATE OR 3– TO 6–INCH COARSE ROCK WHEN THE PAD BECOMES LADEN WITH SEDIMENT.

INSPECTION

1. INSPECT FOR ROCK THAT HAS BEEN DISPLACED FROM THE PAD.

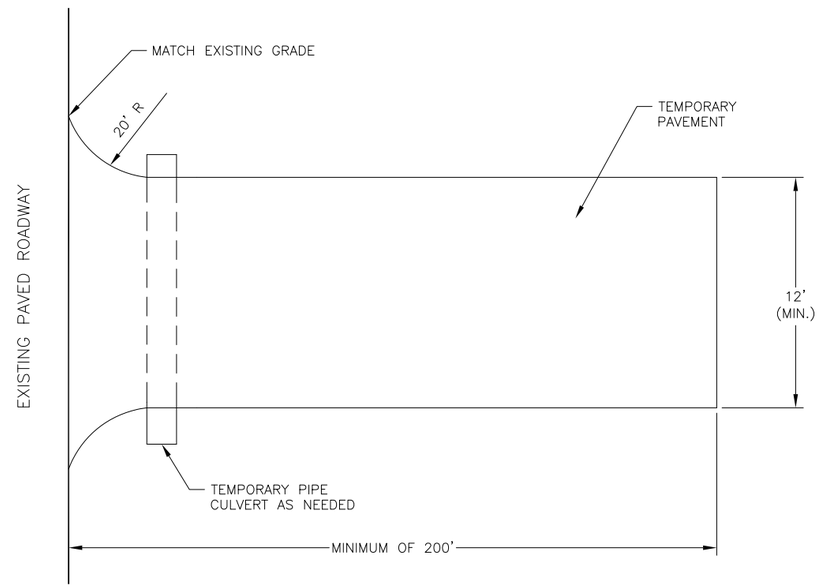

PLAN

TEMPORARY PAVEMENT CONSTRUCTION EXIT

NOT TO SCALE

TEMPORARY PAVEMENT CONSTRUCTION EXIT NOTES:

INSPECTION

1. INSPECT TEMPORARY PAVEMENT FOR DAMAGE.

MAINTENANCE

1. SWEEP DESIGNATED PAVED EXIT TO PREVENT SEDIMENT TRACK–OUT.
2. REPAIR DAMAGED TEMPORARY PAVEMENT.

STABILIZED CONSTRUCTION EXIT GENERAL NOTES:

INSTALLATION

1. INSTALL STABILIZED CONSTRUCTION EXIT PRIOR TO EARTH WORK.
2. CLEAR THE EXIT AREA OF ALL VEGETATION, ROOTS, AND OTHER MATERIAL.
3. PROVIDE DRAINAGE TO CARRY WATER TO A SEDIMENT TRAP, VEGETATIVE SEDIMENT FILTER OR OTHER PROTECTED OUTLET.
4. EXCAVATE AND GRADE THE AREA FOR ROCK PLACEMENT.
5. INSTALL SIGNS, FENCING OR BARRICADES TO CHANNEL OUTGOING TRAFFIC TO THE STABILIZED CONSTRUCTION EXIT.

INSPECTION

1. INSPECT STABILIZED CONSTRUCTION EXIT FOR SEDIMENT ACCUMULATION AND MATERIAL DISPLACEMENT.
2. INSPECT ROADWAY FOR SEDIMENT TRACK–OUT.
3. INSPECT DITCHES TO ENSURE NO SEDIMENT ACCUMULATION.

MAINTENANCE

1. MAINTAIN EACH EXIT IN A CONDITION THAT WILL PREVENT TRACKING OF MUD OR SEDIMENT ONTO PUBLIC RIGHT–OF–WAY.
2. REPAIR AND/OR CLEAN OUT ANY STRUCTURES USED TO TRAP SEDIMENT.
3. REMOVE ALL MUD AND SEDIMENT DEPOSITED ON PAVED ROADWAYS.
4. ADD MORE SIGNS, FENCING OR BARRICADES WHEN VEHICLES ARE EXITING THE PROJECT WITHOUT USING THE STABILIZED CONSTRUCTION EXIT. INSTALL ADDITIONAL STABILIZED CONSTRUCTION EXITS IF NEEDED, YET USE SIGNS AND BARRICADES TO MINIMIZE THE NUIMBER OF STABILIZED CONSTRUCTION EXITS.
5. PREVENT TRACK–OUT BY USING ADDITIONAL BMPs, SUCH AS A TIRE WASH.

REMOVAL

1. REMOVE THE STABILIZED CONSTRUCTION EXIT AND ANY SEDIMENT TRAPPING STRUCTURES AFTER THEY ARE NO LONGER NEEDED, OR WITH FINAL SITE STABILIZATION.
2. REGRADE AND PERMANENTLY STABILIZE THE REMAINING DISTURBED AREAS ACCORDING TO THE PLANS.

REVISIONS

Date	Description	By

State of Alaska DOT&PF

STABILIZED CONSTRUCTION EXIT (NOTES, ROCK & TEMPORARY PAVEMENT)

APPROVED

Date 12/2015 X/XX/XX

BMP–23.00

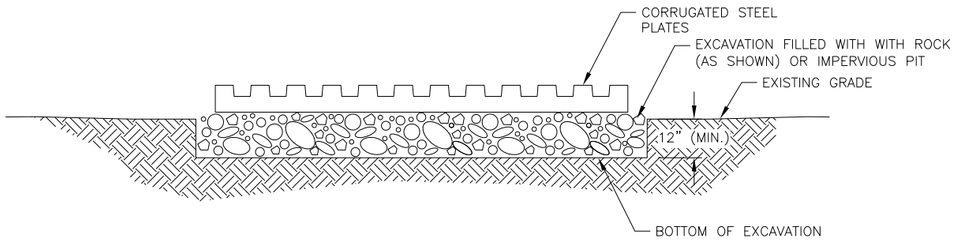

SECTION B–B
OPTION 1

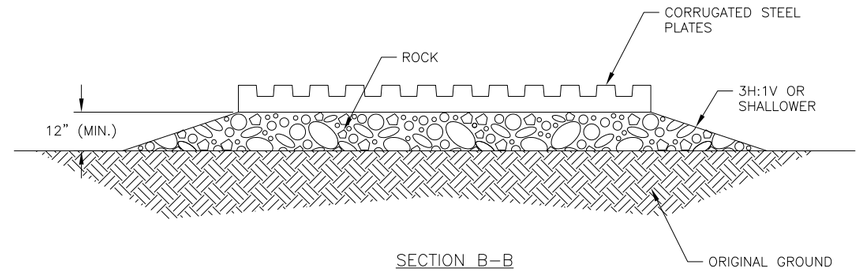

SECTION B–B
OPTION 2

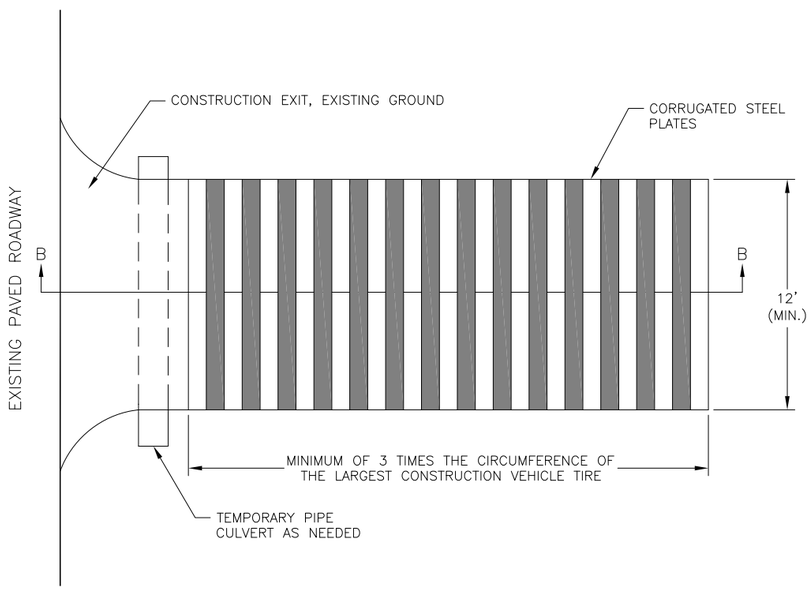

PLAN

METAL PLATE CONSTRUCTION EXIT

NOT TO SCALE

METAL PLATE CONSTRUCTION EXIT NOTES:

MATERIALS

CORRUGATED STEEL PLATES: SHAKER/RUMBLE PLATES, CORRUGATED STEEL PLATES, OR EQUIVALENT DESIGNED FOR ANTICIPATED TRAFFIC LOADS.

ROCK: 2– TO 3–INCH COARSE AGGREGATE.

INSTALLATION

1. IF CORRUGATED STEEL PLATES ARE OPEN TO THE SURFACE BELOW, INSTALL GRAVEL OR IMPERVIOUS PIT.
2. PLACE CORRUGATED STEEL PLATES.

INSPECTION

1. INSPECT CORRUGATED STEEL PLATES FOR DAMAGE.

MAINTENANCE

1. REPLACE DAMAGED CORRUGATED STEEL PLATES AS NECESSARY.
2. LIFT PLATE AND REMOVE ACCUMULATED SEDIMENT.
3. WHEN SURFACE VOIDS FILL WITH SEDIMENT, REPLACE ROCK MATERIAL.

ADDITIONAL NOTES:

SEE STABILIZED CONSTRUCTION EXIT GENERAL NOTES ON BMP 23.00 STABILIZED CONSTRUCTION EXIT (NOTES, ROCK & TEMPORARY PAVEMENT).

REVISIONS

Date	Description	By

State of Alaska DOT&PF

STABILIZED CONSTRUCTION EXIT (METAL PLATE)

APPROVED

Date 12/2015 X/XX/XX

BMP–24.00

BMP 25.00 – 29.00. Storm Drain Inlet Sediment Protection – Curb and Area Inlets

These instructions cover BMP 25.00, 26.00, 27.00, 28.00 and 29.00.

DESIGN CONSIDERATIONS

Objectives

Storm Drain Inlet Sediment Protection is used prior to permanent stabilization of the disturbed area to prevent sediment from entering downgradient storm drainage systems.

Description

Storm Drain Inlet Sediment Protection is a device or mechanism, either internal or external, for preventing sediment from entering a storm drain; generally by trapping sediment within or immediately adjacent to a storm drain inlet. Types of temporary protection devices applicable for different conditions are listed in the table. Pre-fabricated devices are available for internal and external applications.

Other Names

Storm Drain Inlet Protection, Filter Bag Insert, "Witch's Hat," Silt Sack

Applicability

Storm Drain Inlet Sediment Protection – Curb and Area Inlets are applicable when storm drain inlets must remain operational before permanent stabilization of the disturbed area and when there is potential for sediment to be transported into the storm drain system.

Selection Considerations

Internal devices generally consist of nonwoven, semi-porous material that traps larger sediment, but allows silt and clay-size particles to pass. They are most appropriate in situations where roadway flooding is a concern or where construction traffic will damage an external device.

External devices trap sediment by creating a ponding area surrounding or adjacent to the inlet, reducing velocities and allowing sediment to settle. This process allows external devices to be more efficient at trapping greater volumes of smaller sized sediment.

Curb inlets are distinguished from area inlets by their roadway edge location and proximity to traffic. Both are grated inlets, but whereas curb inlets are in-line with concrete curbing or curb and gutter features, area inlets are located in open areas and are generally surrounded by unpaved surfaces. These are also known as field inlets when they are permanent features, or they may be inlets in unpaved areas that will have paving around them as construction progresses.

Storm Drain Inlet Sediment Protection types applicable to curb inlets and area inlets are summarized in the following table:

Storm Drain Inlet Sediment Protection Types and Applicability Table

Storm Drain Inlet Sediment Protection Type	Applicability	
	Curb Inlet	Area Drain Inlet
External Sediment Protection		
Prefabricated Barrier System	Yes *	Yes
Gravel or Sand Bag Berm	Yes *	Yes
Fiber Roll	No	Yes
Filter Fabric (Silt Fence)	No	Yes
Inlet Grate Covers		
Filter Mat	No	Yes
Curb Face Mesh Filter	Yes	No
Internal Sediment Protection		
Filter Bag Insert	Yes	Yes
Sediment Control Inlet Hat	Yes	Yes
* If neither the sediment protection structure nor ponding will intrude into travel way		

- Fiber rolls and prefabricated barrier systems are not appropriate for locations where they cannot be properly anchored to the surface.
- Filter fabric (silt fence) as a sediment protection device is applicable to area inlets and for flows

less than 0.5 cubic feet per second (cfs) on flat grades (5 percent or less).

- Inlet grate filter mats are only applicable where heavy concentrated flows are not expected and are not applicable where ponding around the structure might cause excessive damage to adjacent structures and unprotected areas.
- Curb face inlet mesh filters for curb inlets prevent sediment from entering the inlet but they also require that runoff is bypassed. This sediment protection device should not be used at a sag inlet (an inlet at the lowest point on a vertical curve or in a depression); and, if used, conveyance to another point of discharge must be provided.

Any of these sediment protection devices may cause flooding affecting streets and the construction area. Where flooding would cause a hazard, consider where overflow will go in extreme events and provide emergency overflows with additional treatment.

Design

Drainage Area: Not to exceed 1acre.

Slope Gradient: Not to exceed 5 percent.

Site and construct Storm Drain Inlet Sediment Protection in a manner that will facilitate cleanout and disposal of trapped sediment.

Design and construct the Storm Drain Inlet Sediment Protection in a manner that will allow flow to pass and to minimize ponding after the runoff has ceased.

Relationship to Other Erosion and Sediment Control Measures

Erosion and sediment control measures in the contributing areas must be in place to minimize the amount of sediment that must be treated at inlets. Storm Drain Inlet Sediment Protection is installed as a secondary measure to remove residual sediment that was not removed by other measures such as check dams, grassed swales, and sediment traps.

Common Failures or Misuses

- Sediment accumulation, by which filtering capacity is reduced, resulting in ponding of water.
- Improper installation, resulting in sediment bypassing filter and entering the inlet.
- Tearing, undermining, or collapsing of filter fabric, resulting in sediment entering the inlet.

SPECIFICATIONS

Standard Specifications

- 683 – Storm Drain Inlet Sediment Protection
- 633 – Silt Fence
- 729-2.04 Geosynthetics

Drawings

- BMP-25.00 Storm Drain Inlet Sediment Protection (Sheets 1 of 5)
- BMP-26.00 Storm Drain Inlet Sediment Protection
- BMP-27.00 Storm Drain Inlet Sediment Protection
- BMP-28.00 Storm Drain Inlet Sediment Protection
- BMP-29.00 Storm Drain Inlet Sediment Protection
- BMP-13.00 Prefabricated Barrier System
- BMP-10.00 Fiber Rolls for Erosion and Sediment Control

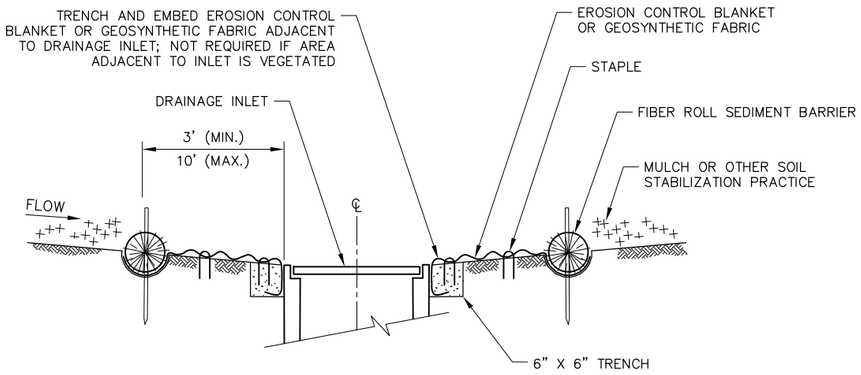

SECTION A–A

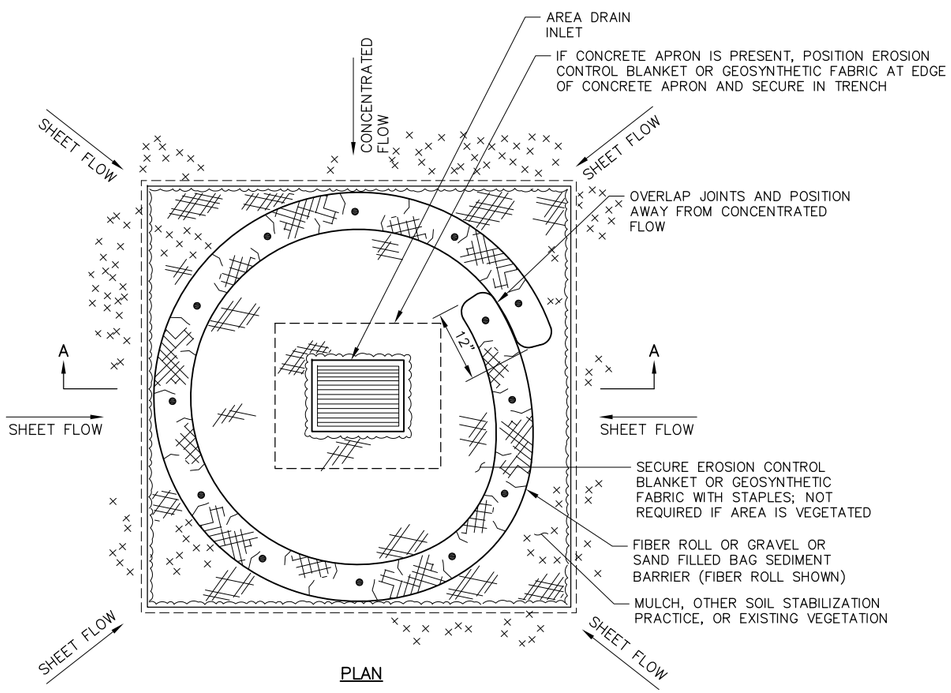

PLAN

FIBER ROLL OR GRAVEL OR SAND BAG BERM FOR AREA INLETS

NOT TO SCALE

FIBER ROLL OR GRAVEL OR SAND BAG BERM NOTES:

MATERIALS

FIBER ROLL AND STAKES: SEE DRAWING BMP–10.00 FIBER ROLL FOR EROSION AND SEDIMENT CONTROL.

GRAVEL– OR SAND–FILLED BAG: TIGHTLY WOVEN BURLAP OR WOVEN GEOTEXTILE BAG MATERIAL THAT IS SUFFICIENTLY DURABLE TO REMAIN INTACT FOR THE TIME INTENDED. FILL BAGS ⅔ FULL OF GRAVEL OR SAND WITH A GRADATION SUCH THAT NO FINE SEDIMENT PASSES THROUGH THE BAG. IF THE SANDBAGS ARE NEEDED FOR MORE THAN ONE SUMMER SEASON, PROVIDE BAG MATERIAL THAT HAS ULTRAVIOLET STABILITY OF AT LEAST 70% IN CONFORMANCE WITH ASTM D4355 REQUIREMENTS. SECURELY CLOSE THE SAND BAGS.

PREFABRICATED UNITS: MAY BE USED IN PLACE OF THE DESIGN SHOWN ON THIS DRAWING UPON APPROVAL BY THE ENGINEER.

INSTALLATION

1. IF PREFABRICATED BARRIERS ARE USED, INSTALL AS SPECIFIED BY THE VENDOR OR MANUFACTURER.
2. FIBER ROLL – SEE DRAWING BMP–10.00 [FIBER ROLL]

INSPECTION, MAINTENANCE, AND REMOVAL

1. SEE STORM DRAIN INLET SEDIMENT PROTECTION GENERAL NOTES, THIS SHEET.

STORM DRAIN INLET SEDIMENT PROTECTION GENERAL NOTES:

INSTALLATION

1. IF PREFABRICATED BARRIERS ARE USED, INSTALL AS SPECIFIED BY THE VENDOR OR MANUFACTURER.

INSPECTION

1. CHECK FOR SEDIMENT DEPTH. CLEANING IS REQUIRED WHEN SEDIMENT HAS ACCUMULATED TO ONE–THIRD THE DESIGN DEPTH (OR LESS WHEN SPECIFIED BY THE MANUFACTURER OF PREFABRICATED BARRIERS).
2. CHECK FOR UNDERMINING OR BYPASSING, SUCH AS EVIDENCE THAT SEDIMENT IS ENTERING THE INLET OR THAT RUN–OFF IS BYPASSING THE BARRIER AND ENTERING THE INLET UNTREATED.

MAINTENANCE

1. IF PREFABRICATED BARRIERS ARE USED, MAINTAIN THEM AS SPECIFIED BY THE VENDOR OR MANUFACTURER.
2. CORRECT UNDERMINING OR BYPASSING FAILURES.
3. REMOVE ACCUMULATED SEDIMENT BEFORE IT REACHES ONE–THIRD OF THE AVAILABLE STORAGE OF THE SEDIMENT PROTECTION DEVICE OR LESS WHEN SPECIFIED BY THE MANUFACTURER.
4. REMOVE AND DISPOSE OF ANY ROCK OR DEBRIS THAT HAS ACCUMULATED BEHIND THE SEDIMENT BARRIER TO PREVENT FURTHER CLOGGING.
5. REPLACE FRAYED OR TORN FABRIC OR MATERIALS AND REPAIR ANY STRUCTURAL DAMAGE AS SOON AS PRACTICABLE.

REMOVAL

1. LEAVE INLET SEDIMENT PROTECTION DEVICES IN PLACE AND OPERATIONAL UNTIL THE DRAINAGE AREA IS PERMANENTLY STABILIZED.
2. REMOVE AND DISPOSE OF TRAPPED OR REMAINING SEDIMENT.
3. STABILIZE DISTURBED SOIL AREAS RESULTING FROM REMOVAL OF BARRIERS OR SEDIMENT.

REVISIONS

Date	Description	By

State of Alaska DOT&PF

STORM DRAIN INLET SEDIMENT PROTECTION (NOTES & AREA INLET FIBER ROLL OR GRAVEL/SAND BAG BERM

APPROVED

Date 12/2015 X/XX/XX

BMP–25.00

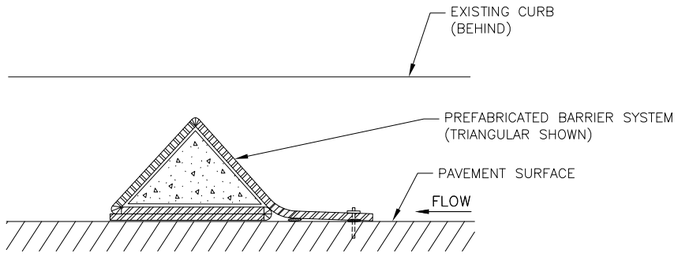

SECTION

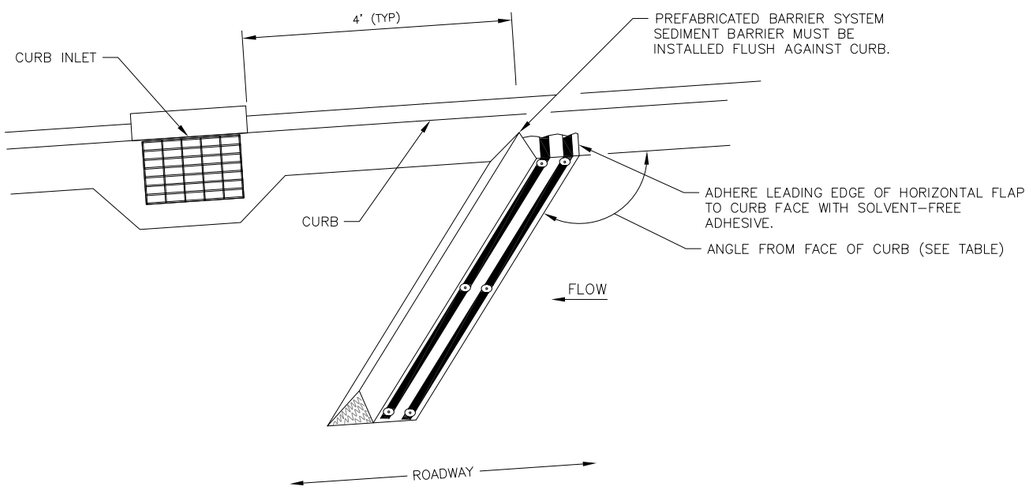

PERSPECTIVE

PREFABRICATED BARRIER SYSTEM FOR CURB INLETS

NOT TO SCALE

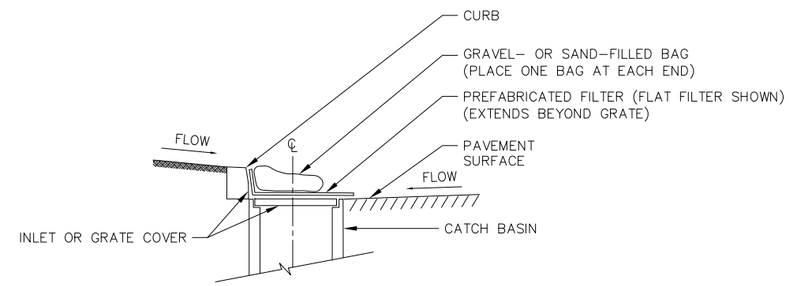

SECTION A-A

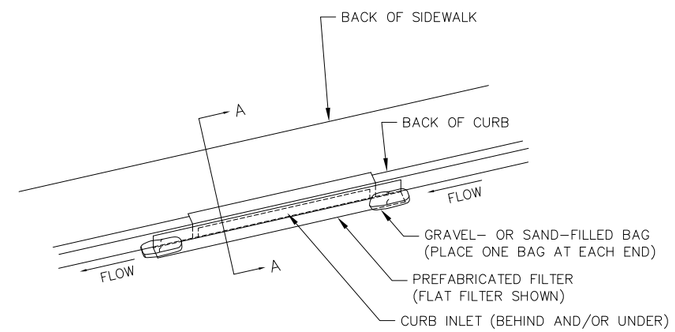

PLAN

CURB FACE INLET FILTER SYSTEM FOR CURB INLETS

NOT TO SCALE

CURB INLET PREFABRICATED BARRIER NOTES:

MATERIALS

1. PREFABRICATED UNITS: UPON APPROVAL BY THE ENGINEER, USE IN PLACE OF THE DESIGN SHOWN ON THIS DRAWING.

INSTALLATION

1. PREFABRICATED BARRIERS: INSTALL AS SPECIFIED BY THE VENDOR OR MANUFACTURER.
2. PREFABRICATED BARRIER SYSTEM – SEE DRAWING BMP-13.00 PREFABRICATED BARRIER SYSTEM

PREFABRICATED BARRIER SYSTEM SEDIMENT BARRIER DIMENSIONS TABLE		
SLOPE OF ROADWAY (PERCENT)	0 TO 2.9	3 TO 5+
ANGLE FROM FACE OF CURB	70°	45°
SUGGESTED BARRIER LENGTH	4'	
SUGGESTED DISTANCE FROM INLET	4'	

INSPECTION, MAINTENANCE, AND REMOVAL

1. SEE STORM DRAIN INLET SEDIMENT PROTECTION GENERAL NOTES ON BMP-25.00 [STORM DRAIN INLET SEDIMENT PROTECTION (NOTES & AREA INLET FIBER ROLL OR GRAVEL/SAND BAG BERM)] NOTES FOR INSPECTION, MAINTENENACE, AND REMOVAL.

CURB FACE INLET FILTER SYSTEM NOTES:

MATERIALS

PREFABRICATED FILTER: LINEAR, FLAT OR TUBE SHAPED CURB INLET FILTER

GRAVEL- OR SAND-FILLED BAG: TIGHTLY WOVEN BURLAP OR WOVEN GEOTEXTILE BAG MATERIAL THAT IS SUFFICIENTLY DURABLE TO REMAIN INTACT FOR THE TIME INTENDED. FILL BAGS ⅔ FULL OF GRAVEL OR SAND WITH A GRADATION SUCH THAT NO FINE SEDIMENT PASSES THROUGH THE BAG. IF THE SANDBAGS ARE NEEDED FOR MORE THAN ONE SUMMER SEASON, PROVIDE BAG MATERIAL THAT HAS ULTRAVIOLET STABILITY OF AT LEAST 70% IN CONFORMANCE WITH ASTM D4355 REQUIREMENTS. SECURELY CLOSE THE SAND BAGS.

PREFABRICATED UNITS: UPON APPROVAL BY THE ENGINEER, USE IN PLACE OF THE DESIGN SHOWN ON THIS DRAWING.

INSTALLATION

1. INSTALL AS SPECIFIED BY THE VENDOR OR MANUFACTURER.

INSPECTION, MAINTENANCE, AND REMOVAL

1. SEE NOTES ON BMP-23.00 STORM DRAIN INLET SEDIMENT POTENTIAL BARRIERS, SHEET 1 – NOTES FOR INSPECTION, MAINTENANCE, AND REMOVAL.

REVISIONS		
Date	Description	By

State of Alaska DOT&PF

STORM DRAIN INLET SEDIMENT PROTECTION (CURB INLET PREFABRICATED BARRIER SYSTEM & CURB FACE INLET FILTER)

APPROVED

Date 12/2015 X/XX/XX

BMP-26.00

GRAVEL BAG BERM SPACING TABLE					
SLOPE OF ROADWAY (PERCENT)	0 TO 3.9	4 TO 5.9	6 TO 7.9	8 TO 10	10+
INTERVAL BETWEEN BARRIERS	100'	75'	50'	25'	12'

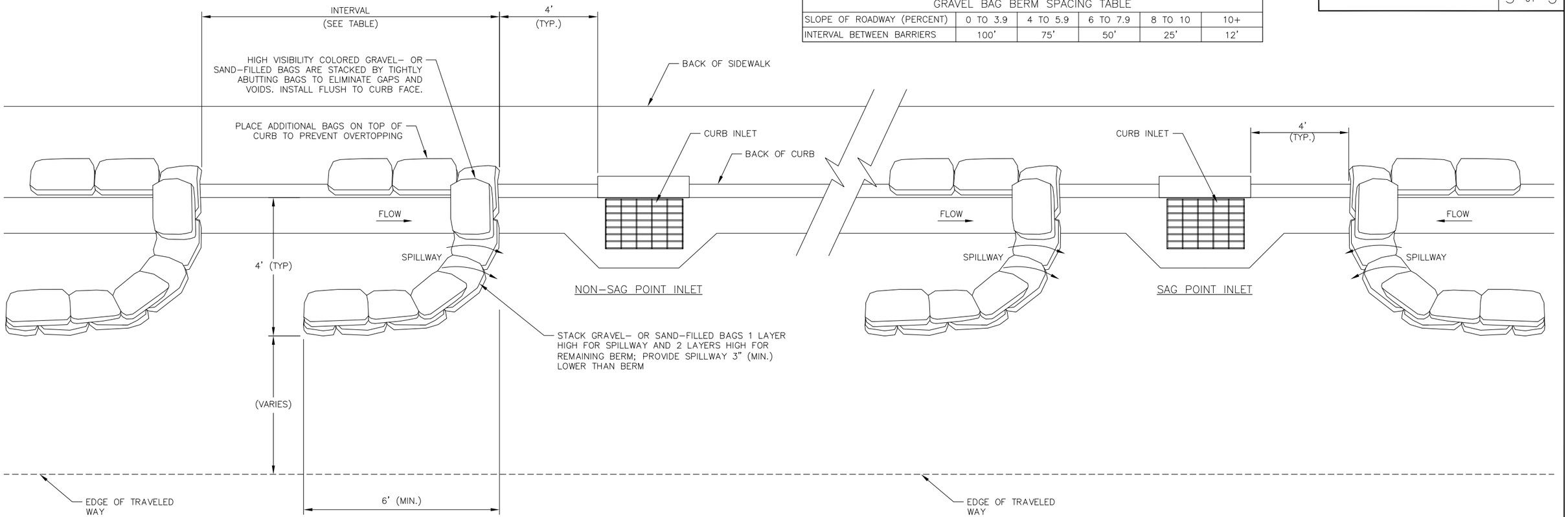

PERSPECTIVE

GRAVEL OR SANDBAG BERMS FOR CURB INLETS

NOT TO SCALE

CURB INLET GRAVEL OR SANDBAG BERM NOTES:

MATERIALS

PREFABRICATED UNITS: UPON APPROVAL BY THE ENGINEER, USE IN PLACE OF THE DESIGN SHOWN ON THIS DRAWING.

GRAVEL– OR SAND–FILLED BAG: TIGHTLY WOVEN BURLAP OR WOVEN GEOTEXTILE BAG MATERIAL THAT IS SUFFICIENTLY DURABLE TO REMAIN INTACT FOR THE TIME INTENDED. FILL BAGS ⅔ FULL OF GRAVEL OR SAND WITH A GRADATION SUCH THAT NO FINE SEDIMENT PASSES THROUGH THE BAG. IF THE SANDBAGS ARE NEEDED FOR MORE THAN ONE SUMMER SEASON, PROVIDE BAG MATERIAL THAT HAS ULTRAVIOLET STABILITY OF AT LEAST 70% IN CONFORMANCE WITH ASTM D4355 REQUIREMENTS. SECURELY CLOSE THE SAND BAGS.

INSTALLATION

1. DELINEATE SAND BAGS WITH TRAFFIC CONTROL DEVICES WHERE NECESSARY
2. IF PREFABRICATED BARRIERS ARE USED, INSTALL AS SPECIFIED BY THE VENDOR OR MANUFACTURER.

INSPECTION, MAINTENANCE, AND REMOVAL

1. SEE STORM DRAIN INLET SEDIMENT PROTECTION GENERAL NOTES ON BMP–25.00 [STORM DRAIN INLET SEDIMENT PROTECTION (NOTES & AREA INLET FIBER ROLL OR GRAVEL/SAND BAG BERM)] NOTES FOR INSPECTION, MAINTENENACE, AND REMOVAL.

REVISIONS		
Date	Description	By

State of Alaska DOT&PF

STORM DRAIN INLET SEDIMENT PROTECTION (CURB INLET GRAVEL OR SANDBAG BERMS)

APPROVED

Date 12/2015 X/XX/XX

BMP–27.00

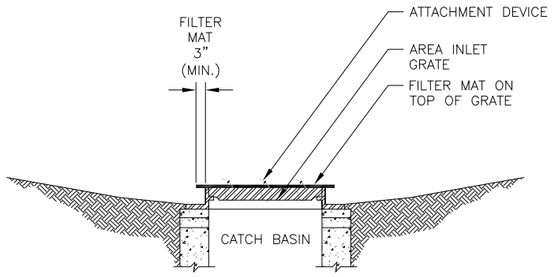

SECTION

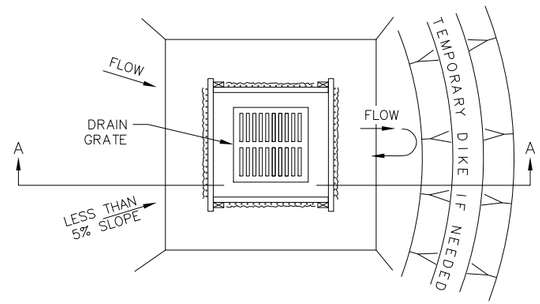

PLAN

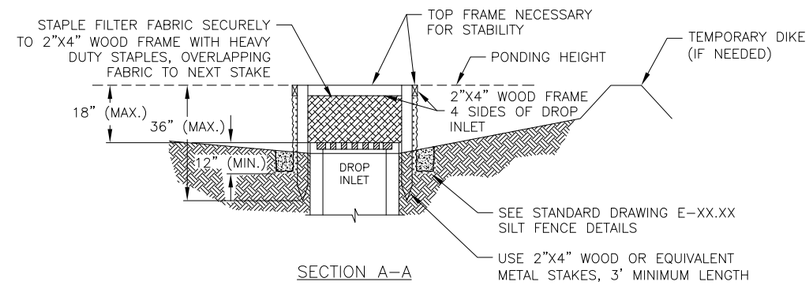

SECTION A–A

FILTER MAT FOR AREA INLETS

NOT TO SCALE

FILTER FABRIC FOR AREA INLETS

NOT TO SCALE

AREA INLET FILTER MAT NOTES:

MATERIALS

MAT: FABRICATED FROM COIR OR EQUIVALENT MATERIAL FOR INLET PROTECTION

ATTACHMENT DEVICES: WIRE OR PLASTIC TIES

PREFABRICATED UNITS: UPON APPROVAL BY THE ENGINEER, USE IN PLACE OF THE DESIGN SHOWN ON THIS DRAWING.

INSTALLATION

1. POSITION THE MAT OVER THE INLET GRATE AND ENSURE THAT IT EXTENDS BEYOND THE EDGE OF THE GRATE BY 3–INCHES MINIMUM ON ALL SIDES.
2. INSTALL AND ATTACH THE MAT TO THE GRATE AS SPECIFIED BY THE MANUFACTURER.
3. IF OTHER PREFABRICATED UNITS ARE USED, INSTALL AS SPECIFIED BY THE VENDOR OR MANUFACTURER.

MAINTENANCE

1. SWEEP TOP AND SIDES OF THE MAT TO REMOVE SEDIMENT AND DEBRIS.
2. REMOVE AND REPLACE MAT IF IT BECOMES CLOGGED.

INSPECTION, MAINTENANCE, AND REMOVAL

1. SEE STORM DRAIN INLET SEDIMENT PROTECTION GENERAL NOTES ON BMP–25.00 [STORM DRAIN INLET SEDIMENT PROTECTION (NOTES & AREA INLET FIBER ROLL OR GRAVEL/SAND BAG BERM)] NOTES FOR INSPECTION, MAINTENENACE, AND REMOVAL.

AREA INLET FILTER FABRIC NOTES:

MATERIALS

PREFABRICATED UNITS: UPON APPROVAL BY THE ENGINEER, USE IN PLACE OF THE DESIGN SHOWN ON THIS DRAWING.

FILTER FABRIC: (SILT FENCE) SHALL COMPLY WITH SECTION 729–2.04 SILT FENCE.

INSTALLATION

1. IF PREFABRICATED BARRIERS ARE USED, INSTALL AS SPECIFIED BY THE VENDOR OR MANUFACTURER.
2. PLACE A STAKE AT EACH CORNER OF THE INLET OR IN A CIRCULAR PATTERN AROUND THE INLET NO MORE THAN 3 FEET APART. DRIVE STAKES INTO THE GROUND A MINIMUM OF 12 INCHES.
3. ENSURE STABILITY BY BRACING AT THE TOP.
4. INSTALL FILTER FABRIC (SILT FENCE) AS SHOWN ON DRAWING BMP–20.00 SILT FENCE.

INSPECTION, MAINTENANCE, AND REMOVAL

1. SEE STORM DRAIN INLET SEDIMENT PROTECTION GENERAL NOTES ON BMP–25.00 [STORM DRAIN INLET SEDIMENT PROTECTION (NOTES & AREA INLET FIBER ROLL OR GRAVEL/SAND BAG BERM)] NOTES FOR INSPECTION, MAINTENENACE, AND REMOVAL.

REVISIONS

Date	Description	By

State of Alaska DOT&PF

STORM DRAIN INLET SEDIMENT PROTECTION (AREA INLET FILTER MAT & FILTER FABRIC)

APPROVED

Date 12/2015 X/XX/XX

BMP–28.00

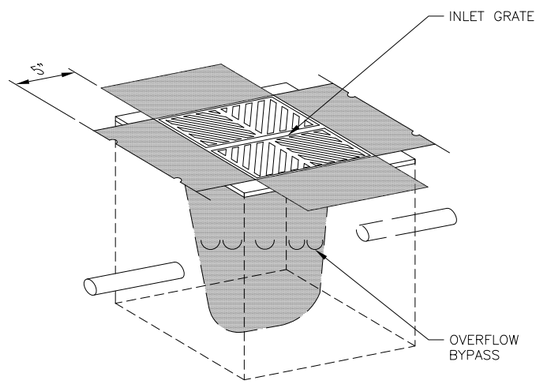

PERSPECTIVE

SEDIMENT CONTROL INLET HAT
FOR AREA DRAINS OR CURB INLETS
NOT TO SCALE

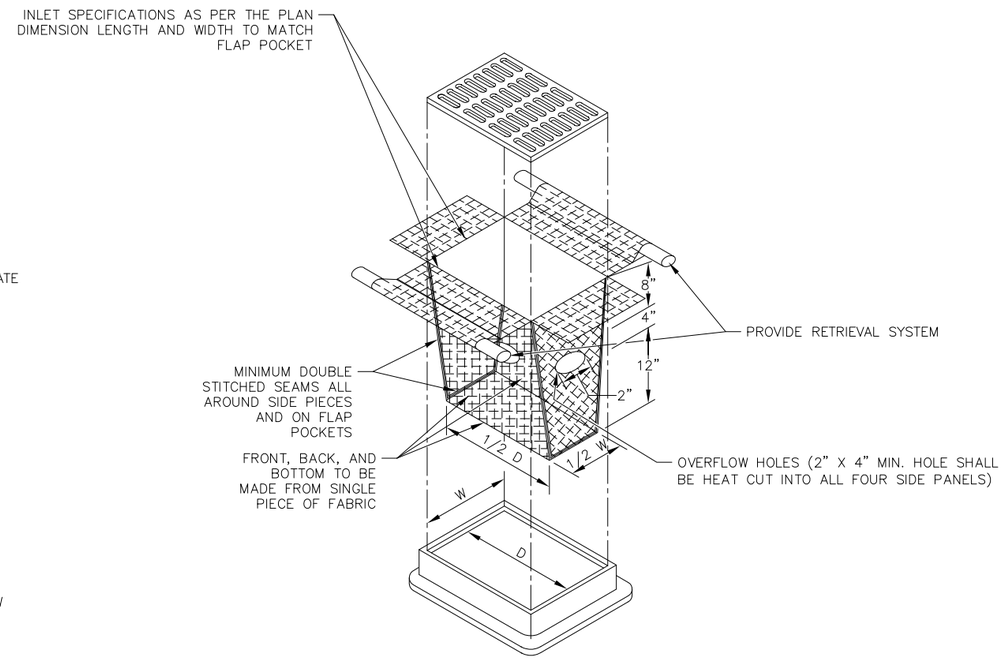

PERSPECTIVE

FILTER BAG INSERT
FOR AREA DRAINS OR CURB INLETS
NOT TO SCALE

AREA DRAINS OR CURB INLET NOTES:

MATERIALS

PREFABRICATED UNITS: UPON APPROVAL BY THE ENGINEER, USE IN PLACE OF THE DESIGN SHOWN ON THIS DRAWING.

SEDIMENT CONTROL INLET HATS: SHALL BE A POLYETHYLENE HAT-LIKE STRUCTURE COVERING THE INLET WITH SMALL WEEP HOLES ON THE SIDE PROVIDING A FILTERING FUNCTION FOR THE STORMWATER RUNOFF, AND A LARGE OPENING ABOVE THE WEEP HOLES FOR EMERGENCY OVERFLOW.

FILTER BAG INSERTS: SHALL CONSIST OF A REPLACEABLE FILTER BAG REINFORCED WITH AN OUTER POLYESTER MESH FABRIC.

1. THE FILTER BAG SHALL BE SUSPENDED FROM A GALVANIZED STEEL RING, REBAR OR STEEL RODS, OR FRAME THAT FITS WITHIN A GRATE UTILIZING A STAINLESS STEEL BAND AND LOCKING CLAMP.

2. CONSTRUCT THE FILTER BAG THAT IS SUSPENDED FROM A FRAME OF A POLYPROPYLENE FILTER GEOTEXTILE FABRIC, THAT MEETS THE FOLLOWING MINIMUM REQUIREMENTS:

	ASTM METHOD	VALUE	UNITS
UNIT WEIGHT	--	4	OUNCE/SQ YD
FLOW RATE	--	145	GALLONS/MINUTE/SQ FT
PERMITTIVITY	D4491	0.5	PER SECOND
GRAB TENSILE STRENGTH	D4632	200	POUNDS
PUNCTURE STRENGTH	D6241	80	POUNDS
TEAR STRENGH	D4533	50	POUNDS
DEBRIS CAPACITY	--	2	CUBIC FT

3. DOUBLE STITCH ALL EDGES AND SEAMS.

4. THE FILTER BAG INSERT SHALL HAVE OVAL, EDGE-HEAT-SEALED OVERFLOW HOLES, MINIMUM 2 INCHES X 4 INCHES, CUT INTO ALL FOUR PANEL SIDES.

5. PROVIDE BUILT-IN OVERFLOW BYPASS.

6. THE INLET STRUCTURE'S GRATE OVERFLOW CAPACITY IS AT A MINIMUM EQUAL TO THE DESIGN FLOW CAPACITY.

7. PROVIDE A RETRIEVAL SYSTEM, SUCH AS FLAPS, HANDLES, OR CORDS, TO ALLOW REMOVAL OF THE BELOW-INLET GRATE BARRIER WITHOUT SPILLING THE COLLECTED MATERIAL.

INSTALLATION

1. IF PREFABRICATED SEDIMENT PROTECTION DEVICES ARE USED, INSTALL AS SPECIFIED BY THE VENDOR OR MANUFACTURER.

INSPECTION, MAINTENANCE, AND REMOVAL

1. SEE STORM DRAIN INLET SEDIMENT PROTECTION GENERAL NOTES ON BMP-25.00 [STORM DRAIN INLET SEDIMENT PROTECTION (NOTES & AREA INLET FIBER ROLL OR GRAVEL/SAND BAG BERM)] NOTES FOR INSPECTION, MAINTENENACE, AND REMOVAL.

REVISIONS

Date	Description	By

State of Alaska DOT&PF

STORM DRAIN INLET SEDIMENT PROTECTION (AREA OR CURB INLET FILTER INSERT)

APPROVED

Date 12/2015 X/XX/XX

BMP-29.00

BMP 30.00. Surface Roughening

DESIGN CONSIDERATIONS

Objectives

Surface roughening measures are intended to aid in the establishment of vegetative cover from seed, to reduce runoff velocity and increase infiltration, and to reduce erosion.

A rough, loose soil surface provides more favorable moisture conditions for seed germination than hard, smooth surfaces. It provides interstitial space for seed deposition and germination and root growth.

Description

Surface roughening establishes a rough soil surface by creating horizontal grooves, furrows, or depressions running parallel to the slope contour over the entire face of the slope. The most common measures include:

- Stair-Step Grading - This is done by cutting "steps" along the contour of a slope, and is applicable to slopes with a gradient greater than 3:1, which have material soft enough to be bulldozed.
- Tracking - This is done by running tracked machinery (such as bulldozers) up and down slopes to leave horizontal depressions in the soil.
- Mechanical methods – This is done by drawing or rolling equipment such as punch or sheepsfoot rollers over the surface.
- Manual Raking - This is done manually by using hand tools such as rakes or hoes to create grooves at least 1-inch deep and no more than 12 inches apart.

Other Names

Contour grading, serration, cat tracking, track walking

Applicability

Surface roughening measures provide simple, inexpensive, and immediate short-term erosion control for bare soil where vegetative cover is not yet established on construction slopes greater than 5 vertical feet. By themselves, they are not soil stabilization and must be seeded, fertilized, and mulched as soon as possible.

Selection Considerations

Selection of slope roughening measures should be based on slope grade, slope type (cut or fill), type of equipment available, and soil type.

1. Cut slopes steeper than 3:1. Use stair-step grading on any erodible material soft enough to be ripped with a bulldozer. Slopes consisting of soft rock with some subsoil are particularly suited to stair-step grading.
2. Fill slopes steeper than 2:1. Use tracking to roughen the face of the slope. If soil is loose, such as sandy soil, manual raking is more suitable.
3. Fill slopes between 2:1 and 3:1. Use tracking or mechanical methods to roughen the face of the slope, if necessary.
4. Cuts, fills, and graded areas no steeper than 3:1. Roughen these areas by tracking, mechanical methods, manual raking, or by using tilling, disking, or harrowing implements.

Surface roughening is suitable for all erodible soils. Stable, sloping rocky faces may not require roughening, while erodible slopes steeper than 3:1 require special attention to surface roughening.

Relationship to Other ESC Measures

Diversions at the upper perimeter of the area function to prevent runoff from causing erosion on the exposed soil. Hydromulch/seed on slopes for erosion control. Silt fences and sediment basins at the lower perimeter of the area function to prevent off-site sedimentation.

Common Failures or Misuses

- Roughening washed away by heavy rain, necessitating re-roughening and reseeding.
- Failure of upslope control measures (diversions), resulting in excessive flows over area and erosion of soil.
- Surface roughening alone is not considered stabilization.

- Surface roughening must not be used as a means to keep an area “actively worked” to reset the stabilization deadline.
- Track walking in the wrong direction is a common failure that provides valleys for the water to concentrate in.

SPECIFICATIONS

Standard Specification

- 684 – Surface Roughening

Drawing

- BMP-30.00 – Surface Roughening

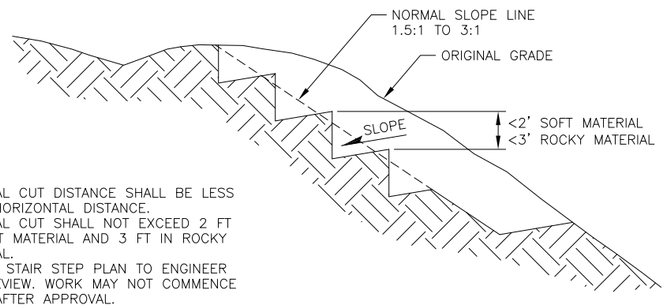

NOTES:
1. VERTICAL CUT DISTANCE SHALL BE LESS THAN HORIZONTAL DISTANCE.
2. VERTICAL CUT SHALL NOT EXCEED 2 FT IN SOFT MATERIAL AND 3 FT IN ROCKY MATERIAL.
3. SUBMIT STAIR STEP PLAN TO ENGINEER FOR REVIEW. WORK MAY NOT COMMENCE UNTIL AFTER APPROVAL.

DETAIL 1: STAIR STEP GRADING

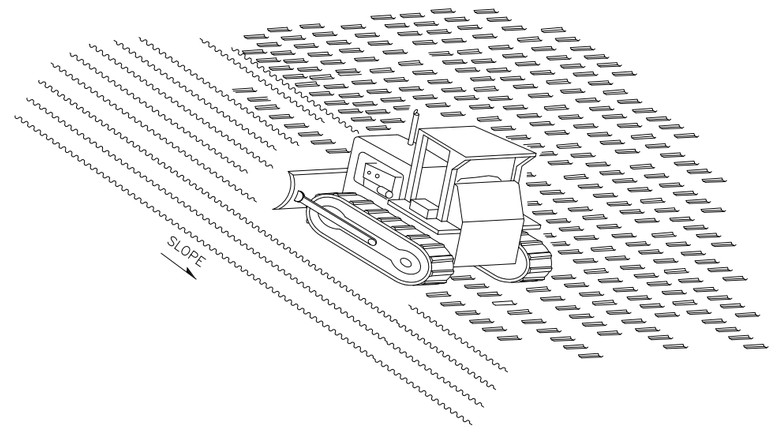

TRACK WITH MACHINERY UP AND DOWN THE SLOPE TO PROVIDE GROOVES TO CATCH SEED AND RAINFALL AND TO REDUCE RUNOFF.

DETAIL 2: TRACKING

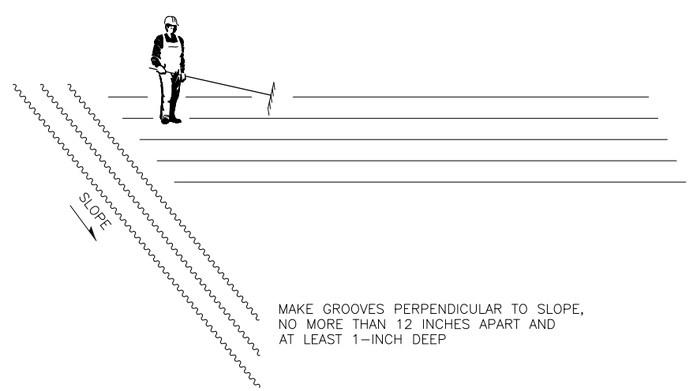

DETAIL 3: MANUAL RAKING

EQUIPMENT
TRACKED EQUIPMENT (SUCH AS BULLDOZERS), SHEEPSFOOT OR PUNCH ROLLERS, RAKES, HOES, HARROWING TOOLS OR OTHER EQUIPMENT AS APPROVED BY THE ENGINEER.

INSTALLATION
1. GROOVE THE SLOPE TO CREATE A SERIES OF RIDGES AND DEPRESSIONS THAT RUN ACROSS THE SLOPE, ALONG THE CONTOUR OF THE GROUND.
2. ON FILL SLOPES STEEPER THAN 3:1, ENSURE THAT THE FACE OF THE SLOPE CONSISTS OF LOOSE, UNCOMPACTED FILL 4 INCHES TO 8 INCHES DEEP.
3. DO NOT BLADE OR SCRAPE THE FINAL SLOPE FACE. DO NOT BACK BLADE DURING THE FINAL GRADING OPERATION.
4. WHEN ROUGHENING WITH TRACKED MACHINERY (DETAILS 1 OR 2), LIMIT THE NUMBER OF PASSES TO AVOID UNDUE COMPACTION OF THE SOIL.
5. AVOID EXCESSIVE ROUGHNESS THAT WOULD HINDER UNIFORM PLANT ESTABLISHMENT, SUCH AS A LARGE PERCENTAGE OF THE AREA WITH FURROWS DEEPER OR CLODS LARGER THAN 4 INCHES.

SEED, FERTILIZE, AND MULCH AREAS THAT ARE ROUGHENED AS SOON AS PRACTICABLE.

INSPECTION
ENSURE THE AREA HAS AN ADEQUATE DEPTH AND COVERAGE OF ROUGHENING. INSPECT THE AREAS ACCORDING TO ESTABLISHED SCHEDULES AS REQUIRED BY THE CGP AND THE SWPPP.

MAINTENANCE
REGRADE AND RESEED AS SOON AS PRACTICABLE IF RILLS OR CHANNELIZATION OF RUNOFF APPEAR.

NOT TO SCALE

REVISIONS		
Date	Description	By

State of Alaska
Department of Transportation
& Public Facilities

SURFACE ROUGHENING

APPROVED
Date 12/2015 X/XX/XX

BMP-30.00

BMP 31.00 – 33.00. Temporary Check Dam

These instructions include BMP 31.00, 32.00, and 33.00.

DESIGN CONSIDERATIONS

Objectives

Temporary Check Dams are used to reduce scour, reduce velocity, dissipate energy, prevent erosion, and settle sediment behind the weir structure in an unlined channel or vegetative swale.

Description

A Temporary Check Dam can be constructed of a variety of materials and is placed perpendicular to flow in a ditch or channel. It is placed so that it extends higher than the water level on both sides of the flow path and is lower in the center to allow water to flow through a controlled path.

Temporary Check Dams can be constructed from angular rock, fiber rolls, prefabricated foam barriers, sandbags, or compost socks. When rock is used, small sediment particles become lodged in the check dam's interior.

Other Names

In-Stream/Channel Energy Dissipater, Velocity Control Device, Sediment Trap, Ditch Check

Applicability

Temporary Check Dams are placed in series in ditches, swales, or other minor drainageways that require velocity checks, are not yet vegetated, or are intended to be filled or stabilized at a later time. When placed in a lined channel, check dams dissipate velocity, settle sediment, and anchor the liner.

Check dams may also be used as permanent measures for gradient control structures in ditches adjacent to elevated roadway sections.

Selection Considerations

Dependent on materials available, best management practices (BMPs) being used on the project and the durability required, Temporary Check Dams can be constructed from rock, fiber rolls, prefabricated barrier systems, sandbags, or compost socks. The Standard Drawing for Temporary Check Dams has details for the installation of each type of check dam.

- Check dams are used in narrow ditches.
- Steep channel slopes reduce effectiveness.
- Coupling check dams with a small adjacent upstream sump improves velocity slowing and sediment trapping ability.
- The area downstream from the last dam should be stabilized or flow diverted.
- Check dam rocks interfere with the establishment of vegetation.
- Some Temporary Check Dams are left as a permanent control measure. Removal may be indicated because of unsightliness or interference with maintenance (grass mowing) activities.

Design

The design of Temporary Check Dams (high at channel banks, lower in the middle) directs overtopping flows centrally to avert scouring of channel surfaces. The check dam is keyed into channel slopes to prevent bank undercut and erosion.

Check dam structures are sized to stay in place during peak flow. The check dam height or weir depth should pass 2-year, 24-hour storm runoff without overtopping the roadway or ditch sideslopes. Generally, check dams are not constructed higher than recommended since excessive weir depth seriously impacts the flow characteristics of the ditch.

- Design flow: 2-year, 24-hour
- Spacing:
  - Align the base of the upstream check dam with the top of the next downstream check dam.
  - Space check dams evenly in the drainageway, adjust spacing for grade breaks.
  - Use the spacing chart below to determine the distance between check dams based on slope and check dam height.

Maximum Spacing for Temporary Check Dams (Feet)

Ditch Grade	Minimum Weir Depth	
	12 inches	18 inches
6%	15	25
5%	20	30
4%	25	40
3%	30	50
2%	50	80

This table is used to estimate the number of check dams. Actual spacing should be based on field conditions and meet the requirement that the top elevation is equal to the bottom elevation of the next upstream check dam. Spacing is also a function of the ditch erodibility, the flow, and the velocity.

Relationship to Other Erosion and Sediment Control Measures

Temporary Check Dams are used for channel protection prior to establishment of permanent or stabilized erosion controls. Although check dams perform some sediment filtering, they are not intended to replace filters or sediment basins. A depression in the bottom of the channel at the upstream edge of a check dam augments velocity slowing and sediment removal; however, digging a sump through stabilized in-channel protection (e.g. grassed lining) should be avoided.

Protective channel linings (e.g. grassed waterway, concrete or rock-lined ditch, erosion control blankets, or mattings), sediment settling ponds, permanent ditch blocks, brush barriers, diversions, slope drains, or combinations of these measures can be used in conjunction with or as an alternative to Temporary Check Dams.

Common Failures or Misuses

- Improper spacing of check dams.
- Undercut/washout of channel banks beside the structure due to improper installation (e.g. dam not built high enough onto the banks).
- Increased bank erosion (e.g. at channel bends) or inadequate protection of channel surfaces due to improper location or installation of check dams.
- Water backup and bank overflow due to overly tall dam structure.
- Use of check dams for soil stabilization.
- Placement of check dams at abrupt bends causing erosive waters to be misdirected by the check dam into channel banks.
- Check dams installed in grass-lined structures may kill the vegetative lining if siltation is excessive or the check dam remains submerged for extended periods of time.
- Placement in waters of the U.S. or wetlands without appropriate agency permitting.
- Placement of check dams below the expected backwater from a salmonid bearing water causing a loss of high flow refuge habitat for overwintering juvenile salmonids and emergent fry.
- Improperly anchored check dams causing the check dam to wash away.
- When rock is used, inadequate rock size or angularity.
- When rock is used, rocks washed downstream causing culvert clogs, misdirecting flow, etc.
- Use of silt fence or straw bales as check dams.

SPECIFICATIONS

Standard Specification

- 685- Temporary Check Dam

Drawings

- BMP-31.00 Temporary Check Dam (Notes & Fiber Roll or Compost Sock)
- BMP-32.00 Temporary Check Dam (Prefabricated Barrier System & Rock)
- BMP-33.00 Temporary Check Dam (Sandbag)

Reference Drawings

- BMP-04.00 Compost Berm
- BMP-05.00 Compost Sock
- BMP-10.00 Fiber Rolls for Erosion and Sediment Control
- BMP-13.00 Prefabricated Barrier System

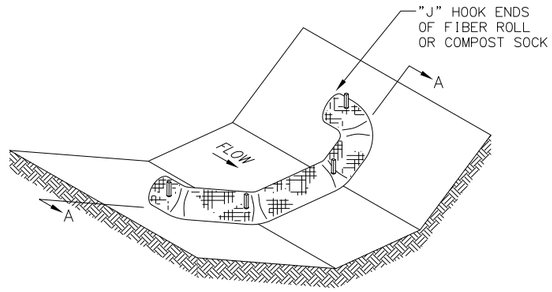

PERSPECTIVE

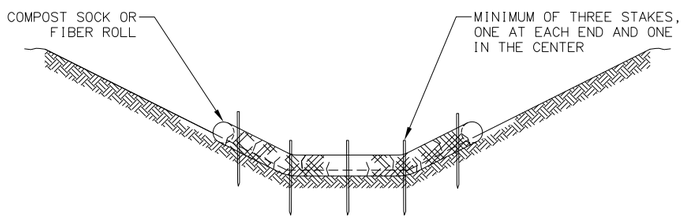

SECTION A–A

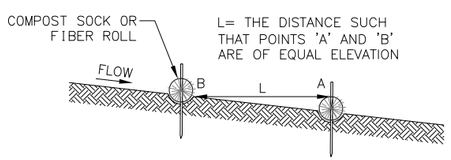

PROFILE

FIBER ROLL OR COMPOST SOCK

NOT TO SCALE

FIBER ROLL OR COMPOST SOCK NOTES:

1. FOR USE OF FIBER ROLLS SEE BMP–10.00 FIBER ROLLS FOR EROSION AND SEDIMENT CONTROL.
2. FOR USE OF COMPOST SOCKS SEE BMP–05.00 COMPOST BERM & SOCK.

INSTALLATION, INSPECTION, MAINTENANCE, AND REMOVAL

1. SEE TEMPORARY CHECK DAM NOTES, THIS SHEET.

TEMPORARY CHECK DAM GENERAL NOTES:

MATERIALS

TEMPORARY CHECK DAM: USE ONLY CLEAN MATERIALS.

INSTALLATION

1. INSTALL CHECK DAMS AS SOON AS DRAINAGE ROUTES ARE ESTABLISHED.
2. PLACE CHECK DAMS PERPENDICULAR TO THE FLOW OF WATER.
3. IF NECESSARY, IMPOUND OR BYPASS UPSTREAM WATER FLOW PRIOR TO INSTALLING CHECK DAMS.
4. EXTEND CHECK DAMS ONTO THE CHANNEL BANKS TO A HEIGHT ABOVE ANTICIPATED HIGH WATER LEVEL TO PREVENT LOCALIZED UNDERMINING AND EROSION.

INSPECTION

1. VISUALLY COMPARE UPSTREAM AND DOWNSTREAM FLOWS TO DETERMINE RELATIVE TURBIDITY LEVELS AND EFFECTIVENESS OF CHECK DAMS.
2. INSPECT CHANNEL BANKS FOR EVIDENCE OF UNDERMINING AND EROSION.
3. INSPECT FOR DAM DETERIORATION AND FOR MIGRATION OF STRUCTURAL COMPONENTS DOWNSTREAM.
4. ENSURE THE CENTER OF THE DAM IS LOWER THAN THE EDGES AND THAT WATER IS NOT RUNNING AROUND THE ENDS.

MAINTENANCE

1. REPAIR BANK UNDERCUTS.
2. REMOVE ACCUMULATED SEDIMENT BEFORE IT REACHES HALF THE HEIGHT OF THE DAM OR ONE–THIRD OF THE AVAILABLE STORAGE IF PROTECTING A WATER BODY OR STORM DRAIN INLET.
3. REPAIR UNDERCUTTING AND FLOW AROUND THE EDGES OR, IF NECESSARY, REPOSITION THE CHECK DAM.
4. INSTALL ADDITIONAL DAMS OR OTHER EROSION AND SEDIMENT CONTROL MEASURES AS NEEDED.

REMOVAL

1. AFTER THE DISTURBED AREA IS PERMANENTLY STABILIZED OR WHEN THE GRASS IN THE CHANNEL HAS MATURED SUFFICIENTLY TO PROTECT THE DITCH OR SWALE, REMOVE TEMPORARY CHECK DAMS.
2. TAKE CARE DURING CHECK DAM REMOVEAL, SINCE THE WATERWAY SURFACE IS SUSCEPTIBLE TO DAMAGE.
3. IMMEDIATELY SEED OR PROVIDE OTHER FORMS OF PROTECTION FOR DAMAGED OR UNPROTECTED AREAS.

REVISIONS		
Date	Description	By

State of Alaska DOT&PF

TEMPORARY CHECK DAM (NOTES & FIBER ROLL OR COMPOST SOCK)

APPROVED

Date 12/2015 X/XX/XX

BMP–31.00

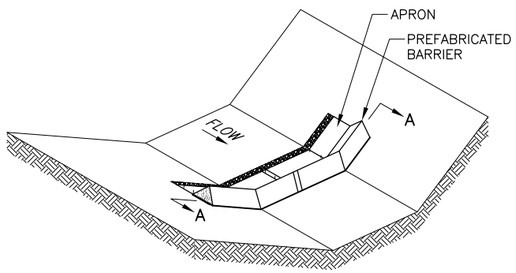

PERSPECTIVE

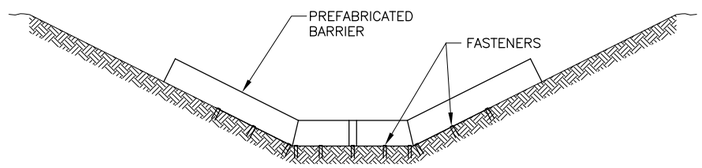

SECTION A–A

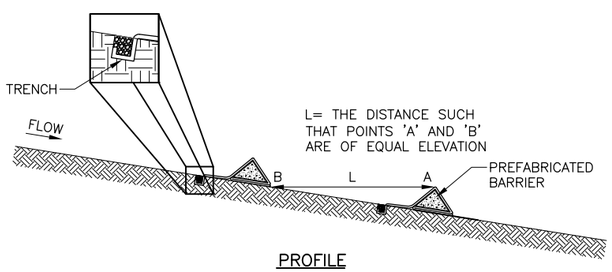

PROFILE

PREFABRICATED BARRIER SYSTEM CHECK DAM

NOT TO SCALE

PREFABRICATED BARRIER SYSTEM NOTES:

1. FOR USE OF PREFABRICATED BARRIER, SEE BMP–13.00 PREFABRICATED BARRIER SYSTEM

INSTALLATION, INSPECTION, MAINTENANCE, AND REMOVAL

1. SEE TEMPORARY CHECK DAM GENERAL NOTES ON BMP–31.00 (TEMPORARY CHECK DAM SHEET 1) – NOTES FOR INSTALLATION, INSPECTION, MAINTENANCE, AND REMOVAL.

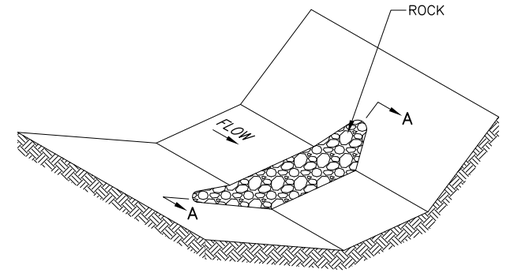

PERSPECTIVE

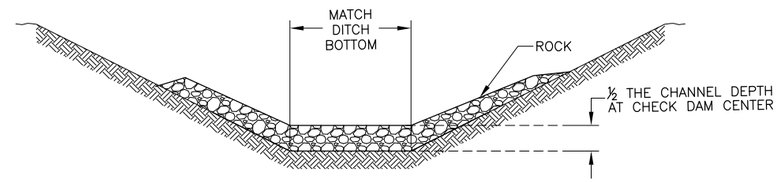

SECTION A–A

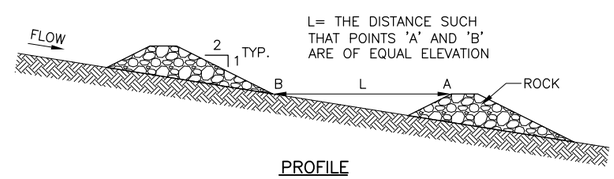

PROFILE

ROCK CHECK DAM

NOT TO SCALE

ROCK NOTES:

MATERIALS

BERM: CLEAN HARD ANGULAR (E.G. CRUSHED, SHOT) ROCK GRADED ACCORDING TO EXPECTED FLOWS; 3– TO 6–INCH DIAMETER ROCK IS USUALLY ADEQUATE.

INSTALLATION

1. PLACE ROCK BY HAND OR MECHANICAL MEANS, DISTRIBUTING SMALLER ROCKS TO THE UPSTREAM SIDE TO PREVENT TRANSPORT.

MAINTENANCE

1. REPAIR VOIDS.
2. FORTIFY DISINTEGRATING DAMS. CONSIDER WHETHER ROCK SIZE IS SUFFICIENT FOR FLOWS.
3. CORRECT EFFECTS OF ROCK MIGRATION (E.G. CLOGGED CULVERT, FLOW CONSTRICTION) OR ANY DOWNSTREAM EROSION. IDENTIFY THE ORIGIN OF THE PROBLEM AND REPAIR, REPLACE OR ADD BMPS TO CORRECT IT.

ADDITIONAL NOTES

1. SEE TEMPORARY CHECK DAM GENERAL NOTES ON BMP–31.00 (TEMPORARY CHECK DAM SHEET 1) – NOTES FOR INSTALLATION, INSPECTION, MAINTENANCE, AND REMOVAL.

REVISIONS

Date	Description	By

State of Alaska DOT&PF

TEMPORARY CHECK DAM (PREFABRICATED BARRIER SYSTEM & ROCK)

APPROVED

Date 12/2015 X/XX/XX

BMP–32.00

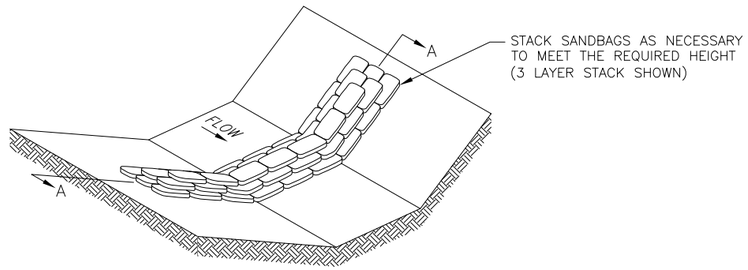

PERSPECTIVE

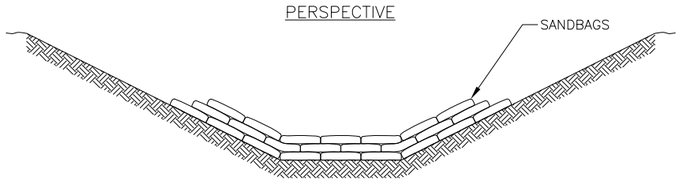

SECTION A–A

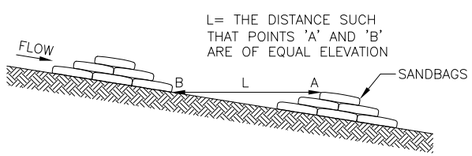

PROFILE

SANDBAG CHECK DAM

NOT TO SCALE

SANDBAG NOTES:

MATERIALS

SANDBAG BARRIER: TIGHTLY WOVEN BURLAP OR WOVEN GEOTEXTILE BAG MATERIAL THAT IS SUFFICIENTLY DURABLE TO REMAIN INTACT FOR THE TIME INTENDED. FILL BAGS ⅔ FULL OF GRAVEL OR SAND WITH A GRADATION SUCH THAT NO FINE SEDIMENT PASSES THROUGH THE BAG. IF THE SANDBAGS ARE NEEDED FOR MORE THAN ONE SUMMER SEASON, PROVIDE BAG MATERIAL THAT HAS ULTRAVIOLET STABILITY OF AT LEAST 70% IN CONFORMANCE WITH ASTM D4355 REQUIREMENTS. SECURELY CLOSE THE SAND BAGS.

INSTALLATION

1. PLACE SANDBAGS SO THAT THE INITIAL ROW MAKES TIGHT CONTACT WITH THE DITCH LINE FOR THE LENGTH OF THE DAM.
2. TIGHTLY ABUT ALL SANDBAGS.
3. STAGGER SANDBAG LIFTS SO THAT THE CENTER OF THE BAG IS PLACED ON THE SPACE BETWEEN BAGS ON THE PREVIOUS LIFT.

INSPECTION

1. ENSURE THE SANDBAGS ARE IN TIGHT CONTACT WITH THE SOIL.
2. LOOK FOR SPLIT, TORN, OR UNRAVELING BAGS.

MAINTENANCE

1. REPLACE DAMAGED SANDBAGS AS NECESSARY.

ADDITIONAL NOTES

1. SEE TEMPORARY CHECK DAM GENERAL NOTES ON BMP–31.00 (TEMPORARY CHECK DAM SHEET 1) – NOTES FOR INSTALLATION, INSPECTION, MAINTENANCE, AND REMOVAL.

REVISIONS

Date	Description	By

State of Alaska DOT&PF

TEMPORARY CHECK DAM (SANDBAG)

APPROVED

Date 12/2015 X/XX/XX

BMP–33.00

BMP 34.00 & 35.00. Temporary Diversion Conveyance

DESIGN CONSIDERATIONS

Objectives

The purpose of Temporary Diversion Conveyance is to temporarily route a concentrated flow around a construction area and reduce sediment pollution from construction work from entering the concentrated flow.

Description

Temporary Diversion Conveyances are a ditch, pipe, or lined channel used to divert water from upstream of the project area, route it around the construction area, and discharge it downstream.

Other Names

Clear Water Diversion, Diversion Ditch.

Applicability

Temporary diversion methods are often required during culvert replacements; the construction of detention ponds, dams, in-stream grade control structures, or utility installation; and bank, channel, and other in-water maintenance and other activities that require working in waterways. Since this BMP is temporary, it would not involve additional analysis in community locations that participate in the National Flood Insurance Program; however, it should comply with local ordinances.

Selection Considerations

Temporary Diversion Conveyances will disturb the concentrated flow paths during installation and removal of diversion activities. The design should consider whether the temporary diversion will cause greater environmental impacts than if the project is constructed without temporary diversion.

Where possible, use natural streambed materials such as larger cobbles and boulders for temporary embankment/slope protection, or other temporary soil stabilization methods. If fish habitat or passage is required in the Temporary Diversion Conveyance, coordinate with Alaska Department of Fish and Game (ADF&G) for details of design.

Where possible, avoid or minimize diversion/ encroachment impacts by limiting construction to periods of low flow or when the stream is dry.

Additional specific permit requirements, including allowable work time periods or mitigation measures, may be required by agencies, such as the U.S. Army Corps of Engineers, Alaska Department of Environmental Conservation, ADF&G, Alaska Department of Natural Resources, etc. The designer should allow adequate time to apply for and receive permits and be cognizant of permit requirements, in order to design a system that will meet permit conditions.

Site topography may not allow for gravity flow, in which case pumps would be required.

Design

Consider having the Regional Hydraulics Engineer review the design.

Flow Rate: Size for system base flow plus flows estimated from a minimum of a 2-year, 24-hour rainfall event, including runoff from drainage area during the anticipated time of construction. Consider tributary area and seasonal rainfall patterns. If there are large paved areas upslope, consider a larger sized system. Include the flow rate that will be used in the contract so the contractor can properly size the pump.

Temporary Dams: Select dam material to be erosion resistant, such as steel pipe plate, sheetpile, sandbags, continuous berms, inflatable water bladders, etc. Fish removal and a fish-proof barrier may be required under an ADF&G Fish Habitat Permit.

Temporary Bypass Structure: The structure may include one or more plastic or metal pipes or an excavated channel lined with plastic sheeting or other known non-erosive material. Determine the location of the channel and the topography along the channel route. Size the conveyance structure based on slope, conveyance roughness, and conveyance geometry (e.g., Manning's equation or similar methodology) with appropriate factors of safety or, for open channels, freeboard.

Outlet Protection: You must add stormwater discharge energy dissipation to the design to prevent scour and erosion at the outlet. Temporary lining of the discharge area (e.g., sandbags or riprap) may be used.

Relationship to Other Erosion and Sediment Control Measures

Pumped stream diversion techniques may be needed for dewatering and diverting intermittent and low flows.

Common Failures or Misuses

- Improper diversion sizing leading to flooding or washouts.
- Complete damming of the flow.
- Insufficient water passing downstream preventing the maintenance of aquatic life downstream.
- Stream bank stabilization is not provided causing erosion to occur.
- Barriers between the flow path and the construction area are not adequate to prevent the flow of muddy water into the concentrated flow.

SPECIFICATIONS

Standard Specification

686 – Temporary Diversion Conveyance

Drawing

- BMP-34.00 Temporary Diversion Conveyance (Notes & Piped Detail)
- BMP-35.00 Temporary Diversion Conveyance (Channel Detail)

Reference Drawing

- BMP-15.00 Pumped Stream Diversion

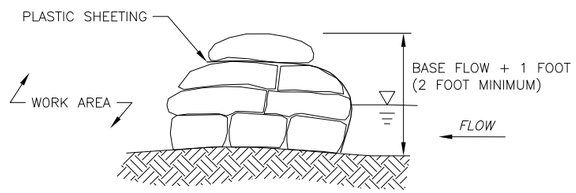

SECTION A–A

SANDBAG DAM
NOT TO SCALE

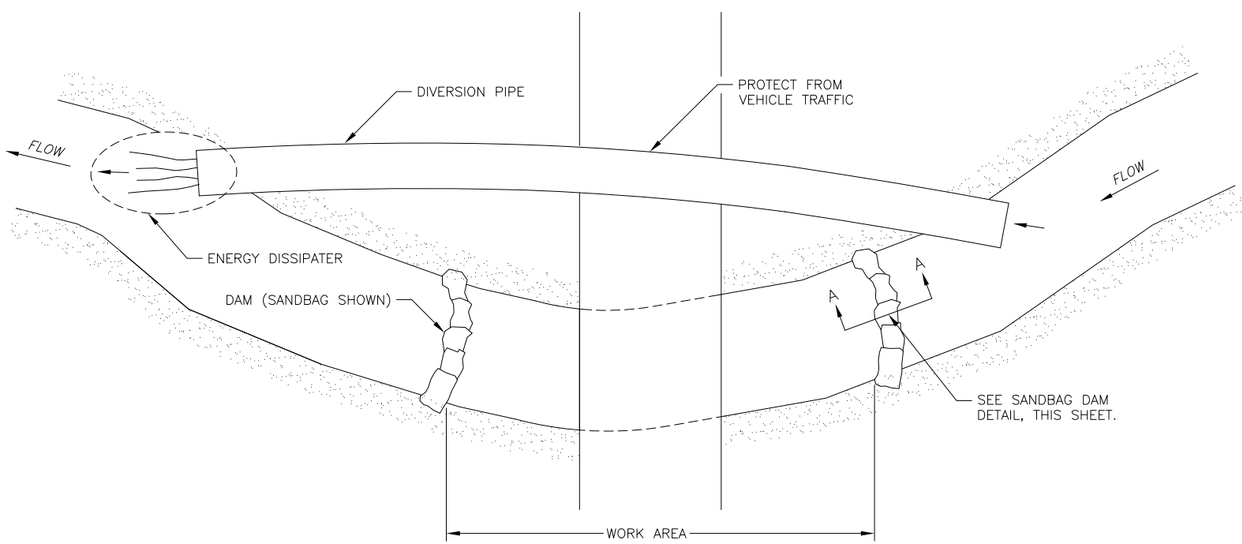

PLAN

PIPED DIVERSION
NOT TO SCALE

PIPED DIVERSION NOTES:

MATERIALS

PIPE: A FLEXIBLE HOSE, PLASTIC OR METAL PIPE (SECTION 706–2.06, 706–2.07, 707–2.03).

INSTALLATION

1. USE WATERTIGHT FITTINGS AT ALL CONNECTIONS.
2. SECURELY FASTEN THE EXPOSED SECTION OF THE PIPE WITH GROMMETS OR STAKES AT 10–FOOT SPACING.
3. ESTABLISH THE FLOW IN THE PIPE AND INSTALL TEMPORARY DAMS TO FORCE WATER TO BE DIVERTED.
4. ENSURE THAT DIVERSION PIPE INLET IS SECURE AND BETWEEN THE ELEVATIONS OF THE TOP OF THE DAM AND THE STREAM CHANNEL.
5. INSTALL ENERGY DISSIPATER.

INSPECTION

1. INSPECT THE PIPE FOR BREAKS OR BLOCKAGE.
2. INSPECT INLET FOR SEDIMENT BUILDUP.

MAINTENANCE

1. INSTALL A HEADWALL IF NECESSARY TO CONTROL EROSION AROUND THE INLET.
2. REPAIR ANY BREAKS IN THE PIPE.
3. TIGHTEN FITTINGS AT LEAKING CONNECTION POINTS.
4. CLEAR ANY CLOGS THAT REDUCE FLOW THROUGH THE PIPE.

ADDITIONAL NOTES

1. SEE TEMPORARY DIVERSION CONVEYANCE GENERAL NOTES ON BMP–34.00 TEMPORARY DIVERSION CONVEYANCE (NOTES AND PIPED DETAIL), THIS SHEET.

TEMPORARY DIVERSION CONVEYANCE GENERAL NOTES:

MATERIALS

DAM MATERIAL: SANDBAGS COVERED WITH PLASTIC SHEETING (30 MIL OR 2 OR MORE LAYERS OF 10 MIL), RIPRAP, STEEL PIPE PLATE, SHEETPILE, INFLATABLE BLADDERS, OR EQUIVALENT.

CONVEYANCE STRUCTURE: PIPE OR CHANNEL.

ENERGY DISSIPATER: RIPRAP, SANDBAGS, T–BAR SPREADER. OR EQUIVALENT

INSTALLATION

1. DISTURBANCE OR REMOVAL OF VEGETATION SHALL NOT EXCEED THE MINIMUM NECESSARY TO COMPLETE OPERATIONS.
2. INSTALL DIVERSION ON THE INSIDE OF THE STREAM BEND, WHERE POSSIBLE.

INSPECTION

1. INSPECT DAMS FOR OVERTOPPING, BYPASS, UNDERCUTTING, OR OTHER DEFECTS.
2. INSPECT DISCHARGE POINT FOR EROSION OR FAILURE OF THE ENERGY DISSIPATER.

REMOVAL

1. REMOVE TEMPORARY DAM STRUCTURES AND DIRECT FLOW TO THE ORIGINAL PATH UPON COMPLETION OF WORK.
2. RECYCLE OR RE–USE THE DAM, IF APPLICABLE.
3. BACKFILL OR REGRADE AND RESTORE THE DIVERSION CONVEYANCE TO ORIGINAL CONTOURS.
4. REGRADE AND SEED OR PERMANENTLY STABILIZE ALL DISTURBED AREAS.
5. STABILIZE AS QUICKLY AS POSSIBLE BECAUSE THE WORK IS CLOSE TO WATER.

REVISIONS		
Date	Description	By

State of Alaska DOT&PF

TEMPORARY DIVERSION CONVEYANCE (NOTES & PIPED DETAIL)

APPROVED

Date 12/2015 X/XX/XX

BMP–34.00

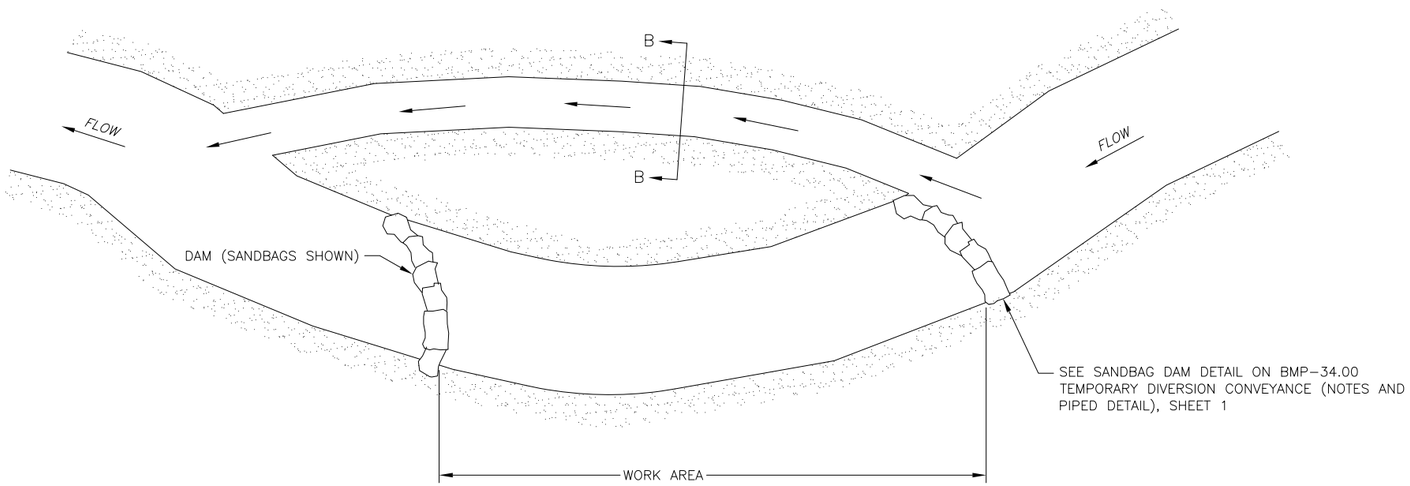

PLAN

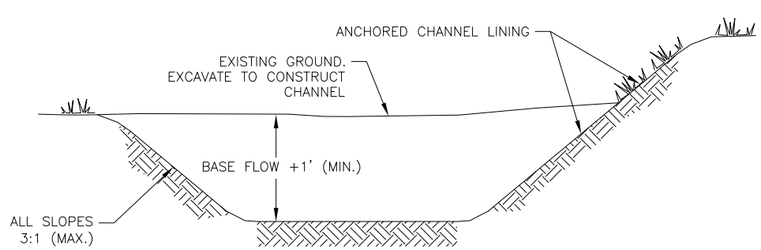

SECTION B–B

CHANNEL DIVERSION
NOT TO SCALE

CHANNEL DIVERSION NOTES:

MATERIALS

CHANNEL LINING: PLASTIC SHEETING (MINIMUM 30 MIL THICKNESS OR TWO OR MORE LAYERS OF 10 MIL FIBER REINFORCED THICKNESS).

INSTALLATION

1. REMOVE AND PROPERLY DISPOSE OF ALL TREES, BRUSH, STUMPS, OR OTHER OBJECTIONABLE MATERIAL.
2. BEGIN EXCAVATION OF THE CHANNEL AT THE PROPOSED DOWNSTREAM END AND WORK UPSTREAM.
3. EXCAVATE, SHAPE, AND STABILIZE THE DIVERSION TO LINE, GRADE, AND CROSS SECTION AS REQUIRED IN THE PLANS.
4. STOCKPILE EXCAVATED MATERIAL TO BACKFILL DIVERSION AFTER FLOW HAS BEEN RE–DIRECTED TO THE ORIGINAL PATH.
5. PROVIDE BMPS FOR THE STOCKPILE SUCH THAT SEDIMENT FROM THE STOCKPILE DOES NOT ENTER THE WATER.
6. STABILIZE THE DIVERSION AFTER INSTALLATION.
7. BREACH THE UPSTREAM END AFTER EXCAVATION FOR THE TEMPORARY CHANNEL IS COMPLETE AND THE CHANNEL IS STABILIZED.
8. ESTABLISH FLOW IN THE EXCAVATED CHANNEL AND INSTALL TEMPORARY DAMS TO FORCE ALL WATER TO BE DIVERTED.

INSPECTION

1. INSPECT FOR DAMAGE TO THE LININGS.
2. INSPECT FOR ACCUMULATING DEBRIS AND SEDIMENT BUILDUP.
3. ENSURE THE SLOPE IS ADEQUATELY PROTECTED.

MAINTENANCE

1. REMOVE ANY SEDIMENT OR OTHER OBSTRUCTIONS FROM THE DIVERSION CHANNEL.
2. REPAIR LININGS AND SLOPE PROTECTION.
3. REPAIR HOLES, GAPS, OR SCOUR.

ADDITIONAL NOTES

1. SEE TEMPORARY DIVERSION CONVEYANCE GENERAL NOTES ON BMP–34.00 TEMPORARY DIVERSION CONVEYANCE (NOTES AND PIPED DETAIL), SHEET 1.

REVISIONS

Date	Description	By

State of Alaska DOT&PF

TEMPORARY DIVERSION CONVEYANCE (CHANNEL DETAIL)

APPROVED

Date 12/2015 x/xx/xx

BMP–35.00

BMP 36.00 & 37.00. Tire Wash

DESIGN CONSIDERATIONS

Objectives

Tire Washes reduce the amount of sediment transported onto paved roads by motor vehicles.

Description

A Tire Wash is an area located at a stabilized construction exit to remove sediment from tires and undercarriages.

Other Names

Tire Wash, Vehicle Washing, Wash Station.

Applicability

Tire Washes are applicable when a Stabilized Construction Exit (see BMP-23 and BMP-24) alone is not expected to prevent sediment from being tracked onto pavement. Tire Washes are used in conjunction with stabilized construction exits.

Selection Considerations

Tire washing is generally an effective best management practice (BMP) when installed with careful attention to topography. For example, a Tire Wash can be detrimental if installed at the top of a slope abutting a right-of-way where the water from the dripping truck can run off the project area unimpeded.

Pressure washing combined with an adequately sized and surfaced pad with direct drainage to a large sump can be very effective.

Design

Suggested details are shown in Drawing BMP-36, showing a passive system and in Drawing BMP-37 showing a mechanical (spray) system. The Project Engineer may allow other designs.

Entrances and Exits: Stabilization of the roadway before and after any Tire Wash area is critical. Stabilization methods will vary depending on the traffic volumes and vehicle type. Pavement may be necessary to prevent the underlying soils from becoming saturated and contributing more sediment to the Tire Wash system. Unstabilized areas at the exit from the tire washing will be exposed to wash-water draining off vehicles and can become additional sources of sediment trackout. Stabilization can be achieved with coarse rock (typically a 12-inch thick layer of 3- to 6-inch crushed aggregate over geotextile filter fabric), metal plates and grates or rattle racks, pavement, and/or combinations of various methods.

Passive and Mechanical Systems:

- Passive systems are configurations in which equipment is driven through a Tire Wash pond with no sprayers. The Tire Wash pond overflow discharges through a pipe to a sump or is routed through a drainage channel to a sediment trap/basin.
- Mechanical systems involve spraying water at the tires and undercarriages. The spray and sediment is collected in a containment structure, which may either be the Tire Wash pond or may be separated from the driving area, for instance by a grate. Mechanical systems are only needed in extremely muddy conditions. Mechanical systems may be commercially available.

Pond Depth: If the system is designed for equipment to drive through the pond, keep the water level in the pond from 12 to 14 inches deep to avoid damage to truck hubs and filling the truck trailer tongues with water.

Bottom Slope of the Pond: Tire Wash ponds, sumps, or containment areas should be designed with a small grade change, 6 to 10 inches for a 12-foot-wide pond, which will allow sediment to flow to the low side of pond to help prevent re-suspension of sediment. A drainpipe with a 2- to 3-foot riser should be installed on the low side of the pond to allow for easy cleaning and refilling.

Treatment and Discharge of Wash Water: Wash water may not be discharged to waters of the U.S. or to a municipal storm water system (MS4). Discharge Tire Wash wastewater to a separate, on-site treatment system that prevents discharge to surface water, such as closed-loop recirculation or upland land application, or to the sanitary sewer with local sewer utility approval.

Polymers may be used to promote coagulation and flocculation in a closed-loop system. Polyacrylamide (PAM) added to the Tire Wash water at a rate of

0.25 to 0.5 pounds per 1,000 gallons of water increases effectiveness and reduces cleanup time.

Vehicle Volume and Tire Wash Capacity: Designers must consider the traffic volumes and wash water capacity in designing appropriate controls.

Frequency of Changing Wash Water: In ponds that are driven through, the Tire Wash should begin the day with fresh water and the water should be changed a minimum of once per day. On large earthwork jobs where more than 10 to 20 trucks per hour are expected, the wash water will need to be changed more often and multiple Tire Wash facilities may be necessary.

Commercial Systems: Commercial manufactured tire and wheel wash systems are available for purchase and rental. Many commercial Tire Wash systems can be installed with adjacent tanks or ponds to allow sediment to accumulate. Commercial systems that combine chemical flocculants and recirculation capabilities can reduce maintenance frequency.

Relationship to Other Erosion and Sediment Control Measures

Sediment control measures such as Tire Washes are secondary to erosion prevention or soil stabilizing measures. Tire Washes may be used as part of a sequential system with other temporary or permanent measures such as temporary stabilization. Tire Washes are used in conjunction with a stabilized construction exit and street sweeping.

Common Failures or Misuses

- Failure to change wash water or remove sediment may cause track-out.

SPECIFICATIONS

Standard Specification

687 – Tire Wash

Drawings

- BMP-36.00 Tire Wash (Notes & Passive System)
- BMP-37.00 Tire Wash (Mechanical System)

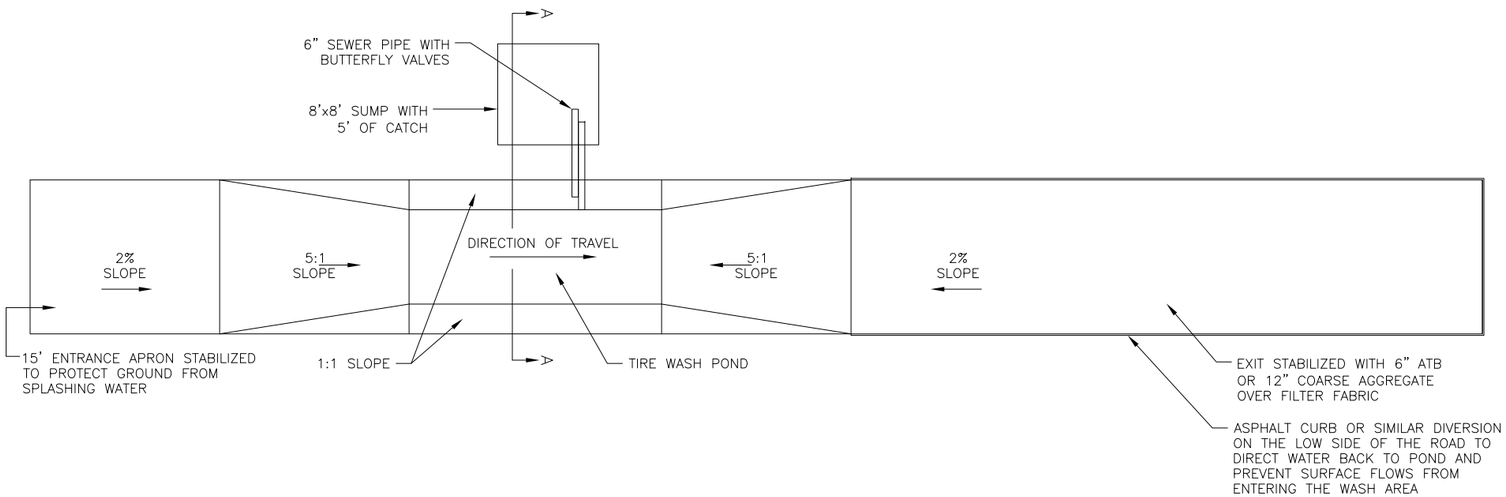

PLAN

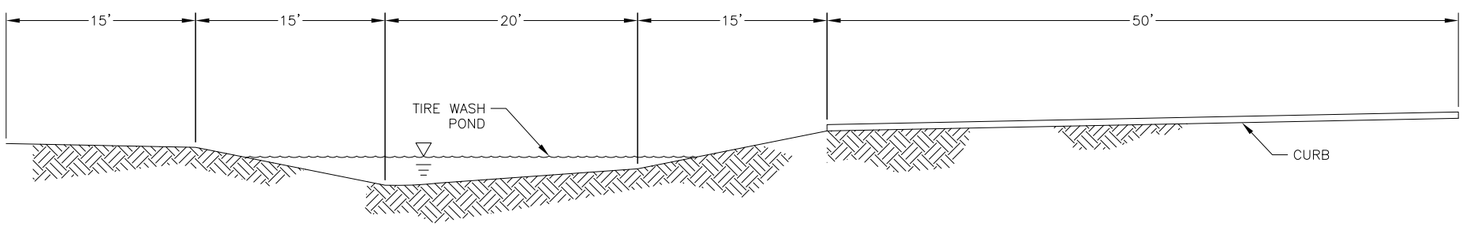

ELEVATION

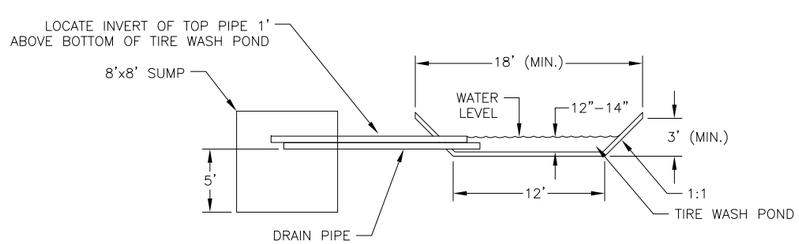

SECTION A-A

PASSIVE SYSTEM TIRE WASH

NOT TO SCALE

TIRE WASH GENERAL NOTES:

MATERIALS

STABILIZATION: ASPHALT TREATED BASE (ATB) OR COARSE AGGREGATE (3-INCH TO 6-INCH STONE) AND GEOTEXTILE FABRIC

PIPE: SCHEDULE 40 PIPE, FITTINGS, AND VALVES.

PUMP: MECHANICAL SYSTEM ONLY.

SPRAY NOZZLE: MECHANICAL SYSTEM ONLY.

SUMP: TANK, PIT (IF SOIL, SLOPE THE SIDES), OR 8' OR MORE VERTICAL CULVERT PIECE.

INSTALLATION

1. CONSTRUCT THE SUMP SO THAT IT CAN BE CLEANED WITH A BACKHOE.
2. ENSURE THAT THE ENTIRE WASH AREA IS PAVED AND THERE ARE NO BARE SOILS.
3. USE A BELLY DUMP, LOWBOY OR OTHER LOW CLEARANCE TRUCK TO TEST THE TIRE WASH BEFORE STABILIZING OR PAVING.
4. TIRE WASH WASTEWATER SHOULD NOT INCLUDE WASTEWATER FROM CONCRETE WASHOUT AREAS.
5. IF PAM IS ALREADY BEING USED FOR DUST OR EROSION CONTROL AND IS BEING APPLIED BY A WATER TRUCK, THE SAME TRUCK CAN BE USED TO CHANGE THE WASH WATER.

INSPECTION

1. INSPECT FOR ADEQUATE DEPTH OF WATER IN THE POND, 12"-14".
2. INSPECT FOR SEDIMENT ACCUMULATION IN THE POND AND SUMP.
3. INSPECT FOR DISPLACEMENT OR STRUCTURAL DAMAGE TO THE STABILIZED ENTRANCE AND EXIT, POND, OR SUMP.

MAINTENANCE

1. USE FRESH WATER AT THE START OF EACH DAY IN THE POND.
2. CHANGE THE WATER A MINIMUM OF ONCE PER DAY, OR MORE OFTEN WHEN MORE THAN 15 TRUCKS PER HOUR USE THE TIRE WASH, OR AS DIRECTED.
3. DO NOT DISCHARGE WASH WATER TO WATERS OF THE U.S. OR TO A STORM SEWER SYSTEM. REMOVE AND PROPERLY DISPOSE OF EXCESS WASH WATER.
4. BEFORE SEDIMENT ACCUMULATES TO ONE-HALF OF THE DESIGN DEPTH, REMOVE SEDIMENT FROM THE SUMP.

REMOVAL

1. REMOVE AND PROPERLY DISPOSE OF THE TRAPPED SEDIMENT AND WASH WATER.
2. REMOVE ALL TEMPORARILY PAVED AREAS, SUCH AS THE ENTRANCES AND EXITS.

REVISIONS

Date	Description	By

State of Alaska DOT&PF

TIRE WASH
(NOTES & PASSIVE SYSTEM)

APPROVED

Date 12/2015

BMP-36.00

SEE TIRE WASH GENERAL NOTES ON BMP–36.00 TIRE WASH, SHEET 1.

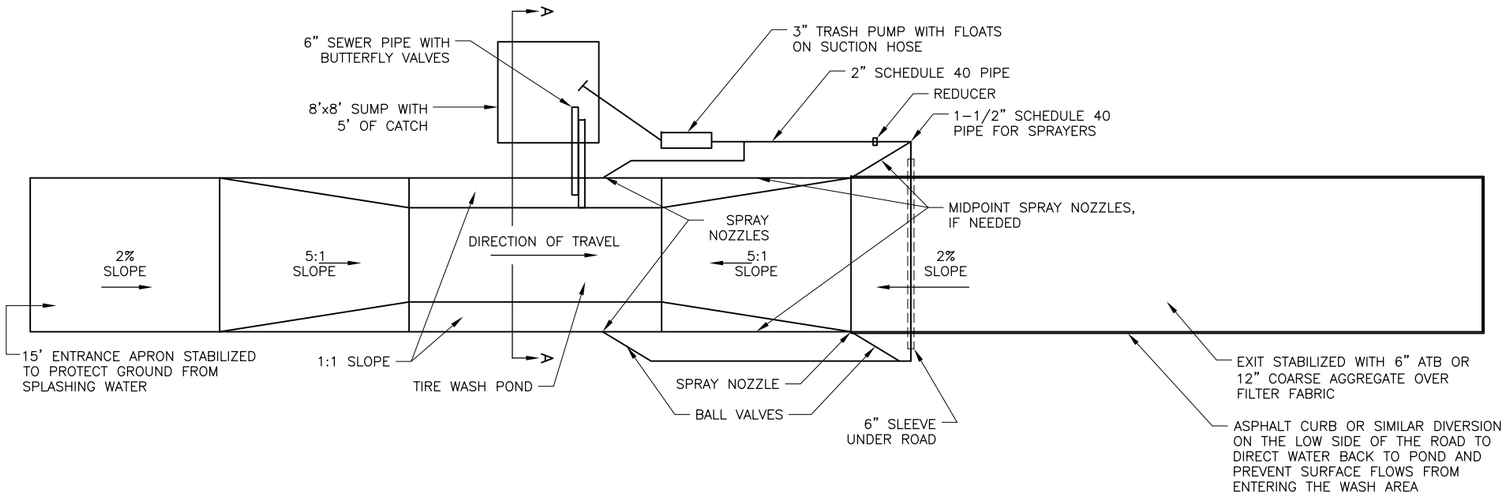

PLAN

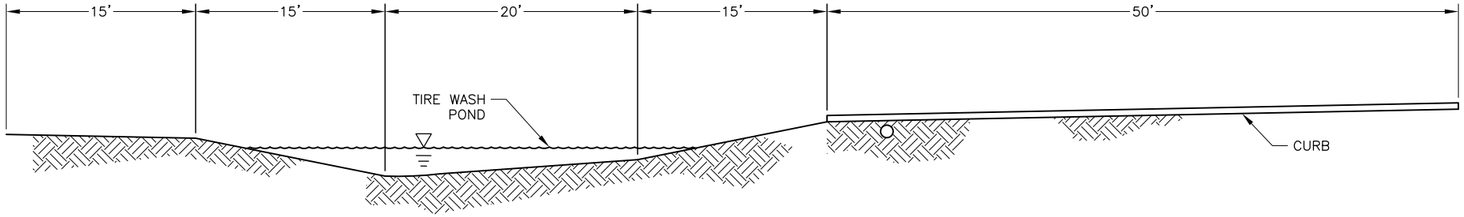

ELEVATION

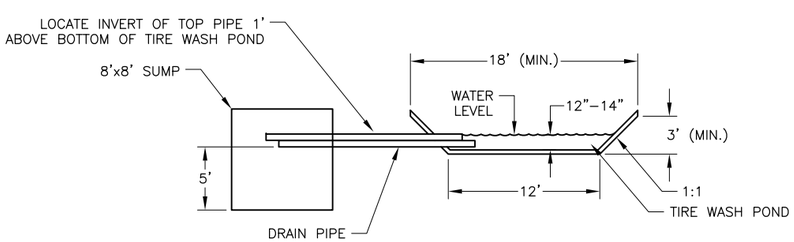

SECTION A–A

MECHANICAL SYSTEM TIRE WASH

NOT TO SCALE

REVISIONS		
Date	Description	By

State of Alaska DOT&PF

TIRE WASH
(MECHANICAL SYSTEM)

APPROVED

Date 12/2015

BMP–37.00

BMP 38.00. Vegetation Buffer

DESIGN CONSIDERATIONS

Objectives

A Vegetation Buffer is intended to reduce the quantity of suspended soil sediments in construction-related stormwater runoff by using living strips of vegetation suitable to reducing run-off velocities. The application for this type of control can include, but is not limited to the following:

- Type I – Perimeter Control - Provides a Vegetation Buffer as a perimeter control between the on-site construction related activities and the project boundaries.
- Type II – Natural Buffer - Provides a Vegetation Buffer between the construction related activities and sensitive areas such as waters of the U.S. and riparian areas (as required by the Alaska Construction General Permit [CGP]).

Description

Vegetation Buffers can be strips of existing vegetation or can be areas that are graded and planted with grass or other types of vegetation. They are intended to be used adjacent to where construction activities will occur and are primarily designed to treat sheet flow. Vegetation Buffers should not be used in areas with concentrated flows. Larger areas must be used to accommodate the larger run-off volume. These strips function by reducing the velocity of run-off to allow the suspended sediments and other pollutants to settle and partially infiltrate into the underlying soils.

Other Names

Vegetated Sediment Filtration Areas, Buffer Strips, Vegetated Strips

Applicability

Vegetation Buffer strips can be used at numerous locations over a project but are best suited if installed at locations where the soil is well drained and where the water table and bedrock are well below the surface. Vegetation Buffers may also be effectively used on the top and bottom of slopes. They can be used either temporarily or as permanent installations.

Selection Considerations

During the design phase of a project any area specified to be a natural Vegetation Buffer area should be identified. The type of vegetation, soil conditions, and the estimated volume of stormwater run-off should be considered when selecting a natural Vegetation Buffer.

Vegetation Buffer areas that are installed (or planted) should be located directly adjacent to where construction activities will occur. These areas should be graded and planted to establish a healthy vigorous stand of vegetation prior to any construction occurring. Other erosion and sediment control measures should be installed to help protect and stabilize the Vegetation Buffer while the planted vegetation becomes established.

When retaining existing vegetation as a Vegetative Buffer, minimize the disturbed areas by locating temporary roadways to avoid stands of vegetation and following the existing contours to reduce cutting and filling. To avoid disturbing the root-zone of existing trees, the edge of the tree canopy or drip-line should be noted when locating these temporary roadways.

Vegetated Buffers must be on land controlled by the project. If in wetlands, they must be recognized in the wetland permit.

Design

The designer should consider the type of Vegetation Buffer (Type I or II) and the slope of the proposed Vegetation Buffer area, the soil type and infiltration rate, the water table level, the type of proposed or existing vegetation, the estimated stormwater flow in the area, and the protection of sensitive areas. There may be site specific constraints that dictate alternate widths for a Vegetation Buffer or require the use of a different perimeter control measure.

Vegetation Buffer areas should be fully established with vegetation prior to construction occurring. A fully established Vegetation Buffer should be composed of species that are capable of growing a sod forming mass that covers 90 percent of the selected area. New Vegetation Buffers with planted vegetation should be composed of more than just one species and be hardy to the area. The

combination of species should capable of creating a perennial stand of vegetation and be able to withstand frequent inundation from run-off. See BMP-53 Permanent Seeding.

All Vegetation Buffer areas with either naturally-occurring or planted stands of vegetation should be delineated prior to and throughout construction to prevent damage to the vegetation and its roots. All Vegetation Buffer areas should be inspected for impacts from soil deposited by construction related activities, damage from channelized run-off, excess accumulation of sediment, and disturbance or damage from construction activities. It may be necessary to employ other erosion and sediment control measures upstream to support existing Vegetation Buffer areas. Do not include the acreage of Vegetation Buffers in the acreage of disturbed areas for the purpose of the Notice of Intent (NOI) acreage.

The two types of buffers for Vegetation Buffer landscaping include the following:

Type I Perimeter Control Vegetation Buffers are used to help filter sediments from run-off before it leaves the job site. These can be composed of existing or newly planted vegetation. The length of these buffers should be determined by the steepness of the slope.

Type II Natural Buffer Vegetation Buffers are used when required by the Alaska CGP to protect sensitive areas (such as waters of the U.S. or riparian areas). The minimum width shall be 25 feet unless found to be infeasible. However, in some cases the governing local ordinance may specify an alternate minimum width. In such cases, it is the responsibility of the designer and the contractor to review and adhere to the specific requirements for a Vegetation Buffer in the local ordinance. Local ordinances governing nonpoint source pollution in Alaska can be found here: http://www.commerce.state.ak.us/dca/nonpoint/ordinances.cfm?type=Hy

Relationship to Other Erosion and Sediment Control Measures

Vegetation Buffers areas with existing vegetation may not require other erosion and sediment control measures; however, installing or planting new Vegetation Buffer areas will require other erosion and sediment control measures during the establishment period of the specified vegetation.

Common Failures or Misuses

Common failures are generally due to faulty application and maintenance. These failures include:

- Damage to the roots or stalks of the vegetation from construction activities.
- Overwhelming the buffer with excessive quantities of stormwater run-off, sediments, channelized run-off, and pollutants.
- Inadequate subsurface soil, vegetation, and size of Vegetation Buffer strip
- Non-observance of delineated Vegetation Buffer areas.
- Designer does not visit site and fails to take site specific conditions into account.

SPECIFICATIONS

Standard Specifications

- 688 – Vegetation Buffer
- 201 – Clearing and Grubbing
- 203 – Excavation and Embankment
- 620 – Topsoil
- 651 – Hydraulic Erosion Control Product
- 652 – Soil Amendments
- 655 – Site Delineation
- 712-2.01 – Water
- 724 – Seed
- 725 – Fertilizer
- 726 – Topsoil
- 751 – Hydraulic Erosion Control Products
- 752 – Tackifier
- 753 – Soil Amendments

Drawing

- BMP-38.00 Vegetation Buffer

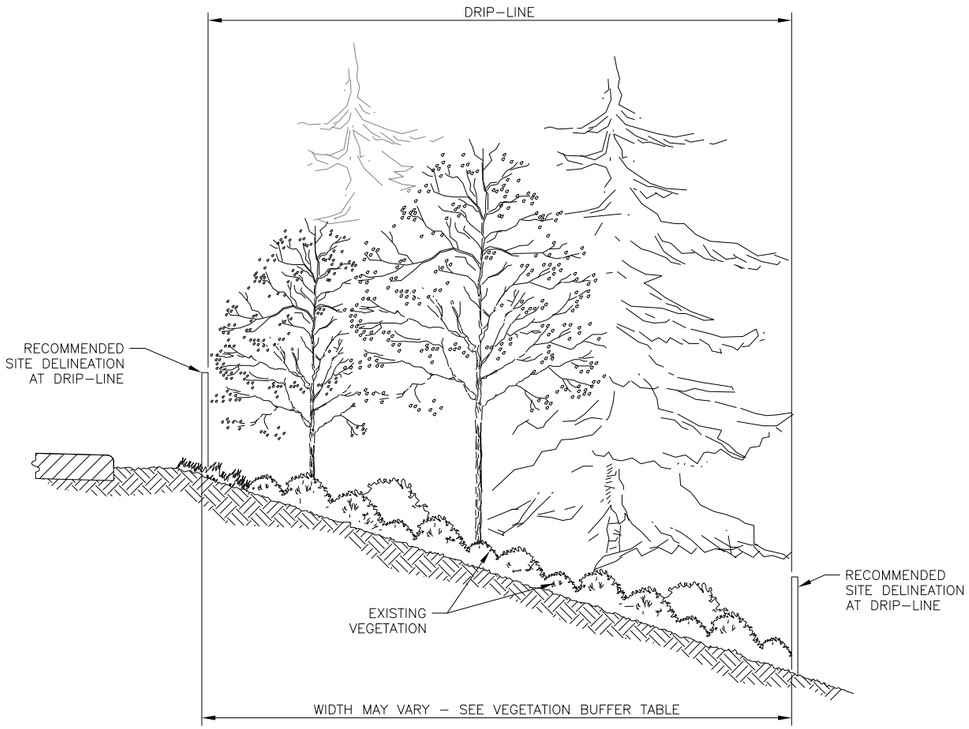

SECTION

EXISTING VEGETATION BUFFER

NOT TO SCALE

EXISTING VEGETATION BUFFER AREA NOTES:

INSTALLATION

1. DELINEATE UNDISTURBED NATURAL AREAS OF VEGETATION IDENTIFIED IN THE PLANS WITH METHODS CONSISTENT WITH THE SITE DELINEATION SPECIFICATION PRIOR TO COMMENCEMENT OF CLEARING AND GRUBBING OPERATIONS OR OTHER SOIL DISTURBING ACTIVITIES.

2. ENSURE ALL OTHER SEDIMENT CONTROL MEASURES USED IN CONJUNCTION WITH THE VEGETATION BUFFER AREAS ARE IN PLACE AND FUNCTIONING PROPERLY.

3. DO NOT ALLOW CONSTRUCTION MATERIALS, EQUIPMENT, OR PARKING ON THE VEGETATION BUFFER AREAS OR WHERE THE ROOT–ZONE OF THE VEGETATION MAY BE DAMAGED.

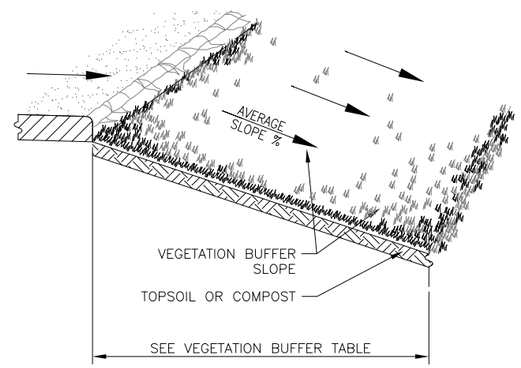

PERSPECTIVE

NEW VEGETATION BUFFER

NOT TO SCALE

NEW VEGETATION BUFFER AREA NOTES:

THIS BMP IS NOT APPROPRIATE FOR PROJECTS LASTING LESS THAN 30 DAYS. THIS BMP IS NOT APPROPRIATE FOR ALL CLIMATE ZONES IN ALASKA.

MATERIAL

TOPSOIL OR COMPOST

SEED, FERTILIZER, MULCH

INSTALLATION

1. ENSURE ALL SEDIMENT CONTROL MEASURES IDENTIFIED IN THE SWPPP (SUCH AS SILT FENCE AND DIVERSIONS) ARE IN PLACE TO PROTECT WATERS OF THE U.S. UNTIL THE VEGETATION BUFFER AREA IS ESTABLISHED.

2. ESTABLISH VEGETATION USING SPECIFIED SEED, FERTILIZER, AND MULCH. IF SEED MIX IS NOT SPECIFIED, USE PERMANENT SEED MIX FOR PERMANENT, POST–CONSTRUCTION BUFFERS AND FAST GROWING ANNUAL RYE FOR TEMPORARAY BUFFERS.

3. MAINTAIN VEGETATION AND PROVIDE IRRIGATION AS NECESSARY TO ENSURE VIGOROUS GROWTH AND TO PREVENT DIEBACK.

4. DELINEATE VEGETATION BUFFER AREAS WITH METHODS CONSISTENT WITH THE SITE DELINEATION SPECIFICATION AT THE EDGE OF THE NEW VEGETATION BUFFER.

5. AVOID DAMAGE TO THE VEGETATION BUFFER OR ROOT–ZONE BY NOT ALLOWING CONSTRUCTION MATERIALS, EQUIPMENT OR PARKING ON THEM.

VEGETATION BUFFER NOTES:

MATERIAL

SITE DELINEATION MATERIAL: SEE SPECIFICATION SECTION 655 SITE DELINEATION.

INSPECTION

1. INSPECT NATURAL EXISTING VEGETATION BUFFER AREAS TO ENSURE THAT THE SITE DELINEATION TO MARK THE NON–DISTURBANCE AREAS IS IN PLACE.

2. CHECK FOR DAMAGE BY EQUIPMENT AND VEHICLES.

3. INSPECT NEW VEGETATION BUFFER AREAS FOR THE PROGRESS OF GERMINATION AND PLANT GROWTH.

4. ENSURE STORMWATER FLOWING THROUGH THE AREA IS NOT FORMING PONDS, RILLS, OR GULLIES.

5. INSPECT FOR SEDIMENT DEPOSITION THROUGHOUT THE BUFFER.

MAINTENANCE

1. REPLACE OR REPAIR SITE DELINEATION (SUCH AS FENCING, STAKING, OR FLAGGING) AS NECESSARY TO DELINEATE THE VEGETATION BUFFER AREAS.

2. REPAIR ANY DAMAGE BY EQUIPMENT OR VEHICLES.

3. PROVIDE ADDITIONAL SEED, FERTILIZER, AND WATER TO REPAIR SEEDED AREAS DAMAGED BY EROSION OR PONDING OF WATER.

4. IF SEDIMENT IS DEPOSITING IN THE BUFFER, INSTALL IMPROVED EROSION CONTROL MEASURES UPSLOPE OF THE BUFFER.

REMOVAL

1. PROVIDE THE NECESSARY PERMANENT STABILIZATION TO AREAS WITH TEMPORARY VEGETATION BUFFER AS REQUIRED BY PLANS.

2. REMOVE SITE DELINEATION MATERIAL AFTER FINAL STABILIZATION OF WORK AREAS. WORK TO REMOVE THE SITE DELINEATION MATERIAL SHALL NOT DAMAGE THE EXISTING VEGETATION OR ANY STABILIZATION MEASURE.

VEGETATION BUFFER TABLE

AVERAGE SLOPE	BUFFER WIDTH (MIN.)
0%–2%	25 FEET
3%–5%	29–37 FEET
5%–10%	37–57 FEET
10%–20%	57–100 FEET
20% MAXIMUM	100 FEET

VEGETATION BUFFER TABLE NOTES:

1. THE MINIMUM WIDTH FOR ANY VEGETATION BUFFER IS 25 FEET. FOR EVERY 1% INCREASE OF THE SLOPE ADD 4 FEET TO THE VEGETATION BUFFER WIDTH.

2. INSTALL VEGETATION BUFFERS ENTIRELY WITHIN THE RIGHT–OF–WAY.

3. FOR VEGETATION BUFFERS THAT ARE USED AS PERIMETER CONTROL (TYPE 1):

a. THE MINIMUM WIDTH FOR ANY VEGETATION BUFFER IS 25 FEET WHEN BUFFER WIDTHS LISTED IN THE TABLE ABOVE ARE NOT FEASIBLE.

b. USE ADDITIONAL BMPS WHEN THE MINIMUM BUFFER WIDTH CANNOT BE ACHIEVED.

4. THE WIDTH OF VEGETATION BUFFERS THAT ARE NATURAL BUFFER AREAS AS REQUIRED BY THE CGP (TYPE II) MUST ALSO COMPLY WITH THE WIDTH REQUIRED BY LOCAL ORDINANCES, IF GREATER THAN 25 FEET.

REVISIONS

Date	Description	By

State of Alaska DOT&PF

VEGETATION BUFFER

APPROVED

Date 12/2015 X/XX/XX

BMP–38.00

BMP 50.00. Compost Blanket

DESIGN CONSIDERATIONS

Objectives

Compost Blankets are applied to the soil surface to control erosion and retain sediment. When properly applied the compost forms a blanket that completely covers the ground surface. The resulting blanket prevents erosion by facilitating infiltration and reducing the rate of rill erosion. Quality compost can promote vegetation establishment and enhance soil structure.

Description

Compost Blankets are a layer of composted material loosely applied to the soil surface by blower trucks or mechanical / hand spreading.

Compost Blankets are uniformly applied to a specified depth - typically 1 to 3 inches. Standard details call for 2-inch blankets, with research showing benefits as thin as 1-inch; however, controlling a 1-inch application is difficult in the field. Too much compost can cause long term challenges for vegetation establishment

Compost can vary from fine to coarse in its gradation. Compost is also specified as a soil amendment, where a uniform blanket is applied as specified and then mixed with the soil by disking or tilling the layer into the soil.

Applicability

Compost Blankets can be used to reduce erosion and assist in vegetation establishment where availability of quality topsoil for revegetation is limited and site access to an available compost source is practical.

- Compost can be placed on any soil surface; however, the interface must provide sufficient friction to prevent the blanket from slumping when saturated. The steeper the application, the rougher the subgrade should be.
- Climate conditions will affect gradation selection: wetter climates will require coarser compost than drier locations.
- Site locations exposed to high winds will require a coarser compost and/or tackifier to prevent wind erosion.
- Compost Blankets are not applicable for locations with concentrated flow.

Application methods must be considered in the selection of Compost Blankets. Trucking, spreading, blower truck access, and availability of compost meeting specifications all must be taken into consideration when specifying compost blankets.

The compost must comply with the processes, testing, and standards specified by the U.S. Composting Council Testing Methods for the Examination of Compost and Composting (TMECC) and Standard Specification Section 750 Compost. An independent Seal of Testing Assurance (STA) Program certified laboratory shall perform the analyses.

Selection Considerations

- Compost Blankets should be considered where existing soils lack organic material and vegetation will be difficult to establish for final long term stabilization.
- Steeper slopes require a coarser compost to resist slumping.
- Compost Blankets are not generally used on slopes greater than 2:1 and should not be used on slopes steeper than 1:1. They may be used on slopes between 2:1 and 1:1 if cellular confinement systems are used in conjunction with the Compost Blanket.
- Site location and access should be planned to make compost delivery feasible. The compost can be distributed manually by using hand tools, or by mechanical means such as bulldozer or pneumatic spreader.
- Because compost must have laboratory certifications, the designer should determine if compost complying with specifications is available for use on the project.

Design

Designers must consider the type and gradation of compost available to a project area to determine if the use of a Compost Blanket is feasible.

- Fine gradation compost will not be appropriate for steep slopes in a wet climate area without the addition of mechanical incorporation techniques or additional coarse material amendments.
- Very coarse compost should be avoided on slopes that will be landscaped as it will make planting and vegetation establishment more difficult.
- Thicker and/or coarser Compost Blankets are recommended for areas with higher annual precipitation or rainfall intensity.
- Specify that the Compost Blanket is to extend at least 3 feet over the shoulder / crown of the slope to prevent run-off from flowing under the blanket. Alternately, designers may consider diversion berms or ditches to direct surface flows around the blanket installation.
- Designers must also specify that the surface will be prepared with Surface Roughening (drawing BMP-24.00). A rough subgrade will reduce the potential for the blanket to slough when saturated. Subgrade soil with high silt or clay content may require more aggressive surface roughening. The greater the silt and clay content the higher the potential of a slippery surface under the Compost Blanket. On granular soils, standard trackwalking techniques may be adequate depending on the slope steepness.

Relationship to Other Erosion and Sediment Control Measures

Compost Blankets can be used as a stand-alone soil stabilization measure during periods when seed germination is not possible. The compost can further benefit vegetation establishment during the growing period. Seeding techniques must still be specified when using Compost Blankets. Some blower trucks may be able to incorporate seed into the compost during application. If hydraulic seeding techniques will be used over the Compost Blanket, the mulch selection guidelines found in Hydraulic Erosion Control Products (BMP 51) must be followed.

Common Failures or Misuses

- Selection of or allowing inappropriate compost gradation or substandard feedstock can create maintenance problems, problems with vegetation establishment, and may be detrimental to water quality.
- Too much compost can cause long term challenges for vegetation establishment.
- Weed seeds and undesired elements may be introduced and require eradication or removal.
- Slumping of the Compost Blanket due to improper surface preparation lacking roughness, friction elements, or scarification.
- Slumping due to water retention of fine grained compost materials on steep slopes.
- Placement in areas of concentrated flows.

SPECIFICATIONS

Standard Specification

- 650 Compost Blanket
- 750 Compost

Drawing

- BMP-30.00 Surface Roughening

BMP 51.00. Hydraulic Erosion Control Products (HECP)

DESIGN CONSIDERATIONS

Objectives

Hydraulic Erosion Control Products (HECPs) are designed to reduce soil erosion and assist in the establishment and growth of vegetation. The HECP forms a protective layer that controls erosion and allows for enhanced seed germination and accelerated plant growth.

HECPs are often used in combination with seed and fertilizer for revegetation but can be used alone for temporary stabilization of bare soils.

Description

A HECP is a manufactured, temporary, degradable, pre-packaged fibrous material that is mixed with water and hydraulically applied as a slurry.

When applied, the HECP creates a continuous, porous, absorbent, moisture retaining, flexible blanket/mat/mulch/covering making intimate contact with, and adhering to, the sloped soil surface. The applied HECP permits water infiltration, resists erosion, and promotes rapid germination and accelerated plant growth.

The HECP will achieve maximum performance after a sufficient curing period, which will vary based upon the manufacturer's recommendations and site specific conditions.

Tackifiers are chemical compounds used in formulating adhesives to increase the stickiness of the surface. They are used to glue the fibrous HECP material to itself and the soil surface.

Other Names

Hydromulch, Bonded Fiber Matrix (BFM), Flexible Growth Medium (FGM), Fiber Reinforced Matrix (FRM), and many others. Some terms may be trademarked and describe a single product as opposed to a product category.

Applicability

HECPs vary in their functional performance longevity, strength to resist shear stress, and fiber types. Wood, straw, cotton, flax, and hemp fibers have all been used in the production of HECPs.

Many HECPs contain a tackifier to bind the fibers together and form a mat over the soil. Others do not.

HECPs without tackifiers are limited to flat or low slopes and infrequent or low amounts of rainfall. HECPs with tackifiers are more expensive, but have better performance in areas with moderate to steep slopes and frequent or moderate to heavy rainfall. They are applicable for any site where there is sufficient time for the tackifiers to cure. Some tackifiers will be able to cure in some precipitation, but none can cure during significant precipitation. Availability of water to mix with the product and site access constraints must be considered when specifying HECPs.

By themselves, HECPs are not applicable in areas with concentrated flow.

Selection Considerations

HECPs must be selected based on expected rainfall, prior performance, the length of time the product is needed to perform (i.e., the functional longevity), and the shear stress (a factor of the slope length and gradient) that the HECP will be exposed to. If site conditions require an expensive product because of harsh environmental conditions, then specify it or consider using a rolled product instead.

The Erosion Control Technology Council (ECTC) provides designers with selection information based on independent testing to supplement manufacturer's design standards

Design

The following table provides guidance on terms used in describing HECPs for typical applications:

Hydraulic Erosion Control Design				
Term	**Functional Longevity**	**Typical Application Rates**	**Slope Gradient (H:V)**	**Slope Length**
	months	**lb/acre**	< or =	**feet**
Moderate	3	2000-3000	4:1	25
Extended Moderate	6	2000-3500	3:1	50
Long	12	2500-4000	2:1	75
Extended Long	18	3000-4500	0.5:1	100
This table is for general guidelines only and is adapted from the Erosion Control Technology Council. Refer to manufacturer for application rates, instructions, gradients, maximum continuous slope lengths and other site specific recommendations				

When estimating quantities needed, account for the increased surface area created as a result of surface roughening and due to the slope length, rather than horizontal length, on sloped sites. Surface roughening alone may require 30 percent more surface area to which the HECP must be applied. This 30 percent increase should be added to the planned seeding quantity too.

If a diversion is required at the top of the slope to handle run-on, then include the diversion details in the plans.

Relationship to Other Erosion and Sediment Control Measures

HECPs are most commonly used in conjunction with seed and fertilizer mixes to vegetate bare soil areas. The HECP is mixed into an homogenous slurry to carry the seed and fertilizer mixture. The HECP must last long enough to provide erosion control while the seed germinates and the vegetation establishes. In order to provide effective erosion control, the HECP must cover all the roughened bare soils to prevent raindrop erosion and the HECP must stay in place to prevent seed creep or migration.

Common Failures or Misuses

- The most common problem with the use of HECPs is a lack of adequate coverage. Without 100 percent of the soil covered, or with a thinner than specified coverage, raindrop erosion can occur, leading to inadequate seed and fertilizer distribution, seed migration, and vegetation establishment failures. Without proper coverage of desired vegetation, weed species are likely to take root and crowd out the specified plants.
- Inadequate coverage may result from only applying the HECP from one direction.
- Areas to be seeded are frequently under-estimated and actual disturbed areas are much larger than anticipated. Strict adherence to bid items based on under-estimated quantities may lead to inadequate coverage, erosion, and failed revegetation.
- Another leading cause of inadequate coverage is lack of accounting for the increased surface area created as a result of surface roughening, which can add 30 percent more surface area to the soils. Combined with take-off measurements on flat plan sheets for sloped sites, field crews often under-apply HECPs compared with the specified rate.

SPECIFICATIONS

Standard Specifications

- 651 and 751 Hydraulic Erosion Control Products

BMP 52.00 & 53.00. Permanent Seeding and Soil Amendments

DESIGN CONSIDERATIONS

Objectives

Permanent Seeding is an erosion control measure intended to establish a perennial vegetation cover and provide full stabilization of a disturbed area. Protecting the soil with well-established perennial stands of grass, or other forms of vegetation, is one of the most effective methods of reducing erosion.

Soil amendments are commonly used in conjunction with Permanent Seeding to improve the soil. Application of the appropriate soil amendment(s) should reduce the potential for soil erosion and restore the health of the soil by improving soil structure. Amending the soil structure will improve the soil's water-holding capacity; and improve the infiltration rate and the ability to support vegetation.

Description

Permanent Seeding is applied to areas where construction has permanently ceased. The seed mix should be composed of several species and designed to establish a permanent perennial stand of vegetation that can survive in the area. Permanent Seeding should be accompanied by surface preparation, surface roughening, fertilizers, and mulch. Surface preparation and roughening enhance seed retention and germination, fertilizer boosts initial growth, and mulch retains moisture.

Soil amendments include topsoil, compost, shredded bark or wood chips, peat, biofertilizers, and mycorrhizae. Most soil amendments, except biofertilizers and mycorrhizae, should be tilled or blended into the soil.

Other Names

Permanent Seed Stabilization, Seeding with Soil Amendments, Compost Blanket with Seeding, Bonded Fiber Matrix with Seeding, Topsoil, and Seed.

Applicability

Permanent Seeding is a final stabilization measure that is generally required for all disturbed areas that are not otherwise stabilized (by paving, structures, landscaping, etc.). It should be completed in areas where ground disturbing activities have permanently ceased.

Seeding with soil amendments provides an additional control where the soil needs to be treated to support a stabilized vegetative mat. Soil amendments should be provided in areas where the soil is highly erodible and/or has poor nutrient content or structure. For example, a sandy soil needs organic matter added in order to increase the water and nutrient holding capacity.

Selection Considerations

- *Seed*: The designer should specify appropriate seed species based on the climatic and environmental conditions. The Alaska Department of Natural Resources (DNR) Plant Material Center manuals provide guidance for revegetation in Alaska, and include the *Revegetation Manual for Alaska*, *Interior Alaska Revegetation and Erosion Control Guide*, and the *Coastal Revegetation and Erosion Control Guide*. These manuals give recommended seeding species and planting dates. The dates to apply seed are dependent on the climatic conditions of the project location. These dates should be provided in the special provisions for each project.
- *Soil Amendments*: Soil amendments should be selected to increase the infiltration rate of water; improve the soil's fertility, texture, and structure; aid in the uptake of nutrients; help to stabilize the soil; aid in seed germination; increase microbial activity; and promote vegetation establishment.

  When considering a soil amendment, the designer should consider how the amendment will improve the soil properties; such as the organic content and textural class, how long the amendment must remain in the soil, and the climate and ecology of the area

Relationship to Other Erosion and Sediment Control Measures

With or without soil amendments, seeding can be used alone but it is likely that other measures should be considered to protect and support seed establishment. Construction stormwater management control measures should be used up-gradient to prevent potential washouts. Sediment

control measures should be used to prevent the release of sediments to and from the treated area.

Design

Seed Selection and Application Rate: Seed mix species should be carefully considered for each project. Several mixes may be applicable for a project depending on proximity to wetlands, roadways, and various microclimates in the general environment. The Alaska Plant Materials Center can assist with selecting species for all types of environments found in Alaska. Typically, seeds are applied at 20 - 40 lbs./acre, although site-specific conditions can affect how much seed needs to be applied. Add 30 percent to the quantity if surface roughening is required.

Fertilizer and Application Rate: Fertilizer should be used when establishing new seed. It is best to test the soils for existing nutrient content and pH to determine the appropriate fertilizer. If testing cannot be done until slopes are finished, then require a fertilizer application rate of 450 lb./acre of 20-20-10 (percent nitrogen-phosphorus-potassium) as an interim placeholder in the bid documents and the Engineer should adjust the fertilizer rate based on the test results.

Mulch: Mulch should be used when establishing new seed. Mulch helps to hold the seed to the soil surface and helps to retain moisture during seed germination. The application rate for mulching during seeding is approximately 2,000 to 4,500 lbs./acre, depending on the steepness of slopes. On slopes steeper than 3:1, tackifier should be added to the mulch (BMP 57).

Soil Stabilizer. For steeper slopes or more erodible soils, hydraulic erosion control products (HECP, BMP 51) can be considered for additional soil stabilization.

Soil Testing: This is recommended when there is uncertainty regarding the fertilizer application rate or when there are risk factors for successful grass growth. It is possible to require the contractor to sample soils, but it may be preferable to have trained Alaska Department of Transportation & Public Facilities (ADOT&PF) staff collect soil samples for laboratory analyses. If it is feasible to test the soils for their pH and nutrients, then the Project Engineer is able to change the fertilizer requirement according to the test results. The existing soil or imported topsoil can be tested to identify the soil's composition of organic matter, macro nutrients, soil texture, and pH. For more information, contact the regional stormwater specialist. Add a special provision if you determine that the contractor should test the soil once graded.

Soil Amendment Options: There are many different soil amendments in addition to fertilizer that can be applied to a project. Selecting a soil amendment can depend on location of a project and availability of the amendment. These soil amendments include the following:

- *Topsoil:* When used as a soil amendment, topsoil should be tilled or blended into the existing soil.
- *Compost:* Compost should comply with the U.S. Composting Council Testing Methods and with specified gradation for each project. Compost can be applied to almost any soil. Compost can be used in wet climates or in the wet season, whereas topsoil or other soil amendments may be prone to erosion. When used as a soil amendment, compost should be tilled or blended into the existing soil.
- *Shredded Bark or Wood Chips:* Although the composition of bark or wood chip will vary per application, material should not contain any materials that would inhibit or stunt vegetation growth. All material should be kept moist prior to the application of seed. When used as a soil amendment, shredded bark or wood chips should be tilled or blended into the existing soil before seeding.
- *Peat:* Peat can be used as a soil amendment when the existing soil texture is sandy. Application of peat will enhance the existing soil by providing organics and increase the water holding capacity. Peat may be applied to the surface or tilled or blended into the soil. It should be applied at a thickness of 1 to 2 inches and, if specified, tilled or blended into the top 4 to 6 inches of the existing soil. When tilled or blended in, the peat composition should be approximately 15 to 25 percent of the soil.

  Peat is naturally acidic. The existing soil should be tested for pH levels so the appropriate quantities of peat can be applied. Over-

application could result in limited growth of some seed species.

- Biofertilizers and Mycorrhizae: Biofertilizers and mycorrhizae are soil amendments that can be used to increase the success and shorten the establishment period of vegetation. When applied, biofertilizers and mycorrhizae help to rebuild living soil that has become damaged during earthwork. Biofertilizers and mycorrhizae help to increase microbial activity in soil resulting in increased nutrient availability to plant roots.

Common Failures or Misuses

Common failures are generally due to faulty application and maintenance. These failures include:

- Seed and slurry mix is not applied with a multi-directional flow or is applied at an inadequate application rate, resulting in non-uniform coverage or stabilization.
- The mulch, tackifier, or HECP (including bonded fiber matrix) used is inadequate to hold seed on slopes, resulting in erosion and washouts.
- Temporary seed, if not appropriately removed, may inhibit growth of permanent grass.
- Seed is not properly or adequately irrigated.
- Seed is floated away due to over-irrigation or by excessive rainfall.
- Seeded areas are disturbed by foot traffic and/or equipment after installation.
- Treated areas are compacted after the seed and amendments are applied.
- Soil amendments are inadequate to support seed growth.
- Supportive Construction Water Management or Sediment Control best management practices (BMPs) are not installed or maintained correctly.
- Fertilizer application is inadequate.
- Fertilizers with high, or quick-release, phosphorus content are used with biofertilizer and mycorrhizal soil amendments.
- Fungicides are used on or around areas that have received biofertilizers and mycorrhizal amendments.
- Inadequate quantities of amendments containing biofertilizers and mycorrhizae are applied.
- Seeding is applied too late in the season, resulting in limited growth and germination prior to freeze up.

SPECIFICATIONS

Standard Specifications

- 652 - Soil Amendments
- 650 - Compost Blanket
- 651 - Hydraulic Erosion Control Products
- 620 - Topsoil
- 712.201 - Water
- 724 - Seed
- 725 - Fertilizer
- 752 – Tackifier
- 750 – Compost
- 753 – Soil Amendments
- 751 Hydraulic Erosion Control Products

BMP 54.00. Site Delineation

DESIGN CONSIDERATIONS

Objectives

Site delineation measures are intended to mark (1) all areas where land disturbing activities will occur, including clearing and grading, and (2) specific areas that will be left undisturbed, such as trees, boundaries of sensitive areas, or environmental buffer zones, prior to work beginning. Buffer zones may include those at stream crossings and around the edges of any wetlands or waters of the U.S. that are located within or immediately adjacent to the property where the construction activity will take place.

This measure is intended to comply with the requirements of Alaska Construction General Permit.

Description

Site delineation measures may be physical barriers, such as temporary fencing, or visual indications, such as staking and flagging, used to delineate specific areas. They are intended to remain until construction activity is completed. The most common measures include temporary fencing, survey flagging tape, stakes, paint on asphalt or concrete, and signs.

Other Names

Flagging, temporary fencing, high-visibility fencing, staking, signs, paint markings.

Applicability

Site delineation applies to all construction projects involving land disturbing activities.

Selection Considerations

Choose marking materials that have high visibility and contrast with the natural surroundings. Select materials based on ability to last for the duration of construction. This is especially important for construction that will span multiple seasons, or last several years.

Sensitive areas and their buffers may require more substantial protection, such as work zone safety fences. Silt fence, in combination with survey flagging, can be an acceptable method of marking sensitive areas and buffers. However, silt fencing should only be used for this purpose if it is also needed for, and properly installed and maintained as, a sediment control measure.

If fencing other than orange fencing is used, provide signage with wording describing the purpose of the fence.

If signs are to be used, specify the type and spacing of signs and the wording on the sign, such as 'No Entry,' 'Keep Out,' 'No Grade Change', 'No Work, Storage Of Materials or Equipment Permitted Beyond This Point,' or other appropriate directive. Specify minimum lettering size for signs.

For long linear projects that are constructed in phases, consider the following:

- Provide delineation to protect adjacent out-of-phase areas that are not part of the current phase of construction.
- Specify installation of site delineation to coincide with phases of construction so that the length of time the site delineation must be inspected and maintained is sufficient but no longer (too far in advance) than necessary.

Common Failures or Misuses

- Failure to install prior to land disturbing activities.
- Inappropriately using materials intended for other purposes. For example, silt fencing material should not be used unless it is properly installed as a sediment control measure (BMP-20).
- Installing markers too close to areas of construction activity; failure to provide adequate maneuvering room for construction activities.
- Damage to markings and flagging cut down during clearing activities.
- Using products that are easily vandalized by humans or disturbed by animals.

SPECIFICATIONS

Standard Specification

655 – Site Delineation

BMP 55.00. Street Sweeping and Vacuuming for Sediment Control

DESIGN CONSIDERATIONS

Objectives

Street Sweeping and Vacuuming for Sediment Control is used to remove sediment from paved surfaces to prevent it from entering storm drain systems or waters of the U.S.

Description

Sediment is removed from roads and paved surfaces by power sweepers or manual methods and disposed of in a controlled sediment disposal area.

Applicability

Sweeping is implemented anywhere sediment is tracked from the project area onto public or private paved roads and other paved surfaces. Street Sweeping and Vacuuming for Sediment Control should be conducted when sediment accumulation is visible on paved surfaces. Typically, this will be concentrated at the exit to the construction site

Selection Considerations

- Sweepers that pick up sediment and control dust emissions should be specified. Of the four types of mechanical power sweepers available, three (vacuum, regenerative air, and high efficiency sweepers) are acceptable. Prohibit the use of methods that use only mechanical kick brooms. Conventional mechanical broom sweepers have been found to have a negative effect on the amount of stormwater runoff pollution. Mechanical sweepers may only be used if followed by a vacuum-assisted sweeper.
- Manual broom sweeping with pickup is acceptable. On smaller construction sites and in areas not accessible by power sweepers, sweeping can be conducted manually using a broom and shovel.
- The use of leaf blowers and other similar equipment for sweeping is unacceptable.
- Reasonable measures must be employed to prevent dust from becoming airborne during any operation where material that may create dust is handled, transported, or stored.
- If the sediment or soil is wet or muddy, paved surfaces will need to be scraped manually or mechanically.

Relationship to Other Erosion and Sediment Control Measures

Erosion and sediment control measures in the contributing areas must be in place to minimize the amount of sediment that must be swept. Stabilized Construction Exit (BMP-23 and BMP-24) or Tire Wash (BMP-36 and BMP-37) should be included in the contract. Street Sweeping and Vacuuming for Sediment Control is a secondary measure to remove residual sediment that was not removed by other measures. Well-maintained stabilized construction exits, vehicle tracking controls, and tire wash facilities can help reduce the necessary frequency of Street Sweeping and Vacuuming for Sediment Control.

Common Failures or Misuses

- Insufficient erosion controls in the contributing disturbed area.

SPECIFICATIONS

Standard Specifications

- 656 Street Sweeping and Vacuuming for Sediment Control

BMP 56.00. Tackifier

DESIGN CONSIDERATIONS

Objectives

Tackifiers are used as a bonding agent for soil, compost, seed, and/or mulch to aid in the stabilization process.

Description

Tackifiers can be either organic (derived from natural plant sources) or synthetic. Tackifiers are frequently pre-mixed with mulch fiber blends used in Hydraulic Erosion Control Products (HECPs).

Applicability

When used alone, Tackifiers can temporarily stabilize bare soils for short term erosion control. Tackifiers are most commonly used where temporary dust and erosion control is required. Hydraulically applied Tackifiers must be applied in conditions where they will cure or dry to be effective. Mulch may be used with Tackifiers to increase their functional longevity and assist in the application process by acting as a visual tracer during the spray installation.

Plant based Tackifiers may be used as stand-alone, temporary soil stabilization.

Chemical based Tackifiers may only be used in combination with sediment trapping measures down gradient of treated areas designed to retain sediment and potential chemicals that may be dislodged and become entrained in site runoff.

The functional longevity of Tackifiers will be dependent on climate and traffic impacts - foot, vehicle, and animal.

Selection Considerations

- Application rates and climate conditions will affect the functional longevity of all Tackifiers. Functional performance and longevity can be increased with the addition of mulch fiber. All applications must follow the manufacturer's specifications for application rates.
- Synthetic Tackifiers often include polyacrylamides (PAM) and designers must determine whether the synthetic Tackifier is anionic or nonionic. Cationic PAM in Tackifiers is not permitted as it can be hazardous to aquatic life.
- Tackifiers containing PAM products will require documentation approving the products use by the U.S. Environmental Protection Agency (EPA) for potable water or by the states of California, Minnesota, Oregon, Washington, or Wisconsin for use in controlling erosion or sediment runoff from agricultural land or construction projects.
- The use of Tackifiers must strictly comply with the terms and conditions of the Alaska Construction General Permit (Alaska CGP). Tackifier use is limited to soil areas only and must meet the treatment chemical requirements for land applications contained in the Alaska CGP.
- When using chemical based tackifiers, typically PAM based, the CGP requires the following conditions.
  - Operators must provide notification on the Notification of Intent (NOI) or a modified NOI of their intention to use chemical treatment.
  - Site personnel must be trained in the proper handling and use of the specified chemical. Their names and titles must also be included in the site Storm Water Pollution Prevention Plan (SWPPP).
  - Proper site storage in leak proof containers under storm resistant covers surrounded by secondary containment will be necessary.
- While most Tackifiers are hydraulically applied, granular application can be performed; however, uniform application rates may be difficult to achieve.

Design

When Tackifiers are used as an interim, temporary control measure during construction, the ground must be reworked prior to applying seed and mulch. See BMP-58 Temporary Seeding and BMP-53 Permanent Seeding.

Relationship to Other Erosion and Sediment Control Measures

Tackifiers can be applied alone or can be used to bond mulch fibers, such as straw or wood, to each other and the soil. Dyes or dyed mulch fiber may be used as a tracer or indicator to determine where Tackifiers have been applied and to ensure adequate coverage. Tackifiers may be applied over surface roughened (track walked) soils, stockpiles, compost, soil amendments, and other areas that will remain unworked and unstabilized for a limited period of time. Manufacturer's guidance must be consulted to determine the functional longevity of Tackifiers in various climatic conditions.

Common Failures or Misuses

- Under-application (not enough Tackifier applied) and traffic across treated areas are the leading causes of failure of properly specified Tackifiers.
- Not all commercially available products will perform the same in all situations. Soils testing for product applicability may be necessary to ensure desired results.
- Weather will be the major contributor to Tackifier longevity. Precipitation, break-up, and freeze-thaw cycles will all contribute to the degradation of Tackifiers in the field

SPECIFICATIONS

Standard Specification

- 657 Tackifier
- 752 Tackifier

BMP 57.00. Temporary Seeding

DESIGN CONSIDERATIONS

Objectives

Temporary Seeding is intended to temporarily stabilize the soil of a disturbed area to prevent the erosion and the discharge of soil and/or sediments.

Temporary Seeding is used in areas where permanent cover is not necessary or appropriate. By protecting bare soil from raindrop impact and binding the soil with roots, a well-established vegetative cover is one of the most effective methods of reducing erosion.

Other Names

Temporary Stabilization.

Applicability

Temporary Seeding is applicable to exposed areas subject to erosion that are not actively being worked. Temporary Seeding can be used where permanent covering is not necessary or where future ground disturbing activities will occur.

By itself, Temporary Seeding is not soil stabilization because the seeds are not effective until they sprout and create a stabilizing root mat. Temporary Seeding should be accompanied by surface preparation, surface roughening, fertilizer, mulch, and maintenance to encourage seed establishment. Temporary Seeding can remain and be left to winter over only if ground-disturbing activities are scheduled to resume the following spring. Prior to application of permanent stabilization measures, Temporary Seeding should be removed from, or plowed/tilled into, the existing soil

Selection Considerations

- Consider application rate, regional climate, environment, and duration of required vegetation coverage prior to application. Temporary Seeding is intended to be used for a maximum of one growing season.
- Temporary Seeding should be applied soon after ground-disturbing activities cease in the area and in compliance with highway Section 641 (airport Section P-157). The use of fertilizers is advised to promote rapid and healthy seed growth. Fertilizer should be applied at the application rate specified by the manufacturer or per the recommendations from a soil analysis

Design

Seed Selection: Annual Ryegrass (*Lolium multiflorum*) should be used for short periods lasting no more than one growing season.

Seed Application Rate: Typical rate of 20 lbs/acre (per Plant Material Center recommendation), although the rate may be varied based on site-specific conditions.

Fertilizer Application Rate: Typical rate of 200 lbs/acre of 20-20-10 (percent nitrogen-phosphorus-potassium) fertilizer (per Plant Material Center recommendation).

Other Soil Amendments: In certain cases, in addition to fertilizer, specifying compost or topsoil may enhance vegetative growth. However, note that in some cases a layer of topsoil on gravel surfaces can increase erosion potential.

Soil Stabilization Methods: Hydraulic erosion control products (HECPs), including bonded fiber matrix, mulch, and tackifiers; and rolled erosion control products (RECPs) for slopes should be considered on a site-specific basis in conjunction with Temporary Seeding to decrease soil erosion potential

Relationship to Other Erosion and Sediment Control Measures

Seeding should be performed in conjunction with surface roughening, soil stabilization methods, and grading practices. Concentrated flows or runoff should be directed away from the seeded areas using diversions.

Common Failures or Misuses

Common failures are generally due to faulty installation and maintenance. These failures include:

- Ground or growth medium is insufficient to support seed.
- Seed is not applied at an adequate application rate.

- Mulch or HECP used is inadequate to hold seed on slopes.
- Seed is not applied uniformly and/or adequate ground coverage is not achieved.
- Seed is not properly or adequately irrigated.
- Seeded areas are disturbed by foot traffic and/or equipment after installation.
- Seeding is applied too close to freeze-up

SPECIFICATIONS

Standard Specifications

- 658 – Temporary Seeding
- 620 – Topsoil
- 657 – Tackifier
- 650 – Compost Blanket
- 653 – Permanent Seeding
- 652 – Soil Amendments
- 753 – Soil Amendments
- 725 – Fertilizer
- 651– Hydraulic Erosion Control Products
- 751—Hydraulic Erosion Control Products
- 654– Rolled Erosion Control Products for Slopes
- 754-- Rolled Erosion Control Products