D-20.04

SHEET 1 of 1

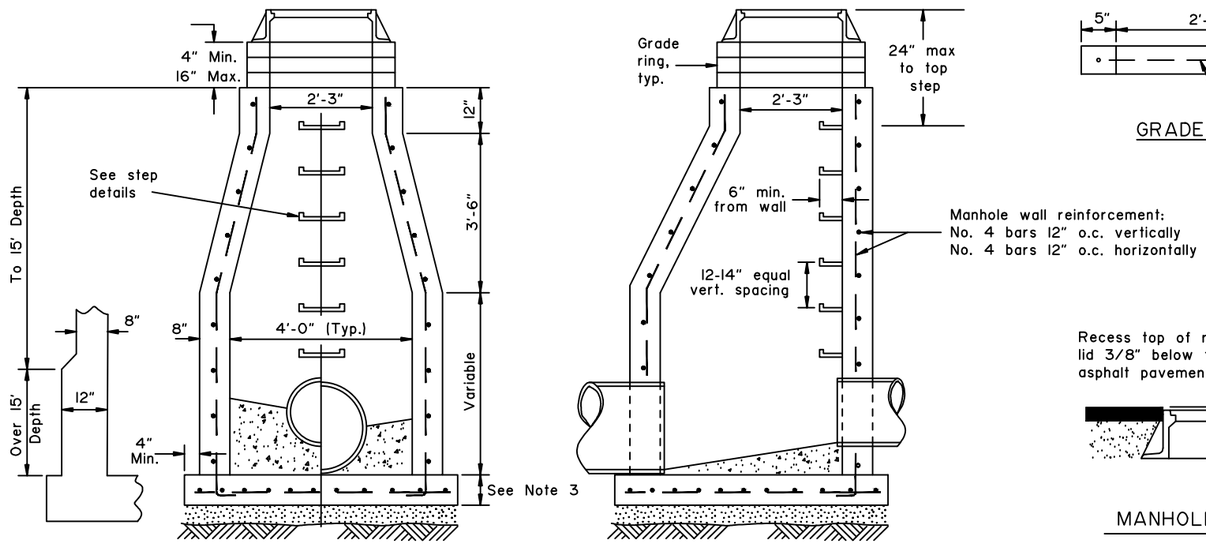

CAST-IN-PLACE MANHOLE

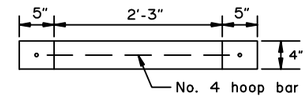

GRADE RING

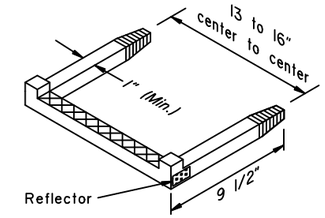

STEP DETAIL

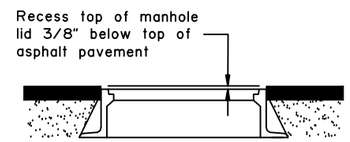

MANHOLE IN PAVEMENT

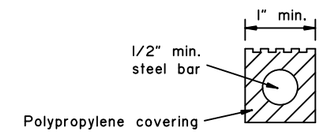

STEP CROSS SECTION

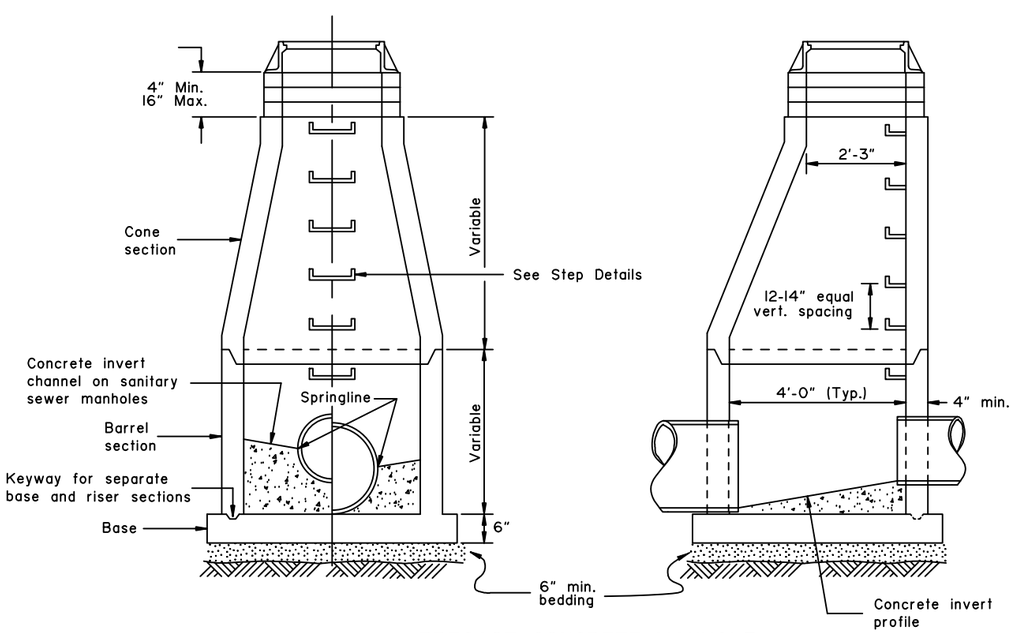

PRECAST CONCRETE MANHOLE

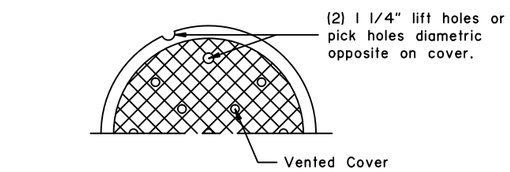

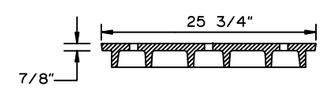

MANHOLE COVER

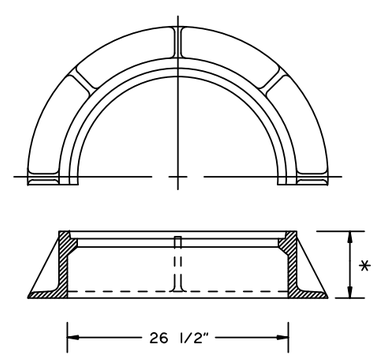

MANHOLE FRAME

MANHOLE FRAME & COVER MINIMUM WEIGHT		
* Depth	6"	380 lbs
	7"	400 lbs
	8"	440 lbs
	9"	470 lbs
	10"	500 lbs

GENERAL NOTES:

1. Either precast or cast-in-place manholes may be used.
2. Details for manhole frame, cover and step are generic in nature and may vary from shown depending on manufacturer
3. Use 8" thick cast-in-place concrete bases for depths less than 15' and 12" thick bases for depths 15' or greater.
4. Manhole frames shall have a depth of 6" unless specified otherwise on the plans.
5. Step requirements:
   a. 18" max. vertical clearance to bottom of manhole or concrete invert.
   b. 3" minimum embedment.
   c. 1,500 lb. min. pullout force.
   d. ASTM A-615 grade 60 steel bar.
   e. Injection molded polypropylene covering meeting ASTM D-41010
   f. Slip resistant foot tread with "wings" to prevent feet from sliding off the edge.
   g. Reflectors at step corners

REVISIONS		
Date	Description	By
9/15/91	Added grade rings	GDO
3/15/99	Remove steps in rings	EMR
1/16/17	Revised concrete/rebar	LRG

State of Alaska DOT&PF
3132 Channel Dr., Juneau, AK
Phone: (907) 465-2960

MANHOLES, FRAME AND COVER

STATE of ALASKA 49th Lars R. Gregovich CE-8065 REGISTERED PROFESSIONAL ENGINEER Jan 11, 2017

Eff. Date: 1/16/17

D-20.04

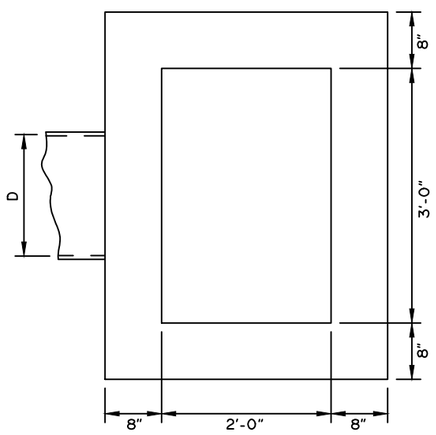

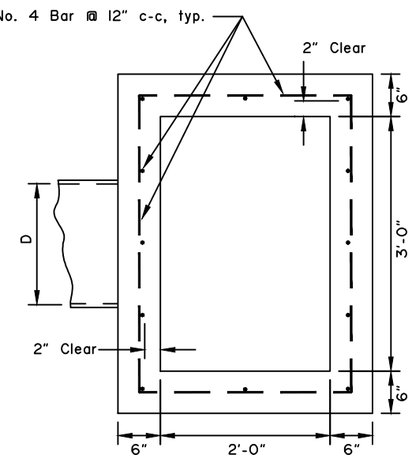

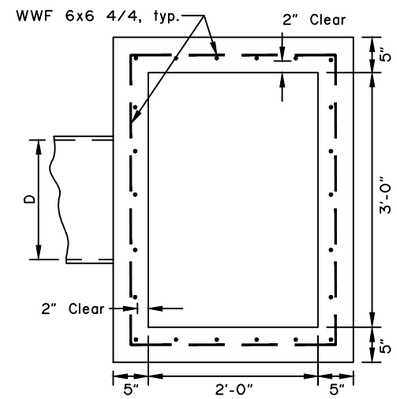

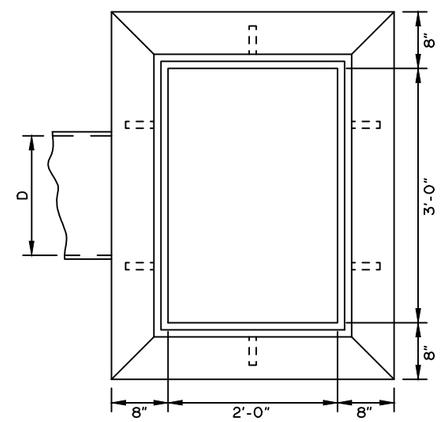

GENERAL NOTES:

1. Install inlet boxes parallel to the curb line.
2. The plans will indicate which inlet boxes require a sump.
3. Shape floors to drain.
4. Use Grade 40 minimum reinforcing steel.

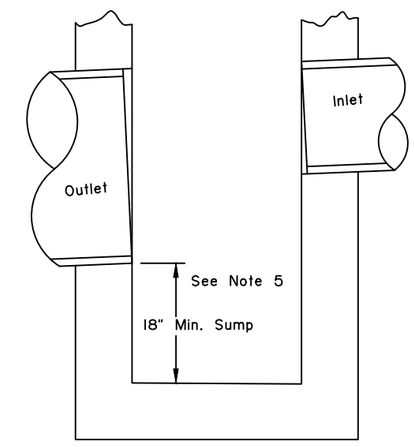

SUMP DETAIL

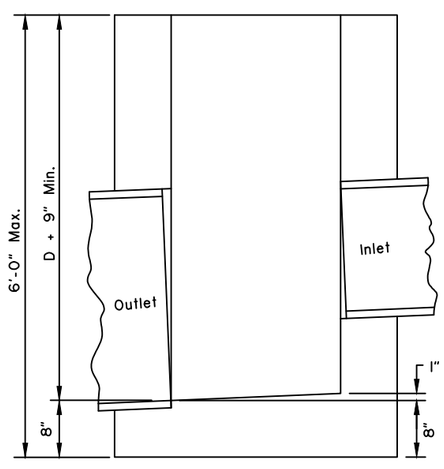

CAST IN PLACE

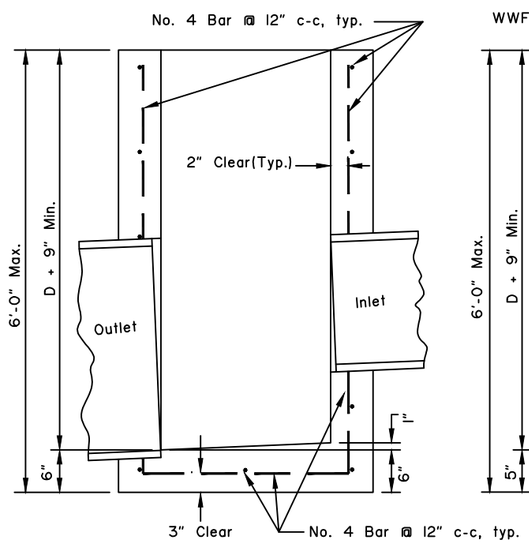

REINFORCED CAST IN PLACE

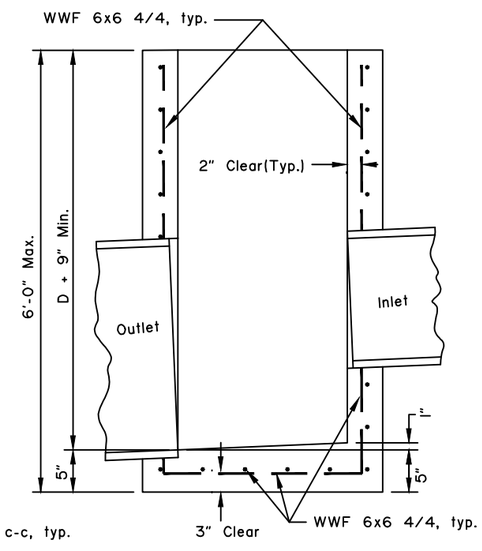

PRECAST

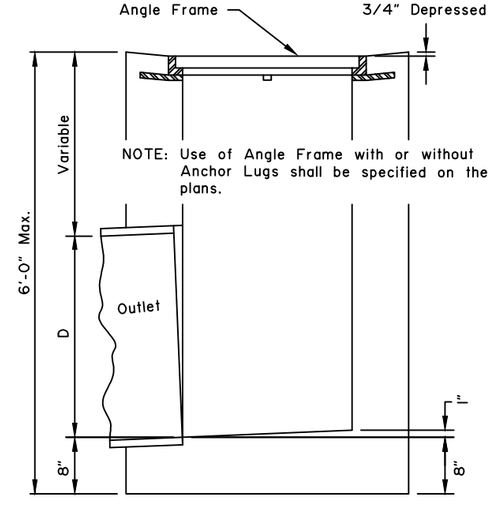

FIELD INLET BOX CAST* IN PLACE

* May be Precast or Reinforced Cast-In-Place Box.

TYPE "A" CONCRETE INLET BOXES

REVISIONS		
Date	Description	By
3/1/83	Gen. notes revision	
1/1/96	Added 6'0" Box Ht.	GDO
1/16/17	Removed conc. class	LRG

State of Alaska DOT&PF
3132 Channel Dr., Juneau, AK
Phone: (907) 465-2960

TYPE "A" INLET BOXES

STATE of ALASKA 49th Lars R. Gregovich CE-8065 REGISTERED PROFESSIONAL ENGINEER Jan. 11 2017

Eff. Date: 1/16/17

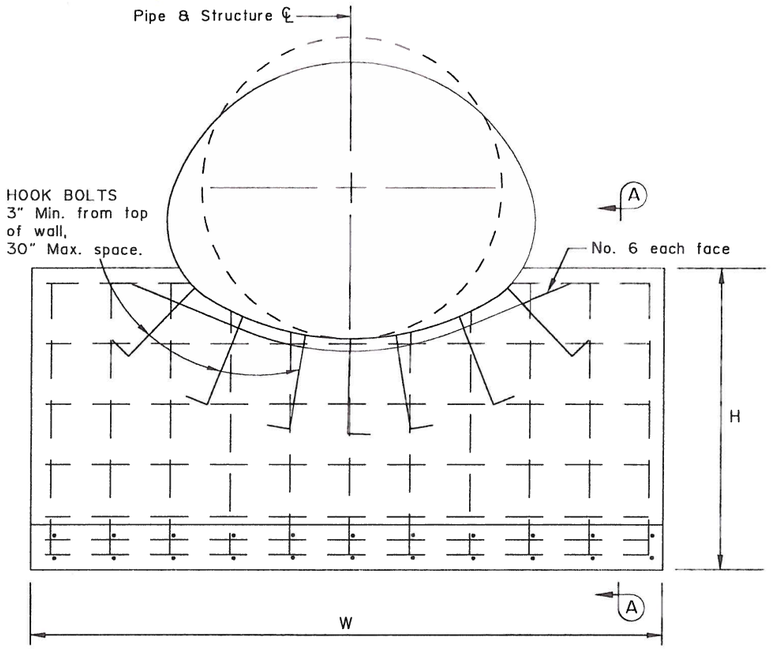

ELEVATION

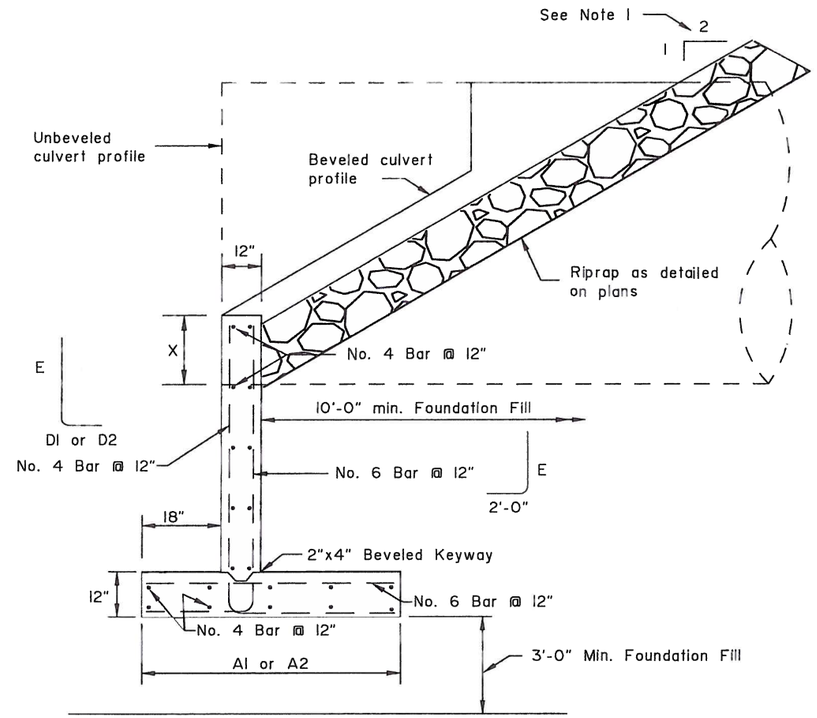

SECTION A-A

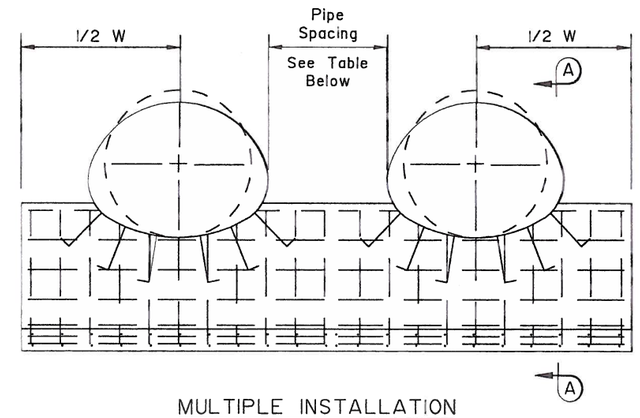

MULTIPLE INSTALLATION

Minimum Space Between Pipes
1/2 Dia. of Pipe or 1/2 Span of Pipe Arch, 24" Min.

CORRUGATED METAL PIPE ✱ SEE NOTE 11							
Dia.	W	H	A1✱	A2✱	D1✱	D2✱	E
5'-0"	9'-0"	4'-0"	4'-0"	4'-0"	2'-0"	2'-0"	3'-6"
5'-6"	10'-0"	4'-6"	4'-0"	4'-0"	2'-0"	2'-0"	4'-0"
6'-0"	11'-0"	4'-6"	4'-0"	4'-0"	2'-0"	2'-0"	4'-0"
6'-6"	12'-0"	4'-6"	4'-0"	4'-0"	2'-0"	2'-0"	4'-0"
7'-0"	12'-6"	4'-6"	4'-0"	4'-0"	2'-0"	2'-0"	4'-0"
7'-6"	13'-6"	5'-0"	4'-6"	4'-0"	2'-6"	2'-0"	4'-6"
8'-0"	14'-6"	5'-0"	4'-6"	4'-0"	2'-6"	2'-0"	4'-6"
8'-6"	15'-6"	5'-0"	4'-6"	4'-0"	2'-6"	2'-0"	4'-6"
9'-0"	16'-6"	5'-6"	5'-0"	4'-0"	3'-0"	2'-0"	5'-0"
9'-6"	17'-0"	5'-6"	5'-0"	4'-0"	3'-0"	2'-0"	5'-0"
10'-0"	18'-0"	5'-6"	5'-0"	4'-0"	3'-0"	2'-0"	5'-0"
10'-6"	19'-0"	5'-6"	5'-0"	4'-0"	3'-0"	2'-0"	5'-0"
11'-0"	20'-0"	5'-6"	5'-0"	4'-0"	3'-0"	2'-0"	5'-0"
11'-6"	21'-0"	5'-6"	5'-0"	4'-0"	3'-0"	2'-0"	5'-0"
12'-0"	21'-6"	5'-6"	5'-0"	4'-0"	3'-0"	2'-0"	5'-0"
12'-6"	22'-6"	5'-6"	5'-0"	4'-0"	3'-0"	2'-0"	5'-0"
13'-0"	23'-6"	5'-6"	5'-0"	4'-0"	3'-0"	2'-0"	5'-0"
13'-6"	24'-6"	6'-0"	5'-6"	4'-0"	3'-6"	2'-0"	5'-6"
14'-0"	25'-6"	6'-6"	6'-0"	4'-0"	4'-0"	2'-0"	6'-0"
14'-6"	26'-0"	6'-6"	6'-0"	4'-0"	4'-0"	2'-0"	6'-0"
15'-0"	27'-0"	6'-6"	6'-0"	4'-0"	4'-0"	2'-0"	6'-0"

CORRUGATED METAL PIPE ARCH ✱ SEE NOTE 11								
SPAN	RISE	W	H	A1✱	A2✱	D1✱	D2✱	E
6'-1"	4'-7"	14'-0"	5'-0"	4'-6"	4'-0"	2'-6"	2'-0"	4'-6"
6'-4"	4'-9"	14'-6"	5'-0"	4'-6"	4'-0"	2'-6"	2'-0"	4'-6"
6'-9"	4'-11"	15'-0"	5'-0"	4'-6"	4'-0"	2'-6"	2'-0"	4'-6"
7'-0"	5'-1"	15'-6"	5'-0"	4'-6"	4'-0"	2'-6"	2'-0"	4'-6"
7'-3"	5'-3"	16'-0"	5'-0"	4'-6"	4'-0"	2'-6"	2'-0"	4'-6"
7'-8"	5'-5"	16'-6"	5'-0"	4'-6"	4'-0"	2'-6"	2'-0"	4'-6"
7'-11"	5'-7"	17'-0"	5'-0"	4'-6"	4'-0"	2'-6"	2'-0"	4'-6"
8'-2"	5'-9"	17'-6"	5'-0"	4'-6"	4'-0"	2'-6"	2'-0"	4'-6"
8'-7"	5'-11"	18'-0"	5'-0"	4'-6"	4'-0"	2'-6"	2'-0"	4'-6"
8'-10"	6'-1"	18'-6"	5'-0"	4'-6"	4'-0"	2'-6"	2'-0"	4'-6"
9'-4"	6'-3"	19'-0"	5'-0"	4'-6"	4'-0"	2'-6"	2'-0"	4'-6"
9'-6"	6'-5"	19'-6"	5'-0"	4'-6"	4'-0"	2'-6"	2'-0"	4'-6"
9'-9"	6'-7"	20'-0"	5'-0"	4'-6"	4'-0"	2'-6"	2'-0"	4'-6"
10'-3"	6'-9"	20'-6"	5'-0"	4'-6"	4'-0"	2'-6"	2'-0"	4'-6"
10'-8"	6'-11"	21'-0"	5'-6"	5'-0"	4'-0"	3'-0"	2'-0"	5'-0"
10'-11"	7'-1"	21'-6"	5'-6"	5'-0"	4'-0"	3'-0"	2'-0"	5'-0"
11'-5"	7'-3"	22'-0"	5'-6"	5'-0"	4'-0"	3'-0"	2'-0"	5'-0"
11'-7"	7'-5"	22'-6"	5'-6"	5'-0"	4'-0"	3'-0"	2'-0"	5'-0"
11'-10"	7'-7"	23'-0"	5'-6"	5'-0"	4'-0"	3'-0"	2'-0"	5'-0"
12'-4"	7'-9"	23'-6"	5'-6"	5'-0"	4'-0"	3'-0"	2'-0"	5'-0"
12'-6"	7'-11"	24'-0"	5'-6"	5'-0"	4'-0"	3'-0"	2'-0"	5'-0"
12'-8"	8'-1"	24'-6"	5'-6"	5'-0"	4'-0"	3'-0"	2'-0"	5'-0"
12'-10"	8'-4"	25'-0"	5'-6"	5'-0"	4'-0"	3'-0"	2'-0"	5'-0"
13'-5"	8'-5"	25'-6"	5'-6"	5'-0"	4'-0"	3'-0"	2'-0"	5'-0"
13'-11"	8'-7"	26'-0"	5'-6"	5'-0"	4'-0"	3'-0"	2'-0"	5'-0"
14'-1"	8'-9"	26'-6"	5'-6"	5'-0"	4'-0"	3'-0"	2'-0"	5'-0"
14'-3"	8'-11"	27'-0"	5'-6"	5'-0"	4'-0"	3'-0"	2'-0"	5'-0"
14'-10"	9'-1"	27'-6"	5'-6"	5'-0"	4'-0"	3'-0"	2'-0"	5'-0"
15'-4"	9'-3"	28'-0"	5'-6"	5'-0"	4'-0"	3'-0"	2'-0"	5'-0"
15'-6"	9'-5"	28'-6"	5'-6"	5'-0"	4'-0"	3'-0"	2'-0"	5'-0"
15'-8"	9'-7"	29'-0"	5'-6"	5'-0"	4'-0"	3'-0"	2'-0"	5'-0"
15'-10"	9'-10"	29'-6"	5'-6"	5'-0"	4'-0"	3'-0"	2'-0"	5'-0"
16'-5"	9'-11"	30'-0"	5'-6"	5'-0"	4'-0"	3'-0"	2'-0"	5'-0"
16'-7"	10'-1"	30'-6"	5'-6"	5'-0"	4'-0"	3'-0"	2'-0"	5'-0"

GENERAL NOTES:

1. For use on 2:1 or flatter backfill slopes only.
2. See plans for pipe beveling requirements. See Std. Dwg. D-07 for "X" dimension and culvert beveling geometry.
3. Use Class A concrete.
4. Use epoxy-coated ASTM A706, Grade 60 reinforcing steel fy=60,000 psi.
5. Place reinforcement 3" clear from surface of concrete unless otherwise noted.
6. Chamfer all exposed concrete corners 3/4".
7. If unsuitable foundation material is encountered, remove and backfill with Foundation Fill as directed by the Engineer.
8. Furnishing and installing hook bolts in place is incidental to Class A concrete.
9. Use galvanized ASTM A307 hook bolts and nuts. Torque culvert nuts to 140 ft-lbs.
10. Headwalls for skewed culverts to be parallel to road centerline. See plans for dimensions of openings in headwalls for skewed culverts.
11. For backfill soil with:
    ϕ=30°, γ=130 pcf
    Use A1 and D1
    ϕ=34°, γ=135 pcf
    Use A2 and D2

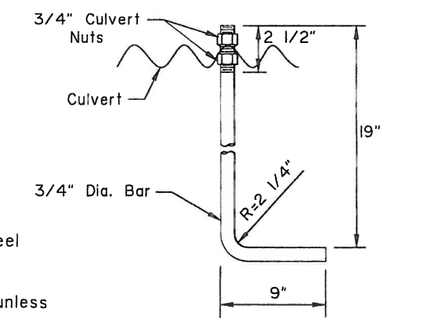

HOOK BOLT

REVISIONS		
Date	Description	By
1/16/17	Removal of f'c	TWA

State of Alaska DOT&PF
3132 Channel Dr., Juneau, AK
Phone: (907) 465-2960

HEADWALLS CAST-IN-PLACE TYPE I

STATE OF ALASKA 49TH Travis W. Arndt No. CE 10805 REGISTERED PROFESSIONAL ENGINEER 1/5/17

Eff. Date: 1/16/17

D-30.11

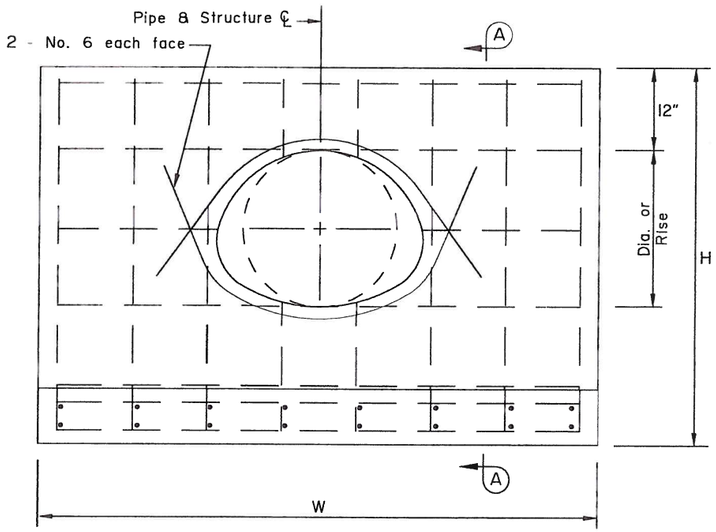

ELEVATION

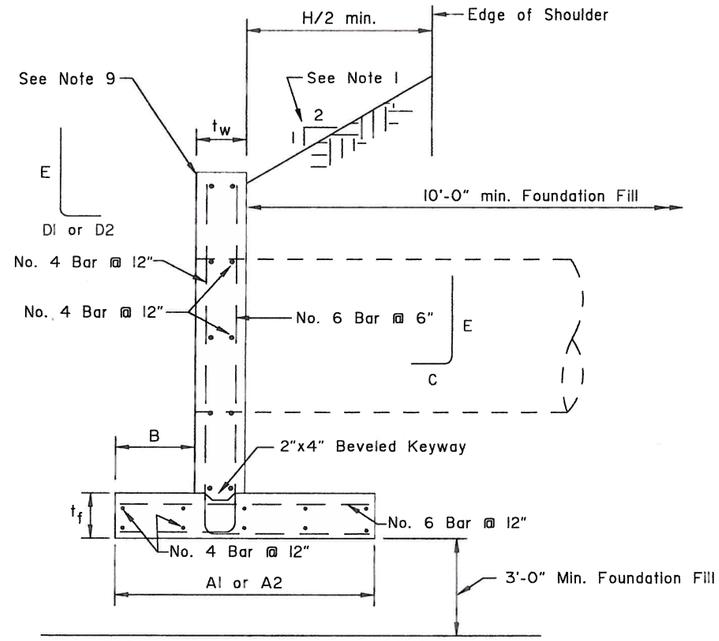

SECTION A-A

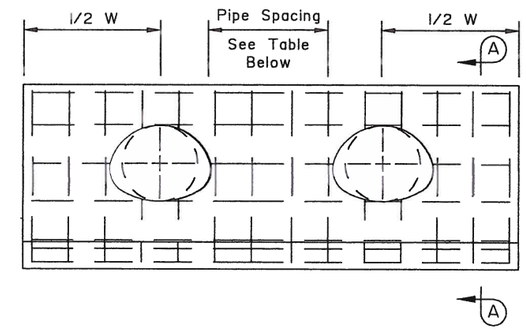

MULTIPLE INSTALLATION

Minimum Space Between Pipes
1/2 Dia. of Pipe or 1/2 Span of Pipe Arch, 24" Min.

CORRUGATED METAL PIPE											✱ SEE NOTE 8
Dia.	W	t_w	t_f	H	A1 ✱	A2 ✱	B	C	D1 ✱	D2 ✱	E
1'-6"	8'-0"	1'-0"	1'-0"	4'-6"	4'-0"	4'-0"	1'-6"	2'-0"	2'-0"	2'-0"	4'-0"
1'-9"	9'-0"	1'-0"	1'-0"	4'-9"	4'-6"	4'-0"	1'-6"	2'-0"	2'-6"	2'-0"	4'-3"
2'-0"	9'-6"	1'-0"	1'-0"	5'-0"	4'-6"	4'-0"	1'-6"	2'-0"	2'-6"	2'-0"	4'-6"
2'-6"	11'-6"	1'-0"	1'-0"	5'-6"	5'-0"	4'-0"	1'-6"	2'-0"	3'-0"	2'-0"	5'-0"
3'-0"	13'-0"	1'-0"	1'-0"	6'-0"	5'-6"	4'-0"	1'-6"	2'-0"	3'-6"	2'-0"	5'-6"
3'-6"	14'-6"	1'-0"	1'-0"	6'-6"	6'-0"	4'-0"	1'-6"	2'-0"	4'-0"	2'-0"	6'-0"
4'-0"	16'-0"	1'-0"	1'-0"	7'-0"	6'-6"	4'-6"	2'-0"	2'-6"	4'-0"	2'-0"	6'-6"
4'-6"	18'-0"	1'-0"	1'-0"	7'-6"	7'-0"	4'-6"	2'-0"	2'-6"	4'-6"	2'-0"	7'-0"
5'-0"	19'-6"	1'-0"	1'-0"	8'-0"	8'-0"	5'-0"	2'-6"	3'-0"	5'-0"	2'-0"	7'-6"
5'-6"	21'-0"	1'-0"	1'-0"	8'-6"	8'-6"	5'-6"	2'-6"	3'-0"	5'-6"	2'-6"	8'-0"
6'-0"	23'-0"	1'-0"	1'-0"	9'-0"	9'-6"	6'-0"	3'-0"	3'-6"	6'-0"	2'-6"	8'-6"
6'-6"	24'-6"	1'-3"	1'-3"	9'-9"	10'-0"	6'-0"	3'-0"	3'-9"	6'-6"	2'-6"	9'-3"
7'-0"	26'-0"	1'-3"	1'-3"	10'-3"	10'-0"	6'-6"	3'-0"	3'-9"	6'-6"	3'-0"	9'-9"
7'-6"	28'-0"	1'-6"	1'-6"	11'-0"	10'-6"	6'-6"	3'-0"	4'-0"	7'-0"	3'-0"	10'-6"
8'-0"	29'-6"	1'-6"	1'-6"	11'-6"	11'-0"	7'-0"	3'-0"	4'-0"	7'-6"	3'-6"	11'-0"
8'-6"	31'-0"	2'-0"	2'-0"	12'-6"	11'-6"	7'-0"	3'-0"	4'-6"	8'-0"	3'-6"	12'-0"
9'-0"	33'-0"	2'-0"	2'-0"	13'-0"	11'-6"	7'-6"	3'-0"	4'-6"	8'-0"	4'-0"	12'-6"

CORRUGATED METAL PIPE ARCH											✱ SEE NOTE 8
SPAN	RISE	W	tw	tf	H	A1 ✱	A2 ✱	B	C	D1 ✱	D2 ✱	E
1'-5"	1'-1"	6'-6"	1'-0"	1'-0"	4'-1"	4'-0"	4'-0"	1'-6"	2'-0"	2'-0"	2'-0"	3'-7"
1'-9"	1'-3"	7'-0"	1'-0"	1'-0"	4'-3"	4'-0"	4'-0"	1'-6"	2'-0"	2'-0"	2'-0"	3'-9"
2'-0"	1'-6"	8'-0"	1'-0"	1'-0"	4'-6"	4'-0"	4'-0"	1'-6"	2'-0"	2'-0"	2'-0"	4'-0"
2'-4"	1'-8"	8'-6"	1'-0"	1'-0"	4'-8"	4'-0"	4'-0"	1'-6"	2'-0"	2'-0"	2'-0"	4'-2"
2'-11"	2'-0"	9'-6"	1'-0"	1'-0"	5'-0"	4'-6"	4'-0"	1'-6"	2'-0"	2'-6"	2'-0"	4'-6"
3'-6"	2'-5"	11'-0"	1'-0"	1'-0"	5'-5"	5'-0"	4'-0"	1'-6"	2'-0"	3'-0"	2'-0"	4'-11"
4'-1"	2'-9"	12'-0"	1'-0"	1'-0"	5'-9"	5'-6"	4'-0"	1'-6"	2'-0"	3'-6"	2'-0"	5'-3"
4'-9"	3'-2"	13'-6"	1'-0"	1'-0"	6'-2"	5'-6"	4'-0"	1'-6"	2'-0"	3'-6"	2'-0"	5'-8"
5'-4"	3'-7"	15'-0"	1'-0"	1'-0"	6'-7"	6'-0"	4'-0"	1'-6"	2'-0"	4'-0"	2'-0"	6'-1"
5'-11"	3'-11"	16'-0"	1'-0"	1'-0"	6'-11"	6'-6"	4'-6"	2'-0"	2'-6"	4'-0"	2'-0"	6'-5"
6'-5"	4'-4"	17'-0"	1'-0"	1'-0"	7'-4"	7'-0"	4'-6"	2'-0"	2'-6"	4'-6"	2'-0"	6'-10"
7'-1"	4'-9"	19'-0"	1'-0"	1'-0"	7'-9"	8'-0"	4'-6"	2'-0"	2'-6"	5'-6"	2'-0"	7'-3"

GENERAL NOTES:

1. For use on 2:1 or flatter backfill slopes only.
2. Use Class A concrete.
3. Use epoxy-coated ASTM A706, Grade 60 reinforcing steel fy=60,000 psi.
4. Place reinforcement 3" clear from surface of concrete unless otherwise noted.
5. Chamfer all exposed concrete corners 3/4".
6. If unsuitable foundation material is encountered, remove and backfill with Foundation Fill as directed by the Engineer.
7. Headwalls for skewed culverts to be parallel to road centerline. See plans for dimensions of openings in headwalls for skewed culverts.
8. For backfill soil with:
   ϕ=30°, γ=130 pcf
   Use A1 and D1
   ϕ=34°, γ=135 pcf
   Use A2 and D2
9. See plans for railing requirements at top of wall.

REVISIONS		
Date	Description	By
1/16/17	Removal of f'c	TWA

State of Alaska DOT&PF
3132 Channel Dr., Juneau, AK
Phone: (907) 465-2960

HEADWALLS CAST-IN-PLACE TYPE II

STATE OF ALASKA 49TH Travis W. Arndt No. CE 10805 REGISTERED PROFESSIONAL ENGINEER 1/5/17

Eff. Date: 1/16/17

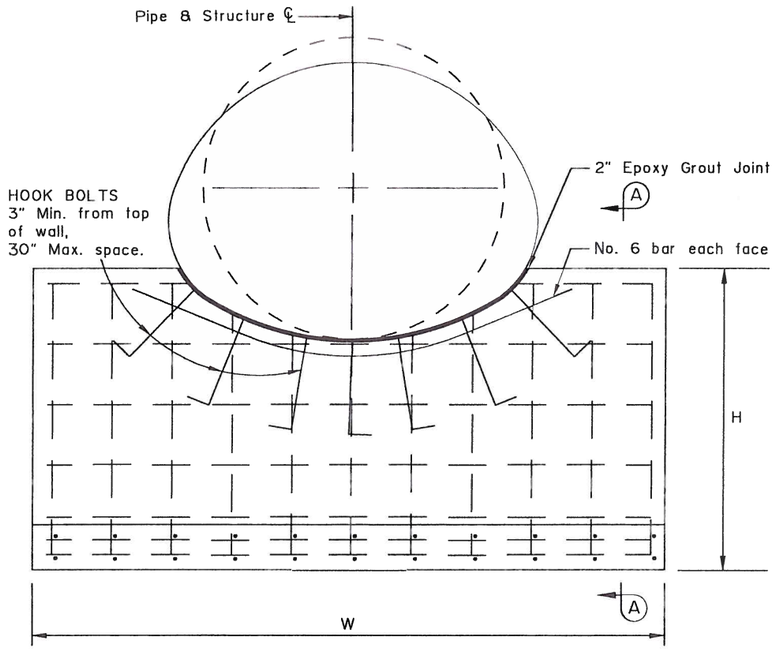

ELEVATION

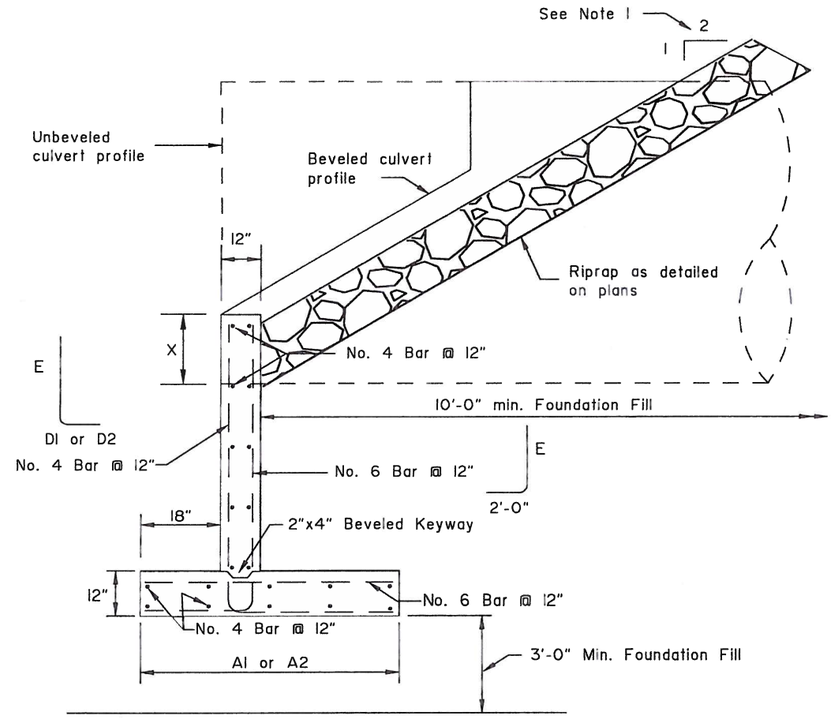

SECTION A-A

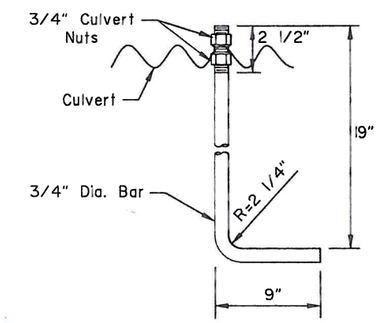

HOOK BOLT

CORRUGATED METAL PIPE ✳ SEE NOTE 11							
Dia.	W	H	A1 ✳	A2 ✳	D1 ✳	D2 ✳	E
5'-0"	9'-0"	4'-0"	4'-0"	4'-0"	2'-0"	2'-0"	3'-6"
5'-6"	10'-0"	4'-6"	4'-0"	4'-0"	2'-0"	2'-0"	4'-0"
6'-0"	11'-0"	4'-6"	4'-0"	4'-0"	2'-0"	2'-0"	4'-0"
6'-6"	12'-0"	4'-6"	4'-0"	4'-0"	2'-0"	2'-0"	4'-0"
7'-0"	12'-6"	4'-6"	4'-0"	4'-0"	2'-0"	2'-0"	4'-0"
7'-6"	13'-6"	5'-0"	4'-6"	4'-0"	2'-6"	2'-0"	4'-6"
8'-0"	14'-6"	5'-0"	4'-6"	4'-0"	2'-6"	2'-0"	4'-6"
8'-6"	15'-6"	5'-0"	4'-6"	4'-0"	2'-6"	2'-0"	4'-6"
9'-0"	16'-6"	5'-6"	5'-0"	4'-0"	3'-0"	2'-0"	5'-0"
9'-6"	17'-0"	5'-6"	5'-0"	4'-0"	3'-0"	2'-0"	5'-0"
10'-0"	18'-0"	5'-6"	5'-0"	4'-0"	3'-0"	2'-0"	5'-0"
10'-6"	19'-0"	5'-6"	5'-0"	4'-0"	3'-0"	2'-0"	5'-0"
11'-0"	20'-0"	5'-6"	5'-0"	4'-0"	3'-0"	2'-0"	5'-0"

CORRUGATED METAL PIPE ARCH ✳ SEE NOTE 11								
SPAN	RISE	W	H	A1 ✳	A2 ✳	D1 ✳	D2 ✳	E
6'-1"	4'-7"	14'-0"	5'-0"	4'-6"	4'-0"	2'-6"	2'-0"	4'-6"
6'-4"	4'-9"	14'-6"	5'-0"	4'-6"	4'-0"	2'-6"	2'-0"	4'-6"
6'-9"	4'-11"	15'-0"	5'-0"	4'-6"	4'-0"	2'-6"	2'-0"	4'-6"
7'-0"	5'-1"	15'-6"	5'-0"	4'-6"	4'-0"	2'-6"	2'-0"	4'-6"
7'-3"	5'-3"	16'-0"	5'-0"	4'-6"	4'-0"	2'-6"	2'-0"	4'-6"
7'-8"	5'-5"	16'-6"	5'-0"	4'-6"	4'-0"	2'-6"	2'-0"	4'-6"
7'-11"	5'-7"	17'-0"	5'-0"	4'-6"	4'-0"	2'-6"	2'-0"	4'-6"
8'-2"	5'-9"	17'-6"	5'-0"	4'-6"	4'-0"	2'-6"	2'-0"	4'-6"
8'-7"	5'-11"	18'-0"	5'-0"	4'-6"	4'-0"	2'-6"	2'-0"	4'-6"
8'-10"	6'-1"	18'-6"	5'-0"	4'-6"	4'-0"	2'-6"	2'-0"	4'-6"
9'-4"	6'-3"	19'-0"	5'-0"	4'-6"	4'-0"	2'-6"	2'-0"	4'-6"
9'-6"	6'-5"	19'-6"	5'-0"	4'-6"	4'-0"	2'-6"	2'-0"	4'-6"
9'-9"	6'-7"	20'-0"	5'-0"	4'-6"	4'-0"	2'-6"	2'-0"	4'-6"
10'-3"	6'-9"	20'-6"	5'-0"	4'-6"	4'-0"	2'-6"	2'-0"	4'-6"
10'-8"	6'-11"	21'-0"	5'-6"	5'-0"	4'-0"	3'-0"	2'-0"	5'-0"
10'-11"	7'-1"	21'-6"	5'-6"	5'-0"	4'-0"	3'-0"	2'-0"	5'-0"

GENERAL NOTES:

1. For use on 2:1 or flatter backfill slopes only.
2. See plans for pipe beveling requirements. See Std. Dwg. D-07 for "X" dimension and culvert beveling geometry.
3. Use Class A concrete.
4. Use epoxy-coated ASTM A706, Grade 60 reinforcing steel fy=60,000 psi.
5. Place reinforcement 3" clear from surface of concrete unless otherwise noted.
6. Chamfer all exposed concrete corners 3/4".
7. If unsuitable foundation material is encountered, remove and backfill with Foundation Fill as directed by the Engineer.
8. Furnishing and installing hook bolts in place is incidental to Class A concrete.
9. Use galvanized ASTM A307 hook bolts and nuts. Torque culvert nuts to 140 ft-lbs.
10. Headwalls for skewed culverts to be parallel to road centerline. See plans for dimensions of openings in headwalls for skewed culverts.
11. For backfill soil with:
    ϕ=30°, γ=130 pcf
    Use A1 and D1
    ϕ=34°, γ=135 pcf
    Use A2 and D2

REVISIONS		
Date	Description	By
1/16/17	Removal of f'c	TWA

State of Alaska DOT&PF
3132 Channel Dr., Juneau, AK
Phone: (907) 465-2960

HEADWALLS PRECAST TYPE I

STATE OF ALASKA 49TH Travis W. Arndt No. CE 10805 REGISTERED PROFESSIONAL ENGINEER 1/5/17

Eff. Date: 1/16/17

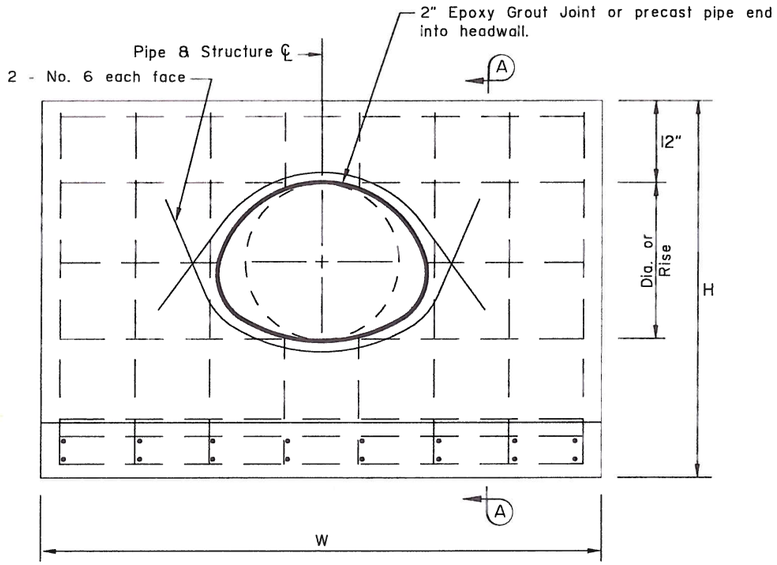

ELEVATION

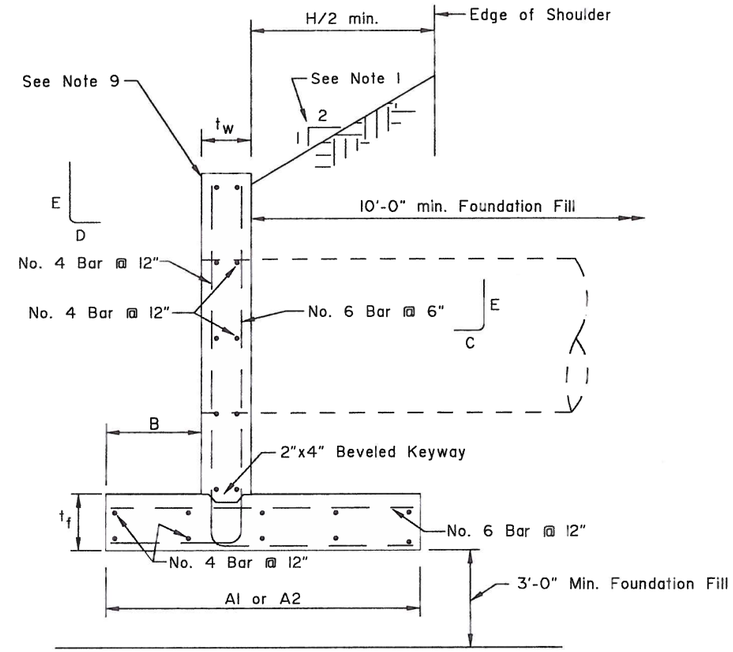

SECTION A-A

CORRUGATED METAL PIPE											✱ SEE NOTE 8
Dia.	W	t_w	t_f	H	A1✱	A2✱	B	C	D1✱	D2✱	E
1'-6"	8'-0"	1'-0"	1'-0"	4'-6"	6'-0"	4'-0"	1'-6"	2'-0"	4'-0"	2'-0"	4'-0"
1'-9"	9'-0"	1'-0"	1'-0"	4'-9"	6'-6"	4'-0"	1'-6"	2'-0"	4'-6"	2'-0"	4'-3"
2'-0"	9'-6"	1'-0"	1'-0"	5'-0"	7'-0"	4'-0"	1'-6"	2'-0"	5'-0"	2'-0"	4'-6"
2'-6"	11'-6"	1'-0"	1'-0"	5'-6"	7'-6"	4'-0"	1'-6"	2'-0"	5'-6"	2'-0"	5'-0"
3'-0"	13'-0"	1'-0"	1'-0"	6'-0"	8'-6"	4'-6"	1'-6"	2'-0"	6'-6"	2'-6"	5'-6"
3'-6"	14'-6"	1'-0"	1'-0"	6'-6"	9'-0"	5'-0"	1'-6"	2'-0"	7'-0"	3'-0"	6'-0"
4'-0"	16'-0"	1'-0"	1'-0"	7'-0"	10'-0"	5'-6"	2'-0"	2'-6"	7'-6"	3'-0"	6'-6"
4'-6"	18'-0"	1'-3"	1'-3"	7'-9"	11'-0"	6'-0"	2'-0"	2'-9"	8'-6"	3'-6"	7'-3"
5'-0"	19'-6"	1'-6"	1'-6"	8'-6"	12'-0"	6'-6"	2'-6"	3'-6"	9'-0"	3'-6"	8'-0"

CORRUGATED METAL PIPE ARCH											✱ SEE NOTE 8
SPAN	RISE	W	t_w	t_f	H	A1✱	A2✱	B	C	D1✱	D2✱	E
1'-5"	1'-1"	6'-6"	1'-0"	1'-0"	4'-1"	5'-6"	4'-0"	1'-6"	2'-0"	3'-6"	2'-0"	3'-7"
1'-9"	1'-3"	7'-0"	1'-0"	1'-0"	4'-3"	5'-6"	4'-0"	1'-6"	2'-0"	3'-6"	2'-0"	3'-9"
2'-0"	1'-6"	8'-0"	1'-0"	1'-0"	4'-6"	6'-0"	4'-0"	1'-6"	2'-0"	4'-0"	2'-0"	4'-0"
2'-4"	1'-8"	8'-6"	1'-0"	1'-0"	4'-8"	6'-0"	4'-0"	1'-6"	2'-0"	4'-0"	2'-0"	4'-2"
2'-11"	2'-0"	9'-6"	1'-0"	1'-0"	5'-0"	7'-0"	4'-0"	1'-6"	2'-0"	5'-0"	2'-0"	4'-6"
3'-6"	2'-5"	11'-0"	1'-0"	1'-0"	5'-5"	7'-6"	4'-0"	1'-6"	2'-0"	5'-6"	2'-0"	4'-11"
4'-1"	2'-9"	12'-0"	1'-0"	1'-0"	5'-9"	8'-0"	4'-0"	1'-6"	2'-0"	6'-0"	2'-6"	5'-3"
4'-9"	3'-2"	13'-6"	1'-0"	1'-0"	6'-2"	8'-6"	4'-0"	1'-6"	2'-0"	6'-6"	2'-6"	5'-8"
5'-4"	3'-7"	15'-0"	1'-0"	1'-0"	6'-7"	9'-0"	5'-0"	1'-6"	2'-0"	7'-0"	3'-0"	6'-1"
5'-11"	3'-11"	16'-0"	1'-0"	1'-0"	6'-11"	10'-0"	5'-6"	2'-0"	2'-6"	7'-6"	3'-0"	6'-5"
6'-5"	4'-4"	17'-0"	1'-3"	1'-3"	7'-7"	10'-6"	5'-6"	2'-0"	2'-9"	8'-0"	3'-0"	7'-1"
7'-1"	4'-9"	19'-0"	1'-6"	1'-6"	8'-3"	11'-6"	6'-6"	2'-6"	3'-6"	8'-6"	3'-6"	7'-9"

GENERAL NOTES:

1. For use on 2:1 or flatter backfill slopes only.
2. Use Class A concrete.
3. Use epoxy-coated ASTM A706, Grade 60 reinforcing steel fy=60,000 psi.
4. Place reinforcement 3" clear from surface of concrete unless otherwise noted.
5. Chamfer all exposed concrete corners 3/4".
6. If unsuitable foundation material is encountered, remove and backfill with Foundation Fill as directed by the Engineer.
7. Headwalls for skewed culverts to be parallel to road centerline. See plans for dimensions of openings in headwalls for skewed culverts.
8. For backfill soil with:
   ϕ=30°, γ=130 pcf
   Use A1 and D1
   ϕ=34°, γ=135 pcf
   Use A2 and D2
9. See plans for railing requirements.

REVISIONS		
Date	Description	By
1/16/17	Removal of f'c	TWA

State of Alaska DOT&PF
3132 Channel Dr., Juneau, AK
Phone: (907) 465-2960

HEADWALLS PRECAST TYPE II

STATE OF ALASKA 49TH Travis W. Arndt No. CE 10805 REGISTERED PROFESSIONAL ENGINEER

1/5/17

Eff. Date: 1/16/17

D-31.01

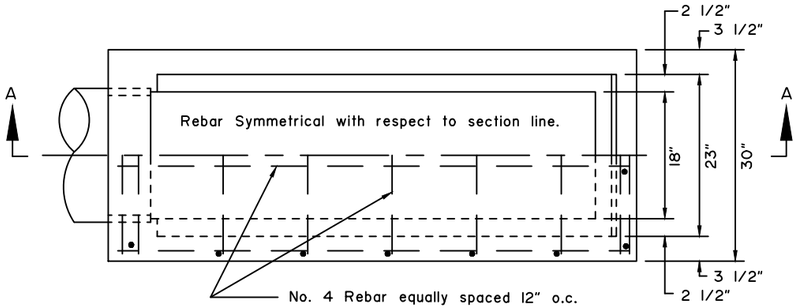

PLAN
(Frame not shown for clarity)

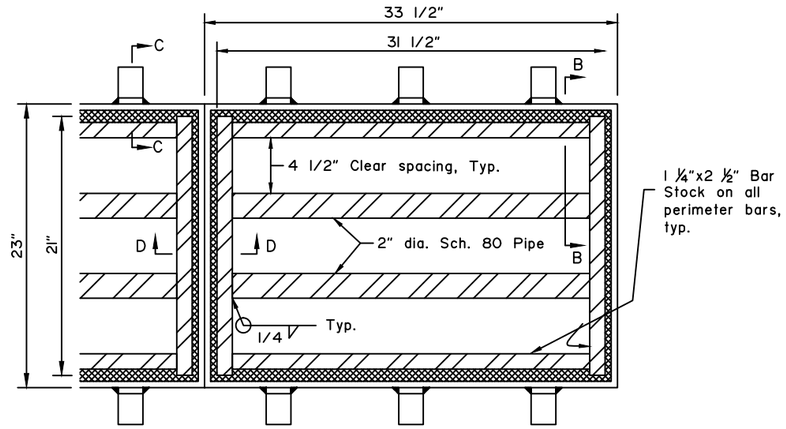

STEEL FRAME AND GRATE CONFIGURATION

GENERAL NOTES:

1. Provide either steel frames and grates or cast iron frames and grates.
2. Chamfer all exposed concrete corners 3/4".
3. Provide 2" minimum cover for all reinforcing steel.
4. Use Grade 40 minimum reinforcing steel.
5. Cast iron frame embedment lugs may differ from the configuration shown for the steel frame. Provide 6 total embedment lugs extending into concrete a minimum of 3".
6. Shop fabricate steel frames and steel grates.
7. Hot dip galvanize steel frames and grates. Provide uncoated cast iron frames and grates.

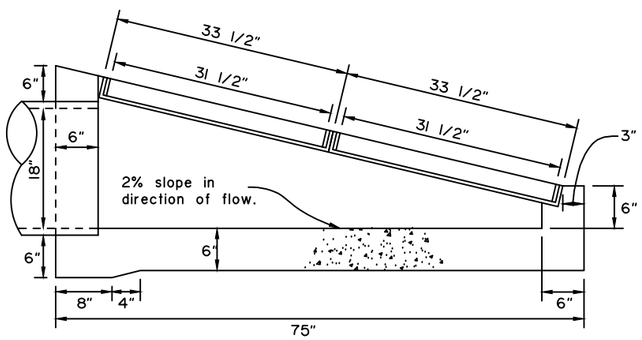

SECTION A-A

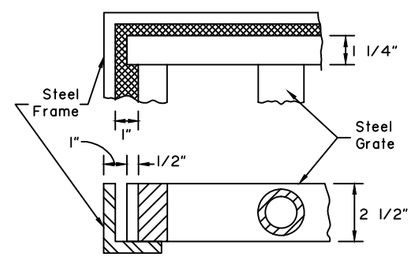

SECTION B-B

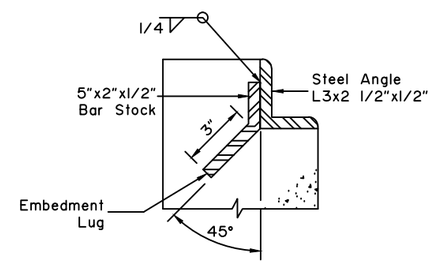

SECTION C-C

STEEL FRAME & GRATE DETAILS
Finished grate size is 21"x31 1/2"

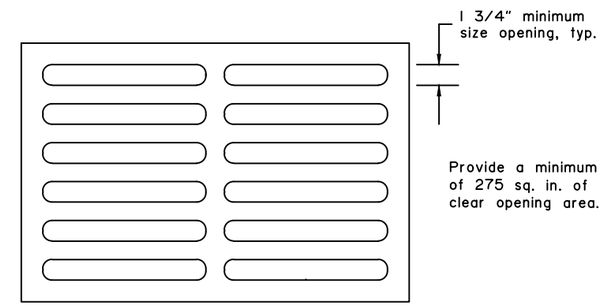

CAST IRON GRATE CONFIGURATION
Finished grate size is 21"x 31 1/2"

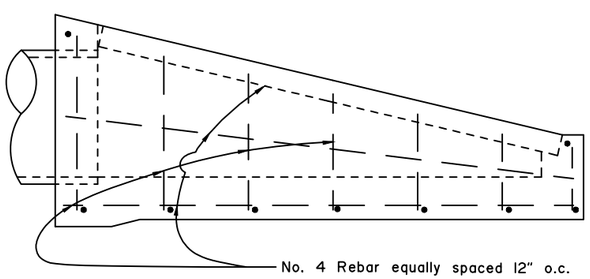

TYPICAL REINFORCEMENT STEEL DETAIL

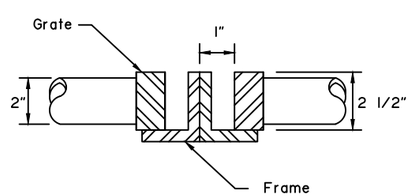

SECTION D-D

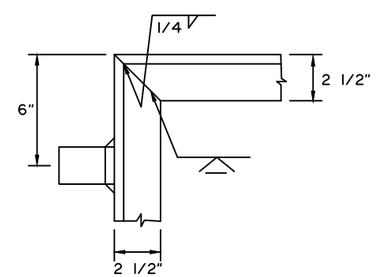

STEEL FRAME DETAIL

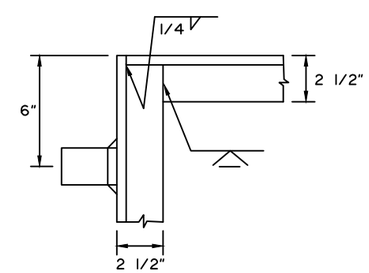

ALTERNATE STEEL FRAME DETAIL

NOTE: DRAWING NOT TO SCALE

REVISIONS		
Date	Description	By
10/31/03	Redesign of grate	LRG
5/31/12	Remove anchor lug and allow cast iron	LRG
1/16/17	Remove Concrete Class	LRG

State of Alaska DOT&PF
3132 Channel Dr., Juneau, AK
Phone: (907) 465-2960

TYPE "C" INLET BOX
18 INCH PIPE
ON 4:1 SLOPE

STATE of ALASKA 49th Lars R. Gregovich CE-8065 REGISTERED PROFESSIONAL ENGINEER Jan. 12, 2017

Eff. Date:
1/16/17

D-42.12

D-43.12

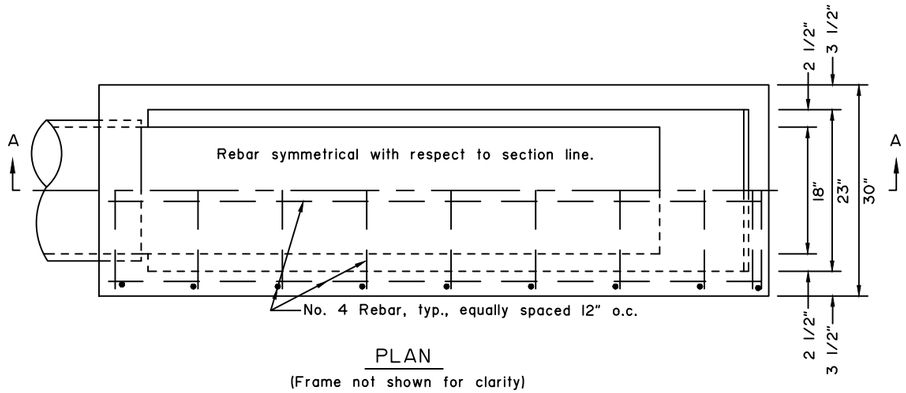

PLAN
(Frame not shown for clarity)

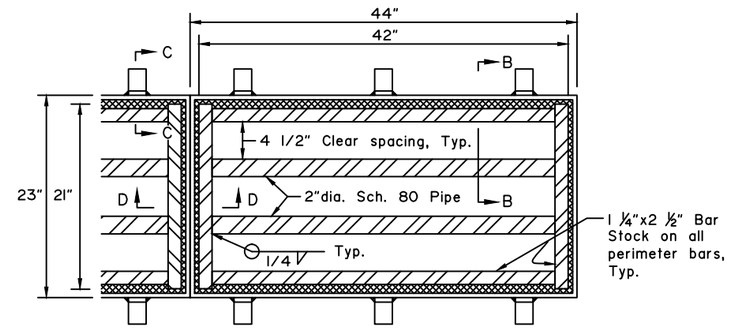

STEEL FRAME & GRATE CONFIGURATION

GENERAL NOTES:

1. Provide either steel frames and grates or cast iron frames and grates.
2. Chamfer all exposed concrete corners 3/4".
3. Provide 2" minimum cover for all reinforcing steel.
4. Use Grade 40 minimum reinforcing steel.
5. Cast iron frame embedment lugs may differ from the configuration shown for steel frames. Provide 6 total embedment lugs extending into concrete a minimum of 3".
6. Shop fabricate steel frames and steel grates.
7. Hot dip galvanize steel frames and grates. Provide uncoated cast iron frames and grates.

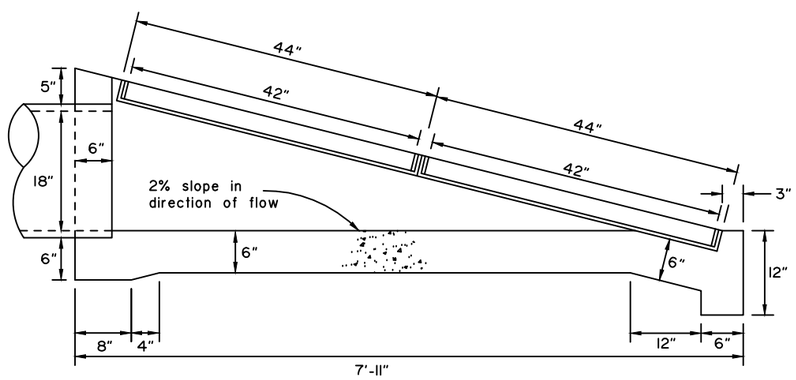

SECTION A-A

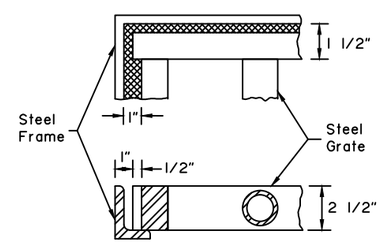

SECTION B-B

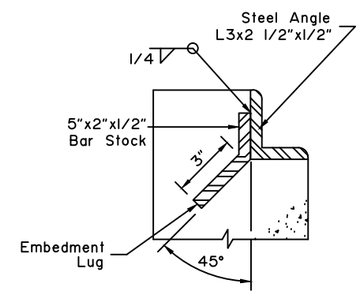

SECTION C-C

STEEL FRAME & GRATE DETAILS
Finished grate size is 21"x42"

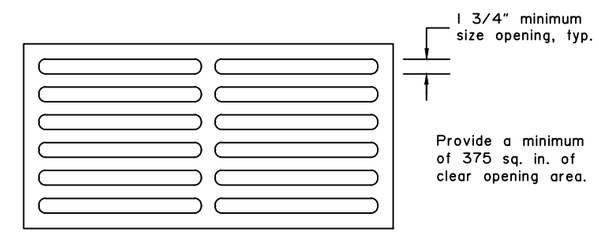

CAST IRON GRATE CONFIGURATION
Finished grate size is 21"x42"

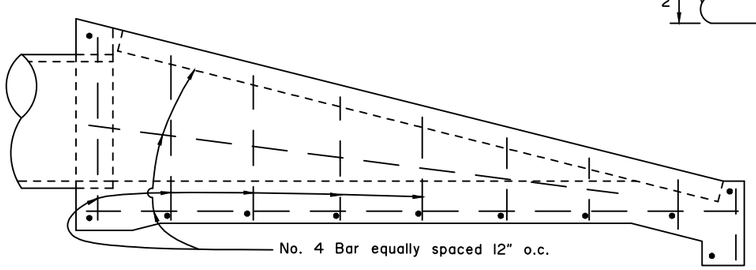

TYPICAL REINFORCEMENT STEEL DETAIL

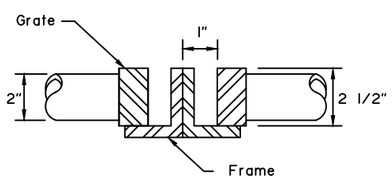

SECTION D-D

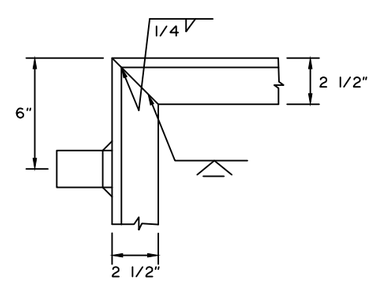

STEEL FRAME DETAIL

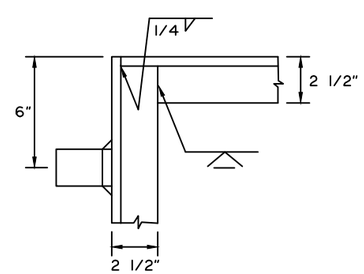

ALTERNATE STEEL FRAME DETAIL

NOTE: DRAWING NOT TO SCALE

REVISIONS		
Date	Description	By
10/31/03	Redesign of grate	LRG
5/31/12	Remove anchor lug and allow cast iron	LRG
1/16/17	Remove Concrete Class	LRG

State of Alaska DOT&PF
3132 Channel Dr., Juneau, AK
Phone: (907) 465-2960

TYPE "D" OUTLET BOX
18 INCH PIPE
ON 4:1 SLOPE

STATE OF ALASKA 49th
Lars R. Gregovich
CE-8065
REGISTERED PROFESSIONAL ENGINEER
Jan. 12, 2017

Eff. Date:
1/16/17

D-43.12

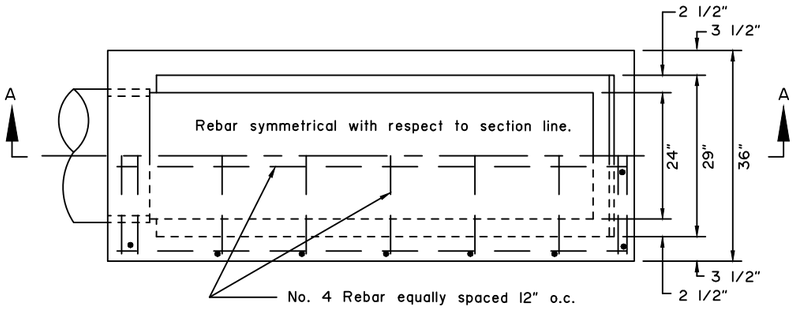

PLAN

(Grate not shown for clarity)

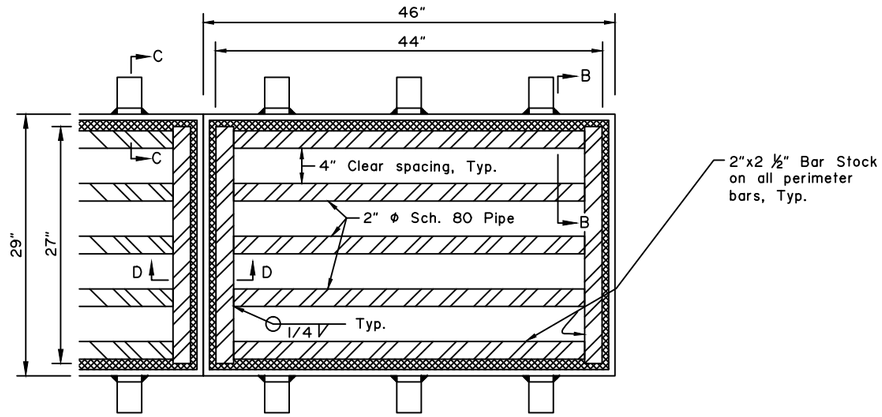

STEEL FRAME & GRATE CONFIGURATION

GENERAL NOTES:

1. Provide either steel frames and grates or cast iron frames and grates.
2. Chamfer all exposed concrete corners 3/4".
3. Provide 2" minimum cover for all reinforcing steel.
4. Use Grade 40 minimum reinforcing steel.
5. Cast iron frame embedment lugs may differ from the configuration shown for steel frames. Provide 6 total embedment lugs extending into concrete a minimum of 3".
6. Shop fabricate steel frames and steel grates.
7. Hot dip galvanize steel frames and grates. Provide uncoated cast iron frames and grates.

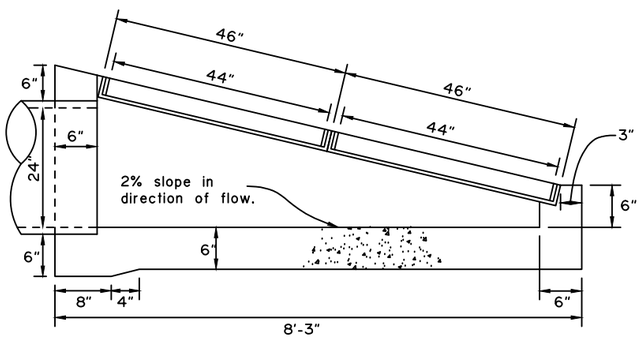

SECTION A-A

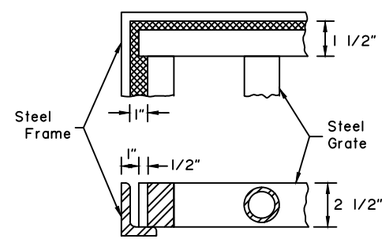

SECTION B-B

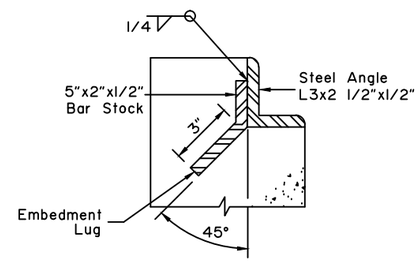

SECTION C-C

STEEL FRAME & GRATE DETAILS

Finished grate size is 27"x44"

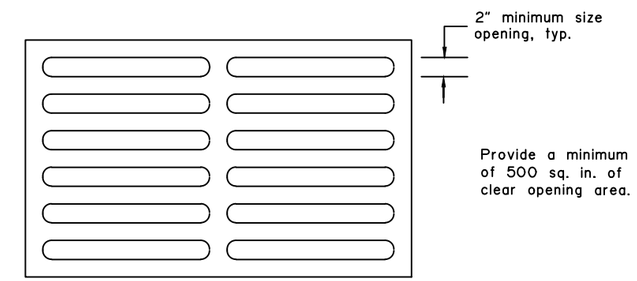

CAST IRON GRATE CONFIGURATION

Finished grate size is 27"x44"

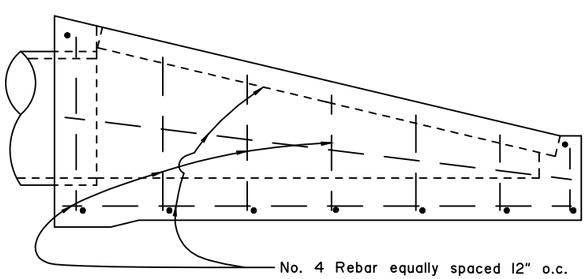

TYPICAL REINFORCEMENT STEEL DETAIL

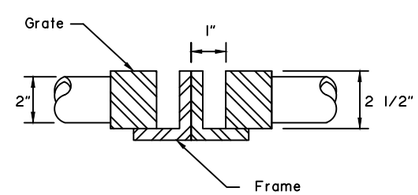

SECTION D-D

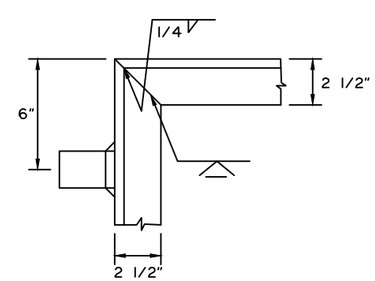

STEEL FRAME DETAIL

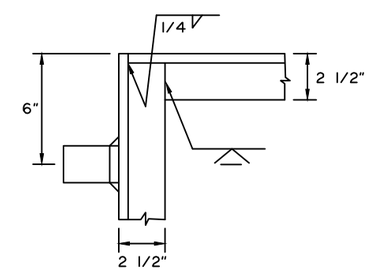

ALTERNATE STEEL FRAME DETAIL

NOTE: DRAWING NOT TO SCALE

REVISIONS		
Date	Description	By
5/31/12	Remove anchor lug and allow cast iron	LRG
1/16/17	Remove Concrete Class	LRG

State of Alaska DOT&PF
3132 Channel Dr., Juneau, AK
Phone: (907) 465-2960

TYPE "C" INLET BOX
24 INCH PIPE
ON 4:1 SLOPE

STATE of ALASKA 49th LRA Lars R. Gregovich CE-8065 REGISTERED PROFESSIONAL ENGINEER Jan. 12, 2017

Eff. Date:
1/16/17

D-44.12

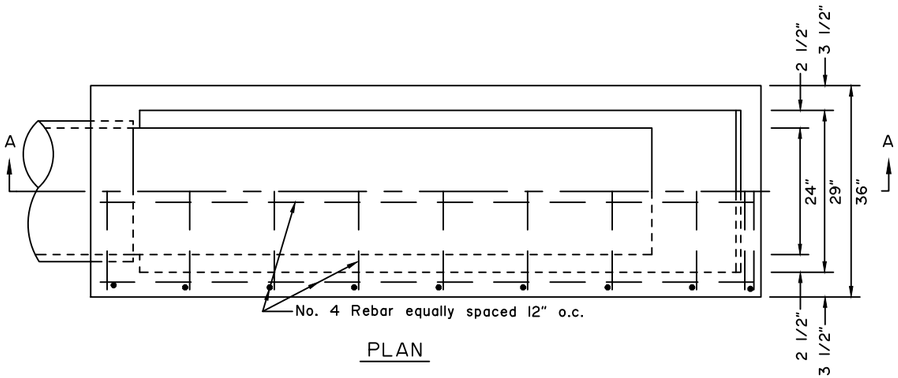

PLAN

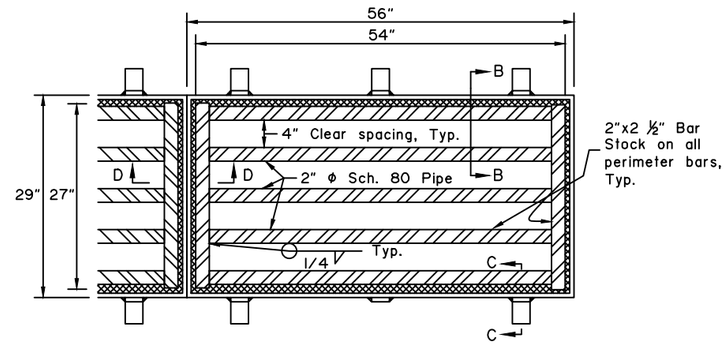

STEEL FRAME & GRATE CONFIGURATION

GENERAL NOTES:

1. Provide either steel frames and grates or cast iron frames and grates.
2. Chamfer all exposed concrete corners ¾".
3. Provide 2" minimum cover for all reinforcing steel.
4. Use Grade 40 minimum reinforcing steel.
5. Cast iron frame embedment lugs may differ from the configuration shown for steel frames. Provide 6 total embedment lugs extending into concrete a minimum of 3".
6. Shop fabricate steel frames and steel grates.
7. Hot dip galvanize steel frames and grates. Provide uncoated cast iron frames and grates.

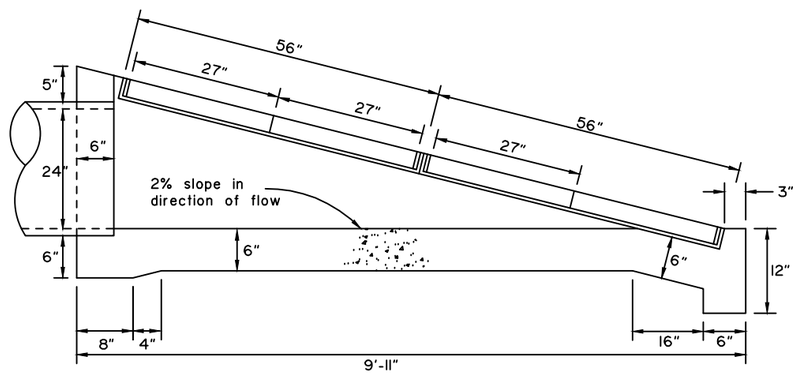

SECTION A-A

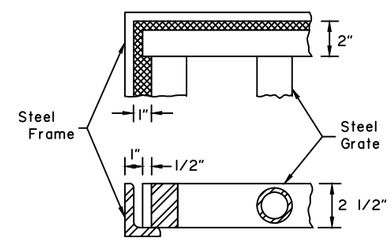

SECTION B-B

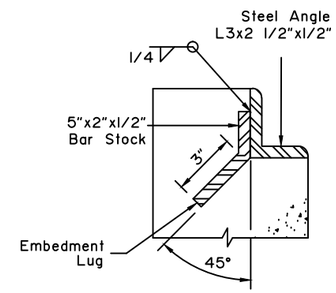

SECTION C-C

STEEL FRAME & GRATE DETAILS

Finished grate size is 27"x54"

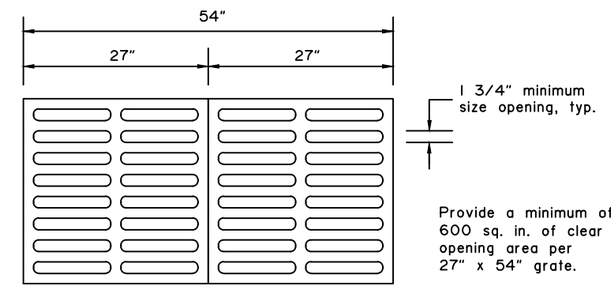

CAST IRON GRATE CONFIGURATION

Finished grate size is 27"x54"
Shown with 2 ea. 27"x27" grates end-to-end

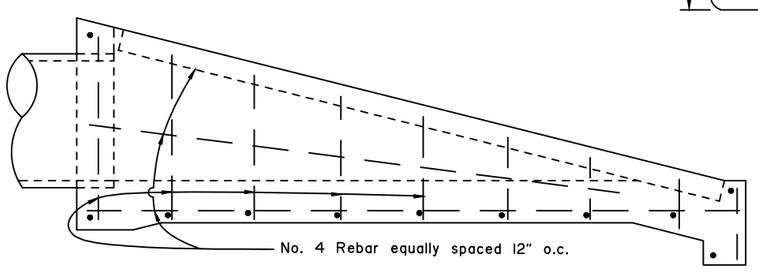

TYPICAL REINFORCEMENT STEEL DETAIL

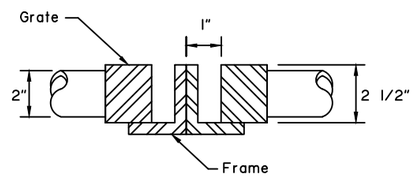

SECTION D-D

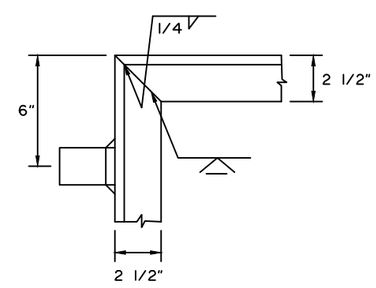

STEEL FRAME DETAIL

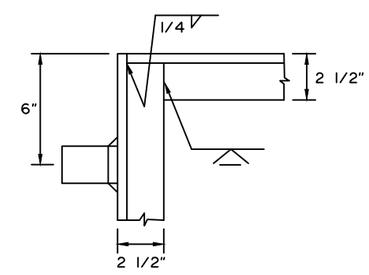

ALTERNATE STEEL FRAME DETAIL

NOT TO SCALE

REVISIONS		
Date	Description	By
10/31/03	Redesign of grate	LRG
5/31/12	Remove anchor lug and allow cast iron	LRG
1/16/17	Remove Concrete Class	LRG

State of Alaska DOT&PF
3132 Channel Dr., Juneau, AK
Phone: (907) 465-2960

TYPE "D" OUTLET BOX 24 INCH PIPE ON 4:1 SLOPE

STATE OF ALASKA 49th LARGO Lars R. Gregovich CE-8065 REGISTERED PROFESSIONAL ENGINEER Jan. 12, 2017

Eff. Date: 1/16/17

D-45.12

F-01.03

SHEET | of |

NOTE: Pull post shall be spaced at 250' maximum intervals.

Fabric shall be placed on highway side of post.

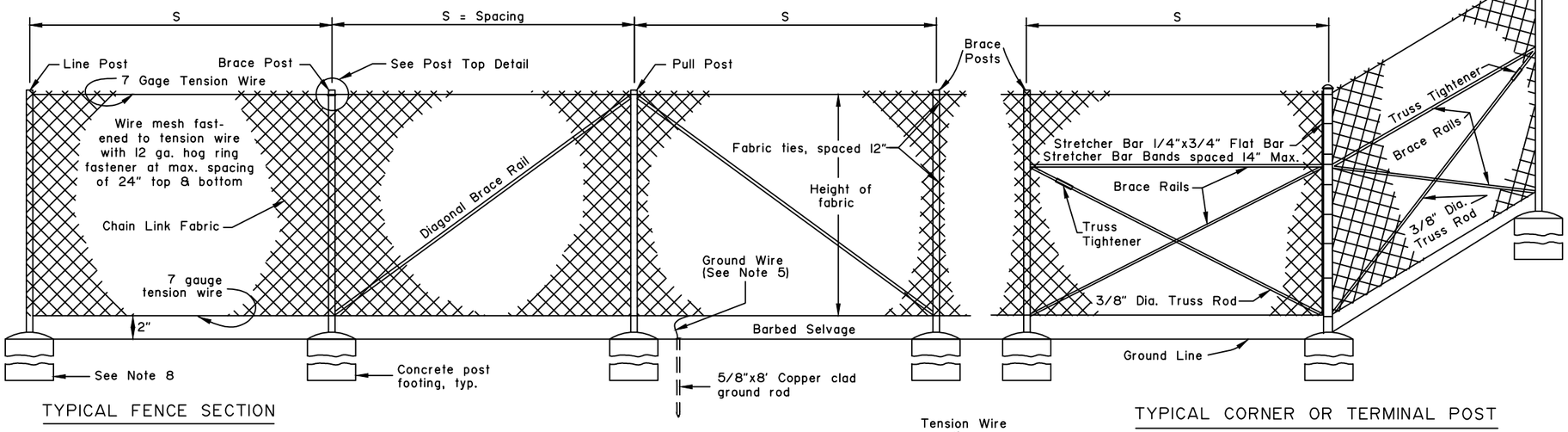

TYPICAL FENCE SECTION

TYPICAL PULL POST

TYPICAL CORNER OR TERMINAL POST

GENERAL NOTES:

1. Use equal pole spacing (S). Maximum pole spacing is 10 feet unless directed otherwise by the Engineer.
2. Securely fasten post tops to post.
3. Securely fasten brace rails and truss rods to post with brace bands.
4. Provide truss rods with a tensioning adjusting mechanism.
5. Attach ground wire to fence fabric with a split bolt.
6. Stretch fabric to a smooth uniform appearance.
7. Details shown indicate general design and dimensions may vary among manufacturers.
8. Set line, pull, corner, and terminal posts in concrete footings unless in muskeg or shown otherwise in the plans.

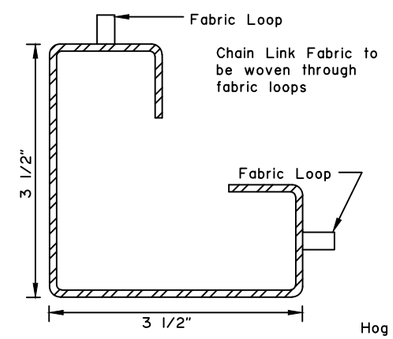

ROLL FORMED POST

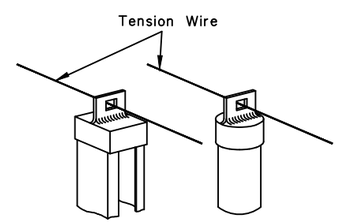

LINE POST TOPS

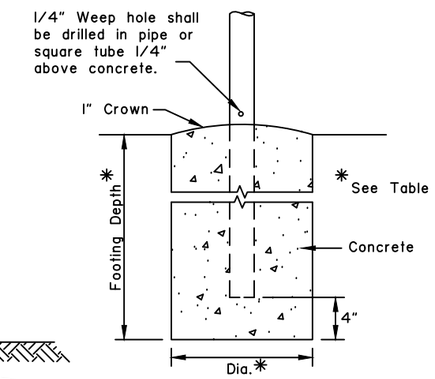

CONCRETE POST FOOTING

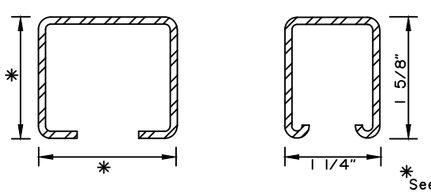

C POST

ROLL FORMED BRACE

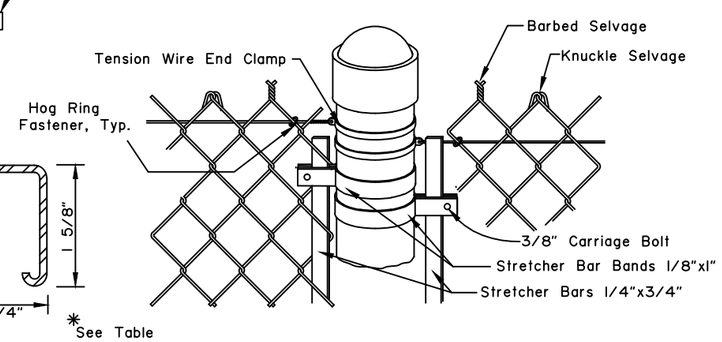

PIPE STYLE POST TOP

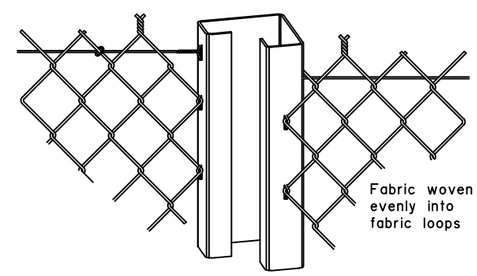

ROLL FORMED POST TOP

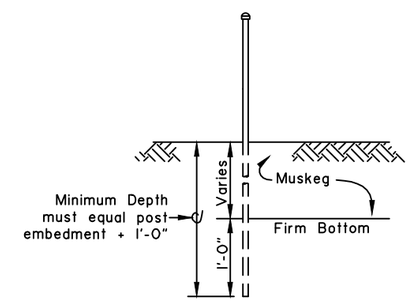

POST SETTING IN MUSKEG AREAS

FABRIC HEIGHT	POST														TOP OR BRACE RAIL						ALTERNATE POST	
	END-CORNER-PULL								LINE-BRACE												LINE-BRACE	
	PIPE		SQUARE TUBE		ROLL FORMED		FOOTING		PIPE		C POST		FOOTING		PIPE		ROLL FORMED		H POST		H POST	
	SIZE	WT/FT.	SIZE	WT/FT.	SIZE	WT/FT.	DEPTH	DIA.	SIZE	WT/FT.	SIZE	WT/FT.	DEPTH	DIA	SIZE	WT/FT.	SIZE	WT/FT.	SIZE	WT/FT.	SIZE	WT/FT.
3'	2"	3.65#	2" x 2"	4.31#	3 1/2"x3 1/2"	4.84#	40"	10"	1 1/2"	2.72#	1 7/8"x1 5/8"	2.28#	28"	10"	1 1/4"	2.27#	1 5/8"	1.35#	1 1/2"x 1 5/16"	2.27#	1 7/8"x1 5/8"	2.72#
4'	"	"	"	"	"	"	"	"	"	"	"	"	"	"	"	"	"	"	"	"	"	"
5'	2"	3.65#	2" x 2"	4.31#	3 1/2"x3 1/2"	4.84#	40"	10"	1 1/2"	2.72#	1 7/8"x1 5/8"	2.28#	28"	10"	"	"	"	"	"	"	1 7/8"x1 5/8"	2.72#
6'	2 1/2"	5.79#	2 1/2"x2 1/2"	5.59#	3 1/2"x3 1/2"	4.84#	48"	15"	2"	3.65#	2 1/4"x1 45/64"	2.64#	40"	12"	"	"	"	"	"	"	2 1/4"x2"	4.1#
7'	"	"	"	"	"	"	"	"	"	"	"	"	"	"	"	"	"	"	"	"	"	"
8'	2 1/2"	5.79#	2 1/2"x2 1/2"	5.59#	3 1/2"x3 1/2"	4.84#	48"	15"	2"	3.65#	2 1/4"x1 45/64"	2.64#	40"	12"	"	"	"	"	"	"	2 1/4"x2"	4.1#

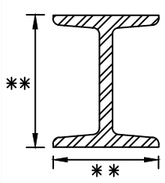

H POST

REVISIONS		
Date	Description	By
2/01/15	8' Ground rod fix	LRG
1/16/17	Remove concrete class	LRG

State of Alaska DOT&PF
3132 Channel Dr., Juneau, AK
Phone: (907) 465-2960

CHAIN LINK FENCE

STATE OF ALASKA 49th Lars R. Gregovich CE-8065 REGISTERED PROFESSIONAL ENGINEER Jan. 12, 2017

Eff. Date: 1/16/17

F-01.03

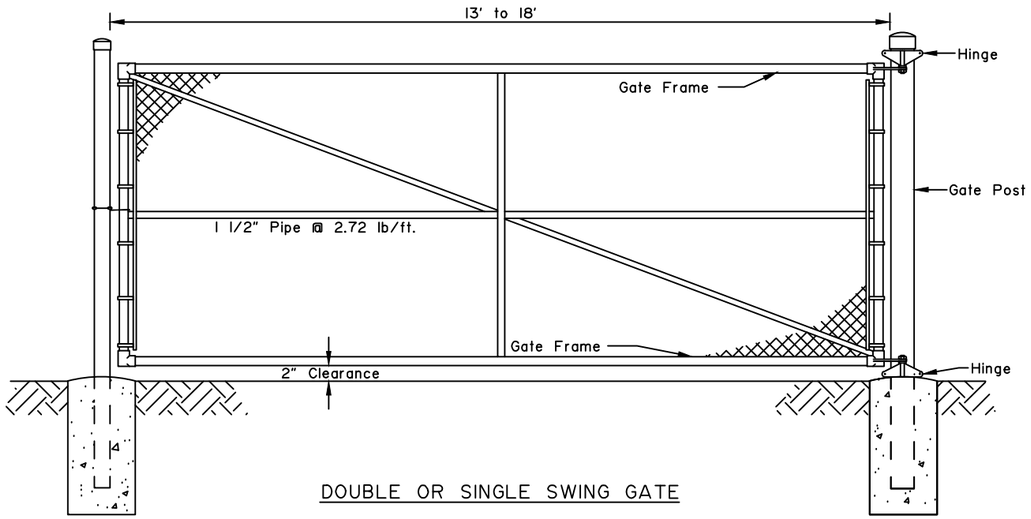

DOUBLE OR SINGLE SWING GATE

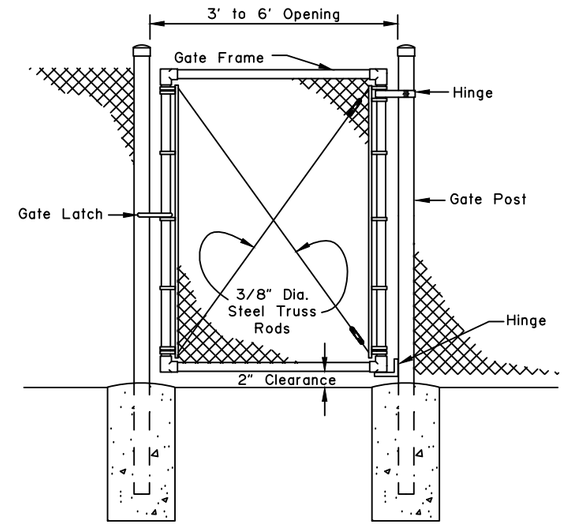

PEDESTRIAN GATE

GENERAL NOTES:

1. Details shown are to indicate general design only. Dimensions may vary slightly among the manufacturers.
2. Gate fabric shall be of the same design and height of line fence fabric.
3. Gate fabric shall be furnished with knuckle selvage top and bottom.
4. Concrete footings shall be of the same depth as end posts with a diameter 1 1/2 times larger except as shown for gate stop.
5. Gate frames may be fabricated by welding or riveting and shall be braced to eliminate sagging. Hinges, latches and other gate appurtenances shall be of sufficient strength and design to assure easy trouble free operation.

Gate Fabric Height	Gate Opening		GATE POST						GATE FRAME			
	SINGLE GATE	DOUBLE GATE	ST'D PIPE		SQUARE TUBE		ROLL FORMED		ST'D PIPE		SQUARE TUBE	
			SIZE	WT/FT.	SIZE	WT/FT.	SIZE	WT/FT.	SIZE	WT/FT.	SIZE	WT/FT.
3' to 5'	3' to 6'	6' to 12'	2"	3.65#	2" x 2"	4.31#	3 1/2"x3 1/2"	5.14#	1 1/2"	2.72#	2" x 2"	4.31#
"	7' to 12'	13' to 24'	2 1/2"	5.79#	2 1/2"x2 1/2"	5.59#	" "	"	"	"	" "	"
"	13' to 18'	25' to 36'	"	"	" "	"	" "	"	"	"	" "	"
6' to 8'	3' to 6'	6' to 12'	2 1/2"	5.79#	2 1/2"x2 1/2"	5.59#	3 1/2"x3 1/2"	5.14#	1 1/2"	2.72#	" "	"
"	7' to 12'	13' to 24'	3 1/2"	9.11#	3 1/2"x3 1/2"	8.14#	———	———	2"	3.65#	" "	"
"	13' to 18'	25' to 36'	6"	18.97#	6" x 6"	18.82#	———	———	"	"	2" x 2"	4.31#

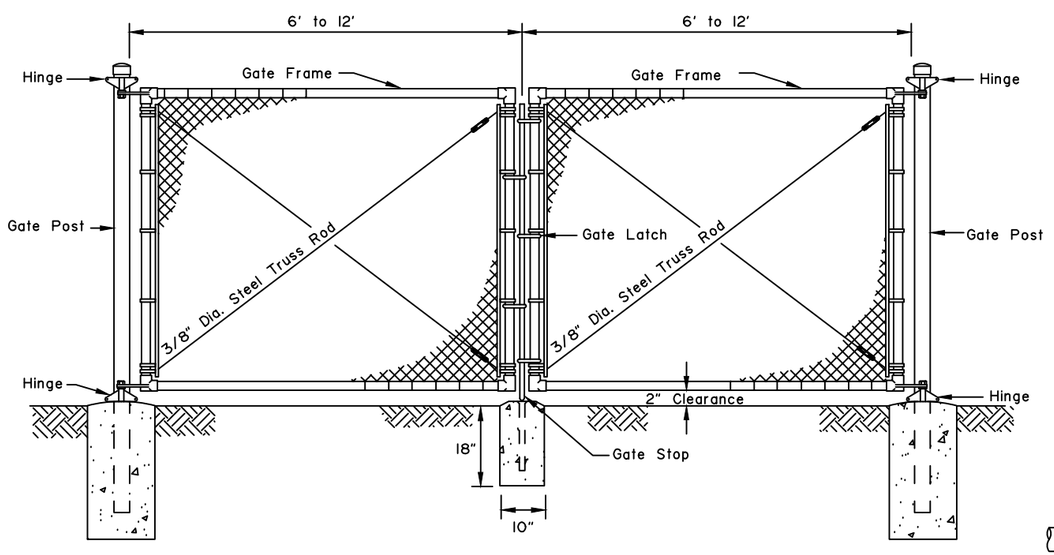

DOUBLE SWING GATE

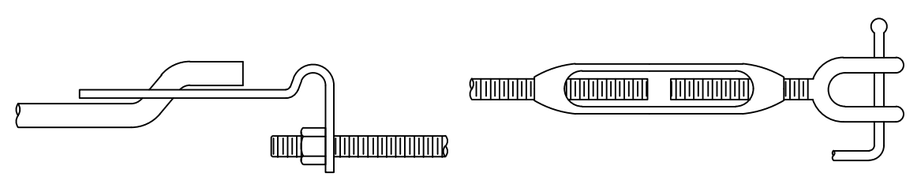

TYPICAL TRUSS ROD TIGHTENERS

REVISIONS		
Date	Description	By
3/1/83	Revised General Notes	WF/HK
1/16/17	Revised concrete	LRG

State of Alaska DOT&PF
3132 Channel Dr., Juneau, AK
Phone: (907) 465-2960

CHAIN LINK FENCE GATE

STATE of ALASKA 49th
Lars R. Gregovich
Lars R. Gregovich
CE-8065
REGISTERED PROFESSIONAL ENGINEER
Jan. 12, 2017

Eff. Date:
1/16/17

F-03.02

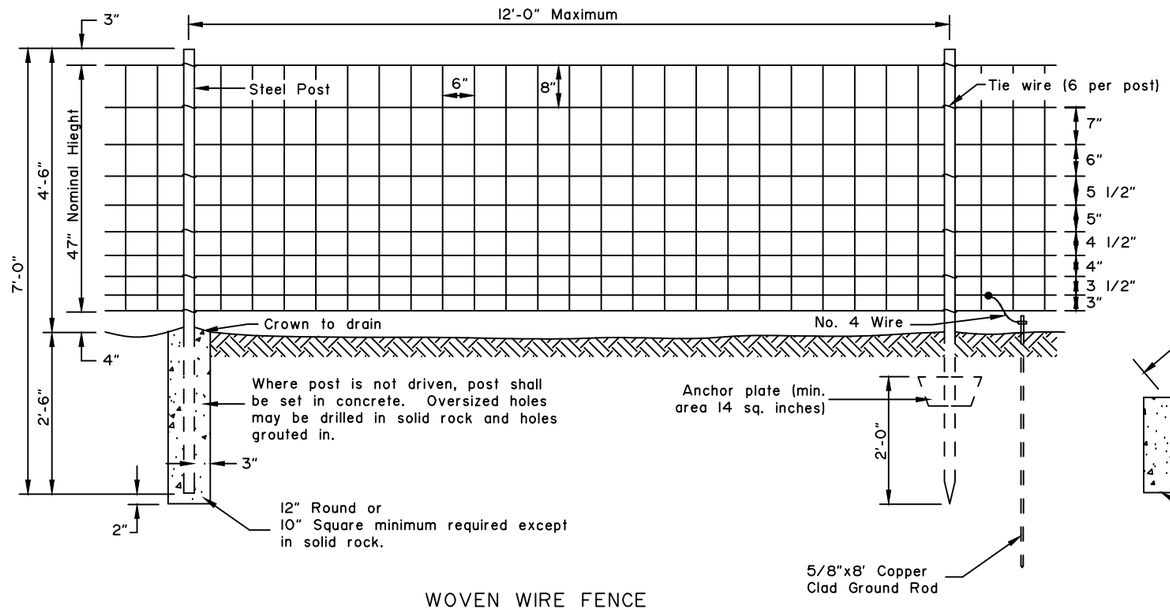

WOVEN WIRE FENCE

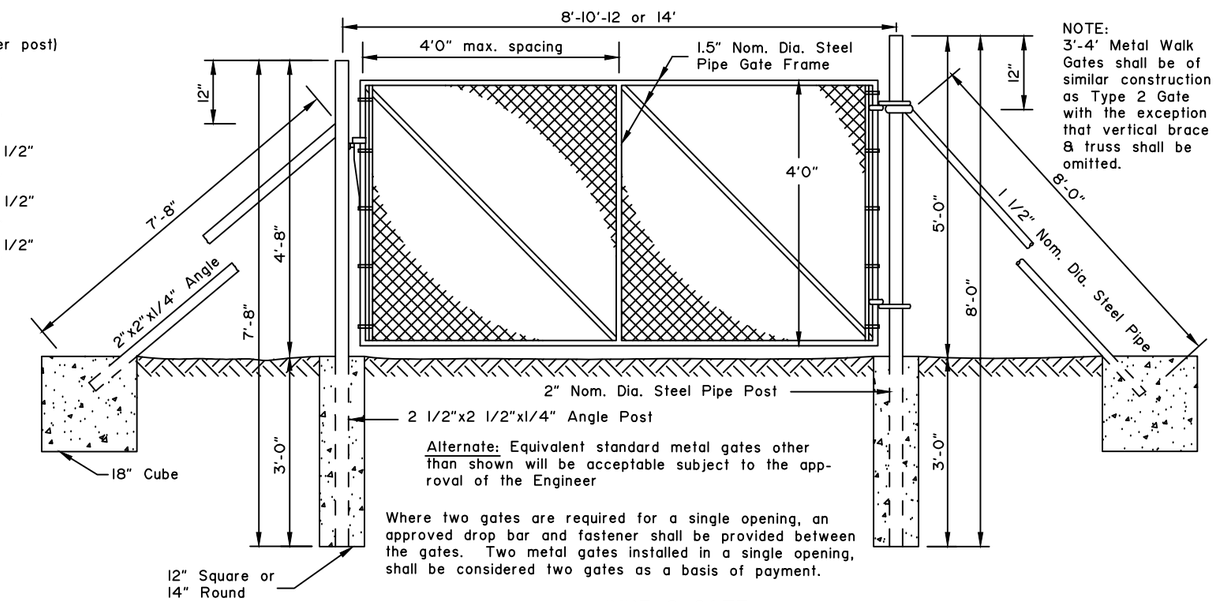

NOTE:
3'-4' Metal Walk Gates shall be of similar construction as Type 2 Gate with the exception that vertical brace & truss shall be omitted.

Alternate: Equivalent standard metal gates other than shown will be acceptable subject to the approval of the Engineer

Where two gates are required for a single opening, an approved drop bar and fastener shall be provided between the gates. Two metal gates installed in a single opening, shall be considered two gates as a basis of payment.

TYPE 2 GATE

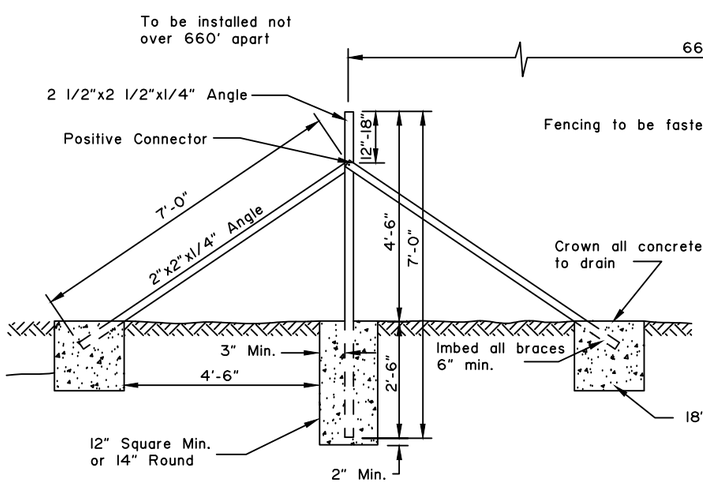

METAL LINE BRACE

Fencing to be fastened to posts as shown above.

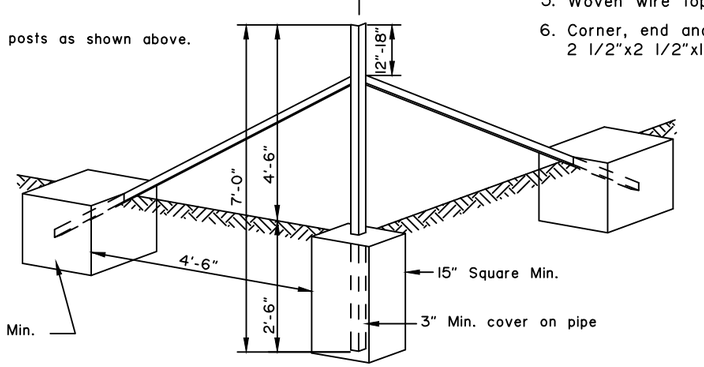

METAL CORNER BRACE

GENERAL NOTES:

1. Gates shall be hung on standard angle or steel pipe posts.
2. Metal posts shall be angle steel or steel pipe with dimensions as shown and with the following nominal weights per linear foot: 1 1/2" Nom. Dia.-2.72 lbs., 2" Nom. Dia.-3.65 lbs.
3. Place fencing and gates where shown on plans.
4. Gate shall be manufactured of steel pipe not less than 1" Nom. Dia., (Nom. wt. 1.68 lbs. per linear foot) for frame and vertical brace. Wire mesh shall be 9 gage and affixed to the frame with 9 gage G.I. wire. Each gate shall be equiped with one standard adjustable diagonal truss rod from corner to corner. Hinges and 2-way self closing latch shall be of an approved rustproof malleable iron or steel.
5. Woven wire top and bottom strands shall be 9 gage intermediate strands and vertical fillers shall be 11 gage.
6. Corner, end and brace posts shall be 2" Nom. Dia. pipe, (Nom. wt. 3.65 lbs per linear foot) or 2 1/2"x2 1/2"x1/4" angle (Nom. wt. 4.1 lbs per linear foot).
7. Metal line posts (Nominal wt. 1.33 lbs. per linear foot) shall have knobs, punched web or corrugated edges to hold hold fencing.
8. Metal braces shall be 1 1/2" Nom. Dia. pipe (Nom. wt. 2.72 lbs per linear foot) or 2"x2"x1/4" angle (Nom. wt. 3.19 lbs. per linear foot.)
9. Wire fencing shall be placed on side of post facing the highway. Special bracing or location may be required when fencing crosses or parallels streams, bodies of water or sags in the fence line.
10. Tie wires shall be 10 gage.
11. All wire, posts and hardware shall be galvanized. Weights and gages specified are minimums before galvanizing.

REVISIONS

Date	Description	By
3/1/83	Revised general notes	WF/HK
1/16/17	Revised concrete	LG

State of Alaska DOT&PF
3132 Channel Dr., Juneau, AK
Phone: (907) 465-2960

WOVEN WIRE FENCE

STATE OF ALASKA 49th LARRY
Lars R. Gregovich
CE-8065
REGISTERED PROFESSIONAL ENGINEER
Jan. 12, 2017

Eff. Date:
1/16/17

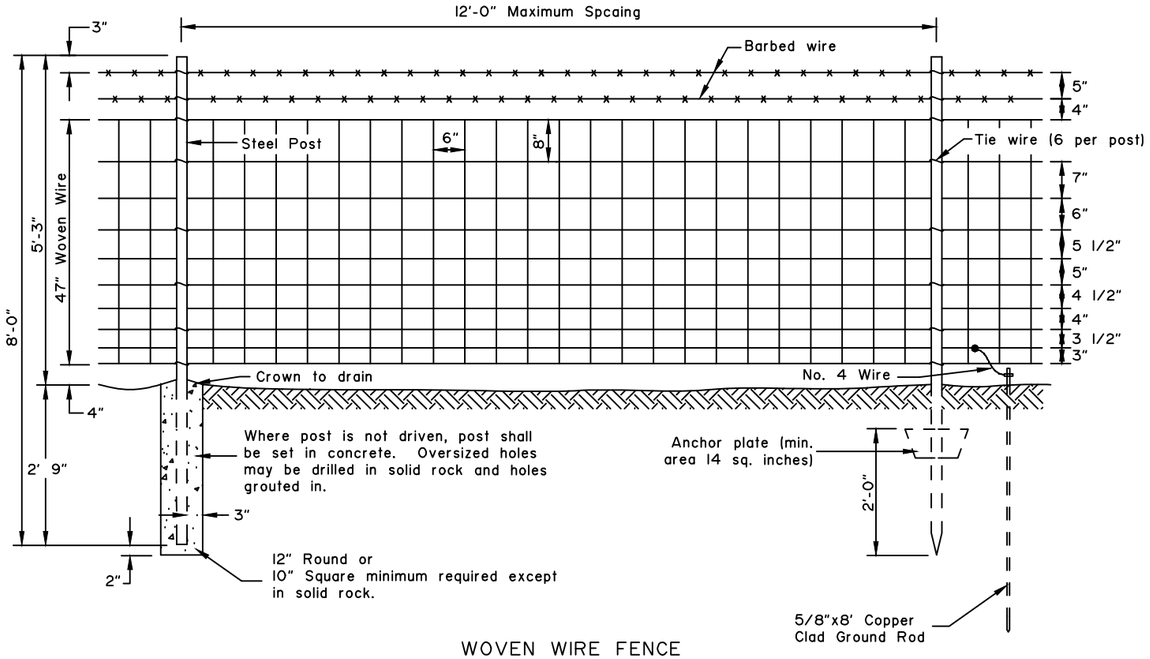

WOVEN WIRE FENCE

GENERAL NOTES:

1. Gate shall be hung on standard angle or steel pipe posts.
2. Metal posts shall be angle steel or steel pipe with dimensions as shown and with the following nominal weights per linear foot: 1 1/2" Nominal Diameter-2.72 lbs, 2" Nominal Diameter-3.65 lbs.
3. Install fencing and gates where shown on plans.
4. Gate shall be manufactured of steel pipe not less than 1" Nominal Diameter, (Nominal wt. 1.68 lbs per linear foot) for frame and vertical brace. Wire mesh shall be 9 gage and affixed to the frame with 9 gage G.I. wire. Each gate shall be equiped with one standard adjustable diagonal truss rod from corner to corner. Hinges and 2-way self closing latch shall be of an approved rustproof malleable iron or steel.
5. Woven wire top and bottom strands shall be 9 gage intermediate strands and vertical fillers shall be 11 gage.
6. Corner, end and brace posts shall be 2" Nominal Diameter pipe. (Nominal wt. 3.65 lbs. per lnear foot) or 2 1/2"x2 1/2"x1/4" angle (Nominal wt. 4.1 lbs. per linear foot).
7. Metal line posts (Nominal wt. 1.33 lbs. per lnear foot) shall have knobs, punched web or corrugated edges to hold fencing.
8. Provide metal braces made of 1 1/2" nominal diameter pipe with a nominal weight of 2.72 lbs per linear foot or 2"x2"x1/4" angle with a nominal weight of 3.19 lbs per linear foot.
9. Wire fencing shall be placed on side of post facing the highway. Special bracing or location may be required when fencing crosses or parallels streams, bodies of water or sags in the fence line.
10. Tie wires shall be 10 gage.
11. All wire, posts and hardware shall be galvanized. Weights and gages specified are minimums before galvanizing.
12. Barbed wire shall be 12 1/2 gage, with 4 point 14 gage round barbs at 5" maximum spacing.

NOTE: 3'-4' Metal Walk Gates shall be of a similar construction as Type 2 Gate with the exception that vertical brace & truss shall be omitted.

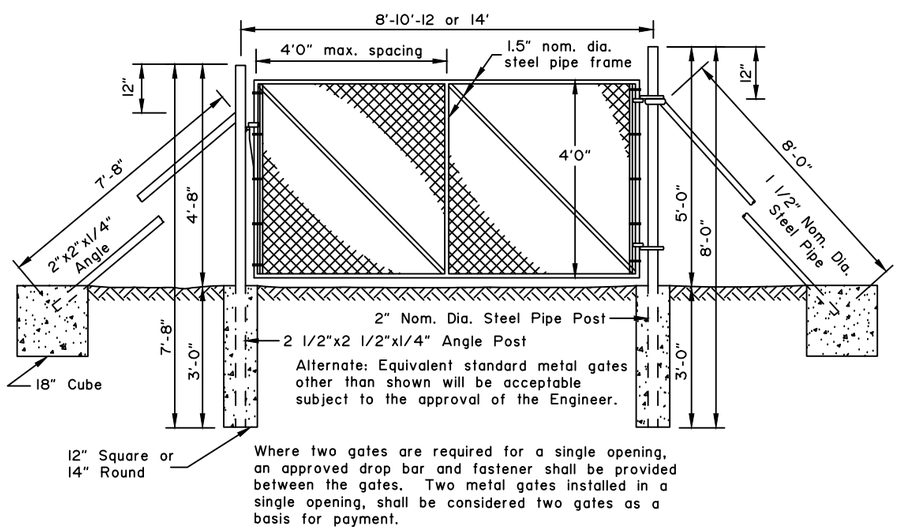

TYPE 2 GATE

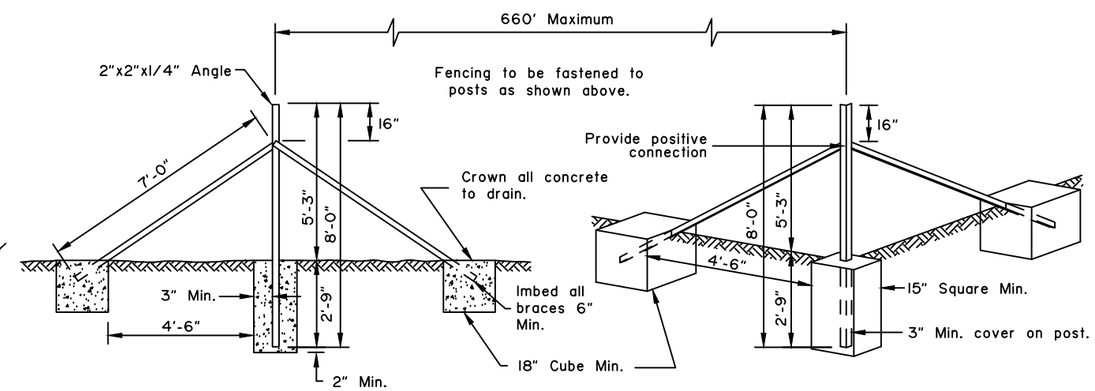

METAL LINE BRACE

Installed at not more than 660' apart.

METAL CORNER BRACE

TYPICAL BRACING DETAIL

REVISIONS		
Date	Description	By
3/1/83	Redraft, Delete Note 14	WF/HK
1/16/17	Conc. revision, renumber from F-04 to F-05	LRG

State of Alaska DOT&PF
3132 Channel Dr., Juneau, AK
Phone: (907) 465-2960

WOVEN WIRE FENCE WITH BARBED WIRE

STATE of ALASKA 49th Lars R. Gregovich CE-8065 REGISTERED PROFESSIONAL ENGINEER Jan. 12, 2017

Eff. Date: 1/16/17

F-05.12

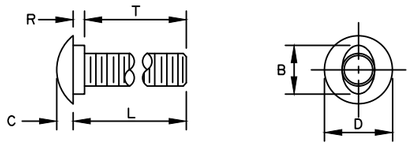

B	C	D	L (Length)	R	T (Thread Length)
15/16"	5/16"	1 5/16" or 1 7/16"	As Required	7/32"	As Required

5/8" BUTTONHEAD BOLT

(FBB01-05)

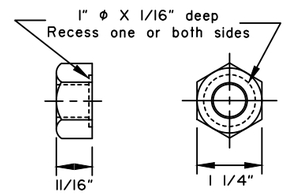

5/8" Dia. RECESSED HEX NUT

(FBB01-05)

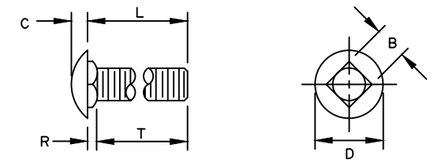

B	C	D	L (Length)	R	T (Thread Length)
5/8"	5/16"	1 5/16"	As Required	3/16"	As Required

5/8" Dia. CARRIAGE BOLT

(FBC10-20)

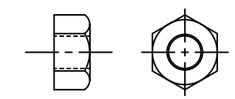

STANDARD HEX NUT

GENERAL NOTES:

1. All covered hardware shall comply with the AASHTO/AGC/ARTBA "A Guide to Standardized Highway Barrier Hardware", latest edition. Designators given when possible in parentheses.

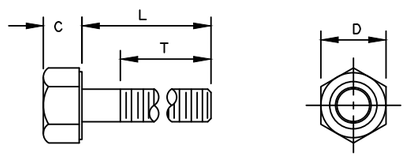

Bolt Size	C	D	L (Length)	T (Thread Length)
5/16"	——	——	1 1/2"	7/8"
5/16"	——	——	1"	1"
3/8"	——	——	7 1/2"	1 1/2"
1/2"	——	——	1 1/2"	1 1/2"
1/2"	——	——	1 1/4"	1 1/4"
5/8" H.S.	5/16"	7/8"	8"	1 1/2"
5/8"-11	——	——	1 1/2"	1 1/2"
3/4"	——	——	1 1/2"	1 1/2"
3/4"	——	——	As Required	2"
3/4" H.S.	15/32"	1 1/4"	2"	1 1/2"

STANDARD HEX BOLTS

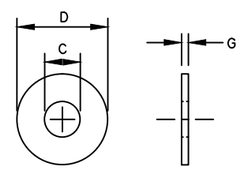

For Bolt Φ	C	D	G
3/8"	7/16"	1"	5/64"
1/2"	17/32"	1 1/16"	3/32"
1/2" H.S.	17/32"	1 1/16"	3/32"
5/8"	11/16"	1 3/4"	9/64"
3/4"	13/16"	1 15/32"	9/64"
3/4" H.S.	13/16"	2"	5/32"
1"	1 1/16"	2"	9/64"

STANDARD STEEL WASHERS

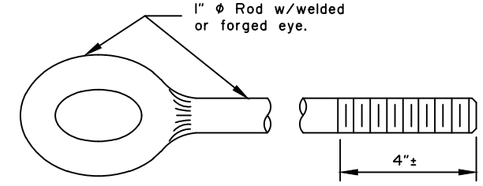

EYE BOLT

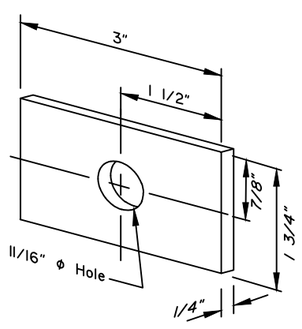

FLAT PLATE WASHER

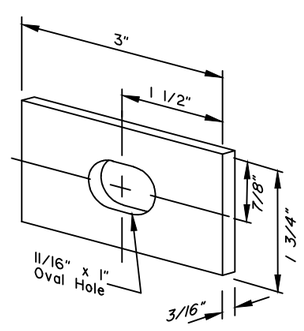

RECTANGULAR POST BOLT WASHER

(FWR03)

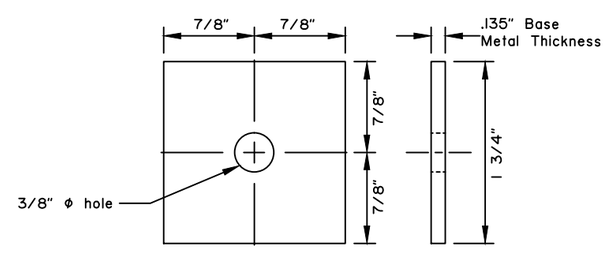

SQUARE STEEL WASHER

(FWR01)

Note: drawing not to scale

REVISIONS		
Date	Description	By
3/15/99	Delete BCT Hardware	KJS
1/16/17	Added Designators	LRG

State of Alaska DOT&PF
3132 Channel Dr., Juneau, AK
Phone: (907) 465-2960

STANDARD GUARDRAIL HARDWARE
(NUTS , BOLTS & WASHERS)

STATE of ALASKA 49th Lars R. Gregovich CE-8065 REGISTERED PROFESSIONAL ENGINEER Jan. 12, 2017

Eff. Date:
1/16/17

G-00.03

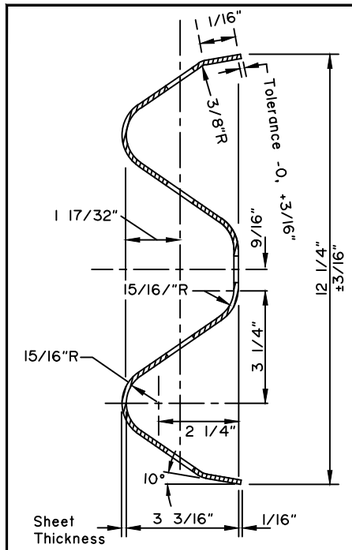

SECTION A-A
(RWM02a-b)

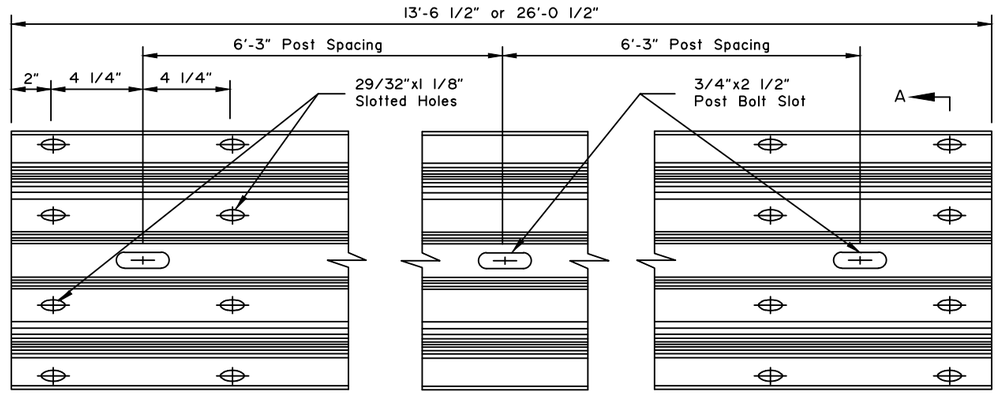

STANDARD W-BEAM PANEL (RWM02a-b)

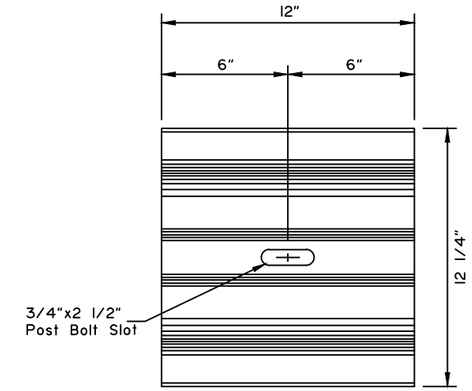

W-BEAM BACKUP PLATE
(RWB01a-b)

GENERAL NOTES:

1. All covered hardware shall comply with the AASHTO/AGC/ARTBA "A Guide to Standardized Highway Barrier Hardware", latest edition. Designators given when possible in parentheses.
2. Install back-up plates between blockouts and w-beam or thrie-beam rail at intermediate (non-splice) posts when steel blockouts are used but not with wood, rubber, plastic, or other approved blockouts.

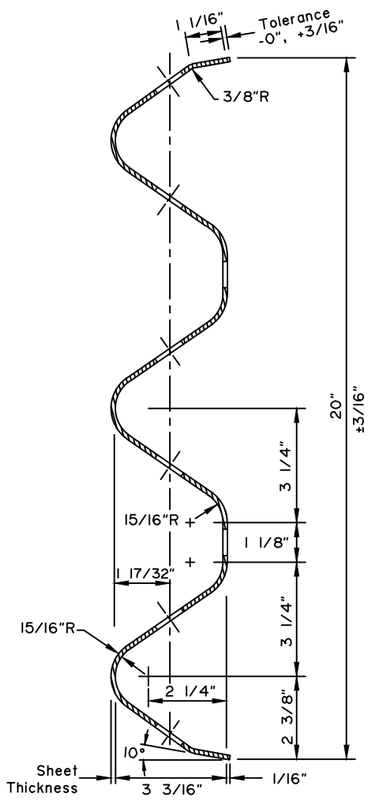

SECTION C-C
(RTM01a-02b)

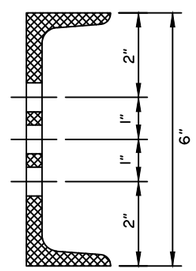

SECTION B-B

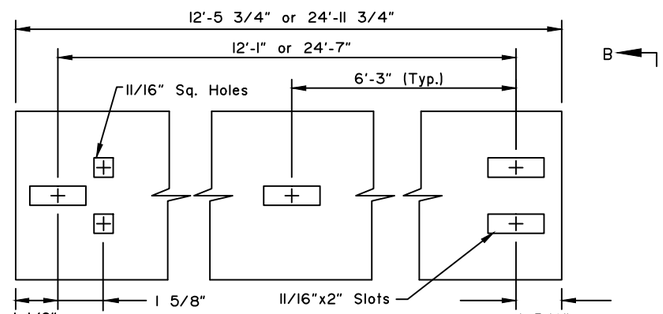

C6 x 8.2 RUB RAIL (RLR01)
ASTM A36 STEEL

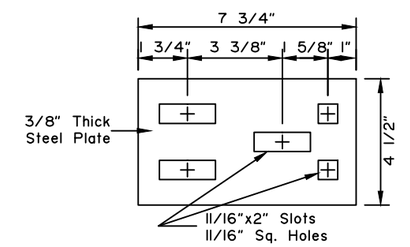

SPLICE PLATE (RLR01)
ASTM A36 STEEL

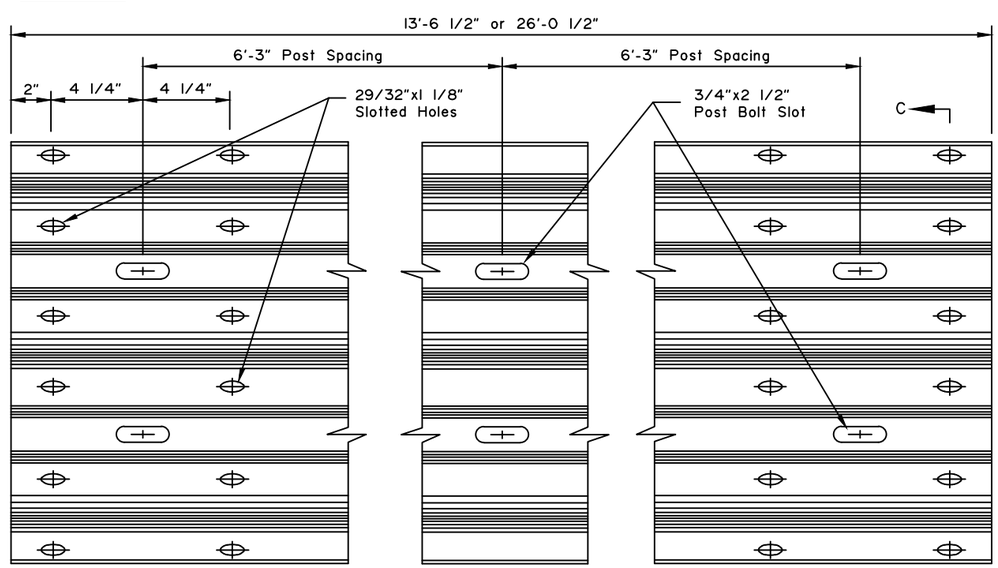

STANDARD THRIE BEAM PANEL (RTM01a-02b)

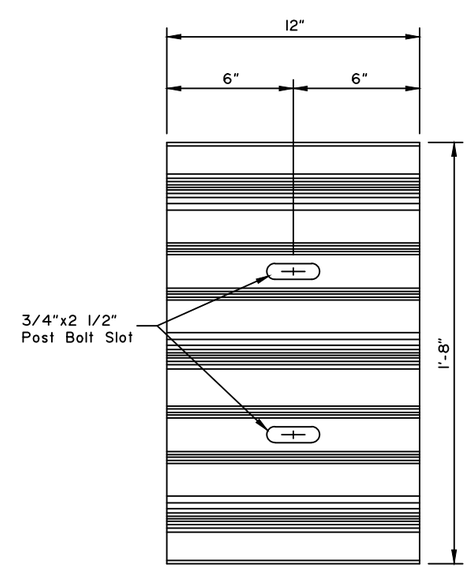

THRIE BEAM BACKUP PLATE
(RTB01a-02b)

REVISIONS		
Date	Description	By
4/28/10	Revise general notes	KJS
1/16/17	Fix dimensions in Sections A-A and C-C	LRG

State of Alaska DOT&PF
3132 Channel Dr., Juneau, AK
Phone: (907) 465-2960

STANDARD GUARDRAIL HARDWARE (RAILS AND SPLICES)

STATE OF ALASKA 49th Lars R. Gregovich CE-8065 REGISTERED PROFESSIONAL ENGINEER Jan. 12, 2017

Eff. Date: 1/16/17

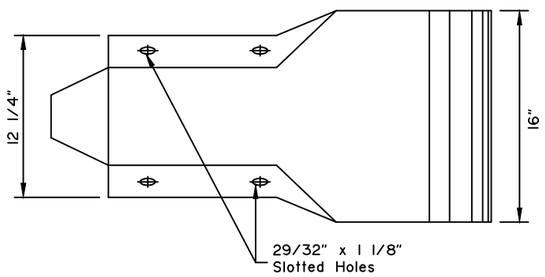

PROFILE

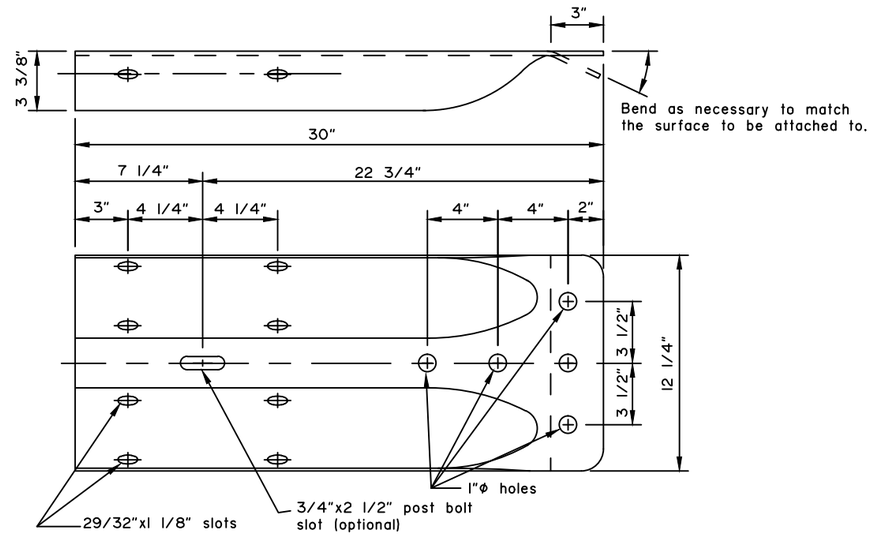

STANDARD W-BEAM TERMINAL CONNECTOR

(RWE02)

GENERAL NOTES:

1. W-Beam and Thrie Beam Terminal Connectors shall conform to AASHTO M 180, Class B, Type II.
2. W-Beam end sections shall conform to AASHTO M 180, Class A, Type II.
3. All covered hardware shall comply with the AASHTO/AGC/ARTBA "A Guide to Standardized Highway Barrier Hardware", latest edition. Designators given when possible in parentheses.

Note: Drawing not to scale

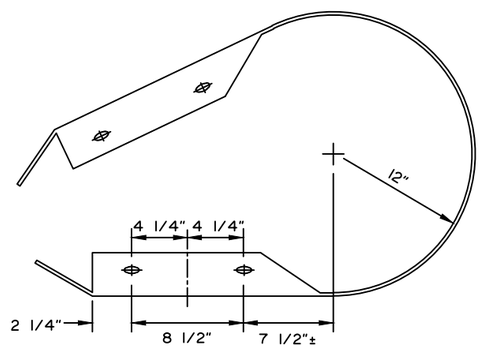

W-BEAM PLAN VIEW

*Radius to be specified on the plans

STANDARD W-BEAM END SECTION

(RWE06)

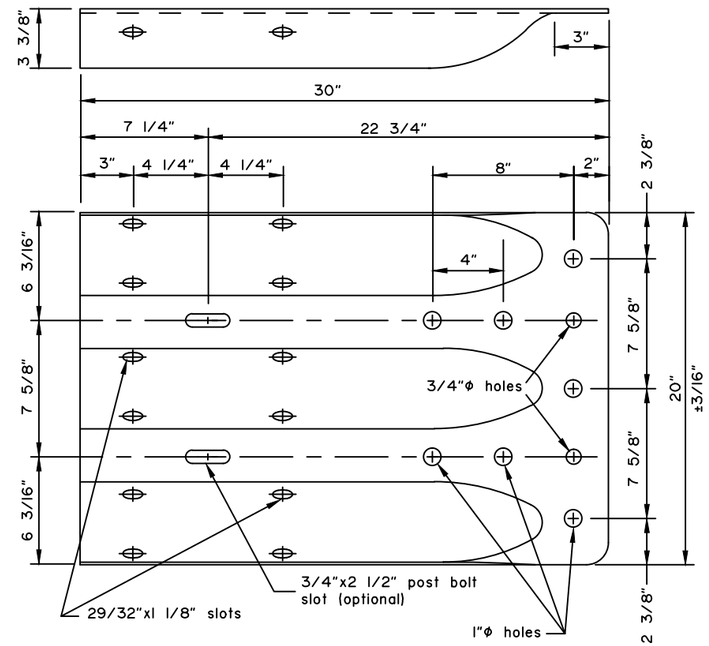

STANDARD THRIE BEAM TERMINAL CONNECTOR

(RTE01b)

REVISIONS		
Date	Description	By
3/15/99	Delete Thrie end sect.	KJS
1/16/17	Holes added to Thrie	LRG

State of Alaska DOT&PF
3132 Channel Dr., Juneau, AK
Phone: (907) 465-2960

STANDARD GUARDRAIL HARDWARE (TERMINAL CONNECTORS)

STATE OF ALASKA 49th Lars R. Gregovich CE-8065 REGISTERED PROFESSIONAL ENGINEER Jan. 12, 2017

Eff. Date: 1/16/17

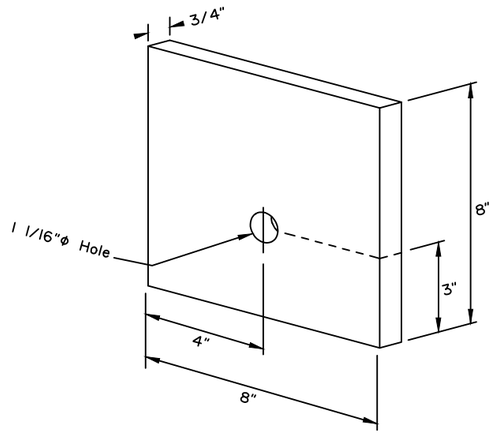

BEARING PLATE for CRT TERMINAL ANCHOR

(FPB01)

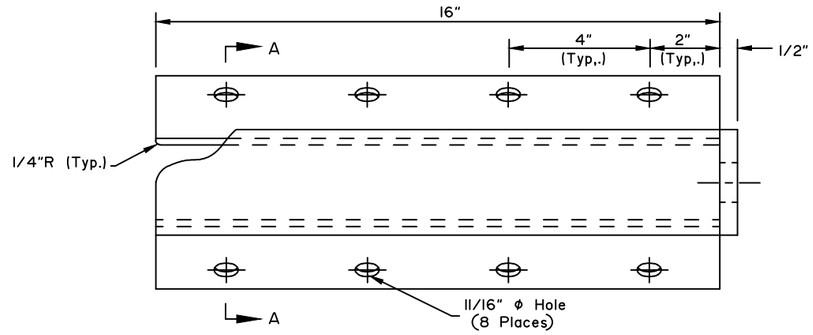

CABLE ANCHOR PLATE

(FPA01)

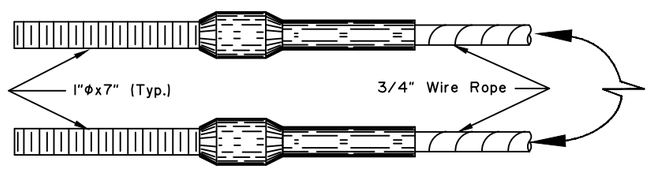

SWAGED FITTING DETAIL

(FCA01-02)

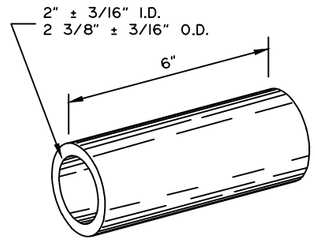

SLEEVE DETAIL

(FMM02)

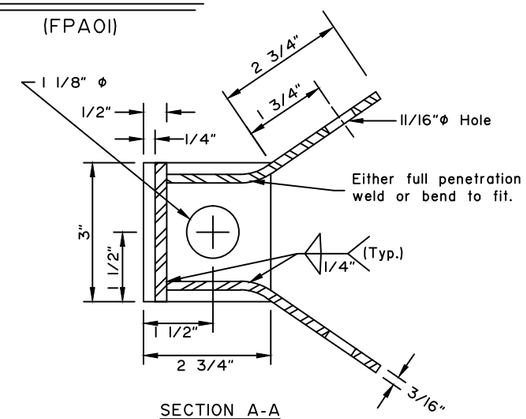

SECTION A-A

CONTROLLED RELEASE TERMINAL HARDWARE DETAILS

GENERAL NOTES:

1. Cable Anchor Plate may be formed in single unit or welded fabrication.
2. Anchor Cable Assembly must conform to AASHTO M 30 with Type II Wire Rope.
3. Provide Sleeve for Wood Posts meeting the requirements of ASTM A53 and made of 2-inch galvanized standard pipe. Sleeve shall be a tight, pressed fit in post.
4. Attach radius ID plates to all shop-bent guardrail sections. Bolt the ID plates to the back side of the guardrail panel with the lower splice bolt nearest the P.C. of the radius.
5. Show the Rail bend radius, in feet, as "XX" on the radius ID plate. Digits shall be etched or stamped and have a min. height of 1 1/2" and a max. width of 3/4". Galvanize the plate after the digits are marked.
6. All covered hardware shall comply with the AASHTO/AGC/ARTBA "A Guide to Standardized Highway Barrier Hardware", latest edition. Designators given when possible in parentheses.

Note: Drawing not to scale

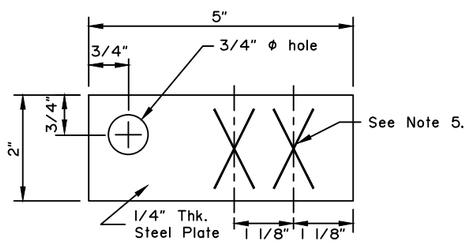

RADIUS I.D. PLATE

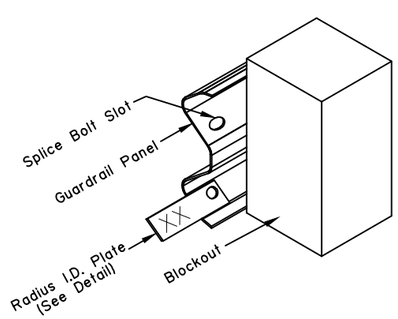

RADIUS I.D. PLATE MOUNTING DETAIL

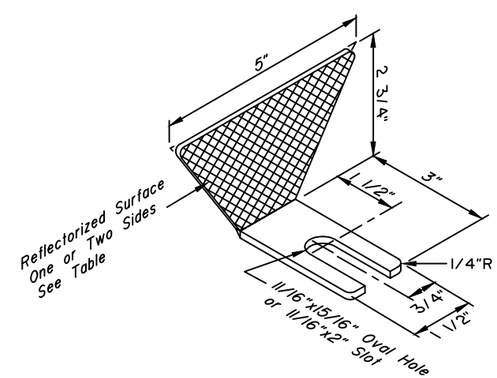

GUARDRAIL REFLECTOR

Guardrail Reflectors

Type	Color	Reflectorized
A	White	Front & Rear
B	White	Front
C	Yellow	Front
D	Yellow	Front & Rear

REVISIONS		
Date	Description	By
3/15/99	Delete BCT Hardware	KJS
1/16/17	Change ASTM in Note 3	LRG

State of Alaska DOT&PF
3132 Channel Dr., Juneau, AK
Phone: (907) 465-2960

STANDARD GUARDRAIL HARDWARE (MISCELLANEOUS)

Eff. Date: 1/16/17

G-00.03

G-03.03

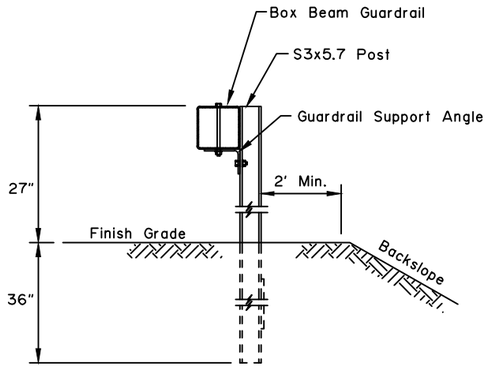

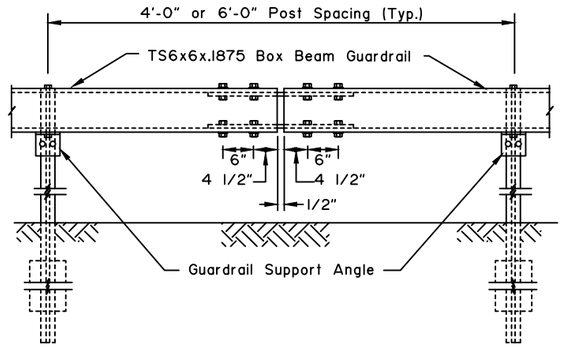

POST INSTALLATION

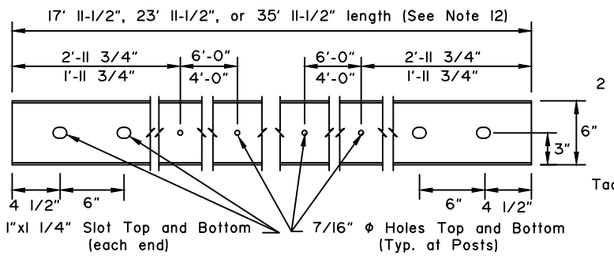

TS6 x 6 x .1875 BOX BEAM GUARDRAIL

(RBM01)

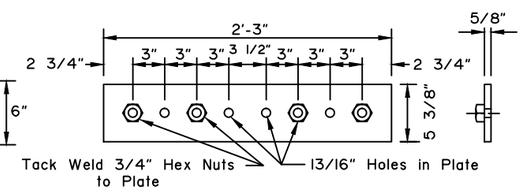

SPLICE PLATE

(RBS01)

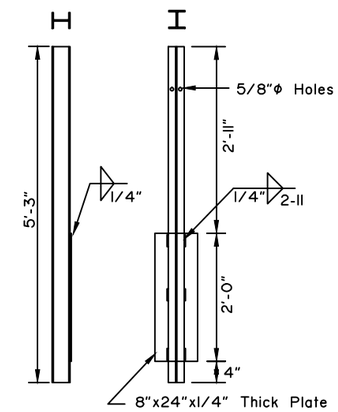

S3x5.7 BOX BEAM GUARDRAIL POST

(PSE08)

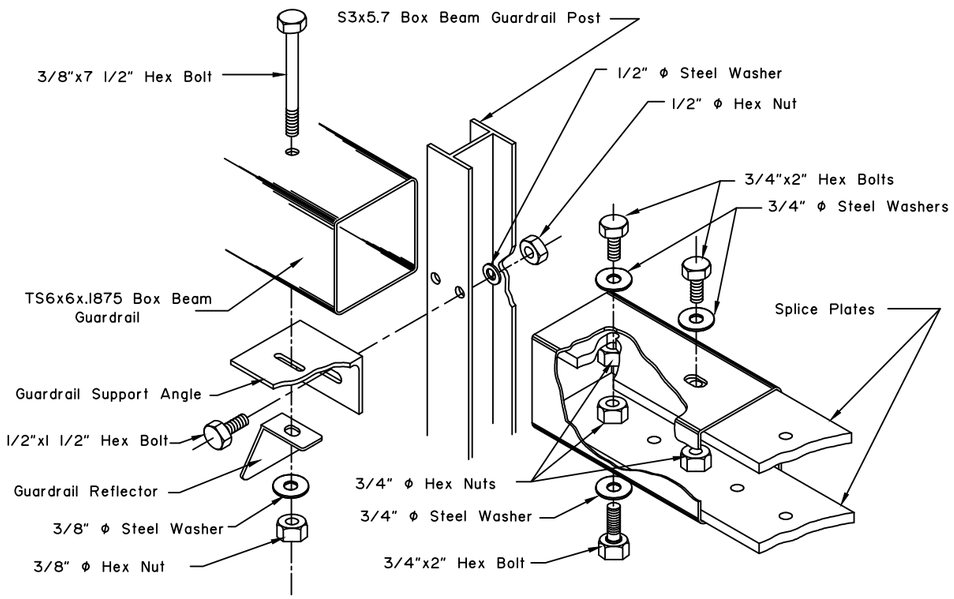

ASSEMBLY DETAIL

(RBS02)

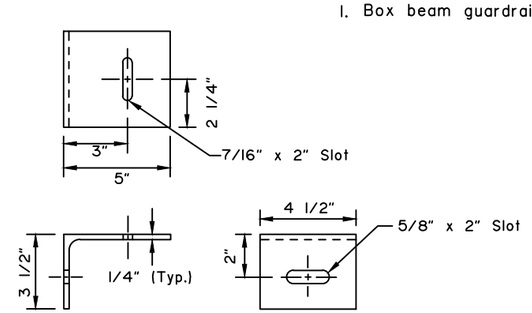

GUARDRAIL SUPPORT ANGLE

(FPP01)

Note: Drawing not to scale

GENERAL NOTES:

1. No fixed objects are allowed closer than 4' 0" from the back of the guardrail
2. Use a post spacing of 6' 0" when there are no fixed objects within 5' 0" from back of guardrail and the backslope is 3:1 or flatter.
3. Use a post spacing of 4' 0" when there are fixed objects within 4' 0" to 5' 0" from the back of guardrail or when backslopes are steeper than 3:1.
4. Shop form guardrail on curves having a radius of less than 717'.
5. Steel tube for box beam guardrail must conform to ASTM A500 Grade B or ASTM A501.
6. Steel bolts and nuts for splice plates and box beam guardrail connections must conform to ASTM A325 for bolt and ASTM A563 Grade A for nuts. All other bolts, nuts and washers shall meet AASHTO M 180.
7. No galvanizing permitted between splice plates and box beam guardrail.
8. Mount guardrail reflectors at 48' centers beginning with the first post. Use Type A Reflectors unless shown otherwise on the plans.
9. Provide reflectors meeting the requirements of Section 606 of the Standard Specifications
10. All barrier hardware as shown in ARTBA "A Guide to Standardized Highway Barrier Rail Hardware" is acceptable. Designators given when possible in parentheses.
11. See Standard Drawing G-00 for hardware details.
12. Select rail lengths compatible with the post spacings shown on the plans or as indicated in Notes 2 and 3.

DESIGN NOTES:

1. Box beam guardrail requires a minimum 125' development length.

REVISIONS		
Date	Description	By
10/31/03	Change install height Delete Alt "C" post	LRG
1/16/17	Correct dimensions	LRG

State of Alaska DOT&PF
3132 Channel Dr., Juneau, AK
Phone: (907) 465-2960

G3S BOX BEAM GUARDRAIL

Eff. Date:
1/16/17

G-03.03

G-04.11S

SHEET 1 of 1

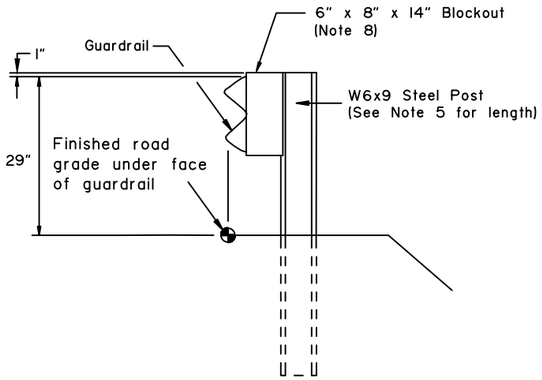

TYPE I POST INSTALLATION

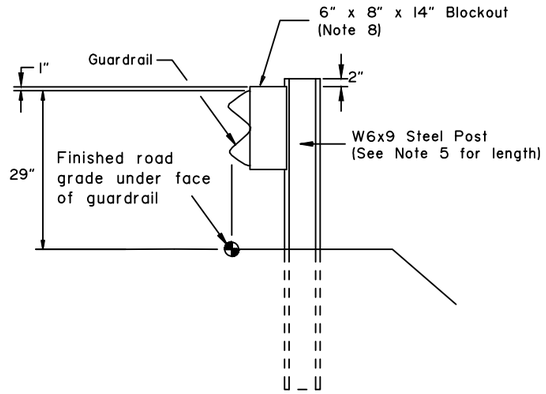

TYPE II POST INSTALLATION

(Facilitates raising rail for future overlays.)

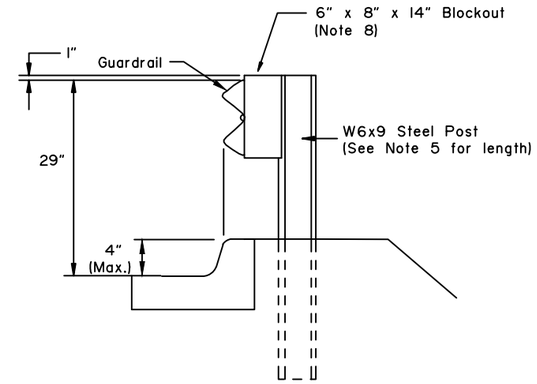

CURB DETAIL

TYPE III POST INSTALLATION

NOTE: Curb should not be installed with guardrail when the speed limit exceeds 40 mph.

GENERAL NOTES:

1. Attach guardrail reflectors at 50' or less spacing beginning with the first post. Use Type A reflectors unless indicated otherwise.
2. All covered hardware shall comply with the AASHTO/AGC/ARTBA "A Guide to Standardized Highway Barrier Hardware", latest edition.
3. See Standard Drawing G-00 for hardware details.
4. Attach blockout using either steel post and blockout hole.
5. See Standard Drawing G-10 for post lengths corresponding to different combinations of slope and behind-post embankment width.
6. Typical post spacing is 6'-3" center to center.
7. This barrier is acceptable under NCHRP 350, TL-3.
8. Use wood, synthetic, or other NCHRP 350 or MASH approved blockouts designed for use with steel posts.
9. Use 25 linear foot transition to match height of existing or new rail elements and end treatments.
10. W6x8.5 steel post may be substituted for W6x9 steel post.

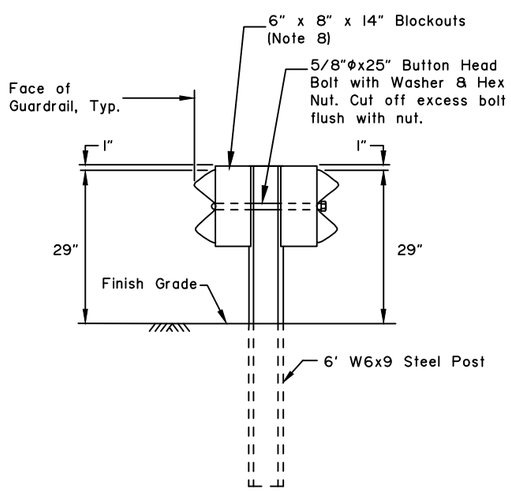

TYPE IV DOUBLE SIDED INSTALLATION

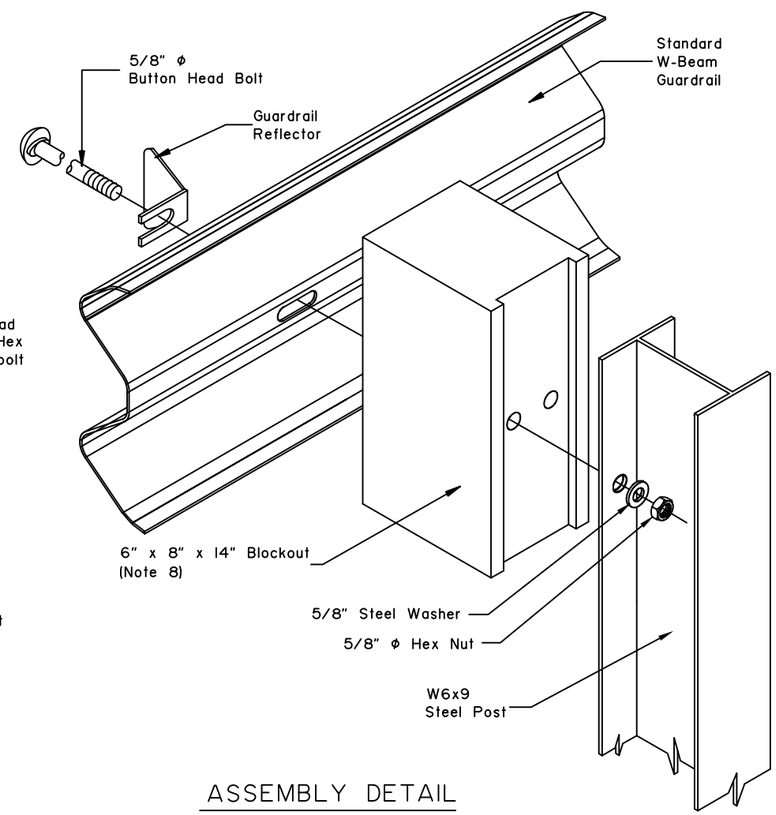

ASSEMBLY DETAIL

(Type I post shown)

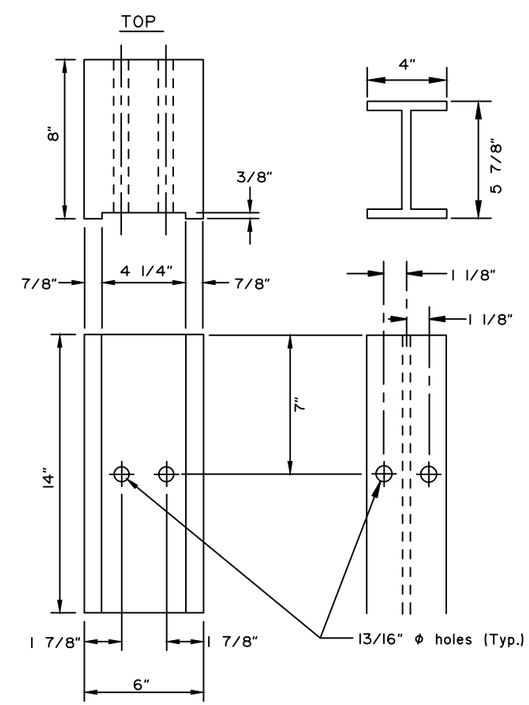

BACK

6" x 8"
BLOCKOUT

FACE

W6x9
STEEL POST

REVISIONS		
Date	Description	By
3/15/99	Block and post length	KJS
4/1/13	Add double-sided detail and increase g/r height	JCJ
1/16/17	Either post bolt hole	LG

State of Alaska DOT&PF
3132 Channel Dr., Juneau, AK
Phone: (907) 465-2960

STEEL POST
W-BEAM GUARDRAIL

STATE of ALASKA 49th
Lars R. Gregovich
CE-8065
REGISTERED PROFESSIONAL ENGINEER
Jan. 6, 2017

Eff. Date:
1/16/17

G-04.11S

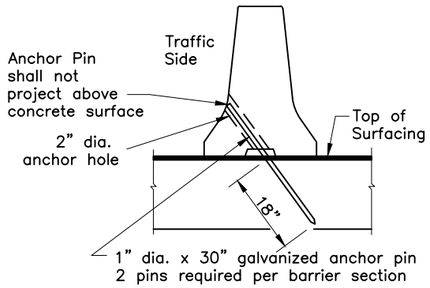

ANCHORING DETAIL

(Anchor when required by plans or as directed)

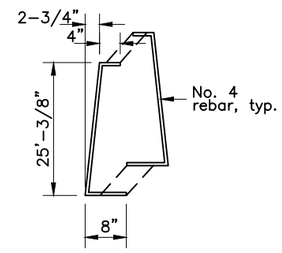

MEDIAN BARRIER STIRRUP

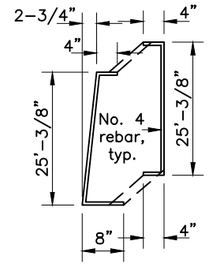

SHOULDER BARRIER STIRRUP

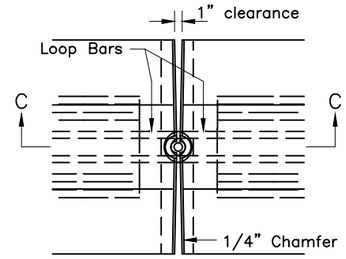

PLAN

For details not shown see End Views A-A and B-B

CONNECTING PIN AND LOOP CONNECTION

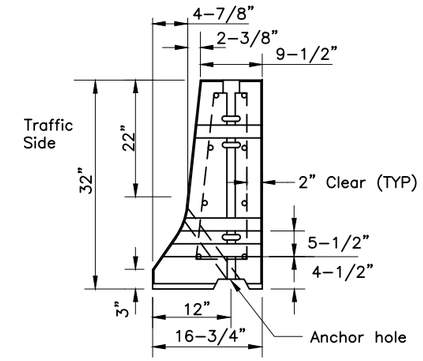

SHOULDER BARRIER

Note:
Dimensions marked with a dot • are to the Intersection point of the barrier slopes.

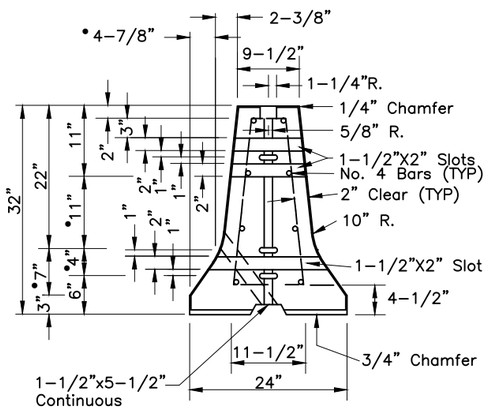

END VIEW A-A

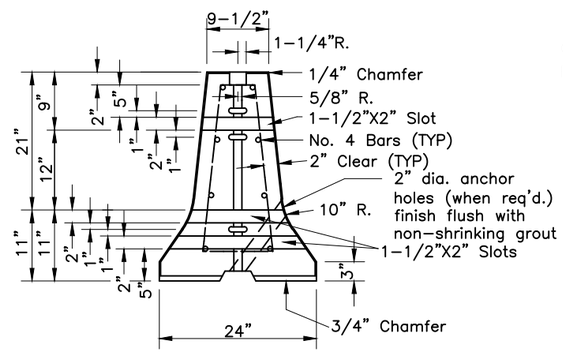

END VIEW B-B

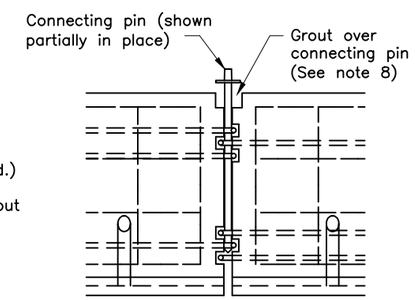

SECTION C-C

For details not shown see End Views A-A and B-B

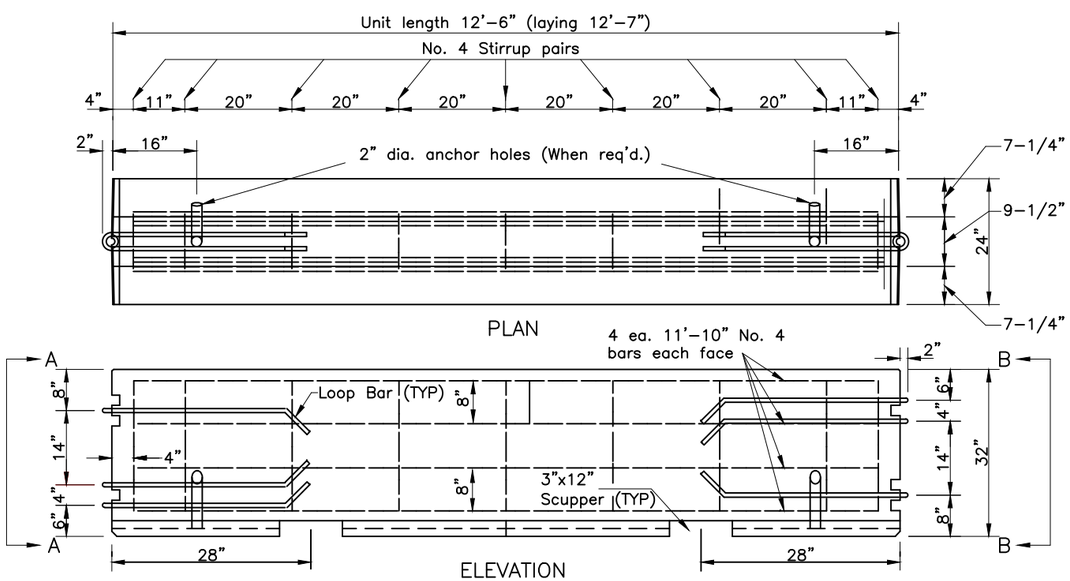

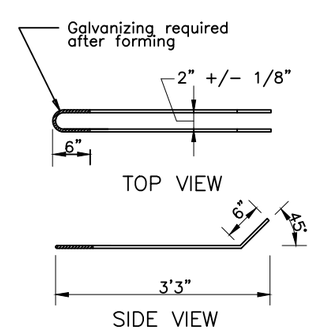

LOOP BAR DETAIL

(3/4" dia. - A36 Steel)

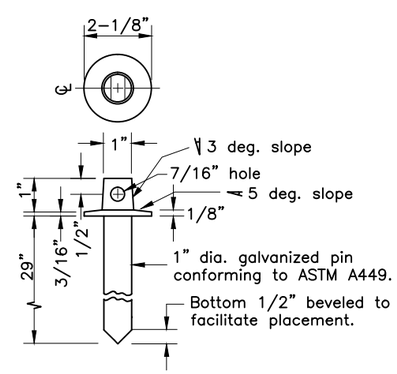

CONNECTING PIN DETAIL

GENERAL NOTES

1. Barriers may be used for temporary and permanent applications.
2. Provide 36" unobstructed smooth deflection area behind barrier for unanchored applications. Provide 12" unobstructed smooth deflection area behind barrier for anchored applications.
3. When anchored, install anchor pins on the side facing traffic. Precast barrier used as permanent median barrier in medians less than 8' in width shall be anchored to the roadway. When anchored in medians, install anchor pins on both sides of the barrier.
4. Provide 2" clearance between all metal reinforcement and the nearest face of concrete unless otherwise shown.
5. Normal use of precast barrier units is restricted to curvatures with radii greater than 770'.
6. Use narrow base shoulder barrier only at locations with full height backfill or equivalent structural support placed behind barrier.
7. When scuppers are not required plug them with a minimum 2" of grout.
8. Concrete grout for grouting over pins, pinning holes or grouting of scuppers shall be a non-shrinking grout, weak in strength and of thick consistency.
9. This precast concrete barrier is NCHRP 350 TL-3 approved.

REVISIONS

Date	Description	By
4/28/10	Correct dims, Note 1	KJS
1/16/17	Minor corrections	LRG

State of Alaska DOT&PF
3132 Channel Dr., Juneau, AK
Phone: (907) 465-2960

PRECAST CONCRETE "F" SHAPE BARRIER

STATE of ALASKA 49th Lars R. Gregovich CE-8065 REGISTERED PROFESSIONAL ENGINEER Jan. 13, 2017

Eff. Date: 1/16/17

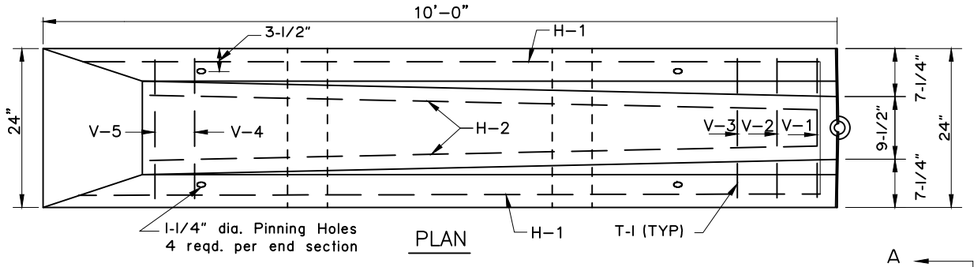

PLAN

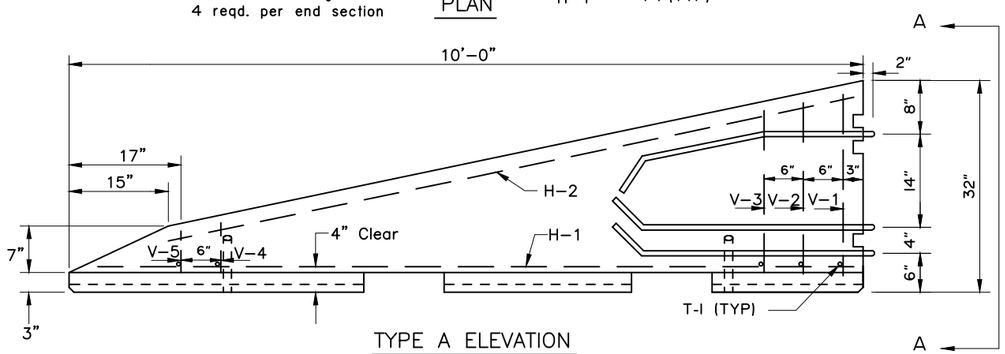

TYPE A ELEVATION

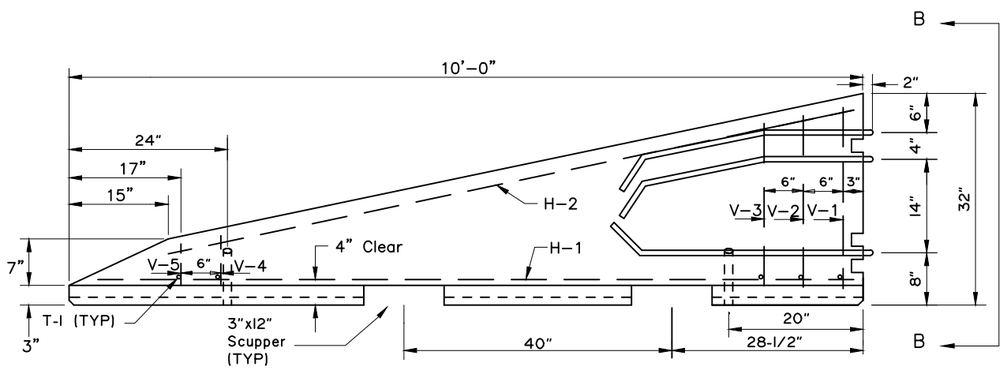

TYPE B ELEVATION

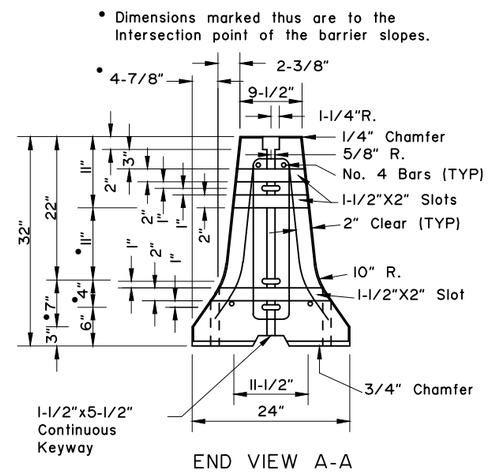

END VIEW A-A

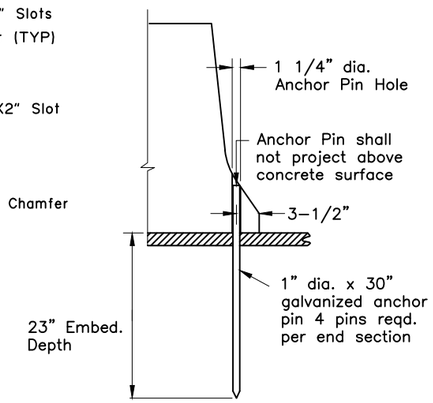

ANCHOR PIN
PLACEMENT DETAIL

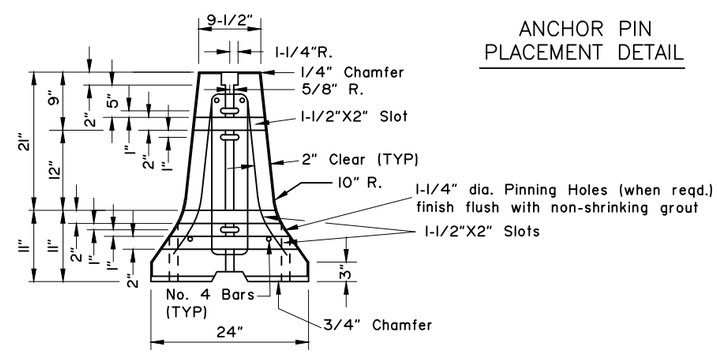

END VIEW B-B

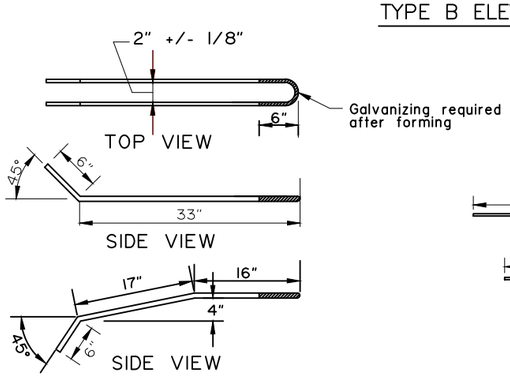

LOOP BARS
(3/4" dia. A36)

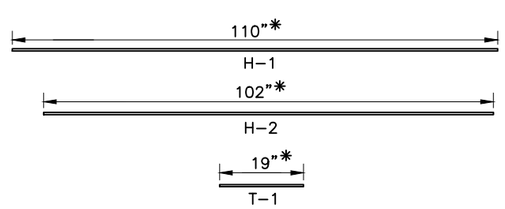

REINFORCEMENT DETAILS

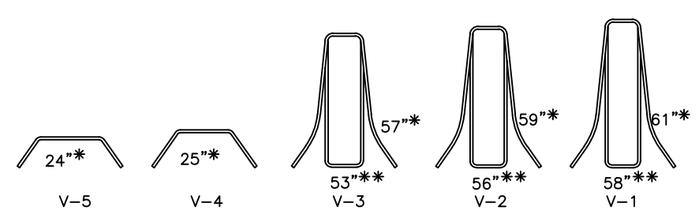

*Length of No. 4 Rebar **Length of No. 4 Rebar (Inner Core)

REINFORCING STEEL

GENERAL NOTES

1. Use tapered end sections only where:
   a. Barriers terminate outside the clear zone, or
   b. The regulatory speed limit is 25 MPH or below, or 30 MPH if the Engineer determines NCHRP 350 or MASH compliant end treatments are unfeasible.
2. Provide a minimum of two inches clear cover for reinforcing steel bars except as shown otherwise.
3. Galvanize all exposed hardware in accordance with AASHTO M 232.
4. Provide reinforcing steel bars conforming to AASHTO M 31, grade 60.
5. Provide anchor pins and anchor pins conforming to ASTM A36 steel.
6. Provide four anchor pins per unit.

REVISIONS

Date	Description	By
4/28/10	Correct Dimensioning	KJS
1/16/17	Revised Concrete	LRG

State of Alaska DOT&PF
3132 Channel Dr., Juneau, AK
Phone: (907) 465-2960

PRECAST CONCRETE "F" SHAPE BARRIER TAPERED END SECTION

STATE of ALASKA 49th R.A. Lars R. Gregovich CE-8065 REGISTERED PROFESSIONAL ENGINEER Jan. 13, 2017

Eff. Date:
1/16/17

M-20.14

SHEET | of |

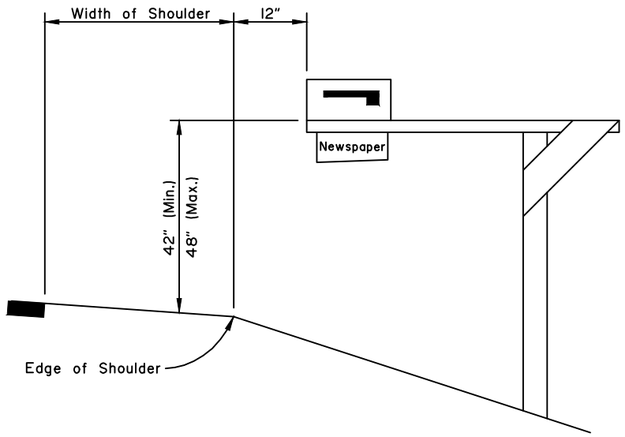

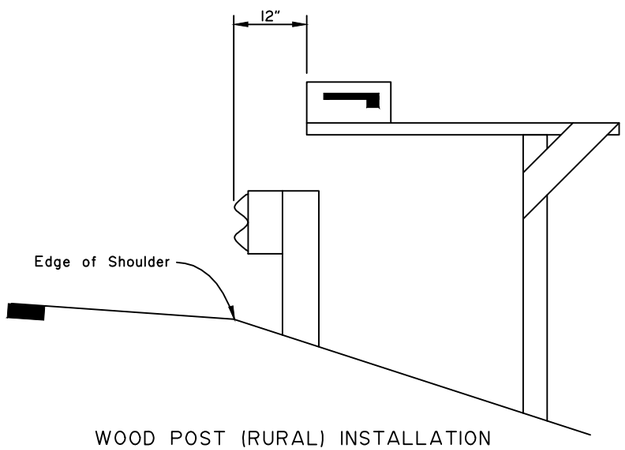

WOOD POST (RURAL) INSTALLATION

Single or Double Box

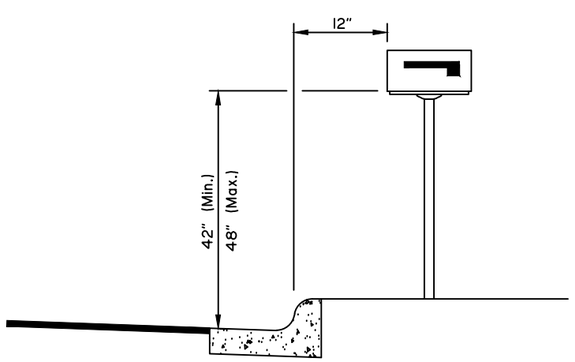

METAL POST (URBAN) INSTALLATION

Single or Double Box

Vc = Average Daily Traffic on Cross Road (vehicles per day)

Vm = Average Daily Traffic on Main Road (vehicles per day)

n = Number of Mailboxes at Mail Stop

Posted Main Road Speed Limit	"D1" Distance (ft) n×Vc×Vm	
	≤4000	>4000
≤40	65	200
>40	65	295

Posted Main Road Speed Limit	"D2" Distance (ft) Cross Road ADT	
	≤4000	>4000
≤40	100	100
>40	150	200

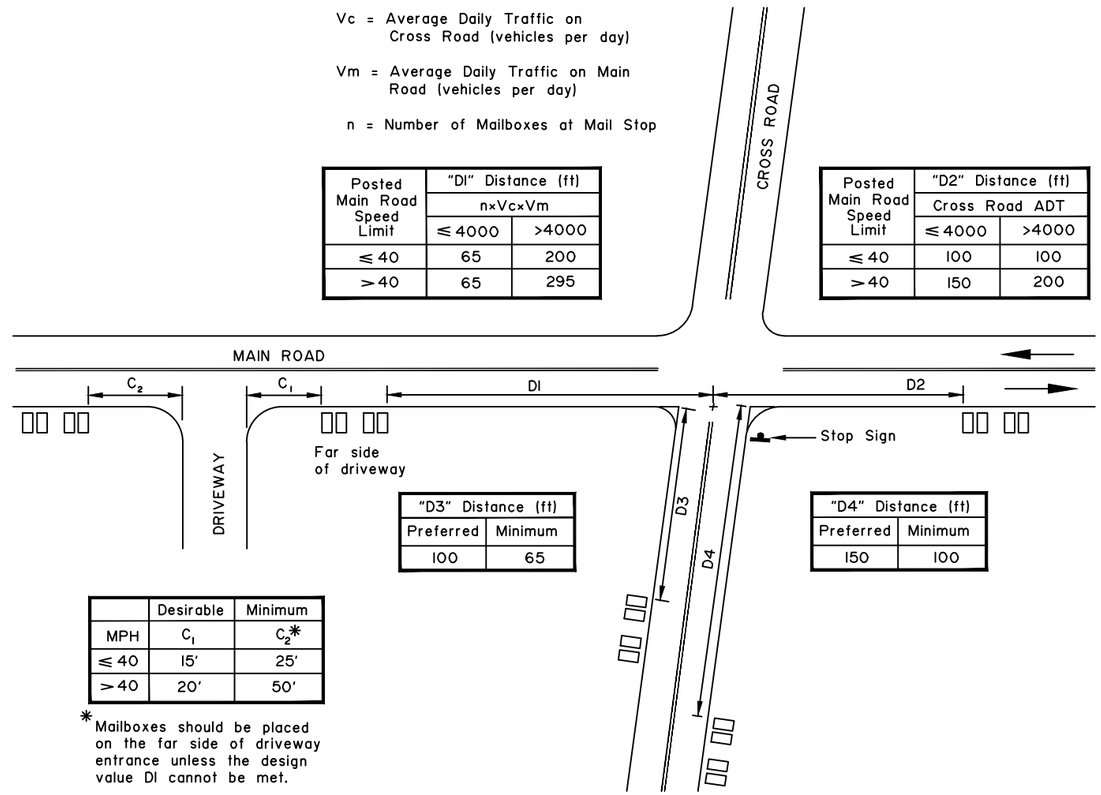

"D3" Distance (ft)	
Preferred	Minimum
100	65

"D4" Distance (ft)	
Preferred	Minimum
150	100

	Desirable	Minimum
MPH	C_1	C_2*
≤40	15'	25'
>40	20'	50'

*Mailboxes should be placed on the far side of driveway entrance unless the design value D1 cannot be met.

MAILBOX LOCATION AT INTERSECTIONS AND DRIVEWAYS

GENERAL NOTES:

1. Install mailboxes conforming to U.S. Postal Service requirements.
2. Mailbox supports shall not present a rigid, unyielding impact resistant hazard to road traffic, but shall be flexible and yielding to vehicular impact. Install crashworthy supports in accordance with Standard Drawing M-23.
3. Installation shall be on the right side of roadway in the direction of mail carrier travel with the exception of one-way streets where they may be placed on either side.
4. Locate mailboxes to minimize dangers to road traffic, carriers and postal recipients.
5. Provide a minimum shoulder width of 8' unless otherwise approved by Engineer. Install single and double mailbox supports separated by at least 3', and desirably 4', from each other. More than two boxes on a single support is allowable only as shown on M-23.
6. Newspaper receptacles shall conform to the same setback and support regulations as mailboxes. Where newspaper receptacles and mailboxes are to be mounted together, the newspaper receptacle may be mounted beneath the mailbox or on the side of the mailbox support opposite the reflecting marker.

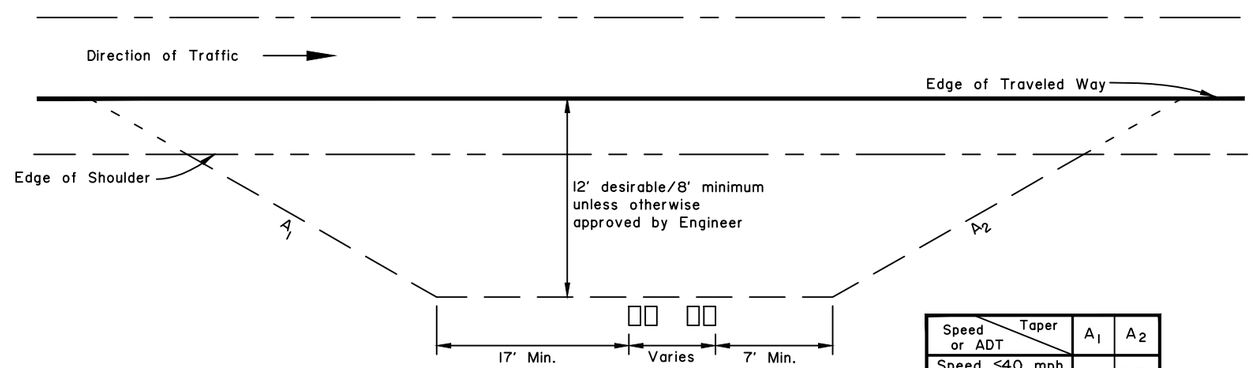

TURNOUTS FOR GROUPED BOXES

Speed or ADT \ Taper	A_1	A_2
Speed ≤40 mph and ADT ≤400	4:1	2.5:1
Speed >40 mph or ADT >400	20:1	12:1

TURNOUT TAPERS

REVISIONS		
Date	Description	By
4/28/10	Tables, details & notes	KJS
1/16/17	Revise d/w distances	LRG

State of Alaska DOT&PF
3132 Channel Dr., Juneau, AK
Phone: (907) 465-2960

MAILBOX LOCATION

STATE of ALASKA 49th Lars R. Gregovich CE-8065 REGISTERED PROFESSIONAL ENGINEER Jan. 13, 2017

Eff. Date: 1/16/17

M-20.14

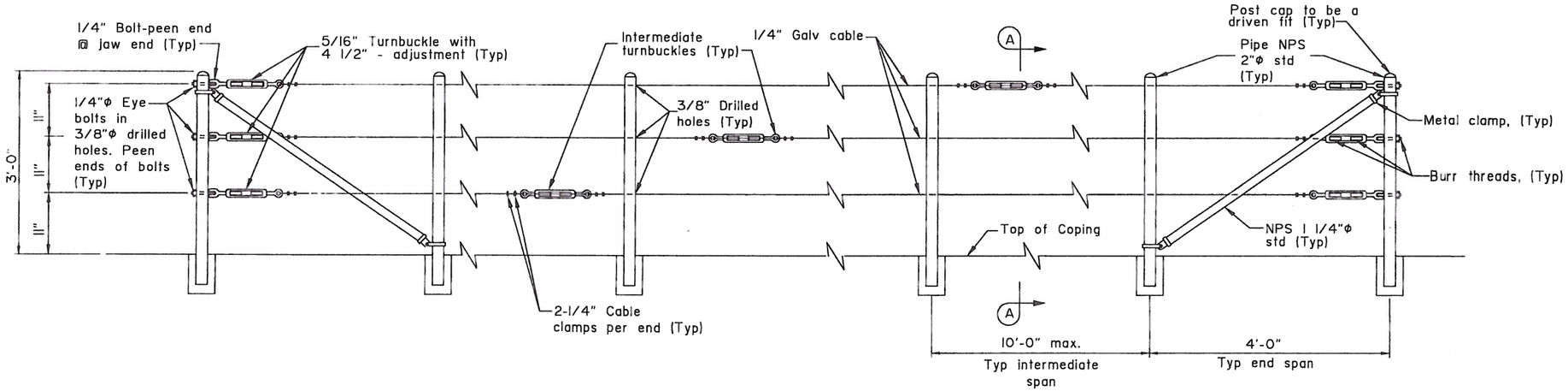

ELEVATION

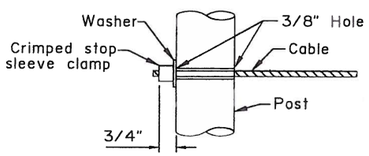

ALTERNATIVE DEAD END ANCHORAGE

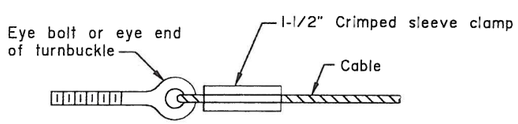

ALTERNATIVE CABLE CONNECTION

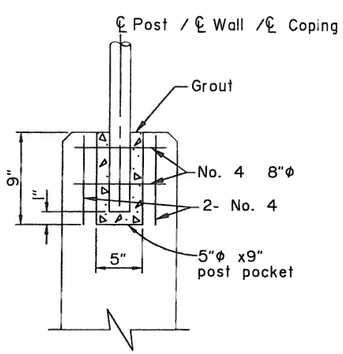

POST POCKET

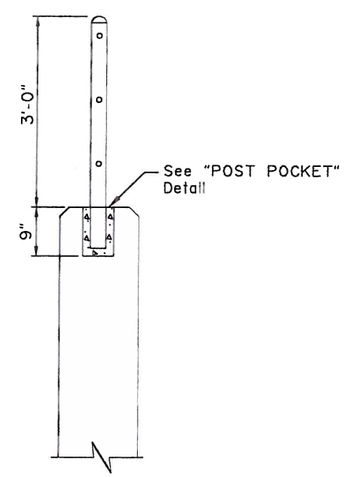

SECTION A-A
CAST IN WALL OR COPING

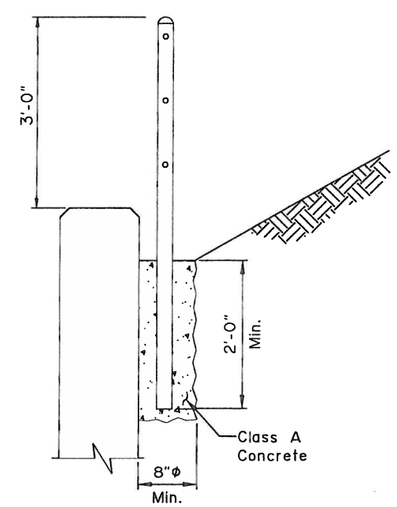

SECTION A-A
BEHIND WALL WITHOUT GUTTER

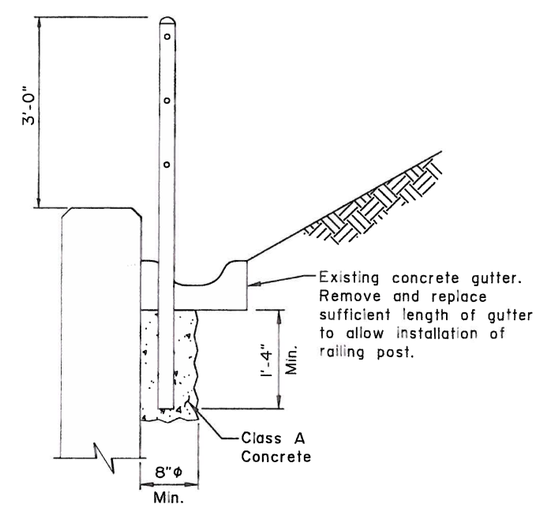

SECTION A-A
BEHIND WALL WITH GUTTER

GENERAL NOTES:

1. Place intermediate turnbuckles in adjacent spans. Maximum span between turnbuckles is 200'-0".
2. Galvanize all posts, cable and hardware.
3. Install posts plumb.
4. Alignment of holes in posts may vary to conform to slope of top of wall.
5. Line posts shall be braced horizontally and trussed diagonally in both directions at intervals not to exceed 1000'-0" and at each end.
6. Typical end spans, braced in both directions, shall be constructed at changes in line where the angle of deflection is 15° or more.
7. Provide thimbles at all cable loops.

DESIGN NOTES:

1. This rail is not intended for use where pedestrians or bicyclists are normally present.
2. This rail is intended for use where M & O personnel, inspectors, or engineers may be working at the top of a wall.

No Scale

REVISIONS		
Date	Description	By
1/16/17	Revised concrete/rebar	JA

State of Alaska DOT&PF
3132 Channel Dr., Juneau, AK
Phone: (907) 465-2960

HEADWALLS
PRECAST
TYPE I

STATE OF ALASKA 49TH Travis W. Arndt No. CE 10805 REGISTERED PROFESSIONAL ENGINEER
4/5/17

Eff. Date:
1/16/17

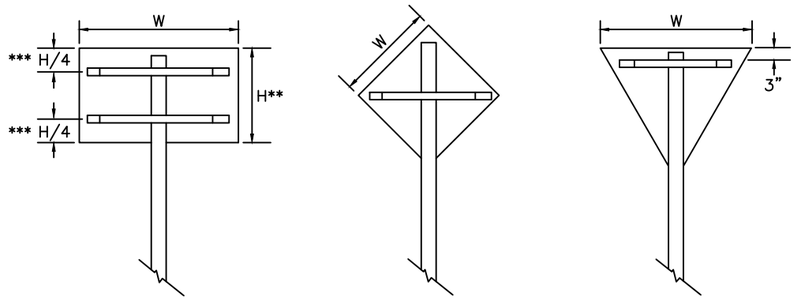

*** Use one brace when H ≤ 18"
Use two braces when 18"< H < 48"
Use three braces when H ≥ 48"

** Position of brace may be varied to match Predrilled mounting holes in panel

SIGN BRACING PLACEMENT

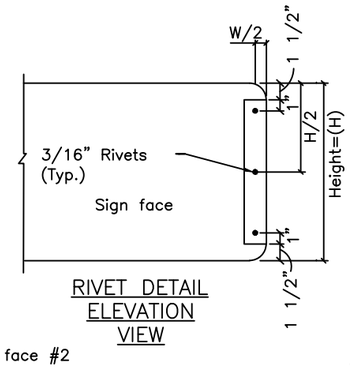

RIVET DETAIL
ELEVATION
VIEW

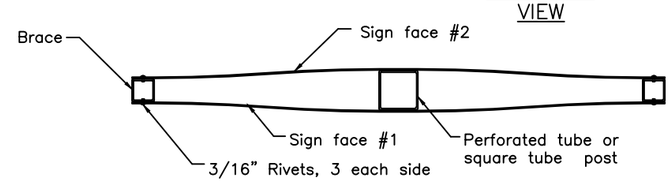

PLAN VIEW

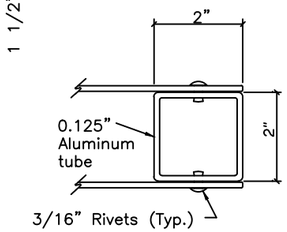

END BRACE DETAIL

SMALL STREET NAME SIGN (D3–1, D3–1A, D3–1D) BRACING DETAILS

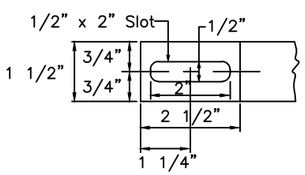

DETAIL OF BRACE SLOT
Elevation view

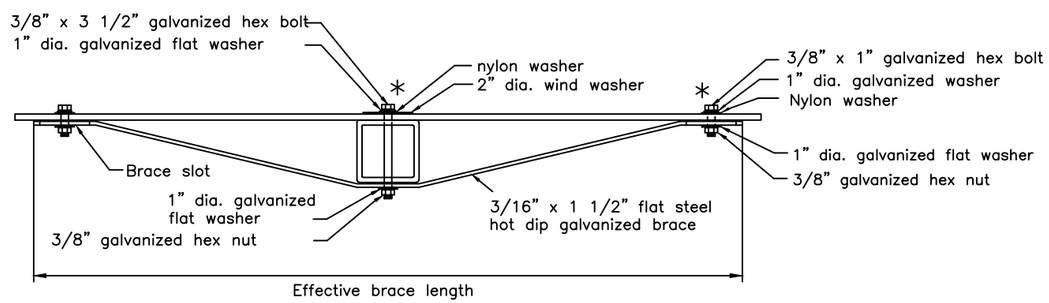

TUBE POST SIGN BRACING
Plan view

* Adjust location of bracing so that bolts and washers will miss the sign legend

Sign Width(W)	Effective Brace Length		
	Warning	Yield	Other
30"	36"	24"	24"
36"	42"	30"	30"
42"	48"	–	36"
48"	Two posts	36"	42"

< 30" No bracing required and use square tube

DRAWING NOT TO SCALE

REVISIONS		
Date	Description	By
1/16/17	Bolt size & type	LRG

State of Alaska DOT&PF
3132 Channel Dr., Juneau, AK
Phone: (907) 465–2960

BRACING FOR SIGNS
MOUNTED ON SINGLE POST

STATE of ALASKA 49th
Lars R. Gregovich
CE-8065
REGISTERED PROFESSIONAL ENGINEER
Jan. 6, 2017

Eff. Date:
1/16/17

S-30.04

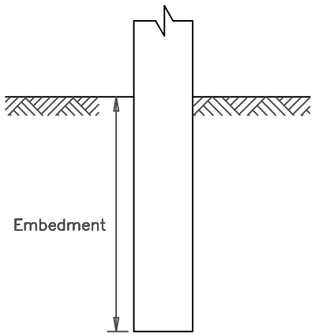

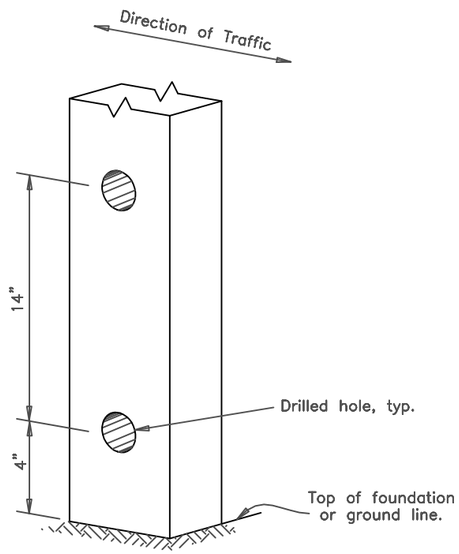

WOOD SIGN POSTS			
SIZE	HOLE DIA.	EMBEDMENT*	NO. OF POSTS WITHIN 7 Ft. PATH
4"x4"	NONE	36"	2
4"x6"	1 1/2"	36"	2
6"x6"	1 1/2"	40"	1
6"x8"	3"	48"	1

* Embedment depth applies in both strong and weak soil.

WOOD POSTS

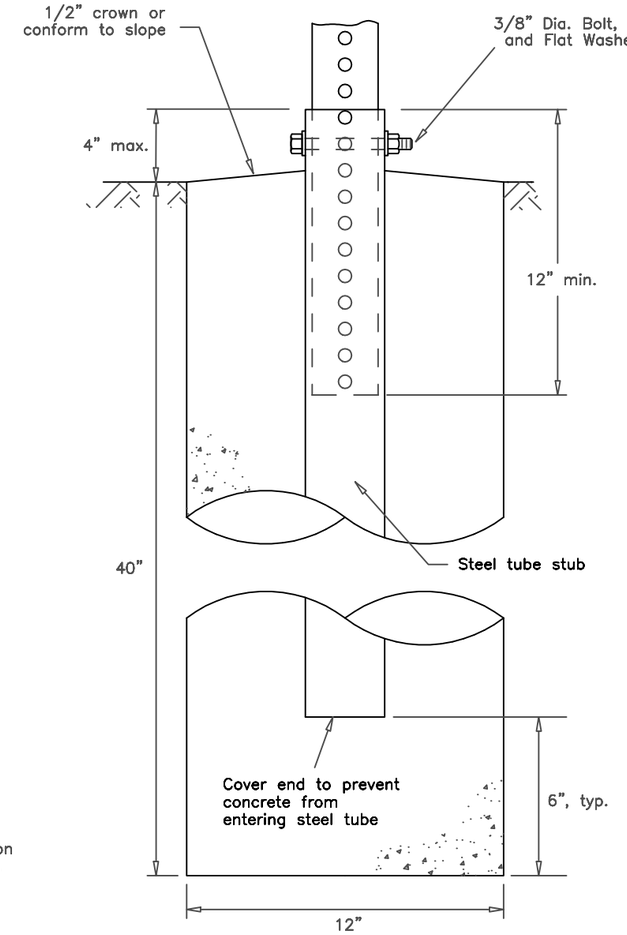

SLEEVE TYPE
CONCRETE FOUNDATION

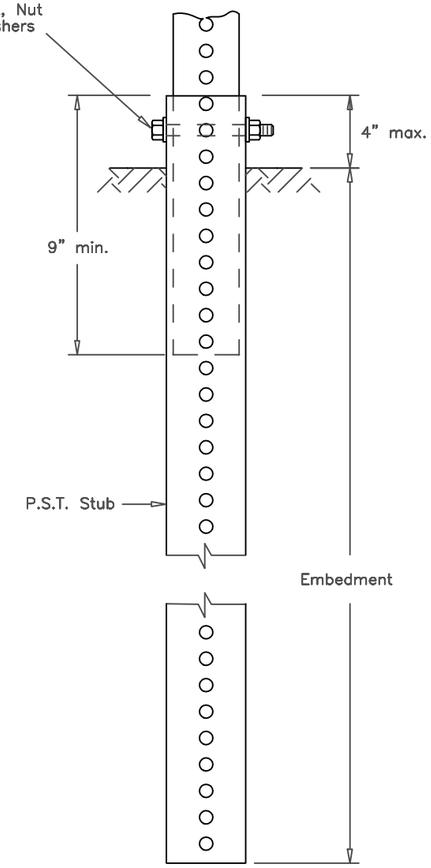

SLEEVE TYPE *
SOIL EMBEDMENT

PERFORATED STEEL TUBES (P.S.T.)		
POST SIZE	Embedment Depth	No. of P.S.T.s permitted within 7 ft path
1 1/2" x 1 1/2"	3'-0"	2
1 3/4" x 1 3/4"	3'-0"	2
2" x 2"	3'-6"	2
2 1/4" x 2 1/4"	4'-0"	1
2 1/2" x 2 1/2"	4'-6"	1

* Use 3"x3"x3/16" Stub for 2 1/2"x2 1/2" PST Applications.

PERFORATED STEEL TUBE (PST) POSTS

GENERAL NOTES:

1. Refer to Std Dwg S-00 for sign framing details.
2. See plans for type of post, size and embedment type.
3. To maintain crashworthiness, install no more than the number of P.S.T.s or wood posts specified in the tables within 7' of each other.
4. Do not install wood posts larger than 6"x8".
5. Do not use the supports on this drawing for multiple support signs if supports are separated by more than 7 feet.
6. Treat all field cuts and field drilled holes in wood posts in accordance with Section 730-2.04 of the Standard Specifications.

REVISIONS		
Date	Description	By
4/2/01	Revised PST table Added Note 3	KJS
2/12/02	Revised wood posts	KJS
1/16/17	Rev. note 1, et. al.	LRG

State of Alaska DOT&PF
3132 Channel Dr., Juneau, AK
Phone: (907) 465-2960

LIGHT SIGN STRUCTURE
POST EMBEDMENT

Eff. Date:
1/16/17

S-30.04

THRUST BLOCK MINIMUM SIZE TABLE						
For Bends Greater Than 45°, Tee Branches & Crosses						
Pipe Diam. (In.)	Water Pressure in Pipe (P.S.I.)					
	50		150		250	
	Bearing Area (Sq. Ft.)	Concrete Volume (Cu. Ft.)	Bearing Area (Sq. Ft.)	Concrete Volume (Cu. Ft.)	Bearing Area (Sq. Ft.)	Concrete Volume (Cu. Ft.)
2	0.5	0.5	0.8	1.0	1.0	1.3
3	0.6	0.8	1.0	1.3	1.1	1.5
4	0.8	1.0	1.6	3.1	1.5	3.0
6	1.0	1.3	1.9	4.0	3.2	7.0
8	1.1	1.5	3.2	7.0	5.4	11.0
10	1.7	3.2	4.9	10.0	8.3	19.0
12	2.4	5.2	7.1	17.0	11.8	24.3
14	3.2	7.0	9.8	21.0	16.1	32.0
16	4.1	8.0	12.3	25.0	20.5	40.0
18	5.4	11.0	16.2	32.0	27.1	50.0
20	6.8	15.0	20.6	40.0	34.4	70.0
24	8.2	19.0	25.3	50.0	42.0	80.0
For Bends 45° or Less						
2	0.5	0.5	0.5	0.5	0.6	0.8
3	0.5	0.5	0.7	0.9	0.8	1.0
4	0.5	0.5	0.9	1.1	1.0	1.5
6	0.6	0.8	1.2	2.0	1.7	3.2
8	0.8	1.0	1.8	3.6	2.9	6.0
10	1.0	1.3	2.7	5.8	4.5	9.0
12	1.3	2.5	3.8	7.5	6.4	14.0
14	1.7	3.2	5.2	11.0	8.6	19.0
16	2.2	4.5	6.7	15.0	11.2	24.0
18	2.8	5.9	8.5	19.0	14.1	30.0
20	3.5	7.0	10.5	22.2	17.5	35.0
24	4.2	8.0	12.8	26.0	21.5	40.0

VALVES REQUIRING ANCHORAGE	
WORKING PRESSURE (P.S.I.)	VALVES REQUIRING ANCHORAGE
50 - 100	12 Inch and up
101 - 150	8 Inch and up
151 - 200	All Sizes

THRUST AT VERTICAL BEND PER DEGREE DEFLECTION AT 100 P.S.I. WATER PRESSURE			
PIPE SIZE	THRUST (LB.)	PIPE SIZE	THRUST (LB.)
4"	35	10"	197
6"	72	12"	278
8"	122	14"	377
		16"	486

GENERAL NOTES:

1. Thrust blocks are to be concrete poured in place between the fitting and undisturbed trench wall.
2. Concrete shall be kept centered behind bell of fitting and not obstructing pipe joints.
3. Thrust blocks are required whenever pipe-line changes direction, changes size, dead ends, or develops thrust at valves.
4. Material, behind the thrust blocks, deemed unsuitable by the engineer shall be removed and replaced as directed by the engineer.
5. In impervious soils, a hole shall be dug beneath the hydrant thrust block tp a minimum volume of 7 cubic feet. The hole shall be filled with porous backfill material.
6. Refer to AWWA C600-64 Section II for placement of hydrant
7. Orient hydrant with nozzles facing street.

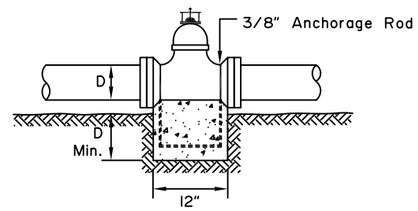

ANCHORAGE OF VALVES

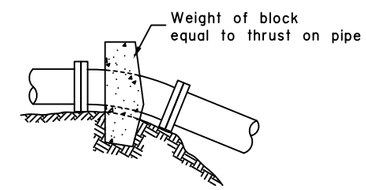

VERTICAL BENDS

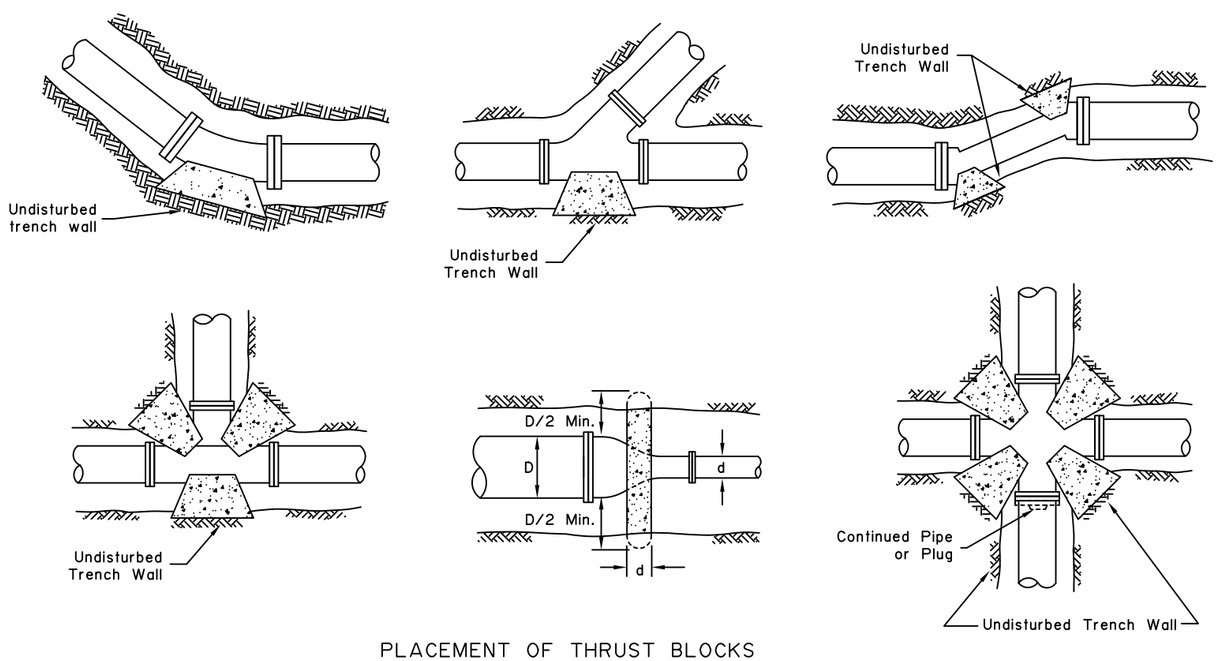

PLACEMENT OF THRUST BLOCKS

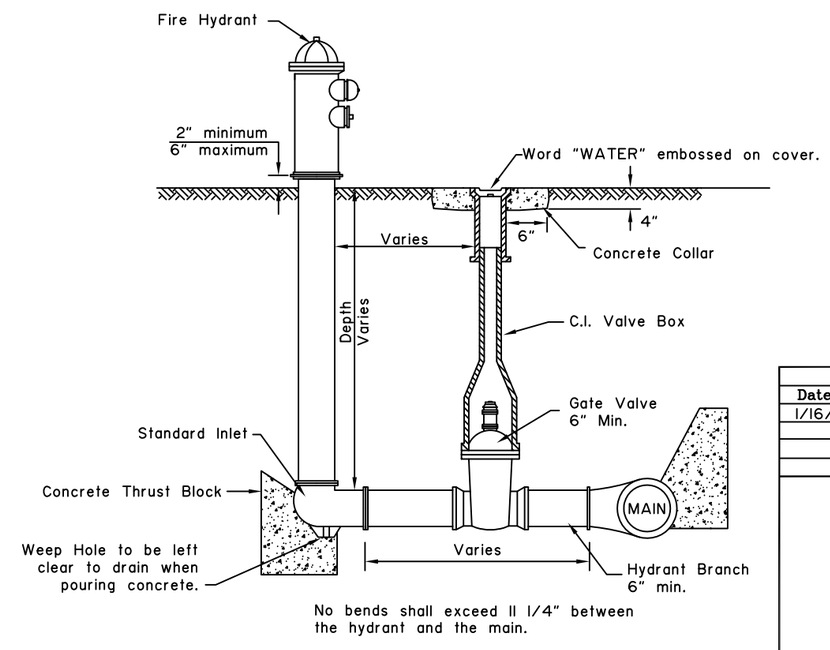

STANDARD HYDRANT

REVISIONS		
Date	Description	By
1/16/17	Delete Note 7	LRG

State of Alaska DOT&PF
3132 Channel Dr., Juneau, AK
Phone: (907) 465-2960

THRUST BLOCKS

STATE OF ALASKA 49th Lars R. Gregovich CE-8065 REGISTERED PROFESSIONAL ENGINEER Jan. 13, 2017

Eff. Date:
1/16/17

U-03.01